OM

Operation Manual

Tetra Pak® E3/CompactFlex

641650-0100

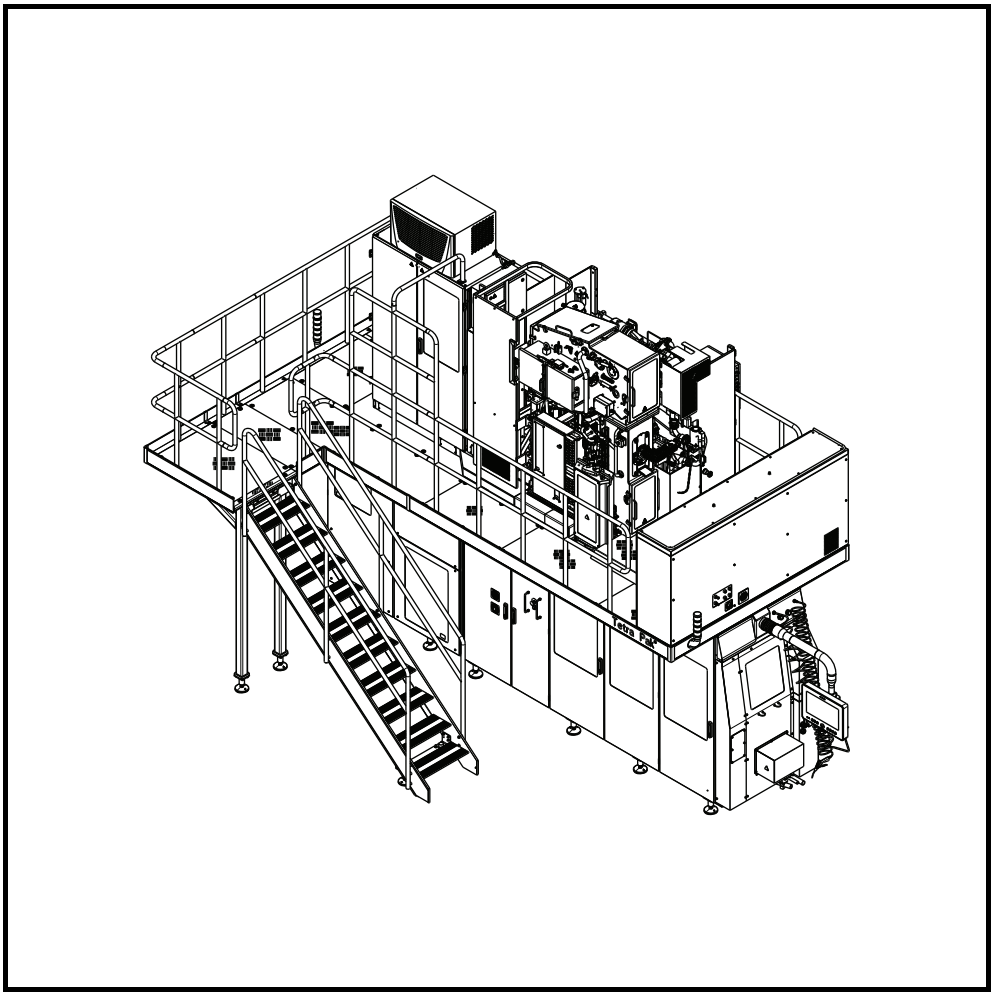

WARNING

Read and follow all safety precaution instructions throughout this manual and on safety signs attached to this equipment.

Failure to follow all safety precaution instructions could result in death or serious injury.

Tetra Pak®

Doc. No. OM-3353934-0102

Copyright © 2014 Tetra Pak International S.A.

All rights reserved. No part of this document may be reproduced or copied in any form or by any means without written permission from Tetra Pak Packaging Solutions.

, Tetra Pak, and all other trademarks displayed in this document are the property of the Tetra Pak International SA. Tetra Pak Packaging Solutions together with Tetra Pak International SA form part of ‘the Tetra Pak Group’. The content of this manual is in accordance with the design and construction of the machine or equipment at the time of publishing. The Tetra Pak Group reserves the right to introduce design modifications without prior notice.

The English language version of this document contains the original instructions. All other language versions are translations of the original instructions.

This document was produced and printed by:

Tetra Pak Packaging Solutions
Via Delfini 1
41123 Modena
Italy

Doc. No. OM-3353934-0102

Issue 2014-10

This manual is valid for:

Series No. / Machine No.
Year of Manufacture Sign.

OM
Operation Manual

Tetra Pak®
E3/CompactFlex
641650-0100

i Introduction
ii Safety Precautions
1 General Description
2 Control Panels
3 Preparation
4 Start
5 Checks
6 Supply of Materials
7 Conversion
8 Stop
9 Care and Cleaning
10 Sterilization Liquid
11 Technical Data

Machine or equipment configurations that this manual is valid for are described on the next page.

Doc. No. OM-3353934-0102
Issue 2014-10

Tetra Pak®
Tetra Pak Packaging Solutions

Valid for:

Name	Drawing Specification and Development Step	Additional Information
Tetra Pak E3/CompactFlex Pateurized	641650-0100	
Tetra Pak E3/CompactFlex XH	641650-0100	

i Introduction

About the Introduction Chapter

This chapter contains basic information about this manual and the related Tetra Pak equipment.

About the Introduction Chapter i-2

Abbreviations and Terminology i-5

Manual Information i-7

Delivered Manuals i-7

CM i-7

EM i-7

IM i-7

MM i-7

OM i-7

SPC i-7

TeM i-8

Page Layout i-9

Page Numbering i-10

Typographical Conventions i-10

Symbols i-10

Machine Introduction i-11

Intended Use of the Equipment i-11

Manufacturer i-11

Assistance and Inquiries i-11

Declaration of Conformity i-11

Identification i-12

CE Classification i-12

3-A Compliance i-12

Machine Plate i-12

Food Grade Lubricated Machine Plate i-13

Delivered Design Label i-13

Orientation i-14

Hygiene i-15

Packaging Material i-15
Steam Barrier in the Product Valve i-15
How to Use This OM i-16
Purpose of the OM i-16
Operator Workflow i-16

Abbreviations and Terminology

Abbreviation/Terminology	Meaning	Translation
ASU	Automatic Splicing Unit	Automatic Splicing Unit
B	Base (package shape)	Base (package shape)
CE	Communautés Européennes/European Communities	Communautés Européennes/European Communities
CF	CompactFlex	CompactFlex
CIP	Cleaning In Place	Cleaning In Place
DE	Distribution Equipment	Distribution Equipment
E	Edge (package shape)	Edge (package shape)
ECM	Engineering Change Management	Engineering Change Management
EM	Electrical Manual	Electrical Manual
HI	Headspace by gas Injection	Headspace by gas Injection
ICU	Integrated Cleaning Unit	Integrated Cleaning Unit
IM	Installation Manual	Installation Manual
LED	Light Emitted Diode	Light Emitted Diode
LH	Left Hand	Left Hand
LS	Longitudinal Seal(ing)	Longitudinal Seal(ing)
LVEB	Low Voltage Electron Beam	Low Voltage Electron Beam
min	Minimum	Minimum
max	Maximum	Maximum
MKC	Mandatory Kit Corrective	Mandatory Kit Corrective
MKS	Mandatory Kit Human and Product Safety	Mandatory Kit Human and Product Safety
MM	Maintenance Manual	Maintenance Manual
OE	Optional Equipment	Optional Equipment
OK	Optional Kit	Optional Kit
OM	Operation Manual	Operation Manual
PE	Polyethylene	Polyethylene
PM	Packaging Material	Packaging Material
QuTI-P	Quality and Technical Issues Platform	Quality and Technical Issues Platform
RFID	Radio-Frequency Identification	Radio-Frequency Identification
RH	Right Hand	Right Hand
RK	Rebuilding Kit	Rebuilding Kit
RM	Rebuilding Manual	Rebuilding Manual
S	Slim (package shape)	Slim (package shape)
SA	Strip Applicator	Strip Applicator

Abbreviation/Terminology	Meaning	Translation
SPC	Spare Parts Catalogue	Spare Parts Catalogue
Sq	Square (package shape)	Square (package shape)
TBA	Tetra Brik® Aseptic	Tetra Brik® Aseptic
TeM	Technical Manual	Technical Manual
TMCC	Tetra Multi-purpose Compact Controller	Tetra Multi-purpose Compact Controller
TPMS	Tetra Pak Maintenance System	Tetra Pak Maintenance System
TPOP	Tetra Pak Operator Panel	Tetra Pak Operator Panel
TS	Transversal Sealing	Transversal Sealing
UK	Upgrade Kit	Upgrade Kit
UP	Update Pages	Update Pages
US	Ultra Sonic energy	Ultra Sonic energy
WPAC	Web Position Active Control	Web Position Active Control

Manual Information

The Tetra Pak Group recommends reading all delivered manuals carefully. Make sure that the delivered manuals are available to personnel who operate or maintain the equipment.

It is important to keep this manual for the lifetime of the equipment and to pass the manual on to any subsequent holder or user.

Any item that is named specifically in this manual is to be considered a designated item for the equipment. Designated items are verified by the Tetra Pak Group for use with the equipment.

The Tetra Pak Group will not be held responsible for any damage, loss, injury, or death caused by not following the instructions in the manuals that accompany this equipment, or by a failure to use designated items specified in the manuals that accompany this equipment.

Delivered Manuals

Manuals delivered with this equipment:

CM

The Conversion Manual provides technicians with information on converting the equipment between different production modes.

EM

The Electrical Manual provides technicians with information about the equipment's electrical system.

IM

The Installation Manual provides technicians with information required to safely install the equipment.

MM

The Maintenance Manual provides technicians with information on maintaining the equipment.

OM

The Operation Manual provides the operator with information on handling and operating the equipment before, during, and after production.

SPC

The Spare Parts Catalogue provides the information necessary to order spare parts from the Tetra Pak Group.

TeM

The Technical Manual provides technicians with information which can be:

- information required to safely install the equipment
- information required to maintaining the equipment
- information about the machine's/equipment's electrical system
- information necessary to order spare parts from the Tetra Pak Group
- other technical information

Page Layout

Every main page in a manual contains a header and a footer. The page header contains the chapter name (1) and the section name (2). The page footer contains the page number (3), and the document number (4). See also the Page Numbering section.

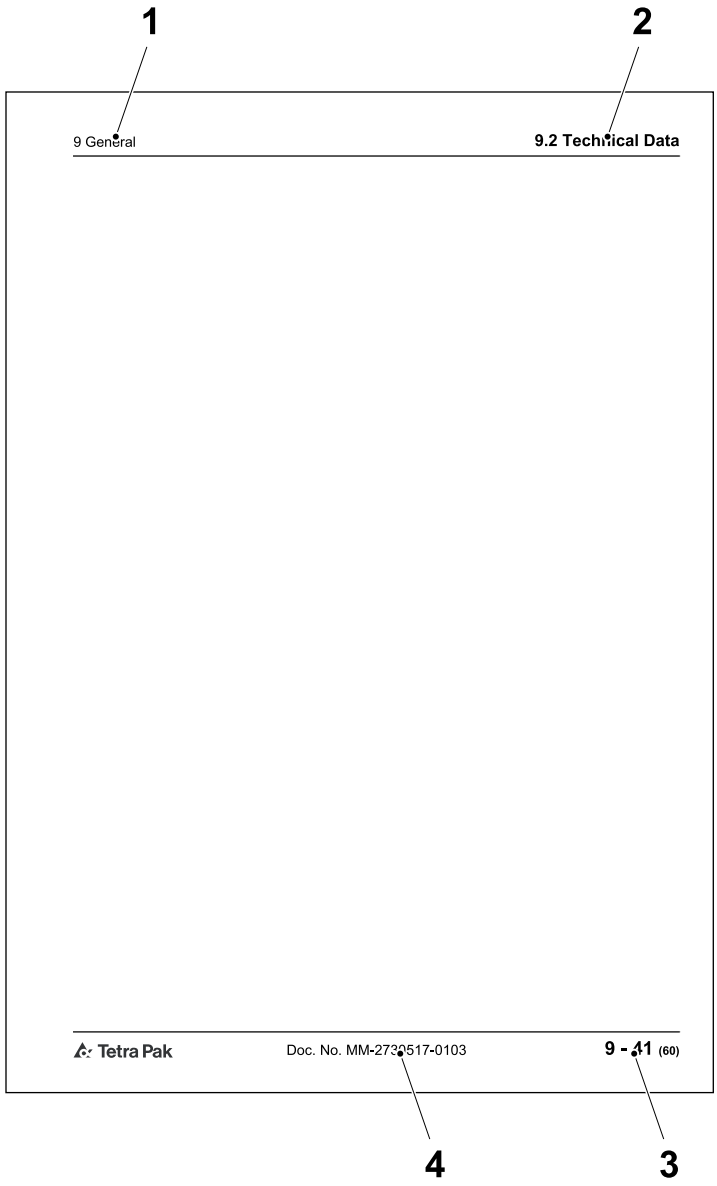

1 Chapter name
2 Section name
3 Page number
4 Document number

Page Numbering

A page number has three parts:

- chapter number (1)
- consecutive page number (2) within the chapter
- total number of pages (3) in the chapter

Note! The letters UP may replace the chapter number (1) if the manual includes update pages. The consecutive page number (2) and the total number of pages (3) of update pages do not follow the existing sequential page numbering of the chapter.

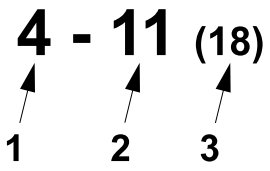

1 Chapter number
2 Consecutive page number
3 Total number of pages

Typographical Conventions

Controls on the operator panel, emergency stop devices, and program steps are printed in CAPITAL LETTERS.

Menu names, button names and other text displayed in software are printed in COURIER.

Cross-references are underlined.

Symbols

Symbols used in illustrations.

	A pointer arrow indicates the position of an object.
	A zoom arrow indicates that an object view is enlarged. The arrow points towards the enlarged view of the object.
	A rotation movement arrow indicates rotational movement of an object. The arrow points in the direction of rotation.
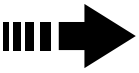	A straight movement arrow indicates movement of an object. The arrow points in the direction of movement.

Machine Introduction

Intended Use of the Equipment

The intended use of this Tetra Pak® equipment is to pack liquid food products.

All other use is strictly prohibited. The Tetra Pak Group will not be held responsible for injury or damage if the equipment is used for any other purpose than the intended use described above.

Manufacturer

This Tetra Pak equipment has been manufactured by

Tetra Pak Packaging Solutions
Via Delfini 1
41123 Modena
Italy

Assistance and Inquiries

For assistance when operating this equipment, or other inquiries, comments, or suggestions, submit the questions or give feedback by using the QuTI-P tool. Type QuTI-P in the address field of your browser. If access to QuTI-P is not available, request access by contacting the Global Service Desk.

If access to the Tetra Pak® intranet is not available, contact the nearest Tetra Pak representative.

Declaration of Conformity

A copy of the Declaration of Conformity can be found in the Installation Manual. The signed Declaration of Conformity is delivered separately with the equipment.

Identification

CE Classification

This equipment complies with the basic health and safety regulations of the European Economic Area (EEA).

3-A Compliance

This equipment complies with the 3-A Sanitary Standards for Formers, Fillers, and Sealers of Containers for Fluid Milk and Fluid Milk Products, Number 17-11.

Machine Plate

The illustration below shows an example of the machine plate and its location on the equipment. The machine plate carries data needed when contacting Tetra Pak® concerning this specific equipment.

Make sure that the equipment data in the front pages of this manual corresponds to the machine plate data and the machine specification.

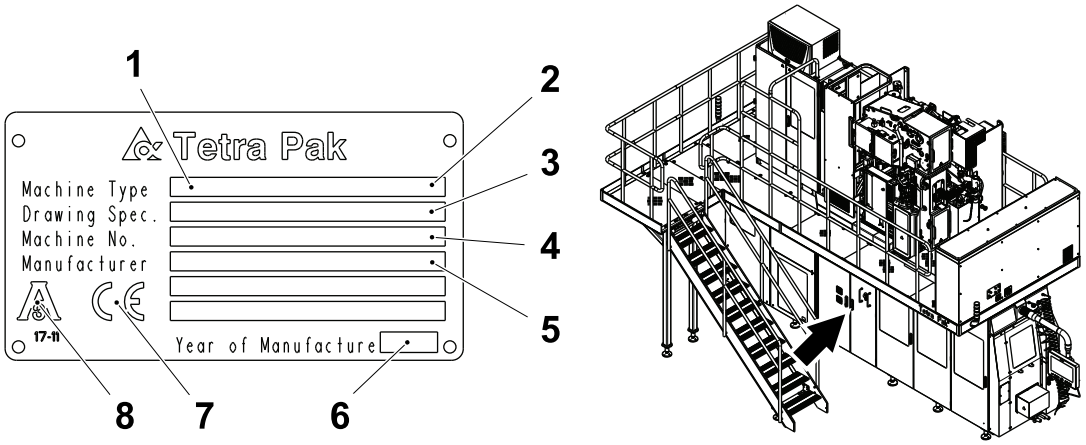

1 Machine type
2 Volume
3 Drawing specifications
4 Machine serial number
5 Manufacturer
6 Year of manufacture
7 CE mark
8 3-A mark (if applicable)

Food Grade Lubricated Machine Plate

The illustration below shows an example of the Food Grade Lubricated Machine plate and its location on the equipment. The Food Grade Lubricated Machine plate indicates that lubricants used in this equipment are of food grade quality.

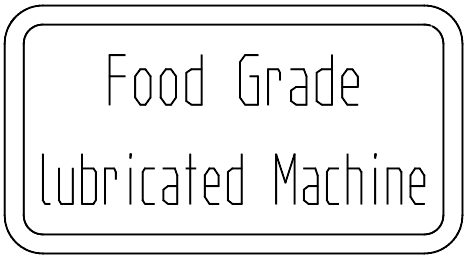

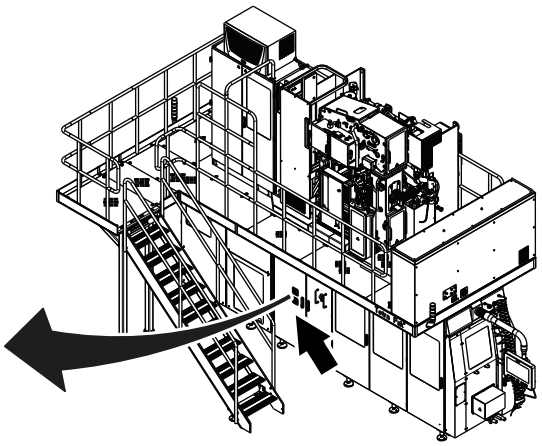

Delivered Design Label

The illustration below shows an example of the delivered design label and its location on the equipment. The delivered design label lists information tracking any rebuilding done to the electrical design, and any alterations done in the electrical cabinet and to related electrical components.

The delivered design label is filled in by the person performing the rebuilding or alteration.

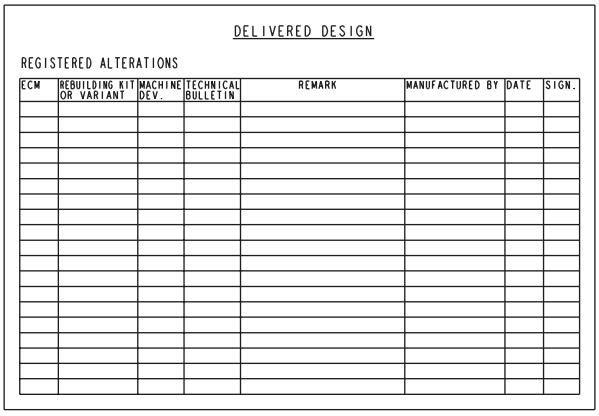

DELIVERED DESIGN

REGISTERED ALTERATIONS

ECM	REBUILDING KIT OR VARIANT	MACHINE DEV.	TECHNICAL BULLETIN	REMARK	MANUFACTURED BY	DATE	SIGN.

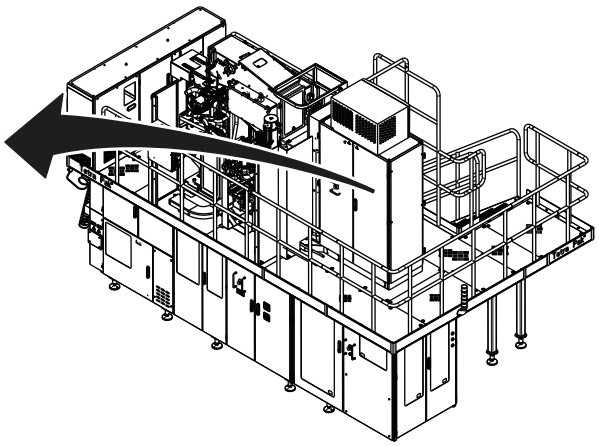

Orientation

The illustration below shows the orientation of the equipment. This orientation information will be used throughout this manual. The arrows indicate the flow of material.

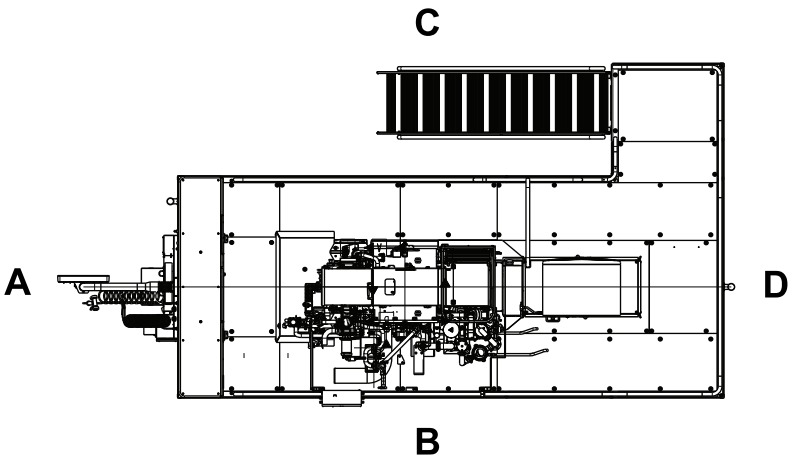

A Front
B Right-hand side
C Left-hand side
D Back

Hygiene

Packaging Material

Avoid microbiological contamination of the packaging material:

- Always protect your packaging material against contamination.
- Always keep the doors to the filling room (area) closed. To prevent contamination via air streams, never open a window when the machine is in production.
- Never clean the floors or the machine in the filling room (area) when the machine is in production.
- Compressed air used for cleaning purposes is to be used only for cleaning filters and should only be used outside of the filling room (area) or in the final folder compartment of the filling machine.
- Prepare the splicing of the packaging material as late as possible.
- Disinfect your hands before touching anything that may come into contact with the product. Use code H disinfectant. See the Technical Data chapter of the Maintenance Manual.
- Keep your hands clean.
- Always wear some type of hair protection (cap or hairnet) and clean clothes (preferably white).
- Do not wear a watch, ring, necklace, earrings, or any other exposed jewellery.

Steam Barrier in the Product Valve

The filling machine's product valve employs a steam barrier to separate the product supply line from the filling machine. The steam barrier allows the machine and the product supply line to be independently sterilised to commercial sterility conditions.

- Never disengage the steam barrier, and never interrupt the steam supply when the filling machine or the product supply line is being brought to the pre-sterilization phase, or when the machine is already in the production phase.
- If any maintenance activity requires disengagement of the steam barrier or the interruption of the steam supply to the machine, make sure that the product supply line is idle and empty of product.

How to Use This OM

Purpose of the OM

The Operation Manual provides operators with information on handling and operating the equipment before, during, and after production.

Operator Workflow

Beginning with Chapter 3, the content is structured to follow the operator workflow, as described below.

Preparation Cycle

a) Preparation

Production Cycle

b) Start

c) Checks

d) Supply of Materials

e) Conversion

f) Change of Product

g) Stop

Care Cycle

h) Care and Cleaning

ii Safety Precautions

Description

Safety Precaution Instructions

WARNING

Read and understand this manual before using the machine.
Failure to follow safety precautions and instructions can result in death or serious injury.

Definition of Lockout Procedure

A lockout procedure is a procedure to put each necessary energy isolating device in its safe position to prevent the energisation of the equipment, such as when a maintenance procedure should be carried out.

A lockout is the use of a device, for example, a padlock, to make sure that an energy isolating device cannot be operated.

An energy isolating device is a mechanical device that physically prevents transmission or release of energy, such as an electrical supply disconnecting device.

Description ii-2

Safety Messages Description..... ii-7

Personnel Requirements ii-8

Skilled Person ii-8

Instructed Person ii-8

Safety Signs..... ii-9

Location of Safety Signs ii-12

Protective Devices ii-21

Emergency Stop.....ii-21

Emergency Stop Push-Buttons ii-22

Safeguards.....ii-22

Indicating Tower.....ii-24

Audible Alarm ii-25

Safe Manual Handling ii-26

Personal Protection ii-27

Noise ii-27

Entanglement.....ii-27

Hazardous Substances.....ii-28

Disposal of Chemical Substances.....ii-28

Hydrogen Peroxide (H_2O_2).....ii-28

Emergency Procedures ii-28

Eyes ii-29

Skin..... ii-29

Inhalation ii-29

Ingestion..... ii-29

Personal Protective Equipment ii-29

Handling of Hydrogen Peroxide ii-30

Storage of Hydrogen Peroxide ii-31

Disposal of Hydrogen Peroxide ii-32

Caustic Soda/Sodium Hydroxide (NaOH) ii-32

Emergency Procedures ii-32

Inhalation ii-32

Ingestion ii-32

Skin Contact ii-32

Eye Contact ii-32

Accidental Release, Spillage or Splashing ii-32

Personal Protective Equipment ii-33

Handling and Storage of Caustic Soda/Sodium Hydroxide ii-33

Disposal of Caustic Soda/Sodium Hydroxide ii-33

Estinguishing Media ii-33

Specific Hazards ii-33

Protective Measures in Fire ii-34

Nitric Acid (HNO_3) ii-34

Emergency Procedures ii-34

Inhalation ii-34

Ingestion ii-34

Skin Contact ii-34

Eye Contact ii-34

Accidental Release, Spillage or Splashing ii-35

Personal Protective Equipment ii-35

Handling and Storage of Nitric Acid ii-35

Disposal of Nitric Acid ii-36

Fire ii-36

Explosion ii-36

Estinguishing Media ii-36

Special Information ii-36

Protective Measures In Fire ii-36

Supply Systems ii-37

Electrical Supply ii-37

Residual Voltage ii-38

Electrical Cabinet **ii-38**
Socket Outlet **ii-39**
Air Supply **ii-40**
Water Supply **ii-41**

This page intentionally left blank

Safety Messages Description

A safety message is always accompanied by a safety alert symbol and a signal word.

The safety alert symbol is used to alert about potential personal injury hazards. To avoid hazards, obey all safety messages that follow this symbol.

The following safety alert symbols and signal words are used in this manual to inform the user of hazards.

DANGER	Danger indicates an imminently hazardous situation which, if not avoided, **will** result in **death or serious injury**.
WARNING	Warning indicates a potentially hazardous situation which, if not avoided, **could** result in **death or serious injury**.
CAUTION	Caution indicates a potentially hazardous situation which, if not avoided, **may** result in **minor or moderate injury.** It may also be used to alert against unsafe practices.
CAUTION	Caution without the safety alert symbol indicates a potentially hazardous situation which, if not avoided, **may** result in **property damage**.

Personnel Requirements

Note! Personnel includes all persons working on or near this equipment.

Only skilled or instructed persons are allowed to work with this equipment.

Skilled Person

A skilled person must have relevant education and experience to enable him or her to identify hazards, analyse risks, and avoid hazards which electricity, machinery, chemicals, other energies, and supply systems on this equipment can create.

Skilled persons must meet local regulations, such as certifications and qualifications for working with these energies and systems.

Instructed Person

An instructed person must be adequately advised or supervised by a skilled person. The skilled person enables the instructed person to identify hazards, analyse risks, and avoid hazards which electricity, machinery, chemicals, other energies, and supply systems on this equipment can create.

Safety Signs

WARNING

Damaged or missing safety signs.
Safety signs are used to indicate safety hazards. If the signs are missing or damaged, they can not fulfil this function. Replace all missing or damaged safety signs immediately.

Safety signs are attached to the equipment. The table below lists all the signs that are used, and illustrations show their locations on the equipment. Each position number refers to two standards of a safety sign in the table, but only one is used on the equipment.

- Make sure that each safety sign is legible and in its correct position after installation and maintenance.
- Replace all missing or damaged safety signs immediately.

Pos	ISO Standard	ANSI Standard
1	 **Moving part can crush and cut.** Do not operate with guard removed. Follow lockout procedure before maintenance.	
2	 **Hazardous voltage.** Will shock, burn, or cause death. Follow lockout procedure before maintenance.	
3	 **Chemical burn hazard.** Wear personal protective equipment.	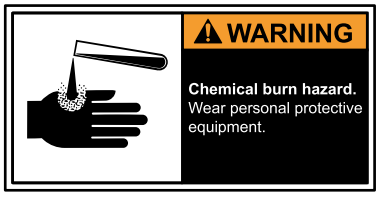

(Cont'd)

(Cont'd)

Pos	ISO Standard	ANSI Standard
4	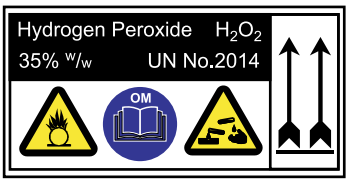	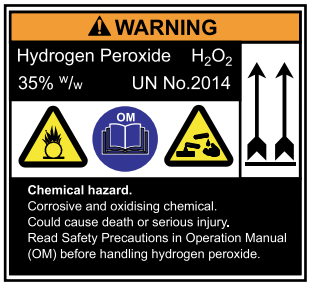
	Chemical hazard. Corrosive and oxidising chemical. Could cause death or serious injury. Read Safety Precautions in Operation Manual (OM) before handling hydrogen peroxide.	
5		
	Risk of eye injury. Wear eye protection.	
6		
	Hot surface. Do not touch. Follow lockout procedure before maintenance.	
7		
	Hazardous voltage. Can shock, burn, or cause death. Read Maintenance Manual (MM) before using this socket outlet.	
8		
	Hazardous rotating shafts and belts. Can crush and cut. Keep hands clear while the machine is operating.	

(Cont'd)

(Cont'd)

Pos	ISO Standard	ANSI Standard
9	 **Hot oil.** Wear protective gloves.	
10	 **Chemical hazard.** Alkali. Wear personal protective equipment.	Not applicable
11	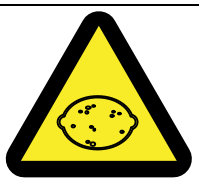 **Chemical hazard.** Acid. Wear personal protective equipment.	Not applicable
12	 **Chemical hazard.** Disinfectant. Wear personal protective equipment.	Not applicable
13	  **Hazardous voltage.** Will shock, burn, or cause death. Follow lockout procedure before maintenance.	

Location of Safety Signs

The illustration shows where the safety signs are located. The position numbers refer to the table in the Safety Signs section.

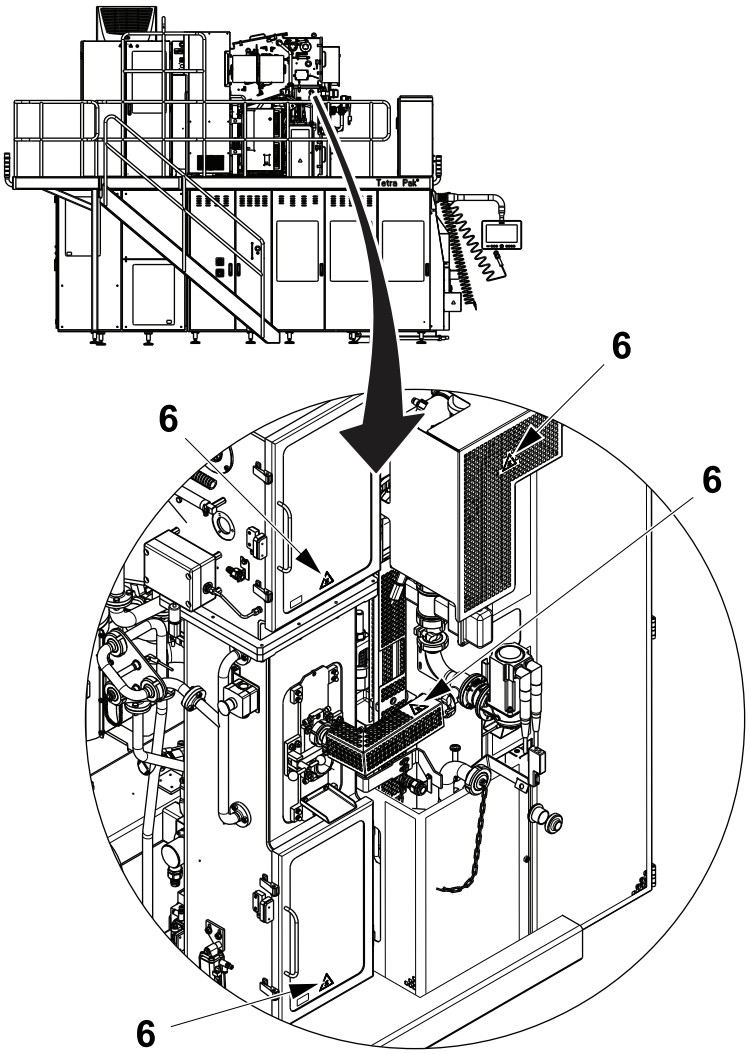

(Cont'd)

(Cont'd)

The illustration shows where the safety signs are located. The position numbers refer to the table in the Safety Signs section.

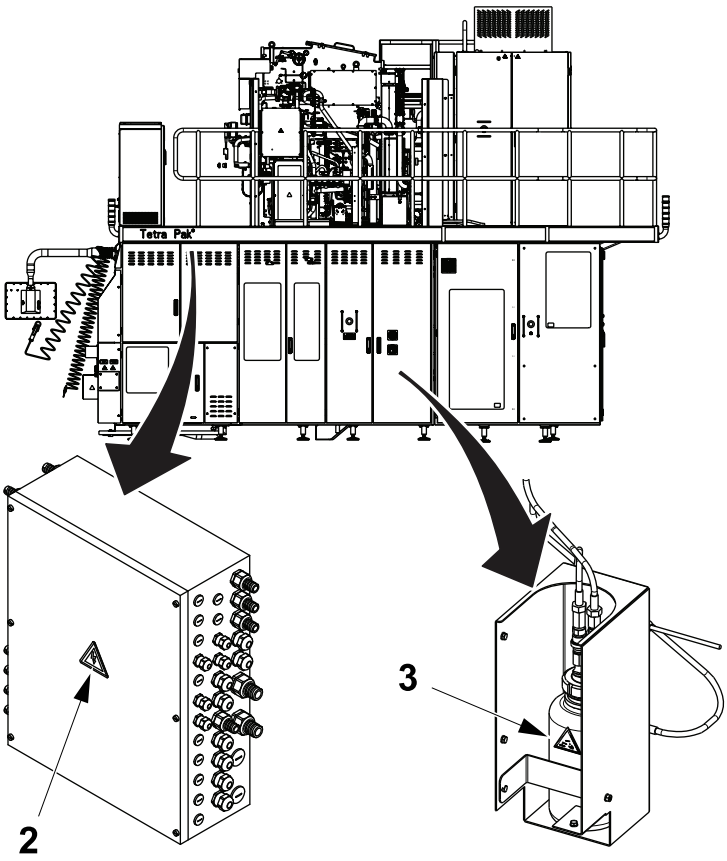

(Cont'd)

(Cont'd)

The illustration shows where the safety signs are located. The position numbers refer to the table in the Safety Signs section.

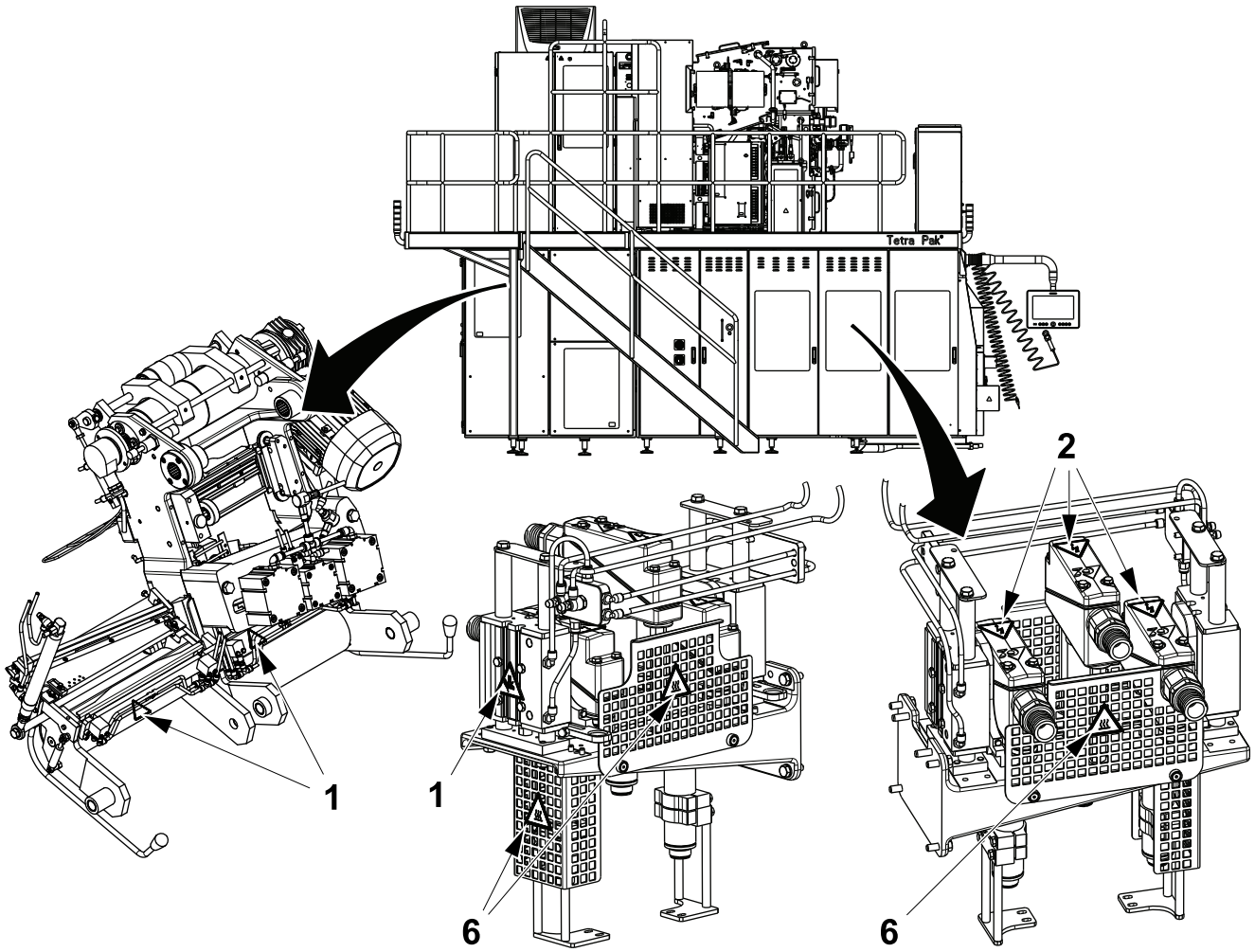

(Cont'd)

(Cont'd)

The illustration shows where the safety signs are located. The position numbers refer to the table in the Safety Signs section.

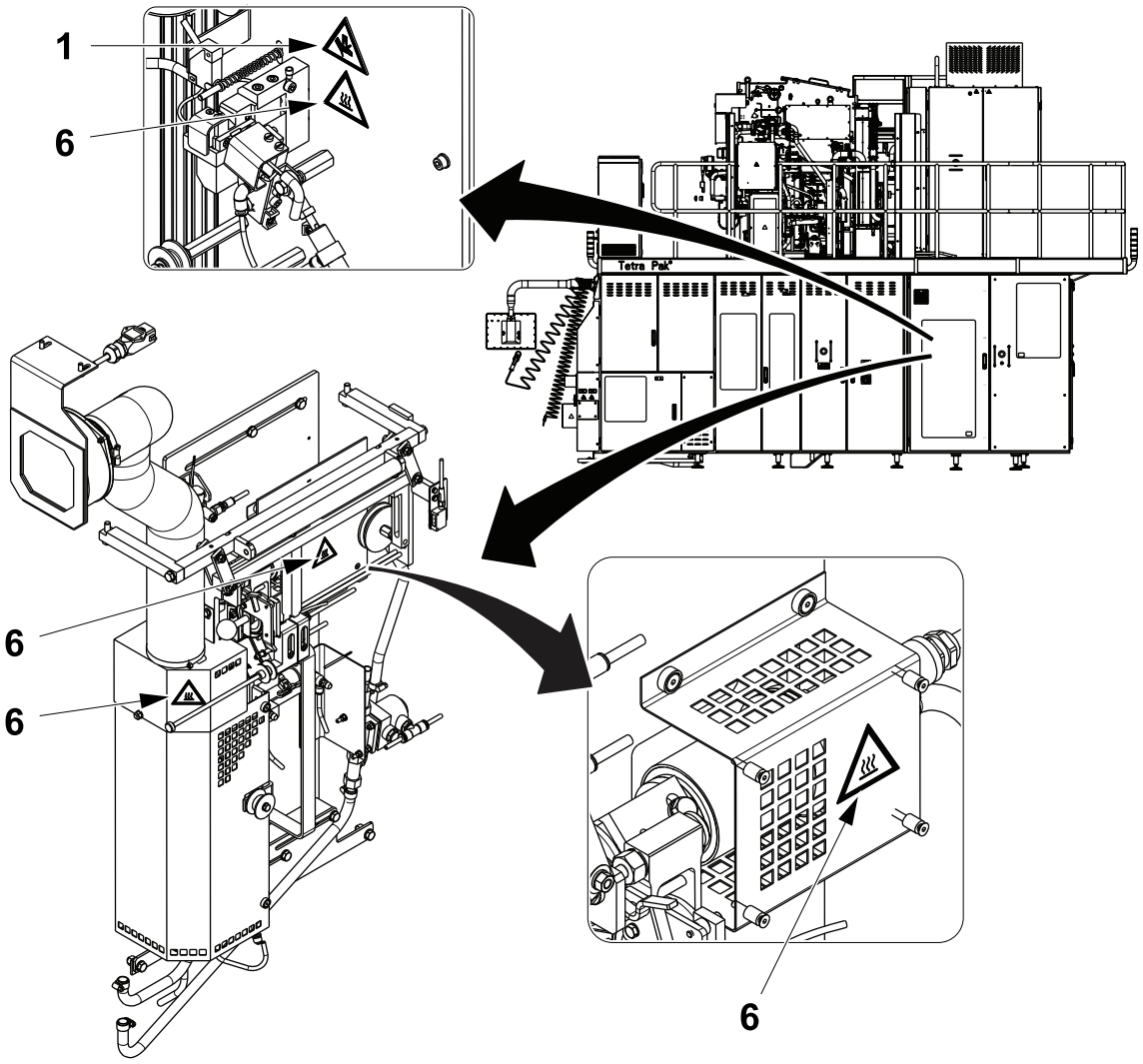

(Cont'd)

(Cont'd)

The illustration shows where the safety signs are located. The position numbers refer to the table in the Safety Signs section.

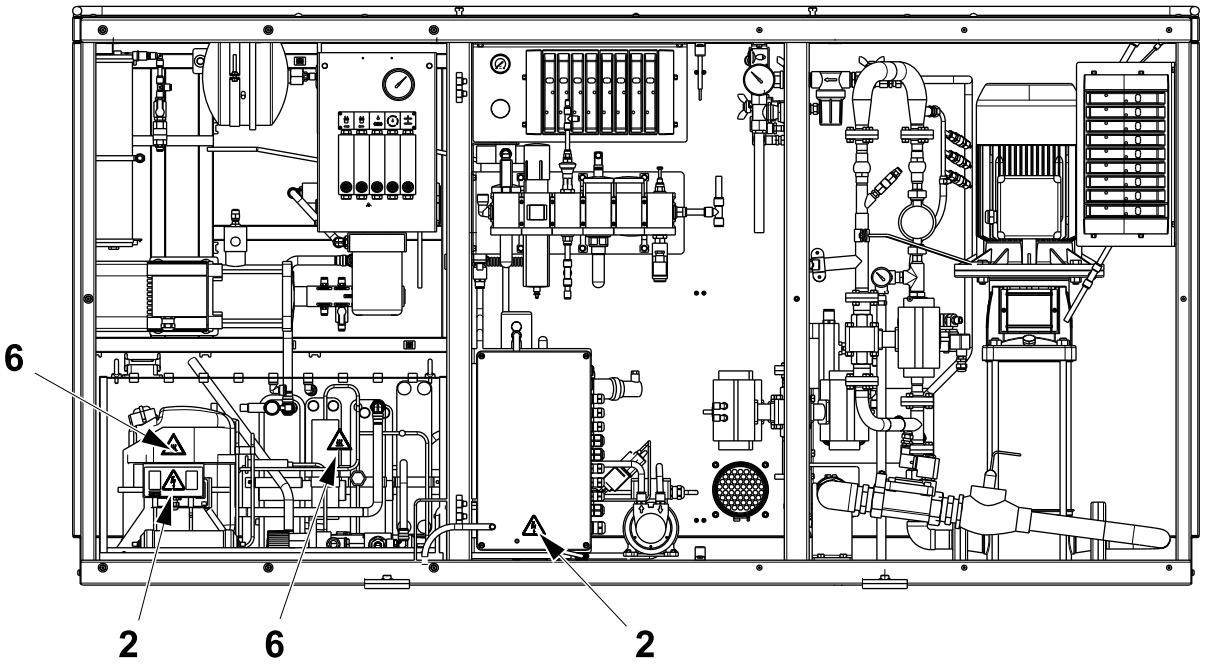

(Cont'd)

(Cont'd)

The illustration shows where the safety signs are located. The position numbers refer to the table in the Safety Signs section.

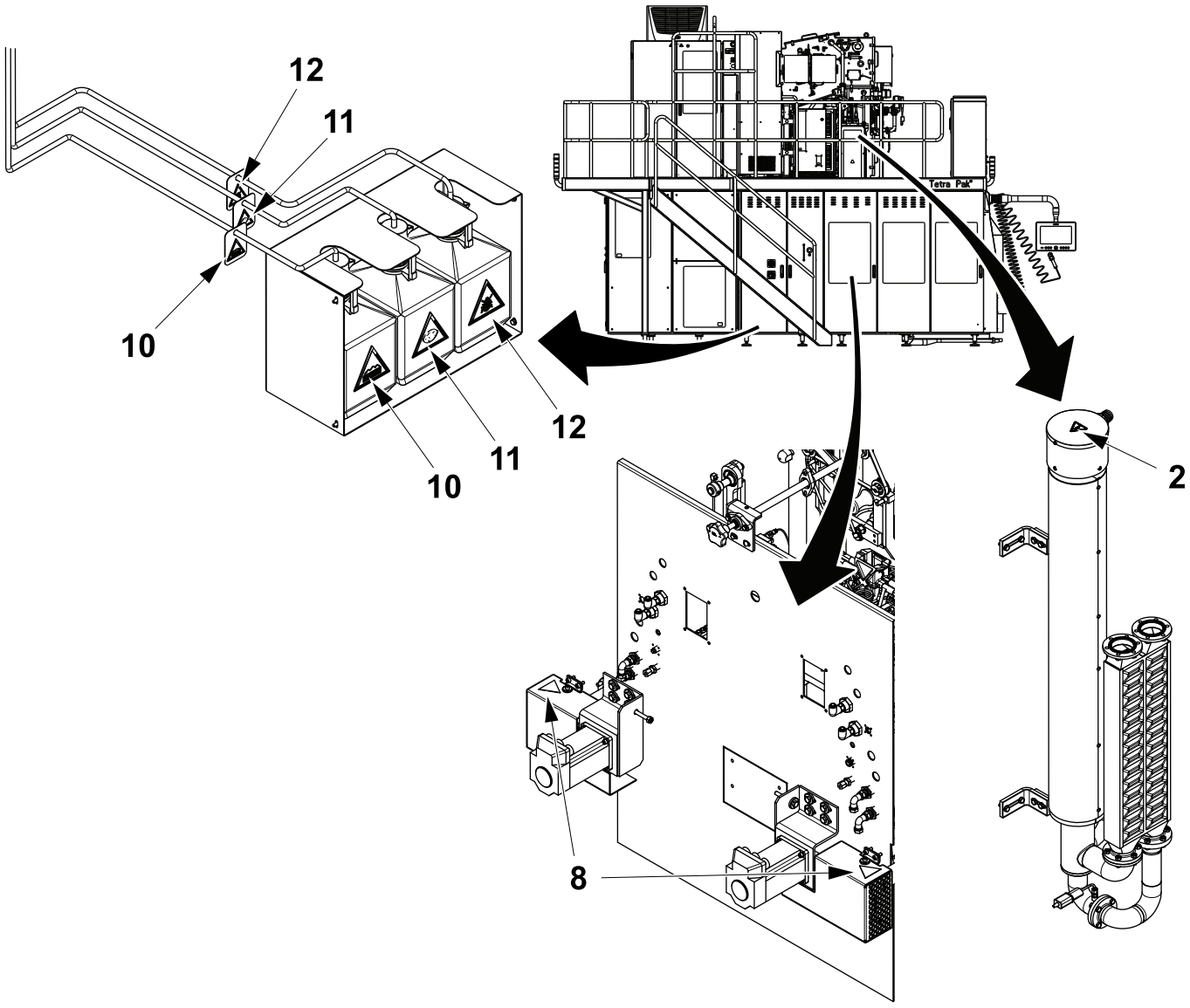

(Cont'd)

(Cont'd)

The illustration shows where the safety signs are located. The position numbers refer to the table in the Safety Signs section.

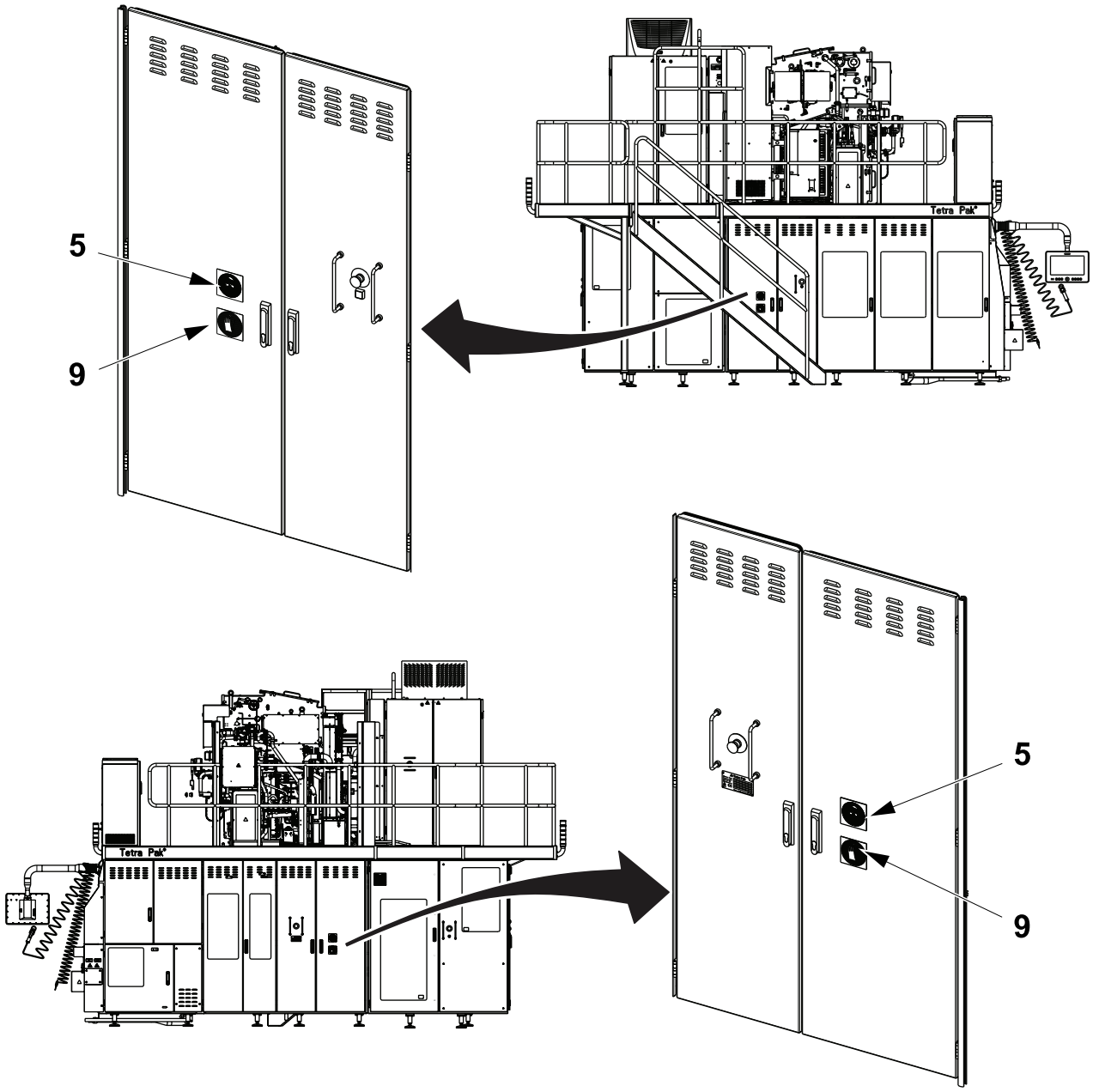

(Cont'd)

(Cont'd)

The illustration shows where the safety signs are located. The position numbers refer to the table in the Safety Signs section.

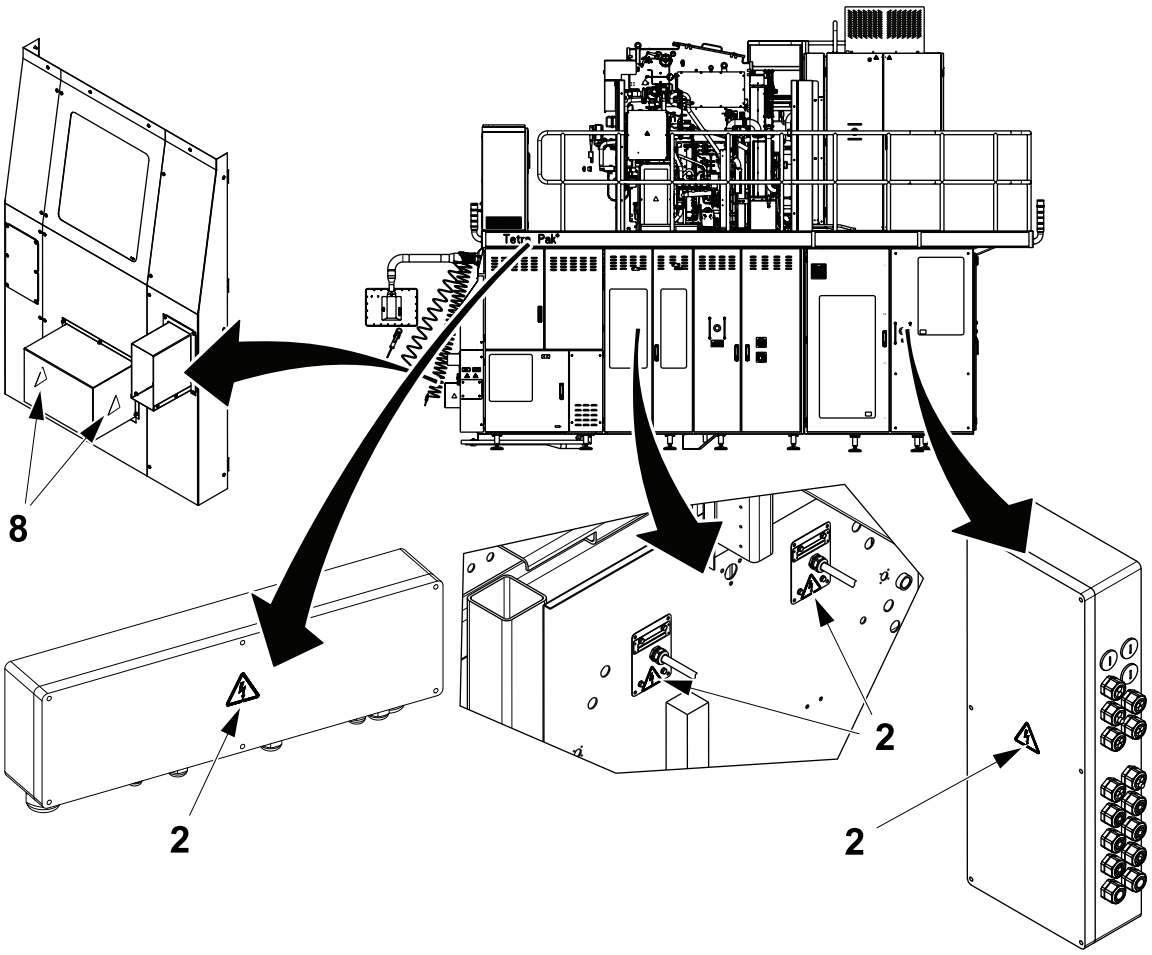

(Cont'd)

(Cont'd)

The illustration shows where the safety signs are located. The position numbers refer to the table in the Safety Signs section.

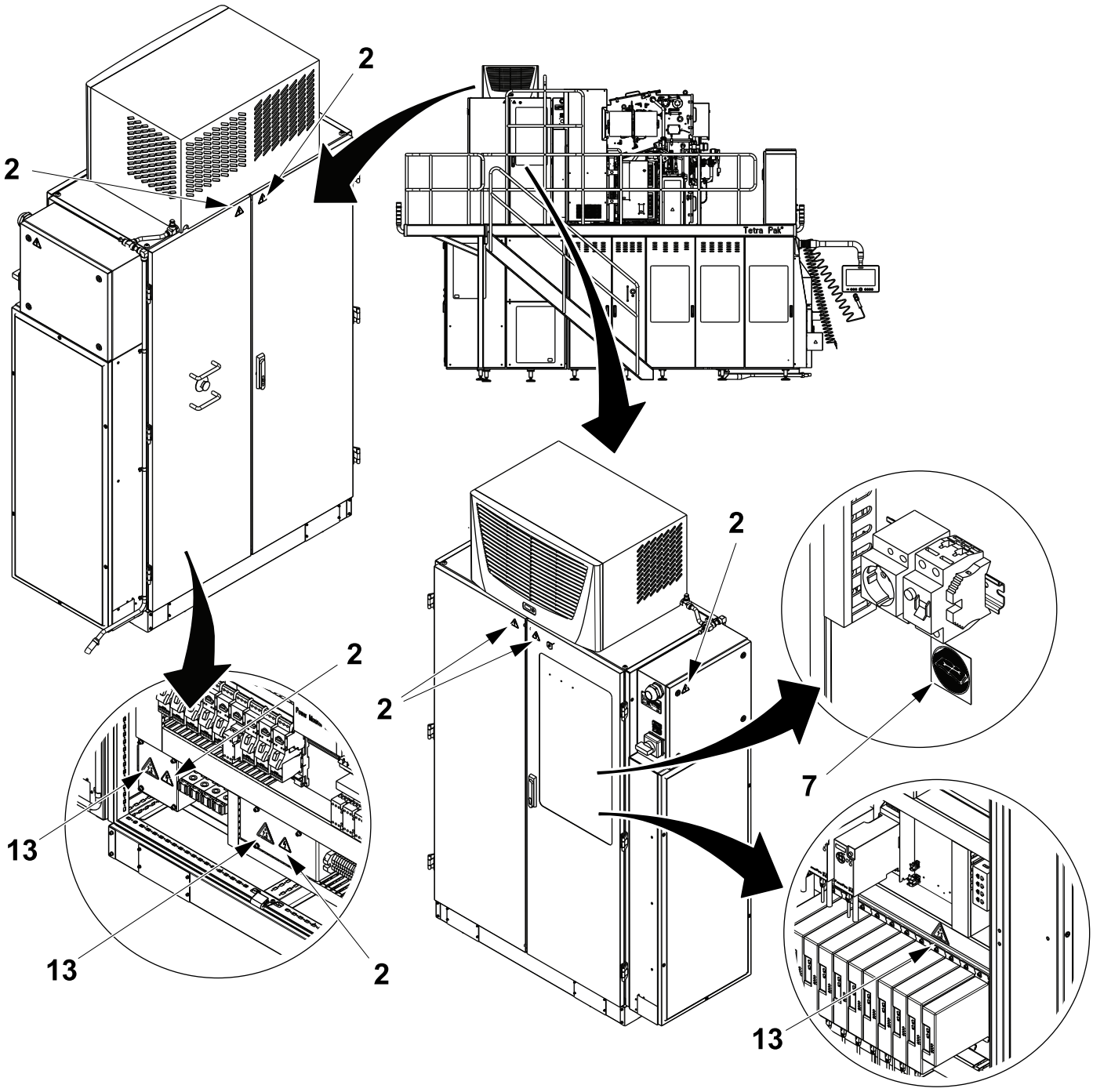

Protective Devices

There are different kinds of protective device designed to ensure safe use of the equipment. See the sections below.

WARNING

Hazardous zones.
Hazardous zones are safeguarded and provided with protective devices. Do not inch or run this equipment if any protective device is inoperative.

Change inoperative components of the safety system immediately.

For the locations of safeguards and/or other protective devices not mentioned in this section, see the Maintenance Manual.

Emergency Stop

DANGER

Hazardous voltage.
Will shock, burn, or cause death.
Hazardous voltage remains ON after activating an EMERGENCY STOP.

Emergency stop devices are used to stop this equipment immediately in a hazardous situation. Learn the positions of all emergency stop devices and how to use them.

Instructions for a normal production stop are included in the Stop chapter of the Operation Manual.

Emergency Stop Push-Buttons

Push one of the EMERGENCY STOP push-buttons to stop this equipment immediately.

The location of each EMERGENCY STOP push-button for the filling machine is shown by an arrow.

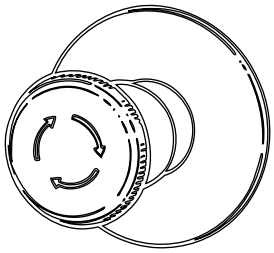

(behind door)

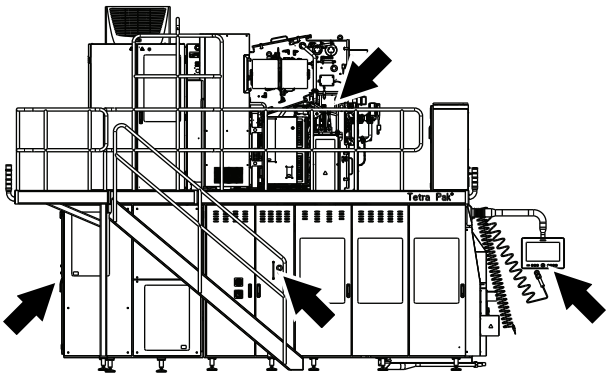

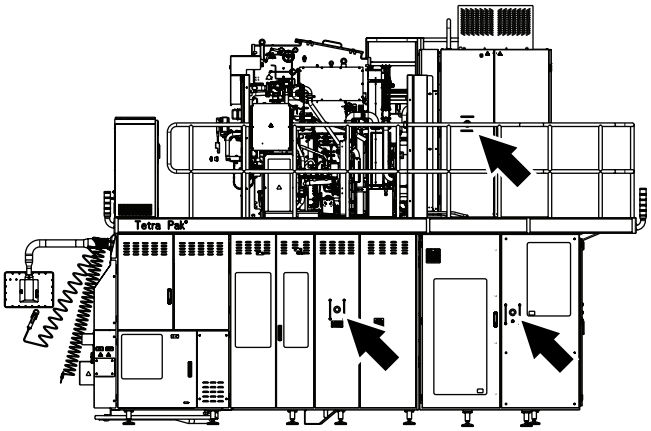

Safeguards

WARNING

Moving machinery parts.
Never defeat or bypass the interlocking devices.

Movable guards, for example, doors and covers leading to hazardous zones, are fitted with interlocking devices where required. These devices are usually electric safety switches that are parts of the safety system and must never be defeated, bypassed, or otherwise made inoperative.

Where movable guards (doors) are equipped with means to be locked in a nonclosed position, any person with the intention to preside, for any reason, behind such a guard must lock the guard in the nonclosed position by use of a padlock.

Note! For work on the electrical equipment, the electrical power must also be disconnected.

(Cont'd)

(Cont'd)

CAUTION

Corners and edges.

Close the doors, guards, or parts of the equipment unless they must be open during work.

CAUTION

Burn hazard.

Parts of the equipment protected by guards may be hot after operation. Allow components to cool down or use personal protective equipment.

After installation and maintenance, and before this equipment is inched or run, check that all safeguards are in place and that they operate correctly.

CAUTION

Equipment damage.

The equipment can be damaged if it is not stopped in the correct way. Never stop this equipment by opening a movable guard, for example, a door or cover, equipped with an interlocking device.

The location of each interlocking device for filling machine is shown by an arrow.

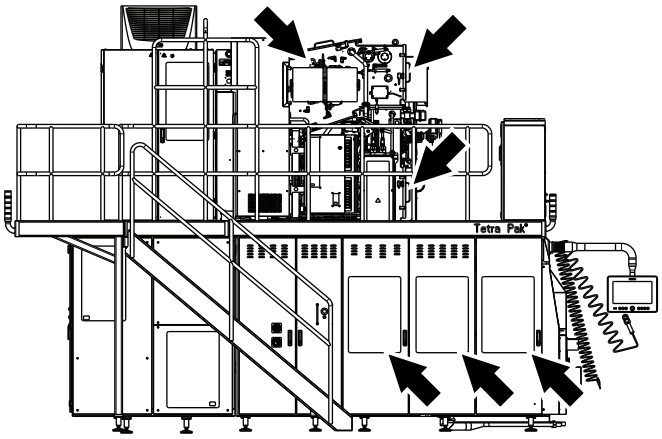

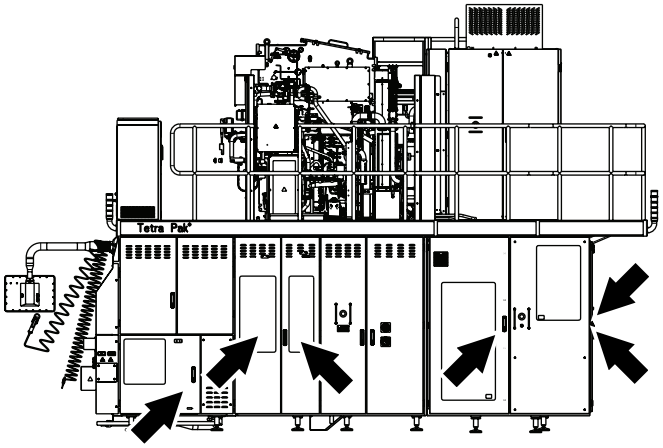

Indicating Tower

An indicating tower is a column of warning lights:

- A red light (1) indicates a hazardous condition. This is a situation that requires immediate action.
- A yellow light (2) indicates an abnormal or impending critical condition. This is a condition calling for action by the operator.
- A blue light (3) indicates that operator action is required.
- A green light (4) indicates a normal condition.

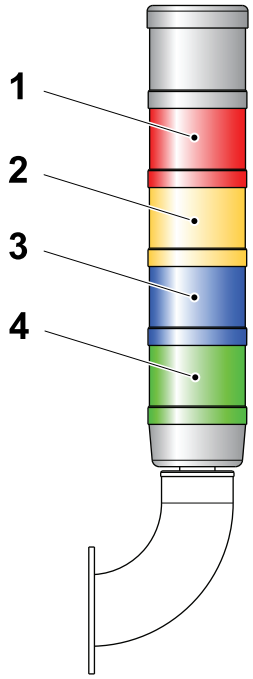

1 Red light
2 Yellow light
3 Blue light
4 Green light

Audible Alarm

The audible alarm (1) produces a warning signal every time this equipment is about to start. The warning signal sounds for approximately three seconds prior to starting to alert personnel.

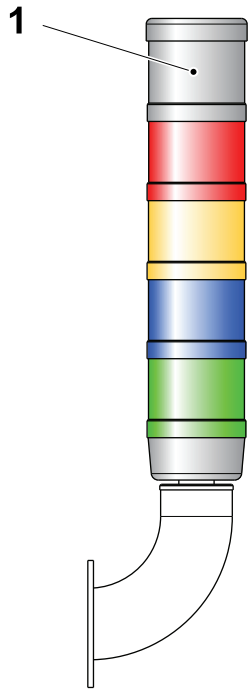

1 Audible alarm

Safe Manual Handling

Use mechanical lifting aids whenever possible. If mechanical lifting aids are not available, do not attempt to lift loads over 23 kg without the assistance of a colleague. Avoid lifting below knee height and above shoulder height. If it is necessary to lift from the floor, follow the instructions below to reduce the risk of back and disc injuries.

- Use safety shoes and be sure that the surface of the floor is not slippery.
- Get close to the load.
- Take a wide stance and find the best positions for your feet.
- Bend your hips and knees, and use your leg muscles.
- Keep the load close to your body.
- Do not twist your body while moving the load.
- Take small steps when turning.

In order to reduce the risk of injury to discs and back muscles, be careful to not bend or twist your back when lifting. Keep the load close to your body to reduce the strain on your back.

To reduce the ergonomic risks to each individual operator, job rotation is recommended, so that recovery and variety are provided.

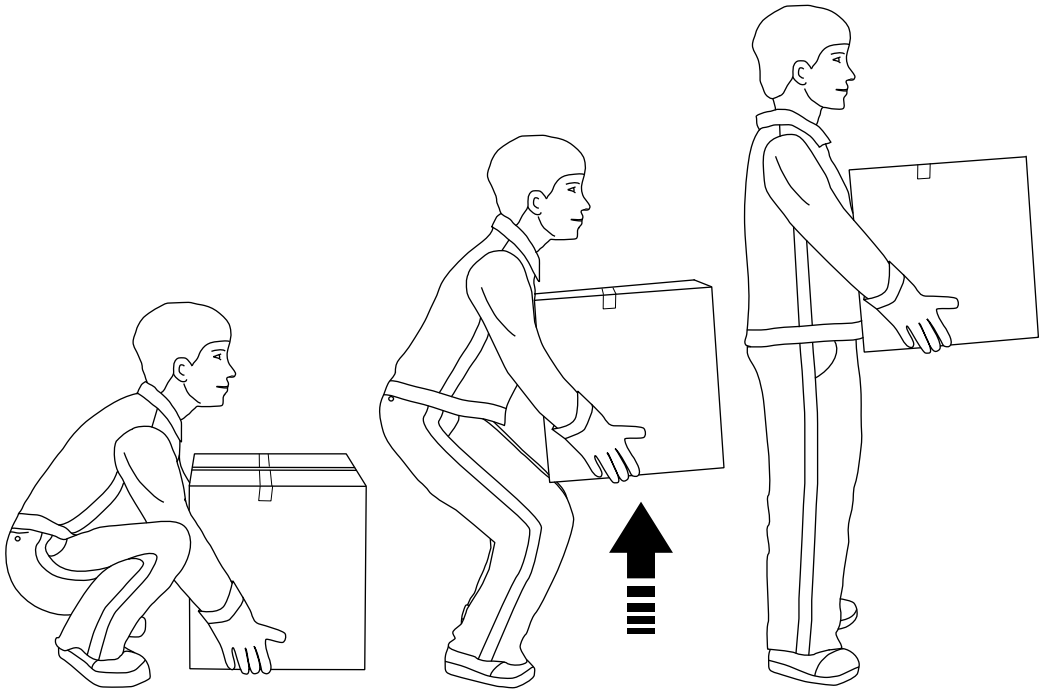

Personal Protection

This section applies to all personnel at all times when this equipment is in operation. For special personal protective equipment required when handling hazardous substances, see the Hazardous Substances section.

Noise

CAUTION

Hazardous noise.
May cause impaired hearing.
Hearing protection is recommended whenever this equipment is in operation.

Entanglement

WARNING

Risk of entanglement.
Do not wear jewellery or loose clothing when working on or near this equipment.
Restrain long hair with, for example, clips or rubber bands.

Hazardous Substances

WARNING

Contact with chemicals can cause death, serious injury, or illness.
Always read and follow the instructions in the safety data sheet supplied by the manufacturer or local supplier, when handling chemicals.

Make sure that

- the safety data sheet is available
- preparations have been done to ensure that the stated safety measures in the safety data sheet can be followed
- the locations of the first aid equipment are learned in order to act immediately in case of an accident

Disposal of Chemical Substances

Always read and follow the disposal instructions in the safety data sheet supplied by the manufacturer or local supplier.

It is strongly recommended that used chemical containers are

- disposed of according to the instructions immediately after use
- not used as disposal containers for other chemicals in order to avoid uncontrolled chemical reactions within the container

Hydrogen Peroxide (H_2O_2)

WARNING

Corrosive chemical.
Wear personal protective equipment.

In both liquid and gas states, hydrogen peroxide may cause irritation or damage if it comes into contact with skin, mucous membranes, eyes, or clothes. Call for medical attention immediately if there is an accident.

Liquid hydrogen peroxide in concentrations of less than 1% is generally considered harmless to humans.

Consult the instructions on the label of the tank or container.

Emergency Procedures

If there is an accident involving hydrogen peroxide, rinse the affected area as soon as possible with large amounts of water.

Eyes

If splashes or vapour from hydrogen peroxide come in contact with the eyes

- wash the eyes thoroughly with lukewarm water for 15 minutes (keep eyelids wide apart)
- call for medical attention immediately

Skin

If hydrogen peroxide comes into contact with skin or clothes

- rinse immediately with plenty of water
- call for medical attention immediately if skin burns appear
- thoroughly wash the clothes before wearing them again

Inhalation

If irritation or pain is experienced due to having **inhaled** hydrogen peroxide vapour

- leave the affected area and get some fresh air
- call for medical attention if the symptoms get worse

Ingestion

If hydrogen peroxide is swallowed

- do not attempt to cause vomiting
- drink large amounts of lukewarm water to dilute the peroxide
- call for medical attention immediately

Personal Protective Equipment

The personal protective equipment for hydrogen peroxide is

- protective goggles (for instance, TP No. 90303-11), tight fitting
  If there is a risk of splashes, a visor is a suitable complement
- protective gloves made of neoprene (for instance, TP No. 90303-12), nitrile, or butyl rubber
- protective apron (for instance, TP No. 90303-13), or protective suit when handling larger amounts
- protective shoes or boots made of PVC, PE plastic, or rubber
- proper respiratory equipment, if ventilation is insufficient

Handling of Hydrogen Peroxide

WARNING

Sudden and violent chemical reaction.
Avoid any contamination of hydrogen peroxide.

Hydrogen peroxide can react very suddenly and violently in combination with many compounds, or if it is contaminated. Never pour surplus hydrogen peroxide back into the original container. There is a risk of a violent decomposition liberating oxygen and heat, with a big increase in volume due to the oxygen generated by the peroxide decomposition. This will cause a large overpressure if the contaminated hydrogen peroxide is in a closed container. If the integrity of the container fails, this could result in a dangerous hazard.

Ensure that equipment used for handling and diluting hydrogen peroxide is clean before it comes in contact with hydrogen peroxide. Pumps or other equipment used for handling hydrogen peroxide must be **used for this purpose only** and must be manufactured from appropriate materials, such as stainless steel 316 L, glass, polyethylene, or teflon. After use, make sure that all peroxide residue is rinsed away.

If hydrogen peroxide is spilled, dilute it with large amounts of water. Dispose of the diluted hydrogen peroxide according to local regulations.

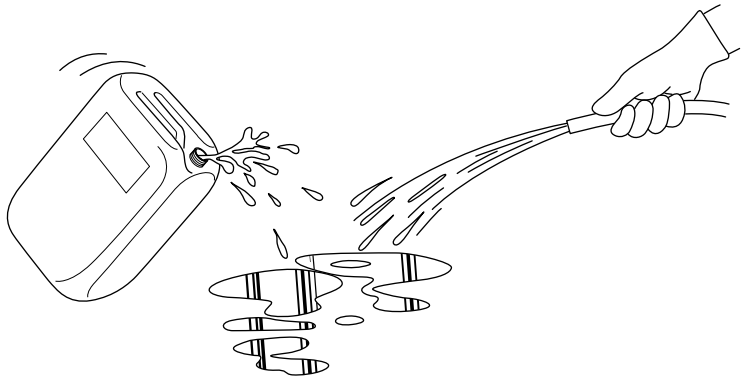

WARNING

Self-ignition.
Never wipe up hydrogen peroxide with materials such as rags or paper as these may self-ignite several hours after contact. If there is a fire, spray with large quantities of water.

Storage of Hydrogen Peroxide

WARNING

Containers may become overpressurised if they are not properly ventilated. If the integrity of a container fails, this could result in a dangerous hazard.
Keep the container upright and fitted with its proper ventilation cap. If there is a fire, cool all containers by spraying them with large quantities of water.

Hydrogen peroxide decomposes much faster with increasing temperature. There is a risk of a container becoming overpressurised at high temperatures, since the ventilation cap cannot release the gases produced quickly enough. If the integrity of the container fails, this could result in a dangerous hazard.

Hydrogen peroxide **must** be stored in the **original container** delivered by the supplier. Keep the container upright and fitted with its proper ventilation cap, which allows oxygen to escape. Otherwise there is a risk of overpressurisation of the container due to violent decomposition of the peroxide. If the integrity of the container fails, this could result in a dangerous hazard.

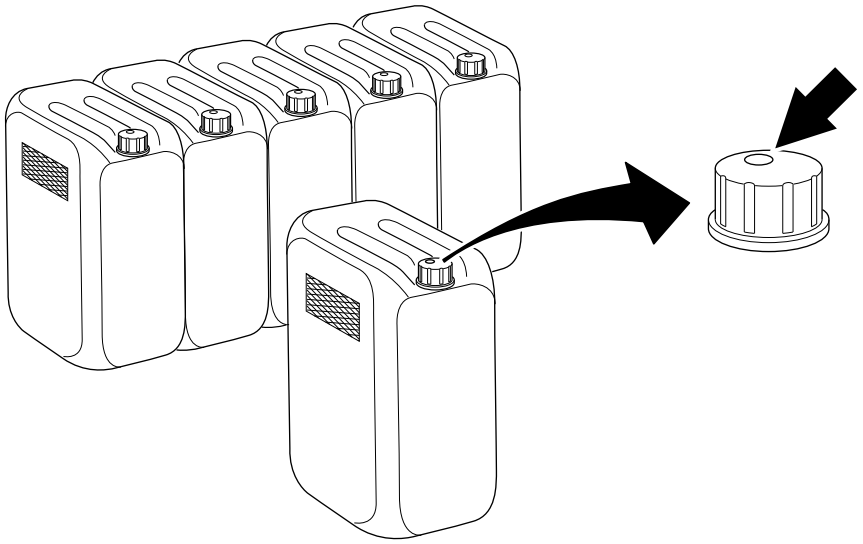

Make sure that the container is always properly closed.

Commercial food-grade hydrogen peroxide has been stabilized to inhibit the catalytic decomposition effects of metals and other impurities, but it can decompose into oxygen and water if it is exposed to heat or contaminated.

Make sure that the area used for storage of hydrogen peroxide is

- cool, clean, and well ventilated
- shielded from direct sunlight
- kept free from combustible materials

Disposal of Hydrogen Peroxide

Always read and follow the disposal instructions in the safety data sheet supplied by the manufacturer or local supplier.

Caustic Soda/Sodium Hydroxide (NaOH)

WARNING

Corrosive chemical.
Wear personal protective equipment.

Caustic soda/sodium hydroxide is highly corrosive in all forms and can cause serious burns on contact with skin and eyes.

Emergency Procedures

Inhalation

Remove victim immediately from source of exposure, provide rest, warmth and fresh air, get medical attention if any discomfort continues.

Ingestion

Do not induce vomiting, immediately rinse mouth and drink plenty of water (200 - 300 ml) and get medical attention immediately!

Skin Contact

Immediately remove contaminated clothing, rinse the skin with lots of water and get medical attention.

Eye Contact

May cause permanent damage if eye is not immediately irrigated. Make sure to remove any contact lenses from eyes before rinsing. Promptly wash eyes with plenty of water while lifting the eyelids, get immediately medical attention and continue to rinse.

Accidental Release, Spillage or Splashing

WARNING

Corrosive chemical.
Wear personal protective equipment.

In case of accidental release, spillage or splashing

- wash contaminated area with water. Alternatively, absorb in vermiculite, dry sand or earth, place into containers and wash the affected area
- in case of contact with eyes or skin wash with plenty of water
- remove any contaminated clothing immediately

Personal Protective Equipment

The personal protective equipment for caustic soda/sodium hydroxide is

- protective goggles (TP No. 90303-11)
- protective gloves made of neoprene (TP No. 90303-12)
- protective apron (TP No. 90303-13)
- protective shoes made of PVC, PE plastic, or rubber

Handling and Storage of Caustic Soda/Sodium Hydroxide

WARNING

Sudden and violent chemical reaction.
Avoid any contamination of caustic soda/sodium hydroxide. Never store or mix caustic soda together with hydrogen peroxide.

Ensure that

- containers are kept tightly closed
- containers are stored in a cool dry place away from direct sunlight or sources of heat
- designated storage and handling areas are adequately ventilated and that emergency shower and eye wash facilities are available nearby
- handle containers carefully during transport
- avoid spilling, skin and eye contact
- use dedicated equipment when sampling, pouring or decanting
- never store or mix caustic soda together with hydrogen peroxide

Disposal of Caustic Soda/Sodium Hydroxide

Dispose of waste and residues in accordance with local authority requirements. Used caustic soda should be sent to an approved facility for destruction. Never allow caustic soda to be disposed into the drain.

Estinguishing Media

CAUTION

Fire-Fighting Measures
Always apply the following measures.

The product is non-combustible, use fire extinguishing media appropriate for surrounding materials.

Specific Hazards

Corrosive liquid.

Protective Measures in Fire

Self-contained breathing apparatus and full-protective clothing must be worn in case of fire.

Note! Always refer to your supplier's Material Safety Data Sheet (MSDS) for caustic soda.

Nitric Acid (HNO_3)

WARNING
Corrosive chemical.
Wear personal protective equipment.

Nitric acid is extremely hazardous; it is corrosive, reactive, a strong oxidizer and a poison. Liquid and mist can cause serious burns on contact with skin and eyes; contact with other material may cause fire; liquid and mist cause severe burns to skin and eyes; inhalation may cause lung and tooth damage.

Emergency Procedures

Inhalation

Remove victim immediately from source of exposure, provide rest, warmth and fresh air. If not breathing, give artificial respiration; if breathing is difficult give oxigen. Get medical attention immediately.

Ingestion

Do not induce vomiting, immediately rinse mouth and drink plenty of water or milk if available. Never give anything by mouth to an unconscious person. Get medical attention immediately.

Skin Contact

Immediately remove contaminated clothing, rinse the skin with lots of water and get medical attention.

Eye Contact

May cause permanent damage if eye is not immediately irrigated. Make sure to remove any contact lenses from eyes before rinsing. Promptly wash eyes with plenty of water while lifting the eyelids, get immediately medical attention and continue to rinse. Get medical attention if any discomfort continues.

Accidental Release, Spillage or Splashing

WARNING
Corrosive chemical.
Wear personal protective equipment.

In case of accidental release, spillage or splashing

- ventilate area of leak or spill, isolate hazard area, keep unnecessary and unprotected personnel from entering, contain and recover liquid when possible, neutralise with alkaline material (soda ash, lime) then absorb with an inert material (e.g. ,vermiculite, dry sand or earth), place in a chemical waste container; do not use combustible materials, such as saw dust, rags, paper, wood
- in case of contact with eyes or skin wash with plenty of water
- remove any contaminated clothing immediately; see the Fire-fighting (fire) measures section on page ii-36

Personal Protective Equipment

The personal protective equipment for nitric acid is

- protective goggles (TP No. 90303-11)
- protective gloves made of neoprene (TP No. 90303-12)
- protective apron (TP No. 90303-13)
- protective shoes made of PVC, PE plastic, or rubber

Handling and Storage of Nitric Acid

WARNING
Sudden and violent chemical reaction.
Avoid any contamination of nitric acid.

Ensure that

- containers are kept tightly closed
- containers are stored in a cool dry place away from direct sunlight or sources of heat, water and incompatible materials and that emergency shower and eye wash facilities are available nearby
- designated storage and handling areas are adequately ventilated and have acid-resistant floors
- handle containers carefully during transport
- avoid spilling, skin and eye contact
- use dedicated equipment when sampling, pouring or decanting
- do not wash out container and use it for other purposes. Containers of this material may be hazardous when empty since they retain product residues (vapours, liquid)

Disposal of Nitric Acid

Dispose of waste and residue in accordance with local authority requirements. Used nitric acid should be sent to an approved facility for destruction. Never allow nitric acid to be disposed into the drain.

Fire

The product is non-combustible, but it is a strong oxidiser and its heat of reaction with reducing agents or combustibles may cause ignition. Can react with metals to release flammable hydrogen gas.

Explosion

Reacts explosively with combustible organic or readily oxidizable materials such as alcohols, turpentine, charcoal, organic refuse, metal powder, hydrogen sulphide, etc. Reacts with most metals to release hydrogen gas which can form explosive mixtures with air.

Estinguishing Media

CAUTION
Fire-Fighting Measures
Always apply the following measures.

The product is non-combustible, use fire extinguishing media appropriate for surrounding materials.

Special Information

Increases the flammability of combustible, organic and readily oxidizable materials.

Protective Measures In Fire

Self-contained breathing apparatus and full-protective clothing must be worn in case of fire.

Note! Always refer to your supplier's Material Safety Data Sheet (MSDS) for nitric acid.

Supply Systems

Electrical Supply

DANGER

Hazardous voltage and moving machinery.
The electrical supply disconnecting device must be in position O (OFF) and secured with a lock before any work with the equipment that requires the electrical supply to be disconnected. See the Machine Status section of the MM Procedure Start Table.

Note! The key to the lock must be removed by the technician and retained in his/her possession until all work is completed.

DANGER

Hazardous voltage can be present with the electrical supply disconnecting device in position O (OFF).
Circuits identified by orange-coloured conductors are not disconnected by the main electrical supply disconnecting device. The location of the electrical supply disconnecting device of these circuits is described in the Maintenance Manual procedures that include work on these types of circuit.

Certain procedures may require that the electrical supply disconnecting device is in position I (ON). These exceptions are clearly stated in the manuals.

The illustrations show the electrical supply disconnecting device and its location.

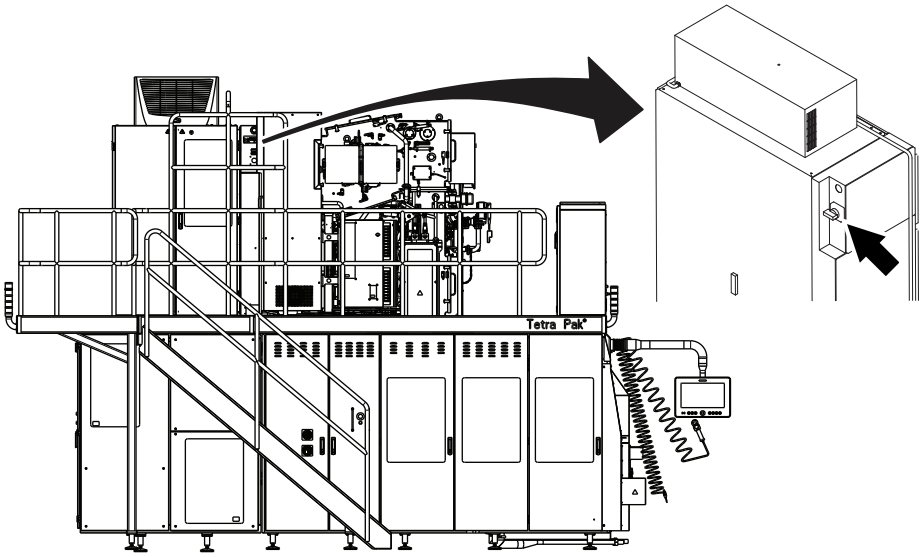

Residual Voltage

DANGER

Hazardous voltage.
Will shock, burn, or cause death.
After the electrical supply disconnecting device is turned to position O (OFF), residual voltage remains in the capacitor circuits. Wait five minutes before opening the enclosure containing these circuits. Ensure that no residual voltage remains on the capacitors before touching them.

Electrical Cabinet

DANGER

Hazardous voltage
Will shock, burn, or cause death.
Parts behind doors to electrical enclosures may be live. The electrical supply disconnecting device must be turned to position O (OFF) and secured with a lock before maintenance inside the electrical cabinet.

Note! The key to the lock must be removed by the technician and retained in his/her possession until all work is completed.

Make sure that the electrical cabinet doors are closed after working inside the electrical cabinet. Doors with locks must be locked.

The location of each electrical cabinet for filling machine is shown by an arrow.

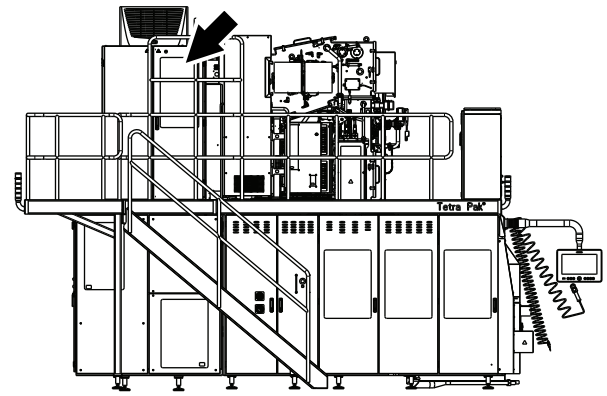

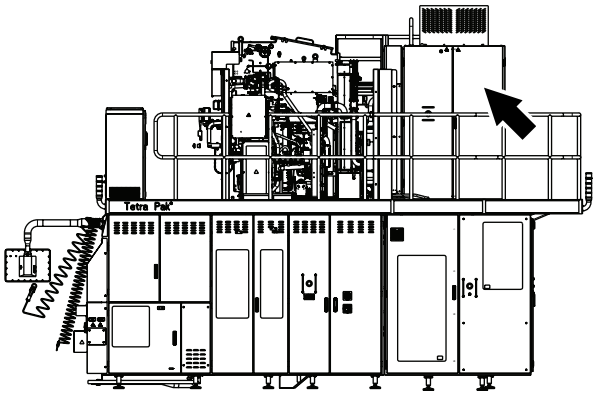

Socket Outlet

WARNING

Hazardous voltage.
Can shock, burn, or cause death.
Read the Maintenance Manual before using this socket outlet.

The socket outlet (1) is connected to a residual current device (2) to protect users against electrical shock if there is an earth fault in the connected equipment. The residual current device must be tested each time before the socket outlet is being used. See the MM for test procedure.

The illustrations show the socket outlet, the residual current device, and their locations.

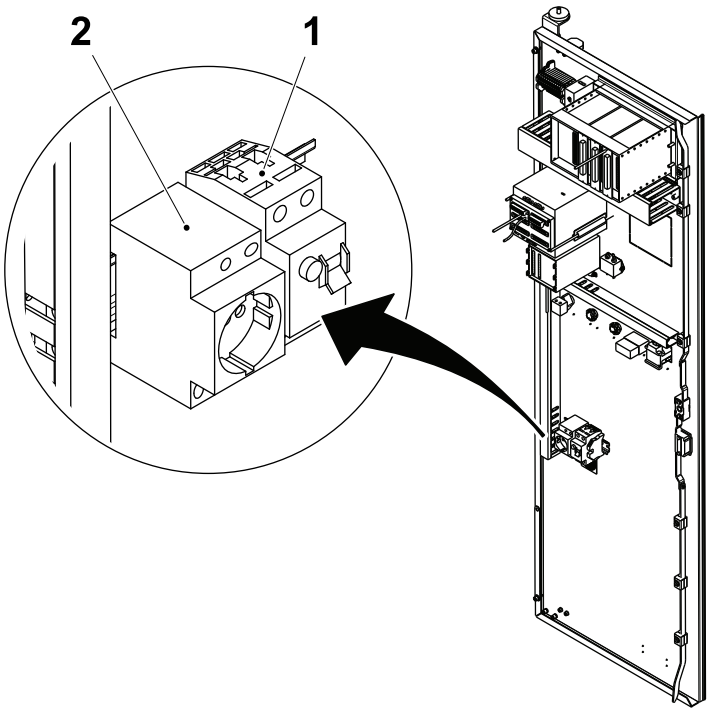

1 Socket outlet
2 Residual current device

Air Supply

WARNING

Compressed air and moving machinery.

Close the main air valve and lock it, and safely release compressed air from the air system before any work with the equipment that requires the air supply to be closed. See the Machine Status section of the Procedure Start Table.

Note! The key to the lock must be removed by the technician and retained in his/her possession until all work is completed.

Certain maintenance procedures may require the air supply systems to be on. These exceptions are clearly stated in the manuals.

The illustrations show the main air valve (1) and its location.

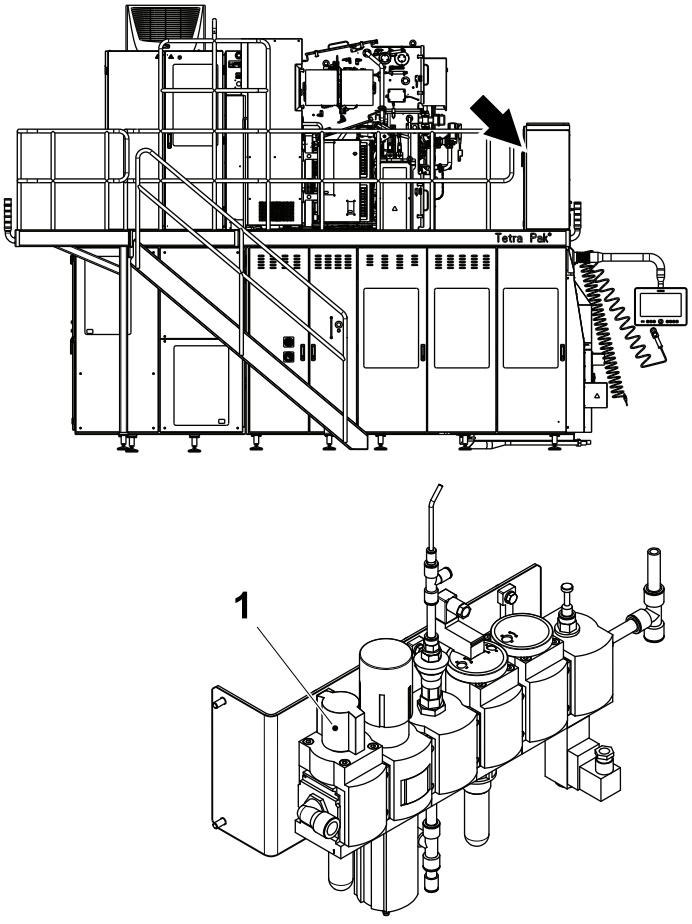

1 Main air valve

Water Supply

CAUTION

Water under pressure.

Close the water supply valves before any work with the equipment that requires the water supply to be closed. See the Machine Status section of the Procedure Start Table.

Certain maintenance procedures may require the water supply systems to be on. These exceptions are clearly stated in the manuals.

The illustration shows the water supply valve (1) and the water supply valve (2), and their location.

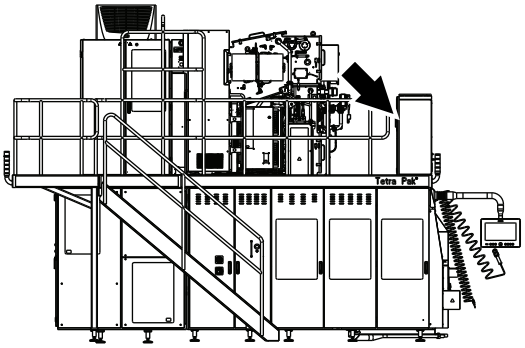

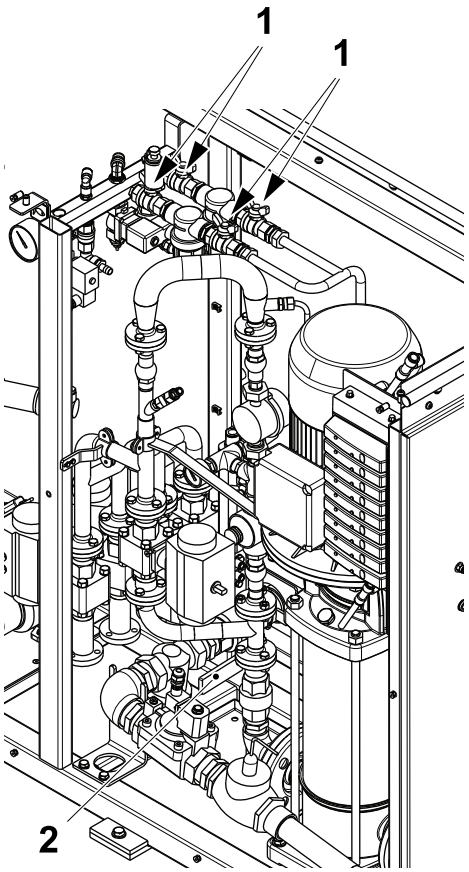

1 Valve, circulating cooling water
2 Valve, hot water external cleaning

This page intentionally left blank

1 General Description

Description

This chapter describes the main parts of the machine and the terminology.

CAUTION

Risk of personal injury or damage to the equipment.
To ensure maximum safety, always read this section and the Safety Precautions carefully before doing any work on the equipment or making any adjustments.

Description 1-2

1.1 Functional Description 1-5

1.2 Main Groups of the Equipment..... 1-9

1.2.1 Filling Machine, LH Side..... 1-9

1.2.2 Service Unit..... 1-11

1.2.3 Valve Panel, Machine Body LH Side..... 1-12

1.2.4 Valve Panel, ASU LH Side 1-13

1.2.5 Valve Panel, Superstructure LH Side..... 1-14

1.2.6 Electrical Cabinet, Filling Machine LH Side 1-15

1.2.7 Filling Machine, RH Side 1-16

1.2.8 Filling Machine, RH Side Rear, No Covers..... 1-17

1.2.9 Control Panel 1-18

1.3 Machine Symbols..... 1-19

1.3.1 Valve Panels, Symbols 1-19

1.3.2 Service Unit, Symbols 1-19

1.3.3 ASU, Symbols 1-20

1.3.4 Electrical Cabinet, Symbols..... 1-20

1.4 Packaging Material Web Path 1-21

This page intentionally left blank

1.1 Functional Description

The filling machine is used to package liquid food products such as milk, juices or wine. To create the filled packages the filling machine needs a supply of packaging material.

Reels of packaging material are loaded into the ASU (Automatic Splicing Unit) at the rear of the filling machine. The packaging material reel is then threaded through the ASU and along a route through the machine referred to as the packaging material web path.

After the ASU, the first part of the machine to be threaded with the packaging material is the strip applicator. The strip applicator is used to apply a special strip of polyethylene to one edge of the packaging material. To keep the supply and movement of the packaging material constant whilst the strip is being applied, the packaging material is threaded through a series of “dancing” rollers. The strip will be used later to seal the two edges of the packaging material together.

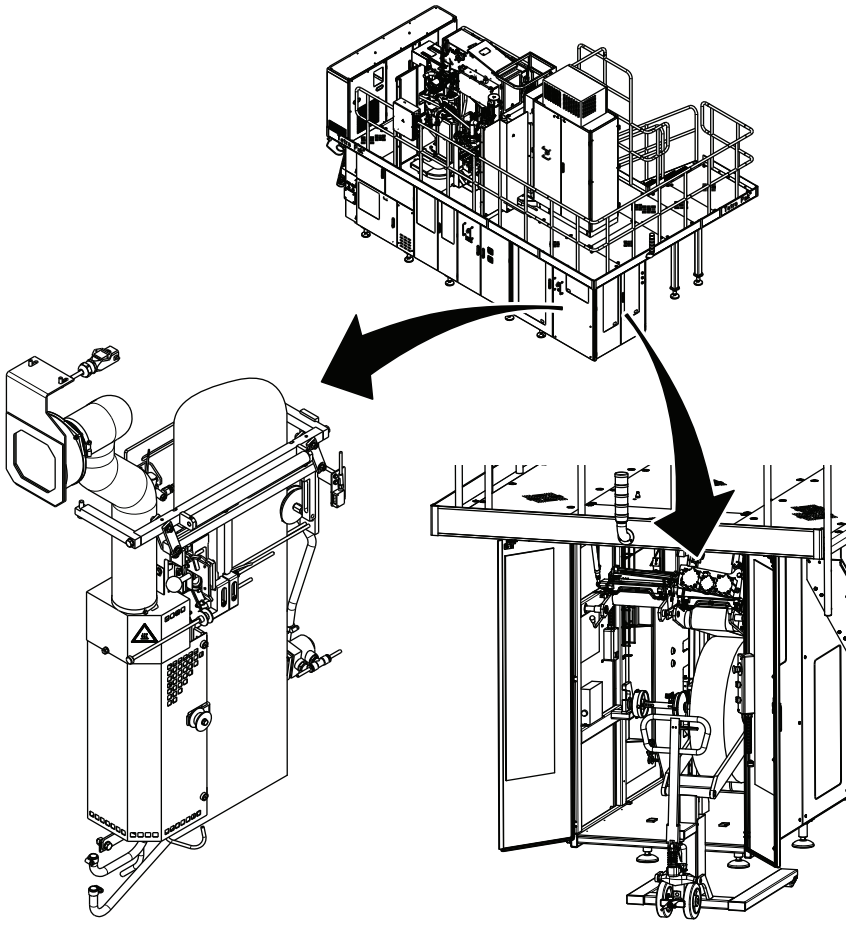

(Cont’d)

(Cont'd)

The packaging material is then fed up through an opening in the filling machine platform and passes through a slot into a chamber where the packaging material is exposed to electron beams to sterilize the packaging material. The packaging material is now ready to be formed and filled with product.

The forming section of the filling machine consists of a series of "forming rings" positioned at intervals inside the hygienic chamber. The forming rings use rollers to progressively form the packaging material into a tube shape. As the packaging material forms a near complete tube in shape, the polyethylene strip is heated and pressed onto the other edge of the packaging material to seal the tube.

The packaging material tube is filled with product by means of a filling pipe. The filling pipe is divided into two parts, the upper filling pipe is fitted inside the hygiene chamber and positioned inside the last two forming rings and continues down into the roof of jaw system compartment below. The lower part of the filling pipe is fitted to the upper filling pipe by a locking pin in the jaw system compartment.

The filling pipe fills the sealed tube with product and the volume of product in the tube is maintained at a constant level to ensure each package is filled with the correct amount of product.

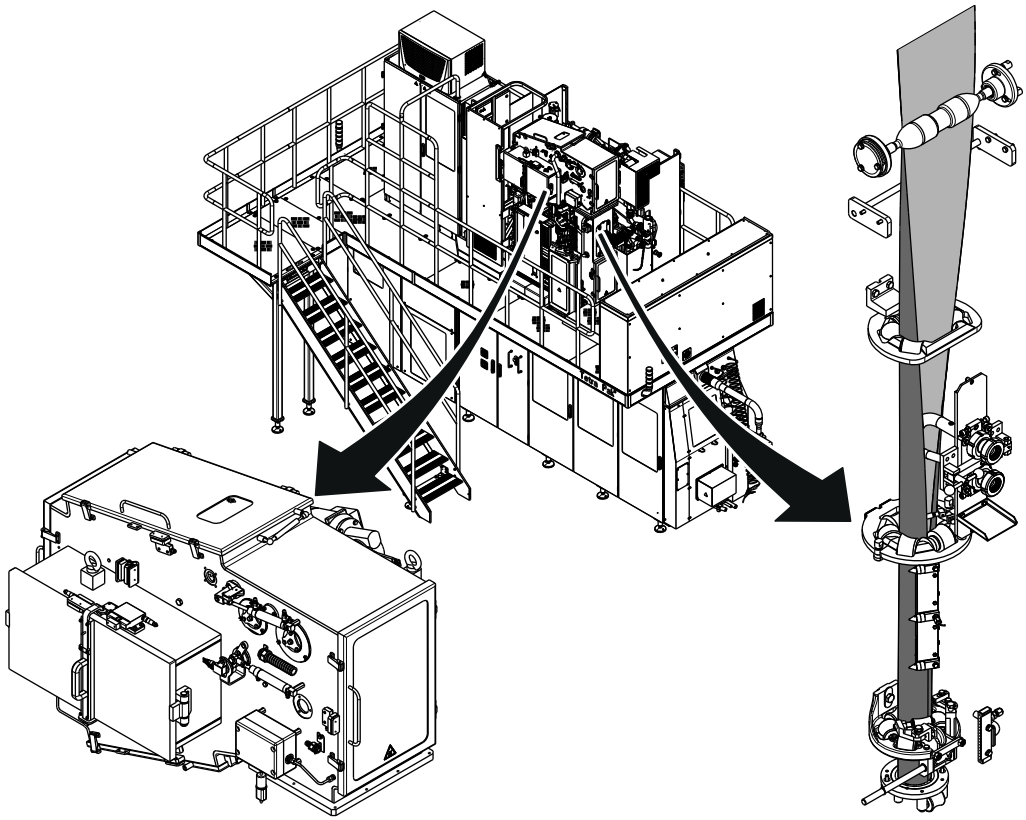

(Cont'd)

(Cont'd)

The packaging material tube then passes down into the jaw system.

The jaw system is the principal component of the filling machine, as the jaw system drives the movement of all the other filling machine components. When the packaging material tube enters the jaw system compartment, the barcode printed on the packaging material is read by two photocell units.

The jaw system needs to cut the packaging material at a specific point along the packaging material tube. This point is in the centre of the section of the packaging material where the printed design of an individual package ends and a new printed design begins.

Reading the barcode helps the filling machine to understand where the packaging material tube is positioned at that particular moment. With this knowledge the jaw system then cuts off and seals an individual package.

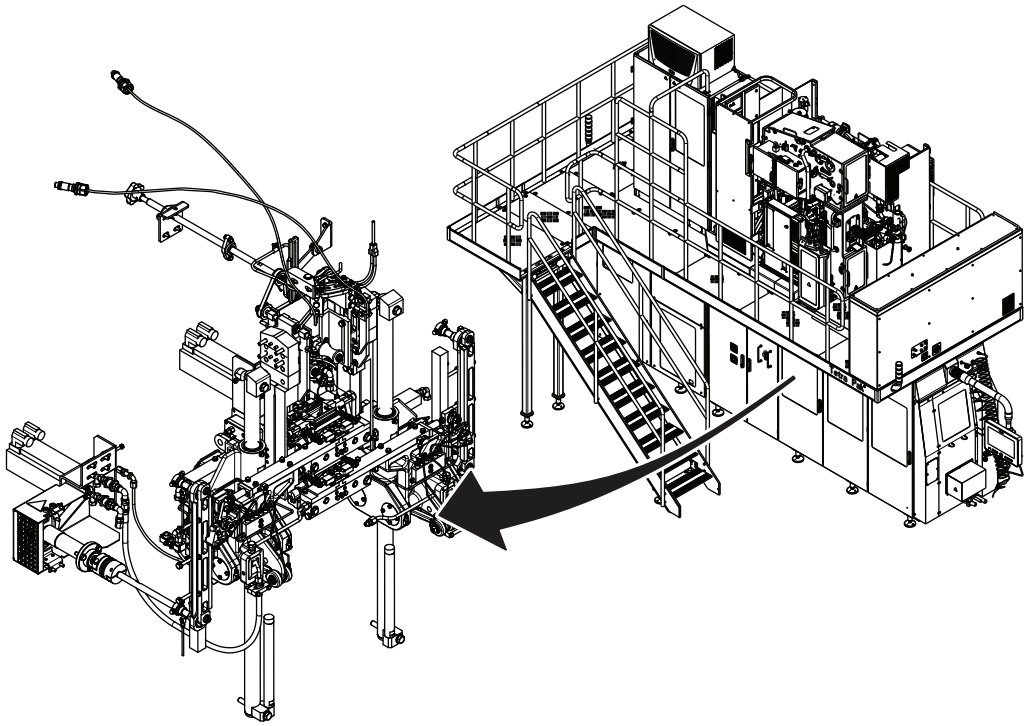

(Cont'd)

(Cont'd)

The last component of the filling machine is the final folder unit.

Once the individual package has been cut from the packaging material tube it slides down a drop chute and is carried along a short conveyor to the final folder unit. The final folder is where the package is pressed into shape.

As the package moves through the final folder, folding flaps press the package along predefined creases on the packaging material which forms the package into shape. At the same time, folding bars bend the corners (or flaps) of the package which are then heated with extremely hot air projected at spots on the corners. The hot air melts the polyethylene outer coating of the packaging material and the corners are then pressed and sealed respectively to the bottom and to the sides of the package.

The package exits the final folder unit, is carried along a conveyor and exits the filling machine.

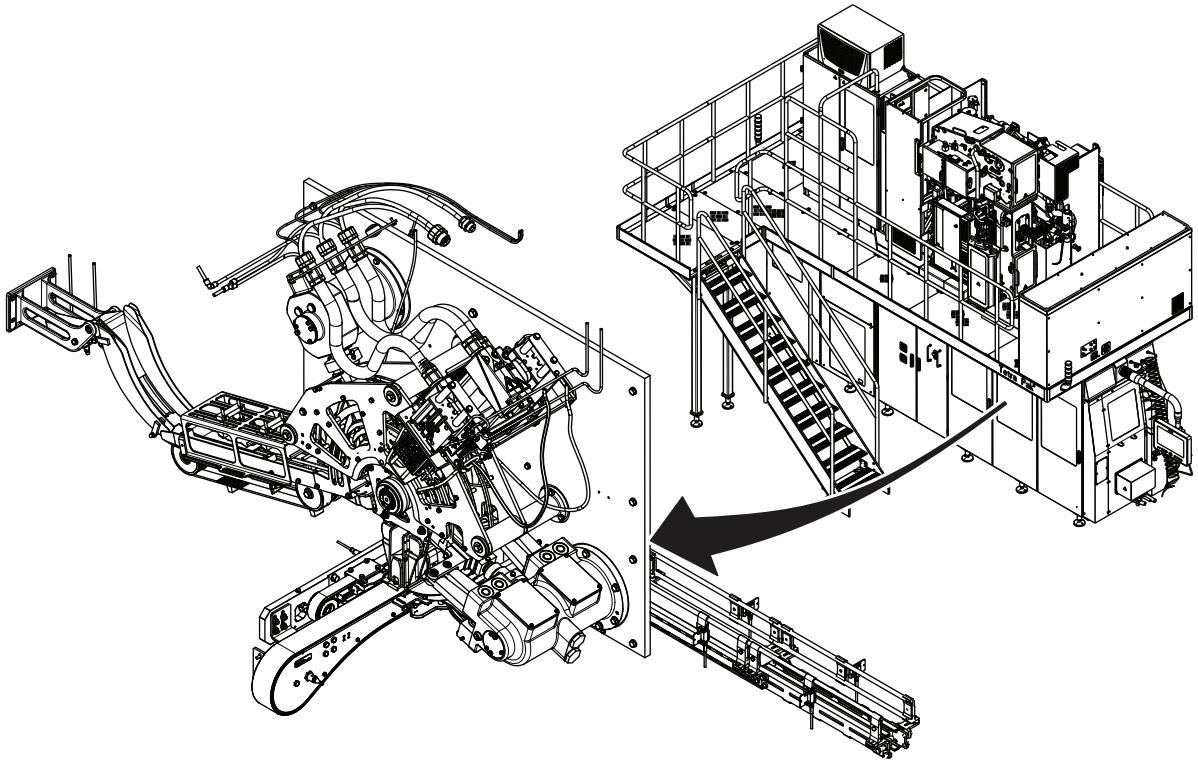

1.2 Main Groups of the Equipment

1.2.1 Filling Machine, LH Side

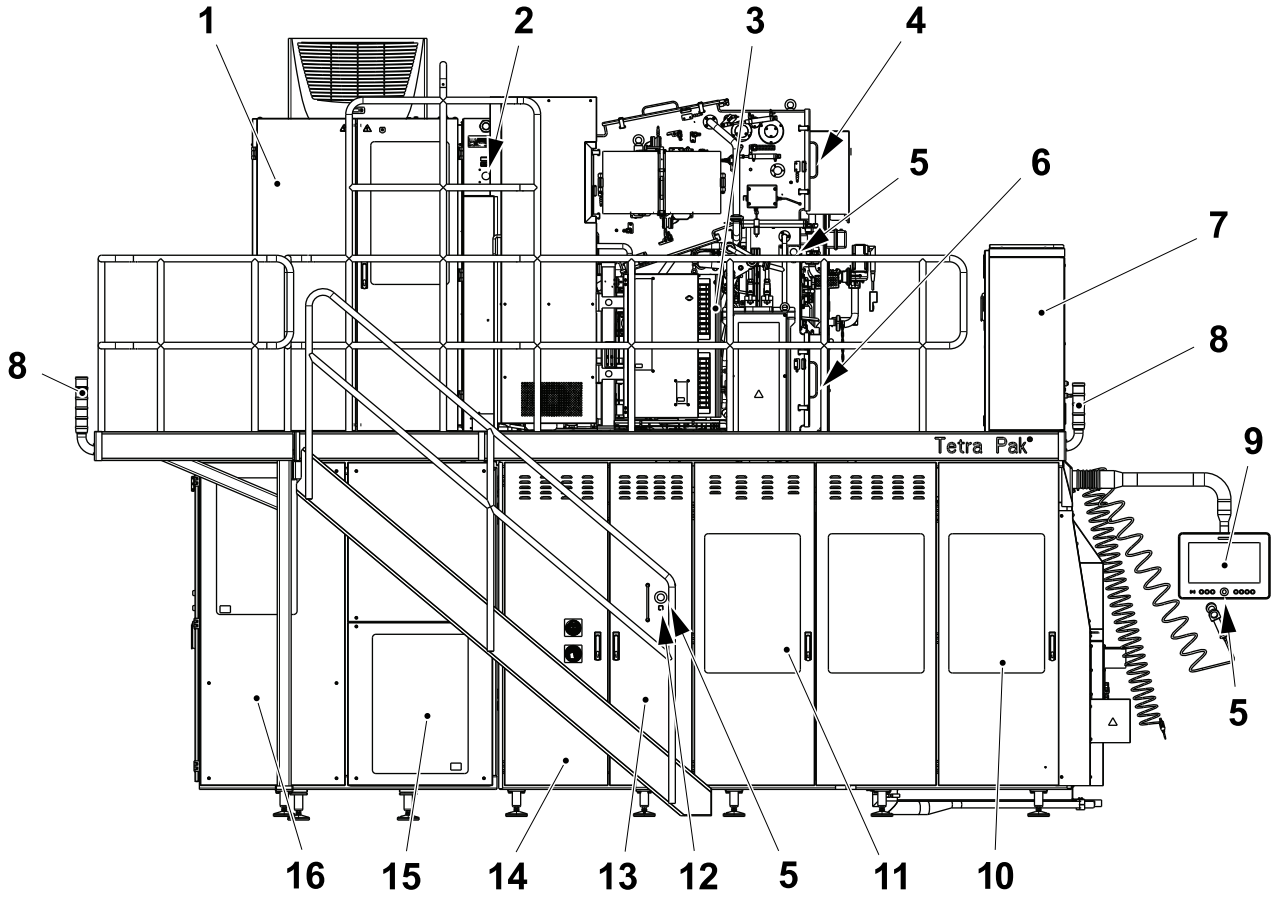

1 Electrical cabinet, filling machine
2 Mains power switch
3 Valve panel, filling system
4 Upper, hygiene chamber door
5 EMERGENCY STOP button
6 Lower, hygiene chamber door
7 Service unit
8 Warning beacon
9 TPOP panel
10 Final folder
11 Jaw system
12 Machine Body doors reset button
13 Valve panel, machine body
14 Hydrogen peroxide container
15 Valve panel, ASU
16 ASU (Automatic Splicing Unit)

(Cont'd)

(Cont'd)

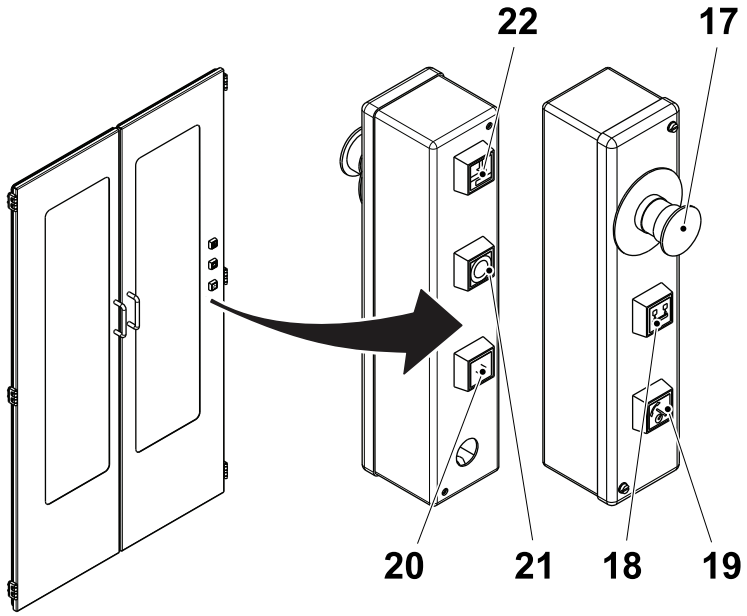

17 EMERGENCY STOP button
18 MATERIAL LOCKING button
19 PACKAGING MATERIAL HOLDER button
20 ASU DOORS RESET button
21 SHORT STOP button
22 MANUAL WEB SPLICE button

1.2.2 Service Unit

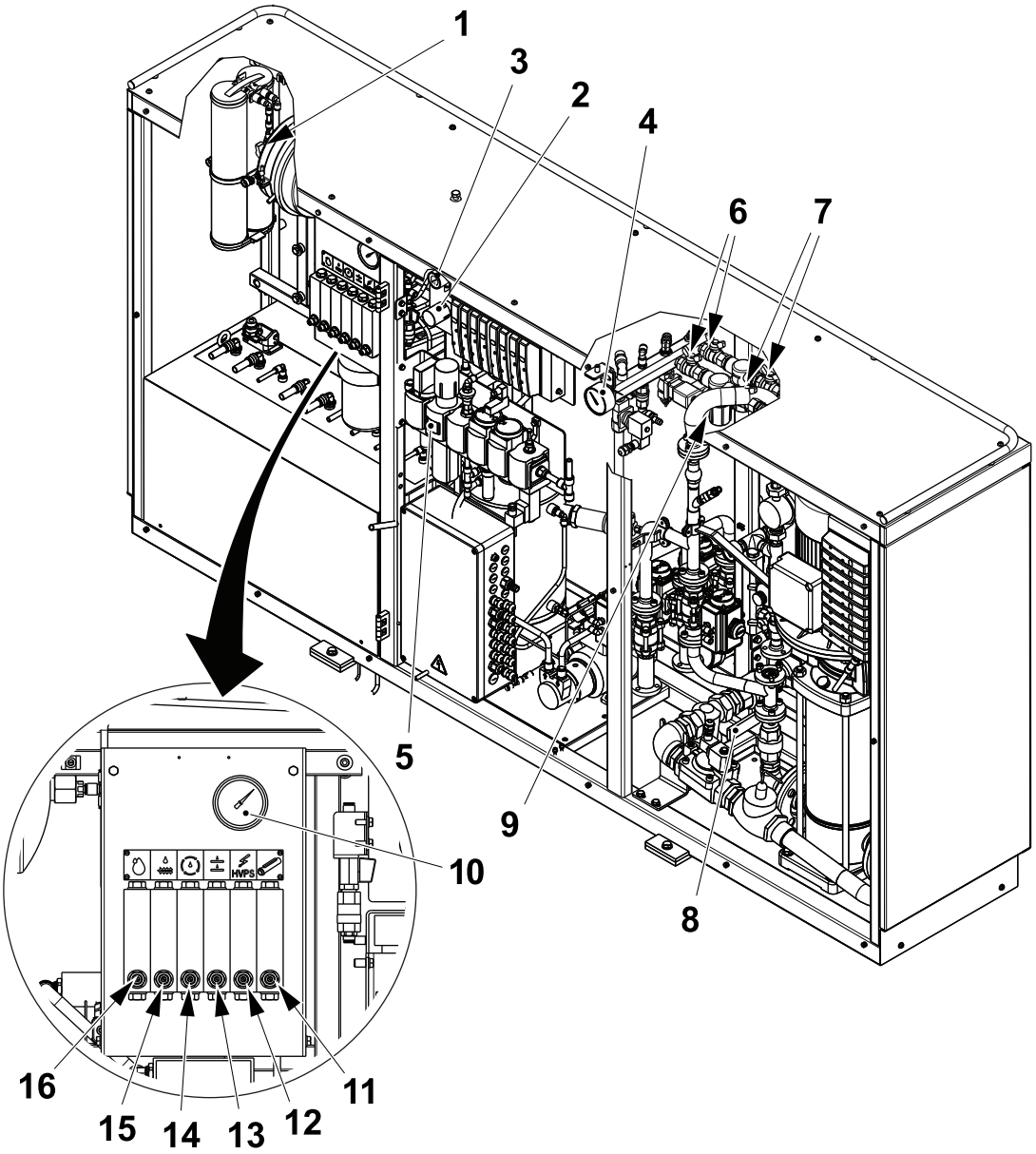

1 Cooling water refilling valve
2 Foaming pressure regulator external cleaning
3 Foaming pressure gauge
4 Mains water pressure gauge
5 Air pressure gauge
6 Mains water supply valve(s)
7 Mains water supply valve (s)
8 External cleaning handle
9 Filter, mains water supply
10 Cooling water pressure gauge
11 Cooling water flow meter, eBeam Lamp (OE)
12 Cooling water flow meter, HVPS Generator (OE)
13 Cooling water flow meter, hydraulic system
14 De-ionizing circuit flow meter
15 Cooling water flow meter, final folder
16 Cooling water flow meter, air cooler

1.2.3 Valve Panel, Machine Body LH Side

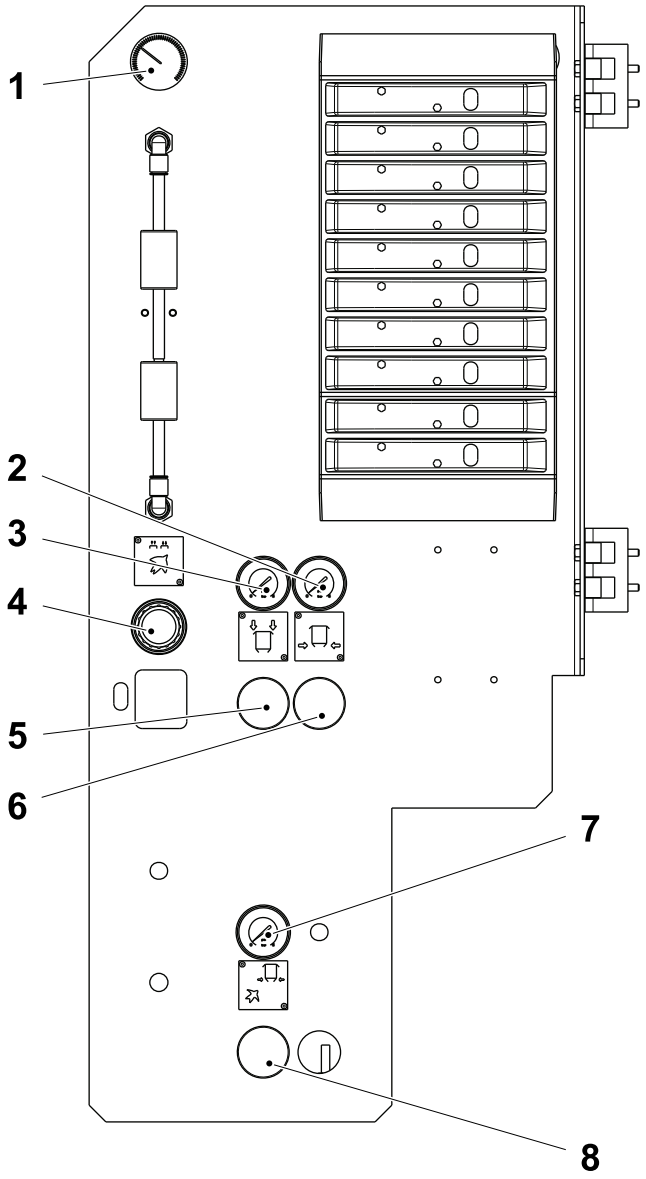

1 Air pressure gauge, design correction photocells
2 Air pressure gauge, flap heating bottom left and right
3 Air pressure gauge, flap heating top left and right
4 Air pressure regulator, design correction photocells
5 Air pressure regulator, flap heating top left and right
6 Air pressure regulator, flap heating bottom left and right
7 Air pressure gauge, bottom flap blowing
8 Air pressure regulator, bottom flap blowing

1.2.4 Valve Panel, ASU LH Side

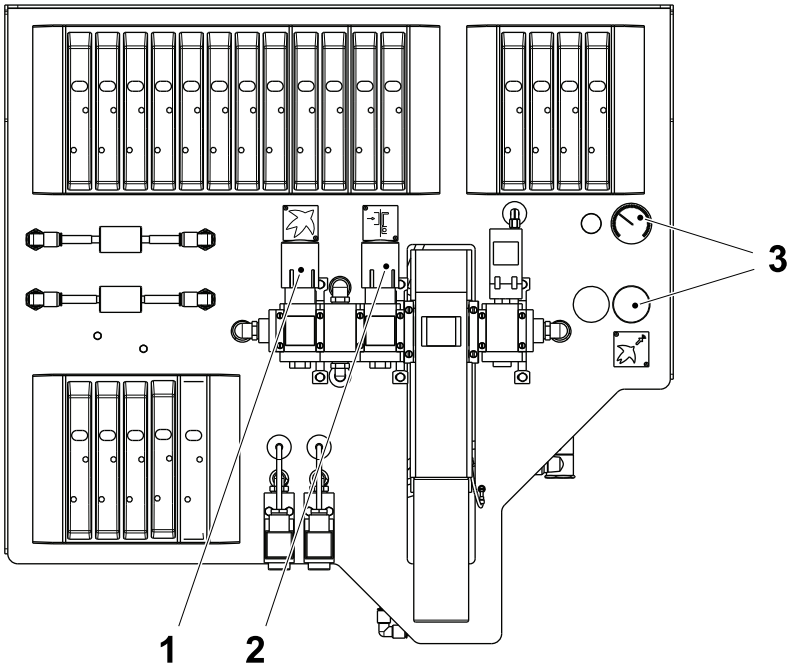

1 Air pressure gauge and regulator, main air ASU

2 Air pressure gauge and regulator, web tension

3 Air pressure gauge and regulator, SA cooling

1.2.5 Valve Panel, Superstructure LH Side

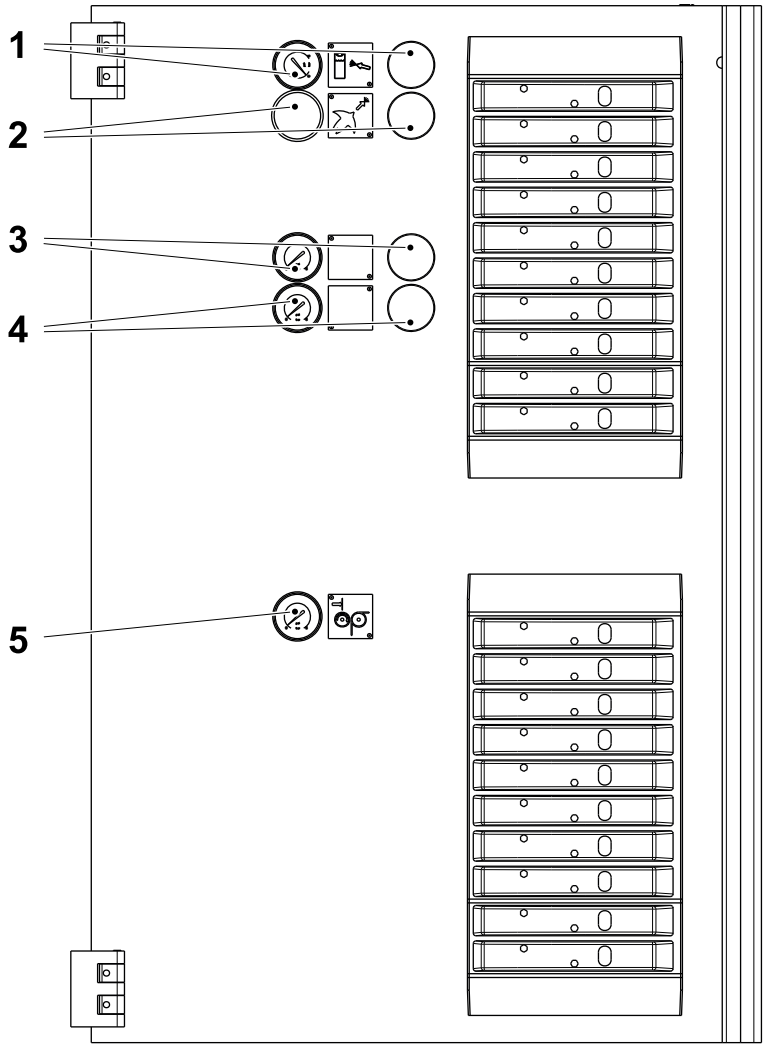

1 Air pressure gauge and regulator, HI peroxide spray (OE)
2 Air pressure gauge and regulator, peroxide spray
3 Air pressure gauge, counter roller drive motor
4 Air pressure gauge and regulator, TCSB (valid for machines with a C valve)
5 Air pressure gauge, pendulum roller

1.2.6 Electrical Cabinet, Filling Machine LH Side

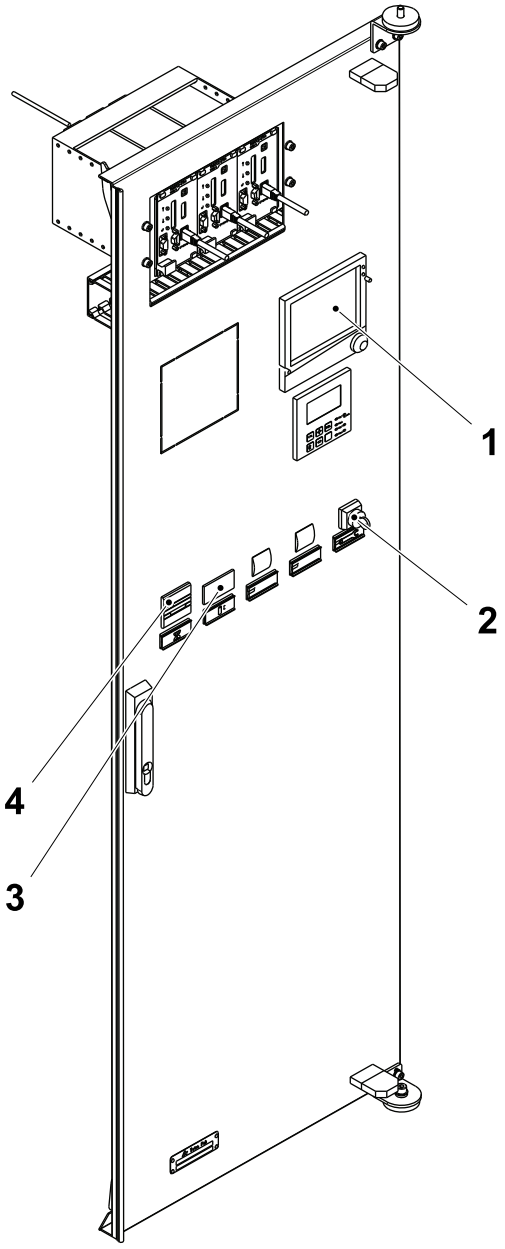

1 Recorder
2 Service switch
3 Package counter
4 Time recorder

1.2.7 Filling Machine, RH Side

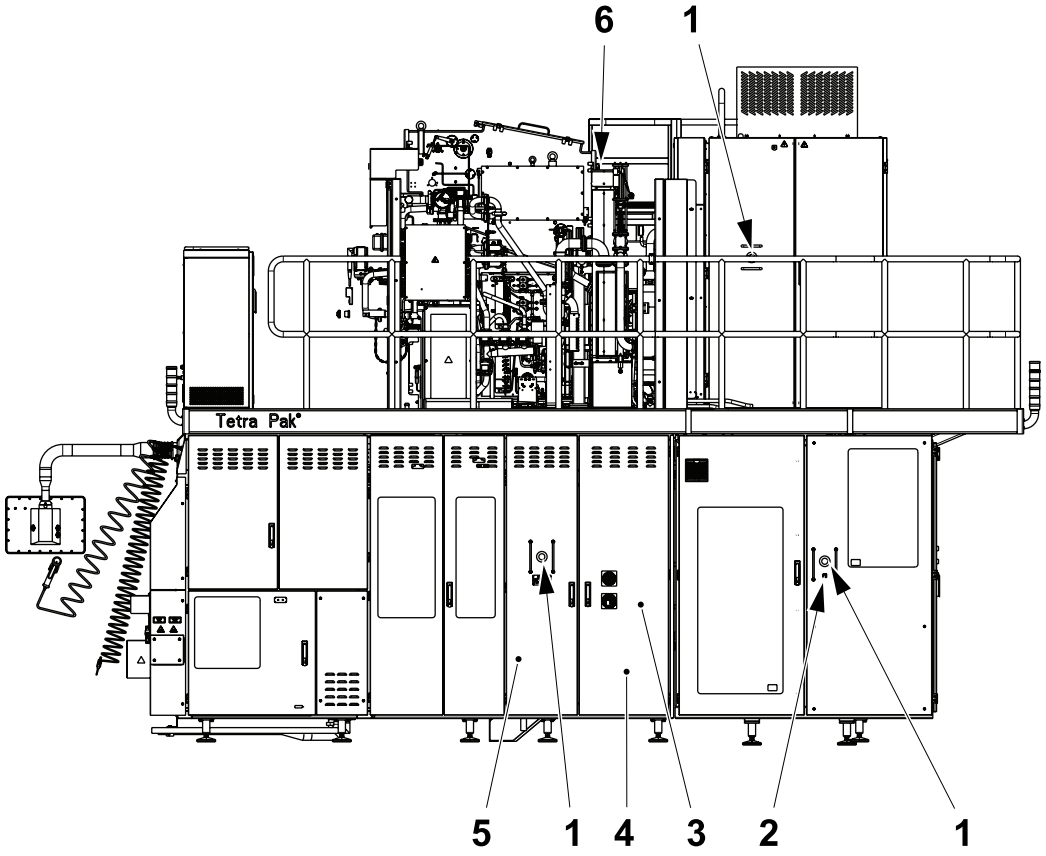

1 EMERGENCY STOP button
2 MANUAL STRIP SPLICE button
3 Hydrogen peroxide concentration meter
4 External cleaning container
5 Jaw system lubrication tank
6 Rear chamber door

1.2.8 Filling Machine, RH Side Rear, No Covers

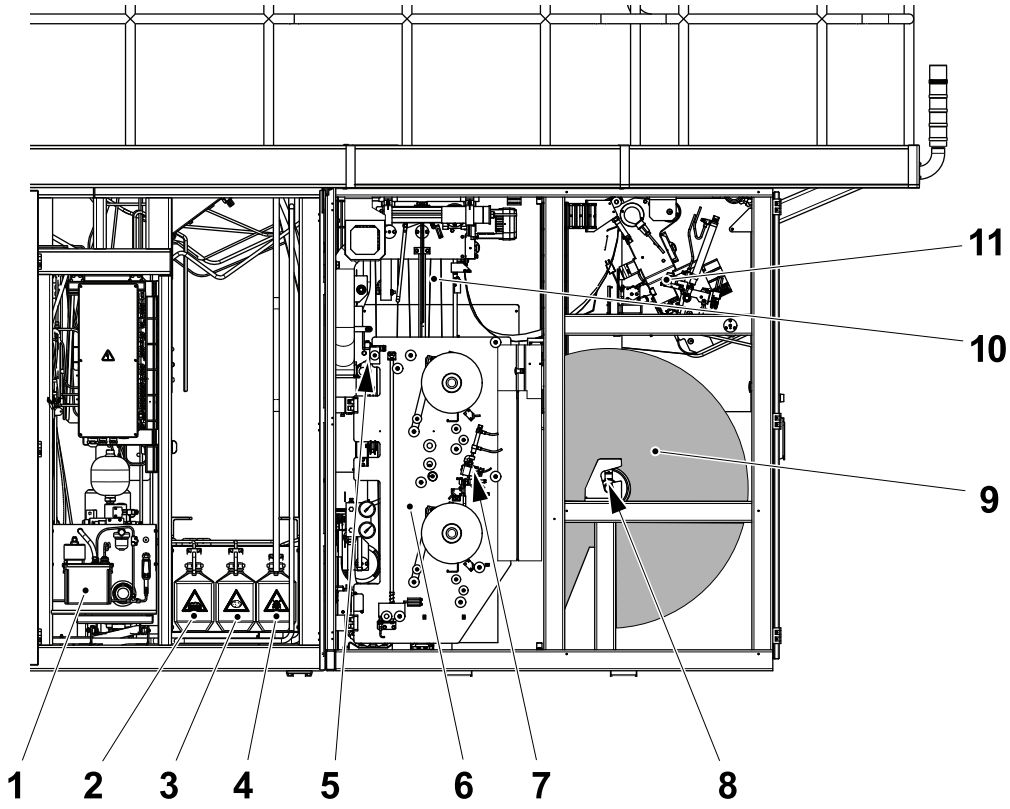

1 Oil tank
2 Alkali container
3 Acid container
4 Disinfectant container
5 Strip applicator (SA)
6 Strip magazine
7 Strip splice
8 Packaging material reel holder
9 Packaging material reel
10 Packaging material web magazine
11 Packaging material web splice

1.2.9 Control Panel

The FINAL FOLDER INCHING button (5) button flashes when inching is possible.

The JAW SYSTEM INCHING button (6) button flashes when inching is possible.

The TPOP display (9) is the interface between the operator/technician and the machine.

The RFID reader (10) allows the access through the proximity ID token key.

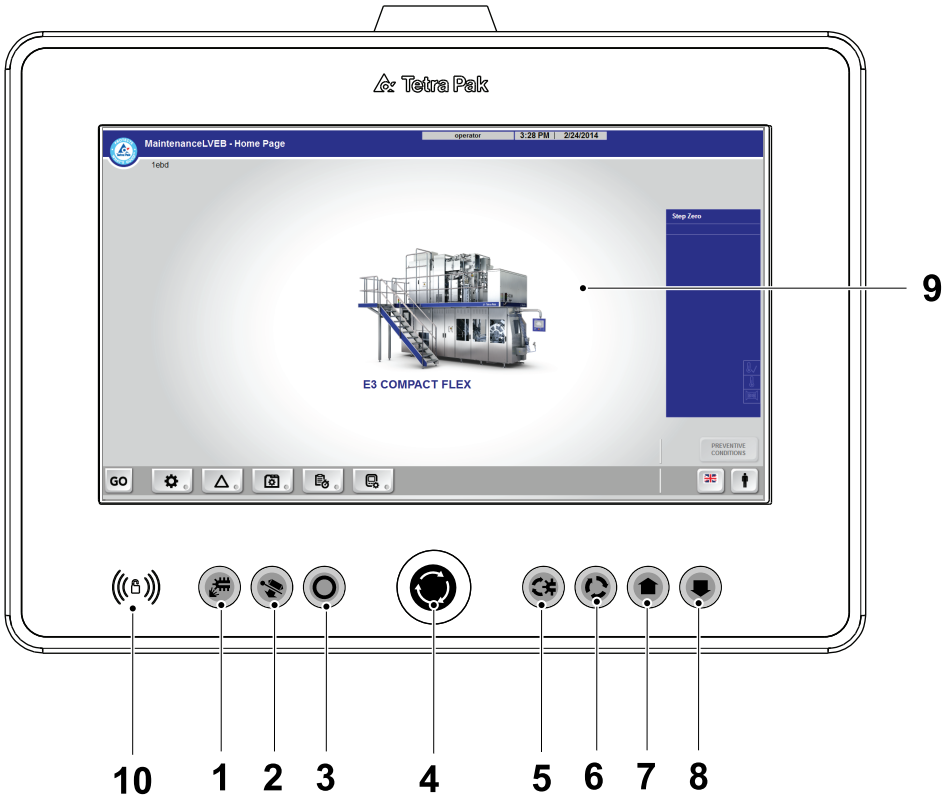

1 FINAL FOLDER MANUAL FLUSHING
2 PACKAGE EJECTOR/WASTE CONVEYOR
3 SHORT STOP
4 EMERGENCY STOP
5 FINAL FOLDER INCHING
6 JAW SYSTEM INCHING
7 PROGRAM UP
8 PROGRAM DOWN
9 TPOP display
10 RFID reader

1.3 Machine Symbols

1.3.1 Valve Panels, Symbols

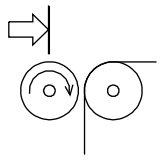	Pendulum roller	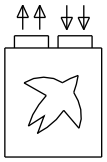	Over pressure, design correction photocells
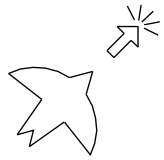	Air pressure, peroxide spray	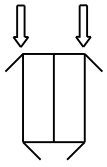	Flap sealing top left and right
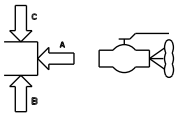	Temperature control steam barrier (only with C valve)	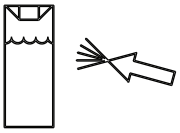	Headspace by Injection, peroxide spray (OE)
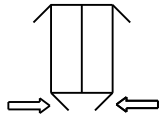	Flap sealing bottom left and right	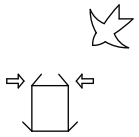	Bottom flap blowing
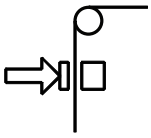	Pressure roller, drying chamber	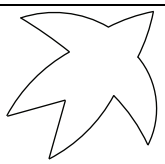	Main air, ASU
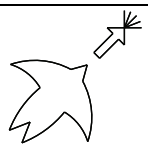	SA cooling, ASU	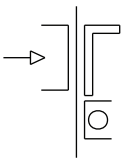	Web tension, ASU

1.3.2 Service Unit, Symbols

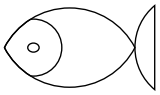	Cold water (blue)	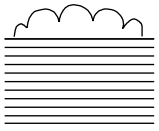	Foaming
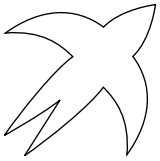	Main Air	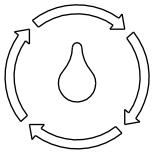	De-ionizing circuit
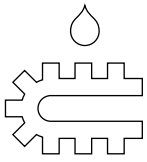	Cold water flow, final folder	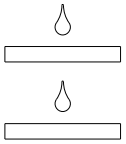	Cold water flow, hydraulic cooler

(Cont'd)

(Cont'd)

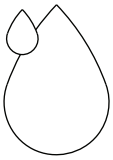	Air cooler		HVPS Generator (OE)
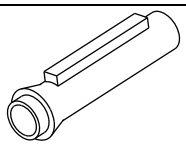	eBeam Lamp (OE)		

1.3.3 ASU, Symbols

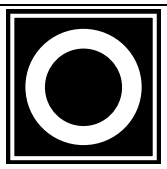	Short stop	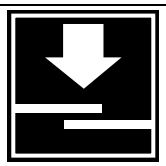	Manual web splice
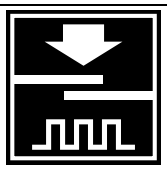	Manual strip splice	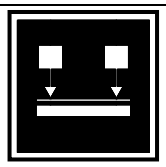	Material locking
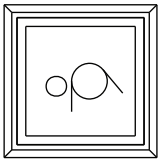	Counter pressure roller	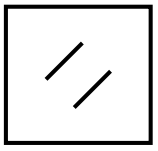	Reset (ASU and Machine body doors alarm)
	Packaging material holder		

1.3.4 Electrical Cabinet, Symbols

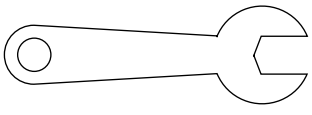	Service switch	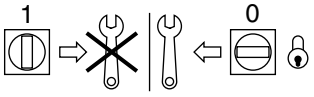	Main switch (on/off)
	Hour counter	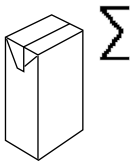	Package counter

1.4 Packaging Material Web Path

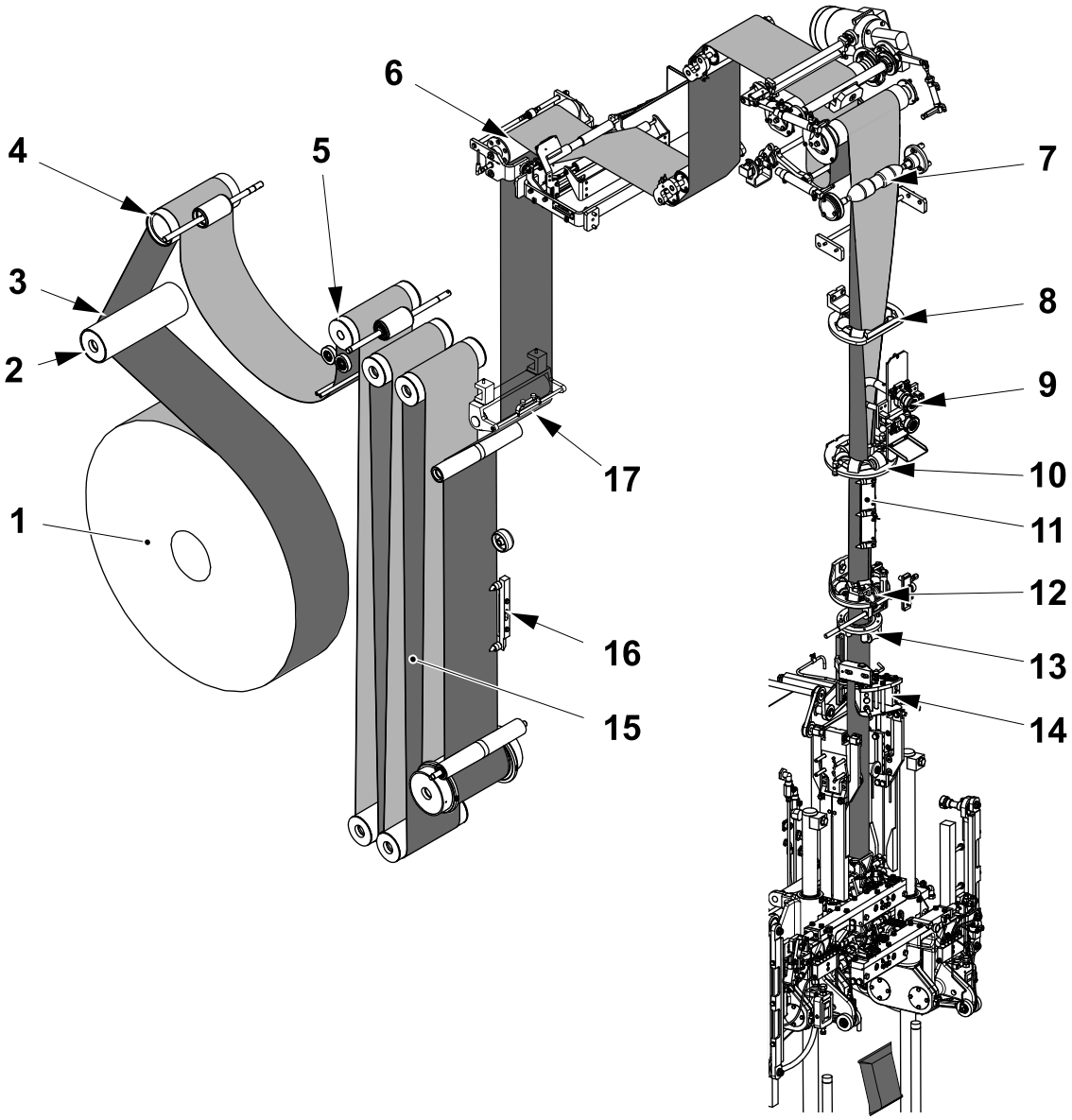

1 Packaging material reel
2 Material holder
3 Movable splicing device
4 Drive unit, rear
5 Drive unit, front
6 Bending roller
7 Reverse bending roller
8 Support rollers
9 Filling pipe
10 Upper forming ring
11 Hot air element LS
12 Lower forming ring
13 Seal, hygiene chamber
14 Photocells, design correction
15 Material lock
16 Strip applicator
17 Web magazine

This page intentionally left blank

2 Control Panels

Description

This chapter describes how to navigate through the TPOP, what to do when alarms occur and how to make machine settings.

CAUTION
Risk of damage to the equipment.
This chapter contains instructions for making machine settings. These settings must only be performed by a trained operator.

Description 2-2

2.1 TPOP Home Window 2-9

Language 2-9

User 2-10

Change Password 2-12

User Login with RFID 2-14

2.1.1 Button Bar 2-15

Go Button and Task Menu 2-15

Manoeuvre Button 2-16

System Setup Button 2-16

Alarm Button 2-16

Collect System Button 2-16

Recipes Button 2-17

2.1.2 Title Bar 2-18

2.1.3 Program Steps 2-19

Task Production 2-19

Task End Production 2-20

Task Internal Cleaning 2-20

Task External Cleaning 2-20

Task Service-Maintenance 2-21

Task LVEB Maintenance 2-21

2.1.4 Basic TPOP Navigation and Procedures 2-22

Buttons 2-22

Keyboard 2-29

Modules Navigation 2-29

Symbols 2-31

Buttons with Informations 2-31

Icons 2-32

Procedures 2-34
Selecting the Cause of an Event. 2-35
Monitoring and Regulating System Setting Parameters 2-35
2.2 Cleaning Procedures 2-38
Internal Cleaning 2-38
CIP Cleaning / CIP Drying 2-38
External Cleaning 2-41
External Cleaning in Eco Mode 2-44
2.3 Alarms 2-45
Alarm Modules 2-45
Alarm Colour Codes 2-46
Navigating Alarms 2-47
Managing Alarms 2-48
System Communication Fault 2-49
Alarm History 2-49
Stop List 2-50
2.4 Collect System 2-51
Collect System Events 2-51
2.4.1 Manually Registering an Event During Preparation 2-52
Delay in the Preparation Phase 2-52
Jump to Step Zero During the Preparation Phase 2-55
2.4.2 Manually Registering an Event During Production 2-56
Manual Recording of a Production Stop Cause 2-56
Jump to Step ZERO During the PRODUCTION Phase 2-58
Jump to Step VENTING During the PRODUCTION Phase 2-59

2.4.3 Generic Collect System Tasks 2-60
Recording Package Waste for Quality Checks 2-60
Recording Maintenance Time 2-63
DE Overview 2-64
Last Package Point Selection 2-65
2.4.4 Logging Materials 2-67
Logging Packaging Material 2-67
Logging Other Packaging Material 2-72
2.5 Manoeuvre 2-74
Modules 2-74
2.5.1 Infeed Module Window 2-75
Automatic Splicing Unit 2-75
Paper Splice 2-76
Constant Heat Bar Temperature 2-77
Move Splice Head 2-78
Preparation Device 2-79
Automatic Strip Splicing Unit 2-79
Heating Temperature SA 2-80
Strip Sealing Time 2-81
Heating Temperature Short Stop 2-81
2.5.2 Sterilization Window 2-83
Sterile Air System 2-83
Aseptic Chamber 2-85
Web Position Active Control 2-85
Motor 2-86
System Referencing 2-88
Peroxide 2-88
LVEB 2-90
2.5.3 Tube Forming Window 2-91

Pendulum Roller Pressure 2-92
Longitudinal Sealing Element 2-93
Short Stop Element 2-93
2.5.4 Filling Module Window 2-95
Product Level and Flow 2-96
Starting Flow 2-96
Bleeding 2-97
2.5.5 Package Forming Unit Window 2-99
Sample Package 2-102
Volume Quick Change 2-103
Jaw Inching 2-103
Move Jaw System To Position 2-104
Photocell Setting 2-105
Design Offset Setting 2-106
Folding Flaps Production Position 2-107
Stop Side Selection 2-108
TS Seal Time during Empty Tube 2-108
TS Ultrasonic Energy 2-109
Diagnostic 2-109
TS Consecutive Links Faults 2-110
Jaw Lubrication 2-110
Oil Level Indicator 2-111
2.5.6 Final Folder Unit Window 2-112
Jog Final Folder 2-113
Move Final Folder to Position 2-114
Flap Heater Temperature 2-114
Infeed Synchronization 2-115
2.5.7 Down Stream 2-117
Conveyor and Line 2-117
Conveyor Speed 2-118

Printers 2-118
Jaw Event and Lot Enable 2-119
Template Upload 2-120
Printer Layouts 2-120
Event ID Configuration 2-122
2.5.8 Safety and Service Window 2-126
2.5.9 Overview Window 2-128
2.6 Recipes 2-130
Recipes Window 2-130
Edit Recipe 2-131
Load Recipe 2-134
Save Recipe 2-135
Create New Recipe 2-136
Copy Recipe 2-139
Delete Recipe 2-140
2.7 System Setting 2-142
Configurations and Options 2-142
Sub-options 2-144
Line Interface Option 2-145
Time Setting 2-146
Production Shift 2-146
2.8 Recorder Navigation 2-149
Login 2-149
Log Out 2-152
Change CompactFlash Card 2-153

This page intentionally left blank

2.1 TPOP Home Window

The TPOP display is a touch sensitive screen which allows the operator to manage and communicate with the filling machine control system.

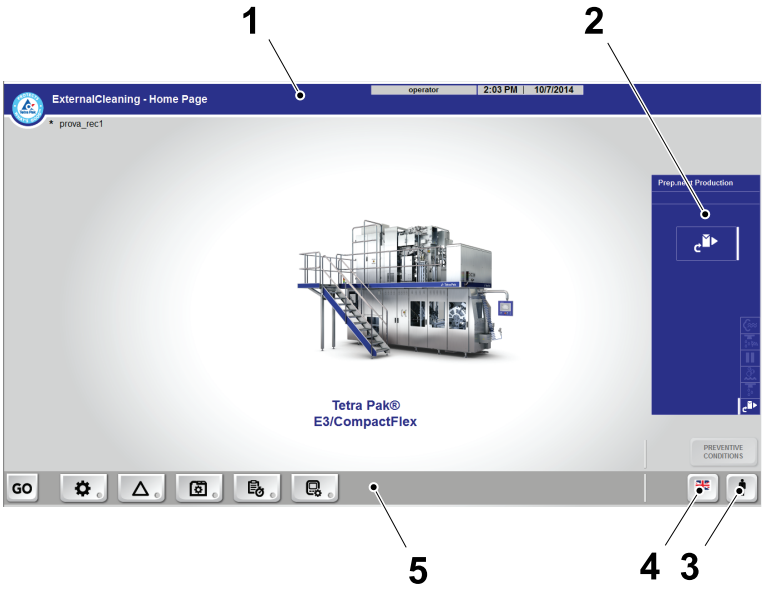

1 Title bar
2 Program step bar
3 Buttons bar
4 Language button
5 Login button

The TPOP home window displays the buttons and icons used to identify the status of the machine and to access the different menus of the filling machine control system.



Language

1

Select the LANGUAGE button.

Note! This setting change the language on the TPOP and on the the Display Information Panel.



2

Select the desired language button. The language is immediately activated.

Note! The maximum number of language buttons displayed is equal to 8.



User

1

The LOGIN button is used to log on to the TPOP with the correct user profile. Touch the LOGIN button.

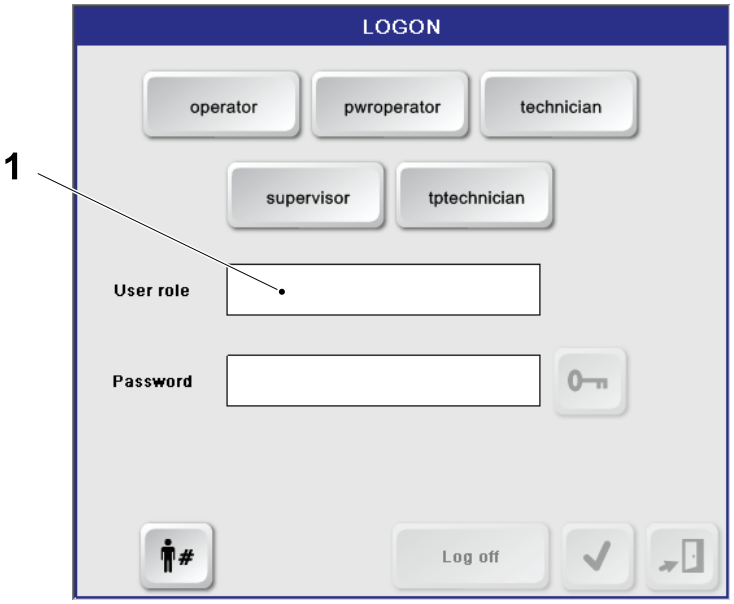

2

Touch the USER button corresponding to the user profile to be logged on. The user profile is displayed in the USER ROLE box (1).

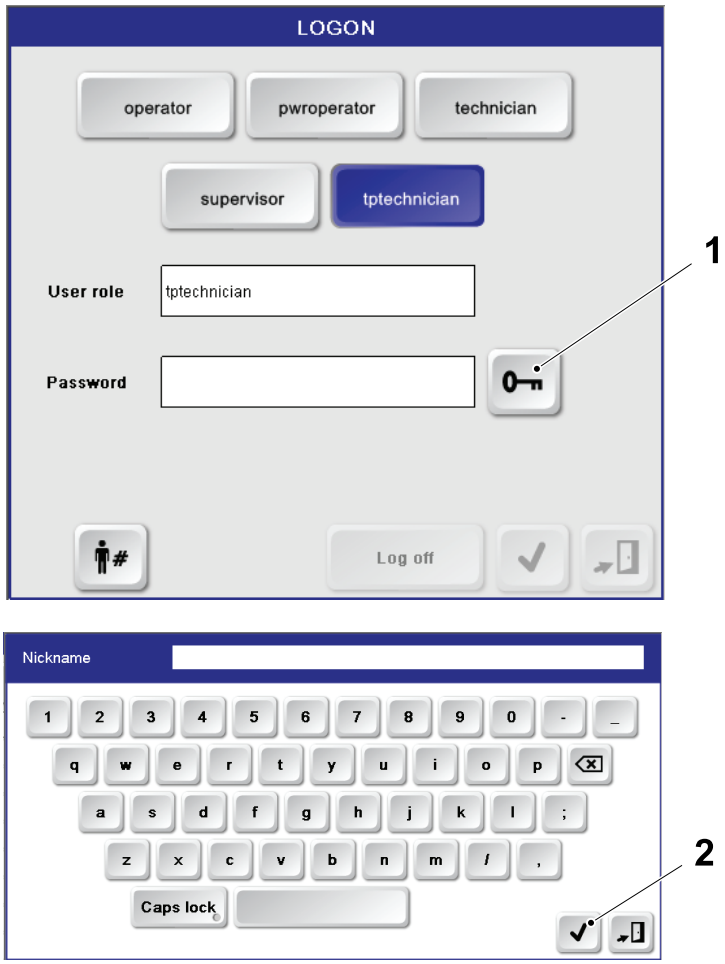

3

Touch the PASSWORD button (1) to enter the password.

The keyboard is displayed. Enter user and password and touch the OK button 2)

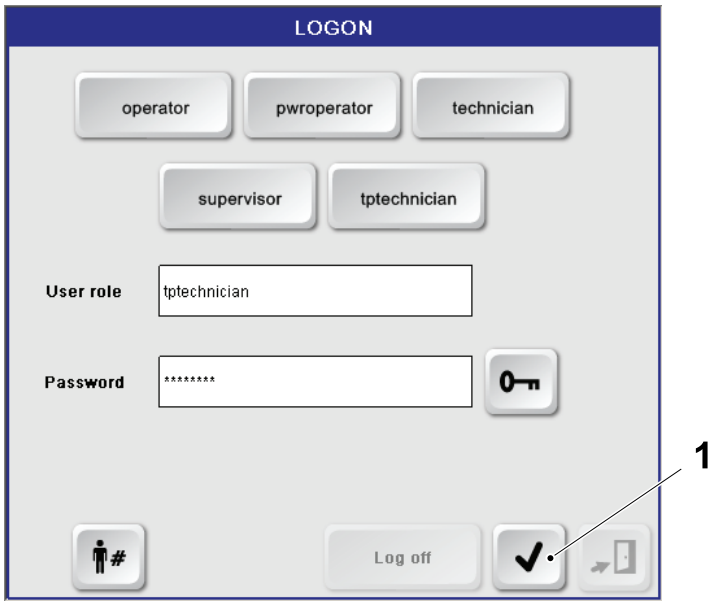

4

Touch the OK button (1) in the LOGON window.

The user is now logged on to the HMI with the corresponding level of access. All changes to the system are recorded along with the user ID information.



Change Password

1

Touch the LOGIN button.

Note! The access to the CHANGE PASSWORD button is restricted to allowed users only (user SUPERVISOR).

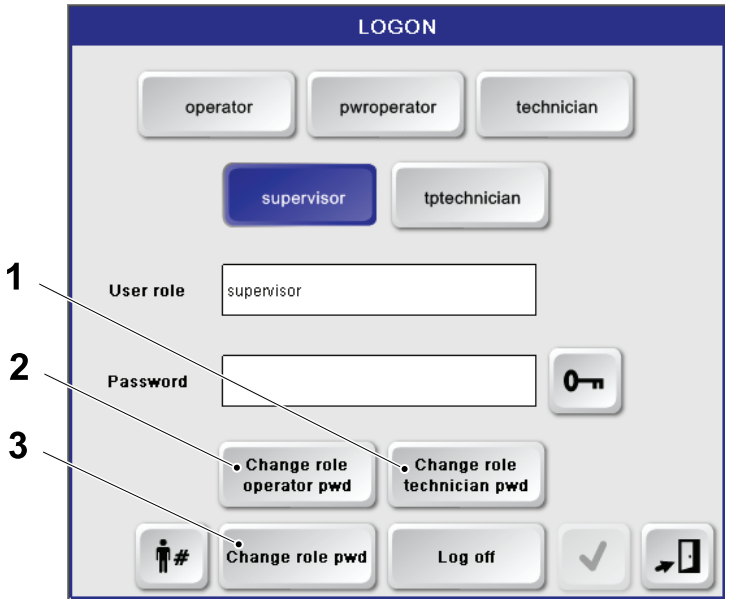

2

Touch the button corresponding to the user that needs to change the password:

- the TECHNICIAN PASSWORD button (1)
- the OPERATOR PASSWORD button (2)
- the SUPERVISOR PASSWORD button (3)

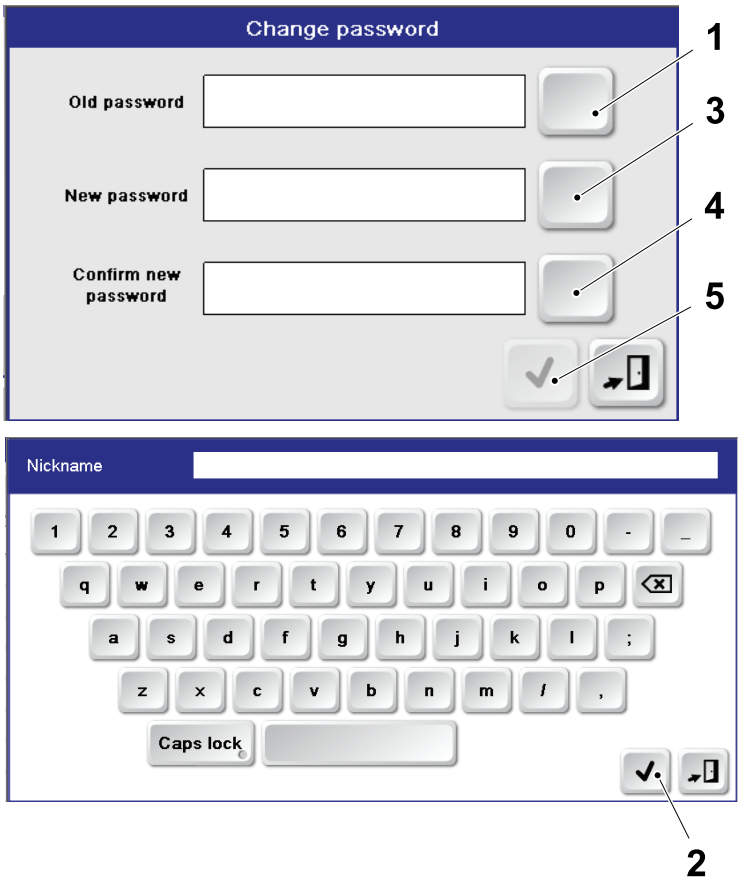

3

The CHANGE PASSWORD dialogue box is displayed.

Touch the OLD PASSWORD button (1) to display the keyboard and enter the current password.

Touch the OK button (2).

Touch the NEW PASSWORD button (3) and CONFIRM NEW PASSWORD button (4) and enter in the same way the new password and the confirmation for the new password.

Touch the OK button (5).

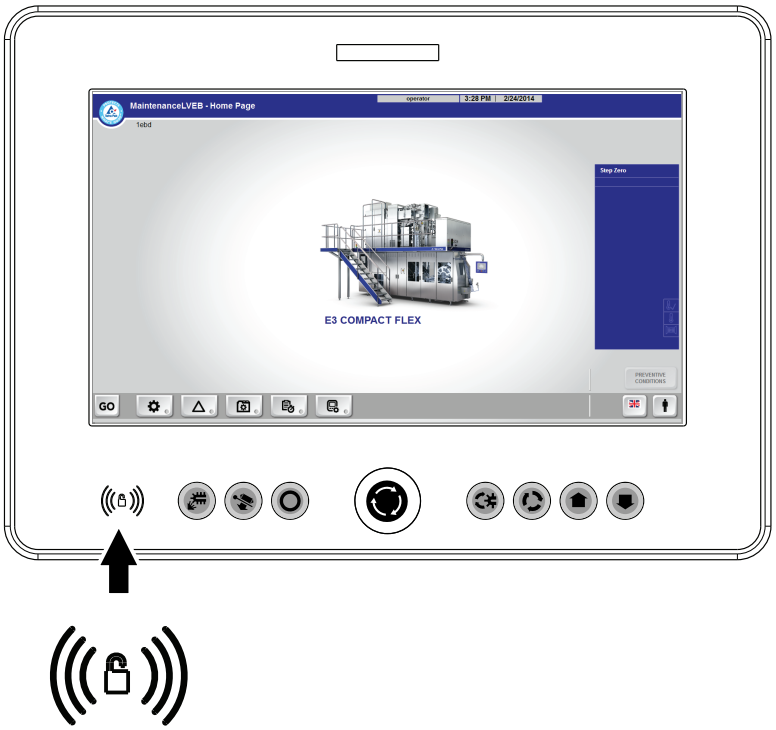

User Login with RFID

1

Use the proximity ID token key to log on to the TPOP with the appropriate user profile.

Get the proximity ID token key close to the receiver on the TPOP (see arrow) to transmit the authentication data.

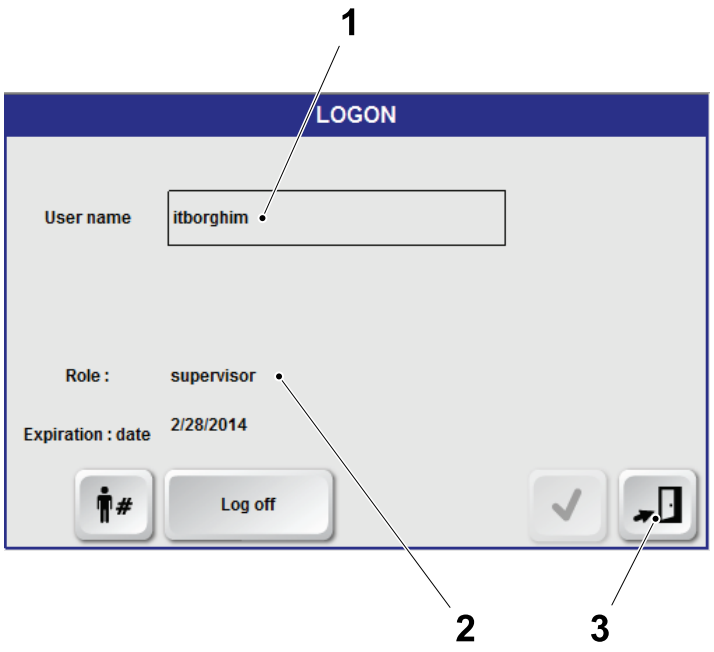

2

The LOGON window is displayed showing the USER NAME (1) and the access level (2) transmitted by the proximity ID token key.

Touch the EXIT button (3) to confirm.

The user is now logged on to the HMI with the corresponding level of access. All changes to the system are recorded along with the user ID information.

2.1.1 Button Bar

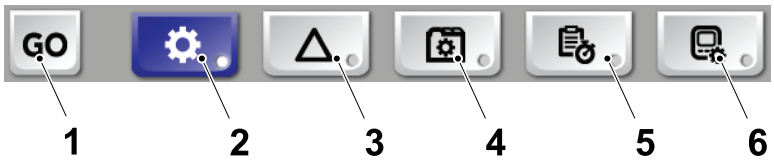

The button bar contains the following buttons used to access the TPOP menus:

- GO button (1)
- MANOEUVRE button (2)
- ALARMS button (3)
- RECIPES button (4)
- COLLECT SYSTEM button (5)
- SYSTEM SETUP button (6)

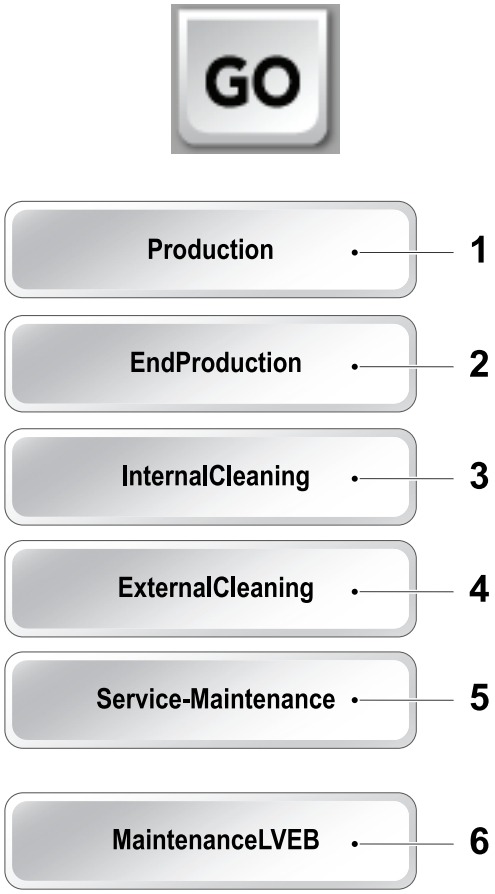

Go Button and Task Menu

The GO button is used to select the task to be performed. Touch the GO button to open the TASK MENU. Touch the task button according to the goal to perform.

Note! According to the selected task, the TPOP displays the program steps, functions and settings proper of the task.

- PRODUCTION task (1)
- END PRODUCTION task (2)
- INTERNAL CLEANING task (3)
- EXTERNAL CLEANING task(4)
- SERVICE - MAINTENANCE task (5)

  Note! The access is restricted to allowed users.
- MAINTENANCE LVEB task (6)

  Note! The access to the MAINTENANCE LVEB task is restricted to allowed users logged on by RFID using a proximity ID token key for Advanced Technicians.



Manoeuvre Button

The MANOEUVRE button is used to access the MANOUEVRE window.

All the machine production settings are accessible through this window, see 2.5 Manoeuvre.

A green line in the MANOEUVRE button indicate that a production setting has been activated. The green line is also visible on the module button and the function icon.



System Setup Button

The SYSTEM SETUP button is used to access the SYSTEM SETUP window.

The time setting and all the machine options which may be enable or disabled are accessible through this button, see 2.7 System Setting.



Alarm Button

The ALARMS button is used to access the ALARMS window.

All the alarm modules are accessible through this button, see 2.3 Alarms.



Collect System Button

The COLLECT SYSTEM button is used to access the COLLECT SYSTEM window.

The COLLECT SYSTEM is used to register events, see 2.4 Collect System.



Recipes Button

The RECIPES button is used to access the RECIPES window.

The management of production recipes is accessible through this button, see 2.6 Recipes.

2.1.2 Title Bar

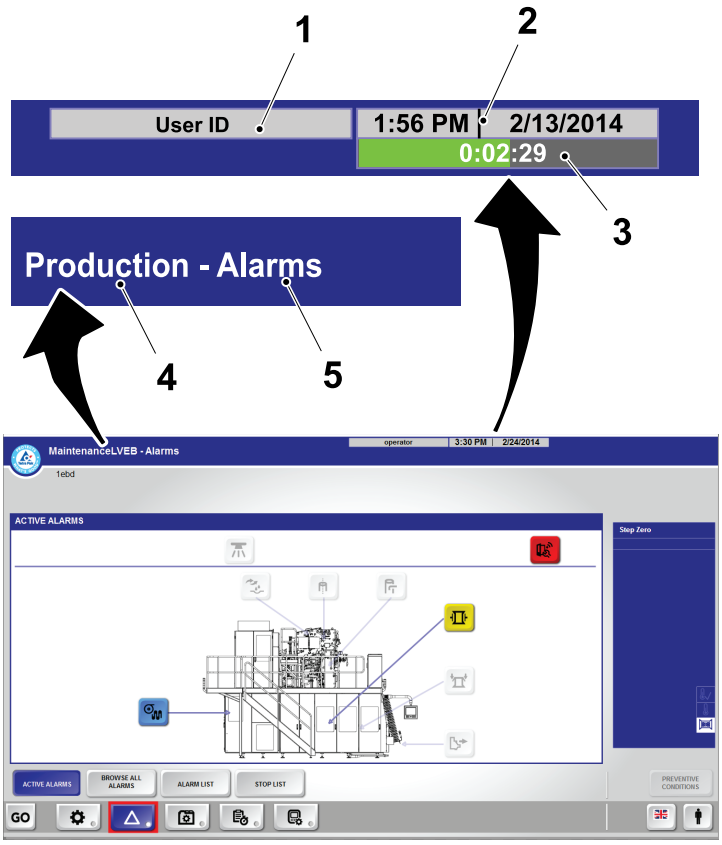

The title bar indicates:

- the current user (1)
- the current time (2)
- the time bar (3), when required by the program step
- the name of the current mode (4)
- the name of the current window (5).

2.1.3 Program Steps

This section describes the program steps displayed on the TPOP to indicate the machine status according to the selected task..

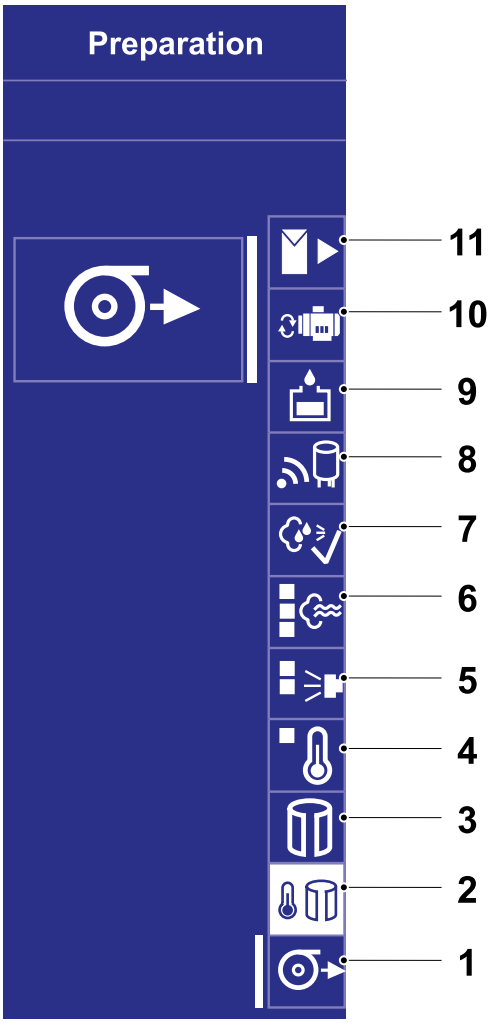

Task Production

1) NO LIGHT = STEP ZERO

LIGHT = PREPARATION

2) PREPARE TO TUBE SEALING

3) TUBE SEALING

4) HEAT STERILIZATION

5) SPRAYING

6) DRYING

7) STERILIZATION DONE

8) SIGNAL TO STERILIZER

9) PREPARE TO PRODUCTION

10) MOTOR START

11) PRODUCTION

The enlarged program icon (e.g. PREPARATION), on the top and a bar close to program icon indicates the current program step.

The program step name is indicated on the top of the ladder step.

Note! Program step icons shown with the white background are intended as flashing.

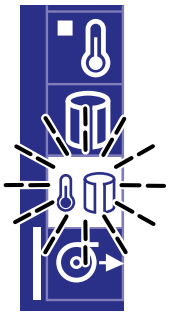

The flashing program icon (e.g. PREPARE TO TUBE SEALING), indicates the machine is ready to begin that program step.

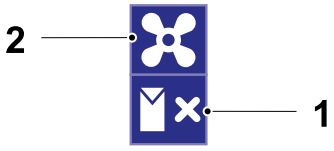

Task End Production

1) END PRODUCTION
2) VENTING

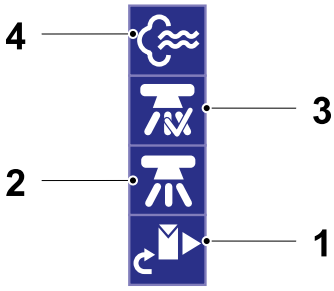

Task Internal Cleaning

Note! ICU is an Optional Equipment.

1) PREPARE NEXT PRODUCTION
2) CLEANING
3) CLEANING DONE
4) DRYING

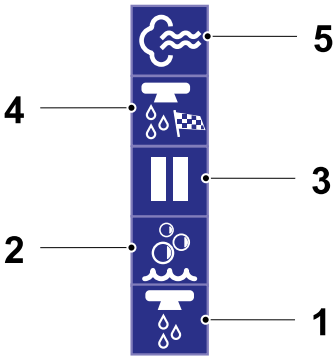

Task External Cleaning

1) RINSING
2) FOAMING
3) PAUSE
4) FINAL RINSING
5) DRYING

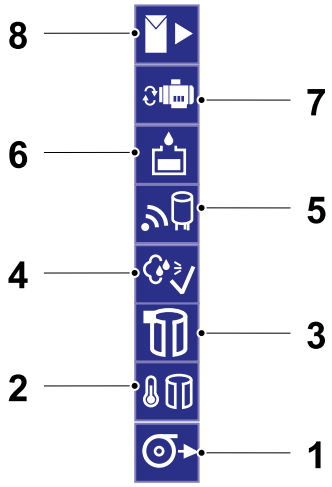

Task Service-Maintenance

1) NO LIGHT = STEP ZERO

LIGHT = PREPARATION

2) PREPARE TO TUBE SEALING

3) TUBE SEALING

4) STERILIZATION DONE

5) SIGNAL TO STERILIZER

6) PREPARE TO PRODUCTION

7) MOTOR START

8) PRODUCTION

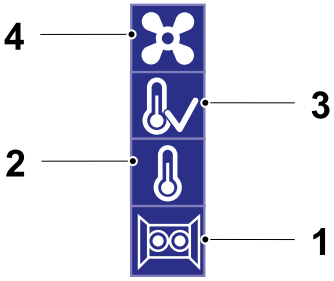

Task LVEB Maintenance

Note! The access to the LVEB maintenance task is restricted to allowed users logged on by RFID using a proximity ID token key for Advanced Technicians.

1) NO LIGHT = STEP ZERO

LIGHT = PREPARATION

2) PREHEATING

3) READY

4) VENTING

2.1.4 Basic TPOP Navigation and Procedures

This section describes the buttons and TPOP components that are used to navigate the TPOP windows and to perform procedures.

Buttons

The following buttons are common to the TPOP windows.



The OK button.

Touch the OK button to confirm a data entry as:

- function start
- function stop
- value input
- recipe selection.



The CANCEL button.

Touch the CANCEL button to discard the data entry without recording any data.



The ON and OFF buttons.

Touch the ON button to enable or the OFF button disable an option.



The EDIT button.

Touch the EDIT button to modify values or configurations.



The DELETE button.

Touch the DELETE button to delete an item (recipe, equipment).



The ZOOM button.

Press the ZOOM button to zoom in on recipe values.



The KEYBOARD button.

Touch the KEYBOARD button to activate the keyboard and enter a value.



The RECIPE DEFAULT button.

Touch the RECIPE DEFAULT button to reset the value or data entry to the recipe setting. If the default value is equal to the actual recipe value, the button will be disabled



The FACTORY button.

Touch the FACTORY button to display the default value.

The reset to the default value is confirmed by touching the OK button.

Note! Some settings have more than one factory value (such as the setting for the tab sealing pad heater that changes with the hole type). For these settings, the factory button only provides an approximate value.



The PLAY and STOP buttons.

Touch the PLAY button to start a movement command.

Touch the STOP button to stop a movement command.

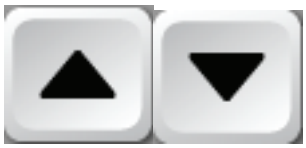

The UP and DOWN buttons.

Touch the UP button to select the up movement command.

Touch the DOWN button to select the down movement command.



The GO TO TOP and GO TO BOTTOM buttons.

Touch the GO TO TOP button to move to the top position or page.

Touch the GO TO BOTTOM button to move to the bottom position or page.



The GO TO START and GO TO END buttons.

Touch the GO TO START button to move to the start position or page.

Touch the GO TO END button to move to the end position or page.



The PLUS and MINUS buttons.

Touch the PLUS button to increase the selected values.

Touch the MINUS button to decrease the selected values.



The OPEN and CLOSE buttons.

Touch the OPEN or the CLOSE button to separate or to approach two parts.



The INCHING button.

Touch the INCHING button to jog movable parts.



The DOUBLE ARROW button.

Touch the DOUBLE ARROW button to fast run a function.



The GAP SETTING button.

Touch the GAP SETTING button to change a gap or stroke value.



The HOMING button.

Touch the HOMING button to execute a referencing.



The OFFSET button.

Touch the OFFSET button to set an offset value.



The CORRECTION button.

Touch the CORRECTION button to fine adjust a setting value.



The RESET button.

Touch the RESET button to reset a counter.



The TREND button.

Touch the TREND button to display graphical statistical information.



The ENABLE button.

Touch the ENABLE button to activate an action.



The DISABLE button.

Touch the DISABLE button to deactivate an action.



The MINIMIZE button.

Touch the MINIMIZE button to minimize the current window



The EXIT button.

Touch the EXIT button to close an active window.

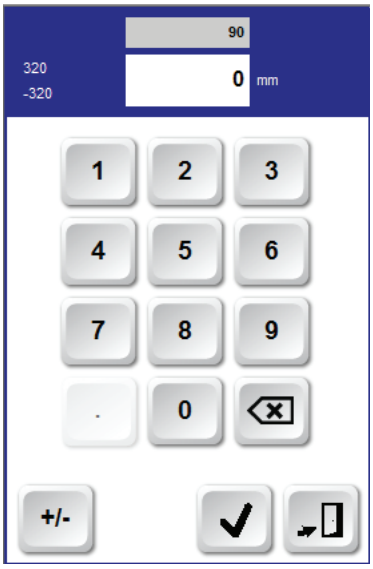

Keyboard

The KEYBOARD is displayed by touching the KEYBOARD button.

Enter the desired value and touch the OK button to confirm the entered value, or the EXIT button to exit.

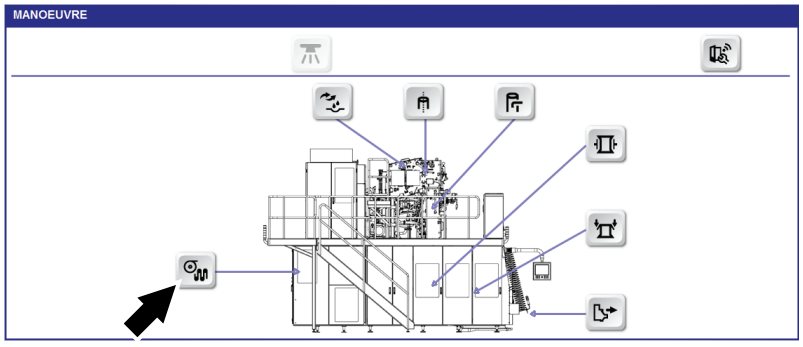

Modules Navigation

The management of settings, functions and alarms is set per modules. Touch the desired module button to access the module window.

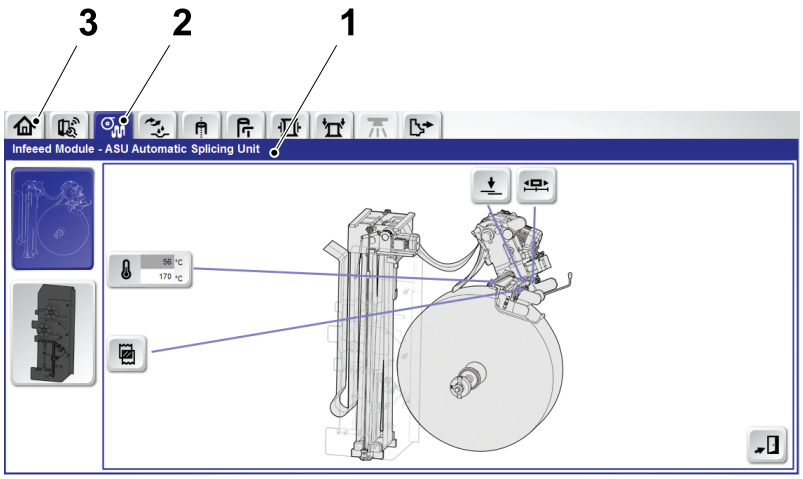

The current module window is indicated by the text bar (1) and the tab icon (2). The tabs at the top of the window allow easy navigation to the other module windows without returning to the main window.

The home tab (3) allows to return to the main window.

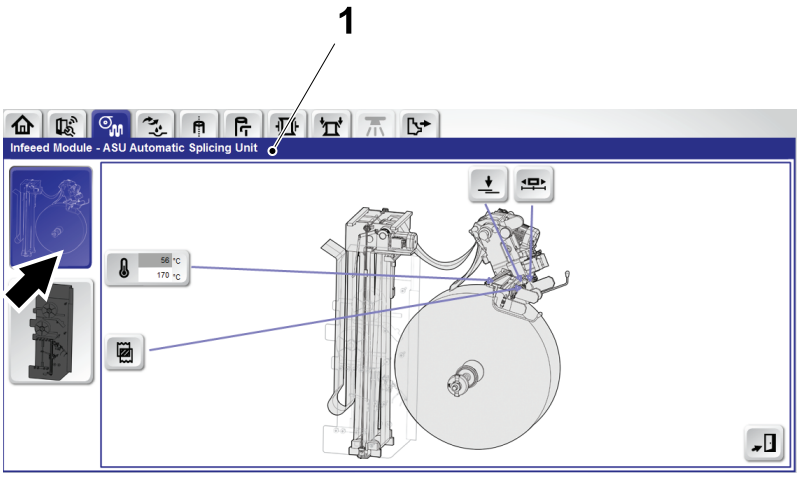

The selected module might have one or several sub modules, indicated by the sub module button(s), see arrow. The current sub module window is indicated by the text bar (1).

The buttons in the sub module window open the corresponding function, setting or alarm.



Factory



Recipe



Set Point

Symbols

The following symbols are common to the TPOP windows.

- `FACTORY` - the value set as default by the factory
- `RECIPE` - the value stored as default in the recipe
- `SET POINT` - value that has been set for the particular operation

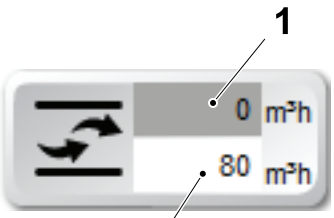

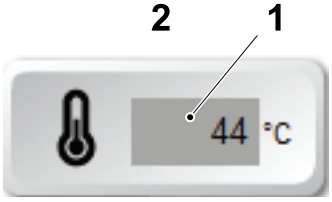

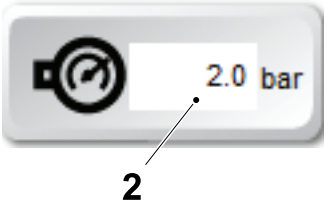

Buttons with Informations

Some button may display the parameter value.

The parameter value may be displayed inside the buttons, for example:

- the current value (1), is shown in a grey box
- the set point value (2), when available, is shown in a white box.

Icons

The following selectable icons are common to the TPOP SETTING windows.

Buttons with selectable icons are white, when a button is selected the colour of the button changes to blue.



The TIME icon.

Touch the button with the TIME icon to display a time value.

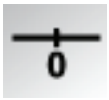

The HOMING icon.

Touch the button HOMING icon to set the home position of an element.



The GAP SETTING icon.

Touch the button with the GAP SETTING icon to set a gap or a stroke value.

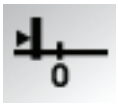

The OFFSET icon.

Touch the button with an OFFSET icon to set an offset value.



The TEMPERATURE icon.

Touch the button with TEMPERATURE icon to display the current temperature value(s) dialogue window.



The AIR FLOW icon.

Touch the button with the AIR FLOW icon to display the current air flow value(s).



The WATER FLOW icon.

Touch the button with the WATER FLOW icon to display the current water flow value(s).



The PRESSURE icon.

Touch the button with the PRESSURE icon to display the current pressure value(s).

Procedures

The following are common procedures used to input data and use a common and repeatable logic.



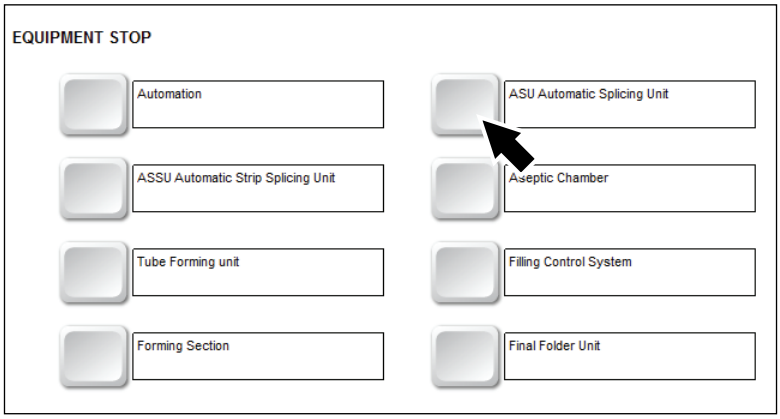

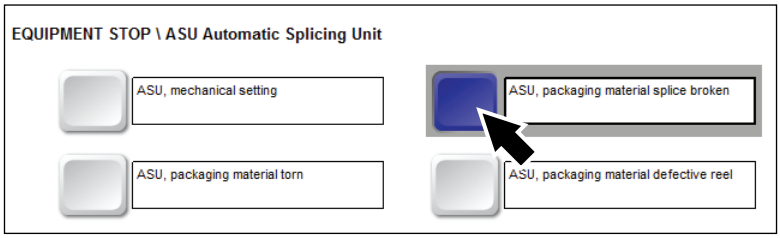



1

Selecting the Cause of an Event

When the Collect System requests the selection of the cause of an event, it is possible to allocate the cause of the event at different levels of detail.

The first window lists the main level of causes.

To find the specific cause, use the buttons (as indicated by the arrows) to select its main group. Repeat until the specific cause is found.

To move back one level, touch the `UP` button.

The title at the top of the cause list shows the previous level of detail.

Every time a specific cause is selected, the `TOP FREQUENT 10 CAUSES` list is updated.

Note! Specific cause selection can be also made by pressing the alarm group button and selecting the alarm icon.



1

Monitoring and Regulating System Setting Parameters

Touch a parameter button as temperature, pressure, water or air flow.

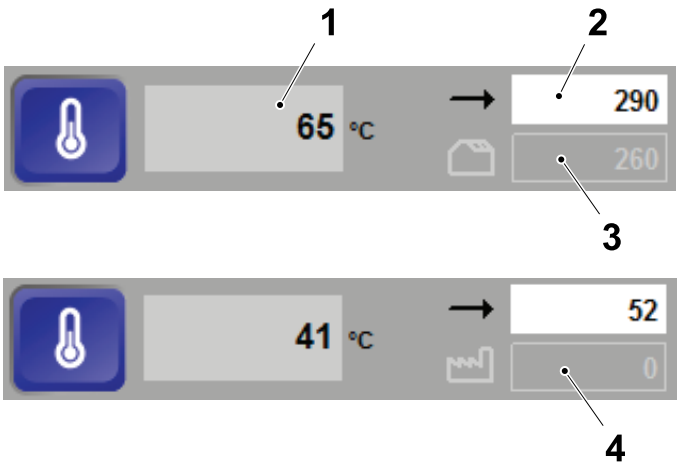

2

The setting window may display the following informations:

- the current value (1)
- the set point value (2)
- the recipe value (3)
- the factory value (4).



3

Touch the TREND button, when available, to display the parameter in real time.

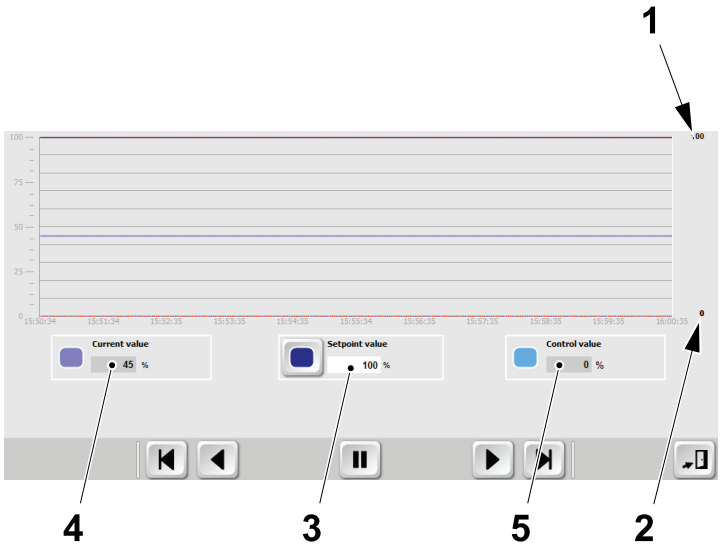

4

The graphic showing the parameter in real time is displayed. The monitor displays the following information:

- the upper value alarm (1)
- the lower value alarm (2)
- the set point value (3), when available
- the process current value (4)
- the regulator output (5), if present.

2.2 Cleaning Procedures

This section describes how to start and stop the cleaning of the product line system with the internal cleaning unit and how to start and stop the external cleaning of the exposed mechanical parts of the machine.





Internal Cleaning

1

Touch the GO button and select the INTERNAL CLEANING task.



2

To access the cleaning functions, touch the MANOEUVRE button.



CIP Cleaning / CIP Drying

3

To clean the product line system, touch the CLEANING button.

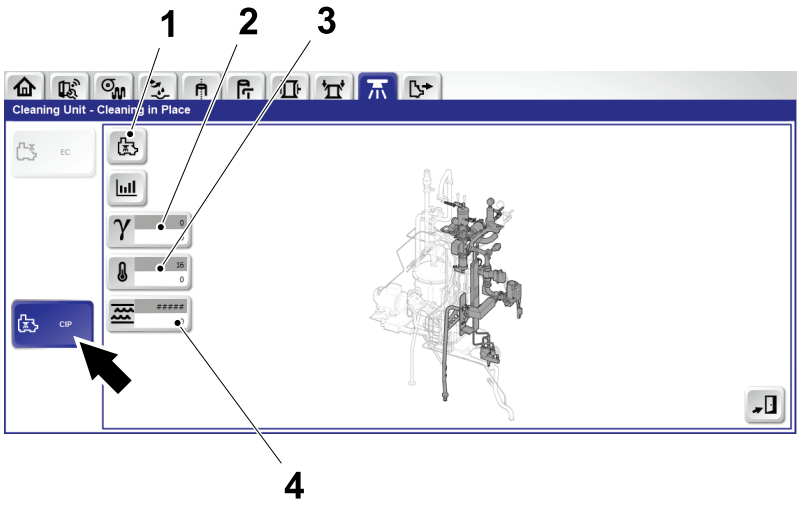

4

Touch the CLEANING IN PLACE button, see arrow.

The CLEANING IN PLACE window is displayed.

All selectable buttons are white. When a button is selected the colour of the button changes to blue.

In this window there are the following selectable buttons:

- INTERNAL CLEANING (1)
- WATER CONDUCTIVITY (2)
- WATER TEMPERATURE (3)
- WATER FLOW (4)



5

When the PROGRAM UP button starts to flash, press the PROGRAM UP button to start the CIP cleaning cycle.

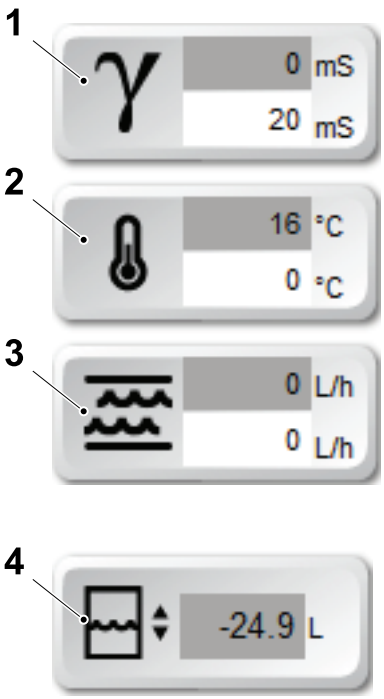

6

Touch one of the three icons for cleaning liquid temperature (2), conductivity (1) and flow (3) to display the current temperature, conductivity or flow value.

Touch the ICU TANK LEVEL button (4) to display the current level of the ICU tank.



7

Touching the TREND button a graph showing the selected parameter in real time is displayed.

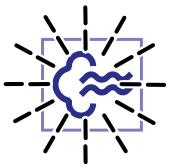

8

Once the cleaning cycle is completed, the DRYING STEP icon starts flashing.

Note! Once the cleaning is completed, the drying must be performed within 5 hours. If not, repeat the CIP cleaning.



9

Touch the INTERNAL CLEANING button and prepare the machine to perform the drying cycle.



10

Touch the CIP DRYING button.

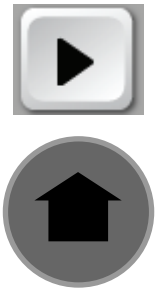

11

Touch the PLAY button.

When the PROGRAM UP button starts to flash, press the PROGRAM UP button to start the drying.

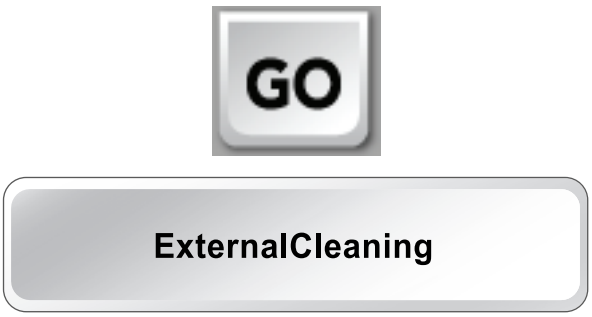

External Cleaning

1

Touch the GO button and select the EXTERNAL CLEANING task.



2

To access the cleaning functions, touch the MANOEUVRE button.



3

Touch the CLEANING button.

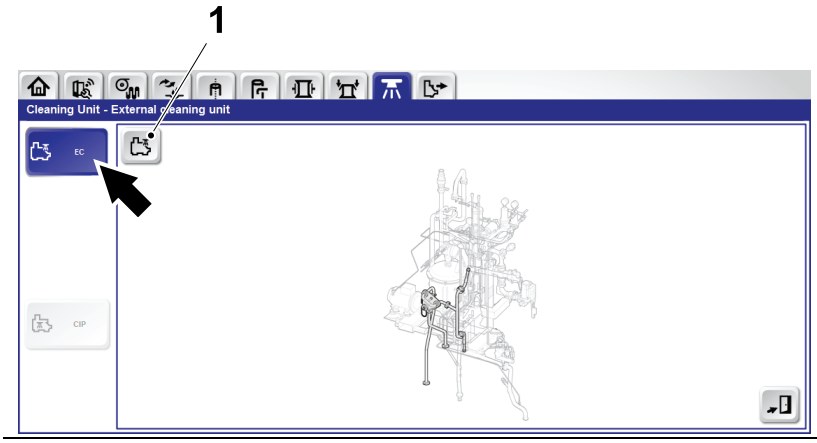

4

Touch the EXTERNAL CLEANING UNIT button, see arrow.

The EXTERNAL CLEANING UNIT window is displayed.

In this window the following information is displayed:

- EXTERNAL CLEANING FUNCTION (1).



5

Touch the EXTERNAL CLEANING FUNCTION button.

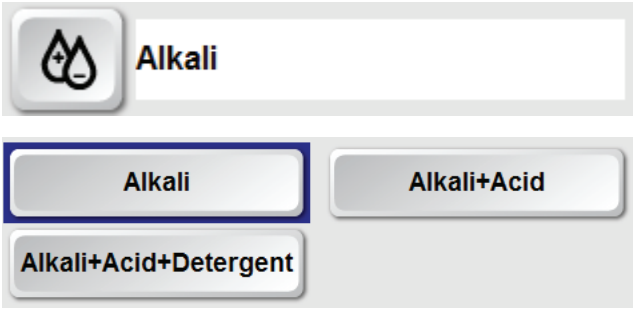

6

Touch the EXTERNAL CLEANING SELECTION button to select the chemicals to be used for the external cleaning.

In the dialogue box select the desired cleaning type: ALKALI, ALKALI+ACID or ALKALI+ACID+DETERGENT.

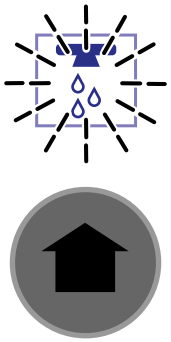

7

When the RINSING icon in the ladder step and PROGRAM UP button starts to flash, press the PROGRAM UP button to start the external cleaning cycle.

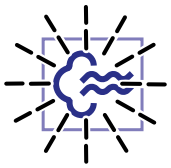

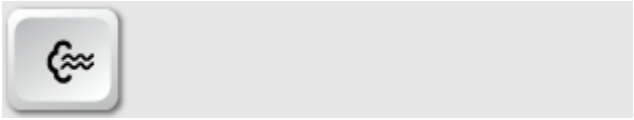

8

Once the cleaning and rinse cycle are completed, the DRYING STEP icon starts flashing.

Note! Once the cleaning is completed, the drying must be performed within 5 hours. If not, repeat the CIP cleaning.

Prepare the machine to perform the drying cycle.

Touch the EXTERNAL CLEANING DRYING button.

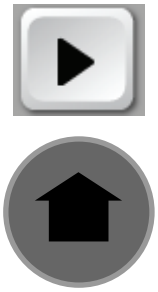

9

Touch the PLAY button. When the PROGRAM UP button starts to flash, press the PROGRAM UP button to start the drying.



10

External Cleaning in Eco Mode

The Eco mode for the external cleaning may be enabled to bypass the cleaning nozzles in the hygiene chamber of the superstructure. The access to enable or disable is restricted to allowed users.

2.3 Alarms

This section describes the machine alarms and how to manage alarms with the TPOP.

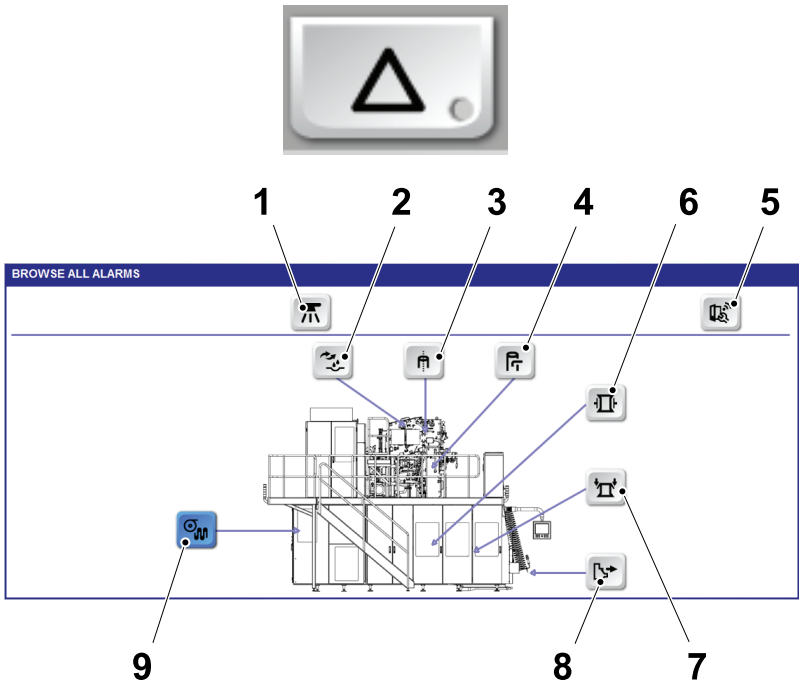

1 CLEANING UNIT
2 STERILIZATION
3 TUBE FORMING
4 FILLING MODULE
5 SAFETY AND SERVICE
6 PACKAGE FORMING UNIT
7 FINAL FOLDER UNIT
8 DOWNSTREAM UNIT
9 ASU

Alarm Modules

Alarms show where there is a problem on the machine and how to resolve it.

Alarms are divided into groups. When an alarm is activated, an alarm window is displayed with the activated alarm lit up.

If no alarms appear, touch the ALARM button.

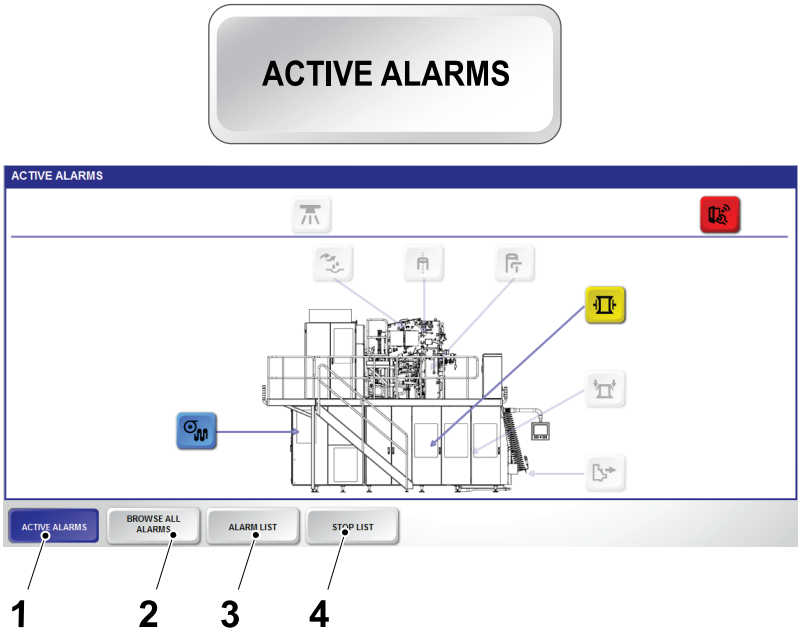

The ACTIVE ALARMS button (1) displays the ACTIVE ALARMS window.

The ALARM MODULE buttons with an alarm activated are highlighted with the color of the corresponding alarm code.

The ALARM MODULE buttons without activated alarms are disabled.

Navigate through the alarm windows using the buttons in the lower part of the window.

- the ACTIVE ALARM button (1) to display only the active alarms
- the BROWSE ALL ALARMS button (2) to display all the alarms, both active and inactive
- the ALARM LIST button (3) to display the list of the occurred alarms
- the STOP LIST button (4) to display the alarms having caused a production stop.

Alarm Colour Codes

The alarms are colour coded:

- RED - hazardous condition
- YELLOW - abnormal condition
- BLUE - information or operator action.

When an alarm is present, the alarm module button changes colour to indicate the alarm type and the appropriate warning light on the machine warning lamp(s) light up.

A red or yellow alarm must be acknowledged. There is no need to acknowledge blue alarms as they disappear when the cause is corrected.





Navigating Alarms

1

When an alarm is active, the ALARM button and the ALARM MODULE button of the module with the active alarm are highlighted with the color of the corresponding alarm code.

Touch the ALARM MODULE button.

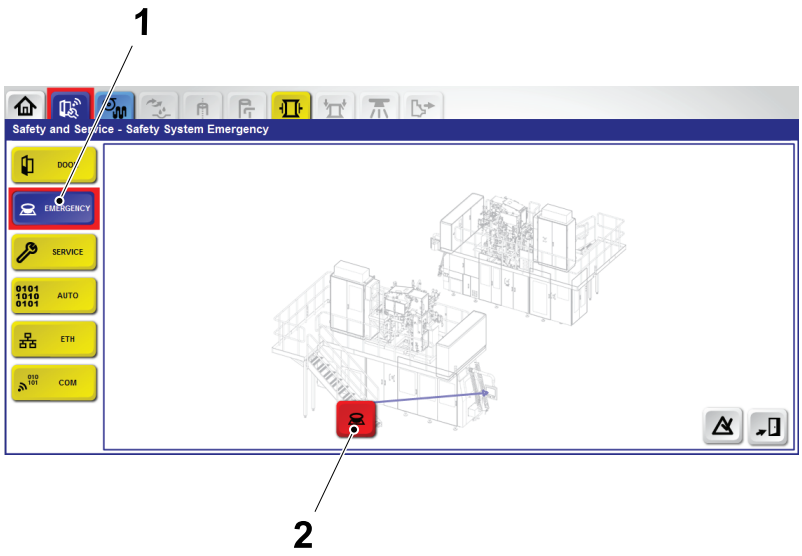

2

The ALARM MODULE window is displayed.

The ALARM SUB MODULE button (1) of the sub module with the active alarm is highlighted.

Only the activated alarm (2) is lit up in the window.

Only the current ALARM MODULE window and tab are active and is not possible to navigate to the other alarm module or sub module windows.



Touch the BROWSE ALL ALARMS button to activate buttons and tabs and to enable the navigation through all the alarms, both active and inactive, within the modules and sub modules.



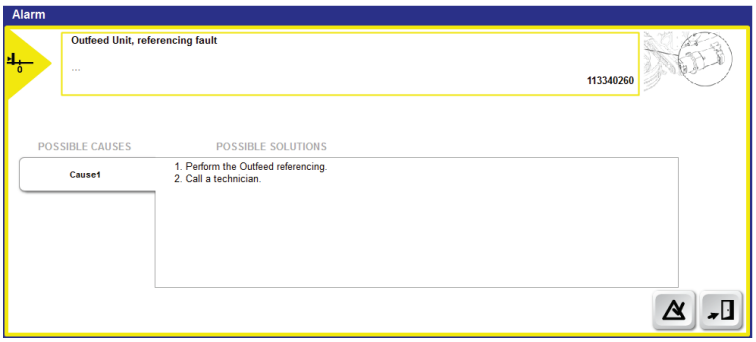

Managing Alarms

1

When an alarm module window opens, the active alarm button is lit up. Touch the button to open the ALARM window.

Follow the instructions in the order given.



2

Touch the flashing ACKNOWLEDGE button to acknowledge the alarm.

If the alarm window does not close after pressing the ACKNOWLEDGE button the alarm still exists.



3

Touch the EXIT button to return to the main window.

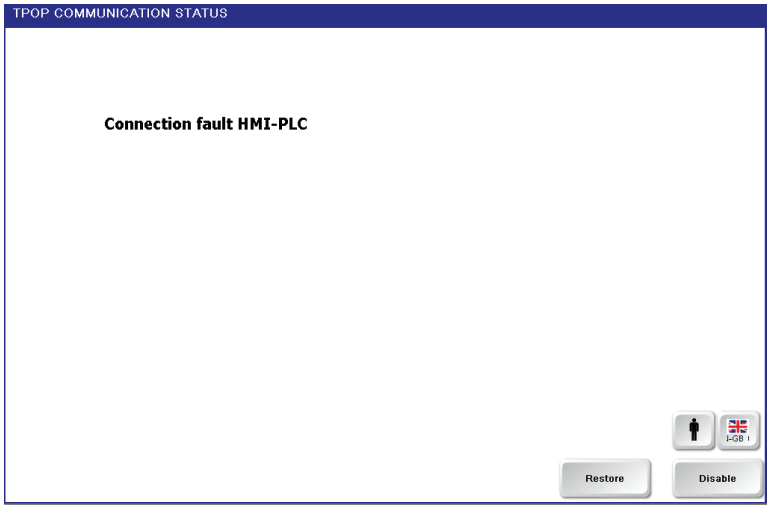

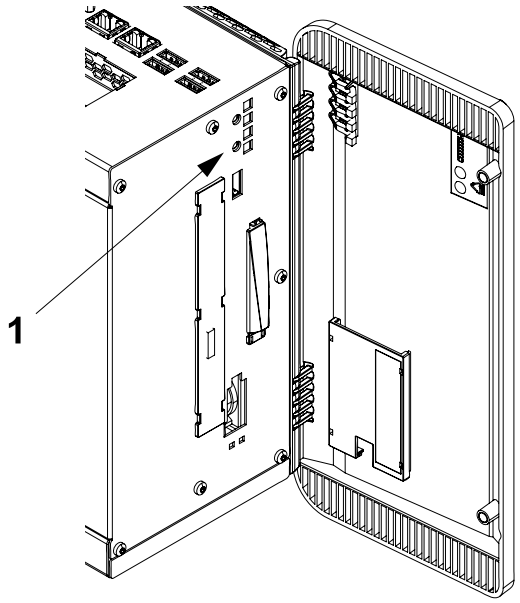

4

System Communication Fault

If a communication fault occurs, a dialogue window is displayed on the TPOP display.

Press the RESET button (1) on the IPC and wait for system restart.

Note! If the communication fault remains, call a technician to check the communication cables between the PLC and the IPC.



Alarm History

1

Touch the ALARM LIST button.

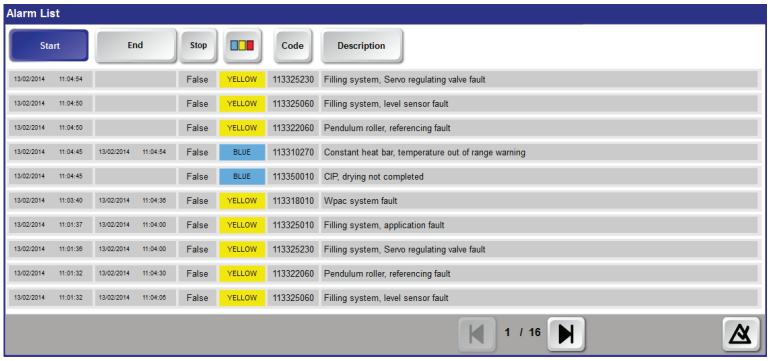

2

The ALARM HISTORY window is displayed.

The ALARM HISTORY window displays a chronological list of all the alarms that have occurred on the machine.

Note! The cross (1) in the column STOP indicates that the alarm caused a production stop.



Stop List

1

Touch the STOP LIST button to display the list of the alarms that they have caused a production stop.

2.4 Collect System

This section describes how to register information to the machine's COLLECT system. The COLLECT system is divided into two main groups; PLANNED MAINTENANCE and WASTE.



Collect System Events

The machine automatically records events for PLANNED MAINTENANCE and WASTE, but for some events the TPOP prompts the operator to select the reason for an event or input other data to the COLLECT system.

The following lists the possible TPOP prompts and the machine phases that require an operator response.

During the PREPARATION phase:

- Delay in the Preparation Phase
- Jump to Step Zero During the Preparation Phase

During the PRODUCTION phase:

- Manual Recording of a Production Stop Cause
- Jump to Step ZERO During the PRODUCTION Phase
- Jump to Step VENTING During the PRODUCTION Phase

Other Generic Tasks:

- Recording Package Waste for Quality Checks
- Recording Maintenance Time
- Last Package Point Selection
- Logging Packaging Material

2.4.1 Manually Registering an Event During Preparation

The following lists the possible TPOP prompts during the preparation phase that require an operator response.



Delay in the Preparation Phase

1

If the PREPARATION PHASE is too long (more than 30 minutes), the ALARMS button and the STOP LIST button start to flash 5 minutes after the PRODUCTION phase has started.

Touch the ALARM button.



2

Touch the STOP LIST button.



3

Touch the CHANGE STOP REASON button.

Why so much pre-production delay?

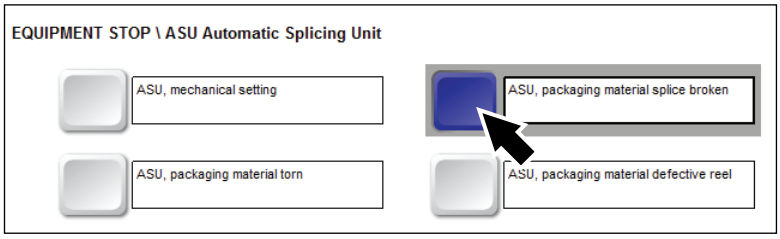

4

The TPOP prompts the question:

WHY SO MUCH PRE-PRODUCTION DELAY?

Select the correct cause for the event, see Selecting the Cause of an Event in 2.1.4 Basic TPOP Navigation and Procedures for details.

If no answer is given within 10 minutes, a `MISSING OPERATOR INPUT` will be automatically assigned as the stop reason.



5

Once selected the correct cause for the event, touch the `OK` button.

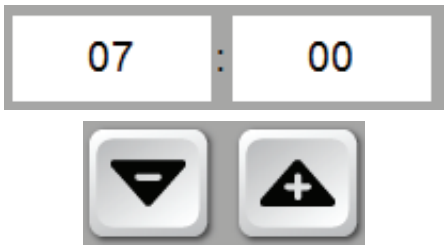

6

The CLOCK window shows the extra PREPARATION time. The system allows the extra PREPARATION time to be divided and allocated to different causes.

Enter the amount of time to be allocated to the selected cause by the PLUS and MINUS buttons.

The CLOCK window shows the amount of time which has been allocated to the selected cause.



7

Touch the OK button to record the data entered and return to the main window.



8

If the extra PREPARATION time is not fully allocated, the COLLECT SYSTEM button continues to flash.

Touch the COLLECT SYSTEM button and repeat the procedure to fully allocate the remaining extra PREPARATION time.

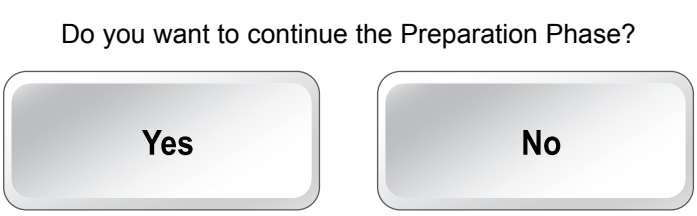

Jump to Step Zero During the Preparation Phase

When the machine steps down to ZERO during PREPARATION the TPOP prompts the following question:

DO YOU WANT TO CONTINUE THE PREPARATION PHASE?

- If the answer is YES the TPOP keeps the PREPARATION phase open. After 10 minutes in step ZERO the TPOP prompts the same question again. If the answer is YES again, the system allows an additional 10 minutes in step ZERO then closes the PREPARATION phase automatically
- If the answer is NO the TPOP closes the PREPARATION phase
- If no answer is given within 20 minutes the PREPARATION phase closes automatically.

2.4.2 Manually Registering an Event During Production



Manual Recording of a Production Stop Cause

1

During PRODUCTION phase, the machine may stop due to:

- conveyor congestion
- manual MOTOR START interruption
- manual SHORT STOP
- manual EMERGENCY STOP
- step out from PRODUCTION (Step up or Step down)
- manual filling off
- opening of a door.

The COLLECT SYSTEM button starts to flash.

Touch the COLLECT SYSTEM button.



2

If not already, selected, touch the DATA LOG button on the second level bar. Touch the COUNTERS tab and press the MANUAL WASTE button.

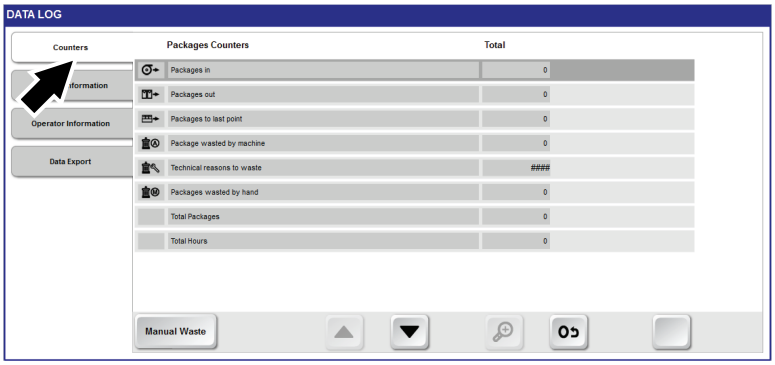

3

Touch the COUNTERS tab, see arrow.

The PACKAGE COUNTERS window is displayed.



4

Touch the MANUAL WASTE button.

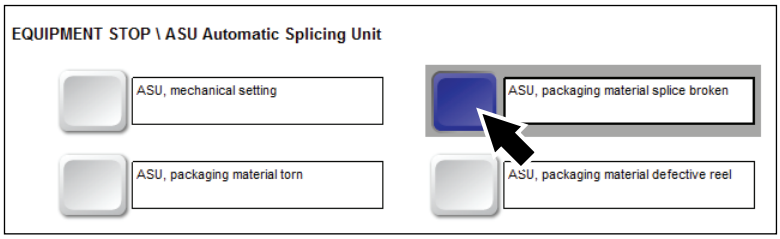

5

Select the correct cause for the event, see Selecting the Cause of an Event in 2.1.4 Basic TPOP Navigation and Procedures for details.



6

Once selected the correct cause for the event, press the OK button.



7

The PACKAGE WASTE window is displayed.

Set the quantity of packages that have been taken using the PLUS and MINUS buttons or the KEYBOARD button.

Note! Manual waste means packages removed by the operator.

Touch the OK button to record the entered data and return to the main window.

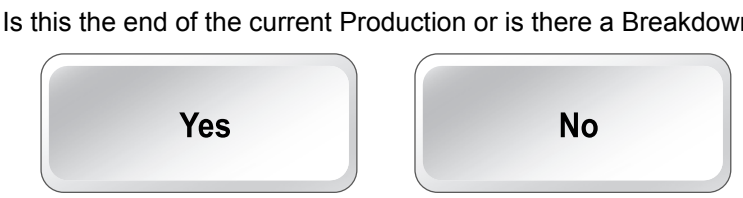

Jump to Step ZERO During the PRODUCTION Phase

When the machine steps to ZERO during the PRODUCTION phase the TPOP prompts the following question:

IS THIS THE END OF THE CURRENT PRODUCTION OR IS THERE A BREAKDOWN?

- If the answer is YES the TPOP closes the PRODUCTION phase
- If the answer is NO the TPOP keeps the PRODUCTION phase open and the period of time until the next PRODUCTION is recorded as a PRODUCTION stop. If the machine remains in step ZERO, the question appears again 10 minutes after the first prompt. If the answer is NO again, the system allows an additional 10 minutes in step ZERO, then closes the PRODUCTION phase automatically
- If no answer is given within 20 minutes, the PRODUCTION phase closes automatically.

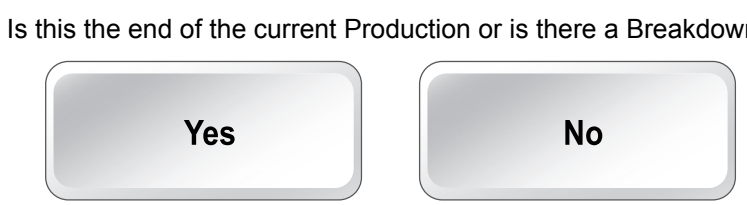

Jump to Step VENTING During the PRODUCTION Phase

When the machine steps to VENTING during the PRODUCTION phase the TPOP prompts a question.

IS THIS THE END OF THE CURRENT PRODUCTION OR IS THERE A BREAKDOWN?

- If the answer is YES the TPOP closes the PRODUCTION phase
- If the answer is NO the TPOP keeps the PRODUCTION phase open and the period of time until the next PRODUCTION is recorded as PRODUCTION stop
- If no answer is given within 4 minutes the TPOP assigns as default YES.

2.4.3 Generic Collect System Tasks



Recording Package Waste for Quality Checks

1

Note! Remember to record the number of packages taken whenever packages are collected for quality checks.

Touch the COLLECT SYSTEM button.



2

Touch the DATA LOG button.



3

Touch the QUALITY CHECK button.



4
Touch the NEW CHECK button.



5
Touch the WASTE NUMBER button.

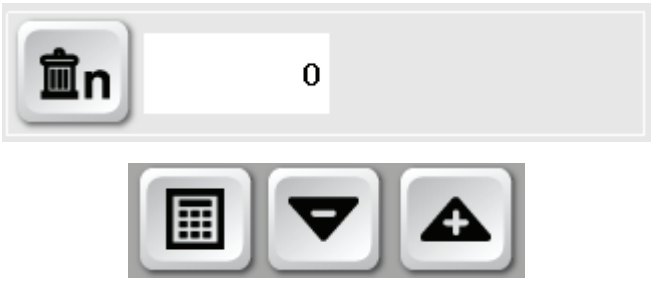

6
Touch the WASTE button insert the quantity of wasted packages using the PLUS and MINUS buttons or the KEYBOARD button.



7
Touch the EXIT button to return on the main window.



8

Touch the OVERALL RESULT button to insert an overall comment and an overall result of the check.



9

Touch the OVERALL RESULT button on the LH side to insert a result.



10

Touch the COMMENT button on the RH side to insert a comment using the keyboard displayed.

Note! The overall result will be overwritten if single check results are inserted later.

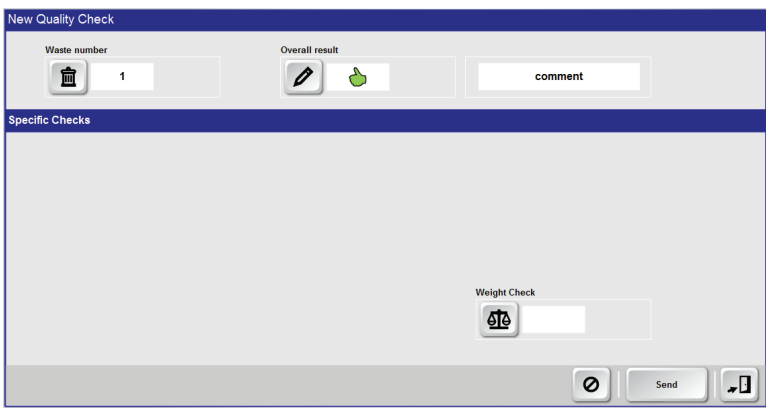

11

Touch each of the single check and insert the result for each one of them.

Note! If all the single checks are good, the overall check will be good as well, but if just only one check is bad the overall check will be bad. This can be easily overwritten by setting the overall result after the single checks.



12

Press the SEND button to record the data entry and to exit to the main window.

Recording Maintenance Time



1

Touch the COLLECT SYSTEM button.



2

Touch the MAINTENANCE button.

Note! This button is only available in step ZERO, and with the PREPARATION and PRODUCTION phases closed.

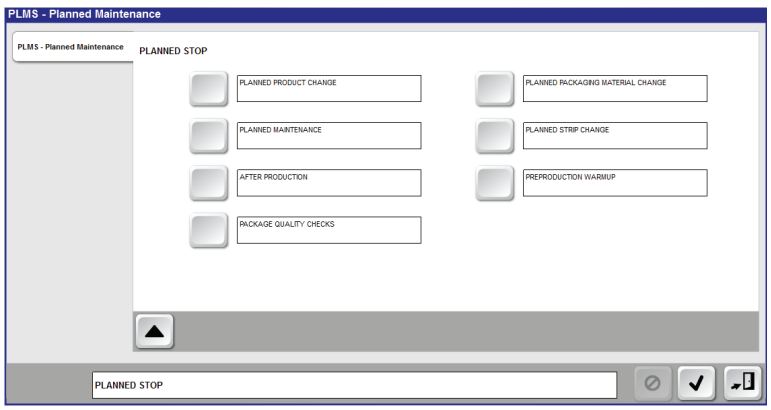

3

Select the correct item, see Selecting the Cause of an Event in 2.1.4 Basic TPOP Navigation and Procedures for details.



4

Once selected the correct item, touch the OK button.

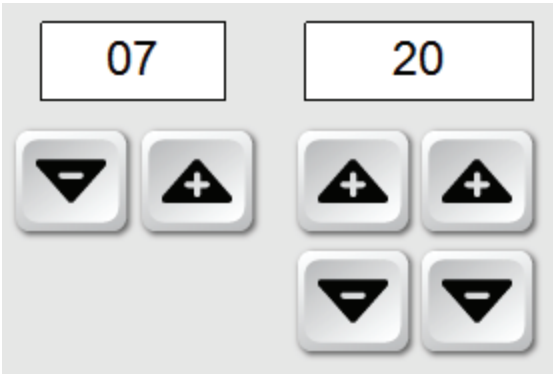

5

Use the the PLUS and MINUS buttons to enter the time used.

The CLOCK window displays the selected time.



6

Touch the OK button to record the data entered and return to the main window.



DE Overview

1

Touch the DE OVERVIEW button.

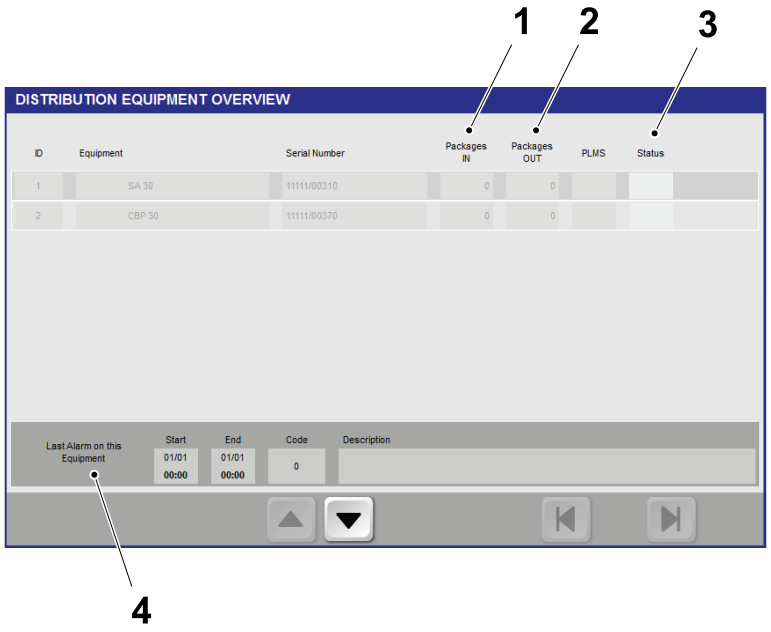



2

This window shows the status of all the DE within the same line and its status.

For each DE are displayed the following informations:

- the quantity of packages incoming the DE since the last restart (1)
- the quantity of packaging exiting from the DE since the last restart (2)
- the status of the equipment (3)
- the last acknowledged alarm (4) on the specific equipment selected

Navigate through the equipments by the UP and DOWN buttons.



Last Package Point Selection 1

Note! The last package point selection setting can only be done in STEP ZERO and with the PREPARATION and PRODUCTION phases closed.

Touch the LAST POINT COUNTER button.

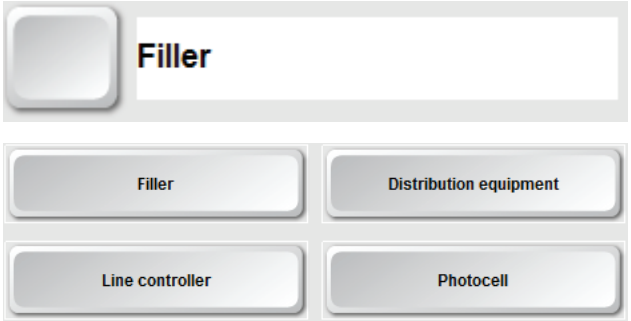

2

In the LAST POINT COUNTER window, touch the LAST POINT COUNTER SELECTION button.

Select the source of the last package counting point in the line.

Note! Select Distribution Equipment only if Line Controller is not available.

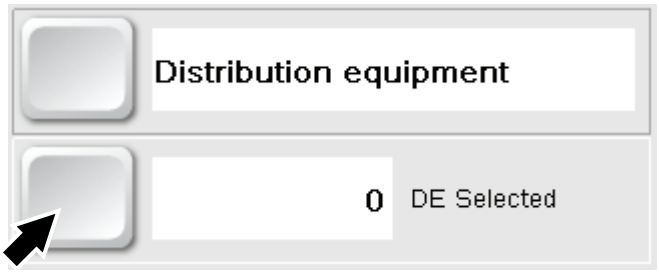

3

Note! Valid only if the DE is selected as last point counter.

If selecting Distribution Equipment, select which Distribution Equipment in the list that is displayed touching the DE SELECTED button.

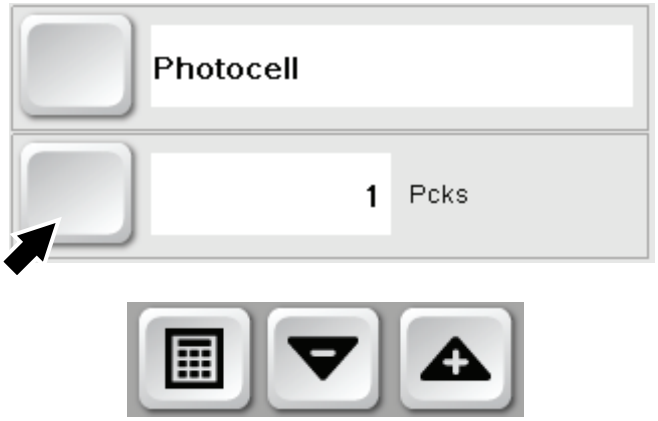

4

Note! Valid only if the photocell is selected as last point counter.

If selecting the photocell, touch the PACKAGES button.

Touch the PLUS and MINUS buttons or the KEYBOARD button to configure the number of packages contained in a cardboard.



5

Touch the EXIT button.

2.4.4 Logging Materials



Logging Packaging Material 1

Note! For machines with eBeam system it is required to log the packaging material.

Touch the COLLECT SYSTEM button.

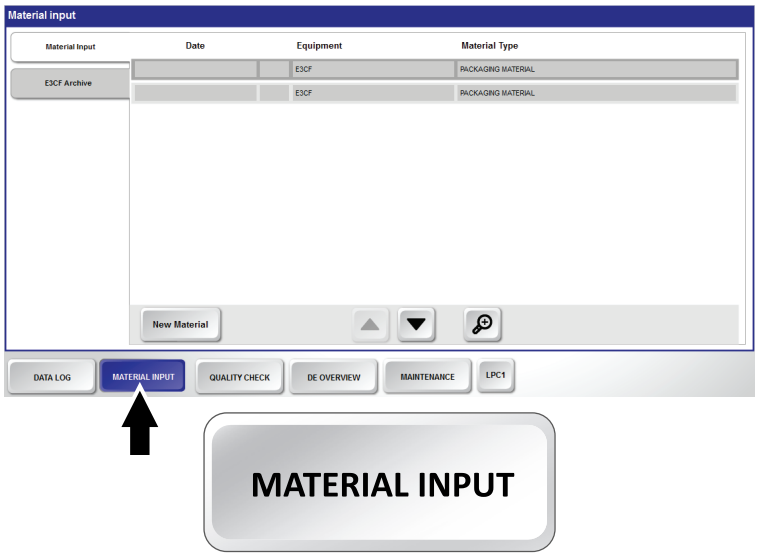

2

Touch the MATERIAL INPUT button.

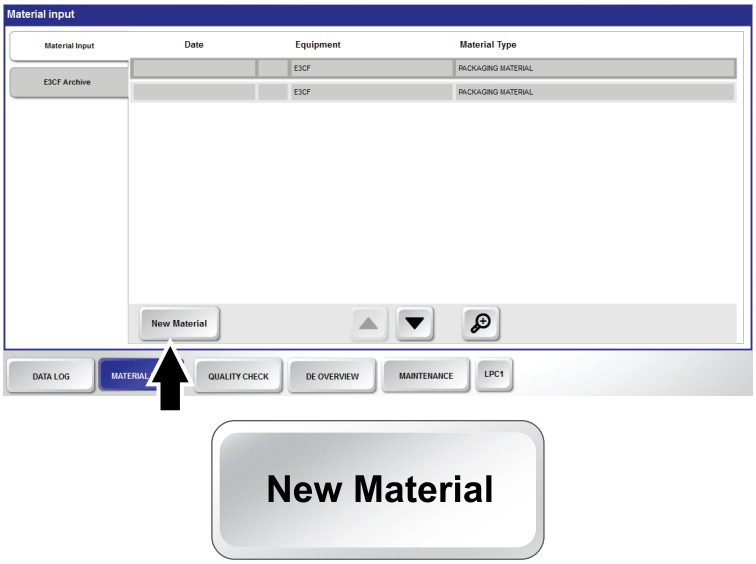

3

Touch the NEW MATERIAL button.



4

In the NEW MATERIAL window, touch:

- the PREPARED button to log the packaging material prepared for the splice
- the ACTIVE button to log the packaging material active.



5

Touch the PM ARTICLE NUMBER button to enter the article number for the material.

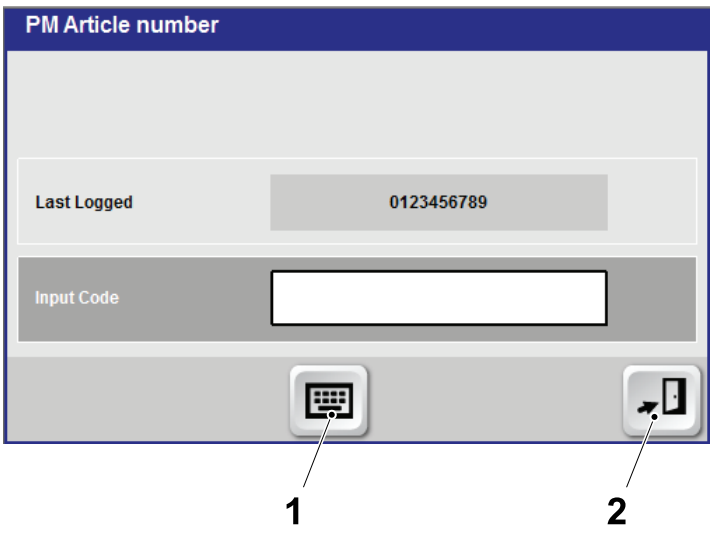

6

Enter the article number through the KEYBOARD button (1) and touch the EXIT button (2).

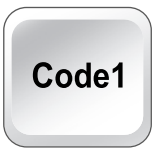

7

Touch the CODE 1 button to enter the first bar code for the material.

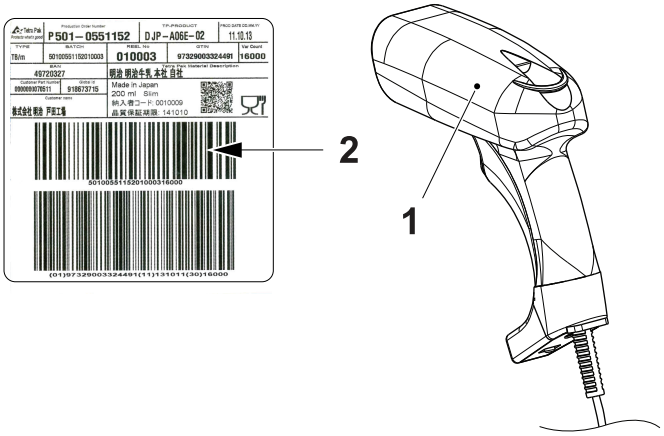

8

With the bar code scanner (1) scan the first bar code (2) on the label of the packaging material reel.

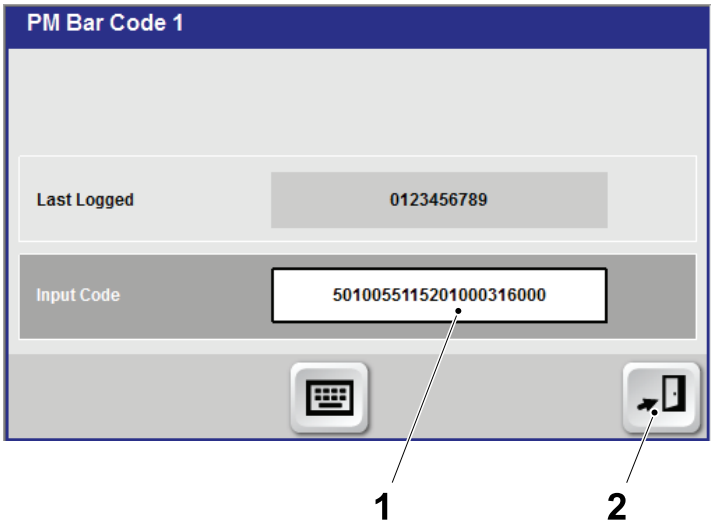

9

When the code is displayed in the field (1), touch the EXIT button (2).



10

Touch the CODE 2 button to enter the second bar code for the material.

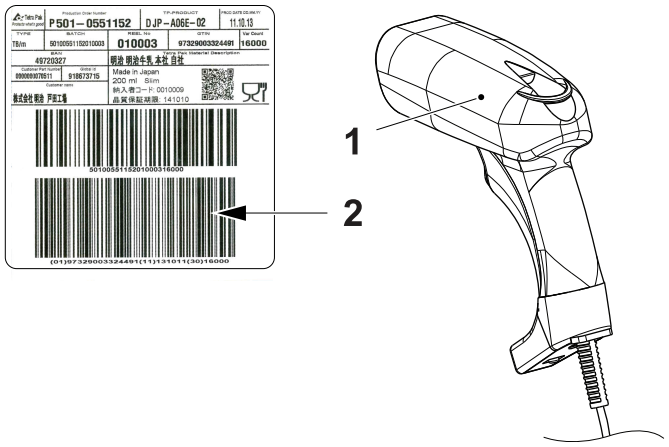

11

With the bar code scanner (1) scan the second bar code (2) on the label of the packaging material reel.

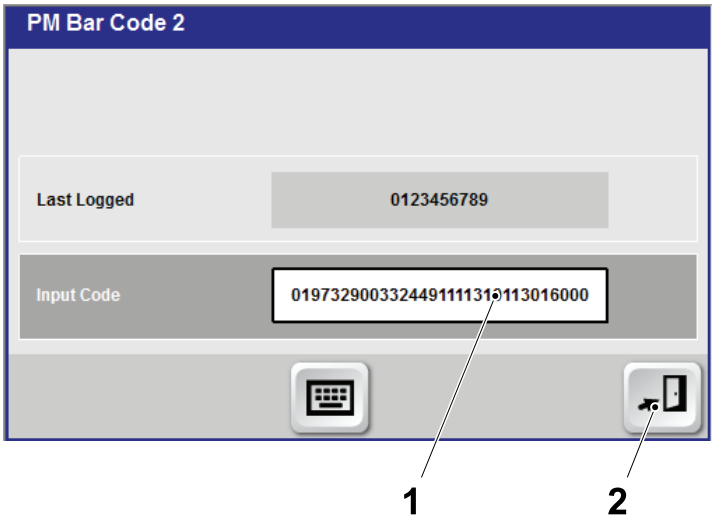

12

When the code is displayed in the field (1), touch the EXIT button (2).



CORRECT

WRONG

13

The green icon indicates that the entered codes are correct. The red icon indicates that the entered codes are wrong.

Note! In case of XH variant the red icon indicates that the packaging material is not eBeam compliant.

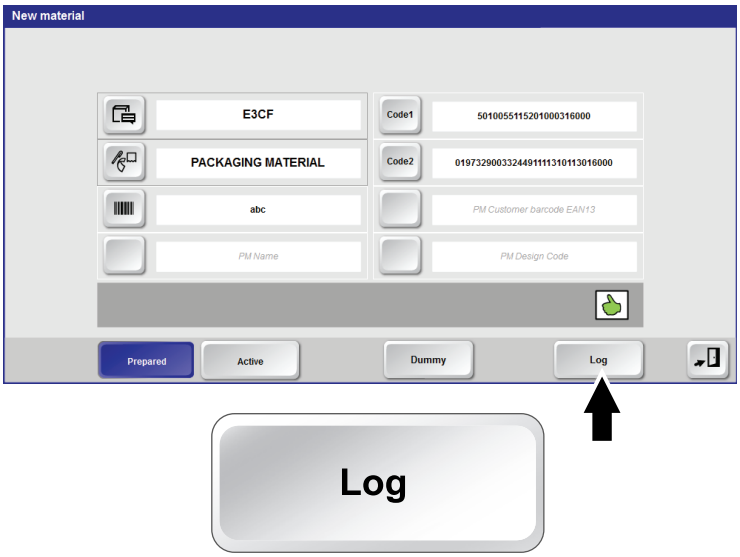

14

Touch the LOG button.

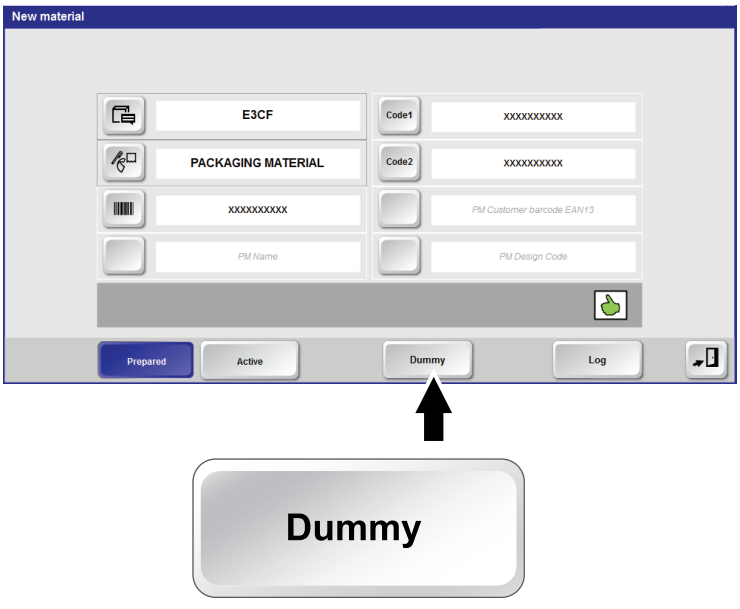

15

Logging Other Packaging Material

If the entered codes are not correct for eBeam compliance, a series of alarms is displayed.

If the entered codes are not correct, a series of alarms is displayed.

Proceed as follows:

- repeat the logging procedure from step 1.

or, if the result is still wrong

- touch the DUMMY button and log the displayed codes to continue with this type of packaging material

  Note! The packaging material logged will be not eBeam compliant.



16

Touch the EXIT button.

2.5 Manoeuvre

This section describes how to use the TPOP to make machine settings, view process parameters and run machine functions.



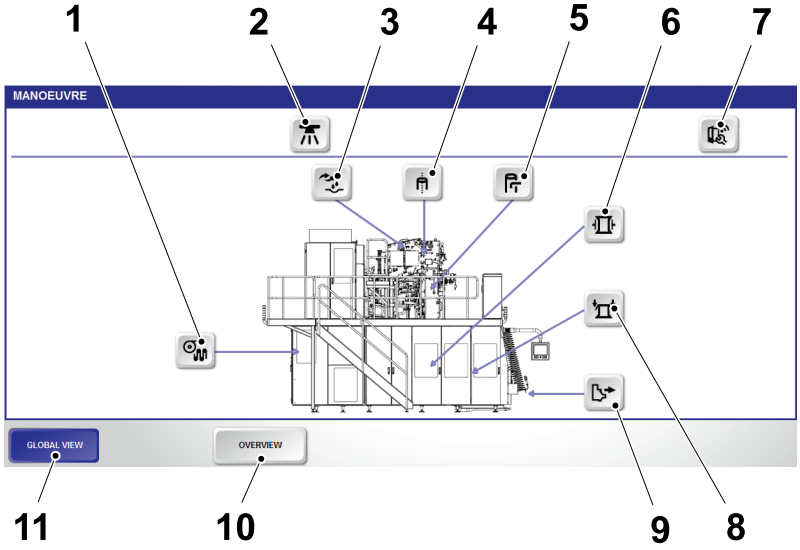

1 Infeed module
2 Cleaning
3 Sterilization
4 Tube forming
5 Filling module
6 Package forming unit
7 Safety and Service
8 Final Folder Unit
9 Downstream module
10 Overview
11 Global view

Modules

Touch the MANOEUVRE button to view the buttons corresponding to the various settings grouped by machine modules or function.

Touch one of the module buttons to open the associated dialogue window.

The OVERVIEW button (9) displays the setting overview pages.

The GLOBAL VIEW displays the main MANOEUVRE window with the machine modules.

2.5.1 Infeed Module Window



1

Touch the INFEED MODULE button.

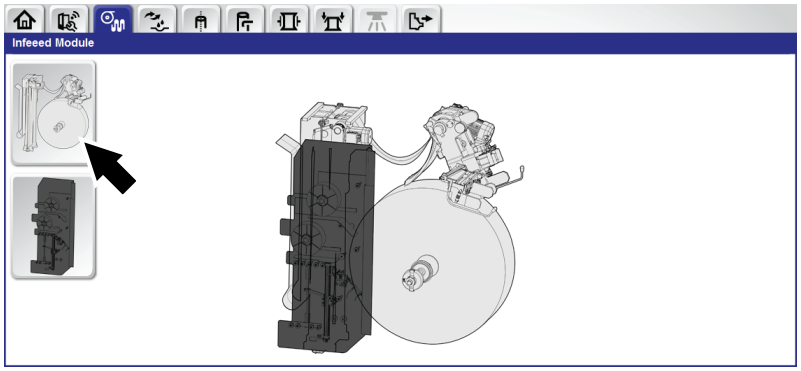

Automatic Splicing Unit

2

Select the ASU SUB MODULE to access settings and function for the ASU.

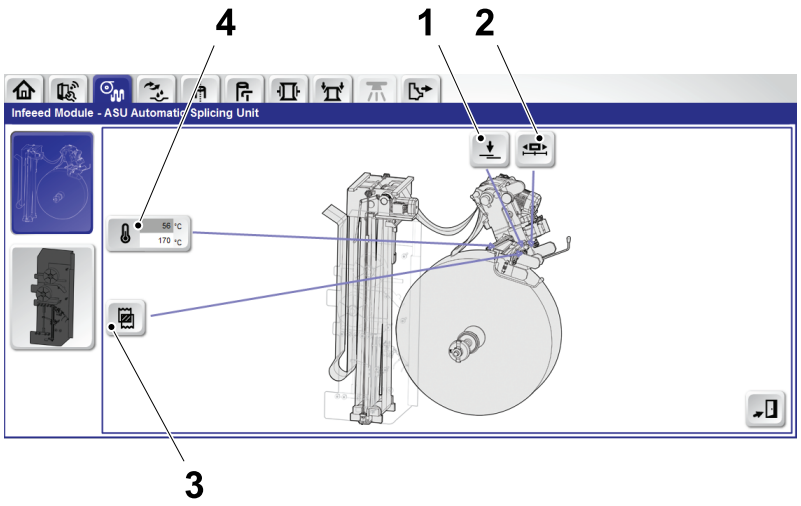

3

The ASU window is displayed.

All selectable icons are white. When an icon is selected the colour of the icon changes to blue.

In this window there are the following selectable icons:

- PREPARATION DEVICE (1)
- SPLICE HEAD (2)
- PAPER SPLICE (3)
- CONSTANT HEAT BAR TEMPERATURE (4)



Paper Splice

4

Touch the PAPER SPLICE button.



5

Touch the SPLICED PACKAGE REPEAT LENGTH OFFSET button.



6

Use the PLUS and MINUS buttons or the KEYBOARD button to set the value.

Touch the FACTORY button to reset the factory default value.

Touch the RECIPE DEFAULT button to reset the recipe default value.

Note! The repeat length can be corrected with this adjustment if the error is ±1.5 mm.

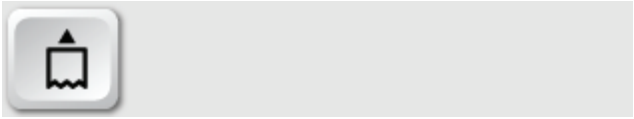

7

Note! Select the FORCE MANUAL SPLICE fucntion to perform a packaging material splice because of an alarm condition. This allows the possibility to perform a splice immediately and disregarding the packaging material position (out of design).

Touch the FORCE MANUAL SPLICE button.

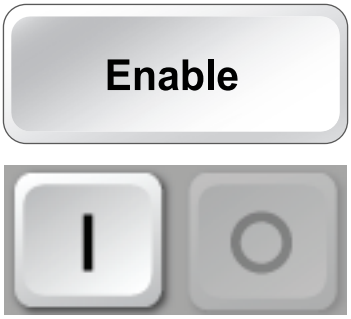

8

Touch the ENABLE button to enable the FORCE MANUAL SPLICE function.

Touch the ON button and perform the manual splice, see 6.2.2 Manual Web Splice.

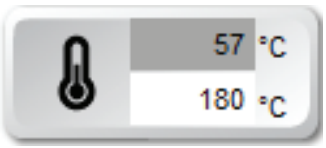

Constant Heat Bar Temperature

9

Touch the CONSTANT HEAT BAR TEMPERATURE button.

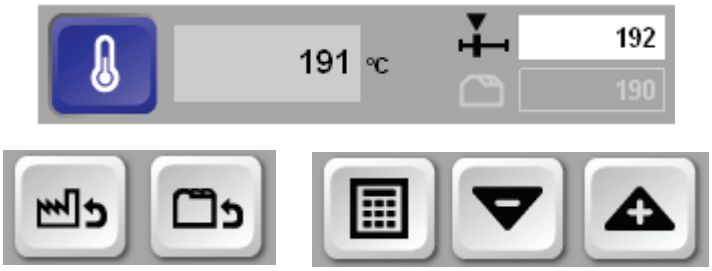

10

The CONSTANT HEAT BAR TEMPERATURE key pad is displayed.

Use the PLUS and MINUS buttons or the KEYBOARD button to set the value.

Touch the FACTORY button to reset the factory default value.

Touch the RECIPE DEFAULT button to reset the recipe default value.



Move Splice Head

11

Touch the SPLICE HEAD button.



12

In PREPARATION, touch the LEFT button or the RIGHT button to force the movement of the head.

Note! The current position of the splicing head is indicated by the green coloured button.

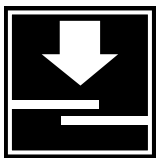

13

Press the MANUAL WEB SPLICE button to start the movement of the splicing head.



Preparation Device

14

Touch the PREPARATION DEVICE button.

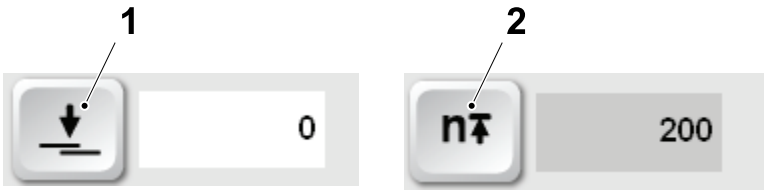

15

The dialogue window displays the following information:

- the NUMBER OF SPLICES COUNTER (1)
- the MAXIMUM NUMBER OF SPLICES BEFORE THE BLADE REPLACEMENT (2).

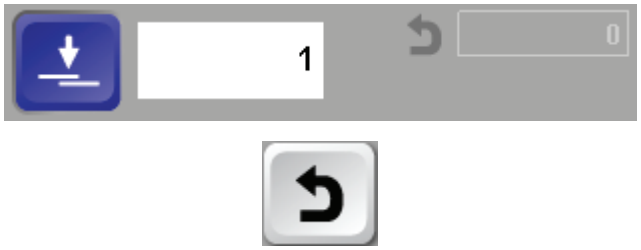

16

Touch the NUMBER OF SPLICE COUNTER button and the RESET button to reset the counter every time the preparation blades are replaced.

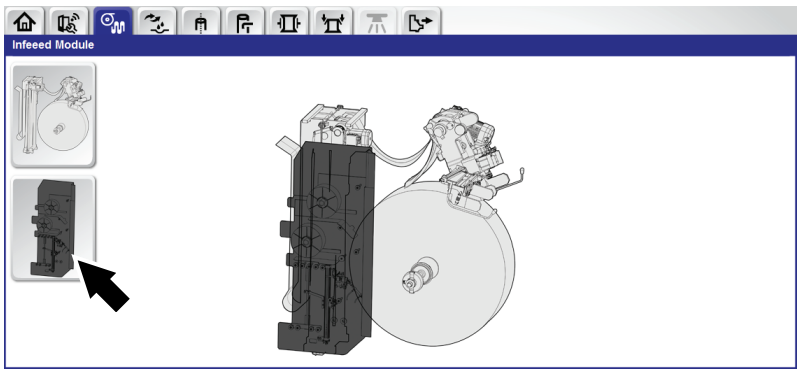

Automatic Strip Splicing Unit

1

Select the ASSU SUB MODULE to access settings and function for the ASSU.

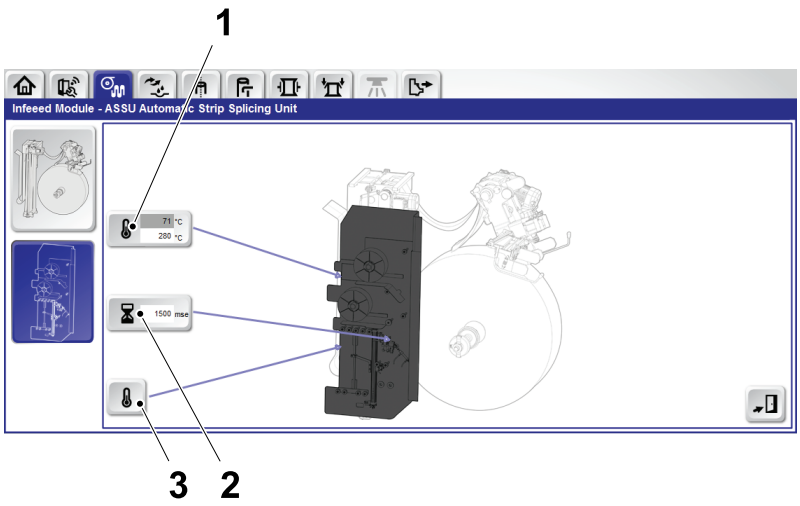

2

The ASSU window is displayed.

All selectable buttons are white. When a button is selected the colour of the button changes to blue.

In this window there are the following selectable buttons:

- HEATING TEMPERATURE SHORT STOP (1)
- STRIP SEALING TIME (2).
- HEATING TEMPERATURE STRIP APPLICATOR (3)



Heating Temperature SA

3

Touch the HEATING TEMPERATURE STRIP APPLICATOR button.

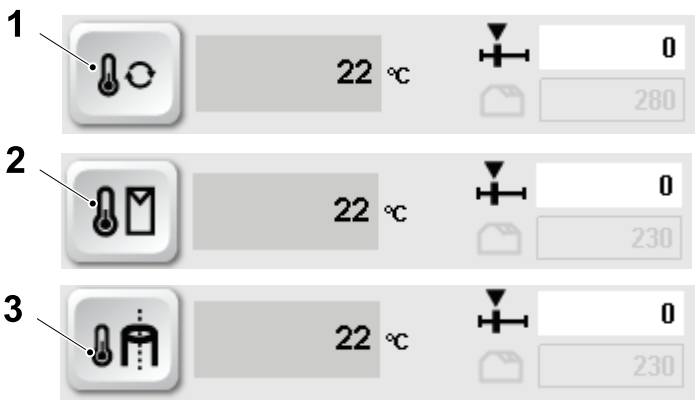

4

Three buttons are displayed on the temperature adjustment window.

Touch either:

- TEMPERATURE DURING SLOW INCHING (1)
- TEMPERATURE DURING PRODUCTION (2)
- TEMPERATURE DURING TUBE SEALING (3)



5

Use the PLUS and MINUS buttons or the KEYBOARD button to set the value.

Touch the FACTORY button to reset the factory default value.

Touch the RECIPE DEFAULT button to reset the recipe default value.



Strip Sealing Time

6

Touch the STRIP SEALING TIME button.

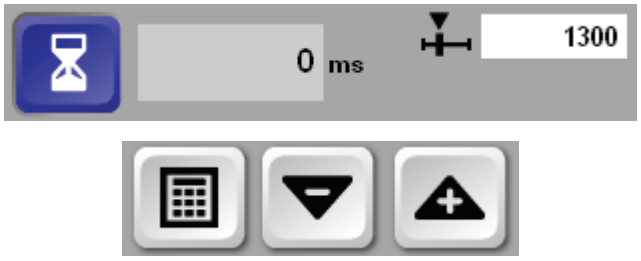

7

The STRIP SEALING TIME window is displayed.

Use the PLUS and MINUS buttons or the KEYBOARD button to set the value.

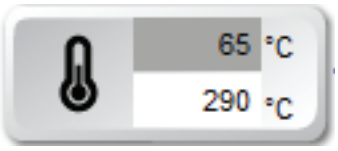

Heating Temperature Short Stop

8

Touch the STRIP SEALING TEMPERATURE SHORT STOP button.

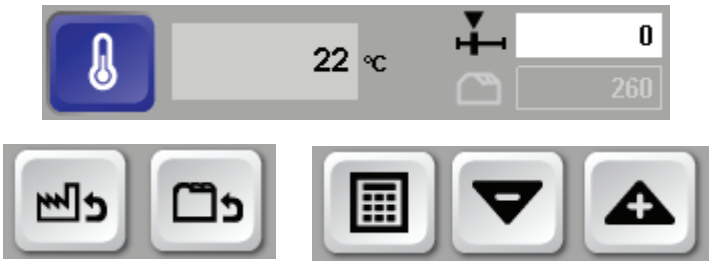

9

The STRIP SEALING TEMPERATURE SHORT STOP key pad is displayed.

Use the PLUS and MINUS buttons or the KEYBOARD button to set the value.

Touch the FACTORY button to reset the factory default value.

Touch the RECIPE DEFAULT button to reset the recipe default value.



10

Touch the EXIT button to return to the MANOEUVRE window.

2.5.2 Sterilization Window



1

Touch the STERILIZATION MODULE button.

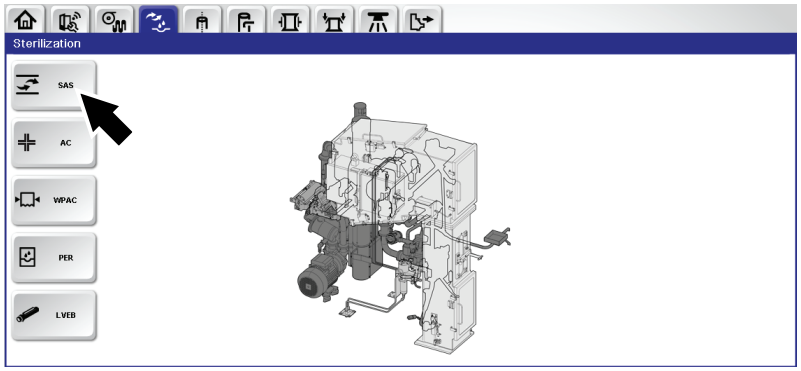

Sterile Air System

2

Touch the STERILE AIR SYSTEM SUB MODULE button.

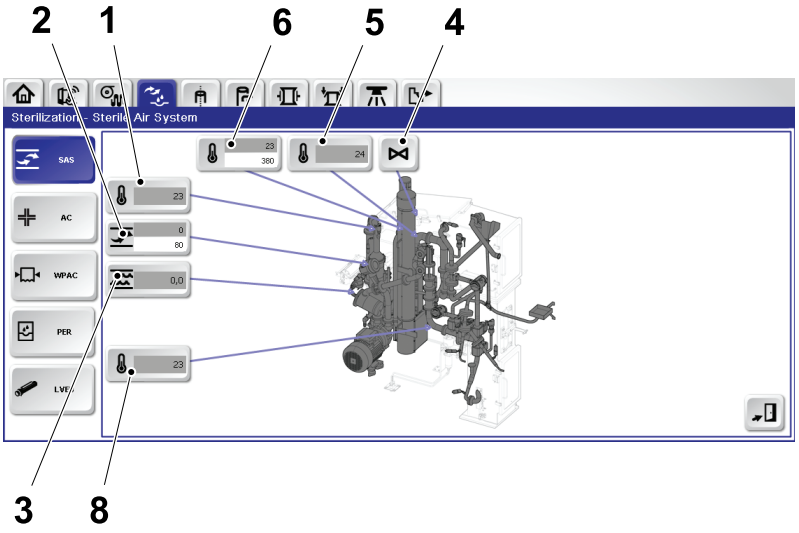

3

The STERILE AIR SYSTEM window is displayed.

All selectable buttons are white. When a button is selected the colour of the button changes to blue.

In this window there are the following selectable icons:

- SCRUBBER WATER TEMPERATURE (1)
- STERILE AIR FLOW (2)
- AIR COMPRESSOR SEALING WATER FLOW (3)
- HEAT EXCHANGER VALVE POSITION (4)
- HEAT STERILIZATION TEMPERATURE (5)
- AIR SUPERHEATER TEMPERATURE (6)
- AIR OUTLET TEMPERATURE (7)



4

Touch the HEAT EXCHANGE VALVE button

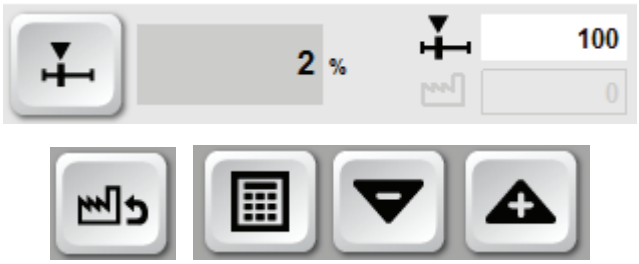

Touch the HEAT EXCHANGE VALVE SET POSITION button to set the opening of the heat exchanger valve.

Use the PLUS and MINUS buttons or the KEYBOARD button to set the value.

Touch the FACTORY button to reset the factory default value.

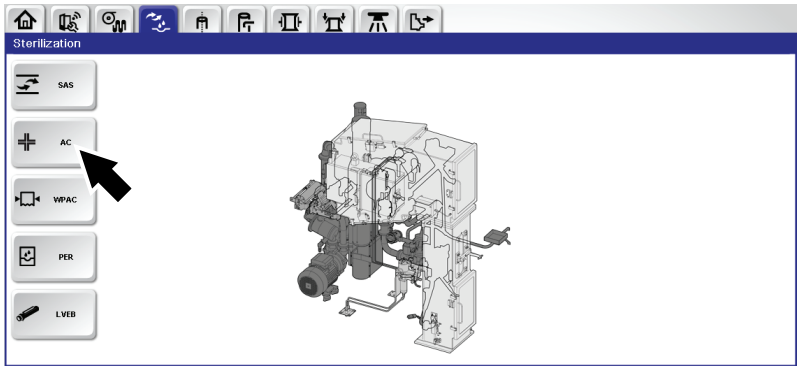

Aseptic Chamber

5

Touch the ASEPTIC CHAMBER SUB MODULE button.

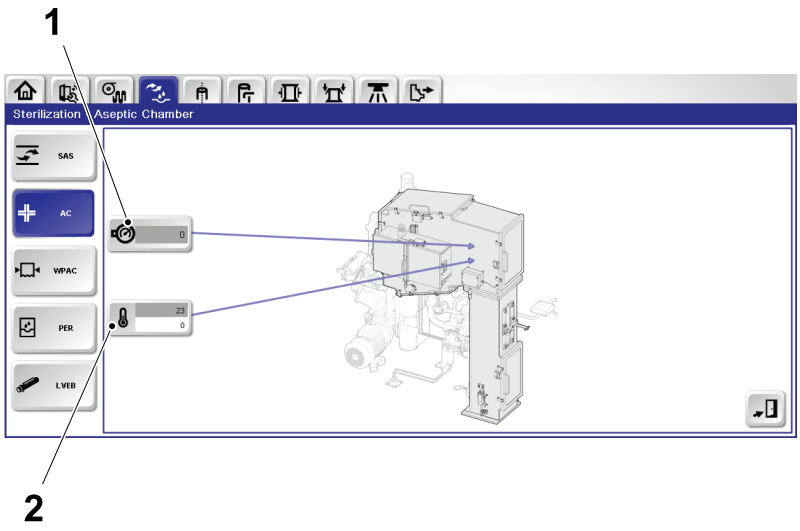

6

The ASEPTIC CHAMBER window is displayed.

All selectable buttons are white. When a button is selected the colour of the button changes to blue.

In this window there are the following selectable icons:

- ASEPTIC CHAMBER PRESSURE (1)
- ASEPTIC CHAMBER TEMPERATURE (2).

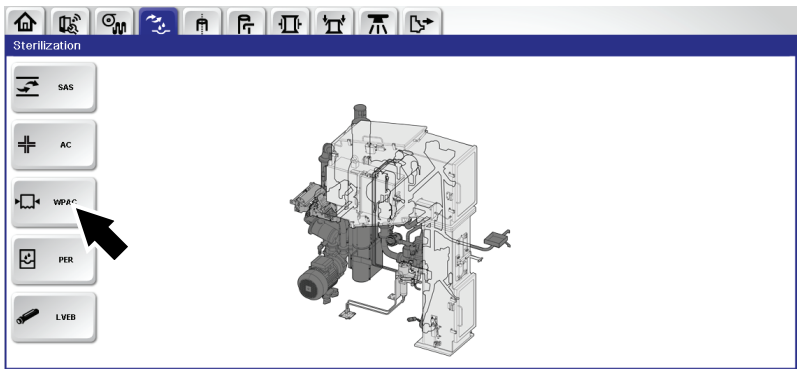

Web Position Active Control

7

Touch the WPAC SUB MODULE button.

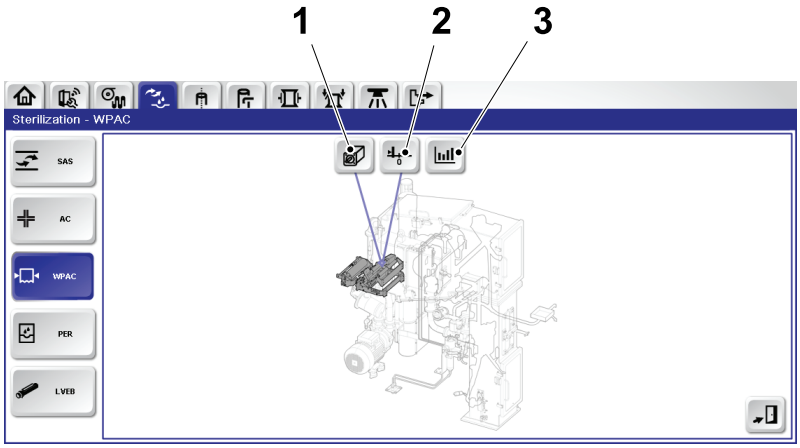

8

The WPAC window is displayed.

All selectable buttons are white. When a button is selected the colour of the button changes to blue.

In this window there are the following selectable buttons:

- WPAC MOTOR (1)
- WPAC SYSTEM REFERENCING (2)
- WPAC TREND (3).



9

Motor

Touch the WPAC MOTOR button.

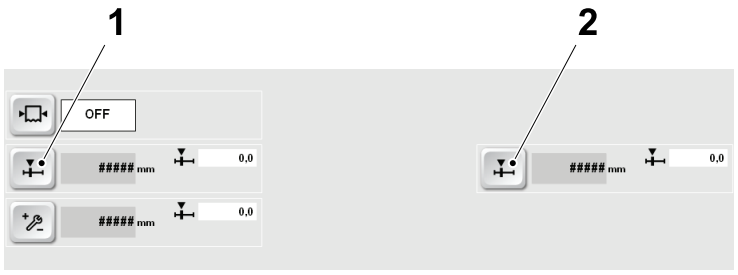

10

In the WPAC MOTOR window the following offset settings are displayed:

- the WPAC OFFSET DURING PRODUCTION button (1)
- the WPAC OFFSET DURING TIGHT TUBE button (2).



11

Use the PLUS and MINUS buttons or the KEYBOARD button to set the value.

Touch the FACTORY button to reset the factory default value.

Note! Positive offset adjustment values will result in a clockwise rotation of the packaging material tube. Negative offset adjustment values will result in a counter clockwise rotation of the packaging material tube.

Note! Offset adjustments are not incremental and always start from the zero position, for example making two separate adjustments of 1.00 mm will equal an offset of 1.00 mm.



12

Touch the WPAC MANUAL ACTIVATION button.

Touch the ON button to move the motor manual position.



13

Touch the WPAC MOTOR MANUAL POSITION SETTING to set the motor position.

Note! The MOTOR MANUAL POSITION function is only used if during the step TIGHT TUBE the alarm PHOTOCELL UNIT BARCODE NOT DETECTED appears and it is not possible to step up the filling machine to the next program step.



14

Use the PLUS and MINUS buttons or the KEYBOARD button to set the value.

Touch the FACTORY button to reset the factory default value.

Note! Positive offset adjustment values will result in a clockwise rotation of the packaging material tube. Negative offset adjustment values will result in a counter clockwise rotation of the packaging material tube.

Note! Offset adjustments are not incremental and always start from the zero position, for example making two separate adjustments of 1.00 mm will equal an offset of 1.00 mm.



15

System Referencing

Touch the WPAC system referencing button.

The EDGE SENSOR ACTUAL POSITION is displayed.

Note! The access to change the position of the edge sensor beam over the packaging material edge is restricted to allowed users.

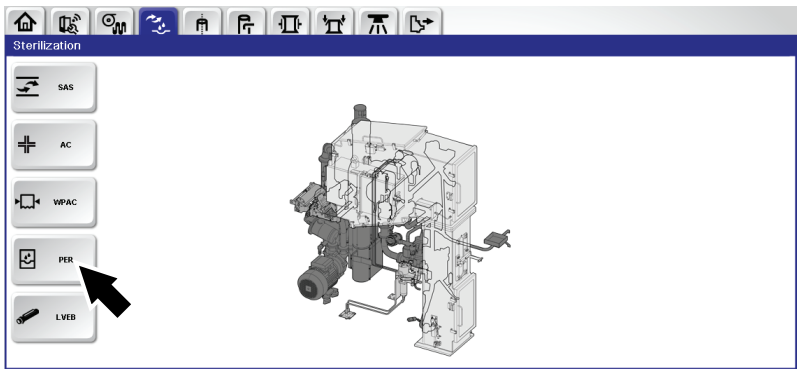

Peroxide

16

Touch the PEROXIDE SUB MODULE button.

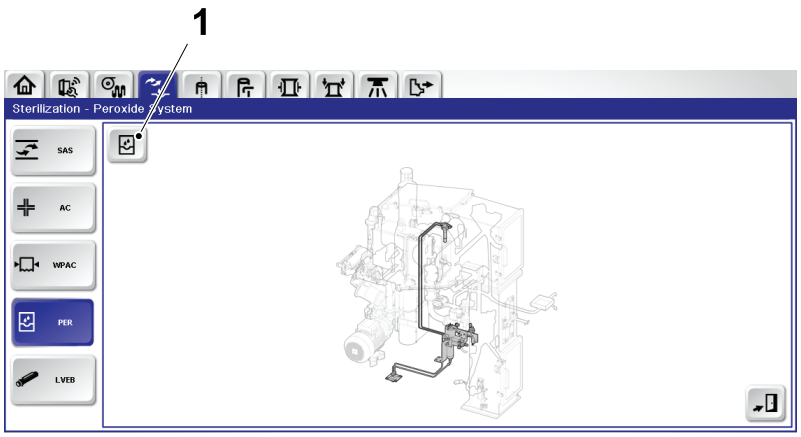

17

The PEROXIDE window is displayed.

All selectable buttons are white. When a button is selected the colour of the button changes to blue.

In this window there are the following selectable buttons:

- PEROXIDE CONCENTRATION AND TEMPERATURE (1).



18

Touch the PEROXIDE CONCENTRATION AND TEMPERATURE button.

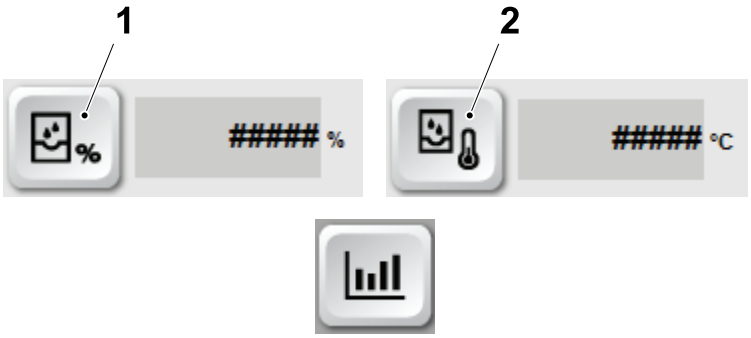

19

The dialogue window displays the following information:

- the value of the HYDROGEN PEROXIDE CONCENTRATION (1)
- the value of the HYDROGEN PEROXIDE TEMPERATURE (2).

The data is shown in real time only for the first 10 minutes when the filling machine is in step PREPARATION or from step HEAT STERILIZATION to step PRODUCTION.

Touch the TREND button to display the graph of the hydrogen peroxide concentration during the last eight hours of PRODUCTION.

Note! The graphs may show blocks of missing information due to the conditions mentioned above.

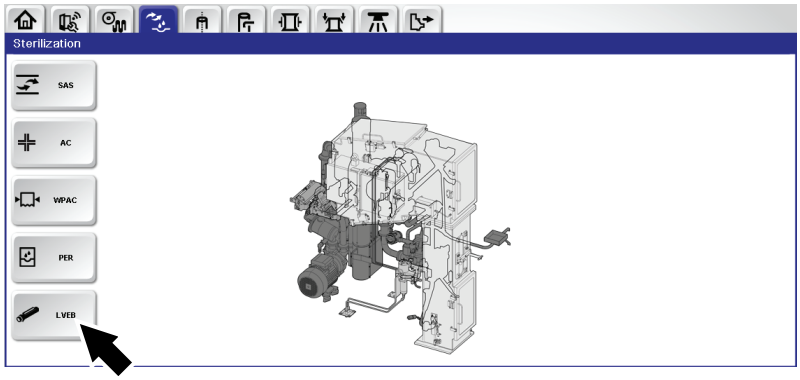

LVEB

20

Touch the LVEB MODULE button.

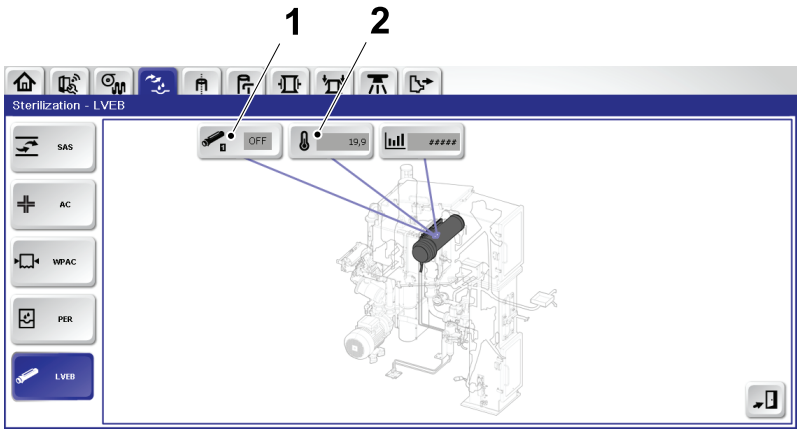

21

The LVEB window is displayed.

All selectable buttons are white. When a button is selected the colour of the button changes to blue.

Note! The access to the LVEB settings is restricted to allowed users.

In this window there are the following selectable icons:

- LVEB STATUS (1)
- LVEB OUTLET WATER TEMPERATURE (2)



22

Touch the EXIT button to return to the MANOEUVRE window.

2.5.3 Tube Forming Window



1

Touch the TUBE FORMING button.

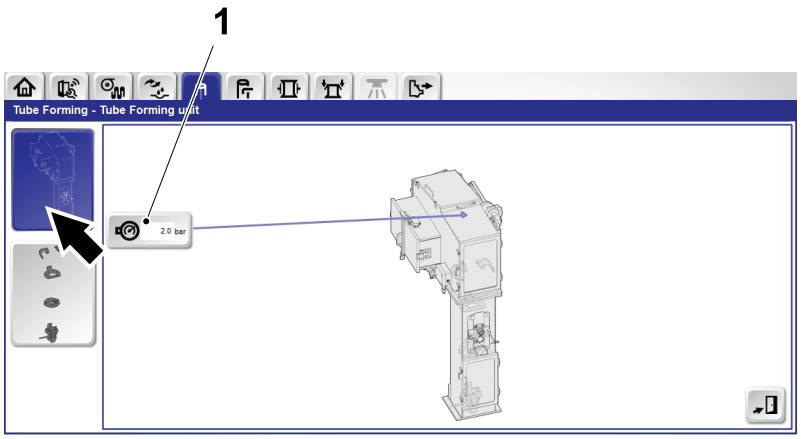

2

Touch the TUBE FORMING UNIT SUB MODULE button, see arrow.

All selectable buttons are white. When a button is selected the colour of the button changes to blue.

In this window there are the following selectable buttons:

- PENDULUM ROLLER PRESSURE (1)

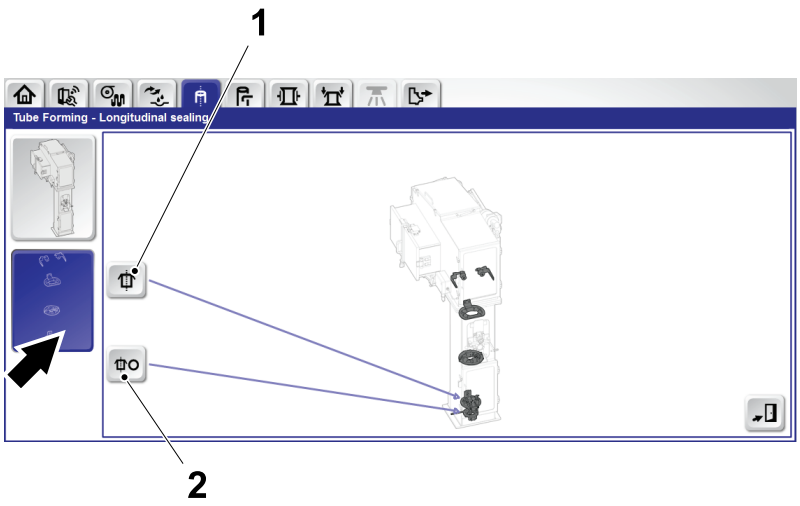

3

Touch the LONGITUDINAL SEALING SUB MODULE button, see arrows.

All selectable buttons are white. When a button is selected the colour of the button changes to blue.

In this window there are the following selectable buttons:

- LONGITUDINAL SEALING ELEMENT (1)
- SHORT STOP ELEMENT (2).



Pendulum Roller Pressure

4

Touch the PENDULUM ROLLER PRESSURE button.



5

Use the PLUS and MINUS buttons or the KEYBOARD button to set the value.

Touch the FACTORY button to reset the factory default value.

Touch the RECIPE DEFAULT button to reset the recipe default value.



Longitudinal Sealing Element 6

Touch the LONGITUDINAL SEALING ELEMENT button.

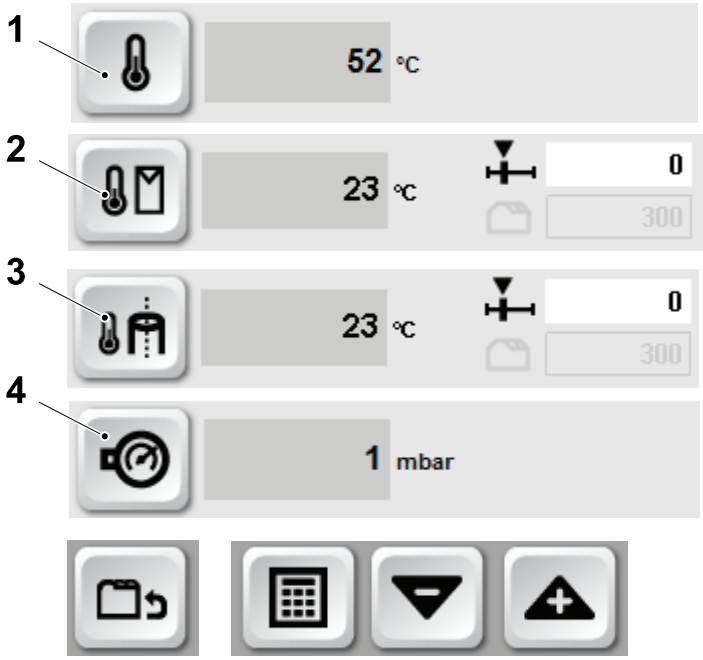

7

The following setting parameters are displayed:

- LS TEMPERATURE (1)
- LS TEMPERATURE IN PRODUCTION (2)
- LS TEMPERATURE IN TUBE SEALING (3)
- LS PRESSURE (4)

Use the PLUS and MINUS buttons or the KEYBOARD button to set the value.

Touch the RECIPE DEFAULT button to reset the recipe default value.



Short Stop Element 8

Touch the SHORT STOP ELEMENT button.

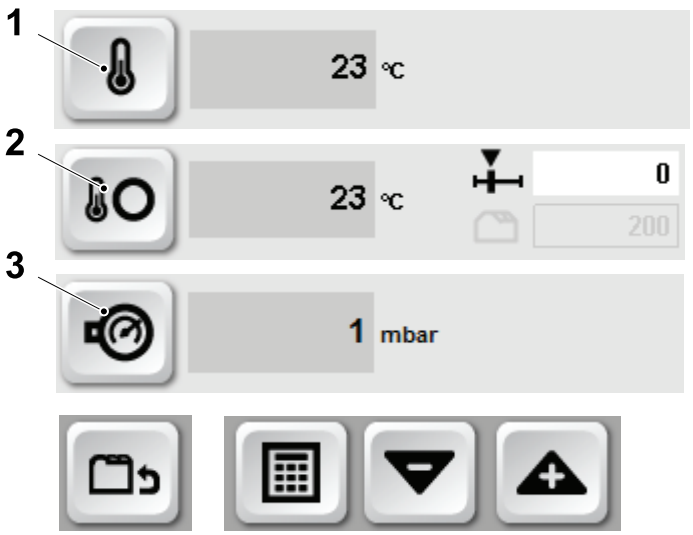

9

The following setting parameters are displayed:

- SHORT STOP TEMPERATURE (1)
- SHORT STOP TEMPERATURE (2)
- SHORT STOP PRESSURE (3)

Use the PLUS and MINUS buttons or the KEYBOARD button to set the value.

Touch the RECIPE DEFAULT button to reset the recipe default value.



10

Touch the EXIT button to return to the TUBE FORMING UNIT window.

2.5.4 Filling Module Window



1

Touch the FILLING MODULE button.

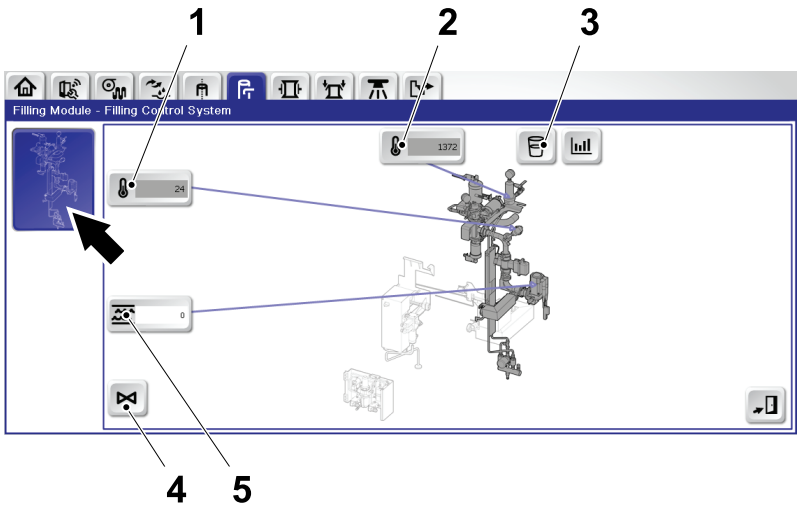

2

Touch the FILLING CONTROL SYSTEM SUB MODULE button, see arrow.

The FILLING CONTROL SYSTEM window is displayed.

All selectable buttons are white. When a button is selected the colour of the button changes to blue.

In this window there are the following selectable buttons:

- PRODUCT TEMPERATURE (1)
- STEAM BARRIER TEMPERATURE (2)
- PRODUCT LEVEL AND FLOW (3)
- BLEEDING (4).
- STARTING FLOW (5)

Note! STEAM BARRIER TEMPERATURE button is available if the option C VALVE has been enabled, see 2.7 System Setting.



Product Level and Flow

3

Touch the PRODUCT LEVEL AND FLOW button.

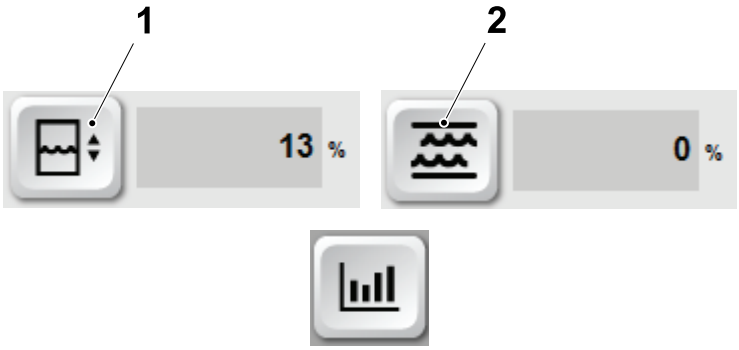

4

The following information are displayed:

- PRODUCT LEVEL (2), expressed as a percentage of floater maximum stroke
- PRODUCT FLOW (1), expressed as a percentage of machine nominal product flow

Touch the TREND button to display the graph showing the values in real time.



Starting Flow

5

Touch the STARTING FLOW icon to set the flow during the starting sequence.

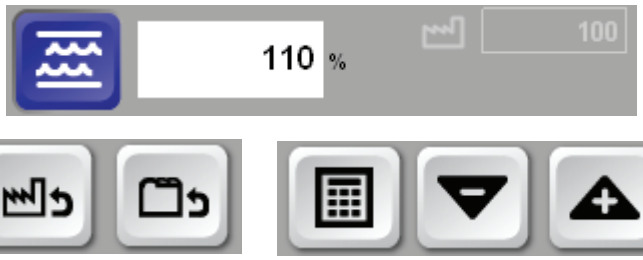

6

Use the PLUS and MINUS buttons or the KEYBOARD button to set the value.

Touch the FACTORY button to reset the factory default value.

Touch the RECIPE DEFAULT button to reset the recipe default value.

Increase the value in case too long time is needed to reach a stable product level; decrease the value in case of overfilling during production start.

Note! Make sure to insert these flow values for all the recipes and all the capacity (p/h) within the recipes.

Save the recipe with the new changes.



7

Bleeding

Touch the BLEEDING button to drain some product out of the filling machine product line.



8

Touch the ON button to start draining.



9

Touch the EXIT button to return to the FILLING MODULE window.

2.5.5 Package Forming Unit Window



1

Touch the PACKAGE FORMING UNIT button.

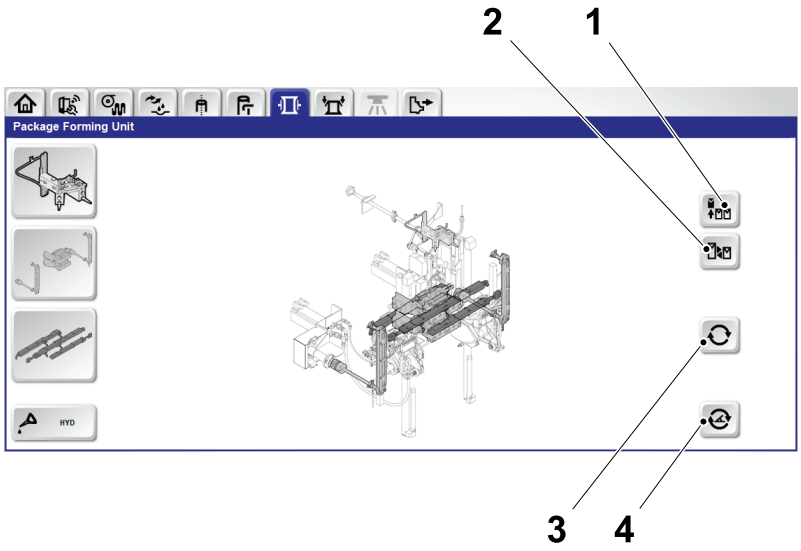

2

The PACKAGE FORMING UNIT window is displayed.

All selectable buttons are white. When a button is selected the colour of the button changes to blue.

Note! Other manoeuvre buttons are into the sub module windows.

In this window there are the following selectable buttons:

- SAMPLE PACKAGES (1)
- VOLUME QUICK CHANGE (2)
- JAW INCHING SELECTOR (3)
- MOVE JAW SYSTEM TO POSITION (4).

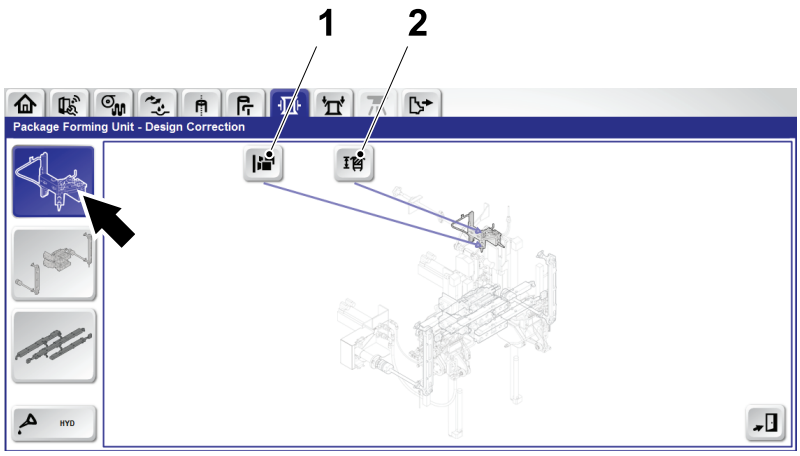

3

Touch the DESIGN CORRECTION SUB MODULE button, see arrow.

The DESIGN CORRECTION window is displayed.

All selectable buttons are white. When a button is selected the colour of the button changes to blue.

In this window there are the following selectable buttons:

- DESIGN CORRECTION PHOTOCELL (1)
- DESIGN CORRECTION OFFSET (2).

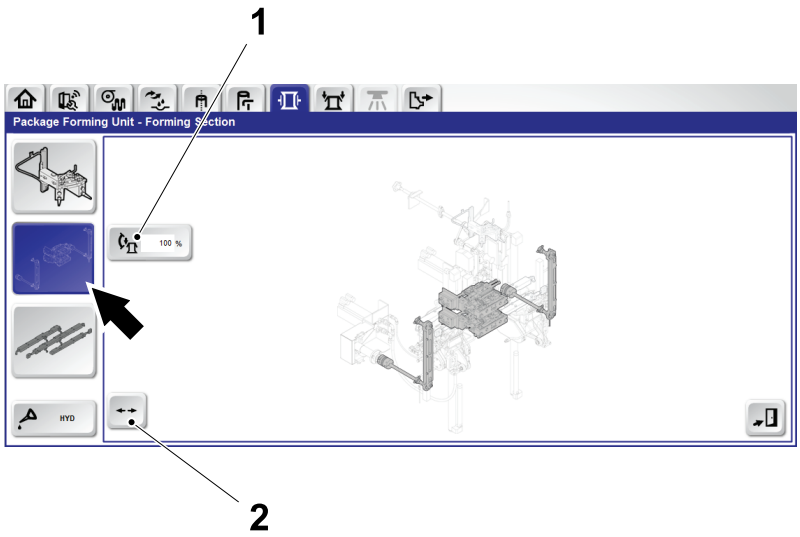

4

Touch the FORMING SECTION SUB MODULE button, see arrow.

The FORMING SECTION window is displayed.

All selectable buttons are white. When a button is selected the colour of the button changes to blue.

In this window there are the following selectable buttons:

- FOLDING FLAPS PRODUCTION POSITION (1)
- STOP SIDE SELECTION (2).

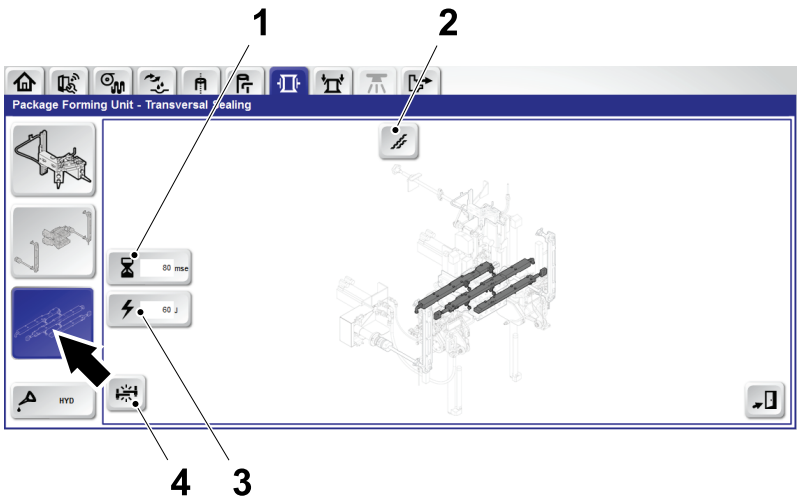

5

Touch the TRANSVERSAL SEALING SUB MODULE button, see arrow.

The TRANSVERSAL SEALING window is displayed.

All selectable buttons are white. When a button is selected the colour of the button changes to blue.

Note! The access to the settings is restricted to allowed users.

In this window there are the following selectable buttons:

- SEAL TIME DURING EMPTY TUBE (1)
- TS DIAGNOSTIC (2)
- TS ULTRASONIC ENERGY (3).
- TS CONSECUTIVE LINK FAULT (4)

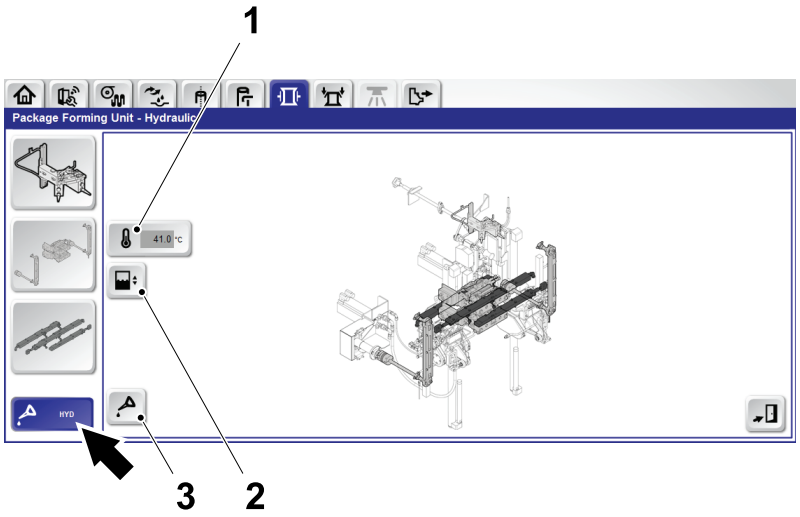

6

Touch the HYDRAULIC SUB MODULE button, see arrow.

The HYDRAULIC window is displayed.

All selectable buttons are white. When a button is selected the colour of the button changes to blue.

In this window there are the following selectable buttons:

- OIL TEMPERATURE (1)
- OIL LEVEL INDICATOR (2)
- LUBRICATE JAW SYSTEM (3).



Sample Package

7

Touch the SAMPLE PACKAGE button.



8

Note! Setting available only for the sampling of one single package.

Touch the PACKAGE SAMPLE NUMBER button to select from which pair of the jaw links has to exit the single package to sample

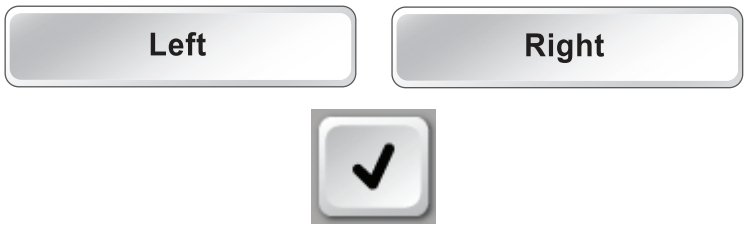

9

Touch the LEFT button or the RIGHT button and confirm with the OK button.



10

Touch the SAMPLE PACKAGE button.

Touch the PLAY button to start the sampling.



Volume Quick Change

11

Touch the VOLUME QUICK CHANGE button to perform the volume quick change.

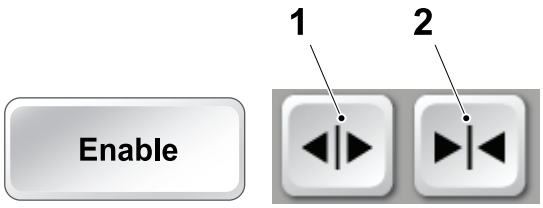

12

Touch the ENABLE button.

Touch the OPEN button (1) to start and wait for completion. Change all mechanical parts. Touch the CLOSE button (2) to end and wait for completion.



Jaw Inching

13

Touch the JAW INCHING button.

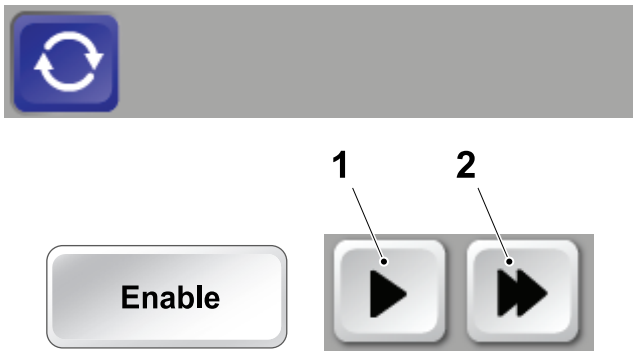

14

Touch the JAW INCHING SELECTION button.

Touch the ENABLE button.

Touch either:

- the SLOW INCHING button (1) to slow inch the jaw system to check the machine movement or to reach an approximate position
- the FAST INCHING button (2) to fast inch the jaw system to check the machine movement.

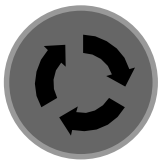

15

Press and hold the JAW SYSTEM INCHING button to start the machine movement.



Move Jaw System To Position 16

Touch the MOVE JAW SYSTEM TO POSITION button.

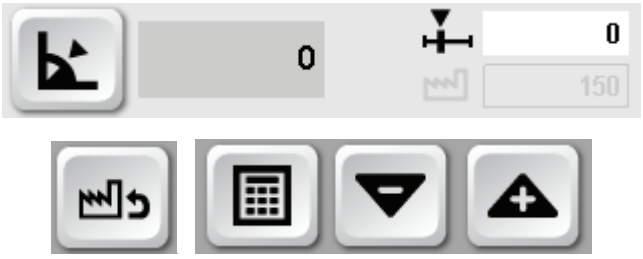

17

Touch the JAW LINK TARGET POSITION button to select the opening angle required by the PLUS and MINUS buttons or by the KEYBOARD button.

Touch the FACTORY button to reset the factory default value.

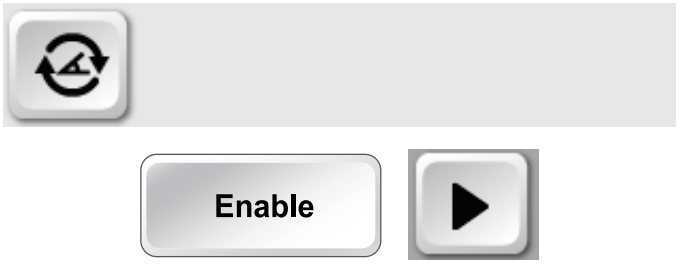

18

Touch the MOVE JAW SYSTEM TO POSITION button.

Touch the ENABLE button to enable the function and the PLAY button to start the machine movement.



Photocell Setting

19

Touch the PHOTOCELL SETTING button.



20

Three buttons are displayed in the window:

Touch the PHOTOCELL SPOT ON button and the ON button to light the spot on the photocells even if the machine is stopped, if needed.

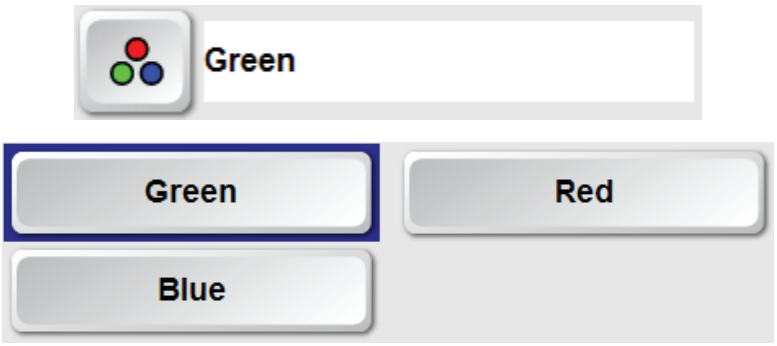

21

Touch the PHOTOCELL SPOT COLOUR button and the desired colour button to change the spot colour.

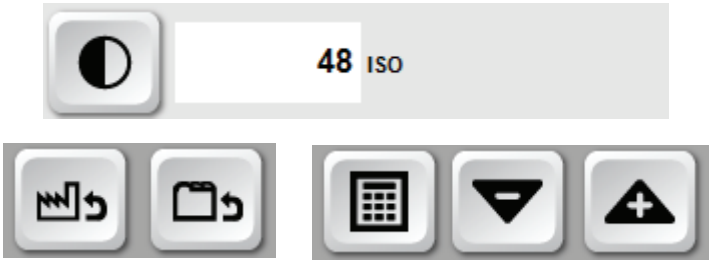

22

Touch the PHOTOCELL SENSITIVITY button to change the sensitivity threshold by the PLUS and MINUS buttons or by the KEYBOARD button.

Touch the FACTORY button to reset the factory default value.

Touch the RECIPE DEFAULT button to reset the recipe default value.



Design Offset Setting

23

Touch the DESIGN OFFSET SETTING button.



24

Two buttons are displayed in the dialogue window:

Touch the DESIGN CORRECTION OFFSET button to align the package design by changing the offset value. Use the PLUS and MINUS buttons or the KEYBOARD button.

Touch the FACTORY button to reset the factory default value.

Touch the RECIPE DEFAULT button to reset the recipe default value.

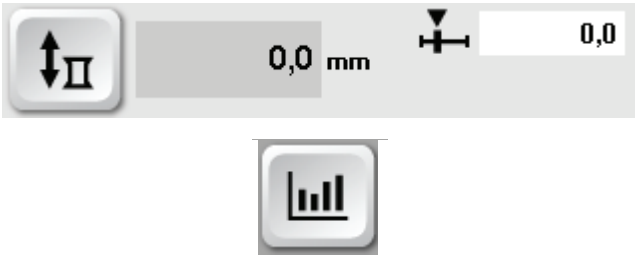

25

Touch the DESIGN ERROR button to display the current design error value and the percentage of the current stroke (from -100% to +100%).

Touch the trend button to display the value on the graphic in real time.



Folding Flaps Production Position

26

Touch the FOLDING FLAPS PRODUCTION POSITION button.



27

Use the PLUS and MINUS buttons or the KEYBOARD button to set the value from precorrection (0%) to fully closed (100%).



Stop Side Selection

28

Touch the STOP SIDE SELECTION button.



29

Touch the ENABLE button to enable the function.

Touch the LEFT SIDE button or the RIGHT SIDE button to select the side stop.



TS Seal Time during Empty Tube

30

Touch the TS SEAL TIME DURING EMPTY TUBE button.

Note! The sealing of the empty tube is not made through an applied energy but it is based on a period time (msec).



31

Use the PLUS and MINUS buttons or the KEYBOARD button to change the time value

Touch the FACTORY button to reset the factory default value.



TS Ultrasonic Energy

32

Touch the TS ULTRASONIC ENERGY button.



33

Use the PLUS and MINUS buttons or the KEYBOARD button to change the energy value

Touch the FACTORY button to reset the factory default value.



Diagnostic

34

Touch the DIAGNOSTIC button.

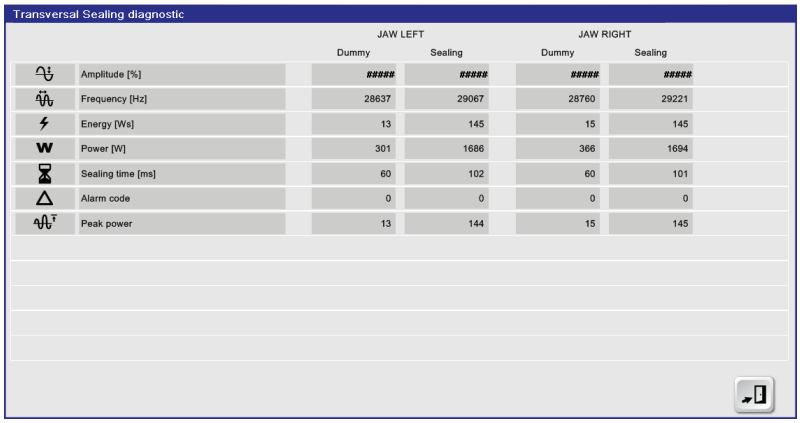

35

The diagnostic window is displayed. Check that the values are within the correct range.



TS Consecutive Links Faults

36

Touch the TS CONSECUTIVE LINKS FAULTS button.

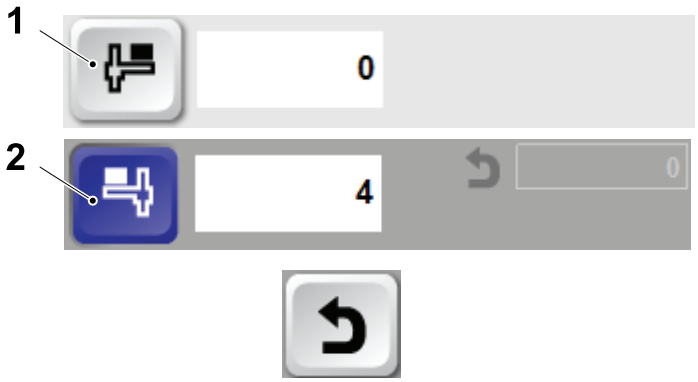

37

The consecutive link faults are displayed for the left jaw (1) and the right jaw (2).

Touch the RESET button to reset the counter.



Jaw Lubrication

38

Touch the LUBRICATE JAW SYSTEM button.



39

CAUTION
Hygiene.
Do not repeatedly cycle the lubrication system to avoid leakage of excess lubrication oil.

Touch the ENABLE button to enable the function.

Touch the ON button to start the lubrication cycle.



Oil Level Indicator

40

Touch the OIL LEVEL INDICATOR button.



41

Check the level of the oil: the highlighted button shows the actual oil level..



42

Touch the EXIT button to return to the PACKAGE FORMING UNIT window.

2.5.6 Final Folder Unit Window



1

Touch the FINAL FOLDER button.

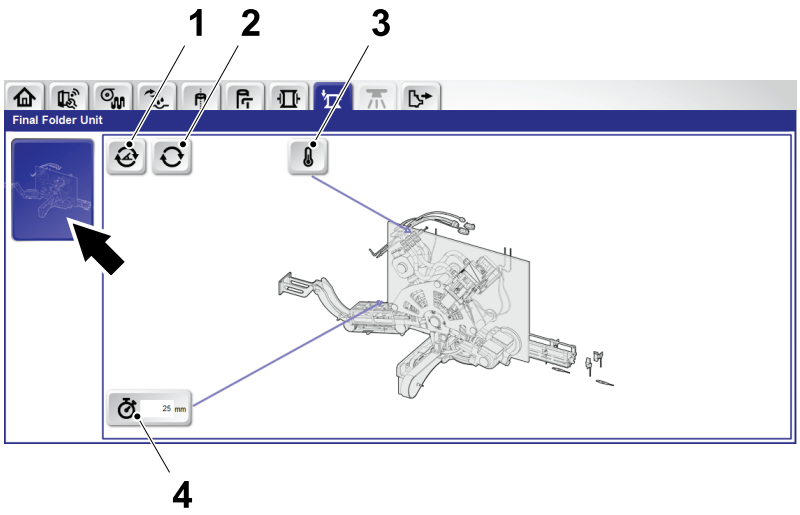

2

Touch the FINAL FOLDER UNIT SUB MODULE button.

The FINAL FOLDER UNIT window is displayed.

All selectable buttons are white. When a button is selected the colour of the button changes to blue.

In this window there are the following selectable icons:

- MOVE FINAL FOLDER TO POSITION (1)
- JOG FINAL FOLDER (2)
- FLAP HEATER TEMPERATURE (3)
- INFEED SYNCHRONIZATION (4)



Jog Final Folder

3

Touch the JOG FINAL FOLDER button.

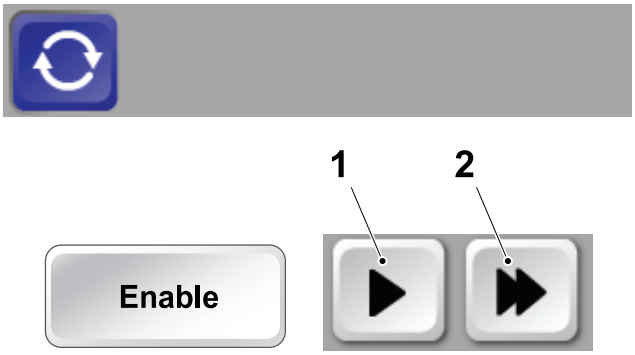

4

Touch the JOG FINAL FOLDER button.

Touch the ENABLE button.

Touch either:

- the SLOW INCHING button (1) to slow inch the final folder to check the machine movement or to reach an approximate position
- the FAST INCHING button (2) to fast inch the final folder to check the machine movement.



5

Press and hold the FINAL FOLDER INCHING button to run the final folder module independently from the machine status.



Move Final Folder to Position 6

Touch the MOVE FINAL FOLDER TO POSITION button.

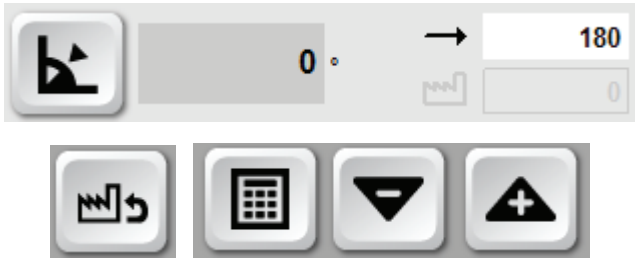

7

Touch the FINAL FOLDER TARGET POSITION button to select the angle position by the PLUS and MINUS buttons or by the KEYBOARD button.

Touch the FACTORY button to reset the factory default value.



8

Touch the MOVE FINAL FOLDER TO POSITION button.

Touch the ENABLE button to enable the function and the BACKWARDS or FORWARDS buttons to start the machine movement in the desired direction.



Flap Heater Temperature 9

Touch the FLAP HEATER TEMPERATURE button.

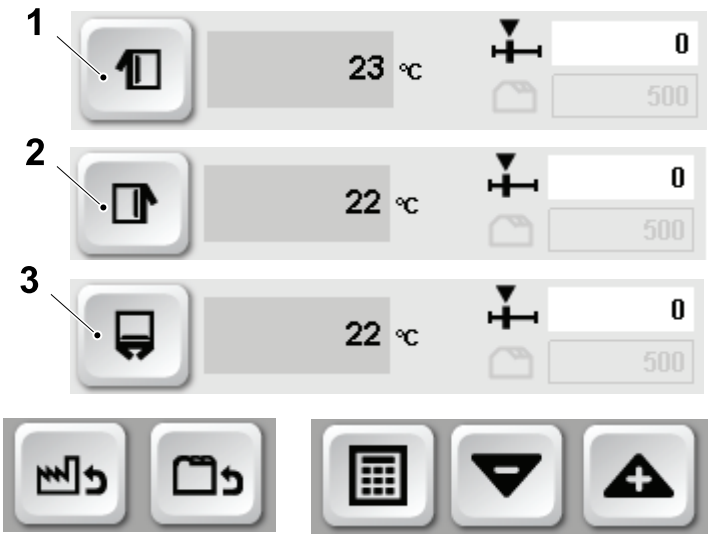

10

Note! Some temperatures can be changed, others are only monitors and cannot be changed.

The temperature of each single flap heater is displayed.

Touch one of the FLAP HEATER icons.

- the TOP LEFT HEATER TEMPERATURE button (1)
- the TOP RIGHT HEATER TEMPERATURE button (2)
- the BOTTOM HEATER TEMPERATURE button (3)

to set the temperature of the selected flap heater.

Use the PLUS and MINUS buttons or the KEYBOARD button to set the offset value.

Touch the FACTORY button to reset the factory default value.

Touch the RECIPE DEFAULT button to reset the recipe default value.



Infeed Synchronization

11

Touch the INFEED SYNCHRONIZATION button to set the offset between the package and the infeed station.

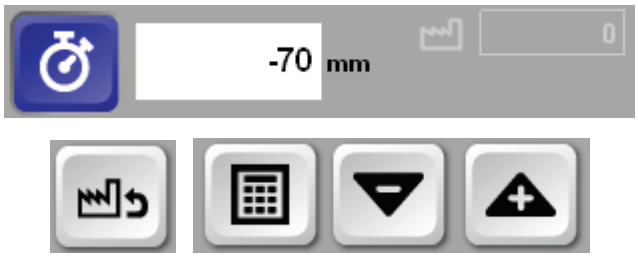

12

Use the PLUS and MINUS buttons or the KEYBOARD button to set the offset value.

Touch the FACTORY button to reset the factory default value.



13

Touch the EXIT button to return to the FINAL FOLDER window.

2.5.7 Down Stream



1

Touch the DOWN STREAM MODULE button.

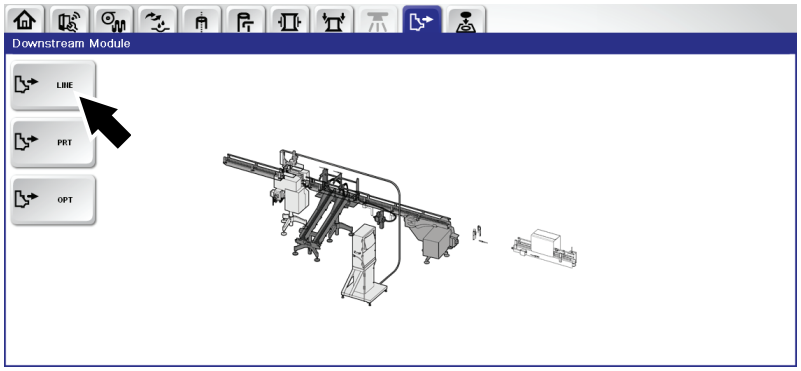

Conveyor and Line

2

Touch the CONVEYOR AND LINE SUB MODULE button, see arrow.

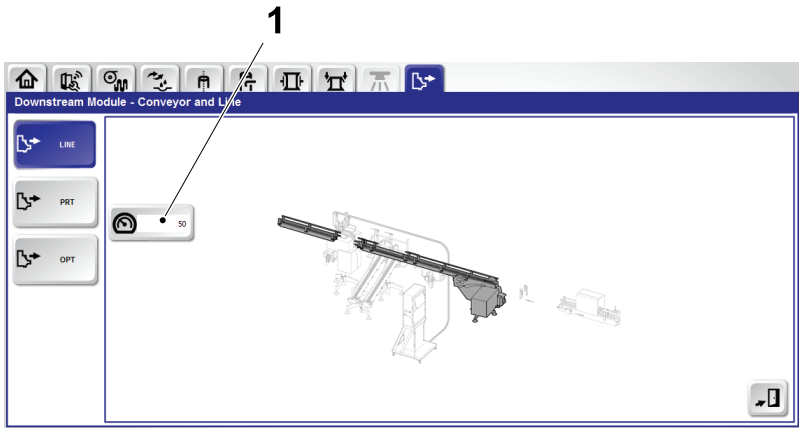

3

All selectable buttons are white. When a button is selected the colour of the button changes to blue.

In this window there is the following selectable buttons:

- CONVEYOR SPEED (1)



4

Conveyor Speed

Touch the CONVEYOR SPEED button.





5

Use the PLUS and MINUS buttons or the KEYBOARD button to set the value.

Touch the FACTORY button to reset the factory default value.

Touch the RECIPE DEFAULT button to reset the recipe default value.

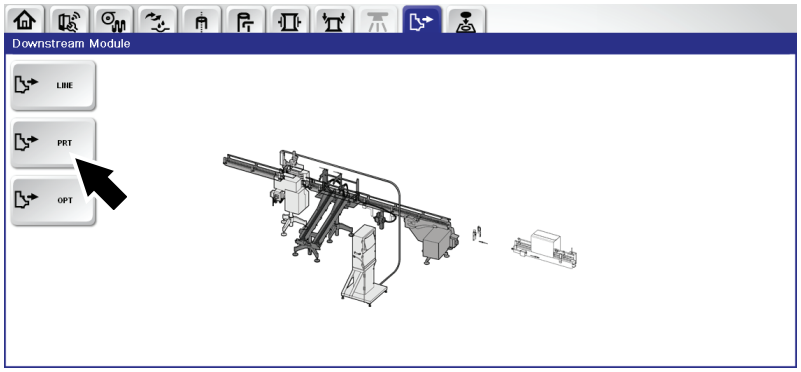

Printers

6

Touch the PRINTER SUB MODULE button, see arrow.

Note! The PRINTER SUB MODULE button is displayed only if the PRINTER OPTION has been enabled, see Configurations and Options in 2.7 System Setting.

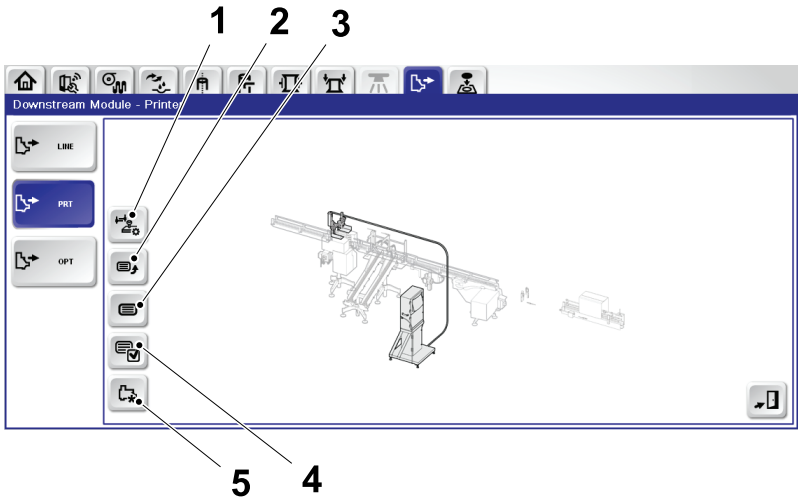

7

All selectable buttons are white. When a button is selected the colour of the button changes to blue.

In this window there is the following selectable buttons:

- JAW EVENT AND LOT ENABLE (1)
- TEMPLATE UPLOAD (2)
- DEFAULT PRINTER LAYOUT (3)
- ACTIVE PRINTER LAYOUT (4)
- EVENT ID CONFIGURATION (5)



8

Jaw Event and Lot Enable

Note! The access to this function is restricted to the allowed users.

Touch the JAW EVENT AND LOT ENABLE button.

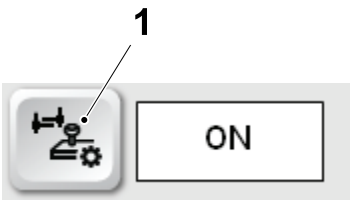

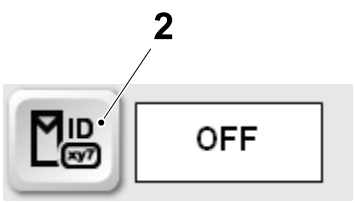

9

Touch:

- the JAW ID AND EVENT ID ENABLE button (1) to enable printing the jaw ID and the event ID.
- the LOT ENABLE button (2) to enable printing the lot ID.

  Note! The LOT ENABLE button (2) may be enabled only if the JAW ID AND EVENT ID has been enabled.



10

Template Upload

Touch the TEMPLATE UPLOAD button.





11

Touch the DRIVE SELECTION button to select the drive where templates to upload are located.

Select the correspondent DRIVE button.

Note! The template file must be named primary.plfxml and it must be located in a folder named PUC_Templates.

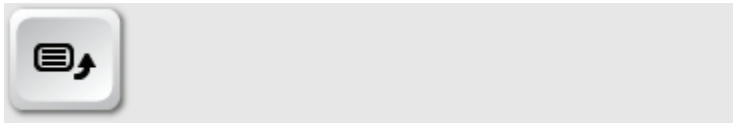

12

Touch the UPLOAD button to upload the template.



13

Printer Layouts

Touch the DEFAULT PRINTER LAYOUT button to enter the data in the default print layout.

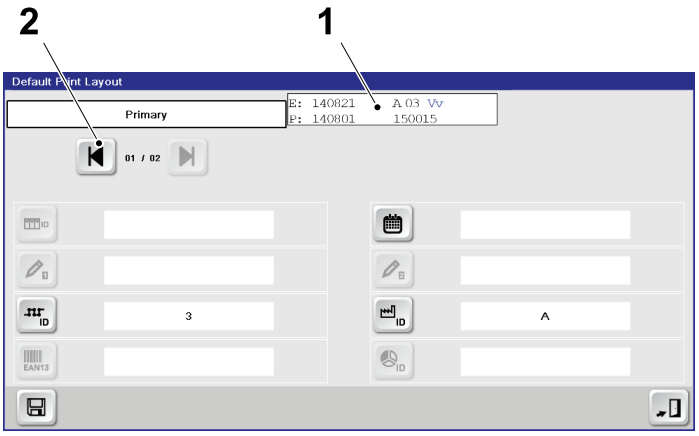

14

Select the print layout (1) using the ARROW buttons (2).

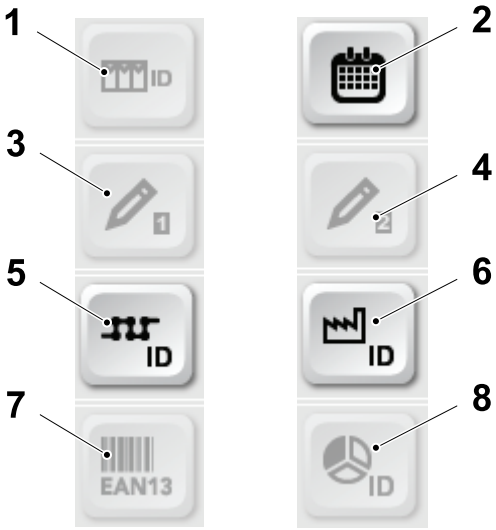

15

A set of informations may be entered in the layout by touching the following buttons:

- batch (1)
- best before date (2)
- generic field 1 (3)
- generic field 2 (4)
- line ID (5)
- factory ID (6)
- product (7)
- production shift (8).



16

Touch the SAVE button to load the configuration.



17

Touch the ACTIVE PRINTER LAYOUT button to enter the data in the layout active in the recipe. Proceed as for the DEFAULT PRINTER LAYOUT, see step 15.



18

Event ID Configuration

Touch the EVENT ID CONFIGURATION button.

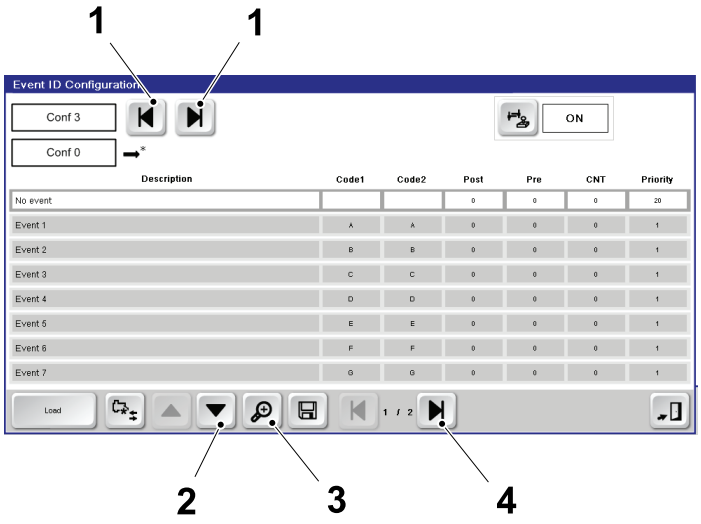

19

The EVENT ID CONFIGURATION window is displayed. Touch the ARROW buttons (1) to select the event ID configuration to be loaded.

Note! The number corresponds to a defined configuration; maximum 8 configurations are available to be selected.

Touch the UP and DOWN buttons (2) to select an event.

Touch the ZOOM button (3) to open the event and edit the codes for an event.

Touch the ARROW buttons (4) to move to the next event page.

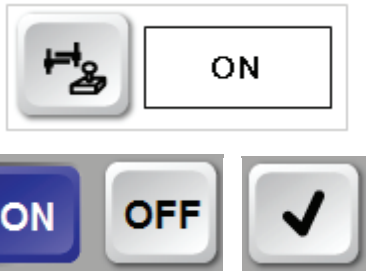

20

Touch the EVENT MODE TYPE button to select between:

- SINGLE EVENT MODE: prints two letters on the package to represent an event (touch the ON button)
- DOUBLE EVENT MODE: prints one letter on the package to represent an event (touch the OFF button)

Touch the OK button to confirm the option selected.



21

Touch the UP or DOWN buttons to select an event.

The list of event that may be printed on the package is:

- No event
- Event 1: first start
- Event 2: restart after stop
- Event 3: paper splice
- Event 4: factory splice
- Event 5: strip splice
- Event 6: machine stop
- Event 7: end of production stop
- Event 8: restart after an elapsed short stop
- Event 9: tab splice
- Event 10: patch splice
- Event 11: opening device stop.

Touch the ZOOM button.

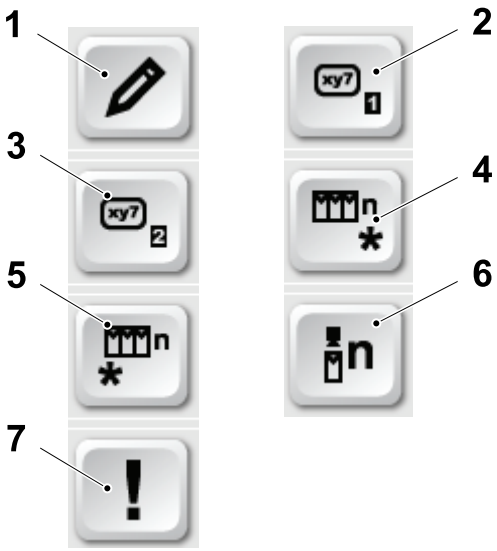

22

Configure the event as follows.

- EVENT DESCRIPTION (1): the appropriate description of the event
- EVENT CODE 1 (2): the identification code of the event
- EVENT CODE 2 (3): the second identification code of the event

  Note! It is used only if SINGLE EVENT have been set as event mode type.
- PACKAGES PRE-EVENT (4): the number of the packages on which will be printed the code before the event
- PACKAGES POST EVENT (5): the number of the packages on which will be printed the code after the event
- PACKAGES COUNTER (6): the number of the packages on which will be printed the count up after the event
- EVENT PRIORITY (7): the priority of the event, the number one being the highest priority.



23

Touch the OK button once entered the values.



24

Touch the SAVE button.

Note! If the entered values are not saved before selecting another event, the default values are restored.

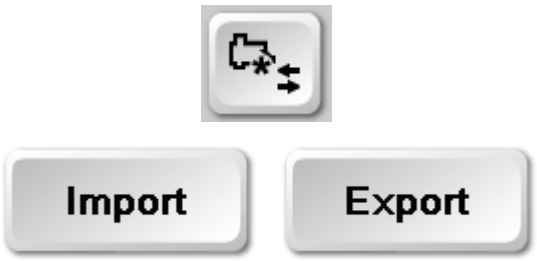

25

Touch the IMPORT/EXPORT button and then the IMPORT button to import the configuration in the IPC.

Note! Touch the EXPORT button when exporting a configuration from the IPC to a USB key.



26

Touch the LOAD button to load the configuration the PLC program.

2.5.8 Safety and Service Window



1

Touch the SAFETY AND SERVICE MODULE button.

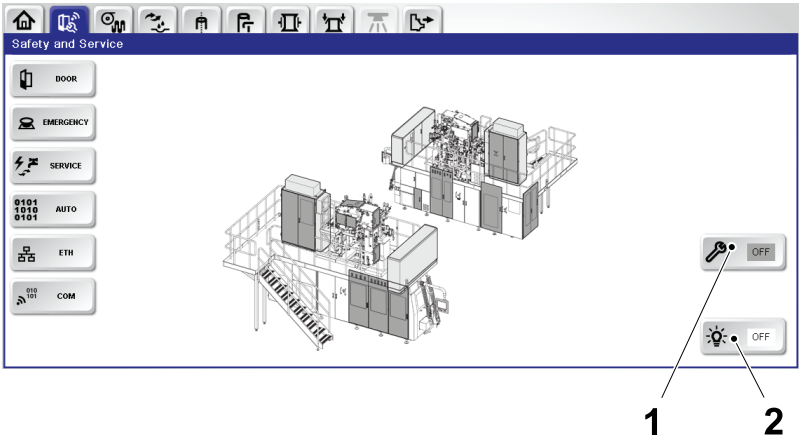

2

The SAFETY AND SERVICE MODULE window is displayed.

All selectable buttons are white. When a button is selected the colour of the button changes to blue.

In this window there are the following selectable buttons:

- SERVICE KEY (1)

  Note! The SERVICE KEY button shows the position of the service switch in the electrical cabinet, see 1.2.6 Electrical Cabinet, Filling Machine LH Side.

- JAW LIGHTS ON/OFF (2)

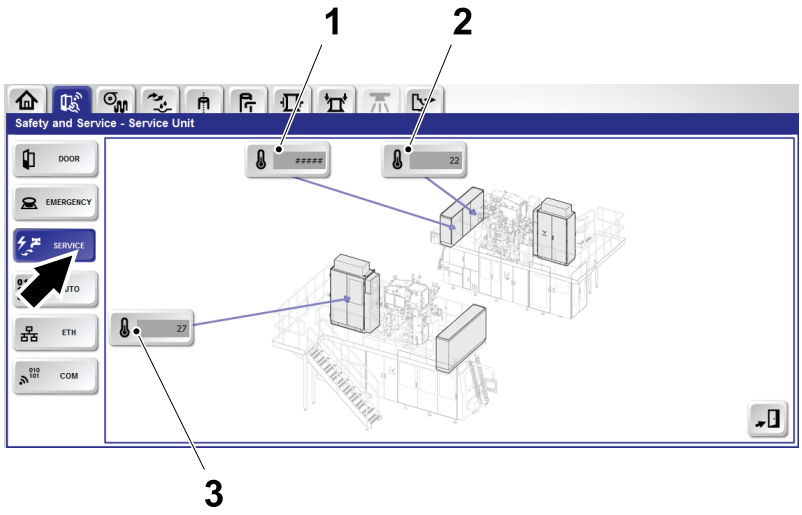

3

Touch the SERVICE UNIT SUB MODULE button, se arrow.

The SERVICE UNIT window is displayed.

In this window there are the following selectable buttons:

- COOLING WATER INLET TEMPERATURE (1)
- MAIN COOLING WATER TEMPERATURE (2)
- ELECTRICAL CABINET TEMPERATURE (3)



4

Touch the EXIT button to return to the MANOEUVRE window.

2.5.9 Overview Window



1
Touch the OVERVIEW button.

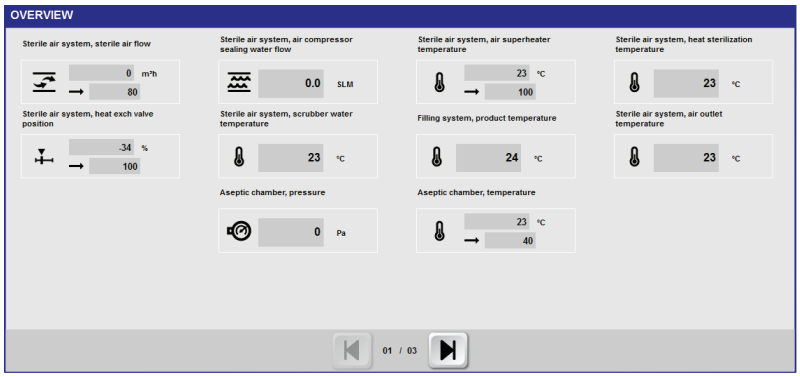

First page



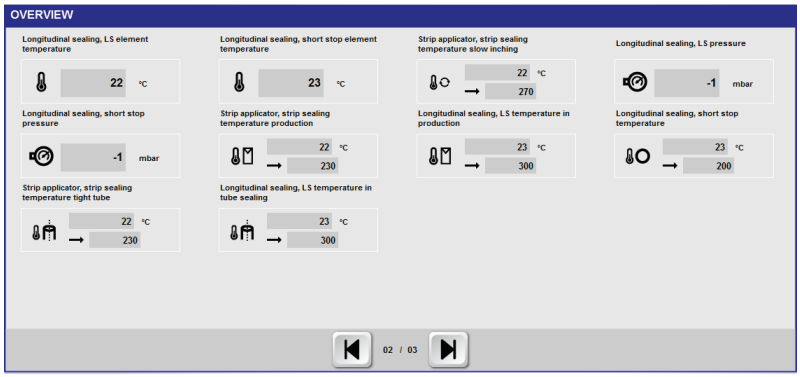

2

The OVERVIEW window is displayed showing the temperature, flow and pressure setting values.

To change a setting value touch the corresponding box that includes the setting value and follow the normal procedure to change the value.

The description of each value is displayed above the box.

Touch the GO TO NEXT button to display the next page or the GO TO PREVIOUS button to display the previous page.

Note! To keep the new value the recipe must be saved or saved as a new recipe.

Note! Values from regulators can be changed, values from monitors cannot be changed.



3

Touch the GLOBAL VIEW button to return to the MANOEUVRE window.

2.6 Recipes

This section describes how to load, save and delete a production recipe with the TPOP. A recipe is a set of parameters related to a certain type of production: when a recipe is loaded, the filling machine adapts its working parameters to the ones stored in the recipe.



Recipes Window

1

Touch the RECIPES button.

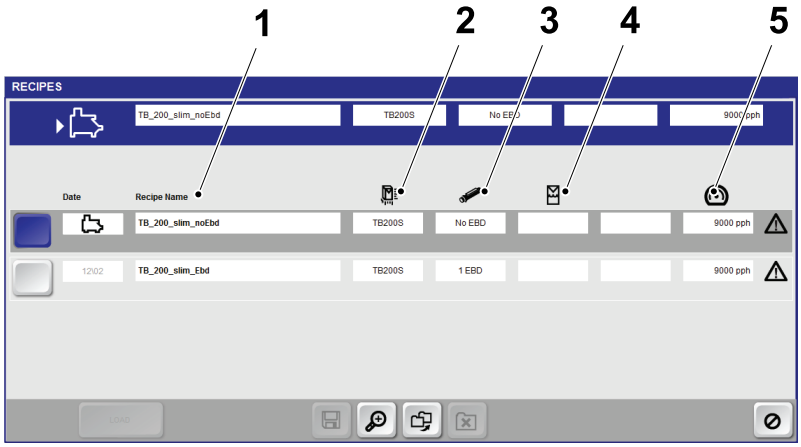

2

The RECIPE window is displayed showing the list of the available recipes. The selected recipe is displayed on the field (1) at the top of the window.

The following informations about the recipe are displayed:

- the recipe name (1)
- the volume (2)
- the eBeam option (3) and the HI option (4)
- the selected speed (5)

It is possible to:

- load stored recipes
- modify parameters of existing recipes and save them
- modify parameters of existing recipes and save them with a new name.

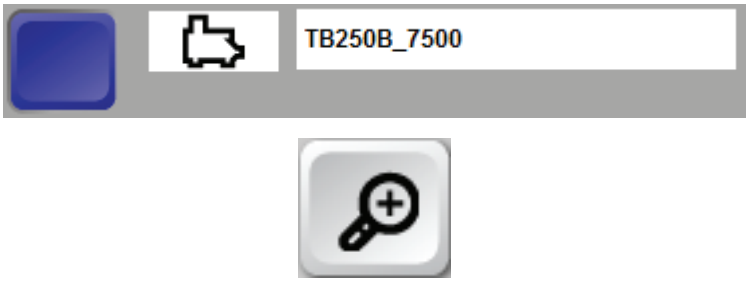

Edit Recipe

3

In the recipe list touch the button of the recipe to be modified, then touch the ZOOM button to view all the parameters stored with the selected recipe.

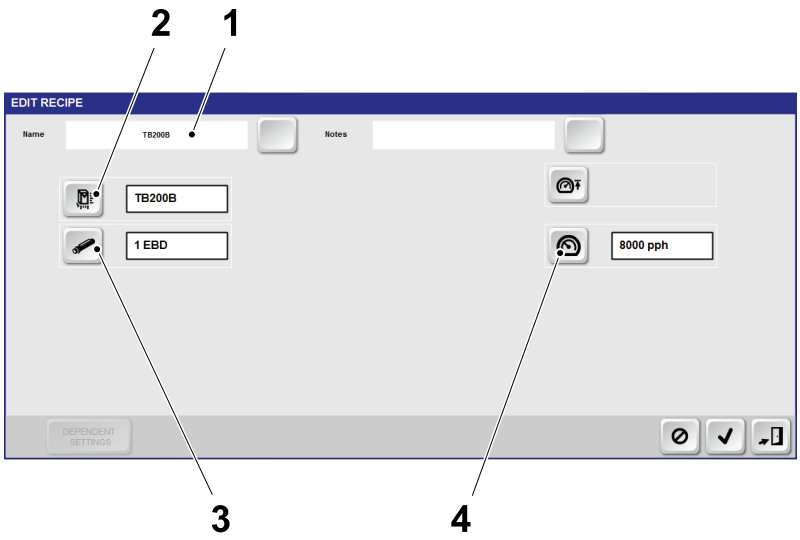

4

The EDIT RECIPE window is displayed. The main recipe parameters are displayed:

- the recipe name (1)
- the volume (2)
- the eBeam option (3)
- the capacity (4).



5

If necessary the proposed production speed can be changed.

Touch the CAPACITY button.



6

Touch one of the available CAPACITY buttons to load the new speed.



7

Touch the DEPENDENT SETTINGS button.

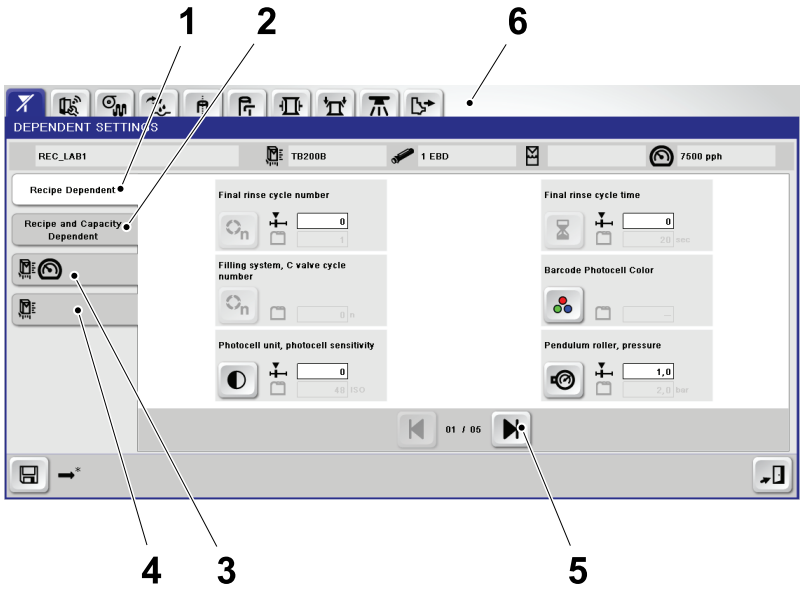

8

The DEPENDENT SETTINGS window id displayed. The dependent parameters may be sorted by type of dependency.

Navigate through the dependent parameters by the tab on the LH side:

- RECIPE DEPENDENT parameters (1)
- RECIPE AND CAPACITY DEPENDENT parameters (2)
- VOLUME AND CAPACITY DEPENDENT parameters (3)
- VOLUME DEPENDENT parameters (4).

Touch the GO TO NEXT button (5) to display another page of parameters.

Note! The parameters may be also sorted by module using the tab (6) on the top of the window.

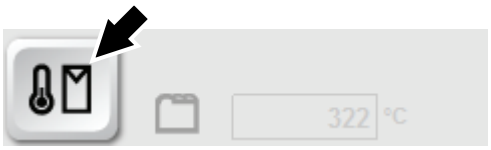

9

The value stored in the recipe is displayed in a grey box.

To change a setting value, touch the corresponding button that includes the setting value and follow the normal procedure to change the value.

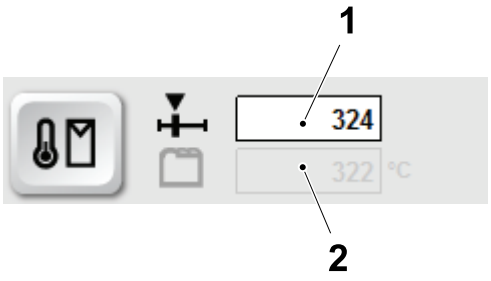

Recipe Loaded

10

If the recipe is loaded, the new entered value (1) is displayed in a white box and it is indicated by an arrow. The value stored in the recipe (2) is still displayed in a grey box.

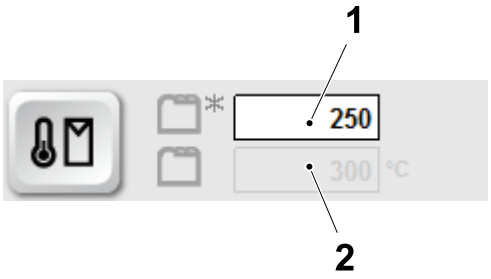

Recipe Not Loaded

11

If the recipe is stored in the PLC but not loaded yet, the new entered value (1) is displayed in a white box and a star appears close to the white box. The value stored in the recipe (2) is still displayed in a grey box.



12

Touch the PRINTER SETTINGS button to edit the printer parameters, see 2.5.7 Down Stream.



13

Touch the SAVE button to save the current recipe with the modified parameters or touch the COPY RECIPE button to save the modified parameters as a new recipe, see Copy Recipe.

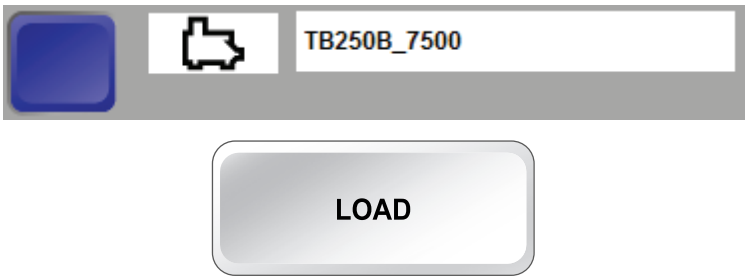

Load Recipe

14

In the recipe list touch the button of the recipe to be loaded, then touch the LOAD button.



15

A dialogue box appears asking for confirmation. Touch the YES button to load the recipe.

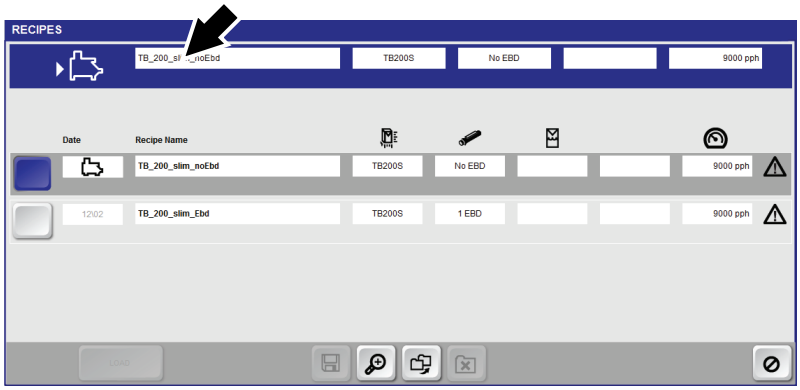

16

The selected recipe is displayed on the field at the top of the window.

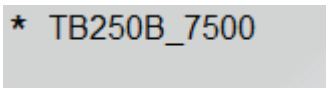

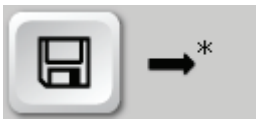

Save Recipe

17

When one or more of the recipe parameters have been modified in the loaded recipe: .

- a star appears beside the recipe name
- an arrow with a star appears close to the SAVE button.



18

When one or more of the recipe paramters have been modified in a recipe stored in the PLC but not loaded yet:

- the recipe icon with a star appears close to the SAVE button.





19

Touch the SAVE button to save the current recipe with the modified parameters or touch the COPY RECIPE button to save the modified parameters as a new recipe, see Copy Recipe.



20

A dialogue box informs that the parameters are changed. Touch the YES button to confirm the recipe save or the NO button to discard the changes.



Create New Recipe

21

Touch the CREATE NEW button.



22

In the EDIT RECIPE window, touch the VOLUME button.



23

Select the required VOLUME button for the new recipe.

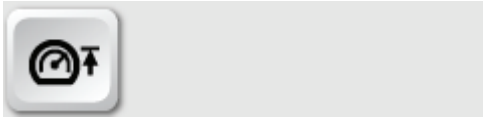

24

Touch the ENABLED CAPACITY button.

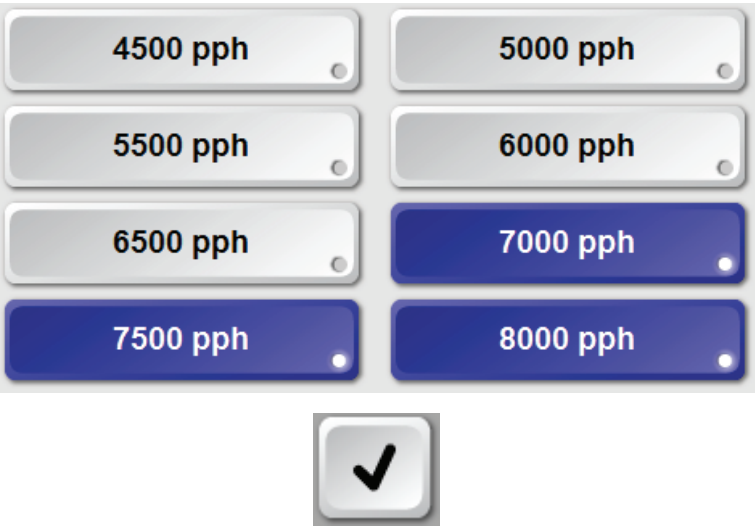

25

Select the CAPACITY buttons to be enabled. The selected capacities become blue.

Touch the OK button.

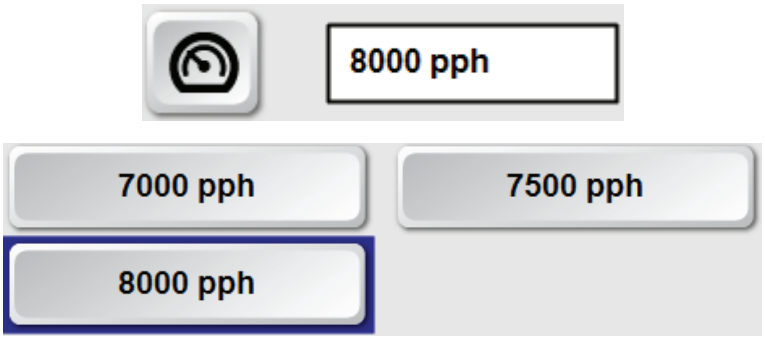

26

Touch the CAPACITY button.

Select the required CAPACITY buttons that will be enabled for production with the new recipe.



27

Touch the DEPENDENT SETTINGS button.

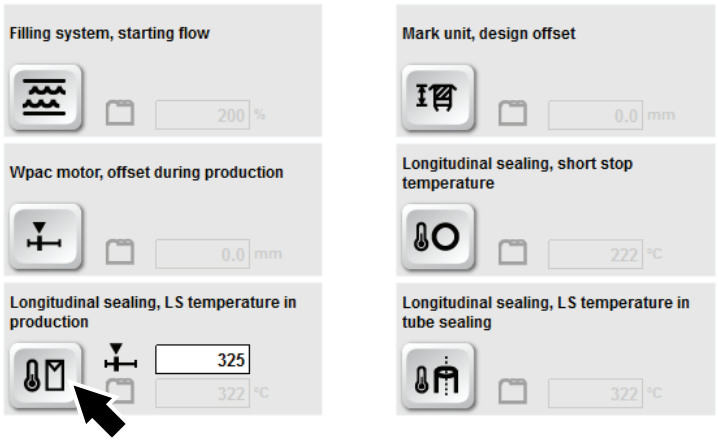

28

The default production setting values for the chosen volume are displayed.

Navigate through the setting values using the tabs, see step 8.

To change a setting value, touch the button that includes the setting value and follow the normal procedure to change the value.



29

Touch the OK button to save the new recipe.

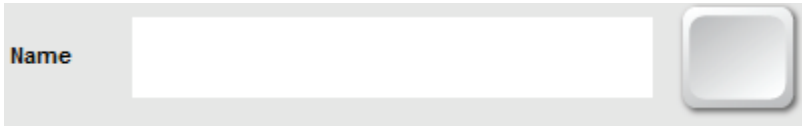

30

Touch the RECIPE NAME button.



31

The KEYBOARD is displayed.

Type the name of the new recipe and touch the OK button.



32

A dialogue box displays that the new recipe has been successfully created. Touch the OK button.



Copy Recipe

33

In the recipe list touch the button of the recipe to be copied, then touch the COPY RECIPE button.



34

Touch the ZOOM button to start editing the recipe parameters, see Edit Recipe.

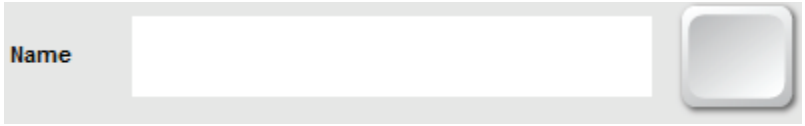

35

Touch the RECIPE NAME button.





36

The KEYBOARD is displayed.

Type the name of the new recipe and touch the OK button.



37

A dialogue box displays that the new recipe has been successfully created. Touch the OK button.

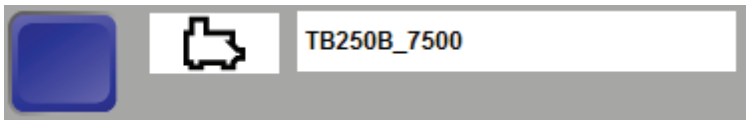



Delete Recipe

38

In the recipe list touch the button of the recipe to be deleted, then touch the DELETE RECIPE button.



39

A dialogue window appears asking for confirmation.

Touch the YES button to delete the recipe.



40

Touch the EXIT button to return to the RECIPE window.

2.7 System Setting

This section describes how to enable/disable the available machine options through the TPOP.



Touch the SYSTEM SETTING button to access the system settings.

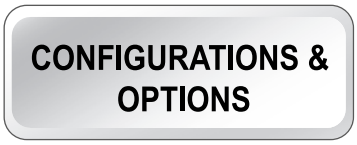

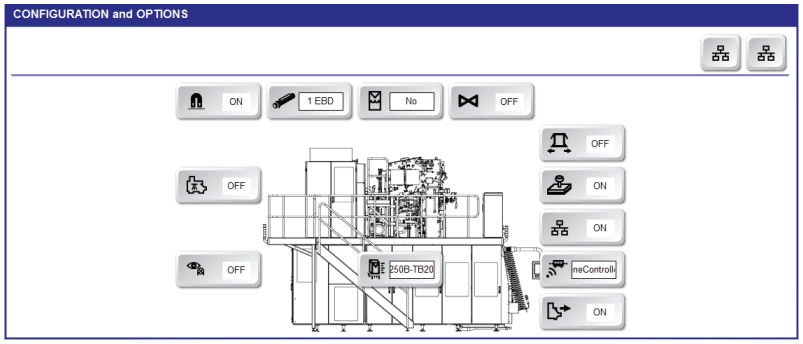

Configurations and Options 1

Note! The access to enable or disable the machine options is restricted and only users with a valid password can modify the configuration. To perform the following steps log on as a technician.

Touch the CONFIGURATION AND OPTIONS button.

The main CONFIGURATION AND OPTIONS window is displayed.

The window displays the configuration of the optional equipment for the filling machine. The box inside button indicates if the option is on (enabled) or off (disabled).

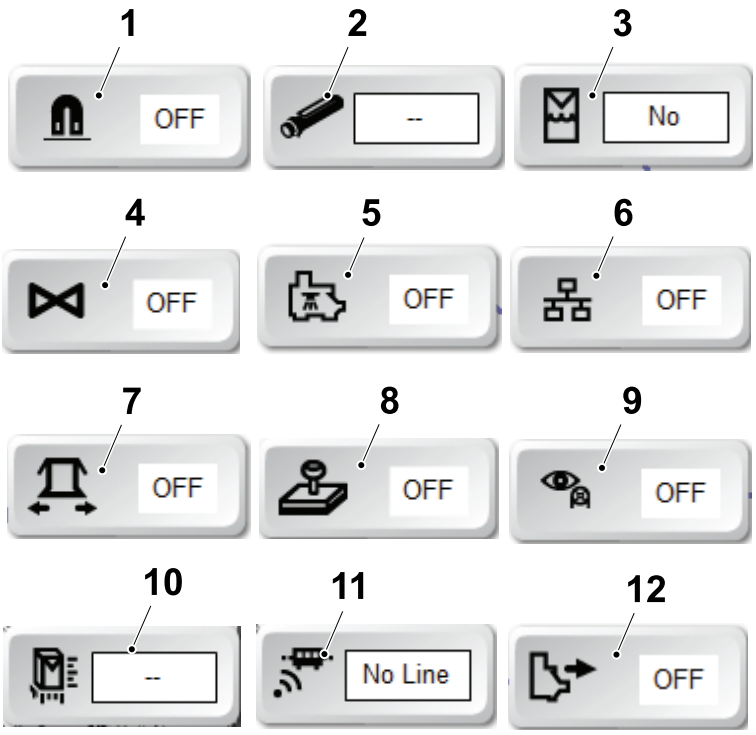

1 Magnetic design reader
2 eBeam
3 Headspace by Injection
4 C Valve
5 ICU
6 RouterNet
7 Final Folder side
8 Printer
9 SPM (Strip Position Monitoring)
10 Volume configuration
11 Line interface
12 Downstream

2

The main CONFIGURATION AND OPTIONS window displays a first level of configuration and options. Some buttons give access to a second level of sub-configurations and sub-options, see the IM for details.

Touch the button of the desired machine configuration or option to enable or disable it.



3

If the ON/OFF buttons are displayed, touch:

- the ON button to enable the option selected
- the OFF button to disable the option selected.



4

If a dialogue box with the YES/NO buttons is displayed, touch:

- the YES button to enable the option selected
- the NO button to disable the option selected.



5

Touch the EDIT button to modify the choice after the first selection.





6

Sub-options

The ICU option, if enabled, allows to enable the ICU CENTRAL REFILLING option



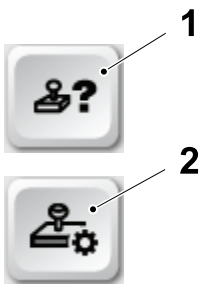

7

The PRINTER option, if enabled, allows to enable the PRINTER TYPE option (1) and the PRINTER MODEL option (2).





8

The DOWNSTREAM option, if enabled, allows to enable the BELT BRAKE option.



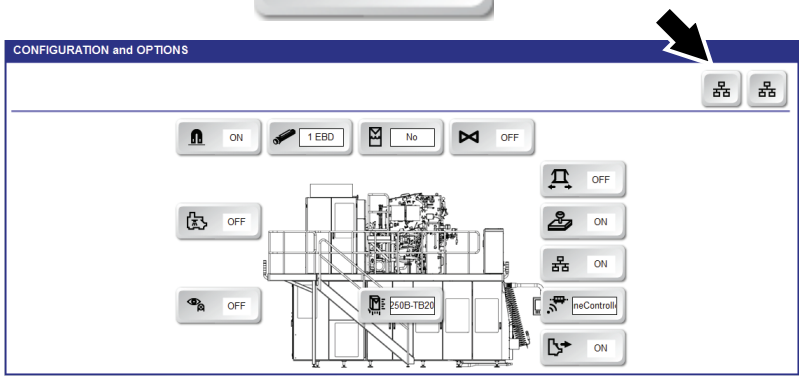

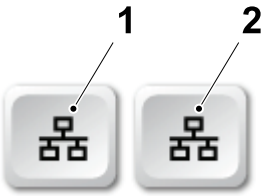

9

The ROUTERNET option, if enabled, allows to enable on the upper right corner of the window:

- the Network Address Translation of filling machine network (Level 7) to Line network (Level 6) (1)
- the Network Address Translation of filling machine PLC IP Address to LC 30 (2).



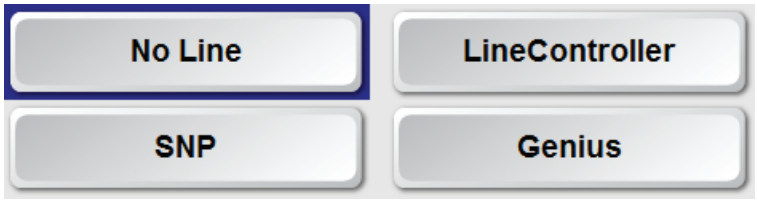

10

Line Interface Option

Touch the LINE INTERFACE OPTION button to select the line interface type: Line Controller, Series Ninty Protocol (SNP), Genius or disinstall the option.



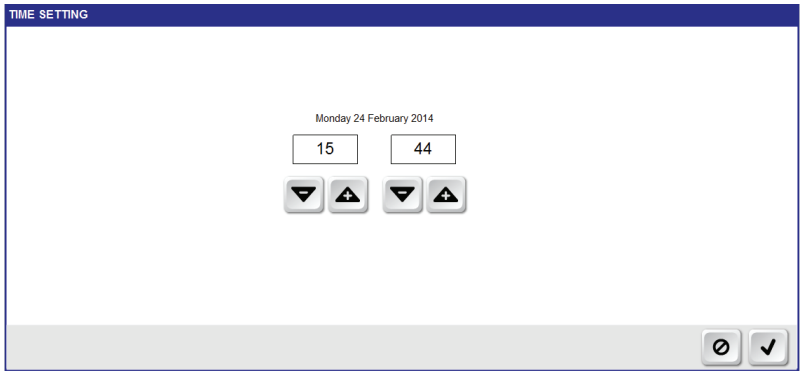

Time Setting

1

Note! The time setting procedure is only possible in STEP ZERO and with the PREPARATION and PRODUCTION phases closed.

Touch the TIME SETTING button.

The TIME SETTING window is displayed.

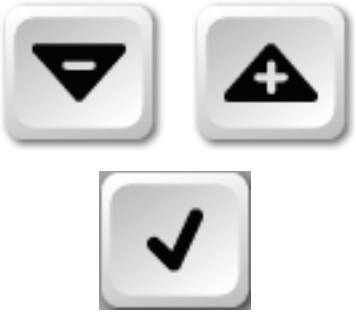

2

Set the hours and minutes fields by the UP and DOWN button.

Touch the OK button.



Production Shift

1

Note! The production shift setting procedure is only possible in STEP ZERO and with the PREPARATION and PRODUCTION phases closed.

Touch the SHIFT PLANNING button.

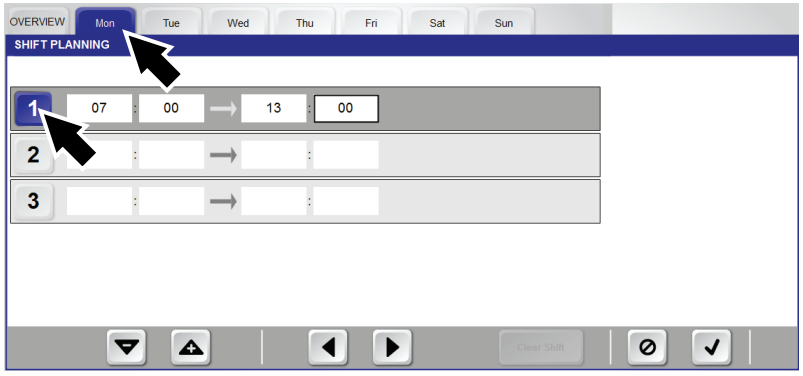

2

Touch the tab of the desired day of the week, then touch the SHIFT 1 button.



3

Input a start time and an end time of the shift using the PLUS and MINUS buttons.

Note! The shift time is preset into eight hour intervals. Do not overlap the shift times otherwise an error will be displayed.

Touch the GO TO NEXT and GO TO PREVIOUS buttons to change time boxes.

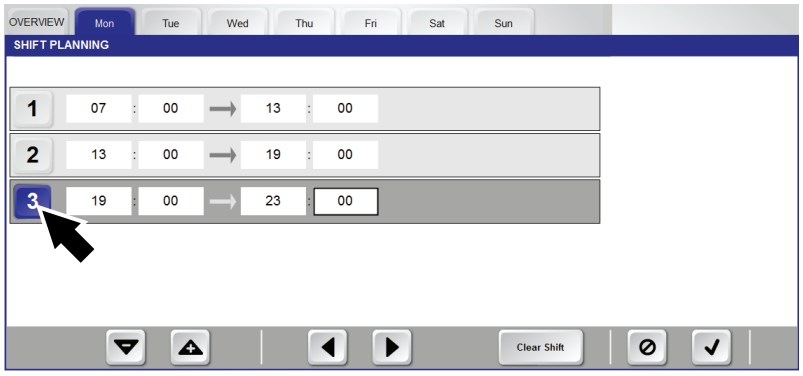

4

Touch the SHIFT 2 and SHIFT 3 buttons to set the time for the other shifts.



5

Touch the OK button when the shift setting of the day is completed.

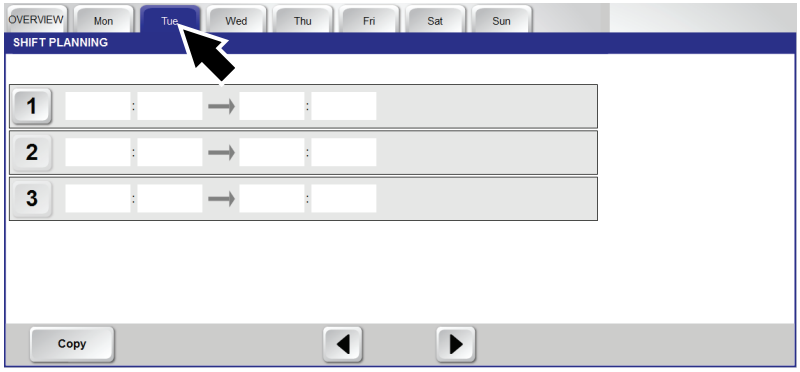

6

Continue touching the tabs of the other days of the week.



7

Touch the COPY button to copy the same shift setting on the selected day, or repeat the steps 2 to 4.

2.8 Recorder Navigation

Note! Valid for recorder Jumo Logoscreen *fd* TP No. 90606-4690.

The recorder displays and records the machines critical parameters during the filling machine production and CIP phases. The control knob on the recorder front panel allows the operator to navigate through the recorders menu system.

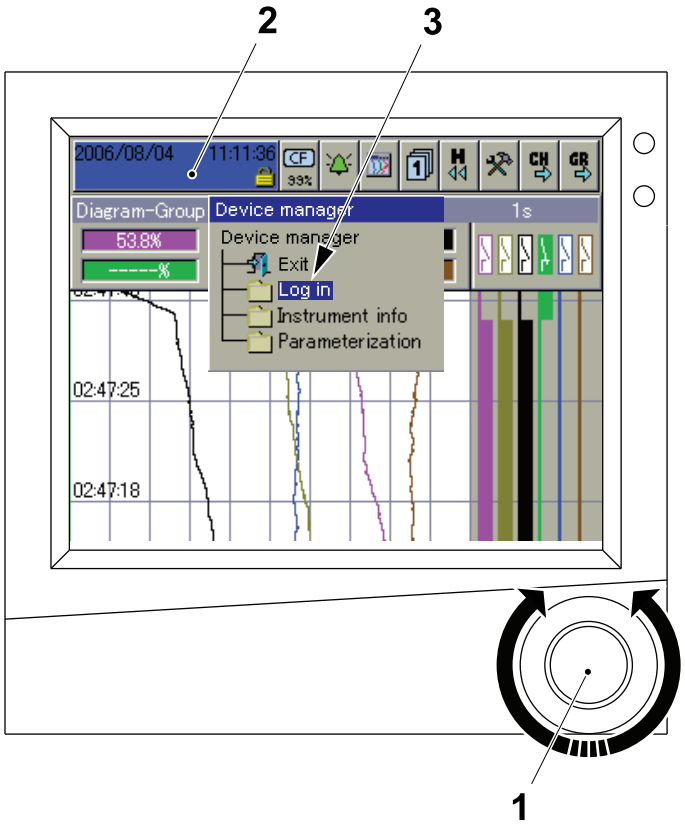

Login

1

Rotate the CONTROL KNOB (1) to access the `DEVICE MANAGER` (2) in the header and press the CONTROL KNOB (1).

Select `LOG IN` (3) by rotating the CONTROL KNOB (1) and press it.

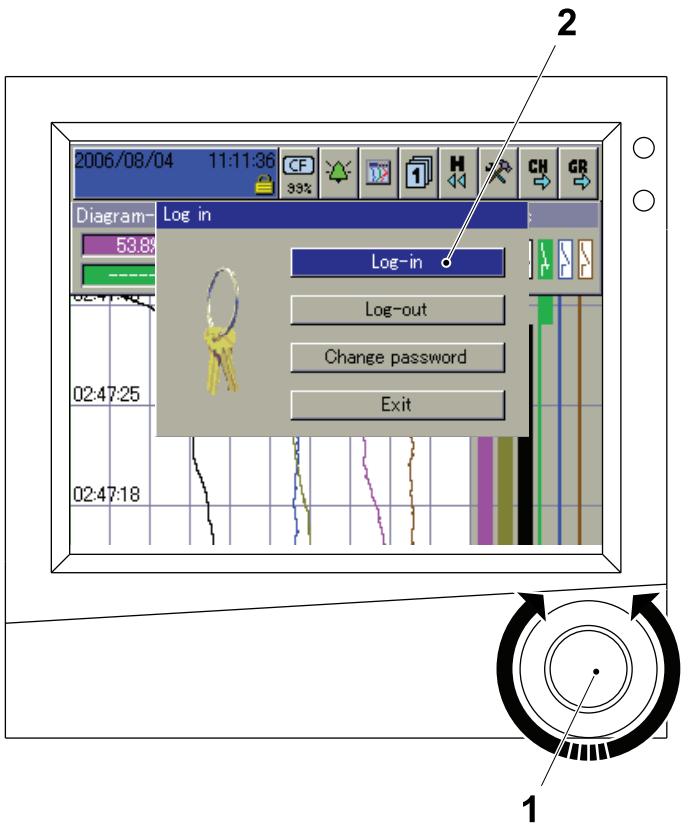

2

Rotate the CONTROL KNOB (1) to select the LOG-IN button (2) and press the CONTROL KNOB (1).

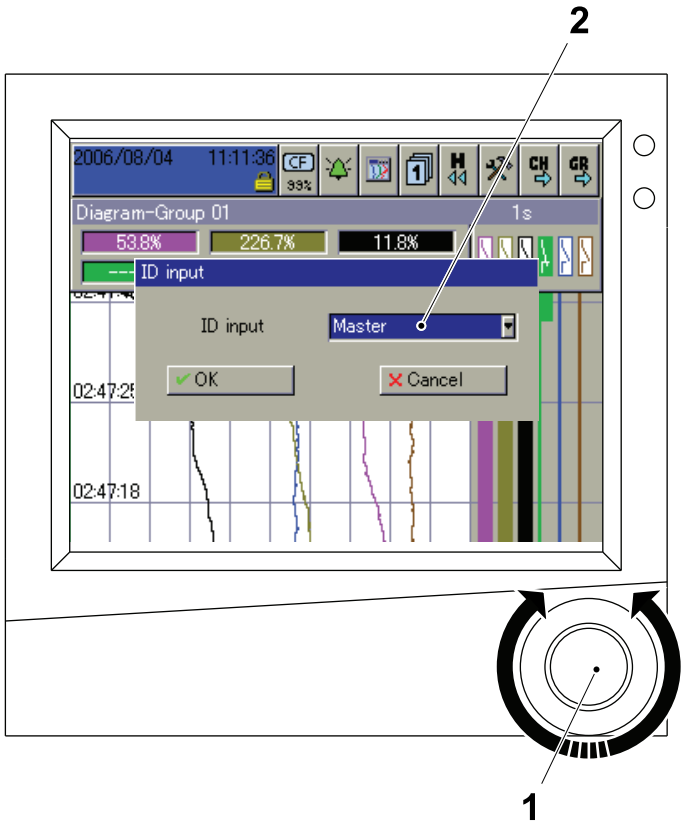

3

Rotate the CONTROL KNOB (1) to select the user ID field (2) and press the CONTROL KNOB (1).

Press the ENTER button.

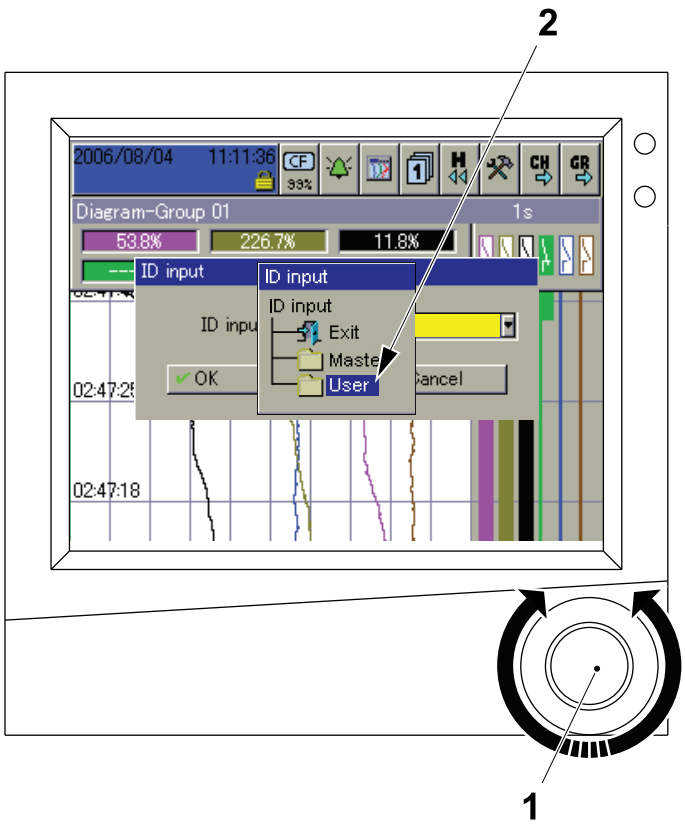

4

The ID INPUT list is displayed.

Rotate the CONTROL KNOB (1) to select either the user ID USER or if the user ID list contains the names of individual users, use the CONTROL KNOB (1) to select the appropriate user ID name from the list.

Press the CONTROL KNOB (1).

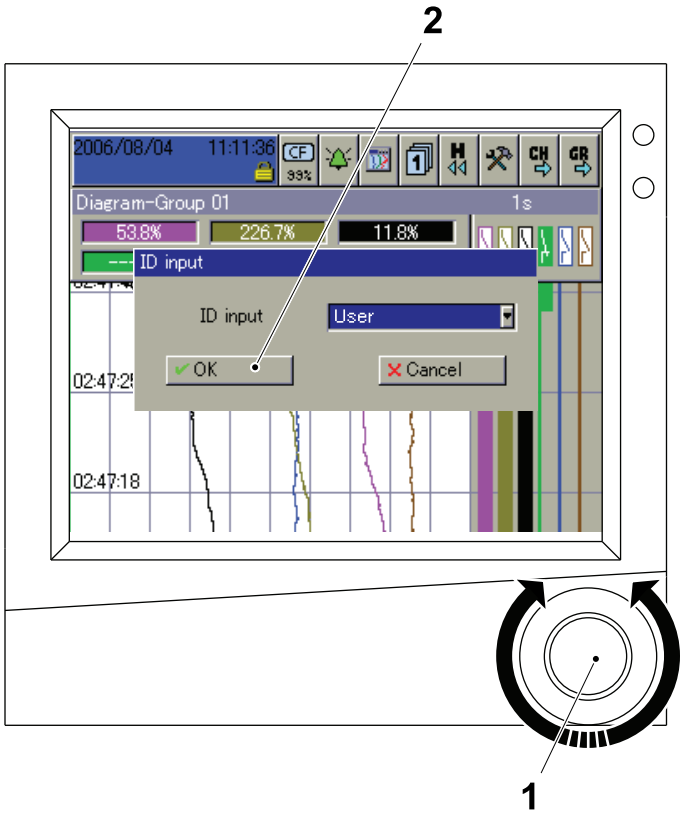

5

Rotate the CONTROL KNOB (1) to select the OK button(2) and press the CONTROL KNOB (1).

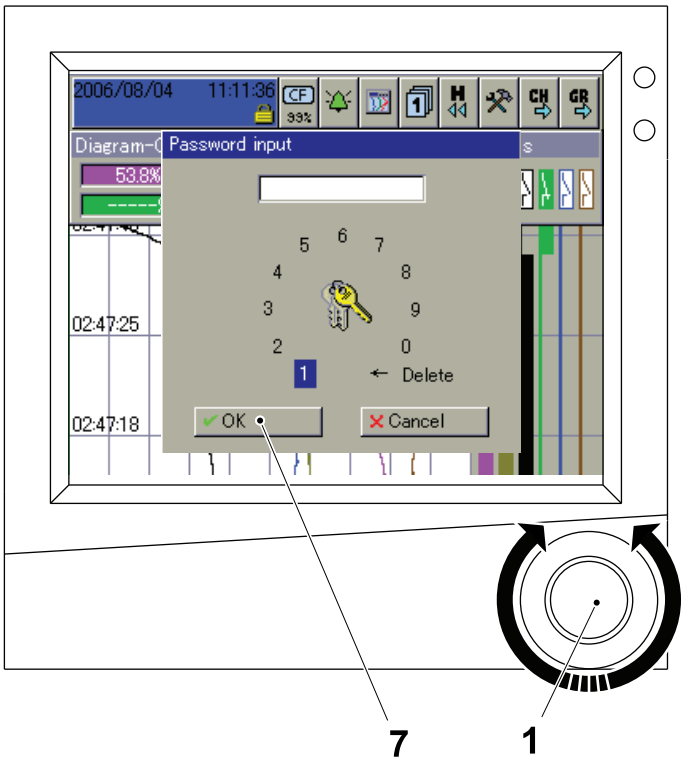

6

The PASSWORD INPUT window is displayed.

To login to the recorder with the user ID USER, rotate the CONTROL KNOB (1) to select the password "0" and press the CONTROL KNOB (1).

To login to the recorder with an individual user ID enter the appropriate password.

Rotate the CONTROL KNOB (1) to select the OK button (2) and press the CONTROL KNOB (1).

The user is now logged into the recorder.

Note! If this is the first time an individual user ID and password has been input, the recorder will require that the password is changed. Follow the prompts on the recorder screen to change the password.

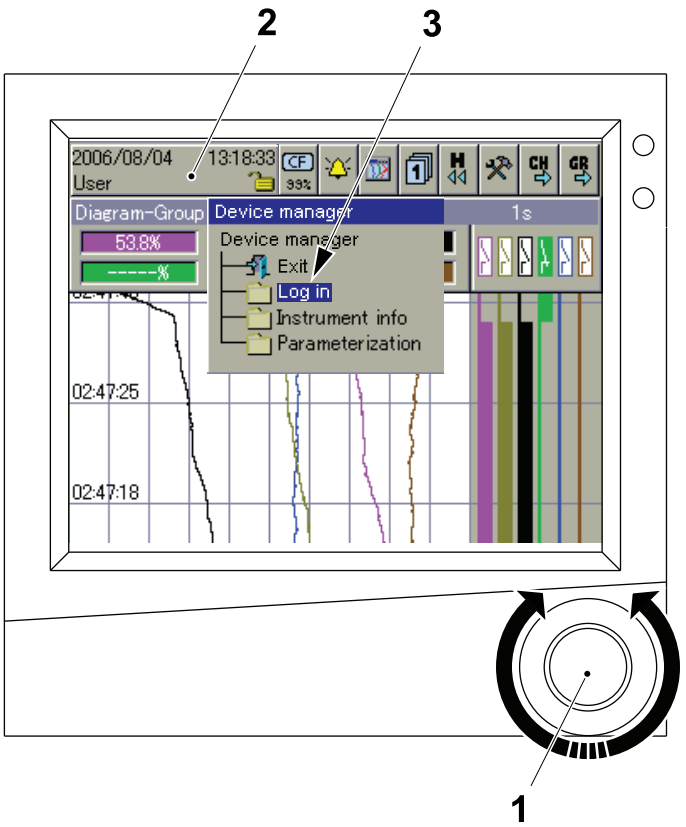

Log Out

1

Rotate the CONTROL KNOB (1) to access the DEVICE MANAGER (2) in the header and press the CONTROL KNOB (1).

Select LOG IN (3) by rotating the CONTROL KNOB (1) and press it.

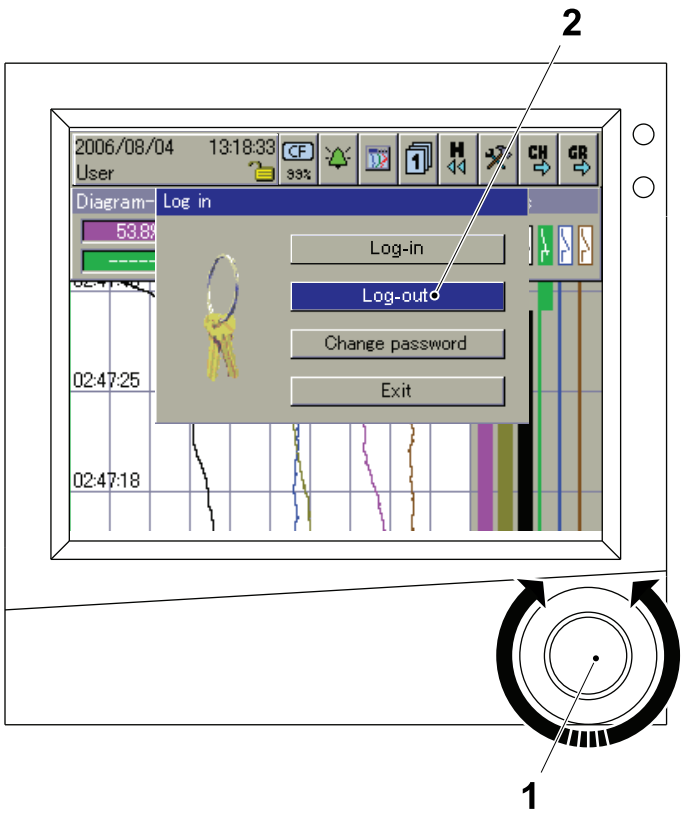

2

Rotate the CONTROL KNOB (1) to select the LOG-OUT button (2) and press the CONTROL KNOB (1).

The user is logged out from the recorder.

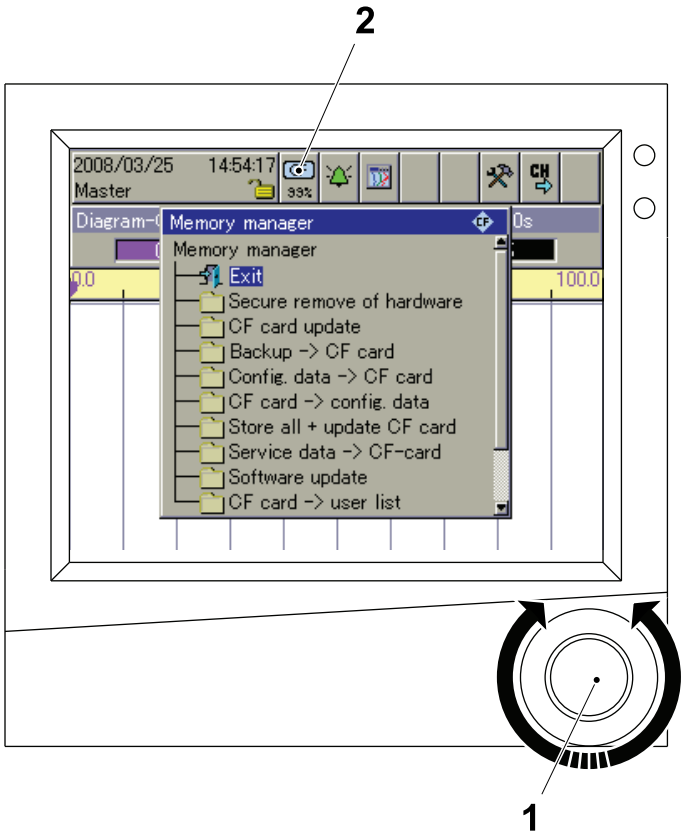

Change CompactFlash Card

1

Note! The CompactFlash card window is only available to users with the appropriate user ID access rights.

Login to the recorder, see Login on page 2-149.

Rotate the CONTROL KNOB (1) to access the MEMORY MANAGER (2) in the header and press the CONTROL KNOB (1).

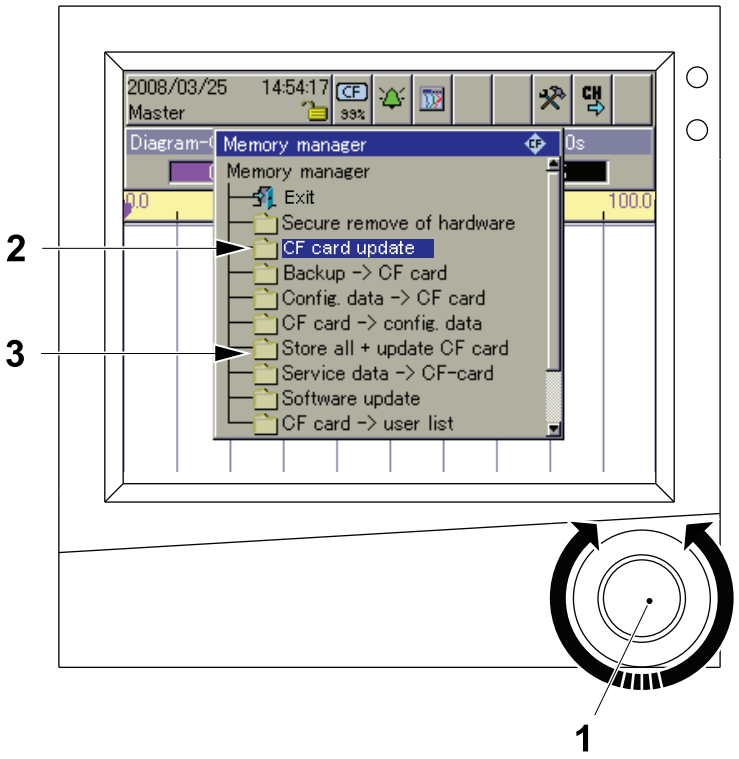

2

Rotate the CONTROL KNOB (1) to select either:

- `CF CARD UPDATE` (2) to download any unsaved PRODUCTION and CIP data to the CompactFlash card

or

- `STORE ALL + UPDATE CF CARD` (3) to conclude any ongoing batch records and to download any unsaved PRODUCTION and CIP data to the CompactFlash card.

Press the CONTROL KNOB (1).

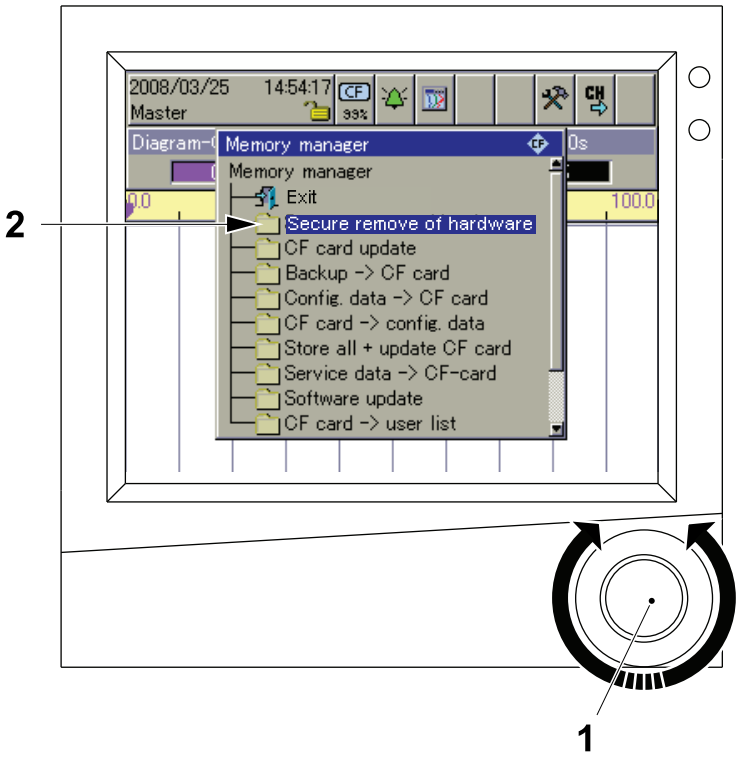

3

When the operation is complete, press the CONTROL KNOB (1) on `SECURE REMOVE OF HARDWARE` (2).

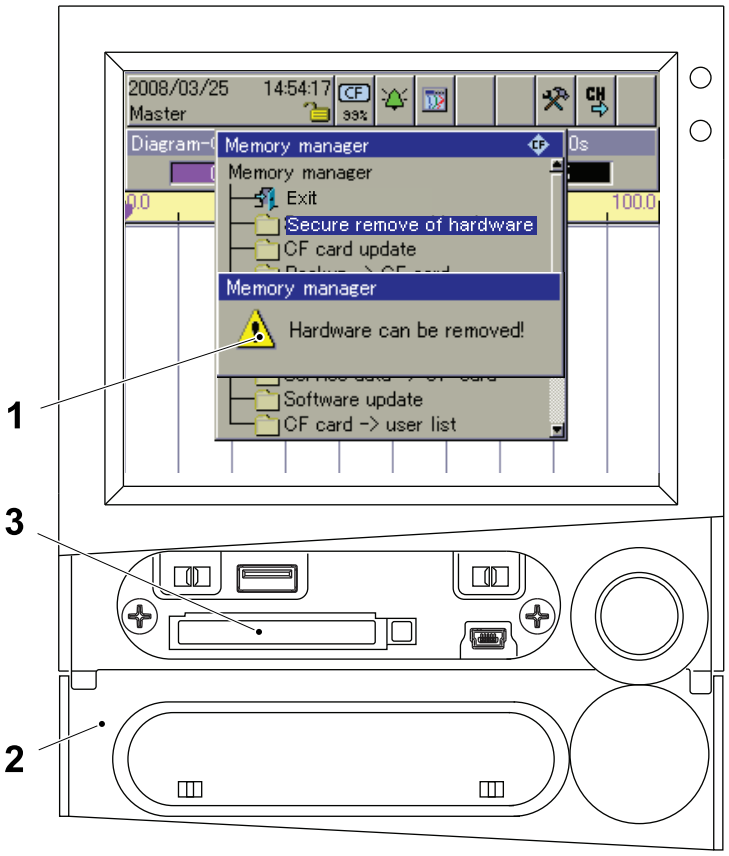

4

When the message `HARDWARE CAN BE REMOVED` (1) appears, open the cover (2) and eject the CompactFlash card (3).

Insert the new CompactFlash card and close the cover.

Log off the recorder, see Log Out on page 2-152.

Give the CompactFlash Memory Card to the person responsible for evaluation.

This page intentionally left blank

3 Preparation

Description

This chapter describes how to prepare the machine for PRODUCTION after Care and Cleaning has been performed.

Description 3-2

3.1 Preparing After Weekly Care..... 3-5

3.1.1 Loading the Packaging Material Reel 3-8

3.1.2 Threading Inside ASU Compartment..... 3-15

3.1.3 Threading Inside the Strip Applicator Compartment 3-18

Paper Magazine with Cylinder..... 3-19

3.1.4 Threading up to the Chamber..... 3-27

3.1.5 Threading Through the Chamber..... 3-30

3.2 Preparing after Daily Care 3-40

3.2.1 Flow Rates 3-42

3.2.2 Recorder 3-43

3.2.3 Hydrogen Peroxide 3-44

3.2.4 Superstructure 3-45

3.2.5 Filling Pipe 3-52

3.2.6 Heat Sterilization 3-64

3.2.7 Strip Check 3-66

This page intentionally left blank

3.1 Preparing After Weekly Care

Note! If only Daily Care has been performed, start with 3.2 Preparing after Daily Care.

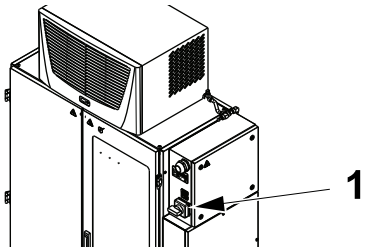

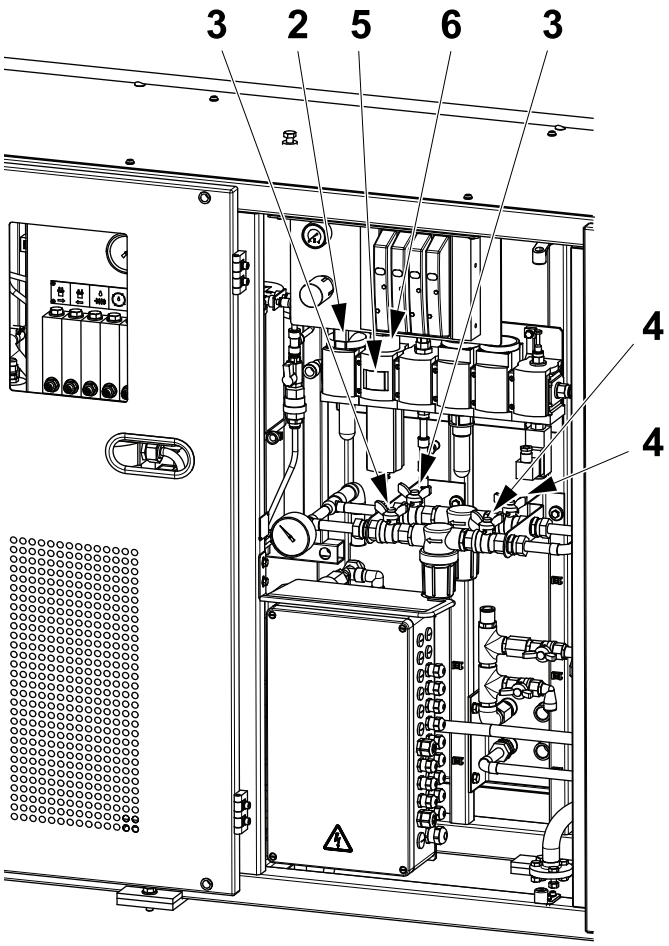

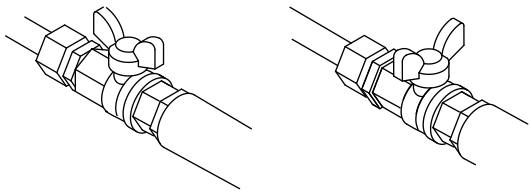

Cooling water ON Cooling water OFF

1

If the machine has been shut down:

- Turn ON the main power switch (1)
- Turn ON the air supply (2)
- Turn ON the cooling water supply (3) or (4), depending on which filter is in use

Check that the pressure gauge (5) shows 5.5 to 6 bar. To adjust the pressure, lift and rotate the valve (6).



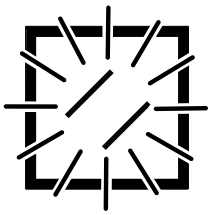

2

Make sure all covers and doors on the machine are closed and reset any alarms on the TPOP display.

If the RESET buttons on the machine body or ASU doors are ON, press the RESET buttons to reset the safety system, see 8.2 Security Stop.

If an alarm reappears, take the appropriate action or call a technician.





3

Touch the GO button and select the PRODUCTION task.



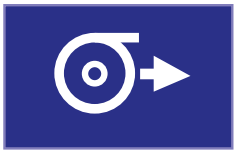

4

Press the PROGRAM UP button.

The PREPARATION symbol is enlarged on the top of the ladder step.

3.1.1 Loading the Packaging Material Reel

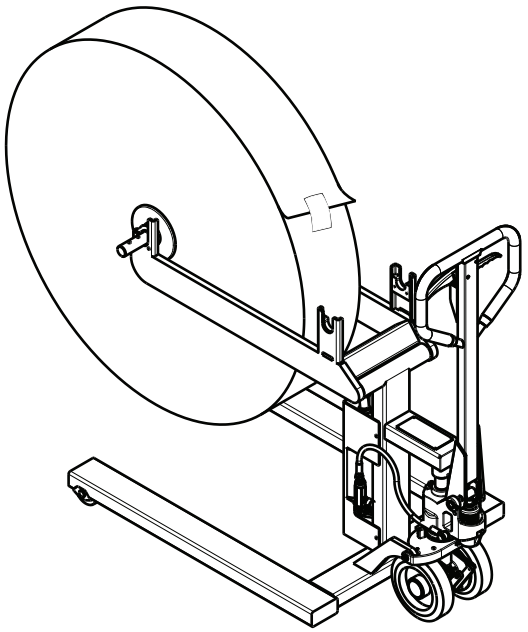

1

Prepare the packaging material reel and place it on the trolley, see Reel Handling on page 6-16.

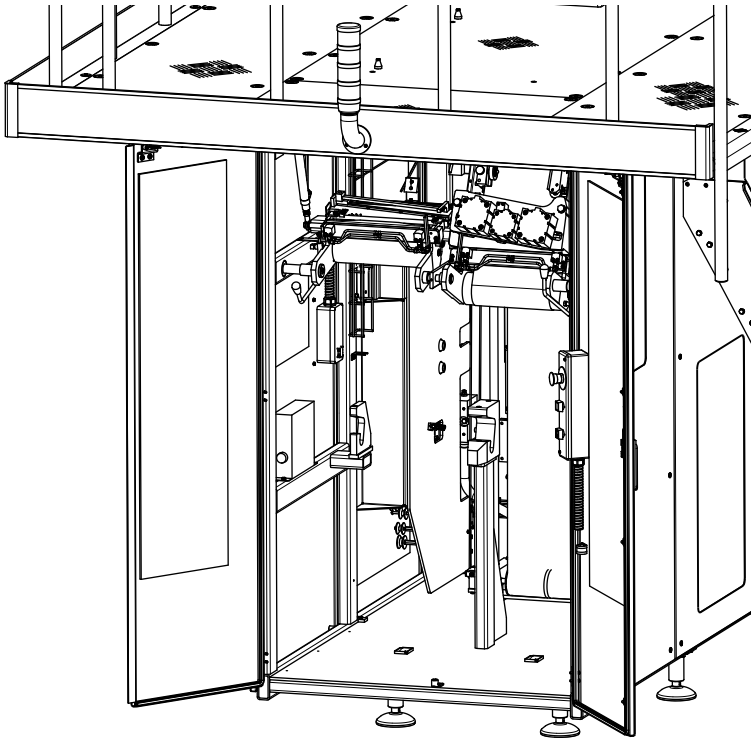

2

Open the ASU doors.

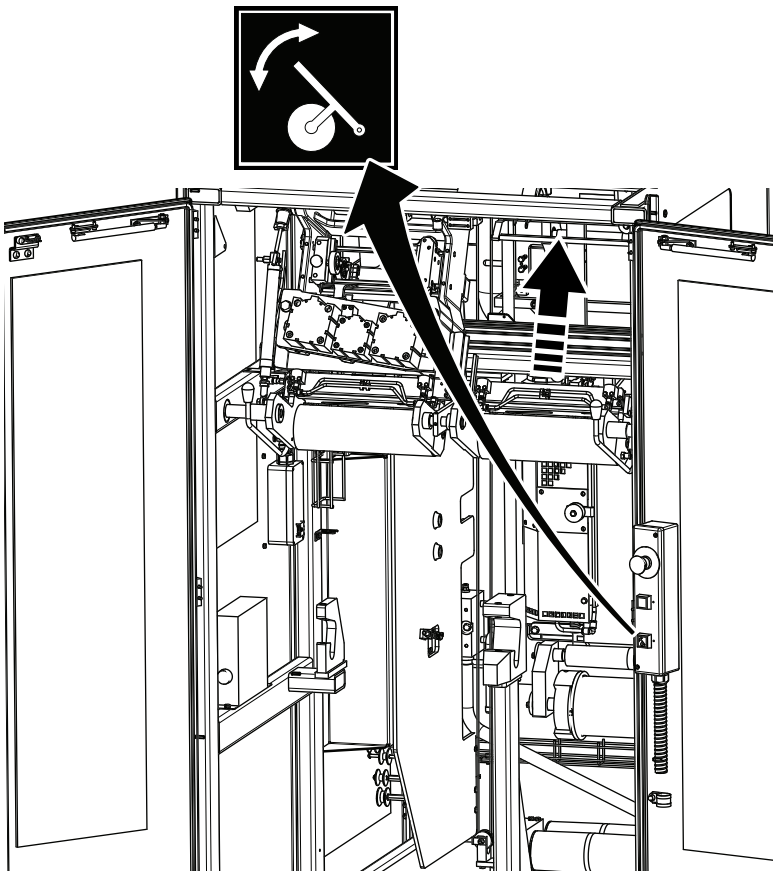

3

WARNING

Moving parts can crush and cut.

Press the PACKAGING MATERIAL HOLDER button.

The packaging material holder next to the splice unit lifts to allow enough space to insert the new reel.

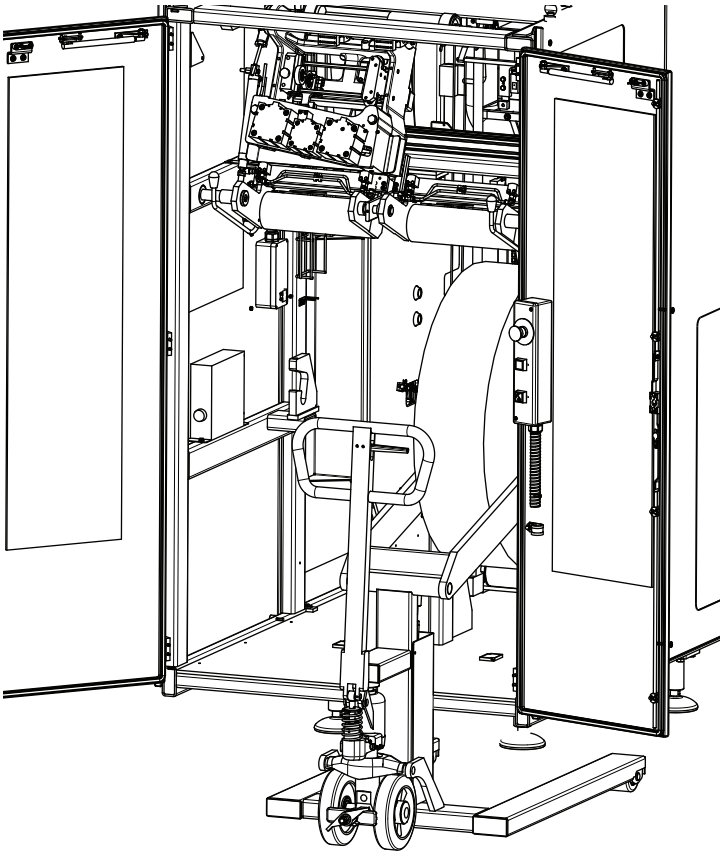

4

Load the reel of packaging material into the ASU.

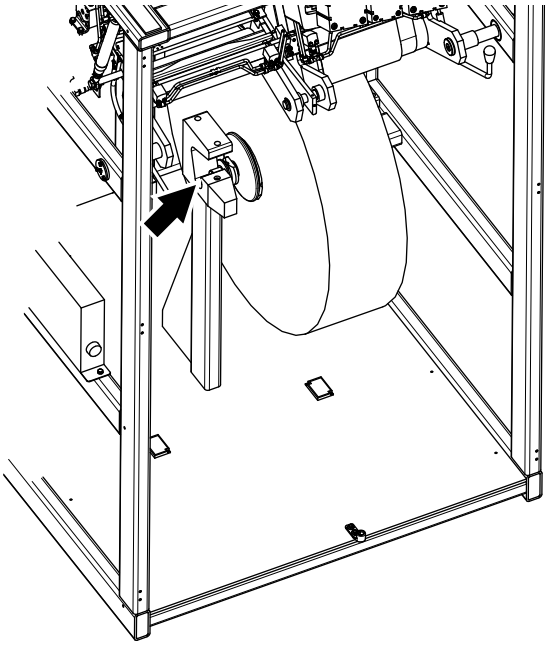

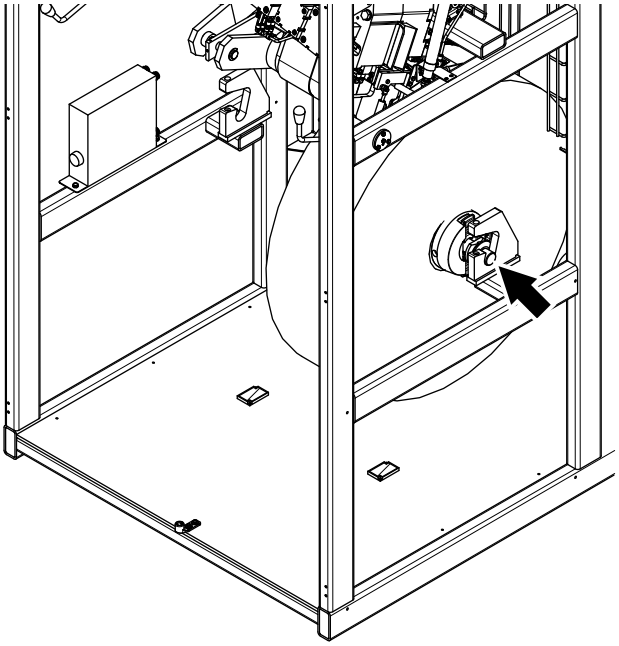

5

Load the reel of packaging material on the carriage.

Make sure the packaging material reel is aligned correctly on the bobbin holders.

Cut approximately two turns of packaging material from the reel.

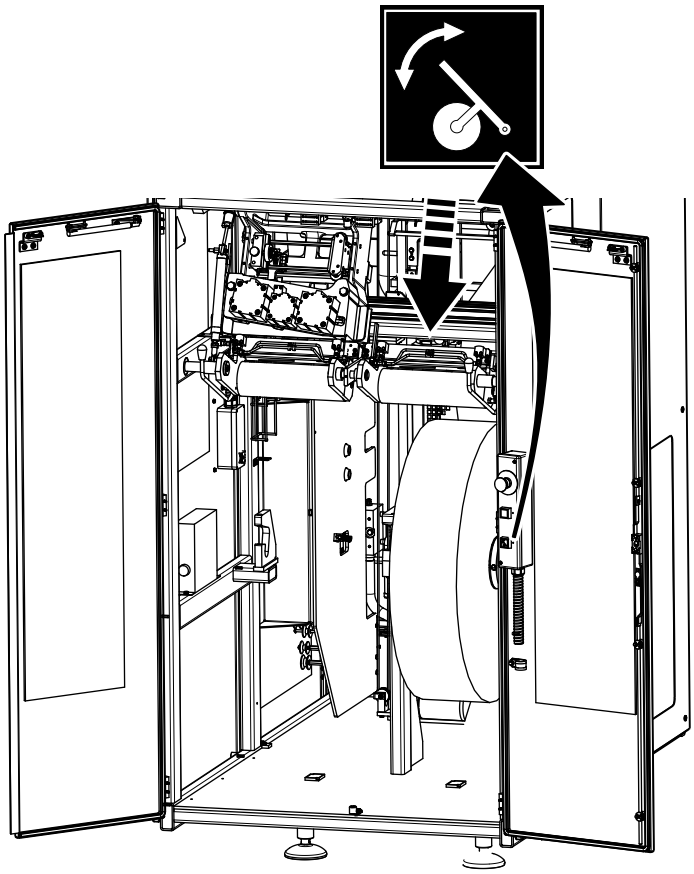

6

WARNING

Moving parts can crush and cut.

Press the PACKAGING MATERIAL HOLDER button.

The packaging material holder above the reel lowers.



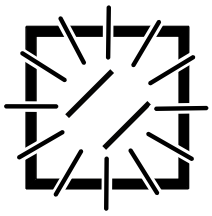

7

Close the ASU doors.

Make sure all covers and doors on the machine are closed and reset any alarms TPOP display.

If the RESET buttons on the machine body or ASU doors are ON, press the RESET buttons to reset the safety system, see 8.2 Security Stop.

If an alarm reappears, take the appropriate action or call a technician.



8

Touch the INFEED MODULE button.

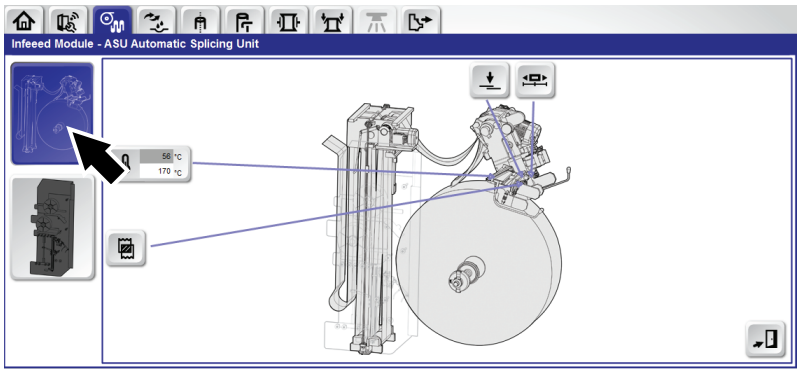

9

Select the ASU SUB MODULE to access settings and function for the ASU.



10

Touch the MOVE SPLICE HEAD button.



11

Touch the LEFT button or the RIGHT button to force the movement of the head.

Note! The current position of the splicing head is indicated by the green coloured button.

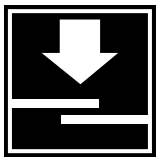

12

Press the MANUAL WEB SPLICE button to start the movement of the splicing head.

3.1.2 Threading Inside ASU Compartment

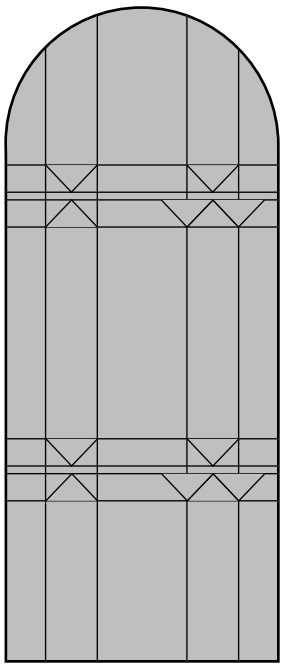

1

CAUTION
Hygiene.
Before handling clean parts, disinfect your hands/gloves with cleaning compound code **H**.

Cut the end of the packaging material as shown, avoiding crease lines on the tip.

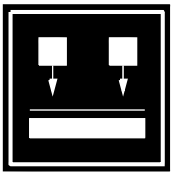

2

Press the MATERIAL LOCKING button for at least 5 seconds to release the material holder allowing the packaging material through the cutting table.

Note! After one minute the material holder locks automatically.

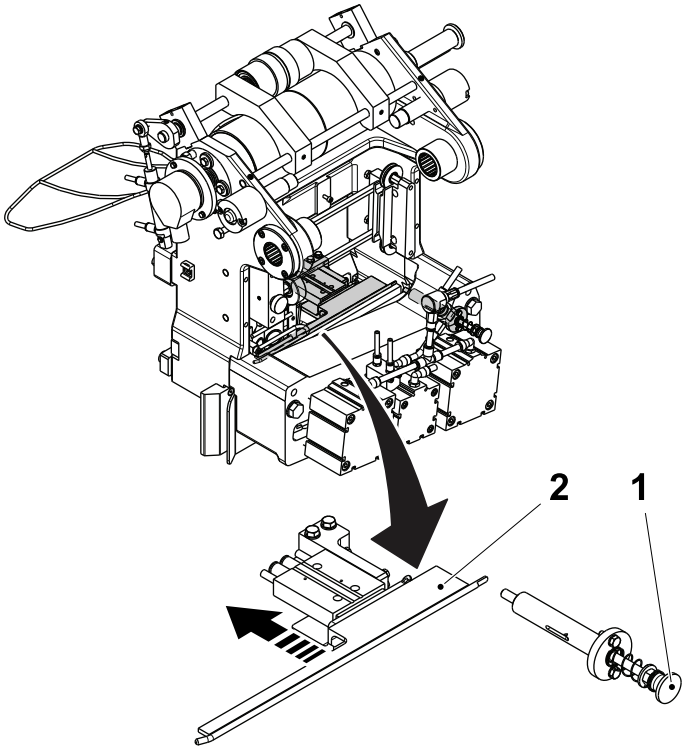

3

Press the knob (1) to move the web remover bracket (2) to its retracted position.

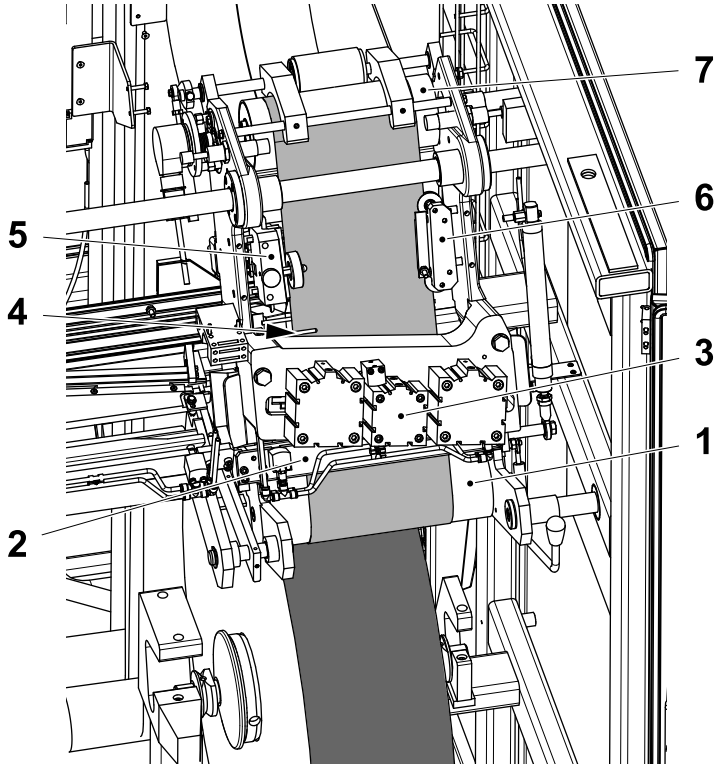

4

Thread the packaging material:

- around the bending roller (1)
- through the packaging material holder (2)
- through the splice unit (3)
- through the fingers (4)
- through the web guides (5) and (6)
- over the driven bending roller (7).

Feed the packaging material between the driven bending roller (7) and the counter pressure roller.



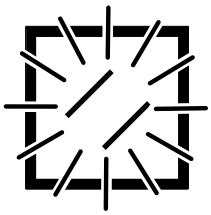

5

Close the ASU doors.

Make sure all covers and doors on the machine are closed and reset any alarms TPOP display.

If the RESET buttons on the machine body or ASU doors are ON, press the RESET buttons to reset the safety system, see 8.2 Security Stop.

The packaging material will be fed automatically into the ASU loop.

Allow the packaging material to be fed for approximately 30 seconds and then open the ASU doors to stop feeding the packaging material.

If an alarm reappears, take the appropriate action or call a technician.

3.1.3 Threading Inside the Strip Applicator Compartment

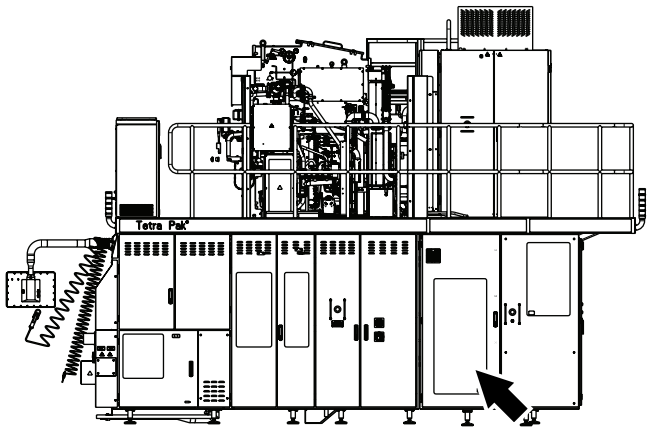

1

Open the door to the Strip Applicator unit.

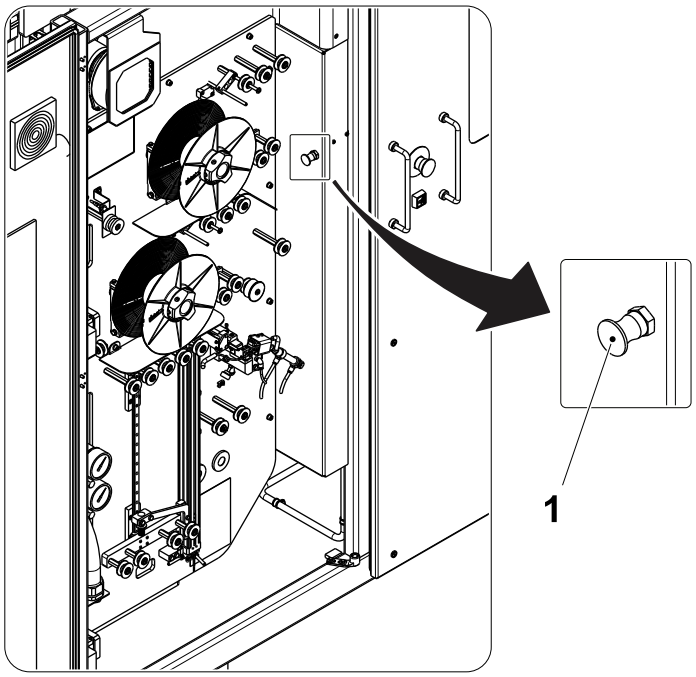

2

Pull the knob (1) and open the strip magazine frame.

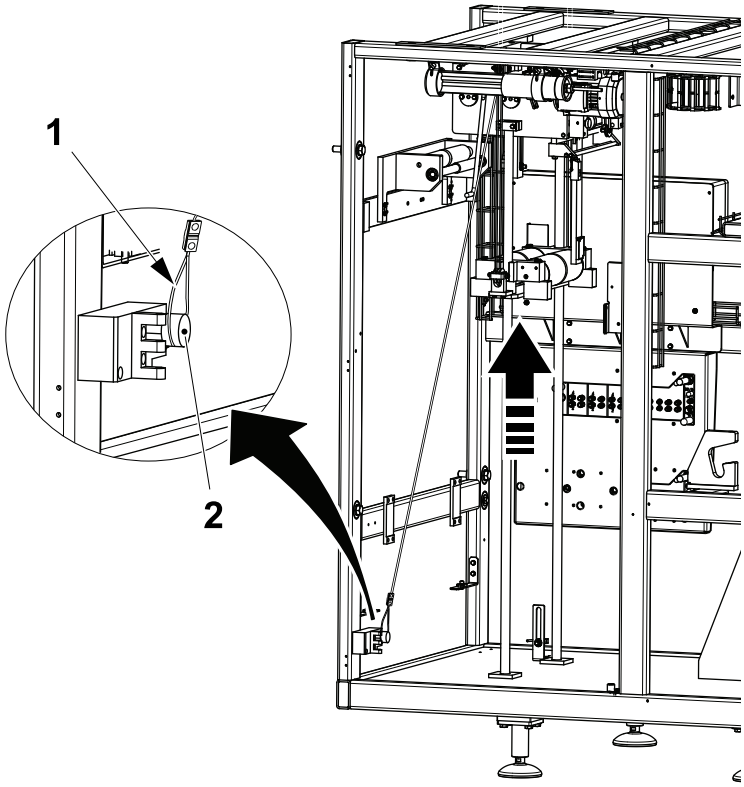

3

WARNING

Risk of personal injury

Make sure that the ropes are securely fastened.

Lift the magazine rollers by means of the rope and pulley and attach the hook (1) to the damper (2) to secure magazine rollers in the upper position.

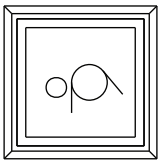

4

Paper Magazine with Cylinder

Press the PRESSURE ROLLER button to release the counter pressure roller.

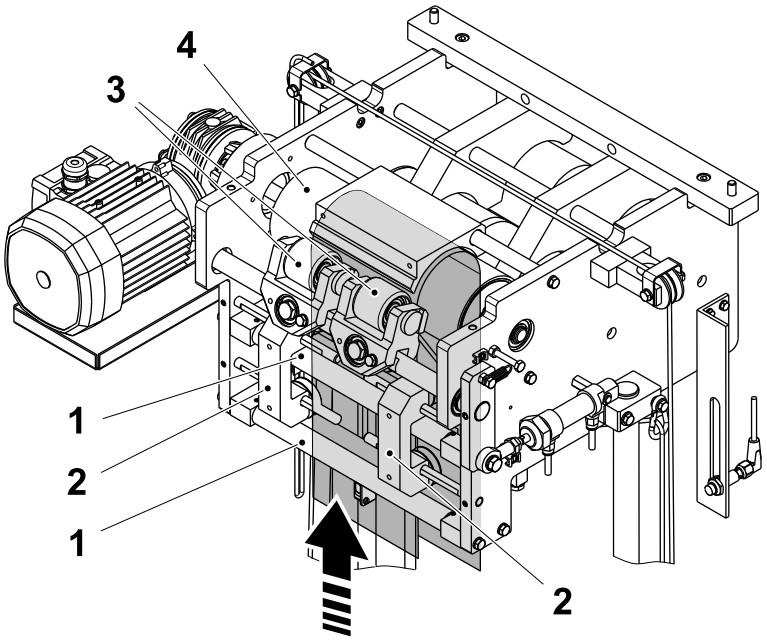

5

Feed the packaging material:

- between the rollers (1)
- through the web guides (2)
- between the counter rollers (3) and the drive roller (4).

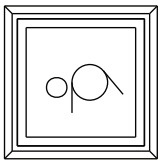

6

Press the PRESSURE ROLLER button to close the counter pressure roller.

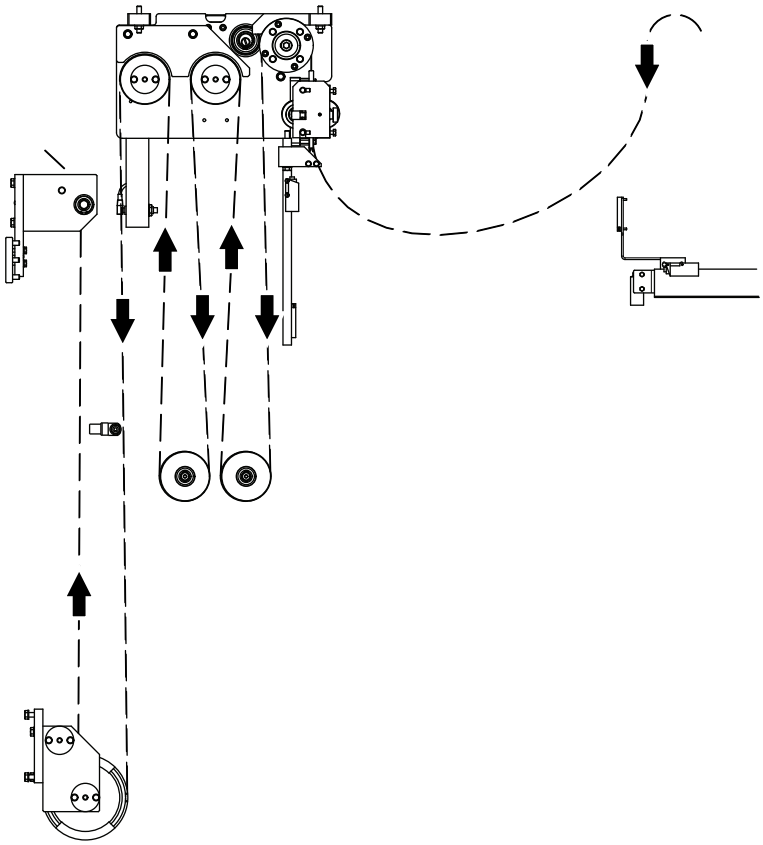

7

Thread the packaging material around the magazine rollers as indicated in the illustration.

If more packaging material is needed, close the strip applicator frame and reset the alarm on the TPOP.

Close the ASU doors.

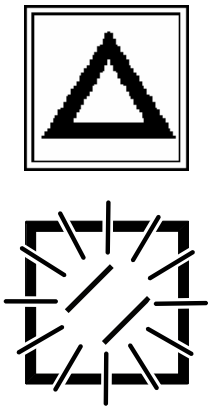

8

Close the ASU doors.

Make sure all covers and doors on the machine are closed and reset any alarms TPOP display.

If the RESET buttons on the machine body or ASU doors are ON, press the RESET buttons to reset the safety system, see 8.2 Security Stop.

The packaging material will be fed automatically into the ASU loop. Allow the packaging material to be fed for approximately 10 seconds and then open the ASU doors to stop feeding the packaging material.

If an alarm reappears, take the appropriate action or call a technician.

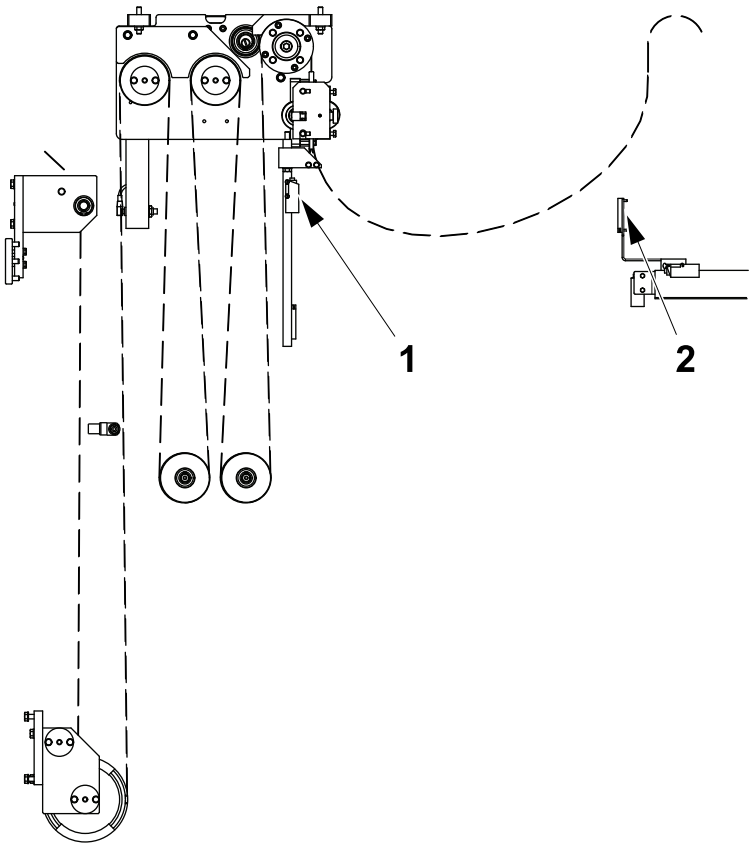

9

Make sure the loop of the packaging material covers the photocell (1) and the reflector (2).

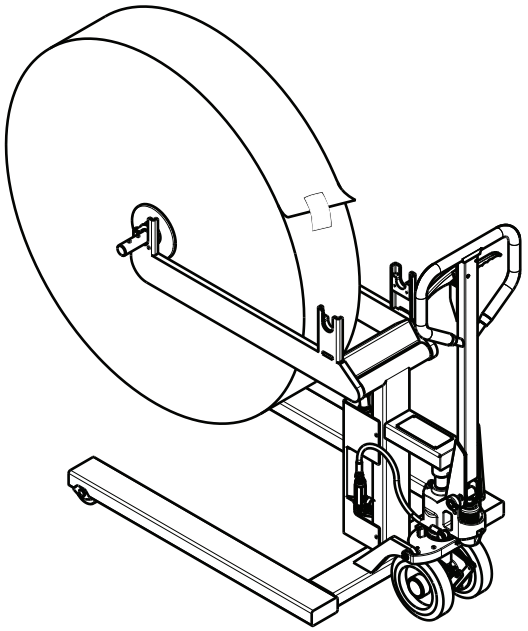

10

Load the second reel of packaging material into the ASU and prepare it for splicing, see 6.2 Packaging Material Supplies.

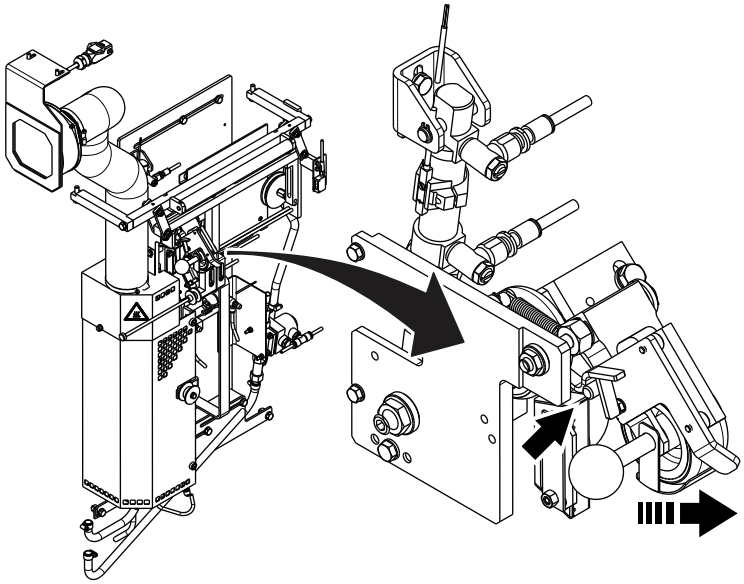

11

Pull the pressure roller away from its operating position and lock it in this position.

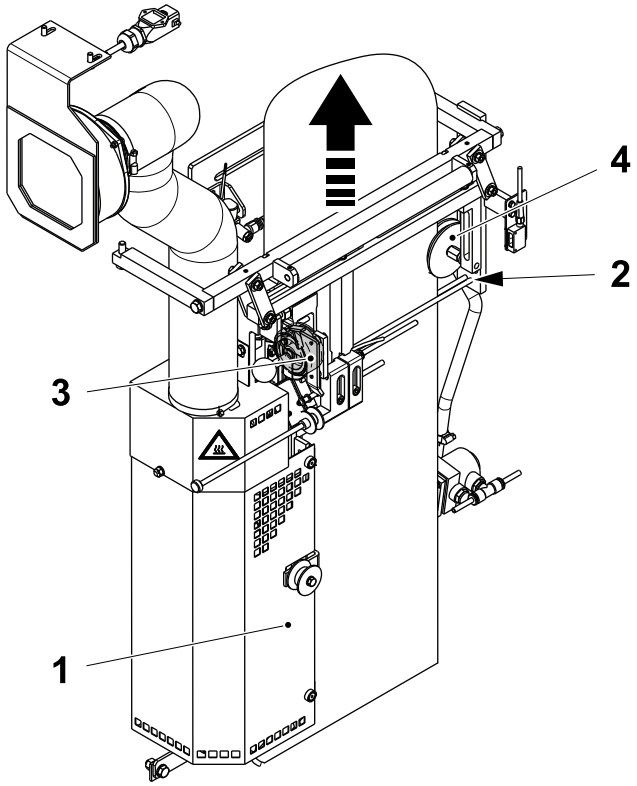

12

Feed the packaging material:

- through the SA (1)
- through the edge guide wheel (2)
- between the pressure rollers (3)
- between the shaft (4).

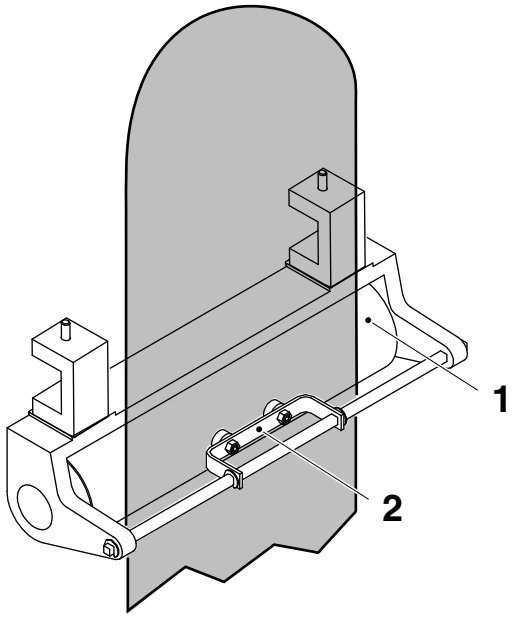

13

Thread approximately 1 meter of packaging material up through the platform floor and passed the bending roller (1).

Lock it in place by means of the material lock (2).

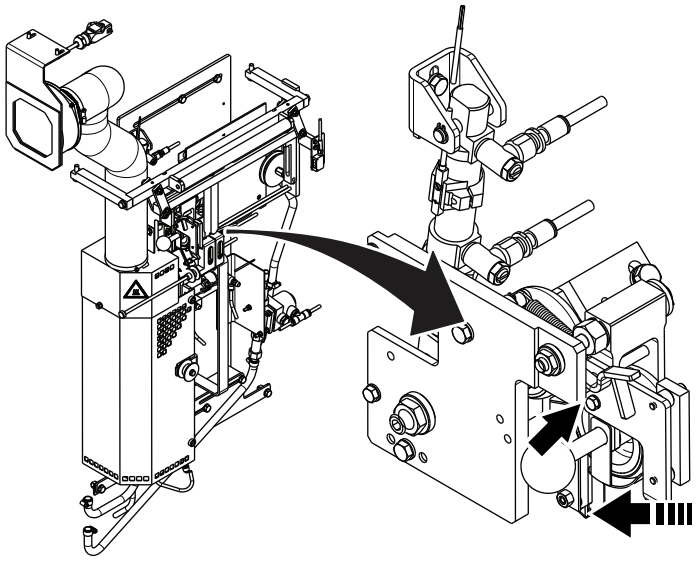

14

Release the catch to return the pressure roller to its operating position.

Note! The pressure roller will be damaged if left in the operating position and the machine is not used for a long time.

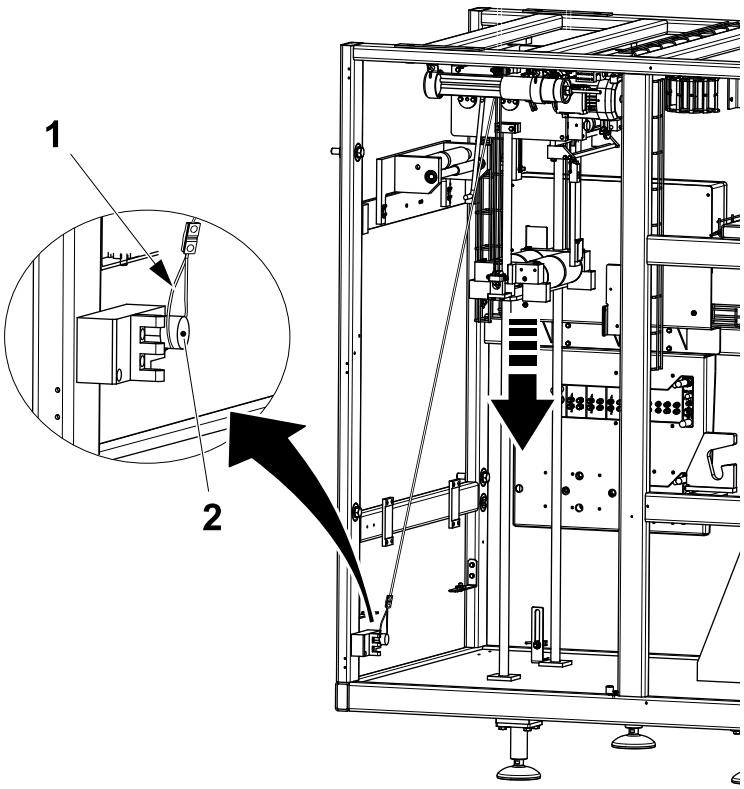

15

CAUTION

Risk of personal injury.

Make sure the rollers of the ASU magazine are in the lower position if it is necessary to cut the packaging material web. Failure to do so will result in the rollers dropping suddenly if the ropes are disengaged from the locking devices.

Make sure that the packaging material is correctly positioned over the rollers.

Release the rope (1) and slowly lower the magazine rollers.

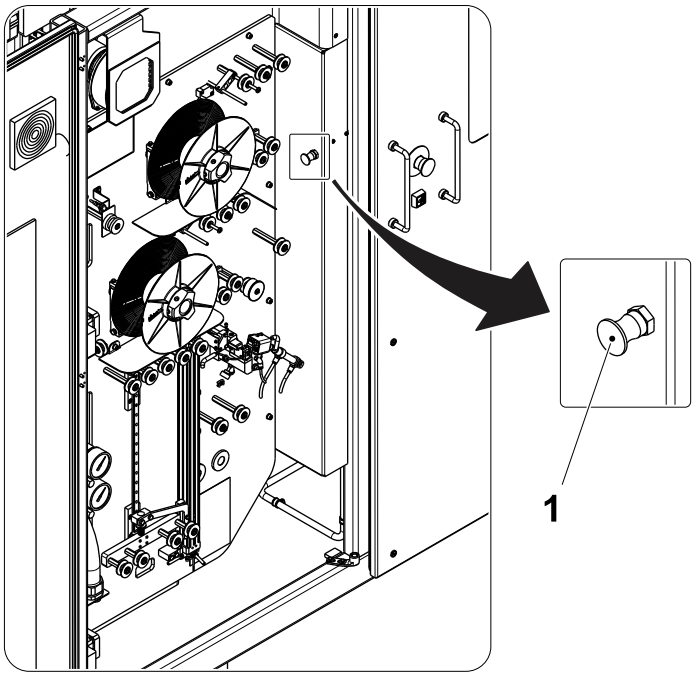

16

Close the strip magazine frame and make sure that the knob (1) locks into place.

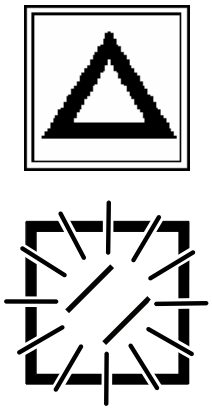

17

Close the ASU doors.

If the RESET buttons on the machine body or ASU doors are ON, press the RESET buttons to reset the safety system, see 8.2 Security Stop.

If an alarm reappears, take the appropriate action or call a technician.

3.1.4 Threading up to the Chamber

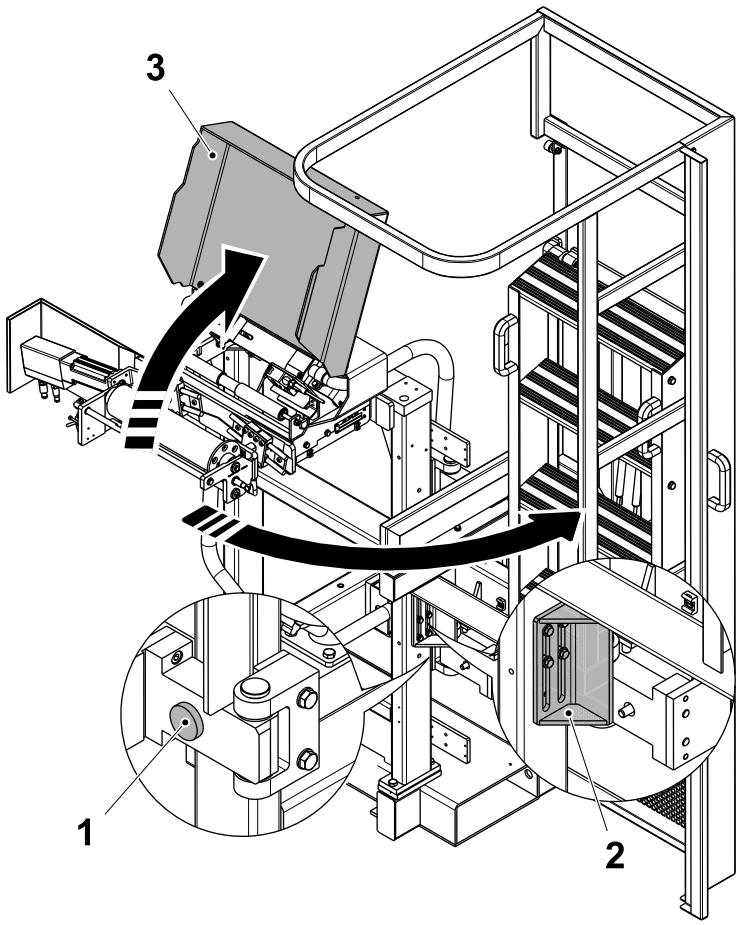

1

Loosen the two knobs (1) on the hinges and swing open the stairs.

Lock the stairs in place by moving the bracket (2) down.

Lift up the cover (3) on the bending roller.

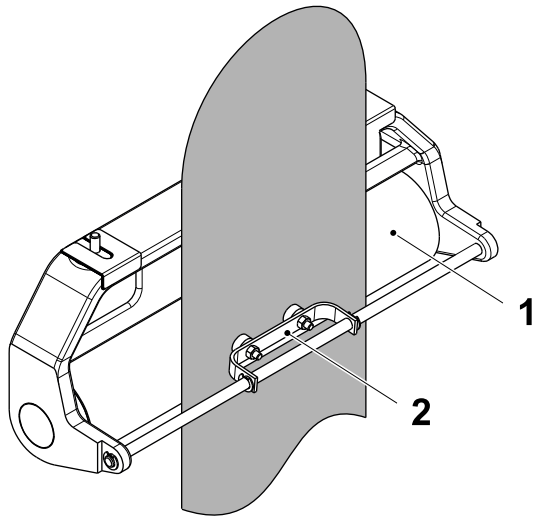

2

Thread approximately 7 meters of packaging material up through the platform floor and passed the bending roller (1).

Lock it into place with the material lock (2).

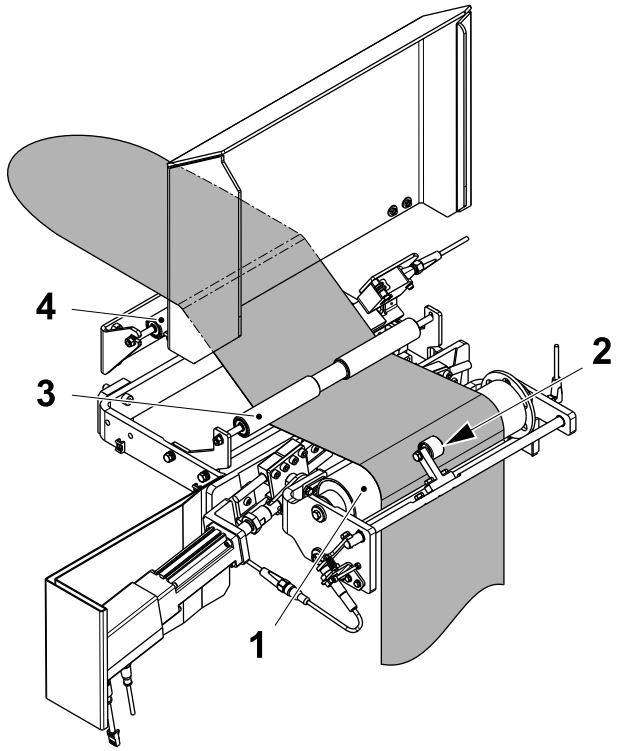

3

Feed the packaging material between the roller (1) and the roller (2), then under the roller (3) and over the roller (4).

Close the cover (5).

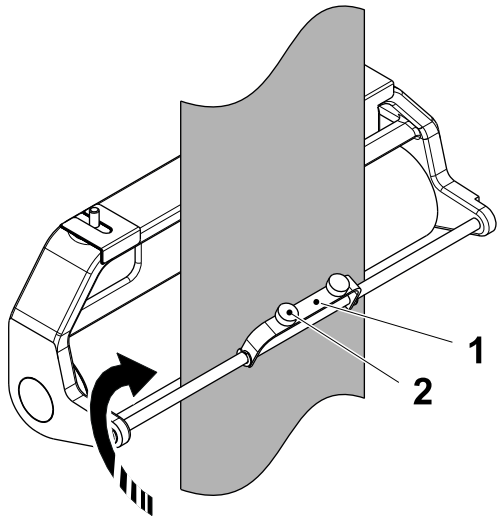

4

Swing up the material lock (1) to make sure the packaging material does not touch the dampers (2) when the machine is running.

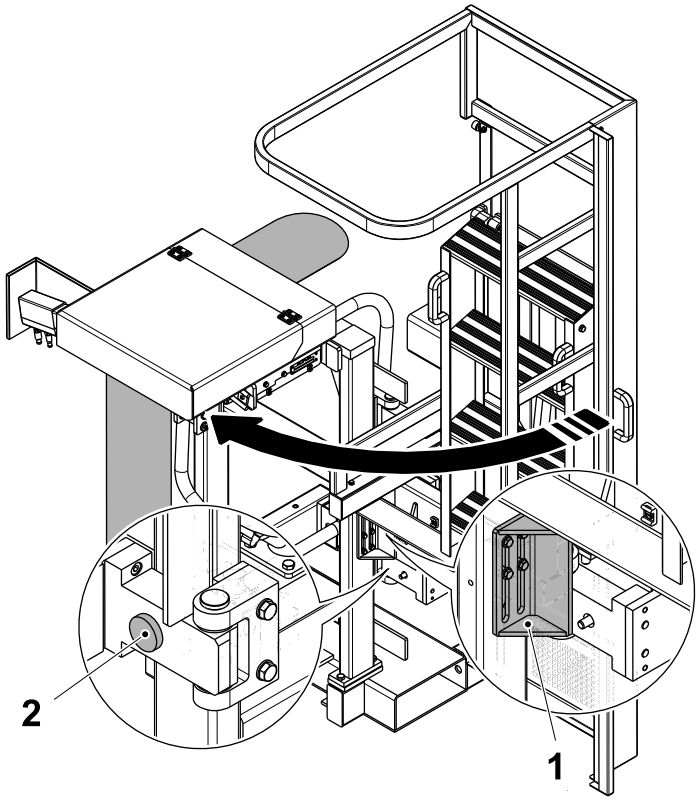

5

Lift up the bracket (1) and move the stairs to the closed position.

Tighten the two knobs (2) on the hinges to lock the stairs in place.

3.1.5 Threading Through the Chamber

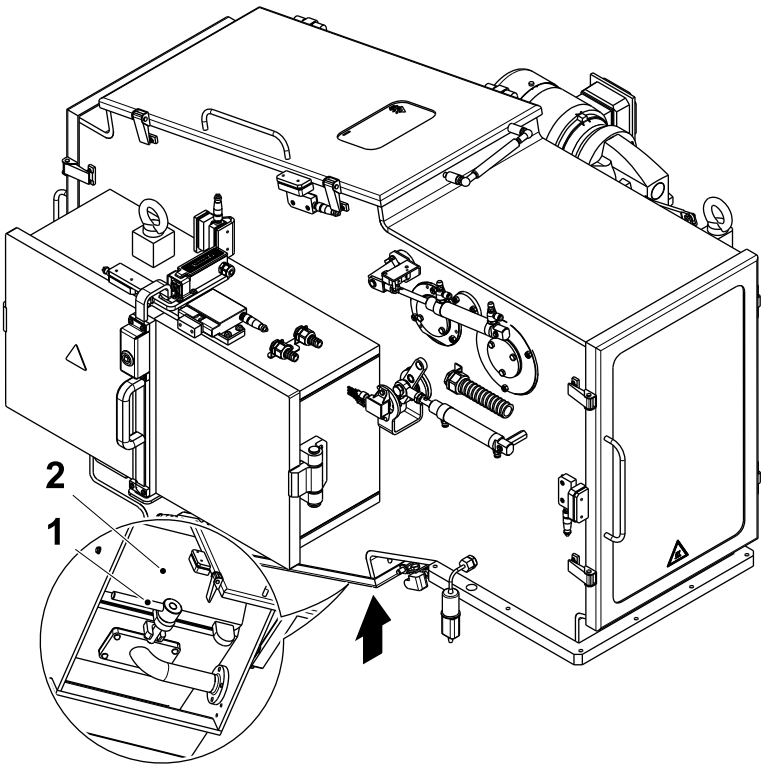

1

Open the bottom door of the chamber.

Turn the handle (1) and open the hatch (2).

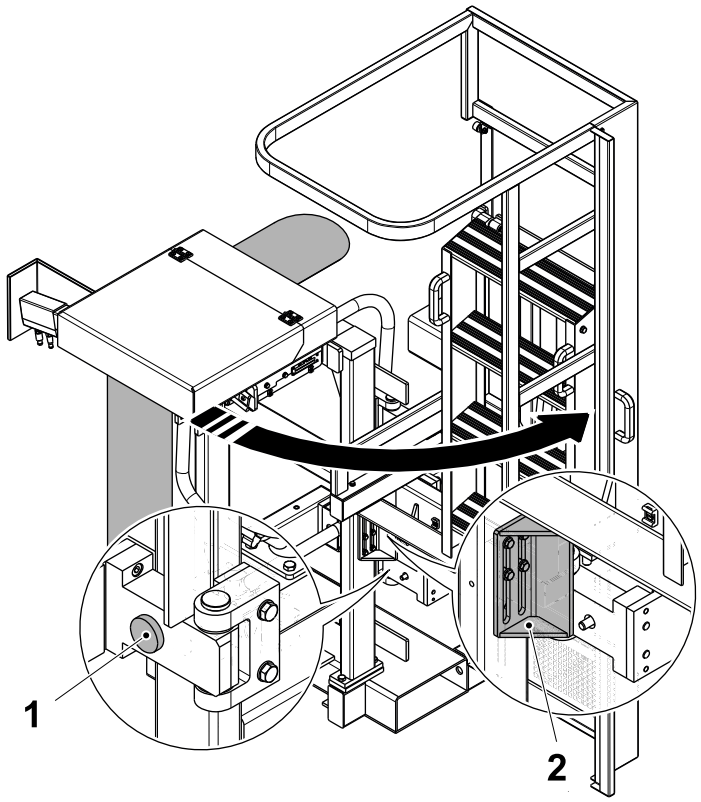

2

Loosen the two knobs (1) on the hinges and swing open the stairs.

Lock the stairs in place by moving the bracket (2) down.

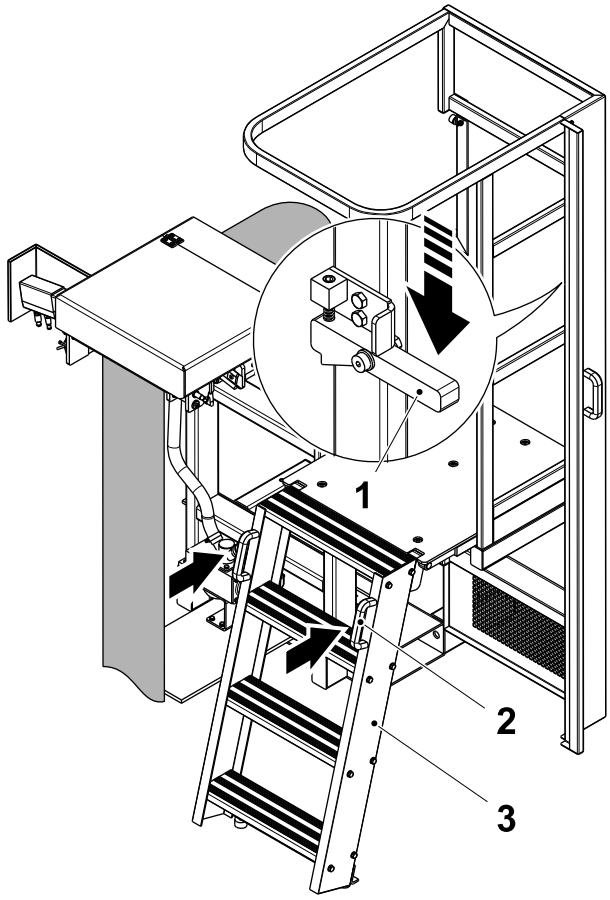

3

Push down on the latch (1), and then holding the two handles (2) pull down the stairs (3).

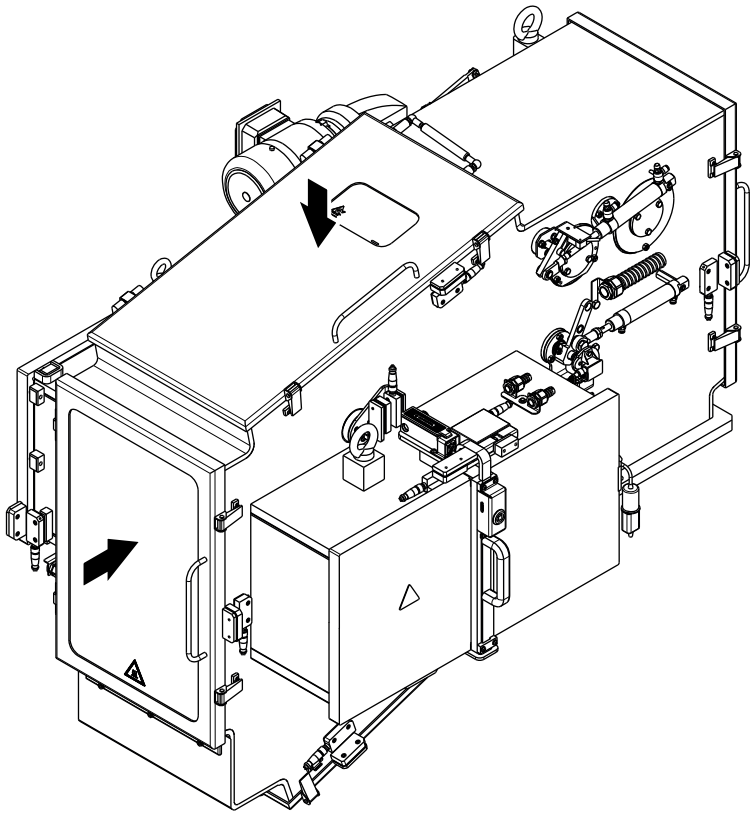

4

Stand on the platform and open the top and rear doors of the chamber.

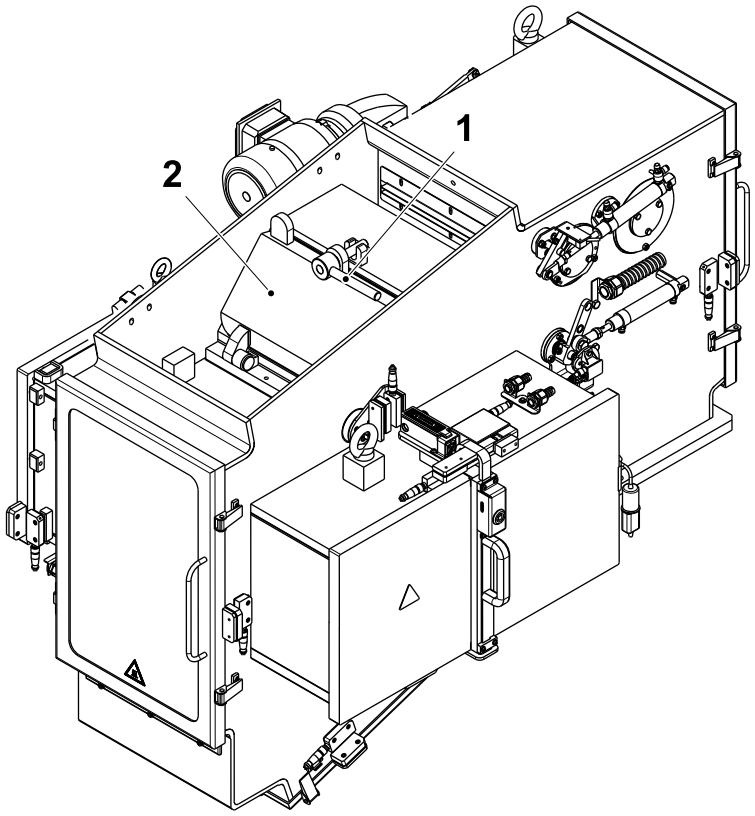

5

Turn the handle (1) and open the hatch (2).

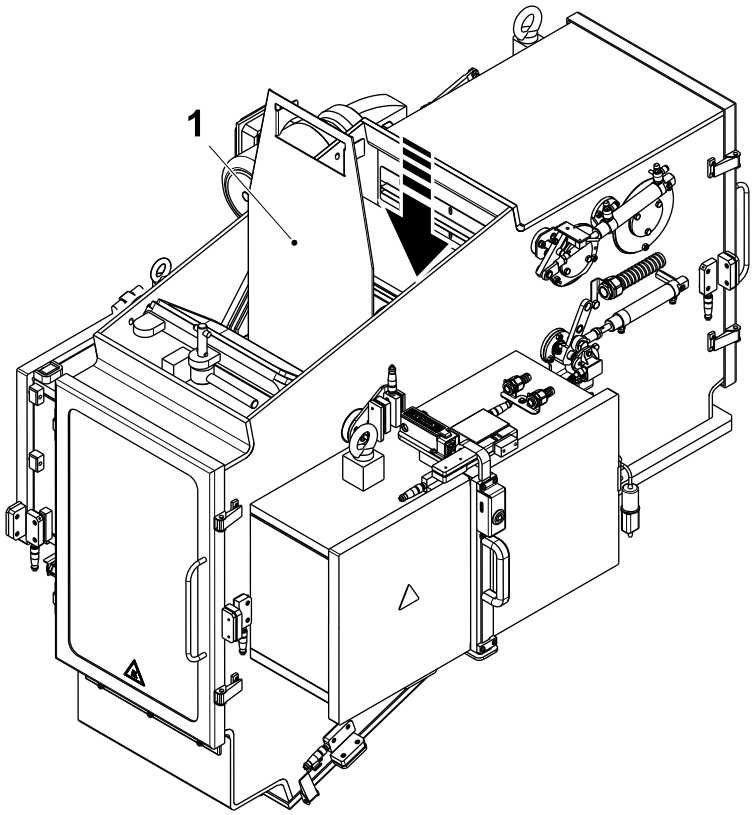

6

Carefully lower the packaging material threading tool (1) down into the slot and through the chamber.

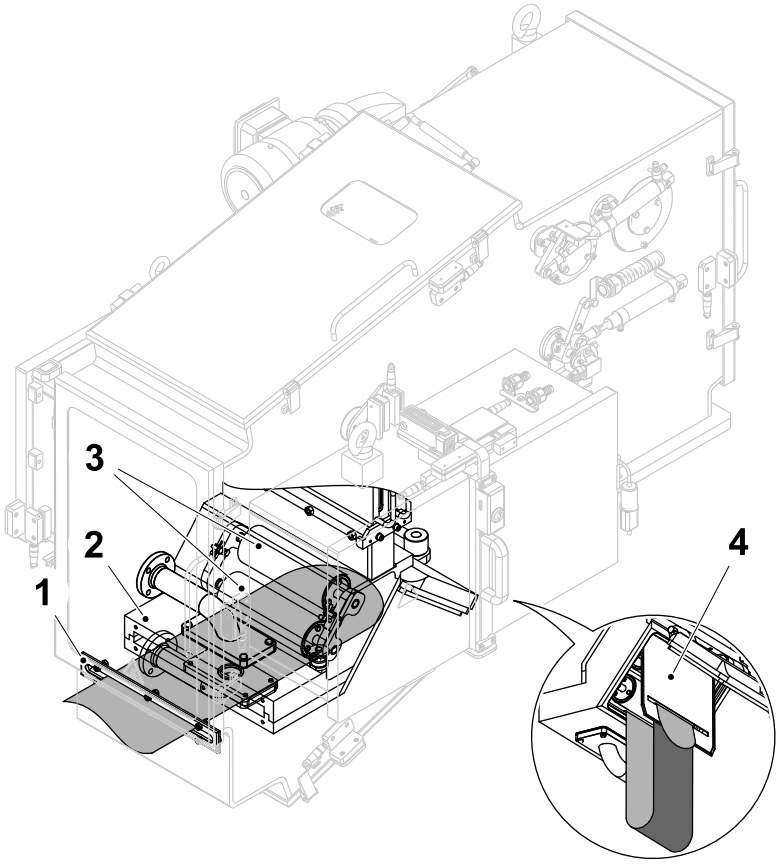

7

Thread the packaging material through the rubber slot (1) and into the chamber (2).

Thread approximately 1 metre of packaging material through the chamber (2) and under the two rollers (3).

Thread the packaging material through the slot in the packaging material threading tool (4) and fold over the end of the packaging material as shown in the illustration.

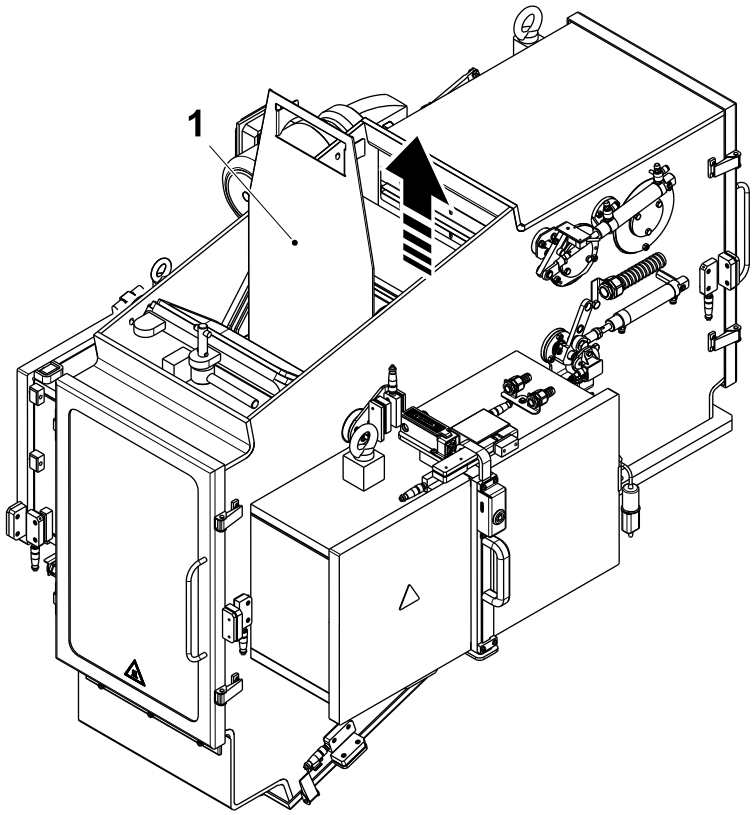

8

Carefully pull the packaging material threading tool (1) up through the chamber.

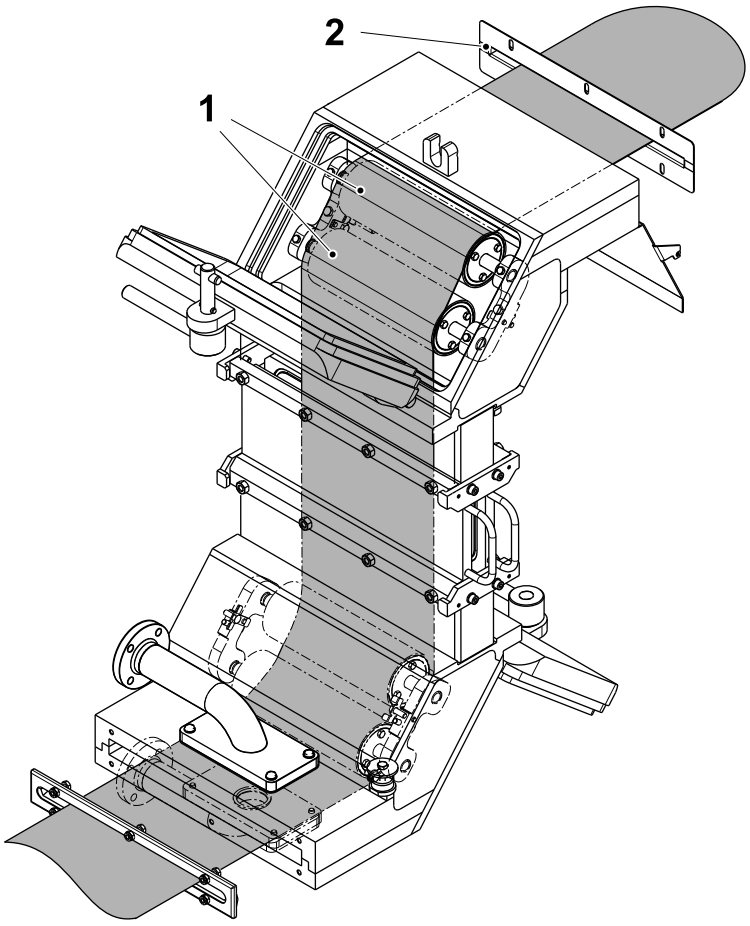

9

Thread the packaging material over the two rollers (1) and then though the slot (2).

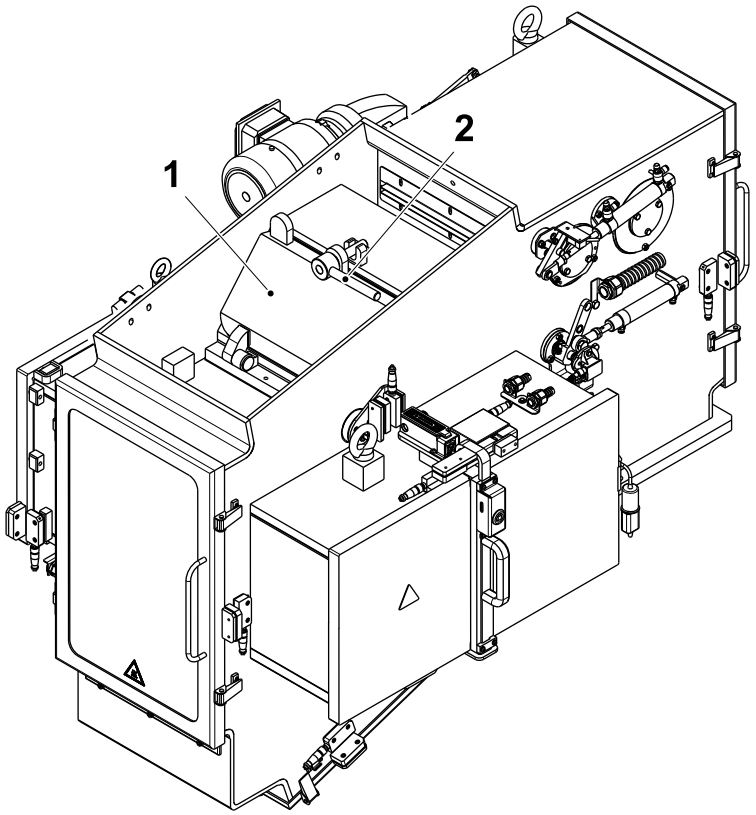

10

Close the hatch (1) with the handle (2).

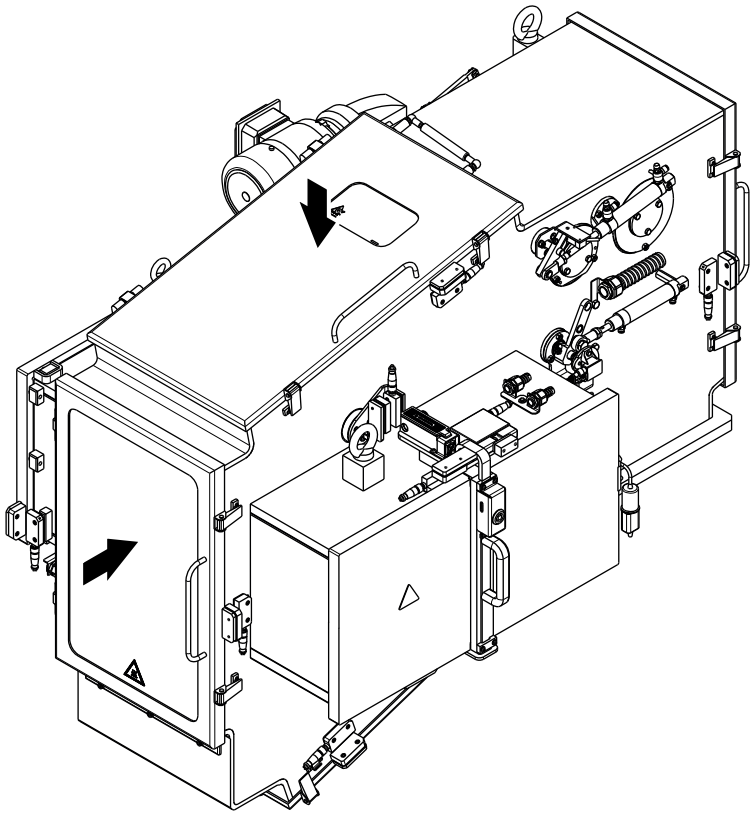

11

Close the top and rear doors of the chamber.

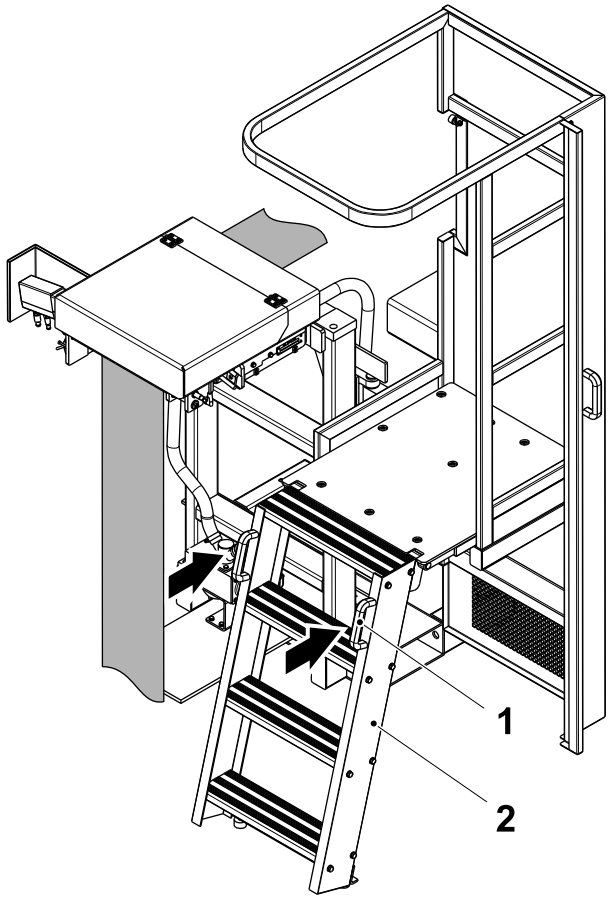

12

Holding the two handles (1) fold up the stairs (2).

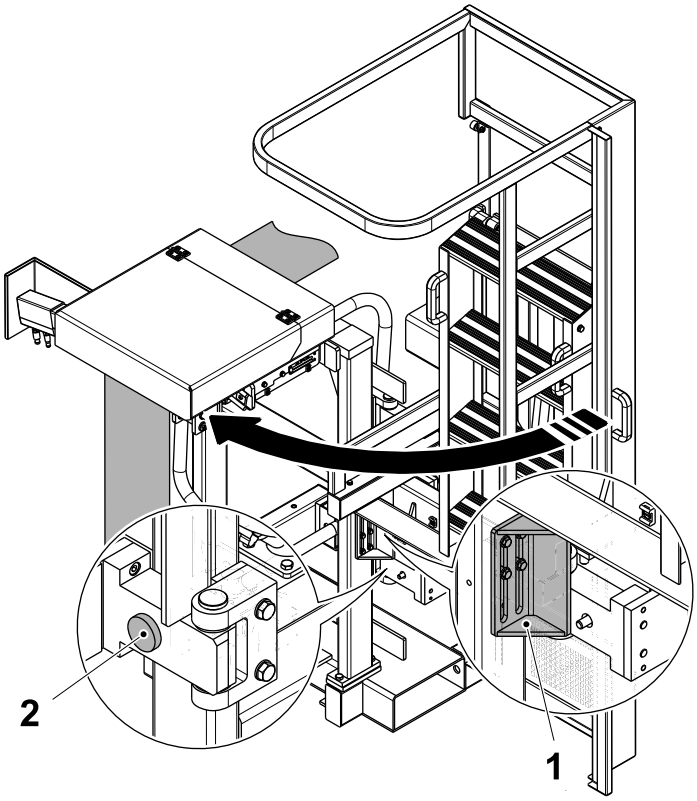

13

Lift up the bracket (1) and move the stairs to the closed position.

Tighten the two knobs (2) on the hinges to lock the stairs in place.

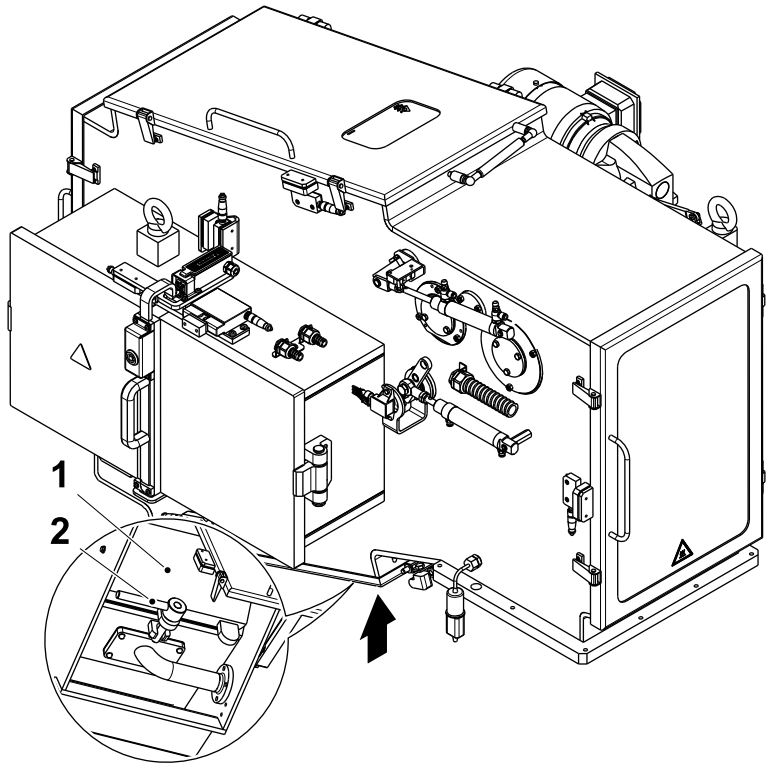

14

Close the hatch (1) with the handle (2).

Close the bottom door of the chamber.

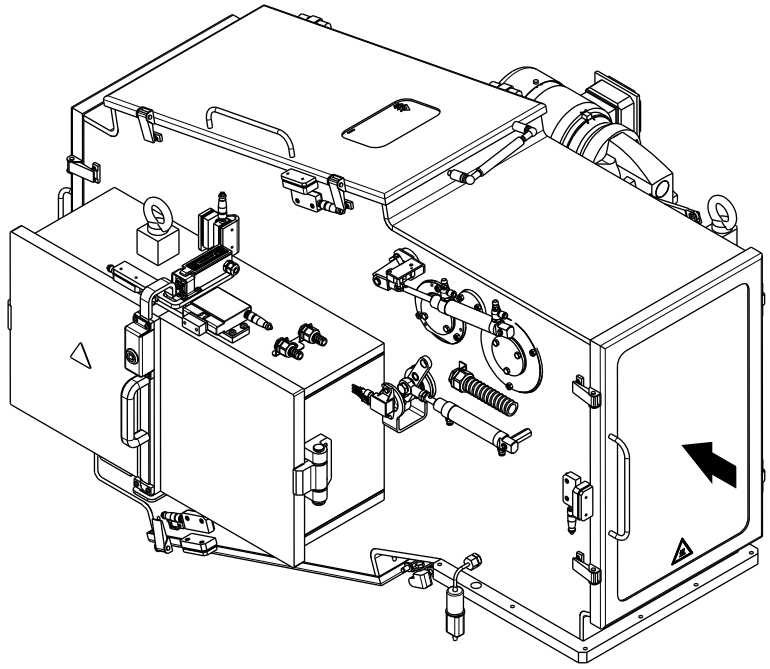

15

Open the front door of the chamber.

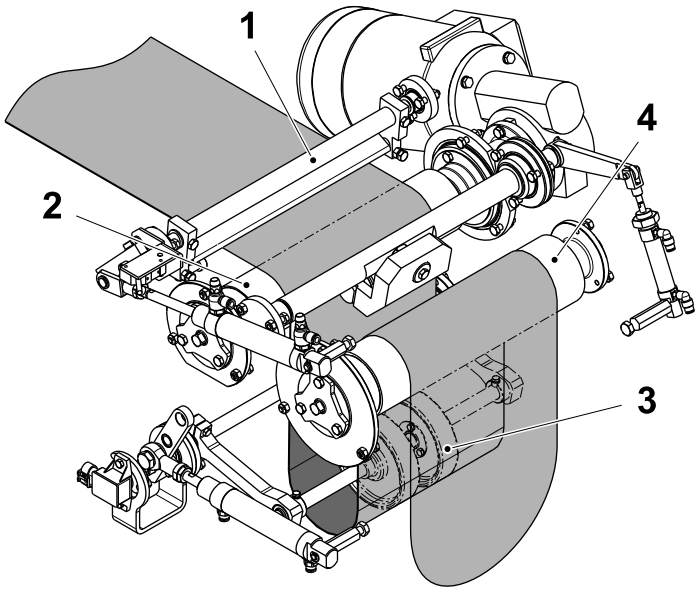

16

CAUTION

Risk of serious production fault.

Check that the packaging material edge is not broken or cracked. If necessary pull out the packaging material up to the broken/cracked part and cut smoothly the packaging material, avoiding crease lines on the tip.

Thread the packaging material under the cleaning lid (1), over the roller (2), around the rollers (3) and over the roller (4).

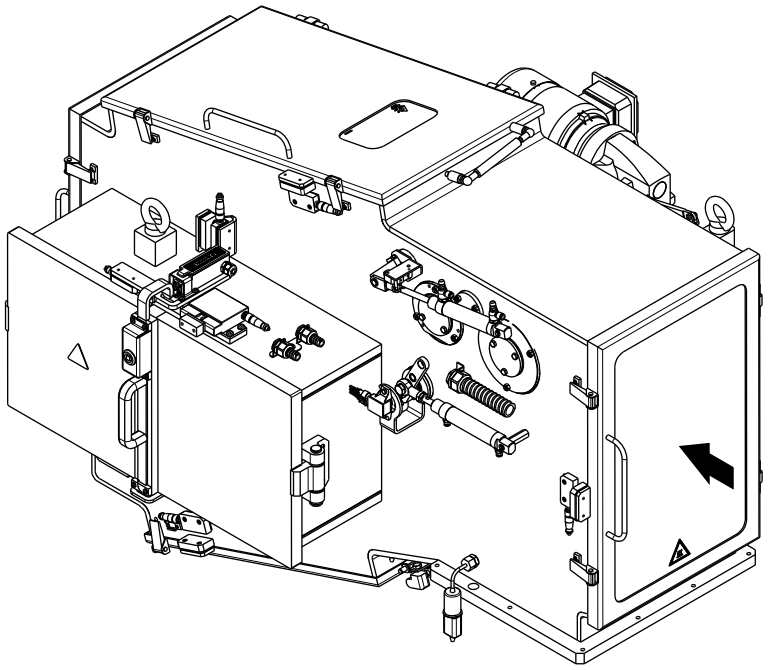

17

Close the front door of the chamber.

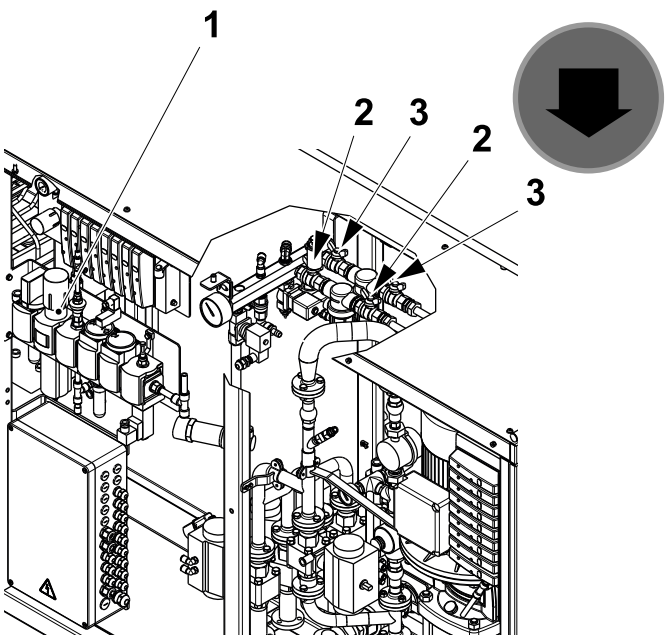

18

Preparing After Weekly Care is now finished.

If PRODUCTION is scheduled, continue according to 3.2 Preparing after Daily Care.

If PRODUCTION is not scheduled:

- Press the PROGRAM DOWN button to step down to STEP ZERO
- Turn OFF the air supply (1)
- Turn OFF the cooling water supply (2) or (3) depending on which filter is in use.

3.2 Preparing after Daily Care

Note! If Weekly Care has been performed, start with 3.1 Preparing After Weekly Care.

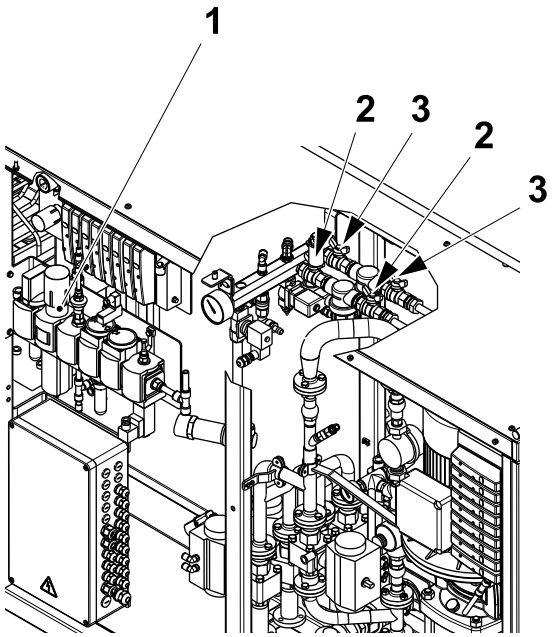

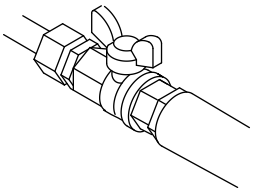

Cooling water ON

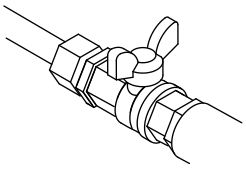

Cooling water OFF

1

Note! If Preparing after Weekly Care has just been carried out, continue with item 3.

Otherwise:

- Turn ON the air supply (1)
- Turn ON the cooling water supply (2) or (3) depending on which filter is in use.





2

Touch the GO button and select the PRODUCTION task.



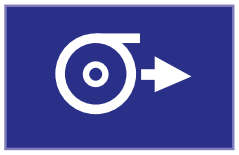

3

On the TPOP, press the PROGRAM UP button.

The machine steps to PREPARATION and the PREPARATION icon is enlarged on the top of the ladder step.

3.2.1 Flow Rates

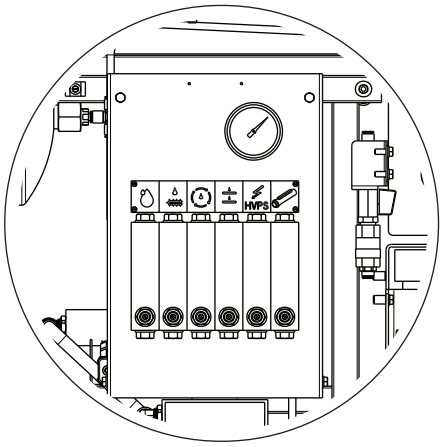

1

Check that the flow rate of the cooling circuits in the service unit are correct.

See the 11.1 Setting Values for the correct flow rates.

Call a technician if adjustments are needed.

3.2.2 Recorder

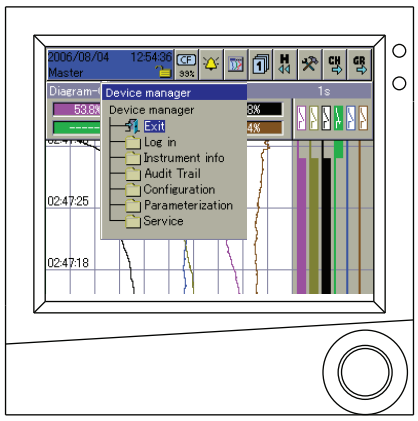

1

Every time the machine is started for PRODUCTION, it is suggested to input the following information:

- Machine serial number
- Batch data.

See the JUMO manual for more details.

3.2.3 Hydrogen Peroxide



1

Check the hydrogen peroxide concentration.
See chapter 10 Sterilization Liquid.

3.2.4 Superstructure

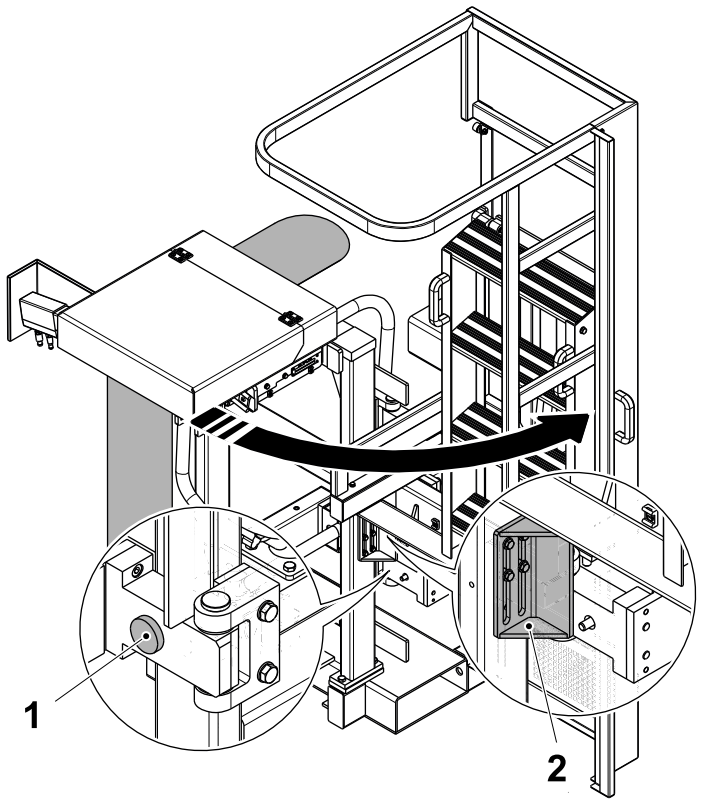

1

Note! If Preparing after Weekly Care has been carried out, continue with 3.2.5 Filling Pipe.

Loosen the two knobs (1) on the hinges and swing open the stairs.

Lock the stairs in place by moving the bracket (2) down.

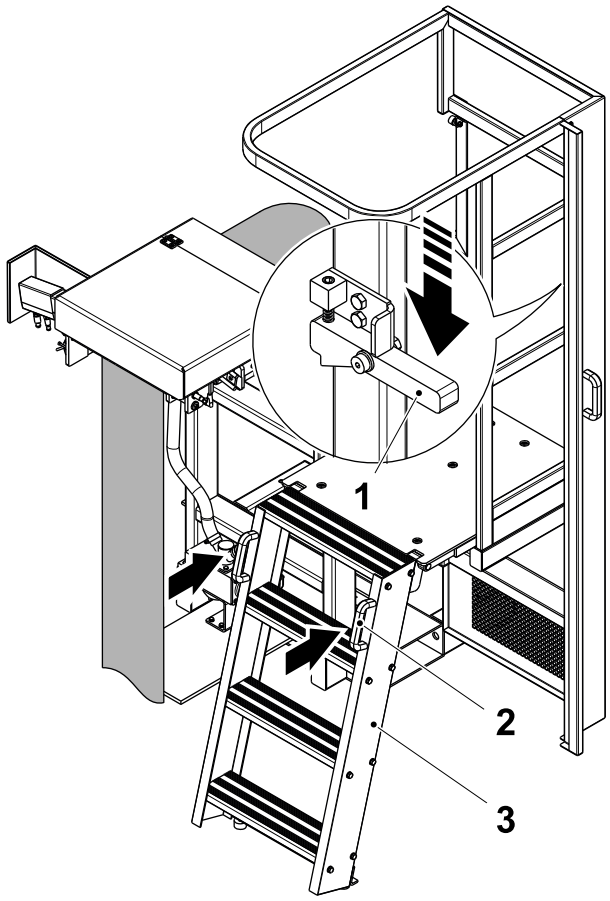

2

Push down on the latch (1), and then holding the two handles (2) pull down the stairs (3).

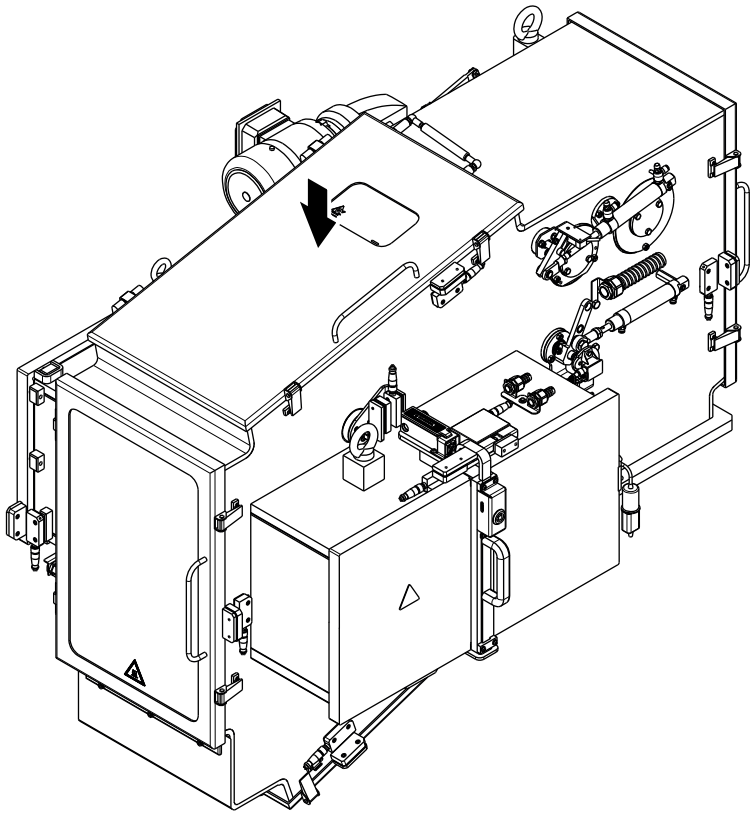

3

Stand on the platform and open the top door of the chamber.

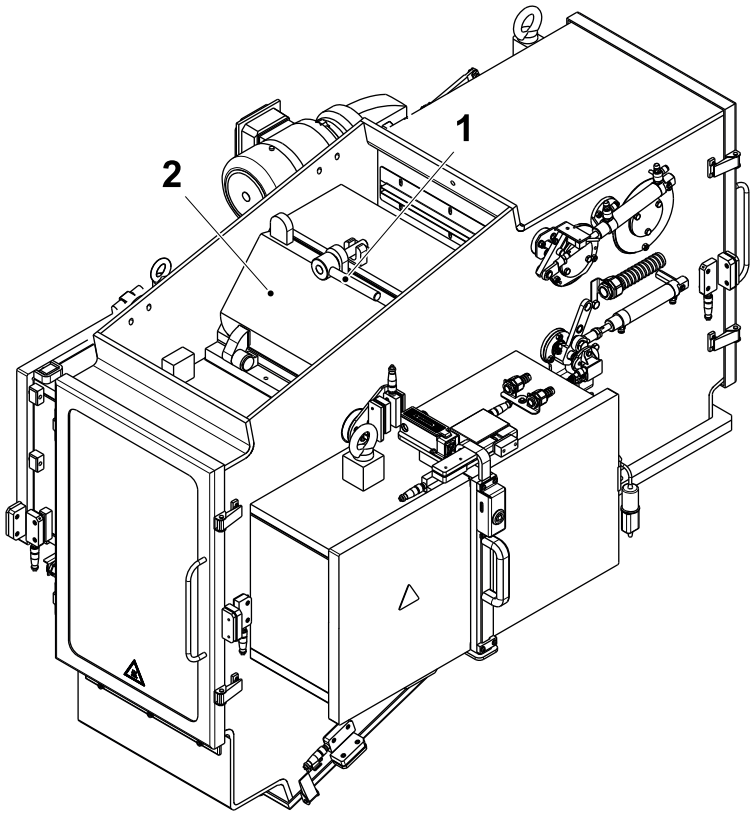

4

Turn the handle (1) and open the hatch (2).

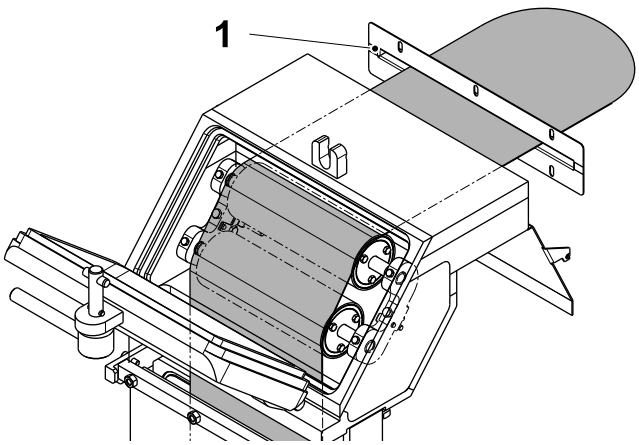

5

Shape the end of the packaging material as shown.

Feed the packaging material through the slot (1).

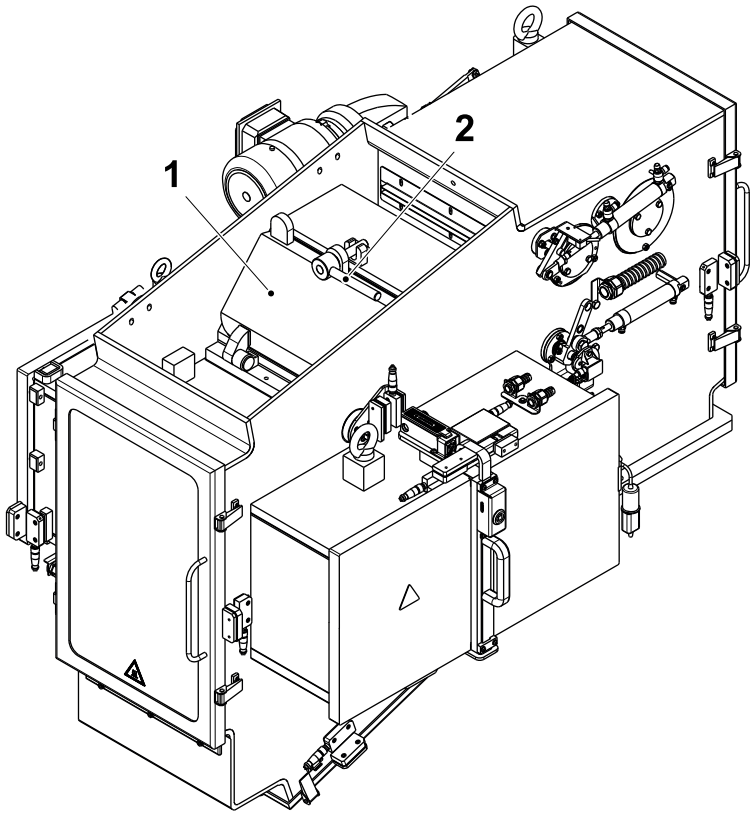

6

Close the hatch (1) with the handle (2).

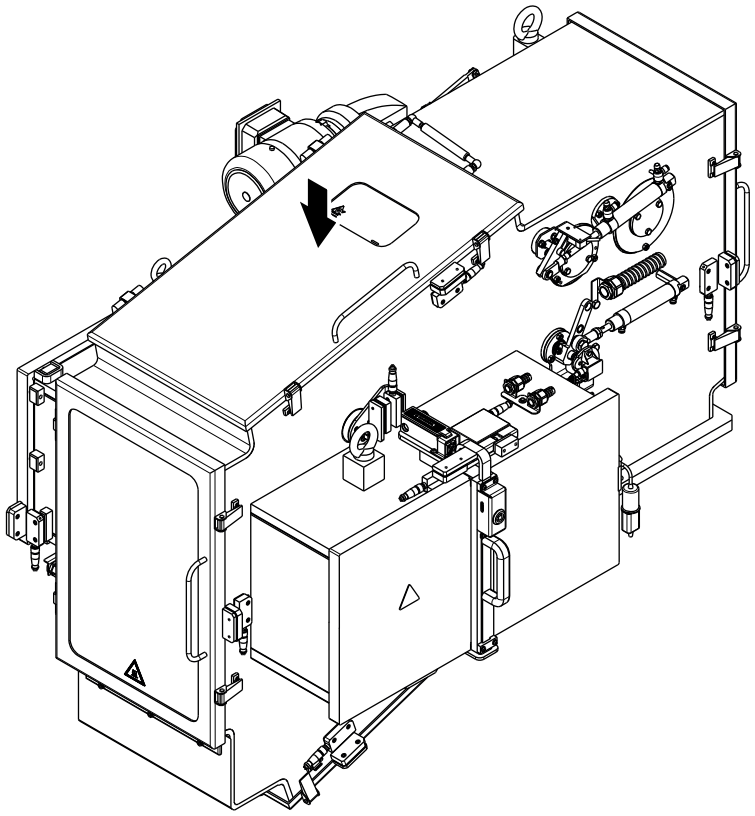

7

Close the top door of the chamber.

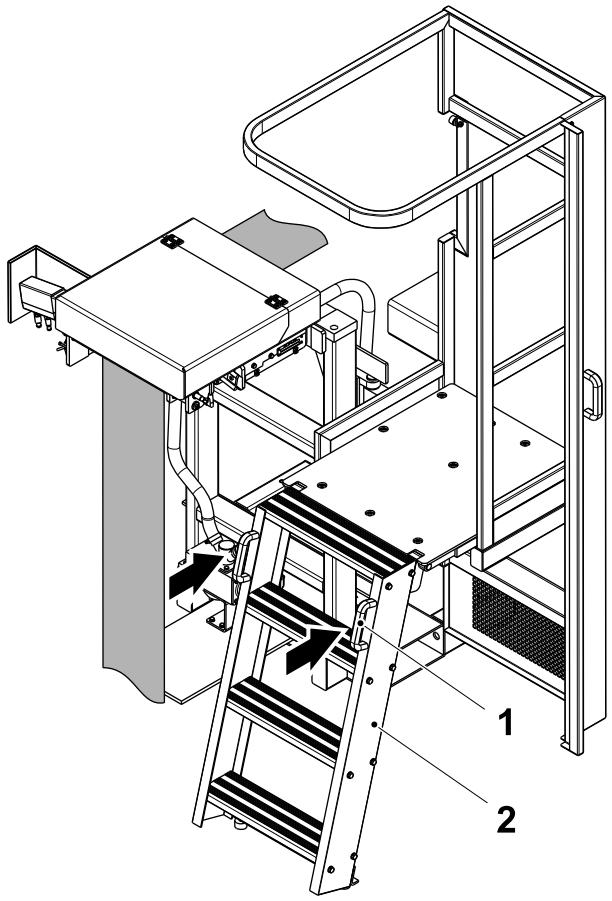

8

Holding the two handles (1) fold up the stairs (2).

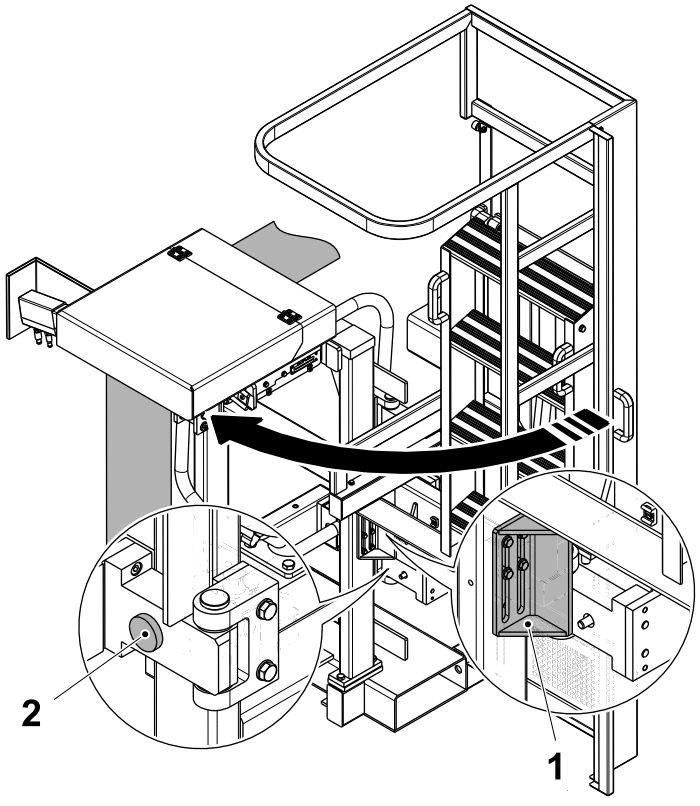

9

Lift up the bracket (1) and move the stairs to the closed position.

Tighten the two knobs (2) on the hinges to lock the stairs in place.

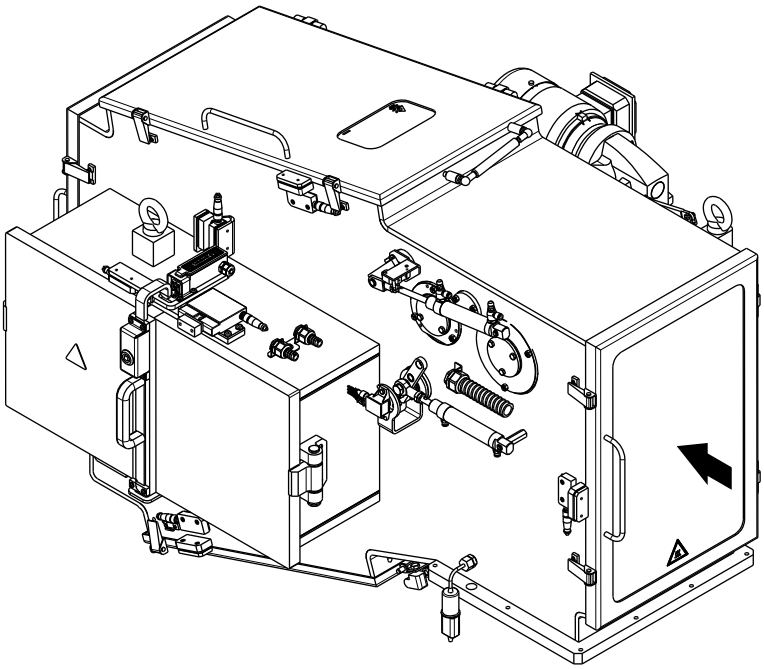

10

Open the front door of the chamber.

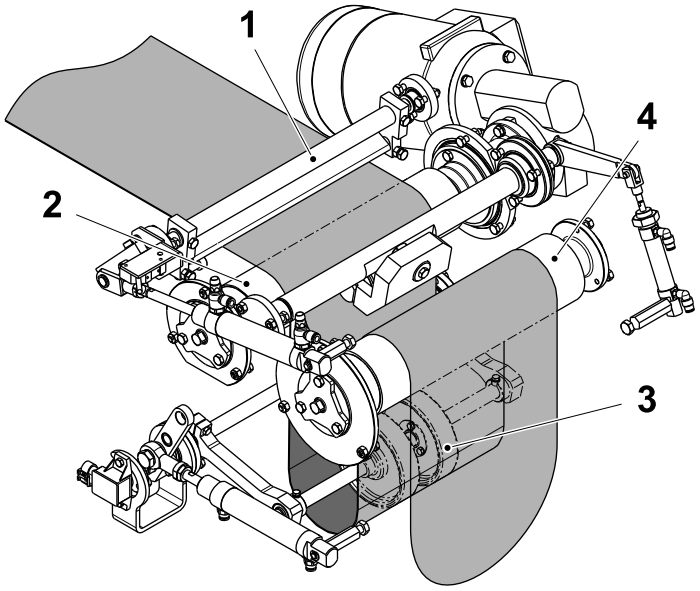

11

CAUTION

Risk of serious production fault.

Check that the packaging material edge is not broken or cracked. If necessary pull out the packaging material up to the broken/cracked part and cut smoothly the packaging material, avoiding crease lines on the tip.

Thread the packaging material under the cleaning lid (1), over the roller (2), around the rollers (3) and over the roller (4).

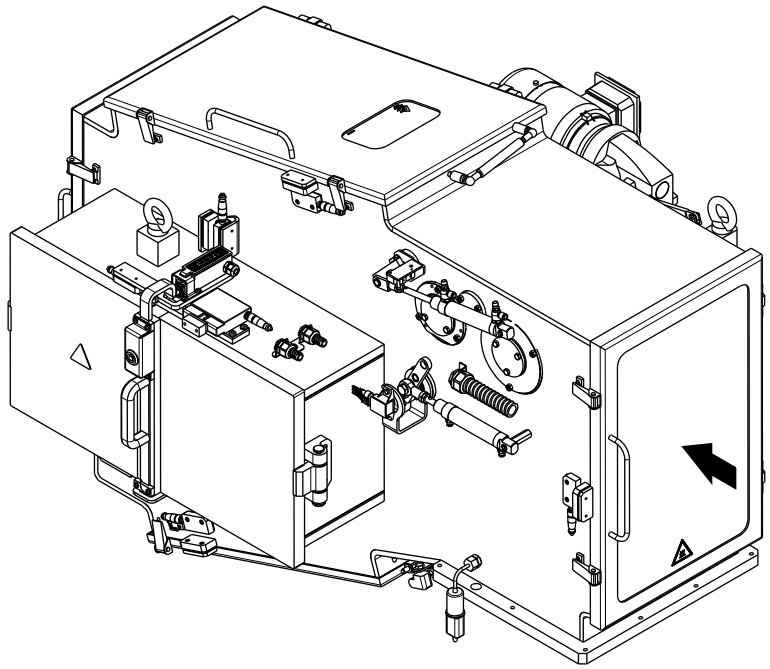

12

Close the front door of the chamber.

3.2.5 Filling Pipe

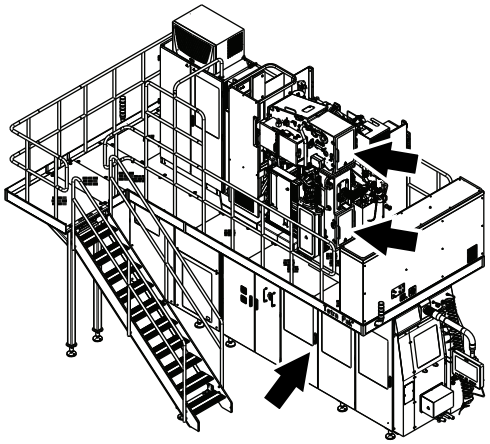

1

WARNING
Hydrogen Peroxide.
Follow the Safety Precautions.

Open the upper hygiene chamber door, the lower hygiene chamber door and the jaw system doors.

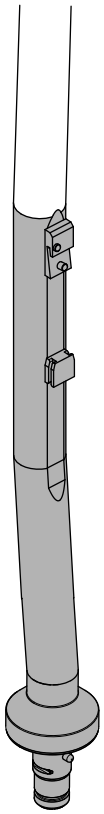

2

CAUTION
Risk of serious production fault.
Make sure all visible product residue has been removed from the pipe.

Check that all product residue has been removed from the lower part (area shown shaded) of the upper filling pipe.

Use a sponge or brush with water and cleaning compound code **D**.

Rinse with drinking water.

Note! For cleaning compound code information, see 11.2.1 Cleaning Compound Table.

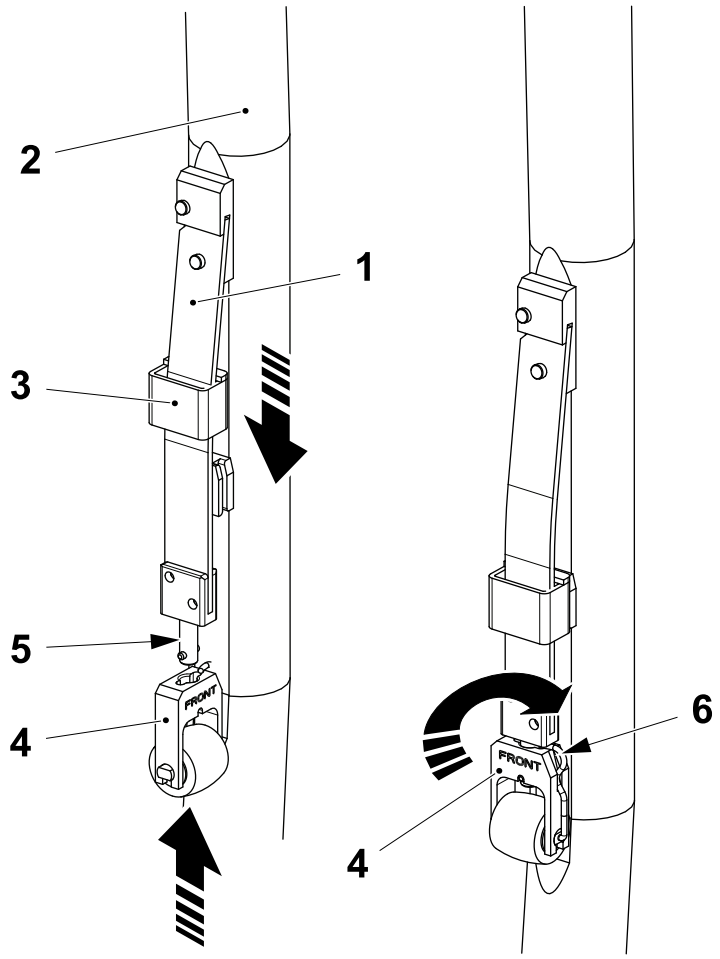

3

CAUTION
Hygiene.
Before handling clean parts, disinfect your hands/gloves with cleaning compound code **H**.

CAUTION
Risk of serious production fault.
Make sure the pressure roller is fitted with the word FRONT facing out from the filling pipe as shown in the illustration.

Take the pressure roller from its storage container.

Fit the spring (1) to the upper filling pipe (2).

Lower the hood (3) to lock the spring onto the filling pipe.

Fit the pressure roller assembly (4) into the shaft (5).

Rotate the pressure roller assembly (4) 90° and lock it in position with the hook (6).

Note! For cleaning compound code information, see 11.2.1 Cleaning Compound Table.

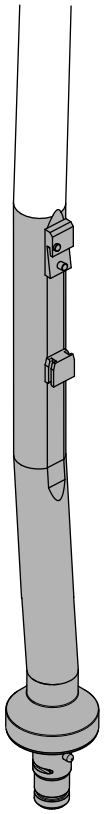

4

CAUTION
Risk of serious production fault.
Make sure all visible product residue has been removed from the pipe.

Spray a small quantity of disinfectant code **G3**, on the filling pipe covering entirely the flange and the area indicated by the shading in the illustration.

Note! For cleaning compound code information, see 11.2.1 Cleaning Compound Table.

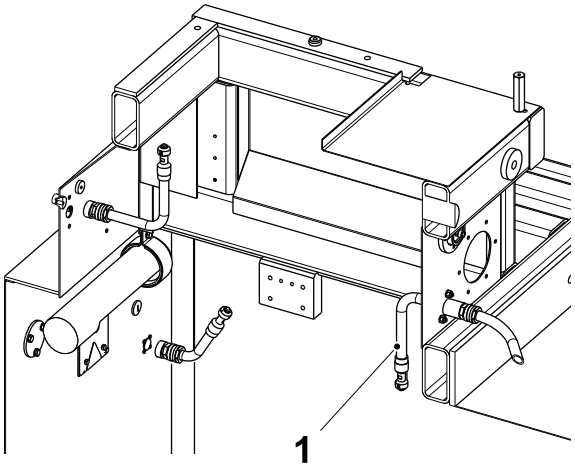

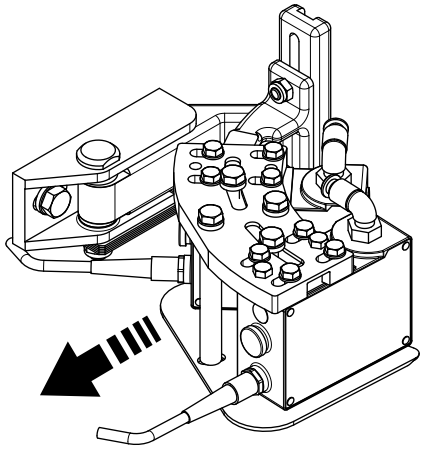

5

CAUTION

Risk of personal injury.

Pay attention to the external cleaning nozzle (1) when accessing the photocells area.

Swing the photocells outwards.

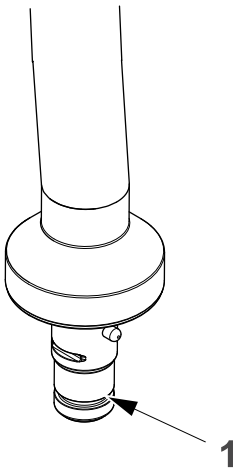

6

CAUTION
Hygiene.
Before handling clean parts, disinfect your hands/gloves with cleaning compound code **H**. Do not rinse the lower filling pipe with water. Allow the lower filling pipe to drip dry.

Fit a new O-ring (1) to the upper filling pipe.

Take the lower filling pipe from its storage container.

Note! For cleaning compound code information, see 11.2.1 Cleaning Compound Table.

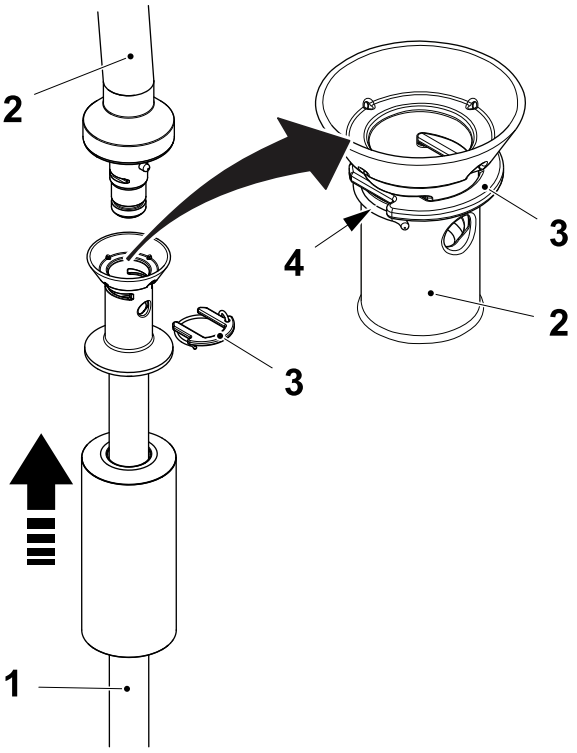

7

Fit the lower filling pipe (1) to the upper filling pipe (2) with the fork (3).

Note! Make sure that the spring (4) of the fork (3) is correctly locked around the filling pipe (1).

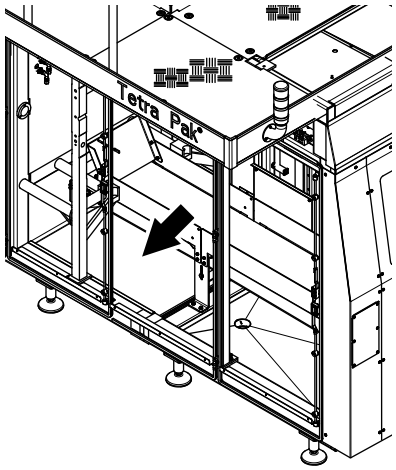

8

Clean away any foot prints left on the floor of the final folder with the water gun.

Close the doors.



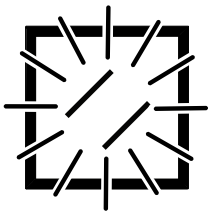

9

If the RESET buttons on the machine body doors are ON, press the RESET buttons to reset the safety system, see 8.2 Security Stop.

If an alarm reappears, take the appropriate action or call a technician.

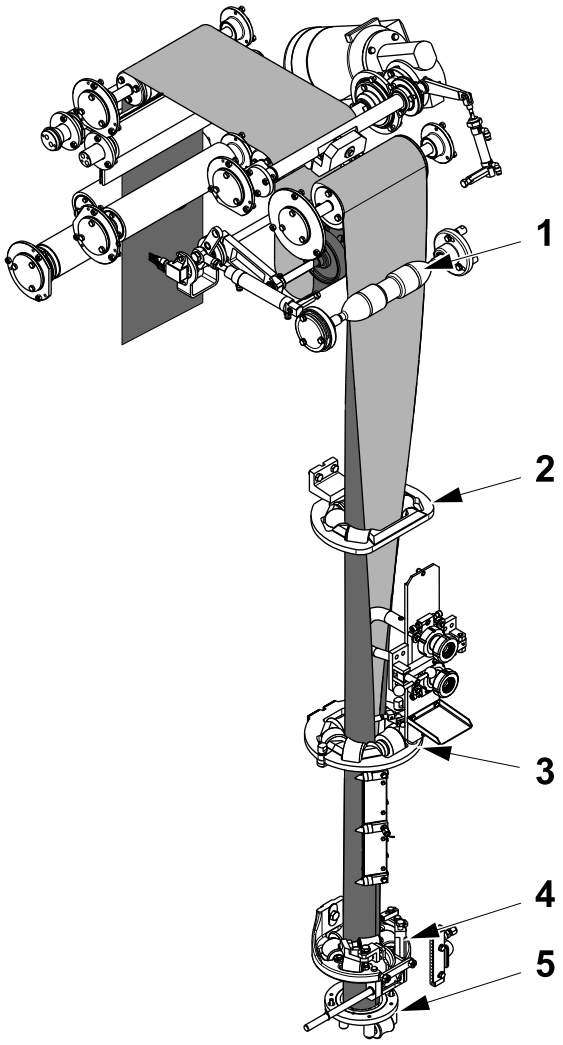

10

CAUTION

Hygiene.

Before handling clean parts, disinfect your hands/gloves with cleaning compound code **H**.

CAUTION

Risk of serious production fault.

Check that the packaging material edge is not ripped or cracked. If necessary pull out the packaging material up to the ripped/cracked part and cut smoothly the packaging material, avoiding crease lines on the tip. Packaging material ripped or cracked can cause unsterility or can cause burns on the tube when it stops in front of the LS inductor.

CAUTION

Risk of production fault.

Check that there is no condensation on the forming rings, the seal and on the hygiene chamber internal walls. Do not use compressed air. Dry with a clean cloth.

Pull the packaging material down through:

- the reverse bending roller (1)
- in front of the guide roller (2)
- the forming ring (3)
- the upper forming ring (4)
- the lower forming ring (5)
- the seal (6).

Close the hygiene chamber doors.

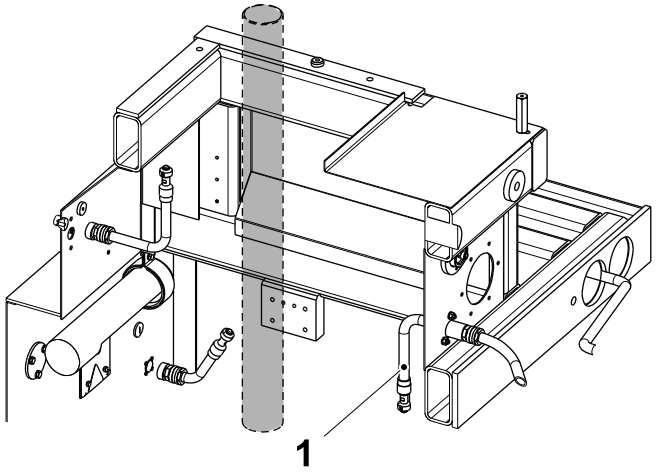

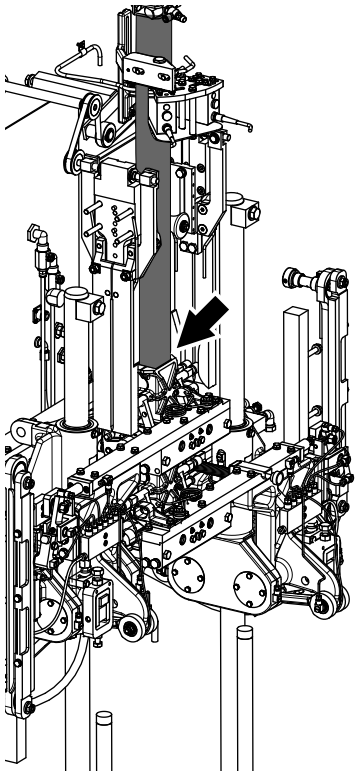

11

CAUTION

Risk of personal injury.

Pay attention to the external cleaning nozzle (1) when accessing the packaging material tube area.

Open the jaw system doors.

Pull the packaging material down to the jaw system.

Check that the jaws grip the packaging material. If required pull down more packaging material.

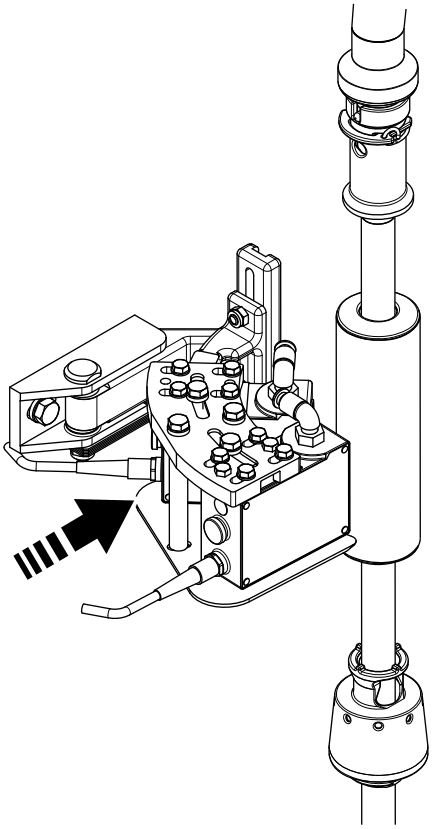

12

Push the photocells inwards.

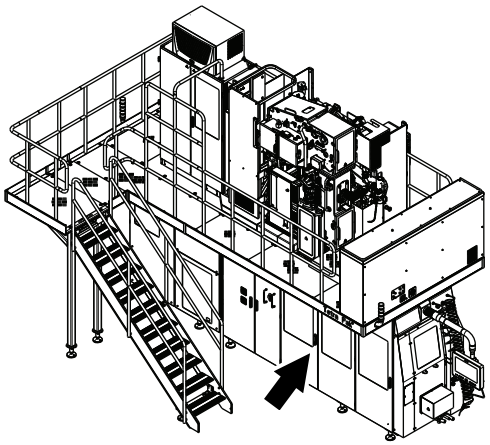

13

Close the jaw system doors.



14

Touch the MANOEUVRE button on the TPOP.



15
Touch the PACKAGE FORMING UNIT button.



16
Touch the JAW INCHING SELECTION icon.



17
Touch the ENABLE button.



18
Touch the SLOW INCHING button.

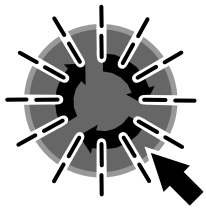

19

Press the INCHING button when it begins to flash.

The packaging material is pulled through the filling machine.

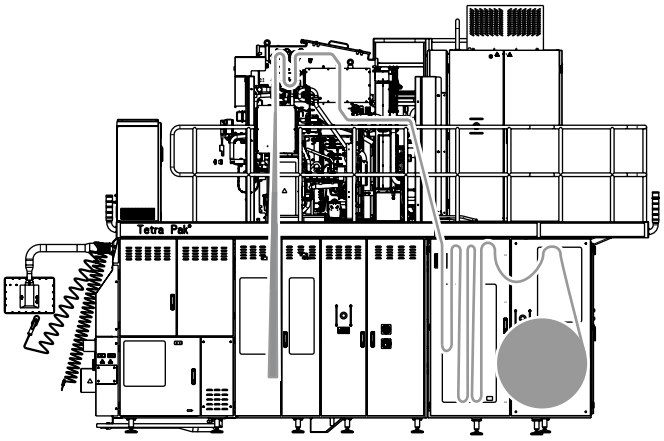

20

Check that the packaging material is properly positioned on all the filling machine bending rollers and that the packaging material passes correctly through the following areas:

- ASU
- Strip applicator
- Chamber
- Hygiene chamber
- Jaw system

Correct the position of the packaging material if necessary.

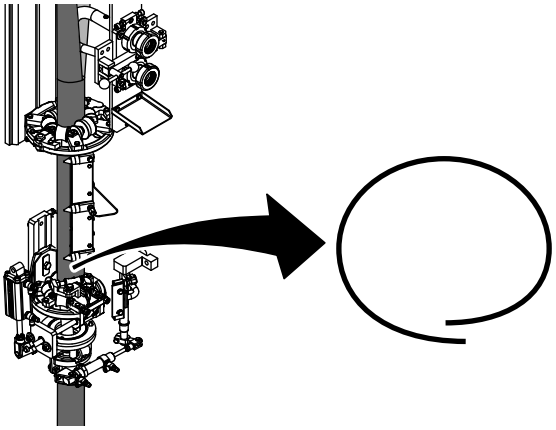

21

Make sure the LH edge of the packaging material overlaps the RH edge.

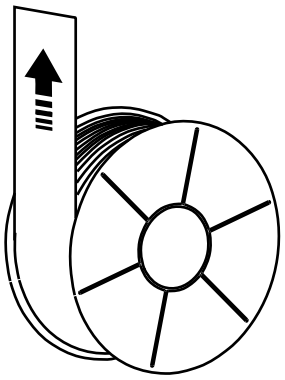

22

WARNING

Burn Hazard.
The components may be hot. Wear personal protective equipment.

CAUTION

Hygiene.
Before handling clean parts, disinfect your hands/gloves with cleaning compound code **H**.

Prepare the strip applicator for Production. See LS Strip Thread on page 6-5.

Note! For cleaning compound code information, see 11.2.1 Cleaning Compound Table.

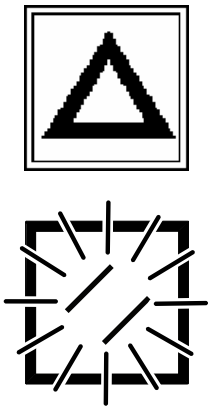

23

Close all covers and doors on the machine and reset the alarms on the TPOP display.

If the RESET buttons on the machine body doors are ON, press the RESET buttons to reset the safety system, see 8.2 Security Stop.

If an alarm reappears, take the appropriate action or call a technician.

3.2.6 Heat Sterilization

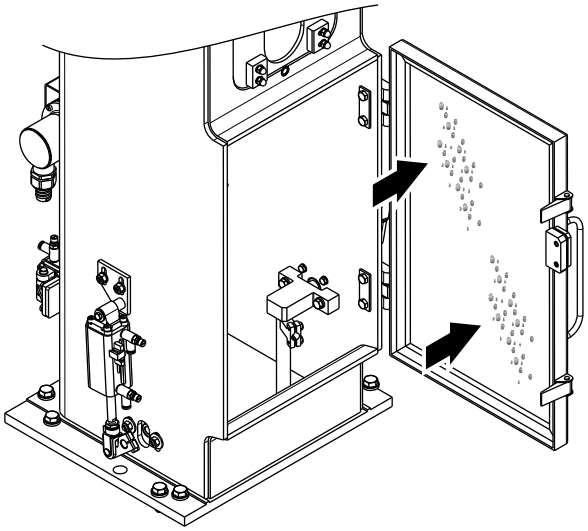

1

CAUTION

Risk of serious product fault.

Make sure that the internal surfaces and all parts inside the chamber and hygiene chamber are dry. If necessary, dry with a clean cloth.

Before starting the filling machine sterilization phase, make sure that all the internal surfaces of the chamber and hygiene chamber are dry.

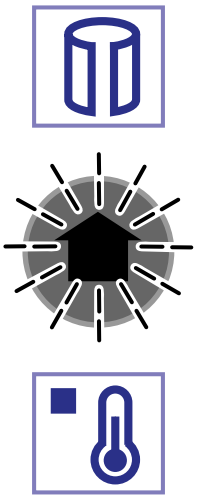

2

When the TUBE SEALING symbol and the PROGRAM UP button starts to flash, press the PROGRAM UP button.

The PROGRAM UP button stops to flash, waiting for the correct machine temperatures.

When the temperatures are reached, the PROGRAM UP button starts to flash again.

Press the PROGRAM UP button until the motor starts.

An audible warning signal sounds and the machine inches forward without stopping until the material tube is sealed with the LS strip.

Machine stops automatically to HEAT STERILIZATION.

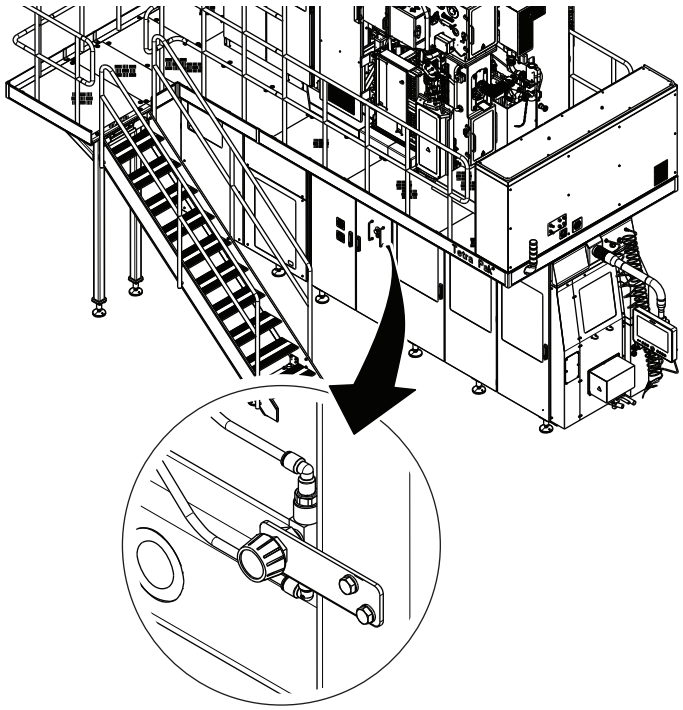

3

Check that the tube flushing flow is normal.

Note! A high flow rate may cause reading errors by the photocells. A low flow rate may cause forming problems.

Open the hydraulic unit door and adjust the flow of water with the knob.

3.2.7 Strip Check

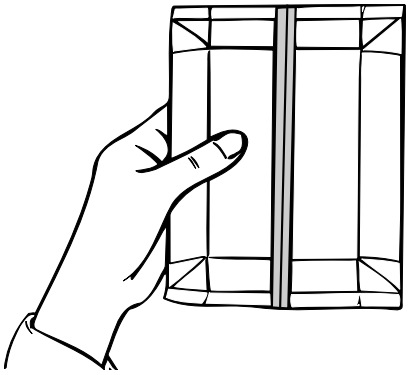

1

Take the last package inched out from the machine. Check that the LS strip is correctly positioned and properly sealed according to LS Strip Application.

If the seal is not satisfactory press and hold the PROGRAM DOWN button to step down to TUBE SEALING. Continue from 3.2.6 Heat Sterilization.

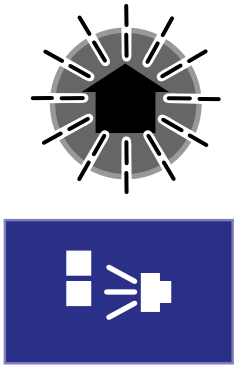

2

Press the PROGRAM UP button to confirm the TIGHT TUBE SEALING.

Machine will automatically step to spraying when HEAT STERILIZATION temperature is reached.

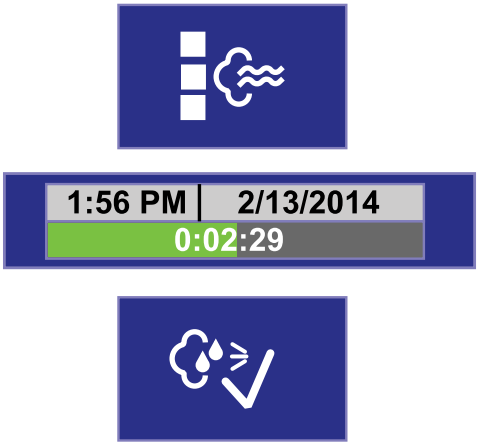

3

After the spraying sequence the DRYING symbol remains lit and the drying sequence starts automatically.

Note! If the sterilization fail the machine program automatically steps down to step Zero when the drying time is finished.

The title bar displays the time remaining.

Note! After the step DRYING and up to step PRODUCTION ENDED, the program steps VENTING, ASEPTIC CHAMBER DOORS, ASEPTIC CHAMBER are executed automatically when the machine program is stepped down.

Note! The machine steps automatically to STERILIZATION DONE after 30 minutes.

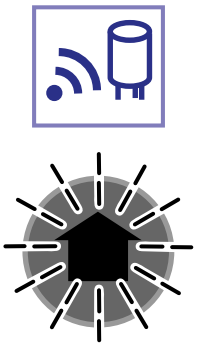

4

When the drying sequence is completed, the SIGNAL TO STERILIZER symbol and the PROGRAM UP button begin to flash.

Press the PROGRAM UP button.

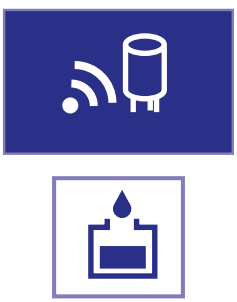

5

The symbol SIGNAL TO STERILIZER is enlarged on the top of the ladder step.

The PREPARE TO PRODUCTION symbol and the PROGRAM UP button begin to flash.

Note! If there is a connection between the filling machine and the sterilizer equipment, a request is sent for the product.

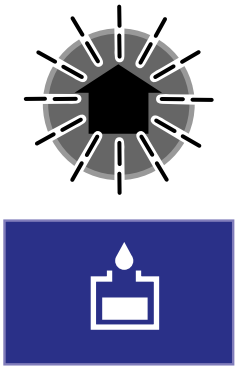

6

Press the PROGRAM UP button.

The PREPARE TO PRODUCTION symbol is enlarged o the top of the ladder step.

The final folder heaters begin to heat up. Two minutes indication appears for heaters to achieve temperature set point.

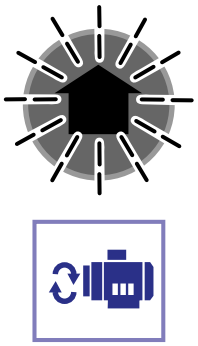

7

Production can start when the MOTOR START symbol and PROGRAM UP button begin to flash.

Proceed according to chapter 4 Start.

4 Start

Description

This chapter describes how to start the machine for PRODUCTION after Preparing after Daily Care. To start the machine after a stop, see the Stop section.

CAUTION

Hazardous noise.

Risk of impaired hearing. Hearing protection is recommended whenever this equipment is in operation.

Description 4-2

4.1 Starting Production 4-5

This page intentionally left blank

4.1 Starting Production



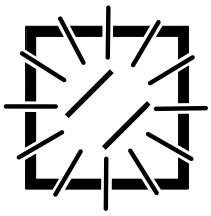

1

Make sure all covers and doors on the machine are closed and reset any alarms on the TPOP.

If the RESET buttons on the machine body or ASU doors are ON, press the RESET buttons to reset the safety system, see 8.2 Security Stop.

If an alarm is present, take the appropriate action or call a technician.



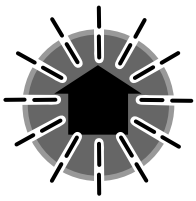



2

CAUTION

Risk of personal injury.
The first two packages discarded onto the waste conveyor after sterilization may contain concentrated hydrogen peroxide. It is recommended to carefully open and rinse these packages before disposal. Always wear personal protective equipment. See the Safety Precautions.

The machine is ready to start when the MOTOR START symbol is flashing.

Press the PROGRAM UP button. Keep the PROGRAM UP button pressed until the MOTOR START symbol is enlarged on the top of the ladder step and the warning signal stops.



3

When the printed design on the tube is in the correct position, the PRODUCTION symbol lights up and the machine automatically lets the packages through the final folder.

CAUTION

Risk of serious production fault.

If during Stops or PRODUCTION the hygiene chamber doors are opened, or the tube bursts, tears, or it is manually cut, or product splashes occur, the machine must be cleaned and sterilized before PRODUCTION can restart.



4

Carry out the checks according to the chapter 5 Checks.

Note! Remember to register the number of packages taken for the checks. See Recording Package Waste for Quality Checks on page 2-60.

5 Checks

Description

This chapter describes the checks to perform when the machine is in step PRODUCTION.

CAUTION

Hazardous noise.
Risk of impaired hearing. Hearing protection is recommended whenever this equipment is in operation.

Description 5-2

5.1 Equipment Checks 5-5

5.2 Introduction to Package Checks 5-9

5.2.1 General Information 5-10

5.2.2 Terminology 5-11

5.2.2.1 Package 5-11

5.2.3 Package Identification 5-12

Selecting and Identifying Packages 5-12

Marking the Package Samples 5-14

5.2.4 Tools and Consumables 5-15

5.2.5 Checking Scheme 5-16

Checking Intervals 5-16

Package Selection 5-16

Package Utilisation 5-17

5.2.5.1 Package Sample Utilization at PRODUCTION Start and for Packaging Material Splices 5-18

5.2.5.2 Package Checks Flowchart 5-19

5.3 Package Checks 5-21

5.3.1 Preparation 5-22

5.3.2 Printing 5-23

5.3.3 Weight 5-24

5.3.4 Forming 5-25

Package 5-25

Shape and Design 5-25

Flap Sealing 5-26

Appearance 5-26

5.3.5 Integrity 5-27

Package 5-27

Crease Lines 5-27

Transversal Seal **5-29**
Internal Surfaces **5-37**
Longitudinal Seal **5-38**
LS Strip Application **5-38**

5.1 Equipment Checks

This section describes the checks to perform on the filling machine during PRODUCTION. Unless otherwise stated the Equipment Checks should be performed at least once during every PRODUCTION run.

CAUTION
Risk of damage to the equipment.
Do not leave the machine unattended during PRODUCTION.

CAUTION
Risk of serious production fault.
If at any point during PRODUCTION the hygiene chamber doors are opened, or the tube bursts, tears, or it is manually cut, or product splashes occur, the machine must be cleaned (and sterilized for XH filling machines only) before PRODUCTION can restart.

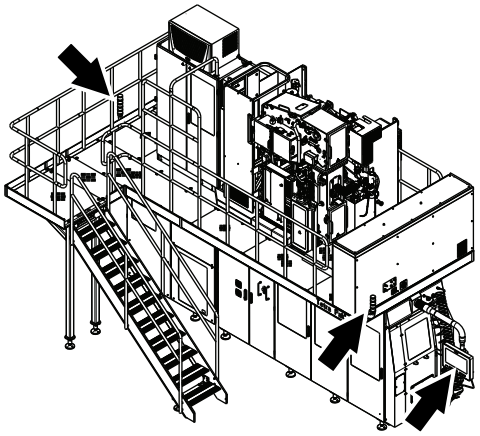

1

Check the warning beacons.

When the beacons are flashing, check the TPOP and take the appropriate action.

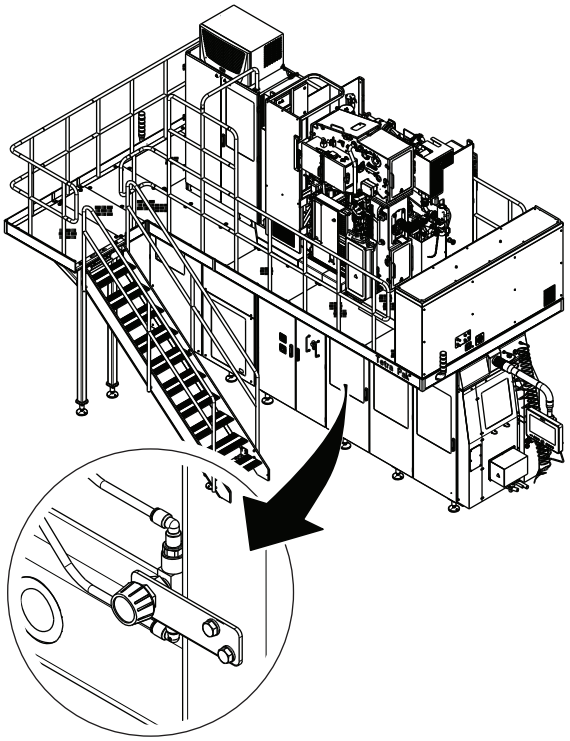

2

Check that the tube flushing flow is normal.

Note! A high flow rate may cause reading errors by the photocells. A low flow rate may cause forming problems.

Open the hydraulic unit door and adjust the flow of water with the knob.

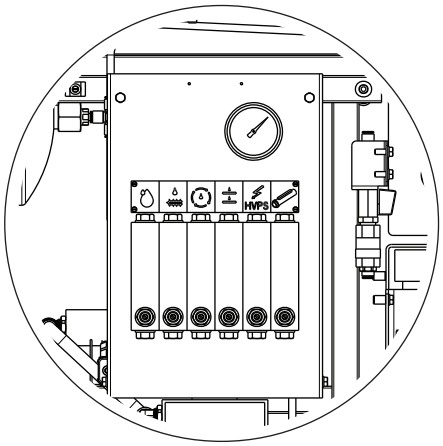

3

Check that the flow rate of the cooling circuits in the service unit are correct.

Check that all pressure gauges indicate the correct pressure setting.

See the 11 Technical Data section for the correct flow rates and pressure settings.

Call a technician if adjustments are needed.

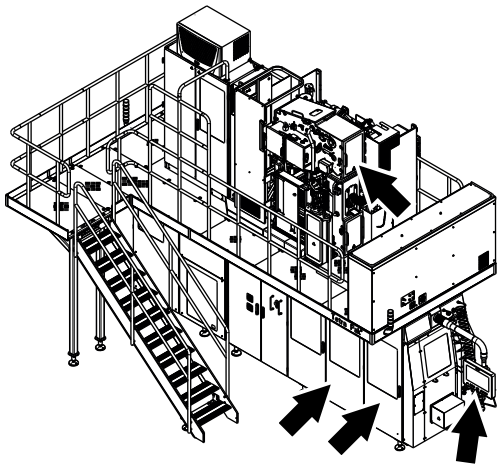

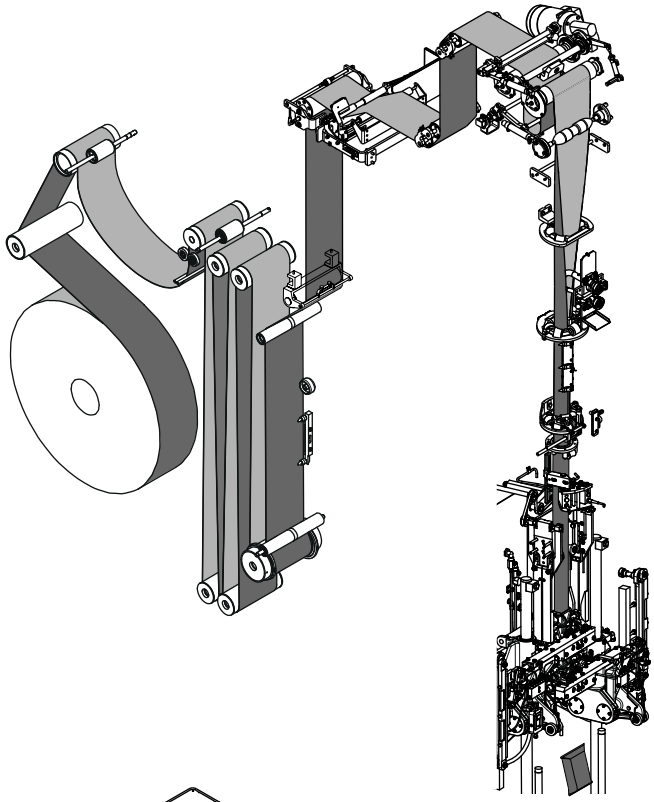

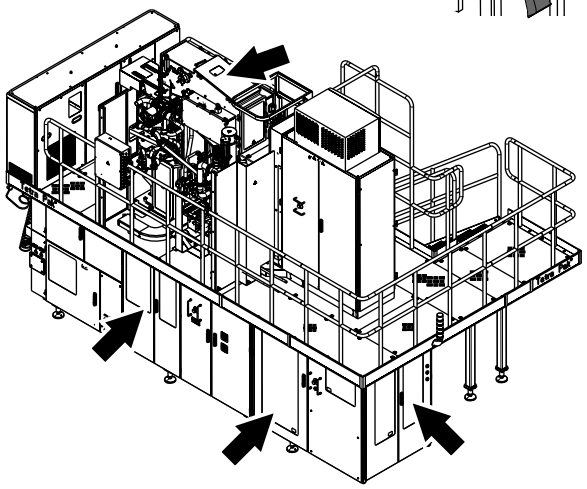

4

Make sure that the packaging material moves through the machine properly.

Make sure that all the strip supplies function correctly.

Make sure that the packages move through the jaw system, final folder area and outfeed correctly.

Refer to the threading diagram and make checks at the positions shown by the arrows:

- the ASU
- the LH side of the jaw system and final folder area
- the hygiene chamber
- the chamber and forming section
- the outfeed.

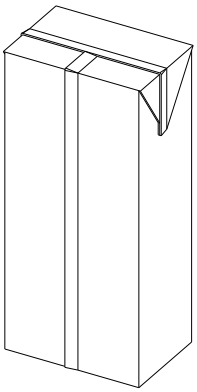

5

Check the forming and shape of the packages. See the 5.3 Package Checks section.

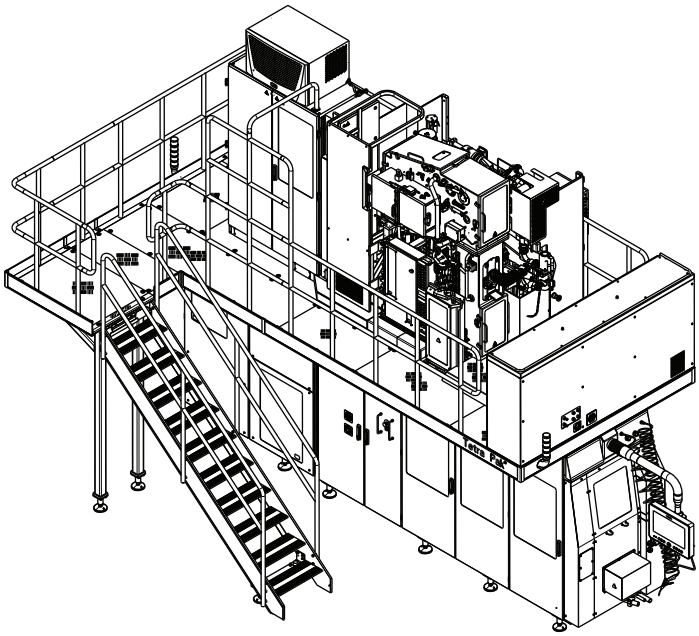

6

Check that all doors are closed. The doors of the electrical cabinet must be closed to ensure sufficient cooling.

Check that all safety covers and guards are fitted.

Make sure the platform, the stairs, and the area around the machine are clean and free from loose objects.

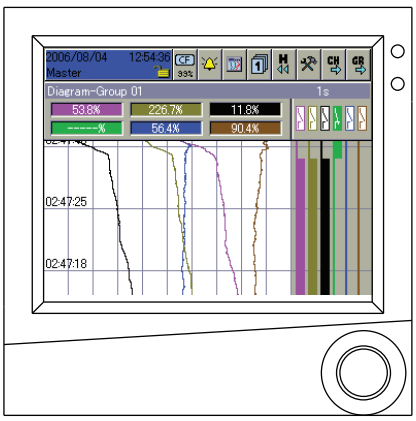

7

Check on the Production data recorder screen that the recorder is recording all of the channels. If not, call a technician.

5.2 Introduction to Package Checks

This section describes the checks to perform concerning the packages during PRODUCTION.

CAUTION
Package Checks and corrective actions will affect the Quality of the PRODUCTION.
Use these checking methods as the minimum requirement. If there is any doubt about the integrity of the packages, pick out more packages for further checking. Whenever a fault cannot be eliminated call a technician.

5.2.1 General Information

Perform the package checks according to the 5.2.5 Checking Scheme on page 5-16.

Use the 5.2.5.2 Package Checks Flowchart on page 5-19 to determine what actions (if any) are needed after each package check.

Carefully read the section 5.2.2.1 Package on page 5-11 to become fully acquainted with the terminology used to describe the different components and characteristics of the package.

5.2.2 Terminology

5.2.2.1 Package

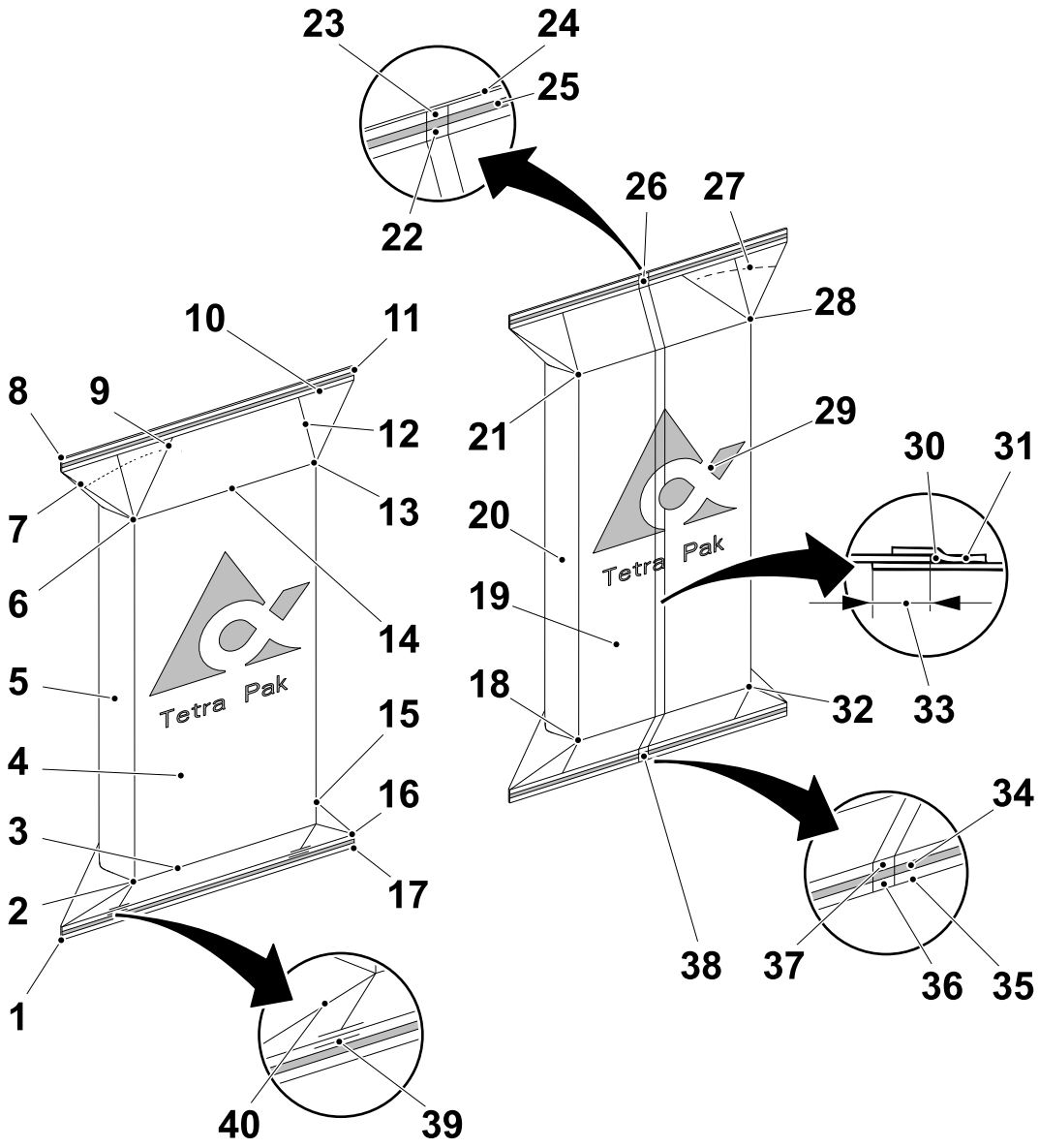

1 Bottom left fin corner
2 Bottom front left corner
3 Bottom crease
4 Front side of package/panel 3
5 Left side of package/panel 2
6 Top front left corner
7 Top flap creases
8 Top left fin corner
9 Spout crease
10 Top fin crease
11 Top right fin corner
12 Longitudinal crease
13 Top front right corner
14 Top crease
15 Bottom front right corner
16 Bottom fin crease
17 Bottom right fin corner
18 Bottom rear right corner
19 Rear side of package/panel 5
20 Right side of package/panel 4
21 Top rear right corner
22 Top inner cross
23 Top outer cross
24 Top cutting line
25 Top transversal seal
26 Top cross
27 Perforation
28 Top rear left corner
29 Rear side of package/panel 1
30 Air gap
31 LS strip
32 Bottom rear left corner
33 LS overlap
34 Bottom transversal seal
35 Bottom cutting line
36 Bottom outer cross
37 Bottom inner cross
38 Bottom cross
39 Double creases
40 Bottom flap crease

5.2.3 Package Identification



Selecting and Identifying Packages

1

To select packages and to be able to identify from which jaw pair the packages were formed, proceed as follows:

Touch the MANOEUVRE button.



2

Touch the PACKAGE FORMING UNIT button.



3

Touch the SAMPLE PACKAGES button.



4

Note! Setting available only for the sampling of one single package.

Touch the PACKAGE SAMPLE NUMBER button to select from which pair of the jaw links has to exit the single package to sample

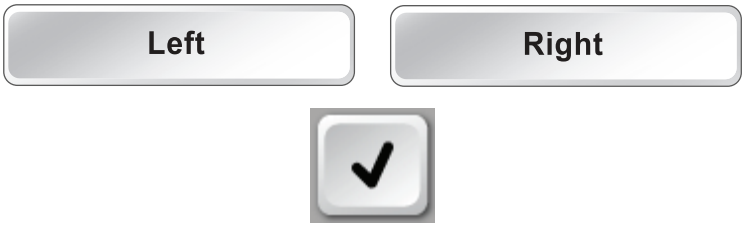

5

Touch the LEFT button or the RIGHT button and confirm with the OK button.



6

Touch the SAMPLE PACKAGE button.

Touch the ENABLE button to enable the function and the PLAY button to start the sampling.

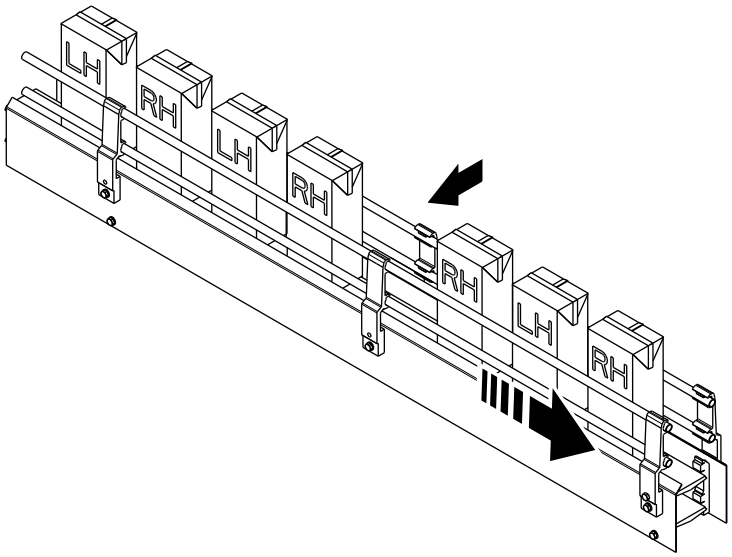

7

The jaw system discards a package.

Take the packages necessary for the checks from the conveyor after the gap caused by the discarded package.

Note! Always take the packages from the conveyor after the Domino printer.

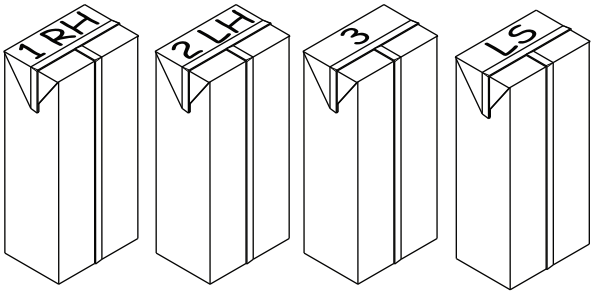



Marking the Package Samples 8

Mark the package samples on the top and bottom with an indelible pen as follows:

- mark a package made in the RH jaw pair with the letters RH and a sequential number
- mark a package made in the LH jaw pair with the letters LH and a sequential number
- mark a package with the letters LS.
- mark the remaining packages with a sequential number.

If a single package sample has been collected, mark the package sample on the top and bottom with an indelible pen with the letters LS.

Note! Remember to register the number of packages taken for the checks. See Recording Package Waste for Quality Checks on page 2-60.

5.2.4 Tools and Consumables

The following tools are needed to perform the package checks:

- scissors
- stretch pliers, TP No. 78073-0100
- a clean work bench in a well illuminated area
- scales for weighing

5.2.5 Checking Scheme

Checking Intervals

Perform the package checks at the following filling machine events:

- PRODUCTION start
- The splicing of a new roll of packaging material
- The splicing of a new roll of LS strip.

Package Selection

For package checks at PRODUCTION start or at the splicing of a new roll of packaging material, take **4** package samples.

For package checks at the splicing of a new LS strip roll, take **1** package sample.

Follow the instructions in Selecting and Identifying Packages on page 5-12 to take the package samples and the instructions in Marking the Package Samples on page 5-14 to mark the package samples.

Package Utilisation

If **4** package samples have been collected:

- Use **3** package samples to perform the package checks except the LS application check
- Use **1** package sample to perform the LS application check.

Use the table in the section 5.2.5.1 Package Sample Utilization at PRODUCTION Start and for Packaging Material Splices to identify which package sample to use for each of the package checks.

If **1** package sample has been collected, follow the instructions in the package check LS Strip Application on page 5-38.

5.2.5.1 Package Sample Utilization at PRODUCTION Start and for Packaging Material Splices

Package Check	Package Sample			
	No. RH, 1	**No. LH, 2**	**No. 3**	**No. LS**
Printing	✓	✓		
Weight	✓	✓		
Shape & Design			✓	
Flap Sealing			✓	
Crease Lines			✓	
TS Rough	✓	✓		
TS Accurate	✓	✓		
Internal Scratches			✓	
Longitudinal Seal			✓	
LS Strip Application				✓

5.2.5.2 Package Checks Flowchart

Flowchart Description

The Flowchart of Package Checks displays:

- the checks to be performed in the sequence described in the checking scheme table (1)
- the type of checks (2)
- the necessary actions (if any) to be taken depending on the result of the completed check (3).

○ = Legal requirement related check

△ = Package integrity related check

☆ = Package appearance and line efficiency related check

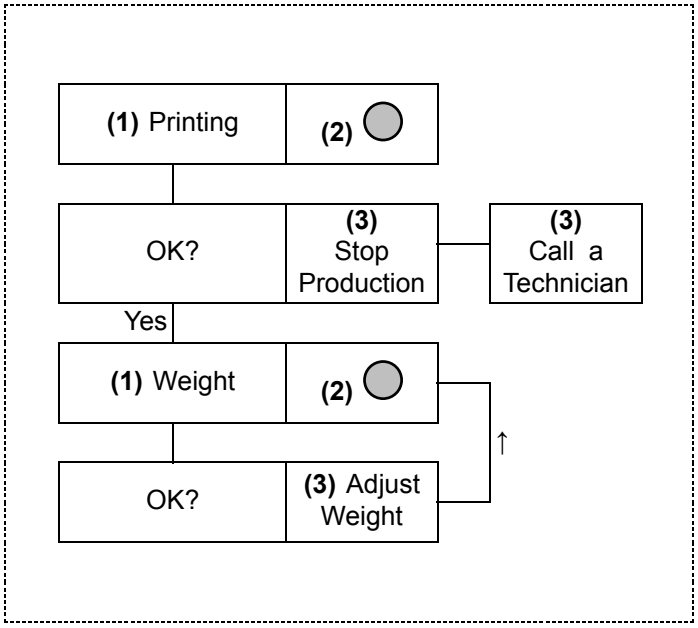

Extract from flowchart of the package checks.

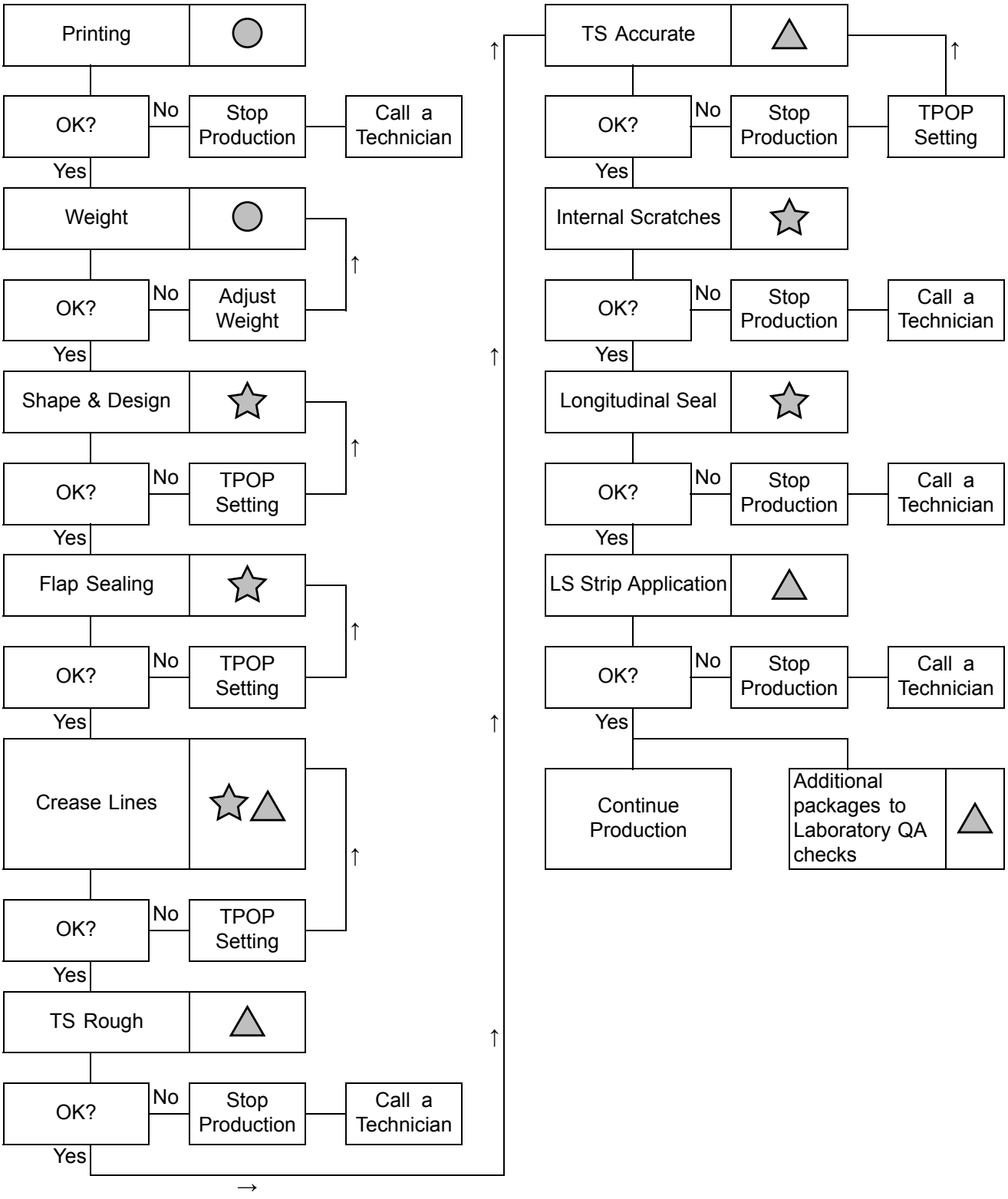
Printing
OK?
No
Stop Production
Call a Technician
Yes
Weight
OK?
No
Adjust Weight
Yes
Shape & Design
OK?
No
TPOP Setting
Yes
Flap Sealing
OK?
No
TPOP Setting
Yes
Crease Lines
OK?
No
TPOP Setting
Yes
TS Rough
OK?
No
Stop Production
Call a Technician
Yes
TS Accurate
OK?
No
Stop Production
TPOP Setting
Yes
Internal Scratches
OK?
No
Stop Production
Call a Technician
Yes
Longitudinal Seal
OK?
No
Stop Production
Call a Technician
Yes
LS Strip Application
OK?
No
Stop Production
Call a Technician
Yes
Continue Production
Additional packages to Laboratory QA checks

5.3 Package Checks

5.3.1 Preparation

Before starting the package checks, make sure that the:

- correct number of package samples have been taken, see 5.2.5 Checking Scheme on page 5-16
- package samples have been correctly identified and marked, see 5.2.3 Package Identification on page 5-12
- all the necessary tools and consumables are available, see 5.2.4 Tools and Consumables on page 5-15.

5.3.2 Printing

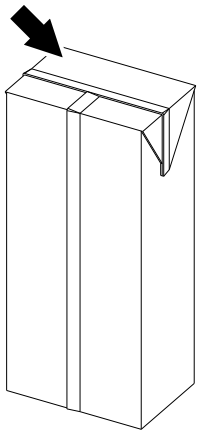

Check the date and code printing.

If necessary stop the filling machine and adjust the date printing according to the instructions supplied with the printer.

5.3.3 Weight

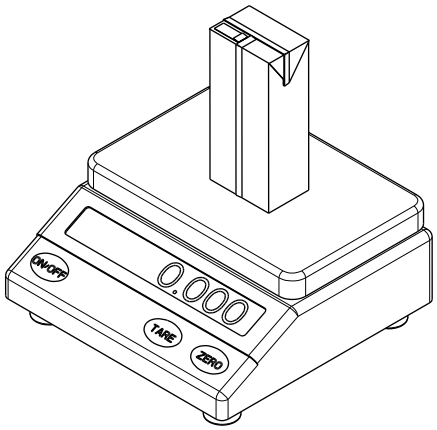

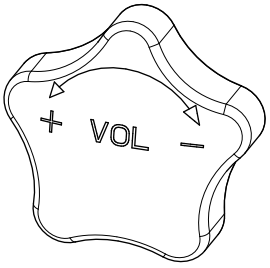

Weigh the packages and record their weights and weight deviations.

To adjust the package weight, turn the knob (1) behind the central lubrication system door (LH side of the machine):

- **plus**, increases the package weight
- **minus**, decreases the package weight.

This can be done during PRODUCTION.

After setting, pick out new packages and check them.

5.3.4 Forming

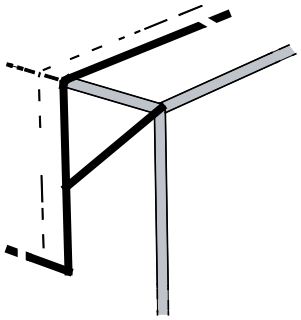

Correct shape

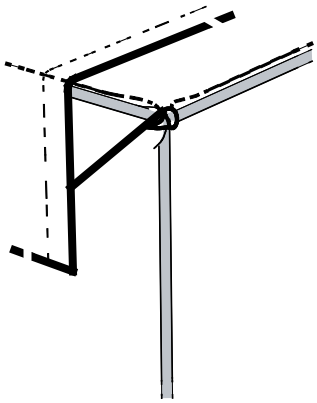

Low crease position

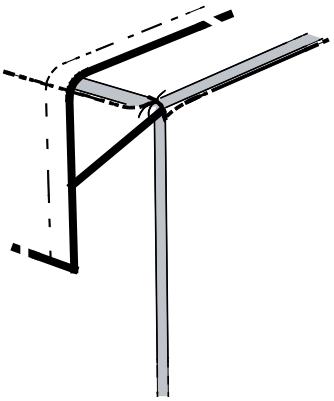

High crease position

Package 1

Shape and Design

Check the shape of the package.

Check that the preformed creases in the packaging material are correctly aligned along the edges of the package.

To adjust the package creases follow the procedure Design Offset Setting on page 2-106.

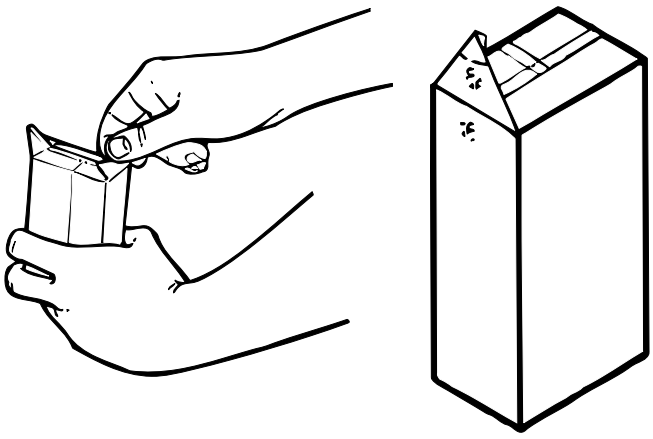

2

Flap Sealing

Unfold the flaps and check that they are properly sealed.

To adjust the flap sealing follow the instructions in 2.5.6 Final Folder Unit Window.

3

Appearance

Check the packages for wrinkles, cracks or any other defects.

5.3.5 Integrity

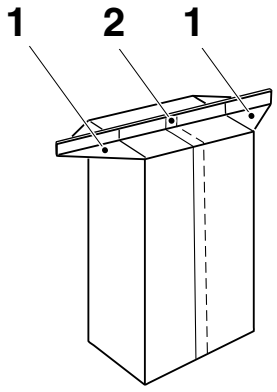

Bottom view of package

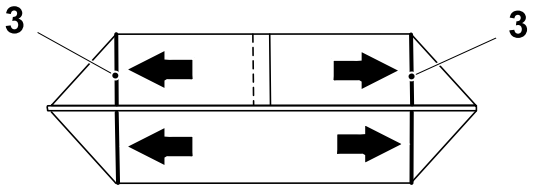

fig.1

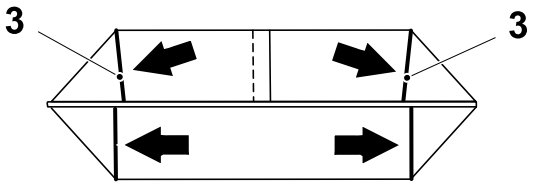

fig.2

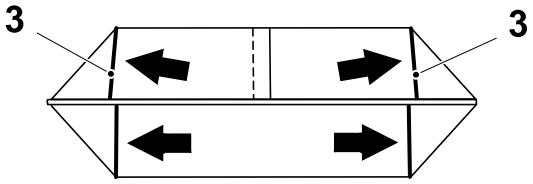

fig.3

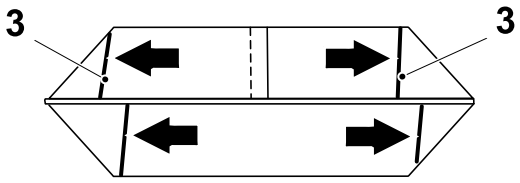

fig.4

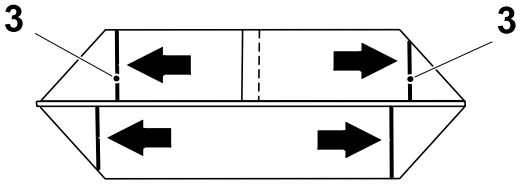

fig.5

Package 1

Crease Lines

Unfold the bottom flaps (1) and then lift up the package bottom fin (2).

Note! To correctly check the crease line alignment, it is important to unfold the flaps. Checking the crease line alignment with the flaps in the folded position may provide an incorrect indication of the crease line alignment due to the package folding.

Check the position of the preformed crease lines (3).

The position is acceptable if:

- the creases are opposite one another (fig.1) either parallel (fig.2) or at an angle (fig.3).

The position is not acceptable if:

- the preformed crease lines are not opposite one another (fig.4 and fig.5).

Note! Figures 2, 3 and 4 show a misalignment due to the LS overlap. The crease positions in figures 2 and 3 are considered acceptable, but may compromise cap application (if any).

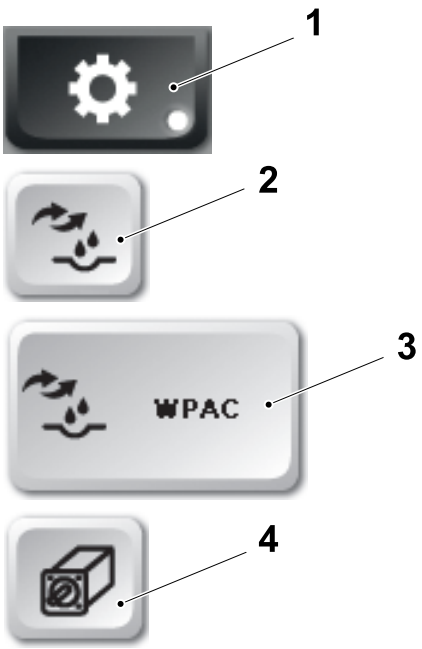

2

Touch the PRODUCTION CONTROL button (1).

Touch the STERILIZATION button (2).

Touch the WPAC button (3).

Touch the WPAC MOTOR button (4).

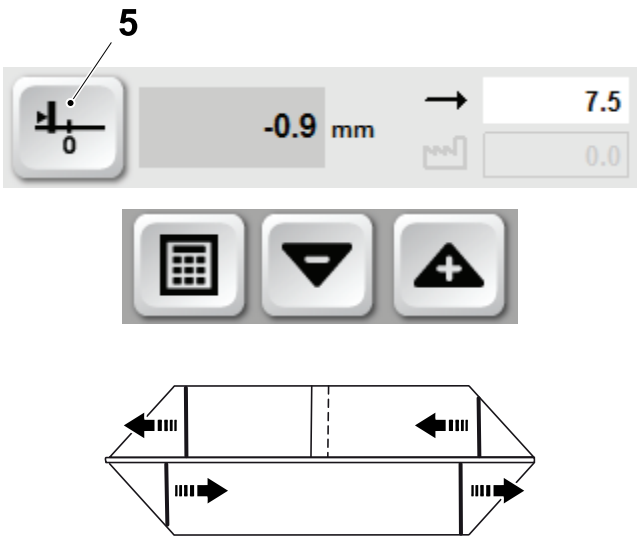

3

Touch the WPAC OFFSET button (5) to set the offset value

Use the PLUS and MINUS buttons or the KEYBOARD button to set the value.

Increase the value with the ARROW buttons to move the creases in the direction shown.

Decrease the value with the ARROW buttons to move the crease lines in the opposite direction

TB 200 S shown

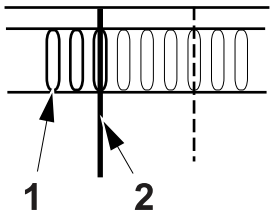

TB 200 B, TB 250 B shown

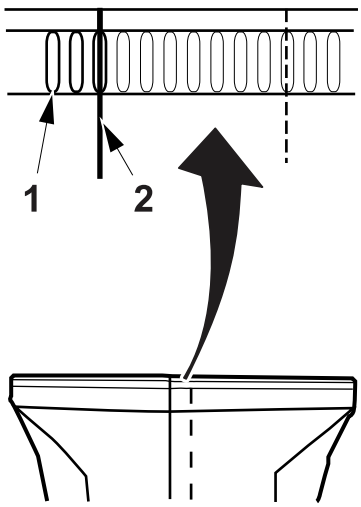

4

When the crease lines are properly aligned, there should be two to three impressions (1) of the TS cutting rail visible outside the edge of the LS overlap (2).

If not, adjust with the `WPAC OFFSET` button, see the instruction above.

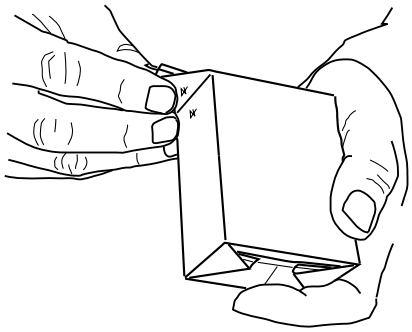

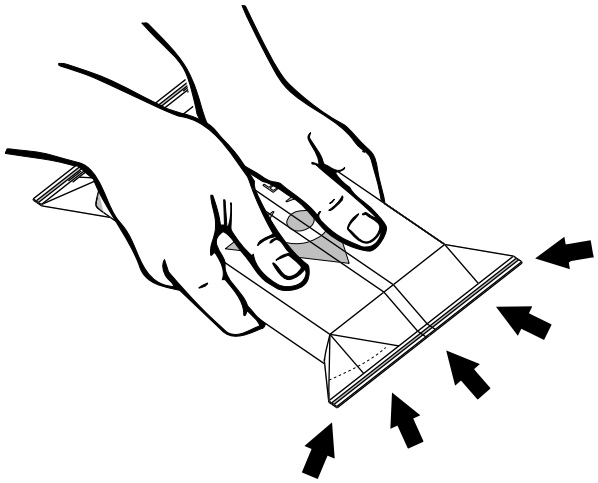

1

Transversal Seal
Rough Check

Unfold the flaps.

Check the integrity of the top and bottom transversal seal by gently squeezing the packages by hand.

Critical points are:

- the corners
- the intersections between the LS creases and the TS
- the crosses where the TS and the LS meet.

If any product leakage is found stop the machine and call a technician.

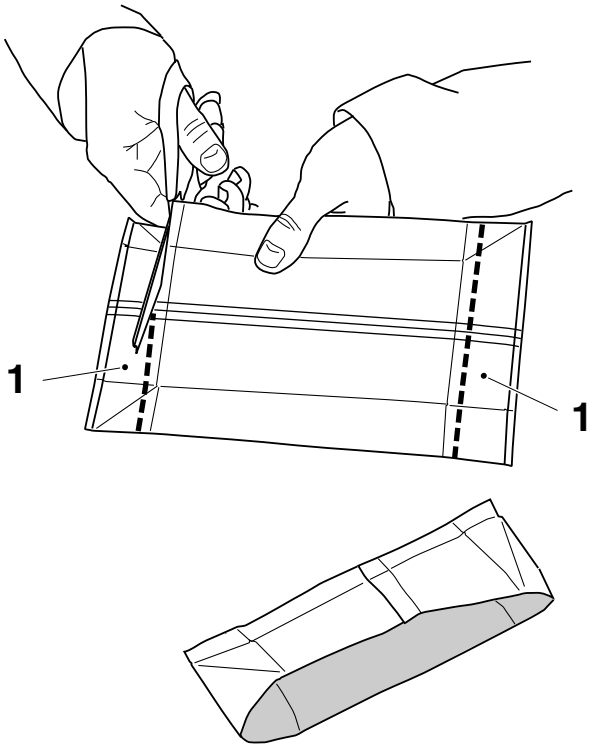

2

Accurate Check

Cut a sample strip (1) of about 25 mm in width from the top and bottom transversal seals.

Wash the samples and dry gently with compressed air from the filling machine or dry with a paper towel.

Note! Improper use of compressed air could create defects in the packages.

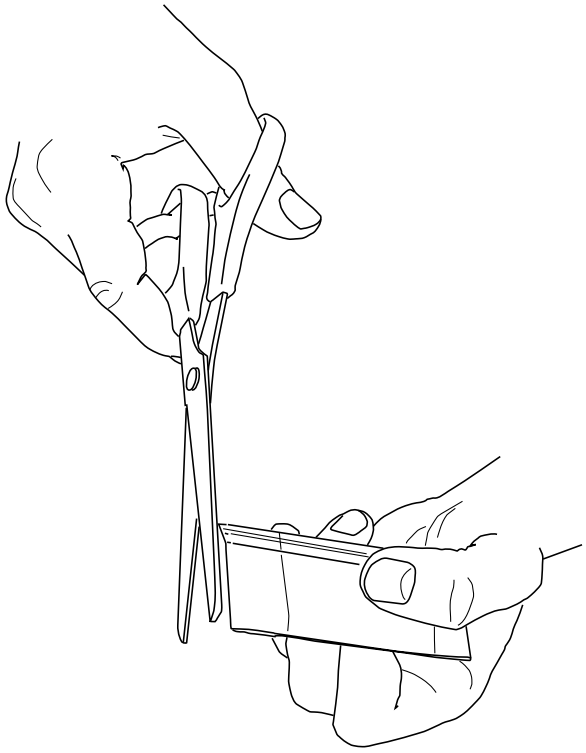

3

Cut off no more than 1 mm from each side of the package at a 90° angle to the TS.

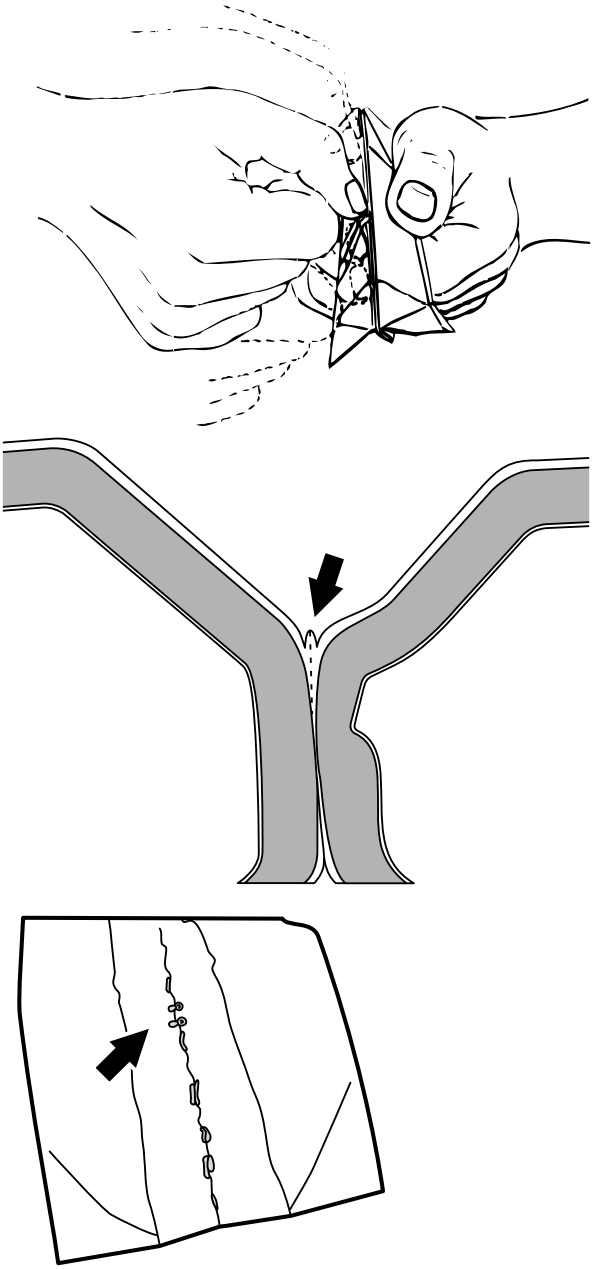

4

Bend the TS splice and check that there are no lumps along the sealing area.

If there is a small ridge along the entire length of the seal, the seal is **acceptable**.

If there are lumps along the sealing area, the sealing energy is too high and the seal is **defective**.

If the sealing energy is too high call a technician.

To adjust the sealing energy and correct the TS sealing, follow the instructions in TS Seal Time during Empty Tube on page 2-108.

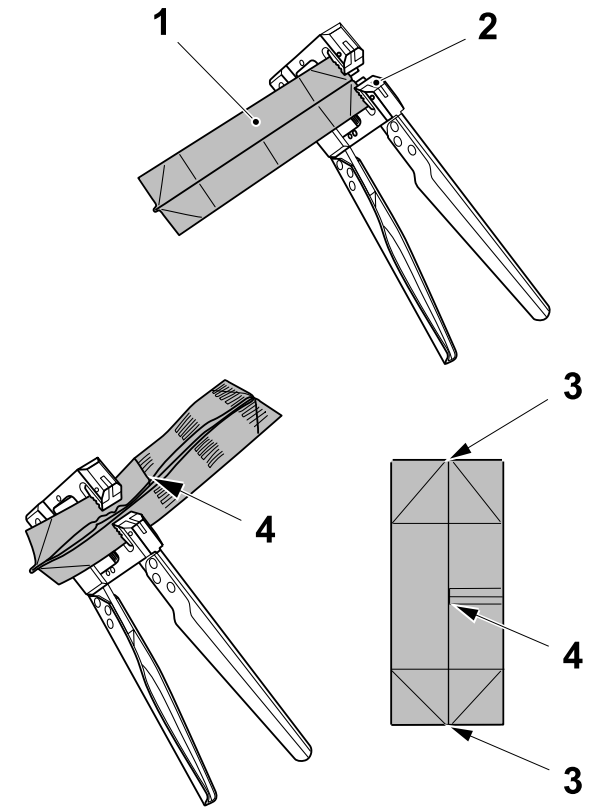

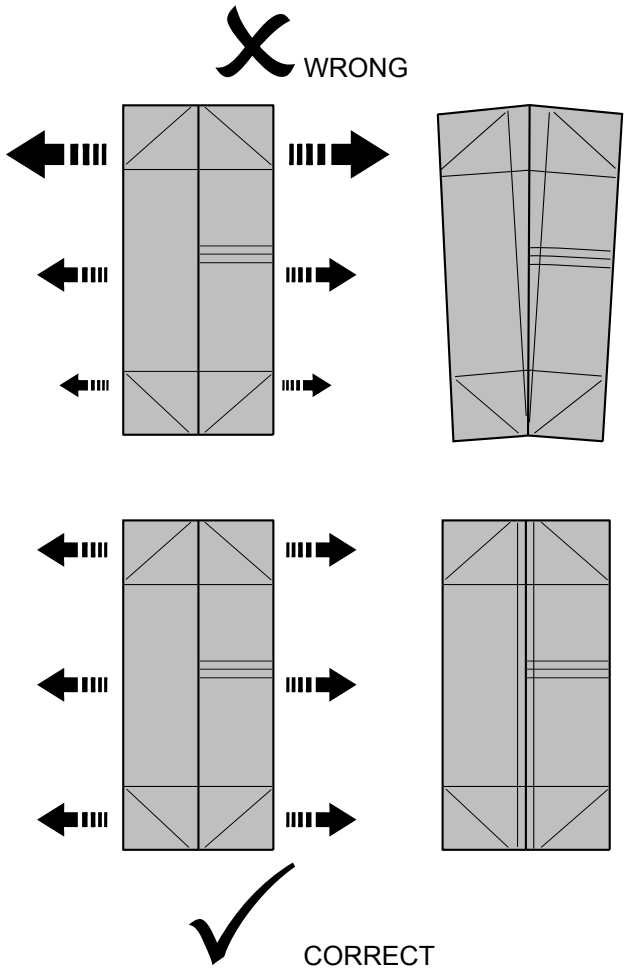

5

Insert the edges of the sample (1) into the gripping jaws (2) of the stretch pliers.

Gently squeeze the handles to stretch the seal.

Stretching slowly makes evaluation easier.

Observe that the seal area stretches and breaks.

Continue stretching along the sample (1) until it has completely opened.

The TS must be stretched and evaluated along the entire seal.

Pay special attention to the TS corners (3) and where the TS and the LS meet TS/LS cross (4).

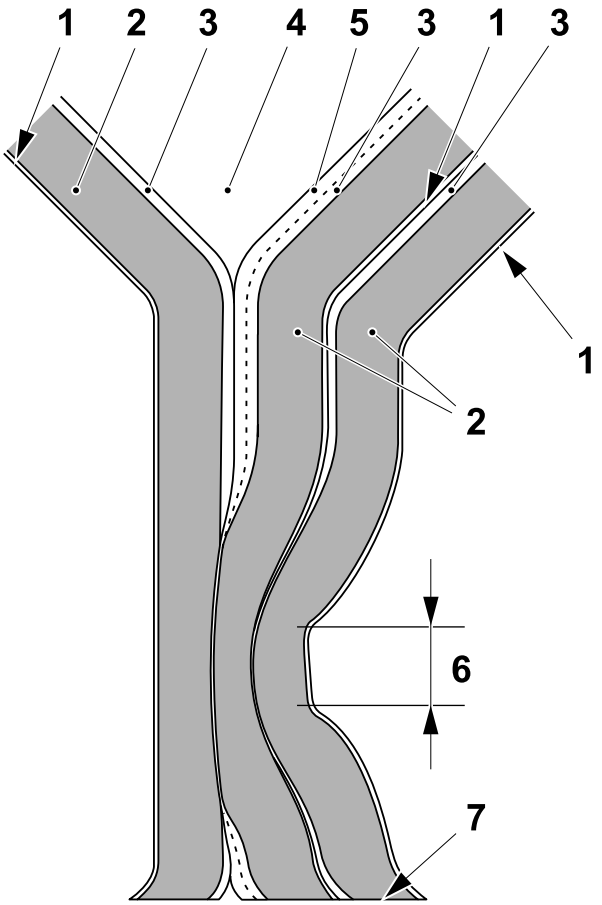

1 Outer plastic layer
2 Packaging material board layer
3 Inner plastic layer
4 Filling product
5 LS strip
6 Cutting rail impression
7 Cutting line

6

The illustration shows a cross section of the transversal seal through the LS overlap.

It is only the sealing on the filling product (6) side that is important.

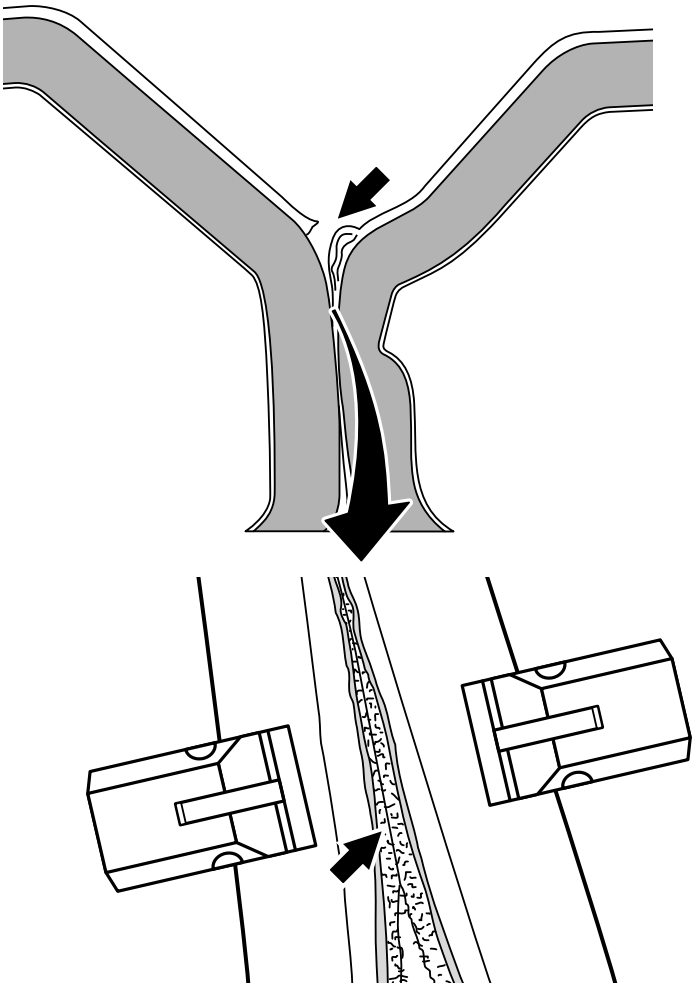

7

Check the TS sealing.

The seal is **acceptable** if:

- the seal remains intact but a rupture takes place in the packaging material board layer.

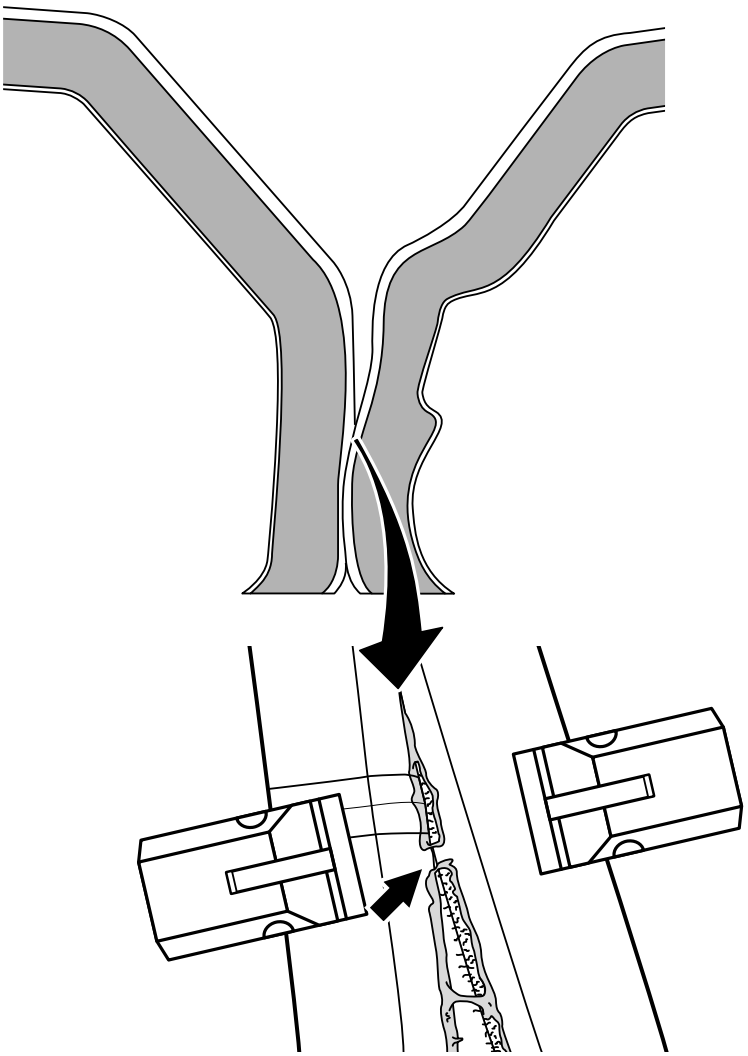

8

The sealing is **defective** if:

- The seal is so weak that the two PE layers separate without rupturing.

If the seal is weak, check that the tube flushing is set to a minimum (fine mist).

If the tube flushing is set to a minimum, and the seal is still weak, stop in SHORT STOP and check that the compact transducers are clean.

If the seal is still so weak that the two inner plastic layers separate without rupturing, increase the sealing energy.

To adjust the sealing energy and correct the TS sealing, follow the instructions in TS Seal Time during Empty Tube on page 2-108.

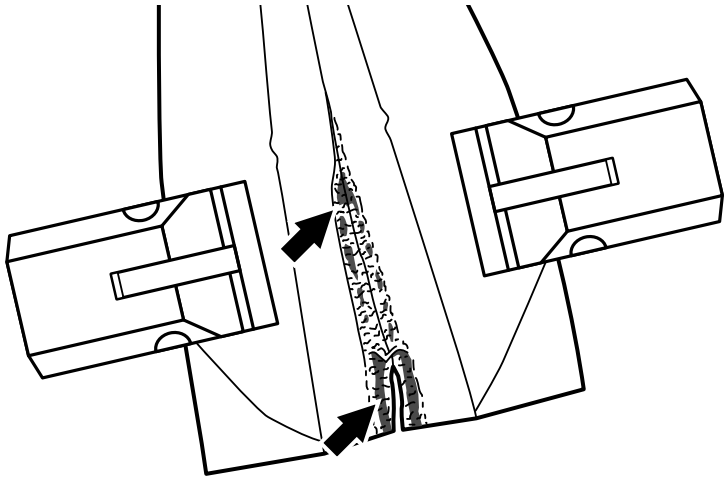

9

The seal is **defective** if:

- there are burn marks in the seal.

A small burn mark in the cross is acceptable.

If there are burn marks in the seal, decrease the sealing energy.

To adjust the sealing energy and correct the TS sealing, follow the instructions in TS Seal Time during Empty Tube on page 2-108.

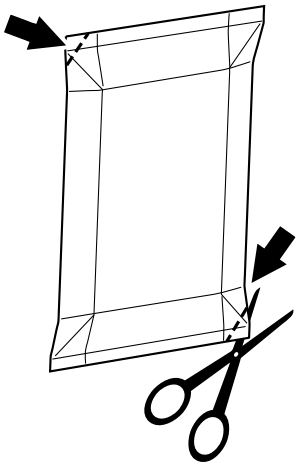

fig.1

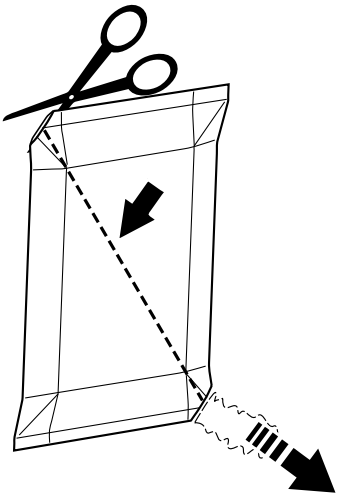

fig.2

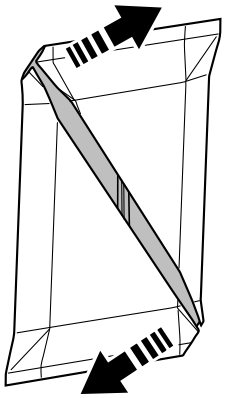

fig.3

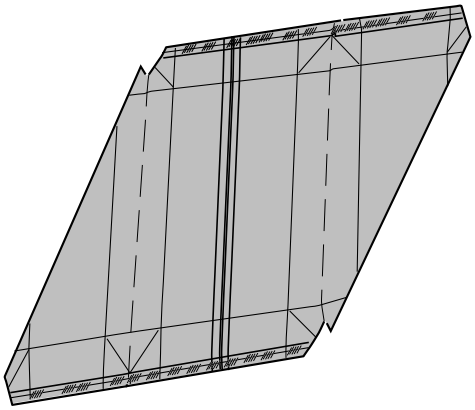

fig.4

1

Internal Surfaces

Cut two opposite corners (fig.1) and empty the content of the package.

Cut transversally the front panel of the package, from the lower cut corner to the opposite one (fig.2 and 3).

Split the TS apart and open the package (fig.4).

Rinse the package and dry gently with compressed air from the filling machine or dry with a paper towel.

Note! Improper use of compressed air could create defects in the packages.

Preparing the samples in this shape allows a fast preparation and avoids the risk of cutting the package internal surfaces.

Check the outside and inside surfaces of the package for scratches or other possible defects that can be detected with the fingernail.

Inside deep scratches might cause package integrity problems.

If there are any defects, call a technician.

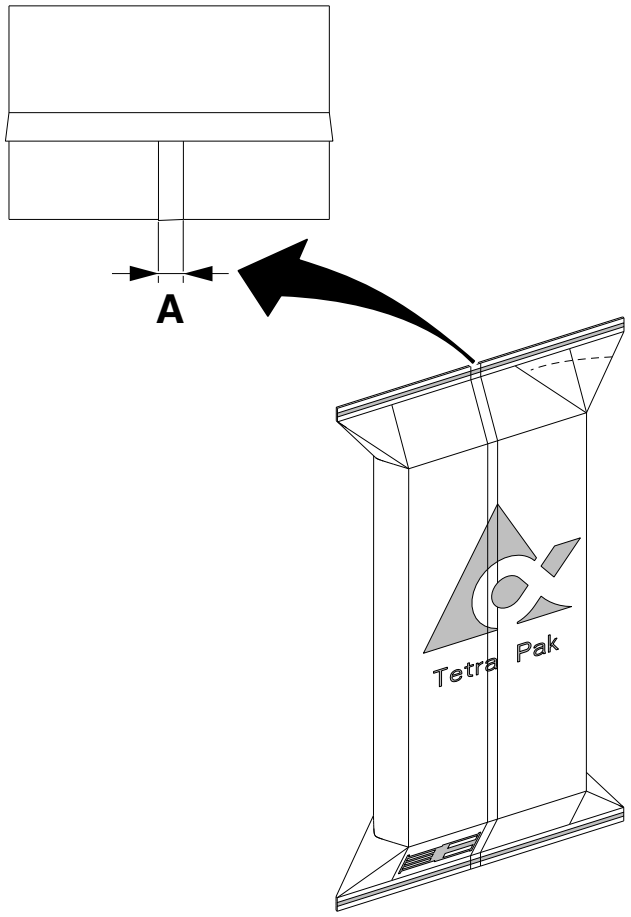

1

Longitudinal Seal Overlap

Check the width of the overlap (distance **A**)

Package	Distance A
TB 200 B	8.0 ±1.0 mm
TB 250 B	8.0 ±1.0 mm
TB 200 S	4.0 ±0.5 mm

1

LS Strip Application

The LS strip application evaluation consists of three steps:

a) Visual inspection of LS position and check of heat and pressure distribution.

b) Sealing quality check, by performing the mechanical tear down of the LS strip.

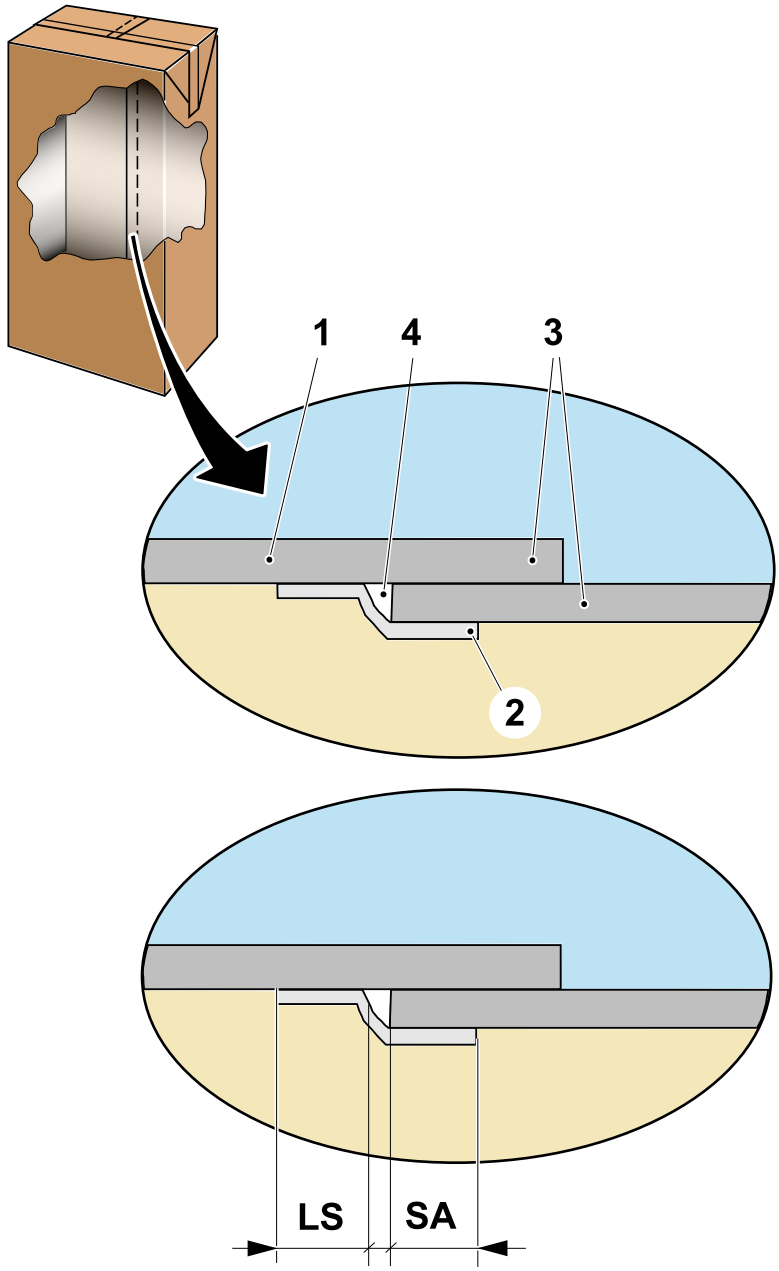

2

LS Strip Visual Inspection

The Strip Applicator side (SA) of the seal is where the strip (2) is attached to the packaging material by the Strip Applicator.

The Strip Applicator side (SA) is the side of the strip where the packaging material (3) is double.

The LS side is where the strip is attached to the packaging material during tube forming.

The Longitudinal Sealing side (LS) is the side of the strip (2) where the packaging material (1) is single.

An air gap (4) is present in the middle of the seal.

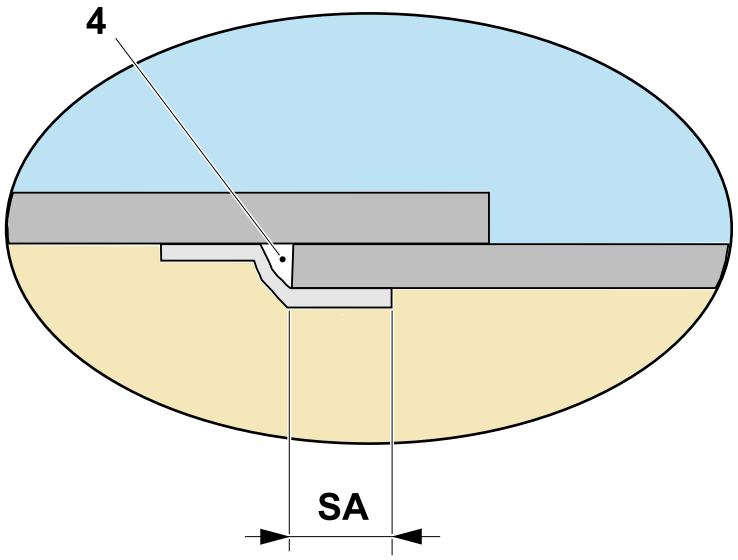

3

The LS strip is not always centred with respect to the seal. This condition changes depending on strip type and tension applied.

Check that the dimensions of the SA side of the strip and the air channel (4) are as reported in the table below, according to the strip type application:

	strip type:
	MHM
SA side	~4.0 mm
Air Channel	less than 1.0 mm

Note! The air gap (4) should be simply visible and not exceeding 1.0 mm, to not compromise package performance during distribution chain.

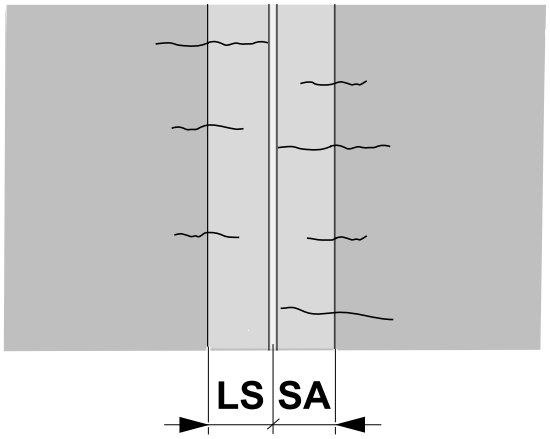

4

Carefully, visually, verify the heated area of both SA and LS application to ensure that the heat and pressure applied are correct.

If a too high heat or pressure are applied, the heat line is often also under the strip.

The following table shows the type of sealing used in this machine for SA and LS.

SA	**LS**
hot air	hot air

Note! Induction heating and hot air give different results in terms of visual appearance, therefore it is important to know which kind of sealing system is used during the package check phase.

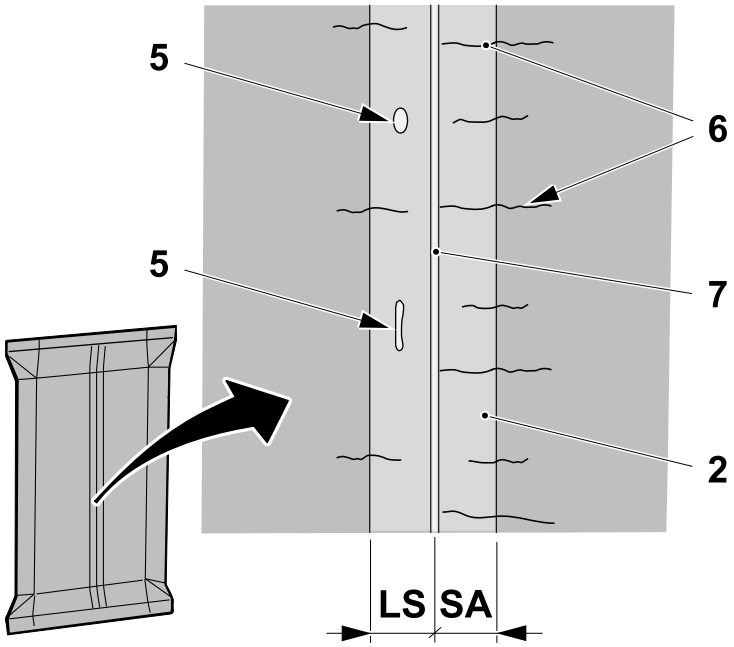

5

Check for blisters or bubbles (5) along the heated zone of the LS strip (2). The presence of blisters (5) in the LS side of the strip (2) indicates too much sealing temperature for the LS induction heater.

Presence of blisters in the SA side of the strip indicates too much sealing temperature for the strip applicator induction heater.

On the LS strip (2) there are some small heating lines (6) visible mainly on the SA side.

Note! The air channel (7) must be visible.

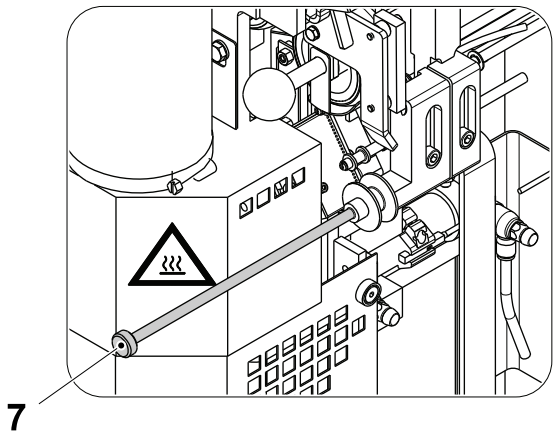

6

Note! Stop the machine in SHORT STOP before adjusting the strip position.

If required, adjust the position of the strip with the knob (7) on the strip roller.

Call a technician if the setting of the LS or SA must be changed.

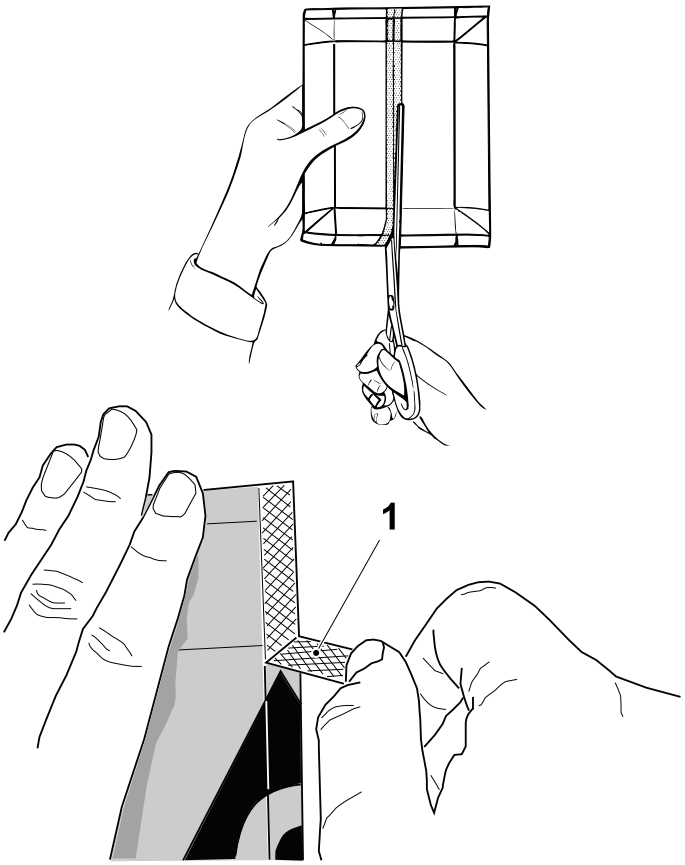

7

Sealing Quality

Cut through the middle of the LS strip, along the inner edge of the packaging material.

Pull off the outer layer of packaging material (1) where it is double, to check the overlap. A good overlap gives stability to the package. If there is any defect, corrective actions should be taken.

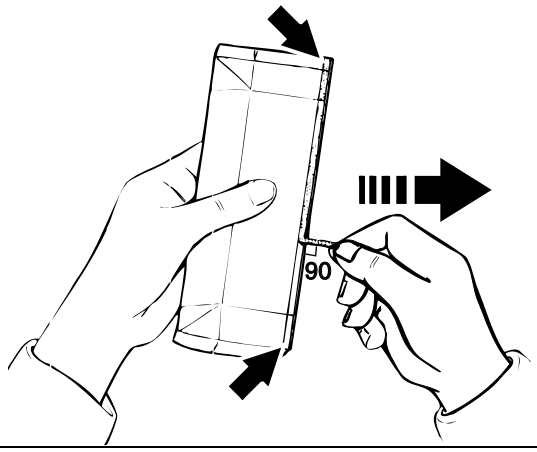

8

Check the strip by slowly pulling approximately 20 mm of the strip outwards at an angle of 90°. Pull **extremely** slowly over the creases. Take hold again and pull another 20 mm. Continue along the whole edge. Pull on both sides (SA and LS).

Note! If any of the layers come off, cut the strip and start pulling again.

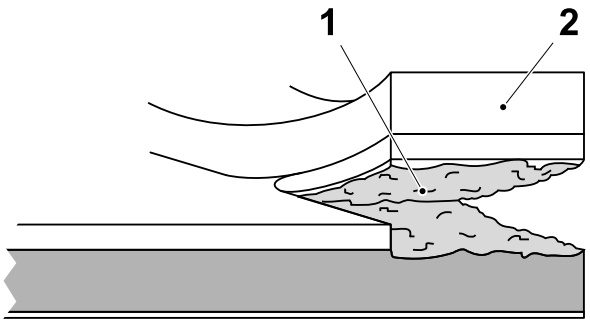

9

Check the LS seal, the overlap seal, and the SA seal.

The LS seal is **acceptable** if the inner plastic layer comes off with the LS strip (2), leaving the packaging material board fibres (1).

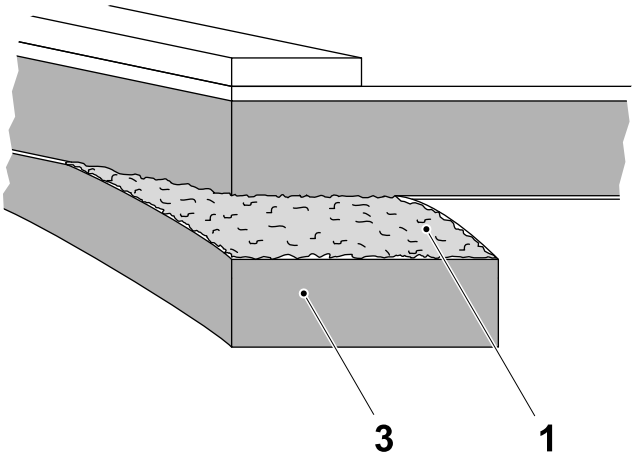

10

The overlap seal is **acceptable** if the outer plastic layer comes off with the overlap (3), leaving packaging material board fibres (1).

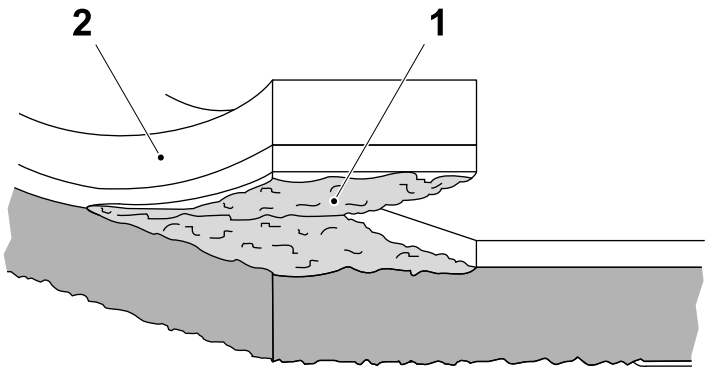

11

The SA seal is **acceptable** if the inner plastic layer comes off with the LS strip (2), leaving packaging material board fibres (1).

If the overlap seal is **not acceptable**, continue with item 12.

If the LS seal is **not acceptable**, continue with item 13.

If the SA seal is **not acceptable**, continue with item 14.

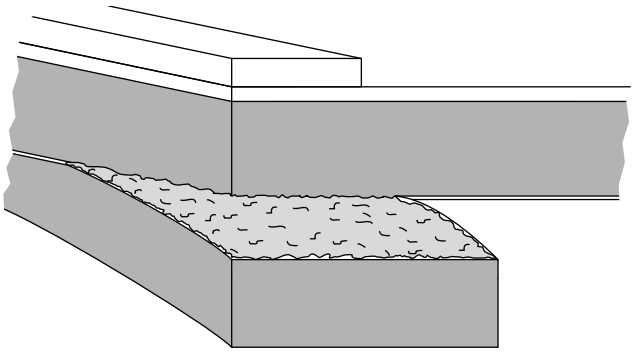

The illustration above shows a correct sealing with the overlap seal pulled.

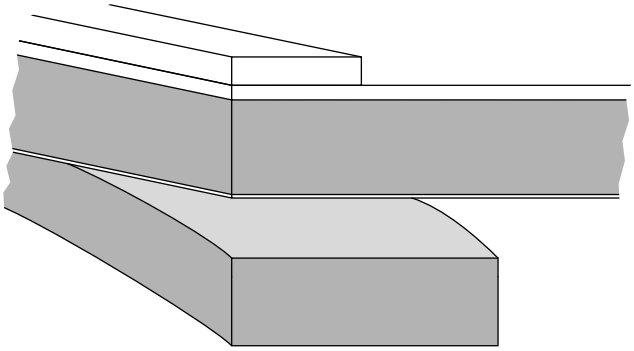

The illustration above shows a defective sealing with the overlap seal pulled and the outer plastic layer intact.

12

Defective Overlap Seal

If the overlap seal is **defective**, proceed as follows:

If the overlap comes off, leaving the outer plastic layer of the package unaffected, the sealing temperature is too low. Increase the sealing temperature of steps of 10 °C until the overlap is acceptable.

To adjust the sealing temperature follow the instructions in 2.5.3 Tube Forming Window.

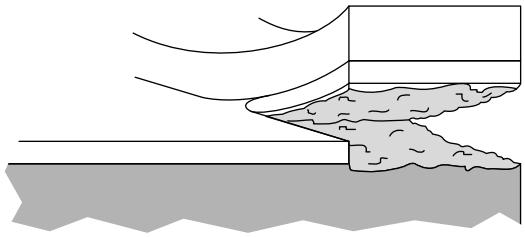

The illustration shows a correct sealing with the LS seal pulled

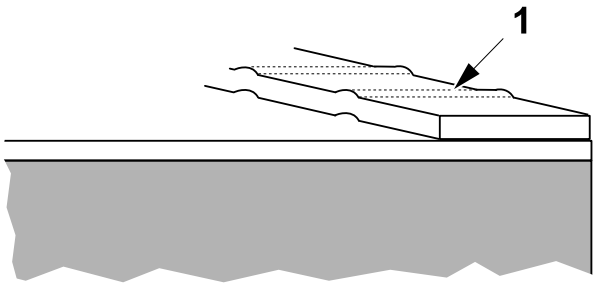

The illustration shows a defective sealing due to a **too high** sealing temperature

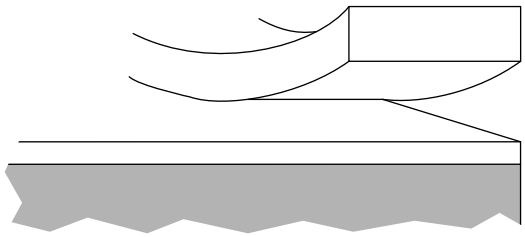

The illustration shows a defective sealing due to a **too low** sealing temperature

13

Defective LS Seal

If the LS seal is **defective**, proceed as follows:

WARNING

Risk of production fault.

Increase the sealing temperature only enough to ensure an adequate seal. Too high of a sealing temperature can result in wrinkles (1) on the LS strip. Increasing the sealing temperature too much may also diminish the quality of the TS.

If the LS strip still comes off, leaving the inner coatings of the package unaffected, the sealing temperature is too low. Increase the sealing temperature of steps of 10 °C until the LS is acceptable.

To adjust the sealing temperature follow the instructions in 2.5.3 Tube Forming Window.

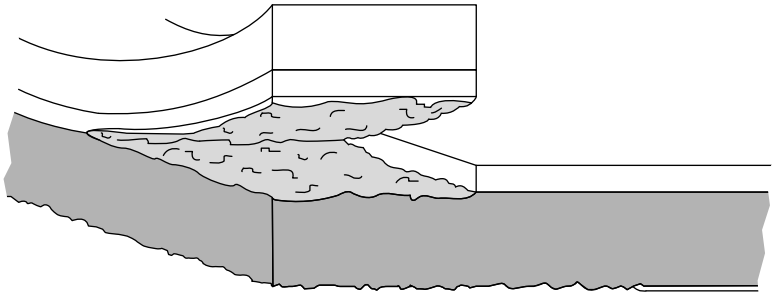

The illustration shows a correct sealing with the SA seal pulled

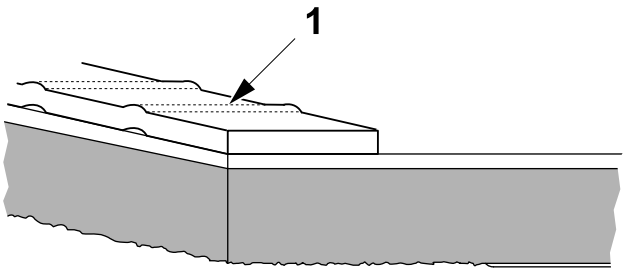

The illustration shows a defective sealing due to a **too high** sealing temperature

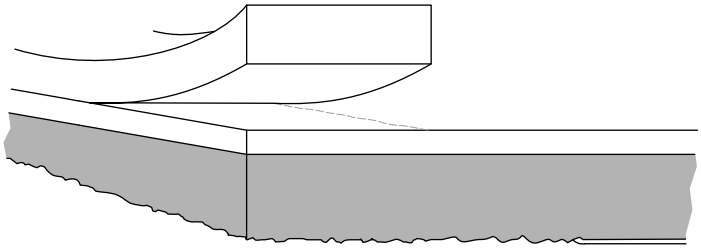

The illustration shows a defective sealing due to a **too low** sealing temperature

14

Defective SA Seal

If the SA seal is **defective**, proceed as follows:

WARNING

Risk of production fault.
Increase the sealing temperature only enough to ensure an adequate seal. Too high of a sealing temperature can result in wrinkles (1) on the LS strip. Increasing the sealing temperature too much may also diminish the quality of the TS.

Increase the sealing temperature of steps of 10 °C until the LS is acceptable.

To adjust the sealing temperature follow the instructions in 2.5.3 Tube Forming Window.

6 Supply of Materials

Description

This chapter describes how to load and prepare a new reel of packaging material and how to thread and splice the strips.

CAUTION

Hazardous noise.
Risk of impaired hearing. Hearing protection is recommended whenever this equipment is in operation.

Description 6-2

6.1 Strip Supplies 6-5

LS Strip Thread 6-5

6.1.1 Strip Reel Replacement 6-9

Fitting a New Reel on the Upper Reel Holder 6-9

Fitting a New Reel on the Lower Reel Holder 6-10

6.1.2 LS Strip Break 6-13

6.1.3 Manual LS Strip Splice 6-14

6.2 Packaging Material Supplies 6-16

Reel Handling 6-16

6.2.1 Splicing Preparation 6-22

6.2.2 Manual Web Splice 6-30

6.2.3 Interrupted Web Splice 6-31

6.2.4 Packaging Material Broken or Splice Failure (ASU Loop Empty) 6-32

6.2.5 Force Manual Splice Enabled 6-34

This page intentionally left blank

6.1 Strip Supplies

CAUTION
Hygiene.
Before touching the strip(s), disinfect hands/gloves.

Note! To avoid unnecessary PRODUCTION stops, always make sure that the strip reels are prepared and the strips are threaded.

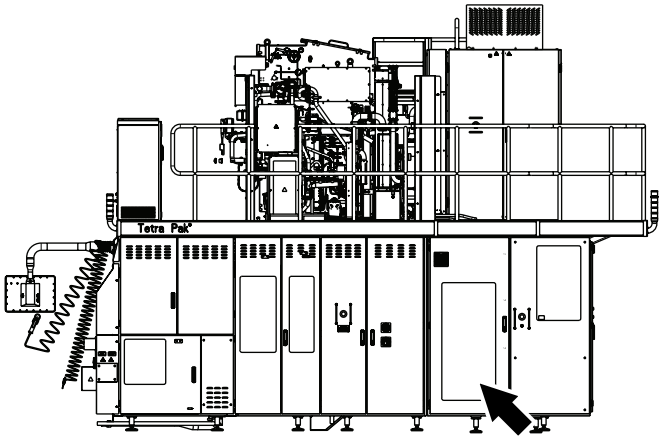

LS Strip Thread

1

Open the Strip applicator doors.

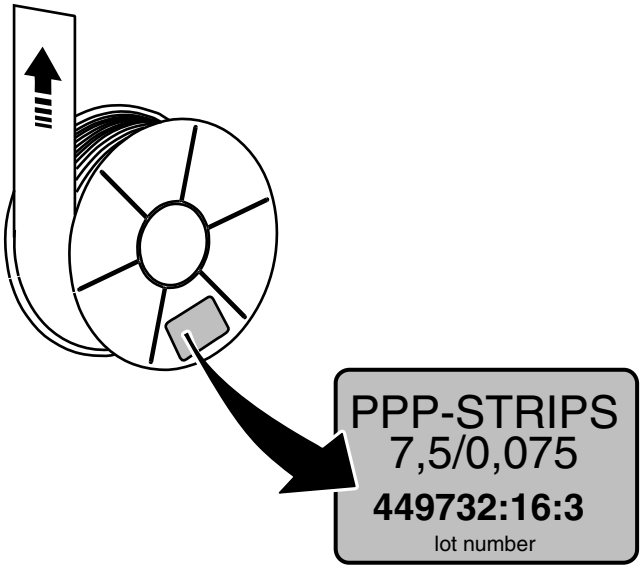

2

CAUTION
Hygiene.
Before handling clean parts, disinfect your hands/gloves with cleaning compound code H.

Remove the protective wrapping from the strip reel. Make a note of the strip type and the lot number indicated on the strip reel tag.

Note! The unique lot number allocated to each strip reel and printed on the strip reel tag provides traceability for the production batch. If a problem with the strip is detected the lot number must be quoted in any communication with Tetra Pak.

Note! For cleaning compound code information, see 11.2.1 Cleaning Compound Table.

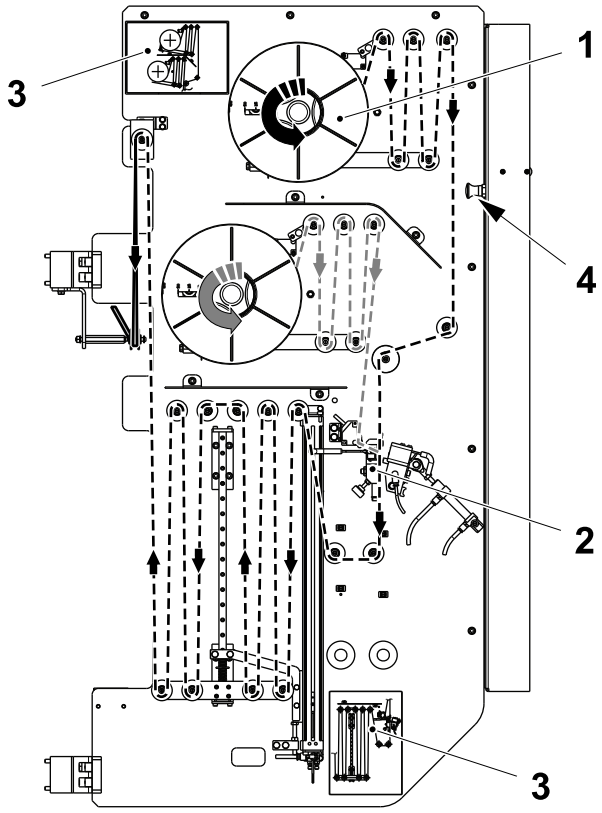

3

Fit the strip reel (1) on the top reel holder. This reel is used in PRODUCTION.

Thread the strip around the rollers, through the splicing head (2), and through the magazine (3), as shown. Avoid twisting the strip.

Note! Use the two signs (3) when threading the strip.

Pull the knob (4) and open the strip magazine frame.

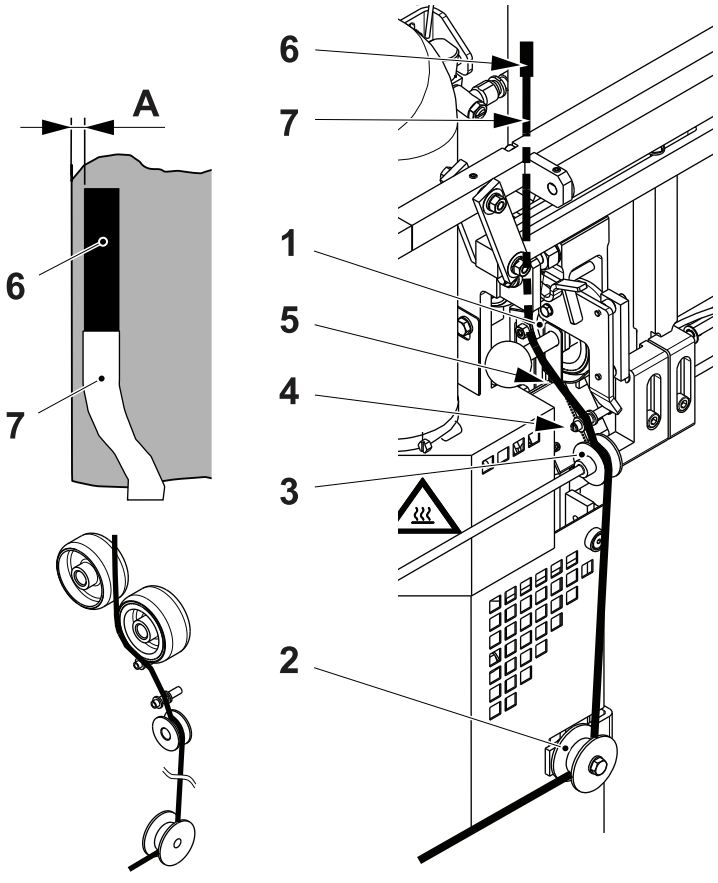

A = 2 ± 1 mm

4

Pull the pressure roller (1) away from the packaging material.

Fasten the strip (6) to the packaging material with tape and then pull the packaging material with strip (6) past the hot air nozzle.

Thread the strip under the roller (2), over the roller (3), over the finger (4), under the finger (5) and under the pressure roller (1).

Attach a piece of adhesive tape (5) to the end of the strip (6), not wider than the strip.

Attach the tape at distance **A** from the edge of the packaging material.

Close the strip magazine frame.

Note! Make sure that the strip magazine frame locks correctly.

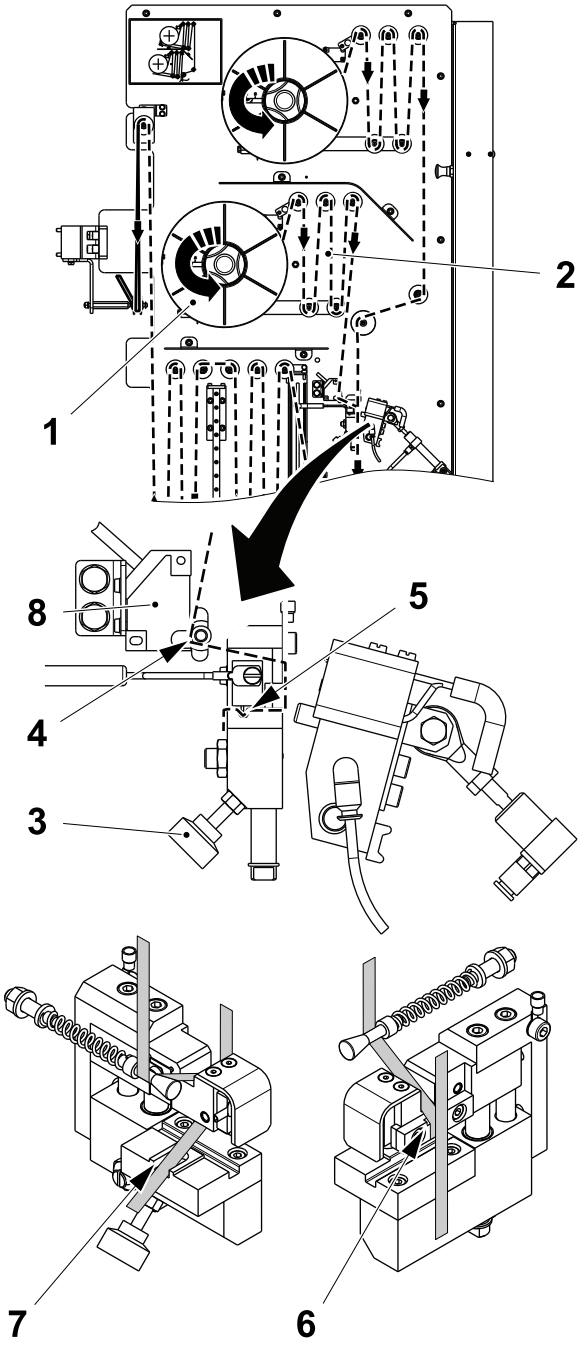

5

Fit a strip reel (1) on the lower reel holder. This reel is now prepared for splicing.

Thread the strip around the rollers (2) as illustrated. Avoid twisting the strip.

Pull the slide knob (3) down to open the splicing head.

Feed the strip around the finger (4) and through the channel (5).

Make sure that the strip is located in the grooves (6) and (7).

Check the strip is aligned correctly against the vertical strip, close the slide and cut off any excess strip.

Rewind the strip reel slightly to tension the strip until the LED of the sensor (8) switches OFF.

Note! If the LED of the sensor (8) is ON an alarm happens on the TPOP to indicate that the strip has not been prepared.

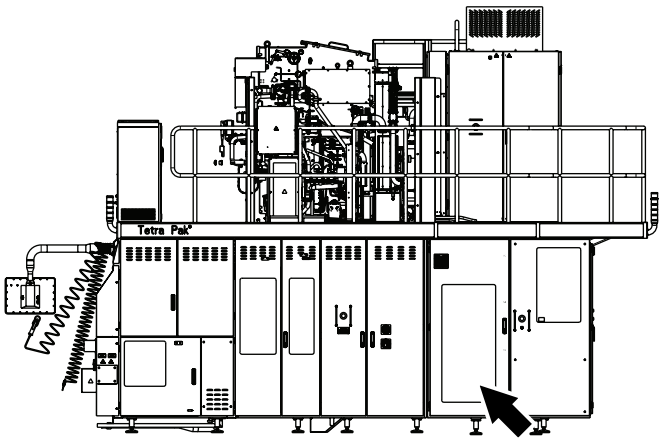

6

Close the strip applicator doors.



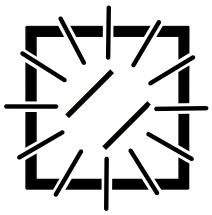

7

Reset the alarms on the TPOP display.

Press the RESET button on the ASU to reset the safety system.

The Strip Applicator is now prepared for an automatic strip splice.

Note! Make sure the strip applicator applies the strip correctly, without wrapping it around the pressure roller.

If an alarm is present, take the appropriate measures or call a technician.

6.1.1 Strip Reel Replacement

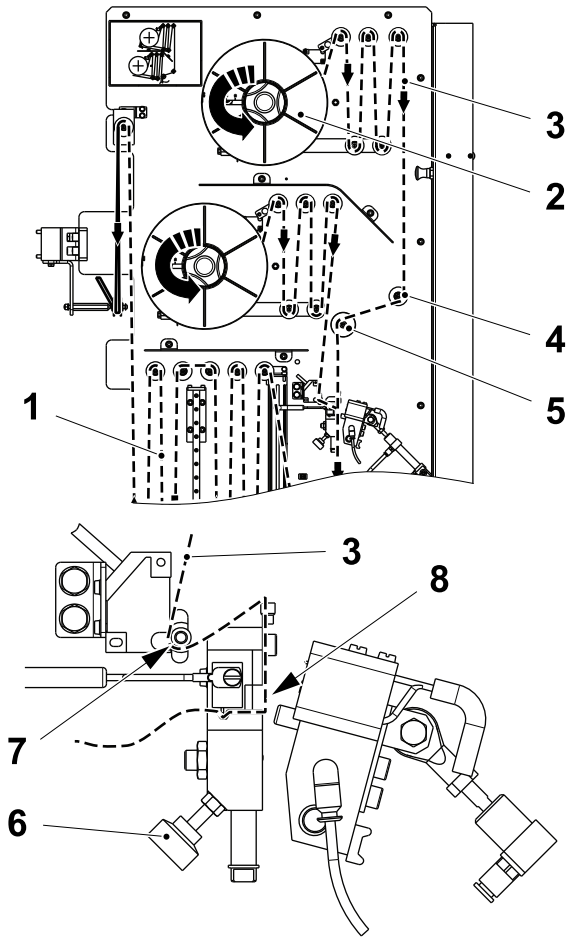

1

Fitting a New Reel on the Upper Reel Holder

WARNING

Burn Hazard.
Some parts may be hot. Wear personal protective equipment.

While the strip (1) is running, fit a new strip reel (2) on the upper reel holder. Thread the strip (3) around the rollers and down to the roller (4), then over the **larger** diameter of the roller (5). Avoid twisting the strip.

Pull the slide knob (6) down to open the splicing head.

Feed the strip around the finger (7) and through the channel (8). Check the strip is aligned correctly, close the slide and cut off any excess strip.

Rewind the strip reel slightly to tension the strip.

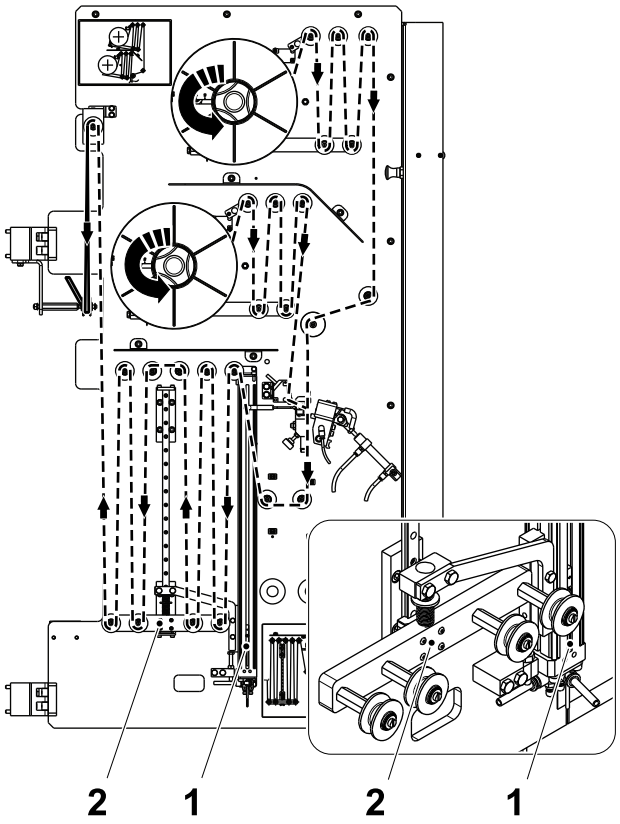

2

Make sure that the cylinder (1) keep the bearing block (2) in its lower position.

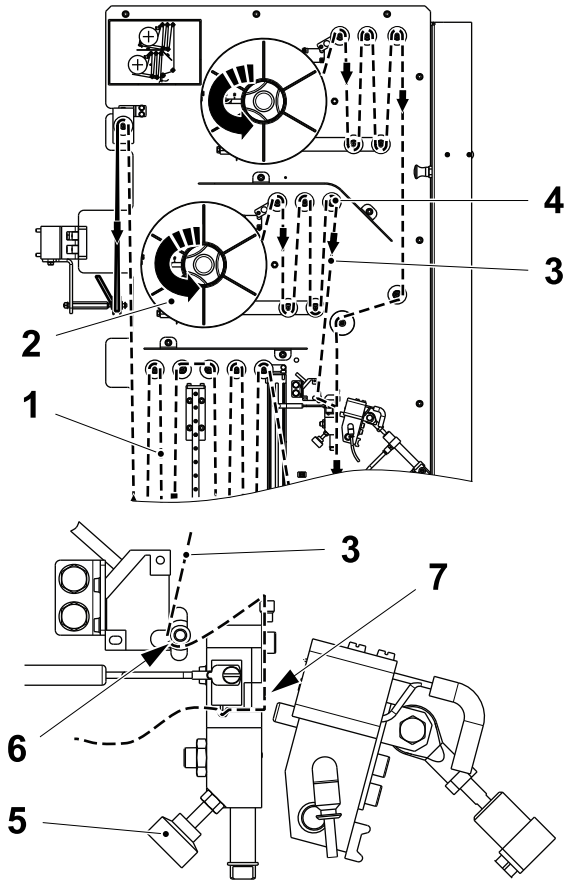

3

Fitting a New Reel on the Lower Reel Holder

While the strip (1) is running, fit a new strip reel (2) on the lower reel holder.

Thread the strip (3) around the rollers and to the roller (4). Avoid twisting the strip.

Pull the slide knob (5) sideways to open the splicing head.

Thread the strip around the finger (6) and through the channel (7).

Check that the strip is aligned correctly, close the slide and cut off any excess strip.

Rewind the strip reel slightly to tension the strip.

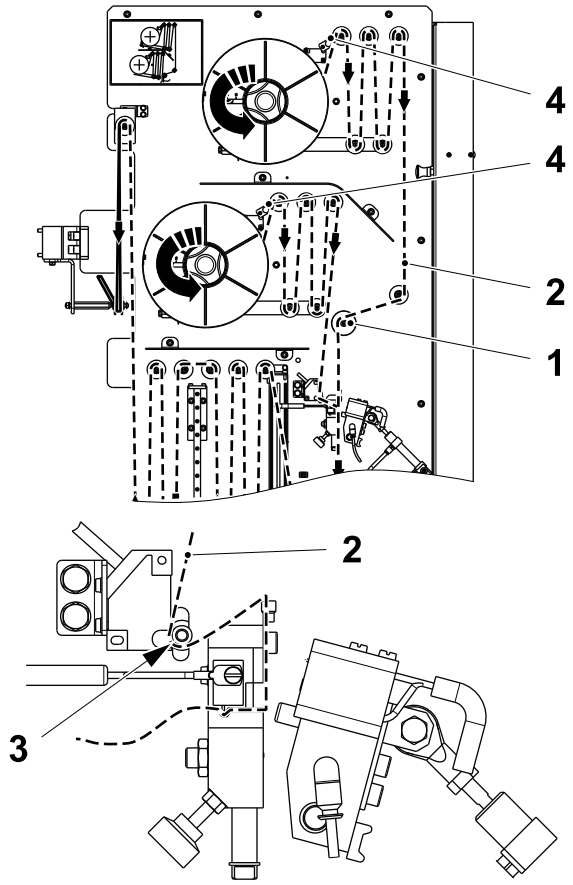

4

When the prepared upper reel is spliced, the LS strip (2) is pulled and jumps onto the smaller diameter of the roller (1).

This moves the finger (3) and activate the sensor that create a request of a new splice on the TPOP display.

Make sure both end-of-reel detectors (4) are above the strip.

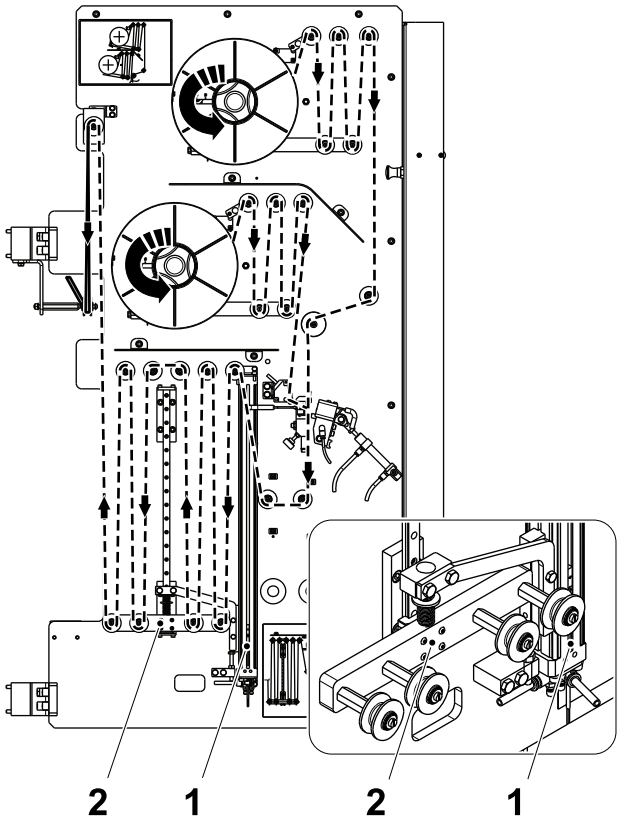

5

Make sure that the cylinder (1) keep the bearing block (2) in its lower position.



6

Some packages are discarded after the splice.

Carry out the checks according to the 5.2 Introduction to Package Checks.

Note! Remember to register the number of packages taken for the checks. See Recording Package Waste for Quality Checks on page 2-60.

6.1.2 LS Strip Break

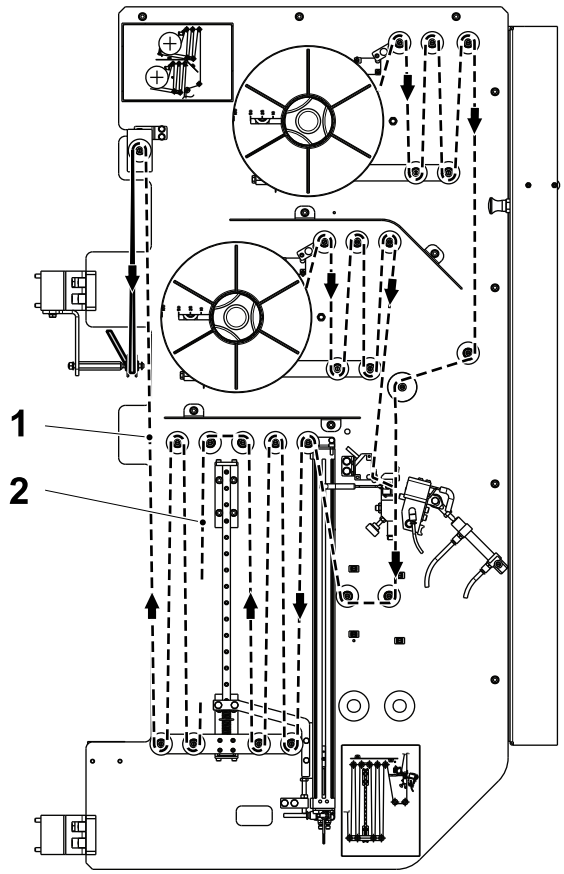

1

Note! Do not repair the LS strip with an adhesive tape.

In case of LS strip break, remove the piece of broken strip (1) and thread again the strip (2) through the magazine, see LS Strip Thread.

6.1.3 Manual LS Strip Splice

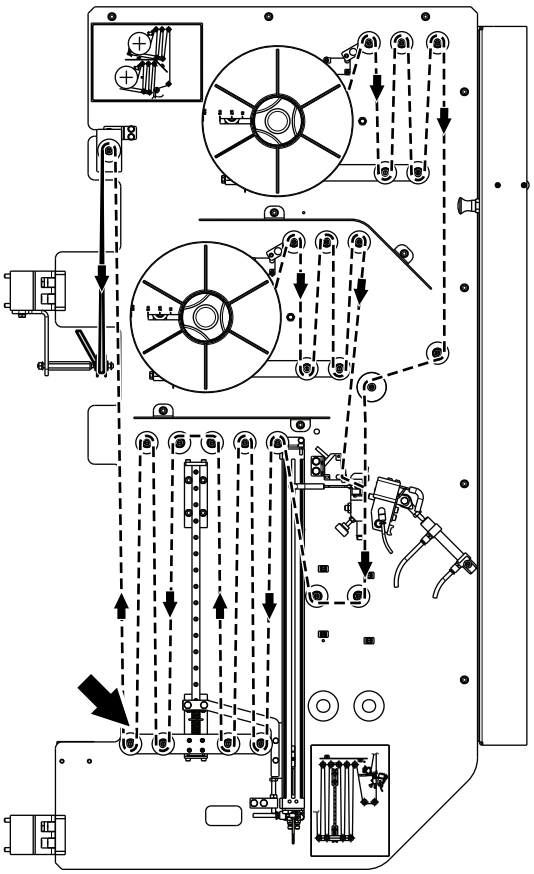

1

In some cases it may be necessary to perform a strip splice manually. Perform as follow:

Make sure that both reels of LS strip are threaded.

Make sure that the strip magazine is in its lower position.

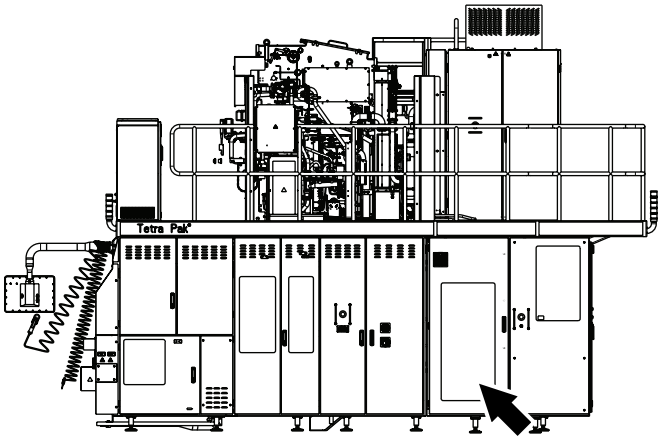

2

Make sure the door of the LS strip magazine is closed.

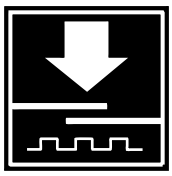

3

Press the MANUAL STRIP SPLICE button.



4

The packages with the strip splice are discarded automatically.

Carry out the checks according to the 5.2 Introduction to Package Checks section.

Note! Remember to register the number of packages taken for the checks. See Recording Package Waste for Quality Checks on page 2-60.

6.2 Packaging Material Supplies

CAUTION
Hygiene.
The packaging material must never touch the floor. Before touching the packaging material, disinfect hands/gloves.

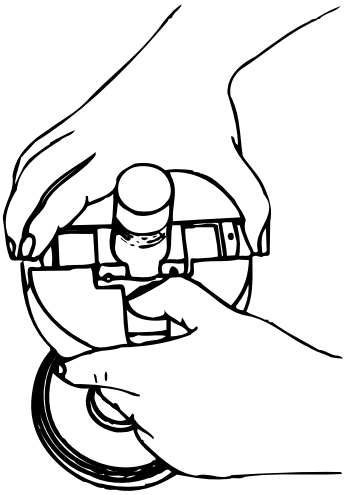

Reel Handling

1

Pull out the reel holder catch slightly while pushing in the spring-loaded lugs.

When the lugs lock, release the reel holder catch.

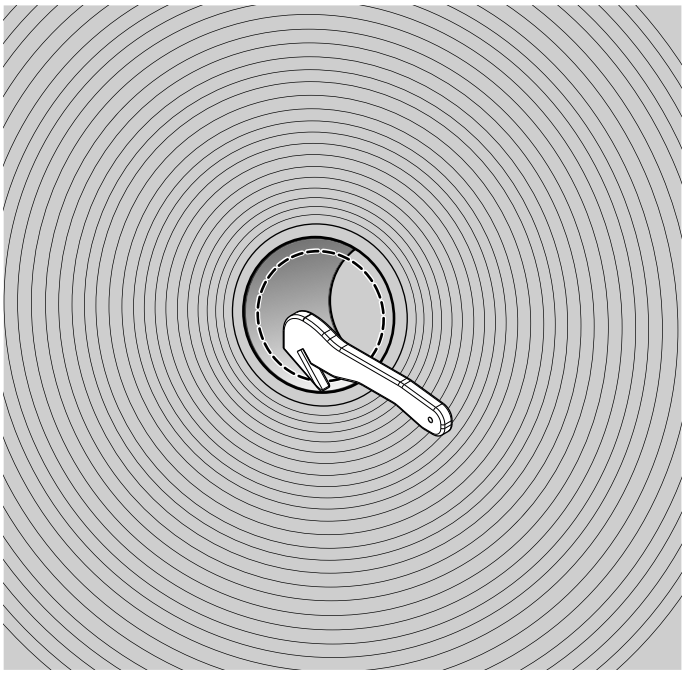

2

CAUTION
Hygienic hazard.
Plastic wrapping around pallets of packaging material may be dirty and must be removed in the packaging material storage area and away from the machine. Plastic wrapping around individual packaging material reel must be removed after the reel has been transported to the machine.

Cut away only a piece of plastic wrapping inside the hole in the reel.

Note! Be careful not to damage the sides of the reel. Use the safety cutter TP No. 90602-0330. A scratch can make a cut on the LS of the packages.

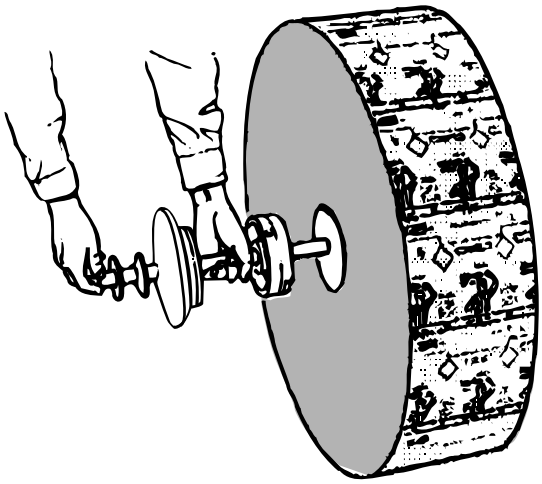

3

Insert the reel holder into the core.

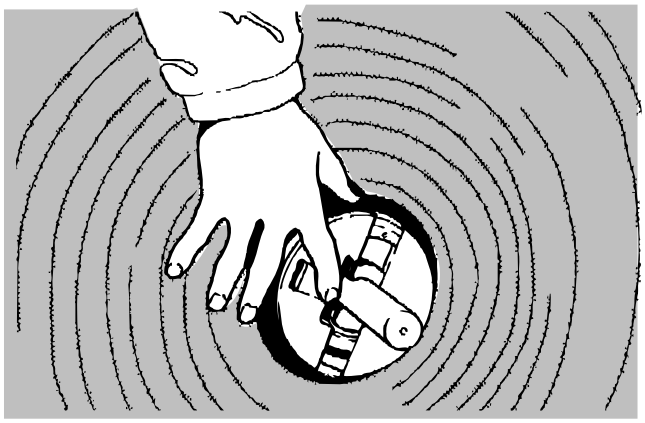

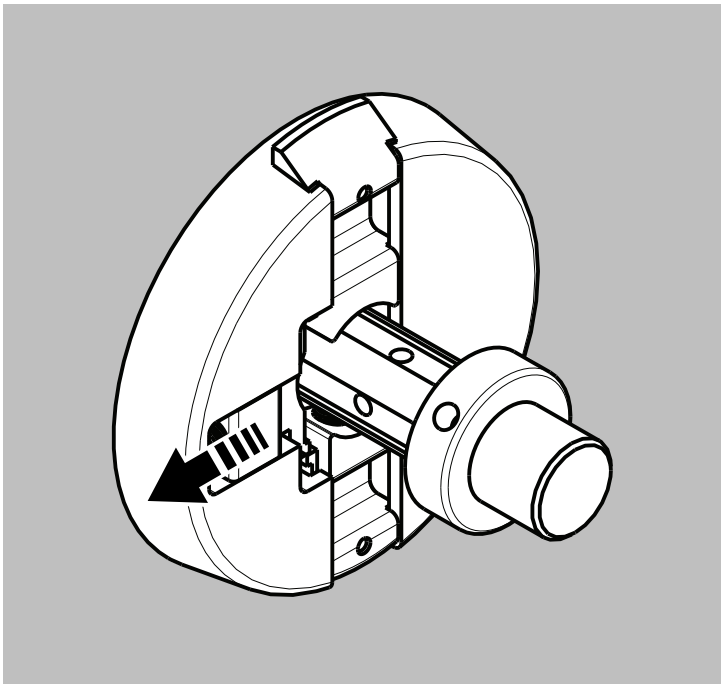

4

Pull out the reel holder catch to release the spring-loaded lugs.

Note! Check that the lugs have expanded to lock the reel holder to the reel.

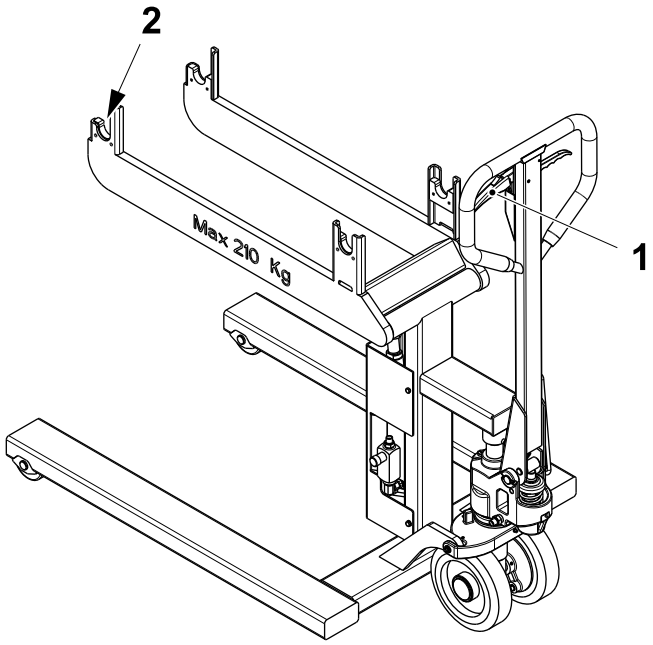

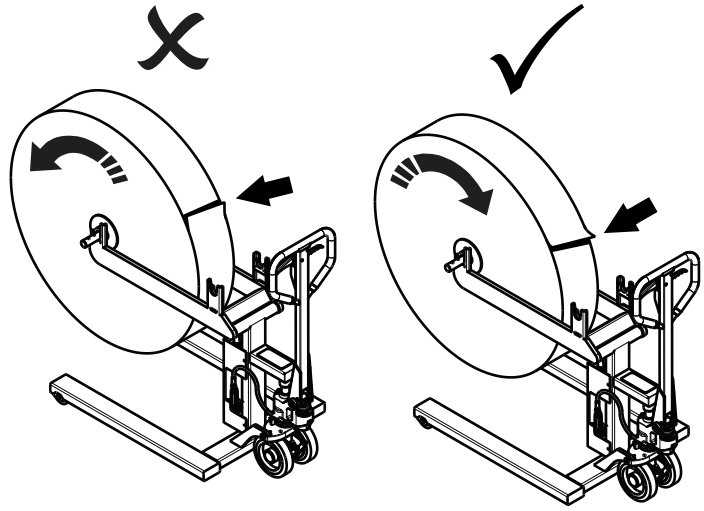

WRONG CORRECT

5

Position the reel so that the end of the packaging material is on top, and it will unwind towards the machine.

Squeeze the lever (1) to release the brake and move the trolley up to the reel. Position the trolley so that the spindle of the reel holder is above the yoke (2) of the trolley.

Note! Make sure the packaging material reel will be lifted onto the trolley with the correct direction of rotation as indicated in the illustration. Be careful not to damage the sides of the reel. A scratch can make a cut on the LS of the packages.

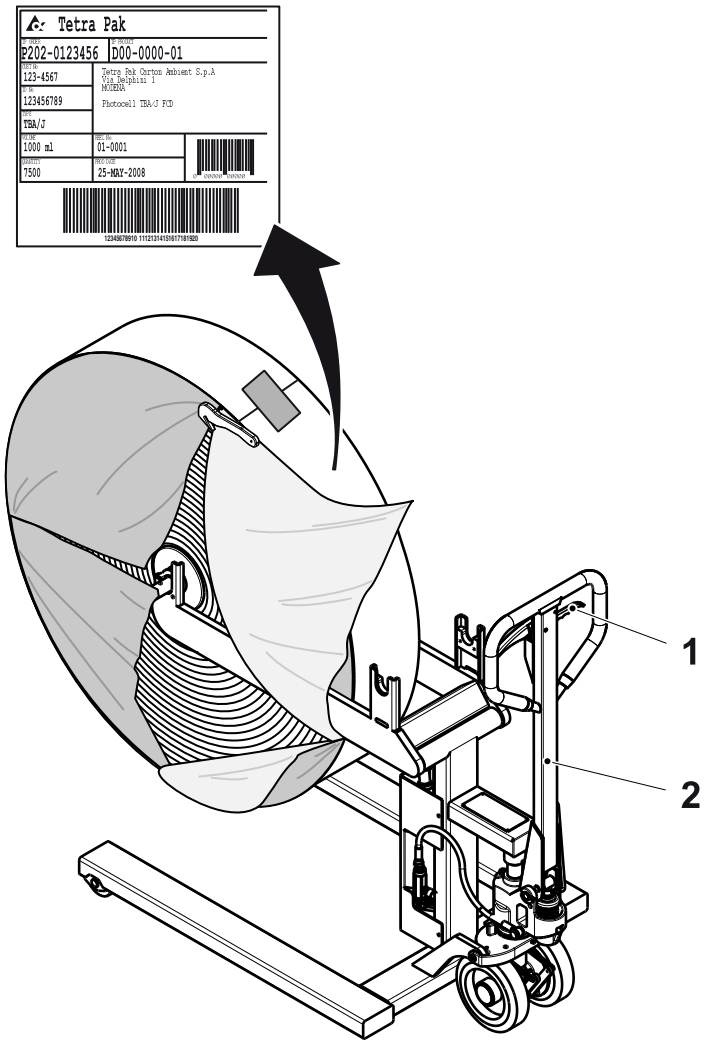

6

Lower the lever (1) fully down and pump the main handle (2) to lift the trolley arms.

Remove the plastic wrapping from the reel.

CAUTION
Hygienic hazard.
Make sure that the packaging material does not touch the floor during the entire supply procedure.

Check carefully the edges of the packaging material reel for damages, cuts or dents due to reel transportation and handling. Report any damage that may effect equipment performance.

Remove and keep the P-order label.

Note! The unique P-order and reel numbers allocated to each packaging material reel and printed on the P-order label provide traceability for the production batch. If a problem with the packaging material is detected these numbers must be quoted in any communication with Tetra Pak.

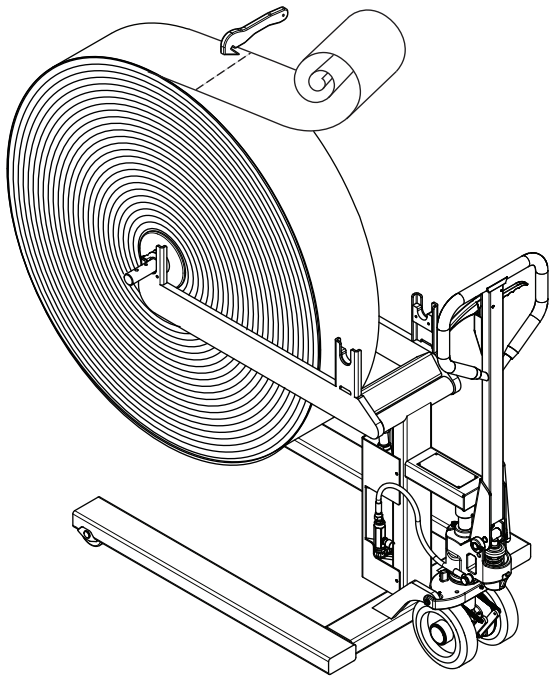

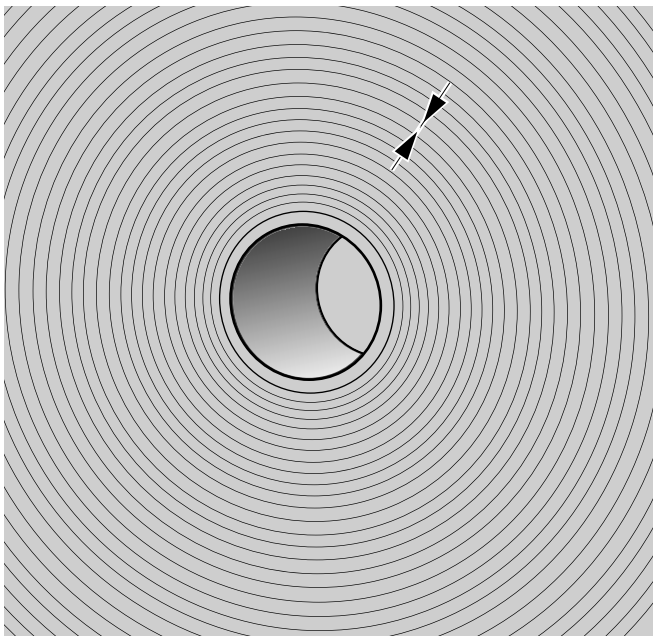

7

WARNING

Risk of unsterility.

Do not damage the underlying packaging material when cutting.

Always use the safety cutter TP No. 90602-0330.

Packaging material is shipped in protective wrapping labelled with non-marking labels. After removing the wrapping and peeling off the label, the entire packaging material can be used.

Note! In cases where the wrapping is missing or damaged, cut approximately one turn of packaging material from the reel. Do not damage the underlying packaging material when cutting.

Note! Arrow marks on the side of the reels indicate where there are factory splices. During production, the machine will automatically discard the packages which include a factory splice.

Always check the packages after a factory splice, see the 5.2 Introduction to Package Checks section in chapter 5 Checks.

6.2.1 Splicing Preparation

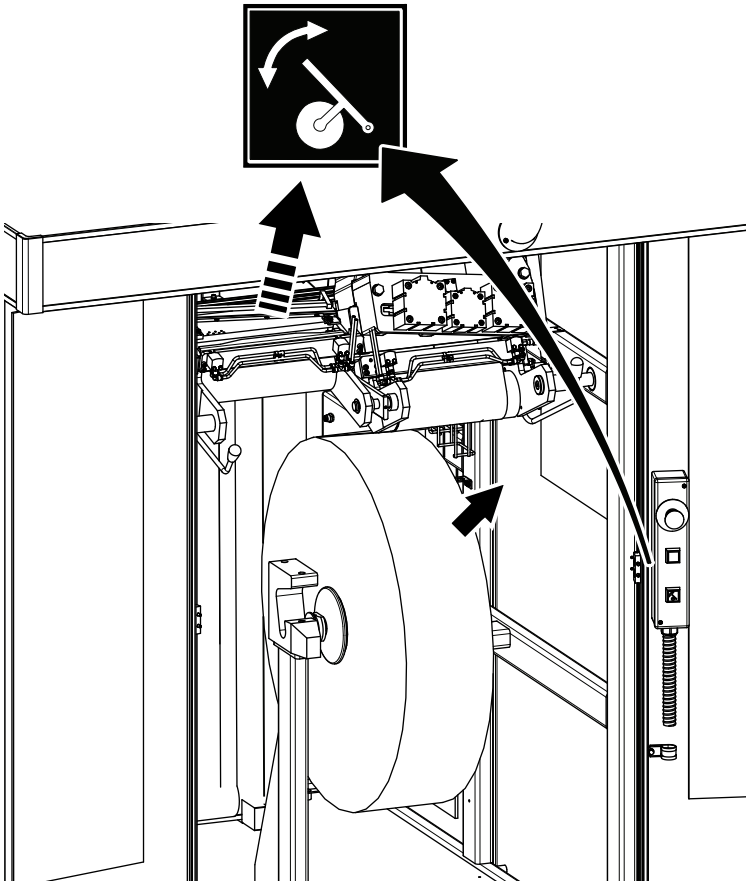

1

WARNING

Risk of personal injury.
Moving parts can crush and cut.

Open the ASU doors only when the splicing sequence is finished.

If required press the PACKAGING MATERIAL HOLDER button to raise the package material holder.

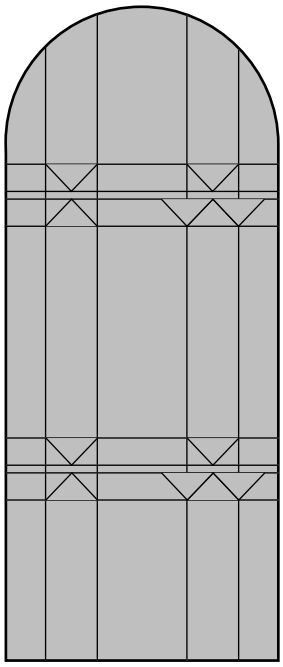

2

Cut the end of the packaging material as shown, avoiding crease lines on the tip.

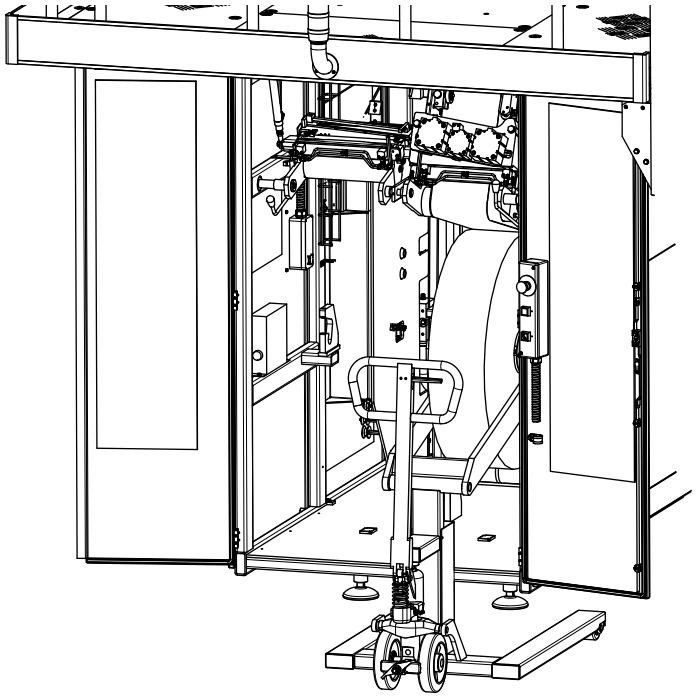

3

Load the reel of packaging material into the ASU.

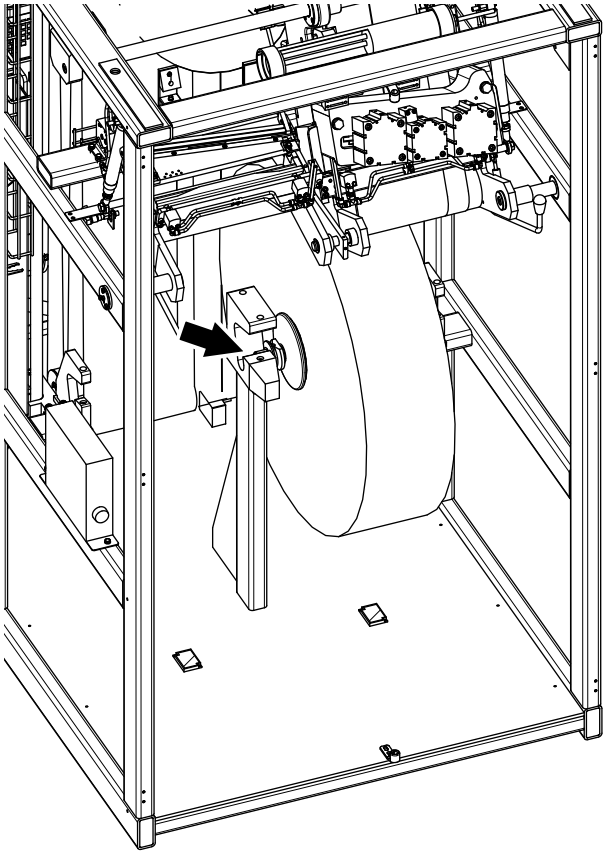

4

Make sure the packaging material reel is aligned correctly on the bobbin holders.

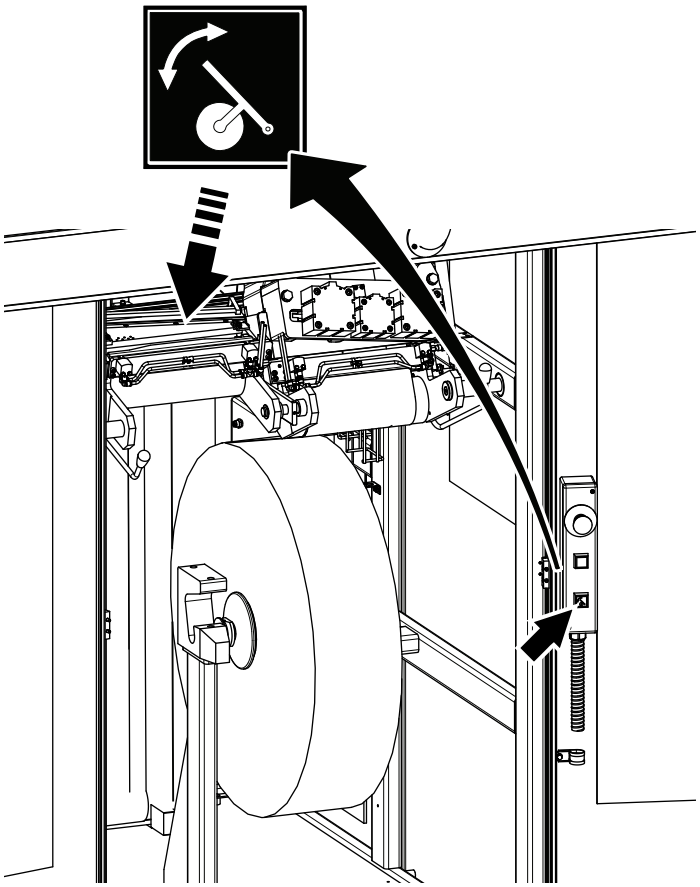

5

WARNING

Risk of personal injury.
Moving parts can crush and cut.

Press the PACKAGING MATERIAL HOLDER button.

The packaging material holder above the reel lowers.

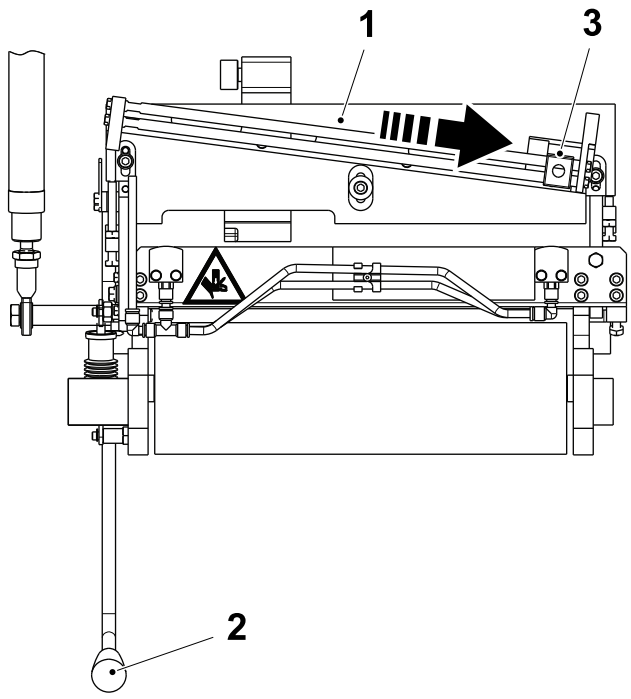

6

Raise the cutting table (1) by means of the handle (2).

Make sure that the knife holder (3) is on the RH side of the cutting table (1).

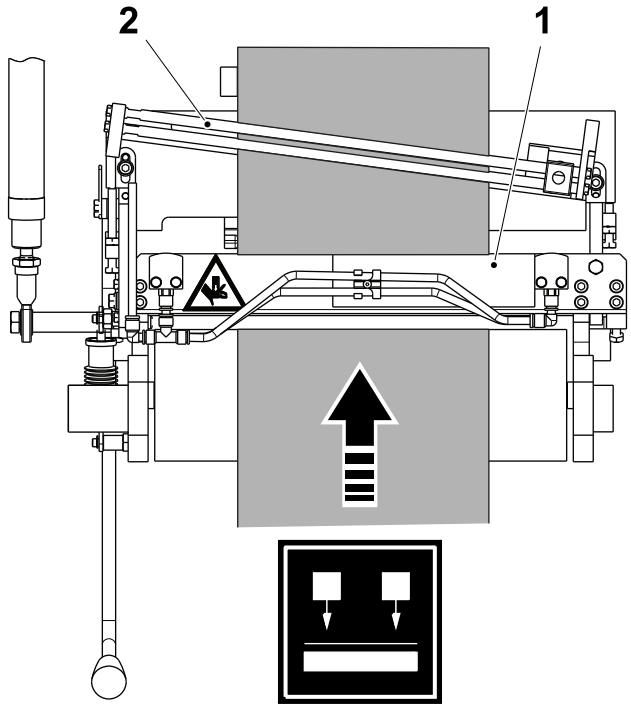

7

Press the MATERIAL LOCKING button to allow the packaging material to pass through the web brake shoe (1).

Thread the packaging material under the cutting device (2).

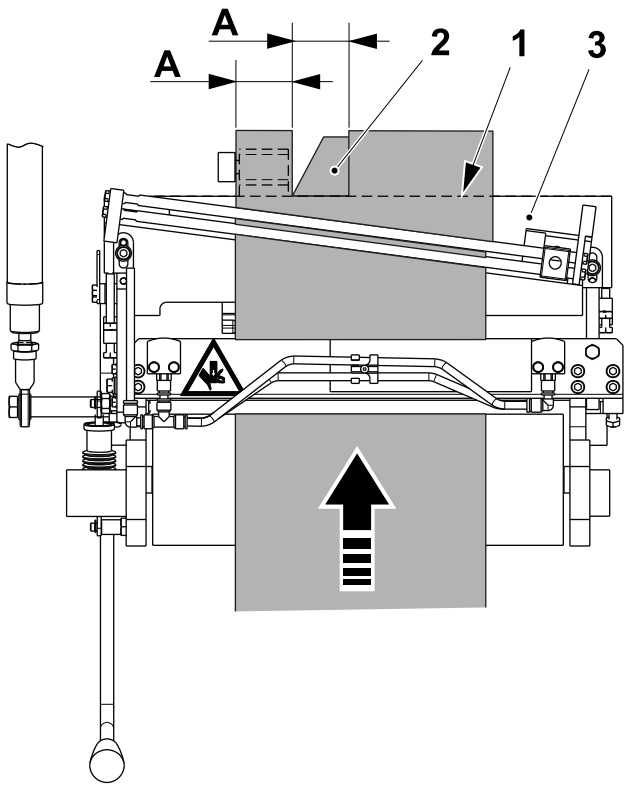

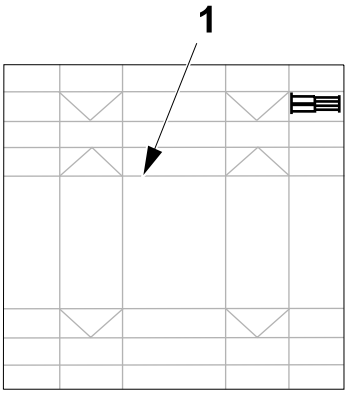

8

Fold the packaging material upwards along the top crease (1), then downwards to make a sharp crease.

Cut vertically the end of the packaging material to obtain a stripe (2) of 40 mm about at the distance 40 mm from the packaging material RH side.

Fold the stripe (2) along the top crease (1) over the edge of the cutting table (3).

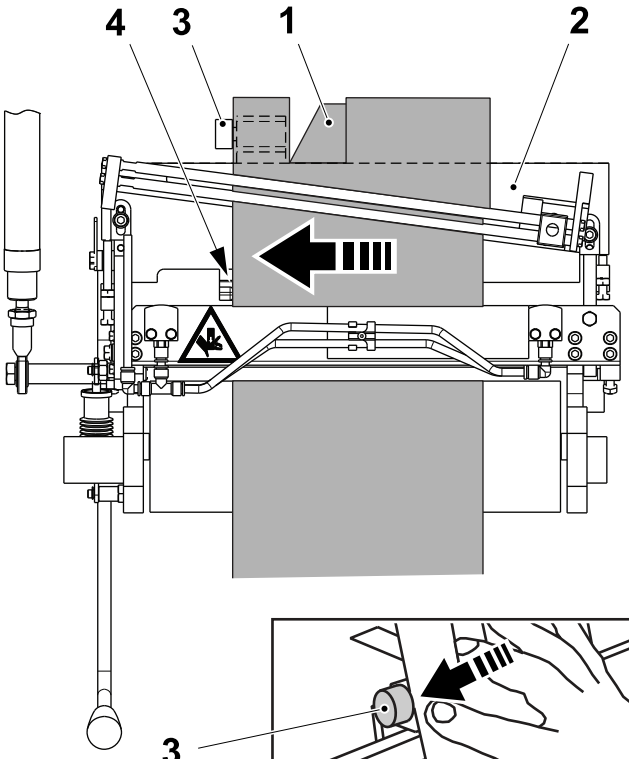

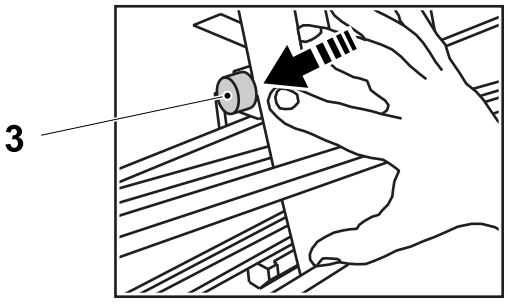

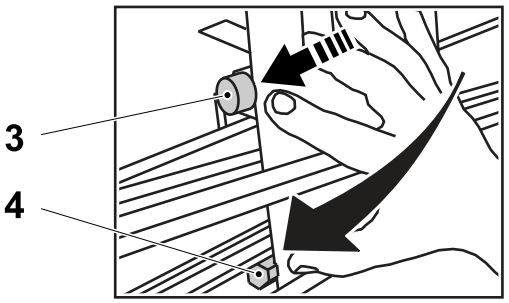

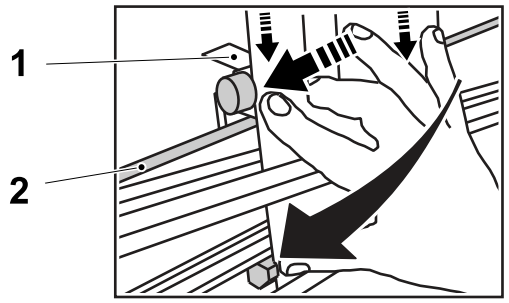

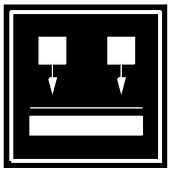

9

Hold the stripe (1) over the cutting table (2).

Move the packaging material against the adjusting screw (3).

Move the packaging material against the tooth (4).

Move the packaging material down until the stripe (1) is against the cutting table (2).

Press the MATERIAL LOCKING button to lock the packaging material in place.

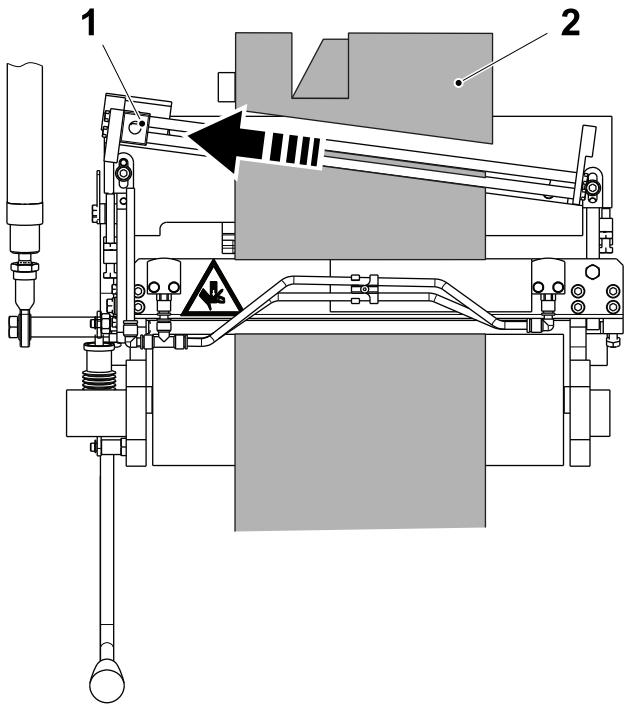

10

Cut off the end of the packaging material by sliding the knife (1) across the cutting table from RH side to LH side.

Remove the end piece (2).

Move back the knife (1) on the RH side.

Note! If the quality of the paper edge after the cut from RH side to LH side is not good enough, call a technician to change the knife (1) in the knife holder.

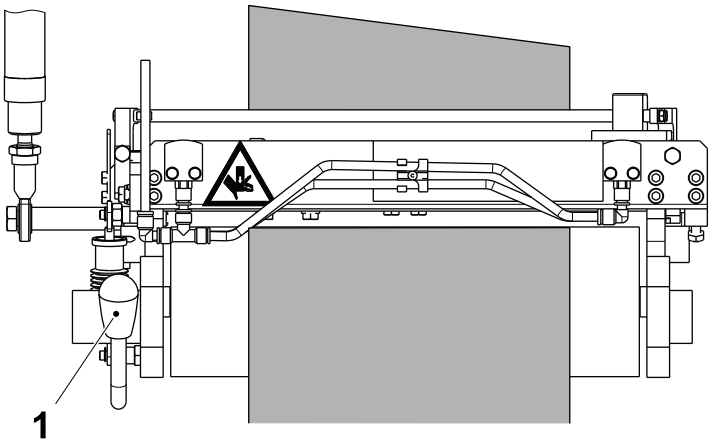

11

Lower the cutting table to the production position by means of the handle (1).

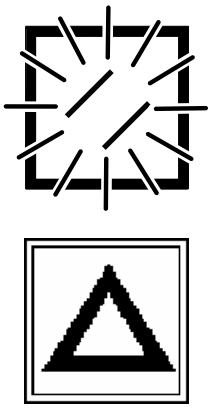

12

Close the ASU doors and press the RESET button to reset the safety system, see 8.2 Security Stop.

If an alarm appears, take the appropriate measures or call a technician.

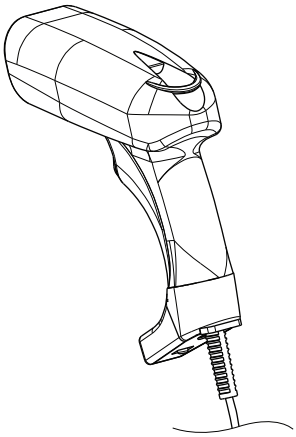

13

Log the packaging material eBeam compliant using the bar code scanner, see 2.4.4 Logging Materials.

6.2.2 Manual Web Splice



1

Press the MANUAL WEB SPLICE button.

When the machine has performed the splice, open the ASU door behind the packaging material reel that is not in use.

6.2.3 Interrupted Web Splice

CAUTION

Risk of personal injury.

The rollers of the ASU magazine may be suspended in an upper position when the machine is stopped due to an interrupted web splice. The rollers may drop suddenly if the packaging material web is cut.



1

If the machine stops when a packaging material splice is being performed, the `SPLICE INTERRUPTED` alarm appears on the TPOP.

To restart the machine, acknowledge the alarm, remove the cause of the stoppage and follow the instructions in 6.2.2 Manual Web Splice.



2

The packages with the splice are automatically discarded.

Carry out the checks according to the 5.3 Package Checks.

Note! Remember to register the number of packages taken for the checks. See Recording Package Waste for Quality Checks on page 2-60.

6.2.4 Packaging Material Broken or Splice Failure (ASU Loop Empty)

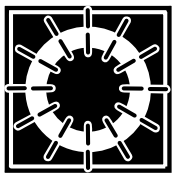

1

WARNING

Risk of serious production fault.
Never use tape to manually join or splice the packaging material when there is a splice failure or the packaging material is broken.

CAUTION

Hygiene.
Before handling clean parts, disinfect your hands/gloves with cleaning compound code H.

When there is an unsuccessful packaging material splice or the packaging material is broken, the ASU loop empties and the machine stops in SHORT STOP.

Note! Reset the alarm on the TPOP only **after** performing the splice.

The ASU LOOP EMPTY and SPLICE INTERRUPTED alarms are displayed on the TPOP and an audible signal is given to indicate that the machine is ready to perform a manual splice.

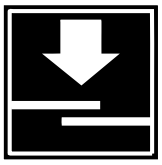

2

Pull back the packaging material and feed it back into the splicing unit.

Prepare a new packaging material splice, follow the instructions in 6.2.1 Splicing Preparation.

Close the ASU doors and press the MANUAL WEB SPLICE button.

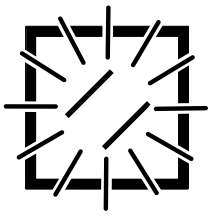



3

Press the RESET button to reset the safety system, see 8.2 Security Stop.

If an alarm appears, take the appropriate measures or call a technician.

The ASU loop is filled with packaging material.



4

Press the PROGRAM UP button to restart the machine.

6.2.5 Force Manual Splice Enabled



1

Note! Using the FORCE MANUAL SPLICE ENABLED function will create extra package waste.

When there is an urgent need to perform a packaging material splice because of an alarm condition, it is possible to perform an immediate splice disregarding the packaging material position (out of design).

Touch the INFEED MODULE button.

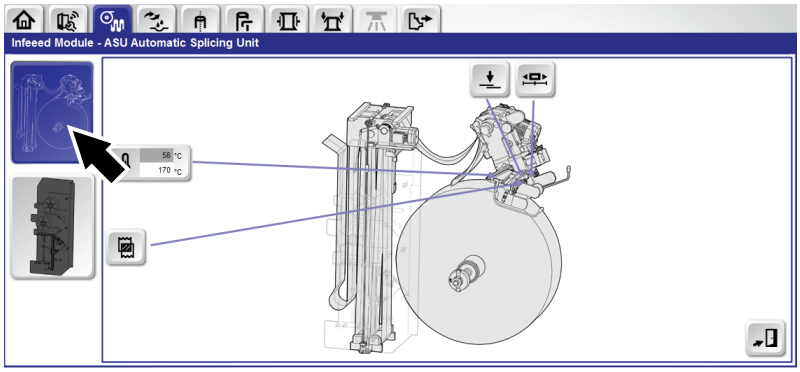

2

Touch the ASU SUB MODULE button.



3

Touch the PAPER SPLICE button.

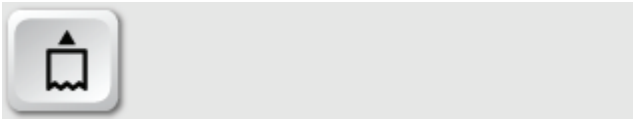

4

Touch the FORCE MANUAL SPLICE button.

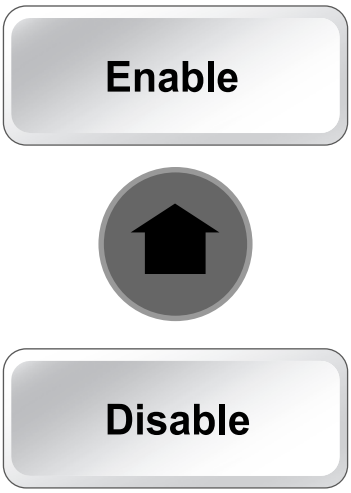

5

Touch the ENABLE button to enable the FORCE MANUAL SPLICE function.

Note! To cancel the function and return to production, press the PROGRAM UP button or the DISABLE button.

An audible signal is given to indicate that the machine is ready to perform a manual web splice. Follow the instructions in 6.2.2 Manual Web Splice.

See also 2.5.1 Infeed Module Window on page 2-75.

This page intentionally left blank

7 Conversion

Description

This chapter describes the procedures necessary to change the machine volume.

Description 7-2

7.1 QuickChange 7-5

Preparation 7-5

Equipment Checklist..... 7-5

7.1.1 Volume QuickChange..... 7-6

Automatic Volume QuickChange During PRODUCTION 7-6

7.1.2 Change Equipment..... 7-8

Volume Flaps 7-8

Wheel..... 7-9

Flap Heater..... 7-10

Pressure Device..... 7-11

7.1.3 Volume QuickChange Completion..... 7-12

This page intentionally left blank

7.1 QuickChange

This section describes what must be done to change the package volume on the filling machine.

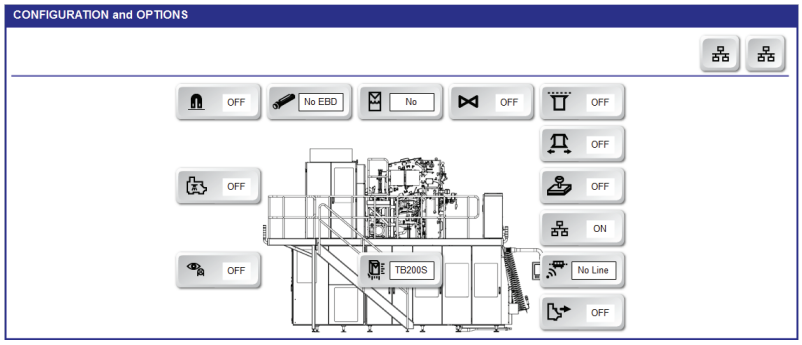



Preparation

1

Make sure the correct packaging material reel is spliced and prepared ready for PRODUCTION.

Check on the TPOP display which volume is currently in use.

Note! The size of the current package being produced is shown on the TPOP display.

Change the reel as necessary and prepare a packaging reel splice, see section 6.2 Packaging Material Supplies.

2

Equipment Checklist

Make sure the necessary volume change equipment is available:

- cutting and pressure jaw volume flaps
- pressure device pushers
- final folder wheel flaps (only for some package volumes)

7.1.1 Volume QuickChange

A volume QuickChange can be performed when the machine is in step PREPARATION, PRODUCTION or during a NORMAL STOP.



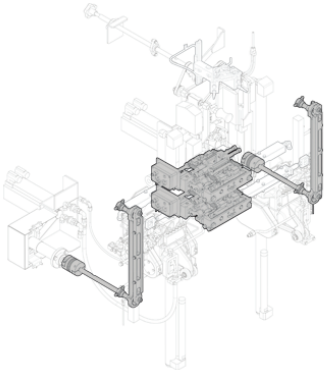

Automatic Volume QuickChange During PRODUCTION

An automatic volume change is performed when the machine is running in PRODUCTION and a new volume size of packaging material is detected by the jaw system photocells.

The machine will stop automatically when the packaging material arrives at the jaw system and an alarm will appear on the TPOP.

Acknowledge the alarm and follow the procedure.



1

Touch the MANOEUVRE button.



2

Touch the PACKAGE FORMING UNIT button.



3

Touch the VOLUME QUICK CHANGE button.



4

Touch the ENABLE button.



5

Touch the OPEN button and wait for completion.

Wait until the jaw system movement has completed and opened both jaw pairs.

Continue with the section 7.1.2 Change Equipment.

7.1.2 Change Equipment

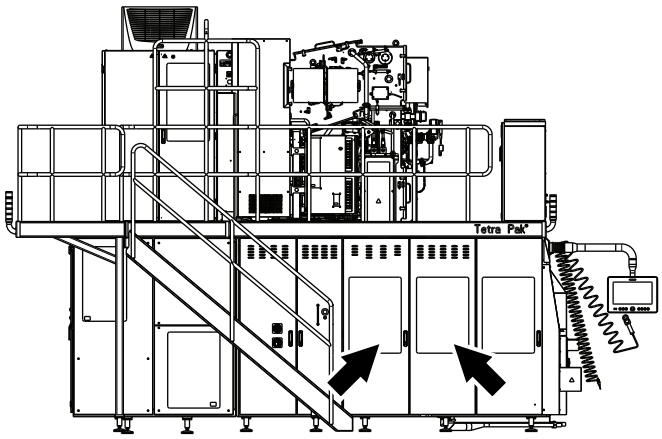

1

Open the two LH jaw system doors.

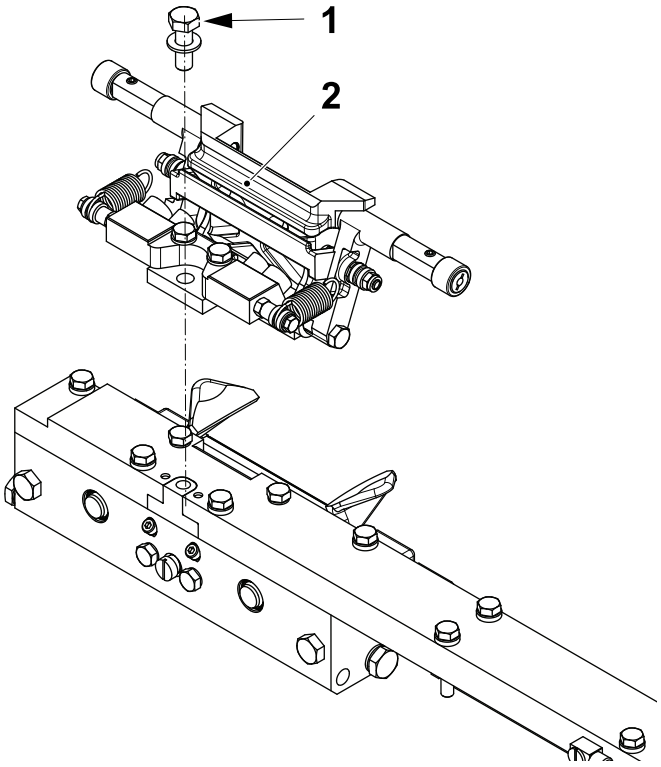

Volume Flaps

2

On each of the four volume flaps:

a) Release the screw (1) securing the volume flap (2) to the carrier and remove the volume flap (2).

b) Fit the correct volume flap according to the volume and secure them using the screw (1).

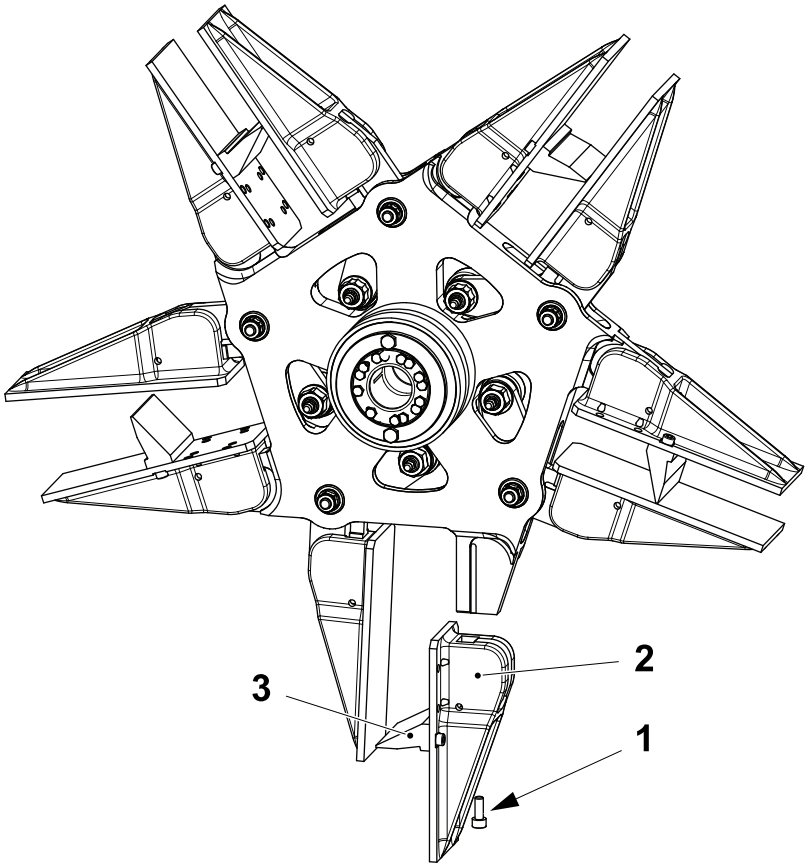

Wheel

3

WARNING

Risk of crushing.

Be careful when manually turn the wheel.

Note! Turn the wheel to access the screws (1).

In each station loosen the screw (1) and remove the flap (2) holding the bottom plate (3).

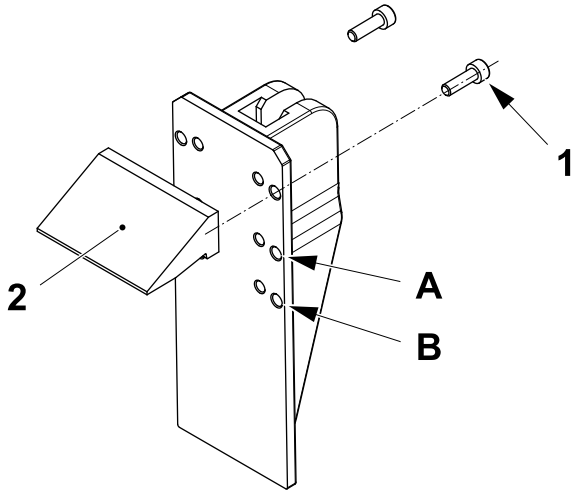

4

Remove the screws (1) and change the position of the bottom plate (2) according to the volume.

Tighten the screws (1).

Package	Position
TB 200 B	A
TB 250 B	B

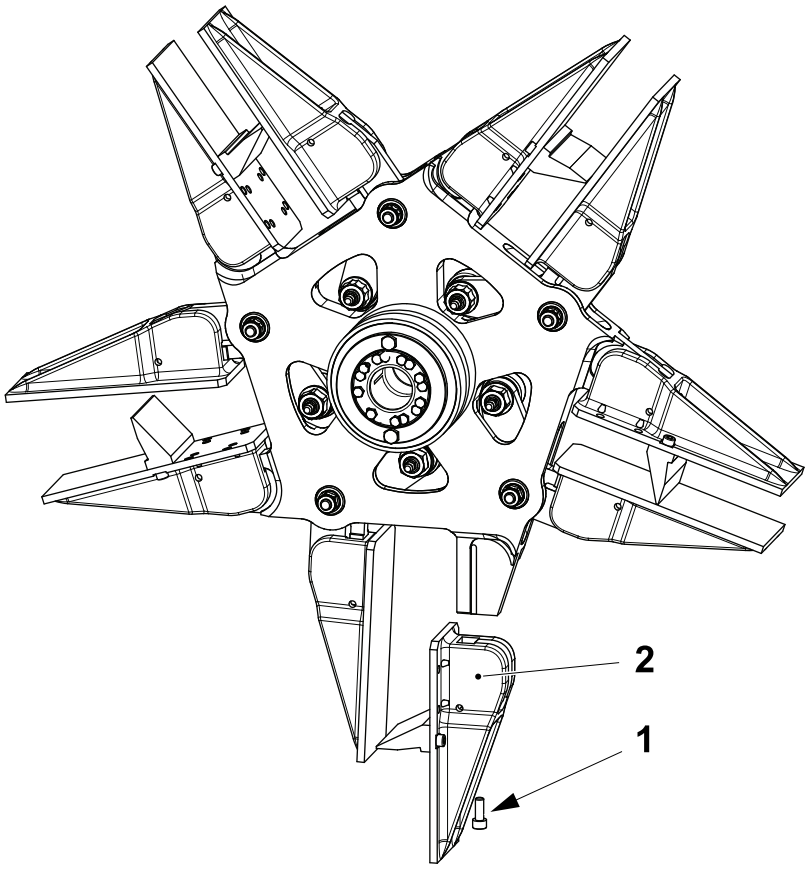

5

Fit the flap (1) and tighten the screw (2)

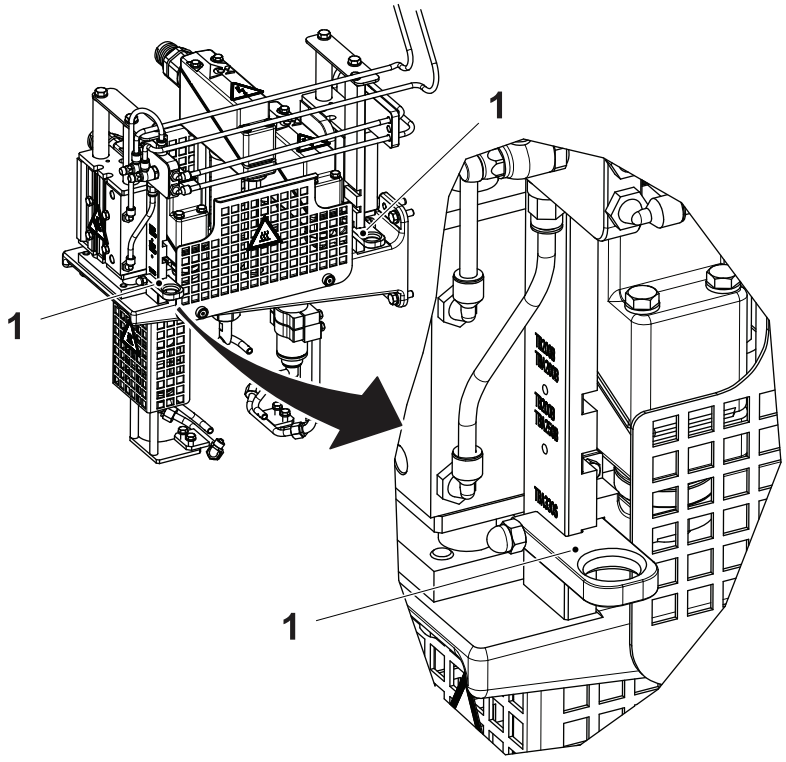

Flap Heater

6

Pull out the two stoppers (1).

Fit the two stoppers (1) in the correct volume position.

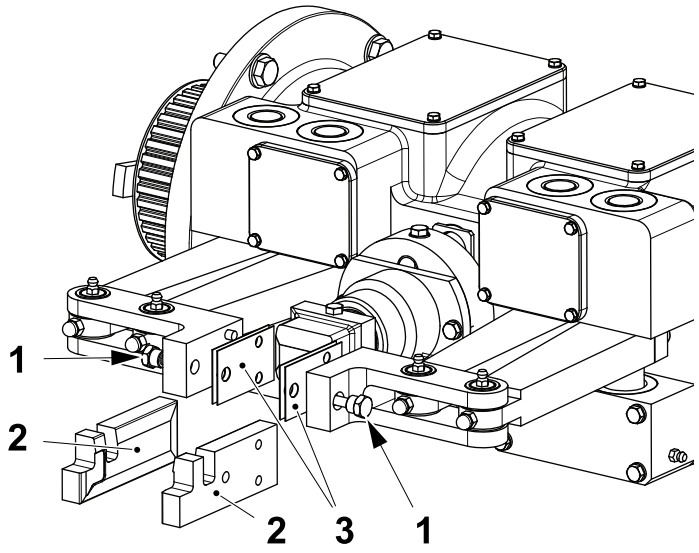

Pressure Device

7

Loosen the screws (1) and remove the pusher (2).

Note! Make sure not to loose the shims (3).

Fit the pusher (2) according to the volume.

Note! Make sure that the pushers (2) are fitted oriented according to the illustration below.

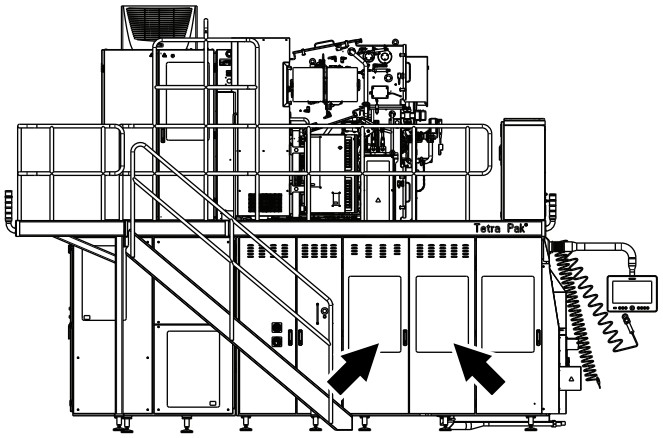

8

Close the two LH jaw system doors.

7.1.3 Volume QuickChange Completion



1

Close the LH jaw system doors and reset any alarms on the TPOP panel.

Touch the MANOEUVRE button.



2

Touch the PACKAGE FORMING UNIT button.



3

Touch the VOLUME QUICK CHANGE button.



4

Touch the ENABLE button.



5

Touch the CLOSE button to end and wait for completion.

Wait until the jaw system movement has completed and closed both jaw pairs.

The volume change has now been completed.

This page intentionally left blank

8 Stop

Description

This chapter describes the different types of stop conditions and how to stop the machine under normal operating conditions.

CAUTION

Hazardous noise.

Risk of impaired hearing. Hearing protection is recommended whenever this equipment is in operation.

CAUTION

Risk of damage to the equipment.

When possible, the machine should normally be stopped in a SHORT STOP during PRODUCTION.

Note! Product temperature increase **may occur during stops in PRODUCTION**. It is Customer's responsibility to verify that the filled product temperature remains in compliance with any local legislation.

Description 8-2

8.1 Emergency Stop 8-5

8.2 Security Stop 8-7

8.3 Short Stop 8-10

8.4 Normal Stop 8-12

8.5 Production Finished Stop 8-13

Interrupting the Automatic Sequence 8-14

This page intentionally left blank

8.1 Emergency Stop

When there is a risk of serious danger to people or to the machine, push any of the EMERGENCY STOP buttons (arrows) as quickly as possible.

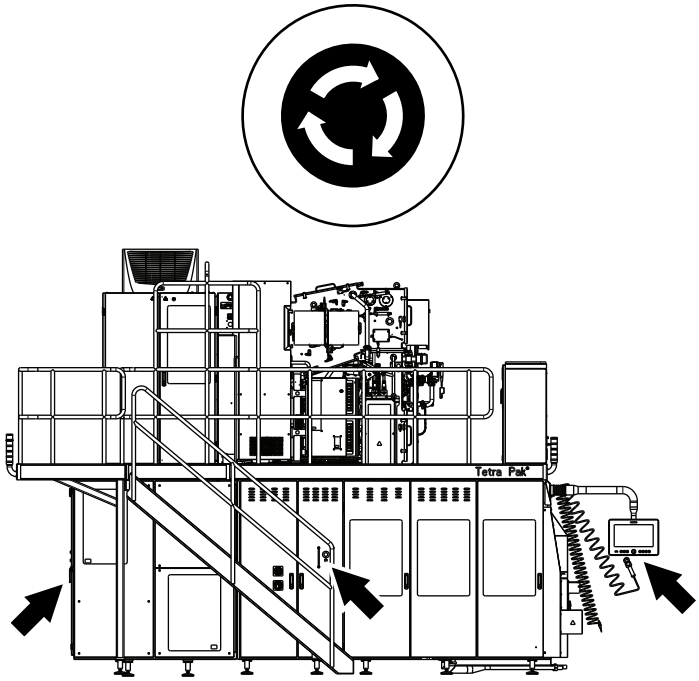

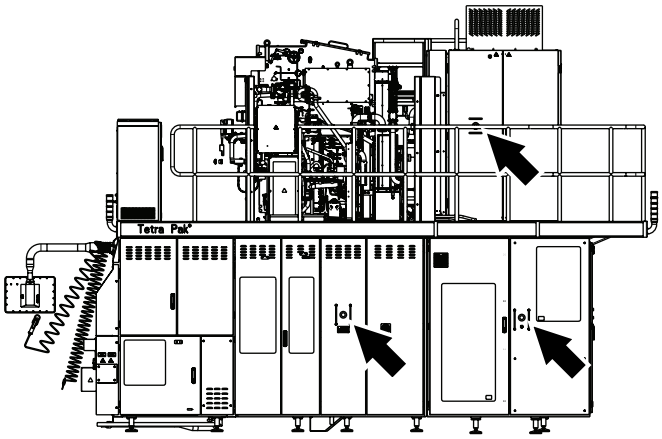

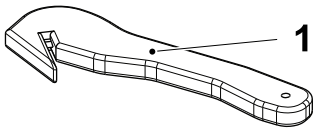

Safety cutter TP No. 90602-0330

1

Pressing an EMERGENCY STOP **button results in the following:**

- All machine movements and functions stop **instantly**
- The pneumatic system de-pressurizes completely
- The machine program steps down to step ZERO.

DANGER

Risk of serious personal injury.
Never open the doors of the hygiene chamber to extinguish a fire on the packaging material. Follow local emergency procedures.

WARNING

Risk of personal injury.
Low levels of NO_2 gas may remain in the chamber and hygiene chamber during an unplanned stop.
Wear respiratory protective equipment before opening the doors of the chamber or hygiene chamber.

CAUTION

Risk of serious production fault.
When cutting the product tube use the safety cutter (1) TP No. 90602-0330 to avoid damaging the float.

Take the following actions:

a) Eliminate the cause of the stop and clear any alarms.

b) Cut open the product tube using the safety cutter (1) to empty any remaining product.

c) Register the cause and number of wasted packages in the collect system. See the 2.4.2 Manually Registering an Event During Production.

d) Twist out and reset the EMERGENCY STOP button.

e) Restart PRODUCTION. See the 3.2 Preparing after Daily Care section.

8.2 Security Stop

All hazardous areas of the machine are fitted with safety switches. If any door or guard fitted with a safety switch is opened the machine will perform a SECURITY STOP.

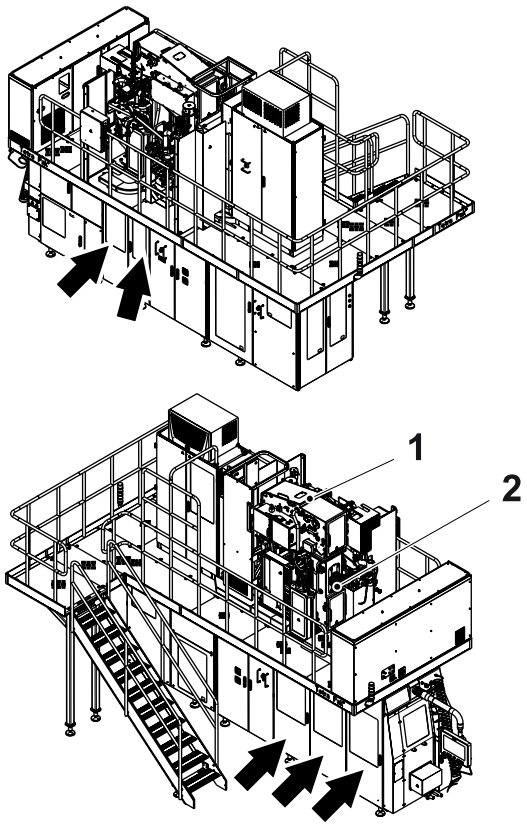

1

During PRODUCTION the machine will stop immediately if:

- any of the doors of the chamber (1) or hygiene chamber (2) are opened
- any of the doors indicated by the arrows are opened
- there are jammed packages
- there are final folder errors.

Also see the Safety Precautions chapter.

Reset any alarms on the TPOP.

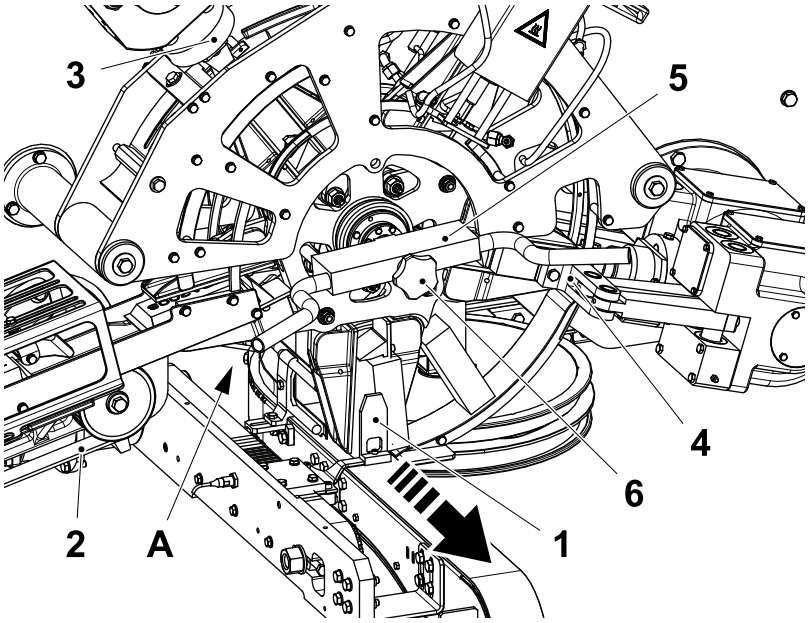

2

In case of jammed packages in the wheel of the final folder:

- pull the finger (1) far from the wheel
- turn the belt (2) until the block (3) and the pushers (4) do not interfere with the wheel
- fit the template (5) to the wheel by means of the knob (6)
- turn the template clockwise until the package is in position A.
- pull out all the jammed packages
- loosen the knob (6) and remove the template (5).

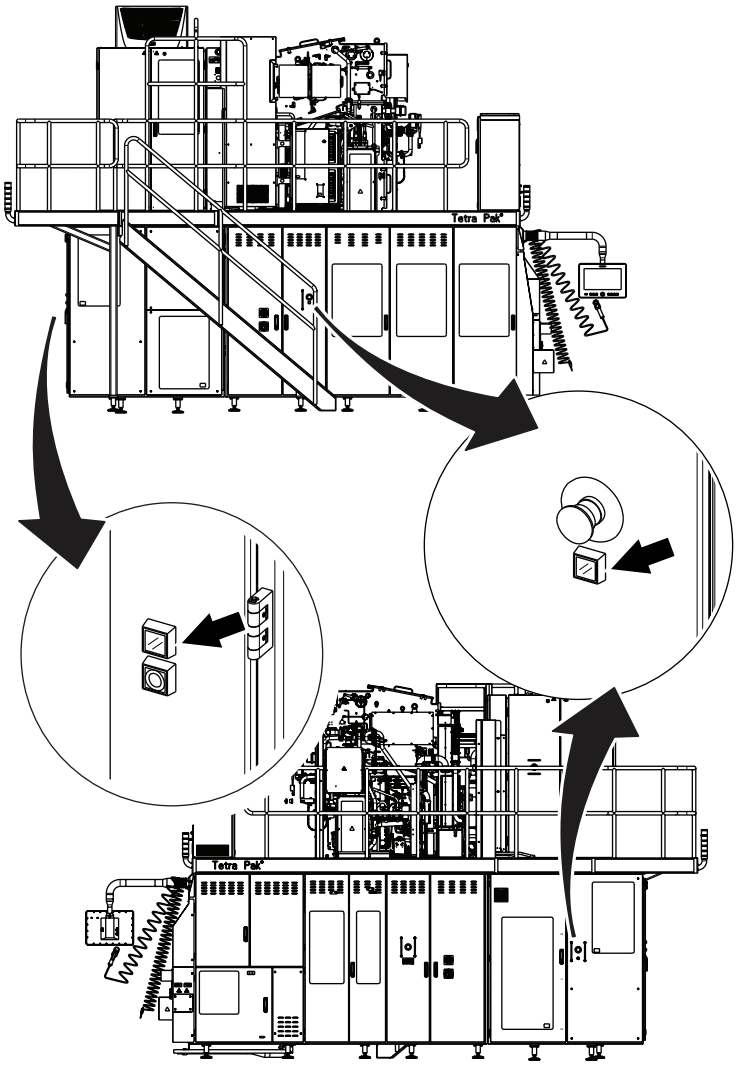

3

Close all the doors on the machine body and ASU.

If the alarm condition was caused by one of:

- the machine body doors, press one of the RESET buttons on the machine body doors
- the ASU doors, press the RESET button on the ASU.

Note! The light of the RESET button is intended to inform the operator when a door is open and the safety system must be reset. The light of the RESET button flashes when a door is open and after the door has been closed will remain ON until the RESET button has been pressed and safety system has completed the system reset.



4

Reset any alarms on the TPOP.

Press the PROGRAM UP button to restart the machine.

8.3 Short Stop

Use the SHORT STOP button to stop the machine for 15 minutes or less.

CAUTION

Risk of serioud product fault.

If the machine has been stopped for more than 120 minutes, the alarm EXCESSIVE PRODUCTION STOP TIME appears on the TPOP. It is recommended to terminate the PRODUCTION and perform CIP. For maximum waiting time reccomendations, see 11.4 Maximum Waiting/Stop Time Recommendations.

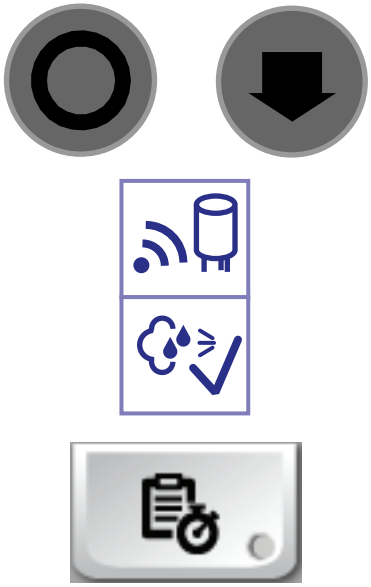

1

Use SHORT STOP or PROGRAM DOWN to stop the machine for 15 minutes or less.

To stop the machine during PRODUCTION:

- Press the SHORT STOP button or the PROGRAM DOWN button
- the machine program steps down to SIGNAL TO STERILIZER. The SIGNAL TO STERILIZER symbol and the DRYING symbol are lit
- the machine stops in design. A bar on the TPOP indicates the remaining time since the SHORT STOP button was pressed.

Note! If it is necessary to stop with the LH or the RH pair of jaws in an open position, see 2.5.5 Package Forming Unit Window.

Note! Register the stop reason in the collect system. See 2.4 Collect System.



2

Press the PROGRAM UP button to restart the machine.

When the machine is restarted if 15 minutes of stop time has been exceeded a certain amount of packaging material is wasted before filling and production can continue.

To restart the machine, see chapter 4 Start.

8.4 Normal Stop

Use NORMAL STOP to stop the machine during PRODUCTION.



1

CAUTION
Risk of broken packaging material web.
If the machine has been stopped for more than 20 minutes, the alarm `PERFORM JAW INCHING` appears on the TPOP. Press the INCHING button until the machine stops, this renews the packaging material inside the hygiene chamber, to minimize the risk of the packaging material web breaking.

To stop the machine during PRODUCTION, press the PROGRAM DOWN button twice.

The machine program steps down to DRYING. The `SIGNAL TO STERILIZER` symbol and the `DRYING` symbol are lit.

The machine continues until the product is emptied from the tube and then stops.

Register the stop reason in the collect system. See 2.4 Collect System.

Restart the machine as usual. See chapter 4 Start.

8.5 Production Finished Stop

Use PRODUCTION FINISHED if this is the planned time to end PRODUCTION.

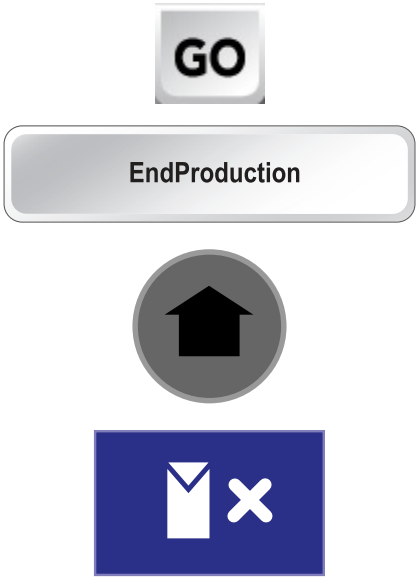

1

CAUTION
Risk of production fault.
Once the production is ended, the CIP (cleaning) must be performed within two hours. Exceeding the recommended period of waiting time increases the risk of product residue burning on hot contact surfaces and may affect the efficiency of the cleaning process. For maximum waiting time recommendations, see 11.4 Maximum Waiting/Stop Time Recommendations in chapter 11 Technical Data.

To stop PRODUCTION, touch the GO icon and the END PRODUCTION button.

Press the PROGRAM UP button for at least three seconds.

The machine program steps to END PRODUCTION.

As soon as the tube is empty, there is a pause for two minutes.

Note! To interrupt the automatic sequence see Interrupting the Automatic Sequence on page 8-14.

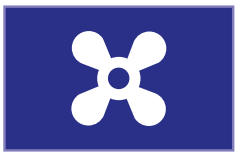

2

After the pause the machine program steps to VENTING for 10 minutes. A time bar on the TPOP displays the remaining time.

When step VENTING is finished the machine jump to zero automatically.

The compressor stops, and the hygiene chamber doors can be opened.



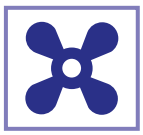

Go immediately to VENTING





Return to PRODUCTION

Interrupting the Automatic Sequence

3

During the two minute pause before the program steps to VENTING, it is possible to proceed straight to step VENTING, or return to PRODUCTION.

To step to VENTING ASEPTIC CHAMBER:

- press the PROGRAM UP button for three seconds.

To return to PRODUCTION:

- touch the GO icon and the PRODUCTION button.
- Restart the machine, see chapter 4 Start.

9 Care and Cleaning

Description

This chapter describes how to clean and maintain the machine. Perform Daily Care after every PRODUCTION run. Perform Weekly Care once a week or after every 120 hours of operation.

CAUTION

Risk of minor or moderate injury.

Use only Tetra Pak recommended cleaning compounds when cleaning parts which may come into contact with hydrogen peroxide. Cleaning with non-recommended compounds may cause an explosion!

Description 9-2

9.1 Daily Care 9-5

9.1.1 Daily Care or Daily and Weekly Care? 9-5

9.1.2 Packaging Material Removal, Daily Care Only 9-6

9.1.3 Packaging Material Removal, Daily and Weekly Care 9-12

9.1.4 Cleaning Preparation 9-19

9.1.5 Internal Cleaning 9-27

Recorder 9-28

9.1.6 External Cleaning 9-29

Column Cleaning 9-30

Cleaning 9-31

Column Cleaning 9-35

9.1.7 Manual Cleaning 9-37

9.1.8 Drying Preparation 9-42

9.1.9 CIP Drying 9-45

Recorder 9-46

9.1.10 Hygiene Chamber 9-47

9.1.11 Jaw System Unit 9-48

Clean Cutting Rail 9-50

Clean Transducer 9-50

9.2 Weekly Care 9-53

9.2.1 ASU 9-54

9.2.2 Chamber 9-56

9.2.3 Hygiene Chamber 9-69

9.2.4 Change Oil 9-74

9.2.5 Check Knife 9-75

9.2.6 Peroxide Container 9-77

9.2.7 Service Unit 9-79

Clean Filters 9-79
9.2.8 Platforms and Surfaces.....9-80
9.2.9 Utilities 9-81

9.1 Daily Care

This section describes what to do after each PRODUCTION run or at least every 24 operating hours.

9.1.1 Daily Care or Daily and Weekly Care?

Note! IF ONLY DAILY CARE IS TO BE PERFORMED, START WITH PROCEDURE 9.1.2 Packaging Material Removal, Daily Care Only AND SKIP PROCEDURE 9.1.3 Packaging Material Removal, Daily and Weekly Care.

Note! IF BOTH DAILY CARE AND WEEKLY CARE HAVE TO BE PERFORMED, START FROM PROCEDURE 9.1.2 Packaging Material Removal, Daily Care Only AND FOLLOW ALSO PROCEDURE 9.1.3 Packaging Material Removal, Daily and Weekly Care.

9.1.2 Packaging Material Removal, Daily Care Only

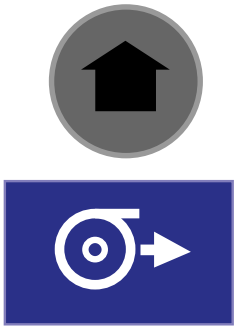

1

Press the PROGRAM UP button.

The PREPARATION symbol is enlarged on the top of the ladder step.

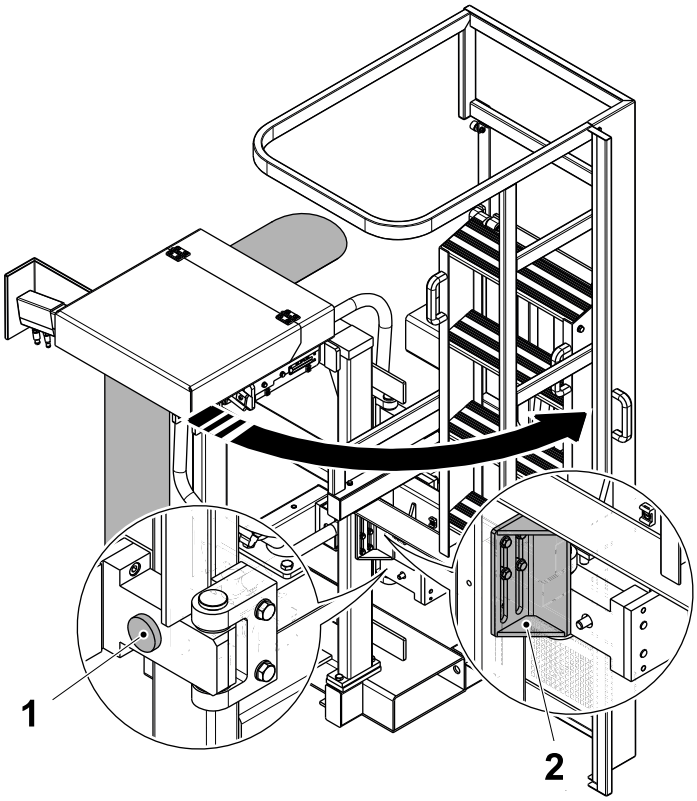

2

Loosen the two knobs (1) on the hinges and swing open the stairs.

Lock the stairs in place by moving the bracket (2) down.

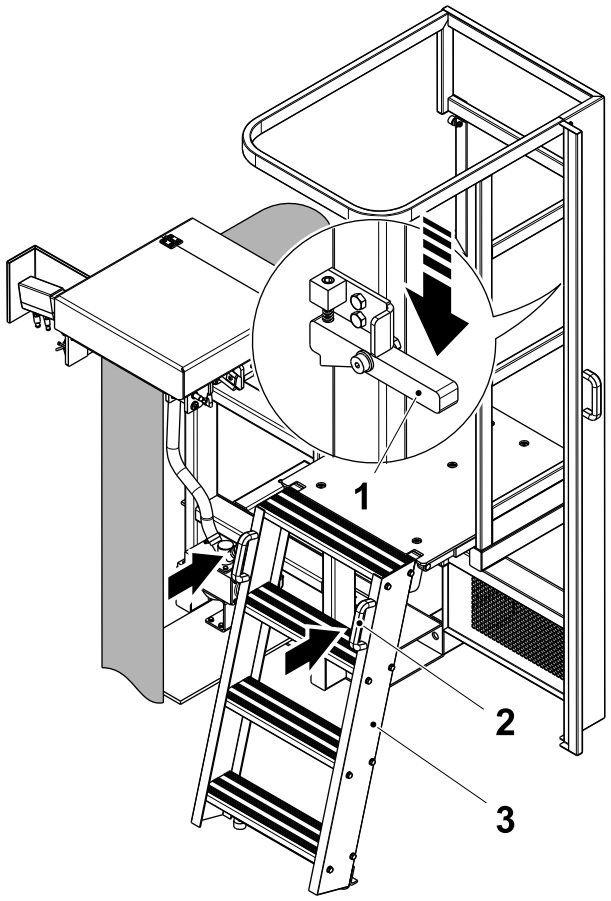

3

Push down on the latch (1), and then holding the two handles (2) pull down the stairs (3).

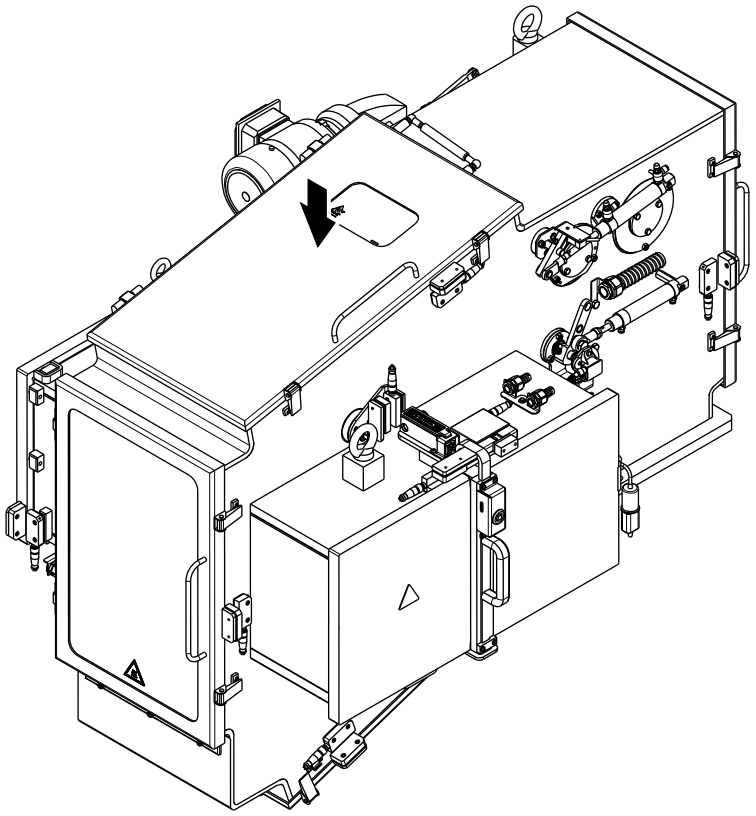

4

Stand on the platform and open the top door of the chamber.

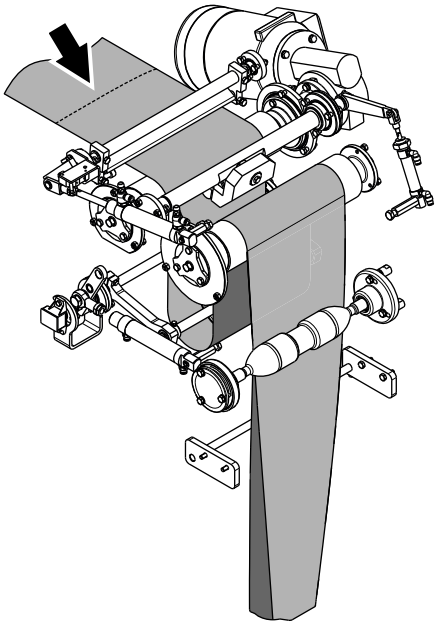

5

WARNING

Hot surface.
The parts may be hot. Wear personal protective equipment.

Cut off the packaging material at the position shown in the illustration behind the cleaning lid.

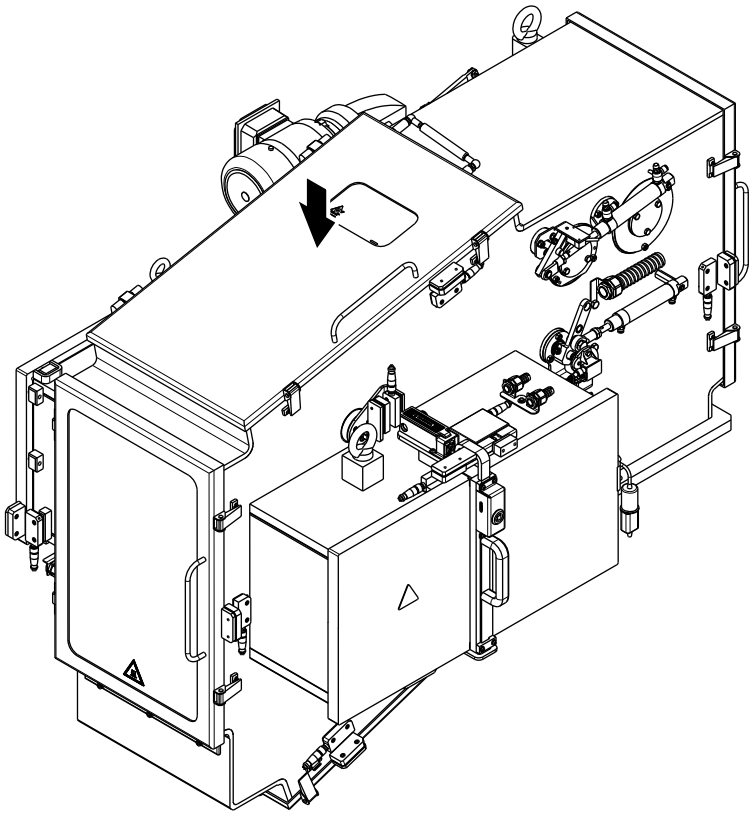

6

Close the top door of the chamber.

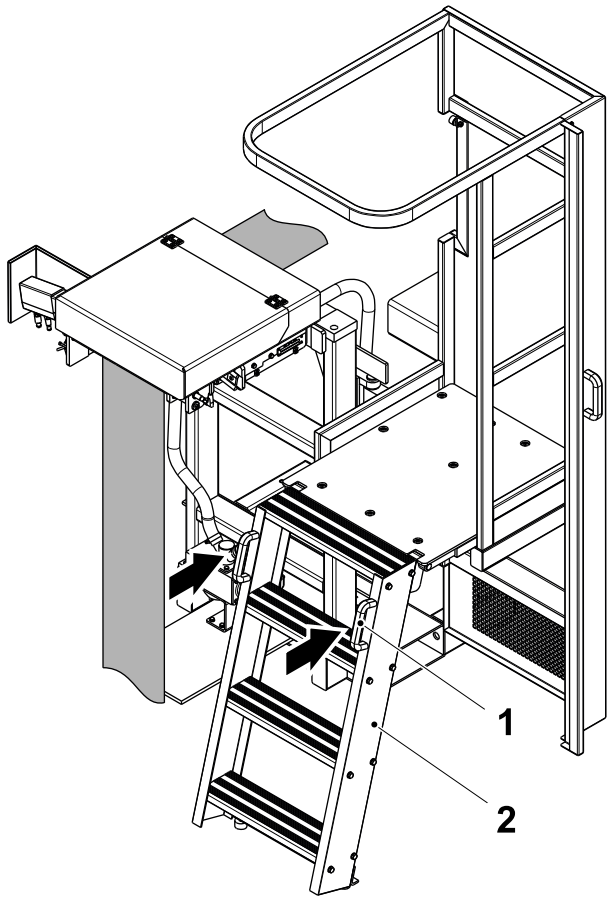

7

Holding the two handles (1) fold up the stairs (2).

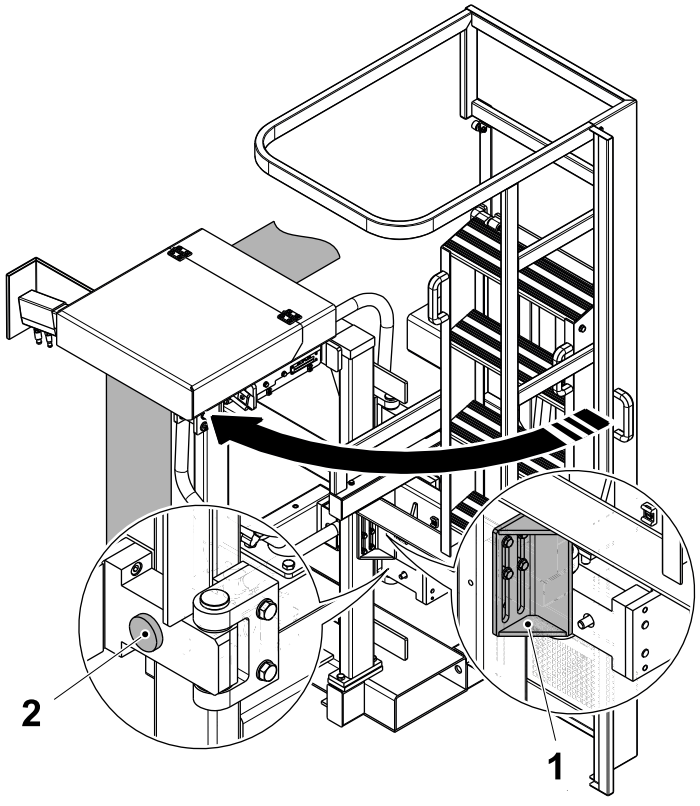

8

Lift up the bracket (1) up and move the stairs to the closed position.

Tighten the two knobs (2) on the hinges to lock the stairs in place.



9

Make sure all covers and doors on the machine are closed and reset any alarms on the TPOP display.

If an alarm reappears, take the appropriate action or call a technician.



10

Touch the MANOEUVRE button.



11

Touch the PACKAGE FORMING UNIT button.



12

Touch the JAW INCHING button.



13

Touch the JAW INCHING SELECTION button.

Touch the ENABLE button and the SLOW INCHING button

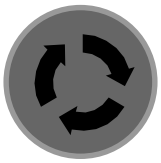

14

Press and hold the JAW SYSTEM INCHING button to slow inch the jaw system and to remove the packaging material from the forming section.



15

When the all the packaging material tube has been removed, press the PROGRAM DOWN button.

The machine steps down to STEP ZERO.

To continue with DAILY CARE only go to procedure 9.1.4 Cleaning Preparation.

9.1.3 Packaging Material Removal, Daily and Weekly Care

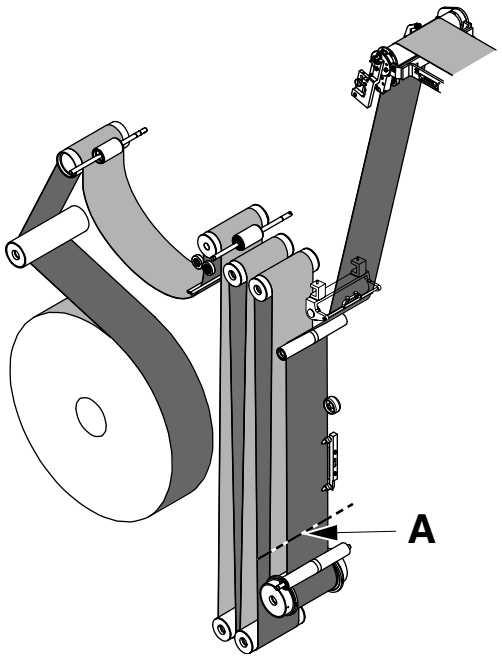

1

Cut the packaging material at point **A**.

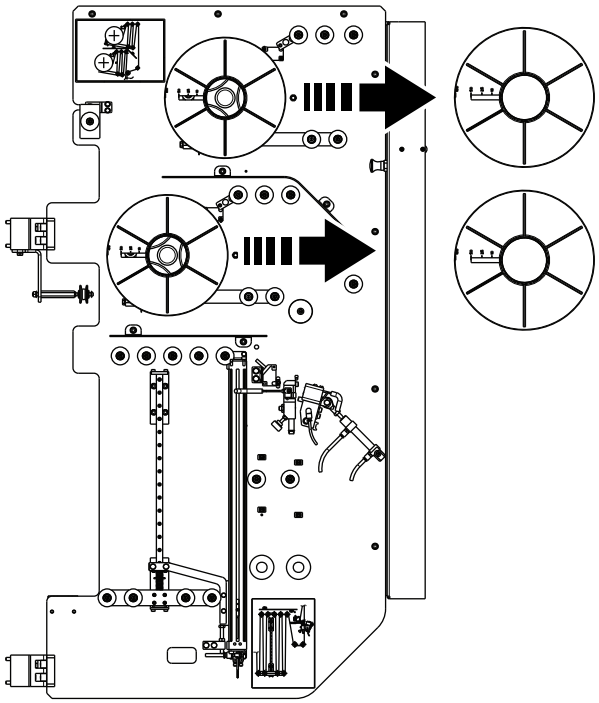

2

Cut the LS strip away from the packaging material. Rewind both LS strips back onto the reels and remove them from the machine.



3

Make sure all covers and doors on the machine are closed and reset any alarms TPOP display.

If an alarm reappears, take the appropriate action or call a technician.

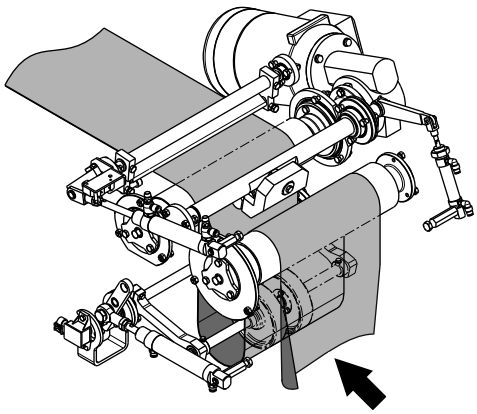

4

Manually pull the packaging material from the point shown with the arrow until it is completely removed from the machine.

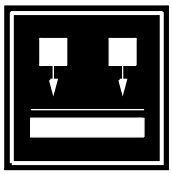

5

Press and hold the MATERIAL LOCKING button for five seconds to release the packaging material in the ASU.

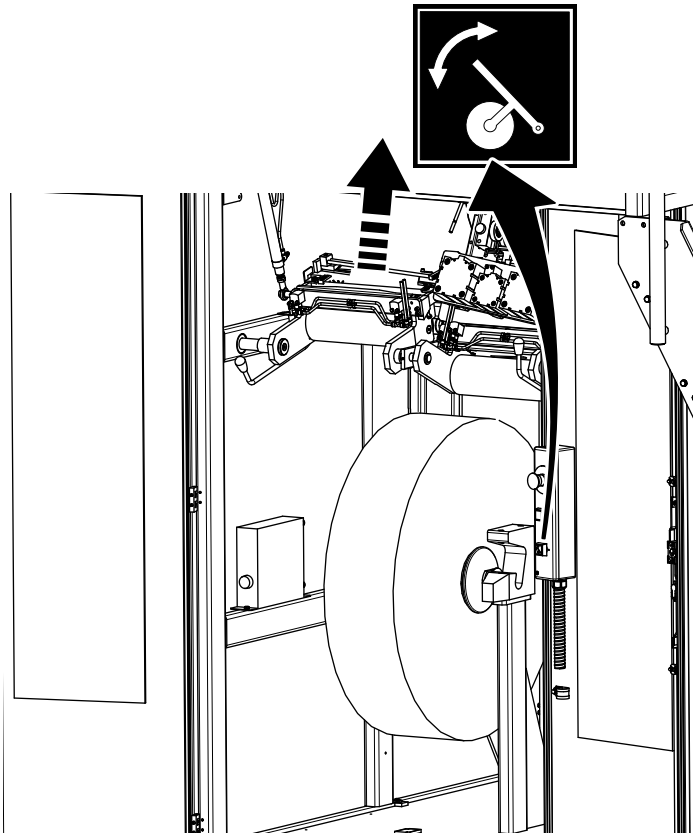

6

WARNING

Risk of personal injury.
Moving parts can crush and cut.

Press the PACKAGING MATERIAL HOLDER button.

The packaging material holder next to the splicing unit lifts.

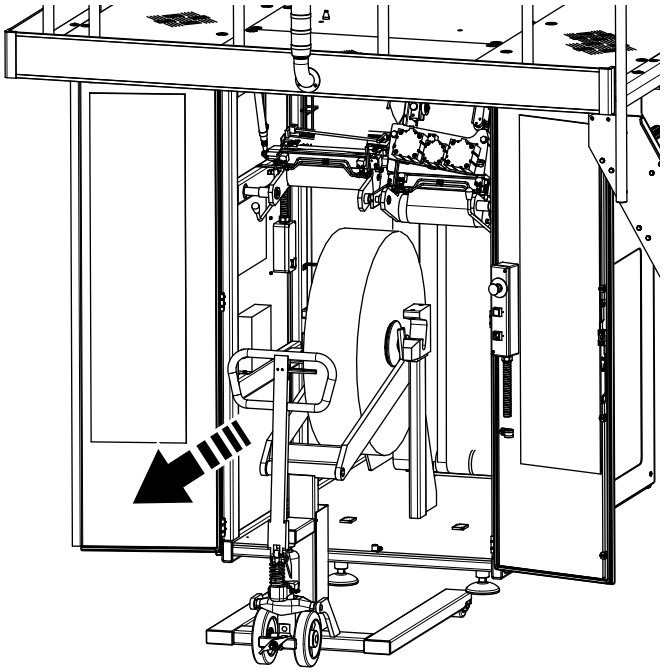

7

Remove the packaging material reel.

Secure the loose end of the reel with tape.

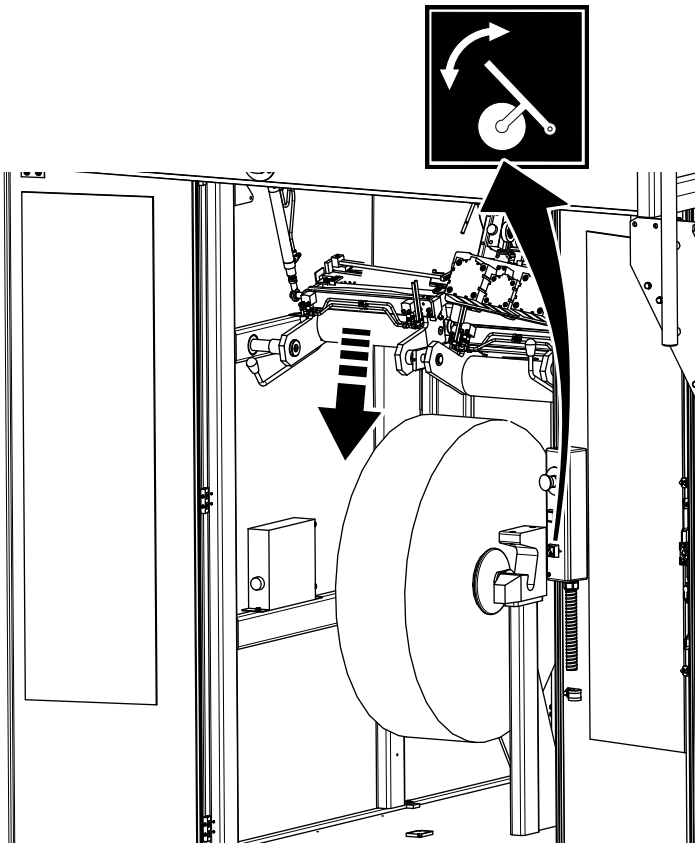

8

WARNING

Risk of personal injury.
Moving parts can crush and cut.

Press the PACKAGING MATERIAL HOLDER button.

The packaging material holder lowers.

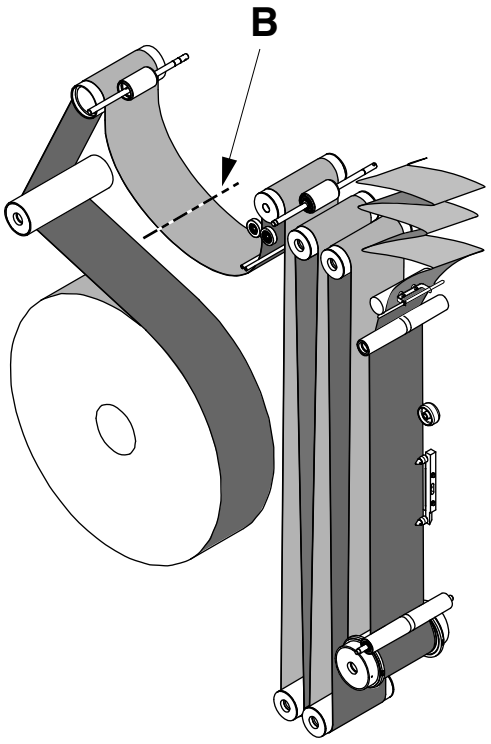

9

CAUTION

Risk of personal injury.

Make sure the rollers of the ASU magazine are in the lower position before cutting the packaging material web.

Cut the packaging material at point **B**.

Pull forward and remove all the remaining packaging material by hand from the ASU and the rest of the machine.

Note! Cut the packaging material at additional points to facilitate the removal of the packaging material.

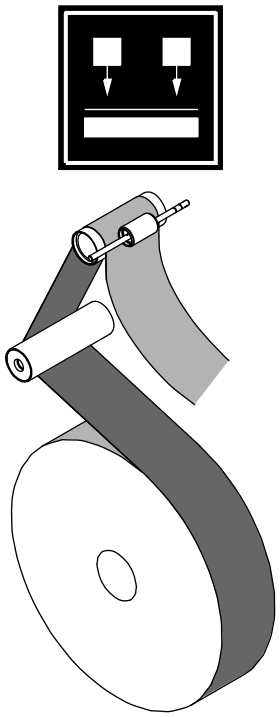

10

Press and hold the MATERIAL LOCKING button for ten seconds to release the packaging material in the ASU.

Unreel the remaining packaging material.



11

Close the ASU doors and reset any alarms on the TPOP display.

Move the splicing unit to the other side using the TPOP, see Move Splice Head on page 2-78.

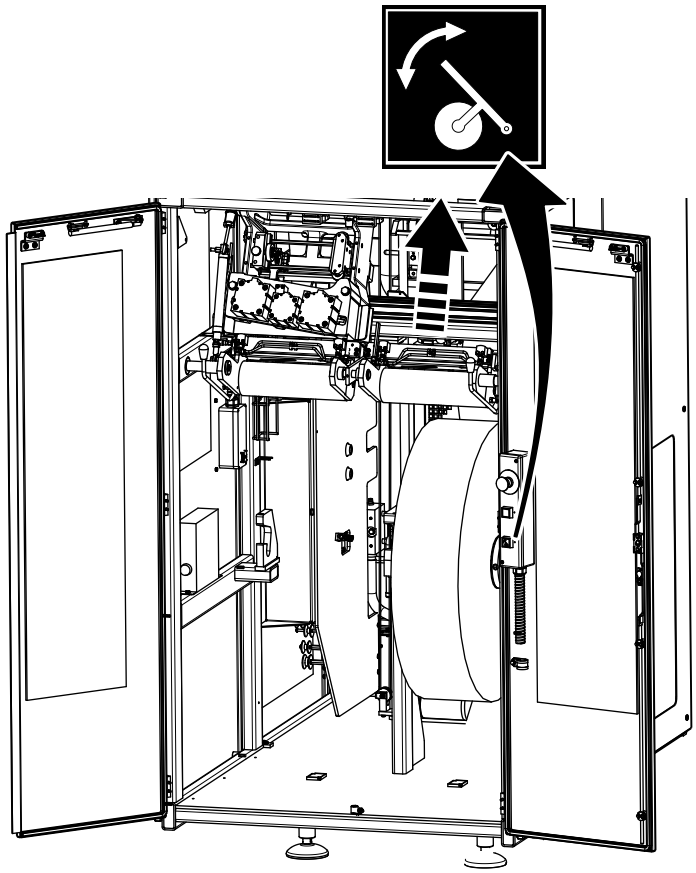

12

WARNING

Risk of personal injury.
Moving parts can crush and cut.

Press the PACKAGING MATERIAL HOLDER button.

The packaging material holder next to the splicing unit lifts.

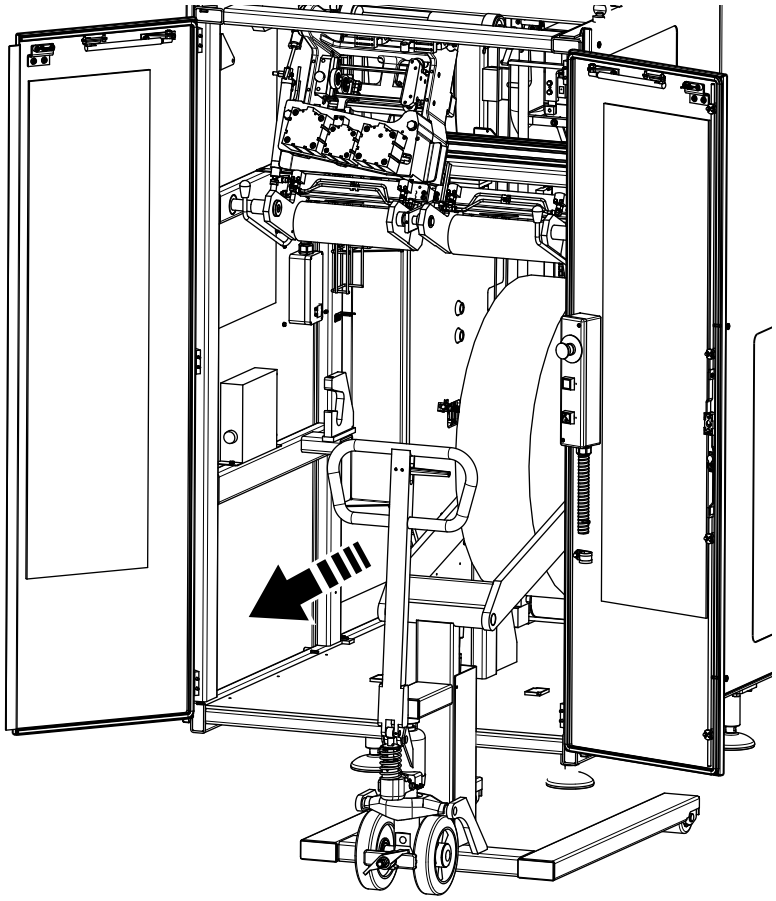

13

Remove the packaging material reel.

Secure the loose end of the reel with tape.

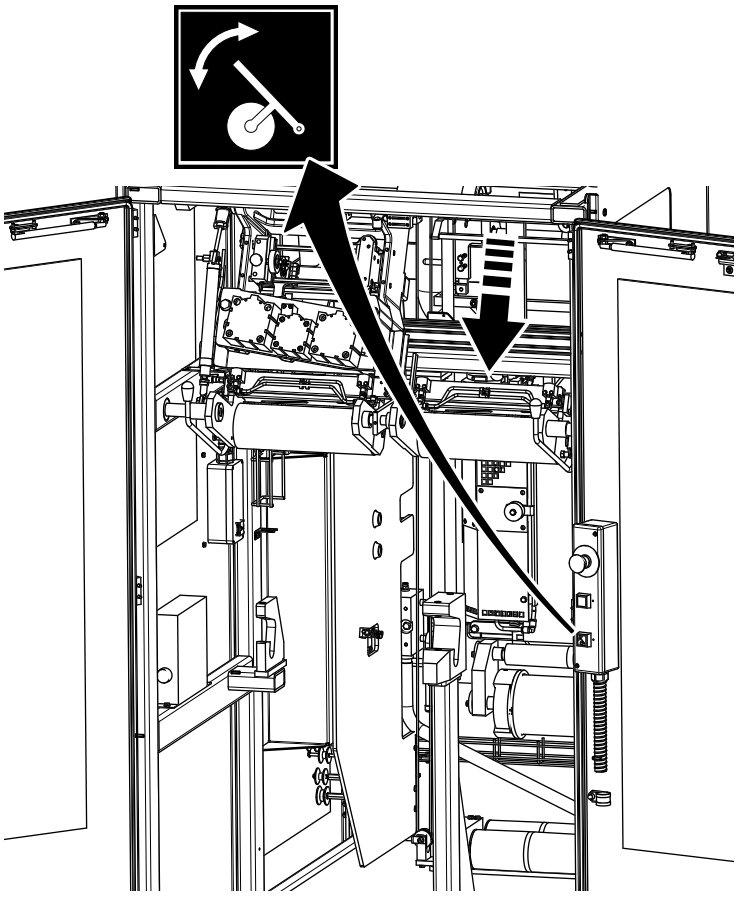

14

WARNING

Risk of personal injury.
Moving parts can crush and cut.

Press the PACKAGING MATERIAL HOLDER button.

The packaging material holder lowers.

Close the ASU doors.

9.1.4 Cleaning Preparation

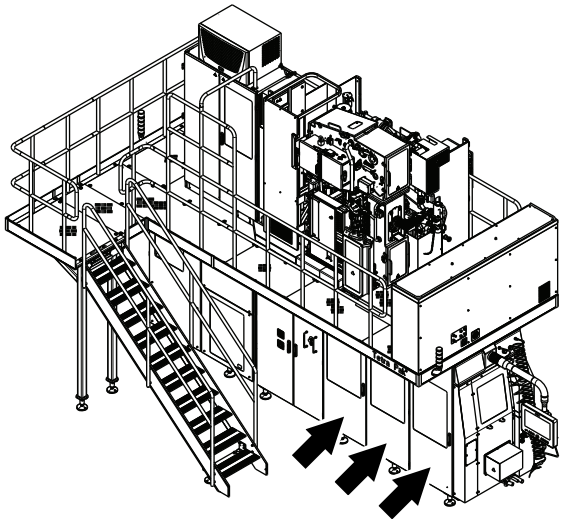

1

Open the doors to the jaw unit and the final folder unit.

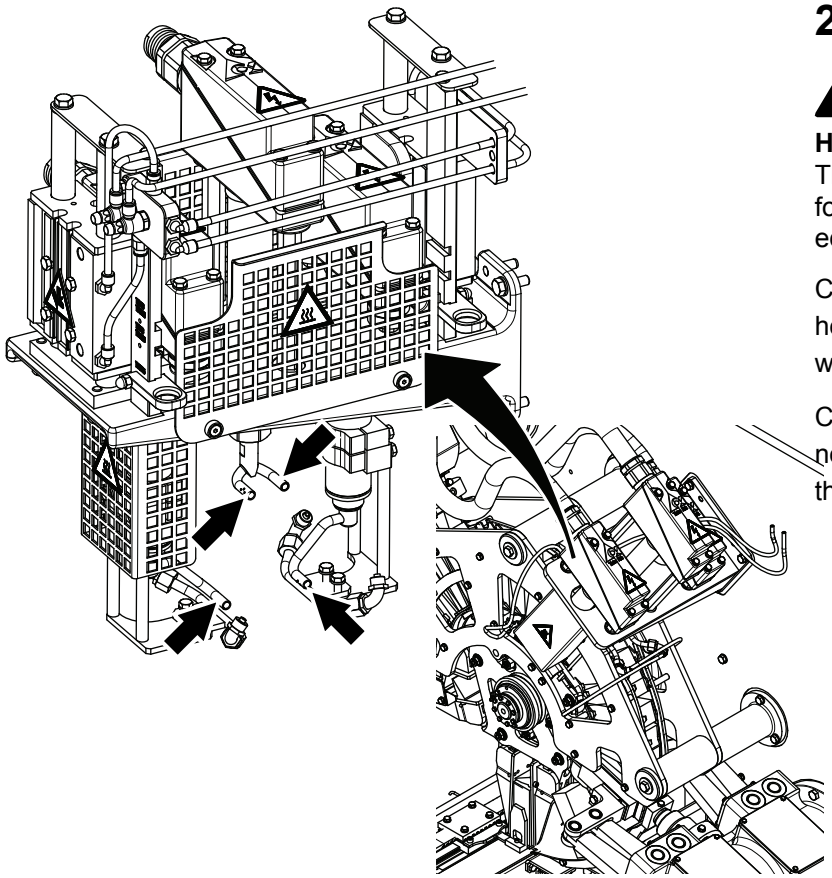

2

WARNING

Hot surface.
The nozzles and other parts of the final folder may be hot. Wear personal protective equipment.

Clean the four heating nozzles of the flap heater (arrow) in the final folder with a brass wire brush.

Check that the air holes of the nozzles are not clogged after the cleaning. Blow clean the nozzles with compressed air.

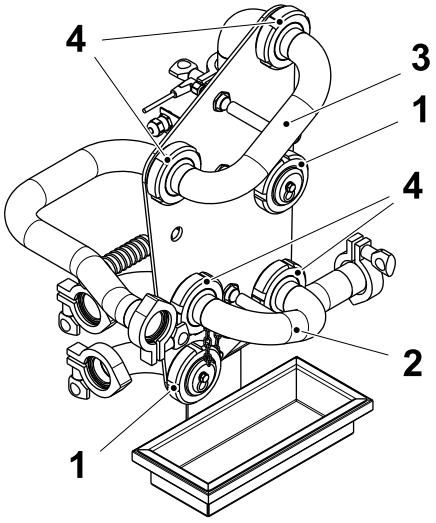

3

WARNING

Hot surface.
The pipes may be hot. Wear personal protective equipment.

Remove the caps (1).

Remove the change-over pipes (2) and (3) from the production position by loosening the locking rings (4).

Note! Fit new gaskets to the locking rings (4) and the caps (1) every time the change-over pipes (2) and (3) are removed.

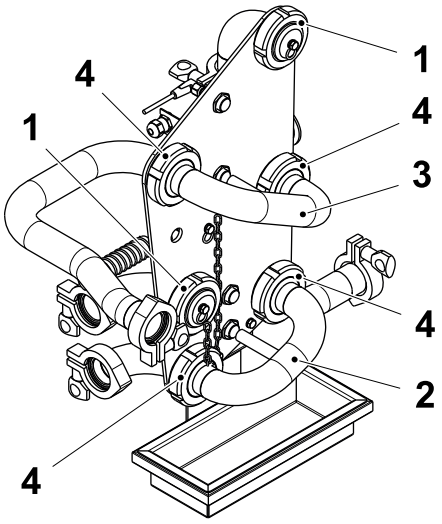

4

Fit the caps (1) to the pipe as shown in the illustration.

Fit the change-over pipes (2) and (3) into the cleaning position and tighten with the locking rings (4).

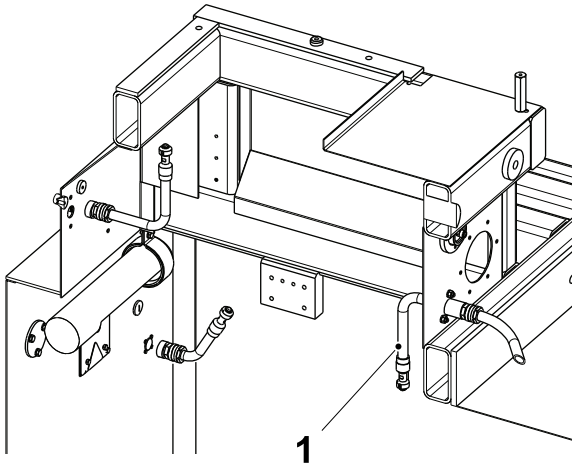

5

CAUTION

Risk of personal injury.

Pay attention to the external cleaning nozzle (1) when accessing the photocells area.

Swing the photocells outwards.

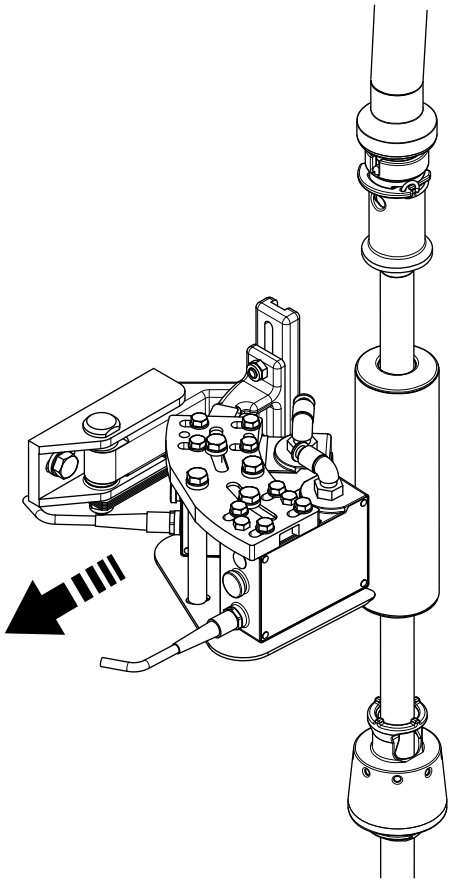

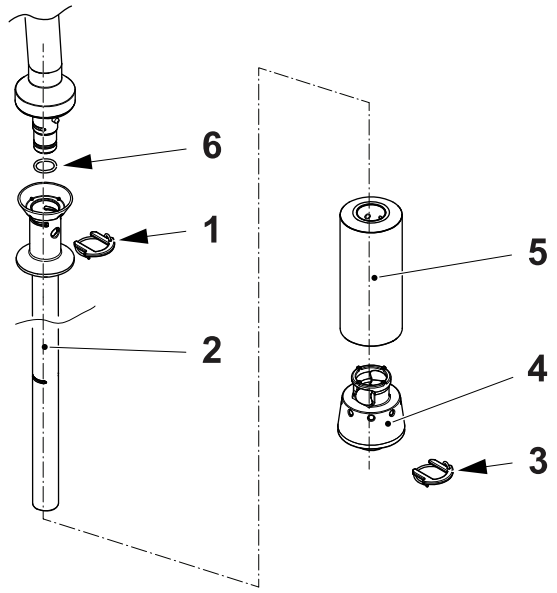

6

Remove the fork (1) and the lower part of the filling pipe (2).

Remove the fork (3), the flange (4) and the float (5).

Remove the O-ring (6).

Note! Fit a new O-ring every time the filling pipe (2) is removed.

Note! Make sure that these parts are cleaned after CIP and external cleaning have been started.

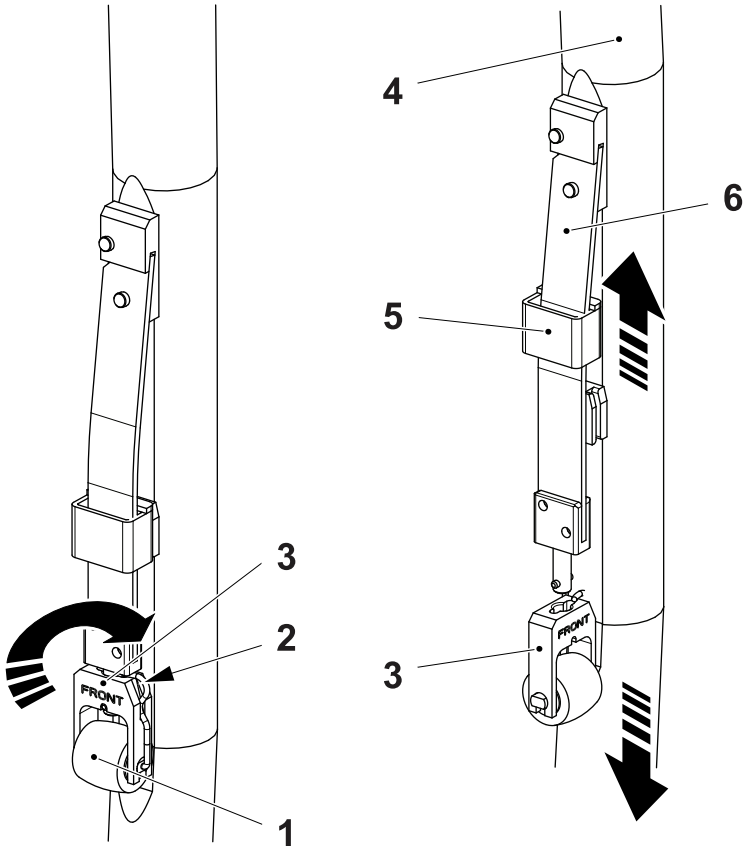

7

Note! Make a note of which direction the part number on the roller (1) is facing and assemble in the same direction after cleaning.

Pull out the hook (2).

Rotate the pressure roller assembly (3) 90° and remove it from the filling pipe (4).

Raise the hood (5) and remove the spring (6) from the filling pipe (4).

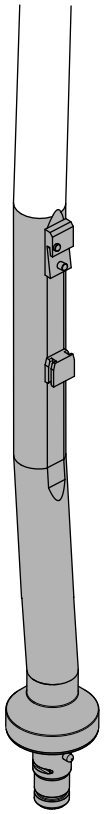

8

CAUTION
Risk of serious production fault.
Take care to remove all visible product residue from the pipe. Sterilization is only effective on clean surfaces and is not effective on product residue.

CAUTION
Hygiene.
Before handling clean parts, disinfect hand/gloves with cleaning compound code **H**.

Wipe off any product residue on the lower part of the upper filling pipe with a sponge.

Use water and cleaning compound code **D**. Rinse with drinking water.

Spray a small quantity of disinfectant code **G3**, on the filling pipe covering entirely the flange area, shown shaded in the illustration.

Note! For cleaning compound code information, see 11.2.1 Cleaning Compound Table.

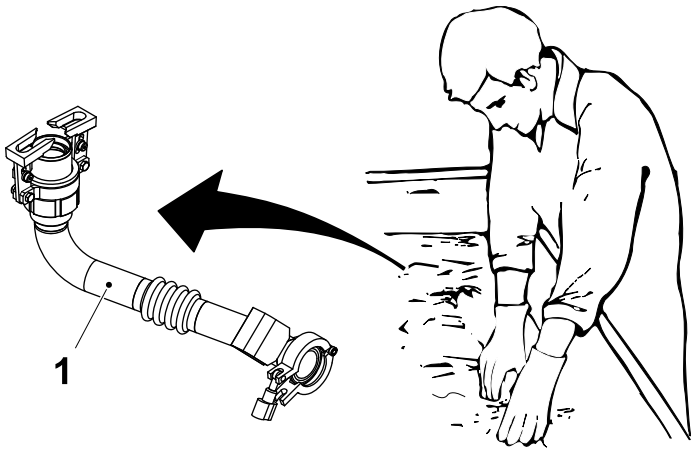

9

WARNING
Chemical product.
Follow the Safety Precautions.

Remove the cleaning sleeve (1) from the bath.

Drain any cleaning compound left in the cleaning sleeve (1).

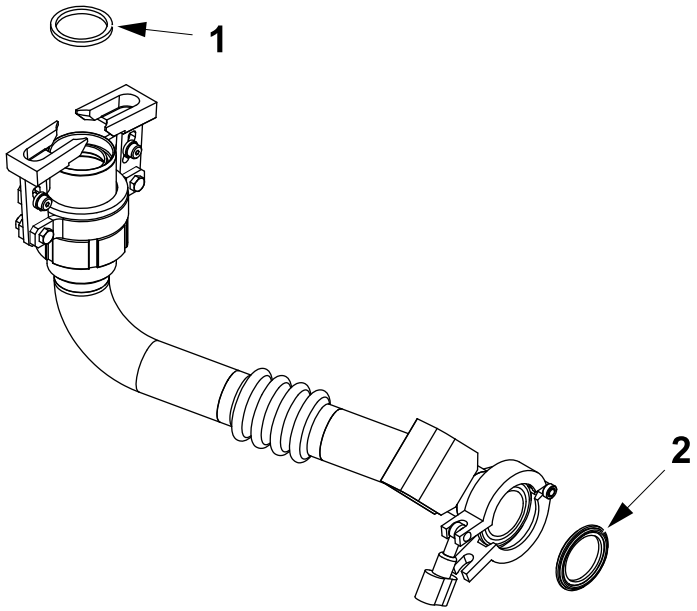

10

CAUTION

Risk of damage to the equipment.

Change the gaskets (1) and (2) every time the cleaning sleave is fitted. A bad seal may cause leakages and an ineffective cleaning process.

Change the gaskets (1) and (2) of the cleaning sleeve.

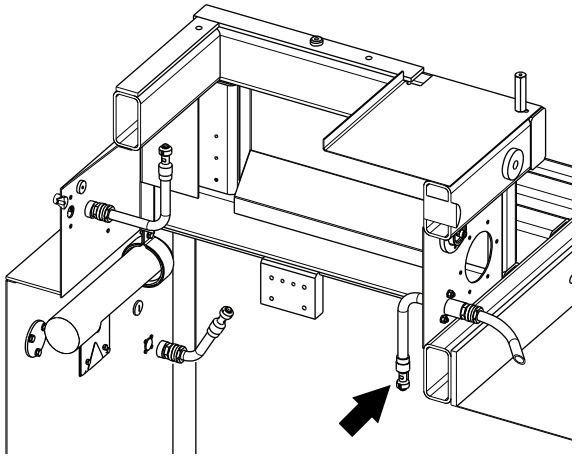

11

CAUTION

Risk of personal injury.
Pay attention to the external cleaning nozzle (see arrow) when accessing the filling pipe area.

CAUTION

Risk of damage to the equipment.
Do not over tighten the nut (4).

Connect the cleaning attachment (1) of the cleaning sleeve (2) to the filling pipe (3) and tighten the nut (4).

Fit the cleaning sleeve (2) to the pipe (5) and secure it with the catch (6).

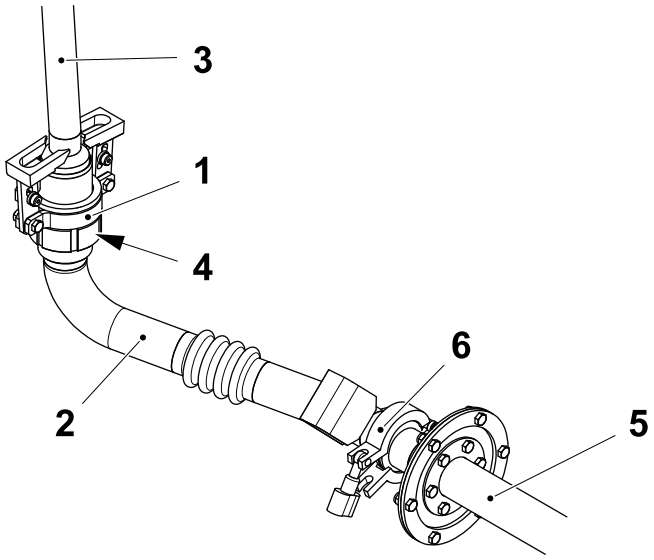



12

Close all covers and doors on the machine and reset the alarms on the TPOP display.

If an alarm is present, take the appropriate action or call a technician.

9.1.5 Internal Cleaning



1
Touch the GO button and select the INTERNAL CLEANING task.



2
To access the cleaning functions, touch the MANOEUVRE button.



3
Touch the CLEANING button.

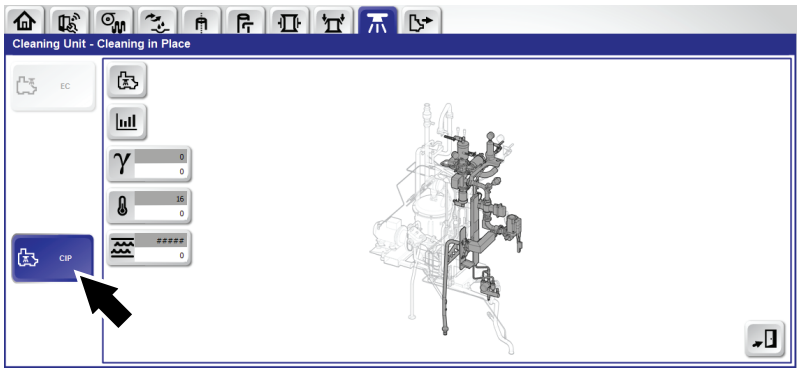

4

Touch the CLEANING IN PLACE button. The CLEANING IN PLACE window is displayed.

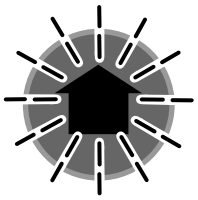

5

CAUTION
Risk of production fault.
Once the CIP CLEANING is ended, the disinfection of the machine must be performed within five hours. If not, repeat the CIP CLEANING. Exceeding the recommended period of waiting time can severely jeopardize the efficiency of the process of machine sterilization. For maximum waiting time recommendations, see the table 11.4 Maximum Waiting/Stop Time Recommendations.

When the PROGRAM UP button starts to flash, press the PROGRAM UP button: the jaw system slowly moves to the open position.

Press the PROGRAM UP button another time to start the CIP cleaning cycle.

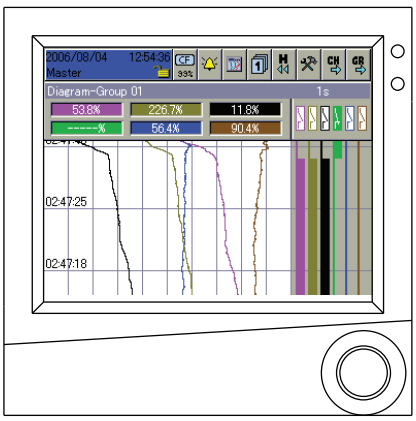

Recorder

6

Check on the CIP data recorder screen that the recorder is recording all of the channels. If not, call a technician.

9.1.6 External Cleaning

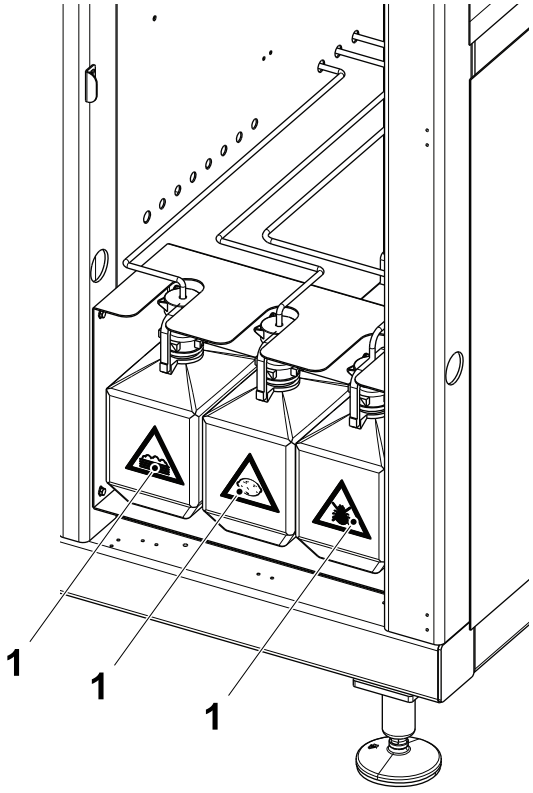

1

WARNING
Chemical Products.
Follow the Safety Precautions.

CAUTION
Risk of production fault.
Once the disinfection of the machine is ended, machine must be brought back to Production within 36 hours. If not, repeat the CIP Cleaning. Exceeding the recommended period of waiting time can lead to a deterioration of the condition of cleanliness established by the CIP. For maximum waiting time recommendations, see the table 11.4 Maximum Waiting/Stop Time Recommendations.

Check the level of the detergent in the containers (1) used for the external cleaning. If required, top up with the cleaning compound according to the table.

Container	Symbol
Disinfectant, code **C4** Min. content 1 litre	
Acid, code **C3** Min. content 1 litre	
Alkali, code **C1** Min. content 2 litres	

Note! For cleaning compound code information, see 11.2.1 Cleaning Compound Table.

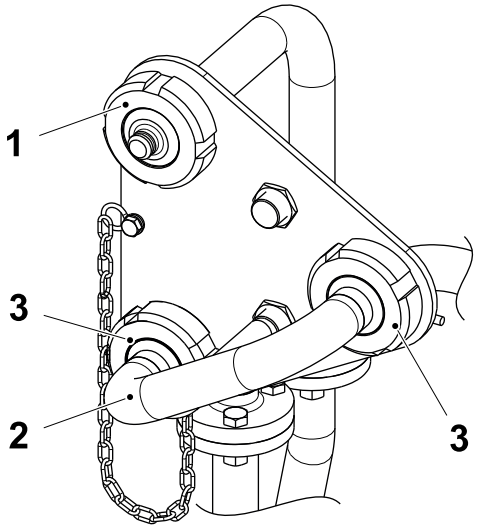

2

Column Cleaning

WARNING

Hot surface.
The pipes may be hot. Wear personal protective equipment.

Note! If the hygienic chamber does not need to be cleaned, continue with item 4.

Remove the cap (1) from the cleaning pipe.

Remove the change-over pipe (2) from the production position by loosening the locking rings (3).

Check the gaskets of the locking rings (3) for wear or damage and change if required.

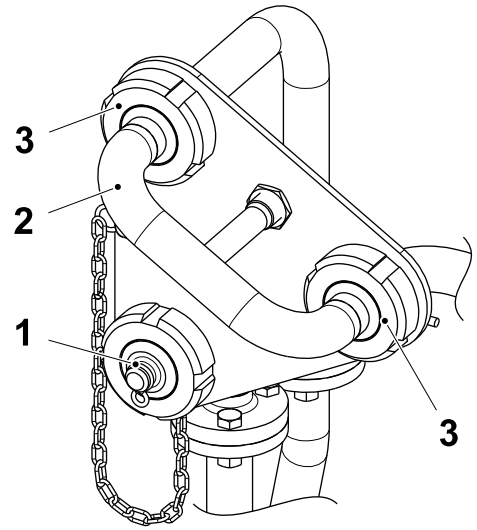

3

Fit the change-over pipe (2) into the cleaning position and tighten with the locking rings (3).

Fit the cap (1) to the production pipe.

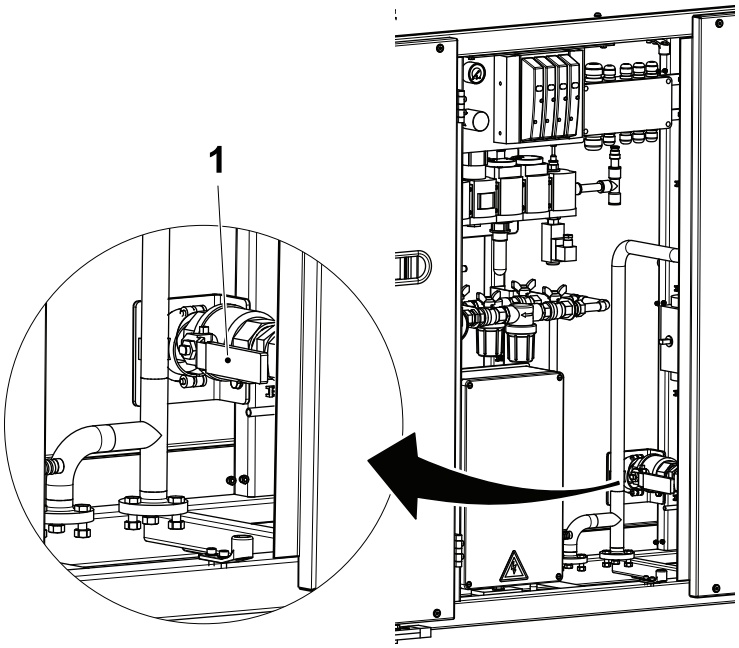

4

Cleaning

Use the cleaning handle (1) to open the cleaning valve.

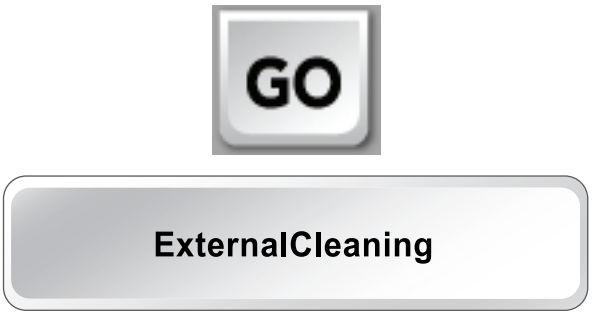

5

Touch the GO button and select the EXTERNAL CLEANING task.



6

To access the cleaning functions, touch the MANOEUVRE button.



7

Touch the CLEANING button.

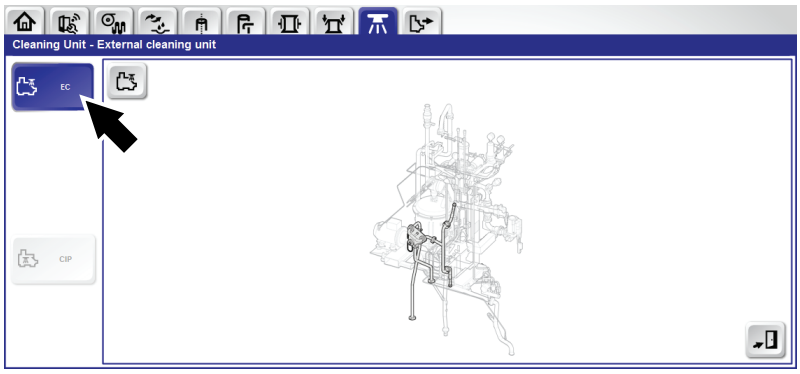

8

Touch the EXTERNAL CLEANING UNIT button, see arrow. The EXTERNAL CLEANING UNIT window is displayed.



9

Touch the EXTERNAL CLEANING FUNCTION button.



10

Touch the EXTERNAL CLEANING SELECTION button to select the chemicals to be used for the external cleaning.



11

Choose which cleaning program to run:

- `ALKALI`: for daily cleaning
- `ALKALI + ACID`: for removal of mineral deposits
- `ALKALI + ACID DISINFECTANT`: for reduction of microorganisms in the jaw system, final folder and hygiene chamber.



12

The Eco Cleaning mode may be enabled to bypass the cleaning of the hygiene chamber.

Note! The access to enable or disable the Eco Cleaning is restricted to users with the required password.

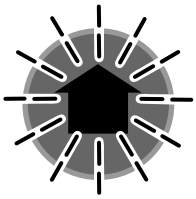

13

CAUTION
Risk of damage to the equipment.
Do not turn off the compressed air and the water supply until CIP cleaning and external cleaning have been completed.

When the PROGRAM UP button begins to flash, press it to start the cleaning.

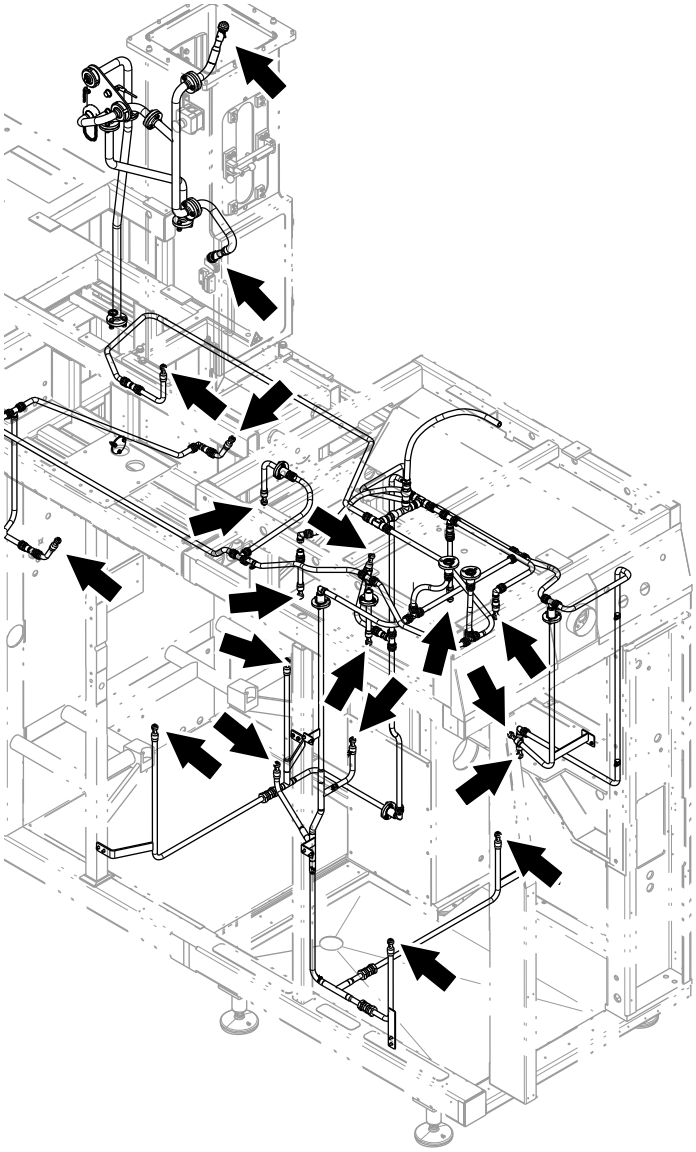

14

Check visually through the glass that the cleaning nozzles are functioning properly.

Note! The cleaning nozzles in the hygienic chamber only function if the change-over pipe is in the cleaning position.

Call a service technician if any of the nozzles do not function.



15

Once the cleaning and rinse cycle are completed, the DRYING STEP icon starts flashing.

Touch the EXTERNAL CLEANING FUNCTION button.



16

Touch the DRYING button.



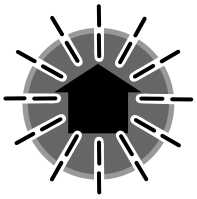

17

Touch the PLAY button. When the PROGRAM UP button starts to flash, press the PROGRAM UP button to start the drying.

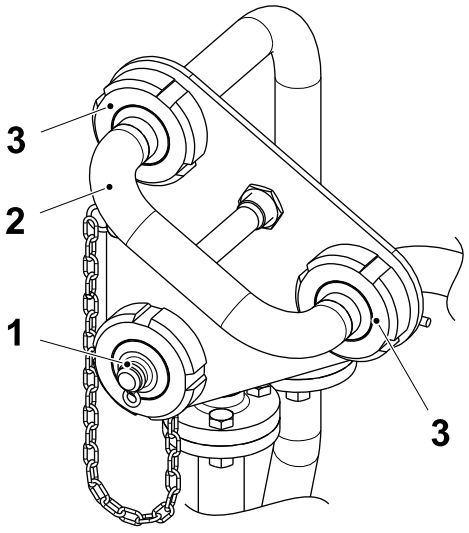

18

Column Cleaning

Note! The following steps are only necessary if the hygienic chamber has been cleaned.

Remove the cap (1) from the production pipe.

Remove the change-over pipe (2) from the cleaning position by loosening the locking rings (3).

Check the gaskets of the locking rings (3) for wear or damage and change if required.

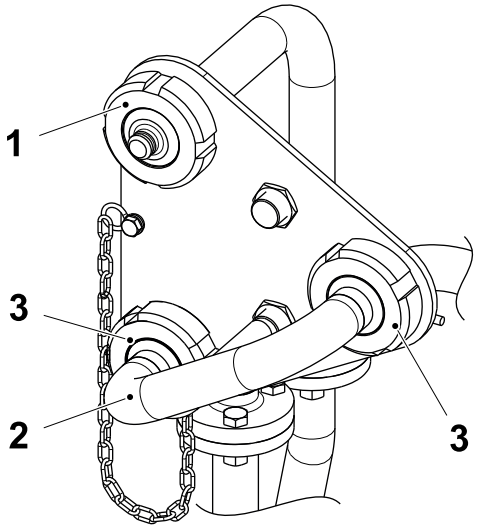

19

Fit the change-over pipe (2) into the production position and tighten with the locking rings (3).

Fit the cap (1) to the cleaning pipe.

9.1.7 Manual Cleaning

CAUTION
Risk of serious production fault.
Take care to remove all visible product residue from the parts. Sterilization is only effective on clean surfaces and is not effective on product residue.

CAUTION
Hygiene.
Before handling clean parts, disinfect hand/gloves with cleaning compound code **H**.

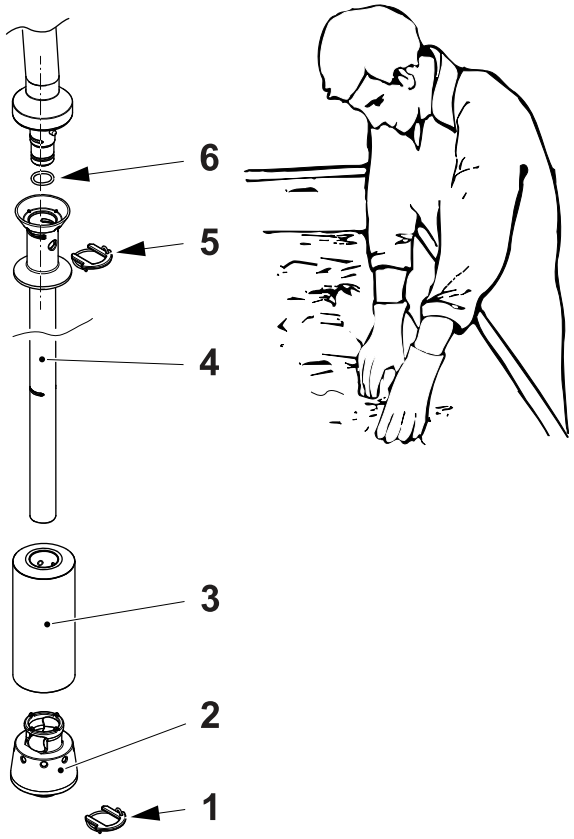

1

Clean separately by hand:

- the fork (1)
- the flange (2)
- the float (3)
- lower filling pipe (4).
- the fork (5)

Use water and the cleaning compound code **D**. Rinse with drinking water.

Immerse the cleaned lower filling pipe parts in a bath of cleaning compound code **F3** until the next planned production.

Change the O-ring (6).

Note! Regularly change the cleaning compound code **F3** in the immersion bath to guarantee the effectiveness of the cleaning.

Note! The lower filling pipe components must be immersed in the cleaning compound **F3** for a minimum of 30 minutes for the cleaning compound to have a satisfactory effect. For cleaning compound code information, see 11.2.1 Cleaning Compound Table.

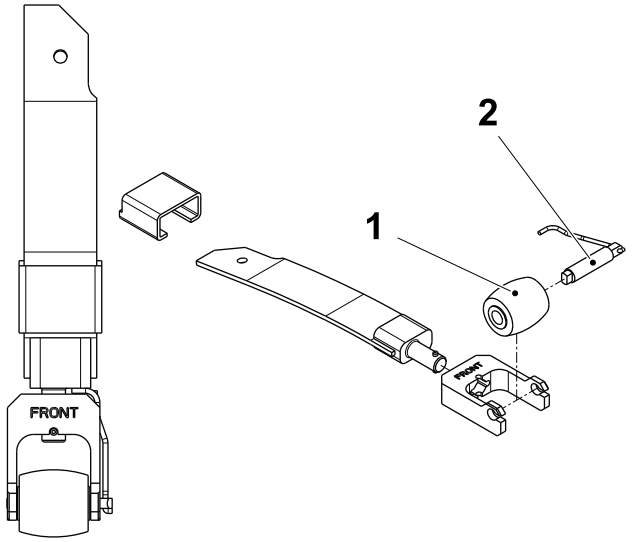

2

WARNING
Chemical Products.
Follow the Safety Precautions.

CAUTION
Risk of serious production fault.
Remove all product residue from the parts. Sterilization is only effective on clean surfaces and is not effective on product residue.

CAUTION
Hygiene.
Before handling clean parts, disinfect hand/gloves with cleaning compound code **H**.

Carefully note how the LS strip pressure roller is assembled, then disassemble it.

Using cleaning compound code **D**, clean all parts of the LS strip pressure roller.

After cleaning, rinse with drinking water.

Make sure that the roller (1) and the shaft (2) are not worn or damaged. Change if necessary.

Note! The roller(s) (1) must be changed once a week or every 120 hours of operation.

Assemble the LS strip pressure roller and place it in a dry, clean place.

Note! For cleaning compound code information, see 11.2.1 Cleaning Compound Table.

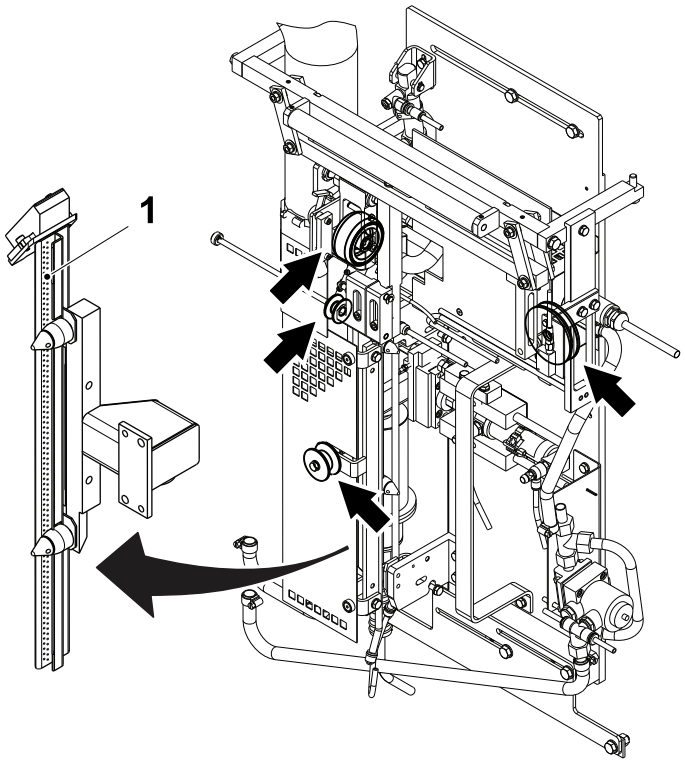

3

WARNING
Chemical Products.
Follow the Safety Precautions.

On the strip applicator, clean all the rollers (marked with arrow) with compressed air. Then use a sponge and cleaning compound code **G1** or **G2**.

Note! For cleaning compound code information, see 11.2.1 Cleaning Compound Table.

Using a mirror, visually check the air nozzle (1) for burnt deposits that can affect the function. Make sure that all the air holes are open. If necessary, clean the air nozzle (1) thoroughly with a wire brush and a knife.

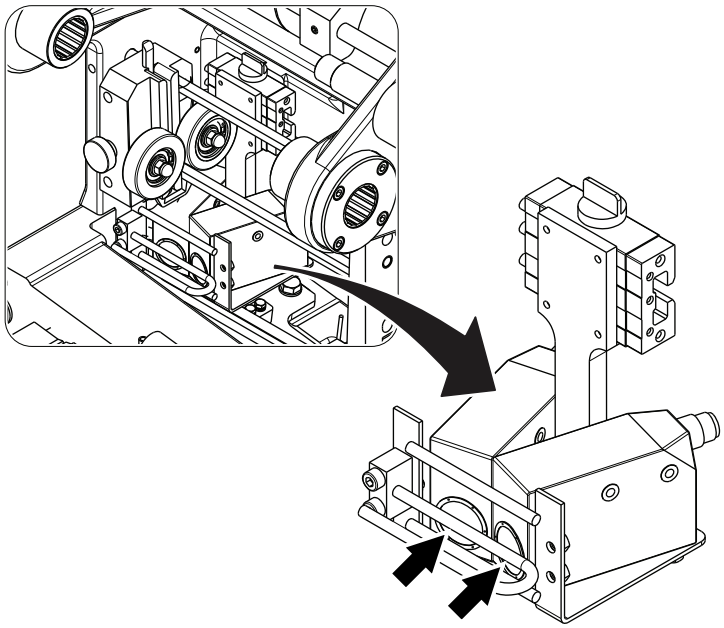

4

WARNING
Burn hazard.
Some parts may be hot. Wear personal protective equipment.

Clean the photocell lenses on the splicing unit using a clean cloth. A dirty lens may cause reading errors which can affect production.

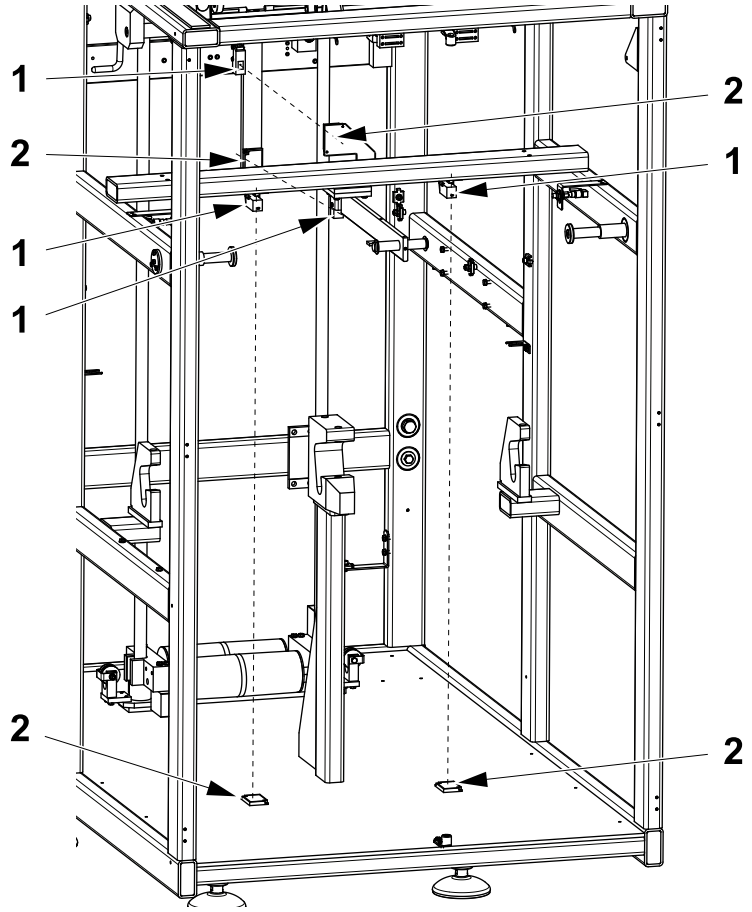

5

Note! Photocells are mounted on a moveable bracket. When cleaning, take care not to change the setting of the photocell.

Clean the four photocell lenses (1) and the four reflectors (2) in the ASU packaging material compartment with a clean dry cloth.

Note! A dirty lens may cause reading errors which can affect production.

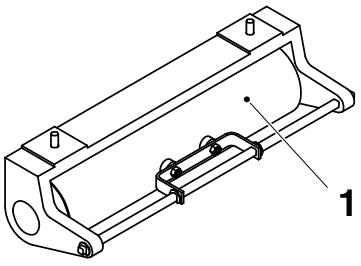

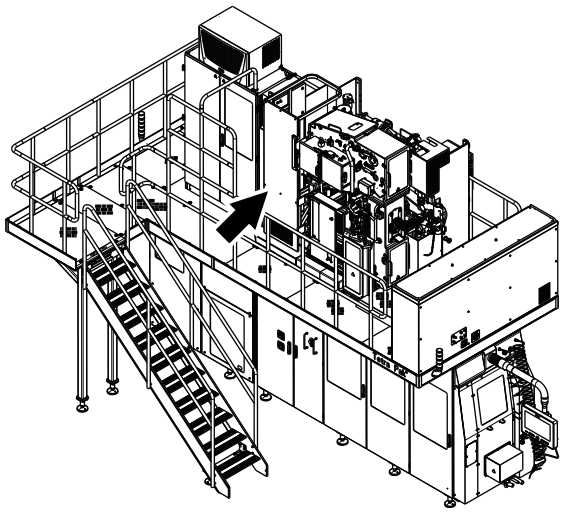

6

Open the doors indicated by the arrow in the illustration.

Clean the roller (1) with a sponge and cleaning compound code **G1** or **G2**.

Note! For cleaning compound code information, see 11.2.1 Cleaning Compound Table.

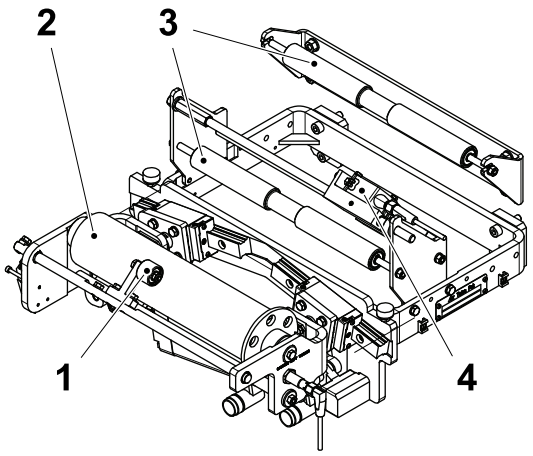

7

Clean the bending roller (1), the splice guard (2) and the rollers (3) with a sponge. Use cleaning compound code **G1** or **G2**. Clean the lens of the photocell (4) and the reflector below with a clean cloth.

Wipe dry with a clean cloth.

Note! For cleaning compound code information, see chapter 11.2.1 Cleaning Compound Table.

9.1.8 Drying Preparation

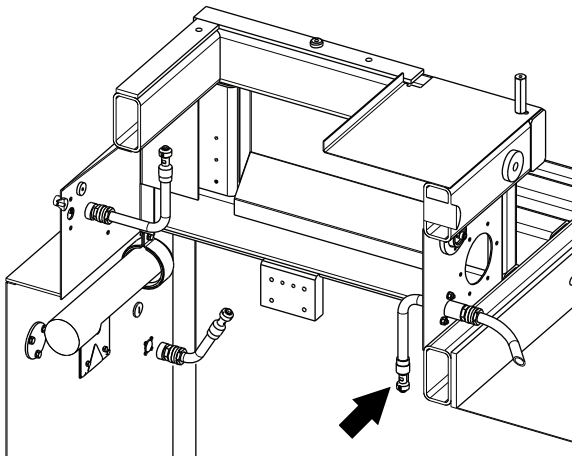

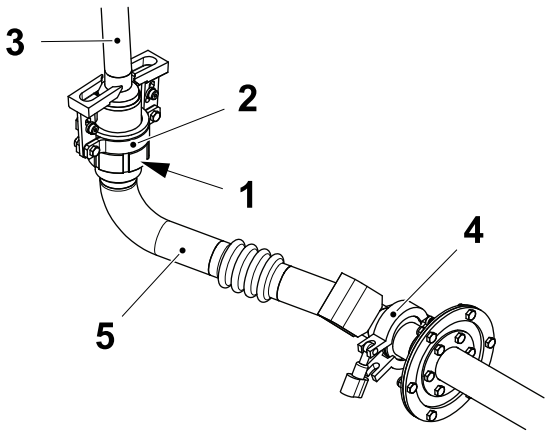

1

CAUTION

Risk of personal injury.
Pay attention to the external cleaning nozzle (see arrow) when accessing the filling pipe area.

WARNING

Hot surface.
The components may be hot. Wear personal protective equipment.

Loosen the nut (1) disconnect the cleaning attachment (2) from the upper filling pipe (3).

Remove the catch (4) and the cleaning sleeve (5) from the filling machine.

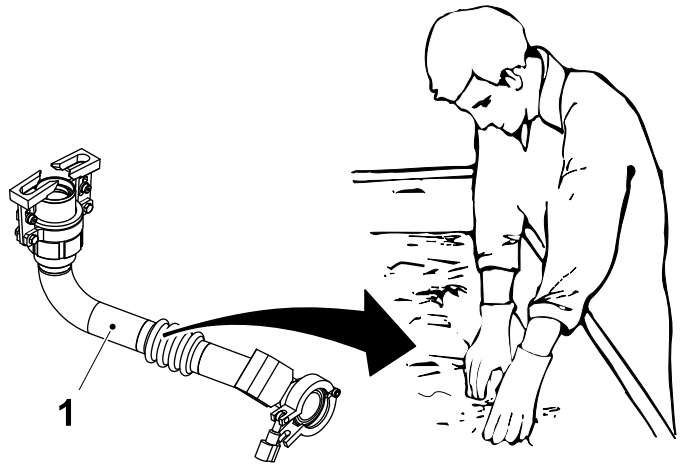

2

WARNING
Chemical product.
Follow the Safety Precautions.

Immerse the cleaning sleeve (1) in a bath of cleaning compound **F3**.

Make sure to immerse the whole length of the cleaning sleeve (1).

Keep the cleaning sleeve (1) in the container until the next use.

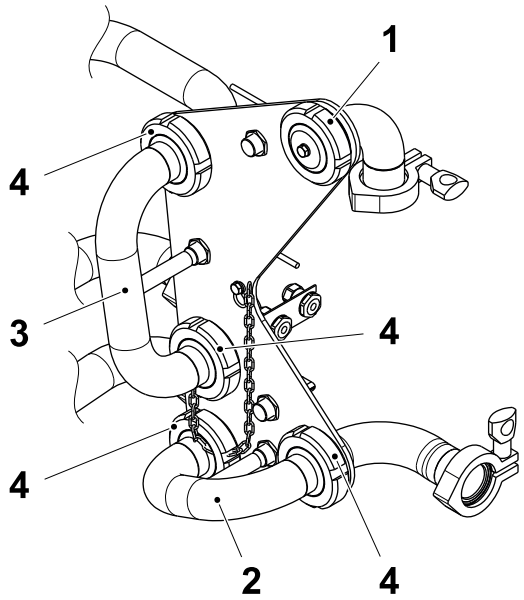

3

WARNING
Hot surface.
The pipes may be hot. Wear personal protective equipment.

Remove the cap (1).

Remove the change-over pipes (2) and (3) from the cleaning position by loosening the locking rings (4).

Check the gaskets of the locking rings (4) for wear or damage and change if required.

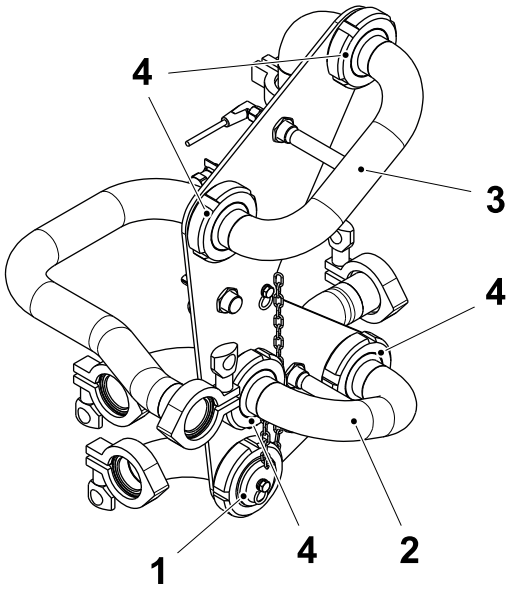

4

Fit the change-over pipes (2) and (3) into the production position and tighten with the locking rings (4).

Fit the cap (1) to the pipe as shown in the illustration.



5

Close all covers and doors on the machine and reset the alarms on the TPOP.

9.1.9 CIP Drying





1

Once the cleaning and rinse cycle are completed, the DRYING STEP icon starts flashing.

Touch the `CLEANING` button to prepare the machine to perform the drying cycle, see 2.2 Cleaning Procedures.



Touch the `INTERNAL CLEANING` button.



2

Touch the `CIP DRYING` button.

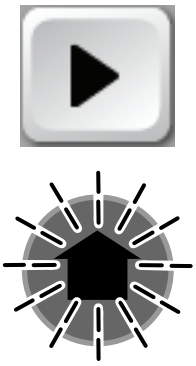

3

CAUTION

Risk of production fault.

Once the CIP DRYING is ended, machine must be brought back to PRODUCTION within 36 hours. If not, repeat the CIP CLEANING. Exceeding the recommended period of waiting time can lead to a deterioration of the condition of cleanliness established by the CIP. For maximum waiting time recommendations, see the table 11.4 Maximum Waiting/Stop Time Recommendations.

Touch the PLAY button. When the PROGRAM UP button starts to flash, press the PROGRAM UP button to start the drying.

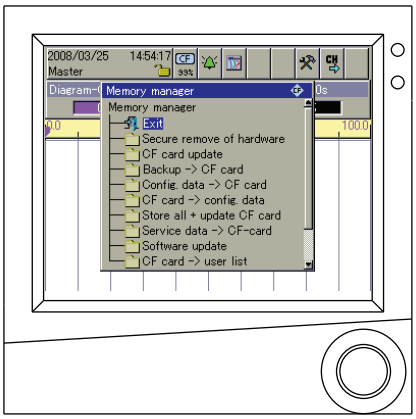

4

Recorder

When the CIP and external cleaning are finished, check the percentage level of the CompactFlash Memory Card in the recorder screen. If the CompactFlash Memory Card is full or more than 90% complete, change the CompactFlash Memory Card, see section 2.8 Recorder Navigation.

9.1.10 Hygiene Chamber

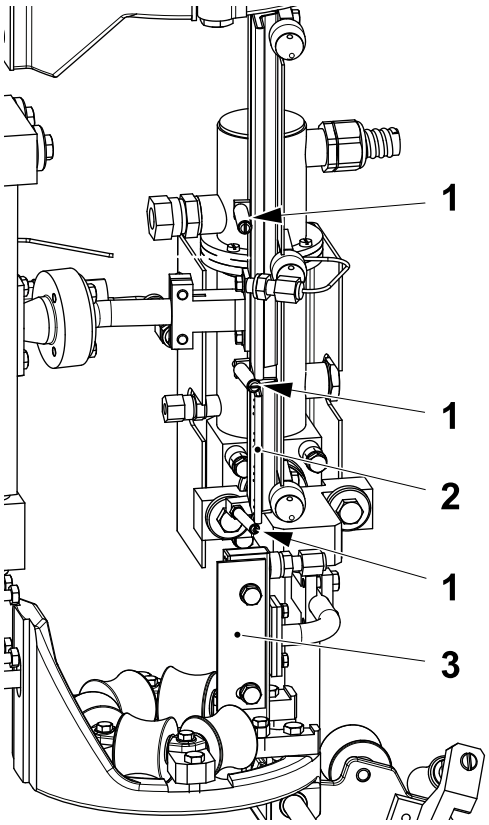

1

WARNING

Burn Hazard.
The components may be hot. Wear personal protective equipment.

Check the rotation and condition of the LS guide rollers (1). If required, call a service technician.

Taking care not to damage the surfaces, carefully remove all residue from:

- the rollers (1)
- the inside of the LS element (2).
- the inside of the LS SS element (3).

9.1.11 Jaw System Unit

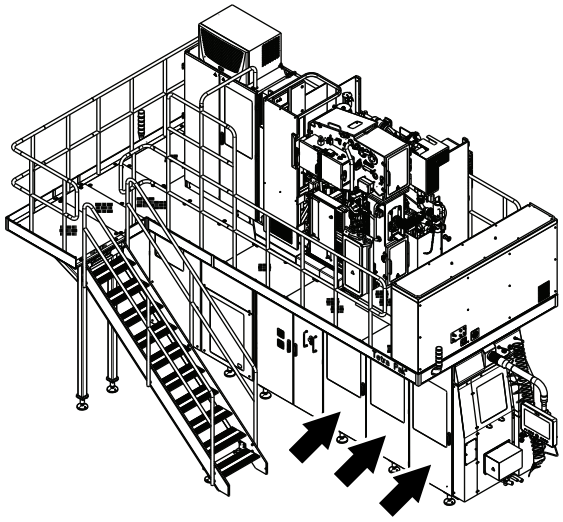

1

Open the doors to the jaw unit and the final folder unit.

Wipe down all the rubber seals on the doors of the jaw unit and final folder area with a sponge to remove water residue.

Inspect the machine body area and check that the parts and the surfaces have been cleaned. If necessary, clean the residues of dirt with a sponge and cleaning compound **C1**.

Note! Pay attention when cleaning sensitive components such as photocells, safety switches, cables, pipe connections.

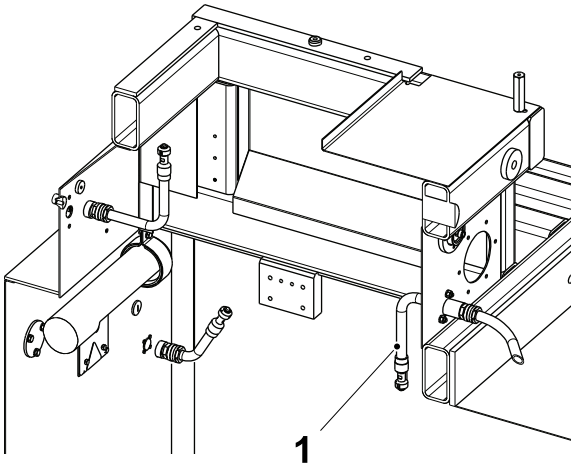

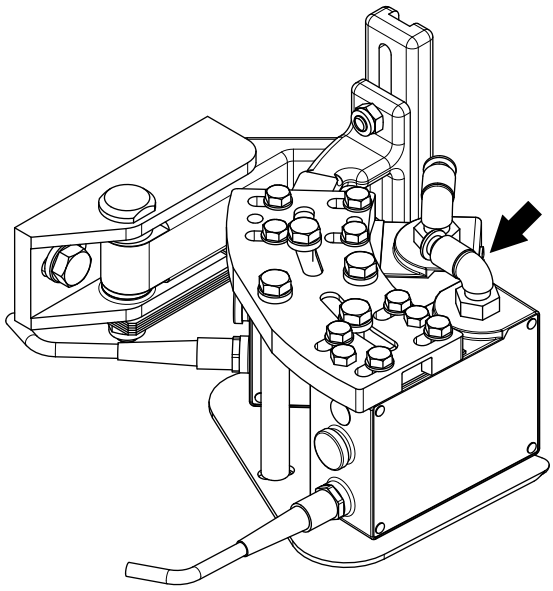

2

CAUTION

Risk of personal injury.
Pay attention to the external cleaning nozzle (1) when accessing the photocells area.

WARNING

Chemical Products.
Follow the Safety Precautions.

Clean the photocell lenses with a clean dry cloth.

Note! If there are small lime deposits on the design correction photocell lenses, use cleaning compound code **D**. A dirty lens may cause reading errors which can affect PRODUCTION.

Note! For cleaning compound code information, see 11.2.1 Cleaning Compound Table.

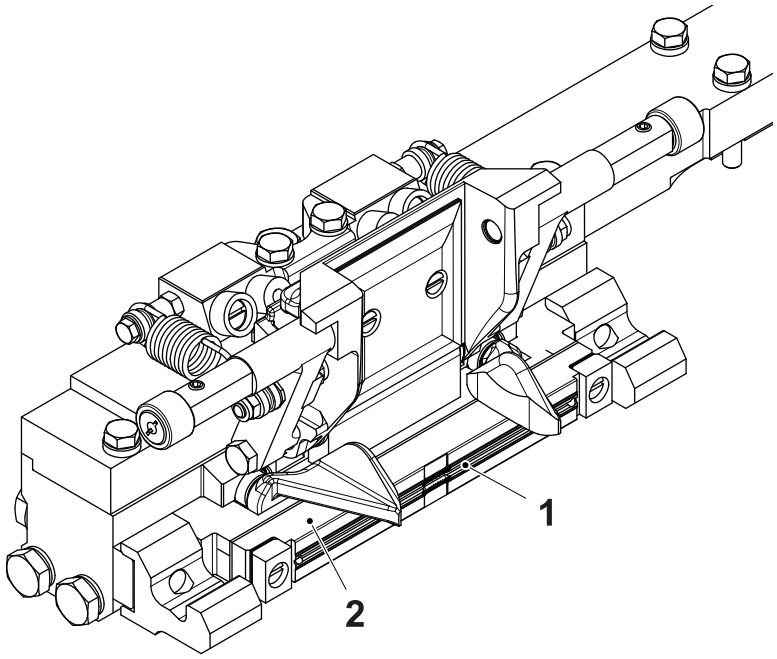

3

Clean Cutting Rail

WARNING

Blade and burn hazard.
The knife is sharp and may be hot. Wear personal protective equipment.

Perform the following work on both the jaw pairs:

a) Step up to PREPARATION.

b) Inch a jaw pair to an open position.

c) Step down to ZERO.

d) Clean the groove (1) of the cutting rails (2).

e) If the cutting rails (2) are damaged or worn, call a technician to change them.

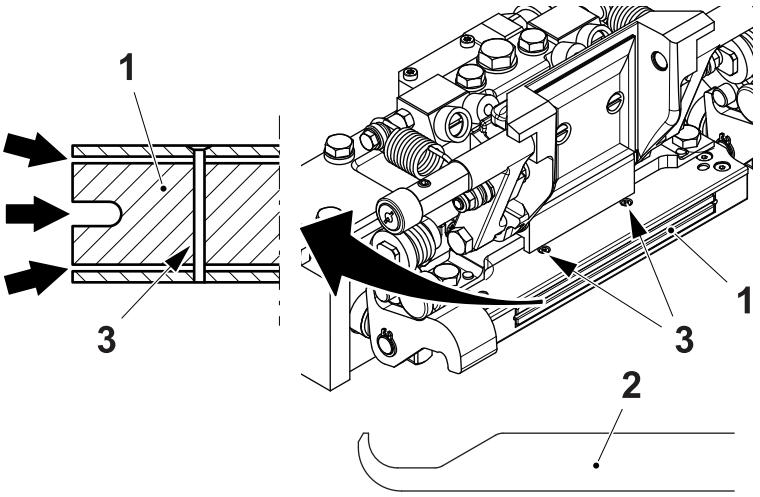

4

Clean Transducer

Perform the following work on both the jaw pairs:

a) Step up to PREPARATION.

b) Inch a jaw pair to an open position.

c) Step down to ZERO.

d) Clean the compact transducer head (1) from deposit with the suitable tool (2).

Note! The maximum thickness of the tool (2) must be 0.15 mm.

Note! Clean thoroughly all slots marked with arrows, move the suitable tool (2) around the two screws (3).

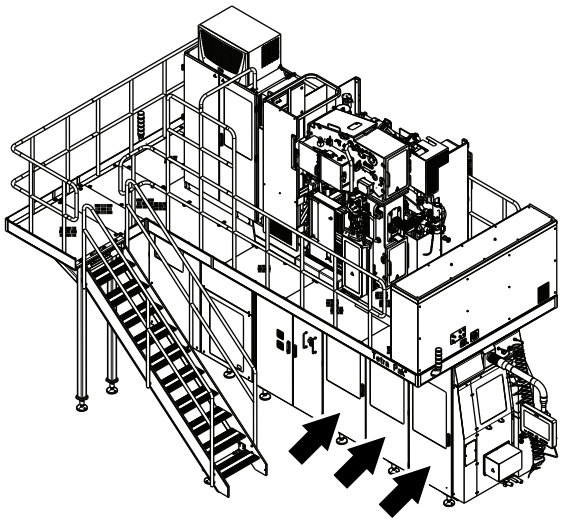

5

Close the jaw unit and final folder unit doors.

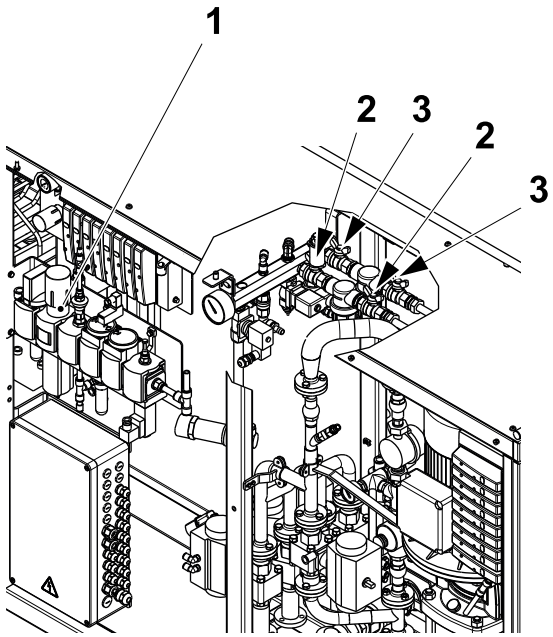

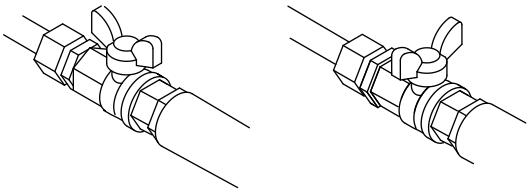

Cooling water ON Cooling water OFF

6

DAILY CARE has now been completed.

When resuming PRODUCTION, start from 3.2 Preparing after Daily Care.

To perform Weekly Care go to the section 9.2 Weekly Care.

If WEEKLY CARE or PRODUCTION is not scheduled, ensure that the air supply (1) is OFF and the cooling water supply (2) or (3) is OFF, depending on which filter is in use.

9.2 Weekly Care

This section describes what to do once a week or at least every 120 operating hours.

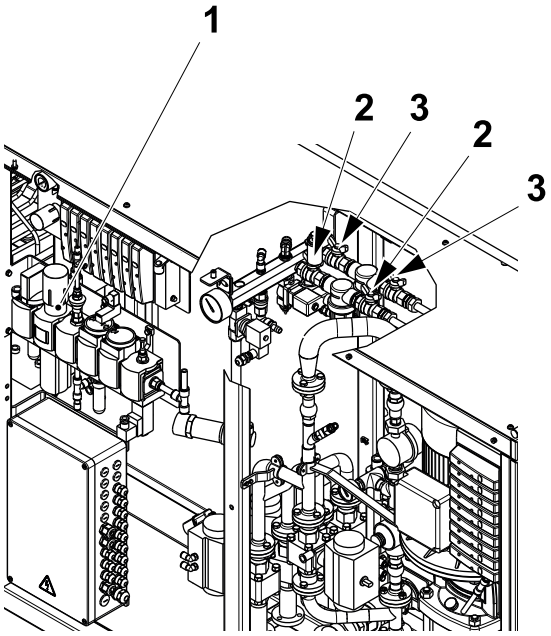

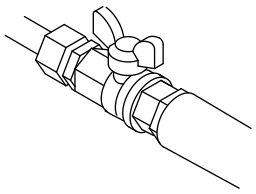

Cooling water ON

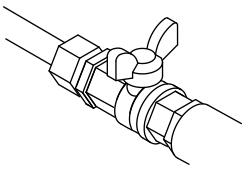

Cooling water OFF

1

Turn ON the air supply (1),

Turn ON the cooling water supply (2) or (3) depending on which filter is in use.

9.2.1 ASU

WARNING
Chemical Products.
Follow the Safety Precautions.

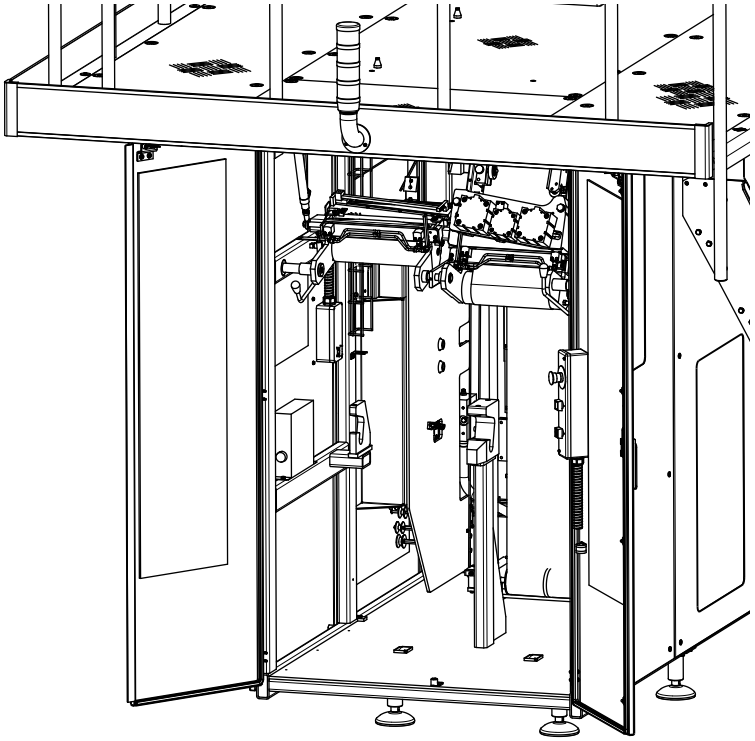

1
Vacuum clean the inside of the ASU (floor and walls).

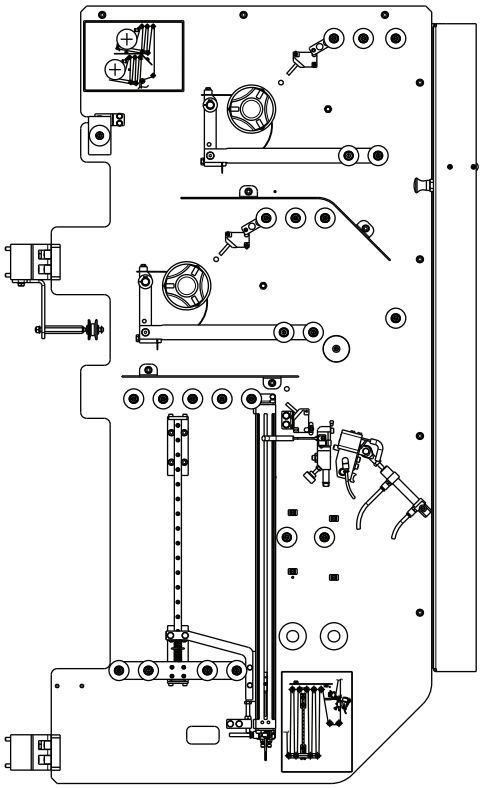

2

Clean the strip applicator unit with compressed air.

Clean all the rollers on the strip applicator and the sealing unit with a sponge. Use cleaning compound code **G1** or **G2**.

Clean the shafts of the strip magazine with a sponge. Use cleaning compound code **G1** or **G2**.

Wipe dry with a clean cloth.

Note! For cleaning compound code information, see 11.2.1 Cleaning Compound Table.

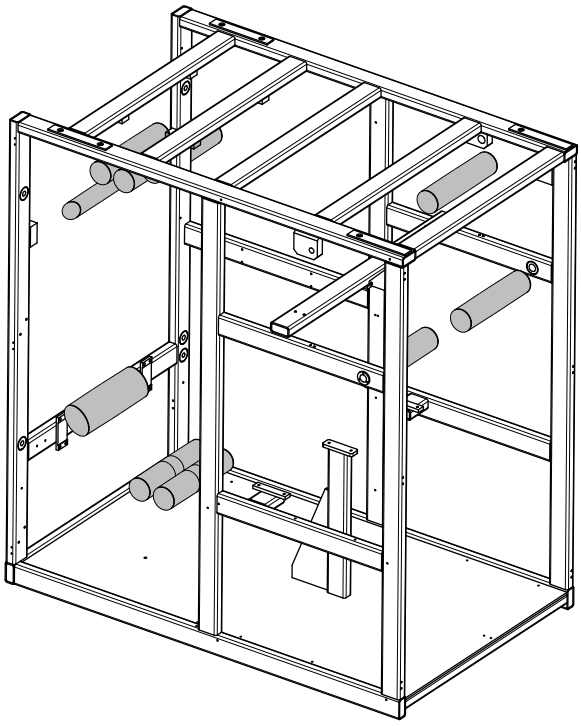

3

WARNING

Moving parts can crush and cut.
Make sure that the material holders are safely locked in either the upper or lower position.

Clean all the ASU rollers shown in the illustration. Use a sponge with cleaning compound code **G1** or **G2**.

Wipe dry with a clean cloth.

Note! For cleaning compound code information, see 11.2.1 Cleaning Compound Table.

9.2.2 Chamber

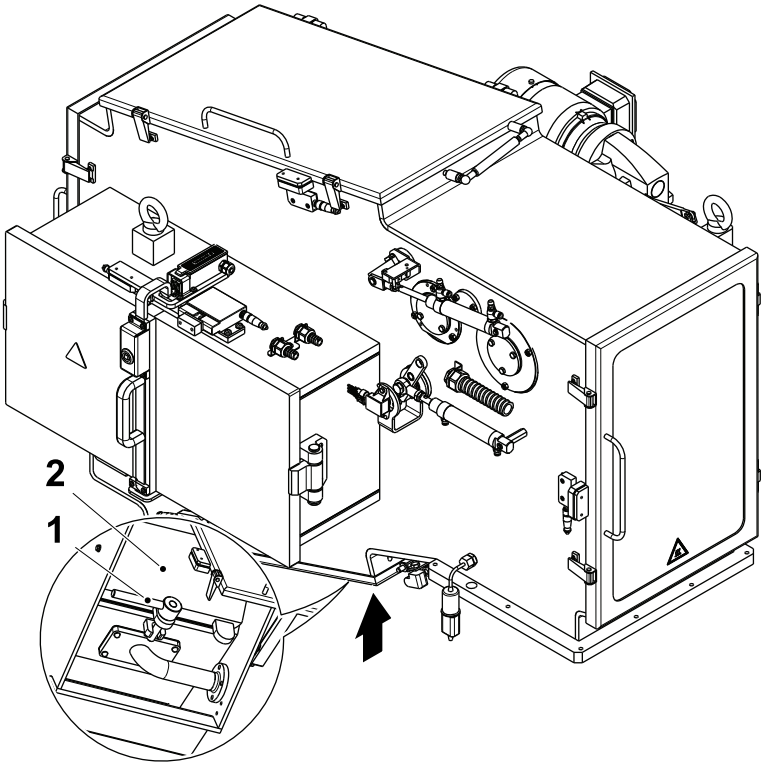

1

Open the door on the bottom of the chamber.

Turn the handle (1) and open the hatch (2).

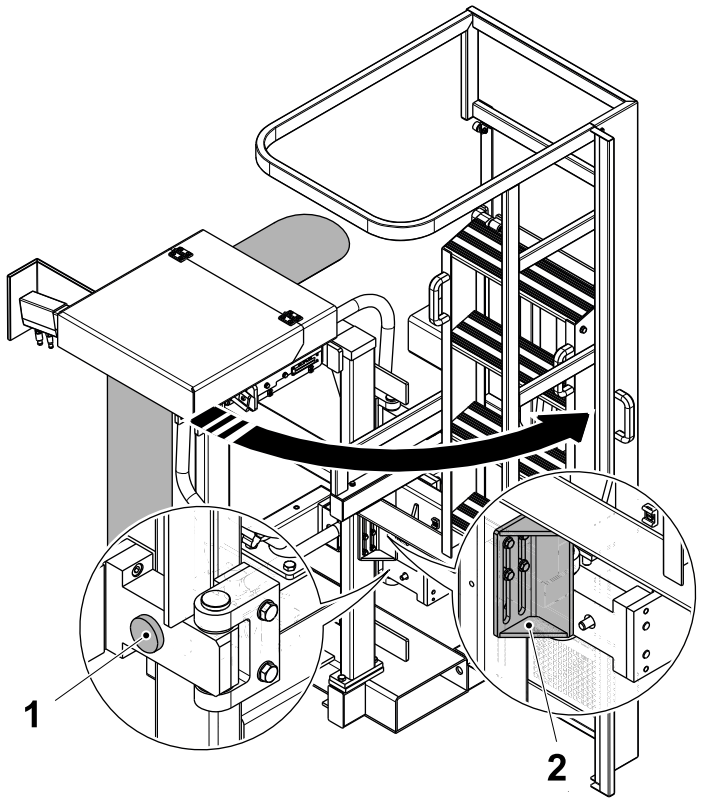

2

Loosen the two knobs (1) on the hinges and swing open the stairs.

Lock the stairs in place by moving the bracket (2) down.

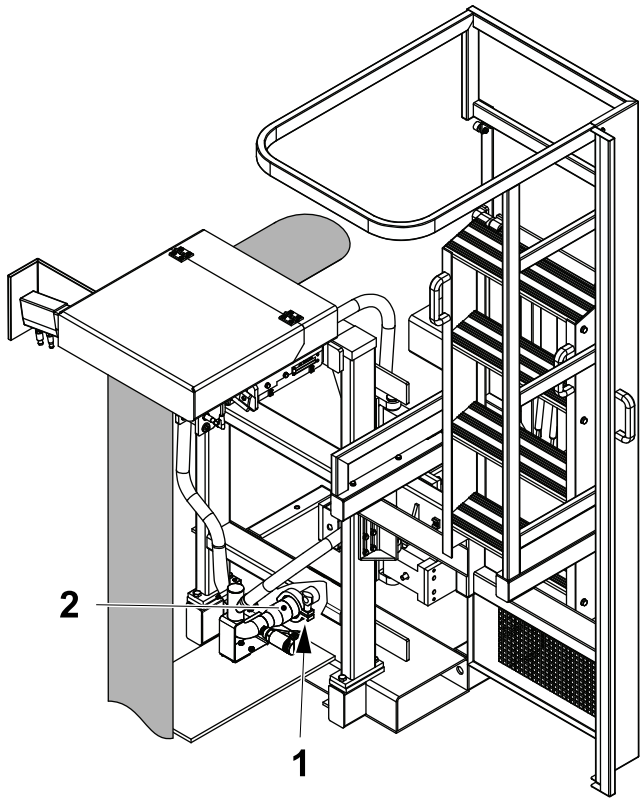

3

Loosen the clamp (1) and remove the filter.

Clean the filter from strip or packaging material residue with a brush wire.

Assemble filter (2) in the reverse order.

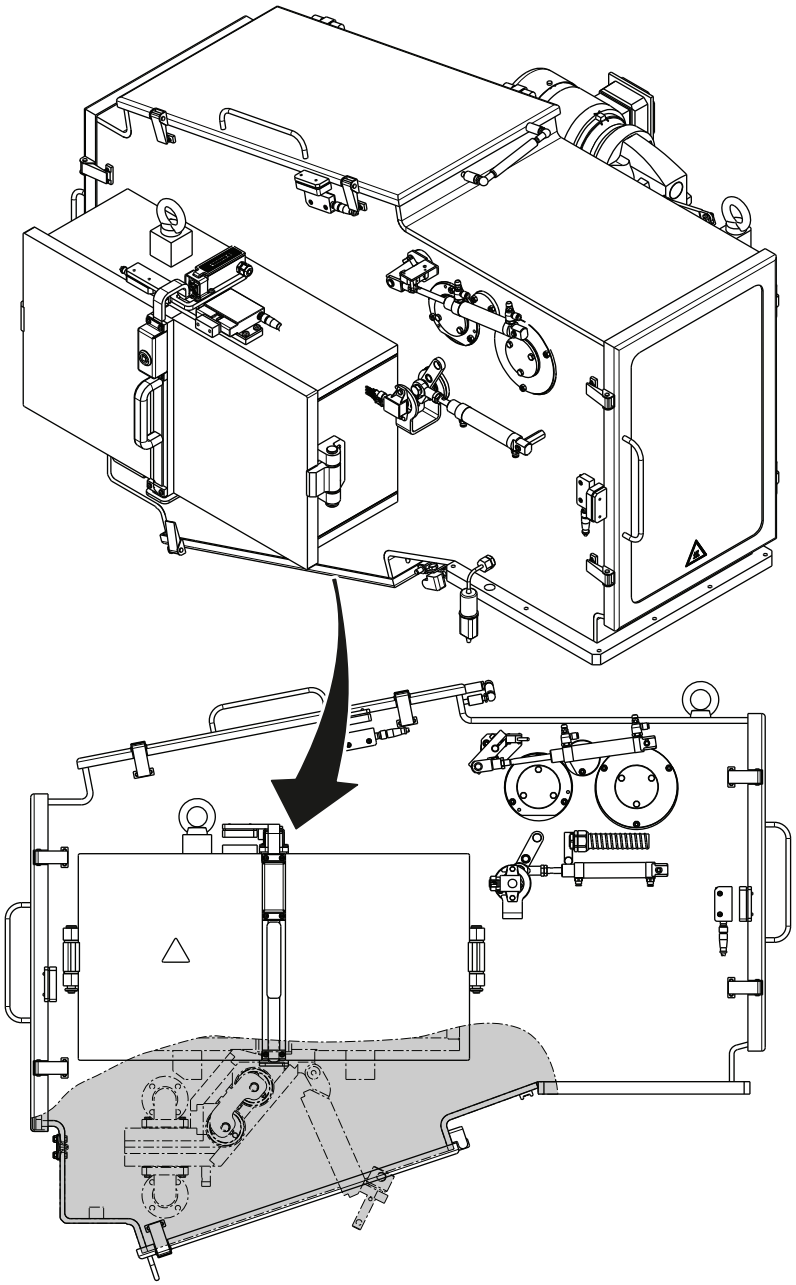

4

Clean any dust from inside the lower compartment of the chamber (the area shaded grey in the illustration).

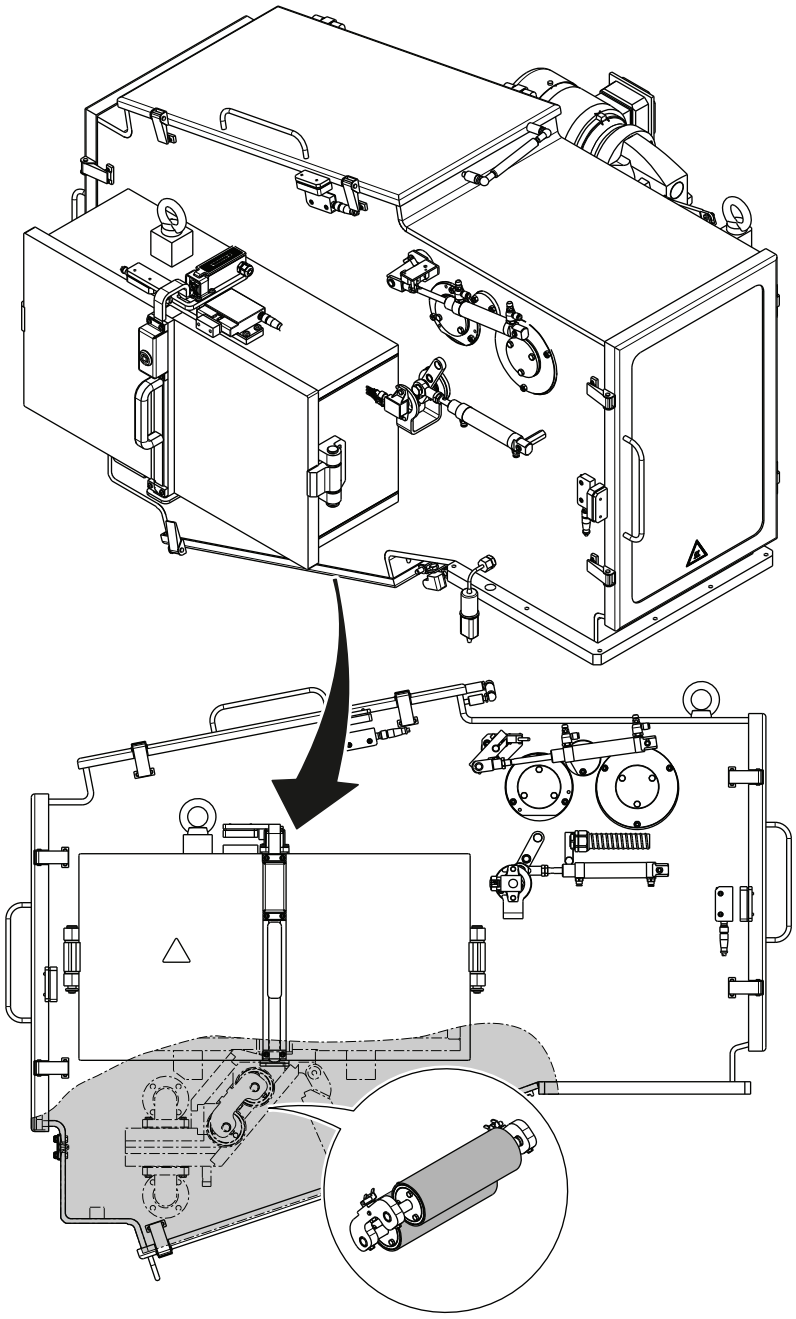

5

Make sure the surface of the rollers are smooth and undamaged. Use a sponge and **distilled water** only to clean the rollers and the internal surfaces of the lower compartment of the chamber.

Make sure the rollers and internal surfaces of the lower compartment of the chamber are dried with a clean cloth.

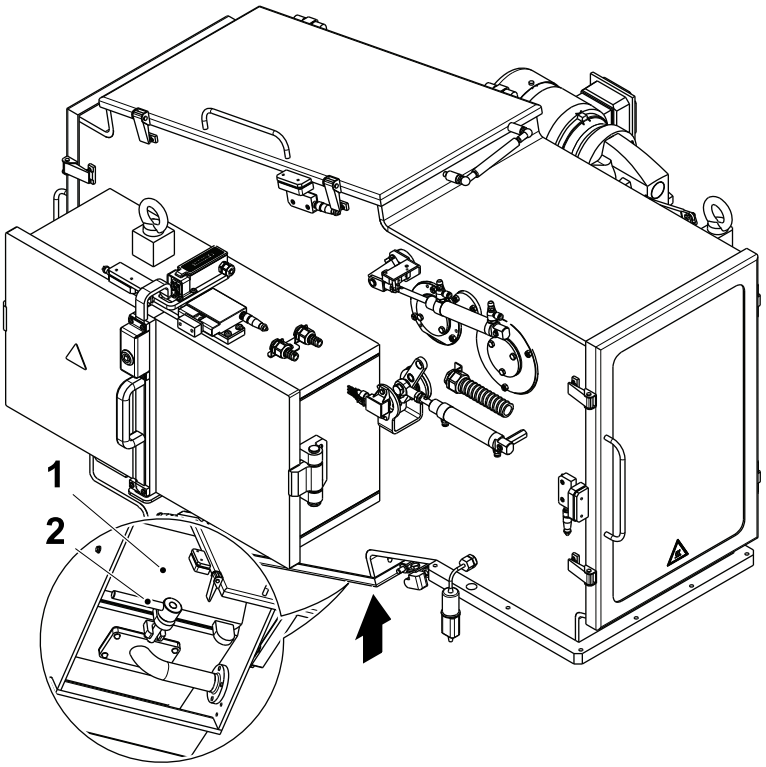

6

Close the hatch (1) with the handle (2).

Close the bottom door of the chamber.

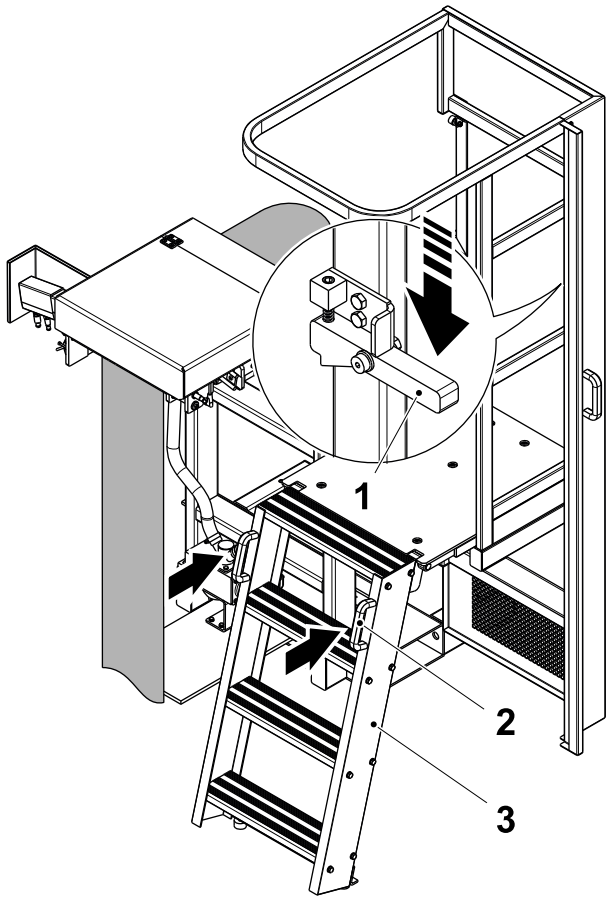

7

Push down on the latch (1), and then holding the two handles (2) pull down the stairs (3).

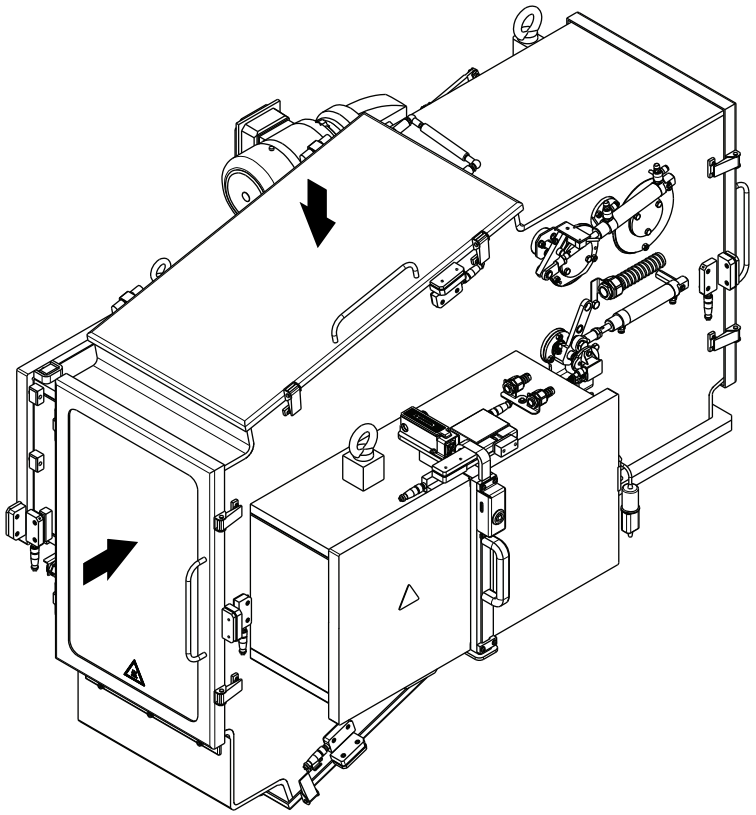

8

Stand on the platform and open the top and rear doors of the chamber.

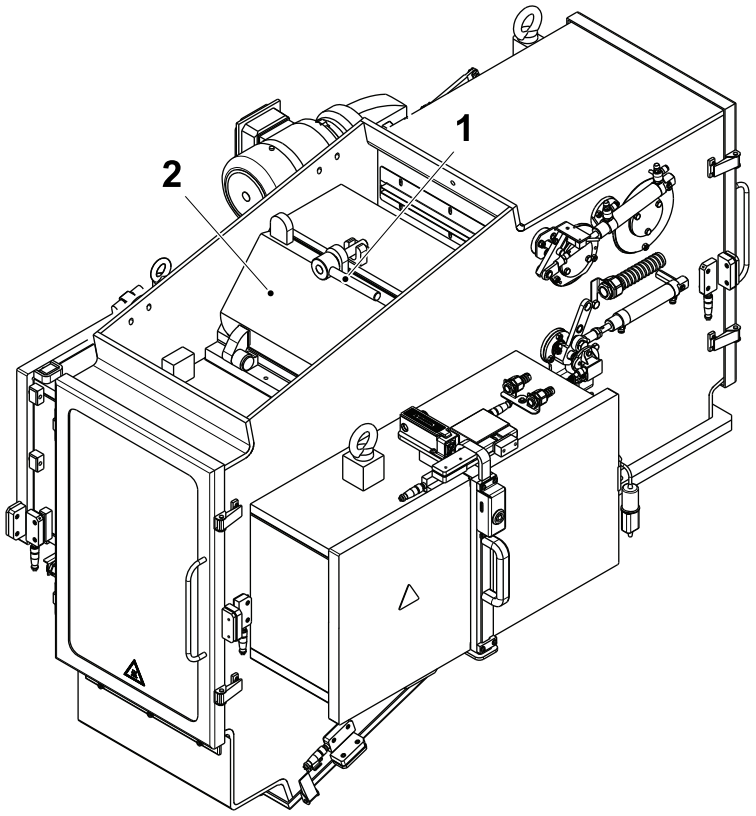

9

Turn the handle (1) and open the hatch (2).

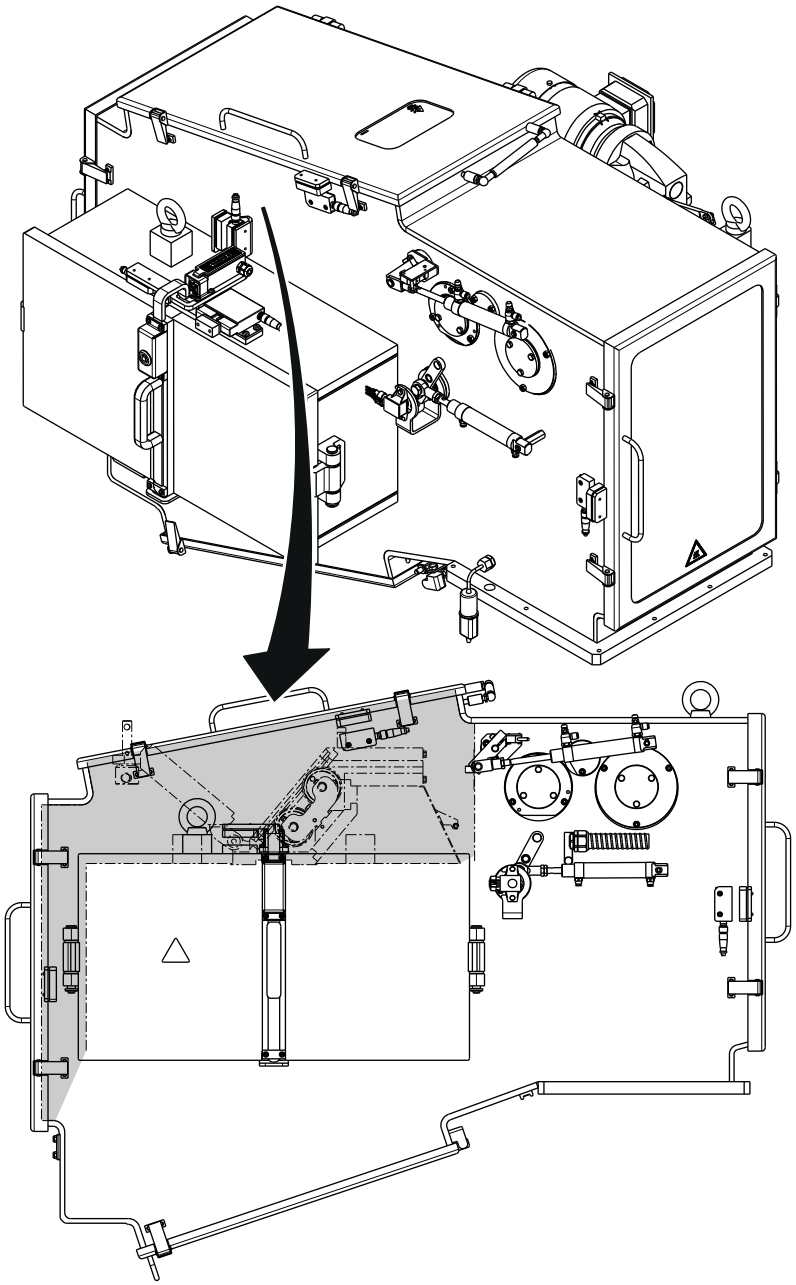

10

Clean any dust from inside the upper compartment of the chamber (the area shaded grey in the illustration).

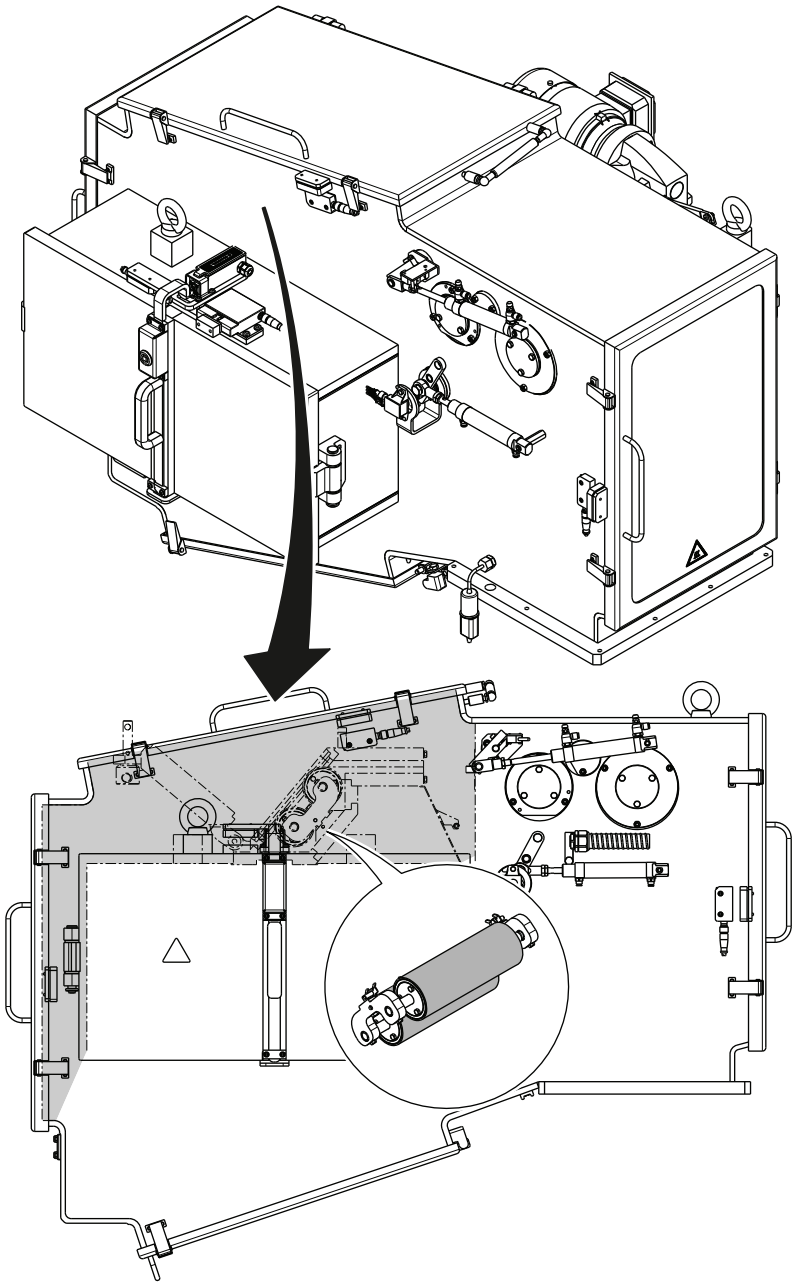

11

Make sure the surface of the rollers are smooth and undamaged. Use a sponge and **distilled water** only to clean the rollers and the internal surfaces of the upper compartment of the chamber.

Make sure the rollers and internal surfaces of the upper compartment of the chamber are dried with a clean cloth.

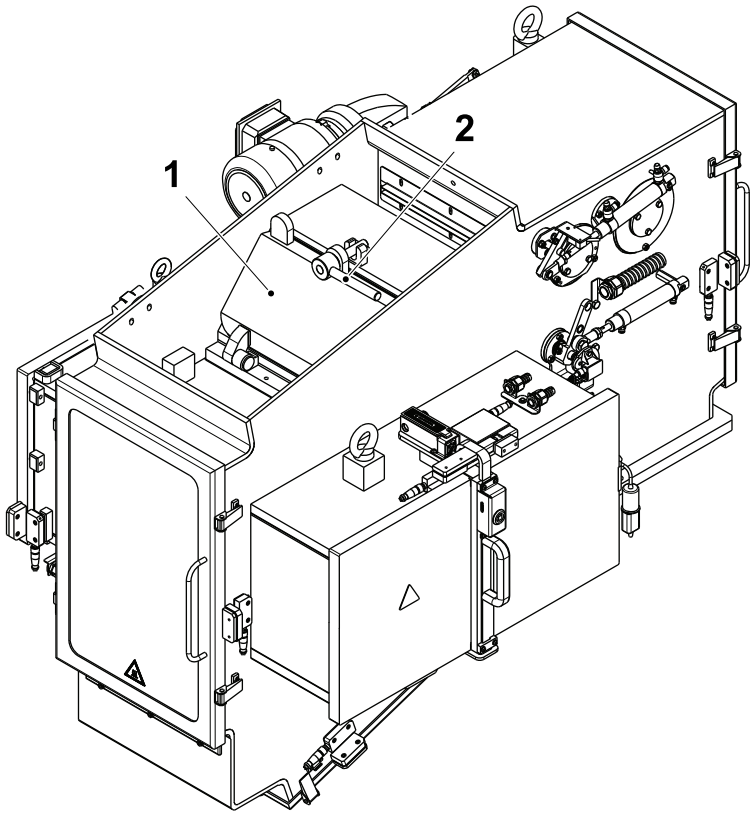

12

Close the hatch (1) with the handle (2).

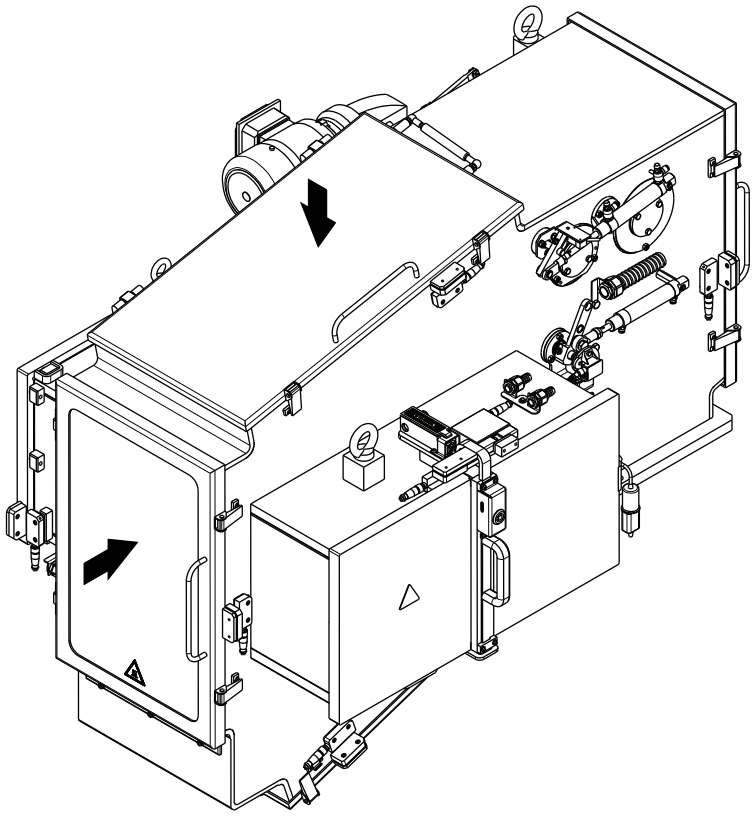

13

Close the top and rear doors of the chamber.

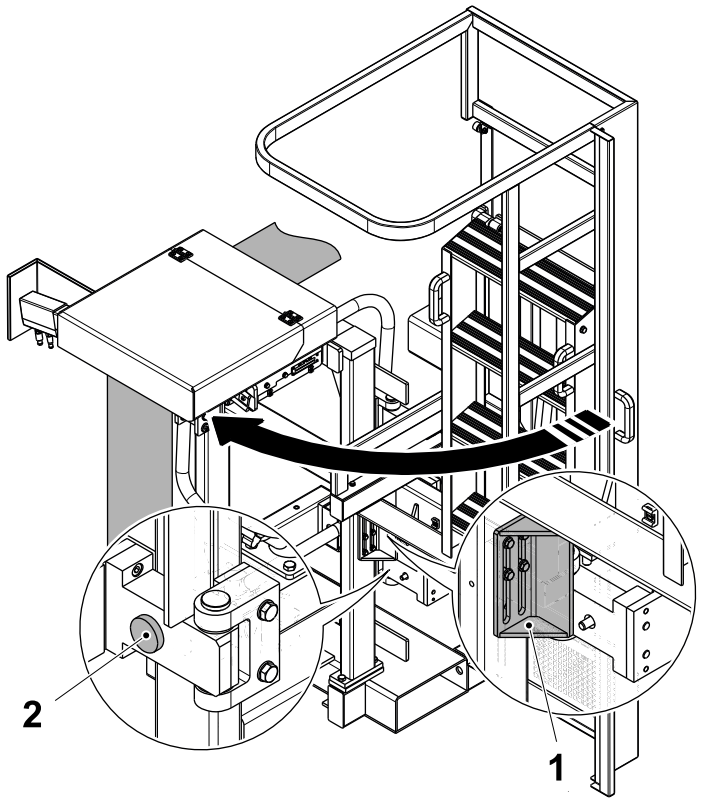

14

Lift up the bracket (1) and move the stairs to the closed position.

Tighten the two knobs (2) on the hinges to lock the stairs in place.

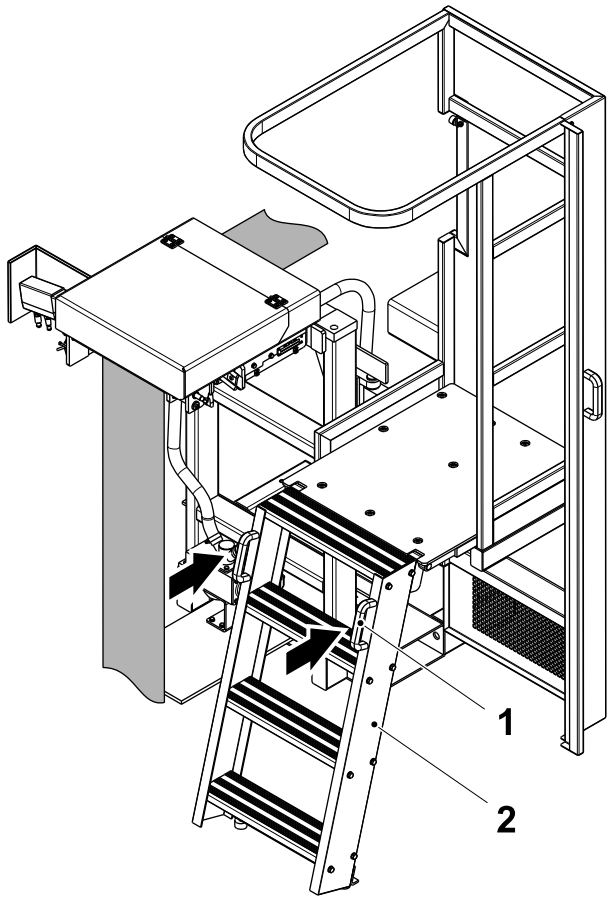

15

Holding the two handles (1) fold up the stairs (2).

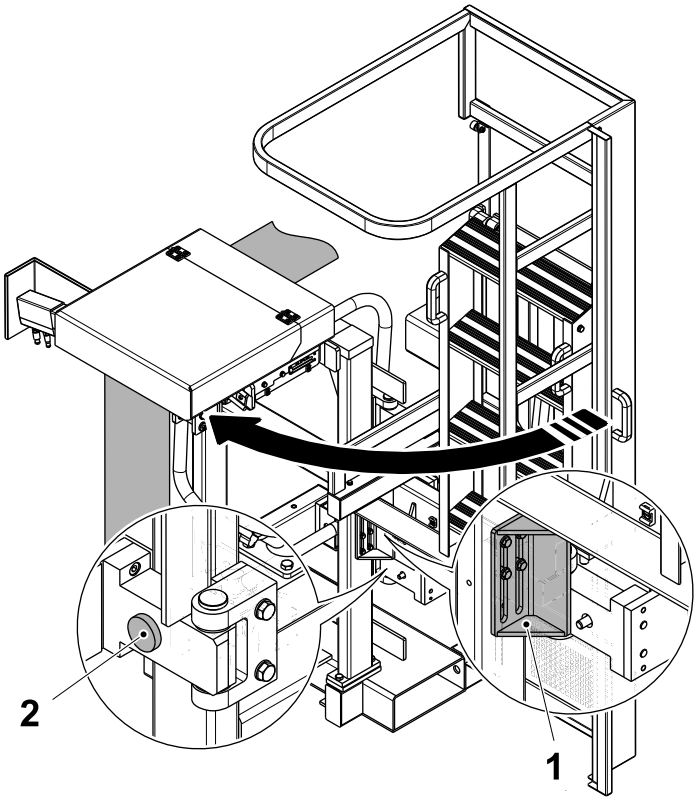

16

Lift up the bracket (1) and move the stairs to the closed position.

Tighten the two knobs (2) on the hinges to lock the stairs in place.

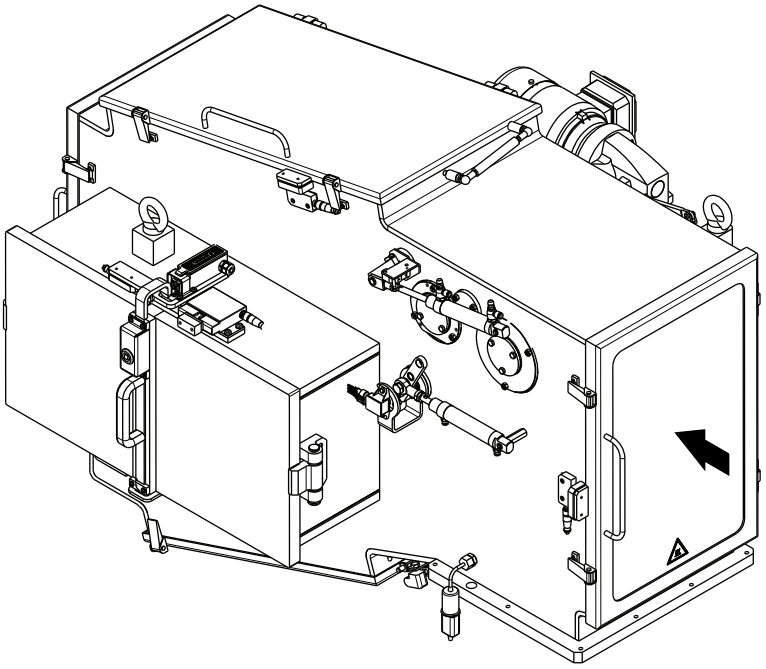

17

Open the front door of the chamber.

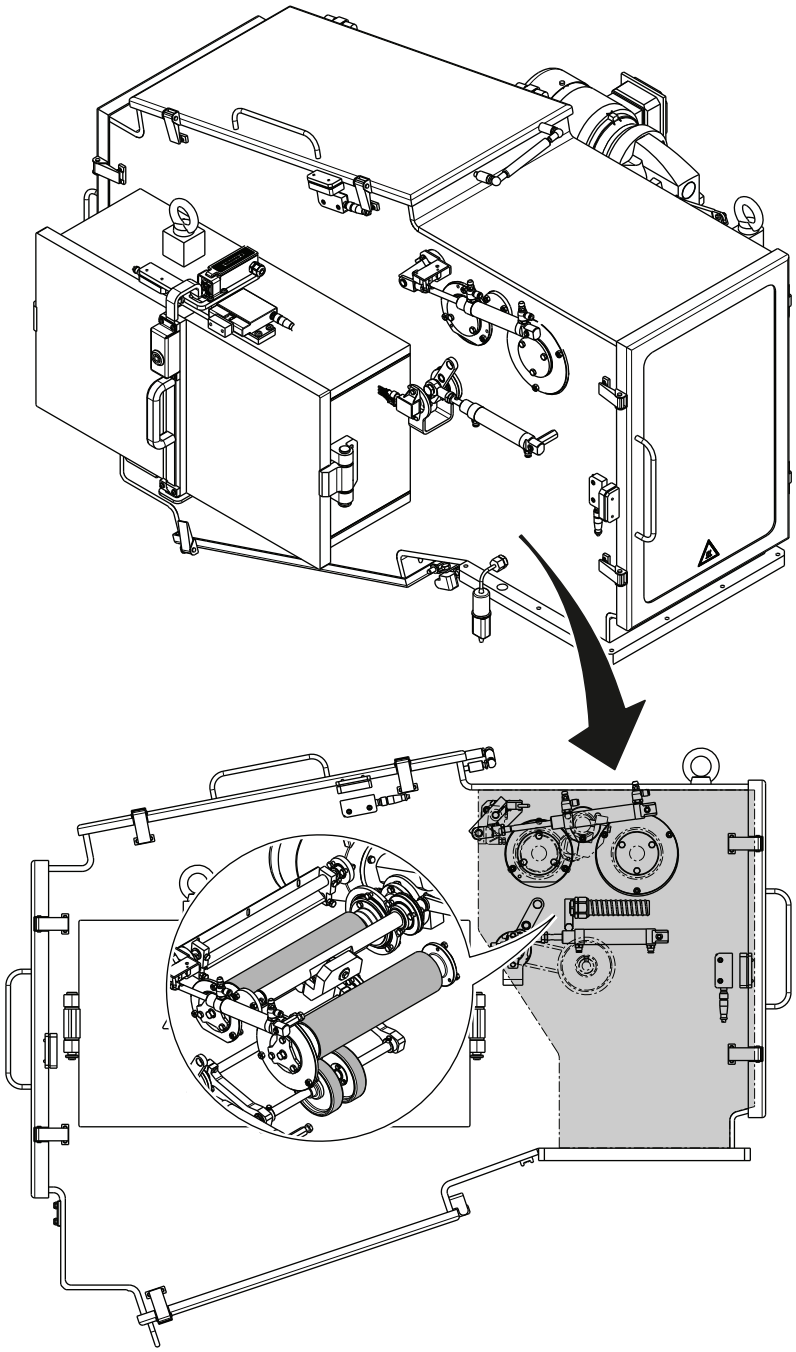

18

Make sure the surface of the rollers are smooth and undamaged. Use a sponge and **distilled water** only to clean the rollers and the internal surfaces of the front compartment of the chamber.

Make sure the rollers and internal surfaces of the front compartment of the chamber are dried with a clean cloth.

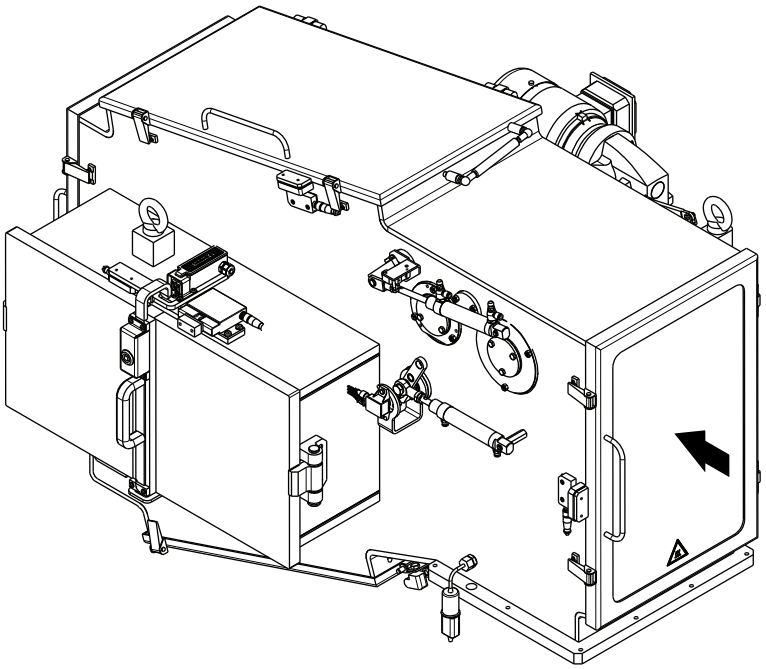

19

Close the front door of the chamber.

9.2.3 Hygiene Chamber

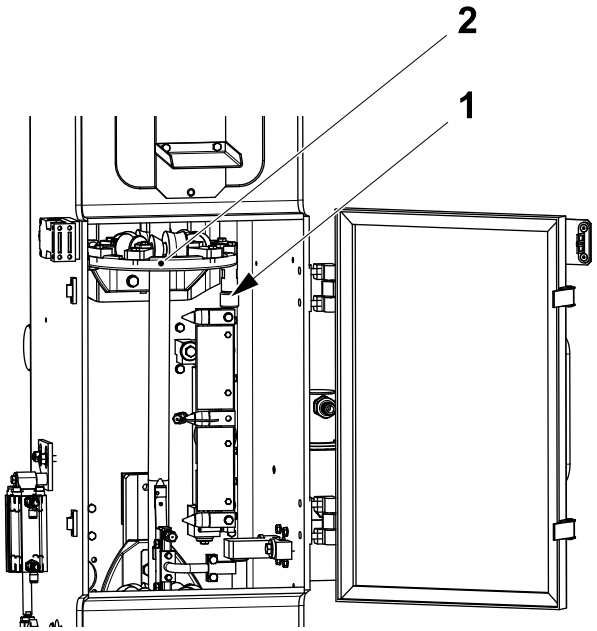

1

Pull the lever (1) and open the forming ring (2).

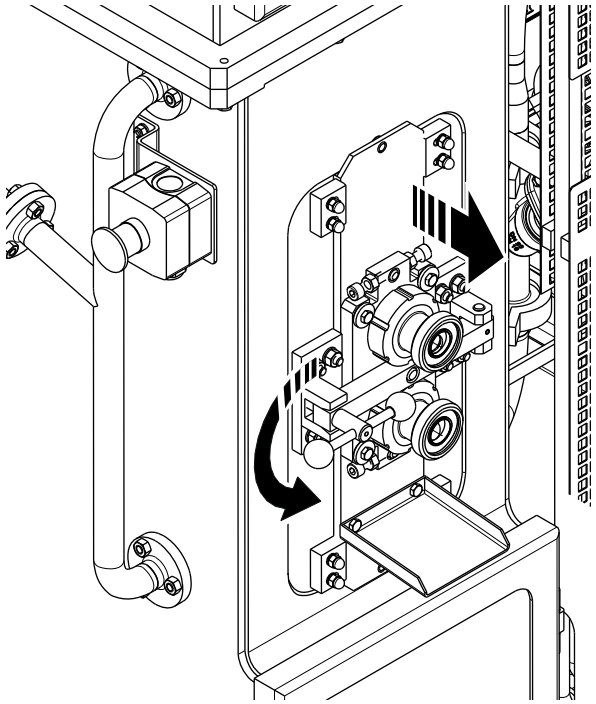

2

With one hand firmly holding the filling pipe, turn the knob to release the filling pipe from the hygiene chamber.

Remove the upper filling pipe.

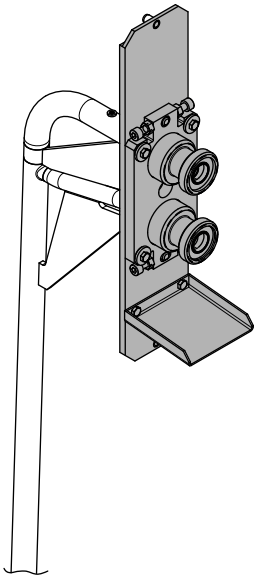

3

WARNING
Chemical products.
Follow the Safety precautions.

CAUTION
Risk of serious production fault.
Remove all product residue from the parts. Sterilization is only effective on clean surfaces and is not effective on product residue.

CAUTION
Risk of damage to the equipment.
Make sure the top connection area (shown in grey) does not come into contact with liquid.

Clean the outside of the upper filling pipe with cleaning compound code **D** and rinse with drinking water.

Clean the top connection area (shown in grey) with a sponge and cleaning compound **D**, rinse with drinking water and dry with a clean cloth.

Make sure that **all** product residue is removed from the pipe.

After cleaning, immerse the upper filling pipe in cleaning compound code **F3**, apart from the top connection area (shown in grey) that should remain dry and above the level of the liquid.

Note! The filling pipe must be immersed in the cleaning compound **F3** for a minimum of 1 hour for the cleaning compound to have a satisfactory effect. For cleaning compound code information, see 11.2.1 Cleaning Compound Table.

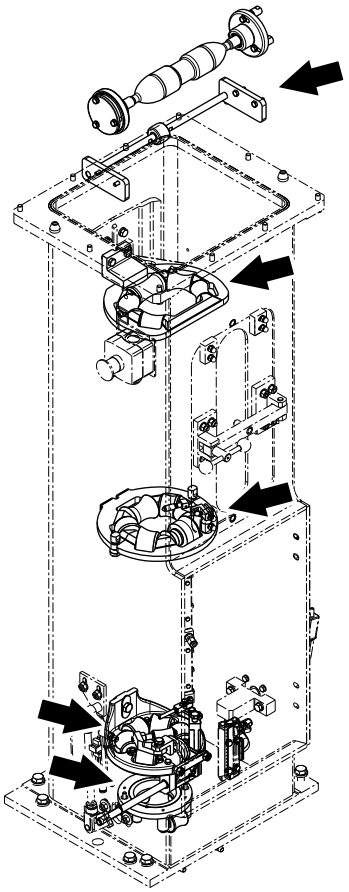

4

WARNING
Chemical Products.
Follow the Safety Precautions.

CAUTION
Risk of serious production fault.
Remove all product residue from the parts. Sterilization is only effective on clean surfaces and is not effective on product residue.

CAUTION
Hygiene.
Do not dry with compressed air. Allow the rollers to dry.

Use a sponge or brush and cleaning compound **D** to clean the rollers and forming rings.

Rinse with drinking water and dry the rollers and the forming rings with a clean cloth.

Check the rollers for surface damage and make sure that they rotate freely in both directions. If necessary call a technician.

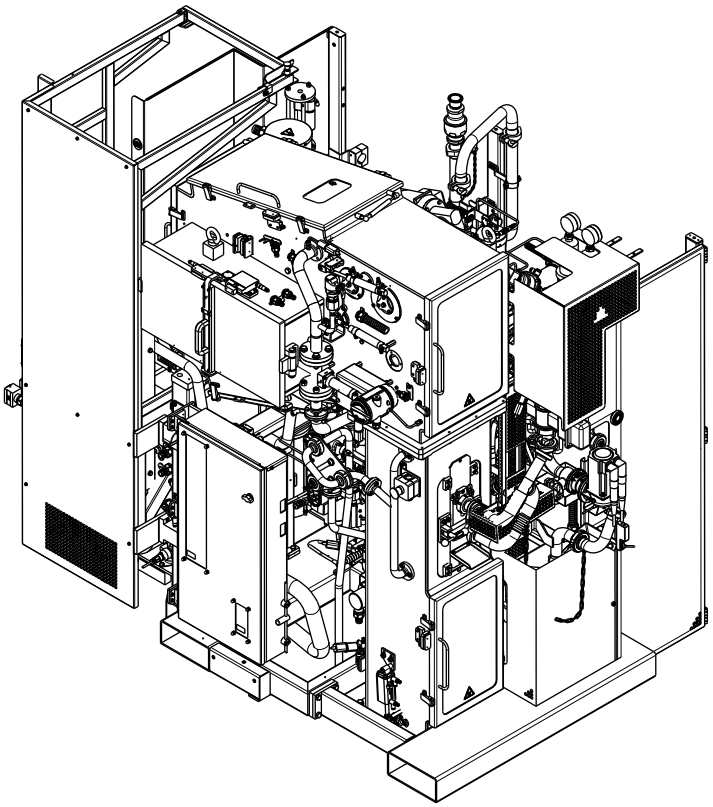

5

WARNING
Risk of explosion.
Cleaning with not recommended cleaning agents, for example agents including alcohol, could cause explosion.

CAUTION
Hygiene.
Do not dry with compressed air. Make sure the internal surfaces of the aseptic chamber are dried with a clean cloth.

Clean the inside of the hygiene chamber and the door windows with a sponge. Use the cleaning compound code **D**.

Rinse with drinking water and a sponge. Dry the internal surfaces of the hygiene chamber with a clean cloth.

Note! For cleaning compound code information, see 11.2.1 Cleaning Compound Table.

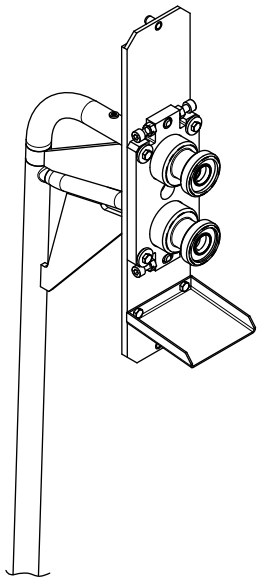

6

WARNING
Chemical products.
Follow the Safety Precautions.

CAUTION
Hygiene.
Before handling clean parts, disinfect your hands/gloves with cleaning compound code **H**.

Remove the immersed upper filling pipe from the cleaning compound code **F3**.

Let the upper filling pipe drip-dry in a clean area for about 15 minutes before fitting it back on the machine.

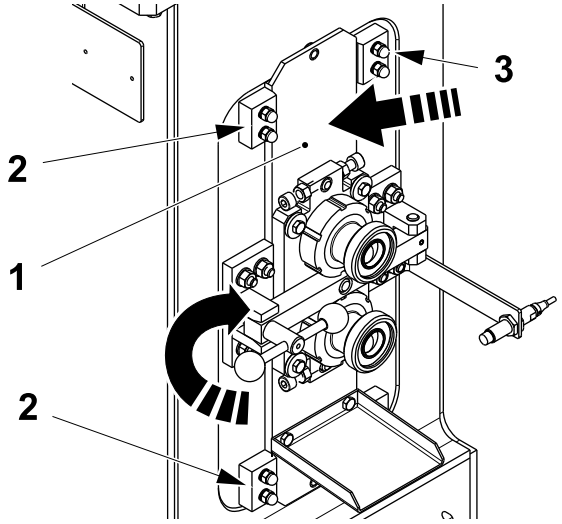

7

Fit the upper filling pipe in the hygiene chamber.

Note! Make sure that the upper filling pipe plate (1) is in contact with the blocks (2).

With one hand firmly holding the filling pipe, turn the two knobs to secure the filling pipe to the hygiene chamber.

Note! Do not loosen the screws (3) in the blocks (2).

9.2.4 Change Oil

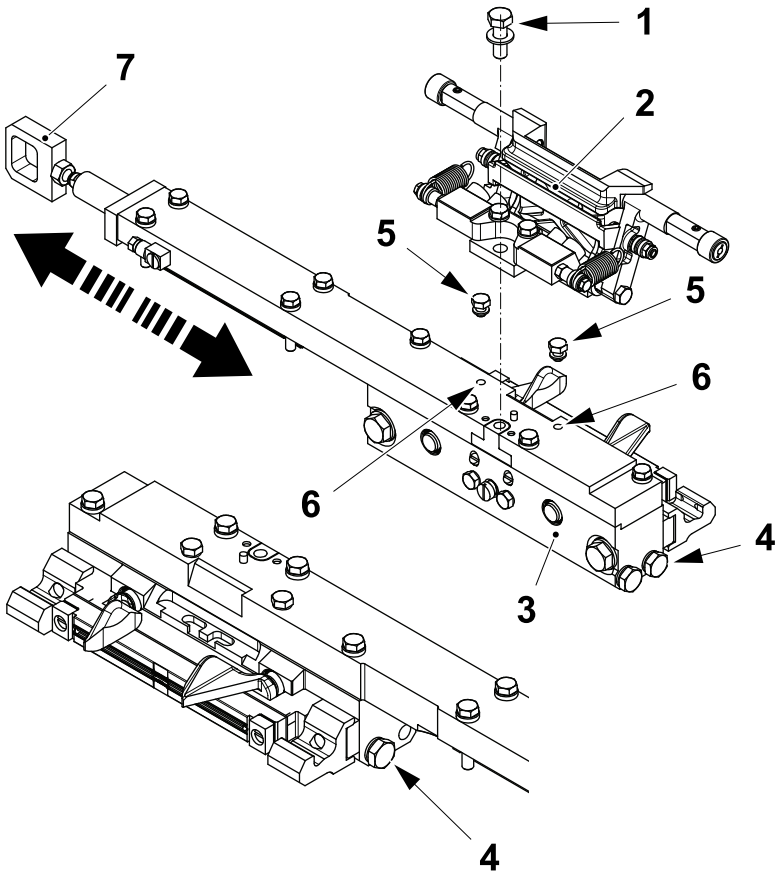

1

WARNING
Chemical Products.
Follow the Safety Precautions.

Perform the following work on both the cutting jaws.

a) Step up to step PREPARATION.

b) Inch a jaw pair to the lower horizontal position.

c) Step down to STEP ZERO.

d) Remove the screw (1) and the volume flap (2) from the bearing housing (3).

e) Remove the drain plugs (4) and the filling plugs (5) and drain the oil from the bearing housing (3).

Note! Use lubricant Kluberoil 4 UH1 320-N TP No. 344414-0000.

f) Fill the bearing housing (3) with oil through the filling plugs holes (6).

g) Manually move the ear (7) to ensure that both the internal chambers of the bearing housing (3) are filled with the oil.

h) Continue to fill with oil through the filling plugs holes (6) until it comes out from the holes of the drain plugs (4)

i) Fit and tighten the drain plugs (4) and the filling plugs (5).

9.2.5 Check Knife

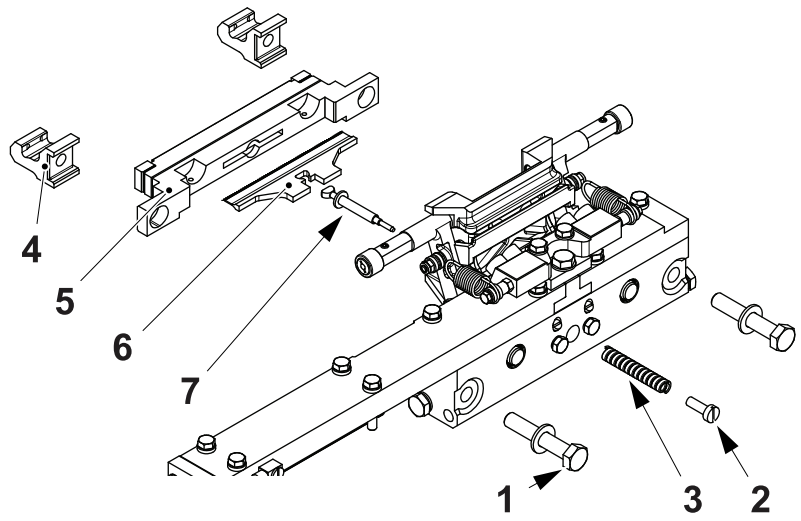

1

WARNING

Risk of cutting injury.
The knife is sharp and may be hot. Wear personal protective equipment.

Remove the screw (1).

Remove the screw (2) and the spring (3).

Remove the catches (4) and the cutting rail assembly (5).

Pull out the knife (6) and the link (7) together.

Note! Apply a layer of silicone grease TP No. 90296-0009 to the link (7) when assembling.

Clean any packaging material and product residue from the knife (6) with a brass brush.

Change the knife (6) if necessary.

Assemble in the reverse order.

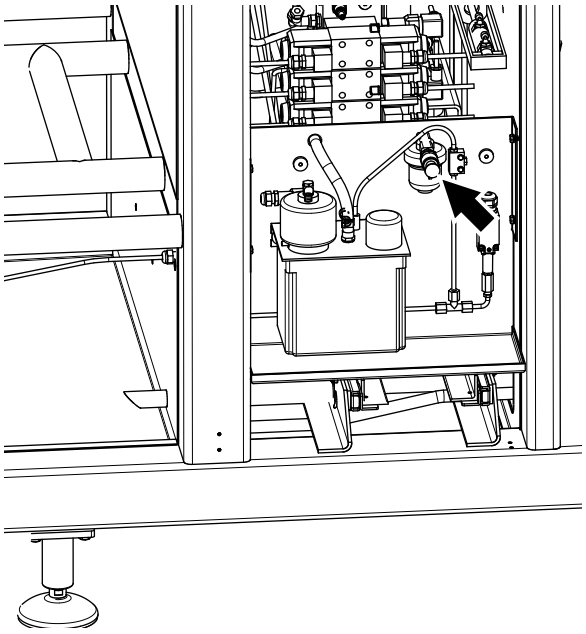

2

WARNING

Chemical Products.
Follow the Safety Precautions.

Check the oil level in the central lubrication tank. Refill if required. Use lubricant Kluberoil 4 UH1 320-N TP No. 344414-0000.

Note! Pump slowly as the level rises faster in the tank than in the level indicator.

9.2.6 Peroxide Container

WARNING
Hydrogen Peroxide.
Follow the Safety precautions.

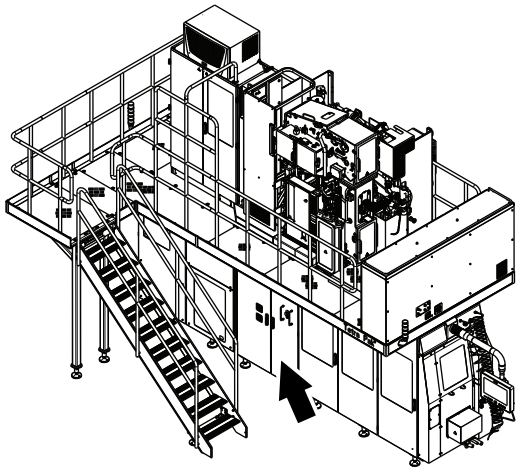

1
Open the door indicated by the arrow in the illustration.

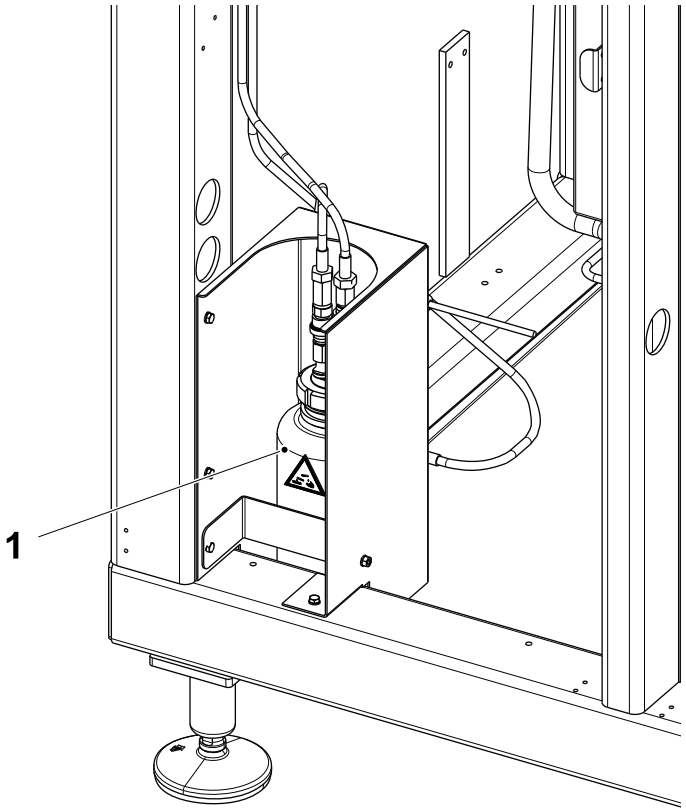

2

CAUTION

Risk of production fault.

The peroxide must be changed weekly to prevent paper dust and impurities accumulating in the tank. If this is not done, it can lead to peroxide stability problems.

Note! The hydrogen peroxide bottle (1) shall be changed every week.

Change the hydrogen peroxide bottle (1), see 10.2 Change Hydrogen Peroxide.

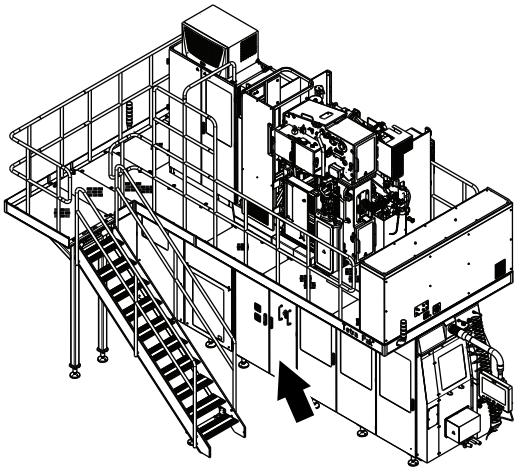

3

Close the door indicated by the arrow in the illustration.

9.2.7 Service Unit

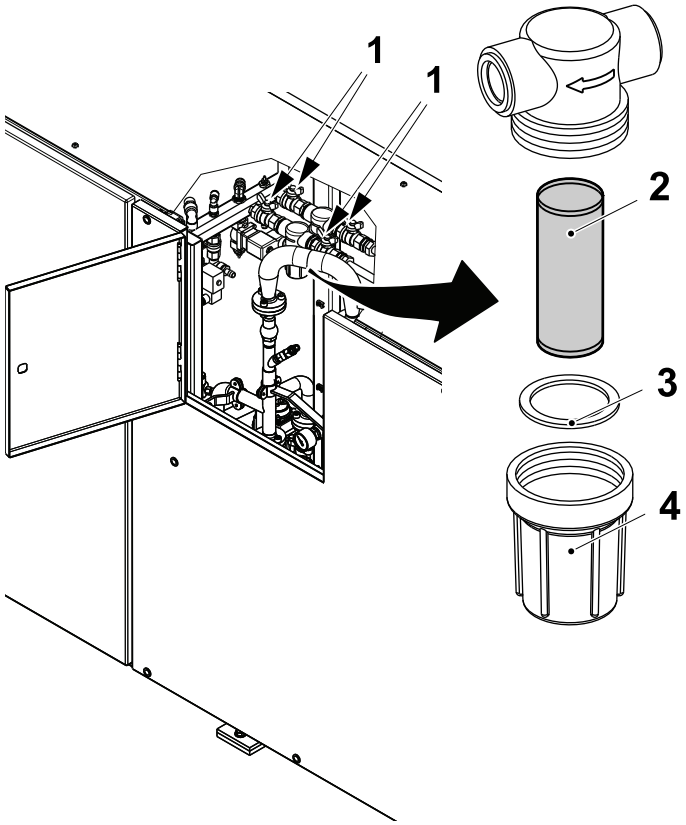

Clean Filters
1

Note! During PRODUCTION only one filtering line must be open.

a) Close the four water valves (1).

b) Unscrew the filter housing (4) and remove the filter insert (2).

c) Clean the filter insert (2) with compressed air or change if required.

d) Check the seal ring (3) for damage. Change as required.

e) Fit the filter insert (2), fit the seal ring (3) and tighten the filter housing (4).

f) Open two of the water valves (1) in one filtering line and make sure that there is no leakage.

Repeat the procedure for the other filter.

9.2.8 Platforms and Surfaces

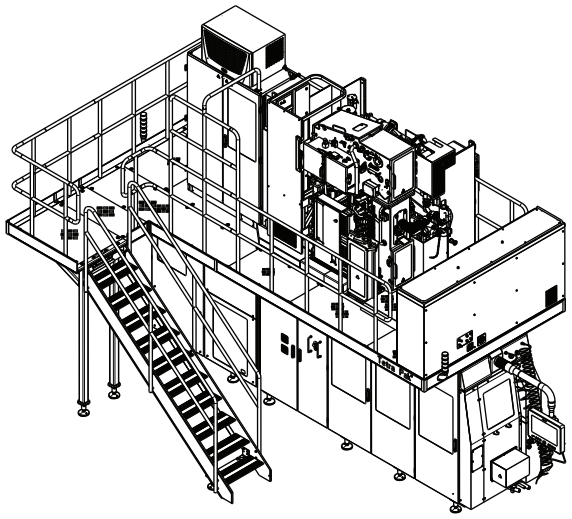

1

CAUTION
Risk of damage to the equipment.
Do not flush water towards the electrical cabinets, control panels, electrical motors or any electrical component even if protected. Failure to observe this caution may result in damage to the equipment.

CAUTION
Risk of damage to the equipment.
Do not use flushing water to clean the platform floor.

Clean the platform floor with a brush. Do not use any water.

Clean the outer machine surfaces with a sponge. Use cleaning compound code **G1** or **G2**.

Polish the stainless steel plating with paraffin oil.

Clean the windows on the machine with a sponge. Use cleaning compound code **G1** or **G2**.

Wipe dry with a clean cloth

Note! For cleaning compound code information, see 11.2.1 Cleaning Compound Table.

9.2.9 Utilities

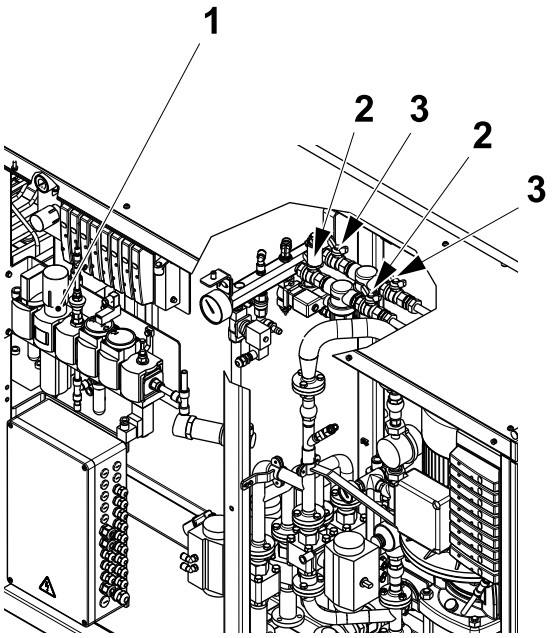

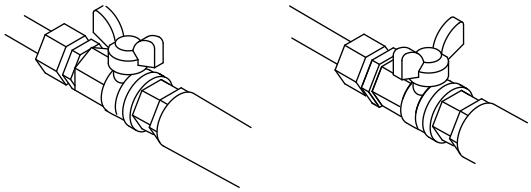

Cooling water ON Cooling water OFF

1

Weekly care is now complete. When resuming production after weekly care, start from the 3.1 Preparing After Weekly Care.

If PRODUCTION is not scheduled:

- turn OFF the air supply (1)
- turn OFF the cooling water (2) or (3).

This page intentionally left blank

10 Sterilization Liquid

Description

This chapter describes how to handle hydrogen peroxide.

WARNING

Hydrogen Peroxide.
Follow the Safety Precautions.

Description 10-2

10.1 Concentration Check 10-5

Peroxide Concentration at Machine Start-up..... 10-7

Peroxide Concentration During PRODUCTION..... 10-7

10.1.1 Hydrogen Peroxide Concentration (by weight) 10-8

10.2 Change Hydrogen Peroxide..... 10-9

Bottle Change 10-9

This page intentionally left blank

10.1 Concentration Check

This section describes how to manually check the concentration of the hydrogen peroxide.

CAUTION

Hygiene.
The equipment must be thoroughly cleaned.

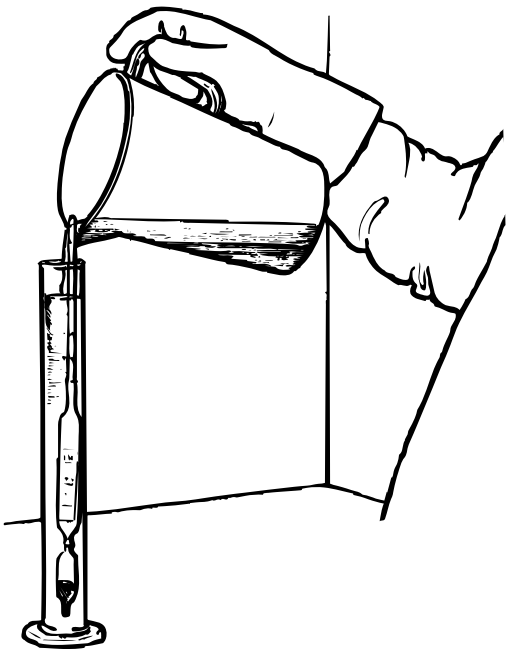

1

The following equipment is required:

- aerometer with thermometer
- graduated plastic cylinder with an inside diameter of 35 - 50 mm.

Open the valve (1) and draw approximately 250 ml of hydrogen peroxide from the tank into a clean vessel.

Pour a small amount of hydrogen peroxide into the graduated cylinder.

Lower the aerometer into the cylinder making sure that it contains enough liquid to float the aerometer.

If there are air bubbles on the aerometer, stir gently until the bubbles disappear.

Read the density at the liquid level on the aerometer and **at the same time** read the temperature.

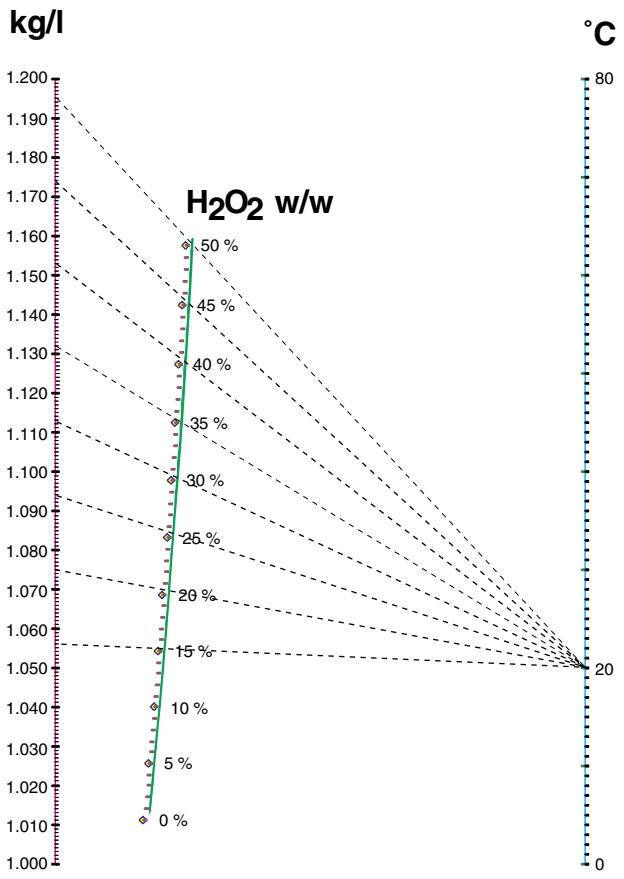

Sample nomogram

2

Evaluate the hydrogen peroxide concentration (in terms of percent by weight) from the nomogram.

With a ruler, join the density value of the sample with the temperature value to get the hydrogen peroxide concentration.

Note! Photocopying and/or resizing the nomogram may distort its accuracy. This could lead to incorrect evaluation of the hydrogen peroxide concentration.

To check the accuracy of the nomogram, refer to the following table reporting the concentration and density values calculated at 20 °C:

°C	kg/l	% w/w
20	1.056	15
20	1.075	20
20	1.094	25
20	1.113	30
20	1.132	35
20	1.153	40
20	1.174	45
20	1.195	50

3

Peroxide Concentration at Machine Start-up

Note! These values are applicable to checks made during PREPARING AFTER DAILY CARE.

If the concentration is below **32%** or above **48%**, change the hydrogen peroxide.

See 10.2 Change Hydrogen Peroxide.

If the hydrogen peroxide concentration is between **32%** and **35%**:

- repeat the check every 30 min
- if the concentration decreases, stop the machine and call a technician.

4

Peroxide Concentration During PRODUCTION

Note! These values are applicable to checks made during PRODUCTION.

If the concentration is below **30%** or above **50%**, change the hydrogen peroxide.

See 10.2 Change Hydrogen Peroxide.

If the hydrogen peroxide concentration is between **30%** and **35%**:

- repeat the check every 30 min
- if the concentration decreases, stop the machine and call a technician.

10.1.1 Hydrogen Peroxide Concentration (by weight)

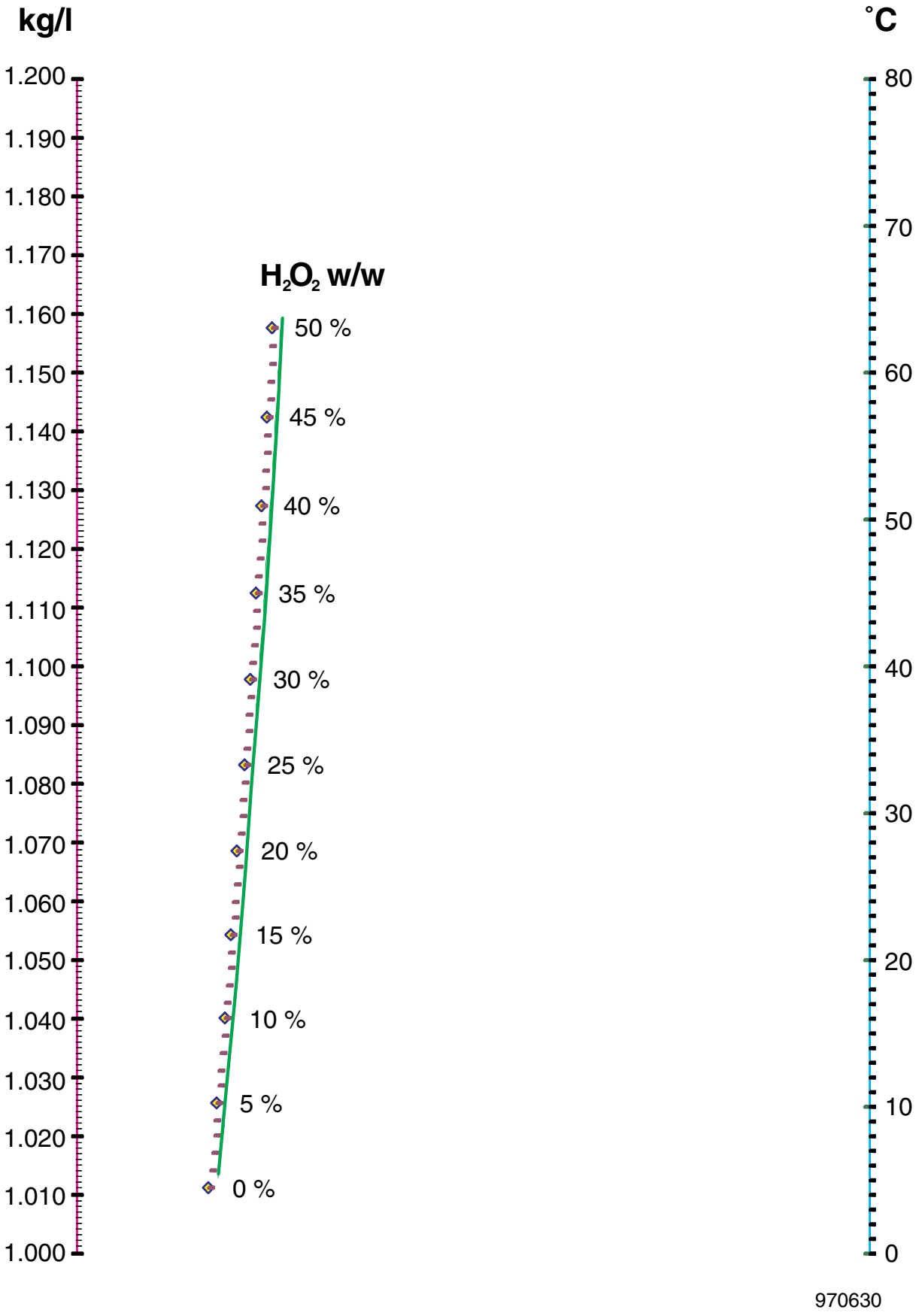

10.2 Change Hydrogen Peroxide

WARNING
Hydrogen peroxide.
Follow the Safety Precautions.

This section describes how to change the hydrogen peroxide container.

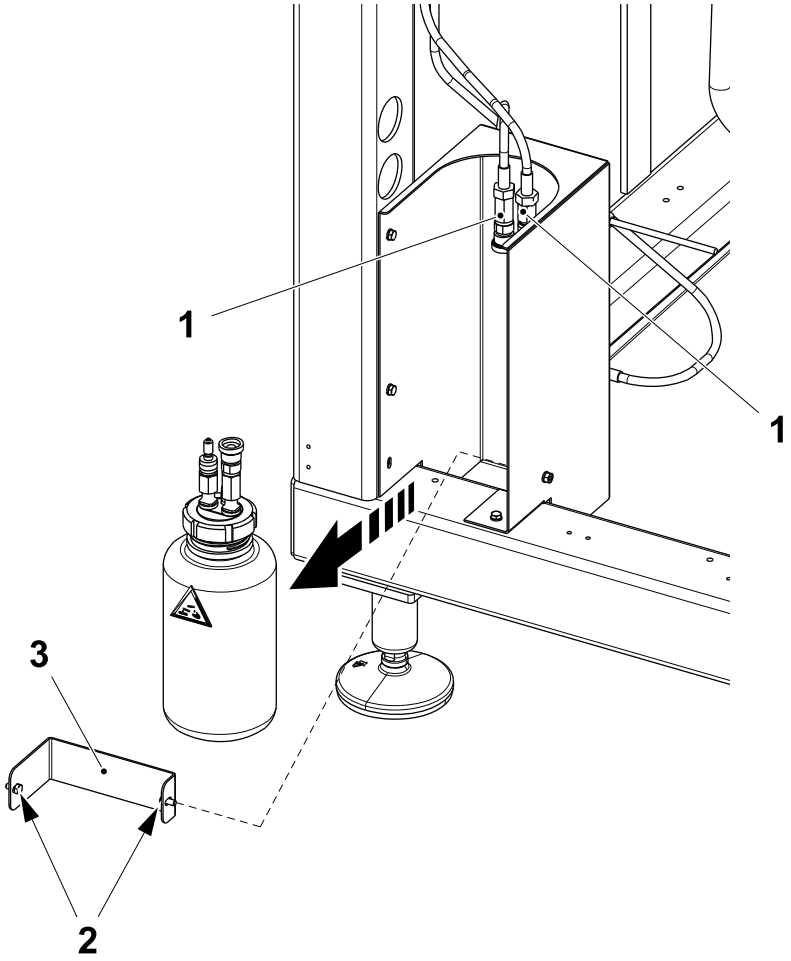

Bottle Change

1

Release the quick couplings (1) to disconnect the hydrogen peroxide bottle.

Loosen the screws (3) and release the holder (2) that secures the bottle.

Remove the bottle.

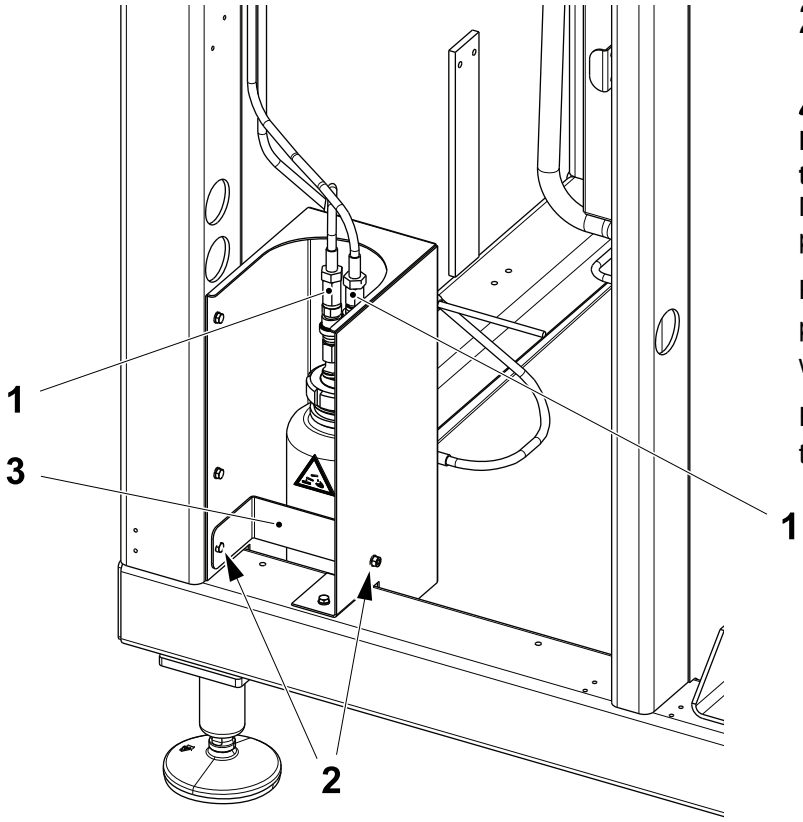

2

CAUTION

Risk of personal injury and/or damage to the equipment.

Make sure that the quick couplings (1) are properly fitted.

Place a full bottle with 35% hydrogen peroxide in the machine. Secure the bottle with the holder (3) and the screws (2).

Fit back the quick couplings (1) to connect the hydrogen peroxide bottle.

11 Technical Data

Description

This chapter provides the standard values for setting this machine and information on the recommended chemicals and lubricants to be used with this machine.

Description 11-2

11.1 Setting Values 11-5

11.1.1 Pressure Setting Values 11-5

11.1.2 Temperature Setting Values 11-6

11.1.3 Coolant Flow Values 11-7

11.1.4 Consumption Data 11-8

11.1.5 Consumables 11-8

11.1.6 Tools 11-8

11.2 Cleaning Compounds 11-9

11.2.1 Cleaning Compound Table 11-9

11.3 Lubricants 11-12

11.4 Maximum Waiting/Stop Time Recommendations 11-14

This page intentionally left blank

11.1 Setting Values

This section provides the correct setting values for this machine.

11.1.1 Pressure Setting Values

Pressure	Symbol	Value (bar)
Air spray	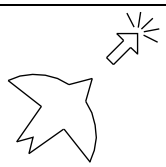	2.5
Cold water	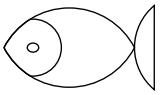	3.0 to 5.0
Flap sealing top left and right	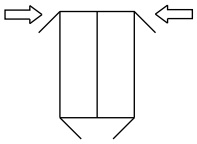	1.0 to 2.0
Flap sealing bottom left and right	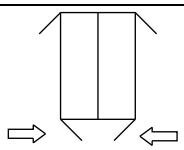	1.0 to 2.0
Air	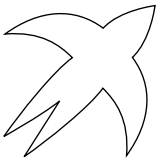	5 to 7
Warm water (red)	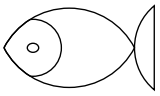	3.0 to 4.5
Main air, ASU		6 ±0.5
Pendulum roller • TB 200 B • TB 250 B • TB 200 S	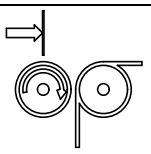	 2.0 2.0 2.0
Photocells, design correction, air	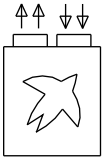	0.6

(Cont'd)

(Cont'd)

Pressure	Symbol	Value (bar)
Foaming	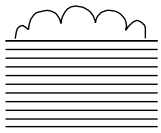	5.0
Peroxide tank filling		0.2
Cooling water system		2.0
Product pressure (dependant on product and local conditions)		0.5 to 2.5
Web tension, ASU	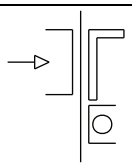	2.0
Air pressure, SA cooling		0.6

11.1.2 Temperature Setting Values

Temperature	Symbol	Process Value (° C)
Air superheater during Production		280
Cooling water (compressor) - Production		10 to 16
Cooling water		2 to 5
Flap heating, top (left and right)		(the parameter is set in the recipe and is depending on the product and the packaging material being produced)
Flap heating, bottom (left and right)		(the parameter is set in the recipe and is depending on the product and the packaging material being produced)
Heat sterilization		240
SA during Production		(the parameter is set in the recipe and depends on the product and the packaging material being produced)

(Cont'd)

(Cont'd)

Temperature	Symbol	Process Value (° C)
SA during Slow Inching		200
SA Short Stop		(the parameter is set in the recipe and is depending on the product and the packaging material being produced)
Top hygiene chamber during Production		55
Warm water (red)	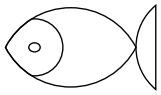	25 to 40
LS		(the parameter is set in the recipe and is depending on the product and the packaging material being produced)
LS short stop		(the parameter is set in the recipe and is depending on the product and the packaging material being produced)

11.1.3 Coolant Flow Values

Flow	Symbol	Value (litre/minute)
Cold water flow, final folder	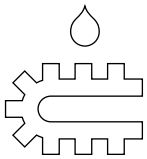	2.0
De-ionizing circuit	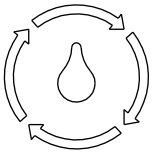	1.5
Cold water flow, hydraulic system	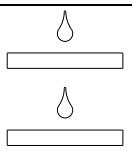	2.0

11.1.4 Consumption Data

Consumption	Unit	Value
Hydrogen peroxide	% w/w ml (during sterilization)	35 100
Detergent	l/cycle	1.8

11.1.5 Consumables

Standard Consumable Materials		
LS strip: - MHM	TP No.	8862-952-02

11.1.6 Tools

Tools		
Tool to remove packages from the FFU Wheel	TP No. 2894712-0100	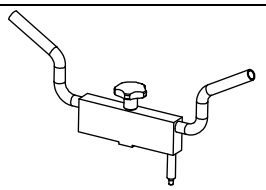
Safety cutter	TP No. 90602-0330	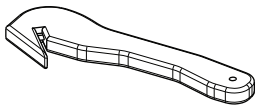

11.2 Cleaning Compounds

WARNING

Risk of explosion.

Cleaning with not recommended cleaning agents, for example agents including alcohol, could cause explosion. Use only Tetra Pak recommended cleaning agents when cleaning or disinfecting parts that can come into contact with hydrogen peroxide.

It is strongly recommended, in order to optimize the cleaning efficiency, to use water characterised by the following physicochemical parameters:

- water quality; chlorine free, drinkable water
- pH; between 7 and 8 pH units
- water hardness; between 5 and 10 °f French degrees of hardness (between 3 and 6 German degrees of hardness)
- chlorides; lower than 50 ppm
- silicates; lower than 10 ppm (in order to reduce the formation of solid deposits difficult to be removed)

11.2.1 Cleaning Compound Table

Comparable qualities from other suppliers may be selected in compliance with the technical requirements listed in the table. All cleaning compounds must comply with local legal requirements.

The supplier recommendations for concentration and temperature should be followed. When dosing the products automatically, the concentration should be checked.

(Cont'd)

(Cont'd)

Cleaning Type	TP Code		Detergent Type	Example 20101223									
				Raw Material				Formulated Products					
				Name	Max Conc w/w	Use Conc w/w	Use Temp °C (*)	Ecolab	Use Conc. w/w	Use Temp. °C (*)	Johnson Diversey	Use Conc vol/vol.	Use Temp. °C (*)
CIP	A	1	Alkali	NaOH	30%	1.50%	80	Mip CA	1.5%	80	VC 11	2.0%	80
	B	1	Acid	HNO_3	50%	1.00%	60	P3-horolith FL	1.0%	60	VA 5	1.0%	60
External Cleaning (automatic)	C	1	Alkali foam (**)					P3-Topactive LA	2.0%	20 - 40	VF 9	3.0%	20 - 40
		2	Alkali solution (***)					P3-mip FPC	2.0%	55	VK 12	1.0%	55
		3	Acid foam (****)					P3-Topax 56	2.0%	25	VF 11	2.0%	25
		4	Disinfection foam (****)					P3-Topax 990	2.0%	25	VS 1	1.0%	25
Manual Cleaning (wiping)	D	1	Alkali					P3-mip FPC	2.0%	25	VK 12	1.0%	25
Manual Disinfection (immersion)	F	3	Acid solution	Peracetic acid solution	15%	200ppm	25	Oxonia Active	0.50%	25	VT 6	0.15%	25
Manual Disinfection (spraying)	G	1	Alcoholic solution	Isopropanol			25	Spitaderm	Pure	25	VT 29	pure	25
		2	Alcoholic solution	Ethanol			25	Alcodes	Pure	25	VT 29	pure	25
		3	Acid solution	Peracetic acid solution	15%	200ppm	25	Oxonia Active	0.50%	25	VT 6	0.15%	25
Hand Disinfection	H	1						P3-Manodes gel	pure	25	H34	pure	25
PullTab Patch Sealing Plate Manual Cleaning	J	1	Solvent	Acetone CAS No 67-64-1 Technical Grade (*****)	Pure	25							

(Cont'd)

(Cont'd)

* 25 °C to the optimal ambient temperature.

** To be used on TBA/21, TBA/22, TP A3/Flex, TP A3/CompactFlex, TP A3/Speed, TB/21, TP C3/Flex.

*** To be used on TBA/8, TBA/9, TBA/19, TB/8, TB/9, TB/19.

**** To be used on TP C3/Flex

***** Acetone is a flammable solvent and the grade has to fulfil requirements for pharmaceutical use or food processing operations according to USO or NF or FCC.

11.3 Lubricants

WARNING

Risk of personal injury!

Certain lubricants can cause injury if they come into contact with the eyes, skin, mucous membranes, or clothing. Always follow the manufacturer's instructions for handling chemical products.

The table below lists the lubricants that can be used for this equipment with their respective designations.

Lubricant specifications may be ordered from:

Tetra Pak Technical Service - Parts Supply Chain, Ruben Rausings gata, SE-221 86 LUND, Sweden

Lubricant Description	Tetra Pak Part No.	Supplier	Product Designation	Lube Type
Gear oil	344413-0000 Reference for purchasing: 344413-0766 (20 l) 344413-0335 (200 l)	Klüber	Klüberoil 4 UH1 220-N	H1 PAO base
	344402-0000 Reference for purchasing: 344402-0766 (20 l) 344402-0335 (200 l)	Klüber	Klübersynth UH1 6-220	H1 PAG base
	344412-0000 Reference for purchasing: 344412-0766 (20 l) 344412-0335 (200 l)	Klüber	Klüberoil 4 UH1 150-N	H1 PAO base
	344401-0000 Reference for purchasing: 344401-0766 (20 l) 344401-0335 (200 l)	Klüber	Klübersynth UH1 6-150	H1 PAG base
Hydraulic oil	344390-0000 Reference for purchasing: 344390-0766 (20 l) 344390-0335 (200 l)	Klüber	Klüberfood 4 NH1-32	H1 PAO base
Grease	344408-0000 Reference for purchasing: 344408-0221 (50 g) 344408-0591 (400 g) 344408-0037 (1 Kg) 344408-0177 (25 Kg)	Klüber	Klübersynth UH1 64-62	H1
Central lubrication oil	344414-0000 Reference for purchasing: 344414-0764 (5 l) 344414-0766 (20 l) 344414-0335 (200 l)	Klüber	Klüberoil 4 UH1 320-N	H1 PAO base
Gearbox oil	344403-0000 Reference for purchasing: 344403-0766 (20 l) 344403-0335 (200 l)	Klüber	Klübersynth UH1 6-320	H1 PAG base
Silicone grease	90296-0009	Dow Corning	Dow Corning 7	H1

(Cont'd)

(Cont'd)

Lubricant Description	Tetra Pak Part No.	Supplier	Product Designation	Lube Type
PTFE grease	90296-0091	PINCO	Fluolub 210	H1
Synthetic grease	344406-0000 Reference for purchasing: 344406-0037 (1 kg) 344406-0177 (25 kg)	Klüber	Klübersynth UH1 14-1600	H1
Synthetic lubricating grease	344469-7277	Shell	Cassida HDS2	H1
Hydraulic fluid	344463-3201	Shell	Cassida Fluid HF32	H1 PAO base
Lubrication oil	344415-0000 Reference for purchasing: 344415-0766 (20 l) 344415-0335 (200 l)	Klüber	Klüberoil 4 UH1 460-N	H1 PAO base
	344404-0000 Reference for purchasing: 344404-0764 (5 l) 344404-0766 (20 l) 344404-0335 (200 l)	Klüber	Klübersynth UH1 6-460	H1 PAG base
Grease	344417-0000 Reference for purchasing: 344417-0213 (60 g) 344417-0594 (500 g)	Klüber	Klüberpaste UH1 84-201	H1
Food grade grease	90600-8108	OKS	Grease OKS 1110 NSF H1	H1
Grease	344397-0000 Reference for purchasing: 344397-0287 (100 g) 344397-0037 (1 Kg)	Klüber	Grease Barrierta L55/2 NSF H1	H1
Synthetic lubricating grease	344460-0000 Reference for purchasing: 344460-0101 (100 g) 344460-0702 (700 g) 344460-1003 (1 Kg)	Rocol	Shappire Endure	H1
Grease	344407-0000 Reference for purchasing: 344407-0285 (45 g) 344407-0591 (400 g) 344407-0037 (1 Kg) 344407-0177 (25 Kg)	Klüber	Klübersynth UH1 14-151	H1
Dry lubricant with PTFE	90606-3683 Reference for purchasing: RM 2000T (5 l)	Specialist Lubricant Ltd	Food grade lubricant with PTFE	H1

11.4 Maximum Waiting/Stop Time Recommendations

These recommendations are only valid for the production of plain white milk and plain fruit juice. The maximum duration of stops and waiting times for products other than plain white milk and plain fruit juice must be evaluated by each customer case by case.

The duration of stops and waiting times should, in all cases, not exceed the recommendations provided in this table.

Note! The duration of the PRODUCTION phase in a food processing and packaging plant is highly product dependant and any limitations are generally related to phenomena affecting the thermal processing equipment, e.g. fouling of heat exchangers. The duration of the Production phase is decided by each customer according to product type, best practice, risk management, economical considerations, etc. As a general indication, Tetra Pak recommends not to exceed a period of 24 hours.

Machine type*	**1: Maximum waiting time between End of Production and CIP start**	**2: Maximum waiting time between end of CIP and start of CIP Drying**	**3: Maximum waiting time between end of CIP and start of Disinfection**	**4: Maximum idle time between end of CIP and restart of operations**	**5: Maximum stop time during Production****	**6: Maximum duration of the Production phase**
Non-platform**	2 hours	n/a	TB machines: 5 hours TBA machines: n/a	36 hours	2 hours	Product dependent. Tetra Pak recommendation: 24 hours.
TB/21		n/a	5 hours			
TBA/21		5 hours***	n/a			
TBA/22		5 hours***	n/a			
C3/Flex E3/CompactFlex		n/a	5 hours			
A3/Flex		5 hours	n/a			
A3/CompactFlex		5 hours	n/a			
A3/Speed		5 hours	n/			

* Models not listed here are not covered by these recommendations

** TBA/3, TB-TBA/8, TB-TBA/9, TB-TBA/19 and earlier machine systems

*** Machines with PLC program updated to include CIP Drying

**** Jaw inching every 10 minutes recommended for Chilled/XH machines. Sterile jaw inching every 20 minutes recommended for Aseptic machines.

Tetra Pak®

Label for 40 mm binder ***Note!*** *This page is generated* ***automatically.***

Tetra Pak® E3/CompactFlex
641650-0100 Issue 2014-10
Doc. No. OM-3353934-0102

Tetra Pak® E3/CompactFlex
641650-0100 Issue 2014-10
Doc. No. OM-3353934-0102

Tetra Pak® E3/CompactFlex 1(2)
641650-0100 Issue 2014-10
Doc. No. OM-3353934-0102

Tetra Pak® E3/CompactFlex 2(2)
641650-0100 Issue 2014-10
Doc. No. OM-3353934-0102

Tetra Pak® E3/CompactFlex 1(2)
641650-0100 Issue 2014-10
Doc. No. OM-3353934-0102

Tetra Pak® E3/CompactFlex 2(2)
641650-0100 Issue 2014-10
Doc. No. OM-3353934-0102

Tetra Pak® E3/CompactFlex
641650-0100 Issue 2014-10
Doc. No. OM-3353934-0102

Tetra Pak® E3/CompactFlex1(3)
641650-0100 Issue 2014-10
Doc. No. OM-3353934-0102

Tetra Pak® E3/CompactFlex
641650-0100 Issue 2014-10
Doc. No. OM-3353934-0102

Tetra Pak® E3/CompactFlex 2(3)
641650-0100 Issue 2014-10
Doc. No. OM-3353934-0102

Tetra Pak® E3/CompactFlex
641650-0100 Issue 2014-10
Doc. No. OM-3353934-0102

Tetra Pak® E3/CompactFlex 3(3)
641650-0100 Issue 2014-10
Doc. No. OM-3353934-0102

Tetra Pak® E3/CompactFlex
641650-0100 Issue 2014-10
Doc. No. OM-3353934-0102

Tetra Pak® E3/CompactFlex3(3)
641650-0100 Issue 2014-10
Doc. No. OM-3353934-0102

Label for 55 mm binder ***Note!*** *This page is generated* ***automatically.***

Tetra Pak® E3/CompactFlex
641650-0100 Issue 2014-10
Doc. No. OM-3353934-0102

Tetra Pak® E3/CompactFlex 1(2)
641650-0100 Issue 2014-10
Doc. No. OM-3353934-0102

Tetra Pak® E3/CompactFlex
641650-0100 Issue 2014-10
Doc. No. OM-3353934-0102

Tetra Pak® E3/CompactFlex 2(2)
641650-0100 Issue 2014-10
Doc. No. OM-3353934-0102

Tetra Pak® E3/CompactFlex
641650-0100 Issue 2014-10
Doc. No. OM-3353934-0102

Tetra Pak® E3/CompactFlex 1(3)
641650-0100 Issue 2014-10
Doc. No. OM-3353934-0102

Tetra Pak® E3/CompactFlex
641650-0100 Issue 2014-10
Doc. No. OM-3353934-0102

Tetra Pak® E3/CompactFlex 2(3)
641650-0100 Issue 2014-10
Doc. No. OM-3353934-0102

Tetra Pak® E3/CompactFlex
641650-0100 Issue 2014-10
Doc. No. OM-3353934-0102

Tetra Pak® E3/CompactFlex 3(3)
641650-0100 Issue 2014-10
Doc. No. OM-3353934-0102

Tetra Pak® E3/CompactFlex
641650-0100 Issue 2014-10
Doc. No. OM-3353934-0102

Tetra Pak® E3/CompactFlex 3(3)
641650-0100 Issue 2014-10
Doc. No. OM-3353934-0102

Tetra Pak® E3/CompactFlex
641650-0100 Issue 2014-10
Doc. No. OM-3353934-0102

Tetra Pak® E3/CompactFlex
641650-0100 Issue 2014-10
Doc. No. OM-3353934-0102

Tetra Pak® E3/CompactFlex
641650-0100 Issue 2014-10
Doc. No. OM-3353934-0102

Tetra Pak® E3/CompactFlex 1(3)
641650-0100 Issue 2014-10
Doc. No. OM-3353934-0102

Tetra Pak® E3/CompactFlex 1(2)
641650-0100 Issue 2014-10
Doc. No. OM-3353934-0102

Tetra Pak® E3/CompactFlex 2(3)
641650-0100 Issue 2014-10
Doc. No. OM-3353934-0102

Tetra Pak® E3/CompactFlex 2(2)

641650-0100 Issue 2014-10

Doc. No. OM-3353934-0102

Tetra Pak® E3/CompactFlex 3(3)

641650-0100 Issue 2014-10

Doc. No. OM-3353934-0102