SPC

Spare Parts Catalogue

Tetra Pak A3/CompactFlex

641550-0200

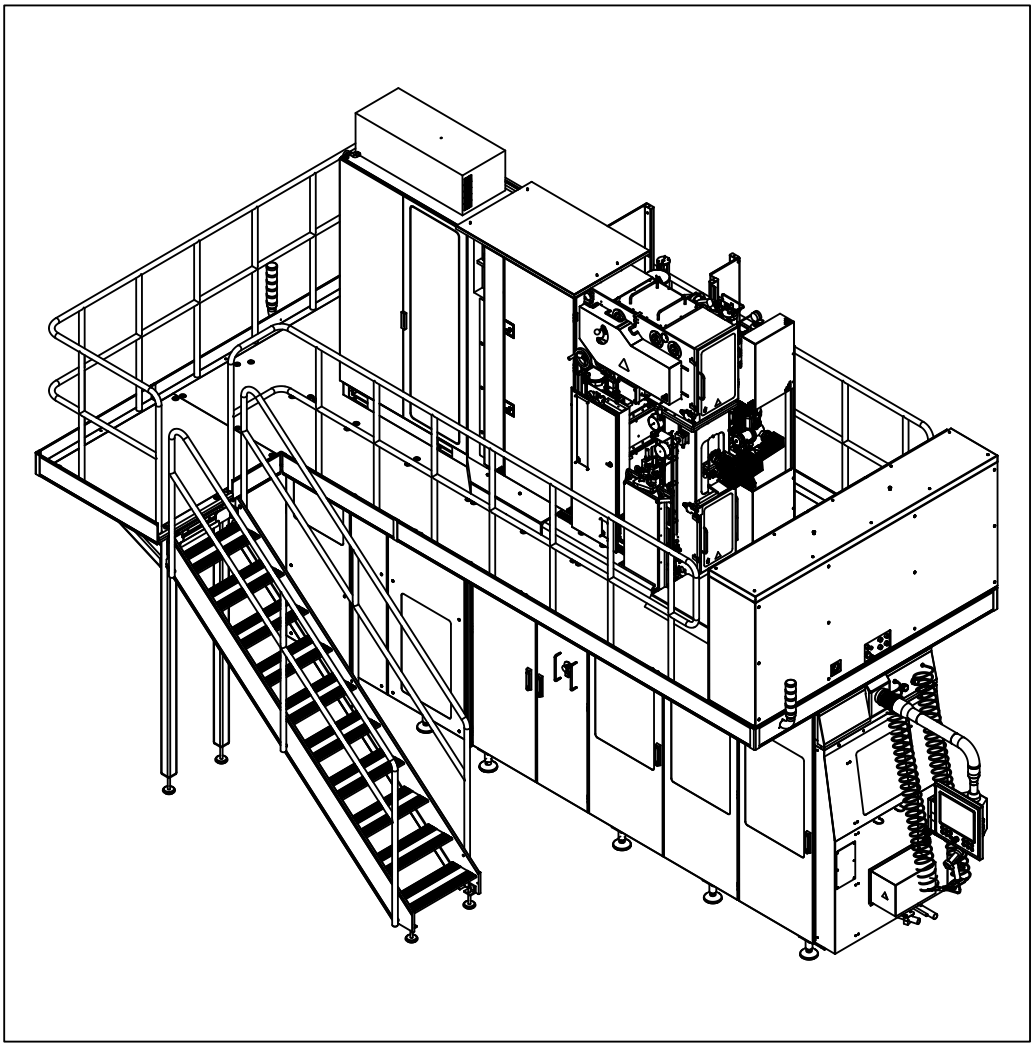

Tetra Pak

Doc. No: SPC-3044481-0117

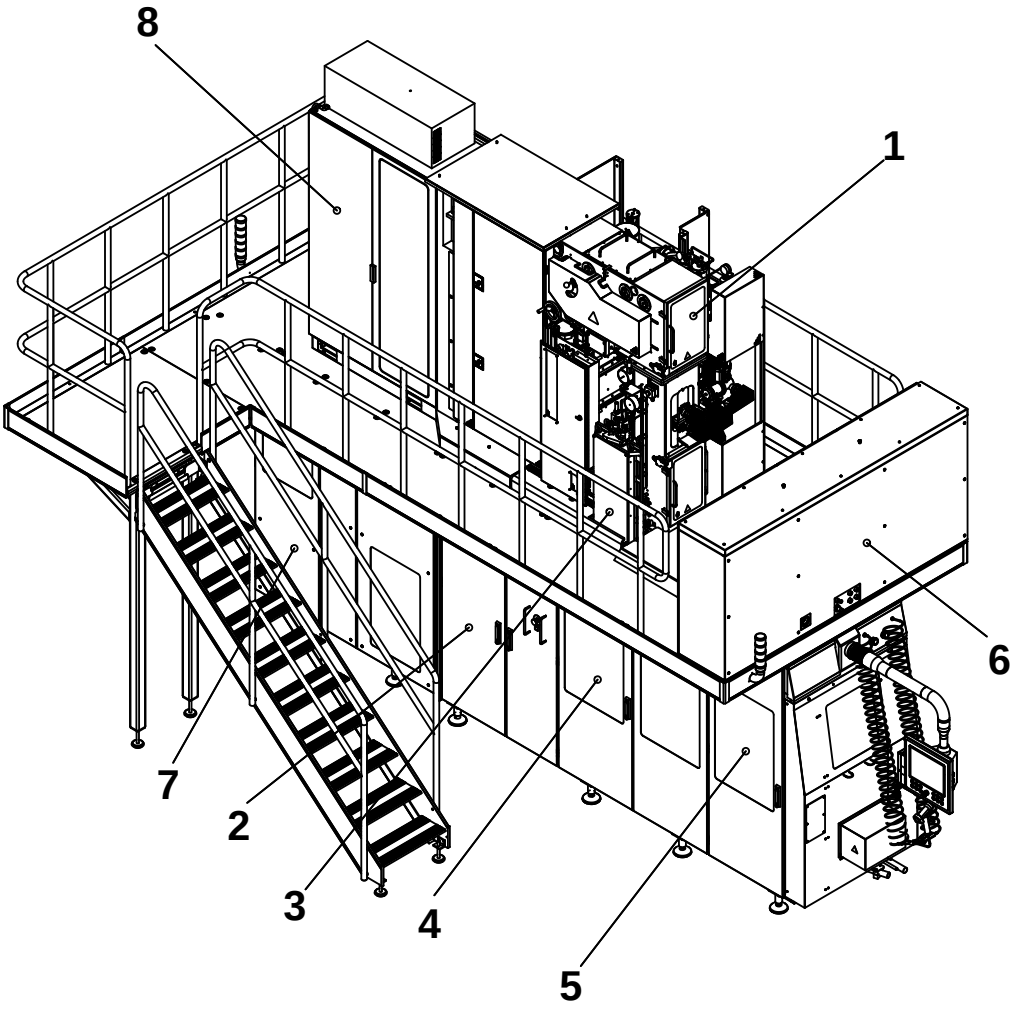

The position numbers in the illustration correspond with the chapter numbers listed on the next page.

Copyright © 2012 Tetra Pak Group

All rights reserved. No part of this document may be reproduced or copied in any form or by any means without written permission from Tetra Pak Packaging Solutions .

Tetra Pak and all Tetra Pak products are trademarks belonging to the Tetra Pak Group.

The content of this manual is in accordance with the design and construction of the machine or equipment at the time of publishing. Tetra Pak reserves the right to introduce design modifications without prior notice.

This document was produced by:

Tetra Pak Packaging Solutions
Via Delfini 1
41123 Modena
ITALY

Additional copies can be ordered from Tetra Pak. When ordering additional copies, always provide the document number.

Doc. No. SPC-3044481-0117

Issue 2012-03

This document is valid for:

Series No/Machine No Sign.

SPC

Spare Parts Catalogue

Tetra Pak A3/CompactFlex
641550-0200

i Introduction
1 Superstructure
2 Machine Body
3 Drive Unit
4 Jaw System
5 Final Folder
6 Service Unit
7 Automatic Splicing Unit
8 Electrical Cabinet
9 Regular Accessories
10 Electric Equipment
11 Optional Accessories
ii Part Number Index
iii Ref. Des. Parts Index

Machine or equipment configurations that this catalogue is valid for are described on the next page.

Doc. No: SPC-3044481-0117

Issue 2012-03

Tetra Pak

Tetra Pak Packaging Solutions

Valid for:

Name	Drawing Specification and Development Step	Additional Information
Tetra Pak A3/Compact Flex	641550-0200	Valid from T-order: 21216/00231

Update Log for Doc. No. SPC-3044481-0117

This table shows all changes made to this catalogue, including installed rebuilding kits, added or removed pages.

Date	Installed Kit	Added Pages (Doc. No.)	Removed Pages	Signature

Date	Installed Kit	Added Pages (Doc. No.)	Removed Pages	Signature

i Introduction

en About the Introduction Chapter
This chapter contains basic information about this catalogue and related Tetra Pak equipment.

bg За уводната глава
Тази глава съдържа основна информация за този каталог и приложимото Tetra Pak оборудване.

cs O kapitole Úvod
Tato kapitola obsahuje základní informace o této příručce a souvisejícím zařízení Tetra Pak.

da Om indledningen
Kapitlet indeholder grundlæggende oplysninger om dette katalog og tilhørende Tetra Pak-udstyr.

de Über das Einleitungskapitel
Diese Kapitel enthält grundlegende Informationen über diesen Katalog und die zugehörige Tetra Pak-Ausrüstung.

el Σχετικά με το Κεφάλαιο 'Εισαγωγή'
Αυτό το κεφάλαιο περιέχει βασικές πληροφορίες για τον παρόντα κατάλογο και τον σχετικό εξοπλισμό της Tetra Pak.

es Acerca del capítulo Introducción
Este capítulo contiene información básica sobre este catálogo y el equipo Tetra Pak relacionado.

et Sissejuhatava peatüki kohta
See peatükk sisaldab teavet käesoleva kataloogi ja sellega seonduva Tetra Paki seadme kohta.

fi Tietoja Johdanto-luvusta
Tässä luvussa on perustietoja tästä luettelosta ja Tetra Pak -laitteesta.

fr À propos du chapitre Introduction
Ce chapitre contient les informations de base à propos de ce catalogue et de l'équipement Tetra Pak concerné.

hu A Bevezetés fejezetről
Ez a fejezet alapvető információkat tartalmaz a katalógusról és a hozzá tartozó Tetra Pak berendezésről.

is Um inngangskaflann
Þessi kafli inniheldur grundvallarupplýsingar um þennan vörulista og tengdan Tetra Pak búnað.

it Informazioni sul capitolo Introduzione
Questo capitolo contiene informazioni generali sul presente catalogo e sulla relativa macchina Tetra Pak.

lt Apie įvadinį skyrių
Šiame skyriuje pateikta pagrindinė informacija apie šį katalogą ir su juo susijusią "Tetra Pak" įrangą.

lv Par Ievada nodaļu
Šī nodaļa ietver galveno informāciju par šo katalogu un saistītajām Tetra Pak iekārtām.

nl Over de inleiding
Dit hoofdstuk bevat basisinformatie omtrent deze catalogus en aanverwante Tetra Pak-installatie.

no Om kapitlet Introduksjon
Dette kapitlet inneholder grunnleggende informasjon om denne katalogen og relatert Tetra Pak-ustyr.

pl Informacje na temat rozdziału wprowadzającego
Rozdział wprowadzający zawiera podstawowe informacje dotyczące niniejszego katalogu i związanej z nim maszyny Tetra Pak.

pt Acerca do Capítulo de Introdução
Este capítulo contém informações básicas sobre este catálogo e os equipamentos relacionados da Tetra Pak.

ro Despre capitolul introductiv
Acest capitol conține informații de bază despre acest catalog şi despre echipamentul Tetra Pak corelat.

sk O kapitole Úvod
Táto kapitola obsahuje základné informácie o tomto návode a informácie súvisiace so zariadením Tetra Pak.

sl O uvodnem poglavju
To poglavje vsebuje osnovne informacije o tem katalogu in opremi Tetra Pak.

sv Om inledningskapitlet
Det här kapitlet innehåller grundläggande information om katalogen och Tetra Pak-utrustningen.

Manual Information

Illustrations . . . . . i - 7

English Text . . . . . i - 9

Информация за ръководството

Илюстрации . . . . . i - 7

Текст на български език . . . . . i - 15

Informace o příručce

Obrázky . . . . . i - 7

Český text . . . . . i - 21

Oplysninger om vejledninger

Illustrationer . . . . . i - 7

Dansk tekst . . . . . i - 27

Handbuch-Informationen

Abbildungen . . . . . i - 7

Deutscher Text . . . . . i - 33

Πληροφορίες εγχειριδίου

Εικόνες . . . . . i - 7

Ελληνικό Κείμενο . . . . . i - 39

Información del manual

Ilustraciones . . . . . i - 7

Texto en español . . . . . i - 45

Manuaali informatsioon

Joonised . . . . . i - 7

Eestikeelne tekst . . . . . i - 51

Tiedot käsikirjasta

Kuvat . . . . . i - 7

Suomenkielinen teksti . . . . . i - 57

Information sur le manuel

Illustrations . . . . . i - 7

Texte français . . . . . i - 63

Kézikönyv információ

Ábrák . . . . . i - 7

Magyar szöveg . . . . . i - 69

Handbókaupplýsingar

Skýringarmyndir . . . . . i - 7

Íslenskur texti . . . . . i - 75

Informazioni sul manuale

Figure . . . . . i - 7

Testo in italiano . . . . . i - 81

Vadovo informacija

Paveikslėliai . . . . . i - 7

Lietuviškas tekstas . . . . . i - 87

Informācija par instrukciju

Ilustrācijas . . . . . i - 7

Teksts latviešu valodā . . . . . i - 93

Handboekinformatie

Afbeeldingen . . . . . i - 7

Nederlands tekst . . . . . i - 99

Informasjon om manualen

Illustrasjoner . . . . . i - 7

Norsk tekst . . . . . i - 105

Informacje na temat instrukcji

Rysunki . . . . . i - 7

Tekst polski . . . . . i - 111

Informação do Manual

Ilustrações . . . . . i - 7

Texto em português . . . . . i - 117

Informațiile de manual

Ilustrații . . . . . i - 7

Text în limba română . . . . . i - 123

Informácie o príručke

Ilustrácie . . . . . i - 7

Slovenský text . . . . . i - 129

Informacije o navodilu

Slike . . . . . i - 7

Slovensko besedilo . . . . . i - 135

Information om handboken

Bilder . . . . . i - 7

Svensk text . . . . . i - 141

This page intentionally left blank

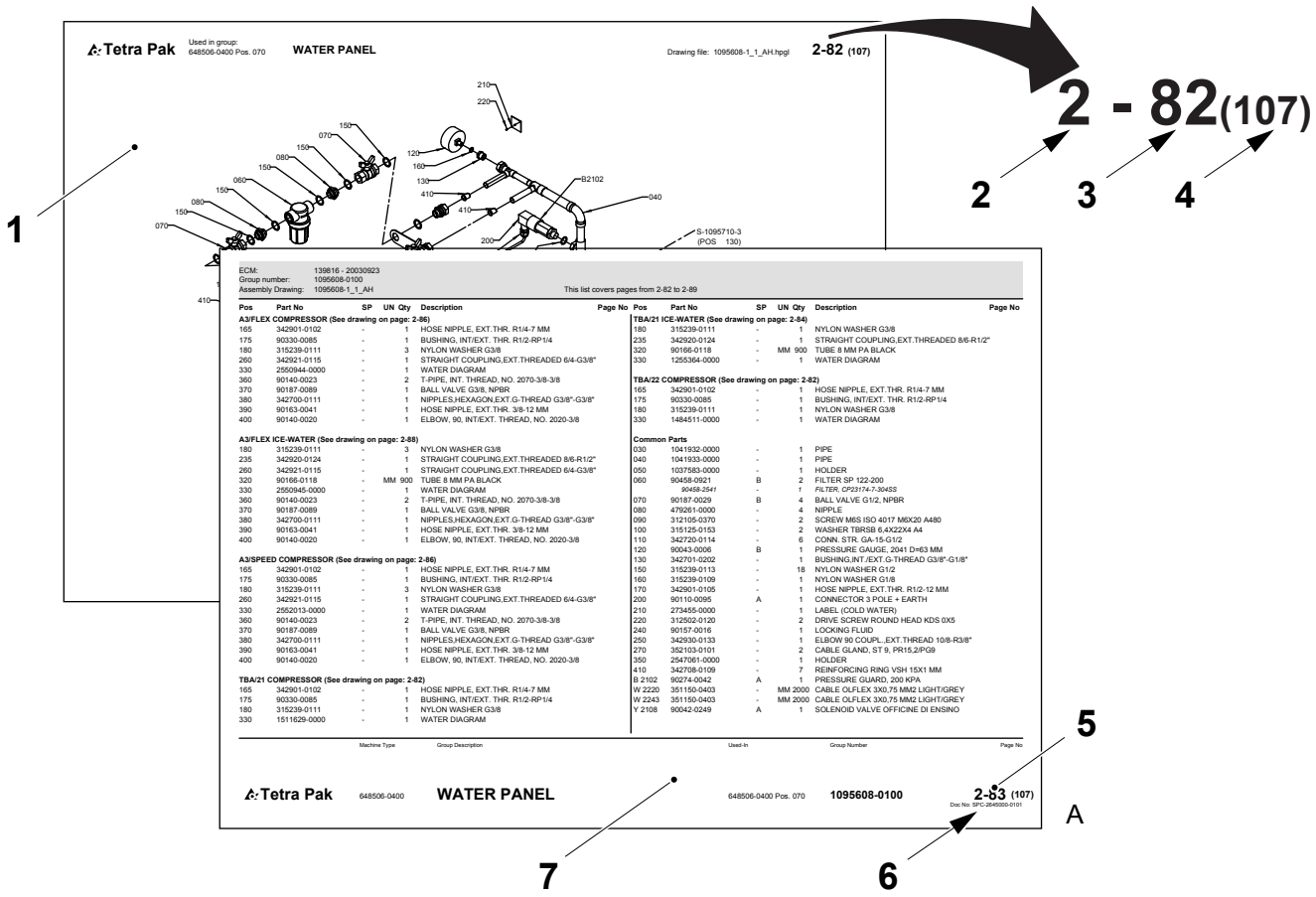
Tetra Pak
Used in group:
648506-0400 Pos. 070
WATER PANEL
Drawing file: 1095608-1_1_AH.hpgl
2-82 (107)
2 - 82(107)
1
2
3
4
5
6
7
A
ECM: 139816 - 20030923
Group number: 1095608-0100
Assembly Drawing: 1095608-1_1_AH
This list covers pages from 2-82 to 2-89
Tetra Pak 648506-0400 WATER PANEL 648506-0400 Pos. 070 1095608-0100 2-83 (107)

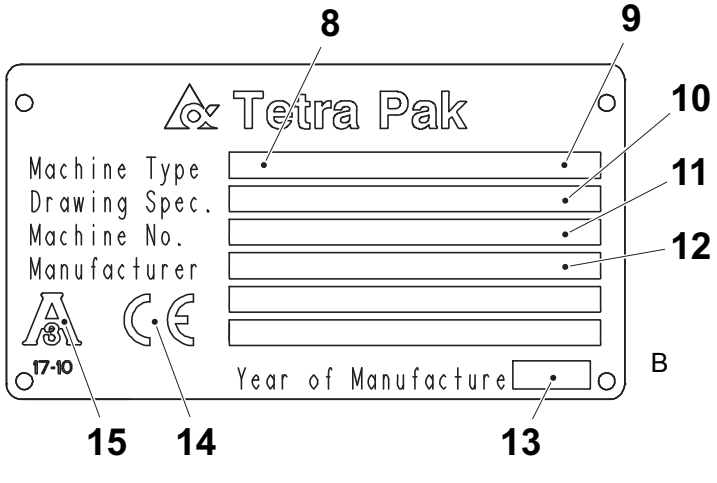
Tetra Pak
Machine Type
Drawing Spec.
Machine No.
Manufacturer
17-10
Year of Manufacture
8
9
10
11
12
13
14
15
B

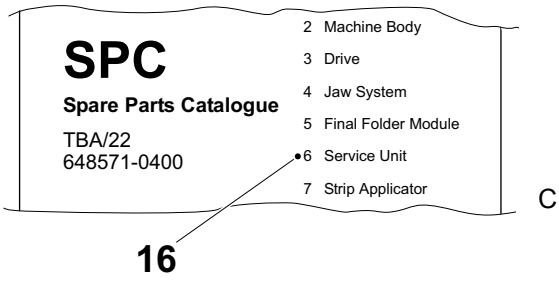
SPC
Spare Parts Catalogue
TBA/22
648571-0400
2 Machine Body
3 Drive
4 Jaw System
5 Final Folder Module
6 Service Unit
7 Strip Applicator
16
C

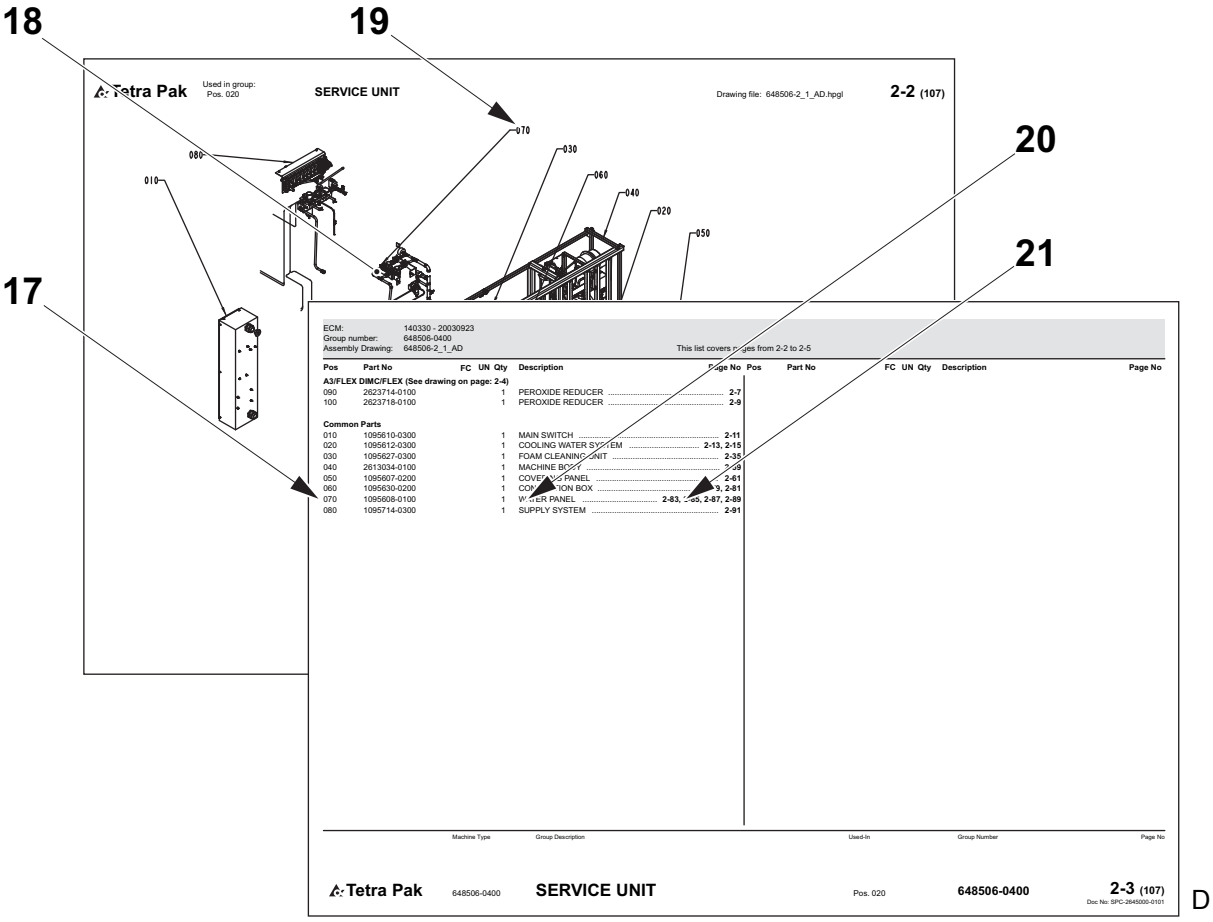
18
19
20
21
17
Tetra Pak
Used in group:
Pos. 020
SERVICE UNIT
Drawing file: 648506-2_1_AD.hpgl
2-2 (107)
070
030
060
040
020
050
080
010
ECM: 140330 - 20030923
Group number: 648506-0400
Assembly Drawing: 648506-2_1_AD
This list covers pages from 2-2 to 2-5
Pos Part No FC UN Qty Description Page No
A3/FLEX DIMC/FLEX (See drawing on page: 2-4)
090 2623714-0100 1 PEROXIDE REDUCER 2-7
100 2623718-0100 1 PEROXIDE REDUCER 2-9
Common Parts
010 1095610-0300 1 MAIN SWITCH 2-11
020 1095612-0300 1 COOLING WATER SYSTEM 2-13, 2-15
030 1095627-0300 1 FOAM CLEANING UNIT 2-35
040 2613034-0100 1 MACHINE BODY 2-39
050 1095607-0200 1 COVER SIDE PANEL 2-61
060 1095630-0200 1 CONNECTION BOX 2-81
070 1095608-0100 1 WATER PANEL 2-83, 2-85, 2-87, 2-89
080 1095714-0300 1 SUPPLY SYSTEM 2-91
Pos Part No FC UN Qty Description Page No
Machine Type
Group Description
Used-In
Group Number
Page No
Tetra Pak
648506-0400
SERVICE UNIT
Pos. 020
648506-0400
2-3 (107)
Doc No: SPC-2645000-0101
D

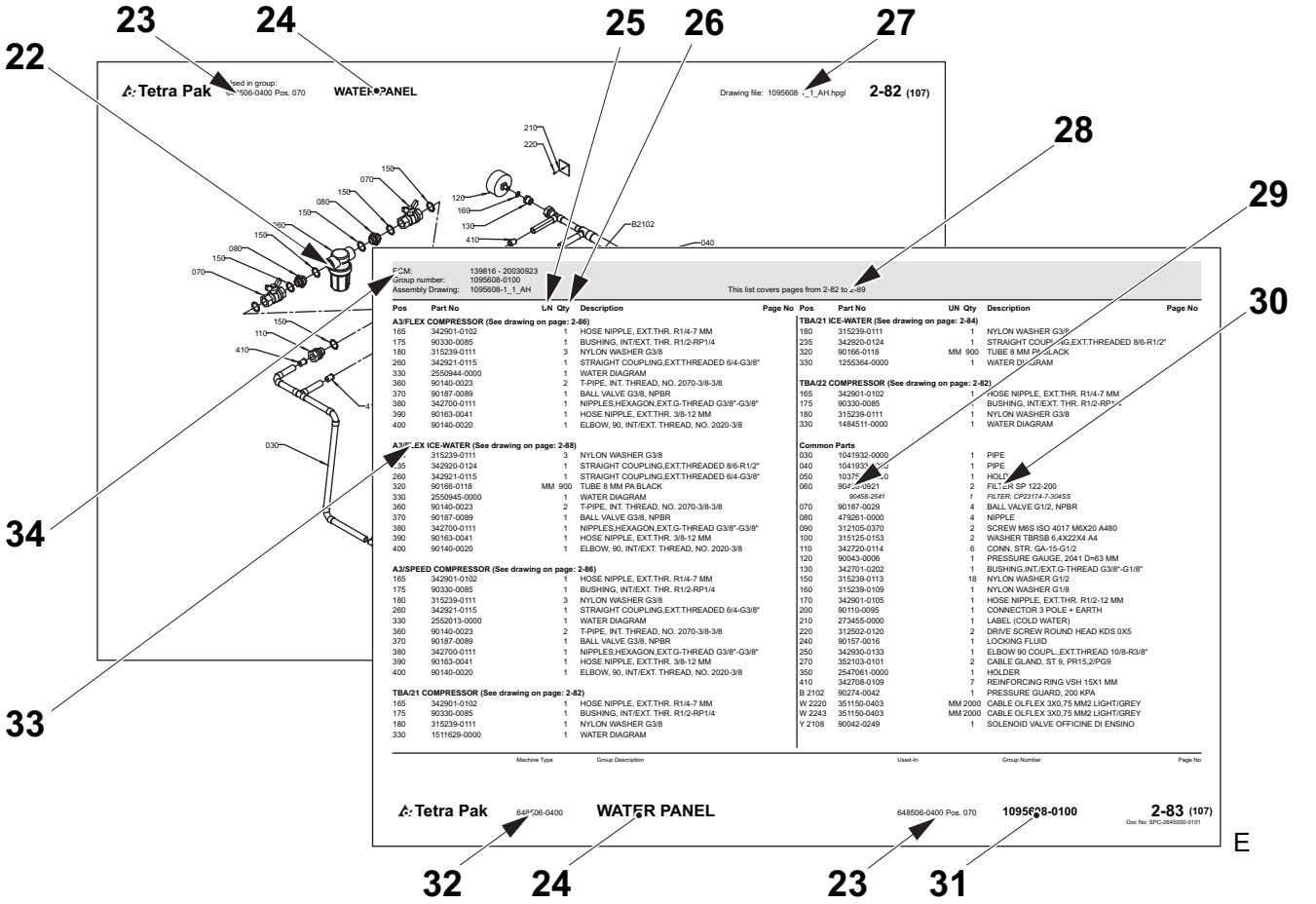
22
23
24
25
26
27
28
29
30
34
33
Tetra Pak
Used in group:
506-0400 Pos. 070
WATER PANEL
Drawing file: 1095608-_1_AH.hpgl
2-82 (107)
210
220
150
070
080
150
160
150
080
150
070
120
169
130
410
B2102
040
150
110
410
030
ECM: 139816 - 20030923
Group number: 1095608-0100
Assembly Drawing: 1095608-1_1_AH
This list covers pages from 2-82 to 2-89
Pos Part No UN Qty Description Page No
A3/FLEX COMPRESSOR (See drawing on page: 2-86)
165 342901-0102 1 HOSE NIPPLE, EXT.THR. R1/4-7 MM
175 90330-0085 1 BUSHING, INT/EXT. THR. R1/2-RP1/4
180 315239-0111 3 NYLON WASHER G3/8
260 342921-0115 1 STRAIGHT COUPLING,EXT.THREADED 6/4-G3/8"
330 2550944-0000 1 WATER DIAGRAM
360 90140-0023 2 T-PIPE, INT. THREAD, NO. 2070-3/8-3/8
370 90187-0089 1 BALL VALVE G3/8, NPBR
380 342700-0111 1 NIPPLES,HEXAGON,EXT.G-THREAD G3/8"-G3/8"
390 90163-0041 1 HOSE NIPPLE, EXT.THR. 3/8-12 MM
400 90140-0020 1 ELBOW, 90, INT/EXT. THREAD, NO. 2020-3/8
A3/FLEX ICE-WATER (See drawing on page: 2-88)
235 315239-0111 3 NYLON WASHER G3/8
240 342920-0124 1 STRAIGHT COUPLING,EXT.THREADED 8/6-R1/2"
260 342921-0115 1 STRAIGHT COUPLING,EXT.THREADED 6/4-G3/8"
320 90166-0118 MM 900 TUBE 8 MM PA BLACK
330 2550945-0000 1 WATER DIAGRAM
360 90140-0023 2 T-PIPE, INT. THREAD, NO. 2070-3/8-3/8
370 90187-0089 1 BALL VALVE G3/8, NPBR
380 342700-0111 1 NIPPLES,HEXAGON,EXT.G-THREAD G3/8"-G3/8"
390 90163-0041 1 HOSE NIPPLE, EXT.THR. 3/8-12 MM
400 90140-0020 1 ELBOW, 90, INT/EXT. THREAD, NO. 2020-3/8
A3/SPEED COMPRESSOR (See drawing on page: 2-86)
165 342901-0102 1 HOSE NIPPLE, EXT.THR. R1/4-7 MM
175 90330-0085 1 BUSHING, INT/EXT. THR. R1/2-RP1/4
180 315239-0111 3 NYLON WASHER G3/8
260 342921-0115 1 STRAIGHT COUPLING,EXT.THREADED 6/4-G3/8"
330 2552013-0000 1 WATER DIAGRAM
360 90140-0023 2 T-PIPE, INT. THREAD, NO. 2070-3/8-3/8
370 90187-0089 1 BALL VALVE G3/8, NPBR
380 342700-0111 1 NIPPLES,HEXAGON,EXT.G-THREAD G3/8"-G3/8"
390 90163-0041 1 HOSE NIPPLE, EXT.THR. 3/8-12 MM
400 90140-0020 1 ELBOW, 90, INT/EXT. THREAD, NO. 2020-3/8
TBA/21 COMPRESSOR (See drawing on page: 2-82)
165 342901-0102 1 HOSE NIPPLE, EXT.THR. R1/4-7 MM
175 90330-0085 1 BUSHING, INT/EXT. THR. R1/2-RP1/4
180 315239-0111 1 NYLON WASHER G3/8
330 1511629-0000 1 WATER DIAGRAM
TBA/21 ICE-WATER (See drawing on page: 2-84)
180 315239-0111 1 NYLON WASHER G3/8
235 342920-0124 1 STRAIGHT COUPLING,EXT.THREADED 8/6-R1/2"
320 90166-0118 MM 900 TUBE 8 MM PA BLACK
330 1255364-0000 1 WATER DIAGRAM
TBA/22 COMPRESSOR (See drawing on page: 2-82)
165 342901-0102 1 HOSE NIPPLE, EXT.THR. R1/4-7 MM
175 90330-0085 1 BUSHING, INT/EXT. THR. R1/2-RP1/4
180 315239-0111 1 NYLON WASHER G3/8
330 148451 1-0000 1 WATER DIAGRAM
Common Parts
030 1041932-0000 1 PIPE
040 1041933-0000 1 PIPE
050 1037[illegible]-0000 1 HOLDER
060 90458-0921 2 FILTER SP 122-200
90458-2541 1 FILTER, CP23174-7-30ASS
070 90187-0029 4 BALL VALVE G1/2, NPBR
080 479261-0000 4 NIPPLE
090 312105-0370 2 SCREW M6S ISO 4017 M6X20 A480
100 315125-0153 2 WASHER TBRSB 6.4X22X4 A4
110 342720-0114 6 CONN. STR. GA-15-G1/2
120 90043-0006 1 PRESSURE GAUGE, 2041 D=63 MM
130 342701-0202 1 BUSHING,INT./EXT.G-THREAD G3/8"-G1/8"
150 315239-0113 18 NYLON WASHER G1/2
160 315239-0109 1 NYLON WASHER G1/8
170 342901-0105 1 HOSE NIPPLE, EXT.THR. R1/2-12 MM
200 90110-0095 1 CONNECTOR 3 POLE + EARTH
210 273455-0000 1 LABEL (COLD WATER)
220 312502-0120 2 DRIVE SCREW ROUND HEAD KDS 0X5
240 90157-0016 1 LOCKING FLUID
250 342930-0133 1 ELBOW 90 COUPL.,EXT.THREAD 10/8-R3/8"
270 352103-0101 2 CABLE GLAND, ST 9, PR15,2/PG9
350 2547061-0000 1 HOLDER
410 342708-0109 7 REINFORCING RING VSH 15X1 MM
B 2102 90274-0042 1 PRESSURE GUARD, 200 KPA
W 2220 351150-0403 MM 2000 CABLE OLFLEX 3X0,75 MM2 LIGHT/GREY
W 2243 351150-0403 MM 2000 CABLE OLFLEX 3X0,75 MM2 LIGHT/GREY
Y 2108 90042-0249 1 SOLENOID VALVE OFFICINE DI ENSINO
Pos Part No UN Qty Description Page No
Machine Type
Group Description
Used-In
Group Number
Page No
Tetra Pak
648506-0400
WATER PANEL
648506-0400 Pos. 070
1095608-0100
2-83 (107)
Doc No: SPC-2645000-0101
E
32
24
23
31

Manual Information

Tetra Pak recommends reading all delivered manuals carefully. Make sure that the delivered manuals are available to personnel who operate or maintain the equipment.

It is important to keep this catalogue for the lifetime of the equipment and to pass the catalogue on to any subsequent holder or user.

Tetra Pak will not be held responsible for any damage to the equipment caused by not following the instructions given in the manuals that accompany this equipment.

Delivered Manuals

Manuals delivered with this equipment:

CM

The Conversion Manual provides technicians with information on converting the equipment between different production modes.

EM

The Electrical Manual provides technicians with information about the equipment’s electrical system.

IM

The Installation Manual provides technicians with information required to safely install the equipment.

MM

The Maintenance Manual provides technicians with information on maintaining the equipment.

OM

The Operation Manual provides the operator with information on handling and operating the equipment before, during, and after production.

RM

The Rebuilding Manual provides technicians with information required to safely install a kit to an installed machine or equipment.

(Cont'd)

(Cont'd)

SPC

The Spare Parts Catalogue provides the information necessary to order spare parts from Tetra Pak.

TeM

The Technical Manual provides technicians with information which can be:

- information required to safely install the equipment
- information required to maintaining the equipment
- information about the machine's/equipment's electrical system
- information necessary to order spare parts from Tetra Pak
- other technical information

UP

The Update Pages provides new pages to update existing machine manuals.

Page Layout

Refer to the illustration (A) on page i-7: The main pages in a Spare Parts Catalogue consist of an illustration page (1) and a corresponding list page (7). The page number (5) is shown in the header of an illustration page and in the footer of a list page. The document number (6) is shown in the footer of a list page.

Page Numbering

Refer to the illustration (A) on page i-7: A page number (5) has three parts:

- chapter number (2)
- consecutive page number within the chapter (3)
- total number of pages in the chapter (4)

Note! The letters UP may replace the chapter number (2) if the manual includes update pages. The consecutive page number (3) and the total number of pages (4) of update pages do not follow the existing sequential page numbering of the chapter.

Machine Introduction

Manufacturer

For the manufacturer’s name and address, see the second page of this catalogue.

Service

Tetra Pak does not accept responsibility for any damages or any injuries to equipment, staff or consumers that is caused by spare parts that are not genuine Tetra Pak spare parts.

To order genuine Tetra Pak spare parts for this machine contact the nearest Tetra Pak office.

Identification

CE Classification

This equipment complies with the basic health and safety regulations of the European Economic Area (EEA).

(Cont'd)

(Cont'd)

3-A Compliance

If the machine plate contains the 3-A mark (15) (see illustration (B) on page i-7) this equipment complies with the 3-A Sanitary Standards for Formers, Fillers, and Sealers of Containers for Fluid Milk and Fluid Milk Products, Number 17-10.

Machine Plate

The illustration (B) on page i-7 shows an example of a machine plate. An illustration of the valid machine plate and its location on the equipment is shown in the Introduction chapter of the manuals delivered with this equipment. The machine plate contains the data listed below, needed when contacting Tetra Pak concerning this specific equipment.

- Machine type (8)
- Volume (9)
- Drawing specifications (10)
- Machine serial number (11)
- Manufacturer (12)
- Year of manufacture (13)
- CE mark (14)
- 3-A mark (if applicable) (15)

Make sure that the equipment data in the front pages of this manual corresponds to the machine plate data and the machine specification.

How to Use This Spare Parts Catalogue

Locate a Spare Part Number

a) Refer to the illustration (C) on page i-7: Go to the chapter number (16) indicated beside the main group that contains the part you want to locate.

Items b) and c) refer to the illustration (D) on page i-8.

b) On the main group illustration, look for the machine subgroup (18) that contains the part or subgroup you are looking for. Note the position number (19) and go to the list page that follows the illustration.

c) Look for the position number/reference designation (17) or the subgroup name (20). Go to the corresponding page number (21) listed in the right-hand column. Tetra Pak has chosen to always use the function oriented structure for reference designation. The prefix indicating function oriented structure (=) is not shown in the reference designation

(Cont'd)

(Cont'd)

Items d) and e) refer to the illustration (E) on page i-8.

d) Locate the part (22) that you are looking for on the subgroup illustration and note the part's position number.

e) The part number (29) and part description (30) are listed beside the position number on the list page.

Information Listed in a Spare Parts Catalogue

The list below refers to the illustration (E) on page i-8. A Spare Parts Catalogue contains the following information about groups, subgroups, and spare parts for the equipment:

- Group structure reference (23). Indicates the next higher group in the equipment list structure.
- Group name (24)
- Unit of measure (25)
- Quantity (26)
- Assembly drawing number (27)
- List page range (28). Included if there are multiple pages in the group illustration or list.
- Part or subgroup number (29)
- Subgroup name or part description (30)
- Group number (31)
- Equipment number (32)
- Group information heading (33). Indicates if the section below the heading is for a specific machine variant or if it is a list of common parts. If a list has more than one variant and each variant has its own assembly drawing, a page reference to the variant's assembly drawing is shown.
- Internal information (34)

Support and Feedback

For assistance when operating this equipment, or other inquiries, comments, or suggestions, pose the questions or give feedback on the E-Liaison home page at http://e-liaison.tetrapak.com. If access to the Tetra Pak intranet is not available, contact the nearest Tetra Pak representative.

Информация за ръководството

Tetra Pak препоръчва внимателното прочитане на всички доставени ръководства. Уверете се, че всички доставени ръководства са достъпни за персонала, който работи с оборудването или го поддържа.

Важно е да съхранявате това ръководство през целия експлоатационен срок на оборудването и да го предадете на всеки следващ собственик или ползвател.

Tetra Pak няма да носи отговорност за никакви повреди на оборудването, предизвикани от неспазването на инструкциите, дадени в ръководството, което придружава това оборудване.

Доставени ръководства

Ръководства, доставени с това оборудване:

CM

Ръководството за преустройство предоставя на техниците информация за преустройство на оборудването за различните производствени режими.

EM

Електрическият наръчник осигурява на техниците информация за електрическата система на оборудването.

IM

Наръчникът за инсталацията осигурява на техниците информация за безопасно инсталиране на оборудването.

MM

Наръчникът за поддръжка осигурява на техниците информация за поддържане на оборудването.

OM

Ръководството за експлоатация предоставя на оператора информацията, която му е необходима за работата и експлоатацията на оборудването, преди, по време на и след производство.

PP

Ръководството за възстановяване предоставя на техниците информация, необходима за безопасно монтиране на .принадлежности на инсталирана машина или оборудване.

(Продължение)

(Продължение)

SPC

Каталогът за резервни части осигурява информация за поръчка на резервни части от Tetra pak.

TeM

Техническите ръководства, осигуряват на техниците информация, която може да бъде:

- информация, необходима за безопасното инсталиране на оборудването
- информация, необходима за поддръжката на оборудването
- информацията за електрическата система на оборудването/машината
- предоставя информацията необходима за поръчката на резервни части от Tetra Pak
- друга техническа информация.

НАГОРЕ

Страниците с актуализации предоставят нови страници за актуализиране на вече съществуващите ръководства за машината.

Разположение на страниците

Вижте илюстрация (A) на страница i-7: Основните страници на Каталога с резервни части съдържат страница с илюстрация (1) и страница със съответен списък (7). Номерът на страницата (5) е даден в горната част на илюстрованата страница и в долната част на страницата със списък.. Номерът на документа (6) е даден в долната част на списъчната страница.

Номериране на страниците

Вижте илюстрация (A) на страница i-7: Номерът на страница (5) има три части:

- номер на глава (2)
- пореден номер на страница (3) в рамките на главата
- общ брой страници (4) в главата.

Забележка! Буквите UP може да заместват номера на главата (2), ако ръководството включва страници с актуализации. Поредният номер на страница (3) и общият брой страници (4) на страниците с актуализации не следват съществуващата поредност в номерата на страниците на главата..

Въведение на машината

Производител

За името на производителя и адреса му, виж на втора страница от този каталог.

Обслужване

Tetra pak не носи отговорност за щети или наранявания на оборудване, персонал или клиенти, които са причинени от резервни части, които не са оригинални резервни части Tetra pak.

За да поръчате оригинални резервни части Tetra pak за тази машина, свържете се с най-близкия офис на Tetra pak.

Идентификация

CE Класификация

Това оборудване съответства на основните разпоредби за опазване на здравето и безопасност на Европейската Икономическа Зона (EEA).

(Продължение)

(Продължение)

3-A Съответствие

Ако табелката на машината съдържа означението 3-A (15) (виж илюстрация (B) на страница i-7), оборудването съответства на 3-A Санитарните стандарти за формоващи, пълнещи и запечатващи устройства за контейнери за течно мляко и течни млечни продукти, номер 17-10.

Табела с технически данни на машината

Илюстрация (B) на страница i-7 показва примерна табела с технически данни на машината.
Илюстрация на реална табела с технически данни на машината и нейното местоположение върху оборудването е дадена в глава Въведение на ръководството, придружаващо оборудването. Табелата с технически данни за машината съдържа данните, описани по-долу, необходими, когато се свързвате с Tetra pak относно това оборудване.

- Тип на машината (8)
- Обем (9)
- Спецификации (10)
- Сериен номер на машината (11)
- Производител (12)
- Година на производство (13)
- CE маркировка (14)
- 3-A маркировка (ако е приложимо) (15)

Уверете се, че данните за оборудването, дадени на първите страници на това ръководство съответстват на данните върху табелата с технически спецификации, и спецификацията на машината.

Как да ползвате Каталога за резервни части

Откриване номер на резервна част

a) Вижте илюстрация (C) на страница i-7: Преминете на глава номер (16), посочена .до основната група, която съдържа частта, която желаете да откриете.

Позиции b) и c) вижте на илюстрации (D) на страница i-8.

b) На главната илюстрация на група, потърсете машинната подгрупа (18), която съдържа частта или подгрупата, която търсите. Отбележете номера на позицията (19) и отидете на страницата със списъка, който следва илюстрацията.

c) Потърсете номера на позиция/вижте обозначението (17) или наименованието на подгрупата (20). Преминете на съответния номер на страница (21), вписан в дясната колона.
От Tetra Pak са избрали, винаги да се използва функционално ориентирана структура за обозначение препратка.
Представката посочва функционално ориентирана структура (=) не се показва в обозначението препратка.

(Продължение)

(Продължение)

Позиции d) и e) вижте на илюстрация (E) на страница i-8.

d) Открийте частта (22), която търсите на илюстрацията с подгрупи и отбележете номера на позицията на частта.

e) Номерът на частта (29) и описанието на частта (30) са вписани до номера на позицията на страницата със списъка.

Информация в Каталога за резервни части

Списъкът по-долу се отнася за илюстрация (E) на страница i-8.
Каталогът за резервни части съдържа следната информация за групи, подгрупи и резервни части за оборудването:

- Препратка към структура на групата (23). Посочва по-горната група в структурата на оборудването.
- Наименование на групата (24)
- Мерна единица (25)
- Количество (26)
- Номер от сборния чертеж (27)
- Серия страници със списък (28). Включен, ако има няколко страници в групова илюстрация или списък
- Част или номер на подгрупа (29)
- Наименование на подгрупа или описание на част (30)
- Номер на група (31)
- Номер на оборудването (32)
- Информационен надпис за група (33). Индицира, че раздела под заглавието е за определен модел машина или че е списък на унифицирани части. Ако списъкът има повече от един вариант и всеки вариант има своя монтажна схема, е показана препратка към страница със сборния чертеж.
- Международна информация (34)

Поддръжка и обратна връзка

За помощ при работа с това оборудване или за други запитвания, коментари или предложения, задайте въпросите си или изпратете информация за обратна връзка на страницата на E-Liaison http://e-liaison.tetrapak.com. Ако достъпът до вътрешната мрежа на Tetra pak не е възможен, свържете се с най-близкия представител на Tetra pak.

Informace o příručce

Společnost Tetra Pak doporučuje se důkladně seznámit se všemi dodanými příručkami. Dodané příručky musí být k dispozici pracovníkům, kteří provádějí obsluhu nebo údržbu zařízení.

Tento katalog je třeba uchovávat po celou dobu životnosti zařízení a předat jej každému dalšímu vlastníkovi nebo uživateli.

Společnost Tetra Pak nezodpovídá za škody na zařízení způsobené nedodržováním pokynů uvedených v příručkách, které doprovází toto zařízení.

Dodané příručky

Příručky dodávané s tímto zařízením:

CM

Příručka pro konverzi poskytuje technikům informace o konverzi zařízení mezi různými produkčními režimy.

EM

Příručka elektrického zařízení (EM) poskytuje technikům informace o elektrickém systému zařízení.

IM

Montážní příručka (IM) poskytuje technikům informace nutné pro bezpečné provedení montáže zařízení.

MM

Příručky údržby (MM) poskytuje technikům informace o údržbě zařízení.

OM

Návod k obsluze poskytuje technikům informace o manipulaci a provozu zařízení před, během a po ukončení výroby.

RM

Příručka pro rekonstrukci poskytuje technikům informace požadované pro bezpečnou instalaci soupravy na nainstalovaný stroj nebo zařízení.

(Pokračování)

(Pokračování)

SPC

Katalog náhradních dílů (SPC) obsahuje informace nezbytné pro objednávání náhradních dílů od společnosti Tetra Pak

TeM

Technická příručka poskytuje technikům informace, kterými mohou být:

- potřebné informace pro bezpečnou instalaci zařízení
- potřebné pro údržbu zařízení
- informace o elektrickém systému zařízení/stroje
- informace nezbytné pro objednávání náhradních dílů od společnosti Tetra Pak
- ostatní technické informace

UP

Aktualizované stránky poskytují nové stránky k existujícím příručkám k zařízení.

Vzhled stránky

Podívejte se na obrázek (A) na straně i-7: hlavní stránky v Katalogu náhradních dílů tvoří stránky s ilustracemi (1) a odpovídající stránka se seznamem (7). Číslo stránky (5) je uvedeno v záhlaví stránky s ilustrací a v zápatí stránky se seznamem. Číslo dokumentu (6) je uvedeno v zápatí stránky se seznamem.

Číslování stránek

Podívejte se na obrázek (A) na straně i-7: číslo stránky (5) má tři části:

- číslo kapitoly (2)
- číslo další stránky v rámci kapitoly (3),
- celkového počtu stránek v kapitole (4)

Poznámka! Písmena UP mohou nahradit číslo kapitoly (2) v případě, že manuál obsahuje aktualizované stránky. Následující číslo stránky (3) a celkový počet stran (4) aktualizovaných stránek se nedrží existujícího sekvenčního číslování stránek v této kapitole.

Seznámení se zařízením

Výrobce

Jméno a adresu výrobce najdete na druhé straně tohoto katalogu.

Servis

Tetra Pak nepřebírá odpovědnost za jakékoli škody na zařízení nebo za zranění zaměstnance nebo spotřebitele, které budou způsobeny tím, že se nepoužijí originální náhradní díly Tetra Pak.

Chcete-li pro tento stroj objednat originální náhradní díly Tetra Pak, kontaktujte nejbližší kancelář společnosti Tetra Pak.

Označení

Klasifikace CE

Toto zařízení vyhovuje základním zdravotním a bezpečnostním směrnicím EU.

(Pokračování)

(Pokračování)

3-A Soulad

Pokud štítek stroje obsahuje označení 3-A (15) (viz obrázek (B) na straně i-7), pak je toto zařízení v souladu s hygienickými normami 3-A pro formování, plnění a uzavírání obalů pro tekuté mléko a tekuté mléčné výrobky, číslo 17-10.

Typový štítek

Obrázek (B) na straně i-7 ukazuje příklad typového štítku.
Obrázek platného typového štítku a jeho umístění na zařízení je uvedeno v úvodní kapitole příruček dodaných s tímto zařízením.
Typový štítek obsahuje údaje uvedené níže, tyto údaje jsou zapotřebí, když kontaktujete společnost Tetra Pak ve věci týkající se tohoto specifického vybavení.

- Typ stroje (8)
- Objem (9)
- Specifikace výkresů (10)
- Sériové číslo stroje (11)
- Výrobce (12)
- Rok výroby (13)
- Symbol CE (14)
- Symbol 3-A (pokud se používá) (15)

Údaje o zařízení uvedené na předních stránkách této příručky musí souhlasit s údaji na typovém štítku a specifikacím zařízení.

Jak používat tento katalog náhradních dílů

Vyhledat číslo náhradního dílu

a) Viz obrázek (C) na straně i-7: Přejít na číslo kapitoly (16) uvedené vedle hlavní skupiny, která obsahuje díl, který chcete najít.

Položky b) a c) se vztahují k obrázku (D) na straně i-8.

b) Na obrázku hlavní skupiny se podívejte na podskupinu stroje (18), která obsahuje díly nebo podskupiny, které hledáte. Poznamenejte si číslo pozice (19) a přejděte na stránku seznamu, který následuje za obrázkem.

c) Podívejte se na číslo pozice/označení reference (17) nebo na název podskupiny (20). Přejděte na odpovídající číslo strany (21) uvedené v seznamu ve sloupci na pravé straně. Firma Tetra Pak si pro referenční označení zvolila vždy používat funkčně orientovanou strukturu. Předpona označující funkčně orientovanou strukturu (=) není uvedena v referenčním označení.

(Pokračování)

(Pokračování)

Položky d) a e) se vztahují k obrázku (E) na straně i-8.

d) Lokalizujte díl (22), který hledáte, na obrázku podskupiny a poznamenejte si číslo pozice dílu.

e) Číslo dílu (29) a popis dílu (30) jsou uvedeny vedle čísla pozice na stránce se seznamem.

Informace uvedené v katalogu náhradních dílů

Níže uvedený seznam se odkazuje na obrázek (E) na stránce i-8.
Katalog náhradních dílů obsahuje následující informace o skupinách, podskupinách a náhradních dílech pro zařízení:

- Reference struktury skupiny (23). Označuje následující vyšší skupinu ve struktuře seznamu výbavy.
- Název skupiny (24)
- Měrná jednotka (25)
- Množství (26)
- Číslo montážního výkresu (27)
- Rozsah stránek se seznamem (28). Zahrnuty, pokud existuje více stránek ve skupině obrázků nebo seznamu.
- Číslo dílu nebo podskupiny (29)
- Název podskupiny nebo popis dílu (30)
- Číslo skupiny (31)
- Číslo výbavy (32)
- Záhlaví informací o skupině (33). Označuje, zdali se část pod záhlavím týká konkrétní varianty stroje, nebo zdali se jedná o seznam společných dílů. Pokud seznam obsahuje více než jednu variantu a každá varianta má své vlastní montážní výkresy, je zobrazen odkaz na stránku s montážním výkresem varianty.
- Vnitřní informace (34)

Podpora a zpětná vazba

Můžete se na nás obracet s žádostí o pomoc při provozu tohoto zařízení nebo s jinými dotazy, připomínkami nebo náměty pomocí internetové kontaktní domovské stránky http://e-liaison.tetrapak.com, kde můžete rovněž poskytnout svou zpětnou vazbu. Pokud nemáte přístup na intranet společnosti Tetra Pak, obraťte se na nejbližšího zástupce firmy Tetra Pak.

Oplysninger om vejledninger

Tetra Pak anbefaler, at alle leverede vejledninger læses grundigt.
Sørg for, at de leverede vejledninger er til rådighed for det personale, som betjener eller vedligeholder udstyret.

Det er vigtigt, at dette katalog opbevares i hele udstyrets levetid og overdrages til en efterfølgende ejer eller bruger.

Tetra Pak hæfter ikke for skader på udstyret, som skyldes manglende overholdelse af anvisningerne i de vejledninger, som følger med dette udstyr.

Leverede vejledninger

Vejledninger, der leveres sammen med dette udstyr:

CM

Konverteringsvejledningen forsyner teknikere med oplysninger om konvertering af udstyret mellem forskellige produktionstilstande.

EM

Den elektriske vejledning forsyner teknikere med oplysninger om udstyrets elektriske system.

IM

Installationsvejledningen forsyner teknikere med oplysninger, som er nødvendige til sikker installation af udstyret.

MM

Vedligeholdelsesvejledningen forsyner teknikere med oplysninger om vedligeholdelsen af udstyret.

OM

Driftsvejledningen forsyner operatøren med oplysninger om håndteringen og betjeningen af udstyret før, under og efter produktion.

RM

Ombygningsvejledningen forsyner teknikere med oplysninger, der er nødvendige til sikker installation af et sæt på en installeret maskine eller installeret udstyr.

(Forts.)

(Forts.)

SPC

Reservedelskataloget indeholder de oplysninger, som er nødvendige til at bestille reservedele fra Tetra Pak.

TeM

Den Tekniske vejledning forsyner tekniker med oplysninger, der kan være:

- nødvendige oplysninger til sikker installation af udstyret
- nødvendige oplysninger til vedligeholdelse af udstyret
- oplysninger om maskinens/udstyrets elektriske system
- oplysninger, som er nødvendige til bestilling af reservedele fra Tetra Pak
- andre tekniske oplysninger

UP

Opdateringssiderne indeholder nye sider til opdatering af eksisterende maskinvejledninger.

Sidelayout

Se illustrationen (A) på side i-7: Hovedsiden i et reservedelskatalog består af en illustrationsside (1) og en tilsvarende listeside (7). Sidetallet (5) vises i overskriften på en illustrationsside og i fodteksten på en listeside. Dokumentnumret (6) vises i fodteksten på en listeside.

Sidenummerering

Se illustrationen (A) på side i-7: Et sidetal (5) har tre dele:

- kapitelnummer (2)
- fortløbende sidetal inden for kapitlet (3)
- det samlede antal sider i kapitlet (4)

Bemærk! Bogstaverne UP kan erstatte kapitelnumret (2), hvis vejledningen inkluderer opdateringssider. Det fortløbende sidetal (3) og det samlede antal sider (4) af opdateringssider følger ikke kapitlets eksisterende fortløbende sidenummerering.

Præsentation af maskinen

Producent

For producentens navn og adresse se anden side i dette katalog.

Service

Tetra Pak påtager sig intet ansvar for skader på udstyret eller kvæstelser af personale eller forbrugere, som forårsages af reservedele, der ikke er ægte reservedele fra Tetra Pak.

For at bestille ægte reservedele fra Tetra Pak til denne maskine kontakt det nærmeste Tetra Pak-kontor.

Identifikation

CE-klassificering

Dette udstyr overholder det Europæiske Økonomiske Samarbejdsområdes (EØS) grundlæggende sundheds- og sikkerhedsbestemmelser.

(Forts.)

(Forts.)

3-A overholdelse

Hvis typeskiltet indeholder 3-A-mærket (15) (se illustration (B) på side i-7), overholder dette udstyr 3-A-sanitetsstandarderne for formnings-, fylde- og forseglingsmaskiner for beholdere til flydende mælk og flydende mælkeprodukter, nummer 17-10.

Maskinens typeskilt

Illustration (B) på side i-7 viser et eksempel på et typeskilt.
En illustration af maskinens gældende typeskilt og dens placering på udstyret vises i kapitlet Indledning af de vejledninger, der leveres sammen med dette udstyr. Maskinens typeskilt indeholder de data, der opføres nedenfor og om der er brug for, hvis der rettes henvendelse til Tetra Pak vedrørende det specifikke udstyr.

- Maskintype (8)
- Volumen (9)
- Tegningsspecifikationer (10)
- Maskinens serienummer (11)
- Producent (12)
- Fremstillingsår (13)
- CE-mærke (14)
- 3-A mærke (i givet fald) (15)

Kontrollér, at udstyrsdataene på de første sider i denne vejledning svarer til dataene på typeskiltet og maskinens specifikation.

Sådan bruges dette reservedelskatalog

Sådan finder men et reservedelsnummer

a) Se illustrationen (C) på side i-7: Gå til kapitelnumret (16), der vises ved siden af hovedgruppen, som indeholder den del, der skal findes.

Punkterne b) og c) refererer til illustrationen (D) på side i-8.

b) På hovedgruppens illustration søg efter den maskinundergruppe (18), der indeholder den del eller undergruppe, der ledes efter. Notér positionsnumret (19) og gå til den listeside, der følger illustrationen.

c) Søg efter positionsnumret/henvisningsbetegnelsen (17) eller undergruppens navn (20). Gå til det tilsvarende sidetal (21), der er opført i højre spalte. Tetra Pak har valgt altid at bruge funktionen orienteret struktur til henvisningsbetegnelse. Det præfiks, der angiver funktionsorienteret struktur (=) vises ikke i henvisningsbetegnelsen.

(Forts.)

(Forts.)

Punkterne d) og e) refererer til illustrationen (E) på side i-8.

d) Find den del (22), der ledes efter, på undergruppens illustration og notér delens positionsnummer.

e) Delnumret (29) og delbeskrivelsen (30) er opført ved siden af positionsnumret på listesiden.

Oplysninger, der er opført i et reservedelskatalog

Listen nedenfor refererer til illustrationen (E) på side i-8.
Et reservedelskatalog indeholder følgende oplysninger om grupper, undergrupper og reservedele for udstyret:

- Gruppens strukturhenvisning (23). Viser den næste højere gruppe i udstyrets listestruktur.
- Gruppenavn (24)
- Måleenhed (25)
- Mængde (26)
- Monteringstegningens nummer (27)
- Listesideområde (28). Inkluderet, hvis gruppeillustrationen eller listen har flere sider.
- Del- eller undergruppenummer (29)
- Undergruppenavn eller delbeskrivelse (30)
- Gruppenummer (31)
- Udstyrsnummer (32)
- Gruppeinformationsoverskrift (33). Angiver, om afsnittet under overskriften gælder for en bestemt maskinversion eller om det er en liste over fælles dele. Hvis en liste har mere end en version og hver version har en egen monteringstegning, vises der en sidehenvisning til versionens monteringstegning.
- Interne oplysninger (34)

Support og feedback

For hjælp med betjening af dette udstyr, eller ved andre forespørgsler, kommentarer eller forslag, kan der stilles spørgsmål eller gives feedback på E-Liaison hjemmesiden på http://e-liaison.tetrapak.com.
Hvis adgang til Tetra Paks intranet ikke er til rådighed, kontakt den nærmeste Tetra Pak-repræsentant.

Handbuch-Informationen

Tetra Pak empfiehlt, alle gelieferten Handbücher sorgfältig zu lesen.
Es muss sichergestellt werden, dass die gelieferten Handbücher dem Bediener- oder Wartungspersonal der Ausrüstung verfügbar sind.

Es ist wichtig, diesen Katalog während der Lebensdauer der Ausrüstung vorzuhalten und an nachfolgende Halter oder Benutzer weiterzugeben.

Tetra Pak ist nicht verantwortlich für Schäden an der Ausrüstung, die durch die Nichtbefolgung der beiliegenden Anweisungen der Handbücher verursacht werden.

Gelieferte Handbücher

Mit dieser Ausrüstung gelieferte Handbücher

CM

Das Umbauhandbuch liefert den Technikern Informationen über den Umbau der Ausrüstung zwischen den verschiedenen Produktionsweisen.

EM

Das Elektrohandbuch liefert den Technikern Informationen zum Elektrosystem der Ausrüstung.

IM

Das Installationshandbuch liefert den Technikern Informationen für die sichere Installation der Ausrüstung.

MM

Das Wartungshandbuch liefert den Technikern Informationen über die Wartung der Ausrüstung.

OM

Das Betriebshandbuch enthält Informationen für den Bediener zu Handhabung und Betrieb der Ausrüstung vor, während und nach der Produktion.

RM

Das Umbauhandbuchliefert Informationen an die Techniker, die diese benötigen, um die Ausrüstung aus dem Kit sicher zu installieren.

(Forts.)

(Forts.)

SPC

Der Ersatzteilkatalog liefert die für die Bestellung von Ersatzteilen bei Tetra Pak erforderlichen Informationen.

TeM

Das Technische Handbuch liefert den Technikern folgende Informationen:

- Informationen für die sichere Installation der Ausrüstung
- Informationen für die Wartung der Ausrüstung
- Informationen über das Elektrosystem der Maschine/Ausrüstung.
- Notwendige Informationen für die Bestellung von Ersatzteilen bei Tetra Pak.
- andere technische Informationen

UP

Die Aktualisierungsseiten sind neu, um die Maschinenhandbücher zu aktualisieren.

Seitenlayout

Siehe die Abbildung (A) auf Seite i-7: Die Hauptseiten in einem Ersatzteilkatalog bestehen auf dem Abbildungsseite (1) und einer entsprechenden Listenseite (7). Die Seitennummer (5) ist im Kopf einer Abbildungsseite und im Fuß einer Listenseite aufgeführt.
Die Dokumentennummer (6) ist im Fuß einer Listenseite angegeben.

Seitennummerierung

Siehe die Abbildung (A) auf Seite i-7: Eine Seitennummer (5) hat drei Teile

- Kapitel Nummer (2)
- Fortlaufende Seitennummer (2) innerhalb des Kapitels (3)
- Gesamtanzahl der Seiten im Kapitel (4)

Hinweis! Die Buchstaben UP können die Kapitelnummer (2) ersetzen, wenn das Handbuch aktualisierte Seiten enthält. Die fortlaufende Seitennummer (3) und die Gesamtanzahl der Seiten (4) der aktualisierten Seiten folgen nicht der laufenden Seitennummerierung des Kapitels.

Einführung in die Maschine

Hersteller

Die zweite Seite des Katalogs enthält Name und Anschrift des Herstellers.

Service

Tetra Pak übernimmt keine Verantwortung für Schäden an Ausrüstungen und Verletzungen von Personen, verursacht durch Ersatzteile, die keine echten Tetra Pak-Ersatzteile sind.

Für die Bestellung echter Tetra Pak-Ersatzteile für die Maschine wende man sich an die nächstgelegene Tetra Pak-Stelle.

Identifizierung

CE-Klassifizierung

Diese Ausrüstung entspricht den grundlegenden Gesundheits- und Sicherheitsvorschriften des Europäischen Wirtschaftsraumes (EWR).

(Forts.)

(Forts.)

3-A Erfüllung

Wenn die Maschinenplatte eine 3-A Markierung (15) enthält (siehe Abbildung (B) auf Seite i-7), entspricht diese Ausrüstung den 3-A Sanitärnormen für Former, Füller und Versiegler von Containern für lose Milch und Milchprodukte Nummer 17-10.

Maschinenschild

Die Abbildung (B) auf Seite i-7 zeigt ein Beispiel eines Maschinenschildes. Eine Abbildung eines gültigen Maschinenschildes und dessen Lage an der Ausrüstung finden Sie in der Einleitung zu dem mit der Ausrüstung gelieferten Handbuch. Das Maschinenschild enthält die nachstehenden Daten, erforderlich für die Kontaktnahme mit Tetra Pak bezüglich dieser spezifischen Ausrüstung.

- Maschinentyp (8)
- Volumen (9)
- Zeichnungsspezifikationen (10)
- Serien-Nummer der Maschine (11)
- Hersteller (12)
- Baujahr (13)
- CE-Markierung (14)
- 3-A Markierung (falls zutreffend) (15)

Es muss sichergestellt sein, dass die in den Frontseiten dieses Handbuchs aufgeführten Ausrüstungsdaten mit den Daten des Maschinenschildes und der Maschinenspezifikation übereinstimmen.

Benutzung dieses Ersatzteilkatalogs

Lokalisieren einer Teilenummer

a) Bezugnahme auf Abbildung (C) auf Seite i-7: Weiter zu Kapitel Nummer (16) neben der Hauptgruppe, die das entsprechende Teil enthält.

Pos. b) und c) beziehen sich auf die Abb. (D) auf Seite i-8.

b) Auf der Abbildung der Hauptgruppe die Untergruppe (18) der Maschine suchen, welche das Teil oder die Untergruppe enthält, das/die Sie suchen. Die Positionsnummer (19) notieren und zu der Listenseite gehen, die auf die Abbildung folgt.

c) Suchen Sie die Positionsnummer/Referenzbezeichnung (17) oder den Untergruppennamen (20). Weiter zur entsprechenden Seitennummer (21) in der rechten Spalte. Tetra Pak verwendet die funktionsorientierte Struktur für die Referenzbezeichnung. Präfix zur funktionsorientierten Struktur (=) ist in der Referenzbezeichnung nicht dargestellt.

(Forts.)

(Forts.)

Pos. d) und e) beziehen sich auf die Abbildung (E) auf Seite i-8.

d) Das gesuchte Teil (22) auf der Untergruppen-Abbildung suchen und die Positionsnummer (060) des Teils notieren.

e) Die Teilenummer (29) und die Beschreibung (30) des Teils sind neben der Positionsnummer auf der Listenseite angegeben.

Information in einem Ersatzteilkatalog

Nachstehende Liste bezieht sich auf die Abbildung (E) auf Seite i-8.
Ein Ersatzteilkatalog enthält folgende Informationen zu Gruppen, Untergruppen und Ersatzteile der Ausrüstung.

- Verweis auf Gruppenstruktur (23). zeigt die nächsthöhere Gruppe in der Listenstruktur.
- Gruppenbezeichnung (24)
- Maßeinheit (25)
- Menge (26)
- Nummer der Montagezeichnung (27)
- Liste Seitenbereich (28). vorhanden, wenn mehrere Seiten in der Gruppenabbildung oder Liste vorhanden sind.
- Teile- oder Untergruppen-Nummer (29)
- Untergruppenbezeichnung oder Beschreibung des Teils (30)
- Gruppennummer (31)
- Gerätenummer (32)
- Gruppeninformations-Überschrift (33). erläutert, ob der Abschnitt unter der Überschrift für eine spezifische Maschinenvariante gilt oder ob es sich um eine Liste allgemeiner Teile handelt. Hat eine Liste mehr als eine Variante und ist jeder Variante eine eigene Montagezeichnung zugeordnet, wird ein Seiten-Querverweis auf die Montagezeichnung der Variante angegeben.
- Interne Informationen (34)

Unterstützung und Feedback

Für Hilfeleistung beim Betrieb der Ausrüstung oder für Anfragen, Kommentare oder Vorschläge wollen Sie Fragen oder Feedback richten an E-Liaison Home Page unter http://e-liaison.tetrapak.com.
Wenn kein Zugang zum Tetra Pak Intranet verfügbar ist, wenden Sie sich an den nächsten Tetra Pak-Vertreter.

Πληροφορίες εγχειριδίου

Η Tetra Pak συνιστά να διαβάζετε προσεκτικά όλα τα παρεχόμενα εγχειρίδια. Βεβαιωθείτε ότι τα παρεχόμενα εγχειρίδια είναι διαθέσιμα στο προσωπικό που χειρίζεται ή συντηρεί τον εξοπλισμό.

Είναι σημαντικό να διατηρήσετε το εγχειρίδιο αυτό καθ' όλη τη διάρκεια ζωής του εξοπλισμού και να το μεταβιβάσετε σε οποιονδήποτε επακόλουθο κάτοχο ή χρήστη.

Η Tetra Pak δεν μπορεί να καταστεί υπεύθυνη για οποιαδήποτε ζημιά στον εξοπλισμό που οφείλεται σε μη τήρηση των οδηγιών που παρατίθενται στα εγχειρίδια που συνοδεύουν τον εξοπλισμό.

Παρεχόμενα εγχειρίδια

Τα εγχειρίδια παρέχονται μαζί με αυτό τον εξοπλισμό:

CM

Το Εγχειρίδιο Μετατροπών (CM) παρέχει πληροφορίες στους τεχνικούς σχετικά με τη μετατροπή του εξοπλισμού για τους διαφορετικούς τρόπους παραγωγής.

EM

Το Ηλεκτρολογικό Εγχειρίδιο (EM) παρέχει στους τεχνικούς τις πληροφορίες για το ηλεκτρικό σύστημα του εξοπλισμού.

IM

Το Εγχειρίδιο Εγκατάστασης (IM) παρέχει στους τεχνικούς τις πληροφορίες που απαιτούνται για την ασφαλή τοποθέτηση του εξοπλισμού.

MM

Το Εγχειρίδιο Συντήρησης (MM) παρέχει στους τεχνικούς πληροφορίες σχετικά με τη συντήρηση του εξοπλισμού.

OM

Το Εγχειρίδιο Χειρισμού (OM) παρέχει στο χειριστή πληροφορίες σχετικά με το χειρισμό και τη λειτουργία του εξοπλισμού πριν, κατά και μετά την παραγωγή.

RM

Το Εγχειρίδιο Μετασκευής (RM) παρέχει πληροφορίες στους τεχνικούς σχετικά με την ασφαλή εγκατάσταση ενός κιτ σε μια εγκατεστημένη μηχανή ή εξοπλισμό.

(Συνέχεια)

(Συνέχεια)

SPC

Ο Κατάλογος Ανταλλακτικών (SPC) παρέχει πληροφορίες που είναι απαραίτητες για την παραγγελία ανταλλακτικών από την Tetra Pak

TeM

Το Τεχνικό Εγχειρίδιο (TeM) παρέχει στους τεχνικούς πληροφορίες που μπορεί να είναι:

- πληροφορίες που είναι απαραίτητες για την ασφαλή εγκατάσταση του εξοπλισμού
- πληροφορίες που απαιτούνται για τη συντήρηση του εξοπλισμού
- πληροφορίες σχετικά με το ηλεκτρικό σύστημα της μηχανής/ εξοπλισμού.
- απαραίτητες πληροφορίες για να παραγγείλετε ανταλλακτικά από την Tetra Pak.
- άλλες τεχνικές πληροφορίες

ΠΑΝΩ

Οι Σελίδες Ενημέρωσης παρέχουν νέες σελίδες για την ενημέρωση των υφιστάμενων εγχειριδίων της μηχανής.

Διάταξη σελίδας

Βλέπε εικόνα (A) στη σελίδα i-7: Οι κύριες σελίδες του Καταλόγου Ανταλλακτικών αποτελούνται από μία σελίδα με εικόνα (1) και μια σελίδα με αντίστοιχη λίστα (7). Ο αριθμός σελίδας (5) αναγράφεται στο πάνω μέρος της σελίδας με την εικόνα και στο κάτω μέρος της σελίδας με τη λίστα.
Ο αριθμός εγγράφου (6) αναγράφεται στο κάτω μέρος της σελίδας με τη λίστα.

Αρίθμηση σελίδων

Βλέπε εικόνα (A) στη σελίδα i-7: Ο αριθμός σελίδας (5) αποτελείται από τρία μέρη:

- τον αριθμό κεφαλαίου (2)
- τον αύξοντα αριθμό σελίδας (3) εντός του κεφαλαίου
- τον συνολικό αριθμό σελίδων (4) στο κεφάλαιο

Σημειωση! Αν το εγχειρίδιο περιέχει σελίδες ενημέρωσης, ο αριθμός κεφαλαίου (2) μπορεί να αντικαθίσταται με τα γράμματα «UP».
Ο αύξων αριθμός σελίδας (3) και ο συνολικός αριθμός σελίδων (4) των σελίδων ενημέρωσης δεν ακολουθούν την αρχική αύξουσα αρίθμηση σελίδων του κεφαλαίου.

Εισαγωγικές πληροφορίες για τη μηχανή

Κατασκευαστής

Για το όνομα και τη διεύθυνση του κατασκευαστή, βλέπε τη δεύτερη σελίδα αυτού του καταλόγου.

Τεχνική εξυπηρέτηση

Η Tetra Pak δεν αναλαμβάνει καμία ευθύνη για οποιαδήποτε ζημιά στον εξοπλισμό ή τραυματισμό του προσωπικού ή των καταναλωτών που οφείλεται σε χρήση ανταλλακτικών που δεν είναι γνήσια ανταλλακτικά της Tetra Pak.

Για να παραγγείλετε γνήσια ανταλλακτικά της Tetra Pak για αυτή τη μηχανή, επικοινωνήστε με το πλησιέστερο γραφείο Tetra Pak.

Αναγνώριση

Ταξινόμηση CE

Ο εξοπλισμός αυτός συμμορφώνεται με τους βασικούς κανονισμούς υγείας και ασφάλειας του Ευρωπαϊκού Οικονομικού Χώρου (ΕΕΑ).

(Συνέχεια)

(Συνέχεια)

Συμμόρφωση 3-A

Αν η πλάκα μηχανής περιλαμβάνει το σήμα 3-A (15) (βλέπε απεικόνιση (B) στη σελίδα i-7), ο εξοπλισμός αυτός συμμορφώνεται με τα υγειονομικά πρότυπα για διαμορφωτές, γεμιστικές μηχανές και διατάξεις σφράγισης των περιεκτών για υγρό γάλα και προϊόντα υγρού γάλακτος, αριθμός 17-10.

Πινακίδα χαρακτηριστικών μηχανής

Η εικόνα (B) στη σελίδα i-7 δείχνει ένα παράδειγμα μιας πινακίδας τύπου. Για μια εικόνα της πινακίδας τύπου της συγκεκριμένης μηχανής και της θέσης της πάνω στον εξοπλισμό, βλέπε το κεφάλαιο «Εισαγωγή» των εγχειριδίων που παραδίδονται μαζί με τον εξοπλισμό. Η πινακίδα τύπου περιέχει τα παρακάτω στοιχεία, τα οποία θα χρειάζεστε όταν επικοινωνείτε με την Tetra Pak σχετικά με τον συγκεκριμένο εξοπλισμό.

- Τύπος μηχανής (8)
- Όγκος (9)
- Στοιχεία σχεδίου (10)
- Αριθμός σειράς μηχανής (11)
- Κατασκευαστής (12)
- Έτος κατασκευής (13)
- Σήμανση CE (14)
- Σήμανση 3-A (εάν εφαρμόζεται) (15)

Βεβαιωθείτε ότι τα δεδομένα εξοπλισμού στις μπροστινές σελίδες αυτού του εγχειριδίου αντιστοιχούν στην πινακίδα χαρακτηριστικών της μηχανής και τις προδιαγραφής αυτής.

Πως να χρησιμοποιήσετε αυτό τον Κατάλογο Ανταλλακτικών

Παράδειγμα: Εντοπισμός αριθμού ανταλλακτικού

a) Βλέπε εικόνα (C) στη σελίδα i-7: Ανοίξτε το κεφάλαιο (16) που αναφέρεται δίπλα στην κυρίως ομάδα που περιέχει το εξάρτημα που θέλετε να εντοπίσετε.

Τα στοιχεία b) και c) αναφέρονται στην εικόνα (D) στη σελίδα i-8.

b) Στην απεικόνιση της k;yriaw ομάδας αναζητήστε την υποομάδα της μηχανής (18) που περιλαμβάνει το εξάρτημα ή την υποομάδα που αναζητάτε. Σημειώστε τον αριθμό θέσης (19) και μεταβείτε στη σελίδα λίστας που ακολουθεί την απεικόνιση.

c) Αναζητήστε τον αριθμό θέσης / χαρακτηρισμό αναφοράς (17) ή το όνομα της υπο-ομάδας (20). Ανοίξτε την αντίστοιχη σελίδα (21) που αναφέρεται στη δεξιά στήλη. Η Tetra Pak έχει επιλέξει να χρησιμοποιεί πάντα τη διάρθρωση που προσανατολίζεται στη λειτουργία για τον ορισμό αναφοράς. Το πρόθεμα που υποδεικνύει διάρθρωση που προσανατολίζεται στη λειτουργία (=) δεν εμφανίζεται στον ορισμό αναφοράς.

(Συνέχεια)

(Συνέχεια)

Τα στοιχεία d) και e) αναφέρονται στην εικόνα (E) στη σελίδα i-8.

d) Εντοπίστε το εξάρτημα (22) που αναζητάτε στην απεικόνιση της υποομάδας και σημειώστε τον αριθμο θέσης του εξαρτήματος.

e) Ο αριθμός εξαρτήματος (29) και η περιγραφή εξαρτήματος (30) παρατίθενται δίπλα στον αριθμό θέσης στη σελίδα λίστας.

Πληροφορίες που αναφέρονται στον Κατάλογο ανταλλακτικών

Η λίστα που ακολουθεί παραπέμπει στην εικόνα (E) στη σελίδα i-8.
Ο Κατάλογος Ανταλλακτικών περιέχει τις εξής πληροφορίες σχετικά με ομάδες, υπο-ομάδες και ανταλλακτικά για τον εξοπλισμό:

- Αναφορά στη δομή της ομάδας (23). Δείχνει την αμέσως μεγαλύτερη ομάδα στη δομή του καταλόγου του εξοπλισμού.
- Όνομα ομάδας (24)
- Μονάδα μέτρησης (25)
- Ποσότητα (26)
- Αριθμός σχεδίου συναρμολόγησης (27)
- Εύρος σελίδων της λίστας (28). Περιλαμβάνεται όταν υπάρχουν πολλαπλές σελίδες στην ομάδα ή στη λίστα.
- Αριθμός εξαρτήματος ή υποομάδας (29)
- Όνομα υποομάδας ή περιγραφή εξαρτήματος (30)
- Αριθμός ομάδας (31)
- Αριθμός εξοπλισμού (32)
- Επικεφαλίδα πληροφοριών ομάδας (33). Δείχνει αν το τμήμα της λίστας κάτω από την επικεφαλίδα ισχύει για συγκεκριμένη παραλλαγή της μηχανής ή αν πρόκειται για κατάλογο κοινών εξαρτημάτων.
  Αν μια λίστα αναφέρεται σε περισσότερες από μία παραλλαγές και κάθε παραλλαγή έχει το δικό της σχέδιο συναρμολόγησης, υπάρχει εδώ μια παραμπομπή στη σελίδα που δείχνει το σχέδιο συναρμολόγησης της παραλλαγής.
- Εσωτερικές πληροφορίες (34)

Υποστήριξη και σχολιασμός

Αν χρειαστείτε βοήθεια με τον χειρισμό αυτού του εξοπλισμού, ή αν έχετε απορίες, σχόλια ή προτάσεις, υποβάλετε τις ερωτήσεις ή τις παρατηρήσεις σας στην ιστοσελίδα της E-Liaison, στη διεύθυνση http://e-liaison.tetrapak.com. Αν δεν έχετε πρόσβαση στο Intranet της Tetra Pak, επικοινωνήστε με τον πλησιέστερο αντιπρόσωπο της Tetra Pak.

Información del manual

Tetra Pak recomienda que se lean cuidadosamente todos los manuales entregados. Comprobar que todos los manuales entregados estén disponibles para el personal que efectúe la operación o el mantenimiento del equipo.

Es importante conservar este manual durante la vida útil del equipo, así como facilitárselo a cualquier propietario o usuario posterior.

Tetra Pak no se responsabilizará de daños en la máquina o equipo debidos a la inobservancia de las instrucciones dadas en los manuales que acompañan este equipo.

Manuales entregados

Manuales entregados con este equipo:

CM

El Manual de conversión proporciona a los técnicos información sobre cómo convertir el equipo entre diferentes modos de producción.

EM

El Manual eléctrico proporciona a los técnicos información acerca del sistema eléctrico del equipo.

IM

El Manual de instalación proporciona a los técnicos la información requerida para instalar el equipo con seguridad.

MM

El Manual de mantenimiento proporciona a los técnicos información sobre el mantenimiento del equipo.

OM

El Manual de servicio proporciona a los operadores información sobre la manipulación y operación del equipo antes, durante y después de la producción.

RM

El Manual de Modificación provee la información necesaria a los técnicos para instalar con seguridad un kit en una máquina o equipo ya instalado.

(Continúa)

(Continuación)

SPC

El Catálogo de piezas de recambio proporciona la información necesaria para pedir piezas de recambio de Tetra Pak.

TeM

El Manual técnico proporciona información a los técnicos, que puede ser:

- la información requerida para instalar el equipo con seguridad
- información requerida para el mantenimiento del equipo
- información acerca del sistema eléctrico de la máquina/del equipo
- la información necesaria para pedir piezas de recambio a Tetra Pak
- otras informaciones técnicas

PA

Las Páginas de Actualización suministran nuevas páginas para actualizar los manuales de máquinas ya existentes.

Organización de las páginas

Remitirse a la ilustración (A) en la página i-7: Las páginas principales en un Catálogo de piezas de recambio se componen de una página de ilustración (1) y una página de lista correspondiente (7). El número de la página (5) se muestra en el encabezado de una página de ilustración y en el pie de página de una página de lista. El número del documento (6) se muestra en el pie de página de una página de lista.

Numeración de las páginas

Remitirse a la ilustración (A) en la página i-7:
Un número de página (5) se compone de tres partes:

- Número de capítulo (2)
- número de página consecutivo dentro del capítulo (3)
- número total de páginas del capítulo (4).

¡Nota! Las letras UP pueden reemplazar el número del capítulo (2) si el manual incluye páginas de actualización. El número de página consecutivo (3) y el número total de páginas (4) de páginas de actualización no siguen la numeración secuencial de páginas del capítulo.

Introducción a la máquina

Fabricante

Para el nombre y la dirección del fabricante, ver la segunda página de este catálogo.

Servicio

Tetra Pak no se hace responsable de cualquier daño o lesión al equipo, personal o consumidores que sea causado por piezas de recambio que no sean piezas Tetra Pak genuinas.

Para pedir piezas de recambio Tetra Pak genuinas para esta máquina, comunicarse con la oficina de Tetra Pak más cercana.

Identificación

Clasificación de la CE

Este equipo cumple los requisitos esenciales relativos a la salud y la seguridad del Área Económica Europea (EEA).

(Continúa)

(Continuación)

Conformidad con 3-A

Si la placa de la máquina contiene la marca 3-A (15) (consultar la ilustración (B) en la página i-7), este equipo cumple con las Normas sanitarias 3-A para formadoras, llenadoras y selladoras de envases para para leche fluida y productos de leche fluida 17-10.

Placa de la máquina

La ilustración (B) en la página i-7 muestra un ejemplo de placa de máquina. En la Introducción del capítulo de los manuales entregados con este equipo se muestra una ilustración de la placa de máquina válida y su ubicación en el equipo La placa de máquina contiene los datos listados a continuación requeridos al contactar con Tetra Pak en relación a este equipo específico.

- Tipo de máquina (8)
- Volumen (9)
- Especificaciones de plano (10)
- Número de serie de la máquina (11)
- Fabricante (12)
- Año de fabricación (13)
- Marca de la CE (14)
- Marca 3-A (si procede) (15)

Asegúrese que los datos de equipo listados en las páginas de cubierta de este manual corresponden a los datos de la placa de máquina y a la especificación máquina.

Cómo utilizar este Catálogo de piezas de recambio

Localizar un número de pieza de recambio

a) Remitirse a la ilustración (C) en la página i-7: Ir al número de capítulo (16) indicado al lado del grupo principal que contiene la pieza que usted desea localizar.

Los items b) y c) se refieren a la ilustración (D) en la página i-8.

b) En la ilustración del grupo principal, buscar el subgrupo máquina (18) que contiene la pieza o subgrupo que usted busca.
Anote el número de posición (19) y vaya a la página de lista que sigue a la ilustración.

c) Buscar el número de posición/designación de referencia (17) o el nombre del subgrupo (20). Vaya al número de página correspondiente (21) listado en la columna de la derecha. Tetra Pak ha elegido utilizar siempre la estructura orientada a la función para la designación de referencia. El prefijo que indica la estructura orientada a la función (=) no se muestra en la designación de referencia

(Continúa)

(Continuación)

Los Items d) y e) se refieren a la ilustración (E) en la página i-8.

d) Localizar la pieza (22) que busca en la ilustración del subgrupo y anotar el número de posición de la pieza.

e) El número de la pieza (29) y la descripción de la pieza (30) están listados al lado del número de posición en la página de lista.

Información listada en un Catálogo de piezas de recambio

La lista a continuación remite a la ilustración (E) en la página i-8.
Un Catálogo de piezas de recambio contiene la siguiente información sobre grupos, subgrupos y piezas de recambio para el equipo:

- Referencia de estructura de grupo (23). Indica el siguiente grupo más alto en la estructura de lista del equipo.
- Nombre de grupo (24)
- Unidad de medida (25)
- Cantidad (26)
- Número de plano de montaje (27)
- Rango de la página de lista (28). Incluida si hay páginas múltiples en la ilustración o lista de grupo.
- Número de pieza o subgrupo (29)
- Nombre del subgrupo o descripción de la pieza (30)
- Número de grupo (31)
- Número de equipo (32)
- Encabezado de información de grupo (33). Indica si la sección debajo del encabezado es para una variante máquina específica o si es una lista de piezas comunes. Si la lista tiene más de una variante y cada variante tiene su propio plano de conjunto, se muestra una referencia página para el plano de conjunto de la variante.
- Información interna (34)

Soporte y retroalimentación

Para asistencia al operar este equipo u otras preguntas, comentarios o sugerencias, haga sus preguntas u ofrezca información en la página de inicio de E-Liaison en http://e-liaison.tetrapak.com. Si no dispone de acceso a la intranet de Tetra Pak, comuníquese con el representante de Tetra Pak más cercano.

Manuaali informatsioon

Tetra Pak soovitab kõiki saadetud manuaale hoolikalt lugeda. Kindlustage saadetud manuaalide kättesaadavus seadmetega töötavale või neid hooldavale personalile.

Kataloog tuleb seadmete eluea jooksul alles hoida ning anda üle seadmete järgmisele omanikule või kasutajale.

Tetra Pak ei vastuta seadmete kahjustuste eest, mis on tekkinud seadmetega kaasapandud juhendites antud juhiste eiramise tagajärjel.

Kättetoimetatud manuaalid

Antud seadmega kaasasolevad manuaalid:

CM

Muutmise juhend annab tehnikutele informatsiooni seadmete muutmiseks vastavalt erinevatele tootmisrežiimidele.

EM

Elektrialane kasutusjuhend annab tehnikutele informatsiooni seadmete elektrisüsteemi kohta.

IM

Paigaldusjuhend annab tehnikutele seadmete turvaliseks paigaldamiseks vajalikku informatsiooni.

MM

Hooldusjuhend annab tehnikutele informatsiooni seadmete hooldamiseks.

OM

Kasutusjuhend annab operaatorile informatsiooni seadmete käsitsemiseks ja nendega töötamiseks enne tootmise alustamist, tootmise ajal ja pärast selle lõpetamist.

RM

Ümberehituse juhend annab tehnikutele vajalikku informatsiooni komplekti ohutuks paigaldamiseks eelnevalt paigaldatud masinale või seadmetele.

(Jätkub)

(Jätkub)

SPC

Varuosade kataloog annab vajalikku informatsiooni Tetra Pakist varuosade tellimiseks.

TeM

Tehniline juhend annab tehnikutele informatsiooni, mis võib olla näiteks:

- vajalik informatsioon seadmete ohutuks paigaldamiseks
- vajalik informatsioon seadmete hooldamiseks
- informatsioon masina/seadmestiku elektrisüsteemi kohta
- vajalik informatsioon tagavaraosade tellimiseks Tetra Pakist
- muu tehniline informatsioon

UP

Ajakohastatud leheküljed sisaldavad uusi lehekülgi olemasolevate masina juhendite ajakohastamiseks.

Lehekülje kujundus

Vaadake joonist (A) leheküljel i-7: varuosade kataloogi põhileheküljed koosnevad joonise leheküljest (1) ja vastava loendi leheküljest (7). Lehekülje number (5) näidatakse joonise lehekülje päises ja loendi lehekülje jaluses. Dokumendi number (6) näidatakse loendi lehekülje jaluses.

Lehekülgede nummerdamine

Vaadake joonist (A) leheküljel i-7: lehekülje numbril (5) on kolm osa:

- peatüki number (2)
- järjestikune lehekülje number peatükis (3)
- lehekülgede koguarv (4) peatükis

Pange tähele! Kui juhend sisaldab ajakohastatud lehekülgi, võivad peatüki numbrit (2) asendada tähed UP. Ajakohastatud lehekülgede järjestikune lehekülje number (3) ja lehekülgede koguarv (4) ei järgi peatüki olemasolevat järjestikust lehekülgede nummerdamist.

Masina sissejuhatus

Tootja

Tootja nime ja aadressi leiate kataloogi teiselt leheküljelt.

Teenindus

Tetra Pak ei vastuta seadmetele, töötajatele või tarbijatele põhjustatud kahjustuste või kehavigastuste eest, mis on tekkinud selliste varuosade kasutamise tagajärjel, mis ei ole Tetra Paki originaalvaruosad.

Tetra Paki originaalvaruosade tellimiseks käesoleva masina jaoks pöörduge lähimasse Tetra Paki kontorisse.

Identifikatsioon

CE klassifikatsioon

Need seadmed on vastavuses Euroopa Majanduspiirkonna (EEA) tervisekaitse ja ohutusmeetmete põhireeglitega.

(Jätkub)

(Jätkub)

3-A vastavus

Kui masina andmeplaadil on märk "3-A" (15) (vt joonist (B) lk i-7), vastab käesolev seadmestik piima- ja piimatoodete mahutite vormimis-, villimis- ja sulgemisseadmete sanitaarnormidele 3-A, number 17-10.

Seadmeplaat

Masina andmeplaadi näidis on toodud leheküljel i-7 oleval joonisel (B). Kehtiv andmeplaat ja selle asukoht seadmel on näidatud joonisel, mille leiate koos seadmestikuga tarnitud juhendite sissejuhatavast peatükist.
Masina andmeplaat sisaldab allpool loetletud andmeid, mida Te vajate antud seadme asjus Tetra Pakiga ühenduse võtmisel.

- Masina tüüp (8)
- Maht (9)
- Joonise spetsifikatsioonid (10)
- Masina seerianumber (11)
- Tootja (12)
- Valmistamise aasta (13)
- CE-märgistus (14)
- 3-A-märgistus (kui on asjakohane) (15)

Veenduge, et antud juhendi esilehtedel olevad andmed vastaksid masina andmesildil olevatele andmetele ja masina tehnilistele andmetele.

Varuosade kataloogi kasutamine

Leidke varuosa number

a) Vaadake joonist (C) leheküljel i-7: minge peatüki juurde, mille number (16) on näidatud selle põhigrupi kõrval, mis sisaldab Teie poolt otsitavat varuosa.

Elemendid b) ja c) viitavad joonisele (D) leheküljel i-8.

b) Põhigrupi joonisel otsige masina alamgruppi (18), mis sisaldab Teie poolt otsitavat varuosa või alamgruppi. Märkige üles positsiooni number (19) ja minge loendi leheküljele, mis järgneb joonisele.

c) Otsige üles positsiooni number/viitetähis (17) või alamgrupi nimi (20). Minge vastavale leheküljele, mille numbri (21) leiate parempoolses veerus olevast loetelust. Tetra Pak kasutab viitetähistes alati funktsioonile orienteeritud struktuuri. Prefiksit, mis näitab funktsioonile orienteeritud struktuuri (=), viitetähises ei näidata.

(Jätkub)

(Jätkub)

Elemendid d) ja e) viitavad joonisele (E) leheküljel i-8.

d) Leidke alamgrupi jooniselt üles otsitav varuosa (22) ja pange kirja varuosa positsiooni number.

e) Varuosa numbri (29) ja varuosa kirjelduse (30) leiate loendi leheküljelt positsiooni numbri kõrvalt.

Varuosade kataloogis loetletud informatsioon

Allpool antud loend viitab joonisele (E) leheküljel i-8.
Varuosade kataloog sisaldab alljärgnevat informatsiooni seadmete gruppide, alamgruppide ja varuosade kohta:

- Grupi struktuuri viide (23). Näitab järgmist kõrgemat gruppi seadmete loetelu struktuuris.
- Grupi nimetus (24)
- Mõõtühik (25)
- Kogus (26)
- Koostejoonise number (27)
- Loendi lehekülgede vahemik (28). Lisatakse juhul, kui grupi joonis või loend paiknevad mitmel leheküljel.
- Varuosa või alamgrupi number (29)
- Alamgrupi nimetus või varuosa kirjeldus (30)
- Grupi number (31)
- Seadme number (32)
- Grupis sisalduva informatsiooni pealkiri (33). Näitab, kas pealkirja all olev lõik puudutab konkreetset masina varianti või sisaldab see üldiste varuosade loendit. Kui loendis on variante rohkem kui üks ning nendel kõigil on eraldi koostejoonised, siis näidatakse konkreetse variandi koostejoonise lehekülgede numbrid.
- Siseinformatsioon (34)

Tugi ja tagasiside

Kui vajate abi seadmete kasutamisel või siis, kui Teil on küsimusi või soovite teha märkusi või ettepanekuid, esitage küsimused ja andke tagasisidet E-Liaisoni kodulehe kaudu aadressil http://e-liaison.tetrapak.com. Kui juurdepääs Tetra Paki intranetile puudub, võtke ühendust lähima Tetra Paki esindajaga.

Tiedot käsikirjasta

Tetra Pak suosittelee kaikkien toimitettujen käyttöohjeiden huolellista lukemista. Varmista että toimitetut käsikirjat ovat niiden henkilöiden käytettävissä, jotka käyttävät tai huoltavat laitetta.

On tärkeää, että käsikirjaa pidetään tallella koko laitteen käyttöiän ajan ja että käsikirja annetaan jokaiselle laitteen tulevalle omistajalle tai käyttäjälle.

Tetra Pak ei ole vastuussa mistään laitteille aiheutuneista vahingoista, jotka ovat johtuneet tämän käsikirjan ohjeiden noudattamatta jättämisestä.

Toimitetut käsikirjat

Laitteen mukana toimitetut käsikirjat:

CM

Muunnoskäsikirja (CM) palvelee teknikoita antamalla tiedot laitteen muuntamisesta erilaisiin tuotantotiloihin.

EM

Sähkökäsikirja (EM) palvelee teknikoita antamalla tiedot laitteen sähköjärjestelmästä.

IM

Asennuskäsikirja (IM) palvelee teknikoita antamalla tiedot laitteiden turvalliseksi asentamiseksi.

MM

Huoltokäsikirja (MM) palvelee teknikoita antamalla tiedot laitteiden huoltamisesta.

OM

Käyttäjän käsikirja (OM) palvelee käyttäjää antamalla tiedot laitteen käyttämisestä ennen tuotantoa, sen aikana ja sen jälkeen.

RM

Korjaus käsikirja antaa teknikoille vaadittavat tiedot turvallisesti asentaa rakennussarja valmiiseen koneeseen tai laitteeseen.

(Jatkuu)

(Jatkoa)

SPC

Varaosaluettelo antaa ne tarpeelliset tiedot, joiden avulla voi tilata varaosia Tetra Pakilta

TeM

Tekninen käsikirja antaa teknikoille tietoja, joka voi olla:

- tietoja laitteen turvallista asennusta varten
- tietoja, joita tarvitaan laitteita huollettaessa
- tietoja koneen/laitteen sähköjärjestelmästä
- tietoja, joita tarvitaan tilattaessa varaosia Tetra Pakilta.
- muita teknisiä tietoja.

SP

Sivujen Päivitys tarjoaa uusia sivuja jo olemassa oleviin koneen käyttöohjeisiin.

Sivutaitto

Katso kuvaa (A) sivulla i-7: Varaosaluettelon pääsivut koostuvat kuvitetusta sivusta (1) ja sitä vastaavasta luettelo sivusta (7). Sivunumero (5) näkyy kuvasivun otsikossa ja luettelo sivun alatunnisteessa.
Dokumentin numero (6) näkyy luettelo sivun alatunnisteessa.

Sivunumerointi

Katso kuvaa (A) sivulla i-7: sivunumerossa (5) on kolme osaa:

- kappaleen numero (2)
- juokseva sivunumero kappaleessa (2)
- kappaleen kokonaissivumäärä (3)

Huom! Kirjaimet SP voivat korvata kappaleen numeron (2) jos sivujen päivitys sisältyy käyttöohjeisiin. Peräkkäisten sivujen numero (3) ja päivitys sivujen kokonaismäärä (4) eivät noudata käytössä olevaa kappaleiden juoksevaa sivunumerointia.

Koneen esittely

Valmistaja

Katso valmistajan nimi ja osoite tämän luettelon toiselta sivulta.

Huolto

Tetra Pak ei vastaa sellaisista vahingoista tai mistään työvälineiden, henkilöstön tai kuluttajien vaurioista, jotka johtuvat varaosista, jotka eivät ole aitoja Tetra Pakin varaosia.

Aitoja Tetra Pakin tämän laitteen varaosia voi tilata ottamalla yhteys lähimpään Tetra Pak toimistoon.

Koneen tunnistaminen

CE-luokitus

Tämä laite täyttää Euroopan talousalueen (ETA) perus turvallisuus- ja terveysvaatimukset.

(Jatkuu)

(Jatkoa)

3-A Soveltuvuus

Jos konekilvessä on merkintä A-3 (15) (ks. kuvasta (B) sivulla i-7) se tarkoittaa, että laite täyttää A-3 -standardin puhtausvaatimukset muotoilimille, täyttimille ja tiivisteille astioissa, jotka on tarkoitettu maidolle ja maitotuotteille, numero 17-10.

Konekilpi

Kuva (B) sivulla i-7 näyttää esimerkin konekilvestä.
Esimerkki voimassa olevasta konekilvestä ja sen sijainnista laitteessa näkyy tämän laitteen mukana toimitettujen käyttöohjeiden johdanto luvussa.
Konekilpi sisältää alla luetellut tiedot, joita tarvitaan kun otetaan yhteyttä Tetra Pakkiin koskien erityisesti tätä laitetta.

- Koneen tyyppi (8)
- Teho (9)
- Piirustus erittelyt (10)
- Koneen sarjanumero (11)
- Valmistaja (12)
- Valmistusvuosi (13)
- CE-merkintä (14)
- 3-A merkintä (tarvittaessa) (15)

Varmista, että tämän käsikirjan etusivuilla olevat tuotetiedot vastaavat konekilven tietoja ja laitteen teknistä erittelyä.

Kuinka tätä varaosaluetteloa käytetään

Löydä ensin varaosan numero

a) Katso kuvaa (C) sivulla i-7: Mene pääryhmän vieressä ilmoitettuun kappaleeseen (16), joka sisältää sen osan, jonka haluat löytää.

Osat b) ja c) katso kuvaa (D) sivulla i-8.

b) Pääryhmän kuvassa etsi sitä koneen alaryhmää (18), joka sisältää etsimäsi osan tai alaryhmän. Huomioi sijaintinumero (19) ja siirry kuvaa seuraavaa luettelosivulle.

c) Etsi sijaintinumeroa/viitenimitystä (17) tai alaryhmän nimeä (20). Siirry vastaavalle sivunumerolle (21), joka on mainittu oikeanpuoleisessa sarakkeessa. Tetra Pak käyttää aina viitteissä toiminnallisia rakenteita. Prefiksi ilmaisin toiminto rakenne (=) ei näy viitenimityksissä.

(Jatkuu)

(Jatkoa)

Osat d) ja e) katso kuvaa (E) sivulla i-8.

d) Paikanna etsimäsi osa (22) alaryhmän piirroksessa ja huomioi osan sijaintinumero.

e) Osanumero (29) ja osan kuvaus (30) on luetteloitu sijaintinumeron vieressä luettelosivulla.

Varaosaluettelossa luetellut tiedot

Seuraava luettelo viittaa kuvaan (E) sivulla i-8. Varaosaluettelo sisältää seuraavat tiedot ryhmistä, alaryhmistä ja varaosista laitteelle:

- Viite ryhmän rakenteeseen (23). Osoittaa seuraavan ylemmän ryhmän laiteluettelon rakenteessa.
- Ryhmän nimi (24)
- Mittayksikkö (25)
- Määrä (26)
- Kokoamispiirustus numero (27)
- Luettelon sivualue (28). Sisällytetty, jos ryhmän kuvissa tai luetteloisssa on useita sivuja.
- Osan tai alaryhmän numero (29)
- Alaryhmän nimi tai osan kuvaus (30)
- Ryhmän numero (31)
- Laitteen numero (32)
- Ryhmätietojen otsikko (33). Ilmoittaa, onko otsikon alla oleva kohta erityiselle konevaihtoehdolle vai onko se luettelo yhteisistä osista. Jos luettelossa on useampi kuin yksi muunnos ja kullakin muunnoksella on oma asennuspiirroksensa, näytetään sivuviite muunnoksen asennuspiirustukseen.
- Sisäinen tiedotus (34)

Tuotetuki ja palaute

Tämän laitteen käyttöön, tai muihin tiedusteluihin, kommentteihin tai ehdotuksiin, esitettyihin kysymyksiin tai palautteeseen saa apua E-yhteystoimiston kotisivuilta osoitteesta http://e-liaison.tetrapak.com.
Jos pääsy Tetra Pak intranet sivuille ei ole saatavilla, ota yhteyttä lähimpään Tetra Pak edustajaan.

Information sur le manuel

Tetra Pak recommande de lire attentivement tous les manuels fournis. S'assurer que les manuels fournis sont accessibles au personnel qui s'occupe du fonctionnement ou de la maintenance de l'équipement.

Il est important de conserver ce manuel pendant toute la durée d'utilisation de la machine et de le transmettre à tout détenteur ou utilisateur ultérieur.

Tetra Pak ne sera pas tenu responsable d'un dommage causé à la machine ou à l'équipement par le fait de ne pas avoir respecté les instructions figurant dans le présent manuel.

Manuels fournis

Manuels fournis avec l'équipement:

CM

Le Manuel de Conversion fournit aux techniciens les informations nécessaires pour convertir la machine en vue des différents modes de production.

EM

Ce manuel électrique fournit aux techniciens les informations sur le système électrique de la machine.

IM

Ce manuel de Mise en place fournit aux techniciens les informations nécessaires pour l'installation de la machine en toute sécurité.

MM

Ce manuel de Maintenance fournit aux techniciens les informations pour la maintenance.

OM

Le Manuel d'Opérateur fournit à l'opérateur les informations sur la manutention et le fonctionnement de l'équipement avant, pendant et après la production.

RM

Le Manuel de Conversion fournit aux techniciens les renseignements nécessaires pour installer en toute sécurité un ensemble sur une machine ou un équipement mis en place.

(Suite à la page suivante)

(Suite de la page précédente)

SPC

Le Catalogue de pièces de rechange fournit les renseignements nécessaires pour commander les pièces de rechange chez Tetra Pak.

TeM

Le Manuel technique offre aux techniciens des informations qui peuvent être:

- des informations nécessaires pour installer l'équipement en toute sécurité,
- des informations nécessaires pour entretenir l'équipement
- des informations concernant le système électrique de l'équipement/des machines.
- des informations nécessaires à la commande de pièces de rechange auprès de Tetra Pak
- d'autres informations techniques.

HAUT

Les pages de Mise à Jour fournissent de nouvelles pages pour mettre à jour les manuels de machine existants.

Présentation d'une page

Se référer à la figure (A) à la page i-7: Les pages principales du Catalogue des Pièces de Rechange sont composées d'une page de figure (1) et d'une page de liste correspondante (7). Le numéro de page (5) est indiqué dans le titre de la page de figure et dans le bas de page d'une page de liste. Le numéro de document (6) est indiqué dans le bas de page de la page de liste.

Numérotation de page

Se référer (A) à la page i-7: Un numéro de page (5) possède trois parties:

- Numéro de chapitre (2)
- numéro de page consécutif (2) à l'intérieur du chapitre (3)
- nombre total de pages dans le chapitre (4)

Remarque! Les lettres UP peuvent remplacer le numéro de chapitre (2), si le manuel comprend des pages de mise à jour. Le numéro de page consécutif (3) et le nombre total de pages (4) des pages de mise à jour ne suivent pas la pagination séquentielle du chapitre.

Présentation de la machine

Fabricant

Pour le nom et l'adresse du fabricant, voir la deuxième page de ce catalogue.

Assistance technique

Tetra Pak ne sera pas tenu responsable des dommages sur l'équipement ou des blessures au personnel ou aux consommateurs qui pourraient être causés par des pièces de rechange qui ne sont pas des pièces de rechange Tetra Pak originales.

Pour commander les pièces de rechange originales de cette machine, prendre contact avec le bureau Tetra Pak le plus proche.

Identification

Certification CE

Cet équipement est conforme aux réglementations essentielles d'hygiène et de sécurité de la Communauté Économique Européenne (CEE).

(Suite à la page suivante)

(Suite de la page précédente)

3-A Conformité

Si la plaque de machine contient le repère 3-A (15) (voir la figure (B) à la page i-7), cet équipement est conforme aux Normes Sanitaires 3-A pour les moules, les remplisseuses et systèmes de soudure de conteneurs pour lait liquide et produits laitiers liquides, Numéro 17-10.

Plaque signalétique de la machine

La figure (B) à la page i-7 montre un exemple d'une plaque signalétique de machine.
Une représentation de la plaque de machine valable et son emplacement sur l'équipement est indiquée au chapitre Introduction des manuels fournis avec l'équipement. La plaque de machine contient les caractéristiques figurant dans la liste ci-dessous, nécessaires pour prendre contact avec Tetra Pak au sujet de cet équipement spécifique.

- Type de machine (8)
- Volume (9)
- Spécifications du plan (10)
- Numéro de série de la machine (11)
- Fabricant (12)
- Année de fabrication (13)
- Marquage CE (14)
- Repère 3-A (s'il y a lieu) (15)

S'assurer que les caractéristiques de l'équipement figurant dans la liste des pages de garde de ce manuel correspondent aux caractéristiques de la plaque signalétique de la machine et à ses spécifications.

Comment utiliser ce Catalogue de Pièces de Rechange

Localiser un Numéro de Pièce de rechange.

a) Se référer à la figure (C) à la page i-7: Aller au numéro de chapitre (16) indiqué à côté du groupe principal qui contient la pièce que vous souhaitez localiser.

Les articles b) et c) se réfèrent à la figure (D) à la page i-8.

b) Sur la figure du groupe principal, chercher la sous-groupe de machine (18) qui contient la pièce ou le sous-groupe que recherché. Noter le numéro de repère (19) et aller à la page de liste qui suit la figure.

c) Rechercher le numéro de repère/la désignation de référence (17) ou le nom de sous-groupe (20). Aller au numéro de page correspondant (21) figurant dans la liste de la colonne de droite. Tetra Pak a choisi de toujours utiliser la structure orientée vers la fonction pour la désignation de référence. Le préfixe indiquant la structure orientée vers la fonction (=) n'est pas indiquée dans la désignation de référence.

(Suite à la page suivante)

(Suite de la page précédente)

Les articles d) et e) se réfèrent à la figure (E) à la page i-8.

d) Localiser la pièce (22) recherchée sur la figure de sous-groupe et noter le numéro de repère de la pièce.
e) Le numéro de pièce (29) et la description de la pièce (30) figurent dans la liste à côté du numéro de repère sur la page de liste.

Informations figurant dans la Liste dans un Catalogue de Pièces de Rechange.

La liste ci-dessous se réfère à la figure (E) à la page i-8. Un Catalogue de Pièces de Rechange contient les renseignements suivants relatifs aux groupes, sous-groupes et pièces de rechange de l'équipement.

- Référence de structure de groupe (23). Indique le groupe supérieur suivant dans la structure de liste d'équipement.
- Nom du groupe (24)
- Unité de mesure (25)
- Quantité (26)
- Numéro de plan de montage (27)
- Gamme de la page de liste (28). Incluse s'il y a des pages multiples dans la figure de groupe ou dans la liste.
- Numéro de pièce ou de sous-groupe (29)
- Nom de sous-groupe ou description de la pièce (30)
- No. de groupe (31)
- Numéro de l'équipement (32)
- Titre des informations de groupe (33). Indique si la section sous le titre est pour une variante de machine spécifique ou s'il y a une liste de pièces communes. Si une liste comporte plus d'une variante et que chaque variante possède son propre plan de montage, une référence de page au plan de montage de la variante est alors indiqué.
- Informations internes (34)

Service Assistance et Réaction ("Support and Feeback")

Pour toute assistance lors de l'utilisation de cet équipement, ou pour toutes autres questions, commentaires ou suggestions, poser les questions ou faire part des réactions sur la page d'accueil du site de liaison électronique: http://e-liaison.tetrapak.com. Si l'accès au réseau interne Tetra Pak n'est pas disponible, prendre contact avec le représentant Tetra Pak le plus proche.

Kézikönyv információ

A Tetra Pak az összes leszállított kézikönyv alapos átolvasását javasolja. Gondoskodjon arról, hogy a készüléket üzemeltető és karbantartó személyzet számára elérhetőek legyenek a leszállított kézikönyvek.

Fontos, hogy a kézikönyvet a berendezés teljes élettartama alatt megőrizzék, és továbbadják azt minden későbbi tulajdonosnak és felhasználónak.

A Tetra Pak nem vállal felelősséget semmilyen a készülékben keletkező kárért, amely a berendezéshez mellékelt kézikönyvben lévő utasítások be nem tartásának következménye.

Leszállított kézikönyvek

A berendezéssel leszállított kézikönyvek:

CM

A CM Átállítási kézikönyv ellátja a szakembereket a különböző gyártási üzemmódokra való átállításról szóló információkkal.

EM

Az EM Elektromossági kézikönyv ellátja a szakembereket a készülék elektromos rendszerével kapcsolatos információkkal.

IM

Az IM Telepítési kézikönyv a készülék biztonságos telepítéséhez szolgáltat információkat a szakemberek számára.

MM

Az MM Karbantartási kézikönyv a készülék karbantartásával kapcsolatosan szolgáltat információkat a szakemberek számára.

OM

Az OM Üzemeltetési kézikönyv a kezelők részére szolgáltat információkat a berendezés kezeléséről és működtetéséről a gyártás előtt, alatt és után.

RM

Az RM újraépítési kézikönyv ellátja a szakembereket azokkal az információkkal, amelyek egy készletnek a már telepített gépre való biztonságos felszereléséhez szükségesek.

(Folyt.)

(Folyt.)

SPC

Az SPC Alkatrész-katalógus a Tetra Paktól megrendelhető alkatrészek megrendeléséhez szükséges információkat tartalmazza.

TeM

A TeM Műszaki útmutató az alábbi információkkal látja el a technikusokat:

- a berendezés biztonságos felszereléséhez szükséges információkkal,
- a berendezés karbantartásához szükséges információkkal,
- a gép/berendezés elektromos rendszerével kapcsolatos információkkal,
- A Tetra Paktól történő cserealkatrész rendeléshez szükséges információkkal,
- egyéb műszaki információkkal.

UP

A UP Termékfrissítési oldalak új oldalakkal frissíti a gépkönyveket.

Oldal elrendezés

Lásd az (A) ábrát a(z) i-7 oldalon: Az Alkatrész-katalógus fő oldalai egy ábrákat tartalmazó oldalból (1) és a megfelelő listát tartalmazó oldalból (7) állnak. Az oldalszám (5) az ábrákat tartalmazó oldal fejlécében és a listát tartalmazó oldal láblécében jelenik meg. A dokumentumszám a listát tartalmazó oldal (6) láblécében jelenik meg.

Oldalszámozás

Lásd az ábrát (A) a(z) i-7 oldalon: Az oldalszám (5) három részből áll:

- fejezetszám (2)
- fejezeten belüli egymást követő oldalak száma (3)
- a fejezet összoldalszáma (4)

Megjegyzés! A UP betűk helyettesíthetik a fejezetszámot (2), ha a kézikönyv termékfrissítési oldalakat tartalmaz. A termékfrissítési oldalak egymást követő oldalai (3) és összoldalszáma (4) nem igazodik a fejezet egymást követő oldalszámozásához.

Gép bevezetés

Gyártó

A gyártó neve és címe a katalógus második oldalán található.

Szerviz

A Tetra Pak nem vállal felelősséget a berendezés, személyzet vagy fogyasztók olyan sérüléseiért, amelyet nem eredeti Tetra Pak pótalkatrészek használata okozott.

Eredeti Tetra Pak pótalkatrészeket a legközelebbi Tetra Pak irodából rendelhet.

Azonosítás

CE besorolás

A berendezés megfelel az Európai Gazdasági Térség (EEA) alapvető egészségügyi és biztonsági előírásainak.

(Folyt.)

(Folyt.)

3-A megfelelőség

Ha a gép adattáblája tartalmazza a 3-A jelzést (15) (lásd (B) ábra az i-7 oldalon), akkor ez a berendezés megfelelő a 3-A Egészségügyi szabványok folyékony tej és folyékony tejtermékek csomagolásának alakító, töltő és lezáró eszközeire, 17-10. sz.

Géptábla

A (B) ábra a(z) i-7 oldalon egy példa a géptáblára.
Az érvényes géptáblát és annak a gépen elfoglalt helyét bemutató ábra a berendezéshez mellékelt kézikönyvek bevezető fejezetében található. A géptábla az alább felsorolt adatokat tartalmazza, amelyekre akkor van szükség, amikor felveszi a kapcsolatot a Tetra Pakkal ezzel a sajátos berendezéssel kapcsolatban.

- Géptípus (8)
- Térfogat (9)
- Tervrajz specifikációk (10)
- Gép gyártási száma (11)
- Gyártó (12)
- Gyártási év (13)
- CE jelölés (14)
- 3-A jelölés (ha van ilyen) (15)

Bizonyosodjon meg arról, hogy a kézikönyv első oldalán található berendezés-adatok megfelelnek a géptábla adatainak és a gép specifikációinak.

Az Alkatrész-katalógus használata

Keresse meg az alkatrész-számot

a) Lásd a (C) ábrát a(z) i-7 oldalon: Ugorjon a fejezetszámra (16), amely a keresett alkatrészt tartalmazó fő csoport mellett található.

A(z) b) és c) adatok a(z) i-8 oldalon található (D) ábrára vonatkoznak.

b) A főcsoport ábráját lásd a gép alcsoportban (18), amely a keresett alkatrészt vagy alcsoportot tartalmazza. Jegyezze fel a pozíció számot (19) és ugorjon az illusztrációt követő lista oldalra.

c) Keresse a pozíció számot/referencia elnevezést (17) vagy az alcsoport nevét (20). Ugorjon a jobboldali oszlopban feltüntetett megfelelő oldalszámra (21). A Tetra Pak úgy döntött, hogy referencia elnevezésre mindig a funkcióorientált szerkezetet alkalmazza. A funkcióorientált szerkezetet jelző előtag (=) nem jelenik meg a referencia elnevezésben.

(Folyt.)

(Folyt.)

A(z) d) és e) adatok a(z) i-8 oldalon található (E) ábrára vonatkoznak.

d) Keresse meg az alkatrészt (22) az alcsoport ábrán és jegyezze fel az alkatrész pozíció számát.

e) Az alkatrész-szám (29) és az alkatrész leírása (30) a lista oldalon a pozíció szám mellett van feltüntetve.

Az Alkatrész-katalógusban feltüntetett információk

Az alábbi lista a(z) i-8 oldalon lévő (E) ábrára vonatkozik.
Az Alkatrész-katalógus a következő információkat tartalmazza a berendezés alcsoportokról, csoportokról és alkatrészekről.

- Csoportszerkezet referencia (23). A következő nagyobb csoportot jelzi a berendezés listaszerkezetében.
- Csoportnév (24)
- Mértékegység (25)
- Mennyiség (26)
- Szerelési rajz száma (27)
- Listaoldal tartomány (28). Akkor található meg, ha több oldalt tartalmaz a csoportábrában vagy a listában.
- Alkatrész vagy alcsoport szám (29)
- Alcsoport név vagy alkatrész leírás (30)
- Csoportszám (31)
- Berendezés szám (32)
- Csoportinformáció címsor (33). Azt jelzi, hogy az alábbi szakaszban a címsor egy bizonyos gépváltozatra vonatkozik, vagy általános alkatrészek egy listája Ha egy lista egynél több változattal rendelkezik, és mindegyik változatnak saját összeszerelési rajza van, a változatok szerelési rajzának egy oldal-hivatkozása jelenik meg.
- Belső információk (34)

Támogatás és visszajelzés

A berendezés üzemeltetésére vonatkozó segítséghez, vagy egyéb kérésekhez, megjegyzésekhez vagy javaslatokhoz az E-Liaison http://e-liaison.tetrapak.com honlapján kell feltenni kérdéseket vagy visszajelzést adni. Ha a Tetra Pak intranet nem érhető el, forduljon a legközelebbi Tetra Pak képviselethez.

Handbókaupplýsingar

Tetra Pak mælir með því að allar handbækur séu lesnar vandlega.
Gangið úr skugga um að afhentar handbækur séu tiltækar starfsmönnum sem reka tækin eða viðhalda þeim.

Mikilvægt er geyma þessa handbók á endingartíma búnaðarins og afhenda hana arftökum eða öðrum notendum.

Tetra Pak ber ekki ábyrgð á neinu tjóni á tækjunum sem stafar af því að ekki var farið eftir leiðbeiningum í þessari handbók.

Afhentar handbækur

Handbækur sem afhentar voru með þessum tækjum:

CM

Breytingahandbók veitir tæknimönnum upplýsingar um breytingar á tækjunum svo að þau hæfi hinum ýmsu framleiðsluháttum.

EM

Raftækjahandbók veitir tæknimönnum upplýsingar um rafkerfi tækjanna.

IM

Uppsetningarhandbók veitir tæknimönnum nauðsynlegar upplýsingar um örugga uppsetningu tækjanna.

MM

Viðhaldshandbók veitir tæknimönnum upplýsingar um viðhald tækjanna.

OM

Rekstrarhandbók veitir stjórnanda upplýsingar um meðhöndlun og rekstur tækjanna fyrir og eftir framleiðslu.

RM

Endurbyggingarhandbók veitir tæknimönnum nauðsynlegar upplýsingar um örugga uppsetningu viðbótarbúnaðar við þegar uppsetta vél eða tæki.

(frh.)

(frh.)

SPC

Varahlutalisti veitir upplýsingar sem nauðsynlegar eru til að panta varahluti frá Tetra Pak.

TeM

Í Tæknihandbókinni eru tæknimönnum veittar upplýsingar, svo sem:

- upplýsingar um örugga uppsetningu tækjanna
- upplýsingar um viðhald tækjanna
- upplýsingar um rafkerfi vélarinnar/búnaðarins
- nauðsynlegar upplýsingar um pantanir varahluta frá Tetra Pak
- aðrar tæknilegar upplýsingar

UP

Uppfærslublaðsíður eru nýjar blaðsíður til að uppfæra eldri vélahandbækur.

Umbrot

Vísað er til myndar (A) á bls. i-7: Meginblaðsíður í Varahlutalistanum eru myndablaðsíða (1) og samsvarandi listablaðsíða (7). Blaðsíða númer (5) er sýnd í fyrirsögn myndablaðsíðu og neðst á listablaðsíðu. Skjalsnúmer (6) er neðst á listablaðsíðu.

Blaðsíðunúmer

Vísað er til myndar (A) á blaðsíðu i-7: Blaðsíðunúmer (5) skiptist í þrjá hluta:

- kaflanúmer (2)
- raðnúmer (3) innan kaflans
- heildarfjölda blaðsíðna (4) í kaflanum.

Ath.! Stafirnir UP kunna að koma í stað kaflanúmers (2) ef uppfærslublaðsíður eru í handbókinni. Raðnúmer blaðsíðu (3) og heildarfjöldi síðna (4) af uppfærslublaðsíðum sýna ekki eldri raðnúmer í kaflanum.

Inngangur um vélina

Framleiðandi

Nafn og heimilisfang framleiðanda er birt á 2. bls. þessa vörulista.

Þjónusta

Tetra Pak ber enga ábyrgð á tjóni eða slysum á tækjum, starfsmönnum eða neytendum af völdum varahluta sem eru ekki ekta Tetra Pak-varahlutir.

Pantanir á ekta Tetra Pak-varahlutum í þessa vél skulu sendar næstu skrifstofu Tetra Pak.

Auðkenni

CE flokkun

Þessi tæki fullnægja grundvallarheilbrigðis- og öryggisreglugerðum Evrópska efnahagssvæðisins (EES).

(frh.)

(frh.)

3-A samræmi

Ef vélarplatan inniheldur 3-A merkingu (15) (sjá mynd (B) á bls. i-7) er þessi búnaður í samræmi við 3-A hreinlætisstaðla fyrir mótara, áfyllara og lokara íláta fyrir mjólkurvökva og mjólkurvökvavörur, nr. 17-10.

Vélarskilti

Myndin (B) á bls. i-7 sýnir dæmi um vélarskilti.
Mynd af gildandi vélarskilti og staðsetning þess á búnaðinun er birt í inngangskafla handbókanna sem afhentar eru með þessum búnaði.
Á vélarskiltinu er að finna þau gögn sem talin eru upp hér að neðan og þörf er fyrir þegar haft er samband við Tetra Pak vegna þessa sérstaka búnaðar.

- Vélargerð (8)
- Magn (9)
- Tækniteikningar (10)
- Raðnúmer vélar (11)
- Framleiðandi vélar (12)
- Framleiðsluár(13)
- CE-merki (14)
- 3-A-merki (ef við á) (15)

Gangið úr skugga um að gögn um búnaðinn á fyrstu blaðsíðum þessarar handbókar komi heim og saman við vélarskiltið og tæknilýsingu vélarinnar.

Notkun þessa varahlutalista

Finna ber númer varahlutar

a) Vísað er til myndar (C) á bls. i-7: Fletta skal upp á kafla (16) sem birtist við hlið meginhópsins sem hefur að geyma þann hlut sem ætlunin er að finna.

Atriði b) og c) vísa til myndar (D) á bls. i-8.

b) Á mynd af meginhópnum ber að gá að undirflokki (18) vélar sem hefur að geyma hlut eða undirflokk sem leitað er að.
Aðgæta skal staðsetningarnúmerið (19) og fletta upp á listablaðsíðu sem fylgir myndinni.

c) Finna ber staðsetningarnúmer/tilvísaða skilgreiningu (17) eða heiti undirhóps (20). Aðgæta skal viðeigandi blaðsíðunúmer (21) sem birt er í dálkinum hægra megin. Tetra Pak hefur valið að nota ávallt virkniform sem skilgreiningarhlut. Forskeytið, sem bendir til virkniformsins (=), er ekki sýnt í skilgreiningarhlutnum

(frh.)

(frh.)

Atriði d) og e) eiga við um mynd (E) á bls. i-8.

d) Finna ber hlutinn (22) sem leitað er að í undirhópsmyndinni og aðgæta hvert er staðsetningarnúmer hlutarins.

e) Hlutarnúmerið (29) og lýsing hlutarins (30) eru listuð við hlið staðsetningarnúmersins á listablaðsíðunni.

Upplýsingar sem birtar eru í Varahlutalistanum

Listinn hér að neðan á við um mynd (E) á bls. i-8. Í Varahlutalista er að finna eftirfarandi upplýsingar um hópa, undirhópa og varahluti fyrir tækin:

- Skilgreining uppbyggingar hóps (23). Bendir til næsta hóps fyrir ofan í uppbyggingu hlutalistans.
- Heiti hóps (24)
- Mælieiningar (25)
- Magn (26)
- Númer á samsetningarteikningu (27)
- Svið listablaðsíðu (28). Fylgir með ef um er að ræða margar blaðsíður á hópmyndninni eða listanum.
- Númer hlutar eða undirflokks (29)
- Heiti undirhóps eða lýsing hlutar (30)
- Hópnúmer (31)
- Númer búnaðar (32)
- Fyrirsögn upplýsingar um hóp (33). Bendir til þess hvort kaflinn undir fyrirsögninni fjalli um sérstaka gerð vélar eða í honum sé listi yfir almenna hluti. Ef í listanum er að finna fleiri en einn frábrugðinn hlut og birt er samsetningarteikning fyrir sérhvern frábrugðinn hlut er vísað til blaðsíðunnar með samsetningarteikningu hins frábrugðna hlutar.
- Innri upplýsingar (34)

Stuðningur og endurgjöf

Ef óskað er aðstoðar við notkun þessa búnaðar, eða að bera fram fyrirspurnir, athugasemdir eða tillögur, á að bera upp spurningar eða veita endurgjöf á E-Liaison-heimasíðunni http://e-liaison.tetrapak.com. Ef ekki er um að ræða aðgang að Tetra Pak-heimasíðunni ber að hafa samband við næsta umboðsmann Tetra Pak.

Informazioni sul manuale

Tetra Pak raccomanda di leggere con attenzione tutti i manuali forniti. Assicurarsi che i manuali forniti siano disponibili per il personale che opera o mantiene in efficienza l'equipaggiamento.

E' importante conservare questo catalogo per tutta la durata dell'equipaggiamento e consegnarlo ad ogni successivo possessore o utilizzatore.

Tetra Pak non si assumerà alcuna responsabilità per qualsiasi danno all'equipaggiamento causato dall'inosservanza delle istruzioni contenute nei manuali forniti con questo equipaggiamento.

Manuali forniti

Manuali forniti con questo equipaggiamento:

CM

Il Manuale di Conversione fornisce ai tecnici le informazioni sulla conversione dell'equipaggiamento tra i diversi modi di produzione.

EM

Il Manuale Elettrico fornisce ai tecnici le informazioni sul sistema elettrico dell'equipaggiamento.

IM

Il Manuale d'Installazione fornisce ai tecnici le informazioni necessarie per installare facilmente l'equipaggiamento.

MM

Il Manuale di Manutenzione fornisce ai tecnici le informazioni sulla manutenzione dell'equipaggiamento.

OM

Il Manuale Operativo fornisce all'operatore informazioni su come movimentare ed azionare l'equipaggiamento prima, durante e dopo la produzione.

RM

Il Manuale di modifica fornisce ai tecnici le informazioni necessarie per installare facilmente un kit ad una macchina o ad un equipaggiamento.

(Continua)

(Continuazione)

SPC

Il Catalogo parti di ricambio fornisce informazioni necessarie per ordinare le parti di ricambio da Tetra Pak.

TeM

Il Manuale Tecnico fornisce le informazioni ai tecnici che possono essere:

- informazioni necessarie per installare in modo sicuro l'equipaggiamento
- informazioni necessarie per la manutenzione dell'equipaggiamento
- informazioni sul sistema elettrico della macchina/equipaggiamento
- informazioni necessarie per ordinare le parti di ricambio a Tetra Pak.
- altre informazioni tecniche

SU

Le pagine di aggiornamento forniscono nuove pagine per aggiornare i manuali delle macchine esistenti.

Schema pagina

Fare riferimento alla figura (A) a pagina i-7: Le pagine principali in un catalogo parti di ricambio consistono di una pagina di illustrazione (1) ed una corrispondente pagina della lista (7). Il numero di pagina (5) è indicato nell'intestazione di una pagina di illustrazione e nel piè di pagina di una pagina della lista. Il numero di documento (6) è indicato nel piè di pagina di una pagina della lista.

Numerazione pagina

Fare riferimento alla figura (A) a pagina i-7: Un numero di pagina (5) ha tre parti:

- numero capitolo (2)
- numero pagina consecutivo nel capitolo (3)
- numero totale di pagine nel capitolo (4)

Nota! Le lettere UP possono sostituire il numero del capitolo (2) se il manuale include le pagine di aggiornamento. Il numero di pagina consecutivo (3) ed il numero totale di pagine (4) delle pagine di aggiornamento non seguono la numerazione esistente sequenziale delle pagine del capitolo.

Introduzione macchina

Fabbricante

Per il nome e l'indirizzo del fabbricante, vedere la seconda pagina di questo catalogo.

Assistenza

Tetra Pak non si assume alcuna responsabilità per qualsiasi danno all'equipaggiamento, o lesioni al personale o ai clienti che sia stato causato da parti di ricambio non originali Tetra Pak.

Per ordinare le parti di ricambio originali Tetra Pak per questa macchina, contattare l'ufficio Tetra Pak più vicino.

Identificazione

Classificazione CE

Questa macchina è conforme alle norme sanitarie e di sicurezza dell'Area Economica Europea (EEA).

(Continua)

(Continuazione)

Conformità 3-A

Se la targhetta macchina contiene il marchio 3-A (15) (vedere la figura (B) a pagina i-7), questo equipaggiamento è conforme alle norme sanitarie 3-A per formatrici, riempitrici e saldatori di contenitori per latte liquido e prodotti lattiero-caseari liquidi, numero 17-10.

Targhetta macchina

La figura (B) a pagina i-7 mostra un esempio della targhetta della macchina. Una figura della targhetta della macchina valida e la relativa posizione sull'equipaggiamento è mostrata nel capitolo Introduzione dei manuali forniti con questo equipaggiamento. La targhetta della macchina contiene i dati elencati in basso, necessari quando si contatta Tetra Pak in merito a questo specifico equipaggiamento.

- Tipo di macchina (8)
- Volume (9)
- Specifiche disegni (10)
- Numero di serie della macchina (11)
- Fabbricante (12)
- Anno di fabbricazione (13)
- Sigla CE (14)
- Marcatura 3-A (se applicabile) (15)

Assicurarsi che i dati dell'equipaggiamento nelle pagine anteriori di questo manuale corrispondano alla targhetta della macchina ed alle specifiche della macchina stessa.

Come usare questo catalogo parti di ricambio

Individuazione di un numero di parte di ricambio

a) Fare riferimento alla figura (C) a pagina i-7: Passare al numero del capitolo (16) indicato accanto al gruppo principale che contiene la parte che si vuole individuare.

Punti b) e c) fare riferimento alla figura (D) a pagina i-8.

b) Sulla figura del gruppo principale, cercare il sottogruppo della macchina (18) che contiene la parte o il sottogruppo che si sta cercando. Annotare il numero di posizione (19) e passare alla pagina della lista che segue la figura.

c) Cercare il numero di posizione/denominazione di riferimento (17) o il nome del sottogruppo (20). Passare al numero di pagina corrispondente (21) elencato nella colonna destra. Tetra Pak ha scelto di utilizzare sempre la funzione della struttura orientata per la denominazione di riferimento. Il prefisso che indica la funzione della struttura orientata (=) non è mostrato nella denominazione di riferimento

(Continua)

(Continuazione)

Punti d) e e) fare riferimento alla figura (E) a pagina i-8 .

d) Individuare la parte (22) che si sta cercando sulla figura del sottogruppo ed annotare il numero di posizione della parte.

e) Il numero della parte (29) e la descrizione della parte (30) sono elencati accanto al numero di posizione nella pagina della lista.

Informazioni elencate nel catalogo parti di ricambio

La lista in basso si riferisce alla figura (E) a pagina i-8. Un catalogo parti di ricambio contiene le seguenti informazioni sui gruppi, sottogruppi e parti di ricambio per l'equipaggiamento:

- Riferimento struttura gruppo (23). Indica il gruppo successivo superiore nella struttura della lista dell'equipaggiamento.
- Nome del gruppo (24)
- Unità di misura (25)
- Quantità (26)
- Numero disegno di montaggio (27)
- Gamma di pagine della lista (28). Inclusa se ci sono pagine multiple nella figura del gruppo o della lista.
- Numero della parte o del sottogruppo (29)
- Nome del sottogruppo o descrizione della parte (30)
- Numero gruppo (31)
- Numero dell'equipaggiamento (32)
- Sezione informazioni del gruppo (33). Indica se la sezione sotto l'intestazione è per una variante macchina specifica o se è una lista di parti comuni. Se una lista ha più di una variante e ogni variante ha il proprio disegno di montaggio, un riferimento della pagina è indicato nel disegno di montaggio della variante.
- Informazioni interne (34)

Supporto e feedback

Per l'assistenza durante il funzionamento di questo equipaggiamento, o altre richieste, commenti, o suggerimenti, presentare le domande o fornire il feedback sulla pagina iniziale E-Liaison a http://e-liaison.tetrapak.com. Se l'accesso all'intranet Tetra Pak non è disponibile, contattare il rappresentante Tetra Pak più vicino.

Vadovo informacija

Tetra Pak rekomenduoja atidžiai perskaityti visus pristatomus vadovus. Įsitikinkite, kad pristatomi vadovai yra prieinami personalui, kuris dirba su įranga arba ją prižiūri.

Svarbu saugoti šį vadovą visam įrangos gyvavimo laikotarpiui ir perduoti vadovą kiekvienam sekančiam savininkui arba naudotojui.

Tetra Pak neatsako už bet kokius įrangos gedimus, atsiradusius nesilaikant šią įrangą lydinčiuose vadovuose pateiktų instrukcijų.

Pristatomi vadovai

Kartu su šia įranga pristatomi vadovai:

CM

Perjungimų vadove specialistams suteikiama informacija apie įrangos perjungimą tarp įvairių gamybos režimų.

EM

Elektrinės dalies vadove pateikiama informacija specialistams apie įrangos elektros sistemą.

IM

Montavimo vadove pateikiama specialistams informacija, reikalinga saugiam įrangos montavimui

MM

Priežiūros vadove pateikiama specialistams informacija, reikalinga prižiūrint įrangą.

OM

Darbo vadove pateikiama informacija operatoriams apie darbą su įranga ir įrangos valdymą prieš gamybą, gamybos metu ir po gamybos.

RM

Restauravimo vadove pateikiama specialistams informacija, reikalinga saugiai sumontuoti komplektą dalių į sumontuotą mašiną ar įrangą.

(Tęsiama)

(Tęsiama)

SPC

Atsarginių dalių kataloge pateikiama informacija, reikalinga užsakant atsargines dalis iš Tetra Pak.

TeM

Techniniame vadove pateikiama specialistams informacija, kuri gali būti:

- informacija, reikalinga saugiam įrangos montavimui
- informacija, reikalinga atliekant techninę įrangos priežiūrą
- informacija apie mašinos / įrangos elektros sistemą
- informacija, reikalinga užsakant atsargines dalis iš Tetra Pak
- kitokia techninė informacija

UP

Nauji puslapiai skirti esamų mašinos vadovų atnaujinimui naujais puslapiais.

Puslapio išdėstymas

Vadovaukitės (A) paveikslėliu i-7 puslapyje: atsarginių dalių katalogo pagrindinius puslapius sudaro paveikslėlių puslapis (1) ir atitinkamo sąrašo puslapis (7). Puslapio numeris (5) nurodytas paveikslėlių puslapio antraštėje ir apatinėje sąrašo puslapio poraštėje. Dokumento numeris (6) nurodytas apatinėje sąrašo puslapio poraštėje.

Puslapių numeravimas

Vadovaukitės (A) paveikslėliu i-7 puslapyje: puslapio numerį (5) sudaro trys dalys:

- skyriaus numeris (2)
- puslapio eilės numeris (3) skyriuje
- bendras puslapių skaičius (4) skyriuje

Pastaba! Jei vadove yra atnaujinimų puslapiai, UP raidės gali būti vietoje skyriaus numerio (2). Atnaujinimo puslapio eilės numeris (3) ir bendras atnaujinimo puslapių skaičius (4) neatitinka nuoseklios skyriaus puslapių numeracijos.

Mašinos įvadas

Gamintojas

Apie gamintojo įmonės pavadinimą ir adresą skaitykite antrame šio katalogo puslapyje.

Aptarnavimas

Tetra Pak neprisiims jokios atsakomybės už žalą ir įrangos gedimus ar darbuotojų arba vartotojų traumas, patirtas naudojant atsargines dalis, kurios nėra originalios Tetra Pak atsarginės dalys.

Norėdami užsakyti originalias Tetra Pak atsargines dalis susisiekite su artimiausia Tetra Pak įstaiga.

Identifikacija

CE klasifikacija

Ši įranga tenkina pagrindines Europos Ekonominės Zonos (EEA) sveikatos ir saugumo taisykles.

(Tęsiama)

(Tęsiama)

3-A atitiktis

Jei mašinos lentelėje yra ženklas 3-A (15) (žr. (B) iliustraciją i-7 puslapyje), ši įranga atitinka 3-A higienos standartus skysto pieno ir skysto prieno produktų talpyklų formuotojams, pripildytojams ir sandarikliams, numeris 17-10.

Mašinos plokštė

Paveikslėlyje (B), esančiame i-7 puslapyje, pavaizduotas įrenginio kortelės pavyzdys.
Mašinos galiojančios kortelės paveikslėlis ir kortelės vieta ant įrangos nurodyta kartu su įranga tiekiamų vadovų įžanginiame skyriuje. Įrangos kortelėje pateikiami išvardinti duomenys, kurių reikia kreipiantis į Tetra Pak dėl konkrečios įrangos.

- Mašinos tipas (8)
- Tūris (9)
- Brėžinio specifikacijos (10)
- Mašinos serijos numeris (11)
- Gamintojas (12)
- Pagaminimo metai (13)
- CE ženklas (14)
- 3-A ženklas (jei taikomas) (15)

Įsitikinkite, kad šio vadovo pirmuose puslapiuose pateikti įrangos duomenis atitinka duomenis pateiktus mašinos informacinėje lentelėje ir mašinos specifikacijoje.

Kaip naudotis šiuo atsarginių dalių katalogu?

Nustatykite atsarginės dalies numerį

a) Vadovaukitės (C) paveikslėliu, esančiu i-7 puslapyje: atsiverskite skyrių, kurio numeris (16) nurodytas prieš pagrindinę grupę, kurioje yra reikiama surasti dalis.

Elementai b) ir c) atitinka (D) paveikslėlį, esantį i-8 puslapyje.

b) Pagrindinės grupės paveikslėlyje ieškokite mašinos dalinės grupės (18), kurioje yra ieškoma dalis ar dalinė grupė. Įsidėmėkite pozicijos numerį (19) ir atsiverskite už paveikslėlio esantį sąrašo puslapį.

c) Suraskite pozicijos numerio / nuorodos aprašymą (17) ar dalinės grupės pavadinimą (20). Atsiverskite atitinkamą puslapio numerį (21), nurodytą dešiniajame stulpelyje. Tetra Pak nuorodų aprašymams pasirinko visuomet naudoti su atliekama funkcija susietą struktūrą. Nuorodos aprašyme nenaudojamas priešdėlis, pažymintis su atliekama funkcija susietą struktūrą (=)

(Tęsiama)

(Tęsiama)

Elementai d) ir e) atitinka (E) paveikslėlį, esantį i-8 puslapyje.

d) Ieškomą dalį (22) suraskite dalinės grupės paveikslėlyje ir įsidėmėkite dalies pozicijos numerį.

e) Dalies numeris (29) ir dalies aprašymas (30) nurodyti sąrašo puslapyje prie pozicijos numerio.

Atsarginių dalių kataloge pateikiama informacija

Pateiktas sąrašas atitinka (E) paveikslėlį, esantį i-8 puslapyje. Atsarginių dalių kataloge pateikiama tokia informacija apie įrangos grupes, dalines grupes ir atsargines dalis:

- Grupės struktūros apibūdinimas (23). Nurodo kitą aukščiausią grupę įrangos sąrašo struktūroje.
- Grupės pavadinimas (24)
- Mato vienetas (25)
- Kiekis (26)
- Surinkimo brėžinio numeris (27)
- Sąrašo puslapių intervalas (28). Nurodomas tuomet, kai grupės paveikslėlį ar sąrašą sudaro keli puslapiai.
- Dalies ar dalinės grupės numeris (29)
- Dalinės grupės pavadinimas arba dalies aprašymas (30)
- Grupės numeris (31)
- Įrangos numeris (32)
- Grupės informacijos antraštė (33). Pažymi, ar po antrašte esantis skyrius skirtas konkrečiam mašinos variantui, ar tai bendrų dalių sąrašas. Jei sąrašą sudaro daugiau kaip vienas variantas ir kiekvienas iš jų atitinka skirtingą surinkimo numerį, pateikiama varianto surinkimo brėžinio puslapio nuoroda.
- Vidinė informacija (34)

Techninė pagalba ir grįžtamasis ryšys

Dėl techninės pagalbos ar kitokių pasiteiravimų eksploatuojant šią įrangą, norėdami pateikti pastabas arba pasiūlymus, užduokite klausimus ar suteikite grįžtamąją informaciją E-Liaison pagrindiniame puslapyje, adresu http://e-liaison.tetrapak.com. Jei nepavyks pasiekti vidinio Tetra Pak tinklo, susisiekite su artimiausia Tetra Pak atstovybe.

Informācija par instrukciju

Tetra Pak iesaka uzmanīgi izlasīt visas piegādātās instrukcijas. Nodrošiniet, lai piegādātās instrukcijas būtu pieejamas personālam, kurš ekspluatē un apkalpo iekārtu.

Ir svarīgi saglabāt šo katalogu visā ierīces kalpošanas laikā un nodot to jebkuram sekojošam īpašniekam vai lietotājam.

Tetra Pak neuzņemas atbildību par jebkādiem šīs iekārtas bojājumiem, ko izraisa šim aprīkojumam pievienotajās rokasgrāmatās sniegto instrukciju neievērošana.

Piegādātās instrukcijas

Ar iekārtu piegādātās instrukcijas:

CM

Šī Maiņas instrukcija (CM) nodrošina tehnisko personālu ar informāciju par iekārtas pārvēršanu dažādiem ražošanas režīmiem.

EM

Elektrisko savienojumu instrukcija (EM) nodrošina tehniķus ar informāciju par iekārtas elektrisko sistēmu.

IM

Instalācijas instrukcija (IM) nodrošina tehniķus ar informāciju, kas ir nepieciešama drošai iekārtas instalācijai.

MM

Tehniskās apkopes instrukcija (MM) sniedz tehniķiem informāciju par aprīkojuma tehnisko apkopi.

OM

Ekspluatācijas instrukcija (OM) nodrošina operatorus ar informāciju par rīcību ar iekārtu un tās ekspluatāciju pirms un pēc ražošanas procesa, kā arī tā laikā.

RM

Pārveidošanas instrukcija (RM) sniedz tehniķiem informāciju, kas nepieciešama, lai uz uzstādītas iekārtas vai aprīkojuma droši uzstādītu komplektu.

(Turpinājums seko)

(Turpinājums seko)

SPC

Rezerves daļu katalogs (SPC) sniedz informāciju, kas ir nepieciešama rezerves daļu pasūtīšanai no Tetra Pak.

TeM

Tehniskā instrukcija (TeM) sniedz tehniķiem informāciju, kas var būt:

- informācija, kura nepieciešama, lai droši uzstādītu aprīkojumu;
- informācija, kura nepieciešama, lai veiktu aprīkojuma tehnisko apkopi;
- informācija par iekārtas/ aprīkojuma elektrosistēmu;
- informācija, kura nepieciešama rezerves daļu pasūtīšanai no Tetra Pak;
- cita tehniskā informācija.

UP

Atjauninājuma lappuses ir jaunas lapas, kas nepieciešamas, lai atjauninātu iekārtas esošās rokasgrāmatas.

Lappuses formāts

Skatiet attēlu (A) lappusē i-7: Rezerves daļu kataloga (SPC) galvenās lapas iekļauj ilustrāciju lapu (1) un attiecīgo saraksta lapu (7). Lappuses numurs (5) ir attēlots ilustrācijas lapas galvenes daļā un saraksta lapas kājenes daļā. Dokumenta numurs (6) ir attēlots saraksta lapas kājenes daļā.

Lappušu numerācija

Skatiet attēlu (A) lappusē i-7: lappuses numuram (5) ir trīs daļas:

- sadaļas numurs (2);
- lappuses kārtas numurs (2) sadaļā;
- kopējais lappušu skaits (3) sadaļā.

Piezīme! Burti UP var aizvietot sadaļas numuru (2), ja rokasgrāmata iekļauj atjauninājumu lappuses. Lappuses kārtas numurs (3) un atjauninājumu lappušu kopējais lappušu skaits (4) neatbilst sadaļas esošajai secīgajai lappušu numerācijai.

Ievads par ierīci

Ražotājs

Ražotāja nosaukumu un adresi skatiet šī kataloga otrajā lappusē.

Serviss

Tetra Pak neuzņemas atbildību par bojājumiem vai kaitējumu aprīkojumam, personālam vai klientiem, ko rada tādu rezerves daļu izmantošana, kas nav oriģinālas Tetra Pak rezerves daļas.

Lai pasūtītu oriģinālas Tetra Pak rezerves daļas šai iekārtai, sazinieties ar tuvāko Tetra Pak biroju.

Identifikācija

CE klasifikācija

Šī iekārta atbilst Eiropas Ekonomiskās Telpas (EEA) galvenajiem veselības un drošības noteikumiem.

(Turpinājums seko)

(Turpinājums seko)

3-A atbilstība

Ja uz iekārtas datu plāksnītes ir 3-A marķējums (15) (skatīt attēlu (B) lappusē i-7), šāds aprīkojums atbilst 3-A Šķidrā piena un šķidro piena produktu iepakojuma formētāju, pildītāju un sakausētāju sanitārajām normām Nr. 17-10.

Iekārtas datu plāksne

Attēlā (B) lappusē i-7 ir attēlots iekārtas datu plāksnes piemērs. Iekārtas datu plāksnes attēls, kā arī šīs plāksnes atrašanās vieta uz aprīkojuma ir attēlota līdz ar šo iekārtu piegādāto rokasgrāmatu ievada sadaļā. Iekārtas datu plāksnē ir iekļauti tālāk norādītie dati, kas ir nepieciešami, sazinoties ar Tetra Pak jautājumos, kuri saistīti ar šo specifisko aprīkojumu.

- Iekārtas tips (8)
- Tilpums (9)
- Rasējuma specifikācijas (10)
- Iekārtas sērijas numurs (11)
- Ražotājs (12)
- Ražošanas gads (13)
- CE marķējums (14)
- 3-A marķējums (ja piemērojams) (15)

Pārliecinieties, vai iekārtas dati šīs instrukcijas pirmajā lappusē atbilst datiem iekārtas datu plāksnē un iekārtas specifikācijai.

Kā lietot šo Rezerves daļu katalogu

Atrodiet rezerves daļas numuru

a) Skatiet attēlu (C) lappusē i-7: atrodiet sadaļas numuru (16), kas norādīts līdzās galvenajai grupai, kur atrodas meklējamā detaļa.

Punkti b) un c) attiecas uz attēlu (D) lappusē i-8.

b) Galvenās grupas attēlā atrodiet iekārtas apakšgrupu (18), kur atrodas meklējamā detaļa vai apakšgrupa. Atcerieties pozīcijas numuru (19) un skatiet sarakstu, kas seko pēc šī attēla.

c) Atrodiet pozīcijas numuru/ atsauces apzīmējumu (17) vai apakšgrupas nosaukumu (20). Atšķiriet attiecīgo lappusi (21), kas norādīta labajā ailē. Atsauču apzīmējumiem Tetra Pak vienmēr izvēlas lietot uz funkciju orientētu struktūru. Prefikss, kas apzīmē uz funkciju orientēto struktūru (=), atsauču apzīmējumos nav norādīts.

(Turpinājums seko)

(Turpinājums seko)

Punkti d) un e) attiecas uz attēlu (E) lappusē i-8.

d) Apakšgrupas attēlā atrodiet meklēto detaļu (22) un atcerieties detaļas pozīcijas numuru.

e) Detaļas numurs (29) un detaļas apraksts (30) ir sniegts saraksta lapā blakus pozīcijas numuram.

Informācija, kas sniegta Rezerves daļu katalogā

Tālāk sniegtais saraksts attiecas uz attēlu (E) lappusē i-8.
Rezerves daļu katalogs satur šādu informāciju par grupām, apakšgrupām un aprīkojuma rezerves daļām:

- grupas struktūras atsauci (23). Norāda uz aprīkojuma saraksta struktūras nākamo augstāko grupu.
- Grupas nosaukumu (24).
- Mērvienība (25)
- Daudzums (26)
- Montāžas rasējuma numurs (27)
- Saraksta lappušu diapazons (28). Ja grupas attēli vai saraksts iekļauj vairākas lappuses.
- Detaļas vai apakšgrupas numurs (29)
- Apakšgrupas nosaukums vai detaļas apraksts (30)
- Grupas numurs (31)
- Aprīkojuma numurs (32)
- Grupas informācijas virsraksts (33). Ja sadaļa, kas seko pēc virsraksta, attiecas uz specifisku iekārtas versiju, vai kopēju detaļu saraksta gadījumā. Ja sarakstā ir vairāk nekā viena versija un katrai versijai ir savs montāžas rasējums, ir sniegta atsauce uz konkrētās versijas montāžas rasējuma lappusi.
- Iekšējā informācija (34)

Atbalsts un atgriezeniskā saite

Lai saņemtu palīdzību attiecībā uz darbu ar šo aprīkojumu, pieprasītu informāciju, izteiktu komentārus, sniegtu ieteikumus, uzdotu jautājumus vai sniegtu atsauksmes, apmeklējiet E-Liaison mājas lapu: http://e-liaison.tetrapak.com. Ja piekļuve Tetra Pak iekštīklam nav iespējama, sazinieties ar tuvāko Tetra Pak pārstāvniecību.

Handboekinformatie

Tetra Pak raadt aan alle geleverde documentatie zorgvuldig te lezen. Ga na of de geleverde documentatie ter beschikking is van het personeel dat de machine moet bedienen of servicewerkzaamheden moet uitvoeren.

Het is belangrijk deze catalogus voor de duur van de machine te bewaren en de catalogus door te geven aan elke volgende eigenaar of gebruiker.

Tetra Pak aanvaardt geen verantwoordelijkheid voor om het even welke soort beschadiging aan de machine als gevolg van het niet opvolgen van de in dit handboek gegeven instructies.

Meegeleverde handboeken

Met deze apparatuur meegeleverde handboeken:

CM

Dit conversiehandboek geeft technici informatie over het ombouwen van de apparatuur tussen verschillende productiemodi.

EM

Het Elektrisch Handboek geeft technici informatie betreffende het elektrisch systeem van de apparatuur.

IM

Het Installatiehandboek geeft technici informatie om op veilige wijze de apparatuur te installeren.

MM

Het Onderhoudshandboek geeft technici informatie over het onderhoud van de apparatuur.

OM

Het Bedieningshandboek geeft operators informatie over hoe de machine moet worden bediend en hoe ermee moet worden omgegaan voor, tijdens en na productie.

RM

Het Ombouwhandboek bevat de nodige informatie voor technici om een kit veilig aan een geïnstalleerde machine of apparatuur te installeren.

(Zie volg. blz.)

(Vervolg)

SPC

De Catalogus Reservedelen geeft informatie die nodig is om reserveonderdelen bij Tetra Pak te bestellen.

TeM

Het Technische Handboek bevat informatie voor technici betreffende:

- het veilig installeren van de apparatuur
- het onderhoud van de apparatuur
- het elektrische systeem van de machine/apparatuur.
- het bestellen van reserveonderdelen bij Tetra Pak
- andere technische informatie

UP

De Update Pages bevat nieuwe bladzijden voor het updaten van de bestaande machinehandboeken.

Pagina lay-out

Zie de illustratie (A) op bladzijde i-7: De belangrijkste bladzijden van een Catalogus Reserveonderdelen bestaan uit een bladzijde met een illustratie (1) en een corresponderende bladzijde met een lijst (7).
Het bladzijdenummer (5) is te vinden in de kop van een illustratiebladzijde en in de voetnoot van de lijstbladzijde. Het documentnummer (6) is te vinden in de voetnoot van een lijstbladzijde.

Bladzijdenummering

Zie de illustratie (A) op bladzijde i-7: een bladzijdenummer (5) bestaat uit drie delen.

- hoofdstuknummer (2)
- opeenvolgende bladzijdenummer in het hoofdstuk (3)
- totaal aantal bladzijden in het hoofdstuk (4)

N.B.! De letters UP kunnen het hoofdstuknummer (2) vervangen als het handboek update-bladzijden omvat. Het opeenvolgende bladzijdenummer (3) en het totale aantal bladzijden (4) van de updatebladzijden volgen niet de bestaande volgordenummering van het hoofdstuk.

Introductie van de machine

Fabrikant

Voor naam en adres van de fabrikant, zie de tweede bladzijde van deze catalogus.

Service

Tetra Pak wijst elke verantwoordelijkheid af voor schade aan machines of letsels aan personeel of consumenten die zijn veroorzaakt door reserveonderdelen die geen originele Tetra Pak-reserveonderdelen zijn.

Neem voor het bestellen van originele Tetra Pak-reserveonderdelen voor deze machine contact op met het dichtstbijzijnde Tetra Pak-kantoor.

Identificatie

CE-classificatie

Deze apparatuur voldoet aan de basiseisen voor gezondheid en veiligheid voor de Europese Economische Ruimte (EEA).

(Zie volg. blz.)

(Vervolg)

3-A Naleving

Als het machineplaatje het 3-A merkteken (15) bevat (zie illustratie (B) op bladzijde i-7), voldoet deze apparatuur aan de 3-A hygiënenormen voor vorm-, vul- en sluitmachines van containers voor vloeibare melk en vloeibare melkproducten, nummer 17-10.

Machineplaatje

De illustratie (B) op bladzijde i-7 toont een voorbeeld van een machineplaatje.
Een illustratie van het wettige machineplaatje en de plaatsing ervan wordt getoond in het hoofdstuk Introductie van de handboeken, meegeleverd met deze apparatuur. Het machineplaatje bevat onderstaande gegevens die nodig zijn wanneer Tetra Pak moet worden gecontacteerd betreffende deze apparatuur.

- Machinetype (8)
- Volume (9)
- Tekeningspecificaties (10)
- Serienummer machine (11)
- Fabrikant (12)
- Fabricagejaar (13)
- CE-markering (14)
- Markering 3-A (indien van toepassing) (15)

Controleer of de gegevens betreffende de apparatuur in de voorste bladzijden van dit handboek overeenkomen met de gegevens op het machineplaatje en de machinespecificatie.

Hoe dient deze catalogus reserveonderdelen te worden gebruikt.

Lokaliseren van een nummer van een reserveonderdeel

a) Zie de illustratie (C) op bladzijde i-7: ga naar het hoofdstuknummer (16), naast de hoofdgroep die het gewenste deel bevat.

Items b) en c) refereren naar de illustratie (D) op bladzijde i-8.

b) Zoek in de illustratie van de hoofdgroep de machinesubgroep (18) op die het deel van de gewenste subgroep bevat. Noteer het positienummer (19) en ga naar de lijstbladzijde die op de illustratie volgt.

c) Zoek het positienummer/referentiebenaming (17) of de naam van de subgroep (20). Ga naar het corresponderende bladzijdenummer (21), aangegeven in de rechterkolom. Tetra Pak heeft altijd gekozen voor een functiegerichte structuur voor referentiebenaming. Het prefix dat de functiegerichte structuur aangeeft (=) wordt niet getoond in de referentiebenaming.

(Zie volg. blz.)

(Vervolg)

Items d) en e) refereren naar de illustratie (E) op bladzijde i-8.

d) Lokaliseer het gewenste onderdeel (22) in de illustratie van de subgroep en noteer het positienummer van het onderdeel.

e) Het onderdeelnummer (29) en de beschrijving ervan (30) worden naast het positienummer op de lijstbladzijde weergegeven.

Informatie die in een Catalogus reserveonderdelen wordt gegeven

Onderstaande lijst verwijst naar de illustratie (E) op bladzijde i-8.
Een Catalogus reserveonderdelen bevat de volgende informatie betreffende groepen, subgroepen en reserveonderdelen voor de apparatuur.

- Referentie groepsstructuur (23). Geeft de volgende hoogste groep in de structuur van de apparatuur aan.
- Groepsnaam (24)
- Meeteenheid (25)
- Hoeveelheid (26)
- Nummer montagetekening (27)
- Bereik lijstbladzijde (28). Inclusief indien er meerdere bladzijden in de groepsillustratie of lijst voorkomen.
- Onderdeel of subgroepsnummer (29)
- Naam subgroep of beschrijving onderdeel (30)
- Groepsnummer (31)
- Apparatuurnummer (32)
- Kopregel groepsinformatie (33). Geeft aan of het deel onder de titel bedoeld is voor een specifieke machinevariant dan wel of het een lijst is met algemene onderdelen. Indien een lijst meer dan één variant bevat en elke variant heeft zijn eigen montagetekening, wordt een bladzijdereferentie naar de montagetekening van de variant gegeven.
- Interne informatie (34)

Ondersteuning en feedback

Voor hulp bij het gebruik van deze apparatuur, of met andere vragen, commentaar, suggesties of feedback kunt u terecht op de E-Liaison homepage op http://e-liaison.tetrapak.com. Als u geen toegang hebt tot het intranet van Tetra Pak, dient u contact op te nemen met de dichtstbijzijnde Tetra Pak-vertegenwoordiger.

Informasjon om manualen

Tetra Pak anbefaler at du leser alle medfølgende manualer nøye. Kontroller at personalet som bruker eller vedlikeholder utstyret har adgang til de medfølgende manualene.

Det er viktig at denne manualen oppbevares trygt gjennom hele utstyrets levetid, og at den gis videre til senere eiere eller brukere av utstyret.

Tetra Pak kan ikke holdes ansvarlig for skader på utstyr som skyldes at instruksjonene i manualene som følger dette utstyret ikke er fulgt.

Medfølgende manualer

Manualer som følger med dette utstyret:

CM

Konverteringsmanualen gir teknikere opplysninger om konvertering av utstyret mellom forskjellige produksjonsmodus.

EM

Denne manualen gir teknikere opplysninger om utstyrets elektriske system.

IM

Denne manualen gir teknikere informasjonen som trengs for sikker installasjon av utstyret.

MM

Denne manualen gir teknikere informasjon om vedlikehold av utstyret.

OM

Driftsmanualen gir operatørene informasjon om håndtering og drift av utstyret før, under og etter produksjon.

RM

Ombyggingsmanualen gir teknikere informasjon som kreves for å installere et sett trygt på en installert maskin eller et utstyr.

(Forts.)

(Forts.)

SPC

Reservedelskatalogen gir nødvendige opplysninger for å kunne bestille reservedeler fra Tetra Pak.

TeM

Den tekniske manualen gir teknikerne informasjon som kan være:

- informasjon som kreves for en trygg installering av utstyret
- informasjon som kreves for vedlikehold av utstyret
- informasjon om maskinens/utstyrets elektriske system
- nødvendig informasjon for å bestille reservedeler fra Tetra Pak.
- annen teknisk informasjon

OPP

Oppdateringssidene har nye sider for å oppdatere eksisterende maskinmanualer.

Sideoppsett

Gå til illustrasjonen (A) på side i-7: Hovedsidene i en reservedelskatalog består av en illustrasjonsside (1) og en korresponderende oversiktsside (7). Sidenummeret (5) vises i overskriften på en illustrasjonsside og i fotnoten på en oversiktsside. Dokumentnummeret (6) vises i fotnoten på en oversiktsside.

Sidenummerering

Gå til illustrasjon (A) på side i-7: Et sidenummer (5) har tre deler:

- kapittelnummer (2)
- neste sidenummer innen kapitlet (3)
- totalt antall sider i kapitlet (4)

Merk! Bokstavene UP kan erstatte kapittelnummer (2) hvis manualen inkluderer oppdateringssidene. Følgende sidenummer (3) og totalt antall sider (4) på oppdateringssidene følger ikke eksisterende sekvensnummerering av sidene i kapitlet.

Innføring i maskinen

Produsent

For produsentens navn og adresse, se andre siden i denne katalogen.

Service

Tetra Pak aksepter ikke ansvar for skader eller personskader på utstyr, ansatte eller brukere forårsaket av reservedeler som ikke er originale Tetra Pak reservedeler.

For å bestille originale Tetra Pak reservedeler til denne maskinen, kontakt nærmeste Tetra Pak kontor.

Identifikasjon

CE-klassifisering

Dette utstyret tilfredsstiller grunnleggende helse- og sikkerhetskrav i Det europeiske økonomiske samarbeidsområde (EØS).

(Forts.)

(Forts.)

3-A samsvar

Hvis maskinplaten er 3-A-merket (15) (se illustrasjon (B) på side i-7), er dette utstyret i samsvar med 3-A Sanitærstandarder for formings-, påfyllings-, og tetningssystemer for beholdere for flytende melkeprodukter, nummer 17-10.

Merkeplate

Illustrasjonen (B) på side i-7 viser et eksempel på en maskinplate.
En illustrasjon av gyldig maskinplate og dennes plassering på utstyret vises i introduksjonskapitlet i manualene som følger dette utstyret.
Maskinplaten inneholder dataen som er oppført under, som er nødvendig når du kontakter Tetra Pak om dette spesifikke utstyret.

- Maskintype (8)
- Volum (9)
- Tegnespesifikasjoner (10)
- Maskinens serienummer (11)
- Produsent (12)
- Produksjonsår (13)
- CE merke (14)
- 3-A merke (hvis relevant) (15)

Pass på at utstyrsdataen på forsidene i denne manualen stemmer overens med merkeplaten og maskinspesifikasjonen.

Hvordan bruke denne reservedelskatalogen

Finn et reservedelsnummer

a) Gå til illustrasjonen (C) på side i-7: Gå til kapittelnummer (16) som er indikert ved siden av hovedgruppen som inneholder delen du ønsker å lokalisere.

Deler b) og c) viser til illustrasjonen (D) på side i-8.

b) På hovedgruppeillustrasjonen, se etter maskinundergruppen (18) som inneholder delen eller undergruppen du ser etter.
Merk posisjonsnummeret (19) og gå til oversiktssiden som følger illustrasjonen.

c) Se etter posisjonsnummer /referanseanvisning (17) eller undergruppenavnet (20). Gå til korresponderende sidenummer (21) oppført i søylen på høyre hånd. Tetra Pak har valgt alltid å bruke funksjonsorientert struktur for referansebestemmelse.
Forinnstilt indikering av funksjonsorientert struktur (=) vises ikke i referansehenvisningen

(Forts.)

(Forts.)

Deler d) og e) viser til illustrasjonen (E) på side i-8.

d) Finn delen (22) som du leter etter i undergruppeillustrasjonen og merk delens posisjonsnummer.

e) Delenummeret (29) og delebeskrivelsen (30) er oppført ved siden av posisjonsnummeret på listesiden.

Informasjon oppført i en reservedelskatalog

Listen under viser til illustrasjonen (E) på side i-8. En reservedelskatalog inneholder følgende informasjon om grupper, undergrupper og reservedeler for utstyret:

- Gruppestrukturreferanse (23). Indikerer den neste gruppen over i utstyrslistestrukturen.
- Gruppenavn (24)
- Måleenhet (25)
- Antall (26)
- Monteringstegningens nummer (27)
- Oversiktssideomfang (28). Inkludert hvis det er mange sider i gruppeillustrasjonen eller listen.
- Delenummer eller undergruppenummer (29)
- Undergruppenavn eller delebeskrivelse (30)
- Gruppenavn (31)
- Utstyrsnummer (32)
- Gruppeinformasjon overskrift (33). Indikerer om seksjonen under overskriften er for en spesiell maskinvariant eller om det er en liste med fellesdeler. Hvis en liste har mer enn en variant og hver variant har sin egen monteringstegning, vil det vises en sidereferanse til denne variantens monteringstegning.
- Intern informasjon (34)

Støtte og tilbakemeldinger

For hjelp med bruk av utstyret, eller andre spørsmål, kommentarer, eller forslag kan du stille spørsmålene eller gi tilbakemelding på E-Liason hjemmesiden på http://e-liaison.tetrapak.com. Hvis tilgang på Tetra Pak intranet ikke finnes, kontakt den nærmeste Tetra Pak representanten.

Informacje na temat instrukcji

Tetra Pak zaleca, aby uważnie przeczytano dostarczone instrukcje. Należy dopilnować, aby instrukcje zostały udostępnione pracownikom, którzy obsługują lub wykonują przeglądy urządzenia.

Ważne jest, aby zachować niniejszy katalog przez okres użytkowania maszyny i przekazać go kolejnemu właścicielowi lub użytkownikowi.

Tetra Pak nie ponosi odpowiedzialności za uszkodzenia maszyny spowodowane nieprzestrzeganiem wskazówek podanych w niniejszej instrukcji dołączonej do maszyny.

Dostarczone instrukcje

Instrukcje dostarczone w raz z maszyną:

CM

Instrukcja przestawienia dostarcza technikom informacji na temat przestawiania maszyny między różnymi trybami produkcji.

EM

Instrukcja elektryczna dostarcza technikom informacji na temat układu elektrycznego maszyny.

IM

Instrukcja instalacyjna dostarcza technikom informacji niezbędnych do bezpiecznej instalacji maszyny.

MM

Instrukcja serwisowa dostarcza technikom informacji na temat przeglądów i napraw maszyny.

OM

Instrukcja obsługi dostarcza operatorowi informacji na temat obsługi maszyny przed, w trakcie i po zakończeniu produkcji.

RM

Instrukcja przebudowy dostarcza technikom informacji niezbędnych do wykonania bezpiecznej instalacji zestawu do przebudowy w zainstalowanej maszynie lub wyposażeniu.

(Ciąg dalszy)

(Ciąg dalszy)

SPC

Katalog części zamiennych dostarcza informacji niezbędnych do zamawiania części zamiennych w Tetra Pak.

TeM

Instrukcja techniczna dostarcza technikom informacji, które mogą być:

- informacjami wymaganymi do bezpiecznej instalacji wyposażenia
- informacjami wymaganymi do wykonywania przeglądów i napraw wyposażenia
- informacjami o systemie elektrycznym maszyny/wyposażenia.
- informacjami niezbędnymi do zamawiania części zamiennych w Tetra Pak.
- innymi informacjami technicznymi

UP

Rozdział Strony aktualizacji zawiera nowe strony użyte do aktualizacji istniejących instrukcji maszyny.

Układ strony

Zapoznaj się z rysunkiem (A) na stronie i-7: Główne strony w Katalogu Części Zamiennych zawierają stronę z rysunkiem (1) i odpowiednią stronę z wykazem (7). Numer strony (5) znajduje się w nagłówku strony z rysunkiem oraz w stopce strony z wykazem. Numer dokumentu (6) znajduje się w stopce strony z wykazem.

Numeracja stron

Zapoznaj się z rysunkiem (A) na stronie i-7: Numer strony (5) składa się z trzech części:

- numer rozdziału (2)
- kolejny numer strony (3) w danym rozdziale
- całkowita ilość stron (4) w rozdziale

Uwaga! Litery UP mogą zastępować numer rozdziału (2) jeśli instrukcja zawiera strony aktualizacji. Kolejny numer strony (3) i całkowita ilość stron (4) aktualizacji nie odpowiada istniejącej numeracji stron rozdziału.

Informacje na temat maszyny

Producent

Nazwa i adres producenta, patrz druga strona niniejszego katalogu.

Serwis

Tetra Pak nie odpowiada za wszelkie uszkodzenia wyposażenia, obrażenia personelu lub konsumentów spowodowane przez części zamienne, które nie są oryginalnymi częściami zamiennymi Tetra Pak.

W celu zamówienia oryginalnych części zamiennych Tetra Pak dla maszyny, skontaktuj się z najbliższym biurem Tetra Pak.

Identyfikacja

Znak CE

Oznacza on, iż urządzenie spełnia wymagania określone w podstawowych przepisach dotyczących bezpieczeństwa i zdrowia, obowiązujących w Europejskiej Strefie Ekonomicznej (EEA).

(Ciąg dalszy)

(Ciąg dalszy)

Zgodność z normą 3-A

Jeśli tabliczka znamionowa maszyny zawiera znak 3-A (15) (patrz rysunek (B) na stronie i-7), oznacza to, że wyposażenie jest zgodne z normami sanitarnymi 3-A dla jednostek formowania, maszyn napełniających i zgrzewarek pojemników dla mleka płynnego i płynnych produktów mlecznych, numer 17-10.

Tabliczka znamionowa

Na rysunku (B) na stronie i-7 pokazano przykład tabliczki znamionowej. Rysunek tabliczki znamionowej i jej lokalizacja na wyposażeniu znajduje się w rozdziale Wstęp instrukcji dostarczonych wraz z wyposażeniem. Tabliczka znamionowa zawiera dane przedstawione poniżej, które trzeba podać kontaktując się z Tetra Pak w sprawach dotyczących określonego wyposażenia.

- Typ maszyny (8)
- Pojemność (9)
- Specyfikacje rysunkowe (10)
- Numer seryjny maszyny (11)
- Producent (12)
- Rok produkcji (13)
- Znak CE (14)
- Znak 3-A (jeśli ma zastosowanie) (15)

Upewnij się, czy dane wyposażenia na pierwszych stronach niniejszej instrukcji odpowiadają danym przedstawionym na tabliczce znamionowej maszyny i specyfikacji maszyny.

Jak korzystać z Katalogu Części Zamiennych

Lokalizacja numeru części zamiennej

a) Zapoznaj się z rysunkiem (C) na stronie i-7: Przejdź do numeru rozdziału (16) wskazanego obok głównej grupy, która zawiera część, którą chcesz zlokalizować.

Pozycje b) i c) dotyczą rysunku (D) na stronie i-8.

b) Na rysunku głównej grupy, poszukaj podgrupy maszyny (18), która zawiera część lub podgrupę, której szukasz. Zanotuj numer pozycji (19) i przejdź na stronę z wykazem odpowiadającym rysunkowi.

c) Poszukaj numeru pozycji/oznaczenia referencyjnego (17) lub nazwy podgrupy (20). Przejdź na odpowiedni numer strony (21) podany w prawej kolumnie. Do oznaczania referencyjnego firma Tetra Pak zdecydowała się zawsze wykorzystywać strukturę zorientowaną na funkcję. Przedrostek wskazujący strukturę zorientowaną na funkcję (=) nie jest uwzględniony w oznaczeniu referencyjnym.

(Ciąg dalszy)

(Ciąg dalszy)

Pozycje d) i e) dotyczą rysunku (E) na stronie i-8.

d) Zlokalizuj część (22), której szukasz na rysunku podgrupy i zanotuj jej numer pozycji.

e) Numer części (29) i opis części (30) znajdują się obok numeru pozycji na stronie z wykazem.

Informacje podane w Katalogu Części Zamiennych

Poniższy wykaz dotyczy rysunku (E) na stronie i-8.
Katalog Części Zamiennych zawiera następujące informacje o grupach, podgrupach i częściach zamiennych wyposażenia.

- Odnośnik struktury grupy (23). Wskazuje następną wyższą grupę w strukturze wykazu wyposażenia.
- Nazwa grupy (24)
- Jednostka miary (25)
- Ilość (26)
- Numer rysunku zespołu (27)
- Zakres stron (28). Dołączony, jeśli na wykazie lub rysunku grupy znajdują się strony o numerach wieloczęściowych.
- Numer części lub podgrupy (29)
- Nazwa podgrupy lub opis części (30)
- Numer grupy (31)
- Numer wyposażenia (32)
- Nagłówek z informacją o grupie (33). Wskazuje czy sekcja poniżej nagłówka przynależy do określonej wersji maszyny, lub czy jest wykazem części. Jeśli wykaz ma więcej niż jedną wersję i każda wersja ma swój własny rysunek montażowy, podany będzie numer strony z rysunkiem montażowym danej wersji.
- Informacje wewnętrzne (34)

Wsparcie techniczne i informacje zwrotne

Jeśli będziesz potrzebował pomocy odnośnie obsługi wyposażenia, lub będziesz miał pytania, komentarze albo sugestie, umieść swoje pytania lub przekaż informacje zwrotne na internetowej stronie pod adresem http://e-liaison.tetrapak.com. Jeśli dostęp do sieci wewnętrznej Tetra Pak nie jest możliwy, skontaktuj się z najbliższym przedstawicielem Tetra Pak.

Informação do Manual

A Tetra Pak recomenda ler cuidadosamente todos os manuais fornecidos. Verificar se os manuais fornecidos estão ao dispor do pessoal que trabalha com o equipamento ou que faz a manutenção do mesmo.

É importante guardar este catálogo durante o tempo útil de vida da máquina ou do equipamento e de entregar o catálogo a qualquer proprietário ou utilizador subsequente.

A Tetra Pak não toma a responsabilidade por quaisquer danos no equipamento causados devido ao facto de que as instruções dadas nos manuais que acompanham este equipamento não foram seguidas.

Manuais fornecidos

Manuais fornecidos com este equipamento:

CM

O Manual de conversão fornece aos técnicos as informações sobre a conversão do equipamento entre os diferentes modos de produção.

EM

Este Manual Eléctrico fornece aos técnicos as informações sobre o sistema eléctrico do equipamento.

IM

Este Manual de Instalação fornece aos técnicos as informações necessárias para instalar seguramente o equipamento.

MM

Este Manual de Manutenção fornece aos técnicos as informações para a manutenção do equipamento.

OM

O Manual de Operação fornece ao operador as informações que ele necessita para manusear e accionar o equipamento antes, durante e depois da produção.

RM

O Manual de Remodelação fornece aos técnicos as informações necessárias para instalar seguramente um conjunto numa máquina ou equipamento instalado.

(Cont.)

(Cont.)

SPC

O Catálogo de Peças Sobressalentes fornece as informações necessárias para se encomendar peças sobressalentes à Tetra Pak.

TeM

O Manual Técnico fornece os técnicos com informações que podem ser:

- informações necessárias para instalar seguramente o equipamento,
- informações necessárias para a manutenção do equipamento
- informações sobre o sistema eléctrico da máquina/do equipamento.
- informações necessárias para encomendar peças sobressalentes à Tetra Pak.
- outras informações técnicas

UP

As Páginas de Actualização fornecem novas páginas para actualizar os manuais existentes da máquina.

Disposição da página

Referência à ilustração (A) na página i-7: As páginas principais num Catálogo de Peças Sobressalentes consistem numa página ilustrada (1) e numa página com a lista correspondente (7). O número da página (5) é mostrado no cabeçalho de uma página ilustrada e no rodapé de uma página com lista. O número do documento (6) é mostrado no rodapé de uma página com lista.

Numeração da página

Referência à ilustração (A) na página i-7: Um número de página (5) tem três partes:

- Número do capítulo (2)
- número consecutivo da página dentro do capítulo (3)
- número total de páginas no capítulo (4)

Nota! As letras UP podem substituir o número do capítulo (2) se o manual incluir páginas de actualização. O número consecutivo da página (3) e o número total de páginas (4) das páginas de actualização não seguem a numeração sequente das páginas do capítulo.

Introdução da máquina

Fabricante

Para o nome e morada do fabricante, ver a segunda página deste catálogo.

Assistência técnica

Tetra Pak não aceita responsabilidade por quaisquer danos ou prejuízos no equipamento, equipa ou consumidores que sejam causados por peças sobressalentes não originais da Tetra Pak.

Para encomendar as peças sobressalentes originais para esta máquina, contactar o representante Tetra Pak mais próximo.

Identificação

Classificação CE

Este equipamento está de acordo com os regulamentos de segurança e saúde da Área Económica Europeia (EEA).

(Cont.)

(Cont.)

3-A Concordância

Se a placa da máquina conter a marca 3-A (15) (ver a ilustração (B) na página i-7), este equipamento cumpre com as Normas Sanitárias 3-A para Formadores, Enchedores e Vedadores de Recipientes para Leite Líquido e Produtos de Leite Líquido, Número 17-10.

Placa da máquina

A ilustração (B) na página i-7 mostra um exemplo de uma placa da máquina. Uma ilustração da placa da máquina válida e a sua localização no equipamento é mostrada no capítulo Introdução dos manuais fornecidos com este equipamento. A placa da máquina contem os dados alistados em baixo, necessários quando se contactar a Tetra Pak relacionando-se a este equipamento em específico.

- Tipo da máquina (8)
- Volume (9)
- Especificações dos desenhos (10)
- Número de série da máquina (11)
- Fabricante (12)
- Ano de construção (13)
- Marca CE (14)
- Marca 3-A (se aplicável) (15)

Verificar se os dados do equipamento indicados nas páginas da frente deste manual correspondem aos dados na placa da máquina e à especificação da máquina.

Como usar este Catálogo de Peças Sobressalentes

Localizar um Número da peça sobressalente

a) Referência à ilustração (C) na página i-7: Para o número do capítulo (16) indicado ao lado do grupo principal que contem a peça que quer localizar.

Itens b) e c) referem-se à ilustração (D) na página i-8.

b) Na ilustração do grupo principal, procurar o subgrupo da máquina (18) que contem a peça ou subgrupo que está à procura. Anotar o número da posição (19) e passar para a página da lista que segue a ilustração.

c) Procurar o número/referência da posição (17) ou o nome do subgrupo (20). Passar para o número da página correspondente (21) alistado na coluna do lado direito. A Tetra Pak escolheu para usar sempre a estrutura orientada na função para a designação da referência.
O prefixo indicando a estrutura orientada na função (=) não está mostrada na designação de referência.

(Cont.)

(Cont.)

Itens d) e e) referem-se à ilustração (E) na página i-8.

d) Localizar a peça (22) que está à procura na ilustração do subgrupo e anotar o número da posição da peça.

e) O número da peça (29) e a descrição da peça (30) estão alistados ao lado do número da posição na página da lista.

Informações indicadas num Catálogo de Peças Sobressalentes

A lista em baixo refere-se à ilustração (E) na página i-8.
Um Catálogo de Peças Sobressalentes contem as seguintes informações sobre grupos, subgrupos e peças sobressalentes para o equipamento:

- Referência da estrutura do grupo (23). Indica o grupo a seguir mais elevado na estrutura da lista do equipamento.
- Nome do grupo (24)
- Unidade de medição (25)
- Quantidade (26)
- Número do desenho de montagem (27)
- Gama da página de lista (28). Incluída se houver páginas múltiplas na ilustração do grupo ou lista.
- Número da peça ou do subgrupo (29)
- Nome do subgrupo ou descrição da peça (30)
- Número do grupo (31)
- Número do equipamento (32)
- Título da informação do grupo (33). Indica se a secção abaixo do título é para uma variante de máquina específica ou se é uma lista de peças comuns. Se uma lista tiver mais do que uma variante e cada variante tiver o seu próprio desenho de montagem, é mostrada uma referência para a página do desenho de montagem da variante.
- Informação interna (34)

Apoio e retro alimentação

Para assistência durante o accionamento deste equipamento, ou outros inquéritos, comentários ou sugestões, fazer as questões ou dar feedback no site da E-Liaison em http://e-liaison.tetrapak.com. Se não estiver disponível o acesso à intranet Tetra Pak, contactar por favor o representante Tetra Pak mais próximo.

Informațiile de manual

Tetra Pak recomandă citirea cu atenție a tuturor manualelor livrate. Asigurați-vă că manuale livrate sunt adecvate pentru personalul ce manipulează sau întreține instalația.

Este important să păstrați acest catalog pe tot parcursul funcționării instalației și să-l transmiteți următorului utilizator sau proprietar.

Tetra Pak nu își asumă nicio responsabilitate pentru nicio defecțiune a instalației cauzată de nerespectarea instrucțiunilor din manualul care însoțește instalația.

Manuale livrate

Manualele livrate împreună cu instalația

CM

Manualul de conversie (CM) furnizează tehnicienilor informații pentru conversia (adaptarea) echipamentului la diferite moduri de producție.

EM

Manualul electric oferă technicienilor informații despre sistemul electric al instalației.

IM

Manualul de instalare oferă tehnicienilor informații legate de montarea în siguranță a instalației.

MM

Manualul de întreținere oferă tehnicienilor informații privind întreținerea instalației.

OM

Manualul de funcționare (OM) oferă operatorului informații despre manipularea și funcționarea echipamentului înainte, în timpul și după procesul tehnologic.

RM

Manualul de reconstrucție oferă tehnicienilor informații necesare pentru montarea în siguranță a unui set pe un utilaj sau echipament montat.

(se continuă)

(se continuă)

SPC

Catalogul cu piese de schimb oferă informații necesare pentru comandarea pieselor de schimb de la Tetra Pak.

TeM

Manualul tehnic furnizează informații tehnicienilor ca de exemplu:

- informații necesare pentru a instala în condiții de siguranță echipamentul
- informații necesare pentru a întreține echipamentul
- informații privind sistemul electric al utilajului/echipamentului
- informațiile necesare pentru a comanda piesele de schimb de la Tetra Pak.
- alte informații tehnice

UP

Paginile pentru actualizare furnizează pagini noi pentru actualizarea manualelor existente ale utilajelor.

Configurația paginii

Consultați ilustrația (A) de la pagina i-7: Paginile principale din Catalogul pieselor de schimb sunt formate dintr-o pagină a ilustrațiilor (1) și o pagină a listei corespunzătoare (7). Numărul paginii (5) este prezentat în antetul unei pagini cu ilustrații și în subsolul unei pagini cu lista. Numărul documentului (6) este prezentat în subsolul unei pagini cu lista.

Numerotarea paginilor

Consultați ilustrația (A) de la pagina i-7: Numărul paginii (5) are trei părți:

- numărul capitolului (2)
- numărul consecutiv al paginii din cadrul capitolului (3)
- numărul total de pagini din capitol (4)

Notă! Literele UP pot înlocui numărul capitolului (2) dacă manualul include pagini actualizate. Numărul consecutiv al paginii (3) și numărul total de pagini (4) al paginilor actualizate nu urmează numerotarea existentă, secvențială a paginilor din cadrul capitolului.

Prezentarea aparatului

Producător

Pentru numele și adresa producătorului, vezi pagina a doua a acestui catalog.

Service

Tetra Pak nu își asumă responsabilitatea pentru nicio avarie sau rănire asupra echipamentului, personalului sau clienților, produsă de piese de schimb care nu sunt piese de schimb originale Tetra Pak.

Pentru a comanda piese de schimb originale Tetra Pak pentru acest utilaj, adresați-vă celui mai apropiat birou Tetra Pak.

Identificare

Clasificare CE

Acest echipament este în conformitate cu regulamentele de bază sanitare și de protecție ale Agenție Europene de Mediu (EEA).

(se continuă)

(se continuă)

Conformitatea 3-A

Dacă plăcuța cu numele utilajului conține marcajul 3-A (15) (vezi ilustrația (B) de la pagina i-7), acest echipament respectă standardele sanitare 3-A pentru dispozitive de formare, umplere și etanșare a containerelor pentru lapte lichid și produse lactate lichide, numărul 17-10.

Plăcuța mașinii

Ilustrația (B) de la pagina i-7 prezintă un exemplu al plăcuței mașinii. O ilustrație a plăcuței valabile a mașinii și a amplasării sale pe echipament este prezentată în capitolul Introducere al manualelor livrate cu acest echipament. Plăcuța mașinii conține datele prezentate mai jos, necesare când vă adresați Tetra Pak referitor la acest echipament.

- Tipul utilajului (8)
- Volum (9)
- Specificațiile desenului (10)
- Numărul de serie al utilajului (11)
- Producător (12)
- Anul de fabricație (13)
- Marcaj CE (14)
- Marcaj 3-A (dacă este cazul) (15)

Verificați dacă datele instalației din primele pagini ale acestui manual corespund cu datele de pe plăcuța mașinii și cu specificația mașinii.

Cum să folosiți acest catalog pentru piese de schimb

Localizați numărul piesei de schimb

a) Consultați ilustrația (C) de la pagina i-7: Mergeți la numărul capitolului (16) indicat lângă grupul principal care conține piesa pe care doriți să o localizați.

Elementele b) și c) se referă la ilustrația (D) de la pagina i-8.

b) Pe ilustrația grupului principal, căutați subgrupul mașinii (18) care conține piesa sau subgrupul pe care îl căutați. Notați numărul poziției (19) și mergeți la pagina listei de după ilustrație.

c) Căutați numărul poziției/denumirea referinței (17) sau numele subgrupului (20). Mergeți la numărul corespunzător al paginii (21) precizat în coloana din dreapta. Tetra Pak a ales să utilizeze întotdeuana structura orientată pe funcții pentru denumirea referinței. Prefixul care indică structura orientată pe funcții (=) nu este prezentat în denumirea referinței.

(se continuă)

(se continuă)

Elementele d) și e) se referă la ilustrația (E) de la pagina i-8.

d) Localizați piesa (22) pe care o căutați în ilustrația subgrupului și notați numărul poziției piesei.
e) Numărul piesei (29) și descrierea piesei (30) sunt listate lângă numărul poziției de pe pagina listei.

Informațiile enumerate în catalogul pentru piese de schimb

Lista de mai jos se referă la ilustrația (E) de la pagina i-8.
Un Catalog cu piese de schimb conține următoarele informații despre grupuri, subgrupuri și piese de schimb pentru echipament.

- Referința structurii grupului (23). Indică următorul grup superior din structura listei echipamentului.
- Numele grupului (24)
- Unitate de măsură (25)
- Cantitate (26)
- Numărul desenului de ansamblu (27)
- Domeniul paginii listei (28). Inclus dacă există mai multe pagini în ilustrația sau lista grupului.
- Numărul piesei sau subgrupului (29)
- Numele subgrupului sau descrierea piesei (30)
- Numărul grupului (31)
- Numărul echipamentului (32)
- Titlul cu informațiile grupului (33). Indică dacă secțiunea de sub titlu este pentru o anumită variantă de mașină sau este o listă de piese comune. Dacă o mașină are mai mult de o variantă și fiecare variantă își are propriul desen de ansamblu, este prezentată o referință a paginii la desenul de ansamblu al variantei.
- Informații interne (34)

Asistență şi feedback

Pentru asistență la operarea acestui echipament sau alte probleme, comentarii sau sugestii, adresați întrebările sau acordați feedback pe pagina E-Liaison, la http://e-liaison.tetrapak.com. Dacă nu este disponibil accesul la intranetul Tetra Pak, adresați-vă celui mai apropiat reprezentant Tetra Pak.

Informácie o príručke

Tetra Pak odporúča, aby ste si pozorne prečítali všetky dodané príručky. Presvedčite sa, či sú dodané príručky k dispozícii personálu, ktorý obsluhuje alebo vykonáva údržbu zariadenia.

Je dôležité, aby ste uchovávali tento katalóg po celý čas životnosti zariadenia, a odovzdali katalóg každému ďalšiemu vlastníkovi alebo užívateľovi zariadenia.

Spoločnosť Tetra Pak nezodpovedá za škody na zariadení spôsobené nedodržaním pokynov uvedených v príručkách, ktoré doprevádzajú toto zariadenie.

Dodané príručky

Príručky dodávané s týmto zariadením:

CM

Príručka na adaptáciu poskytuje technikom informácie o adaptácii zariadenia medzi rôznymi výrobnými režimami.

EM

Táto Elektrická príručka poskytuje technikom informácie o elektrickom systéme zariadenia.

IM

Táto Inštalačná príručka poskytuje technikom informácie potrebné pre bezpečnú inštaláciu zariadenia

MM

Táto Údržbárska príručka poskytuje technikom informácie o vykonávaní údržby zariadenia.

OM

Tento Návod na obsluhu poskytuje operátorovi informácie o tom, ako treba manipulovať so strojom a obsluhovať ho pred, počas a po výrobe.

RM

Príručka na prestavbu poskytuje technikom informácie potrebné pre bezpečnú inštaláciu súpravy na nainštalovaný stroj alebo zariadenie.

(Pokrač.)

(Pokrač.)

SPC

Katalóg náhradných dielov poskytuje informácie potrebné pre objednanie náhradných dielov od Tetra Pak.

TeM

Technická príručka poskytuje technikom informácie, ktorými môžu byť:

- potrebné informácie pre bezpečnú inštaláciu zariadenia
- potrebné informácie pre údržbu zariadenia
- informácie o elektrickom systéme stroja/zariadenia.
- poskytuje informácie potrebné na objednanie náhradných dielov od firmy Tetra Pak
- ostatné technické informácie

NAHOR

Aktualizované stránky poskytujú nové stránky k existujúcim príručkám na zariadenie.

Usporiadanie strany

Pozrite sa na obrázok (A) na strane i-7: hlavné stránky v Katalógu náhradných dielov tvorí stránky s ilustráciami (1) a odpovedajúca stránka so zoznamom (7). Číslo stránky (5) je uvedené v záhlaví stránky s obrázkom a v zápätí stránky so zoznamom. Číslo dokumentu (6) je uvedené v zápätí stránky so zoznamom.

Číslovanie strán

Pozrite sa na obrázok (A) na strane i-7: číslo stránky (5) má tri časti:

- číslo kapitoly (2)
- číslo ďalšej stránky v rámci kapitoly (3),
- celkový počet stránok v kapitole (4)

Poznámka! Písmena UP môžu nahradiť číslo kapitoly (2) v prípade, že manuál obsahuje aktualizované stránky. Nasledujúce číslo stránky (3) a celkový počet strán (4) aktualizovaných stránok sa nedrží existujúceho sekvenčného číslovania stránok v tejto kapitole.

Úvod k zariadeniu

Výrobca

Meno a adresu výrobcu nájdete na druhej strane tohto katalógu.

Servis

Tetra Pak nepreberá zodpovednosť za akúkoľvek škodu na zariadení alebo za zranení zamestnanca alebo spotrebiteľa, ktoré budú spôsobené tým, že sa nepoužijú originálne náhradné diele Tetra Pak.

Ak chcete pre tento stroj objednať originálne náhradné diely Tetra Pak, kontaktujte najbližšiu kanceláriu spoločnosti Tetra Pak.

Identifikácia

Klasifikácia CE

Toto zariadenie vyhovuje základným zdravotným a bezpečnostným predpisom Európskej hospodárskej oblasti (EEA).

(Pokrač.)

(Pokrač.)

3-A Súlad

Ak štítok stroja obsahuje označenie 3-A (15) (pozri obrázok (B) na strane i-7), potom je toto zariadenie v súlade s hygienickými normami 3-A pre formovanie, plnenie a uzatváranie obalov na tekuté mlieko a tekuté mliečne výrobky, číslo 17 -10.

Štítok zariadenia

Obrázok (B) na strane i-7 ukazuje príklad typového štítku.
Obrázok platného typového štítku a jeho umiestnenia na zariadení je uvedený v úvodnej kapitole príručiek dodaných s týmto zariadením.
Typový štítok obsahuje údaje uvedené niže, tieto údaje sú treba, keď kontaktujete spoločnosť Tetra Pak vo veci týkajúcej sa tohto špecifického vybavenia.

- Typ stroja (8)
- Objem (9)
- Špecifikácie výkresov (10)
- Sériové číslo stroja (11)
- Výrobca (12)
- Rok výroby (13)
- Symbol CE (14)
- Symbol 3-A (ak sa používa) (15)

Presvedčte sa, či dáta uvedené na čelnej strane tohoto manuálu korešpondujú s údajmi na identifikačnom typovom štítku stroja a so špecifikáciou stroja.

Ako používať tento katalóg náhradných dielov

Vyhľadať číslo náhradného dielu

a) Pozrite obrázok (C) na strane i-7: Prejsť na číslo kapitoly (16) uvedené vedľa hlavnej skupiny, ktorá obsahuje diel, ktorý chcete nájsť.

Položky b) a c) sa vzťahujú na obrázok (D) na strane i-8.

b) Na obrázku hlavnej skupiny sa pozrite na podskupinu stroja (18), ktorá obsahuje diely alebo podskupiny, ktoré hľadáte. Poznamenajte si číslo pozície (19) a prejdite na stránku zoznamu, ktorý nasleduje za obrázkom.

c) Pozrite sa na číslo pozície/označenie referencie (17) alebo na názov podskupiny (20). Prejdite na odpovedajúce číslo strany (21) uvedené v zozname v stĺpci na pravej strane. Spoločnosť Tetra Pak si zvolila vždy používať pre referenčné označenie štruktúru zameranú na funkciu. Predpona označujúca funkčne orientovanú štruktúru (=) nie je uvedená v referenčnom označení.

(Pokrač.)

(Pokrač.)

Položky d) a e) sa vzťahujú na obrázok (E) na strane i-8.

d) Lokalizujte diel (22), ktorý hľadáte, na obrázku podskupiny a poznamenajte si číslo pozície dielu.

e) Číslo dielu (29) a popis dielu (30) sú uvedené vedľa čísla pozície na stránke so zoznamom.

Informácie uvedené v katalógu náhradných dielov

Niže uvedený zoznam sa odkazuje na obrázok (E) na stránke i-8.
Katalóg náhradných dielov obsahuje nasledujúce informácie o skupinách, podskupinách a náhradných dieloch pre zariadenie:

- Referencia štruktúry skupiny (23). Označuje nasledujúcu vyššiu skupinu vo štruktúre zoznamu výbavy.
- Názov skupiny (24)
- Merná jednotka (25)
- Množstvo (26)
- Číslo montážneho výkresu (27)
- Rozsah stránok so zoznamom (28). Zahrnuté, ak existuje viac stránok v skupine obrázkov alebo v zozname.
- Číslo dielu alebo podskupiny (29)
- Názov podskupiny alebo popis dielu (30)
- Číslo skupiny (31)
- Číslo výbavy (32)
- Záhlavie informácií o skupine (33). Označuje, či sa časť pod záhlavím týka konkrétneho variantu stroja, alebo či sa jedná o zoznam spoločných dielov. Ak zoznam obsahuje viac ako jeden variant a každý variant má svoje vlastné montážne výkresy, je zobrazený odkaz na stránku s montážnym výkresom variantu.
- Vnútorné informácie (34)

Podpora a spätná väzba

Môžete sa na nás obracať s žiadosťou o pomoc počas prevádzky tohto zariadenia alebo s inými dotazmi, pripomienkami alebo námetmi pomocou internetovej kontaktnej domovskej stránky http://e-liaison.tetrapak.com, kde môžete takisto poskytnúť svoju spätnú väzbu. Ak nemáte prístup na intranet spoločnosti Tetra Pak, obráťte sa na najbližšieho zástupcu firmy Tetra Pak.

Informacije o navodilu

Tetra Pak priporoča, da vsa dobavljena navodila pazljivo prebrete. Prepričajte se, da so dobavljena navodila na razpolagu osebju, ki dela s strojem ali pa izvaja vzdrževalna dela na opremi.

Ta navodila je potrebno shraniti do konca življenjske dobe opreme in navodilo predati vsakemu naslednjemu imetniku ali uporabniku.

Tetra Pak ne nosi odgovornosti za poškodbo na opremi, do katere je prišlo zaradi neupoštevanja teh navodilih.

Dobavljena navodila

Navodila, ki se dobavljajo s to opremo:

CM

Navodila za spremembo (CM) oskrbujejo tehnike z informacijami glede zamenjav opreme med različnimi načini proizvodnje.

EM

Električna navodila oskrbujejo tehnike z informacijami glede električnega sistema opreme.

IM

Navodila za inštalacijo oskrbujejo tehnike z informacijami, ki so potrebne za varno inštalacijo opreme.

MM

Navodila za vzdrževanje oskrbujejo tehnika z informacijami glede vzdrževanja opreme.

OM

Navodila za delovanje (OM) oskrbijo strojnike z informacijami glede rokovanja z opremo in delovanjem le-te pred, med in po proizvodnji.

RM

Navodila za predelavo (RM) oskrbujejo tehnike z informacijami, ki so potrebne za varno inštalacijo opreme na inštalirani stroj ali opremo.

(Obrnite)

(Obrnite)

SPC

Katalog rezervnih delov prinaša informacije, ki so potrebne za naročanje rezervnih delov iz podjetja Tetra Pak.

TeM

Tehnološka navodila tehnikom podajo informacije, ki so lahko:

- potrebne za varno inštalacijo opreme
- potrebne za vzdževanje opreme
- vezane na električni sistem stroja/opreme
- ponujajo informacije, ki so potrebna za naročanje nadomestnih delov pri Tetra Paku
- druge tehnične informacije

GOR

Strani za posodobitev podajo nove strani za posodabljanje obstoječih navodil stroja.

Ureditev strani

Sklicujte se na ilustracijo (A) na strani i-7: Glavne strani v katalogu rezervnih delov so sestavljene iz strani z ilustracijami (1) in stranjo s seznamom (7). Številka strani (5) je prikazana v glavi strani z ilustracijo in v nogi strani s seznamom. Številka dokumenta (6) je prikazana v nogi strani s seznamom.

Oštevilčenje strani

Sklicujte se na ilustracijo (A) na strani i-7: Številka strani (5) ima tri dele:

- številko poglavja (2)
- zaporedno številko strani (2) znotraj poglavja (3)
- skupno število strani v poglavju (4)

Opomba! Črke UP lahko zamenjajo številko poglavja (2), če so v navodilih vključene posodobljene strani. Zaporedna številka strani (3) in skupno število strani (4) posodobljenih strani se ne ujemajo z obstoječim zaporedjem strani v poglavju.

Predstavitev stroja

Proizvajalec

Ime in naslov proizvajalca se nahajata na drugi strani tega kataloga.

Servisiranje

Tetra Pak ne prevzema odgovornosti za okvare ali poškodbe opreme, osebja ali potrošnikov, ki ga povzročijo rezervni deli, ki niso originalni Tetra Pak rezervni deli.

Za naročanje originalnih Tetra Pak rezervnih delov kontaktirajte najbližjo pisarno Tetra Pak.

Identifikacija

CE klasifikacija

Ta oprema izpolnjuje osnovne zdravstvene in varnostne ukrepe Evropskega ekonomskega prostora (EEA).

(Obrnite)

(Obrnite)

3-A Skladnost

Če ploščica stroja vsebuje oznako 3-A (15) (glejte ilustracijo (B) na strani i-7), ta oprema ustreza sanitetnim standardom 3-A za kalupe, polnilce in tesnila zbiralnikov za tekoče mleko in izdelke iz tekočega mleka, številka 17-10.

Strojna plošča

Ilustracija (B) na strani i-7 prikazuje primer ploščice za identifikacijo stroja. Ilustracija veljavne ploščice za identifikacijo stroja in njene lokacije na opremi je prikazana v uvodnem poglavju navodil, ki so bila dostavljena s to opremo. Ploščica za identifikacijo stroja vsebuje spodaj navedene podatke, ki so potrebni ob kontaktiranju podjetja Tetra Pak glede te specifične opreme.

- Tip stroja (8)
- Prostornina (9)
- Specifikacije skice (10)
- Serijska številka stroja (11)
- Proizvajalec (12)
- Leto izdelave (13)
- CE oznaka (14)
- 3-A oznaka (če obstaja) (15)

Prepričajte se, da se podatki o opremi, ki se nahajajo na sprednjih straneh teh navodil, v skladu s podatki strojne plošče in specifikacije stroja.

Kako uporabljati ta katalog rezrevnih delov

Poiščite številko rezervnega dela

a) Sklicujte se na ilustracijo (C) na strani i-7: Pojdite na številko poglavja (16), ki se nahaja poleg glavne skupine in ki vsebuje del, ki ga želite poiskati.

Predmeti b) in c) se nanašajo na ilustracijo (D) na strani i-8.

b) Na ilustraciji glavne skupine poiščite podskupino stroja (18), ki vsebuje del ali podskupino, ki jo iščete. Opazite položaj številke (19) in pojdite na stran seznama, ki sledi ilustraciji.

c) Poiščite številko lokacije/referenco (17) ali pa ime podskupine (20). Pojdite na ustrezno številko strani (21), ki je navedena v stolpcu na desni strani. Tetra Pak se je odločil za to, da vedno uporablja funkcijsko naravnano strukturo kot referenco. Predpona, ki nakazuje funkcijsko naravnano strukturo (=), ni prikazana v referenci.

(Obrnite)

(Obrnite)

Predmeti d) in e) se nanašajo na ilustracijo (E) na strani i-8.

d) Poiščite del (22), ki ga iščete, na ilustraciji podskupine in zabeležite številko lokacije dela.

e) Številka dela (29) in opis dela (30) sta navedena poleg lokacije številke na strani s seznamom.

Informacije, ki so navedene v katalogu rezervnih delov

Spodnji seznam se nanaša na ilustracijo (E) na strani i-8. Katalog rezervnih delov vsebuje naslednje informacije o skupinah, podskupinah in rezervnih delih za opremo.

- Referenca strukture skupine (23). Določa naslednjo višjo skupino v strukturi seznama opreme.
- Ime skupine (24)
- Enota merjenja (25)
- Količina (26)
- Številka skice sistema (27)
- Razpon seznama strani (28). Vključeno, če obstaja več strani v ilustraciji skupine ali na seznamu.
- Del ali številka podskupine (29)
- Ime podskupine ali opis dela (30)
- Številka skupine (31)
- Številka opreme (32)
- Naslov informacije o skupini (33). Nakazuje ali je spodnji odsek naslov specifične različice stroja ali pa če gre za seznam splošnih delov. Če ima seznam več kot eno različico in ima vsaka različica svojo skico sistema, je prikazana referenca strani na skici sistema vsake različice.
- Notranje informacije (34)

Podpora in ponovna uporaba

Za pomoč pri rokovanju z opremo ali druga vprašanja, komentarje ali predloge, se obrnite ali podajte mnenje na domači spletni strani sodelavcev na naslovu http://e-liaison.tetrapak.com. Če dostop do Tetra Pak intraneta ni na voljo, kontaktirajte najbližjega zastopnika podjetja Tetra Pak.

Information om handboken

Tetra Pak rekommenderar att alla handböcker läses noggrant.
Se till att handböckerna är tillgängliga för personalen som använder eller underhåller utrustningen.

Det är viktigt att denna katalog behålls under utrustningens livslängd, och att katalogen överlämnas till varje efterföljande innehavare eller användare.

Tetra Pak kan inte hållas ansvarig för eventuella skador på utrustningen som orsakas av man inte följer de instruktioner som ges i de handböcker som medföljer denna utrustning.

Medföljande handböcker

Handböcker som levereras tillsammans med denna utrustning:

CM

Konverteringshandboken ger tekniker information om konvertering av utrustningen mellan olika produktionssätt.

EM

Den elektriska handboken ger teknikerna information om utrustningens elektriska system.

IM

Installationshandboken ger teknikerna information som krävs för att kunna installera utrustningen säkert.

MM

Underhållshandboken ger teknikerna information om hur utrustningen ska underhållas.

OM

Drifthandboken ger operatören information om hur utrustningen ska hanteras före, under och efter produktion.

RM

Ombyggnadshandboken ger teknikerna den information som krävs för att säkert installera en sats på en installerad maskin eller utrustning.

(Forts.)

(Forts.)

SPC

Reservdelskatalogen (SPC) ger den information som krävs för att kunna beställa reservdelar från Tetra Pak.

TeM

Teknisk handbok ger tekniker information i form av:

- information som krävs för att säkert kunna installera utrustningen
- information som krävs för att underhålla utrustningen
- information om maskinens/utrustningens elsystem
- information som krävs för beställning av reservdelar från Tetra Pak
- annan teknisk information

UPP

Uppdateringssidorna innehåller nya sidor för att uppdatera befintliga maskinhandböcker.

Sidlayout

Se illustration (A) på sidan i-7: Huvudsidorna i en Reservdelskatalog består av en illustrationssida (1) och en tillhörande listsida (7).
Sidnumret (5) visas i sidhuvudet på en illustrationssida och i sidfoten på en listsida. Dokumentnumret (6) visas i sidfoten på listsidan.

Sidnumrering

Se illustration (A) på sidan i-7: Ett sidnummer (5) har tre delar:

- kapitelnummer (2)
- löpande sidnummer inom kapitlet (3)
- totalt sidantal i kapitlet (4)

OBS! Bokstäverna UP kan ersätta kapitelnumret (2) om handboken innehåller uppdateringssidor. Det löpande sidnumret (3) och det totala antalet sidor (4) för uppdateringssidor följer inte den befintliga löpande sidnumreringen av kapitlet.

Introduktion till maskinen

Tillverkare

För tillverkarens namn and adress, se andra sidan i denna katalog.

Service

Tetra Pak tar inte något ansvar för eventuella skador eller eventuella personskador på utrustning, personal eller konsumenter som orsakas av att reservdelarna inte är original Tetra Pak reservdelar.

Vid beställning av original Tetra Pak reservdelar för denna maskin, kontakta närmaste Tetra Pak-kontor.

Identifiering

CE-klassificering

Denna utrustning uppfyller de grundläggande hälso- och säkerhetskraven inom European Economic Area (EEA).

(Forts.)

(Forts.)

3-A överensstämmelse

Om maskinskylten är märkt med 3-A (15) (se bild (B) på sidan i-7), uppfyller denna utrustning 3-A Hygienstandarder för resare, fyllare och förseglare av behållare för flytande mjölk och flytande mjölkprodukter, Nummer 17-10.

Maskinskylt

Illustration (B) på sidan i-7 visar ett exempel på en maskinskylt.
En illustration av gällande maskinskylt och dess placering på utrustningen visas i Introduktion-kapitlet i de handböcker som levereras med denna utrustning. Maskinskylten innehåller data som listas nedan, vilken behövs för att kontakta Tetra Pak rörande denna specifika utrustning.

- Maskintyp (8)
- Volym (9)
- Ritningsspecifikationer (10)
- Maskinnummer (11)
- Tillverkare (12)
- Tillverkningsår (13)
- CE-märkning (14)
- 3A-märke (om tillämpligt) (15)

Kontrollera att utrustningsdata som finns på de inledande sidorna i denna handbok överensstämmer med maskinskyltens data och maskinspecifikationen.

Hur man använder denna reservdelskatalog

Hitta ett reservdelsnummer

a) Se illustration (C) på sidan i-7: Gå till det kapitelnummer (16) som anges bredvid huvudgruppen som innehåller delen du vill lokalisera.

Punkterna b) och c) refererar till illustration (D) på sidan i-8.

b) Leta på huvudgruppens bild upp den undergrupp (18) i maskinen som innehåller delen eller undergruppen du letar efter. Notera positionsnumret (19) och gå till listsidan som följer på bilden.

c) Leta upp positionsnummer/referensbeteckning (17) eller undergruppens namn (20). Gå till motsvarande sidnummer (21) som anges i den högra kolumnen. Tetra Pak har valt att alltid använda en funktionsorienterad struktur för referensbeteckning. Prefix som anger funktionsorienterad struktur (=) visas inte i referensbeteckningen.

(Forts.)

(Forts.)

Punkterna d) och e) refererar till illustration (E) på sidan i-8.

d) Leta upp den del (22) som du letar efter på undergruppens bild och notera delens positionsnummer.

e) Artikelnumret (29) och artikelbeskrivningen (30) anges bredvid positionsnumret på listsidan.

Information som anges i en Reservdelskatalog

Listan nedan refererar till illustration (E) på sidan i-8. En Reservdelskatalog innehåller följande information om grupper, undergrupper och reservdelar för utrustningen:

- Gruppstrukturreferens (23). Anger närmast högre grupp i utrustningens liststruktur.
- Gruppnamn (24)
- Måttenhet (25)
- Antal (26)
- Sammanställningsritningens nummer (27)
- Listans sidomfång (28). Anges om det finns flera sidor i gruppens bild eller lista.
- Artikel- eller undergruppnummer (29)
- Undergruppens namn eller beskrivning av delen (30)
- Gruppnummer (31)
- Utrustningsnummer (32)
- Gruppinformationsrubrik (33). Anger om avsnittet under rubriken gäller för en specifik maskinvariant eller om det är en lista över gemensamma delar. Om en lista har mer än en variant och varje variant har sin egen sammanställningsritning, visas en sidreferens till variantens sammanställningsritning.
- Intern information (34)

Support och feedback

För hjälp med att handha denna utrustning, eller andra frågor, kommentarer eller förslag, ställ frågorna eller ge feedback på E-Liaison hemsida på http://e-liaison.tetrapak.com. Om tillgång till Tetra Pak intranet inte föreligger, kontakta närmaste Tetra Pak-representant.

This page intentionally left blank

SPC
Spare Parts Catalogue

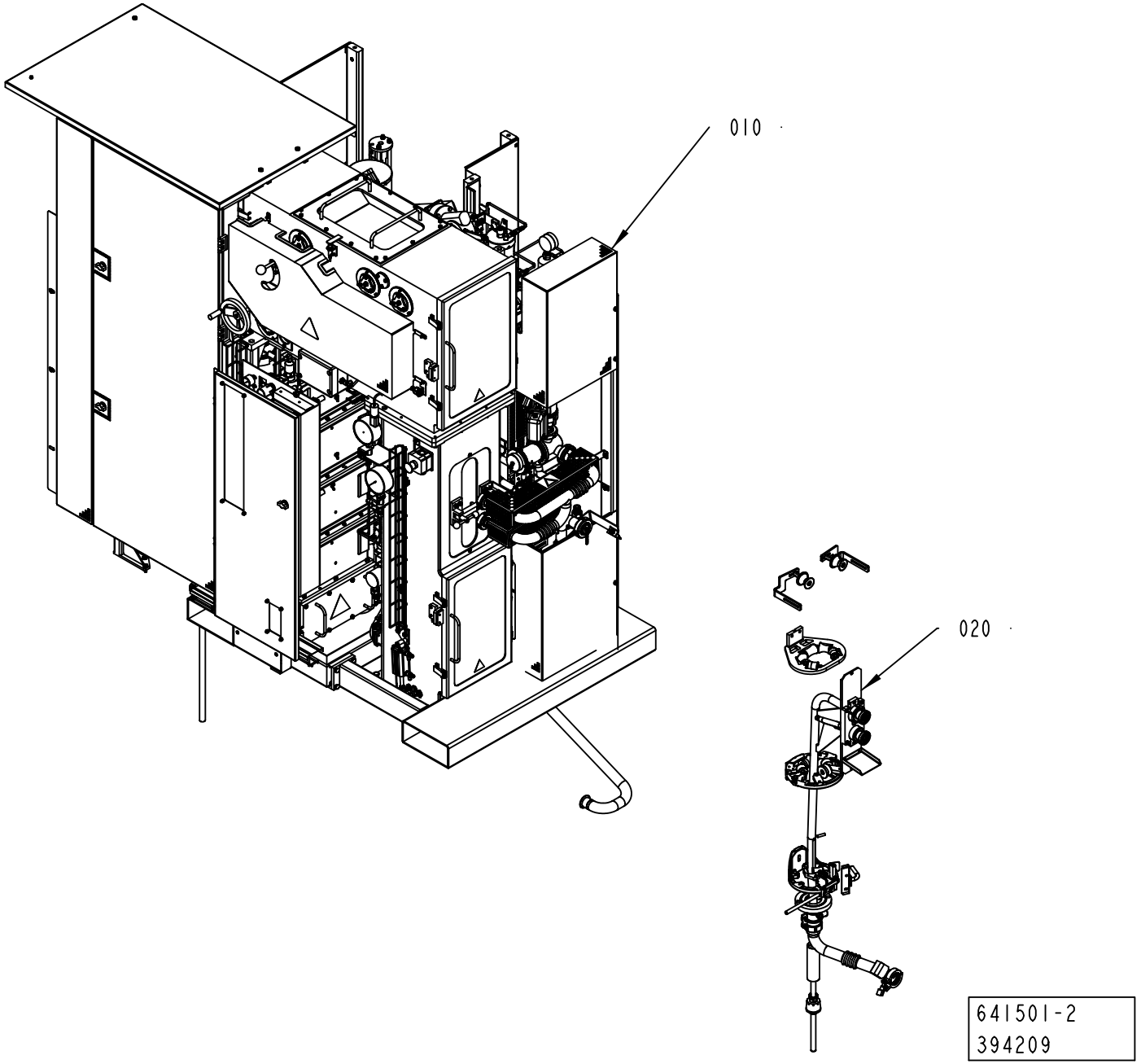
010
020
641501-2
394209

ECM: 511101 - 20111001
Group number: 641501-0200
Assembly Drawing: 641501-2_1_AA

Pos	Part No	UN	Qty	Description	Page No
-					
010	2890045-0200		1	BASE UNIT	**1-5, 1-7, 1-9**
020	2890050-0200		1	FORMING UNIT	**1-269**

Pos	Part No	UN	Qty	Description	Page No

Machine Type | Group Description | Used-In | Group Number | Page No

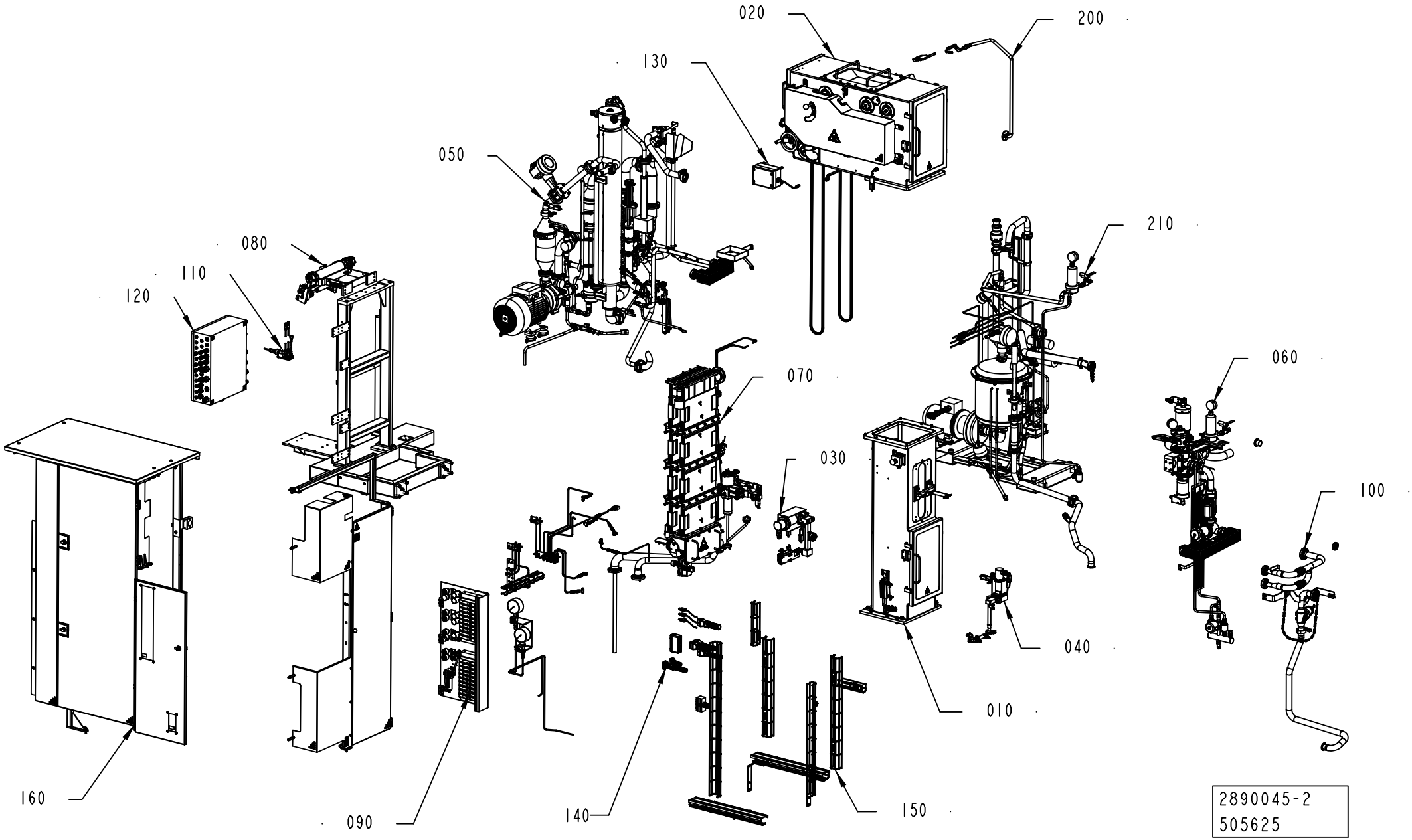
020
200
130
050
080
110
120
210
070
060
030
100
040
010
160
090
140
150
2890045-2
505625

ECM: 529449 - 20111220
Group number: 2890045-0200
Assembly Drawing: 2890045-2_1_AB

This list covers pages from 1-4 to 1-9

Pos	Part No	UN	Qty	Description	Page No
NOPT HVA ICU NOHI (See drawing on page: 1-6)					
170	2945410-0200		1	HIGH VISCOSITY ASEPTIC HVA	**1-11**
210	2906140-0100		1	INTEGRATED CLEANING UNIT	**1-65, 1-67**
NOPT HVA NOICU NOHI (See drawing on page: 1-6)					
170	2945410-0200		1	HIGH VISCOSITY ASEPTIC HVA	**1-11**
NOPT NOHVA ICU HI (See drawing on page: 1-8)					
180	2890060-0200		1	HEAD SPACE BY INJECTION	**1-85**
210	2906140-0100		1	INTEGRATED CLEANING UNIT	**1-65, 1-67**
NOPT NOHVA ICU NOHI (See drawing on page: 1-4)					
210	2906140-0100		1	INTEGRATED CLEANING UNIT	**1-65, 1-67**
NOPT NOHVA NOICU HI (See drawing on page: 1-8)					
180	2890060-0200		1	HEAD SPACE BY INJECTION	**1-85**
PT/CF HVA ICU NOHI (See drawing on pages: 1-4, 1-6)					
170	2945410-0200		1	HIGH VISCOSITY ASEPTIC HVA	**1-11**
210	2906140-0100		1	INTEGRATED CLEANING UNIT	**1-65, 1-67**
PT/CF HVA NOICU NOHI (See drawing on page: 1-6)					
170	2945410-0200		1	HIGH VISCOSITY ASEPTIC HVA	**1-11**
PT/CF NOHVA ICU HI (See drawing on page: 1-8)					
180	2890060-0200		1	HEAD SPACE BY INJECTION	**1-85**
210	2906140-0100		1	INTEGRATED CLEANING UNIT	**1-65, 1-67**
PT/CF NOHVA ICU NOHI (See drawing on page: 1-4)					
210	2906140-0100		1	INTEGRATED CLEANING UNIT	**1-65, 1-67**
PT/CF NOHVA NOICU HI (See drawing on page: 1-8)					
180	2890060-0200		1	HEAD SPACE BY INJECTION	**1-85**
Common Parts					
010	2808320-0200		1	ASEPTIC CHAMBER	**1-101**
020	2808310-0200		1	DRYING CHAMBER	**1-109**
030	2808330-0200		1	HOT AIR ELEMENT	**1-143**
040	2808335-0200		1	HOT AIR ELEMENT	**1-145**
050	2808271-0200		1	STERILE AIR SYSTEM	**1-147**
060	2835307-0200		1	FILLING SYSTEM	**1-169**
070	2808246-0200		1	HYDROGEN PEROXIDE	**1-195**
080	2808381-0100		1	FRAME SECTION,UPPER	**1-205**
090	2839244-0100		1	PNEUMATIC SYSTEM	**1-213**
100	2846109-0100		1	CLEANING SYSTEM	**1-233, 1-235, 1-237**
110	3032218-0100		1	CONNECTION BOX	**1-239**
120	2871450-0200		1	CONNECTION BOX	**1-241**
130	2839255-0100		1	PRESSURE SWITCH	**1-245**
140	2839248-0200		1	CABLE	**1-247, 1-249**
150	2846115-0100		1	CABLE TRENCH	**1-253**
160	2839265-0300		1	COVERING PANEL	**1-255, 1-257**
200	2966630-0100		1	STERILE AIR BLOWER	**1-261**

Pos	Part No	UN	Qty	Description	Page No

Machine Type | Group Description | Used-In | Group Number | Page No

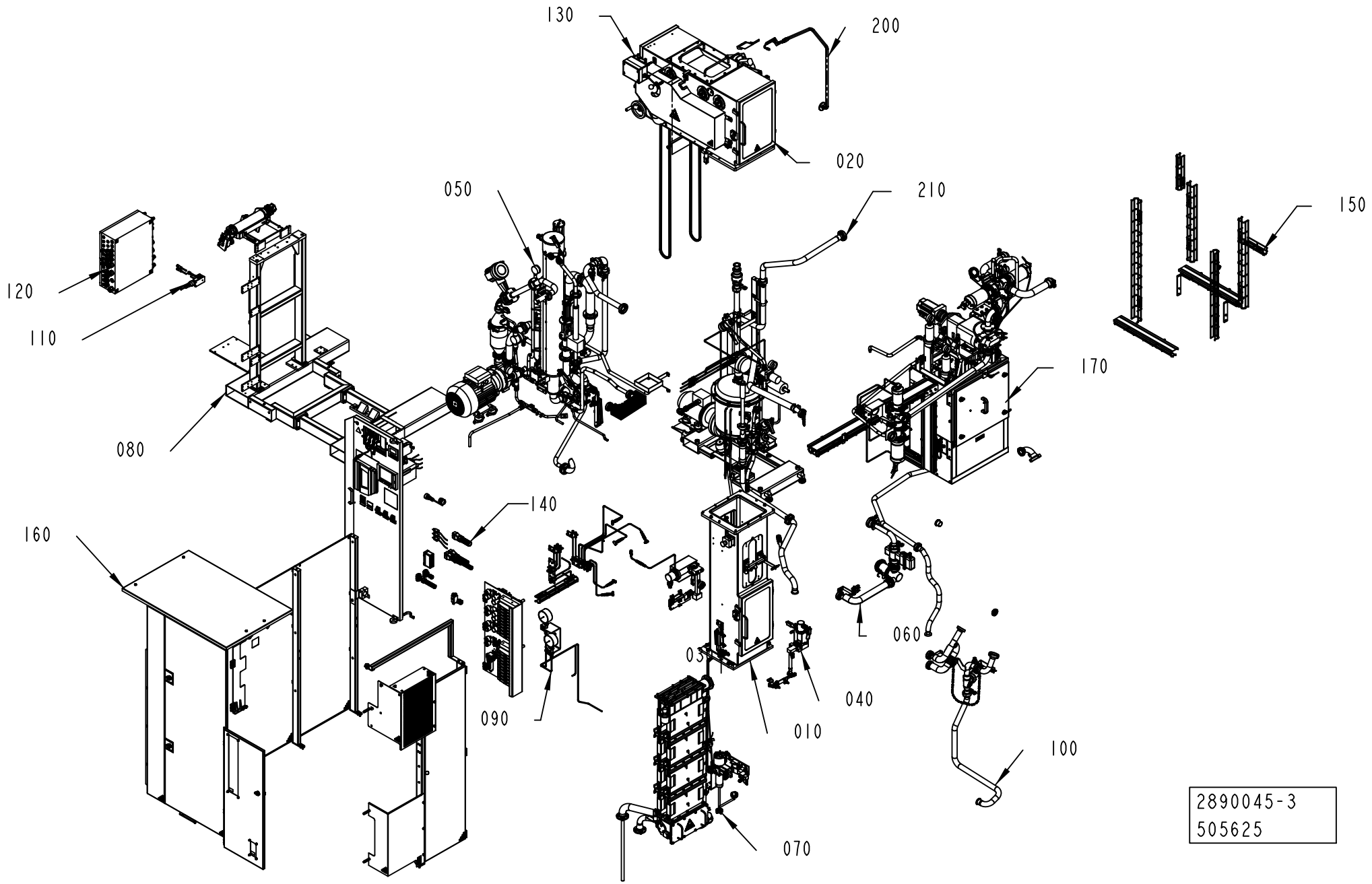
130
200
020
050
210
150
120
110
170
080
140
160
060
030
040
090
010
100
070
2890045-3
505625

ECM: 529449 - 20111220
Group number: 2890045-0200
Assembly Drawing: 2890045-3_1_AA

This list covers pages from 1-4 to 1-9

Pos	Part No	UN	Qty	Description	Page No
NOPT HVA ICU NOHI (See drawing on page: 1-6)					
170	2945410-0200		1	HIGH VISCOSITY ASEPTIC HVA	**1-11**
210	2906140-0100		1	INTEGRATED CLEANING UNIT	**1-65, 1-67**
NOPT HVA NOICU NOHI (See drawing on page: 1-6)					
170	2945410-0200		1	HIGH VISCOSITY ASEPTIC HVA	**1-11**
NOPT NOHVA ICU HI (See drawing on page: 1-8)					
180	2890060-0200		1	HEAD SPACE BY INJECTION	**1-85**
210	2906140-0100		1	INTEGRATED CLEANING UNIT	**1-65, 1-67**
NOPT NOHVA ICU NOHI (See drawing on page: 1-4)					
210	2906140-0100		1	INTEGRATED CLEANING UNIT	**1-65, 1-67**
NOPT NOHVA NOICU HI (See drawing on page: 1-8)					
180	2890060-0200		1	HEAD SPACE BY INJECTION	**1-85**
PT/CF HVA ICU NOHI (See drawing on pages: 1-4, 1-6)					
170	2945410-0200		1	HIGH VISCOSITY ASEPTIC HVA	**1-11**
210	2906140-0100		1	INTEGRATED CLEANING UNIT	**1-65, 1-67**
PT/CF HVA NOICU NOHI (See drawing on page: 1-6)					
170	2945410-0200		1	HIGH VISCOSITY ASEPTIC HVA	**1-11**
PT/CF NOHVA ICU HI (See drawing on page: 1-8)					
180	2890060-0200		1	HEAD SPACE BY INJECTION	**1-85**
210	2906140-0100		1	INTEGRATED CLEANING UNIT	**1-65, 1-67**
PT/CF NOHVA ICU NOHI (See drawing on page: 1-4)					
210	2906140-0100		1	INTEGRATED CLEANING UNIT	**1-65, 1-67**
PT/CF NOHVA NOICU HI (See drawing on page: 1-8)					
180	2890060-0200		1	HEAD SPACE BY INJECTION	**1-85**
Common Parts					
010	2808320-0200		1	ASEPTIC CHAMBER	**1-101**
020	2808310-0200		1	DRYING CHAMBER	**1-109**
030	2808330-0200		1	HOT AIR ELEMENT	**1-143**
040	2808335-0200		1	HOT AIR ELEMENT	**1-145**
050	2808271-0200		1	STERILE AIR SYSTEM	**1-147**
060	2835307-0200		1	FILLING SYSTEM	**1-169**
070	2808246-0200		1	HYDROGEN PEROXIDE	**1-195**
080	2808381-0100		1	FRAME SECTION,UPPER	**1-205**
090	2839244-0100		1	PNEUMATIC SYSTEM	**1-213**
100	2846109-0100		1	CLEANING SYSTEM	**1-233, 1-235, 1-237**
110	3032218-0100		1	CONNECTION BOX	**1-239**
120	2871450-0200		1	CONNECTION BOX	**1-241**
130	2839255-0100		1	PRESSURE SWITCH	**1-245**
140	2839248-0200		1	CABLE	**1-247, 1-249**
150	2846115-0100		1	CABLE TRENCH	**1-253**
160	2839265-0300		1	COVERING PANEL	**1-255, 1-257**
200	2966630-0100		1	STERILE AIR BLOWER	**1-261**

Pos	Part No	UN	Qty	Description	Page No

Machine Type | Group Description | Used-In | Group Number | Page No

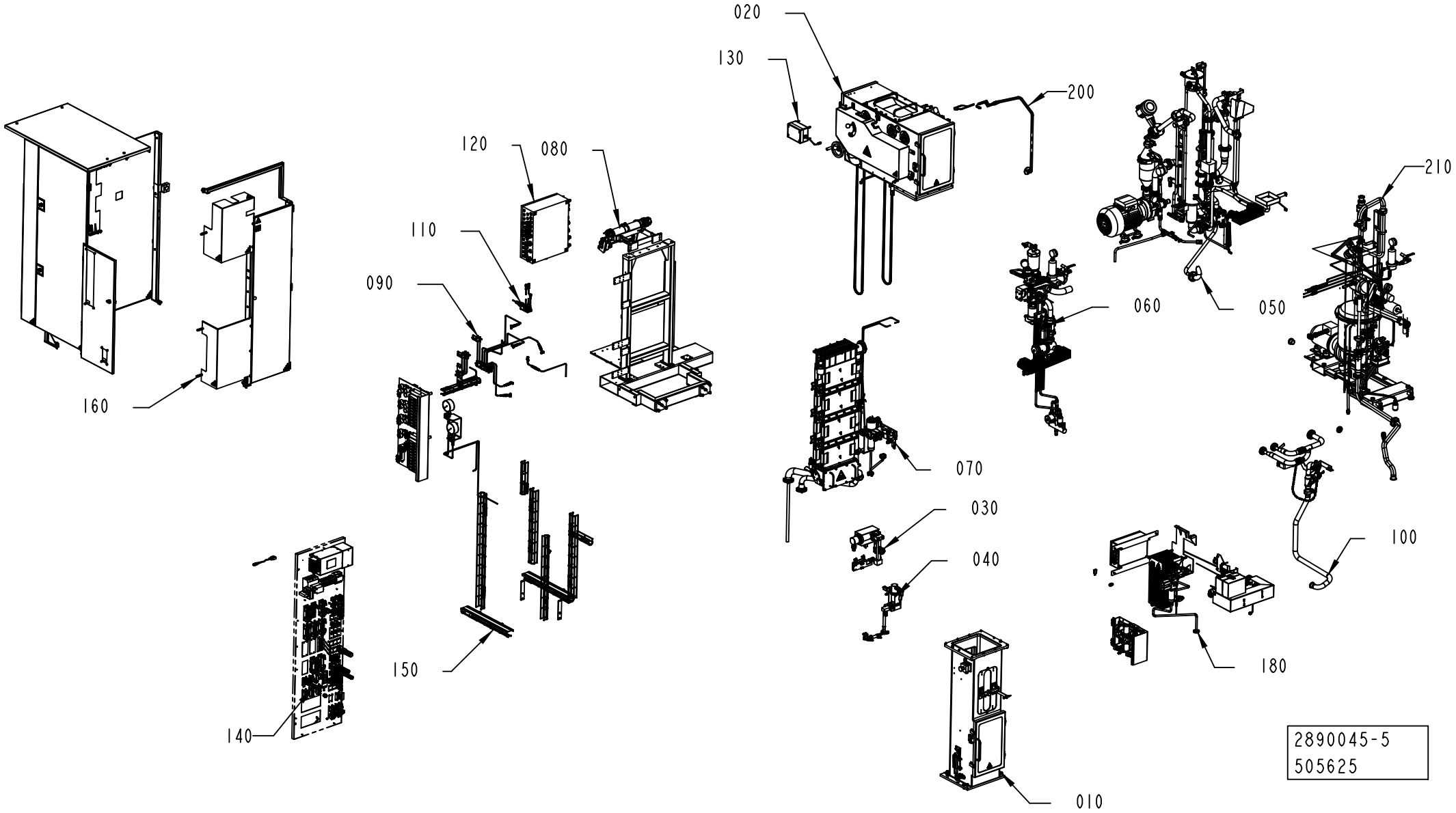
020
130
200
210
120
080
110
090
060
050
070
030
040
100
160
150
140
180
010
2890045-5
505625

ECM: 529449 - 20111220
Group number: 2890045-0200
Assembly Drawing: 2890045-5_1_AA

This list covers pages from 1-4 to 1-9

Pos	Part No	UN	Qty	Description	Page No
NOPT HVA ICU NOHI (See drawing on page: 1-6)					
170	2945410-0200		1	HIGH VISCOSITY ASEPTIC HVA	**1-11**
210	2906140-0100		1	INTEGRATED CLEANING UNIT	**1-65, 1-67**
NOPT HVA NOICU NOHI (See drawing on page: 1-6)					
170	2945410-0200		1	HIGH VISCOSITY ASEPTIC HVA	**1-11**
NOPT NOHVA ICU HI (See drawing on page: 1-8)					
180	2890060-0200		1	HEAD SPACE BY INJECTION	**1-85**
210	2906140-0100		1	INTEGRATED CLEANING UNIT	**1-65, 1-67**
NOPT NOHVA ICU NOHI (See drawing on page: 1-4)					
210	2906140-0100		1	INTEGRATED CLEANING UNIT	**1-65, 1-67**
NOPT NOHVA NOICU HI (See drawing on page: 1-8)					
180	2890060-0200		1	HEAD SPACE BY INJECTION	**1-85**
PT/CF HVA ICU NOHI (See drawing on pages: 1-4, 1-6)					
170	2945410-0200		1	HIGH VISCOSITY ASEPTIC HVA	**1-11**
210	2906140-0100		1	INTEGRATED CLEANING UNIT	**1-65, 1-67**
PT/CF HVA NOICU NOHI (See drawing on page: 1-6)					
170	2945410-0200		1	HIGH VISCOSITY ASEPTIC HVA	**1-11**
PT/CF NOHVA ICU HI (See drawing on page: 1-8)					
180	2890060-0200		1	HEAD SPACE BY INJECTION	**1-85**
210	2906140-0100		1	INTEGRATED CLEANING UNIT	**1-65, 1-67**
PT/CF NOHVA ICU NOHI (See drawing on page: 1-4)					
210	2906140-0100		1	INTEGRATED CLEANING UNIT	**1-65, 1-67**
PT/CF NOHVA NOICU HI (See drawing on page: 1-8)					
180	2890060-0200		1	HEAD SPACE BY INJECTION	**1-85**
Common Parts					
010	2808320-0200		1	ASEPTIC CHAMBER	**1-101**
020	2808310-0200		1	DRYING CHAMBER	**1-109**
030	2808330-0200		1	HOT AIR ELEMENT	**1-143**
040	2808335-0200		1	HOT AIR ELEMENT	**1-145**
050	2808271-0200		1	STERILE AIR SYSTEM	**1-147**
060	2835307-0200		1	FILLING SYSTEM	**1-169**
070	2808246-0200		1	HYDROGEN PEROXIDE	**1-195**
080	2808381-0100		1	FRAME SECTION,UPPER	**1-205**
090	2839244-0100		1	PNEUMATIC SYSTEM	**1-213**
100	2846109-0100		1	CLEANING SYSTEM	**1-233, 1-235, 1-237**
110	3032218-0100		1	CONNECTION BOX	**1-239**
120	2871450-0200		1	CONNECTION BOX	**1-241**
130	2839255-0100		1	PRESSURE SWITCH	**1-245**
140	2839248-0200		1	CABLE	**1-247, 1-249**
150	2846115-0100		1	CABLE TRENCH	**1-253**
160	2839265-0300		1	COVERING PANEL	**1-255, 1-257**
200	2966630-0100		1	STERILE AIR BLOWER	**1-261**

Pos	Part No	UN	Qty	Description	Page No

Machine Type | Group Description | Used-In | Group Number | Page No

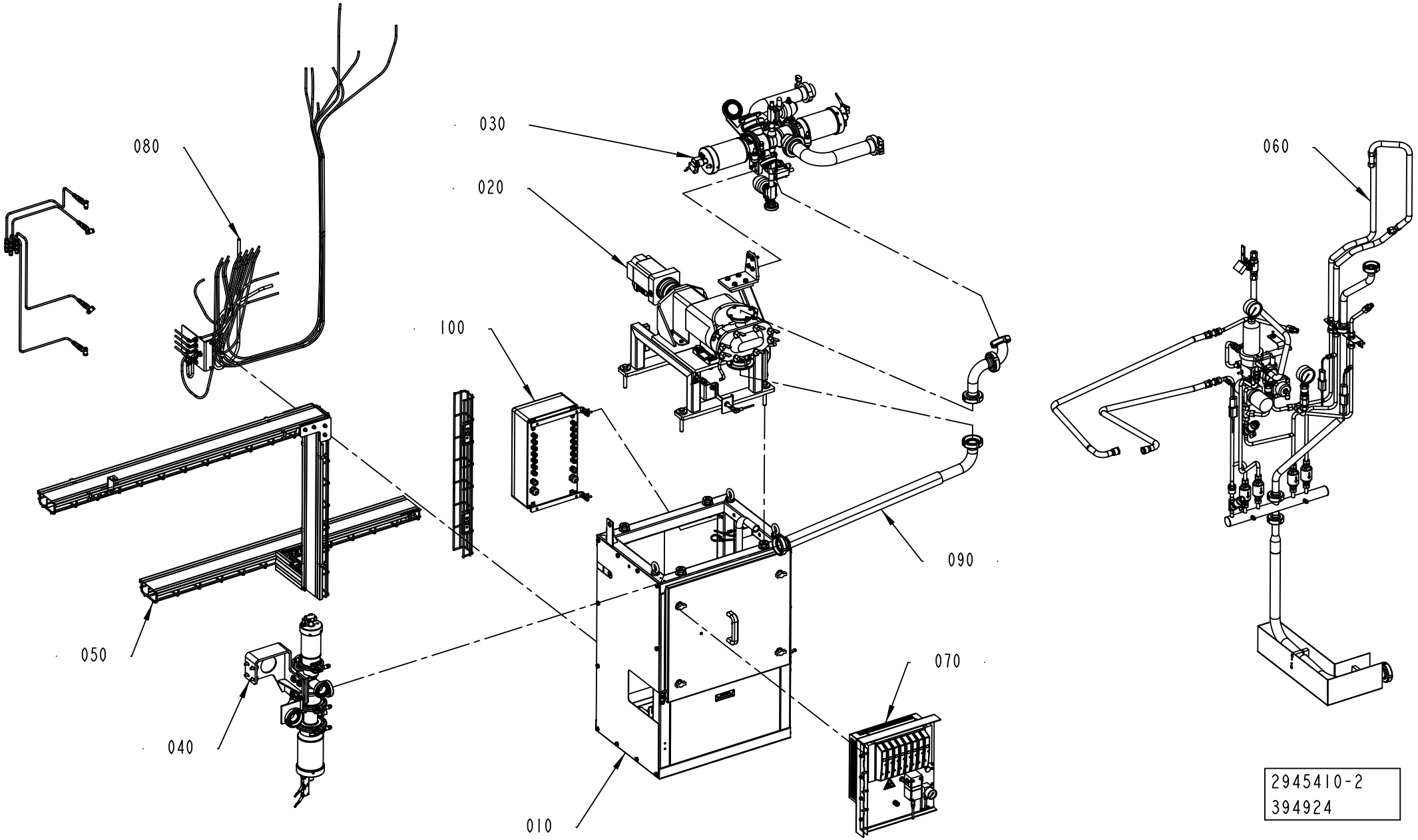
080
030
020
100
060
090
050
070
040
010
2945410-2
394924

ECM: 404900 - 20090715
Group number: 2945410-0200
Assembly Drawing: 2945410-2_1_AA

Pos	Part No	UN	Qty	Description	Page No
-					
010	2922770-0200		1	FRAME	**1-13**
020	2945420-0100		1	PUMP GROUP	**1-17**
030	2922730-0100		1	PRODUCT VALVE	**1-19**
040	2922715-0100		1	VALVE GROUP B-C	**1-25**
050	2945435-0100		1	CABLE TRENCH	**1-33**
060	2922725-0200		1	STEAM SYSTEM	**1-35**
070	2922800-0100		1	VALVE PANEL	**1-43**
080	2922740-0100		1	PNEUMATIC CIRCUIT	**1-47, 1-49, 1-51**
090	2922720-0100		1	PRODUCT LINES	**1-53**
100	2922790-0100		1	CONNECTION BOX	**1-55**
130	3006597-0100		1	REGULAR ACCESSORIES	**1-59**

Pos	Part No	UN	Qty	Description	Page No

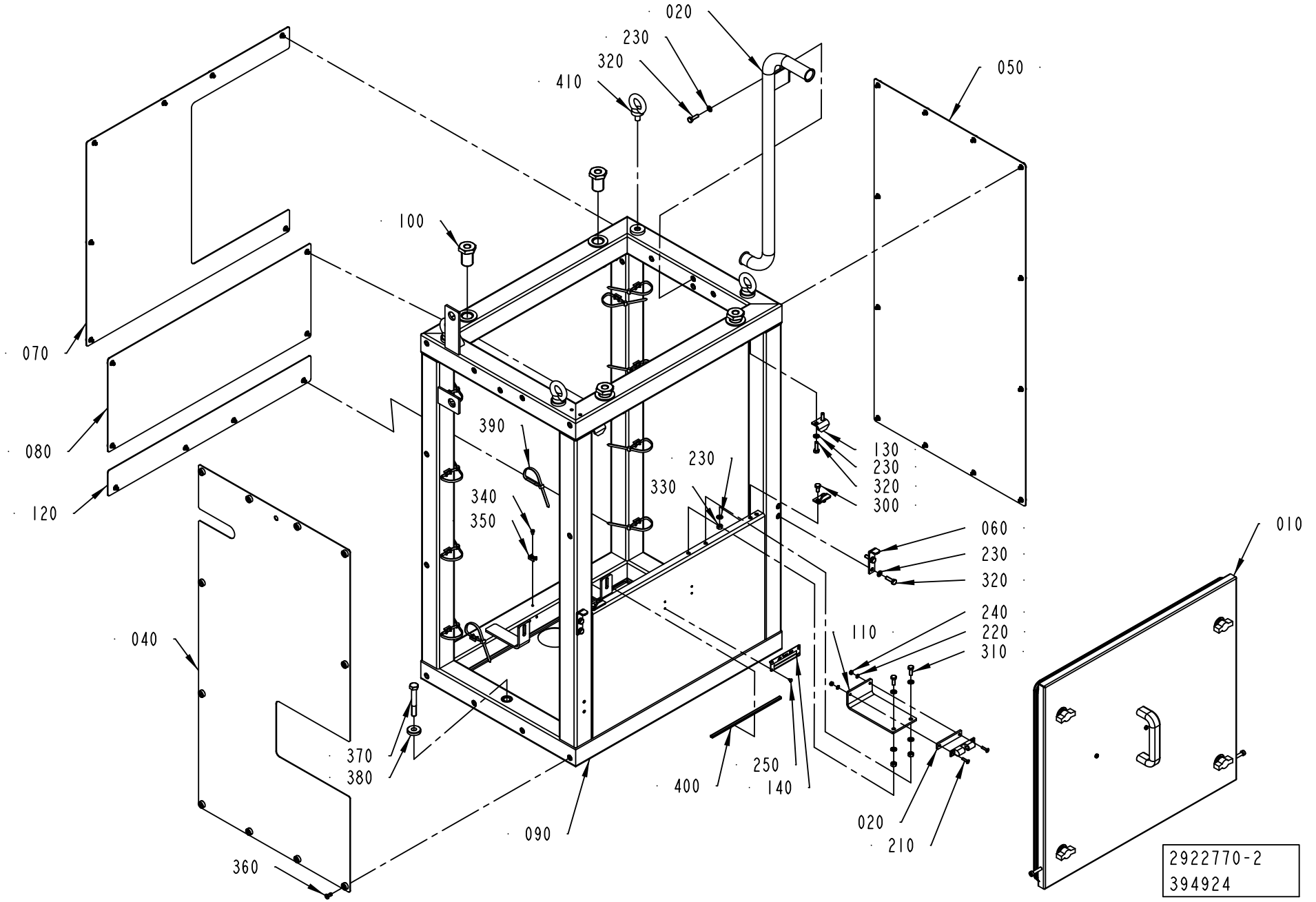
020
230
320
410
050
100
070
080
120
390
230
330
340
350
130
230
320
300
060
230
320
010
240
220
310
110
040
370
380
400
250
140
090
020
210
360
2922770-2
394924

ECM: 404727 - 20090715
Group number: 2922770-0200
Assembly Drawing: 2922770-2_1_AA

Pos	Part No	UN	Qty	Description	Page No
-					
010	2980080-0200		1	HATCH	**1-15**
020	2915064-0000		1	BRACKET	
030	2945414-0000		1	CABLE CONDUIT	
040	3037830-0000		1	COVER	
050	3037831-0000		1	COVER	
060	2998978-0000		2	BRACKET	
070	3037832-0000		1	COVER	
080	3037833-0000		1	COVER	
090	2906162-0000		1	FRAME	
100	735921-0000		4	SCREW	
110	2980084-0000		1	BRACKET	
120	3037834-0000		1	COVER	
130	2846027-0000		4	CLAMP LUG	
140	979548-0000		1	MACHINE PLATE	
210	312155-0293		2	SCREW DIN 7991 MF6S M4X16 A4 70	
220	315105-0136		2	WASHER PLAIN, 4,3X9X0,8 A4 BRB	
230	315105-0153		18	WASHER PLAIN, 6,4X12X1,5 A4 BRB	
240	312605-0312		2	HEXAGON NUT, M6M M4 A280	
250	311521-0143		4	RIVET, BLANK 3,2X8	
300	312105-0366		4	SCREW, M6S ISO 4017 M6X12 A4 80	
310	312105-0368		2	SCREW, M6S ISO 4017 M6X16 A4 80	
320	312105-0370		10	SCREW, M6S ISO 4017 M6X20 A4 80	
330	312605-0316		6	HEXAGON NUT, M6M M6 A280	
340	312125-0285		12	SLOTTED HEAD SCREW, ISO1207 M4X6 A4	
350	352113-0205		12	ANCHOR PLATES FOR STRIPS, TM2S8-C100	
360	90601-2046		38	CAPTIVE SCREW M6, GUTBG 6-4-12	
370	312105-0505		2	SCREW, M6S ISO 4014 M10X70 A4 80	
380	315125-0173		2	WASHER HIGH, TBRSB 10,5X28X6 A4	
390	352113-0102		8	CABLE TIE, BLACK 188X4,8 MM	
400	90143-0060	MM	200	EDGE STRIP 9,5X6,3MM BLACK PVC	
410	318301-0120		4	LIFTING EYE BOLT, LT M10 FZB	

Pos	Part No	UN	Qty	Description	Page No

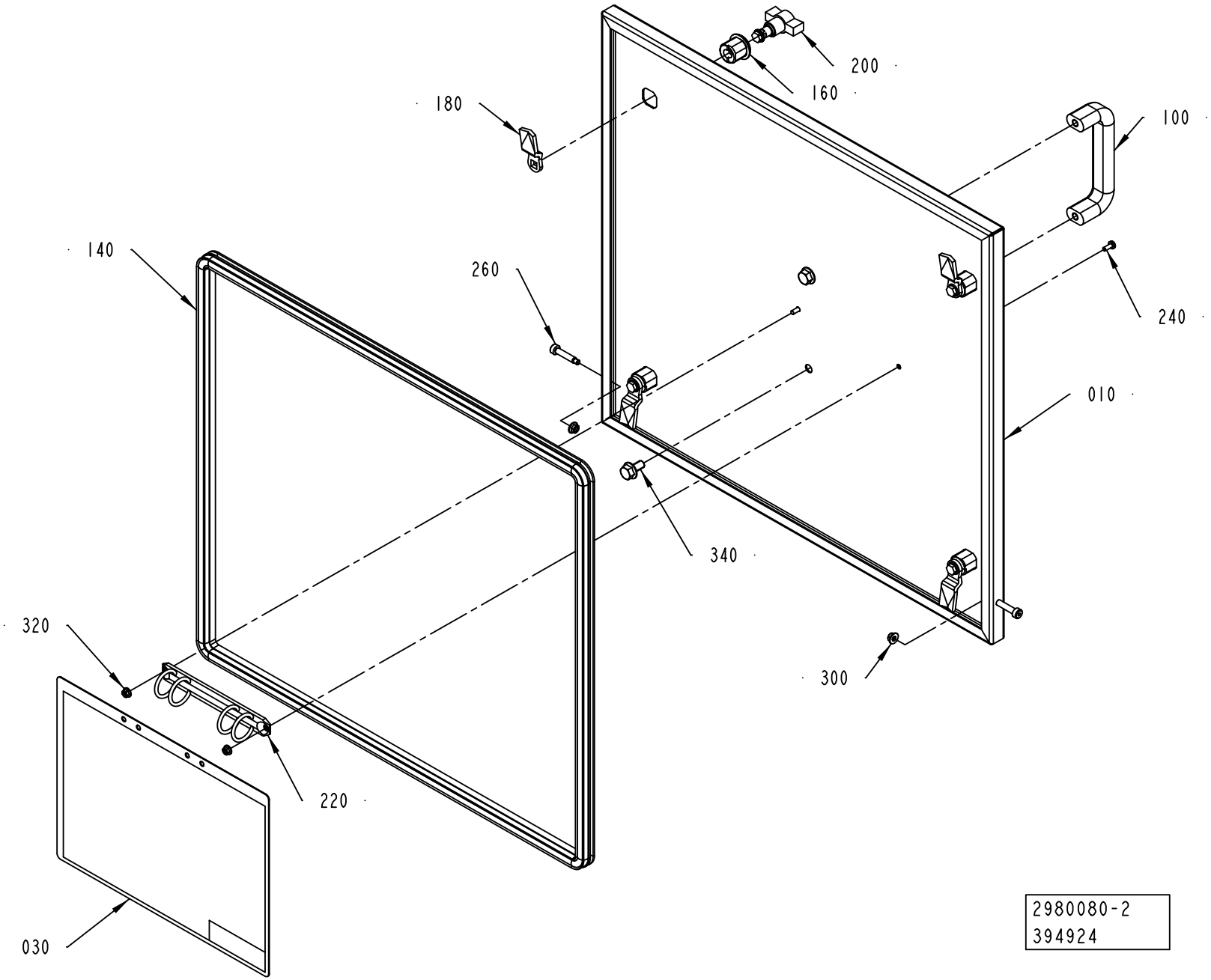
200
160
180
100
140
260
240
010
340
320
300
220
030
2980080-2
394924

ECM: 461869 - 20101001
Group number: 2980080-0200
Assembly Drawing: 2980080-2_1_AA

Pos	Part No	UN	Qty	Description	Page No
-					
010	2980079-0000		1	HATCH	
100	90017-0022		1	HANDLE, NO. EL-037311	
140	90143-0068	M	2.05	RUBBER STRIP EMKA 1011-06	
160	90237-0142		4	LOCK HOUSING, 1000-U45	
180	90237-0335		4	LOCKING CATCH	
200	90237-0337		4	LOCK HANDLE FOR 90237-319	
220	90243-0169		1	BINDER CLIP, DIAM.29 MM, NO. 4670819	
240	312132-0289		2	SLOTTED HEAD, PAN SCREW, MSCS M4X10	
260	90287-0238		2	SHOULDER SCREW, 6X25/M5 SS	
300	312107-0314		2	HEXAGON FLANGE NUT ISO 4161 M5 A2	
320	312107-0312		2	HEXAGON FLANGE NUT ISO 4161 M4 A2	
340	312108-0449		2	SCREW EN 1665 TYPE F M8X16 A270	

Pos	Part No	UN	Qty	Description	Page No

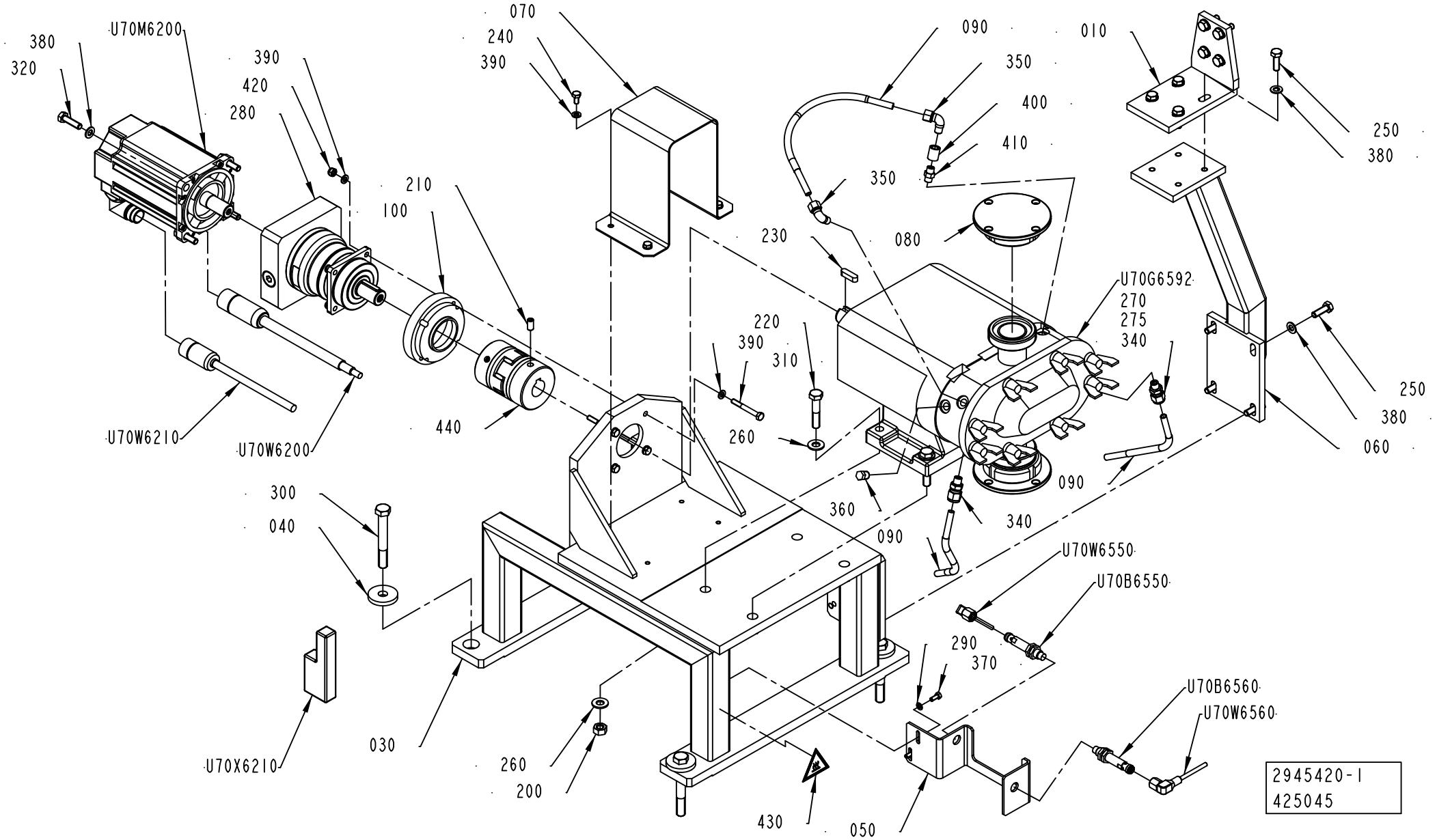
380
320
U70M6200
390
420
280
070
240
390
090
350
400
410
010
250
380
210
100
230
080
U70G6592
270
275
340
220
390
310
260
440
U70W6210
U70W6200
360
090
340
250
380
060
300
040
U70W6550
U70B6550
290
370
U70B6560
U70W6560
030
260
200
430
050
U70X6210
2945420-1
425045

ECM: 460746 - 20101001
Group number: 2945420-0100
Assembly Drawing: 2945420-1_1_AC

Pos	Part No	UN	Qty	Description	Page No
ANSI					
430	90459-7458		2	WARNING SIGN ANSI (H), HOT SURFACE	
ISO					
430	359705-0007		2	WARNING SIGN ISO, HOT SURFACE	
Common Parts					
010	2913723-0000		1	BRACKET	
030	2945408-0000		1	BRACKET	
040	735922-0000		4	WASHER	
050	2945418-0000		1	BRACKET	
060	2913722-0000		1	BRACKET	
070	2945416-0000		1	COVER	
080	2924205-0000		2	BLANK NUT	
090	925436-0000		3	STEAM PIPE	
100	2998979-0000		1	ADAPTER	
200	312605-0320		4	HEXAGON NUT, M6M M10 A280	
210	312318-0449		2	SET SCREW, CUP END ISO4029 M8X16 A4	
220	312105-0501		4	SCREW, M6S ISO 4014 M10X50 A4 80	
230	315701-0266		1	PARALLEL KEY W. ROUND ENDS, 8X7X28 MM	
240	312105-0366		4	SCREW, M6S ISO 4017 M6X12 A4 80	
250	312105-0453		12	SCREW, M6S ISO 4017 M8X25 A4 80	
260	315105-0173		8	WASHER PLAIN, 10,5X22X2 A4 BRB	
270	90296-0073	ML	500	OIL	
275	90296-0070	G	50	SHELL ALVANIA GREASE EP 1	
280	90600-5885		1	GEARS, PLAN SP075F-MC1-4-1E1-2K/MPL-B430	
290	315105-0146		2	WASHER PLAIN, 5,3X10X1 A4 BRB	
300	312105-0550		4	SCREW, M6S ISO 4014 M12X90 A4 80	
310	312105-0380		4	SCREW, M6S ISO 4014 M6X50 A4 80	
320	312105-0455		4	SCREW, M6S ISO 4017 M8X30 A4 80	
340	90600-3668		2	CONN. STR SS-8MO-1-2RT	
350	90030-0257		2	CONN. ELBOW, WE08LLR71	
360	90087-0046		2	PLUG, EXT. 1/8 NPT-THREAD, 2PH-SS	
370	312105-0327		2	SCREW, M6S ISO 4017 M5X12 A4 80	
380	315105-0165		16	WASHER PLAIN, 8,4X16X1,6 A4 BRB	
390	315105-0153		12	WASHER PLAIN, 6,4X12X1,5 A4 BRB	
400	90330-0094		1	SLEEVE, INT, THREAD, NO., R-2011/8	
410	90330-0032		1	NIPPLE, EXT.THREAD, HEXAGON, R1/8-R1/8	
420	312812-0316		4	HEXAGON NUT, NY-LOCK M6 A4 80	
440	90600-5957		1	FLEXIBLE COUPLING, 22X24 MM	
	90600-6010		*1*	*ELASTOMER INSERT, EK 150 TYPE A*	
U70B6550	90600-0462		1	INDUCTIVE SWITCH, E2A-M12LN05-M1-B1-TP	
U70B6560	90600-0462		1	INDUCTIVE SWITCH, E2A-M12LN05-M1-B1-TP	
U70G6592	90600-4437		1	ROT. LOBE PUMP AVMXT 3500DA	
U70M6200	90459-2589		1	SERVO MOTOR, MPL-B430P-MK22AA	
U70W6200	90459-2565		1	MOTOR POW.CABLE 16 AWG 2090-XXNPMP-16S09	
U70W6210	90459-2568		1	MOTOR FEEDBACK CABLE 2090-XXNFMP-S09	
U70W6550	351310-0050		1	ACTUATOR/SENSOR CABLE PRKWT 4-07/5M	
U70W6560	351310-0050		1	ACTUATOR/SENSOR CABLE PRKWT 4-07/5M	
U70X6210	90459-2551		1	CONNECTOR, MOTOR FEEDBACK 15 PIN MALE	

Machine Type | Group Description | Used-In | Group Number | Page No

PRODUCT VALVE

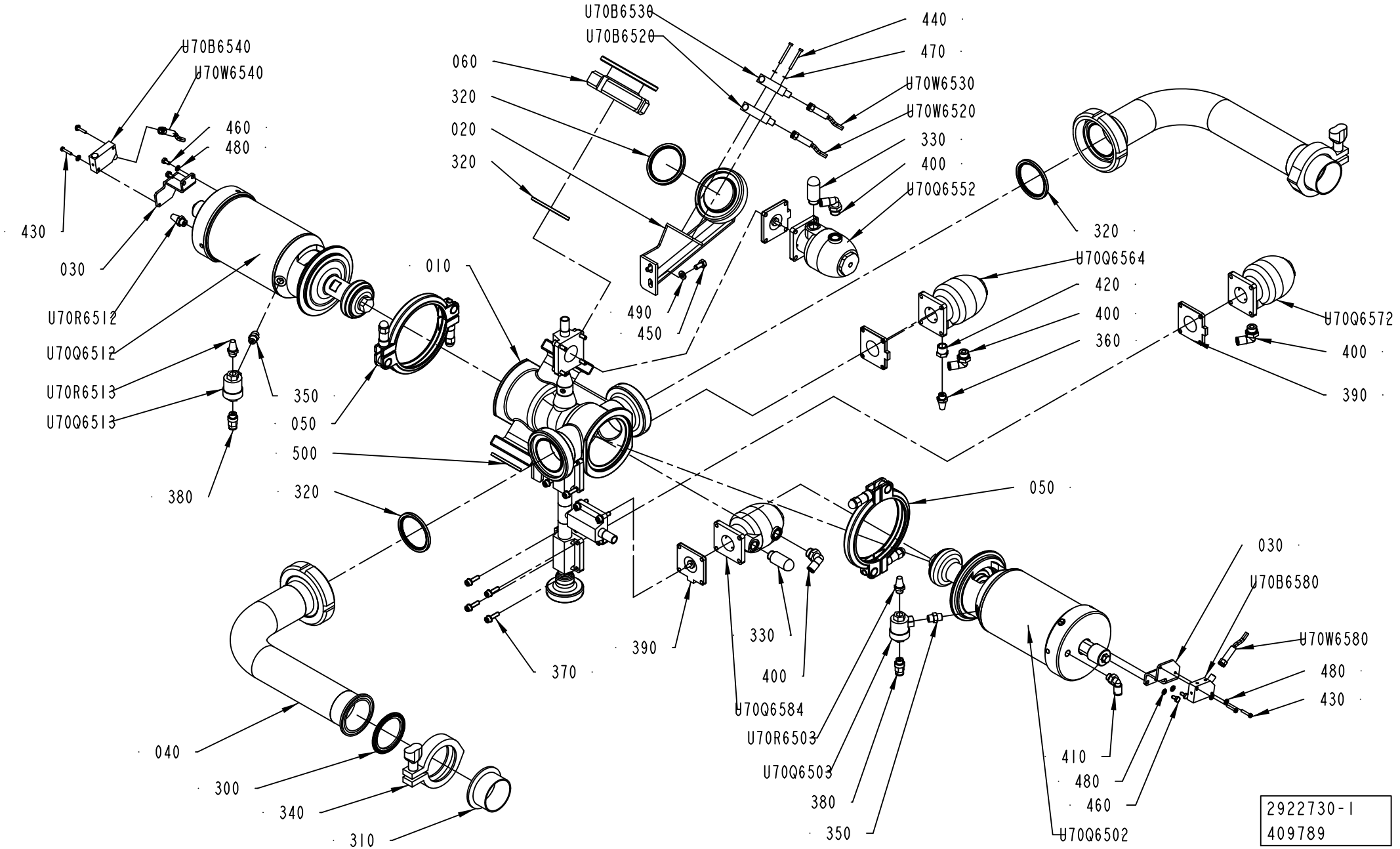

ECM: 507206 - 20111001
Group number: 2922730-0100
Assembly Drawing: 2922730-1_1_AC

Pos	Part No	UN	Qty	Description	Page No
-					
010	3037870-0000		1	VALVE BODY	
020	3124265-0000		1	BRACKET	
030	2922801-0000		2	BRACKET	
040	3092917-0000		2	PIPE	
050	541163-0200		2	CLAMP RING	**1-21**
060	3092918-0000		1	BLANK	
300	342850-0305		2	GASKET 47,8X62,6X5,2 MM 2" FDA 3-A	
310	342841-0505		2	FERRULE, 3-A, GC-CLAMP 50,8 MM (2")	
320	3092163-0000		4	GASKET	
330	90328-0026		2	SILENCER, G1/4"	
340	344215-0105		2	CLAMP RING A13MHM 2", 211054	
350	90030-0207		2	NIPPLE	
360	90328-0003		1	SILENCER, 338/110	
370	342800-1502		4	VALVE ASSEMBLING KIT, SEAT S. 10	
380	350001-0006		2	PUSH-IN FITTING QS-F-G1/8-6	
390	342800-1102		4	DIAPHRAGM, FDA PTFE/EPDM 5E, SEAT S. 10	
400	350002-0008		4	PUSH-IN L-FITTING QSL-F-G1/4-6	
410	350002-0006		1	PUSH-IN L-FITTING QSL-F-G1/8-6	
420	342701-0201		1	BUSHING, INT/EXT, G1/4-G1/8	
430	312125-0228		4	SLOTTED HEAD SCREW, ISO1207 M3X16 A4	
440	312125-0234		2	SLOTTED HEAD SCREW, ISO1207 M3X30 A4	
450	312105-0366		2	SCREW, M6S ISO 4017 M6X12 A4 80	
460	312105-0287		4	SCREW, M6S ISO 4017 M4X8 A4 70	
470	315105-0124		2	WASHER PLAIN, 3,2X6X0,5 A4 BRB	
480	315105-0136		8	WASHER PLAIN, 4,3X9X0,8 A4 BRB	
490	315105-0153		2	WASHER PLAIN, 6,4X12X1,5 A4 BRB	
500	3024322-0000		1	GASKET	
U70B6520	90459-2409		1	INDUCTIVE SENSOR, IN 5230	
U70B6530	90459-2409		1	INDUCTIVE SENSOR, IN 5230	
U70B6540	90459-2409		1	INDUCTIVE SENSOR, IN 5230	
U70B6580	90459-2409		1	INDUCTIVE SENSOR, IN 5230	
U70Q6502	2980081-0100		1	A-CYLINDER	**1-23**
U70Q6503	90235-0259		1	VALVE	
U70Q6512	2980081-0100		1	A-CYLINDER	**1-23**
U70Q6513	90235-0259		1	VALVE	
U70Q6552	342800-1302		1	ACTUATOR, SS, N.O. SEAT S. 10	
U70Q6564	342800-1302		1	ACTUATOR, SS, N.O. SEAT S. 10	
U70Q6572	342800-1202		1	ACTUATOR, SS, N.C. SEAT S. 10	
U70Q6584	342800-1302		1	ACTUATOR, SS, N.O. SEAT S. 10	
U70R6503	90328-0003		1	SILENCER, 338/110	
U70R6512	90328-0003		1	SILENCER, 338/110	
U70R6513	90328-0003		1	SILENCER, 338/110	
U70W6520	351301-0050		1	ACTUATOR/SENSOR CABLE PRKMV 3-06/5M	
U70W6530	351301-0050		1	ACTUATOR/SENSOR CABLE PRKMV 3-06/5M	
U70W6540	351301-0050		1	ACTUATOR/SENSOR CABLE PRKMV 3-06/5M	
U70W6580	351301-0050		1	ACTUATOR/SENSOR CABLE PRKMV 3-06/5M	

Machine Type | Group Description | Used-In | Group Number | Page No

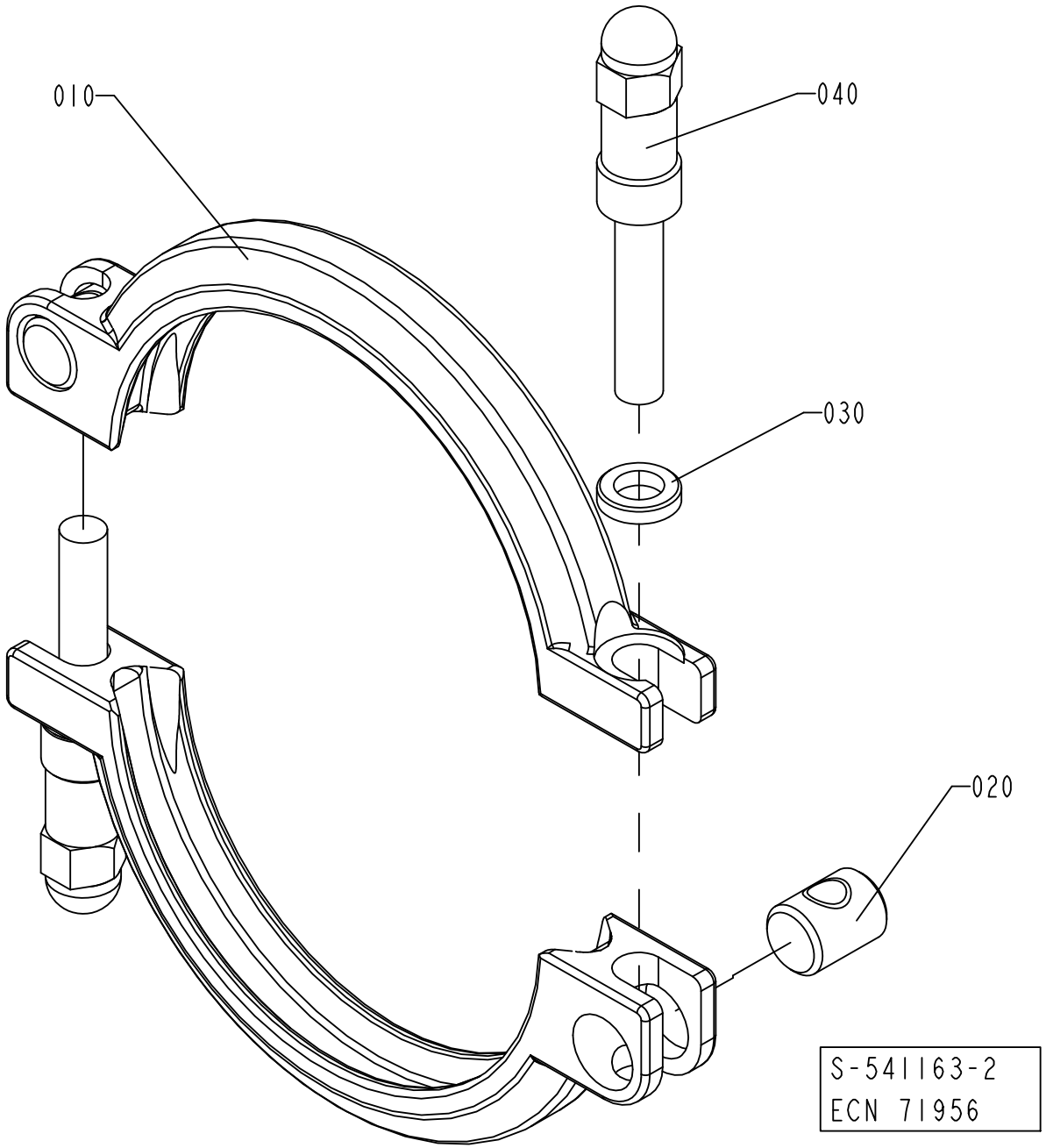
010
040
030
020
S-541163-2
ECN 71956

ECM: 343597 - 20080402
Group number: 541163-0200
Assembly Drawing: 541163-2_1_AB

Pos	Part No	UN	Qty	Description	Page No
-					
010	532117-0000		2	CLAMP RING	
020	497748-0000		2	PIN	
030	541165-0000		2	WASHER	
040	554162-0000		2	SCREW	

Pos	Part No	UN	Qty	Description	Page No

Machine Type	Group Description	Used-In	Group Number	Page No

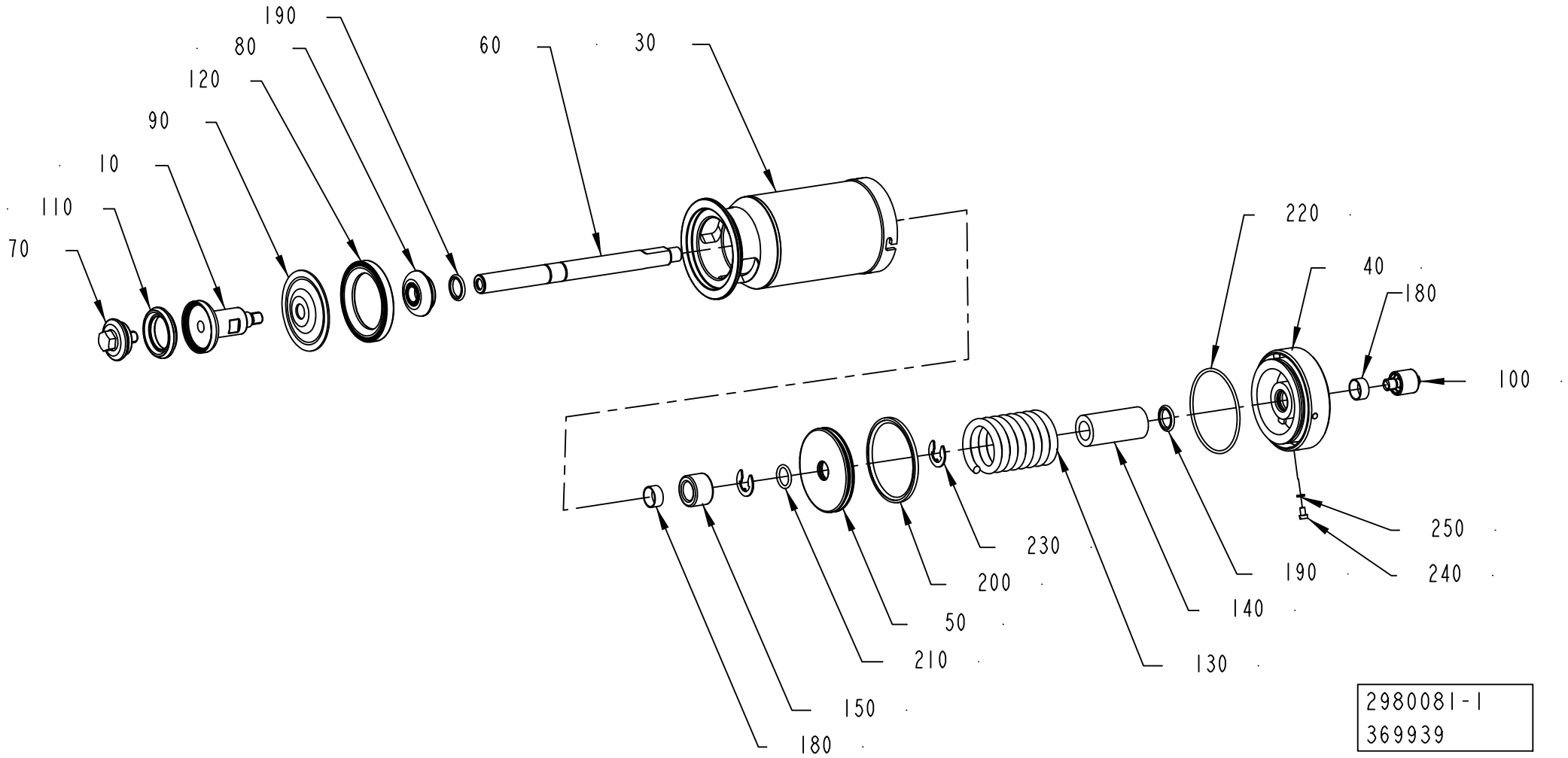
190
80
120
90
10
110
70
60
30
220
40
180
100
250
240
190
140
130
230
200
50
210
150
180
2980081-1
369939

ECM: 369964 - 20081009
Group number: 2980081-0100
Assembly Drawing: 2980081-1_1_AA

Pos	Part No	UN	Qty	Description	Page No
-					
010	2980078-0000		1	SEAL HOLDER	
030	576439-0000		1	CYLINDER HOUSING	
040	576440-0000		1	END SECTION	
050	576441-0000		1	PISTON	
060	576446-0000		1	PISTON ROD	
070	924897-0000		1	SCREW	
080	541166-0000		1	WASHER	
090	533169-0000		1	DIAPHRAGM	
100	553607-0000		1	SLEEVE	
110	2826441-0000		1	SEAL RING	
120	440655-0000		1	RING	
130	440663-0000		1	COMPRESSION SPRING	
140	576448-0000		1	SPACER	
150	576449-0000		1	SPACER	
180	90091-0238		2	WEAR RING 20X22X10 MM	
190	90091-0237		2	ROD SEAL GLYD RING 20X27,5X3 MM	
200	90091-0336		1	PISTON SEAL GLYD RING 79X90X4,2 MM	
210	315204-0215		1	O-RING 19,2X3 MM	
220	315204-0308		1	O-RING 84,5X3 MM	
230	315754-0113		2	RETAINING RING SHAFT DIN 6799 15	
240	312125-0323		1	SLOTTED HEAD SCREW, ISO1207 M5X8 A4	
250	315239-0101		5	NYLON WASHER M5, M5RRP	

Pos	Part No	UN	Qty	Description	Page No

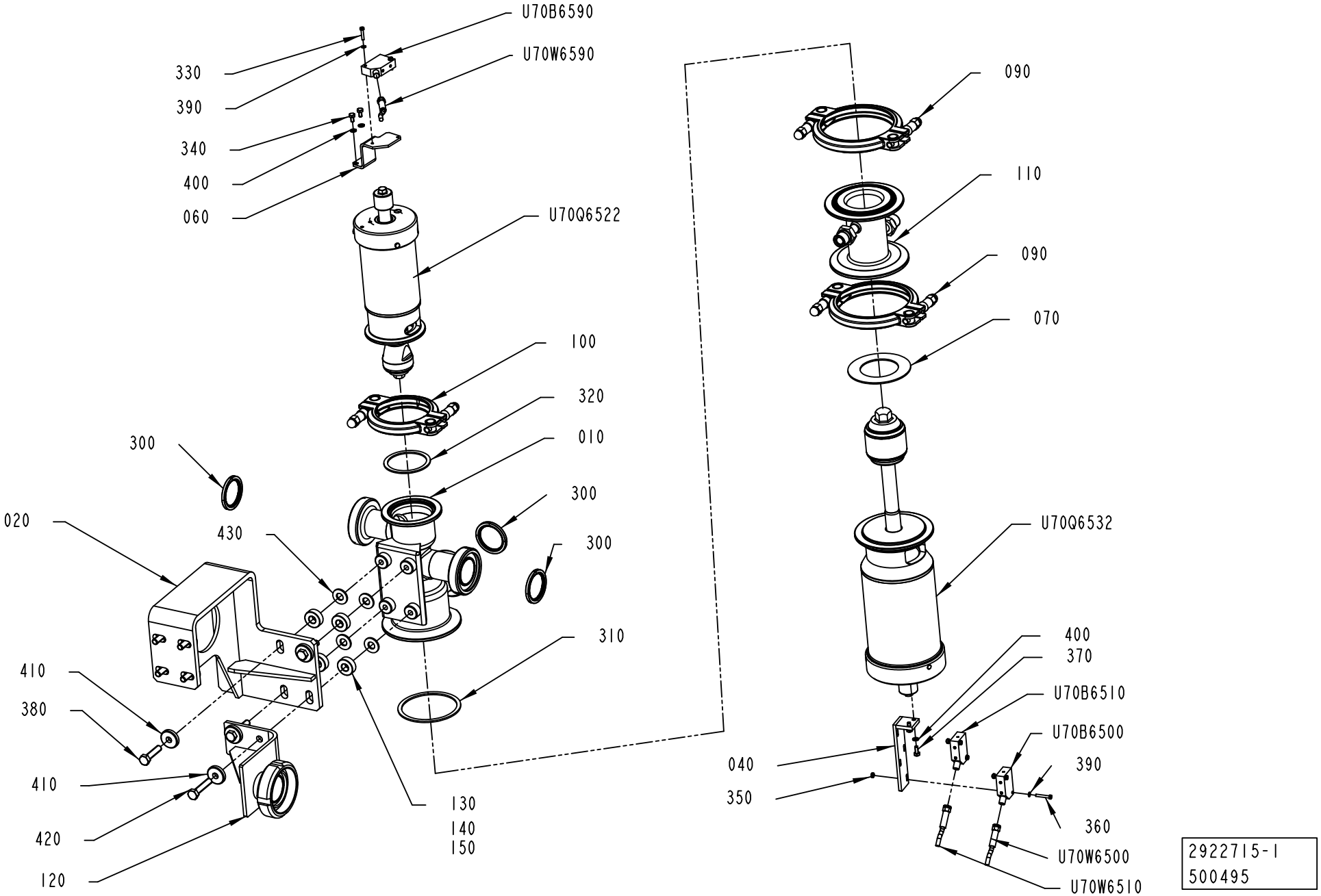
U70B6590
U70W6590
330
390
340
400
060
U70Q6522
100
320
010
300
300
300
310
130
140
150
020
430
410
380
410
420
120
090
110
090
070
U70Q6532
400
370
U70B6510
U70B6500
390
360
U70W6500
U70W6510
040
350
2922715-1
500495

ECM: 504141 - 20111001
Group number: 2922715-0100
Assembly Drawing: 2922715-1_1_AD

Pos	Part No	UN	Qty	Description	Page No
-					
010	3037869-0000		1	VALVE BODY	
020	2922703-0000		1	BRACKET	
040	2980077-0000		1	HOLDER	
060	2922801-0000		1	BRACKET	
070	539212-0000		1	GASKET	
090	541163-0200		2	CLAMP RING	**1-21**
100	541164-0200		1	CLAMP RING	**1-27**
110	567018-0000		1	STEAM HOUSE	
120	3124655-0000		1	BRACKET	
130	3171037-0000		4	SPACER	
140	3172208-0000		4	SPACER	
150	3172209-0000		4	SPACER	
160	315106-0173		4	WASHER PLAIN, M10 ISO7089-10-200 HV A4	
300	3024322-0000		3	GASKET	
310	90207-0363		1	GASKET 75X85X1,8 MM 3" FDA 3-A	
320	90207-0365		1	GASKET 53X63X1,8 MM 2,5" FDA 3-A	
330	312125-0228		2	SLOTTED HEAD SCREW, ISO1207 M3X16 A4	
340	312105-0287		2	SCREW, M6S ISO 4017 M4X8 A4 70	
350	312605-0310		4	HEXAGON NUT, M6M M3 A280	
360	312125-0230		4	SLOTTED HEAD SCREW, ISO1207 M3X20 A4	
370	312105-0289		2	SCREW, M6S ISO 4017 M4X10 A4 70	
380	312105-0453		6	SCREW, M6S ISO 4017 M8X25 A4 80	
390	315105-0124		6	WASHER PLAIN, 3,2X6X0,5 A4 BRB	
400	315105-0136		4	WASHER PLAIN, 4,3X9X0,8 A4 BRB	
410	315125-0165		8	WASHER HIGH, TBRSB 8,4X26X5 A4	
420	312105-0455		2	SCREW, M6S ISO 4017 M8X30 A4 80	
U70B6500	90459-2409		1	INDUCTIVE SENSOR, IN 5230	
U70B6510	90459-2409		1	INDUCTIVE SENSOR, IN 5230	
U70B6590	90459-2409		1	INDUCTIVE SENSOR, IN 5230	
U70Q6522	2994299-0100		1	B-CYLINDER	**1-29**
U70Q6532	926937-0200		1	C-CYLINDER	**1-31**
U70W6500	351301-0050		1	ACTUATOR/SENSOR CABLE PRKMV 3-06/5M	
U70W6510	351301-0050		1	ACTUATOR/SENSOR CABLE PRKMV 3-06/5M	
U70W6590	351301-0050		1	ACTUATOR/SENSOR CABLE PRKMV 3-06/5M	

Pos	Part No	UN	Qty	Description	Page No

Machine Type | Group Description | Used-In | Group Number | Page No

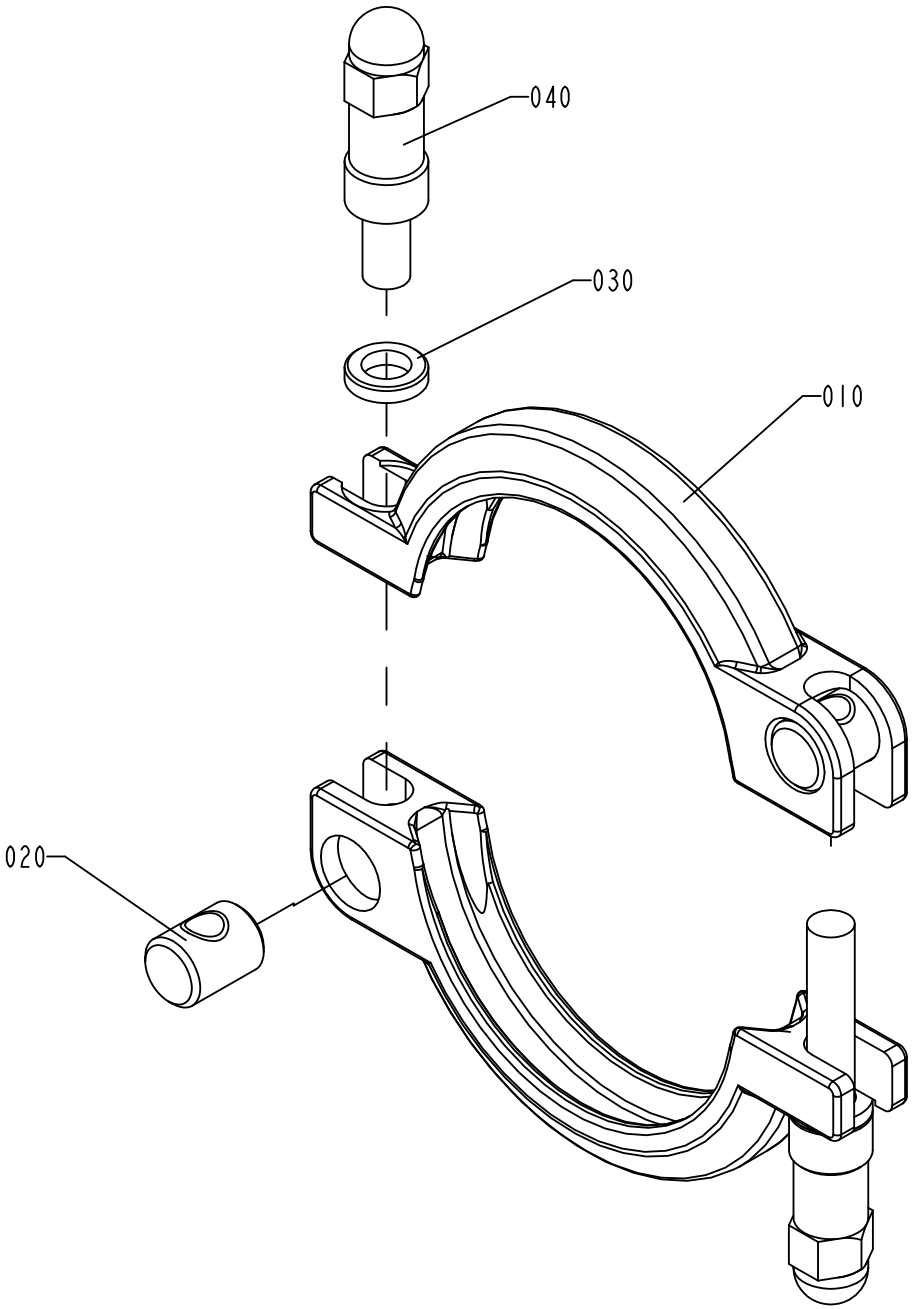

S-541164-2
ECN 71956

ECM: 343598 - 20080402
Group number: 541164-0200
Assembly Drawing: 541164-2_1_AB

Pos	Part No	UN	Qty	Description	Page No
-					
010	532118-0000		2	CLAMP RING	
020	497748-0000		2	PIN	
030	541165-0000		2	WASHER	
040	554162-0000		2	SCREW	

Pos	Part No	UN	Qty	Description	Page No

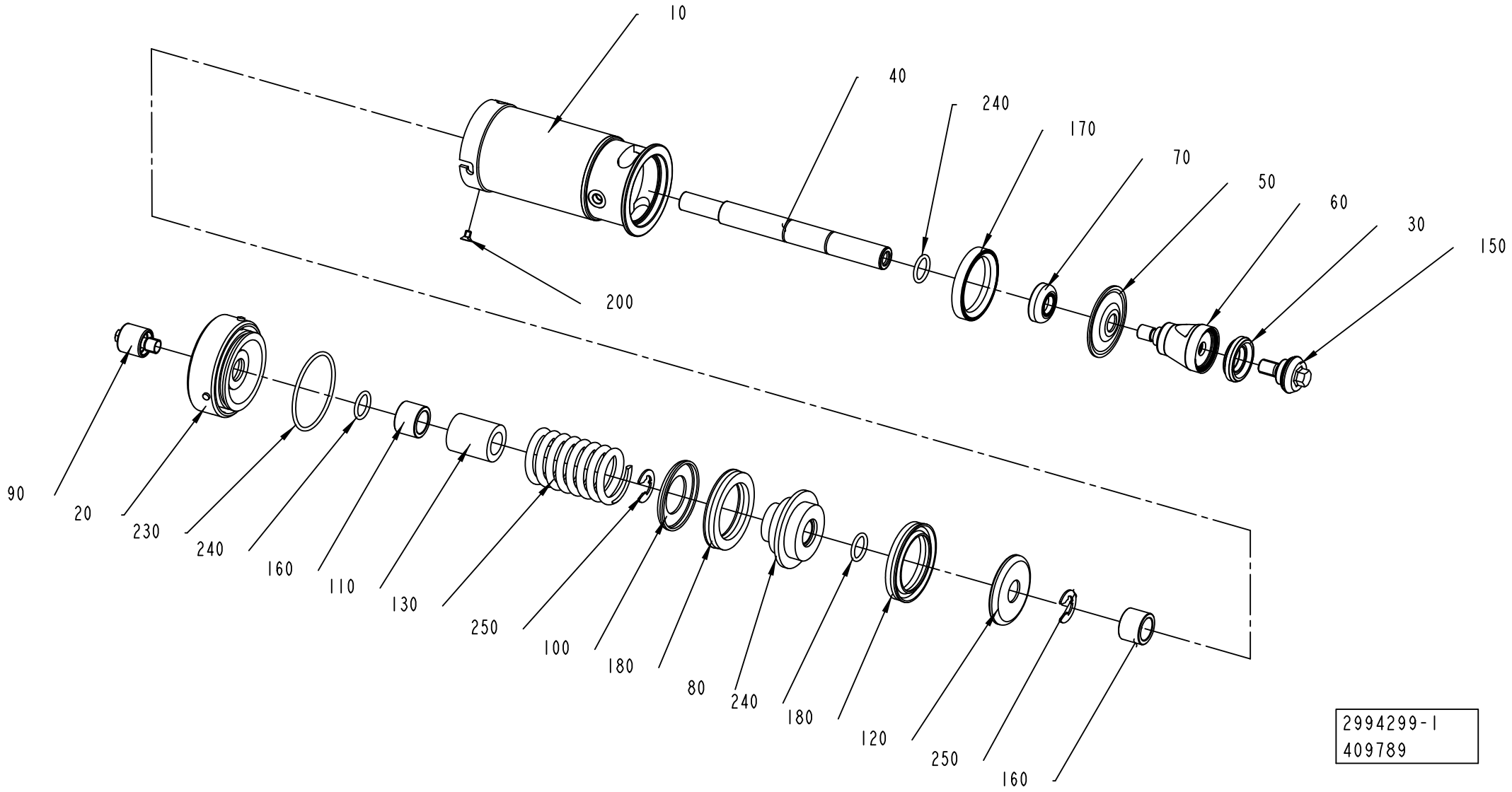
10
40
240
170
70
50
60
30
150
200
90
20
230
240
160
110
130
250
100
180
80
240
180
120
250
160
2994299-1
409789

ECM: 411473 - 20091001
Group number: 2994299-0100
Assembly Drawing: 2994299-1_1_AB

Pos	Part No	UN	Qty	Description	Page No
-					
010	440633-0000		1	CYLINDER HOUSING	
020	440695-0000		1	END SECTION	
030	2826440-0000		1	SEAL RING	
040	735632-0000		1	PISTON ROD	
050	794246-0000		1	DIAPHRAGM	
060	794247-0000		1	SEAL RING HOLDER	
070	794248-0000		1	WASHER	
080	440646-0000		1	PISTON	
090	553607-0000		1	SLEEVE	
100	440652-0000		1	WASHER	
110	440654-0000		1	SPACER SLEEVE	
120	440656-0000		1	WASHER	
130	440662-0000		1	COMPRESSION SPRING	
150	2826439-0000		1	VALVE CONE	
160	497933-0000		2	BUSHING	
170	735630-0000		1	RING	
180	90020-0027		2	SLEEVE	
200	312155-0323		1	SCREW DIN 7991 MF6S M5X8 A4 70	
230	315202-0304		1	O-RING 64,5X3 MM	
240	315204-0215		3	O-RING 19,2X3 MM	
250	315754-0113		2	RETAINING RING SHAFT DIN 6799 15	

Pos	Part No	UN	Qty	Description	Page No

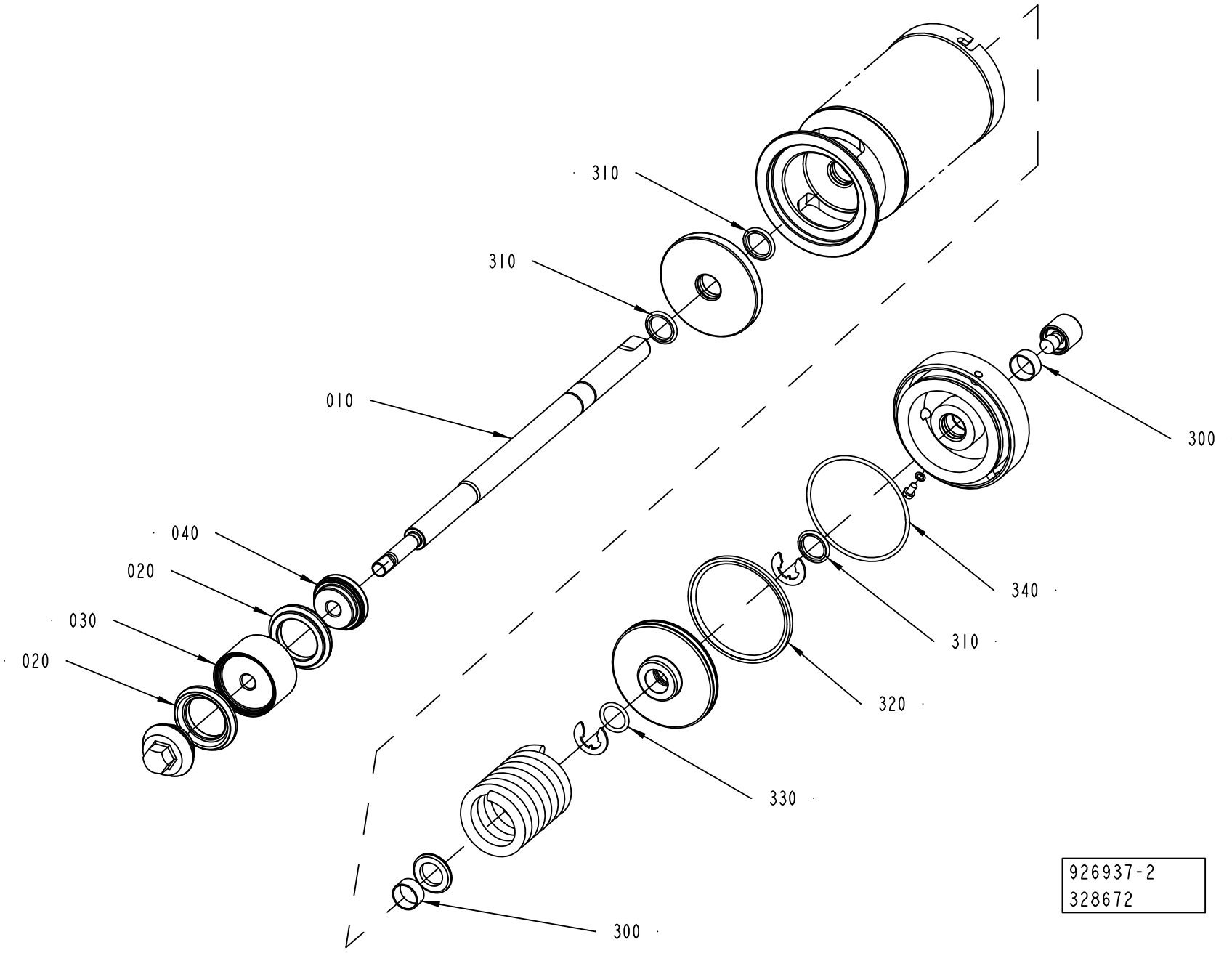
310
310
010
040
020
030
020
300
340
310
320
330
300
926937-2
328672

ECM: 329050 - 20071102
Group number: 926937-0200
Assembly Drawing: 926937-2_1_AA

Pos	Part No	UN	Qty	Description	Page No
-					
010	2913732-0000		1	PISTON ROD	
020	2826441-0000		2	SEAL RING	
030	925471-0000		1	SEAL HOLDER	
040	925472-0000		1	SEAL HOLDER	
300	90091-0238		2	WEAR RING 20X22X10 MM	
310	90091-0237		3	ROD SEAL GLYD RING 20X27,5X3 MM	
320	90091-0336		1	PISTON SEAL GLYD RING 79X90X4,2 MM	
330	315204-0215		1	O-RING 19,2X3 MM	
340	315202-0308		1	O-RING 84,5X3 MM	

Pos	Part No	UN	Qty	Description	Page No

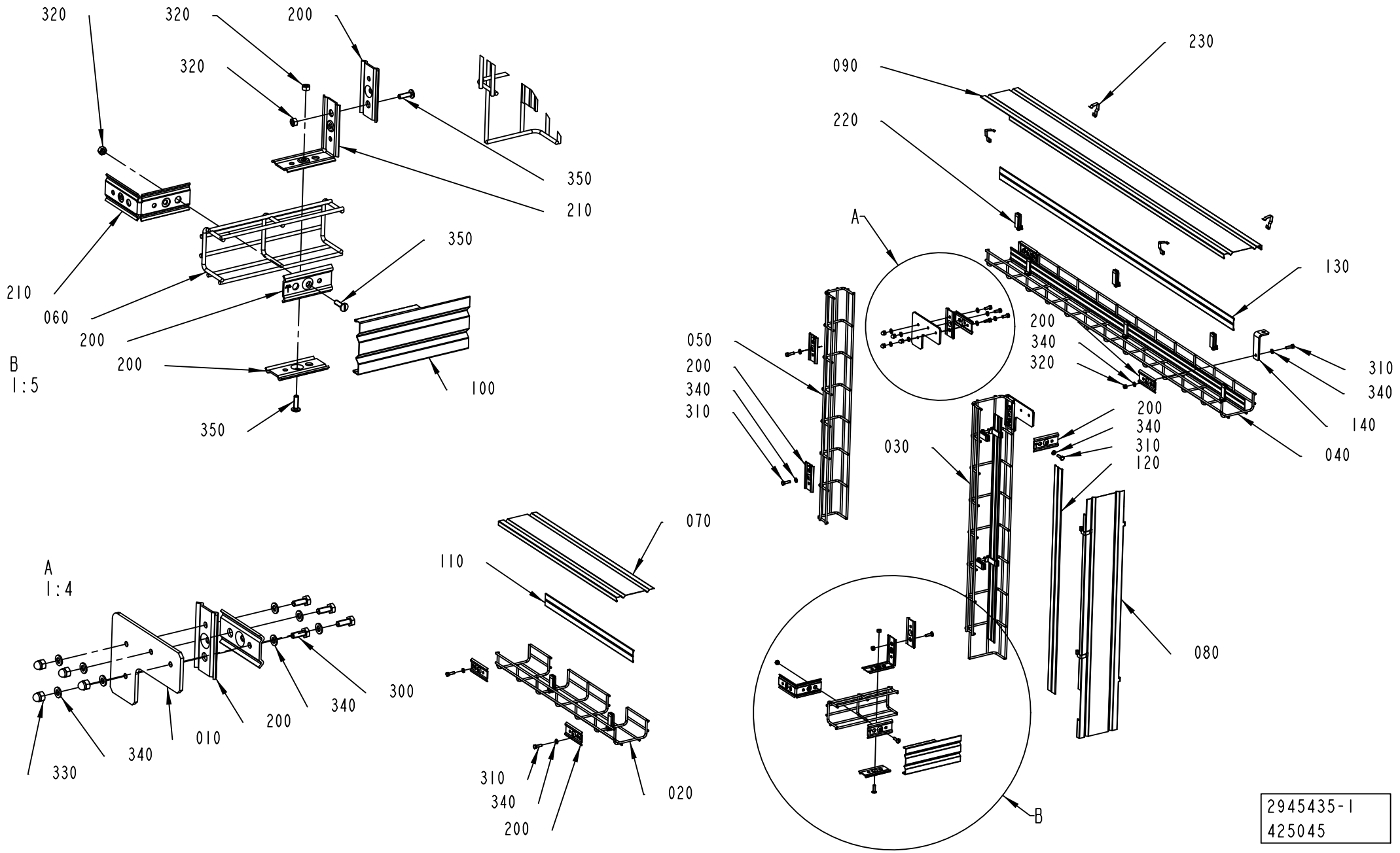
320
320
200
320
350
210
210
060
200
350
200
B
1:5
100
350
A
1:4
330
340
010
200
340
300
110
070
310
340
200
020
090
220
230
A
130
050
200
340
310
200
340
320
310
340
140
040
030
200
340
310
120
080
B
2945435-1
425045

ECM: 430389 - 20100301
Group number: 2945435-0100
Assembly Drawing: 2945435-1_1_AB

Pos	Part No	UN	Qty	Description	Page No
-					
010	2984573-0000		2	BRACKET	
020	2993995-0000		1	CABLE DUCT	
030	2993996-0000		1	CABLE DUCT	
040	2993997-0000		1	CABLE DUCT	
050	2993998-0000		1	CABLE DUCT	
060	2993999-0000		1	CABLE DUCT	
070	2994000-0000		1	LID	
080	2994001-0000		1	LID	
090	2994002-0000		1	LID	
100	2994003-0000		1	LID	
110	2994004-0000		1	SEPARATOR	
120	2994005-0000		2	SEPARATOR	
130	2994006-0000		2	SEPARATOR	
140	2994950-0000		1	BRACKET	
200	90181-0182		13	BRACKET, 1149354	
210	90181-0186		2	CABLE DUCT, ELBOW BRACKET, B27	
220	90181-0191		12	CABLE DUCT, PLATE HOLDER, B38	
230	90600-1954		8	CABLE DUCT, CABLE CLIP, 1149379	
300	312105-0368		9	SCREW, M6S ISO 4017 M6X16 A4 80	
310	312105-0370		5	SCREW, M6S ISO 4017 M6X20 A4 80	
320	312605-0316		4	HEXAGON NUT, M6M M6 A280	
330	312705-0316		8	HEX. DOMED CAP MHM-6 M6 A280	
340	315105-0153		23	WASHER PLAIN, 6,4X12X1,5 A4 BRB	
350	90287-0076		3	SCREW SLOT. PAN HEAD LKCS M6X20	

Pos	Part No	UN	Qty	Description	Page No

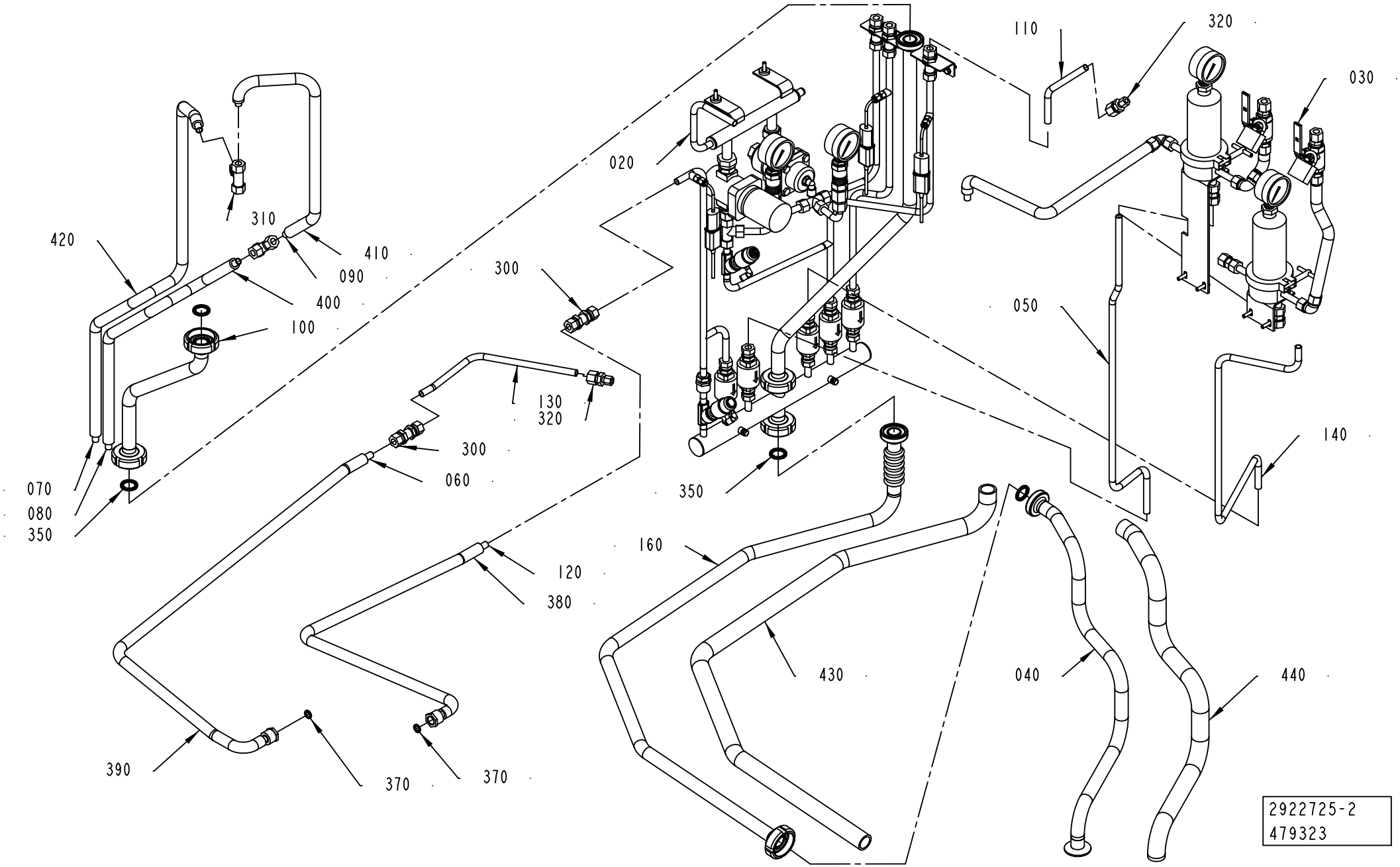
110
320
030
020
310
420
410
090
300
400
100
050
130
320
140
300
060
070
080
350
350
160
120
380
430
040
440
390
370
370
2922725-2
479323

ECM: 481480 - 20110401
Group number: 2922725-0200
Assembly Drawing: 2922725-2_1_AC

Pos	Part No	UN	Qty	Description	Page No
-					
020	2922780-0100		1	STEAM UNIT	**1-37, 1-39**
030	2945400-0200		1	STEAM SYSTEM	**1-41**
040	3092919-0000		1	PIPE	
050	3058510-0000		1	STEAM PIPE	
060	2922737-0000		1	STEAM PIPE	
070	2879218-0000		1	STEAM PIPE	
080	2879216-0000		1	STEAM PIPE	
090	2879217-0000		1	STEAM PIPE	
100	3092920-0000		1	WASTE PIPE	
110	3002813-0000		1	PIPE	
120	2922738-0000		1	STEAM PIPE	
130	2945393-0000		1	STEAM PIPE	
140	3058502-0000		1	STEAM PIPE	
160	3092921-0000		1	WASTE PIPE	
300	90030-0030		2	CONN. BULKHEAD SV12L71	
310	90030-0058		2	CONN. T-PIPE T12L71	
320	90600-0937		2	PIPE CONNECTION 12-8	
350	3092164-0000		4	GASKET	
370	90091-0266		2	SEAL RING 10,4X16,3X2,5 MM	
380	90600-0190	MM	935	INSULATION TUBE Ø21/13 MM, 1627-0013	
390	90600-0190	M	1.15	INSULATION TUBE Ø21/13 MM, 1627-0013	
400	90600-0190	MM	700	INSULATION TUBE Ø21/13 MM, 1627-0013	
410	90600-0190	MM	650	INSULATION TUBE Ø21/13 MM, 1627-0013	
420	90600-0190	M	1.15	INSULATION TUBE Ø21/13 MM, 1627-0013	
430	90602-3850	MM	1600	INSULATION TUBE Ø33/25MM, 1627-0025	
440	90602-3850	MM	1000	INSULATION TUBE Ø33/25MM, 1627-0025	

Pos	Part No	UN	Qty	Description	Page No

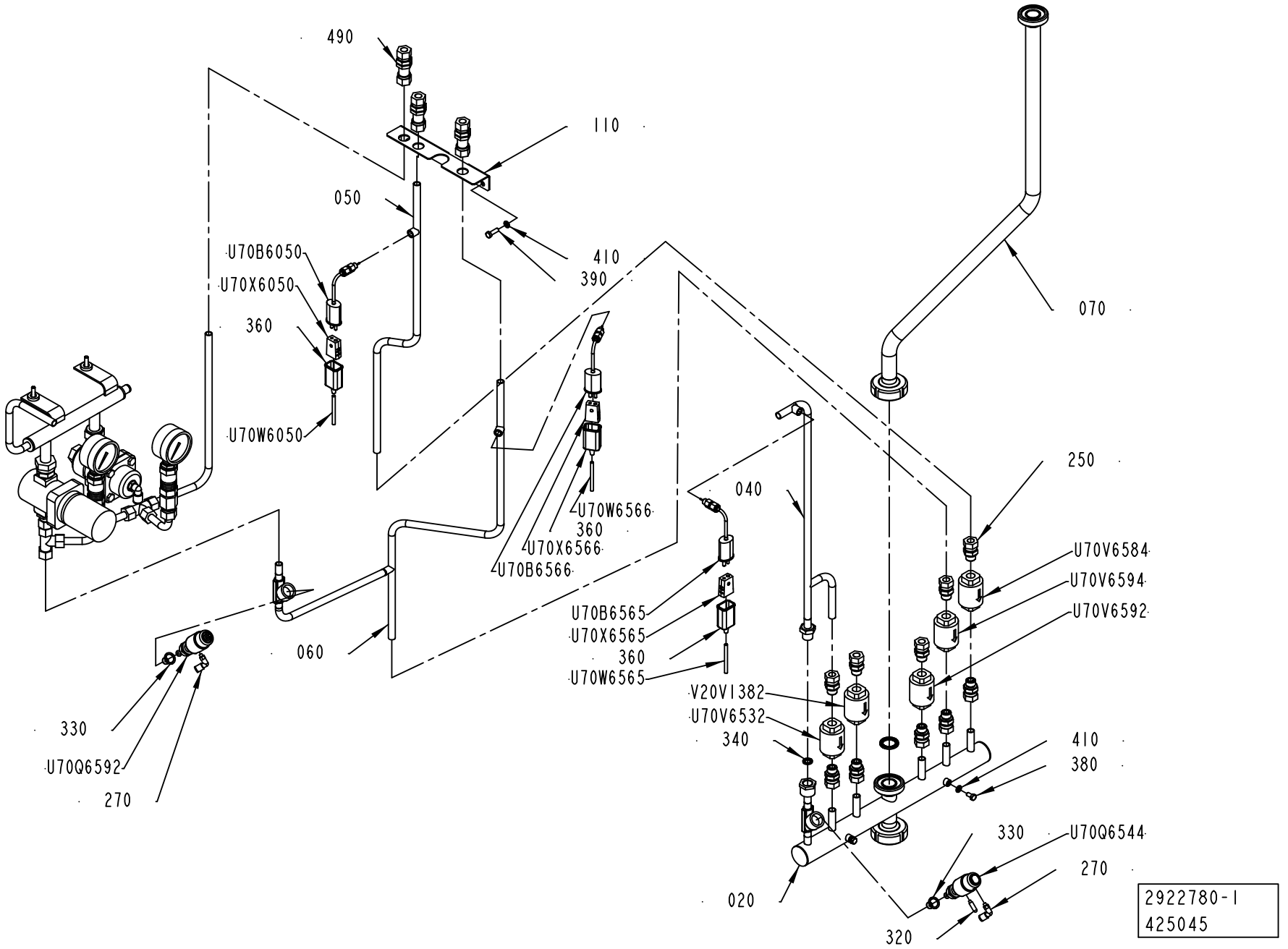
490
110
050
U70B6050
U70X6050
360
U70W6050
410
390
070
250
040
U70W6566
360
U70X6566
U70B6566
U70V6584
U70V6594
U70V6592
U70B6565
U70X6565
360
U70W6565
060
V20V1382
U70V6532
340
410
380
330
U70Q6544
270
020
320
330
U70Q6592
270
2922780-1
425045

ECM: 481482 - 20110401
Group number: 2922780-0100
Assembly Drawing: 2922780-1_1_AB

This list covers pages from 1-36 to 1-39

Pos	Part No	UN	Qty	Description	Page No
-					
010	3058503-0000		1	STEAM DISTRIBUTOR	
020	3092922-0000		1	WASTE BOX	
030	2695992-0000		1	PIPE	
040	2922722-0000		1	STEAM PIPE	
050	3058508-0000		1	STEAM PIPE	
060	3058509-0000		1	STEAM PIPE	
070	3092923-0000		1	WASTE PIPE	
080	2835318-0000		2	PIPE	
090	2980082-0000		1	STEAM PIPE	
100	2980083-0000		1	STEAM PIPE	
110	2980085-0000		1	LEAD-IN PLATE	
210	90030-0191		1	CONN. STR. GE18LRED71	
220	90030-0109		1	STRAIGHT PIPE CONN. GE12LR1/271	
230	90030-0416		1	CONN. STR. M12MSC1/2K-316	
240	90030-0213		1	CONN. STR. M12MSC1/2K-316	
250	90030-0187		10	CONN. STR. GE12LRED71	
260	342701-0205		2	BUSHING, INT/EXT, G 1/2 - G1/4	
270	350002-0002		2	PUSH-IN L-FITTING QSL-F-M5-6	
280	90458-2385		2	COOLER FOR MANOMETER, HIGH TEMP. G1/2	
290	350002-0010		1	PUSH-IN L-FITTING QSL-F-G1/4-10	
320	90328-0029		1	SILENCER, M5	
330	90459-3642		2	SEAL KIT, 88232960	
340	90091-0266		1	SEAL RING 10,4X16,3X2,5 MM	
350	3092164-0000		1	GASKET	
360	90326-0012		3	PROTECTIVE COVER, 03-001 10	
380	312105-0366		2	SCREW, M6S ISO 4017 M6X12 A4 80	
390	312105-0370		2	SCREW, M6S ISO 4017 M6X20 A4 80	
400	312109-0374		2	SCREW, M6S ISO 4017 M6X30 A4 80	
410	315105-0153		4	WASHER PLAIN, 6,4X12X1,5 A4 BRB	
420	315125-0153		2	WASHER HIGH, TBRSB 6,4X22X4 A4	
430	315217-0111		2	BONDED SEAL SS/VITON G1/2	
450	90459-1948		2	BONDED SEAL SS/VITON G1/4	
460	90030-0058		2	CONN. T-PIPE T12L71	
470	342713-0209		1	PLUG, EXT THREAD HEX SOCKET 8638-00-180	
480	342790-0309		2	MAV PRESSURE GAUGE CONNECTOR 12	
490	90030-0030		3	CONN. BULKHEAD SV12L71	
U70B6050	90326-0089		1	THERMOCOUPLE, 5110 089-000	
U70B6565	90326-0089		1	THERMOCOUPLE, 5110 089-000	
U70B6566	90326-0089		1	THERMOCOUPLE, 5110 089-000	
U70P6592	90043-0082		1	PRESSURE GAUGE, 2840, D=63 MM	
U70P6594	90043-0082		1	PRESSURE GAUGE, 2840, D=63 MM	
U70Q6544	90600-3199		1	ACTUATOR, NO, 9550 10Z 520G1	
010	*90600-3201*		*1*	*SEAL KIT, 550000SVS500*	
U70Q6592	90600-3198		1	ACTUATOR, NC, 9550 10Z 510G1	
010	*90600-3201*		*1*	*SEAL KIT, 550000SVS500*	
U70R6592	90601-8470		1	PRESSURE REGULATOR, GD-30S G 1/2	
U70R6603	90458-2264		1	PRESSURE REGULATOR ARC-30-1/2"	
	90458-2655		*1*	*STRAINER FOR ARC-30-1/2"*	
	90458-2654		*1*	*GASKET KIT FOR ARC-30-1/2"*	
	90458-2653		*1*	*BELLOWS AISI 316L FOR ARC-30-1/2"*	
U70V6532	90360-0020		1	STEAM TRAP / MK36/51 3/8 INCH	
	90360-0310		*1*	*CAPSULE, FOR STEAM TRAP 90360-20*	
	90360-0309		*1*	*STRAINER, FOR STEAM TRAP 90360-20*	
U70V6584	90360-0020		1	STEAM TRAP / MK36/51 3/8 INCH	
	90360-0310		*1*	*CAPSULE, FOR STEAM TRAP 90360-20*	
	90360-0309		*1*	*STRAINER, FOR STEAM TRAP 90360-20*	
U70V6592	90360-0020		1	STEAM TRAP / MK36/51 3/8 INCH	
	90360-0310		*1*	*CAPSULE, FOR STEAM TRAP 90360-20*	
	90360-0309		*1*	*STRAINER, FOR STEAM TRAP 90360-20*	
U70V6594	90360-0020		1	STEAM TRAP / MK36/51 3/8 INCH	
	90360-0310		*1*	*CAPSULE, FOR STEAM TRAP 90360-20*	
	90360-0309		*1*	*STRAINER, FOR STEAM TRAP 90360-20*	
U70W6050	90220-0059	M	1.6	THERMOCOUPLE CABLE, P/PTW-20F-K 2X0,5MM2	
U70W6565	90220-0059	M	1.2	THERMOCOUPLE CABLE, P/PTW-20F-K 2X0,5MM2	
U70W6566	90220-0059	M	1.2	THERMOCOUPLE CABLE, P/PTW-20F-K 2X0,5MM2	
U70X6050	90326-0020		1	SOCKET, FEMALE YELLOW CR-AL, 03-22000A	
U70X6565	90326-0020		1	SOCKET, FEMALE YELLOW CR-AL, 03-22000A	
U70X6566	90326-0020		1	SOCKET, FEMALE YELLOW CR-AL, 03-22000A	
V20V1382	90360-0020		1	STEAM TRAP / MK36/51 3/8 INCH	
	90360-0310		*1*	*CAPSULE, FOR STEAM TRAP 90360-20*	
	90360-0309		*1*	*STRAINER, FOR STEAM TRAP 90360-20*	

Machine Type | Group Description | Used-In | Group Number | Page No

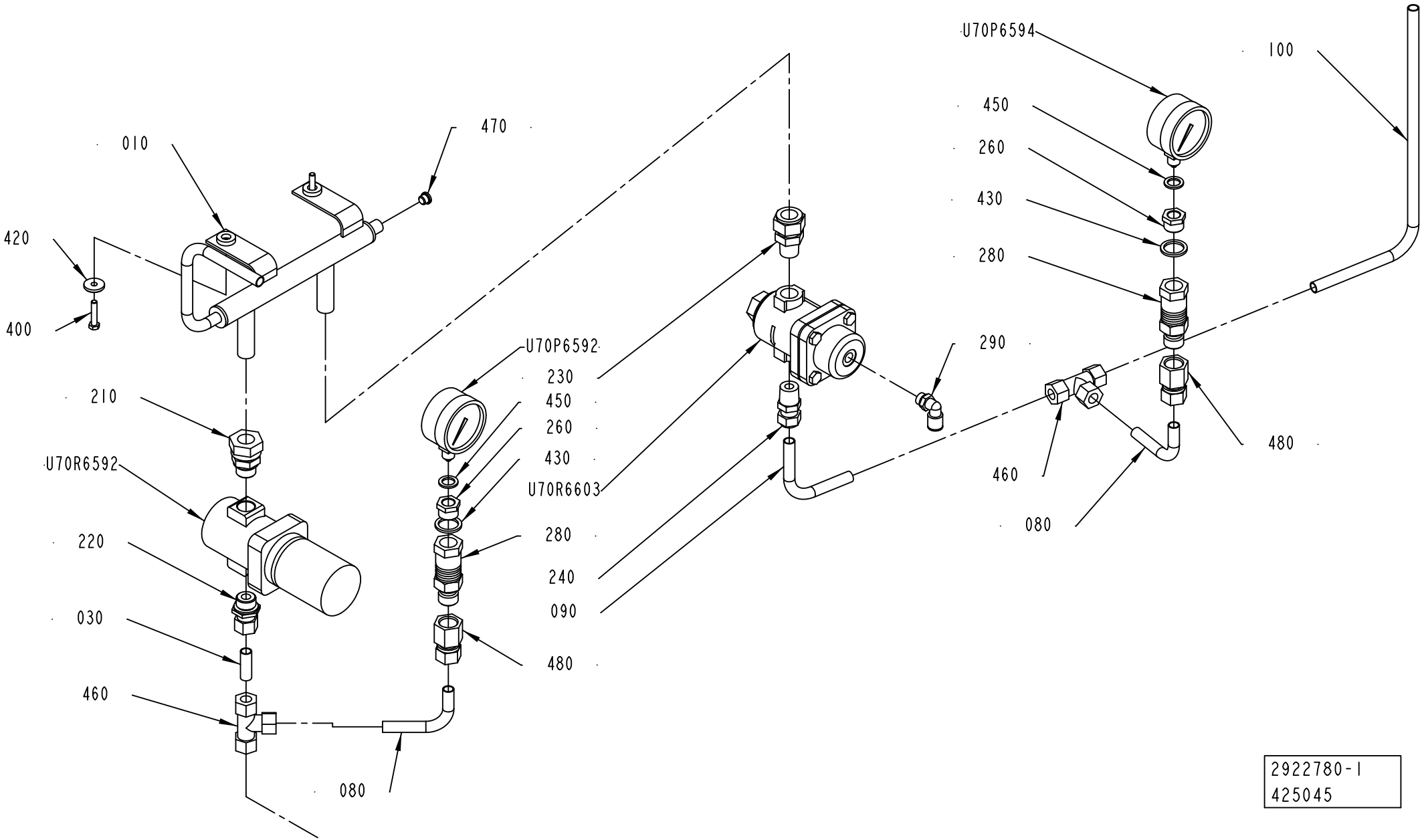
010
470
420
400
210
U70R6592
220
030
460
080
U70P6592
230
450
260
430
U70R6603
280
240
090
480
U70P6594
450
260
430
280
290
100
480
460
080
2922780-1
425045

ECM: 481482 - 20110401
Group number: 2922780-0100
Assembly Drawing: 2922780-1_2_AB

This list covers pages from 1-36 to 1-39

Pos	Part No	UN	Qty	Description	Page No
-					
010	3058503-0000		1	STEAM DISTRIBUTOR	
020	3092922-0000		1	WASTE BOX	
030	2695992-0000		1	PIPE	
040	2922722-0000		1	STEAM PIPE	
050	3058508-0000		1	STEAM PIPE	
060	3058509-0000		1	STEAM PIPE	
070	3092923-0000		1	WASTE PIPE	
080	2835318-0000		2	PIPE	
090	2980082-0000		1	STEAM PIPE	
100	2980083-0000		1	STEAM PIPE	
110	2980085-0000		1	LEAD-IN PLATE	
210	90030-0191		1	CONN. STR. GE18LRED71	
220	90030-0109		1	STRAIGHT PIPE CONN. GE12LR1/271	
230	90030-0416		1	CONN. STR. M12MSC1/2K-316	
240	90030-0213		1	CONN. STR. M12MSC1/2K-316	
250	90030-0187		10	CONN. STR. GE12LRED71	
260	342701-0205		2	BUSHING, INT/EXT, G 1/2 - G1/4	
270	350002-0002		2	PUSH-IN L-FITTING QSL-F-M5-6	
280	90458-2385		2	COOLER FOR MANOMETER, HIGH TEMP. G1/2	
290	350002-0010		1	PUSH-IN L-FITTING QSL-F-G1/4-10	
320	90328-0029		1	SILENCER, M5	
330	90459-3642		2	SEAL KIT, 88232960	
340	90091-0266		1	SEAL RING 10,4X16,3X2,5 MM	
350	3092164-0000		1	GASKET	
360	90326-0012		3	PROTECTIVE COVER, 03-001 10	
380	312105-0366		2	SCREW, M6S ISO 4017 M6X12 A4 80	
390	312105-0370		2	SCREW, M6S ISO 4017 M6X20 A4 80	
400	312109-0374		2	SCREW, M6S ISO 4017 M6X30 A4 80	
410	315105-0153		4	WASHER PLAIN, 6,4X12X1,5 A4 BRB	
420	315125-0153		2	WASHER HIGH, TBRSB 6,4X22X4 A4	
430	315217-0111		2	BONDED SEAL SS/VITON G1/2	
450	90459-1948		2	BONDED SEAL SS/VITON G1/4	
460	90030-0058		2	CONN. T-PIPE T12L71	
470	342713-0209		1	PLUG, EXT THREAD HEX SOCKET 8638-00-180	
480	342790-0309		2	MAV PRESSURE GAUGE CONNECTOR 12	
490	90030-0030		3	CONN. BULKHEAD SV12L71	
U70B6050	90326-0089		1	THERMOCOUPLE, 5110 089-000	
U70B6565	90326-0089		1	THERMOCOUPLE, 5110 089-000	
U70B6566	90326-0089		1	THERMOCOUPLE, 5110 089-000	
U70P6592	90043-0082		1	PRESSURE GAUGE, 2840, D=63 MM	
U70P6594	90043-0082		1	PRESSURE GAUGE, 2840, D=63 MM	
U70Q6544	90600-3199		1	ACTUATOR, NO, 9550 10Z 520G1	
010	*90600-3201*		*1*	*SEAL KIT, 550000SVS500*	
U70Q6592	90600-3198		1	ACTUATOR, NC, 9550 10Z 510G1	
010	*90600-3201*		*1*	*SEAL KIT, 550000SVS500*	
U70R6592	90601-8470		1	PRESSURE REGULATOR, GD-30S G 1/2	
U70R6603	90458-2264		1	PRESSURE REGULATOR ARC-30-1/2"	
	90458-2655		*1*	*STRAINER FOR ARC-30-1/2"*	
	90458-2654		*1*	*GASKET KIT FOR ARC-30-1/2"*	
	90458-2653		*1*	*BELLOWS AISI 316L FOR ARC-30-1/2"*	
U70V6532	90360-0020		1	STEAM TRAP / MK36/51 3/8 INCH	
	90360-0310		*1*	*CAPSULE, FOR STEAM TRAP 90360-20*	
	90360-0309		*1*	*STRAINER, FOR STEAM TRAP 90360-20*	
U70V6584	90360-0020		1	STEAM TRAP / MK36/51 3/8 INCH	
	90360-0310		*1*	*CAPSULE, FOR STEAM TRAP 90360-20*	
	90360-0309		*1*	*STRAINER, FOR STEAM TRAP 90360-20*	
U70V6592	90360-0020		1	STEAM TRAP / MK36/51 3/8 INCH	
	90360-0310		*1*	*CAPSULE, FOR STEAM TRAP 90360-20*	
	90360-0309		*1*	*STRAINER, FOR STEAM TRAP 90360-20*	
U70V6594	90360-0020		1	STEAM TRAP / MK36/51 3/8 INCH	
	90360-0310		*1*	*CAPSULE, FOR STEAM TRAP 90360-20*	
	90360-0309		*1*	*STRAINER, FOR STEAM TRAP 90360-20*	
U70W6050	90220-0059	M	1.6	THERMOCOUPLE CABLE, P/PTW-20F-K 2X0,5MM2	
U70W6565	90220-0059	M	1.2	THERMOCOUPLE CABLE, P/PTW-20F-K 2X0,5MM2	
U70W6566	90220-0059	M	1.2	THERMOCOUPLE CABLE, P/PTW-20F-K 2X0,5MM2	
U70X6050	90326-0020		1	SOCKET, FEMALE YELLOW CR-AL, 03-22000A	
U70X6565	90326-0020		1	SOCKET, FEMALE YELLOW CR-AL, 03-22000A	
U70X6566	90326-0020		1	SOCKET, FEMALE YELLOW CR-AL, 03-22000A	
V20V1382	90360-0020		1	STEAM TRAP / MK36/51 3/8 INCH	
	90360-0310		*1*	*CAPSULE, FOR STEAM TRAP 90360-20*	
	90360-0309		*1*	*STRAINER, FOR STEAM TRAP 90360-20*	

Machine Type | Group Description | Used-In | Group Number | Page No

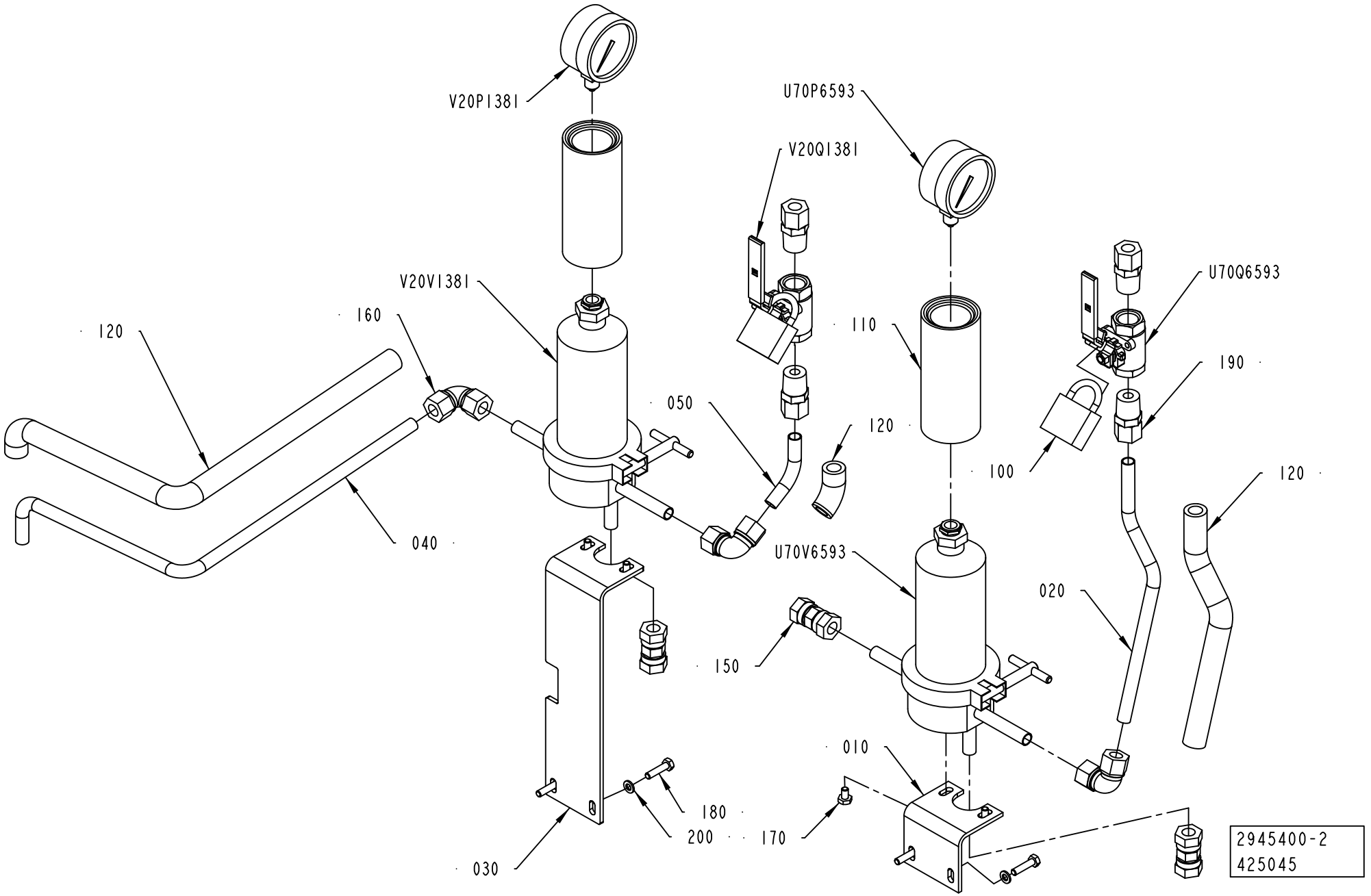
V20P1381
V20Q1381
V20V1381
U70P6593
U70Q6593
U70V6593
120
160
050
110
190
100
040
020
150
010
180
200
170
030
2945400-2
425045

ECM: 430386 - 20100301
Group number: 2945400-0200
Assembly Drawing: 2945400-2_1_AA

Pos	Part No	UN	Qty	Description	Page No
-					
010	2924214-0000		1	SUPPORT	
020	3058504-0000		1	STEAM PIPE	
030	3058506-0000		1	BRACKET	
040	3058505-0000		1	STEAM PIPE	
050	3058507-0000		1	STEAM PIPE	
100	779910-0101		2	PADLOCK, 250/40 W 2 KEYS	
110	90337-0315		2	FILTER INSERT / MCS 4463	
	90458-2549		*1*	*O-RING 72,69X2,62 MM*	
120	90600-0190	MM	1000	INSULATION TUBE Ø21/13 MM, 1627-0013	
150	90030-0106		3	PIPE CONNECTION G 12	
160	90030-0096		3	ELBOW CONNECTION 12	
170	90600-0657		4	SCREW UNC 1/4-20 X10	
180	312105-0372		4	SCREW, M6S ISO 4017 M6X25 A4 80	
190	90030-0180		2	CONN. STR. GE12L1/2NPT71	
200	315105-0153		4	WASHER PLAIN, 6,4X12X1,5 A4 BRB	
U70P6593	90043-0082		1	PRESSURE GAUGE, 2840, D=63 MM	
U70Q6593	90600-3701		1	BALL VALVE, 1/2NPT	
U70V6593	90600-3159		1	FILTER HOUSING, MDS4463G58383	
V20P1381	90043-0082		1	PRESSURE GAUGE, 2840, D=63 MM	
V20Q1381	90600-3701		1	BALL VALVE, 1/2NPT	
V20V1381	90600-3159		1	FILTER HOUSING, MDS4463G58383	

Pos	Part No	UN	Qty	Description	Page No

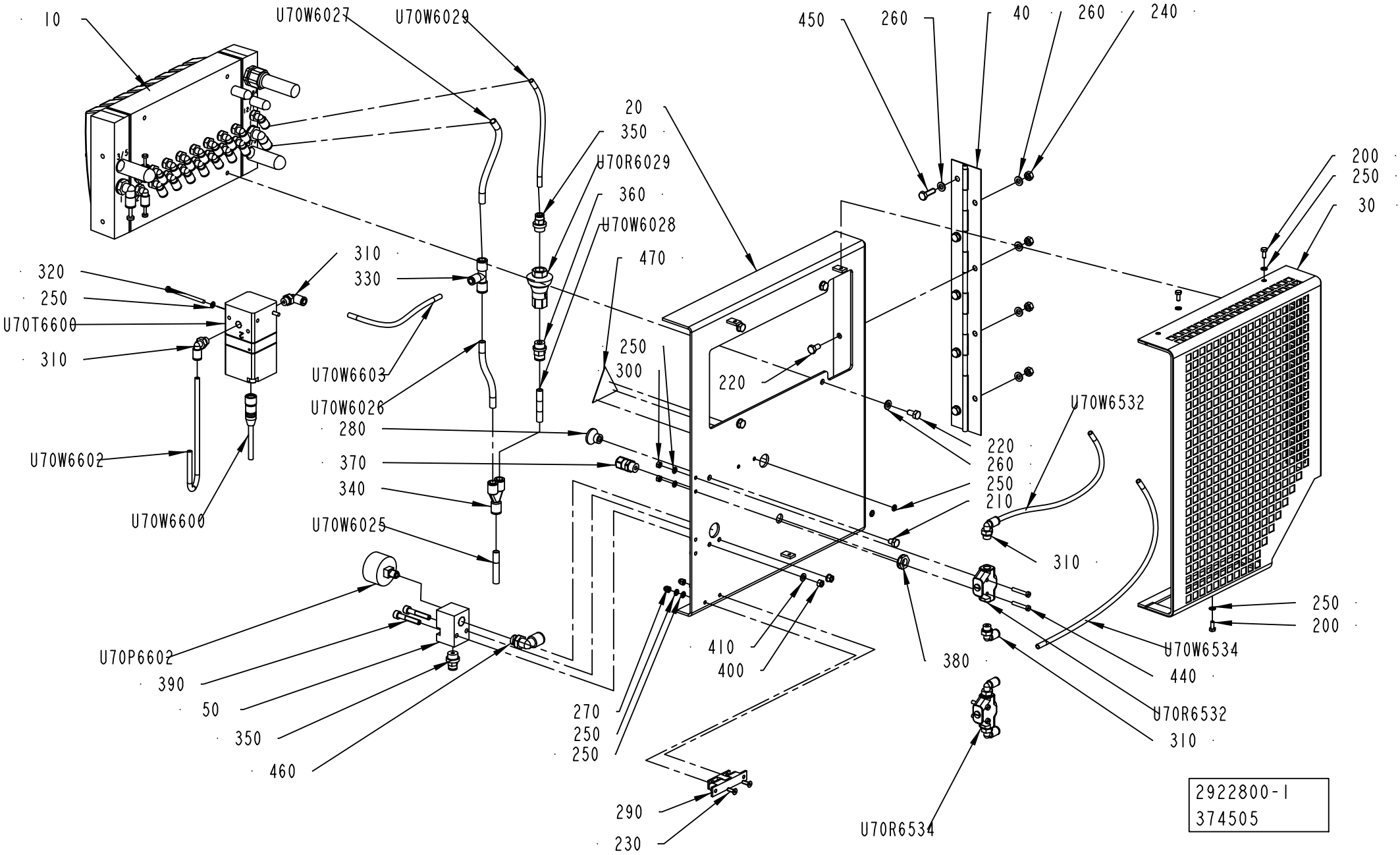
10
U70W6027
U70W6029
450
260
40
260
240
20
350
U70R6029
360
U70W6028
470
200
250
30
320
250
U70T6600
310
310
330
U70W6603
U70W6026
280
370
340
U70W6025
250
300
220
U70W6532
220
260
250
210
310
U70W6602
U70W6600
U70P6602
390
50
350
460
270
250
250
410
400
380
290
230
U70R6534
250
200
U70W6534
440
U70R6532
310
2922800-1
374505

ECM: 460745 - 20101001
Group number: 2922800-0100
Assembly Drawing: 2922800-1_1_AB

Pos	Part No	UN	Qty	Description	Page No
ANSI					
470	90459-7458		1	WARNING SIGN ANSI (H), HOT SURFACE	
ISO					
470	359705-0007		1	WARNING SIGN ISO, HOT SURFACE	
Common Parts					
010	2945395-0100		1	VALVE GROUP	**1-45**
020	2945401-0000		1	PLATE	
030	925457-0000		1	TOUCH GUARD	
040	735503-0000		1	HINGE	
050	2913729-0000		1	BLOCK	
200	312105-0289		3	SCREW, M6S ISO 4017 M4X10 A4 70	
210	312105-0362		1	SCREW, M6S ISO 4017 M6X8 A4 80	
220	312105-0366		8	SCREW, M6S ISO 4017 M6X12 A4 80	
230	312155-0291		2	SCREW DIN 7991 MF6S M4X12 A4 70	
240	312605-0316		4	HEXAGON NUT, M6M M6 A280	
250	315105-0136		15	WASHER PLAIN, 4,3X9X0,8 A4 BRB	
260	315105-0153		13	WASHER PLAIN, 6,4X12X1,5 A4 BRB	
270	312705-0312		2	NUT HEX. DOMED CAP MHM-6 M4 A280	
280	318873-0103		1	KNOB, CIRCUL, THREADED BUSH, M6 21X17 MM	
290	90237-0070		1	SNAP-IN BALL LOCK, 69X19 MM	
300	312605-0312		2	HEXAGON NUT, M6M M4 A280	
310	350002-0006		6	PUSH-IN L-FITTING QSL-F-G1/8-6	
320	312125-0307		2	SCREW ISO 1207 M4X60 A4	
330	350011-0002		1	PUSH-IN T-FITTING QST-F-8-6	
340	350015-0003		1	PUSH-IN Y-CONNECTOR QSY-F-8	
350	350001-0008		2	PUSH-IN FITTING QS-F-G1/4-6	
360	350001-0009		1	PUSH-IN FITTING QS-F-G1/4-8	
370	90458-0305		1	CABLE GLAND, M12X1,5, 5311 1000	
380	90458-0321		1	NUT, M12X1,5	
390	312115-0376		2	SCREW ISO4762 M6X35 A4 80	
400	312605-0314		2	HEXAGON NUT, M6M M5 A280	
410	315106-0146		2	WASHER PLAIN, M5 ISO7089-5-200 HV A4	
440	312125-0297		4	SLOTTED HEAD SCREW, ISO1207 M4X25 A4	
450	312105-0370		5	SCREW, M6S ISO 4017 M6X20 A4 80	
460	350002-0010		1	PUSH-IN L-FITTING QSL-F-G1/4-10	
U70P6602	90043-0069		1	PRESSURE GAUGE 0-4BAR WIEGAND 2040	
U70R6029	90459-2425		1	PRESSURE REGULATOR IN-LINE, BSP-1/4	
U70R6532	90235-0048		1	VALVE	
U70R6534	90235-0048		1	VALVE	
U70T6600	90600-4354		1	PROP. PRESS. REG., VPPE-3-1/8-6-010	
U70W6025	90458-0191	MM	400	SPIRALE TUBE, 8 MM TEFLON	
U70W6026	90458-0191	MM	110	SPIRALE TUBE, 8 MM TEFLON	
U70W6027	90458-0191	MM	140	SPIRALE TUBE, 8 MM TEFLON	
U70W6028	90458-0191	MM	40	SPIRALE TUBE, 8 MM TEFLON	
U70W6029	90458-0190	MM	130	SPIRALE TUBE, 6 MM TEFLON	
U70W6532	90458-0190	MM	300	SPIRALE TUBE, 6 MM TEFLON	
U70W6534	90458-0190	MM	400	SPIRALE TUBE, 6 MM TEFLON	
U70W6600	90600-1768		1	ACTUATOR/SENSOR CABLE RKTS 5-298/5M	
U70W6602	90458-0190	MM	250	SPIRALE TUBE, 6 MM TEFLON	
U70W6603	90458-0190	MM	250	SPIRALE TUBE, 6 MM TEFLON	

Machine Type | Group Description | Used-In | Group Number | Page No

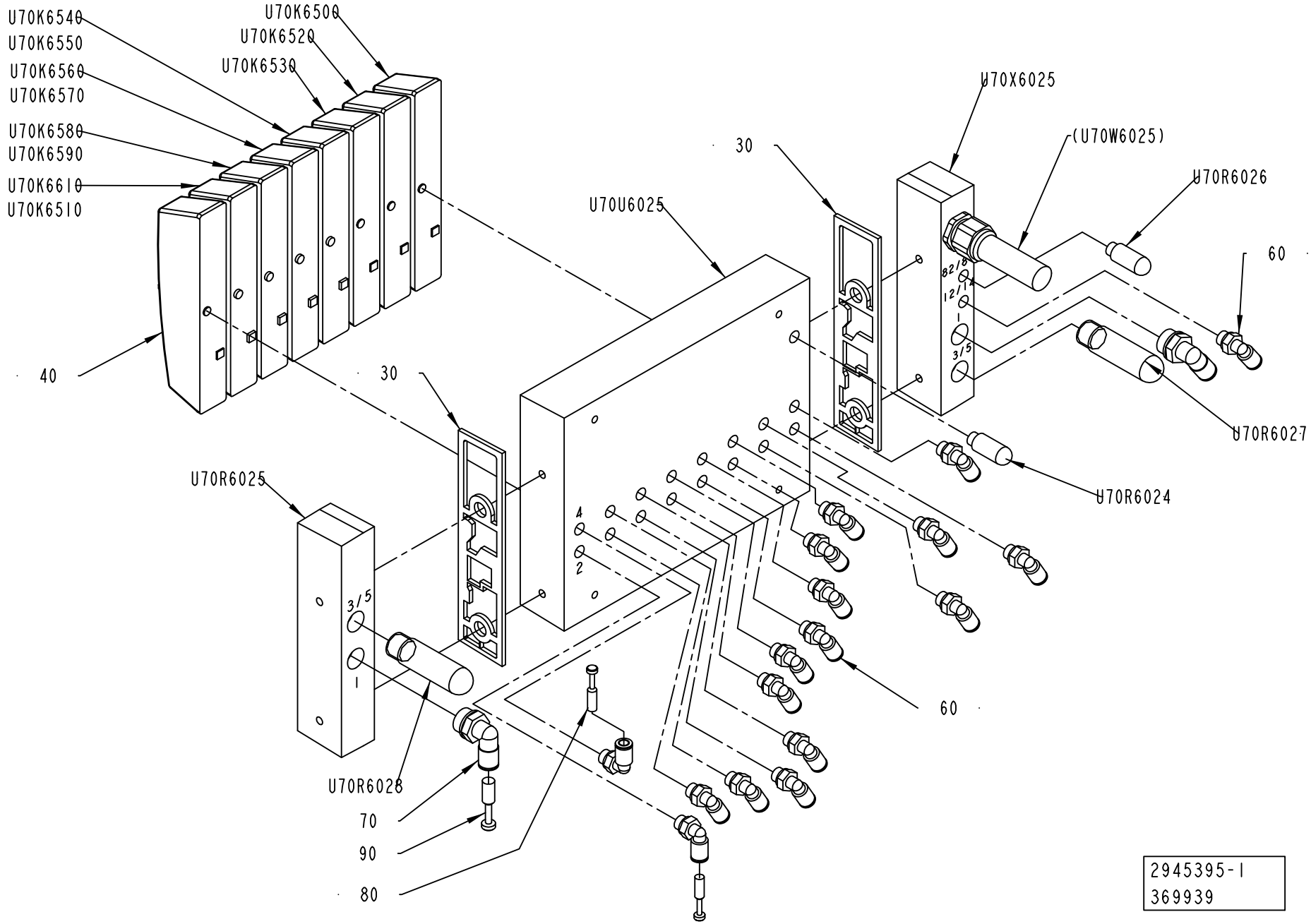
U70K6540
U70K6550
U70K6560
U70K6570
U70K6580
U70K6590
U70K6610
U70K6510
U70K6500
U70K6520
U70K6530
U70X6025
(U70W6025)
U70R6026
U70U6025
30
60
40
30
U70R6027
U70R6025
U70R6024
60
U70R6028
70
90
80
2945395-1
369939

ECM: 369956 - 20081009
Group number: 2945395-0100
Assembly Drawing: 2945395-1_1_AA

Pos	Part No	UN	Qty	Description	Page No
-					
030	90458-1207		2	SEALING, STANDARD	
040	90458-1215		1	COVER PLATE, EMPTY VALVE POSITION	
060	350002-0006		17	PUSH-IN L-FITTING QSL-F-G1/8-6	
070	350002-0012		2	PUSH-IN L-FITTING QSL-F-G3/8-8	
080	350013-0002		2	PLUG QSC-6H	
090	350013-0003		1	PLUG QSC-8H	
U70K6500	90458-1194		1	VALVE, 5/2 MONOSTABLE	
U70K6520	90458-1194		1	VALVE, 5/2 MONOSTABLE	
U70K6530	90458-1194		1	VALVE, 5/2 MONOSTABLE	
U70K6540	90458-1202		1	VALVES 2X3/2, CLOSED	
U70K6560	90458-1202		1	VALVES 2X3/2, CLOSED	
U70K6580	90458-1202		1	VALVES 2X3/2, CLOSED	
U70K6610	90458-1202		1	VALVES 2X3/2, CLOSED	
U70R6024	90328-0047		1	SILENCER, G1/8"	
U70R6025	90458-1214		1	RIGHT ENDPL EXT. PILOT AIR,CDVI5.0-EPR-S	
U70R6026	90328-0047		1	SILENCER, G1/8"	
U70R6027	90328-0024		1	SILENCER, G3/8"	
U70R6028	90328-0024		1	SILENCER, G3/8"	
U70U6025	90458-1205		1	BASIC SUB-BASE 8 VALVES, CDVI5.0-GB8-MP	
U70X6025	90458-1212		1	LEFT ENDPLATE INCL. 10M CABLE	

Pos	Part No	UN	Qty	Description	Page No

PNEUMATIC CIRCUIT

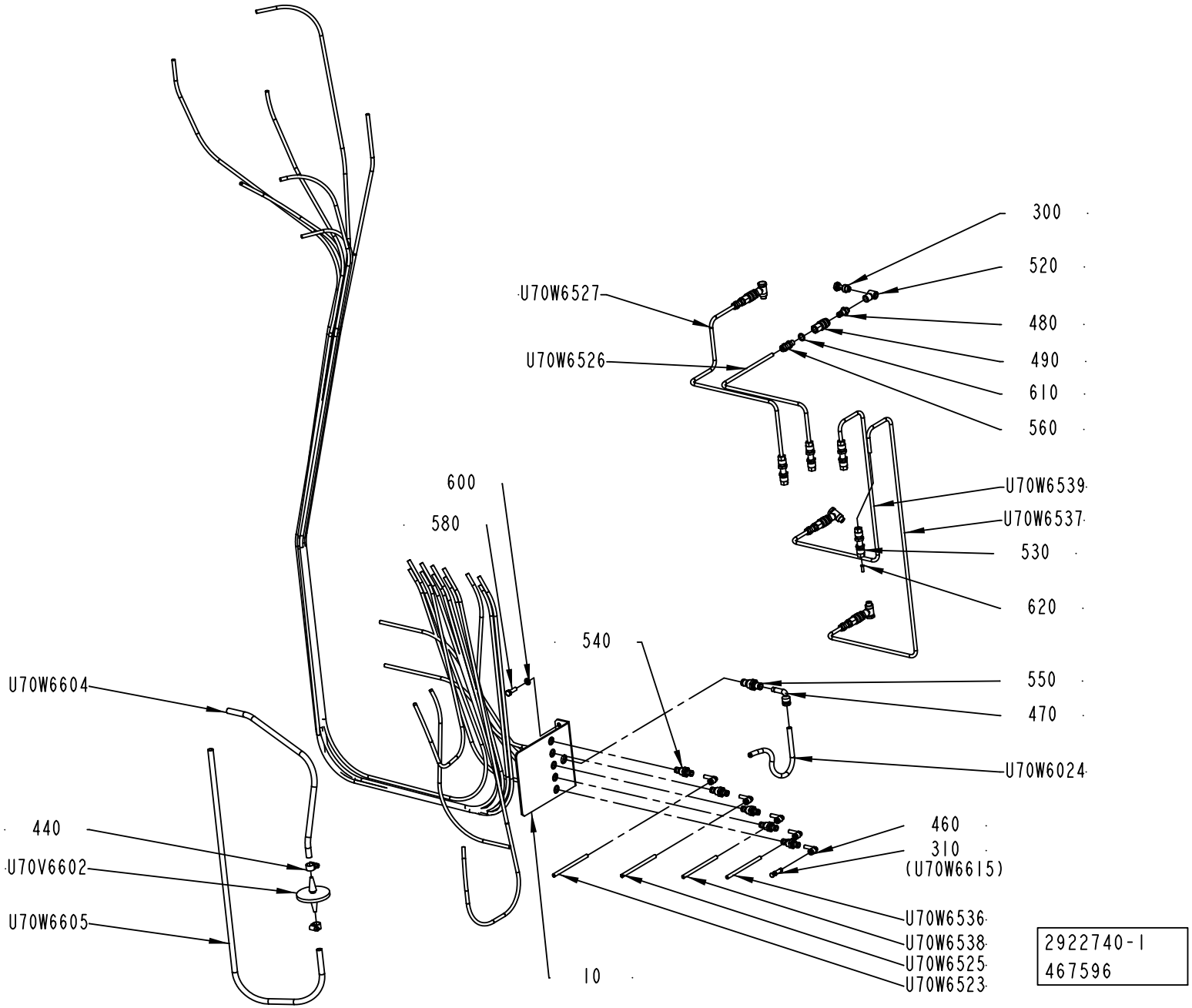

ECM: 474474 - 20110101
Group number: 2922740-0100
Assembly Drawing: 2922740-1_1_AC

This list covers pages from 1-46 to 1-51

Pos	Part No	UN	Qty	Description	Page No
-					
010	2945407-0000		1	BRACKET	
300	342980-0303		4	BANJO-HOLLOW BOLT COUPL,EXT.THR.01-G1/8	
310	342715-0102		1	BLIND PLUG 6 MM	
440	342991-0100		2	HOSE CLIP,WORM DRIVE TYPE (8)-14	
460	90055-0217		5	ELBOW PIPE JOINT	
470	90055-0204		1	ELBOW WITH TAILPIECE 8/8 MM LONG	
480	90163-0057		4	QUICK COUPLING, (M) 5150-1/8	
490	90163-0062		4	QUICK COUPLING, (F) 5053-1/8	
520	90224-0308		4	CONN. BANJO, ART. NO. 2023-1/8-1/8	
530	90224-0349		4	CONN. BULKHEAD. 1250-6	
540	90457-0086		5	BULKHEAD CONNECTOR 6MM	
550	90457-0141		1	BULKHEAD CONNECTOR, 8MM	
560	90458-1849		4	CONN. STR., 1050-6-1/8	
580	312105-0370		2	SCREW, M6S ISO 4017 M6X20 A4 80	
600	315105-0153		2	WASHER PLAIN, 6,4X12X1,5 A4 BRB	
610	315237-0109		4	WASHER,PL.RND.AL.10/14,H=1,5	
620	342706-0130		4	STIFFNER SLEEVE FOR HOSE 6X1	
U70V6602	90458-2554		1	STERILE GRADE MEMBRANE FILTER 0,2µM	
U70W6024	90458-0191	M	5	SPIRALE TUBE, 8 MM TEFLON	
U70W6502	90458-0190	M	2.5	SPIRALE TUBE, 6 MM TEFLON	
U70W6504	90458-0190	M	2.5	SPIRALE TUBE, 6 MM TEFLON	
U70W6512	90458-0190	M	2.25	SPIRALE TUBE, 6 MM TEFLON	
U70W6522	90458-0190	M	0.45	SPIRALE TUBE, 6 MM TEFLON	
U70W6523	90458-0190	M	3	SPIRALE TUBE, 6 MM TEFLON	
U70W6524	90458-0190	M	0.5	SPIRALE TUBE, 6 MM TEFLON	
U70W6525	90458-0190	M	3	SPIRALE TUBE, 6 MM TEFLON	
U70W6526	2922777-0000		1	PIPE	
U70W6527	2922778-0000		1	PIPE	
U70W6527	2922776-0000		1	PIPE	
U70W6533	90458-0190	M	0.5	SPIRALE TUBE, 6 MM TEFLON	
U70W6535	90458-0190	M	0.45	SPIRALE TUBE, 6 MM TEFLON	
U70W6536	90458-0190	M	3	SPIRALE TUBE, 6 MM TEFLON	
U70W6538	90458-0190	M	3	SPIRALE TUBE, 6 MM TEFLON	
U70W6539	2922774-0000		1	PIPE	
U70W6544	90458-0190	M	1	SPIRALE TUBE, 6 MM TEFLON	
U70W6552	90458-0190	M	2.6	SPIRALE TUBE, 6 MM TEFLON	
U70W6564	90458-0190	M	2.3	SPIRALE TUBE, 6 MM TEFLON	
U70W6572	90458-0190	M	2.1	SPIRALE TUBE, 6 MM TEFLON	
U70W6584	90458-0190	M	2.3	SPIRALE TUBE, 6 MM TEFLON	
U70W6592	90458-0190	M	0.65	SPIRALE TUBE, 6 MM TEFLON	
U70W6604	90600-2065	M	0.23	HOSE, 10X1 MM PTFE TRANSPARENT	
U70W6605	90600-2065	M	0.3	HOSE, 10X1 MM PTFE TRANSPARENT	
U70W6614	90458-0190	M	0.6	SPIRALE TUBE, 6 MM TEFLON	

Machine Type | Group Description | Used-In | Group Number | Page No

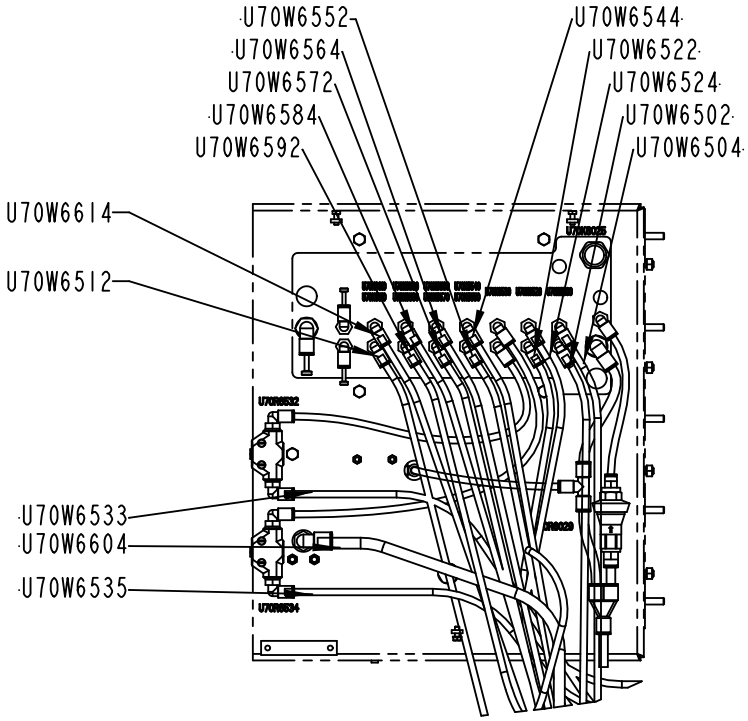

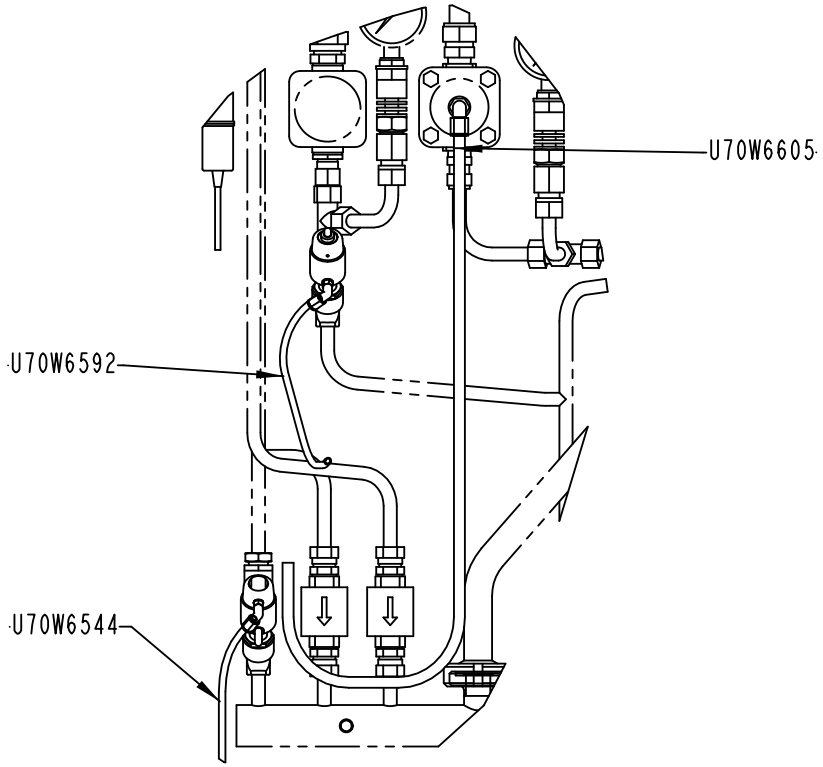

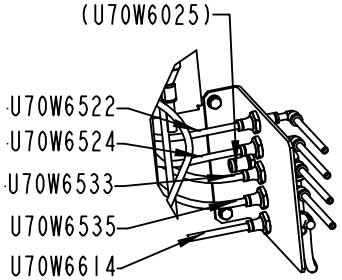

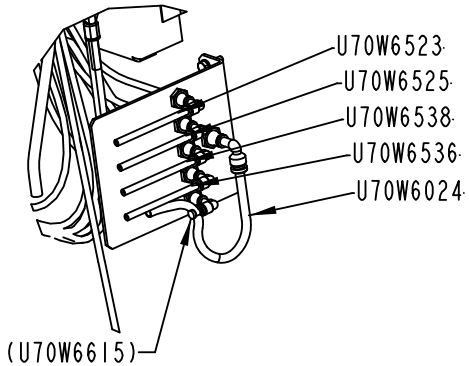

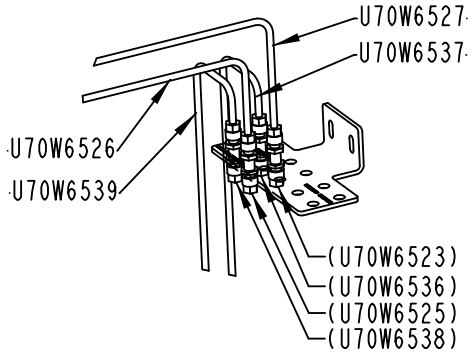

2922740-1
467596

ECM: 474474 - 20110101
Group number: 2922740-0100
Assembly Drawing: 2922740-1_2_AC

This list covers pages from 1-46 to 1-51

Pos	Part No	UN	Qty	Description	Page No
-					
010	2945407-0000		1	BRACKET	
300	342980-0303		4	BANJO-HOLLOW BOLT COUPL,EXT.THR.01-G1/8	
310	342715-0102		1	BLIND PLUG 6 MM	
440	342991-0100		2	HOSE CLIP,WORM DRIVE TYPE (8)-14	
460	90055-0217		5	ELBOW PIPE JOINT	
470	90055-0204		1	ELBOW WITH TAILPIECE 8/8 MM LONG	
480	90163-0057		4	QUICK COUPLING, (M) 5150-1/8	
490	90163-0062		4	QUICK COUPLING, (F) 5053-1/8	
520	90224-0308		4	CONN. BANJO, ART. NO. 2023-1/8-1/8	
530	90224-0349		4	CONN. BULKHEAD. 1250-6	
540	90457-0086		5	BULKHEAD CONNECTOR 6MM	
550	90457-0141		1	BULKHEAD CONNECTOR, 8MM	
560	90458-1849		4	CONN. STR., 1050-6-1/8	
580	312105-0370		2	SCREW, M6S ISO 4017 M6X20 A4 80	
600	315105-0153		2	WASHER PLAIN, 6,4X12X1,5 A4 BRB	
610	315237-0109		4	WASHER,PL.RND.AL.10/14,H=1,5	
620	342706-0130		4	STIFFNER SLEEVE FOR HOSE 6X1	
U70V6602	90458-2554		1	STERILE GRADE MEMBRANE FILTER 0,2µM	
U70W6024	90458-0191	M	5	SPIRALE TUBE, 8 MM TEFLON	
U70W6502	90458-0190	M	2.5	SPIRALE TUBE, 6 MM TEFLON	
U70W6504	90458-0190	M	2.5	SPIRALE TUBE, 6 MM TEFLON	
U70W6512	90458-0190	M	2.25	SPIRALE TUBE, 6 MM TEFLON	
U70W6522	90458-0190	M	0.45	SPIRALE TUBE, 6 MM TEFLON	
U70W6523	90458-0190	M	3	SPIRALE TUBE, 6 MM TEFLON	
U70W6524	90458-0190	M	0.5	SPIRALE TUBE, 6 MM TEFLON	
U70W6525	90458-0190	M	3	SPIRALE TUBE, 6 MM TEFLON	
U70W6526	2922777-0000		1	PIPE	
U70W6527	2922778-0000		1	PIPE	
U70W6527	2922776-0000		1	PIPE	
U70W6533	90458-0190	M	0.5	SPIRALE TUBE, 6 MM TEFLON	
U70W6535	90458-0190	M	0.45	SPIRALE TUBE, 6 MM TEFLON	
U70W6536	90458-0190	M	3	SPIRALE TUBE, 6 MM TEFLON	
U70W6538	90458-0190	M	3	SPIRALE TUBE, 6 MM TEFLON	
U70W6539	2922774-0000		1	PIPE	
U70W6544	90458-0190	M	1	SPIRALE TUBE, 6 MM TEFLON	
U70W6552	90458-0190	M	2.6	SPIRALE TUBE, 6 MM TEFLON	
U70W6564	90458-0190	M	2.3	SPIRALE TUBE, 6 MM TEFLON	
U70W6572	90458-0190	M	2.1	SPIRALE TUBE, 6 MM TEFLON	
U70W6584	90458-0190	M	2.3	SPIRALE TUBE, 6 MM TEFLON	
U70W6592	90458-0190	M	0.65	SPIRALE TUBE, 6 MM TEFLON	
U70W6604	90600-2065	M	0.23	HOSE, 10X1 MM PTFE TRANSPARENT	
U70W6605	90600-2065	M	0.3	HOSE, 10X1 MM PTFE TRANSPARENT	
U70W6614	90458-0190	M	0.6	SPIRALE TUBE, 6 MM TEFLON	

Machine Type | Group Description | Used-In | Group Number | Page No

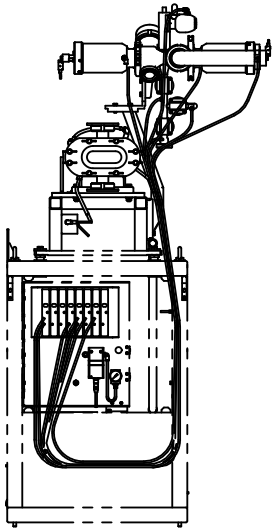

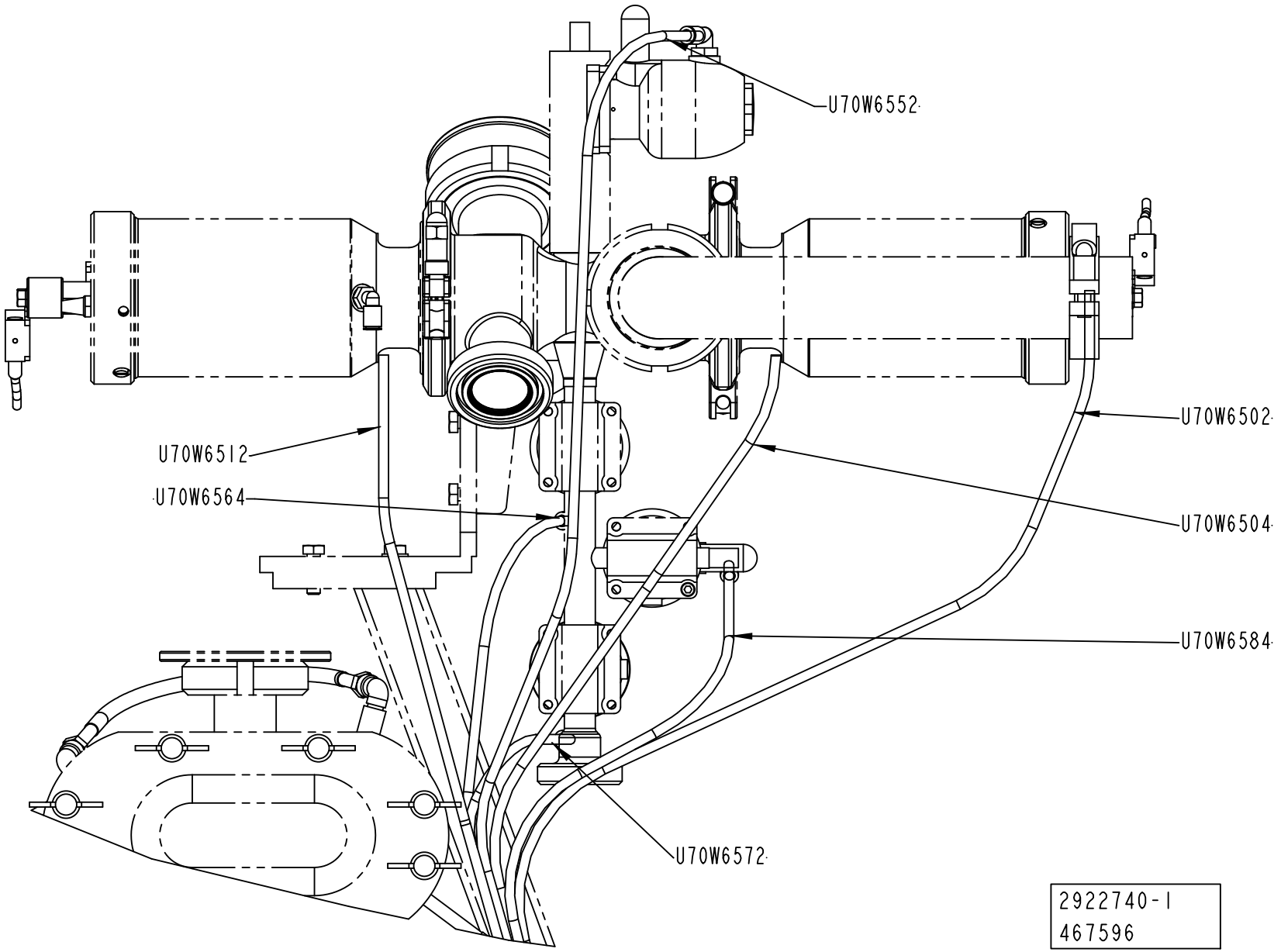
U70W6552
U70W6512
U70W6564
U70W6502
U70W6504
U70W6584
U70W6572
2922740-1
467596

ECM: 474474 - 20110101
Group number: 2922740-0100
Assembly Drawing: 2922740-1_3_AC

This list covers pages from 1-46 to 1-51

Pos	Part No	UN	Qty	Description	Page No
-					
010	2945407-0000		1	BRACKET	
300	342980-0303		4	BANJO-HOLLOW BOLT COUPL,EXT.THR.01-G1/8	
310	342715-0102		1	BLIND PLUG 6 MM	
440	342991-0100		2	HOSE CLIP,WORM DRIVE TYPE (8)-14	
460	90055-0217		5	ELBOW PIPE JOINT	
470	90055-0204		1	ELBOW WITH TAILPIECE 8/8 MM LONG	
480	90163-0057		4	QUICK COUPLING, (M) 5150-1/8	
490	90163-0062		4	QUICK COUPLING, (F) 5053-1/8	
520	90224-0308		4	CONN. BANJO, ART. NO. 2023-1/8-1/8	
530	90224-0349		4	CONN. BULKHEAD. 1250-6	
540	90457-0086		5	BULKHEAD CONNECTOR 6MM	
550	90457-0141		1	BULKHEAD CONNECTOR, 8MM	
560	90458-1849		4	CONN. STR., 1050-6-1/8	
580	312105-0370		2	SCREW, M6S ISO 4017 M6X20 A4 80	
600	315105-0153		2	WASHER PLAIN, 6,4X12X1,5 A4 BRB	
610	315237-0109		4	WASHER,PL.RND.AL.10/14,H=1,5	
620	342706-0130		4	STIFFNER SLEEVE FOR HOSE 6X1	
U70V6602	90458-2554		1	STERILE GRADE MEMBRANE FILTER 0,2µM	
U70W6024	90458-0191	M	5	SPIRALE TUBE, 8 MM TEFLON	
U70W6502	90458-0190	M	2.5	SPIRALE TUBE, 6 MM TEFLON	
U70W6504	90458-0190	M	2.5	SPIRALE TUBE, 6 MM TEFLON	
U70W6512	90458-0190	M	2.25	SPIRALE TUBE, 6 MM TEFLON	
U70W6522	90458-0190	M	0.45	SPIRALE TUBE, 6 MM TEFLON	
U70W6523	90458-0190	M	3	SPIRALE TUBE, 6 MM TEFLON	
U70W6524	90458-0190	M	0.5	SPIRALE TUBE, 6 MM TEFLON	
U70W6525	90458-0190	M	3	SPIRALE TUBE, 6 MM TEFLON	
U70W6526	2922777-0000		1	PIPE	
U70W6527	2922778-0000		1	PIPE	
U70W6527	2922776-0000		1	PIPE	
U70W6533	90458-0190	M	0.5	SPIRALE TUBE, 6 MM TEFLON	
U70W6535	90458-0190	M	0.45	SPIRALE TUBE, 6 MM TEFLON	
U70W6536	90458-0190	M	3	SPIRALE TUBE, 6 MM TEFLON	
U70W6538	90458-0190	M	3	SPIRALE TUBE, 6 MM TEFLON	
U70W6539	2922774-0000		1	PIPE	
U70W6544	90458-0190	M	1	SPIRALE TUBE, 6 MM TEFLON	
U70W6552	90458-0190	M	2.6	SPIRALE TUBE, 6 MM TEFLON	
U70W6564	90458-0190	M	2.3	SPIRALE TUBE, 6 MM TEFLON	
U70W6572	90458-0190	M	2.1	SPIRALE TUBE, 6 MM TEFLON	
U70W6584	90458-0190	M	2.3	SPIRALE TUBE, 6 MM TEFLON	
U70W6592	90458-0190	M	0.65	SPIRALE TUBE, 6 MM TEFLON	
U70W6604	90600-2065	M	0.23	HOSE, 10X1 MM PTFE TRANSPARENT	
U70W6605	90600-2065	M	0.3	HOSE, 10X1 MM PTFE TRANSPARENT	
U70W6614	90458-0190	M	0.6	SPIRALE TUBE, 6 MM TEFLON	

Machine Type | Group Description | Used-In | Group Number | Page No

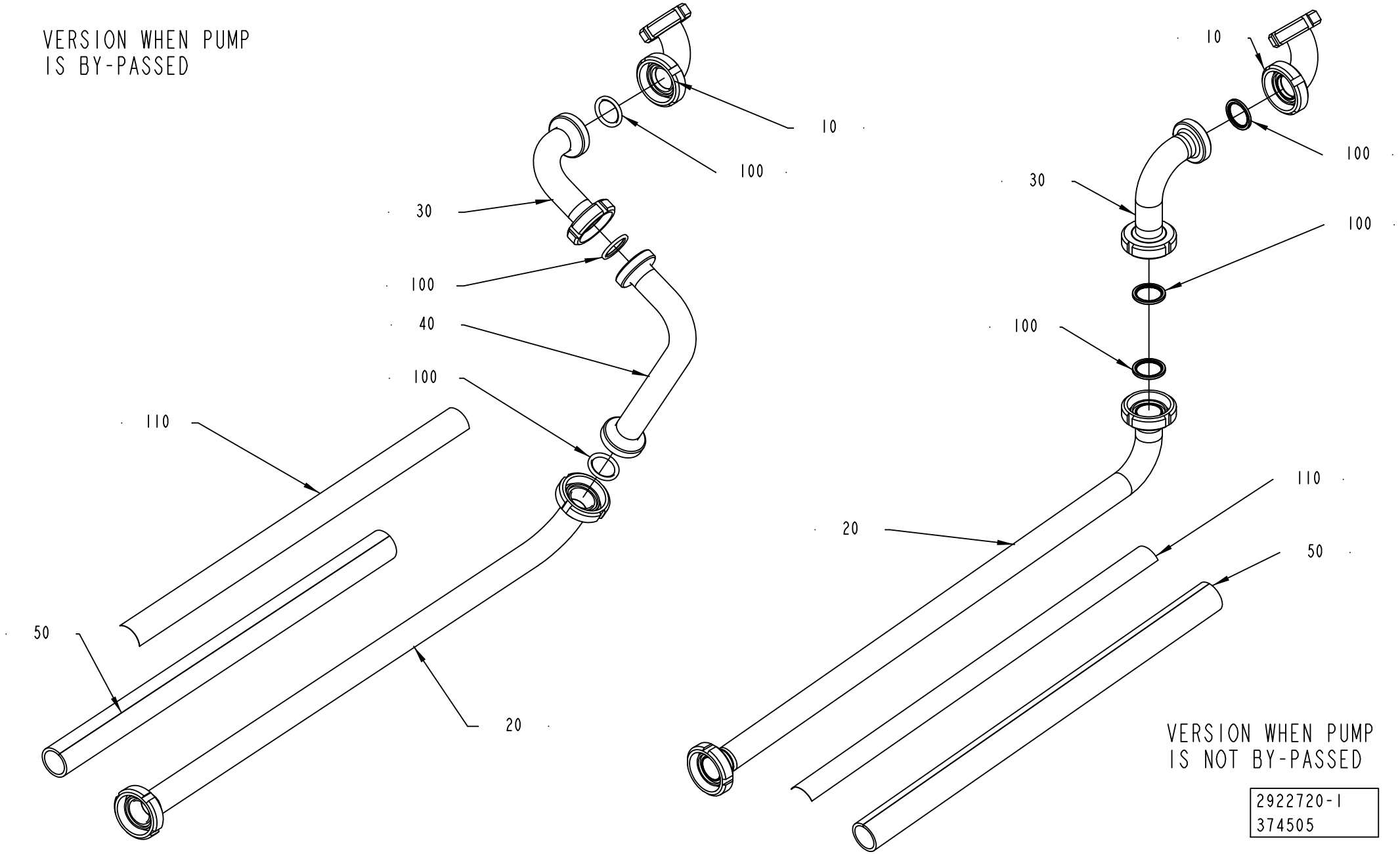
VERSION WHEN PUMP
IS BY-PASSED
10
100
30
100
40
100
110
50
20
10
100
30
100
100
110
20
50
VERSION WHEN PUMP
IS NOT BY-PASSED
2922720-1
374505

ECM: 481479 - 20110401
Group number: 2922720-0100
Assembly Drawing: 2922720-1_1_AB

Pos	Part No	UN	Qty	Description	Page No
-					
010	3092924-0000		1	PIPE	
020	3092925-0000		1	PIPE	
030	3092926-0000		1	PIPE	
040	3092927-0000		1	PIPE	
050	2998980-0000		1	PROTECTION	
100	3024322-0000		3	GASKET	
110	90144-0030	MM	700	TAPE	

Pos	Part No	UN	Qty	Description	Page No

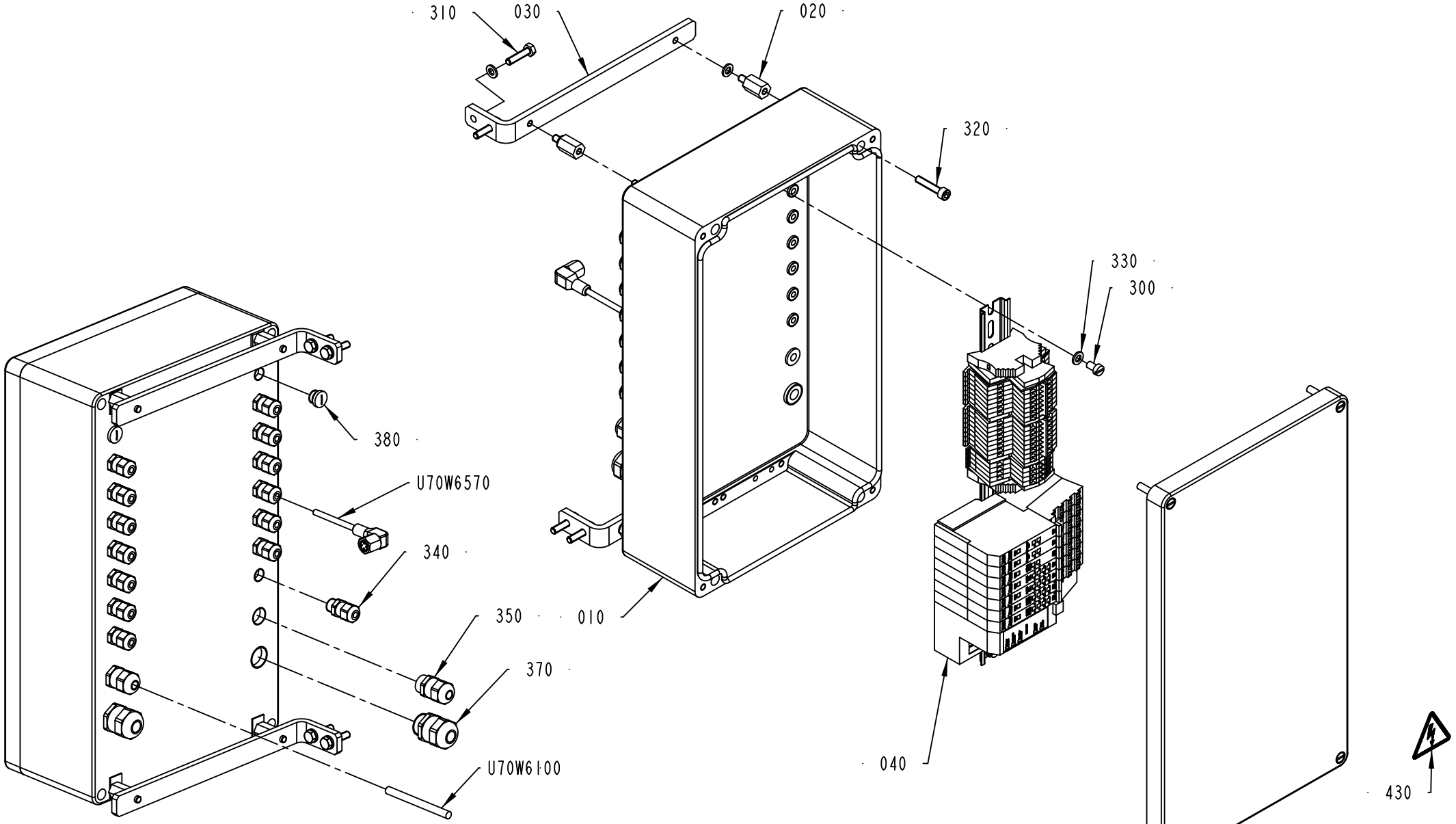
310
030
020
320
330
300
380
U70W6570
340
350
370
U70W6100
010
040
430
2922790-1
425045

ECM: 468935 - 20110101
Group number: 2922790-0100
Assembly Drawing: 2922790-1_1_AB

Pos	Part No	UN	Qty	Description	Page No
ANSI					
430	359715-0100		1	WARNING SIGN ANSI (H), ELECTRIC SHOCK	
ISO					
430	359705-0015		1	WARNING SIGN ISO, RISK OF ELECTRIC SHOCK	
Common Parts					
010	2945394-0000		1	CONNECTION BOX	
020	1548870-0000		4	SPACER	
030	2945396-0000		2	BRACKET	
040	2922795-0100		1	TERMINAL BLOCK	**1-57**
300	312121-0364		2	SCREW ISO 1207 M6X10 4.8-5.8 Z.PL.	
310	312105-0372		4	SCREW, M6S ISO 4017 M6X25 A4 80	
320	312115-0374		4	SCREW ISO4762 M6X30 A4 80	
330	315105-0153		10	WASHER PLAIN, 6,4X12X1,5 A4 BRB	
340	90458-0305		14	CABLE GLAND, M12X1,5, 5311 1000	
350	90458-0306		2	CABLE GLAND, M16X1,5, 5311 1010	
370	90458-0315		2	CABLE GLAND, M20X1,5, 5311 1120	
380	90458-1306		2	BLIND PLUG CIRCULAR, M12X1,5 514GFK/212	
390	90458-1307		3	BLIND PLUG CIRCULAR, M16X1,5 514GFK/216	
U70W6100	351150-0403	M	7.5	CABLE OLFLEX 3X0,75 MM2 LIGHT/GREY	
U70W6570	351310-0050		1	ACTUATOR/SENSOR CABLE PRKWT 4-07/5M	

Pos	Part No	UN	Qty	Description	Page No

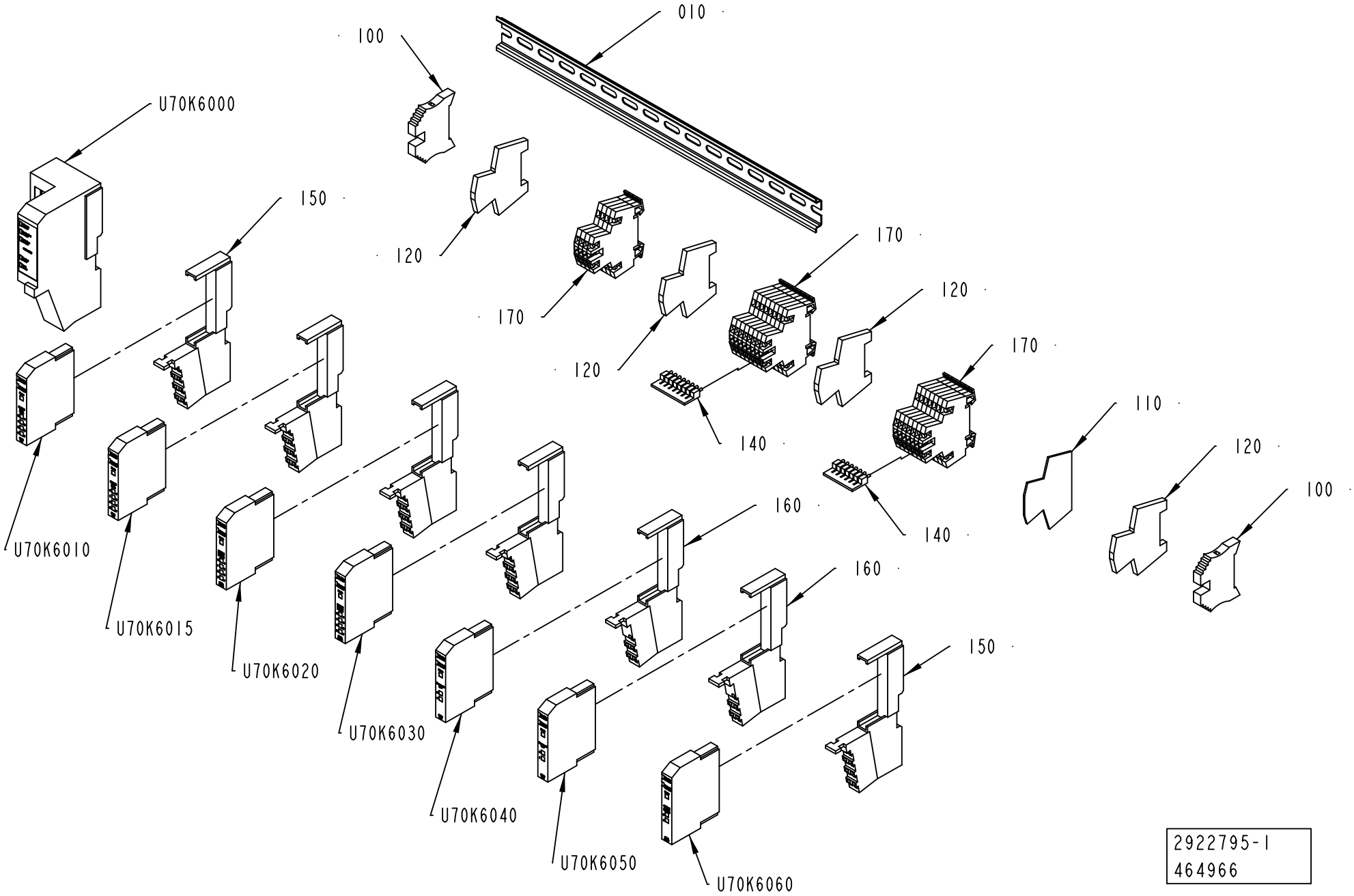

2922795-1
464966

ECM: 464968 - 20100801
Group number: 2922795-0100
Assembly Drawing: 2922795-1_1_AB

Pos	Part No	UN	Qty	Description	Page No
-					
010	2839250-0000		1	RAIL	
100	353031-0203		2	END BRACKET, WEW 35/2	
110	90077-0114		1	END PLATE, WAP WDK 2.5 1059100000	
120	353024-0212		4	EARTH TERMINAL WDK 2,5 PE	
140	353034-0030		1	BRIDGE CONNECTOR WQV 2,5/10	
150	90459-2526		5	REMOTE I/O BASE MODULE 8 POINTS, 1734-TB	
160	90459-2528		2	REMOTE I/O BASE MODULE FOR THERMOCOUPLE	
170	90459-5253		19	TERMINAL BLOCK WDK 2,5 V	
U70K6000	90459-2494		1	DEVICENET I/O ADAPTER MODULE, 1734-ADN	
U70K6010	90459-6561		1	DIGITAL INPUT 8 PTS SINK, 1734-IB8/C	
U70K6015	90459-6561		1	DIGITAL INPUT 8 PTS SINK, 1734-IB8/C	
U70K6020	90459-6560		1	DIGITAL OUTPUT 8 PTS, 1734-OB8E/C	
U70K6030	90459-6560		1	DIGITAL OUTPUT 8 PTS, 1734-OB8E/C	
U70K6040	90459-2512		1	REMOTE I/O THERMOCOUPLE INPUT 2 PTS	
U70K6050	90459-2512		1	REMOTE I/O THERMOCOUPLE INPUT 2 PTS	
U70K6060	90459-2510		1	ANALOG OUTPUT VOLTAGE MODULE 2 PTS	

Pos	Part No	UN	Qty	Description	Page No

Machine Type | Group Description | Used-In | Group Number | Page No

This page is intentionally left blank.

ECM: 378893 - 20081128
Group number: 3006597-0100
Assembly Drawing:

Pos	Part No	UN	Qty	Description	Page No
-					
010	1317640-0200		1	START-UP KIT	**1-61**
020	925419-0100		1	BED	**1-63**
030	2846571-0002		1	INSTALLATION DRAWING	
040	90600-5981		1	PROTECTIVE GLOVES HEAT PROTECTION, 9A/50	
050	3006596-0000		1	SPACER	

Pos	Part No	UN	Qty	Description	Page No

This page is intentionally left blank.

ECM: 481483 - 20110401
Group number: 1317640-0200
Assembly Drawing:

Pos	Part No	UN	Qty	Description	Page No
-					
	3092164-0000		3	GASKET	
	3092163-0000		3	GASKET	
	3024322-0000		3	GASKET	
	342800-1102		2	DIAPHRAGM, FDA PTFE/EPDM 5E, SEAT S. 10	
	90321-0504		2	O-RING, NAKAMURA AMXT 2500,3500 POS59	
	90321-0500		1	O-RING	
	90321-0498		1	O-RING	
	90321-0496		2	O-RING	
	90321-0493		2	O-RING	
	90321-0492		2	O-RING	
	90321-0491		1	O-RING, NAKAMURA A/CMXT 2500,3500 POS35	
	90321-0490		2	O-RING	
	90277-0333		1	GASKET KIT / ART.NO ACS 0325 EH	
	90207-0363		2	GASKET 75X85X1,8 MM 3" FDA 3-A	
	90091-0266		5	SEAL RING 10,4X16,3X2,5 MM	

Pos	Part No	UN	Qty	Description	Page No

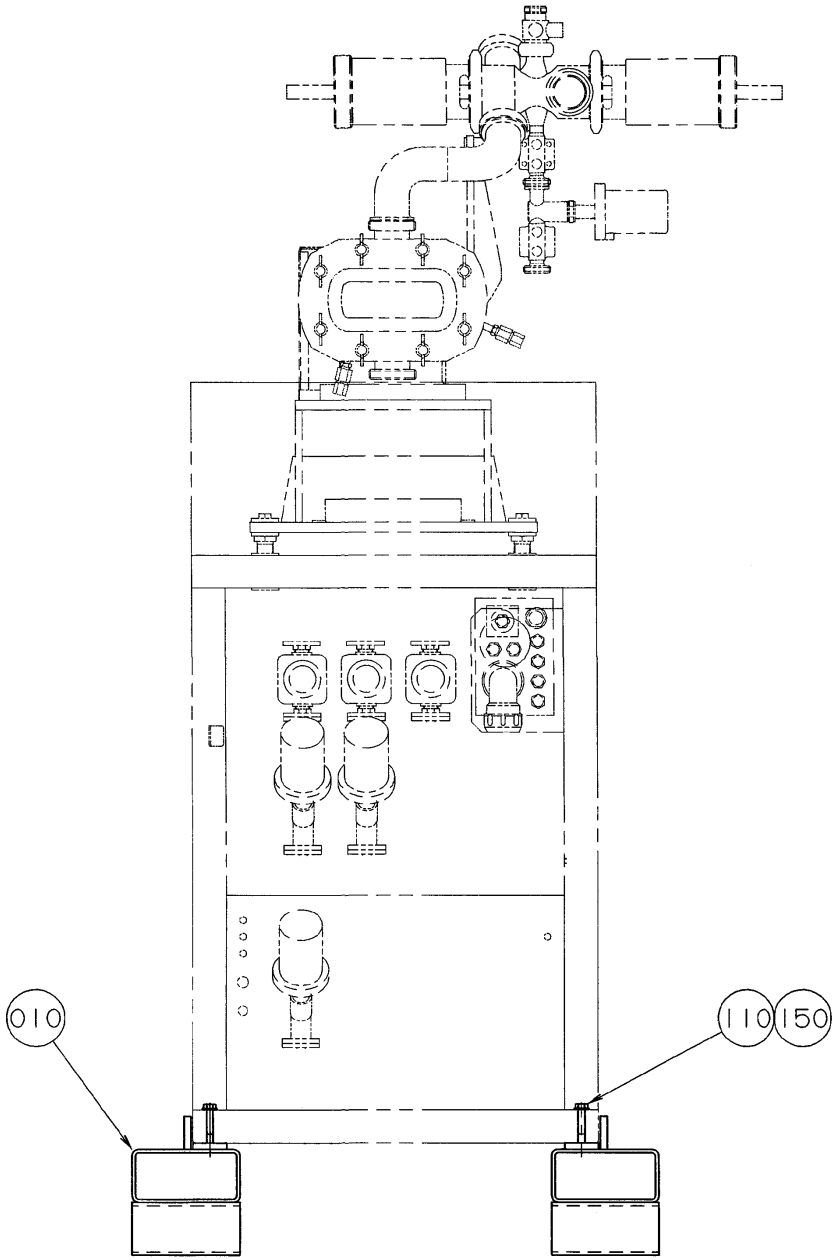
010
110
150

ECM: - -
Group number: 925419-0100
Assembly Drawing: 925419-1_1_AA

Pos	Part No	UN	Qty	Description	Page No
-					
010	925765-0000		2	BED	
110	312101-0504		2	SCREW M6S M10X65 FZB	
150	315101-0173		2	WASHER PLAIN, BRB, 10,5/22 H=2	

Pos	Part No	UN	Qty	Description	Page No

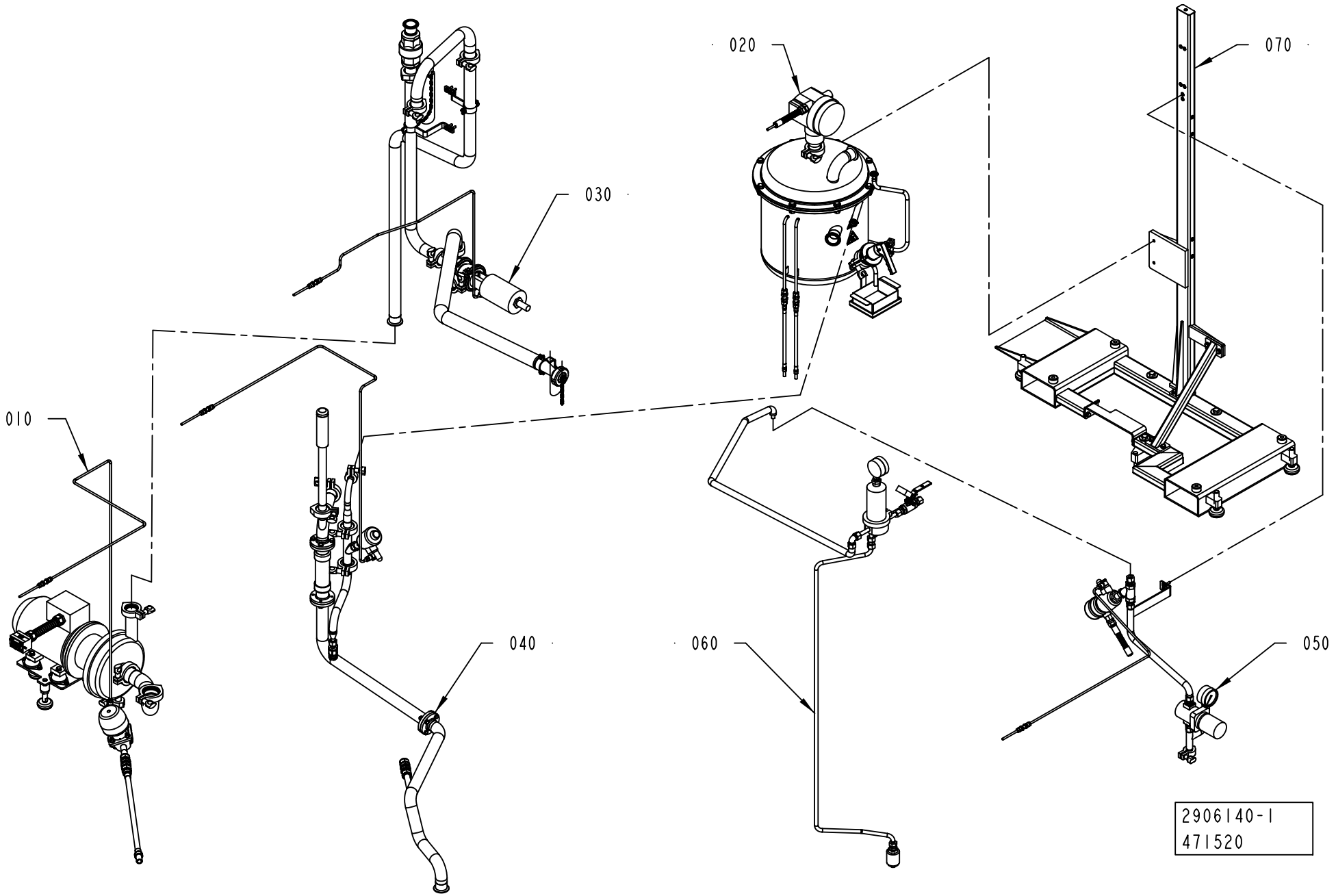
010
020
030
040
050
060
070
2906140-1
471520

ECM: 520797 - 20120101
Group number: 2906140-0100
Assembly Drawing: 2906140-1_1_AB

This list covers pages from 1-64 to 1-67

Pos	Part No	UN	Qty	Description	Page No
NOHVA (See drawing on pages: 1-64, 1-66)					
060	3058520-0100		1	STEAM SYSTEM	**1-69**
Common Parts					
010	2906150-0200		1	CENTRIFUGAL PUMP	**1-71**
020	2906145-0100		1	CLEANING TANK	**1-73**
030	2906160-0100		1	PIPE WORK	**1-75, 1-77**
040	2906155-0100		1	PIPE-LINE	**1-79**
050	2922705-0100		1	STEAM PIPE	**1-81**
070	3058530-0100		1	TRANSPORT EQUIPMENT	**1-83**

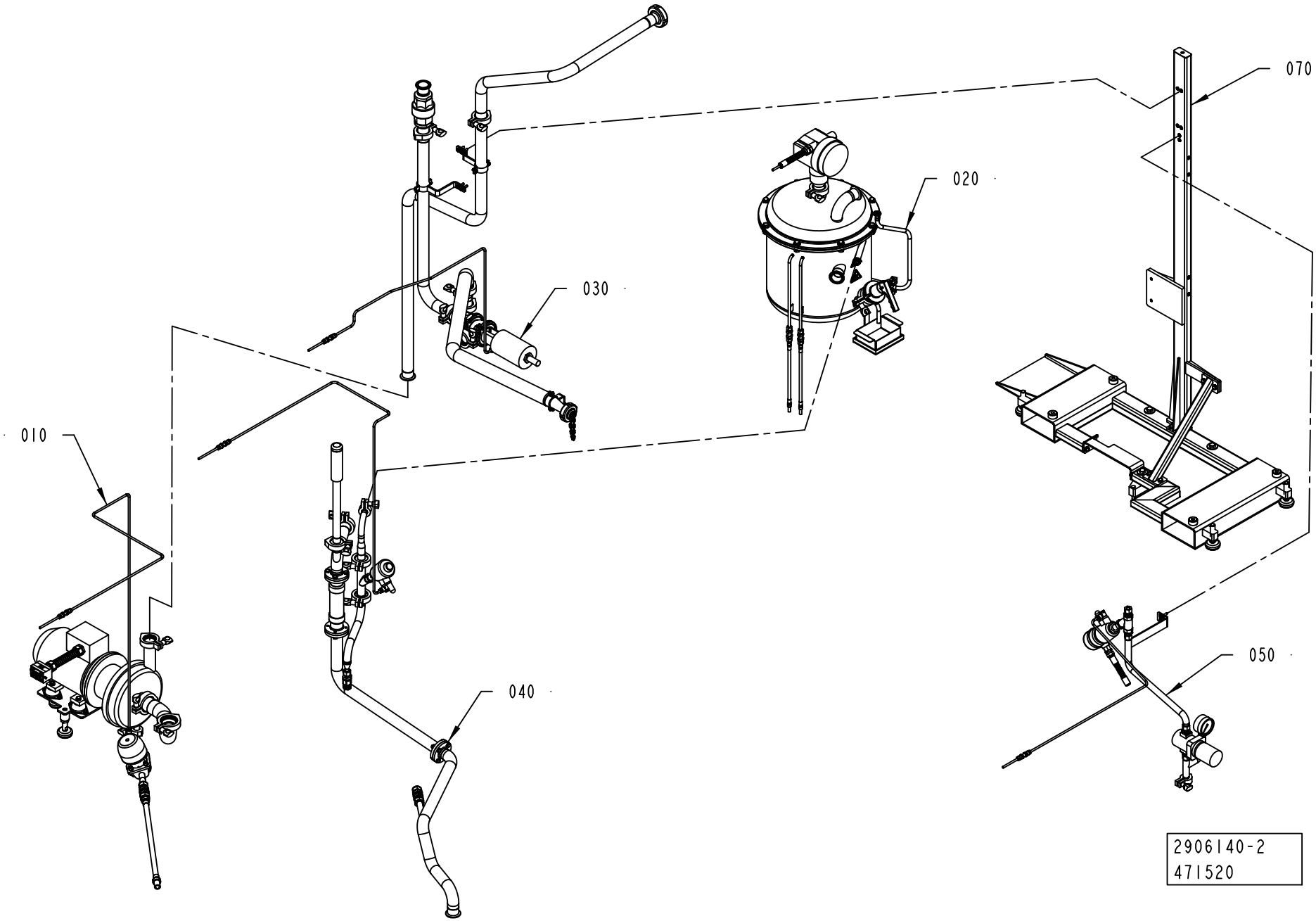
010
020
030
040
050
070
2906140-2
471520

ECM: 520797 - 20120101
Group number: 2906140-0100
Assembly Drawing: 2906140-2_1_AB

This list covers pages from 1-64 to 1-67

Pos	Part No	UN	Qty	Description	Page No
NOHVA (See drawing on pages: 1-64, 1-66)					
060	3058520-0100		1	STEAM SYSTEM	**1-69**
Common Parts					
010	2906150-0200		1	CENTRIFUGAL PUMP	**1-71**
020	2906145-0100		1	CLEANING TANK	**1-73**
030	2906160-0100		1	PIPE WORK	**1-75, 1-77**
040	2906155-0100		1	PIPE-LINE	**1-79**
050	2922705-0100		1	STEAM PIPE	**1-81**
070	3058530-0100		1	TRANSPORT EQUIPMENT	**1-83**

Pos	Part No	UN	Qty	Description	Page No

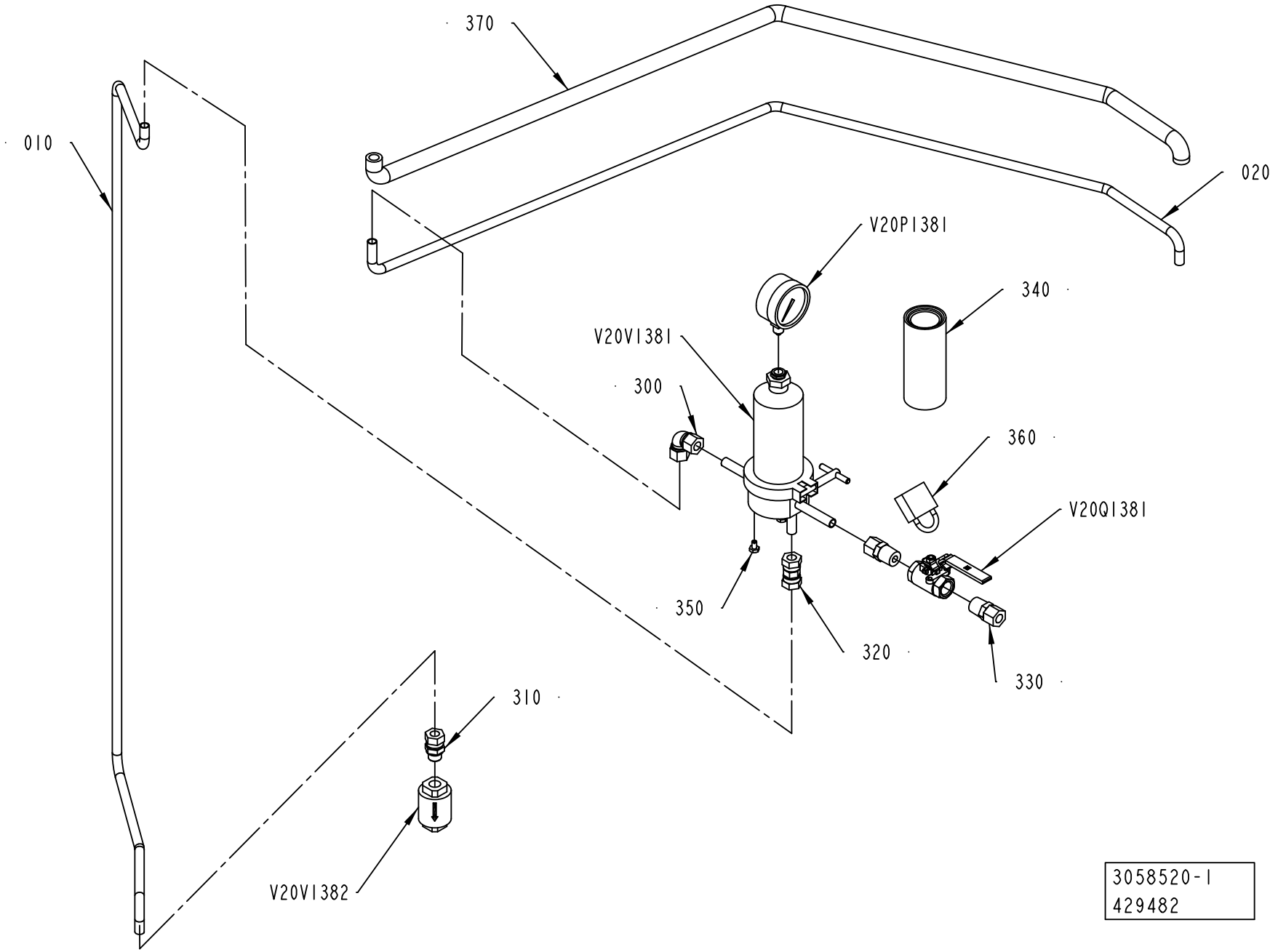
370
010
020
V20P1381
340
V20V1381
300
360
V20Q1381
350
320
330
310
V20V1382
3058520-1
429482

ECM: 479218 - 20110102
Group number: 3058520-0100
Assembly Drawing: 3058520-1_1_AA

Pos	Part No	UN	Qty	Description	Page No
-					
010	3037913-0000		1	PIPE	
020	3037914-0000		1	PIPE	
300	90030-0096		1	ELBOW CONNECTION 12	
310	90030-0187		1	CONN. STR. GE12LRED71	
320	90030-0106		1	PIPE CONNECTION G 12	
330	90030-0180		2	CONN. STR. GE12L1/2NPT71	
340	90337-0315		1	FILTER INSERT / MCS 4463	
	90458-2549		*1*	*O-RING 72,69X2,62 MM*	
350	90600-0657		4	SCREW UNC 1/4-20 X10	
360	779910-0101		1	PADLOCK, 250/40 W 2 KEYS	
370	90600-0190	MM	1400	INSULATION TUBE Ø21/13 MM, 1627-0013	
V20P1381	90043-0082		1	PRESSURE GAUGE, 2840, D=63 MM	
V20Q1381	90600-3701		1	BALL VALVE, 1/2NPT	
V20V1381	90600-3159		1	FILTER HOUSING, MDS4463G58383	
V20V1382	90360-0020		1	STEAM TRAP / MK36/51 3/8 INCH	
	90360-0310		*1*	*CAPSULE, FOR STEAM TRAP 90360-20*	
	90360-0309		*1*	*STRAINER, FOR STEAM TRAP 90360-20*	

Pos	Part No	UN	Qty	Description	Page No

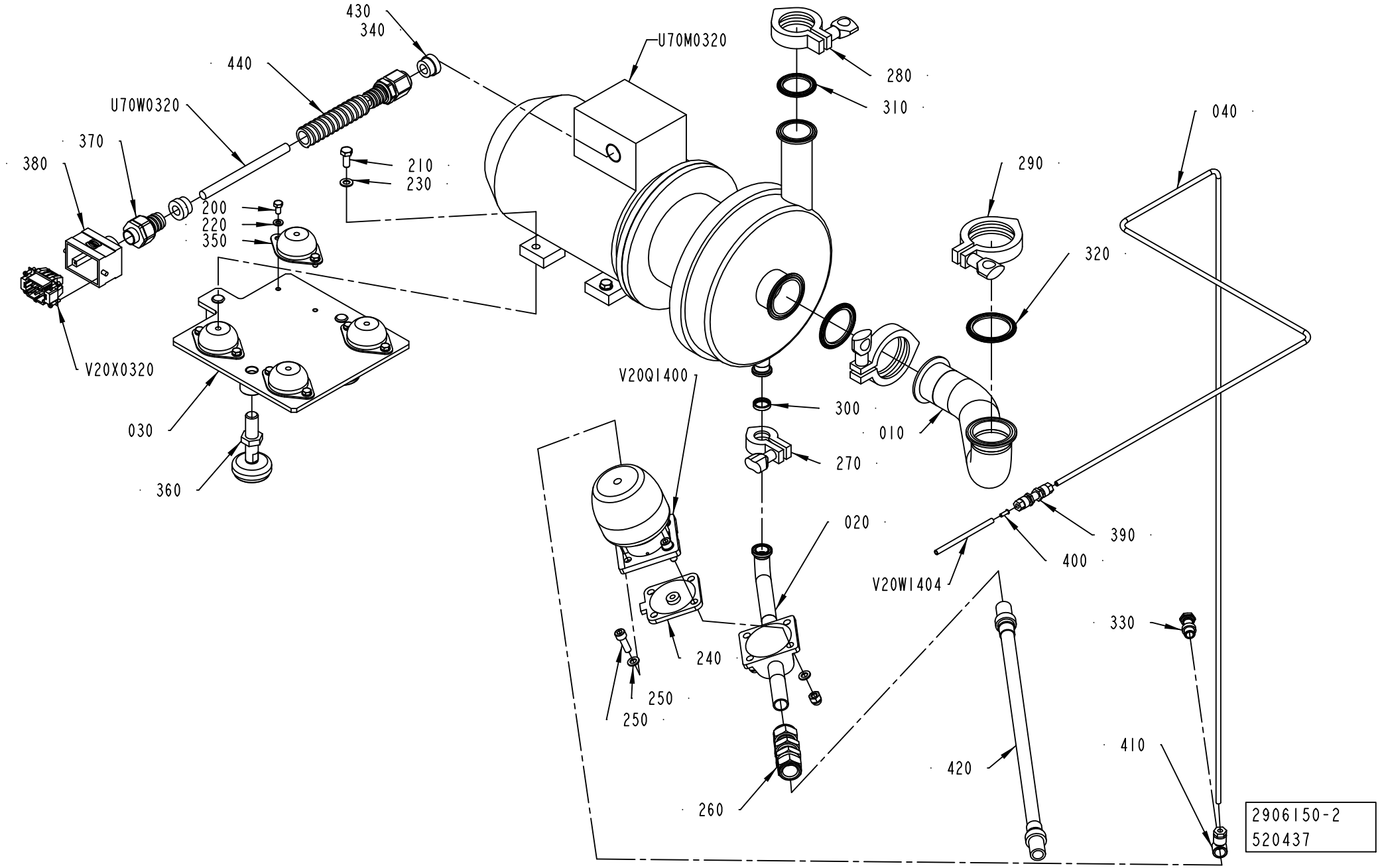
430
340
440
U70W0320
370
380
210
230
200
220
350
V20X0320
030
360
U70M0320
280
310
040
290
320
V20Q1400
300
010
270
020
390
400
V20W1404
330
240
250
250
410
420
260
2906150-2
520437

ECM: 520437 - 20120101
Group number: 2906150-0200
Assembly Drawing: 2906150-2_1_AA

Pos	Part No	UN	Qty	Description	Page No
-					
010	2906141-0000		1	PIPE	
020	2986742-0000		1	DRAIN PIPE	
030	3058524-0000		1	BRACKET	
040	2986769-0000		1	PIPE	
200	312105-0366		8	SCREW, M6S ISO 4017 M6X12 A4 80	
210	312105-0451		4	SCREW, M6S ISO 4017 M8X20 A4 80	
220	315105-0153		8	WASHER PLAIN, 6,4X12X1,5 A4 BRB	
230	315105-0165		4	WASHER PLAIN, 8,4X16X1,6 A4 BRB	
240	342800-1103		1	DIAPHRAGM, FDA PTFE/EPDM 5E, SEAT S. 25	
250	342800-1503		1	VALVE ASSEMBLING KIT, SEAT S. 25	
260	90601-8435		1	CONN. BULKHEAD SS-1210-61	
270	90600-3559		1	CLAMPING PIECE, 211290	
280	344215-0103		1	CLAMP RING A13MHM 1X1 1/2", 211053	
290	344215-0105		2	CLAMP RING A13MHM 2", 211054	
300	90600-3558		1	GASKET 16,2X21,8X4,45 MM 3/4"	
310	342850-0304		1	GASKET 35,4X49,1X5,2 1"1/2 FDA, 3-A	
320	342850-0305		2	GASKET 47,8X62,6X5,2 MM 2" FDA 3-A	
330	342980-0304		1	BANJO-HOLLOW BOLT COUPL,EXT.THR.01-G1/4	
340	90458-0450		1	GLAND FITTING, 2205416S08 UL16	
350	90347-0104		4	VIBRATION DAMPER NO. 1861220	
360	90458-2581		3	FOOT PLATE, M50-16-70	
370	90458-0430		1	GLAND FITTING, VK 22054YUL16	
380	90459-6632		1	HOOD, TOP ENTRY, 6B, 19 30 006 1440	
390	90224-0349		1	CONN. BULKHEAD. 1250-6	
400	342706-0130		1	STIFFNER SLEEVE FOR HOSE 6X1	
410	342797-0122		1	BANJO CONN., RINGPIECE 6-1/4	
420	3058519-0000		1	HOSE	
430	353249-0013		2	INSERT, SINGLE HOLE, EK154 13	
440	90152-0051	M	2.5	HOSE, SPIRAL CONDUIT, 25X18, UL 1816	
U70M0320	3120865-0000		1	CENTRIFUGAL PUMP	
U70W0320	315756-0009	M	2.7	ÖLFLEX CONTROL TM CY 4G1,5, 281604CY	
V20Q1400	342800-1303		1	ACTUATOR, SS, N.O. SEAT S. 25	
V20W1404	315400-0001	M	7	TUBE PUN-H-6X1-BL	
V20X0320	90110-0052		1	MALE INSERT, HAN E06, 0933 0062 601	

Pos	Part No	UN	Qty	Description	Page No

Machine Type | Group Description | Used-In | Group Number | Page No

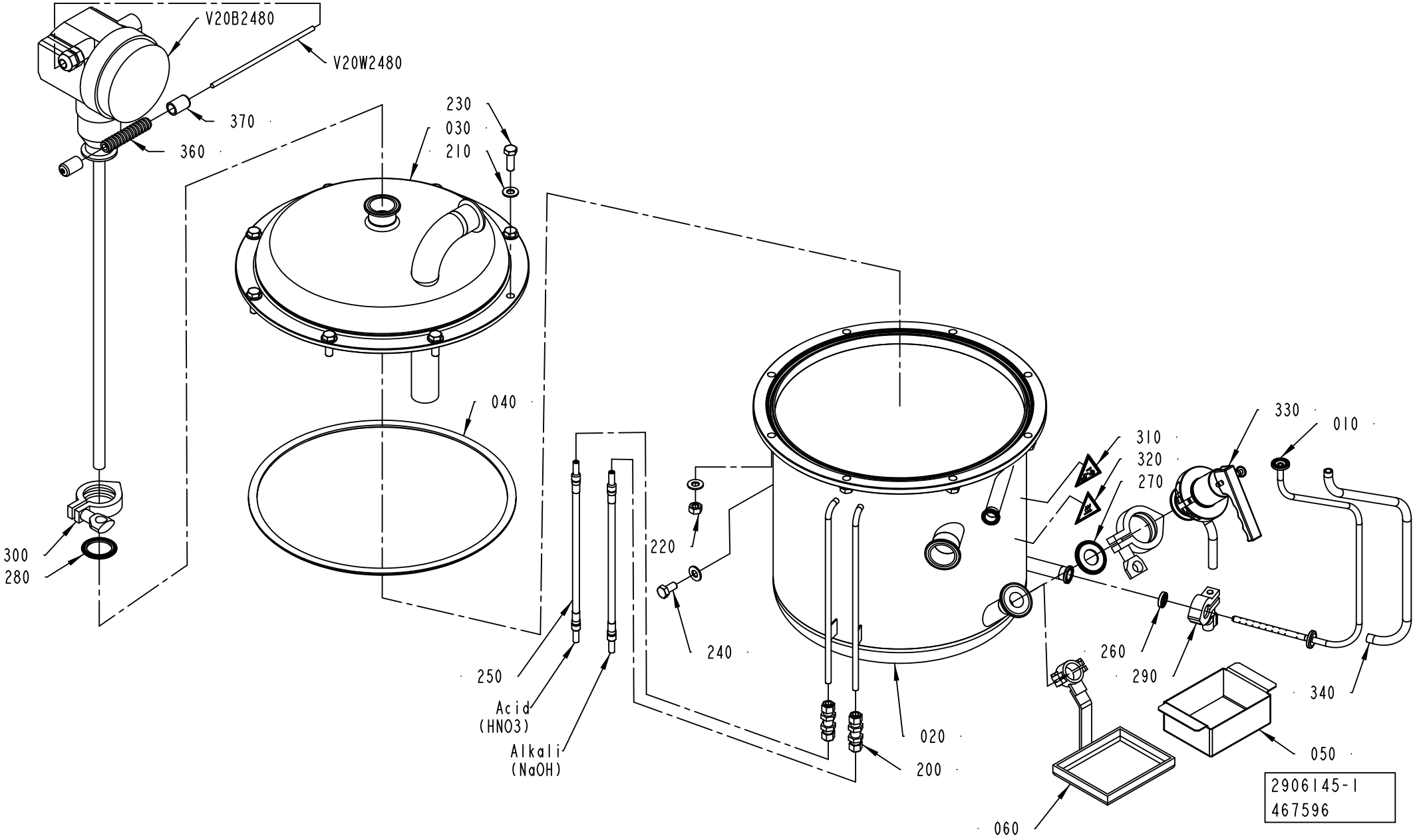
V20B2480
V20W2480
370
360
230
030
210
040
300
280
220
240
250
Acid
(HNO3)
Alkali
(NaOH)
020
200
060
310
320
270
330
010
260
290
340
050
2906145-1
467596

ECM: 479215 - 20110102
Group number: 2906145-0100
Assembly Drawing: 2906145-1_1_AB

Pos	Part No	UN	Qty	Description	Page No
ANSI					
310	359725-0104		1	WARNING SIGN ANSI (H), CHEMICAL HAZARD	
320	90459-7458		1	WARNING SIGN ANSI (H), HOT SURFACE	
ISO					
310	359705-0003		1	WARNING SIGN ISO, DANGEROUS CHEMICALS	
320	359705-0007		1	WARNING SIGN ISO, HOT SURFACE	
Common Parts					
010	2906148-0000		1	STEAM PIPE	
020	2906147-0000		1	TANK	
030	2906143-0000		1	LID	
040	2829766-0000		1	SEALING	
050	3021577-0000		1	TANK	
060	3058512-0000		1	BRACKET	
200	90030-0485		2	CONN. BULKHEAD BMC8-316	
210	315105-0173		18	WASHER PLAIN, 10,5X22X2 A4 BRB	
220	312605-0320		8	HEXAGON NUT, M6M M10 A280	
230	312105-0495		8	SCREW, M6S ISO 4017 M10X30 A4 80	
240	312105-0491		2	SCREW, M6S ISO 4017 M10X20 A4 80	
250	3058521-0000		2	HOSE	
260	90600-3558		1	GASKET 16,2X21,8X4,45 MM 3/4"	
270	342850-0303		1	GASKET 22,7X49,1X5,2 MM 1" FDA, 3-A	
280	342850-0304		1	GASKET 35,4X49,1X5,2 1"1/2 FDA, 3-A	
290	90600-3559		1	CLAMPING PIECE, 211290	
300	344215-0103		2	CLAMP RING A13MHM 1X1 1/2", 211053	
340	90601-0926		1	SEAT VALVE, 0968.50085	
350	90600-0190	MM	600	INSULATION TUBE Ø21/13 MM, 1627-0013	
360	90152-0058	M	3	HOSE, SPIRAL CONDUIT, 15X9, UL 0909	
370	979593-0000		2	CAP	
V20B2480	90600-0821		1	LEVEL PR.,LEVELFLEX-M FMP41C-AKTJKB11A2Y	
V20W2480	351423-0008	M	3	CABLE UNITRONIC LICY 2X0,5	

Pos	Part No	UN	Qty	Description	Page No

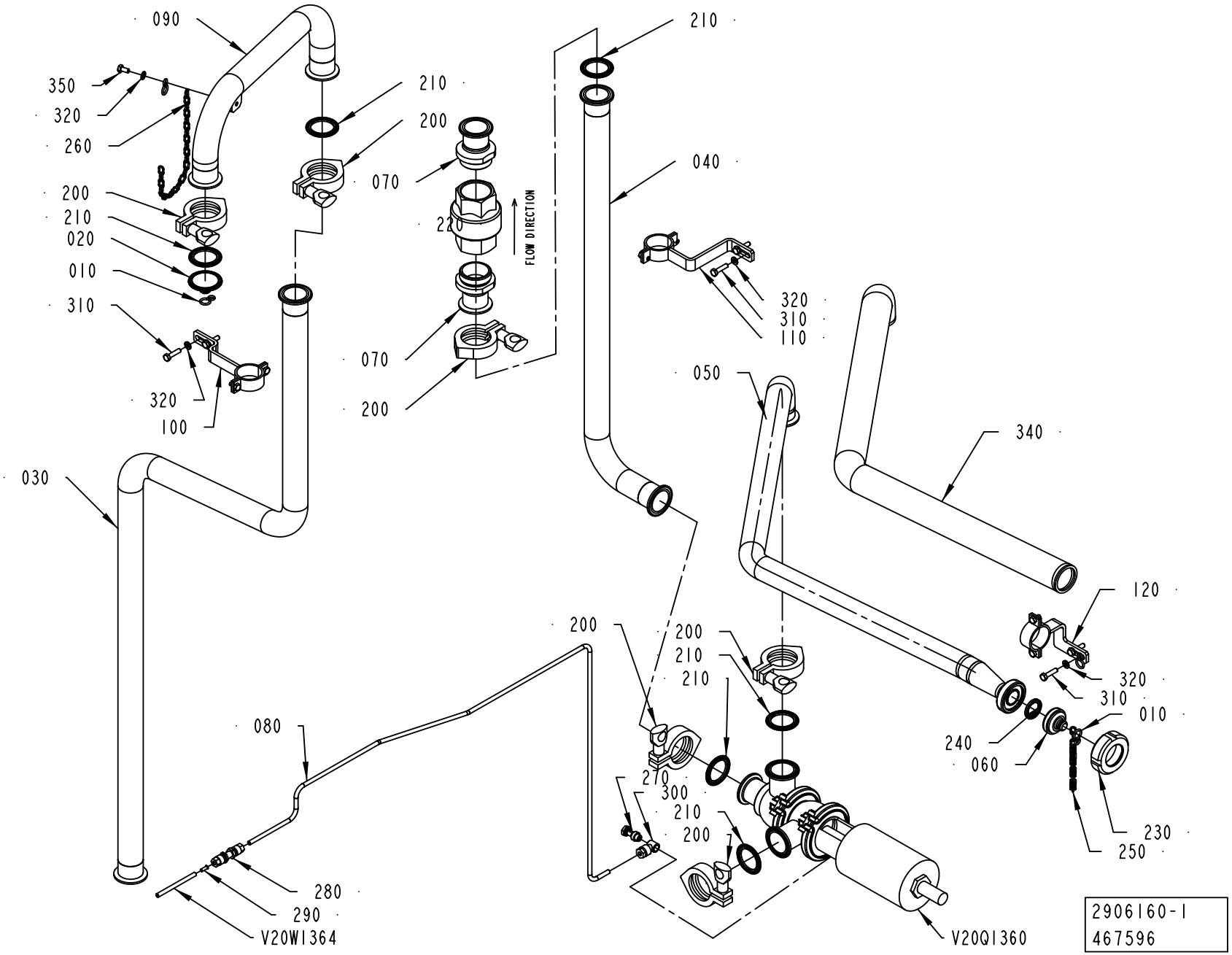
090
350
320
260
200
210
020
010
310
320
100
030
210
200
070
220
070
200
FLOW DIRECTION
210
040
320
310
110
050
340
120
320
310
010
240
060
230
250
200
200
210
210
080
270
300
210
200
280
290
V20W1364
V20Q1360
2906160-1
467596

ECM: 481475 - 20110401
Group number: 2906160-0100
Assembly Drawing: 2906160-1_1_AB

This list covers pages from 1-74 to 1-77

Pos	Part No	UN	Qty	Description	Page No
HVA (See drawing on page: 1-76)					
010	209183-0000		2	RING	
090	3109311-0000		1	PIPE	
130	3123350-0000		1	PIPE	
330	3024322-0000		1	GASKET	
NOHVA (See drawing on page: 1-74)					
010	209183-0000		4	RING	
020	556898-0000		1	LID	
090	2922718-0000		1	PIPE	
260	90155-0016	MM	450	CHAIN LONG LINK, LLB-3-R	
350	312105-0366		1	SCREW, M6S ISO 4017 M6X12 A4 80	
360	315105-0153		1	WASHER PLAIN, 6,4X12X1,5 A4 BRB	
Common Parts					
030	2906142-0000		1	PIPE	
040	2906144-0000		1	PIPE	
050	3109310-0000		1	PIPE	
060	3109309-0000		1	LID	
070	2531083-0000		2	SLEEVE	
080	2986771-0000		1	PIPE	
100	2986781-0000		1	PIPE HOLDER	
110	2986782-0000		1	PIPE HOLDER	
120	2986783-0000		1	PIPE HOLDER	
200	344215-0103		6	CLAMP RING A13MHM 1X1 1/2", 211053	
210	342850-0304		6	GASKET 35,4X49,1X5,2 1"1/2 FDA, 3-A	
230	3061353-0000		1	LOCKING RING	
240	3092164-0000		1	GASKET	
250	90155-0016	MM	450	CHAIN LONG LINK, LLB-3-R	
270	342980-0303		1	BANJO-HOLLOW BOLT COUPL,EXT.THR.01-G1/8	
280	90224-0349		1	CONN. BULKHEAD. 1250-6	
290	342706-0130		1	STIFFNER SLEEVE FOR HOSE 6X1	
300	342797-0121		1	BANJO CONN., RINGPIECE 6-1/8	
310	312105-0372		6	SCREW, M6S ISO 4017 M6X25 A4 80	
320	315105-0153		6	WASHER PLAIN, 6,4X12X1,5 A4 BRB	
340	90459-1775	MM	1100	INSULATING TUBE ø38, 1627-0038	
V20Q1360	90600-1946		1	SEAT VALVE, 3A. 9613320304	
V20W1364	315400-0001	M	7	TUBE PUN-H-6X1-BL	

Pos	Part No	UN	Qty	Description	Page No

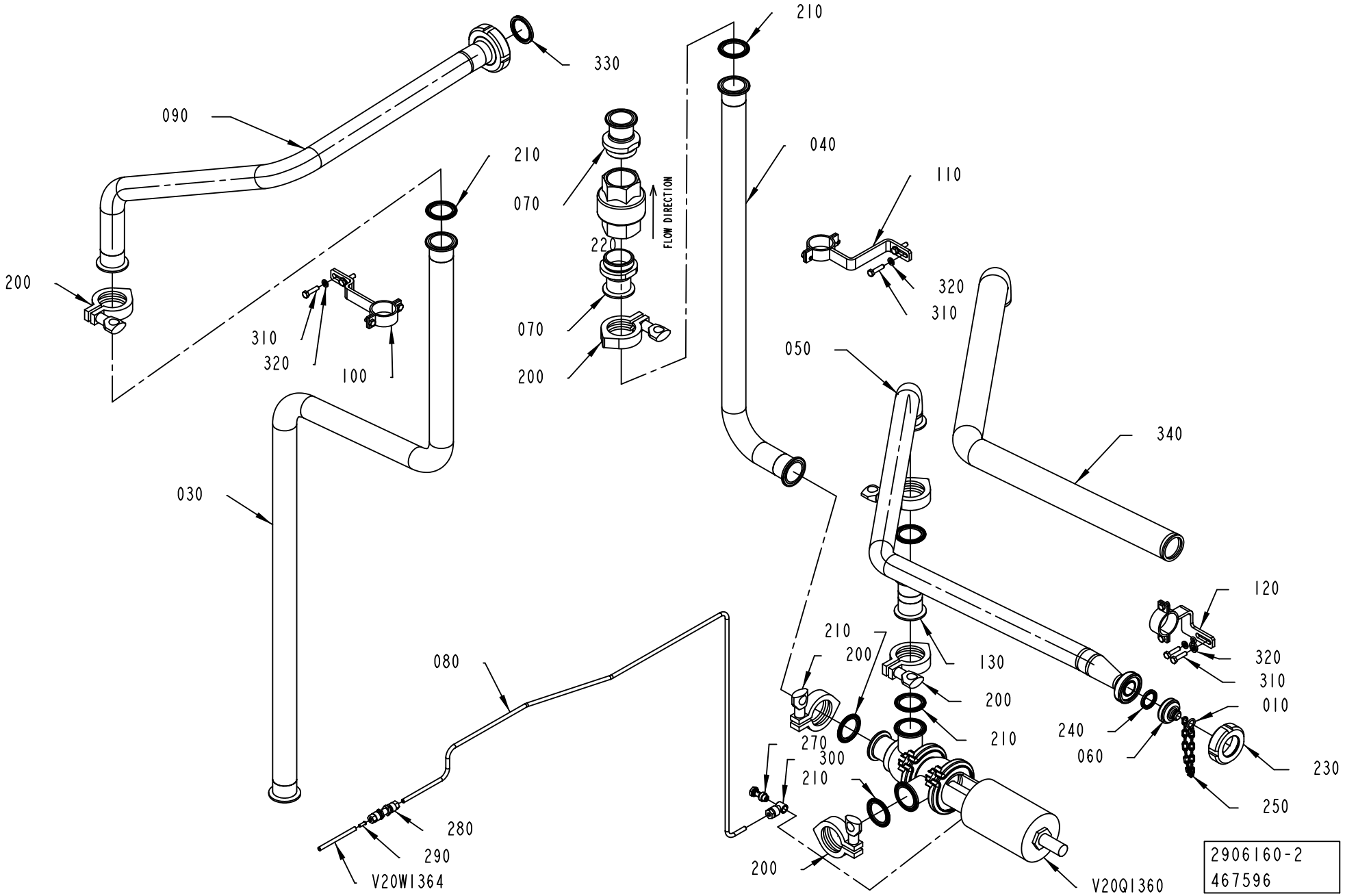
210
330
090
040
210
070
220
070
200
FLOW DIRECTION
110
320
310
200
310
320
100
050
340
030
120
210
200
130
320
310
200
010
240
210
270
300
060
230
210
250
080
280
290
V20W1364
200
V20Q1360
2906160-2
467596

ECM: 481475 - 20110401
Group number: 2906160-0100
Assembly Drawing: 2906160-2_1_AB

This list covers pages from 1-74 to 1-77

Pos	Part No	UN	Qty	Description	Page No
HVA (See drawing on page: 1-76)					
010	209183-0000		2	RING	
090	3109311-0000		1	PIPE	
130	3123350-0000		1	PIPE	
330	3024322-0000		1	GASKET	
NOHVA (See drawing on page: 1-74)					
010	209183-0000		4	RING	
020	556898-0000		1	LID	
090	2922718-0000		1	PIPE	
260	90155-0016	MM	450	CHAIN LONG LINK, LLB-3-R	
350	312105-0366		1	SCREW, M6S ISO 4017 M6X12 A4 80	
360	315105-0153		1	WASHER PLAIN, 6,4X12X1,5 A4 BRB	
Common Parts					
030	2906142-0000		1	PIPE	
040	2906144-0000		1	PIPE	
050	3109310-0000		1	PIPE	
060	3109309-0000		1	LID	
070	2531083-0000		2	SLEEVE	
080	2986771-0000		1	PIPE	
100	2986781-0000		1	PIPE HOLDER	
110	2986782-0000		1	PIPE HOLDER	
120	2986783-0000		1	PIPE HOLDER	
200	344215-0103		6	CLAMP RING A13MHM 1X1 1/2", 211053	
210	342850-0304		6	GASKET 35,4X49,1X5,2 1"1/2 FDA, 3-A	
230	3061353-0000		1	LOCKING RING	
240	3092164-0000		1	GASKET	
250	90155-0016	MM	450	CHAIN LONG LINK, LLB-3-R	
270	342980-0303		1	BANJO-HOLLOW BOLT COUPL,EXT.THR.01-G1/8	
280	90224-0349		1	CONN. BULKHEAD. 1250-6	
290	342706-0130		1	STIFFNER SLEEVE FOR HOSE 6X1	
300	342797-0121		1	BANJO CONN., RINGPIECE 6-1/8	
310	312105-0372		6	SCREW, M6S ISO 4017 M6X25 A4 80	
320	315105-0153		6	WASHER PLAIN, 6,4X12X1,5 A4 BRB	
340	90459-1775	MM	1100	INSULATING TUBE ø38, 1627-0038	
V20Q1360	90600-1946		1	SEAT VALVE, 3A. 9613320304	
V20W1364	315400-0001	M	7	TUBE PUN-H-6X1-BL	

Pos	Part No	UN	Qty	Description	Page No

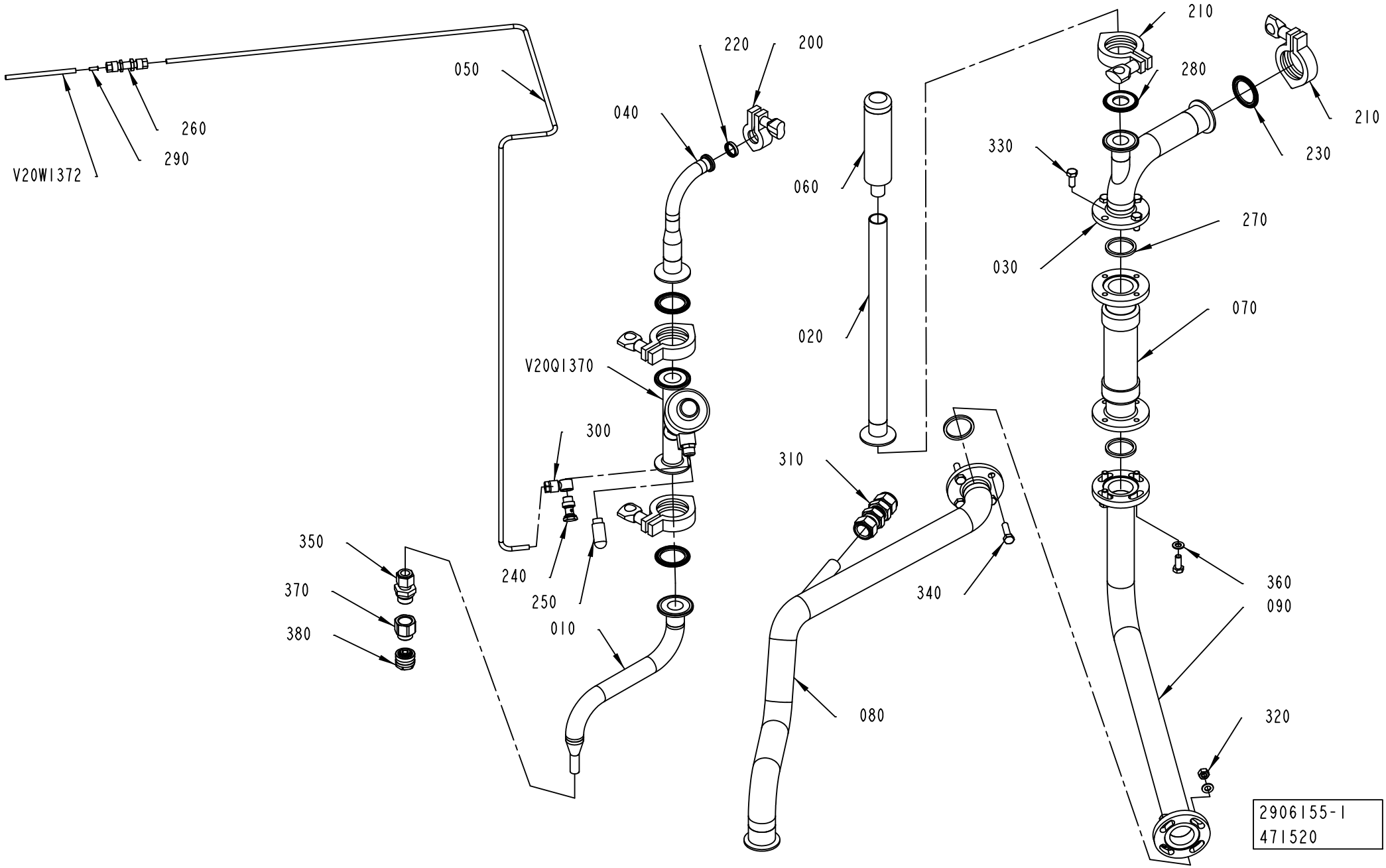
V20W1372
260
290
050
040
220
200
V20Q1370
300
240
250
010
350
370
380
060
020
310
340
080
210
280
330
230
270
030
070
360
090
320
2906155-1
471520

ECM: 479216 - 20110102
Group number: 2906155-0100
Assembly Drawing: 2906155-1_1_AB

Pos	Part No	UN	Qty	Description	Page No
-					
010	2986737-0000		1	PIPE	
020	3020051-0000		1	PIPE	
030	2986741-0000		1	PIPE	
040	2986763-0000		1	PIPE	
050	2986768-0000		1	PIPE	
060	3020052-0000		1	PIPE	
070	2808210-0000		1	HOSE	
080	3037866-0000		1	PIPE	
090	3037868-0000		1	PIPE	
200	90600-3559		1	CLAMPING PIECE, 211290	
210	344215-0103		4	CLAMP RING A13MHM 1X1 1/2", 211053	
220	90600-3558		1	GASKET 16,2X21,8X4,45 MM 3/4"	
230	342850-0304		3	GASKET 35,4X49,1X5,2 1"1/2 FDA, 3-A	
240	342980-0304		1	BANJO-HOLLOW BOLT COUPL,EXT.THR.01-G1/4	
250	90328-0026		1	SILENCER, G1/4"	
260	90224-0349		1	CONN. BULKHEAD. 1250-6	
270	315229-0104		3	SQUARE RING, 35,8X42,8X3,7 MM 1"1/2 FD	
280	342850-0303		1	GASKET 22,7X49,1X5,2 MM 1" FDA, 3-A	
290	342706-0130		1	STIFFNER SLEEVE FOR HOSE 6X1	
300	342797-0122		1	BANJO CONN., RINGPIECE 6-1/4	
310	90601-8435		1	CONN. BULKHEAD SS-1210-61	
320	312605-0318		4	HEXAGON NUT, M6M M8 A280	
330	312105-0451		8	SCREW, M6S ISO 4017 M8X20 A4 80	
340	312105-0455		4	SCREW, M6S ISO 4017 M8X30 A4 80	
350	90600-0873		1	CONN. STR., 12,7-G1/2, EXT THREAD	
360	315105-0165		8	WASHER PLAIN, 8,4X16X1,6 A4 BRB	
370	90600-4074		1	HEXAGON NIPPLE, WIROFLEX 260336	
380	90600-4081		1	ADAPTER, WIROFLEX 260459	
V20Q1370	90459-1241		1	ANGLE SEAT VALVE, TRI-CLAMP, N.C. DN20	
V20W1372	315400-0001	M	7	TUBE PUN-H-6X1-BL	

Pos	Part No	UN	Qty	Description	Page No

Machine Type | Group Description | Used-In | Group Number | Page No

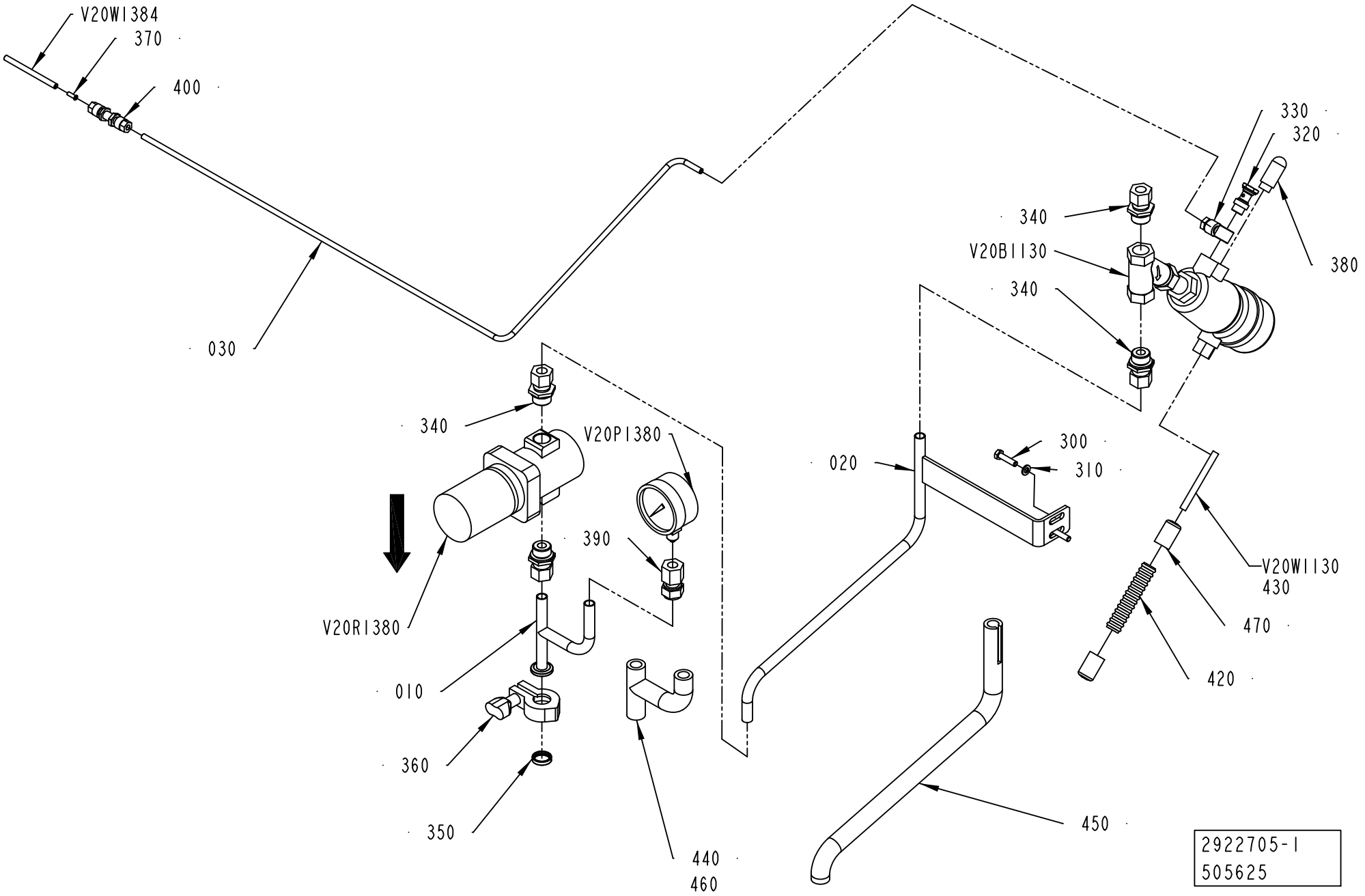
V20WI384
370
400
030
330
320
340
V20BI130
340
380
340
V20PI380
V20RI380
390
010
360
350
440
460
020
300
310
V20WI130
430
470
420
450
2922705-1
505625

ECM: 507212 - 20111001
Group number: 2922705-0100
Assembly Drawing: 2922705-1_1_AD

Pos	Part No	UN	Qty	Description	Page No
-					
010	3058517-0000		1	STEAM PIPE	
020	2906149-0000		1	STEAM PIPE	
030	2906152-0000		1	PIPE	
300	312105-0372		2	SCREW, M6S ISO 4017 M6X25 A4 80	
310	315105-0153		2	WASHER PLAIN, 6,4X12X1,5 A4 BRB	
320	342980-0304		1	BANJO-HOLLOW BOLT COUPL,EXT.THR.01-G1/4	
330	342797-0122		1	BANJO CONN., RINGPIECE 6-1/4	
340	90030-0109		4	STRAIGHT PIPE CONN. GE12LR1/271	
350	90600-3558		1	GASKET 16,2X21,8X4,45 MM 3/4"	
360	90600-3559		1	CLAMPING PIECE, 211290	
370	342706-0130		1	STIFFNER SLEEVE FOR HOSE 6X1	
380	90328-0026		1	SILENCER, G1/4"	
390	90030-0278		1	CONN. STR., 12GC1/4R-316	
400	90224-0349		1	CONN. BULKHEAD. 1250-6	
420	90152-0058	M	1	HOSE, SPIRAL CONDUIT, 15X9, UL 0909	
430	979593-0000		2	CAP	
440	90600-0190	MM	250	INSULATION TUBE Ø21/13 MM, 1627-0013	
450	90600-0190	MM	500	INSULATION TUBE Ø21/13 MM, 1627-0013	
460	90157-0041		1	SEALING COMPOUND, RHODORSEAL 5651	
470	979593-0000		2	CAP	
V20B1130	90459-1235		1	ANGLE SEAT VALVE, N.C. DN13 TYPE 2002	
V20P1380	90043-0082		1	PRESSURE GAUGE, 2840, D=63 MM	
V20R1380	90601-8470		1	PRESSURE REGULATOR, GD-30S G 1/2	
V20W1130	351150-0404	M	2.5	CABLE OLFLEX 4X0,75 MM2 LIGHT/GREY	
V20W1384	315400-0001	M	7	TUBE PUN-H-6X1-BL	

Pos	Part No	UN	Qty	Description	Page No

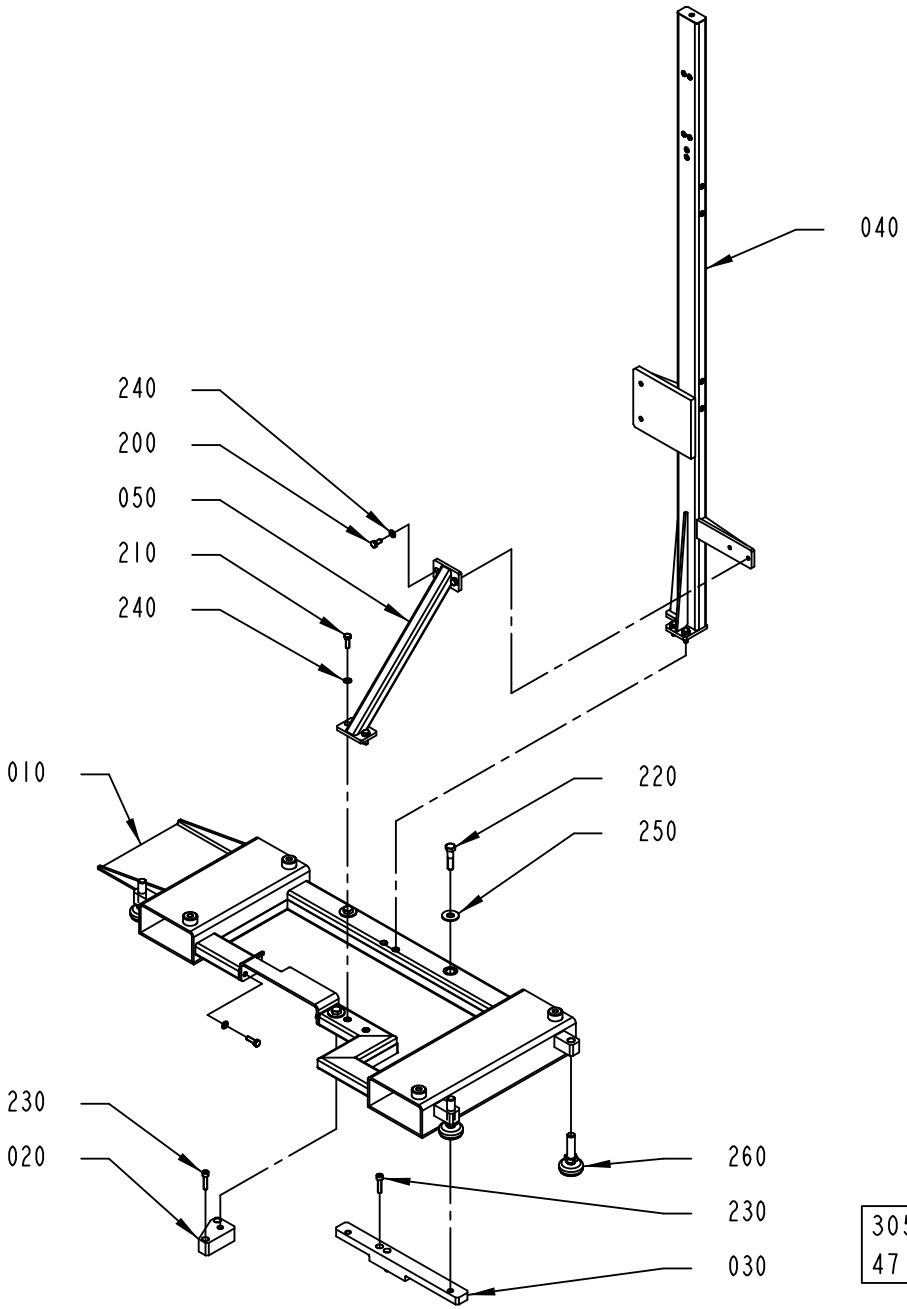
040
240
200
050
210
240
010
220
250
230
020
260
230
030
3058530-1
471520

ECM: 471522 - 20110102
Group number: 3058530-0100
Assembly Drawing: 3058530-1_1_AA

Pos	Part No	UN	Qty	Description	Page No
-					
010	3058518-0000		1	FRAME	
020	3058522-0000		1	SPACER	
030	3058523-0000		1	SPACER	
040	3058526-0000		1	BRACKET	
050	3089562-0000		1	BRACKET	
200	312105-0449		2	SCREW, M6S ISO 4017 M8X16 A4 80	
210	312105-0453		4	SCREW, M6S ISO 4017 M8X25 A4 80	
220	312105-0542		3	SCREW, M6S ISO 4014 M12X50 A4 80	
230	312115-0457		4	SCREW ISO4762 M8X35 A4 80	
240	315105-0165		6	WASHER PLAIN, 8,4X16X1,6 A4 BRB	
250	90005-0129		3	WASHER PLAIN ROUND 14,3/34,9, H=2,77	
260	90458-2581		3	FOOT PLATE, M50-16-70	

Pos	Part No	UN	Qty	Description	Page No

HEAD SPACE BY INJECTION

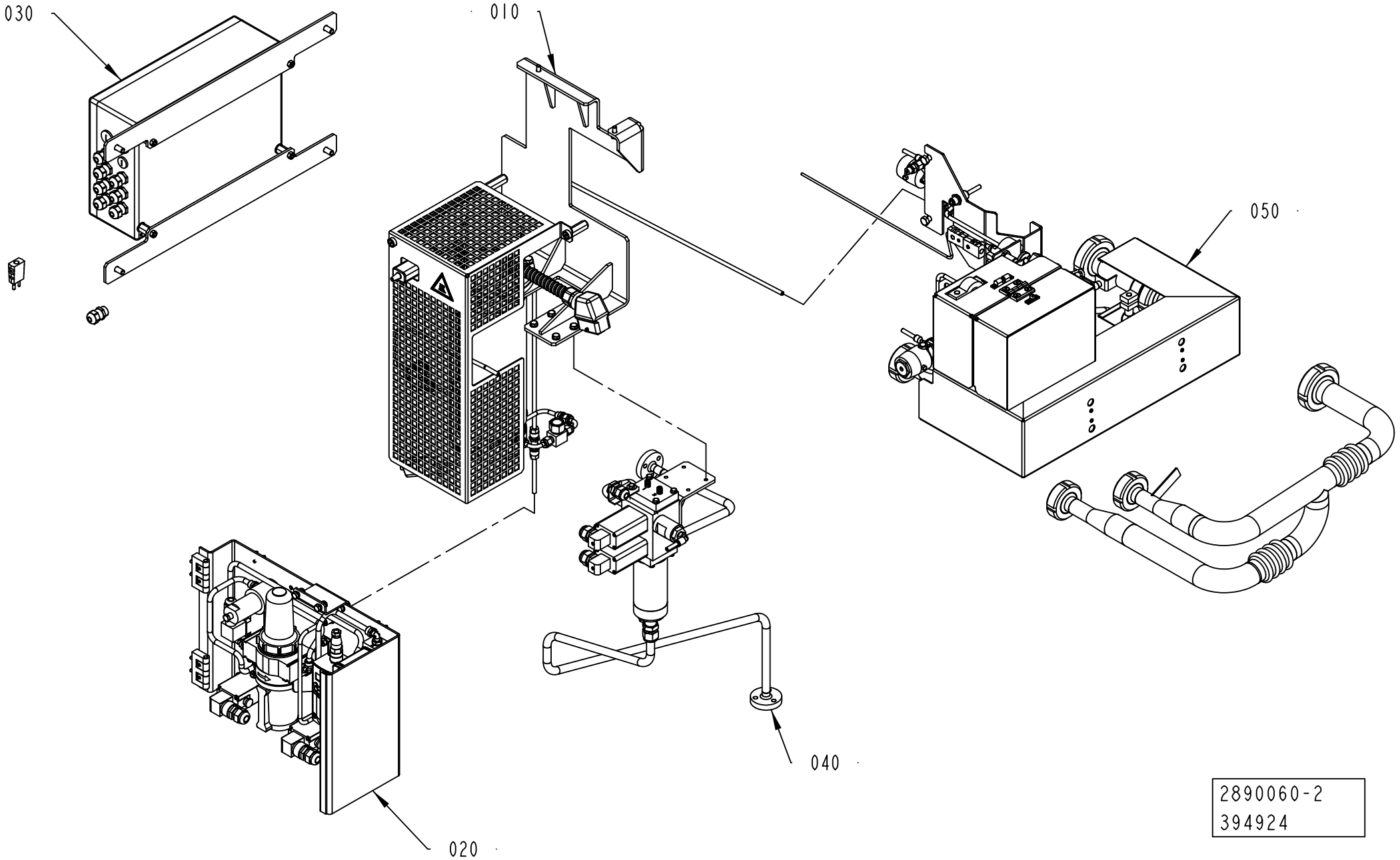

2890060-2
394924

ECM: 461868 - 20101001
Group number: 2890060-0200
Assembly Drawing: 2890060-2_1_AA

Pos	Part No	UN	Qty	Description	Page No
-					
010	2890080-0200		1	HEATER	**1-87**
020	2890075-0100		1	PNEUMATIC PANEL	**1-89**
030	2906090-0100		1	CONNECTION BOX	**1-91**
040	2906070-0100		1	SPRAY TANK	**1-97**
050	2890065-0200		1	NOZZLE UNIT	**1-99**

Pos	Part No	UN	Qty	Description	Page No

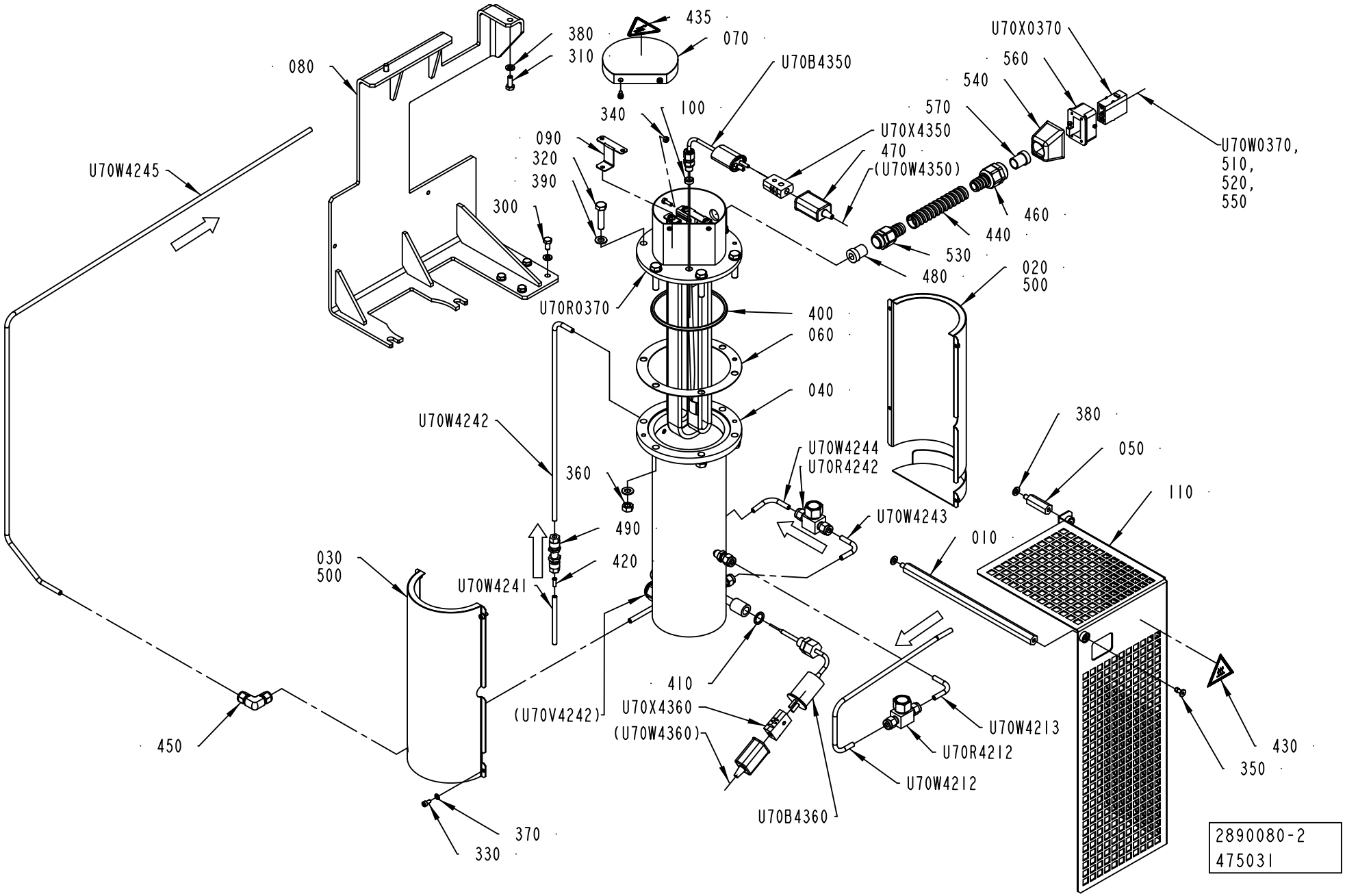
080
435
380
310
070
U70B4350
U70X0370
560
540
570
U70X4350
470
(U70W4350)
U70W0370,
510,
520,
550
340
100
090
320
390
300
U70W4245
460
440
530
480
020
500
U70R0370
400
060
040
U70W4242
380
050
110
U70W4244
U70R4242
360
U70W4243
490
010
030
500
420
U70W4241
410
(U70V4242)
U70X4360
(U70W4360)
U70W4213
U70R4212
U70W4212
U70B4360
430
350
450
370
330
2890080-2
475031

ECM: 483271 - 20110401
Group number: 2890080-0200
Assembly Drawing: 2890080-2_1_AC

Pos	Part No	UN	Qty	Description	Page No
ANSI					
430	90459-7458		1	WARNING SIGN ANSI (H), HOT SURFACE	
435	359715-0100		1	WARNING SIGN ANSI (H), ELECTRIC SHOCK	
ISO					
430	359705-0007		1	WARNING SIGN ISO, HOT SURFACE	
435	359705-0015		1	WARNING SIGN ISO, RISK OF ELECTRIC SHOCK	
Common Parts					
010	3037838-0000		1	SPACER	
020	2685340-0000		1	COVER	
030	2685341-0000		1	COVER	
040	2685314-0000		1	COIL	
U70V4242	*90277-0407*		*1*	*FILTER ELEMENT 60µ, SS-4F-K4-60*	
050	3037837-0000		1	SPACER	
060	2685339-0000		1	GASKET	
070	2562315-0000		1	PLUG	
080	2890132-0000		1	BRACKET	
090	2598084-0000		2	PLATE	
100	2598085-0000		1	SPACER	
110	3037839-0000		1	COVER	
300	312105-0366		4	SCREW, M6S ISO 4017 M6X12 A4 80	
310	312105-0368		2	SCREW, M6S ISO 4017 M6X16 A4 80	
320	312109-0457		6	SCREW, M6S ISO 4017 M8X35 A4 80	
330	312115-0287		6	SCREW ISO4762 M4X8 A4 80	
340	312605-0312		1	HEXAGON NUT, M6M M4 A280	
350	90601-2046		2	CAPTIVE SCREW M6, GUTBG 6-4-12	
360	312605-0318		6	HEXAGON NUT, M6M M8 A280	
370	315105-0136		4	WASHER PLAIN, 4,3X9X0,8 A4 BRB	
380	315105-0153		8	WASHER PLAIN, 6,4X12X1,5 A4 BRB	
390	315105-0165		12	WASHER PLAIN, 8,4X16X1,6 A4 BRB	
400	315229-0208		1	GASKET 97,4X105,4X3,7 MM 4"	
410	315234-0110		1	WASHER,PL.RND.CU.13,5/18 H=1,5	
420	342706-0130		1	STIFFNER SLEEVE FOR HOSE 6X1	
440	90152-0050	MM	6500	HOSE, SPIRAL CONDUIT, 20X13, UL 1313	
450	90459-4511		1	CONN. ELBOW, 6	
460	90458-0414		1	GLAND FITTING, VK 22553YUL13	
470	90326-0012		2	PROTECTIVE COVER, 03-001 10	
480	90600-0976		1	INSERT, SINGLE HOLE, HI.TEMP, EK153 I 9	
490	90224-0349		1	CONN. BULKHEAD. 1250-6	
500	90411-0001	MM	1000	INSULATING MAT, WIRED 100 6000X600X30MM	
510	90459-3165	MM	6500	CABLE, PTFE HEAT 1X4,72MM2 BLACK	
520	90459-3154	MM	6500	CABLE, PTFE HEAT 1X4,72MM2 YELLOW/GREEN	
530	90458-0454		1	GLAND FITTING, VK 22053 D UL13	
540	90601-7130		1	HOOD, HAN MODULE COMPACT, 1914 0010 401	
550	353106-0107		3	CABLE SHOE, RING, HEAT RESISTANT, 58N/5	
560	90459-3852		1	HOUSING, 09 14 001 0311	
570	353249-0005		1	INSERT, SINGLE HOLE, E153 13	
U70B4350	90459-2122		1	THERMOCOUPLE, 5130 060-001	
U70B4360	90326-0053		1	THERMOCOUPLE, 5110 053-000	
U70R0370	3020119-0000		1	HEATING ELEMENT	
U70R4212	90230-0064		1	CHECK VALVE, 6 MM HIGH TEMP.	
U70R4242	90230-0064		1	CHECK VALVE, 6 MM HIGH TEMP.	
U70W0370	90459-3165	MM	6500	CABLE, PTFE HEAT 1X4,72MM2 BLACK	
U70W4212	2890134-0000		1	PIPE	
U70W4213	2736707-0000		1	PIPE	
U70W4241	315400-0001	MM	2000	TUBE PUN-H-6X1-BL	
U70W4242	2890133-0000		1	PIPE	
U70W4243	2736707-0000		1	PIPE	
U70W4244	2736707-0000		1	PIPE	
U70W4245	2906067-0000		1	PIPE	
U70X0370	90601-6217		1	MALE INSERT, HAN 3 MOD-M-S 40A	
U70X4350	90326-0020		1	SOCKET, FEMALE YELLOW CR-AL, 03-22000A	
U70X4360	90326-0020		1	SOCKET, FEMALE YELLOW CR-AL, 03-22000A	

Machine Type	Group Description	Used-In	Group Number	Page No

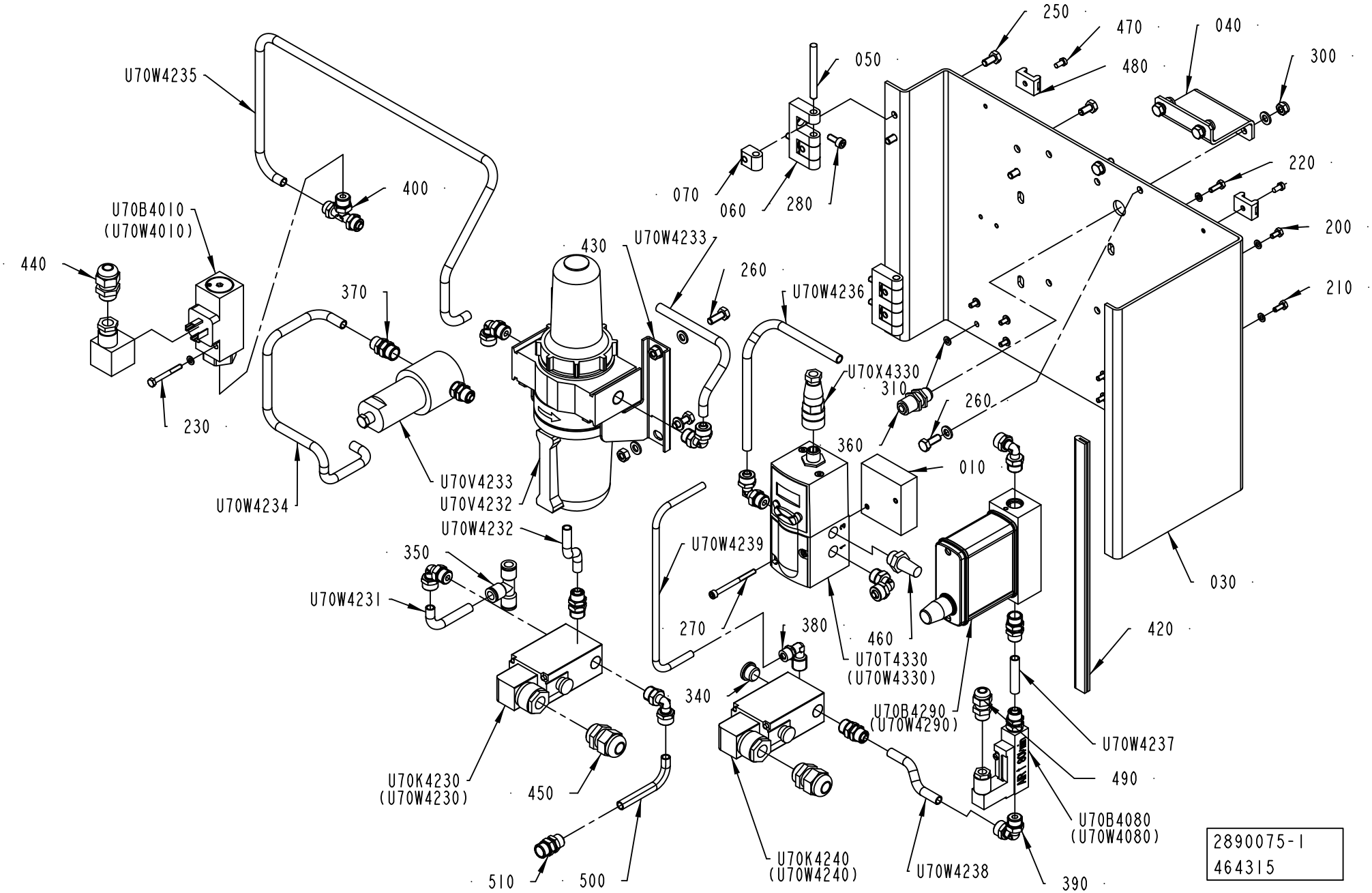
U70W4235
400
U70B4010
(U70W4010)
440
230
370
U70W4234
U70V4233
U70V4232
U70W4232
350
U70W4231
U70K4230
(U70W4230)
450
510
500
430
U70W4233
260
U70W4236
050
070
060
280
250
470
480
040
300
220
200
210
U70X4330
310
260
360
010
030
U70W4239
270
380
460
U70T4330
(U70W4330)
420
340
U70B4290
(U70W4290)
U70W4237
490
U70B4080
(U70W4080)
U70K4240
(U70W4240)
U70W4238
390
2890075-1
464315

ECM: 472498 - 20110102
Group number: 2890075-0100
Assembly Drawing: 2890075-1_1_AC

Pos	Part No	UN	Qty	Description	Page No
-					
010	2511330-0000		1	SPACER	
030	2906095-0000		1	BRACKET	
040	2906111-0000		1	BRACKET	
050	988685-0000		2	PIN	
060	1035792-0000		2	E-HINGE	
070	1129770-0000		4	BLOCKING PIECE	
200	312105-0287		2	SCREW, M6S ISO 4017 M4X8 A4 70	
210	312105-0289		2	SCREW, M6S ISO 4017 M4X10 A4 70	
220	312105-0291		8	SCREW, M6S ISO 4017 M4X12 A4 70	
230	312105-0301		2	SCREW, M6S ISO 4017 M4X35 A4 70	
250	312105-0366		6	SCREW, M6S ISO 4017 M6X12 A4 80	
260	312105-0368		4	SCREW, M6S ISO 4017 M6X16 A4 80	
270	312115-0305		2	SCREW ISO4762 M4X50 A4 80	
280	312115-0327		4	SCREW ISO4762 M5X12 A4 80	
290	312605-0316		4	HEXAGON NUT, M6M M6 A280	
300	312812-0316		4	HEXAGON NUT, NY-LOCK M6 A4 80	
310	315105-0136		22	WASHER PLAIN, 4,3X9X0,8 A4 BRB	
330	315105-0153		12	WASHER PLAIN, 6,4X12X1,5 A4 BRB	
340	342713-0210		1	PLUG, EXT THREAD HEX SOCKET	
350	342748-0103		1	T-CONNECTION 8MM	
360	342768-0102		1	BULKHEAD CONNECTOR, 6 MM	
370	342921-0122		6	STRAIGHT COUPLING, EXT.THREAD 8/6-G1/4	
380	342930-0114		1	ELBOW 90 COULP., EXT. THREAD 6/4-R1/4"	
390	342931-0122		8	ELBOW 90 COUPL., EXT. THREAD 8/6-G1/4"	
400	342941-0122		1	T-COUPLING,EXT.THREAD 8/6-G1/4"	
420	90143-0097	MM	300	SELF GRIPPING GASKET, 1011-24	
430	90236-0041		1	BRACKET, 74504-50	
440	352103-0101		1	CABLE GLAND, ST 9, PR15,2/PG9	
450	352103-0106		2	CABLE GLAND, ST 11, PR18,6/PG11	
460	346800-0110		1	SILENCER FILTER R1/4"	
470	312125-0287		2	SLOTTED HEAD SCREW, ISO1207 M4X8 A4	
480	352113-0203		2	ANCHOR PLATES FOR STRIPS, TM3S8-M0	
490	352103-0096		1	CABLE GLAND, ST 7, PR 12,5/PG7	
500	315300-0004	MM	4000	TUBE, 8 MM PE BLUE	
510	342921-0122		1	STRAIGHT COUPLING, EXT.THREAD 8/6-G1/4	
U70B4010	90458-2241		1	PRESSURE SWITCH 0,5-10 BAR ADJUSTABLE	
U70B4080	90459-6215		1	FLOW SWITCH BFS-10-N-G1/4-MS-NO-ST	
U70B4290	90600-1154		1	FLOW METER,D-6230-HGB-BB-AV-99-0-N2/IP65	
U70K4230	90042-0171		1	SOLENOID VALVE, 330 3/2 NC	
	90042-0466		*1*	*DIAPHRAGM 330.95.2 VITON*	
U70K4240	90042-0171		1	SOLENOID VALVE, 330 3/2 NC	
	90042-0466		*1*	*DIAPHRAGM 330.95.2 VITON*	
U70T4330	90459-1420		1	PROPORTIONAL VALVE 0 - 10V/0-6 BAR	
	90458-1262		*1*	*CONNECTOR, FOR PROP.VALVE, 131028001*	
U70V4232	90277-0104		1	FILTER F64B-2GN-ARO	
	90113-0457		*1*	*FILTER ELEMENTS*	
	90113-0458		*1*	*FILTER ELEMENTS, 5350-99*	
U70V4233	90277-0323		1	FILTER HOUSING / ART.NO 95S6-1/4 S 5430	
U70W4231	315400-0004	MM	4000	TUBE PUN-H-8X1,25-BL	
U70W4232	315400-0004	MM	110	TUBE PUN-H-8X1,25-BL	
U70W4233	315400-0004	MM	165	TUBE PUN-H-8X1,25-BL	
U70W4234	315400-0004	MM	360	TUBE PUN-H-8X1,25-BL	
U70W4235	315400-0004	MM	660	TUBE PUN-H-8X1,25-BL	
U70W4236	315400-0004	MM	235	TUBE PUN-H-8X1,25-BL	
U70W4237	315400-0004	MM	40	TUBE PUN-H-8X1,25-BL	
U70W4238	315400-0004	MM	90	TUBE PUN-H-8X1,25-BL	
U70W4239	315400-0001	MM	280	TUBE PUN-H-6X1-BL	
U70X4330	90458-1262		1	CONNECTOR, FOR PROP.VALVE, 131028001	

Machine Type	Group Description	Used-In	Group Number	Page No

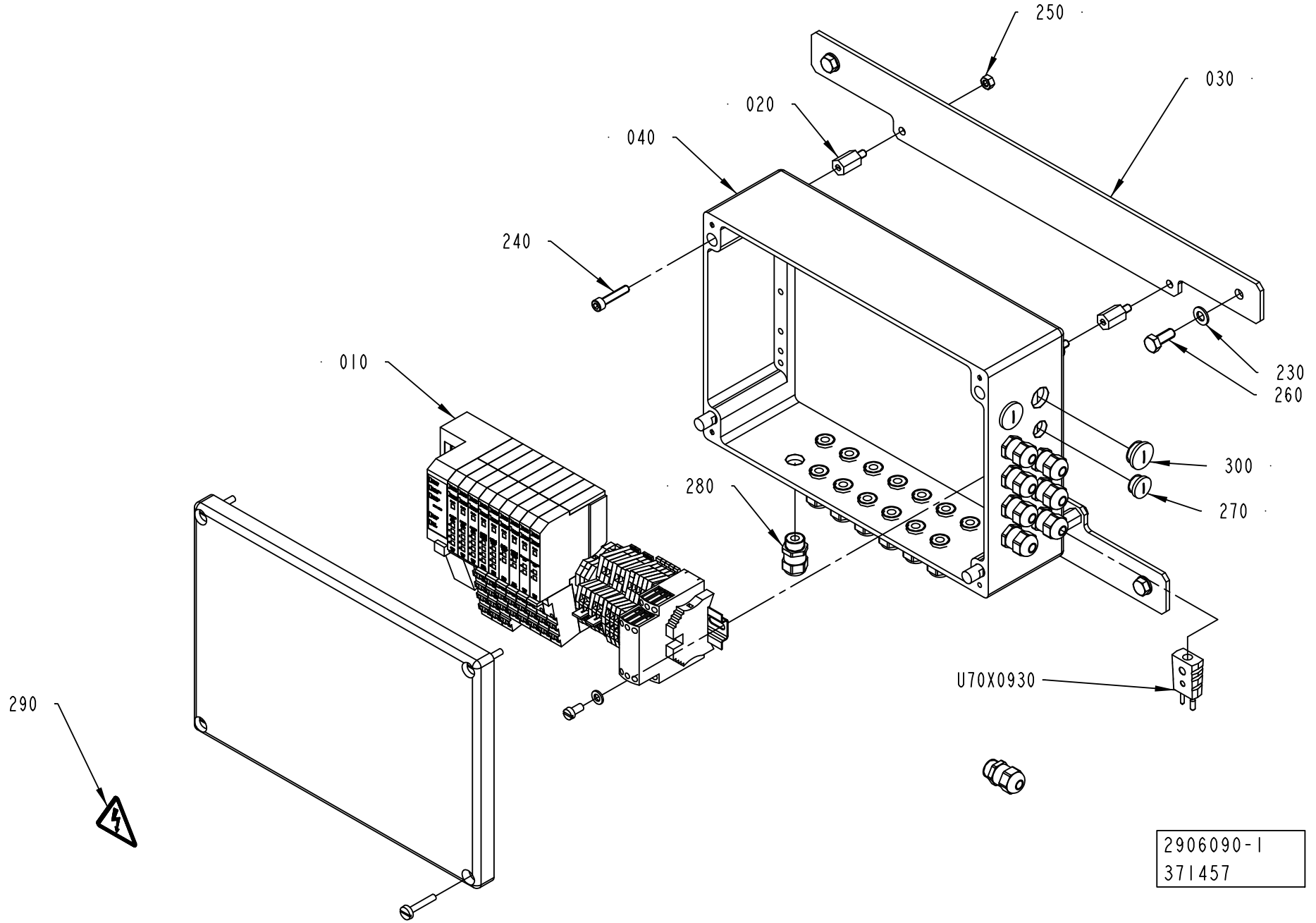
250
030
020
040
240
010
230
260
300
280
270
290
U70X0930
2906090-1
371457

ECM: 460714 - 20101001
Group number: 2906090-0100
Assembly Drawing: 2906090-1_1_AA

Pos	Part No	UN	Qty	Description	Page No
ANSI					
290	359715-0100		1	WARNING SIGN ANSI (H), ELECTRIC SHOCK	
ISO					
290	359705-0015		1	WARNING SIGN ISO, RISK OF ELECTRIC SHOCK	
Common Parts					
010	2906091-0100		1	TERMINAL BLOCK	**1-93**
020	1548870-0000		4	SPACER	
030	2922779-0000		2	BRACKET	
040	2906096-0000		1	CONNECTION BOX	
230	315105-0165		4	WASHER PLAIN, 8,4X16X1,6 A4 BRB	
240	312115-0374		4	SCREW ISO4762 M6X30 A4 80	
250	312605-0316		4	HEXAGON NUT, M6M M6 A280	
260	312105-0451		4	SCREW, M6S ISO 4017 M8X20 A4 80	
270	90458-1307		1	BLIND PLUG CIRCULAR, M16X1,5 514GFK/216	
280	90458-0306		22	CABLE GLAND, M16X1,5, 5311 1010	
300	90458-1308		2	BLIND PLUG CIRCULAR, M20X1,5 514GFK/220	
U70W0930	90220-0034	MM	5000	THERMOC.CABLE, TEX/SITW-20F-KX 2X0,5MM2	
U70W4010	351150-0403	MM	2000	CABLE OLFLEX 3X0,75 MM2 LIGHT/GREY	
U70W4060	351150-0404	MM	4000	CABLE OLFLEX 4X0,75 MM2 LIGHT/GREY	
U70W4080	351150-0403	MM	2000	CABLE OLFLEX 3X0,75 MM2 LIGHT/GREY	
U70W4210	351150-0403	MM	4000	CABLE OLFLEX 3X0,75 MM2 LIGHT/GREY	
U70W4220	351150-0403	MM	4000	CABLE OLFLEX 3X0,75 MM2 LIGHT/GREY	
U70W4230	351150-0403	MM	2000	CABLE OLFLEX 3X0,75 MM2 LIGHT/GREY	
U70W4240	351150-0403	MM	2000	CABLE OLFLEX 3X0,75 MM2 LIGHT/GREY	
U70W4290	90220-0165	MM	2500	SCR. CABLE 5X0,34MM2	
U70W4330	90220-0165	MM	2000	SCR. CABLE 5X0,34MM2	
U70W4350	90220-0034	MM	2000	THERMOC.CABLE, TEX/SITW-20F-KX 2X0,5MM2	
U70W4360	90220-0034	MM	2500	THERMOC.CABLE, TEX/SITW-20F-KX 2X0,5MM2	
U70W9000	90459-2530	MM	2500	DEVICENET CABLE THIN	
U70W9001	351150-0406	MM	2500	CABLE OLFLEX 7X0,75 MM2 LIGHT/GREY	
U70X0930	90326-0022		1	PLUG, MALE YELLOW CR-AL, 03-21000A	

Pos	Part No	UN	Qty	Description	Page No

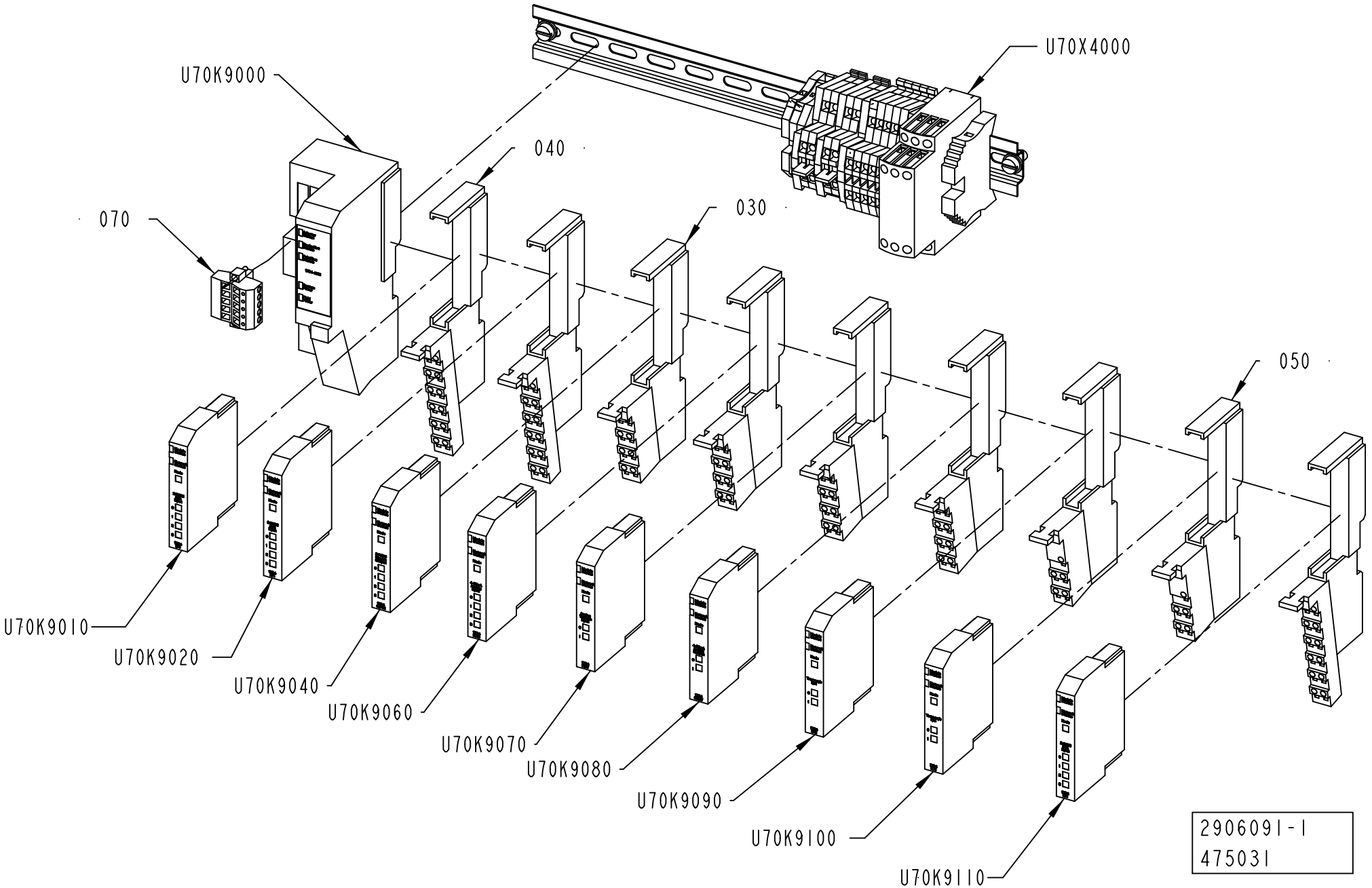
U70X4000
U70K9000
040
070
030
050
U70K9010
U70K9020
U70K9040
U70K9060
U70K9070
U70K9080
U70K9090
U70K9100
U70K9110
2906091-1
475031

ECM: 483272 - 20110401
Group number: 2906091-0100
Assembly Drawing: 2906091-1_1_AC

Pos	Part No	UN	Qty	Description	Page No
-					
030	90459-2526		4	REMOTE I/O BASE MODULE 8 POINTS, 1734-TB	
040	90459-2527		3	REMOTE I/O BASE MODULE 12 POINTS	
050	90459-2528		2	REMOTE I/O BASE MODULE FOR THERMOCOUPLE	
070	90459-5574		1	CONNECTOR, 1787-PLUG10R	
U70K9000	90459-2494		1	DEVICENET I/O ADAPTER MODULE, 1734-ADN	
U70K9010	90459-2503		1	DIGITAL INPUT 4 PTS SINK, 1734-IB4	
U70K9020	90459-2503		1	DIGITAL INPUT 4 PTS SINK, 1734-IB4	
U70K9040	90459-2505		1	DIGITAL OUTPUT 4 PTS, 1734-OB4E	
U70K9060	90459-2509		1	REMOTE I/O ANALOG INPUT CURRENT 2 PTS	
U70K9070	90459-2508		1	REMOTE I/O ANALOG INPUT VOLTAGE 2 PTS	
U70K9080	90459-2510		1	ANALOG OUTPUT VOLTAGE MODULE 2 PTS	
U70K9090	90459-2512		1	REMOTE I/O THERMOCOUPLE INPUT 2 PTS	
U70K9100	90459-2512		1	REMOTE I/O THERMOCOUPLE INPUT 2 PTS	
U70K9110	90459-2503		1	DIGITAL INPUT 4 PTS SINK, 1734-IB4	
U70X4000	3144484-0100		1	TERMINAL BLOCK	**1-95**

Pos	Part No	UN	Qty	Description	Page No

Machine Type | Group Description | Used-In | Group Number | Page No

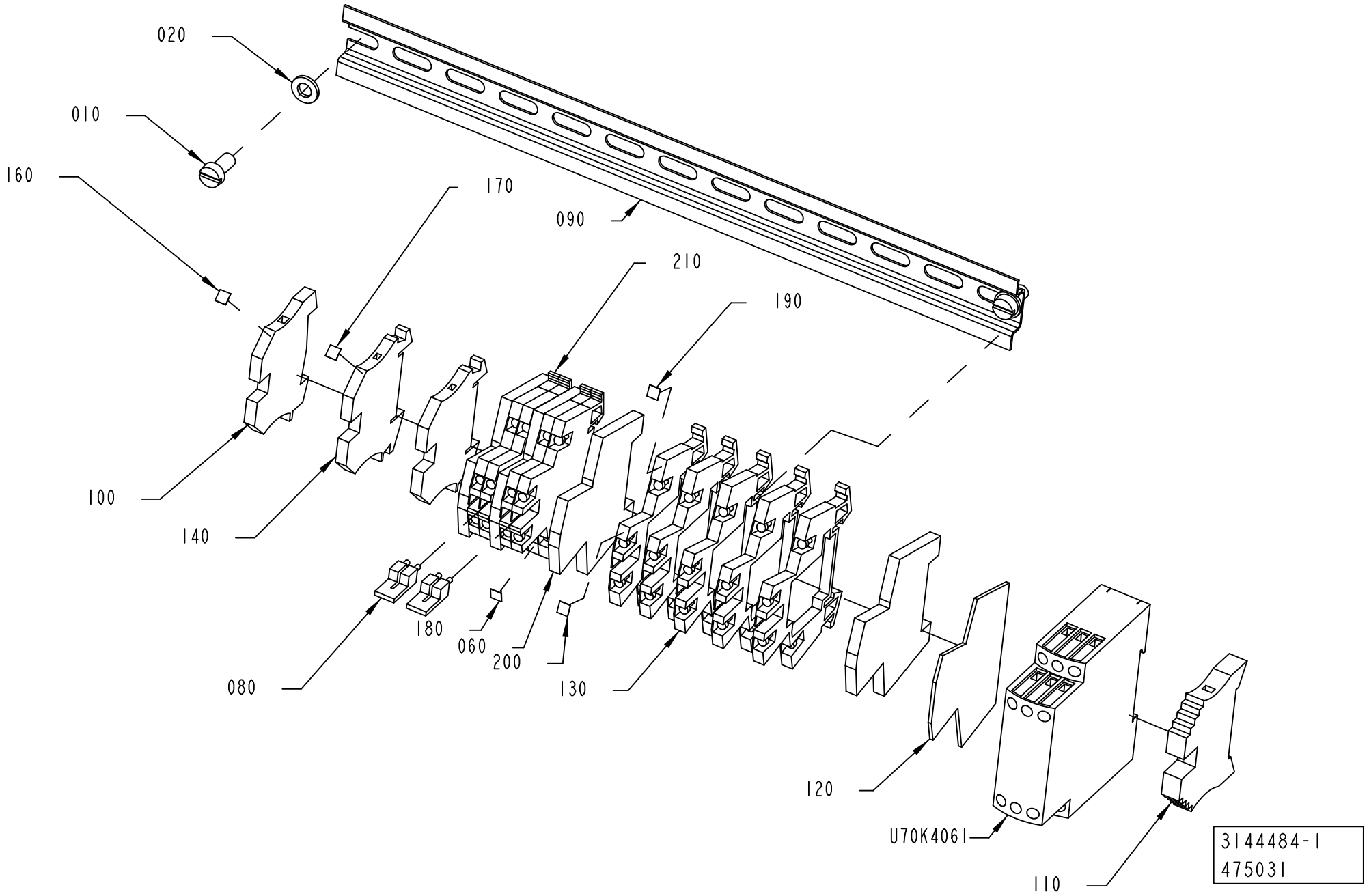
020
010
160
170
090
210
190
100
140
180
060
200
080
130
120
U70K4061
110
3144484-1
475031

ECM: 483273 - 20110401
Group number: 3144484-0100
Assembly Drawing: 3144484-1_1_AA

Pos	Part No	UN	Qty	Description	Page No
-					
010	312125-0366		2	SLOTTED HEAD SCREW, ISO1207 M6X12 A4	
020	315105-0153		2	WASHER PLAIN, 6,4X12X1,5 A4 BRB	
060	353024-0212		4	EARTH TERMINAL WDK 2,5 PE	
080	353034-0030		2	BRIDGE CONNECTOR WQV 2,5/10	
090	2847235-0000		1	RAIL	
100	353024-0204		1	EARTH TERMINAL WPE 2,5	
110	353031-0203		1	END BRACKET, WEW 35/2	
120	90077-0114		1	END PLATE, WAP WDK 2.5 1059100000	
130	90077-0113		5	TERMINAL BLOCK WDK 2.5	
140	353021-0212		2	FEED THROUGH TERMINAL, WDU 2,5	
160	359011-0819		1	MARKING, EARTH, DEK 5 GW ERDE I.KR.	
170	359011-0807		1	MARKING, DEK 5 FW 1-50	
180	359011-0808		1	MARKING, DEK 5FW 51-100	
190	359011-0809		1	MARKING, DEK 5 FW 101-150	
200	359011-0810		1	MARKING, DEK 5 FW 151-200	
210	90459-5253		4	TERMINAL BLOCK WDK 2,5 V	
U70K4061	90459-2742		1	LEVEL CONTROL RELAY, RM4-LA32MW	

Pos	Part No	UN	Qty	Description	Page No

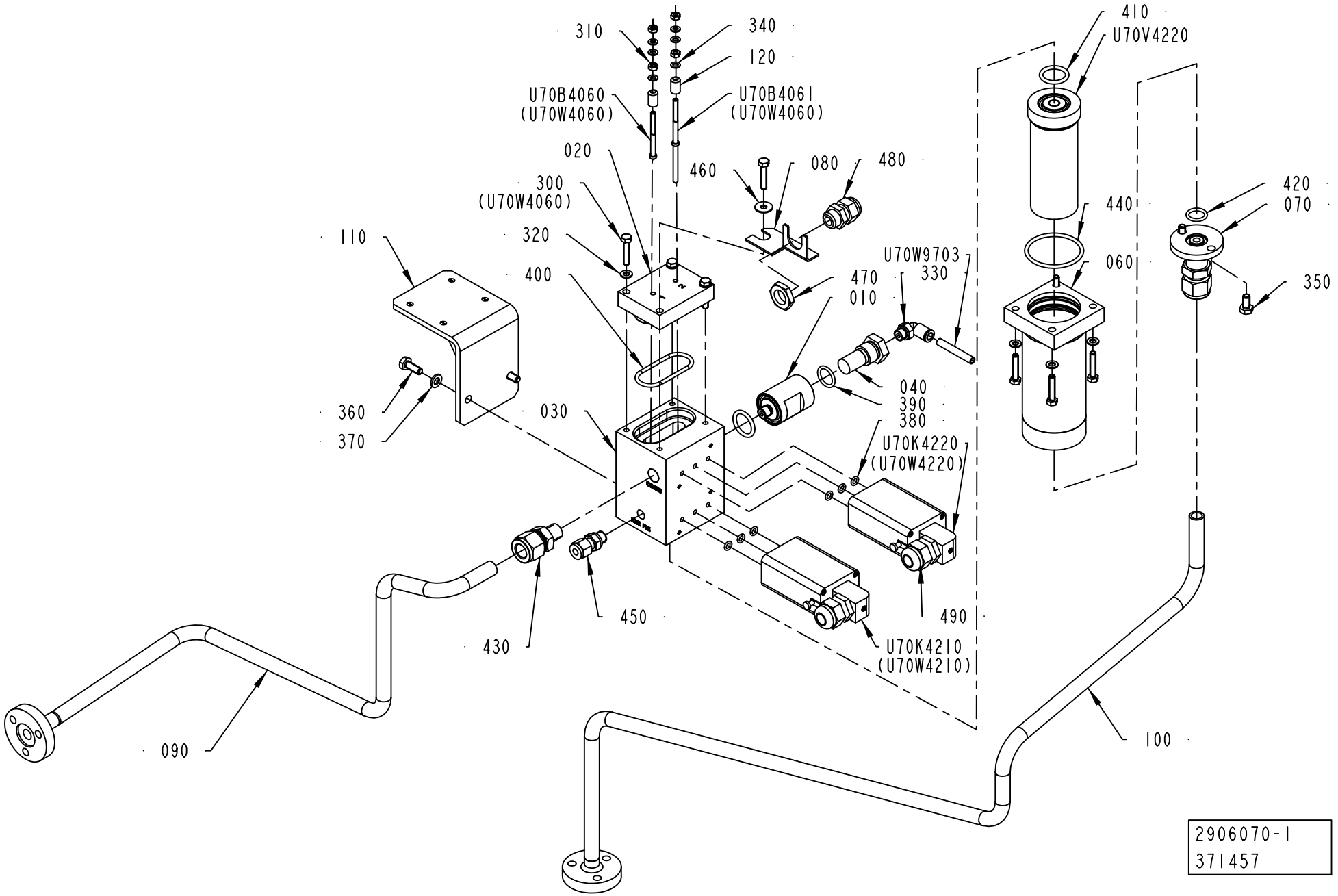
310
340
120
U70B4060
(U70W4060)
U70B4061
(U70W4060)
020
460
080
480
300
(U70W4060)
320
400
110
470
010
U70W9703
330
410
U70V4220
420
070
440
060
350
040
390
380
360
370
030
U70K4220
(U70W4220)
450
490
430
U70K4210
(U70W4210)
090
100
2906070-1
371457

ECM: 371463 - 20081127
Group number: 2906070-0100
Assembly Drawing: 2906070-1_1_AA

Pos	Part No	UN	Qty	Description	Page No
-					
010	1519486-0000		1	FILTER HOUSING	
020	2553167-0000		1	LID	
030	2512939-0000		1	DISTRIBUTOR BLOCK	
040	450833-0000		1	FILTER	
060	554142-0000		1	FILTER HOUSING	
070	2657865-0000		1	PIPE CONNECTION	
080	1036610-0000		1	BRACKET	
090	2906069-0000		1	PIPE	
100	2906071-0000		1	PIPE	
110	2906083-0000		1	BRACKET	
120	2672974-0000		2	BUSHING	
300	312105-0333		8	SCREW, M6S ISO 4017 M5X25 A4 80	
310	312605-0312		4	HEXAGON NUT, M6M M4 A280	
320	315105-0146		7	WASHER PLAIN, 5,3X10X1 A4 BRB	
330	350002-0006		1	PUSH-IN L-FITTING QSL-F-G1/8-6	
340	315105-0136		6	WASHER PLAIN, 4,3X9X0,8 A4 BRB	
350	312105-0366		2	SCREW, M6S ISO 4017 M6X12 A4 80	
360	312105-0368		2	SCREW, M6S ISO 4017 M6X16 A4 80	
370	315105-0153		2	WASHER PLAIN, 6,4X12X1,5 A4 BRB	
380	927420-0001		6	O-RING 5.1X1.6 SILICONE	
390	927421-0004		1	O-RING 15.3X2.4 SILICONE	
400	927422-0006		1	O-RING 42.2X3 SILICONE	
410	927422-0001		2	O-RING 19.2X3 SILICONE	
420	927421-0003		1	O-RING 13.3X2.4 SILICONE	
430	90459-4148		1	CONN. STR., 1/2"-1/4 ISO 7/1, EXT. THREA	
440	927422-0007		1	O-RING 44.2X3 SILICONE	
450	90459-1424		1	CONN. STR., 6-G1/8, EXT. THREAD	
460	90005-0114		1	WASHER PLAIN ROUND 5,3(M5)/15, H=1	
470	90099-0104		1	PLUG, PR 15,2 (PG9)	
480	352103-0101		1	CABLE GLAND, ST 9, PR15,2/PG9	
490	352103-0106		2	CABLE GLAND, ST 11, PR18,6/PG11	
U70B4060	2672972-0000		1	BOLT	
U70B4061	2672973-0000		1	ELECTRODE	
U70K4210	90042-0203		1	SOLENOID VALVE, 331 3/2 NC	
U70K4220	90042-0203		1	SOLENOID VALVE, 331 3/2 NC	
U70V4220	554141-0000		1	FILTER	
U70W9703	315400-0001	MM	7000	TUBE PUN-H-6X1-BL	

Pos	Part No	UN	Qty	Description	Page No

Machine Type | Group Description | Used-In | Group Number | Page No

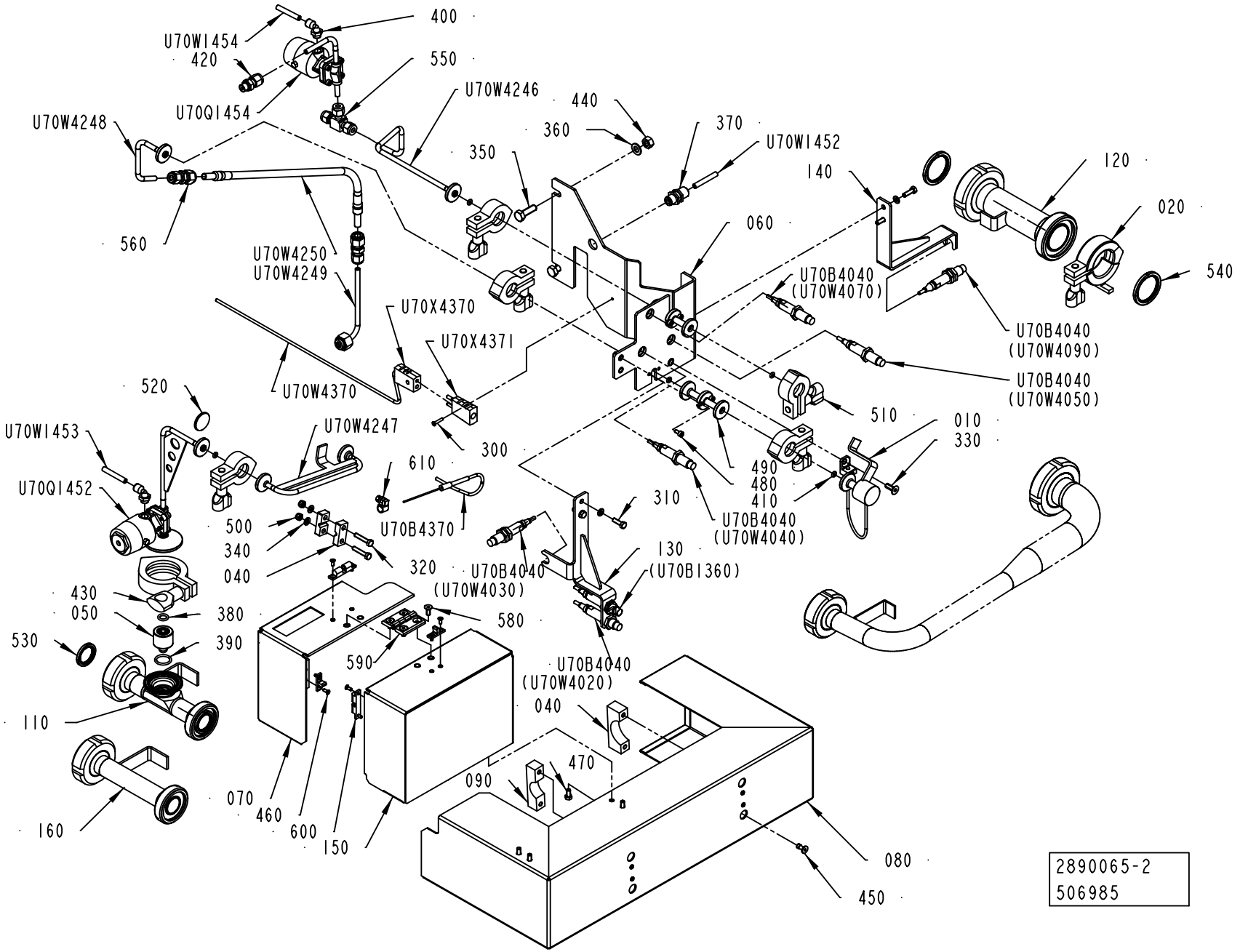
400
U70W1454
420
550
U70W4246
440
U70Q1454
U70W4248
360
370
U70W1452
350
140
120
020
060
560
U70W4250
U70W4249
U70B4040
(U70W4070)
540
U70X4370
U70B4040
(U70W4090)
U70X4371
U70W4370
U70B4040
(U70W4050)
520
510
010
330
U70W1453
U70W4247
300
610
490
480
410
U70Q1452
310
U70B4040
(U70W4040)
500
U70B4370
340
320
130
U70B4040
(U70W4030)
(U70B1360)
040
430
050
380
580
530
390
590
U70B4040
(U70W4020)
040
110
470
090
070
460
600
150
080
160
450
2890065-2
506985

ECM: 507512 - 20111001
Group number: 2890065-0200
Assembly Drawing: 2890065-2_1_AD

Pos	Part No	UN	Qty	Description	Page No
-					
010	2696109-0000		1	PLUG	
020	2552201-0000		1	LOCKING DEVICE	
030	3037829-0000		1	CLAMP	
040	2939863-0000		2	CLAMP	
050	1523154-0003		1	SPRAY NOZZLE	
050	1523154-0004		1	SPRAY NOZZLE	
050	1523154-0005		1	SPRAY NOZZLE	
050	1523154-0006		1	SPRAY NOZZLE	
060	2890046-0000		1	BRACKET	
070	3037840-0000		1	COVER	
080	3037842-0000		1	TOUCH GUARD	
090	3037845-0000		1	CLAMP	
110	3124264-0000		1	PIPE	
120	3124263-0000		1	PIPE	
130	2906086-0000		1	BRACKET	
140	2906087-0000		1	BRACKET	
150	3037841-0000		1	COVER	
160	3124262-0000		1	PIPE	
300	312145-0228		1	SCREW ISO 2009 MFS M3X16 A4	
310	312105-0329		4	SCREW, M6S ISO 4017 M5X16 A4 80	
320	312105-0333		2	SCREW, M6S ISO 4017 M5X25 A4 80	
330	312155-0368		1	SCREW DIN 7991 MF6S M6X16 A4 70	
340	315105-0146		6	WASHER PLAIN, 5,3X10X1 A4 BRB	
350	312105-0453		2	SCREW, M6S ISO 4017 M8X25 A4 80	
360	315105-0165		2	WASHER PLAIN, 8,4X16X1,6 A4 BRB	
370	342768-0102		1	BULKHEAD CONNECTOR, 6 MM	
380	315204-0208		1	O-RING 9,3X2,4 MM	
390	90600-2508		1	O-RING 17,3X2,4 MM FDA, 3-A	
400	90458-2956		2	ELBOW PIPE JOINT, EXT.THREAD, D=6MM-G1/8	
410	90600-0495		5	O-RING 4X2 MM	
420	90459-1424		1	CONN. STR., 6-G1/8, EXT. THREAD	
430	342840-0103		1	CLAMPING PIECE DN 1-11/2, GH13LAH112304N	
440	312605-0318		2	HEXAGON NUT, M6M M8 A280	
450	90601-2046		4	CAPTIVE SCREW M6, GUTBG 6-4-12	
460	90287-0295		8	SCREW HEX.SOCK.COUNT.MF6S M3X8 A280	
470	312105-0325		4	SCREW, M6S ISO 4017 M5X10 A4 80	
480	312115-0287		4	SCREW ISO4762 M4X8 A4 80	
490	2847310-0000		2	CONNECTION	
500	312812-0314		2	HEXAGON NUT, NY-LOCK M5 A4 80	
510	342840-0101		5	CLAMP, 12,7 AND 19,1 MM 3-A PCS+PMCS	
520	90600-0614		1	BLANK PLUG, 16AMP-316-1/2"-3/4"-AR	
530	3092164-0000		2	GASKET	
540	3024322-0000		2	GASKET	
550	90030-0571		1	CONN. T-PIPE SS-6MO-3	
560	90600-5606		2	CONN. PIPE REDUCTION 8-6	
580	312155-0327		4	SCREW DIN 7991 MF6S M5X12 A4 70	
590	90459-0075		1	HINGE, 1056-U30	
600	90600-0276		2	SNAP-IN BALL LOCK, 43X14,5 MM	
610	90132-0021		1	HOSE CLIP 6-10MM	
U70B4020	90600-0463		1	INDUCTIVE SWITCH,E2A-M12LN05-WP-B1-TP 5M	
U70B4030	90600-0463		1	INDUCTIVE SWITCH,E2A-M12LN05-WP-B1-TP 5M	
U70B4040	90600-0463		1	INDUCTIVE SWITCH,E2A-M12LN05-WP-B1-TP 5M	
U70B4050	90600-0463		1	INDUCTIVE SWITCH,E2A-M12LN05-WP-B1-TP 5M	
U70B4070	90600-0463		1	INDUCTIVE SWITCH,E2A-M12LN05-WP-B1-TP 5M	
U70B4090	90600-0463		1	INDUCTIVE SWITCH,E2A-M12LN05-WP-B1-TP 5M	
U70B4370	90326-0060		1	THERMOCOUPLE, 5110060-000 CR-AL	
U70Q1452	2890047-0000		1	VALVE BODY	
	90600-0500		*1*	*DIAPHRAGM VALVE, 650 4D 0405A10T1 CF02*	
	90600-0493		*1*	*DIAPHRAGM 3A, 600-8M-5AD*	
	342800-1202		*1*	*ACTUATOR, SS, N.C. SEAT S. 10*	
U70Q1454	2890049-0000		1	VALVE BODY	
	90600-0500		*1*	*DIAPHRAGM VALVE, 650 4D 0405A10T1 CF02*	
	90600-0493		*1*	*DIAPHRAGM 3A, 600-8M-5AD*	
	342800-1202		*1*	*ACTUATOR, SS, N.C. SEAT S. 10*	
U70W1452	315400-0001	MM	5300	TUBE PUN-H-6X1-BL	
U70W1453	315400-0001	MM	300	TUBE PUN-H-6X1-BL	
U70W1454	315400-0001	MM	5300	TUBE PUN-H-6X1-BL	
U70W4246	2890048-0000		1	PIPE	
U70W4247	2715602-0000		1	PIPE	
U70W4248	2986708-0000		1	PIPE	
U70W4249	90600-4501		1	HYDRAULIC HOSE, 919-ID-ID-8-8-5C-5-420	
U70W4250	2986709-0000		1	PIPE	
U70W4370	90220-0034	MM	3500	THERMOC.CABLE, TEX/SITW-20F-KX 2X0,5MM2	
U70X4370	90326-0020		1	SOCKET, FEMALE YELLOW CR-AL, 03-22000A	
U70X4371	90326-0022		1	PLUG, MALE YELLOW CR-AL, 03-21000A	

Machine Type	Group Description	Used-In	Group Number	Page No

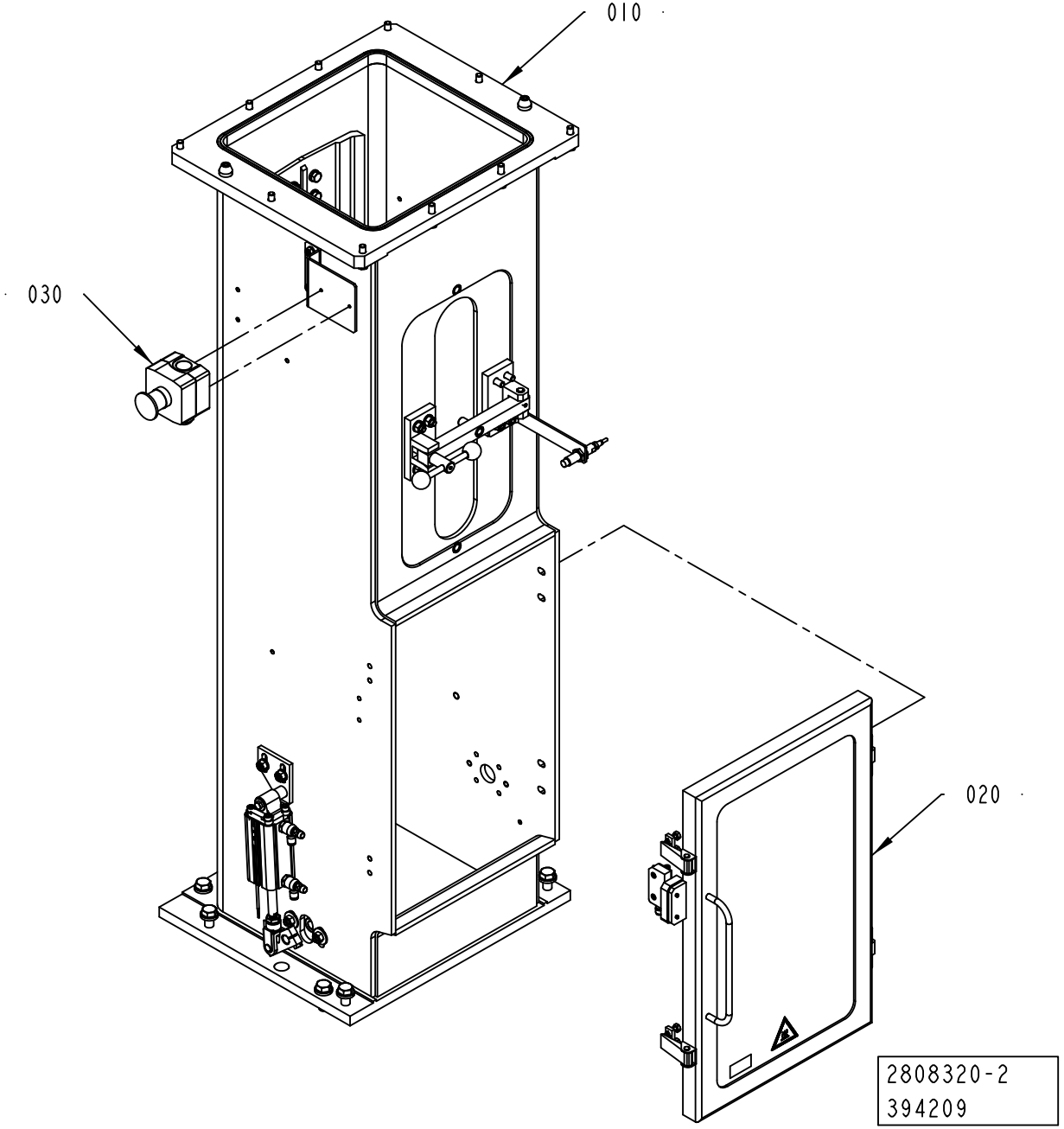
010
030
020
2808320-2
394209

ECM: 404926 - 20090715
Group number: 2808320-0200
Assembly Drawing: 2808320-2_1_AA

Pos	Part No	UN	Qty	Description	Page No
-					
010	2808250-0100		1	PILLAR	**1-103**
020	2808355-0200		1	DOOR	**1-105**
030	3037846-0100		1	EMERGENCY STOP	**1-107**

Pos	Part No	UN	Qty	Description	Page No

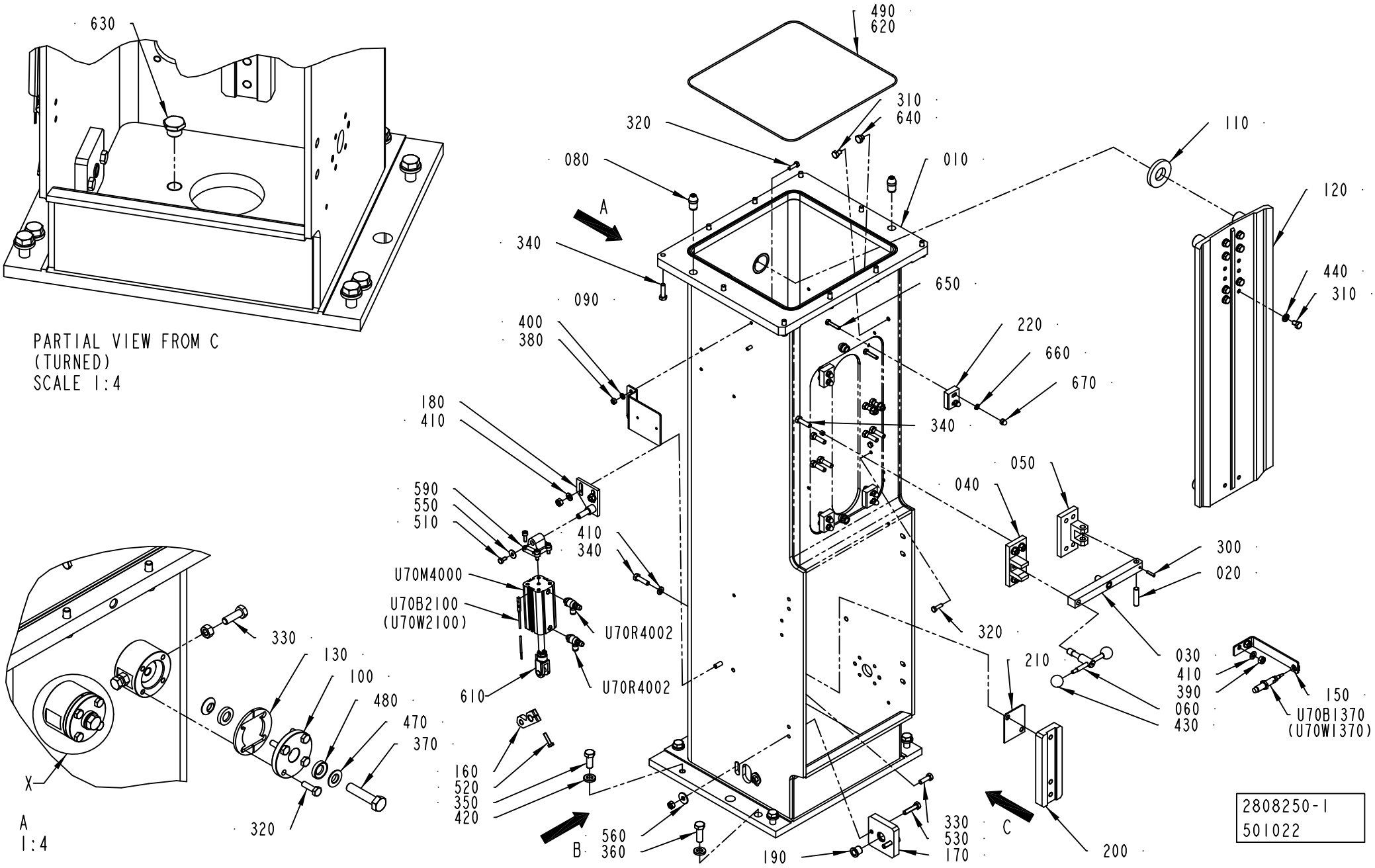
630
PARTIAL VIEW FROM C
(TURNED)
SCALE 1:4
490
620
310
640
320
080
010
110
120
A
340
090
650
440
310
400
380
220
660
670
180
410
340
050
590
550
510
040
410
340
300
020
U70M4000
U70B2100
(U70W2100)
U70R4002
320
330
130
100
480
470
370
210
030
410
390
060
430
150
U70B1370
(U70W1370)
610
U70R4002
X
160
520
350
420
A
1:4
320
B
560
360
190
330
530
170
C
200
2808250-1
501022

ECM: 504800 - 20111001
Group number: 2808250-0100
Assembly Drawing: 2808250-1_1_AE

Pos	Part No	UN	Qty	Description	Page No
-					
010	2808169-0000		1	PILLAR	
020	256163-0000		1	SHAFT	
030	295426-0000		1	CAP	
040	295427-0000		1	LOCK	
050	295428-0000		1	HINGE	
060	295429-0000		1	HANDLE	
080	1519150-0000		2	PIN	
090	2922772-0000		1	HOLDER	
100	2709274-0000		4	FLANGE	
110	3093272-0000		4	GASKET	
120	3162667-0000		1	PLATE	
130	2709281-0000		8	SHIM	
150	2839243-0000		1	BRACKET	
160	3179058-0000		1	CYLINDER BRACKET	
170	2808339-0000		1	PLATE	
180	2808420-0000		1	BRACKET	
190	2808434-0000		1	BUSHING	
200	2808435-0000		1	SPACER	
210	2846080-0000		1	SHIM	
220	3109585-0000		4	RULING GUIDE	
300	311112-0256		1	SPRING PIN, ISO 8752 4X20 A2	
310	312105-0447		10	SCREW, M6S ISO 4017 M8X12 A4 80	
320	312105-0370		20	SCREW, M6S ISO 4017 M6X20 A4 80	
330	312105-0453		6	SCREW, M6S ISO 4017 M8X25 A4 80	
340	312105-0455		20	SCREW, M6S ISO 4017 M8X30 A4 80	
350	312105-0536		4	SCREW, M6S ISO 4017 M12X30 A4 80	
360	312105-0538		4	SCREW, M6S ISO 4017 M12X35 A4 80	
370	312109-0500		4	SCREW, M6S ISO 4017 M10X45 A4 80	
380	312605-0316		2	HEXAGON NUT, M6M M6 A280	
390	312605-0318		16	HEXAGON NUT, M6M M8 A280	
400	315105-0153		2	WASHER PLAIN, 6,4X12X1,5 A4 BRB	
410	315105-0165		12	WASHER PLAIN, 8,4X16X1,6 A4 BRB	
420	315115-0178		8	WASHER PLAIN, TBRB 13/24 H=4	
430	318800-0103		2	HANDLES,SPHERICAL KNOB,INT.THRE.,D.25-M6	
440	315115-0165		8	WASHER PLAIN, TBRB 8,4/16 H=3	
470	90459-6881		8	SPHERICAL WASHER M10 DIN 6319 C SHAPE	
480	90459-6882		8	CONICAL WASHER M10 DIN 6319 D SHAPE	
490	90600-0708		1	O-RING 375X3 MM	
510	312105-0366		1	SCREW, M6S ISO 4017 M6X12 A4 80	
520	312105-0372		1	SCREW, M6S ISO 4017 M6X25 A4 80	
530	312109-0457		2	SCREW, M6S ISO 4017 M8X35 A4 80	
550	90005-0060		1	WASHER PLAIN, RBS 6,4/M6)/18,H=1,5	
560	90005-0116		2	WASHER PLAIN ROUND 8,4(M8)/24, H=2	
590	90459-3355		1	SWIVEL FLANGE 32	
610	90459-2881		1	ROD CLEVIS SG-M10X1,25	
620	90153-0023		1	ADHESIVE, SILICON 251470 TUB 90CC(UN1993	
630	90330-0029		1	PLUG, G3/8EXT, R-236R3/8	
640	90330-0066		1	PLUG, G1/8EXT, G1/8	
650	312105-0372		8	SCREW, M6S ISO 4017 M6X25 A4 80	
660	90062-0050		8	LOCK WASHER NORD-LOCK,6,5/10,8, H=1,6	
670	312705-0316		8	HEX. DOMED CAP MHM-6 M6 A280	
U70B1370	90600-0463		1	INDUCTIVE SWITCH,E2A-M12LN05-WP-B1-TP 5M	
U70B2100	90600-3272		1	PROX. SENSOR, SMT-8M-PS-24V-K-5,0-OE	
U70M4000	90459-3557		1	DOUBLE ACTING, COMPACT, CYL 32-60	
U70R4002	90235-0846		1	THROTTLE CHECK VALVE G1/8", MANUAL, 6	
U70R4004	90235-0846		1	THROTTLE CHECK VALVE G1/8", MANUAL, 6	

Machine Type	Group Description	Used-In	Group Number	Page No

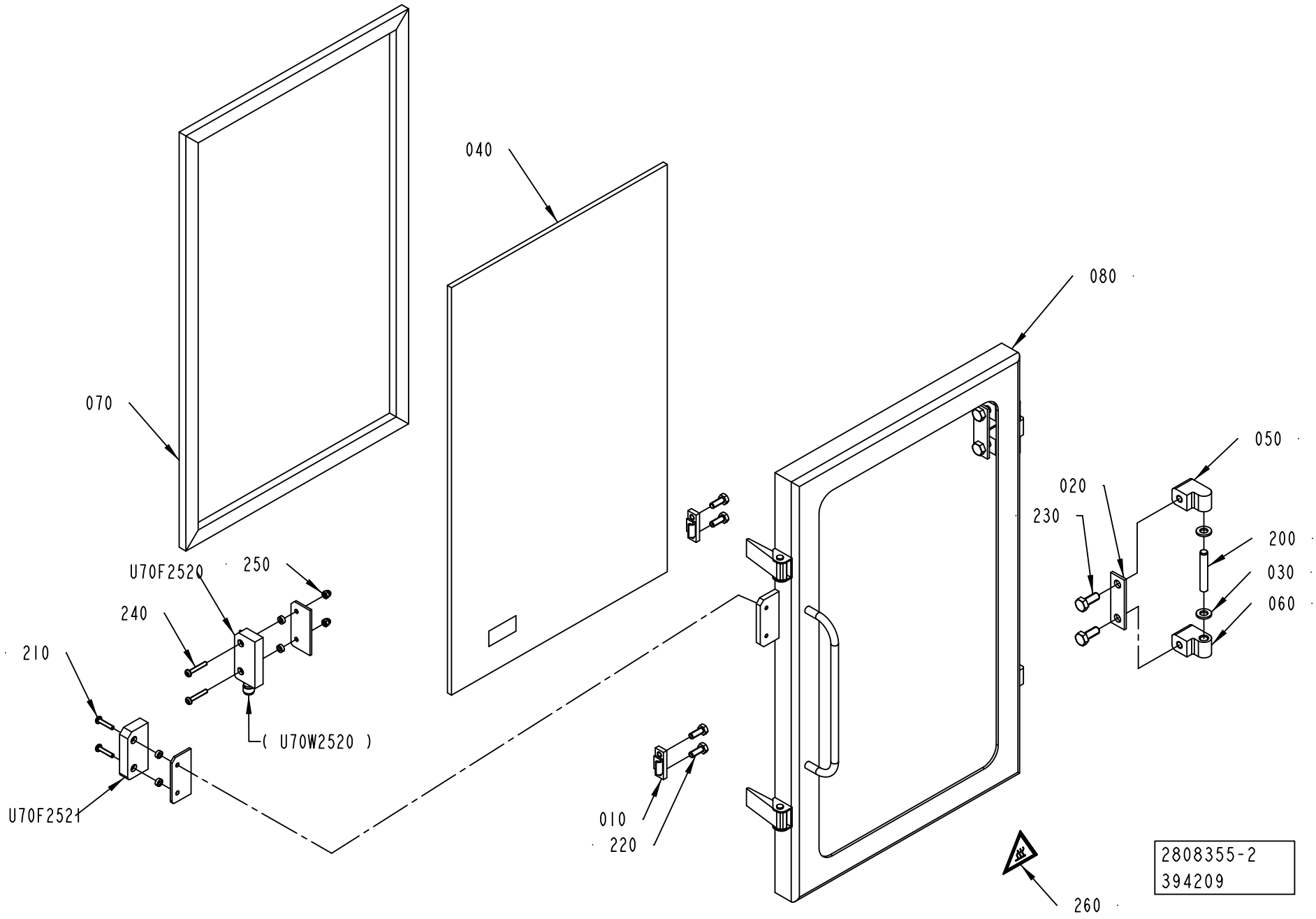
040
070
080
050
020
230
200
030
060
U70F2520
250
240
210
(U70W2520)
U70F2521
010
220
260
2808355-2
394209

ECM: 460710 - 20101001
Group number: 2808355-0200
Assembly Drawing: 2808355-2_1_AA

Pos	Part No	UN	Qty	Description	Page No
ANSI					
260	90459-7458		1	WARNING SIGN ANSI (H), HOT SURFACE	
ISO					
260	359705-0007		1	WARNING SIGN ISO, HOT SURFACE	
Common Parts					
010	271860-0000		2	CLAMP BLOCK	
020	441737-0000		2	WASHER	
030	441739-0000		4	WASHER	
040	2890054-0000		1	GLASS PANE	
050	1041978-0000		2	HINGE FLANGE	
060	1041979-0000		2	HINGE FLANGE	
070	2808336-0000		1	GASKET	
080	3020076-0000		1	FRAME	
200	311103-0413		2	PARALLEL PIN ISO 2338 8M6X50 A1	
210	90459-4164		2	SAFETY SCREW, SM4X20	
220	312105-0368		4	SCREW, M6S ISO 4017 M6X16 A4 80	
230	312105-0451		4	SCREW, M6S ISO 4017 M8X20 A4 80	
240	90459-4165		2	SAFETY SCREW, SM4X25	
250	312705-0312		2	NUT HEX. DOMED CAP MHM-6 M4 A280	
U70F2520	90459-4142		1	SAFETY SENSOR, ADAM M12, 20-051-00	
U70F2521	90458-2794		1	SAFETY SENSOR, EVA 20-046-00	

Pos	Part No	UN	Qty	Description	Page No

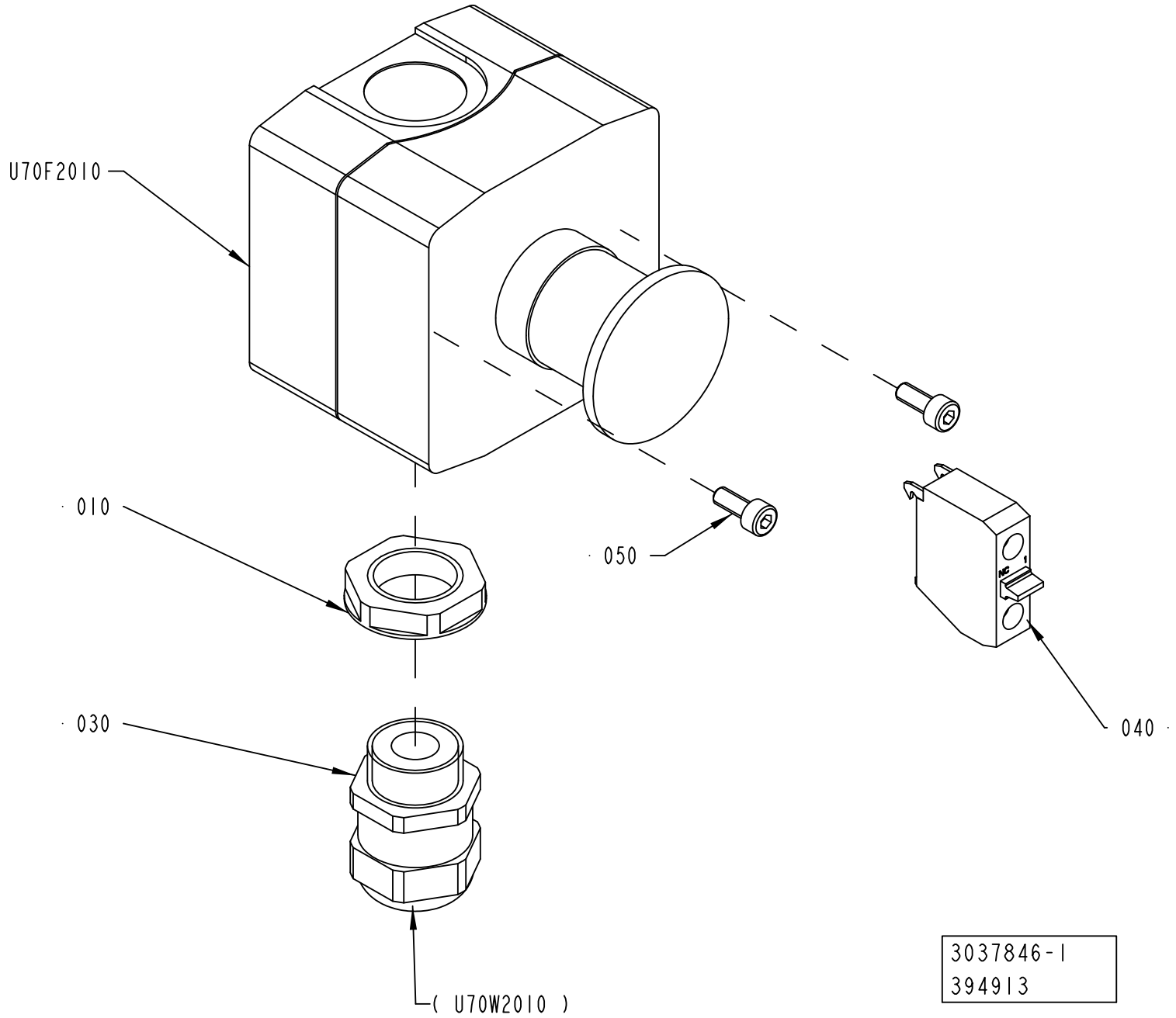
U70F2010
010
050
040
030
(U70W2010)
3037846-1
394913

ECM: 432528 - 20100301
Group number: 3037846-0100
Assembly Drawing: 3037846-1_1_AB

Pos	Part No	UN	Qty	Description	Page No
-					
010	90458-0323		1	NUT, M20X1,5	
030	90458-0307		1	CABLE GLAND, M20X1,5, 5311 1020	
040	90600-1949		1	CONTACT BLOCK, ZEN L1121, 1NC	
050	312115-0289		2	SCREW ISO4762 M4X10 A4 80	
U70F2010	90459-1130		1	EM. STOP XAL-K178F	

Pos	Part No	UN	Qty	Description	Page No

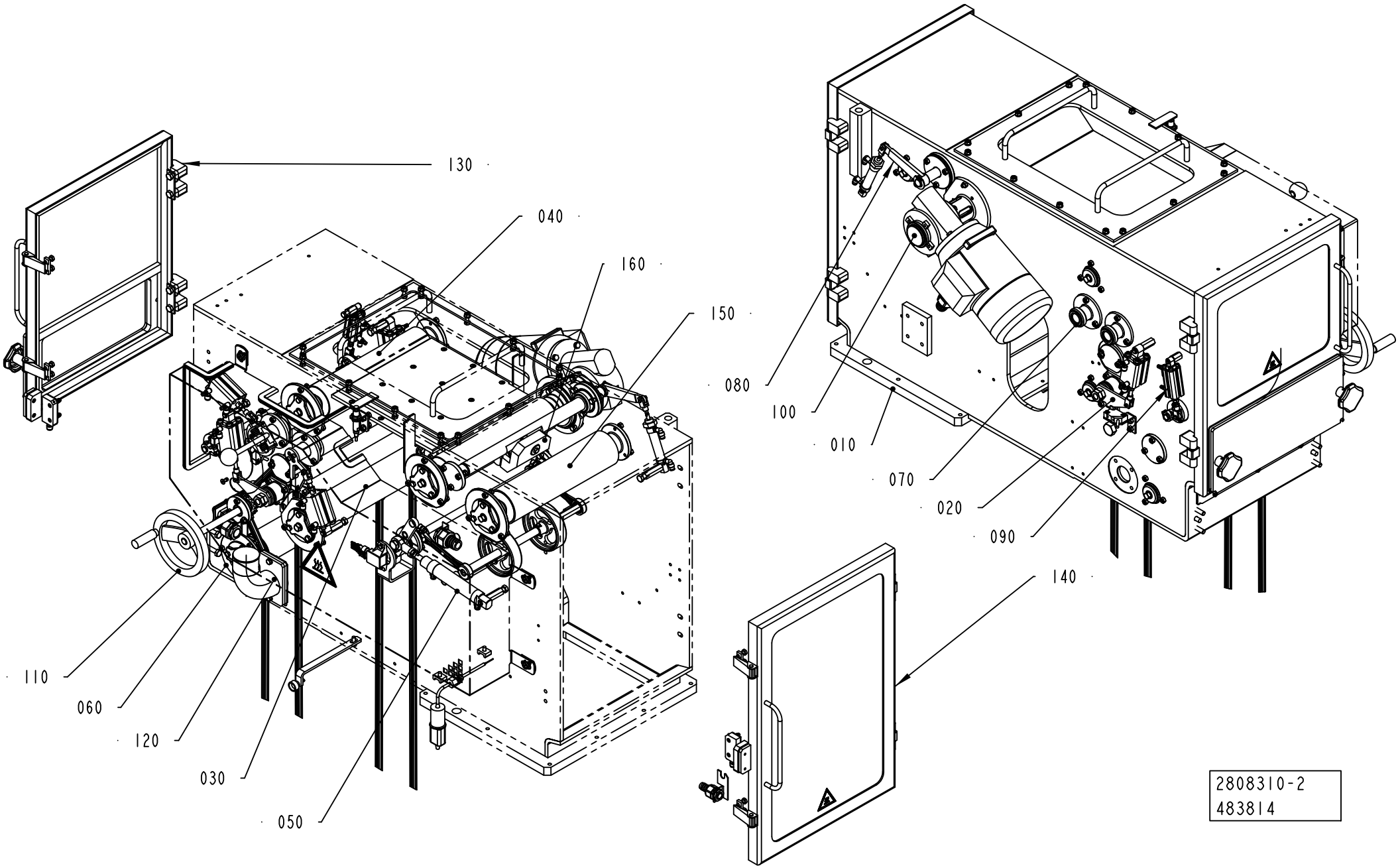
130
040
160
150
080
100
010
070
020
090
140
110
060
120
030
050
2808310-2
483814

ECM: 484504 - 20110401
Group number: 2808310-0200
Assembly Drawing: 2808310-2_1_AB

Pos	Part No	UN	Qty	Description	Page No
-					
010	2808300-0200		1	FRAME HOUSING	**1-111**
020	2808145-0100		1	CALENDER ROLLER	**1-113**
030	2808150-0100		1	SQUEE-GEE ROLLER	**1-115**
040	2808155-0100		1	BENDING ROLLER	**1-117**
050	2808160-0100		1	PENDULUM ROLLER	**1-119**
060	2808165-0100		1	BENDING ROLLER	**1-121**
070	2808170-0100		1	AIR KNIFE	**1-123**
080	2808175-0200		1	PRESSURE ROLLER	**1-125**
090	2808180-0100		1	VALVE	**1-127**
100	2808190-0100		1	DRIVE ROLLER	**1-129**
110	2808195-0100		1	CRANK	**1-131**
120	2808185-0100		1	VALVE	**1-133**
130	2808275-0200		1	DOOR	**1-135**
140	2808280-0200		1	DOOR	**1-137**
150	2808400-0100		1	BENDING ROLLER	**1-139**
160	2871525-0200		1	PRESSURE ROLLER	**1-141**

Pos	Part No	UN	Qty	Description	Page No

FRAME HOUSING

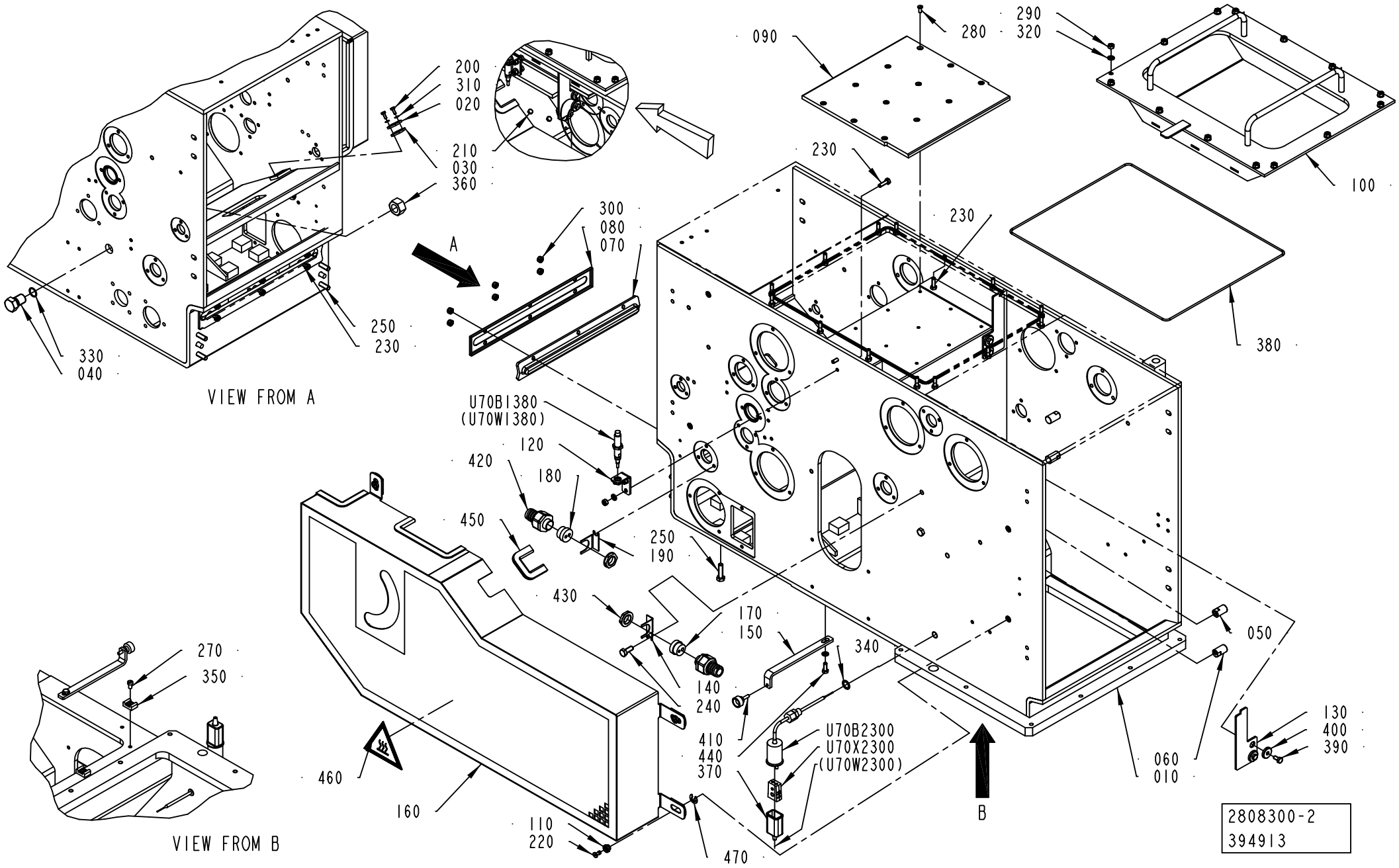

ECM: 483268 - 20110401
Group number: 2808300-0200
Assembly Drawing: 2808300-2_1_AB

Pos	Part No	UN	Qty	Description	Page No
ANSI					
460	359725-0116		1	WARNING SIGN ANSI (H), HOT SURFACE	
ISO					
460	359705-0008		1	WARNING SIGN ISO, HOT SURFACE	
Common Parts					
010	2808186-0000		1	HOUSING	
020	2528133-0000		2	WASHER	
030	2528134-0000		2	GASKET	
040	2594624-0000		1	PLUG	
050	2758079-0000		2	BLOCK	
060	2758080-0000		2	BLOCK	
070	2808159-0000		1	GASKET	
080	2808161-0000		1	LID	
090	2986722-0000		1	PLATE	
100	2986721-0000		1	COVER	
110	3020099-0000		3	BUSHING	
120	2846079-0000		1	BRACKET	
130	2846077-0000		2	PLATE	
140	1129086-0000		1	BRACKET	
150	2846076-0000		1	BRACKET	
160	3020077-0000		1	TOUCH GUARD	
170	2871490-0000		1	INSERT	
180	3144125-0000		1	INSERT	
190	2871496-0000		1	BRACKET	
200	312105-0289		4	SCREW, M6S ISO 4017 M4X10 A4 70	
210	312105-0323		2	SCREW, M6S ISO 4017 M5X8 A4 80	
220	90601-2046		4	CAPTIVE SCREW M6, GUTBG 6-4-12	
230	312105-0370		22	SCREW, M6S ISO 4017 M6X20 A4 80	
240	312105-0451		4	SCREW, M6S ISO 4017 M8X20 A4 80	
250	312105-0455		7	SCREW, M6S ISO 4017 M8X30 A4 80	
270	312125-0364		2	SCREW ISO 1207 M6X10 A4	
280	312145-0327		12	SCREW ISO 2009 MFS M5X12 A4	
290	312605-0316		16	HEXAGON NUT, M6M M6 A280	
300	312812-0316		6	HEXAGON NUT, NY-LOCK M6 A4 80	
310	315105-0136		4	WASHER PLAIN, 4,3X9X0,8 A4 BRB	
320	315105-0153		17	WASHER PLAIN, 6,4X12X1,5 A4 BRB	
330	315205-0704		1	O-RING 15,60X1,78 MM	
340	315237-0110		1	WASHER,PL.RND.AL.13,5/18,H=1,5	
350	352113-0204		2	ANCHOR PLATES FOR STRIPS, TM3S25-M	
360	90099-0095		1	NUT HEX. M18X1,5	
370	90326-0012		1	PROTECTIVE COVER, 03-001 10	
380	90600-0709		1	O-RING 452X3 MM	
390	312105-0366		4	SCREW, M6S ISO 4017 M6X12 A4 80	
400	315125-0153		4	WASHER HIGH, TBRSB 6,4X22X4 A4	
410	90051-0035		1	KNOB, EXTERNAL THREAD. NO. 8308-1135	
420	90457-0146		2	GLAND FITTING, VK 15154YUL16	
430	90458-0323		2	NUT, M20X1,5	
440	312105-0368		1	SCREW, M6S ISO 4017 M6X16 A4 80	
450	90143-0097	MM	1300	SELF GRIPPING GASKET, 1011-24	
470	315755-0110		3	RETAINING RING SHAFT DIN 6799 9 SS	
U70B1380	90600-0463		1	INDUCTIVE SWITCH,E2A-M12LN05-WP-B1-TP 5M	
U70B2300	90458-0341		1	THERMOCOUPLE, 5130 050-001	
U70X2300	90326-0020		1	SOCKET, FEMALE YELLOW CR-AL, 03-22000A	

Machine Type	Group Description	Used-In	Group Number	Page No

CALENDER ROLLER

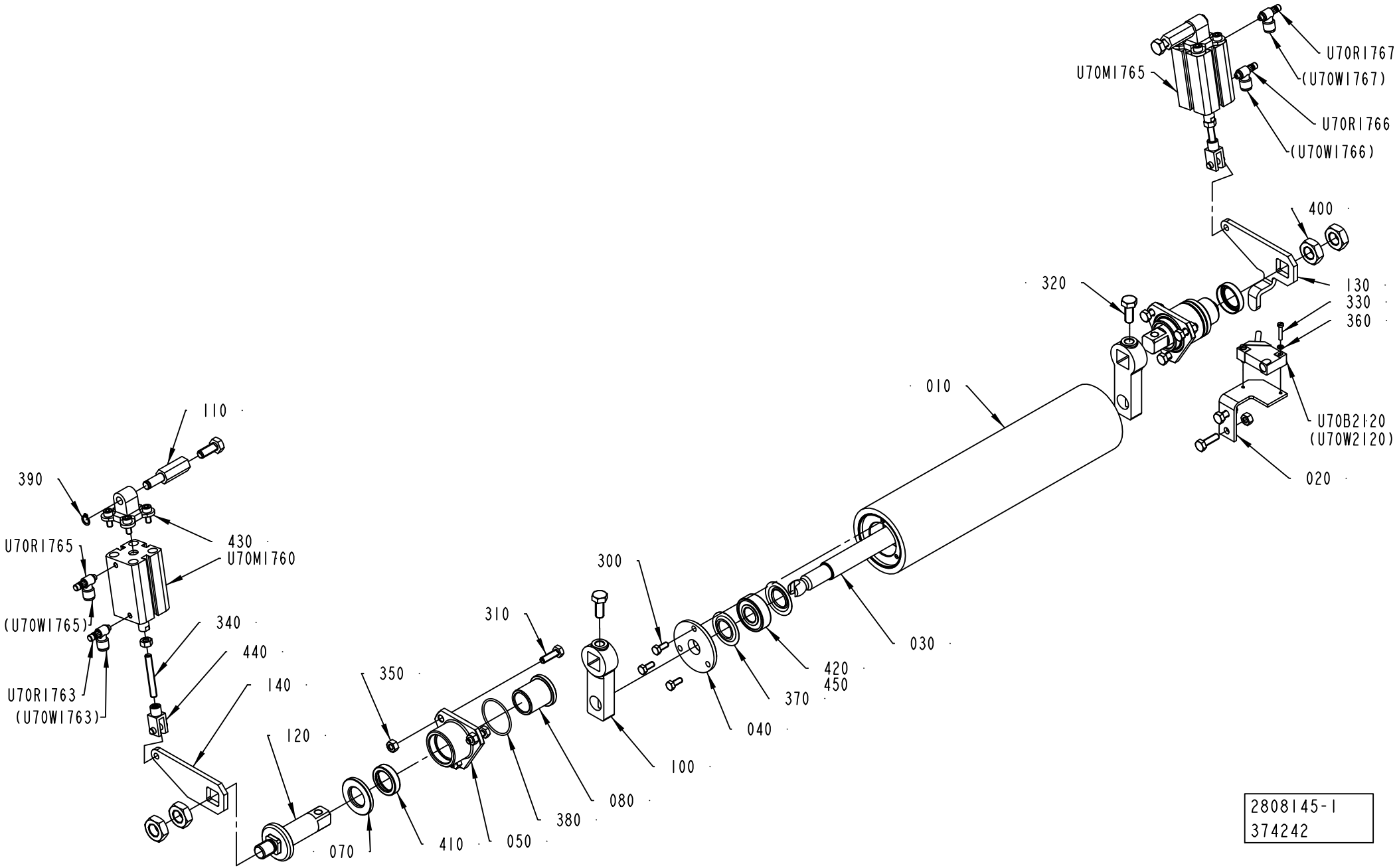

ECM: 375703 - 20081222
Group number: 2808145-0100
Assembly Drawing: 2808145-1_1_AB

Pos	Part No	UN	Qty	Description	Page No
-					
010	2808144-0000		1	ROLLER	
020	1498131-0000		1	BRACKET	
030	2808142-0000		1	SHAFT	
040	2931911-0000		2	BEARING COVER	
050	2541643-0000		2	FLANGE	
070	2541681-0000		2	WASHER	
080	2541682-0000		2	BUSHING	
100	2924151-0000		2	ARM	
110	2808143-0000		2	SHAFT	
120	2532969-0000		2	SHAFT	
130	1498130-0000		1	PLATE	
140	1498134-0000		1	PLATE	
300	312105-0327		6	SCREW, M6S ISO 4017 M5X12 A4 80	
310	312105-0370		8	SCREW, M6S ISO 4017 M6X20 A4 80	
320	312105-0451		4	SCREW, M6S ISO 4017 M8X20 A4 80	
330	312125-0228		2	SLOTTED HEAD SCREW, ISO1207 M3X16 A4	
340	90459-1728		2	SET SCREW, CUP END ISO4029 M6X45 A4	
350	312605-0316		10	HEXAGON NUT, M6M M6 A280	
360	315105-0124		2	WASHER PLAIN, 3,2X6X0,5 A4 BRB	
370	90214-0303		4	SEALING RING, 18,6X35X2 MM	
380	315205-0716		2	O-RING 34,65X1,78 MM	
390	90141-0015		2	RETAINING RING FOR SHAFT DIN 471 8 SS	
400	90099-0027		4	HEXAGON NUT, M14, DIN936	
410	90458-0639		2	SEALING RING, VARILIP 20X30X7 MM	
420	90458-1704		2	BALL BEARING 15/35X11	
430	90459-4558		2	SWIVEL FLANGE 25	
440	90450-0725		2	ROD END, CLEVIS WITH AXLE M6	
450	90296-0091		1	LUBRICATION GREASE, FLUOLUB 210	
U70B2120	90044-0194		1	INDUCTIVE SENSOR, IN 5329	
U70M1760	90459-6924		1	DOUBLE ACTING, COMPACT, 25-25	
U70M1765	90459-6924		1	DOUBLE ACTING, COMPACT, 25-25	
U70R1763	90235-0844		1	THROTTLE CHECK VALVE M5, MANUAL, 6MM	
U70R1765	90235-0844		1	THROTTLE CHECK VALVE M5, MANUAL, 6MM	
U70R1766	90235-0844		1	THROTTLE CHECK VALVE M5, MANUAL, 6MM	
U70R1767	90235-0844		1	THROTTLE CHECK VALVE M5, MANUAL, 6MM	

Pos	Part No	UN	Qty	Description	Page No

Machine Type | Group Description | Used-In | Group Number | Page No

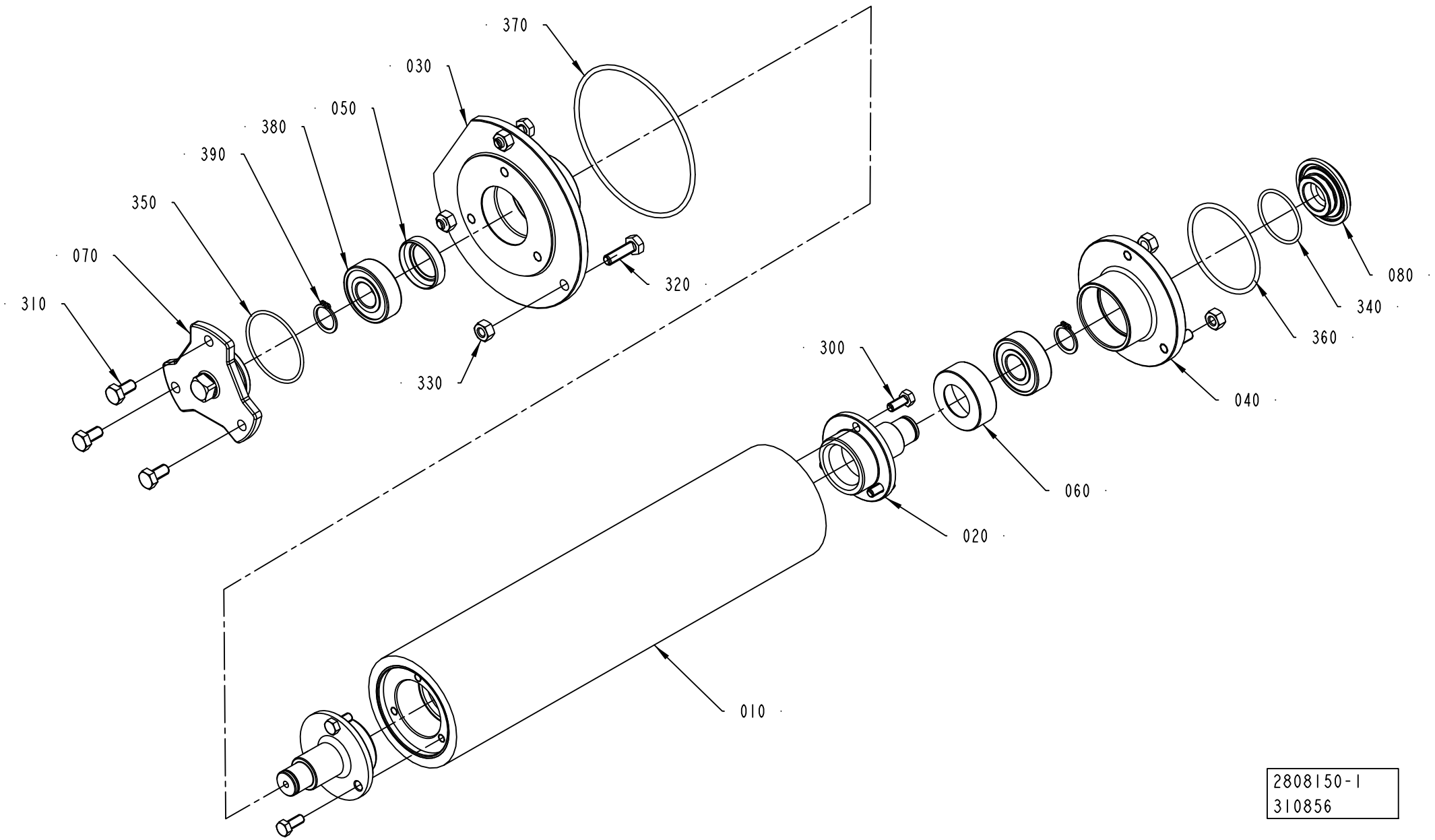
370
030
050
380
390
350
070
310
320
330
300
080
340
360
040
060
020
010
2808150-1
310856

ECM: 312428 - 20071221
Group number: 2808150-0100
Assembly Drawing: 2808150-1_1_AA

Pos	Part No	UN	Qty	Description	Page No
-					
010	2808144-0000		1	ROLLER	
020	2808148-0000		2	SHAFT	
030	2808146-0000		1	FLANGE	
040	2808147-0000		1	FLANGE	
050	2541648-0000		1	LID	
060	2808157-0000		1	LID	
070	2541639-0000		1	LID	
080	2532983-0000		1	FLANGE	
300	312105-0327		6	SCREW, M6S ISO 4017 M5X12 A4 80	
310	312105-0366		3	SCREW, M6S ISO 4017 M6X12 A4 80	
320	312105-0370		3	SCREW, M6S ISO 4017 M6X20 A4 80	
330	312605-0316		6	HEXAGON NUT, M6M M6 A280	
340	315205-0713		1	O-RING 29,87X1,78 MM	
350	315205-0802		1	O-RING 41,00X1,78 MM	
360	315205-0736		1	O-RING 50,47X2,62 MM	
370	6-990262 53		1	O-RING 88.57X2.62 AL113 3038-76 FPM	
380	90458-1704		2	BALL BEARING 15/35X11	
390	315751-0112		2	RETAINING RING FOR SHAFT DIN 471 15 SS	

Pos	Part No	UN	Qty	Description	Page No

BENDING ROLLER

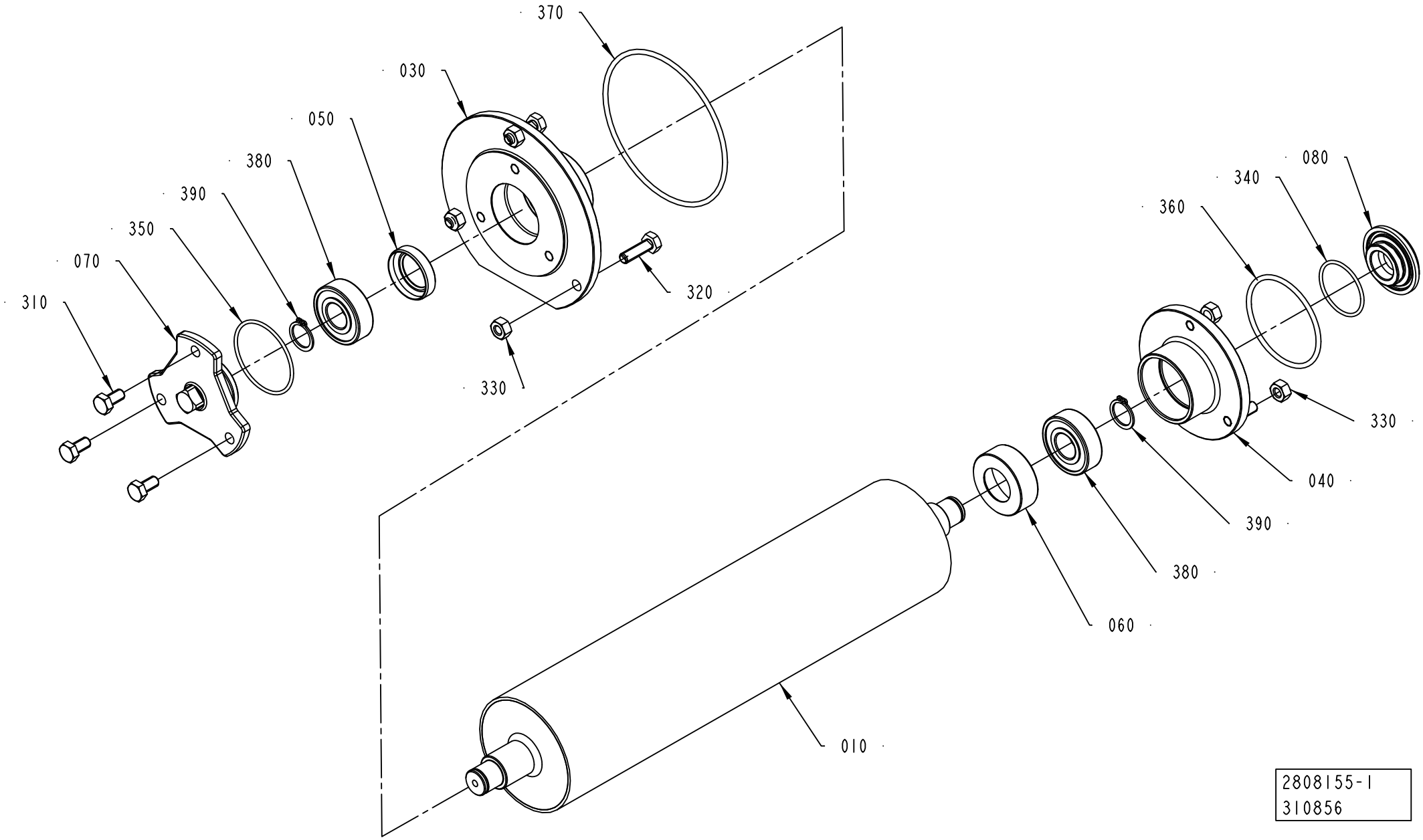

ECM: 312295 - 20071221
Group number: 2808155-0100
Assembly Drawing: 2808155-1_1_AA

Pos	Part No	UN	Qty	Description	Page No
-					
010	2808354-0000		1	BENDING ROLLER	
030	2808146-0000		1	FLANGE	
040	2808147-0000		1	FLANGE	
050	2541648-0000		1	LID	
060	2808157-0000		1	LID	
070	2541639-0000		1	LID	
080	2532983-0000		1	FLANGE	
310	312105-0366		3	SCREW, M6S ISO 4017 M6X12 A4 80	
320	312105-0370		3	SCREW, M6S ISO 4017 M6X20 A4 80	
330	312605-0316		6	HEXAGON NUT, M6M M6 A280	
340	315205-0713		1	O-RING 29,87X1,78 MM	
350	315205-0802		1	O-RING 41,00X1,78 MM	
360	315205-0736		1	O-RING 50,47X2,62 MM	
370	6-990262 53		1	O-RING 88.57X2.62 AL113 3038-76 FPM	
380	90458-1704		2	BALL BEARING 15/35X11	
390	315751-0112		2	RETAINING RING FOR SHAFT DIN 471 15 SS	

Pos	Part No	UN	Qty	Description	Page No

PENDULUM ROLLER

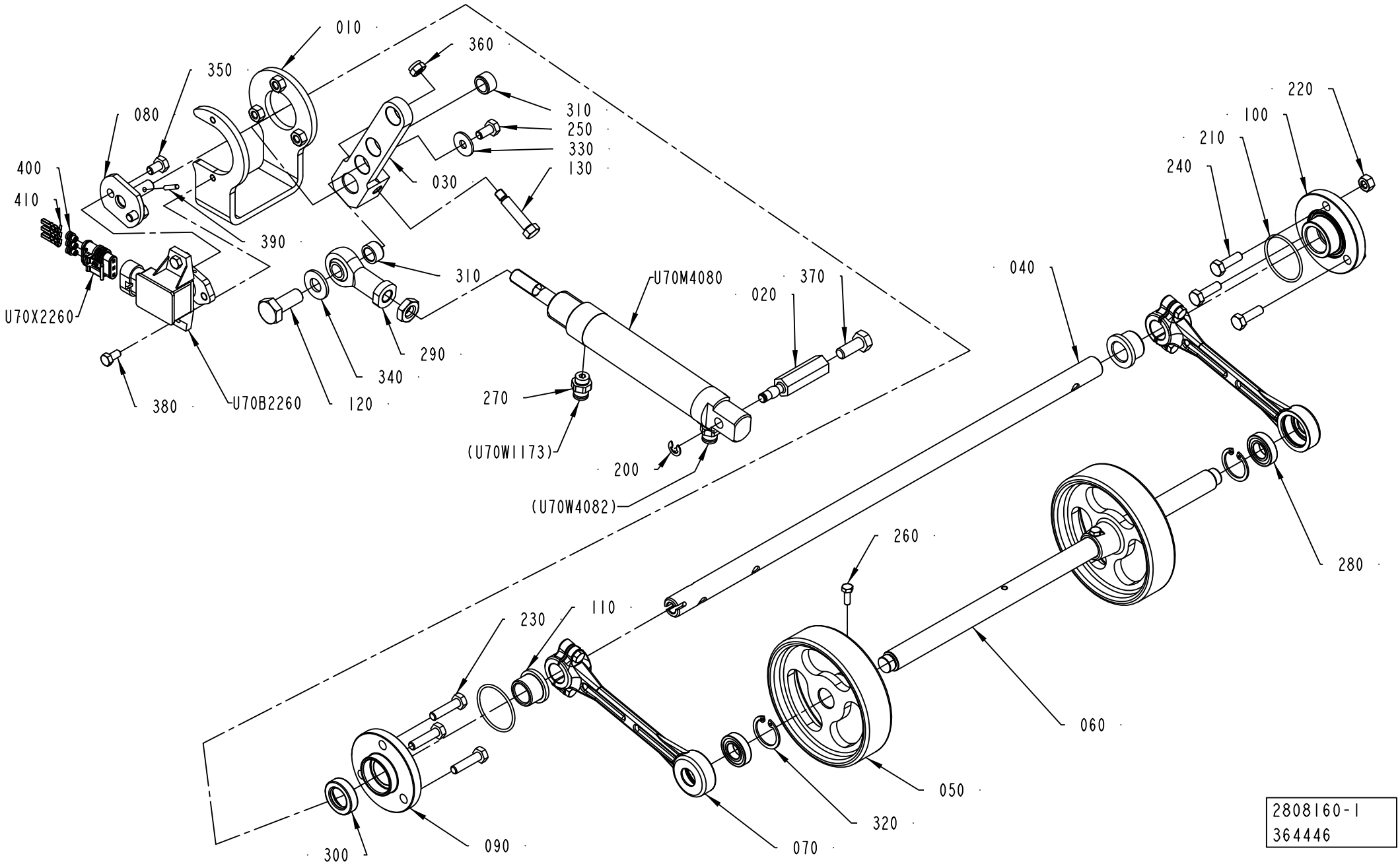

ECM: 379566 - 20081219
Group number: 2808160-0100
Assembly Drawing: 2808160-1_1_AC

Pos	Part No	UN	Qty	Description	Page No
-					
010	2758083-0000		1	SUPPORT	
020	2658077-0000		1	SHAFT	
030	2758082-0000		1	LEVER	
040	2808168-0000		1	SHAFT	
050	1558358-0000		2	WHEEL	
060	2808167-0000		1	SHAFT	
070	2763956-0000		2	LEVER	
080	2691183-0000		1	FLANGED SHAFT	
090	1549548-0000		1	FLANGE	
100	1549545-0000		1	FLANGE	
110	1511512-0000		2	BEARING BUSHING	
120	2611009-0000		1	SHAFT	
130	2653607-0000		1	SCREW	
200	315755-0107		1	RETAINING RING SHAFT DIN 6799 5 SS	
210	315205-0715		2	O-RING 33,05X1,78 MM	
220	312605-0316		6	HEXAGON NUT, M6M M6 A280	
230	312105-0372		3	SCREW, M6S ISO 4017 M6X25 A4 80	
240	312105-0370		3	SCREW, M6S ISO 4017 M6X20 A4 80	
250	312105-0366		1	SCREW, M6S ISO 4017 M6X12 A4 80	
260	312105-0291		2	SCREW, M6S ISO 4017 M4X12 A4 70	
270	342722-0202		2	PIPE COUPLING 1/8" D=6MM	
280	90214-0112		2	BALL BEARING 12/24X6	
290	90459-1018		1	ROD END, BALL JOINT EYE M10X1,25	
300	90091-0429		1	SEALING RING, VARILIP 15X26X7 MM	
310	90459-0805		2	BUSHING, IGLIDUR A200 10X14X8	
320	90458-2071		2	RETAINING RING FOR BORE DIN 472 24 SS	
330	90005-0060		1	WASHER PLAIN, RBS 6,4/M6)/18,H=1,5	
340	315105-0173		1	WASHER PLAIN, 10,5X22X2 A4 BRB	
350	312105-0364		2	SCREW, M6S ISO 4017 M6X10 A4 80	
360	312812-0316		1	HEXAGON NUT, NY-LOCK M6 A4 80	
370	312105-0451		1	SCREW, M6S ISO 4017 M8X20 A4 80	
380	312105-0325		2	SCREW, M6S ISO 4017 M5X10 A4 80	
390	311103-0235		1	PARALLEL PIN ISO 2338 3M6X14 A1	
400	90459-4077		3	WIRE SEAL , AMP 281934	
410	90459-4079		3	MINI MIC SRS, AMP 183035-1	
U70B2260	90459-3682		1	ROTARY POSITION SENSOR RPNS090AA1B11A	
U70M4080	90459-3650		1	DOUBLE ACTING, MINI-ISO, CYL. 25-40	
U70X2260	90459-3709		1	CONNECTOR 3-POLE AMP 282087-1	

Pos	Part No	UN	Qty	Description	Page No

Machine Type	Group Description	Used-In	Group Number	Page No

BENDING ROLLER

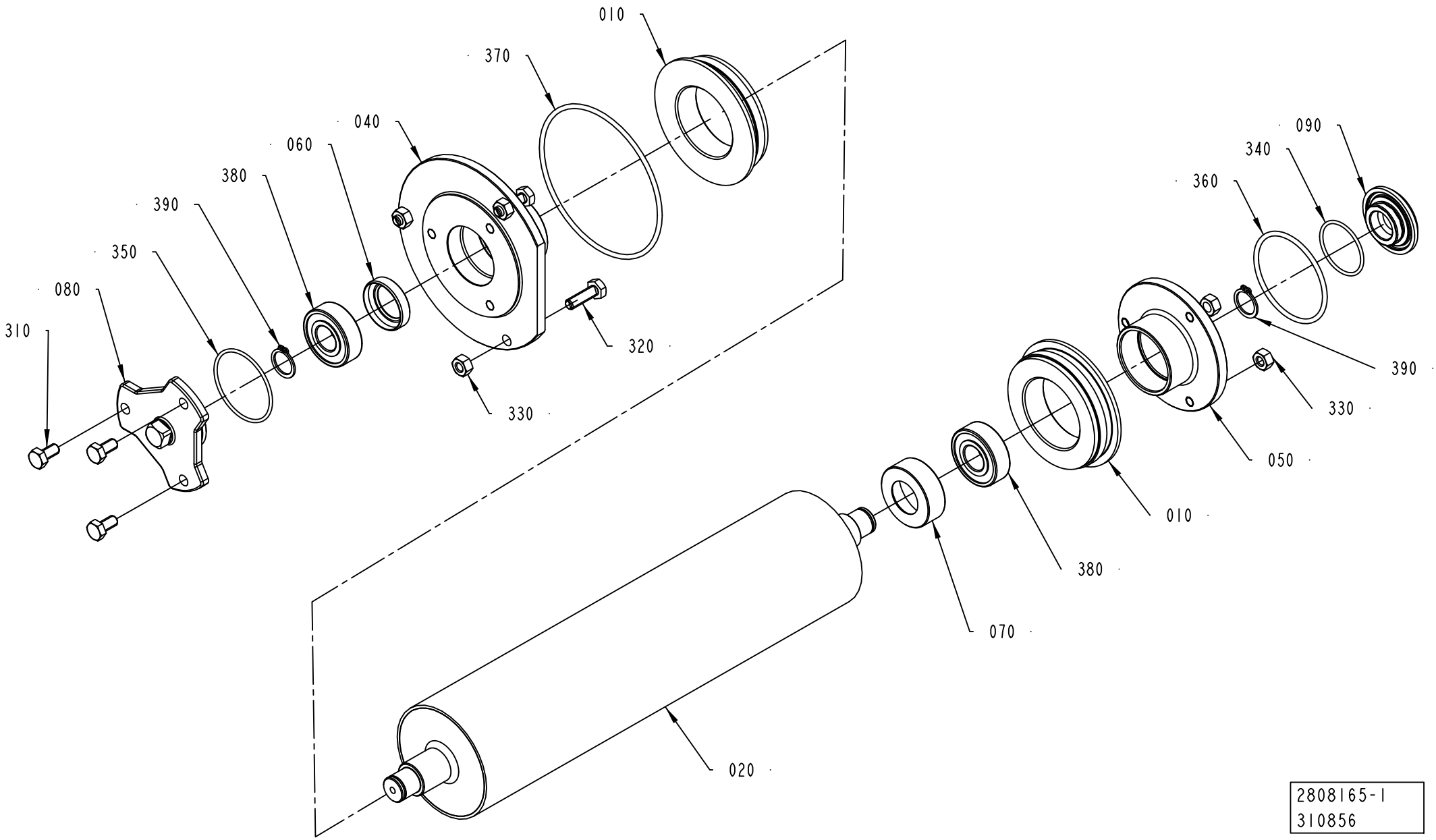

2808165-1
310856

ECM: 312293 - 20071221
Group number: 2808165-0100
Assembly Drawing: 2808165-1_1_AA

Pos	Part No	UN	Qty	Description	Page No
-					
010	2808156-0000		2	WHEEL	
020	2808354-0000		1	BENDING ROLLER	
040	2808146-0000		1	FLANGE	
050	2808147-0000		1	FLANGE	
060	2541648-0000		1	LID	
070	2808157-0000		1	LID	
080	2541639-0000		1	LID	
090	2532983-0000		1	FLANGE	
310	312105-0366		3	SCREW, M6S ISO 4017 M6X12 A4 80	
320	312105-0370		3	SCREW, M6S ISO 4017 M6X20 A4 80	
330	312605-0316		6	HEXAGON NUT, M6M M6 A280	
340	315205-0713		1	O-RING 29,87X1,78 MM	
350	315205-0802		1	O-RING 41,00X1,78 MM	
360	315205-0736		1	O-RING 50,47X2,62 MM	
370	6-990262 53		1	O-RING 88.57X2.62 AL113 3038-76 FPM	
380	90458-1704		2	BALL BEARING 15/35X11	
390	315751-0112		2	RETAINING RING FOR SHAFT DIN 471 15 SS	

Pos	Part No	UN	Qty	Description	Page No

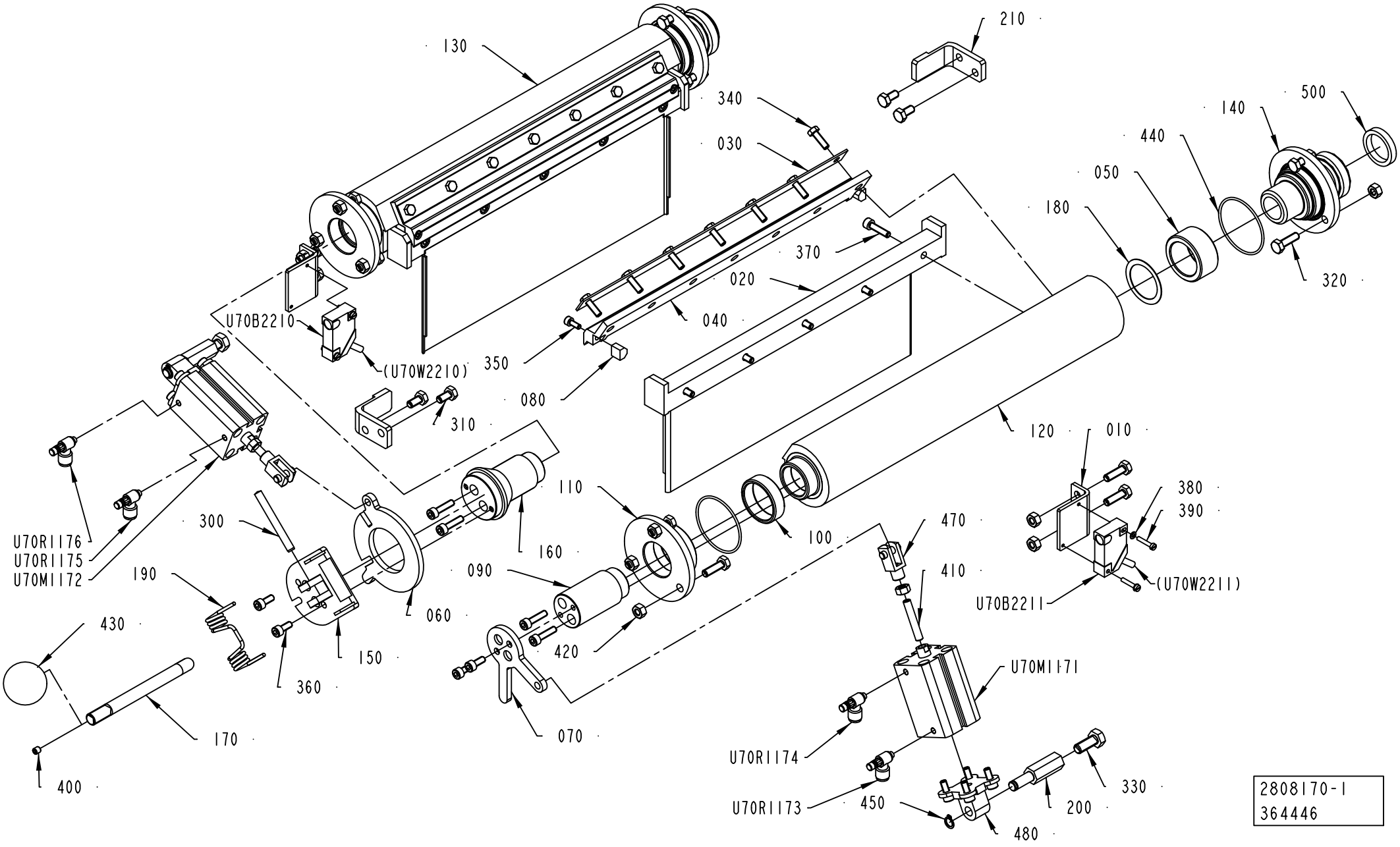

2808170-1
364446

ECM: 375704 - 20081219
Group number: 2808170-0100
Assembly Drawing: 2808170-1_1_AB

Pos	Part No	UN	Qty	Description	Page No
-					
010	2808181-0000		2	SUPPORT	
020	2808173-0000		2	AIR GUIDE	
030	2808177-0000		2	PLATE	
040	2846123-0000		2	RAIL	
050	1519166-0000		2	BUSHING	
060	2808179-0000		1	ARM	
070	2808178-0000		1	ARM	
080	2731437-0000		4	SHAFT	
090	2777971-0000		1	SHAFT	
100	1519159-0000		2	BUSHING	
110	1519158-0000		2	LID	
120	2808171-0000		1	AIR DISTRIBUTOR	
130	2808172-0000		1	AIR DISTRIBUTOR	
140	2870078-0000		2	CONNECTION	
150	2695434-0000		1	HOLDER	
160	2679560-0000		1	SHAFT	
170	2935999-0000		1	CATCH LEVER	
180	2532915-0000		2	WASHER	
190	276360-0000		1	SPRING	
200	2808143-0000		2	SHAFT	
210	2808183-0000		2	STOP	
300	311103-0367		1	PARALLEL PIN ISO 2338 6M6X55 A1	
310	312105-0366		4	SCREW, M6S ISO 4017 M6X12 A4 80	
320	312105-0370		16	SCREW, M6S ISO 4017 M6X20 A4 80	
330	312105-0451		2	SCREW, M6S ISO 4017 M8X20 A4 80	
340	312105-0329		14	SCREW, M6S ISO 4017 M5X16 A4 80	
350	312115-0289		4	SCREW ISO4762 M4X10 A4 80	
360	312115-0327		4	SCREW ISO4762 M5X12 A4 80	
370	312115-0331		14	SCREW ISO4762 M5X20 A4 80	
380	315105-0124		4	WASHER PLAIN, 3,2X6X0,5 A4 BRB	
390	312125-0228		4	SLOTTED HEAD SCREW, ISO1207 M3X16 A4	
400	312316-0320		1	SET SCREW, CUP END ISO4029 M5X5 FZB	
410	312318-0376		2	SET SCREW, CUP END ISO4029 M6X35 A4	
420	312605-0316		18	HEXAGON NUT, M6M M6 A280	
430	318800-0105		1	HANDLE,SPHERICAL KNOB,INT.THRE.,D.35-M10	
440	315205-0804		4	O-RING 47,35X1,78 MM	
450	90141-0015		2	RETAINING RING FOR SHAFT DIN 471 8 SS	
470	90450-0725		2	ROD END, CLEVIS WITH AXLE M6	
480	90459-4558		2	SWIVEL FLANGE 25	
500	12242-0001		2	GASKET 32X25X5,5	
U70B2210	90044-0194		1	INDUCTIVE SENSOR, IN 5329	
U70B2211	90044-0194		1	INDUCTIVE SENSOR, IN 5329	
U70M1171	90459-6924		1	DOUBLE ACTING, COMPACT, 25-25	
U70M1172	90459-6924		1	DOUBLE ACTING, COMPACT, 25-25	
U70R1173	90235-0844		1	THROTTLE CHECK VALVE M5, MANUAL, 6MM	
U70R1174	90235-0844		1	THROTTLE CHECK VALVE M5, MANUAL, 6MM	
U70R1175	90235-0844		1	THROTTLE CHECK VALVE M5, MANUAL, 6MM	
U70R1176	90235-0844		1	THROTTLE CHECK VALVE M5, MANUAL, 6MM	

Machine Type	Group Description	Used-In	Group Number	Page No

PRESSURE ROLLER

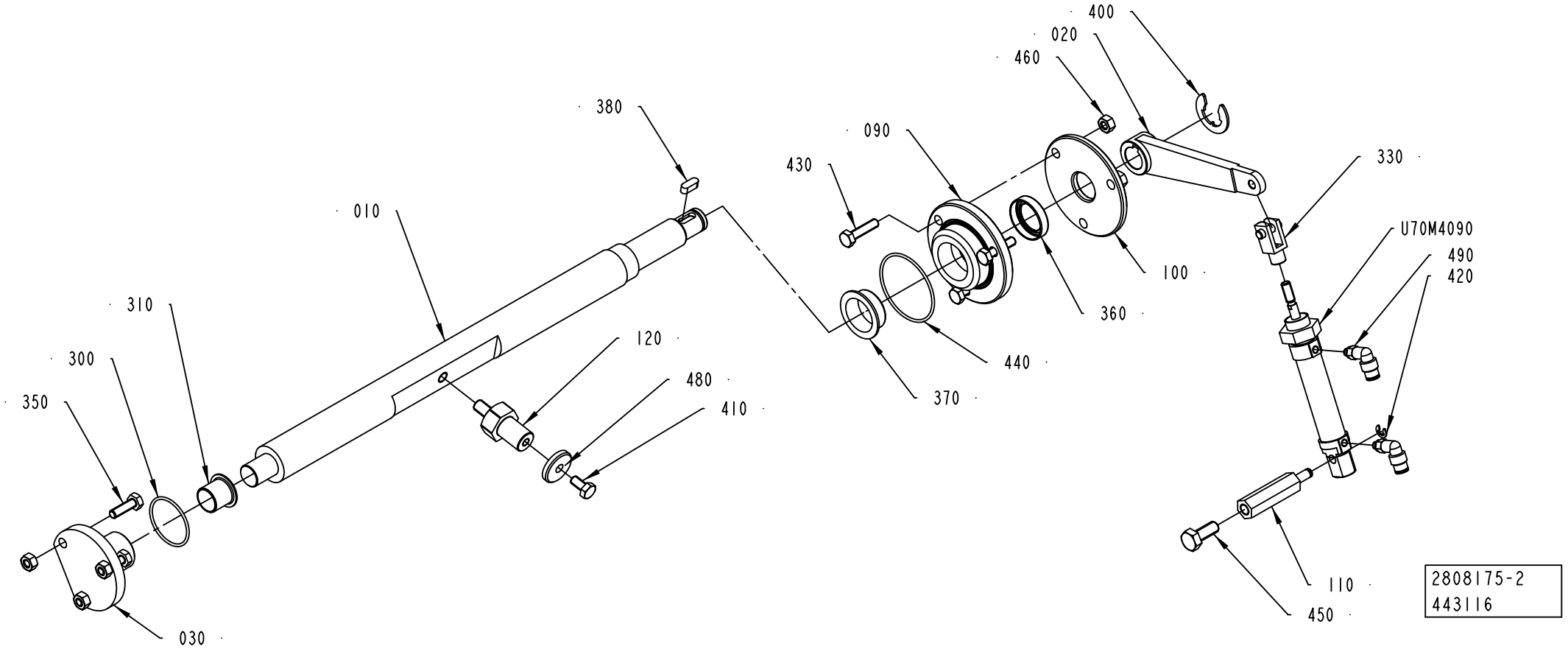

ECM: 460027 - 20101001
Group number: 2808175-0200
Assembly Drawing: 2808175-2_1_AB

Pos	Part No	UN	Qty	Description	Page No
-					
010	2808162-0000		1	ROD	
020	2783090-0000		1	LEVER	
030	2764010-0000		1	LID	
090	2751507-0000		1	FLANGE	
100	2783092-0000		1	LID	
110	2783089-0000		1	SHAFT	
120	3020072-0000		1	PIN	
300	315205-0715		1	O-RING 33,05X1,78 MM	
310	321158-0221		1	FLANGE BUSHING, IGLIDUR J 16X18X17	
330	90450-0725		1	ROD END, CLEVIS WITH AXLE M6	
350	312105-0370		3	SCREW, M6S ISO 4017 M6X20 A4 80	
360	90458-0639		1	SEALING RING, VARILIP 20X30X7 MM	
370	90459-1058		1	FLANGE BUSHING, IGLIDUR G 25X28X11,5	
380	315705-0198		1	PARALLEL KEY W. ROUND ENDS, 5X5X14 MM	
400	315755-0113		1	RETAINING RING SHAFT DIN 6799 15 SS	
410	312105-0366		1	SCREW, M6S ISO 4017 M6X12 A4 80	
420	315755-0106		1	RETAINING RING SHAFT DIN 6799 4 SS	
430	312105-0372		3	SCREW, M6S ISO 4017 M6X25 A4 80	
440	315205-0804		1	O-RING 47,35X1,78 MM	
450	312105-0451		1	SCREW, M6S ISO 4017 M8X20 A4 80	
460	312605-0316		6	HEXAGON NUT, M6M M6 A280	
480	3111043-0000		1	WASHER	
490	350002-0001		2	PUSH-IN L-FITTING QSL-F-M5-4	
U70M4090	90457-0871		1	DOUBLE ACTING, MINI-ISO, CYL. 16-25	

Pos	Part No	UN	Qty	Description	Page No

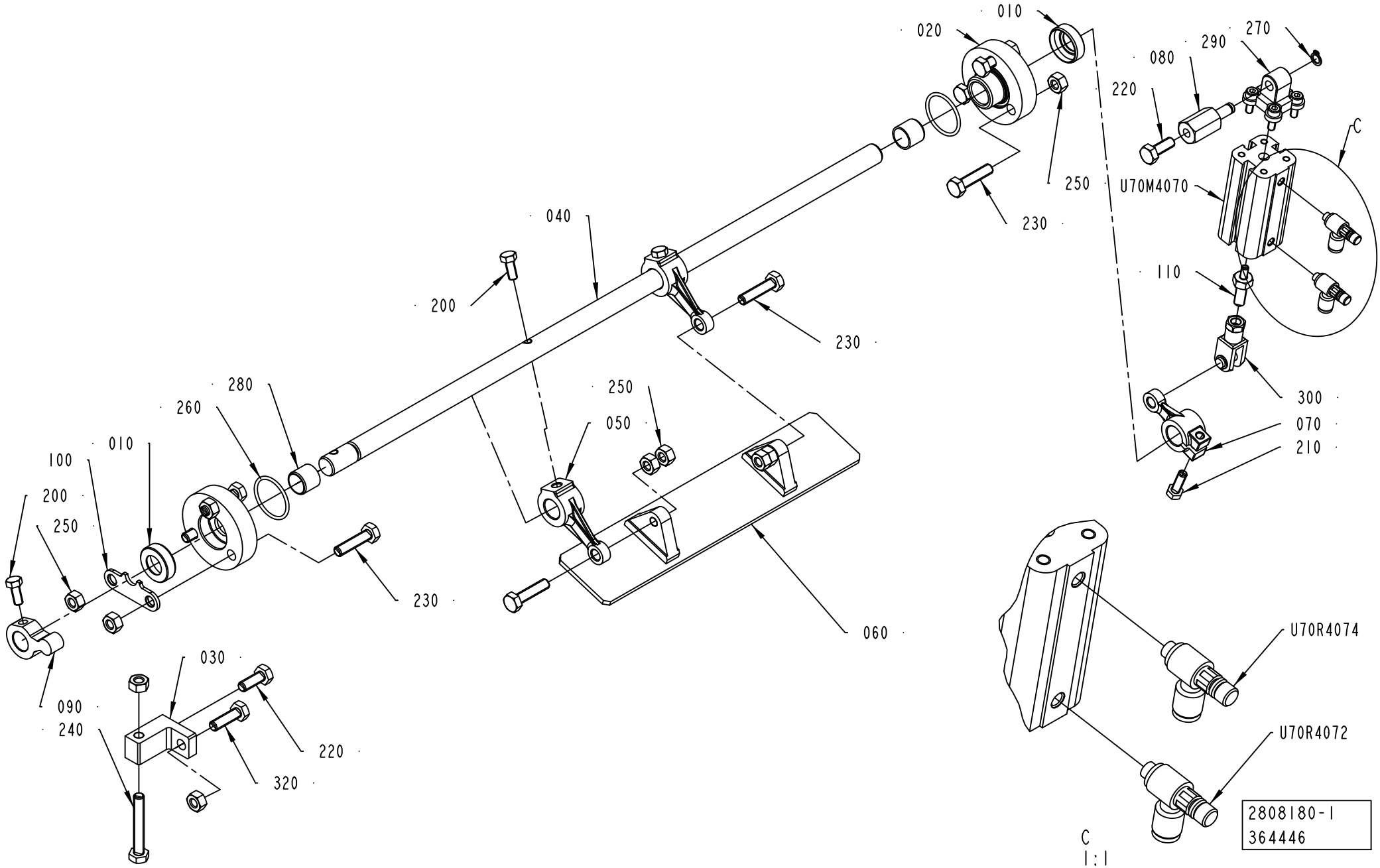
010
020
080
290
270
220
C
250
U70M4070
230
040
200
230
110
300
070
210
280
260
250
050
010
100
200
250
230
060
030
090
240
220
320
U70R4074
U70R4072
2808180-1
364446
C
1:1

ECM: 379568 - 20081219
Group number: 2808180-0100
Assembly Drawing: 2808180-1_1_AB

Pos	Part No	UN	Qty	Description	Page No
-					
010	2541661-0000		2	LID	
020	1523179-0000		2	FLANGE	
030	2808329-0000		1	BLOCK	
040	2808331-0000		1	CANTILEVER	
050	2526842-0000		2	LINK	
060	2685303-0000		1	SHUTTER	
070	2526820-0000		1	LINK	
080	2808332-0000		1	AXLE PIN	
090	1538163-0000		1	LEVER	
100	2526849-0000		1	PLATE	
110	2986276-0000		1	AXLE PIN	
200	312105-0327		3	SCREW, M6S ISO 4017 M5X12 A4 80	
210	312105-0329		1	SCREW, M6S ISO 4017 M5X16 A4 80	
220	312105-0368		2	SCREW, M6S ISO 4017 M6X16 A4 80	
230	312105-0372		8	SCREW, M6S ISO 4017 M6X25 A4 80	
240	312109-0374		1	SCREW, M6S ISO 4017 M6X30 A4 80	
250	312605-0316		12	HEXAGON NUT, M6M M6 A280	
260	315205-0709		2	O-RING 23,52X1,78 MM	
270	315751-0103		1	RETAINING RING FOR SHAFT DIN 471 6X 0.7C	
280	321133-0180		2	BUSHING IGLIDUR G 12X14X12	
290	90600-3964		1	SWIVEL FLANGE 16	
300	90239-0489		1	ROD END, CLEVIS WITH AXLE M6X1,25	
320	312105-0370		1	SCREW, M6S ISO 4017 M6X20 A4 80	
U70M4070	90600-5541		1	DOUBLE ACTING, COMPACT, CYL 16-25	
U70R4072	90235-0845		1	THROTTLE CHECK VALVE M5, MANUAL, 4MM	
U70R4074	90235-0845		1	THROTTLE CHECK VALVE M5, MANUAL, 4MM	

Pos	Part No	UN	Qty	Description	Page No

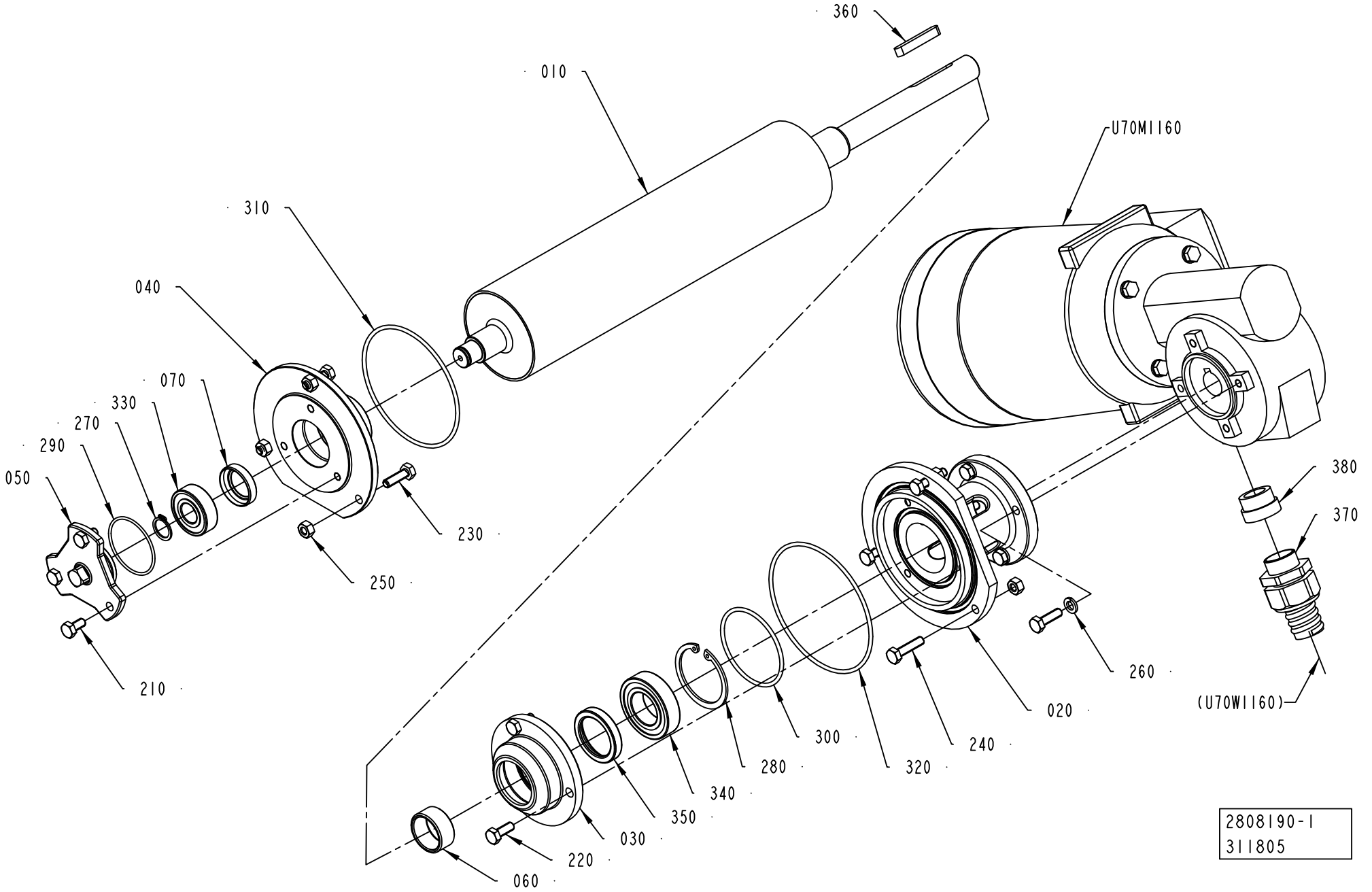
360
010
U70MI160
310
040
070
330
270
290
050
230
250
210
380
370
260
020
(U70WI160)
300
240
280
320
340
350
030
220
060
2808190-1
311805

ECM: 379569 - 20081219
Group number: 2808190-0100
Assembly Drawing: 2808190-1_1_AA

Pos	Part No	UN	Qty	Description	Page No
-					
010	2808356-0000		1	BENDING ROLLER	
020	2808333-0000		1	FLANGE	
030	2783025-0000		1	FLANGE	
040	2808146-0000		1	FLANGE	
050	2541639-0000		1	LID	
060	1548751-0000		1	BUSHING	
070	2541648-0000		1	LID	
210	312105-0366		3	SCREW, M6S ISO 4017 M6X12 A4 80	
220	312105-0368		3	SCREW, M6S ISO 4017 M6X16 A4 80	
230	312105-0370		7	SCREW, M6S ISO 4017 M6X20 A4 80	
240	312105-0372		3	SCREW, M6S ISO 4017 M6X25 A4 80	
250	312605-0316		6	HEXAGON NUT, M6M M6 A280	
260	315402-0156		4	LOCK WASHER, DIN127B 6,5 A4, 1/4	
270	315751-0112		1	RETAINING RING FOR SHAFT DIN 471 15 SS	
280	315753-0130		1	RETAINING RING FOR BORE DIN 472 47 SS	
290	315205-0802		1	O-RING 41,00X1,78 MM	
300	315205-0739		1	O-RING 55,25X2,62 MM	
310	6-990262 53		1	O-RING 88.57X2.62 AL113 3038-76 FPM	
320	6-990262 54		1	O-RING 94.92X2.62 AL113 3038-76 FPM	
330	90458-1704		1	BALL BEARING 15/35X11	
340	90214-0165		1	BALL BEARING, 25X47X12 MM	
350	90459-1650		1	SEALING RING, VARILIP 30X40X7 MM	
360	315705-0239		1	PARALLEL KEY W. ROUND ENDS, 6X6X40 MM	
370	90458-0431		1	GLAND FITTING, VK 22554YUL16	
380	353249-0014		1	INSERT, SINGLE HOLE, EK154 16	
U70M1160	90459-1226		1	GEARS, WORM MOTOR VF 44P-10+BN71B 0.37KW	

Pos	Part No	UN	Qty	Description	Page No

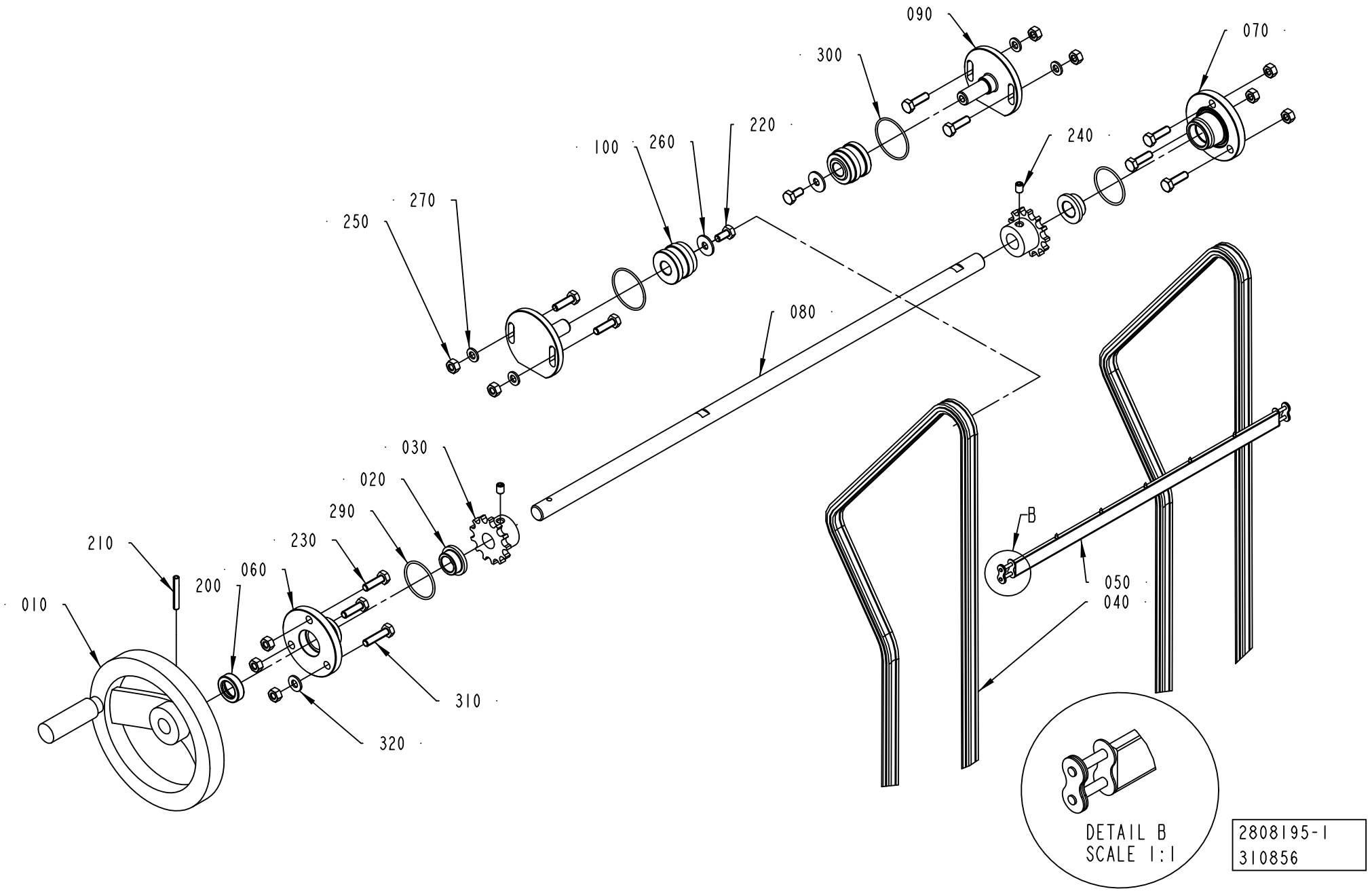
090
300
070
220
100
260
240
270
250
080
030
020
290
230
210
060
200
010
B
050
040
310
320
DETAIL B
SCALE 1:1
2808195-1
310856

ECM: 312288 - 20071221
Group number: 2808195-0100
Assembly Drawing: 2808195-1_1_AA

Pos	Part No	UN	Qty	Description	Page No
-					
010	247358-0000		1	SHIFTER HANDLE	
020	279008-0000		2	BUSHING	
030	1038464-0000		2	SPROCKET	
040	2808154-0000		2	CHAIN	
050	2808153-0000		1	CARRIER	
060	1549982-0000		1	FLANGE	
070	1549981-0000		1	FLANGE	
080	2808152-0000		1	SHAFT	
090	2808184-0000		2	SHAFT	
100	2833052-0000		2	WHEEL	
200	90459-1148		1	SEALING RING, VARILIP 14X24X7 MM	
210	311112-0262		1	SPRING PIN, ISO 8752 4X32 A2	
220	312105-0366		2	SCREW, M6S ISO 4017 M6X12 A4 80	
230	312105-0370		9	SCREW, M6S ISO 4017 M6X20 A4 80	
240	312318-0362		2	SET SCREW, CUP END ISO4029 M6X8 A4	
250	312605-0316		10	HEXAGON NUT, M6M M6 A280	
260	90005-0060		2	WASHER PLAIN, RBS 6,4/M6)/18,H=1,5	
270	315105-0153		4	WASHER PLAIN, 6,4X12X1,5 A4 BRB	
290	315205-0714		2	O-RING 31,47X1,78 MM	
300	315204-0123		2	O-RING 35,1X1,6 MM	
310	312105-0372		1	SCREW, M6S ISO 4017 M6X25 A4 80	
320	315105-0156		1	WASHER PLAIN, 6,7X14X1,5 A4 BRB	

Pos	Part No	UN	Qty	Description	Page No

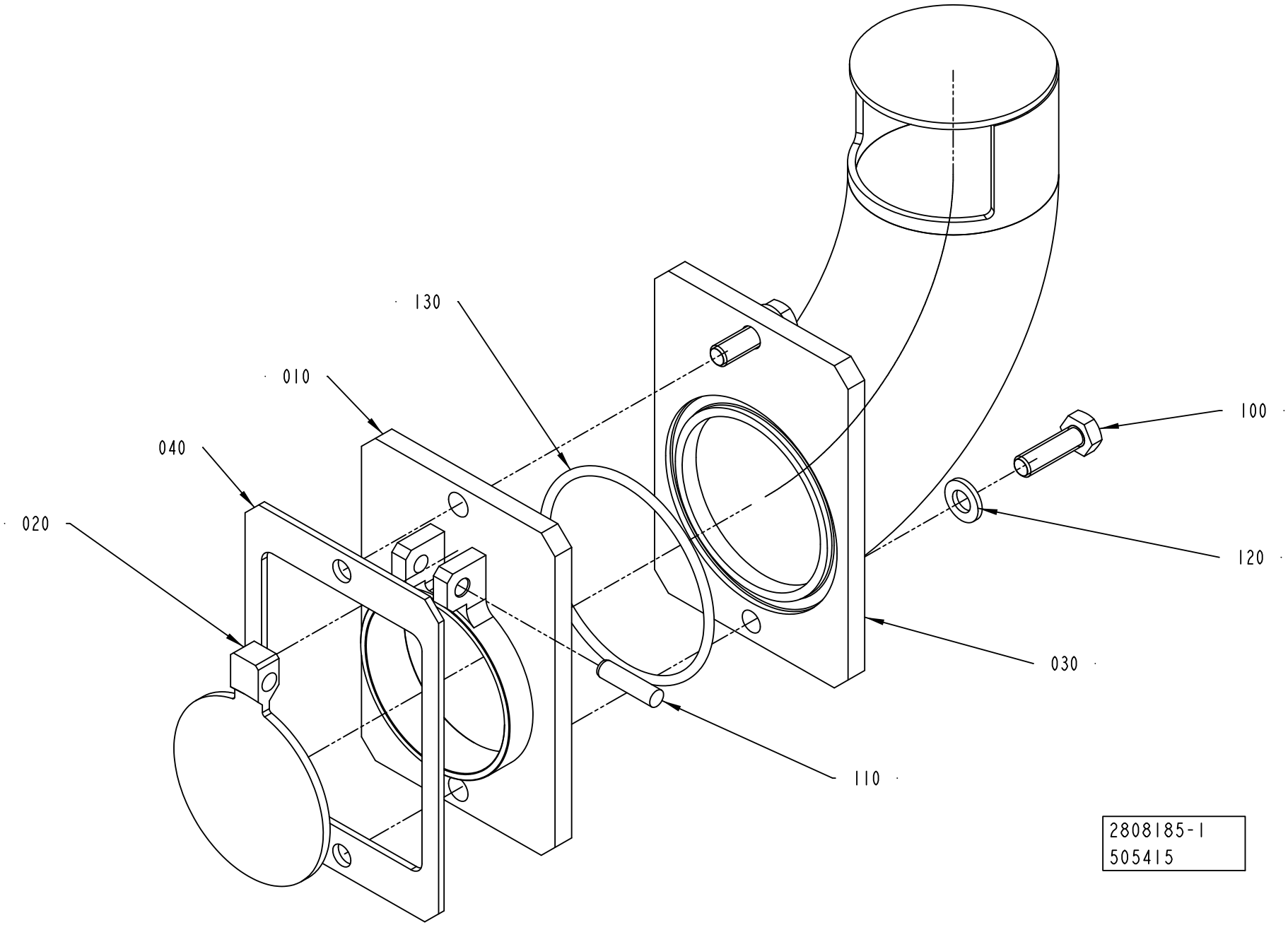
130
010
040
020
100
120
030
110
2808185-1
505415

ECM: 506138 - 20111001
Group number: 2808185-0100
Assembly Drawing: 2808185-1_1_AD

Pos	Part No	UN	Qty	Description	Page No
-					
010	2808158-0000		1	FLANGE	
020	1538494-0000		1	LID	
030	3137518-0000		1	CONTAINER	
040	3149896-0000		1	GASKET	
100	312105-0370		2	SCREW, M6S ISO 4017 M6X20 A4 80	
110	311103-0310		1	PARALLEL PIN ISO 2338 5M6X20 A1	
120	315105-0153		2	WASHER PLAIN, 6,4X12X1,5 A4 BRB	
130	315206-0740		1	O-RING 56,82X2,62 MM	

Pos	Part No	UN	Qty	Description	Page No

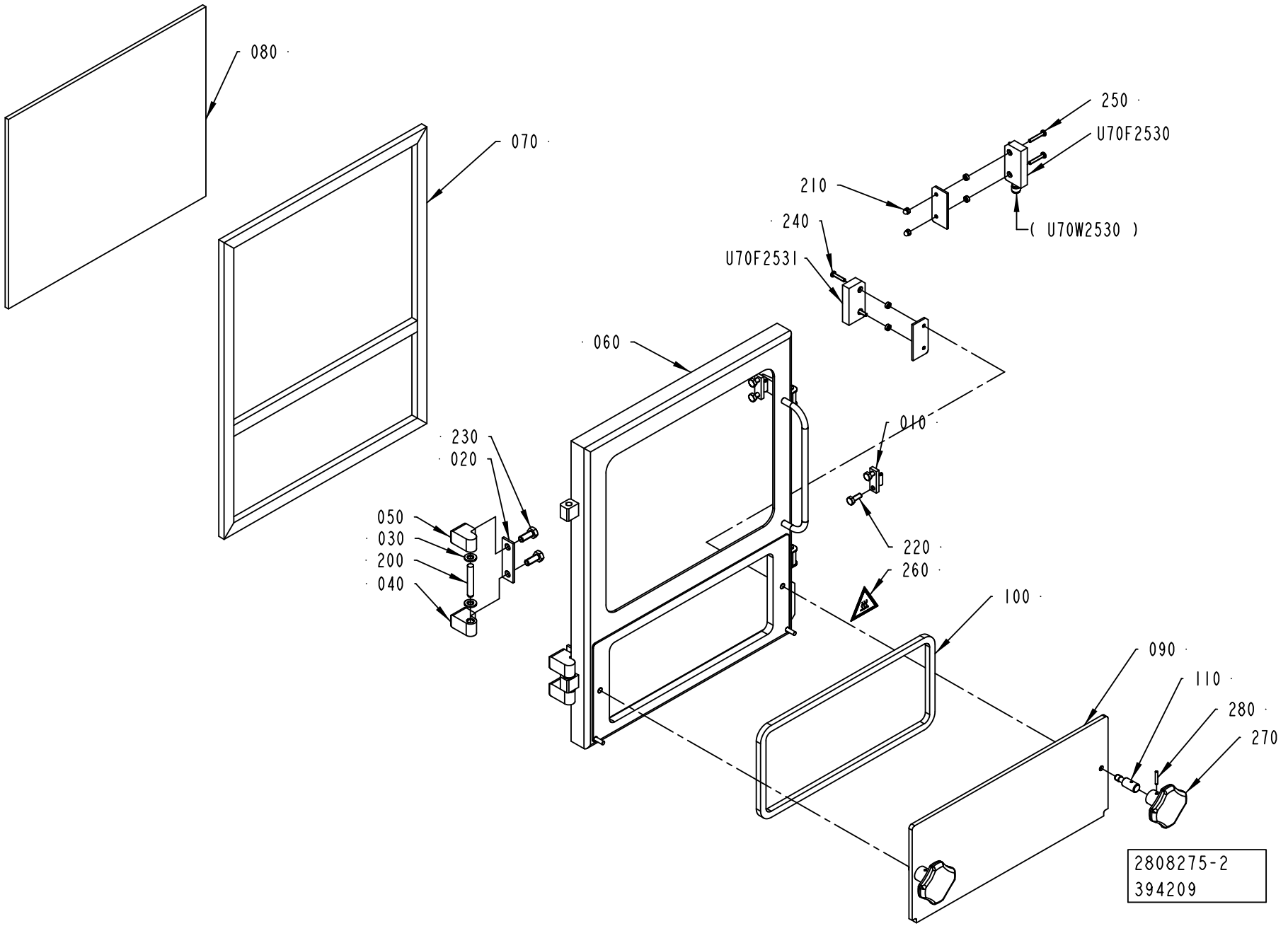
080
070
250
U70F2530
210
240
(U70W2530)
U70F2531
060
010
230
020
050
030
200
040
220
260
100
090
110
280
270
2808275-2
394209

ECM: 460702 - 20101001
Group number: 2808275-0200
Assembly Drawing: 2808275-2_1_AA

Pos	Part No	UN	Qty	Description	Page No
ANSI					
260	90459-7458		1	WARNING SIGN ANSI (H), HOT SURFACE	
ISO					
260	359705-0007		1	WARNING SIGN ISO, HOT SURFACE	
Common Parts					
010	271860-0000		2	CLAMP BLOCK	
020	441737-0000		2	WASHER	
030	441739-0000		4	WASHER	
040	1041978-0000		2	HINGE FLANGE	
050	1041979-0000		2	HINGE FLANGE	
060	3020075-0000		1	FRAME	
070	2808188-0000		1	GASKET	
080	2890056-0000		1	GLASS PANE	
090	2808194-0000		1	LID	
100	2808276-0000		1	GASKET	
110	1036475-0000		2	PIN	
200	311103-0413		2	PARALLEL PIN ISO 2338 8M6X50 A1	
210	312705-0312		2	NUT HEX. DOMED CAP MHM-6 M4 A280	
220	312105-0368		4	SCREW, M6S ISO 4017 M6X16 A4 80	
230	312105-0451		4	SCREW, M6S ISO 4017 M8X20 A4 80	
240	90459-4164		2	SAFETY SCREW, SM4X20	
250	90459-4165		2	SAFETY SCREW, SM4X25	
270	90051-0045		2	STELLAR KNOB, NO. 8323-257	
280	90258-0031		2	PIN, STRAIGHT SLOTTED SPRING FRP 3X20	
U70F2530	90459-4142		1	SAFETY SENSOR, ADAM M12, 20-051-00	
U70F2531	90458-2794		1	SAFETY SENSOR, EVA 20-046-00	

Pos	Part No	UN	Qty	Description	Page No

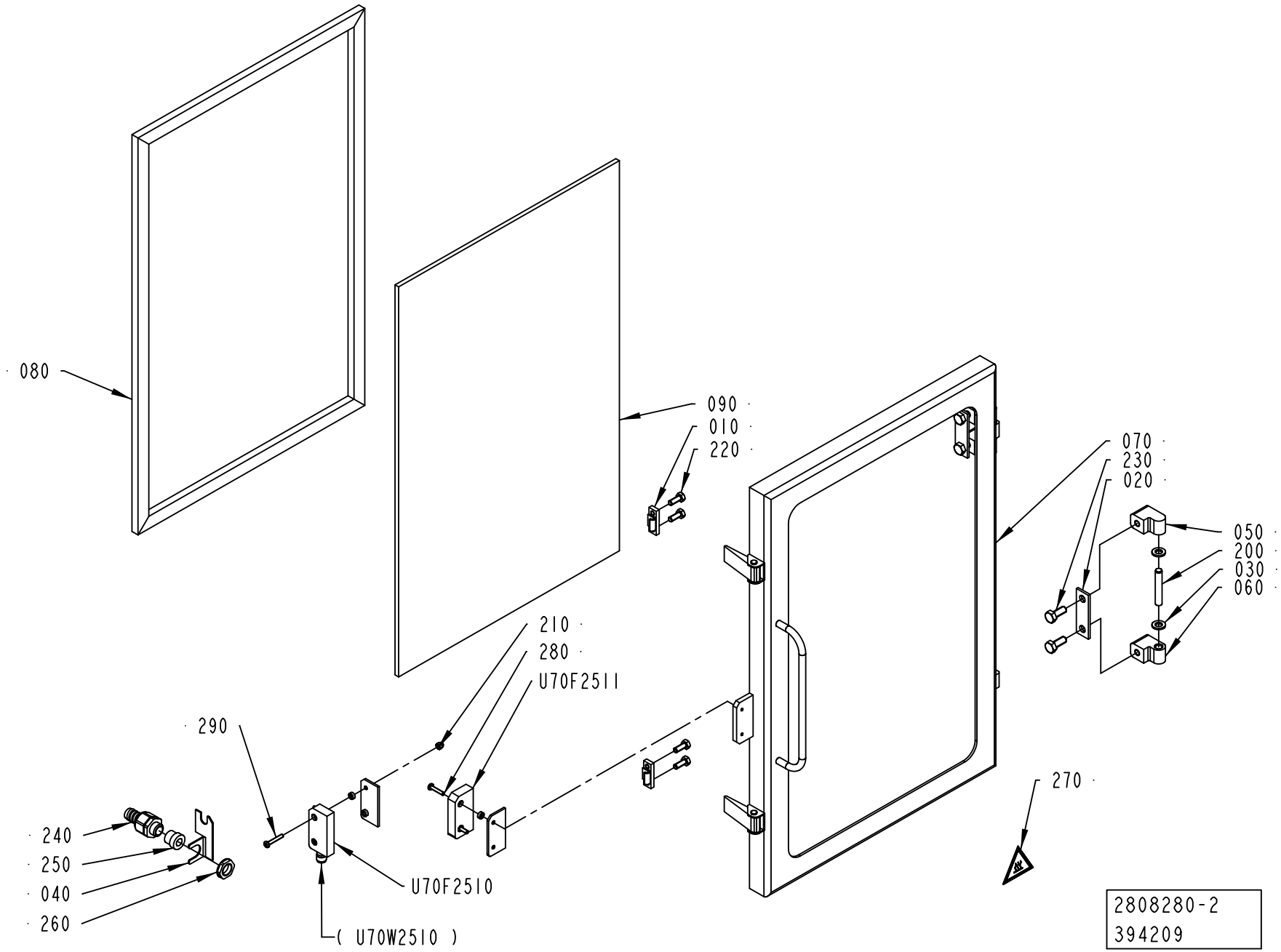
080
090
010
220
070
230
020
050
200
030
060
210
280
U70F2511
290
240
250
040
260
U70F2510
(U70W2510)
270
2808280-2
394209

ECM: 460708 - 20101001
Group number: 2808280-0200
Assembly Drawing: 2808280-2_1_AA

Pos	Part No	UN	Qty	Description	Page No
ANSI					
270	90459-7458		1	WARNING SIGN ANSI (H), HOT SURFACE	
ISO					
270	359705-0007		1	WARNING SIGN ISO, HOT SURFACE	
Common Parts					
010	271860-0000		2	CLAMP BLOCK	
020	441737-0000		2	WASHER	
030	441739-0000		4	WASHER	
040	1036610-0000		1	BRACKET	
050	1041978-0000		2	HINGE FLANGE	
060	1041979-0000		2	HINGE FLANGE	
070	3020074-0000		1	PLATE	
080	2808192-0000		1	GASKET	
090	2890057-0000		1	GLASS PANE	
200	311103-0413		2	PARALLEL PIN ISO 2338 8M6X50 A1	
210	312705-0312		2	NUT HEX. DOMED CAP MHM-6 M4 A280	
220	312105-0368		4	SCREW, M6S ISO 4017 M6X16 A4 80	
230	312105-0451		4	SCREW, M6S ISO 4017 M8X20 A4 80	
240	90458-0427		1	GLAND FITTING, VK 21652YUL11	
250	353249-0009		1	INSERT, SINGLE HOLE, EK152 9	
260	90458-0322		1	NUT, M16X1,5	
280	90459-4164		2	SAFETY SCREW, SM4X20	
290	90459-4165		2	SAFETY SCREW, SM4X25	
U70F2510	90459-4142		1	SAFETY SENSOR, ADAM M12, 20-051-00	
U70F2511	90458-2794		1	SAFETY SENSOR, EVA 20-046-00	

Pos	Part No	UN	Qty	Description	Page No

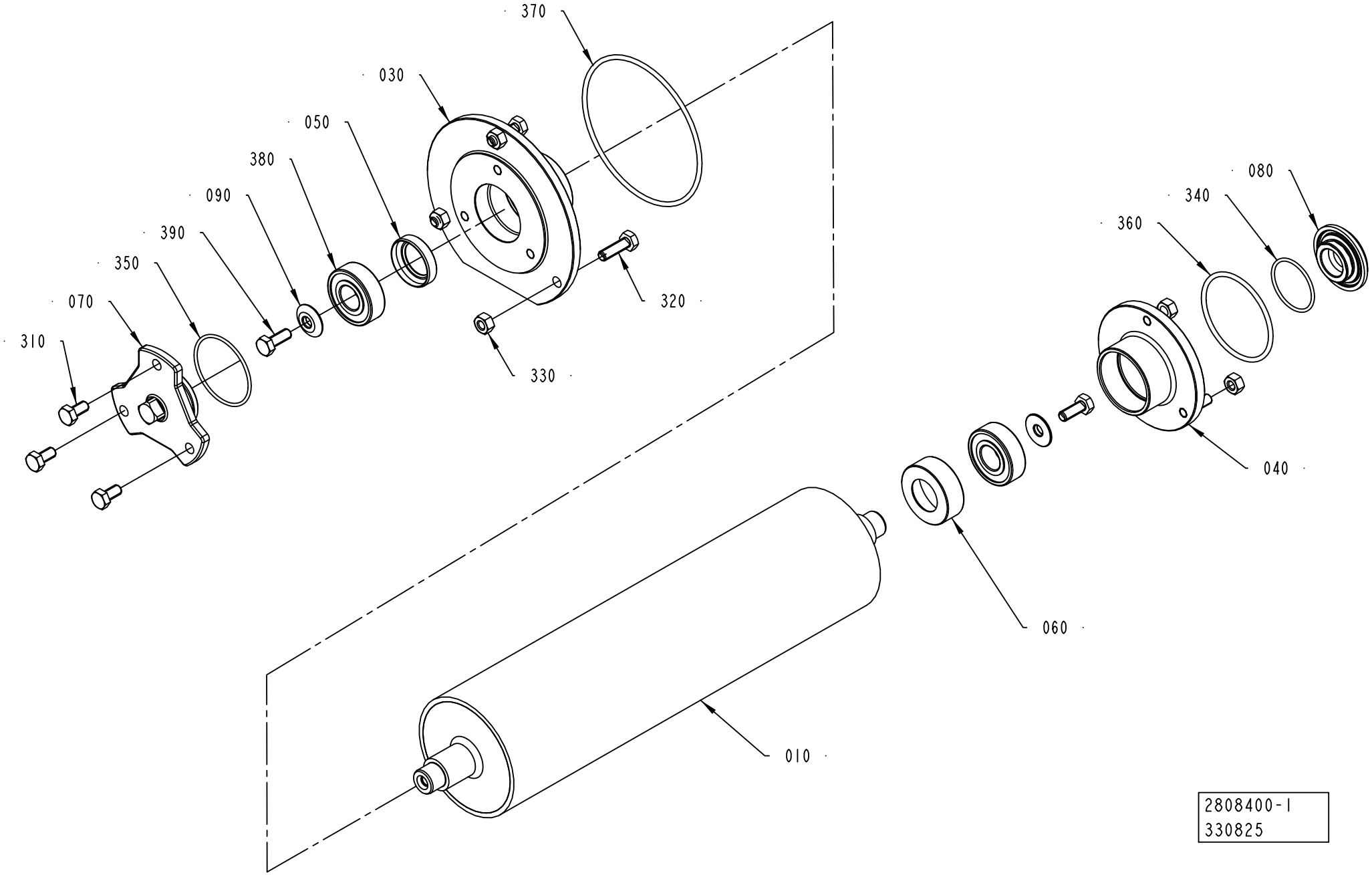

2808400-1
330825

ECM: 362256 - 20080801
Group number: 2808400-0100
Assembly Drawing: 2808400-1_1_AA

Pos	Part No	UN	Qty	Description	Page No
-					
010	2846112-0000		1	BENDING ROLLER	
030	2808146-0000		1	FLANGE	
040	2808147-0000		1	FLANGE	
050	2541648-0000		1	LID	
060	2808157-0000		1	LID	
070	2541639-0000		1	LID	
080	2532983-0000		1	FLANGE	
090	1558768-0000		2	WASHER	
310	312105-0366		3	SCREW, M6S ISO 4017 M6X12 A4 80	
320	312105-0370		3	SCREW, M6S ISO 4017 M6X20 A4 80	
330	312605-0316		6	HEXAGON NUT, M6M M6 A280	
340	315205-0713		1	O-RING 29,87X1,78 MM	
350	315205-0802		1	O-RING 41,00X1,78 MM	
360	315205-0736		1	O-RING 50,47X2,62 MM	
370	6-990262 53		1	O-RING 88.57X2.62 AL113 3038-76 FPM	
380	90458-1704		2	BALL BEARING 15/35X11	
390	312105-0368		2	SCREW, M6S ISO 4017 M6X16 A4 80	

Pos	Part No	UN	Qty	Description	Page No

PRESSURE ROLLER

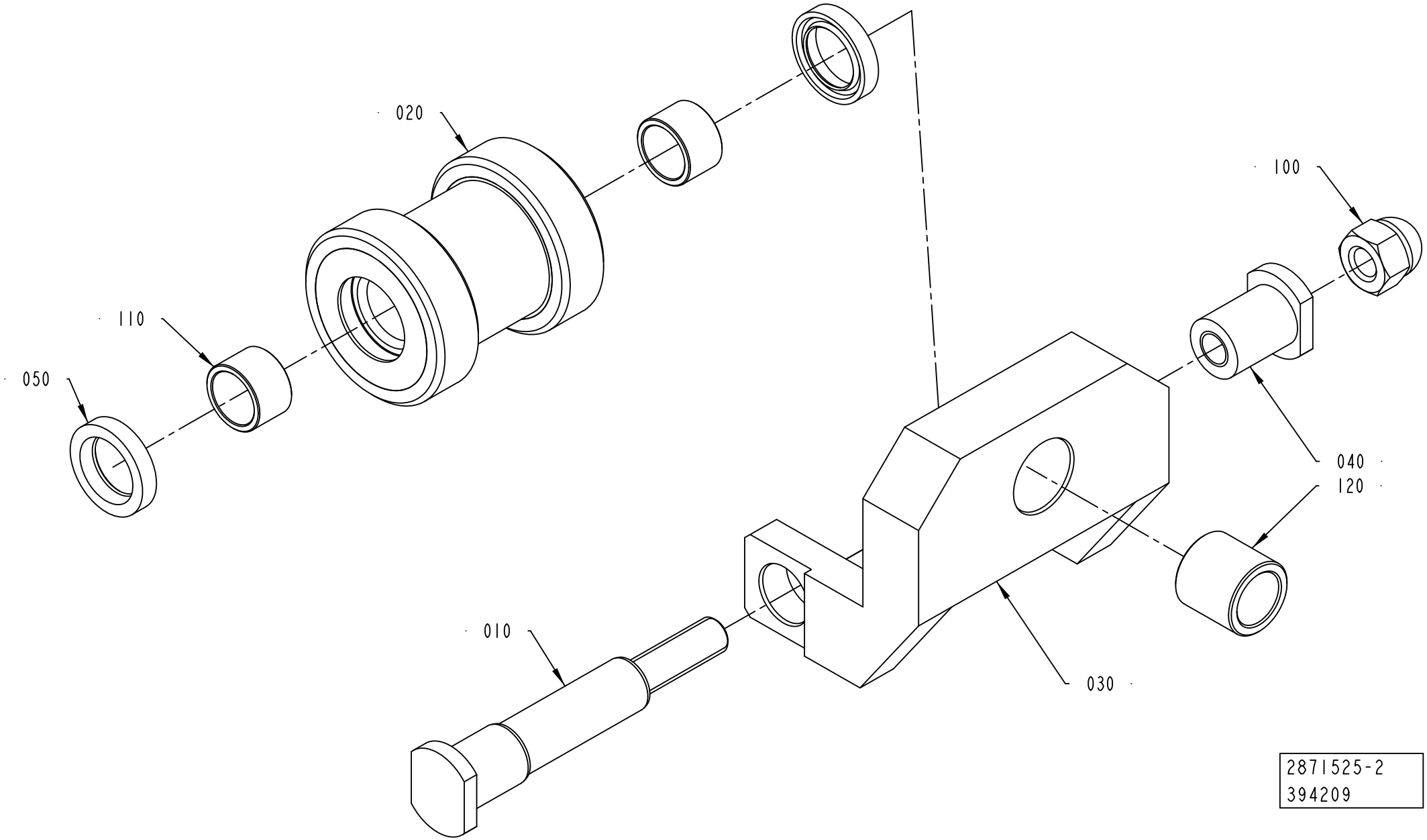

ECM: 398222 - 20090715
Group number: 2871525-0200
Assembly Drawing: 2871525-2_1_AA

Pos	Part No	UN	Qty	Description	Page No
-					
010	3020071-0000		1	SHAFT	
020	3020070-0000		1	WHEEL	
030	3037859-0000		1	BRACKET	
040	3020069-0000		1	NUT	
050	90600-5539		2	BEARING SEAL 17X26X5	
100	312705-0320		1	NUT HEX. DOMED CAP MHM-6 M10 A280	
110	90600-8806		2	BUSHING, 15X19X12 MM	
120	90600-8826		1	BUSHING, 15X21X20 MM	

Pos	Part No	UN	Qty	Description	Page No

HOT AIR ELEMENT

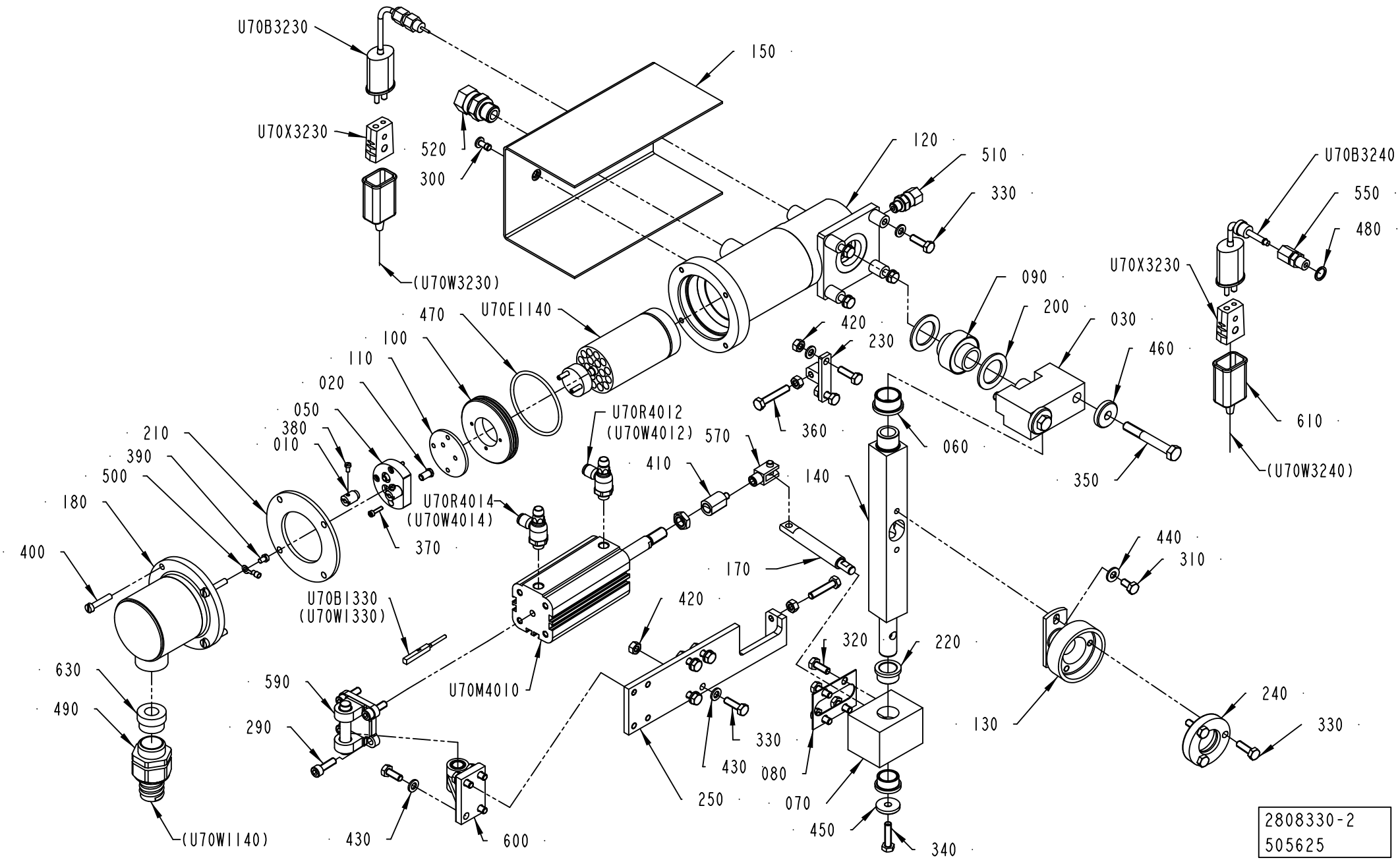

2808330-2
505625

ECM: 507208 - 20111001
Group number: 2808330-0200
Assembly Drawing: 2808330-2_1_AF

Pos	Part No	UN	Qty	Description	Page No
-					
010	3178940-0000		2	CABLE GLAND	
020	270927-0000		2	SCREW	
030	272286-0000		1	AXLE SUPPORT	
050	294464-0000		1	BASE PLATE	
060	295909-0000		1	BUSHING	
070	2898805-0000		1	BLOCK	
080	2898823-0000		1	GASKET	
090	491487-0000		1	BUSHING	
100	1285307-0000		1	SPACER	
110	1285308-0000		1	GASKET	
120	2871883-0000		1	HEATING PIPE	
130	2808362-0000		1	FLANGE	
140	2808363-0000		1	PIVOT ARM	
150	3020106-0000		1	HEAT GUARD	
170	2898806-0000		1	ARM	
180	3037843-0000		1	COVER	
200	751023-0000		2	GASKET	
210	2808413-0000		1	GASKET	
220	271269-0000		2	BUSHING	
230	2808415-0000		1	BRACKET	
240	2808416-0000		1	RING	
250	2898807-0000		1	PLATE	
290	312115-0370		4	SCREW ISO4762 M6X20 A4 80	
300	90601-2046		2	CAPTIVE SCREW M6, GUTBG 6-4-12	
310	312105-0366		2	SCREW, M6S ISO 4017 M6X12 A4 80	
320	312105-0368		8	SCREW, M6S ISO 4017 M6X16 A4 80	
330	312105-0370		13	SCREW, M6S ISO 4017 M6X20 A4 80	
340	312105-0372		1	SCREW, M6S ISO 4017 M6X25 A4 80	
350	312105-0463		2	SCREW, M6S ISO 4014 M8X60 A4 80	
360	312109-0376		2	SCREW, M6S ISO 4017 M6X35 A4 80	
370	312115-0226		3	SCREW ISO4762 M3X12 A4 80	
380	312125-0220		2	SCREW ISO 1207 M3X6 A4	
390	312125-0285		1	SLOTTED HEAD SCREW, ISO1207 M4X6 A4	
400	312125-0333		4	SLOTTED HEAD SCREW, ISO1207 M5X25 A4	
410	2898808-0000		1	SHAFT	
420	312605-0316		8	HEXAGON NUT, M6M M6 A280	
430	315105-0153		14	WASHER PLAIN, 6,4X12X1,5 A4 BRB	
440	315105-0156		2	WASHER PLAIN, 6,7X14X1,5 A4 BRB	
450	315125-0153		1	WASHER HIGH, TBRSB 6,4X22X4 A4	
460	315125-0165		2	WASHER HIGH, TBRSB 8,4X26X5 A4	
470	315204-0303		1	O-RING 59,5X3 MM	
480	315234-0109		1	WASHER,PL.RND.CU.10,3/13,5 H=1,0	
490	90458-0431		1	GLAND FITTING, VK 22554YUL16	
500	353101-0120		1	CABLE SHOE 0,5-1,5MM2 M4 RED	
510	90030-0184		1	CONN. STR., GE06LRED71	
520	90030-0187		1	CONN. STR. GE12LRED71	
550	90326-0306		1	GLAND FITTING, 5101 015-010	
570	90450-0725		1	ROD END, CLEVIS WITH AXLE M6	
590	90459-0399		1	BRACKET, REAR, EYE WITH AXLE 32	
600	90459-0400		1	BRACKET, REAR CLEVIS FLANGE FOOT, 32	
610	90326-0012		2	PROTECTIVE COVER, 03-001 10	
630	353249-0013		1	INSERT, SINGLE HOLE, EK154 13	
U70B1330	90600-3272		1	PROX. SENSOR, SMT-8M-PS-24V-K-5,0-OE	
U70B3230	90326-0089		1	THERMOCOUPLE, 5110 089-000	
U70B3240	90326-0048		1	THERMOCOUPLE, 5110 048-000	
	90326-0304		*1*	*COMPRESSION GLAND, 5101 015-005*	
U70E1140	90206-0030		1	HEATING ELEMENT 3000W, 220V	
U70M4010	90459-3557		1	DOUBLE ACTING, COMPACT, CYL 32-60	
U70R4012	90235-0846		1	THROTTLE CHECK VALVE G1/8", MANUAL, 6	
U70R4014	90235-0846		1	THROTTLE CHECK VALVE G1/8", MANUAL, 6	
U70X3230	90326-0020		1	SOCKET, FEMALE YELLOW CR-AL, 03-22000A	
U70X3240	90326-0020		1	SOCKET, FEMALE YELLOW CR-AL, 03-22000A	

Machine Type	Group Description	Used-In	Group Number	Page No

HOT AIR ELEMENT

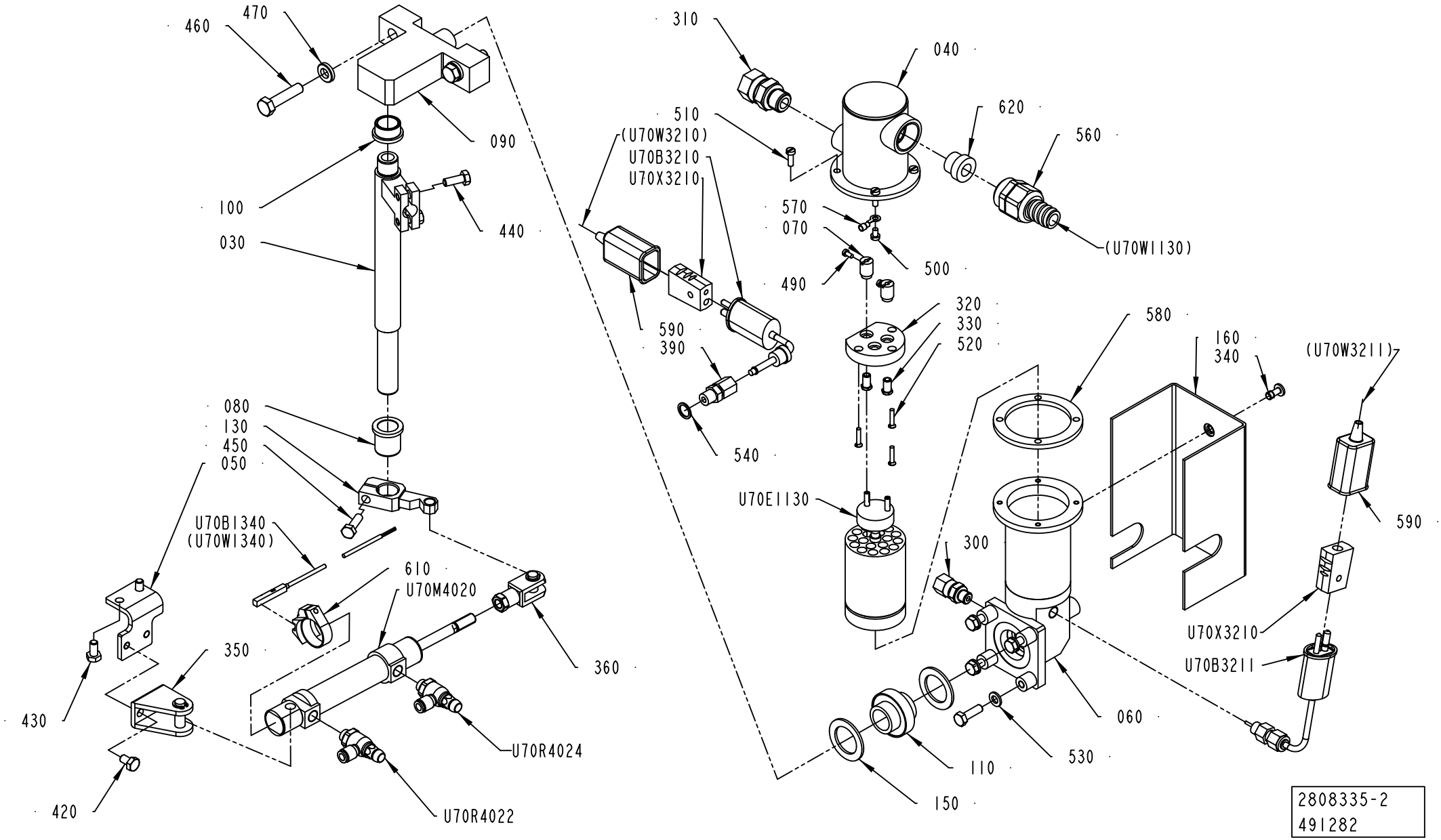

2808335-2
491282

ECM: 493289 - 20110701
Group number: 2808335-0200
Assembly Drawing: 2808335-2_1_AB

Pos	Part No	UN	Qty	Description	Page No
-					
030	2808358-0000		1	SHAFT	
040	3037844-0000		1	COVER	
050	2871471-0000		1	BRACKET	
060	2871497-0000		1	HEATING PIPE	
070	266739-0000		2	CABLE GLAND	
080	2808359-0000		1	BUSHING	
090	2808368-0000		1	AXLE SUPPORT	
100	295910-0000		1	BUSHING	
110	295936-0000		1	BUSHING	
130	491545-0000		1	BRACKET	
150	751023-0000		2	GASKET	
160	3020107-0000		1	HEAT GUARD	
300	90030-0184		1	CONN. STR., GE06LRED71	
310	90030-0187		1	CONN. STR. GE12LRED71	
320	294464-0000		1	BASE PLATE	
330	270927-0000		2	SCREW	
340	90601-2046		2	CAPTIVE SCREW M6, GUTBG 6-4-12	
350	90239-0487		1	REAR, CLEVIS, MINI-ISO 20-25	
360	90239-0532		1	ROD END, CLEVIS WITH AXLE M8X1,25	
390	90326-0306		1	GLAND FITTING, 5101 015-010	
420	312105-0364		2	SCREW, M6S ISO 4017 M6X10 A4 80	
430	312105-0366		2	SCREW, M6S ISO 4017 M6X12 A4 80	
440	312105-0368		2	SCREW, M6S ISO 4017 M6X16 A4 80	
450	312105-0370		5	SCREW, M6S ISO 4017 M6X20 A4 80	
460	312105-0457		2	SCREW, M6S ISO 4014 M8X35 A4 80	
470	315115-0165		2	WASHER PLAIN, TBRB 8,4/16 H=3	
490	312125-0220		2	SCREW ISO 1207 M3X6 A4	
500	312125-0285		1	SLOTTED HEAD SCREW, ISO1207 M4X6 A4	
510	312125-0291		4	SLOTTED HEAD SCREW, ISO1207 M4X12 A4	
520	312145-0228		3	SCREW ISO 2009 MFS M3X16 A4	
530	315105-0153		4	WASHER PLAIN, 6,4X12X1,5 A4 BRB	
540	315234-0109		1	WASHER,PL.RND.CU.10,3/13,5 H=1,0	
560	90458-0414		1	GLAND FITTING, VK 22553YUL13	
570	353101-0120		1	CABLE SHOE 0,5-1,5MM2 M4 RED	
580	90206-0322		1	GASKET	
590	90326-0012		2	PROTECTIVE COVER, 03-001 10	
610	90458-0531		1	SENSOR BRACKET, FOR CYL 20	
620	353249-0011		1	INSERT, SINGLE HOLE, EK153 11	
U70B1340	90600-3272		1	PROX. SENSOR, SMT-8M-PS-24V-K-5,0-OE	
U70B3210	90326-0048		1	THERMOCOUPLE, 5110 048-000	
	90326-0304		*1*	*COMPRESSION GLAND, 5101 015-005*	
U70B3211	90326-0089		1	THERMOCOUPLE, 5110 089-000	
U70E1130	90457-0866		1	HEATING ELEMENT 2000W/230V	
U70M4020	90459-5845		1	DOUBLE ACTING, MINI-ISO, CYL. 20-40	
U70R4022	90235-0846		1	THROTTLE CHECK VALVE G1/8", MANUAL, 6	
U70R4024	90235-0846		1	THROTTLE CHECK VALVE G1/8", MANUAL, 6	
U70X3210	90326-0020		1	SOCKET, FEMALE YELLOW CR-AL, 03-22000A	
U70X3211	90326-0020		1	SOCKET, FEMALE YELLOW CR-AL, 03-22000A	

Machine Type	Group Description	Used-In	Group Number	Page No

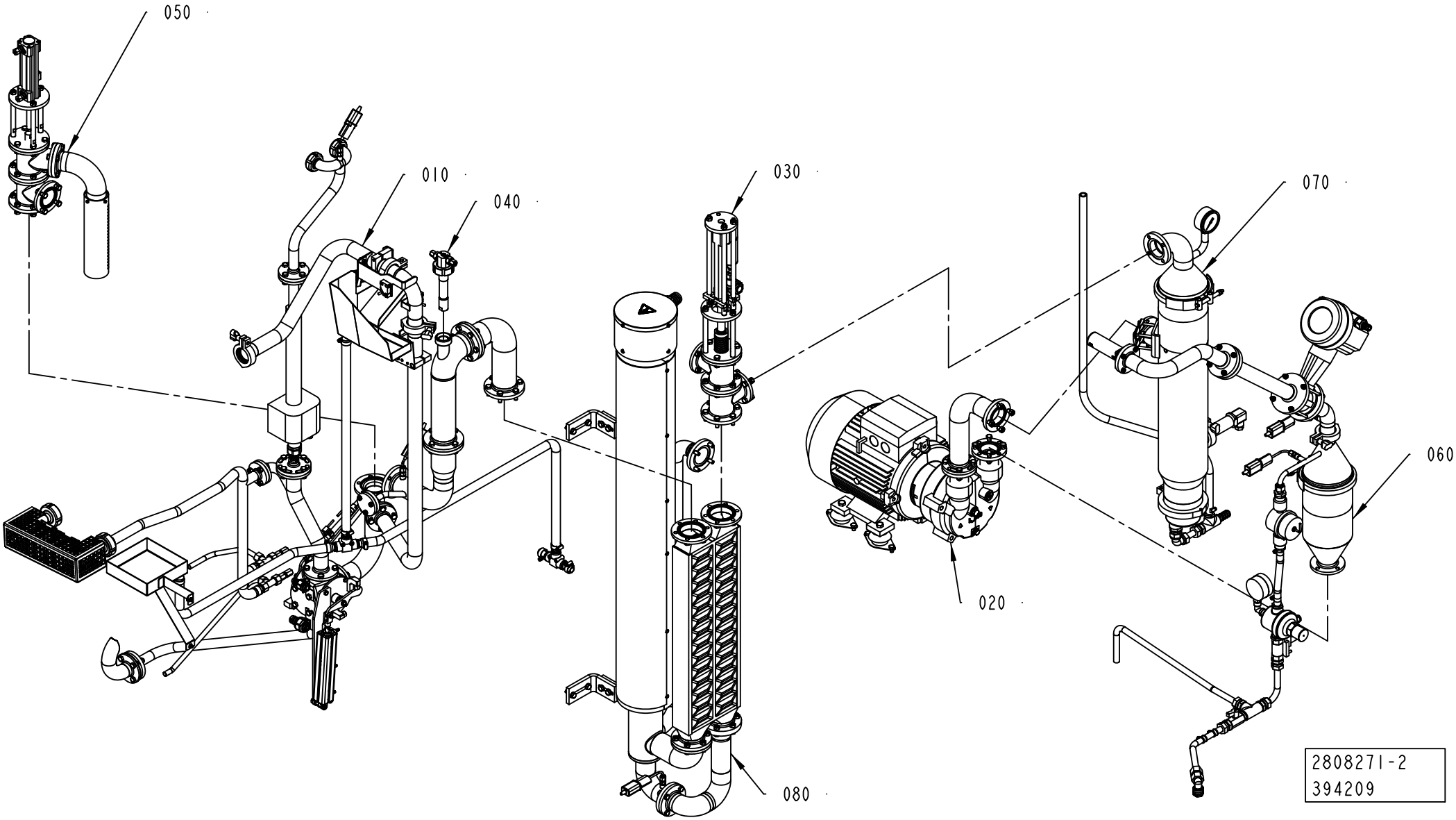
050
010
040
030
070
060
020
080
2808271-2
394209

ECM: 507202 - 20111001
Group number: 2808271-0200
Assembly Drawing: 2808271-2_1_AA

Pos	Part No	UN	Qty	Description	Page No
-					
010	2808255-0200		1	PIPE WORK-AIR	**1-149, 1-151**
020	2808196-0100		1	COMPRESSOR UNIT	**1-155**
030	2808254-0100		1	HEAT EXCHANGER VALVE	**1-157**
040	2547391-0100		1	NOZZLE	**1-159**
050	2808265-0100		1	VALVE	**1-161**
060	2808247-0200		1	SCRUBBER	**1-163**
070	2808226-0200		1	SEPARATOR	**1-165**
080	2808251-0200		1	HEATER	**1-167**

Pos	Part No	UN	Qty	Description	Page No

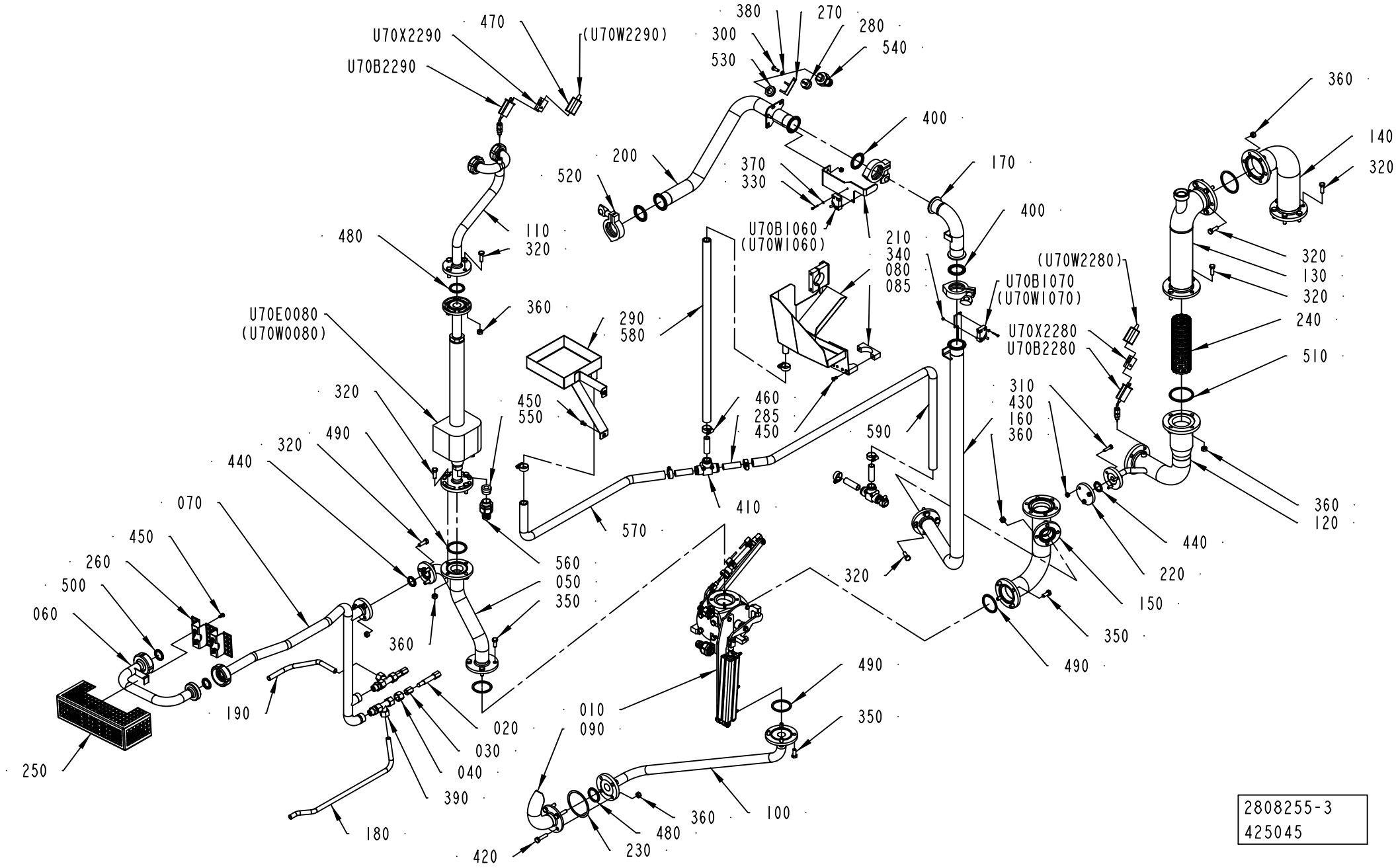
470
U70X2290
U70B2290
(U70W2290)
380
300
530
270
280
540
360
140
320
400
200
520
370
330
170
400
480
110
320
U70B1060
(U70W1060)
210
340
080
085
(U70W2280)
U70B1070
(U70W1070)
320
130
320
240
510
U70E0080
(U70W0080)
360
290
580
U70X2280
U70B2280
320
450
550
460
285
450
310
430
160
360
590
490
320
440
070
450
260
500
060
410
570
560
050
350
360
190
250
020
030
040
390
180
420
010
090
230
480
360
100
490
350
320
490
440
220
150
350
360
120
2808255-3
425045

ECM: 481477 - 20110401
Group number: 2808255-0200
Assembly Drawing: 2808255-3_1_AB

This list covers pages from 1-148 to 1-151

Pos	Part No	UN	Qty	Description	Page No
HVA (See drawing on page: 1-150)					
200	3092929-0000		1	PIPE	
285	3037855-0000		3	PIPE	
300	312105-0368		1	SCREW, M6S ISO 4017 M6X16 A4 80	
330	312125-0230		2	SLOTTED HEAD SCREW, ISO1207 M3X20 A4	
340	312605-0310		2	HEXAGON NUT, M6M M3 A280	
400	342850-0304		2	GASKET 35,4X49,1X5,2 1"1/2 FDA, 3-A	
410	90459-2555		1	PUSH-IN T-FITTING QST-16	
430	312605-0316		4	HEXAGON NUT, M6M M6 A280	
450	90601-2046		6	CAPTIVE SCREW M6, GUTBG 6-4-12	
460	342991-0103		4	HOSE CLIP,WORM DRIVE TYPE (15)-24	
520	344215-0103		2	CLAMP RING A13MHM 1X1 1/2", 211053	
570	90166-0096	M	4	TUBE, 22 MM PA BLUE	
600	353249-0303		1	SEALING PIN, 5,3X25	
NOHVA (See drawing on page: 1-148)					
080	3020080-0000		1	SPLASH PLATE	
085	3037829-0000		2	CLAMP	
200	2835291-0000		1	PIPE	
210	2835292-0000		1	BRACKET	
285	3037855-0000		6	PIPE	
300	312105-0368		2	SCREW, M6S ISO 4017 M6X16 A4 80	
330	312125-0230		4	SLOTTED HEAD SCREW, ISO1207 M3X20 A4	
340	312605-0310		4	HEXAGON NUT, M6M M3 A280	
400	342850-0304		3	GASKET 35,4X49,1X5,2 1"1/2 FDA, 3-A	
410	90459-2555		2	PUSH-IN T-FITTING QST-16	
430	312605-0316		5	HEXAGON NUT, M6M M6 A280	
450	90601-2046		10	CAPTIVE SCREW M6, GUTBG 6-4-12	
460	342991-0103		8	HOSE CLIP,WORM DRIVE TYPE (15)-24	
520	344215-0103		3	CLAMP RING A13MHM 1X1 1/2", 211053	
570	90166-0096	M	3	TUBE, 22 MM PA BLUE	
580	90166-0096	M	3	TUBE, 22 MM PA BLUE	
590	90166-0096	M	3	TUBE, 22 MM PA BLUE	
U70B1060	90044-0194		1	INDUCTIVE SENSOR, IN 5329	
Common Parts					
010	2808256-0100		1	VALVE	**1-153**
020	2871042-0000		2	THROTTLE SCREW	
030	209146-0000		2	BARRIER NUT	
040	279589-0000		2	NUT	
050	2869632-0000		1	PIPE	
060	3092928-0000		1	PIPE	
070	3092930-0000		1	PIPE	
090	2882428-0000		1	HORN	
100	2870942-0000		1	PIPE	
110	2870941-0000		1	PIPE	
120	2808262-0000		1	PIPE	
130	2808263-0000		1	PIPE	
140	2808264-0000		1	PIPE	
150	2808430-0000		1	PIPE	
160	2808431-0000		1	PIPE	
170	2808432-0000		1	PIPE	
180	3058513-0000		1	PIPE	
190	2808440-0000		1	PIPE	
220	2835294-0000		1	PLUG	
230	1036294-0000		1	GASKET	
240	1549526-0000		1	CONTAINER	
250	3020084-0000		1	TOUCH GUARD	
260	3020085-0000		1	TOUCH GUARD	
270	1129086-0000		1	BRACKET	
280	3144125-0000		1	INSERT	
290	3037854-0000		1	SPLASH PLATE	
310	312105-0372		3	SCREW, M6S ISO 4017 M6X25 A4 80	
320	312105-0453		31	SCREW, M6S ISO 4017 M8X25 A4 80	
350	312105-0451		12	SCREW, M6S ISO 4017 M8X20 A4 80	
360	312605-0318		29	HEXAGON NUT, M6M M8 A280	
370	315105-0124		4	WASHER PLAIN, 3,2X6X0,5 A4 BRB	
380	315105-0153		2	WASHER PLAIN, 6,4X12X1,5 A4 BRB	
390	342759-0109		2	ASSEMBLED ADJUSTABLE LPIPE CONNECTION 12	
420	312109-0457		4	SCREW, M6S ISO 4017 M8X35 A4 80	
440	315229-0203		2	GASKET 22,1X30,1X3,7 MM 1"	
470	90326-0012		2	PROTECTIVE COVER, 03-001 10	
480	315229-0204		3	GASKET 34,8X42,8X3,7 MM 1"1/2	
490	315229-0205		4	GASKET 47,5X55,5X3,7 MM 2 INCH	
500	3092164-0000		2	GASKET	
510	315229-0206		2	GASKET 60,2X68,2X3,7 MM 2"1/2	
530	90458-0323		1	NUT, M20X1,5	
540	90458-0430		1	GLAND FITTING, VK 22054YUL16	
550	353249-0013		1	INSERT, SINGLE HOLE, EK154 13	
560	90458-0431		1	GLAND FITTING, VK 22554YUL16	
U70B1070	90044-0194		1	INDUCTIVE SENSOR, IN 5329	
U70B2280	90326-0057		1	THERMOCOUPLE, 5110 057-000	
U70B2290	90326-0057		1	THERMOCOUPLE, 5110 057-000	
U70E0080	2874301-0000		1	HEATER	
U70X2280	90326-0020		1	SOCKET, FEMALE YELLOW CR-AL, 03-22000A	
U70X2290	90326-0020		1	SOCKET, FEMALE YELLOW CR-AL, 03-22000A	

Machine Type | Group Description | Used-In | Group Number | Page No

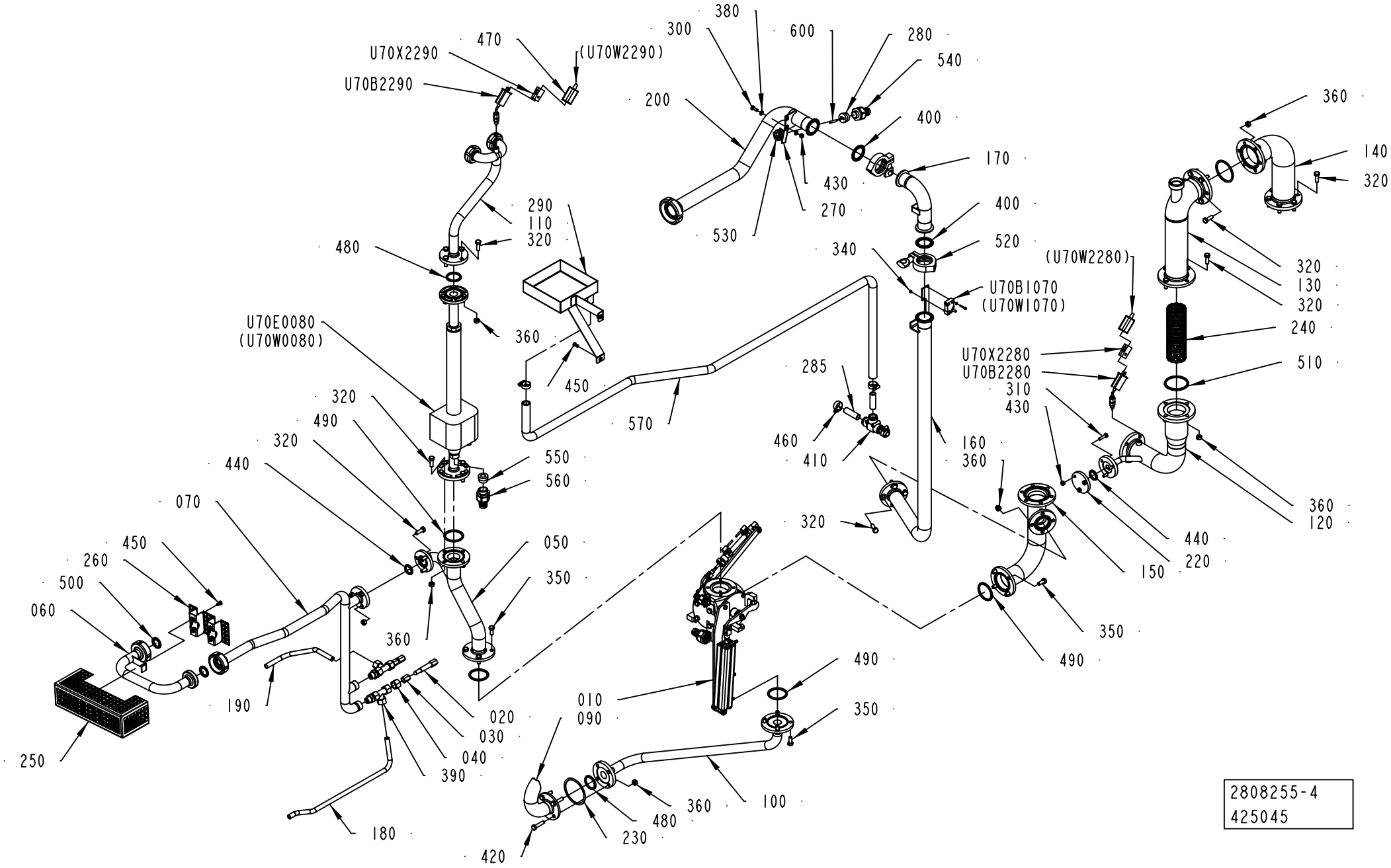
380
300
600
280
540
470
U70X2290
(U70W2290)
U70B2290
200
400
170
430
270
530
400
520
340
U70B1070
(U70W1070)
290
110
320
480
360
450
U70E0080
(U70W0080)
570
285
460
410
160
360
320
490
320
440
550
560
070
050
350
450
260
500
060
360
190
020
030
040
390
180
250
010
090
490
350
360
100
480
230
420
490
350
490
(U70W2280)
U70X2280
U70B2280
310
430
360
140
320
320
130
320
240
510
360
120
440
220
150
2808255-4
425045

ECM: 481477 - 20110401
Group number: 2808255-0200
Assembly Drawing: 2808255-4_1_AC

This list covers pages from 1-148 to 1-151

Pos	Part No	UN	Qty	Description	Page No
HVA (See drawing on page: 1-150)					
200	3092929-0000		1	PIPE	
285	3037855-0000		3	PIPE	
300	312105-0368		1	SCREW, M6S ISO 4017 M6X16 A4 80	
330	312125-0230		2	SLOTTED HEAD SCREW, ISO1207 M3X20 A4	
340	312605-0310		2	HEXAGON NUT, M6M M3 A280	
400	342850-0304		2	GASKET 35,4X49,1X5,2 1"1/2 FDA, 3-A	
410	90459-2555		1	PUSH-IN T-FITTING QST-16	
430	312605-0316		4	HEXAGON NUT, M6M M6 A280	
450	90601-2046		6	CAPTIVE SCREW M6, GUTBG 6-4-12	
460	342991-0103		4	HOSE CLIP,WORM DRIVE TYPE (15)-24	
520	344215-0103		2	CLAMP RING A13MHM 1X1 1/2", 211053	
570	90166-0096	M	4	TUBE, 22 MM PA BLUE	
600	353249-0303		1	SEALING PIN, 5,3X25	
NOHVA (See drawing on page: 1-148)					
080	3020080-0000		1	SPLASH PLATE	
085	3037829-0000		2	CLAMP	
200	2835291-0000		1	PIPE	
210	2835292-0000		1	BRACKET	
285	3037855-0000		6	PIPE	
300	312105-0368		2	SCREW, M6S ISO 4017 M6X16 A4 80	
330	312125-0230		4	SLOTTED HEAD SCREW, ISO1207 M3X20 A4	
340	312605-0310		4	HEXAGON NUT, M6M M3 A280	
400	342850-0304		3	GASKET 35,4X49,1X5,2 1"1/2 FDA, 3-A	
410	90459-2555		2	PUSH-IN T-FITTING QST-16	
430	312605-0316		5	HEXAGON NUT, M6M M6 A280	
450	90601-2046		10	CAPTIVE SCREW M6, GUTBG 6-4-12	
460	342991-0103		8	HOSE CLIP,WORM DRIVE TYPE (15)-24	
520	344215-0103		3	CLAMP RING A13MHM 1X1 1/2", 211053	
570	90166-0096	M	3	TUBE, 22 MM PA BLUE	
580	90166-0096	M	3	TUBE, 22 MM PA BLUE	
590	90166-0096	M	3	TUBE, 22 MM PA BLUE	
U70B1060	90044-0194		1	INDUCTIVE SENSOR, IN 5329	
Common Parts					
010	2808256-0100		1	VALVE	**1-153**
020	2871042-0000		2	THROTTLE SCREW	
030	209146-0000		2	BARRIER NUT	
040	279589-0000		2	NUT	
050	2869632-0000		1	PIPE	
060	3092928-0000		1	PIPE	
070	3092930-0000		1	PIPE	
090	2882428-0000		1	HORN	
100	2870942-0000		1	PIPE	
110	2870941-0000		1	PIPE	
120	2808262-0000		1	PIPE	
130	2808263-0000		1	PIPE	
140	2808264-0000		1	PIPE	
150	2808430-0000		1	PIPE	
160	2808431-0000		1	PIPE	
170	2808432-0000		1	PIPE	
180	3058513-0000		1	PIPE	
190	2808440-0000		1	PIPE	
220	2835294-0000		1	PLUG	
230	1036294-0000		1	GASKET	
240	1549526-0000		1	CONTAINER	
250	3020084-0000		1	TOUCH GUARD	
260	3020085-0000		1	TOUCH GUARD	
270	1129086-0000		1	BRACKET	
280	3144125-0000		1	INSERT	
290	3037854-0000		1	SPLASH PLATE	
310	312105-0372		3	SCREW, M6S ISO 4017 M6X25 A4 80	
320	312105-0453		31	SCREW, M6S ISO 4017 M8X25 A4 80	
350	312105-0451		12	SCREW, M6S ISO 4017 M8X20 A4 80	
360	312605-0318		29	HEXAGON NUT, M6M M8 A280	
370	315105-0124		4	WASHER PLAIN, 3,2X6X0,5 A4 BRB	
380	315105-0153		2	WASHER PLAIN, 6,4X12X1,5 A4 BRB	
390	342759-0109		2	ASSEMBLED ADJUSTABLE LPIPE CONNECTION 12	
420	312109-0457		4	SCREW, M6S ISO 4017 M8X35 A4 80	
440	315229-0203		2	GASKET 22,1X30,1X3,7 MM 1"	
470	90326-0012		2	PROTECTIVE COVER, 03-001 10	
480	315229-0204		3	GASKET 34,8X42,8X3,7 MM 1"1/2	
490	315229-0205		4	GASKET 47,5X55,5X3,7 MM 2 INCH	
500	3092164-0000		2	GASKET	
510	315229-0206		2	GASKET 60,2X68,2X3,7 MM 2"1/2	
530	90458-0323		1	NUT, M20X1,5	
540	90458-0430		1	GLAND FITTING, VK 22054YUL16	
550	353249-0013		1	INSERT, SINGLE HOLE, EK154 13	
560	90458-0431		1	GLAND FITTING, VK 22554YUL16	
U70B1070	90044-0194		1	INDUCTIVE SENSOR, IN 5329	
U70B2280	90326-0057		1	THERMOCOUPLE, 5110 057-000	
U70B2290	90326-0057		1	THERMOCOUPLE, 5110 057-000	
U70E0080	2874301-0000		1	HEATER	
U70X2280	90326-0020		1	SOCKET, FEMALE YELLOW CR-AL, 03-22000A	
U70X2290	90326-0020		1	SOCKET, FEMALE YELLOW CR-AL, 03-22000A	

Machine Type | Group Description | Used-In | Group Number | Page No

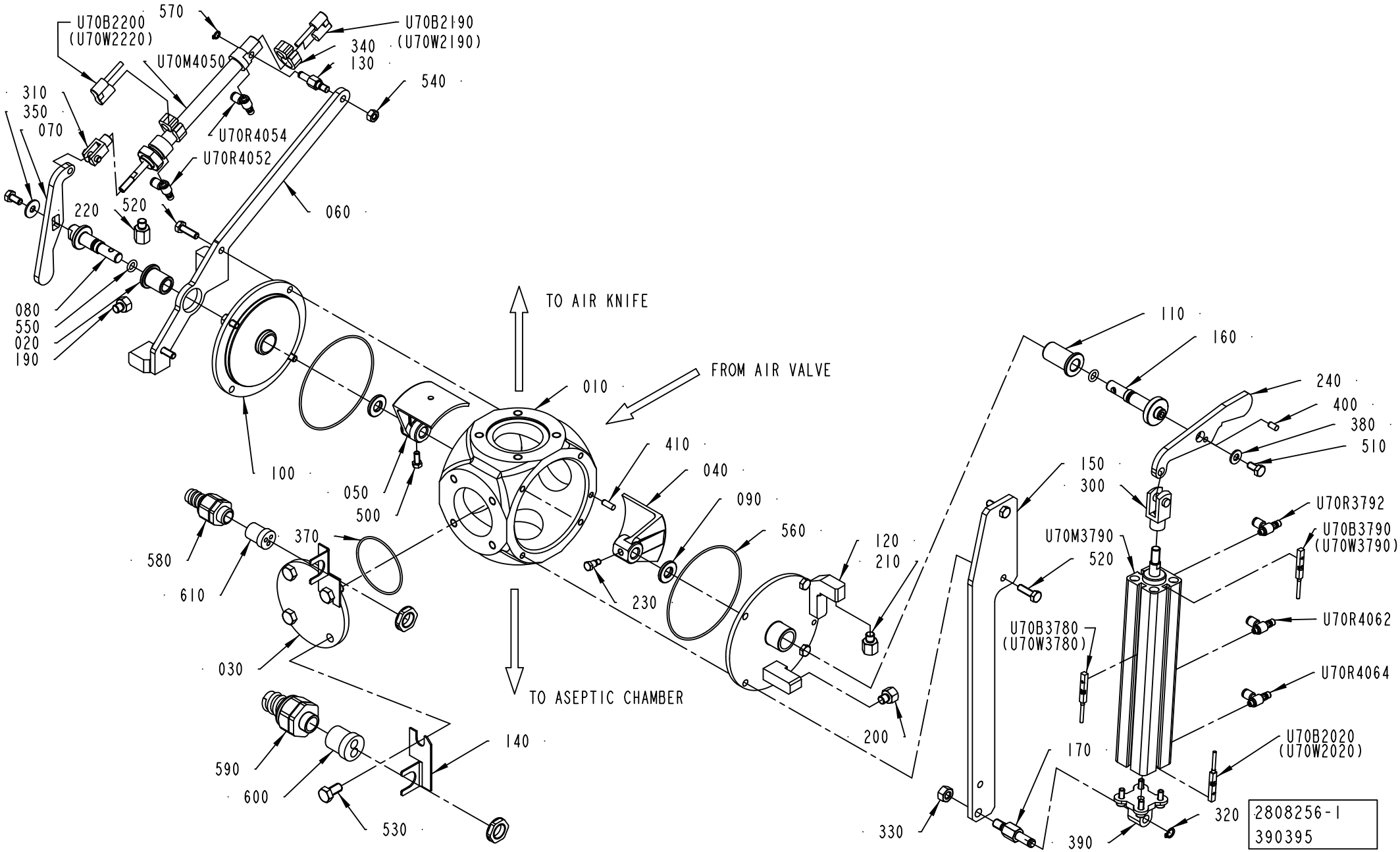
U70B2200
(U70W2220)
570
U70B2190
(U70W2190)
340
130
U70M4050
540
310
350
070
U70R4054
U70R4052
220
520
060
080
550
020
190
TO AIR KNIFE
FROM AIR VALVE
010
110
160
240
400
380
510
410
040
090
560
120
210
100
050
500
150
300
U70R3792
U70M3790
U70B3790
(U70W3790)
520
370
580
610
230
U70B3780
(U70W3780)
U70R4062
U70R4064
030
TO ASEPTIC CHAMBER
200
170
U70B2020
(U70W2020)
140
590
600
530
320
330
390
2808256-1
390395

ECM: 407824 - 20090715
Group number: 2808256-0100
Assembly Drawing: 2808256-1_1_AC

Pos	Part No	UN	Qty	Description	Page No
-					
010	1524236-0000		1	VALVE HOUSING	
020	2883295-0000		1	BUSHING	
030	1539741-0000		1	COVER	
040	2922729-0000		1	SHUTTER	
050	1539743-0000		1	SHUTTER	
060	3020058-0000		1	BRACKET	
070	1539745-0000		1	LEVER	
080	1539750-0000		1	SHAFT	
090	2890041-0000		2	WASHER	
100	1539751-0000		1	COVER	
110	2906131-0000		1	BUSHING	
120	2922726-0000		1	COVER	
130	1548742-0000		1	SPACER	
140	1036610-0000		2	BRACKET	
150	2922727-0000		1	BRACKET	
160	2922732-0000		1	SHAFT	
170	2906125-0000		1	SPACER	
190	2898880-0001		1	SCREW	
200	2898880-0002		1	SCREW	
210	2898880-0003		1	SCREW	
220	2898880-0004		1	SCREW	
230	2922731-0000		1	SHOULDER SCREW	
240	2922733-0000		1	LEVER	
300	90459-2590		1	ROD END, CLEVIS WITH AXLE M8	
310	90450-0725		1	ROD END, CLEVIS WITH AXLE M6	
320	90141-0015		1	RETAINING RING FOR SHAFT DIN 471 8 SS	
330	312605-0318		1	HEXAGON NUT, M6M M8 A280	
340	90459-0799		2	SENSOR BRACKET, SMBR-12 FOR CYL 12	
350	90005-0060		1	WASHER PLAIN, RBS 6,4/M6)/18,H=1,5	
360	90458-0322		2	NUT, M16X1,5	
370	90459-1189		1	O-RING 56,87X1,78 MM	
380	315105-0156		1	WASHER PLAIN, 6,7X14X1,5 A4 BRB	
390	90459-4558		1	SWIVEL FLANGE 25	
400	311103-0305		1	PARALLEL PIN ISO 2338 5M6X10 A1	
410	311103-0307		1	PARALLEL PIN ISO 2338 5M6X14 A1	
500	312105-0327		1	SCREW, M6S ISO 4017 M5X12 A4 80	
510	312105-0366		6	SCREW, M6S ISO 4017 M6X12 A4 80	
520	312105-0370		4	SCREW, M6S ISO 4017 M6X20 A4 80	
530	312105-0449		4	SCREW, M6S ISO 4017 M8X16 A4 80	
540	312605-0316		1	HEXAGON NUT, M6M M6 A280	
550	315204-0206		2	O-RING 7,3X2,4 MM	
560	315205-0807		2	O-RING 94,97X1,78 MM	
570	315751-0103		1	RETAINING RING FOR SHAFT DIN 471 6X 0.7C	
580	90458-0427		1	GLAND FITTING, VK 21652YUL11	
590	90457-0146		1	GLAND FITTING, VK 15154YUL16	
600	3044511-0000		1	INSERT	
610	353249-0025		1	INSERT, MULTI HOLE, E152M 3X4	
U70B2020	90600-3272		1	PROX. SENSOR, SMT-8M-PS-24V-K-5,0-OE	
U70B2190	90459-0829		1	PROX. SENSOR, SMTO-4U-PS-K-LED-24	
U70B2200	90459-0829		1	PROX. SENSOR, SMTO-4U-PS-K-LED-24	
U70B3780	90600-3272		1	PROX. SENSOR, SMT-8M-PS-24V-K-5,0-OE	
U70B3790	90600-3272		1	PROX. SENSOR, SMT-8M-PS-24V-K-5,0-OE	
U70M3790	90600-3837		1	DOUBLE ACTING, COMPACT, CYL 25-50/80	
U70M4050	90459-0713		1	DOUBLE ACTING, MINI-ISO, CYL. 12-80	
U70R3792	90235-0845		1	THROTTLE CHECK VALVE M5, MANUAL, 4MM	
U70R4052	90235-0845		1	THROTTLE CHECK VALVE M5, MANUAL, 4MM	
U70R4054	90235-0845		1	THROTTLE CHECK VALVE M5, MANUAL, 4MM	
U70R4062	90235-0845		1	THROTTLE CHECK VALVE M5, MANUAL, 4MM	
U70R4064	90235-0845		1	THROTTLE CHECK VALVE M5, MANUAL, 4MM	

Machine Type	Group Description	Used-In	Group Number	Page No

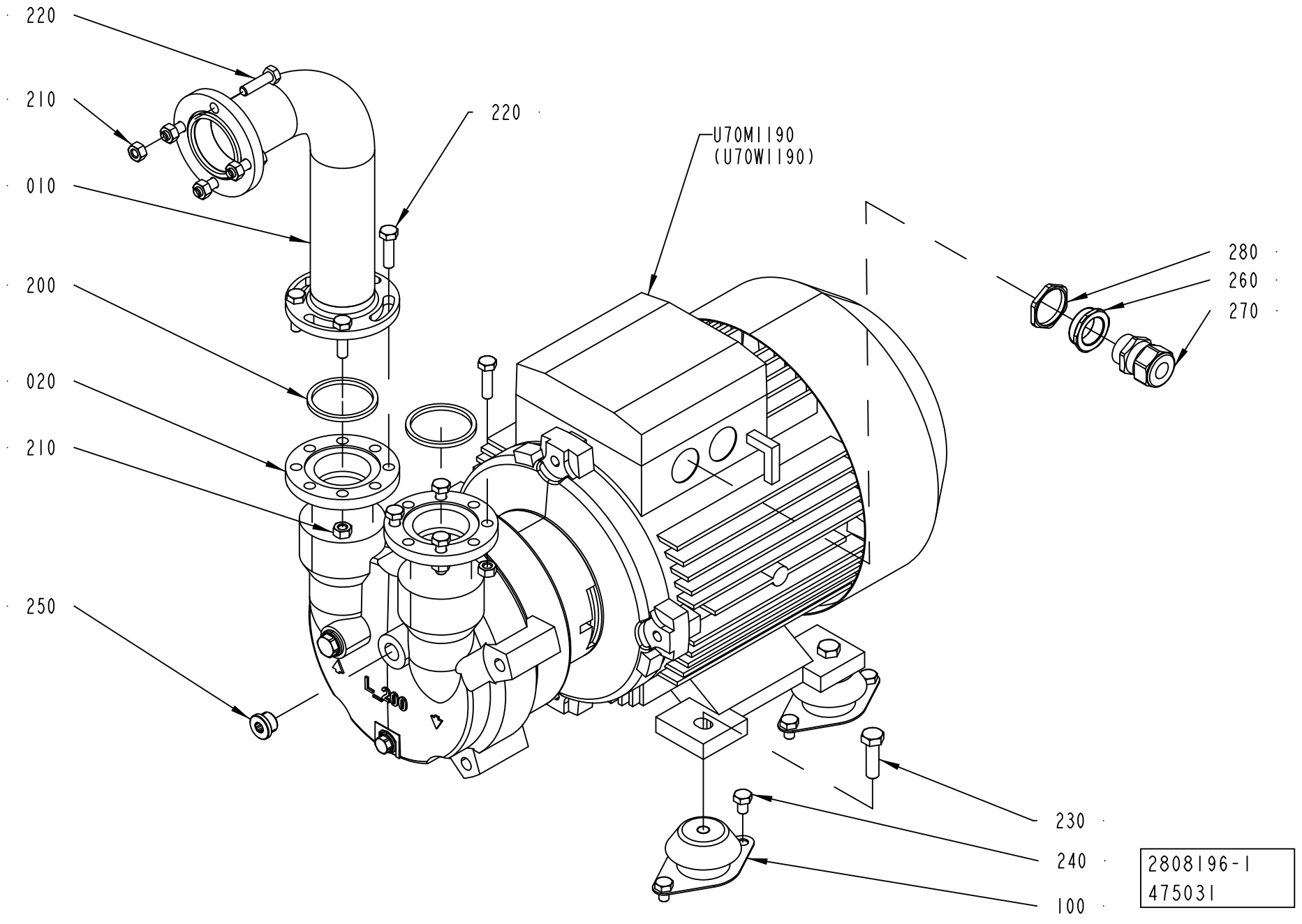
220
210
010
200
020
210
250
220
U70M1190
(U70W1190)
280
260
270
230
240
100
2808196-1
475031

ECM: 488154 - 20110402
Group number: 2808196-0100
Assembly Drawing: 2808196-1_1_AB

Pos	Part No	UN	Qty	Description	Page No
-					
010	2808198-0000		1	PIPE	
020	2808197-0000		2	FLANGE	
100	90347-0144		4	VIBRATION DAMPER, NO. RA 40EM-A	
200	315229-0105		3	SQUARE RING, 48,5X55,5X3,7 MM 2" FDA	
210	312605-0318		12	HEXAGON NUT, M6M M8 A280	
220	312105-0455		12	SCREW, M6S ISO 4017 M8X30 A4 80	
230	312105-0497		4	SCREW, M6S ISO 4017 M10X35 A4 80	
240	312105-0447		8	SCREW, M6S ISO 4017 M8X12 A4 80	
250	90600-1712		1	PLUG, EXT. THREAD HEX. SOCKET 09190017	
260	90459-4186		1	REDUCER, M32/M25	
270	90458-0440		1	GLAND, EXTENDED WITH INSERT, M25X1,5	
280	353250-0032		1	GLAND LOCK NUT, M32X1,5	
U70M1190	90602-6227		1	COMPRESSOR, 2BV2070-8ZH03-8S	
	90602-6187		*1*	*SPARE PART KIT, 8692000015000*	

Pos	Part No	UN	Qty	Description	Page No

HEAT EXCHANGER VALVE

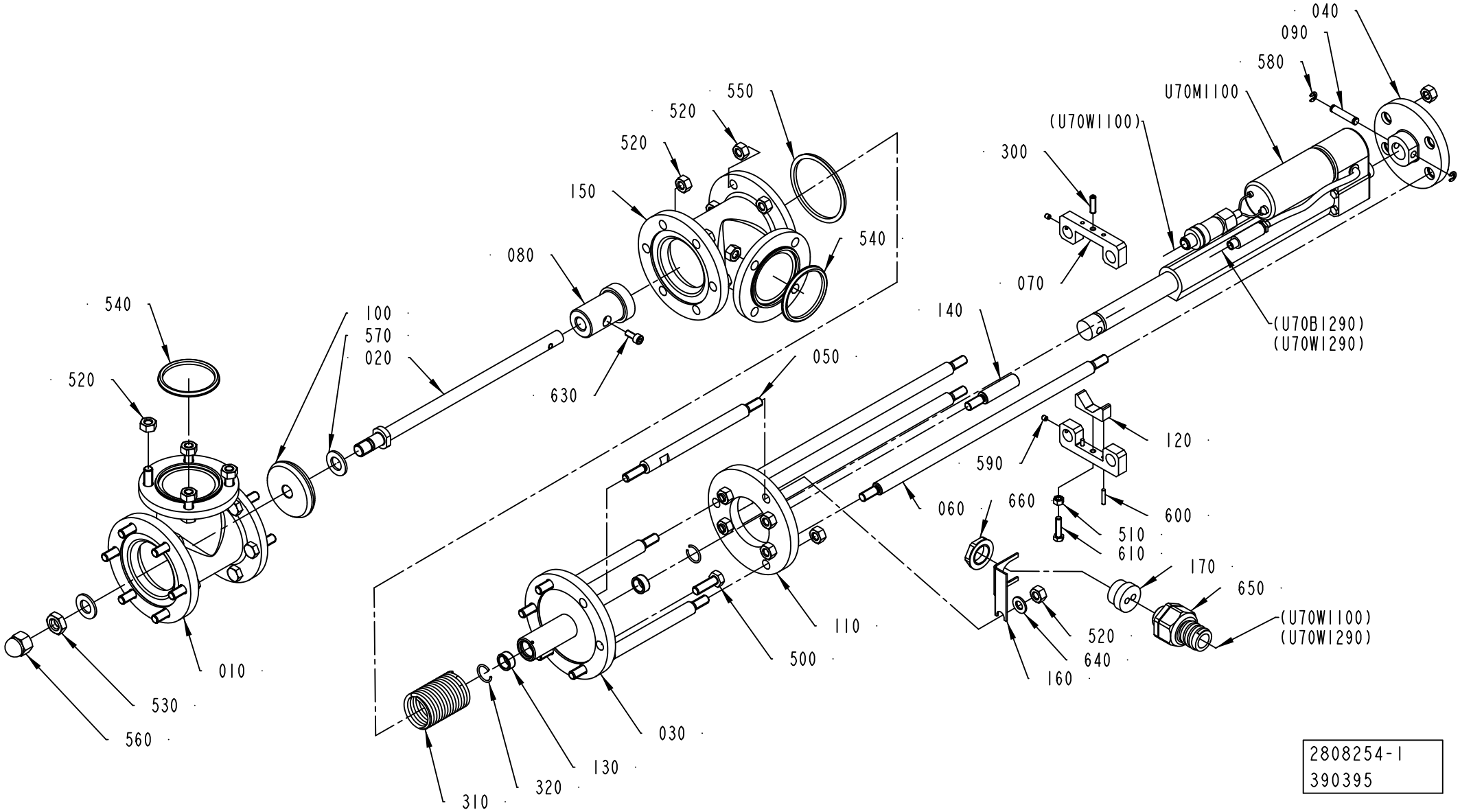

ECM: 432518 - 20100301
Group number: 2808254-0100
Assembly Drawing: 2808254-1_1_AD

Pos	Part No	UN	Qty	Description	Page No
-					
010	1036187-0000		1	T-PIPE	
020	2709788-0000		1	SHAFT	
030	2833049-0000		1	SPINDLE GUIDE	
040	2720849-0000		1	FLANGE	
050	1036192-0000		3	SPACER ROD	
060	2720848-0000		3	SHAFT	
070	2720850-0000		2	BRACKET	
080	3037847-0000		1	PIN	
090	2720852-0000		1	PIN	
100	2709291-0000		1	SEAL RING	
110	2720847-0000		1	SUPPORT FLANGE	
120	2720853-0000		1	GUIDE	
130	532349-0000		2	PLAIN BEARING	
140	2775096-0000		1	STUD	
150	1036194-0000		1	T-PIPE	
160	1129086-0000		1	BRACKET	
170	2871502-0000		1	INSERT	
300	90287-0118		1	SCREW SPRINGLOAD. SOCK. HEX HEAD M5X18	
310	90459-6255		1	COMP. SPRING, 23460, 3,2X35,2X190	
320	90141-0022		2	SNAP RING B 16	
500	312105-0453		19	SCREW, M6S ISO 4017 M8X25 A4 80	
510	312605-0314		1	HEXAGON NUT, M6M M5 A280	
520	312605-0318		30	HEXAGON NUT, M6M M8 A280	
530	312625-0322		1	HEXAGON THIN NUT, EN 24035 ML6M M12 A4	
540	315229-0205		2	GASKET 47,5X55,5X3,7 MM 2 INCH	
550	315229-0206		2	GASKET 60,2X68,2X3,7 MM 2"1/2	
560	312705-0322		1	NUT HEX. DOMED CAP MHM-6 M12 A2	
570	315105-0178		2	WASHER PLAIN, 13X24X2,5 A4 BRB	
580	315755-0106		2	RETAINING RING SHAFT DIN 6799 4 SS	
590	312318-0283		2	SET SCREW, CUP END ISO4029 M4X4 A4	
600	311103-0236		2	PARALLEL PIN ISO 2338 3M6X16 A1	
610	312105-0331		1	SCREW, M6S ISO 4017 M5X20 A4 80	
630	312115-0327		1	SCREW ISO4762 M5X12 A4 80	
640	315105-0165		1	WASHER PLAIN, 8,4X16X1,6 A4 BRB	
650	90458-0430		1	GLAND FITTING, VK 22054YUL16	
660	90458-0323		1	NUT, M20X1,5	
U70M1100	90459-4977		1	LINEAR ACTUATOR, LA 1 SP-SP36 17A16-04	

Pos	Part No	UN	Qty	Description	Page No

Machine Type	Group Description	Used-In	Group Number	Page No

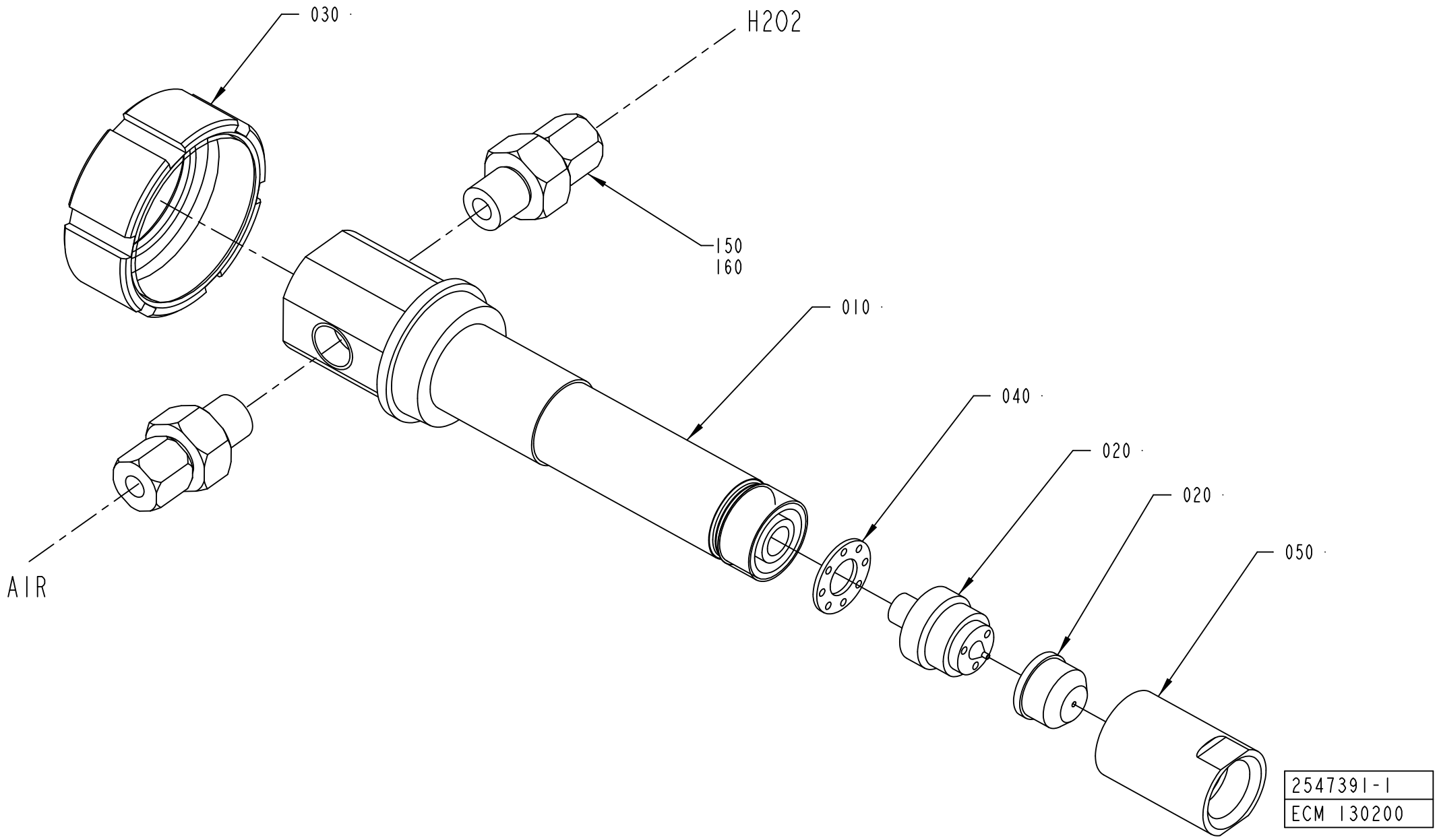
030
H202
150
160
010
040
020
020
050
AIR
2547391-1
ECM 130200

ECM: 344003 - 20080402
Group number: 2547391-0100
Assembly Drawing: 2547391-1_1_AB

Pos	Part No	UN	Qty	Description	Page No
-					
010	2563760-0000		1	EXTENSION	
020	2563759-0000		1	SPRAY SYSTEM	
030	1512405-0000		1	NUT	
040	2563762-0000		1	SPACER	
050	2563761-0000		1	NUT	
150	90030-0202		2	CONN. STR., 6-G1/4, EXT. THREAD	
160	90144-0007		1	TAPE	

Pos	Part No	UN	Qty	Description	Page No

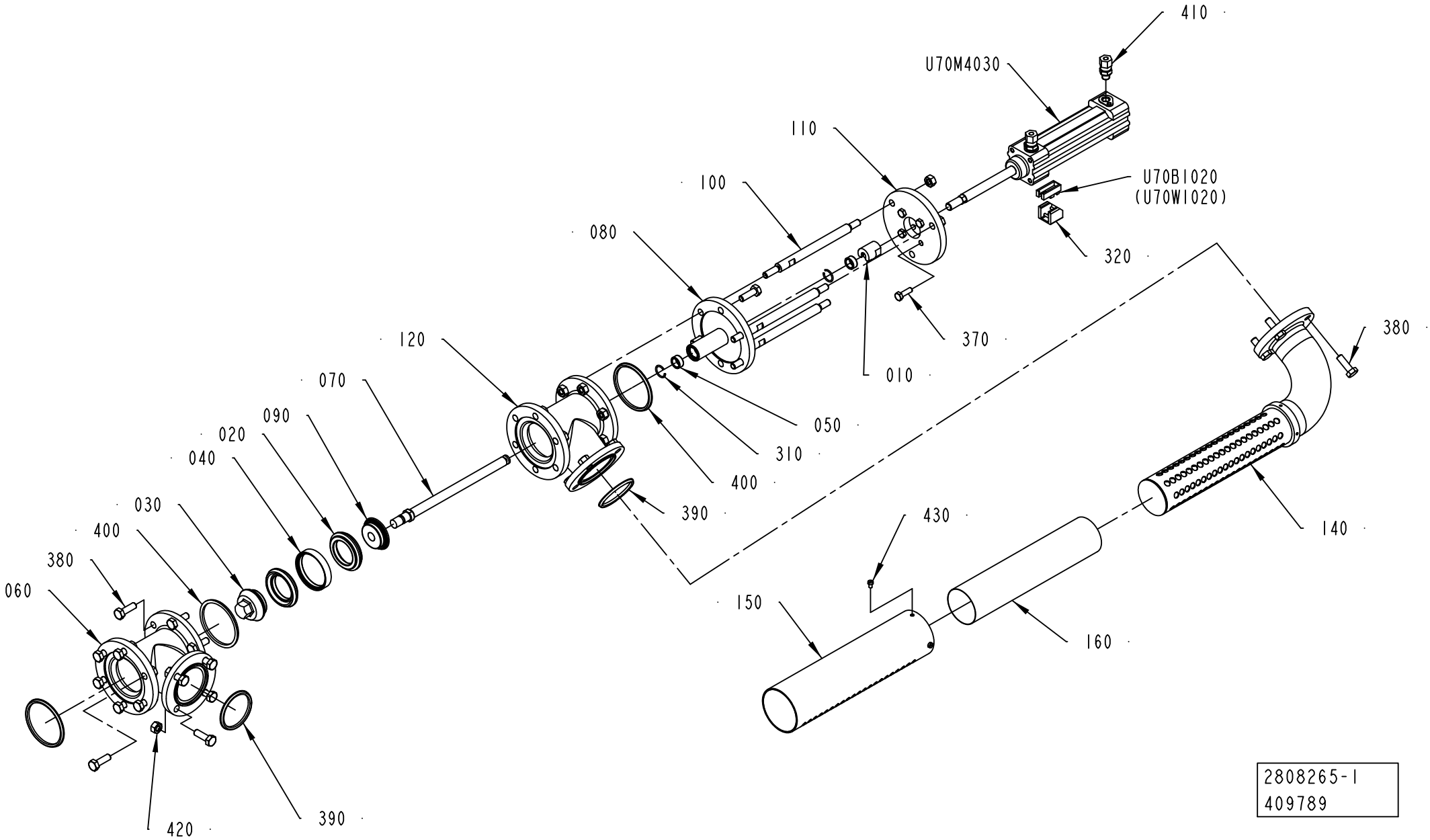
410
U70M4030
110
100
U70B1020
(U70W1020)
080
320
370
120
070
090
020
040
030
400
380
060
010
050
310
400
390
380
140
430
150
160
420
390
2808265-1
409789

ECM: 411474 - 20091001
Group number: 2808265-0100
Assembly Drawing: 2808265-1_1_AB

Pos	Part No	UN	Qty	Description	Page No
-					
010	441871-0000		1	PENDULUM SUSPENSION	
020	2826441-0000		2	SEAL RING	
030	2826442-0000		1	VALVE CONE	
040	530599-0000		1	RING	
050	532349-0000		2	PLAIN BEARING	
060	1036187-0000		1	T-PIPE	
070	1036188-0000		1	SHAFT	
080	1036189-0000		1	SPINDEL GUIDE	
090	1036191-0000		1	SEAL HOLDER	
100	1036192-0000		3	SPACER ROD	
110	1036193-0000		1	CYLINDER BRACKET	
120	1036194-0000		1	T-PIPE	
140	2501519-0000		1	PIPE	
150	1511503-0000		1	PIPE	
160	1511755-0000		1	NET	
310	90141-0022		2	SNAP RING B 16	
320	90450-0669		1	SENSOR, BRACKET SERIES 168	
370	312105-0370		4	SCREW, M6S ISO 4017 M6X20 A4 80	
380	312105-0453		23	SCREW, M6S ISO 4017 M8X25 A4 80	
390	315229-0205		2	GASKET 47,5X55,5X3,7 MM 2 INCH	
400	315229-0206		3	GASKET 60,2X68,2X3,7 MM 2"1/2	
410	90030-0184		2	CONN. STR., GE06LRED71	
420	312605-0318		30	HEXAGON NUT, M6M M8 A280	
430	312125-0285		4	SLOTTED HEAD SCREW, ISO1207 M4X6 A4	
U70B1020	90457-0047		1	SENSOR 2750-1-5111-1 W.ADAPTER PNP	
U70M4030	90450-0281		1	DOUBLE ACTING,PROF.CYL 32-80	

Pos	Part No	UN	Qty	Description	Page No

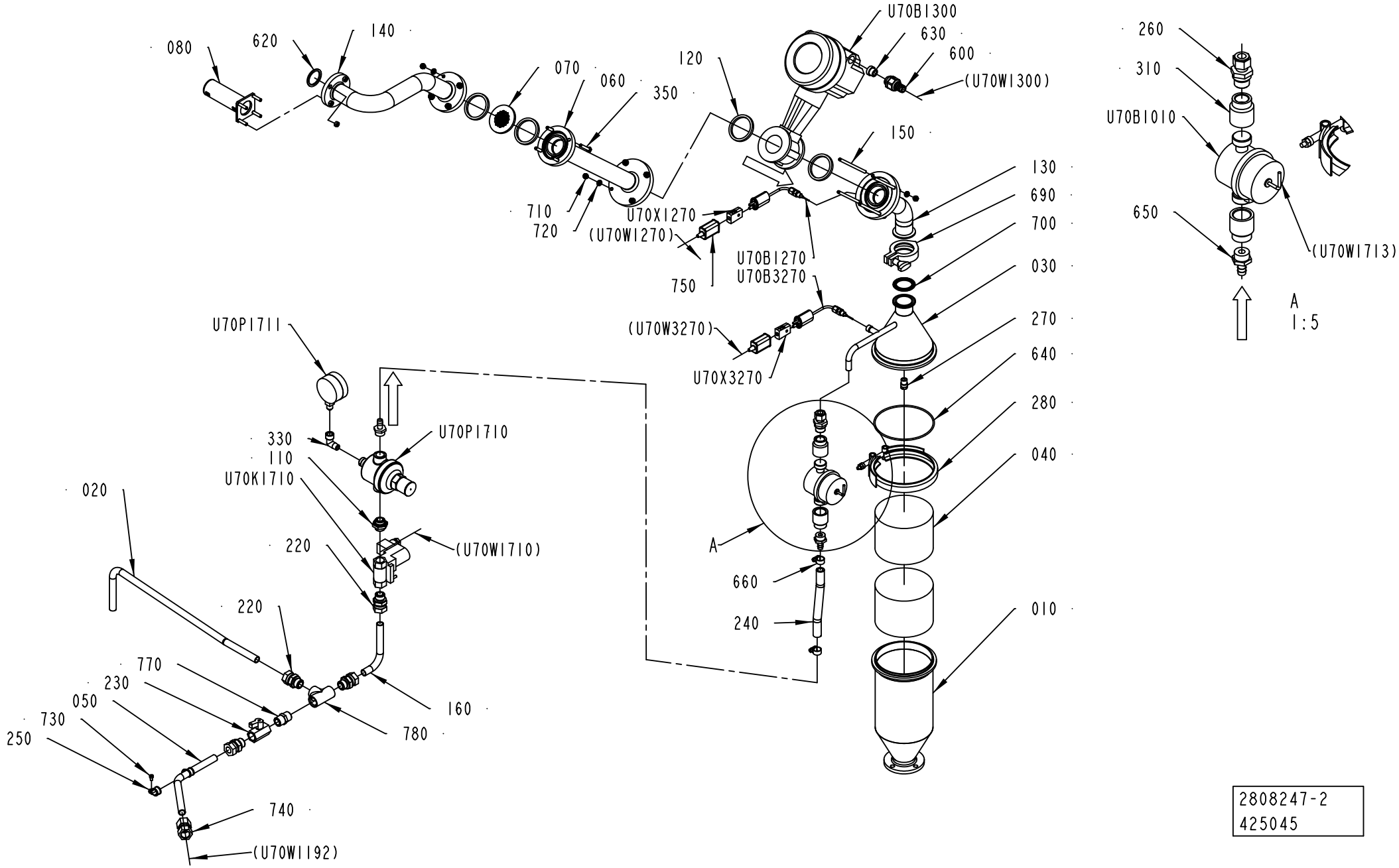

2808247-2
425045

ECM: 460031 - 20101001
Group number: 2808247-0200
Assembly Drawing: 2808247-2_1_AB

Pos	Part No	UN	Qty	Description	Page No
-					
010	2808249-0000		1	CONTAINER	
020	2843998-0000		1	TUBE	
030	2808248-0000		1	UPPER SECTION	
040	546929-0000		2	FILTER	
050	2844051-0000		1	TUBE	
060	2981777-0000		1	PIPE	
070	2835293-0000		1	FLOW CONTROLLER	
080	2808422-0000		1	FILTER	
110	479261-0000		1	NIPPLE	
120	12242-0005		4	GASKET 61X51X5,5	
130	2987115-0000		1	PIPE	
140	3118981-0000		1	PIPE	
150	2685350-0000		4	THREADED ROD	
160	2844052-0000		1	TUBE	
220	90030-0188		4	CONN. STR. GE15LRED71	
230	90187-0062		1	BALL VALVE, G1/2, NPBR	
240	90166-0121	MM	200	HOSE	
250	90165-0039		2	PIPE CLAMP D=15 MM, GSK15/12	
260	90458-2006		1	CONN. STR., 12-R1/2	
270	90459-0106		1	SPRAY NOZZLE, 103 DEG B1/4 HH - SS 14W	
280	90132-0030		1	SUPORTE MV 87177 KS 580T	
290	90144-0073	MM	1	TREBOFLON-TAPE W=13MM	
300	90157-0037	ML	1	THREAD SEALANT LOCTITE 542	
310	90330-0022		2	SLEEVE, REDUCTION, INT, R-202 3/4X1/2	
330	90140-0013		1	ELBOW, 90 INT/EXT, S2020-1/4-1/4	
350	312105-0376		4	SCREW, M6S ISO 4014 M6X35 A4 80	
600	90458-0429		1	GLAND FITTING, VK 22053YUL13	
620	315229-0204		1	GASKET 34,8X42,8X3,7 MM 1"1/2	
630	353249-0011		1	INSERT, SINGLE HOLE, EK153 11	
640	315204-0317		1	O-RING 129,5X3 MM	
650	342901-0105		2	HOSE NIPPLE, EXT.THR. G1/2-12 MM	
660	342991-0101		2	HOSE CLIP,WORM DRIVE TYPE (11)-17	
690	344215-0103		1	CLAMP RING A13MHM 1X1 1/2", 211053	
700	342850-0404		1	GASKET 35,4X49,1X5,2 MM 1"1/2 FDA 3-A	
710	312605-0316		16	HEXAGON NUT, M6M M6 A280	
720	315105-0153		12	WASHER PLAIN, 6,4X12X1,5 A4 BRB	
730	312125-0323		2	SLOTTED HEAD SCREW, ISO1207 M5X8 A4	
740	342725-0114		1	CONN. STR. PIPE GAI15LR71	
750	90326-0012		2	PROTECTIVE COVER, 03-001 10	
770	90330-0021		1	NIPPLE, EXT.THREAD, HEXAGON, R1/2-R1/2	
780	90330-0049		1	T-PIPE, INT. THREAD, R-221R1/2	

Pos	Part No	UN	Qty	Description	Page No
U70B1010	90243-0245		1	MEASURING INSTRUMENT	
U70B1270	90326-0051		1	THERMOCOUPLE, 5110 051-000	
U70B1300	90600-0529		1	FLOW METER, PROWIRL 72W40-SD0BA1AAA0BW	
U70B3270	90326-0051		1	THERMOCOUPLE, 5110 051-000	
U70K1710	90601-4450		1	SOLENOID VALVE, 5281 2/2 NC	
U70P1710	90459-2804		1	REDUCING VALVE G1/2", 51.04.70	
U70P1711	90043-0082		1	PRESSURE GAUGE, 2840, D=63 MM	
U70X1270	90326-0020		1	SOCKET, FEMALE YELLOW CR-AL, 03-22000A	
U70X3270	90326-0020		1	SOCKET, FEMALE YELLOW CR-AL, 03-22000A	

Machine Type	Group Description	Used-In	Group Number	Page No

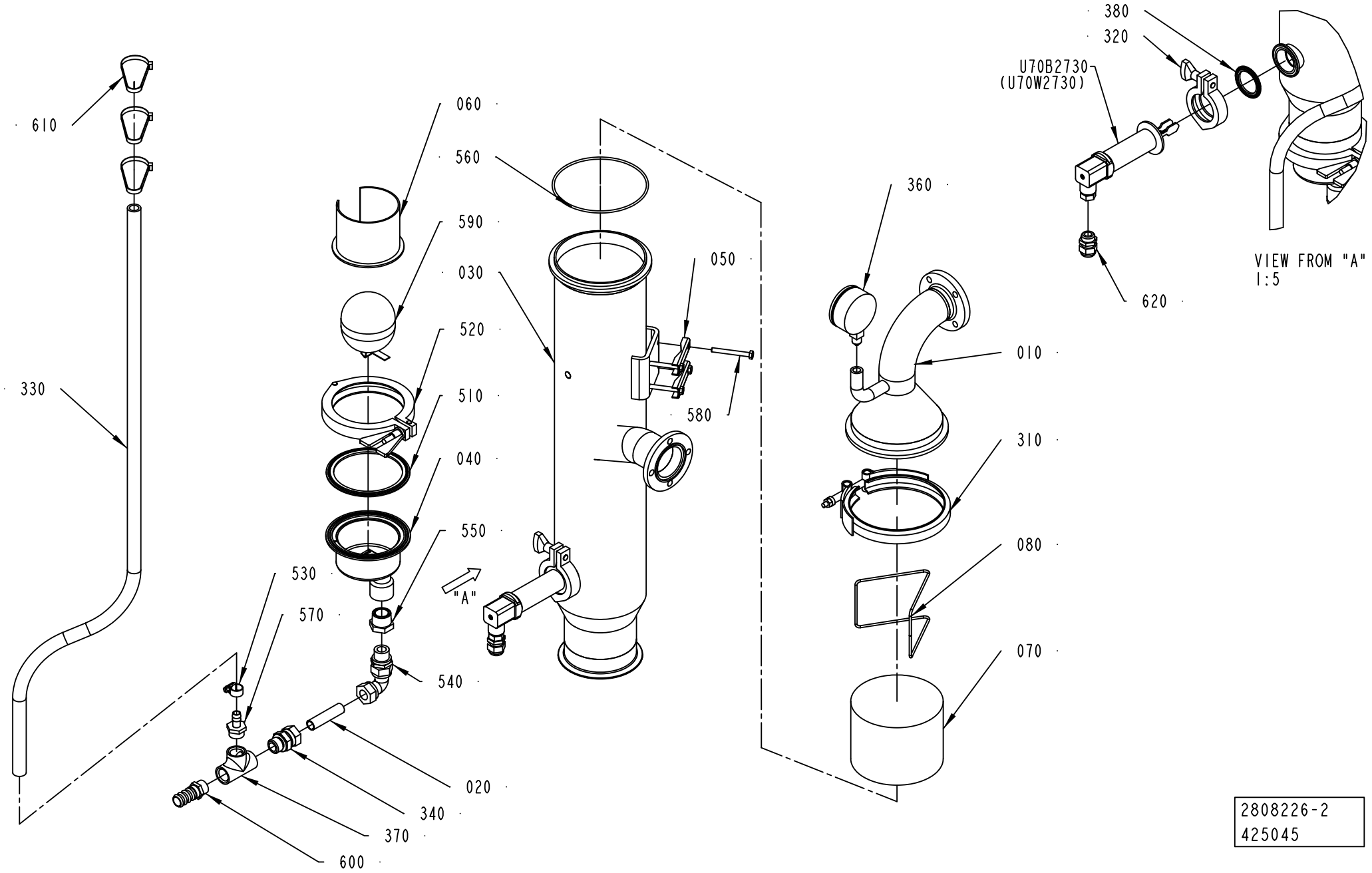

2808226-2
425045

ECM: 432516 - 20100301
Group number: 2808226-0200
Assembly Drawing: 2808226-2_1_AB

Pos	Part No	UN	Qty	Description	Page No
-					
010	2808228-0000		1	UPPER SECTION	
020	1490963-0000		1	PIPE	
030	3037836-0000		1	INTERMEDIARY SECTION	
040	1038634-0000		1	DRAINING	
050	1036811-0000		2	CLAMP	
060	568828-0000		1	FLOAT GUARD	
070	546929-0000		1	FILTER	
080	2685375-0000		1	RETAINING RING	
310	90132-0030		1	SUPORTE MV 87177 KS 580T	
320	344215-0103		1	CLAMP RING A13MHM 1X1 1/2", 211053	
330	90166-0121	MM	1215	HOSE	
340	90030-0188		1	CONN. STR. GE15LRED71	
350	90157-0037	ML	1	THREAD SEALANT LOCTITE 542	
360	90043-0095		1	PRESSURE GAUGE, 2750, D=63 MM, GLYC.	
370	90330-0049		1	T-PIPE, INT. THREAD, R-221R1/2	
380	342850-0404		1	GASKET 35,4X49,1X5,2 MM 1"1/2 FDA 3-A	
390	90144-0073	MM	1	TREBOFLON-TAPE W=13MM	
510	342850-0408		1	GASKET 97X117,7X5,2 MM 4" FDA 3-A	
520	90600-0260		1	CLAMPING PIECE, 10503.000.400.14	
530	342991-0101		1	HOSE CLIP,WORM DRIVE TYPE (11)-17	
540	342738-0221		1	ADJUSTABLE ELBOW CONNECTION 15-G1/2	
550	342206-0109		1	BUSHING, INT.EXT. THR. R3/4-G1/2	
560	315204-0317		1	O-RING 129,5X3 MM	
570	342901-0105		1	HOSE NIPPLE, EXT.THR. G1/2-12 MM	
580	312105-0381		4	SCREW, M6S ISO 4014 M6X55 A4 80	
590	90360-0305		1	FLOAT, ART NO 10739920	
600	90055-0191		1	HOSE NIPPLE, EXT.THR. R1/2X16 MM	
610	352113-0104		3	CABLE TIE, BLACK 300X4,8 MM	
620	352103-0106		1	CABLE GLAND, ST 11, PR18,6/PG11	
U70B2730	90600-2107		1	LEVEL SWITCH, FTL20H-0TCJ2B	

Pos	Part No	UN	Qty	Description	Page No

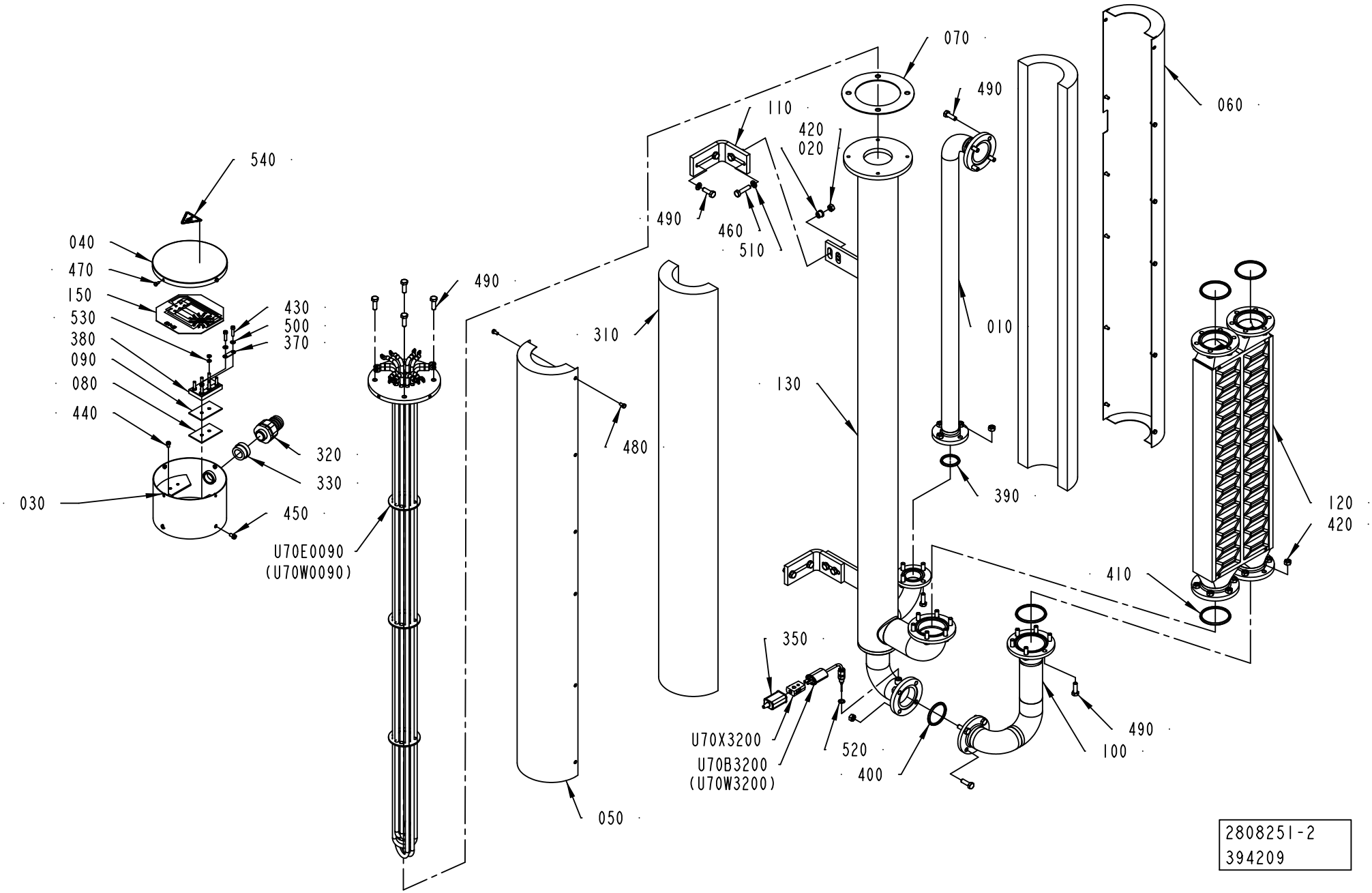
540
040
470
150
530
380
090
080
440
030
430
500
370
320
330
450
U70E0090
(U70W0090)
490
310
480
050
070
110
420
020
490
460
510
490
060
010
130
390
120
420
410
350
U70X3200
U70B3200
(U70W3200)
520
400
490
100
2808251-2
394209

ECM: 493287 - 20110701
Group number: 2808251-0200
Assembly Drawing: 2808251-2_1_AA

Pos	Part No	UN	Qty	Description	Page No
ANSI					
540	359715-0100		1	WARNING SIGN ANSI (H), ELECTRIC SHOCK	
ISO					
540	359705-0015		1	WARNING SIGN ISO, RISK OF ELECTRIC SHOCK	
Common Parts					
010	2808252-0000		1	PIPE	
020	1519601-0000		2	BUSHING	
030	3037848-0000		1	CONNECTION	
040	29876-0000		1	COVER	
050	1296849-0000		1	DISCHARGE TRAY	
060	1296850-0000		1	DISCHARGE TRAY	
070	531731-0000		1	GASKET	
080	30298-0000		1	INSULATION	
090	751009-0000		1	INSULATION	
100	1519482-0000		1	PIPE	
110	2808253-0000		2	SUPPORT	
120	3020050-0000		1	HEAT EXCHANGER	
130	1519483-0000		1	HEATING PIPE	
150	491305-0000		1	CONN.DIAGRAM AIR SUPERH.	
300	90153-0020	ML	1	ADHESIVE, BOSTIK 1782 125ML	
310	90411-0005	M	1.1	INSULATION 1200MM SERIE 21 89/154X30	
320	90458-0457		1	GLAND FITTING, VK 22555 D UL21	
330	353249-0016		1	INSERT, SINGLE HOLE, EK155 18	
350	90326-0012		1	PROTECTIVE COVER, 03-001 10	
370	90195-0029		3	CONN. LINK NO324 FOR -28	
380	90603-1575		1	MOTOR PLINTH, 19901	
390	315229-0204		1	GASKET 34,8X42,8X3,7 MM 1"1/2	
400	315229-0205		1	GASKET 47,5X55,5X3,7 MM 2 INCH	
410	315229-0206		4	GASKET 60,2X68,2X3,7 MM 2"1/2	
420	312605-0318		36	HEXAGON NUT, M6M M8 A280	
430	312125-0331		2	SLOTTED HEAD SCREW, ISO1207 M5X20 A4	
440	312125-0323		1	SLOTTED HEAD SCREW, ISO1207 M5X8 A4	
450	312125-0364		4	SCREW ISO 1207 M6X10 A4	
460	312105-0457		4	SCREW, M6S ISO 4014 M8X35 A4 80	
470	312105-0287		4	SCREW, M6S ISO 4017 M4X8 A4 70	
480	312105-0325		12	SCREW, M6S ISO 4017 M5X10 A4 80	
490	312105-0453		32	SCREW, M6S ISO 4017 M8X25 A4 80	
500	315105-0146		2	WASHER PLAIN, 5,3X10X1 A4 BRB	
510	315105-0165		8	WASHER PLAIN, 8,4X16X1,6 A4 BRB	
520	315234-0109		1	WASHER,PL.RND.CU.10,3/13,5 H=1,0	
530	315402-0146		12	LOCK WASHER, DIN127B 5,1 A4, M5-3/16	
U70B3200	90326-0051		1	THERMOCOUPLE, 5110 051-000	
U70E0090	90600-2007		1	HEATING ELEM.15KW 3X230/400V,T90600-2007	
U70X3200	90326-0020		1	SOCKET, FEMALE YELLOW CR-AL, 03-22000A	

Machine Type | Group Description | Used-In | Group Number | Page No

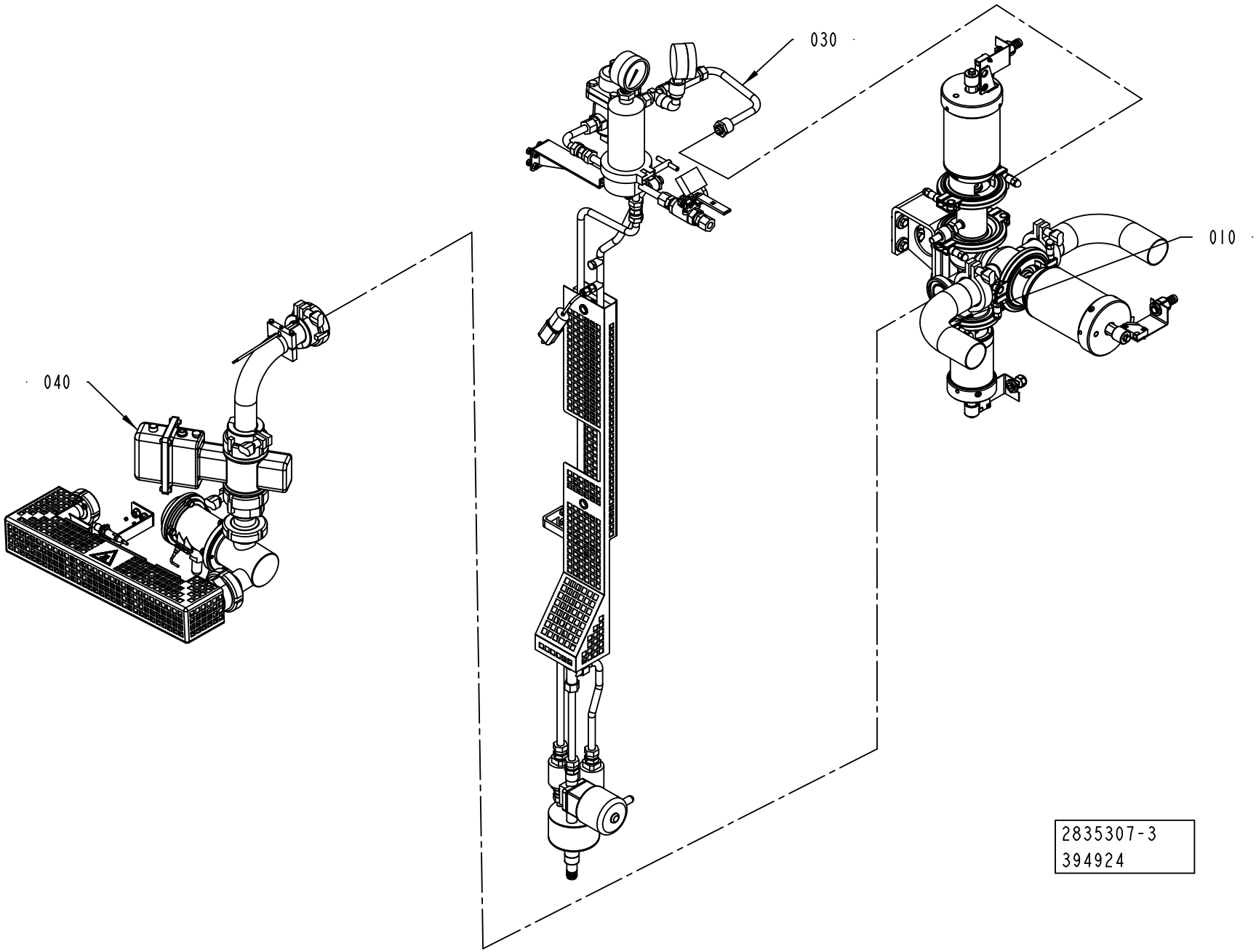
030
010
040
2835307-3
394924

ECM: 507203 - 20111001
Group number: 2835307-0200
Assembly Drawing: 2835307-3_1_AA

Pos	Part No	UN	Qty	Description	Page No
NOHVA					
010	2835303-0100		1	PRODUCT VALVE	**1-171**
030	2808321-0200		1	STEAM SYSTEM	**1-181**
Common Parts					
040	2835279-0200		1	PRODUCT LINES	**1-187, 1-189, 1-191**

Pos	Part No	UN	Qty	Description	Page No

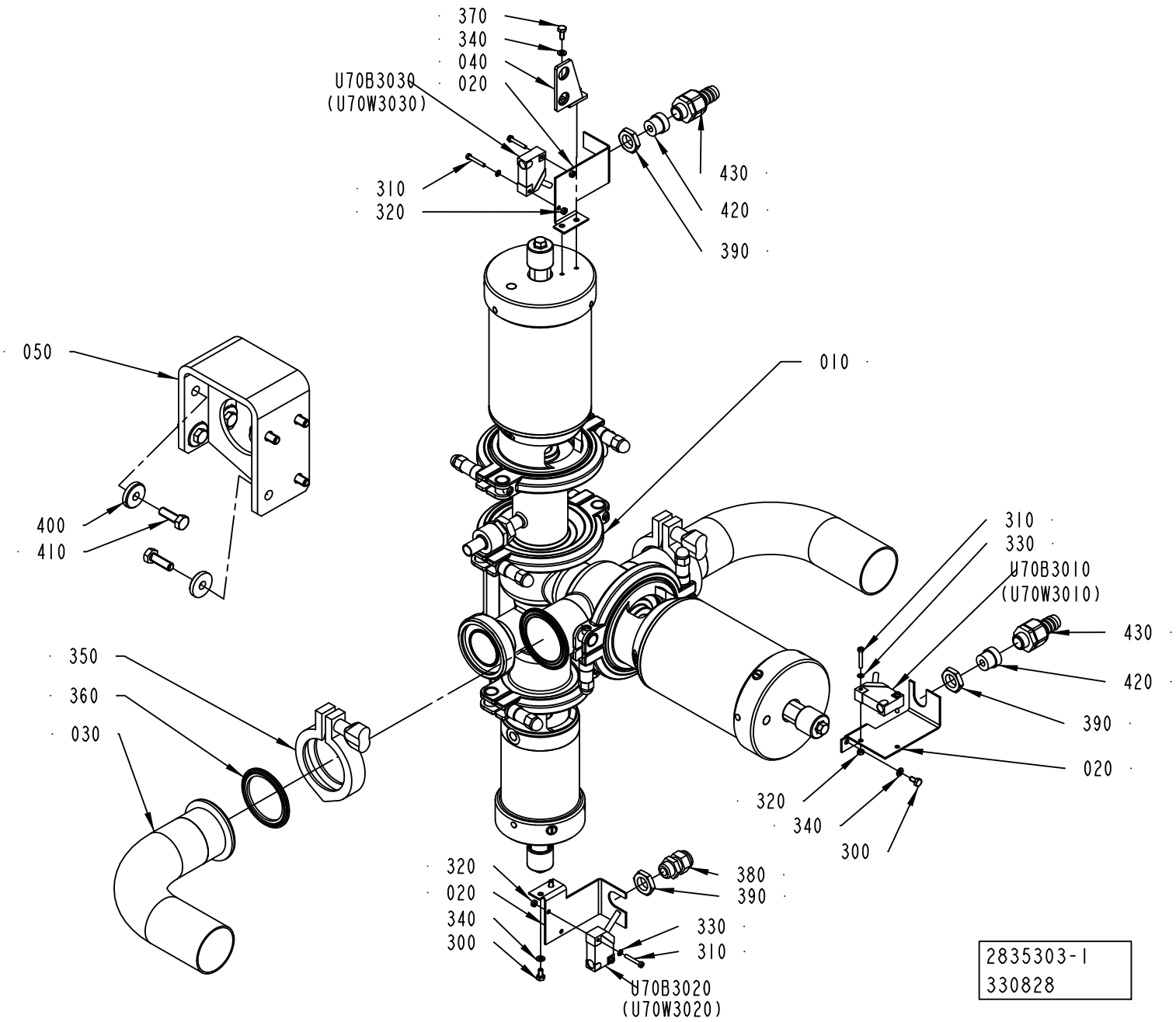
370
340
040
020
U70B3030
(U70W3030)
310
320
430
420
390
050
010
400
410
310
330
U70B3010
(U70W3010)
430
420
390
020
350
360
030
320
340
300
320
020
340
300
380
390
330
310
U70B3020
(U70W3020)
2835303-1
330828

ECM: 394369 - 20090623
Group number: 2835303-0100
Assembly Drawing: 2835303-1_1_AA

Pos	Part No	UN	Qty	Description	Page No
-					
010	2864005-0100		1	PRODUCT VALVE	**1-173**
020	1037093-0000		3	SENSOR BRACKET	
030	2833039-0000		2	PIPE	
040	2559095-0000		1	BRACKET	
050	2835305-0000		1	BRACKET	
300	312105-0287		4	SCREW, M6S ISO 4017 M4X8 A4 70	
310	312125-0230		6	SLOTTED HEAD SCREW, ISO1207 M3X20 A4	
320	312605-0310		6	HEXAGON NUT, M6M M3 A280	
330	315105-0124		6	WASHER PLAIN, 3,2X6X0,5 A4 BRB	
340	315105-0136		6	WASHER PLAIN, 4,3X9X0,8 A4 BRB	
350	342840-0105		2	CLAMPING PIECE, GH13LAH2304NO79612011202	
360	342850-0305		2	GASKET 47,8X62,6X5,2 MM 2" FDA 3-A	
370	312105-0289		2	SCREW, M6S ISO 4017 M4X10 A4 70	
380	90458-0306		1	CABLE GLAND, M16X1,5, 5311 1010	
390	90458-0322		3	NUT, M16X1,5	
400	315125-0165		8	WASHER HIGH, TBRSB 8,4X26X5 A4	
410	312105-0453		8	SCREW, M6S ISO 4017 M8X25 A4 80	
420	353249-0008		2	INSERT, SINGLE HOLE, EK152 7	
430	90458-0427		2	GLAND FITTING, VK 21652YUL11	
U70B3010	90044-0194		1	INDUCTIVE SENSOR, IN 5329	
U70B3020	90044-0194		1	INDUCTIVE SENSOR, IN 5329	
U70B3030	90044-0194		1	INDUCTIVE SENSOR, IN 5329	

Pos	Part No	UN	Qty	Description	Page No

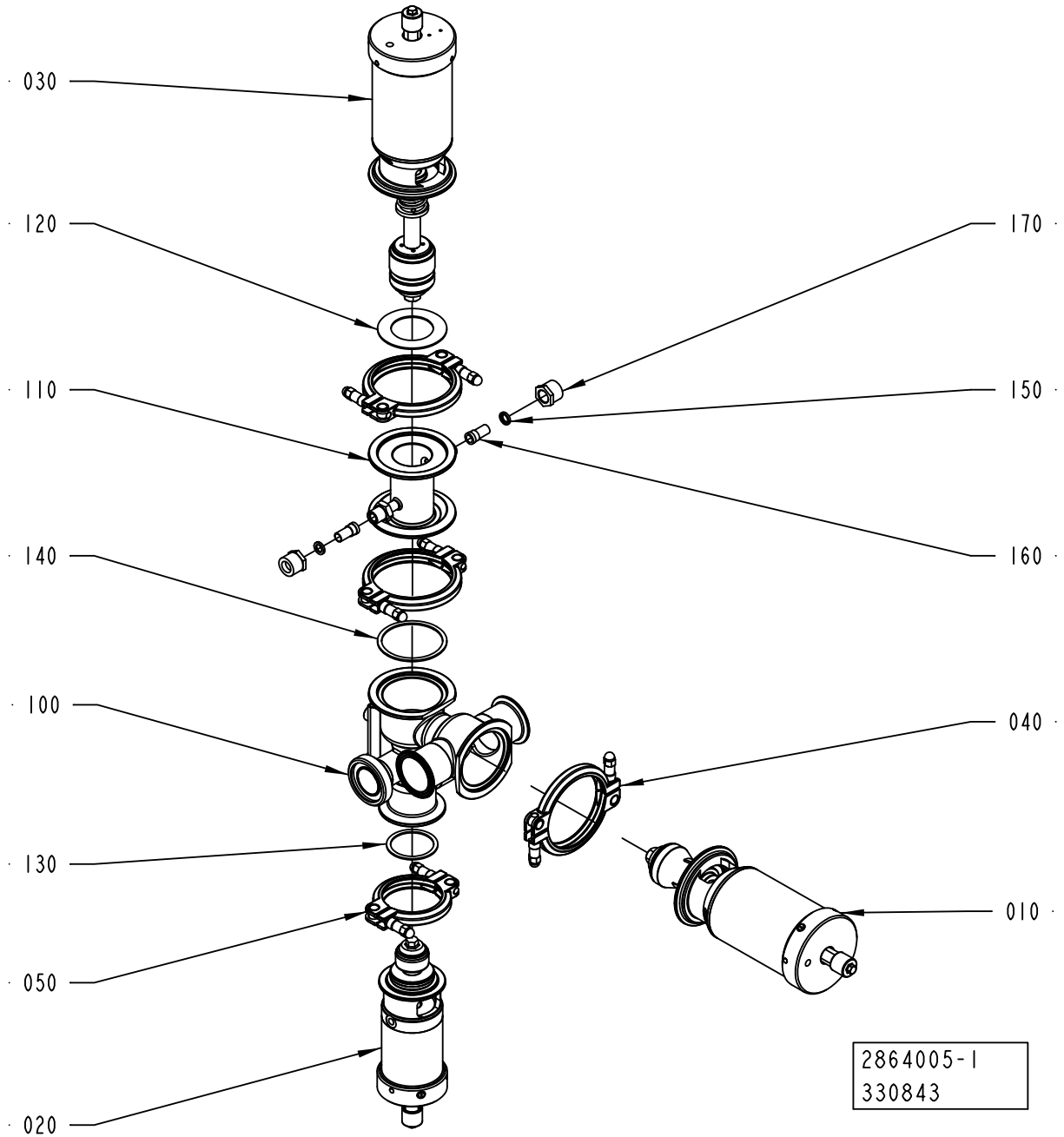
030
120
110
140
100
130
050
020
170
150
160
040
010
2864005-1
330843

ECM: 443657 - 20100701
Group number: 2864005-0100
Assembly Drawing: 2864005-1_1_AA

Pos	Part No	UN	Qty	Description	Page No
-					
010	2922735-0100		1	A-CYLINDER	**1-175**
020	576438-0100		1	B-CYLINDER	**1-177**
030	576437-0100		1	C-CYLINDER	**1-179**
040	541163-0200		3	CLAMP RING	**1-21**
050	541164-0200		1	CLAMP RING	**1-27**
100	3020525-0000		1	BODY	
110	567018-0000		1	STEAM HOUSE	
120	539212-0000		1	GASKET	
130	90207-0365		1	GASKET 53X63X1,8 MM 2,5" FDA 3-A	
140	90207-0363		1	GASKET 75X85X1,8 MM 3" FDA 3-A	
150	90091-0266		2	SEAL RING 10,4X16,3X2,5 MM	
160	90030-0336		2	CONN. STRAIGHT, 316L-12M-BVCO-3	
170	90030-0338		2	NUT, PIPE & CONNECTORS, SS-8-BVCO-4	

Pos	Part No	UN	Qty	Description	Page No

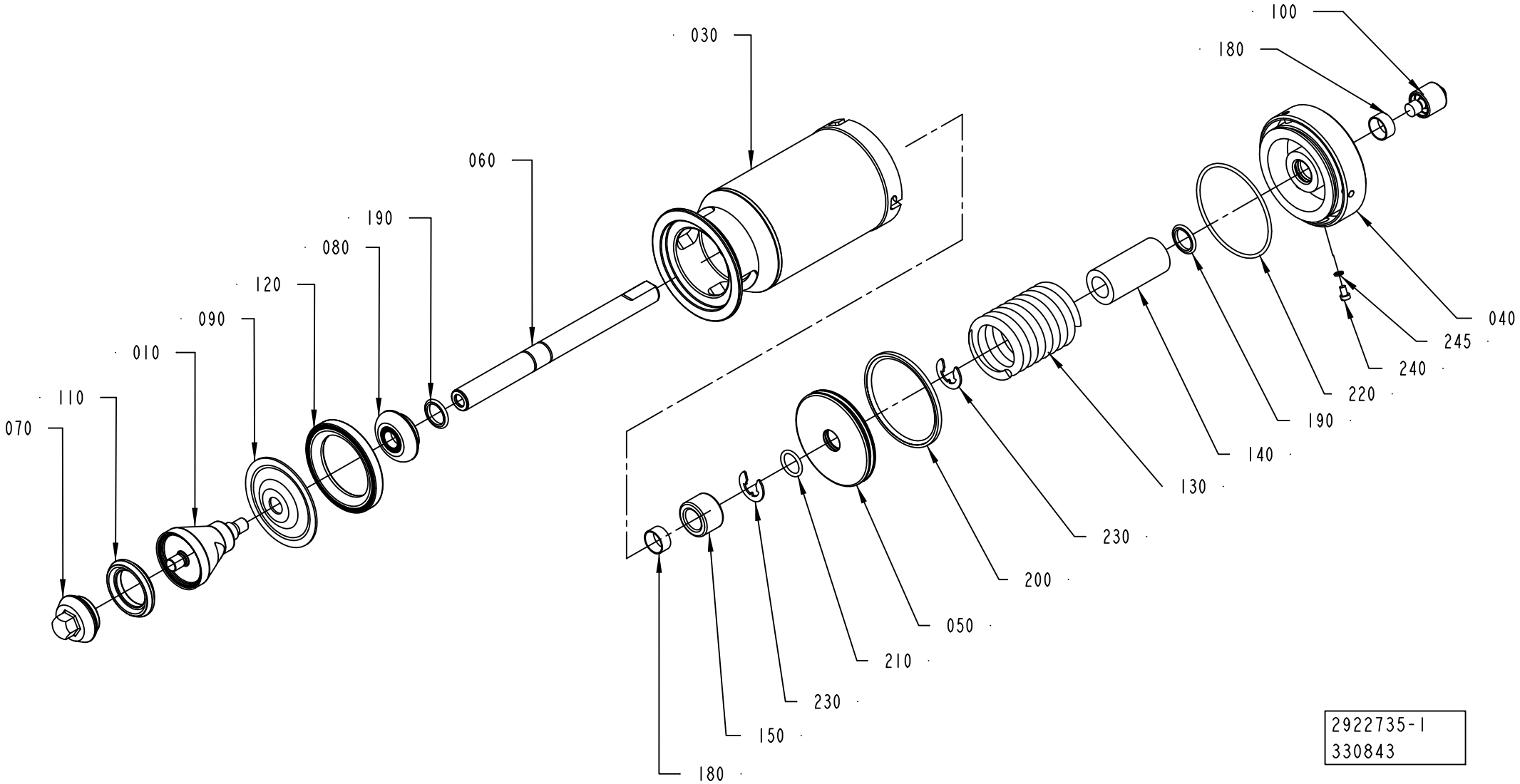
100
180
030
060
190
080
120
090
010
110
070
040
245
240
220
190
140
130
230
200
050
210
230
150
180
2922735-1
330843

ECM: 379844 - 20081219
Group number: 2922735-0100
Assembly Drawing: 2922735-1_1_AA

Pos	Part No	UN	Qty	Description	Page No
-					
010	2833037-0000		1	SEAL RING	
030	576439-0000		1	CYLINDER HOUSING	
040	576440-0000		1	END SECTION	
050	576441-0000		1	PISTON	
060	576446-0000		1	PISTON ROD	
070	2826442-0000		1	VALVE CONE	
080	541166-0000		1	WASHER	
090	533169-0000		1	DIAPHRAGM	
100	553607-0000		1	SLEEVE	
110	2826441-0000		1	SEAL RING	
120	440655-0000		1	RING	
130	440663-0000		1	COMPRESSION SPRING	
140	576448-0000		1	SPACER	
150	576449-0000		1	SPACER	
180	90091-0238		2	WEAR RING 20X22X10 MM	
190	90091-0237		2	ROD SEAL GLYD RING 20X27,5X3 MM	
200	90091-0336		1	PISTON SEAL GLYD RING 79X90X4,2 MM	
210	315204-0215		1	O-RING 19,2X3 MM	
220	315204-0308		1	O-RING 84,5X3 MM	
230	315754-0113		2	RETAINING RING SHAFT DIN 6799 15	
240	312125-0323		1	SLOTTED HEAD SCREW, ISO1207 M5X8 A4	
245	315239-0101		1	NYLON WASHER M5, M5RRP	

Pos	Part No	UN	Qty	Description	Page No

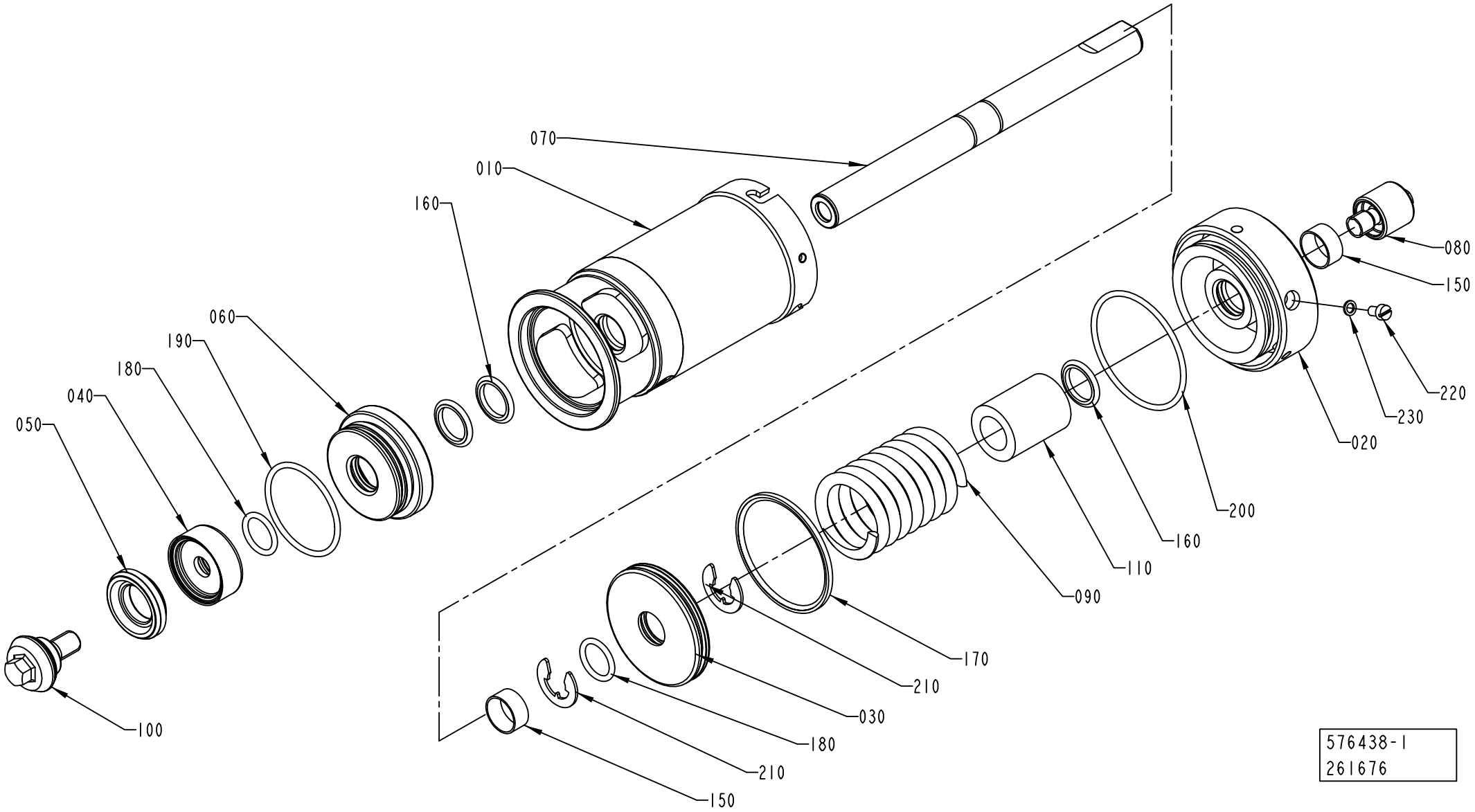
070
010
160
060
190
180
040
050
080
150
220
230
020
200
160
110
090
170
210
030
180
210
150
100
576438-1
261676

ECM: 456625 - 20110101
Group number: 576438-0100
Assembly Drawing: 576438-1_1_AC

Pos	Part No	UN	Qty	Description	Page No
-					
010	576443-0000		1	CYLINDER HOUSING	
020	576444-0000		1	END SECTION	
030	576445-0000		1	PISTON	
040	530587-0000		1	WASHER	
050	2826440-0000		1	SEAL RING	
060	556133-0000		1	SEALING WASHER	
070	576447-0000		1	PISTON ROD	
080	553607-0000		1	SLEEVE	
090	440662-0000		1	COMPRESSION SPRING	
100	2826439-0000		1	VALVE CONE	
110	576451-0000		1	SPACER	
150	90091-0238		2	WEAR RING 20X22X10 MM	
160	90091-0237		3	ROD SEAL GLYD RING 20X27,5X3 MM	
170	90091-0335		1	PISTON SEAL GLYD RING 62,5X70X3,2 MM	
180	90602-2911		2	O-RING 19,2X3 MM FDA, 3-A	
190	90602-2912		1	O-RING 49,5X3 MM FDA, 3-A	
200	315202-0304		1	O-RING 64,5X3 MM	
210	315754-0113		2	RETAINING RING SHAFT DIN 6799 15	
220	312125-0323		1	SLOTTED HEAD SCREW, ISO1207 M5X8 A4	
230	315239-0101		1	NYLON WASHER M5, M5RRP	

Pos	Part No	UN	Qty	Description	Page No

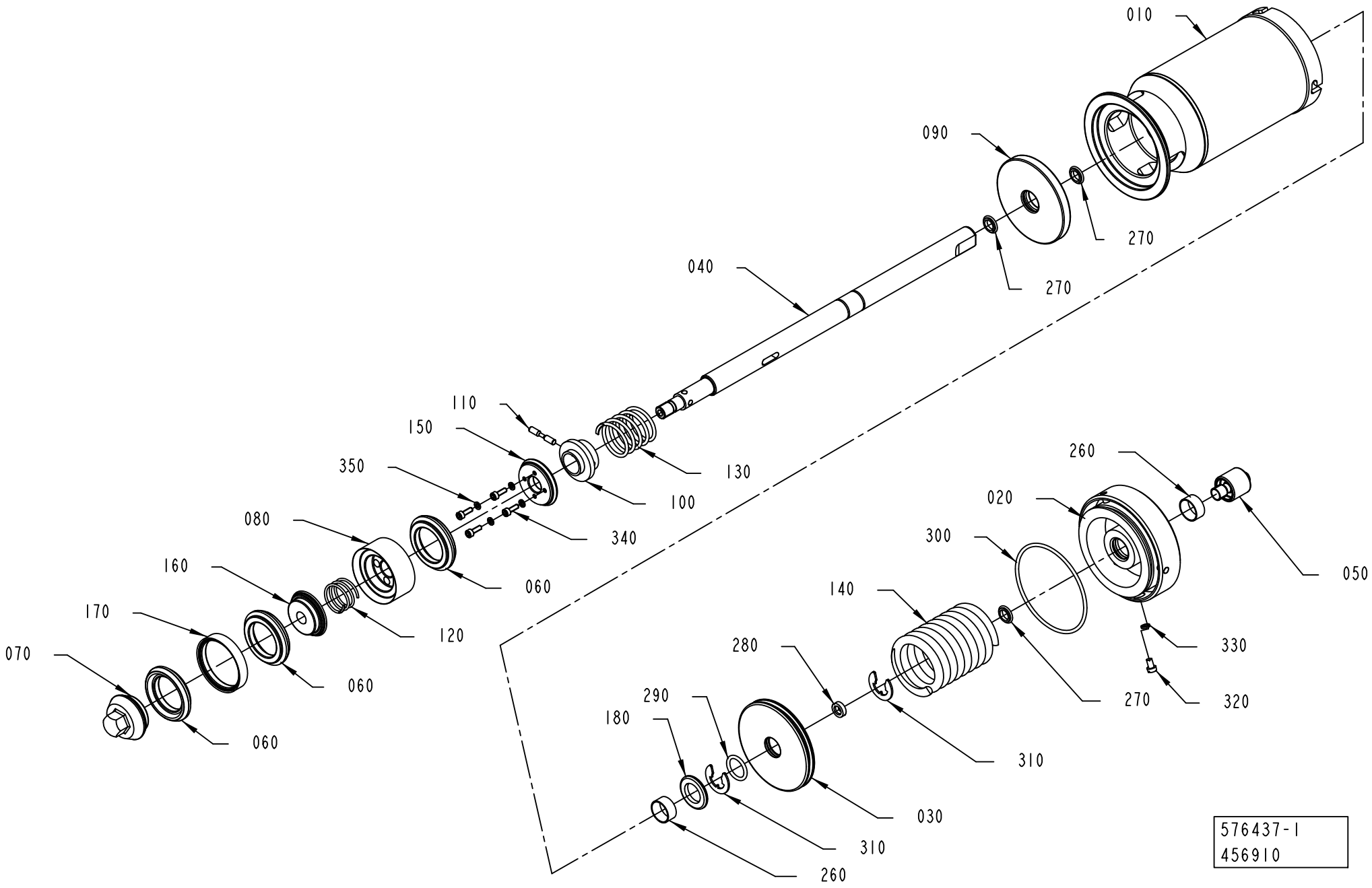
010
090
270
270
040
110
150
350
080
160
170
070
060
060
060
120
100
130
340
260
020
300
140
280
290
180
050
330
320
270
310
030
310
260
576437-1
456910

ECM: 460041 - 20101001
Group number: 576437-0100
Assembly Drawing: 576437-1_1_AD

Pos	Part No	UN	Qty	Description	Page No
-					
010	576439-0000		1	CYLINDER HOUSING	
020	576440-0000		1	END SECTION	
030	576441-0000		1	PISTON	
040	576442-0000		1	PISTON ROD	
050	553607-0000		1	SLEEVE	
060	2826441-0000		3	SEAL RING	
070	2826442-0000		1	VALVE CONE	
080	530591-0000		1	HOLDER	
090	555458-0000		1	SEALING WASHER	
100	3112808-0000		1	WASHER	
110	440659-0000		1	CYLINDRICAL PIN	
120	440660-0000		1	COMPRESSION SPRING	
130	440661-0000		1	COMPRESSION SPRING	
140	440663-0000		1	COMPRESSION SPRING	
150	530597-0000		1	WASHER	
160	530598-0000		1	WASHER	
170	530599-0000		2	RING	
180	576450-0000		1	SPACER	
260	90091-0238		2	WEAR RING 20X22X10 MM	
270	90091-0237		3	ROD SEAL GLYD RING 20X27,5X3 MM	
280	90091-0336		1	PISTON SEAL GLYD RING 79X90X4,2 MM	
290	315204-0215		1	O-RING 19,2X3 MM	
300	315202-0308		1	O-RING 84,5X3 MM	
310	315754-0113		2	RETAINING RING SHAFT DIN 6799 15	
320	312125-0323		1	SLOTTED HEAD SCREW, ISO1207 M5X8 A4	
330	315239-0101		1	NYLON WASHER M5, M5RRP	
340	312115-0291		4	SCREW ISO4762 M4X12 A4 80	
350	315402-0136		4	LOCK WASHER, DIN127B 4,1 A4, M4-5/32	

Pos	Part No	UN	Qty	Description	Page No

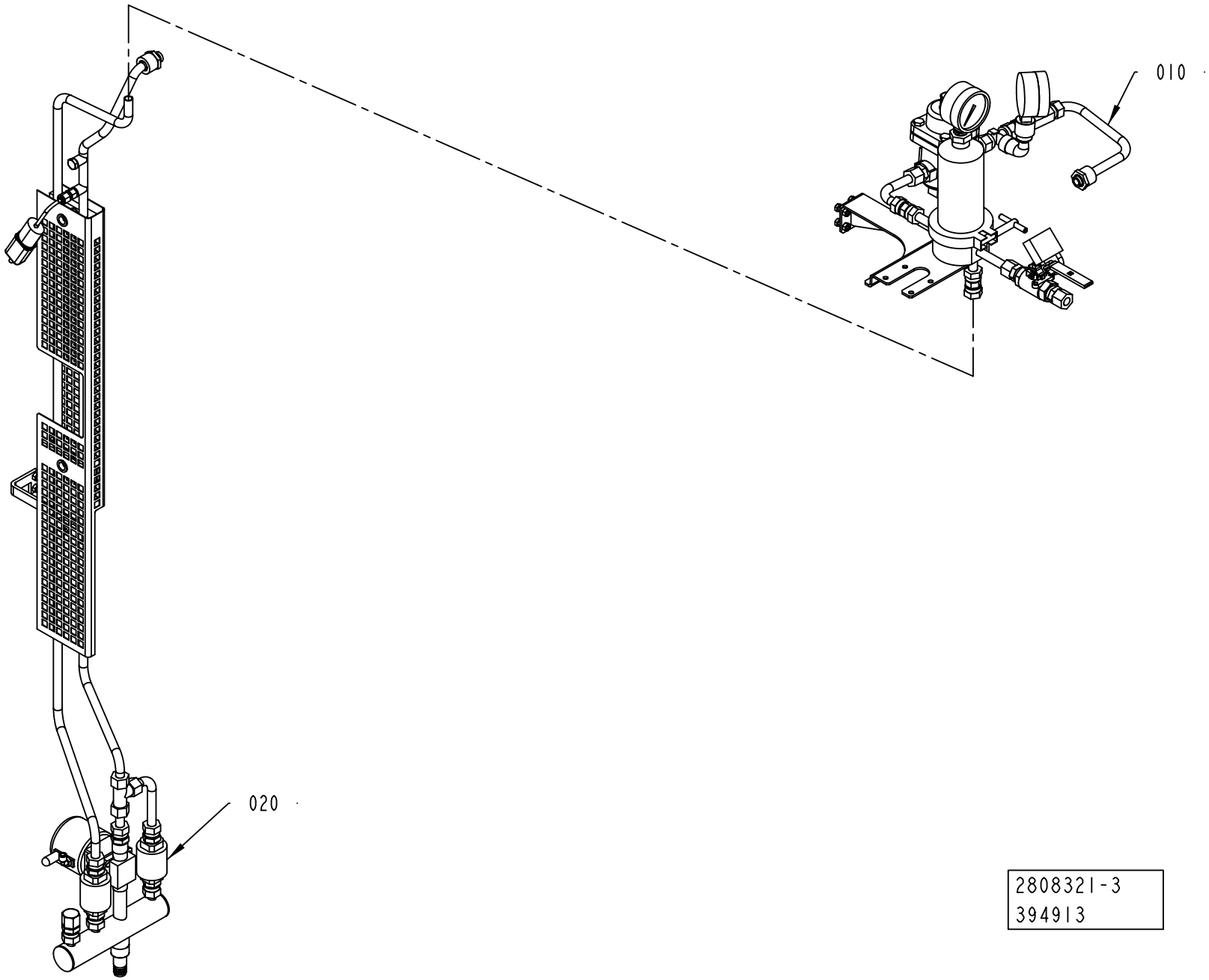

2808321-3
394913

ECM: 430390 - 20100301
Group number: 2808321-0200
Assembly Drawing: 2808321-3_1_AB

Pos	Part No	UN	Qty	Description	Page No
-					
010	2808269-0100		1	STEAM PIPE	**1-183**
020	2852425-0300		1	STEAM TRAP	**1-185**

Pos	Part No	UN	Qty	Description	Page No

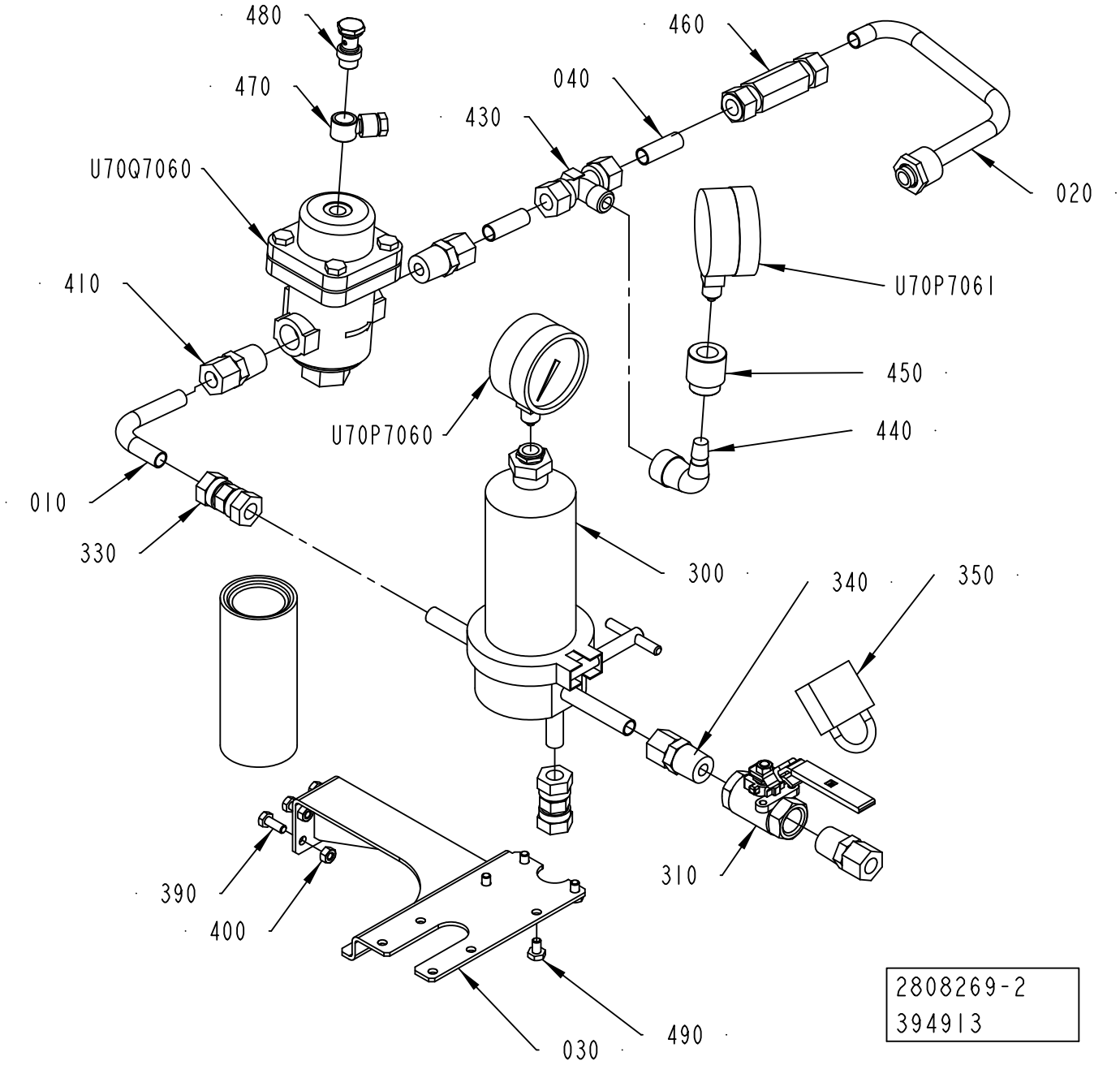
480
470
U70Q7060
410
010
330
460
040
430
020
U70P7061
450
440
U70P7060
300
340
350
310
390
400
030
490
2808269-2
394913

ECM: 430598 - 20100301
Group number: 2808269-0100
Assembly Drawing: 2808269-2_1_AA

Pos	Part No	UN	Qty	Description	Page No
-					
010	2835318-0000		1	PIPE	
020	2808325-0000		1	PIPE	
030	3037912-0000		1	BRACKET	
040	2695992-0000		2	PIPE	
300	90600-3159		1	FILTER HOUSING, MDS4463G58383	
310	90600-3701		1	BALL VALVE, 1/2NPT	
320	90337-0315		1	FILTER INSERT / MCS 4463	
	90458-2549		*1*	*O-RING 72,69X2,62 MM*	
330	90030-0106		2	PIPE CONNECTION G 12	
340	90030-0180		2	CONN. STR. GE12L1/2NPT71	
350	779910-0101		1	PADLOCK, 250/40 W 2 KEYS	
390	312105-0368		4	SCREW, M6S ISO 4017 M6X16 A4 80	
400	312605-0316		4	HEXAGON NUT, M6M M6 A280	
410	90030-0180		2	CONN. STR. GE12L1/2NPT71	
430	342741-0209		1	CONN. T-PIPE TE-12-R3/8	
440	90330-0172		1	ELBOW, 90 INT/EXT, 3/8 NPT	
450	90330-0011		1	SLEEVE, REDUCTION, INT, R-2023/8X1/4	
460	90459-4686		1	NON RETURN VALVE, M12A-C6L-1-EPR-SS	
470	342797-0122		1	BANJO CONN., RINGPIECE 6-1/4	
480	342980-0304		1	BANJO-HOLLOW BOLT COUPL,EXT.THR.01-G1/4	
490	90600-0657		4	SCREW UNC 1/4-20 X10	
U70P7060	90043-0082		1	PRESSURE GAUGE, 2840, D=63 MM	
U70P7061	90043-0082		1	PRESSURE GAUGE, 2840, D=63 MM	
U70Q7060	90458-2264		1	PRESSURE REGULATOR ARC-30-1/2"	
	90458-2655		*1*	*STRAINER FOR ARC-30-1/2"*	
	90458-2654		*1*	*GASKET KIT FOR ARC-30-1/2"*	
	90458-2653		*1*	*BELLOWS AISI 316L FOR ARC-30-1/2"*	

Pos	Part No	UN	Qty	Description	Page No

Machine Type | Group Description | Used-In | Group Number | Page No

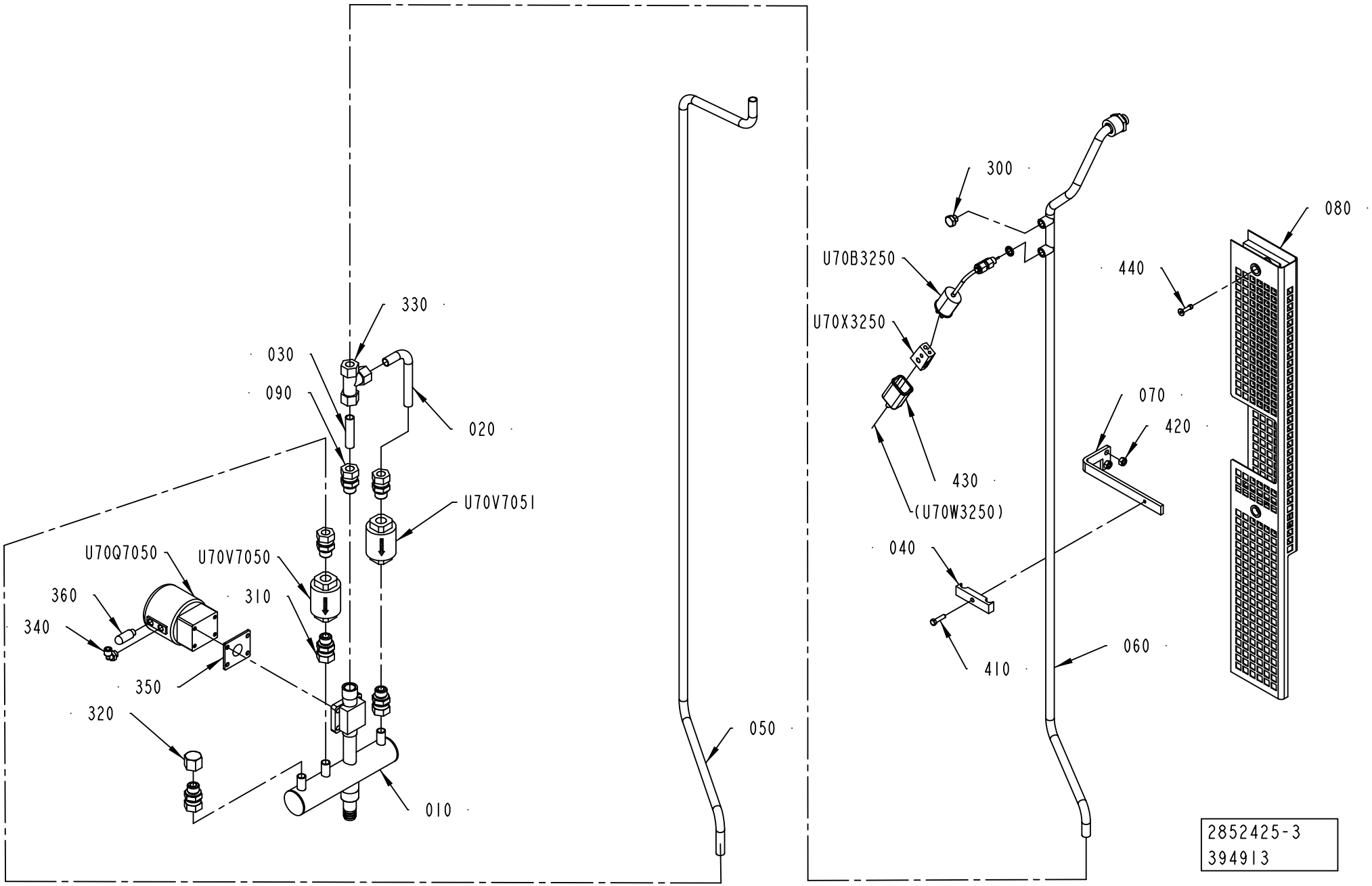
330
030
090
020
U70V7051
U70Q7050
U70V7050
360
310
340
350
320
010
050
300
U70B3250
U70X3250
430
(U70W3250)
040
410
060
070
420
440
080
2852425-3
394913

ECM: 430004 - 20100301
Group number: 2852425-0300
Assembly Drawing: 2852425-3_1_AA

Pos	Part No	UN	Qty	Description	Page No
-					
010	3037898-0000		1	PIPE	
020	3037901-0000		1	PIPE	
030	2874702-0000		1	PIPE	
040	2517371-0000		1	CLAMP	
050	3037899-0000		1	PIPE	
060	3037910-0000		1	PIPE	
070	2846083-0000		1	BRACKET	
080	3037911-0000		1	TOUCH GUARD	
090	3075932-0000		1	STRAIGHT CONNECTION	
300	90330-0066		1	PLUG, G1/8EXT, G1/8	
310	90030-0187		5	CONN. STR. GE12LRED71	
320	90602-3432		1	PLUG, INT. G-THREAD, NO.R-231-3/8	
330	90030-0058		1	CONN. T-PIPE T12L71	
340	90458-2956		1	ELBOW PIPE JOINT, EXT.THREAD, D=6MM-G1/8	
350	90459-5901		1	DIAPHRAGM, 425 EPM SIZE 15	
360	90328-0047		1	SILENCER, G1/8"	
410	312105-0331		1	SCREW, M6S ISO 4017 M5X20 A4 80	
420	312605-0316		2	HEXAGON NUT, M6M M6 A280	
430	90326-0012		1	PROTECTIVE COVER, 03-001 10	
440	90601-2466		2	CAPTIVE SCREW M6, GUTBG 6-4-20	
U70B3250	90326-0089		1	THERMOCOUPLE, 5110 089-000	
U70Q7050	90187-0110		1	DIAPHRAGM VALVE, DN15, NC WELD CONN.	
U70V7050	90360-0020		1	STEAM TRAP / MK36/51 3/8 INCH	
	90360-0310		*1*	*CAPSULE, FOR STEAM TRAP 90360-20*	
	90360-0309		*1*	*STRAINER, FOR STEAM TRAP 90360-20*	
U70V7051	90360-0020		1	STEAM TRAP / MK36/51 3/8 INCH	
	90360-0310		*1*	*CAPSULE, FOR STEAM TRAP 90360-20*	
	90360-0309		*1*	*STRAINER, FOR STEAM TRAP 90360-20*	
U70X3250	90326-0020		1	SOCKET, FEMALE YELLOW CR-AL, 03-22000A	

Pos	Part No	UN	Qty	Description	Page No

PRODUCTION WITH HVA

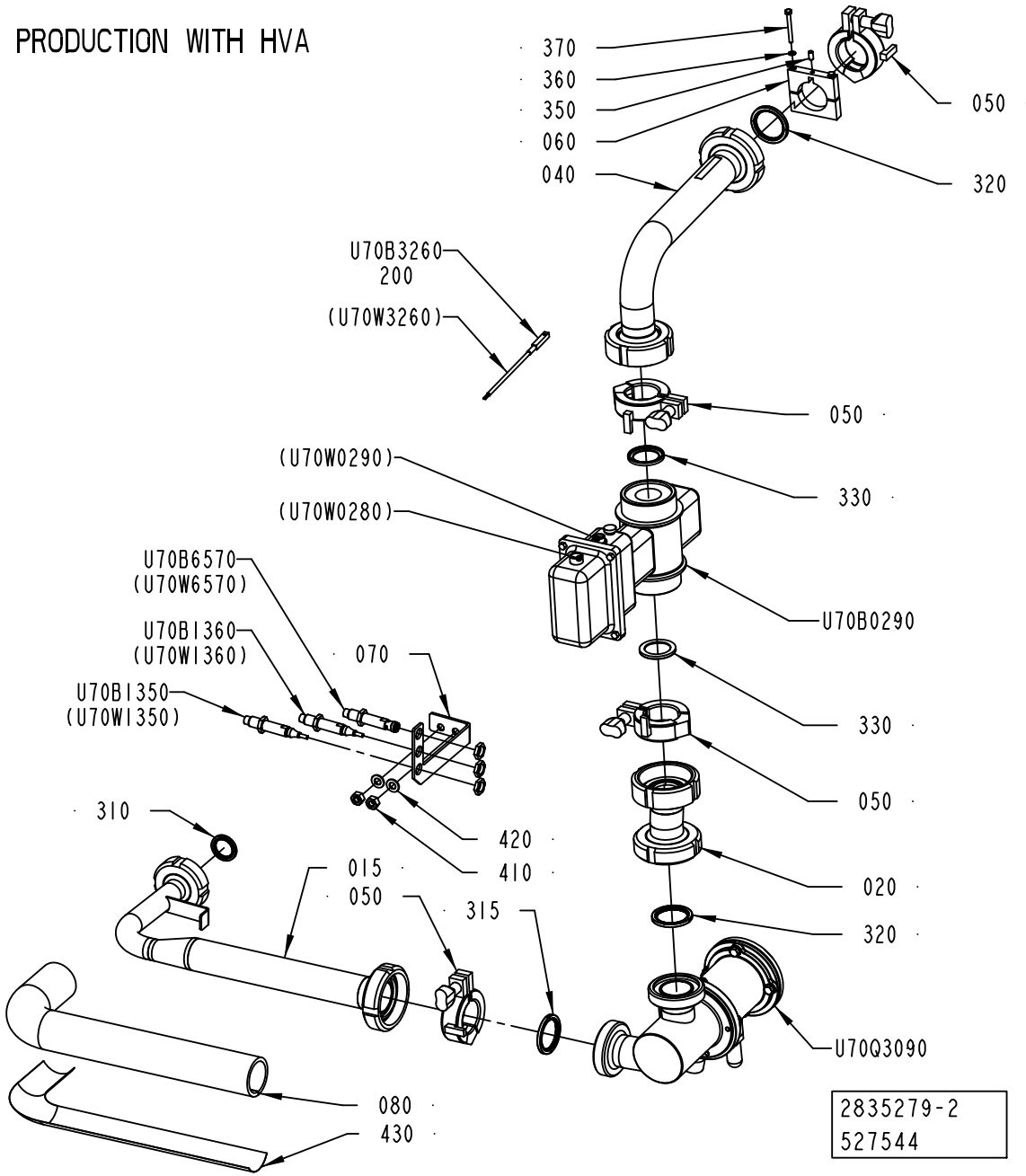

ECM: 529116 - 20111110
Group number: 2835279-0200
Assembly Drawing: 2835279-2_1_AG

This list covers pages from 1-186 to 1-191

Pos	Part No	UN	Qty	Description	Page No
HVA ANSI (See drawing on pages: 1-186, 1-190)					
010	3092931-0000		1	PIPE	
015	3092932-0000		1	PIPE	
040	3092934-0000		1	PIPE	
070	2922773-0000		1	BRACKET	
080	2998981-0000		1	PROTECTION	
090	2998982-0000		1	PROTECTION	
390	359725-0116		1	WARNING SIGN ANSI (H), HOT SURFACE	
430	90144-0030	MM	450	TAPE	
440	90144-0030	MM	450	TAPE	
U70B6570	90600-0462		1	INDUCTIVE SWITCH, E2A-M12LN05-M1-B1-TP	
HVA ISO (See drawing on pages: 1-186, 1-190)					
010	3092931-0000		1	PIPE	
015	3092932-0000		1	PIPE	
040	3092934-0000		1	PIPE	
070	2922773-0000		1	BRACKET	
080	2998981-0000		1	PROTECTION	
090	2998982-0000		1	PROTECTION	
390	359710-0001		1	WARNING SIGN ISO, HOT SURFACE	
430	90144-0030	MM	450	TAPE	
440	90144-0030	MM	450	TAPE	
U70B6570	90600-0462		1	INDUCTIVE SWITCH, E2A-M12LN05-M1-B1-TP	
NOHVA ANSI (See drawing on page: 1-188)					
010	2839242-0000		1	BRACKET	
030	3092935-0000		1	PIPE	
040	3092933-0000		1	PRODUCTION LINE	
070	2721239-0000		2	SPACER	
080	3020091-0000		1	TOUCH GUARD	
090	3020092-0000		1	TOUCH GUARD	
380	90601-2046		4	CAPTIVE SCREW M6, GUTBG 6-4-12	
390	359725-0116		1	WARNING SIGN ANSI (H), HOT SURFACE	
NOHVA ISO (See drawing on page: 1-188)					
010	2839242-0000		1	BRACKET	
030	3092935-0000		1	PIPE	
040	3092933-0000		1	PRODUCTION LINE	
070	2721239-0000		2	SPACER	
080	3020091-0000		1	TOUCH GUARD	
090	3020092-0000		1	TOUCH GUARD	
380	90601-2046		4	CAPTIVE SCREW M6, GUTBG 6-4-12	
390	359710-0001		1	WARNING SIGN ISO, HOT SURFACE	
Common Parts					
020	3040930-0000		1	ECCENTRIC	
050	2552201-0000		4	LOCKING DEVICE	
060	2799892-0000		1	CLAMP	
200	90296-0051	KG	1	HEAT SINK COMPOUND 340	
310	3092164-0000		1	GASKET	
315	3024322-0000		1	GASKET	
320	3024322-0000		2	GASKET	
330	90459-4179		2	GASKET 30,5X42X4 MM FDA	
350	90459-7283		1	SCREW HEX.SOCK.SET CONEPT.MS6SS M5X12 A2	
360	315105-0136		2	WASHER PLAIN, 4,3X9X0,8 A4 BRB	
370	312105-0303		2	SCREW, M6S ISO 4017 M4X40 A4 70	
400	312105-0455		2	SCREW, M6S ISO 4017 M8X30 A4 80	
410	312605-0318		2	HEXAGON NUT, M6M M8 A280	
420	315105-0165		2	WASHER PLAIN, 8,4X16X1,6 A4 BRB	
U70B0290	90458-0806		1	FLOW METER, COPA-XF DF23-DN32	
U70B1350	90600-0463		1	INDUCTIVE SWITCH,E2A-M12LN05-WP-B1-TP 5M	
U70B1360	90600-0463		1	INDUCTIVE SWITCH,E2A-M12LN05-WP-B1-TP 5M	
U70B3260	90459-6178		1	TEMPERATURE SENSOR, , 902522/10-386-1003	
U70Q3090	2840040-0100		1	REGULATING VALVE	**1-193**

Machine Type	Group Description	Used-In	Group Number	Page No

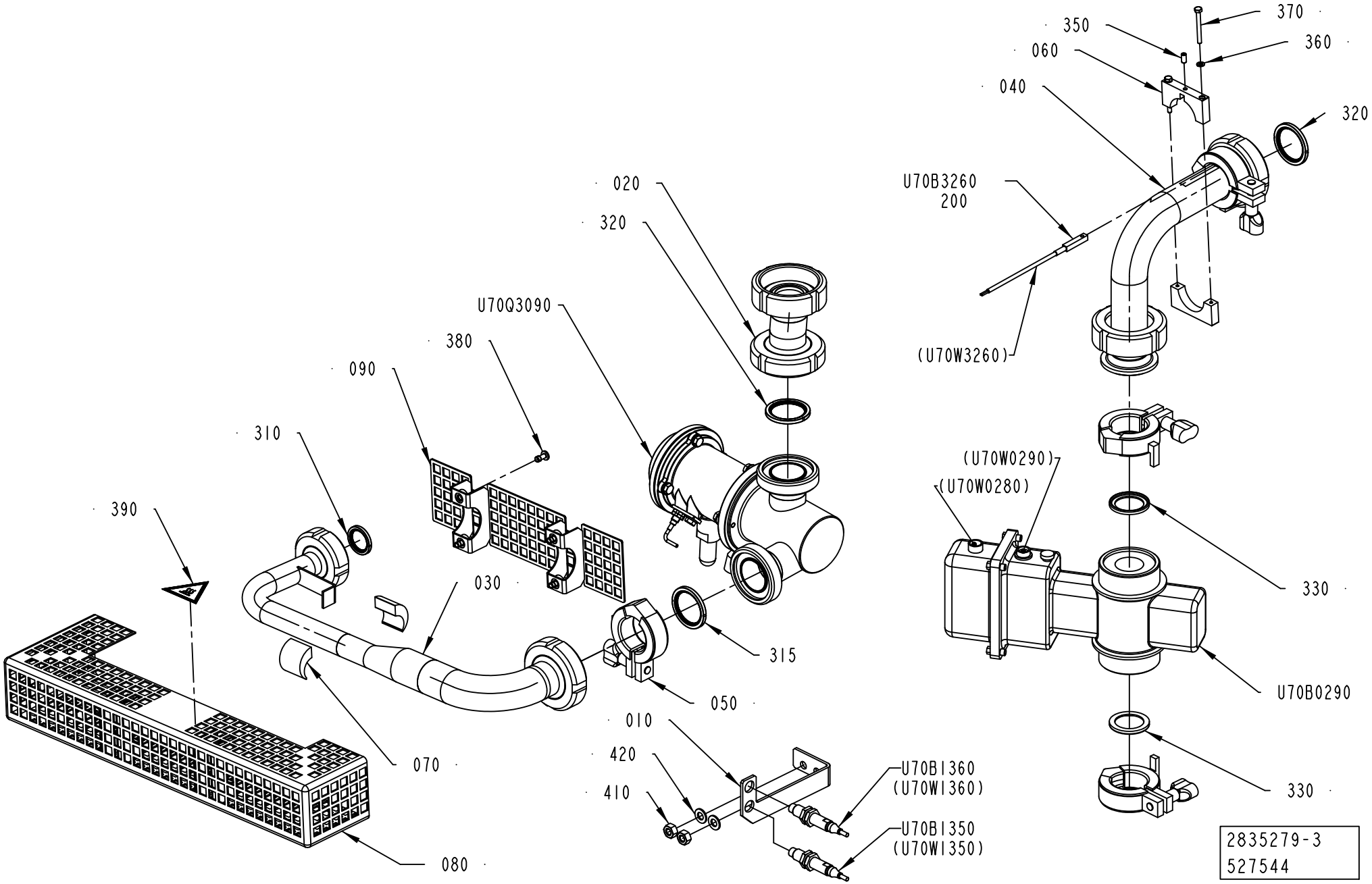
370
350
360
060
040
320
U70B3260
200
(U70W3260)
020
320
U70Q3090
380
090
310
390
030
315
050
070
080
010
420
410
U70BI360
(U70WI360)
U70BI350
(U70WI350)
(U70W0290)
(U70W0280)
330
U70B0290
330
2835279-3
527544

ECM: 529116 - 20111110
Group number: 2835279-0200
Assembly Drawing: 2835279-3_1_AD

This list covers pages from 1-186 to 1-191

Pos	Part No	UN	Qty	Description	Page No
HVA ANSI (See drawing on pages: 1-186, 1-190)					
010	3092931-0000		1	PIPE	
015	3092932-0000		1	PIPE	
040	3092934-0000		1	PIPE	
070	2922773-0000		1	BRACKET	
080	2998981-0000		1	PROTECTION	
090	2998982-0000		1	PROTECTION	
390	359725-0116		1	WARNING SIGN ANSI (H), HOT SURFACE	
430	90144-0030	MM	450	TAPE	
440	90144-0030	MM	450	TAPE	
U70B6570	90600-0462		1	INDUCTIVE SWITCH, E2A-M12LN05-M1-B1-TP	
HVA ISO (See drawing on pages: 1-186, 1-190)					
010	3092931-0000		1	PIPE	
015	3092932-0000		1	PIPE	
040	3092934-0000		1	PIPE	
070	2922773-0000		1	BRACKET	
080	2998981-0000		1	PROTECTION	
090	2998982-0000		1	PROTECTION	
390	359710-0001		1	WARNING SIGN ISO, HOT SURFACE	
430	90144-0030	MM	450	TAPE	
440	90144-0030	MM	450	TAPE	
U70B6570	90600-0462		1	INDUCTIVE SWITCH, E2A-M12LN05-M1-B1-TP	
NOHVA ANSI (See drawing on page: 1-188)					
010	2839242-0000		1	BRACKET	
030	3092935-0000		1	PIPE	
040	3092933-0000		1	PRODUCTION LINE	
070	2721239-0000		2	SPACER	
080	3020091-0000		1	TOUCH GUARD	
090	3020092-0000		1	TOUCH GUARD	
380	90601-2046		4	CAPTIVE SCREW M6, GUTBG 6-4-12	
390	359725-0116		1	WARNING SIGN ANSI (H), HOT SURFACE	
NOHVA ISO (See drawing on page: 1-188)					
010	2839242-0000		1	BRACKET	
030	3092935-0000		1	PIPE	
040	3092933-0000		1	PRODUCTION LINE	
070	2721239-0000		2	SPACER	
080	3020091-0000		1	TOUCH GUARD	
090	3020092-0000		1	TOUCH GUARD	
380	90601-2046		4	CAPTIVE SCREW M6, GUTBG 6-4-12	
390	359710-0001		1	WARNING SIGN ISO, HOT SURFACE	
Common Parts					
020	3040930-0000		1	ECCENTRIC	
050	2552201-0000		4	LOCKING DEVICE	
060	2799892-0000		1	CLAMP	
200	90296-0051	KG	1	HEAT SINK COMPOUND 340	
310	3092164-0000		1	GASKET	
315	3024322-0000		1	GASKET	
320	3024322-0000		2	GASKET	
330	90459-4179		2	GASKET 30,5X42X4 MM FDA	
350	90459-7283		1	SCREW HEX.SOCK.SET CONEPT.MS6SS M5X12 A2	
360	315105-0136		2	WASHER PLAIN, 4,3X9X0,8 A4 BRB	
370	312105-0303		2	SCREW, M6S ISO 4017 M4X40 A4 70	
400	312105-0455		2	SCREW, M6S ISO 4017 M8X30 A4 80	
410	312605-0318		2	HEXAGON NUT, M6M M8 A280	
420	315105-0165		2	WASHER PLAIN, 8,4X16X1,6 A4 BRB	
U70B0290	90458-0806		1	FLOW METER, COPA-XF DF23-DN32	
U70B1350	90600-0463		1	INDUCTIVE SWITCH,E2A-M12LN05-WP-B1-TP 5M	
U70B1360	90600-0463		1	INDUCTIVE SWITCH,E2A-M12LN05-WP-B1-TP 5M	
U70B3260	90459-6178		1	TEMPERATURE SENSOR, , 902522/10-386-1003	
U70Q3090	2840040-0100		1	REGULATING VALVE	**1-193**

Machine Type | Group Description | Used-In | Group Number | Page No

PRODUCTION WITH HVA BYPASSED

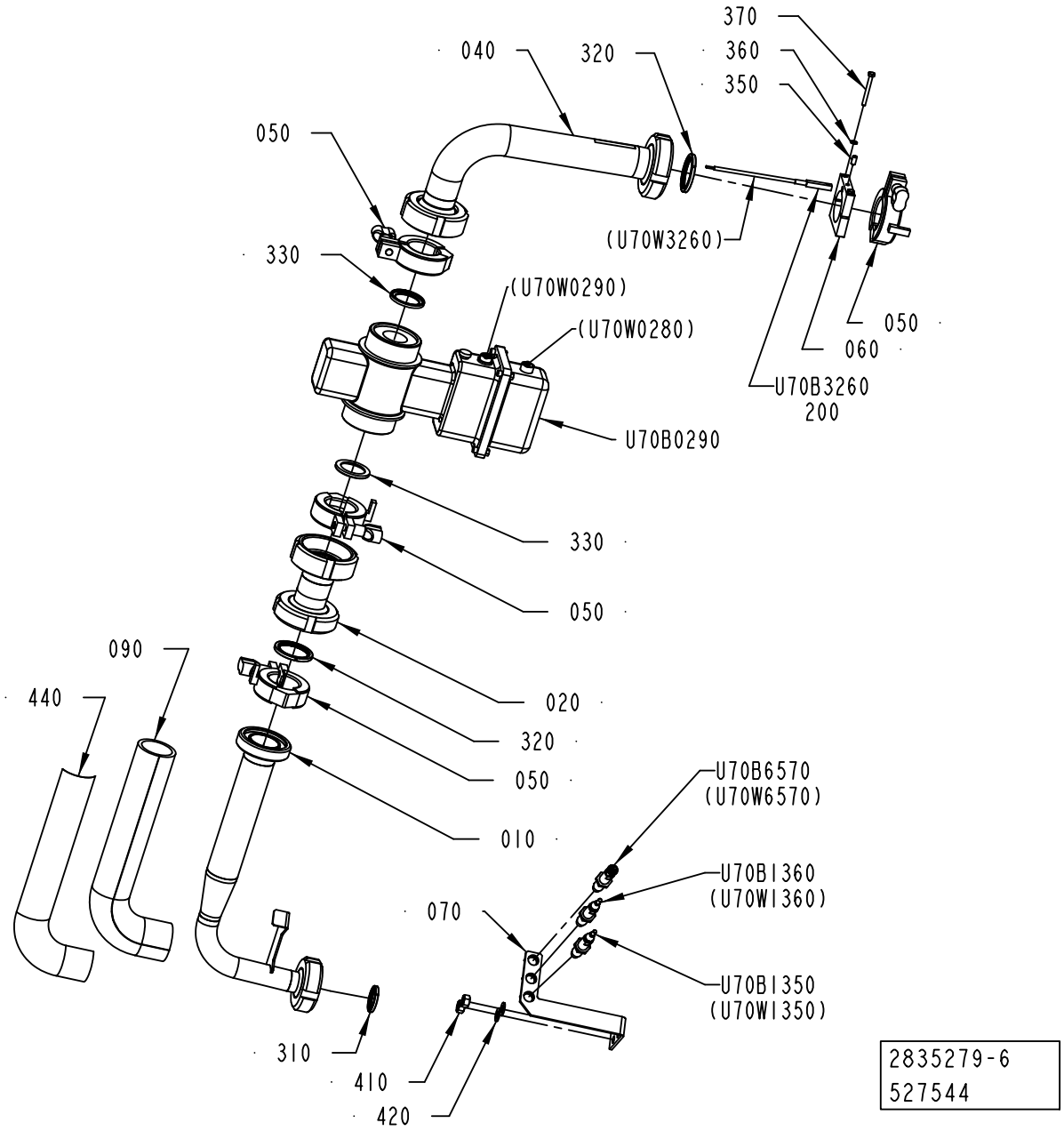

ECM: 529116 - 20111110
Group number: 2835279-0200
Assembly Drawing: 2835279-6_1_AA

This list covers pages from 1-186 to 1-191

Pos	Part No	UN	Qty	Description	Page No
HVA ANSI (See drawing on pages: 1-186, 1-190)					
010	3092931-0000		1	PIPE	
015	3092932-0000		1	PIPE	
040	3092934-0000		1	PIPE	
070	2922773-0000		1	BRACKET	
080	2998981-0000		1	PROTECTION	
090	2998982-0000		1	PROTECTION	
390	359725-0116		1	WARNING SIGN ANSI (H), HOT SURFACE	
430	90144-0030	MM	450	TAPE	
440	90144-0030	MM	450	TAPE	
U70B6570	90600-0462		1	INDUCTIVE SWITCH, E2A-M12LN05-M1-B1-TP	
HVA ISO (See drawing on pages: 1-186, 1-190)					
010	3092931-0000		1	PIPE	
015	3092932-0000		1	PIPE	
040	3092934-0000		1	PIPE	
070	2922773-0000		1	BRACKET	
080	2998981-0000		1	PROTECTION	
090	2998982-0000		1	PROTECTION	
390	359710-0001		1	WARNING SIGN ISO, HOT SURFACE	
430	90144-0030	MM	450	TAPE	
440	90144-0030	MM	450	TAPE	
U70B6570	90600-0462		1	INDUCTIVE SWITCH, E2A-M12LN05-M1-B1-TP	
NOHVA ANSI (See drawing on page: 1-188)					
010	2839242-0000		1	BRACKET	
030	3092935-0000		1	PIPE	
040	3092933-0000		1	PRODUCTION LINE	
070	2721239-0000		2	SPACER	
080	3020091-0000		1	TOUCH GUARD	
090	3020092-0000		1	TOUCH GUARD	
380	90601-2046		4	CAPTIVE SCREW M6, GUTBG 6-4-12	
390	359725-0116		1	WARNING SIGN ANSI (H), HOT SURFACE	
NOHVA ISO (See drawing on page: 1-188)					
010	2839242-0000		1	BRACKET	
030	3092935-0000		1	PIPE	
040	3092933-0000		1	PRODUCTION LINE	
070	2721239-0000		2	SPACER	
080	3020091-0000		1	TOUCH GUARD	
090	3020092-0000		1	TOUCH GUARD	
380	90601-2046		4	CAPTIVE SCREW M6, GUTBG 6-4-12	
390	359710-0001		1	WARNING SIGN ISO, HOT SURFACE	
Common Parts					
020	3040930-0000		1	ECCENTRIC	
050	2552201-0000		4	LOCKING DEVICE	
060	2799892-0000		1	CLAMP	
200	90296-0051	KG	1	HEAT SINK COMPOUND 340	
310	3092164-0000		1	GASKET	
315	3024322-0000		1	GASKET	
320	3024322-0000		2	GASKET	
330	90459-4179		2	GASKET 30,5X42X4 MM FDA	
350	90459-7283		1	SCREW HEX.SOCK.SET CONEPT.MS6SS M5X12 A2	
360	315105-0136		2	WASHER PLAIN, 4,3X9X0,8 A4 BRB	
370	312105-0303		2	SCREW, M6S ISO 4017 M4X40 A4 70	
400	312105-0455		2	SCREW, M6S ISO 4017 M8X30 A4 80	
410	312605-0318		2	HEXAGON NUT, M6M M8 A280	
420	315105-0165		2	WASHER PLAIN, 8,4X16X1,6 A4 BRB	
U70B0290	90458-0806		1	FLOW METER, COPA-XF DF23-DN32	
U70B1350	90600-0463		1	INDUCTIVE SWITCH,E2A-M12LN05-WP-B1-TP 5M	
U70B1360	90600-0463		1	INDUCTIVE SWITCH,E2A-M12LN05-WP-B1-TP 5M	
U70B3260	90459-6178		1	TEMPERATURE SENSOR, , 902522/10-386-1003	
U70Q3090	2840040-0100		1	REGULATING VALVE	**1-193**

Machine Type	Group Description	Used-In	Group Number	Page No

REGULATING VALVE

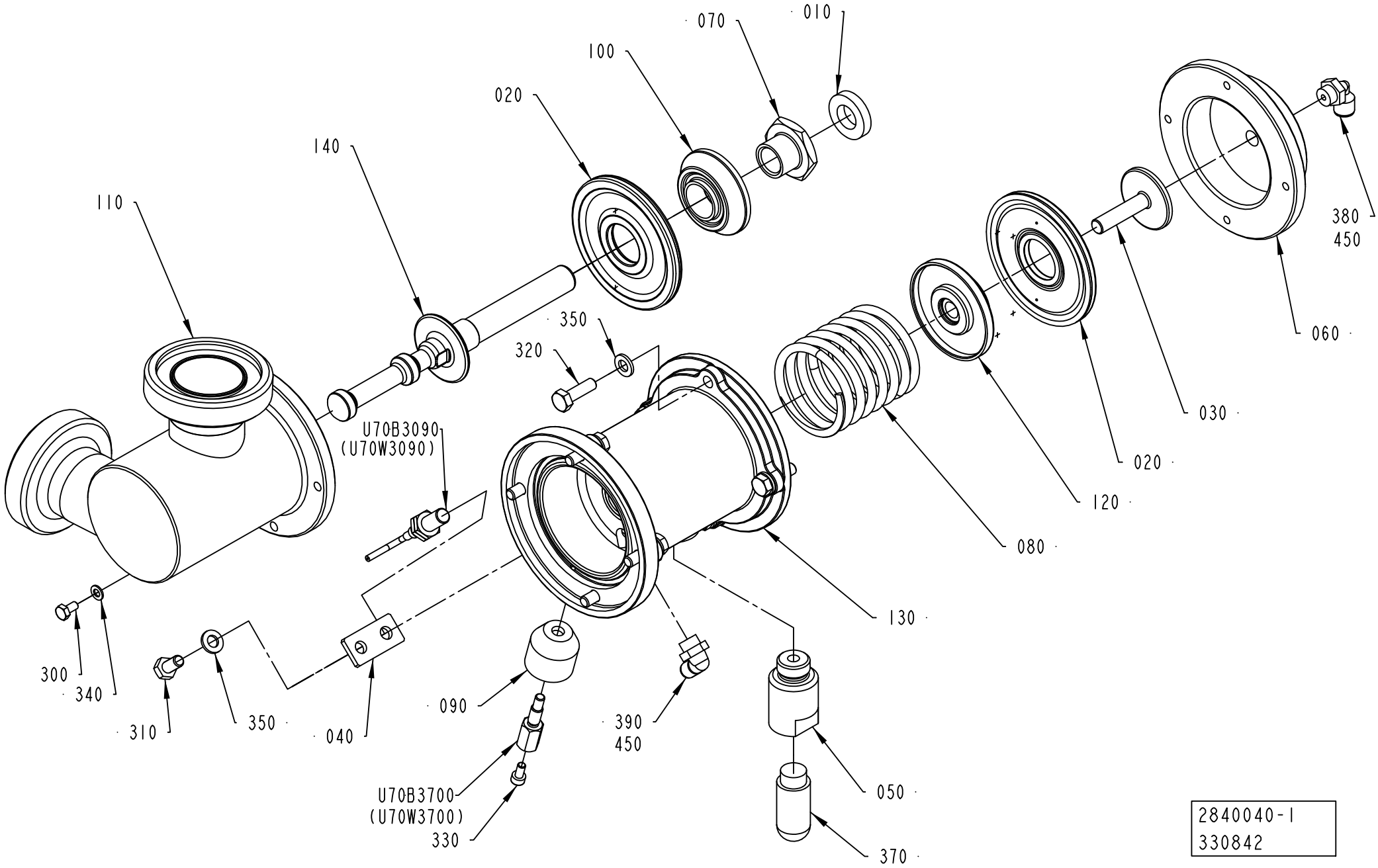

ECM: 330842 - 20071221
Group number: 2840040-0100
Assembly Drawing: 2840040-1_1_AA

Pos	Part No	UN	Qty	Description	Page No
-					
010	736514-0000		1	SHOCK ABSORBER	
020	925998-0000		2	DIAPHRAGM	
030	926907-0000		1	SCREW	
040	926934-0000		1	SUPPORT	
050	927044-0000		1	SPACER	
060	927203-0000		1	COVER	
070	979434-0000		1	FERRULE	
080	1195397-0000		1	COMPRESSION SPRING	
090	1478813-0000		1	SPACER	
100	1511600-0000		1	SPACER	
110	2562704-0000		1	BODY	
120	2693622-0000		1	SPACER	
130	2790433-0000		1	BODY	
140	2840039-0000		1	SHUTTER	
300	312105-0287		1	SCREW, M6S ISO 4017 M4X8 A4 70	
310	312105-0366		1	SCREW, M6S ISO 4017 M6X12 A4 80	
320	312105-0370		8	SCREW, M6S ISO 4017 M6X20 A4 80	
330	312115-0287		1	SCREW ISO4762 M4X8 A4 80	
340	315105-0136		1	WASHER PLAIN, 4,3X9X0,8 A4 BRB	
350	315105-0153		9	WASHER PLAIN, 6,4X12X1,5 A4 BRB	
360	90144-0073	MM	1	TREBOFLON-TAPE W=13MM	
370	90328-0026		1	SILENCER, G1/4"	
380	90458-2956		1	ELBOW PIPE JOINT, EXT.THREAD, D=6MM-G1/8	
390	90458-2955		1	ELBOW PIPE JOINT, EXT.THREAD,	
U70B3090	90600-0473		1	INDUCTIVE SWITCH E2A-S08KS01-WP-B1-TP 5M	
U70B3700	1478814-0000		1	SENSOR	

Pos	Part No	UN	Qty	Description	Page No

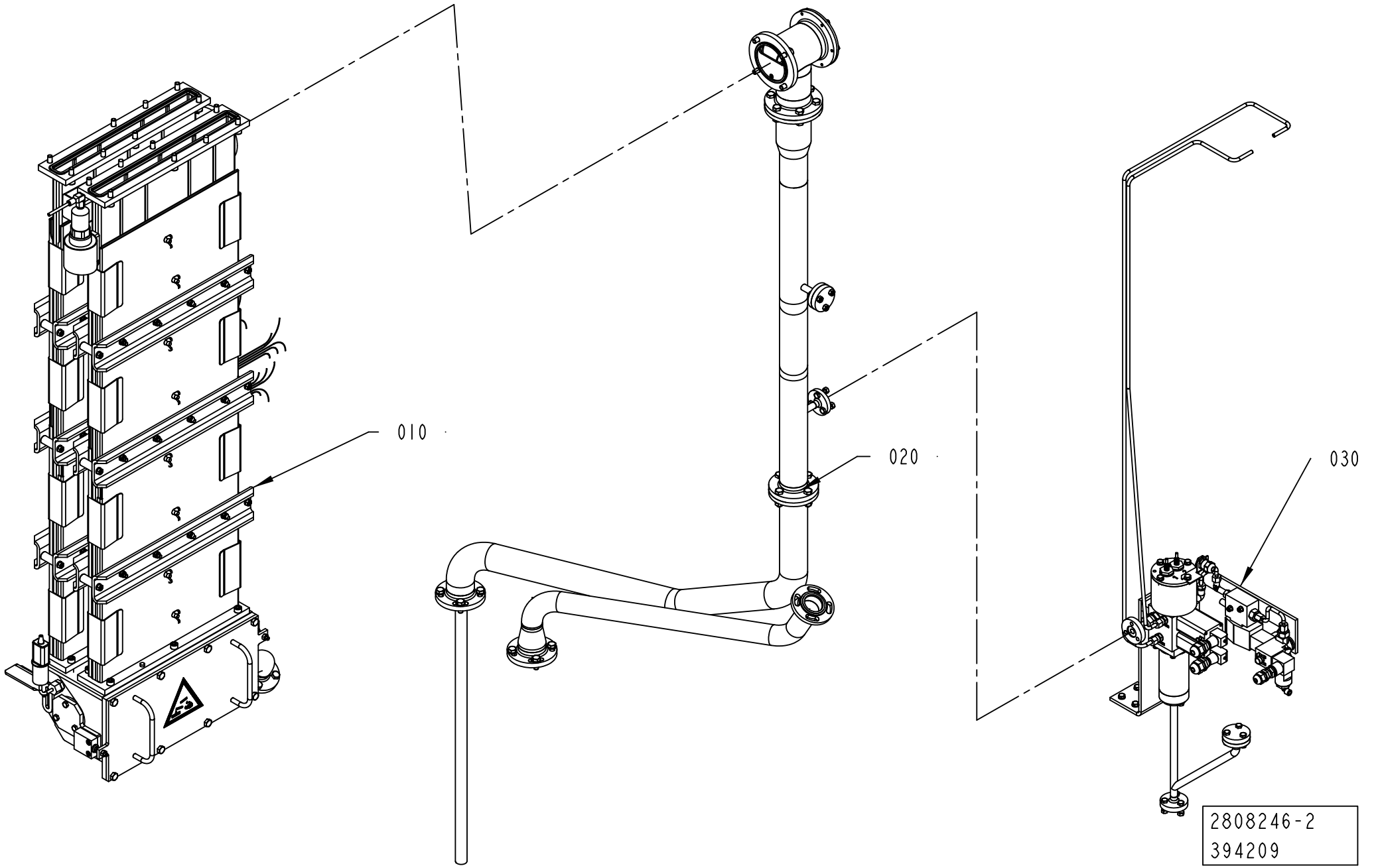
010
020
030
2808246-2
394209

ECM: 404898 - 20090715
Group number: 2808246-0200
Assembly Drawing: 2808246-2_1_AA

Pos	Part No	UN	Qty	Description	Page No
-					
010	2808229-0200		1	BATH	**1-197, 1-199**
020	2846095-0100		1	PEROXIDE PIPE	**1-201**
030	2846090-0100		1	SPRAY SYSTEM	**1-203**

Pos	Part No	UN	Qty	Description	Page No

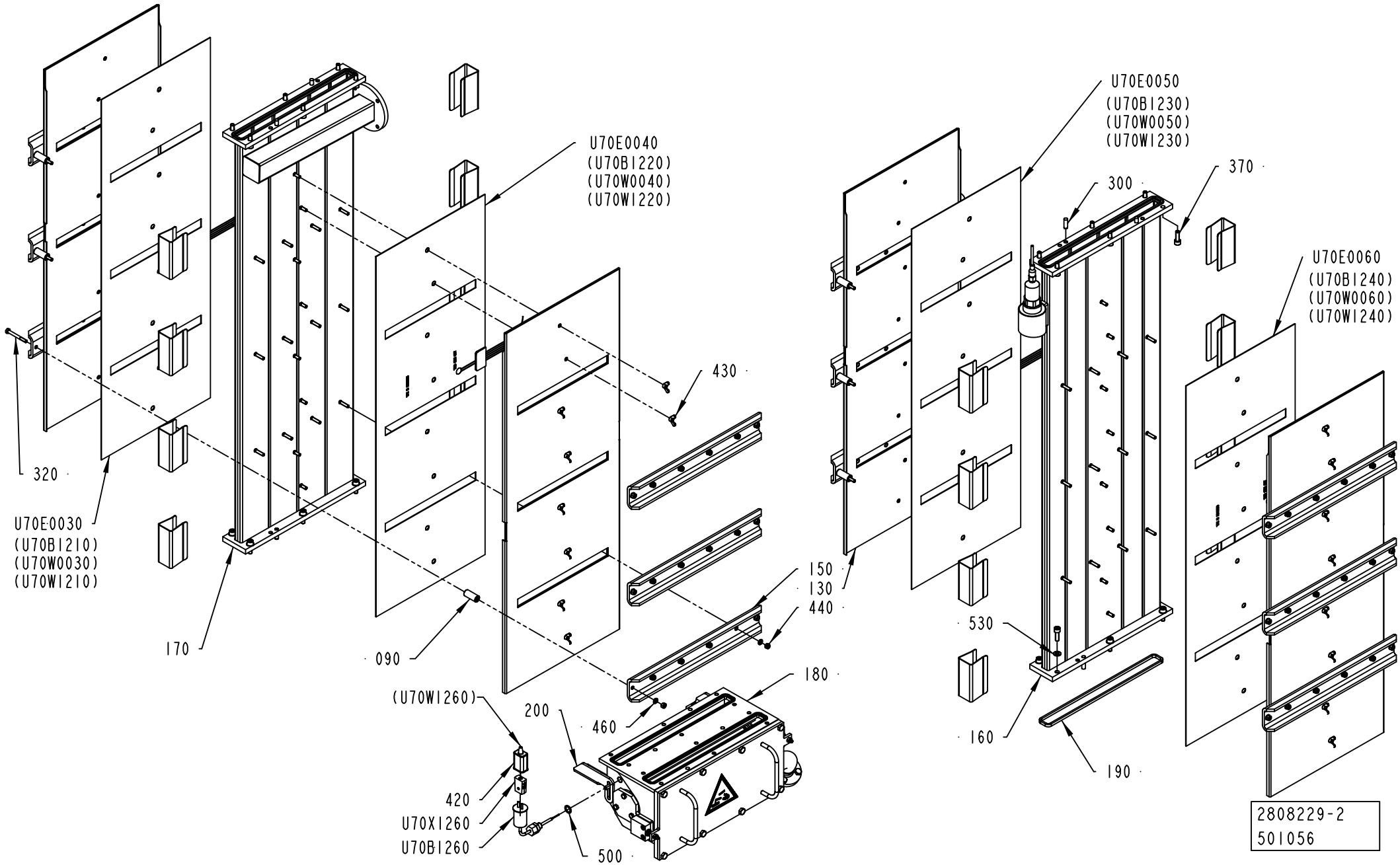
U70E0040
(U70B1220)
(U70W0040)
(U70W1220)
U70E0050
(U70B1230)
(U70W0050)
(U70W1230)
U70E0060
(U70B1240)
(U70W0060)
(U70W1240)
U70E0030
(U70B1210)
(U70W0030)
(U70W1210)
320
170
090
430
150
130
440
180
(U70W1260)
200
460
420
U70X1260
U70B1260
500
300
370
530
160
190
2808229-2
501056

ECM: 505778 - 20111001
Group number: 2808229-0200
Assembly Drawing: 2808229-2_1_AD

This list covers pages from 1-196 to 1-199

Pos	Part No	UN	Qty	Description	Page No
ANSI					
520	359725-0105		1	WARNING SIGN ANSI (V), CHEMICAL HAZARD	
ISO					
520	359705-0004		1	WARNING SIGN ISO, DANGEROUS CHEMICALS	
Common Parts					
040	1511759-0000		16	SPRING	
050	1523805-0000		2	PIN	
060	1539726-0000		2	SHAFT	
070	1539727-0000		2	WHEEL	
080	1539729-0000		2	BRACKET	
090	2685380-0000		12	SPACER	
100	2808230-0000		1	GASKET	
110	2808231-0000		1	BENDING ROLLER	
120	2808232-0000		1	LID	
130	2808234-0000		4	COVER	
150	2808236-0000		12	PLATE	
160	3037835-0000		1	PEROXIDE CHAMBER	
170	2808238-0000		1	PEROXIDE CHAMBER	
180	2808239-0000		1	BOTTOM SECTION	
190	2808240-0000		4	GASKET	
200	2808424-0000		1	BRACKET	
210	2808425-0000		1	BRACKET	
300	311103-1403		8	PARALLEL PIN ISO 2338 8M6X24 A1	
310	312105-0370		8	SCREW, M6S ISO 4017 M6X20 A4 80	
320	312105-0381		12	SCREW, M6S ISO 4014 M6X55 A4 80	
330	312105-0449		4	SCREW, M6S ISO 4017 M8X16 A4 80	
340	312105-0451		8	SCREW, M6S ISO 4017 M8X20 A4 80	
350	312105-0455		4	SCREW, M6S ISO 4017 M8X30 A4 80	
360	312115-0329		4	SCREW ISO4762 M5X16 A4 80	
370	312115-0453		24	SCREW ISO4762 M8X25 A4 80	
380	315206-0711		1	O-RING 26,70X1,78 MM	
390	312605-0312		2	HEXAGON NUT, M6M M4 A280	
400	312605-0316		14	HEXAGON NUT, M6M M6 A280	
410	312605-0318		4	HEXAGON NUT, M6M M8 A280	
420	90326-0012		1	PROTECTIVE COVER, 03-001 10	
430	312715-0116		32	WING NUT DIN 315 A2 MVM-K M6	
440	312812-0316		48	HEXAGON NUT, NY-LOCK M6 A4 80	
450	315105-0136		3	WASHER PLAIN, 4,3X9X0,8 A4 BRB	
460	315105-0153		60	WASHER PLAIN, 6,4X12X1,5 A4 BRB	
470	315105-0165		8	WASHER PLAIN, 8,4X16X1,6 A4 BRB	
480	3123940-0000		2	BUSHING	
490	315205-0802		2	O-RING 41,00X1,78 MM	
500	315237-0110		1	WASHER,PL.RND.AL.13,5/18,H=1,5	
510	90144-0073	MM	1	TREBOFLON-TAPE W=13MM	
530	315105-0165		12	WASHER PLAIN, 8,4X16X1,6 A4 BRB	
U70B1040	90601-1027		1	LIMIT SWITCH, D4C-1G01 5M	
U70B1050	90601-1027		1	LIMIT SWITCH, D4C-1G01 5M	
U70B1260	90326-0053		1	THERMOCOUPLE, 5110 053-000	
U70B1700	90603-4518		1	LEVEL SWITCH, T FTL20-9095	
U70E0030	2808235-0000		1	RESISTANCE	
U70E0040	2808235-0000		1	RESISTANCE	
U70E0050	2808235-0000		1	RESISTANCE	
U70E0060	2808235-0000		1	RESISTANCE	
U70X1260	90326-0020		1	SOCKET, FEMALE YELLOW CR-AL, 03-22000A	

Machine Type | Group Description | Used-In | Group Number | Page No

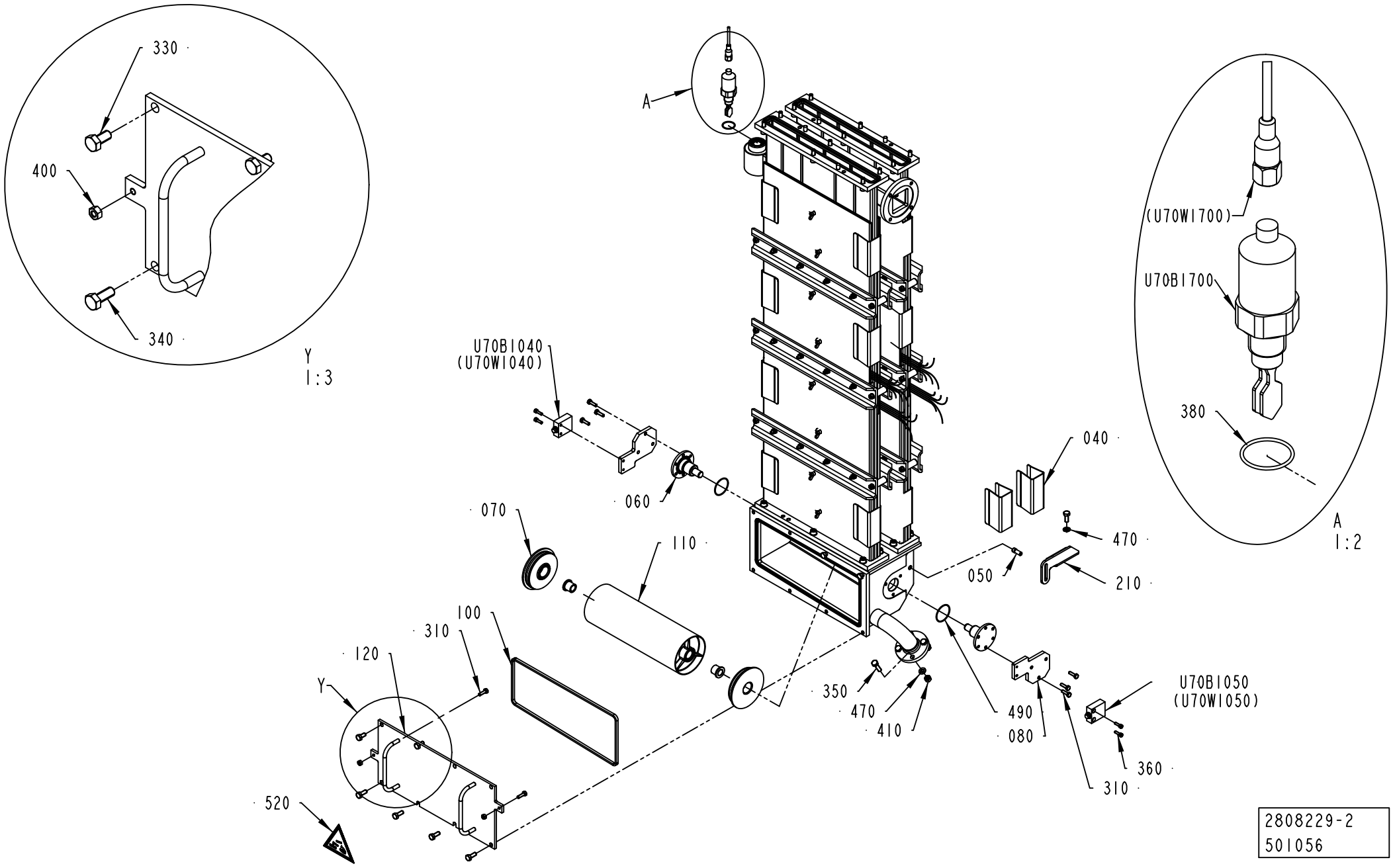
330
400
340
Y
1:3
A
(U70W1700)
U70B1700
380
A
1:2
U70B1040
(U70W1040)
060
070
110
100
310
120
Y
520
040
470
050
210
350
470
410
490
080
U70B1050
(U70W1050)
360
310
2808229-2
501056

ECM: 505778 - 20111001
Group number: 2808229-0200
Assembly Drawing: 2808229-2_2_AD

This list covers pages from 1-196 to 1-199

Pos	Part No	UN	Qty	Description	Page No
ANSI					
520	359725-0105		1	WARNING SIGN ANSI (V), CHEMICAL HAZARD	
ISO					
520	359705-0004		1	WARNING SIGN ISO, DANGEROUS CHEMICALS	
Common Parts					
040	1511759-0000		16	SPRING	
050	1523805-0000		2	PIN	
060	1539726-0000		2	SHAFT	
070	1539727-0000		2	WHEEL	
080	1539729-0000		2	BRACKET	
090	2685380-0000		12	SPACER	
100	2808230-0000		1	GASKET	
110	2808231-0000		1	BENDING ROLLER	
120	2808232-0000		1	LID	
130	2808234-0000		4	COVER	
150	2808236-0000		12	PLATE	
160	3037835-0000		1	PEROXIDE CHAMBER	
170	2808238-0000		1	PEROXIDE CHAMBER	
180	2808239-0000		1	BOTTOM SECTION	
190	2808240-0000		4	GASKET	
200	2808424-0000		1	BRACKET	
210	2808425-0000		1	BRACKET	
300	311103-1403		8	PARALLEL PIN ISO 2338 8M6X24 A1	
310	312105-0370		8	SCREW, M6S ISO 4017 M6X20 A4 80	
320	312105-0381		12	SCREW, M6S ISO 4014 M6X55 A4 80	
330	312105-0449		4	SCREW, M6S ISO 4017 M8X16 A4 80	
340	312105-0451		8	SCREW, M6S ISO 4017 M8X20 A4 80	
350	312105-0455		4	SCREW, M6S ISO 4017 M8X30 A4 80	
360	312115-0329		4	SCREW ISO4762 M5X16 A4 80	
370	312115-0453		24	SCREW ISO4762 M8X25 A4 80	
380	315206-0711		1	O-RING 26,70X1,78 MM	
390	312605-0312		2	HEXAGON NUT, M6M M4 A280	
400	312605-0316		14	HEXAGON NUT, M6M M6 A280	
410	312605-0318		4	HEXAGON NUT, M6M M8 A280	
420	90326-0012		1	PROTECTIVE COVER, 03-001 10	
430	312715-0116		32	WING NUT DIN 315 A2 MVM-K M6	
440	312812-0316		48	HEXAGON NUT, NY-LOCK M6 A4 80	
450	315105-0136		3	WASHER PLAIN, 4,3X9X0,8 A4 BRB	
460	315105-0153		60	WASHER PLAIN, 6,4X12X1,5 A4 BRB	
470	315105-0165		8	WASHER PLAIN, 8,4X16X1,6 A4 BRB	
480	3123940-0000		2	BUSHING	
490	315205-0802		2	O-RING 41,00X1,78 MM	
500	315237-0110		1	WASHER,PL.RND.AL.13,5/18,H=1,5	
510	90144-0073	MM	1	TREBOFLON-TAPE W=13MM	
530	315105-0165		12	WASHER PLAIN, 8,4X16X1,6 A4 BRB	
U70B1040	90601-1027		1	LIMIT SWITCH, D4C-1G01 5M	
U70B1050	90601-1027		1	LIMIT SWITCH, D4C-1G01 5M	
U70B1260	90326-0053		1	THERMOCOUPLE, 5110 053-000	
U70B1700	90603-4518		1	LEVEL SWITCH, T FTL20-9095	
U70E0030	2808235-0000		1	RESISTANCE	
U70E0040	2808235-0000		1	RESISTANCE	
U70E0050	2808235-0000		1	RESISTANCE	
U70E0060	2808235-0000		1	RESISTANCE	
U70X1260	90326-0020		1	SOCKET, FEMALE YELLOW CR-AL, 03-22000A	

Machine Type	Group Description	Used-In	Group Number	Page No

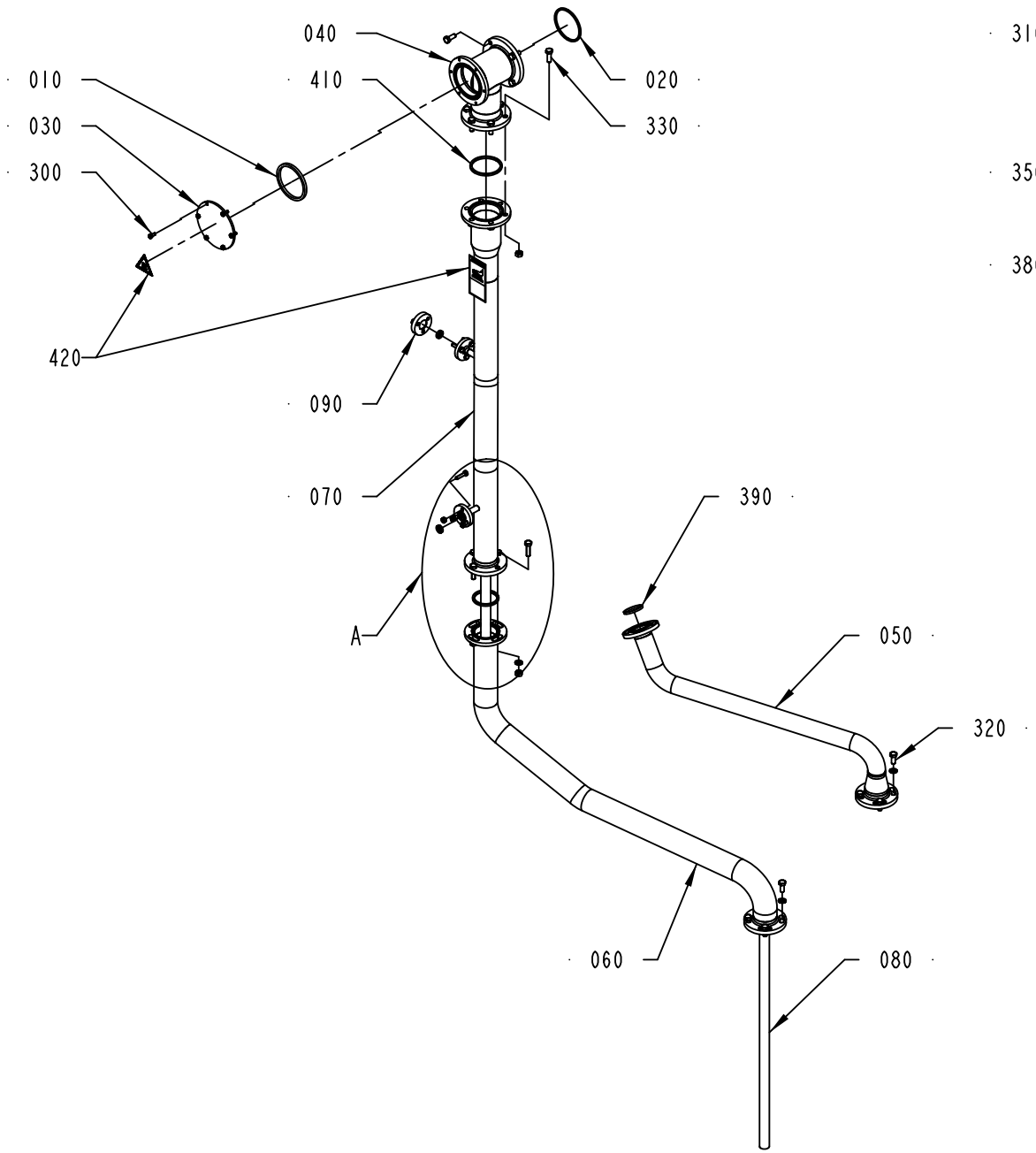
040
010
410
020
030
330
300
420
090
070
390
A
050
320
060
080

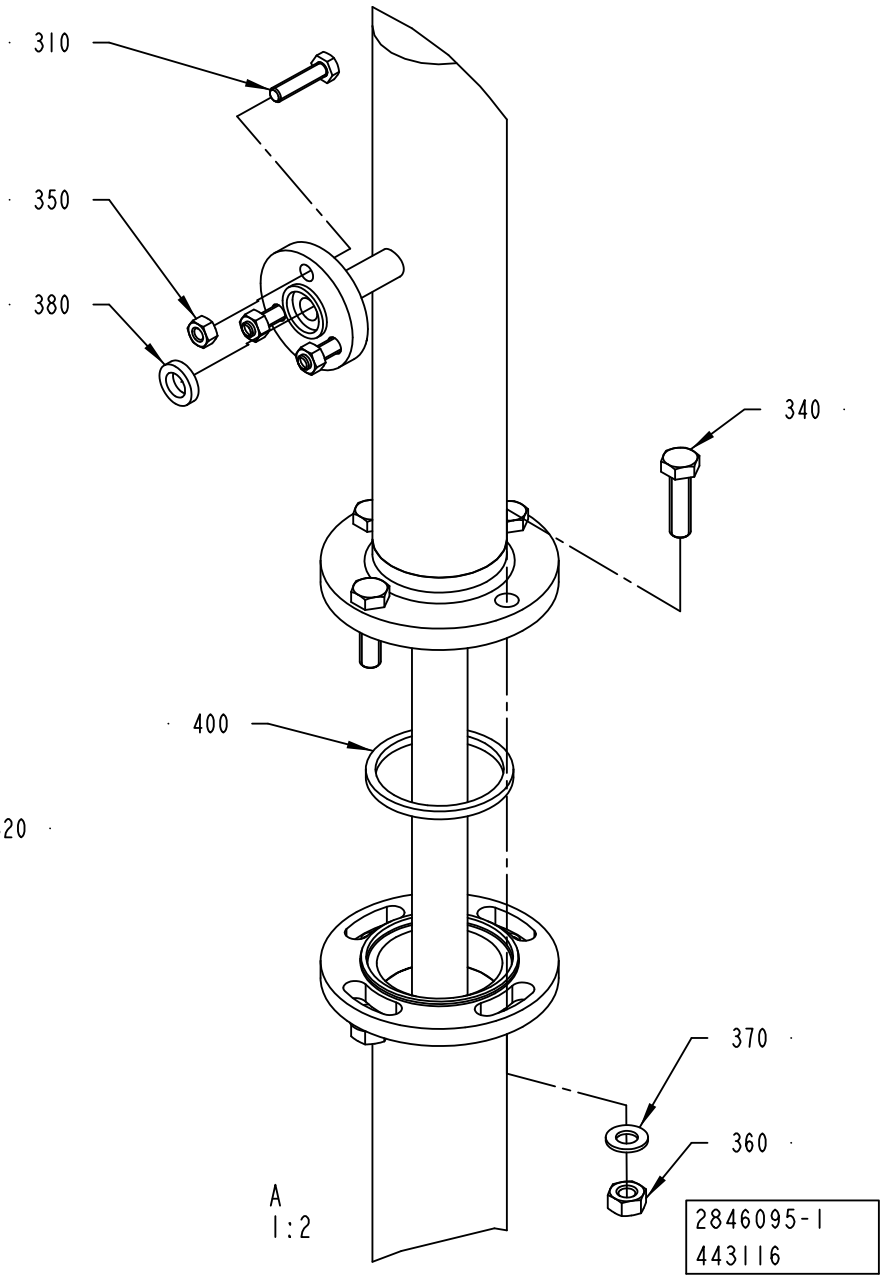
310
350
380
340
400
370
360
A
1:2
2846095-1
443116

ECM: 460712 - 20101001
Group number: 2846095-0100
Assembly Drawing: 2846095-1_1_AC

Pos	Part No	UN	Qty	Description	Page No
ANSI					
420	359725-0117		1	WARNING SIGN ANSI (V), HOT SURFACE	
ISO					
420	359705-0007		1	WARNING SIGN ISO, HOT SURFACE	
Common Parts					
010	436781-0000		1	GASKET	
020	1523808-0000		1	GASKET	
030	1558427-0000		1	LID	
040	2708584-0000		1	CONNECTION PIPE	
050	2910403-0000		1	PIPE	
060	2808243-0000		1	PIPE	
070	2906068-0000		1	PIPE	
080	2808349-0000		1	PLASTIC HOSE	
090	2564107-0000		1	LID	
300	312105-0327		6	SCREW, M6S ISO 4017 M5X12 A4 80	
310	312105-0372		6	SCREW, M6S ISO 4017 M6X25 A4 80	
320	312105-0451		8	SCREW, M6S ISO 4017 M8X20 A4 80	
330	312105-0453		6	SCREW, M6S ISO 4017 M8X25 A4 80	
340	312105-0455		8	SCREW, M6S ISO 4017 M8X30 A4 80	
350	312605-0316		6	HEXAGON NUT, M6M M6 A280	
360	312605-0318		14	HEXAGON NUT, M6M M8 A280	
370	315105-0165		16	WASHER PLAIN, 8,4X16X1,6 A4 BRB	
380	315229-0101		2	SQUARE RING, 10,4X17,4X3,7 MM 1/2" FDA	
390	315229-0104		1	SQUARE RING, 35,8X42,8X3,7 MM 1"1/2 FD	
400	315229-0105		1	SQUARE RING, 48,5X55,5X3,7 MM 2" FDA	
410	315229-0106		1	SQUARE RING, 61,2X68,2X3,7 MM 2"1/2 FDA	

Pos	Part No	UN	Qty	Description	Page No

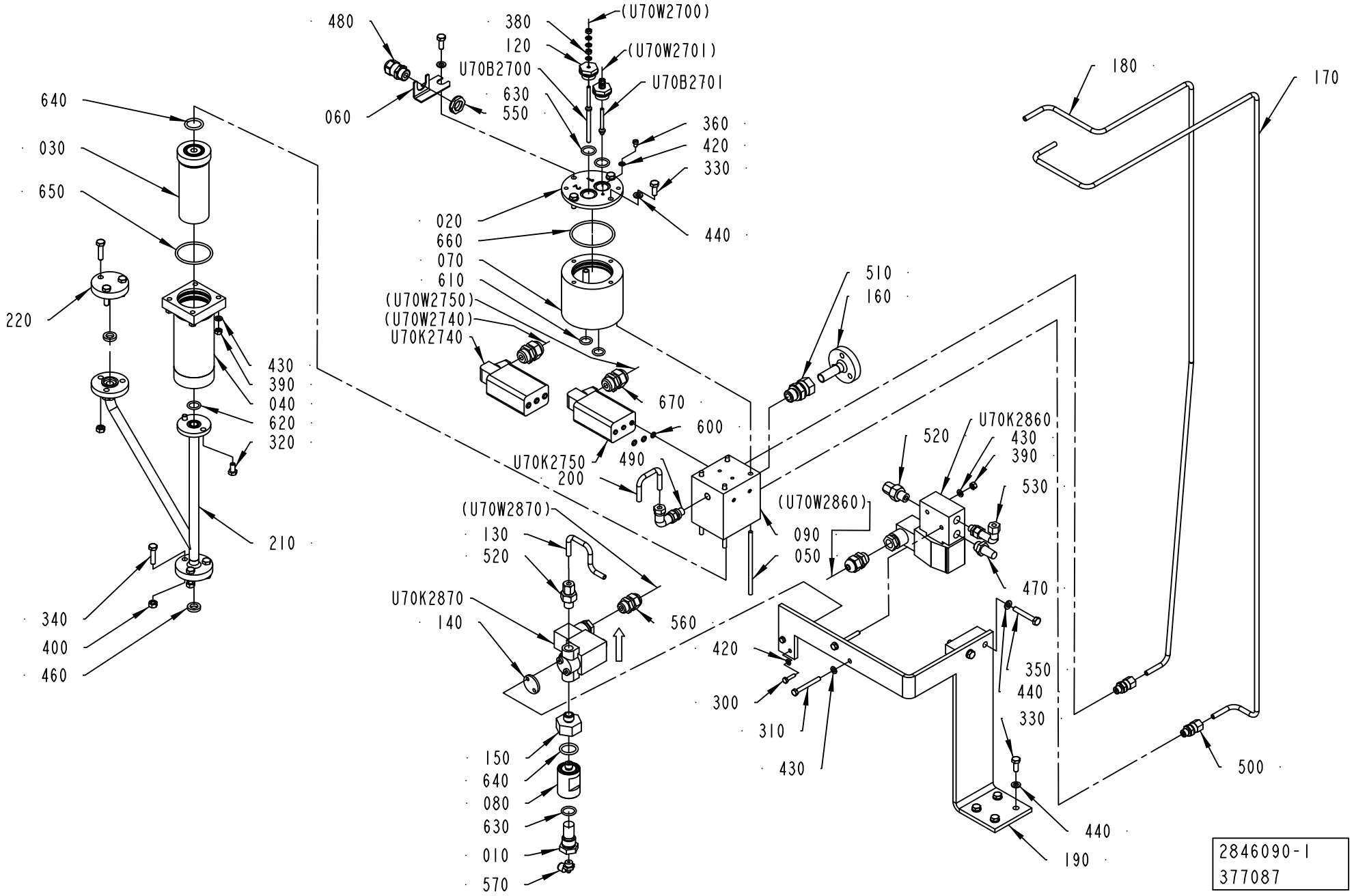
480
380
120
U70B2700
630
550
060
(U70W2700)
(U70W2701)
U70B2701
360
420
330
440
020
660
070
610
(U70W2750)
(U70W2740)
U70K2740
670
600
490
U70K2750
200
640
030
650
220
430
390
040
620
320
210
340
400
460
510
160
180
170
520
U70K2860
430
390
530
(U70W2860)
090
050
470
350
440
330
500
420
300
310
430
440
190
(U70W2870)
130
520
U70K2870
140
560
150
640
080
630
010
570
2846090-1
377087

ECM: 493291 - 20110701
Group number: 2846090-0100
Assembly Drawing: 2846090-1_1_AB

Pos	Part No	UN	Qty	Description	Page No
-					
010	450833-0000		1	FILTER	
020	549267-0000		1	LID	
030	554141-0000		1	FILTER	
040	554142-0000		1	FILTER HOUSING	
050	554585-0000		4	STUD SCREW	
060	1036610-0000		1	BRACKET	
070	1478170-0000		1	CONTAINER	
080	1519486-0000		1	FILTER HOUSING	
090	2871529-0000		1	BLOCK	
120	2578486-0000		2	BRACKET	
130	2763967-0000		1	PIPE	
140	2763968-0000		1	SPACER	
150	2763969-0000		1	REDUCER	
160	2846094-0000		1	PIPE	
170	2846097-0000		1	PIPE	
180	2846096-0000		1	PIPE	
190	2846091-0000		1	BRACKET	
200	2808376-0000		1	PIPE	
210	2906072-0000		1	PIPE	
220	2564107-0000		1	LID	
300	312105-0293		2	SCREW, M6S ISO 4017 M4X16 A4 70	
310	312105-0340		2	SCREW, M6S ISO 4014 M5X45 A4 80	
320	312105-0366		2	SCREW, M6S ISO 4017 M6X12 A4 80	
330	312105-0368		8	SCREW, M6S ISO 4017 M6X16 A4 80	
340	312105-0372		6	SCREW, M6S ISO 4017 M6X25 A4 80	
350	312109-0378		2	SCREW, M6S ISO 4017 M6X40 A4 80	
360	312125-0285		1	SLOTTED HEAD SCREW, ISO1207 M4X6 A4	
380	312605-0312		4	HEXAGON NUT, M6M M4 A280	
390	312605-0314		6	HEXAGON NUT, M6M M5 A280	
400	312605-0316		6	HEXAGON NUT, M6M M6 A280	
420	315105-0136		9	WASHER PLAIN, 4,3X9X0,8 A4 BRB	
430	315105-0146		8	WASHER PLAIN, 5,3X10X1 A4 BRB	
440	315105-0153		10	WASHER PLAIN, 6,4X12X1,5 A4 BRB	
460	315229-0101		2	SQUARE RING, 10,4X17,4X3,7 MM 1/2" FDA	
470	346800-0110		1	SILENCER FILTER R1/4"	
480	90458-0306		1	CABLE GLAND, M16X1,5, 5311 1010	
490	90030-0171		1	ADJUSTABLE ELBOW CONNECTION 6-G1/8	
500	90030-0184		2	CONN. STR., GE06LRED71	
510	90030-0187		1	CONN. STR. GE12LRED71	
520	90030-0202		2	CONN. STR., 6-G1/4, EXT. THREAD	
530	90030-0203		1	ADJUSTABLE ELBOW CONNECTION 6-G1/4	
550	90458-0322		1	NUT, M16X1,5	
560	352103-0101		2	CABLE GLAND, ST 9, PR15,2/PG9	
570	90458-2956		1	ELBOW PIPE JOINT, EXT.THREAD, D=6MM-G1/8	
600	927420-0001		6	O-RING 5.1X1.6 SILICONE	
610	927421-0002		2	O-RING 12.3X2.4 SILICONE	
620	927421-0003		1	O-RING 13.3X2.4 SILICONE	
630	927421-0004		3	O-RING 15.3X2.4 SILICONE	
640	927422-0001		2	O-RING 19.2X3 SILICONE	
650	927422-0007		1	O-RING 44.2X3 SILICONE	
660	927422-0009		1	O-RING 54.5X3 SILICONE	
670	352103-0105		2	CABLE GLAND, STR 11, PR 18,6/PG11	
U70B2700	2559045-0003		1	ELECTRODE	
U70B2701	2559045-0004		1	ELECTRODE	
U70K2740	90042-0203		1	SOLENOID VALVE, 331 3/2 NC	
U70K2750	90042-0203		1	SOLENOID VALVE, 331 3/2 NC	
U70K2860	90459-6975		1	SOLENOID VALVE G1/4, 2401186082702400	
U70K2870	90459-6977		1	SOLENOID VALVE G1/4, V04B286N-B423A	

Machine Type | Group Description | Used-In | Group Number | Page No

FRAME SECTION,UPPER

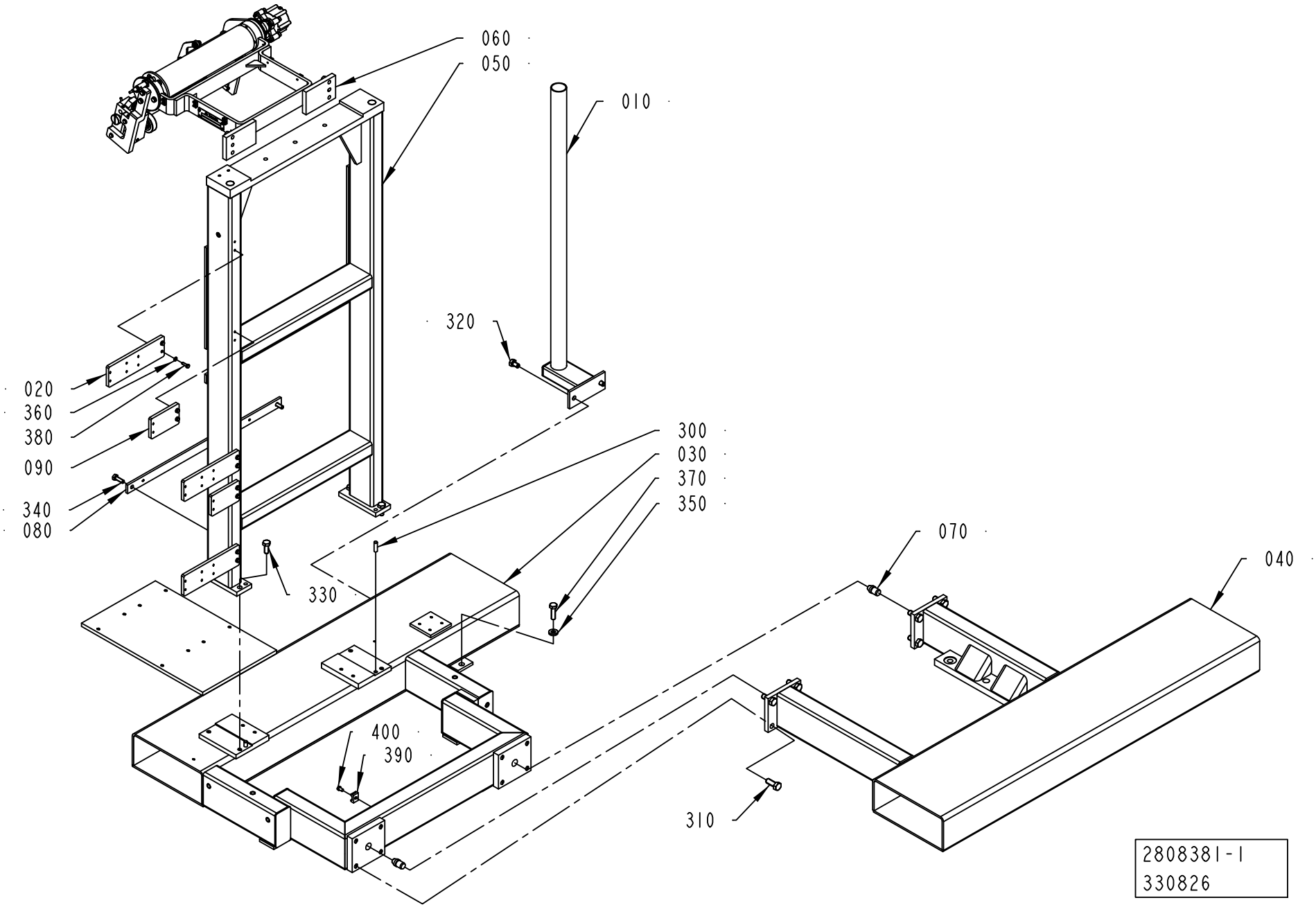

ECM: 330826 - 20071221
Group number: 2808381-0100
Assembly Drawing: 2808381-1_1_AA

Pos	Part No	UN	Qty	Description	Page No
-					
010	1484067-0000		1	BRACKET	
020	2871461-0000		3	BRACKET	
030	2808382-0000		1	FRAME	
040	2808383-0000		1	FRAME	
050	2808410-0000		1	FRAME	
060	2835324-0100		1	BENDING ROLLER	**1-207**
070	1519150-0000		2	PIN	
080	2846106-0000		2	SUPPORT	
090	2839278-0000		2	BRACKET	
300	311103-0404		2	PARALLEL PIN ISO 2338 8M6X28 A1	
310	312105-0536		8	SCREW, M6S ISO 4017 M12X30 A4 80	
320	312105-0489		2	SCREW, M6S ISO 4017 M10X16 A4 80	
330	312105-0493		4	SCREW, M6S ISO 4017 M10X25 A4 80	
340	312105-0453		4	SCREW, M6S ISO 4017 M8X25 A4 80	
350	315115-0173		5	WASHER PLAIN, TBRB 10,5/22 H=4	
360	315105-0146		10	WASHER PLAIN, 5,3X10X1 A4 BRB	
370	312105-0497		5	SCREW, M6S ISO 4017 M10X35 A4 80	
380	312105-0329		10	SCREW, M6S ISO 4017 M5X16 A4 80	
390	352113-0204		2	ANCHOR PLATES FOR STRIPS, TM3S25-M	
400	312125-0364		2	SCREW ISO 1207 M6X10 A4	

Pos	Part No	UN	Qty	Description	Page No

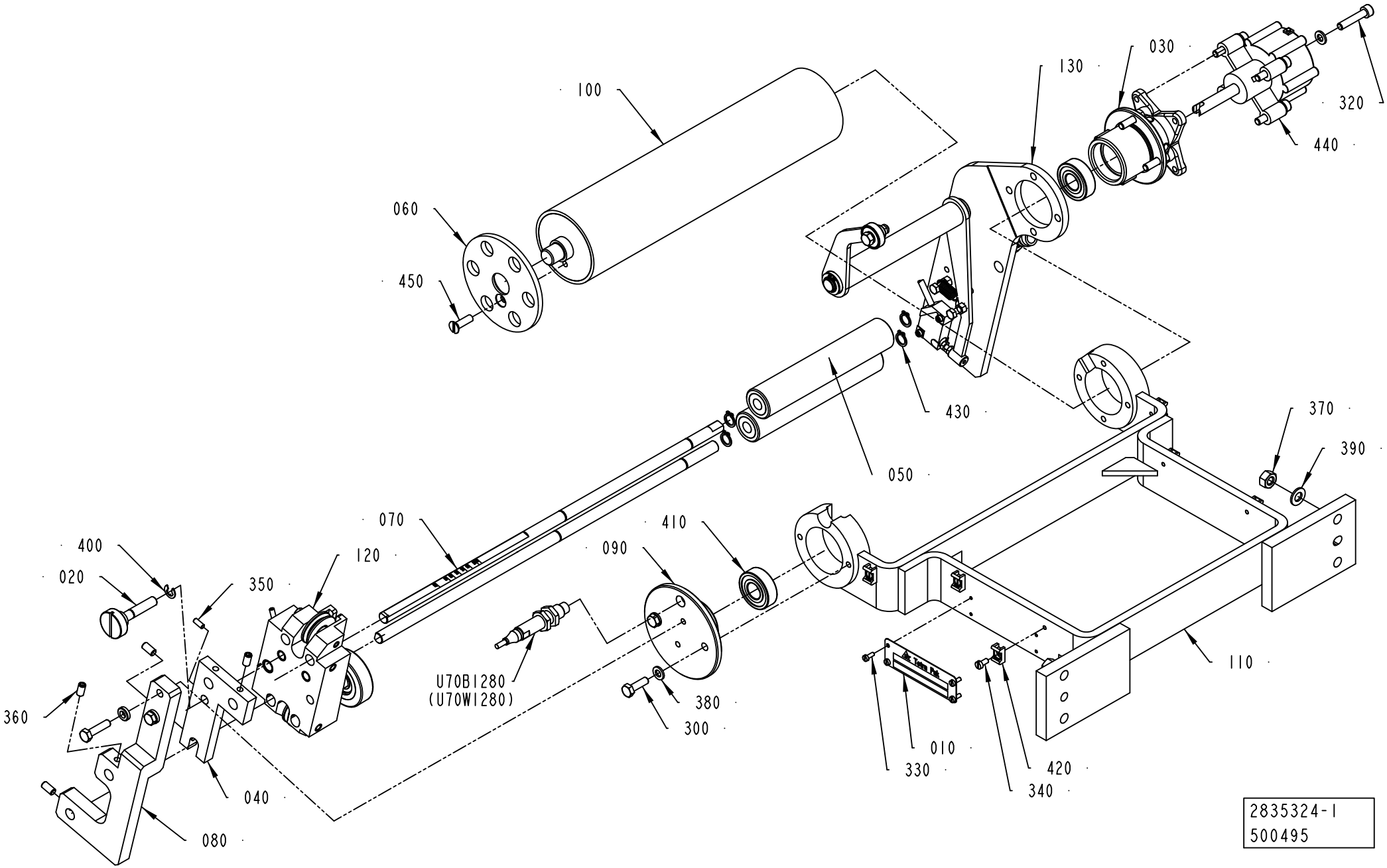
100
130
030
320
440
060
450
430
050
370
390
070
410
400
120
090
020
350
U70B1280
(U70W1280)
380
300
360
040
080
010
330
420
340
110
2835324-1
500495

ECM: 504140 - 20111001
Group number: 2835324-0100
Assembly Drawing: 2835324-1_1_AC

Pos	Part No	UN	Qty	Description	Page No
-					
010	979548-0000		1	MACHINE PLATE	
020	1317713-0000		1	SHAFT	
030	2528110-0000		1	HOUSING	
040	2547565-0000		1	HOLDER	
050	2833054-0000		2	ROLLER	
060	2839231-0000		1	WHEEL	
070	2839232-0000		2	ROD	
080	2839233-0000		1	PLATE	
090	2839234-0000		1	FLANGE	
100	2839235-0000		1	ROLLER	
110	3175070-0000		1	BRACKET	
120	2601483-0100		1	PAPER GUIDE	**1-209**
130	2835323-0100		1	SPLICE DETECTOR	**1-211**
300	312105-0370		6	SCREW, M6S ISO 4017 M6X20 A4 80	
310	312105-0372		2	SCREW, M6S ISO 4017 M6X25 A4 80	
320	312115-0374		4	SCREW ISO4762 M6X30 A4 80	
330	312125-0222		4	SLOTTED HEAD SCREW, ISO1207 M3X8 A4	
340	312125-0287		6	SLOTTED HEAD SCREW, ISO1207 M4X8 A4	
350	312318-0289		1	SET SCREW, CUP END ISO4029 M4X10 A4	
360	312318-0366		4	SET SCREW, CUP END ISO4029 M6X12 A4	
370	312605-0318		4	HEXAGON NUT, M6M M8 A280	
380	315105-0153		6	WASHER PLAIN, 6,4X12X1,5 A4 BRB	
390	315105-0165		4	WASHER PLAIN, 8,4X16X1,6 A4 BRB	
400	315755-0108		1	RETAINING RING SHAFT DIN 6799 6 SS	
410	321313-0102		2	BALL BEARING 15/35X11	
420	352113-0205		6	ANCHOR PLATES FOR STRIPS, TM2S8-C100	
430	90141-0016		4	RETAINING RING FOR SHAFT DIN 471 10 SS	
440	90347-0054		1	ROTARY DASHPOT, S-CRD-P277	
450	312145-0370		1	SCREW ISO 2009 MFS M6X20 A4	
460	315115-0153		2	WASHER PLAIN, TBRB 6,4/12 H=3	
U70B1280	90600-0463		1	INDUCTIVE SWITCH,E2A-M12LN05-WP-B1-TP 5M	

Pos	Part No	UN	Qty	Description	Page No

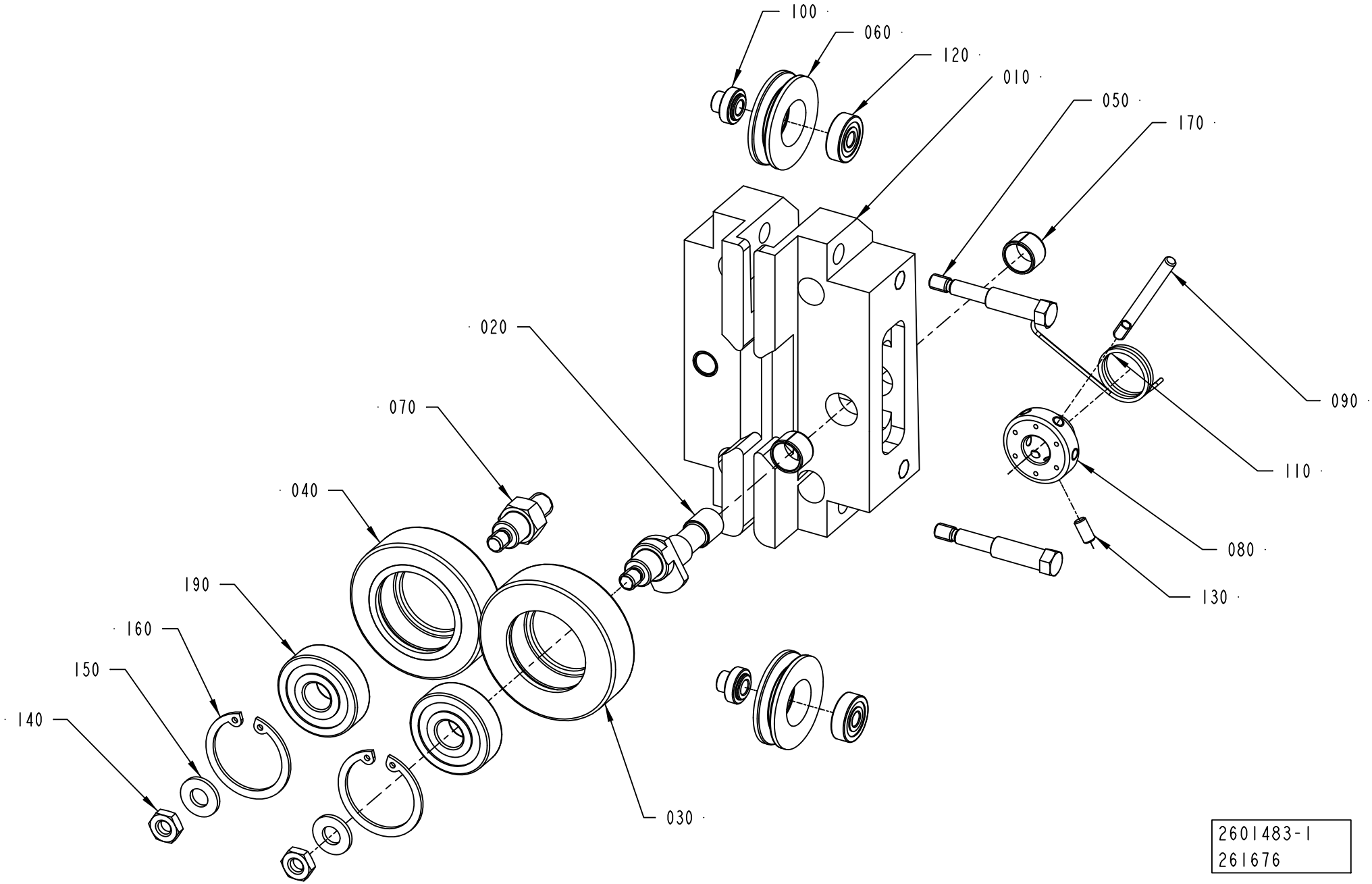
100
060
120
010
050
170
020
070
040
090
110
080
130
190
160
150
140
030
2601483-1
261676

ECM: 437213 - 20100403
Group number: 2601483-0100
Assembly Drawing: 2601483-1_1_AB

Pos	Part No	UN	Qty	Description	Page No
-					
010	2832463-0000		1	SUPPORT	
020	2503436-0000		1	SHAFT	
030	2594126-0000		1	GUIDE ROLLER	
040	1036623-0000		1	GUIDE ROLLER	
050	2533671-0000		2	SCREW	
060	2533673-0000		2	ROLLER	
070	1558254-0000		1	SHAFT	
080	2594125-0000		1	SLEEVE	
090	2503438-0000		1	LEVER	
100	2533672-0000		2	SHAFT	
110	2591782-0000		1	SPRING	
120	90214-0037		2	BALL BEARING 5/16X5	
130	312318-0287		1	SET SCREW, CUP END ISO4029 M4X8 A4	
140	312625-0316		2	HEXAGON THIN NUT, EN 24035 ML6M M6 A4	
150	315105-0156		2	WASHER PLAIN, 6,7X14X1,5 A4 BRB	
160	315753-0122		2	RETAINING RING FOR BORE DIN 472 30 SS	
170	321141-0138		2	BEARING BUSHING, 10X12X8 MM	
190	321313-0100		2	BALL BEARING 10/30X9	

Pos	Part No	UN	Qty	Description	Page No

SPLICE DETECTOR

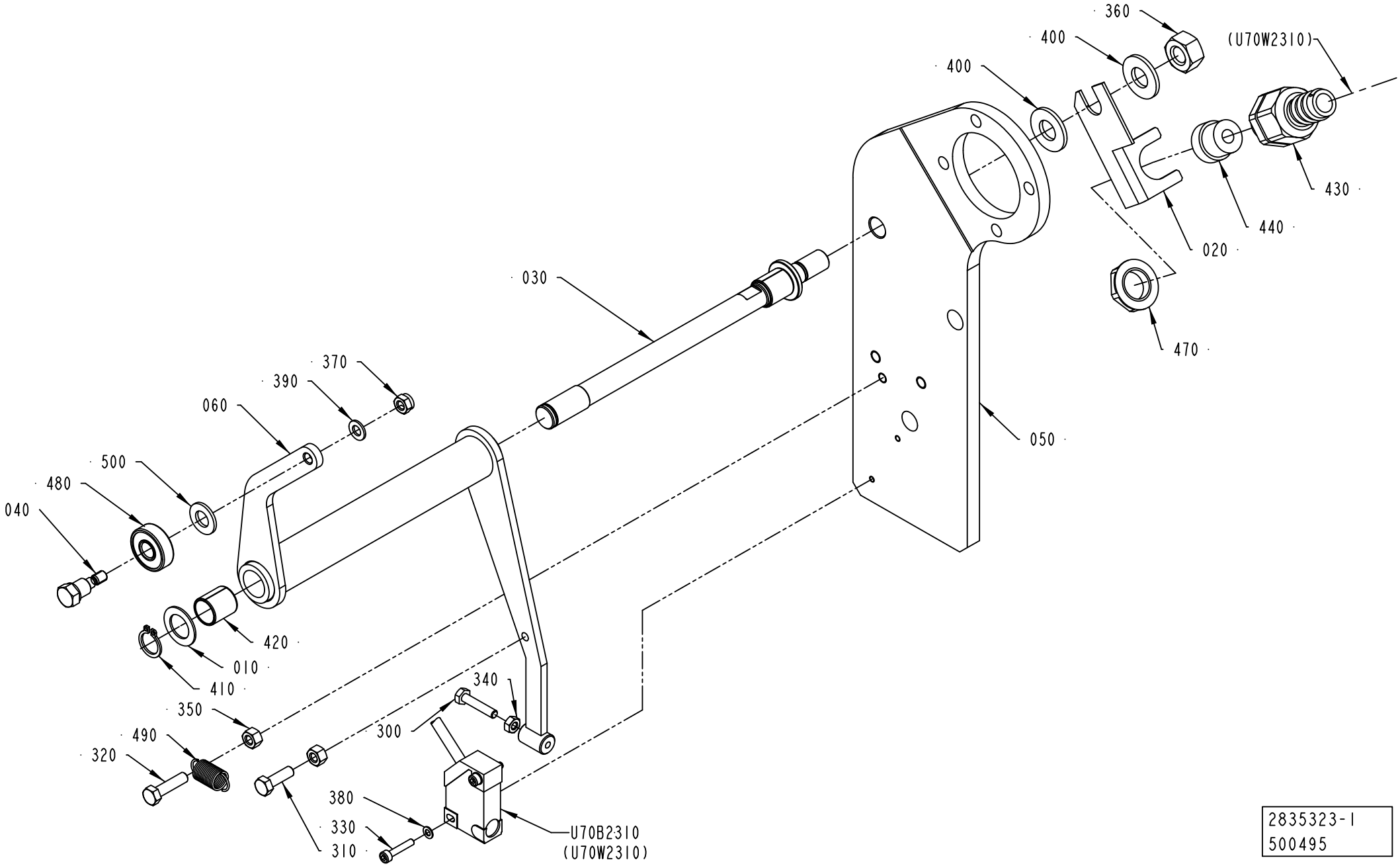

2835323-1
500495

ECM: 500985 - 20111001
Group number: 2835323-0100
Assembly Drawing: 2835323-1_1_AC

Pos	Part No	UN	Qty	Description	Page No
-					
010	266737-0000		1	WASHER	
020	1036610-0000		1	BRACKET	
030	2528128-0000		1	SHAFT	
040	3153330-0000		1	SHAFT	
050	3174957-0000		1	PLATE	
060	2835322-0000		1	BRACKET	
300	312105-0295		1	SCREW, M6S ISO 4017 M4X20 A4 70	
310	312105-0329		1	SCREW, M6S ISO 4017 M5X16 A4 80	
320	312105-0331		1	SCREW, M6S ISO 4017 M5X20 A4 80	
330	312115-0228		2	SCREW ISO4762 M3X16 A4 80	
340	312605-0312		1	HEXAGON NUT, M6M M4 A280	
350	312605-0314		2	HEXAGON NUT, M6M M5 A280	
360	312605-0320		1	HEXAGON NUT, M6M M10 A280	
370	312812-0314		1	HEXAGON NUT, NY-LOCK M5 A4 80	
380	315105-0124		2	WASHER PLAIN, 3,2X6X0,5 A4 BRB	
390	315105-0146		1	WASHER PLAIN, 5,3X10X1 A4 BRB	
400	315105-0173		2	WASHER PLAIN, 10,5X22X2 A4 BRB	
410	315751-0109		1	RETAINING RING FOR SHAFT DIN 471 12 SS	
420	321141-0183		2	BEARING BUSHING, 12X14X15 MM	
430	90458-0427		1	GLAND FITTING, VK 21652YUL11	
440	353249-0008		1	INSERT, SINGLE HOLE, EK152 7	
470	90458-0322		1	NUT, M16X1,5	
480	90459-6335		1	BALL BEARING 8/22X7	
490	90335-0089		1	TENSION SPRING, 41490, 0,9X10X23	
500	315105-0165		1	WASHER PLAIN, 8,4X16X1,6 A4 BRB	
U70B2310	90044-0194		1	INDUCTIVE SENSOR, IN 5329	

Pos	Part No	UN	Qty	Description	Page No

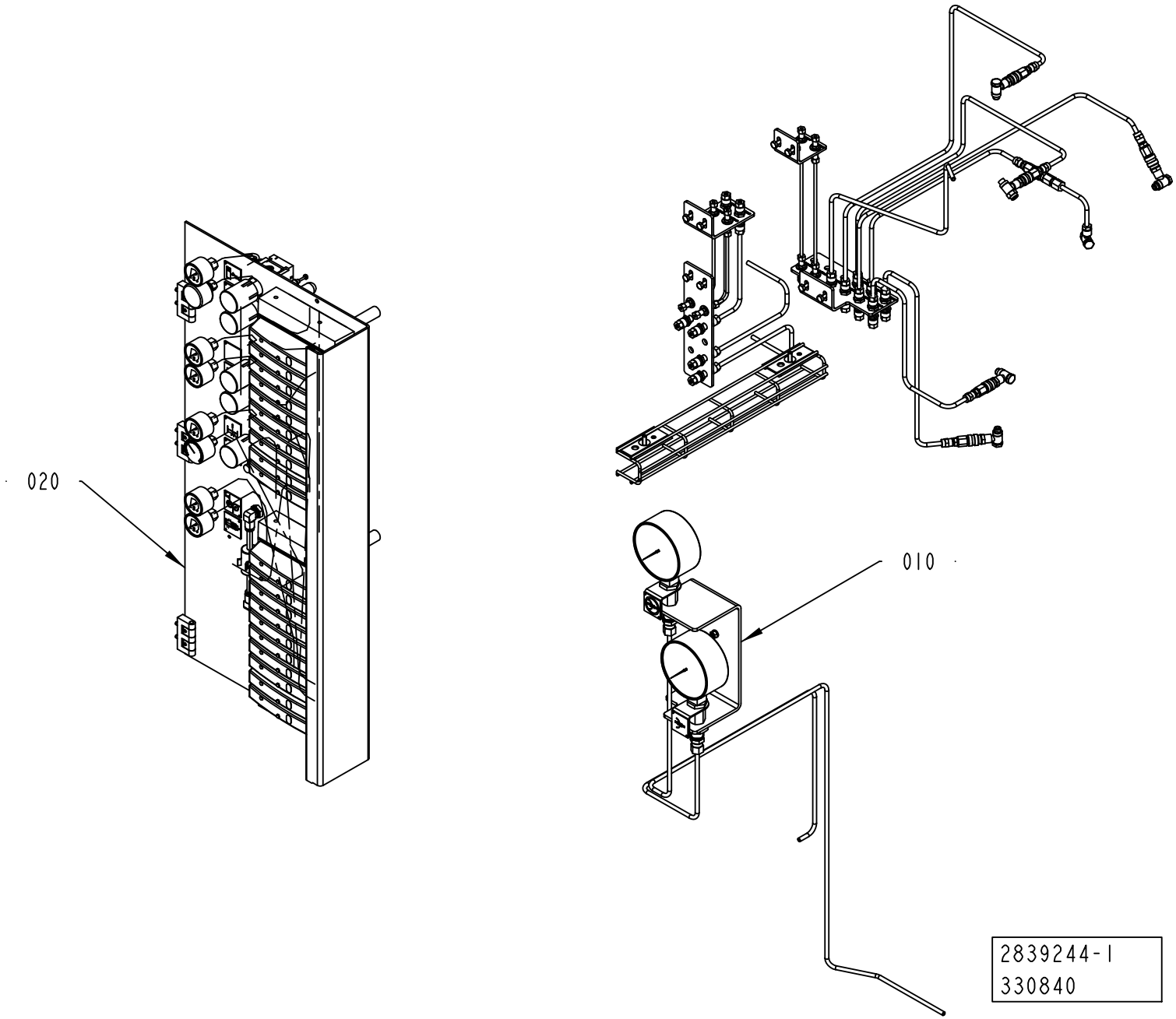
020
010
2839244-1
330840

ECM: 330840 - 20071221
Group number: 2839244-0100
Assembly Drawing: 2839244-1_1_AA

Pos	Part No	UN	Qty	Description	Page No
-					
010	2835309-0100		1	HOSE INSTALLATION	**1-215, 1-217**
020	2846099-0100		1	VALVE PANEL	**1-219, 1-221, 1-223, 1-225**

Pos	Part No	UN	Qty	Description	Page No

HOSE INSTALLATION

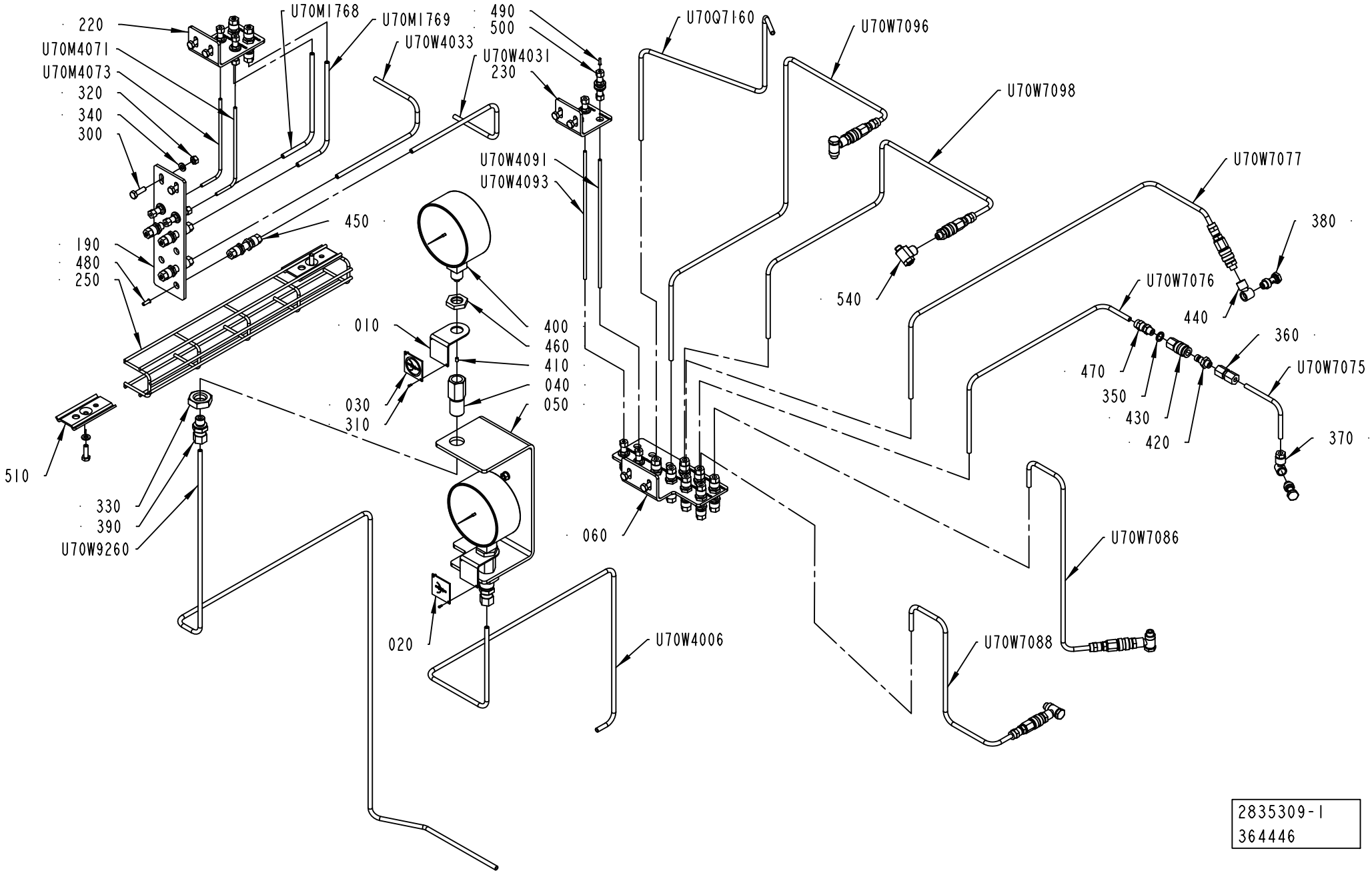

ECM: 513146 - 20111002
Group number: 2835309-0100
Assembly Drawing: 2835309-1_1_AB

This list covers pages from 1-214 to 1-217

Pos	Part No	UN	Qty	Description	Page No
HVA (See drawing on page: 1-216)					
060	2994298-0000		1	BRACKET	
340	315106-0153		10	WASHER PLAIN, M6 ISO7089-6-200 HV A4	
450	90224-0349		6	CONN. BULKHEAD. 1250-6	
520	90055-0100		5	Y-CONNECTION, 6-6	
NOHVA (See drawing on page: 1-214)					
060	2864006-0000		1	BRACKET	
250	2871444-0000		1	HOSE HOLDER	
300	312105-0370		12	SCREW, M6S ISO 4017 M6X20 A4 80	
340	315106-0153		12	WASHER PLAIN, M6 ISO7089-6-200 HV A4	
350	315237-0109		6	WASHER,PL.RND.AL.10/14,H=1,5	
360	342724-0102		1	CONN. STR. PIPE GAI06LRCF	
370	342797-0121		1	BANJO CONN., RINGPIECE 6-1/8	
380	342980-0303		5	BANJO-HOLLOW BOLT COUPL,EXT.THR.01-G1/8	
420	90163-0057	MM	6	QUICK COUPLING, (M) 5150-1/8	
430	90163-0062		6	QUICK COUPLING, (F) 5053-1/8	
440	90224-0308		4	CONN. BANJO, ART. NO. 2023-1/8-1/8	
450	90224-0349		13	CONN. BULKHEAD. 1250-6	
470	90458-1849		6	CONN. STR., 1050-6-1/8	
510	90181-0182		2	BRACKET, 1149354	
520	90055-0100		4	Y-CONNECTION, 6-6	
540	90458-2738		1	THROTTLE CHECK VALVE, GRLA-1/8-B	
U70Q7160	2864019-0000		1	PIPE	
U70W7072	315400-0001	MM	3200	TUBE PUN-H-6X1-BL	
U70W7074	315400-0001	MM	3200	TUBE PUN-H-6X1-BL	
U70W7075	2835314-0000		1	PIPE	
U70W7076	2835315-0000		1	PIPE	
U70W7077	2835313-0000		1	PIPE	
U70W7082	315400-0001	MM	3200	TUBE PUN-H-6X1-BL	
U70W7084	315400-0001	MM	3200	TUBE PUN-H-6X1-BL	
U70W7086	2835311-0000		1	PIPE	
U70W7088	2835312-0000		1	PIPE	
U70W7092	315400-0001	MM	3200	TUBE PUN-H-6X1-BL	
U70W7094	315400-0001	MM	3200	TUBE PUN-H-6X1-BL	
U70W7096	2835316-0000		1	PIPE	
U70W7098	2835317-0000		1	PIPE	
U70W7105	315400-0001	MM	3500	TUBE PUN-H-6X1-BL	
Common Parts					
010	464173-0000		2	LABEL HOLDER	
020	464174-0000		1	SIGN, LONGITUDINAL SEALING	
030	464175-0000		1	SIGN, LONGITUDINAL SEALING SHORT STOP	
040	1524674-0000		2	REDUCTION SLEEVE	
050	2833159-0000		1	BRACKET	
190	2864014-0000		1	BRACKET	
220	2864017-0000		1	BRACKET	
230	2864018-0000		1	BRACKET	
300	312105-0370		10	SCREW, M6S ISO 4017 M6X20 A4 80	
310	312502-0120		4	DRIVE SCREW ROUND HEAD KDS 0X5	
320	312607-0316		10	HEXAGON NUT, EN 24032 M6M M6 A480	
330	312625-0326		2	HEXAGON THIN NUT, EN 24035 ML6M M20 A4	
390	90030-0092		2	STRAIGHT CONN., 6-R1/4,EXT. TAPPERED	
400	90043-0034		2	PRESSURE GAUGE	
410	90043-0302		2	SCREW	
460	90330-0105		2	NUT, HEXAGON SS, G 3/8	
480	342706-0130		13	STIFFNER SLEEVE FOR HOSE 6X1	
490	342706-0114		8	STIFFNER SLEEVE FOR HOSE 4X0,75	
500	90030-0462		8	CONN. BULKHEAD DE04-00	
530	352113-0101		100	CABLE TIE, BLACK 92X2,5 MM	
U70M1768	2864016-0000		1	PIPE	
U70M1769	2864016-0000		1	PIPE	
U70M4071	2864015-0000		1	PIPE	
U70M4073	2864015-0000		1	PIPE	
U70M4075	315400-0016	MM	2500	TUBE PUN-H-4X0,75-BL	
U70M4076	315400-0016	MM	1000	TUBE PUN-H-4X0,75-BL	
U70M4077	315400-0016	MM	2500	TUBE PUN-H-4X0,75-BL	
U70M4078	315400-0016	MM	1000	TUBE PUN-H-4X0,75-BL	
U70W1172	315400-0001	MM	2500	TUBE PUN-H-6X1-BL	
U70W1173	315400-0001	MM	2500	TUBE PUN-H-6X1-BL	
U70W1762	315400-0001	MM	300	TUBE PUN-H-6X1-BL	
U70W1763	315400-0001	MM	2500	TUBE PUN-H-6X1-BL	
U70W1764	315400-0001	MM	300	TUBE PUN-H-6X1-BL	
U70W1765	315400-0001	MM	2500	TUBE PUN-H-6X1-BL	
U70W1772	315400-0001	MM	3500	TUBE PUN-H-6X1-BL	
U70W1774	315400-0001	MM	3500	TUBE PUN-H-6X1-BL	
U70W1775	315400-0001	MM	3500	TUBE PUN-H-6X1-BL	
U70W1776	315400-0001	MM	1000	TUBE PUN-H-6X1-BL	
U70W1777	315400-0001	MM	3500	TUBE PUN-H-6X1-BL	
U70W1778	315400-0001	MM	1000	TUBE PUN-H-6X1-BL	
U70W2742	315400-0001	MM	3500	TUBE PUN-H-6X1-BL	
U70W3093	315400-0001	MM	3700	TUBE PUN-H-6X1-BL	
U70W3792	315400-0016	MM	3500	TUBE PUN-H-4X0,75-BL	
U70W3794	315400-0016	MM	3500	TUBE PUN-H-4X0,75-BL	
U70W4002	315400-0001	MM	3000	TUBE PUN-H-6X1-BL	
U70W4004	315400-0001	MM	3000	TUBE PUN-H-6X1-BL	

Machine Type | Group Description | Used-In | Group Number | Page No

HOSE INSTALLATION

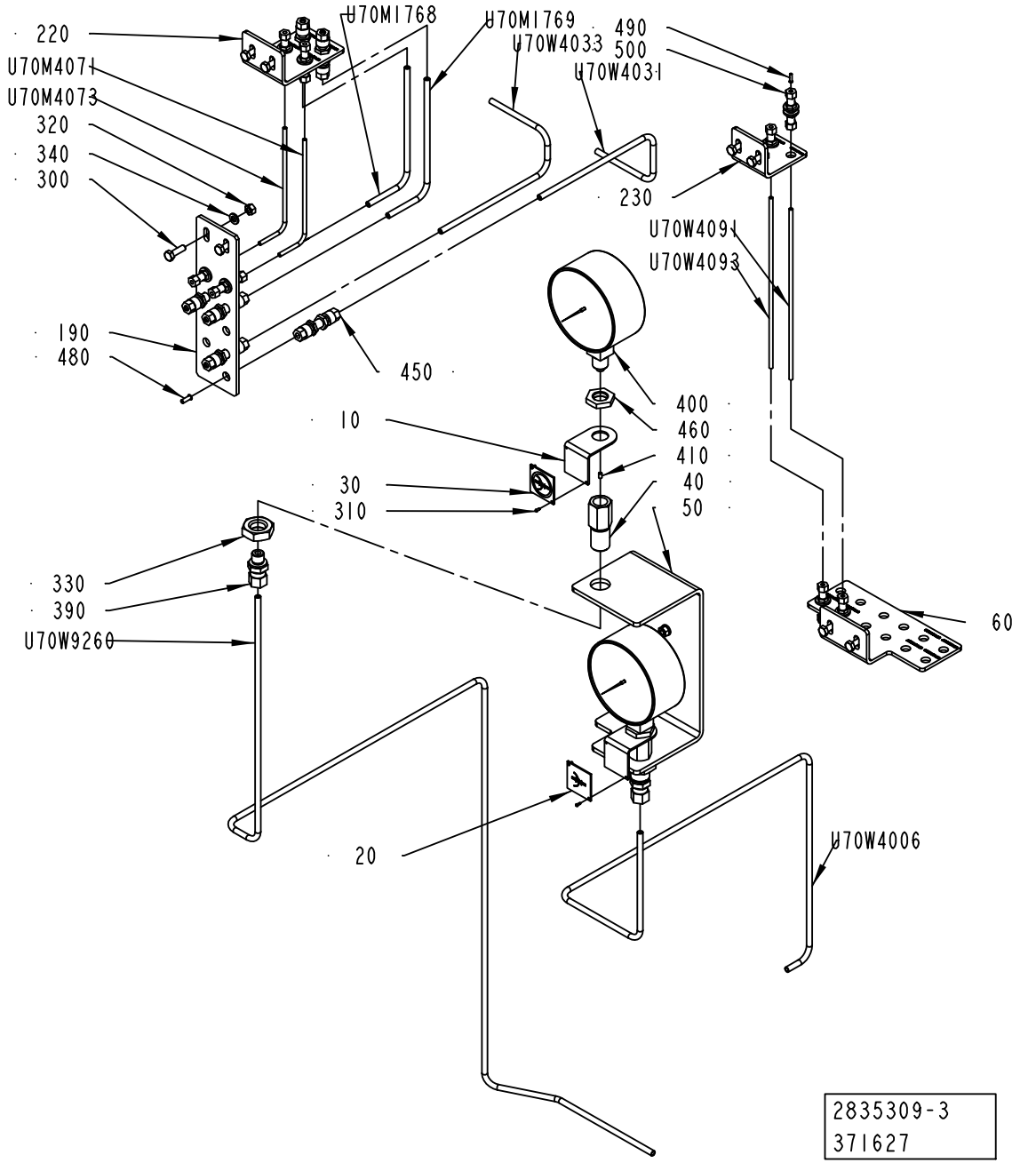

Pos	Part No	UN	Qty	Description	Page No
Common Parts (Cont'd)					
U70W4006	2835319-0000		1	PIPE	
U70W4012	315400-0001	MM	3000	TUBE PUN-H-6X1-BL	
U70W4014	315400-0001	MM	3000	TUBE PUN-H-6X1-BL	
U70W4022	315400-0001	MM	3000	TUBE PUN-H-6X1-BL	
U70W4024	315400-0001	MM	3000	TUBE PUN-H-6X1-BL	
U70W4031	2864007-0000		1	PIPE	
U70W4033	2864008-0000		1	PIPE	
U70W4035	315400-0001	MM	2500	TUBE PUN-H-6X1-BL	
U70W4036	315400-0001	MM	2500	TUBE PUN-H-6X1-BL	
U70W4037	315400-0001	MM	1000	TUBE PUN-H-6X1-BL	
U70W4038	315400-0001	MM	1000	TUBE PUN-H-6X1-BL	
U70W4052	315400-0016	MM	3500	TUBE PUN-H-4X0,75-BL	
U70W4054	315400-0016	MM	3500	TUBE PUN-H-4X0,75-BL	
U70W4062	315400-0016	MM	3500	TUBE PUN-H-4X0,75-BL	
U70W4064	315400-0016	MM	3500	TUBE PUN-H-4X0,75-BL	
U70W4091	2871489-0000		1	PIPE	
U70W4093	2871489-0000		1	PIPE	
U70W4096	315400-0016	MM	3500	TUBE PUN-H-4X0,75-BL	
U70W4097	315400-0016	MM	1000	TUBE PUN-H-4X0,75-BL	
U70W4098	315400-0016	MM	3500	TUBE PUN-H-4X0,75-BL	
U70W4099	315400-0016	MM	1000	TUBE PUN-H-4X0,75-BL	
U70W7045	315400-0016	MM	3700	TUBE PUN-H-4X0,75-BL	
U70W7054	315400-0001	MM	3700	TUBE PUN-H-6X1-BL	
U70W7064	315400-0001	MM	4000	TUBE PUN-H-6X1-BL	
U70W9260	2871499-0000		1	PIPE	

Pos	Part No	UN	Qty	Description	Page No

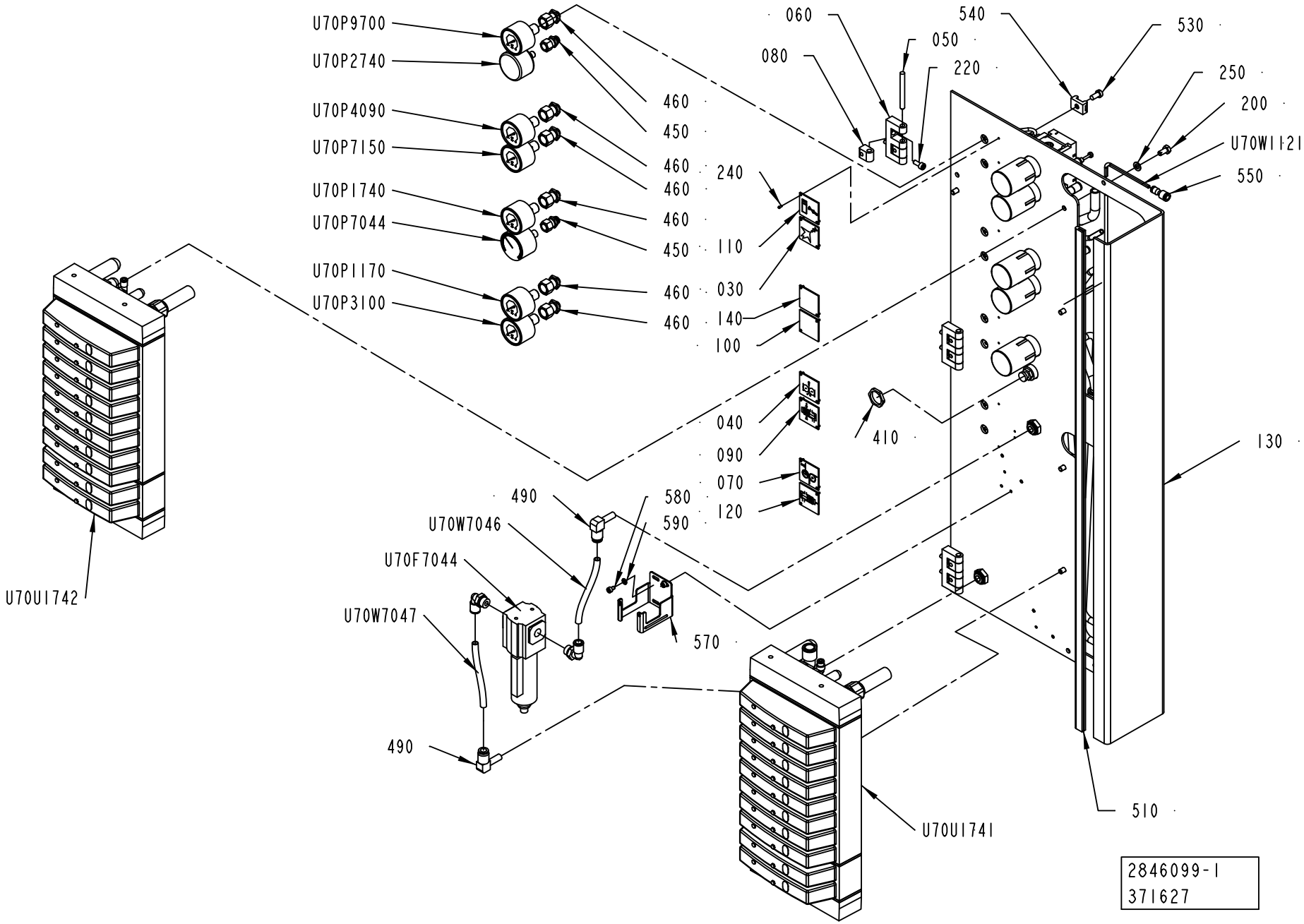
U70P9700
U70P2740
U70P4090
U70P7150
U70P1740
U70P7044
U70P1170
U70P3100
460
450
460
460
460
450
460
460
240
110
030
140
100
040
090
070
120
580
590
490
U70W7046
U70F7044
U70W7047
490
570
U70U1742
U70U1741
060
080
050
220
540
530
250
200
U70W1121
550
410
130
510
2846099-1
371627

ECM: 372123 - 20081009
Group number: 2846099-0100
Assembly Drawing: 2846099-1_1_AC

This list covers pages from 1-218 to 1-225

Pos	Part No	UN	Qty	Description	Page No
NOHVA (See drawing on pages: 1-218, 1-220, 1-222, 1-224)					
600	350013-0005		1	PLUG QSC-12H	
U70W7104	315400-0004	MM	175	TUBE PUN-H-8X1,25-BL	
Common Parts					
030	273450-0000		1	SIGN, AIR SPRAY	
040	273452-0000		1	SIGN, ROLLING MACHINE FOR FABRICS	
050	988685-0000		3	PIN	
060	1035792-0000		3	E-HINGE	
070	1041937-0000		1	SIGN	
080	1129770-0000		6	BLOCKING PIECE	
090	1548001-0000		1	SIGN	
100	2634917-0000		1	SIGN	
110	2640822-0000		1	SIGN	
120	2672942-0000		1	SYMBOLSIGN	
130	2863096-0000		1	PANEL	
140	1140034-0000		1	SIGN	
200	312105-0366		10	SCREW, M6S ISO 4017 M6X12 A4 80	
210	312115-0305		4	SCREW ISO4762 M4X50 A4 80	
220	312115-0327		6	SCREW ISO4762 M5X12 A4 80	
240	312502-0120		16	DRIVE SCREW ROUND HEAD KDS 0X5	
250	315105-0153		6	WASHER PLAIN, 6,4X12X1,5 A4 BRB	
270	350001-0008		1	PUSH-IN FITTING QS-F-G1/4-6	
280	350002-0005		5	PUSH-IN L-FITTING QSL-F-G1/8-4	
290	350002-0008		4	PUSH-IN L-FITTING QSL-F-G1/4-6	
300	350002-0009		8	PUSH-IN L-FITTING QSL-F-G1/4-8	
310	350002-0011		1	PUSH-IN L-FITTING QSL-F-G1/4-12	
320	350004-0005		1	PUSH-IN L-FITTING QSL-F-12	
330	350005-0005		3	PUSH-IN T-FITTING QST-F-12	
340	350006-0001		3	PUSH-IN FITTING QS-F-6H-4	
350	350006-0002		3	PUSH-IN FITTING QS-F-8H-4	
360	350006-0007		1	PUSH-IN FITTING QS-F-12H-6	
370	350007-0008		2	PUSH-IN T-FITTING QST-F-G1/4-6	
380	350007-0009		1	PUSH-IN T-FITTING QST-F-G1/4-8	
390	350007-0011		2	PUSH-IN T-FITTING QST-F-G1/4-12	
400	350012-0005		5	SLEEVE QSH-F-12	
410	353250-0020		1	GLAND LOCK NUT, M20X1,5	
420	90165-0019		1	TOOL CLIP, 81/3, OPEN, 20 - 30 MM	
430	90328-0026		2	SILENCER, G1/4"	
440	90459-2248		2	BRACKET, MS4-MV	
450	90459-7332		2	PUSH-IN FITTING QSSF-1/8-4-B	
460	90459-7333		6	PUSH-IN FITTING QSSF-1/4-4-B	
470	90600-1167		1	PLUG, EXT. R-THREAD, R1/4	
480	90600-1169		2	PLUG G1/4, B-1/4-NPT	
490	90600-1175		2	ELBOW WITH TAILPIECE 8/8 MM	
500	90600-2029		2	PUSH-IN BULKHEAD FITTING QSSF-F-G1/4-8	
510	90143-0097	MM	820	SELF GRIPPING GASKET, 1011-24	
520	350013-0002		1	PLUG QSC-6H	
530	312125-0366		4	SLOTTED HEAD SCREW, ISO1207 M6X12 A4	
540	352113-0204		4	ANCHOR PLATES FOR STRIPS, TM3S25-M	
550	90055-0237		1	HOSE,NIPPLE,REDUCER,TUBE, 4/6MM	
570	90459-7110		1	BRACKET, 4224-50	
580	312115-0285		2	SCREW ISO4762 M4X6 A4 80	
590	315105-0136		2	WASHER PLAIN, 4,3X9X0,8 A4 BRB	
U70F7044	90113-0472		1	FILTER 0,01 MICRON, F72C-2GD-AEO	
	90113-0471		*1*	*FILTER ELEMENT COALESCING, F72C-5925-09*	
U70P1170	90459-7344		1	PRESSURE GAUGE, MA-40-6-R1/4-EN	
U70P1740	90459-7344		1	PRESSURE GAUGE, MA-40-6-R1/4-EN	
U70P2740	90459-0671		1	PRESSURE GAUGE, MAP-40-4-1/8-EN	
U70P3100	90459-7344		1	PRESSURE GAUGE, MA-40-6-R1/4-EN	
U70P4090	90459-7344		1	PRESSURE GAUGE, MA-40-6-R1/4-EN	
U70P7044	90458-2969		1	PRESSURE GAUGE, MAP-40-1-1/8-EN	
U70P7150	90459-7344		1	PRESSURE GAUGE, MA-40-6-R1/4-EN	
U70P9700	90459-7344		1	PRESSURE GAUGE, MA-40-6-R1/4-EN	
U70R1740	90459-4554		1	REGULATOR, MS4-LRB-1/4-D7-A8-AS	
U70R2740	90600-1717		1	REGULATOR, MS4-LRB-1/4-D5-A8-AS	
U70R4090	90459-4554		1	REGULATOR, MS4-LRB-1/4-D7-A8-AS	
U70R7044	90235-0748		1	THROTTLE CHECK VALVE, GRA-1/4-B	
U70R7150	90459-4554		1	REGULATOR, MS4-LRB-1/4-D7-A8-AS	
U70R9700	90459-4554		1	REGULATOR, MS4-LRB-1/4-D7-A8-AS	
U70T1170	90458-1092		1	PROPORTIONAL VALVE, 0-10V/0-6 BAR	
	90458-1262		*1*	*CONNECTOR, FOR PROP.VALVE, 131028001*	
U70T3100	90458-1092		1	PROPORTIONAL VALVE, 0-10V/0-6 BAR	
	90458-1262		*1*	*CONNECTOR, FOR PROP.VALVE, 131028001*	
U70U1741	2863097-0100		1	VALVE RAMP	**1-227**
U70U1742	2863098-0100		1	VALVE RAMP	**1-229, 1-231**
U70W1120	315400-0016	MM	420	TUBE PUN-H-4X0,75-BL	
U70W1121	315400-0016	MM	500	TUBE PUN-H-4X0,75-BL	
U70W1123	315400-0010	MM	340	TUBE PUN-H-12X2-BL	
U70W1124	315400-0010	MM	155	TUBE PUN-H-12X2-BL	
U70W1126	315400-0010	MM	150	TUBE PUN-H-12X2-BL	
U70W1127	315400-0010	MM	167	TUBE PUN-H-12X2-BL	
U70W1141	315400-0004	MM	525	TUBE PUN-H-8X1,25-BL	
U70W1142	315400-0016	MM	105	TUBE PUN-H-4X0,75-BL	
U70W1170	315400-0016	MM	220	TUBE PUN-H-4X0,75-BL	

Machine Type | Group Description | Used-In | Group Number | Page No

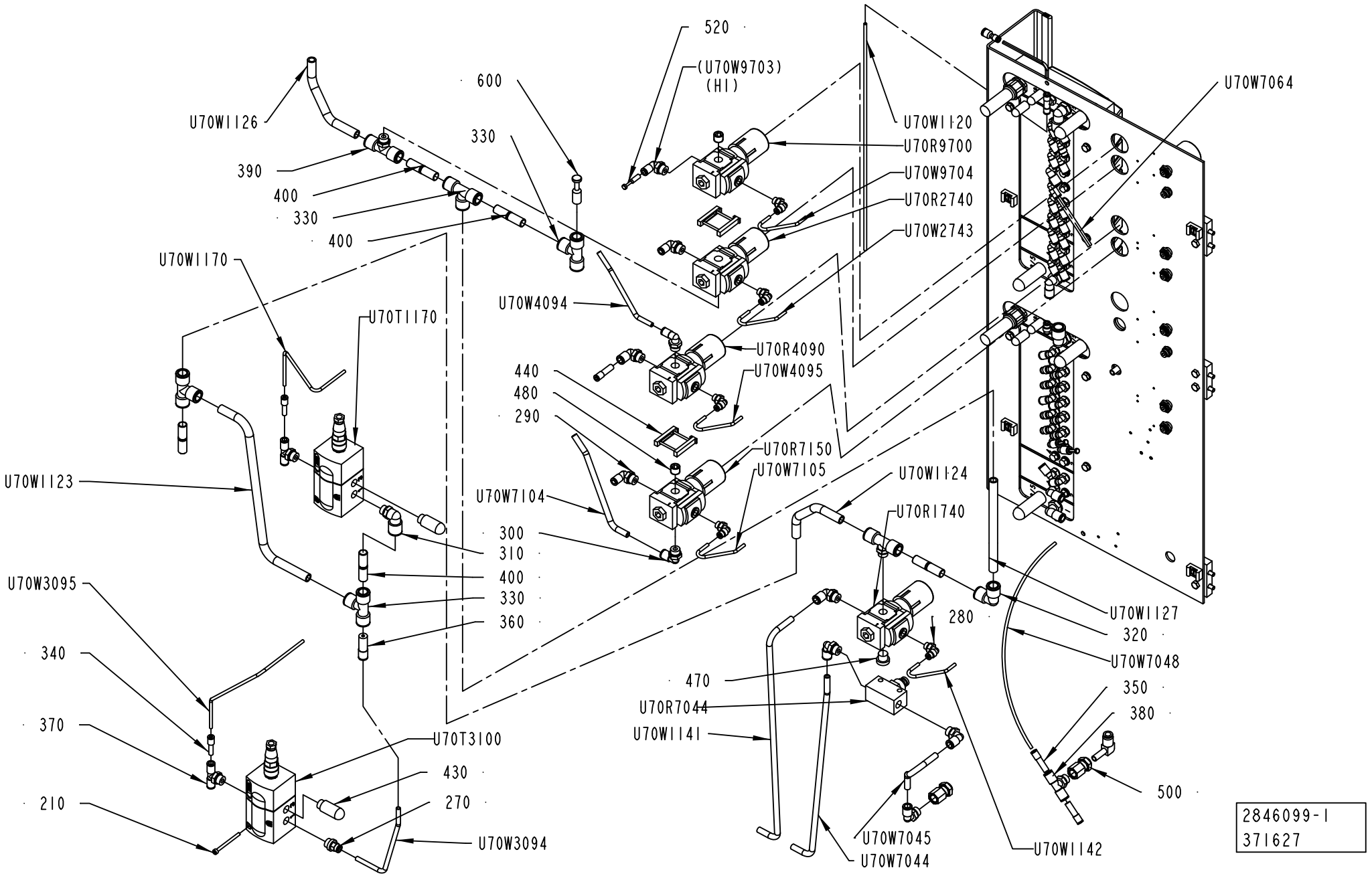
520
(U70W9703)
(HI)
600
330
U70W1126
390
400
330
400
U70W1170
U70T1170
U70W4094
U70R4090
U70W4095
440
480
290
U70R7150
U70W7105
U70W7104
300
310
400
330
360
U70W3095
340
370
210
U70T3100
430
270
U70W3094
U70W1120
U70R9700
U70W9704
U70R2740
U70W2743
U70W7064
U70W1124
U70R1740
280
U70W1127
320
U70W7048
350
380
500
470
U70R7044
U70W1141
U70W7045
U70W7044
U70W1142
2846099-1
371627

Pos	Part No	UN	Qty	Description	Page No
Common Parts (Cont'd)					
U70W2743	315400-0016	MM	105	TUBE PUN-H-4X0,75-BL	
U70W3094	315400-0001	MM	190	TUBE PUN-H-6X1-BL	
U70W3095	315400-0016	MM	385	TUBE PUN-H-4X0,75-BL	
U70W4094	315400-0001	MM	140	TUBE PUN-H-6X1-BL	
U70W4095	315400-0016	MM	105	TUBE PUN-H-4X0,75-BL	
U70W7044	315400-0004	MM	400	TUBE PUN-H-8X1,25-BL	
U70W7045	315400-0004	MM	145	TUBE PUN-H-8X1,25-BL	
U70W7046	315400-0004	MM	150	TUBE PUN-H-8X1,25-BL	
U70W7047	315400-0004	MM	150	TUBE PUN-H-8X1,25-BL	
U70W7048	315400-0016	MM	350	TUBE PUN-H-4X0,75-BL	
U70W7064	315400-0001	MM	4000	TUBE PUN-H-6X1-BL	
U70W7105	315400-0016	MM	105	TUBE PUN-H-4X0,75-BL	
U70W9704	315400-0016	MM	105	TUBE PUN-H-4X0,75-BL	

Pos	Part No	UN	Qty	Description	Page No

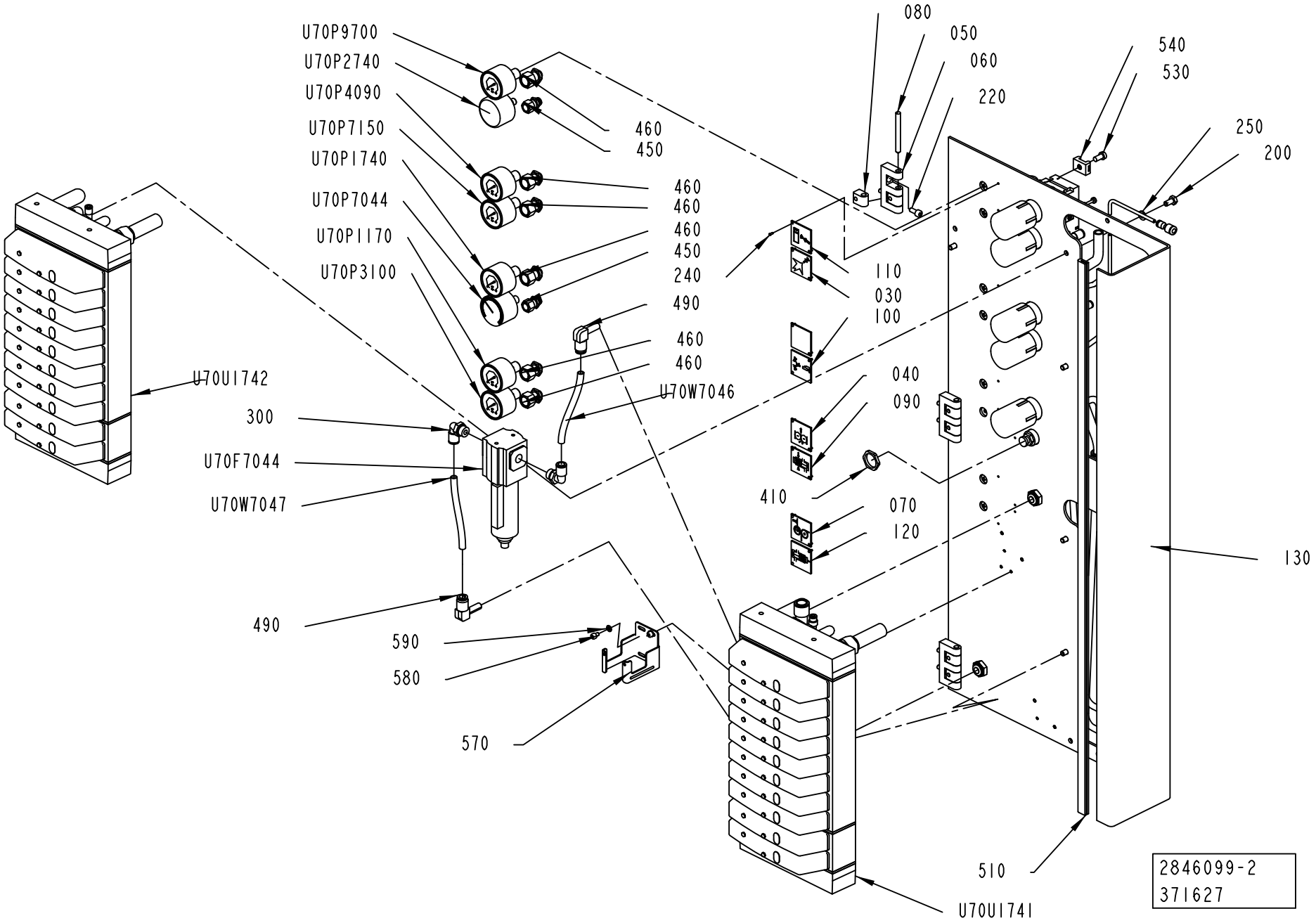
U70P9700
U70P2740
U70P4090
U70P7150
U70P1740
U70P7044
U70P1170
U70P3100
460
450
460
460
460
450
240
490
460
460
U70W7046
080
050
060
220
540
530
250
200
110
030
100
040
090
410
070
120
130
U70U1742
300
U70F7044
U70W7047
490
590
580
570
510
U70U1741
2846099-2
371627

ECM: 372123 - 20081009
Group number: 2846099-0100
Assembly Drawing: 2846099-2_1_AA

This list covers pages from 1-218 to 1-225

Pos	Part No	UN	Qty	Description	Page No
SEE PREVIOUS LISTS PAGES: 1-219, 1-221.					

Pos	Part No	UN	Qty	Description	Page No

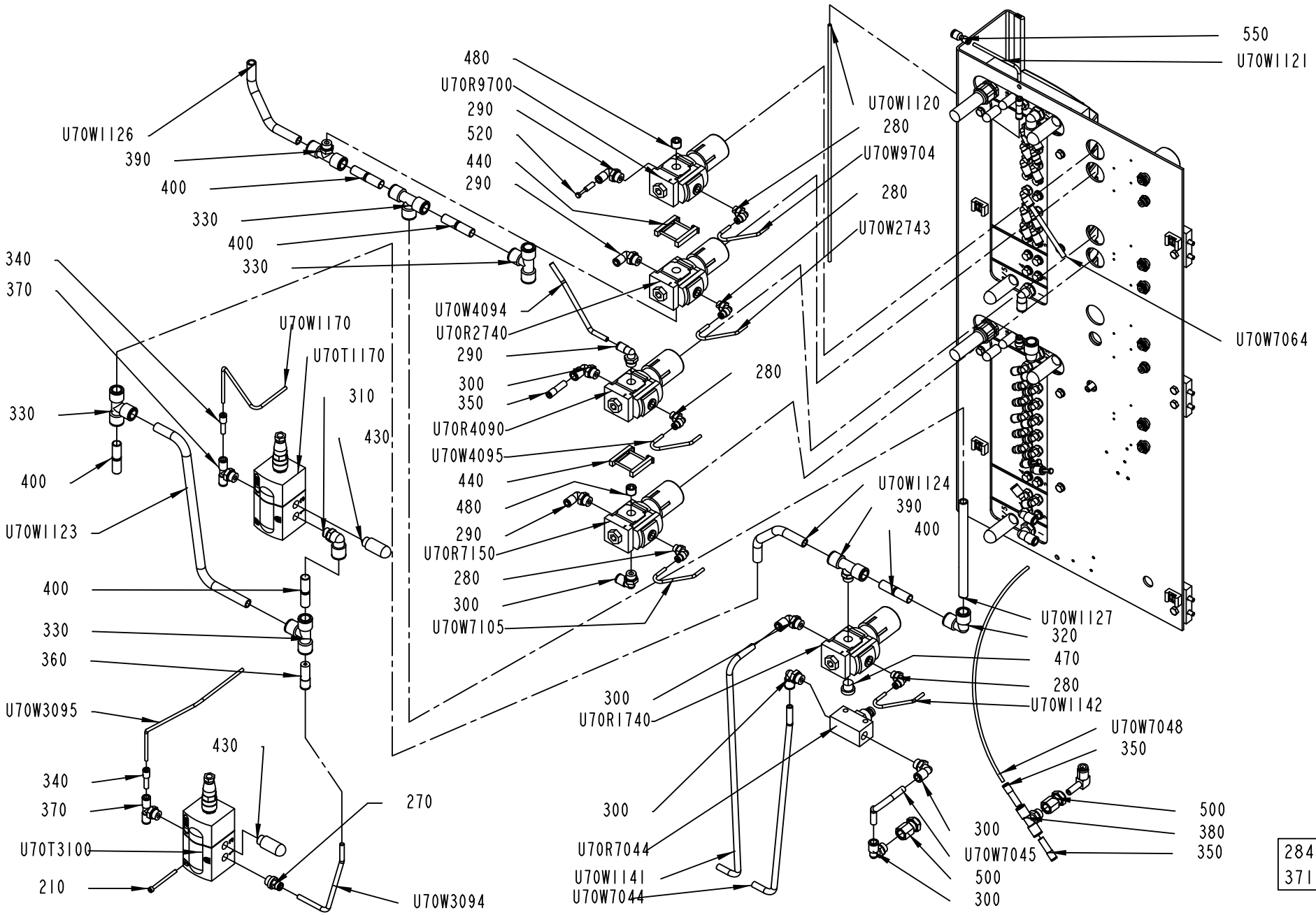
550
U70W1121
480
U70R9700
290
520
440
290
U70W1120
280
U70W9704
280
U70W2743
U70W1126
390
400
330
400
330
340
370
U70W1170
U70T1170
310
430
330
400
U70W1123
U70W4094
U70R2740
290
300
350
U70R4090
U70W4095
440
480
290
U70R7150
280
300
U70W7105
280
U70W7064
U70W1124
390
400
U70W1127
320
470
280
U70W1142
U70W7048
350
400
330
360
U70W3095
340
370
U70T3100
210
430
270
U70W3094
300
U70R1740
300
U70R7044
U70W1141
U70W7044
300
U70W7045
500
300
500
380
350
2846099-2
371627

Pos	Part No	UN	Qty	Description	Page No
SEE PREVIOUS LISTS PAGES: 1-219, 1-221.					

Pos	Part No	UN	Qty	Description	Page No

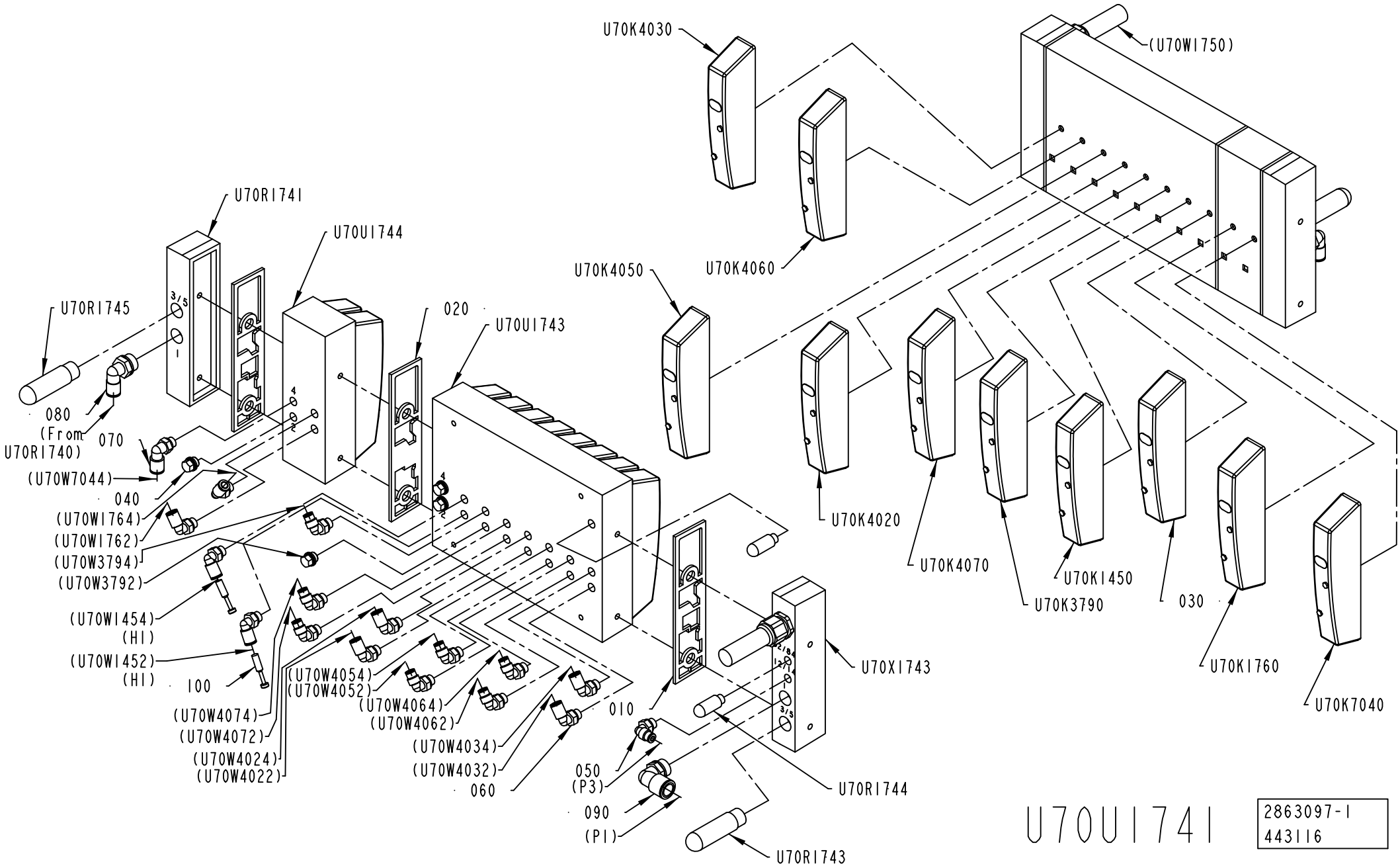
U70K4030
(U70W1750)
U70R1741
U70U1744
U70K4050
U70K4060
U70R1745
020
U70U1743
080
(From U70R1740)
070
(U70W7044)
040
(U70W1764)
(U70W1762)
(U70W3794)
(U70W3792)
(U70W1454) (HI)
(U70W1452) (HI)
100
(U70W4074)
(U70W4072)
(U70W4024)
(U70W4022)
(U70W4054)
(U70W4052)
(U70W4064)
(U70W4062)
(U70W4034)
(U70W4032)
060
010
050 (P3)
090 (P1)
U70X1743
U70R1744
U70R1743
U70K4020
U70K4070
U70K3790
U70K1450
030
U70K1760
U70K7040
U70U1741
2863097-1
443116

ECM: 460029 - 20101001
Group number: 2863097-0100
Assembly Drawing: 2863097-1_1_AB

Pos	Part No	UN	Qty	Description	Page No
-					
010	90458-1207		2	SEALING, STANDARD	
020	90458-1208		1	SEALING, CHANNEL 1 BLOCKED	
030	90458-1215		1	COVER PLATE, EMPTY VALVE POSITION	
040	90459-0698		4	PLUG, G1/8EXT, G1/8	
050	350002-0005		8	PUSH-IN L-FITTING QSL-F-G1/8-4	
060	350002-0006		8	PUSH-IN L-FITTING QSL-F-G1/8-6	
070	350002-0007		1	PUSH-IN L-FITTING QSL-F-G1/8-8	
080	350002-0012		1	PUSH-IN L-FITTING QSL-F-G3/8-8	
090	350002-0014		1	PUSH-IN L-FITTING QSL-F-G3/8-12	
100	350013-0002		2	PLUG QSC-6H	
U70K1450	90458-1202		1	VALVES 2X3/2, CLOSED	
U70K1760	90458-1194		1	VALVE, 5/2 MONOSTABLE	
U70K3790	90458-1194		1	VALVE, 5/2 MONOSTABLE	
U70K4020	90458-1194		1	VALVE, 5/2 MONOSTABLE	
U70K4030	90458-1194		1	VALVE, 5/2 MONOSTABLE	
U70K4050	90458-1194		1	VALVE, 5/2 MONOSTABLE	
U70K4060	90458-1194		1	VALVE, 5/2 MONOSTABLE	
U70K4070	90458-1194		1	VALVE, 5/2 MONOSTABLE	
U70K7040	90458-1194		1	VALVE, 5/2 MONOSTABLE	
U70R1741	90458-1214		1	RIGHT ENDPL EXT. PILOT AIR,CDVI5.0-EPR-S	
U70R1743	90328-0047		1	SILENCER, G1/8"	
U70R1744	90328-0024		2	SILENCER, G3/8"	
U70R1745	90328-0047		1	SILENCER, G1/8"	
U70U1743	90458-1205		1	BASIC SUB-BASE 8 VALVES, CDVI5.0-GB8-MP	
U70U1744	90458-1206		1	EXP. SUB-BASE 2 VALVES, CDVI5.0-EB	
U70X1743	90458-1212		1	LEFT ENDPLATE INCL. 10M CABLE	

Pos	Part No	UN	Qty	Description	Page No

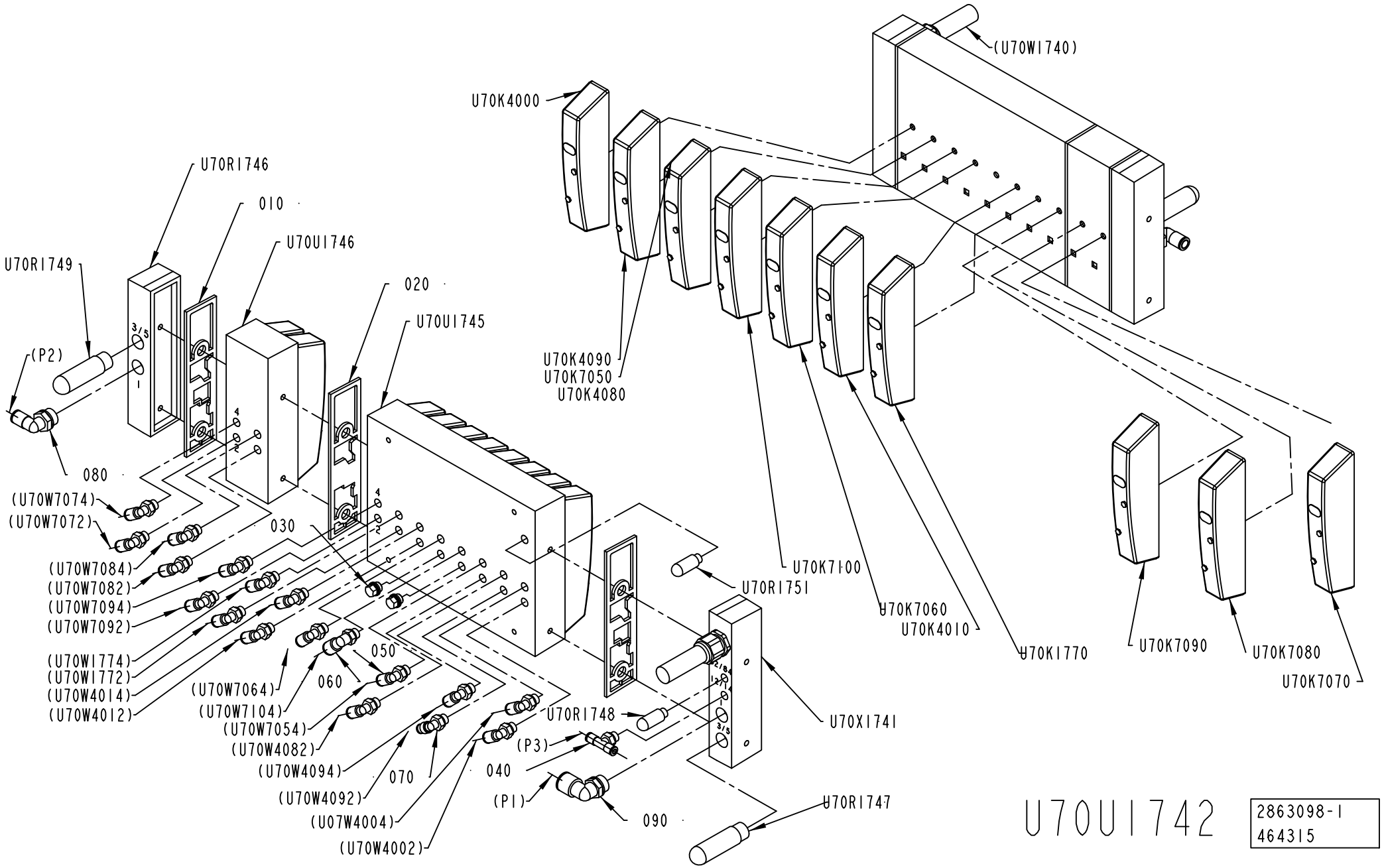

U70U1742

2863098-1
464315

Pos	Part No	UN	Qty	Description	Page No
HVA (See drawing on page: 1-230)					
030	90459-0698		9	PLUG, G1/8EXT, G1/8	
050	350002-0006		10	PUSH-IN L-FITTING QSL-F-G1/8-6	
100	90458-1215		4	COVER PLATE, EMPTY VALVE POSITION	
NOHVA (See drawing on page: 1-228)					
030	90459-0698		2	PLUG, G1/8EXT, G1/8	
050	350002-0006		16	PUSH-IN L-FITTING QSL-F-G1/8-6	
060	350002-0007		1	PUSH-IN L-FITTING QSL-F-G1/8-8	
U70K7070	90458-1194		1	VALVE, 5/2 MONOSTABLE	
U70K7080	90458-1194		1	VALVE, 5/2 MONOSTABLE	
U70K7090	90458-1194		1	VALVE, 5/2 MONOSTABLE	
U70K7100	90458-1194		1	VALVE, 5/2 MONOSTABLE	
Common Parts					
010	90458-1207		2	SEALING, STANDARD	
020	90458-1208		1	SEALING, CHANNEL 1 BLOCKED	
040	350007-0005		1	PUSH-IN T-FITTING QST-F-G1/8-4	
070	350002-0005		1	PUSH-IN L-FITTING QSL-F-G1/8-4	
080	350002-0012		1	PUSH-IN L-FITTING QSL-F-G3/8-8	
090	350002-0014		1	PUSH-IN L-FITTING QSL-F-G3/8-12	
U70K1770	90458-1194		1	VALVE, 5/2 MONOSTABLE	
U70K4000	90458-1194		1	VALVE, 5/2 MONOSTABLE	
U70K4010	90458-1194		1	VALVE, 5/2 MONOSTABLE	
U70K4090	90458-1194		1	VALVE, 5/2 MONOSTABLE	
U70K7050	90458-1202		1	VALVES 2X3/2, CLOSED	
U70K7060	90458-1194		1	VALVE, 5/2 MONOSTABLE	
U70R1746	90458-1214		1	RIGHT ENDPL EXT. PILOT AIR,CDVI5.0-EPR-S	
U70R1747	90328-0024		1	SILENCER, G3/8"	
U70R1748	90328-0047		1	SILENCER, G1/8"	
U70R1749	90328-0024		1	SILENCER, G3/8"	
U70R1751	90328-0047		1	SILENCER, G1/8"	
U70U1745	90458-1205		1	BASIC SUB-BASE 8 VALVES, CDVI5.0-GB8-MP	
U70U1746	90458-1206		1	EXP. SUB-BASE 2 VALVES, CDVI5.0-EB	
U70X1741	90458-1212		1	LEFT ENDPLATE INCL. 10M CABLE	

Pos	Part No	UN	Qty	Description	Page No

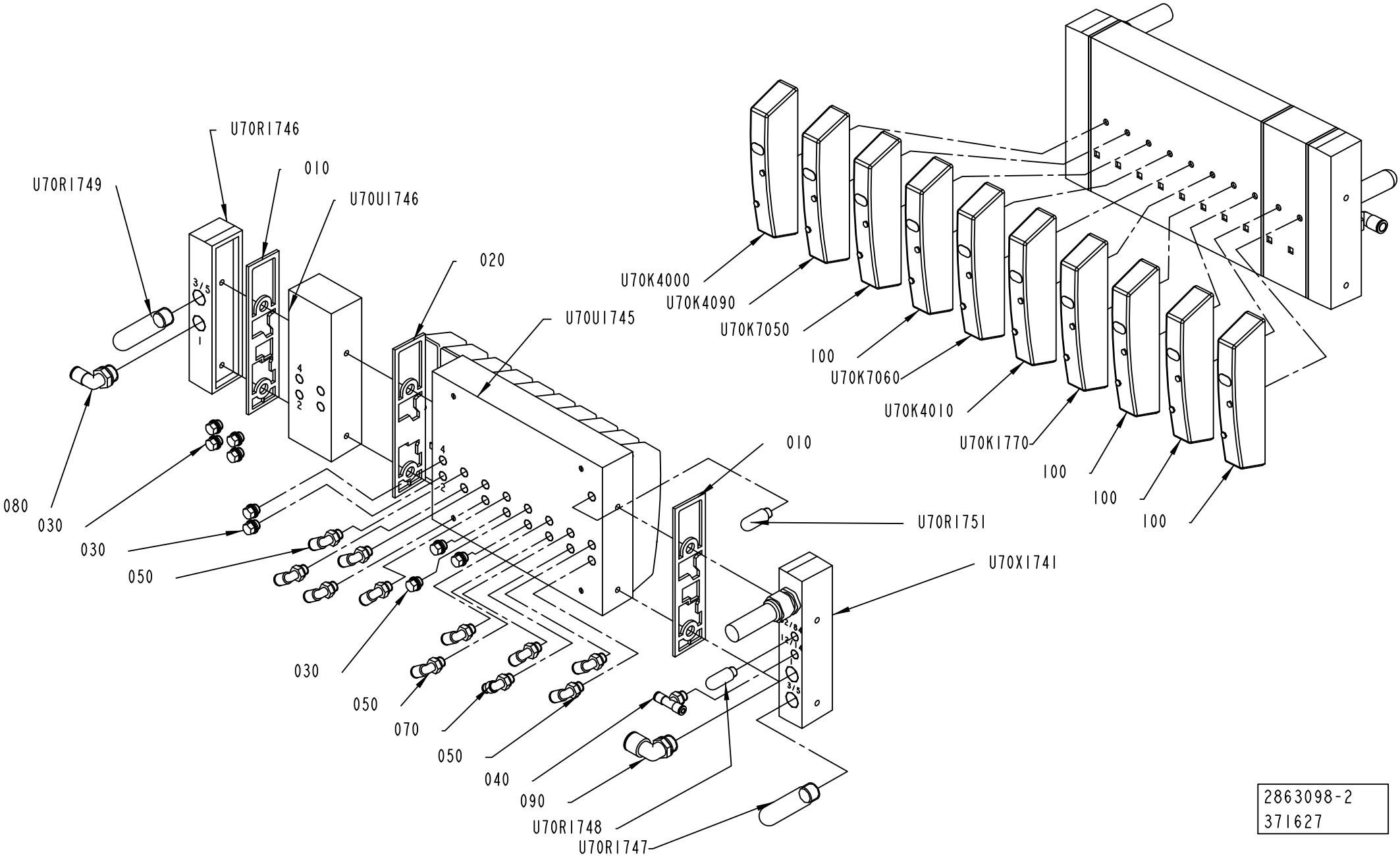

2863098-2
371627

ECM: 472497 - 20110102
Group number: 2863098-0100
Assembly Drawing: 2863098-2_1_AA

This list covers pages from 1-228 to 1-231

Pos	Part No	UN	Qty	Description	Page No
HVA (See drawing on page: 1-230)					
030	90459-0698		9	PLUG, G1/8EXT, G1/8	
050	350002-0006		10	PUSH-IN L-FITTING QSL-F-G1/8-6	
100	90458-1215		4	COVER PLATE, EMPTY VALVE POSITION	
NOHVA (See drawing on page: 1-228)					
030	90459-0698		2	PLUG, G1/8EXT, G1/8	
050	350002-0006		16	PUSH-IN L-FITTING QSL-F-G1/8-6	
060	350002-0007		1	PUSH-IN L-FITTING QSL-F-G1/8-8	
U70K7070	90458-1194		1	VALVE, 5/2 MONOSTABLE	
U70K7080	90458-1194		1	VALVE, 5/2 MONOSTABLE	
U70K7090	90458-1194		1	VALVE, 5/2 MONOSTABLE	
U70K7100	90458-1194		1	VALVE, 5/2 MONOSTABLE	
Common Parts					
010	90458-1207		2	SEALING, STANDARD	
020	90458-1208		1	SEALING, CHANNEL 1 BLOCKED	
040	350007-0005		1	PUSH-IN T-FITTING QST-F-G1/8-4	
070	350002-0005		1	PUSH-IN L-FITTING QSL-F-G1/8-4	
080	350002-0012		1	PUSH-IN L-FITTING QSL-F-G3/8-8	
090	350002-0014		1	PUSH-IN L-FITTING QSL-F-G3/8-12	
U70K1770	90458-1194		1	VALVE, 5/2 MONOSTABLE	
U70K4000	90458-1194		1	VALVE, 5/2 MONOSTABLE	
U70K4010	90458-1194		1	VALVE, 5/2 MONOSTABLE	
U70K4090	90458-1194		1	VALVE, 5/2 MONOSTABLE	
U70K7050	90458-1202		1	VALVES 2X3/2, CLOSED	
U70K7060	90458-1194		1	VALVE, 5/2 MONOSTABLE	
U70R1746	90458-1214		1	RIGHT ENDPL EXT. PILOT AIR,CDVI5.0-EPR-S	
U70R1747	90328-0024		1	SILENCER, G3/8"	
U70R1748	90328-0047		1	SILENCER, G1/8"	
U70R1749	90328-0024		1	SILENCER, G3/8"	
U70R1751	90328-0047		1	SILENCER, G1/8"	
U70U1745	90458-1205		1	BASIC SUB-BASE 8 VALVES, CDVI5.0-GB8-MP	
U70U1746	90458-1206		1	EXP. SUB-BASE 2 VALVES, CDVI5.0-EB	
U70X1741	90458-1212		1	LEFT ENDPLATE INCL. 10M CABLE	

Pos	Part No	UN	Qty	Description	Page No

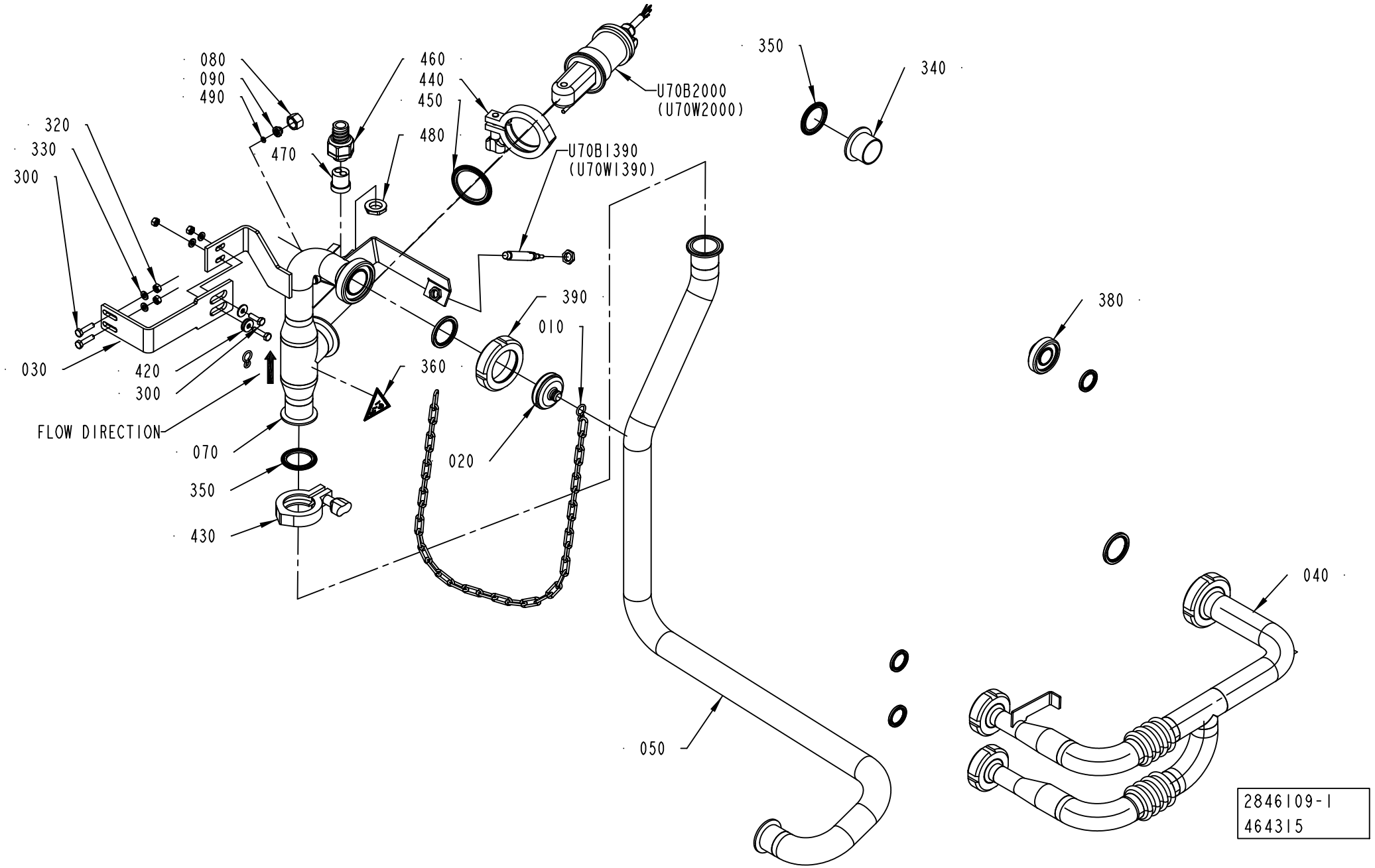
080
090
490
460
440
450
480
470
320
330
300
U70B2000
(U70W2000)
U70B1390
(U70W1390)
350
340
390
010
380
030
420
300
360
FLOW DIRECTION
070
020
350
430
040
050
2846109-1
464315

ECM: 482218 - 20110401
Group number: 2846109-0100
Assembly Drawing: 2846109-1_1_AE

This list covers pages from 1-232 to 1-237

Pos	Part No	UN	Qty	Description	Page No
HVA NOHI ANSI (See drawing on pages: 1-234, 1-236)					
040	3128970-0000		1	PIPE	
045	3131207-0000		1	PIPE	
100	3092938-0000		1	CLEANING PIPE	
110	3123352-0000		1	PIPE	
120	3123351-0000		1	PIPE	
130	3003573-0000		1	PROTECTION	
140	3003574-0000		1	PROTECTION	
150	3003575-0000		1	PROTECTION	
160	3003576-0000		1	PROTECTION	
170	3003577-0000		1	PROTECTION	
180	3003578-0000		1	PROTECTION	
360	359725-0105		1	WARNING SIGN ANSI (V), CHEMICAL HAZARD	
400	3092164-0000		4	GASKET	
500	90144-0030	MM	210	TAPE	
510	90144-0030	MM	180	TAPE	
520	90144-0030	MM	140	TAPE	
530	90144-0030	MM	280	TAPE	
540	90144-0030	MM	200	TAPE	
550	90144-0030	MM	130	TAPE	
HVA NOHI ISO (See drawing on pages: 1-234, 1-236)					
040	3128970-0000		1	PIPE	
045	3131207-0000		1	PIPE	
100	3092938-0000		1	CLEANING PIPE	
110	3123352-0000		1	PIPE	
120	3123351-0000		1	PIPE	
130	3003573-0000		1	PROTECTION	
140	3003574-0000		1	PROTECTION	
150	3003575-0000		1	PROTECTION	
160	3003576-0000		1	PROTECTION	
170	3003577-0000		1	PROTECTION	
180	3003578-0000		1	PROTECTION	
360	359705-0003		1	WARNING SIGN ISO, DANGEROUS CHEMICALS	
400	3092164-0000		4	GASKET	
500	90144-0030	MM	210	TAPE	
510	90144-0030	MM	180	TAPE	
520	90144-0030	MM	140	TAPE	
530	90144-0030	MM	280	TAPE	
540	90144-0030	MM	200	TAPE	
550	90144-0030	MM	130	TAPE	
NOHVA HI ANSI (See drawing on page: 1-232)					
040	3122618-0000		1	PIPE	
360	359725-0105		1	WARNING SIGN ANSI (V), CHEMICAL HAZARD	
400	3092164-0000		3	GASKET	
NOHVA HI ISO (See drawing on page: 1-232)					
040	3122618-0000		1	PIPE	
360	359705-0003		1	WARNING SIGN ISO, DANGEROUS CHEMICALS	
400	3092164-0000		3	GASKET	
NOHVA NOHI ANSI (See drawing on page: 1-232)					
040	3116508-0000		1	PIPE	
360	359725-0105		1	WARNING SIGN ANSI (V), CHEMICAL HAZARD	
400	3092164-0000		3	GASKET	
NOHVA NOHI ISO (See drawing on page: 1-232)					
040	3116508-0000		1	PIPE	
360	359705-0003		1	WARNING SIGN ISO, DANGEROUS CHEMICALS	
400	3092164-0000		3	GASKET	
Common Parts					
010	209183-0000		2	RING	
020	3092941-0000		1	LID	
030	2846111-0000		1	BRACKET	
050	3037864-0000		1	PIPE	
070	3092940-0000		1	PIPE	
080	2847313-0000		1	NUT	
090	2869175-0000		1	PLUG	
300	312105-0370		2	SCREW, M6S ISO 4017 M6X20 A4 80	
310	312105-0372		2	SCREW, M6S ISO 4017 M6X25 A4 80	
320	312605-0316		4	HEXAGON NUT, M6M M6 A280	
330	315105-0153		4	WASHER PLAIN, 6,4X12X1,5 A4 BRB	
340	342841-0104		1	FERRULE, 3-A, GC-CLAMP 38,1 MM (1 1/2")	
350	342850-0304		2	GASKET 35,4X49,1X5,2 1"1/2 FDA, 3-A	
370	90155-0016	MM	440	CHAIN LONG LINK, LLB-3-R	
380	3133483-0000		1	FITTING	
390	3020447-0000		1	LOCKING RING	
410	3024322-0000		2	GASKET	
420	90005-0060		2	WASHER PLAIN, RBS 6,4/M6)/18,H=1,5	
430	344215-0103		1	CLAMP RING A13MHM 1X1 1/2", 211053	
440	344215-0105		1	CLAMP RING A13MHM 2", 211054	
450	342850-0305		1	GASKET 47,8X62,6X5,2 MM 2" FDA 3-A	
460	90458-0430		1	GLAND FITTING, VK 22054YUL16	
470	3044511-0000		1	INSERT	
480	90458-0323		1	NUT, M20X1,5	
490	90600-0495		1	O-RING 4X2 MM	
U70B1390	90600-0463		1	INDUCTIVE SWITCH,E2A-M12LN05-WP-B1-TP 5M	
U70B2000	90600-3924		1	CONDUCTIVITY SENSOR CLS 54-ACS1022	

Machine Type | Group Description | Used-In | Group Number | Page No

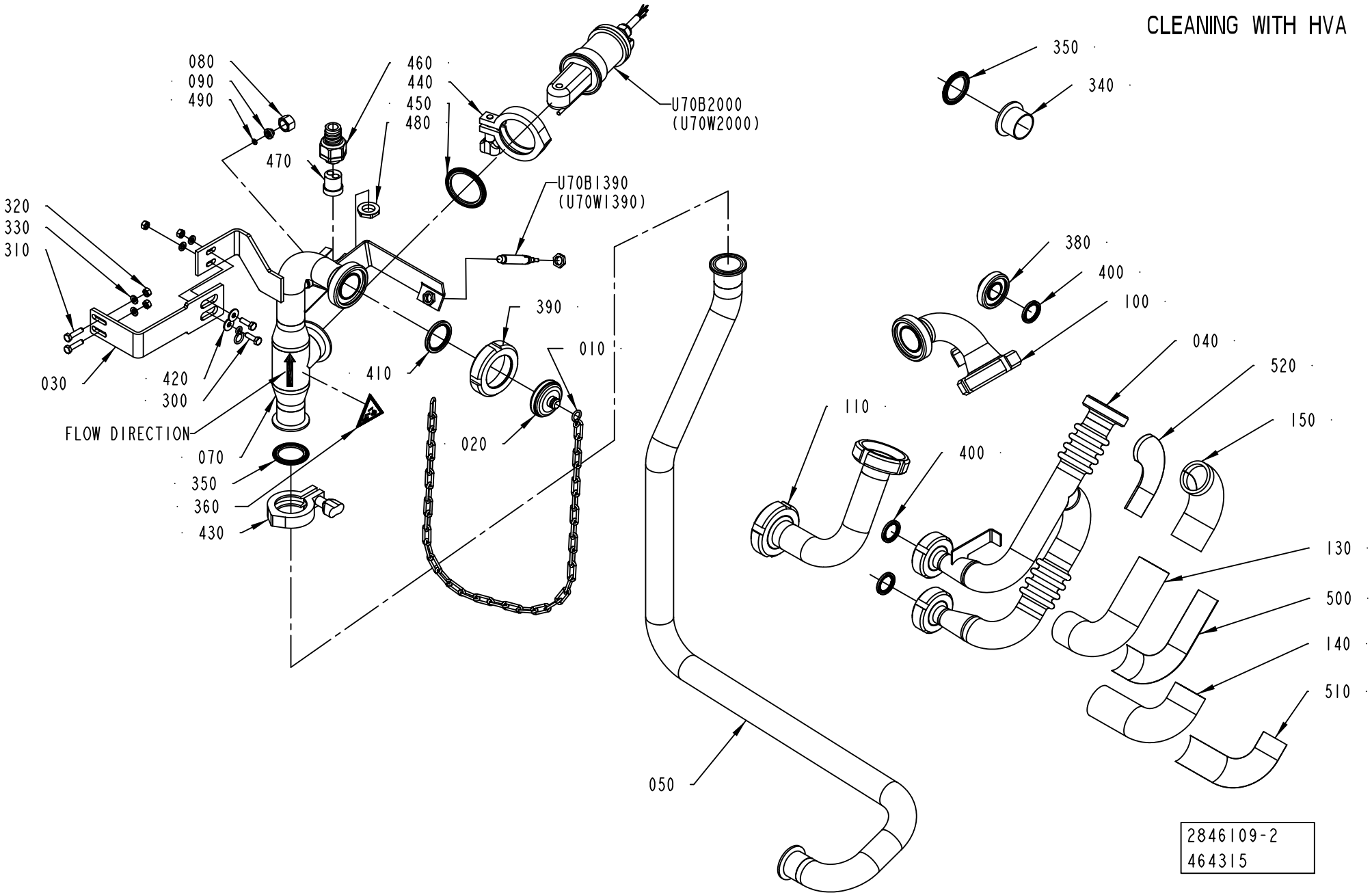
CLEANING WITH HVA
080
090
490
460
440
450
480
U70B2000
(U70W2000)
470
U70B1390
(U70W1390)
320
330
310
390
010
030
420
300
410
FLOW DIRECTION
070
350
360
430
020
050
350
340
380
400
100
040
520
150
110
400
130
500
140
510
2846109-2
464315

ECM: 482218 - 20110401
Group number: 2846109-0100
Assembly Drawing: 2846109-2_1_AF

This list covers pages from 1-232 to 1-237

Pos	Part No	UN	Qty	Description	Page No
HVA NOHI ANSI (See drawing on pages: 1-234, 1-236)					
040	3128970-0000		1	PIPE	
045	3131207-0000		1	PIPE	
100	3092938-0000		1	CLEANING PIPE	
110	3123352-0000		1	PIPE	
120	3123351-0000		1	PIPE	
130	3003573-0000		1	PROTECTION	
140	3003574-0000		1	PROTECTION	
150	3003575-0000		1	PROTECTION	
160	3003576-0000		1	PROTECTION	
170	3003577-0000		1	PROTECTION	
180	3003578-0000		1	PROTECTION	
360	359725-0105		1	WARNING SIGN ANSI (V), CHEMICAL HAZARD	
400	3092164-0000		4	GASKET	
500	90144-0030	MM	210	TAPE	
510	90144-0030	MM	180	TAPE	
520	90144-0030	MM	140	TAPE	
530	90144-0030	MM	280	TAPE	
540	90144-0030	MM	200	TAPE	
550	90144-0030	MM	130	TAPE	
HVA NOHI ISO (See drawing on pages: 1-234, 1-236)					
040	3128970-0000		1	PIPE	
045	3131207-0000		1	PIPE	
100	3092938-0000		1	CLEANING PIPE	
110	3123352-0000		1	PIPE	
120	3123351-0000		1	PIPE	
130	3003573-0000		1	PROTECTION	
140	3003574-0000		1	PROTECTION	
150	3003575-0000		1	PROTECTION	
160	3003576-0000		1	PROTECTION	
170	3003577-0000		1	PROTECTION	
180	3003578-0000		1	PROTECTION	
360	359705-0003		1	WARNING SIGN ISO, DANGEROUS CHEMICALS	
400	3092164-0000		4	GASKET	
500	90144-0030	MM	210	TAPE	
510	90144-0030	MM	180	TAPE	
520	90144-0030	MM	140	TAPE	
530	90144-0030	MM	280	TAPE	
540	90144-0030	MM	200	TAPE	
550	90144-0030	MM	130	TAPE	
NOHVA HI ANSI (See drawing on page: 1-232)					
040	3122618-0000		1	PIPE	
360	359725-0105		1	WARNING SIGN ANSI (V), CHEMICAL HAZARD	
400	3092164-0000		3	GASKET	
NOHVA HI ISO (See drawing on page: 1-232)					
040	3122618-0000		1	PIPE	
360	359705-0003		1	WARNING SIGN ISO, DANGEROUS CHEMICALS	
400	3092164-0000		3	GASKET	
NOHVA NOHI ANSI (See drawing on page: 1-232)					
040	3116508-0000		1	PIPE	
360	359725-0105		1	WARNING SIGN ANSI (V), CHEMICAL HAZARD	
400	3092164-0000		3	GASKET	
NOHVA NOHI ISO (See drawing on page: 1-232)					
040	3116508-0000		1	PIPE	
360	359705-0003		1	WARNING SIGN ISO, DANGEROUS CHEMICALS	
400	3092164-0000		3	GASKET	
Common Parts					
010	209183-0000		2	RING	
020	3092941-0000		1	LID	
030	2846111-0000		1	BRACKET	
050	3037864-0000		1	PIPE	
070	3092940-0000		1	PIPE	
080	2847313-0000		1	NUT	
090	2869175-0000		1	PLUG	
300	312105-0370		2	SCREW, M6S ISO 4017 M6X20 A4 80	
310	312105-0372		2	SCREW, M6S ISO 4017 M6X25 A4 80	
320	312605-0316		4	HEXAGON NUT, M6M M6 A280	
330	315105-0153		4	WASHER PLAIN, 6,4X12X1,5 A4 BRB	
340	342841-0104		1	FERRULE, 3-A, GC-CLAMP 38,1 MM (1 1/2")	
350	342850-0304		2	GASKET 35,4X49,1X5,2 1"1/2 FDA, 3-A	
370	90155-0016	MM	440	CHAIN LONG LINK, LLB-3-R	
380	3133483-0000		1	FITTING	
390	3020447-0000		1	LOCKING RING	
410	3024322-0000		2	GASKET	
420	90005-0060		2	WASHER PLAIN, RBS 6,4/M6)/18,H=1,5	
430	344215-0103		1	CLAMP RING A13MHM 1X1 1/2", 211053	
440	344215-0105		1	CLAMP RING A13MHM 2", 211054	
450	342850-0305		1	GASKET 47,8X62,6X5,2 MM 2" FDA 3-A	
460	90458-0430		1	GLAND FITTING, VK 22054YUL16	
470	3044511-0000		1	INSERT	
480	90458-0323		1	NUT, M20X1,5	
490	90600-0495		1	O-RING 4X2 MM	
U70B1390	90600-0463		1	INDUCTIVE SWITCH,E2A-M12LN05-WP-B1-TP 5M	
U70B2000	90600-3924		1	CONDUCTIVITY SENSOR CLS 54-ACS1022	

Machine Type | Group Description | Used-In | Group Number | Page No

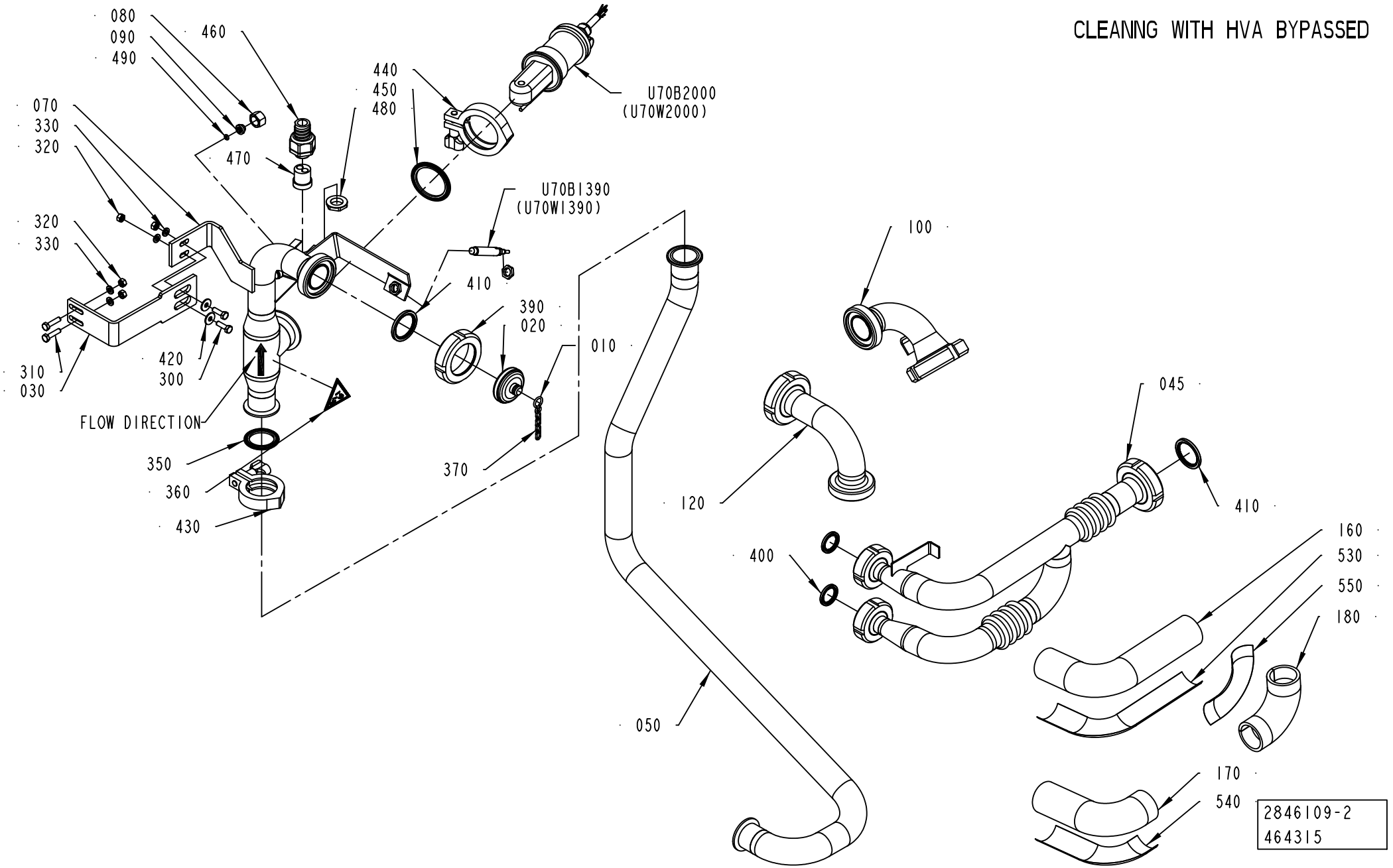
CLEANING WITH HVA BYPASSED
080
090
490
460
440
450
480
U70B2000
(U70W2000)
070
330
320
470
U70B1390
(U70W1390)
320
330
410
390
020
010
100
045
310
030
420
300
FLOW DIRECTION
120
410
350
360
370
400
160
530
550
180
430
050
170
540
2846109-2
464315

ECM: 482218 - 20110401
Group number: 2846109-0100
Assembly Drawing: 2846109-2_2_AF

This list covers pages from 1-232 to 1-237

Pos	Part No	UN	Qty	Description	Page No
HVA NOHI ANSI (See drawing on pages: 1-234, 1-236)					
040	3128970-0000		1	PIPE	
045	3131207-0000		1	PIPE	
100	3092938-0000		1	CLEANING PIPE	
110	3123352-0000		1	PIPE	
120	3123351-0000		1	PIPE	
130	3003573-0000		1	PROTECTION	
140	3003574-0000		1	PROTECTION	
150	3003575-0000		1	PROTECTION	
160	3003576-0000		1	PROTECTION	
170	3003577-0000		1	PROTECTION	
180	3003578-0000		1	PROTECTION	
360	359725-0105		1	WARNING SIGN ANSI (V), CHEMICAL HAZARD	
400	3092164-0000		4	GASKET	
500	90144-0030	MM	210	TAPE	
510	90144-0030	MM	180	TAPE	
520	90144-0030	MM	140	TAPE	
530	90144-0030	MM	280	TAPE	
540	90144-0030	MM	200	TAPE	
550	90144-0030	MM	130	TAPE	
HVA NOHI ISO (See drawing on pages: 1-234, 1-236)					
040	3128970-0000		1	PIPE	
045	3131207-0000		1	PIPE	
100	3092938-0000		1	CLEANING PIPE	
110	3123352-0000		1	PIPE	
120	3123351-0000		1	PIPE	
130	3003573-0000		1	PROTECTION	
140	3003574-0000		1	PROTECTION	
150	3003575-0000		1	PROTECTION	
160	3003576-0000		1	PROTECTION	
170	3003577-0000		1	PROTECTION	
180	3003578-0000		1	PROTECTION	
360	359705-0003		1	WARNING SIGN ISO, DANGEROUS CHEMICALS	
400	3092164-0000		4	GASKET	
500	90144-0030	MM	210	TAPE	
510	90144-0030	MM	180	TAPE	
520	90144-0030	MM	140	TAPE	
530	90144-0030	MM	280	TAPE	
540	90144-0030	MM	200	TAPE	
550	90144-0030	MM	130	TAPE	
NOHVA HI ANSI (See drawing on page: 1-232)					
040	3122618-0000		1	PIPE	
360	359725-0105		1	WARNING SIGN ANSI (V), CHEMICAL HAZARD	
400	3092164-0000		3	GASKET	
NOHVA HI ISO (See drawing on page: 1-232)					
040	3122618-0000		1	PIPE	
360	359705-0003		1	WARNING SIGN ISO, DANGEROUS CHEMICALS	
400	3092164-0000		3	GASKET	
NOHVA NOHI ANSI (See drawing on page: 1-232)					
040	3116508-0000		1	PIPE	
360	359725-0105		1	WARNING SIGN ANSI (V), CHEMICAL HAZARD	
400	3092164-0000		3	GASKET	
NOHVA NOHI ISO (See drawing on page: 1-232)					
040	3116508-0000		1	PIPE	
360	359705-0003		1	WARNING SIGN ISO, DANGEROUS CHEMICALS	
400	3092164-0000		3	GASKET	
Common Parts					
010	209183-0000		2	RING	
020	3092941-0000		1	LID	
030	2846111-0000		1	BRACKET	
050	3037864-0000		1	PIPE	
070	3092940-0000		1	PIPE	
080	2847313-0000		1	NUT	
090	2869175-0000		1	PLUG	
300	312105-0370		2	SCREW, M6S ISO 4017 M6X20 A4 80	
310	312105-0372		2	SCREW, M6S ISO 4017 M6X25 A4 80	
320	312605-0316		4	HEXAGON NUT, M6M M6 A280	
330	315105-0153		4	WASHER PLAIN, 6,4X12X1,5 A4 BRB	
340	342841-0104		1	FERRULE, 3-A, GC-CLAMP 38,1 MM (1 1/2")	
350	342850-0304		2	GASKET 35,4X49,1X5,2 1"1/2 FDA, 3-A	
370	90155-0016	MM	440	CHAIN LONG LINK, LLB-3-R	
380	3133483-0000		1	FITTING	
390	3020447-0000		1	LOCKING RING	
410	3024322-0000		2	GASKET	
420	90005-0060		2	WASHER PLAIN, RBS 6,4/M6)/18,H=1,5	
430	344215-0103		1	CLAMP RING A13MHM 1X1 1/2", 211053	
440	344215-0105		1	CLAMP RING A13MHM 2", 211054	
450	342850-0305		1	GASKET 47,8X62,6X5,2 MM 2" FDA 3-A	
460	90458-0430		1	GLAND FITTING, VK 22054YUL16	
470	3044511-0000		1	INSERT	
480	90458-0323		1	NUT, M20X1,5	
490	90600-0495		1	O-RING 4X2 MM	
U70B1390	90600-0463		1	INDUCTIVE SWITCH,E2A-M12LN05-WP-B1-TP 5M	
U70B2000	90600-3924		1	CONDUCTIVITY SENSOR CLS 54-ACS1022	

Machine Type | Group Description | Used-In | Group Number | Page No

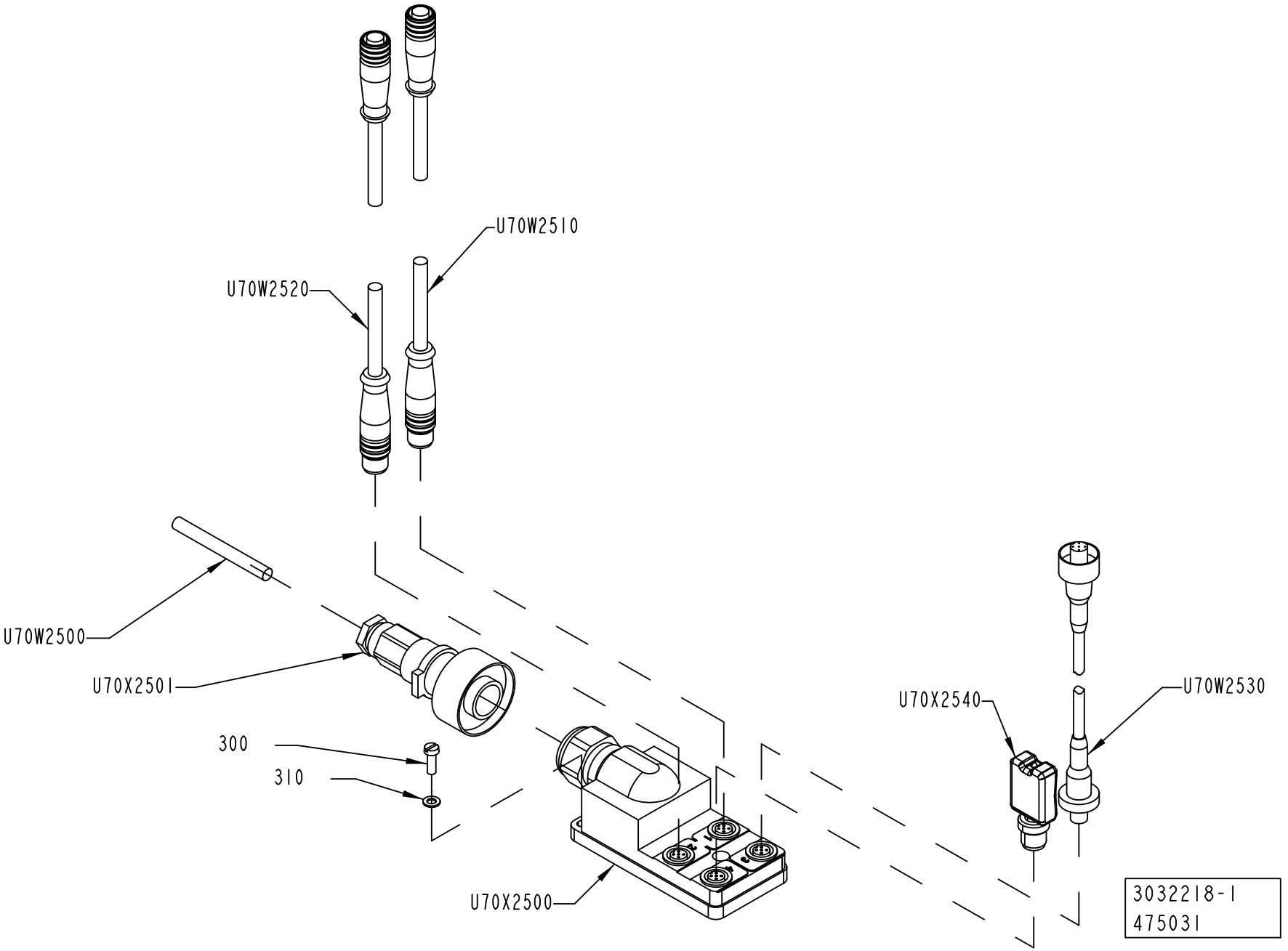
U70W2510
U70W2520
U70W2500
U70X2501
300
310
U70X2500
U70X2540
U70W2530
3032218-1
475031

ECM: 483274 - 20110401
Group number: 3032218-0100
Assembly Drawing: 3032218-1_1_AB

Pos	Part No	UN	Qty	Description	Page No
-					
300	312125-0291		2	SLOTTED HEAD SCREW, ISO1207 M4X12 A4	
310	315105-0136		2	WASHER PLAIN, 4,3X9X0,8 A4 BRB	
U70W2500	351423-0006	M	4	CABLE UNITRONIC LICY 5X0,34	
U70W2510	90459-4876		1	FOCUS JUMPER CABLE M12 5P 3M, 20-056-21	
U70W2520	90459-4876		1	FOCUS JUMPER CABLE M12 5P 3M, 20-056-21	
U70W2530	90459-7095		1	FOCUS JUMPER CABLE M12 5P 1M, 20-056-20	
U70X2500	90602-4058		1	CONNECTION BOX TINA 4A, 20-054-03	
U70X2501	90110-0235		1	CABLE CONTACT, PX0739/P	
U70X2540	90459-5627		1	CONNECTION, TINA 1-A	

Pos	Part No	UN	Qty	Description	Page No

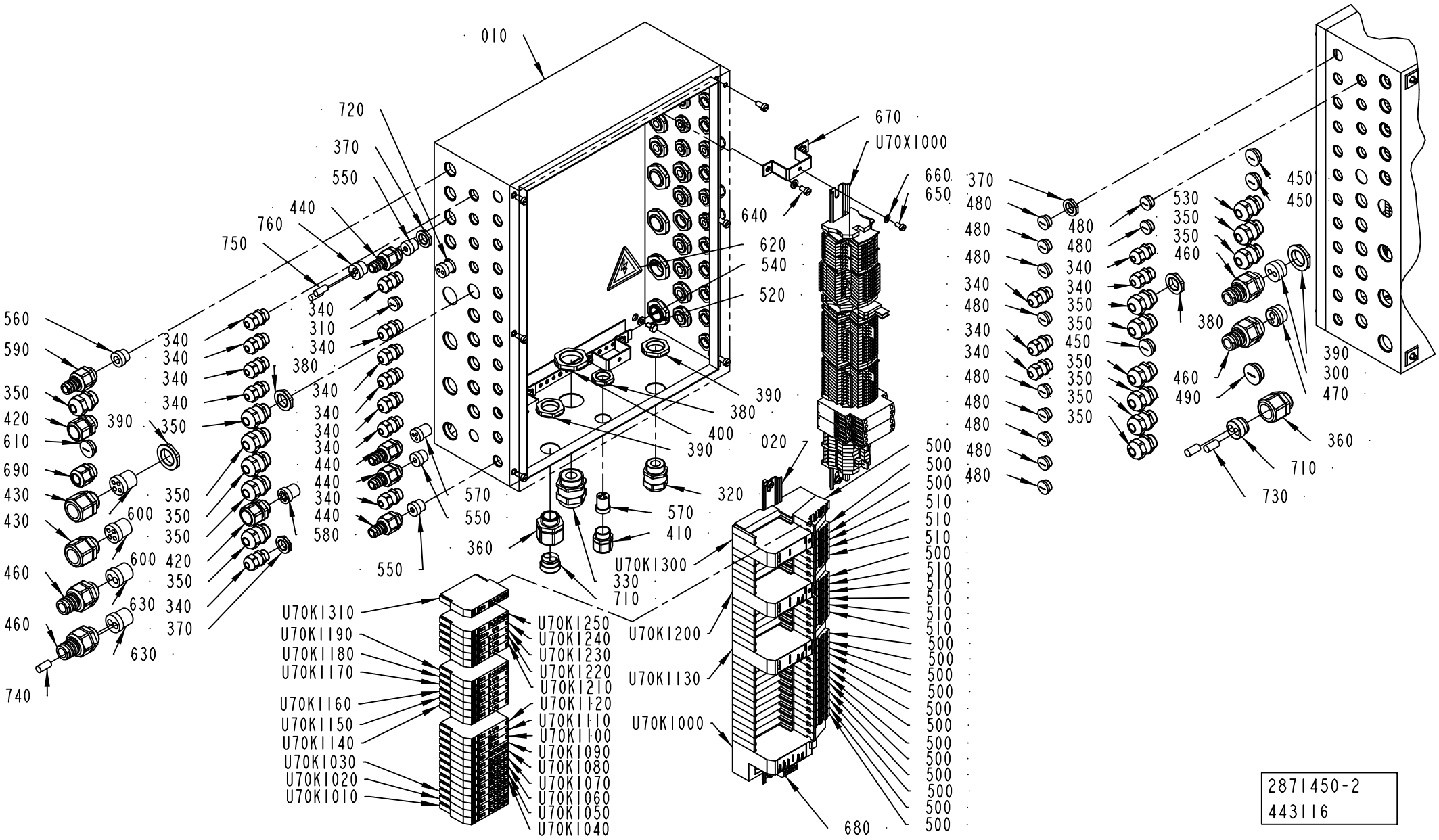
010
720
370
550
440
760
750
340
310
340
380
340
340
340

ECM: 460030 - 20101001
Group number: 2871450-0200
Assembly Drawing: 2871450-2_1_AC

Pos	Part No	UN	Qty	Description	Page No
ANSI					
620	359715-0100		1	WARNING SIGN ANSI (H), ELECTRIC SHOCK	
ISO					
620	359705-0015		1	WARNING SIGN ISO, RISK OF ELECTRIC SHOCK	
Common Parts					
010	2871457-0000		1	CONNECTION BOX	
020	2890051-0000		1	RAIL	
300	90457-0147		1	INSERT, MULTI HOLE, EK154M 2X7	
310	90458-1307		1	BLIND PLUG CIRCULAR, M16X1,5 514GFK/216	
320	90458-0308		1	CABLE GLAND, M25X1,5, 5311 1030	
330	90458-0309		1	CABLE GLAND, M32X1,5, 5311 1040	
340	90458-0314		17	CABLE GLAND, M16X1,5, 5311 1110	
350	90458-0315		14	CABLE GLAND, M20X1,5, 5311 1120	
360	90458-0426		2	CABLE GLAND, VK 22554Y	
370	90458-0322		33	NUT, M16X1,5	
380	90458-0323		24	NUT, M20X1,5	
390	90458-0324		10	NUT, M25X1,5	
400	90458-0325		1	NUT, M32X1,5	
410	90458-0406		1	CABLE GLAND, VK 22052Y	
420	90458-0422		2	CABLE GLAND, VK 22053Y	
430	90458-0426		2	CABLE GLAND, VK 22554Y	
440	90458-0427		4	GLAND FITTING, VK 21652YUL11	
450	90458-1308		3	BLIND PLUG CIRCULAR, M20X1,5 514GFK/220	
460	90458-0431		4	GLAND FITTING, VK 22554YUL16	
470	90458-1239		1	INSERT, MULTI HOLE, EK154M 1X9, 1X5,5	
480	90458-1307		11	BLIND PLUG CIRCULAR, M16X1,5 514GFK/216	
490	90458-1309		1	BLIND PLUG CIRCULAR, M25X1,5 514GFK/225	
500	90459-2526		16	REMOTE I/O BASE MODULE 8 POINTS, 1734-TB	
510	90459-2528		8	REMOTE I/O BASE MODULE FOR THERMOCOUPLE	
520	312105-0364		4	SCREW, M6S ISO 4017 M6X10 A4 80	
530	90458-0307		1	CABLE GLAND, M20X1,5, 5311 1020	
540	315105-0153		12	WASHER PLAIN, 6,4X12X1,5 A4 BRB	
550	353249-0008		3	INSERT, SINGLE HOLE, EK152 7	
560	353249-0011		1	INSERT, SINGLE HOLE, EK153 11	
570	353249-0025		2	INSERT, MULTI HOLE, E152M 3X4	
580	353249-0026		1	INSERT, MULTI HOLE, E153M 6X4	
590	90458-0429		1	GLAND FITTING, VK 22053YUL13	
600	353249-0051		2	INSERT, MULTI HOLE, E154M 4X6	
610	90458-1308		1	BLIND PLUG CIRCULAR, M20X1,5 514GFK/220	
630	90459-3555		2	INSERT, MULTI HOLE, E154M 2X9	
640	312125-0364		8	SCREW ISO 1207 M6X10 A4	
650	312125-0325		4	SCREW ISO 1207 M5X10 A4	
660	315105-0146		4	WASHER PLAIN, 5,3X10X1 A4 BRB	
670	3038003-0000		4	SUPPORT	
680	90459-5574		1	CONNECTOR, 1787-PLUG10R	
690	90458-0421		1	CABLE GLAND, VK 22052Y	
710	90600-0604		1	INSERT, MULTI HOLE, EK154M 2X10	
720	3107112-0000		1	INSERT	
730	353249-0310		2	SEALING PIN, 10,0X20	
740	353249-0309		1	SEALING PIN, 9,3X20	
750	353249-0308		2	SEALING PIN, 8,0X20	
760	353249-0083		1	INSERT, MULTI HOLE, EK153M 2X8	
U70K1000	90459-2494		1	DEVICENET I/O ADAPTER MODULE, 1734-ADN	
U70K1010	90459-6561		1	DIGITAL INPUT 8 PTS SINK, 1734-IB8/C	
U70K1020	90459-6561		1	DIGITAL INPUT 8 PTS SINK, 1734-IB8/C	
U70K1030	90459-6561		1	DIGITAL INPUT 8 PTS SINK, 1734-IB8/C	
U70K1040	90459-6561		1	DIGITAL INPUT 8 PTS SINK, 1734-IB8/C	
U70K1050	90459-6560		1	DIGITAL OUTPUT 8 PTS, 1734-OB8E/C	
U70K1060	90459-6560		1	DIGITAL OUTPUT 8 PTS, 1734-OB8E/C	
U70K1070	90459-6560		1	DIGITAL OUTPUT 8 PTS, 1734-OB8E/C	
U70K1080	90459-2509		1	REMOTE I/O ANALOG INPUT CURRENT 2 PTS	
U70K1090	90459-2509		1	REMOTE I/O ANALOG INPUT CURRENT 2 PTS	
U70K1100	90459-2508		1	REMOTE I/O ANALOG INPUT VOLTAGE 2 PTS	
U70K1110	90459-2510		1	ANALOG OUTPUT VOLTAGE MODULE 2 PTS	
U70K1120	90459-4055		1	REMOTE I/O RELAY OUTPUT 2 PTS	
U70K1130	90459-2500		1	EXPANSION POWER SUPPLY MODULE	
U70K1140	90459-2512		1	REMOTE I/O THERMOCOUPLE INPUT 2 PTS	
U70K1150	90459-2512		1	REMOTE I/O THERMOCOUPLE INPUT 2 PTS	
U70K1160	90459-2512		1	REMOTE I/O THERMOCOUPLE INPUT 2 PTS	
U70K1170	90459-2512		1	REMOTE I/O THERMOCOUPLE INPUT 2 PTS	
U70K1180	90459-2512		1	REMOTE I/O THERMOCOUPLE INPUT 2 PTS	
U70K1190	90459-5261		1	REMOTE I/O, RELAY OUTP. 4 PTS,1734-OW4/C	
U70K1200	90459-2500		1	EXPANSION POWER SUPPLY MODULE	
U70K1210	90459-2512		1	REMOTE I/O THERMOCOUPLE INPUT 2 PTS	
U70K1220	90459-2512		1	REMOTE I/O THERMOCOUPLE INPUT 2 PTS	
U70K1230	90459-2512		1	REMOTE I/O THERMOCOUPLE INPUT 2 PTS	
U70K1240	90459-4056		1	REMOTE I/O RTD INPUT 2PTS	
U70K1250	90459-6561		1	DIGITAL INPUT 8 PTS SINK, 1734-IB8/C	
U70K1300	90459-2501		1	FIELD POWER DISTRIBUTOR, 1734-FPD	
U70K1310	90459-6560		1	DIGITAL OUTPUT 8 PTS, 1734-OB8E/C	
U70X1000	2871449-0200		1	TERMINAL BLOCK	**1-243**

Machine Type	Group Description	Used-In	Group Number	Page No

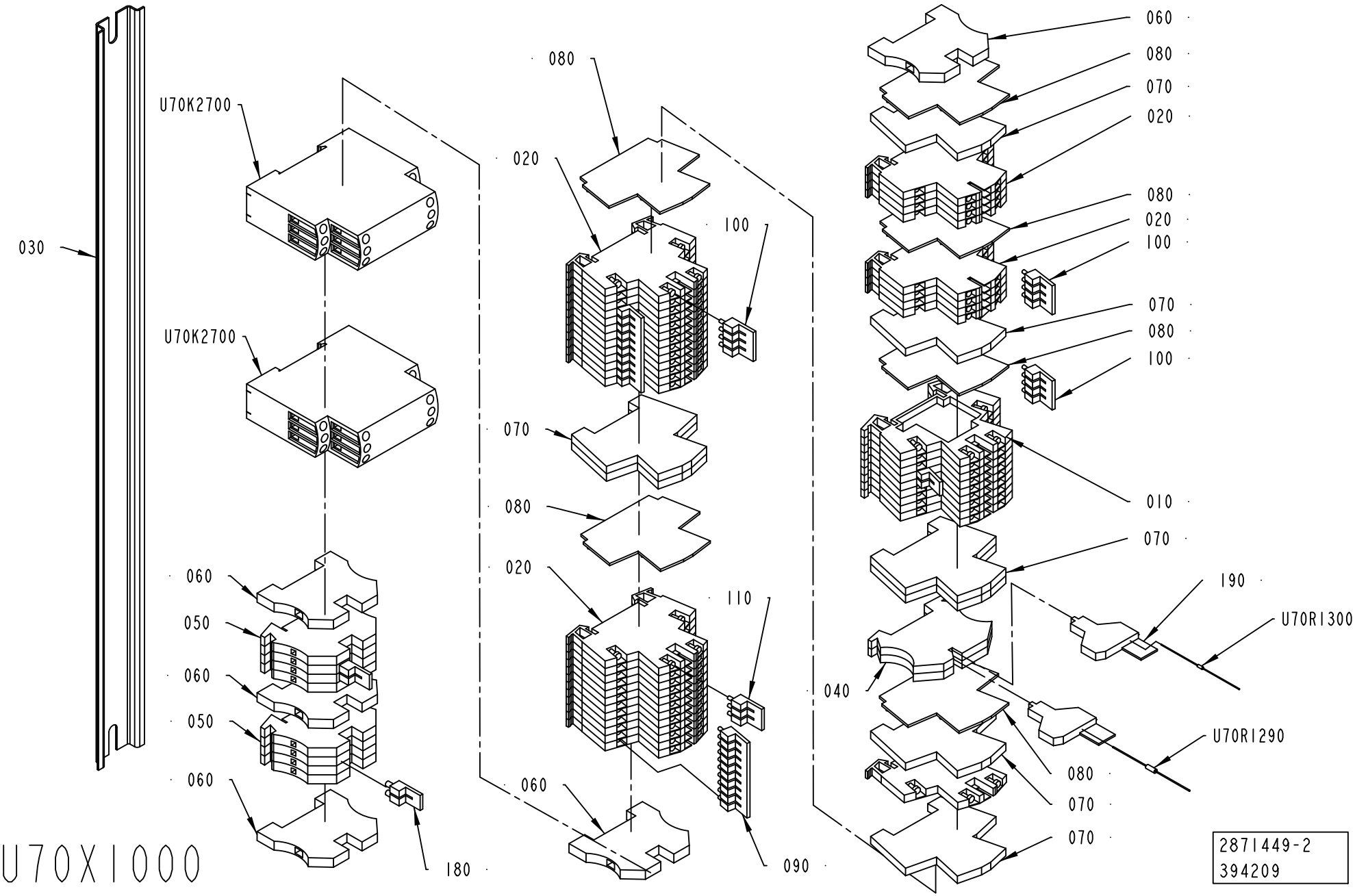
030
U70K2700
U70K2700
060
050
060
050
060
180
080
020
100
070
080
020
110
060
090
060
080
020
100
070
080
100
010
070
190
U70R1300
040
U70R1290
080
070
070
U70X1000
2871449-2
394209

ECM: 404928 - 20090715
Group number: 2871449-0200
Assembly Drawing: 2871449-2_1_AA

Pos	Part No	UN	Qty	Description	Page No
-					
010	90077-0113		9	TERMINAL BLOCK WDK 2.5	
020	90459-5253		34	TERMINAL BLOCK WDK 2,5 V	
030	2890051-0000		1	RAIL	
040	90600-2134		2	TERMINAL DISCONNECATBLE, WTR 2,5/O.TNHE	
050	353021-0213		8	FEED THROUGH TERMINAL, WDU 4	
060	353024-0205		5	EARTH TERMINAL WPE 4	
070	353024-0212		8	EARTH TERMINAL WDK 2,5 PE	
080	353032-0009		6	END PLATE, WAP WDK 2,5	
090	353034-0030		2	BRIDGE CONNECTOR WQV 2,5/10	
100	353034-0030		3	BRIDGE CONNECTOR WQV 2,5/10	
110	353034-0030		1	BRIDGE CONNECTOR WQV 2,5/10	
120	353034-0030		1	BRIDGE CONNECTOR WQV 2,5/10	
125	359011-0813		1	MARKING, DEK 5 FW 301-350	
128	359011-0814		1	MARKING, DEK 5 FW 350-400	
130	359011-0821		1	MARKING, DEK 6 FW 1-50	
140	359011-0822		1	MARKING, DEK 6 FW 51-100	
150	359011-0823		1	MARKING, DEK 6 FW 101-150	
160	359011-0824		2	MARKING, DEK 6 FW 151-200	
165	359011-0825		1	MARKING, DEK 6 FW 201-250	
170	359011-0834		1	MARKING, EARTH, DKE 6 GW ERDE I.KR.	
180	90459-0828		2	BRIDGE CONNECTOR WQV 4/2	
190	90600-2133		2	MODULE CONNECTOR 250V, BEST 1833100000	
U70K2700	90459-2742		1	LEVEL CONTROL RELAY, RM4-LA32MW	
U70K3700	90459-2742		1	LEVEL CONTROL RELAY, RM4-LA32MW	
U70R1290	90121-0127		1	RESISTANCE FIXED, 1,5 KOHM, 0,25 W	
U70R1300	90038-0049		1	DIODE	

Pos	Part No	UN	Qty	Description	Page No

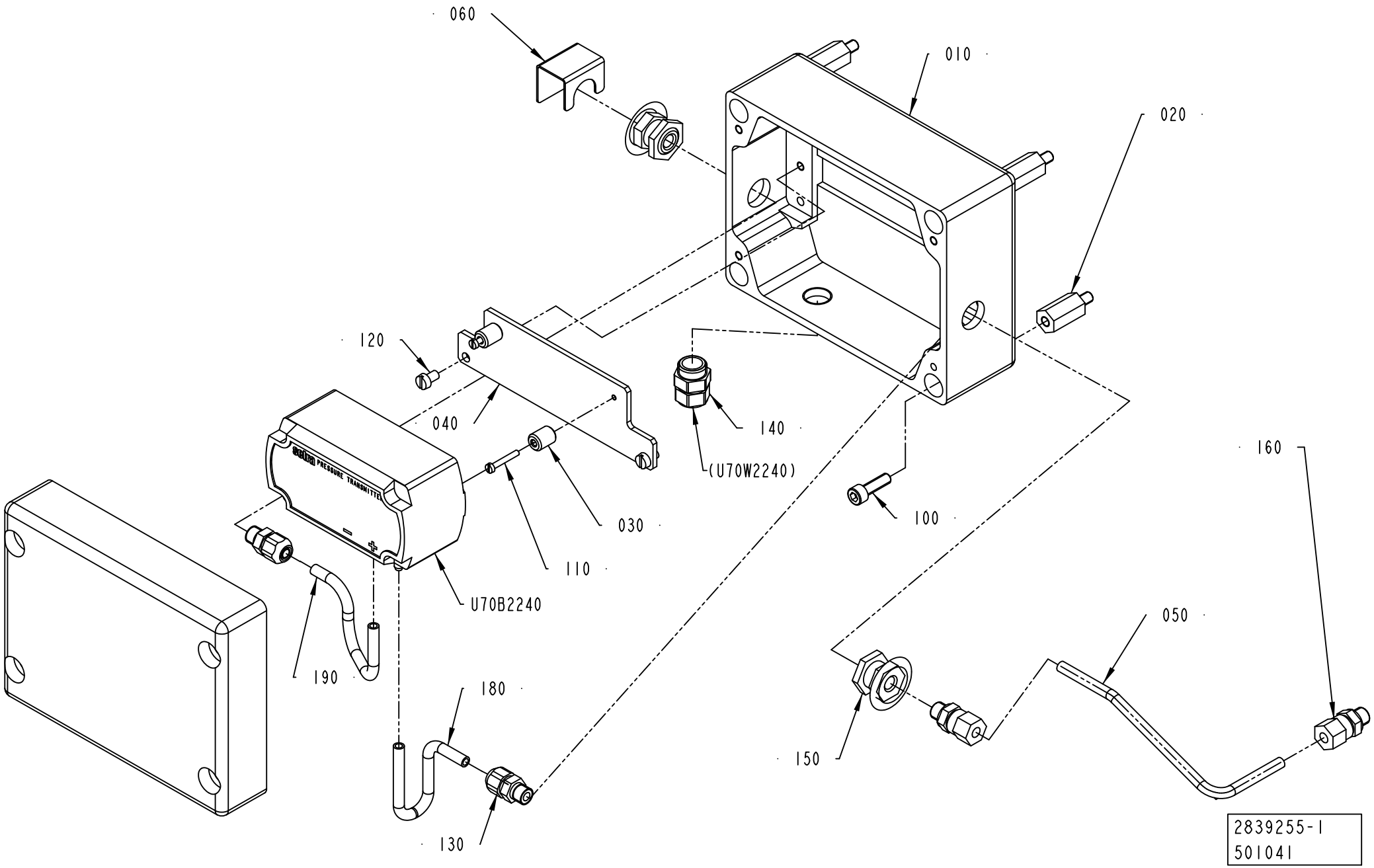
060
010
020
120
040
140
(U70W2240)
160
030
100
110
050
U70B2240
190
180
150
130
2839255-1
501041

ECM: 501192 - 20111001
Group number: 2839255-0100
Assembly Drawing: 2839255-1_1_AC

Pos	Part No	UN	Qty	Description	Page No
-					
010	2839254-0000		1	CONNECTION BOX	
020	1548869-0000		4	SPACER	
030	2839258-0000		2	SPACER	
040	2839256-0000		1	BRACKET	
050	3142884-0000		1	PIPE	
060	2877756-0000		1	PROTECTION	
100	312115-0370		4	SCREW ISO4762 M6X20 A4 80	
110	312125-0230		2	SLOTTED HEAD SCREW, ISO1207 M3X20 A4	
120	312125-0323		2	SLOTTED HEAD SCREW, ISO1207 M5X8 A4	
130	90600-1435		2	STRAIGHT COUPL., EXT. THREADED 6/4-G1/8	
140	90459-7081		1	CABLE GLAND, EXTENDED, M16X1,5	
150	342767-0100		2	BULKHEAD LEAD-IN, G1/8	
160	90030-0184		2	CONN. STR., GE06LRED71	
180	90166-0176	MM	210	RUBBER HOSE	
190	90166-0176	MM	210	RUBBER HOSE	
U70B2240	90459-4810		1	PRESS TRANSD (DIFF) 0 - 2000PA, 2681-20C	

Pos	Part No	UN	Qty	Description	Page No

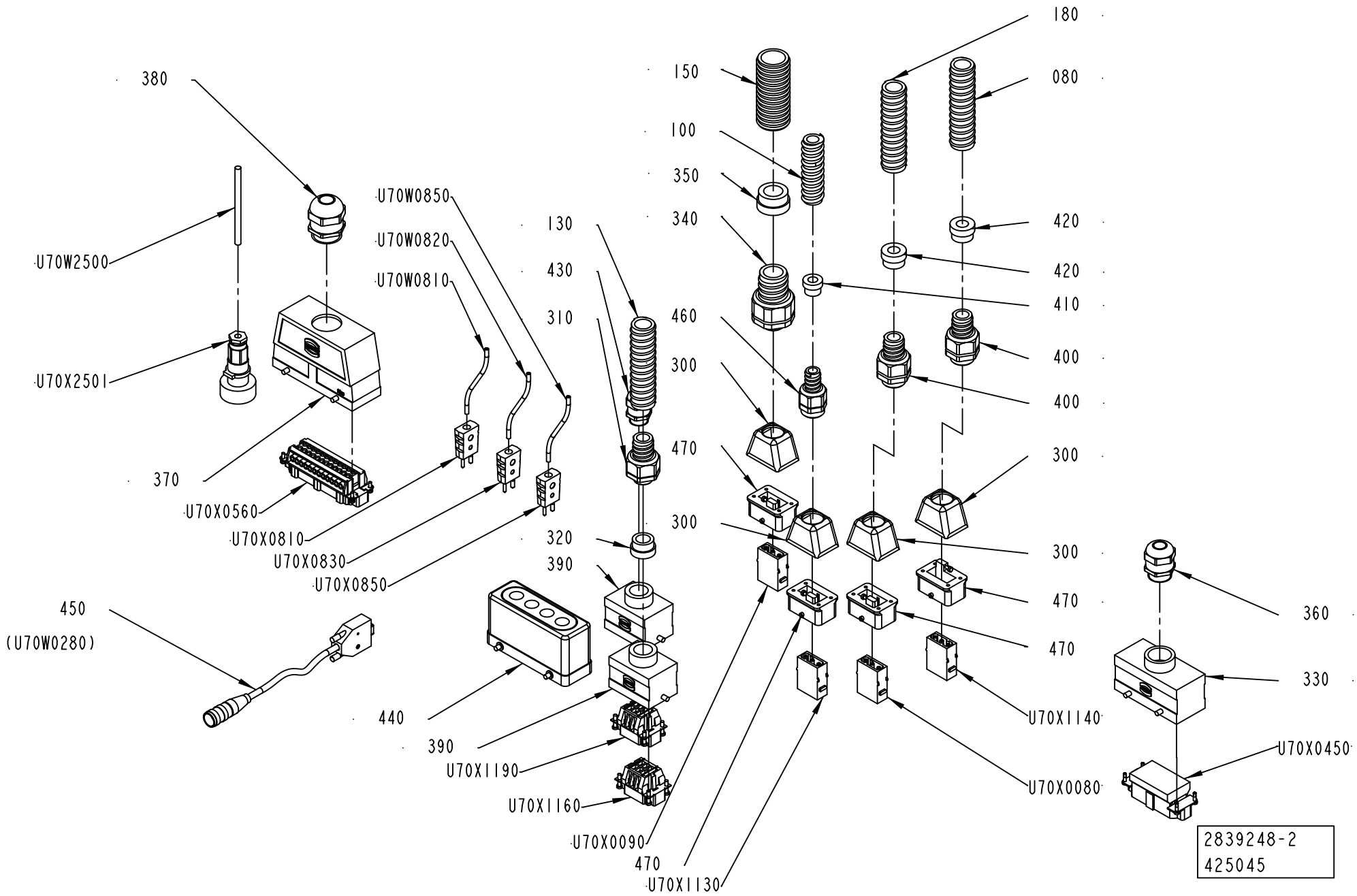
380
U70W2500
U70X2501
370
U70X0560
U70W0850
U70W0820
U70W0810
U70X0810
U70X0830
U70X0850
450
(U70W0280)
440
390
U70X1190
U70X1160
U70X0090
470
U70X1130
130
430
310
320
390
150
100
350
340
460
300
470
300
180
080
420
420
410
400
400
300
300
300
470
470
U70X1140
U70X0080
360
330
U70X0450
2839248-2
425045

ECM: 509089 - 20111001
Group number: 2839248-0200
Assembly Drawing: 2839248-2_1_AB

This list covers pages from 1-246 to 1-249

Pos	Part No	UN	Qty	Description	Page No
-					
010	90152-0059	M	3	HOSE, SPIRAL CONDUIT, 18X12, UL 1211	
020	90152-0059	M	3	HOSE, SPIRAL CONDUIT, 18X12, UL 1211	
030	90152-0051	M	2.5	HOSE, SPIRAL CONDUIT, 25X18, UL 1816	
040	90152-0051	M	2	HOSE, SPIRAL CONDUIT, 25X18, UL 1816	
050	90152-0050	M	2.5	HOSE, SPIRAL CONDUIT, 20X13, UL 1313	
070	90152-0050	M	3.5	HOSE, SPIRAL CONDUIT, 20X13, UL 1313	
080	90152-0051	M	5	HOSE, SPIRAL CONDUIT, 25X18, UL 1816	
090	90152-0050	M	1.5	HOSE, SPIRAL CONDUIT, 20X13, UL 1313	
100	90152-0050	M	3.6	HOSE, SPIRAL CONDUIT, 20X13, UL 1313	
110	90152-0050	M	1.5	HOSE, SPIRAL CONDUIT, 20X13, UL 1313	
120	90152-0059	M	2	HOSE, SPIRAL CONDUIT, 18X12, UL 1211	
130	90152-0051	M	6.4	HOSE, SPIRAL CONDUIT, 25X18, UL 1816	
140	90152-0051	M	3.5	HOSE, SPIRAL CONDUIT, 25X18, UL 1816	
150	90152-0070	M	4.3	HOSE, SPIRAL CONDUIT, 32,5X26, UL 2621	
160	90152-0051	M	1.8	HOSE, SPIRAL CONDUIT, 25X18, UL 1816	
170	90152-0051	M	1.5	HOSE, SPIRAL CONDUIT, 25X18, UL 1816	
180	90152-0051	M	4.5	HOSE, SPIRAL CONDUIT, 25X18, UL 1816	
190	90152-0058	M	1	HOSE, SPIRAL CONDUIT, 15X9, UL 0909	
200	353001-0119		100	END SLEEVE H 1.0/14 YELLOW	
210	979593-0000		2	CAP	
220	90458-0406		1	CABLE GLAND, VK 22052Y	
230	353249-0036		1	INSERT, MULTI HOLE, EK152M 2X4	
240	90458-0323		1	NUT, M20X1,5	
250	352113-0101		296	CABLE TIE, BLACK 92X2,5 MM	
260	90152-0059	M	1.65	HOSE, SPIRAL CONDUIT, 18X12, UL 1211	
300	90601-7130		4	HOOD, HAN MODULE COMPACT, 1914 0010 401	
310	90458-0430		1	GLAND FITTING, VK 22054YUL16	
320	353249-0014		1	INSERT, SINGLE HOLE, EK154 16	
330	90459-6634		1	HOOD, TOP ENTRY, 16B, 19 30 016 1421	
340	90458-0432		1	GLAND FITTING, VK 22555YUL21	
350	353249-0016		1	INSERT, SINGLE HOLE, EK155 18	
360	90458-0308		1	CABLE GLAND, M25X1,5, 5311 1030	
370	90459-6636		1	HOOD, TOP ENTRY, 24B, 19 30 024 0427	
380	90458-0309		1	CABLE GLAND, M32X1,5, 5311 1040	
390	90459-6632		2	HOOD, TOP ENTRY, 6B, 19 30 006 1440	
400	90458-0431		2	GLAND FITTING, VK 22554YUL16	
410	353249-0011		1	INSERT, SINGLE HOLE, EK153 11	
420	353249-0013		2	INSERT, SINGLE HOLE, EK154 13	
430	90458-0307		1	CABLE GLAND, M20X1,5, 5311 1020	
440	90110-0381		1	COVER, 310601-33 CYR24.4	
450	2906094-0100		1	CABLE	**1-251**
460	90458-0414		1	GLAND FITTING, VK 22553YUL13	
470	90459-3852		4	HOUSING, 09 14 001 0311	
U70W0080	351120-0146	M	4.7	CABLE ÖLFLEX HEAT 180 SIHF 3X4	
U70W0090	351120-0267	M	4.7	CABLE ÖLFLEX HEAT 180 SIHF 4X6	
U70W0280	90220-0091	M	8.2	CABLE, PAIR TWISTED 2X2X0,25MM2	
U70W0450	351150-0420	M	2.7	CABLE OLFLEX 7X2,5 MM2 LIGHT/GREY	
U70W0560	351150-0425	M	4	CABLE OLFLEX 25X0,75 MM2 LIGHT/GREY	
U70W0810	90220-0034	M	3.8	THERMOC.CABLE, TEX/SITW-20F-KX 2X0,5MM2	
U70W0830	90220-0034	M	3.8	THERMOC.CABLE, TEX/SITW-20F-KX 2X0,5MM2	
U70W0850	90220-0034	M	3.8	THERMOC.CABLE, TEX/SITW-20F-KX 2X0,5MM2	
U70W1000	90459-2530	M	4.5	DEVICENET CABLE THIN	
U70W1100	90459-5578		1	ACTUATOR/SENSOR CABLE PRKT 5-56/5M	
U70W1130	351120-0145	M	3.8	CABLE ÖLFLEX HEAT 180 SIHF 3X2,5	
U70W1140	351120-0146	M	5	CABLE ÖLFLEX HEAT 180 SIHF 3X4	
U70W1160	351422-0302	M	6.4	CABLE ÖLFLEX 150CY QUATTRO 4X2,5	
U70W1170	351423-0006	M	2	CABLE UNITRONIC LICY 5X0,34	
U70W1190	351422-0302	M	3.2	CABLE ÖLFLEX 150CY QUATTRO 4X2,5	
U70W1260	90220-0034	M	1.6	THERMOC.CABLE, TEX/SITW-20F-KX 2X0,5MM2	
U70W1270	90220-0034	M	3.5	THERMOC.CABLE, TEX/SITW-20F-KX 2X0,5MM2	
U70W1290	351301-0050		1	ACTUATOR/SENSOR CABLE PRKMV 3-06/5M	
U70W1300	351150-0412	M	3	CABLE OLFLEX 3X1,5 MM2 LIGHT/GREY	
U70W1700	351309-0100		1	ACTUATOR/SENSOR CABLE PRKT 4-07/10M	
U70W1710	351150-0403	M	1.5	CABLE OLFLEX 3X0,75 MM2 LIGHT/GREY	
U70W2010	351150-0406	M	4.2	CABLE OLFLEX 7X0,75 MM2 LIGHT/GREY	
U70W2240	351423-0008	M	2.3	CABLE UNITRONIC LICY 2X0,5	
U70W2260	351423-0006	M	4.5	CABLE UNITRONIC LICY 5X0,34	
U70W2280	90220-0034	M	2.1	THERMOC.CABLE, TEX/SITW-20F-KX 2X0,5MM2	
U70W2290	90220-0034	M	2.8	THERMOC.CABLE, TEX/SITW-20F-KX 2X0,5MM2	
U70W2300	90220-0034	M	3.6	THERMOC.CABLE, TEX/SITW-20F-KX 2X0,5MM2	
U70W2500	351423-0006	M	4	CABLE UNITRONIC LICY 5X0,34	
U70W2700	351150-0404	M	3	CABLE OLFLEX 4X0,75 MM2 LIGHT/GREY	
U70W2730	351150-0404	M	1.8	CABLE OLFLEX 4X0,75 MM2 LIGHT/GREY	
U70W2740	351150-0403	M	2.3	CABLE OLFLEX 3X0,75 MM2 LIGHT/GREY	
U70W2750	351150-0403	M	2.3	CABLE OLFLEX 3X0,75 MM2 LIGHT/GREY	
U70W2860	351150-0403	M	2.3	CABLE OLFLEX 3X0,75 MM2 LIGHT/GREY	
U70W2870	351150-0403	M	1.9	CABLE OLFLEX 3X0,75 MM2 LIGHT/GREY	
U70W3100	351423-0006	M	6	CABLE UNITRONIC LICY 5X0,34	
U70W3200	90220-0034	M	2	THERMOC.CABLE, TEX/SITW-20F-KX 2X0,5MM2	
U70W3210	90220-0034	M	2.5	THERMOC.CABLE, TEX/SITW-20F-KX 2X0,5MM2	
U70W3211	90220-0034	M	3	THERMOC.CABLE, TEX/SITW-20F-KX 2X0,5MM2	
U70W3230	90220-0034	M	2.3	THERMOC.CABLE, TEX/SITW-20F-KX 2X0,5MM2	
U70W3240	90220-0034	M	2.4	THERMOC.CABLE, TEX/SITW-20F-KX 2X0,5MM2	

Machine Type | Group Description | Used-In | Group Number | Page No

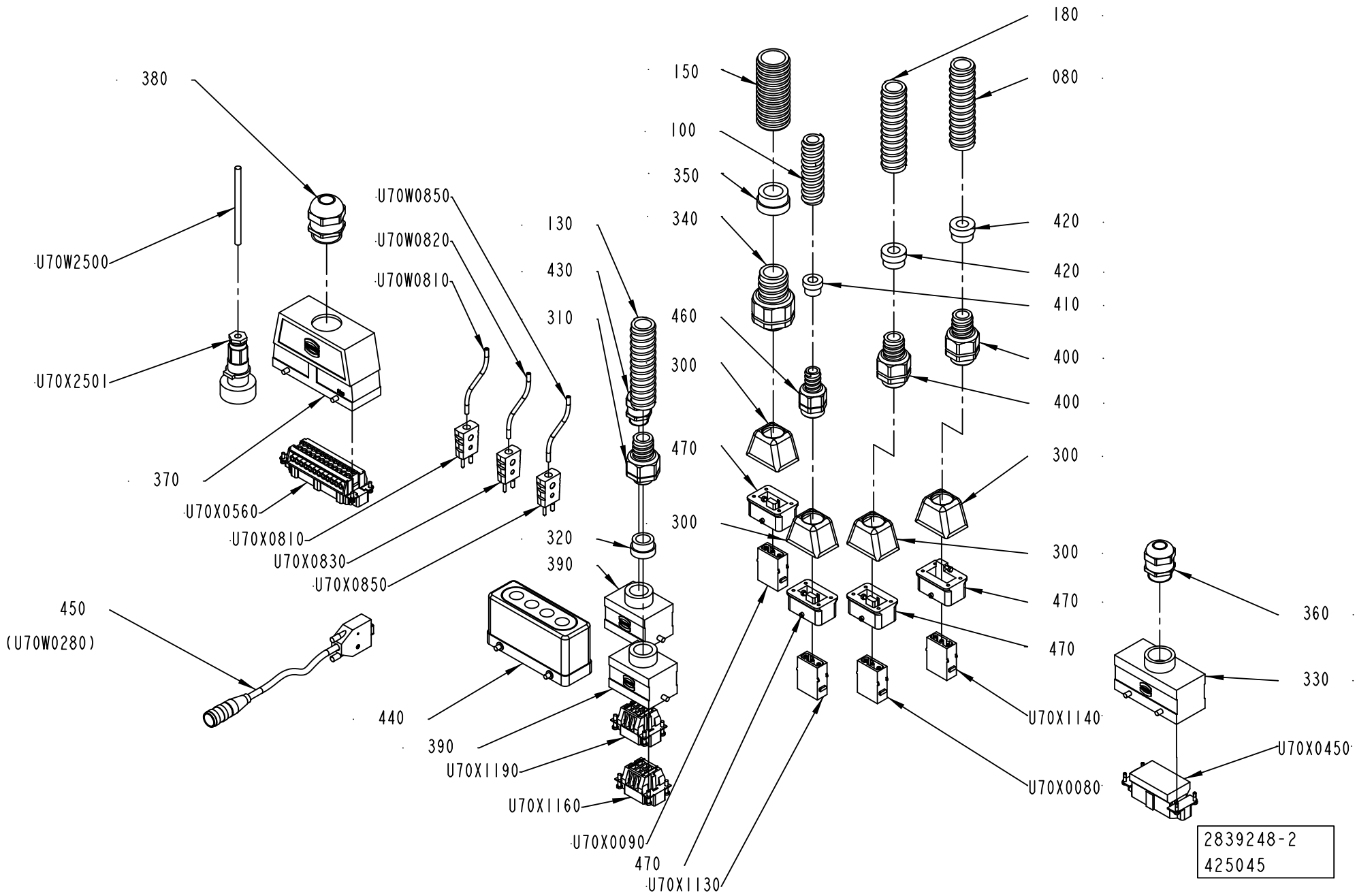
380
U70W2500
U70X2501
370
U70X0560
U70W0850
U70W0820
U70W0810
U70X0810
U70X0830
U70X0850
450
(U70W0280)
130
430
310
320
390
440
390
U70X1190
U70X1160
U70X0090
470
U70X1130
150
100
350
340
460
300
470
300
180
080
420
420
410
400
400
300
300
300
470
470
U70X1140
U70X0080
360
330
U70X0450
2839248-2
425045

ECM: 509089 - 20111001
Group number: 2839248-0200
Assembly Drawing: 2839248-2_1_AB

This list covers pages from 1-246 to 1-249

Pos	Part No	UN	Qty	Description	Page No
- (Cont'd)					
U70W3250	90220-0034	M	4	THERMOC.CABLE, TEX/SITW-20F-KX 2X0,5MM2	
U70W3270	90220-0034	M	1	THERMOC.CABLE, TEX/SITW-20F-KX 2X0,5MM2	
U70W3700	351150-0403	M	4	CABLE OLFLEX 3X0,75 MM2 LIGHT/GREY	
U70X0080	90601-6217		1	MALE INSERT, HAN 3 MOD-M-S 40A	
U70X0090	90601-0087		1	MALE INSERT, HAN 3 MOD-M-S 40A	
U70X0450	90110-0156		1	MALE INSERT 70.210.0653.0	
U70X0560	90110-0056		1	MALE INSERT, HAN E 24, 0933 0242 601	
U70X0810	90326-0022		1	PLUG, MALE YELLOW CR-AL, 03-21000A	
U70X0830	90326-0022		1	PLUG, MALE YELLOW CR-AL, 03-21000A	
U70X0850	90326-0022		1	PLUG, MALE YELLOW CR-AL, 03-21000A	
U70X1130	90601-6217		1	MALE INSERT, HAN 3 MOD-M-S 40A	
U70X1140	90601-6217		1	MALE INSERT, HAN 3 MOD-M-S 40A	
U70X1160	90110-0052		1	MALE INSERT, HAN E06, 0933 0062 601	
U70X1190	90110-0052		1	MALE INSERT, HAN E06, 0933 0062 601	
U70X2501	90110-0235		1	CABLE CONTACT, PX0739/P	

Pos	Part No	UN	Qty	Description	Page No

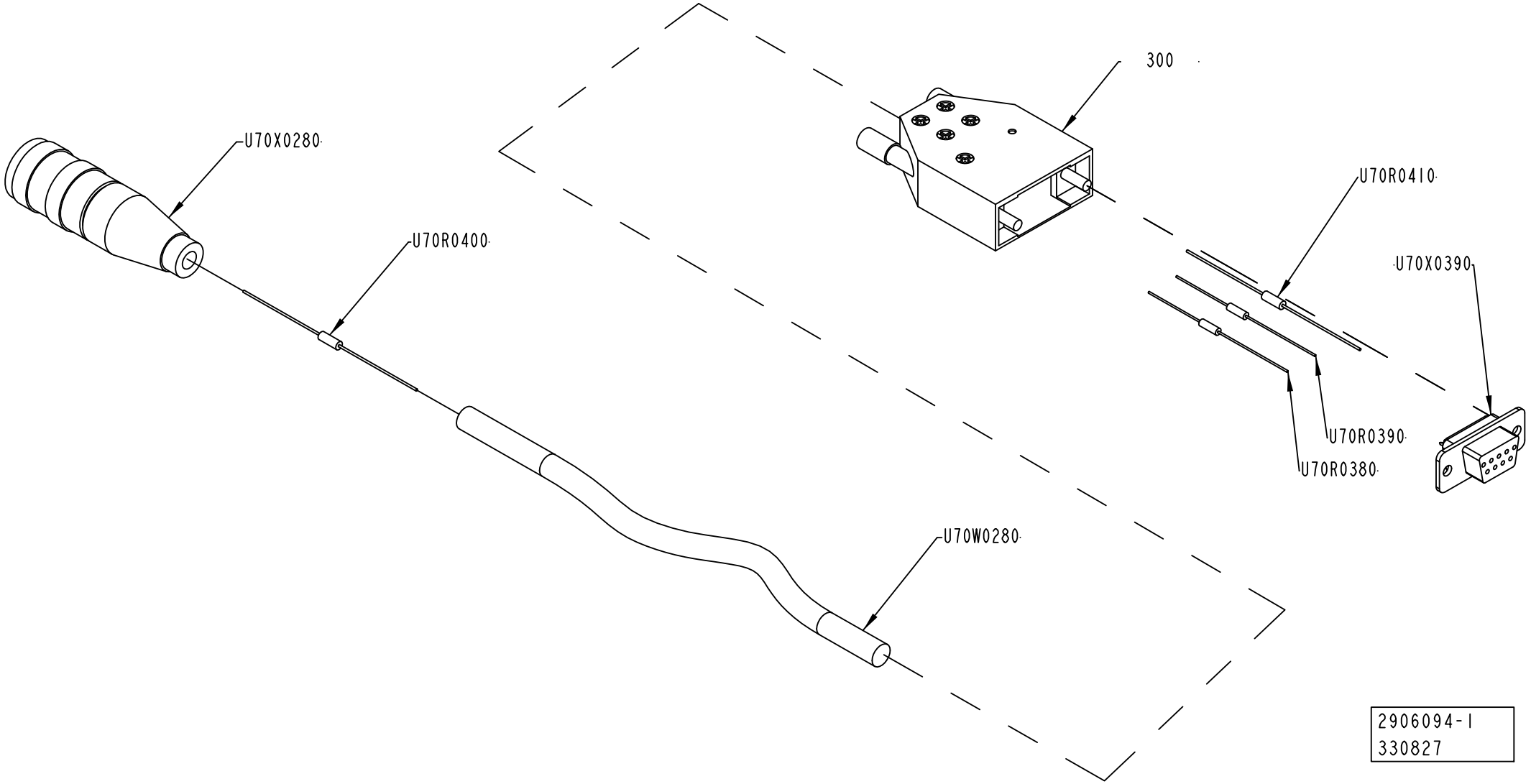
300
U70X0280
U70R0400
U70R0410
U70X0390
U70R0390
U70R0380
U70W0280
2906094-1
330827

ECM: 335006 - 20071221
Group number: 2906094-0100
Assembly Drawing: 2906094-1_1_AA

Pos	Part No	UN	Qty	Description	Page No
-					
300	90110-0144		1	CONNECTOR, COVER, 8655MH0911LF	
U70R0380	90121-0132		1	RESISTANCE FIXED, 0,51 KOHM, 0,25 W	
U70R0390	90121-0132		1	RESISTANCE FIXED, 0,51 KOHM, 0,25 W	
U70R0400	90459-1297		1	RESISTANCE FIXED, 120 OHM, 0,25 W	
U70R0410	90459-1297		1	RESISTANCE FIXED, 120 OHM, 0,25 W	
U70W0280	90220-0091	M	10	CABLE, PAIR TWISTED 2X2X0,25MM2	
U70X0280	90459-2106		1	CABLE CONNECTOR, C091 31D004 100 2	
U70X0390	90110-0147		1	CONNECTOR, D-SUB, DE09S064TLF	

Pos	Part No	UN	Qty	Description	Page No

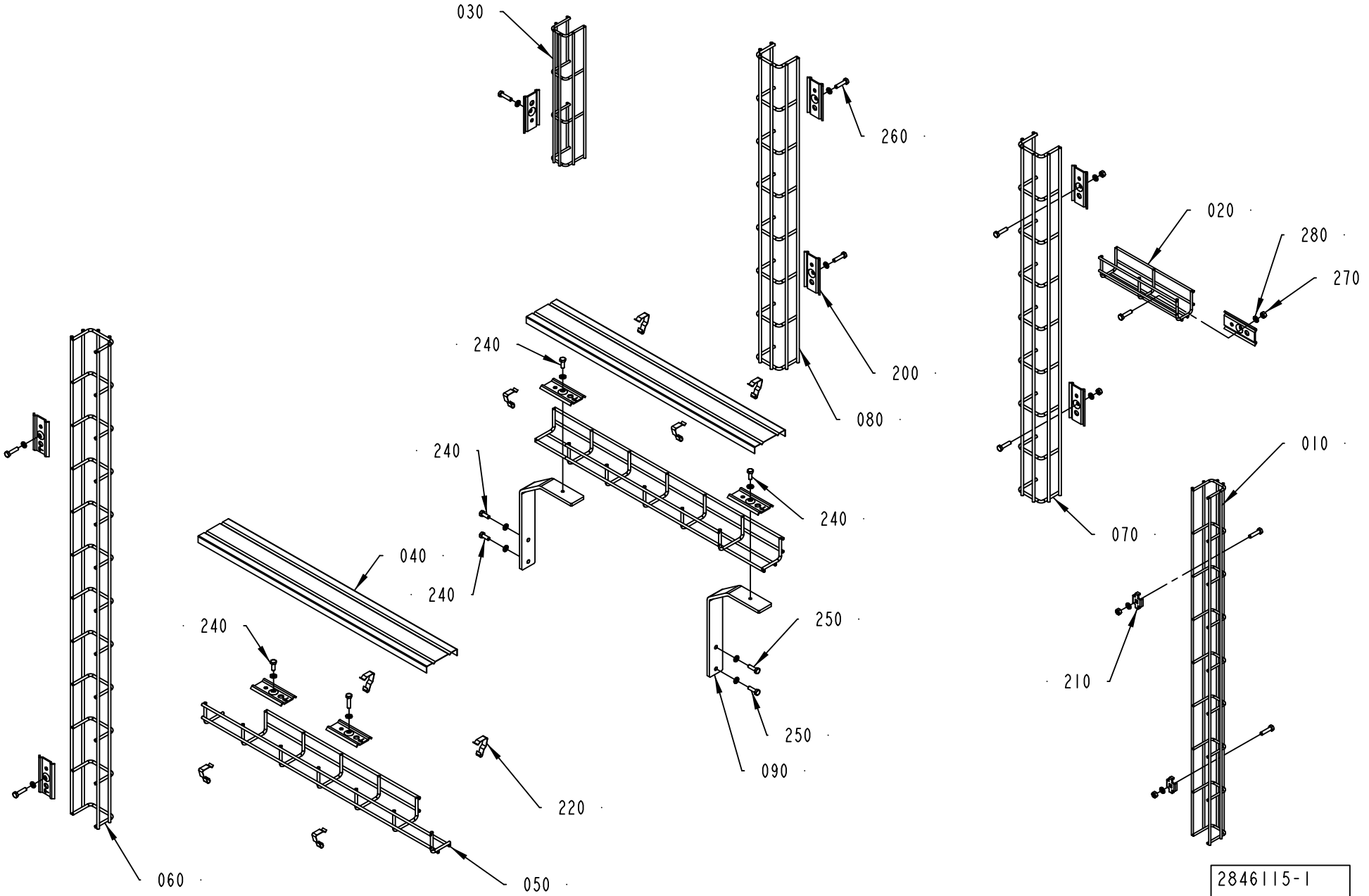
030
260
200
080
240
240
240
240
040
240
250
250
090
220
060
050
020
280
270
010
070
210
2846115-1
390395

ECM: 394372 - 20090623
Group number: 2846115-0100
Assembly Drawing: 2846115-1_1_AD

Pos	Part No	UN	Qty	Description	Page No
-					
010	2864042-0000		1	CABLE TRENCH	
020	2864035-0000		1	CABLE TRENCH	
030	2864036-0000		1	CABLE TRENCH	
040	2846117-0000		2	COVER	
050	2864037-0000		2	CABLE TRENCH	
060	2864038-0000		1	CABLE TRENCH	
070	2864039-0000		1	CABLE TRENCH	
080	2864040-0000		1	CABLE TRENCH	
090	2864041-0000		2	BRACKET	
200	90181-0182		12	BRACKET, 1149354	
210	90600-1448		2	CLAMP, 6016 82 0	
220	90600-1954		8	CABLE DUCT, CABLE CLIP, 1149379	
240	312105-0368		5	SCREW, M6S ISO 4017 M6X16 A4 80	
250	312105-0370		7	SCREW, M6S ISO 4017 M6X20 A4 80	
260	312105-0372		6	SCREW, M6S ISO 4017 M6X25 A4 80	
270	312605-0316		5	HEXAGON NUT, M6M M6 A280	
280	315105-0153		18	WASHER PLAIN, 6,4X12X1,5 A4 BRB	

Pos	Part No	UN	Qty	Description	Page No

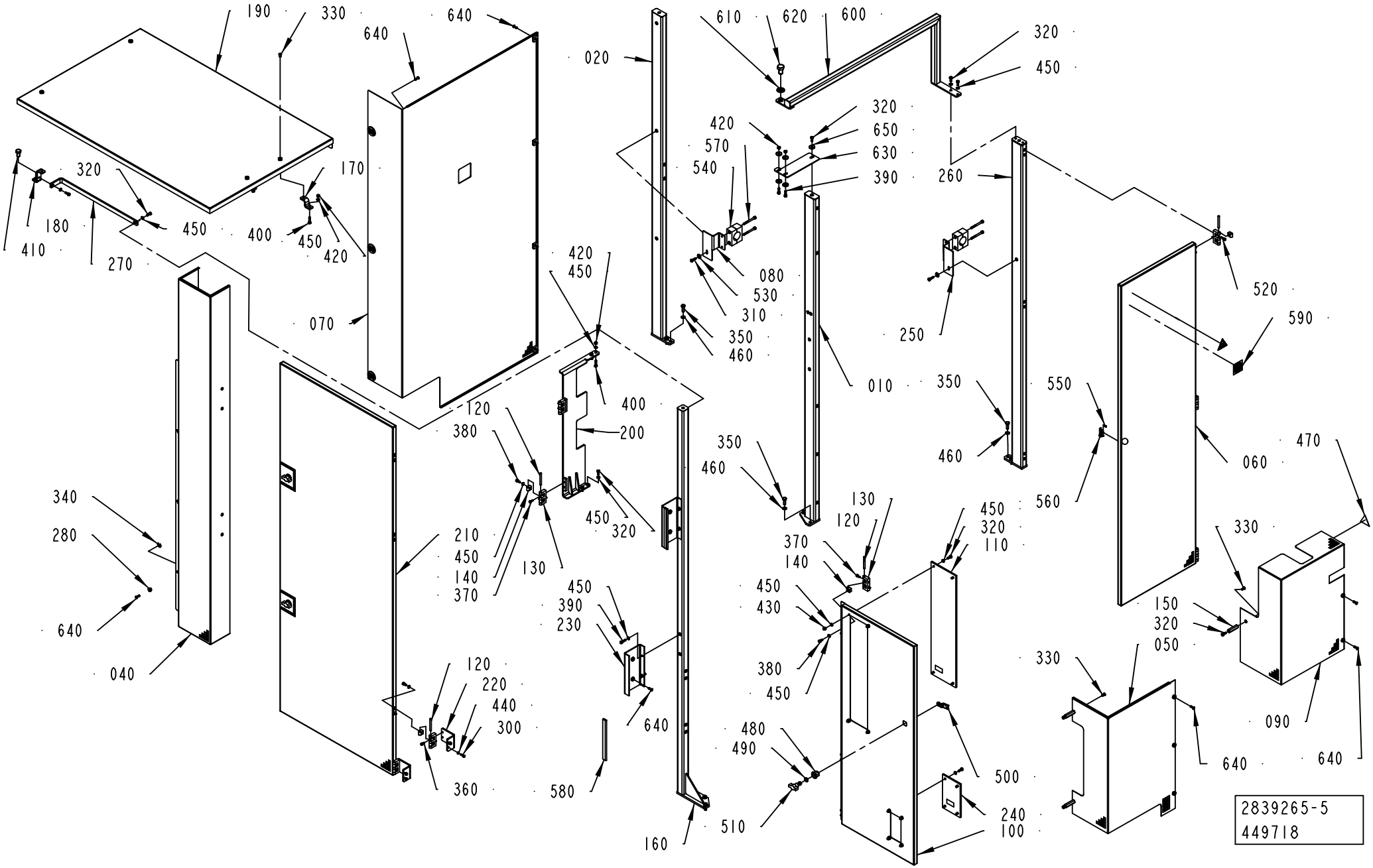
190
330
640
640
640
020
610
620
600
320
450
320
650
630
390
420
570
540
260
320
450
180
410
270
400
450
420
170
070
080
530
310
350
460
250
010
350
460
420
450
120
380
400
200
450
320
130
210
450
140
370
340
280
640
040
450
390
230
640
580
160
120
220
440
300
360
130
120
370
140
450
320
110
450
430
380
450
480
490
510
500
240
100
520
590
550
560
060
470
330
150
320
050
330
090
640
640
2839265-5
449718

ECM: 452658 - 20101001
Group number: 2839265-0300
Assembly Drawing: 2839265-5_1_AB

This list covers pages from 1-254 to 1-257

Pos	Part No	UN	Qty	Description	Page No
HVA ANSI (See drawing on page: 1-256)					
030	2996617-0300		1	COVERS	**1-259**
310	312105-0370		1	SCREW, M6S ISO 4017 M6X20 A4 80	
470	359725-0117		2	WARNING SIGN ANSI (V), HOT SURFACE	
530	90005-0060		1	WASHER PLAIN, RBS 6,4/M6)/18,H=1,5	
540	90165-0114		1	PIPE CLAMP, D=38 MM, RAN538X	
570	312115-0382		2	SCREW ISO4762 M6X60 A4 80	
590	90459-2267		1	WARNING SIGN ANSI (H), READ MAINT. MAN.	
HVA ISO (See drawing on page: 1-256)					
030	2996617-0300		1	COVERS	**1-259**
310	312105-0370		1	SCREW, M6S ISO 4017 M6X20 A4 80	
470	359710-0001		2	WARNING SIGN ISO, HOT SURFACE	
530	90005-0060		1	WASHER PLAIN, RBS 6,4/M6)/18,H=1,5	
540	90165-0114		1	PIPE CLAMP, D=38 MM, RAN538X	
570	312115-0382		2	SCREW ISO4762 M6X60 A4 80	
590	90459-1738		1	MANDATORY ACTION SIGN ISO, READ MAINTENA	
NOHVA ANSI (See drawing on page: 1-254)					
090	3020090-0000		1	TOUCH GUARD	
250	3037907-0000		1	BRACKET	
310	312105-0370		2	SCREW, M6S ISO 4017 M6X20 A4 80	
470	359725-0117		2	WARNING SIGN ANSI (V), HOT SURFACE	
530	90005-0060		2	WASHER PLAIN, RBS 6,4/M6)/18,H=1,5	
540	90165-0114		2	PIPE CLAMP, D=38 MM, RAN538X	
570	312115-0382		4	SCREW ISO4762 M6X60 A4 80	
590	90459-2267		1	WARNING SIGN ANSI (H), READ MAINT. MAN.	
NOHVA ISO (See drawing on page: 1-254)					
090	3020090-0000		1	TOUCH GUARD	
250	3037907-0000		1	BRACKET	
310	312105-0370		2	SCREW, M6S ISO 4017 M6X20 A4 80	
470	359710-0001		2	WARNING SIGN ISO, HOT SURFACE	
530	90005-0060		2	WASHER PLAIN, RBS 6,4/M6)/18,H=1,5	
540	90165-0114		2	PIPE CLAMP, D=38 MM, RAN538X	
570	312115-0382		4	SCREW ISO4762 M6X60 A4 80	
590	90459-1738		1	MANDATORY ACTION SIGN ISO, READ MAINTENA	
Common Parts					
010	3037908-0000		1	BRACKET	
020	2839275-0000		1	BRACKET	
040	3020104-0000		1	TOUCH GUARD	
050	3020089-0000		1	TOUCH GUARD	
060	3037905-0000		1	DOOR	
070	3020100-0000		1	TOUCH GUARD	
080	3005962-0000		1	BRACKET	
100	2864004-0000		1	DOOR	
110	2890058-0000		1	GLASS PANE	
120	988685-0000		10	PIN	
130	1035792-0000		10	E-HINGE	
140	1129770-0000		20	BLOCKING PIECE	
150	3020087-0000		3	SUPPORT	
160	2922783-0000		1	BRACKET	
170	2890073-0000		2	BRACKET	
180	2890074-0000		2	BRACKET	
190	3020086-0000		1	COVER	
200	2890077-0000		1	BRACKET	
210	2922784-0000		1	DOOR	
220	2890079-0000		2	BRACKET	
230	3020105-0000		2	PLATE	
240	2906139-0000		1	GLASS PANE	
260	3037902-0000		1	BRACKET	
270	2922786-0000		1	BRACKET	
280	3020099-0000		6	BUSHING	
300	312105-0329		4	SCREW, M6S ISO 4017 M5X16 A4 80	
320	312105-0368		18	SCREW, M6S ISO 4017 M6X16 A4 80	
330	90601-2046		7	CAPTIVE SCREW M6, GUTBG 6-4-12	
340	315755-0110		6	RETAINING RING SHAFT DIN 6799 9 SS	
350	312105-0453		8	SCREW, M6S ISO 4017 M8X25 A4 80	
360	312115-0325		4	SCREW ISO4762 M5X10 A4 80	
370	312115-0327		10	SCREW ISO4762 M5X12 A4 80	
380	312115-0366		20	SCREW ISO4762 M6X12 A4 80	
390	312115-0370		6	SCREW ISO4762 M6X20 A4 80	
400	312105-0372		4	SCREW, M6S ISO 4017 M6X25 A4 80	
410	312105-0532		2	SCREW, M6S ISO 4017 M12X20 A4 80	
420	312605-0316		6	HEXAGON NUT, M6M M6 A280	
430	312705-0316		8	HEX. DOMED CAP MHM-6 M6 A280	
440	315105-0146		4	WASHER PLAIN, 5,3X10X1 A4 BRB	
450	315105-0153		50	WASHER PLAIN, 6,4X12X1,5 A4 BRB	
460	315105-0165		8	WASHER PLAIN, 8,4X16X1,6 A4 BRB	
480	90237-0319		3	LOCK HOUSING, 1000-U134	
490	90237-0323		3	LOCK O-RING, 1000-24	
500	90237-0335		3	LOCKING CATCH	
510	90237-0337		3	LOCK HANDLE FOR 90237-319	
520	312115-0329		6	SCREW ISO4762 M5X16 A4 80	
550	90287-0295		4	SCREW HEX.SOCK.COUNT.MF6S M3X8 A280	
560	90600-0276		1	SNAP-IN BALL LOCK, 43X14,5 MM	
580	90143-0097	MM	1750	SELF GRIPPING GASKET, 1011-24	

Machine Type | Group Description | Used-In | Group Number | Page No

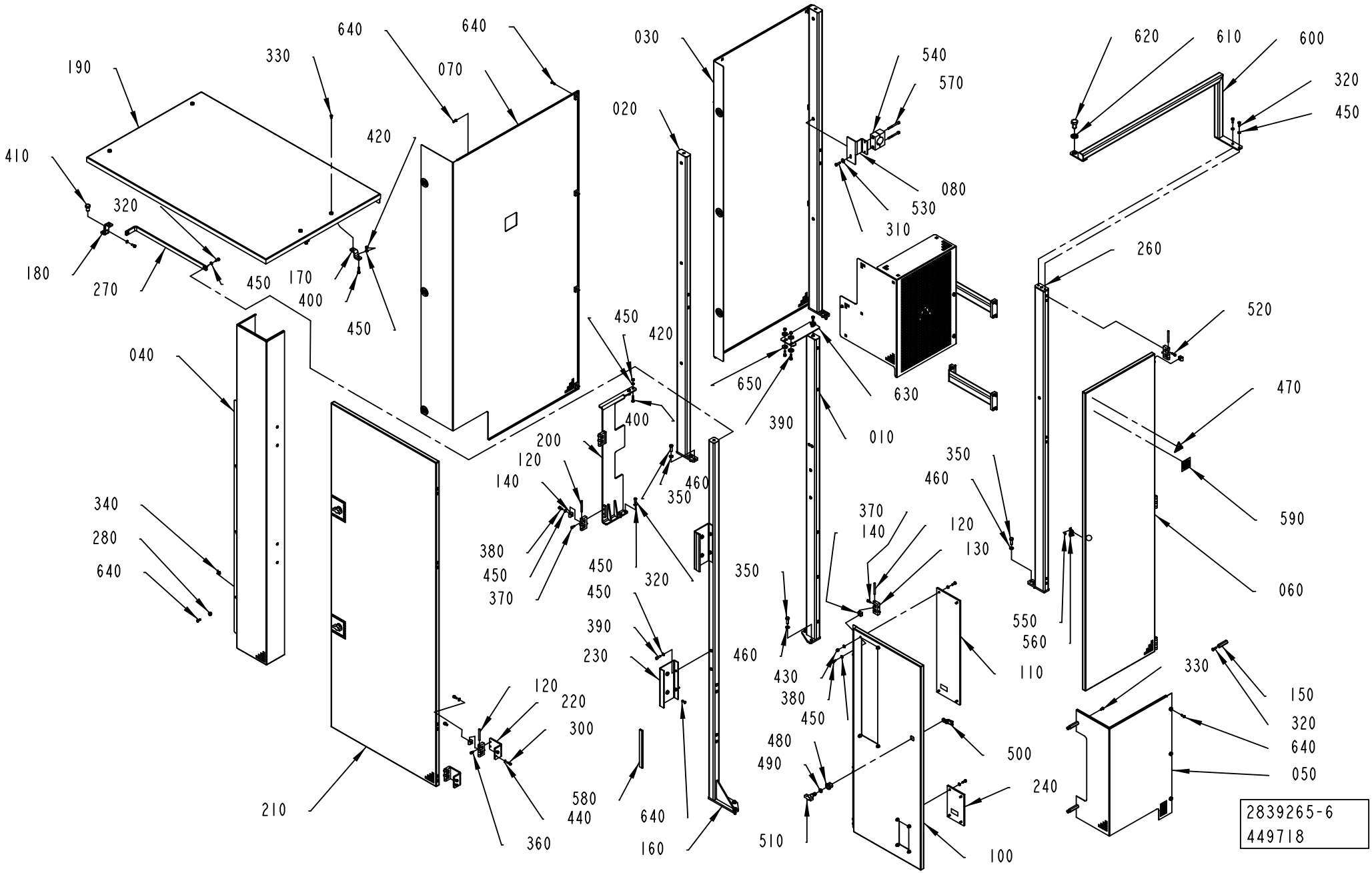
190
330
640
640
070
030
540
570
620
610
600
320
450
410
420
020
080
530
310
260
320
180
270
450
170
400
450
520
040
450
420
650
630
390
010
470
400
200
120
140
460
350
350
460
370
140
120
130
590
340
280
640
380
450
370
450
450
320
350
060
390
230
460
550
560
110
430
380
450
330
150
320
640
050
120
220
300
480
490
500
240
580
440
640
160
510
100
210
360
2839265-6
449718

Pos	Part No	UN	Qty	Description	Page No
Common Parts (Cont'd)					
600	3103342-0000		1	BRACKET	
610	315105-0186		1	WASHER PLAIN, 17X30X3 A4 BRB	
620	312105-0622		1	SCREW, M6S ISO 4017 M16X25 A4 80	
630	3103341-0000		1	BRACKET	
640	3103340-0000		19	SCREW	
650	315125-0153		5	WASHER HIGH, TBRSB 6,4X22X4 A4	

Pos	Part No	UN	Qty	Description	Page No

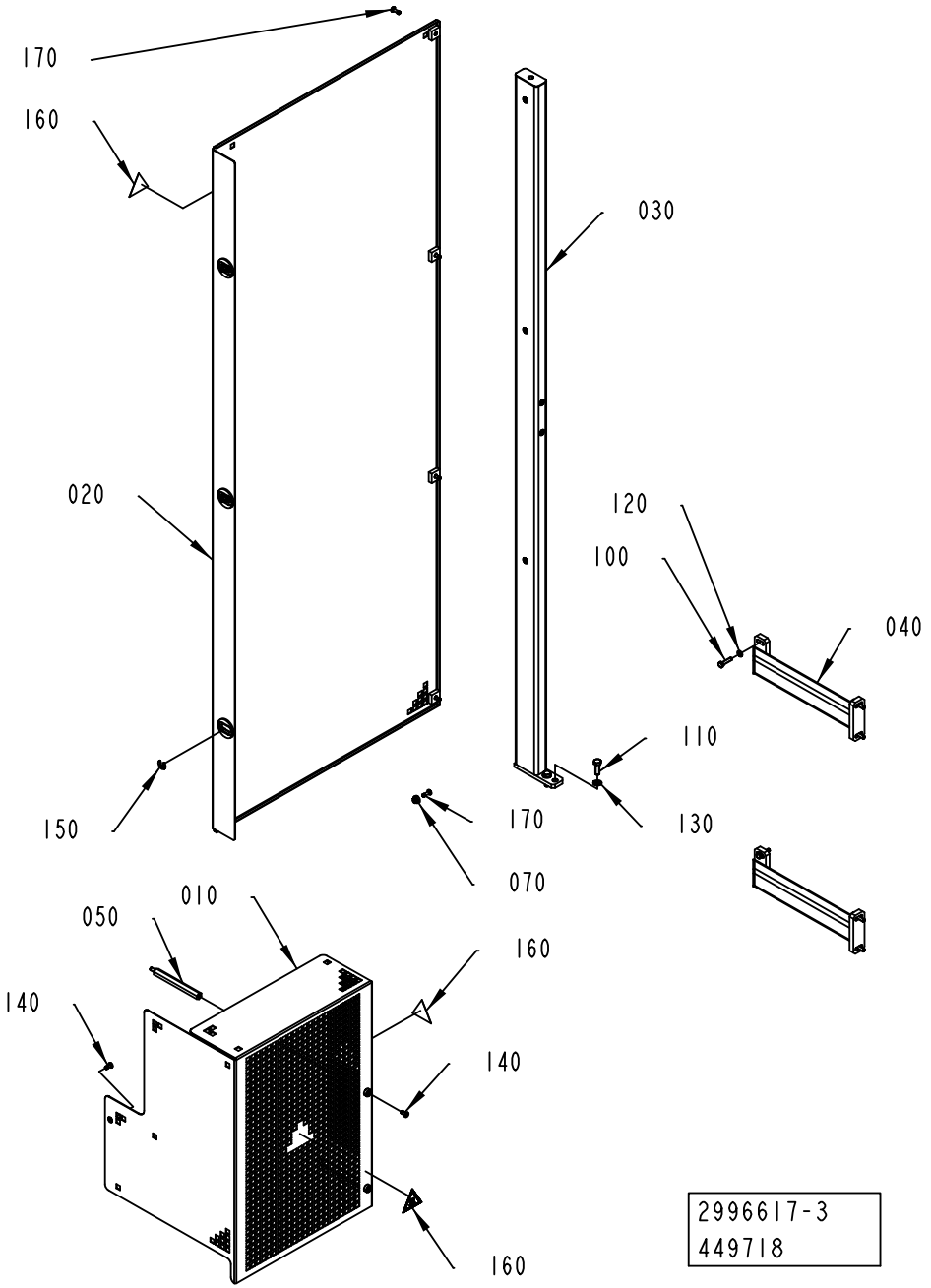
170
160
030
020
120
100
040
110
150
170
130
070
050
010
160
140
140
160
2996617-3
449718

ECM: 459595 - 20101001
Group number: 2996617-0300
Assembly Drawing: 2996617-3_1_AB

Pos	Part No	UN	Qty	Description	Page No
ANSI					
160	359725-0116		3	WARNING SIGN ANSI (H), HOT SURFACE	
ISO					
160	359710-0001		3	WARNING SIGN ISO, HOT SURFACE	
Common Parts					
010	3020098-0000		1	TOUCH GUARD	
020	3020103-0000		1	TOUCH GUARD	
030	2839275-0000		1	BRACKET	
040	3037903-0000		2	BRACKET	
050	2990407-0000		2	PIN	
070	3020099-0000		3	BUSHING	
100	312105-0372		8	SCREW, M6S ISO 4017 M6X25 A4 80	
110	312105-0453		2	SCREW, M6S ISO 4017 M8X25 A4 80	
120	315105-0153		8	WASHER PLAIN, 6,4X12X1,5 A4 BRB	
130	315105-0165		2	WASHER PLAIN, 8,4X16X1,6 A4 BRB	
140	90601-2046		3	CAPTIVE SCREW M6, GUTBG 6-4-12	
150	315755-0110		3	RETAINING RING SHAFT DIN 6799 9 SS	
170	3103340-0000		7	SCREW	

Pos	Part No	UN	Qty	Description	Page No

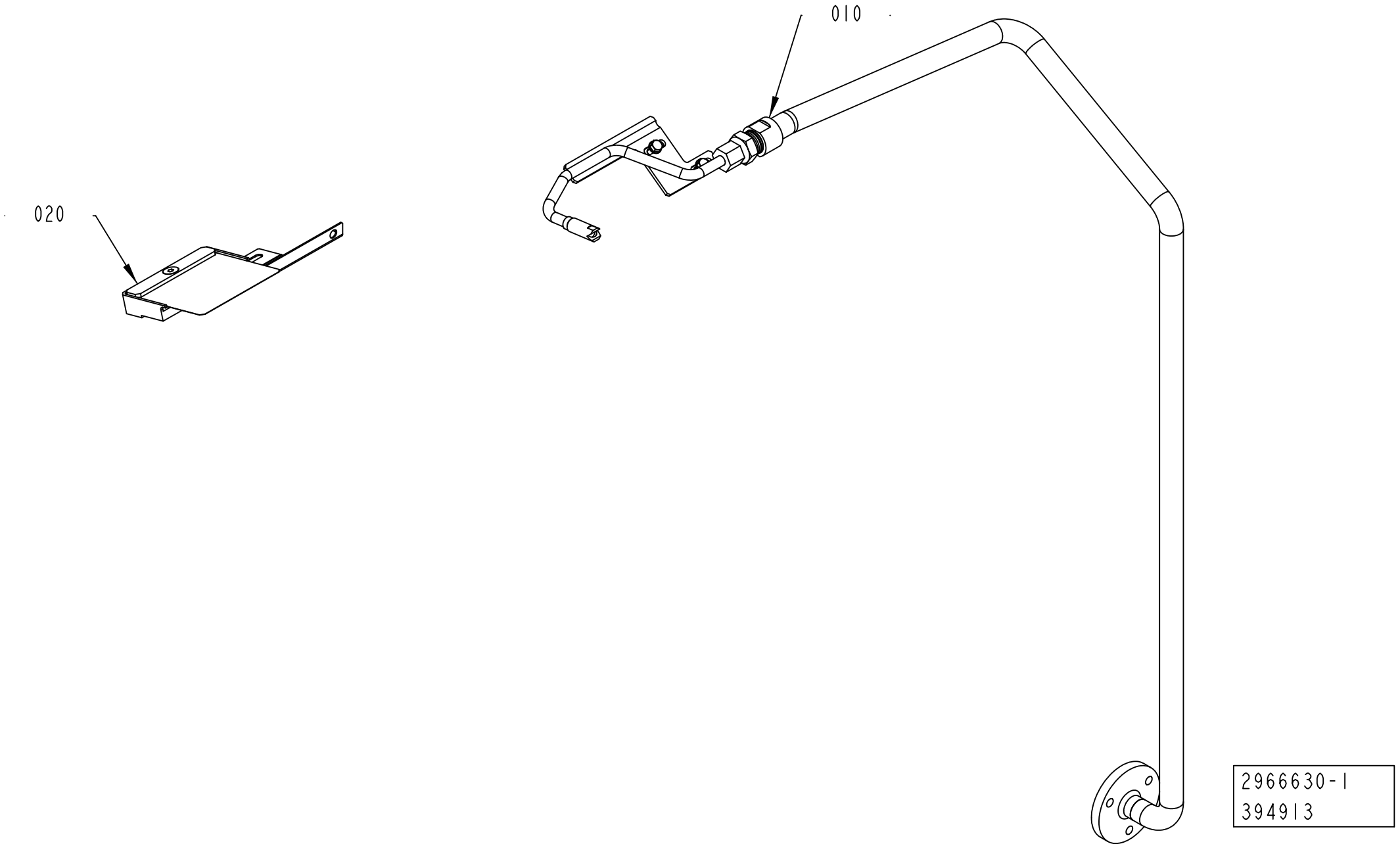
010
020
2966630-1
394913

ECM: 529451 - 20111220
Group number: 2966630-0100
Assembly Drawing: 2966630-1_1_AA

Pos	Part No	UN	Qty	Description	Page No
NOPT HELICAP2 23, NOPT STREAMCAP200, NOPT STREAMCAP330, NOPT DREAMCAP 26, TBA 200E					
NOPT NOCAP					
010	3058495-0100		1	STERILE AIR PIPE	**1-263**
PT/CF					
010	3058495-0100		1	STERILE AIR PIPE	**1-263**
020	2966625-0100		1	GUIDE	**1-267**

Pos	Part No	UN	Qty	Description	Page No

STERILE AIR PIPE

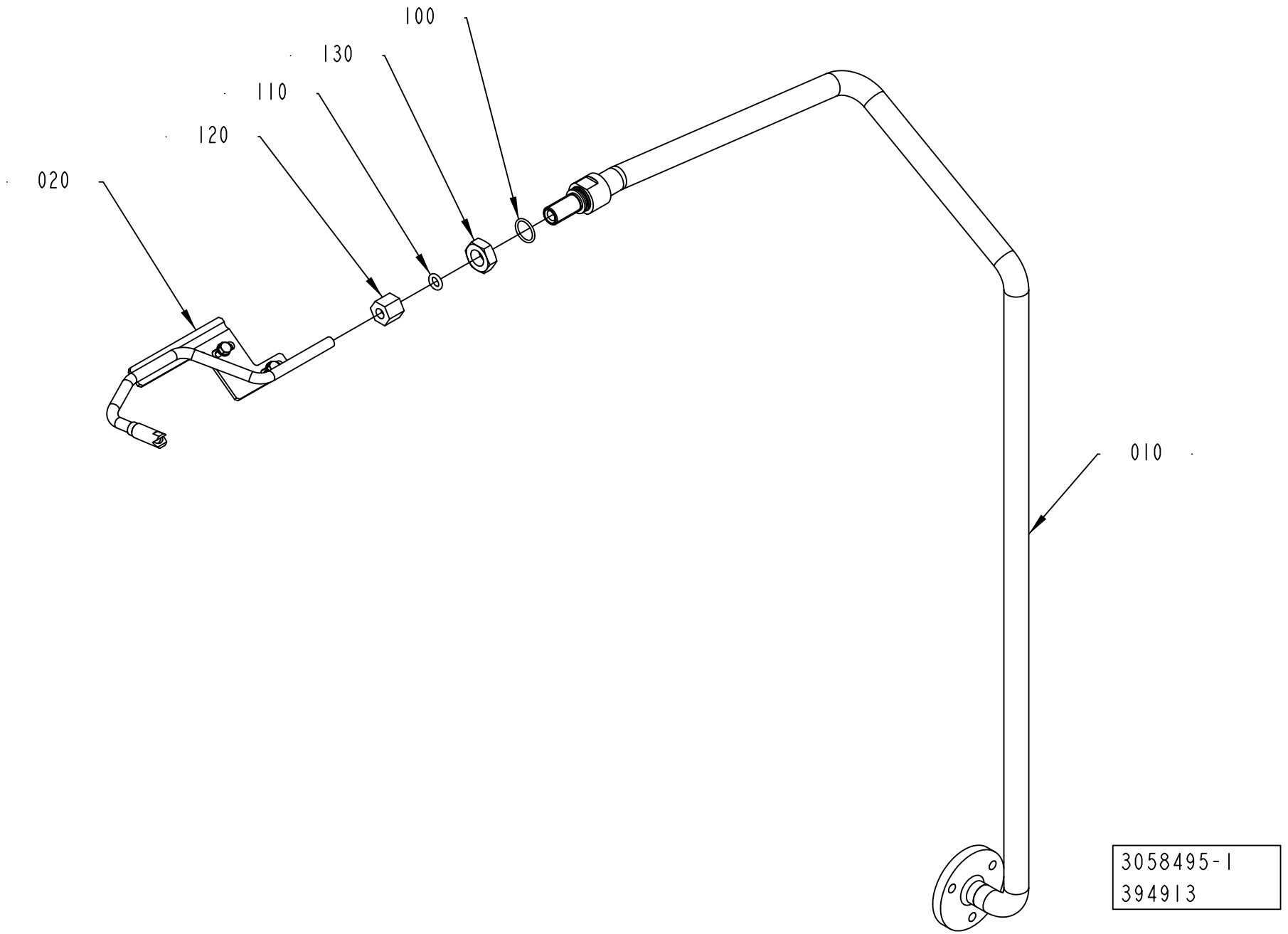

ECM: 529777 - 20111220
Group number: 3058495-0100
Assembly Drawing: 3058495-1_1_AA

Pos	Part No	UN	Qty	Description	Page No
-					
010	2966621-0000		1	PIPE	
020	2966620-0100		1	STERILE AIR PIPE	**1-265**
100	315205-0704		1	O-RING 15,60X1,78 MM	
110	315205-0808		1	O-RING 7,59X2,62 MM	
120	342703-0208		1	CONE NUT M8, NUT M-8 SS	
130	90099-0053		1	HEXAGON NUT, M14X1,5, SMS2176	

Pos	Part No	UN	Qty	Description	Page No

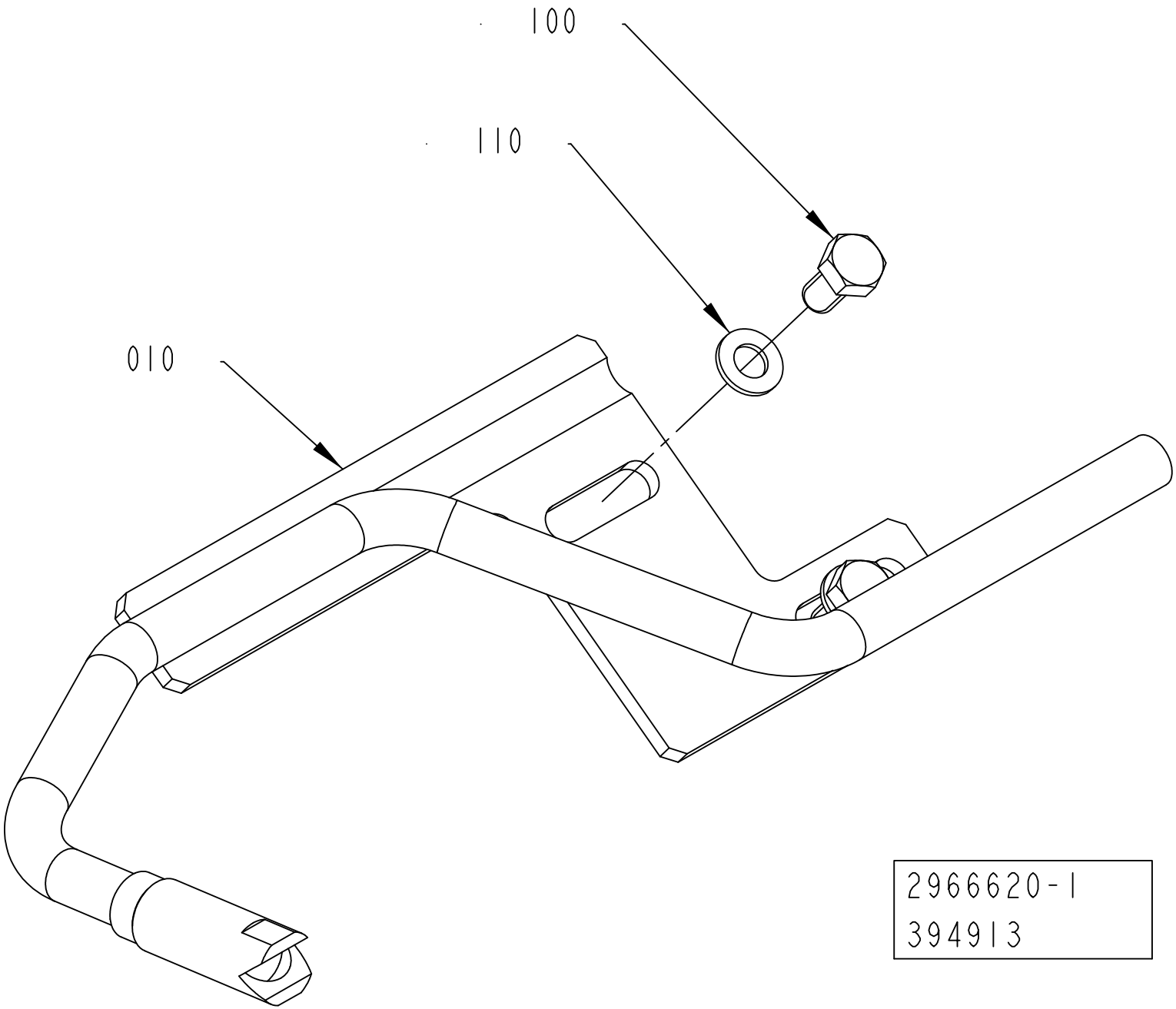
100
110
010
2966620-1
394913

ECM: 529450 - 20111220
Group number: 2966620-0100
Assembly Drawing: 2966620-1_1_AA

Pos	Part No	UN	Qty	Description	Page No
TBA 0100B, TBA 0125S, TBA 0160S, TBA 0200M, TBA 0200S, TBA 0250S, TBA 0080S					
010	3058493-0000		1	NOZZLE	
TBA 0200B, TBA 0284B, TBA 0250B, TBA 0300S, TBA 0330S, TBA 0375S					
010	2986731-0000		1	NOZZLE	
TBA 0200SQ, TPA 0330SQ, TPA 0250SQ, TPA 0200SQ, TBA 0250SQ, TPA 0125SQ, TBA 0200E					
010	2966622-0000		1	NOZZLE	
Common Parts					
100	312105-0325		2	SCREW, M6S ISO 4017 M5X10 A4 80	
110	315105-0146		2	WASHER PLAIN, 5,3X10X1 A4 BRB	

Pos	Part No	UN	Qty	Description	Page No

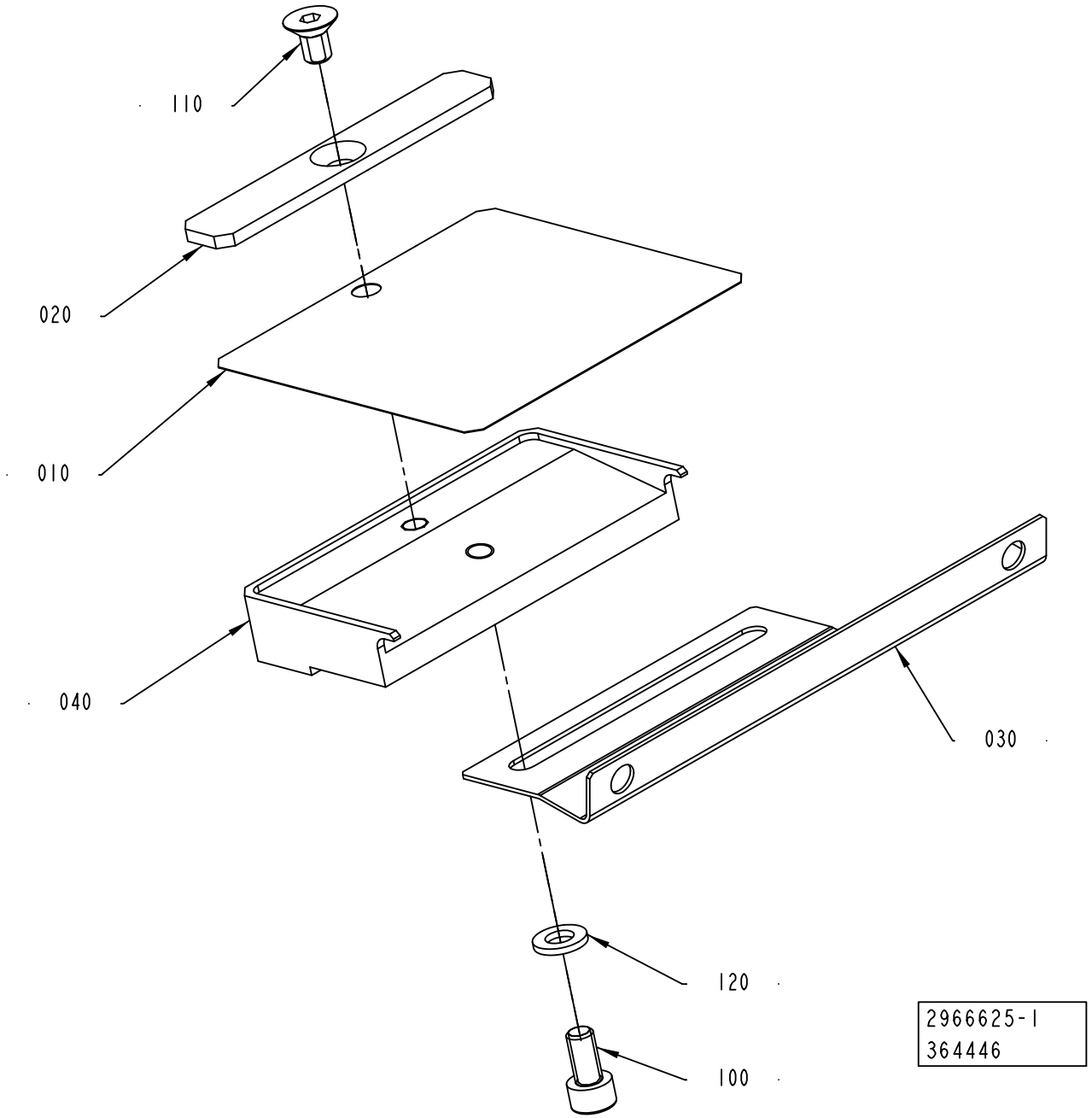
110
020
010
040
030
120
100
2966625-1
364446

ECM: 379845 - 20081219
Group number: 2966625-0100
Assembly Drawing: 2966625-1_1_AA

Pos	Part No	UN	Qty	Description	Page No
-					
010	1490714-0000		1	GUIDE	
020	1490715-0000		1	DOLLY	
030	2966623-0000		1	ANGLE BRACKET	
040	2966624-0000		1	SPRING HOLDER	
100	312115-0366		1	SCREW ISO4762 M6X12 A4 80	
110	312155-0364		1	SCREW DIN 7991 MF6S M6X10 A4 70	
120	315105-0153		1	WASHER PLAIN, 6,4X12X1,5 A4 BRB	

Pos	Part No	UN	Qty	Description	Page No

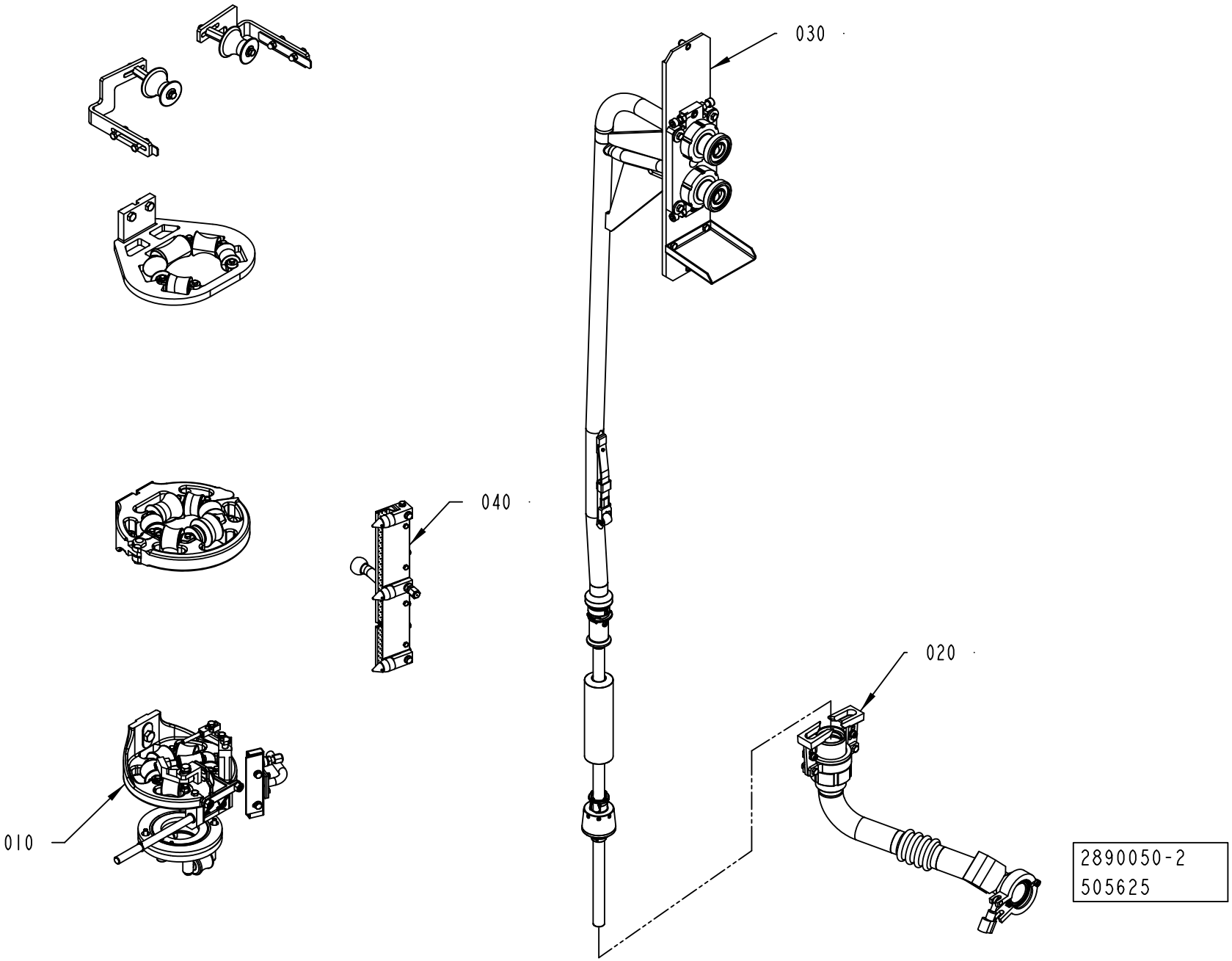
030
040
020
010
2890050-2
505625

ECM: 529775 - 20111220
Group number: 2890050-0200
Assembly Drawing: 2890050-2_1_AA

Pos	Part No	UN	Qty	Description	Page No
-					
010	2808305-0200		1	FORMING SECTION	**1-271**
020	2839259-0100		1	CLEANING CUP	**1-301**
030	2839240-0200		1	FILLING PIPE	**1-303, 1-305**
040	2808340-0200		1	AIR NOZZLE	**1-307**

Pos	Part No	UN	Qty	Description	Page No

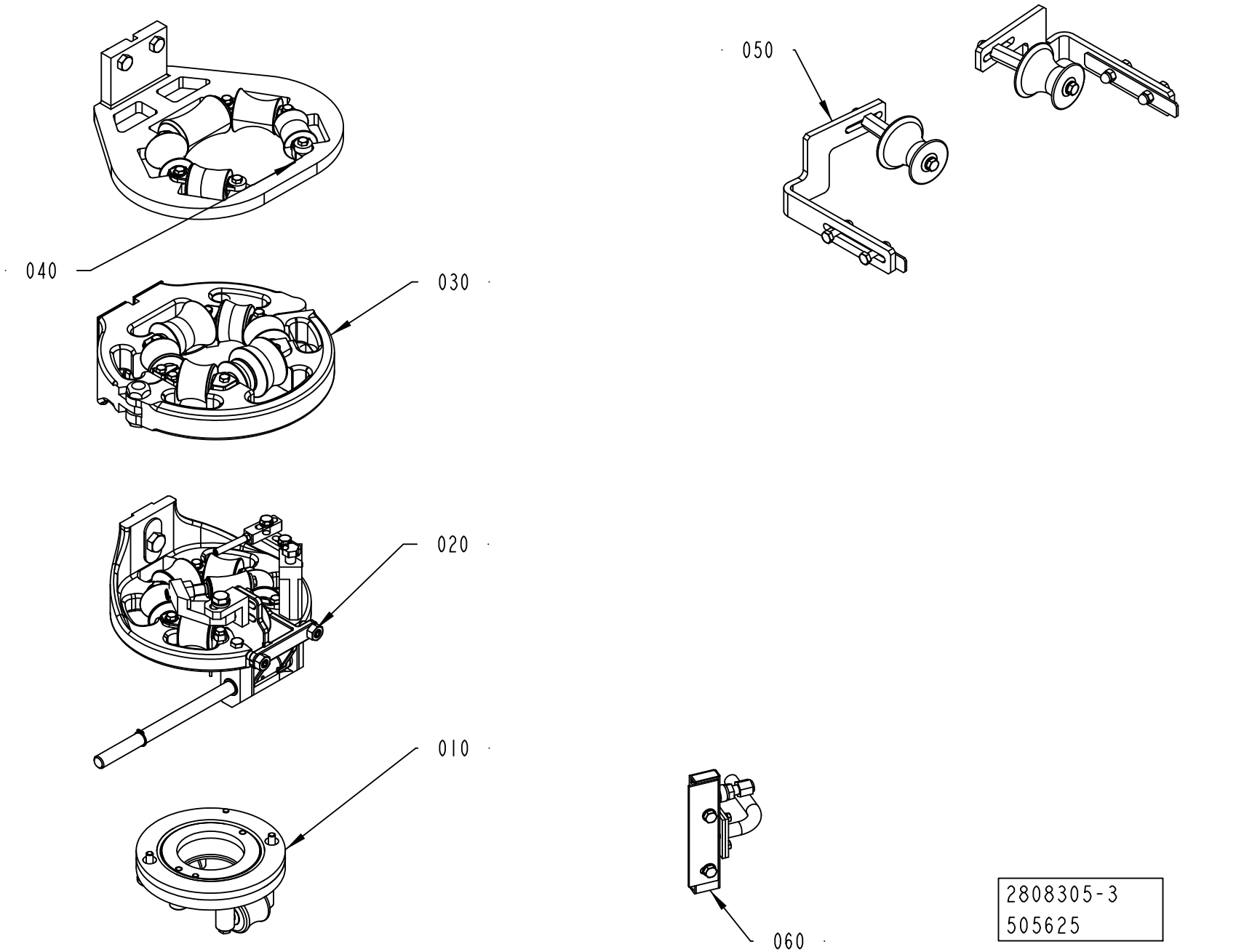

2808305-3
505625

ECM: 529770 - 20111220
Group number: 2808305-0200
Assembly Drawing: 2808305-3_1_AA

Pos	Part No	UN	Qty	Description	Page No
-					
010	2808315-0200		1	SEAL RING	**1-273, 1-275, 1-277**
020	2808290-0150		1	LOWER FORMING RING	**1-279, 1-281**
030	2808285-0150		1	UPPER FORMING RING	**1-283, 1-285, 1-287, 1-289**
040	2890090-0100		1	LOWER SUPPORT ROLLERS	**1-291**
050	2808295-0100		1	EDGE ROLLER	**1-293, 1-295, 1-297**
060	2871540-0100		1	AIR NOZZLE	**1-299**

Pos	Part No	UN	Qty	Description	Page No

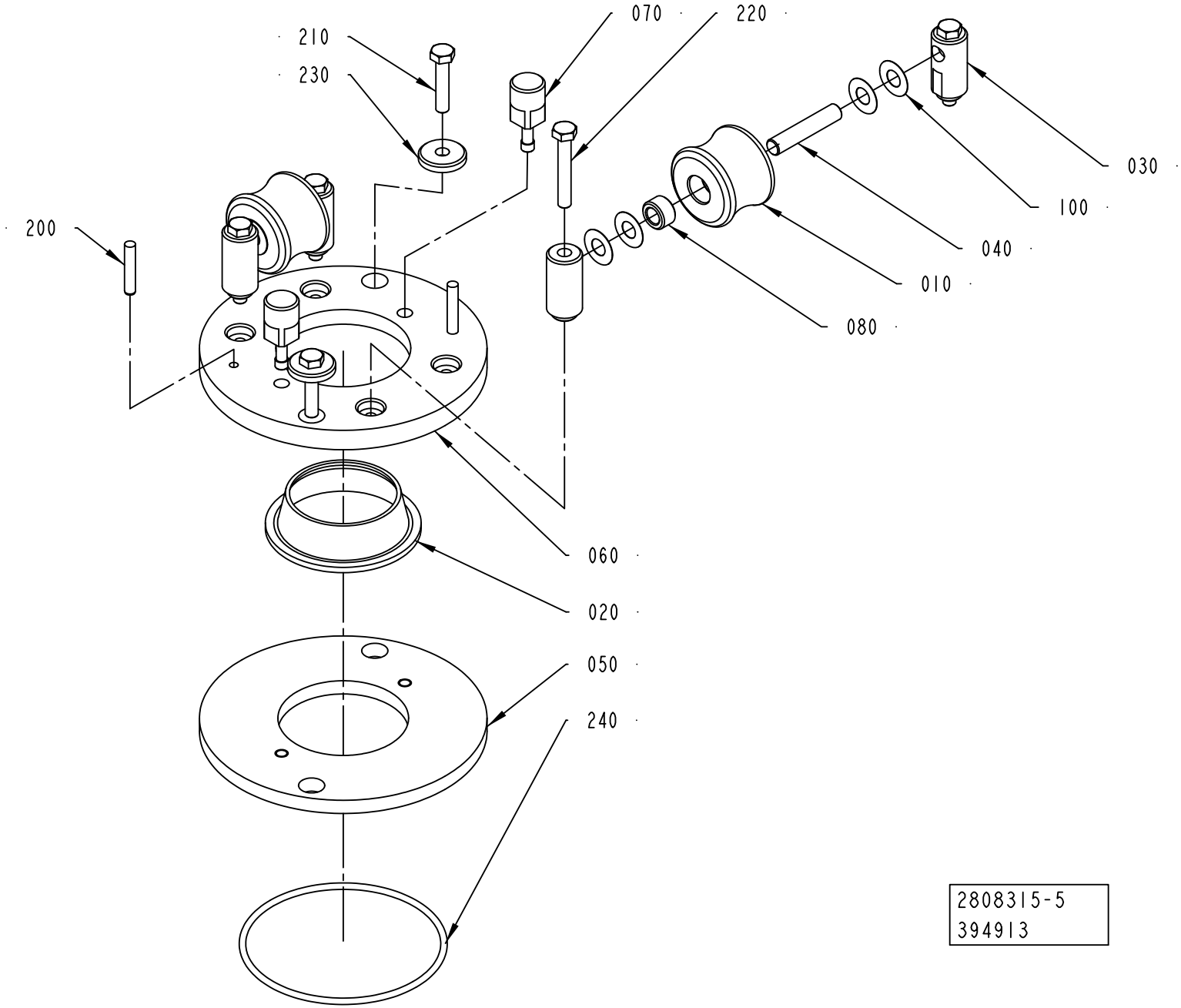
210
230
070
220
030
100
040
010
080
200
060
020
050
240
2808315-5
394913

ECM: 529771 - 20111220
Group number: 2808315-0200
Assembly Drawing: 2808315-5_1_AA

This list covers pages from 1-272 to 1-277

Pos	Part No	UN	Qty	Description	Page No
TBA 0080S (See drawing on page: 1-276)					
010	2945443-0000		2	ROLLER	
020	3021605-0000		1	SEAL RING	
030	490902-0000		4	AXLE SUPPORT	
040	263655-0018		2	SHAFT	
050	2795385-0000		1	RING	
060	2795386-0000		1	RING	
070	571540-0000		2	PIN	
080	751230-0000		4	PLAIN BEARING	
200	311103-0313		2	PARALLEL PIN ISO 2338 5M6X28 A1	
210	312115-0370		2	SCREW ISO4762 M6X20 A4 80	
240	315204-0309		1	O-RING 89,5X3 MM	
250	312105-0368		2	SCREW, M6S ISO 4017 M6X16 A4 80	
TBA 0100B, TBA 0125S (See drawing on page: 1-272)					
010	2970443-0000		2	ROLLER	
020	3023659-0000		1	SEAL RING	
030	490902-0000		4	AXLE SUPPORT	
040	490903-0000		2	SHAFT	
050	571537-0000		1	RING	
060	571538-0000		1	RING	
070	571540-0000		2	PIN	
080	751230-0000		4	PLAIN BEARING	
200	311103-0313		2	PARALLEL PIN ISO 2338 5M6X28 A1	
210	312105-0374		2	SCREW, M6S ISO 4014 M6X30 A4 80	
240	315204-0309		1	O-RING 89,5X3 MM	
TBA 0160S, TBA 0200S, TPA 0250SQ, TPA 0200SQ (See drawing on page: 1-272)					
010	2966629-0000		2	ROLLER	
020	3023522-0000		1	SEAL RING	
030	490902-0000		4	AXLE SUPPORT	
040	490903-0000		2	SHAFT	
050	571537-0000		1	RING	
060	571539-0000		1	RING	
070	571540-0000		2	PIN	
080	751230-0000		4	PLAIN BEARING	
200	311103-0313		2	PARALLEL PIN ISO 2338 5M6X28 A1	
210	312105-0374		2	SCREW, M6S ISO 4014 M6X30 A4 80	
240	315204-0309		1	O-RING 89,5X3 MM	
TBA 0200B, TBA 0200SQ, TBA 0284B, TBA 0250B, TBA 0300S, TBA 0330S, TBA 0250SQ (See drawing on page: 1-274)					
010	456796-0000		2	ROLLER	
020	3023523-0000		1	SEAL RING	
030	456797-0000		4	AXLE SUPPORT	
040	263655-0006		2	SHAFT	
050	456794-0000		1	RING	
070	752519-0002		2	PIN	
200	311103-0310		2	PARALLEL PIN ISO 2338 5M6X20 A1	
210	312105-0372		2	SCREW, M6S ISO 4017 M6X25 A4 80	
TBA 0200M, TBA 0250S, TBA 0200E (See drawing on page: 1-272)					
010	2966627-0000		2	ROLLER	
020	3023524-0000		1	SEAL RING	
030	490902-0000		4	AXLE SUPPORT	
040	490903-0000		2	SHAFT	
050	574334-0000		1	RING	
060	574335-0000		1	RING	
070	571540-0000		2	PIN	
080	751230-0000		4	PLAIN BEARING	
200	311103-0313		2	PARALLEL PIN ISO 2338 5M6X28 A1	
210	312105-0374		2	SCREW, M6S ISO 4014 M6X30 A4 80	
240	315204-0309		1	O-RING 89,5X3 MM	
TBA 0375S (See drawing on page: 1-274)					
010	3058449-0000		2	ROLLER	
020	3058448-0000		1	SEAL RING	
030	456797-0000		4	AXLE SUPPORT	
040	263655-0006		2	SHAFT	
050	456794-0000		1	RING	
070	752519-0002		2	PIN	
200	311103-0310		2	PARALLEL PIN ISO 2338 5M6X20 A1	
210	312105-0372		2	SCREW, M6S ISO 4017 M6X25 A4 80	
TPA 0125SQ (See drawing on page: 1-276)					
010	2795387-0000		2	ROLLER	
020	3021604-0000		1	SEAL RING	
030	490902-0000		4	AXLE SUPPORT	
040	263655-0018		2	SHAFT	
050	2795385-0000		1	RING	
060	2795386-0000		1	RING	
070	571540-0000		2	PIN	
080	751230-0000		4	PLAIN BEARING	
200	311103-0313		2	PARALLEL PIN ISO 2338 5M6X28 A1	
210	312115-0370		2	SCREW ISO4762 M6X20 A4 80	
240	315204-0309		1	O-RING 89,5X3 MM	
250	312105-0368		2	SCREW, M6S ISO 4017 M6X16 A4 80	
TPA 0330SQ (See drawing on page: 1-274)					
010	929284-0000		2	ROLLER	
020	3021606-0000		1	SEAL RING	

SEAL RING

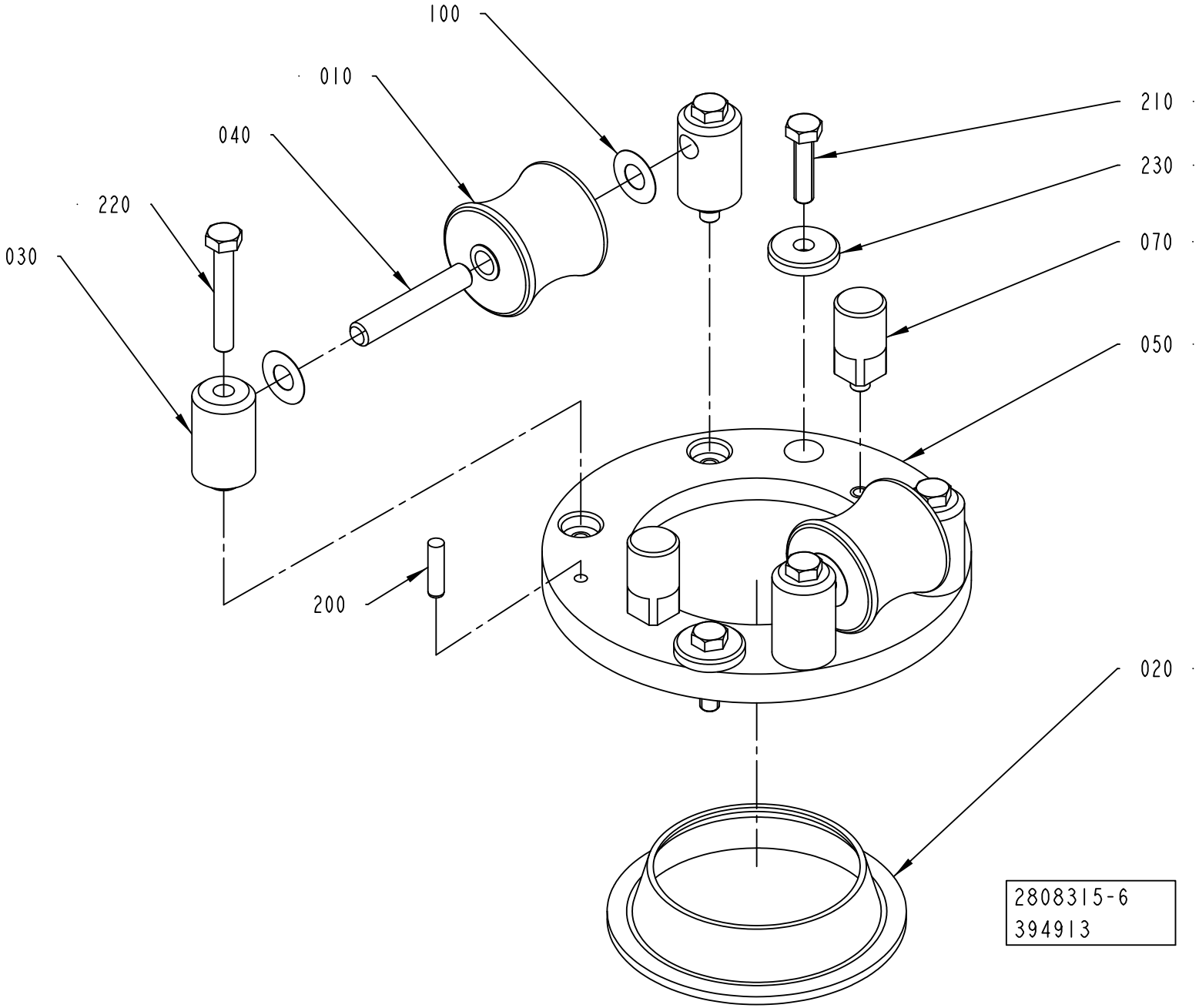

Pos	Part No	UN	Qty	Description	Page No
TPA 0330SQ (Cont'd) (See drawing on page: 1-274)					
030	456797-0000		4	AXLE SUPPORT	
040	263655-0006		2	SHAFT	
050	456794-0000		1	RING	
070	752519-0002		2	PIN	
200	311103-0310		2	PARALLEL PIN ISO 2338 5M6X20 A1	
210	312105-0372		2	SCREW, M6S ISO 4017 M6X25 A4 80	
Common Parts					
100	2033-0007		8	WASHER	
220	312105-0378		4	SCREW, M6S ISO 4014 M6X40 A4 80	
230	315125-0153		2	WASHER HIGH, TBRSB 6,4X22X4 A4	

Pos	Part No	UN	Qty	Description	Page No

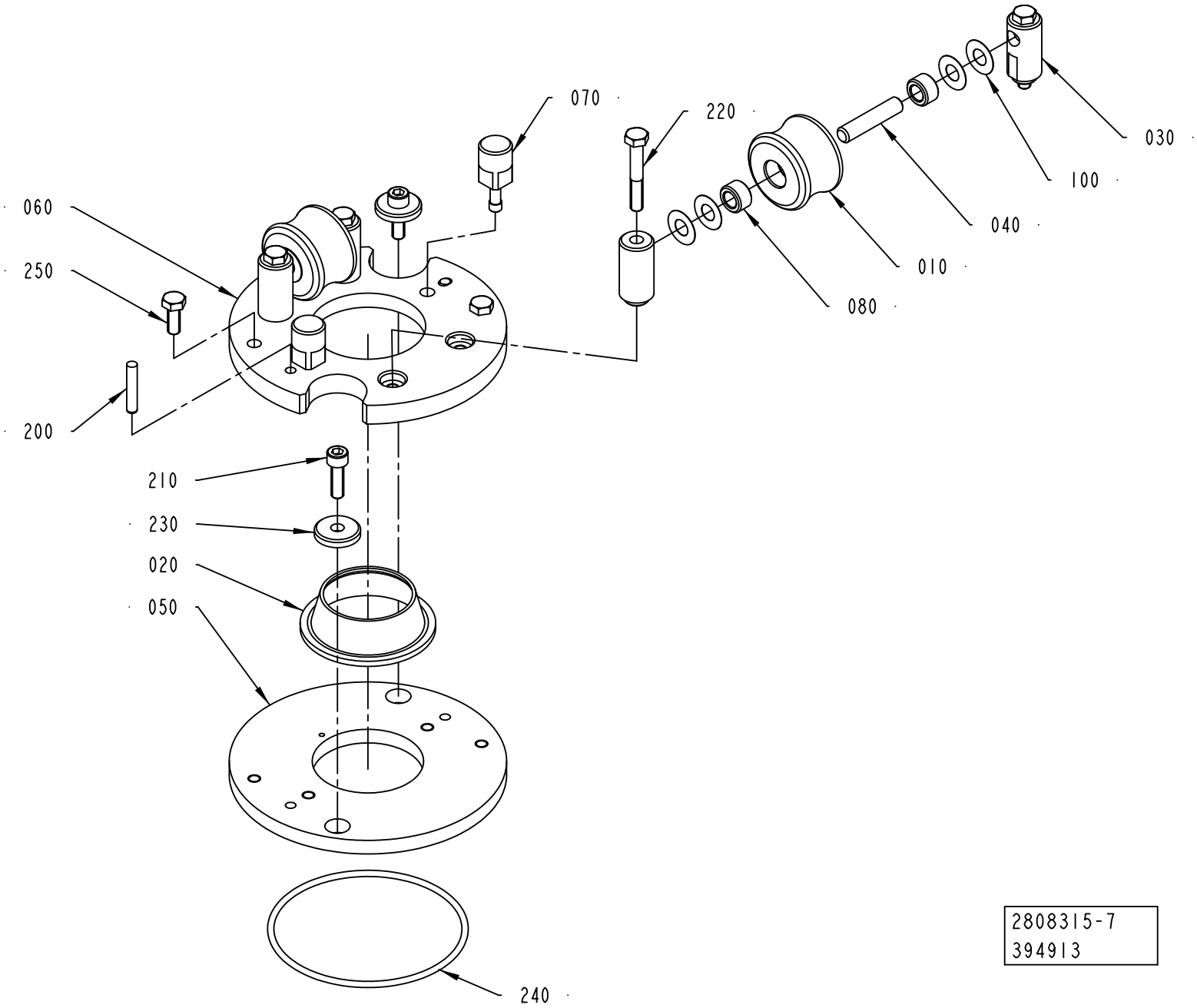
070
220
030
100
060
040
250
010
080
200
210
230
020
050
240
2808315-7
394913

ECM: 529771 - 20111220
Group number: 2808315-0200
Assembly Drawing: 2808315-7_1_AA

This list covers pages from 1-272 to 1-277

Pos	Part No	UN	Qty	Description	Page No	Pos	Part No	UN	Qty	Description	Page No

SEE PREVIOUS LISTS PAGES: 1-273, 1-275.

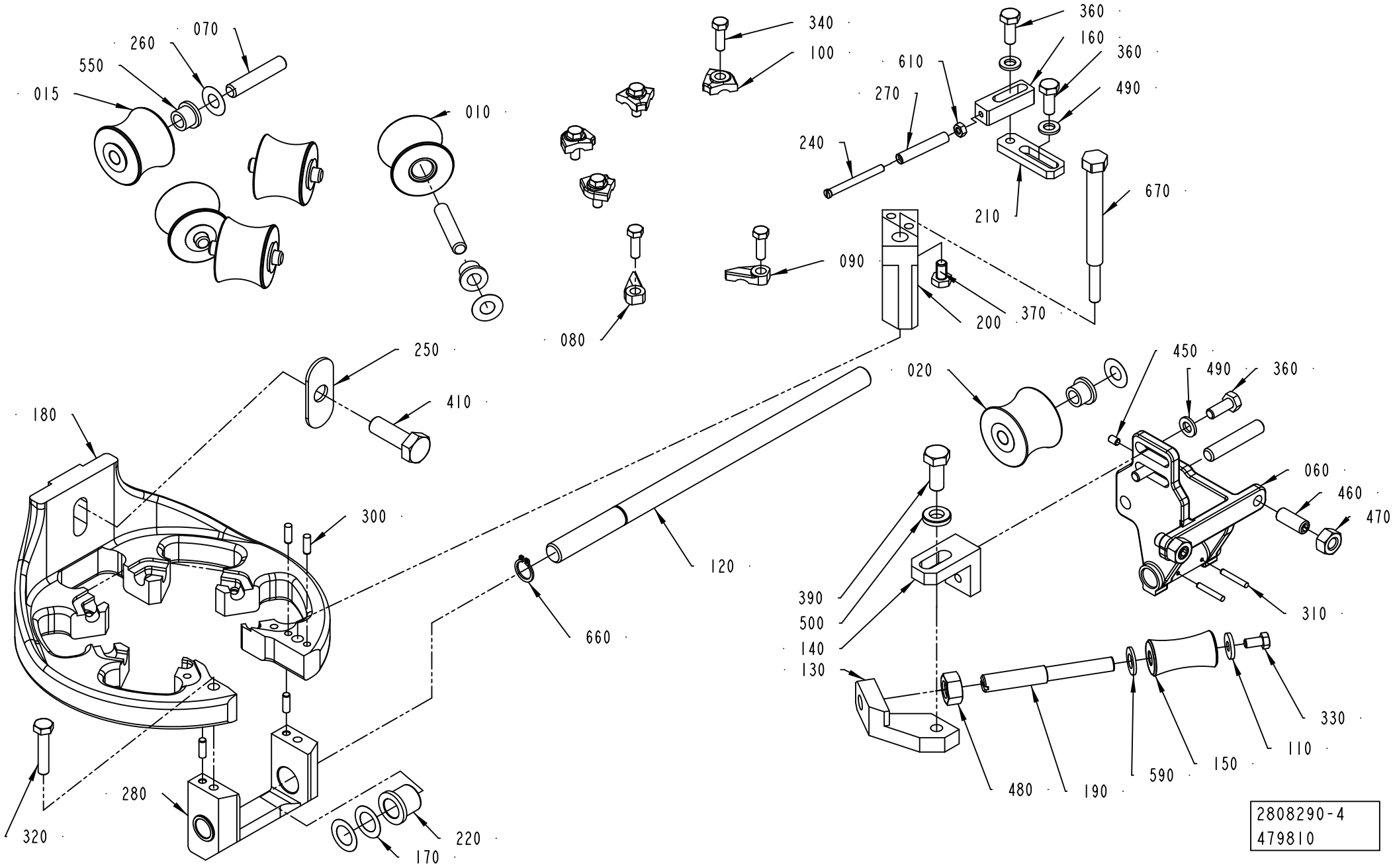
015
260
070
550
010
080
340
100
360
160
360
610
490
270
240
670
210
090
200
370
250
410
180
300
120
660
020
450
490
360
060
460
470
310
390
500
140
130
330
110
150
590
480
190
280
320
220
170
2808290-4
479810

ECM: 529769 - 20111220
Group number: 2808290-0150
Assembly Drawing: 2808290-4_1_AB

This list covers pages from 1-278 to 1-281

Pos	Part No	UN	Qty	Description	Page No
TBA 0080S (See drawing on page: 1-280)					
010	2922709-0001		4	ROLLER	
015	2945446-0001		1	ROLLER	
020	2945445-0000		1	COUNTER ROLLER	
060	2890093-0000		1	FORK	
070	752186-0013		6	SHAFT	
090	2528119-0001		1	LOCK PLATE	
100	2528123-0001		4	LOCK PLATE	
180	3127434-0000		1	LOWER FORMING RING	
200	3142889-0000		1	BRACKET	
670	3142890-0000		1	BRACKET	
TBA 0100B, TBA 0125S (See drawing on page: 1-280)					
010	752153-0000		4	FORMING ROLLER	
015	2969725-0001		1	ROLLER (STANDARD SIZE)	
020	2969939-0000		1	COUNTER ROLLER	
060	2808311-0000		1	FORK	
070	2522213-0009		6	SHAFT	
090	2528119-0001		1	LOCK PLATE	
100	2528123-0001		4	LOCK PLATE	
180	3100994-0000		1	LOWER FORMING RING	
200	3142889-0000		1	BRACKET	
670	3142890-0000		1	BRACKET	
TBA 0160S, TBA 0200S (See drawing on page: 1-278)					
010	752138-0000		4	FORMING ROLLER	
015	2966599-0001		1	ROLLER	
020	2966598-0000		1	COUNTER ROLLER	
060	2808311-0000		1	FORK	
070	2522213-0009		6	SHAFT	
090	2528119-0001		1	LOCK PLATE	
100	2528123-0001		4	LOCK PLATE	
180	3100994-0000		1	LOWER FORMING RING	
200	3142887-0000		1	BRACKET	
670	3142888-0000		1	BRACKET	
TBA 0200B, TBA 0200SQ, TBA 0250B, TBA 0330S, TBA 0250SQ (See drawing on page: 1-278)					
010	751502-0000		4	ROLLER	
015	2966602-0001		1	ROLLER	
020	2966601-0000		1	COUNTER ROLLER	
060	2808370-0000		1	FORK	
070	752186-0005		6	SHAFT	
090	2528119-0001		1	LOCK PLATE	
100	2528123-0004		4	LOCK PLATE	
180	3089599-0000		1	LOWER FORMING RING	
200	3142887-0000		1	BRACKET	
670	3142888-0000		1	BRACKET	
TBA 0200E (See drawing on page: 1-278)					
010	3089567-0001		4	ROLLER	
015	3089568-0001		1	ROLLER	
020	3089569-0000		1	ROLLER	
060	2808312-0000		1	FORK	
070	2522213-0009		6	SHAFT	
090	2528119-0001		1	LOCK PLATE	
100	2528123-0001		4	LOCK PLATE	
180	3089606-0000		1	LOWER FORMING RING	
200	3142887-0000		1	BRACKET	
670	3142888-0000		1	BRACKET	
TBA 0200M, TBA 0250S (See drawing on page: 1-278)					
010	3006310-0000		4	ROLLER	
015	3006309-0001		1	ROLLER	
020	2808308-0000		1	COUNTER ROLLER	
060	2808312-0000		1	FORK	
070	2522213-0009		6	SHAFT	
090	2528119-0001		1	LOCK PLATE	
100	2528123-0001		4	LOCK PLATE	
180	3089606-0000		1	LOWER FORMING RING	
200	3142887-0000		1	BRACKET	
670	3142888-0000		1	BRACKET	
TBA 0284B, TBA 0300S (See drawing on page: 1-278)					
010	2922717-0001		4	ROLLER	
015	2945469-0001		1	ROLLER	
020	2808307-0000		1	COUNTER ROLLER	
060	2808370-0000		1	FORK	
070	752186-0005		6	SHAFT	
090	2528119-0001		1	LOCK PLATE	
100	2528123-0004		4	LOCK PLATE	
180	3089599-0000		1	LOWER FORMING RING	
200	3142887-0000		1	BRACKET	
670	3142888-0000		1	BRACKET	
TBA 0375S (See drawing on page: 1-278)					
010	3058446-0001		4	ROLLER	
015	3058447-0001		1	ROLLER	
020	3058444-0000		1	COUNTER ROLLER	
060	3058452-0000		1	FORK	
070	752186-0005		6	SHAFT	
090	3151766-0000		1	LOCK PLATE	

Machine Type | Group Description | Used-In | Group Number | Page No

LOWER FORMING RING

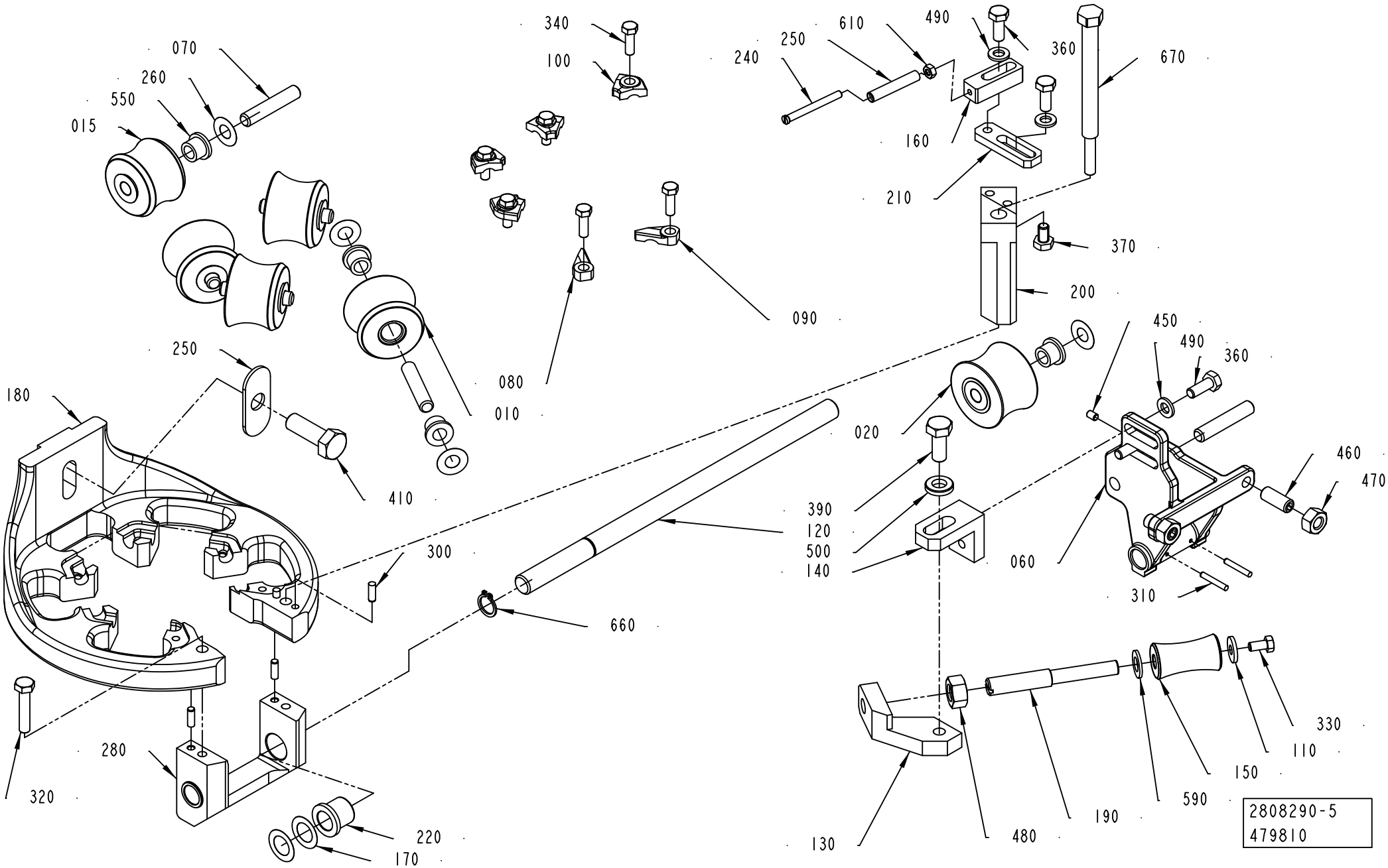

ECM: 529769 - 20111220
Group number: 2808290-0150
Assembly Drawing: 2808290-5_1_AB

This list covers pages from 1-278 to 1-281

Pos	Part No	UN	Qty	Description	Page No
TBA 0375S (Cont'd) (See drawing on page: 1-278)					
100	2528123-0002		4	LOCK PLATE	
180	3127435-0000		1	LOWER FORMING RING	
200	3142887-0000		1	BRACKET	
670	3142890-0000		1	BRACKET	
TPA 0125SQ (See drawing on page: 1-280)					
010	2890091-0001		4	ROLLER	
015	2966605-0001		1	ROLLER	
020	2966604-0000		1	COUNTER ROLLER	
060	2890093-0000		1	FORK	
070	752186-0013		6	SHAFT	
090	2528119-0001		1	LOCK PLATE	
100	2528123-0001		4	LOCK PLATE	
180	3127434-0000		1	LOWER FORMING RING	
200	3142889-0000		1	BRACKET	
670	3142890-0000		1	BRACKET	
TPA 0250SQ, TPA 0200SQ (See drawing on page: 1-280)					
010	2922767-0001		4	ROLLER	
015	2945467-0001		1	ROLLER	
020	2945466-0000		1	COUNTER ROLLER	
060	2808311-0000		1	FORK	
070	2522213-0009		6	SHAFT	
090	2528119-0001		1	LOCK PLATE	
100	2528123-0001		4	LOCK PLATE	
180	3100994-0000		1	LOWER FORMING RING	
200	3142889-0000		1	BRACKET	
670	3142890-0000		1	BRACKET	
TPA 0330SQ (See drawing on page: 1-280)					
010	929279-0000		4	ROLLER	
015	2986698-0001		1	ROLLER	
020	2986699-0000		1	COUNTER ROLLER	
060	2808370-0000		1	FORK	
070	752186-0005		6	SHAFT	
090	2528119-0001		1	LOCK PLATE	
100	2528123-0004		4	LOCK PLATE	
180	3089599-0000		1	LOWER FORMING RING	
200	3142889-0000		1	BRACKET	
670	3142890-0000		1	BRACKET	
Common Parts					
080	2528118-0001		1	LOCK PLATE	
110	27815-0000		1	WASHER	
120	3127549-0000		1	SHAFT	
130	257042-0000		1	BRACKET	
140	257043-0000		1	ANGLE BRACKET	
150	2890043-0000		1	ROLLER	
160	3120863-0000		1	PIN	
170	752038-0000		4	SHIM	
190	2808318-0000		1	SHAFT2781168-0000	
210	3120862-0000		1	BRACKET	
220	2808434-0000		2	BUSHING	
240	2906064-0000		1	SHAFT	
250	3089589-0000		1	WASHER	
260	2033-0011		24	WASHER	
270	2906065-0000		1	ROLLER	
280	3100995-0000		1	SUPPORT	
300	311103-0268		4	PARALLEL PIN ISO 2338 4M6X12 A1	
310	311103-0238		2	PARALLEL PIN ISO 2338 3M6X20 A1	
320	312105-0374		1	SCREW, M6S ISO 4014 M6X30 A4 80	
330	312105-0325		1	SCREW, M6S ISO 4017 M5X10 A4 80	
340	312105-0329		6	SCREW, M6S ISO 4017 M5X16 A4 80	
360	312105-0368		4	SCREW, M6S ISO 4017 M6X16 A4 80	
370	312105-0364		1	SCREW, M6S ISO 4017 M6X10 A4 80	
390	312105-0451		1	SCREW, M6S ISO 4017 M8X20 A4 80	
410	312105-0495		1	SCREW, M6S ISO 4017 M10X30 A4 80	
450	312318-0285		1	SET SCREW, CUP END ISO4029 M4X6 A4	
460	312318-0451		2	SET SCREW, CUP END ISO4029 M8X20 A4	
470	312605-0318		2	HEXAGON NUT, M6M M8 A280	
480	312605-0320		1	HEXAGON NUT, M6M M10 A280	
490	315105-0153		4	WASHER PLAIN, 6,4X12X1,5 A4 BRB	
500	315115-0165		1	WASHER PLAIN, TBRB 8,4/16 H=3	
550	90240-0172		12	FLANGE BUSHING, 8X12X10 MM	
590	315105-0165		1	WASHER PLAIN, 8,4X16X1,6 A4 BRB	
610	312605-0312		1	HEXAGON NUT, M6M M4 A280	
660	315751-0109		1	RETAINING RING FOR SHAFT DIN 471 12 SS	

Machine Type	Group Description	Used-In	Group Number	Page No

UPPER FORMING RING

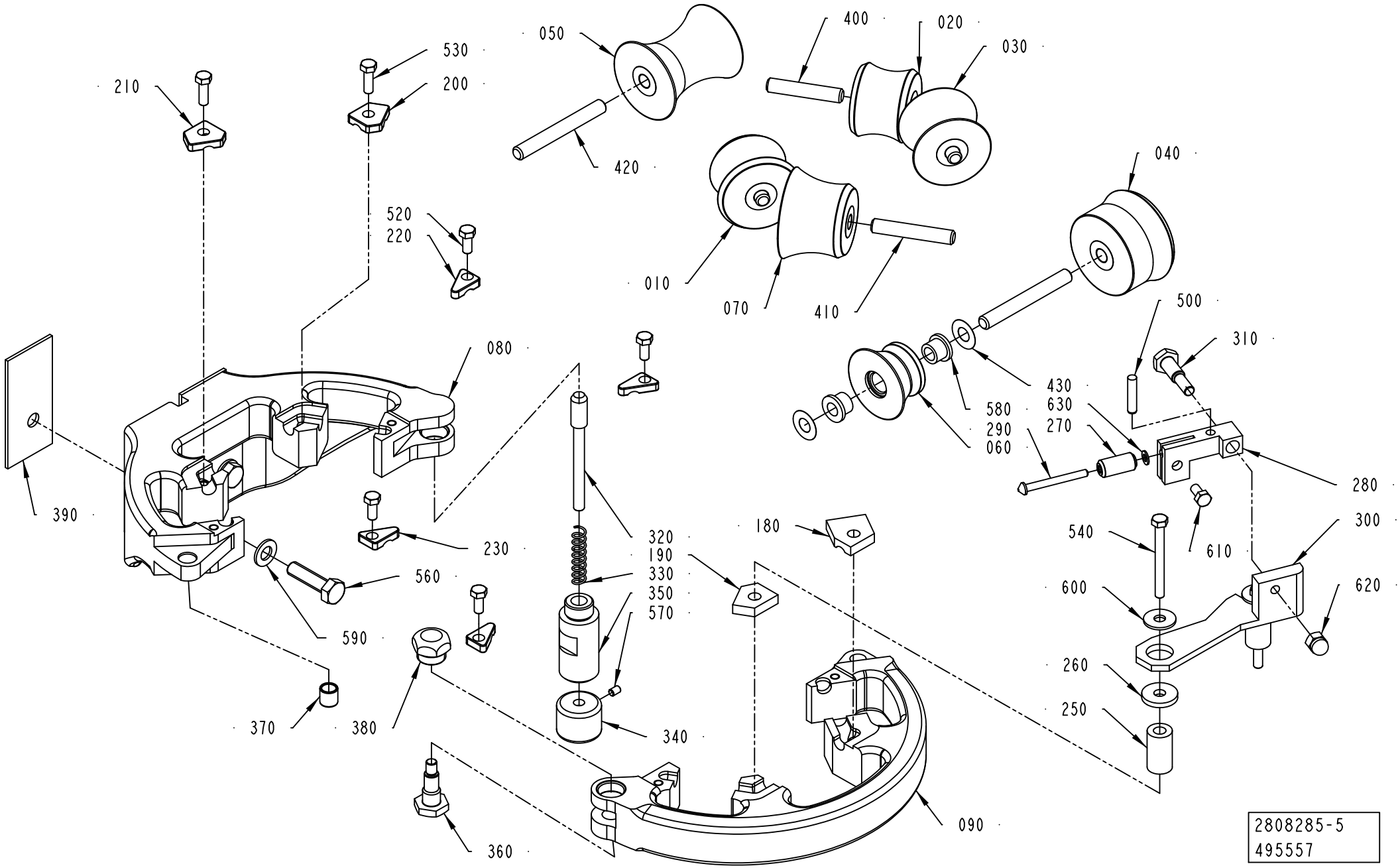

Pos	Part No	UN	Qty	Description	Page No
TBA 0080S (See drawing on page: 1-288)					
010	2945450-0000		1	ROLLER	
020	2945451-0000		1	ROLLER	
030	2945453-0000		1	ROLLER	
040	2945447-0000		1	ROLLER	
050	2945449-0000		1	ROLLER	
060	2945448-0000		1	ROLLER	
070	2945452-0000		1	ROLLER	
080	3127436-0000		1	UPPER FORMING RING	
090	3127439-0000		1	UPPER FORMING RING	
200	2528123-0009		3	LOCK PLATE	
220	2528119-0001		2	LOCK PLATE	
230	2528118-0001		2	LOCK PLATE	
240	2890110-0000		1	SHAFT	
390	3127442-0000		6	SHIM	
400	752186-0002		4	SHAFT	
410	752186-0005		1	SHAFT	
440	752156-0000		2	FLANGE BUSHING	
450	2890114-0000		1	LOCK PLATE	
530	312105-0329		4	SCREW, M6S ISO 4017 M5X16 A4 80	
580	90240-0172		12	FLANGE BUSHING, 8X12X10 MM	
TBA 0100B, TBA 0125S (See drawing on page: 1-284)					
010	2966613-0000		1	ROLLER	
020	2966614-0000		1	ROLLER	
030	752150-0000		1	FORMING ROLLER	
040	2966615-0000		1	ROLLER	
050	2966612-0000		1	ROLLER	
060	2871536-0000		1	ROLLER	
070	752149-0000		1	FORMING ROLLER	
080	3089600-0000		1	UPPER FORMING RING	
090	3089601-0000		1	UPPER FORMING RING	
180	456872-0000		1	LOCK PLATE	
200	1279090-0000		2	LOCKING PLATE	
210	1279086-0000		1	LOCKING PLATE	
220	1279093-0000		2	LOCKING PLATE	
230	1279094-0000		2	LOCKING PLATE	
240	752185-0000		1	SHAFT	
390	3089607-0000		2	SHIM	
400	752186-0003		4	SHAFT	
420	752186-0006		1	SHAFT	
440	752156-0000		2	FLANGE BUSHING	
530	312105-0329		4	SCREW, M6S ISO 4017 M5X16 A4 80	
580	90240-0172		12	FLANGE BUSHING, 8X12X10 MM	
TBA 0160S, TBA 0200S, TPA 0250SQ, TPA 0200SQ (See drawing on page: 1-284)					
010	752132-0000		1	FORMING ROLLER	
020	752133-0000		1	FORMING ROLLER	
030	752135-0000		1	FORMING ROLLER	
040	2871532-0000		1	ROLLER	
050	752131-0000		1	FORMING ROLLER	
060	2846108-0000		1	FORMING ROLLER	
070	752134-0000		1	FORMING ROLLER	
080	3127429-0000		1	UPPER FORMING RING	
090	3089601-0000		1	UPPER FORMING RING	
180	456872-0000		1	LOCK PLATE	
200	1279090-0000		2	LOCKING PLATE	
210	1279086-0000		1	LOCKING PLATE	
220	1279093-0000		2	LOCKING PLATE	
230	1279094-0000		2	LOCKING PLATE	
240	752185-0000		1	SHAFT	
390	3089607-0000		2	SHIM	
400	752186-0003		4	SHAFT	
420	752186-0006		1	SHAFT	
440	752156-0000		2	FLANGE BUSHING	
530	312105-0329		4	SCREW, M6S ISO 4017 M5X16 A4 80	
580	90240-0172		12	FLANGE BUSHING, 8X12X10 MM	
TBA 0200B, TBA 0200SQ, TBA 0284B, TBA 0250B, TBA 0300S, TBA 0330S, TBA 0250SQ (See drawing on page: 1-282)					
010	751499-0000		1	ROLL	
020	751497-0000		1	ROLL	
030	751496-0000		1	ROLL	
040	2912637-0000		1	ROLLER	
050	751498-0000		1	ROLL	
060	3005112-0000		1	ROLLER	
070	751500-0000		1	ROLL	
080	3089602-0000		1	UPPER FORMING RING	
090	3089603-0000		1	UPPER FORMING RING	
180	456199-0000		1	LOCK PLATE	
190	456198-0000		1	LOCK PLATE	
200	1279090-0000		1	LOCKING PLATE	
210	1279086-0000		1	LOCKING PLATE	
220	1279093-0000		2	LOCKING PLATE	
230	1279094-0000		2	LOCKING PLATE	
250	456181-0000		2	SPACER	
260	257175-0000		2	WASHER	

Machine Type | Group Description | Used-In | Group Number | Page No

UPPER FORMING RING

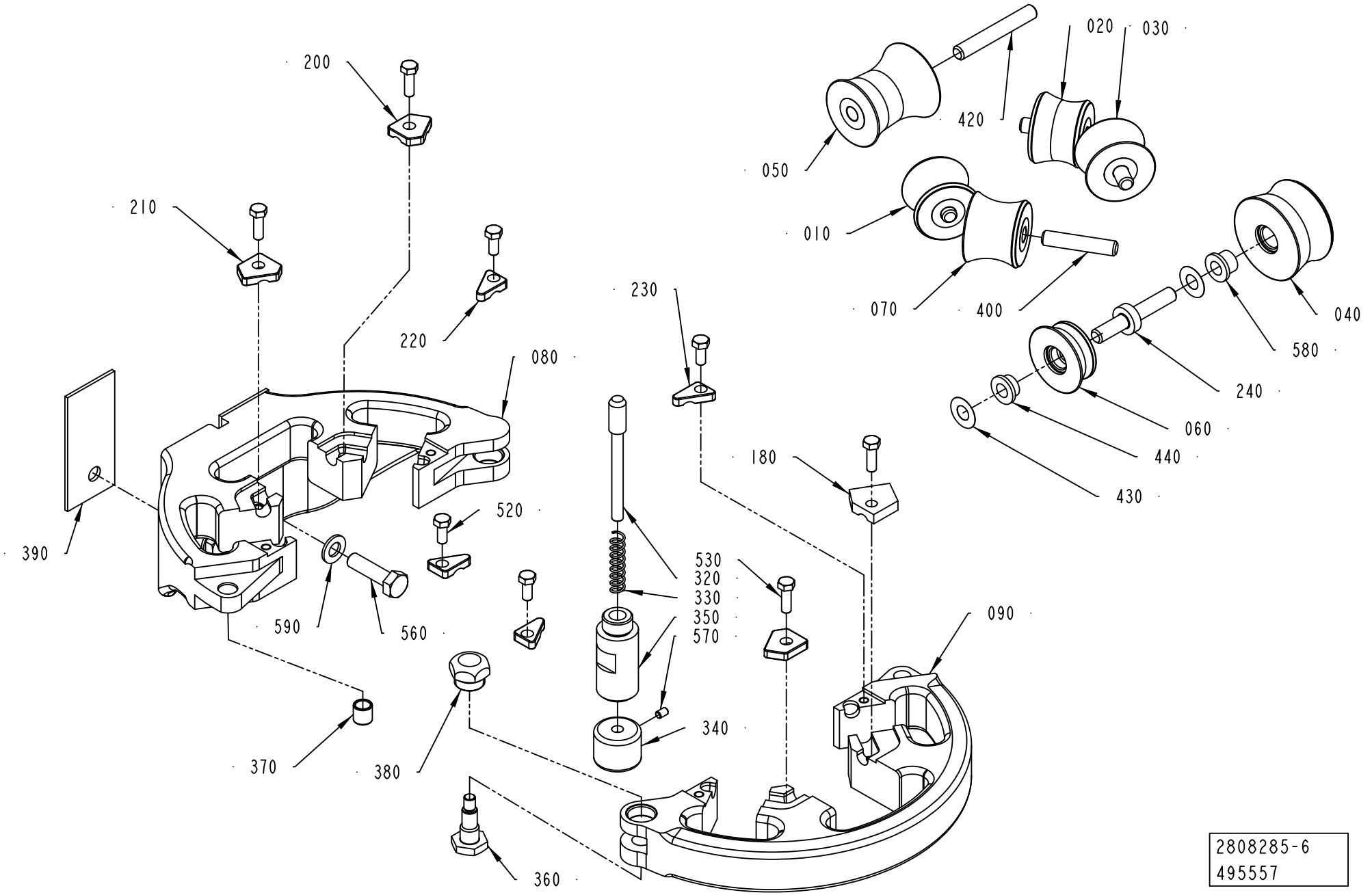

2808285-6
495557

Pos	Part No	UN	Qty	Description	Page No
TBA 0200SQ, TBA 0284B, TBA 0250B, TBA 0300S, TBA 0330S, TBA 0250SQ, TBA 0200B (Cont'd) (See drawing on page: 1-282)					
270	2890044-0000		1	ROLLER	
280	451148-0000		1	BRACKET	
290	451149-0000		1	SHAFT	
300	2808293-0000		1	BRACKET	
310	2808294-0000		1	SCREW	
390	3089608-0000		2	SHIM	
400	752186-0004		2	SHAFT	
410	752186-0005		2	SHAFT	
420	752186-0014		2	SHAFT	
500	311103-1312		1	PARALLEL PIN ISO 2338 5M6X24 A1	
530	312105-0329		2	SCREW, M6S ISO 4017 M5X16 A4 80	
540	312105-0341		2	SCREW, M6S ISO 4014 M5X50 A4 80	
580	90240-0172		14	FLANGE BUSHING, 8X12X10 MM	
600	90005-0060		2	WASHER PLAIN, RBS 6,4/M6)/18,H=1,5	
610	312105-0325		1	SCREW, M6S ISO 4017 M5X10 A4 80	
620	312705-0316		1	HEX. DOMED CAP MHM-6 M6 A280	
630	315105-0136		1	WASHER PLAIN, 4,3X9X0,8 A4 BRB	
TBA 0200M, TBA 0250S, TBA 0200E (See drawing on page: 1-286)					
010	574397-0000		1	ROLL	
020	2986736-0000		1	ROLL	
030	574400-0000		1	ROLL	
040	2871530-0000		1	ROLLER	
050	2986735-0000		1	ROLL	
060	2871534-0000		1	ROLLER	
070	574403-0000		1	ROLL	
080	3089604-0000		1	UPPER FORMING RING	
090	3089605-0000		1	UPPER FORMING RING	
180	574393-0000		1	LOCK PLATE	
190	574394-0000		1	LOCK PLATE	
200	1279090-0000		1	LOCKING PLATE	
210	1279086-0000		1	LOCKING PLATE	
220	1279093-0000		2	LOCKING PLATE	
230	1279094-0000		2	LOCKING PLATE	
240	574395-0000		1	SHAFT	
250	456181-0000		2	SPACER	
260	257175-0000		2	WASHER	
270	2890044-0000		1	ROLLER	
280	451148-0000		1	BRACKET	
290	451149-0000		1	SHAFT	
300	2808299-0000		1	BRACKET	
310	2808294-0000		1	SCREW	
390	3089607-0000		2	SHIM	
400	752186-0004		4	SHAFT	
420	752186-0006		1	SHAFT	
440	752156-0000		2	FLANGE BUSHING	
500	311103-1312		1	PARALLEL PIN ISO 2338 5M6X24 A1	
530	312105-0329		2	SCREW, M6S ISO 4017 M5X16 A4 80	
540	312105-0341		2	SCREW, M6S ISO 4014 M5X50 A4 80	
580	90240-0172		12	FLANGE BUSHING, 8X12X10 MM	
600	90005-0060		2	WASHER PLAIN, RBS 6,4/M6)/18,H=1,5	
610	312105-0325		1	SCREW, M6S ISO 4017 M5X10 A4 80	
620	312705-0316		1	HEX. DOMED CAP MHM-6 M6 A280	
630	315105-0136		1	WASHER PLAIN, 4,3X9X0,8 A4 BRB	
TBA 0375S (See drawing on page: 1-282)					
010	3058472-0000		1	ROLLER	
020	3058470-0000		1	ROLLER	
030	3058469-0000		1	ROLLER	
040	3058474-0000		1	ROLLER	
050	3058471-0000		1	ROLLER	
060	3058475-0000		1	ROLLER	
070	3058473-0000		1	ROLLER	
080	3127437-0000		1	UPPER FORMING RING	
090	3127440-0000		1	UPPER FORMING RING	
180	3058476-0000		1	LOCK PLATE	
190	3058468-0000		1	LOCK PLATE	
200	1279090-0000		1	LOCKING PLATE	
210	1279086-0000		1	LOCKING PLATE	
220	1279093-0000		2	LOCKING PLATE	
230	1279094-0000		2	LOCKING PLATE	
250	456181-0000		2	SPACER	
260	257175-0000		2	WASHER	
270	2890044-0000		1	ROLLER	
280	451148-0000		1	BRACKET	
290	451149-0000		1	SHAFT	
300	3058480-0000		1	BRACKET	
310	2808294-0000		1	SCREW	
390	3089608-0000		2	SHIM	
400	752186-0021		2	SHAFT	
410	752186-0019		2	SHAFT	
420	752186-0014		2	SHAFT	
500	311103-1312		1	PARALLEL PIN ISO 2338 5M6X24 A1	
530	312105-0329		2	SCREW, M6S ISO 4017 M5X16 A4 80	

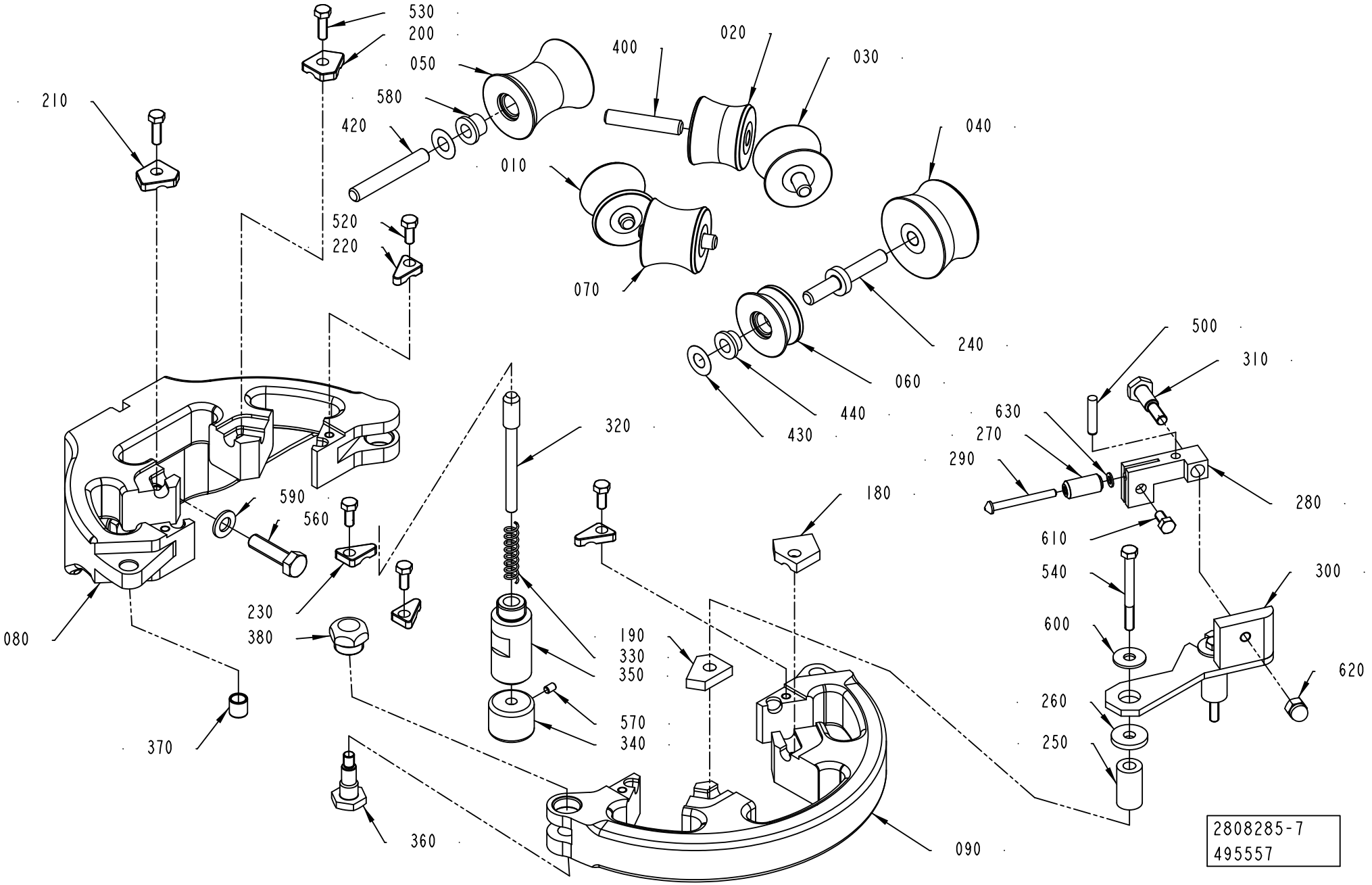
530
200
050
580
420
210
400
020
030
040
010
070
520
220
240
060
440
430
500
310
630
270
290
280
610
540
300
600
620
260
250
320
180
190
330
350
570
340
590
560
230
380
080
370
360
090
2808285-7
495557

ECM: 529768 - 20111220
Group number: 2808285-0150
Assembly Drawing: 2808285-7_1_AA

This list covers pages from 1-282 to 1-289

Pos	Part No	UN	Qty	Description	Page No
TBA 0375S (Cont'd) (See drawing on page: 1-282)					
540	312105-0341		2	SCREW, M6S ISO 4014 M5X50 A4 80	
580	90240-0172		14	FLANGE BUSHING, 8X12X10 MM	
600	90005-0060		2	WASHER PLAIN, RBS 6,4/M6)/18,H=1,5	
610	312105-0325		1	SCREW, M6S ISO 4017 M5X10 A4 80	
TPA 0125SQ (See drawing on page: 1-288)					
010	2890105-0000		1	ROLLER	
020	2890106-0000		1	ROLLER	
030	2890108-0000		1	ROLLER	
040	2890102-0000		1	ROLLER	
050	2890104-0000		1	ROLLER	
060	2890103-0000		1	ROLLER	
070	2890107-0000		1	ROLLER	
080	3127436-0000		1	UPPER FORMING RING	
090	3127439-0000		1	UPPER FORMING RING	
200	2528123-0009		3	LOCK PLATE	
220	2528119-0001		2	LOCK PLATE	
230	2528118-0001		2	LOCK PLATE	
240	2890110-0000		1	SHAFT	
390	3127442-0000		6	SHIM	
400	752186-0002		4	SHAFT	
410	752186-0005		1	SHAFT	
440	752156-0000		2	FLANGE BUSHING	
450	2890114-0000		1	LOCK PLATE	
530	312105-0329		4	SCREW, M6S ISO 4017 M5X16 A4 80	
580	90240-0172		12	FLANGE BUSHING, 8X12X10 MM	
TPA 0330SQ (See drawing on page: 1-286)					
010	3037924-0000		1	ROLLER	
020	3037926-0000		1	ROLLER	
030	3078547-0000		1	ROLLER	
040	3058432-0000		1	ROLLER	
050	3037925-0000		1	ROLLER	
060	3058433-0000		1	ROLLER	
070	3058434-0000		1	ROLLER	
080	3127438-0000		1	UPPER FORMING RING	
090	3127441-0000		1	UPPER FORMING RING	
180	574338-0000		1	LOCK PLATE	
190	574338-0000		1	LOCK PLATE	
200	2528123-0008		1	LOCK PLATE	
210	2528123-0008		1	LOCK PLATE	
220	2528119-0001		2	LOCK PLATE	
230	2528118-0001		2	LOCK PLATE	
240	574395-0000		1	SHAFT	
250	456181-0000		2	SPACER	
260	257175-0000		2	WASHER	
270	2890044-0000		1	ROLLER	
280	451148-0000		1	BRACKET	
290	451149-0000		1	SHAFT	
300	3058435-0000		1	BRACKET	
310	2808294-0000		1	SCREW	
390	3089608-0000		2	SHIM	
400	752186-0021		4	SHAFT	
420	2522213-0006		1	SHAFT	
440	752156-0000		2	FLANGE BUSHING	
500	311103-1312		1	PARALLEL PIN ISO 2338 5M6X24 A1	
530	312105-0329		2	SCREW, M6S ISO 4017 M5X16 A4 80	
540	312105-0341		2	SCREW, M6S ISO 4014 M5X50 A4 80	
580	90240-0172		12	FLANGE BUSHING, 8X12X10 MM	
600	90005-0060		2	WASHER PLAIN, RBS 6,4/M6)/18,H=1,5	
610	312105-0325		1	SCREW, M6S ISO 4017 M5X10 A4 80	
620	312705-0316		1	HEX. DOMED CAP MHM-6 M6 A280	
630	315105-0136		1	WASHER PLAIN, 4,3X9X0,8 A4 BRB	
Common Parts					
320	35918-0000		1	SHAFT	
330	35919-0000		1	COMPRESSION SPRING	
340	36325-0000		1	KNOB	
350	2808289-0000		1	SHAFT	
360	2808291-0000		1	SCREW	
370	2808292-0000		1	BUSHING	
380	2808298-0000		1	PLUG	
430	2033-0011		14	WASHER	
520	312105-0327		4	SCREW, M6S ISO 4017 M5X12 A4 80	
560	312105-0455		2	SCREW, M6S ISO 4017 M8X30 A4 80	
570	312318-0285		1	SET SCREW, CUP END ISO4029 M4X6 A4	
590	315105-0165		2	WASHER PLAIN, 8,4X16X1,6 A4 BRB	

Machine Type | Group Description | Used-In | Group Number | Page No

UPPER FORMING RING

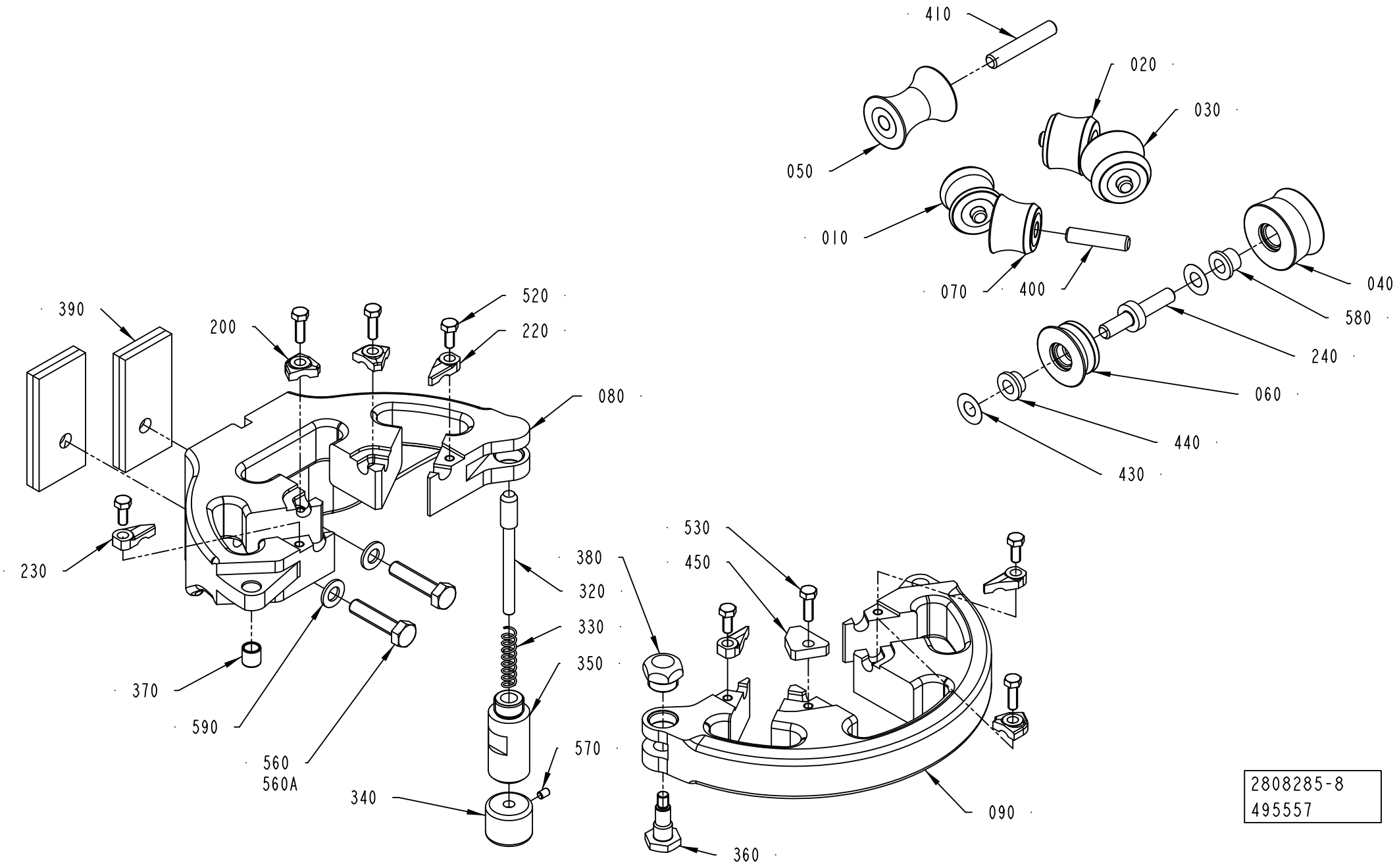

2808285-8
495557

ECM: 529768 - 20111220
Group number: 2808285-0150
Assembly Drawing: 2808285-8_1_AA

This list covers pages from 1-282 to 1-289

Pos	Part No	UN	Qty	Description	Page No
SEE PREVIOUS LISTS PAGES: 1-283, 1-285, 1-287.					

Pos	Part No	UN	Qty	Description	Page No

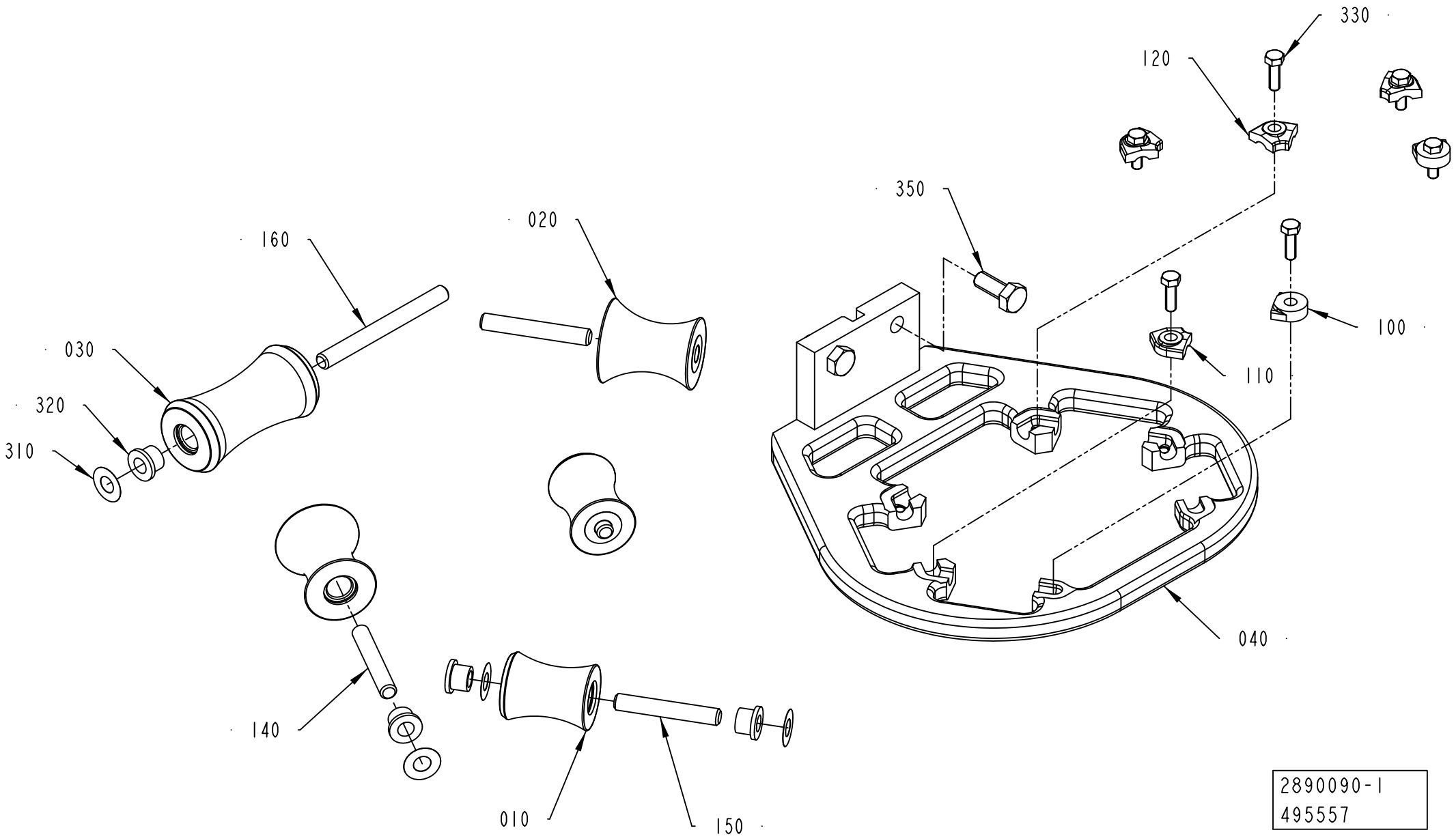
330
120
350
020
160
100
030
110
320
310
040
140
010
150
2890090-1
495557

ECM: 529776 - 20111220
Group number: 2890090-0100
Assembly Drawing: 2890090-1_1_AC

Pos	Part No	UN	Qty	Description	Page No
TBA 0080S					
010	2906119-0000		2	ROLLER	
020	2906120-0000		2	ROLLER	
030	2906121-0000		1	ROLLER	
040	2986716-0000		1	LOWER SUPPORT ROLLERS	
100	2532895-0002		2	LOCK PLATE	
110	2528123-0001		4	LOCK PLATE	
140	752186-0004		2	SHAFT	
150	752186-0020		2	SHAFT	
160	752186-0022		1	SHAFT	
TBA 0100B, TBA 0125S					
010	2976256-0000		2	ROLLER	
020	2906120-0000		2	ROLLER	
030	2906121-0000		1	ROLLER	
040	2906118-0000		1	LOWER SUPPORT ROLLERS	
100	2532895-0011		2	LOCK PLATE	
110	2528123-0001		4	LOCK PLATE	
140	752186-0004		2	SHAFT	
150	752186-0020		2	SHAFT	
160	752186-0022		1	SHAFT	
TBA 0160S, TBA 0200S, TPA 0250SQ, TPA 0200SQ					
010	2986772-0000		2	ROLLER	
020	2986773-0000		2	ROLLER	
030	2986774-0000		1	ROLLER	
040	2986776-0000		1	SUPPORT RING	
100	2532895-0002		2	LOCK PLATE	
110	2528123-0001		2	LOCK PLATE	
120	2528123-0003		2	LOCK PLATE	
140	2522213-0004		2	SHAFT	
150	752186-0021		2	SHAFT	
160	2522213-0012		1	SHAFT	
TBA 0200B, TBA 0200SQ, TBA 0284B, TBA 0250B, TBA 0300S, TBA 0330S, TPA 0330SQ, TBA 0250SQ					
010	2930304-0000		2	ROLLER	
020	2906104-0000		2	ROLLER	
030	2906105-0000		1	ROLLER	
040	2913350-0000		1	SUPPORT RING	
100	2532895-0002		2	LOCK PLATE	
110	2528123-0001		2	LOCK PLATE	
120	2528123-0003		2	LOCK PLATE	
140	2522213-0015		2	SHAFT	
150	752186-0019		2	SHAFT	
160	2522213-0003		1	SHAFT	
TBA 0200M, TBA 0250S, TBA 0200E					
010	2906103-0000		2	ROLLER	
020	2906104-0000		2	ROLLER	
030	2986739-0000		1	ROLLER	
040	2986740-0000		1	LOWER SUPPORT ROLLERS	
100	2532895-0002		2	LOCK PLATE	
110	2528123-0001		2	LOCK PLATE	
120	2528123-0003		2	LOCK PLATE	
140	2522213-0015		2	SHAFT	
150	752186-0019		2	SHAFT	
160	2522213-0018		1	SHAFT	
TBA 0375S					
010	3058481-0000		2	ROLLER	
020	3058479-0000		2	ROLLER	
030	3058478-0000		1	ROLLER	
040	3058477-0000		1	SUPPORT RING	
100	2532895-0002		2	LOCK PLATE	
110	2528123-0001		2	LOCK PLATE	
120	2528123-0003		2	LOCK PLATE	
140	2522213-0015		2	SHAFT	
150	752186-0006		2	SHAFT	
160	2522213-0020		1	SHAFT	
TPA 0125SQ					
010	2906119-0000		2	ROLLER	
020	2906120-0000		2	ROLLER	
030	2906121-0000		1	ROLLER	
040	2945457-0000		1	LOWER SUPPORT ROLLERS	
100	2532895-0002		2	LOCK PLATE	
110	2528123-0001		4	LOCK PLATE	
140	752186-0004		2	SHAFT	
150	752186-0020		2	SHAFT	
160	752186-0022		1	SHAFT	
Common Parts					
310	2033-0011		10	WASHER	
320	90240-0172		10	FLANGE BUSHING, 8X12X10 MM	
330	312105-0329		6	SCREW, M6S ISO 4017 M5X16 A4 80	
350	312105-0451		2	SCREW, M6S ISO 4017 M8X20 A4 80	

Machine Type	Group Description	Used-In	Group Number	Page No

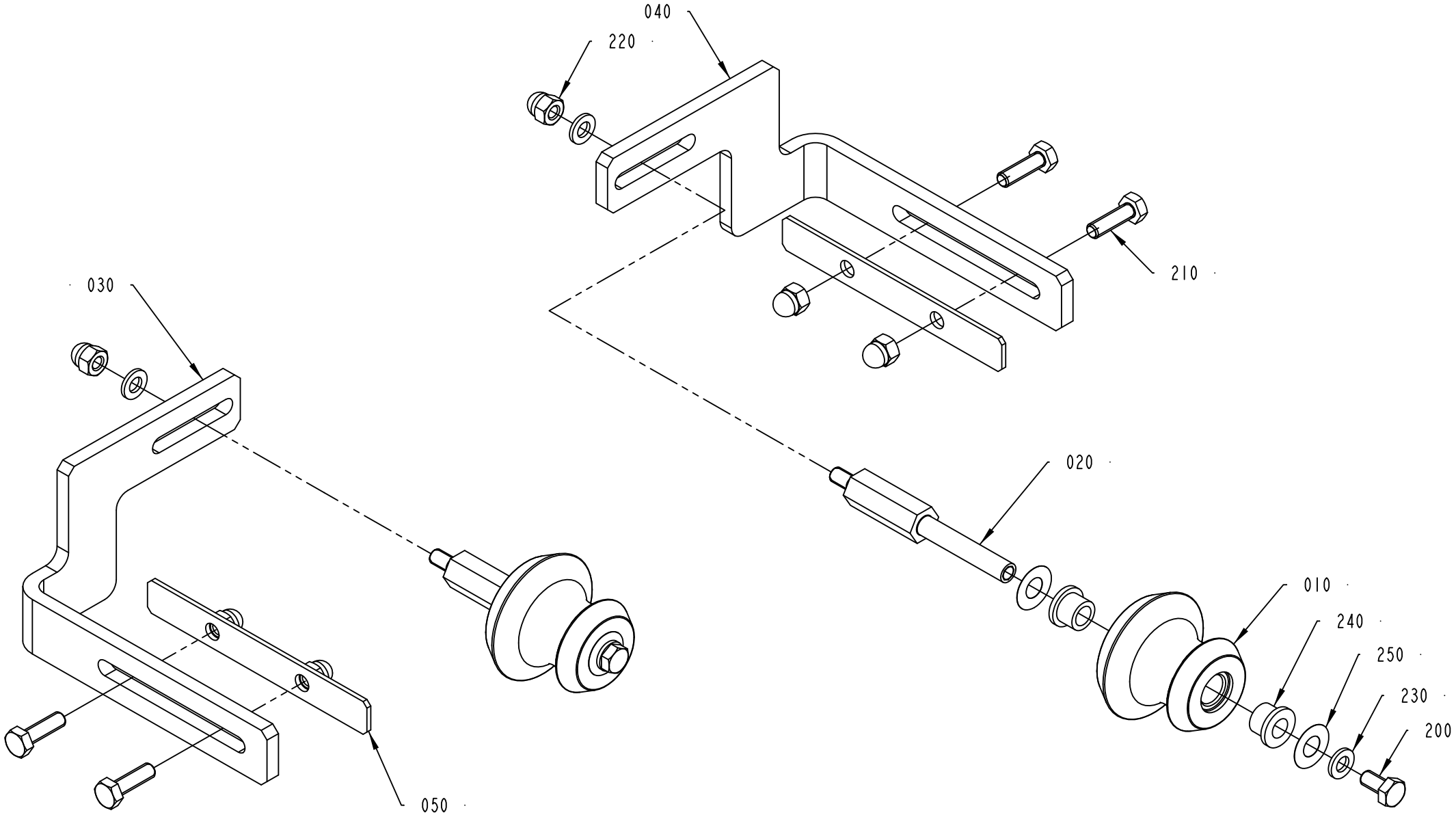
040
220
210
030
020
010
240
250
230
200
050
2808295-1
368835

Pos	Part No	UN	Qty	Description	Page No
TBA 0100B, TBA 0125S (See drawing on page: 1-296)					
010	2640354-0000		2	ROLLER	
020	2890119-0000		2	SHAFT	
030	2808319-0000		1	BRACKET	
040	2863999-0000		1	BRACKET	
260	2033-0008		8	WASHER	
TBA 0160S, TBA 0200M, TBA 0200B, TBA 0200SQ, TBA 0200S, TBA 0250S, TBA 0284B, TBA 0250B, TBA 0300S, TBA 0330S, TPA 0330SQ, TPA 0250SQ, TPA 0200SQ, TBA 0250SQ, TBA 0200E (See drawing on page: 1-294)					
010	2640354-0000		2	ROLLER	
020	2863998-0000		2	SHAFT	
030	2945431-0000		1	BRACKET	
040	2945432-0000		1	BRACKET	
TBA 0375S (See drawing on page: 1-294)					
010	2640354-0000		2	ROLLER	
020	2863998-0000		2	SHAFT	
030	3099357-0000		1	BRACKET	
040	3100273-0000		1	BRACKET	
TPA 0125SQ, TBA 0080S (See drawing on page: 1-292)					
010	2890115-0000		2	ROLLER	
020	2890119-0000		2	SHAFT	
030	2808319-0000		1	BRACKET	
040	2863999-0000		1	BRACKET	
Common Parts					
050	2528114-0000		2	COVER PLATE	
200	312105-0366		2	SCREW, M6S ISO 4017 M6X12 A4 80	
210	312105-0370		4	SCREW, M6S ISO 4017 M6X20 A4 80	
220	312705-0316		6	HEX. DOMED CAP MHM-6 M6 A280	
230	315105-0153		4	WASHER PLAIN, 6,4X12X1,5 A4 BRB	
240	90240-0172		4	FLANGE BUSHING, 8X12X10 MM	
250	2033-0011		4	WASHER	

Pos	Part No	UN	Qty	Description	Page No

EDGE ROLLER

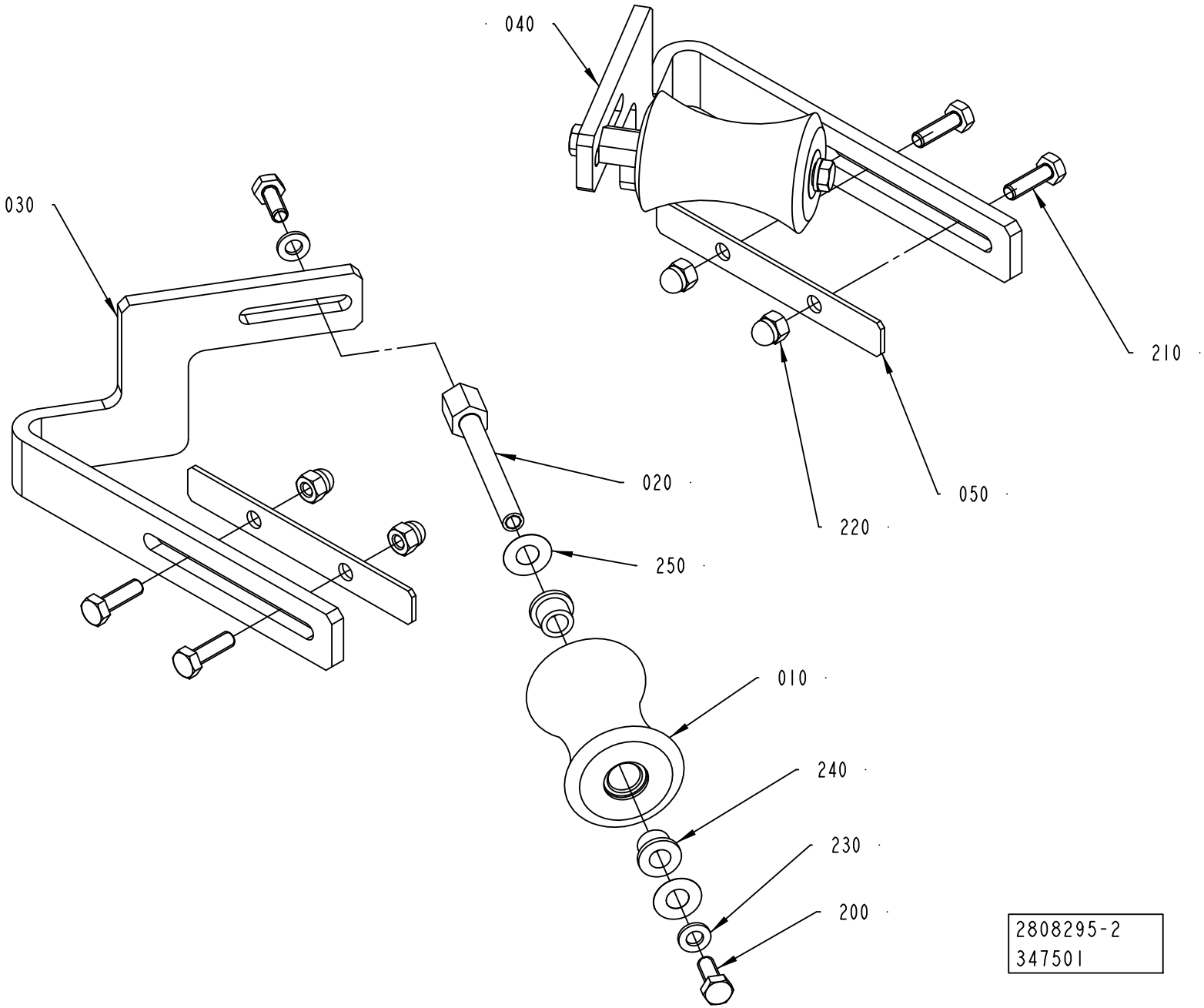

Pos	Part No	UN	Qty	Description	Page No
TBA 0100B, TBA 0125S (See drawing on page: 1-296)					
010	2640354-0000		2	ROLLER	
020	2890119-0000		2	SHAFT	
030	2808319-0000		1	BRACKET	
040	2863999-0000		1	BRACKET	
260	2033-0008		8	WASHER	
TBA 0160S, TBA 0200M, TBA 0200B, TBA 0200SQ, TBA 0200S, TBA 0250S, TBA 0284B, TBA 0250B, TBA 0300S, TBA 0330S, TPA 0330SQ, TPA 0250SQ, TPA 0200SQ, TBA 0250SQ, TBA 0200E (See drawing on page: 1-294)					
010	2640354-0000		2	ROLLER	
020	2863998-0000		2	SHAFT	
030	2945431-0000		1	BRACKET	
040	2945432-0000		1	BRACKET	
TBA 0375S (See drawing on page: 1-294)					
010	2640354-0000		2	ROLLER	
020	2863998-0000		2	SHAFT	
030	3099357-0000		1	BRACKET	
040	3100273-0000		1	BRACKET	
TPA 0125SQ, TBA 0080S (See drawing on page: 1-292)					
010	2890115-0000		2	ROLLER	
020	2890119-0000		2	SHAFT	
030	2808319-0000		1	BRACKET	
040	2863999-0000		1	BRACKET	
Common Parts					
050	2528114-0000		2	COVER PLATE	
200	312105-0366		2	SCREW, M6S ISO 4017 M6X12 A4 80	
210	312105-0370		4	SCREW, M6S ISO 4017 M6X20 A4 80	
220	312705-0316		6	HEX. DOMED CAP MHM-6 M6 A280	
230	315105-0153		4	WASHER PLAIN, 6,4X12X1,5 A4 BRB	
240	90240-0172		4	FLANGE BUSHING, 8X12X10 MM	
250	2033-0011		4	WASHER	

Pos	Part No	UN	Qty	Description	Page No

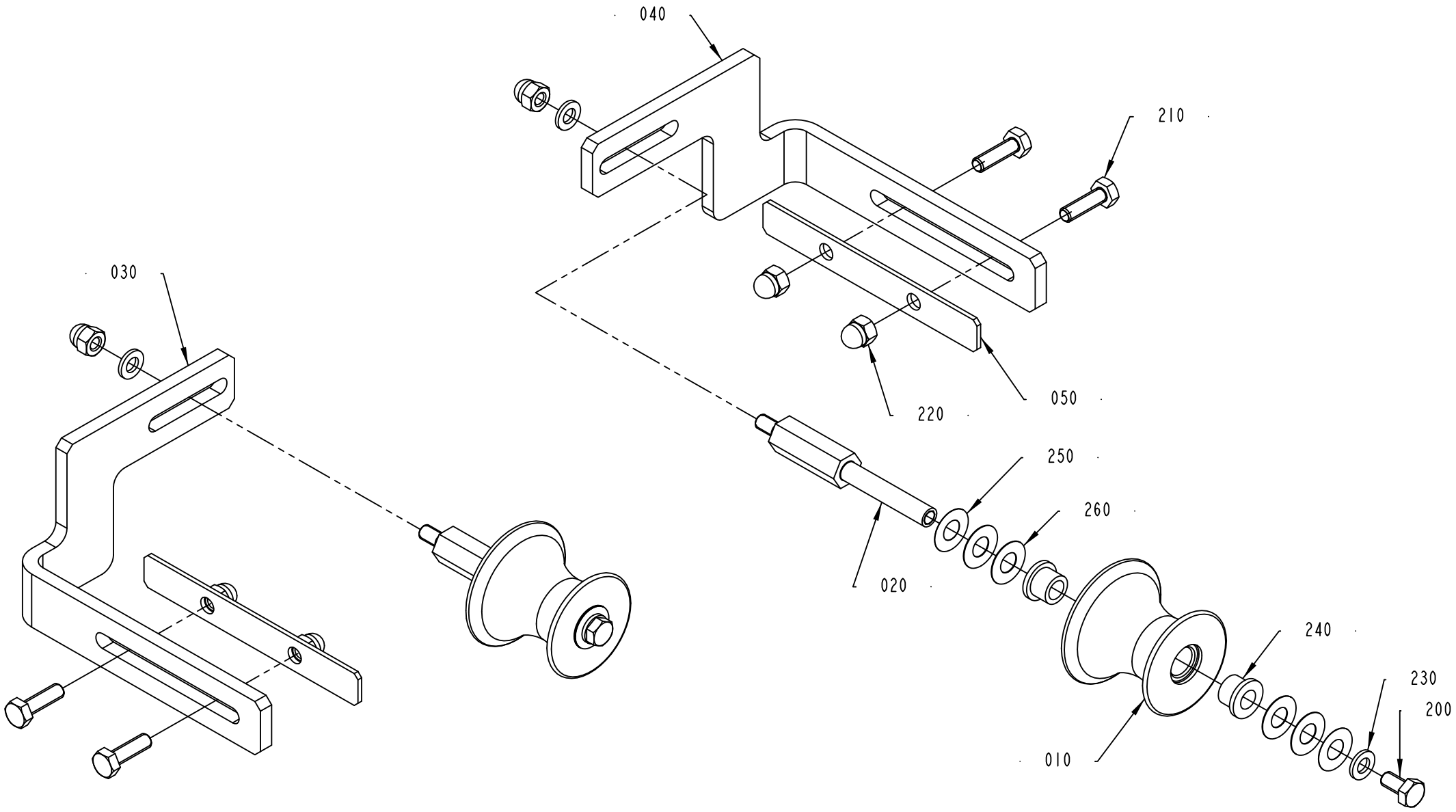
040
210
030
220
050
250
260
020
240
230
200
010
2808295-3
356242

Pos	Part No	UN	Qty	Description	Page No
TBA 0100B, TBA 0125S (See drawing on page: 1-296)					
010	2640354-0000		2	ROLLER	
020	2890119-0000		2	SHAFT	
030	2808319-0000		1	BRACKET	
040	2863999-0000		1	BRACKET	
260	2033-0008		8	WASHER	
TBA 0160S, TBA 0200M, TBA 0200B, TBA 0200SQ, TBA 0200S, TBA 0250S, TBA 0284B, TBA 0250B, TBA 0300S, TBA 0330S, TPA 0330SQ, TPA 0250SQ, TPA 0200SQ, TBA 0250SQ, TBA 0200E (See drawing on page: 1-294)					
010	2640354-0000		2	ROLLER	
020	2863998-0000		2	SHAFT	
030	2945431-0000		1	BRACKET	
040	2945432-0000		1	BRACKET	
TBA 0375S (See drawing on page: 1-294)					
010	2640354-0000		2	ROLLER	
020	2863998-0000		2	SHAFT	
030	3099357-0000		1	BRACKET	
040	3100273-0000		1	BRACKET	
TPA 0125SQ, TBA 0080S (See drawing on page: 1-292)					
010	2890115-0000		2	ROLLER	
020	2890119-0000		2	SHAFT	
030	2808319-0000		1	BRACKET	
040	2863999-0000		1	BRACKET	
Common Parts					
050	2528114-0000		2	COVER PLATE	
200	312105-0366		2	SCREW, M6S ISO 4017 M6X12 A4 80	
210	312105-0370		4	SCREW, M6S ISO 4017 M6X20 A4 80	
220	312705-0316		6	HEX. DOMED CAP MHM-6 M6 A280	
230	315105-0153		4	WASHER PLAIN, 6,4X12X1,5 A4 BRB	
240	90240-0172		4	FLANGE BUSHING, 8X12X10 MM	
250	2033-0011		4	WASHER	

Pos	Part No	UN	Qty	Description	Page No

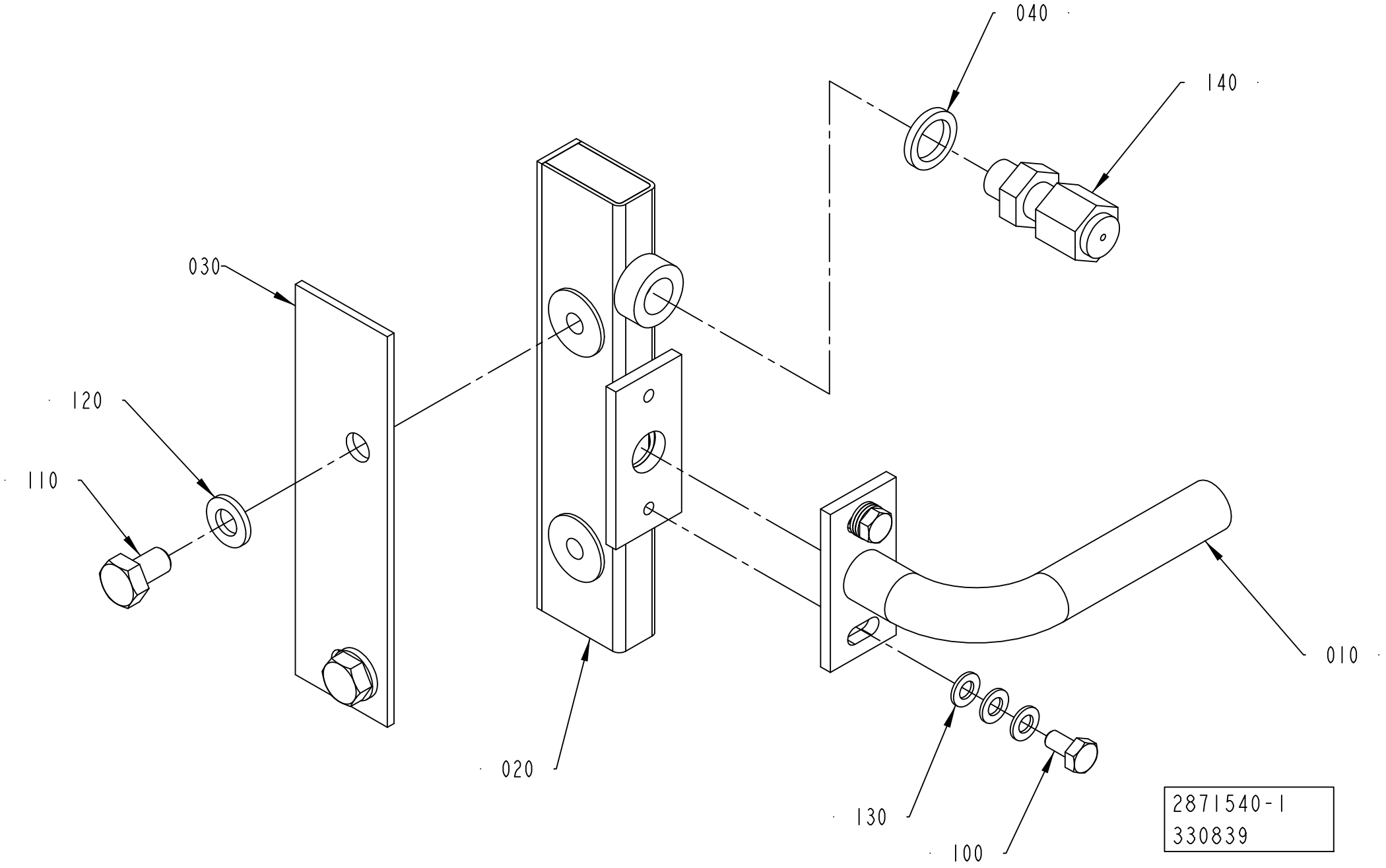
040
140
030
120
110
020
010
130
100
2871540-1
330839

ECM: 486296 - 20111220
Group number: 2871540-0100
Assembly Drawing: 2871540-1_1_AA

Pos	Part No	UN	Qty	Description	Page No
TBA 0100B, TBA 0125S					
010	2808379-0000		1	BRACKET	
020	2986710-0000		1	AIR NOZZLE	
030	2986711-0000		1	HEAT GUARD	
TBA 0160S, TBA 0200M, TBA 0200S, TBA 0250S, TPA 0250SQ, TPA 0200SQ, TBA 0200E					
010	2808378-0000		1	BRACKET	
020	2902962-0000		1	AIR NOZZLE	
030	2903070-0000		1	HEAT GUARD	
TBA 0200B, TBA 0200SQ, TBA 0284B, TBA 0250B, TBA 0300S, TBA 0330S, TPA 0330SQ, TBA 0250SQ					
010	2808366-0000		1	BRACKET	
020	2902962-0000		1	AIR NOZZLE	
030	2903070-0000		1	HEAT GUARD	
TBA 0375S					
010	3058450-0000		1	BRACKET	
020	2902962-0000		1	AIR NOZZLE	
030	2903070-0000		1	HEAT GUARD	
TPA 0125SQ, TBA 0080S					
010	2808365-0000		1	BRACKET	
020	2986710-0000		1	AIR NOZZLE	
030	2986711-0000		1	HEAT GUARD	
Common Parts					
040	273429-0000		1	WASHER	
100	312105-0287		2	SCREW, M6S ISO 4017 M4X8 A4 70	
110	312105-0364		2	SCREW, M6S ISO 4017 M6X10 A4 80	
120	315105-0153		2	WASHER PLAIN, 6,4X12X1,5 A4 BRB	
130	315105-0136		6	WASHER PLAIN, 4,3X9X0,8 A4 BRB	
140	90326-0304		1	COMPRESSION GLAND, 5101 015-005	

Pos	Part No	UN	Qty	Description	Page No

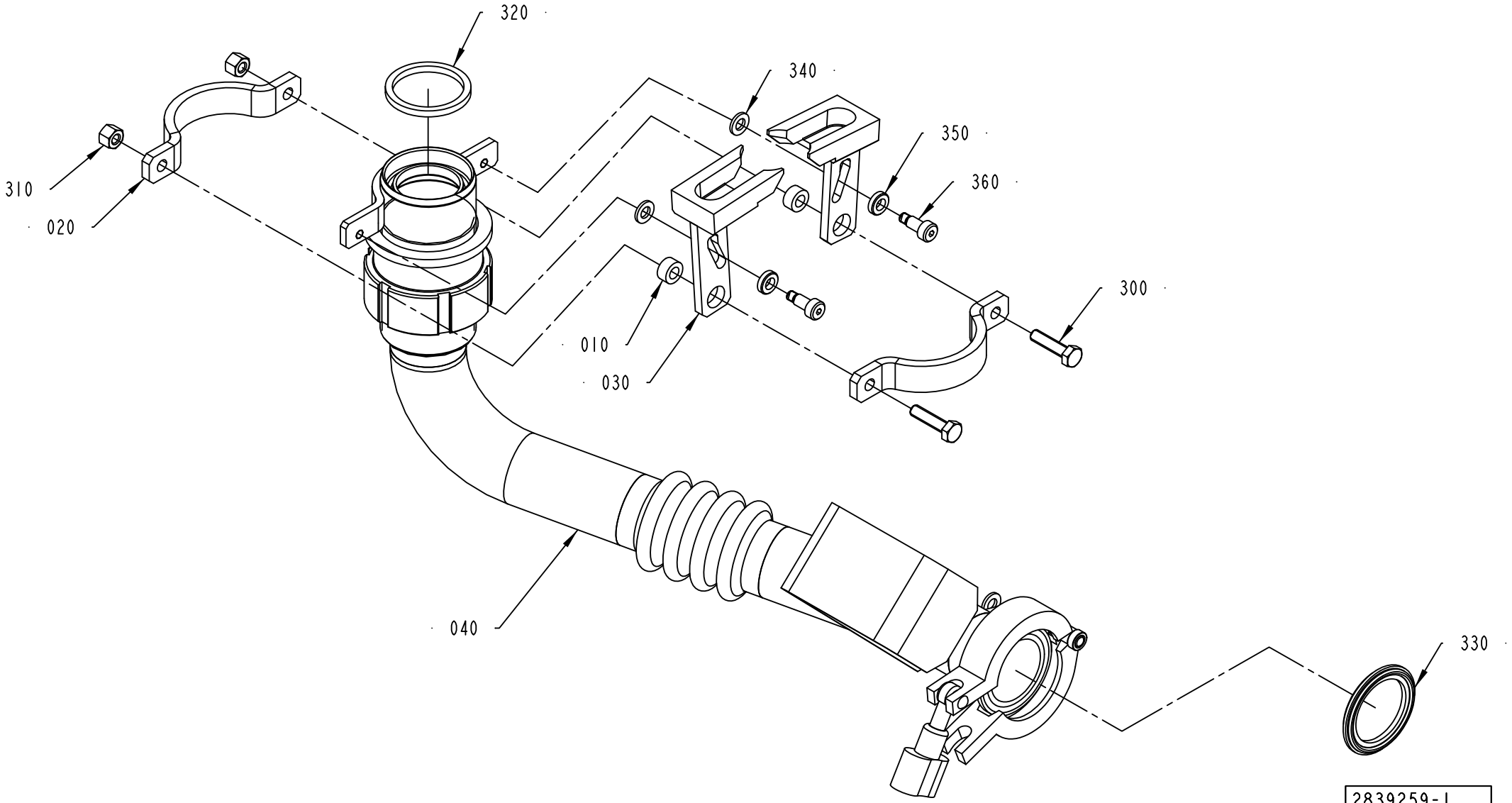
320
340
350
360
310
020
300
010
030
040
330
2839259-1
377087

ECM: 529774 - 20111220
Group number: 2839259-0100
Assembly Drawing: 2839259-1_1_AC

Pos	Part No	UN	Qty	Description	Page No
TBA 0100B, TBA 0125S, TPA 0125SQ, TBA 0080S					
030	2795376-0000		2	CATCH	
040	2890111-0000		1	CLEANING PIPE	
320	12242-0006		1	GASKET	
TBA 0160S, TBA 0200S, TPA 0250SQ, TPA 0200SQ					
030	979728-0000		2	CATCH	
040	2890880-0000		1	CLEANING PIPE	
320	12242-0007		1	GASKET	
TBA 0200B, TBA 0200SQ, TBA 0284B, TBA 0250B, TBA 0300S, TBA 0330S, TBA 0375S, TPA 0330SQ, TBA 0250SQ					
030	579637-0000		2	CATCH	
040	2922724-0000		1	CLEANING PIPE	
320	12242-0005		1	GASKET 61X51X5,5	
TBA 0200M, TBA 0250S, TBA 0200E					
030	579771-0000		2	CATCH	
040	2966651-0000		1	CLEANING PIPE	
320	12242-0003		1	GASKET 48X38X5,5	
Common Parts					
010	553586-0000		2	SPACER	
020	752499-0000		2	RING	
300	312105-0372		2	SCREW, M6S ISO 4017 M6X25 A4 80	
310	312811-0316		2	NUT HEX.LOCK HELI COIL MID GRIP M6 SS	
330	342850-0304		1	GASKET 35,4X49,1X5,2 1"1/2 FDA, 3-A	
340	315105-0153		2	WASHER PLAIN, 6,4X12X1,5 A4 BRB	
350	315115-0153		2	WASHER PLAIN, TBRB 6,4/12 H=3	
360	90287-0229		2	SCREW, HEX.SOCK.HEAD SHOULD. M5X6	

Pos	Part No	UN	Qty	Description	Page No

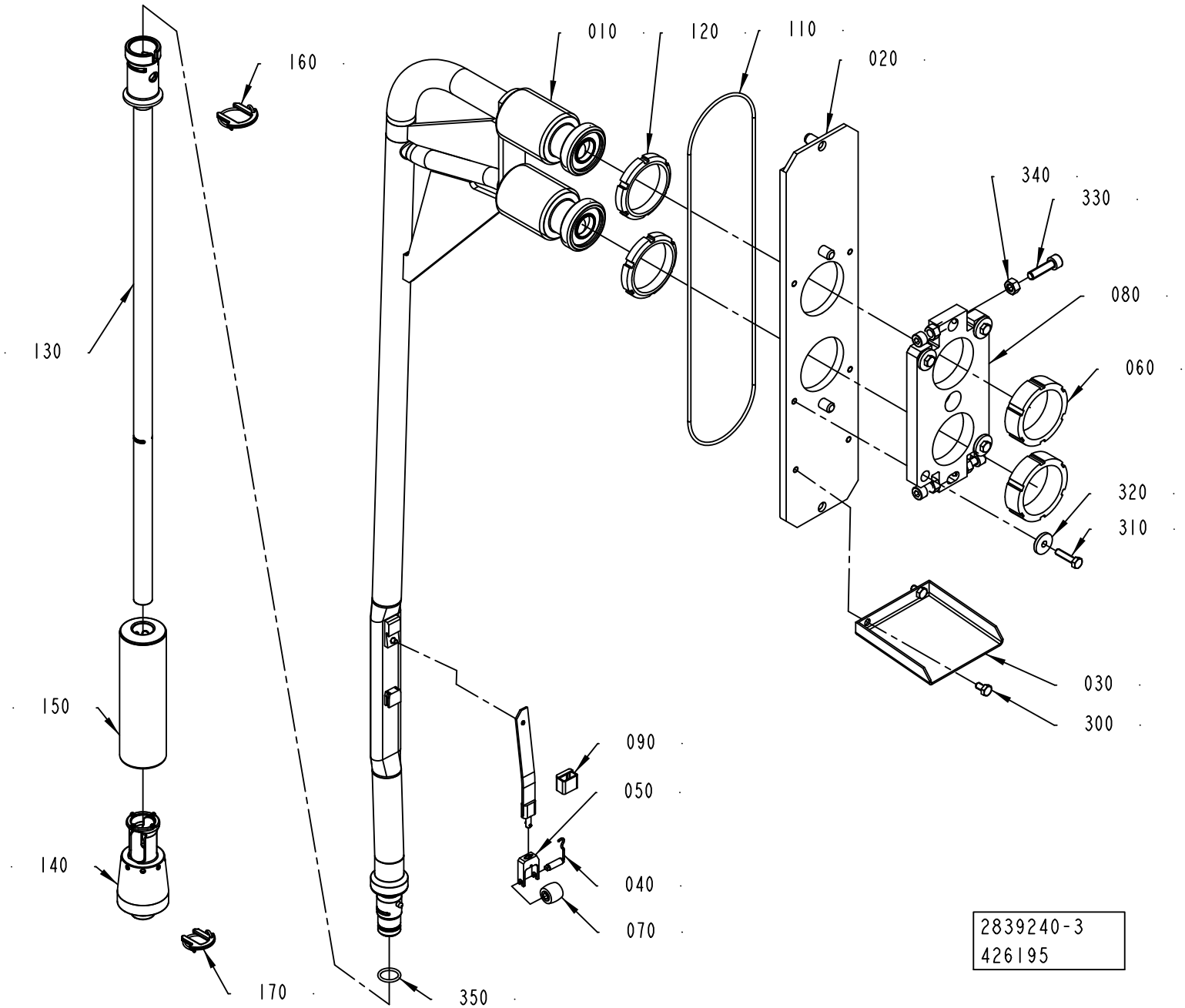
010
120
110
020
160
340
330
080
130
060
320
310
030
300
150
090
050
140
040
070
170
350
2839240-3
426195

ECM: 530101 - 20120228
Group number: 2839240-0200
Assembly Drawing: 2839240-3_1_AA

This list covers pages from 1-302 to 1-305

Pos	Part No	UN	Qty	Description	Page No
TBA 0080S (See drawing on page: 1-302)					
010	2966648-0000		1	UPPER FILLING TUBE	
040	255977-0000		1	SHAFT	
050	255978-0000		1	FORK	
070	2932253-0000		1	PRESSURE ROLLER (PACK 10)	
090	295377-0002		1	HOOD	
100	2906117-0000		1	SPRING	
130	2986705-0000		1	LOWER FILLING TUBE	
140	2986706-0000		1	PRESSURE FLANGE	
150	2945423-0000		1	FLOAT	
160	3115221-0000		1	FORK	
170	2966649-0000		1	FORK	
TBA 0100B, TBA 0125S (See drawing on page: 1-302)					
010	2966648-0000		1	UPPER FILLING TUBE	
040	255977-0000		1	SHAFT	
050	255978-0000		1	FORK	
070	2932253-0000		1	PRESSURE ROLLER (PACK 10)	
090	295377-0004		1	HOOD	
100	2906117-0000		1	SPRING	
130	2966640-0000		1	LOWER FILLING TUBE	
140	2966641-0000		1	PRESSURE FLANGE	
150	3158205-0000		1	FLOAT	
160	2796072-0001		1	LOCKING FORK	
170	2796072-0002		1	LOCKING FORK	
TBA 0160S, TBA 0200S (See drawing on page: 1-302)					
010	2966639-0000		1	UPPER FILLING TUBE	
040	255977-0000		1	SHAFT	
050	255978-0000		1	FORK	
070	2932253-0000		1	PRESSURE ROLLER (PACK 10)	
090	295377-0001		1	HOOD	
100	2906117-0000		1	SPRING	
130	2966644-0000		1	LOWER FILLING TUBE	
140	2914808-0002		1	PRESSURE FLANGE	
150	3158205-0000		1	FLOAT	
160	2796072-0001		1	LOCKING FORK	
170	2796072-0002		1	LOCKING FORK	
TBA 0200B, TBA 0250B, TBA 0330S (See drawing on page: 1-304)					
010	2966672-0000		1	UPPER FILLING TUBE	
040	295376-0000		1	SHAFT	
050	568583-0000		1	FORK	
070	2909368-0000		1	PRESSURE ROLLER (PACK 10)	
090	295377-0002		1	HOOD	
100	2906116-0000		1	SPRING	
130	2966645-0000		1	LOWER FILLING TUBE	
140	2966646-0000		1	PRESSURE FLANGE	
150	3159703-0000		1	FLOAT	
160	2796072-0001		2	LOCKING FORK	
TBA 0200E (See drawing on page: 1-302)					
010	2966647-0000		1	UPPER FILLING TUBE	
040	255977-0000		1	SHAFT	
050	255978-0000		1	FORK	
070	2932253-0000		1	PRESSURE ROLLER (PACK 10)	
090	295377-0001		1	HOOD	
100	2906117-0000		1	SPRING	
130	2966653-0000		1	LOWER FILLING TUBE	
140	3089565-0000		1	PRESSURE FLANGE	
150	3158205-0000		1	FLOAT	
160	2796072-0001		1	LOCKING FORK	
170	2796072-0002		1	LOCKING FORK	
TBA 0200M, TBA 0250S (See drawing on page: 1-302)					
010	2966647-0000		1	UPPER FILLING TUBE	
040	255977-0000		1	SHAFT	
050	255978-0000		1	FORK	
070	2932253-0000		1	PRESSURE ROLLER (PACK 10)	
090	295377-0001		1	HOOD	
100	2906117-0000		1	SPRING	
130	2966653-0000		1	LOWER FILLING TUBE	
140	2914808-0003		1	PRESSURE FLANGE	
150	3158205-0000		1	FLOAT	
160	2796072-0001		1	LOCKING FORK	
170	2796072-0002		1	LOCKING FORK	
TBA 0200SQ, TBA 0250SQ (See drawing on page: 1-304)					
010	2966672-0000		1	UPPER FILLING TUBE	
040	295376-0000		1	SHAFT	
050	568583-0000		1	FORK	
070	2909368-0000		1	PRESSURE ROLLER (PACK 10)	
090	295377-0002		1	HOOD	
100	2906116-0000		1	SPRING	
130	2966654-0000		1	LOWER FILLING TUBE	
140	3022594-0000		1	PRESSURE FLANGE	
150	3159703-0000		1	FLOAT	
160	2796072-0001		2	LOCKING FORK	
TBA 0284B, TBA 0300S (See drawing on page: 1-304)					
010	2966672-0000		1	UPPER FILLING TUBE	

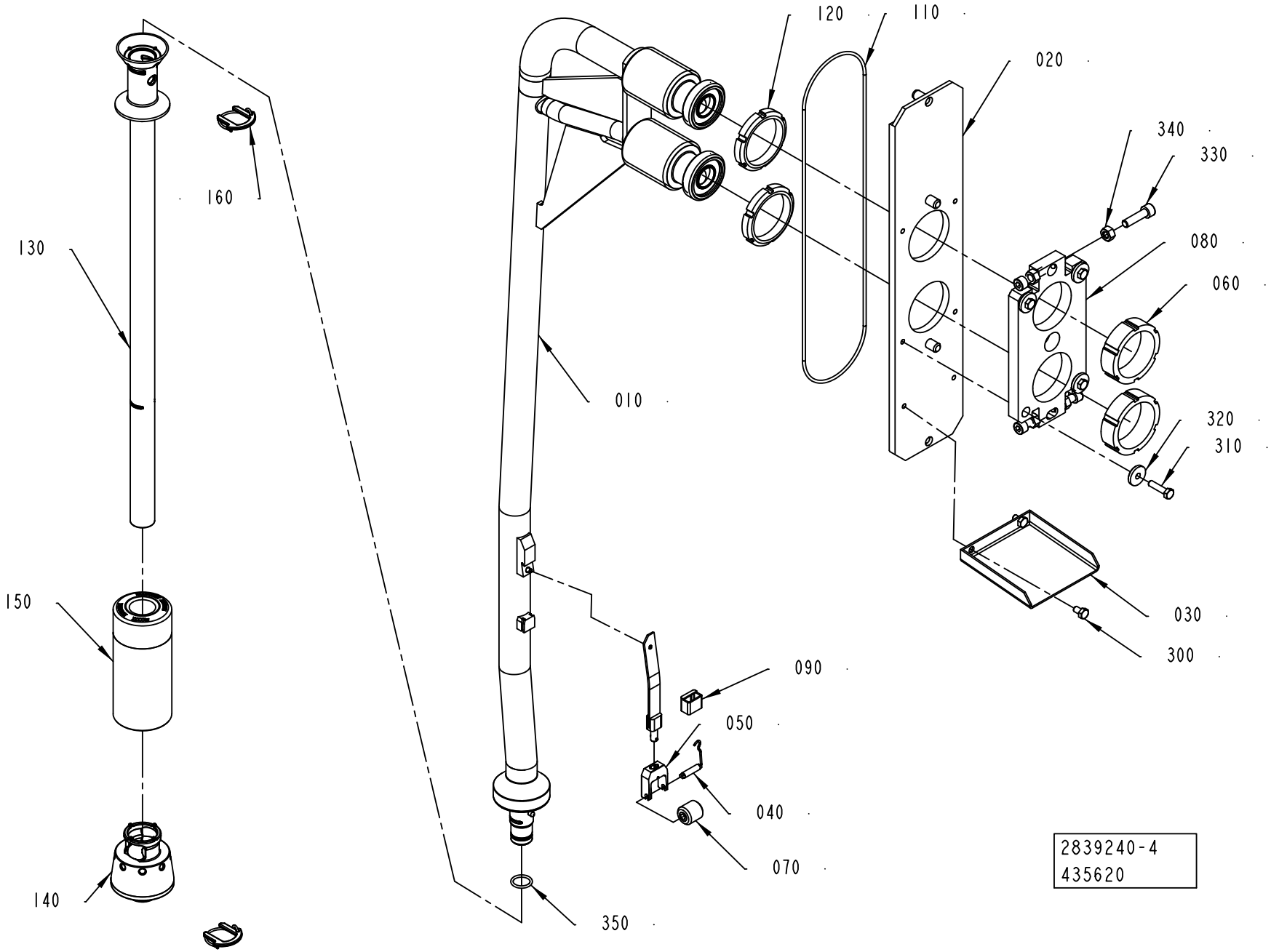
120
110
020
340
330
080
060
320
310
030
300
160
130
150
140
010
090
050
040
070
350
2839240-4
435620

Pos	Part No	UN	Qty	Description	Page No
TBA 0284B, TBA 0300S (Cont'd) (See drawing on page: 1-304)					
040	295376-0000		1	SHAFT	
050	568583-0000		1	FORK	
070	2909368-0000		1	PRESSURE ROLLER (PACK 10)	
090	295377-0002		1	HOOD	
100	2906116-0000		1	SPRING	
130	2986733-0000		1	LOWER FILLING TUBE	
140	3067587-0000		1	PRESSURE FLANGE	
150	3159703-0000		1	FLOAT	
160	2796072-0001		2	LOCKING FORK	
TBA 0375S (See drawing on page: 1-304)					
010	2966672-0000		1	UPPER FILLING TUBE	
040	295376-0000		1	SHAFT	
050	568583-0000		1	FORK	
070	2909367-0000		1	PRESSURE ROLLER (PACK 10)	
090	295377-0005		1	HOOD	
100	2906116-0000		1	SPRING	
130	2966645-0000		1	LOWER FILLING TUBE	
140	3058457-0000		1	PRESSURE FLANGE	
150	3159703-0000		1	FLOAT	
160	2796072-0001		2	LOCKING FORK	
TPA 0125SQ (See drawing on page: 1-302)					
010	2966648-0000		1	UPPER FILLING TUBE	
040	255977-0000		1	SHAFT	
050	255978-0000		1	FORK	
070	2932253-0000		1	PRESSURE ROLLER (PACK 10)	
090	295377-0004		1	HOOD	
100	2906117-0000		1	SPRING	
130	2966656-0000		1	LOWER FILLING TUBE	
140	2966660-0000		1	PRESSURE FLANGE	
150	2945423-0000		1	FLOAT	
160	3115221-0000		1	FORK	
170	2966649-0000		1	FORK	
TPA 0250SQ, TPA 0200SQ (See drawing on page: 1-302)					
010	2966639-0000		1	UPPER FILLING TUBE	
040	255977-0000		1	SHAFT	
050	255978-0000		1	FORK	
070	2932253-0000		1	PRESSURE ROLLER (PACK 10)	
090	295377-0001		1	HOOD	
100	2906117-0000		1	SPRING	
130	2966644-0000		1	LOWER FILLING TUBE	
140	3089566-0000		1	PRESSURE FLANGE	
150	3158205-0000		1	FLOAT	
160	2796072-0001		1	LOCKING FORK	
170	2796072-0002		1	LOCKING FORK	
TPA 0330SQ (See drawing on page: 1-304)					
010	2966672-0000		1	UPPER FILLING TUBE	
040	295376-0000		1	SHAFT	
050	568583-0000		1	FORK	
070	2909367-0000		1	PRESSURE ROLLER (PACK 10)	
090	295377-0002		1	HOOD	
100	2906116-0000		1	SPRING	
130	2986702-0000		1	LOWER FILLING TUBE	
140	3089571-0000		1	PRESSURE FLANGE	
150	3106891-0000		1	FLOAT	
160	2796072-0001		2	LOCKING FORK	
Common Parts					
020	1523222-0000		1	PLATE	
030	295984-0000		1	DRIP GUARD	
060	1523223-0000		2	NUT	
080	1523225-0000		1	FASTENING PLATE	
110	90600-3388		1	O-RING 284X3 MM	
120	1523224-0000		2	NUT	
300	312105-0364		2	SCREW, M6S ISO 4017 M6X10 A4 80	
310	312105-0372		4	SCREW, M6S ISO 4017 M6X25 A4 80	
320	315125-0153		4	WASHER HIGH, TBRSB 6,4X22X4 A4	
330	312115-0455		4	SCREW ISO4762 M8X30 A4 80	
340	312605-0318		4	HEXAGON NUT, M6M M8 A280	
350	90600-2508		1	O-RING 17,3X2,4 MM FDA, 3-A	

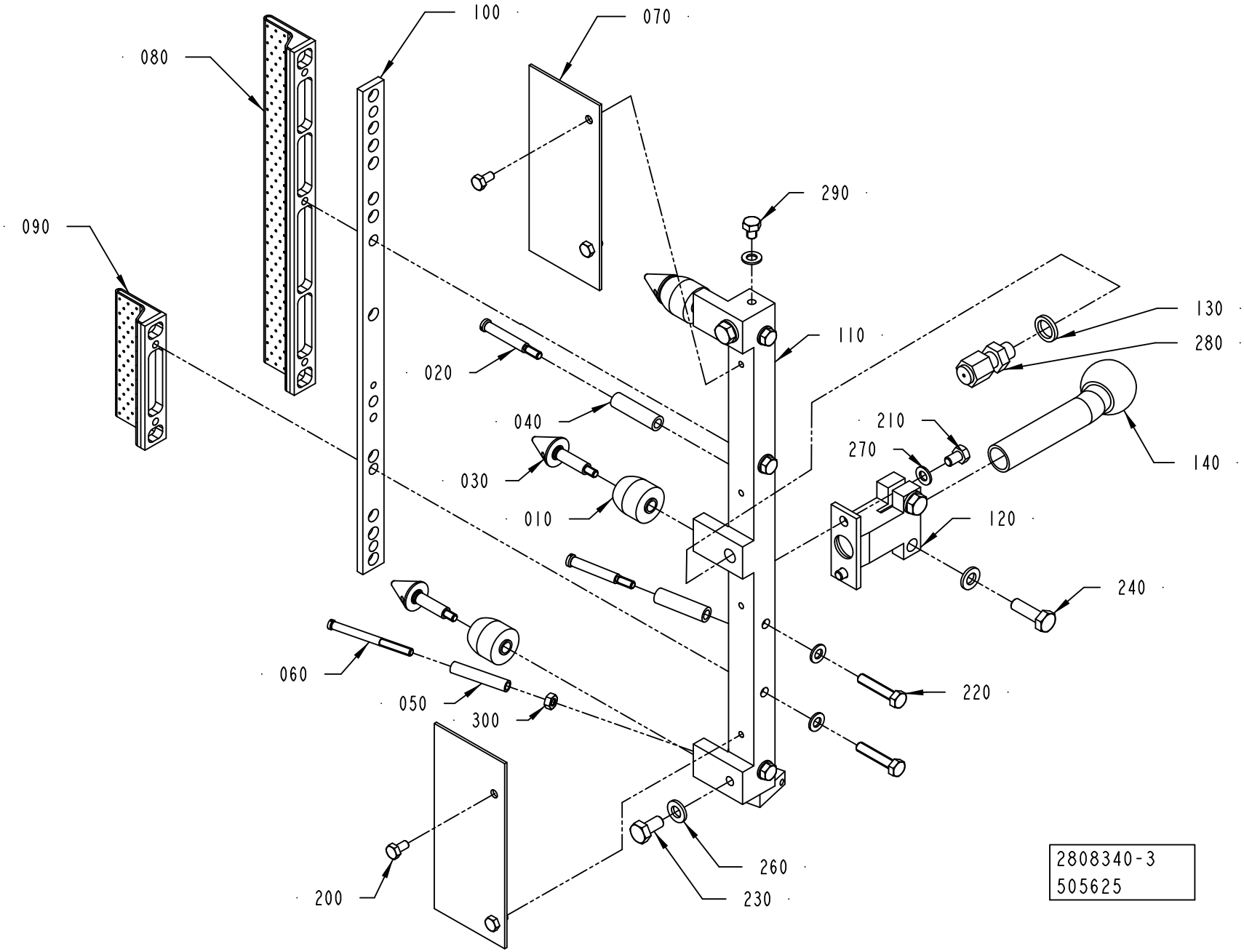
100
070
080
290
090
130
280
110
020
040
210
270
030
140
010
120
240
060
220
050
300
260
200
230
2808340-3
505625

ECM: 529772 - 20111220
Group number: 2808340-0200
Assembly Drawing: 2808340-3_1_AA

Pos	Part No	UN	Qty	Description	Page No
TBA 0100B, TBA 0125S, TBA 0160S, TBA 0200M, TBA 0200S, TBA 0250S, TPA 0250SQ, TPA 0200SQ, TPA 0125SQ, TBA 0080S, TBA 0200E					
020	3037861-0000		2	SHAFT	
040	3037862-0000		2	ROLLER	
100	2906099-0000		1	DISTRIBUTOR WING	
120	2808402-0000		1	CLAMP	
140	2808403-0000		1	ELBOW PIPE	
TBA 0200B, TBA 0200SQ, TBA 0284B, TBA 0250B, TBA 0300S, TBA 0330S, TPA 0330SQ, TBA 0250SQ					
020	3037861-0000		1	SHAFT	
040	3037862-0000		1	ROLLER	
100	2906099-0000		1	DISTRIBUTOR WING	
120	2808402-0000		1	CLAMP	
140	2808403-0000		1	ELBOW PIPE	
TBA 0375S					
020	3037861-0000		1	SHAFT	
040	3037862-0000		1	ROLLER	
100	568581-0000		1	DISTRIBUTOR WING	
120	3058488-0000		1	CLAMP	
140	3058489-0000		1	ELBOW PIPE	
Common Parts					
010	3009960-0000		3	ROLL	
030	272095-0000		3	SHAFT	
050	2890117-0000		1	ROLLER	
060	2890118-0000		1	SHAFT	
070	469466-0000		2	PLATE	
080	568577-0000		1	AIR NOZZLE	
090	568578-0000		1	AIR NOZZLE	
110	752218-0000		1	ATTACHMENT	
130	273429-0000		1	WASHER	
200	312105-0287		4	SCREW, M6S ISO 4017 M4X8 A4 70	
210	312105-0323		2	SCREW, M6S ISO 4017 M5X8 A4 80	
220	312105-0333		5	SCREW, M6S ISO 4017 M5X25 A4 80	
230	312105-0366		2	SCREW, M6S ISO 4017 M6X12 A4 80	
240	312105-0370		2	SCREW, M6S ISO 4017 M6X20 A4 80	
260	315105-0153		4	WASHER PLAIN, 6,4X12X1,5 A4 BRB	
270	315105-0146		8	WASHER PLAIN, 5,3X10X1 A4 BRB	
280	90326-0304		1	COMPRESSION GLAND, 5101 015-005	
290	90287-0199		1	SCREW, M6S ISO 4017 M5X6 A4 80	
300	312605-0312		1	HEXAGON NUT, M6M M4 A280	

Pos	Part No	UN	Qty	Description	Page No

Machine Type	Group Description	Used-In	Group Number	Page No

Tetra Pak

SPC
Spare Parts Catalogue

MACHINE BODY

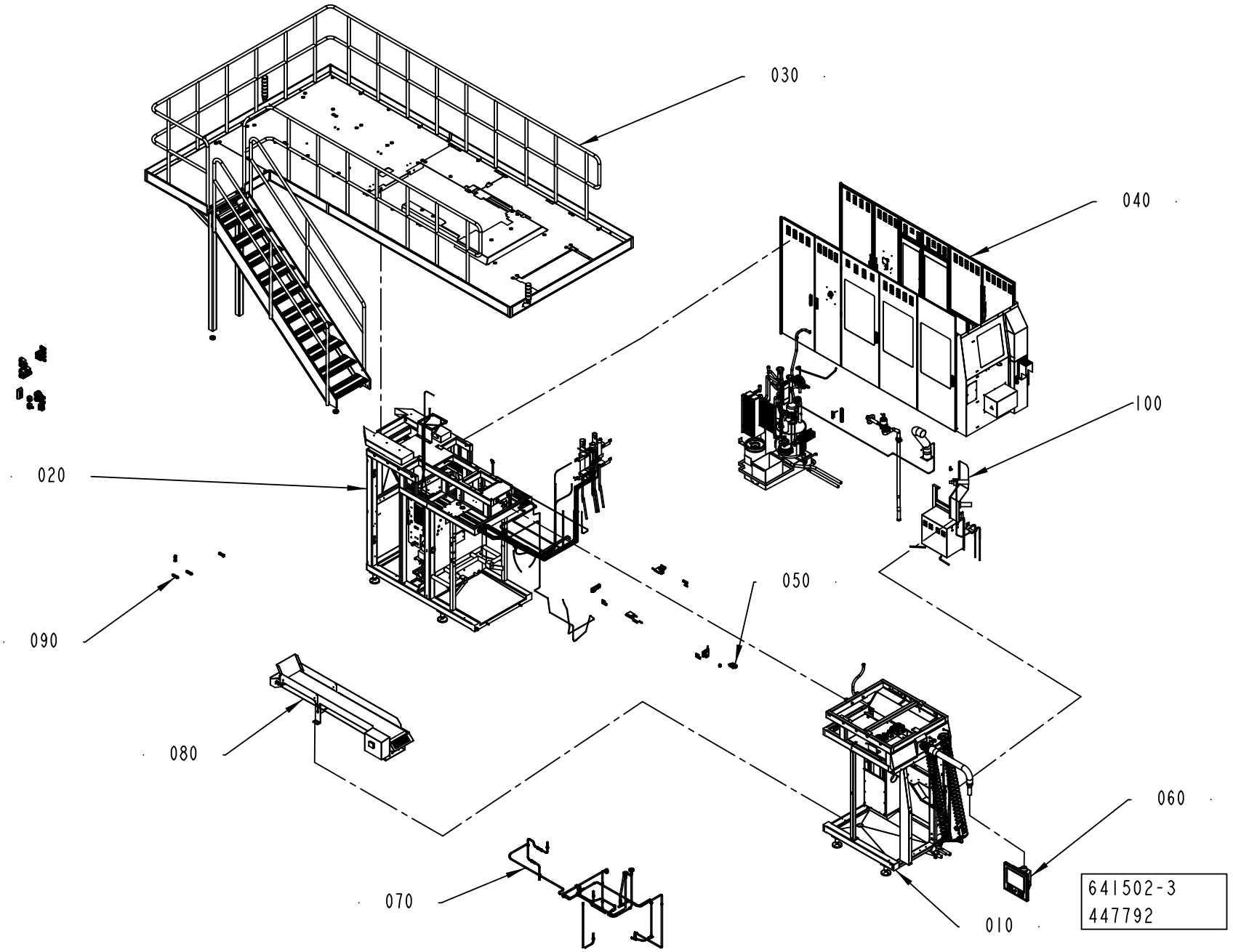

ECM: 456383 - 20101001
Group number: 641502-0200
Assembly Drawing: 641502-3_1_AB

Pos	Part No	UN	Qty	Description	Page No
-					
010	2839000-0200		1	FRONT MODULE	**2-5**
020	2835898-0200		1	CENTRAL MODULE	**2-31**
030	3074420-0100		1	PLATFORM	**2-71, 2-73, 2-75, 2-77, 2-79, 2-81**
040	2838100-0200		1	DOORS AND COVERS	**2-123, 2-125**
050	2841055-0200		1	DOOR SAFETY SWITCH	**2-161**
060	2937883-0200		1	TPOP	**2-163**
070	2838995-0200		1	CLEANING SYSTEM	**2-165**
080	2845290-0100		1	WASTE CONVEYOR	**2-167**
090	2901593-0200		1	ELECTRIC EQUIPMENT	**2-169**
100	3109943-0100		1	SUPERSTRUCTURE CHEMICAL UNIT	**2-181**

Pos	Part No	UN	Qty	Description	Page No

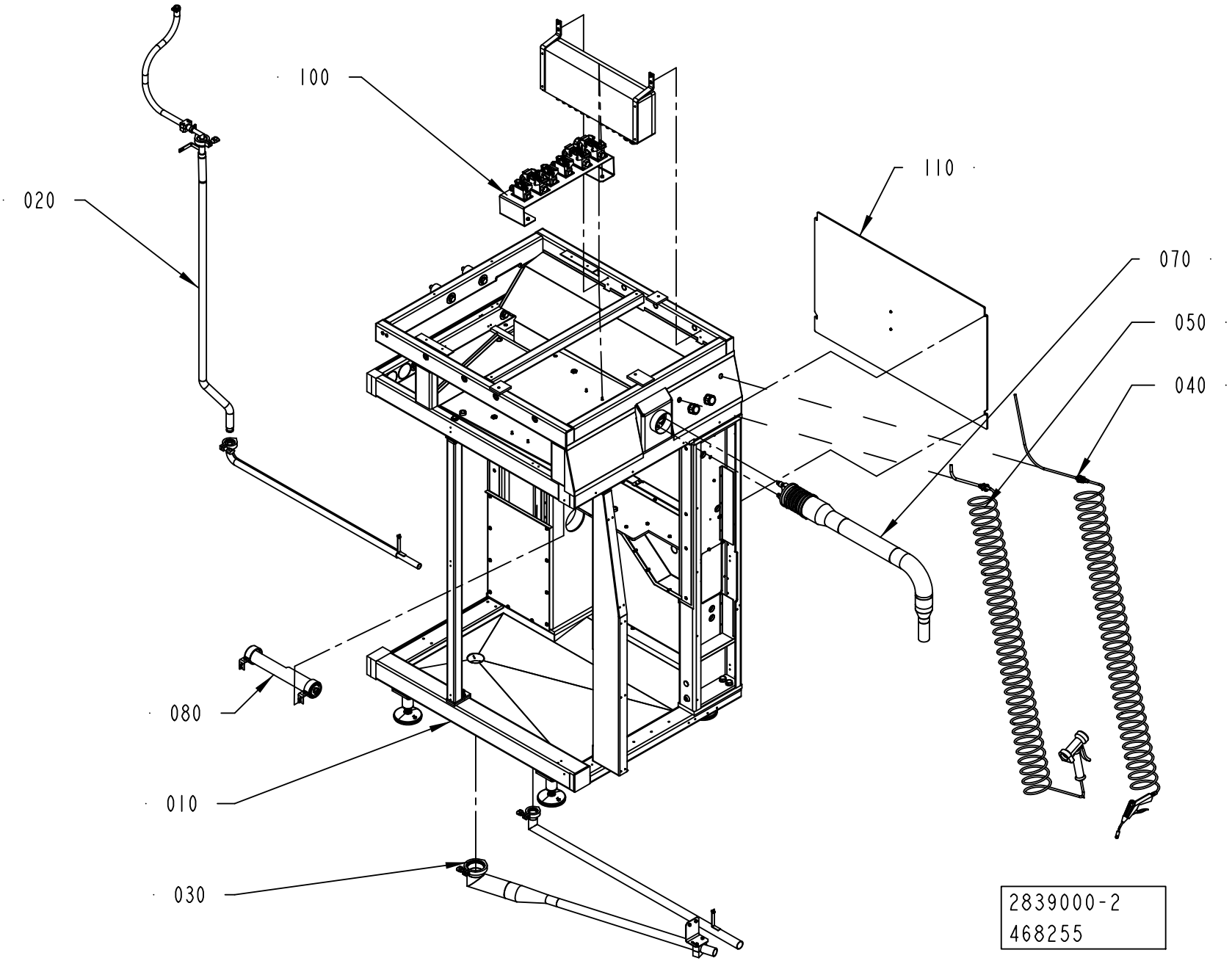
100
110
020
070
050
040
080
010
030
2839000-2
468255

ECM: 482029 - 20110401
Group number: 2839000-0200
Assembly Drawing: 2839000-2_1_AD

Pos	Part No	UN	Qty	Description	Page No
-					
010	2833336-0200		1	MACHINE BODY	**2-7**
020	2867530-0200		1	DRAINING	**2-9**
030	2836229-0100		1	DRAINING	**2-11**
040	1095682-0300		1	AIR JET GUN	**2-13**
050	1095681-0300		1	SPRAY GUN	**2-15**
070	2841056-0200		1	PIVOT ARM	**2-17**
080	3033505-0100		1	LIGHT FIXTURE	**2-19**
090	2837089-0200		1	CONNECTION BOX	**2-21, 2-23**
100	2839830-0200		1	CABLE CONNECTION	**2-27**
110	2841050-0200		1	DOOR	**2-29**

Pos	Part No	UN	Qty	Description	Page No

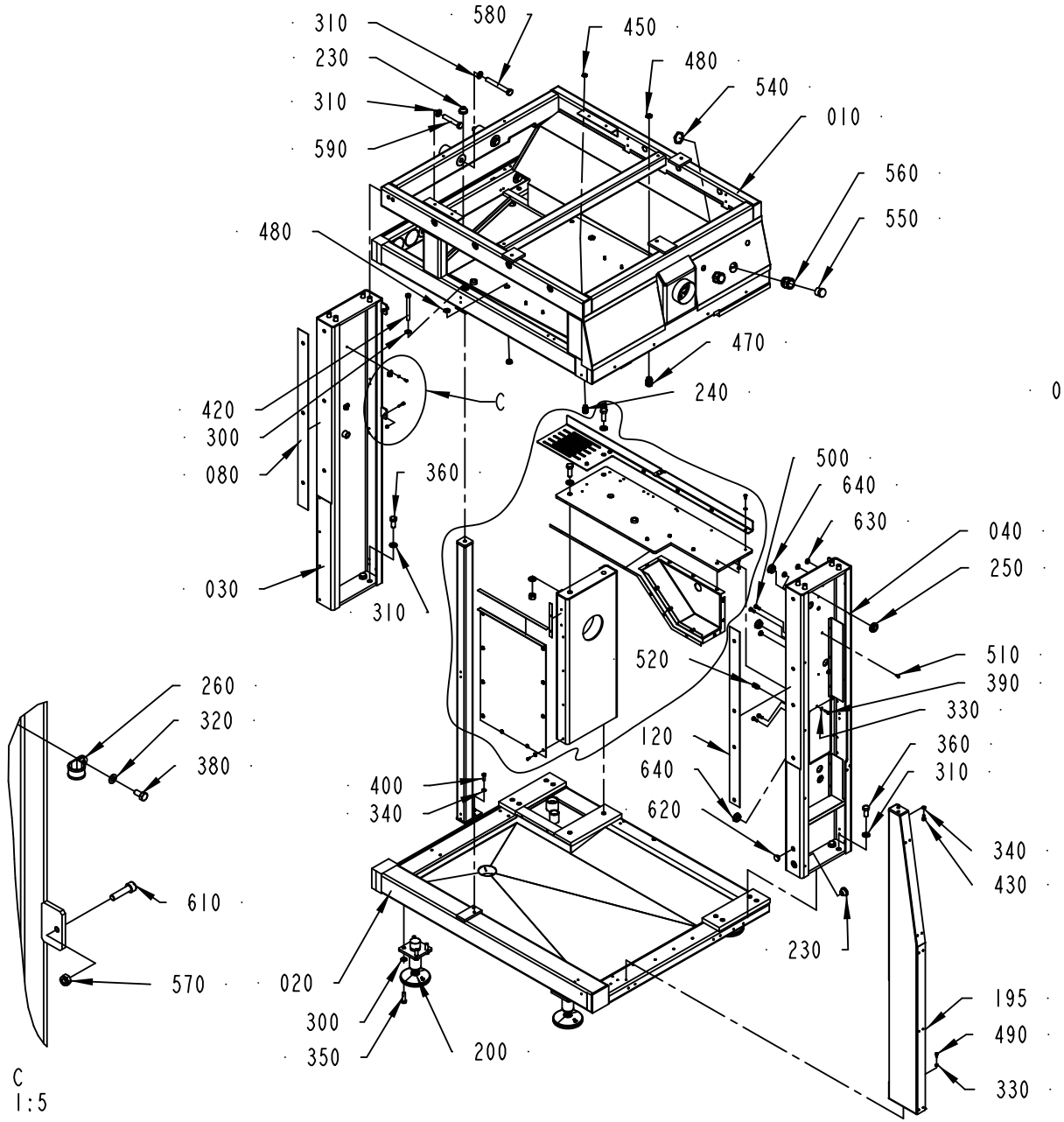

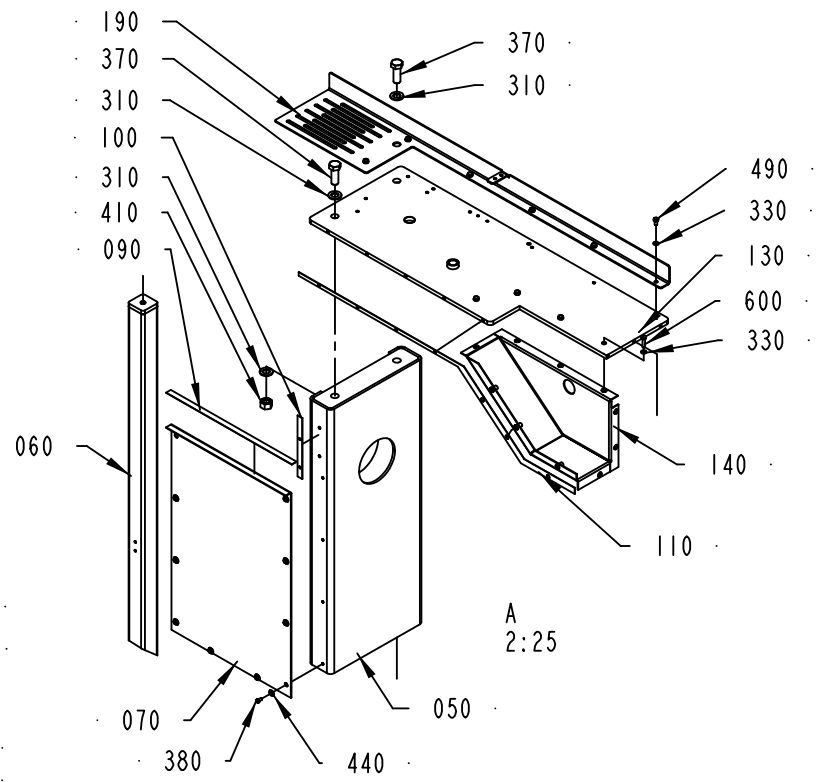

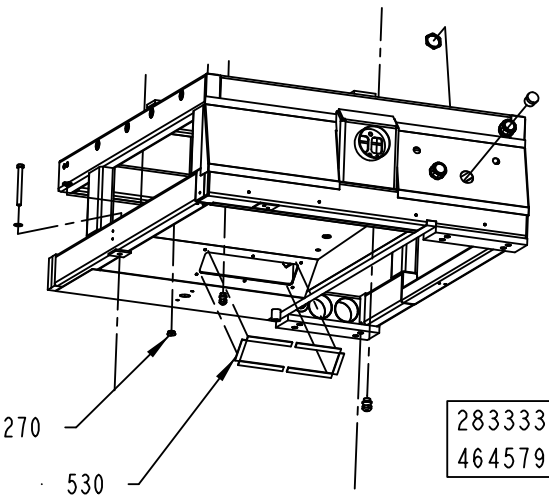

2833336-2
464579

ECM: 467501 - 20101002
Group number: 2833336-0200
Assembly Drawing: 2833336-2_1_AC

Pos	Part No	UN	Qty	Description	Page No
-					
010Â	3033488-0000		1	TOP FRAME	
020	2833337-0000		1	FRAME	
030	3046470-0000		1	PROFILE	
040	3058500-0000		1	PROFILE	
050	2834103-0000		1	PROFILE	
060	2838021-0000		1	BEAM	
070	2838076-0000		1	COVER	
080	2843327-0000		1	GASKET	
090	2843328-0000		1	GASKET	
100	2843329-0000		1	GASKET	
110	2843330-0000		1	GASKET	
120	2843331-0000		1	GASKET	
130	3043267-0000		1	PLATE	
140	2838074-0000		1	PLATE	
190	3019719-0000		1	SUPPORT	
195	2864046-0000		1	BEAM	
200	90600-0725		4	FOOT 32000N, 90600-0725	
230	90015-0022		2	LEAD-IN, TET 14-20, E1458029	
240	90458-0306		1	CABLE GLAND, M16X1,5, 5311 1010	
250	90458-1228		2	LEAD-IN, BUSHING, DA 230/300/60	
260	90165-0039		2	PIPE CLAMP D=15 MM, GSK15/12	
270	90458-1308		2	BLIND PLUG CIRCULAR, M20X1,5 514GFK/220	
300	315105-0178		17	WASHER PLAIN, 13X24X2,5 A4 BRB	
310	315105-0186		26	WASHER PLAIN, 17X30X3 A4 BRB	
320	315105-0146		2	WASHER PLAIN, 5,3X10X1 A4 BRB	
330	315105-0153		18	WASHER PLAIN, 6,4X12X1,5 A4 BRB	
340	315105-0165		4	WASHER PLAIN, 8,4X16X1,6 A4 BRB	
350	312105-0540		16	SCREW, M6S ISO 4017 M12X40 A4 80	
360	312105-0626		18	SCREW, M6S ISO 4017 M16X35 A4 80	
370	312105-0629		2	SCREW, M6S ISO 4017 M16X45 A4 80	
380	312105-0325		12	SCREW, M6S ISO 4017 M5X10 A4 80	
390	312105-0370		3	SCREW, M6S ISO 4017 M6X20 A4 80	
400	312105-0453		2	SCREW, M6S ISO 4017 M8X25 A4 80	
410	312605-0324		2	HEXAGON NUT, M6M M16 A280	
420	312105-0556		1	SCREW, M6S ISO 4014 M12X120 A4 80	
430	312105-0449		2	SCREW, M6S ISO 4017 M8X16 A4 80	
440	315125-0146		10	WASHER HIGH, TBRSB 5.3X15X1 A4	
450	353250-0016		1	GLAND LOCK NUT, M16X1,5	
470	90458-0307		2	CABLE GLAND, M20X1,5, 5311 1020	
480	353250-0020		4	GLAND LOCK NUT, M20X1,5	
490	312105-0366		8	SCREW, M6S ISO 4017 M6X12 A4 80	
500	312105-0451		4	SCREW, M6S ISO 4017 M8X20 A4 80	
510	312125-0366		4	SLOTTED HEAD SCREW, ISO1207 M6X12 A4	
520	90458-0305		1	CABLE GLAND, M12X1,5, 5311 1000	
530	90143-0073	M	0	FLAT GASKET TAPE W. ADHESIVE, 15X3.0	
540	353250-0040		2	GLAND LOCK NUT, M40X1,5	
550	353249-0044		2	INSERT, SOLID, E155 G	
560	90458-0410		2	CABLE GLAND, VK 24055Y	
570	312812-0316		4	HEXAGON NUT, NY-LOCK M6 A4 80	
580	312105-0646		2	SCREW, M6S ISO 4014 M16X130 A4 80	
590	312105-0638		2	SCREW, M6S ISO 4014 M16X90 A4 80	
600	312105-0372		7	SCREW, M6S ISO 4017 M6X25 A4 80	
610	312115-0372		4	SCREW ISO4762 M6X25 A4 80	
620	90261-0018		1	PLUG, BLIND, PLASTIC GPN300F-183	
630	90459-7245		4	PLUG, BLIND, PLASTIC GPN300F11	
640	90600-5802		6	PLUG, BLIND, PLASTIC GPN 300 F 25	

Machine Type	Group Description	Used-In	Group Number	Page No

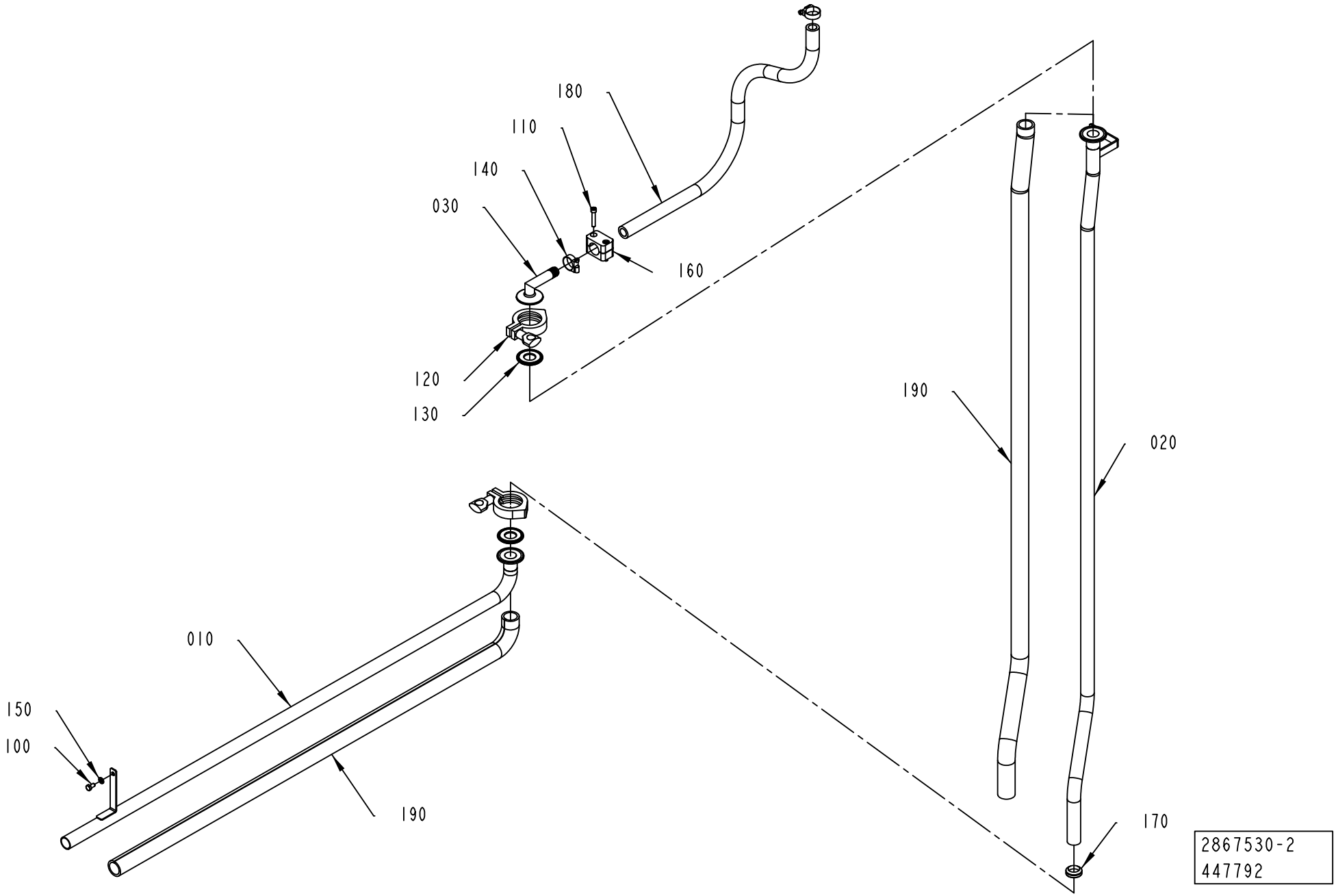
180
110
140
030
160
120
130
190
020
010
150
100
190
170
2867530-2
447792

ECM: 453399 - 20101001
Group number: 2867530-0200
Assembly Drawing: 2867530-2_1_AB

Pos	Part No	UN	Qty	Description	Page No
-					
010	3058490-0000		1	PIPE	
020	3058491-0000		1	PIPE	
030	3058492-0000		1	PLUG	
100	312105-0366		1	SCREW, M6S ISO 4017 M6X12 A4 80	
110	312115-0376		2	SCREW ISO4762 M6X35 A4 80	
120	344215-0103		2	CLAMP RING A13MHM 1X1 1/2", 211053	
130	342850-0303		2	GASKET 22,7X49,1X5,2 MM 1" FDA, 3-A	
140	342991-0104		2	HOSE CLIP,WORM DRIVE TYPE (19)-28	
150	315105-0153		1	WASHER PLAIN, 6,4X12X1,5 A4 BRB	
160	90165-0048		1	PIPE CLAMP, D=25 MM, RAP325X	
170	315220-0156		1	V-RING 22X30X10,5 MM V-25S	
180	90166-0260	MM	1200	HOSE	
190	90602-3850	MM	1600	INSULATION TUBE Ã˜33/25MM, 1627-0025	

Pos	Part No	UN	Qty	Description	Page No

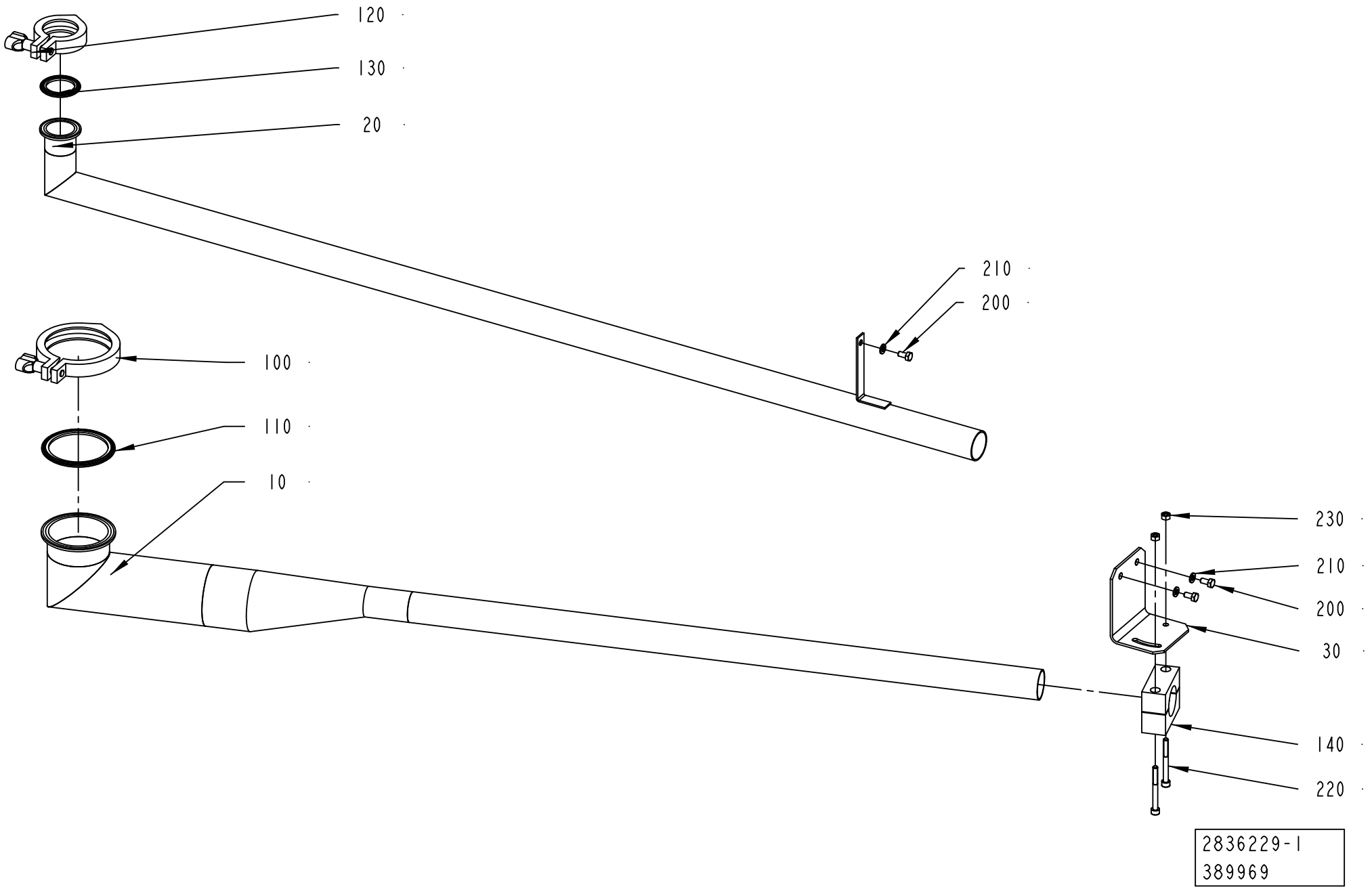
120
130
20
210
200
100
110
10
230
210
200
30
140
220
2836229-1
389969

ECM: 506344 - 20111001
Group number: 2836229-0100
Assembly Drawing: 2836229-1_1_AB

Pos	Part No	UN	Qty	Description	Page No
-					
010Â	2836230-0000		1	DRAINING	
020	2844591-0000		1	PIPE	
030	3021305-0000		1	BRACKET	
100	344215-0107		1	CLAMP RING A13MHM 3", 211056	
110	342850-0107		1	GASKET 72,9X89,6X5,2 MM 3" FDA 3-A	
120	344215-0103		1	CLAMP RING A13MHM 1X1 1/2", 211053	
130	342850-0304		1	GASKET 35,4X49,1X5,2 1"1/2 FDA, 3-A	
140	90165-0114		1	PIPE CLAMP, D=38 MM, RAN538X	
200	312105-0366		3	SCREW, M6S ISO 4017 M6X12 A4 80	
210	315105-0153		3	WASHER PLAIN, 6,4X12X1,5 A4 BRB	
220	312115-0382		2	SCREW ISO4762 M6X60 A4 80	
230	312605-0316		2	HEXAGON NUT, M6M M6 A280	

Pos	Part No	UN	Qty	Description	Page No

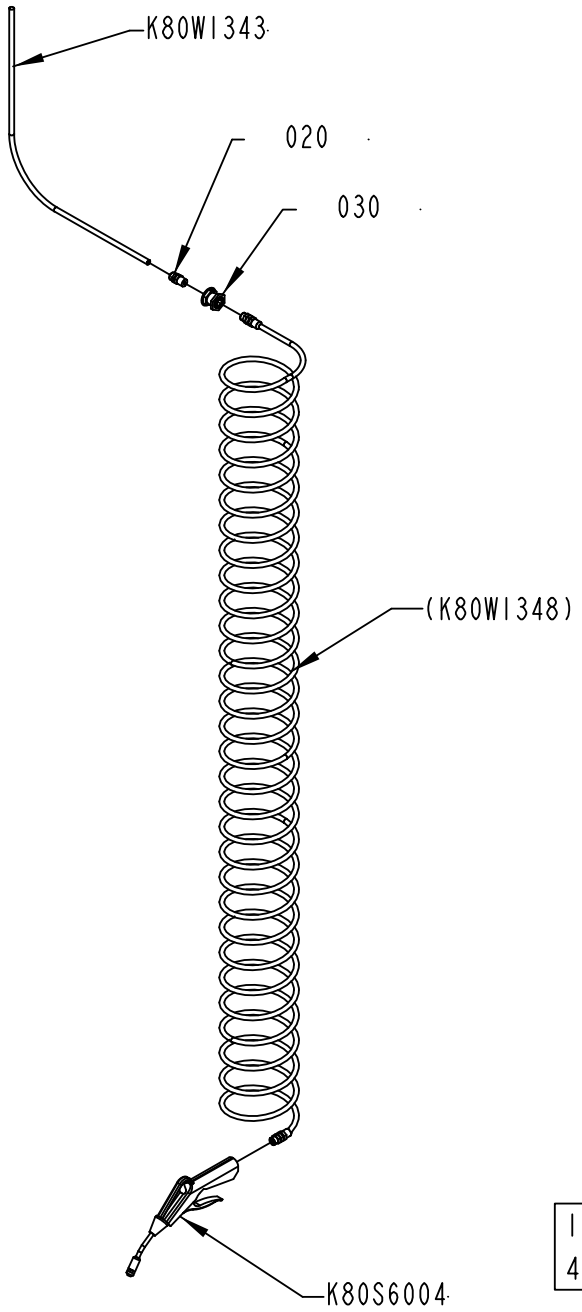
K80WI343
020
030
(K80WI348)
K80S6004
1095682-11
467895

ECM: 472330 - 20110101
Group number: 1095682-0300
Assembly Drawing: 1095682-11_1_AB

Pos	Part No	UN	Qty	Description	Page No
-					
020	342920-0122		1	STRAIGHT COUPLING, EXT.THREAD 8/6-R1/4	
030	342767-0104		1	BULKHEAD LEAD-IN, G1/4	
K80S6004	90458-1740		1	AIR GUN ASSEMBLY, CEJN 199589668	
K80W1343	315300-0004	MM	1800	TUBE, 8 MM PE BLUE	

Pos	Part No	UN	Qty	Description	Page No

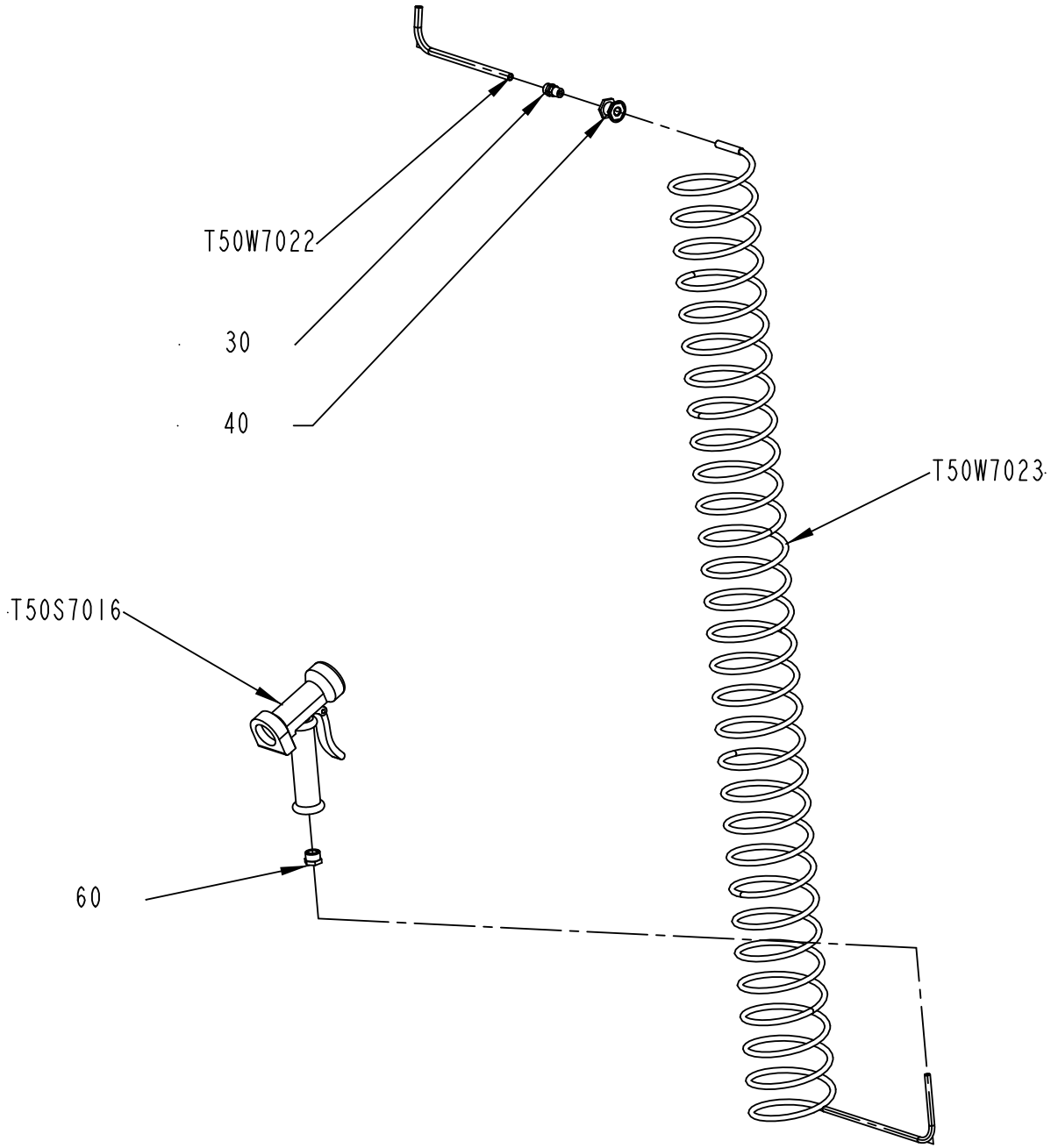
T50W7022
30
40
T50W7023
T50S7016
60
1095681-11
418784

ECM: 472329 - 20110101
Group number: 1095681-0300
Assembly Drawing: 1095681-11_1_AA

Pos	Part No	UN	Qty	Description	Page No
-					
030	342920-0132		1	STRAIGHT COUPLING, EXT.THREAD 10/8-R1/4	
040	342767-0104		1	BULKHEAD LEAD-IN, G1/4	
060	342701-0205		1	BUSHING, INT/EXT, G 1/2 - G1/4	
T50S7016	90426-0003		1	HAND SHOWER, 361100	
T50W7022	90166-0135	MM	1600	TUBE 10 MM PA BLACK	
T50W7023	90152-0017		1	HOSE (SPIRAL)	

Pos	Part No	UN	Qty	Description	Page No

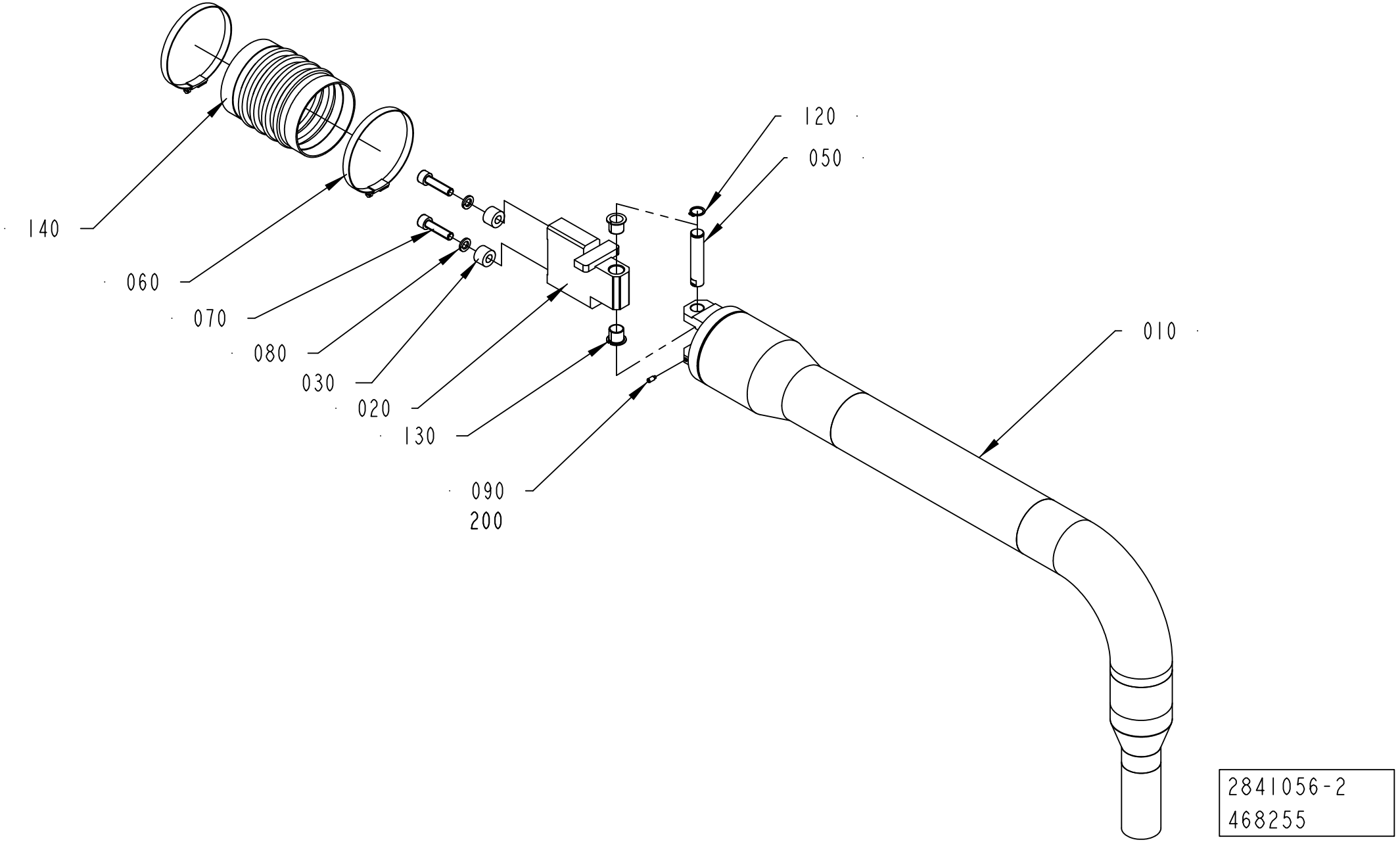
140
060
070
080
030
020
130
090
200
120
050
010
2841056-2
468255

ECM: 472136 - 20110101
Group number: 2841056-0200
Assembly Drawing: 2841056-2_1_AB

Pos	Part No	UN	Qty	Description	Page No
-					
010Â	3046472-0000		1	PIPE BRACKET	
020	2841057-0000		1	BLOCKING PIECE	
030	1254494-0000		2	SPACER	
050	1558945-0000		1	PIVOT PIN	
060	342991-0114		2	HOSE CLIP,WORM DRIVE TYPE (87)-112	
070	312115-0499		2	SCREW ISO4762 M10X40 A4 80	
080	315402-0173		2	LOCK WASHER, DIN127B 10,2 A4, M10	
090	312311-0327		1	SET SCREW, DOG POINT ISO4028 M5X12 FZB	
120	315751-0113		1	RETAINING RING FOR SHAFT DIN 471 16 SS	
130	321161-0221		2	FLANGE BEARING, 16X18X17 MM	
140	90342-0024		1	RUBBER BELLOWS, 100X100 MM	
200	90157-0021	KG	1	LOCKING FLUID LOCTITE 270	

Pos	Part No	UN	Qty	Description	Page No

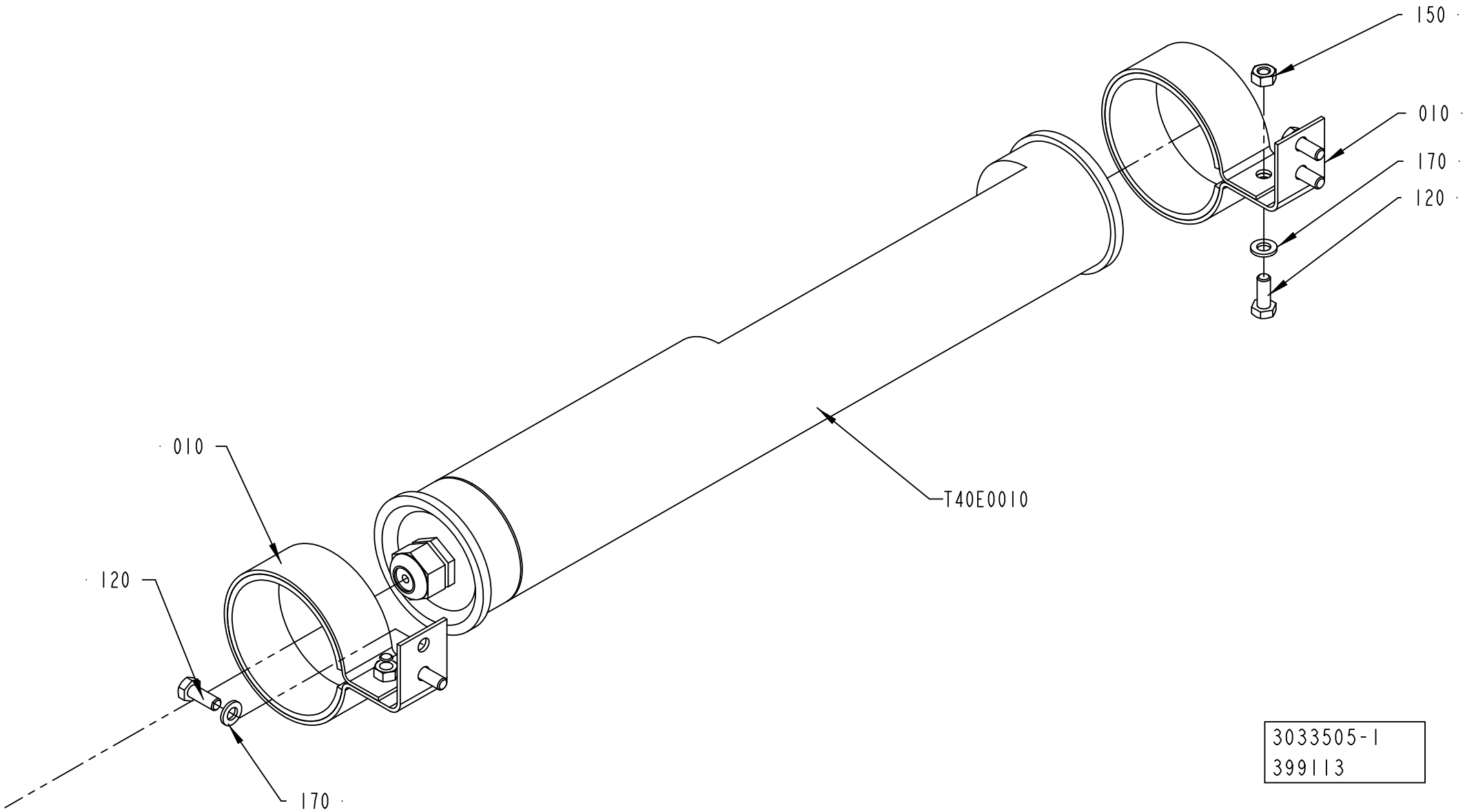
150
010
170
120
010
T40E0010
120
170
3033505-1
399113

ECM: 452801 - 20101001
Group number: 3033505-0100
Assembly Drawing: 3033505-1_1_AA

Pos	Part No	UN	Qty	Description	Page No
CE					
T40E0010	90164-0015		1	LIGHT FIXTURE, RL70CV-111 / 230V 50HZ	
	90297-0007		*1*	*FLUORESCENT TUBE, PLS 11*	
	92297-0301		*1*	*GLOW IGNITER 4-65W S\10, E 8219023*	
	90297-0007		*1*	*FLUORESCENT TUBE, PLS 11*	
	92297-0301		*1*	*GLOW IGNITER 4-65W S\10, E 8219023*	
UL, CSA					
T40E0010	90459-3784		1	LIGHT FIXTURE, RL70CE-118	
	90459-3785		*1*	*FLUORESCENT TUBE, PL-L 18*	
Common Parts					
010	1140129-0000		2	HOLDER	
120	312105-0368		6	SCREW, M6S ISO 4017 M6X16 A4 80	
150	312605-0316		2	HEXAGON NUT, M6M M6 A280	
170	315105-0153		6	WASHER PLAIN, 6,4X12X1,5 A4 BRB	

Pos	Part No	UN	Qty	Description	Page No

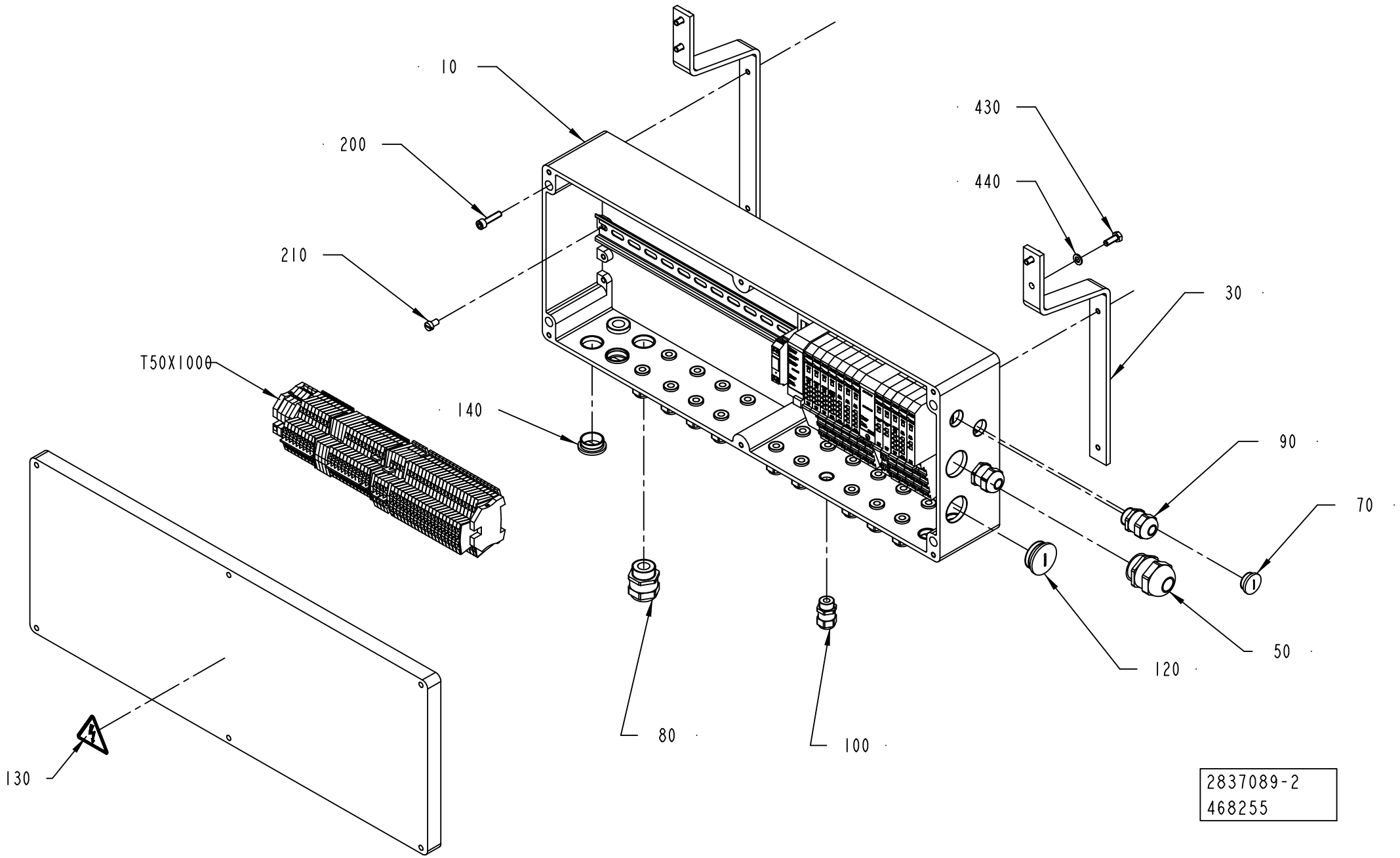
10
200
210
T50X1000
140
430
440
30
90
70
50
120
80
100
130
2837089-2
468255

Pos	Part No	UN	Qty	Description	Page No
ANSI					
130	359715-0100		1	WARNING SIGN ANSI (H), ELECTRIC SHOCK	
ISO					
130	359705-0015		1	WARNING SIGN ISO, RISK OF ELECTRIC SHOCK	
Common Parts					
010	3011831-0000		1	CONNECTION BOX	
020	1347878-0000		1	RAIL	
030	2849958-0000		2	SUPPORT	
050	90458-0309		1	CABLE GLAND, M32X1,5, 5311 1040	
070	90458-1308		3	BLIND PLUG CIRCULAR, M20X1,5 514GFK/220	
080	90458-0316		2	CABLE GLAND, M25X1,5, 5311 1130	
090	90458-0307		2	CABLE GLAND, M20X1,5, 5311 1020	
100	90458-0306		20	CABLE GLAND, M16X1,5, 5311 1010	
120	90458-1310		1	BLIND PLUG CIRCULAR, M32X1,5 514GFK/232	
140	90458-1309		2	BLIND PLUG CIRCULAR, M25X1,5 514GFK/225	
200	312115-0372		4	SCREW ISO4762 M6X25 A4 80	
210	312125-0364		2	SCREW ISO 1207 M6X10 A4	
430	312105-0368		4	SCREW, M6S ISO 4017 M6X16 A4 80	
440	315105-0153		4	WASHER PLAIN, 6,4X12X1,5 A4 BRB	
600	90459-2526		10	REMOTE I/O BASE MODULE 8 POINTS, 1734-TB	
610	90459-2528		2	REMOTE I/O BASE MODULE FOR THERMOCOUPLE	
T50K1000	90459-2494		1	DEVICENET I/O ADAPTER MODULE, 1734-ADN	
T50K1010	90459-6561		1	DIGITAL INPUT 8 PTS SINK, 1734-IB8/C	
T50K1020	90459-6561		1	DIGITAL INPUT 8 PTS SINK, 1734-IB8/C	
T50K1030	90459-6561		1	DIGITAL INPUT 8 PTS SINK, 1734-IB8/C	
T50K1040	90459-6560		1	DIGITAL OUTPUT 8 PTS, 1734-OB8E/C	
T50K1050	90459-5261		1	REMOTE I/O, RELAY OUTP. 4 PTS,1734-OW4/C	
T50K1060	90459-5261		1	REMOTE I/O, RELAY OUTP. 4 PTS,1734-OW4/C	
T50K1070	90459-5261		1	REMOTE I/O, RELAY OUTP. 4 PTS,1734-OW4/C	
T50K1080	90459-2500		1	EXPANSION POWER SUPPLY MODULE	
T50K1090	90459-2512		1	REMOTE I/O THERMOCOUPLE INPUT 2 PTS	
T50K1100	90459-2512		1	REMOTE I/O THERMOCOUPLE INPUT 2 PTS	
T50K1110	90459-6561		1	DIGITAL INPUT 8 PTS SINK, 1734-IB8/C	
T50K1120	90459-5261		1	REMOTE I/O, RELAY OUTP. 4 PTS,1734-OW4/C	
T50K1130	90459-4055		1	REMOTE I/O RELAY OUTPUT 2 PTS	
T50X1000	2890280-0200		1	TERMINAL BLOCK	**2-25**
W51K1700	90119-0104		1	OPTO COUPLER AMMS 50070	

Pos	Part No	UN	Qty	Description	Page No

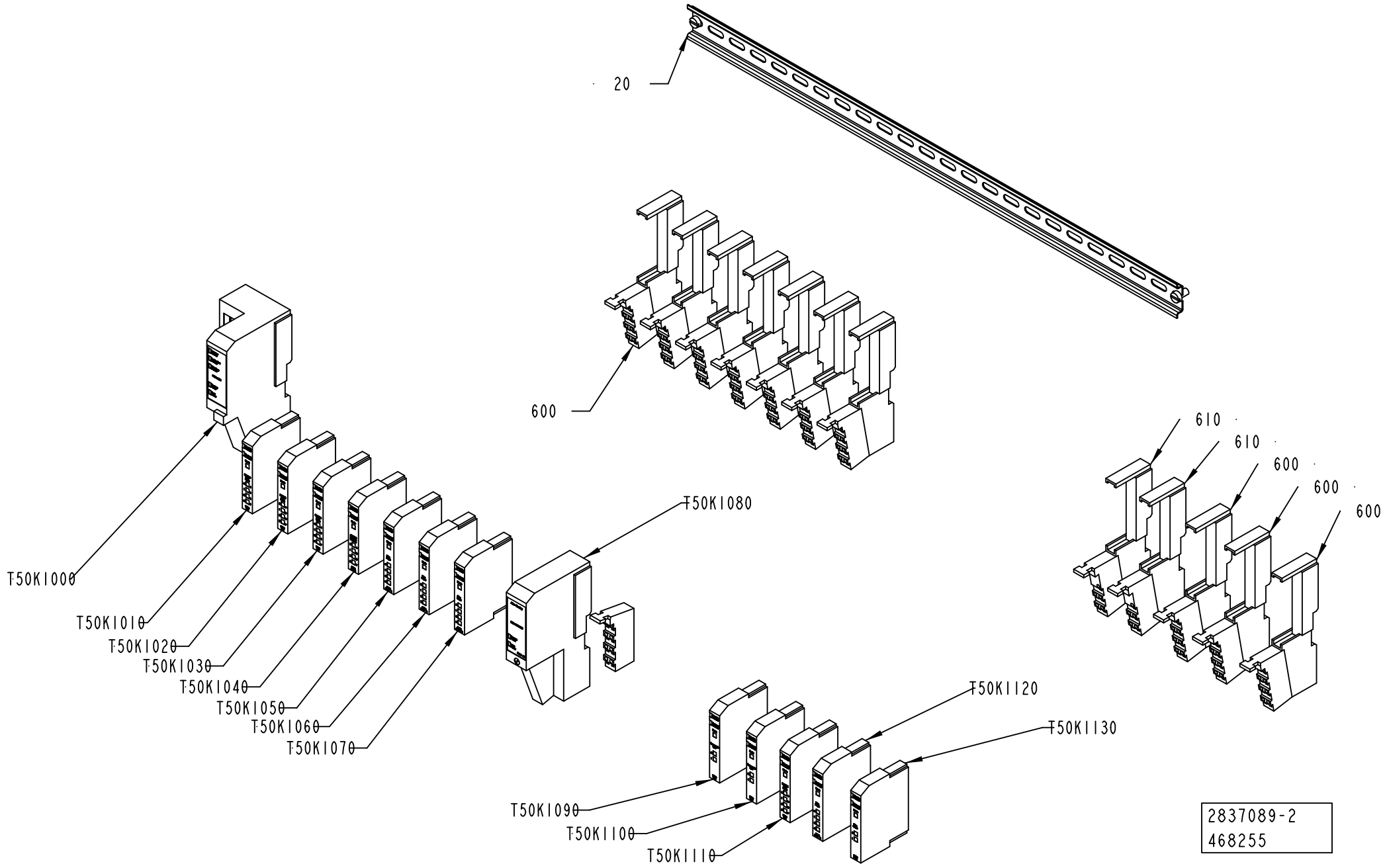
20
600
610
610
600
600
600
T50K1000
T50K1010
T50K1020
T50K1030
T50K1040
T50K1050
T50K1060
T50K1070
T50K1080
T50K1090
T50K1100
T50K1110
T50K1120
T50K1130
2837089-2
468255

Pos	Part No	UN	Qty	Description	Page No
ANSI					
130	359715-0100		1	WARNING SIGN ANSI (H), ELECTRIC SHOCK	
ISO					
130	359705-0015		1	WARNING SIGN ISO, RISK OF ELECTRIC SHOCK	
Common Parts					
010	3011831-0000		1	CONNECTION BOX	
020	1347878-0000		1	RAIL	
030	2849958-0000		2	SUPPORT	
050	90458-0309		1	CABLE GLAND, M32X1,5, 5311 1040	
070	90458-1308		3	BLIND PLUG CIRCULAR, M20X1,5 514GFK/220	
080	90458-0316		2	CABLE GLAND, M25X1,5, 5311 1130	
090	90458-0307		2	CABLE GLAND, M20X1,5, 5311 1020	
100	90458-0306		20	CABLE GLAND, M16X1,5, 5311 1010	
120	90458-1310		1	BLIND PLUG CIRCULAR, M32X1,5 514GFK/232	
140	90458-1309		2	BLIND PLUG CIRCULAR, M25X1,5 514GFK/225	
200	312115-0372		4	SCREW ISO4762 M6X25 A4 80	
210	312125-0364		2	SCREW ISO 1207 M6X10 A4	
430	312105-0368		4	SCREW, M6S ISO 4017 M6X16 A4 80	
440	315105-0153		4	WASHER PLAIN, 6,4X12X1,5 A4 BRB	
600	90459-2526		10	REMOTE I/O BASE MODULE 8 POINTS, 1734-TB	
610	90459-2528		2	REMOTE I/O BASE MODULE FOR THERMOCOUPLE	
T50K1000	90459-2494		1	DEVICENET I/O ADAPTER MODULE, 1734-ADN	
T50K1010	90459-6561		1	DIGITAL INPUT 8 PTS SINK, 1734-IB8/C	
T50K1020	90459-6561		1	DIGITAL INPUT 8 PTS SINK, 1734-IB8/C	
T50K1030	90459-6561		1	DIGITAL INPUT 8 PTS SINK, 1734-IB8/C	
T50K1040	90459-6560		1	DIGITAL OUTPUT 8 PTS, 1734-OB8E/C	
T50K1050	90459-5261		1	REMOTE I/O, RELAY OUTP. 4 PTS,1734-OW4/C	
T50K1060	90459-5261		1	REMOTE I/O, RELAY OUTP. 4 PTS,1734-OW4/C	
T50K1070	90459-5261		1	REMOTE I/O, RELAY OUTP. 4 PTS,1734-OW4/C	
T50K1080	90459-2500		1	EXPANSION POWER SUPPLY MODULE	
T50K1090	90459-2512		1	REMOTE I/O THERMOCOUPLE INPUT 2 PTS	
T50K1100	90459-2512		1	REMOTE I/O THERMOCOUPLE INPUT 2 PTS	
T50K1110	90459-6561		1	DIGITAL INPUT 8 PTS SINK, 1734-IB8/C	
T50K1120	90459-5261		1	REMOTE I/O, RELAY OUTP. 4 PTS,1734-OW4/C	
T50K1130	90459-4055		1	REMOTE I/O RELAY OUTPUT 2 PTS	
T50X1000	2890280-0200		1	TERMINAL BLOCK	**2-25**
W51K1700	90119-0104		1	OPTO COUPLER AMMS 50070	

Pos	Part No	UN	Qty	Description	Page No

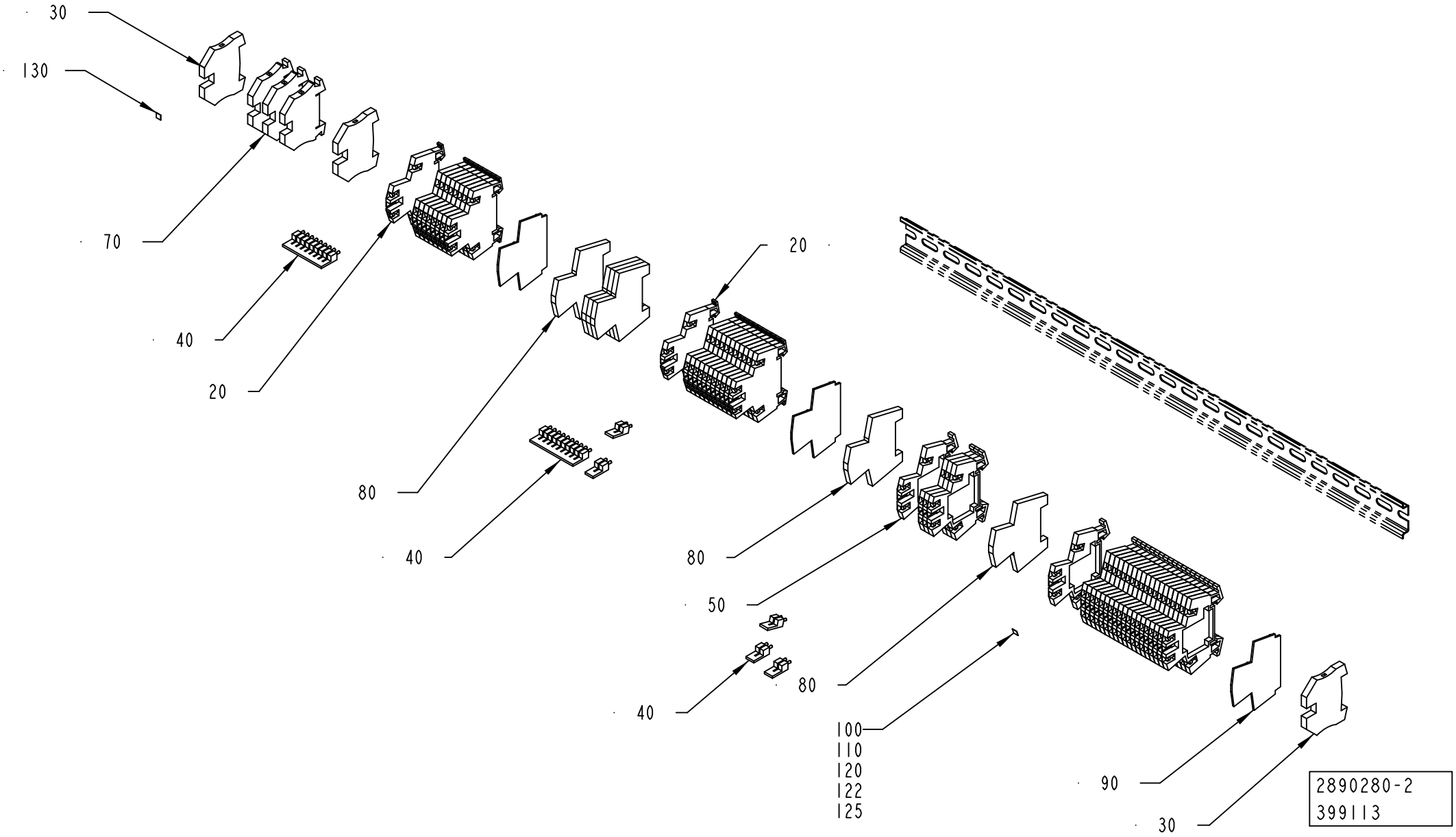
30
130
70
40
20
80
40
20
80
50
40
80
100
110
120
122
125
90
30
2890280-2
399113

ECM: 407983 - 20090904
Group number: 2890280-0200
Assembly Drawing: 2890280-2_1_AA

Pos	Part No	UN	Qty	Description	Page No
-					
020	90459-5253		21	TERMINAL BLOCK WDK 2,5 V	
030	353024-0205		3	EARTH TERMINAL WPE 4	
040	353034-0030		3	BRIDGE CONNECTOR WQV 2,5/10	
050	90077-0113		24	TERMINAL BLOCK WDK 2.5	
070	353021-0213		3	FEED THROUGH TERMINAL, WDU 4	
080	353024-0212		6	EARTH TERMINAL WDK 2,5 PE	
090	353032-0009		3	END PLATE, WAP WDK 2,5	
100	359011-0807		1	MARKING, DEK 5 FW 1-50	
110	359011-0808		1	MARKING, DEK 5FW 51-100	
120	359011-0809		2	MARKING, DEK 5 FW 101-150	
122	359011-0810		2	MARKING, DEK 5 FW 151-200	
125	359011-0811		2	MARKING, DEK 5 FW 201-250	
130	359011-0819		1	MARKING, EARTH, DEK 5 GW ERDE I.KR.	

Pos	Part No	UN	Qty	Description	Page No

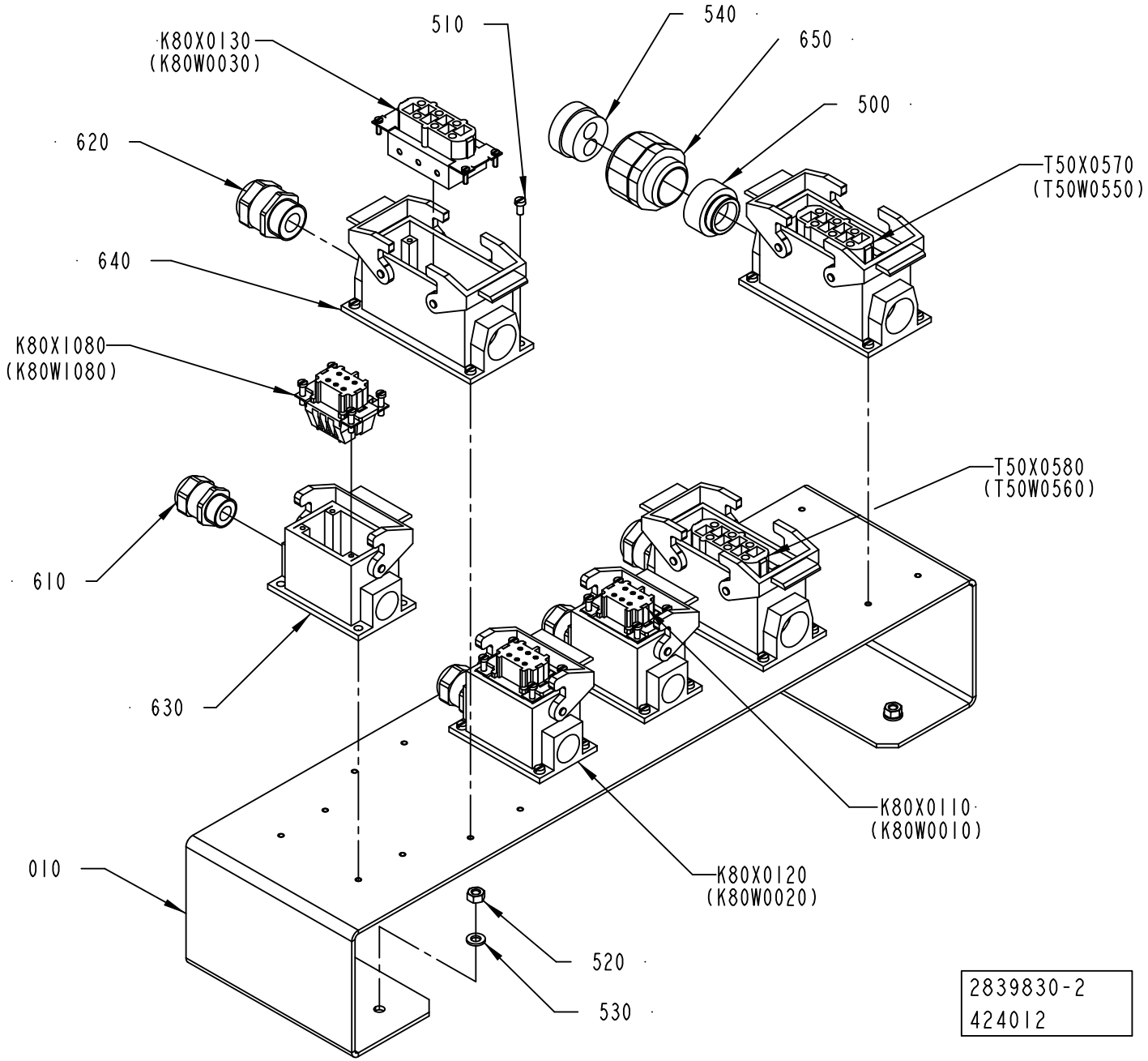
K80X0130
(K80W0030)
510
540
650
500
620
T50X0570
(T50W0550)
640
K80X1080
(K80W1080)
T50X0580
(T50W0560)
610
630
K80X0110
(K80W0010)
010
K80X0120
(K80W0020)
520
530
2839830-2
424012

ECM: 424088 - 20091001
Group number: 2839830-0200
Assembly Drawing: 2839830-2_1_AB

Pos	Part No	UN	Qty	Description	Page No
-					
010	3046889-0000		1	SUPPORT	
500	90458-0423		1	CABLE GLAND, VK 23255Y	
510	312125-0287		20	SLOTTED HEAD SCREW, ISO1207 M4X8 A4	
520	312605-0316		4	HEXAGON NUT, M6M M6 A280	
530	315105-0153		4	WASHER PLAIN, 6,4X12X1,5 A4 BRB	
540	3060488-0000		1	INSERT	
610	90458-0307		3	CABLE GLAND, M20X1,5, 5311 1020	
620	90458-0308		2	CABLE GLAND, M25X1,5, 5311 1030	
630	90459-6640		3	HOUSING, 19 30 006 1250	
640	90459-6642		3	HOUSING, 19 30 016 1231	
650	90459-7225		1	REDUCER, M32/M25	
K80X0110	90110-0053		1	FEMALE INSERT, HAN 6 E 09 33 006 2701	
K80X0120	90110-0053		1	FEMALE INSERT, HAN 6 E 09 33 006 2701	
K80X0130	90110-0055		1	FEMALE INSERT, HAN 6 HSB 09 31 006 2701	
K80X1080	90110-0053		1	FEMALE INSERT, HAN 6 E 09 33 006 2701	
T50X0570	90110-0055		1	FEMALE INSERT, HAN 6 HSB 09 31 006 2701	
T50X0580	90110-0055		1	FEMALE INSERT, HAN 6 HSB 09 31 006 2701	

Pos	Part No	UN	Qty	Description	Page No

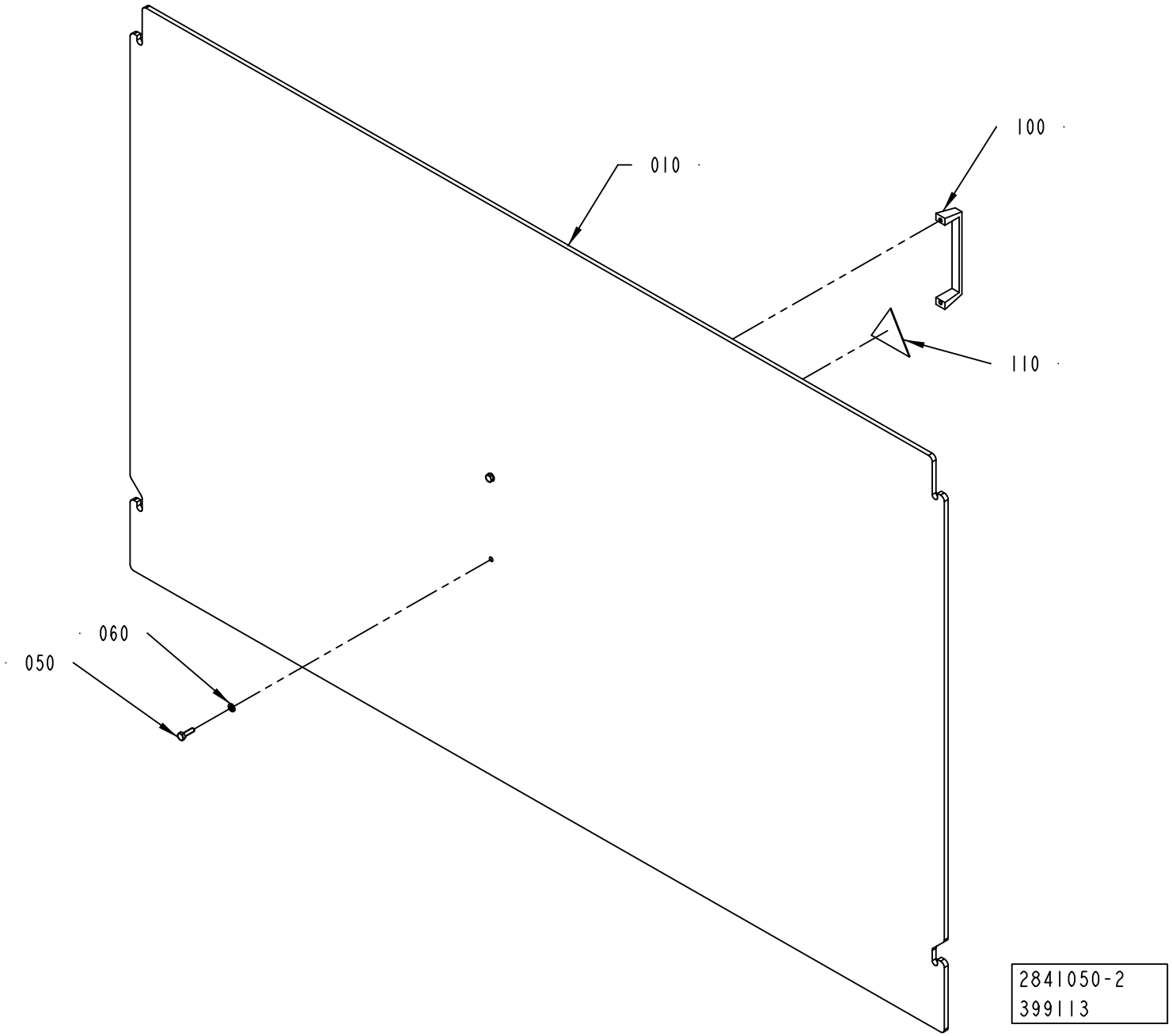
100
010
110
060
050
2841050-2
399113

ECM: 460811 - 20101001
Group number: 2841050-0200
Assembly Drawing: 2841050-2_1_AA

Pos	Part No	UN	Qty	Description	Page No
ANSI					
110	90459-6083		1	WARNING SIGN ANSI (H), HAZARDOUS ROTATIN	
ISO					
110	90459-6084		1	WARNING SIGN ISO, HAZARDOUS ROTATING BEL	
Common Parts					
010	3046473-0000		1	DOOR	
050	312105-0292		2	SCREW, M6S ISO 4017 M4X14 A4 70	
060	315105-0136		2	WASHER PLAIN, 4,3X9X0,8 A4 BRB	
100	90458-2633		1	HANDLE, 1045-05	

Pos	Part No	UN	Qty	Description	Page No

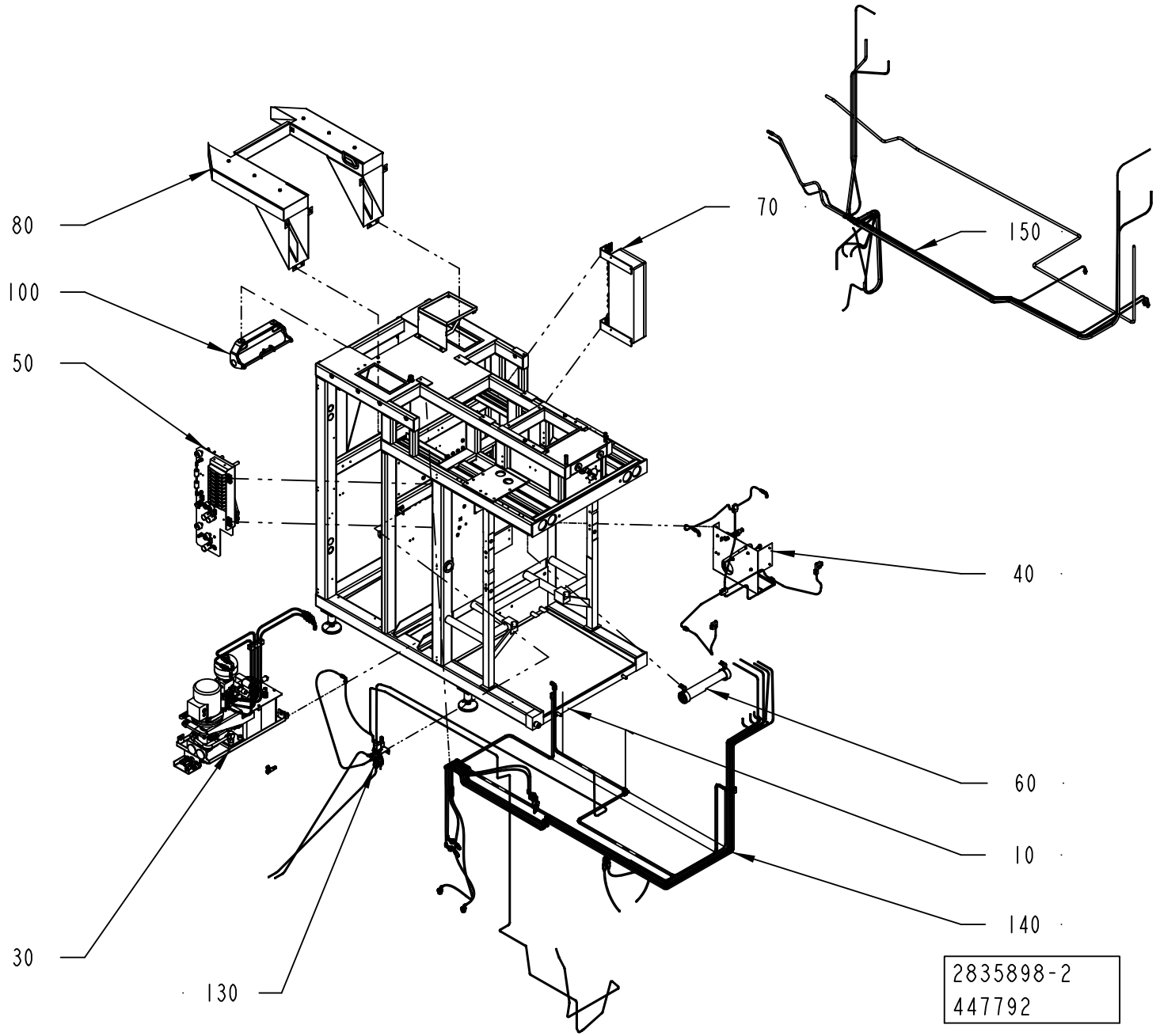
80
100
50
70
150
40
60
10
140
30
130
2835898-2
447792

ECM: 456384 - 20101001
Group number: 2835898-0200
Assembly Drawing: 2835898-2_1_AC

Pos	Part No	UN	Qty	Description	Page No
-					
010Â	2876614-0200		1	CENTRAL MODULE	**2-33**
030	2828687-0200		1	HYDRAULIC UNIT	**2-35**
040	2844594-0100		1	LUBRICATING SYSTEM	**2-43**
050	2839628-0100		1	VALVE PANEL	**2-49**
060	3033506-0100		1	LIGHT FIXTURE	**2-53**
070	2837091-0200		1	CONNECTION BOX	**2-55**
080	2832090-0200		1	CABLE DUCT	**2-59**
100	2504784-0200		1	BENDING ROLLER	**2-61**
130	2877590-0100		1	TUBE FLUSHING	**2-63**
140	2845716-0100		1	PIPE WORK-WATER	**2-65, 2-67**
150	2987037-0200		1	AIR PIPE-LINE	**2-69**

Pos	Part No	UN	Qty	Description	Page No

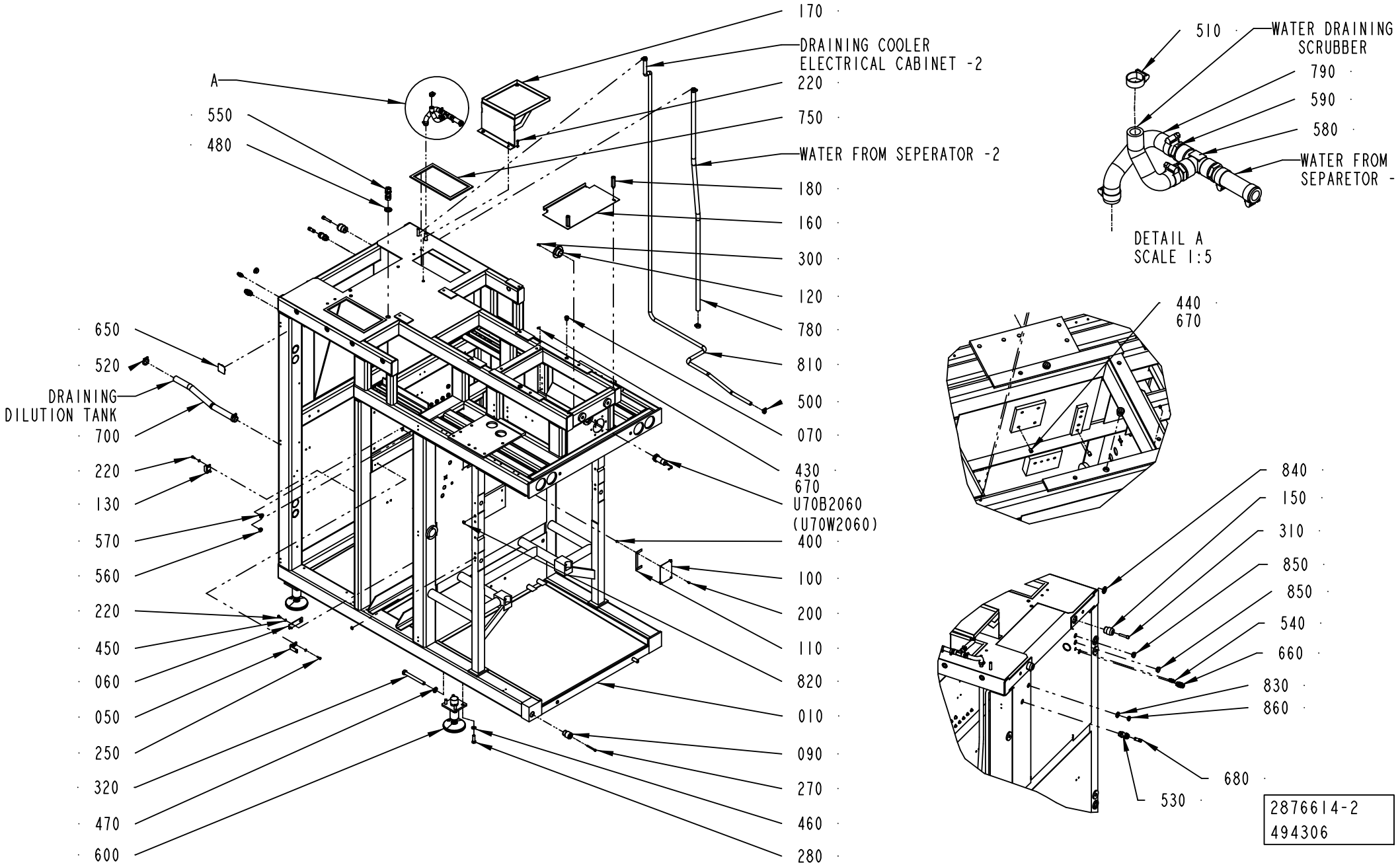
170
DRAINING COOLER ELECTRICAL CABINET -2
220
750
WATER FROM SEPERATOR -2
180
160
300
120
780
810
500
070
430
670
U70B2060
(U70W2060)
400
100
200
110
820
010
090
270
460
280
A
550
480
650
520
DRAINING DILUTION TANK
700
220
130
570
560
220
450
060
050
250
320
470
600
510
WATER DRAINING SCRUBBER
790
590
580
WATER FROM SEPARETOR -1
DETAIL A
SCALE 1:5
440
670
840
150
310
850
850
540
660
830
860
680
530
2876614-2
494306

ECM: 498343 - 20110701
Group number: 2876614-0200
Assembly Drawing: 2876614-2_1_AE

Pos	Part No	UN	Qty	Description	Page No
-					
010Â	2813401-0000		1	FRAME	
050	2872393-0000		1	HOLDER	
060	2877368-0000		1	HOLDER	
070	1490046-0000		2	PIN	
090	2835927-0000		1	PIN	
100	2839827-0000		2	COVER	
110	2839826-0000		4	GASKET	
120	450457-0000		1	FLANGE	
130	2921683-0000		2	LOCKING CATCH	
150	591341-0000		2	PIN	
160	3022733-0000		1	COVER	
170	3046890-0000		1	COVER	
180	3119249-0000		2	SPACER	
200	312105-0325		8	SCREW, M6S ISO 4017 M5X10 A4 80	
220	312105-0368		8	SCREW, M6S ISO 4017 M6X16 A4 80	
250	312115-0368		2	SCREW ISO4762 M6X16 A4 80	
270	312115-0382		1	SCREW ISO4762 M6X60 A4 80	
280	312115-0540		16	SCREW ISO4762 M12X40 A4 80	
300	312155-0329		4	SCREW DIN 7991 MF6S M5X16 A4 70	
310	312115-0501		2	SCREW ISO4762 M10X50 A4 80	
320	312105-0648		2	SCREW, M6S ISO 4014 M16X150 A4 80	
400	312605-0314		8	HEXAGON NUT, M6M M5 A280	
430	312318-0360		1	SET SCREW, CUP END ISO4029 M6X6 A4	
440	312318-0445		4	SET SCREW, CUP END ISO4029 M8X10 A4	
450	315105-0153		10	WASHER PLAIN, 6,4X12X1,5 A4 BRB	
460	315105-0178		16	WASHER PLAIN, 13X24X2,5 A4 BRB	
470	315105-0186		2	WASHER PLAIN, 17X30X3 A4 BRB	
480	315105-0195		1	WASHER PLAIN, 23X40X3 A4 BRB	
500	342991-0102		2	HOSE CLIP,WORM DRIVE TYPE (13)-20	
510	342991-0103		8	HOSE CLIP,WORM DRIVE TYPE (15)-24	
520	342991-0106		2	HOSE CLIP,WORM DRIVE TYPE (26)-38	
530	342768-0110		1	BULKHEAD CONNECTOR, 14 MM	
540	350010-0002		1	PUSH-IN BULKHEAD FITTING QSS-F-6	
550	90030-0159		1	CONN. BULKHEAD SV15L71	
560	90015-0020		17	LEAD-IN, TET5-7, E-1458016	
570	90015-0023		2	LEAD-IN, TET 7-10, E1458019	
580	90140-0010		1	T-PIPE, INT. THREAD, 20031/2	
590	90163-0039		3	HOSE NIPPLE EXT.THR. G1/2-17 MM	
600	90600-0725		4	FOOT 32000N, 90600-0725	
650	90261-0070		2	PLASTIC PLUG SS 0082.31	
660	350010-0005		1	PUSH-IN BULKHEAD FITTING QSS-F-12	
670	90157-0037	ML	1	THREAD SEALANT LOCTITE 542	
680	342715-0106		1	BLIND PLUG 14 MM	
700	90166-0158	M	0	HOSE	
750	90143-0097	M	2	SELF GRIPPING GASKET, 1011-24	
780	90166-0087	M	1	HOSE 15/23 REINF.PVC TRANSP.	
790	90166-0087	M	1	HOSE 15/23 REINF.PVC TRANSP.	
810	90166-0121	M	3	HOSE	
820	90261-0057		4	PLUG, BLIND, PLASTIC	
830	90458-0323		1	NUT, M20X1,5	
840	90458-0324		2	NUT, M25X1,5	
850	90458-1309		2	BLIND PLUG CIRCULAR, M25X1,5 514GFK/225	
860	90458-1308		1	BLIND PLUG CIRCULAR, M20X1,5 514GFK/220	
U70B2060	90458-0256		1	PROX.SWITCH IIA 3010-BPKG/6M	

Machine Type	Group Description	Used-In	Group Number	Page No

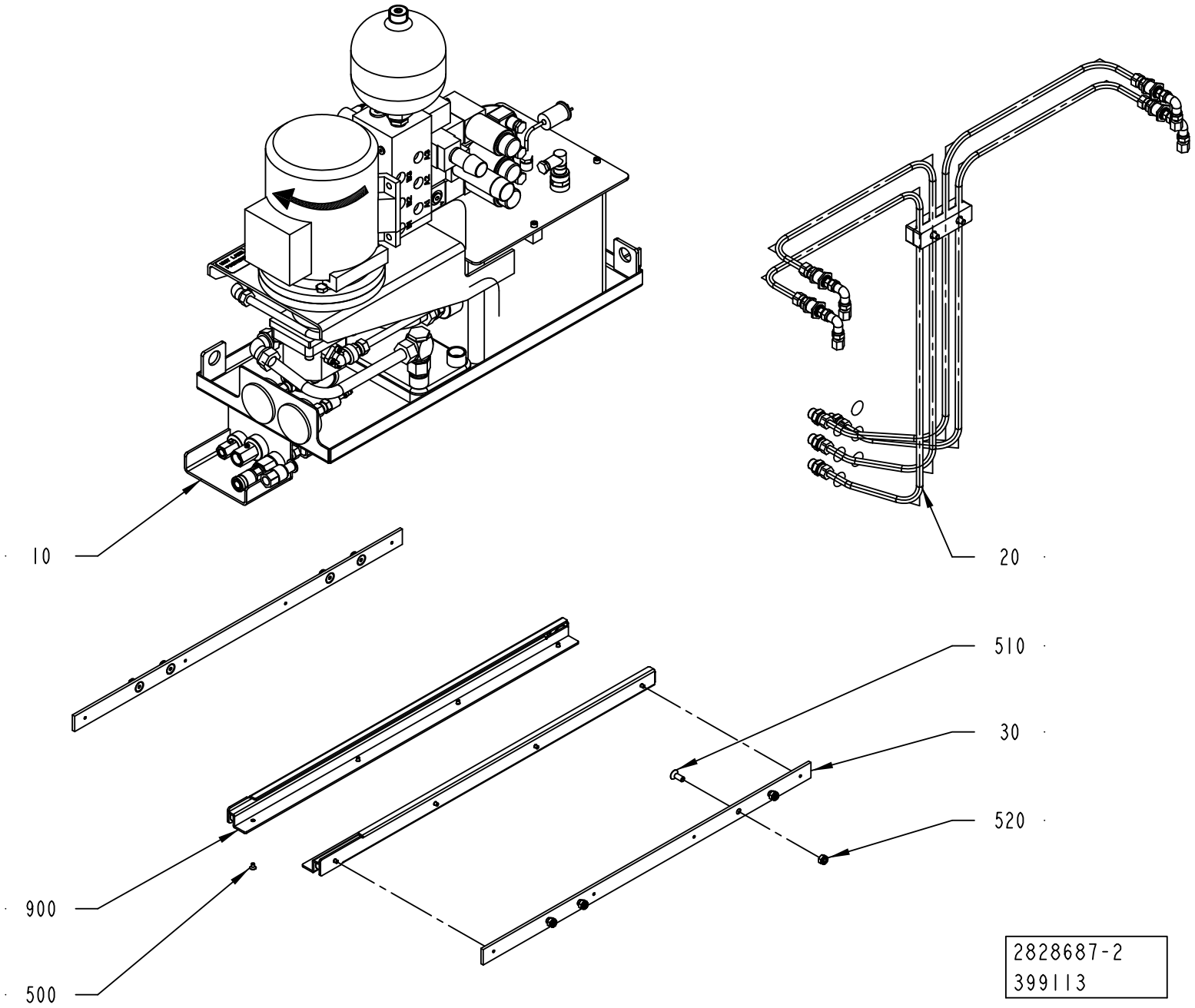
10
20
510
30
520
900
500
2828687-2
399113

ECM: 410178 - 20090904
Group number: 2828687-0200
Assembly Drawing: 2828687-2_1_AA

Pos	Part No	UN	Qty	Description	Page No
-					
010	2764890-0200		1	HYDRAULIC UNIT	**2-37, 2-39**
020	2828688-0200		1	PIPE WORK-HYDRAULIC	**2-41**
030	2686318-0000		2	HOLDER	
500	312155-0323		16	SCREW DIN 7991 MF6S M5X8 A4 70	
510	312155-0451		8	SCREW DIN 7991 MF6S M8X20 A4 70	
520	312812-0318		8	HEXAGON NUT, NY-LOCK M8 A4 80	
900	90459-5633		1	GUIDE CONSOLE 30X13X750, FR1105/750	

Pos	Part No	UN	Qty	Description	Page No

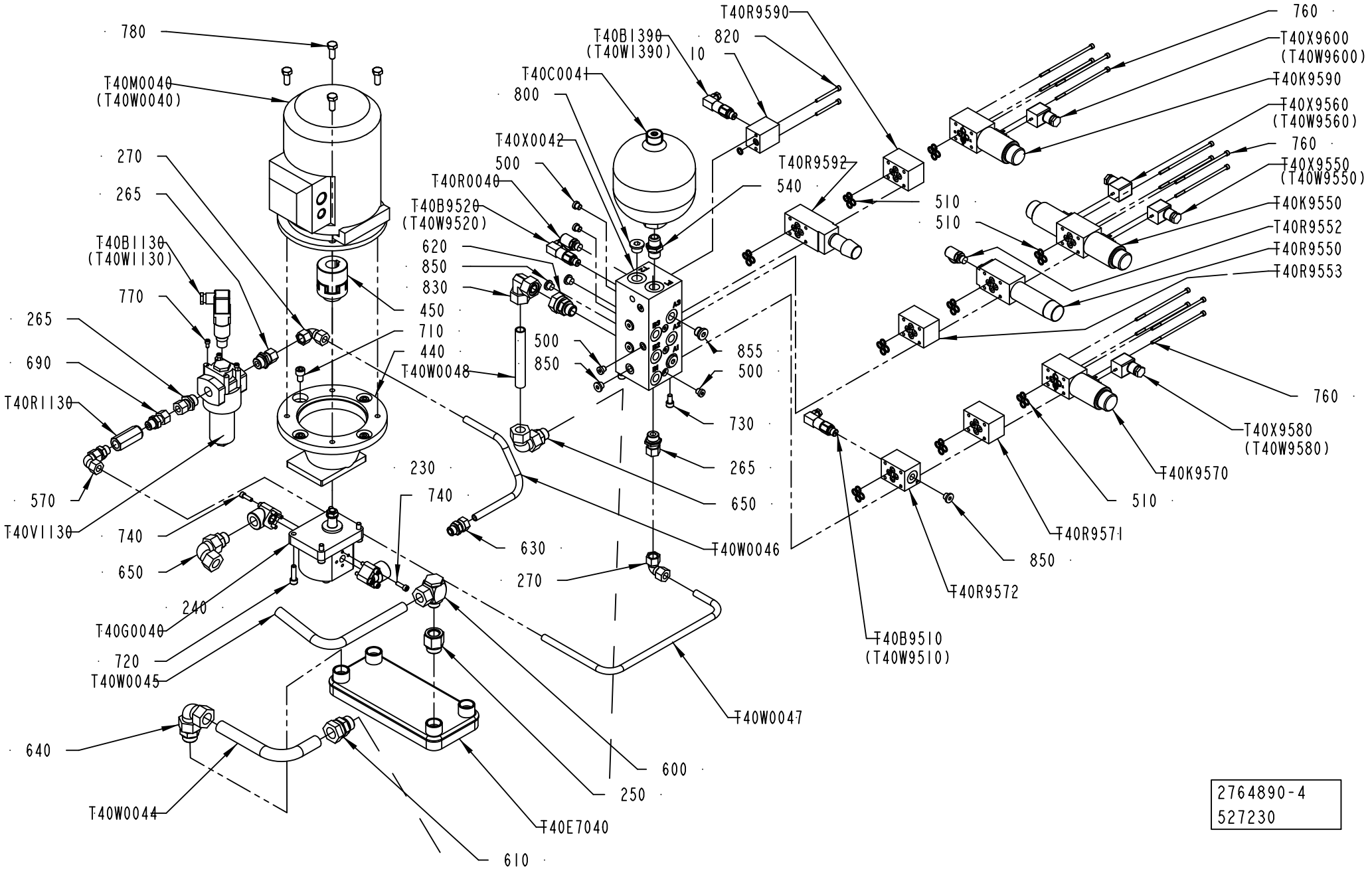

2764890-4
527230

ECM: 532286 - 20111128
Group number: 2764890-0200
Assembly Drawing: 2764890-4_1_AC

This list covers pages from 2-36 to 2-39

Pos	Part No	UN	Qty	Description	Page No
A3/COMPACTFLEX (See drawing on pages: 2-36, 2-38)					
855	342713-0311		2	PLUG, EXT. THREAD HEX. SOCKET. BPS38	
T40B1390	90602-3330		1	PRESSURE TRANSMITTER 0-200 BAR 8251.33.2	
T40B9510	90602-3330		1	PRESSURE TRANSMITTER 0-200 BAR 8251.33.2	
T40B9520	90602-3330		1	PRESSURE TRANSMITTER 0-200 BAR 8251.33.2	
T40K9570	90601-0068		1	DIRECTIONAL VALVE, NO. 4WE 6 D6X/EG24N9K	
T40K9590	90601-0068		1	DIRECTIONAL VALVE, NO. 4WE 6 D6X/EG24N9K	
T40M0040	90604-3045		1	MOTOR 3GAA 092 314-BSE	
T40X9580	90600-1296		1	CONNECTOR 2 POLE + PE, Z4-A GRIG	
T40X9600	90600-1296		1	CONNECTOR 2 POLE + PE, Z4-A GRIG	
Common Parts					
010	2838347-0000		1	BLOCK	
080	2764892-0000		1	LID	
220	90600-1306		2	MANOMETER GAUGE CONN., AB20-11 M 1/4"	
230	90600-1305		1	PUMP ELBOW W. FIXING HOLES, R996087364	
240	90600-1304		1	PUMP ELBOW W. FIXING HOLES, R996087365	
250	3069589-0000		1	REDUCER	
265	90030-0109		3	STRAIGHT PIPE CONN. GE12LR1/271	
270	342744-0109		2	ADJUSTABLE ELBOW CONNECTION 12	
280	90600-1298		1	CONNECTOR, 03POL Z4 M SW (BLACK)	
440	90600-1281		1	BELLHOUSING, PL 200/02/03	
450	90600-1280		1	FLEXIBLE COUPLING, 17,29X24 MM	
500	90459-2738		7	PLUG, EXT. THR. HEX. SOCK. VSTI1/8EDA3C	
510	90201-0442		37	GASKET, NO. 313162	
530	90091-0159		1	GASKET 330X308X9 MM	
540	90030-0340		1	NIPPLES, EXT. THREAD, HEXAGON, RA-G1/2A3	
560	90030-0147		2	ADJUSTABLE ELBOW CONNECTION 10-G1/4	
570	90030-0241		1	ADJUSTABLE ELBOW CONNECTION 12-G3/8	
580	90163-0304		1	QUICK COUPLING, LP-006-5-74-KU (DUST CAP	
590	90600-2724		1	REDUCER, G 1/4- G 1/2 X40,0SW30-A3C	
600	342796-0118		1	CONN. BANJO,WH 18-G1/2	
610	342752-0119		2	CONN. STR. GE22LREDCF	
620	342752-0118		3	CONN. STR. GE18LREDCF	
630	342752-0110		1	CONN. STR. GE12LREDCF	
640	3069588-0000		1	ELBOW PIPE JOINT	
650	342738-0125		2	ADJUSTABLE ELBOW CONNECTION 18-G1/2	
690	90030-0339		1	CONN. STR. EVGE12LREDCF	
710	312115-0489		4	SCREW ISO4762 M10X16 A4 80	
720	312115-0455		4	SCREW ISO4762 M8X30 A4 80	
730	312115-0449		2	SCREW ISO4762 M8X16 A4 80	
740	312115-0370		6	SCREW ISO4762 M6X20 A4 80	
750	312115-0367		4	SCREW ISO4762 M6X14 A4 80	
760	90600-8346		12	SCREW M5X130 10.9, R91300516	
770	312115-0325		6	SCREW ISO4762 M5X10 A4 80	
780	312105-0493		4	SCREW, M6S ISO 4017 M10X25 A4 80	
790	342752-0104		2	CONN. STR. GE10LREDCF	
800	342713-0313		1	PLUG, EXT. THREAD HEX. SOCKET. BPS12	
810	315234-0110		1	WASHER,PL.RND.CU.13,5/18 H=1,5	
820	90287-0261		2	SCREW MC6S M5X55 A270	
830	90459-6578		1	ELBOW FITTING ADJ., EW 18-PL	
850	342713-0310		7	PLUG, EXT. THREAD HEX. SOCKET. BPS14	
860	342714-0221		1	TUBE END REDUCER 22 - 18	
870	342796-0119		1	CONN. BANJO,WH 22-G3/4	
880	90030-0154		1	NIPPLES, REDUCING, INT. THR. NO. 2520	
890	90602-4727		1	REDUCING, R1/2EXT-G1/2INT	
900	315234-0113		1	WASHER PL.RND.CU.21,3//26 H=1,5	
T40B1130	90600-1288		1	PRESS. SENS. 0-420 BAR VD5C.0,R900001431	
T40B1150	90600-1301		1	LEVEL GUARD, ABZMS-35-1X /120F050S-K24	
T40B1370	2834035-0000		1	THERMOCOUPLE	
T40C0040	3042605-0000		1	TANK	
T40C0041	90459-4032		1	HYDR.ACC., SBO-210-1.4E1/112U-210AK	
T40E7040	90600-1269		1	HEAT EXCHANGER M18-10	
T40G0040	90600-1283		1	PUMP, AZPF -12-004RH030PB	
T40K9550	90601-0067		1	DIRECTIONAL VALVE,4WE 6 J61/EG24N9K4/B15	
T40P0040	90600-1284		1	PRESSURE GAUGE, D=63 MM ABZMM 63-160BAR/	
T40P0042	90600-8349		1	OIL LEVEL INDICATOR, HGFT. 40-2-C9-RE	
T40P9550	90600-1284		1	PRESSURE GAUGE, D=63 MM ABZMM 63-160BAR/	
T40Q0040	90600-0775		1	BALL VALVE G1/4, 406F-1/4"	
T40Q0041	90601-5110		1	BALL VALVE G1/2, 3861-1/2"	
T40R0040	90600-1308		1	HOSE ATTACHMENT, AB20-11/K1 1/4G	
T40R1130	90600-1282		1	NON-RETURN VALVE, NO. S8 A1,0/	
T40R9550	90600-1292		1	PRESSURE RED. VALVE, ZDR 6 DP2-4X/150YM	
T40R9552	90600-1308		1	HOSE ATTACHMENT, AB20-11/K1 1/4G	
T40R9553	90600-1294		1	NON-RETURN VALVE, NO. Z1S 6 T05-4X/V	
T40R9571	90600-1293		1	CHECK VALVE, NO. Z1S 6 F05-4X/V	
T40R9572	90600-8347		1	VALVE PLATE, R996009791	
T40R9590	90600-1293		1	CHECK VALVE, NO. Z1S 6 F05-4X/V	
T40R9592	90600-1291		1	PRESSURE RELIEF VALVE,ZDBK 6 VP2-1X/210V	
T40V0040	90600-1287		1	BREATHER FILTER, ELFP 3 F03W1.X/	
T40V1130	90600-1286		1	FILTER, R996087121	
10	*90457-0042*		*1*	*FILTER 10 MICRON, 0030-D-010-BN4HC*	
20	*315202-0510*		*1*	*O-RING 12,37X2,62 MM*	
30	*90600-4477*		*1*	*O-RING 40X2 MM*	
T40W0042	3042667-0000		1	PIPE	

Machine Type | Group Description | Used-In | Group Number | Page No

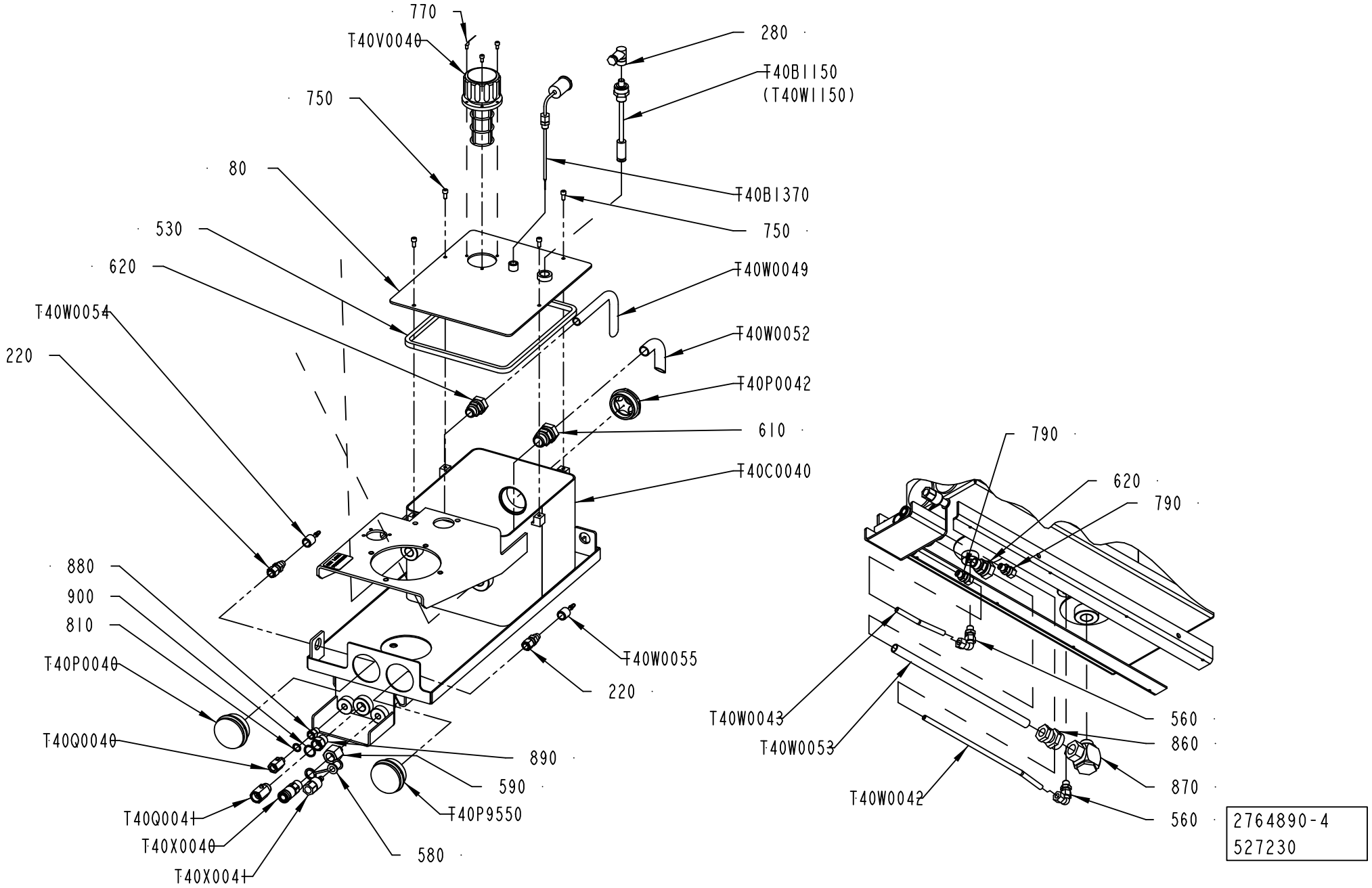
770
T40V0040
280
T40B1150
(T40W1150)
750
80
T40B1370
750
530
620
T40W0049
T40W0054
T40W0052
220
T40P0042
610
T40C0040
880
900
810
T40P0040
T40W0055
220
T40Q0040
890
590
T40P9550
T40Q0041
T40X0040
T40X0041
580
790
620
790
T40W0043
T40W0053
560
860
870
T40W0042
560
2764890-4
527230

Pos	Part No	UN	Qty	Description	Page No
Common Parts (Cont'd)					
T40W0043	3042666-0000		1	PIPE	
T40W0044	2764897-0000		1	PIPE	
T40W0045	2764898-0000		1	PIPE	
T40W0046	3078685-0000		1	PIPE	
T40W0047	2764894-0000		1	PIPE	
T40W0048	3030309-0000		1	PIPE	
T40W0049	3042664-0000		1	PIPE	
T40W0052	3042663-0000		1	PIPE	
T40W0053	3042384-0000		1	PIPE	
T40W0054	90600-1307		1	MEASURING HOSE, AB20-11/1000	
T40W0055	90600-1307		1	MEASURING HOSE, AB20-11/1000	
T40X0040	90163-0076		1	QUICK COUPLING, (F) LP-006-0-WR021	
T40X0041	90163-0064		1	QUICK COUPLING, (M) LP-006-2-WR517	
T40X0042	90600-1289		1	HYDRAULIC VALVE, AG 32 L783-1-1-2	
T40X9550	90600-1296		1	CONNECTOR 2 POLE + PE, Z4-A GRIG	
T40X9560	90600-1297		1	CONNECTOR, 03POL Z4 M SW (BLACK)	

Pos	Part No	UN	Qty	Description	Page No

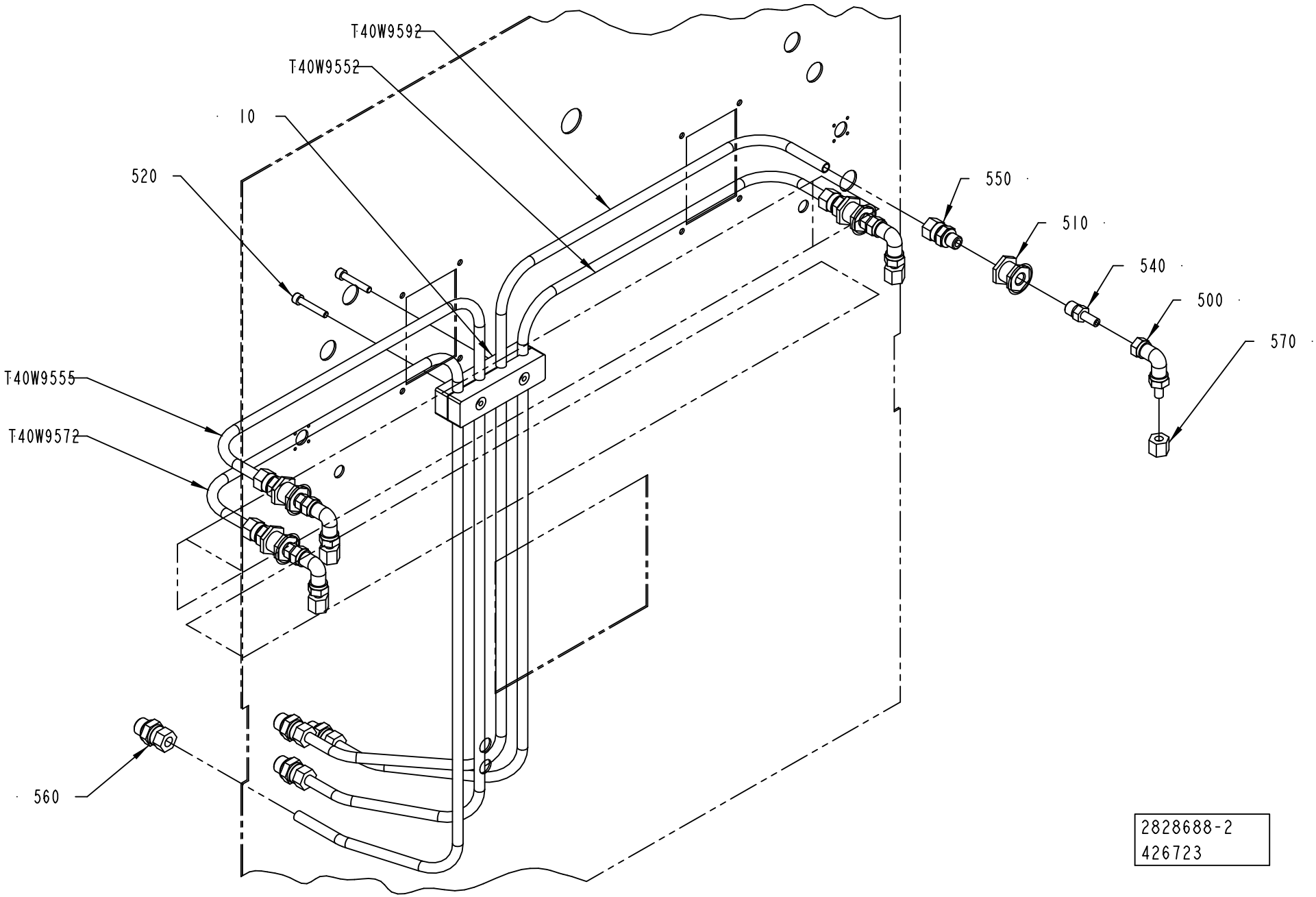
T40W9592
T40W9552
10
520
550
510
540
500
570
T40W9555
T40W9572
560
2828688-2
426723

ECM: 455683 - 20100624
Group number: 2828688-0200
Assembly Drawing: 2828688-2_1_AB

Pos	Part No	UN	Qty	Description	Page No
-					
010	2828689-0000		1	PIPE CLAMP	
500	342738-0208		4	ADJUSTABLE ELBOW CONNECTION 8-G1/4	
510	342767-0104		4	BULKHEAD LEAD-IN, G1/4	
520	312115-0457		2	SCREW ISO4762 M8X35 A4 80	
540	90030-0065		4	PIPE CONNECTION	
550	90030-0186		4	CONN. STR. GE10LRED71	
560	90457-0934		4	CONN. STR., GE10LR3/8ED71	
	90030-0099		*1*	*PROGRESSIVE RING 10*	
570	342703-0208		4	CONE NUT M8, NUT M-8 SS	
T40W9552	3032804-0000		1	HYDRAULIC PIPE	
T40W9555	3032805-0000		1	HYDRAULIC PIPE	
T40W9572	3032806-0000		1	HYDRAULIC PIPE	
T40W9592	3032807-0000		1	HYDRAULIC PIPE	

Pos	Part No	UN	Qty	Description	Page No

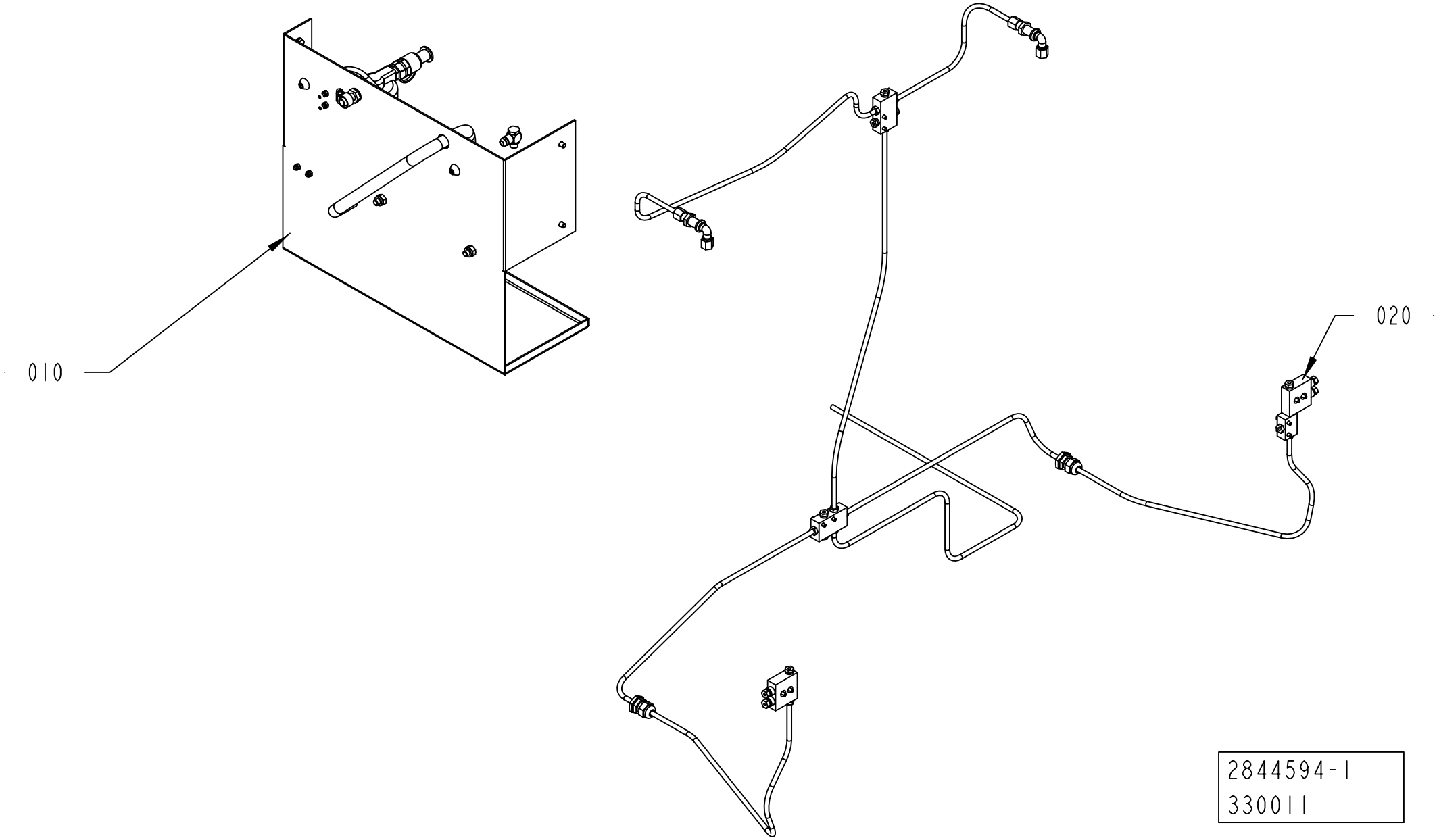
010
020
2844594-1
330011

ECM: 330011 - 20080116
Group number: 2844594-0100
Assembly Drawing: 2844594-1_1_AA

Pos	Part No	UN	Qty	Description	Page No
-					
010Â	2832237-0100		1	LUBRICATION UNIT	**2-45**
020	2844593-0100		1	LUBRICATION UNIT	**2-47**

Pos	Part No	UN	Qty	Description	Page No

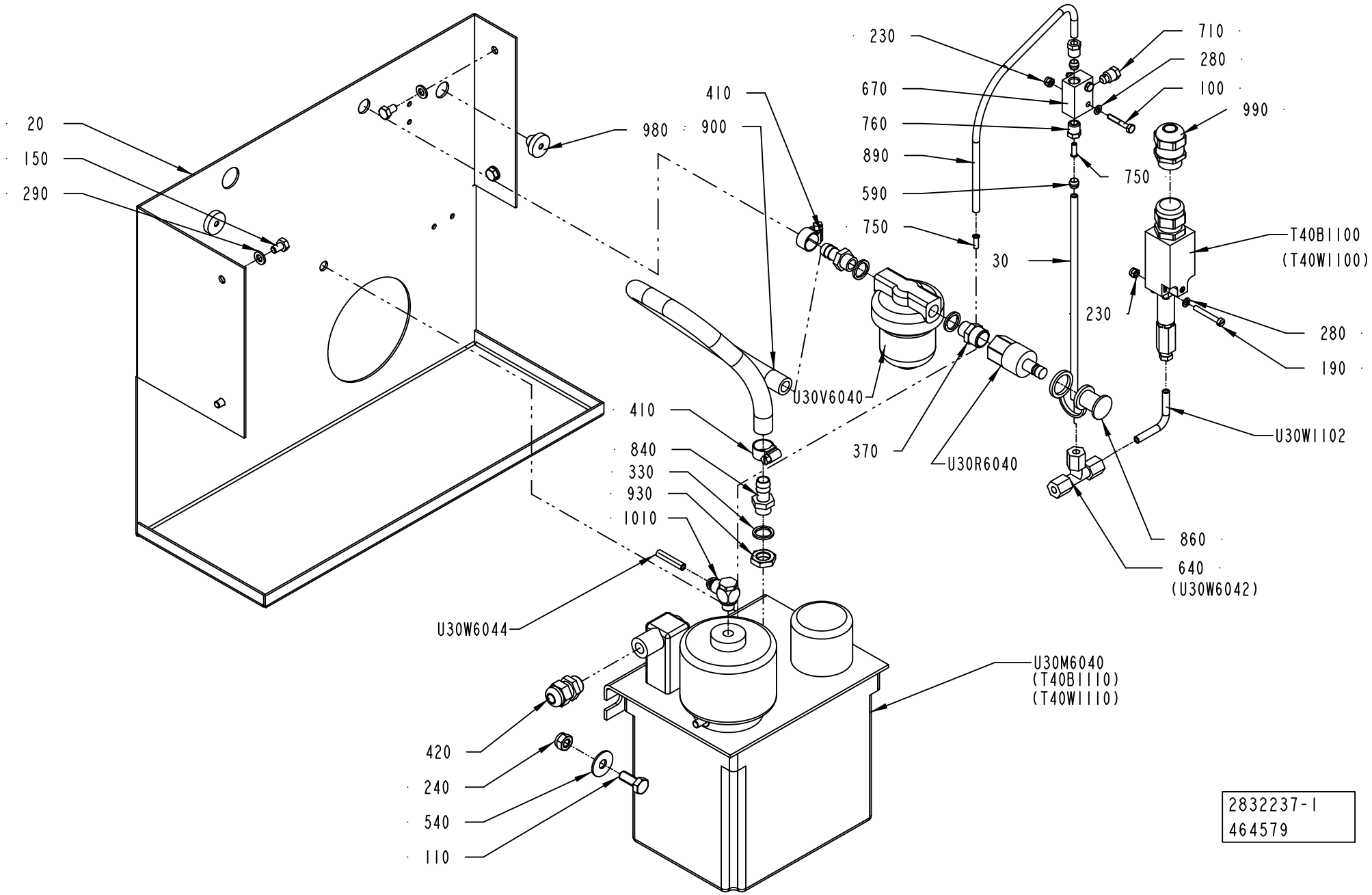
20
150
290
980
900
410
230
670
760
890
590
750
710
280
100
990
750
30
230
T40B1100
(T40W1100)
280
190
U30V6040
U30R6040
370
410
840
330
930
1010
U30W1102
860
640
(U30W6042)
U30W6044
U30M6040
(T40B1110)
(T40W1110)
420
240
540
110
2832237-1
464579

ECM: 512044 - 20111001
Group number: 2832237-0100
Assembly Drawing: 2832237-1_1_AD

Pos	Part No	UN	Qty	Description	Page No
-					
020	2832239-0000		1	PLATE	
030	2832240-0000		1	PIPE	
100	312105-0297		2	SCREW, M6S ISO 4017 M4X25 A4 70	
110	312105-0451		2	SCREW, M6S ISO 4017 M8X20 A4 80	
150	312105-0364		4	SCREW, M6S ISO 4017 M6X10 A4 80	
190	312125-0299		2	SLOTTED HEAD SCREW, ISO1207 M4X30 A4	
230	312812-0312		4	HEXAGON NUT, NY-LOCK M4 A4 80	
240	312812-0318		2	HEXAGON NUT, NY-LOCK M8 A4 80	
280	315105-0136		4	WASHER PLAIN, 4,3X9X0,8 A4 BRB	
290	315105-0153		4	WASHER PLAIN, 6,4X12X1,5 A4 BRB	
330	315239-0110		3	NYLON WASHER G1/4, 1/4RRP	
370	342700-0203		1	NIPPLE, EXT.THREAD, HEXAGON, G3/8-G1/4	
410	342991-0101		2	HOSE CLIP,WORM DRIVE TYPE (11)-17	
420	352103-0101		1	CABLE GLAND, ST 9, PR15,2/PG9	
540	90005-0105		2	WASHER PLAIN ROUND 8,4(M8)/24, H=1,5	
590	90028-0022		2	CONE TUBE 6 MM	
640	90030-0076		1	CONN. T-PIPE T06L71	
670	90032-0043		1	DISTRIBUTION BLOCK 3 WAYS	
710	90087-0019		1	PLUG M10X1 STAINLESS	
750	342706-0130		2	STIFFNER SLEEVE FOR HOSE 6X1	
760	90134-0055		2	BUSHING/NUT INLET/OUTLET 6 MM	
840	90163-0052		2	HOSE NIPPLE, EXT.THR. G1/4-12 MM	
860	90163-0304		1	QUICK COUPLING, LP-006-5-74-KU (DUST CAP	
890	90166-0108	MM	350	TUBE 6 MM PA TRANSP.	
900	90166-0121	MM	450	HOSE	
930	90330-0120		1	NUT, HEXAGON SS, G1/4	
980	90015-0020		2	LEAD-IN, TET5-7, E-1458016	
990	90458-0307		1	CABLE GLAND, M20X1,5, 5311 1020	
1010	90459-5522		1	CONN. BANJO, COR8PB6M10	
T40B1100	90274-0084		1	PRESSURE GUARD, 1800 KPA	
U30M6040	90459-5481		1	OIL PUMP 3L, 10P-P3	
	90048-0450		*1*	*SPARE PARTS KIT*	
	90274-0052		*1*	*LEVEL GUARD, 2.855432.1*	
U30R6040	90163-0064		1	QUICK COUPLING, (M) LP-006-2-WR517	
U30V6040	90415-0033		1	OIL FILTER REFILLING UC-HP-1229-25	
	90415-0330		*1*	*FILTER INSERT ART.NO. HR-1229-25UCC*	
U30W1102	2832238-0000		1	PIPE	
U30W6044	315300-0001	MM	2000	TUBE, 6 MM PE BLUE	

Pos	Part No	UN	Qty	Description	Page No

Machine Type | Group Description | Used-In | Group Number | Page No

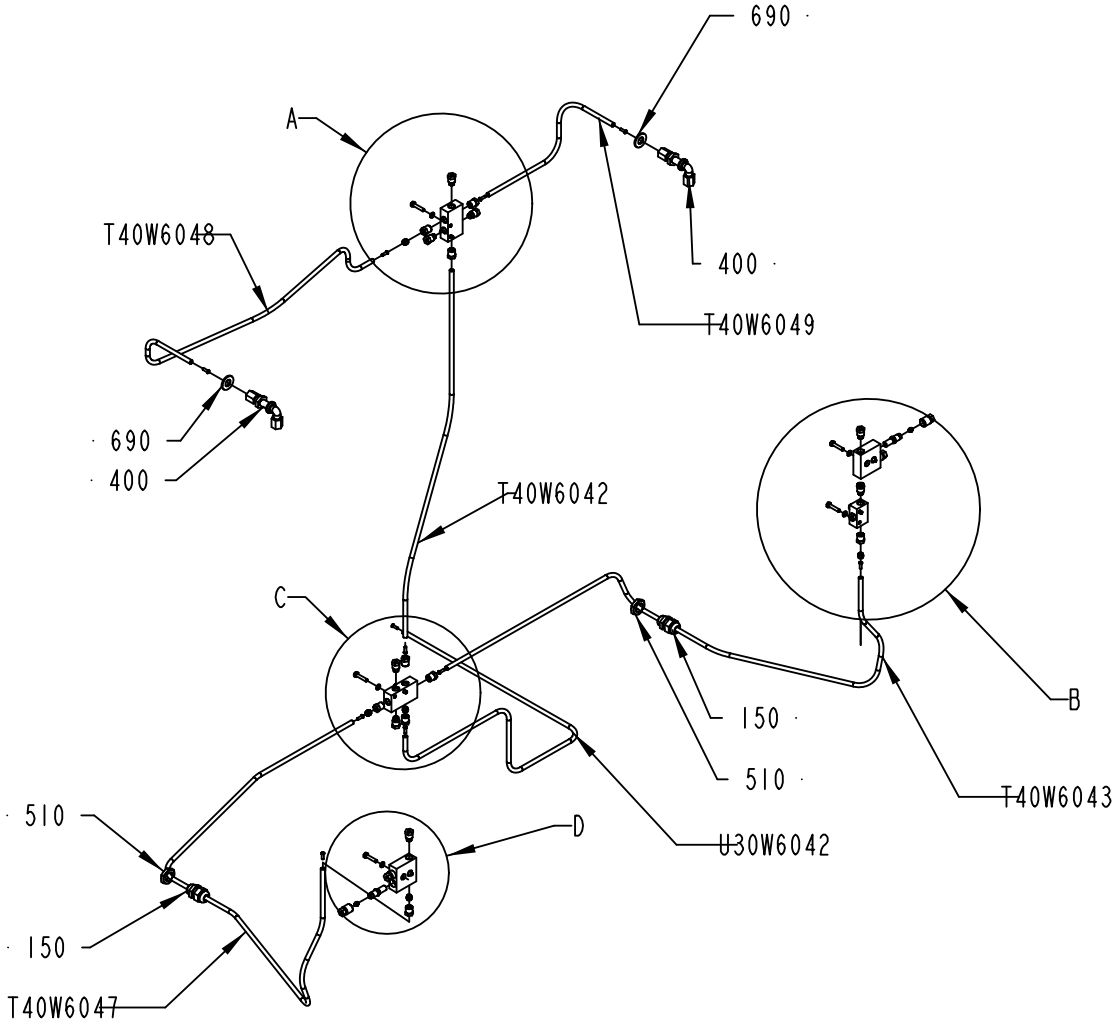

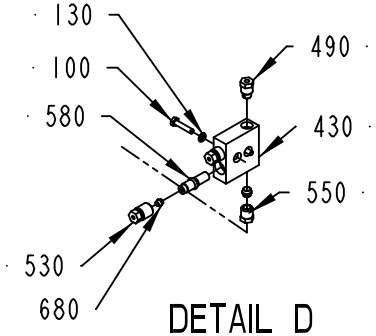

DETAIL D
SCALE 1:5

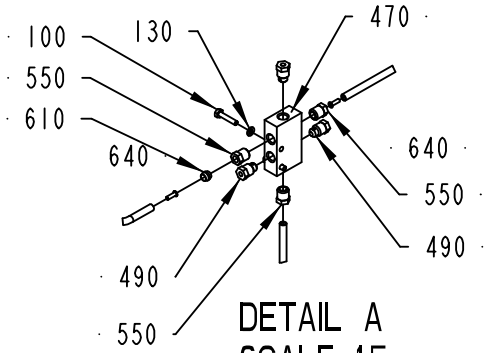

DETAIL A
SCALE 1:5

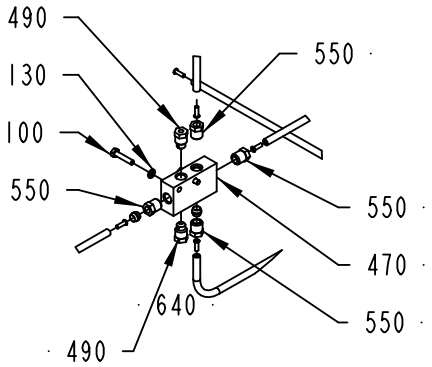

DETAIL C
SCALE 1:5

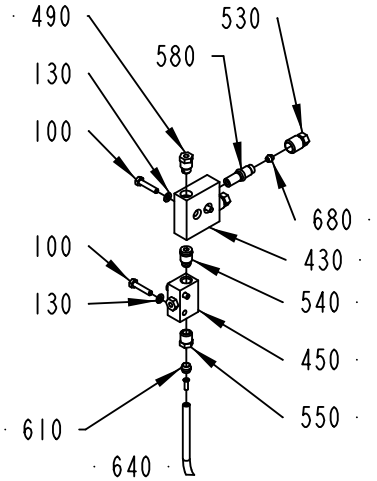

DETAIL B
SCALE 1:5

2844593-1
494306

ECM: 498342 - 20110701
Group number: 2844593-0100
Assembly Drawing: 2844593-1_1_AF

Pos	Part No	UN	Qty	Description	Page No
-					
100	312105-0295		10	SCREW, M6S ISO 4017 M4X20 A4 70	
130	315105-0136		10	WASHER PLAIN, 4,3X9X0,8 A4 BRB	
150	352103-0101		2	CABLE GLAND, ST 9, PR15,2/PG9	
400	90030-0219		2	BULKHEAD LEAD-IN, ELBOW WSV 6	
430	90459-5650		2	LUBRICATION BLOCK, HFS4662	
450	90032-0043		1	DISTRIBUTION BLOCK 3 WAYS	
470	90032-0046		2	DISTRIBUTION BLOCK 6 WAYS	
490	90087-0019		8	PLUG M10X1 STAINLESS	
510	90099-0104		2	PLUG, PR 15,2 (PG9)	
530	90134-0040		4	BUSHING VALVE CONNECTION 4 MM	
540	90134-0054		1	BLOCK CONNECTION M10X1	
550	90134-0055		9	BUSHING/NUT INLET/OUTLET 6 MM	
580	90092-0053		4	METERING VALVE 30 MM3	
610	90028-0022		9	CONE TUBE 6 MM	
640	90134-0030		12	SLEEVE FOR PLASTIC TUBE	
680	90028-0021		4	CONE TUBE 4 MM	
690	315105-0173		2	WASHER PLAIN, 10,5X22X2 A4 BRB	
T40W6042	90166-0108	MM	620	TUBE 6 MM PA TRANSP.	
T40W6043	90166-0108	MM	1160	TUBE 6 MM PA TRANSP.	
T40W6047	90166-0108	MM	1110	TUBE 6 MM PA TRANSP.	
T40W6048	90166-0108	MM	570	TUBE 6 MM PA TRANSP.	
T40W6049	90166-0108	MM	270	TUBE 6 MM PA TRANSP.	
U30W6042	90166-0108	MM	800	TUBE 6 MM PA TRANSP.	

Pos	Part No	UN	Qty	Description	Page No

Machine Type | Group Description | Used-In | Group Number | Page No

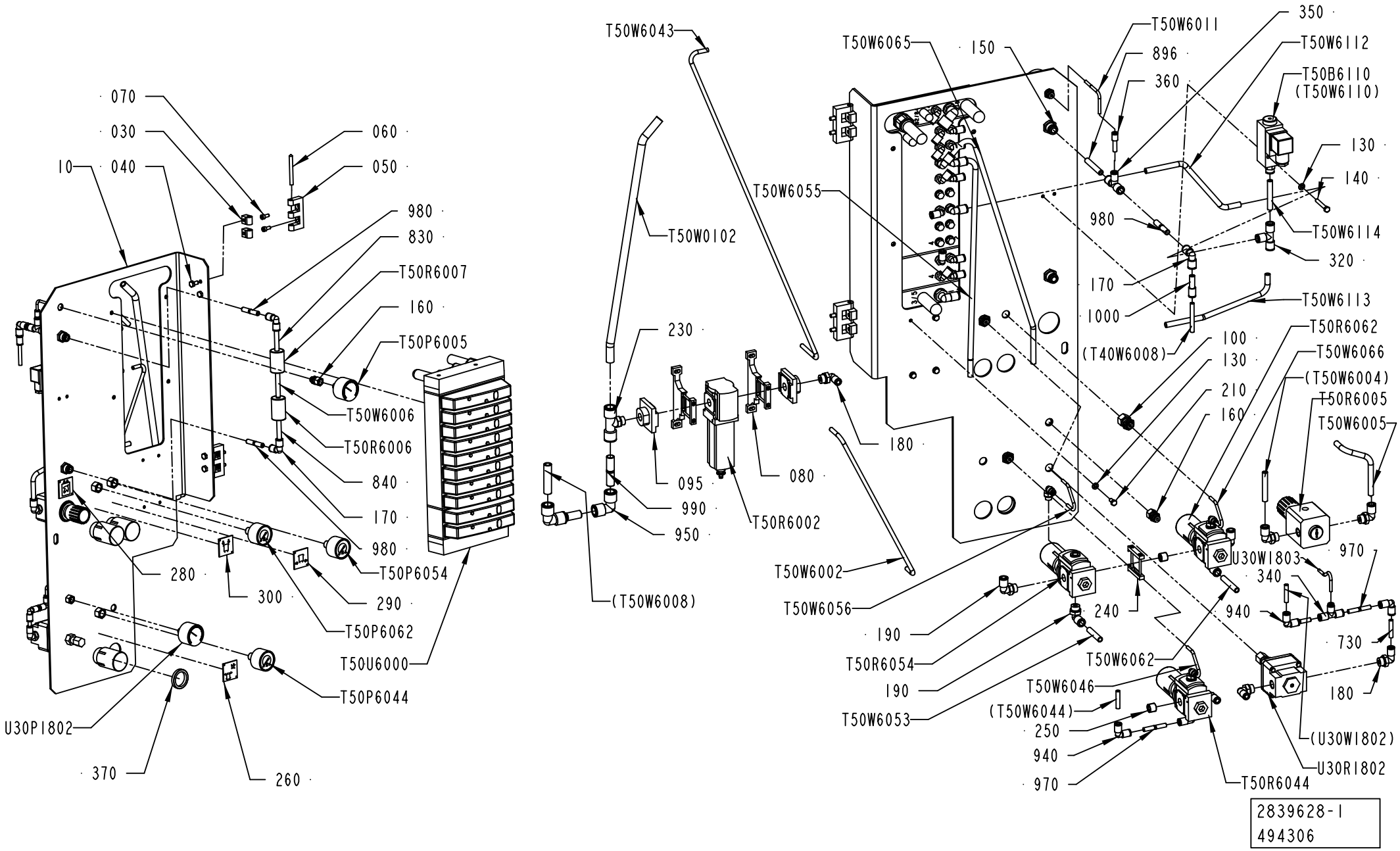
070
030
040
10
060
050
980
830
T50R6007
160
T50P6005
T50W6006
T50R6006
840
170
980
T50P6054
280
300
290
T50P6062
T50U6000
T50P6044
U30P1802
370
260
T50W6043
T50W6065
150
T50W6011
896
360
350
T50W6112
T50B6110
(T50W6110)
130
140
T50W6055
T50W0102
980
T50W6114
320
170
T50W6113
1000
(T40W6008)
T50R6062
100
130
T50W6066
(T50W6004)
210
160
T50R6005
T50W6005
230
180
095
080
990
950
T50R6002
(T50W6008)
T50W6002
T50W6056
U30W1803
970
340
940
730
180
(U30W1802)
U30R1802
T50R6044
240
190
T50R6054
190
T50W6053
T50W6062
T50W6046
(T50W6044)
250
940
970
2839628-1
494306

ECM: 509587 - 20111001
Group number: 2839628-0100
Assembly Drawing: 2839628-1_1_AG

Pos	Part No	UN	Qty	Description	Page No
-					
010Â	2839516-0000		1	PANEL	
030	1129770-0000		4	BLOCKING PIECE	
040	312105-0366		4	SCREW, M6S ISO 4017 M6X12 A4 80	
050	1035792-0000		2	E-HINGE	
060	988685-0000		2	PIN	
070	312115-0327		4	SCREW ISO4762 M5X12 A4 80	
080	90459-2247		2	BRACKET, MS4-WP	
095	90459-2246		1	END PLATE, MS4-AGB	
100	90459-7333		3	PUSH-IN FITTING QSSF-1/4-4-B	
130	315106-0146		6	WASHER PLAIN, M5 ISO7089-5-200 HV A4	
140	312105-0337		2	SCREW, M6S ISO 4014 M5X35 A4 80	
150	350010-0003		2	PUSH-IN BULKHEAD FITTING QSS-F-8	
160	90459-7332		2	PUSH-IN FITTING QSSF-1/8-4-B	
170	350004-0003		3	PUSH-IN L-FITTING QSL-F-8	
180	350002-0008		5	PUSH-IN L-FITTING QSL-F-G1/4-6	
190	350002-0009		6	PUSH-IN L-FITTING QSL-F-G1/4-8	
210	312105-0325		4	SCREW, M6S ISO 4017 M5X10 A4 80	
220	350002-0005		3	PUSH-IN L-FITTING QSL-F-G1/8-4	
230	350007-0011		1	PUSH-IN T-FITTING QST-F-G1/4-12	
240	90459-2248		1	BRACKET, MS4-MV	
250	90600-1169		2	PLUG G1/4, B-1/4-NPT	
260	1129370-0000		1	SIGN	
280	978603-0000		1	SIGN	
290	1144607-0000		1	SIGN	
300	1144606-0000		1	SIGN	
310	350001-0009		1	PUSH-IN FITTING QS-F-G1/4-8	
320	350005-0003		1	PUSH-IN T-FITTING QST-F-8	
340	350011-0001		1	PUSH-IN T-FITTING QST-F-6-4	
350	350011-0002		1	PUSH-IN T-FITTING QST-F-8-6	
360	350006-0001		1	PUSH-IN FITTING QS-F-6H-4	
370	90459-2390		1	NUT, MS-LR-10	
730	315300-0001	MM	80	TUBE, 6 MM PE BLUE	
830	315300-0004	MM	45	TUBE, 8 MM PE BLUE	
840	315300-0004	MM	45	TUBE, 8 MM PE BLUE	
896	315300-0004	MM	50	TUBE, 8 MM PE BLUE	
910	315400-0016	M	3	TUBE PUN-H-4X0,75-BL	
920	315400-0016	M	1	TUBE PUN-H-4X0,75-BL	
930	315400-0016	M	1	TUBE PUN-H-4X0,75-BL	
940	350004-0002		3	PUSH-IN L-FITTING QSL-F-6	
950	350004-0005		2	PUSH-IN L-FITTING QSL-F-12	
970	350012-0002		3	SLEEVE QSH-F-6	
980	350012-0003		3	SLEEVE QSH-F-8	
990	350012-0005		2	SLEEVE QSH-F-12	
1000	350006-0003		1	PUSH-IN FITTING QS-F-8H-6	
T50B6110	90274-0103		1	PRESSURE SWITTCH PEV-1/4-B	
T50P6005	90458-2969		1	PRESSURE GAUGE, MAP-40-1-1/8-EN	
T50P6044	90459-7344		1	PRESSURE GAUGE, MA-40-6-R1/4-EN	
T50P6054	90459-7344		1	PRESSURE GAUGE, MA-40-6-R1/4-EN	
T50P6062	90459-7344		1	PRESSURE GAUGE, MA-40-6-R1/4-EN	
T50R6002	90459-2338		1	FILTER, MS4-LF-1/4-CRV	
	90459-3818		*1*	*FILTER CARTRIDGE, MS4-LFP-C*	
T50R6005	90600-3050		1	REGULATOR, 574612	
T50R6006	90277-0045		1	FILTER / 9900-05-BK	
T50R6007	90277-0046		1	FILTER / 9933-05-101	
T50R6044	90459-4554		1	REGULATOR, MS4-LRB-1/4-D7-A8-AS	
T50R6054	90459-4554		1	REGULATOR, MS4-LRB-1/4-D7-A8-AS	
T50R6062	90459-4554		1	REGULATOR, MS4-LRB-1/4-D7-A8-AS	
T50U6000	2863377-0100		1	VALVE GROUP	**2-51**
T50W0102	315300-0010	MM	425	TUBE, 12 MM PE BLUE	
T50W6002	315300-0001	MM	320	TUBE, 6 MM PE BLUE	
T50W6005	315300-0004	MM	150	TUBE, 8 MM PE BLUE	
T50W6006	315300-0004	MM	55	TUBE, 8 MM PE BLUE	
T50W6011	315300-0016	MM	90	TUBE 4MPE BLUE	
T50W6043	315300-0001	MM	590	TUBE, 6 MM PE BLUE	
T50W6046	315300-0016	MM	125	TUBE 4MPE BLUE	
T50W6053	315300-0004	M	2	TUBE, 8 MM PE BLUE	
T50W6055	315300-0004	MM	390	TUBE, 8 MM PE BLUE	
T50W6056	315300-0016	MM	125	TUBE 4MPE BLUE	
T50W6062	315300-0004	M	2	TUBE, 8 MM PE BLUE	
T50W6065	315300-0004	MM	390	TUBE, 8 MM PE BLUE	
T50W6066	315300-0016	MM	125	TUBE 4MPE BLUE	
T50W6112	315300-0004	MM	165	TUBE, 8 MM PE BLUE	
T50W6113	315300-0004	MM	155	TUBE, 8 MM PE BLUE	
T50W6114	315300-0004	MM	90	TUBE, 8 MM PE BLUE	
U30P1802	90458-2969		1	PRESSURE GAUGE, MAP-40-1-1/8-EN	
U30R1802	90113-0056		1	REGULATOR, 11-818-998	
U30W1803	315300-0016	MM	80	TUBE 4MPE BLUE	

Machine Type	Group Description	Used-In	Group Number	Page No

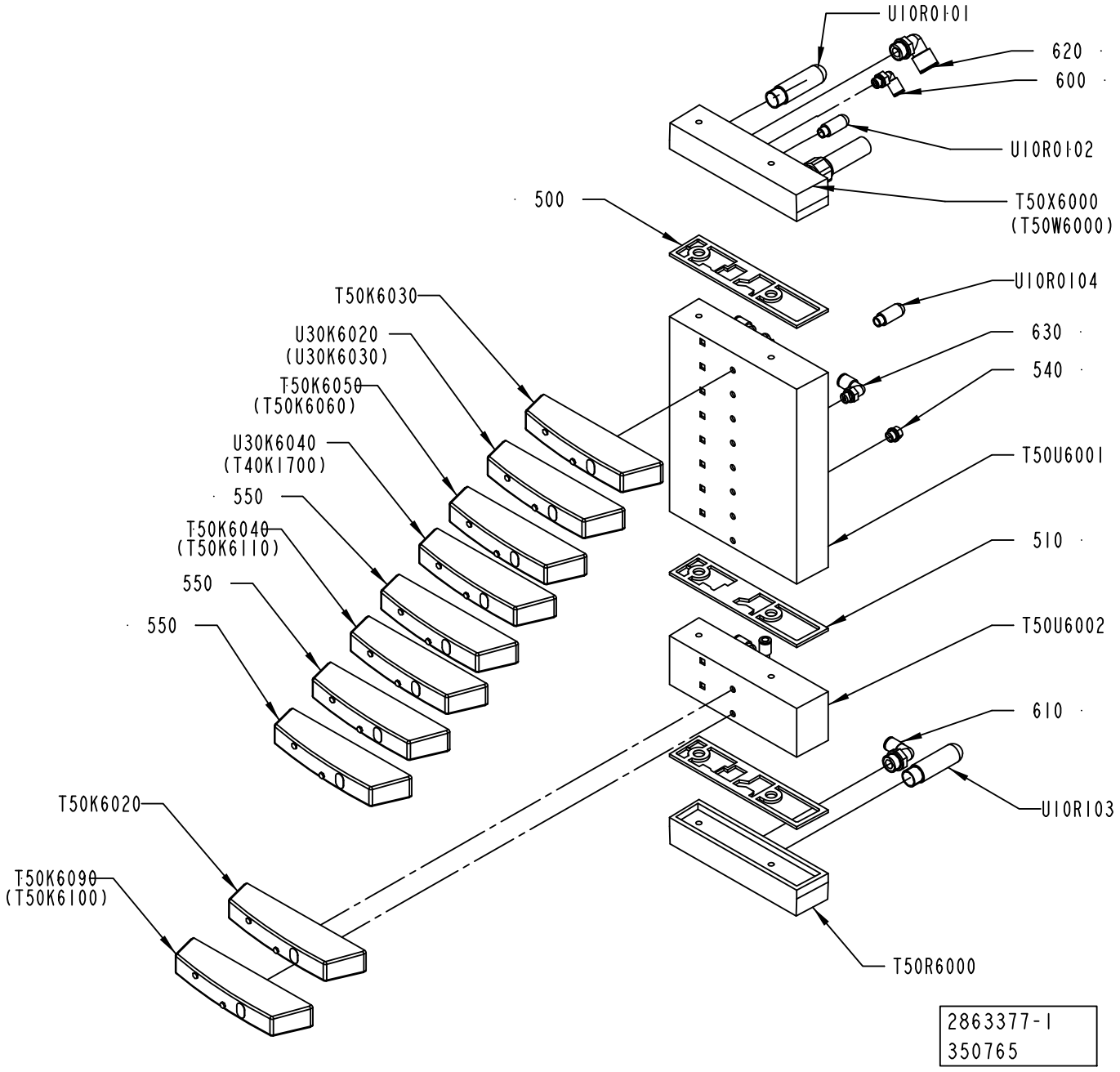
U10R0101
620
600
U10R0102
500
T50X6000
(T50W6000)
U10R0104
T50K6030
U30K6020
(U30K6030)
T50K6050
(T50K6060)
U30K6040
(T40K1700)
550
T50K6040
(T50K6110)
550
550
630
540
T50U6001
510
T50U6002
610
U10R103
T50K6020
T50K6090
(T50K6100)
T50R6000
2863377-1
350765

ECM: 424092 - 20091001
Group number: 2863377-0100
Assembly Drawing: 2863377-1_1_AB

Pos	Part No	UN	Qty	Description	Page No
-					
500	90458-1207		2	SEALING, STANDARD	
510	90458-1208		1	SEALING, CHANNEL 1 BLOCKED	
540	90459-0698		6	PLUG, G1/8EXT, G1/8	
550	90458-1215		3	COVER PLATE, EMPTY VALVE POSITION	
600	350002-0006		12	PUSH-IN L-FITTING QSL-F-G1/8-6	
610	350002-0012		1	PUSH-IN L-FITTING QSL-F-G3/8-8	
620	350002-0014		1	PUSH-IN L-FITTING QSL-F-G3/8-12	
630	350002-0007		3	PUSH-IN L-FITTING QSL-F-G1/8-8	
T50K6020	90458-1194		1	VALVE, 5/2 MONOSTABLE	
T50K6030	90458-1194		1	VALVE, 5/2 MONOSTABLE	
T50K6040	90458-1202		1	VALVES 2X3/2, CLOSED	
T50K6050	90458-1201		1	VALVES 2X3/2, OPEN	
T50K6090	90458-1200		1	VALVE OPEN IN MID-POSITION 5/3	
T50R6000	90458-1214		1	RIGHT ENDPL EXT. PILOT AIR,CDVI5.0-EPR-S	
T50U6001	90458-1205		1	BASIC SUB-BASE 8 VALVES, CDVI5.0-GB8-MP	
T50U6002	90458-1206		1	EXP. SUB-BASE 2 VALVES, CDVI5.0-EB	
T50X6000	90458-1212		1	LEFT ENDPLATE INCL. 10M CABLE	
U30K6020	90458-1202		1	VALVES 2X3/2, CLOSED	
U30K6040	90458-1202		1	VALVES 2X3/2, CLOSED	
U10R0101	90328-0024		1	SILENCER, G3/8"	
U10R0102	90328-0047		1	SILENCER, G1/8"	
U10R0103	90328-0024		1	SILENCER, G3/8"	
U10R0104	90328-0047		1	SILENCER, G1/8"	

Pos	Part No	UN	Qty	Description	Page No

LIGHT FIXTURE

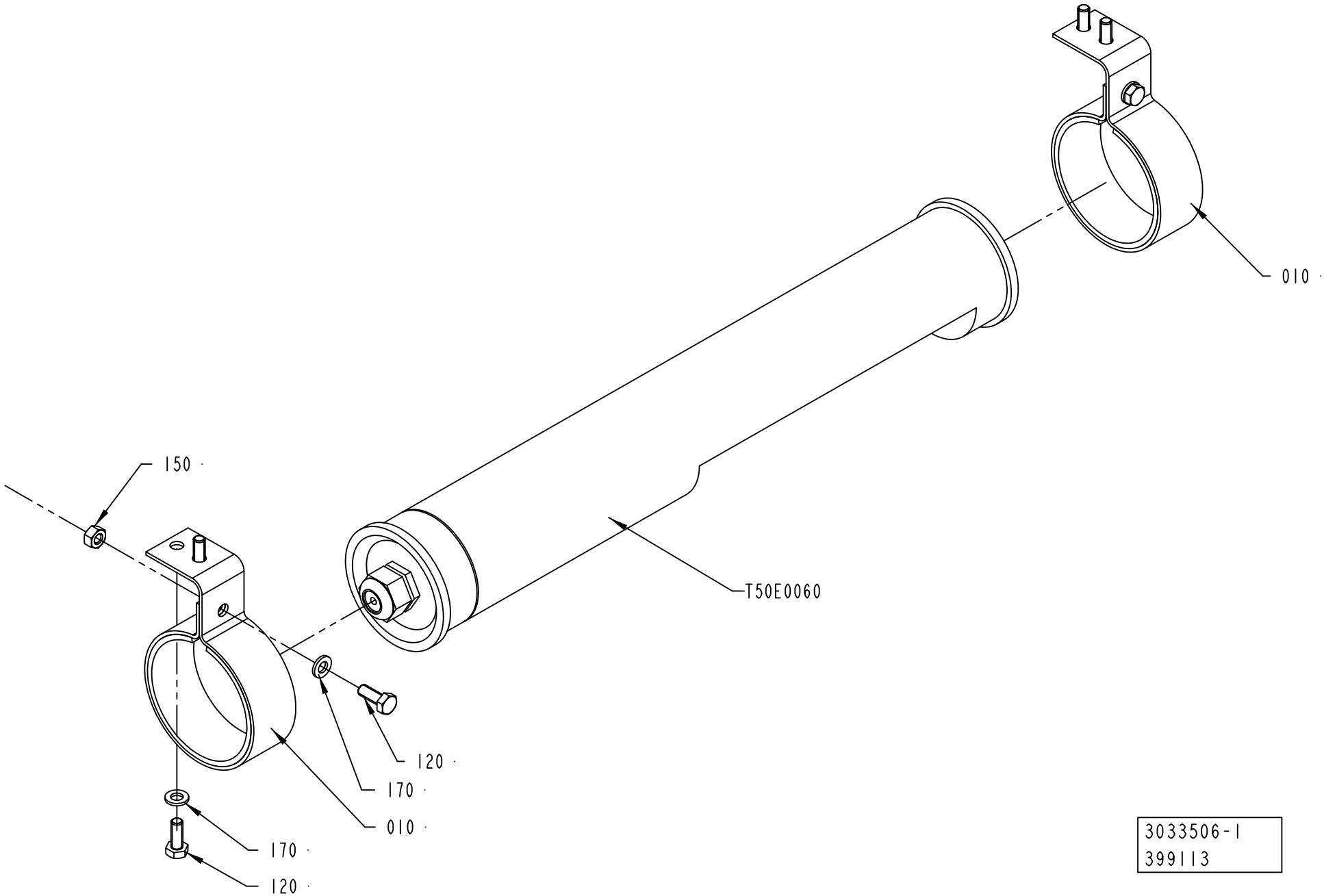

ECM: 452802 - 20101001
Group number: 3033506-0100
Assembly Drawing: 3033506-1_1_AA

Pos	Part No	UN	Qty	Description	Page No
CE					
T50E0060	90164-0015		1	LIGHT FIXTURE, RL70CV-111 / 230V 50HZ	
	90297-0007		*1*	*FLUORESCENT TUBE, PLS 11*	
	92297-0301		*1*	*GLOW IGNITER 4-65W S\10, E 8219023*	
	90297-0007		*1*	*FLUORESCENT TUBE, PLS 11*	
	92297-0301		*1*	*GLOW IGNITER 4-65W S\10, E 8219023*	
UL, CSA					
T50E0060	90459-3784		1	LIGHT FIXTURE, RL70CE-118	
	90459-3785		*1*	*FLUORESCENT TUBE, PL-L 18*	
Common Parts					
010	1140129-0000		2	HOLDER	
120	312105-0368		6	SCREW, M6S ISO 4017 M6X16 A4 80	
150	312605-0316		2	HEXAGON NUT, M6M M6 A280	
170	315105-0153		6	WASHER PLAIN, 6,4X12X1,5 A4 BRB	

Pos	Part No	UN	Qty	Description	Page No

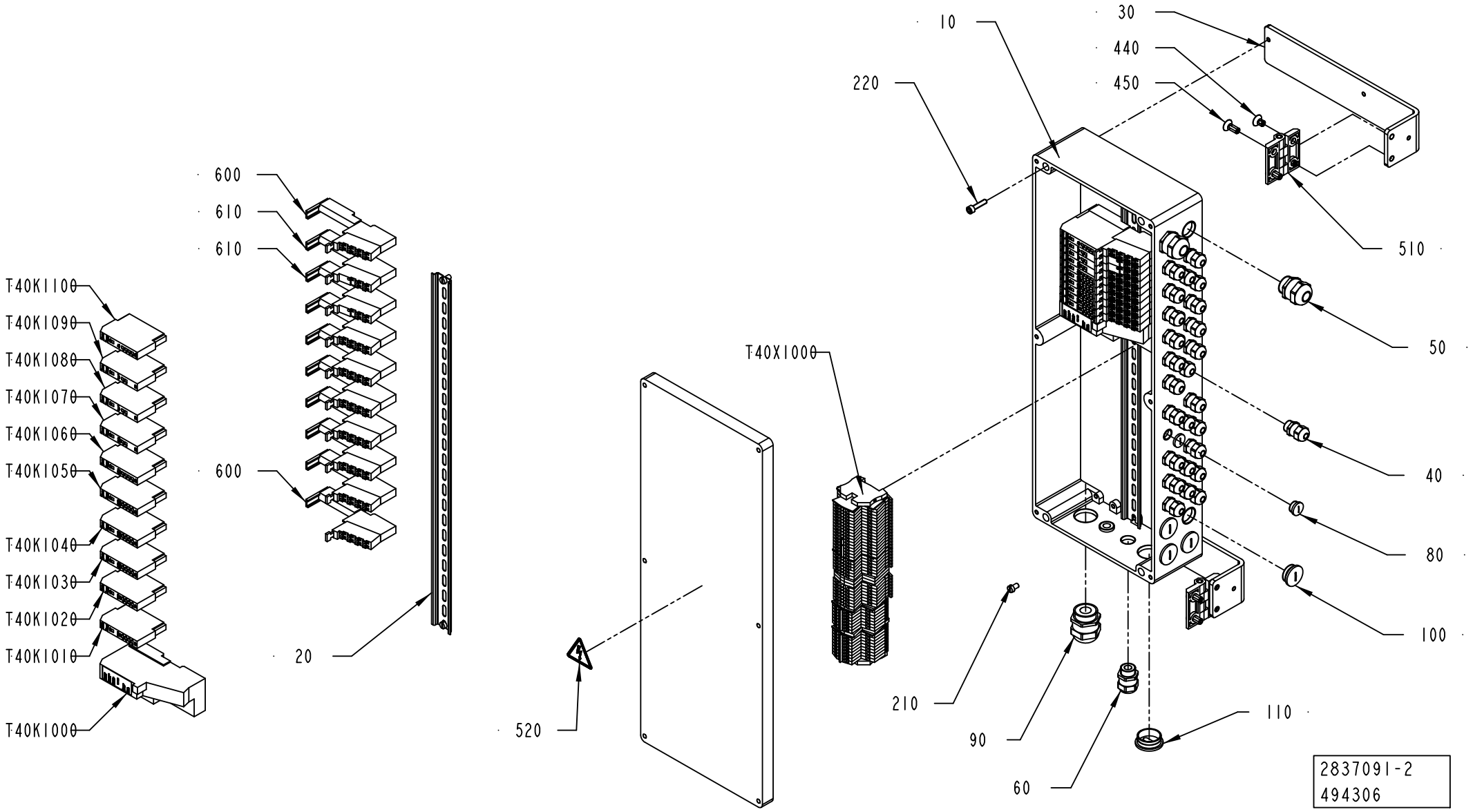
10
30
440
450
220
510
50
40
80
100
T40X1000
210
90
60
110
520
600
610
610
600
20
T40K1100
T40K1090
T40K1080
T40K1070
T40K1060
T40K1050
T40K1040
T40K1030
T40K1020
T40K1010
T40K1000
2837091-2
494306

ECM: 498340 - 20110701
Group number: 2837091-0200
Assembly Drawing: 2837091-2_1_AD

Pos	Part No	UN	Qty	Description	Page No
ANSI					
520	359715-0100		1	WARNING SIGN ANSI (H), ELECTRIC SHOCK	
ISO					
520	359705-0015		1	WARNING SIGN ISO, RISK OF ELECTRIC SHOCK	
Common Parts					
010	3011830-0000		1	CONNECTION BOX	
020	1347878-0000		1	RAIL	
030	2832236-0000		2	SUPPORT	
040	90458-0306		26	CABLE GLAND, M16X1,5, 5311 1010	
050	90458-0316		2	CABLE GLAND, M25X1,5, 5311 1130	
060	90458-0307		2	CABLE GLAND, M20X1,5, 5311 1020	
080	90458-1307		6	BLIND PLUG CIRCULAR, M16X1,5 514GFK/216	
090	90458-0309		1	CABLE GLAND, M32X1,5, 5311 1040	
100	90458-1309		4	BLIND PLUG CIRCULAR, M25X1,5 514GFK/225	
110	90458-1310		1	BLIND PLUG CIRCULAR, M32X1,5 514GFK/232	
210	312125-0364		2	SCREW ISO 1207 M6X10 A4	
220	312115-0372		4	SCREW ISO4762 M6X25 A4 80	
440	312155-0447		4	SCREW DIN 7991 MF6S M8X12 A4 70	
450	312155-0451		4	SCREW DIN 7991 MF6S M8X20 A4 70	
510	90600-0822		2	HINGE, 1056-U13-PH	
600	90459-2526		8	REMOTE I/O BASE MODULE 8 POINTS, 1734-TB	
610	90459-2528		2	REMOTE I/O BASE MODULE FOR THERMOCOUPLE	
T40K1000	90459-2494		1	DEVICENET I/O ADAPTER MODULE, 1734-ADN	
T40K1010	90459-6561		1	DIGITAL INPUT 8 PTS SINK, 1734-IB8/C	
T40K1020	90459-6561		1	DIGITAL INPUT 8 PTS SINK, 1734-IB8/C	
T40K1030	90459-6560		1	DIGITAL OUTPUT 8 PTS, 1734-OB8E/C	
T40K1040	90459-6560		1	DIGITAL OUTPUT 8 PTS, 1734-OB8E/C	
T40K1050	90459-6560		1	DIGITAL OUTPUT 8 PTS, 1734-OB8E/C	
T40K1060	90459-2509		1	REMOTE I/O ANALOG INPUT CURRENT 2 PTS	
T40K1070	90459-2508		1	REMOTE I/O ANALOG INPUT VOLTAGE 2 PTS	
T40K1080	90459-2512		1	REMOTE I/O THERMOCOUPLE INPUT 2 PTS	
T40K1090	90459-2512		1	REMOTE I/O THERMOCOUPLE INPUT 2 PTS	
T40K1100	90459-5261		1	REMOTE I/O, RELAY OUTP. 4 PTS,1734-OW4/C	
T40X1000	2890279-0200		1	TERMINAL BLOCK	**2-57**

Pos	Part No	UN	Qty	Description	Page No

Machine Type | Group Description | Used-In | Group Number | Page No

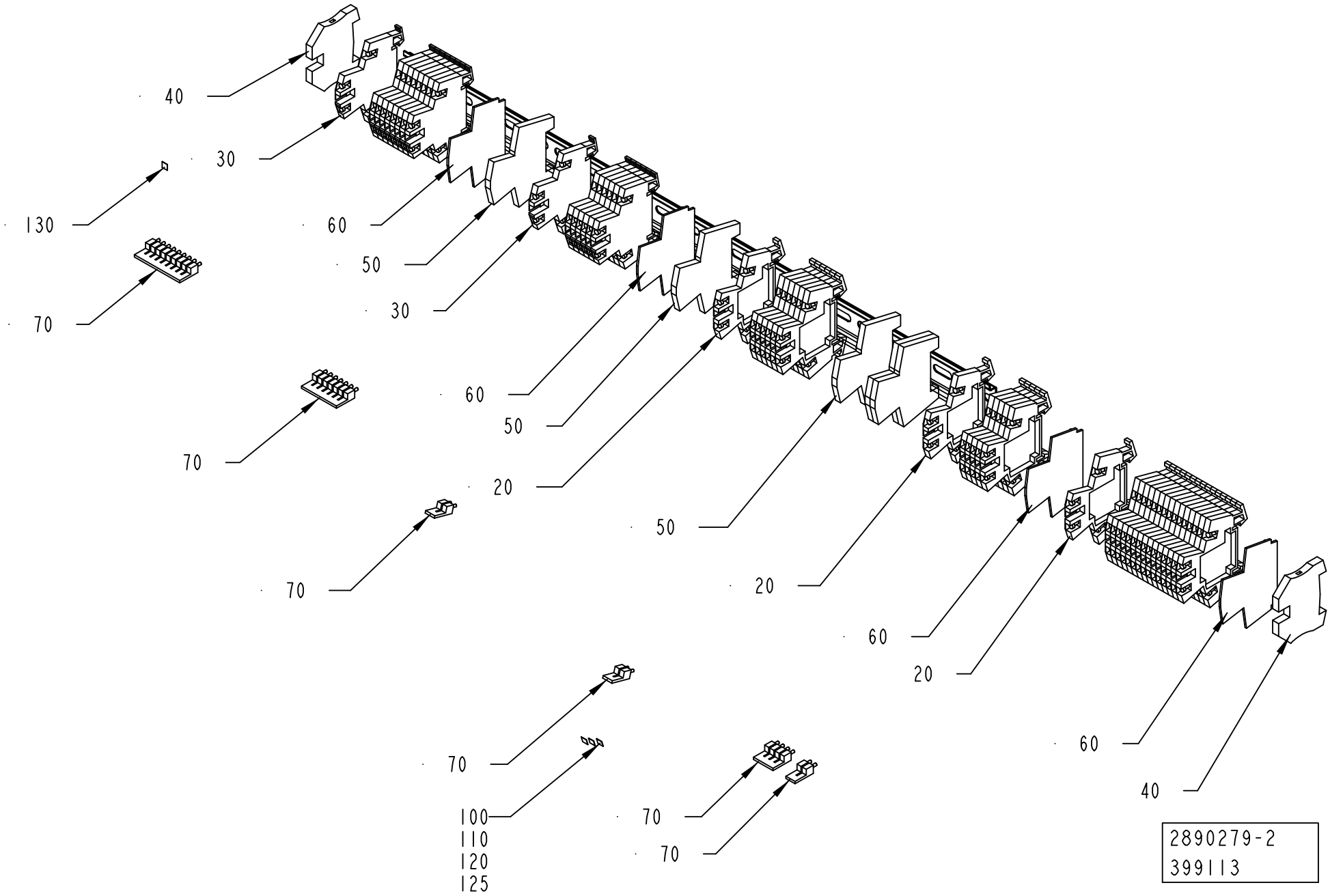
40
30
130
60
50
30
70
60
50
20
70
50
20
60
20
70
60
40
70
100
110
120
125
70
70
2890279-2
399113

ECM: 407982 - 20090904
Group number: 2890279-0200
Assembly Drawing: 2890279-2_1_AA

Pos	Part No	UN	Qty	Description	Page No
-					
020	90077-0113		29	TERMINAL BLOCK WDK 2.5	
030	90459-5253		16	TERMINAL BLOCK WDK 2,5 V	
040	353024-0205		2	EARTH TERMINAL WPE 4	
050	353024-0212		5	EARTH TERMINAL WDK 2,5 PE	
060	353032-0009		4	END PLATE, WAP WDK 2,5	
070	353034-0030		3	BRIDGE CONNECTOR WQV 2,5/10	
100	359011-0807		1	MARKING, DEK 5 FW 1-50	
110	359011-0808		1	MARKING, DEK 5FW 51-100	
120	359011-0809		2	MARKING, DEK 5 FW 101-150	
125	359011-0810		2	MARKING, DEK 5 FW 151-200	
130	359011-0819		1	MARKING, EARTH, DEK 5 GW ERDE I.KR.	

Pos	Part No	UN	Qty	Description	Page No

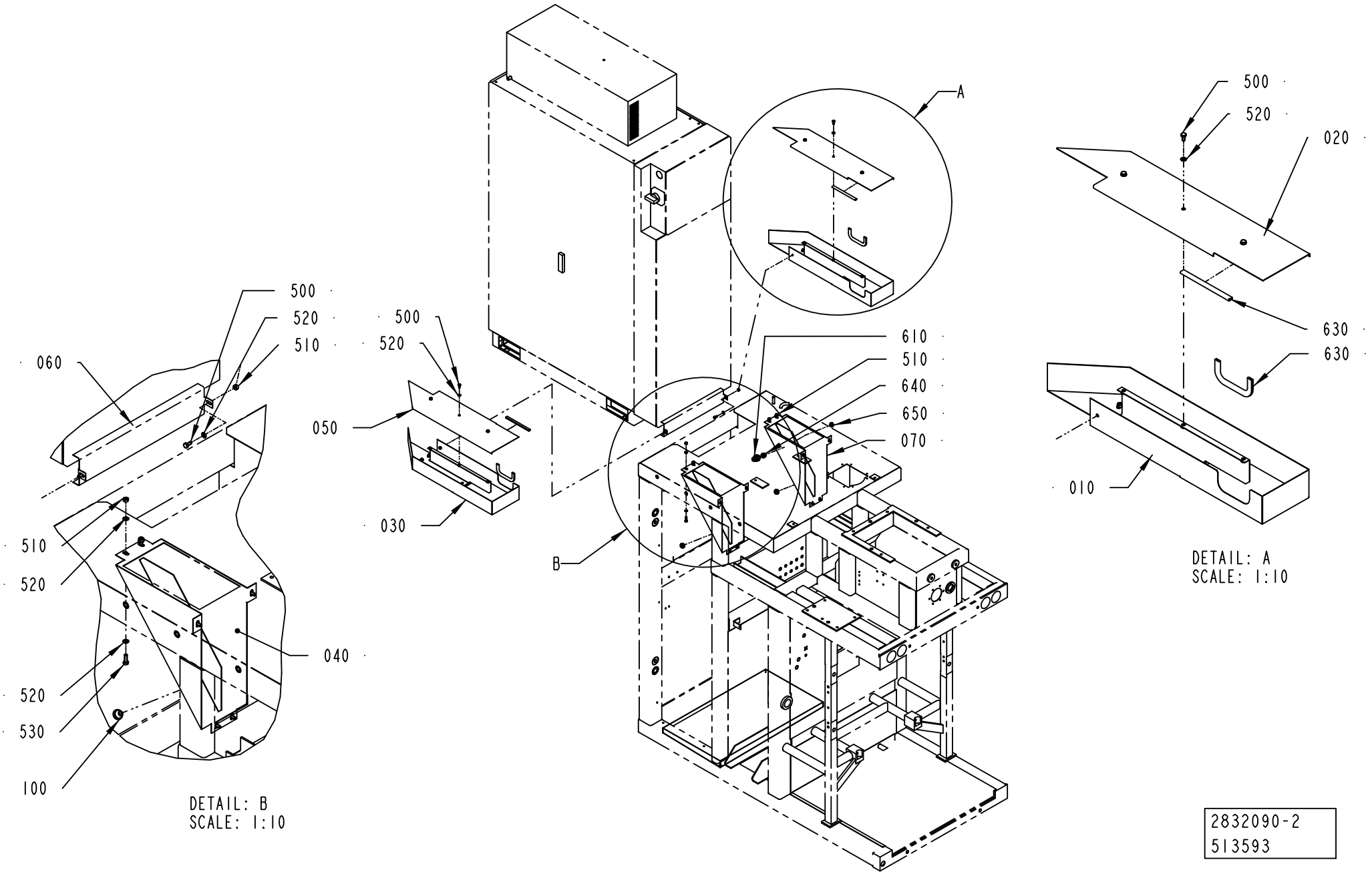

2832090-2
513593

ECM: 519563 - 20120101
Group number: 2832090-0200
Assembly Drawing: 2832090-2_1_AC

Pos	Part No	UN	Qty	Description	Page No
-					
010Â	2832091-0000		1	LID	
020	2832092-0000		1	LID	
030	2832088-0000		1	CABLE DUCT	
040	2832114-0000		1	CABLE DUCT	
050	2832089-0000		1	LID	
060	2842734-0000		1	COVER PLATE	
070	2864204-0000		1	CABLE DUCT	
100	90015-0021		2	LEAD-IN, TET 10-14, E1458023	
500	312105-0449		16	SCREW, M6S ISO 4017 M8X16 A4 80	
510	312605-0318		10	HEXAGON NUT, M6M M8 A280	
520	315105-0165		32	WASHER PLAIN, 8,4X16X1,6 A4 BRB	
530	312105-0453		8	SCREW, M6S ISO 4017 M8X25 A4 80	
610	90458-0430		1	GLAND FITTING, VK 22054YUL16	
630	90143-0097	M	0	SELF GRIPPING GASKET, 1011-24	
640	353249-0012		1	INSERT, SINGLE HOLE, EK154 11	
650	353250-0020		1	GLAND LOCK NUT, M20X1,5	

Pos	Part No	UN	Qty	Description	Page No

Machine Type | Group Description | Used-In | Group Number | Page No

BENDING ROLLER

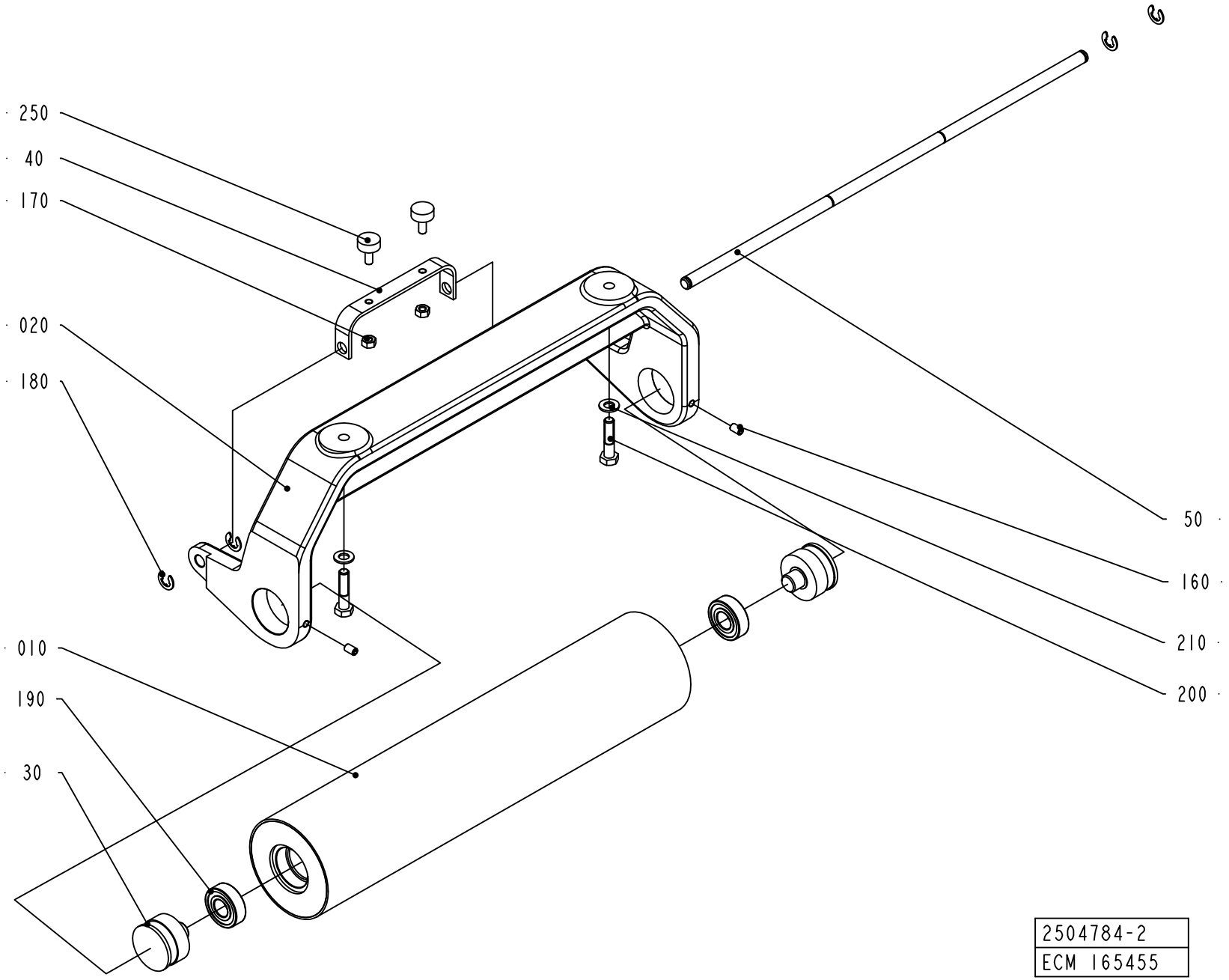

ECM: 379821 - 20090114
Group number: 2504784-0200
Assembly Drawing: 2504784-2_1_AA

Pos	Part No	UN	Qty	Description	Page No
-					
010	2605877-0000		1	BENDING ROLLER	
020	2605879-0000		1	CANTILEVER	
030	1037012-0000		2	AXLE PIN	
040	1041603-0000		1	BRACKET	
050	2605880-0000		1	SHAFT	
160	312318-0364		2	SET SCREW, CUP END ISO4029 M6X10 A4	
170	312605-0316		2	HEXAGON NUT, M6M M6 A280	
180	315755-0801		4	RETAINING RING SHAFT DIN 6799 8 SS	
190	321313-0102		2	BALL BEARING 15/35X11	
200	312105-0457		2	SCREW, M6S ISO 4014 M8X35 A4 80	
210	315105-0165		2	WASHER PLAIN, 8,4X16X1,6 A4 BRB	
250	90347-0007		2	VIBRATION DAMPER	

Pos	Part No	UN	Qty	Description	Page No

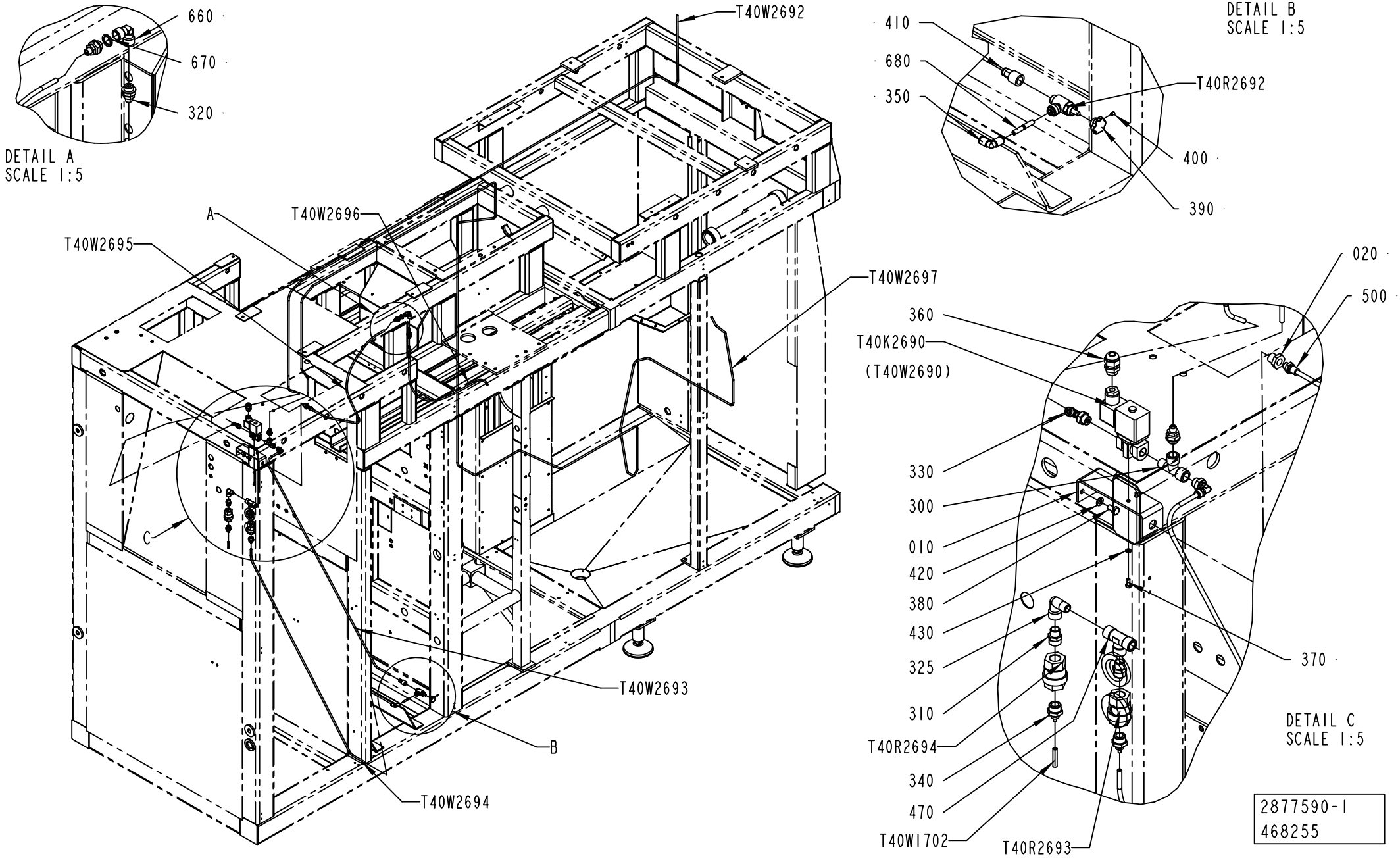
660
670
320
DETAIL A
SCALE 1:5
T40W2692
410
680
350
DETAIL B
SCALE 1:5
T40R2692
400
390
A
T40W2696
T40W2695
T40W2697
020
500
360
T40K2690
(T40W2690)
330
300
010
420
380
430
325
310
T40R2694
340
470
T40W1702
T40R2693
370
C
T40W2693
B
T40W2694
DETAIL C
SCALE 1:5
2877590-1
468255

ECM: 472132 - 20110101
Group number: 2877590-0100
Assembly Drawing: 2877590-1_1_AD

Pos	Part No	UN	Qty	Description	Page No
-					
010Â	2721151-0000		1	CANTILEVER	
020	532413-0000		1	REDUCING NIPPLE	
300	342245-0102		1	T-PIPE, INT. THREAD, R1/4XKR1/4	
310	342700-0203		2	NIPPLE, EXT.THREAD, HEXAGON, G3/8-G1/4	
320	342921-0114		3	STRAIGHT COUPLING, EXT.THREAD 6/4-G1/4	
325	90140-0013		1	ELBOW, 90 INT/EXT, S2020-1/4-1/4	
330	90224-0329		2	ELBOW 90 COUPL., EXT. THREAD 6/4-G1/4"	
340	342921-0115		2	STRAIGHT COUPLING, EXT.THREAD 6/4-G3/8	
350	350004-0002		1	PUSH-IN L-FITTING QSL-F-6	
360	352103-0101		1	CABLE GLAND, ST 9, PR15,2/PG9	
370	312105-0289		2	SCREW, M6S ISO 4017 M4X10 A4 70	
380	312105-0366		2	SCREW, M6S ISO 4017 M6X12 A4 80	
390	2710507-0000		1	KNOB	
400	90459-5076		1	SET SCREW ISO4026 M4X5 HRC 45	
410	350008-0004		1	PUSH-IN FITTING QSF-F-G1/4-6	
420	315105-0153		2	WASHER PLAIN, 6,4X12X1,5 A4 BRB	
430	315105-0136		2	WASHER PLAIN, 4,3X9X0,8 A4 BRB	
470	90140-0018		1	T-PIPE, INT. THREAD, 2003-1/4	
500	342921-0113		1	STRAIGHT COUPLING, EXT.THREAD 6/4-G1/8	
660	90140-0019		1	ELBOW, 90, INT. THREAD, NO. 2013-1/4	
670	315239-0110		1	NYLON WASHER G1/4, 1/4RRP	
T40K2690	90042-0248		1	SOLENOID VALVE OFFICIENE DI ENSINO	
T40R2692	90459-5472		1	FLOW CONTROL VALVE, CFM360612E	
T40R2693	90230-0028		1	NON-RETURN VALVE H 151 R 3/8"	
T40R2694	90230-0028		1	NON-RETURN VALVE H 151 R 3/8"	
T40W1702	315300-0001	M	1	TUBE, 6 MM PE BLUE	
T40W2692	90459-0221	M	4	TUBE, 6 MM PE BLACK	
T40W2693	90459-0221	M	1	TUBE, 6 MM PE BLACK	
T40W2694	90459-0221	M	1	TUBE, 6 MM PE BLACK	
T40W2695	90459-0221	M	0	TUBE, 6 MM PE BLACK	
T40W2696	90459-0221	M	0	TUBE, 6 MM PE BLACK	
T40W2697	90459-0221	M	4	TUBE, 6 MM PE BLACK	

Pos	Part No	UN	Qty	Description	Page No

Machine Type | Group Description | Used-In | Group Number | Page No

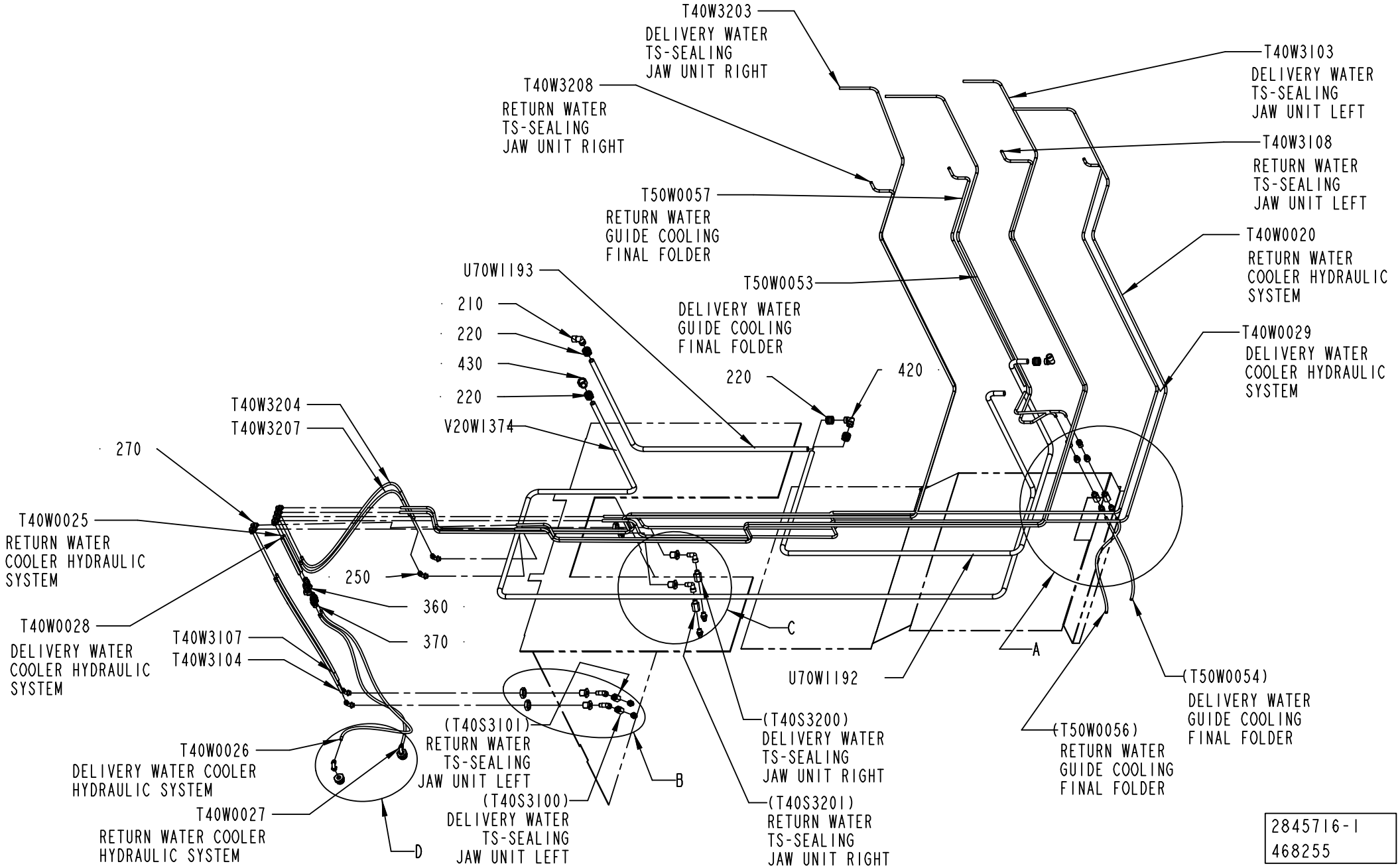
T40W3203
DELIVERY WATER TS-SEALING JAW UNIT RIGHT
T40W3208
RETURN WATER TS-SEALING JAW UNIT RIGHT
T40W3103
DELIVERY WATER TS-SEALING JAW UNIT LEFT
T40W3108
RETURN WATER TS-SEALING JAW UNIT LEFT
T50W0057
RETURN WATER GUIDE COOLING FINAL FOLDER
T40W0020
RETURN WATER COOLER HYDRAULIC SYSTEM
U70W1193
T50W0053
DELIVERY WATER GUIDE COOLING FINAL FOLDER
T40W0029
DELIVERY WATER COOLER HYDRAULIC SYSTEM
210
220
430
220
220
420
T40W3204
T40W3207
V20W1374
270
T40W0025
RETURN WATER COOLER HYDRAULIC SYSTEM
250
360
370
T40W0028
DELIVERY WATER COOLER HYDRAULIC SYSTEM
T40W3107
T40W3104
C
A
U70W1192
(T50W0054)
DELIVERY WATER GUIDE COOLING FINAL FOLDER
(T40S3200)
DELIVERY WATER TS-SEALING JAW UNIT RIGHT
(T50W0056)
RETURN WATER GUIDE COOLING FINAL FOLDER
(T40S3101)
RETURN WATER TS-SEALING JAW UNIT LEFT
T40W0026
DELIVERY WATER COOLER HYDRAULIC SYSTEM
B
(T40S3100)
DELIVERY WATER TS-SEALING JAW UNIT LEFT
(T40S3201)
RETURN WATER TS-SEALING JAW UNIT RIGHT
T40W0027
RETURN WATER COOLER HYDRAULIC SYSTEM
D
2845716-1
468255

ECM: 482805 - 20110401
Group number: 2845716-0100
Assembly Drawing: 2845716-1_1_AG

This list covers pages from 2-64 to 2-67

Pos	Part No	UN	Qty	Description	Page No
ICU					
220	90600-4081		5	ADAPTER, WIROFLEX 260459	
430	90600-4074		1	HEXAGON NIPPLE, WIROFLEX 260336	
V20W1374	90600-3000	M	4	HOSE 16X2MM, WIROFLEX 26002 2	
NO ICU					
220	90600-4081		4	ADAPTER, WIROFLEX 260459	
Common Parts					
200	3122813-0000		4	HEXAGON NIPPLE	
210	90600-4082		2	ELBOW PIPE CONN., WIROFLEX 260299	
250	342931-0122		6	ELBOW 90 COUPL., EXT. THREAD 8/6-G1/4"	
270	342936-0122		6	ELBOW 90 COUPL.,UNION 8/6	
290	90140-0013		4	ELBOW, 90 INT/EXT, S2020-1/4-1/4	
300	90030-0166		2	NIPPLE, REDUCING, G1/4EXR-G1/4INT	
320	90330-0093		4	NUT, HEXAGON SS, G1/2	
340	342921-0122		6	STRAIGHT COUPLING, EXT.THREAD 8/6-G1/4	
360	90459-0941		2	QUICK COUPLING, PLCD 130-M8	
370	90459-0960		2	QUICK COUPLING, PLCD 200-M8	
385	342931-0122		2	ELBOW 90 COUPL., EXT. THREAD 8/6-G1/4"	
390	342923-0122		2	STRAIGHT COUPL.,INT.THREADED 8/6-G1/4"	
410	3069591-0000		2	REDUCER	
420	90600-4075		1	ELBOW PIPE CONN., WIROFLEX 260121	
T40S0050	90600-0775		1	BALL VALVE G1/4, 406F-1/4"	
T40S0051	90600-0775		1	BALL VALVE G1/4, 406F-1/4"	
T40S3100	90600-0775		1	BALL VALVE G1/4, 406F-1/4"	
T40S3101	90600-0775		1	BALL VALVE G1/4, 406F-1/4"	
T40S3200	90600-0775		1	BALL VALVE G1/4, 406F-1/4"	
T40S3201	90600-0775		1	BALL VALVE G1/4, 406F-1/4"	
T40W0020	315300-0006	MM	6000	TUBE, 8 MM PE BLACK	
T40W0025	315300-0006	MM	800	TUBE, 8 MM PE BLACK	
T40W0026	315300-0006	MM	2800	TUBE, 8 MM PE BLACK	
T40W0027	315300-0006	MM	2500	TUBE, 8 MM PE BLACK	
T40W0028	315300-0006	MM	800	TUBE, 8 MM PE BLACK	
T40W0029	315300-0006	MM	6000	TUBE, 8 MM PE BLACK	
T40W3103	315300-0006	MM	6000	TUBE, 8 MM PE BLACK	
T40W3104	315300-0006	MM	1300	TUBE, 8 MM PE BLACK	
T40W3107	315300-0006	MM	1300	TUBE, 8 MM PE BLACK	
T40W3108	315300-0006	MM	6000	TUBE, 8 MM PE BLACK	
T40W3203	315300-0006	MM	6000	TUBE, 8 MM PE BLACK	
T40W3204	315300-0006	MM	1200	TUBE, 8 MM PE BLACK	
T40W3207	315300-0006	MM	1200	TUBE, 8 MM PE BLACK	
T40W3208	315300-0006	MM	6000	TUBE, 8 MM PE BLACK	
T50W0053	315300-0006	MM	3000	TUBE, 8 MM PE BLACK	
T50W0057	315300-0006	MM	3000	TUBE, 8 MM PE BLACK	
U70W1192	90600-3000	M	2	HOSE 16X2MM, WIROFLEX 26002 2	
U70W1193	90600-3000	M	2	HOSE 16X2MM, WIROFLEX 26002 2	

Machine Type | Group Description | Used-In | Group Number | Page No

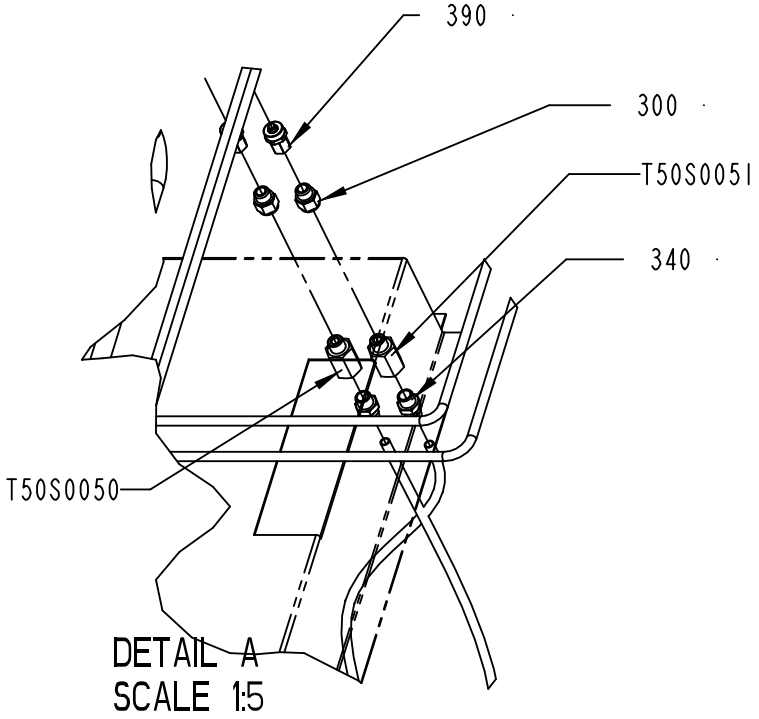

DETAIL A
SCALE 1:5

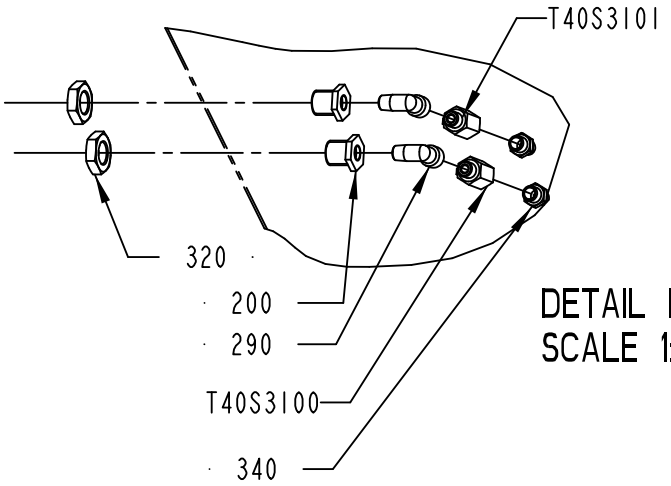

DETAIL B
SCALE 1:5

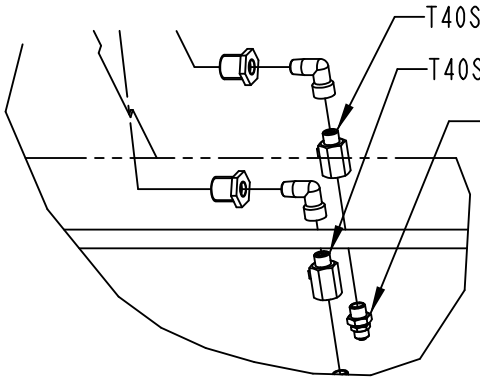

DETAIL C
SCALE 1:5

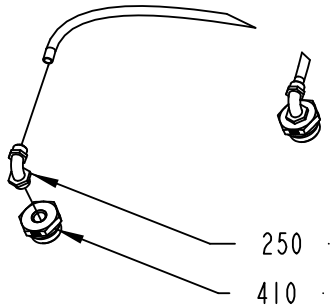

DETAIL D
SCALE 1:5

2845716-1
468255

ECM: 482805 - 20110401
Group number: 2845716-0100
Assembly Drawing: 2845716-1_2_AG

This list covers pages from 2-64 to 2-67

Pos	Part No	UN	Qty	Description	Page No
ICU					
220	90600-4081		5	ADAPTER, WIROFLEX 260459	
430	90600-4074		1	HEXAGON NIPPLE, WIROFLEX 260336	
V20W1374	90600-3000	M	4	HOSE 16X2MM, WIROFLEX 26002 2	
NO ICU					
220	90600-4081		4	ADAPTER, WIROFLEX 260459	
Common Parts					
200	3122813-0000		4	HEXAGON NIPPLE	
210	90600-4082		2	ELBOW PIPE CONN., WIROFLEX 260299	
250	342931-0122		6	ELBOW 90 COUPL., EXT. THREAD 8/6-G1/4"	
270	342936-0122		6	ELBOW 90 COUPL.,UNION 8/6	
290	90140-0013		4	ELBOW, 90 INT/EXT, S2020-1/4-1/4	
300	90030-0166		2	NIPPLE, REDUCING, G1/4EXR-G1/4INT	
320	90330-0093		4	NUT, HEXAGON SS, G1/2	
340	342921-0122		6	STRAIGHT COUPLING, EXT.THREAD 8/6-G1/4	
360	90459-0941		2	QUICK COUPLING, PLCD 130-M8	
370	90459-0960		2	QUICK COUPLING, PLCD 200-M8	
385	342931-0122		2	ELBOW 90 COUPL., EXT. THREAD 8/6-G1/4"	
390	342923-0122		2	STRAIGHT COUPL.,INT.THREADED 8/6-G1/4"	
410	3069591-0000		2	REDUCER	
420	90600-4075		1	ELBOW PIPE CONN., WIROFLEX 260121	
T40S0050	90600-0775		1	BALL VALVE G1/4, 406F-1/4"	
T40S0051	90600-0775		1	BALL VALVE G1/4, 406F-1/4"	
T40S3100	90600-0775		1	BALL VALVE G1/4, 406F-1/4"	
T40S3101	90600-0775		1	BALL VALVE G1/4, 406F-1/4"	
T40S3200	90600-0775		1	BALL VALVE G1/4, 406F-1/4"	
T40S3201	90600-0775		1	BALL VALVE G1/4, 406F-1/4"	
T40W0020	315300-0006	MM	6000	TUBE, 8 MM PE BLACK	
T40W0025	315300-0006	MM	800	TUBE, 8 MM PE BLACK	
T40W0026	315300-0006	MM	2800	TUBE, 8 MM PE BLACK	
T40W0027	315300-0006	MM	2500	TUBE, 8 MM PE BLACK	
T40W0028	315300-0006	MM	800	TUBE, 8 MM PE BLACK	
T40W0029	315300-0006	MM	6000	TUBE, 8 MM PE BLACK	
T40W3103	315300-0006	MM	6000	TUBE, 8 MM PE BLACK	
T40W3104	315300-0006	MM	1300	TUBE, 8 MM PE BLACK	
T40W3107	315300-0006	MM	1300	TUBE, 8 MM PE BLACK	
T40W3108	315300-0006	MM	6000	TUBE, 8 MM PE BLACK	
T40W3203	315300-0006	MM	6000	TUBE, 8 MM PE BLACK	
T40W3204	315300-0006	MM	1200	TUBE, 8 MM PE BLACK	
T40W3207	315300-0006	MM	1200	TUBE, 8 MM PE BLACK	
T40W3208	315300-0006	MM	6000	TUBE, 8 MM PE BLACK	
T50W0053	315300-0006	MM	3000	TUBE, 8 MM PE BLACK	
T50W0057	315300-0006	MM	3000	TUBE, 8 MM PE BLACK	
U70W1192	90600-3000	M	2	HOSE 16X2MM, WIROFLEX 26002 2	
U70W1193	90600-3000	M	2	HOSE 16X2MM, WIROFLEX 26002 2	

Machine Type | Group Description | Used-In | Group Number | Page No

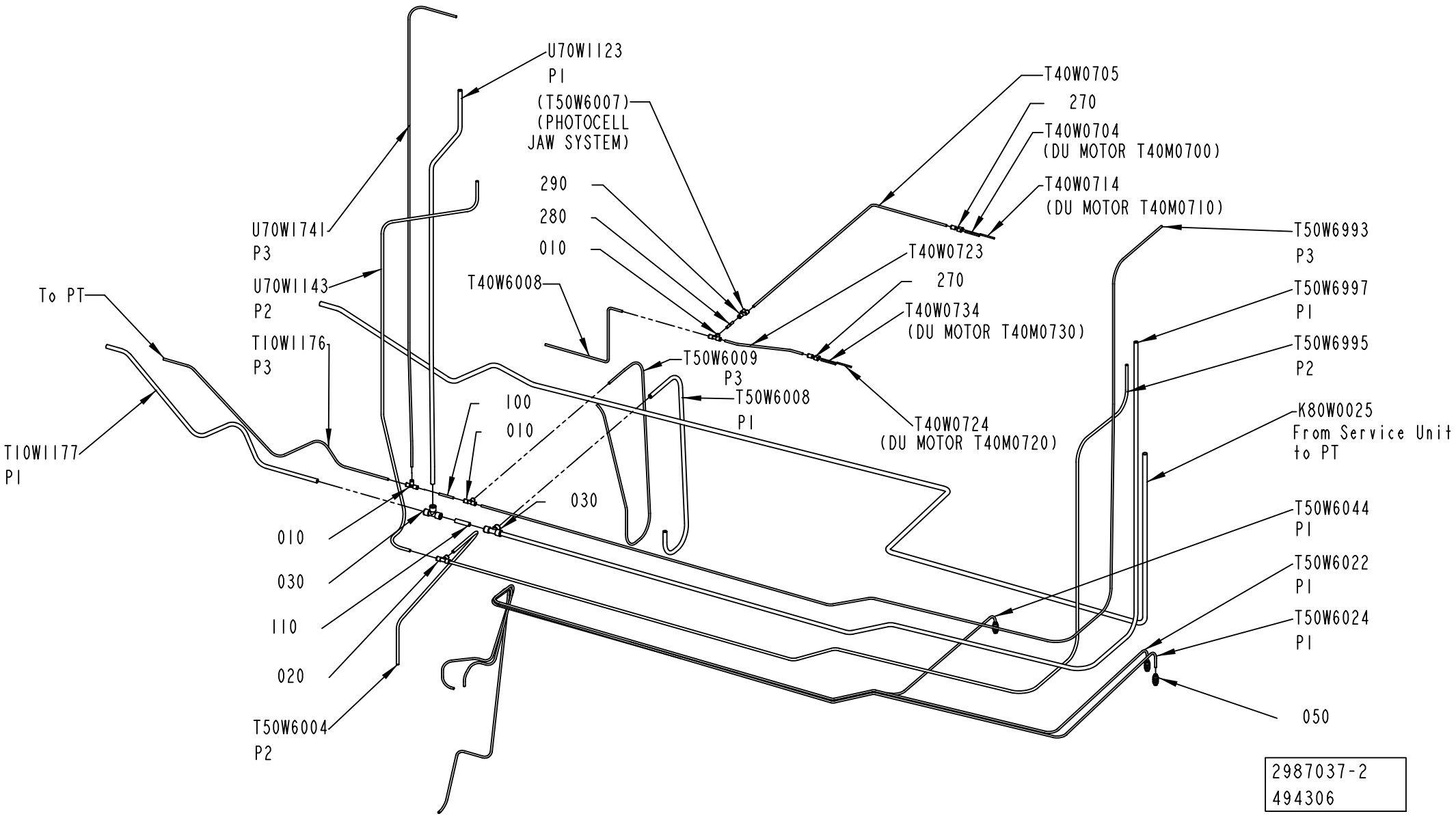
U70W1123
P1
(T50W6007)
(PHOTOCELL
JAW SYSTEM)
290
280
010
T40W0705
270
T40W0704
(DU MOTOR T40M0700)
T40W0714
(DU MOTOR T40M0710)
U70W1741
P3
U70W1143
P2
T40W6008
T40W0723
270
T40W0734
(DU MOTOR T40M0730)
T50W6993
P3
T50W6997
P1
T50W6995
P2
To PT
T10W1176
P3
T50W6009
P3
T50W6008
P1
100
010
T40W0724
(DU MOTOR T40M0720)
K80W0025
From Service Unit
to PT
T10W1177
P1
030
010
030
110
020
T50W6004
P2
T50W6044
P1
T50W6022
P1
T50W6024
P1
050
2987037-2
494306

ECM: 498345 - 20110701
Group number: 2987037-0200
Assembly Drawing: 2987037-2_1_AD

Pos	Part No	UN	Qty	Description	Page No
-					
010	350005-0002		3	PUSH-IN T-FITTING QST-F-6	
020	350005-0003		1	PUSH-IN T-FITTING QST-F-8	
030	350005-0005		2	PUSH-IN T-FITTING QST-F-12	
040	342716-0211		1	REDUCER 12-14	
050	350010-0002		3	PUSH-IN BULKHEAD FITTING QSS-F-6	
100	315300-0001	MM	50	TUBE, 6 MM PE BLUE	
110	315300-0010	MM	50	TUBE, 12 MM PE BLUE	
270	350015-0002		2	PUSH-IN Y-CONNECTOR QSY-F-6-4	
280	350012-0002		1	SLEEVE QSH-F-6	
290	350015-0001		1	PUSH-IN Y-CONNECTOR QSY-F-6	
K80W0025	90166-0196	MM	4700	TUBE 14MM PA BLUE	
T10W1176	315300-0001	MM	1100	TUBE, 6 MM PE BLUE	
T10W1177	315300-0010	MM	1100	TUBE, 12 MM PE BLUE	
T40W0704	315300-0016	MM	500	TUBE 4MPE BLUE	
T40W0705	315300-0001	MM	1400	TUBE, 6 MM PE BLUE	
T40W0714	315300-0016	MM	800	TUBE 4MPE BLUE	
T40W0723	315300-0001	MM	400	TUBE, 6 MM PE BLUE	
T40W0724	315300-0016	MM	500	TUBE 4MPE BLUE	
T40W0734	315300-0016	MM	800	TUBE 4MPE BLUE	
T40W6008	315300-0001	MM	1300	TUBE, 6 MM PE BLUE	
T50W6004	315300-0004	MM	1120	TUBE, 8 MM PE BLUE	
T50W6008	315300-0010	MM	630	TUBE, 12 MM PE BLUE	
T50W6009	315300-0001	MM	1650	TUBE, 6 MM PE BLUE	
T50W6022	315300-0001	MM	4500	TUBE, 6 MM PE BLUE	
T50W6024	315300-0001	MM	4500	TUBE, 6 MM PE BLUE	
T50W6044	315300-0001	MM	3700	TUBE, 6 MM PE BLUE	
T50W6993	315300-0001	MM	3900	TUBE, 6 MM PE BLUE	
T50W6995	315300-0004	MM	3600	TUBE, 8 MM PE BLUE	
T50W6997	315300-0010	MM	3600	TUBE, 12 MM PE BLUE	
U70W1123	315300-0010	MM	1500	TUBE, 12 MM PE BLUE	
U70W1143	315300-0004	MM	1800	TUBE, 8 MM PE BLUE	
U70W1741	315300-0001	MM	2500	TUBE, 6 MM PE BLUE	

Pos	Part No	UN	Qty	Description	Page No

Machine Type | Group Description | Used-In | Group Number | Page No

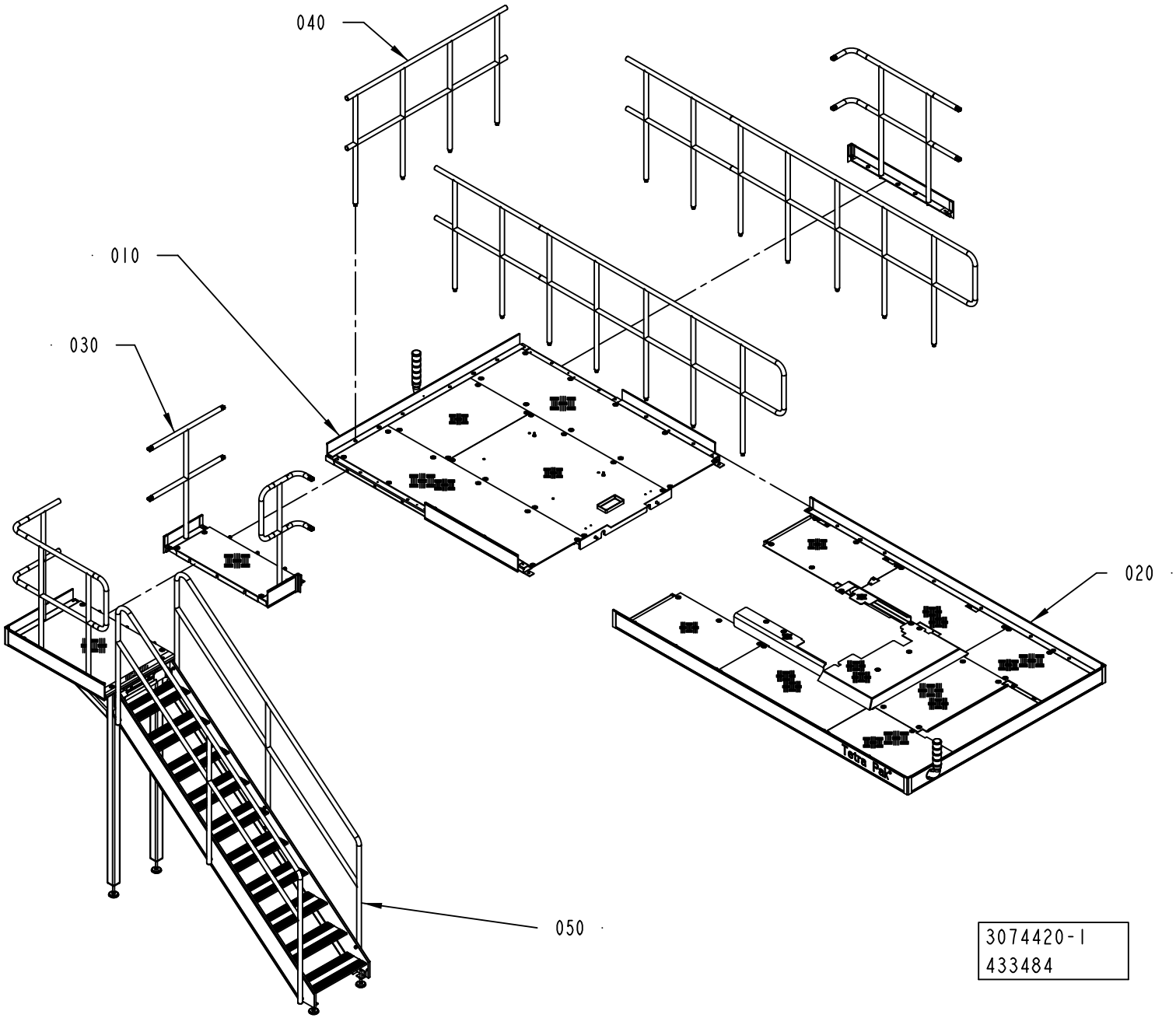
040
010
030
020
050
3074420-1
433484

ECM: 467498 - 20101002
Group number: 3074420-0100
Assembly Drawing: 3074420-1_1_AA

This list covers pages from 2-70 to 2-81

Pos	Part No	UN	Qty	Description	Page No
NOPT HVA (See drawing on page: 2-78)					
050	3074419-0100		1	STAIR	**2-83**
060	3078321-0100		1	EXTENDED PLATFORM	**2-91, 2-93**
NOPT NOHVA STAIR (See drawing on pages: 2-70, 2-72)					
050	3074419-0100		1	STAIR	**2-83**
PT/CF HVA (See drawing on page: 2-80)					
050	3074419-0100		1	STAIR	**2-83**
060	3078321-0100		1	EXTENDED PLATFORM	**2-91, 2-93**
PT/CF NOHVA STAIR (See drawing on pages: 2-74, 2-76)					
050	3074419-0100		1	STAIR	**2-83**
Common Parts					
010	3074200-0100		1	REAR PLATFORM	**2-99, 2-101**
020	2838071-0200		1	FRONT PLATFORM	**2-107**
030	3055049-0100		1	LINK	**2-111, 2-113**
040	3074204-0100		1	RAILING	**2-115, 2-117, 2-119, 2-121**

Pos	Part No	UN	Qty	Description	Page No

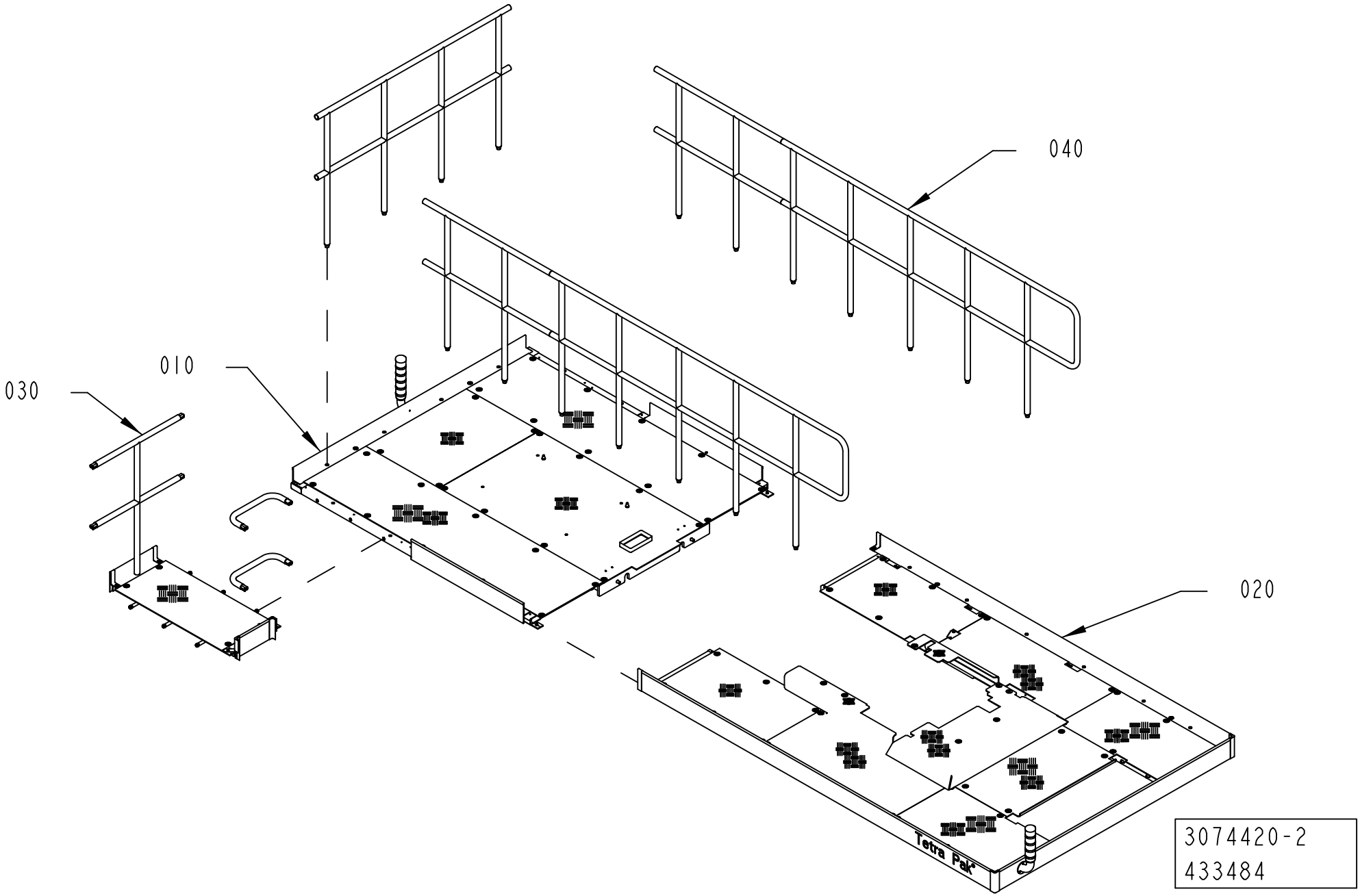
040
010
030
020
Tetra Pak
3074420-2
433484

ECM: 467498 - 20101002
Group number: 3074420-0100
Assembly Drawing: 3074420-2_1_AA

This list covers pages from 2-70 to 2-81

Pos	Part No	UN	Qty	Description	Page No
NOPT HVA (See drawing on page: 2-78)					
050	3074419-0100		1	STAIR	**2-83**
060	3078321-0100		1	EXTENDED PLATFORM	**2-91, 2-93**
NOPT NOHVA STAIR (See drawing on pages: 2-70, 2-72)					
050	3074419-0100		1	STAIR	**2-83**
PT/CF HVA (See drawing on page: 2-80)					
050	3074419-0100		1	STAIR	**2-83**
060	3078321-0100		1	EXTENDED PLATFORM	**2-91, 2-93**
PT/CF NOHVA STAIR (See drawing on pages: 2-74, 2-76)					
050	3074419-0100		1	STAIR	**2-83**
Common Parts					
010	3074200-0100		1	REAR PLATFORM	**2-99, 2-101**
020	2838071-0200		1	FRONT PLATFORM	**2-107**
030	3055049-0100		1	LINK	**2-111, 2-113**
040	3074204-0100		1	RAILING	**2-115, 2-117, 2-119, 2-121**

Pos	Part No	UN	Qty	Description	Page No

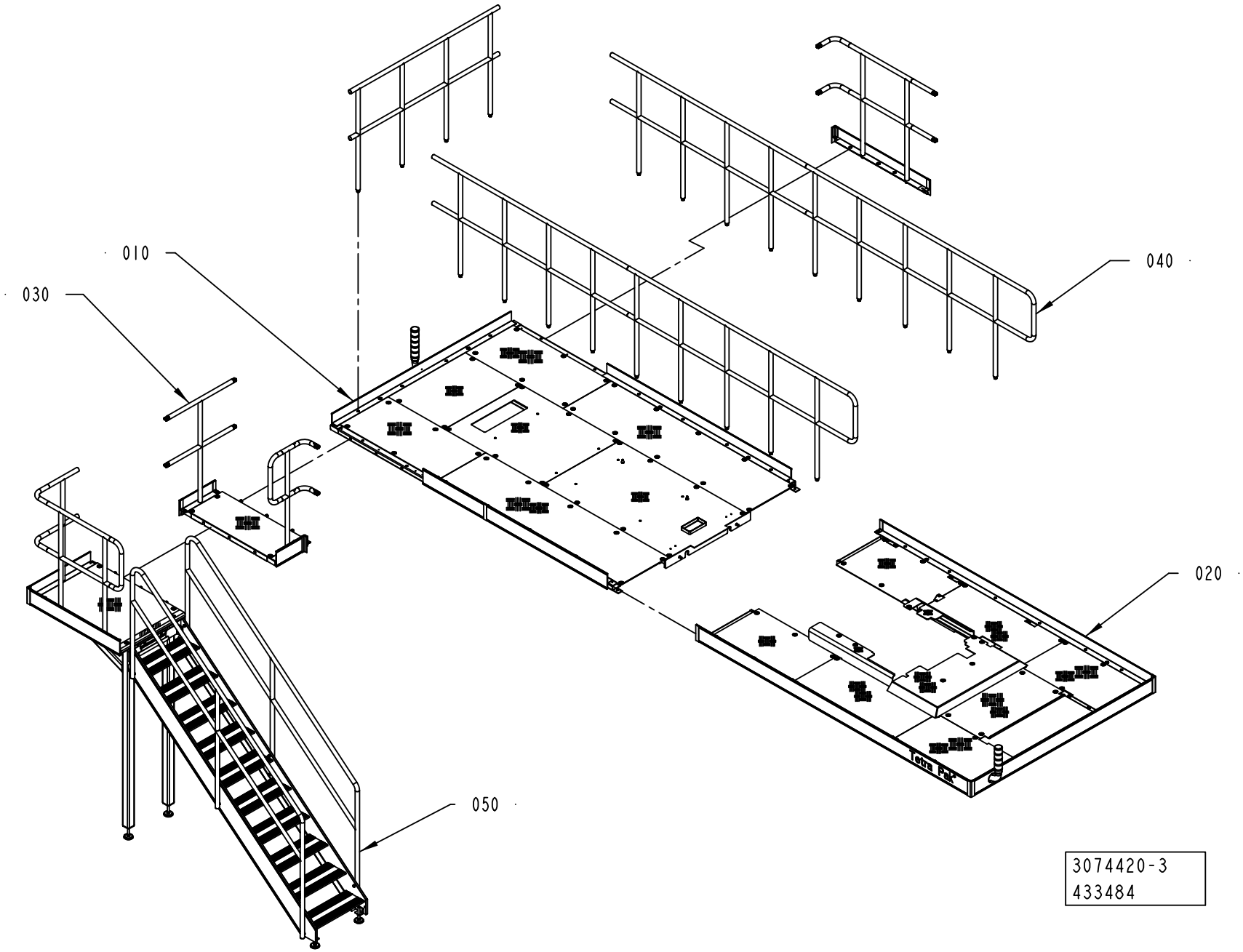
010
020
030
040
050
Tetra Pak
3074420-3
433484

ECM: 467498 - 20101002
Group number: 3074420-0100
Assembly Drawing: 3074420-3_1_AA

This list covers pages from 2-70 to 2-81

Pos	Part No	UN	Qty	Description	Page No
NOPT HVA (See drawing on page: 2-78)					
050	3074419-0100		1	STAIR	**2-83**
060	3078321-0100		1	EXTENDED PLATFORM	**2-91, 2-93**
NOPT NOHVA STAIR (See drawing on pages: 2-70, 2-72)					
050	3074419-0100		1	STAIR	**2-83**
PT/CF HVA (See drawing on page: 2-80)					
050	3074419-0100		1	STAIR	**2-83**
060	3078321-0100		1	EXTENDED PLATFORM	**2-91, 2-93**
PT/CF NOHVA STAIR (See drawing on pages: 2-74, 2-76)					
050	3074419-0100		1	STAIR	**2-83**
Common Parts					
010	3074200-0100		1	REAR PLATFORM	**2-99, 2-101**
020	2838071-0200		1	FRONT PLATFORM	**2-107**
030	3055049-0100		1	LINK	**2-111, 2-113**
040	3074204-0100		1	RAILING	**2-115, 2-117, 2-119, 2-121**

Pos	Part No	UN	Qty	Description	Page No

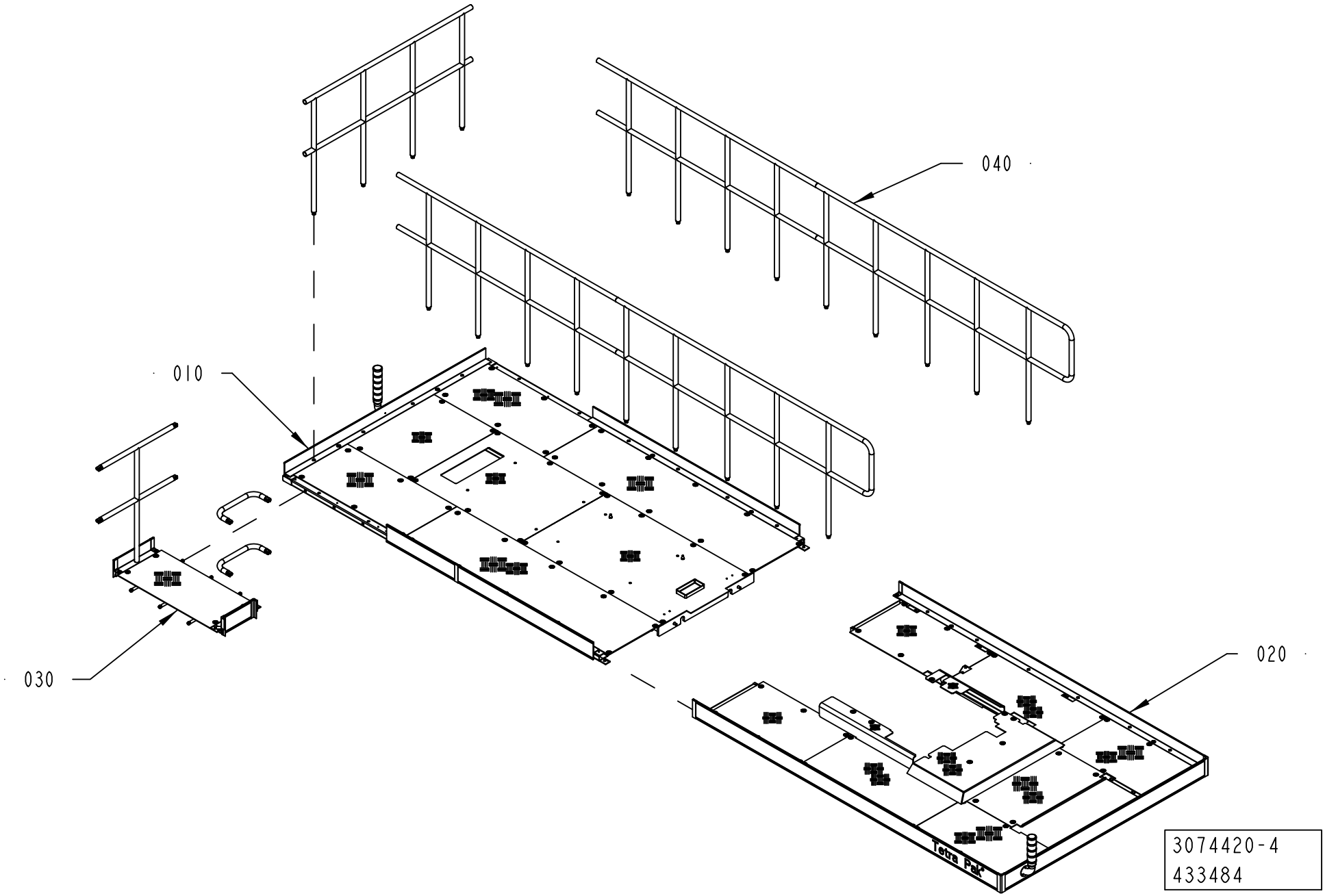
040
010
030
020
Tetra Pak
3074420-4
433484

ECM: 467498 - 20101002
Group number: 3074420-0100
Assembly Drawing: 3074420-4_1_AA

This list covers pages from 2-70 to 2-81

Pos	Part No	UN	Qty	Description	Page No
NOPT HVA (See drawing on page: 2-78)					
050	3074419-0100		1	STAIR	**2-83**
060	3078321-0100		1	EXTENDED PLATFORM	**2-91, 2-93**
NOPT NOHVA STAIR (See drawing on pages: 2-70, 2-72)					
050	3074419-0100		1	STAIR	**2-83**
PT/CF HVA (See drawing on page: 2-80)					
050	3074419-0100		1	STAIR	**2-83**
060	3078321-0100		1	EXTENDED PLATFORM	**2-91, 2-93**
PT/CF NOHVA STAIR (See drawing on pages: 2-74, 2-76)					
050	3074419-0100		1	STAIR	**2-83**
Common Parts					
010	3074200-0100		1	REAR PLATFORM	**2-99, 2-101**
020	2838071-0200		1	FRONT PLATFORM	**2-107**
030	3055049-0100		1	LINK	**2-111, 2-113**
040	3074204-0100		1	RAILING	**2-115, 2-117, 2-119, 2-121**

Pos	Part No	UN	Qty	Description	Page No

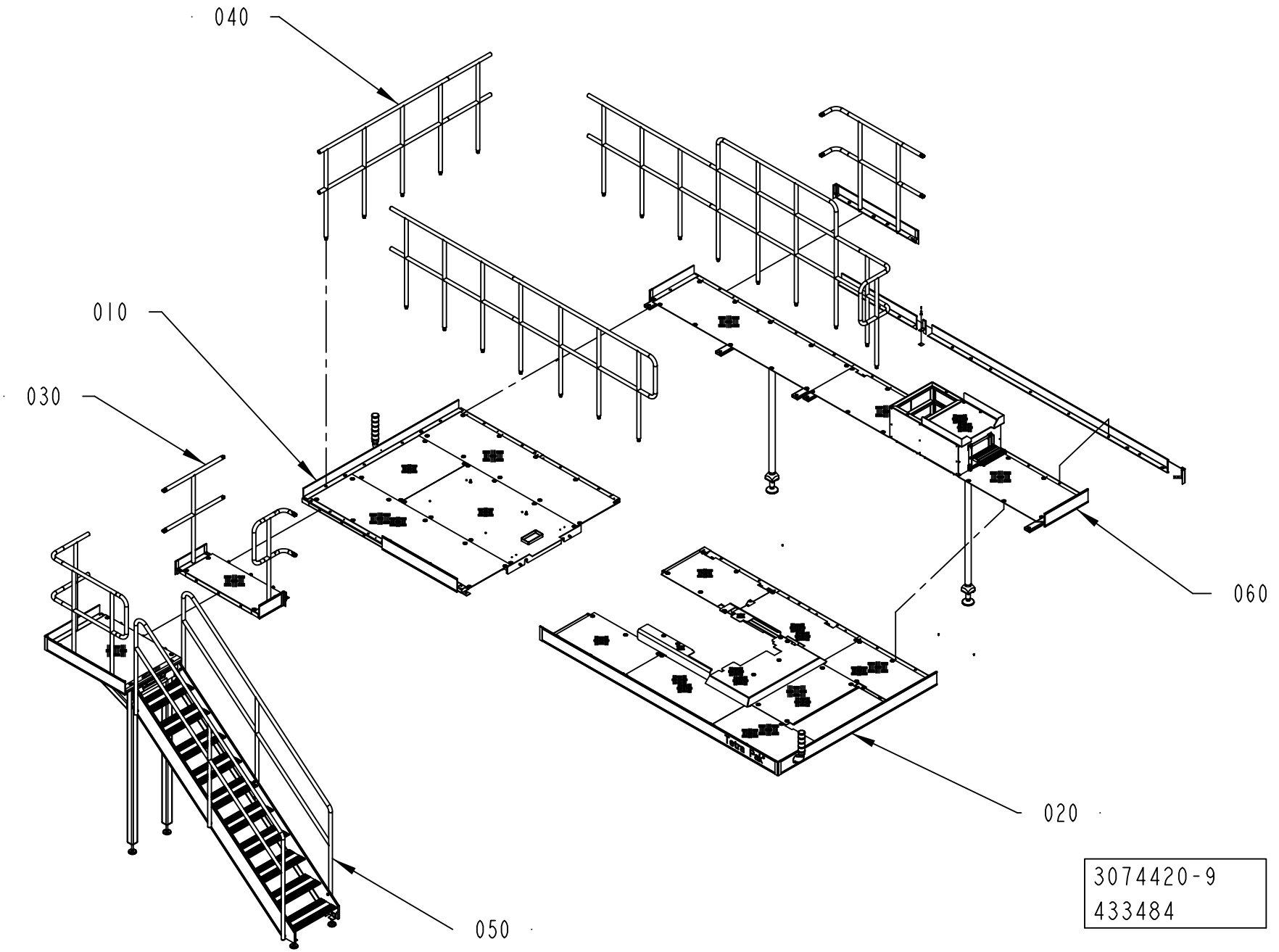
040
010
030
060
020
050
3074420-9
433484

ECM: 467498 - 20101002
Group number: 3074420-0100
Assembly Drawing: 3074420-9_1_AA

This list covers pages from 2-70 to 2-81

Pos	Part No	UN	Qty	Description	Page No
NOPT HVA (See drawing on page: 2-78)					
050	3074419-0100		1	STAIR	**2-83**
060	3078321-0100		1	EXTENDED PLATFORM	**2-91, 2-93**
NOPT NOHVA STAIR (See drawing on pages: 2-70, 2-72)					
050	3074419-0100		1	STAIR	**2-83**
PT/CF HVA (See drawing on page: 2-80)					
050	3074419-0100		1	STAIR	**2-83**
060	3078321-0100		1	EXTENDED PLATFORM	**2-91, 2-93**
PT/CF NOHVA STAIR (See drawing on pages: 2-74, 2-76)					
050	3074419-0100		1	STAIR	**2-83**
Common Parts					
010	3074200-0100		1	REAR PLATFORM	**2-99, 2-101**
020	2838071-0200		1	FRONT PLATFORM	**2-107**
030	3055049-0100		1	LINK	**2-111, 2-113**
040	3074204-0100		1	RAILING	**2-115, 2-117, 2-119, 2-121**

Pos	Part No	UN	Qty	Description	Page No

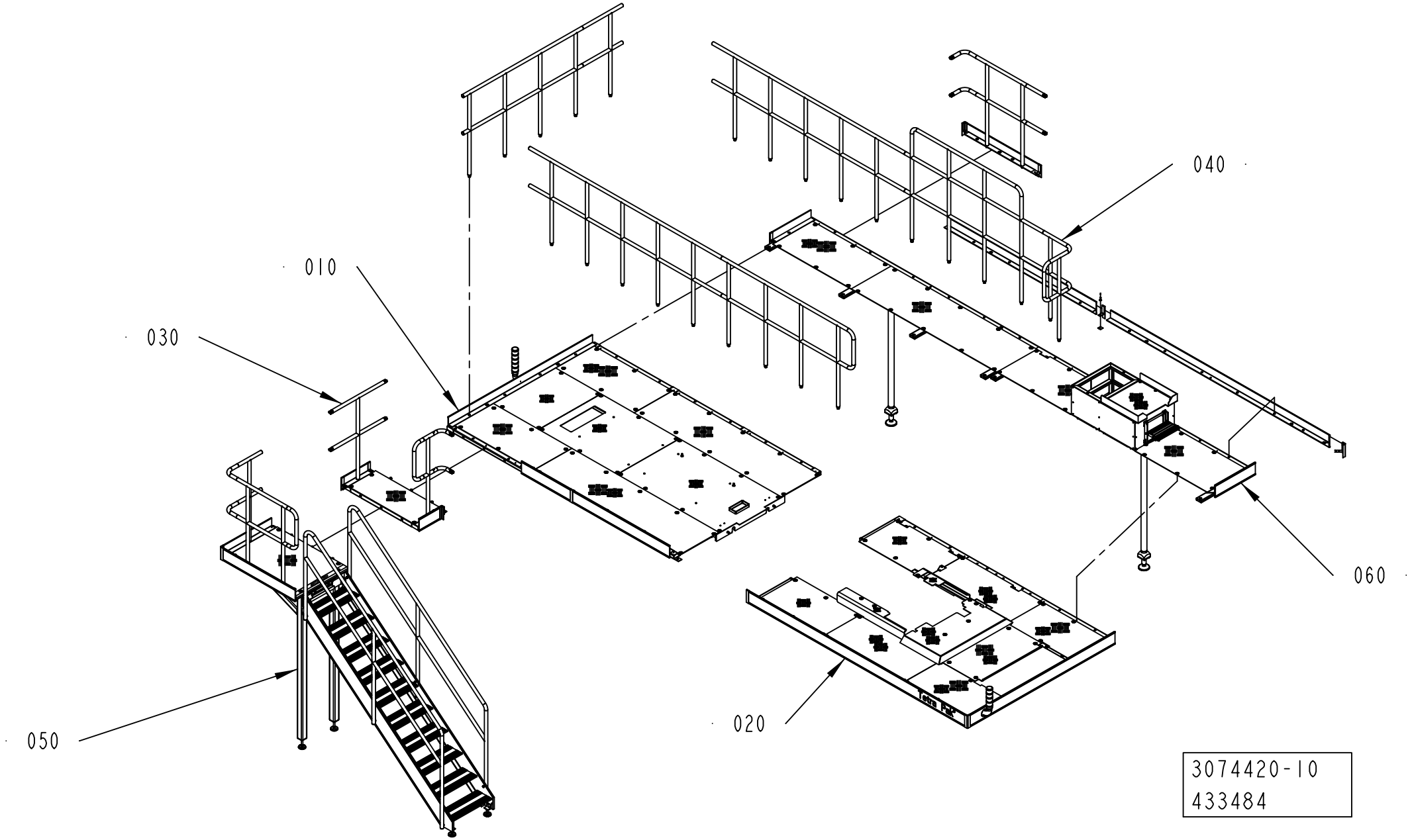
010
020
030
040
050
060
3074420-10
433484

ECM: 467498 - 20101002
Group number: 3074420-0100
Assembly Drawing: 3074420-10_1_AA

This list covers pages from 2-70 to 2-81

Pos	Part No	UN	Qty	Description	Page No
NOPT HVA (See drawing on page: 2-78)					
050	3074419-0100		1	STAIR	**2-83**
060	3078321-0100		1	EXTENDED PLATFORM	**2-91, 2-93**
NOPT NOHVA STAIR (See drawing on pages: 2-70, 2-72)					
050	3074419-0100		1	STAIR	**2-83**
PT/CF HVA (See drawing on page: 2-80)					
050	3074419-0100		1	STAIR	**2-83**
060	3078321-0100		1	EXTENDED PLATFORM	**2-91, 2-93**
PT/CF NOHVA STAIR (See drawing on pages: 2-74, 2-76)					
050	3074419-0100		1	STAIR	**2-83**
Common Parts					
010	3074200-0100		1	REAR PLATFORM	**2-99, 2-101**
020	2838071-0200		1	FRONT PLATFORM	**2-107**
030	3055049-0100		1	LINK	**2-111, 2-113**
040	3074204-0100		1	RAILING	**2-115, 2-117, 2-119, 2-121**

Pos	Part No	UN	Qty	Description	Page No

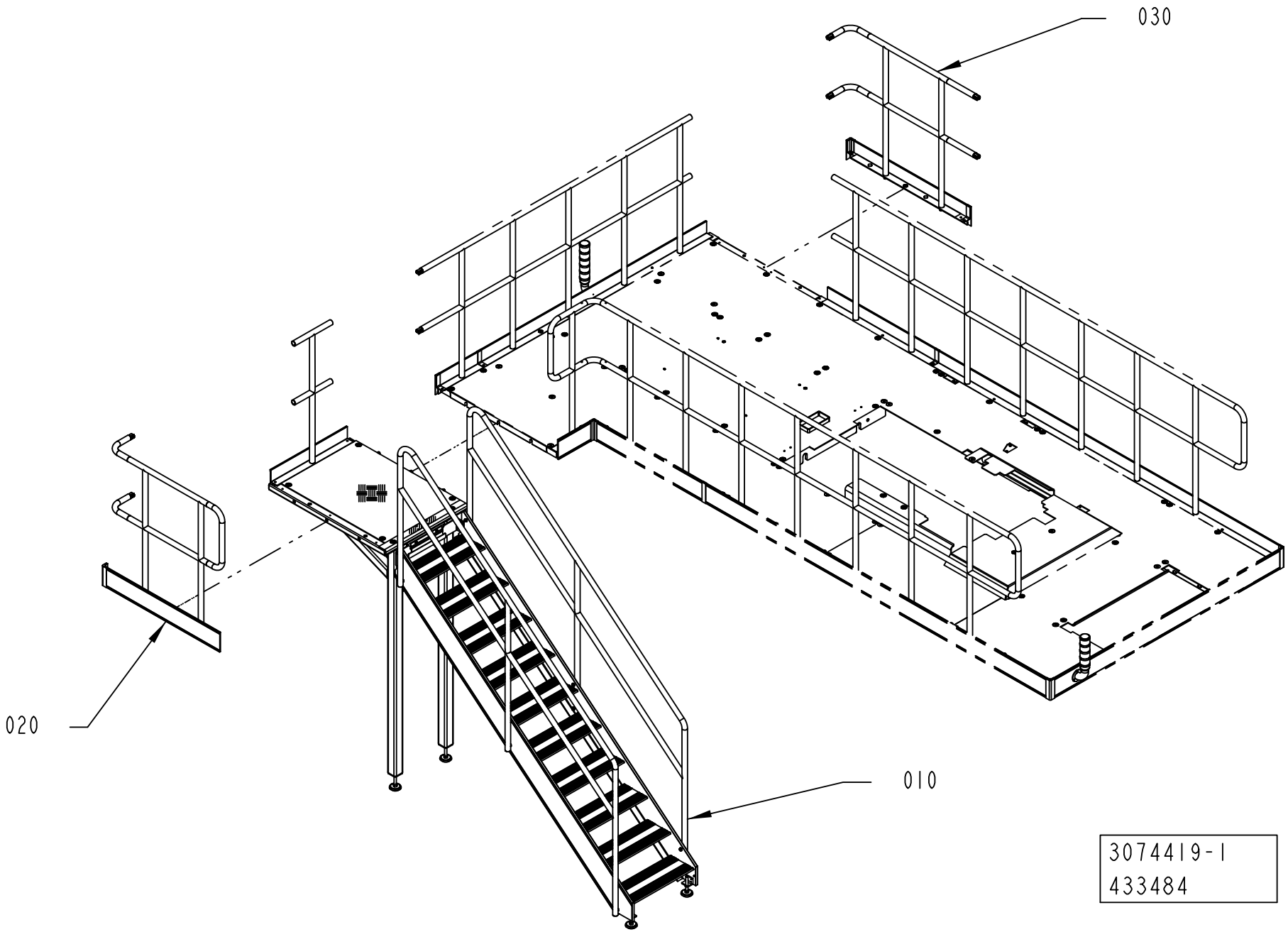
030
020
010
3074419-1
433484

ECM: 434203 - 20100128
Group number: 3074419-0100
Assembly Drawing: 3074419-1_1_AA

Pos	Part No	UN	Qty	Description	Page No
-					
010	3055050-0100		1	STAIRCASE	**2-85**
020	3067395-0100		1	RAILING	**2-87**
030	3077097-0100		1	RAILING	**2-89**

Pos	Part No	UN	Qty	Description	Page No

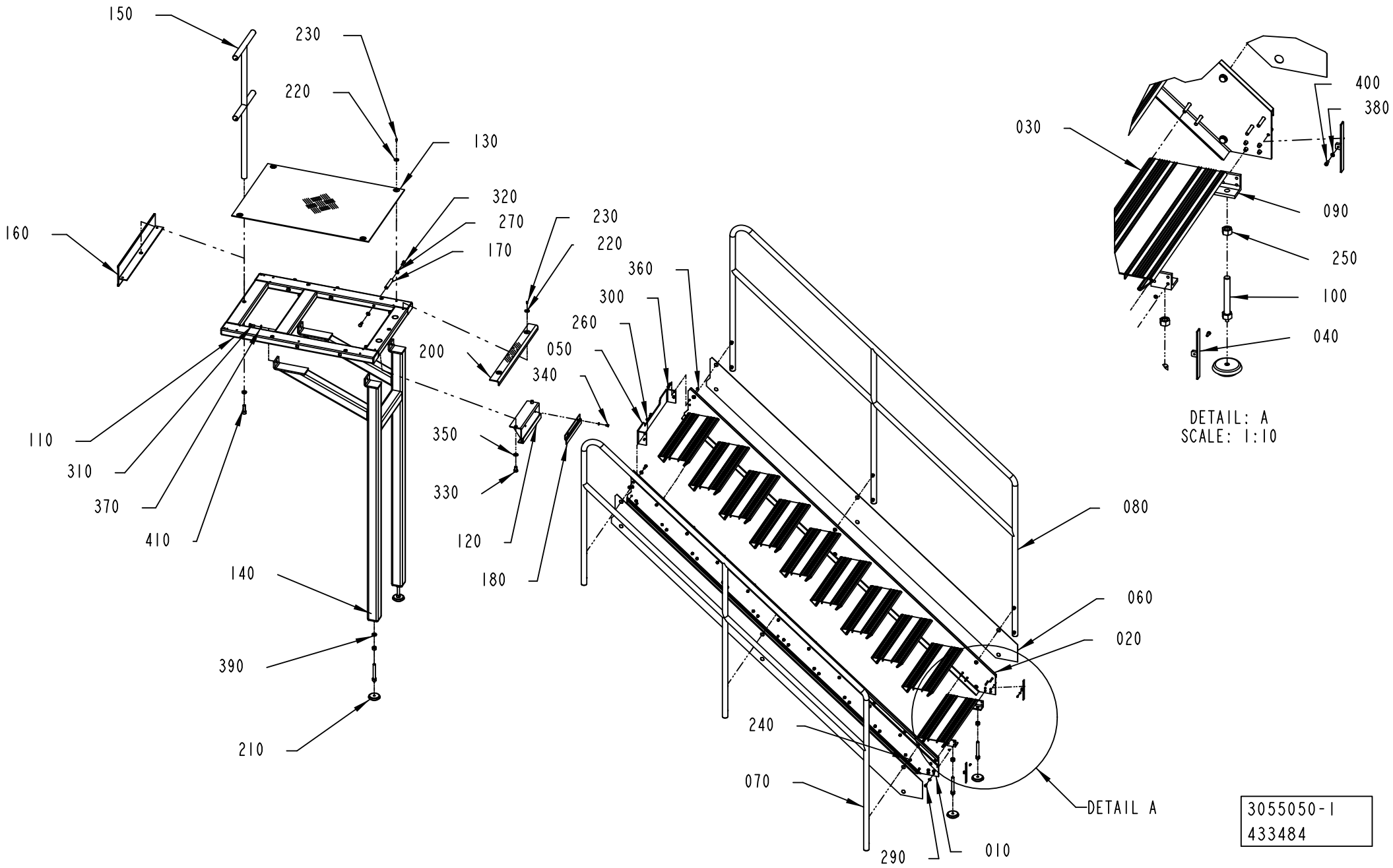
150
230
220
130
320
270
170
160
230
220
360
300
260
050
340
200
110
310
370
410
350
330
120
180
140
390
210
240
070
290
010
080
060
020
DETAIL A
400
380
030
090
250
100
040
DETAIL: A
SCALE: 1:10
3055050-1
433484

ECM: 434199 - 20100128
Group number: 3055050-0100
Assembly Drawing: 3055050-1_1_AA

Pos	Part No	UN	Qty	Description	Page No
-					
010	3090032-0000		1	PROFILE	
020	3090033-0000		1	PROFILE	
030	1524188-0000		10	STAIR	
040	3089695-0000		2	PLUG	
050	2990953-0000		1	BRACKET	
060	3033496-0000		2	RIM	
070	3033492-0000		1	RAILING	
080	3033493-0000		1	RAILING	
090	1037391-0000		2	CANTILEVER	
100	1524185-0000		4	EXTENSION PIECE	
110	3055041-0000		1	FRAME	
120	2565386-0000		1	HOOK	
130	3055044-0000		1	CHECKER PLATE	
140	3033502-0000		1	LEG	
150	3055048-0000		1	RAILING	
160	3055043-0000		1	TOE PLATE	
170	3069059-0000		3	PIN	
180	1524176-0000		1	CLAMP	
200	3069060-0000		1	CHECKER PLATE	
210	90347-0009		4	VIBRATION DAMPER S1860740	
220	90458-0073		6	WASHER 6,4/30, H=1,5	
230	90458-0072		6	SCREW ISO 7380 S M6X12 A2	
240	312104-0461		79	SCREW M6S M8X50H FZB	
250	312605-0324		4	HEXAGON NUT, M6M M16 A280	
260	315105-0165		94	WASHER PLAIN, 8,4X16X1,6 A4 BRB	
270	315105-0178		6	WASHER PLAIN, 13X24X2,5 A4 BRB	
290	312105-0449		8	SCREW, M6S ISO 4017 M8X16 A4 80	
300	312105-0451		4	SCREW, M6S ISO 4017 M8X20 A4 80	
310	312105-0495		16	SCREW, M6S ISO 4017 M10X30 A4 80	
320	312105-0536		6	SCREW, M6S ISO 4017 M12X30 A4 80	
330	312105-0622		2	SCREW, M6S ISO 4017 M16X25 A4 80	
340	312105-0447		2	SCREW, M6S ISO 4017 M8X12 A4 80	
350	315105-0186		2	WASHER PLAIN, 17X30X3 A4 BRB	
360	312605-0318		4	HEXAGON NUT, M6M M8 A280	
370	315105-0173		16	WASHER PLAIN, 10,5X22X2 A4 BRB	
380	315105-0146		2	WASHER PLAIN, 5,3X10X1 A4 BRB	
390	315111-0186		3	WASHER PLAIN, TBRB 17/30 H=6	
400	312115-0327		2	SCREW ISO4762 M5X12 A4 80	
410	312111-0630		1	SCREW HEX.SOCK.HD.MC6S-TT 16X50 88 FZB	

Pos	Part No	UN	Qty	Description	Page No

Machine Type | Group Description | Used-In | Group Number | Page No

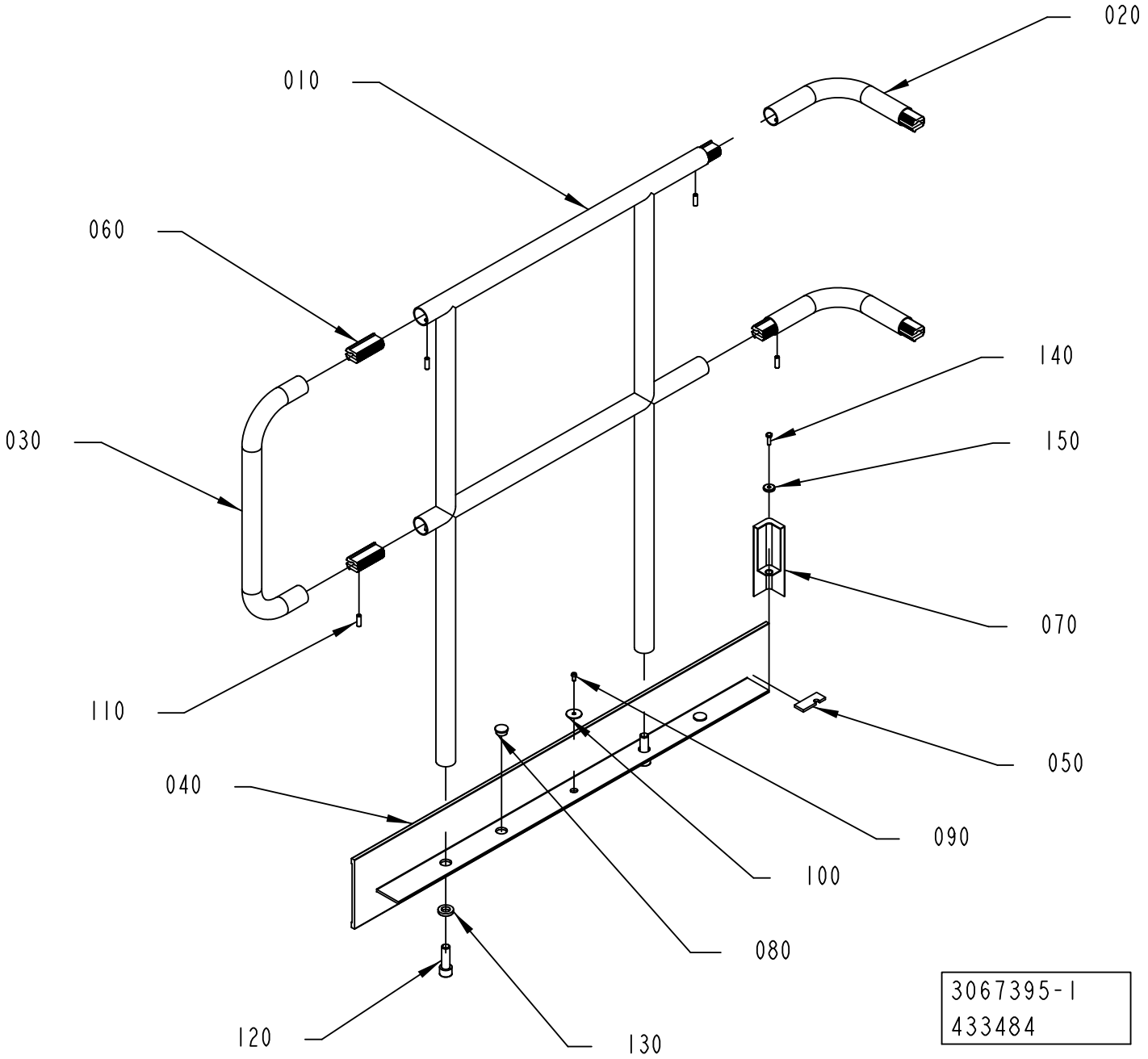
020
010
060
140
030
150
070
110
050
040
090
100
080
120
130
3067395-1
433484

ECM: 467506 - 20101002
Group number: 3067395-0100
Assembly Drawing: 3067395-1_1_AA

Pos	Part No	UN	Qty	Description	Page No
-					
010	3055047-0000		1	RAILING	
020	3067394-0000		2	RAILING	
030	3067392-0000		1	RAILING	
040	3067388-0000		1	TOE PLATE	
050	3069061-0000		1	PLATE	
060	985328-0000		6	CONNECTION	
070	1524167-0000		1	CORNER STRIP	
080	90261-0033		2	PLUG, BLIND, PLASTIC GPN300F182	
090	90458-0072		1	SCREW ISO 7380 S M6X12 A2	
100	90458-0073		1	WASHER 6,4/30, H=1,5	
110	312318-0453		12	SET SCREW, CUP END ISO4029 M8X25 A4	
120	312111-0630		2	SCREW HEX.SOCK.HD.MC6S-TT 16X50 88 FZB	
130	315111-0186		2	WASHER PLAIN, TBRB 17/30 H=6	
140	312105-0370		1	SCREW, M6S ISO 4017 M6X20 A4 80	
150	315125-0153		1	WASHER HIGH, TBRSB 6,4X22X4 A4	

Pos	Part No	UN	Qty	Description	Page No

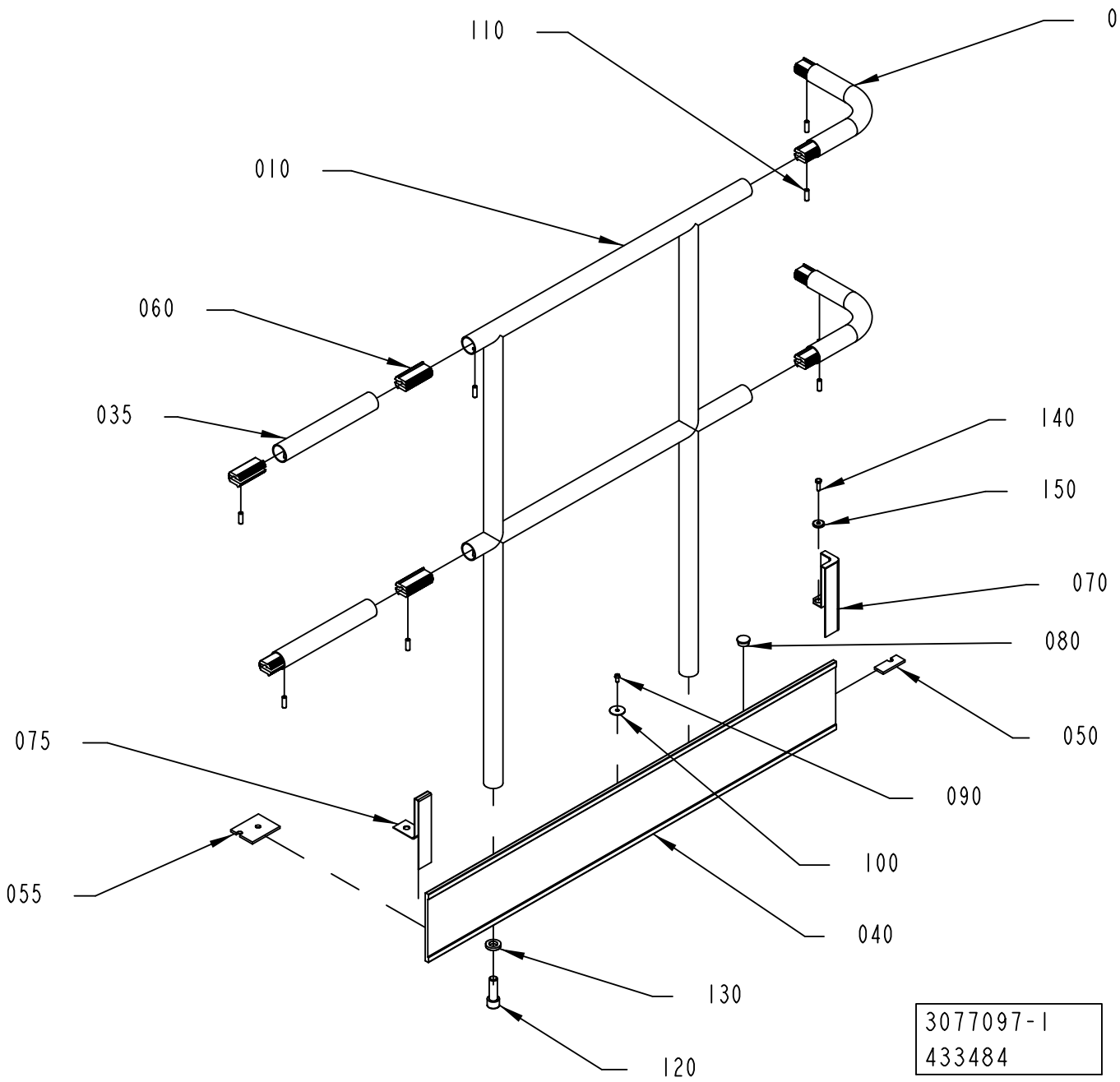
110
020
010
060
035
140
150
070
080
050
075
090
055
100
040
130
120
3077097-1
433484

ECM: 434205 - 20100128
Group number: 3077097-0100
Assembly Drawing: 3077097-1_1_AA

Pos	Part No	UN	Qty	Description	Page No
-					
010	3055047-0000		1	RAILING	
020	3067394-0000		2	RAILING	
035	3074730-0000		2	RAILING	
040	3067388-0000		1	TOE PLATE	
050	3069061-0000		1	PLATE	
055	3069056-0000		1	PLATE	
060	985328-0000		8	CONNECTION	
070	1524167-0000		1	CORNER STRIP	
075	1254025-0000		1	STRIP	
080	90261-0033		2	PLUG, BLIND, PLASTIC GPN300F182	
090	90458-0072		1	SCREW ISO 7380 S M6X12 A2	
100	90458-0073		1	WASHER 6,4/30, H=1,5	
110	312318-0453		16	SET SCREW, CUP END ISO4029 M8X25 A4	
120	312111-0630		2	SCREW HEX.SOCK.HD.MC6S-TT 16X50 88 FZB	
130	315111-0186		2	WASHER PLAIN, TBRB 17/30 H=6	
140	312105-0370		1	SCREW, M6S ISO 4017 M6X20 A4 80	
150	315125-0153		1	WASHER HIGH, TBRSB 6,4X22X4 A4	

Pos	Part No	UN	Qty	Description	Page No

EXTENDED PLATFORM

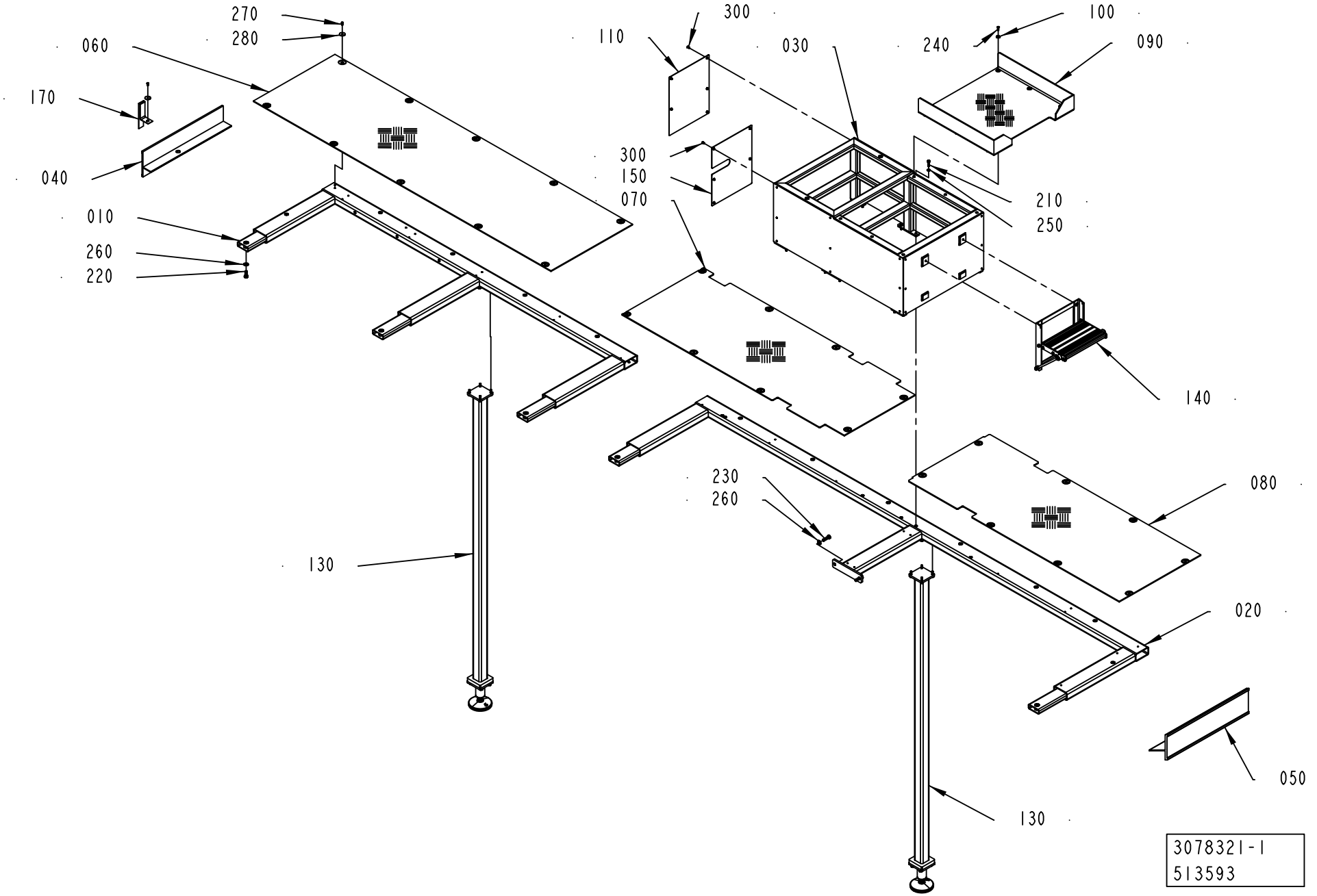

ECM: 519561 - 20120101
Group number: 3078321-0100
Assembly Drawing: 3078321-1_1_AB

This list covers pages from 2-90 to 2-93

Pos	Part No	UN	Qty	Description	Page No
NOPT HVA (See drawing on page: 2-90)					
010	2922748-0000		1	PLATFORM	
060	2922756-0000		1	CHECKER PLATE	
270	90458-0072		27	SCREW ISO 7380 S M6X12 A2	
280	90458-0073		27	WASHER 6,4/30, H=1,5	
PT/CF HVA (See drawing on page: 2-92)					
010	3078320-0000		1	PLATFORM	
060	3074728-0000		1	CHECKER PLATE	
160	3075956-0000		1	CHECKER PLATE	
270	90458-0072		33	SCREW ISO 7380 S M6X12 A2	
280	90458-0073		33	WASHER 6,4/30, H=1,5	
Common Parts					
020	2922749-0000		1	PLATFORM	
030	2906161-0000		1	FRAME	
040	3078319-0000		1	TOE PLATE	
050	2922752-0000		1	TOE PLATE	
070	2922757-0000		1	CHECKER PLATE	
080	2922758-0000		1	CHECKER PLATE	
090	2922741-0000		1	CHECKER PLATE	
100	2541673-0000		6	WASHER	
110	3020108-0000		1	COVER	
130	3190643-0100		2	FOOT	**2-95**
140	2709308-0100		1	STAIR	**2-97**
150	3020109-0000		1	COVER	
170	1254025-0000		1	STRIP	
210	312105-0455		8	SCREW, M6S ISO 4017 M8X30 A4 80	
220	312105-0536		5	SCREW, M6S ISO 4017 M12X30 A4 80	
230	312105-0540		2	SCREW, M6S ISO 4017 M12X40 A4 80	
240	312155-0370		6	SCREW DIN 7991 MF6S M6X20 A4 70	
250	315105-0165		8	WASHER PLAIN, 8,4X16X1,6 A4 BRB	
260	315105-0178		7	WASHER PLAIN, 13X24X2,5 A4 BRB	
300	90601-2046		10	CAPTIVE SCREW M6, GUTBG 6-4-12	

Pos	Part No	UN	Qty	Description	Page No

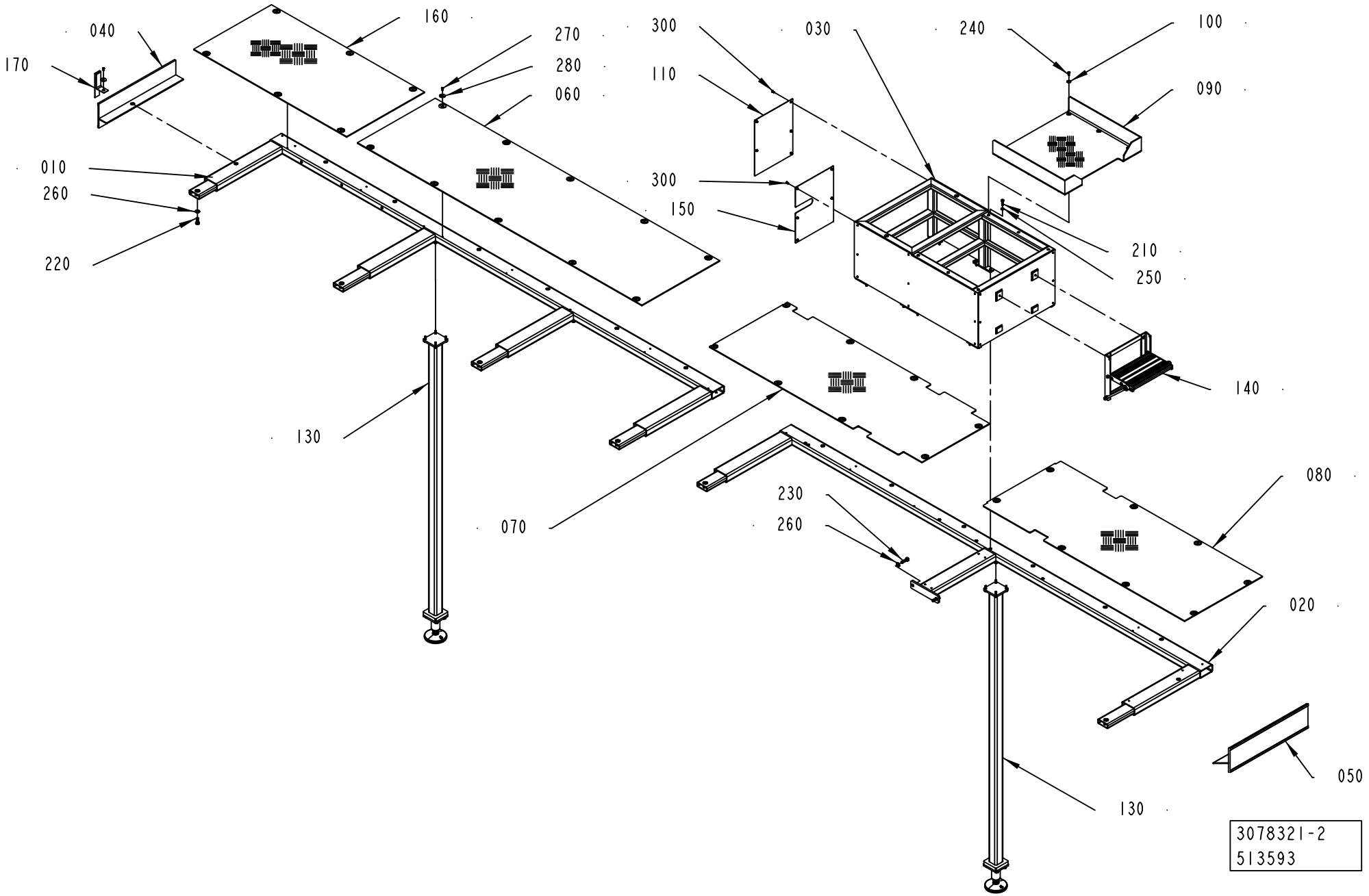
040
170
160
270
280
060
300
110
030
240
100
090
010
260
220
300
150
210
250
140
130
070
230
260
080
020
050
130
3078321-2
513593

ECM: 519561 - 20120101
Group number: 3078321-0100
Assembly Drawing: 3078321-2_1_AB

This list covers pages from 2-90 to 2-93

Pos	Part No	UN	Qty	Description	Page No
NOPT HVA (See drawing on page: 2-90)					
010	2922748-0000		1	PLATFORM	
060	2922756-0000		1	CHECKER PLATE	
270	90458-0072		27	SCREW ISO 7380 S M6X12 A2	
280	90458-0073		27	WASHER 6,4/30, H=1,5	
PT/CF HVA (See drawing on page: 2-92)					
010	3078320-0000		1	PLATFORM	
060	3074728-0000		1	CHECKER PLATE	
160	3075956-0000		1	CHECKER PLATE	
270	90458-0072		33	SCREW ISO 7380 S M6X12 A2	
280	90458-0073		33	WASHER 6,4/30, H=1,5	
Common Parts					
020	2922749-0000		1	PLATFORM	
030	2906161-0000		1	FRAME	
040	3078319-0000		1	TOE PLATE	
050	2922752-0000		1	TOE PLATE	
070	2922757-0000		1	CHECKER PLATE	
080	2922758-0000		1	CHECKER PLATE	
090	2922741-0000		1	CHECKER PLATE	
100	2541673-0000		6	WASHER	
110	3020108-0000		1	COVER	
130	3190643-0100		2	FOOT	**2-95**
140	2709308-0100		1	STAIR	**2-97**
150	3020109-0000		1	COVER	
170	1254025-0000		1	STRIP	
210	312105-0455		8	SCREW, M6S ISO 4017 M8X30 A4 80	
220	312105-0536		5	SCREW, M6S ISO 4017 M12X30 A4 80	
230	312105-0540		2	SCREW, M6S ISO 4017 M12X40 A4 80	
240	312155-0370		6	SCREW DIN 7991 MF6S M6X20 A4 70	
250	315105-0165		8	WASHER PLAIN, 8,4X16X1,6 A4 BRB	
260	315105-0178		7	WASHER PLAIN, 13X24X2,5 A4 BRB	
300	90601-2046		10	CAPTIVE SCREW M6, GUTBG 6-4-12	

Pos	Part No	UN	Qty	Description	Page No

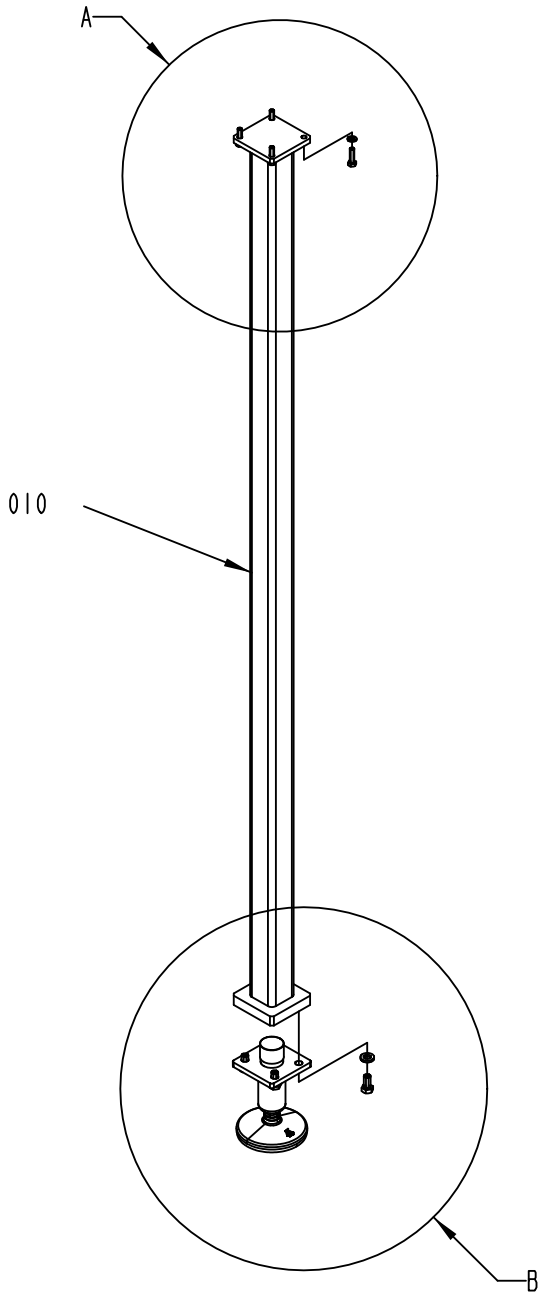

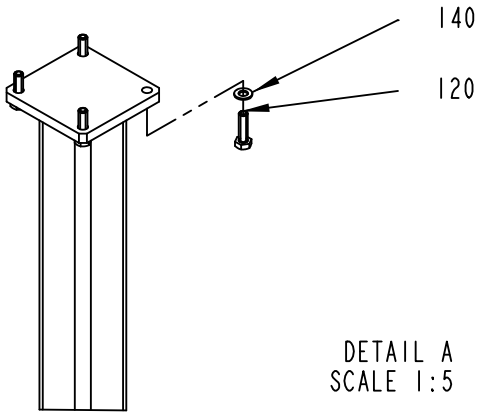

DETAIL A
SCALE 1:5

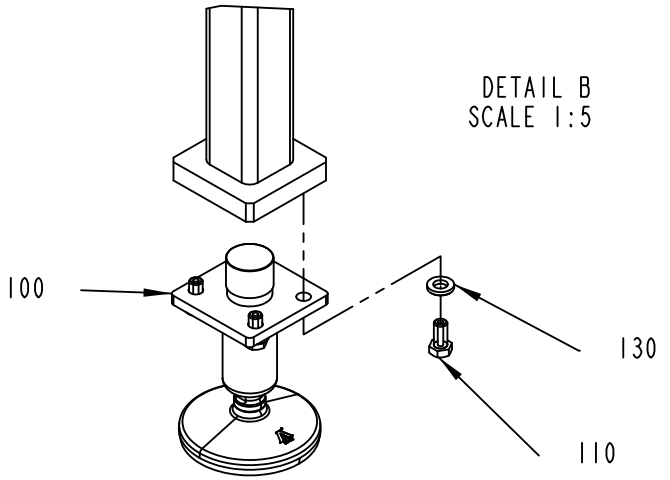

DETAIL B
SCALE 1:5

3190643-2
513593

ECM: 519560 - 20120101
Group number: 3190643-0100
Assembly Drawing: 3190643-2_1_AA

Pos	Part No	UN	Qty	Description	Page No
A3/COMPACTFLEX					
010Â	3190647-0000		1	COLUMN	
Common Parts					
100	90600-0725		1	FOOT 32000N, 90600-0725	
110	312105-0534		4	SCREW, M6S ISO 4017 M12X25 A4 80	
120	312105-0455		4	SCREW, M6S ISO 4017 M8X30 A4 80	
130	315115-0178		4	WASHER PLAIN, TBRB 13/24 H=4	
140	315105-0165		4	WASHER PLAIN, 8,4X16X1,6 A4 BRB	

Pos	Part No	UN	Qty	Description	Page No

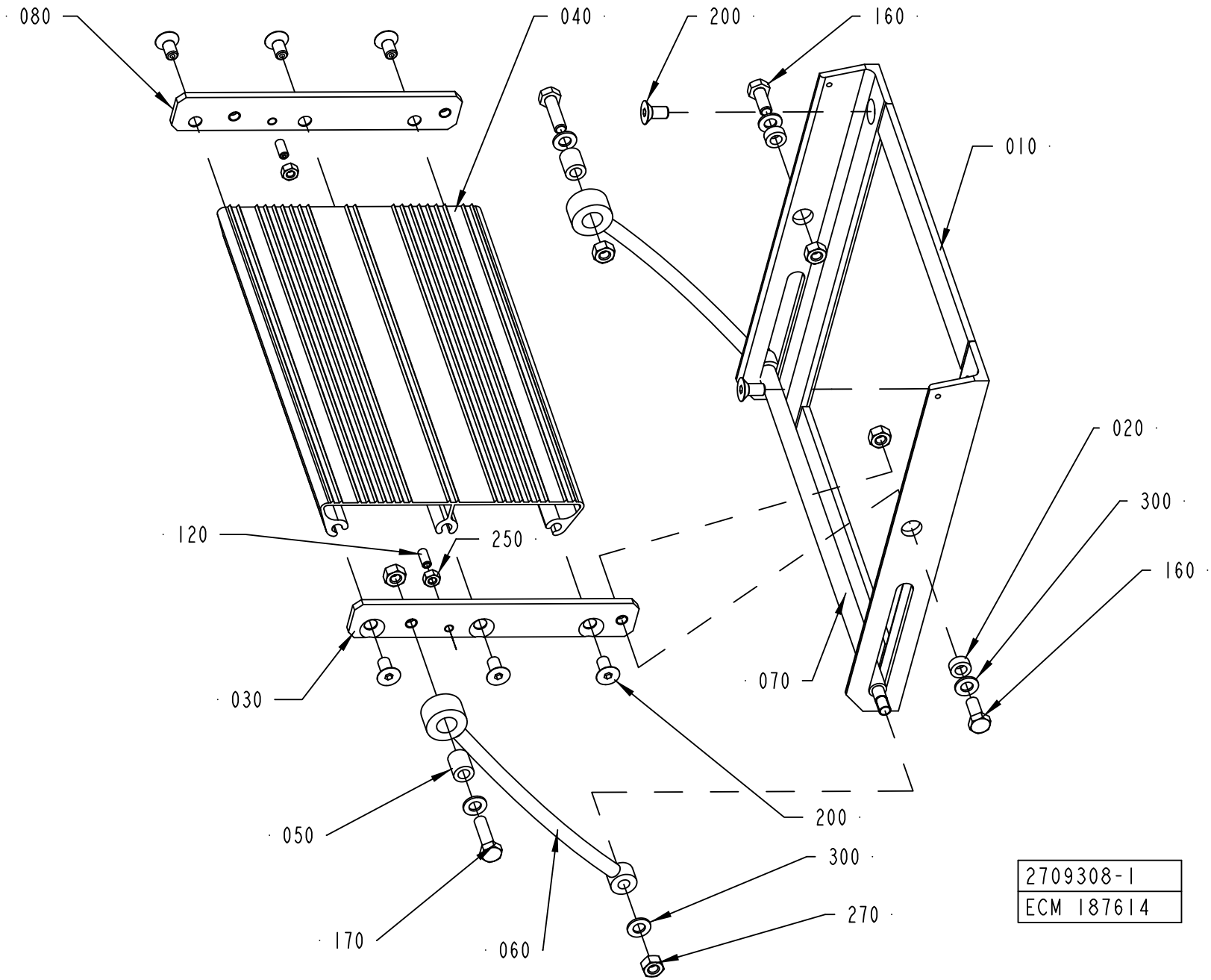
080
040
200
160
010
020
300
160
120
250
030
070
200
050
300
270
170
060
2709308-1
ECM 187614

ECM: 189478 - 20041105
Group number: 2709308-0100
Assembly Drawing: 2709308-1_1_AA

Pos	Part No	UN	Qty	Description	Page No
-					
010	2709309-0000		1	SUPPORT	
020	1519421-0000		2	BUSHING	
030	2709310-0000		1	PLATE	
040	1519417-0000		1	STAIR	
050	1519422-0000		2	BUSHING	
060	1519424-0000		2	SUPPORT	
070	1519425-0000		1	SPACER	
080	2709311-0000		1	PLATE	
120	90287-0163		2	SCREW SPRINGLOAD. SLOTTED HEAD M6X14	
160	312105-0451		2	SCREW, M6S ISO 4017 M8X20 A4 80	
170	312105-0455		2	SCREW, M6S ISO 4017 M8X30 A4 80	
200	312155-0449		8	SCREW DIN 7991 MF6S M8X16 A4 70	
250	312605-0316		2	HEXAGON NUT, M6M M6 A280	
270	312605-0318		6	HEXAGON NUT, M6M M8 A280	
300	315105-0165		6	WASHER PLAIN, 8,4X16X1,6 A4 BRB	

Pos	Part No	UN	Qty	Description	Page No

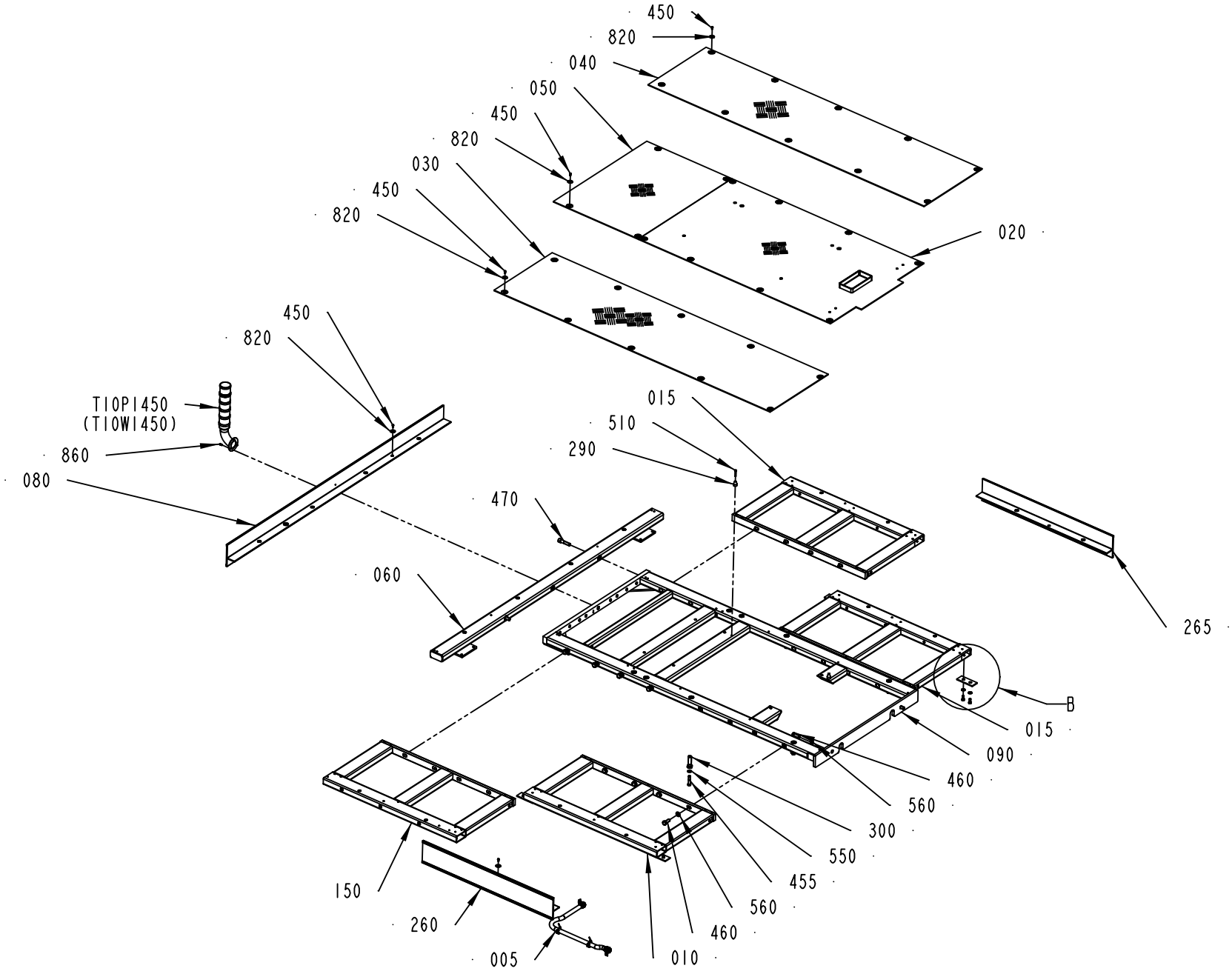

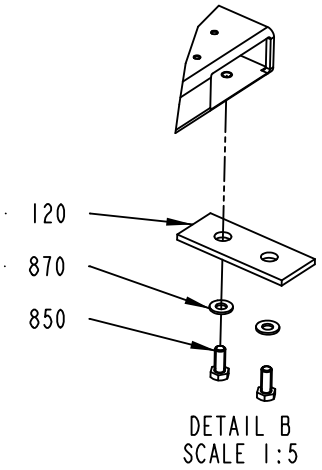

3074200-1
494306

ECM: 498346 - 20110701
Group number: 3074200-0100
Assembly Drawing: 3074200-1_1_AC

This list covers pages from 2-98 to 2-101

Pos	Part No	UN	Qty	Description	Page No
NOPT HVA (See drawing on page: 2-98)					
010	2838068-0000		1	PLATFORM	
150	3069057-0000		1	PLATFORM	
260	3074196-0000		1	TOE PLATE	
265	3067389-0000		1	TOE PLATE	
300	2839832-0000		4	SCREW	
450	90458-0072		35	SCREW ISO 7380 S M6X12 A2	
455	312105-0544		4	SCREW, M6S ISO 4014 M12X60 A4 80	
460	312105-0628		18	SCREW, M6S ISO 4017 M16X40 A4 80	
550	315105-0179		4	WASHER PLAIN, 13,5X242 A4 BRB	
560	315105-0186		18	WASHER PLAIN, 17X30X3 A4 BRB	
820	90458-0073		35	WASHER 6,4/30, H=1,5	
850	312105-0493		8	SCREW, M6S ISO 4017 M10X25 A4 80	
870	315105-0173		8	WASHER PLAIN, 10,5X22X2 A4 BRB	
880	315125-0173		8	WASHER HIGH, TBRSB 10,5X28X6 A4	
NOPT NOHVA (See drawing on page: 2-98)					
010	2838068-0000		1	PLATFORM	
150	3069057-0000		1	PLATFORM	
260	3074196-0000		1	TOE PLATE	
265	3067389-0000		1	TOE PLATE	
300	2839832-0000		4	SCREW	
450	90458-0072		35	SCREW ISO 7380 S M6X12 A2	
455	312105-0544		4	SCREW, M6S ISO 4014 M12X60 A4 80	
460	312105-0628		18	SCREW, M6S ISO 4017 M16X40 A4 80	
550	315105-0179		4	WASHER PLAIN, 13,5X242 A4 BRB	
560	315105-0186		18	WASHER PLAIN, 17X30X3 A4 BRB	
820	90458-0073		35	WASHER 6,4/30, H=1,5	
850	312105-0493		8	SCREW, M6S ISO 4017 M10X25 A4 80	
870	315105-0173		8	WASHER PLAIN, 10,5X22X2 A4 BRB	
880	315125-0173		8	WASHER HIGH, TBRSB 10,5X28X6 A4	
PT/CF HVA (See drawing on page: 2-100)					
010	2838068-0000		2	PLATFORM	
070	2840049-0000		1	TOE PLATE	
110	3074201-0000		1	TOE PLATE	
130	3074199-0000		1	PLATFORM	
160	3074198-0000		1	PLATFORM	
170	2991234-0000		1	PLATFORM	
180	2986255-0000		1	CHECKER PLATE	
190	2986379-0000		1	CHECKER PLATE	
200	2986256-0000		1	CHECKER PLATE	
210	3074202-0000		1	TOE PLATE	
220	1254025-0000		1	STRIP	
230	1254028-0000		1	FASTENING PLATE	
300	2839832-0000		8	SCREW	
310	2553124-0000		2	PIN	
450	90458-0072		57	SCREW ISO 7380 S M6X12 A2	
455	312105-0544		8	SCREW, M6S ISO 4014 M12X60 A4 80	
460	312105-0628		26	SCREW, M6S ISO 4017 M16X40 A4 80	
480	312105-0630		6	SCREW, M6S ISO 4017 M16X50 A4 80	
550	315105-0179		8	WASHER PLAIN, 13,5X242 A4 BRB	
560	315105-0186		32	WASHER PLAIN, 17X30X3 A4 BRB	
820	90458-0073		57	WASHER 6,4/30, H=1,5	
850	312105-0493		10	SCREW, M6S ISO 4017 M10X25 A4 80	
870	315105-0173		10	WASHER PLAIN, 10,5X22X2 A4 BRB	
880	315125-0173		2	WASHER HIGH, TBRSB 10,5X28X6 A4	
890	315125-0153		1	WASHER HIGH, TBRSB 6,4X22X4 A4	
900	312605-0316		1	HEXAGON NUT, M6M M6 A280	
PT/CF NO HVA (See drawing on page: 2-100)					
010	2838068-0000		2	PLATFORM	
070	2840049-0000		1	TOE PLATE	
110	3074201-0000		1	TOE PLATE	
130	3074199-0000		1	PLATFORM	
160	3074198-0000		1	PLATFORM	
170	2991234-0000		1	PLATFORM	
180	2986255-0000		1	CHECKER PLATE	
190	2986379-0000		1	CHECKER PLATE	
200	2986256-0000		1	CHECKER PLATE	
210	3074202-0000		1	TOE PLATE	
220	1254025-0000		1	STRIP	
230	1254028-0000		1	FASTENING PLATE	
300	2839832-0000		8	SCREW	
310	2553124-0000		2	PIN	
450	90458-0072		57	SCREW ISO 7380 S M6X12 A2	
455	312105-0544		8	SCREW, M6S ISO 4014 M12X60 A4 80	
460	312105-0628		26	SCREW, M6S ISO 4017 M16X40 A4 80	
480	312105-0630		6	SCREW, M6S ISO 4017 M16X50 A4 80	
550	315105-0179		8	WASHER PLAIN, 13,5X242 A4 BRB	
560	315105-0186		32	WASHER PLAIN, 17X30X3 A4 BRB	
820	90458-0073		57	WASHER 6,4/30, H=1,5	
850	312105-0493		10	SCREW, M6S ISO 4017 M10X25 A4 80	
870	315105-0173		10	WASHER PLAIN, 10,5X22X2 A4 BRB	
880	315125-0173		2	WASHER HIGH, TBRSB 10,5X28X6 A4	
890	315125-0153		1	WASHER HIGH, TBRSB 6,4X22X4 A4	
900	312605-0316		1	HEXAGON NUT, M6M M6 A280	

Machine Type | Group Description | Used-In | Group Number | Page No

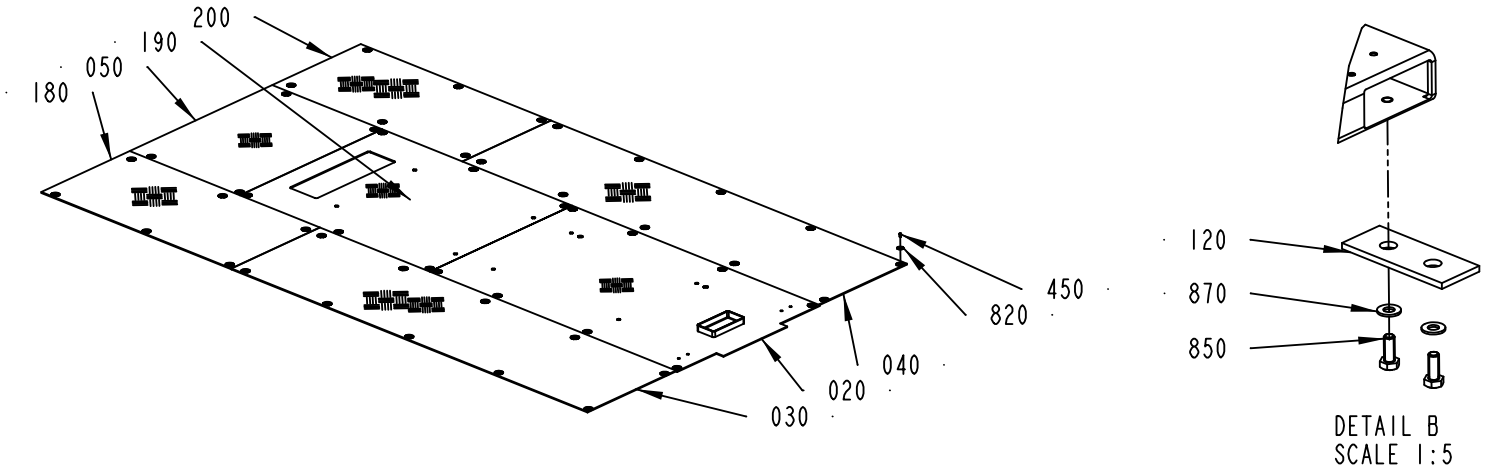

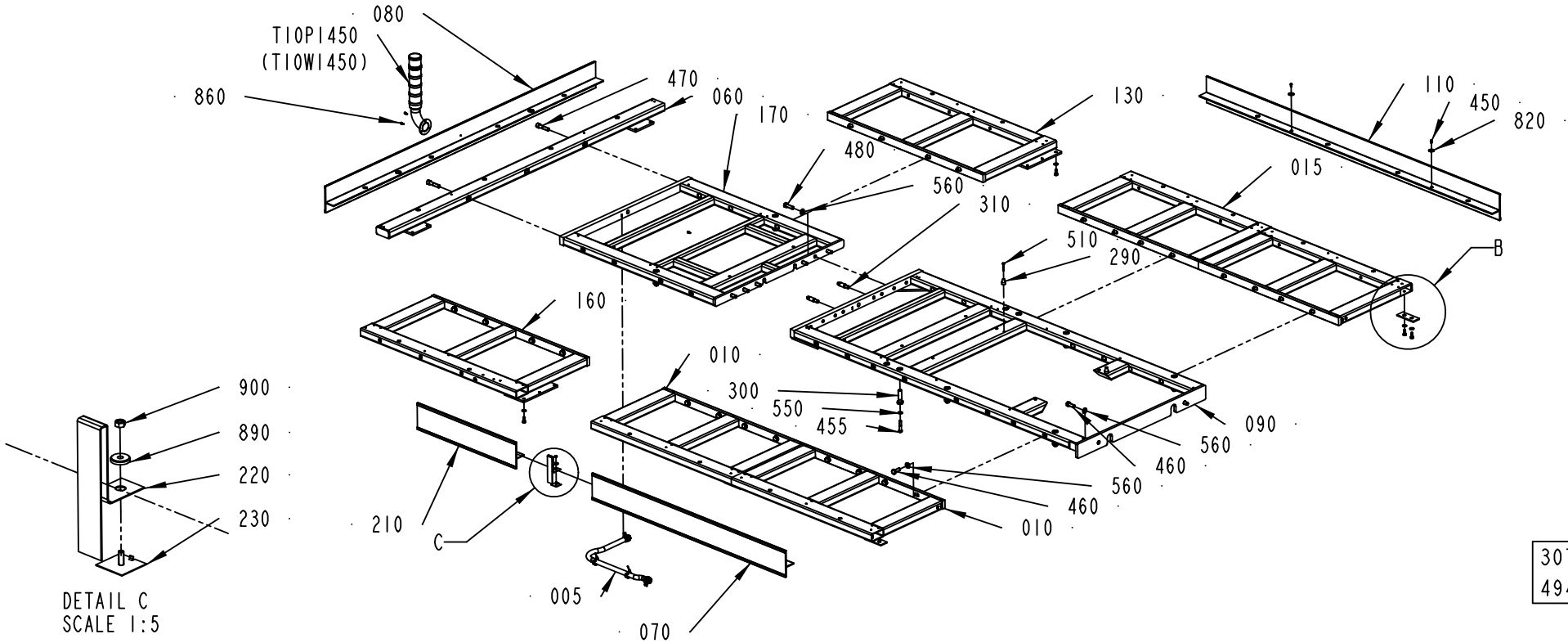

3074200-2
494306

ECM: 498346 - 20110701
Group number: 3074200-0100
Assembly Drawing: 3074200-2_1_AC

This list covers pages from 2-98 to 2-101

Pos	Part No	UN	Qty	Description	Page No
Common Parts (Cont'd)					
005	2986544-0100		1	CABLE CONDUIT	**2-103**
015	3074195-0000		2	PLATFORM	
020	2840051-0000		1	CHECKER PLATE	
030	2840047-0000		1	CHECKER PLATE	
040	2862409-0000		1	CHECKER PLATE	
050	2840050-0000		1	CHECKER PLATE	
060	3074194-0000		1	BEAM	
080	3074193-0000		1	TOE PLATE	
090	2991233-0000		1	PLATFORM	
120	3046891-0000		4	PLATE	
290	1037571-0000		2	GUIDE BUSHING	
470	312115-0634		2	SCREW ISO4762 M16X70 A4 80	
510	312109-0378		2	SCREW, M6S ISO 4017 M6X40 A4 80	
860	312115-0327		3	SCREW ISO4762 M5X12 A4 80	
T10P1450	2893407-0200		1	SIGNAL LAMP	**2-105**

Pos	Part No	UN	Qty	Description	Page No

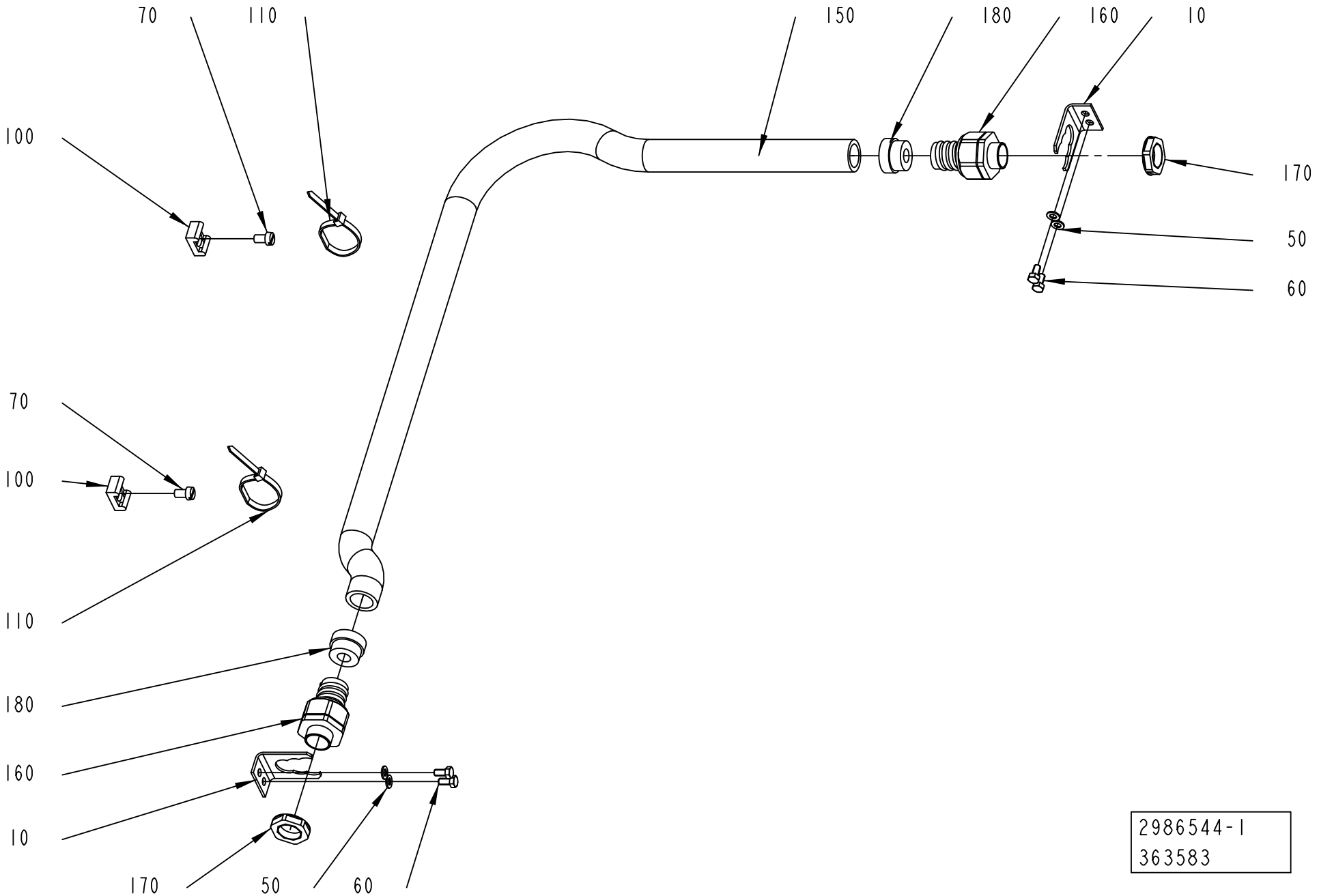
70
110
150
180
160
10
100
170
50
60
70
100
110
180
160
10
170
50
60
2986544-1
363583

ECM: 363614 - 20080805
Group number: 2986544-0100
Assembly Drawing: 2986544-1_1_AA

Pos	Part No	UN	Qty	Description	Page No
-					
010	977527-0000		2	BRACKET	
050	315105-0146		4	WASHER PLAIN, 5,3X10X1 A4 BRB	
060	312105-0325		4	SCREW, M6S ISO 4017 M5X10 A4 80	
070	312125-0364		2	SCREW ISO 1207 M6X10 A4	
100	352113-0204		2	ANCHOR PLATES FOR STRIPS, TM3S25-M	
110	352113-0102		2	CABLE TIE, BLACK 188X4,8 MM	
150	90152-0051	MM	800	HOSE, SPIRAL CONDUIT, 25X18, UL 1816	
160	90458-0430		2	GLAND FITTING, VK 22054YUL16	
170	90458-0323		2	NUT, M20X1,5	
180	353249-0012		2	INSERT, SINGLE HOLE, EK154 11	

Pos	Part No	UN	Qty	Description	Page No

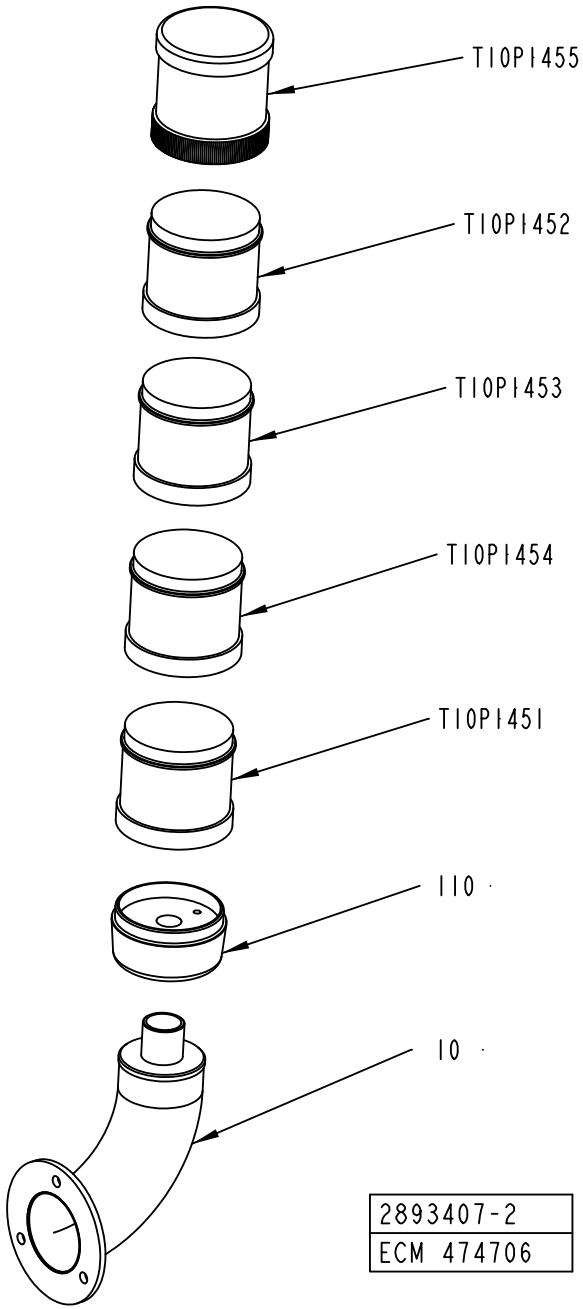
T10P1455
T10P1452
T10P1453
T10P1454
T10P1451
110
10
2893407-2
ECM 474706

ECM: 482030 - 20110401
Group number: 2893407-0200
Assembly Drawing: 2893407-2_1_AA

Pos	Part No	UN	Qty	Description	Page No
-					
010	2540767-0000		1	PIPE	
110	90602-4626		1	TERMINAL ELEMENT, PSD-S CE-SM SPRING	
T10P1451	90602-4061		1	LIGHT ELEMENT, GREEN, PSD-S OE LED GN	
T10P1452	90602-4060		1	LIGHT ELEMENT, BLUE, PSD-S OE LED BU	
T10P1453	90602-4063		1	LIGHT ELEMENT, YELLOW, PSD-S OE LED YE	
T10P1454	90602-4062		1	LIGHT ELEMENT, RED, PSD-S OE LED RD	
T10P1455	90602-4631		1	SIREN 100DB, PSD-S AE SM8-5 100DB/1	

Pos	Part No	UN	Qty	Description	Page No

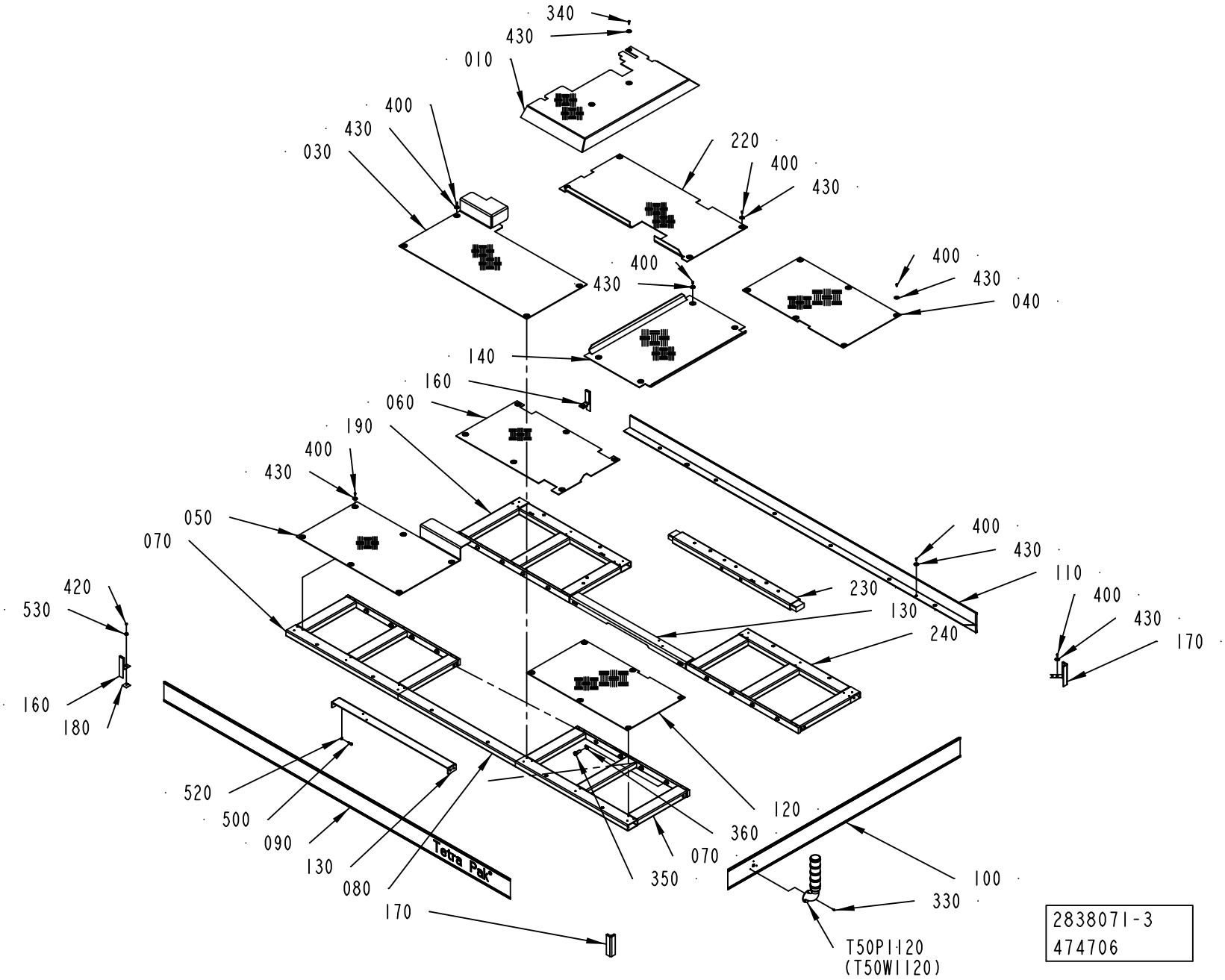
340
430
010
400
430
030
220
400
430
400
430
400
430
040
140
160
060
190
400
430
050
070
420
530
160
180
400
430
110
400
430
170
230
130
240
520
500
090
130
080
170
120
360
070
350
100
330
T50P1120
(T50W1120)
2838071-3
474706

ECM: 482032 - 20110401
Group number: 2838071-0200
Assembly Drawing: 2838071-3_1_AE

Pos	Part No	UN	Qty	Description	Page No
-					
010Â	3119250-0000		1	CHECKER PLATE	
030	3128999-0000		1	CHECKER PLATE	
040	2839872-0000		1	CHECKER PLATE	
050	2839873-0000		1	CHECKER PLATE	
060	2840057-0000		1	CHECKER PLATE	
070	2838068-0000		2	PLATFORM	
080	2838069-0000		1	PLATFORM	
090	2839869-0000		1	TOE PLATE	
100	2839870-0000		1	TOE PLATE	
110	2839871-0000		1	TOE PLATE	
120	2861837-0000		1	CHECKER PLATE	
130	2861457-0000		2	SUPPORT	
140	2861205-0000		1	CHECKER PLATE	
160	1254025-0000		2	STRIP	
170	1254027-0000		2	CORNER STRIP	
180	1254028-0000		2	FASTENING PLATE	
190	2922788-0000		1	PLATFORM	
220	2922030-0000		1	CHECKER PLATE	
230	2922789-0000		1	PLATFORM	
240	2922787-0000		1	PLATFORM	
330	312115-0325		3	SCREW ISO4762 M5X10 A4 80	
340	312105-0370		2	SCREW, M6S ISO 4017 M6X20 A4 80	
350	312105-0628		16	SCREW, M6S ISO 4017 M16X40 A4 80	
360	315105-0186		16	WASHER PLAIN, 17X30X3 A4 BRB	
400	90458-0072		45	SCREW ISO 7380 S M6X12 A2	
420	312605-0316		2	HEXAGON NUT, M6M M6 A280	
430	90458-0073		47	WASHER 6,4/30, H=1,5	
500	312105-0453		8	SCREW, M6S ISO 4017 M8X25 A4 80	
520	315105-0165		8	WASHER PLAIN, 8,4X16X1,6 A4 BRB	
530	315125-0153		2	WASHER HIGH, TBRSB 6,4X22X4 A4	
T50P1120	2893457-0200		1	SIGNAL LAMP	**2-109**

Pos	Part No	UN	Qty	Description	Page No

Machine Type	Group Description	Used-In	Group Number	Page No

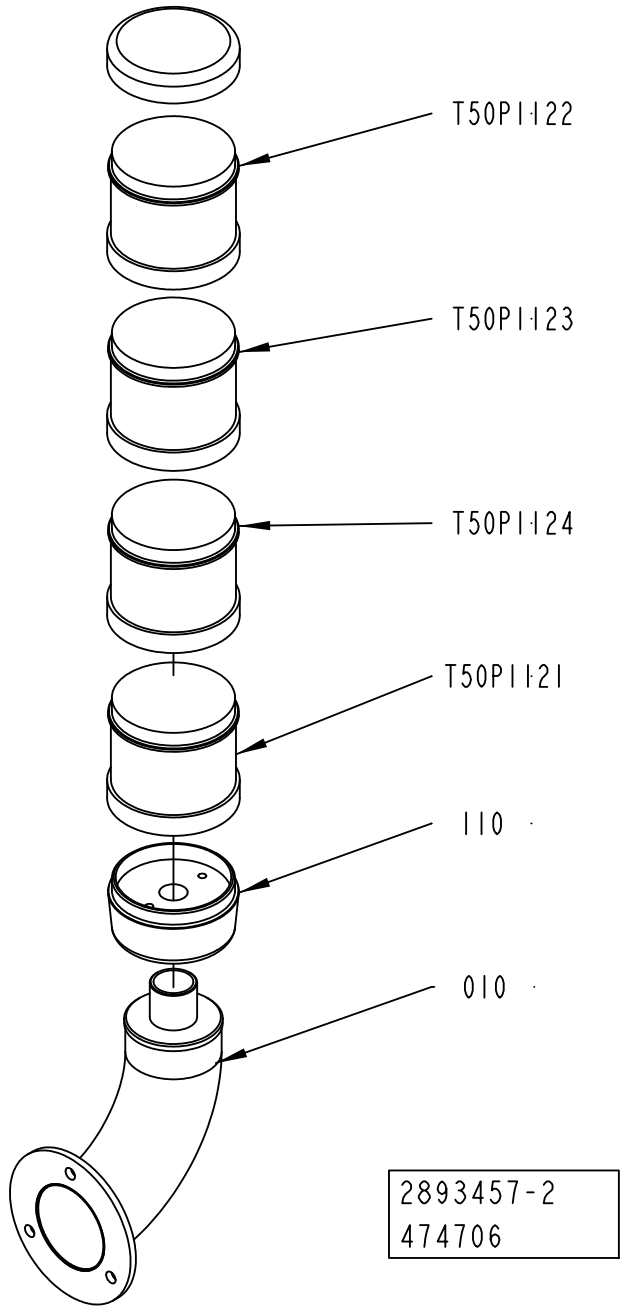
T50P1122
T50P1123
T50P1124
T50P1121
110
010
2893457-2
474706

ECM: 482031 - 20110401
Group number: 2893457-0200
Assembly Drawing: 2893457-2_1_AA

Pos	Part No	UN	Qty	Description	Page No
-					
010	2540767-0000		1	PIPE	
110	90602-4626		1	TERMINAL ELEMENT, PSD-S CE-SM SPRING	
T50P1121	90602-4061		1	LIGHT ELEMENT, GREEN, PSD-S OE LED GN	
T50P1122	90602-4062		1	LIGHT ELEMENT, RED, PSD-S OE LED RD	
T50P1123	90602-4063		1	LIGHT ELEMENT, YELLOW, PSD-S OE LED YE	
T50P1124	90602-4060		1	LIGHT ELEMENT, BLUE, PSD-S OE LED BU	

Pos	Part No	UN	Qty	Description	Page No

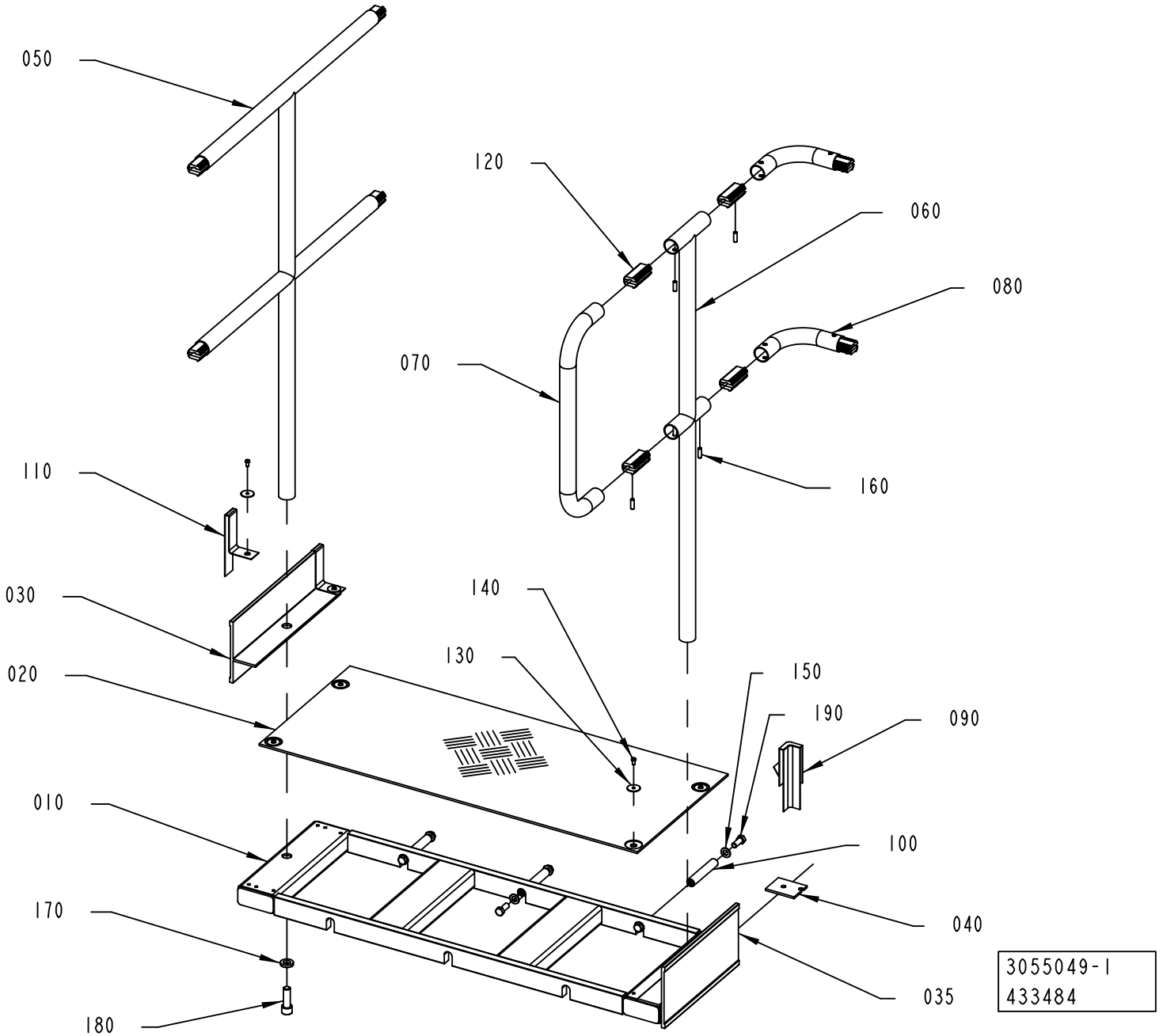
050
120
060
080
070
160
110
030
140
130
150
190
090
020
010
100
040
170
035
180
3055049-1
433484

ECM: 434198 - 20100128
Group number: 3055049-0100
Assembly Drawing: 3055049-1_1_AA

This list covers pages from 2-110 to 2-113

Pos	Part No	UN	Qty	Description	Page No
NOSTAIR (See drawing on page: 2-112)					
025	3069054-0000		1	CHECKER PLATE	
040	3069056-0000		2	PLATE	
055	3069052-0000		2	RAILING	
090	1524168-0000		2	CORNER STRIP	
100	3069059-0000		6	PIN	
120	985328-0000		8	CONNECTION	
150	315105-0178		12	WASHER PLAIN, 13X24X2,5 A4 BRB	
160	312318-0453		16	SET SCREW, CUP END ISO4029 M8X25 A4	
170	315111-0186		1	WASHER PLAIN, TBRB 17/30 H=6	
180	312111-0630		1	SCREW HEX.SOCK.HD.MC6S-TT 16X50 88 FZB	
190	312105-0536		12	SCREW, M6S ISO 4017 M12X30 A4 80	
200	90261-0033		1	PLUG, BLIND, PLASTIC GPN300F182	
STAIR (See drawing on page: 2-110)					
020	3055045-0000		1	CHECKER PLATE	
040	3069056-0000		1	PLATE	
060	3067391-0000		1	RAILING	
070	3067392-0000		1	RAILING	
080	3069053-0000		2	RAILING	
090	1524168-0000		1	CORNER STRIP	
100	3069059-0000		3	PIN	
120	985328-0000		10	CONNECTION	
150	315105-0178		6	WASHER PLAIN, 13X24X2,5 A4 BRB	
160	312318-0453		20	SET SCREW, CUP END ISO4029 M8X25 A4	
170	315111-0186		2	WASHER PLAIN, TBRB 17/30 H=6	
180	312111-0630		2	SCREW HEX.SOCK.HD.MC6S-TT 16X50 88 FZB	
190	312105-0536		6	SCREW, M6S ISO 4017 M12X30 A4 80	
Common Parts					
010	3055042-0000		1	FRAME	
030	3055046-0000		1	TOE PLATE	
035	3067393-0000		1	TOE PLATE	
050	3067390-0000		1	RAILING	
110	1254025-0000		2	STRIP	
130	90458-0073		6	WASHER 6,4/30, H=1,5	
140	90458-0072		6	SCREW ISO 7380 S M6X12 A2	

Pos	Part No	UN	Qty	Description	Page No

Machine Type | Group Description | Used-In | Group Number | Page No

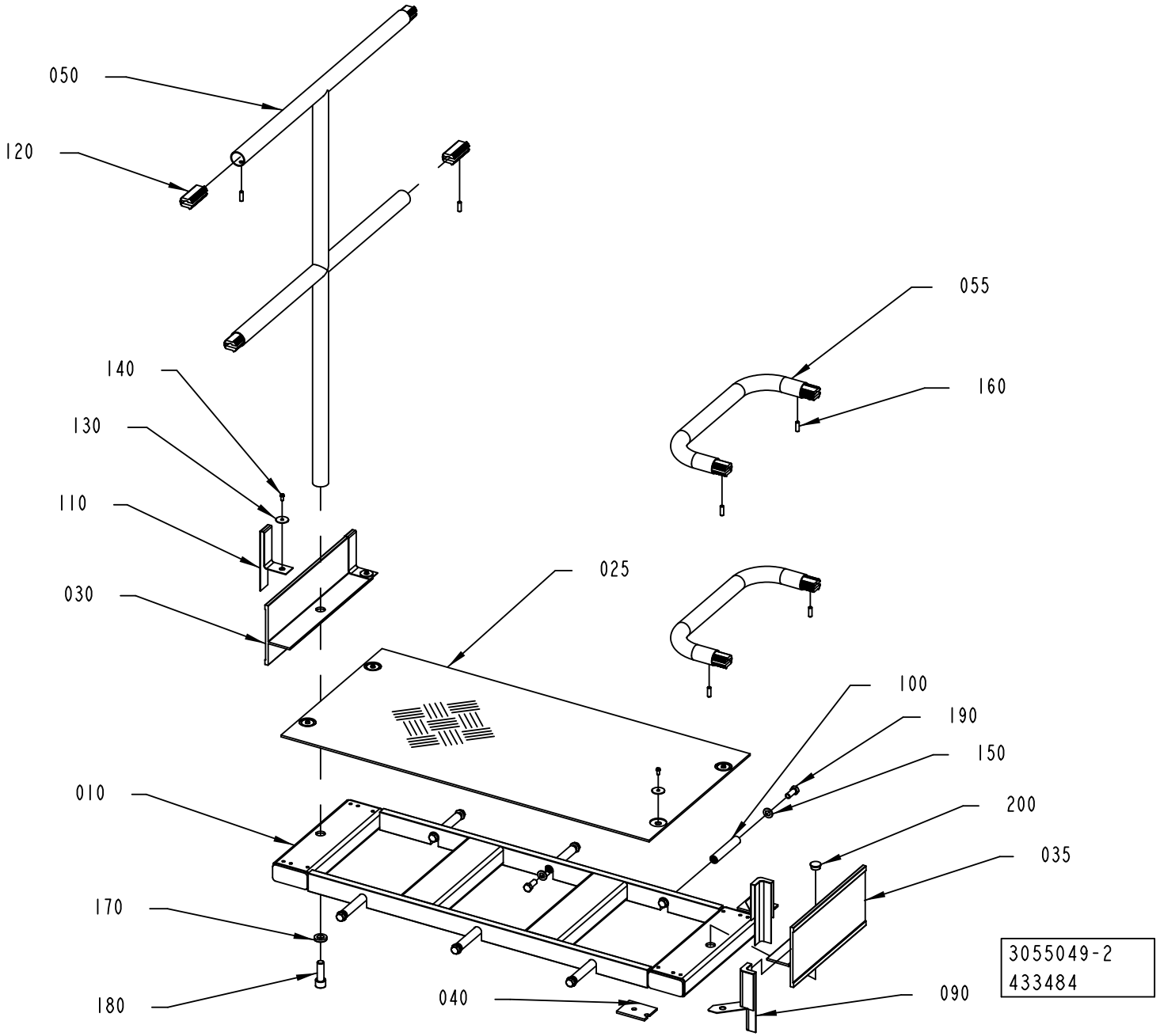
050
120
140
130
110
030
025
055
160
100
190
150
200
035
010
170
180
040
090
3055049-2
433484

ECM: 434198 - 20100128
Group number: 3055049-0100
Assembly Drawing: 3055049-2_1_AA

This list covers pages from 2-110 to 2-113

Pos	Part No	UN	Qty	Description	Page No
NOSTAIR (See drawing on page: 2-112)					
025	3069054-0000		1	CHECKER PLATE	
040	3069056-0000		2	PLATE	
055	3069052-0000		2	RAILING	
090	1524168-0000		2	CORNER STRIP	
100	3069059-0000		6	PIN	
120	985328-0000		8	CONNECTION	
150	315105-0178		12	WASHER PLAIN, 13X24X2,5 A4 BRB	
160	312318-0453		16	SET SCREW, CUP END ISO4029 M8X25 A4	
170	315111-0186		1	WASHER PLAIN, TBRB 17/30 H=6	
180	312111-0630		1	SCREW HEX.SOCK.HD.MC6S-TT 16X50 88 FZB	
190	312105-0536		12	SCREW, M6S ISO 4017 M12X30 A4 80	
200	90261-0033		1	PLUG, BLIND, PLASTIC GPN300F182	
STAIR (See drawing on page: 2-110)					
020	3055045-0000		1	CHECKER PLATE	
040	3069056-0000		1	PLATE	
060	3067391-0000		1	RAILING	
070	3067392-0000		1	RAILING	
080	3069053-0000		2	RAILING	
090	1524168-0000		1	CORNER STRIP	
100	3069059-0000		3	PIN	
120	985328-0000		10	CONNECTION	
150	315105-0178		6	WASHER PLAIN, 13X24X2,5 A4 BRB	
160	312318-0453		20	SET SCREW, CUP END ISO4029 M8X25 A4	
170	315111-0186		2	WASHER PLAIN, TBRB 17/30 H=6	
180	312111-0630		2	SCREW HEX.SOCK.HD.MC6S-TT 16X50 88 FZB	
190	312105-0536		6	SCREW, M6S ISO 4017 M12X30 A4 80	
Common Parts					
010	3055042-0000		1	FRAME	
030	3055046-0000		1	TOE PLATE	
035	3067393-0000		1	TOE PLATE	
050	3067390-0000		1	RAILING	
110	1254025-0000		2	STRIP	
130	90458-0073		6	WASHER 6,4/30, H=1,5	
140	90458-0072		6	SCREW ISO 7380 S M6X12 A2	

Pos	Part No	UN	Qty	Description	Page No

Machine Type | Group Description | Used-In | Group Number | Page No

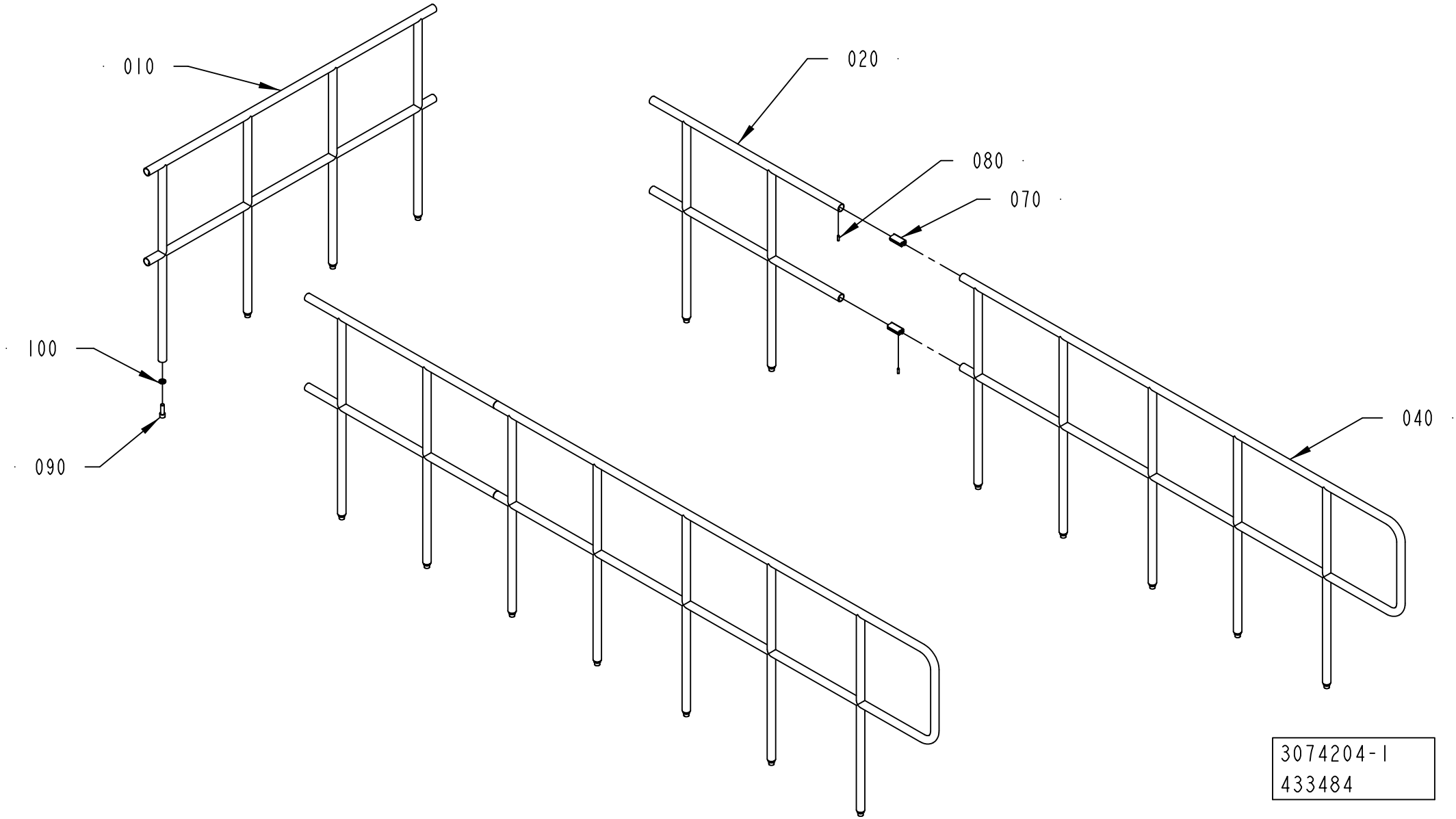
010
020
080
070
040
100
090
3074204-1
433484

ECM: 434202 - 20100128
Group number: 3074204-0100
Assembly Drawing: 3074204-1_1_AA

This list covers pages from 2-114 to 2-121

Pos	Part No	UN	Qty	Description	Page No
NOPT HVA (See drawing on page: 2-118)					
015	2922754-0000		1	RAILING	
030	3078317-0000		2	RAILING	
045	2844532-0000		1	RAILING	
050	2922744-0000		1	RAILING	
060	2922753-0000		1	RAILING	
070	985328-0000		8	CONNECTION	
080	312318-0453		16	SET SCREW, CUP END ISO4029 M8X25 A4	
090	312111-0630		21	SCREW HEX.SOCK.HD.MC6S-TT 16X50 88 FZB	
100	315111-0186		21	WASHER PLAIN, TBRB 17/30 H=6	
NOPT NOHVA (See drawing on page: 2-114)					
020	3067387-0000		2	RAILING	
040	3074203-0000		2	RAILING	
070	985328-0000		4	CONNECTION	
080	312318-0453		8	SET SCREW, CUP END ISO4029 M8X25 A4	
090	312111-0630		18	SCREW HEX.SOCK.HD.MC6S-TT 16X50 88 FZB	
100	315111-0186		18	WASHER PLAIN, TBRB 17/30 H=6	
PT/CF HVA (See drawing on page: 2-120)					
015	2922754-0000		1	RAILING	
035	3078318-0000		2	RAILING	
045	2844532-0000		1	RAILING	
050	2922744-0000		1	RAILING	
060	2922753-0000		1	RAILING	
070	985328-0000		8	CONNECTION	
080	312318-0453		16	SET SCREW, CUP END ISO4029 M8X25 A4	
090	312111-0630		25	SCREW HEX.SOCK.HD.MC6S-TT 16X50 88 FZB	
100	315111-0186		25	WASHER PLAIN, TBRB 17/30 H=6	
PT/CF NO HVA (See drawing on page: 2-116)					
025	3074535-0000		2	RAILING	
040	3074203-0000		2	RAILING	
070	985328-0000		4	CONNECTION	
080	312318-0453		8	SET SCREW, CUP END ISO4029 M8X25 A4	
090	312111-0630		22	SCREW HEX.SOCK.HD.MC6S-TT 16X50 88 FZB	
100	315111-0186		22	WASHER PLAIN, TBRB 17/30 H=6	
Common Parts					
010	3074197-0000		1	RAILING	

Pos	Part No	UN	Qty	Description	Page No

Machine Type	Group Description	Used-In	Group Number	Page No

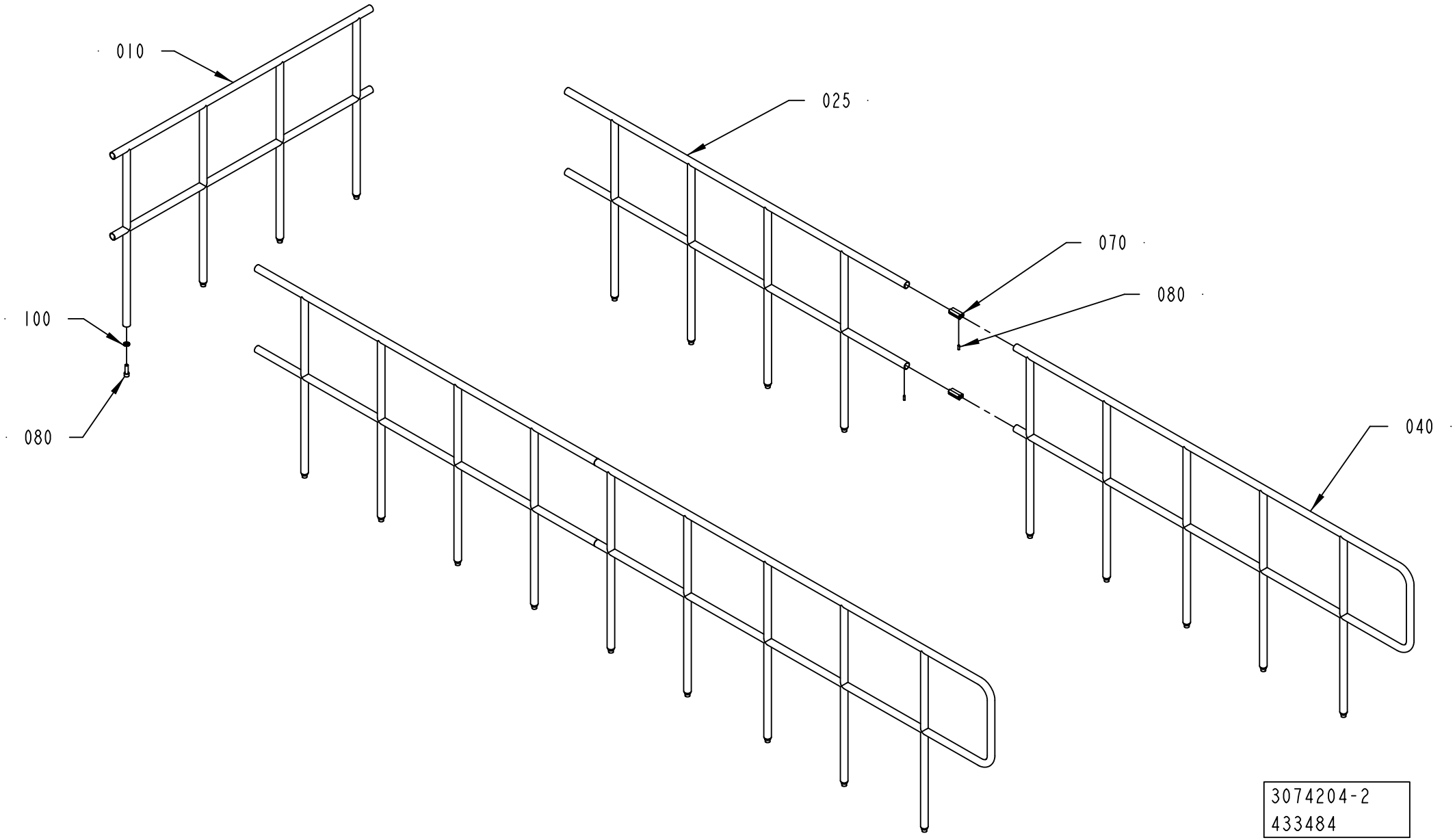
010
025
070
080
100
080
040
3074204-2
433484

ECM: 434202 - 20100128
Group number: 3074204-0100
Assembly Drawing: 3074204-2_1_AA

This list covers pages from 2-114 to 2-121

Pos	Part No	UN	Qty	Description	Page No
NOPT HVA (See drawing on page: 2-118)					
015	2922754-0000		1	RAILING	
030	3078317-0000		2	RAILING	
045	2844532-0000		1	RAILING	
050	2922744-0000		1	RAILING	
060	2922753-0000		1	RAILING	
070	985328-0000		8	CONNECTION	
080	312318-0453		16	SET SCREW, CUP END ISO4029 M8X25 A4	
090	312111-0630		21	SCREW HEX.SOCK.HD.MC6S-TT 16X50 88 FZB	
100	315111-0186		21	WASHER PLAIN, TBRB 17/30 H=6	
NOPT NOHVA (See drawing on page: 2-114)					
020	3067387-0000		2	RAILING	
040	3074203-0000		2	RAILING	
070	985328-0000		4	CONNECTION	
080	312318-0453		8	SET SCREW, CUP END ISO4029 M8X25 A4	
090	312111-0630		18	SCREW HEX.SOCK.HD.MC6S-TT 16X50 88 FZB	
100	315111-0186		18	WASHER PLAIN, TBRB 17/30 H=6	
PT/CF HVA (See drawing on page: 2-120)					
015	2922754-0000		1	RAILING	
035	3078318-0000		2	RAILING	
045	2844532-0000		1	RAILING	
050	2922744-0000		1	RAILING	
060	2922753-0000		1	RAILING	
070	985328-0000		8	CONNECTION	
080	312318-0453		16	SET SCREW, CUP END ISO4029 M8X25 A4	
090	312111-0630		25	SCREW HEX.SOCK.HD.MC6S-TT 16X50 88 FZB	
100	315111-0186		25	WASHER PLAIN, TBRB 17/30 H=6	
PT/CF NO HVA (See drawing on page: 2-116)					
025	3074535-0000		2	RAILING	
040	3074203-0000		2	RAILING	
070	985328-0000		4	CONNECTION	
080	312318-0453		8	SET SCREW, CUP END ISO4029 M8X25 A4	
090	312111-0630		22	SCREW HEX.SOCK.HD.MC6S-TT 16X50 88 FZB	
100	315111-0186		22	WASHER PLAIN, TBRB 17/30 H=6	
Common Parts					
010	3074197-0000		1	RAILING	

Pos	Part No	UN	Qty	Description	Page No

Machine Type | Group Description | Used-In | Group Number | Page No

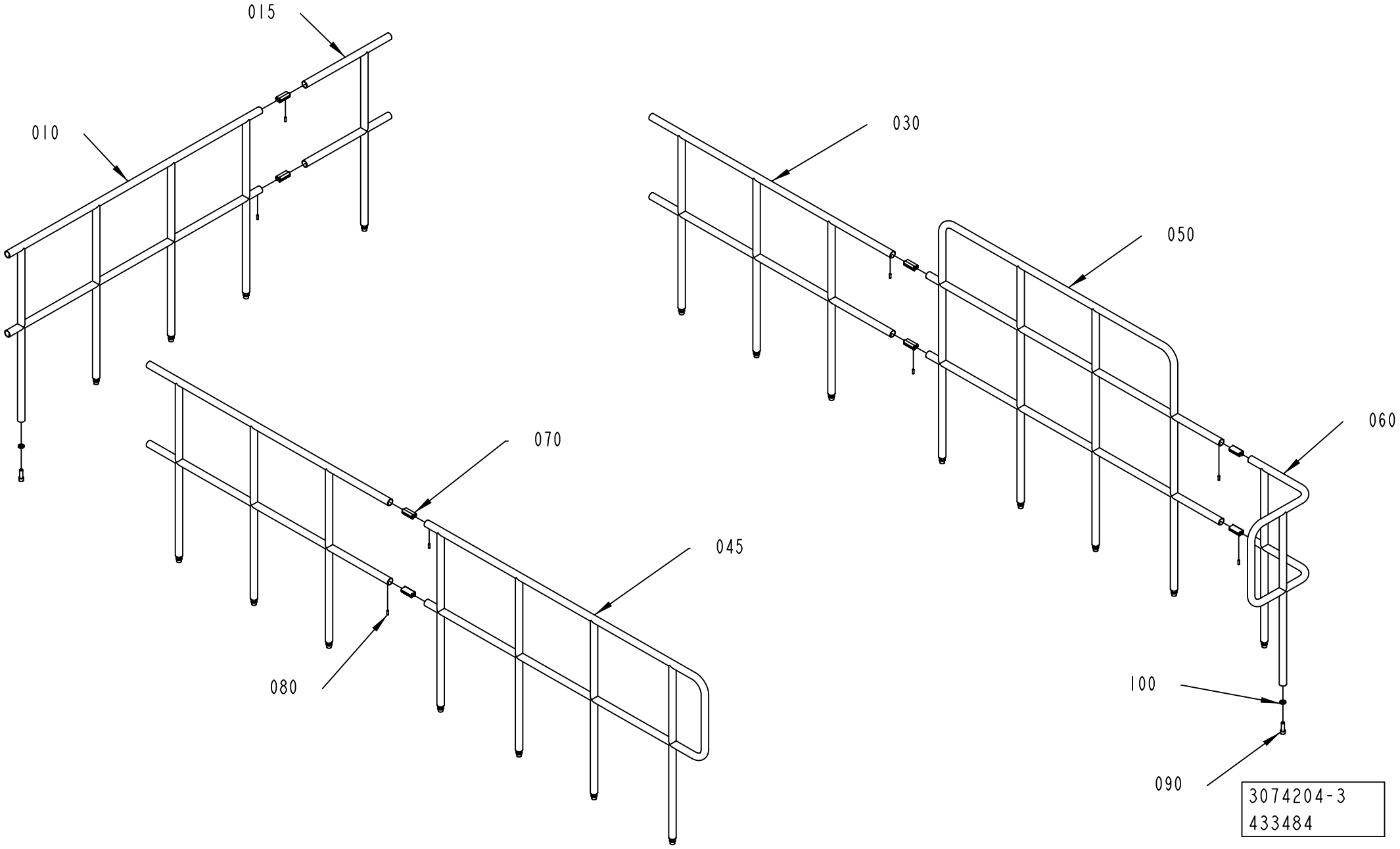
015
010
030
050
060
070
045
080
100
090
3074204-3
433484

ECM: 434202 - 20100128
Group number: 3074204-0100
Assembly Drawing: 3074204-3_1_AA

This list covers pages from 2-114 to 2-121

Pos	Part No	UN	Qty	Description	Page No
NOPT HVA (See drawing on page: 2-118)					
015	2922754-0000		1	RAILING	
030	3078317-0000		2	RAILING	
045	2844532-0000		1	RAILING	
050	2922744-0000		1	RAILING	
060	2922753-0000		1	RAILING	
070	985328-0000		8	CONNECTION	
080	312318-0453		16	SET SCREW, CUP END ISO4029 M8X25 A4	
090	312111-0630		21	SCREW HEX.SOCK.HD.MC6S-TT 16X50 88 FZB	
100	315111-0186		21	WASHER PLAIN, TBRB 17/30 H=6	
NOPT NOHVA (See drawing on page: 2-114)					
020	3067387-0000		2	RAILING	
040	3074203-0000		2	RAILING	
070	985328-0000		4	CONNECTION	
080	312318-0453		8	SET SCREW, CUP END ISO4029 M8X25 A4	
090	312111-0630		18	SCREW HEX.SOCK.HD.MC6S-TT 16X50 88 FZB	
100	315111-0186		18	WASHER PLAIN, TBRB 17/30 H=6	
PT/CF HVA (See drawing on page: 2-120)					
015	2922754-0000		1	RAILING	
035	3078318-0000		2	RAILING	
045	2844532-0000		1	RAILING	
050	2922744-0000		1	RAILING	
060	2922753-0000		1	RAILING	
070	985328-0000		8	CONNECTION	
080	312318-0453		16	SET SCREW, CUP END ISO4029 M8X25 A4	
090	312111-0630		25	SCREW HEX.SOCK.HD.MC6S-TT 16X50 88 FZB	
100	315111-0186		25	WASHER PLAIN, TBRB 17/30 H=6	
PT/CF NO HVA (See drawing on page: 2-116)					
025	3074535-0000		2	RAILING	
040	3074203-0000		2	RAILING	
070	985328-0000		4	CONNECTION	
080	312318-0453		8	SET SCREW, CUP END ISO4029 M8X25 A4	
090	312111-0630		22	SCREW HEX.SOCK.HD.MC6S-TT 16X50 88 FZB	
100	315111-0186		22	WASHER PLAIN, TBRB 17/30 H=6	
Common Parts					
010	3074197-0000		1	RAILING	

Pos	Part No	UN	Qty	Description	Page No

Machine Type | Group Description | Used-In | Group Number | Page No

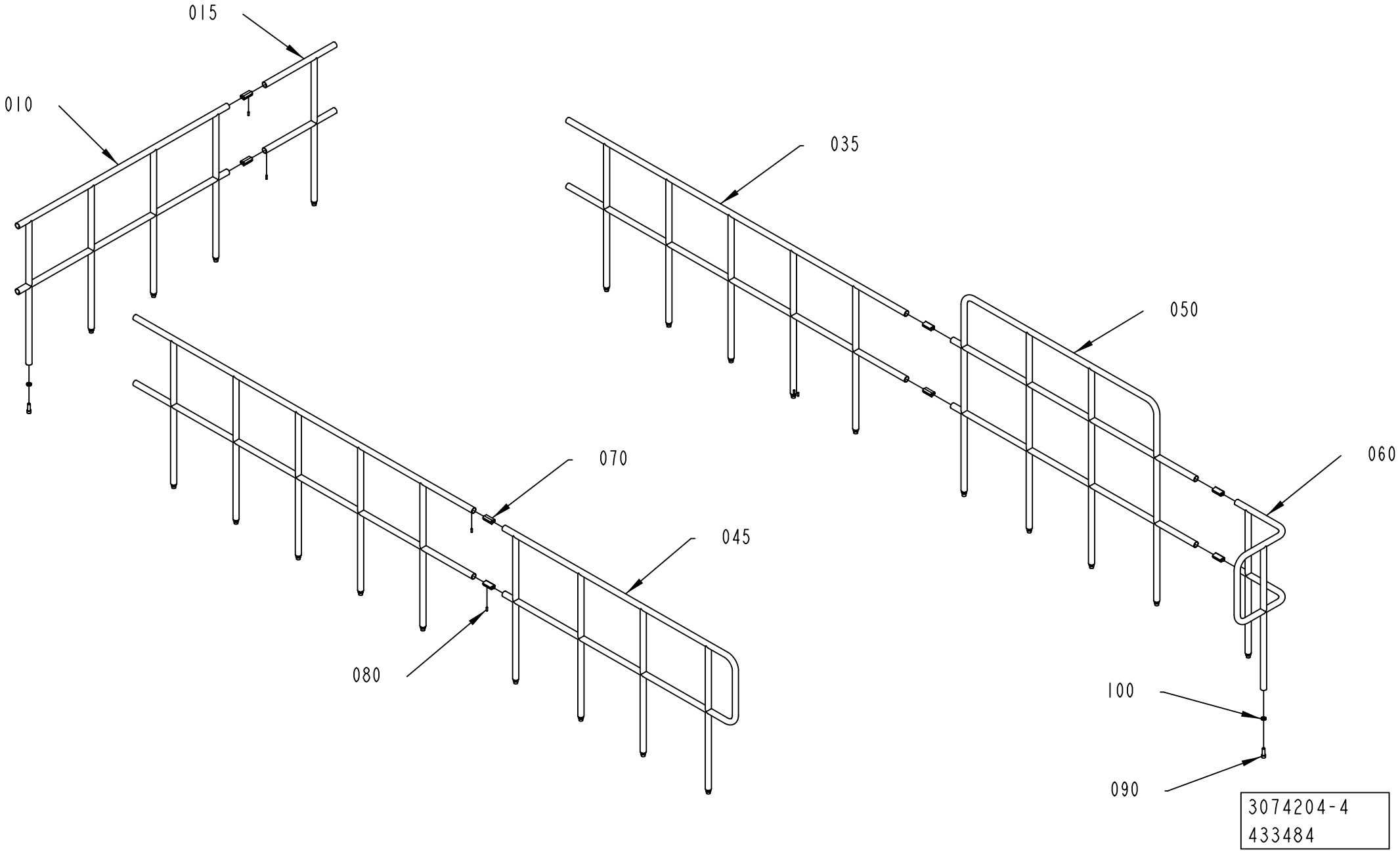
015
010
035
050
060
070
045
080
100
090
3074204-4
433484

ECM: 434202 - 20100128
Group number: 3074204-0100
Assembly Drawing: 3074204-4_1_AA

This list covers pages from 2-114 to 2-121

Pos	Part No	UN	Qty	Description	Page No
NOPT HVA (See drawing on page: 2-118)					
015	2922754-0000		1	RAILING	
030	3078317-0000		2	RAILING	
045	2844532-0000		1	RAILING	
050	2922744-0000		1	RAILING	
060	2922753-0000		1	RAILING	
070	985328-0000		8	CONNECTION	
080	312318-0453		16	SET SCREW, CUP END ISO4029 M8X25 A4	
090	312111-0630		21	SCREW HEX.SOCK.HD.MC6S-TT 16X50 88 FZB	
100	315111-0186		21	WASHER PLAIN, TBRB 17/30 H=6	
NOPT NOHVA (See drawing on page: 2-114)					
020	3067387-0000		2	RAILING	
040	3074203-0000		2	RAILING	
070	985328-0000		4	CONNECTION	
080	312318-0453		8	SET SCREW, CUP END ISO4029 M8X25 A4	
090	312111-0630		18	SCREW HEX.SOCK.HD.MC6S-TT 16X50 88 FZB	
100	315111-0186		18	WASHER PLAIN, TBRB 17/30 H=6	
PT/CF HVA (See drawing on page: 2-120)					
015	2922754-0000		1	RAILING	
035	3078318-0000		2	RAILING	
045	2844532-0000		1	RAILING	
050	2922744-0000		1	RAILING	
060	2922753-0000		1	RAILING	
070	985328-0000		8	CONNECTION	
080	312318-0453		16	SET SCREW, CUP END ISO4029 M8X25 A4	
090	312111-0630		25	SCREW HEX.SOCK.HD.MC6S-TT 16X50 88 FZB	
100	315111-0186		25	WASHER PLAIN, TBRB 17/30 H=6	
PT/CF NO HVA (See drawing on page: 2-116)					
025	3074535-0000		2	RAILING	
040	3074203-0000		2	RAILING	
070	985328-0000		4	CONNECTION	
080	312318-0453		8	SET SCREW, CUP END ISO4029 M8X25 A4	
090	312111-0630		22	SCREW HEX.SOCK.HD.MC6S-TT 16X50 88 FZB	
100	315111-0186		22	WASHER PLAIN, TBRB 17/30 H=6	
Common Parts					
010	3074197-0000		1	RAILING	

Pos	Part No	UN	Qty	Description	Page No

Machine Type | Group Description | Used-In | Group Number | Page No

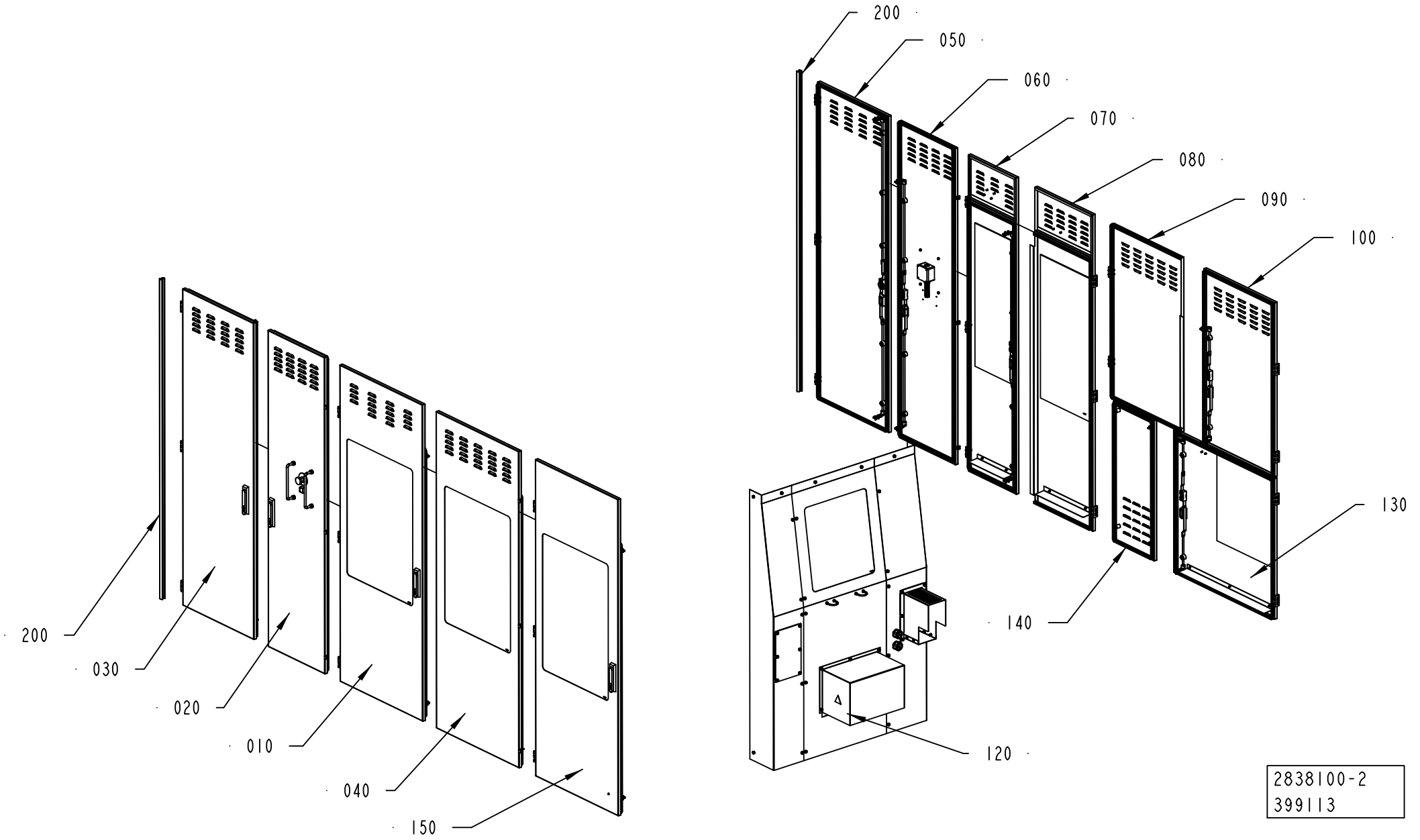
200
050
060
070
080
090
100
130
140
120
200
030
020
010
040
150
2838100-2
399113

ECM: 460343 - 20101001
Group number: 2838100-0200
Assembly Drawing: 2838100-2_1_AA

This list covers pages from 2-122 to 2-125

Pos	Part No	UN	Qty	Description	Page No
ICU (See drawing on page: 2-124)					
130	3020045-0200		1	COVERING PANEL	**2-127**
NO ICU (See drawing on page: 2-122)					
130	2861851-0200		1	DOOR	**2-129**
Common Parts					
010	2838020-0200		1	DOOR	**2-131**
020	2838022-0200		1	DOOR	**2-133**
030	2838025-0100		1	DOOR	**2-137**
040	2838026-0200		1	DOOR	**2-139**
050	2838047-0100		1	DOOR	**2-141**
060	2838049-0200		1	DOOR	**2-143**
070	2838096-0200		1	DOOR	**2-147**
080	2838098-0200		1	DOOR	**2-149**
090	2838103-0200		1	DOOR	**2-151**
100	2838279-0200		1	DOOR	**2-153**
120	2840686-0200		1	FRONT COVER	**2-155**
140	2861853-0200		1	DOOR	**2-157**
150	2861854-0200		1	DOOR	**2-159**
200	90600-8226	M	3	RUBBER STRIP, 10.2520.8989	

Pos	Part No	UN	Qty	Description	Page No

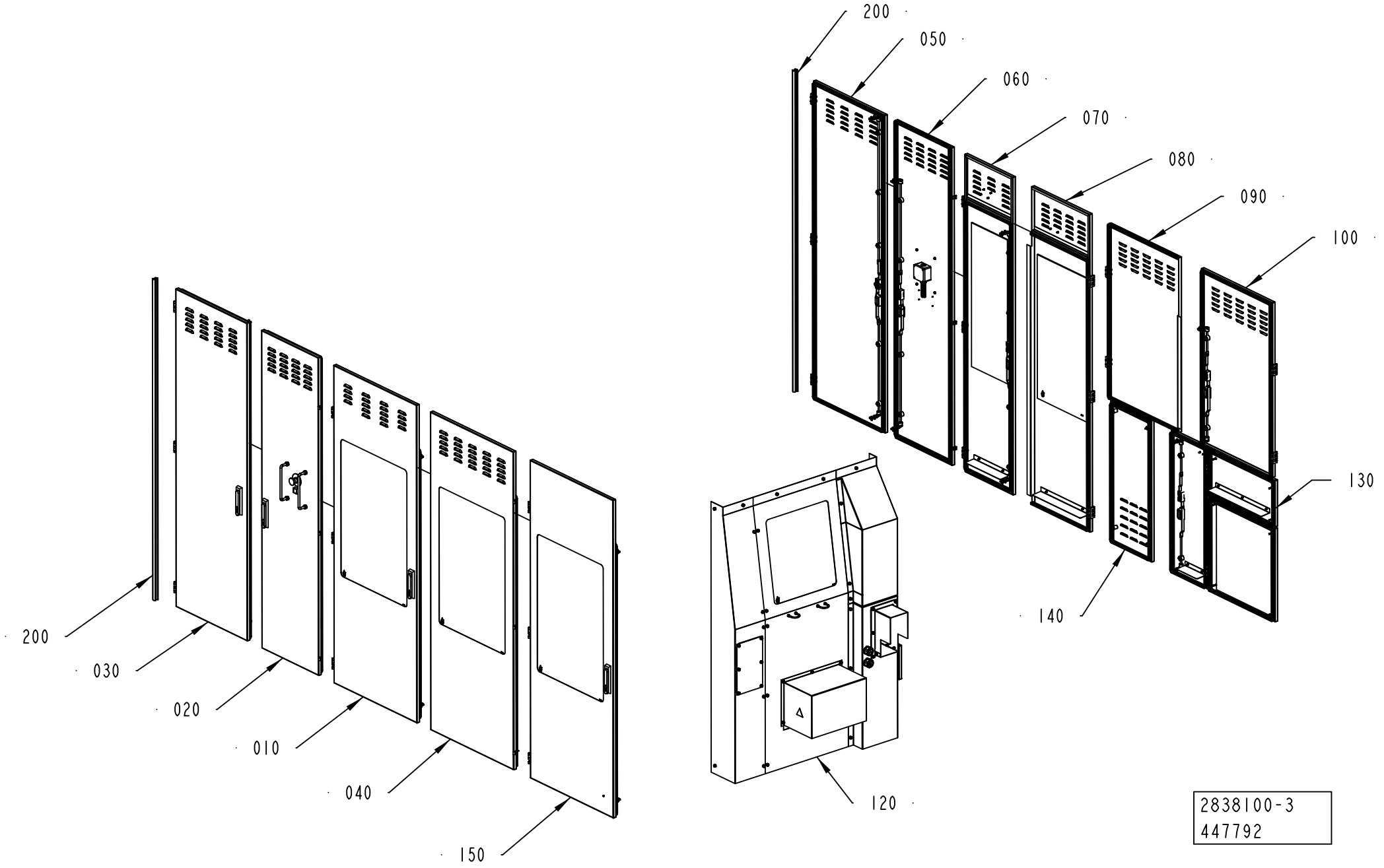
200
050
060
070
080
090
100
130
140
120
200
030
020
010
040
150
2838100-3
447792

ECM: 460343 - 20101001
Group number: 2838100-0200
Assembly Drawing: 2838100-3_1_AB

This list covers pages from 2-122 to 2-125

Pos	Part No	UN	Qty	Description	Page No
ICU (See drawing on page: 2-124)					
130	3020045-0200		1	COVERING PANEL	**2-127**
NO ICU (See drawing on page: 2-122)					
130	2861851-0200		1	DOOR	**2-129**
Common Parts					
010	2838020-0200		1	DOOR	**2-131**
020	2838022-0200		1	DOOR	**2-133**
030	2838025-0100		1	DOOR	**2-137**
040	2838026-0200		1	DOOR	**2-139**
050	2838047-0100		1	DOOR	**2-141**
060	2838049-0200		1	DOOR	**2-143**
070	2838096-0200		1	DOOR	**2-147**
080	2838098-0200		1	DOOR	**2-149**
090	2838103-0200		1	DOOR	**2-151**
100	2838279-0200		1	DOOR	**2-153**
120	2840686-0200		1	FRONT COVER	**2-155**
140	2861853-0200		1	DOOR	**2-157**
150	2861854-0200		1	DOOR	**2-159**
200	90600-8226	M	3	RUBBER STRIP, 10.2520.8989	

Pos	Part No	UN	Qty	Description	Page No

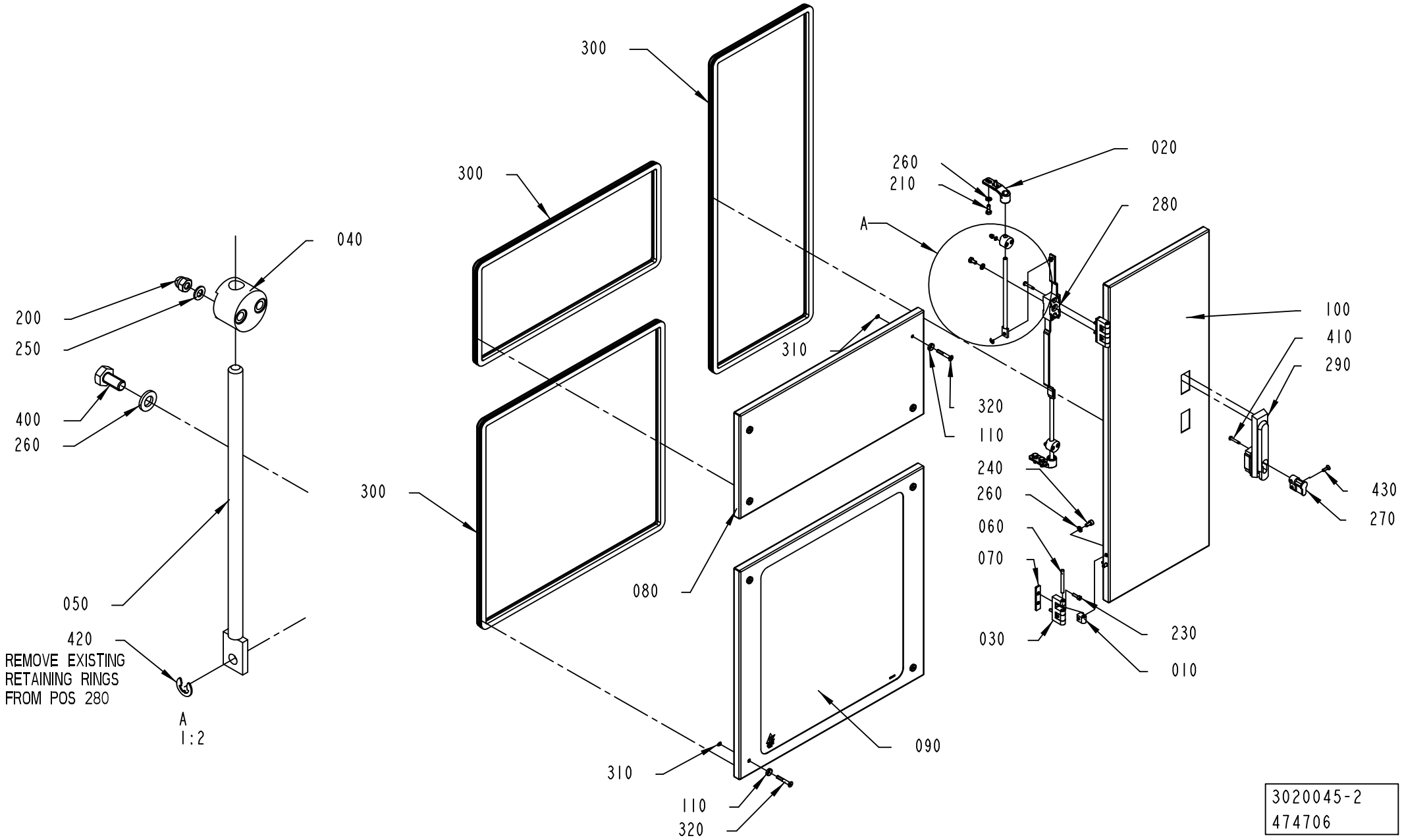
300
300
300
040
200
250
400
260
050
420
REMOVE EXISTING
RETAINING RINGS
FROM POS 280
A
1:2
080
310
310
110
320
090
260
210
A
020
280
100
410
290
320
110
240
260
060
070
030
230
010
430
270
3020045-2
474706

ECM: 482028 - 20110401
Group number: 3020045-0200
Assembly Drawing: 3020045-2_1_AB

Pos	Part No	UN	Qty	Description	Page No
-					
010	1129770-0000		4	BLOCKING PIECE	
020	1538868-0000		2	BRACKET	
030	1035792-0000		2	E-HINGE	
040	1129274-0000		2	GUIDE LUG	
050	2861858-0000		2	LOCKING ARM	
060	988685-0000		2	PIN	
070	1517182-0000		2	SPACER	
080	3113415-0000		1	DOOR	
090	3113413-0000		1	DOOR	
100	3113414-0000		1	DOOR	
110	1317228-0000		8	WASHER	
200	312705-0312		4	NUT HEX. DOMED CAP MHM-6 M4 A280	
210	312105-0368		4	SCREW, M6S ISO 4017 M6X16 A4 80	
230	312115-0329		4	SCREW ISO4762 M5X16 A4 80	
240	312115-0366		4	SCREW ISO4762 M6X12 A4 80	
250	315105-0136		4	WASHER PLAIN, 4,3X9X0,8 A4 BRB	
260	315105-0153		9	WASHER PLAIN, 6,4X12X1,5 A4 BRB	
270	90237-0128		1	LOCK CYLINDER, 1109-SU125	
280	90600-0477		1	LOCK HOUSING, 1121-U139	
290	90600-5084		1	LEVER MECHANISM, 1125-SU404	
300	90143-0068	M	7	RUBBER STRIP EMKA 1011-06	
310	315751-0103		8	RETAINING RING FOR SHAFT DIN 471 6X 0.7C	
320	312155-0378		8	SCREW DIN 7991 MF6S M6X40 A4 70	
400	312105-0366		1	SCREW, M6S ISO 4017 M6X12 A4 80	
410	312504-0348		4	TAPPING SCREW, ISO7049 A2-ST4,2X25-C-Z	
420	315755-0107		2	RETAINING RING SHAFT DIN 6799 5 SS	
430	312155-0329		1	SCREW DIN 7991 MF6S M5X16 A4 70	

Pos	Part No	UN	Qty	Description	Page No

Machine Type | Group Description | Used-In | Group Number | Page No

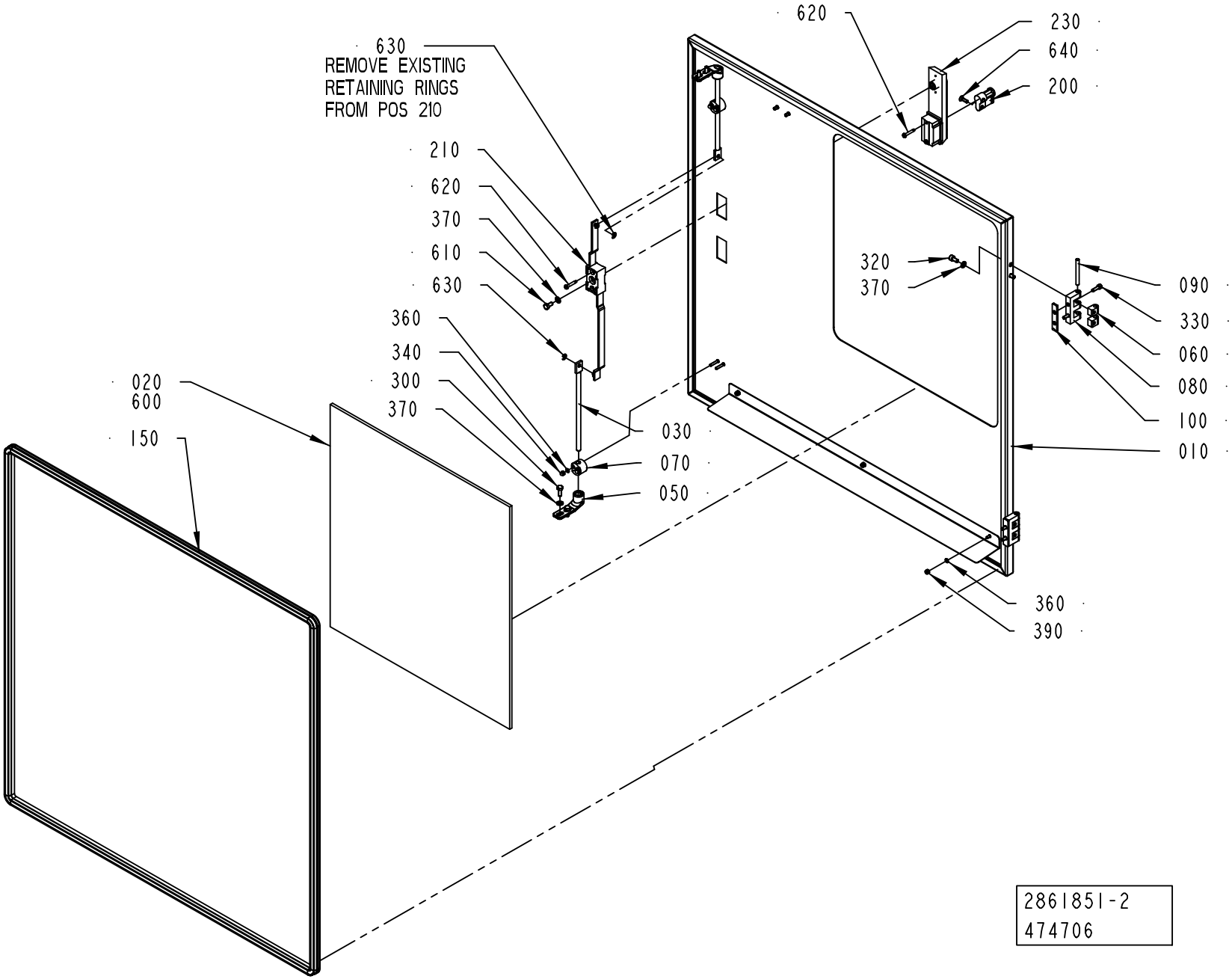
620
230
640
200
630
REMOVE EXISTING
RETAINING RINGS
FROM POS 210
210
620
370
610
630
360
340
300
370
020
600
150
320
370
090
330
060
080
100
010
030
070
050
360
390
2861851-2
474706

ECM: 482026 - 20110401
Group number: 2861851-0200
Assembly Drawing: 2861851-2_1_AC

Pos	Part No	UN	Qty	Description	Page No
-					
010Â	3046762-0000		1	DOOR	
020	3116333-0000		1	GLASS PANE	
030	2861858-0000		2	LOCKING ARM	
050	1538868-0000		2	BRACKET	
060	1129770-0000		4	BLOCKING PIECE	
070	1129274-0000		2	GUIDE LUG	
080	1035792-0000		2	E-HINGE	
090	988685-0000		2	PIN	
100	1517182-0000		2	SPACER	
150	90143-0068	MM	3200	RUBBER STRIP EMKA 1011-06	
200	90237-0128		1	LOCK CYLINDER, 1109-SU125	
210	90600-0477		1	LOCK HOUSING, 1121-U139	
230	90600-5084		1	LEVER MECHANISM, 1125-SU404	
300	312105-0368		4	SCREW, M6S ISO 4017 M6X16 A4 80	
320	312115-0366		4	SCREW ISO4762 M6X12 A4 80	
330	312115-0329		4	SCREW ISO4762 M5X16 A4 80	
340	312705-0312		4	NUT HEX. DOMED CAP MHM-6 M4 A280	
360	315105-0136		7	WASHER PLAIN, 4,3X9X0,8 A4 BRB	
370	315105-0153		9	WASHER PLAIN, 6,4X12X1,5 A4 BRB	
390	312812-0312		3	HEXAGON NUT, NY-LOCK M4 A4 80	
600	90157-0041	L	1	SEALING COMPOUND, RHODORSEAL 5651	
610	312105-0366		1	SCREW, M6S ISO 4017 M6X12 A4 80	
620	312504-0348		4	TAPPING SCREW, ISO7049 A2-ST4,2X25-C-Z	
630	315755-0107		2	RETAINING RING SHAFT DIN 6799 5 SS	
640	312155-0329		1	SCREW DIN 7991 MF6S M5X16 A4 70	

Pos	Part No	UN	Qty	Description	Page No

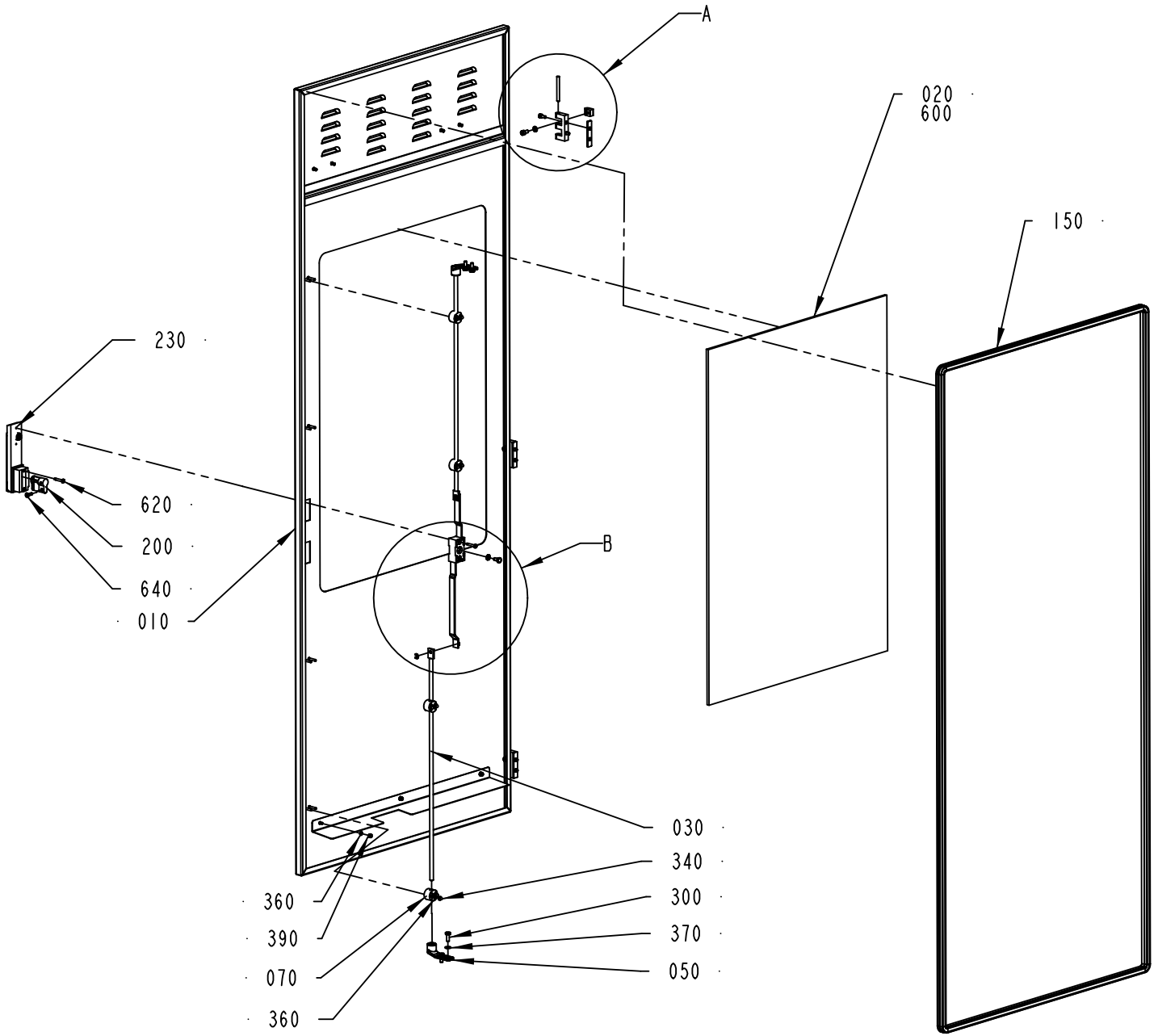

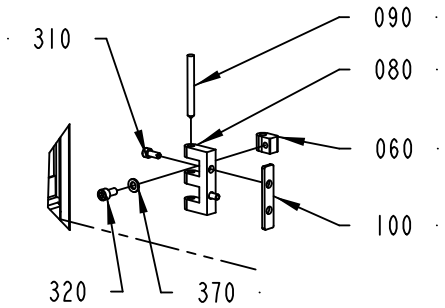

DETAIL A
1:5

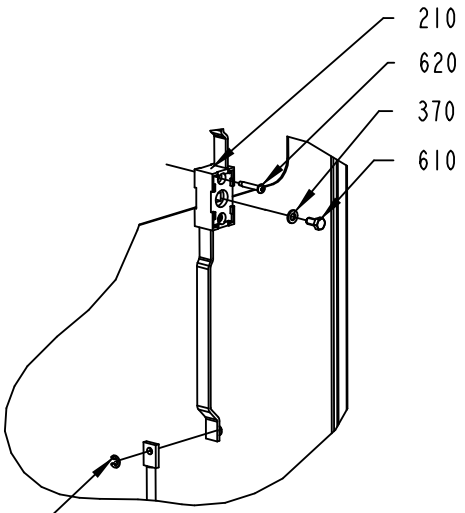

DETAIL B
SCALE 1:5

REMOVE EXISTING
RETAINING RINGS
FROM POS 210

2838020-2
474706

ECM: 482024 - 20110401
Group number: 2838020-0200
Assembly Drawing: 2838020-2_1_AC

Pos	Part No	UN	Qty	Description	Page No
-					
010Â	3046761-0000		1	DOOR	
020	3116330-0000		1	GLASS PANE	
030	2838288-0000		2	DOOR	
050	1538868-0000		2	BRACKET	
060	1129770-0000		3	BLOCKING PIECE	
070	1129274-0000		4	GUIDE LUG	
080	1035792-0000		3	E-HINGE	
090	988685-0000		3	PIN	
100	1517182-0000		3	SPACER	
150	90143-0068	MM	4200	RUBBER STRIP EMKA 1011-06	
200	90237-0128		1	LOCK CYLINDER, 1109-SU125	
210	90600-0477		1	LOCK HOUSING, 1121-U139	
230	90600-5084		1	LEVER MECHANISM, 1125-SU404	
300	312105-0368		4	SCREW, M6S ISO 4017 M6X16 A4 80	
310	312115-0327		6	SCREW ISO4762 M5X12 A4 80	
320	312115-0366		3	SCREW ISO4762 M6X12 A4 80	
340	312705-0312		8	NUT HEX. DOMED CAP MHM-6 M4 A280	
360	315105-0136		11	WASHER PLAIN, 4,3X9X0,8 A4 BRB	
370	315105-0153		8	WASHER PLAIN, 6,4X12X1,5 A4 BRB	
390	312812-0312		3	HEXAGON NUT, NY-LOCK M4 A4 80	
600	90157-0041	L	1	SEALING COMPOUND, RHODORSEAL 5651	
610	312105-0366		1	SCREW, M6S ISO 4017 M6X12 A4 80	
620	312504-0348		4	TAPPING SCREW, ISO7049 A2-ST4,2X25-C-Z	
630	315755-0107		2	RETAINING RING SHAFT DIN 6799 5 SS	
640	312155-0329		1	SCREW DIN 7991 MF6S M5X16 A4 70	

Pos	Part No	UN	Qty	Description	Page No

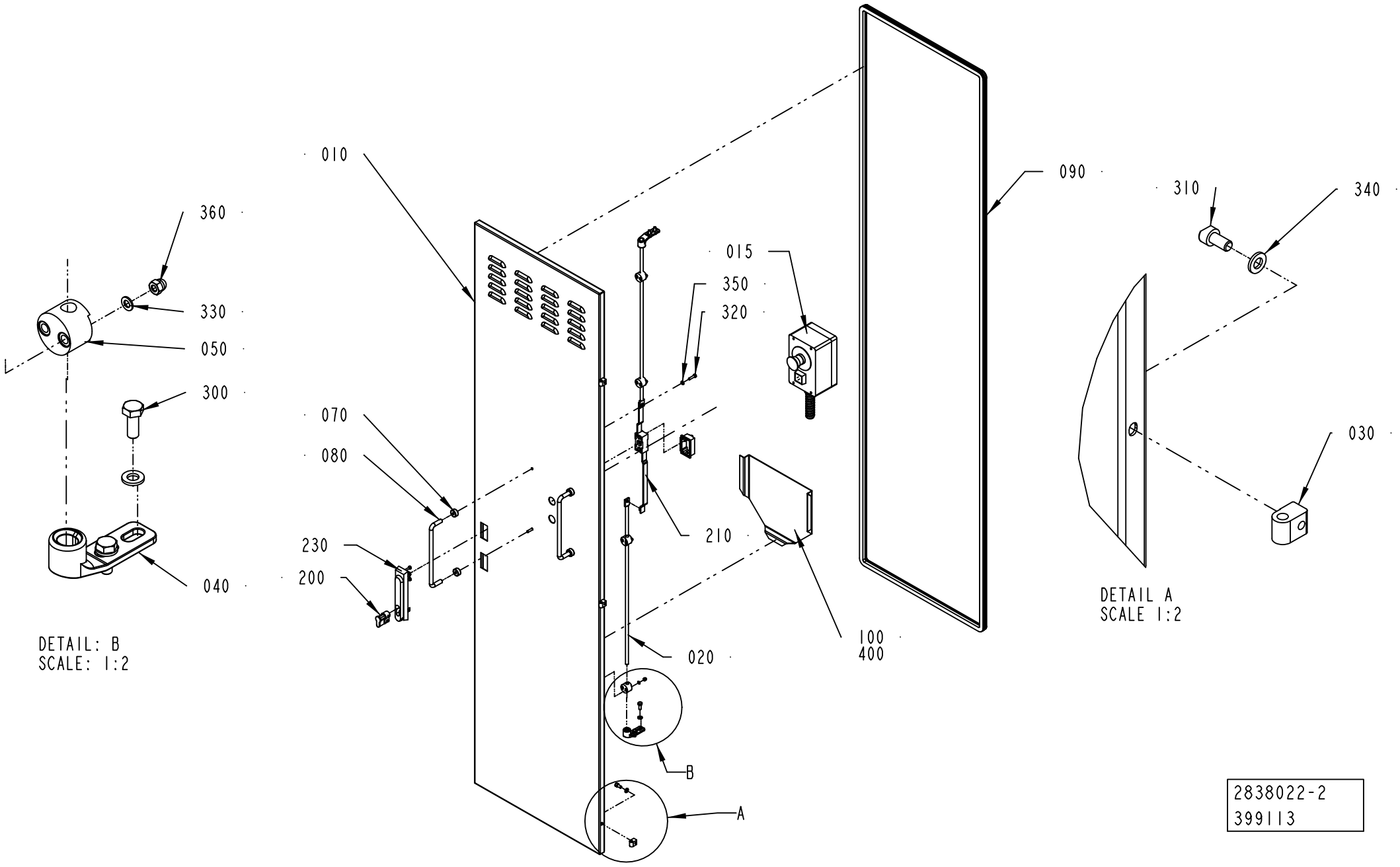

2838022-2
399113

ECM: 410110 - 20090904
Group number: 2838022-0200
Assembly Drawing: 2838022-2_1_AA

Pos	Part No	UN	Qty	Description	Page No
-					
010Â	3033510-0000		1	DOOR	
015	3030257-0100		1	PUSH BUTTON BOX	**2-135**
020	2838288-0000		2	DOOR	
030	1129770-0000		3	BLOCKING PIECE	
040	1538868-0000		2	BRACKET	
050	1129274-0000		4	GUIDE LUG	
070	2751586-0000		4	SPACER	
080	90600-2670		2	HANDLE, GN 425-10-200-NI	
090	90143-0068	MM	4700	RUBBER STRIP EMKA 1011-06	
100	1129275-0000		1	BOX FOR DIAGRAM	
200	90237-0128		1	LOCK CYLINDER, 1109-SU125	
210	90237-0153		1	LOCK HOUSING, 1121-U26-0B	
230	90237-0176		1	TURNING HANDLE, 1125-U190-A	
300	312105-0368		4	SCREW, M6S ISO 4017 M6X16 A4 80	
310	312115-0366		3	SCREW ISO4762 M6X12 A4 80	
320	312105-0331		4	SCREW, M6S ISO 4017 M5X20 A4 80	
330	315105-0136		8	WASHER PLAIN, 4,3X9X0,8 A4 BRB	
340	315105-0153		7	WASHER PLAIN, 6,4X12X1,5 A4 BRB	
350	315105-0146		4	WASHER PLAIN, 5,3X10X1 A4 BRB	
360	312705-0312		8	NUT HEX. DOMED CAP MHM-6 M4 A280	
400	90157-0041	L	1	SEALING COMPOUND, RHODORSEAL 5651	

Pos	Part No	UN	Qty	Description	Page No

PUSH BUTTON BOX

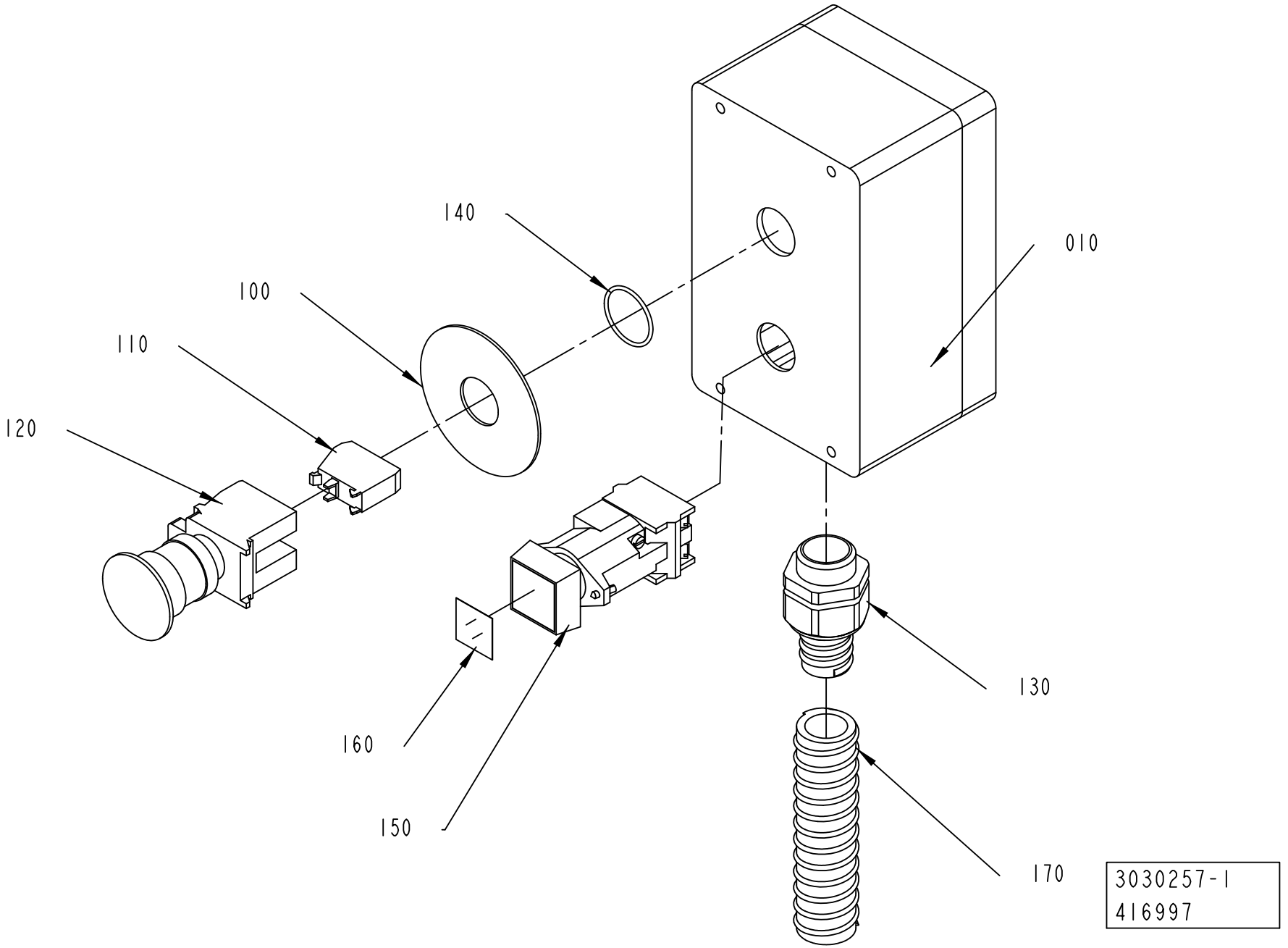

ECM: 418513 - 20090924
Group number: 3030257-0100
Assembly Drawing: 3030257-1_1_AB

Pos	Part No	UN	Qty	Description	Page No
-					
010	3030256-0000		1	PUSH BUTTON BOX	
100	486826-0001		1	SIGN "EMERGENCY STOP"	
110	90459-1917		1	CONTACT BLOCK ZBE-102 NC	
130	90458-0431		1	GLAND FITTING, VK 22554YUL16	
140	315202-0119		1	O-RING 25,1X1,6 MM	
160	359301-0504		1	BUTTON SIGN, RESET	
170	90152-0051	M	0	HOSE, SPIRAL CONDUIT, 25X18, UL 1816	
T40F2840	90458-1651		1	EMERGENCY STOP, ZB4-BS-844 ZB4-BZ-104	
T40S2841	90064-0098		1	PUSH BUTTON, WHITE	

Pos	Part No	UN	Qty	Description	Page No

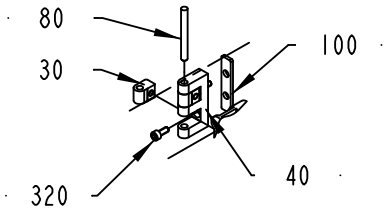

DETAIL B
SCALE 1:5

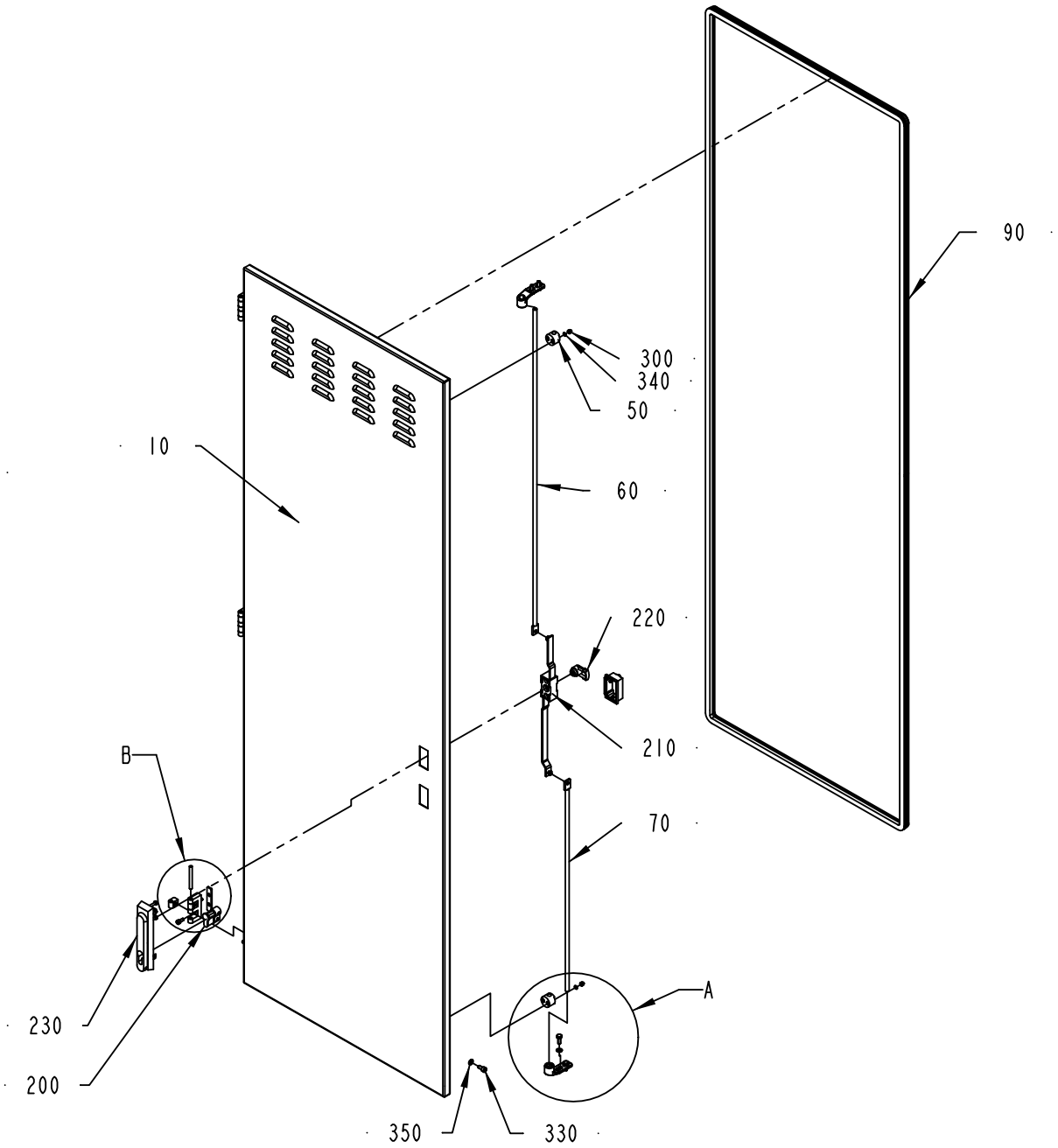

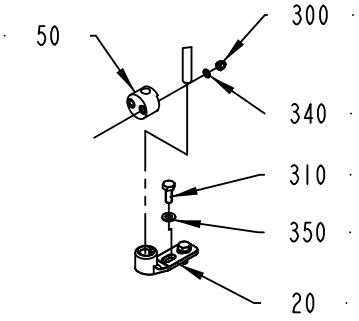

DETAIL A
SCALE 1:5

2838025-1
330007

ECM: 350671 - 20080422
Group number: 2838025-0100
Assembly Drawing: 2838025-1_1_AA

Pos	Part No	UN	Qty	Description	Page No
-					
010	2838024-0000		1	DOOR	
020	1538868-0000		2	BRACKET	
030	1129770-0000		6	BLOCKING PIECE	
040	1035792-0000		3	E-HINGE	
050	1129274-0000		5	GUIDE LUG	
060	2849957-0000		1	LOCKING ARM	
070	2838288-0000		1	DOOR	
080	988685-0000		3	PIN	
090	90143-0068	MM	4900	RUBBER STRIP EMKA 1011-06	
100	1517182-0000		3	SPACER	
200	90237-0128		1	LOCK CYLINDER, 1109-SU125	
210	90237-0153		1	LOCK HOUSING, 1121-U26-0B	
220	90237-0165		1	LATCH	
230	90237-0176		1	TURNING HANDLE, 1125-U190-A	
300	312705-0312		10	NUT HEX. DOMED CAP MHM-6 M4 A280	
310	312105-0368		4	SCREW, M6S ISO 4017 M6X16 A4 80	
320	312115-0327		6	SCREW ISO4762 M5X12 A4 80	
330	312115-0366		6	SCREW ISO4762 M6X12 A4 80	
340	315105-0136		10	WASHER PLAIN, 4,3X9X0,8 A4 BRB	
350	315105-0153		10	WASHER PLAIN, 6,4X12X1,5 A4 BRB	

Pos	Part No	UN	Qty	Description	Page No

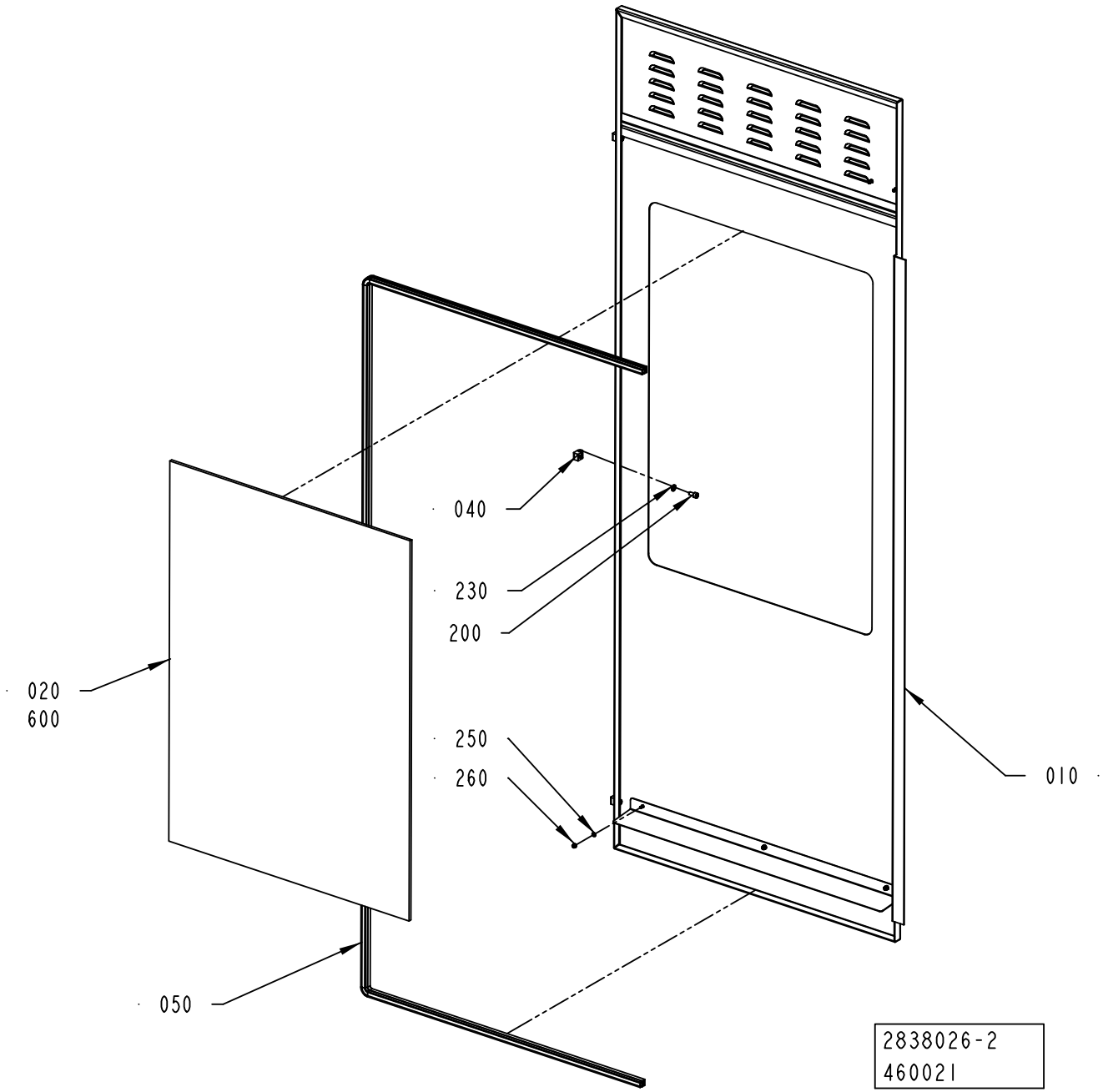
040
230
200
020
600
250
260
010
050
2838026-2
460021

ECM: 460592 - 20100621
Group number: 2838026-0200
Assembly Drawing: 2838026-2_1_AB

Pos	Part No	UN	Qty	Description	Page No
-					
010	3046760-0000		1	DOOR	
020	3116330-0000		1	GLASS PANE	
040	1129770-0000		3	BLOCKING PIECE	
050	90143-0068	MM	2800	RUBBER STRIP EMKA 1011-06	
200	312115-0366		3	SCREW ISO4762 M6X12 A4 80	
230	315105-0153		3	WASHER PLAIN, 6,4X12X1,5 A4 BRB	
250	315105-0136		3	WASHER PLAIN, 4,3X9X0,8 A4 BRB	
260	312812-0312		3	HEXAGON NUT, NY-LOCK M4 A4 80	
600	90157-0041	L	1	SEALING COMPOUND, RHODORSEAL 5651	

Pos	Part No	UN	Qty	Description	Page No

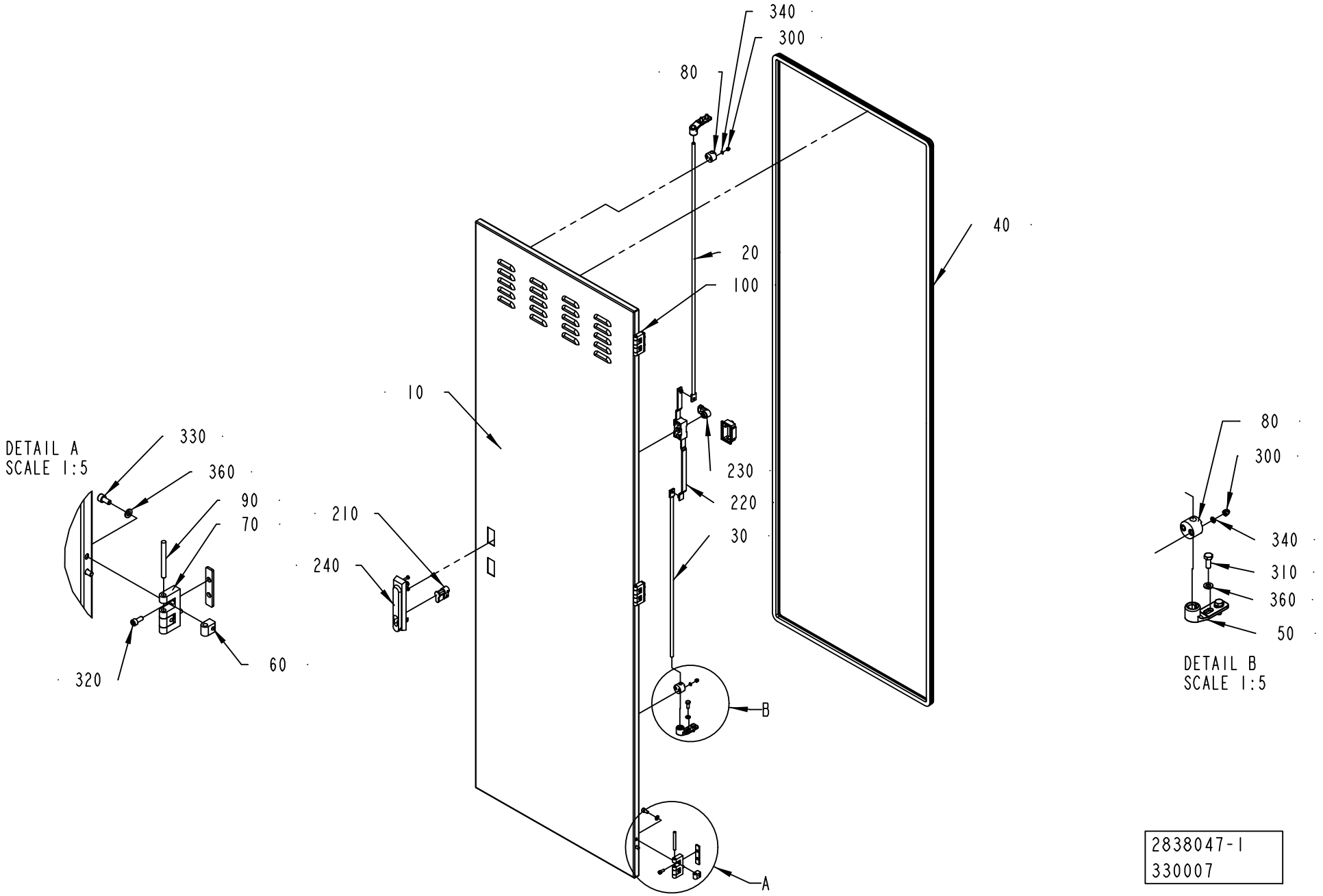

2838047-1
330007

ECM: 427512 - 20091001
Group number: 2838047-0100
Assembly Drawing: 2838047-1_1_AA

Pos	Part No	UN	Qty	Description	Page No
-					
010	2838048-0000		1	DOOR	
020	2849957-0000		1	LOCKING ARM	
030	2838288-0000		1	DOOR	
040	90143-0068	MM	4900	RUBBER STRIP EMKA 1011-06	
050	1538868-0000		2	BRACKET	
060	1129770-0000		6	BLOCKING PIECE	
070	1035792-0000		3	E-HINGE	
080	1129274-0000		5	GUIDE LUG	
090	988685-0000		3	PIN	
100	1517182-0000		3	SPACER	
210	90237-0128		1	LOCK CYLINDER, 1109-SU125	
220	90237-0153		1	LOCK HOUSING, 1121-U26-0B	
230	90237-0165		1	LATCH	
240	90237-0176		1	TURNING HANDLE, 1125-U190-A	
300	312705-0312		10	NUT HEX. DOMED CAP MHM-6 M4 A280	
310	312105-0368		4	SCREW, M6S ISO 4017 M6X16 A4 80	
320	312115-0327		6	SCREW ISO4762 M5X12 A4 80	
330	312115-0366		6	SCREW ISO4762 M6X12 A4 80	
340	315105-0136		10	WASHER PLAIN, 4,3X9X0,8 A4 BRB	
360	315105-0153		10	WASHER PLAIN, 6,4X12X1,5 A4 BRB	

Pos	Part No	UN	Qty	Description	Page No

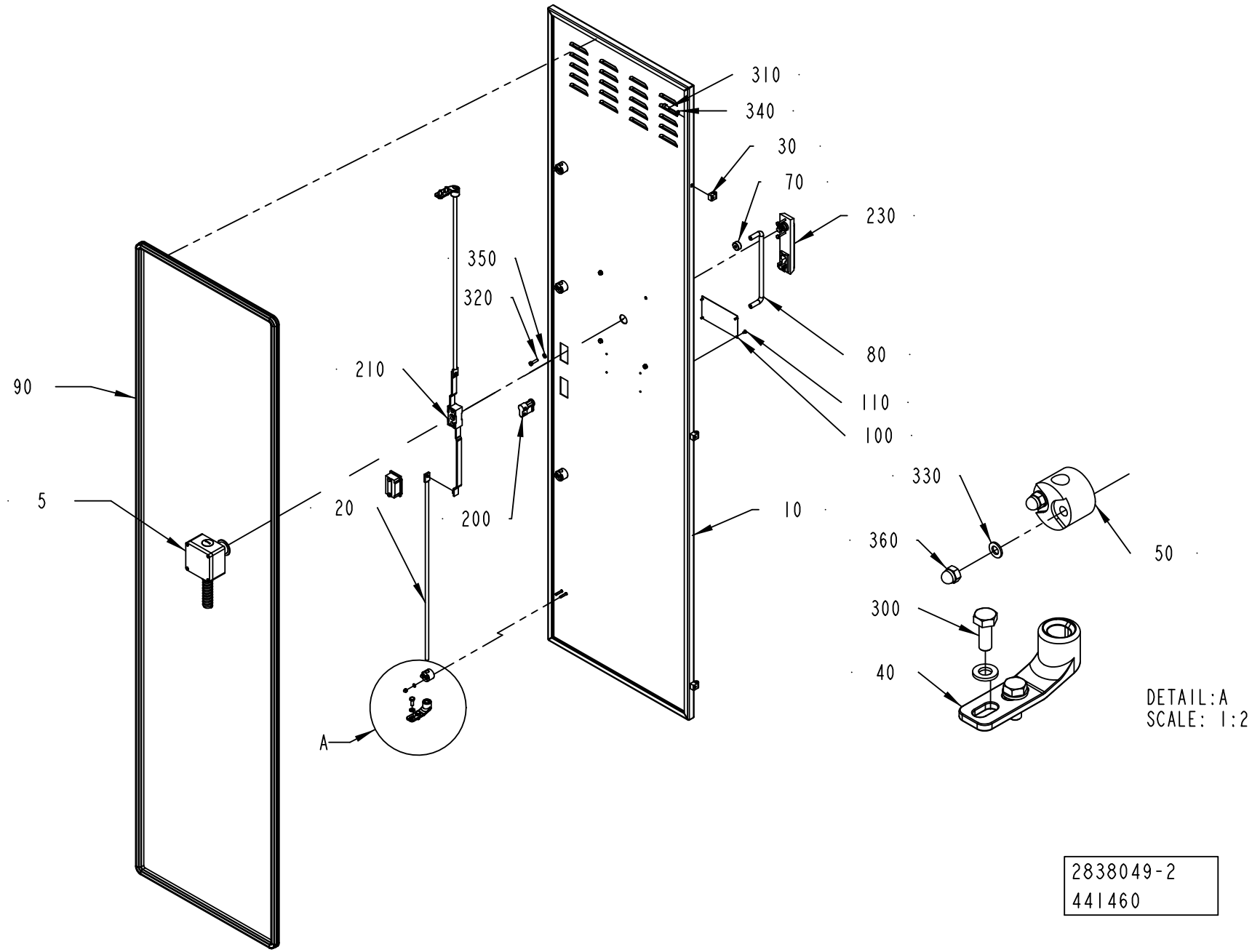

2838049-2
441460

ECM: 441969 - 20100701
Group number: 2838049-0200
Assembly Drawing: 2838049-2_1_AB

Pos	Part No	UN	Qty	Description	Page No
-					
005	2893286-0200		1	EMERGENCY STOP	**2-145**
010Â	2838095-0000		1	DOOR	
020	2838288-0000		2	DOOR	
030	1129770-0000		3	BLOCKING PIECE	
040	1538868-0000		2	BRACKET	
050	1129274-0000		4	GUIDE LUG	
070	2751586-0000		4	SPACER	
080	90600-2670		2	HANDLE, GN 425-10-200-NI	
090	90143-0068	MM	4600	RUBBER STRIP EMKA 1011-06	
100	2968251-0000		1	MACHINE SIGN	
110	311523-0142		4	BLIND RIVET ISO 15983 -3.2X6 A2/A2	
120	90157-0041	L	1	SEALING COMPOUND, RHODORSEAL 5651	
200	90237-0128		1	LOCK CYLINDER, 1109-SU125	
210	90237-0153		1	LOCK HOUSING, 1121-U26-0B	
230	90237-0176		1	TURNING HANDLE, 1125-U190-A	
300	312105-0368		4	SCREW, M6S ISO 4017 M6X16 A4 80	
310	312115-0366		3	SCREW ISO4762 M6X12 A4 80	
320	312105-0331		4	SCREW, M6S ISO 4017 M5X20 A4 80	
330	315105-0136		8	WASHER PLAIN, 4,3X9X0,8 A4 BRB	
340	315105-0153		7	WASHER PLAIN, 6,4X12X1,5 A4 BRB	
350	315105-0146		4	WASHER PLAIN, 5,3X10X1 A4 BRB	
360	312705-0312		8	NUT HEX. DOMED CAP MHM-6 M4 A280	

Pos	Part No	UN	Qty	Description	Page No

Machine Type | Group Description | Used-In | Group Number | Page No

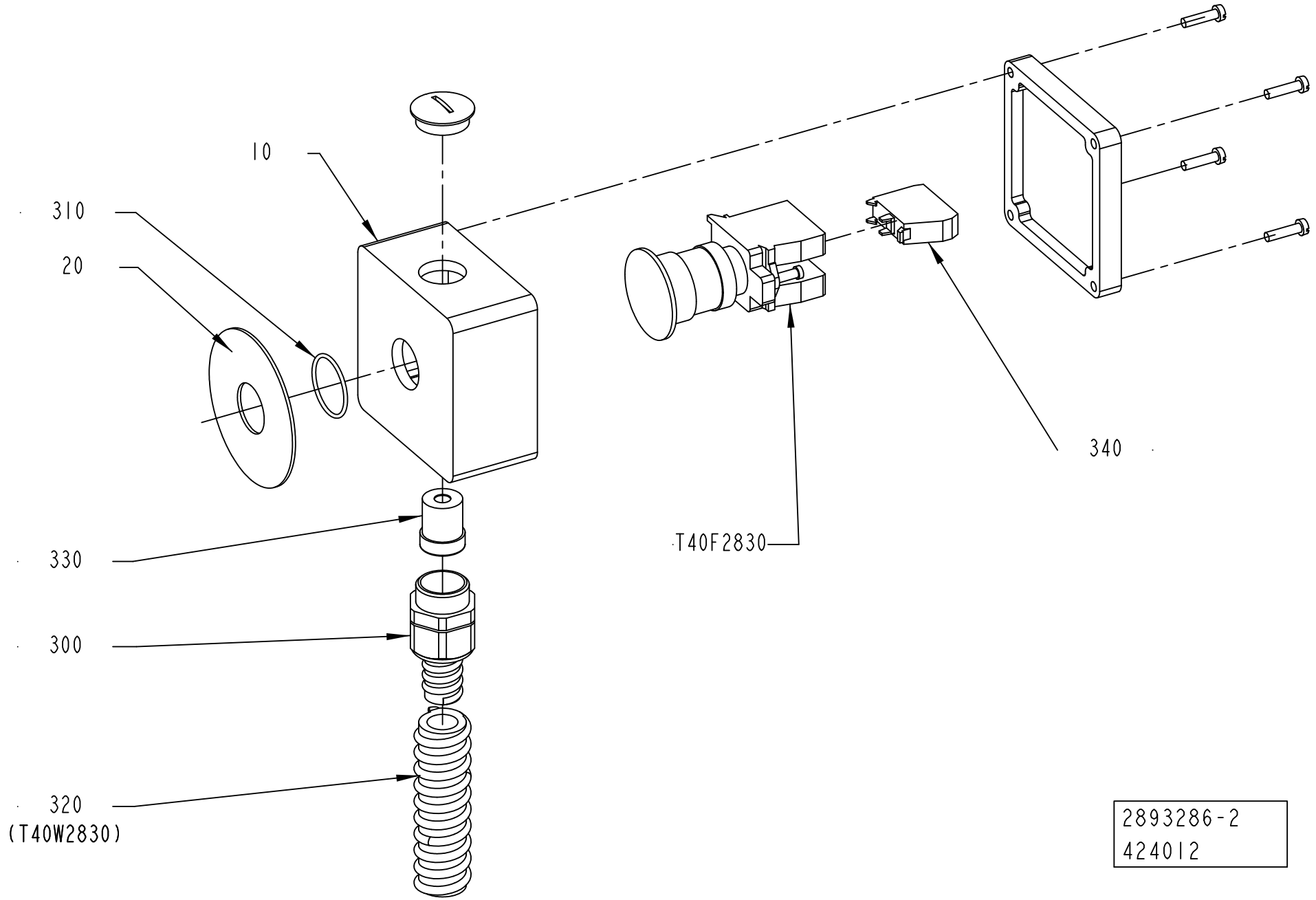
10
310
20
330
300
320
(T40W2830)
T40F2830
340
2893286-2
424012

ECM: 424090 - 20091001
Group number: 2893286-0200
Assembly Drawing: 2893286-2_1_AA

Pos	Part No	UN	Qty	Description	Page No
-					
010Â	1037130-0000		1	,CONNECTION BOX	
020	486826-0001		1	SIGN "EMERGENCY STOP"	
300	353242-0002		1	COMPRESSION GLAND, VK 153YUL13	
310	315202-0119		1	O-RING 25,1X1,6 MM	
320	90152-0050	M	0	HOSE, SPIRAL CONDUIT, 20X13, UL 1313	
330	353249-0069		1	INSERT, SINGLE HOLE, E153 11	
340	90459-1917		1	CONTACT BLOCK ZBE-102 NC	
T40F2830	90458-1651		1	EMERGENCY STOP, ZB4-BS-844 ZB4-BZ-104	

Pos	Part No	UN	Qty	Description	Page No

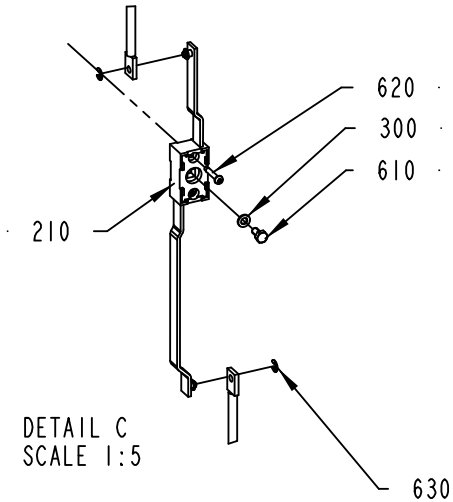

DETAIL C
SCALE 1:5

REMOVE EXISTING RETAINING RINGS FROM POS 210

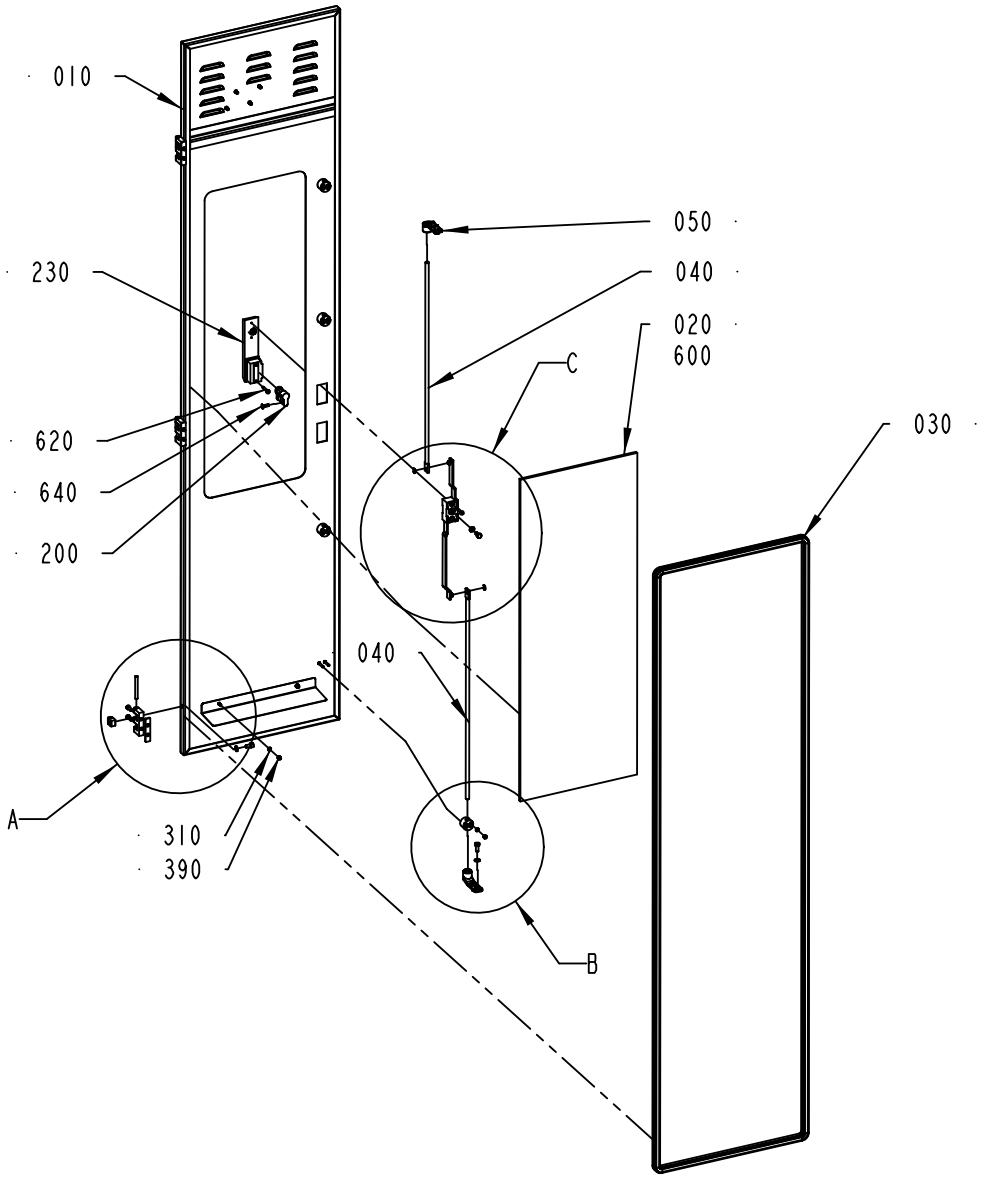

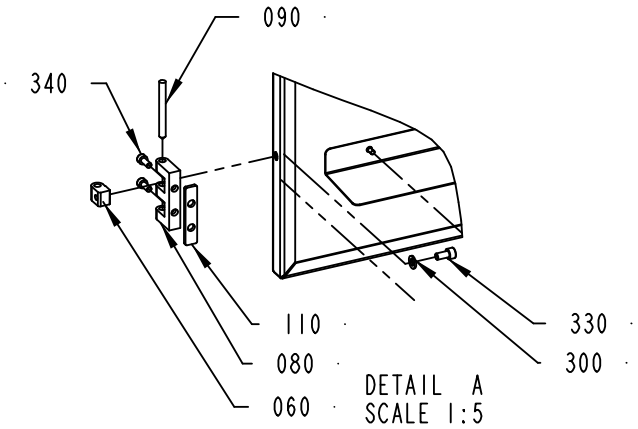

DETAIL A
SCALE 1:5

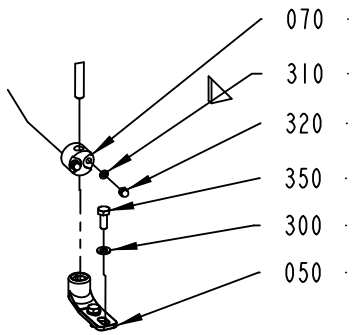

DETAIL B
SCALE 1:5

2838096-2
474706

ECM: 482025 - 20110401
Group number: 2838096-0200
Assembly Drawing: 2838096-2_1_AC

Pos	Part No	UN	Qty	Description	Page No
-					
010	3046888-0000		1	DOOR	
020	3116331-0000		1	GLASS PANE	
030	90143-0068	MM	4600	RUBBER STRIP EMKA 1011-06	
040	2838288-0000		2	DOOR	
050	1538868-0000		2	BRACKET	
060	1129770-0000		3	BLOCKING PIECE	
070	1129274-0000		4	GUIDE LUG	
080	1035792-0000		3	E-HINGE	
090	988685-0000		3	PIN	
110	1517182-0000		3	SPACER	
200	90237-0128		1	LOCK CYLINDER, 1109-SU125	
210	90600-0477		1	LOCK HOUSING, 1121-U139	
230	90600-5084		1	LEVER MECHANISM, 1125-SU404	
300	315105-0153		8	WASHER PLAIN, 6,4X12X1,5 A4 BRB	
310	315105-0136		10	WASHER PLAIN, 4,3X9X0,8 A4 BRB	
320	312705-0312		8	NUT HEX. DOMED CAP MHM-6 M4 A280	
330	312115-0366		3	SCREW ISO4762 M6X12 A4 80	
340	312115-0327		6	SCREW ISO4762 M5X12 A4 80	
350	312105-0368		4	SCREW, M6S ISO 4017 M6X16 A4 80	
390	312812-0312		2	HEXAGON NUT, NY-LOCK M4 A4 80	
600	90157-0041	L	1	SEALING COMPOUND, RHODORSEAL 5651	
610	312105-0366		1	SCREW, M6S ISO 4017 M6X12 A4 80	
620	312504-0348		4	TAPPING SCREW, ISO7049 A2-ST4,2X25-C-Z	
630	315755-0107		2	RETAINING RING SHAFT DIN 6799 5 SS	
640	312155-0329		1	SCREW DIN 7991 MF6S M5X16 A4 70	

Pos	Part No	UN	Qty	Description	Page No

Machine Type | Group Description | Used-In | Group Number | Page No

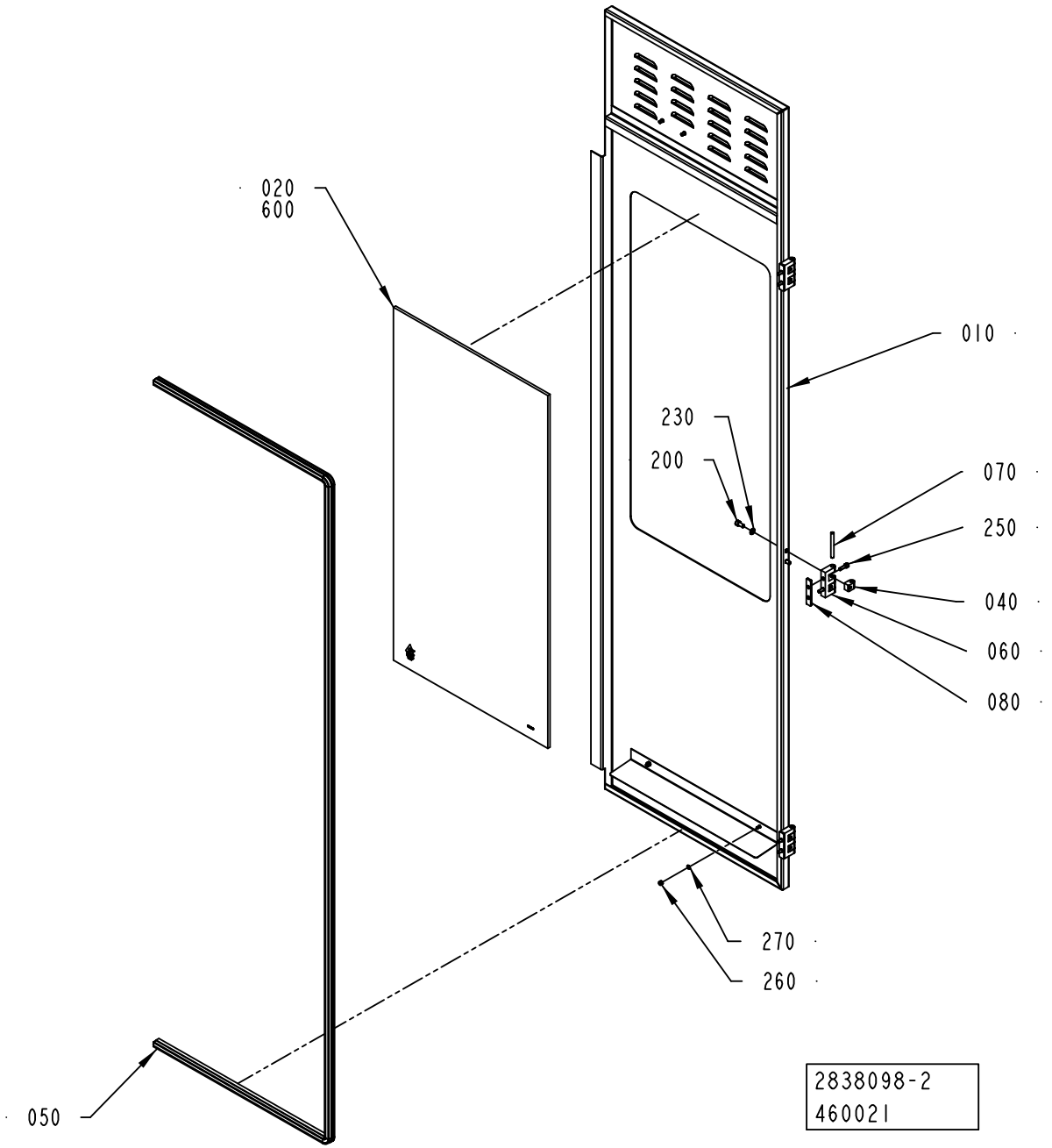
020
600
010
230
200
070
250
040
060
080
270
260
050
2838098-2
460021

ECM: 460594 - 20100621
Group number: 2838098-0200
Assembly Drawing: 2838098-2_1_AB

Pos	Part No	UN	Qty	Description	Page No
-					
010Â	3046763-0000		1	DOOR	
020	3116332-0000		1	GLASS PANE	
040	1129770-0000		6	BLOCKING PIECE	
050	90143-0068	MM	2300	RUBBER STRIP EMKA 1011-06	
060	1035792-0000		3	E-HINGE	
070	988685-0000		3	PIN	
080	1517182-0000		3	SPACER	
200	312115-0366		6	SCREW ISO4762 M6X12 A4 80	
230	315105-0153		6	WASHER PLAIN, 6,4X12X1,5 A4 BRB	
250	312115-0329		6	SCREW ISO4762 M5X16 A4 80	
260	312812-0312		2	HEXAGON NUT, NY-LOCK M4 A4 80	
270	315105-0136		2	WASHER PLAIN, 4,3X9X0,8 A4 BRB	
600	90157-0041	L	1	SEALING COMPOUND, RHODORSEAL 5651	

Pos	Part No	UN	Qty	Description	Page No

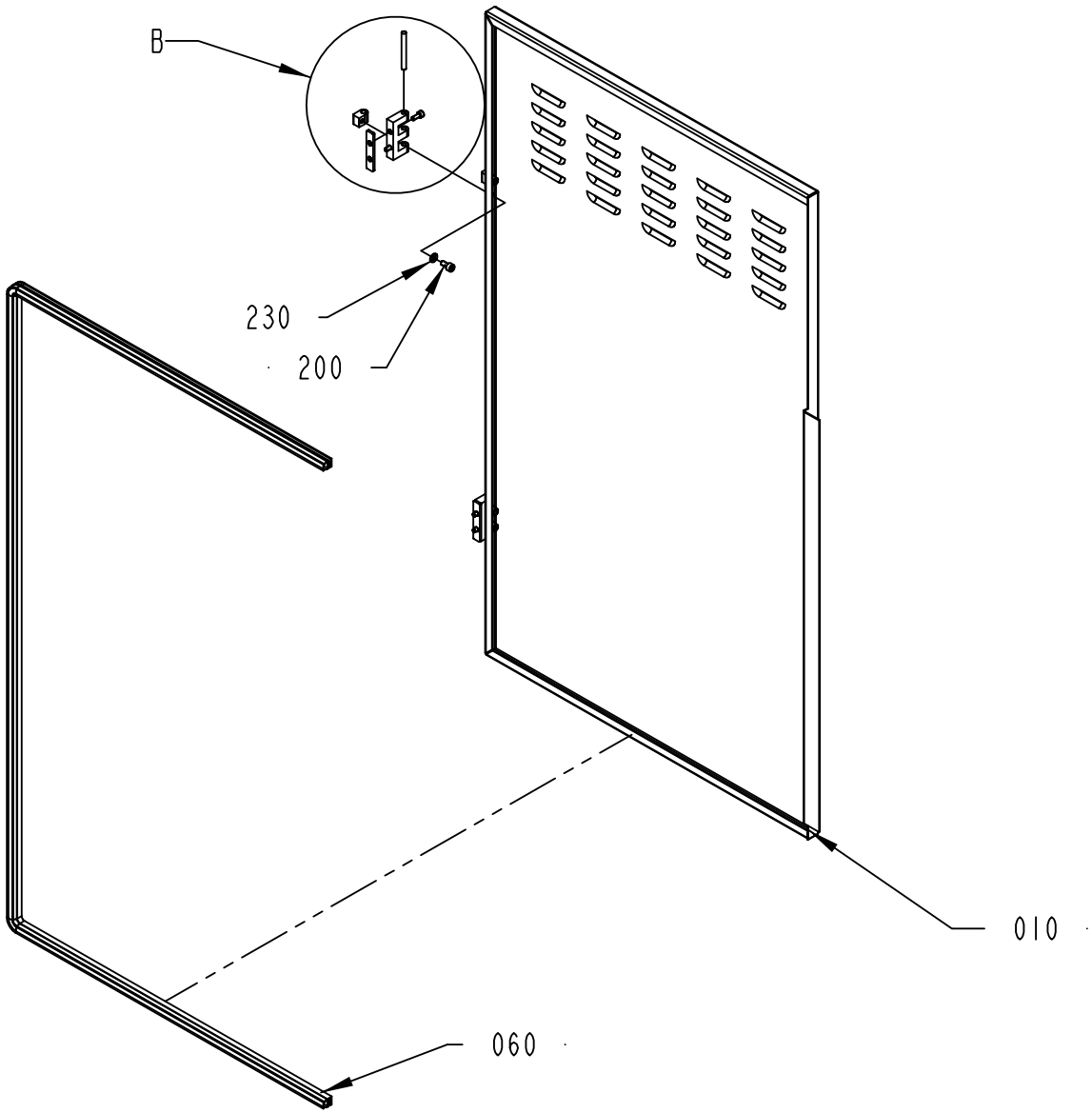

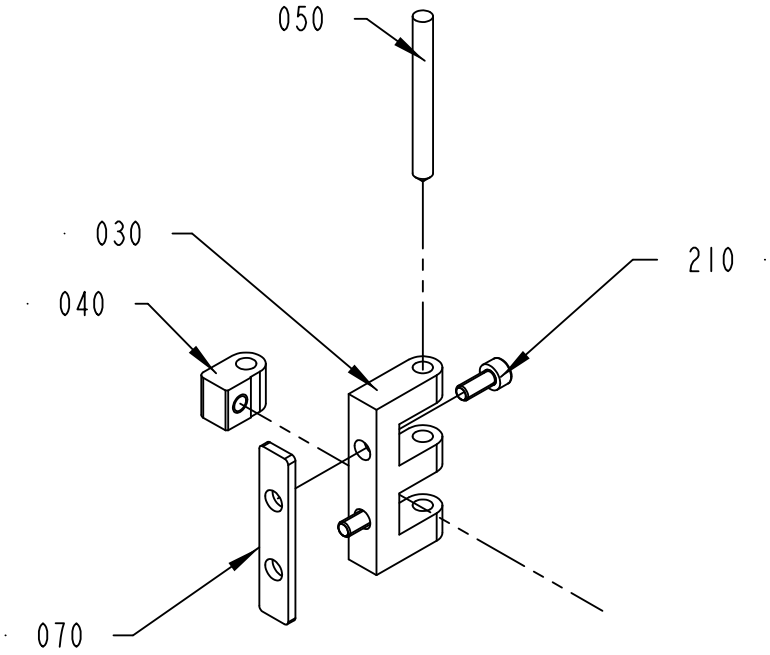

DETAIL B
SCALE 1:2

2838103-2
399113

ECM: 410115 - 20090904
Group number: 2838103-0200
Assembly Drawing: 2838103-2_1_AA

Pos	Part No	UN	Qty	Description	Page No
-					
010	3019716-0000		1	DOOR	
030	1035792-0000		2	E-HINGE	
040	1129770-0000		4	BLOCKING PIECE	
050	988685-0000		2	PIN	
060	90143-0068	MM	2100	RUBBER STRIP EMKA 1011-06	
070	1517182-0000		2	SPACER	
200	312115-0366		4	SCREW ISO4762 M6X12 A4 80	
210	312115-0327		4	SCREW ISO4762 M5X12 A4 80	
230	315105-0153		4	WASHER PLAIN, 6,4X12X1,5 A4 BRB	

Pos	Part No	UN	Qty	Description	Page No

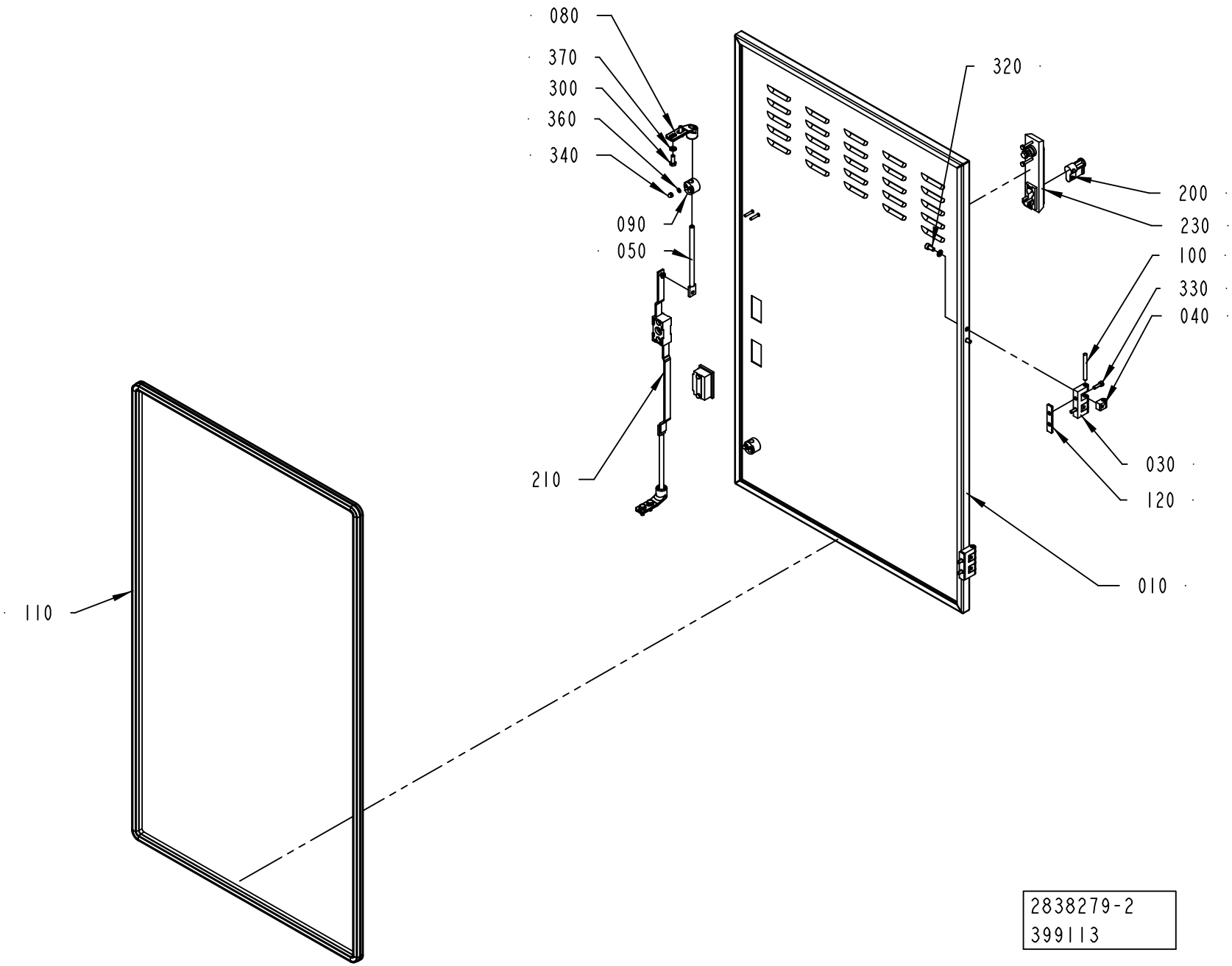
080
370
300
360
340
090
050
210
320
200
230
100
330
040
030
120
010
110
2838279-2
399113

ECM: 410116 - 20090904
Group number: 2838279-0200
Assembly Drawing: 2838279-2_1_AA

Pos	Part No	UN	Qty	Description	Page No
-					
010Â	3019717-0000		1	DOOR	
030	1035792-0000		2	E-HINGE	
040	1129770-0000		4	BLOCKING PIECE	
050	2861857-0000		2	LOCKING ARM	
080	1538868-0000		2	BRACKET	
090	1129274-0000		2	GUIDE LUG	
100	988685-0000		2	PIN	
110	90143-0068	MM	3200	RUBBER STRIP EMKA 1011-06	
120	1517182-0000		2	SPACER	
200	90237-0128		1	LOCK CYLINDER, 1109-SU125	
210	90237-0153		1	LOCK HOUSING, 1121-U26-0B	
230	90237-0176		1	TURNING HANDLE, 1125-U190-A	
300	312105-0368		4	SCREW, M6S ISO 4017 M6X16 A4 80	
320	312115-0366		4	SCREW ISO4762 M6X12 A4 80	
330	312115-0329		4	SCREW ISO4762 M5X16 A4 80	
340	312705-0312		4	NUT HEX. DOMED CAP MHM-6 M4 A280	
360	315105-0136		4	WASHER PLAIN, 4,3X9X0,8 A4 BRB	
370	315105-0153		8	WASHER PLAIN, 6,4X12X1,5 A4 BRB	

Pos	Part No	UN	Qty	Description	Page No

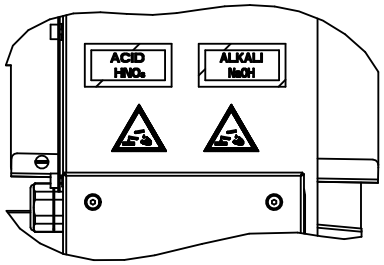

RIGHT VIEW (LABELS POSITION)
1:5

ECM: 461789 - 20101001
Group number: 2840686-0200
Assembly Drawing: 2840686-2_1_AD

Pos	Part No	UN	Qty	Description	Page No
ANSI					
220	359725-0104		2	WARNING SIGN ANSI (H), CHEMICAL HAZARD	
230	90459-6083		2	WARNING SIGN ANSI (H), HAZARDOUS ROTATIN	
ISO					
220	359705-0003		2	WARNING SIGN ISO, DANGEROUS CHEMICALS	
230	90459-6084		2	WARNING SIGN ISO, HAZARDOUS ROTATING BEL	
Common Parts					
010	3046754-0000		1	FRONT COVER	
020	3116333-0000		1	GLASS PANE	
030	3046475-0000		1	COVER	
040	3037880-0000		1	TUNNEL	
050	3037883-0000		1	SPLASH PLATE	
060	3046476-0000		1	COVER	
070	2864045-0000		1	DRAIN PLATE	
080	3037881-0000		1	COVER	
085	3037882-0000		1	COVER	
090	3046478-0000		1	COVER	
095	3112979-0000		1	DOOR	
100	2864048-0000		1	SPLASH PLATE	
110	531616-0000		2	HOLDER	
120	3019720-0000		1	INSERT	
130	3019721-0000		1	INSERT	
140	2566211-0000		1	LABEL	
145	2566212-0000		1	LABEL	
150	90287-0075		4	SCREW SLOT. PAN HEAD LKCS M6X12	
160	90601-2046		20	CAPTIVE SCREW M6, GUTBG 6-4-12	
170	90601-2466		23	CAPTIVE SCREW M6, GUTBG 6-4-20	
180	1317228-0000		4	WASHER	
200	312105-0366		8	SCREW, M6S ISO 4017 M6X12 A4 80	
210	315105-0153		16	WASHER PLAIN, 6,4X12X1,5 A4 BRB	
215	312605-0316		8	HEXAGON NUT, M6M M6 A280	
240	90143-0043	MM	500	STRIP SELLOTAPE 3,2X6MM	
250	90143-0068	MM	1000	RUBBER STRIP EMKA 1011-06	
310	353250-0040		2	GLAND LOCK NUT, M40X1,5	
330	90458-0410		2	CABLE GLAND, VK 24055Y	
340	315751-0103		4	RETAINING RING FOR SHAFT DIN 471 6X 0.7C	
350	312155-0378		4	SCREW DIN 7991 MF6S M6X40 A4 70	
600	90157-0041	L	1	SEALING COMPOUND, RHODORSEAL 5651	

Pos	Part No	UN	Qty	Description	Page No

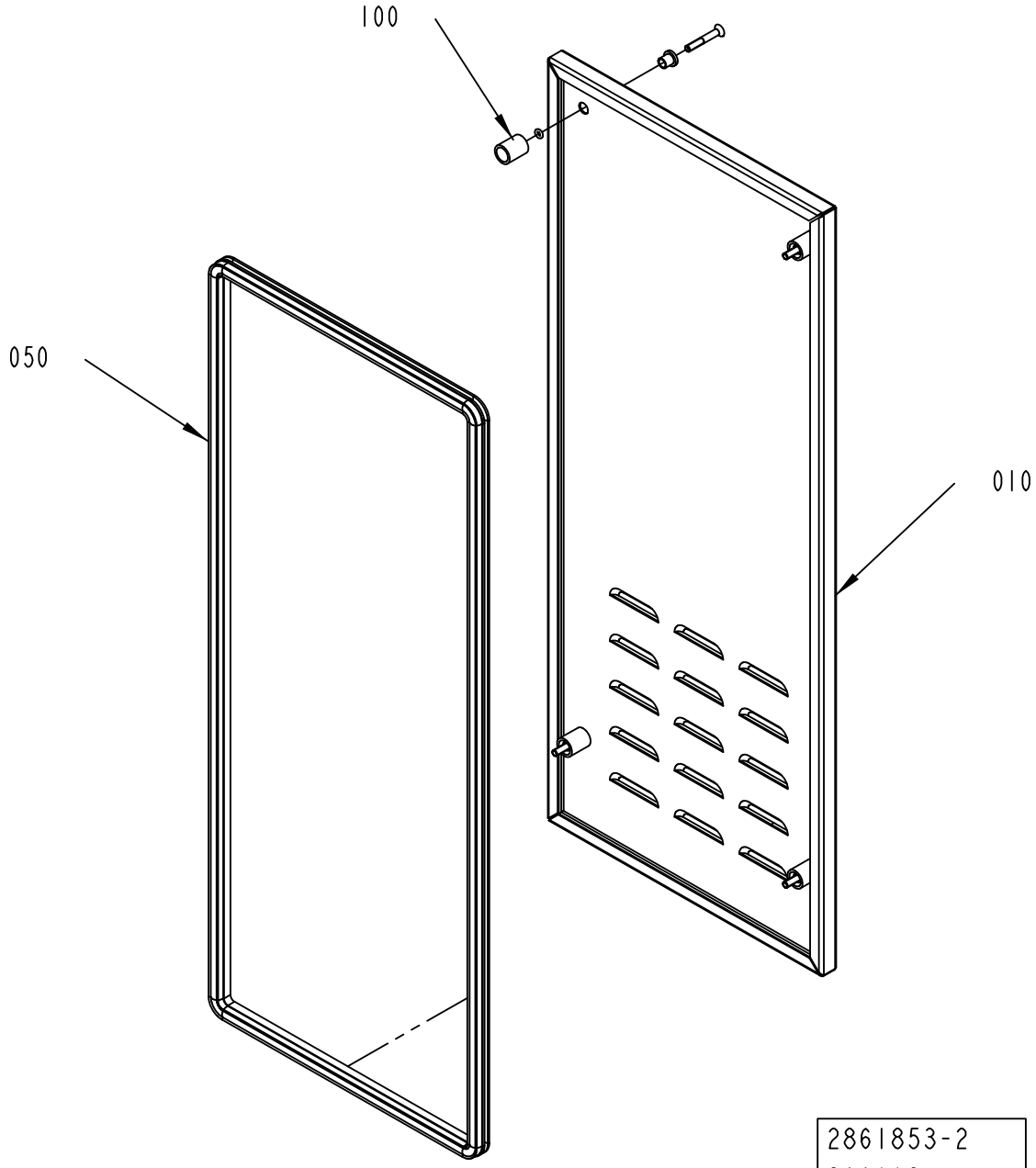
100
050
010
2861853-2
399113

ECM: 410119 - 20090904
Group number: 2861853-0200
Assembly Drawing: 2861853-2_1_AA

Pos	Part No	UN	Qty	Description	Page No
-					
010Â	3019718-0000		1	DOOR	
050	90143-0068	MM	2300	RUBBER STRIP EMKA 1011-06	
100	90226-0458		4	MOUNTING SCREW	

Pos	Part No	UN	Qty	Description	Page No

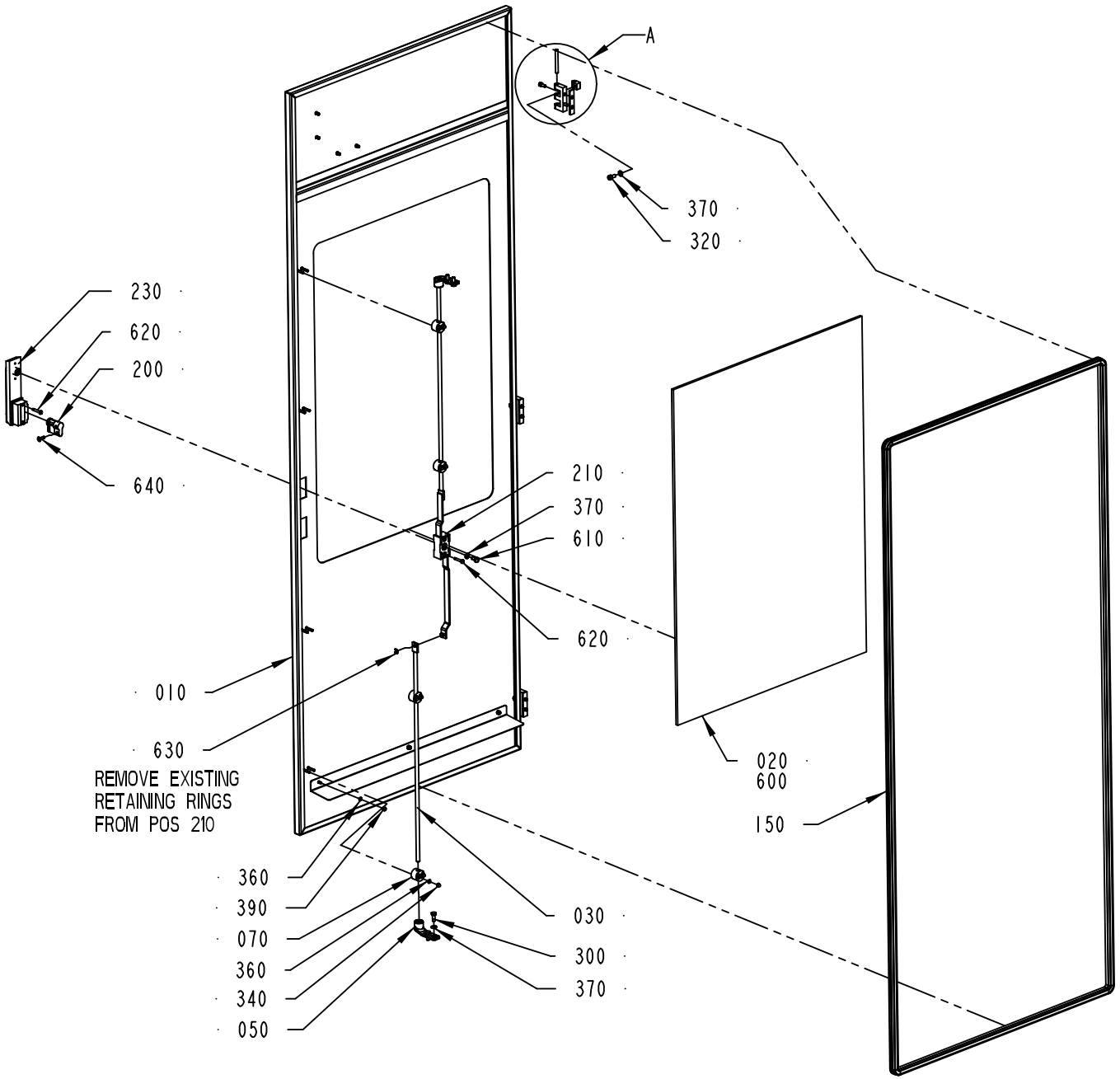

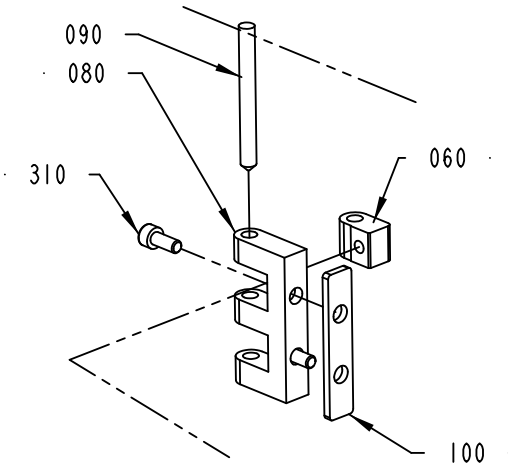

DETAIL A
SCALE 1:2

2861854-2
474706

ECM: 482027 - 20110401
Group number: 2861854-0200
Assembly Drawing: 2861854-2_1_AC

Pos	Part No	UN	Qty	Description	Page No
-					
10	3046759-0000		1	DOOR	
20	3116330-0000		1	GLASS PANE	
30	2838288-0000		2	DOOR	
50	1538868-0000		2	BRACKET	
60	1129770-0000		3	BLOCKING PIECE	
70	1129274-0000		4	GUIDE LUG	
80	1035792-0000		3	E-HINGE	
90	988685-0000		3	PIN	
100	1517182-0000		3	SPACER	
150	90143-0068	MM	4200	RUBBER STRIP EMKA 1011-06	
200	90237-0128		1	LOCK CYLINDER, 1109-SU125	
210	90600-0477		1	LOCK HOUSING, 1121-U139	
230	90600-5084		1	LEVER MECHANISM, 1125-SU404	
300	312105-0368		4	SCREW, M6S ISO 4017 M6X16 A4 80	
310	312115-0327		6	SCREW ISO4762 M5X12 A4 80	
320	312115-0366		3	SCREW ISO4762 M6X12 A4 80	
340	312705-0312		8	NUT HEX. DOMED CAP MHM-6 M4 A280	
360	315105-0136		11	WASHER PLAIN, 4,3X9X0,8 A4 BRB	
370	315105-0153		8	WASHER PLAIN, 6,4X12X1,5 A4 BRB	
390	312812-0312		3	HEXAGON NUT, NY-LOCK M4 A4 80	
600	90157-0041	L	1	SEALING COMPOUND, RHODORSEAL 5651	
610	312105-0366		1	SCREW, M6S ISO 4017 M6X12 A4 80	
620	312504-0348		4	TAPPING SCREW, ISO7049 A2-ST4,2X25-C-Z	
630	315755-0107		2	RETAINING RING SHAFT DIN 6799 5 SS	
640	312155-0329		1	SCREW DIN 7991 MF6S M5X16 A4 70	

Pos	Part No	UN	Qty	Description	Page No

Machine Type | Group Description | Used-In | Group Number | Page No

DOOR SAFETY SWITCH

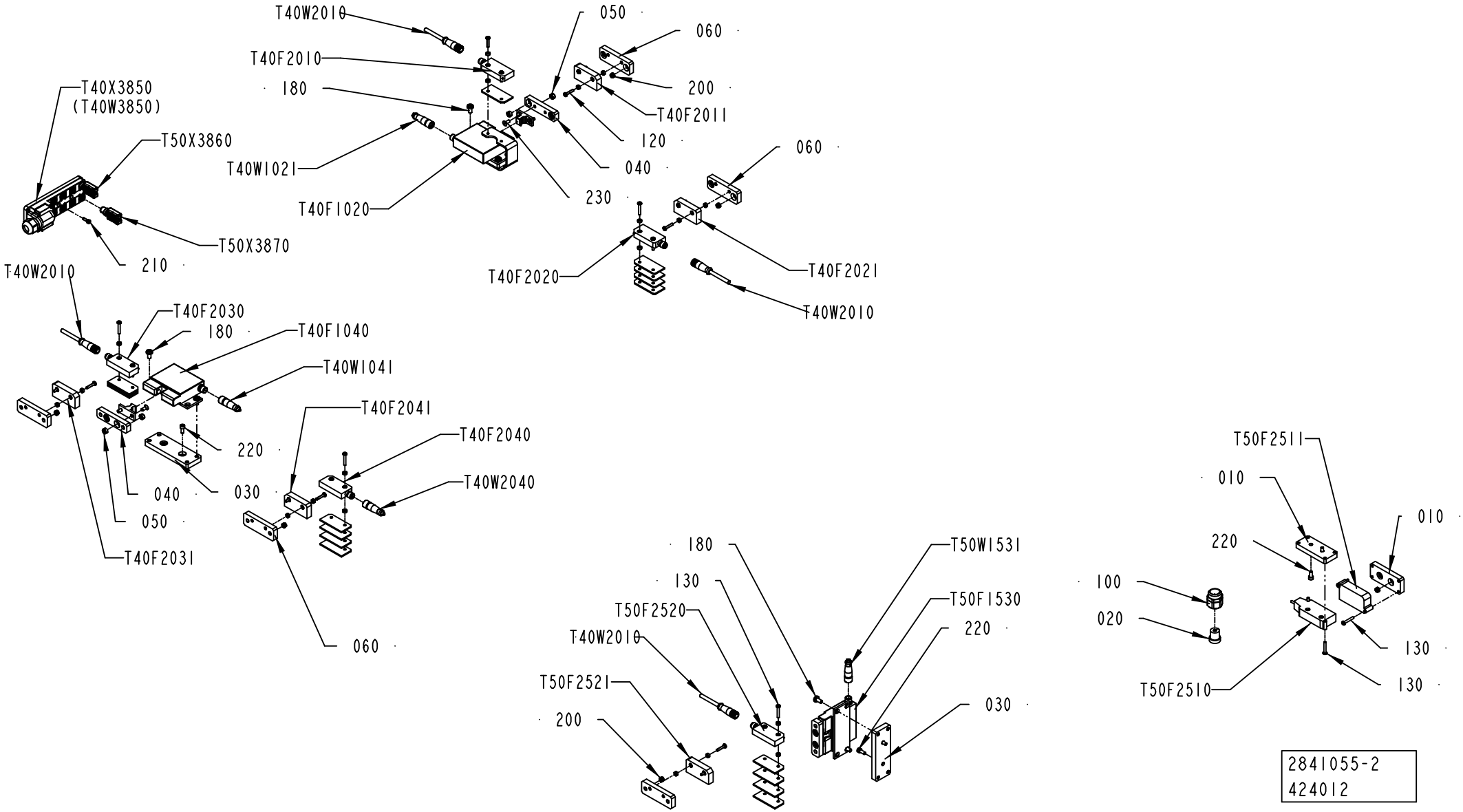

ECM: 424089 - 20091001
Group number: 2841055-0200
Assembly Drawing: 2841055-2_1_AB

Pos	Part No	UN	Qty	Description	Page No
-					
010	3031346-0000		2	PLATE	
020	3032222-0000		1	INSERT	
030	3033511-0000		3	SPACER PLATE	
040	3033512-0000		3	SPACER PLATE	
050	575034-0000		12	ROUND NUT	
060	3046477-0000		5	SPACER PLATE	
070	3046757-0000		1	BRACKET	
100	90458-0407		1	CABLE GLAND, VK 22553Y	
120	90459-4164		12	SAFETY SCREW, SM4X20	
130	90459-4165		12	SAFETY SCREW, SM4X25	
180	90600-2563		6	SCREW PANHEAD SNAKE EYE SPANNER, M6X12	
200	312812-0314		12	HEXAGON NUT, NY-LOCK M5 A4 80	
210	312115-0291		2	SCREW ISO4762 M4X12 A4 80	
220	312115-0327		8	SCREW ISO4762 M5X12 A4 80	
230	312155-0327		6	SCREW DIN 7991 MF6S M5X12 A4 70	
T40F1020	90600-5852		1	DOOR LOCKING DEVICE, DALTON M315	
T40F1040	90600-5852		1	DOOR LOCKING DEVICE, DALTON M315	
T40F2010	90459-4142		1	SAFETY SENSOR, ADAM M12, 20-051-00	
T40F2011	90458-2794		1	SAFETY SENSOR, EVA 20-046-00	
T40F2020	90459-4142		1	SAFETY SENSOR, ADAM M12, 20-051-00	
T40F2021	90458-2794		1	SAFETY SENSOR, EVA 20-046-00	
T40F2030	90459-4142		1	SAFETY SENSOR, ADAM M12, 20-051-00	
T40F2031	90458-2794		1	SAFETY SENSOR, EVA 20-046-00	
T40F2040	90459-4142		1	SAFETY SENSOR, ADAM M12, 20-051-00	
T40F2041	90458-2794		1	SAFETY SENSOR, EVA 20-046-00	
T50F1530	90600-5852		1	DOOR LOCKING DEVICE, DALTON M315	
T50F2510	90600-5926		1	SAFETY SENSOR, ADAM E M12 5M CABLE	
T50F2511	90459-4089		1	SAFETY SENSOR, EVA E, 20-046-06	
T50F2520	90459-4142		1	SAFETY SENSOR, ADAM M12, 20-051-00	
T50F2521	90458-2794		1	SAFETY SENSOR, EVA 20-046-00	
T40W1021	90459-4252		1	CABLE M12-C101, 20-056-10	
T40W1041	90459-4252		1	CABLE M12-C101, 20-056-10	
T40W2010	90459-4876		1	FOCUS JUMPER CABLE M12 5P 3M, 20-056-21	
T40W2020	90459-4876		1	FOCUS JUMPER CABLE M12 5P 3M, 20-056-21	
T40W2030	90459-4876		1	FOCUS JUMPER CABLE M12 5P 3M, 20-056-21	
T40W2040	90459-4876		1	FOCUS JUMPER CABLE M12 5P 3M, 20-056-21	
T50W1531	90459-4252		1	CABLE M12-C101, 20-056-10	
T50W2520	90459-4876		1	FOCUS JUMPER CABLE M12 5P 3M, 20-056-21	
T40X3850	90600-4876		1	CONNECTION BOX TINA 8A , 20-054-05	
T40X3860	90459-5627		1	CONNECTION, TINA 1-A	
T40X3870	90459-5627		1	CONNECTION, TINA 1-A	

Pos	Part No	UN	Qty	Description	Page No

Machine Type	Group Description	Used-In	Group Number	Page No

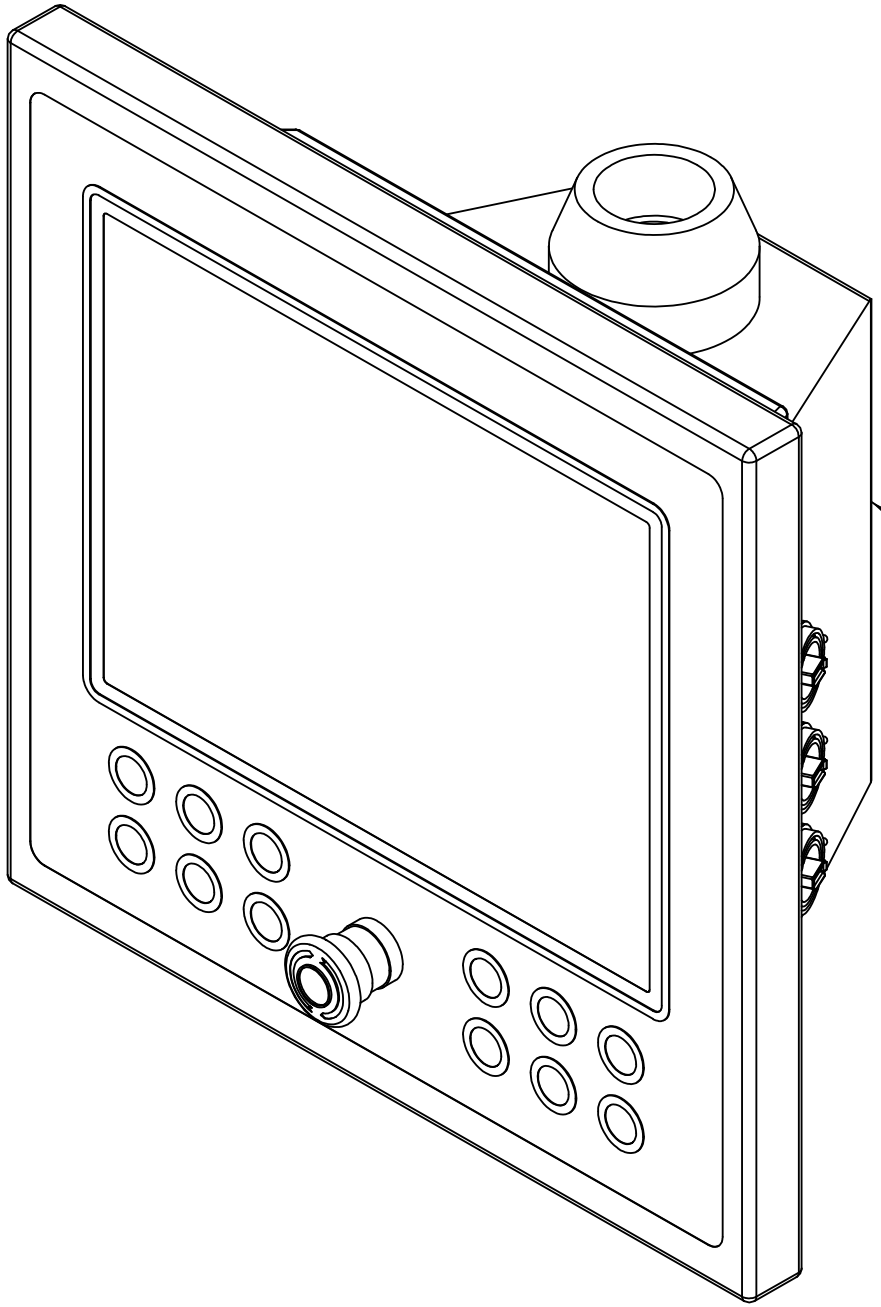

020

(P60W0730)
(P60W1000)
(P60W1020)

2937883-2
399113

ECM: 410107 - 20090904
Group number: 2937883-0200
Assembly Drawing: 2937883-2_1_AA

Pos	Part No	UN	Qty	Description	Page No
-					
020	90600-5002		1	OPERATOR PANEL, 5AP920_1505-K42-C0	
	90458-1150		*1*	*CABLE GLAND, RG M63/4*	
	90600-4778		*1*	*USB CABLE SET, 5A9000.54*	
	90600-4787		*1*	*USB CABLE SET, 5A9000.55*	
	90600-4980		*1*	*AP LINK SDL RECEIVER, 5DLSDL.1000-00*	
	90600-4981		*1*	*DEVICENET & ETHERN./IP MOD., 5E9000.44*	
	90600-4982		*1*	*PUSH BUTTON PCB, 4E0011.01-K17*	
	90600-5000		*1*	*INTERNAL PANEL CABLE SET, 5A9000.57*	
	90600-5003		*1*	*PANEL FRONT, 5AP920.1505-K64*	
	2872847-0000		*1*	*LABEL*	

Pos	Part No	UN	Qty	Description	Page No

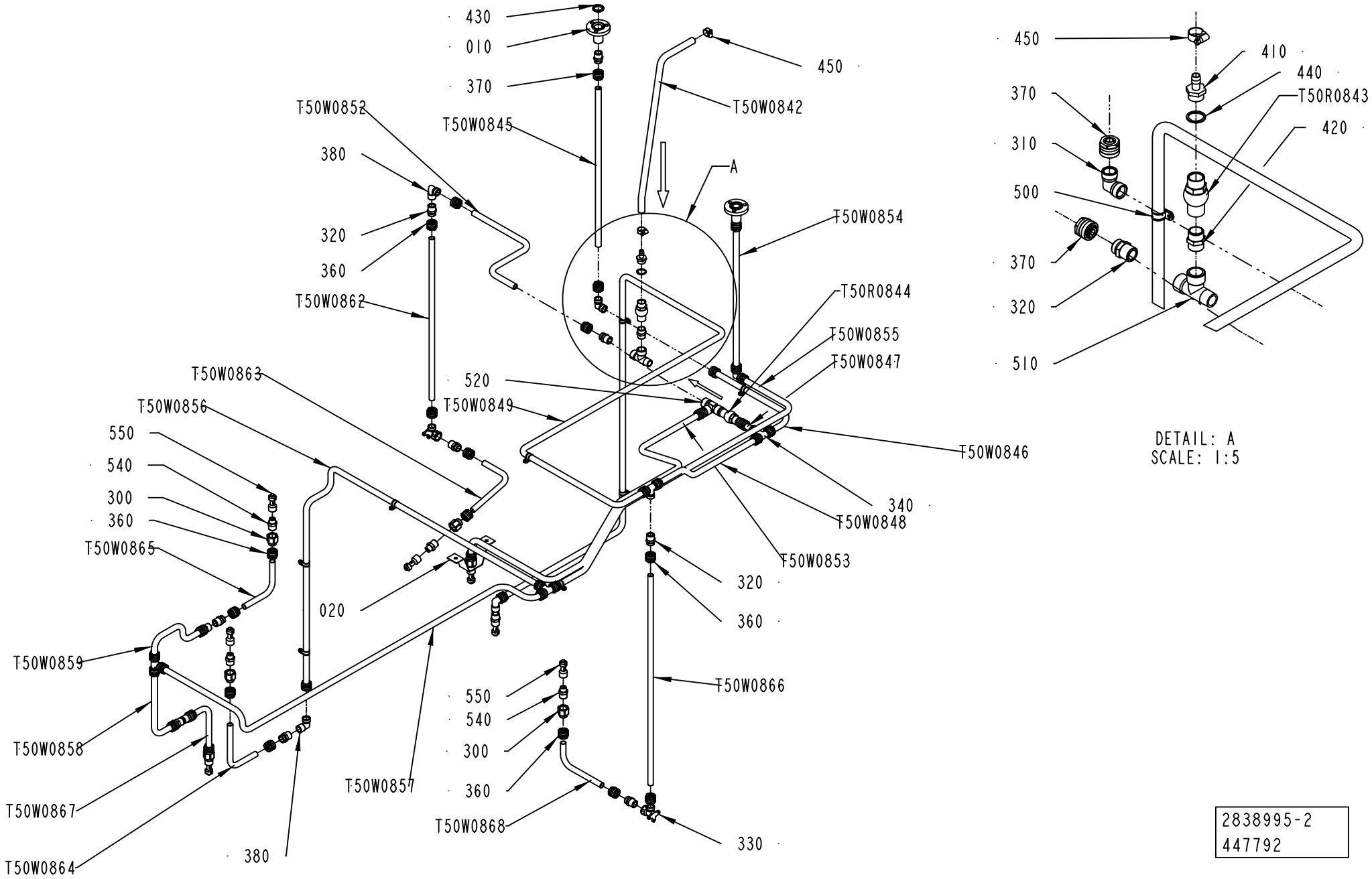

2838995-2
447792

ECM: 472125 - 20110101
Group number: 2838995-0200
Assembly Drawing: 2838995-2_1_AB

Pos	Part No	UN	Qty	Description	Page No
-					
010	2898134-0000		2	FLANGE	
020	2874823-0000		1	SUPPORT	
300	90600-4074		6	HEXAGON NIPPLE, WIROFLEX 260336	
310	90600-4075		2	ELBOW PIPE CONN., WIROFLEX 260121	
320	90600-4076		14	HEXAGON NIPPLE, WIROFLEX 260374	
330	90600-4077		2	ELBOW PIPE CONN., WIROFLEX 260435	
340	90600-4078		4	T-PIPE, EXT. THREAD, 1/2",WIROFL. 260152	
360	90600-4080		14	ADAPTER, WIROFLEX 260480	
370	90600-4081		26	ADAPTER, WIROFLEX 260459	
380	90600-4082		3	ELBOW PIPE CONN., WIROFLEX 260299	
410	342901-0105		1	HOSE NIPPLE, EXT.THR. G1/2-12 MM	
420	342700-0113		2	NIPPLE, EXT.THREAD, HEXAGON, G1/2-G1/2	
430	315229-0103		2	SQUARE RING, 23,1X30,1X3,7 MM 1" FDA	
440	315239-0113		1	NYLON WASHER G1/2, 1/2RRP	
450	342991-0102		2	HOSE CLIP,WORM DRIVE TYPE (13)-20	
500	90165-0039		8	PIPE CLAMP D=15 MM, GSK15/12	
510	90140-0011		1	T-PIPE, INT. THREAD, NO. 2070-1/2-1/2	
520	90140-0010		1	T-PIPE, INT. THREAD, 20031/2	
540	90330-0019		7	NIPPLE, EXT.THREAD, HEXAGON, R1/2-R3/8	
550	90600-2646		7	ROT.SPRAY NOZZLE, 599.186.1Y.AF.00.0	
T50R0843	90230-0042		1	NON-RETURN VALVE 1/2"	
T50R0844	90230-0042		1	NON-RETURN VALVE 1/2"	
T50W0842	90166-0121	MM	1500	HOSE	
T50W0845	90600-3000	M	0	HOSE 16X2MM, WIROFLEX 26002 2	
T50W0846	90600-3000	M	0	HOSE 16X2MM, WIROFLEX 26002 2	
T50W0847	90600-3000	M	0	HOSE 16X2MM, WIROFLEX 26002 2	
T50W0848	90600-3000	M	0	HOSE 16X2MM, WIROFLEX 26002 2	
T50W0849	90600-3000	M	3	HOSE 16X2MM, WIROFLEX 26002 2	
T50W0852	90600-3000	M	0	HOSE 16X2MM, WIROFLEX 26002 2	
T50W0853	90600-3000	M	1	HOSE 16X2MM, WIROFLEX 26002 2	
T50W0854	90600-3000	M	0	HOSE 16X2MM, WIROFLEX 26002 2	
T50W0855	90600-3000	M	1	HOSE 16X2MM, WIROFLEX 26002 2	
T50W0856	90600-3000	M	1	HOSE 16X2MM, WIROFLEX 26002 2	
T50W0857	90600-3000	M	1	HOSE 16X2MM, WIROFLEX 26002 2	
T50W0858	90600-3000	M	0	HOSE 16X2MM, WIROFLEX 26002 2	
T50W0859	90600-3000	M	0	HOSE 16X2MM, WIROFLEX 26002 2	
T50W0862	3046758-0000		1	PIPE	
T50W0863	2872390-0000		1	PIPE	
T50W0864	2872390-0000		1	PIPE	
T50W0865	3046756-0000		1	PIPE	
T50W0866	3046474-0000		1	PIPE	
T50W0867	2872387-0000		1	PIPE	
T50W0868	2872387-0000		1	PIPE	

Machine Type | Group Description | Used-In | Group Number | Page No

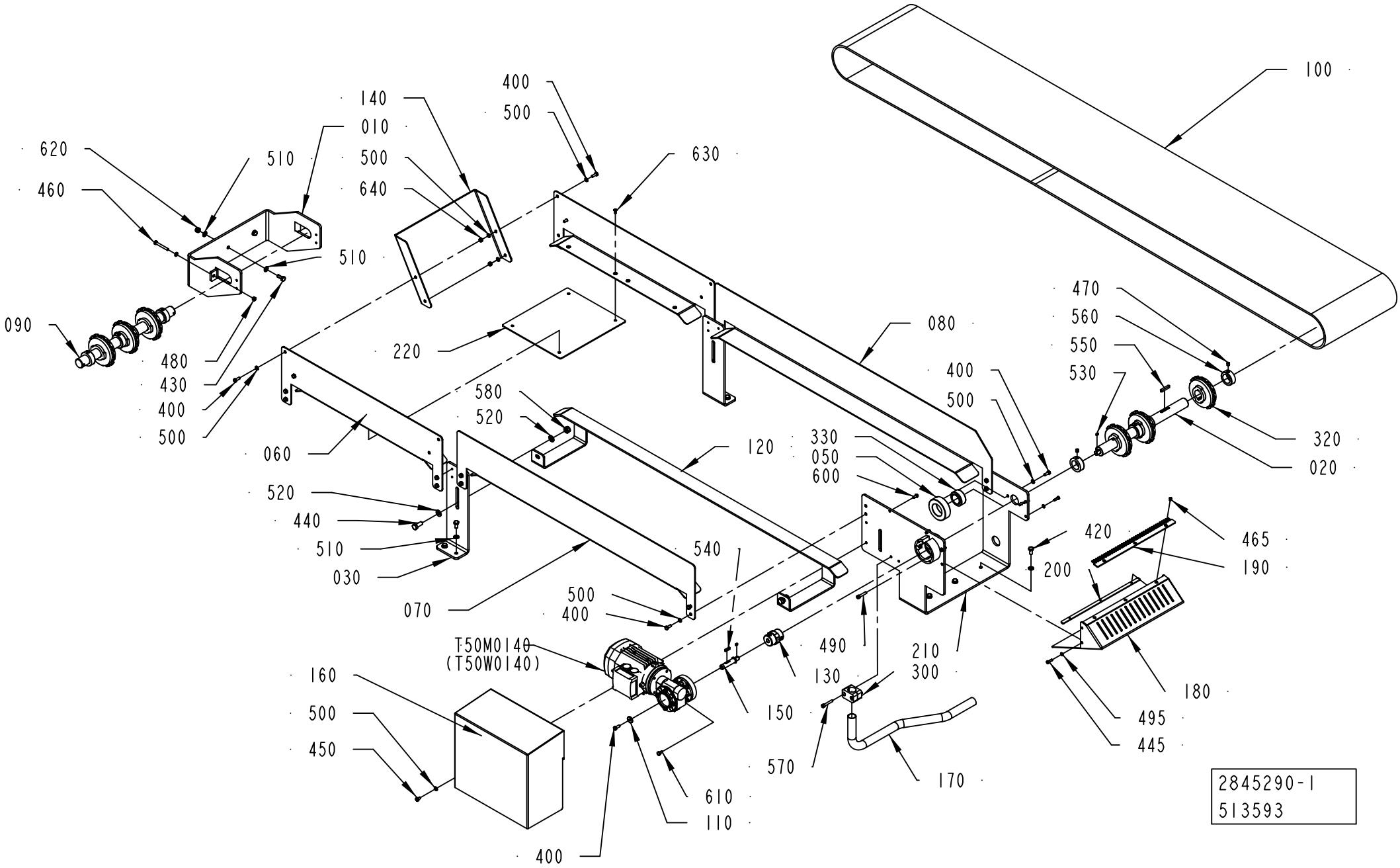
100
140
010
500
640
400
500
630
620
460
510
510
090
480
430
400
500
220
080
470
560
550
530
400
500
320
020
580
520
120
330
050
600
060
520
440
510
030
070
540
500
400
T50M0140
(T50W0140)
490
210
300
130
150
570
170
420
465
190
200
180
495
445
160
500
450
610
110
400
2845290-1
513593

ECM: 519562 - 20120101
Group number: 2845290-0100
Assembly Drawing: 2845290-1_1_AJ

Pos	Part No	UN	Qty	Description	Page No
-					
010Â	2844597-0000		1	BRACKET	
020	2845292-0000		1	SHAFT	
030	2844598-0000		2	BRACKET	
050	1348386-0000		2	BEARING HOUSING	
060	2845288-0000		2	SIDE PLATE	
070	2838998-0000		1	SIDE PLATE	
080	2845289-0000		1	SIDE PLATE	
090	2849959-0000		1	SHAFT	
100	2845294-0000		1	CONVEYOR CHAIN	
110	2529670-0000		1	WASHER	
120	2874647-0000		1	SUPPORT	
130	445848-0000		1	ELASTIC COUPLING	
140	2864144-0000		1	BACK PLATE	
150	2508200-0000		1	SHAFT	
160	2841058-0000		1	MOTOR COVER	
170	3058498-0000		1	PIPE	
180	2946785-0000		1	OUTFEED CONVEYOR	
190	2947016-0000		1	GUARD PLATE	
200	2947414-0000		1	GUARD PLATE	
210	2974829-0000		1	SUPPORT	
220	3126678-0000		1	PLATE	
300	90165-0048		1	PIPE CLAMP, D=25 MM, RAP325X	
320	90344-0073		6	TOOTHED WHEEL	
330	90240-0315		2	SPHER. BEARING, 30X47X22 PLASTIC MM	
400	312105-0368		11	SCREW, M6S ISO 4017 M6X16 A4 80	
420	312105-0449		7	SCREW, M6S ISO 4017 M8X16 A4 80	
430	312105-0455		3	SCREW, M6S ISO 4017 M8X30 A4 80	
440	312105-0493		2	SCREW, M6S ISO 4017 M10X25 A4 80	
445	312105-0329		4	SCREW, M6S ISO 4017 M5X16 A4 80	
450	312105-0364		14	SCREW, M6S ISO 4017 M6X10 A4 80	
460	312109-0380		2	SCREW, M6S ISO 4017 M6X50 A4 80	
465	312155-0287		3	SCREW DIN 7991 MF6S M4X8 A4 70	
470	312318-0443		10	SET SCREW, CUP END ISO4029 M8X8 A4	
480	312605-0316		2	HEXAGON NUT, M6M M6 A280	
490	312115-0374		2	SCREW ISO4762 M6X30 A4 80	
495	315105-0146		4	WASHER PLAIN, 5,3X10X1 A4 BRB	
500	315105-0153		34	WASHER PLAIN, 6,4X12X1,5 A4 BRB	
510	315105-0165		13	WASHER PLAIN, 8,4X16X1,6 A4 BRB	
520	315106-0173		4	WASHER PLAIN, M10 ISO7089-10-200 HV A4	
530	315705-0164		2	PARALLEL KEY W. ROUND ENDS, 4X4X8 MM	
540	315705-0201		1	PARALLEL KEY W. ROUND ENDS, 5X5X20 MM	
550	315705-0238		3	PARALLEL KEY W. ROUND ENDS, 6X6X36 MM	
560	315741-0122		8	RETAINING RING, DIN 705 A2 30	
570	312115-0376		2	SCREW ISO4762 M6X35 A4 80	
580	312812-0320		2	HEXAGON NUT, NY-LOCK M10 A4 80	
600	90458-0072		2	SCREW ISO 7380 S M6X12 A2	
610	312105-0366		4	SCREW, M6S ISO 4017 M6X12 A4 80	
620	312812-0318		3	HEXAGON NUT, NY-LOCK M8 A4 80	
630	312155-0327		4	SCREW DIN 7991 MF6S M5X12 A4 70	
640	312812-0316		4	HEXAGON NUT, NY-LOCK M6 A4 80	
T50M0140	90459-6323		1	GEARS, WORM MOTOR VF 30F2 15 P63 B14 B3	

Machine Type	Group Description	Used-In	Group Number	Page No

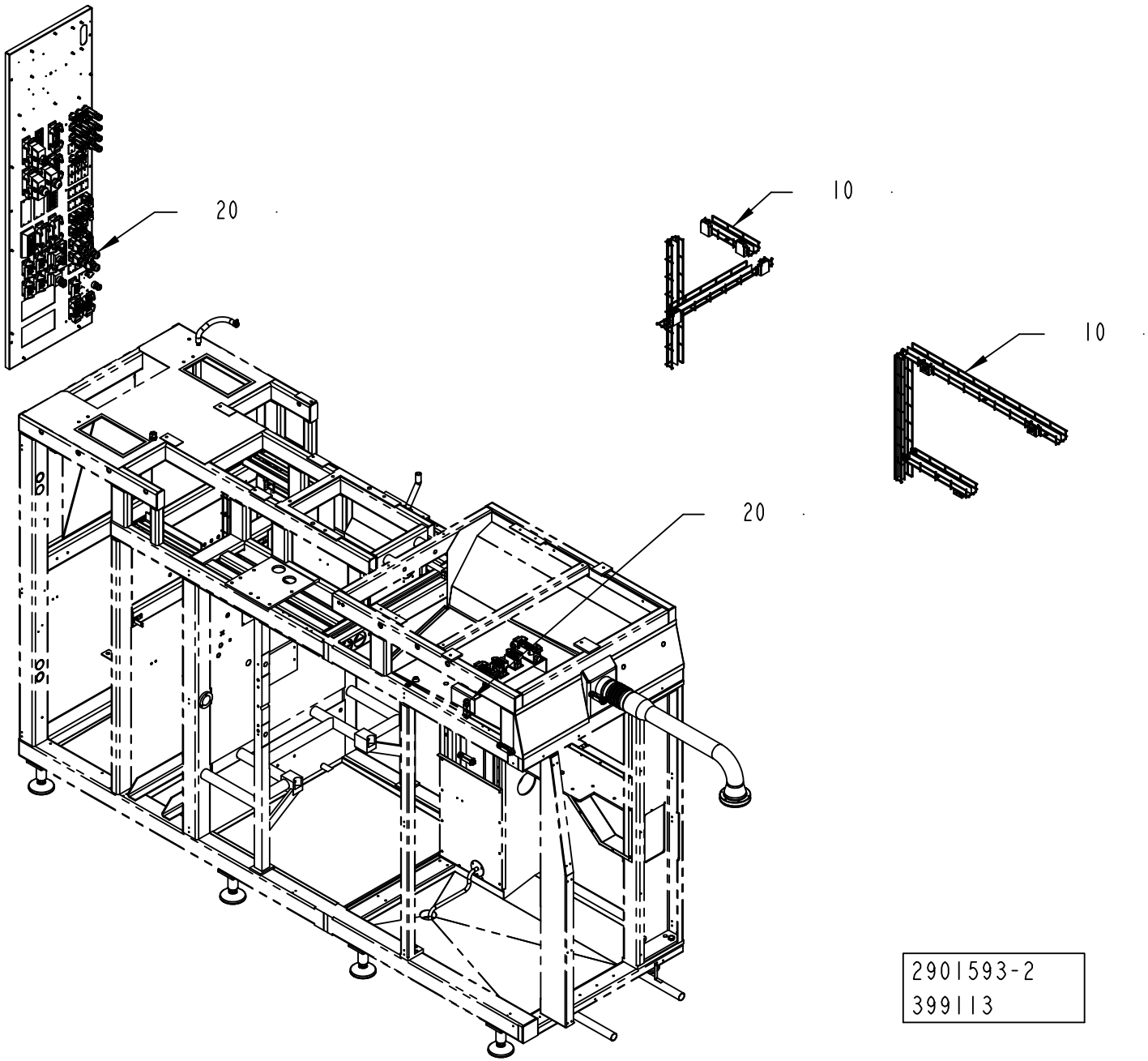
20
10
10
20
2901593-2
399113

ECM: 442572 - 20100701
Group number: 2901593-0200
Assembly Drawing: 2901593-2_1_AA

Pos	Part No	UN	Qty	Description	Page No
-					
010	2868614-0100		1	ELECTRIC EQUIPMENT	**2-171**
020	2899066-0300		1	CABLE HARNESS	**2-173, 2-175, 2-177, 2-179**

Pos	Part No	UN	Qty	Description	Page No

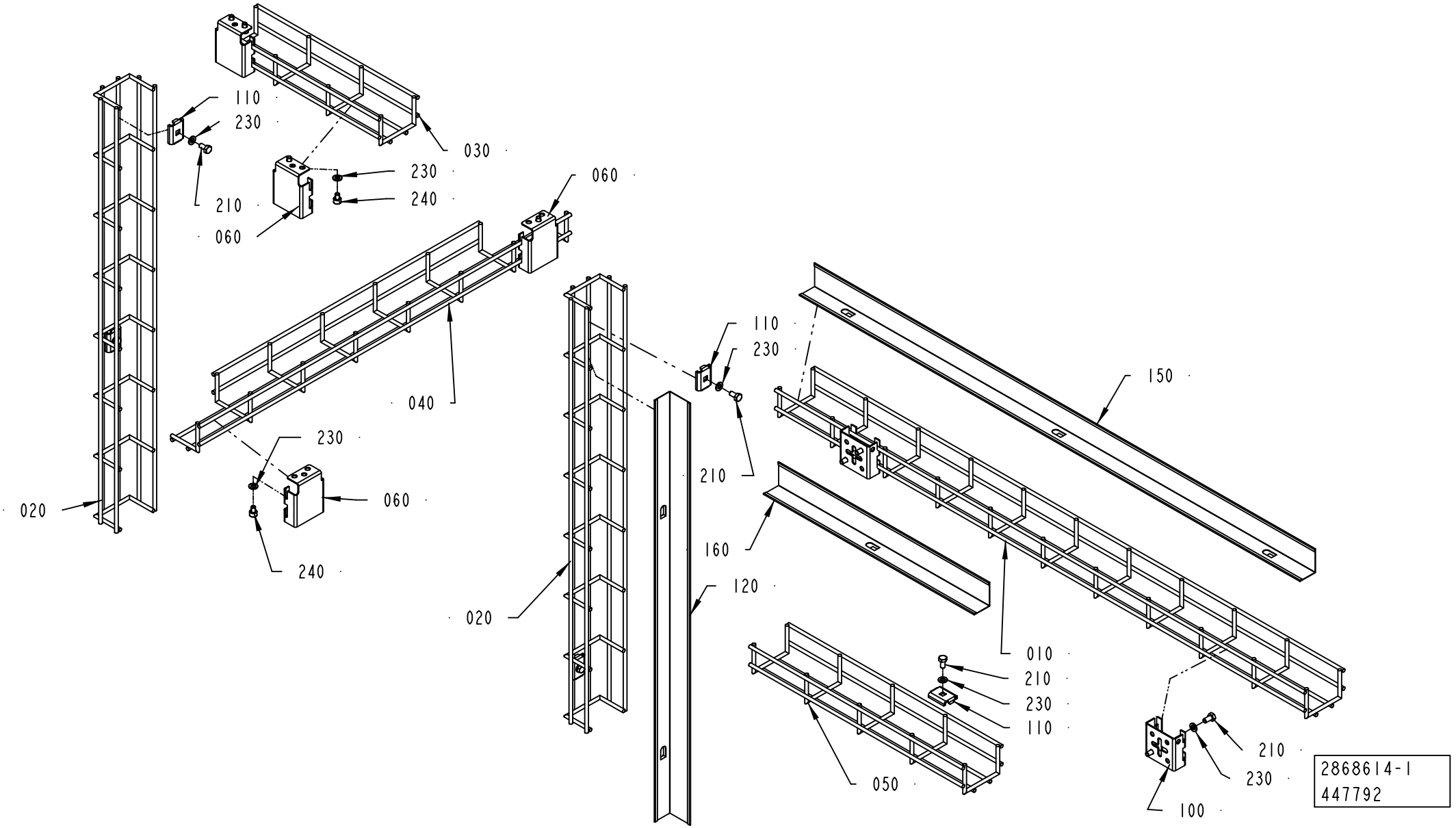
110
230
030
230
240
210
060
060
040
230
060
240
020
110
230
150
210
160
120
020
010
210
230
110
050
210
230
100
2868614-1
447792

ECM: 519837 - 20120101
Group number: 2868614-0100
Assembly Drawing: 2868614-1_1_AC

Pos	Part No	UN	Qty	Description	Page No
-					
010	2849955-0000		1	CABLE	
020	2868610-0000		2	CABLE DUCT	
030	2868611-0000		1	CABLE DUCT	
040	2868612-0000		1	CABLE DUCT	
050	2868613-0000		1	CABLE DUCT	
060	2876321-0000		4	SUPPORT	
100	90181-0190		2	CABLE DUCT, WALL BRACKET, B4 MINI	
110	90181-0183		5	CABLE DUCT, FITTING, B2	
120	2957795-0000		1	SECTIONING PLATE	
150	2957797-0000		1	SECTIONING PLATE	
160	2957798-0000		1	SECTIONING PLATE	
210	312105-0366		9	SCREW, M6S ISO 4017 M6X12 A4 80	
230	315105-0153		15	WASHER PLAIN, 6,4X12X1,5 A4 BRB	
240	312115-0362		6	SCREW ISO4762 M6X8 A4 80	

Pos	Part No	UN	Qty	Description	Page No

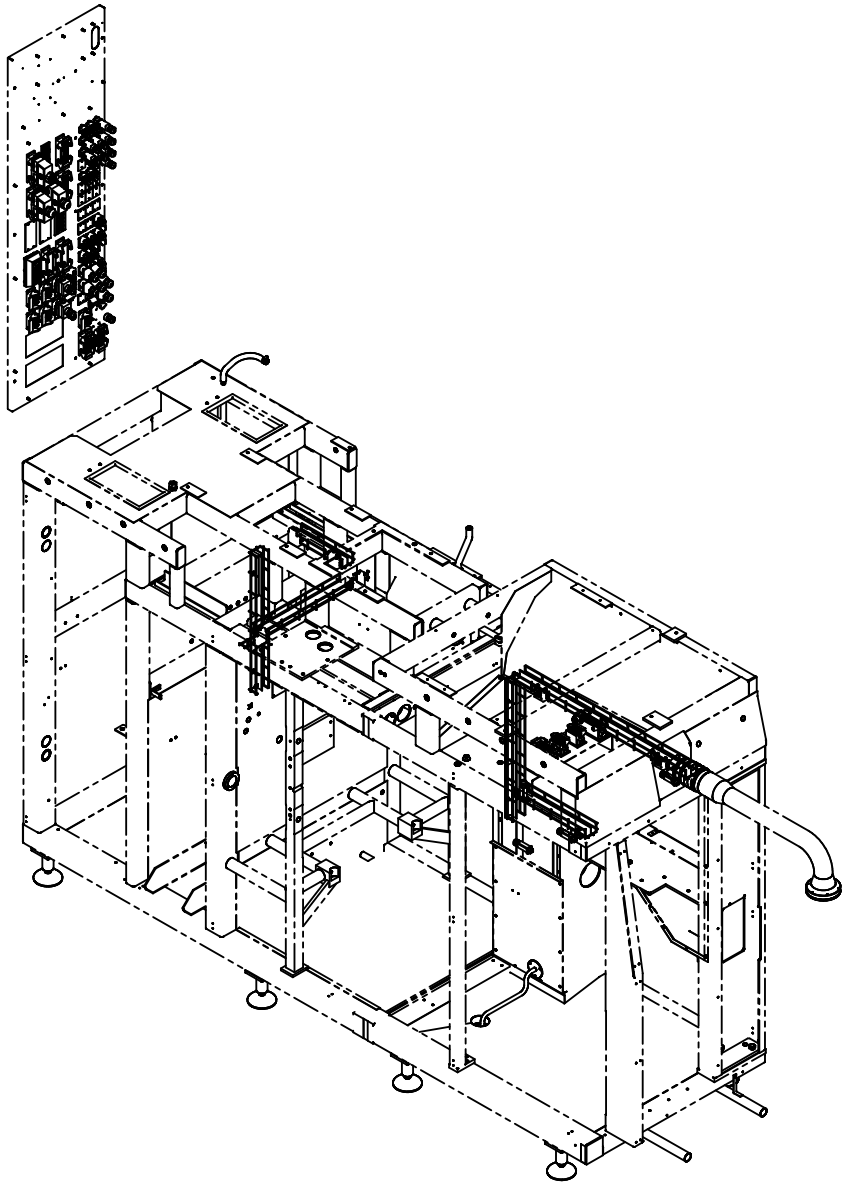

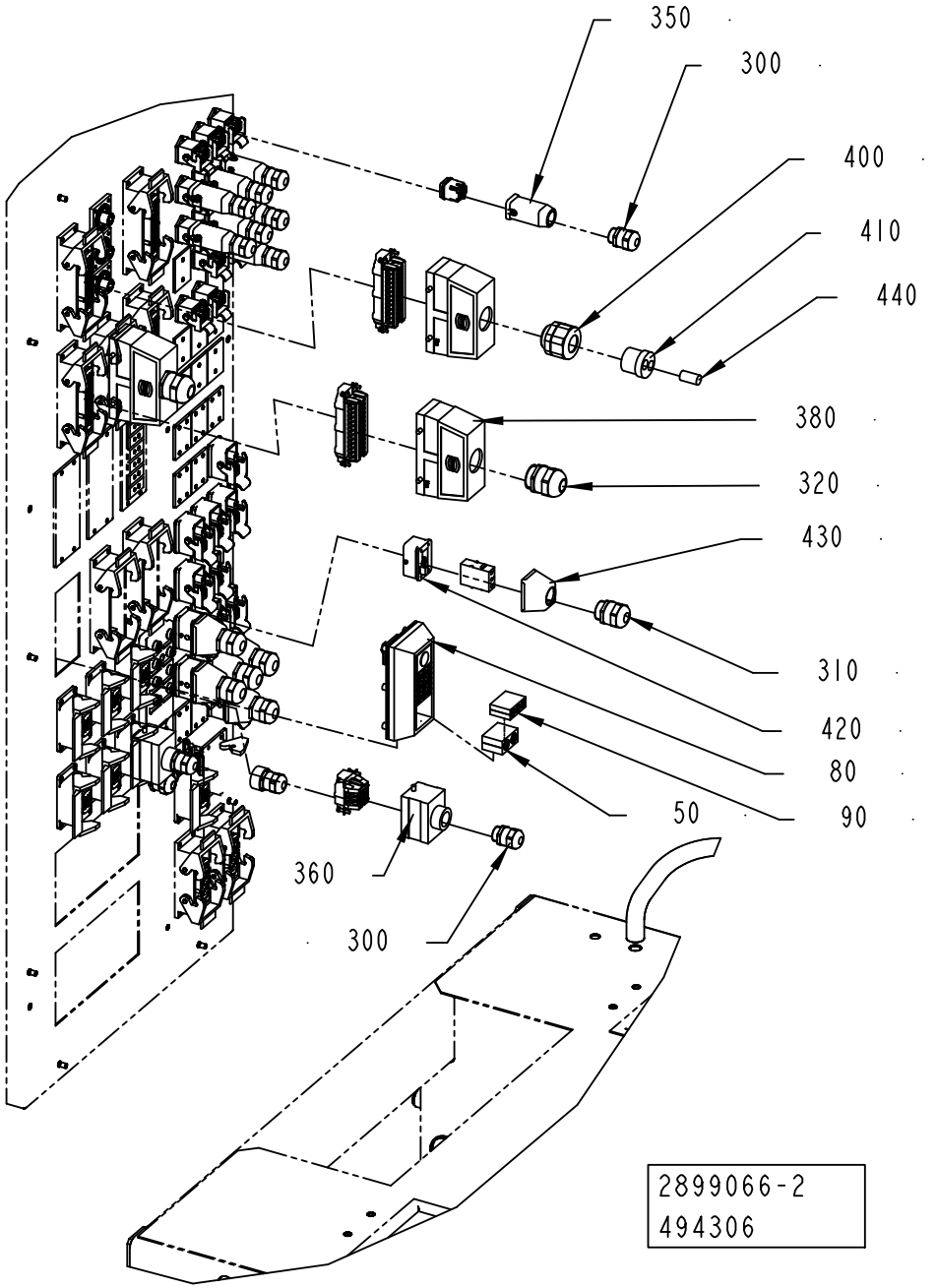
350
300
400
410
440
380
320
430
310
420
80
90
50
360
300
2899066-2
494306

ECM: 498344 - 20110701
Group number: 2899066-0300
Assembly Drawing: 2899066-2_1_AE

This list covers pages from 2-172 to 2-179

Pos	Part No	UN	Qty	Description	Page No
-					
010	90459-2550		3	I/O CONNECTOR 26 PIN MALE, 2090-K6CK-D26	
020	90326-0020		1	SOCKET, FEMALE YELLOW CR-AL, 03-22000A	
030	90459-6387		2	CONNECTOR 5-POL M12, RSCS 5/9	
040	90458-1179		2	FRAME, CF 32	
050	90458-1174		27	MULTI DIAMETER MODULE, CM 20W40	
060	90458-1173		4	MULTI DIAMETER MODULE, CM 30W40	
080	90458-1178		1	FRAME, CF 8	
090	90458-1175		4	MULTI DIAMETER MODULE, CM 15W40	
300	90458-0307		11	CABLE GLAND, M20X1,5, 5311 1020	
310	90458-0308		6	CABLE GLAND, M25X1,5, 5311 1030	
320	90458-0309		2	CABLE GLAND, M32X1,5, 5311 1040	
350	90459-3080		12	HOOD, HAN-BRID3A, 19 20 003 1443	
360	90459-6632		3	HOOD, TOP ENTRY, 6B, 19 30 006 1440	
380	90459-6636		3	HOOD, TOP ENTRY, 24B, 19 30 024 0427	
390	90110-0144		1	CONNECTOR, COVER, 8655MH0911LF	
400	90458-0423		1	CABLE GLAND, VK 23255Y	
410	353249-0060		1	INSERT, MULTI HOLE, E155M 2X13	
420	90459-3852		6	HOUSING, 09 14 001 0311	
430	90601-7130		6	HOOD, HAN MODULE COMPACT, 1914 0010 401	
440	353249-0312		1	SEALING PIN, 13,0X25	
450	90458-0316		1	CABLE GLAND, M25X1,5, 5311 1130	
460	353250-0025		1	GLAND LOCK NUT, M25X1,5	
A01W0500	90459-2530	M	8	DEVICENET CABLE THIN	
A01X2000	90110-0147		1	CONNECTOR, D-SUB, DE09S064TLF	
K80W0010	351150-0413	M	6	CABLE OLFLEX 4GX1,5 MM2 LIGHT/GREY	
K80W0020	351150-0413	M	6	CABLE OLFLEX 4GX1,5 MM2 LIGHT/GREY	
K80W0030	351150-0166	M	5	CABLE OLFLEX 4X4 MM2 LIGHT/GREY	
K80W1080	351150-0406	M	6	CABLE OLFLEX 7X0,75 MM2 LIGHT/GREY	
K80X0010	90459-6821		1	MALE INSERT HAN 4A, 0920 0042 611	
K80X0020	90459-6821		1	MALE INSERT HAN 4A, 0920 0042 611	
K80X0030	90601-6217		1	MALE INSERT, HAN 3 MOD-M-S 40A	
K80X0580	90110-0052		1	MALE INSERT, HAN E06, 0933 0062 601	
P60W0730	90600-3697		1	SDL FLEX CABLE 10M, 5CASDL.0100-03	
P60W1000	351150-0407	M	4	CABLE OLFLEX 12X0,75 MM2 LIGHT/GREY	
P60W1020	90459-2530	M	5	DEVICENET CABLE THIN	
T50V0600	90600-5249		1	FERRITE, B64290L616X38	
T50V0610	90600-5249		1	FERRITE, B64290L616X38	
T50V0811	90600-5249		1	FERRITE, B64290L616X38	
T50V0821	90600-5249		1	FERRITE, B64290L616X38	
T40W0010	351150-0412	M	3	CABLE OLFLEX 3X1,5 MM2 LIGHT/GREY	
T40W0040	351150-0413	M	6	CABLE OLFLEX 4GX1,5 MM2 LIGHT/GREY	
T40W0260	351423-0005	M	3	CABLE UNITRONIC LICY 4X0,34	
T40W0270	351423-0005	M	3	CABLE UNITRONIC LICY 4X0,34	
T40W0520	351150-0425	M	5	CABLE OLFLEX 25X0,75 MM2 LIGHT/GREY	
T40W0700	90602-8107		1	CABLE	
T40W0710	90602-8107		1	CABLE	
T40W0720	90602-8107		1	CABLE	
T40W0730	90602-8107		1	CABLE	
T40W0740	90600-3293		1	MOTOR PWWER CABLE 2090-XXNPMF-16S09	
T40W0750	90600-3293		1	MOTOR PWWER CABLE 2090-XXNPMF-16S09	
T40W0800	351150-0403	M	3	CABLE OLFLEX 3X0,75 MM2 LIGHT/GREY	
T40W0810	351150-0403	M	3	CABLE OLFLEX 3X0,75 MM2 LIGHT/GREY	
T40W0820	351150-0403	M	3	CABLE OLFLEX 3X0,75 MM2 LIGHT/GREY	
T40W0830	351150-0403	M	3	CABLE OLFLEX 3X0,75 MM2 LIGHT/GREY	
T40W1000	90459-2530	M	6	DEVICENET CABLE THIN	
T40W1090	351150-0403	M	3	CABLE OLFLEX 3X0,75 MM2 LIGHT/GREY	
T40W1100	351150-0403	M	3	CABLE OLFLEX 3X0,75 MM2 LIGHT/GREY	
T40W1110	351150-0404	M	3	CABLE OLFLEX 4X0,75 MM2 LIGHT/GREY	
T40W1130	351150-0403	M	3	CABLE OLFLEX 3X0,75 MM2 LIGHT/GREY	
T40W1150	351150-0404	M	3	CABLE OLFLEX 4X0,75 MM2 LIGHT/GREY	
T40W1370	90220-0034	M	2	THERMOC.CABLE, TEX/SITW-20F-KX 2X0,5MM2	
T40W1390	90220-0091	M	3	CABLE, PAIR TWISTED 2X2X0,25MM2	
T40W1700	90600-3294		1	MOTOR FEEDBACK CABLE 2090-XXNFMF-S09/C	
T40W1710	90600-3294		1	MOTOR FEEDBACK CABLE 2090-XXNFMF-S09/C	
T40W1720	90600-3294		1	MOTOR FEEDBACK CABLE 2090-XXNFMF-S09/C	
T40W1730	90600-3294		1	MOTOR FEEDBACK CABLE 2090-XXNFMF-S09/C	
T40W1740	90600-3294		1	MOTOR FEEDBACK CABLE 2090-XXNFMF-S09/C	
T40W1750	90600-3294		1	MOTOR FEEDBACK CABLE 2090-XXNFMF-S09/C	
T40W2690	351150-0403	M	3	CABLE OLFLEX 3X0,75 MM2 LIGHT/GREY	
T40W2830	351150-0406	M	3	CABLE OLFLEX 7X0,75 MM2 LIGHT/GREY	
T40W2840	351150-0407	M	4	CABLE OLFLEX 12X0,75 MM2 LIGHT/GREY	
T40W3101	2856954-0000		1	COAXIAL CABLE	
T40W3201	2856954-0000		1	COAXIAL CABLE	
T40W3850	90220-0046	M	4	SCR. CABLE 16X0,34MM2 GREEN/YELLOW	
T40W9510	90220-0091	M	3	CABLE, PAIR TWISTED 2X2X0,25MM2	
T40W9520	90220-0091	M	3	CABLE, PAIR TWISTED 2X2X0,25MM2	
T40W9550	351150-0403	M	3	CABLE OLFLEX 3X0,75 MM2 LIGHT/GREY	
T40W9560	351150-0403	M	3	CABLE OLFLEX 3X0,75 MM2 LIGHT/GREY	
T40W9580	351150-0403	M	3	CABLE OLFLEX 3X0,75 MM2 LIGHT/GREY	
T40W9600	351150-0403	M	3	CABLE OLFLEX 3X0,75 MM2 LIGHT/GREY	
T50W0060	351150-0412	M	6	CABLE OLFLEX 3X1,5 MM2 LIGHT/GREY	
T50W0140	351150-0413	M	9	CABLE OLFLEX 4GX1,5 MM2 LIGHT/GREY	
T50W0150	351150-0418	M	6	CABLE OLFLEX 4X2,5 MM2 LIGHT/GREY	

Machine Type | Group Description | Used-In | Group Number | Page No

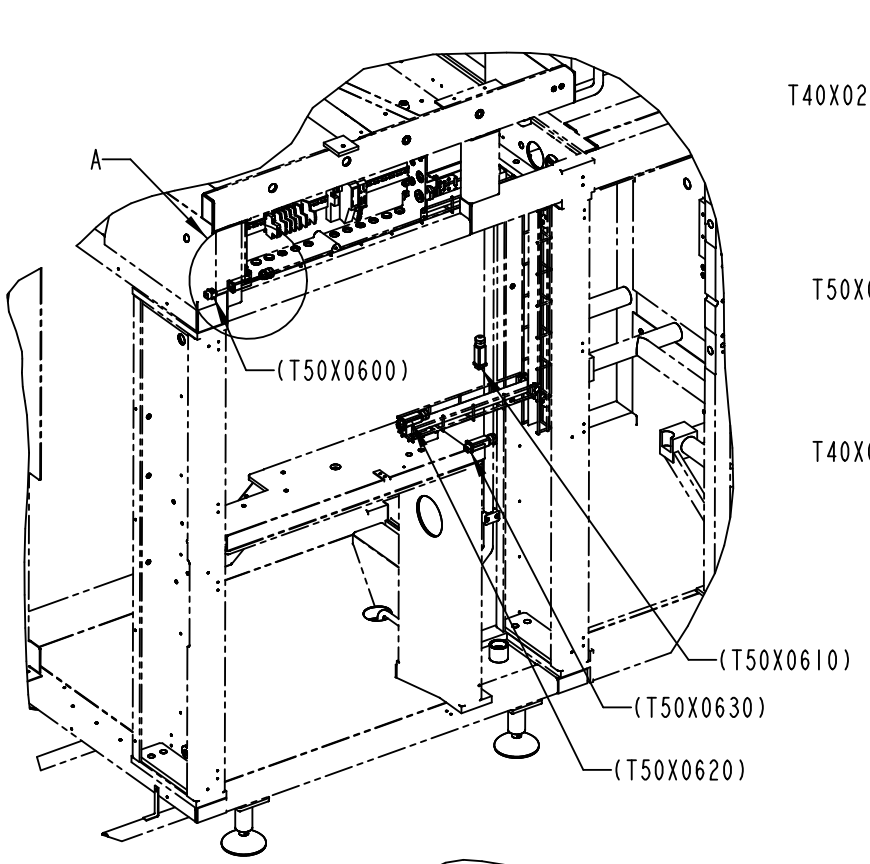

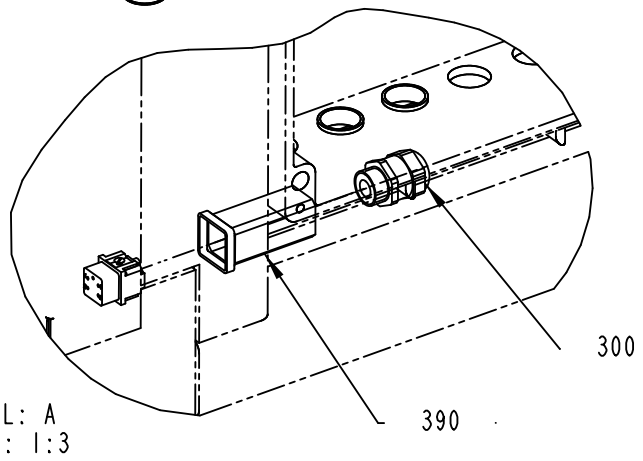

DETAIL: A
SCALE: 1:3

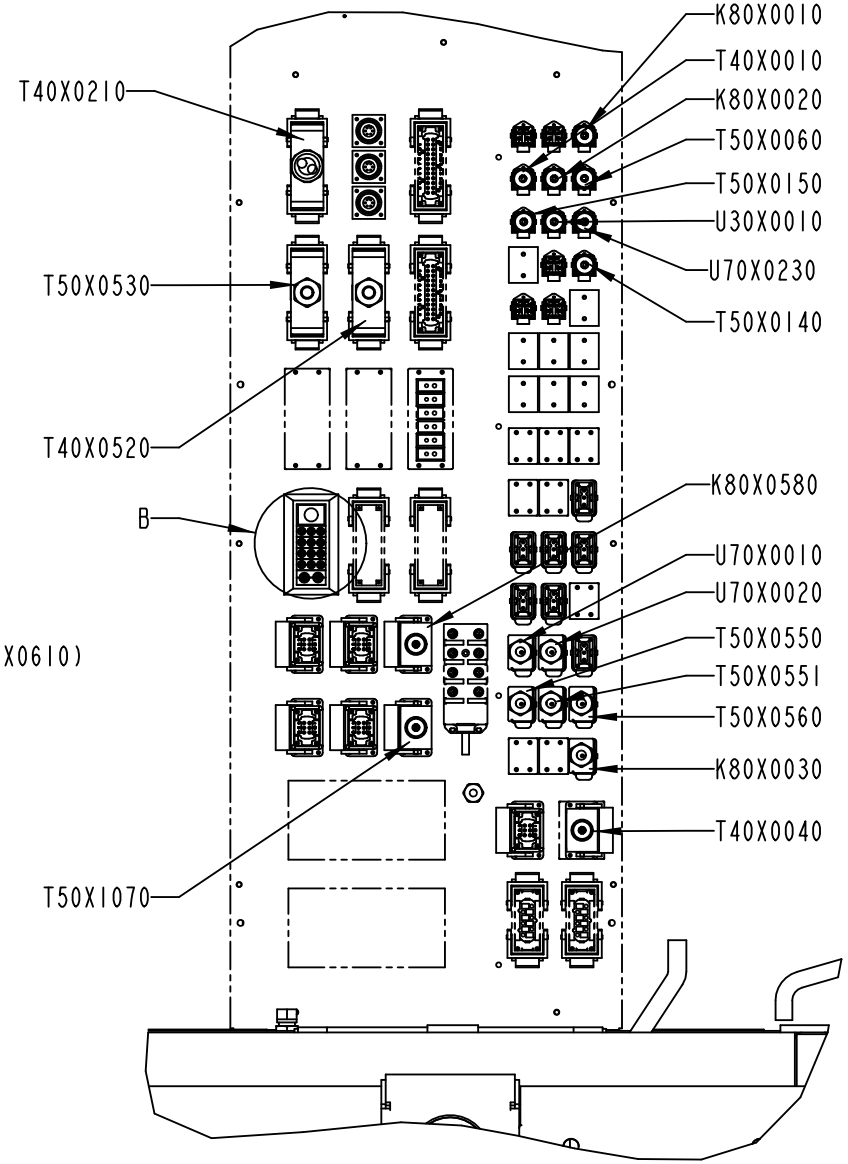

DETAIL B
SCALE 1:2

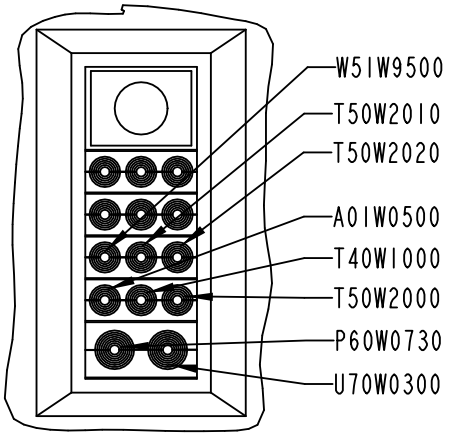

2899066-2
494306

Pos	Part No	UN	Qty	Description	Page No
- (Cont'd)					
T50W0530	351150-0425	M	6	CABLE OLFLEX 25X0,75 MM2 LIGHT/GREY	
T50W0550	351120-0146	M	5	CABLE Ã–LFLEX HEAT 180 SIHF 3X4	
T50W0551	351120-0146	M	5	CABLE Ã–LFLEX HEAT 180 SIHF 3X4	
T50W0560	351120-0146	M	5	CABLE Ã–LFLEX HEAT 180 SIHF 3X4	
T50W0600	351423-0005	M	6	CABLE UNITRONIC LICY 4X0,34	
T50W0610	351423-0005	M	6	CABLE UNITRONIC LICY 4X0,34	
T50W0620	351423-0005	M	6	CABLE UNITRONIC LICY 4X0,34	
T50W0630	351423-0005	M	6	CABLE UNITRONIC LICY 4X0,34	
T50W0800	90600-3293		1	MOTOR PWWER CABLE 2090-XXNPMF-16S09	
T50W0810	90600-3293		1	MOTOR PWWER CABLE 2090-XXNPMF-16S09	
T50W0820	90600-3293		1	MOTOR PWWER CABLE 2090-XXNPMF-16S09	
T50W1000	90459-2530	M	6	DEVICENET CABLE THIN	
T50W1030	351150-0405	M	8	CABLE OLFLEX 5X0,75 MM2 LIGHT/GREY	
T50W1070	351422-0203	M	16	CABLE Ã–LFLEX 150CY QUATTRO 4X1,5	
T50W1120	351150-0406	M	4	CABLE OLFLEX 7X0,75 MM2 LIGHT/GREY	
T50W1800	90600-3294		1	MOTOR FEEDBACK CABLE 2090-XXNFMF-S09/C	
T50W1810	90600-3294		1	MOTOR FEEDBACK CABLE 2090-XXNFMF-S09/C	
T50W1820	90600-3294		1	MOTOR FEEDBACK CABLE 2090-XXNFMF-S09/C	
T50W2000	90220-0091	M	7	CABLE, PAIR TWISTED 2X2X0,25MM2	
T50W2010	351501-0075		1	ETHERNET PATCH CABLE, FL CAT5 PATCH 7,5	
T50W2020	351501-0075		1	ETHERNET PATCH CABLE, FL CAT5 PATCH 7,5	
T50W2030	351150-0405	M	8	CABLE OLFLEX 5X0,75 MM2 LIGHT/GREY	
T50W6110	351150-0403	M	3	CABLE OLFLEX 3X0,75 MM2 LIGHT/GREY	
T40X0010	90459-6821		1	MALE INSERT HAN 4A, 0920 0042 611	
T40X0040	90110-0052		1	MALE INSERT, HAN E06, 0933 0062 601	
T40X0210	90110-0056		1	MALE INSERT, HAN E 24, 0933 0242 601	
T40X0520	90110-0056		1	MALE INSERT, HAN E 24, 0933 0242 601	
T40X1700	90459-2551		1	CONNECTOR, MOTOR FEEDBACK 15 PIN MALE	
T40X1710	90459-2551		1	CONNECTOR, MOTOR FEEDBACK 15 PIN MALE	
T40X1720	90459-2551		1	CONNECTOR, MOTOR FEEDBACK 15 PIN MALE	
T40X1730	90459-2551		1	CONNECTOR, MOTOR FEEDBACK 15 PIN MALE	
T40X1740	90459-2551		1	CONNECTOR, MOTOR FEEDBACK 15 PIN MALE	
T40X1750	90459-2551		1	CONNECTOR, MOTOR FEEDBACK 15 PIN MALE	
T50X0060	90459-6821		1	MALE INSERT HAN 4A, 0920 0042 611	
T50X0140	90459-6821		1	MALE INSERT HAN 4A, 0920 0042 611	
T50X0150	90459-6821		1	MALE INSERT HAN 4A, 0920 0042 611	
T50X0530	90110-0056		1	MALE INSERT, HAN E 24, 0933 0242 601	
T50X0550	90601-6217		1	MALE INSERT, HAN 3 MOD-M-S 40A	
T50X0551	90601-6217		1	MALE INSERT, HAN 3 MOD-M-S 40A	
T50X0560	90601-6217		1	MALE INSERT, HAN 3 MOD-M-S 40A	
T50X0600	90459-6820		1	FEMALE INSERT, HAN 4 A, 09 20 004 2711	
T50X0610	90459-6820		1	FEMALE INSERT, HAN 4 A, 09 20 004 2711	
T50X0620	90459-6820		1	FEMALE INSERT, HAN 4 A, 09 20 004 2711	
T50X0630	90459-6820		1	FEMALE INSERT, HAN 4 A, 09 20 004 2711	
T50X1070	90110-0052		1	MALE INSERT, HAN E06, 0933 0062 601	
T50X1800	90459-2551		1	CONNECTOR, MOTOR FEEDBACK 15 PIN MALE	
T50X1810	90459-2551		1	CONNECTOR, MOTOR FEEDBACK 15 PIN MALE	
T50X1820	90459-2551		1	CONNECTOR, MOTOR FEEDBACK 15 PIN MALE	
U30X0010	90459-6821		1	MALE INSERT HAN 4A, 0920 0042 611	
U70X0010	90601-6217		1	MALE INSERT, HAN 3 MOD-M-S 40A	
U70X0020	90601-6217		1	MALE INSERT, HAN 3 MOD-M-S 40A	
U70X0230	90459-6821		1	MALE INSERT HAN 4A, 0920 0042 611	
W51W9500	351501-0075		1	ETHERNET PATCH CABLE, FL CAT5 PATCH 7,5	

Machine Type | Group Description | Used-In | Group Number | Page No

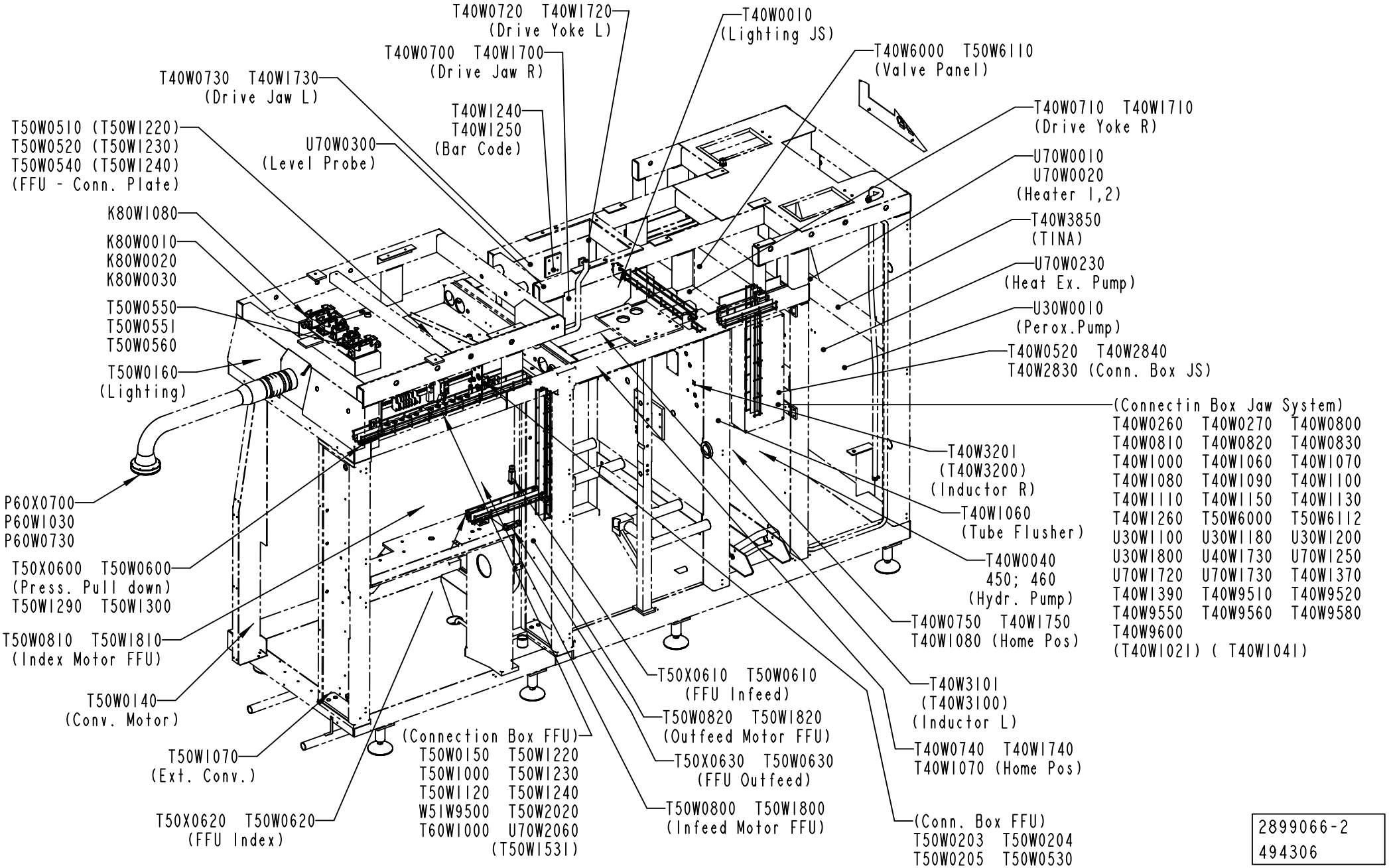

2899066-2
494306

ECM: 498344 - 20110701
Group number: 2899066-0300
Assembly Drawing: 2899066-2_3_AE

This list covers pages from 2-172 to 2-179

Pos	Part No	UN	Qty	Description	Page No
SEE PREVIOUS LISTS PAGES: 2-173, 2-175.					

Pos	Part No	UN	Qty	Description	Page No

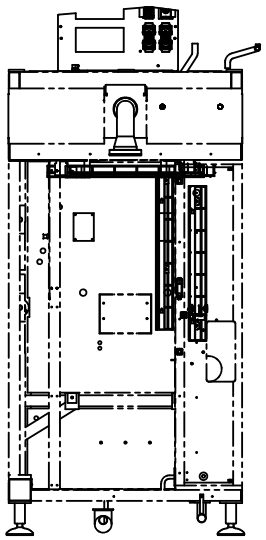

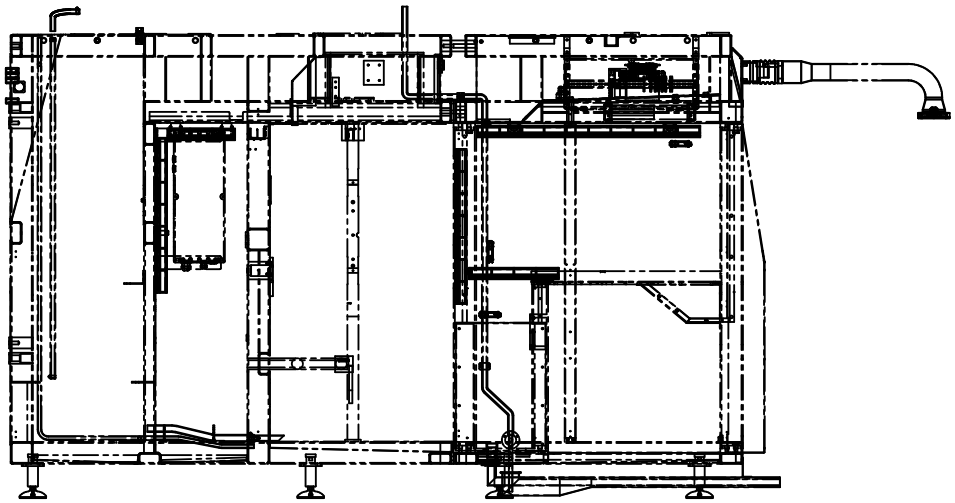

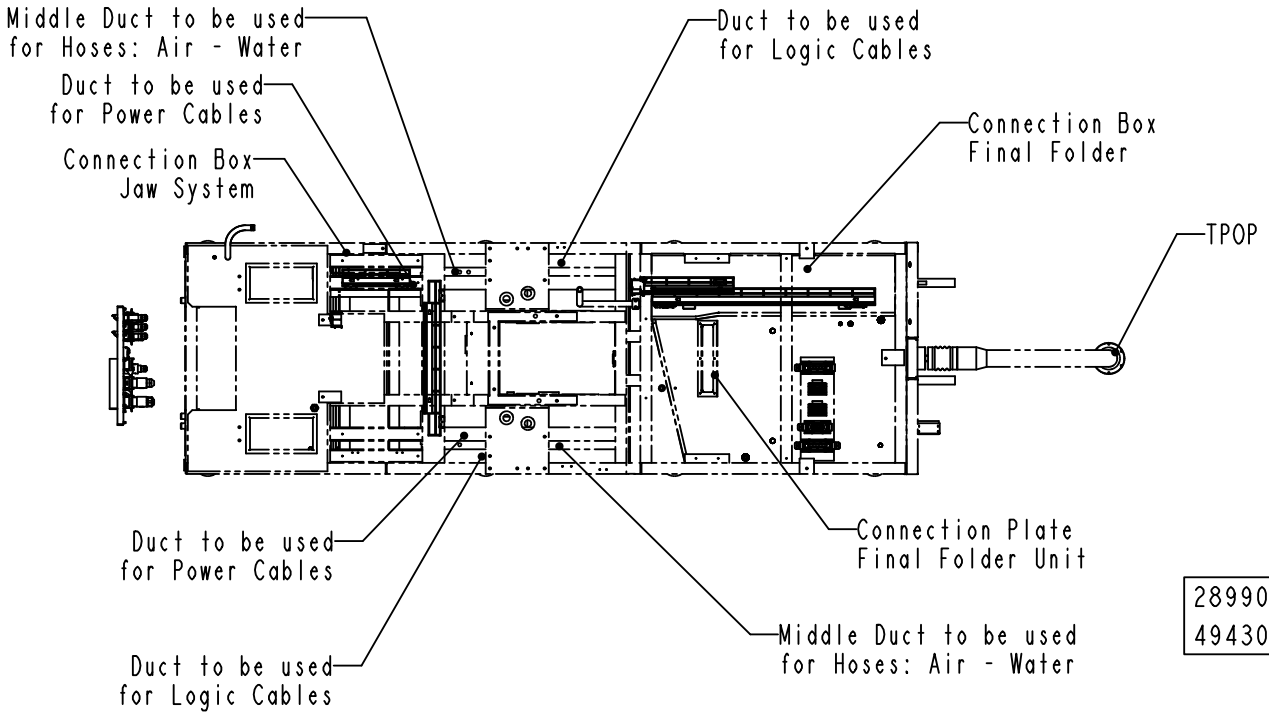

2899066-2
494306

ECM: 498344 - 20110701
Group number: 2899066-0300
Assembly Drawing: 2899066-2_4_AE

This list covers pages from 2-172 to 2-179

Pos	Part No	UN	Qty	Description	Page No	Pos	Part No	UN	Qty	Description	Page No

SEE PREVIOUS LISTS PAGES: 2-173, 2-175.

SUPERSTRUCTURE CHEMICAL UNIT

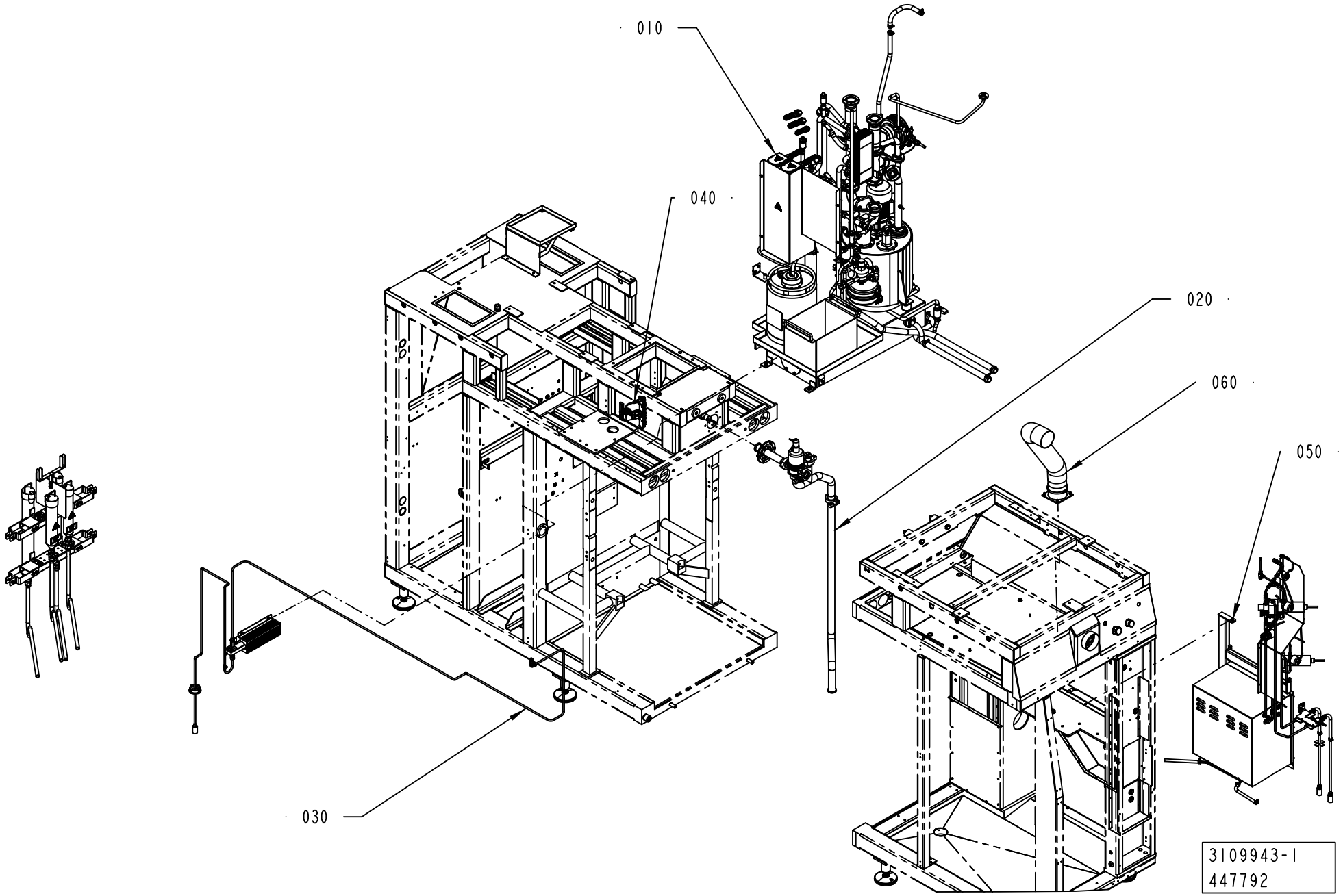

ECM: 483763 - 20110401
Group number: 3109943-0100
Assembly Drawing: 3109943-1_1_AA

Pos	Part No	UN	Qty	Description	Page No
ICU					
050	3058525-0100		1	INTEGRATED CLEANING UNIT	**2-183**
Common Parts					
010	2808245-0200		1	HYDROGEN PEROXIDE	**2-197**
020	2839823-0100		1	DRAINING	**2-219**
030	2875858-0200		1	CHEMICALS	**2-223**
040	2839829-0100		1	LEVEL CONTROL DEVICE	**2-225**
060	3033500-0100		1	VENTILATION SYSTEM	**2-227**

Pos	Part No	UN	Qty	Description	Page No

Machine Type | Group Description | Used-In | Group Number | Page No

INTEGRATED CLEANING UNIT

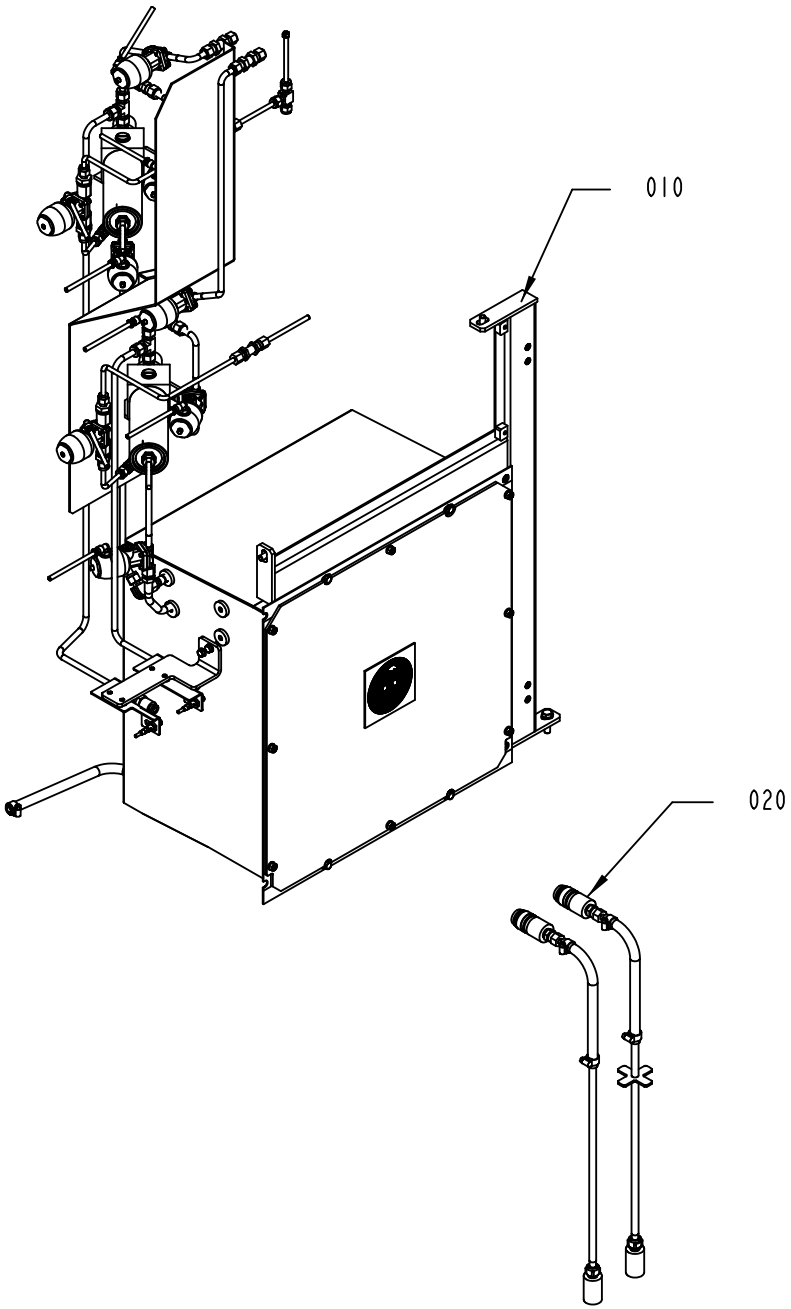

3058525-1
495684

ECM: 503890 - 20110701
Group number: 3058525-0100
Assembly Drawing: 3058525-1_1_AB

Pos	Part No	UN	Qty	Description	Page No
-					
010	2986750-0200		1	CHEMICALS	**2-185, 2-187, 2-189**
020	3037895-0100		1	REFILLING	**2-193**
030	3037900-0100		1	STORAGE	**2-195**

Pos	Part No	UN	Qty	Description	Page No

Machine Type	Group Description	Used-In	Group Number	Page No

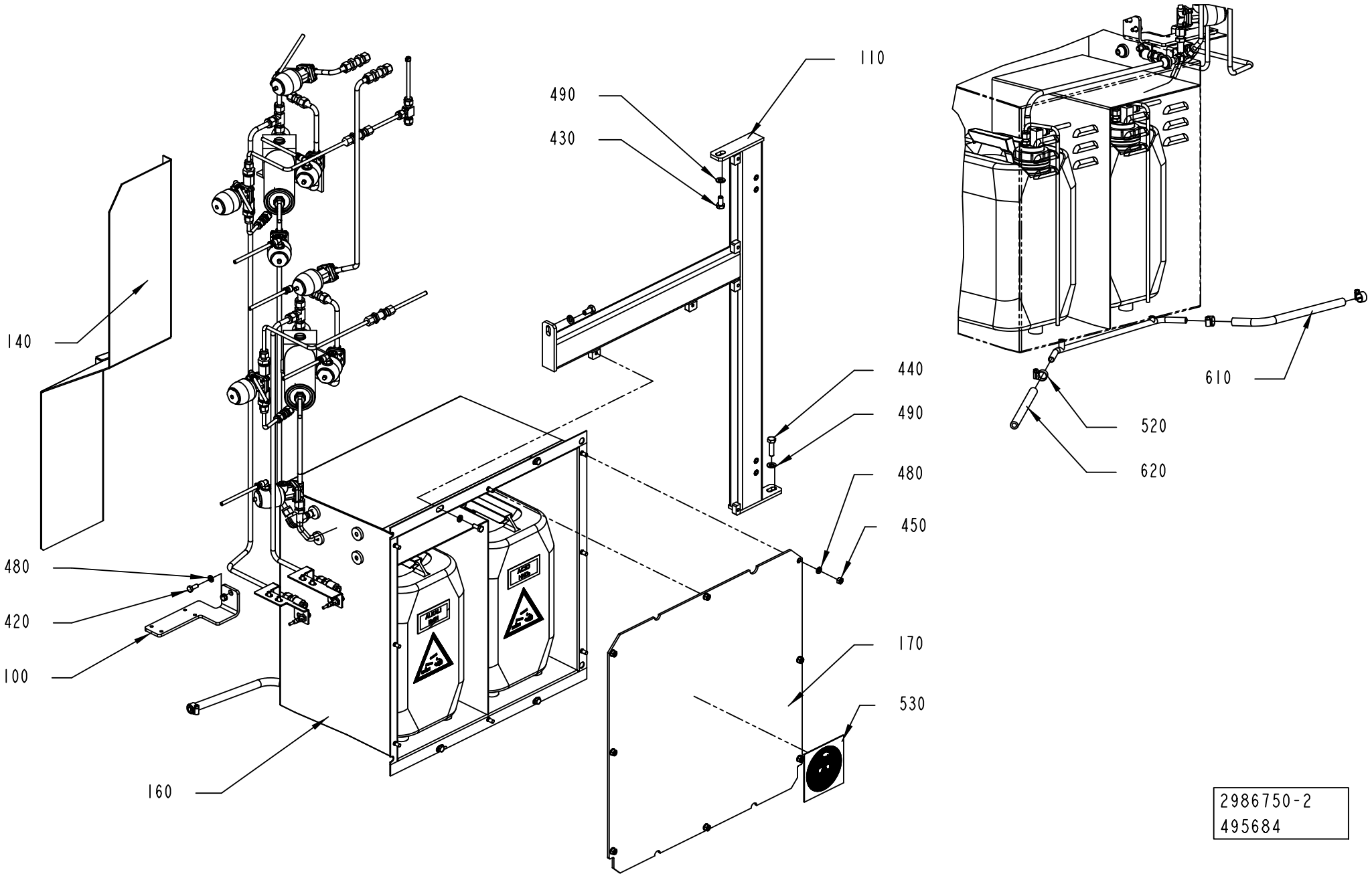

2986750-2
495684

ECM: 503889 - 20110701
Group number: 2986750-0200
Assembly Drawing: 2986750-2_1_AA

This list covers pages from 2-184 to 2-189

Pos	Part No	UN	Qty	Description	Page No
ANSI					
530	90459-1927		1	WARNING SIGN ANSI (H), EYE PROTECTION	
540	359725-0104		2	WARNING SIGN ANSI (H), CHEMICAL HAZARD	
ISO					
530	359605-0002		1	MANDATORY SIGN ISO, EYE PROTECTION	
540	359705-0004		2	WARNING SIGN ISO, DANGEROUS CHEMICALS	
Common Parts					
010	2544318-0000		2	PIPE	
020	2544330-0000		2	PLUG	
030	2559461-0000		4	SPACER	
040	2559977-0000		1	HOSE	
050	2566211-0000		1	LABEL	
060	2566212-0000		1	LABEL	
070	2986784-0000		2	PIPE	
080	2986786-0000		1	PIPE	
090	2986787-0000		1	PIPE	
100	2986795-0000		1	BRACKET	
110	3037873-0000		1	BRACKET	
120	3037884-0000		1	BRACKET	
130	3037885-0000		1	BRACKET	
140	3037888-0000		1	PLATE	
150	3037891-0000		1	PIPE	
160	3113831-0000		1	BOX	
170	3113832-0000		1	COVER	
180	3162417-0000		1	PIPE	
190	3162418-0000		1	PIPE	
200	3162421-0000		1	PIPE	
210	3162422-0000		1	PIPE	
400	312105-0329		4	SCREW, M6S ISO 4017 M5X16 A4 80	
410	312105-0364		4	SCREW, M6S ISO 4017 M6X10 A4 80	
420	312105-0368		6	SCREW, M6S ISO 4017 M6X16 A4 80	
430	312105-0449		2	SCREW, M6S ISO 4017 M8X16 A4 80	
440	312105-0455		1	SCREW, M6S ISO 4017 M8X30 A4 80	
450	312605-0316		8	HEXAGON NUT, M6M M6 A280	
460	312105-0447		4	SCREW, M6S ISO 4017 M8X12 A4 80	
470	315105-0146		4	WASHER PLAIN, 5,3X10X1 A4 BRB	
480	315105-0153		18	WASHER PLAIN, 6,4X12X1,5 A4 BRB	
490	315105-0165		7	WASHER PLAIN, 8,4X16X1,6 A4 BRB	
500	315206-0506		4	O-RING 7,65X1,78 MM	
510	342706-0130		5	STIFFNER SLEEVE FOR HOSE 6X1	
520	342991-0101		3	HOSE CLIP,WORM DRIVE TYPE (11)-17	
550	90015-0023		4	LEAD-IN, TET 7-10, E1458019	
560	90030-0066		2	CONN. BULKHEAD SV06L71	
570	90030-0477		2	PIPE CONNECTION SMC 8	
580	90030-0485		4	CONN. BULKHEAD BMC8-316	
590	90030-0571		1	CONN. T-PIPE SS-6MO-3	
600	90144-0073		1	TREBOFLON-TAPE W=13MM	
610	90166-0225	MM	1500	HOSE	
620	90166-0225	MM	1500	HOSE	
630	90459-0462		2	CANISTER LY 500-10	
640	90459-1424		2	CONN. STR., 6-G1/8, EXT. THREAD	
650	90459-1425		4	CONN. T-PIPE 8	
660	90459-1426		1	CONN. ELBOW, INT 8	
670	90459-1427		1	QUICK-RELEASE COUPLING, SS-QTM2-D-8M0-K2	
680	90459-1430		1	QUICK-RELEASE COUPLING, SS-QTM2-D-8M0-K4	
690	3162423-0000		4	BONDED SEAL	
700	90600-2445		1	HOSE CLIP, 7,0 RER	
710	90600-4219		2	CONN. PIPE REDUCTION 8-6	
720	90600-4266		8	PUSH-IN L-FITTING CRQSL-1/8-6	
730	90600-4501		1	HYDRAULIC HOSE, 919-ID-ID-8-8-5C-5-420	
740	90603-1867		4	CONN. STR. M6MSC1/4R-316	
V20B1020	90600-0473		1	INDUCTIVE SWITCH E2A-S08KS01-WP-B1-TP 5M	
V20B1030	2544312-0000		1	FLOAT	
V20B1070	2544312-0000		1	FLOAT	
V20B1090	90600-0473		1	INDUCTIVE SWITCH E2A-S08KS01-WP-B1-TP 5M	
V20M1570	927244-0100		1	PUMP	**2-191**
V20M1590	927244-0100		1	PUMP	**2-191**
V20Q1280	3162416-0000		1	DIAPHRAGM VALVE	
	90603-5347		*1*	*DIAPHRAGM VALVE, 650 6 D 0 34 5A 2 0T1 D*	
	342800-1301		*1*	*ACTUATOR, SS, N.O. SEAT S. 8*	
	90600-0493		*1*	*DIAPHRAGM 3A, 600-8M-5AD*	
V20Q1290	3162415-0000		1	DIAPHRAGM VALVE	
	90603-5347		*1*	*DIAPHRAGM VALVE, 650 6 D 0 34 5A 2 0T1 D*	
	342800-1301		*1*	*ACTUATOR, SS, N.O. SEAT S. 8*	
	90600-0493		*1*	*DIAPHRAGM 3A, 600-8M-5AD*	
V20Q1300	3162416-0000		1	DIAPHRAGM VALVE	
	90603-5347		*1*	*DIAPHRAGM VALVE, 650 6 D 0 34 5A 2 0T1 D*	
	342800-1301		*1*	*ACTUATOR, SS, N.O. SEAT S. 8*	
	90600-0493		*1*	*DIAPHRAGM 3A, 600-8M-5AD*	
V20Q1310	3162420-0000		1	DIAPHRAGM VALVE	
	90603-5347		*1*	*DIAPHRAGM VALVE, 650 6 D 0 34 5A 2 0T1 D*	
	342800-1301		*1*	*ACTUATOR, SS, N.O. SEAT S. 8*	
	90600-0493		*1*	*DIAPHRAGM 3A, 600-8M-5AD*	
V20Q1320	3162414-0000		1	DIAPHRAGM VALVE	

Machine Type | Group Description | Used-In | Group Number | Page No

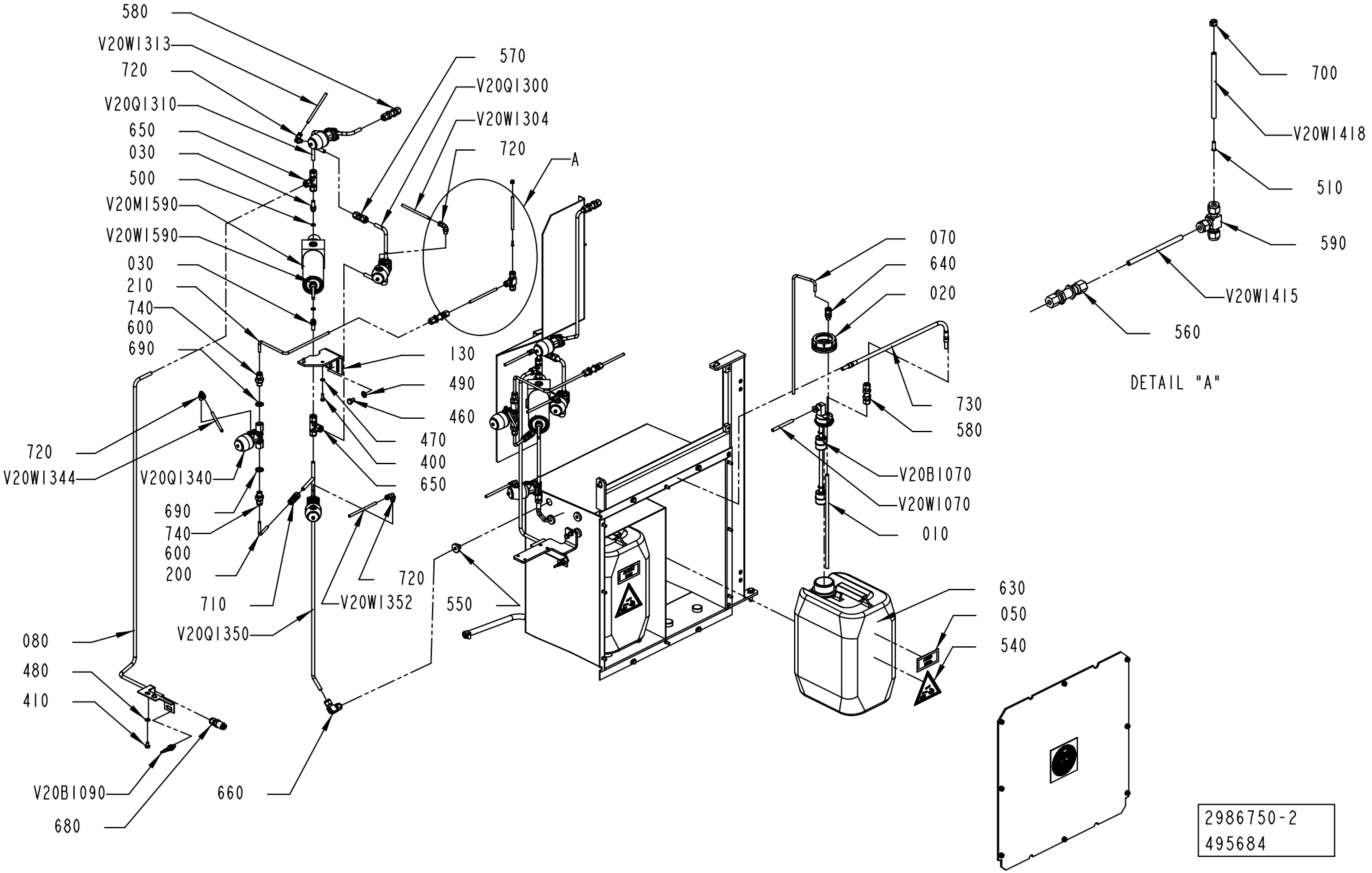
580
V20WI313
720
V20QI310
650
030
500
V20MI590
V20WI590
030
210
740
600
690
720
V20WI344
V20QI340
690
740
600
200
710
V20QI350
080
480
410
V20BI090
680
660
570
V20QI300
V20WI304
720
A
130
490
460
470
400
650
V20WI352
720
550
070
640
020
730
580
V20BI070
V20WI070
010
630
050
540
700
V20WI418
510
590
V20WI415
560
DETAIL "A"
2986750-2
495684

Pos	Part No	UN	Qty	Description	Page No
Common Parts (Cont'd)					
V20Q1330	90603-1861		1	DIAPHRAGM VALVE, 650 8D 1345A10T1 DA88	
	90600-0493		*1*	*DIAPHRAGM 3A, 600-8M-5AD*	
	342800-1201		*1*	*ACTUATOR, SS, N.C. SEAT S. 8*	
V20Q1340	90603-1861		1	DIAPHRAGM VALVE, 650 8D 1345A10T1 DA88	
	90600-0493		*1*	*DIAPHRAGM 3A, 600-8M-5AD*	
	342800-1201		*1*	*ACTUATOR, SS, N.C. SEAT S. 8*	
V20Q1350	3162419-0000		1	DIAPHRAGM VALVE	
	90603-5347		*1*	*DIAPHRAGM VALVE, 650 6 D 0 34 5A 2 0T1 D*	
	342800-1301		*1*	*ACTUATOR, SS, N.O. SEAT S. 8*	
	90600-0493		*1*	*DIAPHRAGM 3A, 600-8M-5AD*	
V20W1030	351150-0404	MM	3500	CABLE OLFLEX 4X0,75 MM2 LIGHT/GREY	
V20W1070	351150-0404	MM	3500	CABLE OLFLEX 4X0,75 MM2 LIGHT/GREY	
V20W1284	90603-1615	MM	3500	HOSE 4/6, PFAN-6X1-NT	
V20W1292	90603-1615	MM	3500	HOSE 4/6, PFAN-6X1-NT	
V20W1304	90603-1615	MM	3500	HOSE 4/6, PFAN-6X1-NT	
V20W1313	90603-1615	MM	3500	HOSE 4/6, PFAN-6X1-NT	
V20W1324	90603-1615	MM	3500	HOSE 4/6, PFAN-6X1-NT	
V20W1332	90603-1615	MM	3500	HOSE 4/6, PFAN-6X1-NT	
V20W1344	90603-1615	MM	3500	HOSE 4/6, PFAN-6X1-NT	
V20W1352	90603-1615	MM	3500	HOSE 4/6, PFAN-6X1-NT	
V20W1415	90459-0221	MM	3500	TUBE, 6 MM PE BLACK	
V20W1416	90459-0221	MM	3500	TUBE, 6 MM PE BLACK	
V20W1418	90459-0221	MM	3500	TUBE, 6 MM PE BLACK	
V20W1570	351150-0403	MM	7000	CABLE OLFLEX 3X0,75 MM2 LIGHT/GREY	
V20W1590	351150-0403	MM	7000	CABLE OLFLEX 3X0,75 MM2 LIGHT/GREY	

Pos	Part No	UN	Qty	Description	Page No

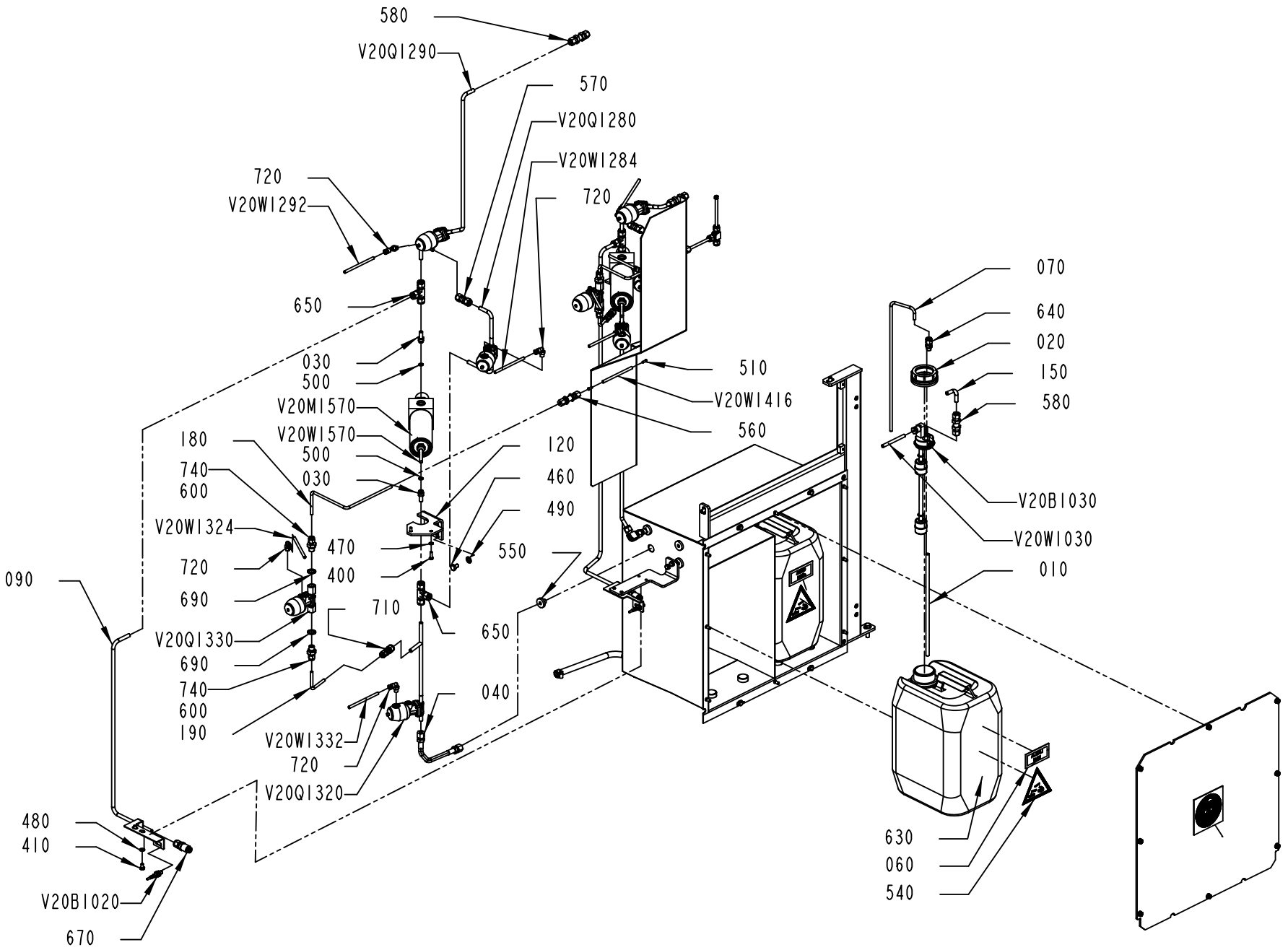
580
V20Q1290
570
V20Q1280
V20W1284
720
V20W1292
720
650
030
500
V20M1570
V20W1570
500
030
180
740
600
V20W1324
720
690
V20Q1330
690
740
600
190
V20W1332
720
V20Q1320
090
480
410
V20B1020
670
710
650
040
120
460
490
550
510
V20W1416
560
070
640
020
150
580
V20B1030
V20W1030
010
630
060
540
2986750-2
495684

Pos	Part No	UN	Qty	Description	Page No
SEE PREVIOUS LISTS PAGES: 2-185, 2-187.					

Pos	Part No	UN	Qty	Description	Page No

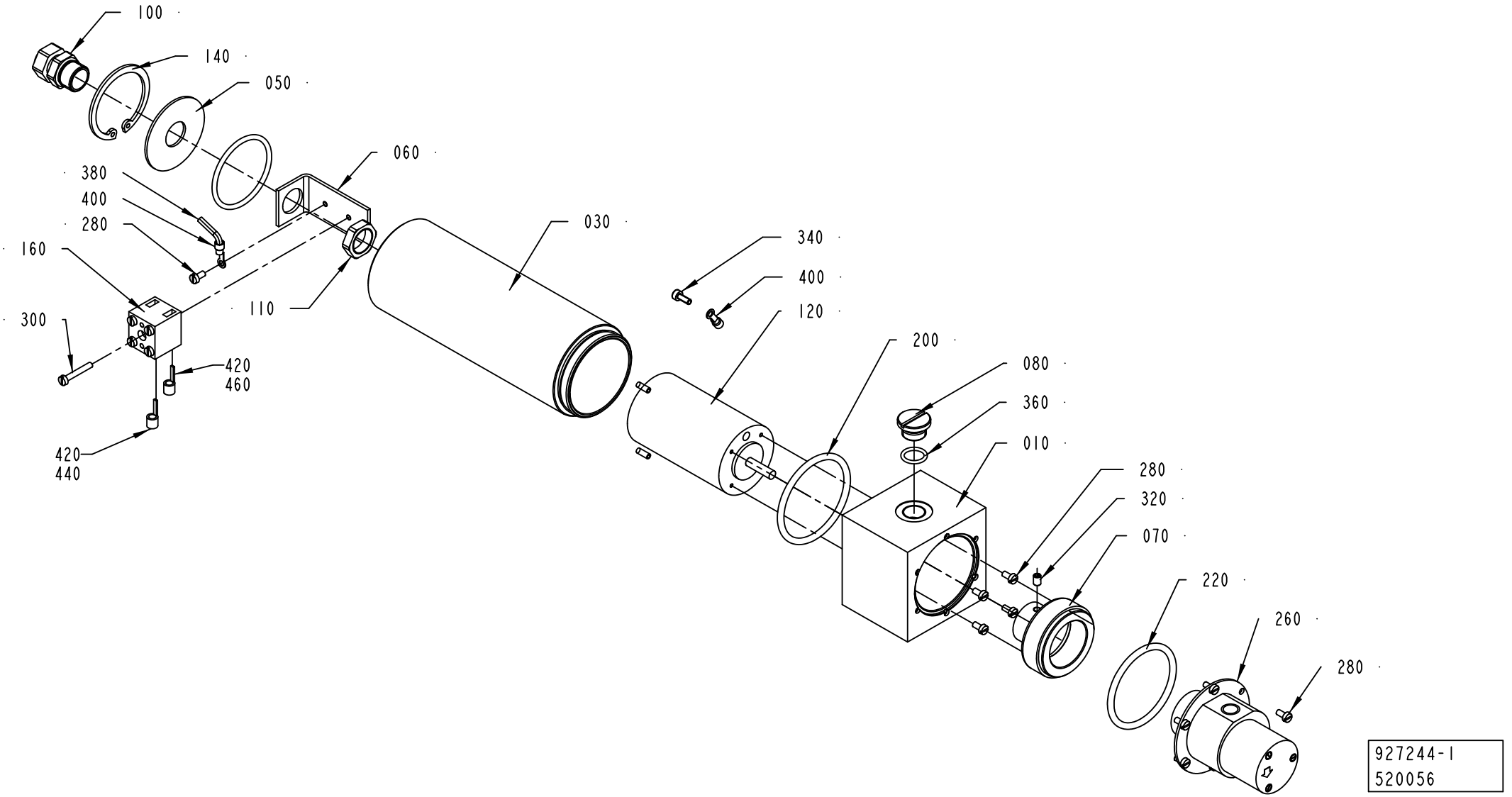
100
140
050
060
380
400
280
160
300
110
030
340
400
120
200
080
360
010
280
320
070
220
260
280
420
460
420
440
927244-1
520056

ECM: 526902 - 20111128
Group number: 927244-0100
Assembly Drawing: 927244-1_1_AD

Pos	Part No	UN	Qty	Description	Page No
-					
010	927339-0000		1	ADAPTER	
030	927342-0000		1	CYLINDER	
050	927340-0000		1	DISC	
060	927341-0000		1	HOLDER	
070	927362-0000		1	MAGNET	
080	927363-0000		1	PLUG	
100	90604-0953		1	CABLE GLAND, PG9, NO.5203 2520	
110	3192415-0000		1	NUT	
120	90045-0162		1	MOTOR 4G42X25	
140	90141-0020		1	RETAINING RING FOR BORE DIN 472 42 SS	
160	90195-0020		1	TERMINAL BLOCK, BK 2CRN, 0624 7200 00	
180	315202-0729		1	O-RING 39,34X2,62 MM	
200	90242-0223		1	O-RING 47,35X1,78 MM	
220	90242-0224		1	O-RING 44,17X1,78 MM	
260	90321-0102		1	PUMP, MG209XD0TT10000	
	90600-3200		*1*	*REPAIR KIT FOR MG209XTS37, KGMG209T0*	
280	312125-0220		11	SCREW ISO 1207 M3X6 A4	
300	312125-0230		1	SLOTTED HEAD SCREW, ISO1207 M3X20 A4	
320	312318-0285		1	SET SCREW, CUP END ISO4029 M4X6 A4	
340	312115-0222		1	SCREW ISO4762 M3X8 A4 80	
360	315202-0701		1	O-RING 10,82X1,78 MM	
380	351162-0102	MM	200	WIRE AWM 1X0,75 MM2 YELLOW-GREEN	
400	353101-0118		2	CABLE SHOE 0,5-1,5MM2 M3 RED	
420	353105-0117		2	PIN CABLE SHOE 0,75-1,5MM2 RED A1519SR	
440	359000-0101		1	WIRE MARKING, YELLOW, PY01/3"1"	
460	359000-0102		1	WIRE MARKING, YELLOW, PY01/3"2"	

Pos	Part No	UN	Qty	Description	Page No

Machine Type | Group Description | Used-In | Group Number | Page No

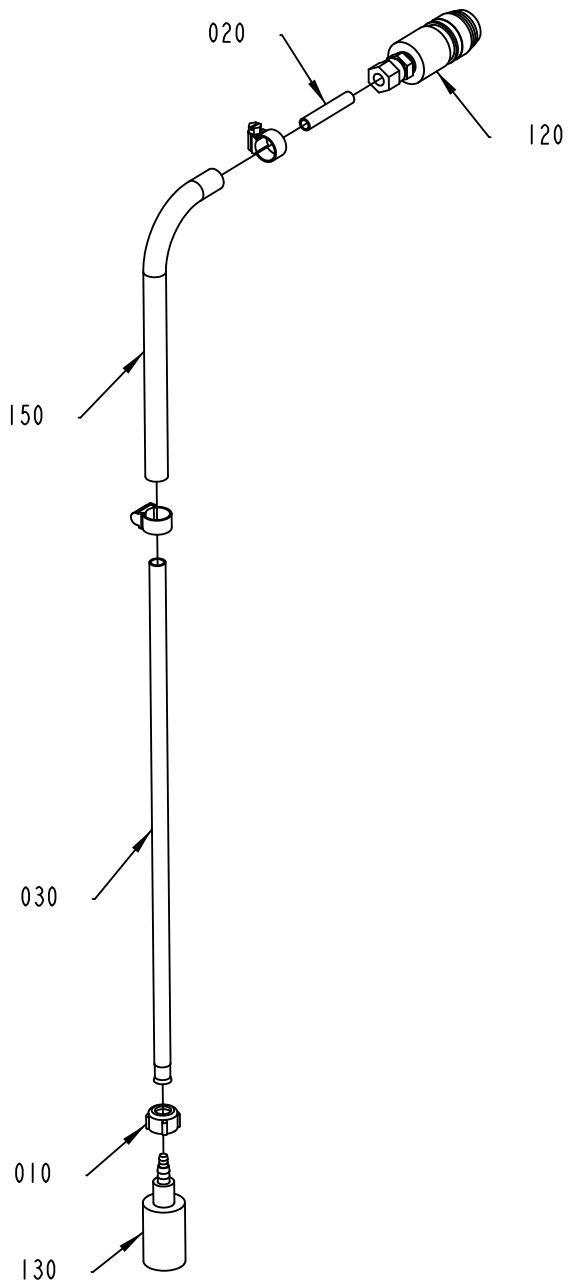
020
120
150
030
010
130

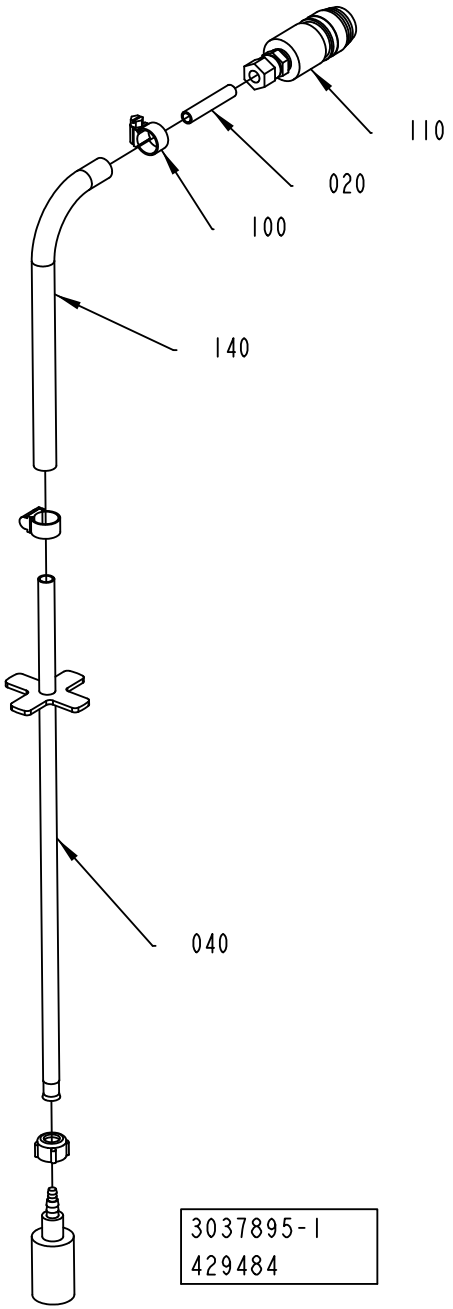
110
020
100
140
040
3037895-1
429484

ECM: 431966 - 20100302
Group number: 3037895-0100
Assembly Drawing: 3037895-1_1_AA

Pos	Part No	UN	Qty	Description	Page No
-					
010	928025-0000		2	PLUG	
020	2544314-0000		2	PIPE	
030	2986796-0000		1	PIPE	
040	3037892-0000		1	PIPE	
100	342991-0101		4	HOSE CLIP,WORM DRIVE TYPE (11)-17	
110	90163-0141		1	QUICK-RELEASE COUPLING SS-QTM2A-B-8M0-K2	
120	90163-0172		1	QUICK-RELEASE COUPLING SS-QTM2A-B-8M0-K4	
130	90415-0052		2	FILTER ART NO 12565 C-340-6E FOTVENTI EP	
140	90166-0225	MM	700	HOSE	
150	90166-0225	MM	700	HOSE	
160	90144-0073		1500	TREBOFLON-TAPE W=13MM	

Pos	Part No	UN	Qty	Description	Page No

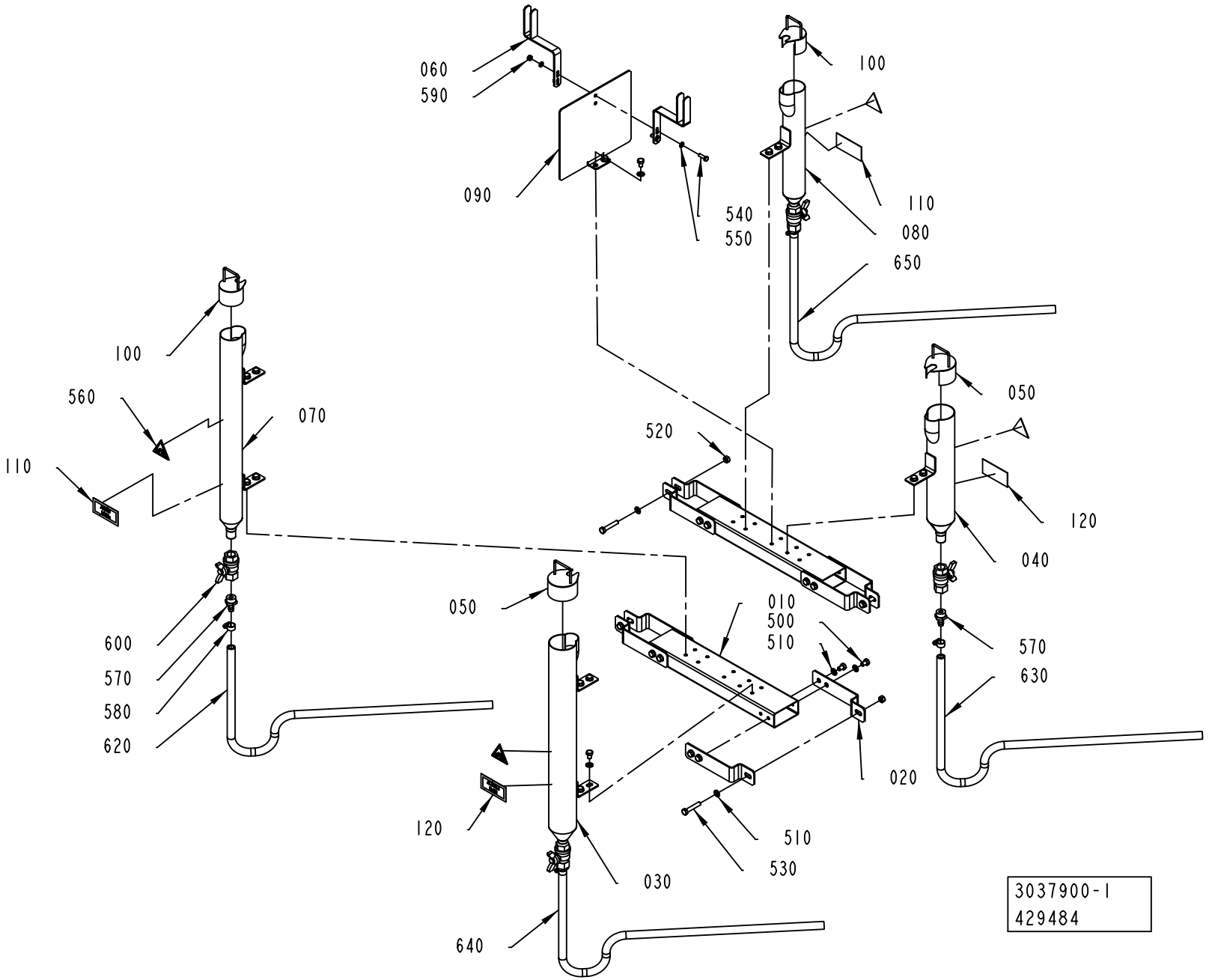
060
590
090
100
540
550
110
080
650
100
560
070
110
520
050
120
040
600
570
580
620
050
010
500
510
570
630
020
120
030
510
530
640
3037900-1
429484

ECM: 460812 - 20101001
Group number: 3037900-0100
Assembly Drawing: 3037900-1_1_AA

Pos	Part No	UN	Qty	Description	Page No
ANSI					
560	359725-0104		4	WARNING SIGN ANSI (H), CHEMICAL HAZARD	
ISO					
560	359705-0003		4	WARNING SIGN ISO, DANGEROUS CHEMICALS	
Common Parts					
010	3019128-0000		2	BRACKET	
020	3019129-0000		8	BRACKET	
030	3037894-0000		1	CONTAINER	
040	3019131-0000		1	CONTAINER	
050	3019132-0000		2	LID	
060	3039305-0000		2	BRACKET	
070	3037893-0000		1	CONTAINER	
080	3019725-0000		1	CONTAINER	
090	3019727-0000		1	PLATE	
100	3019726-0000		2	LID	
110	2566211-0000		2	LABEL	
120	2566212-0000		2	LABEL	
500	312105-0447		30	SCREW, M6S ISO 4017 M8X12 A4 80	
510	315105-0165		34	WASHER PLAIN, 8,4X16X1,6 A4 BRB	
520	312605-0318		4	HEXAGON NUT, M6M M8 A280	
530	312105-0460		4	SCREW, M6S ISO 4014 M8X45 A4 80	
540	312105-0370		2	SCREW, M6S ISO 4017 M6X20 A4 80	
550	315105-0153		4	WASHER PLAIN, 6,4X12X1,5 A4 BRB	
570	342901-0105		4	HOSE NIPPLE, EXT.THR. G1/2-12 MM	
580	342991-0101		4	HOSE CLIP,WORM DRIVE TYPE (11)-17	
590	312605-0316		2	HEXAGON NUT, M6M M6 A280	
600	90187-0029		4	BALL VALVE, G1/2, NPBR	
610	90144-0073		1	TREBOFLON-TAPE W=13MM	
620	90166-0121	M	5	HOSE	
630	90166-0121	M	5	HOSE	
640	90166-0121	M	5	HOSE	
650	90166-0121	M	5	HOSE	

Pos	Part No	UN	Qty	Description	Page No

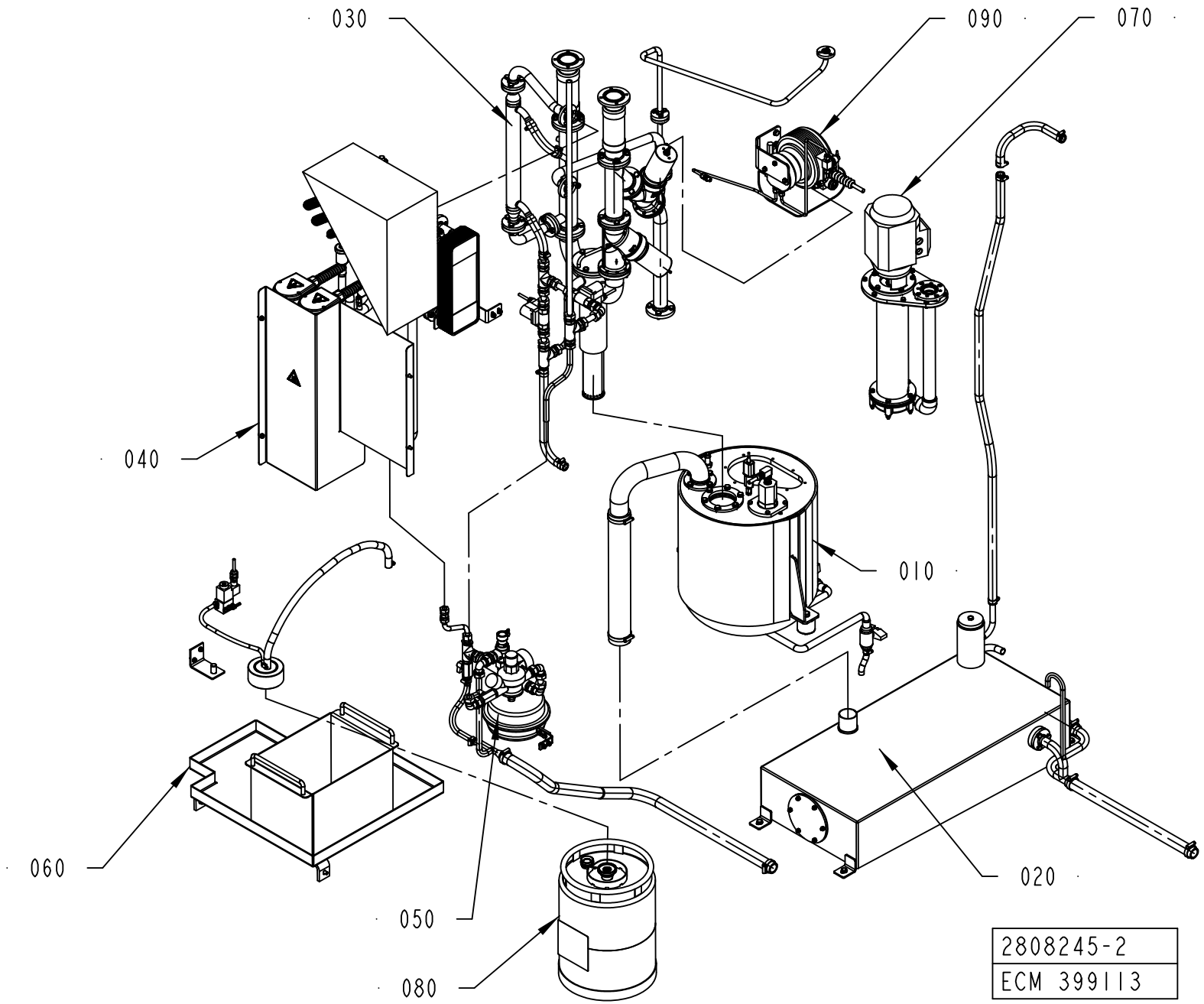
030
090
070
040
010
060
020
050
080
2808245-2
ECM 399113

ECM: 400664 - 20090904
Group number: 2808245-0200
Assembly Drawing: 2808245-2_1_AA

Pos	Part No	UN	Qty	Description	Page No
-					
010	2808202-0100		1	PEROXIDE TANK	**2-199**
020	2808199-0200		1	DILUTION TANK	**2-201**
030	2910399-0200		1	PEROXIDE PIPE	**2-205**
040	2808216-0100		1	HEATING UNIT	**2-207**
050	2808220-0200		1	PRESSURE UNIT	**2-209**
060	2808224-0100		1	AIR PIPE-LINE	**2-211**
070	2808418-0100		1	PEROXIDE PUMP	**2-213**
080	527898-0100		1	CONTAINER H2O2	**2-215, 11-73**
090	2839270-0100		1	HYDROGEN PEROXIDE	**2-217**

Pos	Part No	UN	Qty	Description	Page No

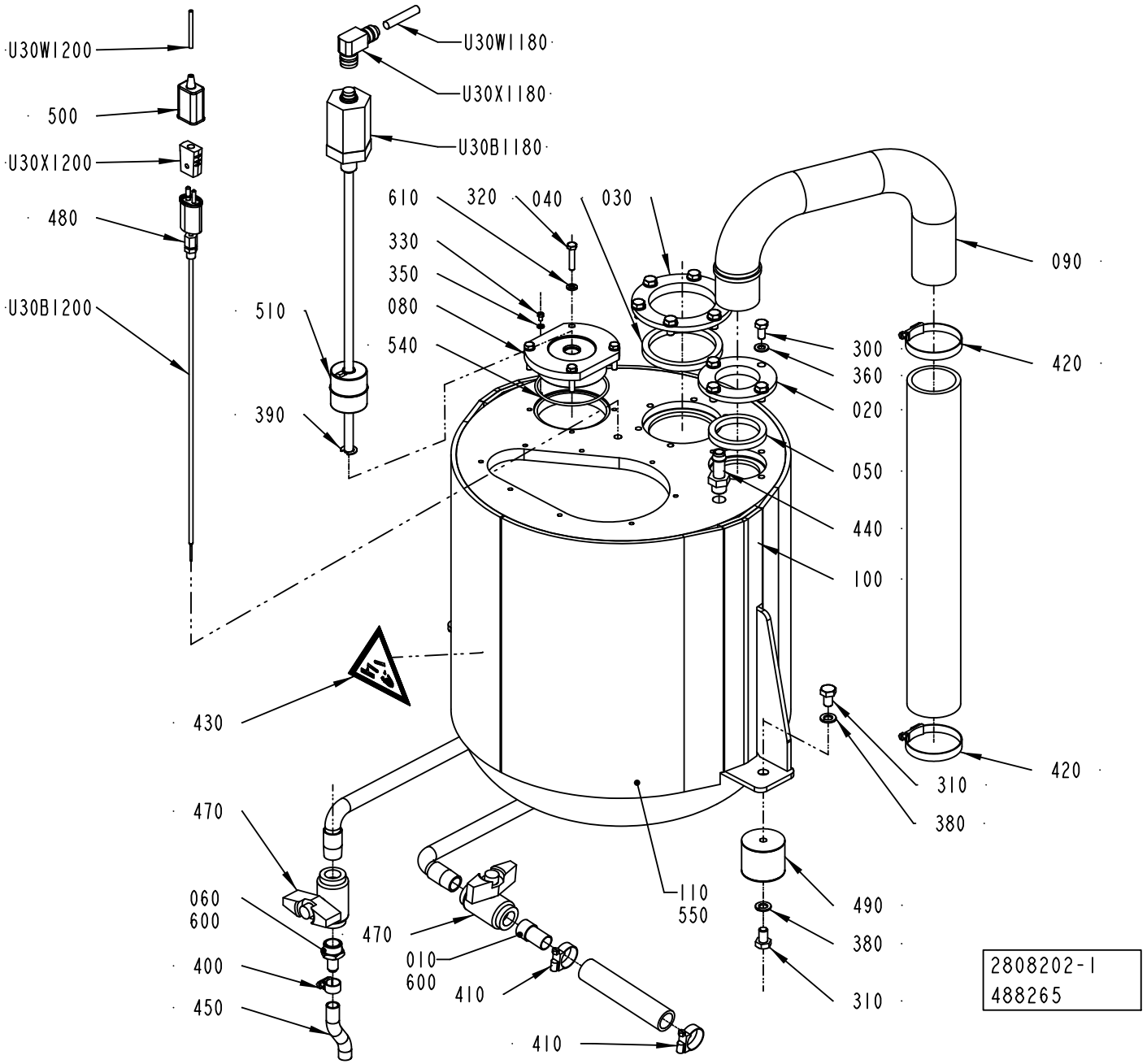
U30W1200
500
U30X1200
480
U30B1200
U30W1180
U30X1180
U30B1180
610
320
040
030
330
350
080
540
510
390
090
300
360
020
050
440
100
420
420
310
380
430
470
060
600
400
450
470
010
600
410
410
110
550
490
380
310
2808202-1
488265

ECM: 493257 - 20110701
Group number: 2808202-0100
Assembly Drawing: 2808202-1_1_AC

Pos	Part No	UN	Qty	Description	Page No
ANSI					
430	359725-0105		1	WARNING SIGN ANSI (V), CHEMICAL HAZARD	
ISO					
430	359705-0004		1	WARNING SIGN ISO, DANGEROUS CHEMICALS	
Common Parts					
010Â	1037102-0000		1	SPACER PIPE	
020	1040840-0000		1	FLANGE	
030	1040841-0000		1	FLANGE	
040	1040852-0000		1	SEALING RING	
050	1040853-0000		1	SEALING RING	
060	1282906-0000		1	NIPPLE	
080	1558327-0000		1	LID	
090	2808204-0000		1	PIPE	
100	2808296-0000		1	TANK	
110	2808297-0000		1	INSULATION CLOTH	
120	2808350-0000		1	HOSE	
300	312105-0449		10	SCREW, M6S ISO 4017 M8X16 A4 80	
310	312105-0489		4	SCREW, M6S ISO 4017 M10X16 A4 80	
320	312109-0374		4	SCREW, M6S ISO 4017 M6X30 A4 80	
330	312125-0285		1	SLOTTED HEAD SCREW, ISO1207 M4X6 A4	
350	315105-0136		1	WASHER PLAIN, 4,3X9X0,8 A4 BRB	
360	315105-0165		10	WASHER PLAIN, 8,4X16X1,6 A4 BRB	
380	315401-0173		4	WASHER FBH10,2FZB	
390	315755-0110		1	RETAINING RING SHAFT DIN 6799 9 SS	
400	342991-0101		1	HOSE CLIP,WORM DRIVE TYPE (11)-17	
410	342991-0104		2	HOSE CLIP,WORM DRIVE TYPE (19)-28	
420	342991-0110		2	HOSE CLIP,WORM DRIVE TYPE (50)-65	
440	90055-0051		1	HOSE NIPPLE, EXT.THR. R3/8X13 MM	
450	90166-0138	MM	85	HOSE	
460	90166-0151	MM	130	HOSE SILICONE, 20/27 MM	
470	90187-0059		2	BALL VALVE, FOR HYDR.PER. G1/2 3MM HOLE	
480	90326-0306		1	GLAND FITTING, 5101 015-010	
490	90347-0132		2	VIBRATION DAMPER, NO. 66639HARDNESS A	
500	90326-0012		1	PROTECTIVE COVER, 03-001 10	
510	90458-2358		1	FLOATING MAGNET, BTL2-S-4414-4Z	
540	927422-0016		1	O-RING 79.5X3 SILICONE	
550	90153-0048		1	ADHESIVE, LOCTITE HYSOL 3430 A&B	
600	90144-0073	MM	200	TREBOFLON-TAPE W=13MM	
610	315105-0153		4	WASHER PLAIN, 6,4X12X1,5 A4 BRB	
U30B1180	90600-0527		1	LEVEL SWITCH, BTL5-A11-M0320-B-S32	
U30B1200	90600-0528		1	THERMOCOUPLE, 5120 001-001	
U30W1180	351423-0005	MM	3000	CABLE UNITRONIC LICY 4X0,34	
U30W1200	90220-0034	MM	3000	THERMOC.CABLE, TEX/SITW-20F-KX 2X0,5MM2	
U30X1180	90458-1595		1	CONNECTION, BKS-S 33M-00	
U30X1200	90326-0020		1	SOCKET, FEMALE YELLOW CR-AL, 03-22000A	

Machine Type	Group Description	Used-In	Group Number	Page No

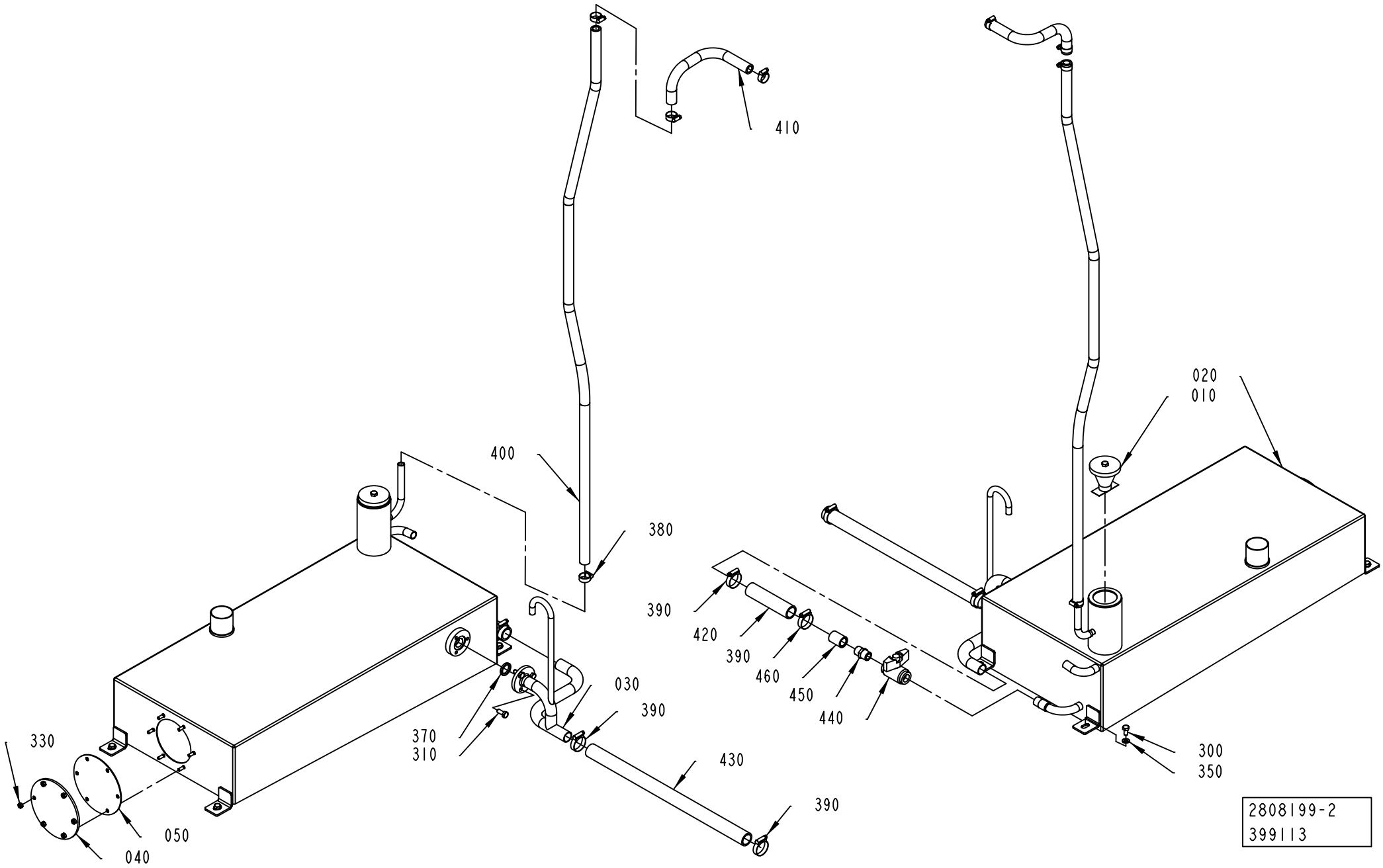
410
400
380
390
420
390
460
450
440
020
010
030
390
370
310
430
390
330
050
040
300
350
2808199-2
399113

ECM: 399113 - 20090904
Group number: 2808199-0200
Assembly Drawing: 2808199-2_1_AA

Pos	Part No	UN	Qty	Description	Page No
-					
010	566196-0100		1	LID WITH WEIGHT	**2-203**
020	2808200-0000		1	TANK	
030	3020067-0000		1	PIPE	
040	2808344-0000		1	COVER	
050	2808345-0000		1	GASKET	
300	312105-0449		4	SCREW, M6S ISO 4017 M8X16 A4 80	
310	312105-0451		3	SCREW, M6S ISO 4017 M8X20 A4 80	
330	312605-0316		6	HEXAGON NUT, M6M M6 A280	
350	315105-0165		4	WASHER PLAIN, 8,4X16X1,6 A4 BRB	
370	315229-0103		1	SQUARE RING, 23,1X30,1X3,7 MM 1" FDA	
380	342991-0103		4	HOSE CLIP,WORM DRIVE TYPE (15)-24	
390	342991-0106		4	HOSE CLIP,WORM DRIVE TYPE (26)-38	
400	90166-0087	MM	1650	HOSE 15/23 REINF.PVC TRANSP.	
410	90166-0087	MM	600	HOSE 15/23 REINF.PVC TRANSP.	
420	90166-0158	MM	130	HOSE	
430	90166-0158	MM	500	HOSE	
440	90187-0059		1	BALL VALVE, FOR HYDR.PER. G1/2 3MM HOLE	
450	90330-0021		1	NIPPLE, EXT.THREAD, HEXAGON, R1/2-R1/2	
460	90330-0054		1	SLEEVE, INT. THREAD, NO. R-201R1/2	

Pos	Part No	UN	Qty	Description	Page No

Machine Type | Group Description | Used-In | Group Number | Page No

LID WITH WEIGHT

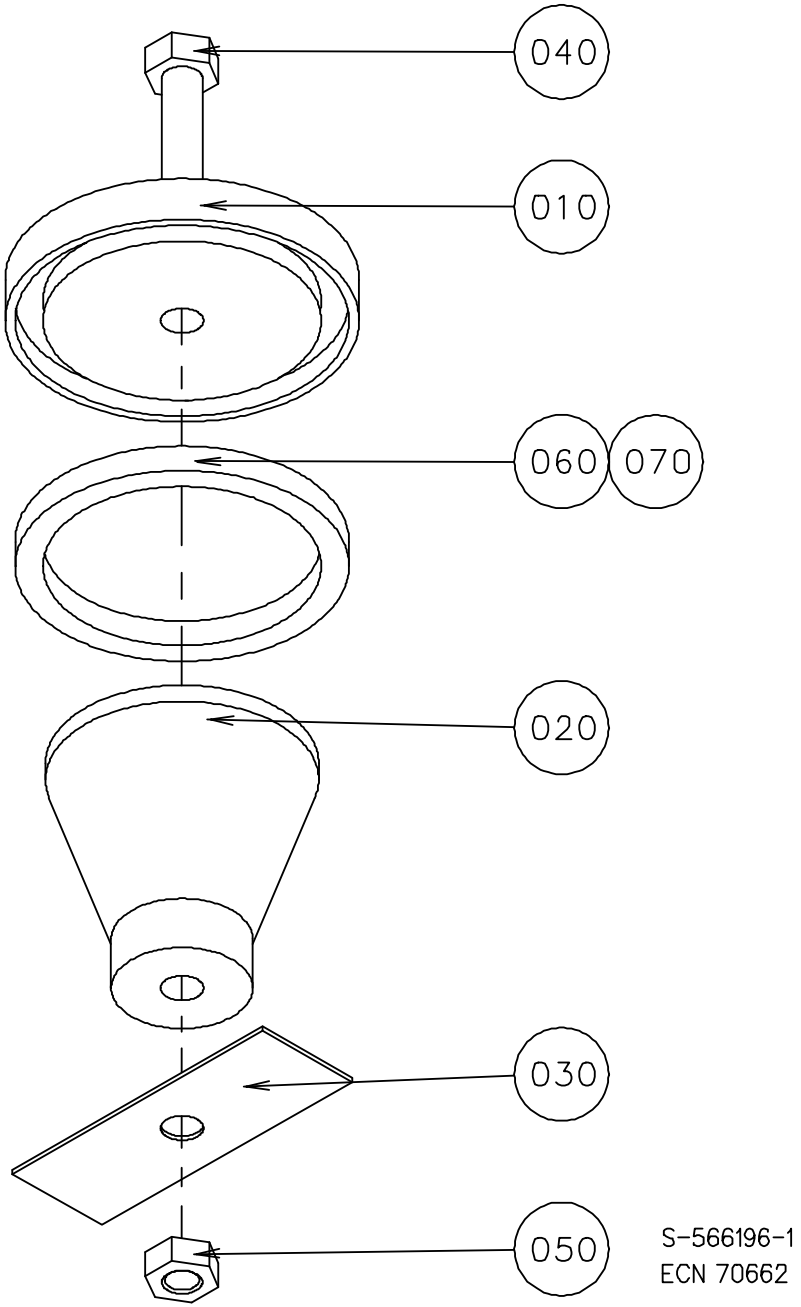

ECM: 385019 - 20090128
Group number: 566196-0100
Assembly Drawing: 566196-1_1_AA

Pos	Part No	UN	Qty	Description	Page No
-					
010	566195-0000		1	LID	
020	566194-0000		1	WEIGHT	
030	566171-0000		1	CUP SPRING	
040	312105-0466		1	SCREW, M6S ISO 4014 M8X75 A4 80	
050	312605-0318		1	HEXAGON NUT, M6M M8 A280	
060	90143-0020	MM	190	STRIP	
070	90153-0023		1	ADHESIVE, SILICON 251470 TUB 90CC(UN1993	

Pos	Part No	UN	Qty	Description	Page No

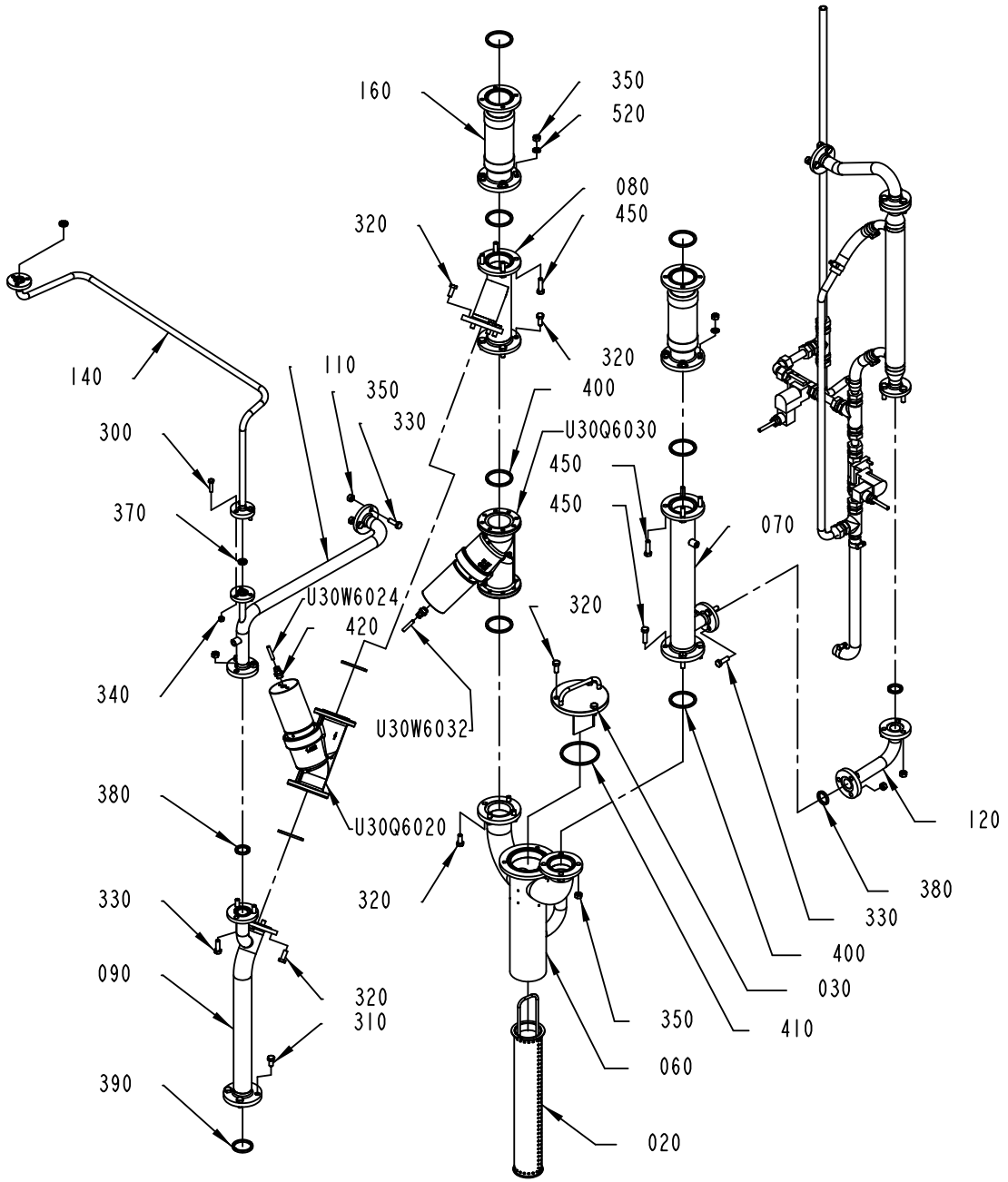
160
350
520
080
450
320
320
400
110
350
330
U30Q6030
140
300
370
450
450
070
U30W6024
420
320
340
U30W6032
380
U30Q6020
120
380
320
330
330
400
090
030
320
310
410
350
060
390
020

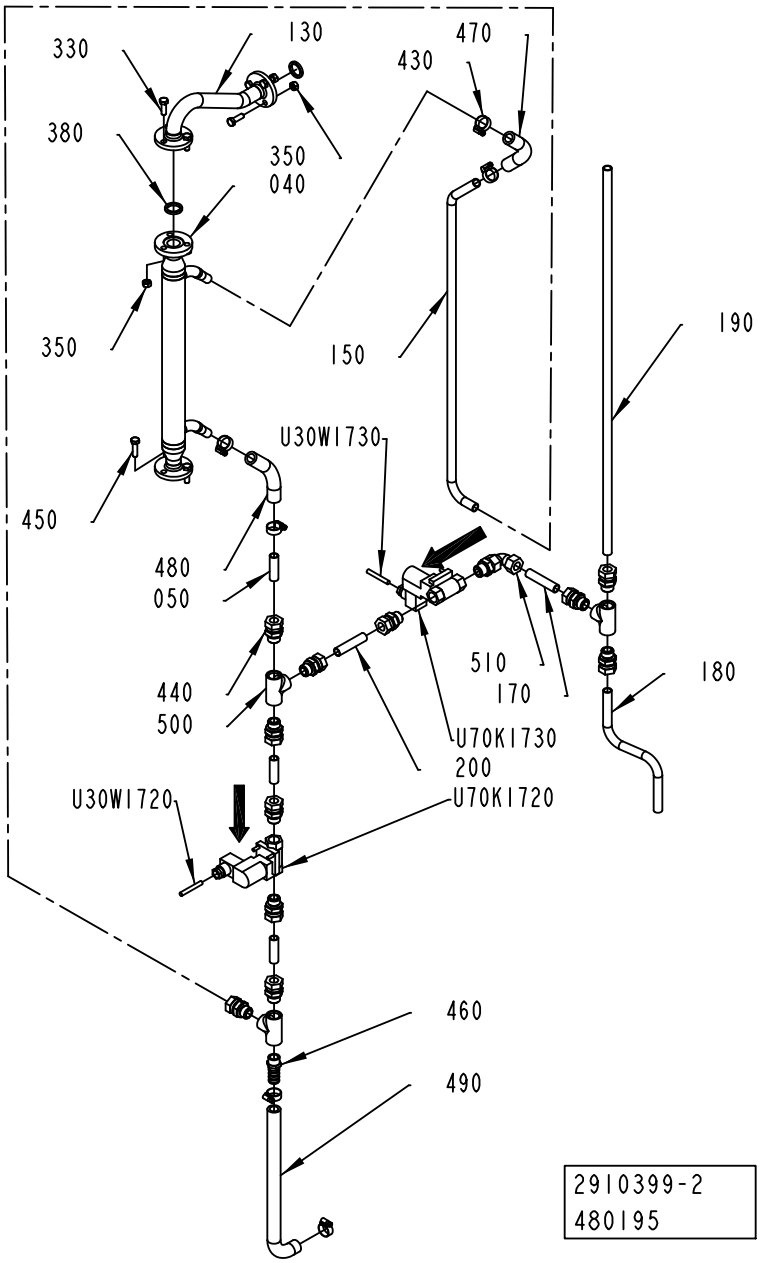
330
130
470
430
380
350
040
350
150
190
U30W1730
450
480
050
510
180
440
170
500
U70K1730
200
U30W1720
U70K1720
460
490
2910399-2
480195

ECM: 480544 - 20110401
Group number: 2910399-0200
Assembly Drawing: 2910399-2_1_AD

Pos	Part No	UN	Qty	Description	Page No
-					
020	1348529-0000		1	STRAINER	
030	1348530-0000		1	LID	
040	2509656-0000		1	PIPE	
050	2519442-0000		3	TUBE	
060	2910402-0000		1	CONNECTING PIPE	
070	2808207-0000		1	TUBE	
080	2910400-0000		1	PIPE	
090	2910401-0000		1	PIPE	
110	2808211-0000		1	TUBE	
120	2808212-0000		1	PIPE	
130	2808213-0000		1	PIPE	
140	2808214-0000		1	PIPE	
150	2808215-0000		1	TUBE	
160	2808348-0000		2	HOSE	
170	3020078-0000		1	PIPE	
180	3020079-0000		1	PIPE	
190	2844048-0000		1	TUBE	
200	2844053-0000		1	TUBE	
300	312105-0372		3	SCREW, M6S ISO 4017 M6X25 A4 80	
310	312105-0449		4	SCREW, M6S ISO 4017 M8X16 A4 80	
320	312105-0451		19	SCREW, M6S ISO 4017 M8X20 A4 80	
330	312105-0453		15	SCREW, M6S ISO 4017 M8X25 A4 80	
340	312605-0316		3	HEXAGON NUT, M6M M6 A280	
350	312605-0318		30	HEXAGON NUT, M6M M8 A280	
370	315229-0101		2	SQUARE RING, 10,4X17,4X3,7 MM 1/2" FDA	
380	315229-0103		6	SQUARE RING, 23,1X30,1X3,7 MM 1" FDA	
390	315229-0104		1	SQUARE RING, 35,8X42,8X3,7 MM 1"1/2 FD	
400	315229-0105		9	SQUARE RING, 48,5X55,5X3,7 MM 2" FDA	
410	315229-0107		1	SQUARE RING, 73,9X80,9X3,7 MM 2"1/2 FDA	
420	350001-0008		2	PUSH-IN FITTING QS-F-G1/4-6	
430	342991-0103		6	HOSE CLIP,WORM DRIVE TYPE (15)-24	
440	90030-0188		11	CONN. STR. GE15LRED71	
450	312105-0455		15	SCREW, M6S ISO 4017 M8X30 A4 80	
460	90055-0191		1	HOSE NIPPLE, EXT.THR. R1/2X16 MM	
470	90166-0087	M	0	HOSE 15/23 REINF.PVC TRANSP.	
480	90166-0087	M	0	HOSE 15/23 REINF.PVC TRANSP.	
490	90166-0087	M	0	HOSE 15/23 REINF.PVC TRANSP.	
500	90330-0049		3	T-PIPE, INT. THREAD, R-221R1/2	
510	342738-0221		1	ADJUSTABLE ELBOW CONNECTION 15-G1/2	
520	315105-0165		8	WASHER PLAIN, 8,4X16X1,6 A4 BRB	
U70K1720	90601-4450		1	SOLENOID VALVE, 5281 2/2 NC	
U70K1730	90601-4450		1	SOLENOID VALVE, 5281 2/2 NC	
U30Q6020	90459-5178		1	ANGLE SEAT VALVE, W. FLANGES,NO, 8498669	
U30Q6030	90459-5177		1	ANGLE SEAT VALVE, W. FLANGES,NO, 8498668	
U30W1720	351150-0403	M	3	CABLE OLFLEX 3X0,75 MM2 LIGHT/GREY	
U30W1730	351150-0403	M	3	CABLE OLFLEX 3X0,75 MM2 LIGHT/GREY	
U30W6024	315300-0001	M	3200	TUBE, 6 MM PE BLUE	
U30W6032	315300-0001	M	3200	TUBE, 6 MM PE BLUE	

Machine Type | Group Description | Used-In | Group Number | Page No

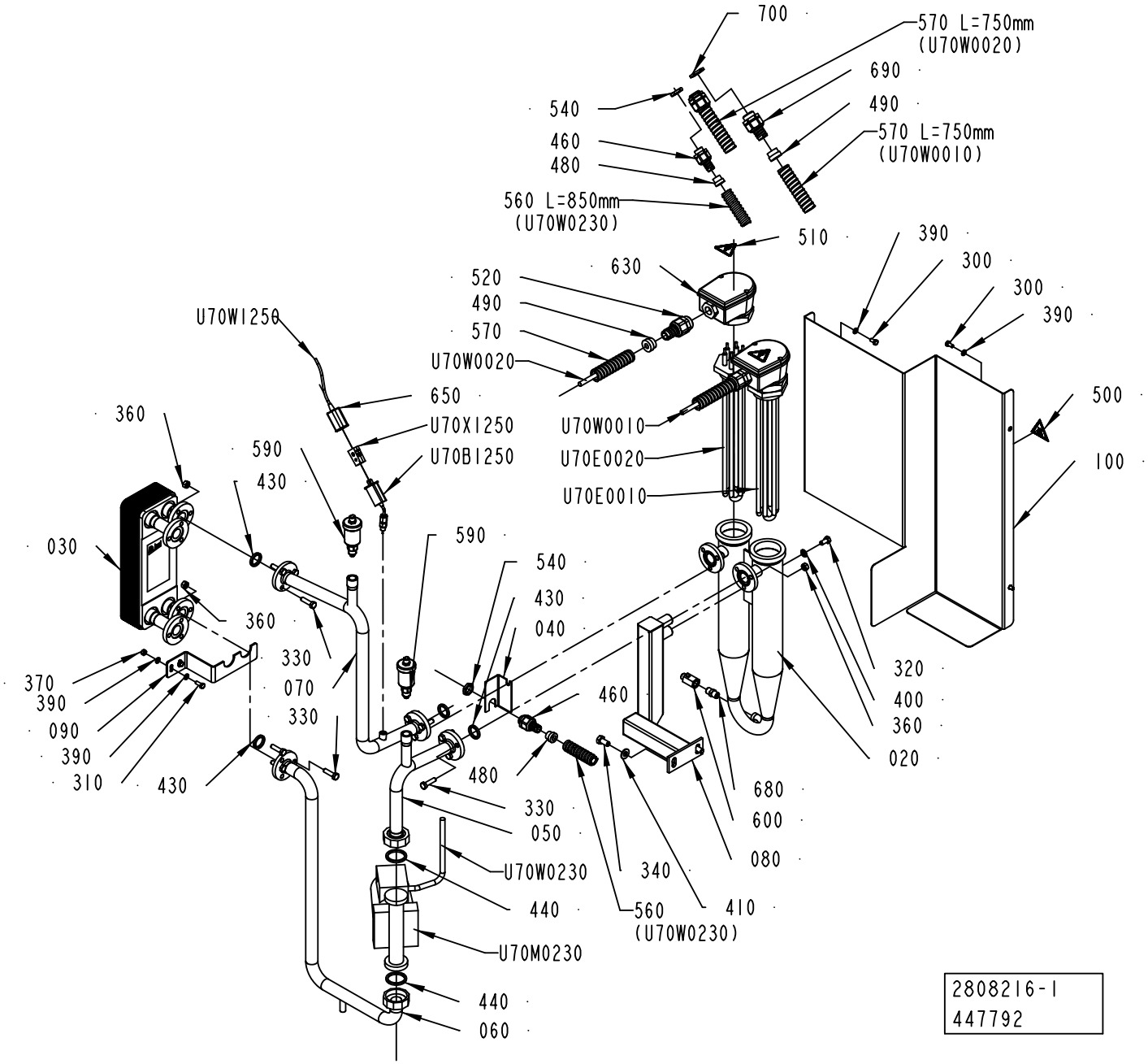
700
570 L=750mm
(U70W0020)
690
490
570 L=750mm
(U70W0010)
540
460
480
560 L=850mm
(U70W0230)
510
390
300
300
390
630
520
490
570
U70W0020
U70W1250
650
U70X1250
U70B1250
U70W0010
U70E0020
U70E0010
500
100
360
590
430
030
590
540
430
040
360
330
070
330
370
390
090
390
310
430
460
320
400
360
020
480
330
050
U70W0230
440
U70M0230
440
060
340
560
(U70W0230)
410
680
600
080
2808216-1
447792

ECM: 453395 - 20101001
Group number: 2808216-0100
Assembly Drawing: 2808216-1_1_AF

Pos	Part No	UN	Qty	Description	Page No
50HZ ISO					
500	359705-0007		1	WARNING SIGN ISO, HOT SURFACE	
510	359705-0015		2	WARNING SIGN ISO, RISK OF ELECTRIC SHOCK	
U70M0230	90321-0134		1	CIRCULATING PUMP, 105 006 120	
60HZ ANSI					
500	90459-7458		1	WARNING SIGN ANSI (H), HOT SURFACE	
510	359715-0101		2	WARNING SIGN ANSI (V), ELECTRIC SHOCK	
U70M0230	90321-0135		1	CIRCULATING PUMP, 105 006 121	
60HZ ISO					
500	359705-0007		1	WARNING SIGN ISO, HOT SURFACE	
510	359705-0015		2	WARNING SIGN ISO, RISK OF ELECTRIC SHOCK	
U70M0230	90321-0135		1	CIRCULATING PUMP, 105 006 121	
Common Parts					
020	1334507-0000		1	TUBE	
030	1346568-0000		1	HEAT EXCHANGER	
040	1517707-0000		1	BRACKET	
050	2808217-0000		1	PIPE	
060	2808218-0000		1	PIPE	
070	2808219-0000		1	PIPE	
080	2808343-0000		1	FRAME	
090	2808346-0000		1	HOLDER	
100	2808347-0000		1	PROTECTION	
300	312105-0366		4	SCREW, M6S ISO 4017 M6X12 A4 80	
310	312105-0368		2	SCREW, M6S ISO 4017 M6X16 A4 80	
320	312105-0449		2	SCREW, M6S ISO 4017 M8X16 A4 80	
330	312105-0455		12	SCREW, M6S ISO 4017 M8X30 A4 80	
340	312105-0491		2	SCREW, M6S ISO 4017 M10X20 A4 80	
360	312605-0318		12	HEXAGON NUT, M6M M8 A280	
370	312607-0316		2	HEXAGON NUT, EN 24032 M6M M6 A480	
390	315105-0153		8	WASHER PLAIN, 6,4X12X1,5 A4 BRB	
400	315105-0165		2	WASHER PLAIN, 8,4X16X1,6 A4 BRB	
410	315105-0173		2	WASHER PLAIN, 10,5X22X2 A4 BRB	
430	315229-0103		4	SQUARE RING, 23,1X30,1X3,7 MM 1" FDA	
440	315229-0104		2	SQUARE RING, 35,8X42,8X3,7 MM 1"1/2 FD	
460	353243-0003		2	GLAND FITTING, VK 15153YUL13	
480	353249-0011		2	INSERT, SINGLE HOLE, EK153 11	
490	353249-0012		4	INSERT, SINGLE HOLE, EK154 11	
520	90458-0431		2	GLAND FITTING, VK 22554YUL16	
540	90099-0117		2	PLUG, PR 18,6 (PG11)	
550	90144-0073		1	TREBOFLON-TAPE W=13MM	
560	90152-0050	MM	850	HOSE, SPIRAL CONDUIT, 20X13, UL 1313	
570	90152-0051	MM	1500	HOSE, SPIRAL CONDUIT, 25X18, UL 1816	
580	90157-0037		1	THREAD SEALANT LOCTITE 542	
590	90600-6015		2	VENTING VALVE, 12003 (+ 11163)	
	315202-0721		*1*	*O-RING 26,64X2,62 MM*	
	90600-6021		*1*	*O-RING 17X2 MM*	
600	90600-0775		1	BALL VALVE G1/4, 406F-1/4"	
630	90206-0326		2	CONNECTION BOX K2 FOR 90206-56 AND -70	
650	90326-0012		1	PROTECTIVE COVER, 03-001 10	
680	90330-0043		1	NIPPLE, EXT.THREAD, HEXAGON, R1/4-R1/4	
690	90458-0431		2	GLAND FITTING, VK 22554YUL16	
700	353250-0025		2	GLAND LOCK NUT, M25X1,5	
U70B1250	90326-0057		1	THERMOCOUPLE, 5110 057-000	
U70E0010	90206-0070		1	HEATING ELEMENT 6000W 380/220V	
	90206-0326		*1*	*CONNECTION BOX K2 FOR 90206-56 AND -70*	
	90269-0308		*1*	*GASKET 59X68X3 MM*	
U70E0020	90206-0070		1	HEATING ELEMENT 6000W 380/220V	
	90206-0326		*1*	*CONNECTION BOX K2 FOR 90206-56 AND -70*	
	90269-0308		*1*	*GASKET 59X68X3 MM*	
U70W0010	351120-0265	MM	4000	CABLE Ã–LFLEX HEAT 180 SIHF 4X2,5	
U70W0020	351120-0265	MM	4000	CABLE Ã–LFLEX HEAT 180 SIHF 4X2,5	
U70W0230	351120-0144	MM	4000	CABLE Ã–LFLEX HEAT 180 SIHF 3X1,5	
U70W1250	90220-0034	MM	5000	THERMOC.CABLE, TEX/SITW-20F-KX 2X0,5MM2	
U70X1250	90326-0020		1	SOCKET, FEMALE YELLOW CR-AL, 03-22000A	

Machine Type	Group Description	Used-In	Group Number	Page No

PRESSURE UNIT

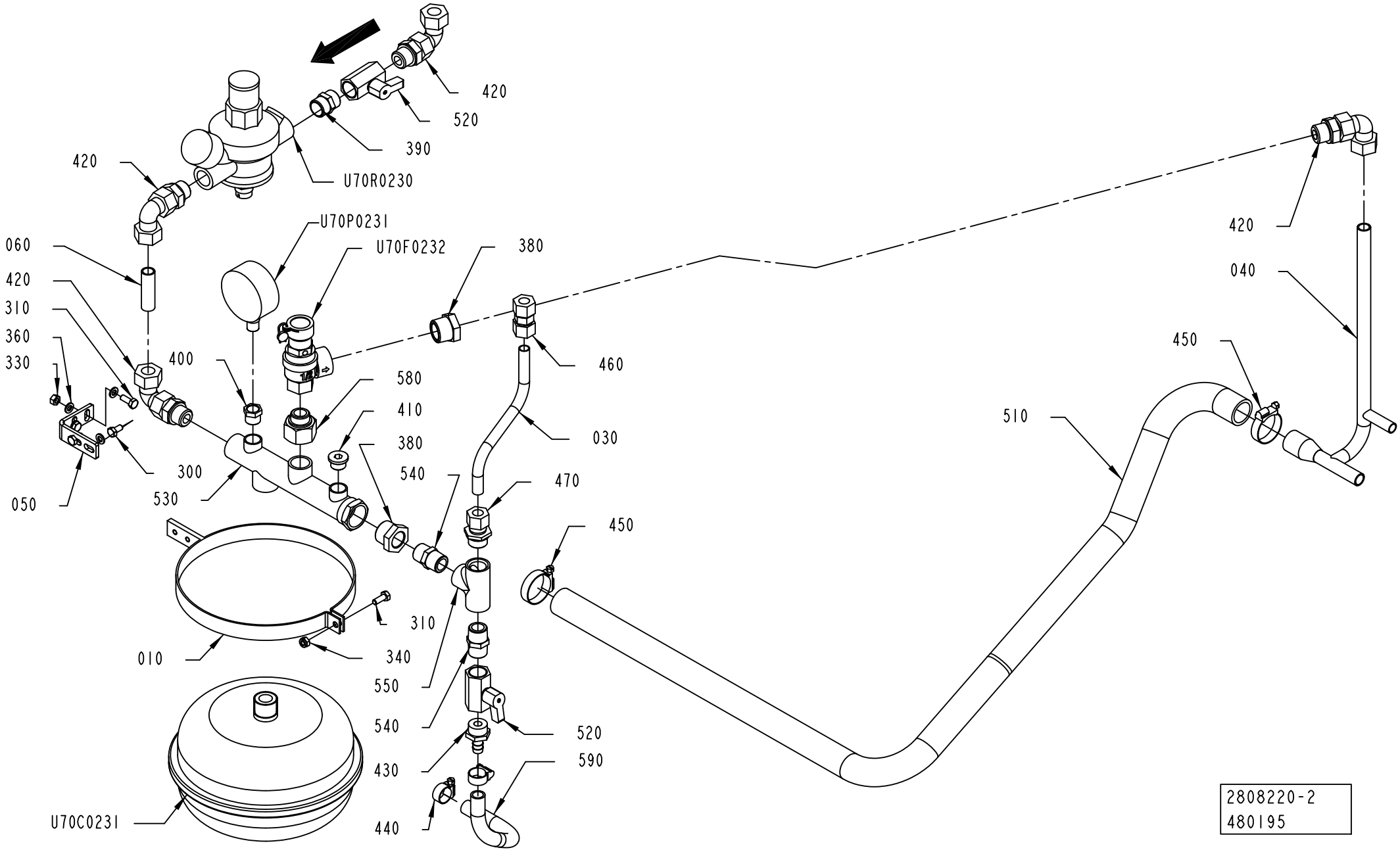

ECM: 480543 - 20110401
Group number: 2808220-0200
Assembly Drawing: 2808220-2_1_AC

Pos	Part No	UN	Qty	Description	Page No
-					
010	3057124-0000		1	BRACKET	
030	2808221-0000		1	PIPE	
040	3020073-0000		1	PIPE	
050	2808351-0000		1	HOLDER	
060	2519442-0000		1	TUBE	
300	312105-0366		2	SCREW, M6S ISO 4017 M6X12 A4 80	
310	312105-0368		3	SCREW, M6S ISO 4017 M6X16 A4 80	
330	312607-0316		2	HEXAGON NUT, EN 24032 M6M M6 A480	
340	312812-0316		1	HEXAGON NUT, NY-LOCK M6 A4 80	
360	315105-0153		6	WASHER PLAIN, 6,4X12X1,5 A4 BRB	
380	342206-0109		2	BUSHING, INT.EXT. THR. R3/4-G1/2	
390	342700-0113		1	NIPPLE, EXT.THREAD, HEXAGON, G1/2-G1/2	
400	342701-0203		1	BUSHING, INT/EXT. G 3/8 - G 1/4	
410	342713-0211		1	PLUG, EXT THREAD HEX SOCKET 8638-00-380	
420	342738-0221		4	ADJUSTABLE ELBOW CONNECTION 15-G1/2	
430	342901-0105		1	HOSE NIPPLE, EXT.THR. G1/2-12 MM	
440	342991-0102		2	HOSE CLIP,WORM DRIVE TYPE (13)-20	
450	342991-0106		2	HOSE CLIP,WORM DRIVE TYPE (26)-38	
460	90030-0106		1	PIPE CONNECTION G 12	
470	90030-0109		1	STRAIGHT PIPE CONN. GE12LR1/271	
480	90043-0002		1	PRESSURE GAUGE, 2040 D=63 MM	
490	90144-0073		1	TREBOFLON-TAPE W=13MM	
500	90157-0037		1	THREAD SEALANT LOCTITE 542	
510	90166-0158	MM	1165	HOSE	
520	90187-0062		2	BALL VALVE, G1/2, NPBR	
530	90304-0307		1	ATTACHMENT PIPE	
540	90330-0021		2	NIPPLE, EXT.THREAD, HEXAGON, R1/2-R1/2	
550	90330-0049		1	T-PIPE, INT. THREAD, R-221R1/2	
580	90458-0751		1	BUSHING, INT/EXT, G3/4-G1/2	
590	90459-6690	MM	300	HOSE PVC, 12/16 MM	
U70C0231	90602-3913		1	PRESSURE EXPANSION VESSEL, 13224	
U70F0232	90458-0200		1	PEROX. SAFETY VALVE, NO. 527-430 1/2X3/4	
U70R0230	90458-0201		1	FLUID AUT. FEEDER, ALINOX 1/2 46.04.00	

Pos	Part No	UN	Qty	Description	Page No

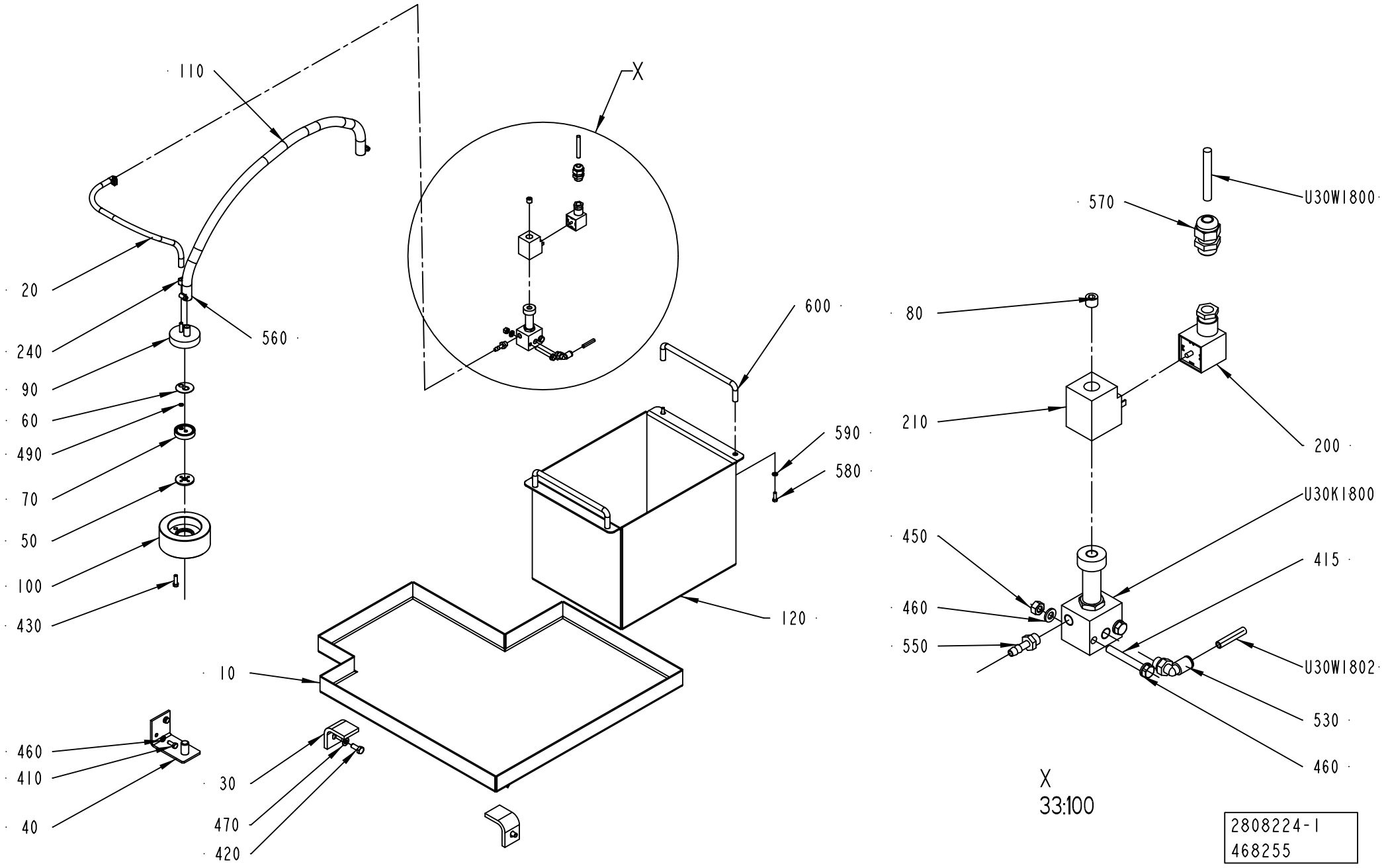
110
X
20
240
90
60
490
70
50
100
430
560
600
590
580
120
10
460
410
40
30
470
420
570
U30W1800
80
210
200
U30K1800
450
415
460
550
U30W1802
530
460
X
33:100
2808224-1
468255

ECM: 472120 - 20110101
Group number: 2808224-0100
Assembly Drawing: 2808224-1_1_AC

Pos	Part No	UN	Qty	Description	Page No
-					
010Â	2808225-0000		1	SPLASH PLATE	
020	90166-0101	MM	700	HOSE, SILICONE, 60 SHORE, 6/10 MM	
030	1037539-0000		2	BRACKET	
040	1317784-0000		1	BRACKET	
050	273981-0000		1	GASKET	
060	527912-0000		1	NON-RETURN VALVE	
070	530551-0000		1	WASHER	
080	563285-0000		1	BLIND PLUG	
090	1129328-0000		1	ATTACHMENT	
100	1317226-0000		1	WEIGHT	
110	90166-0161	MM	950	HOSE	
120	2944449-0000		1	SPLASH PLATE	
200	90110-0095		1	CONNECTOR, PLUG SOCKET, MSSD-C-4P	
210	90042-0487		1	COIL, 04983-197-18	
240	90132-0021		2	HOSE CLIP 6-10MM	
410	312105-0368		2	SCREW, M6S ISO 4017 M6X16 A4 80	
415	312105-0379		2	SCREW, M6S ISO 4014 M6X45 A4 80	
420	312105-0451		2	SCREW, M6S ISO 4017 M8X20 A4 80	
430	312125-0370		2	SLOTTED HEAD SCREW, ISO1207 M6X20 A4	
450	312605-0316		2	HEXAGON NUT, M6M M6 A280	
460	315105-0153		6	WASHER PLAIN, 6,4X12X1,5 A4 BRB	
470	315105-0165		2	WASHER PLAIN, 8,4X16X1,6 A4 BRB	
490	315204-0103		1	O-RING 5,1X1,6 MM	
530	350002-0006		1	PUSH-IN L-FITTING QSL-F-G1/8-6	
550	342901-0101		1	HOSE NIPPLE, EXT.THR. G1/8-7 MM	
560	342991-0101		2	HOSE CLIP,WORM DRIVE TYPE (11)-17	
570	352103-0101		1	CABLE GLAND, ST 9, PR15,2/PG9	
580	312105-0329		4	SCREW, M6S ISO 4017 M5X16 A4 80	
590	315105-0146		4	WASHER PLAIN, 5,3X10X1 A4 BRB	
600	90600-2670		2	HANDLE, GN 425-10-200-NI	
U30K1800	90042-0206		1	SOLENOID VALVE, G1/8 444-111-000-1	
U30W1800	351150-0403	M	3	CABLE OLFLEX 3X0,75 MM2 LIGHT/GREY	
U30W1802	315300-0001	M	2	TUBE, 6 MM PE BLUE	

Pos	Part No	UN	Qty	Description	Page No

Machine Type	Group Description	Used-In	Group Number	Page No

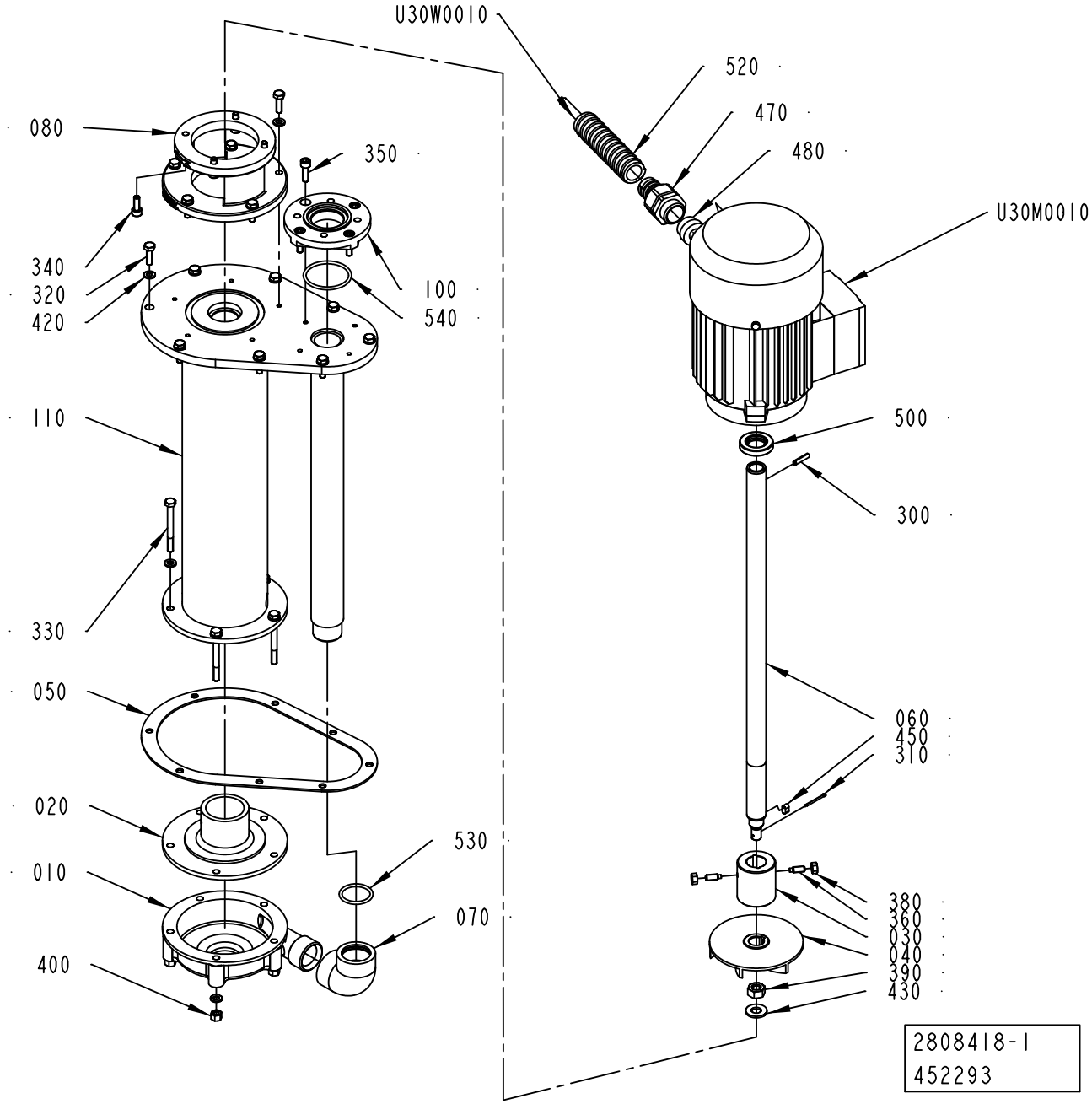
U30W0010
520
470
480
U30M0010
080
350
340
320
420
100
540
110
500
300
330
050
060
450
310
020
530
010
070
400
380
360
030
040
390
430
2808418-1
452293

ECM: 452295 - 20100701
Group number: 2808418-0100
Assembly Drawing: 2808418-1_1_AE

Pos	Part No	UN	Qty	Description	Page No
-					
010	2987089-0000		1	PUMP HOUSING	
020	292456-0000		1	BEARING COVER	
030	2510372-0000		1	BUSHING	
040	491929-0000		1	IMPELLER WHEEL	
050	577770-0000		1	GASKET	
060	577771-0000		1	SHAFT	
070	751316-0000		1	ELBOW PIPE	
080	751395-0000		1	FLANGE	
100	1523061-0000		1	FLANGE	
110	2808419-0000		1	EXTENSION PIPE	
300	311112-0256		1	SPRING PIN, ISO 8752 4X20 A2	
310	311411-0169		1	SPLIT PIN SP2,5X25RFR	
320	312105-0370		13	SCREW, M6S ISO 4017 M6X20 A4 80	
330	312105-0382		5	SCREW, M6S ISO 4014 M6X60 A4 80	
340	312115-0368		4	SCREW ISO4762 M6X16 A4 80	
350	312115-0370		4	SCREW ISO4762 M6X20 A4 80	
360	90287-0159		2	SET SCREW, DOGPOINT M6X16 A4	
380	312605-0316		2	HEXAGON NUT, M6M M6 A280	
390	312605-0320		1	HEXAGON NUT, M6M M10 A280	
400	312811-0316		5	NUT HEX.LOCK HELI COIL MID GRIP M6 SS	
420	315105-0153		23	WASHER PLAIN, 6,4X12X1,5 A4 BRB	
430	315105-0173		1	WASHER PLAIN, 10,5X22X2 A4 BRB	
450	315705-0196		1	PARALLEL KEY W. ROUND ENDS, 5X5X10 MM	
470	90458-0431		1	GLAND FITTING, VK 22554YUL16	
480	353249-0013		1	INSERT, SINGLE HOLE, EK154 13	
500	90459-5018		1	SEALING RING, VARILIP 20X35X7 MM	
510	90144-0073		1	TREBOFLON-TAPE W=13MM	
520	90152-0051	MM	2500	HOSE, SPIRAL CONDUIT, 25X18, UL 1816	
530	927422-0004		1	O-RING 29.2X3 SILICONE	
540	927422-0007		1	O-RING 44.2X3 SILICONE	
U30M0010	90602-9317		1	MOTOR 1LA9073-2KA12	
U30W0010	351150-0413	MM	4500	CABLE OLFLEX 4GX1,5 MM2 LIGHT/GREY	

Pos	Part No	UN	Qty	Description	Page No

Machine Type | Group Description | Used-In | Group Number | Page No

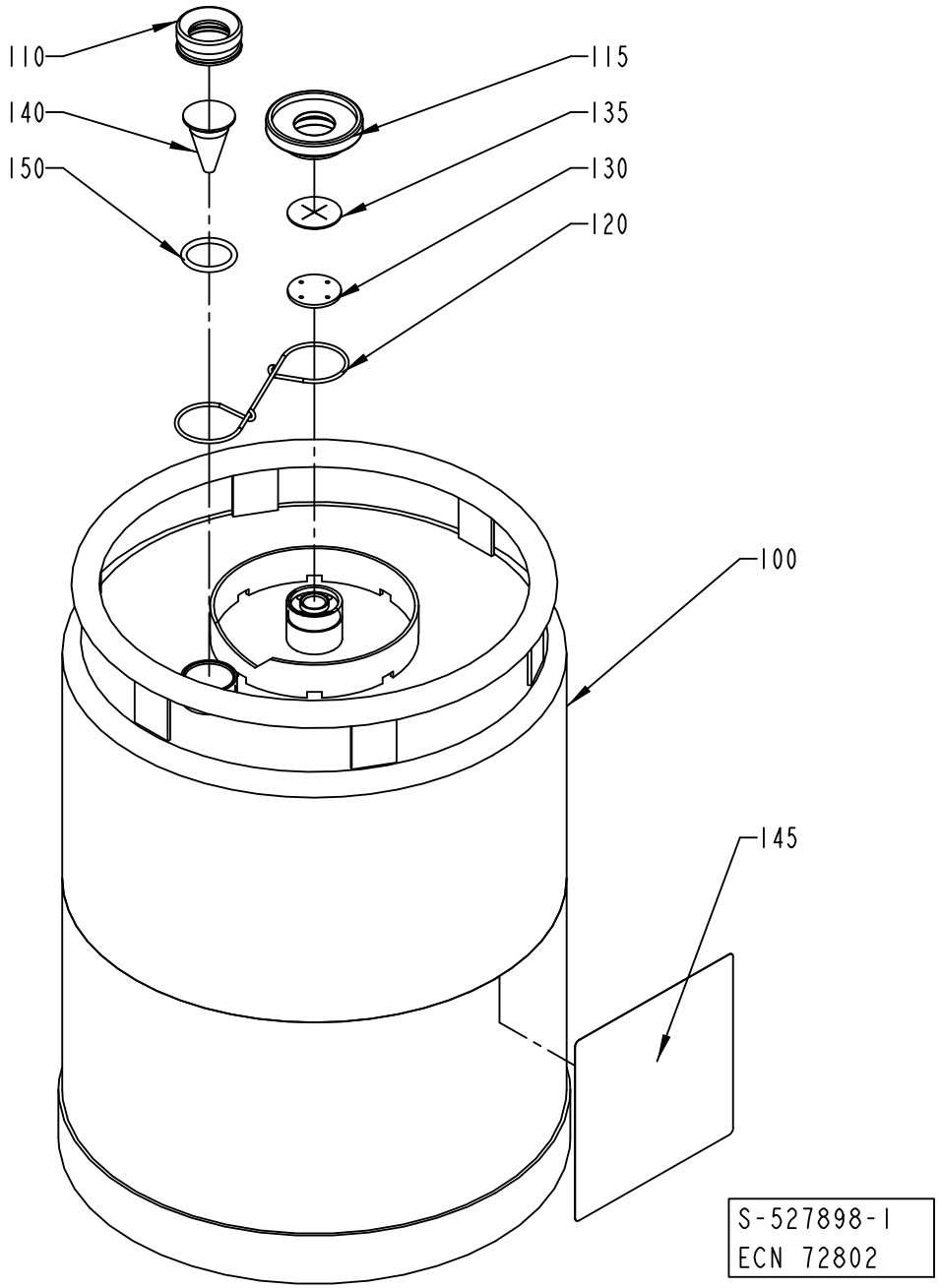
110
140
150
115
135
130
120
100
145
S-527898-1
ECN 72802

ECM: 224840 - 20050831
Group number: 527898-0100
Assembly Drawing: 527898-1_1_AB

Pos	Part No	UN	Qty	Description	Page No
-					
100	561427-0000		1	CONTAINER	
110	273977-0000		1	NUT	
115	273996-0000		1	NUT	
120	273980-0000		1	SPRING	
130	565250-0000		1	WASHER	
135	565251-0000		1	VALVE	
140	273978-0000		1	LEVEL GLAS	
145	532655-0000		1	CAUTION SIGN	
150	927422-0003		1	O.RING 24.2X3 SILICONE	

Pos	Part No	UN	Qty	Description	Page No

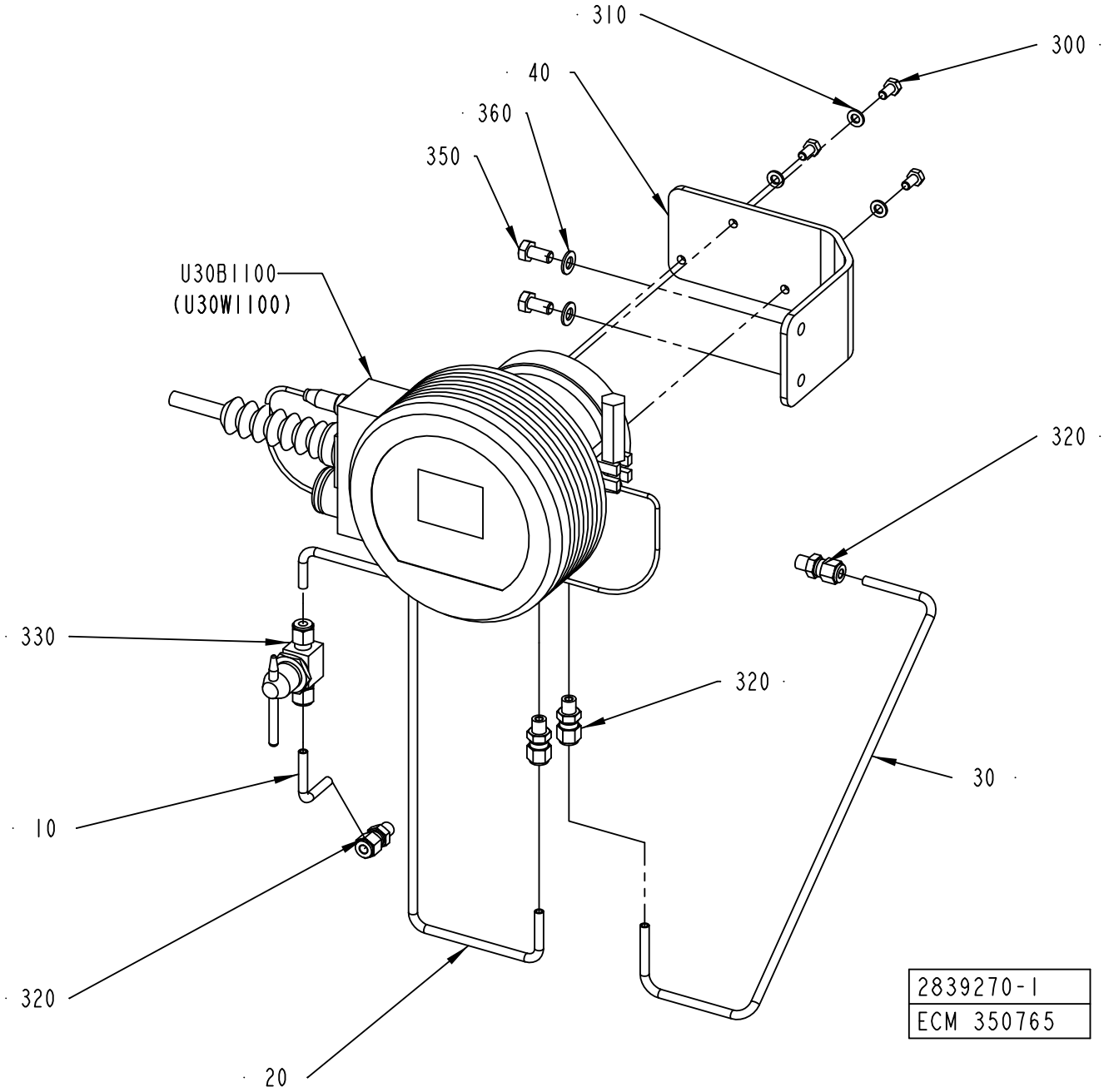
310
300
40
360
350
U30B1100
(U30W1100)
320
330
320
30
10
320
20
2839270-1
ECM 350765

ECM: 352515 - 20080422
Group number: 2839270-0100
Assembly Drawing: 2839270-1_1_AB

Pos	Part No	UN	Qty	Description	Page No
-					
010Â	2839273-0000		1	TUBE	
020	2839271-0000		1	TUBE	
030	2839272-0000		1	TUBE	
040	2519556-0000		1	BRACKET	
300	312105-0366		3	SCREW, M6S ISO 4017 M6X12 A4 80	
310	315105-0153		3	WASHER PLAIN, 6,4X12X1,5 A4 BRB	
320	90458-1477		4	CONNECTOR 6-1/8 NPT, EXT. TAPERED	
330	90458-1478		1	BALL VALVE SS-43GS6MM-SH	
350	312105-0449		2	SCREW, M6S ISO 4017 M8X16 A4 80	
360	315105-0165		2	WASHER PLAIN, 8,4X16X1,6 A4 BRB	
U30B1100	90458-1977		1	REFRACTOMETER SET DA15FC15A DFTP A	
	90458-1892		*1*	*GASKET A0539066 73X90,5X2 MM*	
	90458-1893		*1*	*CARTRIDGE A0111004*	
	90458-1940		*1*	*CLAMP A0515170 3" AISI 304*	
	90458-1941		*1*	*O-RING A0701180 10,82X1,78 MM*	
	90458-1943		*1*	*O-RING A0701145 53,65X2,62 MM*	
	90458-1950		*1*	*PROBE A0803021 IPT100 1/8" GAS TRIC-B*	
	90458-1976		*1*	*CABLE A0804273*	
	90458-1979		*1*	*BELLOWS A0710020*	
	90458-1980		*1*	*REFRACTOMETER DA16FC16B*	
	90458-2269		*1*	*DEFLECTOR A0808137*	

Pos	Part No	UN	Qty	Description	Page No

Machine Type | Group Description | Used-In | Group Number | Page No

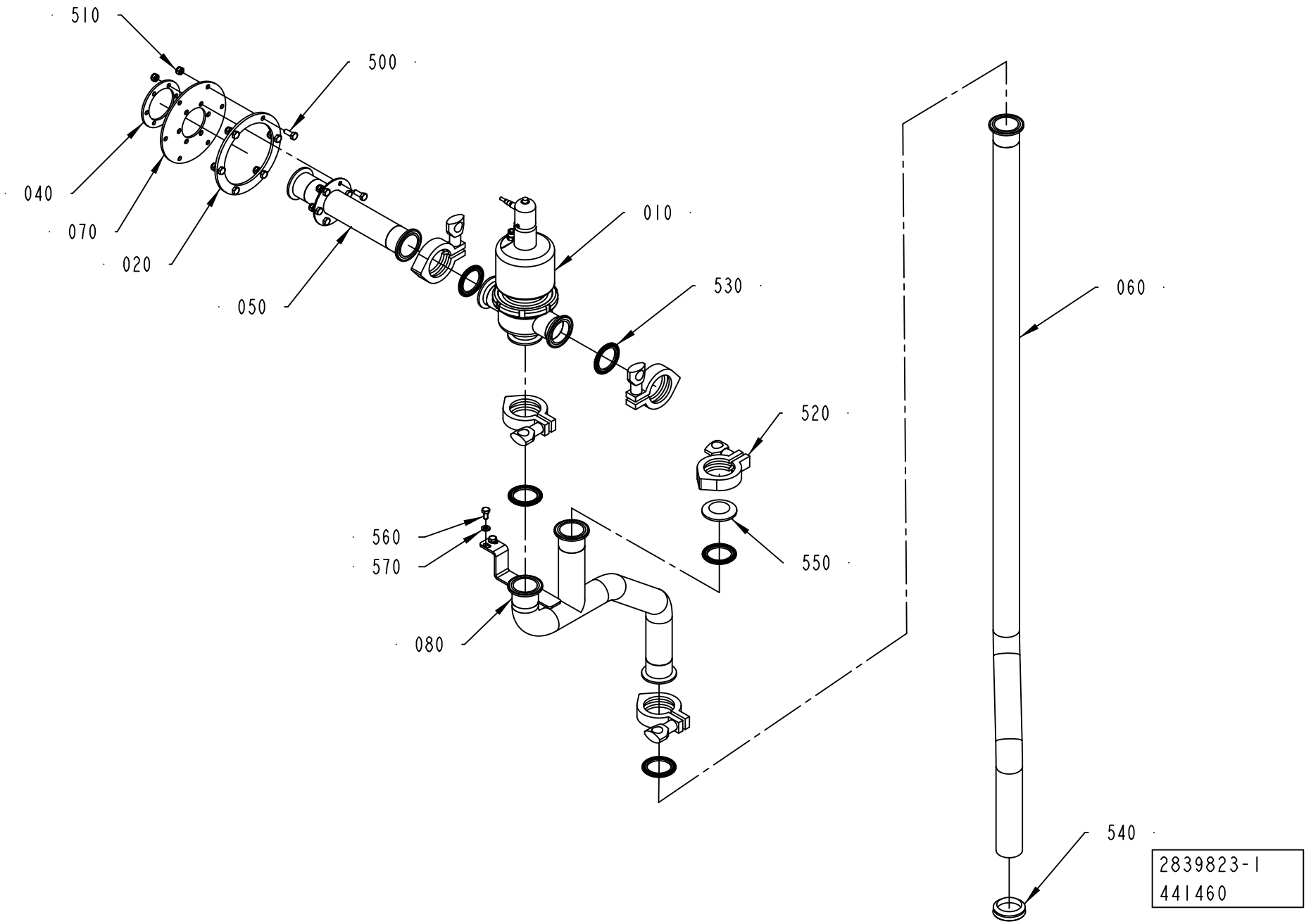
510
500
040
070
020
050
010
530
060
520
560
570
550
080
540
2839823-1
441460

ECM: 442570 - 20100701
Group number: 2839823-0100
Assembly Drawing: 2839823-1_1_AD

Pos	Part No	UN	Qty	Description	Page No
-					
010	2500088-0200		1	3-WAY VALVE	**2-221**
020	1498856-0000		1	FLANGE	
040	1498858-0000		1	FLANGE	
050	2890879-0000		1	PIPE	
060	2837634-0000		1	PIPE	
070	1498855-0000		1	GASKET	
080	3037865-0000		1	PIPE	
500	312105-0368		12	SCREW, M6S ISO 4017 M6X16 A4 80	
510	312812-0316		12	HEXAGON NUT, NY-LOCK M6 A4 80	
520	344215-0103		5	CLAMP RING A13MHM 1X1 1/2", 211053	
530	342850-0304		5	GASKET 35,4X49,1X5,2 1"1/2 FDA, 3-A	
540	315220-0183		1	V-RING 36X46X13 MM V-40S	
550	6-210854 00		1	END CAP 16AMP SOLID TC 1" & 1.5" 316L	
560	312105-0366		2	SCREW, M6S ISO 4017 M6X12 A4 80	
570	315105-0153		2	WASHER PLAIN, 6,4X12X1,5 A4 BRB	

Pos	Part No	UN	Qty	Description	Page No

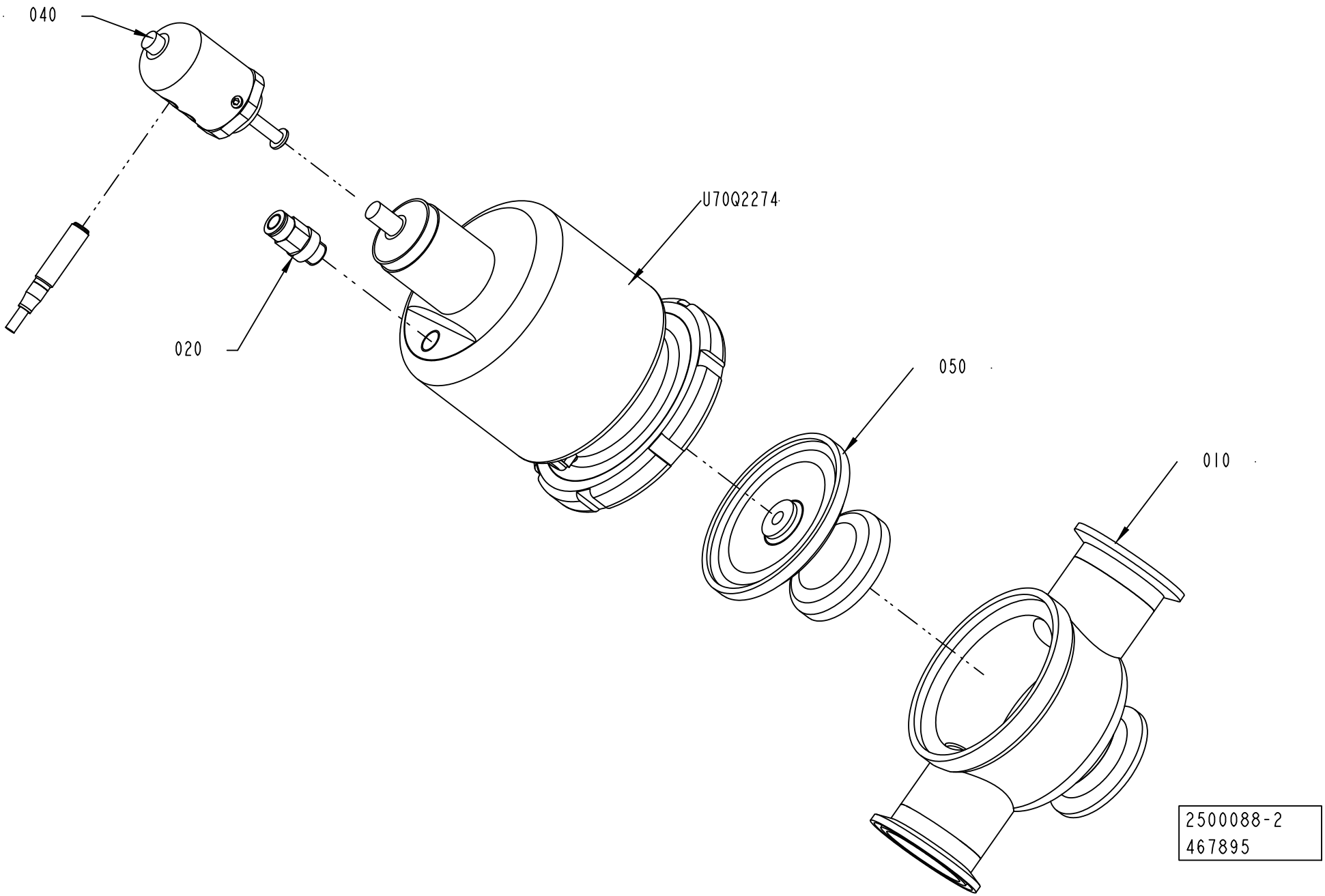
040
020
U70Q2274
050
010
2500088-2
467895

ECM: 472332 - 20110101
Group number: 2500088-0200
Assembly Drawing: 2500088-2_1_AB

Pos	Part No	UN	Qty	Description	Page No
-					
010	2501292-0000		1	VALVE HOUSING	
020	350001-0006		1	PUSH-IN FITTING QS-F-G1/8-6	
040	90458-1537		1	HOLDER FOR SENSORS, PA38/PO-TET-PTFE	
050	90458-1541		1	DIAPHRAGM, NA 38/25 PFTE	
	90458-1542		*1*	*SUPPORT FOR NA 38/25 DIAPHRAGM*	
T40B1060	90600-0473		1	INDUCTIVE SWITCH E2A-S08KS01-WP-B1-TP 5M	
U70Q2274	90458-1531		1	ACTUATOR, N.O., PA 38/100	
	90458-1533		*1*	*LOCK RING, N7-29, FOR PA 38*	
	90458-1534		*1*	*SILENCER, N4-23, FOR PA 38/100*	

Pos	Part No	UN	Qty	Description	Page No

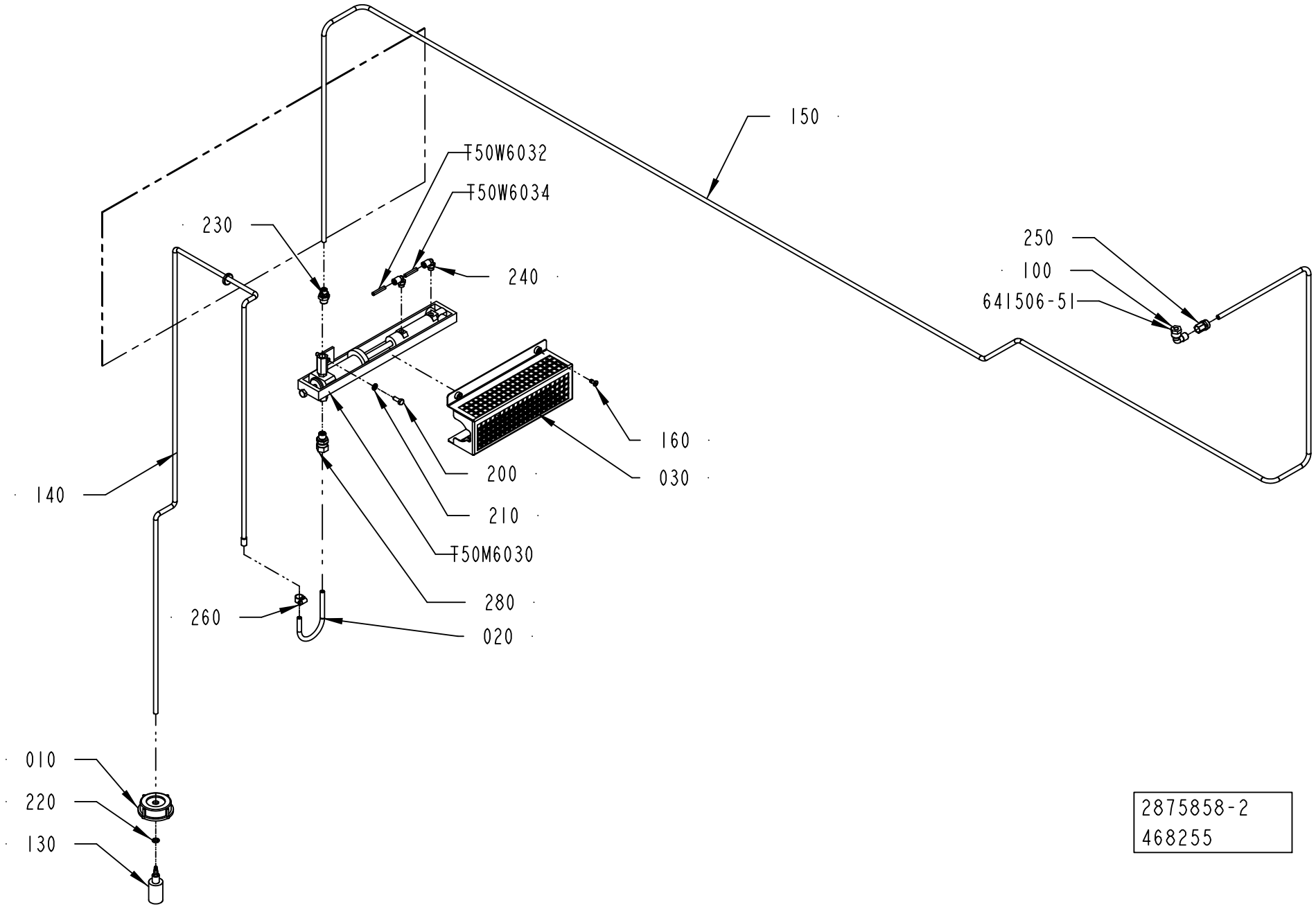
150
T50W6032
T50W6034
230
240
250
100
641506-51
160
030
200
210
T50M6030
280
020
260
140
010
220
130
2875858-2
468255

ECM: 472130 - 20110101
Group number: 2875858-0200
Assembly Drawing: 2875858-2_1_AC

Pos	Part No	UN	Qty	Description	Page No
-					
010	1129432-0000		1	LID	
020	2962056-0000		1	PIPE	
030	3025064-0000		1	PROTECTIVE COVER	
100	90030-0071		1	CONN. ELBOW, WE08LR71	
130	90415-0052		1	FILTER ART NO 12565 C-340-6E FOTVENTI EP	
140	90166-0008	M	2	HOSE 7/10 PVC TRANSP.	
150	315300-0006	M	5	TUBE, 8 MM PE BLACK	
160	90601-2046		2	CAPTIVE SCREW M6, GUTBG 6-4-12	
200	312105-0368		2	SCREW, M6S ISO 4017 M6X16 A4 80	
210	315101-0153		2	WASHER PLAIN, BRB, 6,4/12 H=1,5	
220	315204-0207		1	O-RING 8,3X2,4 MM	
230	342921-0122		1	STRAIGHT COUPLING, EXT.THREAD 8/6-G1/4	
240	350002-0006		2	PUSH-IN L-FITTING QSL-F-G1/8-6	
250	342923-0122		1	STRAIGHT COUPL.,INT.THREADED 8/6-G1/4"	
260	342991-0100		1	HOSE CLIP,WORM DRIVE TYPE (8)-14	
280	90030-0185		1	CONN. STR., GE08LRED71	
T50M6030	90321-0128		1	CHEMICAL PUMP UNIT 081778	
T50W6032	315300-0001	M	2	TUBE, 6 MM PE BLUE	
T50W6034	315300-0001	M	2	TUBE, 6 MM PE BLUE	

Pos	Part No	UN	Qty	Description	Page No

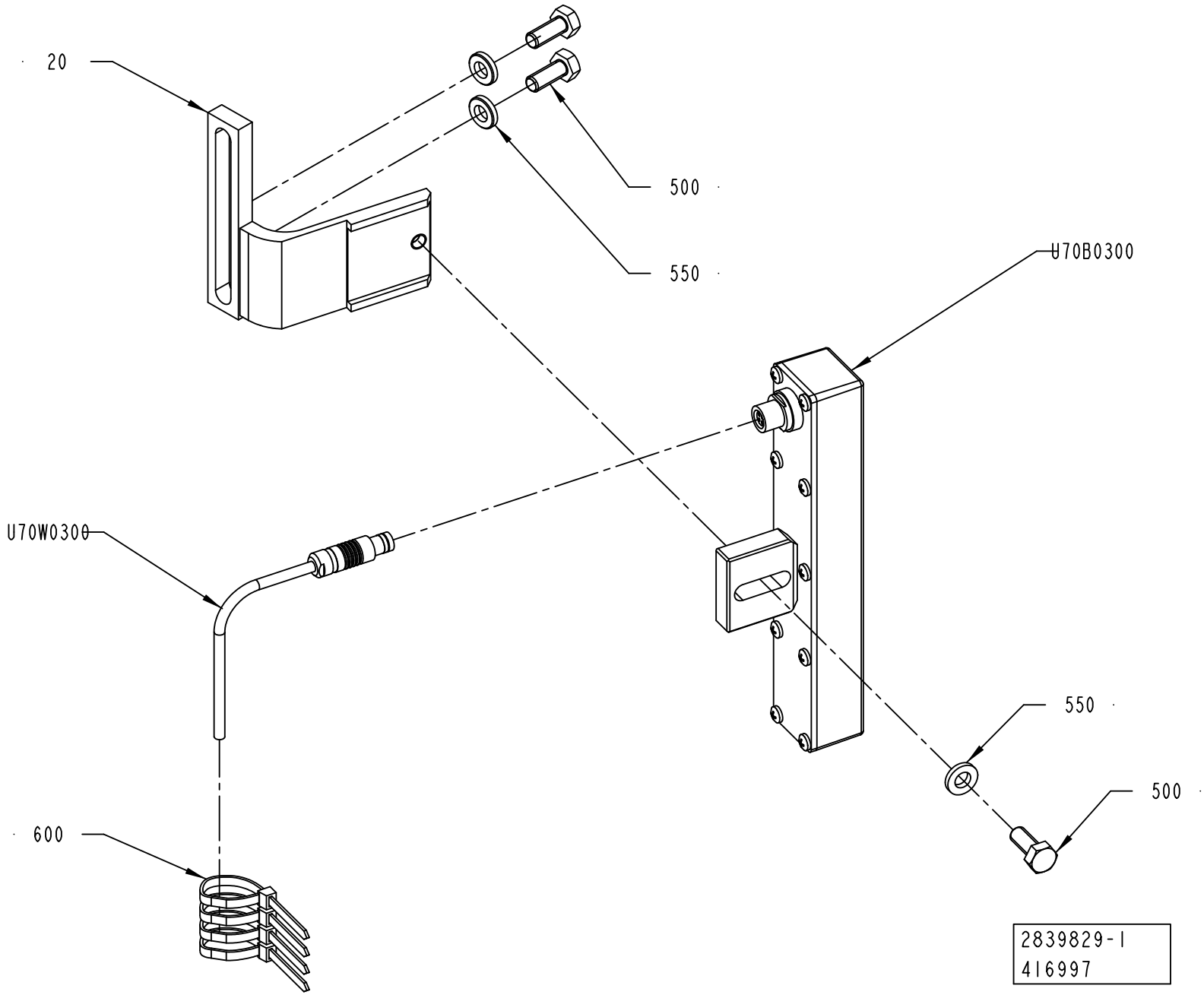
20
500
550
U70B0300
U70W0300
550
500
600
2839829-1
416997

ECM: 417311 - 20090924
Group number: 2839829-0100
Assembly Drawing: 2839829-1_1_AB

Pos	Part No	UN	Qty	Description	Page No
-					
020	2926384-0000		1	HOLDER	
500	312105-0451		3	SCREW, M6S ISO 4017 M8X20 A4 80	
550	315115-0165		3	WASHER PLAIN, TBRB 8,4/16 H=3	
600	352113-0102		4	CABLE TIE, BLACK 188X4,8 MM	
U70B0300	2968260-0000		1	LEVEL PROBE	
U70W0300	90459-4705		1	LOCKING PLUG, S 103 A 053-130+ AND 90220	
	90459-4707		*1*	*RECEPTACLE, MOD.DBEE 103 A 053-130*	

Pos	Part No	UN	Qty	Description	Page No

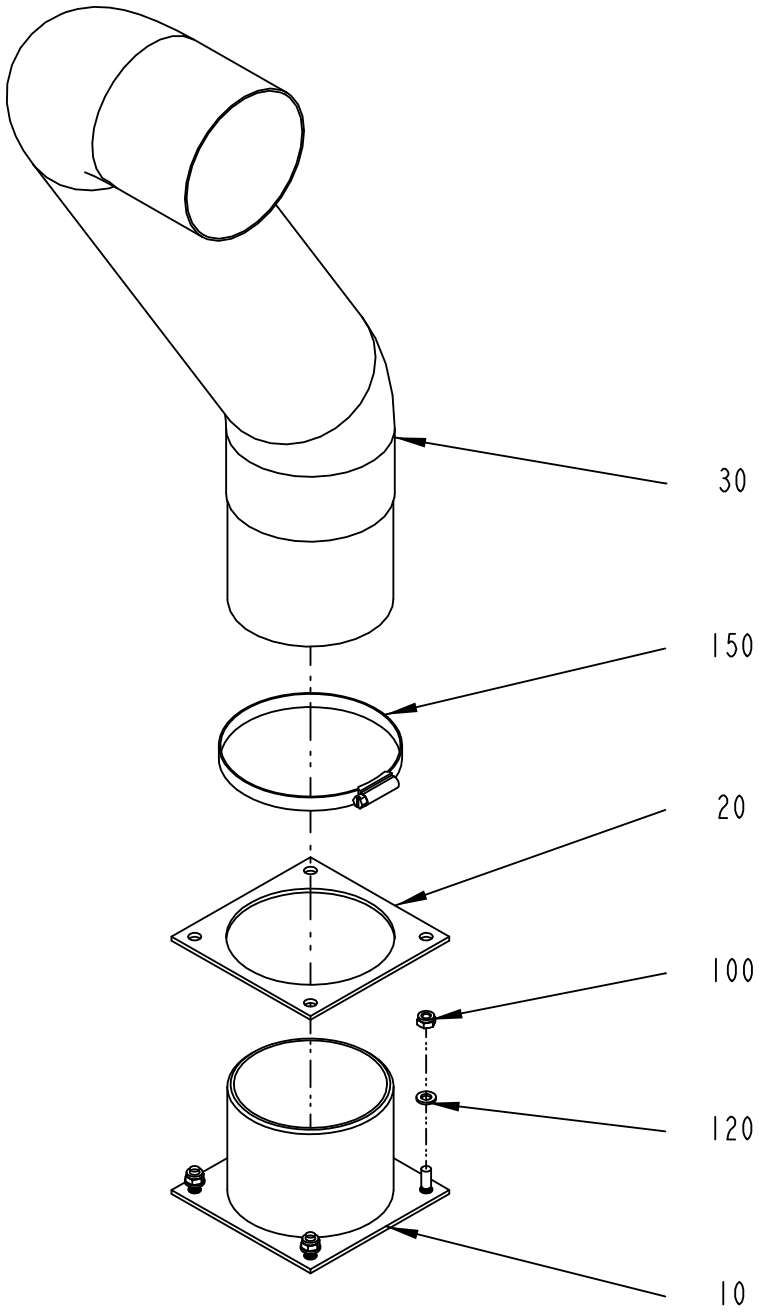

3033500-1
399113

ECM: 410176 - 20090904
Group number: 3033500-0100
Assembly Drawing: 3033500-1_1_AA

Pos	Part No	UN	Qty	Description	Page No
-					
010	3031958-0000		1	HOSE CONNECTION	
020	3031959-0000		1	HOSE CONNECTION	
030	3032296-0000	MM	1100	HOSE	
100	312812-0316		4	HEXAGON NUT, NY-LOCK M6 A4 80	
120	315105-0153		4	WASHER PLAIN, 6,4X12X1,5 A4 BRB	
150	342991-0114		1	HOSE CLIP,WORM DRIVE TYPE (87)-112	

Pos	Part No	UN	Qty	Description	Page No

Tetra Pak

SPC
Spare Parts Catalogue

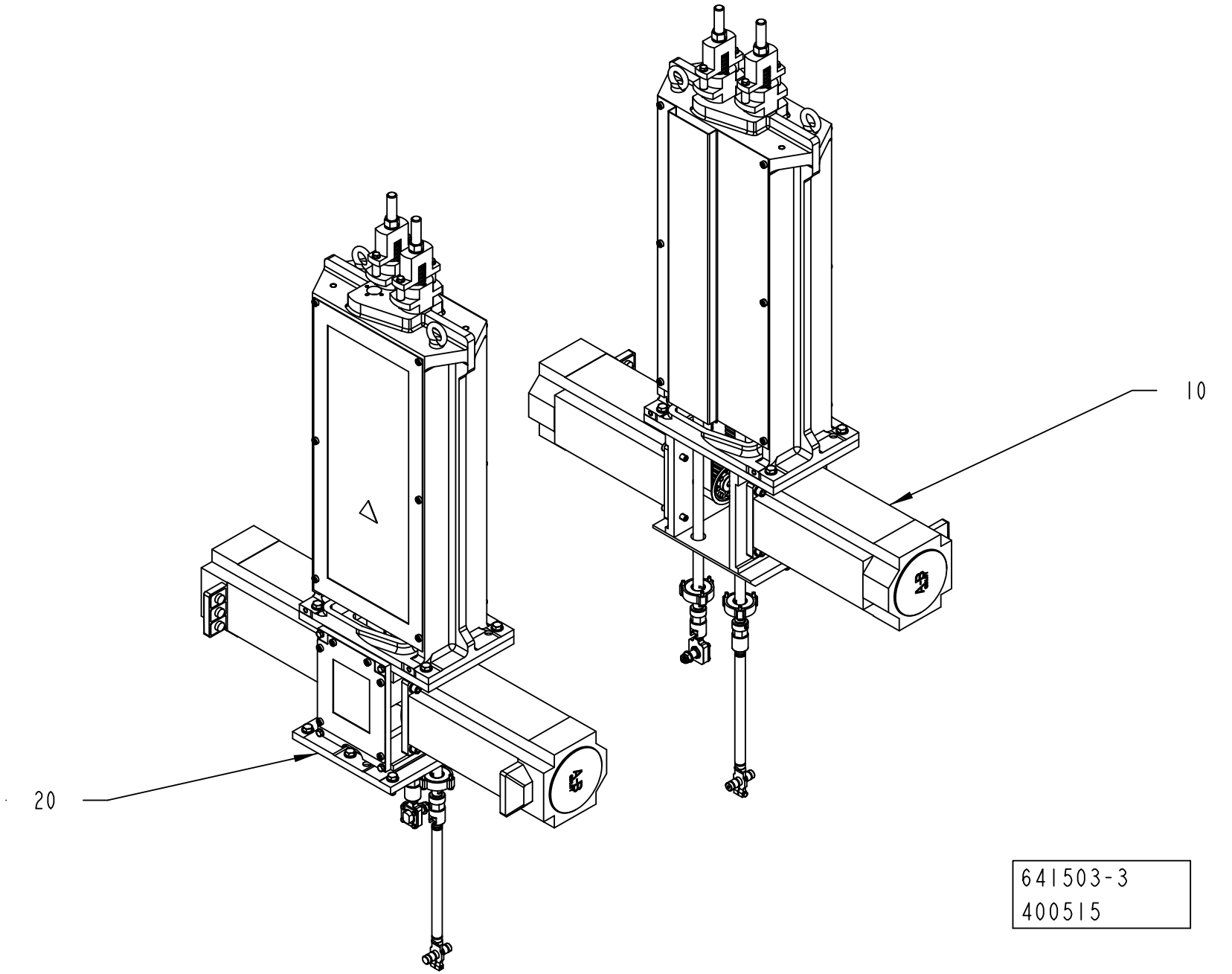
10
20
641503-3
400515

ECM: 404339 - 20090701
Group number: 641503-0200
Assembly Drawing: 641503-3_1_AA

Pos	Part No	UN	Qty	Description	Page No
-					
010	2931510-0200		1	DRIVE UNIT RIGHT	**3-5**
020	2931511-0200		1	DRIVE UNIT LEFT	**3-29**

Pos	Part No	UN	Qty	Description	Page No

Machine Type | Group Description | Used-In | Group Number | Page No

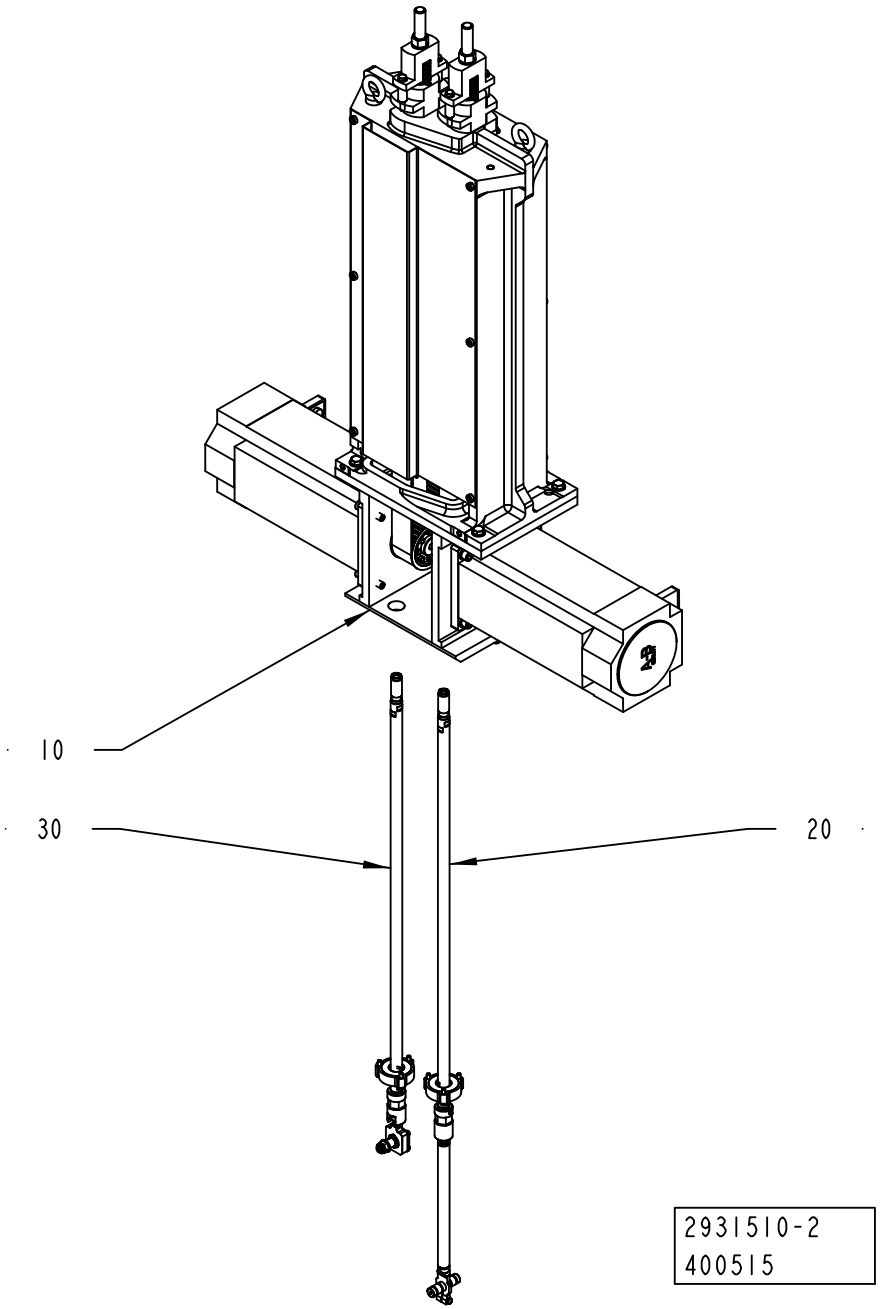
10
30
20
2931510-2
400515

ECM: 404338 - 20090701
Group number: 2931510-0200
Assembly Drawing: 2931510-2_1_AA

Pos	Part No	UN	Qty	Description	Page No
-					
010	2931512-0200		1	SUPPORT	**3-7**
020	2890415-0100		1	LINK	**3-21**
030	2890414-0100		1	LINK	**3-27**

Pos	Part No	UN	Qty	Description	Page No

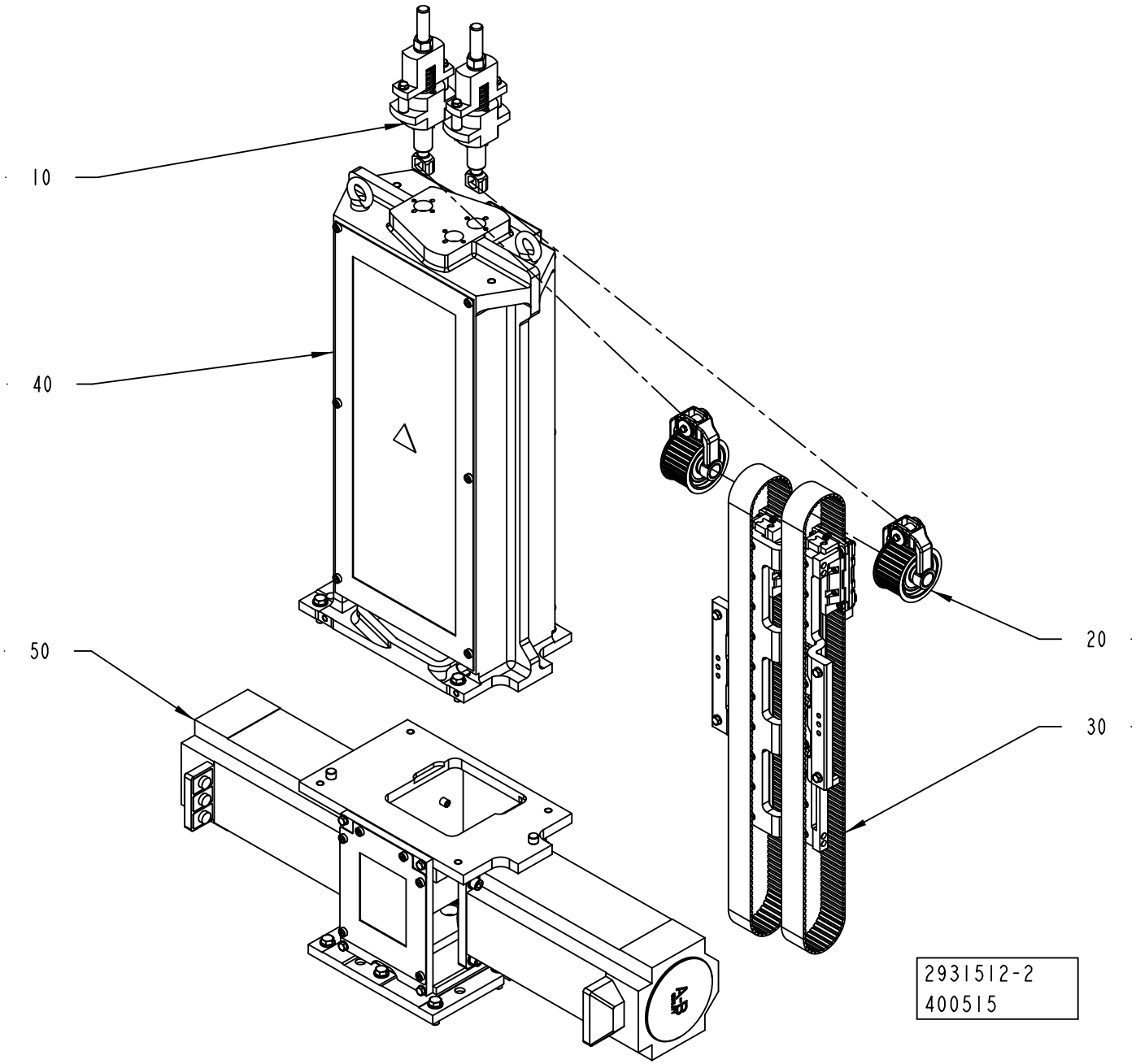
10
40
50
20
30
2931512-2
400515

ECM: 404337 - 20090701
Group number: 2931512-0200
Assembly Drawing: 2931512-2_1_AA

Pos	Part No	UN	Qty	Description	Page No
-					
010	2931514-0100		2	BELT TENSIONER	**3-9**
020	2803072-0100		2	PULLEY	**3-11**
030	2890413-0100		1	SUPPORT	**3-13**
040	2829754-0200		1	FRAME	**3-17**
050	2836488-0200		1	MOTOR BRACKET	**3-19**

Pos	Part No	UN	Qty	Description	Page No

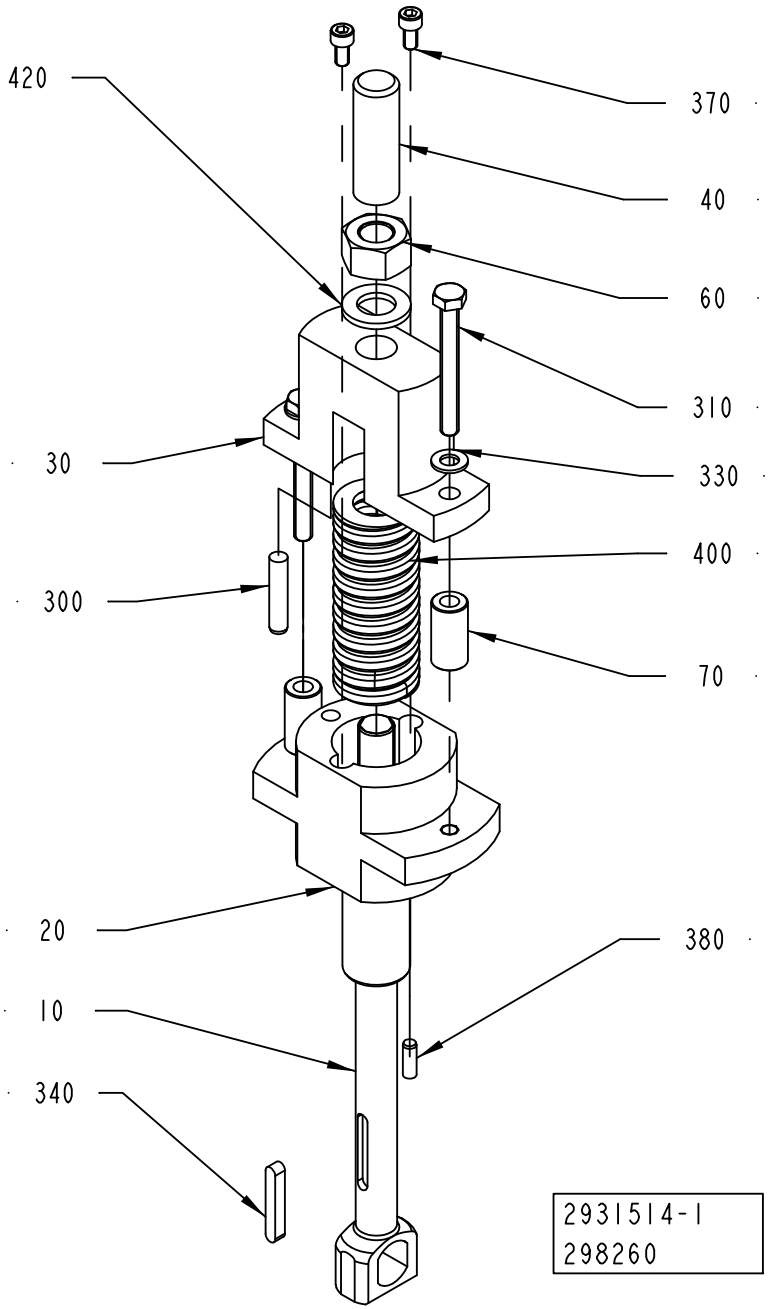
420
370
40
60
310
30
330
400
300
70
20
380
10
340
2931514-1
298260

ECM: 329478 - 20071219
Group number: 2931514-0100
Assembly Drawing: 2931514-1_1_AA

Pos	Part No	UN	Qty	Description	Page No
-					
010	2802625-0000		1	SHAFT	
020	2794931-0000		1	BUSHING	
030	2794932-0000		1	ROCKER	
040	2525570-0000		1	COVER	
060	2640826-0000		1	NUT	
070	2868788-0000		2	SPACER	
300	311103-0409		1	PARALLEL PIN ISO 2338 8M6X40 A1	
310	312109-0465		2	SCREW, M6S ISO 4017 M8X70 A4 80	
330	315105-0165		2	WASHER BRB 8,4X16 RFR	
340	315705-0239		1	PARALLEL KEY W. ROUND ENDS, 6X6X40 MM	
370	312115-0366		2	SCREW ISO4762 M6X12 A4 80	
380	311103-0352		1	PARALLEL PIN ISO 2338 6M6X18 A1	
400	90458-2301		1	SPRING, YELLOW SPRING G40X115	
420	315105-0186		1	WASHER BRB 17X30 RFR	

Pos	Part No	UN	Qty	Description	Page No

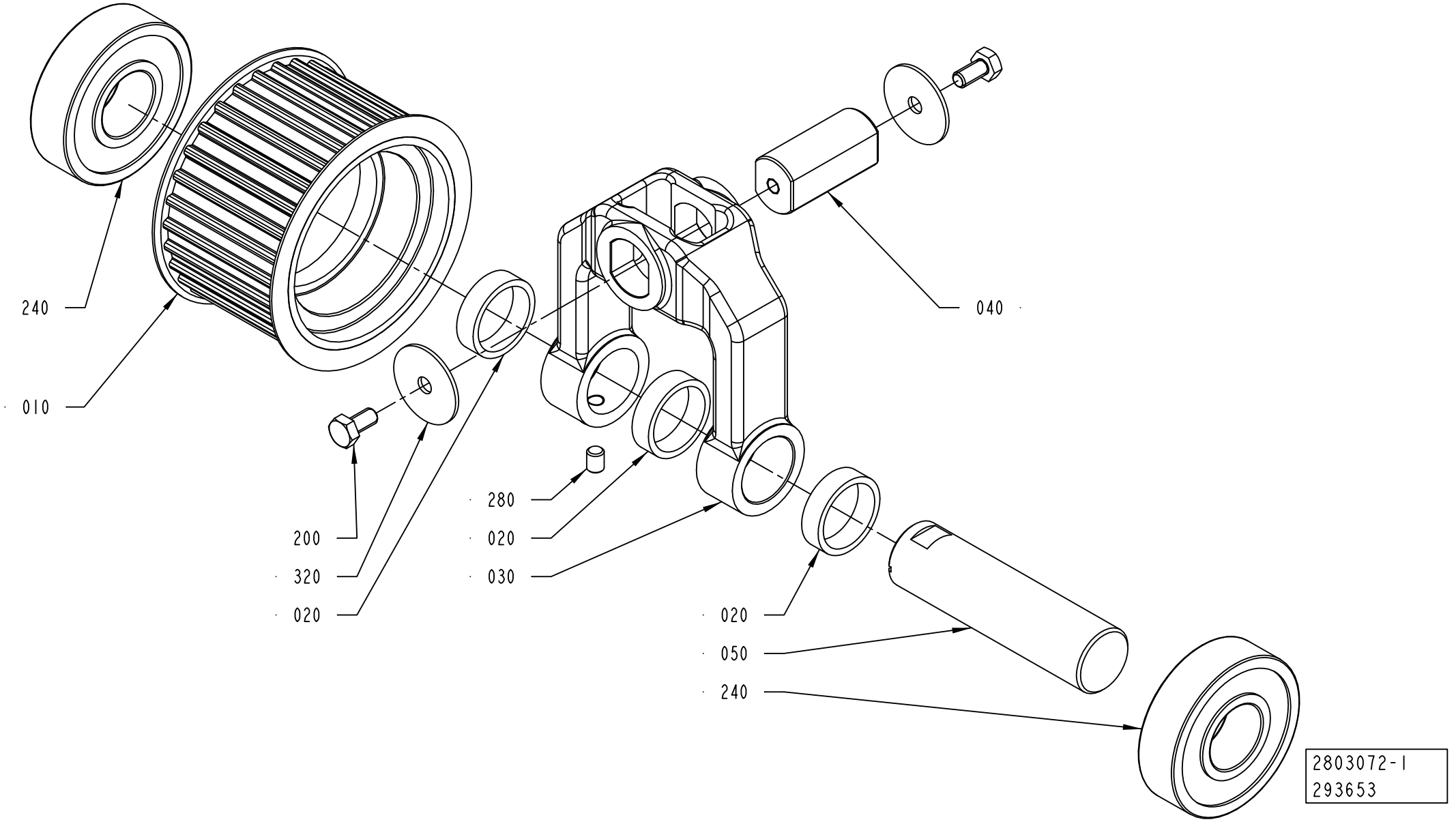
240
010
200
320
020
280
020
030
040
020
050
240
2803072-1
293653

ECM: 342877 - 20080215
Group number: 2803072-0100
Assembly Drawing: 2803072-1_1_AA

Pos	Part No	UN	Qty	Description	Page No
-					
010	2802756-0000		1	PULLEY	
020	1346890-0000		3	SPACER	
030	2802611-0000		1	SUPPORT PULLEY	
040	2802624-0000		1	AXLE PIN	
050	1511195-0000		1	SHAFT	
200	312105-0366		2	SCREW, M6S ISO 4017 M6X12 A4 80	
240	321316-0205		2	BALL BEARING 25/62X17	
280	312318-0362		1	SCREW ISO4029 M6X8 A4	
320	90458-0073		2	WASHER 6,4/30, H=1,5	

Pos	Part No	UN	Qty	Description	Page No

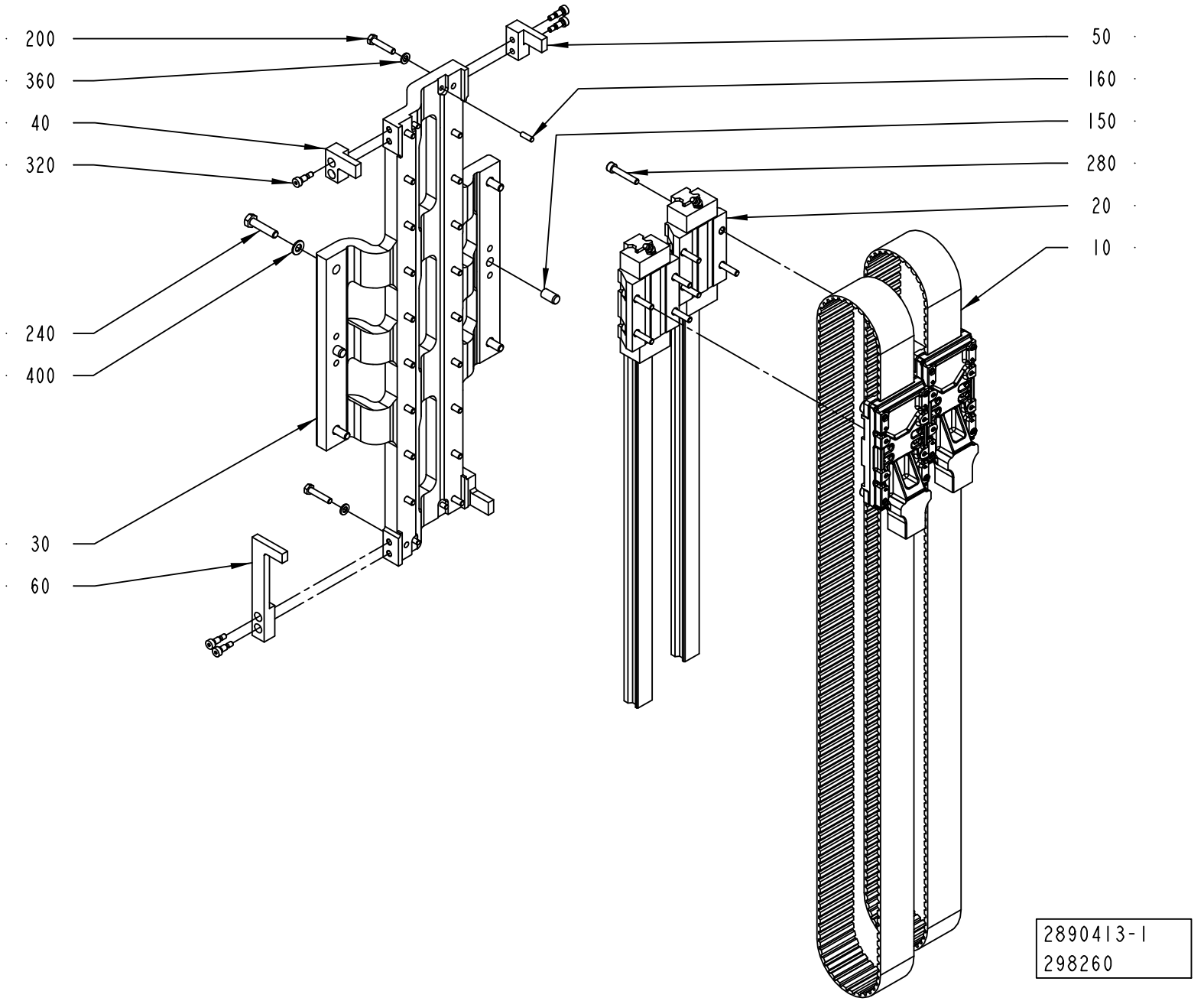
200
360
40
320
240
400
30
60
50
160
150
280
20
10
2890413-1
298260

ECM: 329470 - 20071219
Group number: 2890413-0100
Assembly Drawing: 2890413-1_1_AA

Pos	Part No	UN	Qty	Description	Page No
-					
010	2890416-0100		2	BELT UNIT	**3-15**
020	90600-2526		2	LINEAR UNIT, SHS25LC1QZSSFME+600LKF	
030	2829760-0000		1	HOLDER	
040	2890417-0000		2	LOCK COMPONENT	
050	2890418-0000		1	LOCK COMPONENT	
060	2890419-0000		1	LOCK COMPONENT	
150	311103-0454		2	PARALLEL PIN ISO 2338 10M6X20 A1	
160	311103-0308		4	PARALLEL PIN ISO 2338 5M6X16 A1	
200	312109-0374		20	SCREW, M6S ISO 4017 M6X30 A4 80	
240	312109-0457		4	SCREW, M6S ISO 4017 M8X35 A4 80	
280	312115-0376		8	SCREW ISO4762 M6X35 A4 80	
320	312180-0364		8	SCREW ISO7379 H6X10	
360	315105-0153		20	WASHER BRB 6,4X12 RFR	
400	315105-0165		4	WASHER BRB 8,4X16 RFR	

Pos	Part No	UN	Qty	Description	Page No

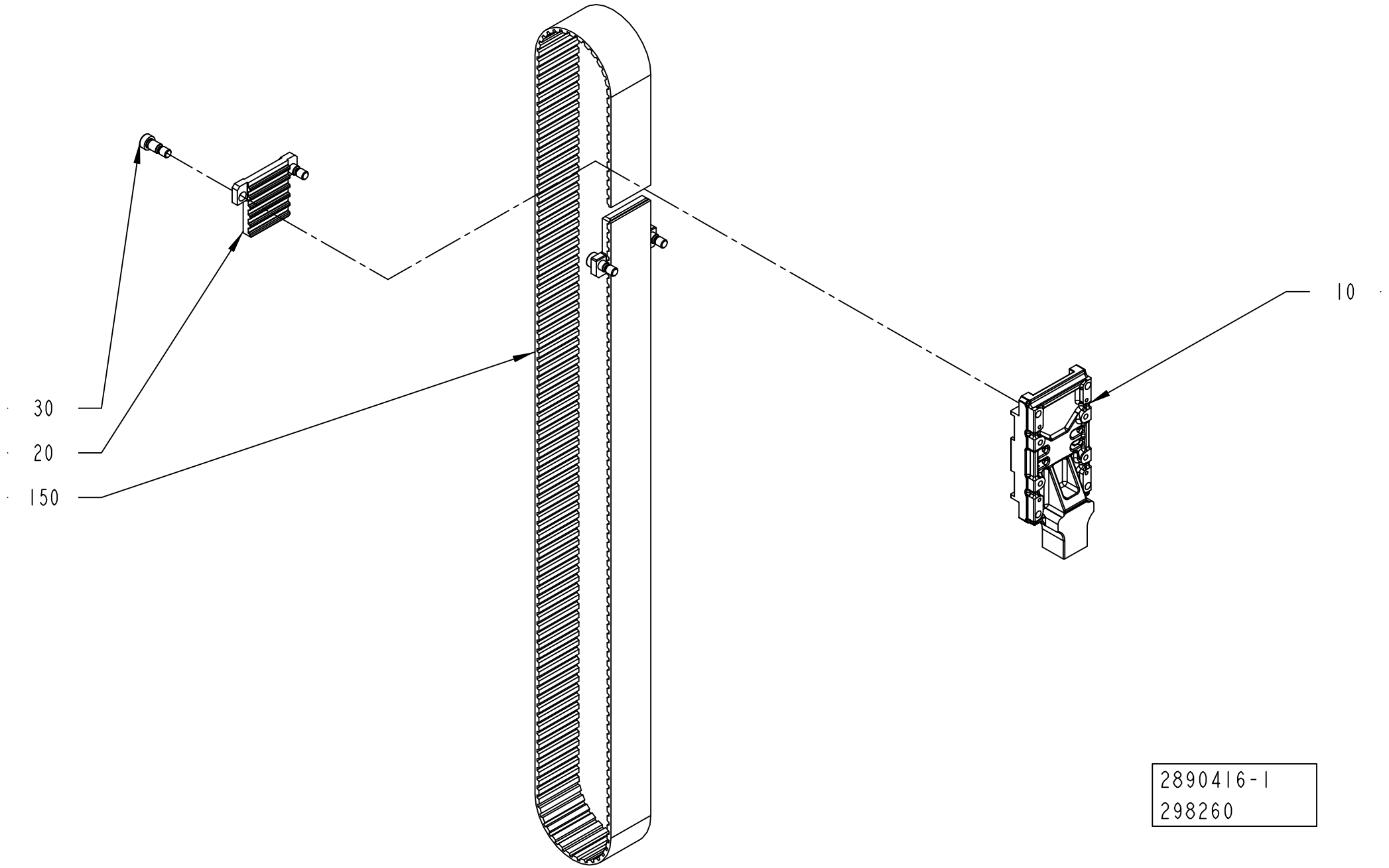
30
20
150
10
2890416-1
298260

ECM: 348015 - 20080805
Group number: 2890416-0100
Assembly Drawing: 2890416-1_1_AA

Pos	Part No	UN	Qty	Description	Page No
-					
010	2899554-0000		1	PLATE	
020	2847933-0000		2	BELT HOLDER	
030	2644623-0000		4	SHOULDER SCREW	
150	90600-1890		1	TIMING BELT 50ATL10/1900 PU	

Pos	Part No	UN	Qty	Description	Page No

Machine Type | Group Description | Used-In | Group Number | Page No

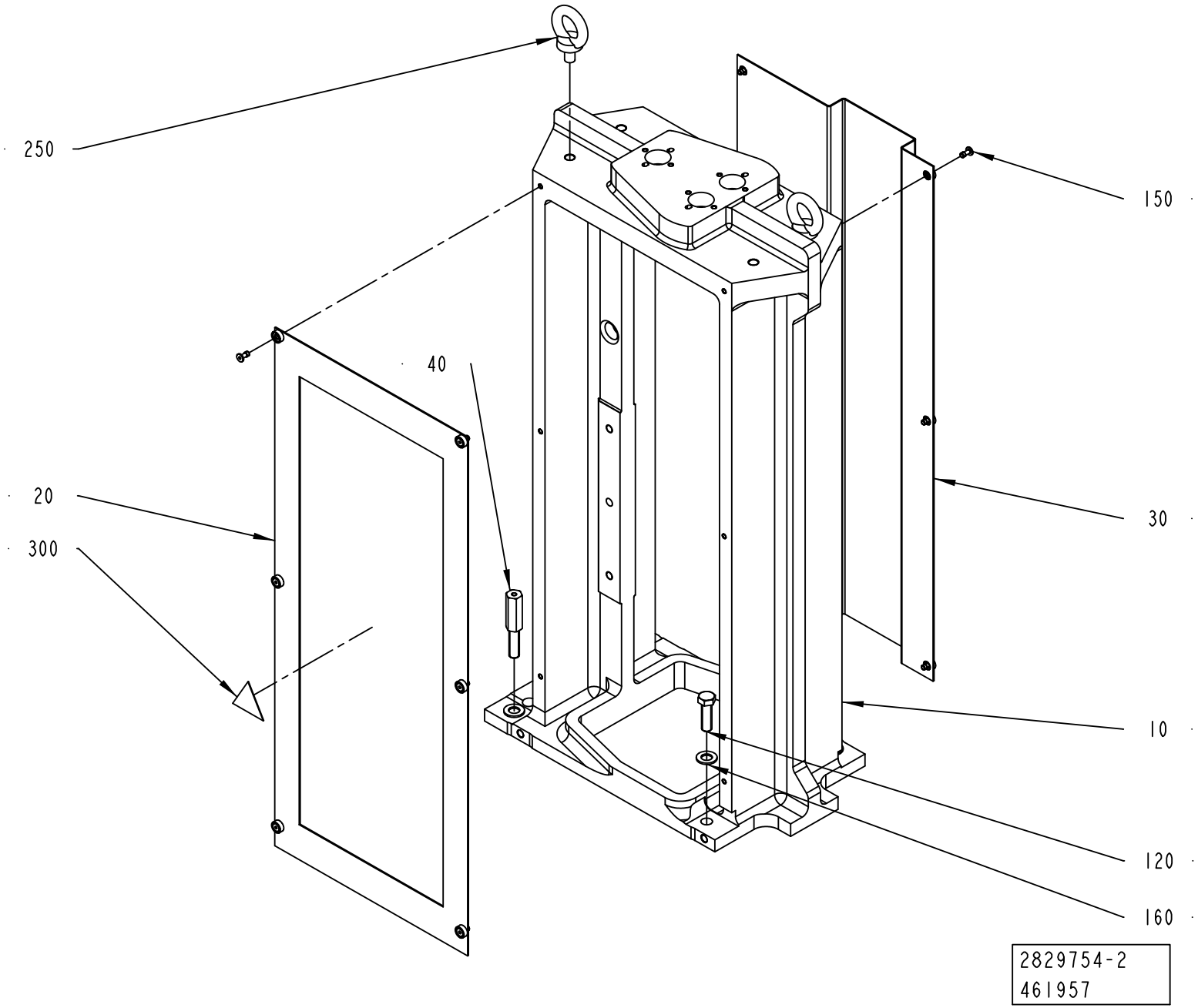
250
150
40
20
30
300
10
120
160
2829754-2
461957

ECM: 461957 - 20101001
Group number: 2829754-0200
Assembly Drawing: 2829754-2_1_AB

Pos	Part No	UN	Qty	Description	Page No
ANSI					
300	90459-6083		1	WARNING SIGN ANSI (H), HAZARDOUS ROTATIN	
ISO					
300	90459-6084		1	WARNING SIGN ISO, HAZARDOUS ROTATING BEL	
Common Parts					
010	2912663-0000		1	FRAME	
020	3037016-0000		1	COVER	
030	3037015-0000		1	COVER	
040	3119098-0000		1	COLUMN	
120	312105-0540		3	SCREW, M6S ISO 4017 M12X40 A4 80	
150	90601-2046		12	CAPTIVE SCREW M6, GUTBG 6-4-12	
160	315105-0178		4	WASHER BRB 13X24 RFR	
250	318301-0122		2	LIFTING EYE BOLT, LT M12 FZB	

Pos	Part No	UN	Qty	Description	Page No

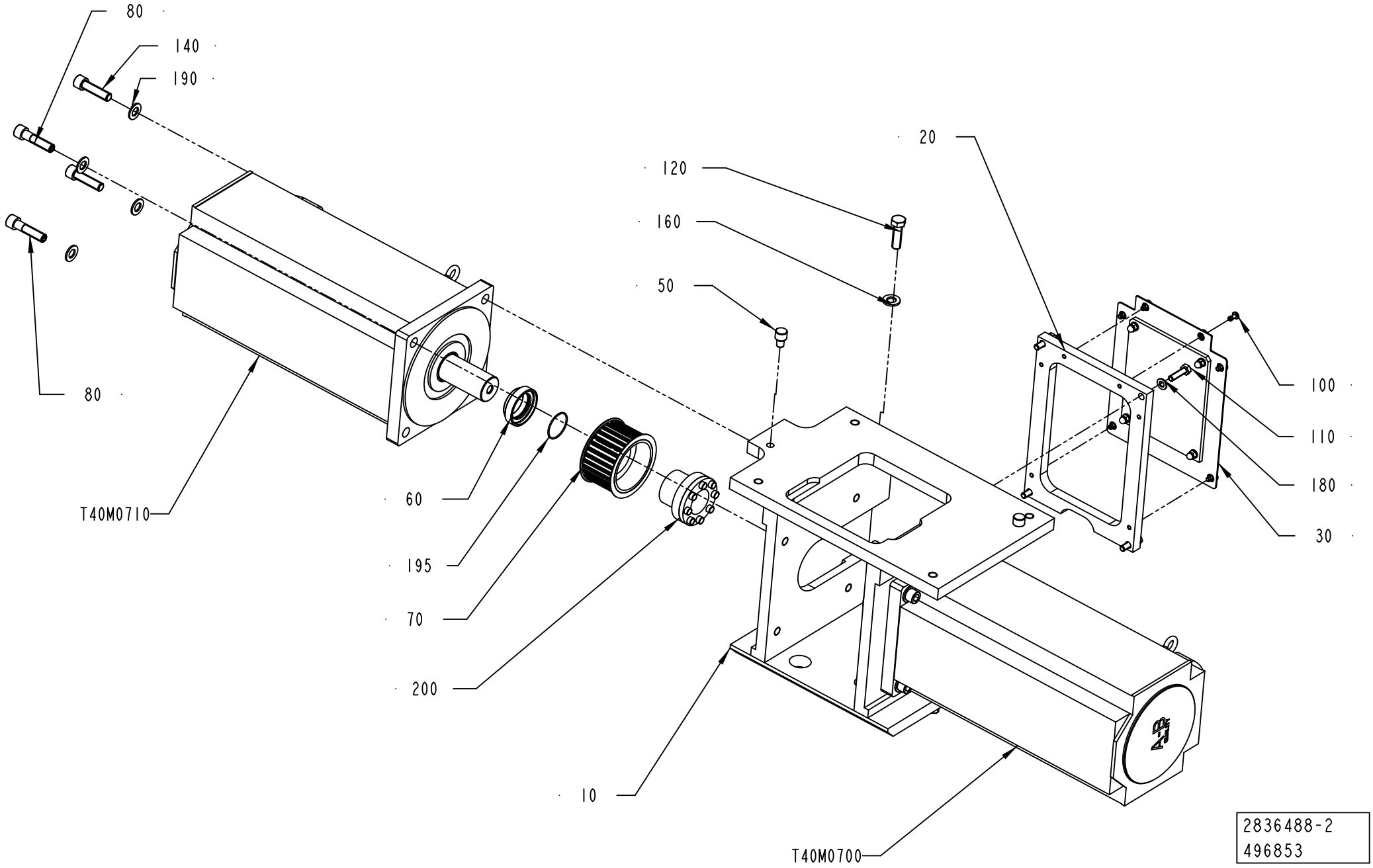
80
140
190
80
T40M0710
120
160
50
20
60
195
70
200
10
T40M0700
100
110
180
30
2836488-2
496853

ECM: 497092 - 20110701
Group number: 2836488-0200
Assembly Drawing: 2836488-2_1_AC

Pos	Part No	UN	Qty	Description	Page No
-					
010	2829762-0000		1	MOTOR BRACKET	
020	2836491-0000		1	STIFFENING PLATE	
030	3037017-0000		1	COVER	
050	2836494-0000		4	PIN	
060	2730770-0000		2	SPACER	
070	1347839-0000		2	PULLEY	
080	2836502-0000		4	SCREW	
100	90601-2046		6	CAPTIVE SCREW M6, GUTBG 6-4-12	
110	312105-0455		4	SCREW, M6S ISO 4017 M8X30 A4 80	
120	312105-0540		5	SCREW, M6S ISO 4017 M12X40 A4 80	
140	312115-0541		4	SCREW ISO4762 M12X45 A4 80	
160	315105-0178		5	WASHER BRB 13X24 RFR	
180	315106-0165		4	WASHER ISO 7089-8-200 HV A4	
190	315105-0178		8	WASHER BRB 13X24 RFR	
195	315202-0124		1	O-RING 37,1X1,6 MM	
200	90458-2303		2	CLAMPING ELEMENT WITH SLEEVE, 38X50 MM	
T40M0700	90602-2813		1	SERVO MOTOR, MPL-B680B-M-X227,ESM	
T40M0710	90602-2813		1	SERVO MOTOR, MPL-B680B-M-X227,ESM	

Pos	Part No	UN	Qty	Description	Page No

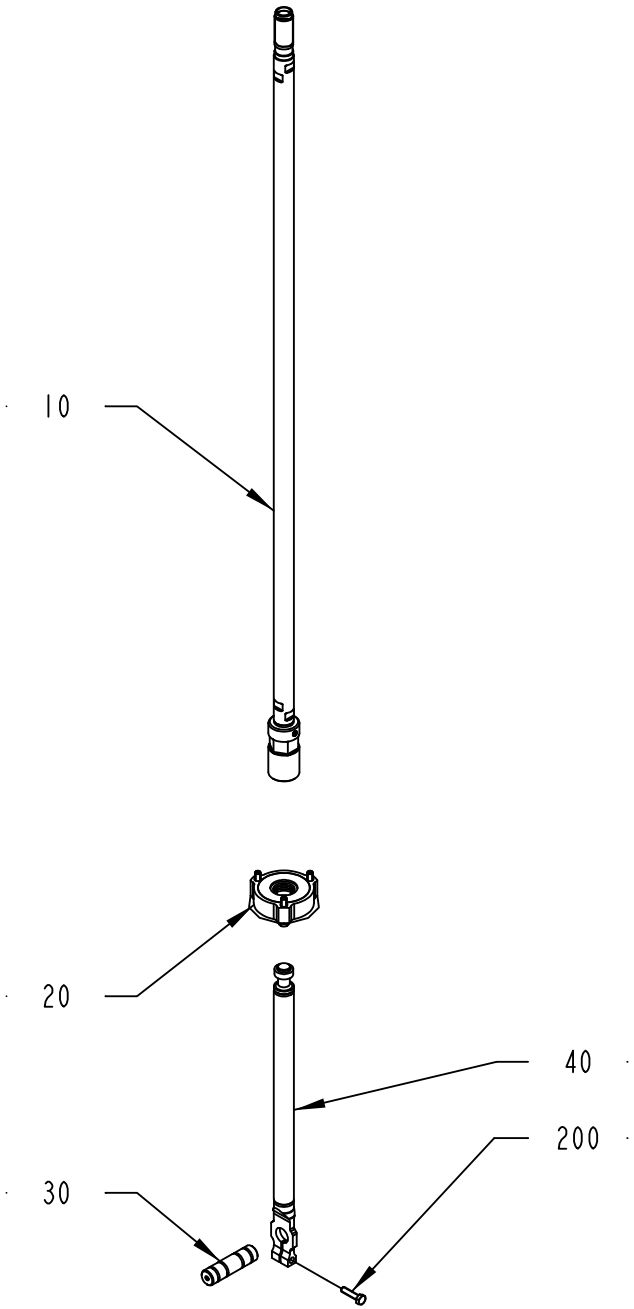

2890415-1
298260

ECM: 362119 - 20080805
Group number: 2890415-0100
Assembly Drawing: 2890415-1_1_AA

Pos	Part No	UN	Qty	Description	Page No
-					
010	2890412-0100		1	LINK	**3-23**
020	2651990-0100		1	LINK SYSTEM GASKET	**3-25**
030	2983173-0000		1	SHAFT	
040	2890422-0000		1	LINK	
200	312105-0372		1	SCREW, M6S ISO 4017 M6X25 A4 80	

Pos	Part No	UN	Qty	Description	Page No

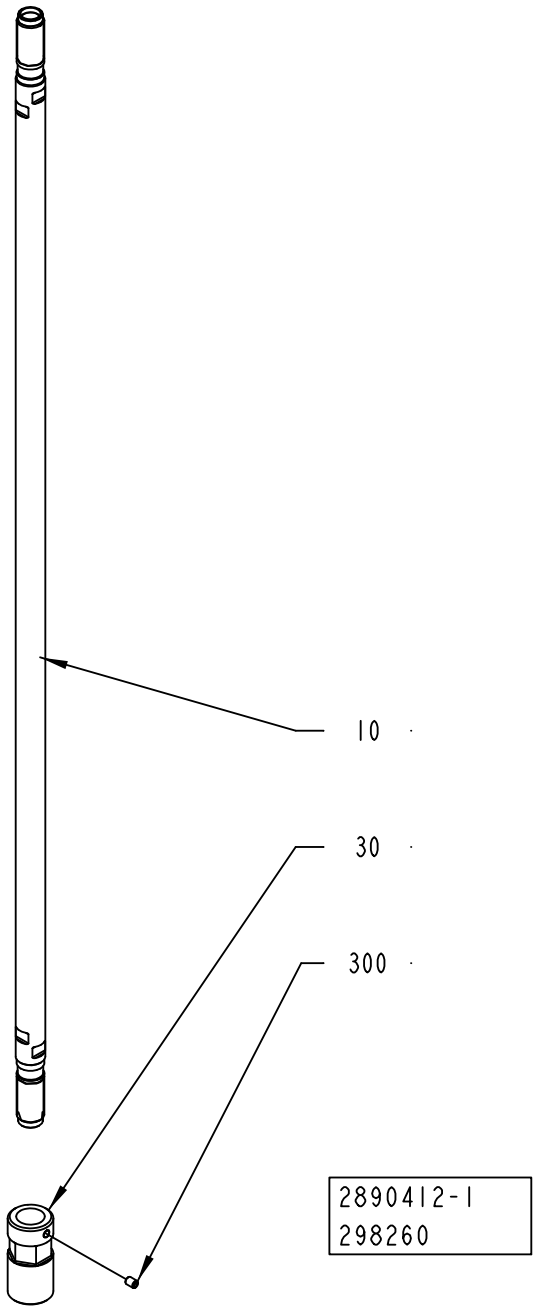
10
30
300
2890412-1
298260

ECM: 298280 - 20071219
Group number: 2890412-0100
Assembly Drawing: 2890412-1_1_AA

Pos	Part No	UN	Qty	Description	Page No
-					
010	2890421-0000		1	LINK	
030	2847936-0000		1	CONNECTION CLAMP	
300	312318-0362		1	SCREW ISO4029 M6X8 A4	

Pos	Part No	UN	Qty	Description	Page No

LINK SYSTEM GASKET

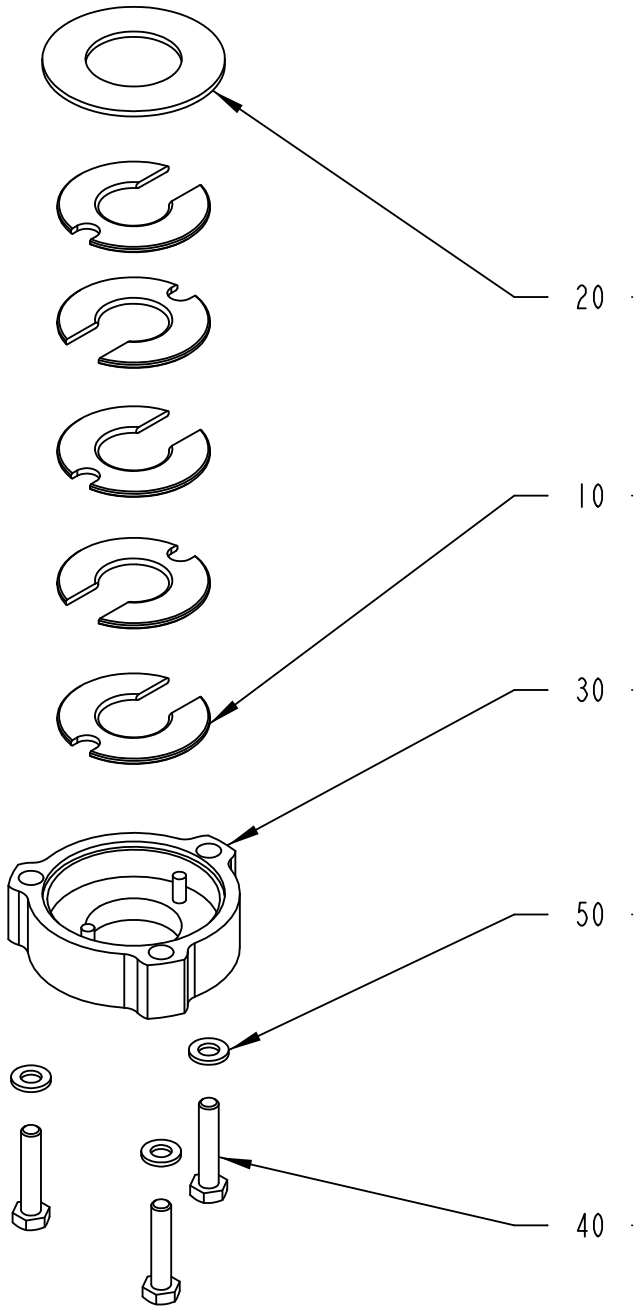

2651990-1
293651

ECM: 293962 - 20070701
Group number: 2651990-0100
Assembly Drawing: 2651990-1_1_AA

Pos	Part No	UN	Qty	Description	Page No
-					
010	2651988-0000		5	GASKET	
020	2651989-0000		1	LID	
030	2651987-0000		1	LID	
040	312109-0374		3	SCREW, M6S ISO 4017 M6X30 A4 80	
050	315105-0153		3	WASHER BRB 6,4X12 RFR	

Pos	Part No	UN	Qty	Description	Page No

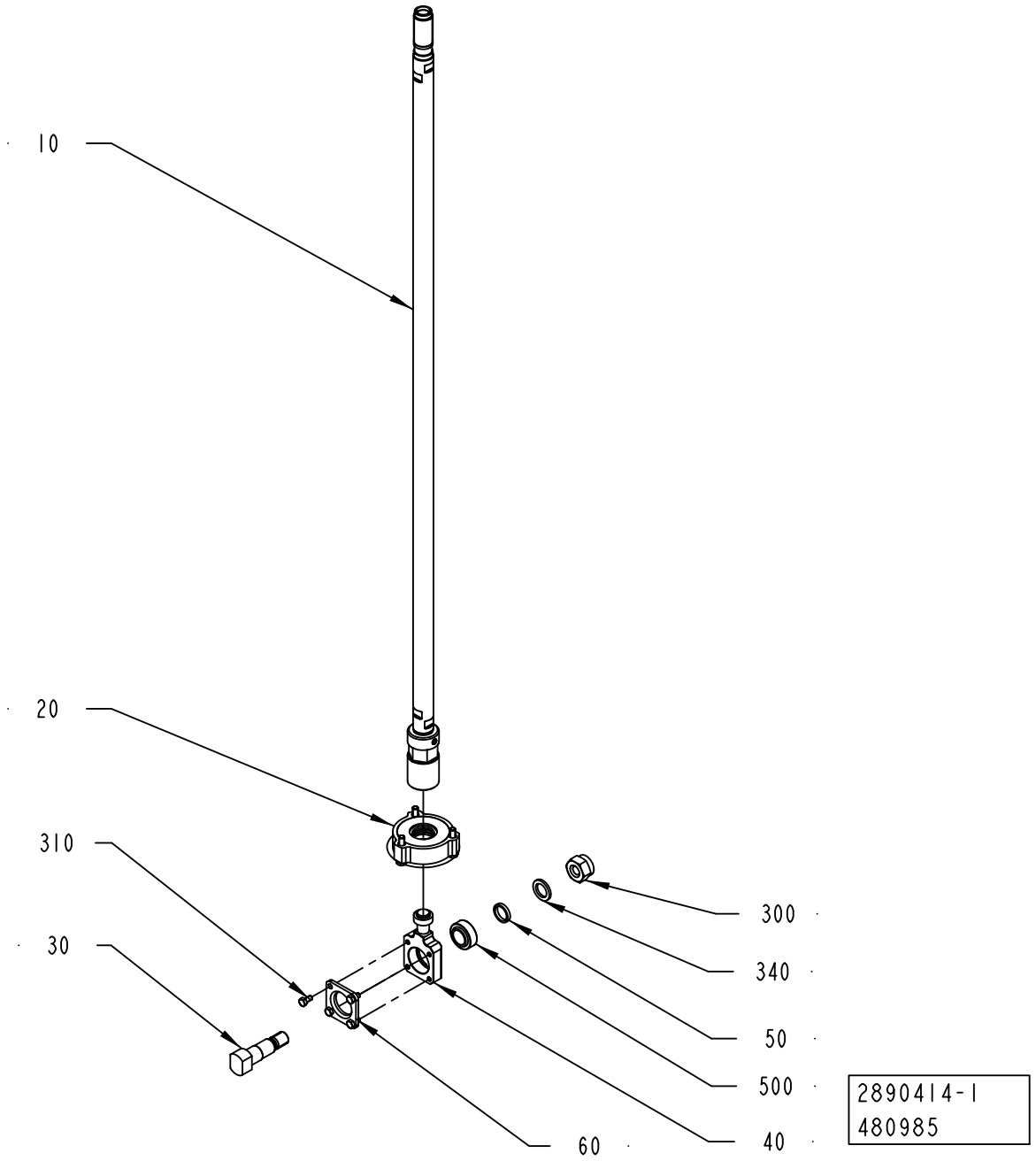
10
20
310
30
300
340
50
500
40
60
2890414-1
480985

ECM: 484833 - 20110401
Group number: 2890414-0100
Assembly Drawing: 2890414-1_1_AC

Pos	Part No	UN	Qty	Description	Page No
-					
010	2890412-0100		1	LINK	**3-23**
020	2651990-0100		1	LINK SYSTEM GASKET	**3-25**
030	3146832-0000		1	AXLE PIN	
040	2986240-0000		1	LINK HEAD	
050	2847940-0000		1	SPACER	
060	2986241-0000		1	FLANGE	
300	90099-0187		1	HEXAGON NUT, LOCK, M14, DIN985	
310	312105-0325		4	SCREW, M6S ISO 4017 M5X10 A4 80	
340	3047319-0000		1	WASHER	
500	90600-2005		1	SELF ADJ.SPHER.17X30X14 MM	

Pos	Part No	UN	Qty	Description	Page No

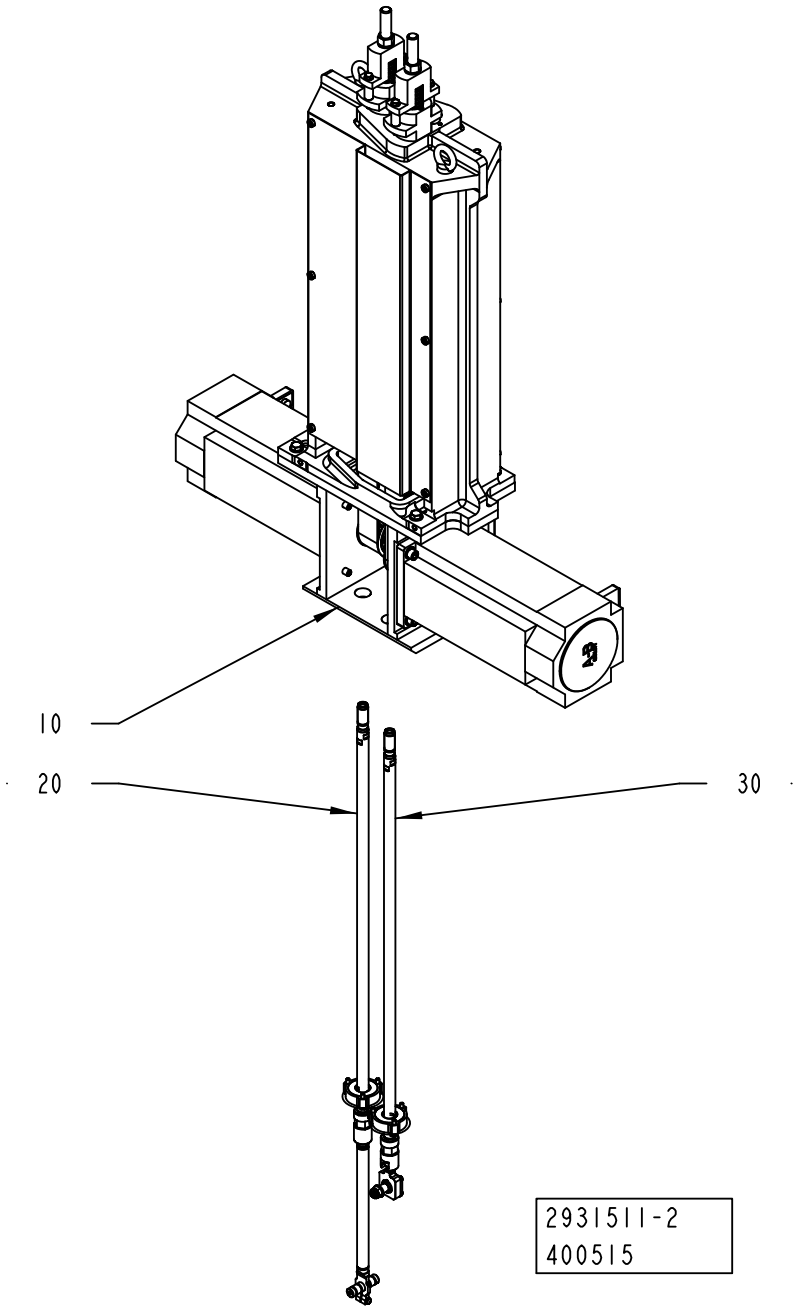
10
20
30
2931511-2
400515

ECM: 404334 - 20090701
Group number: 2931511-0200
Assembly Drawing: 2931511-2_1_AA

Pos	Part No	UN	Qty	Description	Page No
-					
010	2931513-0200		1	SUPPORT	**3-31**
020	2890415-0100		1	LINK	**3-21**
030	2890414-0100		1	LINK	**3-27**

Pos	Part No	UN	Qty	Description	Page No

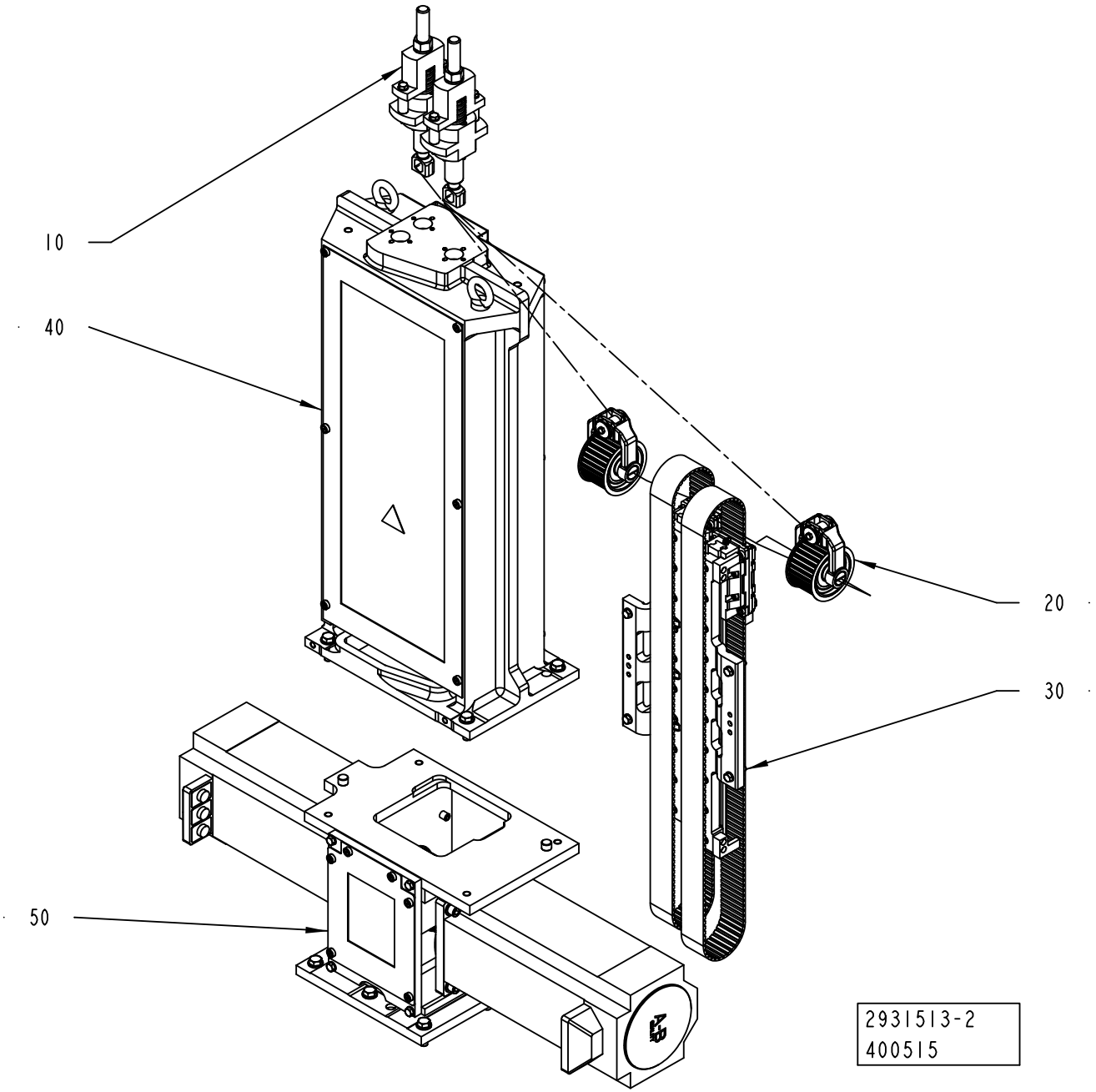
10
40
20
30
50
2931513-2
400515

ECM: 404333 - 20090701
Group number: 2931513-0200
Assembly Drawing: 2931513-2_1_AA

Pos	Part No	UN	Qty	Description	Page No
-					
010	2931514-0100		2	BELT TENSIONER	**3-9**
020	2803072-0100		2	PULLEY	**3-11**
030	2890411-0100		1	SUPPORT	**3-33**
040	2829755-0200		1	FRAME	**3-35**
050	2836489-0200		1	MOTOR BRACKET	**3-37**

Pos	Part No	UN	Qty	Description	Page No

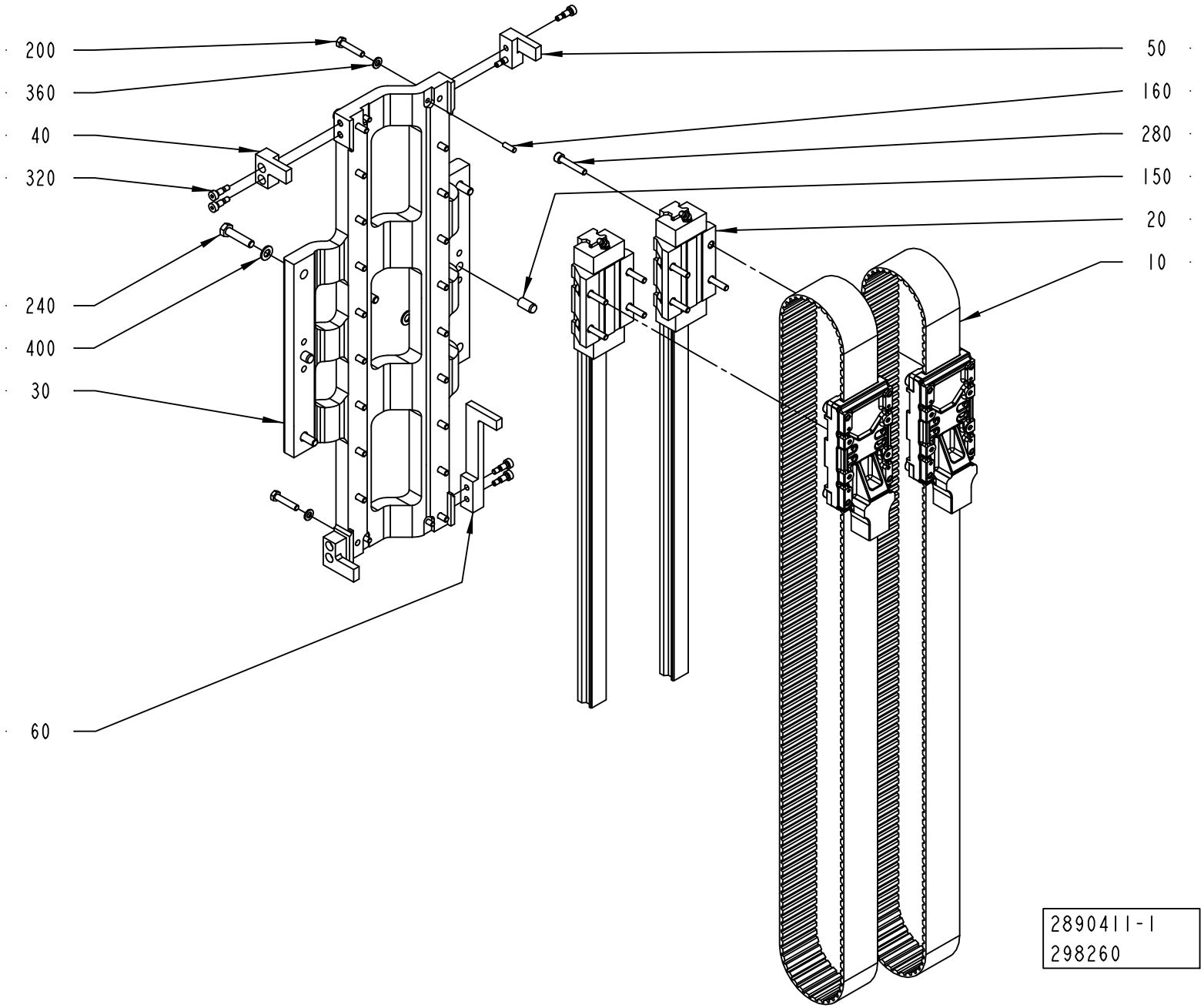
200
360
40
320
240
400
30
60
50
160
280
150
20
10
2890411-1
298260

ECM: 298279 - 20071219
Group number: 2890411-0100
Assembly Drawing: 2890411-1_1_AA

Pos	Part No	UN	Qty	Description	Page No
-					
010	2890416-0100		2	BELT UNIT	**3-15**
020	90600-2526		2	LINEAR UNIT, SHS25LC1QZSSFME+600LKF	
030	2829760-0000		1	HOLDER	
040	2890417-0000		1	LOCK COMPONENT	
050	2890418-0000		2	LOCK COMPONENT	
060	2890420-0000		1	LOCK COMPONENT	
150	311103-0454		2	PARALLEL PIN ISO 2338 10M6X20 A1	
160	311103-0308		4	PARALLEL PIN ISO 2338 5M6X16 A1	
200	312109-0374		20	SCREW, M6S ISO 4017 M6X30 A4 80	
240	312109-0457		4	SCREW, M6S ISO 4017 M8X35 A4 80	
280	312115-0376		8	SCREW ISO4762 M6X35 A4 80	
320	312180-0364		8	SCREW ISO7379 H6X10	
360	315105-0153		20	WASHER BRB 6,4X12 RFR	
400	315105-0165		4	WASHER BRB 8,4X16 RFR	

Pos	Part No	UN	Qty	Description	Page No

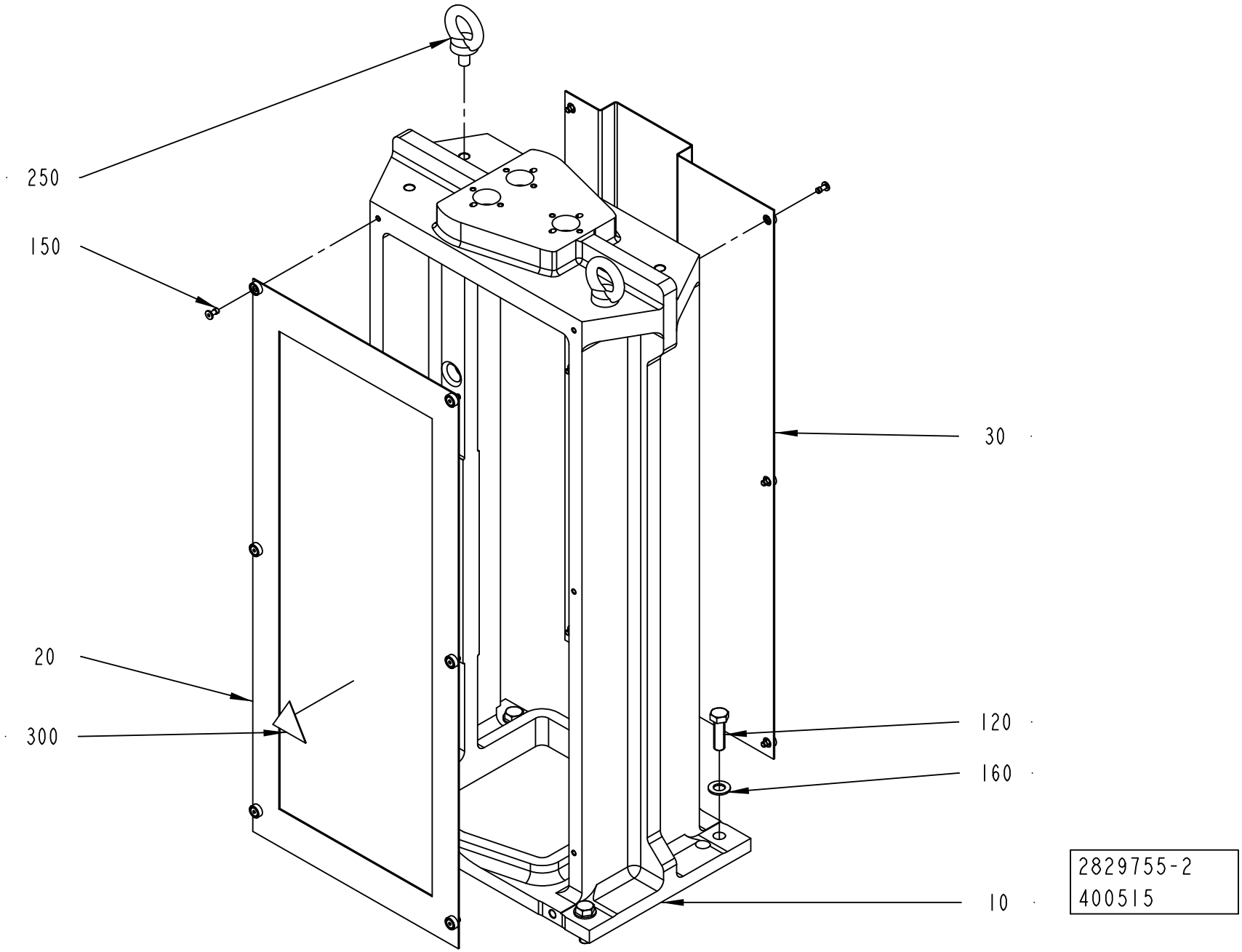
250
150
30
20
300
120
160
10
2829755-2
400515

ECM: 460569 - 20101001
Group number: 2829755-0200
Assembly Drawing: 2829755-2_1_AA

Pos	Part No	UN	Qty	Description	Page No
ANSI					
300	90459-6083		1	WARNING SIGN ANSI (H), HAZARDOUS ROTATIN	
ISO					
300	90459-6084		1	WARNING SIGN ISO, HAZARDOUS ROTATING BEL	
Common Parts					
010	2912663-0000		1	FRAME	
020	3037016-0000		1	COVER	
030	3037015-0000		1	COVER	
120	312105-0540		4	SCREW, M6S ISO 4017 M12X40 A4 80	
150	90601-2046		12	CAPTIVE SCREW M6, GUTBG 6-4-12	
160	315105-0178		4	WASHER BRB 13X24 RFR	
250	318301-0122		2	LIFTING EYE BOLT, LT M12 FZB	

Pos	Part No	UN	Qty	Description	Page No

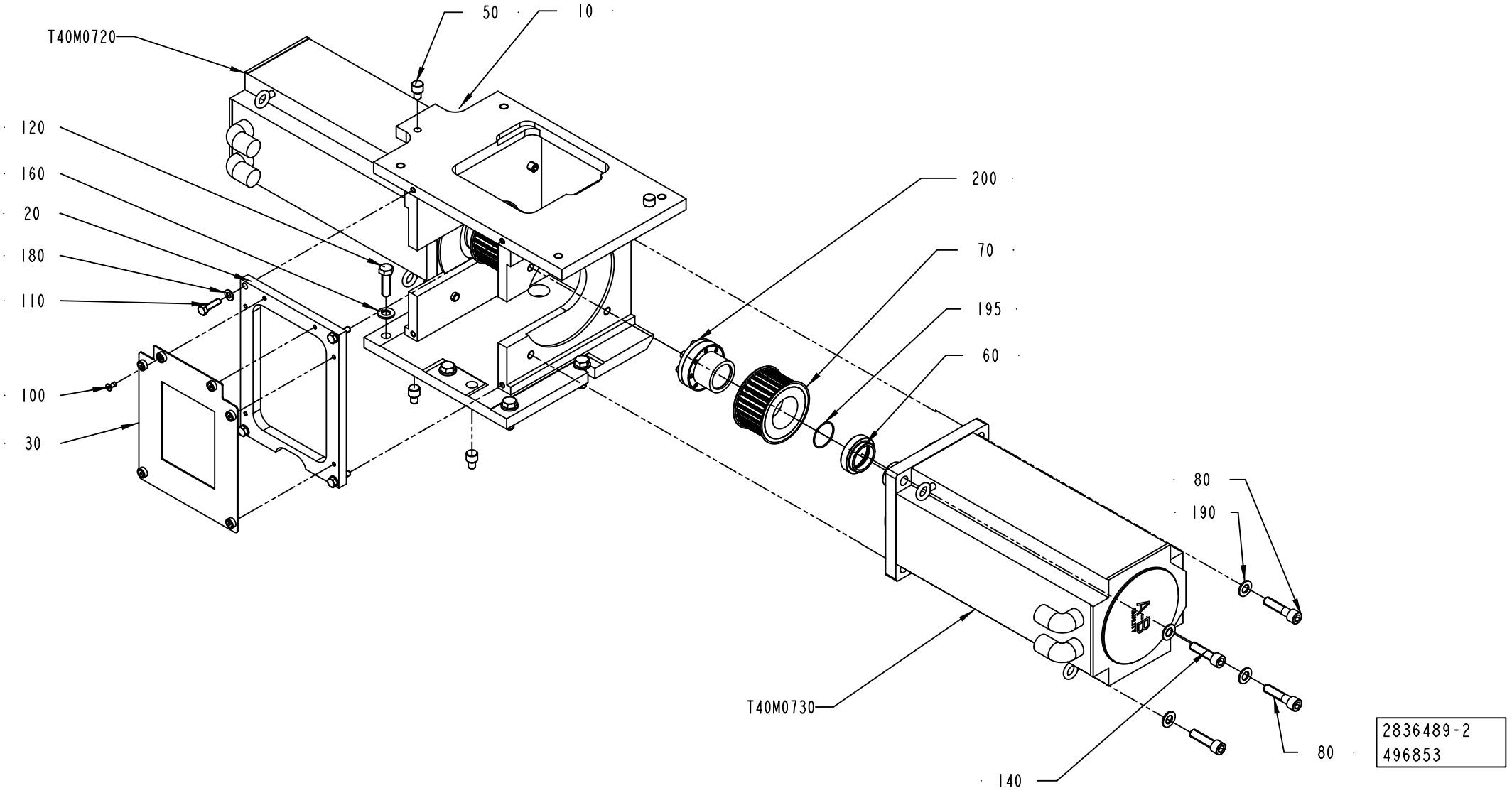
T40M0720
50
10
120
160
20
180
110
100
30
200
70
195
60
80
190
T40M0730
140
80
2836489-2
496853

ECM: 497091 - 20110701
Group number: 2836489-0200
Assembly Drawing: 2836489-2_1_AC

Pos	Part No	UN	Qty	Description	Page No
-					
010	2836490-0000		1	MOTOR BRACKET	
020	2836491-0000		1	STIFFENING PLATE	
030	3037017-0000		1	COVER	
050	2836494-0000		4	PIN	
060	2730770-0000		2	SPACER	
070	1347839-0000		2	PULLEY	
080	2836502-0000		4	SCREW	
100	90601-2046		6	CAPTIVE SCREW M6, GUTBG 6-4-12	
110	312105-0455		4	SCREW, M6S ISO 4017 M8X30 A4 80	
120	312105-0540		5	SCREW, M6S ISO 4017 M12X40 A4 80	
140	312115-0541		4	SCREW ISO4762 M12X45 A4 80	
160	315105-0178		5	WASHER BRB 13X24 RFR	
180	315106-0165		4	WASHER ISO 7089-8-200 HV A4	
190	315105-0178		8	WASHER BRB 13X24 RFR	
195	315202-0124		1	O-RING 37,1X1,6 MM	
200	90458-2303		2	CLAMPING ELEMENT WITH SLEEVE, 38X50 MM	
T40M0720	90602-2813		1	SERVO MOTOR, MPL-B680B-M-X227,ESM	
T40M0730	90602-2813		1	SERVO MOTOR, MPL-B680B-M-X227,ESM	

Pos	Part No	UN	Qty	Description	Page No

Tetra Pak

SPC
Spare Parts Catalogue

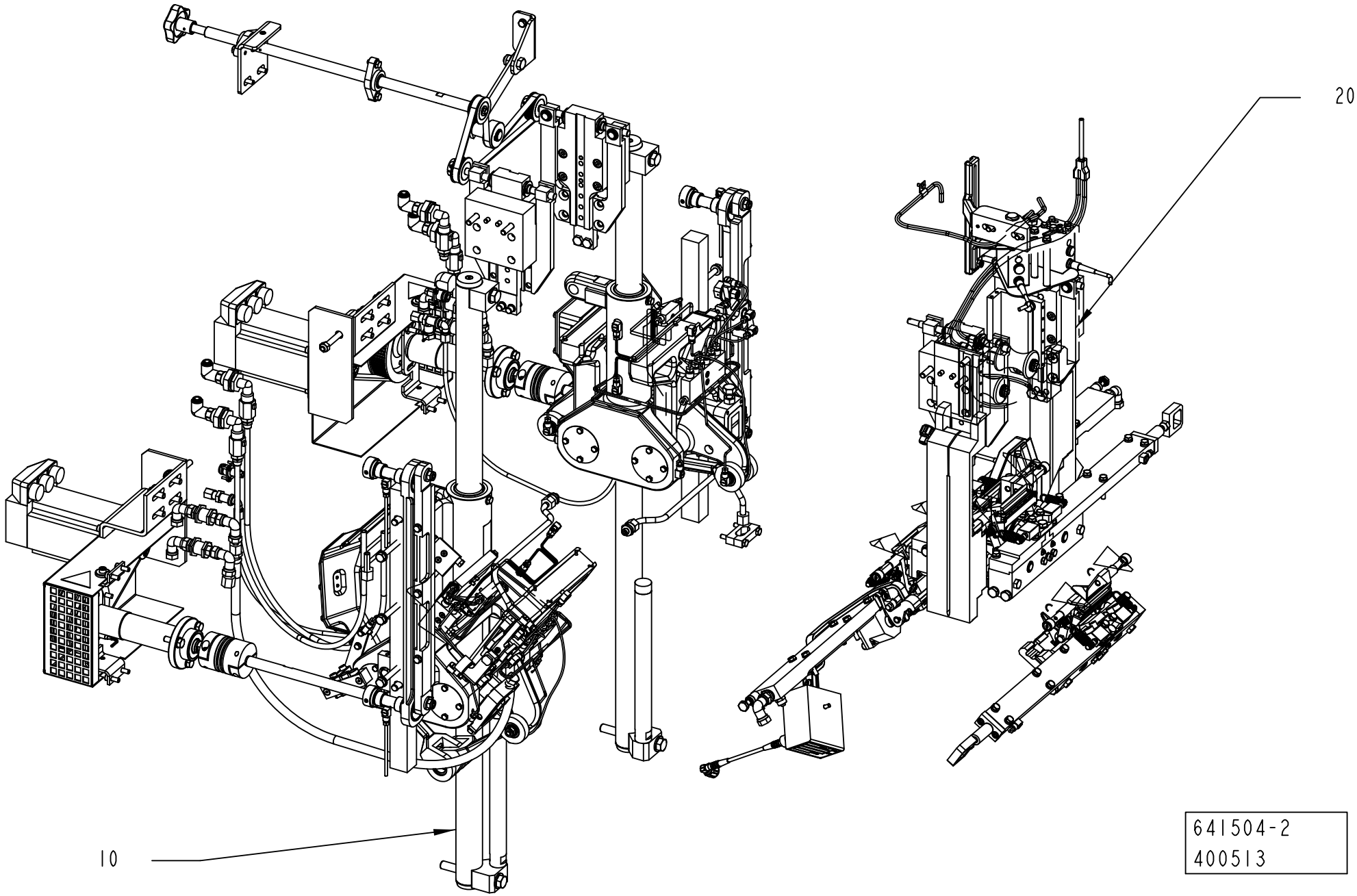
20
10
641504-2
400513

ECM: 539992 - 20120202
Group number: 641504-0200
Assembly Drawing: 641504-2_1_AA

Pos	Part No	UN	Qty	Description	Page No
-					
010	2824755-0200		1	BASE UNIT	**4-5**
020	2824756-0200		1	FORMING UNIT	**4-49, 4-51**

Pos	Part No	UN	Qty	Description	Page No

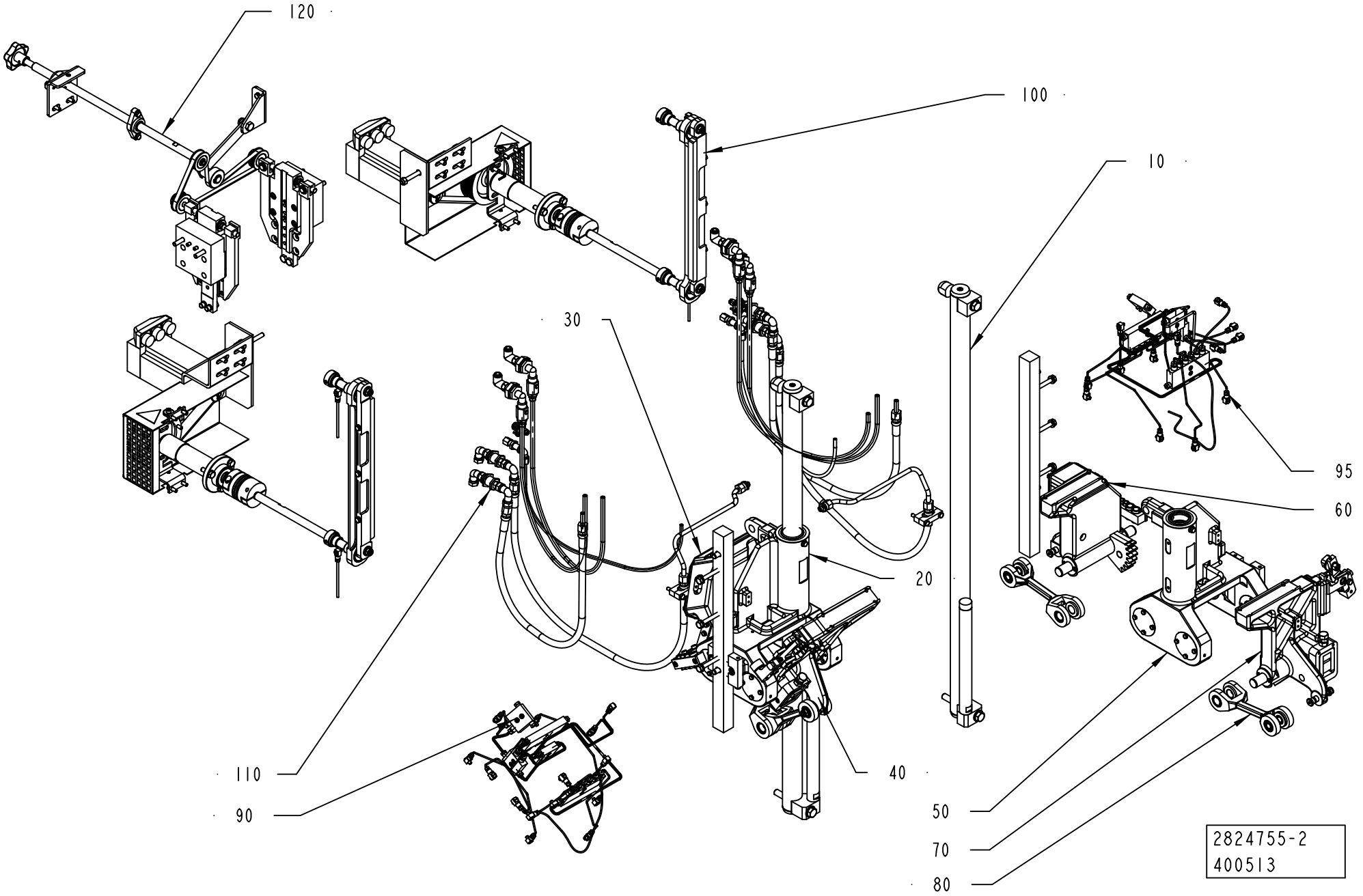
120
100
10
30
95
60
20
110
90
40
50
70
80
2824755-2
400513

ECM: 403511 - 20090701
Group number: 2824755-0200
Assembly Drawing: 2824755-2_1_AA

Pos	Part No	UN	Qty	Description	Page No
-					
010	2818116-0200		1	GUIDE	**4-7**
020	2818106-0100		1	YOKE	**4-9**
030	2818108-0100		1	PRESSURE ARM	**4-13**
040	2818110-0100		1	CUTTING ARM	**4-15**
050	2818090-0100		1	YOKE	**4-19**
060	2818102-0100		1	PRESSURE ARM	**4-21**
070	2818101-0100		1	CUTTING ARM	**4-23**
080	2997957-0100		4	LINK ARM	**4-27**
090	2847375-0100		1	LUBRICATION UNIT	**4-29**
095	2846124-0100		1	LUBRICATION UNIT	**4-31**
100	2818127-0200		1	DESIGN CORRECTION	**4-33**
110	2841496-0100		1	CABLE CONNECTION	**4-43**
120	2867520-0100		1	VOLUME ADJUSTER	**4-45**

Pos	Part No	UN	Qty	Description	Page No

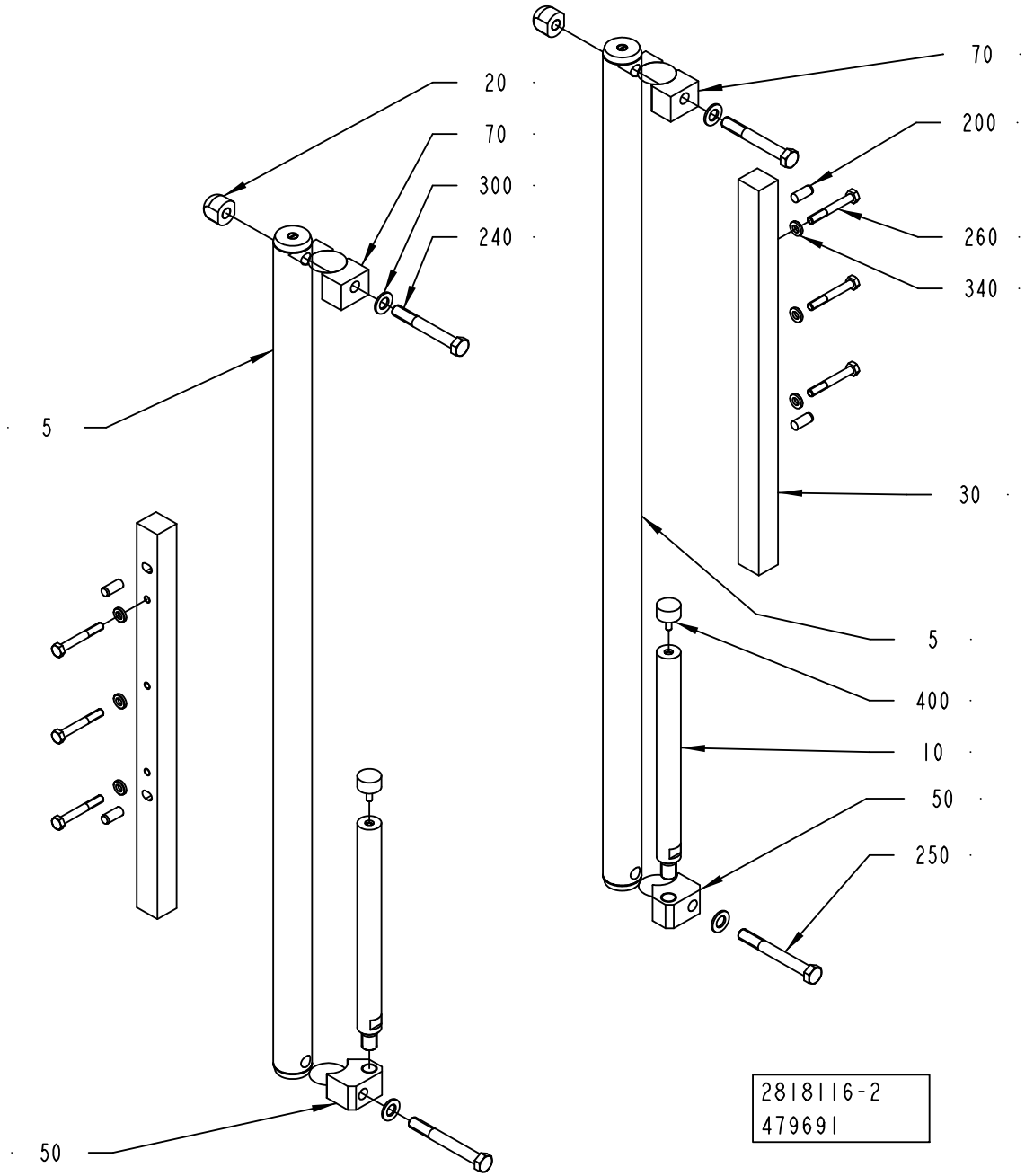
20
70
300
240
5
50
70
200
260
340
30
5
400
10
50
250
2818116-2
479691

ECM: 484766 - 20110401
Group number: 2818116-0200
Assembly Drawing: 2818116-2_1_AB

Pos	Part No	UN	Qty	Description	Page No
-					
005	3147608-0000		2	GUIDE	
010	2861202-0000		2	COLUMN	
020	2542488-0000		2	NUT	
030	2792156-0000		2	RULER	
050	2812313-0000		2	BLOCK	
070	2812315-0000		2	CLAMP	
200	311103-1456		4	PARALLEL PIN ISO 2338 10M6X24 A1	
240	312105-0550		2	SCREW, M6S ISO 4014 M12X90 A4 80	
250	312105-0552		2	SCREW, M6S ISO 4014 M12X100 A4 80	
260	312105-0463		6	SCREW, M6S ISO 4014 M8X60 A4 80	
300	315105-0178		4	WASHER PLAIN, 13X24X2,5 A4 BRB	
340	315115-0165		6	WASHER PLAIN, TBRB 8,4/16 H=3	
400	90347-0034		2	VIBRATION DAMPER	

Pos	Part No	UN	Qty	Description	Page No

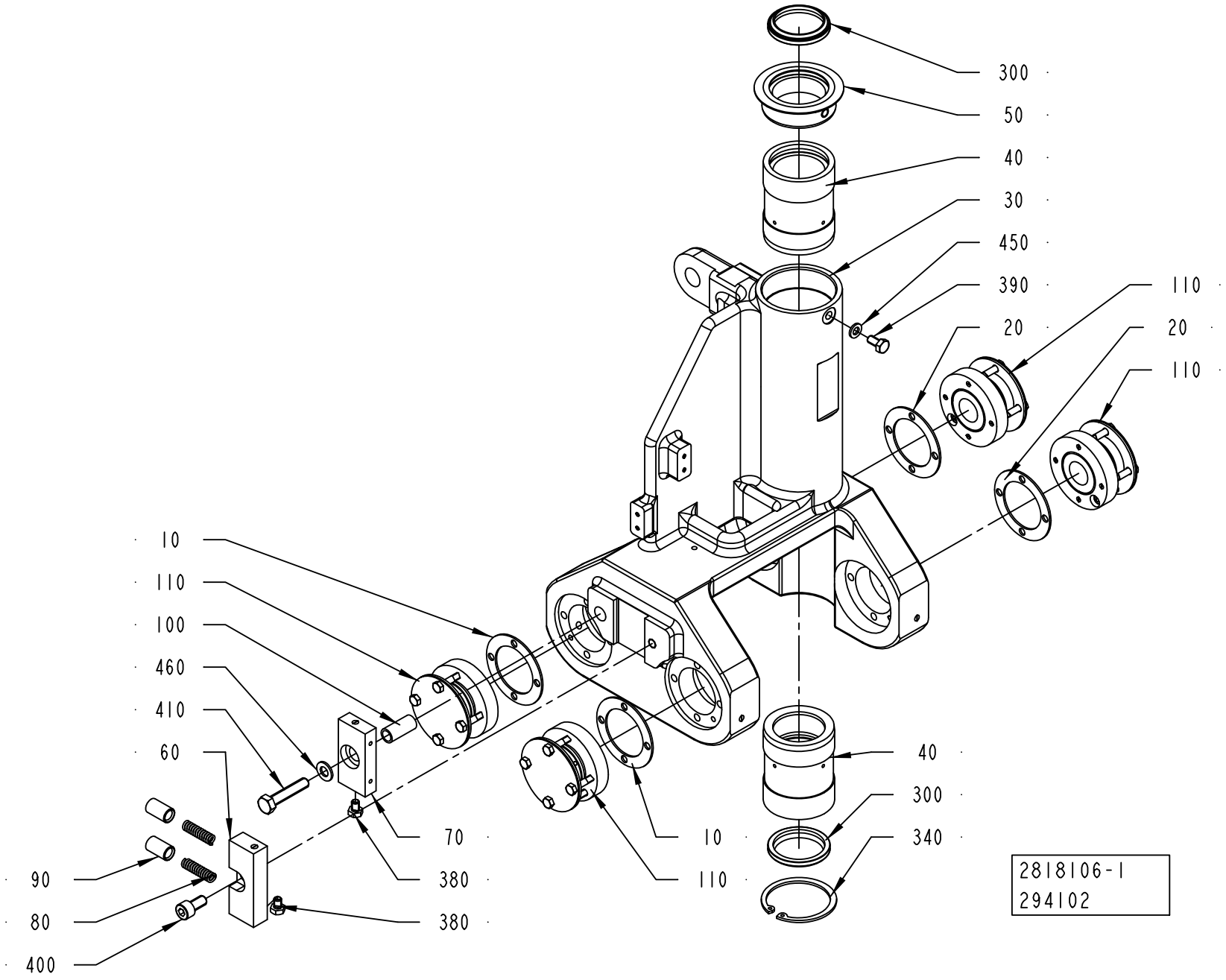
300
50
40
30
450
390
20
110
20
110
10
110
100
460
410
60
90
80
400
70
380
380
10
110
40
300
340
2818106-1
294102

ECM: 484757 - 20110401
Group number: 2818106-0100
Assembly Drawing: 2818106-1_1_AA

Pos	Part No	UN	Qty	Description	Page No
-					
010	29886-0000		2	LACE	
020	1038509-0000		2	WASHER	
030	2818105-0000		1	YOKE	
040	2818092-0000		2	BUSHING	
050	2818093-0000		1	LID	
060	2818094-0000		1	SPRING HOUSING	
070	1037104-0000		1	LOCATING PIECE	
080	20494-0000		2	COMPRESSION SPRING	
090	31838-0000		2	PLUNGER	
100	1037106-0000		1	SLEEVE	
110	2818115-0100		4	BEARING UNIT	**4-11**
300	90091-0218		2	SCRAPER 40X48X7 MM	
340	315753-0133		1	RETAINING RING FOR BORE DIN 472 55 SS	
380	312105-0362		2	SCREW, M6S ISO 4017 M6X8 A4 80	
390	312105-0366		1	SCREW, M6S ISO 4017 M6X12 A4 80	
400	312115-0449		1	SCREW ISO4762 M8X16 A4 80	
410	312109-0460		1	SCREW, M6S ISO 4017 M8X45 A4 80	
450	315105-0153		1	WASHER PLAIN, 6,4X12X1,5 A4 BRB	
460	315105-0165		1	WASHER PLAIN, 8,4X16X1,6 A4 BRB	

Pos	Part No	UN	Qty	Description	Page No

Machine Type	Group Description	Used-In	Group Number	Page No

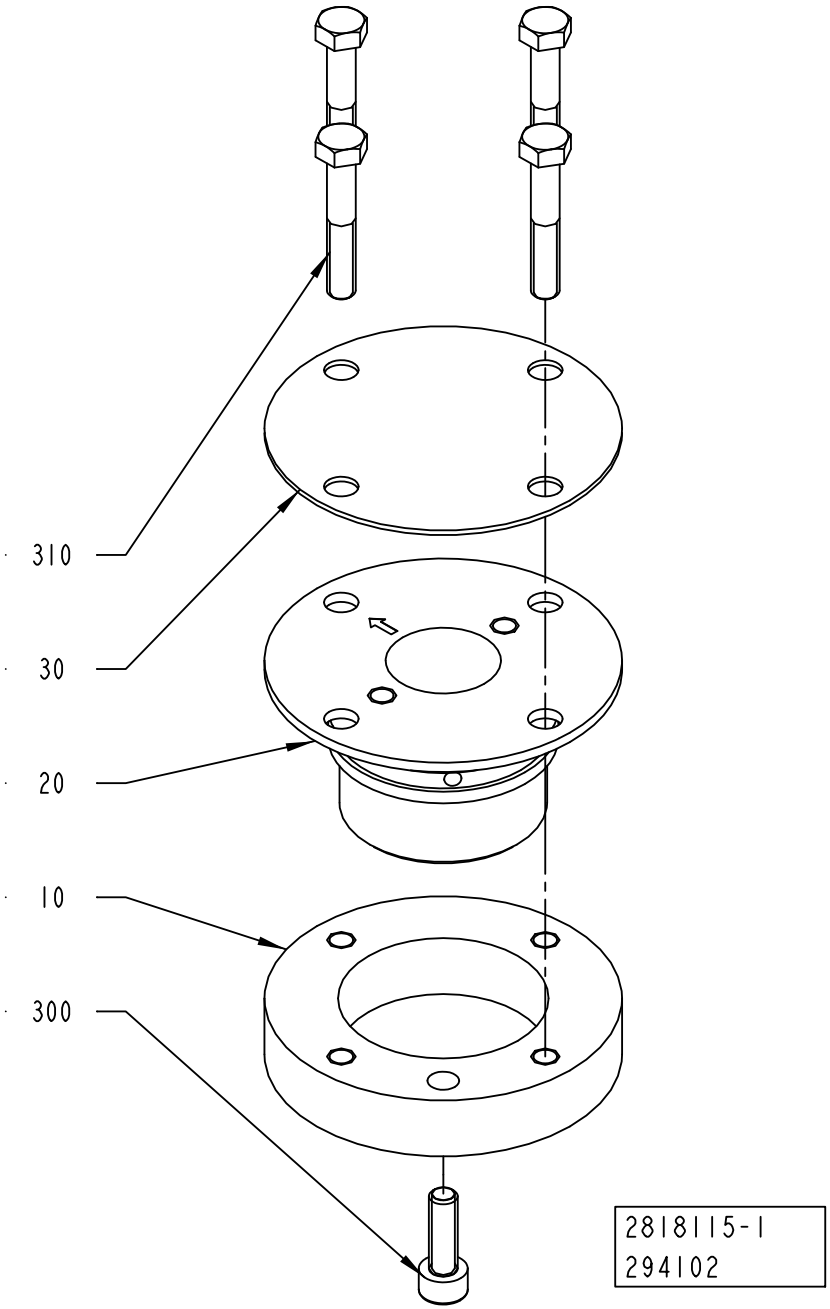
310
30
20
10
300
2818115-1
294102

ECM: 294202 - 20071219
Group number: 2818115-0100
Assembly Drawing: 2818115-1_1_AA

Pos	Part No	UN	Qty	Description	Page No
-					
010	36753-0000		1	RING	
020	246513-0000		1	BEARING	
030	239874-0000		1	WASHER	
300	312115-0329		1	SCREW ISO4762 M5X16 A4 80	
310	312105-0335		4	SCREW, M6S ISO 4014 M5X30 A4 80	

Pos	Part No	UN	Qty	Description	Page No

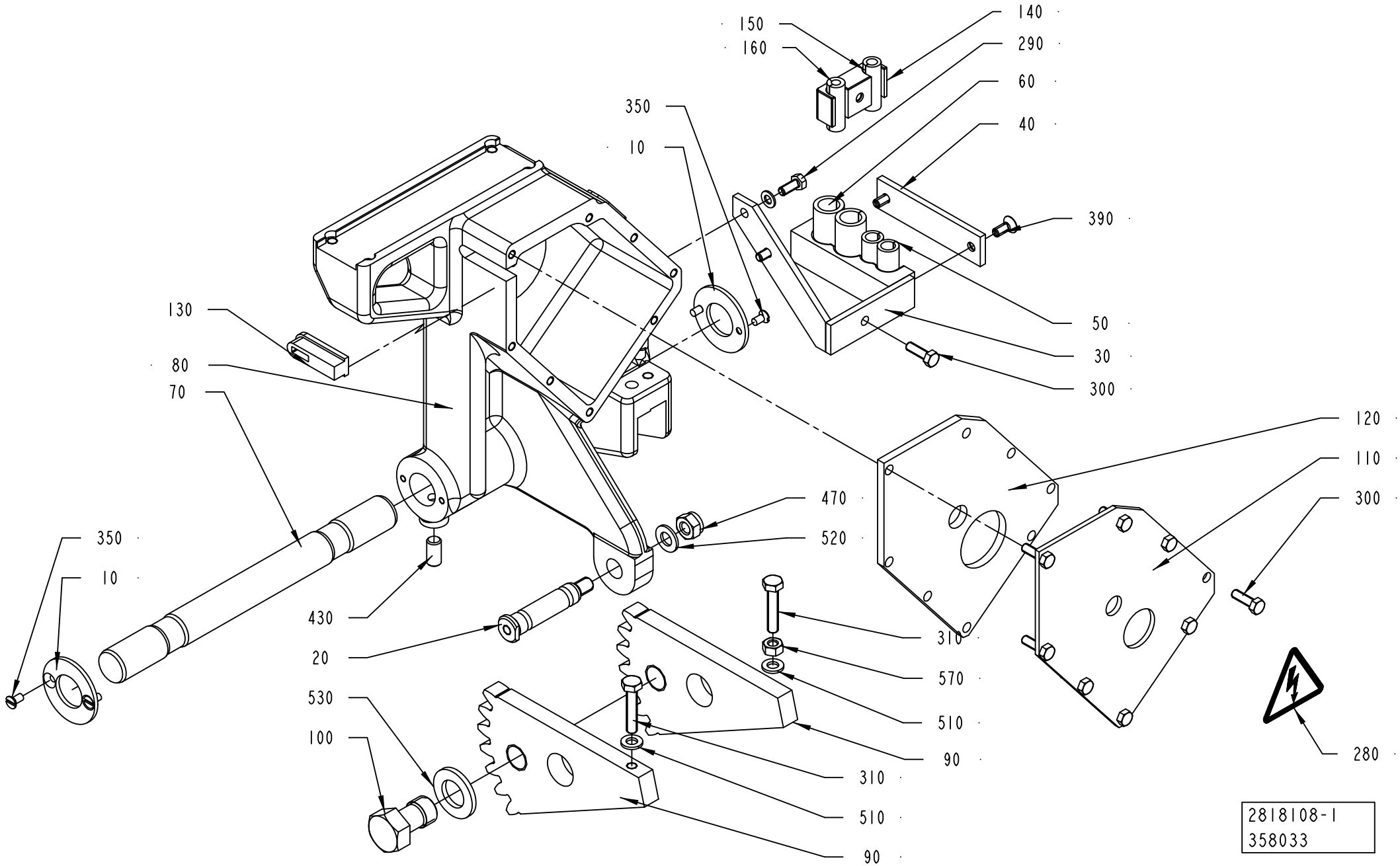
150
160
140
290
60
40
350
10
390
130
80
70
50
30
300
120
110
300
350
10
470
520
430
20
530
100
310
570
510
90
310
510
90
280
2818108-1
358033

ECM: 460576 - 20101001
Group number: 2818108-0100
Assembly Drawing: 2818108-1_1_AB

Pos	Part No	UN	Qty	Description	Page No
ANSI					
280	359715-0100		1	WARNING SIGN ANSI (H), ELECTRIC SHOCK	
ISO					
280	90600-1738		1	WARNING SIGN ISO, ELECTRIC SHOCK	
Common Parts					
010	536704-0000		2	WASHER	
020	1037853-0000		1	SHAFT	
030	1349867-0000		1	FASTENING PLATE	
040	1349868-0000		1	FASTENING PLATE	
050	1478000-0000		2	HOSE	
060	1478001-0000		2	HOSE	
070	2818100-0000		1	SHAFT	
080	2818107-0000		1	ARM	
090	2818104-0000		2	TOOTHED SEGMENT	
100	2818112-0000		1	SCREW	
110	2818113-0000		1	COVER	
120	2818114-0000		1	GASKET	
130	2818111-0000		1	SEAL	
140	2889885-0000		1	BLOCK	
150	2889946-0000		1	HOSE	
160	2889947-0000		1	HOSE	
290	312105-0327		2	SCREW, M6S ISO 4017 M5X12 A4 80	
300	312105-0329		9	SCREW, M6S ISO 4017 M5X16 A4 80	
310	312109-0374		2	SCREW, M6S ISO 4017 M6X30 A4 80	
350	312145-0287		4	SCREW ISO 2009 MFS M4X8 A4	
390	312155-0327		2	SCREW DIN 7991 MF6S M5X12 A4 70	
430	312318-0449		2	SET SCREW, CUP END ISO4029 M8X16 A4	
470	312812-0318		1	HEXAGON NUT, NY-LOCK M8 A4 80	
510	315105-0153		4	WASHER PLAIN, 6,4X12X1,5 A4 BRB	
520	315105-0165		1	WASHER PLAIN, 8,4X16X1,6 A4 BRB	
530	315105-0186		1	WASHER PLAIN, 17X30X3 A4 BRB	
570	312605-0316		1	HEXAGON NUT, M6M M6 A280	

Pos	Part No	UN	Qty	Description	Page No

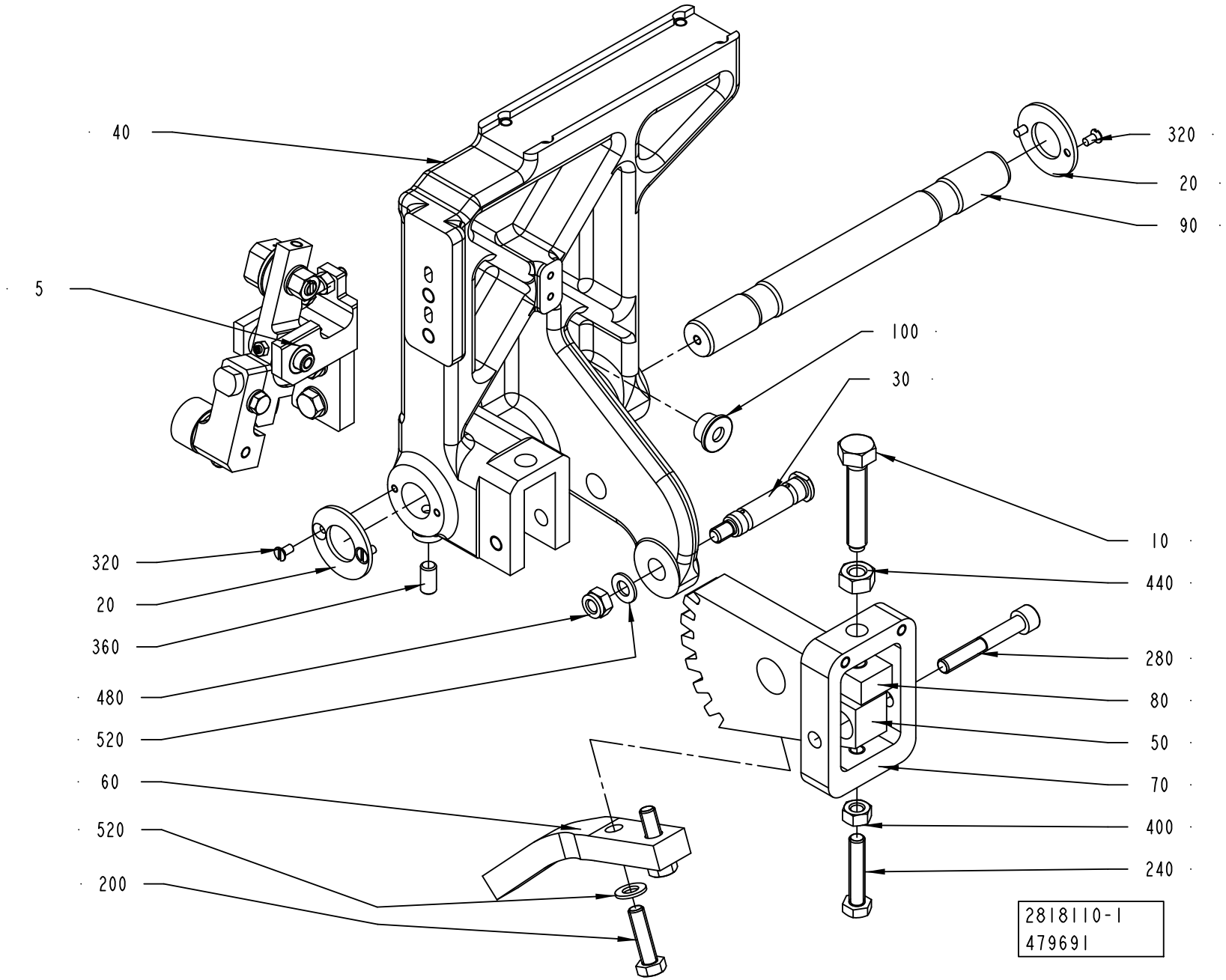
40
5
320
20
360
480
520
60
520
200
320
20
90
100
30
10
440
280
80
50
70
400
240
2818110-1
479691

ECM: 484758 - 20110401
Group number: 2818110-0100
Assembly Drawing: 2818110-1_1_AB

Pos	Part No	UN	Qty	Description	Page No
-					
005	2818121-0100		1	DESIGN CORRECTION	**4-17**
010	32957-0000		1	SCREW	
020	536704-0000		2	WASHER	
030	1037853-0000		1	SHAFT	
040	2818109-0000		1	ARM	
050	2818096-0000		1	TOOTHED SEGMENT	
060	2818097-0000		1	ROD	
070	2818098-0000		1	BOW CLAMP	
080	2818099-0000		1	NUT	
090	2818100-0000		1	SHAFT	
100	3149720-0000		1	PLUG	
200	312105-0455		2	SCREW, M6S ISO 4017 M8X30 A4 80	
240	312109-0459		1	SCREW, M6S ISO 4017 M8X40 A4 80	
280	312115-0462		1	SCREW ISO4762 M8X55 A4 80	
320	312145-0287		4	SCREW ISO 2009 MFS M4X8 A4	
360	312318-0449		2	SET SCREW, CUP END ISO4029 M8X16 A4	
400	312605-0318		1	HEXAGON NUT, M6M M8 A280	
440	312635-0320		1	NUT M6M 10X1 STAINLESS A2 80	
480	312812-0318		1	HEXAGON NUT, NY-LOCK M8 A4 80	
520	315105-0165		3	WASHER PLAIN, 8,4X16X1,6 A4 BRB	

Pos	Part No	UN	Qty	Description	Page No

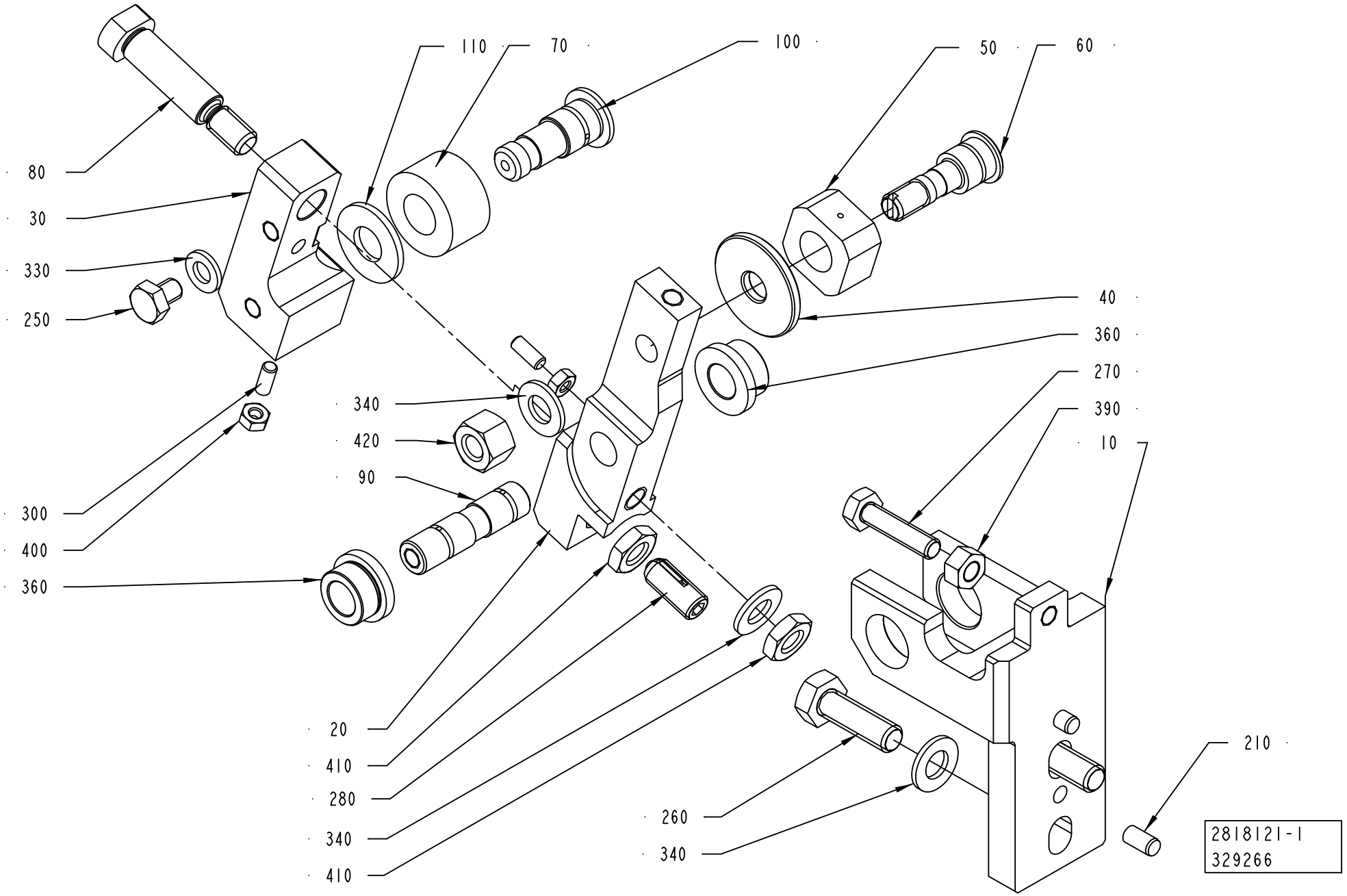
110
70
100
50
60
80
30
330
250
40
360
270
390
10
340
420
90
300
400
360
20
410
280
340
410
260
340
210
2818121-1
329266

ECM: 329266 - 20071219
Group number: 2818121-0100
Assembly Drawing: 2818121-1_1_AA

Pos	Part No	UN	Qty	Description	Page No
-					
010	2837093-0000		1	BRACKET	
020	2818122-0000		1	ARM	
030	2849952-0000		1	JOINT	
040	441706-0000		1	WASHER	
050	256628-0000		1	PIECE	
060	256629-0001		1	AXLE PIN	
070	1036618-0000		1	ROLL	
080	1348669-0000		1	SCREW	
090	1036615-0000		1	SHAFT	
100	1036620-0000		1	SHAFT	
110	1036616-0000		1	WASHER	
210	311103-0305		2	PARALLEL PIN ISO 2338 5M6X10 A1	
250	312105-0362		1	SCREW, M6S ISO 4017 M6X8 A4 80	
260	312105-0453		2	SCREW, M6S ISO 4017 M8X25 A4 80	
270	312105-0372		1	SCREW, M6S ISO 4017 M6X25 A4 80	
280	90458-1517		1	SCREW SPRINGLOAD. SOCK. HEX HEAD M8X18	
300	312318-0289		2	SET SCREW, CUP END ISO4029 M4X10 A4	
330	315105-0153		1	WASHER PLAIN, 6,4X12X1,5 A4 BRB	
340	315105-0165		4	WASHER PLAIN, 8,4X16X1,6 A4 BRB	
360	321101-0163		2	FLANGE BUSHING, 10/16X10-20X3 MM	
390	312607-0316		1	HEXAGON NUT, EN 24032 M6M M6 A480	
400	312605-0312		2	HEXAGON NUT, M6M M4 A280	
410	312625-0318		2	HEXAGON THIN NUT, EN 24035 ML6M M8 A4	
420	312811-0318		1	NUT HEX.LOCK HELI COIL M8 SS	

Pos	Part No	UN	Qty	Description	Page No

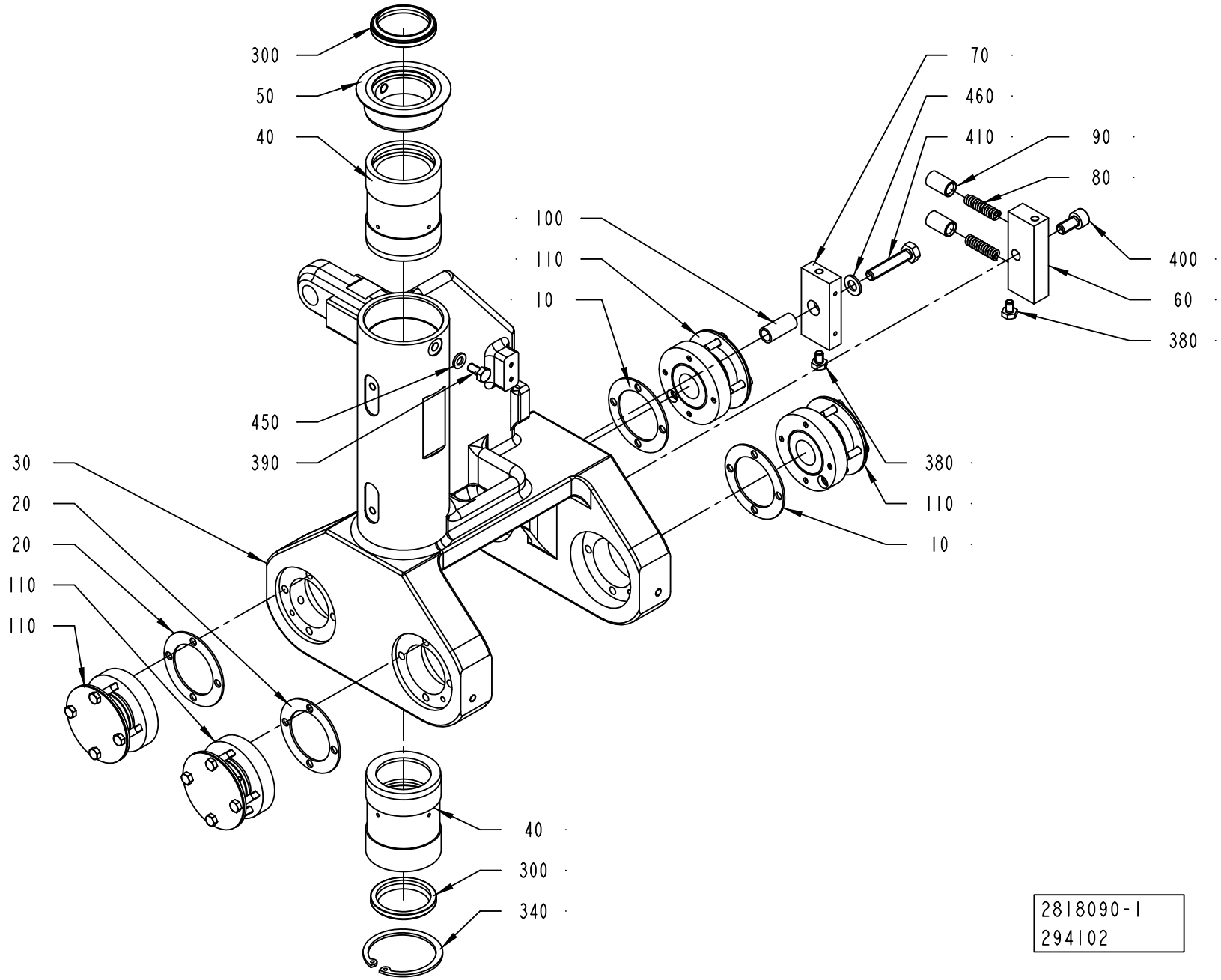
300
50
40
70
460
410
90
80
100
110
10
400
60
380
450
390
30
20
20
110
110
380
110
10
40
300
340
2818090-1
294102

ECM: 484755 - 20110401
Group number: 2818090-0100
Assembly Drawing: 2818090-1_1_AA

Pos	Part No	UN	Qty	Description	Page No
-					
010	29886-0000		2	LACE	
020	1038509-0000		2	WASHER	
030	2818091-0000		1	YOKE	
040	2818092-0000		2	BUSHING	
050	2818093-0000		1	LID	
060	2818094-0000		1	SPRING HOUSING	
070	1037104-0000		1	LOCATING PIECE	
080	20494-0000		2	COMPRESSION SPRING	
090	31838-0000		2	PLUNGER	
100	1037106-0000		1	SLEEVE	
110	2818115-0100		4	BEARING UNIT	**4-11**
300	90091-0218		2	SCRAPER 40X48X7 MM	
340	315753-0133		1	RETAINING RING FOR BORE DIN 472 55 SS	
380	312105-0362		2	SCREW, M6S ISO 4017 M6X8 A4 80	
390	312105-0366		1	SCREW, M6S ISO 4017 M6X12 A4 80	
400	312115-0449		1	SCREW ISO4762 M8X16 A4 80	
410	312109-0460		1	SCREW, M6S ISO 4017 M8X45 A4 80	
450	315105-0153		1	WASHER PLAIN, 6,4X12X1,5 A4 BRB	
460	315105-0165		1	WASHER PLAIN, 8,4X16X1,6 A4 BRB	

Pos	Part No	UN	Qty	Description	Page No

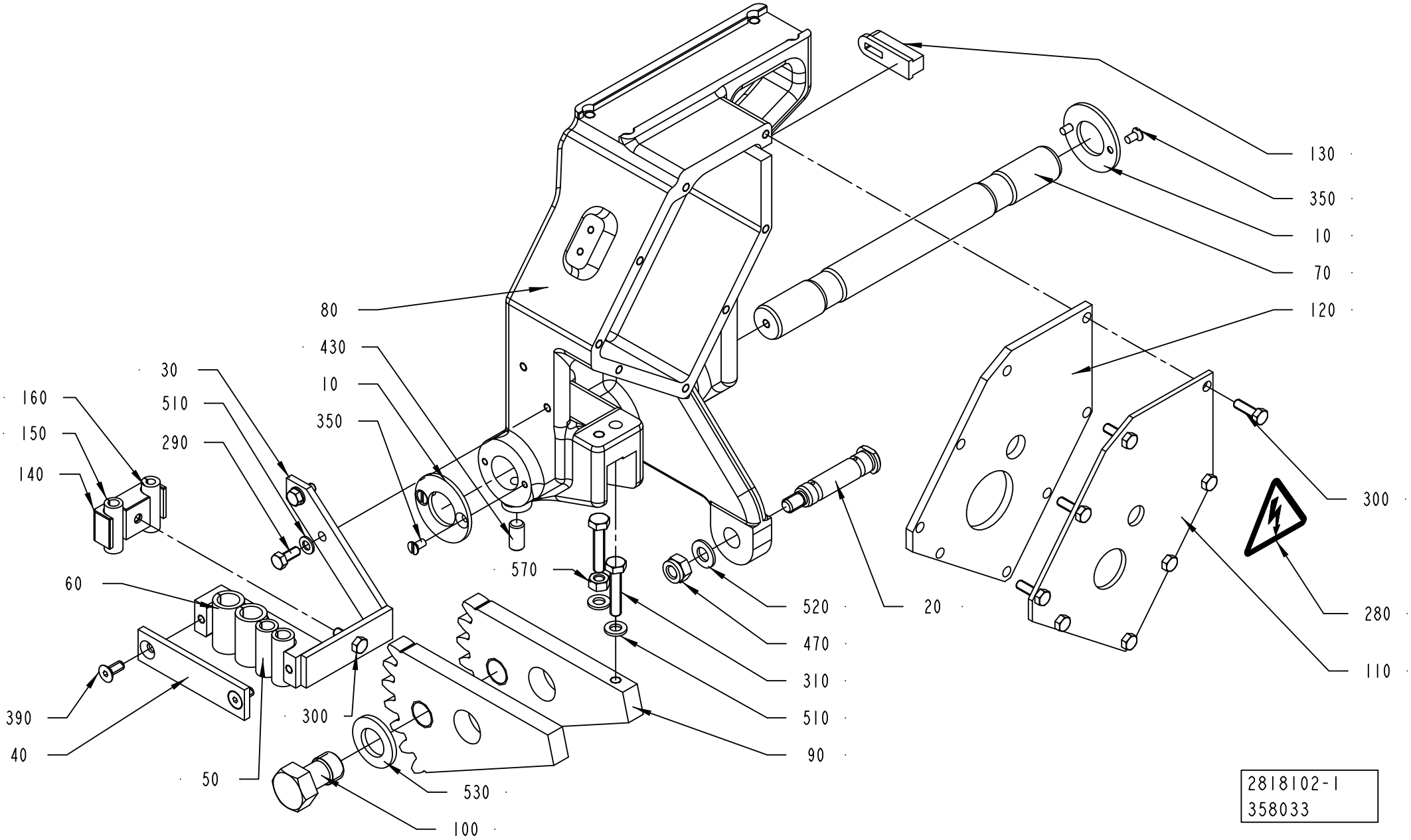
130
350
10
70
120
80
430
10
350
30
510
290
160
150
140
300
280
110
570
520
20
470
310
510
90
60
390
40
50
300
530
100
2818102-1
358033

ECM: 460575 - 20101001
Group number: 2818102-0100
Assembly Drawing: 2818102-1_1_AB

Pos	Part No	UN	Qty	Description	Page No
ANSI					
280	359715-0100		1	WARNING SIGN ANSI (H), ELECTRIC SHOCK	
ISO					
280	90600-1738		1	WARNING SIGN ISO, ELECTRIC SHOCK	
Common Parts					
010	536704-0000		2	WASHER	
020	1037853-0000		1	SHAFT	
030	1348196-0000		1	FASTENING PLATE	
040	1349868-0000		1	FASTENING PLATE	
050	1478000-0000		2	HOSE	
060	1478001-0000		2	HOSE	
070	2818100-0000		1	SHAFT	
080	2818103-0000		1	ARM	
090	2818104-0000		2	TOOTHED SEGMENT	
100	2818112-0000		1	SCREW	
110	2818113-0000		1	COVER	
120	2818114-0000		1	GASKET	
130	2818111-0000		1	SEAL	
140	2889885-0000		1	BLOCK	
150	2889946-0000		1	HOSE	
160	2889947-0000		1	HOSE	
290	312105-0327		2	SCREW, M6S ISO 4017 M5X12 A4 80	
300	312105-0329		9	SCREW, M6S ISO 4017 M5X16 A4 80	
310	312109-0374		2	SCREW, M6S ISO 4017 M6X30 A4 80	
350	312145-0287		4	SCREW ISO 2009 MFS M4X8 A4	
390	312155-0327		2	SCREW DIN 7991 MF6S M5X12 A4 70	
430	312318-0449		2	SET SCREW, CUP END ISO4029 M8X16 A4	
470	312812-0318		1	HEXAGON NUT, NY-LOCK M8 A4 80	
510	315105-0153		4	WASHER PLAIN, 6,4X12X1,5 A4 BRB	
520	315105-0165		1	WASHER PLAIN, 8,4X16X1,6 A4 BRB	
530	315105-0186		1	WASHER PLAIN, 17X30X3 A4 BRB	
570	312605-0316		1	HEXAGON NUT, M6M M6 A280	

Pos	Part No	UN	Qty	Description	Page No

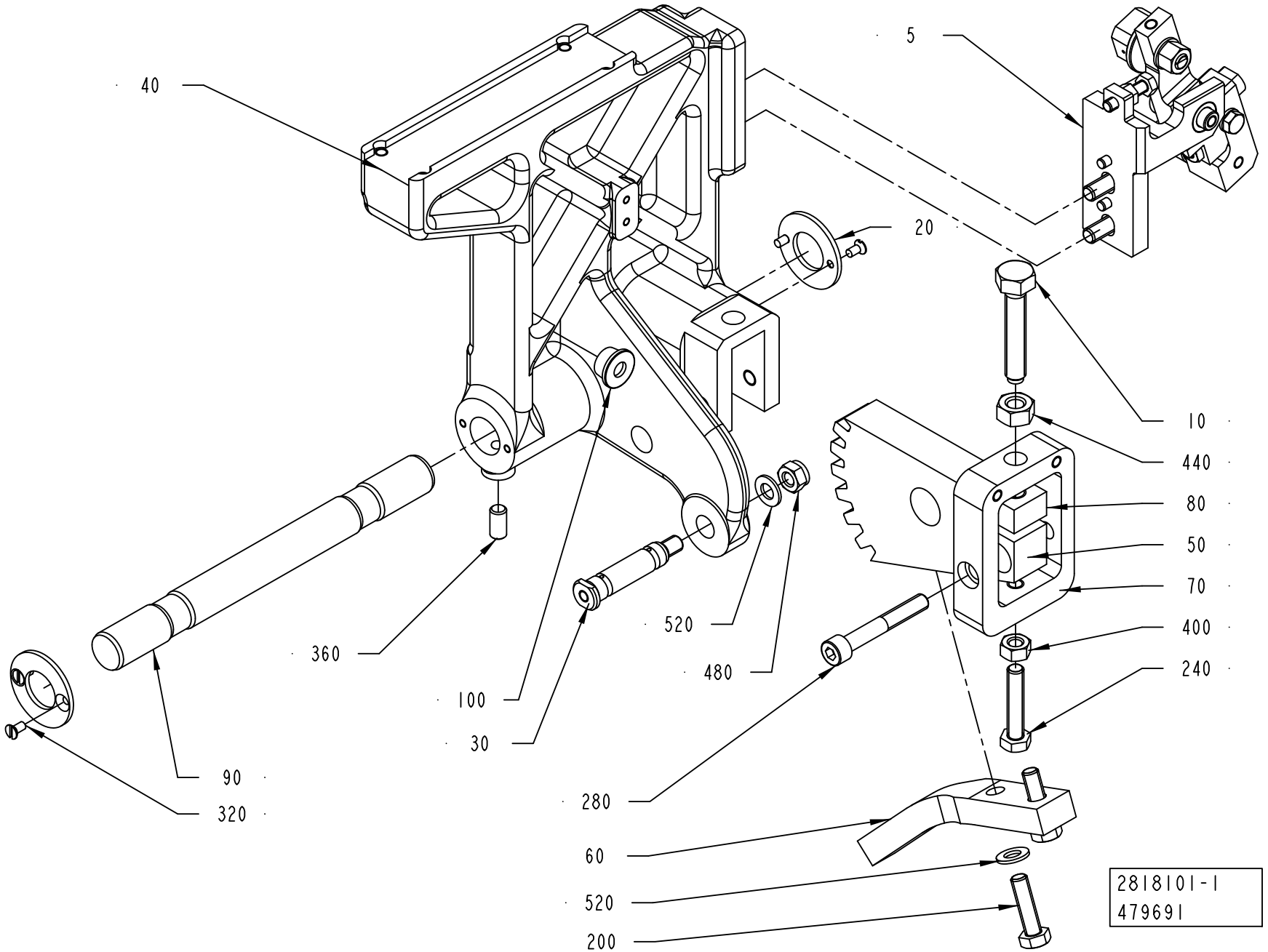
40
5
20
10
440
80
50
70
400
240
360
100
30
520
480
90
320
280
60
520
200
2818101-1
479691

ECM: 484756 - 20110401
Group number: 2818101-0100
Assembly Drawing: 2818101-1_1_AB

Pos	Part No	UN	Qty	Description	Page No
-					
005	2818117-0100		1	DESIGN CORRECTION	**4-25**
010	32957-0000		1	SCREW	
020	536704-0000		2	WASHER	
030	1037853-0000		1	SHAFT	
040	2818095-0000		1	ARM	
050	2818096-0000		1	TOOTHED SEGMENT	
060	2818097-0000		1	ROD	
070	2818098-0000		1	BOW CLAMP	
080	2818099-0000		1	NUT	
090	2818100-0000		1	SHAFT	
100	3149720-0000		1	PLUG	
200	312105-0455		2	SCREW, M6S ISO 4017 M8X30 A4 80	
240	312109-0459		1	SCREW, M6S ISO 4017 M8X40 A4 80	
280	312115-0462		1	SCREW ISO4762 M8X55 A4 80	
320	312145-0287		4	SCREW ISO 2009 MFS M4X8 A4	
360	312318-0449		2	SET SCREW, CUP END ISO4029 M8X16 A4	
400	312605-0318		1	HEXAGON NUT, M6M M8 A280	
440	312635-0320		1	NUT M6M 10X1 STAINLESS A2 80	
480	312812-0318		1	HEXAGON NUT, NY-LOCK M8 A4 80	
520	315105-0165		3	WASHER PLAIN, 8,4X16X1,6 A4 BRB	

Pos	Part No	UN	Qty	Description	Page No

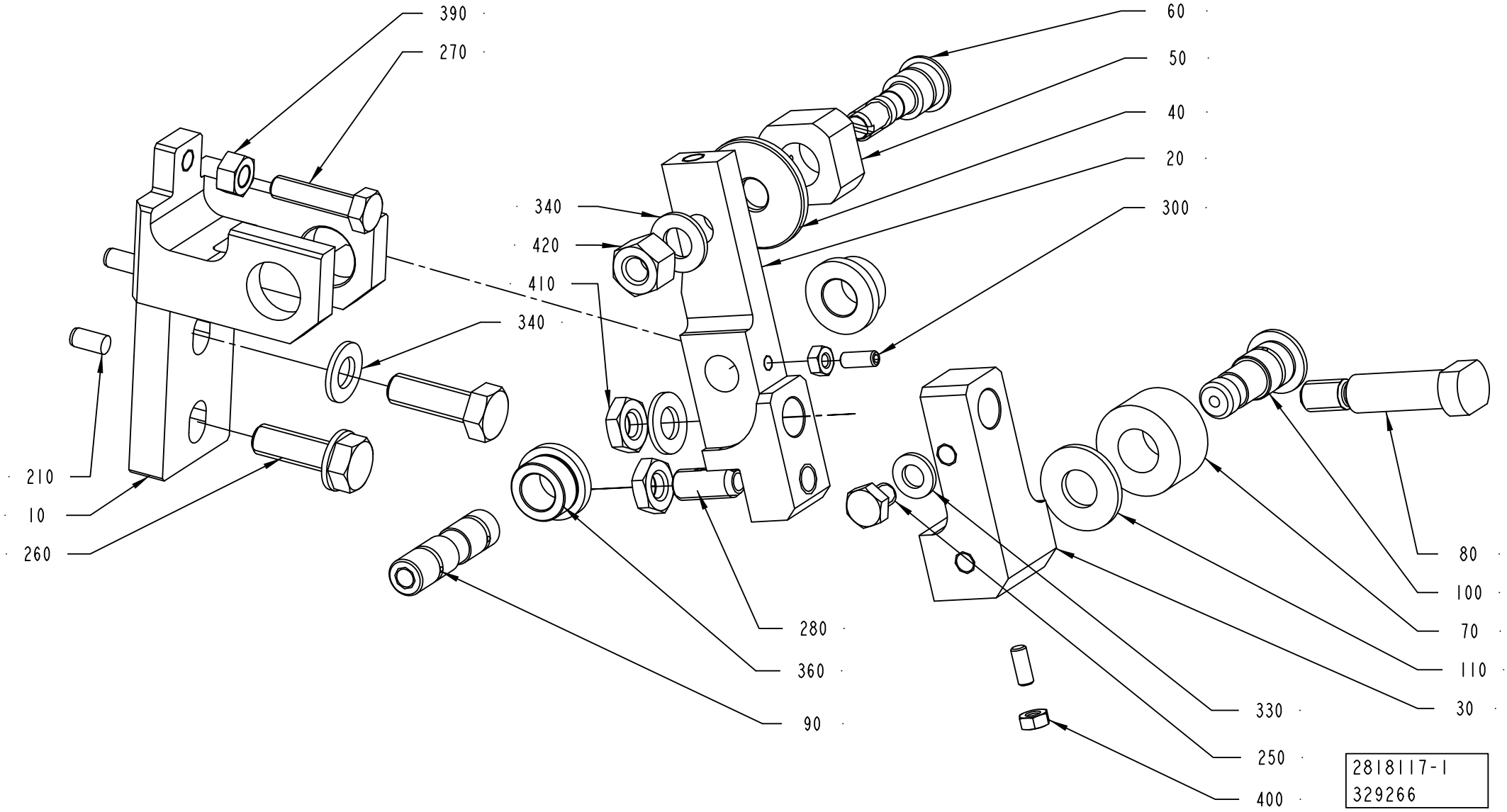
390
270
340
420
410
340
210
10
260
280
360
90
60
50
40
20
300
80
100
70
110
30
330
250
400
2818117-1
329266

ECM: 329266 - 20071219
Group number: 2818117-0100
Assembly Drawing: 2818117-1_1_AA

Pos	Part No	UN	Qty	Description	Page No
-					
010	2818118-0000		1	BRACKET	
020	2818119-0000		1	ARM	
030	2849951-0000		1	JOINT	
040	441706-0000		1	WASHER	
050	256628-0000		1	PIECE	
060	256629-0001		1	AXLE PIN	
070	1036618-0000		1	ROLL	
080	1348669-0000		1	SCREW	
090	1036615-0000		1	SHAFT	
100	1036620-0000		1	SHAFT	
110	1036616-0000		1	WASHER	
210	311103-0305		2	PARALLEL PIN ISO 2338 5M6X10 A1	
250	312105-0362		1	SCREW, M6S ISO 4017 M6X8 A4 80	
260	312105-0453		2	SCREW, M6S ISO 4017 M8X25 A4 80	
270	312105-0372		1	SCREW, M6S ISO 4017 M6X25 A4 80	
280	90458-1517		1	SCREW SPRINGLOAD. SOCK. HEX HEAD M8X18	
300	312318-0289		2	SET SCREW, CUP END ISO4029 M4X10 A4	
330	315105-0153		1	WASHER PLAIN, 6,4X12X1,5 A4 BRB	
340	315105-0165		4	WASHER PLAIN, 8,4X16X1,6 A4 BRB	
360	321101-0163		2	FLANGE BUSHING, 10/16X10-20X3 MM	
390	312607-0316		1	HEXAGON NUT, EN 24032 M6M M6 A480	
400	312605-0312		2	HEXAGON NUT, M6M M4 A280	
410	312625-0318		2	HEXAGON THIN NUT, EN 24035 ML6M M8 A4	
420	312811-0318		1	NUT HEX.LOCK HELI COIL M8 SS	

Pos	Part No	UN	Qty	Description	Page No

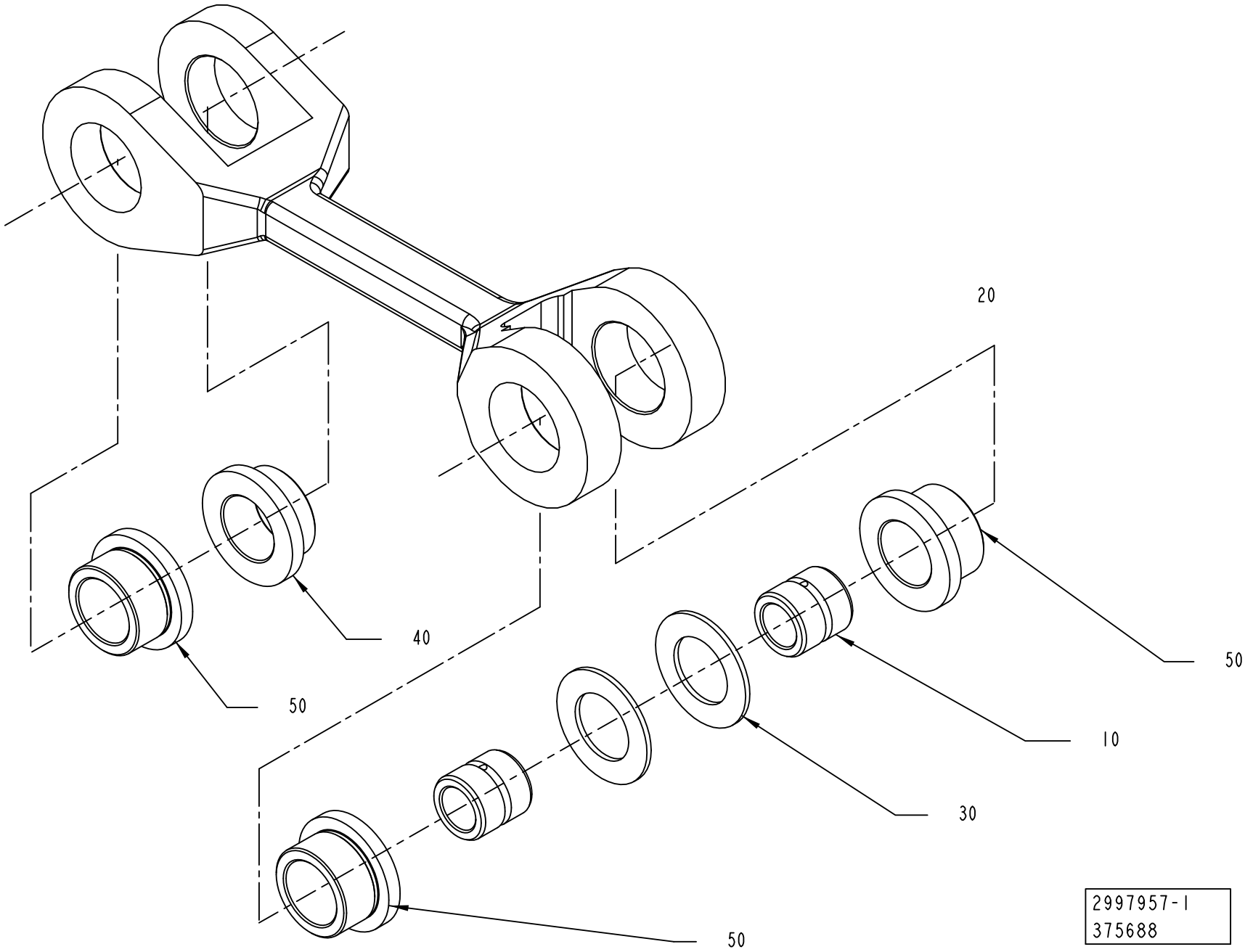
20
40
50
50
10
30
50
2997957-1
375688

ECM: 379560 - 20081217
Group number: 2997957-0100
Assembly Drawing: 2997957-1_1_AA

Pos	Part No	UN	Qty	Description	Page No
-					
010	1037849-0000		2	SLEEVE	
020	1037851-0000		1	LINK	
030	1038021-0000		2	WASHER	
040	321101-0222		1	FLANGE BUSHING, 18/25X12-32X4 MM	
050	321101-0223		3	FLANGE BUSHING, 18/25X16-32X4 MM	

Pos	Part No	UN	Qty	Description	Page No

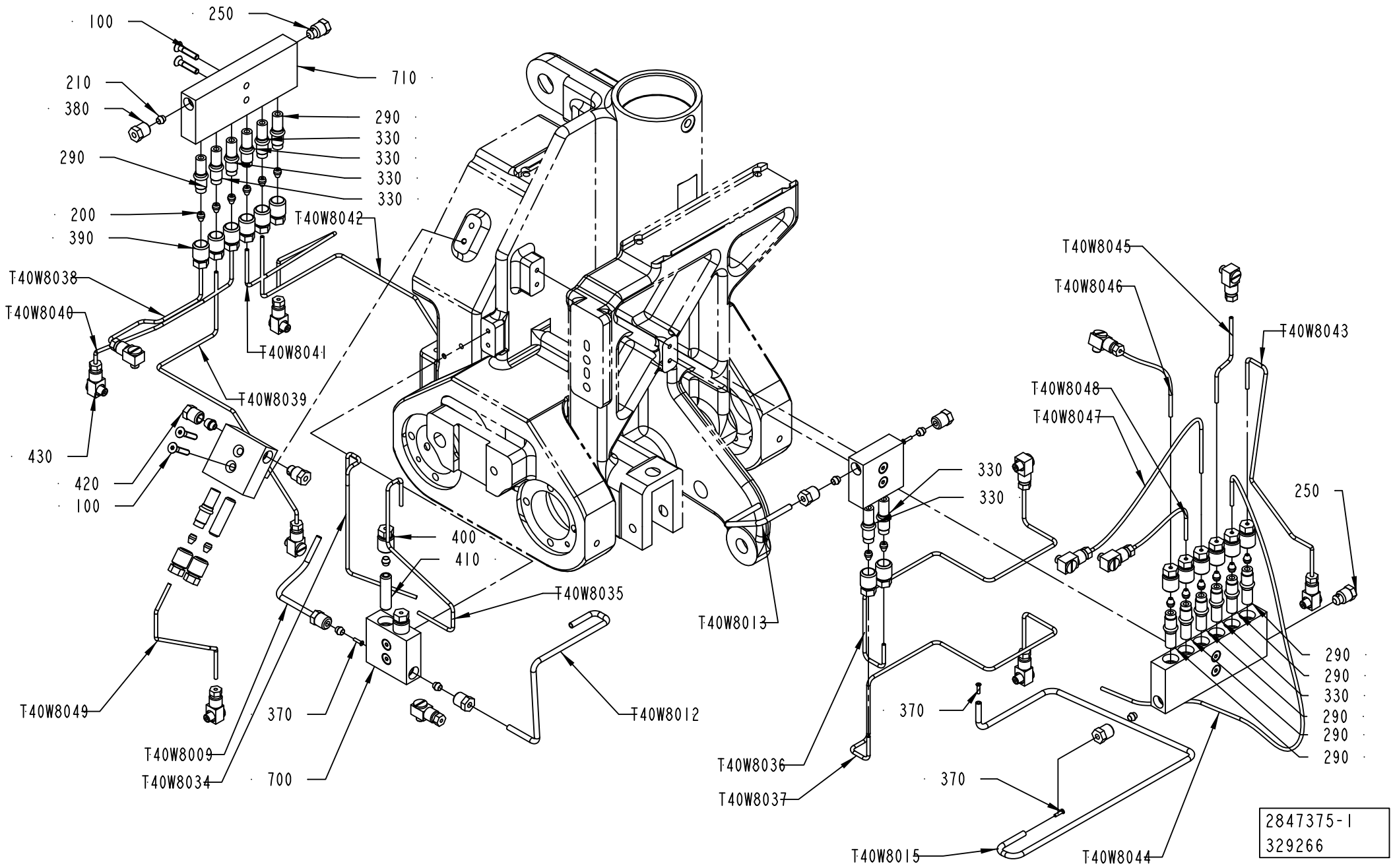
100
250
210
710
380
290
330
330
330
330
290
200
390
T40W8042
T40W8038
T40W8040
T40W8041
T40W8039
430
420
100
400
410
T40W8035
T40W8013
T40W8049
370
T40W8009
T40W8034
700
T40W8012
T40W8045
T40W8046
T40W8043
T40W8048
T40W8047
330
330
250
290
290
330
290
290
290
370
T40W8036
T40W8037
370
T40W8015
T40W8044
2847375-1
329266

ECM: 484760 - 20110401
Group number: 2847375-0100
Assembly Drawing: 2847375-1_1_AA

Pos	Part No	UN	Qty	Description	Page No
-					
100	312155-0295		10	SCREW DIN 7991 MF6S M4X20 A4 70	
200	90028-0020		17	CONE TUBE 2,5MM	
210	90028-0021		7	CONE TUBE 4 MM	
220	90028-0025		1	CONE TUBE 6 MM	
250	90087-0019		3	PLUG M10X1 STAINLESS	
290	90092-0052		9	METERING VALVE 10 MM3	
330	90092-0054		7	METERING VALVE 50 MM3	
370	90134-0031		7	SLEEVE FOR PLASTIC TUBE	
380	90134-0038		6	BUSHING/NUT INLET/OUTLET 4 MM	
390	90134-0039		16	BUSHING VALVE CONNECTION 2,5 MM	
400	90134-0040		2	BUSHING VALVE CONNECTION 4 MM	
410	90134-0051		2	SPACING COLLAR DOSING BLOCK	
420	90134-0055		1	BUSHING/NUT INLET/OUTLET 6 MM	
430	90134-0058		14	CONNECTION	
700	90459-5650		3	LUBRICATION BLOCK, HFS4662	
710	90459-5652		2	LUBRICATION BLOCK, HFS4666	
T40W8009	90166-0109	MM	160	TUBE 4 MM PA TRANSP.	
T40W8012	90266-0165	MM	300	BRASS PIPE	
T40W8013	90266-0165	MM	300	BRASS PIPE	
T40W8015	90166-0109	MM	360	TUBE 4 MM PA TRANSP.	
T40W8034	90266-0019	MM	300	PIPE	
T40W8035	90266-0019	MM	300	PIPE	
T40W8036	90266-0019	MM	300	PIPE	
T40W8037	90266-0019	MM	300	PIPE	
T40W8038	90266-0019	MM	300	PIPE	
T40W8039	90266-0019	MM	300	PIPE	
T40W8040	90266-0019	MM	300	PIPE	
T40W8041	90266-0019	MM	300	PIPE	
T40W8042	90266-0019	MM	300	PIPE	
T40W8043	90266-0019	MM	300	PIPE	
T40W8044	90166-0143	MM	560	TUBE 2,5 MM PA TRANSP.	
T40W8045	90266-0019	MM	300	PIPE	
T40W8046	90166-0143	MM	180	TUBE 2,5 MM PA TRANSP.	
T40W8047	90166-0143	MM	130	TUBE 2,5 MM PA TRANSP.	
T40W8048	90166-0143	MM	190	TUBE 2,5 MM PA TRANSP.	
T40W8049	90266-0019	MM	300	PIPE	

Pos	Part No	UN	Qty	Description	Page No

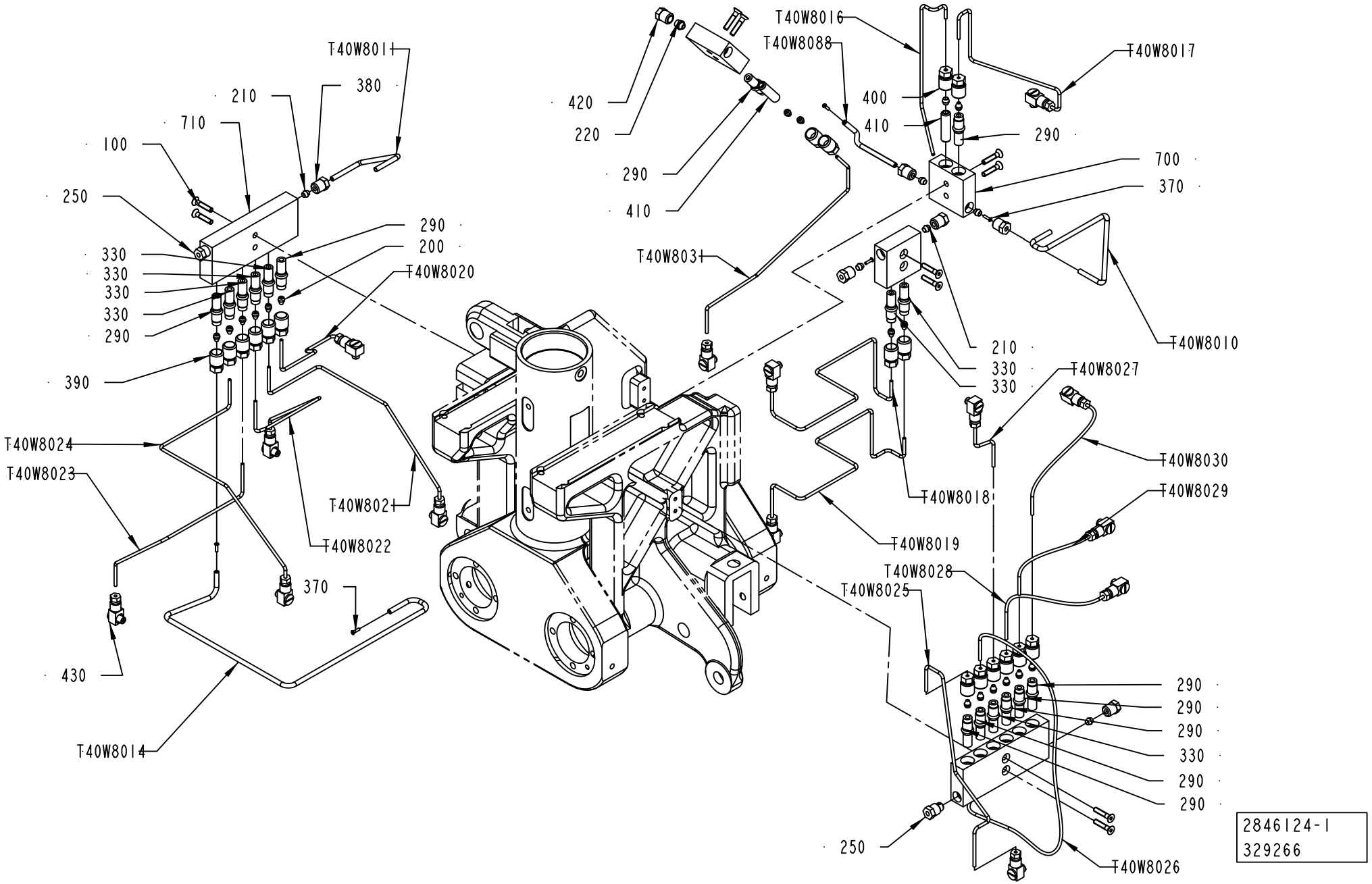
T40W8016
T40W8088
T40W8017
T40W8011
380
210
710
100
250
420
220
290
410
400
410
290
700
370
290
200
330
330
330
330
290
T40W8020
T40W803
T40W8010
210
330
330
T40W8027
390
T40W8024
T40W8023
T40W8030
T40W8029
T40W8018
T40W802
T40W8022
T40W8019
T40W8028
T40W8025
370
430
290
290
290
330
290
290
250
T40W8026
T40W8014
2846124-1
329266

ECM: 484759 - 20110401
Group number: 2846124-0100
Assembly Drawing: 2846124-1_1_AA

Pos	Part No	UN	Qty	Description	Page No
-					
100	312155-0295		10	SCREW DIN 7991 MF6S M4X20 A4 70	
200	90028-0020		17	CONE TUBE 2,5MM	
210	90028-0021		7	CONE TUBE 4 MM	
220	90028-0025		1	CONE TUBE 6 MM	
250	90087-0019		3	PLUG M10X1 STAINLESS	
290	90092-0052		9	METERING VALVE 10 MM3	
330	90092-0054		7	METERING VALVE 50 MM3	
370	90134-0031		7	SLEEVE FOR PLASTIC TUBE	
380	90134-0038		6	BUSHING/NUT INLET/OUTLET 4 MM	
390	90134-0039		16	BUSHING VALVE CONNECTION 2,5 MM	
400	90134-0040		2	BUSHING VALVE CONNECTION 4 MM	
410	90134-0051		2	SPACING COLLAR DOSING BLOCK	
420	90134-0055		1	BUSHING/NUT INLET/OUTLET 6 MM	
430	90134-0058		14	CONNECTION	
700	90459-5650		3	LUBRICATION BLOCK, HFS4662	
710	90459-5652		2	LUBRICATION BLOCK, HFS4666	
T40W8010	90266-0165	MM	300	BRASS PIPE	
T40W8011	90266-0165	MM	300	BRASS PIPE	
T40W8014	90166-0109	MM	360	TUBE 4 MM PA TRANSP.	
T40W8016	90266-0019	MM	300	PIPE	
T40W8017	90266-0019	MM	300	PIPE	
T40W8018	90266-0019	MM	300	PIPE	
T40W8019	90266-0019	MM	300	PIPE	
T40W8020	90266-0019	MM	300	PIPE	
T40W8021	90266-0019	MM	300	PIPE	
T40W8022	90266-0019	MM	300	PIPE	
T40W8023	90266-0019	MM	300	PIPE	
T40W8024	90266-0019	MM	300	PIPE	
T40W8025	90266-0019	MM	300	PIPE	
T40W8026	90166-0143	MM	560	TUBE 2,5 MM PA TRANSP.	
T40W8027	90266-0019	MM	300	PIPE	
T40W8028	90166-0143	MM	130	TUBE 2,5 MM PA TRANSP.	
T40W8029	90166-0143	MM	190	TUBE 2,5 MM PA TRANSP.	
T40W8030	90166-0143	MM	180	TUBE 2,5 MM PA TRANSP.	
T40W8031	90266-0019	MM	300	PIPE	
T40W8088	90166-0109	MM	160	TUBE 4 MM PA TRANSP.	

Pos	Part No	UN	Qty	Description	Page No

Machine Type | Group Description | Used-In | Group Number | Page No

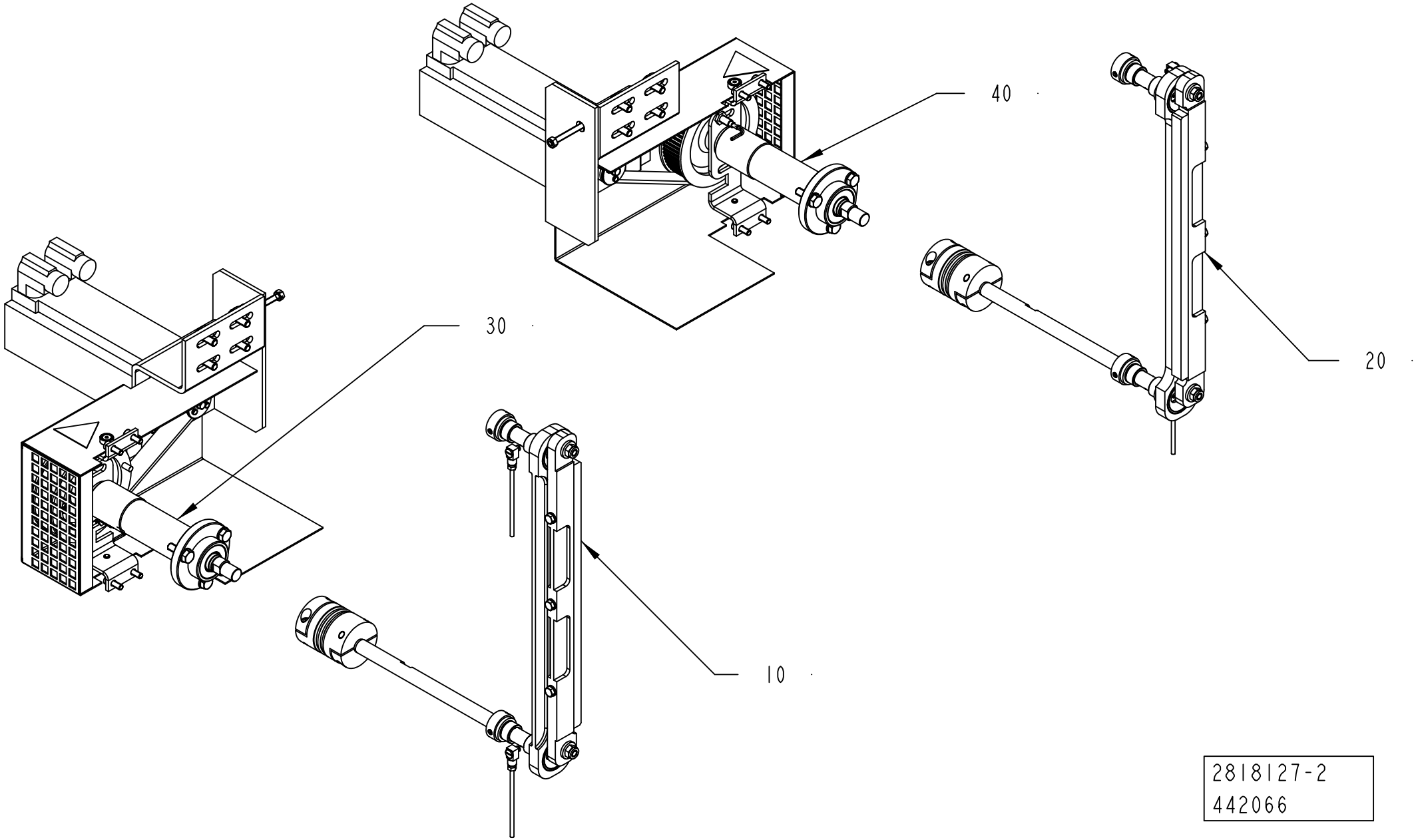
40
30
20
10
2818127-2
442066

ECM: 443210 - 20100701
Group number: 2818127-0200
Assembly Drawing: 2818127-2_1_AB

Pos	Part No	UN	Qty	Description	Page No
-					
010	2792160-0100		1	DESIGN CORRECTION DEVICE	4-35
020	2792161-0100		1	DESIGN CORRECTION DEVICE	4-37
030	2854326-0300		1	DRIVE UNIT	4-39
040	2854320-0300		1	DRIVE UNIT	4-41

Pos	Part No	UN	Qty	Description	Page No

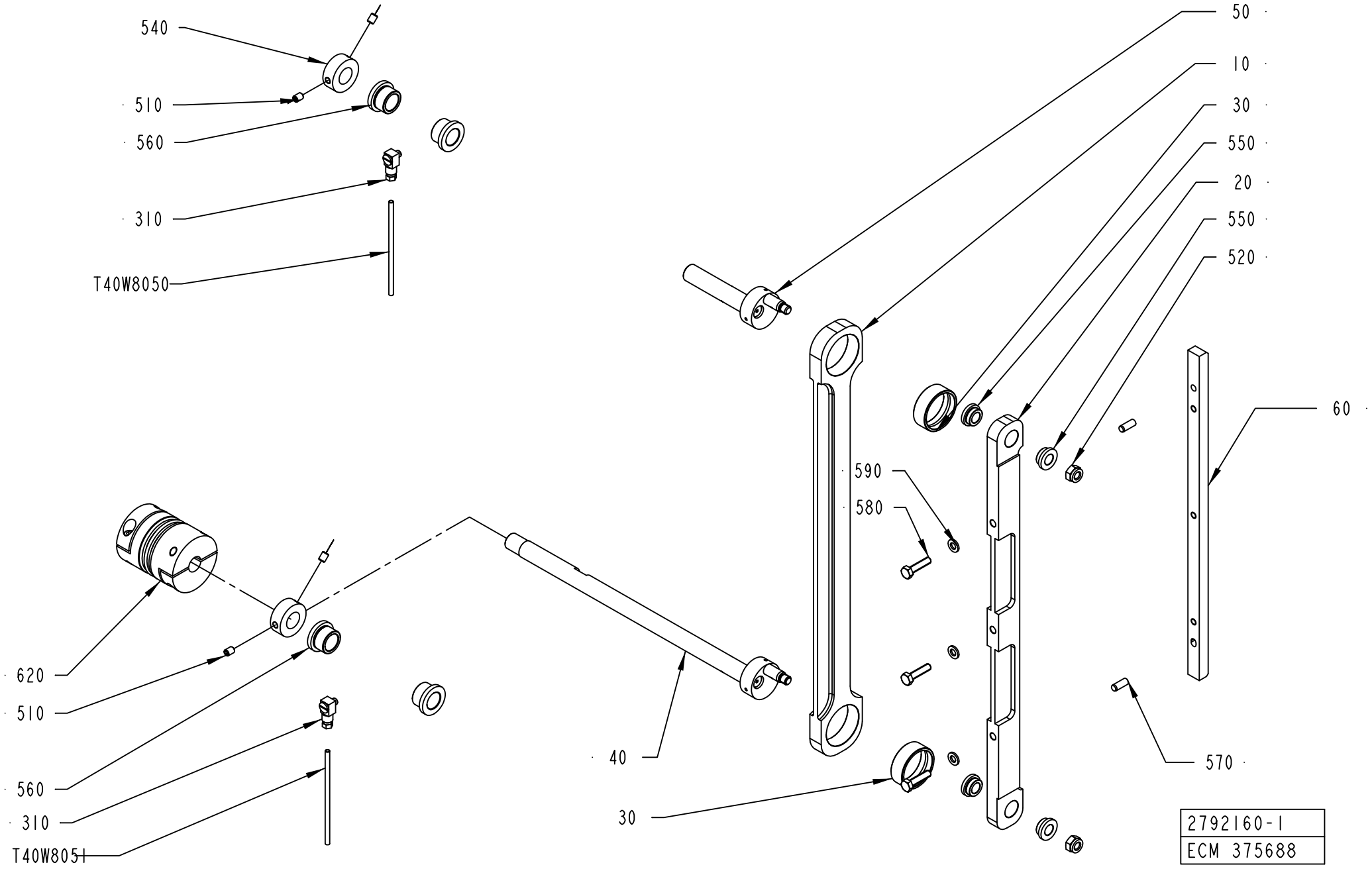
540
510
560
310
T40W8050
50
10
30
550
20
550
520
60
590
580
570
620
510
560
310
T40W8051
40
30
2792160-1
ECM 375688

ECM: 403514 - 20090701
Group number: 2792160-0100
Assembly Drawing: 2792160-1_1_AB

Pos	Part No	UN	Qty	Description	Page No
-					
010	2792158-0000		1	STRUT	
020	2849953-0000		1	BAR	
030	1255117-0000		2	PLAIN BEARING	
040	2798536-0000		1	ECCENTRIC SHAFT	
050	2506340-0000		1	ECCENTRIC SHAFT	
060	2798537-0000		1	FOLDING FLAP CAM	
310	90134-0068		2	CONNECTION	
510	312318-0362		4	SET SCREW, CUP END ISO4029 M6X8 A4	
520	312812-0318		2	HEXAGON NUT, NY-LOCK M8 A4 80	
540	2982739-0000		2	RETAINING RING	
550	321101-0162		4	FLANGE BUSHING, 10/16X8-20X3 MM	
560	321101-0203		4	FLANGE BUSHING, 16/22X16-28X4 MM	
570	311103-0351		2	PARALLEL PIN ISO 2338 6M6X16 A1	
580	312105-0372		3	SCREW, M6S ISO 4017 M6X25 A4 80	
590	315105-0153		3	WASHER PLAIN, 6,4X12X1,5 A4 BRB	
620	90459-1733		1	TORQUE RIGID COUPLING, 15X15 MM	
T40W8050	90266-0165	MM	650	BRASS PIPE	
T40W8051	90266-0165	MM	650	BRASS PIPE	

Pos	Part No	UN	Qty	Description	Page No

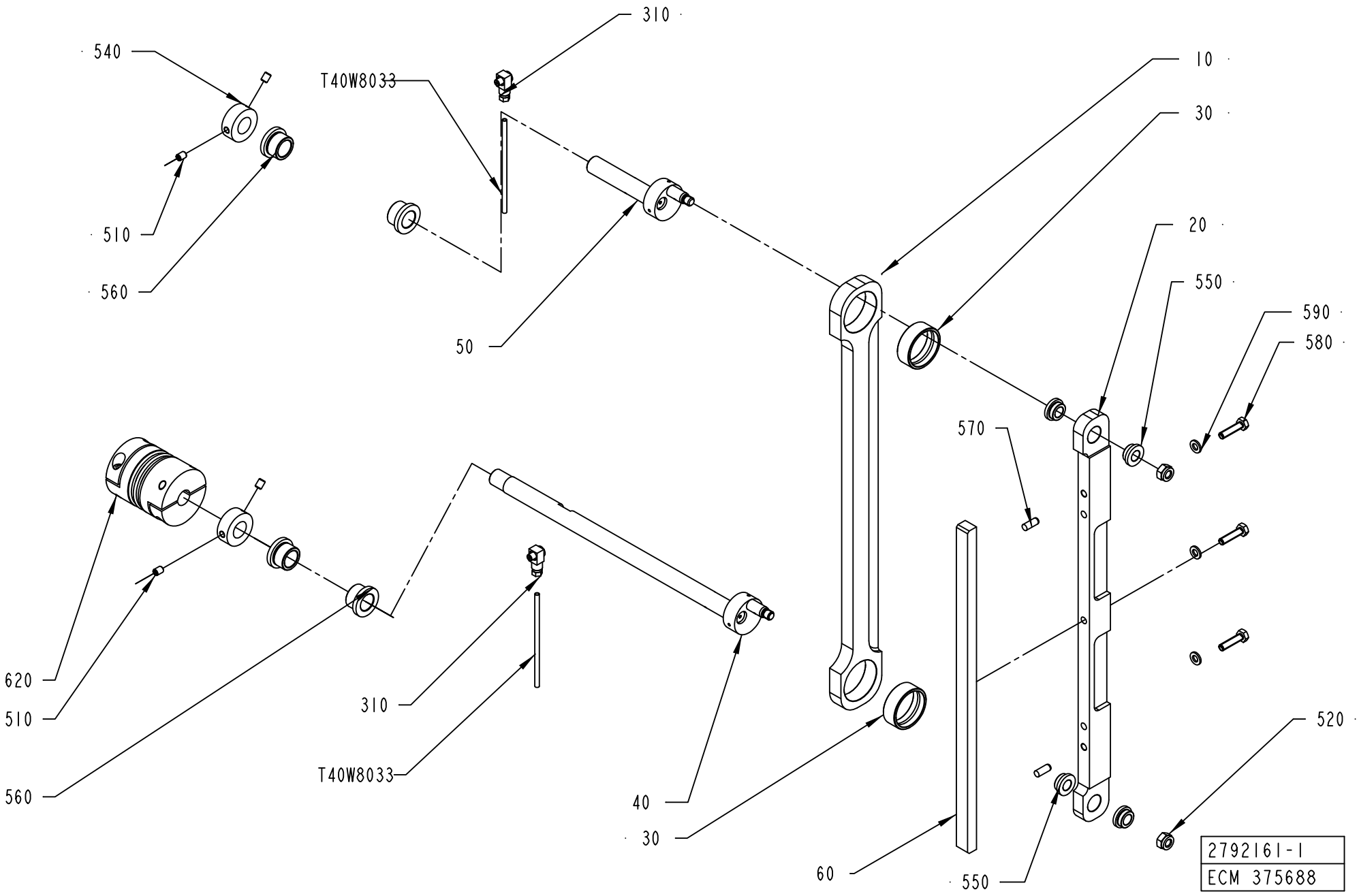
540
510
560
T40W8033
310
50
10
30
20
550
590
580
570
520
620
510
560
310
T40W8033
40
30
60
550
2792161-1
ECM 375688

ECM: 379559 - 20081217
Group number: 2792161-0100
Assembly Drawing: 2792161-1_1_AB

Pos	Part No	UN	Qty	Description	Page No
-					
010	2792158-0000		1	STRUT	
020	2849953-0000		1	BAR	
030	1255117-0000		2	PLAIN BEARING	
040	2798536-0000		1	ECCENTRIC SHAFT	
050	2506340-0000		1	ECCENTRIC SHAFT	
060	2798537-0000		1	FOLDING FLAP CAM	
310	90134-0068		2	CONNECTION	
510	312318-0362		4	SET SCREW, CUP END ISO4029 M6X8 A4	
520	312812-0318		2	HEXAGON NUT, NY-LOCK M8 A4 80	
540	2982739-0000		2	RETAINING RING	
550	321101-0162		4	FLANGE BUSHING, 10/16X8-20X3 MM	
560	321101-0203		4	FLANGE BUSHING, 16/22X16-28X4 MM	
570	311103-0351		2	PARALLEL PIN ISO 2338 6M6X16 A1	
580	312105-0372		3	SCREW, M6S ISO 4017 M6X25 A4 80	
590	315105-0153		3	WASHER PLAIN, 6,4X12X1,5 A4 BRB	
620	90459-1733		1	TORQUE RIGID COUPLING, 15X15 MM	
T40W8032	90266-0165	MM	650	BRASS PIPE	
T40W8033	90266-0165	MM	650	BRASS PIPE	

Pos	Part No	UN	Qty	Description	Page No

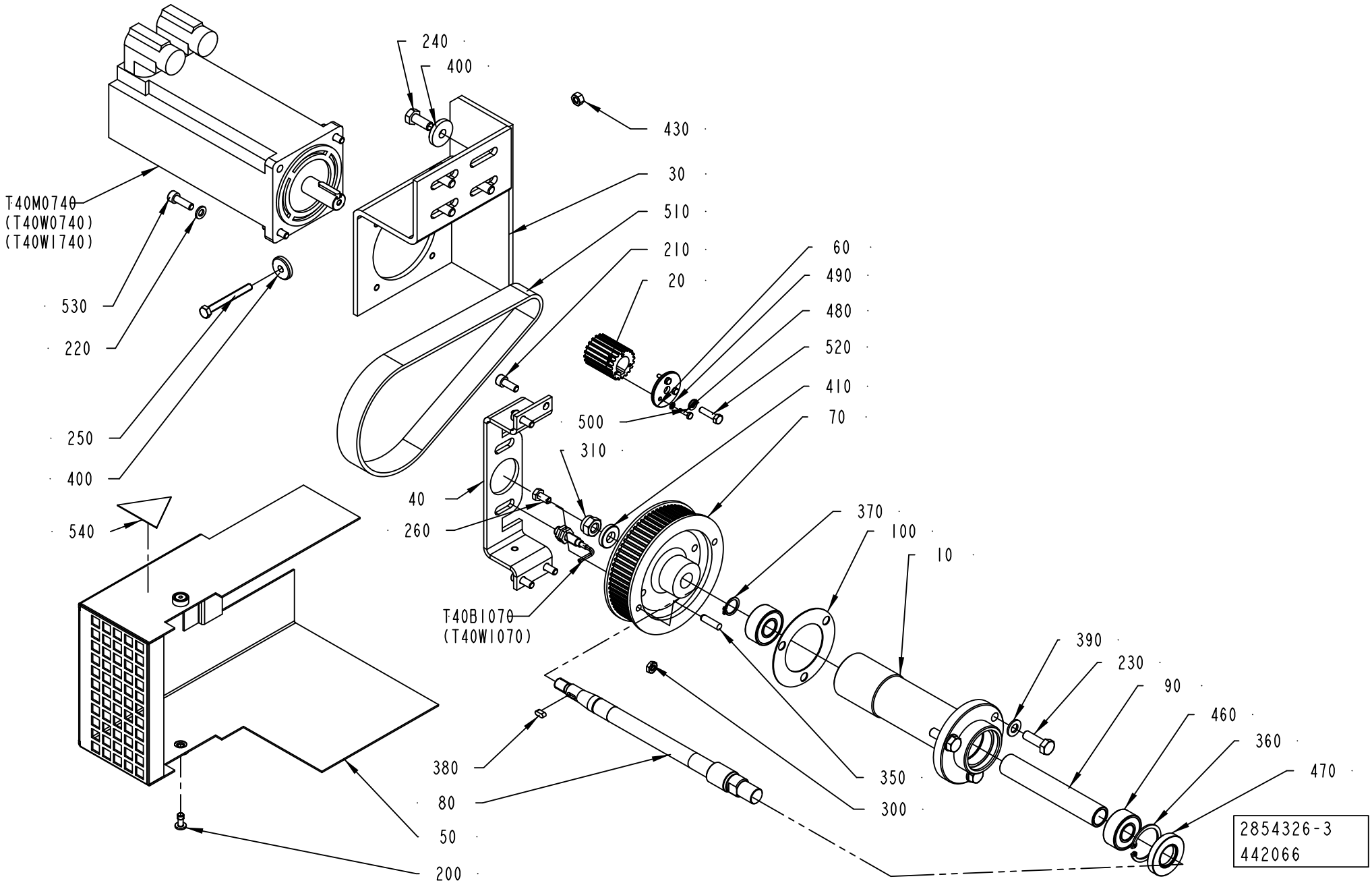
240
400
430
30
510
210
20
60
490
480
520
410
70
500
310
T40M0740
(T40W0740)
(T40WI740)
530
220
250
400
540
40
260
T40BI070
(T40WI070)
370
100
10
390
230
90
460
360
470
350
300
380
80
50
200
2854326-3
442066

ECM: 460643 - 20101001
Group number: 2854326-0300
Assembly Drawing: 2854326-3_1_AA

Pos	Part No	UN	Qty	Description	Page No
ANSI					
540	90459-6083		1	WARNING SIGN ANSI (H), HAZARDOUS ROTATIN	
ISO					
540	90459-6084		1	WARNING SIGN ISO, HAZARDOUS ROTATING BEL	
Common Parts					
010	2854316-0000		1	SUPPORT	
020	2854317-0000		1	TOOTHED PULLEY	
030	2854325-0000		1	BRACKET	
040	2854319-0000		1	SUPPORT	
050	3038339-0000		1	COVER	
060	2854324-0000		1	SPACER	
070	2652891-0000		1	TOOTHED PULLEY	
080	2506338-0000		1	SHAFT	
090	2506392-0000		1	SPACER	
100	2859983-0000		1	GASKET	
200	90601-2046		2	CAPTIVE SCREW M6, GUTBG 6-4-12	
210	312115-0368		4	SCREW ISO4762 M6X16 A4 80	
220	315105-0153		4	WASHER PLAIN, 6,4X12X1,5 A4 BRB	
230	312105-0453		3	SCREW, M6S ISO 4017 M8X25 A4 80	
240	312105-0451		4	SCREW, M6S ISO 4017 M8X20 A4 80	
250	312109-0381		1	SCREW, M6S ISO 4017 M6X55 A4 80	
260	312105-0366		1	SCREW, M6S ISO 4017 M6X12 A4 80	
290	312115-0366		1	SCREW ISO4762 M6X12 A4 80	
300	312625-0316		1	HEXAGON THIN NUT, EN 24035 ML6M M6 A4	
310	312812-0320		1	HEXAGON NUT, NY-LOCK M10 A4 80	
340	315125-0153		1	WASHER HIGH, TBRSB 6,4X22X4 A4	
350	311103-0354		1	PARALLEL PIN ISO 2338 6M6X22 A1	
360	315753-0124		1	RETAINING RING FOR BORE DIN 472 35 SS	
370	315751-0112		1	RETAINING RING FOR SHAFT DIN 471 15 SS	
380	315701-0165		1	PARALLEL KEY W. ROUND ENDS 4X4X10 MM	
390	315105-0165		3	WASHER PLAIN, 8,4X16X1,6 A4 BRB	
400	315125-0165		4	WASHER HIGH, TBRSB 8,4X26X5 A4	
410	315115-0173		1	WASHER PLAIN, TBRB 10,5/22 H=4	
430	312605-0316		1	HEXAGON NUT, M6M M6 A280	
460	90214-0194		2	SPHERICAL BALL BEAR 15/35X14 SOLID OIL	
470	90091-0436		1	RADIAL SEAL 20X40X7 MM DUST LIP	
480	90287-0175		3	SCREW M6S M3X12 A480	
490	315105-0124		3	WASHER PLAIN, 3,2X6X0,5 A4 BRB	
500	315105-0146		1	WASHER PLAIN, 5,3X10X1 A4 BRB	
510	90600-2347		1	TIMING BELT 5MR-580-25	
520	312105-0331		1	SCREW, M6S ISO 4017 M5X20 A4 80	
530	312115-0370		4	SCREW ISO4762 M6X20 A4 80	
T40B1070	90600-0473		1	INDUCTIVE SWITCH E2A-S08KS01-WP-B1-TP 5M	
T40M0740	90601-4870		1	SERVO MOTOR, MPL-B330P-SJ74AA, SERIES A	

Machine Type | Group Description | Used-In | Group Number | Page No

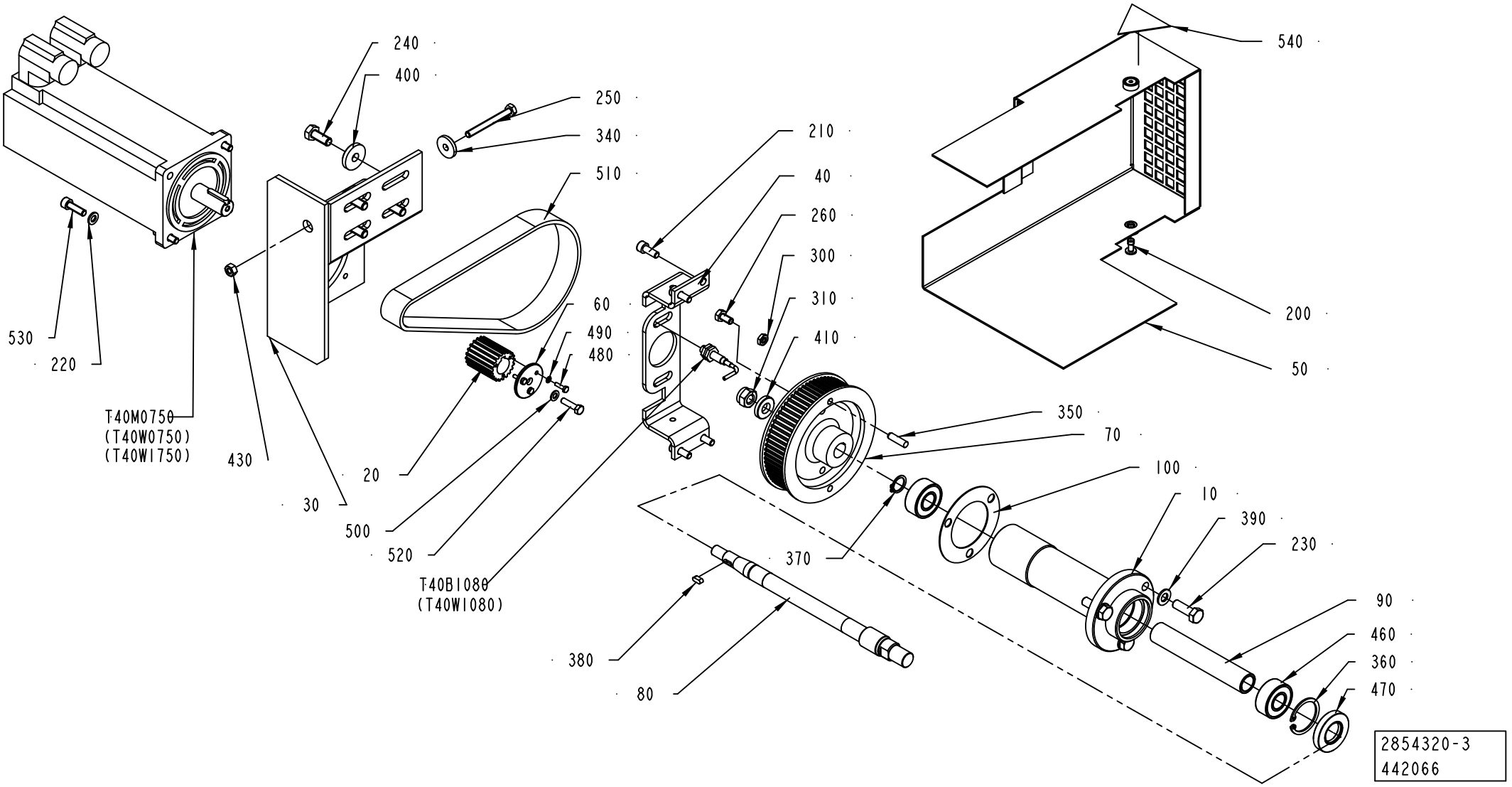
240
400
250
340
510
210
40
260
300
310
410
540
200
50
530
220
T40M0750
(T40W0750)
(T40W1750)
430
60
490
480
20
30
500
520
T40B1080
(T40W1080)
350
70
100
10
390
230
370
90
460
360
470
380
80
2854320-3
442066

ECM: 473844 - 20110101
Group number: 2854320-0300
Assembly Drawing: 2854320-3_1_AA

Pos	Part No	UN	Qty	Description	Page No
ANSI					
540	90459-6083		1	WARNING SIGN ANSI (H), HAZARDOUS ROTATIN	
ISO					
540	90459-6084		1	WARNING SIGN ISO, HAZARDOUS ROTATING BEL	
Common Parts					
010	2854316-0000		1	SUPPORT	
020	2854317-0000		1	TOOTHED PULLEY	
030	2854318-0000		1	BRACKET	
040	2854319-0000		1	SUPPORT	
050	3038338-0000		1	COVER	
060	2854324-0000		1	SPACER	
070	2652891-0000		1	TOOTHED PULLEY	
080	2506338-0000		1	SHAFT	
090	2506392-0000		1	SPACER	
100	2859983-0000		1	GASKET	
200	90601-2046		2	CAPTIVE SCREW M6, GUTBG 6-4-12	
210	312115-0368		4	SCREW ISO4762 M6X16 A4 80	
220	315105-0153		4	WASHER PLAIN, 6,4X12X1,5 A4 BRB	
230	312105-0453		3	SCREW, M6S ISO 4017 M8X25 A4 80	
240	312105-0451		4	SCREW, M6S ISO 4017 M8X20 A4 80	
250	312109-0381		1	SCREW, M6S ISO 4017 M6X55 A4 80	
260	312105-0366		1	SCREW, M6S ISO 4017 M6X12 A4 80	
290	312115-0366		1	SCREW ISO4762 M6X12 A4 80	
300	312625-0316		1	HEXAGON THIN NUT, EN 24035 ML6M M6 A4	
310	312812-0320		1	HEXAGON NUT, NY-LOCK M10 A4 80	
340	315125-0153		1	WASHER HIGH, TBRSB 6,4X22X4 A4	
350	311103-0354		1	PARALLEL PIN ISO 2338 6M6X22 A1	
360	315753-0124		1	RETAINING RING FOR BORE DIN 472 35 SS	
370	315751-0112		1	RETAINING RING FOR SHAFT DIN 471 15 SS	
380	315701-0165		1	PARALLEL KEY W. ROUND ENDS 4X4X10 MM	
390	315105-0165		3	WASHER PLAIN, 8,4X16X1,6 A4 BRB	
400	315125-0165		4	WASHER HIGH, TBRSB 8,4X26X5 A4	
410	315115-0173		1	WASHER PLAIN, TBRB 10,5/22 H=4	
430	312605-0316		1	HEXAGON NUT, M6M M6 A280	
460	90214-0194		2	SPHERICAL BALL BEAR 15/35X14 SOLID OIL	
470	90091-0436		1	RADIAL SEAL 20X40X7 MM DUST LIP	
480	90287-0175		3	SCREW M6S M3X12 A480	
490	315105-0124		3	WASHER PLAIN, 3,2X6X0,5 A4 BRB	
500	315105-0146		1	WASHER PLAIN, 5,3X10X1 A4 BRB	
510	90600-2347		1	TIMING BELT 5MR-580-25	
520	312105-0331		1	SCREW, M6S ISO 4017 M5X20 A4 80	
530	312115-0370		4	SCREW ISO4762 M6X20 A4 80	
T40B1080	90600-0473		1	INDUCTIVE SWITCH E2A-S08KS01-WP-B1-TP 5M	
T40M0750	90601-4870		1	SERVO MOTOR, MPL-B330P-SJ74AA, SERIES A	

Machine Type	Group Description	Used-In	Group Number	Page No

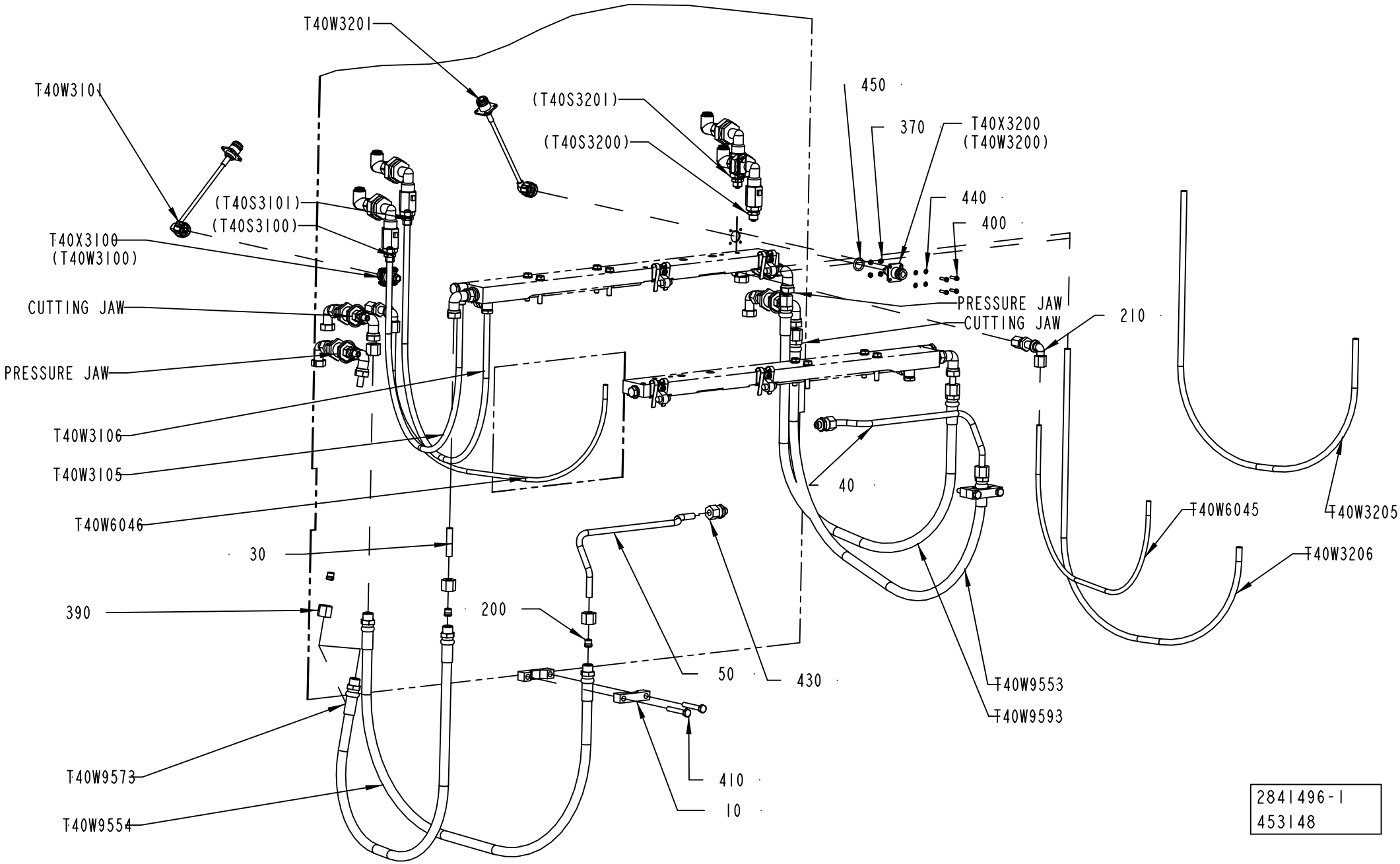
T40W3201
T40W3101
(T40S3201)
(T40S3200)
450
370
T40X3200
(T40W3200)
440
400
(T40S3101)
(T40S3100)
T40X3100
(T40W3100)
CUTTING JAW
PRESSURE JAW
PRESSURE JAW
CUTTING JAW
210
T40W3106
T40W3105
T40W6046
40
T40W6045
T40W3205
T40W3206
30
390
200
50
430
T40W9553
T40W9593
T40W9573
T40W9554
410
10
2841496-1
453148

ECM: 453481 - 20100614
Group number: 2841496-0100
Assembly Drawing: 2841496-1_1_AC

Pos	Part No	UN	Qty	Description	Page No
-					
010	1129599-0000		4	CRAMP	
030	2841568-0000		4	PIPE	
040	2837721-0000		1	TUBE	
050	2838346-0000		1	TUBE	
200	90030-0098		8	PROGRESSIVE RING 8	
210	90030-0219		2	BULKHEAD LEAD-IN, ELBOW WSV 6	
260	90600-0775		4	BALL VALVE G1/4, 406F-1/4"	
370	315105-0124		8	WASHER PLAIN, 3,2X6X0,5 A4 BRB	
390	342703-0208		8	CONE NUT M8, NUT M-8 SS	
400	312125-0226		8	SLOTTED HEAD SCREW, ISO1207 M3X12 A4	
410	312105-0378		4	SCREW, M6S ISO 4014 M6X40 A4 80	
430	342720-0103		2	CONN. STR. GA-8-G1/8	
440	315105-0124		8	WASHER PLAIN, 3,2X6X0,5 A4 BRB	
450	315202-0211		2	O-RING 13,3X2,4 MM	
T40W3101	2856954-0000		1	COAXIAL CABLE	
T40W3105	90166-0118	MM	1100	TUBE 8 MM PA BLACK	
T40W3106	90166-0118	MM	1100	TUBE 8 MM PA BLACK	
T40W3201	2856954-0000		1	COAXIAL CABLE	
T40W3205	90166-0118	MM	1100	TUBE 8 MM PA BLACK	
T40W3206	90166-0118	MM	1100	TUBE 8 MM PA BLACK	
T40W6045	90166-0108	MM	1000	TUBE 6 MM PA TRANSP.	
T40W6046	90166-0108	MM	1000	TUBE 6 MM PA TRANSP.	
T40W9553	90148-0038		1	HYDRAULIC HOSE	
T40W9554	90148-0038		1	HYDRAULIC HOSE	
T40W9573	90148-0037		1	HYDRAULIC HOSE	
T40W9593	90148-0037		1	HYDRAULIC HOSE	
T40X3100	90110-0127		1	COAXIAL CONNECTOR, GE 15057C10HBNT-2PT	
T40X3200	90110-0127		1	COAXIAL CONNECTOR, GE 15057C10HBNT-2PT	

Pos	Part No	UN	Qty	Description	Page No

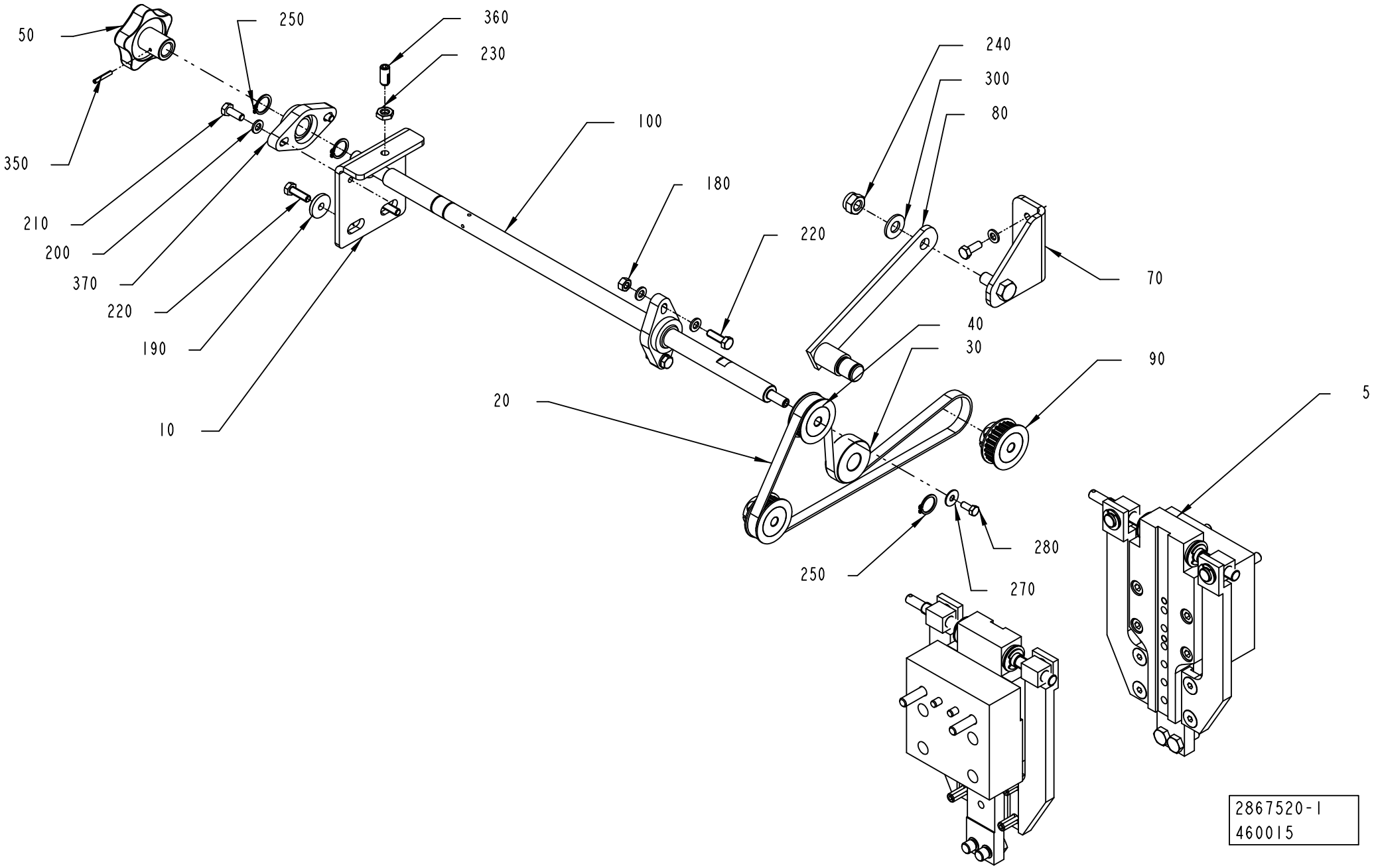
50
250
360
230
240
300
80
100
180
220
70
350
210
200
370
220
190
10
40
30
90
20
5
250
280
270
2867520-1
460015

ECM: 485957 - 20110401
Group number: 2867520-0100
Assembly Drawing: 2867520-1_1_AD

Pos	Part No	UN	Qty	Description	Page No
-					
005	2976922-0200		1	VOLUME CURVE PIECE	**4-47**
010	2864049-0000		1	BRACKET	
020	90600-1894		1	TIMING BELT 10T5/690 PU	
030	2867523-0000		1	ROLLER	
040	1539108-0000		1	TIMING BELT PULLEY	
050	240797-0000		1	HANDLE	
070	2920982-0000		1	BRACKET	
080	2920983-0000		1	SUPPORT	
090	2920987-0000		2	TIMING BELT PULLEY	
100	2867521-0000		1	SHAFT	
180	312605-0316		2	HEXAGON NUT, M6M M6 A280	
190	315125-0153		2	WASHER HIGH, TBRSB 6,4X22X4 A4	
200	315105-0153		8	WASHER PLAIN, 6,4X12X1,5 A4 BRB	
210	312105-0368		8	SCREW, M6S ISO 4017 M6X16 A4 80	
220	312105-0370		2	SCREW, M6S ISO 4017 M6X20 A4 80	
230	312625-0318		1	HEXAGON THIN NUT, EN 24035 ML6M M8 A4	
240	312810-0320		1	HEXAGON NUT, NY-LOCK M10 FZB	
250	315751-0113		3	RETAINING RING FOR SHAFT DIN 471 16 SS	
270	315125-0146		1	WASHER HIGH, TBRSB 5.3X15X1 A4	
280	312105-0327		1	SCREW, M6S ISO 4017 M5X12 A4 80	
300	315105-0173		1	WASHER PLAIN, 10,5X22X2 A4 BRB	
350	90258-0031		3	PIN, STRAIGHT SLOTTED SPRING FRP 3X20	
360	90458-1517		1	SCREW SPRINGLOAD. SOCK. HEX HEAD M8X18	
370	90459-0750		2	FLANGE BEARING 16X73X17,5 MM	

Pos	Part No	UN	Qty	Description	Page No

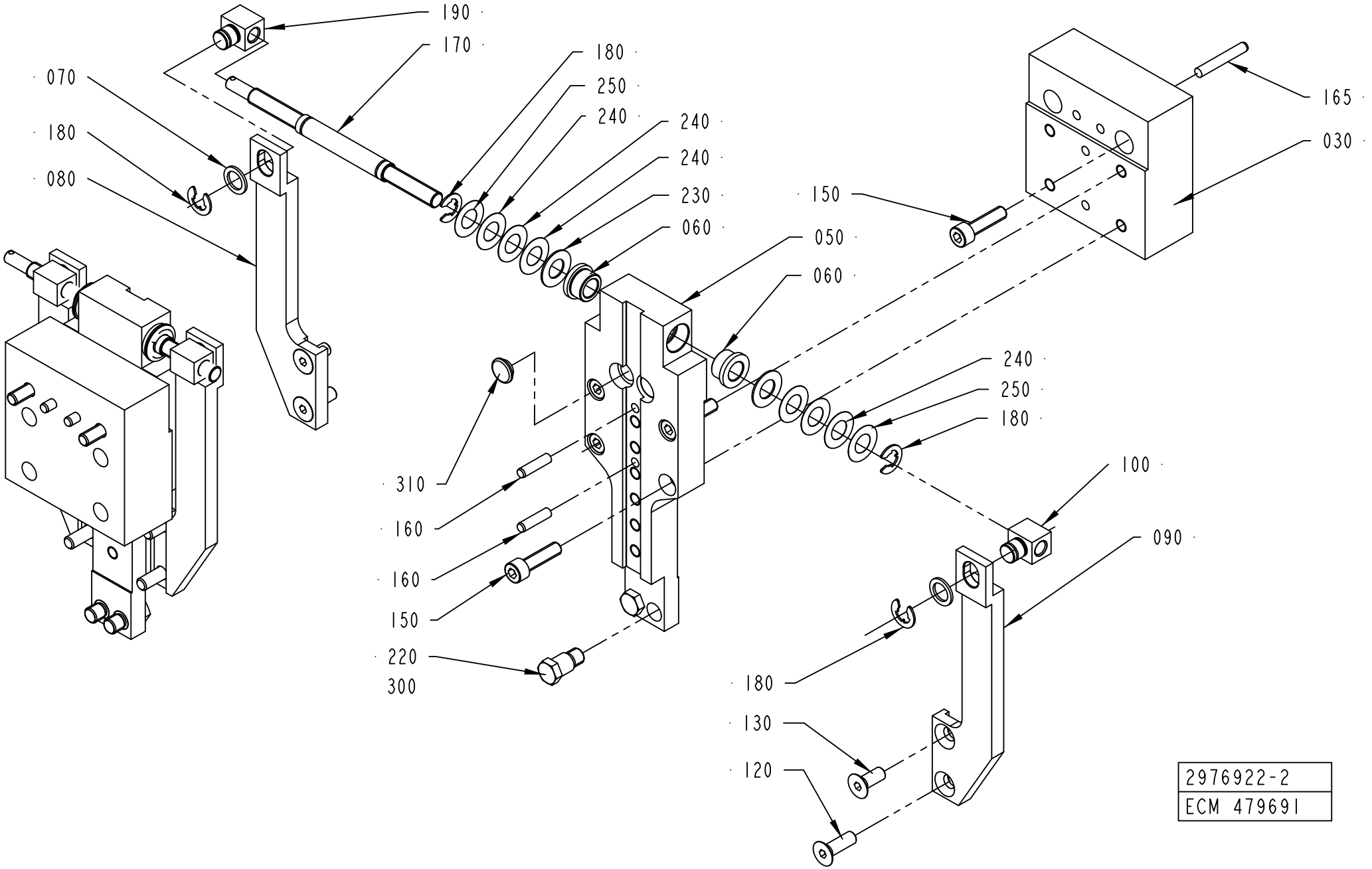
190
170
180
250
240
240
240
230
060
070
180
080
165
030
150
050
060
240
250
180
100
090
310
160
160
150
220
300
180
130
120
2976922-2
ECM 479691

ECM: 484765 - 20110401
Group number: 2976922-0200
Assembly Drawing: 2976922-2_1_AB

Pos	Part No	UN	Qty	Description	Page No
-					
030	2909139-0000		2	BRACKET	
050	3133918-0000		2	BRACKET	
060	321101-0173		4	FLANGE BUSHING, 12X18X12 MM	
070	90005-0047		4	WASHER,PL.RND.CU.12,2/ H=1,5	
080	1539102-0000		2	ARM	
090	1539103-0000		2	ARM	
100	3101169-0000		2	JOINT	
120	312155-0453		4	SCREW DIN 7991 MF6S M8X25 A4 70	
130	312155-0451		4	SCREW DIN 7991 MF6S M8X20 A4 70	
150	312115-0460		8	SCREW ISO4762 M8X45 A4 80	
155	312115-0459		4	SCREW ISO4762 M8X40 A4 80	
160	311103-1355		4	PARALLEL PIN ISO 2338 6M6X24 A1	
165	311103-0361		4	PARALLEL PIN ISO 2338 6M6X40 A1	
170	3101170-0000		2	SPINDLE	
180	315755-0110		8	RETAINING RING SHAFT DIN 6799 9 SS	
190	3101168-0000		2	JOINT	
220	272973-0000		4	DOWEL	
230	1755-0001		4	WASHER	
240	1755-0002		12	WASHER	
250	1755-0003		4	WASHER	
300	90157-0021	KG	1	LOCKING FLUID LOCTITE 270	
310	90261-0057		4	PLUG, BLIND, PLASTIC	

Pos	Part No	UN	Qty	Description	Page No

Machine Type	Group Description	Used-In	Group Number	Page No

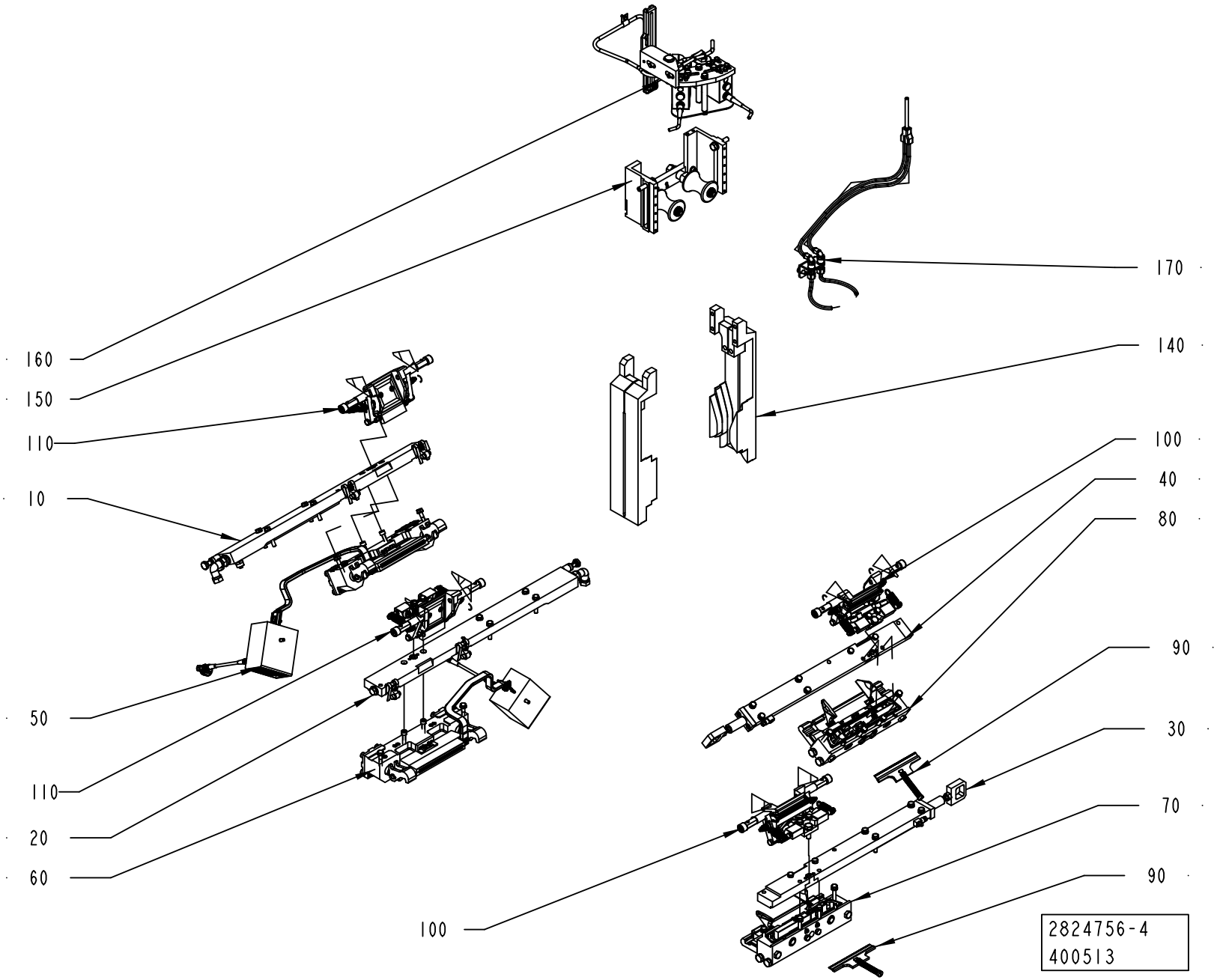
160
150
110
10
50
110
20
60
100
170
140
100
40
80
90
30
70
90
2824756-4
400513

Pos	Part No	UN	Qty	Description	Page No
TBA 0250B (See drawing on page: 4-48)					
100	2869019-0200		2	VOLUME FLAP	**4-53**
110	2869019-0200		2	VOLUME FLAP	**4-53**
TBA 0250S HI					
100	2869019-0200		2	VOLUME FLAP	**4-53**
110	2869019-0200		2	VOLUME FLAP	**4-53**
TBA 0250S NOHI (See drawing on page: 4-48)					
100	2869019-0200		2	VOLUME FLAP	**4-53**
110	2869019-0200		2	VOLUME FLAP	**4-53**
TBA 0250SQ (See drawing on page: 4-50)					
100	2869019-0200		1	VOLUME FLAP	**4-53**
105	2966465-0200		1	VOLUME FLAP	**4-71**
110	2907729-0200		1	VOLUME FLAP	**4-75**
115	2966467-0200		1	VOLUME FLAP	**4-87**
TBA 0284B (See drawing on page: 4-50)					
100	2869019-0200		1	VOLUME FLAP	**4-53**
105	2966465-0200		1	VOLUME FLAP	**4-71**
110	2907729-0200		1	VOLUME FLAP	**4-75**
115	2966467-0200		1	VOLUME FLAP	**4-87**
TBA 0300S (See drawing on page: 4-50)					
100	2869019-0200		1	VOLUME FLAP	**4-53**
105	2966465-0200		1	VOLUME FLAP	**4-71**
110	2907729-0200		1	VOLUME FLAP	**4-75**
115	2966467-0200		1	VOLUME FLAP	**4-87**
TBA 0330S (See drawing on page: 4-48)					
100	2869019-0200		2	VOLUME FLAP	**4-53**
110	2869019-0200		2	VOLUME FLAP	**4-53**
TBA 0375S (See drawing on page: 4-50)					
100	2869019-0200		1	VOLUME FLAP	**4-53**
105	2966465-0200		1	VOLUME FLAP	**4-71**
110	2907729-0200		1	VOLUME FLAP	**4-75**
115	2966467-0200		1	VOLUME FLAP	**4-87**
TPA 0125SQ (See drawing on page: 4-48)					
100	2869019-0200		2	VOLUME FLAP	**4-53**
110	2907729-0200		2	VOLUME FLAP	**4-75**
TPA 0200SQ (See drawing on page: 4-50)					
100	2869019-0200		1	VOLUME FLAP	**4-53**
105	2966465-0200		1	VOLUME FLAP	**4-71**
110	2907729-0200		1	VOLUME FLAP	**4-75**
115	2966467-0200		1	VOLUME FLAP	**4-87**
TPA 0250SQ (See drawing on page: 4-50)					
100	2869019-0200		1	VOLUME FLAP	**4-53**
105	2966465-0200		1	VOLUME FLAP	**4-71**
110	2907729-0200		1	VOLUME FLAP	**4-75**
115	2966467-0200		1	VOLUME FLAP	**4-87**
TPA 0330SQ (See drawing on page: 4-50)					
100	2869019-0200		1	VOLUME FLAP	**4-53**
105	2966465-0200		1	VOLUME FLAP	**4-71**
110	2907729-0200		1	VOLUME FLAP	**4-75**
115	2966467-0200		1	VOLUME FLAP	**4-87**
TBA 0080S HI					
100	2869019-0200		2	VOLUME FLAP	**4-53**
110	2869019-0200		2	VOLUME FLAP	**4-53**
TBA 0080S NOHI (See drawing on page: 4-48)					
100	2869019-0200		2	VOLUME FLAP	**4-53**
110	2869019-0200		2	VOLUME FLAP	**4-53**
TBA 0100B HI (See drawing on page: 4-48)					
100	2869019-0200		2	VOLUME FLAP	**4-53**
110	2869019-0200		2	VOLUME FLAP	**4-53**
TBA 0100B NOHI (See drawing on page: 4-48)					
100	2869019-0200		2	VOLUME FLAP	**4-53**
110	2869019-0200		2	VOLUME FLAP	**4-53**
TBA 0125S HI					
100	2869019-0200		2	VOLUME FLAP	**4-53**
110	2869019-0200		2	VOLUME FLAP	**4-53**
TBA 0125S NOHI (See drawing on page: 4-48)					
100	2869019-0200		2	VOLUME FLAP	**4-53**
110	2869019-0200		2	VOLUME FLAP	**4-53**
TBA 0160S (See drawing on page: 4-50)					
100	2869019-0200		1	VOLUME FLAP	**4-53**
105	2966465-0200		1	VOLUME FLAP	**4-71**
110	2907729-0200		1	VOLUME FLAP	**4-75**
115	2966467-0200		1	VOLUME FLAP	**4-87**
TBA 0200B HI					
100	2869019-0200		2	VOLUME FLAP	**4-53**
110	2869019-0200		2	VOLUME FLAP	**4-53**
TBA 0200B NOHI (See drawing on page: 4-48)					
100	2869019-0200		2	VOLUME FLAP	**4-53**
110	2869019-0200		2	VOLUME FLAP	**4-53**
TBA 0200E HI (See drawing on page: 4-50)					
100	2869019-0200		1	VOLUME FLAP	**4-53**
105	2966465-0200		1	VOLUME FLAP	**4-71**
110	2907729-0200		1	VOLUME FLAP	**4-75**
115	2966467-0200		1	VOLUME FLAP	**4-87**

Machine Type | Group Description | Used-In | Group Number | Page No

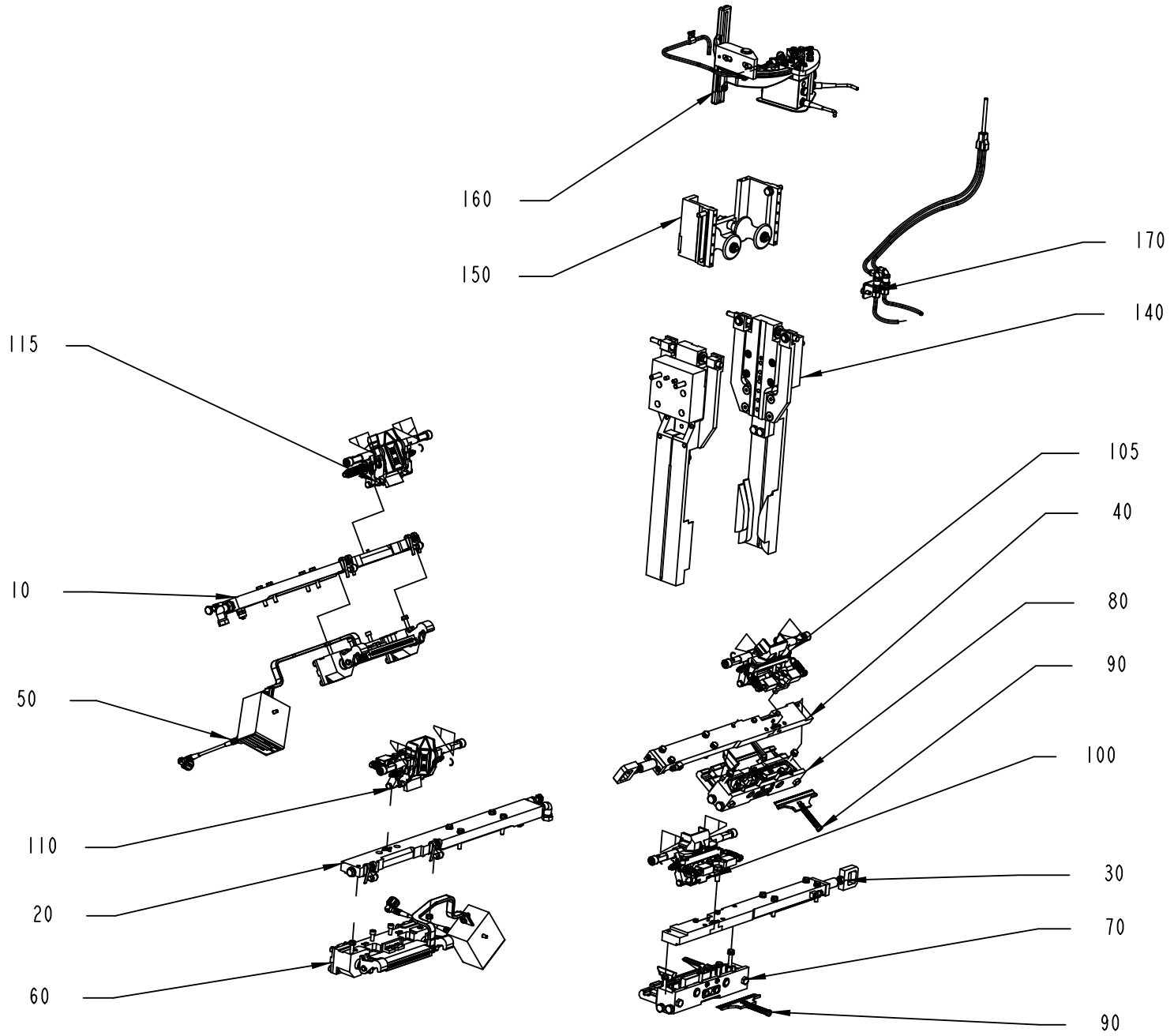
160
150
170
140
115
105
40
10
80
90
50
100
110
30
20
70
60
90
2824756-5
400513

Pos	Part No	UN	Qty	Description	Page No
TBA 0200E NOHI (Cont'd) (See drawing on page: 4-50)					
100	2869019-0200		1	VOLUME FLAP	**4-53**
105	2966465-0200		1	VOLUME FLAP	**4-71**
110	2907729-0200		1	VOLUME FLAP	**4-75**
115	2966467-0200		1	VOLUME FLAP	**4-87**
TBA 0200M HI					
100	2869019-0200		2	VOLUME FLAP	**4-53**
110	2869019-0200		2	VOLUME FLAP	**4-53**
TBA 0200M NOHI (See drawing on page: 4-48)					
100	2869019-0200		2	VOLUME FLAP	**4-53**
110	2869019-0200		2	VOLUME FLAP	**4-53**
TBA 0200S HI (See drawing on page: 4-50)					
100	2869019-0200		1	VOLUME FLAP	**4-53**
105	2966465-0200		1	VOLUME FLAP	**4-71**
110	2907729-0200		1	VOLUME FLAP	**4-75**
115	2966467-0200		1	VOLUME FLAP	**4-87**
TBA 0200S NOHI (See drawing on page: 4-50)					
100	2869019-0200		1	VOLUME FLAP	**4-53**
105	2966465-0200		1	VOLUME FLAP	**4-71**
110	2907729-0200		1	VOLUME FLAP	**4-75**
115	2966467-0200		1	VOLUME FLAP	**4-87**
TBA 0200SQ (See drawing on page: 4-50)					
100	2869019-0200		1	VOLUME FLAP	**4-53**
105	2966465-0200		1	VOLUME FLAP	**4-71**
110	2907729-0200		1	VOLUME FLAP	**4-75**
115	2966467-0200		1	VOLUME FLAP	**4-87**
Common Parts					
010	2869011-0100		1	CARRIER PRESSURE	**4-91, 4-93**
020	2869012-0100		1	CARRIER PRESSURE	**4-95, 4-97**
030	2869013-0100		1	CARRIER CUTTING	**4-99, 4-101**
040	2869014-0100		1	CARRIER CUTTING	**4-103, 4-105**
050	2869015-0100		1	PRESSURE JAW	**4-107, 4-109, 4-111, 4-113**
060	2869016-0100		1	PRESSURE JAW	**4-117, 4-119, 4-121, 4-123**
070	2869017-0100		1	CUTTING JAW	**4-127, 4-129, 4-131, 4-133**
080	2869018-0100		1	CUTTING JAW	**4-135, 4-137, 4-139, 4-141**
090	256208-0400		2	KNIFE HOLDER	**4-143, 4-145, 4-147**
140	2835504-0200		1	VOLUME CURVE PIECE	**4-149, 4-151**
150	2901092-0100		1	SUPPORT ROLLER	**4-153**
160	2862751-0100		1	PHOTOCELL UNIT	**4-155, 4-157**
170	2961522-0100		1	TUBE FLUSHING	**4-159**

Pos	Part No	UN	Qty	Description	Page No

Machine Type | Group Description | Used-In | Group Number | Page No

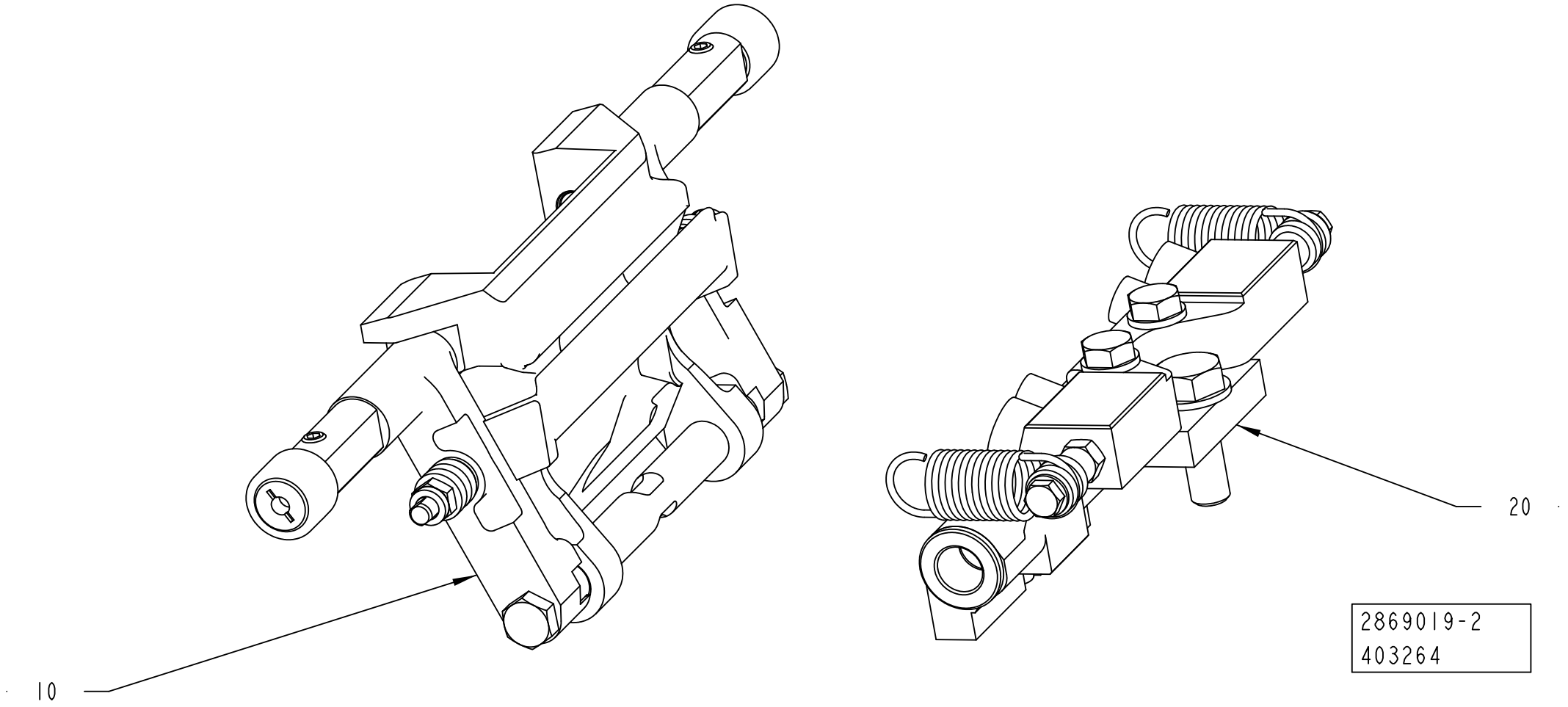
10
20
2869019-2
403264

ECM: 539996 - 20120202
Group number: 2869019-0200
Assembly Drawing: 2869019-2_1_AA

Pos	Part No	UN	Qty	Description	Page No
-					
010	2869207-0200		1	VOLUME FLAP	**4-55, 4-57, 4-59, 4-61, 4-63**
020	2869206-0200		1	SHOCK ABSORBER	**4-65, 4-67, 4-69**

Pos	Part No	UN	Qty	Description	Page No

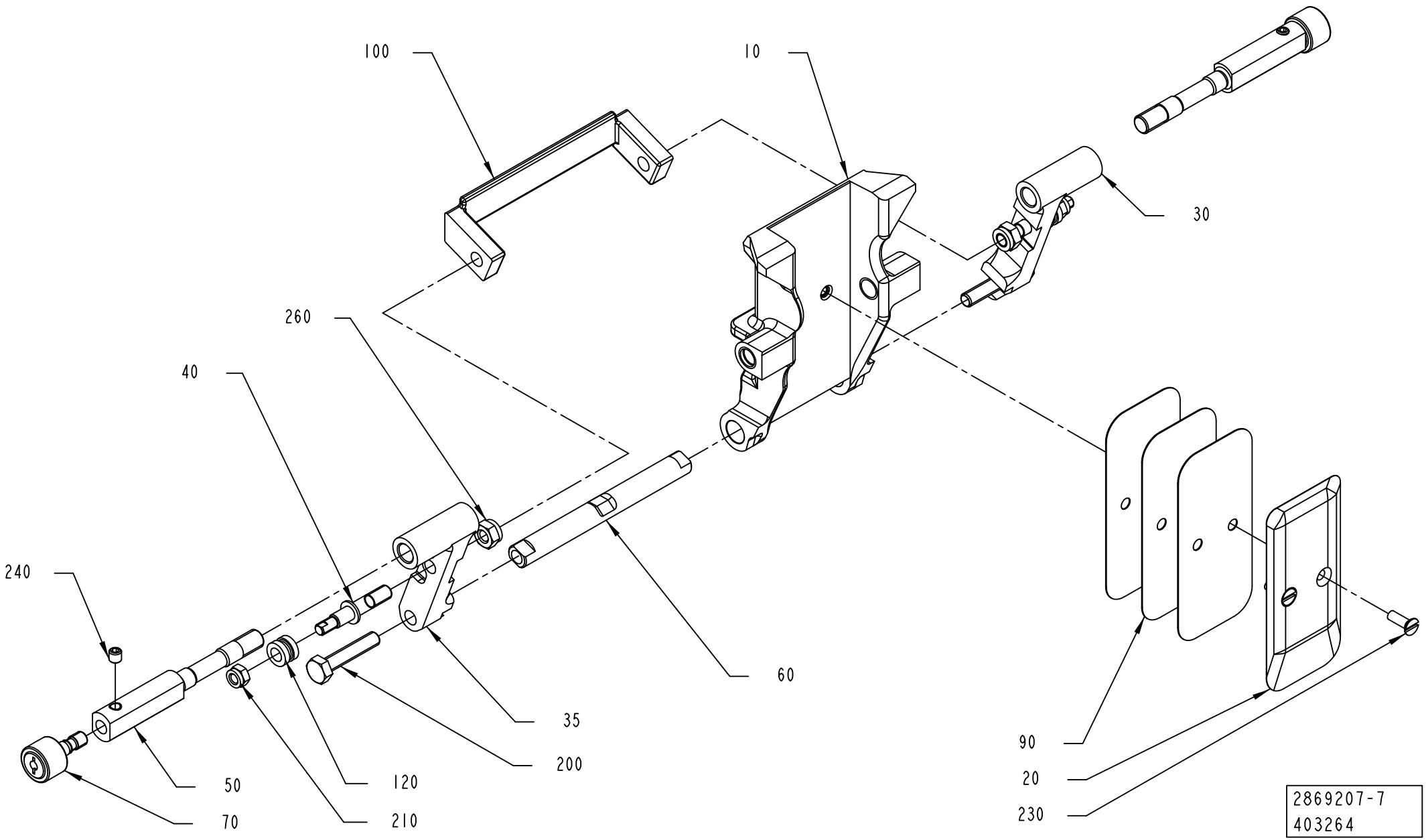
100
10
30
260
40
240
60
35
200
50
120
70
210
90
20
230
2869207-7
403264

ECM: 539997 - 20120202
Group number: 2869207-0200
Assembly Drawing: 2869207-7_1_AA

This list covers pages from 4-54 to 4-63

Pos	Part No	UN	Qty	Description	Page No
TBA 0250B (See drawing on page: 4-54)					
010	2958511-0000		1	VOLUME FLAP	
020	456005-0001		1	VOLUME BULGE	
030	2992940-0000		1	CARRIER	
035	2993250-0000		1	CARRIER	
040	3022273-0000		2	SCREW	
050	2914728-0000		2	SHAFT	
060	2916179-0000		1	SHAFT	
090	272986-0001		3	VOLUME SHIM	
100	2992941-0000		1	STOP	
120	2905199-0000		2	HOLDER	
200	312109-0374		2	SCREW, M6S ISO 4017 M6X30 A4 80	
210	312812-0314		2	HEXAGON NUT, NY-LOCK M5 A4 80	
230	312145-0291		2	SCREW ISO 2009 MFS M4X12 A4	
TBA 0250S HI (See drawing on page: 4-54)					
010	2947186-0000		1	VOLUME FLAP	
020	3104458-0000		1	VOLUME BULGE	
030	2992940-0000		1	CARRIER	
035	2993250-0000		1	CARRIER	
040	3022273-0000		2	SCREW	
050	2914728-0000		2	SHAFT	
060	2916179-0000		1	SHAFT	
090	3104459-0000		3	SHIM	
100	2992941-0000		1	STOP	
120	2905199-0000		2	HOLDER	
200	312109-0374		2	SCREW, M6S ISO 4017 M6X30 A4 80	
210	312812-0314		2	HEXAGON NUT, NY-LOCK M5 A4 80	
230	312145-0287		2	SCREW ISO 2009 MFS M4X8 A4	
TBA 0250S NOHI (See drawing on page: 4-54)					
010	2947186-0000		1	VOLUME FLAP	
020	3002255-0000		1	VOLUME BULGE	
030	2992940-0000		1	CARRIER	
035	2993250-0000		1	CARRIER	
040	3022273-0000		2	SCREW	
050	2914728-0000		2	SHAFT	
060	2916179-0000		1	SHAFT	
090	3002257-0000		3	VOLUME SHIM	
100	2992941-0000		1	STOP	
120	2905199-0000		2	HOLDER	
200	312109-0374		2	SCREW, M6S ISO 4017 M6X30 A4 80	
210	312812-0314		2	HEXAGON NUT, NY-LOCK M5 A4 80	
230	312145-0287		2	SCREW ISO 2009 MFS M4X8 A4	

Pos	Part No	UN	Qty	Description	Page No
TBA 0250SQ (See drawing on page: 4-54)					
010	2976921-0000		1	VOLUME FLAP	
020	2977545-0000		1	VOLUME BULGE	
030	3042529-0000		1	CARRIER	
035	3042530-0000		1	CARRIER	
040	3022273-0000		2	SCREW	
050	2976923-0000		2	SHAFT	
060	2916179-0000		1	SHAFT	
090	2977544-0000		3	SHIM	
100	3042522-0000		1	STOP	
120	2905199-0000		2	HOLDER	
200	312109-0374		2	SCREW, M6S ISO 4017 M6X30 A4 80	
210	312812-0314		2	HEXAGON NUT, NY-LOCK M5 A4 80	
230	312145-0291		2	SCREW ISO 2009 MFS M4X12 A4	
TBA 0284B (See drawing on page: 4-54)					
010	3010751-0000		1	VOLUME FLAP	
020	3010755-0000		1	VOLUME BULGE	
030	3010753-0000		1	CARRIER	
035	3010752-0000		1	CARRIER	
040	3022273-0000		2	SCREW	
050	3002893-0000		2	SHAFT	
060	2916179-0000		1	SHAFT	
090	3010756-0000		3	VOLUME SHIM	
100	3010754-0000		1	STOP	
120	2905199-0000		2	HOLDER	
200	312109-0335		2	SCREW, M6S ISO 4017 M5X30 A4 80	
210	312812-0314		2	HEXAGON NUT, NY-LOCK M5 A4 80	
230	312145-0287		2	SCREW ISO 2009 MFS M4X8 A4	
TBA 0300S (See drawing on page: 4-54)					
010	3010751-0000		1	VOLUME FLAP	
020	3047317-0000		1	VOLUME BULGE	
030	3010753-0000		1	CARRIER	
035	3010752-0000		1	CARRIER	
040	3022273-0000		2	SCREW	
050	3002893-0000		2	SHAFT	
060	2916179-0000		1	SHAFT	
090	3047358-0000		3	VOLUME SHIM	
100	3010754-0000		1	STOP	
120	2905199-0000		2	HOLDER	
200	312109-0335		2	SCREW, M6S ISO 4017 M5X30 A4 80	
210	312812-0314		2	HEXAGON NUT, NY-LOCK M5 A4 80	
230	312145-0287		2	SCREW ISO 2009 MFS M4X8 A4	

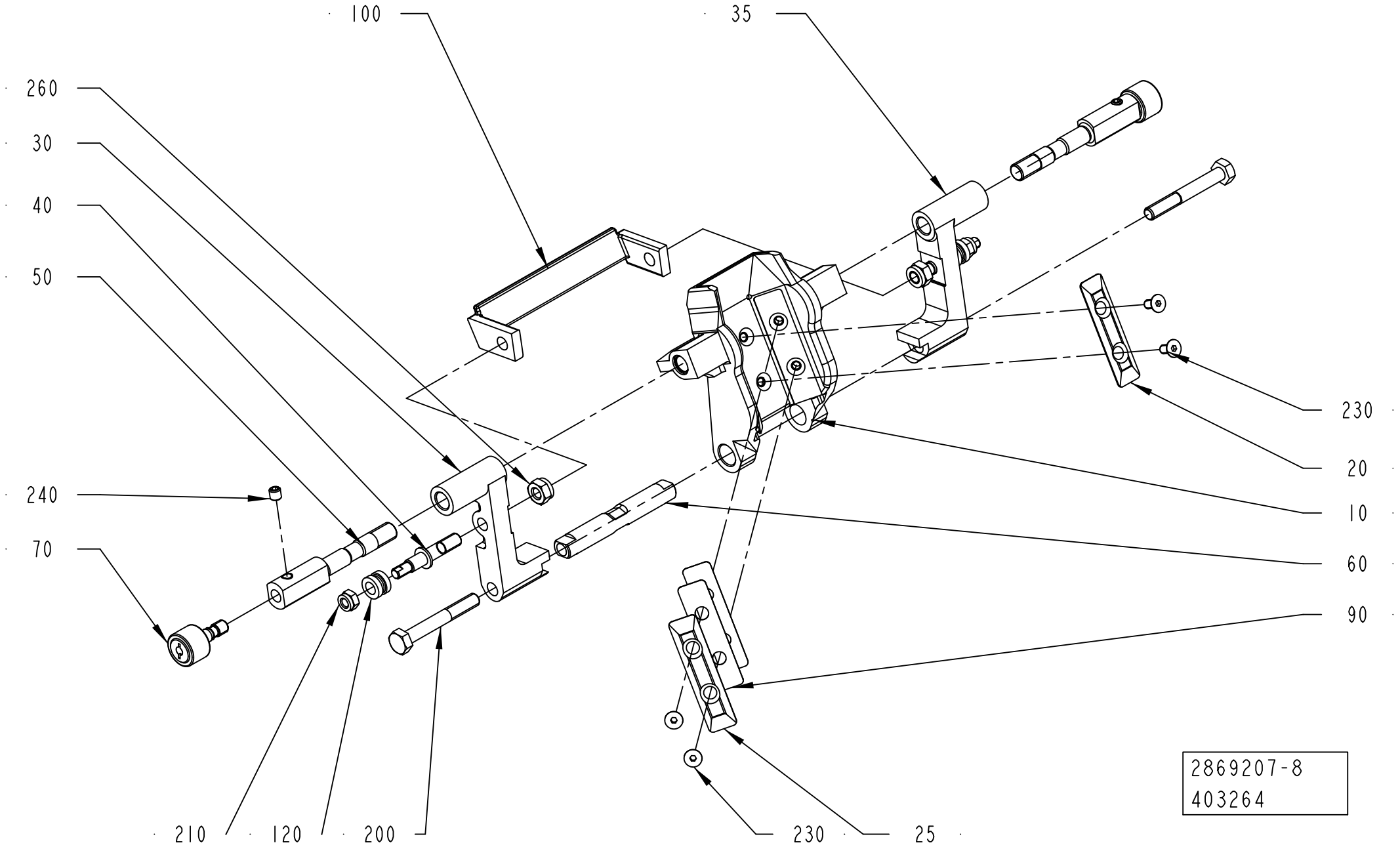
100
35
260
30
40
50
240
70
230
20
10
60
90
210
120
200
230
25
2869207-8
403264

Pos	Part No	UN	Qty	Description	Page No
TBA 0330S (Cont'd) (See drawing on page: 4-54)					
010	2958512-0000		1	VOLUME FLAP	
020	979931-0000		1	VOLUME BULGE	
030	2992940-0000		1	CARRIER	
035	2993250-0000		1	CARRIER	
040	3022273-0000		2	SCREW	
050	2914729-0000		2	SHAFT	
060	2916179-0000		1	SHAFT	
090	272986-0006		3	VOLUME SHIM 330S	
100	2992941-0000		1	STOP	
120	2905199-0000		2	HOLDER	
200	312109-0374		2	SCREW, M6S ISO 4017 M6X30 A4 80	
210	312812-0314		2	HEXAGON NUT, NY-LOCK M5 A4 80	
230	312145-0291		2	SCREW ISO 2009 MFS M4X12 A4	
TBA 0375S (See drawing on page: 4-54)					
010	3067248-0000		1	VOLUME FLAP	
025	3067249-0000		1	VOLUME BULGE	
030	3067250-0000		1	CARRIER	
035	3067251-0000		1	CARRIER	
040	3022273-0000		2	SCREW	
050	3067273-0000		2	SHAFT	
060	2916179-0000		1	SHAFT	
090	3067274-0000		3	SHIM	
100	3042522-0000		1	STOP	
120	2905199-0000		2	HOLDER	
200	312109-0374		2	SCREW, M6S ISO 4017 M6X30 A4 80	
210	312812-0314		2	HEXAGON NUT, NY-LOCK M5 A4 80	
230	312145-0287		2	SCREW ISO 2009 MFS M4X8 A4	
TPA 0125SQ (See drawing on page: 4-56)					
010	2907726-0000		1	VOLUME FLAP	
020	2971940-0000		1	VOLUME BULGE	
025	2979711-0000		2	VOLUME BULGE	
030	2906024-0000		1	CARRIER	
035	2906023-0000		1	CARRIER	
040	3022273-0000		2	SCREW	
050	2921571-0000		2	SHAFT	
060	2906025-0000		1	SHAFT	
090	2908756-0000		4	VOLUME SHIM	
100	2992941-0000		1	STOP	
120	2905199-0000		2	HOLDER	
200	312105-0379		2	SCREW, M6S ISO 4014 M6X45 A4 80	
210	312812-0314		2	HEXAGON NUT, NY-LOCK M5 A4 80	
230	312155-0287		4	SCREW DIN 7991 MF6S M4X8 A4 70	
TPA 0200SQ (See drawing on page: 4-58)					
010	2964389-0000		1	VOLUME FLAP	
020	1538782-0000		2	VOLUME BULGE P48 200	
030	3042528-0000		2	CARRIER	
040	3022273-0000		2	SCREW	
050	2964541-0000		2	SHAFT	
060	2916179-0000		1	SHAFT	
090	3019316-0000		4	SHIM	
100	3042521-0000		1	STOP	
120	2905199-0000		2	HOLDER	
200	312109-0374		2	SCREW, M6S ISO 4017 M6X30 A4 80	
210	312812-0314		2	HEXAGON NUT, NY-LOCK M5 A4 80	
230	312155-0287		4	SCREW DIN 7991 MF6S M4X8 A4 70	
TPA 0250SQ (See drawing on page: 4-58)					
010	2964390-0000		1	VOLUME FLAP	
020	1350959-0000		2	VOLUME BULGE P48 250	
030	3042528-0000		2	CARRIER	
040	3022273-0000		2	SCREW	
050	2964542-0000		2	SHAFT	
060	2916179-0000		1	SHAFT	
090	3019317-0000		4	SHIM	
100	3042521-0000		1	STOP	
120	2905199-0000		2	HOLDER	
200	312109-0374		2	SCREW, M6S ISO 4017 M6X30 A4 80	
210	312812-0314		2	HEXAGON NUT, NY-LOCK M5 A4 80	
230	312155-0287		4	SCREW DIN 7991 MF6S M4X8 A4 70	
TPA 0330SQ (See drawing on page: 4-60)					
010	3002889-0000		1	VOLUME FLAP	
020	3003862-0000		2	VOLUME BULGE	
030	3002894-0000		1	CARRIER	
035	3002891-0000		1	CARRIER	
040	3022273-0000		2	SCREW	
050	3002893-0000		2	SHAFT	
060	3003860-0000		1	SHAFT	
090	3003863-0000		6	VOLUME SHIM	
100	3007781-0000		1	STOP	
120	2905199-0000		2	HOLDER	
200	312109-0335		2	SCREW, M6S ISO 4017 M5X30 A4 80	
210	312812-0314		2	HEXAGON NUT, NY-LOCK M5 A4 80	
230	312105-0328		2	SCREW M6S ISO 4017 M5X14 A4 80	
400	315105-0146		2	WASHER PLAIN, 5,3X10X1 A4 BRB	

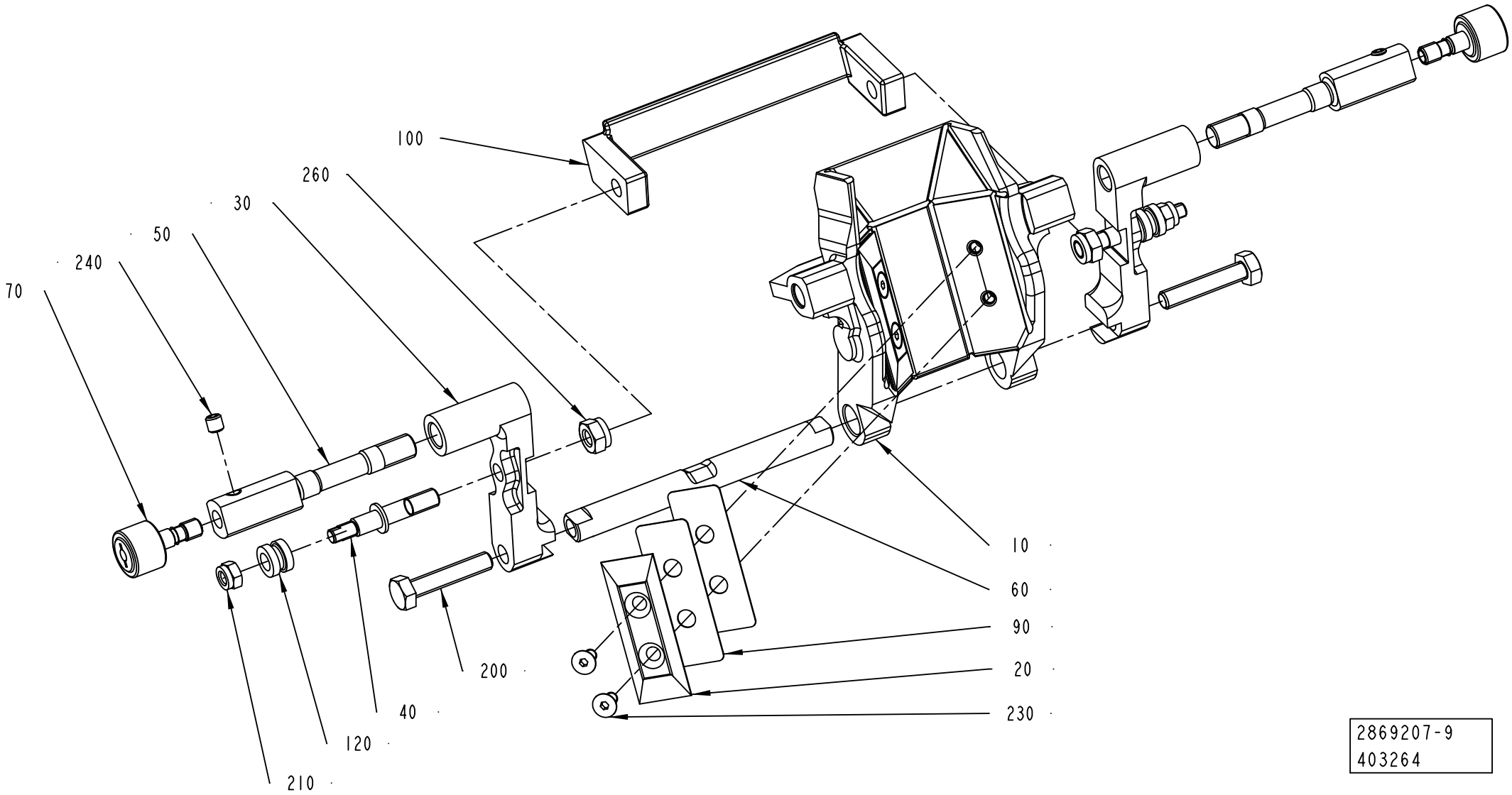
100
260
30
50
240
70
10
60
90
20
230
200
40
120
210
2869207-9
403264

ECM: 539997 - 20120202
Group number: 2869207-0200
Assembly Drawing: 2869207-9_1_AA

This list covers pages from 4-54 to 4-63

Pos	Part No	UN	Qty	Description	Page No
TBA 0080S HI (Cont'd) (See drawing on page: 4-54)					
010	2950901-0000		1	VOLUME FLAP	
020	3115484-0000		1	VOLUME BULGE	
030	3042525-0000		1	CARRIER	
035	3042525-0000		1	CARRIER	
040	3042518-0000		2	SUPPORT	
050	2914727-0000		2	AXLE	
060	2916887-0000		1	SHAFT	
090	3115485-0000		3	VOLUME SHIM	
100	3042523-0000		1	STOP	
120	3024046-0000		2	HOLDER	
200	312105-0374		2	SCREW, M6S ISO 4014 M6X30 A4 80	
210	3042504-0000		2	NUT	
230	312145-0287		2	SCREW ISO 2009 MFS M4X8 A4	
TBA 0080S NOHI (See drawing on page: 4-54)					
010	2950901-0000		1	VOLUME FLAP	
020	3000073-0000		1	VOLUME BULGE	
030	3042525-0000		1	CARRIER	
035	3042525-0000		1	CARRIER	
040	3042518-0000		2	SUPPORT	
050	2914727-0000		2	AXLE	
060	2916887-0000		1	SHAFT	
090	2950902-0000		3	VOLUME SHIM	
100	3042523-0000		1	STOP	
120	3024046-0000		2	HOLDER	
200	312105-0374		2	SCREW, M6S ISO 4014 M6X30 A4 80	
210	3042504-0000		2	NUT	
230	312145-0287		2	SCREW ISO 2009 MFS M4X8 A4	
TBA 0100B HI (See drawing on page: 4-54)					
010	2919303-0000		1	VOLUME FLAP	
025	3122818-0000		1	VOLUME BULGE	
030	3042525-0000		1	CARRIER	
035	3042525-0000		1	CARRIER	
040	3042518-0000		2	SUPPORT	
050	2914727-0000		2	AXLE	
060	2916887-0000		1	SHAFT	
090	3122819-0000		3	VOLUME SHIM	
100	3042519-0000		1	STOP	
120	3024046-0000		2	HOLDER	
200	312105-0374		2	SCREW, M6S ISO 4014 M6X30 A4 80	
210	3042504-0000		2	NUT	
230	312145-0291		2	SCREW ISO 2009 MFS M4X12 A4	
TBA 0100B NOHI (See drawing on page: 4-54)					
010	2919303-0000		1	VOLUME FLAP	
020	979755-0000		1	VOLUME BULGE 100	
030	3042525-0000		1	CARRIER	
035	3042525-0000		1	CARRIER	
040	3042518-0000		2	SUPPORT	
050	2914727-0000		2	AXLE	
060	2916887-0000		1	SHAFT	
090	979754-0000		3	VOLUME SHIM 100	
100	3042519-0000		1	STOP	
120	3024046-0000		2	HOLDER	
200	312105-0374		2	SCREW, M6S ISO 4014 M6X30 A4 80	
210	3042504-0000		2	NUT	
230	312145-0291		2	SCREW ISO 2009 MFS M4X12 A4	
TBA 0125S HI (See drawing on page: 4-54)					
010	2919304-0000		1	VOLUME FLAP	
020	3106859-0000		1	VOLUME BULGE	
030	3042526-0000		1	CARRIER	
035	3042527-0000		1	CARRIER	
040	3042518-0000		2	SUPPORT	
050	2914728-0000		2	SHAFT	
060	2916887-0000		1	SHAFT	
090	3106860-0000		3	SHIM	
100	3042519-0000		1	STOP	
120	3024046-0000		2	HOLDER	
200	312105-0374		2	SCREW, M6S ISO 4014 M6X30 A4 80	
210	3042504-0000		2	NUT	
230	312145-0291		2	SCREW ISO 2009 MFS M4X12 A4	
TBA 0125S NOHI (See drawing on page: 4-54)					
010	2919304-0000		1	VOLUME FLAP	
020	491868-0000		1	VOLUME BULGE	
030	3042526-0000		1	CARRIER	
035	3042527-0000		1	CARRIER	
040	3042518-0000		2	SUPPORT	
050	2914728-0000		2	SHAFT	
060	2916887-0000		1	SHAFT	
090	272987-0000		3	VOLUME SHIM	
100	3042519-0000		1	STOP	
120	3024046-0000		2	HOLDER	
200	312105-0374		2	SCREW, M6S ISO 4014 M6X30 A4 80	
210	3042504-0000		2	NUT	
230	312145-0291		2	SCREW ISO 2009 MFS M4X12 A4	

Machine Type | Group Description | Used-In | Group Number | Page No

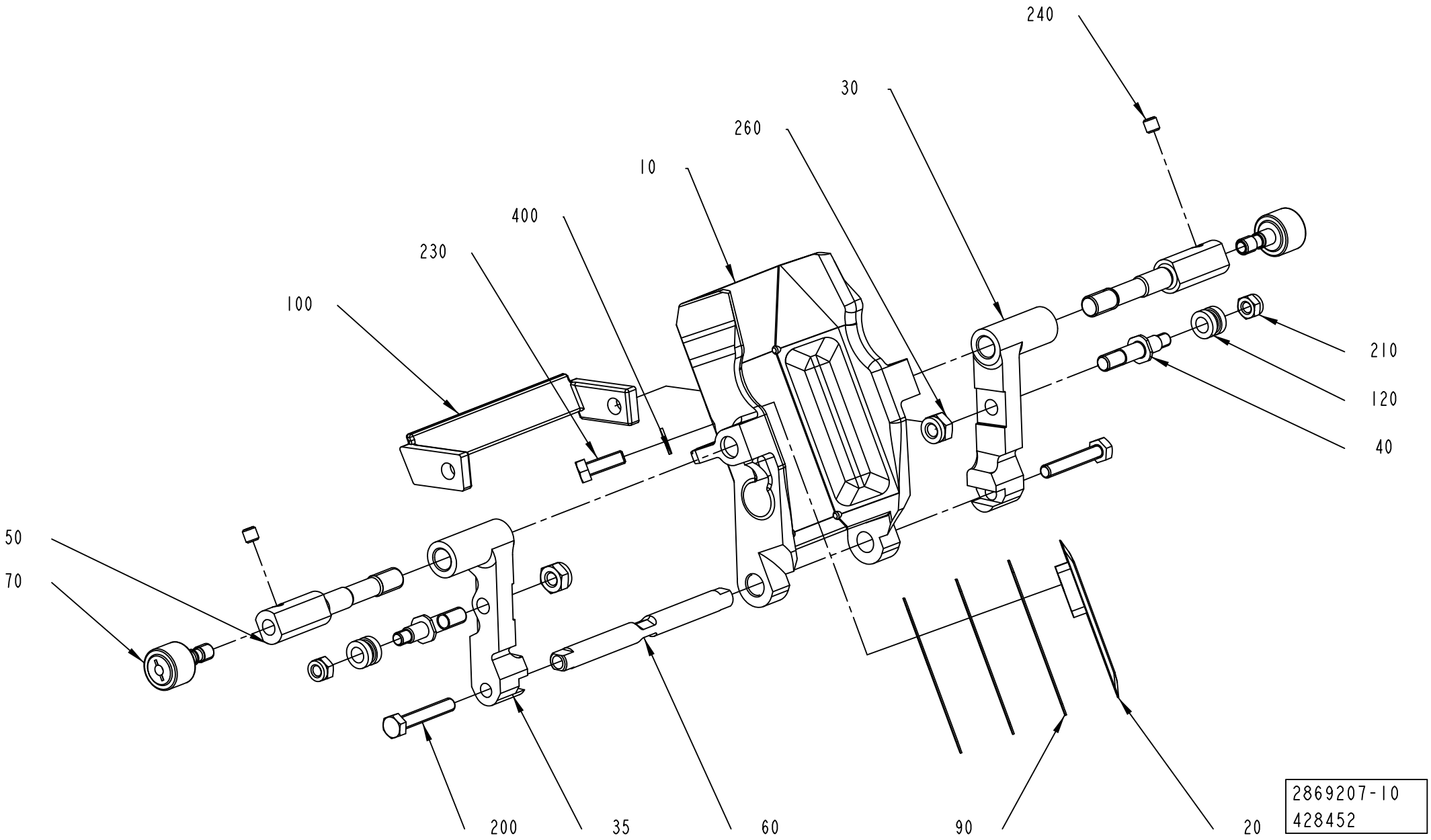
240
30
260
10
400
230
100
210
120
40
50
70
200
35
60
90
20
2869207-10
428452

Pos	Part No	UN	Qty	Description	Page No
TBA 0160S (Cont'd) (See drawing on page: 4-54)					
010	3024345-0000		1	VOLUME FLAP	
020	3022278-0000		1	VOLUME BULGE	
030	3022271-0000		1	CARRIER	
035	3022272-0000		1	CARRIER	
040	3022273-0000		2	SCREW	
050	2914727-0000		2	AXLE	
060	2916179-0000		1	SHAFT	
090	3022276-0000		3	VOLUME SHIM	
100	3022275-0000		1	STOP	
120	2905199-0000		2	HOLDER	
200	312109-0374		2	SCREW, M6S ISO 4017 M6X30 A4 80	
210	312812-0314		2	HEXAGON NUT, NY-LOCK M5 A4 80	
230	312145-0287		2	SCREW ISO 2009 MFS M4X8 A4	
TBA 0200B HI (See drawing on page: 4-54)					
010	2910371-0000		1	VOLUME FLAP	
020	3047317-0000		1	VOLUME BULGE	
030	2992940-0000		1	CARRIER	
035	2993250-0000		1	CARRIER	
040	3022273-0000		2	SCREW	
050	2914727-0000		2	AXLE	
060	2916179-0000		1	SHAFT	
090	3047358-0000		3	VOLUME SHIM	
100	2992941-0000		1	STOP	
120	2905199-0000		2	HOLDER	
200	312109-0374		2	SCREW, M6S ISO 4017 M6X30 A4 80	
210	312812-0314		2	HEXAGON NUT, NY-LOCK M5 A4 80	
230	312145-0291		2	SCREW ISO 2009 MFS M4X12 A4	
TBA 0200B NOHI (See drawing on page: 4-54)					
010	2910371-0000		1	VOLUME FLAP	
020	456005-0003		1	VOLUME BULGE	
030	2992940-0000		1	CARRIER	
035	2993250-0000		1	CARRIER	
040	3022273-0000		2	SCREW	
050	2914727-0000		2	AXLE	
060	2916179-0000		1	SHAFT	
090	272986-0003		3	VOLUME SHIM	
100	2992941-0000		1	STOP	
120	2905199-0000		2	HOLDER	
200	312109-0374		2	SCREW, M6S ISO 4017 M6X30 A4 80	
210	312812-0314		2	HEXAGON NUT, NY-LOCK M5 A4 80	
230	312145-0291		2	SCREW ISO 2009 MFS M4X12 A4	

Pos	Part No	UN	Qty	Description	Page No
TBA 0200E HI (See drawing on page: 4-54)					
010	3123577-0000		1	VOLUME FLAP	
020	3222718-0000		1	VOLUME BULGE	
030	3097407-0000		1	CARRIER	
035	3097408-0000		1	CARRIER	
040	3022273-0000		2	SCREW	
050	2976920-0000		2	SHAFT	
060	3003860-0000		1	SHAFT	
090	3222719-0000		2	VOLUME SHIM	
100	3097582-0000		1	STOP	
120	2905199-0000		2	HOLDER	
200	312109-0335		2	SCREW, M6S ISO 4017 M5X30 A4 80	
210	312812-0314		2	HEXAGON NUT, NY-LOCK M5 A4 80	
230	312145-0291		2	SCREW ISO 2009 MFS M4X12 A4	
TBA 0200E NOHI (See drawing on page: 4-54)					
010	3123577-0000		1	VOLUME FLAP	
020	3110105-0000		1	VOLUME BULGE	
030	3097407-0000		1	CARRIER	
035	3097408-0000		1	CARRIER	
040	3022273-0000		2	SCREW	
050	2976920-0000		2	SHAFT	
060	3003860-0000		1	SHAFT	
090	3111045-0000		3	VOLUME SHIM	
100	3097582-0000		1	STOP	
120	2905199-0000		2	HOLDER	
200	312109-0335		2	SCREW, M6S ISO 4017 M5X30 A4 80	
210	312812-0314		2	HEXAGON NUT, NY-LOCK M5 A4 80	
230	312145-0291		2	SCREW ISO 2009 MFS M4X12 A4	
TBA 0200M HI (See drawing on page: 4-54)					
010	2947187-0000		1	VOLUME FLAP	
020	3104458-0000		1	VOLUME BULGE	
030	2992940-0000		1	CARRIER	
035	2993250-0000		1	CARRIER	
040	3022273-0000		2	SCREW	
050	2914727-0000		2	AXLE	
060	2916179-0000		1	SHAFT	
090	3104459-0000		3	SHIM	
100	2992941-0000		1	STOP	
120	2905199-0000		2	HOLDER	
200	312109-0374		2	SCREW, M6S ISO 4017 M6X30 A4 80	
210	312812-0314		2	HEXAGON NUT, NY-LOCK M5 A4 80	
230	312145-0287		2	SCREW ISO 2009 MFS M4X8 A4	

See previous drawings pages: 4-54, 4-56, 4-58, 4-60.

ECM: 539997 - 20120202
Group number: 2869207-0200
Assembly Drawing: 2869207-10_1_AA

This list covers pages from 4-54 to 4-63

Pos	Part No	UN	Qty	Description	Page No
TBA 0200M NOHI (Cont'd) (See drawing on page: 4-54)					
010	2947187-0000		1	VOLUME FLAP	
020	979860-0000		1	VOLUME BULGE	
030	2992940-0000		1	CARRIER	
035	2993250-0000		1	CARRIER	
040	3022273-0000		2	SCREW	
050	2914727-0000		2	AXLE	
060	2916179-0000		1	SHAFT	
090	979861-0000		3	VOLUME SHIM	
100	2992941-0000		1	STOP	
120	2905199-0000		2	HOLDER	
200	312109-0374		2	SCREW, M6S ISO 4017 M6X30 A4 80	
210	312812-0314		2	HEXAGON NUT, NY-LOCK M5 A4 80	
230	312145-0287		2	SCREW ISO 2009 MFS M4X8 A4	
TBA 0200S HI (See drawing on page: 4-54)					
010	2954994-0000		1	VOLUME FLAP	
020	3174445-0000		1	VOLUME BULGE	
030	3022271-0000		2	CARRIER	
035	3022272-0000		2	CARRIER	
040	3022273-0000		2	SCREW	
050	2914728-0000		2	SHAFT	
060	2916179-0000		1	SHAFT	
090	3174446-0000		3	VOLUME SHIM	
100	3022275-0000		1	STOP	
120	2905199-0000		2	HOLDER	
200	312109-0374		2	SCREW, M6S ISO 4017 M6X30 A4 80	
210	312812-0314		2	HEXAGON NUT, NY-LOCK M5 A4 80	
230	312145-0287		2	SCREW ISO 2009 MFS M4X8 A4	
TBA 0200S NOHI (See drawing on page: 4-54)					
010	2954994-0000		1	VOLUME FLAP	
020	2947787-0000		2	VOLUME BULGE	
030	3022271-0000		2	CARRIER	
035	3022272-0000		2	CARRIER	
040	3022273-0000		2	SCREW	
050	2914728-0000		2	SHAFT	
060	2916179-0000		1	SHAFT	
090	2947788-0000		3	VOLUME SHIM	
100	3022275-0000		1	STOP	
120	2905199-0000		2	HOLDER	
200	312109-0374		2	SCREW, M6S ISO 4017 M6X30 A4 80	
210	312812-0314		2	HEXAGON NUT, NY-LOCK M5 A4 80	
230	312145-0287		2	SCREW ISO 2009 MFS M4X8 A4	

Pos	Part No	UN	Qty	Description	Page No
TBA 0200SQ (See drawing on page: 4-54)					
010	2976916-0000		1	VOLUME FLAP	
020	1548941-0000		1	VOLUME BULGE	
030	3042529-0000		1	CARRIER	
035	3042530-0000		1	CARRIER	
040	3022273-0000		2	SCREW	
050	2976920-0000		2	SHAFT	
060	2916179-0000		1	SHAFT	
090	1519222-0000		3	VOLUME SHIM	
100	3042522-0000		1	STOP	
120	2905199-0000		2	HOLDER	
200	312109-0374		2	SCREW, M6S ISO 4017 M6X30 A4 80	
210	312812-0314		2	HEXAGON NUT, NY-LOCK M5 A4 80	
230	312145-0291		2	SCREW ISO 2009 MFS M4X12 A4	
Common Parts					
070	2914730-0000		2	ROLLER	
240	312318-0320		2	SET SCREW, CUP END ISO4029 M5X5 A4	
260	312812-0316		2	HEXAGON NUT, NY-LOCK M6 A4 80	

Machine Type | Group Description | Used-In | Group Number | Page No

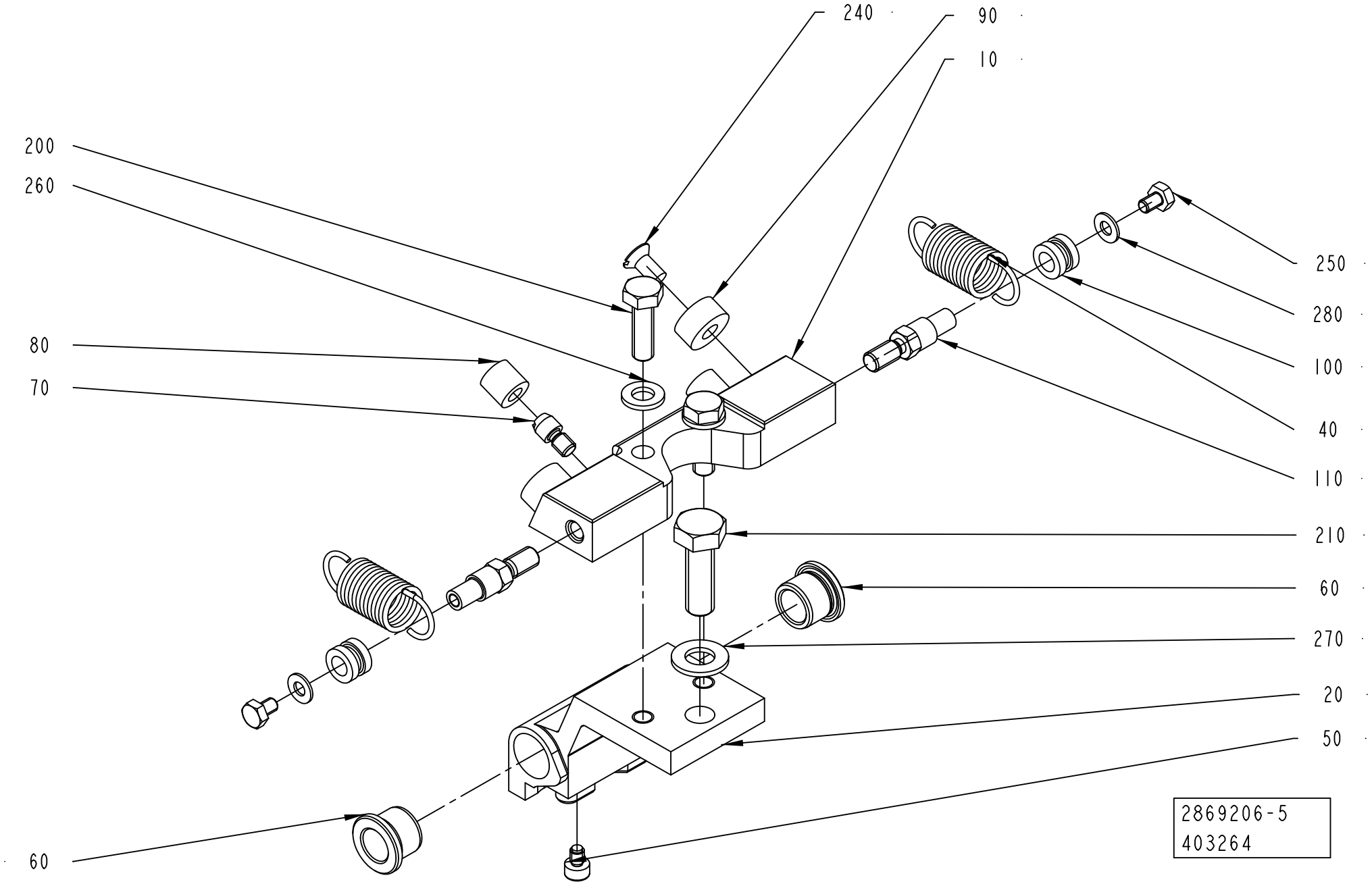
240
90
10
200
260
80
70
250
280
100
40
110
210
60
270
20
50
60
2869206-5
403264

ECM: 521044 - 20120101
Group number: 2869206-0200
Assembly Drawing: 2869206-5_1_AA

This list covers pages from 4-64 to 4-69

Pos	Part No	UN	Qty	Description	Page No
TBA 0080S (See drawing on page: 4-66)					
010	3042505-0000		1	SUPPORT	
020	2950900-0000		1	HOLDER	
040	2950910-0000		2	TENSION SPRING	
050	2933520-0000		1	SCREW	
060	2532544-0000		2	BUSHING	
090	2993461-0000		2	STOP	
100	3024046-0000		2	HOLDER	
120	3042504-0000		2	NUT	
200	312105-0327		2	SCREW, M6S ISO 4017 M5X12 A4 80	
330	90287-0199		1	SCREW, M6S ISO 4017 M5X6 A4 80	
TBA 0100B, TBA 0125S (See drawing on page: 4-66)					
010	3042505-0000		1	SUPPORT	
020	2916883-0000		1	HOLDER	
040	2950910-0000		2	TENSION SPRING	
050	2933520-0000		1	SCREW	
060	2532544-0000		2	BUSHING	
090	2869195-0000		2	STOP	
100	3024046-0000		2	HOLDER	
120	3042504-0000		2	NUT	
200	312105-0327		2	SCREW, M6S ISO 4017 M5X12 A4 80	
330	90287-0199		1	SCREW, M6S ISO 4017 M5X6 A4 80	
TBA 0160S, TBA 0200S (See drawing on page: 4-64)					
010	3018882-0000		1	SUPPORT	
020	3022267-0004		1	HOLDER	
040	3040850-0000		2	TENSION SPRING	
050	3022268-0000		1	SCREW	
060	2532544-0000		2	BUSHING	
070	2869193-0000		2	PIN	
080	2869194-0000		2	DAMPER	
090	2869195-0000		2	STOP	
100	2905199-0000		2	HOLDER	
110	3022269-0000		2	SCREW	
200	312105-0370		2	SCREW, M6S ISO 4017 M6X20 A4 80	
250	312105-0285		2	SCREW, M6S ISO 4017 M4X6 A4 70	
260	315105-0153		2	WASHER PLAIN, 6,4X12X1,5 A4 BRB	
280	315106-0136		2	WASHER PLAIN, M4 ISO7089-4-200 HV A4	
TBA 0200B, TBA 0250B (See drawing on page: 4-64)					
010	3018882-0000		1	SUPPORT	
020	2870080-0000		1	HOLDER	
040	3040850-0000		2	TENSION SPRING	
050	3003494-0000		1	SCREW	
060	2532544-0000		2	BUSHING	
070	2869193-0000		2	PIN	
080	2869194-0000		2	DAMPER	
090	2869195-0000		2	STOP	
100	2905199-0000		2	HOLDER	
110	3022269-0000		2	SCREW	
200	312105-0370		2	SCREW, M6S ISO 4017 M6X20 A4 80	
250	312105-0285		2	SCREW, M6S ISO 4017 M4X6 A4 70	
260	315105-0153		2	WASHER PLAIN, 6,4X12X1,5 A4 BRB	
280	315106-0136		2	WASHER PLAIN, M4 ISO7089-4-200 HV A4	
TBA 0200E (See drawing on page: 4-64)					
010	3018882-0000		1	SUPPORT	
020	3097405-0004		1	HOLDER	
040	3040850-0000		2	TENSION SPRING	
050	2966463-0000		1	SCREW	
060	3097403-0000		2	BUSHING	
070	2869193-0000		2	PIN	
080	2869194-0000		2	DAMPER	
090	3022743-0000		2	STOP	
100	2905199-0000		2	HOLDER	
110	3022269-0000		2	SCREW	
200	312105-0370		2	SCREW, M6S ISO 4017 M6X20 A4 80	
250	312105-0285		2	SCREW, M6S ISO 4017 M4X6 A4 70	
260	315105-0153		2	WASHER PLAIN, 6,4X12X1,5 A4 BRB	
280	315106-0136		2	WASHER PLAIN, M4 ISO7089-4-200 HV A4	
TBA 0200M, TBA 0250S (See drawing on page: 4-64)					
010	3018882-0000		1	SUPPORT	
020	2947185-0000		1	HOLDER	
040	3040850-0000		2	TENSION SPRING	
050	3003494-0000		1	SCREW	
060	2532544-0000		2	BUSHING	
070	2869193-0000		2	PIN	
080	2869194-0000		2	DAMPER	
090	2869195-0000		2	STOP	
100	2905199-0000		2	HOLDER	
110	3022269-0000		2	SCREW	
200	312105-0370		2	SCREW, M6S ISO 4017 M6X20 A4 80	
250	312105-0285		2	SCREW, M6S ISO 4017 M4X6 A4 70	
260	315105-0153		2	WASHER PLAIN, 6,4X12X1,5 A4 BRB	
280	315106-0136		2	WASHER PLAIN, M4 ISO7089-4-200 HV A4	
TBA 0200SQ, TBA 0250SQ (See drawing on page: 4-64)					
010	3018882-0000		1	SUPPORT	

Machine Type | Group Description | Used-In | Group Number | Page No

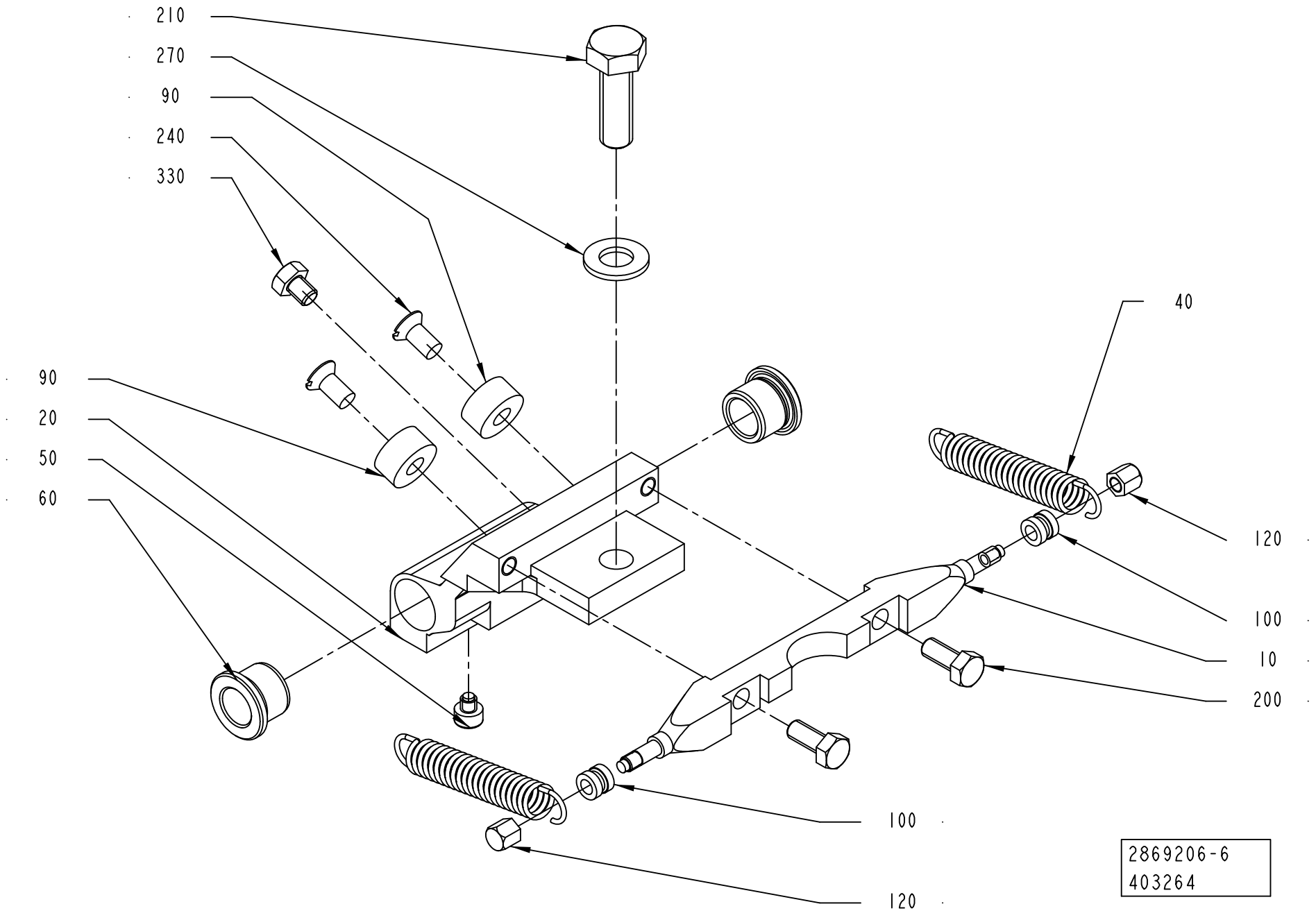
210
270
90
240
330
90
20
50
60
40
120
100
10
200
100
120
2869206-6
403264

Pos	Part No	UN	Qty	Description	Page No
TBA 0200SQ, TBA 0250SQ (Cont'd) (See drawing on page: 4-64)					
020	2976830-0004		1	HOLDER	
040	3040850-0000		2	TENSION SPRING	
050	2966463-0000		1	SCREW	
060	2532544-0000		2	BUSHING	
070	2869193-0000		2	PIN	
080	2869194-0000		2	DAMPER	
090	2869195-0000		2	STOP	
100	2905199-0000		2	HOLDER	
110	3022269-0000		2	SCREW	
200	312105-0370		2	SCREW, M6S ISO 4017 M6X20 A4 80	
250	312105-0285		2	SCREW, M6S ISO 4017 M4X6 A4 70	
260	315105-0153		2	WASHER PLAIN, 6,4X12X1,5 A4 BRB	
280	315106-0136		2	WASHER PLAIN, M4 ISO7089-4-200 HV A4	
TBA 0284B, TBA 0300S (See drawing on page: 4-64)					
010	3018882-0000		1	SUPPORT	
020	3010750-0004		1	HOLDER	
040	3040850-0000		2	TENSION SPRING	
050	3013566-0000		1	SCREW	
060	2532544-0000		2	BUSHING	
070	2869193-0000		2	PIN	
080	2869194-0000		2	DAMPER	
090	2869195-0000		2	STOP	
100	2905199-0000		2	HOLDER	
110	3022269-0000		2	SCREW	
200	312105-0370		2	SCREW, M6S ISO 4017 M6X20 A4 80	
250	312105-0285		2	SCREW, M6S ISO 4017 M4X6 A4 70	
260	315105-0153		2	WASHER PLAIN, 6,4X12X1,5 A4 BRB	
280	315106-0136		2	WASHER PLAIN, M4 ISO7089-4-200 HV A4	
TBA 0330S (See drawing on page: 4-64)					
010	3018882-0000		1	SUPPORT	
020	2870080-0000		1	HOLDER	
040	3040850-0000		2	TENSION SPRING	
050	3003494-0000		1	SCREW	
060	2532544-0000		2	BUSHING	
070	2869193-0000		2	PIN	
080	2869194-0000		2	DAMPER	
090	2869195-0000		2	STOP	
100	2905199-0000		2	HOLDER	
110	3022269-0000		2	SCREW	
200	312105-0370		2	SCREW, M6S ISO 4017 M6X20 A4 80	
250	312105-0285		2	SCREW, M6S ISO 4017 M4X6 A4 70	
260	315105-0153		2	WASHER PLAIN, 6,4X12X1,5 A4 BRB	
280	315106-0136		2	WASHER PLAIN, M4 ISO7089-4-200 HV A4	
TBA 0375S (See drawing on page: 4-64)					
010	3018882-0000		1	SUPPORT	
020	3067247-0004		1	HOLDER	
040	3040850-0000		2	TENSION SPRING	
050	2966463-0000		1	SCREW	
060	2532544-0000		2	BUSHING	
070	2869193-0000		2	PIN	
080	2869194-0000		2	DAMPER	
090	2869195-0000		2	STOP	
100	2905199-0000		2	HOLDER	
110	3022269-0000		2	SCREW	
200	312105-0370		2	SCREW, M6S ISO 4017 M6X20 A4 80	
250	312105-0285		2	SCREW, M6S ISO 4017 M4X6 A4 70	
260	315105-0153		2	WASHER PLAIN, 6,4X12X1,5 A4 BRB	
280	315106-0136		2	WASHER PLAIN, M4 ISO7089-4-200 HV A4	
TPA 0125SQ (See drawing on page: 4-64)					
010	3018882-0000		1	SUPPORT	
020	2906170-0000		1	HOLDER	
040	3040850-0000		2	TENSION SPRING	
050	2991044-0000		1	STOP SCREW	
060	2532544-0000		2	BUSHING	
070	2869193-0000		2	PIN	
080	2869194-0000		2	DAMPER	
090	2869195-0000		2	STOP	
100	2905199-0000		2	HOLDER	
110	3022269-0000		2	SCREW	
200	312105-0370		2	SCREW, M6S ISO 4017 M6X20 A4 80	
250	312105-0285		2	SCREW, M6S ISO 4017 M4X6 A4 70	
260	315105-0153		2	WASHER PLAIN, 6,4X12X1,5 A4 BRB	
280	315106-0136		2	WASHER PLAIN, M4 ISO7089-4-200 HV A4	
TPA 0200SQ (See drawing on page: 4-64)					
010	3018882-0000		1	SUPPORT	
020	2959957-0004		1	HOLDER	
040	3040850-0000		2	TENSION SPRING	
050	2966463-0000		1	SCREW	
060	2532544-0000		2	BUSHING	
070	2869193-0000		2	PIN	
080	2869194-0000		2	DAMPER	
090	2869195-0000		2	STOP	
100	2905199-0000		2	HOLDER	

See previous drawings pages: 4-64, 4-66.

Pos	Part No	UN	Qty	Description	Page No
TPA 0200SQ (Cont'd) (See drawing on page: 4-64)					
110	3022269-0000		2	SCREW	
200	312105-0370		2	SCREW, M6S ISO 4017 M6X20 A4 80	
250	312105-0285		2	SCREW, M6S ISO 4017 M4X6 A4 70	
260	315105-0153		2	WASHER PLAIN, 6,4X12X1,5 A4 BRB	
280	315106-0136		2	WASHER PLAIN, M4 ISO7089-4-200 HV A4	
TPA 0250SQ (See drawing on page: 4-64)					
010	3018882-0000		1	SUPPORT	
020	2965109-0004		1	HOLDER	
040	3040850-0000		2	TENSION SPRING	
050	2966463-0000		1	SCREW	
060	2532544-0000		2	BUSHING	
070	2869193-0000		2	PIN	
080	2869194-0000		2	DAMPER	
090	2869195-0000		2	STOP	
100	2905199-0000		2	HOLDER	
110	3022269-0000		2	SCREW	
200	312105-0370		2	SCREW, M6S ISO 4017 M6X20 A4 80	
250	312105-0285		2	SCREW, M6S ISO 4017 M4X6 A4 70	
260	315105-0153		2	WASHER PLAIN, 6,4X12X1,5 A4 BRB	
280	315106-0136		2	WASHER PLAIN, M4 ISO7089-4-200 HV A4	
TPA 0330SQ (See drawing on page: 4-64)					
010	3018882-0000		1	SUPPORT	
020	3002890-0004		1	HOLDER	
040	3040850-0000		2	TENSION SPRING	
050	3003861-0000		1	SCREW	
060	2810394-0000		2	BUSHING	
070	2869193-0000		2	PIN	
080	2869194-0000		2	DAMPER	
090	2869195-0000		2	STOP	
100	2905199-0000		2	HOLDER	
110	3022269-0000		2	SCREW	
200	312105-0370		2	SCREW, M6S ISO 4017 M6X20 A4 80	
250	312105-0285		2	SCREW, M6S ISO 4017 M4X6 A4 70	
260	315105-0153		2	WASHER PLAIN, 6,4X12X1,5 A4 BRB	
280	315106-0136		2	WASHER PLAIN, M4 ISO7089-4-200 HV A4	
Common Parts					
210	312105-0453		1	SCREW, M6S ISO 4017 M8X25 A4 80	
240	312145-0325		2	SCREW ISO 2009 MFS M5X10 A4	
270	315105-0165		1	WASHER PLAIN, 8,4X16X1,6 A4 BRB	

Pos	Part No	UN	Qty	Description	Page No

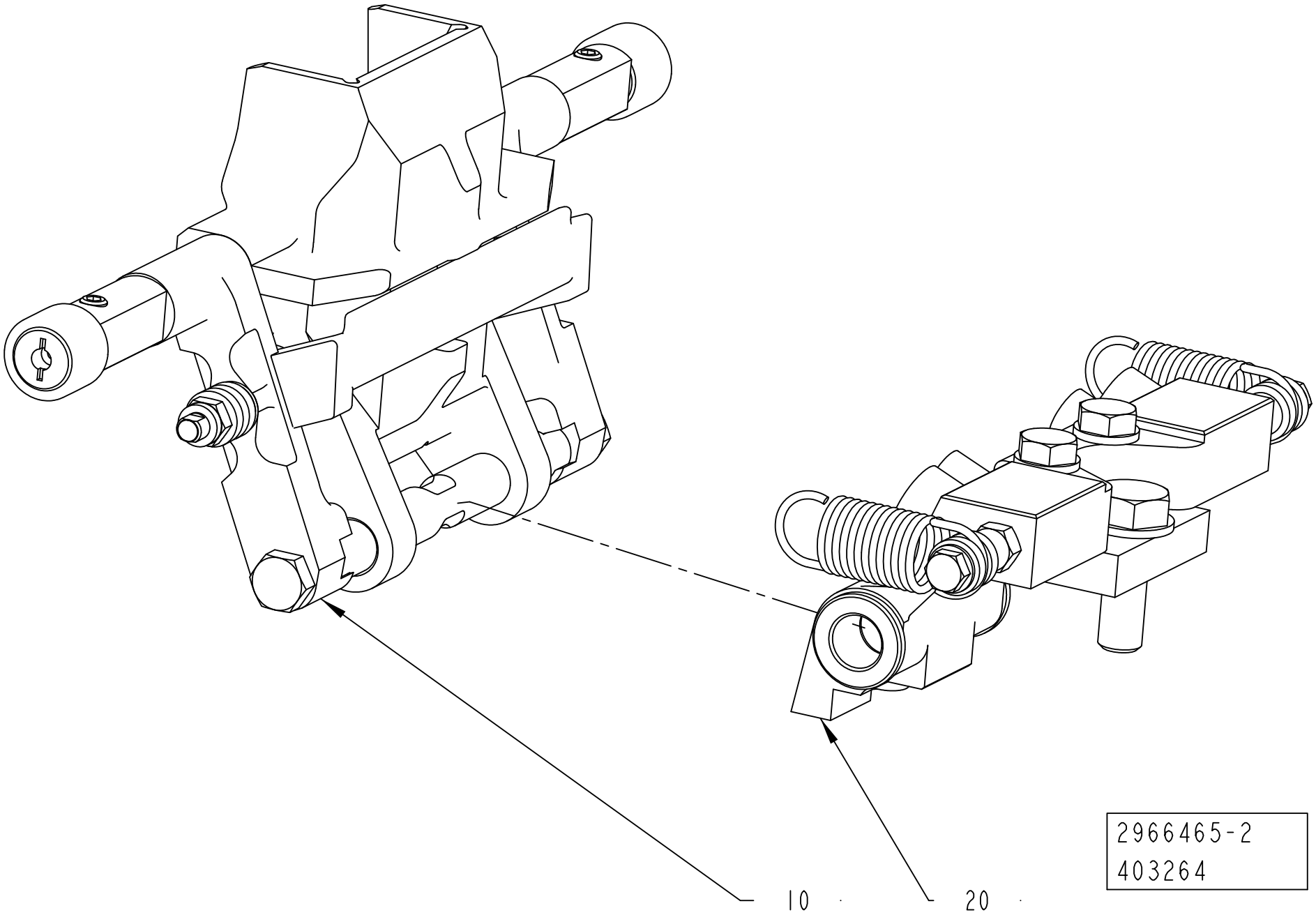
10
20
2966465-2
403264

ECM: 539998 - 20120202
Group number: 2966465-0200
Assembly Drawing: 2966465-2_1_AA

Pos	Part No	UN	Qty	Description	Page No
-					
010	2869207-0200		1	VOLUME FLAP	**4-55, 4-57, 4-59, 4-61, 4-63**
020	2966466-0200		1	SHOCK ABSORBER	**4-73**

Pos	Part No	UN	Qty	Description	Page No

SHOCK ABSORBER

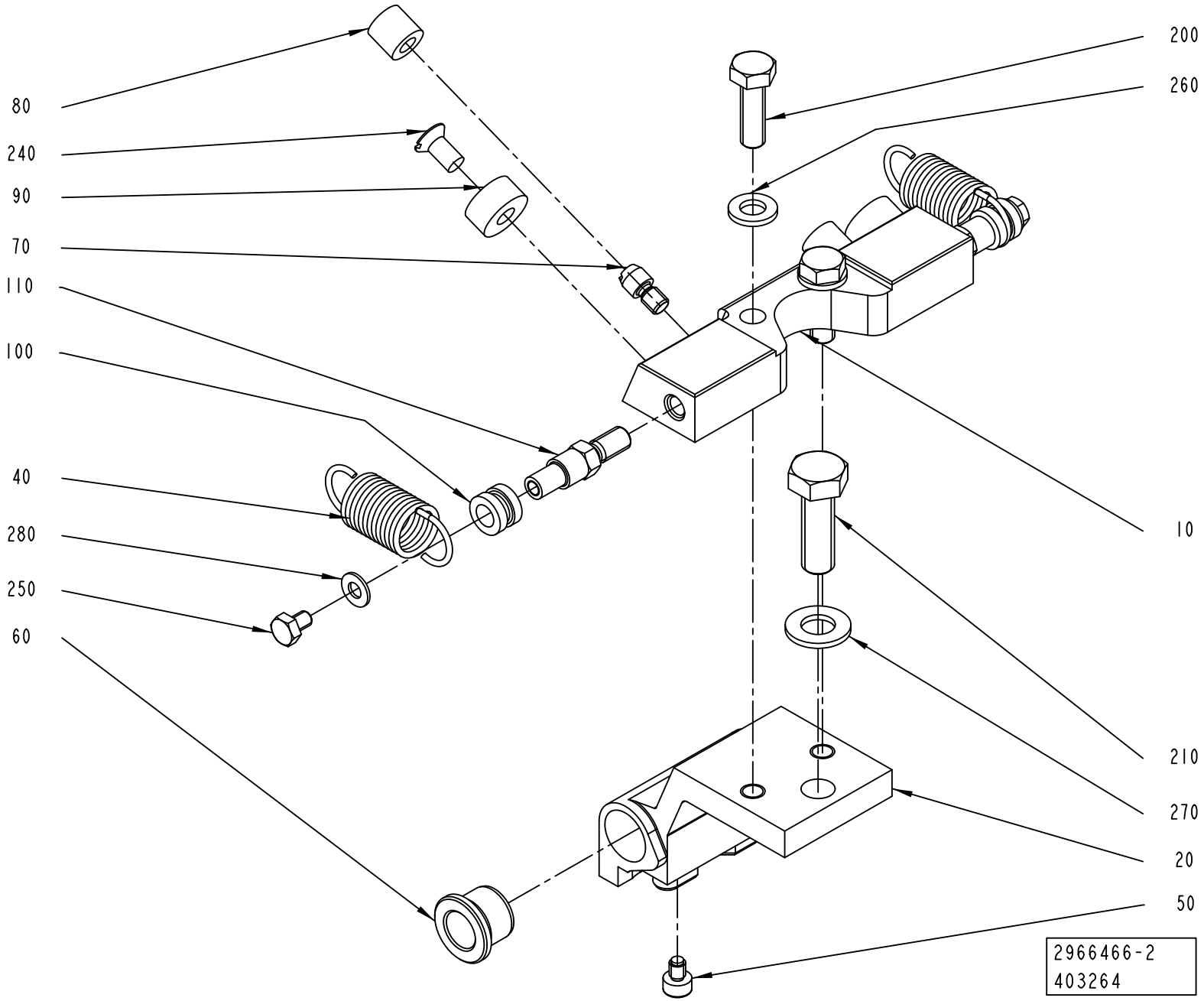

ECM: 521045 - 20120101
Group number: 2966466-0200
Assembly Drawing: 2966466-2_1_AA

Pos	Part No	UN	Qty	Description	Page No
TBA 0160S, TBA 0200S					
020	3022267-0002		1	HOLDER	
050	3022268-0000		1	SCREW	
060	2532544-0000		2	BUSHING	
TBA 0200E					
020	3097405-0002		1	HOLDER	
050	2966463-0000		1	SCREW	
060	3097403-0000		2	BUSHING	
090	3022743-0000		2	STOP	
TBA 0200SQ, TBA 0250SQ					
020	2976830-0002		1	HOLDER	
050	2966463-0000		1	SCREW	
060	2532544-0000		2	BUSHING	
TBA 0284B, TBA 0300S					
020	3010750-0002		1	HOLDER	
050	3013566-0000		1	SCREW	
060	2532544-0000		2	BUSHING	
TBA 0375S					
020	3067247-0002		1	HOLDER	
050	2966463-0000		1	SCREW	
060	2532544-0000		2	BUSHING	
TPA 0200SQ					
020	2959957-0002		1	HOLDER	
050	2966463-0000		1	SCREW	
060	2532544-0000		2	BUSHING	
TPA 0250SQ					
020	2965109-0002		1	HOLDER	
050	2966463-0000		1	SCREW	
060	2532544-0000		2	BUSHING	
TPA 0330SQ					
020	3002890-0002		1	HOLDER	
050	3003861-0000		1	SCREW	
060	2810394-0000		2	BUSHING	
Common Parts					
010	3018882-0000		1	SUPPORT	
040	3040850-0000		2	TENSION SPRING	
070	2869193-0000		2	PIN	
080	2869194-0000		2	DAMPER	
090	2869195-0000		2	STOP	
100	2905199-0000		2	HOLDER	
110	3022269-0000		2	SCREW	
200	312105-0370		2	SCREW, M6S ISO 4017 M6X20 A4 80	
210	312105-0453		1	SCREW, M6S ISO 4017 M8X25 A4 80	
240	312145-0325		2	SCREW ISO 2009 MFS M5X10 A4	
250	312105-0285		2	SCREW, M6S ISO 4017 M4X6 A4 70	
260	315105-0153		2	WASHER PLAIN, 6,4X12X1,5 A4 BRB	
270	315105-0165		1	WASHER PLAIN, 8,4X16X1,6 A4 BRB	
280	315106-0136		2	WASHER PLAIN, M4 ISO7089-4-200 HV A4	

Machine Type | Group Description | Used-In | Group Number | Page No

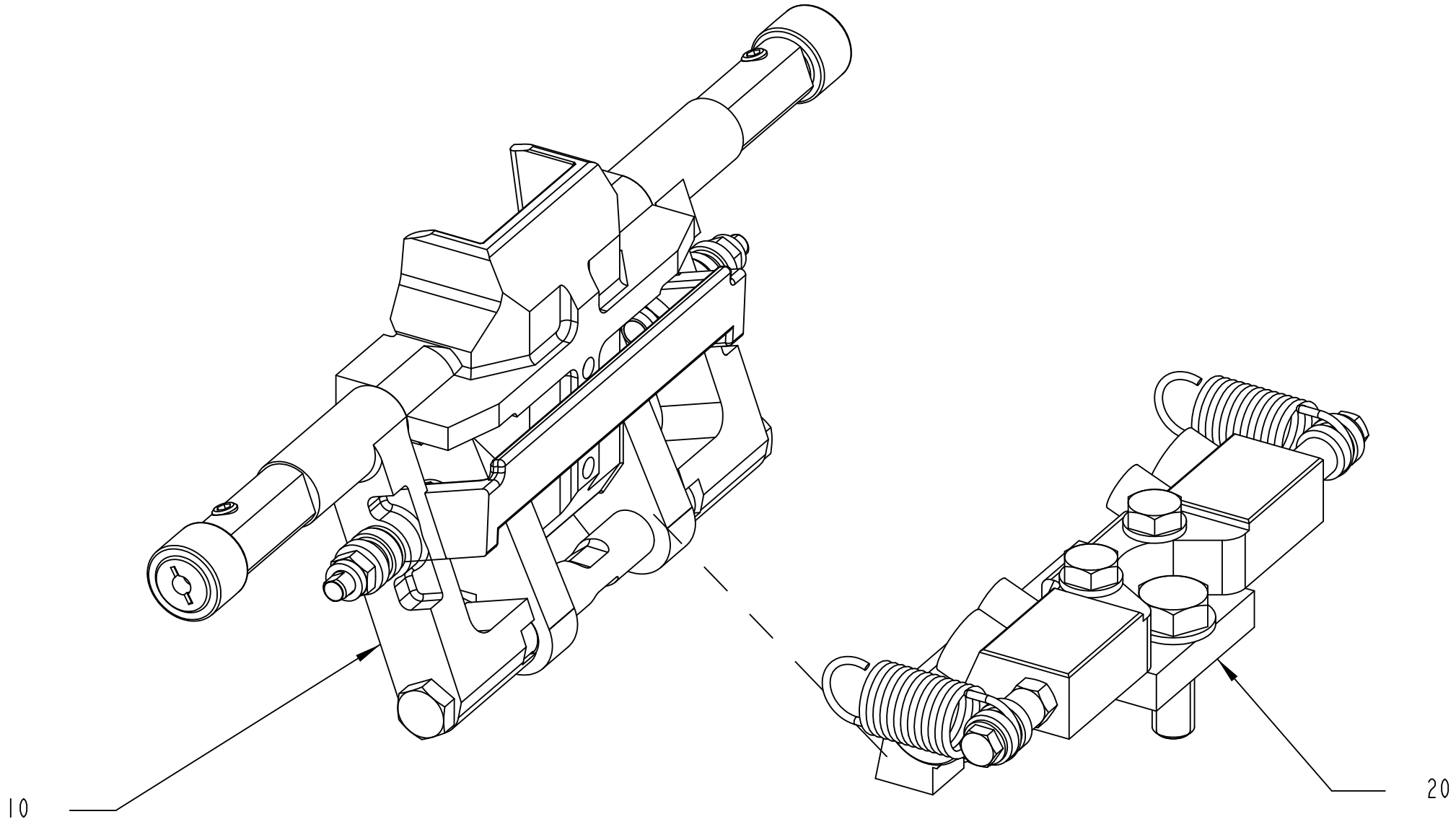

2907729-2
403264

ECM: 509351 - 20111001
Group number: 2907729-0200
Assembly Drawing: 2907729-2_1_AA

Pos	Part No	UN	Qty	Description	Page No
TBA 0160S					
010	2869207-0200		1	VOLUME FLAP	**4-55, 4-57, 4-59, 4-61, 4-63**
020	2966464-0200		1	SHOCK ABSORBER	**4-77**
TBA 0200E					
010	2907728-0200		1	VOLUME FLAP	**4-79, 4-81, 4-83, 4-85**
020	2966464-0200		1	SHOCK ABSORBER	**4-77**
TBA 0200S HI					
010	2869207-0200		1	VOLUME FLAP	**4-55, 4-57, 4-59, 4-61, 4-63**
020	2966464-0200		1	SHOCK ABSORBER	**4-77**
TBA 0200S NOHI					
010	2869207-0200		1	VOLUME FLAP	**4-55, 4-57, 4-59, 4-61, 4-63**
020	2966464-0200		1	SHOCK ABSORBER	**4-77**
TBA 0200SQ					
010	2869207-0200		1	VOLUME FLAP	**4-55, 4-57, 4-59, 4-61, 4-63**
020	2966464-0200		1	SHOCK ABSORBER	**4-77**
TBA 0250SQ					
010	2869207-0200		1	VOLUME FLAP	**4-55, 4-57, 4-59, 4-61, 4-63**
020	2966464-0200		1	SHOCK ABSORBER	**4-77**
TBA 0284B					
010	2869207-0200		1	VOLUME FLAP	**4-55, 4-57, 4-59, 4-61, 4-63**
020	2966464-0200		1	SHOCK ABSORBER	**4-77**
TBA 0300S					
010	2869207-0200		1	VOLUME FLAP	**4-55, 4-57, 4-59, 4-61, 4-63**
020	2966464-0200		1	SHOCK ABSORBER	**4-77**
TBA 0375S					
010	2869207-0200		1	VOLUME FLAP	**4-55, 4-57, 4-59, 4-61, 4-63**
020	2966464-0200		1	SHOCK ABSORBER	**4-77**
TPA 0125SQ					
010	2907728-0200		1	VOLUME FLAP	**4-79, 4-81, 4-83, 4-85**
020	2869206-0200		1	SHOCK ABSORBER	**4-65, 4-67, 4-69**
TPA 0200SQ					
010	2907728-0200		1	VOLUME FLAP	**4-79, 4-81, 4-83, 4-85**
020	2966464-0200		1	SHOCK ABSORBER	**4-77**
TPA 0250SQ					
010	2907728-0200		1	VOLUME FLAP	**4-79, 4-81, 4-83, 4-85**
020	2966464-0200		1	SHOCK ABSORBER	**4-77**
TPA 0330SQ					
010	2907728-0200		1	VOLUME FLAP	**4-79, 4-81, 4-83, 4-85**
020	2966464-0200		1	SHOCK ABSORBER	**4-77**

Pos	Part No	UN	Qty	Description	Page No

Machine Type | Group Description | Used-In | Group Number | Page No

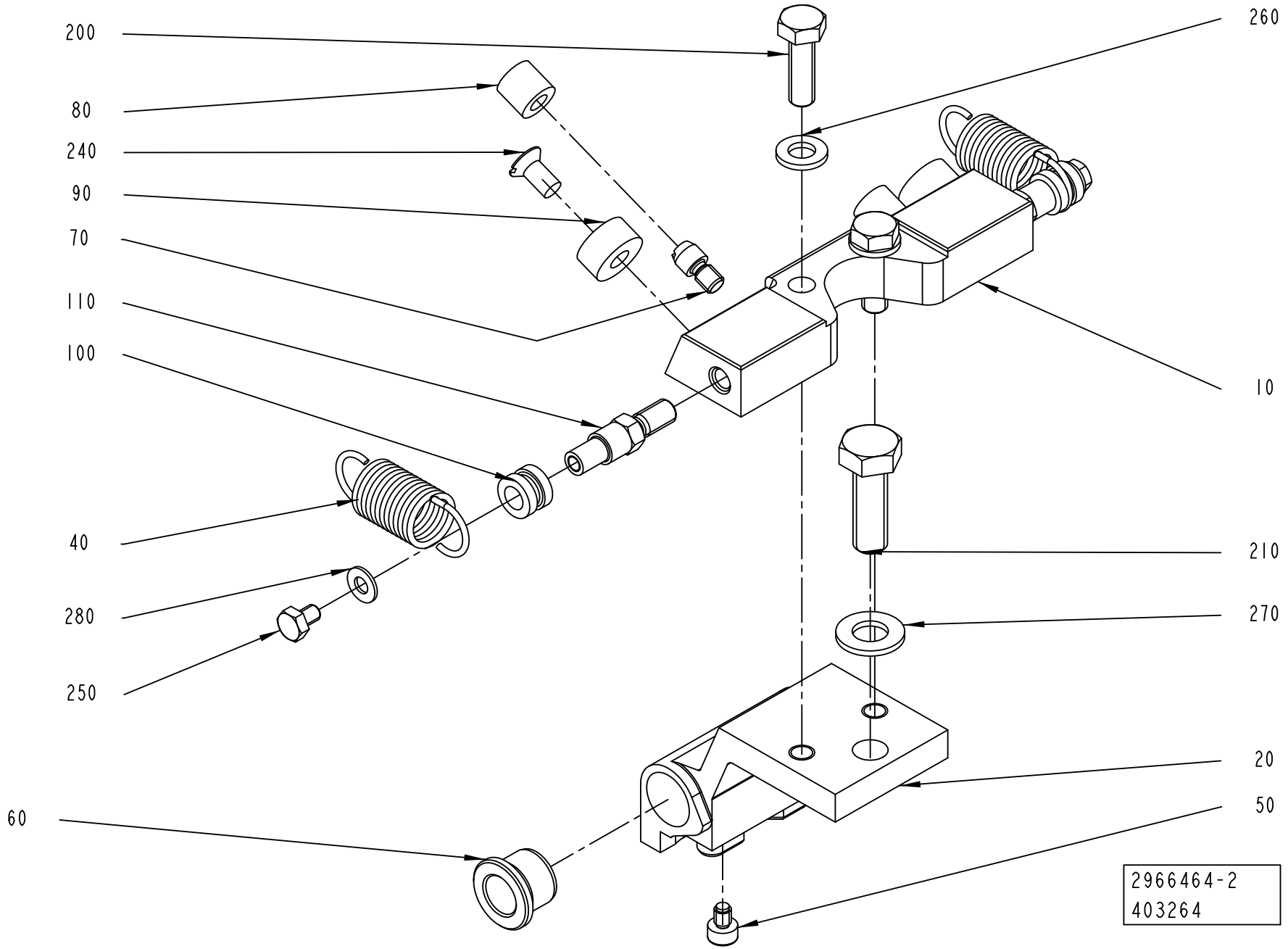
200
80
240
90
70
110
100
40
280
250
60
260
10
210
270
20
50
2966464-2
403264

ECM: 521046 - 20120101
Group number: 2966464-0200
Assembly Drawing: 2966464-2_1_AA

Pos	Part No	UN	Qty	Description	Page No
TBA 0160S, TBA 0200S					
020	3022267-0001		1	HOLDER	
050	3022268-0000		1	SCREW	
060	2532544-0000		2	BUSHING	
TBA 0200E					
020	3097404-0001		1	HOLDER	
050	2933520-0000		1	SCREW	
060	3097403-0000		2	BUSHING	
090	3133957-0000		2	STOP	
TBA 0200SQ, TBA 0250SQ					
020	2976830-0001		1	HOLDER	
060	2532544-0000		2	BUSHING	
TBA 0284B, TBA 0300S					
020	3010750-0001		1	HOLDER	
050	3013566-0000		1	SCREW	
060	2532544-0000		2	BUSHING	
TBA 0375S					
020	3067247-0001		1	HOLDER	
050	2966463-0000		1	SCREW	
060	2532544-0000		2	BUSHING	
TPA 0200SQ					
020	2959957-0001		1	HOLDER	
050	2966463-0000		1	SCREW	
060	2532544-0000		2	BUSHING	
TPA 0250SQ					
020	2965109-0001		1	HOLDER	
050	2966463-0000		1	SCREW	
060	2532544-0000		2	BUSHING	
TPA 0330SQ					
020	3002890-0001		1	HOLDER	
050	3003861-0000		1	SCREW	
060	2810394-0000		2	BUSHING	
Common Parts					
010	3018882-0000		1	SUPPORT	
040	3040850-0000		2	TENSION SPRING	
070	2869193-0000		2	PIN	
080	2869194-0000		2	DAMPER	
090	2869195-0000		2	STOP	
100	2905199-0000		2	HOLDER	
110	3022269-0000		2	SCREW	
200	312105-0370		2	SCREW, M6S ISO 4017 M6X20 A4 80	
210	312105-0453		1	SCREW, M6S ISO 4017 M8X25 A4 80	
240	312145-0325		2	SCREW ISO 2009 MFS M5X10 A4	
250	312105-0285		2	SCREW, M6S ISO 4017 M4X6 A4 70	
260	315105-0153		2	WASHER PLAIN, 6,4X12X1,5 A4 BRB	
270	315105-0165		1	WASHER PLAIN, 8,4X16X1,6 A4 BRB	
280	315106-0136		2	WASHER PLAIN, M4 ISO7089-4-200 HV A4	

Machine Type	Group Description	Used-In	Group Number	Page No

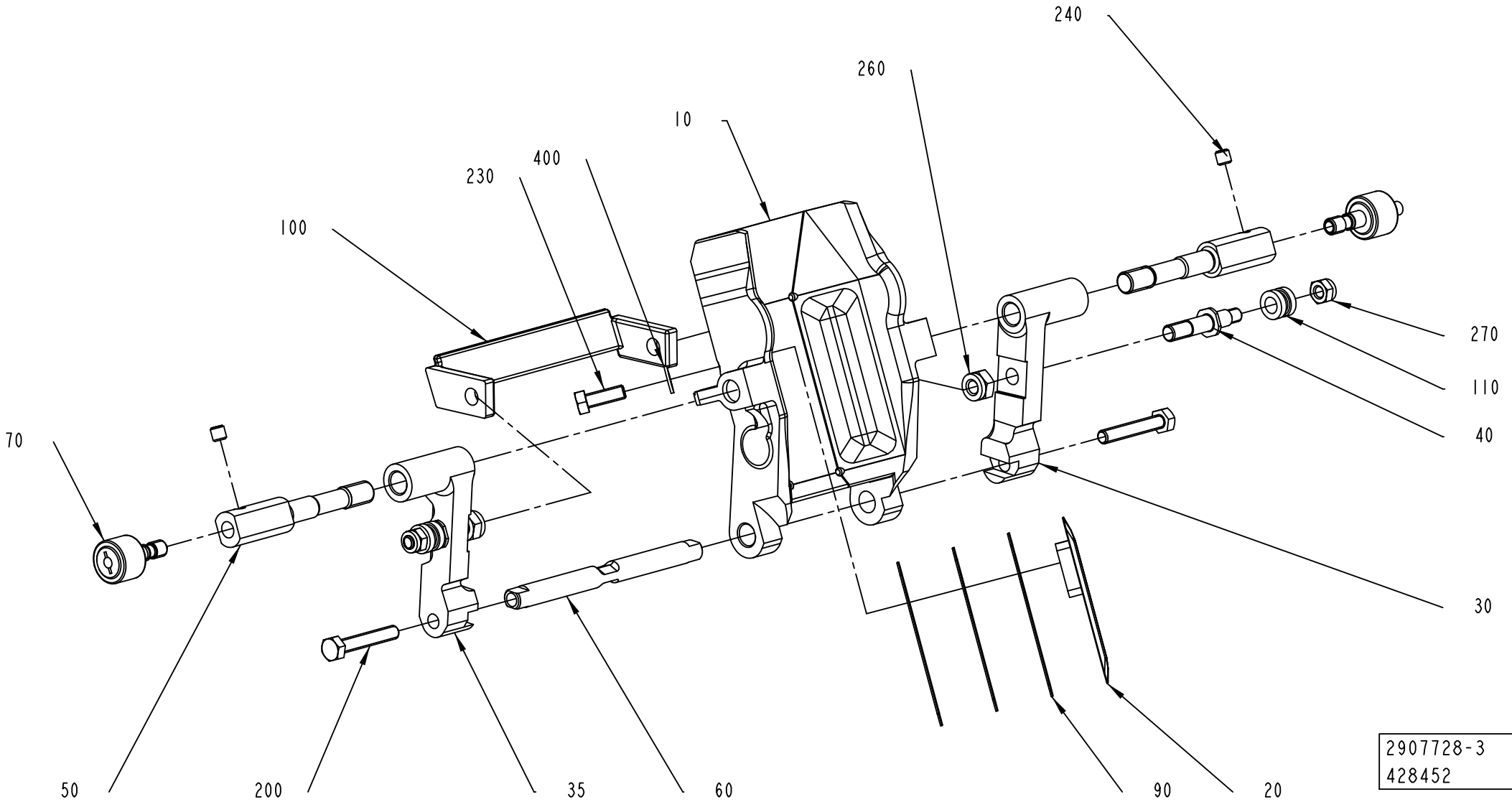
240
260
10
400
230
100
270
110
40
70
30
50
200
35
60
90
20
2907728-3
428452

ECM: 521068 - 20111003
Group number: 2907728-0200
Assembly Drawing: 2907728-3_1_AA

This list covers pages from 4-78 to 4-85

Pos	Part No	UN	Qty	Description	Page No
TBA 0200E (See drawing on page: 4-84)					
010	3122374-0000		1	VOLUME FLAP	
025	3123029-0000		1	VOLUME BULGE	
030	3097409-0000		1	CARRIER	
035	3097580-0000		1	CARRIER	
050	2976920-0000		2	SHAFT	
060	3003860-0000		1	SHAFT	
100	3097581-0000		1	STOP	
200	312109-0335		2	SCREW, M6S ISO 4017 M5X30 A4 80	
230	312105-0287		4	SCREW, M6S ISO 4017 M4X8 A4 70	
400	315105-0136		4	WASHER PLAIN, 4,3X9X0,8 A4 BRB	
TPA 0125SQ (See drawing on page: 4-80)					
010	2907727-0000		1	VOLUME FLAP	
020	2971940-0000		1	VOLUME BULGE	
025	2979711-0000		2	VOLUME BULGE	
030	2906024-0000		1	CARRIER	
035	2906023-0000		1	CARRIER	
050	2921571-0000		2	SHAFT	
060	2906025-0000		1	SHAFT	
090	2908756-0000		4	VOLUME SHIM	
100	2992941-0000		1	STOP	
200	312105-0379		2	SCREW, M6S ISO 4014 M6X45 A4 80	
230	312155-0287		6	SCREW DIN 7991 MF6S M4X8 A4 70	
TPA 0200SQ (See drawing on page: 4-82)					
010	2950908-0000		1	VOLUME FLAP	
020	1538782-0000		2	VOLUME BULGE P48 200	
030	3042528-0000		2	CARRIER	
050	2964541-0000		2	SHAFT	
060	2916179-0000		1	SHAFT	
100	3042521-0000		1	STOP	
200	312109-0374		2	SCREW, M6S ISO 4017 M6X30 A4 80	
230	312155-0287		4	SCREW DIN 7991 MF6S M4X8 A4 70	
TPA 0250SQ (See drawing on page: 4-82)					
010	2964391-0000		1	VOLUME FLAP	
020	1350959-0000		2	VOLUME BULGE P48 250	
030	3042528-0000		2	CARRIER	
050	2964542-0000		2	SHAFT	
060	2916179-0000		1	SHAFT	
100	3042521-0000		1	STOP	
200	312109-0374		2	SCREW, M6S ISO 4017 M6X30 A4 80	
230	312155-0287		4	SCREW DIN 7991 MF6S M4X8 A4 70	
TPA 0330SQ (See drawing on page: 4-78)					
010	3003477-0000		1	VOLUME FLAP	
020	3003862-0000		2	VOLUME BULGE	
030	3002894-0000		1	CARRIER	
035	3002891-0000		1	CARRIER	
050	3002893-0000		1	SHAFT	
060	3003860-0000		1	SHAFT	
090	3003863-0000		6	VOLUME SHIM	
100	3007781-0000		1	STOP	
200	312109-0335		2	SCREW, M6S ISO 4017 M5X30 A4 80	
230	312105-0328		2	SCREW M6S ISO 4017 M5X14 A4 80	
400	315105-0146		2	WASHER PLAIN, 5,3X10X1 A4 BRB	
Common Parts					
040	3022273-0000		2	SCREW	
070	2914730-0000		2	ROLLER	
110	2905199-0000		2	HOLDER	
240	312318-0320		2	SET SCREW, CUP END ISO4029 M5X5 A4	
260	312812-0316		2	HEXAGON NUT, NY-LOCK M6 A4 80	
270	312812-0314		2	HEXAGON NUT, NY-LOCK M5 A4 80	

Machine Type | Group Description | Used-In | Group Number | Page No

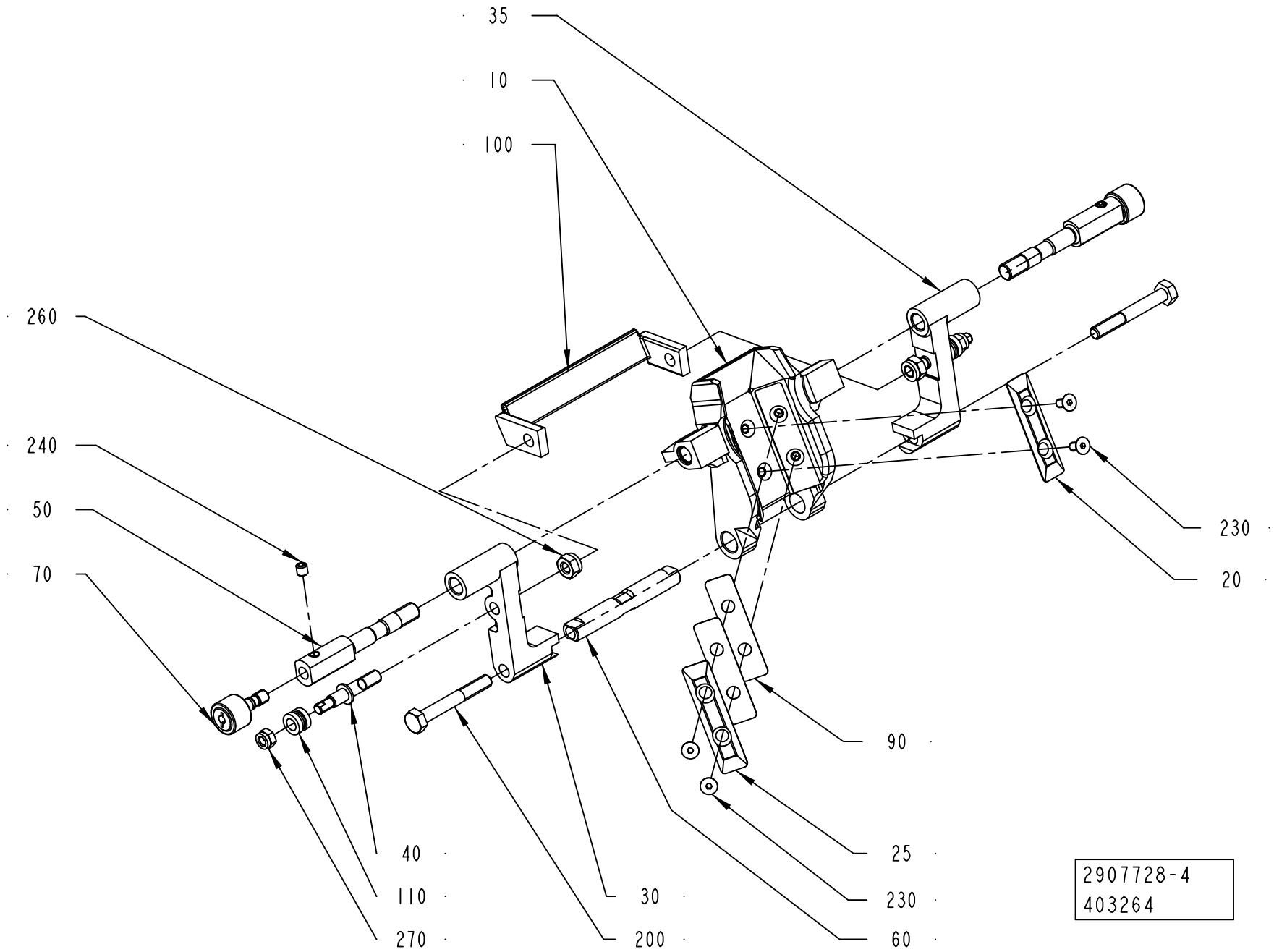
35
10
100
260
240
50
70
230
20
90
25
230
60
40
110
270
30
200
2907728-4
403264

ECM: 521068 - 20111003
Group number: 2907728-0200
Assembly Drawing: 2907728-4_1_AA

This list covers pages from 4-78 to 4-85

Pos	Part No	UN	Qty	Description	Page No
TBA 0200E (See drawing on page: 4-84)					
010	3122374-0000		1	VOLUME FLAP	
025	3123029-0000		1	VOLUME BULGE	
030	3097409-0000		1	CARRIER	
035	3097580-0000		1	CARRIER	
050	2976920-0000		2	SHAFT	
060	3003860-0000		1	SHAFT	
100	3097581-0000		1	STOP	
200	312109-0335		2	SCREW, M6S ISO 4017 M5X30 A4 80	
230	312105-0287		4	SCREW, M6S ISO 4017 M4X8 A4 70	
400	315105-0136		4	WASHER PLAIN, 4,3X9X0,8 A4 BRB	
TPA 0125SQ (See drawing on page: 4-80)					
010	2907727-0000		1	VOLUME FLAP	
020	2971940-0000		1	VOLUME BULGE	
025	2979711-0000		2	VOLUME BULGE	
030	2906024-0000		1	CARRIER	
035	2906023-0000		1	CARRIER	
050	2921571-0000		2	SHAFT	
060	2906025-0000		1	SHAFT	
090	2908756-0000		4	VOLUME SHIM	
100	2992941-0000		1	STOP	
200	312105-0379		2	SCREW, M6S ISO 4014 M6X45 A4 80	
230	312155-0287		6	SCREW DIN 7991 MF6S M4X8 A4 70	
TPA 0200SQ (See drawing on page: 4-82)					
010	2950908-0000		1	VOLUME FLAP	
020	1538782-0000		2	VOLUME BULGE P48 200	
030	3042528-0000		2	CARRIER	
050	2964541-0000		2	SHAFT	
060	2916179-0000		1	SHAFT	
100	3042521-0000		1	STOP	
200	312109-0374		2	SCREW, M6S ISO 4017 M6X30 A4 80	
230	312155-0287		4	SCREW DIN 7991 MF6S M4X8 A4 70	
TPA 0250SQ (See drawing on page: 4-82)					
010	2964391-0000		1	VOLUME FLAP	
020	1350959-0000		2	VOLUME BULGE P48 250	
030	3042528-0000		2	CARRIER	
050	2964542-0000		2	SHAFT	
060	2916179-0000		1	SHAFT	
100	3042521-0000		1	STOP	
200	312109-0374		2	SCREW, M6S ISO 4017 M6X30 A4 80	
230	312155-0287		4	SCREW DIN 7991 MF6S M4X8 A4 70	
TPA 0330SQ (See drawing on page: 4-78)					
010	3003477-0000		1	VOLUME FLAP	
020	3003862-0000		2	VOLUME BULGE	
030	3002894-0000		1	CARRIER	
035	3002891-0000		1	CARRIER	
050	3002893-0000		1	SHAFT	
060	3003860-0000		1	SHAFT	
090	3003863-0000		6	VOLUME SHIM	
100	3007781-0000		1	STOP	
200	312109-0335		2	SCREW, M6S ISO 4017 M5X30 A4 80	
230	312105-0328		2	SCREW M6S ISO 4017 M5X14 A4 80	
400	315105-0146		2	WASHER PLAIN, 5,3X10X1 A4 BRB	
Common Parts					
040	3022273-0000		2	SCREW	
070	2914730-0000		2	ROLLER	
110	2905199-0000		2	HOLDER	
240	312318-0320		2	SET SCREW, CUP END ISO4029 M5X5 A4	
260	312812-0316		2	HEXAGON NUT, NY-LOCK M6 A4 80	
270	312812-0314		2	HEXAGON NUT, NY-LOCK M5 A4 80	

Machine Type | Group Description | Used-In | Group Number | Page No

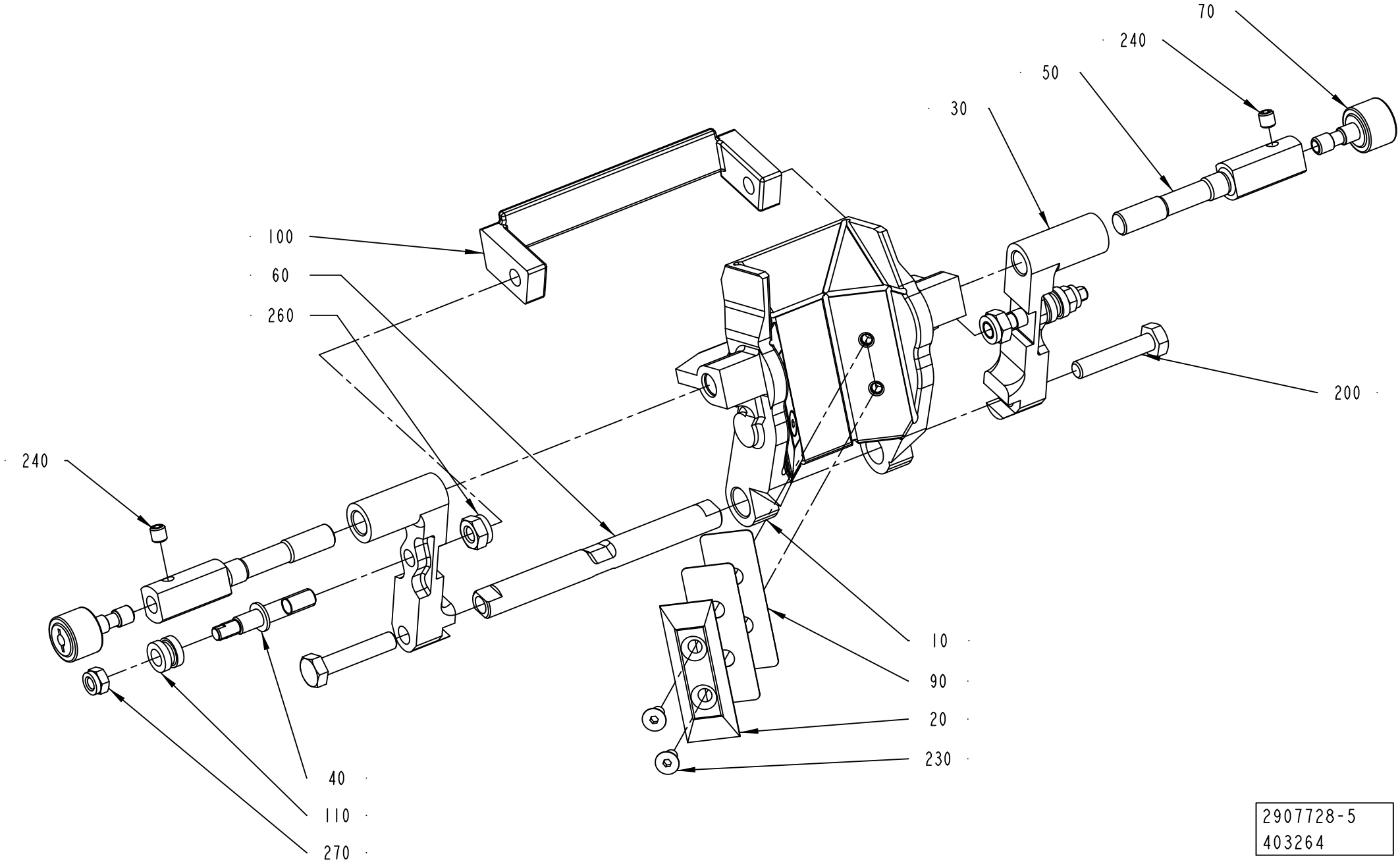

2907728-5
403264

ECM: 521068 - 20111003
Group number: 2907728-0200
Assembly Drawing: 2907728-5_1_AA

This list covers pages from 4-78 to 4-85

Pos	Part No	UN	Qty	Description	Page No
TBA 0200E (See drawing on page: 4-84)					
010	3122374-0000		1	VOLUME FLAP	
025	3123029-0000		1	VOLUME BULGE	
030	3097409-0000		1	CARRIER	
035	3097580-0000		1	CARRIER	
050	2976920-0000		2	SHAFT	
060	3003860-0000		1	SHAFT	
100	3097581-0000		1	STOP	
200	312109-0335		2	SCREW, M6S ISO 4017 M5X30 A4 80	
230	312105-0287		4	SCREW, M6S ISO 4017 M4X8 A4 70	
400	315105-0136		4	WASHER PLAIN, 4,3X9X0,8 A4 BRB	
TPA 0125SQ (See drawing on page: 4-80)					
010	2907727-0000		1	VOLUME FLAP	
020	2971940-0000		1	VOLUME BULGE	
025	2979711-0000		2	VOLUME BULGE	
030	2906024-0000		1	CARRIER	
035	2906023-0000		1	CARRIER	
050	2921571-0000		2	SHAFT	
060	2906025-0000		1	SHAFT	
090	2908756-0000		4	VOLUME SHIM	
100	2992941-0000		1	STOP	
200	312105-0379		2	SCREW, M6S ISO 4014 M6X45 A4 80	
230	312155-0287		6	SCREW DIN 7991 MF6S M4X8 A4 70	
TPA 0200SQ (See drawing on page: 4-82)					
010	2950908-0000		1	VOLUME FLAP	
020	1538782-0000		2	VOLUME BULGE P48 200	
030	3042528-0000		2	CARRIER	
050	2964541-0000		2	SHAFT	
060	2916179-0000		1	SHAFT	
100	3042521-0000		1	STOP	
200	312109-0374		2	SCREW, M6S ISO 4017 M6X30 A4 80	
230	312155-0287		4	SCREW DIN 7991 MF6S M4X8 A4 70	
TPA 0250SQ (See drawing on page: 4-82)					
010	2964391-0000		1	VOLUME FLAP	
020	1350959-0000		2	VOLUME BULGE P48 250	
030	3042528-0000		2	CARRIER	
050	2964542-0000		2	SHAFT	
060	2916179-0000		1	SHAFT	
100	3042521-0000		1	STOP	
200	312109-0374		2	SCREW, M6S ISO 4017 M6X30 A4 80	
230	312155-0287		4	SCREW DIN 7991 MF6S M4X8 A4 70	
TPA 0330SQ (See drawing on page: 4-78)					
010	3003477-0000		1	VOLUME FLAP	
020	3003862-0000		2	VOLUME BULGE	
030	3002894-0000		1	CARRIER	
035	3002891-0000		1	CARRIER	
050	3002893-0000		1	SHAFT	
060	3003860-0000		1	SHAFT	
090	3003863-0000		6	VOLUME SHIM	
100	3007781-0000		1	STOP	
200	312109-0335		2	SCREW, M6S ISO 4017 M5X30 A4 80	
230	312105-0328		2	SCREW M6S ISO 4017 M5X14 A4 80	
400	315105-0146		2	WASHER PLAIN, 5,3X10X1 A4 BRB	
Common Parts					
040	3022273-0000		2	SCREW	
070	2914730-0000		2	ROLLER	
110	2905199-0000		2	HOLDER	
240	312318-0320		2	SET SCREW, CUP END ISO4029 M5X5 A4	
260	312812-0316		2	HEXAGON NUT, NY-LOCK M6 A4 80	
270	312812-0314		2	HEXAGON NUT, NY-LOCK M5 A4 80	

Machine Type | Group Description | Used-In | Group Number | Page No

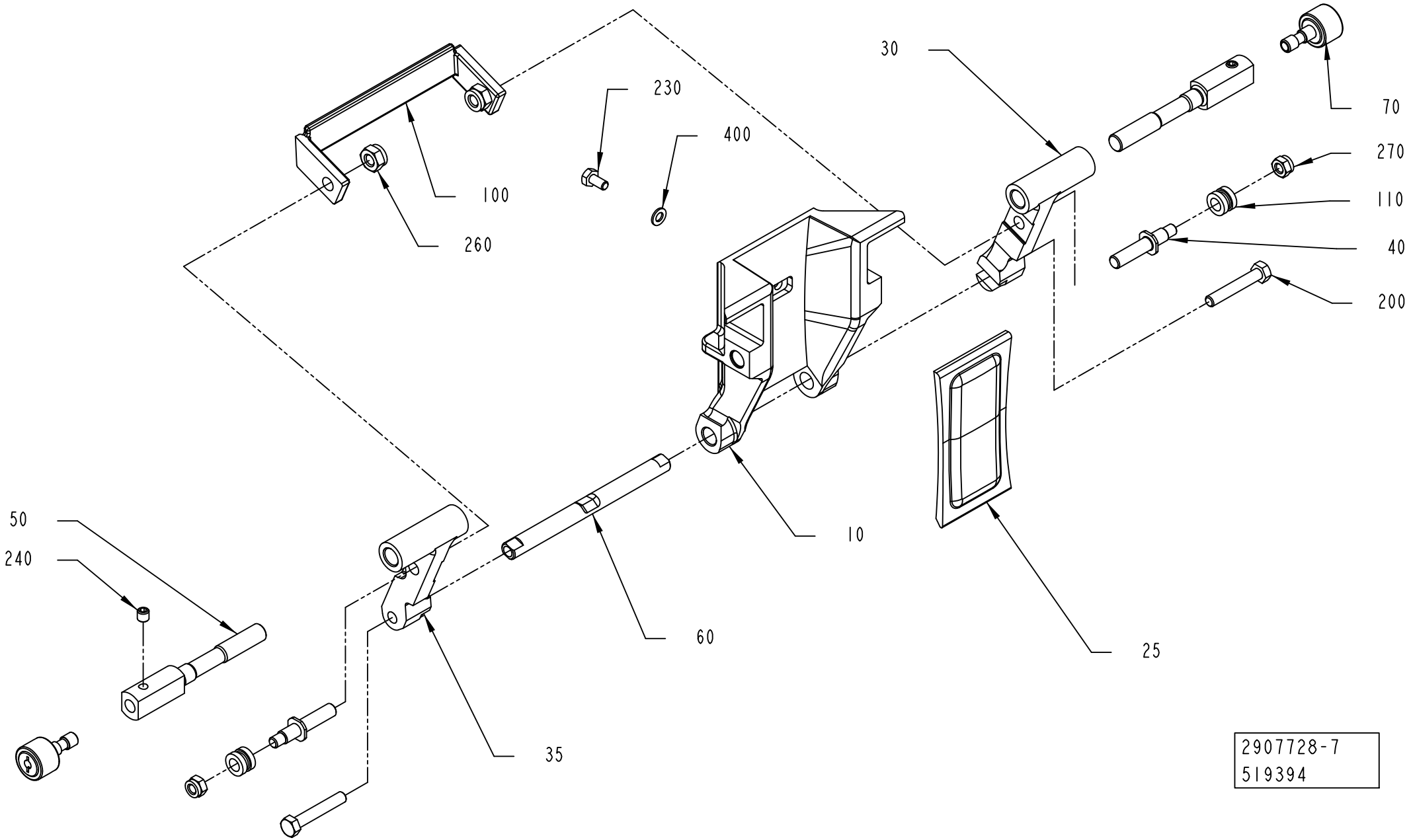
30
70
230
400
270
100
110
260
40
200
50
240
10
60
25
35
2907728-7
519394

ECM: 521068 - 20111003
Group number: 2907728-0200
Assembly Drawing: 2907728-7_1_AB

This list covers pages from 4-78 to 4-85

Pos	Part No	UN	Qty	Description	Page No
TBA 0200E (See drawing on page: 4-84)					
010	3122374-0000		1	VOLUME FLAP	
025	3123029-0000		1	VOLUME BULGE	
030	3097409-0000		1	CARRIER	
035	3097580-0000		1	CARRIER	
050	2976920-0000		2	SHAFT	
060	3003860-0000		1	SHAFT	
100	3097581-0000		1	STOP	
200	312109-0335		2	SCREW, M6S ISO 4017 M5X30 A4 80	
230	312105-0287		4	SCREW, M6S ISO 4017 M4X8 A4 70	
400	315105-0136		4	WASHER PLAIN, 4,3X9X0,8 A4 BRB	
TPA 0125SQ (See drawing on page: 4-80)					
010	2907727-0000		1	VOLUME FLAP	
020	2971940-0000		1	VOLUME BULGE	
025	2979711-0000		2	VOLUME BULGE	
030	2906024-0000		1	CARRIER	
035	2906023-0000		1	CARRIER	
050	2921571-0000		2	SHAFT	
060	2906025-0000		1	SHAFT	
090	2908756-0000		4	VOLUME SHIM	
100	2992941-0000		1	STOP	
200	312105-0379		2	SCREW, M6S ISO 4014 M6X45 A4 80	
230	312155-0287		6	SCREW DIN 7991 MF6S M4X8 A4 70	
TPA 0200SQ (See drawing on page: 4-82)					
010	2950908-0000		1	VOLUME FLAP	
020	1538782-0000		2	VOLUME BULGE P48 200	
030	3042528-0000		2	CARRIER	
050	2964541-0000		2	SHAFT	
060	2916179-0000		1	SHAFT	
100	3042521-0000		1	STOP	
200	312109-0374		2	SCREW, M6S ISO 4017 M6X30 A4 80	
230	312155-0287		4	SCREW DIN 7991 MF6S M4X8 A4 70	
TPA 0250SQ (See drawing on page: 4-82)					
010	2964391-0000		1	VOLUME FLAP	
020	1350959-0000		2	VOLUME BULGE P48 250	
030	3042528-0000		2	CARRIER	
050	2964542-0000		2	SHAFT	
060	2916179-0000		1	SHAFT	
100	3042521-0000		1	STOP	
200	312109-0374		2	SCREW, M6S ISO 4017 M6X30 A4 80	
230	312155-0287		4	SCREW DIN 7991 MF6S M4X8 A4 70	
TPA 0330SQ (See drawing on page: 4-78)					
010	3003477-0000		1	VOLUME FLAP	
020	3003862-0000		2	VOLUME BULGE	
030	3002894-0000		1	CARRIER	
035	3002891-0000		1	CARRIER	
050	3002893-0000		1	SHAFT	
060	3003860-0000		1	SHAFT	
090	3003863-0000		6	VOLUME SHIM	
100	3007781-0000		1	STOP	
200	312109-0335		2	SCREW, M6S ISO 4017 M5X30 A4 80	
230	312105-0328		2	SCREW M6S ISO 4017 M5X14 A4 80	
400	315105-0146		2	WASHER PLAIN, 5,3X10X1 A4 BRB	
Common Parts					
040	3022273-0000		2	SCREW	
070	2914730-0000		2	ROLLER	
110	2905199-0000		2	HOLDER	
240	312318-0320		2	SET SCREW, CUP END ISO4029 M5X5 A4	
260	312812-0316		2	HEXAGON NUT, NY-LOCK M6 A4 80	
270	312812-0314		2	HEXAGON NUT, NY-LOCK M5 A4 80	

Machine Type | Group Description | Used-In | Group Number | Page No

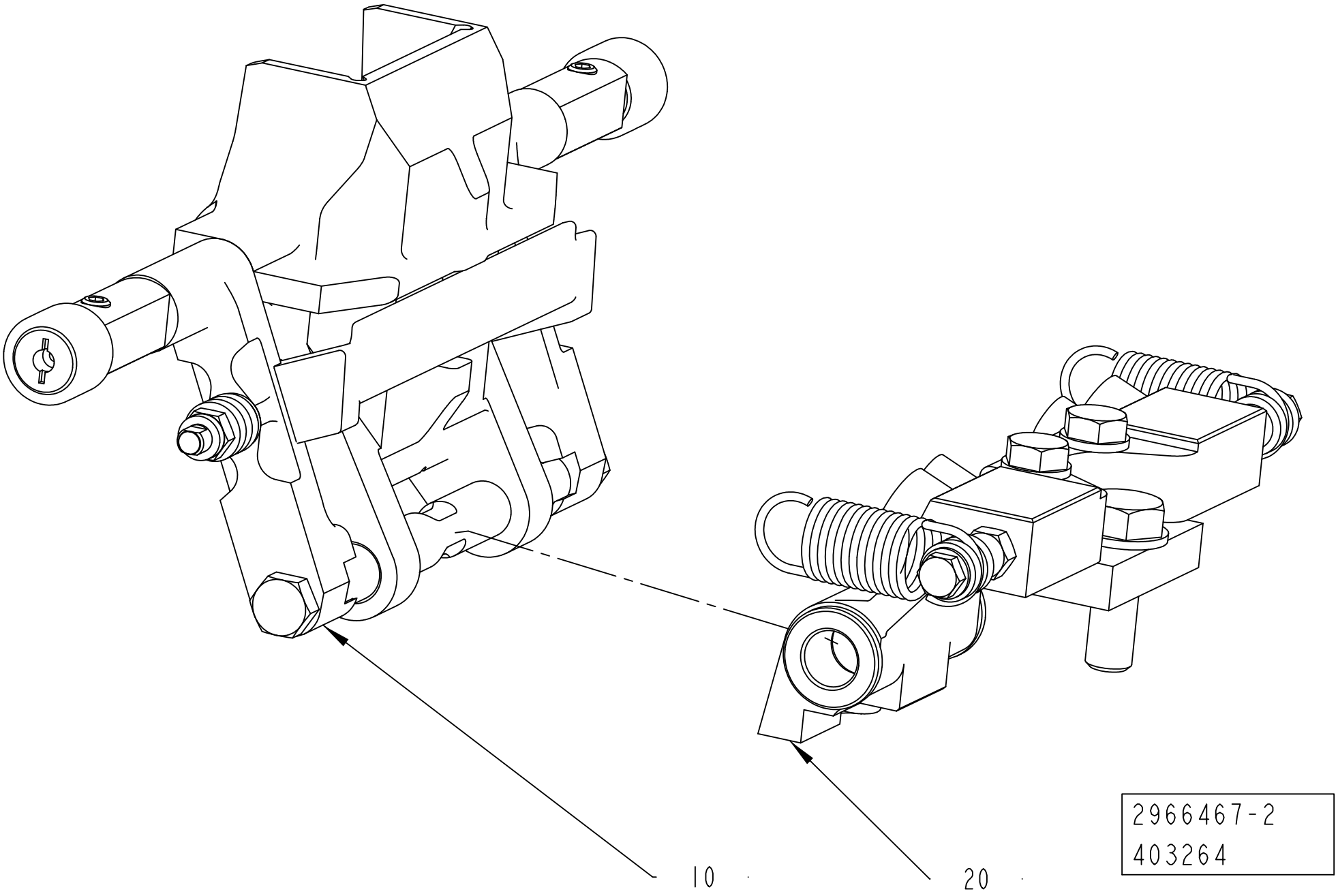
10
20
2966467-2
403264

ECM: 509353 - 20111001
Group number: 2966467-0200
Assembly Drawing: 2966467-2_1_AA

Pos	Part No	UN	Qty	Description	Page No
TBA 0160S					
10	2869207-0200		1	VOLUME FLAP	**4-55, 4-57, 4-59, 4-61, 4-63**
TBA 0200E					
10	2907728-0200		1	VOLUME FLAP	**4-79, 4-81, 4-83, 4-85**
TBA 0200S HI					
10	2869207-0200		1	VOLUME FLAP	**4-55, 4-57, 4-59, 4-61, 4-63**
TBA 0200S NOHI					
10	2869207-0200		1	VOLUME FLAP	**4-55, 4-57, 4-59, 4-61, 4-63**
TBA 0200SQ					
10	2869207-0200		1	VOLUME FLAP	**4-55, 4-57, 4-59, 4-61, 4-63**
TBA 0250SQ					
10	2869207-0200		1	VOLUME FLAP	**4-55, 4-57, 4-59, 4-61, 4-63**
TBA 0284B					
10	2869207-0200		1	VOLUME FLAP	**4-55, 4-57, 4-59, 4-61, 4-63**
TBA 0300S					
10	2869207-0200		1	VOLUME FLAP	**4-55, 4-57, 4-59, 4-61, 4-63**
TBA 0375S					
10	2869207-0200		1	VOLUME FLAP	**4-55, 4-57, 4-59, 4-61, 4-63**
TPA 0200SQ					
10	2907728-0200		1	VOLUME FLAP	**4-79, 4-81, 4-83, 4-85**
TPA 0250SQ					
10	2907728-0200		1	VOLUME FLAP	**4-79, 4-81, 4-83, 4-85**
TPA 0330SQ					
10	2907728-0200		1	VOLUME FLAP	**4-79, 4-81, 4-83, 4-85**
Common Parts					
20	2966468-0200		1	SHOCK ABSORBER	**4-89**

Pos	Part No	UN	Qty	Description	Page No

Machine Type | Group Description | Used-In | Group Number | Page No

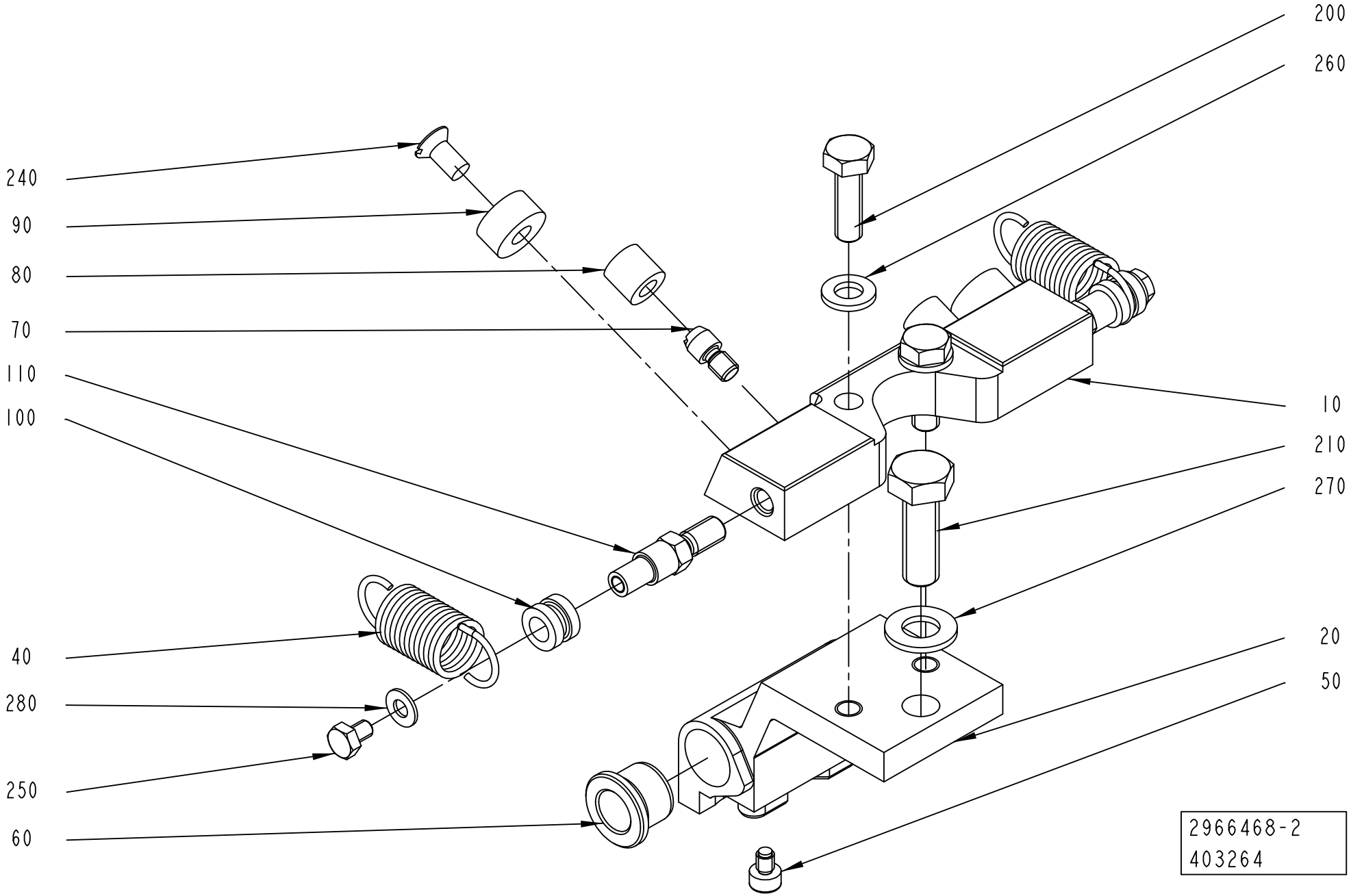
200
260
240
90
80
70
110
100
10
210
270
40
280
250
60
20
50
2966468-2
403264

ECM: 521047 - 20120101
Group number: 2966468-0200
Assembly Drawing: 2966468-2_1_AA

Pos	Part No	UN	Qty	Description	Page No
TBA 0160S, TBA 0200S					
020	3022267-0003		1	HOLDER	
050	3022268-0000		1	SCREW	
060	2532544-0000		2	BUSHING	
090	2869195-0000		2	STOP	
TBA 0200E					
020	3097404-0003		1	HOLDER	
050	2933520-0000		1	SCREW	
060	3097403-0000		2	BUSHING	
090	3133957-0000		2	STOP	
TBA 0200SQ, TBA 0250SQ					
020	2976830-0003		1	HOLDER	
050	2966463-0000		1	SCREW	
060	2532544-0000		2	BUSHING	
090	2869195-0000		2	STOP	
TBA 0284B, TBA 0300S					
020	3010750-0003		1	HOLDER	
050	3013566-0000		1	SCREW	
060	2532544-0000		2	BUSHING	
090	2869195-0000		2	STOP	
TBA 0375S					
020	3067247-0003		1	HOLDER	
050	2966463-0000		1	SCREW	
060	2532544-0000		2	BUSHING	
090	2869195-0000		2	STOP	
TPA 0200SQ					
020	2959957-0003		1	HOLDER	
050	2966463-0000		1	SCREW	
060	2532544-0000		2	BUSHING	
090	2869195-0000		2	STOP	
TPA 0250SQ					
020	2965109-0003		1	HOLDER	
050	2966463-0000		1	SCREW	
060	2532544-0000		2	BUSHING	
090	2869195-0000		2	STOP	
TPA 0330SQ					
020	3002890-0003		1	HOLDER	
050	3003861-0000		1	SCREW	
060	2810394-0000		2	BUSHING	
090	2869195-0000		2	STOP	
Common Parts					
010	3018882-0000		1	SUPPORT	
040	3040850-0000		2	TENSION SPRING	
070	2869193-0000		2	PIN	
080	2869194-0000		2	DAMPER	
100	2905199-0000		2	HOLDER	
110	3022269-0000		2	SCREW	
200	312105-0370		2	SCREW, M6S ISO 4017 M6X20 A4 80	
210	312105-0453		1	SCREW, M6S ISO 4017 M8X25 A4 80	
240	312145-0325		2	SCREW ISO 2009 MFS M5X10 A4	
250	312105-0285		2	SCREW, M6S ISO 4017 M4X6 A4 70	
260	315105-0153		2	WASHER PLAIN, 6,4X12X1,5 A4 BRB	
270	315105-0165		1	WASHER PLAIN, 8,4X16X1,6 A4 BRB	
280	315106-0136		2	WASHER PLAIN, M4 ISO7089-4-200 HV A4	

Machine Type	Group Description	Used-In	Group Number	Page No

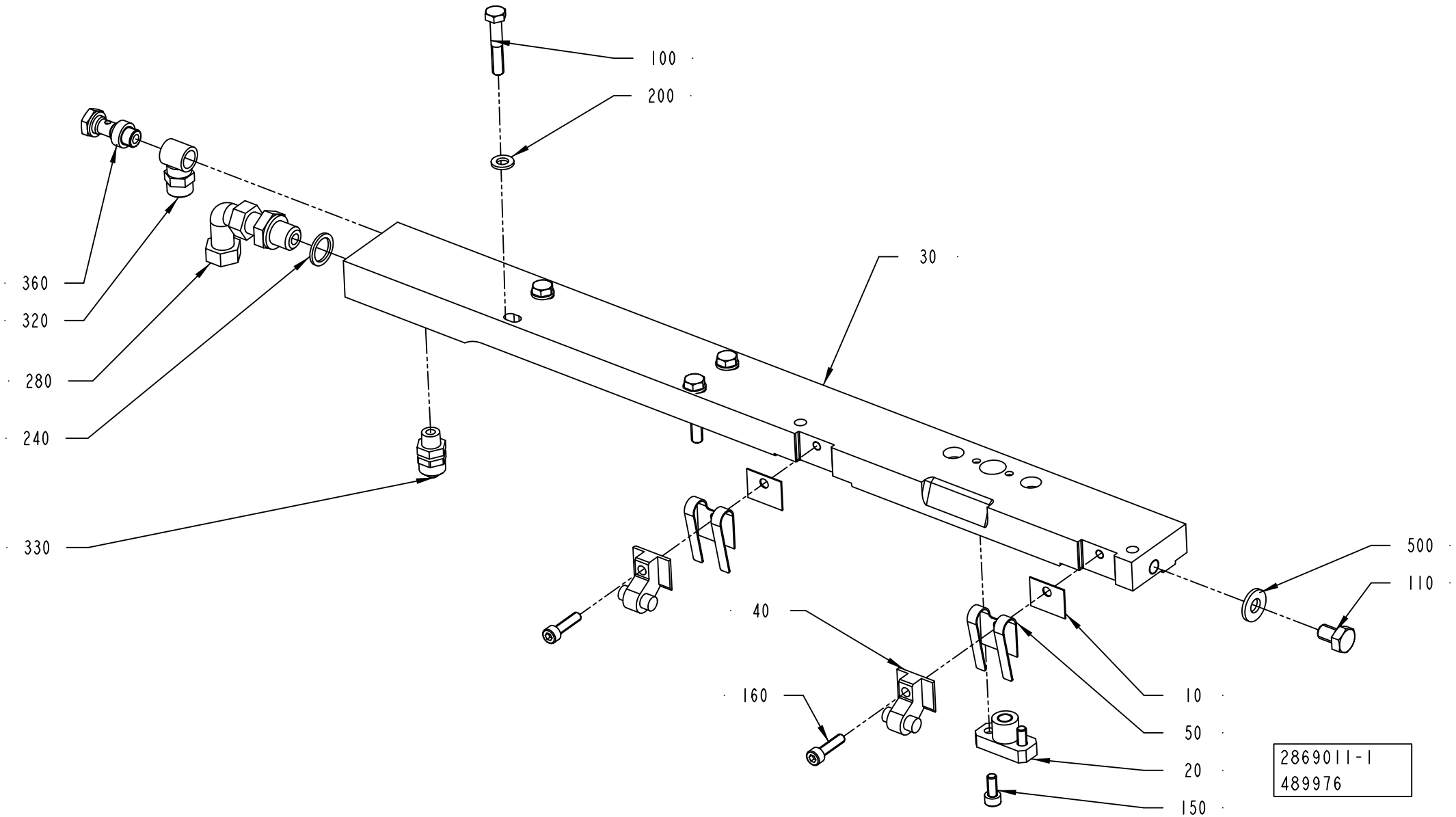
100
200
30
360
320
280
240
330
500
110
40
160
10
50
20
150
2869011-1
489976

Pos	Part No	UN	Qty	Description	Page No
TBA 0100B, TBA 0125S, TBA 0080S (See drawing on page: 4-90)					
020	2916871-0000		1	BLOCK	
030	2916870-0000		1	CARRIER	
150	312115-0325		2	SCREW ISO4762 M5X10 A4 80	
TBA 0160S, TBA 0200M, TBA 0200B, TBA 0200S, TBA 0250S, TBA 0284B, TBA 0250B, TBA 0300S, TBA 0330S, TPA 0125SQ (See drawing on page: 4-90)					
020	2869196-0000		1	BLOCK	
030	2869205-0000		1	CARRIER	
150	312115-0327		2	SCREW ISO4762 M5X12 A4 80	
TBA 0200SQ, TBA 0375S, TPA 0330SQ, TPA 0250SQ, TPA 0200SQ, TBA 0250SQ, TBA 0200E (See drawing on page: 4-92)					
020	2869196-0000		1	BLOCK	
030	2962051-0000		1	CARRIER	
150	312115-0327		2	SCREW ISO4762 M5X12 A4 80	
180	311103-0267		1	PARALLEL PIN ISO 2338 4M6X10 A1	
Common Parts					
010	2837094-0000		2	SHIM	
040	3167562-0000		2	SUPPORT	
050	929391-0000		2	SPRING	
100	312105-0376		4	SCREW, M6S ISO 4014 M6X35 A4 80	
110	312105-0447		1	SCREW, M6S ISO 4017 M8X12 A4 80	
160	312115-0331		2	SCREW ISO4762 M5X20 A4 80	
200	315105-0153		4	WASHER PLAIN, 6,4X12X1,5 A4 BRB	
240	315237-0110		1	WASHER,PL.RND.AL.13,5/18,H=1,5	
280	342738-0208		1	ADJUSTABLE ELBOW CONNECTION 8-G1/4	
320	342980-0121		1	HOSE FITTING, BANJO RING L PO G1/8 8/6	
330	342920-0121		1	STRAIGHT COUPLING, EXT.THREAD 8/6-R1/8	
360	342980-0303		1	BANJO-HOLLOW BOLT COUPL,EXT.THR.01-G1/8	
500	90005-0052		1	WASHER,PL.RND.CU.8/18 H=2	

Pos	Part No	UN	Qty	Description	Page No

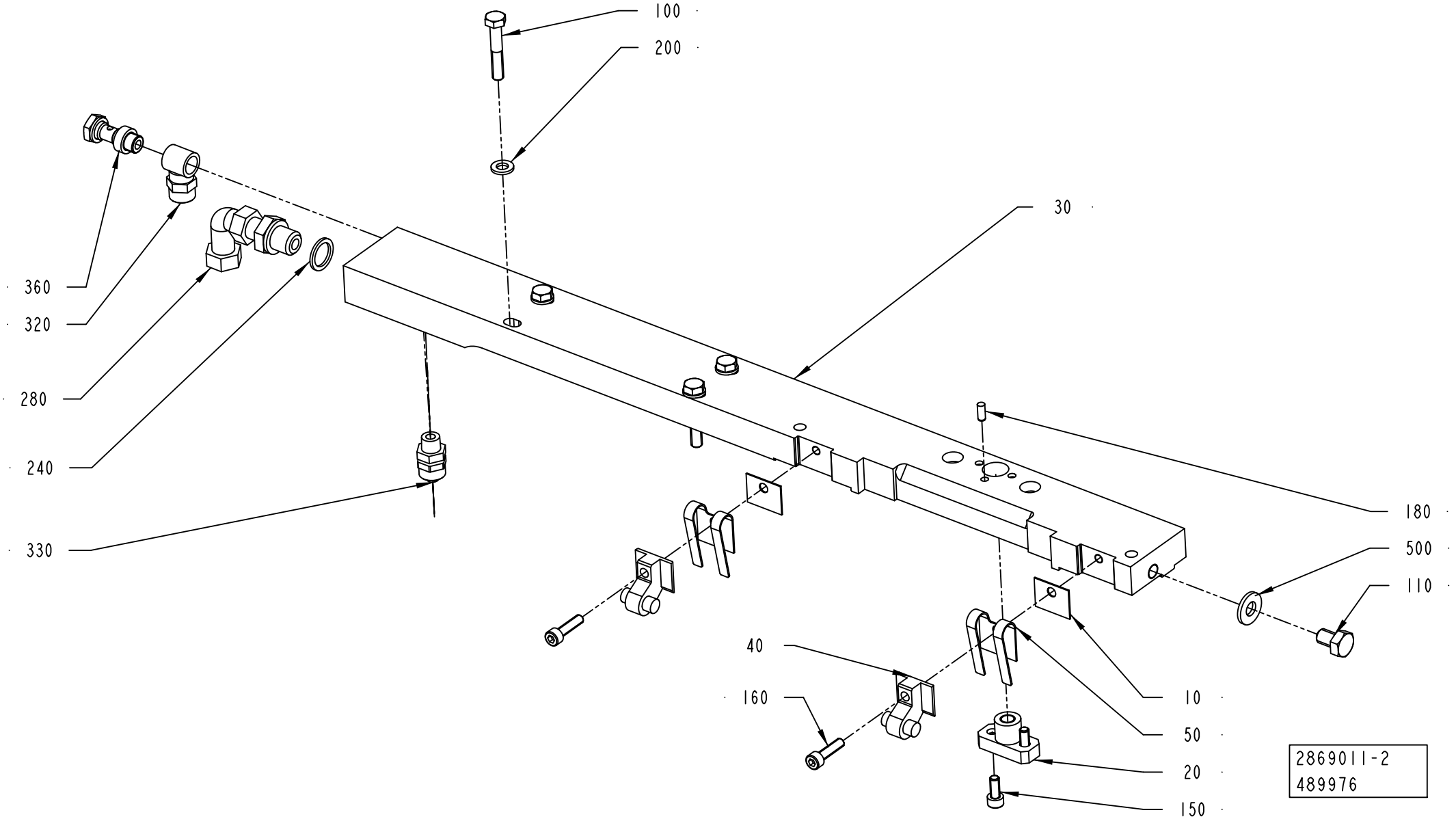
100
200
30
360
320
280
240
330
180
500
110
40
160
10
50
20
150
2869011-2
489976

ECM: 498656 - 20110701
Group number: 2869011-0100
Assembly Drawing: 2869011-2_1_AB

This list covers pages from 4-90 to 4-93

Pos	Part No	UN	Qty	Description	Page No
TBA 0100B, TBA 0125S, TBA 0080S (See drawing on page: 4-90)					
020	2916871-0000		1	BLOCK	
030	2916870-0000		1	CARRIER	
150	312115-0325		2	SCREW ISO4762 M5X10 A4 80	
TBA 0160S, TBA 0200M, TBA 0200B, TBA 0200S, TBA 0250S, TBA 0284B, TBA 0250B, TBA 0300S, TBA 0330S, TPA 0125SQ (See drawing on page: 4-90)					
020	2869196-0000		1	BLOCK	
030	2869205-0000		1	CARRIER	
150	312115-0327		2	SCREW ISO4762 M5X12 A4 80	
TBA 0200SQ, TBA 0375S, TPA 0330SQ, TPA 0250SQ, TPA 0200SQ, TBA 0250SQ, TBA 0200E (See drawing on page: 4-92)					
020	2869196-0000		1	BLOCK	
030	2962051-0000		1	CARRIER	
150	312115-0327		2	SCREW ISO4762 M5X12 A4 80	
180	311103-0267		1	PARALLEL PIN ISO 2338 4M6X10 A1	
Common Parts					
010	2837094-0000		2	SHIM	
040	3167562-0000		2	SUPPORT	
050	929391-0000		2	SPRING	
100	312105-0376		4	SCREW, M6S ISO 4014 M6X35 A4 80	
110	312105-0447		1	SCREW, M6S ISO 4017 M8X12 A4 80	
160	312115-0331		2	SCREW ISO4762 M5X20 A4 80	
200	315105-0153		4	WASHER PLAIN, 6,4X12X1,5 A4 BRB	
240	315237-0110		1	WASHER,PL.RND.AL.13,5/18,H=1,5	
280	342738-0208		1	ADJUSTABLE ELBOW CONNECTION 8-G1/4	
320	342980-0121		1	HOSE FITTING, BANJO RING L PO G1/8 8/6	
330	342920-0121		1	STRAIGHT COUPLING, EXT.THREAD 8/6-R1/8	
360	342980-0303		1	BANJO-HOLLOW BOLT COUPL,EXT.THR.01-G1/8	
500	90005-0052		1	WASHER,PL.RND.CU.8/18 H=2	

Pos	Part No	UN	Qty	Description	Page No

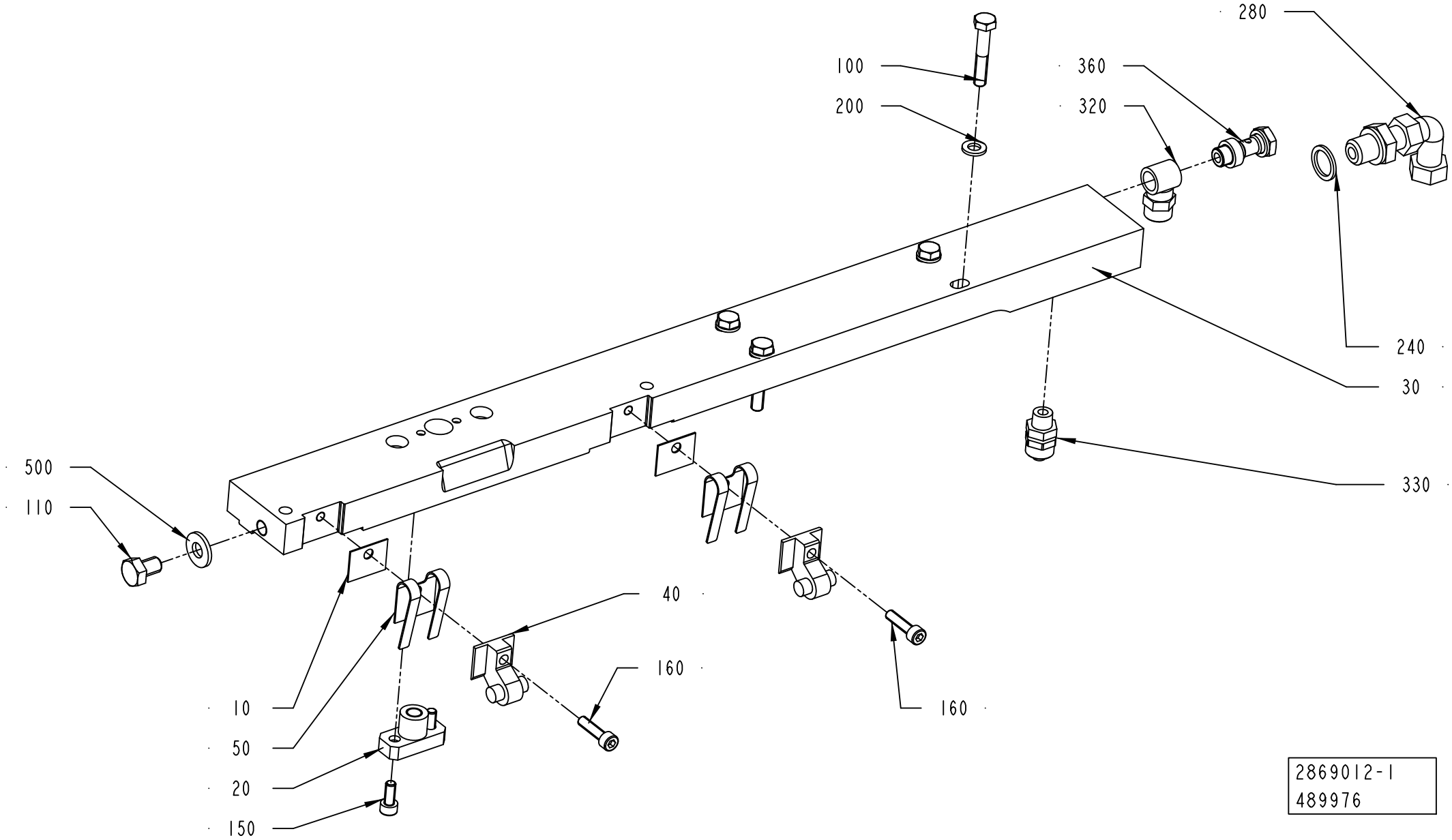
280
100
360
200
320
240
30
500
330
110
40
160
10
160
50
20
150
2869012-1
489976

ECM: 498655 - 20110701
Group number: 2869012-0100
Assembly Drawing: 2869012-1_1_AB

This list covers pages from 4-94 to 4-97

Pos	Part No	UN	Qty	Description	Page No
TBA 0100B, TBA 0125S, TBA 0080S (See drawing on page: 4-94)					
020	2916871-0000		1	BLOCK	
030	2916872-0000		1	CARRIER	
150	312115-0325		2	SCREW ISO4762 M5X10 A4 80	
TBA 0160S, TBA 0200M, TBA 0200B, TBA 0200S, TBA 0250S, TBA 0284B, TBA 0250B, TBA 0300S, TBA 0330S, TPA 0125SQ (See drawing on page: 4-94)					
020	2869196-0000		1	BLOCK	
030	2869204-0000		1	CARRIER	
150	312115-0327		2	SCREW ISO4762 M5X12 A4 80	
TBA 0200SQ, TBA 0375S, TPA 0330SQ, TPA 0250SQ, TPA 0200SQ, TBA 0250SQ, TBA 0200E (See drawing on page: 4-96)					
020	2869196-0000		1	BLOCK	
030	2962050-0000		1	CARRIER	
150	312115-0327		2	SCREW ISO4762 M5X12 A4 80	
180	311103-0267		1	PARALLEL PIN ISO 2338 4M6X10 A1	
Common Parts					
010	2837094-0000		2	SHIM	
040	3167562-0000		2	SUPPORT	
050	929391-0000		2	SPRING	
100	312105-0376		4	SCREW, M6S ISO 4014 M6X35 A4 80	
110	312105-0447		1	SCREW, M6S ISO 4017 M8X12 A4 80	
160	312115-0331		2	SCREW ISO4762 M5X20 A4 80	
200	315105-0153		4	WASHER PLAIN, 6,4X12X1,5 A4 BRB	
240	315237-0110		1	WASHER,PL.RND.AL.13,5/18,H=1,5	
280	342738-0208		1	ADJUSTABLE ELBOW CONNECTION 8-G1/4	
320	342980-0121		1	HOSE FITTING, BANJO RING L PO G1/8 8/6	
330	342920-0121		1	STRAIGHT COUPLING, EXT.THREAD 8/6-R1/8	
360	342980-0303		1	BANJO-HOLLOW BOLT COUPL,EXT.THR.01-G1/8	
500	90005-0052		1	WASHER,PL.RND.CU.8/18 H=2	

Pos	Part No	UN	Qty	Description	Page No

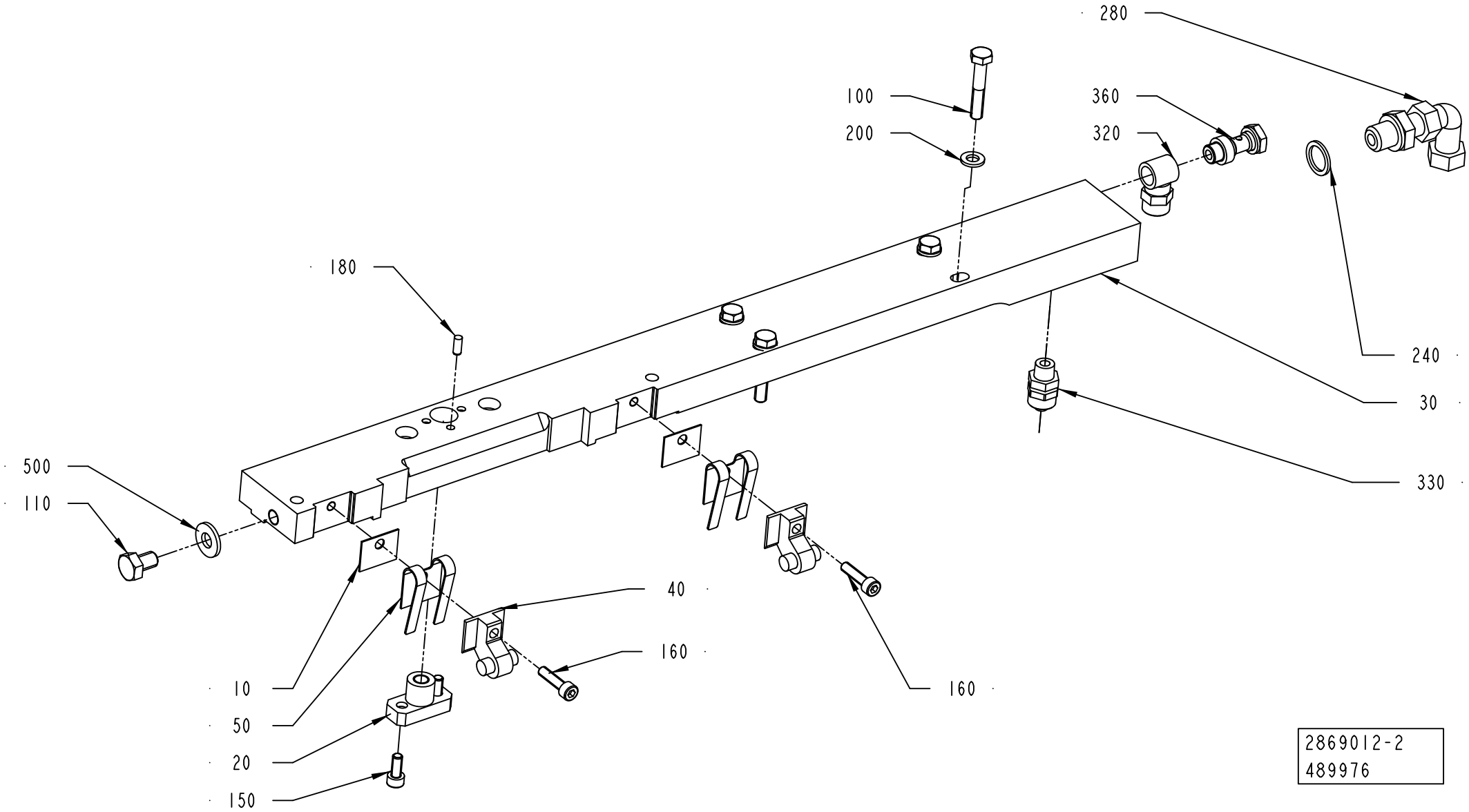
280
100
200
360
320
180
240
30
500
110
330
40
160
10
50
20
150
160
2869012-2
489976

Pos	Part No	UN	Qty	Description	Page No
TBA 0100B, TBA 0125S, TBA 0080S (See drawing on page: 4-94)					
020	2916871-0000		1	BLOCK	
030	2916872-0000		1	CARRIER	
150	312115-0325		2	SCREW ISO4762 M5X10 A4 80	
TBA 0160S, TBA 0200M, TBA 0200B, TBA 0200S, TBA 0250S, TBA 0284B, TBA 0250B, TBA 0300S, TBA 0330S, TPA 0125SQ (See drawing on page: 4-94)					
020	2869196-0000		1	BLOCK	
030	2869204-0000		1	CARRIER	
150	312115-0327		2	SCREW ISO4762 M5X12 A4 80	
TBA 0200SQ, TBA 0375S, TPA 0330SQ, TPA 0250SQ, TPA 0200SQ, TBA 0250SQ, TBA 0200E (See drawing on page: 4-96)					
020	2869196-0000		1	BLOCK	
030	2962050-0000		1	CARRIER	
150	312115-0327		2	SCREW ISO4762 M5X12 A4 80	
180	311103-0267		1	PARALLEL PIN ISO 2338 4M6X10 A1	
Common Parts					
010	2837094-0000		2	SHIM	
040	3167562-0000		2	SUPPORT	
050	929391-0000		2	SPRING	
100	312105-0376		4	SCREW, M6S ISO 4014 M6X35 A4 80	
110	312105-0447		1	SCREW, M6S ISO 4017 M8X12 A4 80	
160	312115-0331		2	SCREW ISO4762 M5X20 A4 80	
200	315105-0153		4	WASHER PLAIN, 6,4X12X1,5 A4 BRB	
240	315237-0110		1	WASHER,PL.RND.AL.13,5/18,H=1,5	
280	342738-0208		1	ADJUSTABLE ELBOW CONNECTION 8-G1/4	
320	342980-0121		1	HOSE FITTING, BANJO RING L PO G1/8 8/6	
330	342920-0121		1	STRAIGHT COUPLING, EXT.THREAD 8/6-R1/8	
360	342980-0303		1	BANJO-HOLLOW BOLT COUPL,EXT.THR.01-G1/8	
500	90005-0052		1	WASHER,PL.RND.CU.8/18 H=2	

Pos	Part No	UN	Qty	Description	Page No

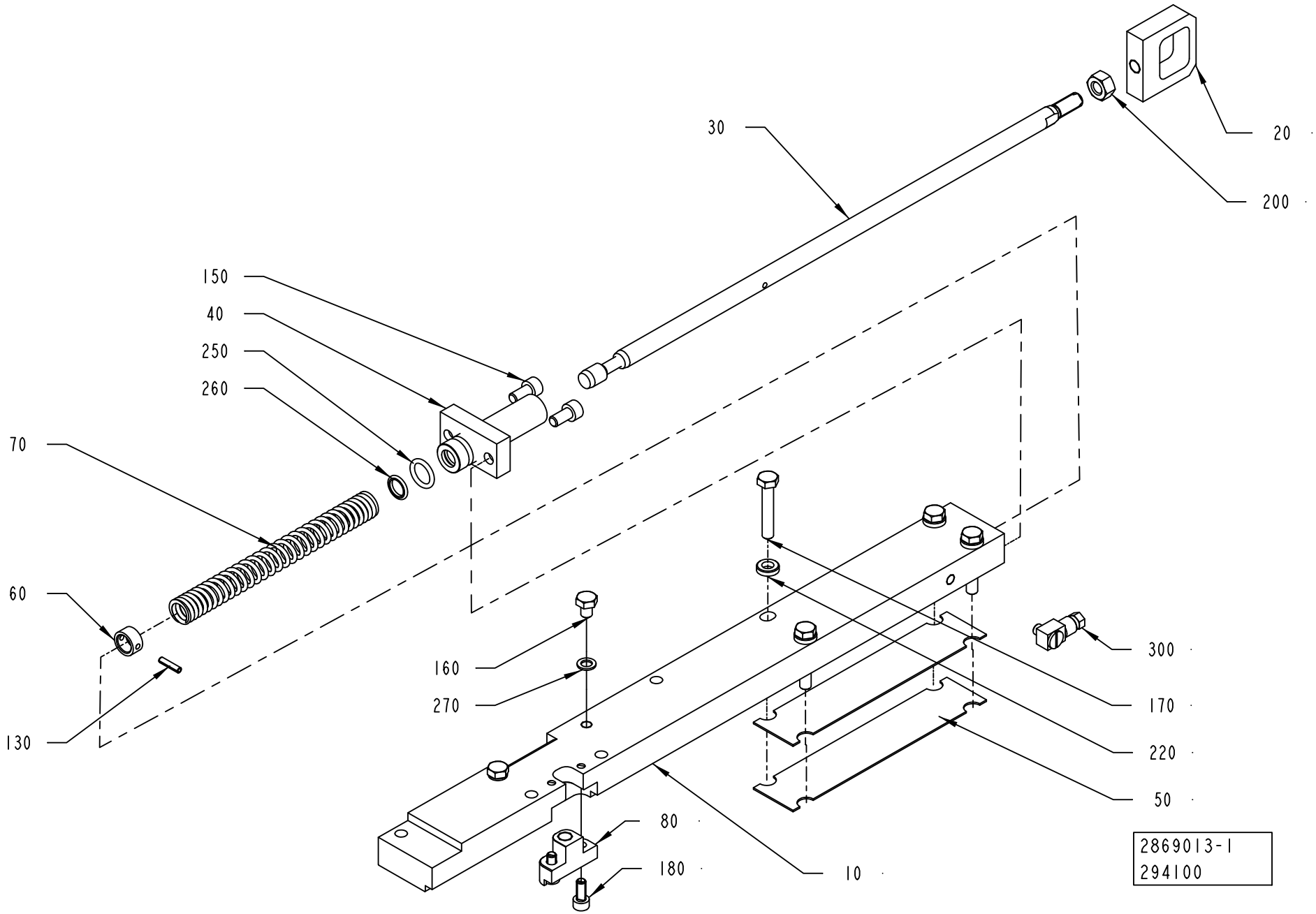
30
20
200
150
40
250
260
70
60
130
160
270
300
170
220
50
80
180
10
2869013-1
294100

ECM: 521048 - 20120101
Group number: 2869013-0100
Assembly Drawing: 2869013-1_1_AA

This list covers pages from 4-98 to 4-101

Pos	Part No	UN	Qty	Description	Page No
TBA 0100B, TBA 0125S, TBA 0080S (See drawing on page: 4-98)					
010	2916873-0000		1	CARRIER	
030	2818125-0000		1	OPERATING ROD	
080	2916875-0000		1	BLOCK	
160	312105-0362		2	SCREW, M6S ISO 4017 M6X8 A4 80	
180	312115-0325		2	SCREW ISO4762 M5X10 A4 80	
270	315237-0106		2	WASHER,PL.RND.AL.6/10,H=1	
TBA 0160S, TBA 0200M, TBA 0200B, TBA 0200S, TBA 0250S, TBA 0284B, TBA 0250B, TBA 0300S, TBA 0330S (See drawing on page: 4-98)					
010	2869200-0000		1	CARRIER	
030	2818125-0000		1	OPERATING ROD	
080	2869199-0000		1	BLOCK	
160	312105-0362		2	SCREW, M6S ISO 4017 M6X8 A4 80	
180	312115-0327		2	SCREW ISO4762 M5X12 A4 80	
270	315237-0106		2	WASHER,PL.RND.AL.6/10,H=1	
TBA 0200E (See drawing on page: 4-100)					
010	3013513-0000		1	CARRIER	
030	3199906-0000		1	OPERATING ROD	
080	2869199-0000		1	BLOCK	
120	311103-0267		1	PARALLEL PIN ISO 2338 4M6X10 A1	
160	312105-0362		2	SCREW, M6S ISO 4017 M6X8 A4 80	
180	312115-0327		2	SCREW ISO4762 M5X12 A4 80	
270	315237-0106		2	WASHER,PL.RND.AL.6/10,H=1	
TBA 0200SQ, TBA 0375S, TPA 0330SQ, TPA 0250SQ, TPA 0200SQ, TBA 0250SQ (See drawing on page: 4-100)					
010	2962052-0000		1	CARRIER	
030	2818125-0000		1	OPERATING ROD	
080	2964567-0000		1	BLOCK	
120	311103-0267		1	PARALLEL PIN ISO 2338 4M6X10 A1	
160	312105-0323		2	SCREW, M6S ISO 4017 M5X8 A4 80	
180	312115-0327		2	SCREW ISO4762 M5X12 A4 80	
270	315237-0108		2	WASHER,PL.RND.AL.5,2/8,H=0,5	
TPA 0125SQ (See drawing on page: 4-98)					
010	2869200-0000		1	CARRIER	
030	2906017-0000		1	OPERATING ROD	
080	2869199-0000		1	BLOCK	
160	312105-0362		2	SCREW, M6S ISO 4017 M6X8 A4 80	
180	312115-0327		2	SCREW ISO4762 M5X12 A4 80	
270	315237-0106		2	WASHER,PL.RND.AL.6/10,H=1	
Common Parts					
020	256626-0000		1	EAR	
040	2818126-0000		1	BEARING PLATE	
050	257362-0000		2	LACE	
060	255801-0000		1	RETAINING RING	
070	255742-0000		1	COMPRESSION SPRING	
130	311111-0207		1	SPRING PIN ISO 8752 3X14-ST	
150	312115-0366		2	SCREW ISO4762 M6X12 A4 80	
170	312105-0376		4	SCREW, M6S ISO 4014 M6X35 A4 80	
200	312605-0318		1	HEXAGON NUT, M6M M8 A280	
220	315115-0153		4	WASHER PLAIN, TBRB 6,4/12 H=3	
250	315202-0265		1	O-RING 12,3X2,4 MM	
260	90091-0091		1	ROD SEAL 10X14X1,7 MM	
300	90134-0058		1	CONNECTION	

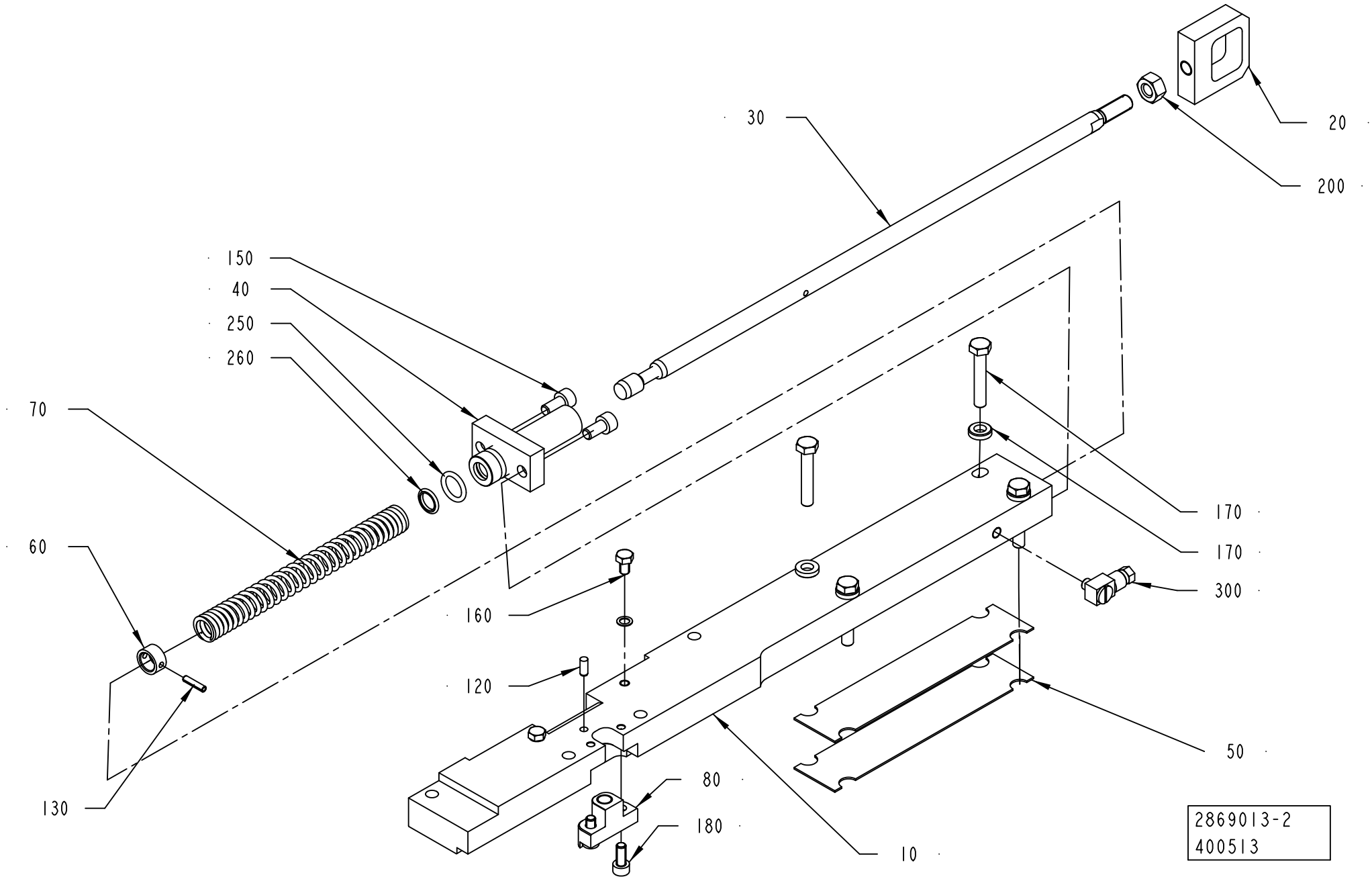
30
20
200
150
40
250
260
70
60
130
160
120
80
180
10
170
170
300
50
2869013-2
400513

ECM: 521048 - 20120101
Group number: 2869013-0100
Assembly Drawing: 2869013-2_1_AA

This list covers pages from 4-98 to 4-101

Pos	Part No	UN	Qty	Description	Page No
TBA 0100B, TBA 0125S, TBA 0080S (See drawing on page: 4-98)					
010	2916873-0000		1	CARRIER	
030	2818125-0000		1	OPERATING ROD	
080	2916875-0000		1	BLOCK	
160	312105-0362		2	SCREW, M6S ISO 4017 M6X8 A4 80	
180	312115-0325		2	SCREW ISO4762 M5X10 A4 80	
270	315237-0106		2	WASHER,PL.RND.AL.6/10,H=1	
TBA 0160S, TBA 0200M, TBA 0200B, TBA 0200S, TBA 0250S, TBA 0284B, TBA 0250B, TBA 0300S, TBA 0330S (See drawing on page: 4-98)					
010	2869200-0000		1	CARRIER	
030	2818125-0000		1	OPERATING ROD	
080	2869199-0000		1	BLOCK	
160	312105-0362		2	SCREW, M6S ISO 4017 M6X8 A4 80	
180	312115-0327		2	SCREW ISO4762 M5X12 A4 80	
270	315237-0106		2	WASHER,PL.RND.AL.6/10,H=1	
TBA 0200E (See drawing on page: 4-100)					
010	3013513-0000		1	CARRIER	
030	3199906-0000		1	OPERATING ROD	
080	2869199-0000		1	BLOCK	
120	311103-0267		1	PARALLEL PIN ISO 2338 4M6X10 A1	
160	312105-0362		2	SCREW, M6S ISO 4017 M6X8 A4 80	
180	312115-0327		2	SCREW ISO4762 M5X12 A4 80	
270	315237-0106		2	WASHER,PL.RND.AL.6/10,H=1	
TBA 0200SQ, TBA 0375S, TPA 0330SQ, TPA 0250SQ, TPA 0200SQ, TBA 0250SQ (See drawing on page: 4-100)					
010	2962052-0000		1	CARRIER	
030	2818125-0000		1	OPERATING ROD	
080	2964567-0000		1	BLOCK	
120	311103-0267		1	PARALLEL PIN ISO 2338 4M6X10 A1	
160	312105-0323		2	SCREW, M6S ISO 4017 M5X8 A4 80	
180	312115-0327		2	SCREW ISO4762 M5X12 A4 80	
270	315237-0108		2	WASHER,PL.RND.AL.5,2/8,H=0,5	
TPA 0125SQ (See drawing on page: 4-98)					
010	2869200-0000		1	CARRIER	
030	2906017-0000		1	OPERATING ROD	
080	2869199-0000		1	BLOCK	
160	312105-0362		2	SCREW, M6S ISO 4017 M6X8 A4 80	
180	312115-0327		2	SCREW ISO4762 M5X12 A4 80	
270	315237-0106		2	WASHER,PL.RND.AL.6/10,H=1	
Common Parts					
020	256626-0000		1	EAR	
040	2818126-0000		1	BEARING PLATE	
050	257362-0000		2	LACE	
060	255801-0000		1	RETAINING RING	
070	255742-0000		1	COMPRESSION SPRING	
130	311111-0207		1	SPRING PIN ISO 8752 3X14-ST	
150	312115-0366		2	SCREW ISO4762 M6X12 A4 80	
170	312105-0376		4	SCREW, M6S ISO 4014 M6X35 A4 80	
200	312605-0318		1	HEXAGON NUT, M6M M8 A280	
220	315115-0153		4	WASHER PLAIN, TBRB 6,4/12 H=3	
250	315202-0265		1	O-RING 12,3X2,4 MM	
260	90091-0091		1	ROD SEAL 10X14X1,7 MM	
300	90134-0058		1	CONNECTION	

Machine Type | Group Description | Used-In | Group Number | Page No

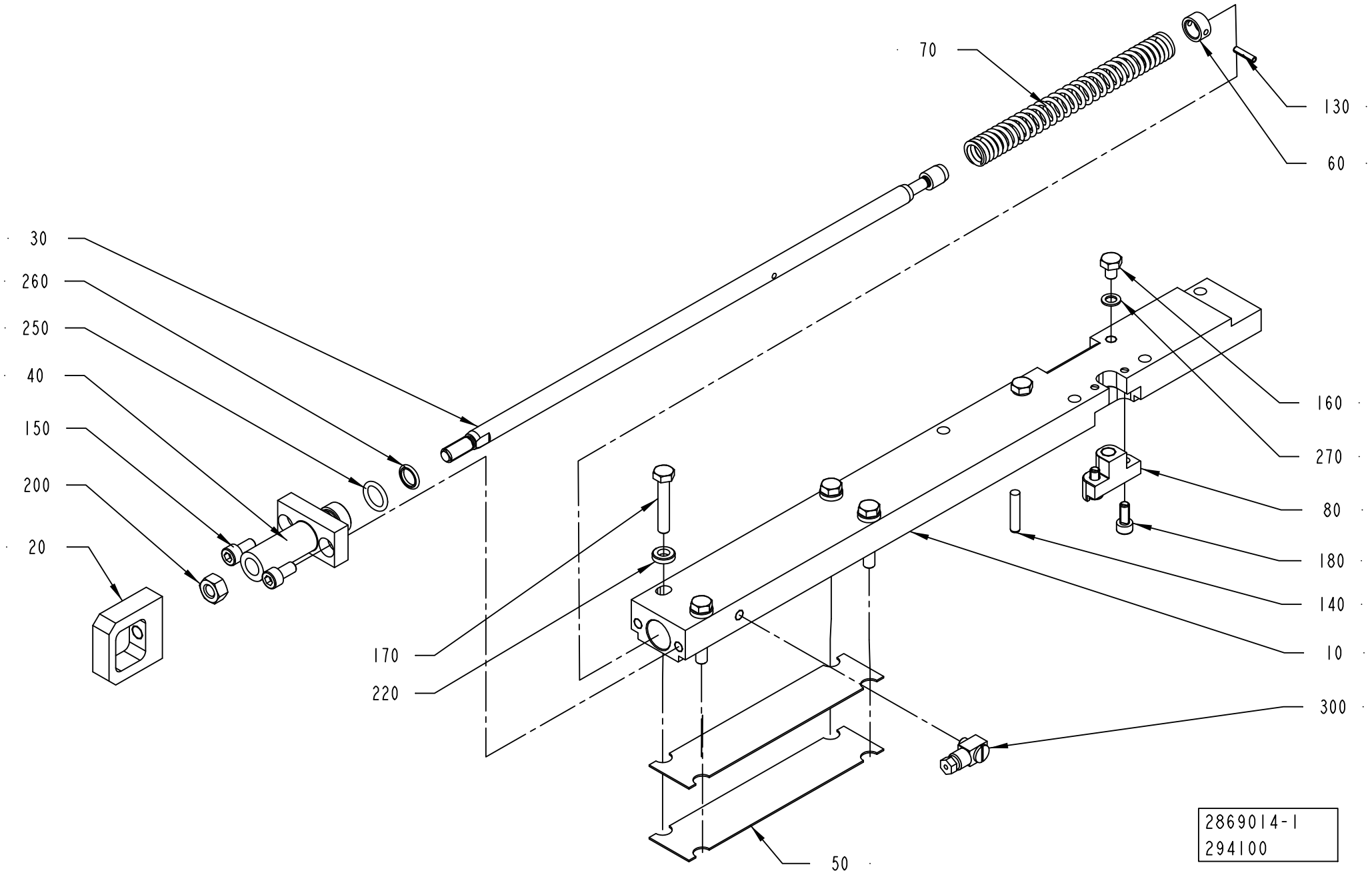
70
130
60
30
260
250
40
150
200
20
160
270
80
180
140
10
170
220
300
50
2869014-1
294100

ECM: 522425 - 20120101
Group number: 2869014-0100
Assembly Drawing: 2869014-1_1_AA

This list covers pages from 4-102 to 4-105

Pos	Part No	UN	Qty	Description	Page No
TBA 0100B, TBA 0125S, TBA 0080S (See drawing on page: 4-102)					
010	2916876-0000		1	CARRIER	
030	2818125-0000		1	OPERATING ROD	
080	2916875-0000		1	BLOCK	
160	312105-0362		2	SCREW, M6S ISO 4017 M6X8 A4 80	
180	312115-0325		2	SCREW ISO4762 M5X10 A4 80	
270	315237-0106		2	WASHER,PL.RND.AL.6/10,H=1	
TBA 0160S, TBA 0200M, TBA 0200B, TBA 0200S, TBA 0250S, TBA 0284B, TBA 0250B, TBA 0300S, TBA 0330S (See drawing on page: 4-102)					
010	2869203-0000		1	CARRIER	
030	2818125-0000		1	OPERATING ROD	
080	2869199-0000		1	BLOCK	
160	312105-0362		2	SCREW, M6S ISO 4017 M6X8 A4 80	
180	312115-0327		2	SCREW ISO4762 M5X12 A4 80	
270	315237-0106		2	WASHER,PL.RND.AL.6/10,H=1	
TBA 0200E (See drawing on page: 4-104)					
010	3013514-0000		1	CARRIER	
030	3199906-0000		1	OPERATING ROD	
080	2869199-0000		1	BLOCK	
120	311103-0267		1	PARALLEL PIN ISO 2338 4M6X10 A1	
160	312105-0362		2	SCREW, M6S ISO 4017 M6X8 A4 80	
180	312115-0327		2	SCREW ISO4762 M5X12 A4 80	
270	315237-0106		2	WASHER,PL.RND.AL.6/10,H=1	
TBA 0200SQ, TBA 0375S, TPA 0330SQ, TPA 0250SQ, TPA 0200SQ, TBA 0250SQ (See drawing on page: 4-104)					
010	2962053-0000		1	CARRIER	
030	2818125-0000		1	OPERATING ROD	
080	2964567-0000		1	BLOCK	
120	311103-0267		1	PARALLEL PIN ISO 2338 4M6X10 A1	
160	312105-0323		2	SCREW, M6S ISO 4017 M5X8 A4 80	
180	312115-0327		2	SCREW ISO4762 M5X12 A4 80	
270	315237-0108		2	WASHER,PL.RND.AL.5,2/8,H=0,5	
TPA 0125SQ (See drawing on page: 4-102)					
010	2869203-0000		1	CARRIER	
030	2906017-0000		1	OPERATING ROD	
080	2869199-0000		1	BLOCK	
160	312105-0362		2	SCREW, M6S ISO 4017 M6X8 A4 80	
180	312115-0327		2	SCREW ISO4762 M5X12 A4 80	
270	315237-0106		2	WASHER,PL.RND.AL.6/10,H=1	
Common Parts					
020	256626-0000		1	EAR	
040	2818126-0000		1	BEARING PLATE	
050	257362-0000		2	LACE	
060	255801-0000		1	RETAINING RING	
070	255742-0000		1	COMPRESSION SPRING	
130	311111-0207		1	SPRING PIN ISO 8752 3X14-ST	
150	312115-0366		2	SCREW ISO4762 M6X12 A4 80	
170	312105-0376		4	SCREW, M6S ISO 4014 M6X35 A4 80	
200	312605-0318		1	HEXAGON NUT, M6M M8 A280	
220	315115-0153		4	WASHER PLAIN, TBRB 6,4/12 H=3	
250	315202-0265		1	O-RING 12,3X2,4 MM	
260	90091-0091		1	ROD SEAL 10X14X1,7 MM	
300	90134-0058		1	CONNECTION	

Machine Type | Group Description | Used-In | Group Number | Page No

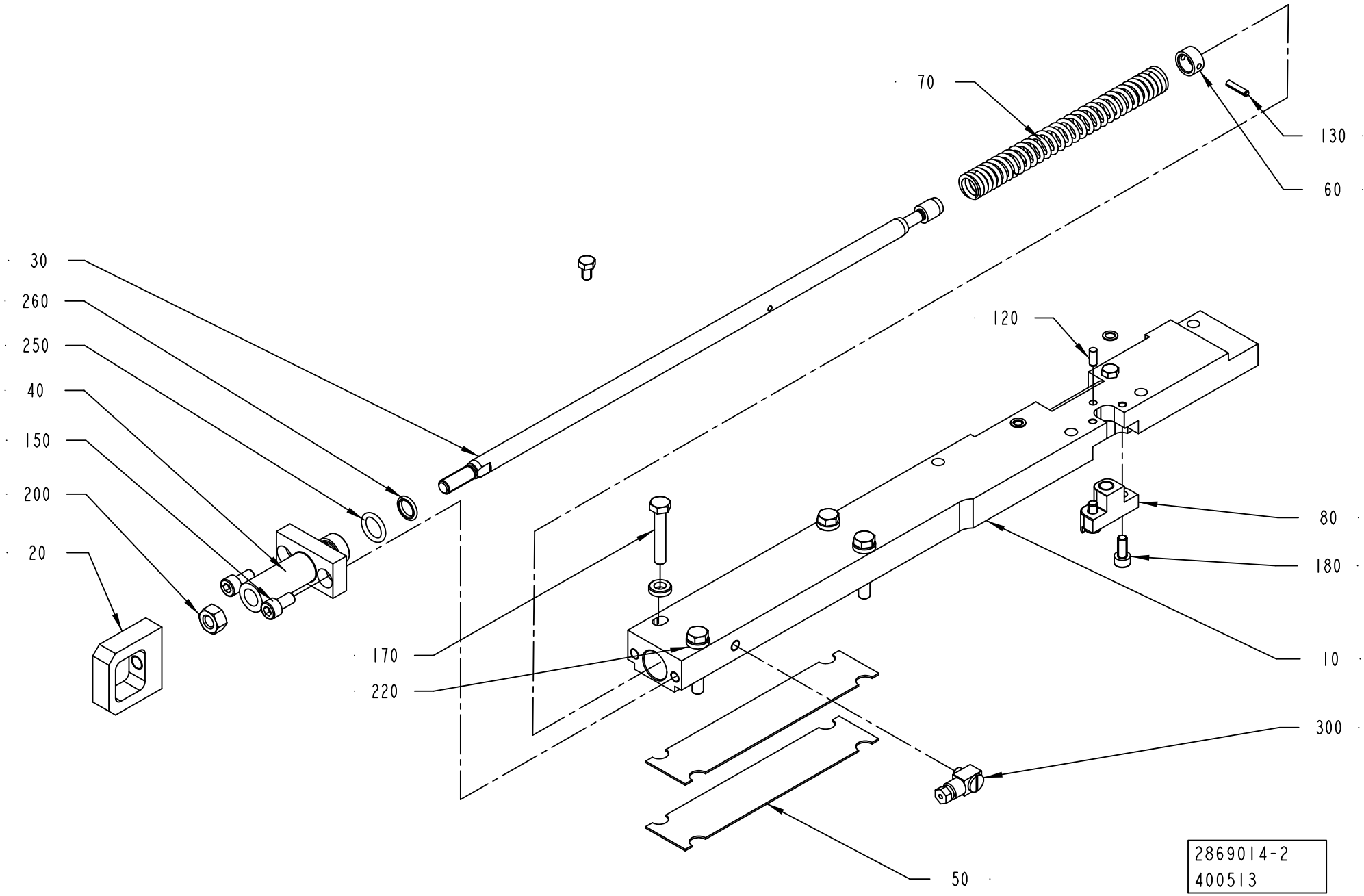
70
130
60
30
260
250
40
150
200
20
120
80
180
10
170
220
300
50
2869014-2
400513

ECM: 522425 - 20120101
Group number: 2869014-0100
Assembly Drawing: 2869014-2_1_AA

This list covers pages from 4-102 to 4-105

Pos	Part No	UN	Qty	Description	Page No
TBA 0100B, TBA 0125S, TBA 0080S (See drawing on page: 4-102)					
010	2916876-0000		1	CARRIER	
030	2818125-0000		1	OPERATING ROD	
080	2916875-0000		1	BLOCK	
160	312105-0362		2	SCREW, M6S ISO 4017 M6X8 A4 80	
180	312115-0325		2	SCREW ISO4762 M5X10 A4 80	
270	315237-0106		2	WASHER,PL.RND.AL.6/10,H=1	
TBA 0160S, TBA 0200M, TBA 0200B, TBA 0200S, TBA 0250S, TBA 0284B, TBA 0250B, TBA 0300S, TBA 0330S (See drawing on page: 4-102)					
010	2869203-0000		1	CARRIER	
030	2818125-0000		1	OPERATING ROD	
080	2869199-0000		1	BLOCK	
160	312105-0362		2	SCREW, M6S ISO 4017 M6X8 A4 80	
180	312115-0327		2	SCREW ISO4762 M5X12 A4 80	
270	315237-0106		2	WASHER,PL.RND.AL.6/10,H=1	
TBA 0200E (See drawing on page: 4-104)					
010	3013514-0000		1	CARRIER	
030	3199906-0000		1	OPERATING ROD	
080	2869199-0000		1	BLOCK	
120	311103-0267		1	PARALLEL PIN ISO 2338 4M6X10 A1	
160	312105-0362		2	SCREW, M6S ISO 4017 M6X8 A4 80	
180	312115-0327		2	SCREW ISO4762 M5X12 A4 80	
270	315237-0106		2	WASHER,PL.RND.AL.6/10,H=1	
TBA 0200SQ, TBA 0375S, TPA 0330SQ, TPA 0250SQ, TPA 0200SQ, TBA 0250SQ (See drawing on page: 4-104)					
010	2962053-0000		1	CARRIER	
030	2818125-0000		1	OPERATING ROD	
080	2964567-0000		1	BLOCK	
120	311103-0267		1	PARALLEL PIN ISO 2338 4M6X10 A1	
160	312105-0323		2	SCREW, M6S ISO 4017 M5X8 A4 80	
180	312115-0327		2	SCREW ISO4762 M5X12 A4 80	
270	315237-0108		2	WASHER,PL.RND.AL.5,2/8,H=0,5	
TPA 0125SQ (See drawing on page: 4-102)					
010	2869203-0000		1	CARRIER	
030	2906017-0000		1	OPERATING ROD	
080	2869199-0000		1	BLOCK	
160	312105-0362		2	SCREW, M6S ISO 4017 M6X8 A4 80	
180	312115-0327		2	SCREW ISO4762 M5X12 A4 80	
270	315237-0106		2	WASHER,PL.RND.AL.6/10,H=1	
Common Parts					
020	256626-0000		1	EAR	
040	2818126-0000		1	BEARING PLATE	
050	257362-0000		2	LACE	
060	255801-0000		1	RETAINING RING	
070	255742-0000		1	COMPRESSION SPRING	
130	311111-0207		1	SPRING PIN ISO 8752 3X14-ST	
150	312115-0366		2	SCREW ISO4762 M6X12 A4 80	
170	312105-0376		4	SCREW, M6S ISO 4014 M6X35 A4 80	
200	312605-0318		1	HEXAGON NUT, M6M M8 A280	
220	315115-0153		4	WASHER PLAIN, TBRB 6,4/12 H=3	
250	315202-0265		1	O-RING 12,3X2,4 MM	
260	90091-0091		1	ROD SEAL 10X14X1,7 MM	
300	90134-0058		1	CONNECTION	

Machine Type | Group Description | Used-In | Group Number | Page No

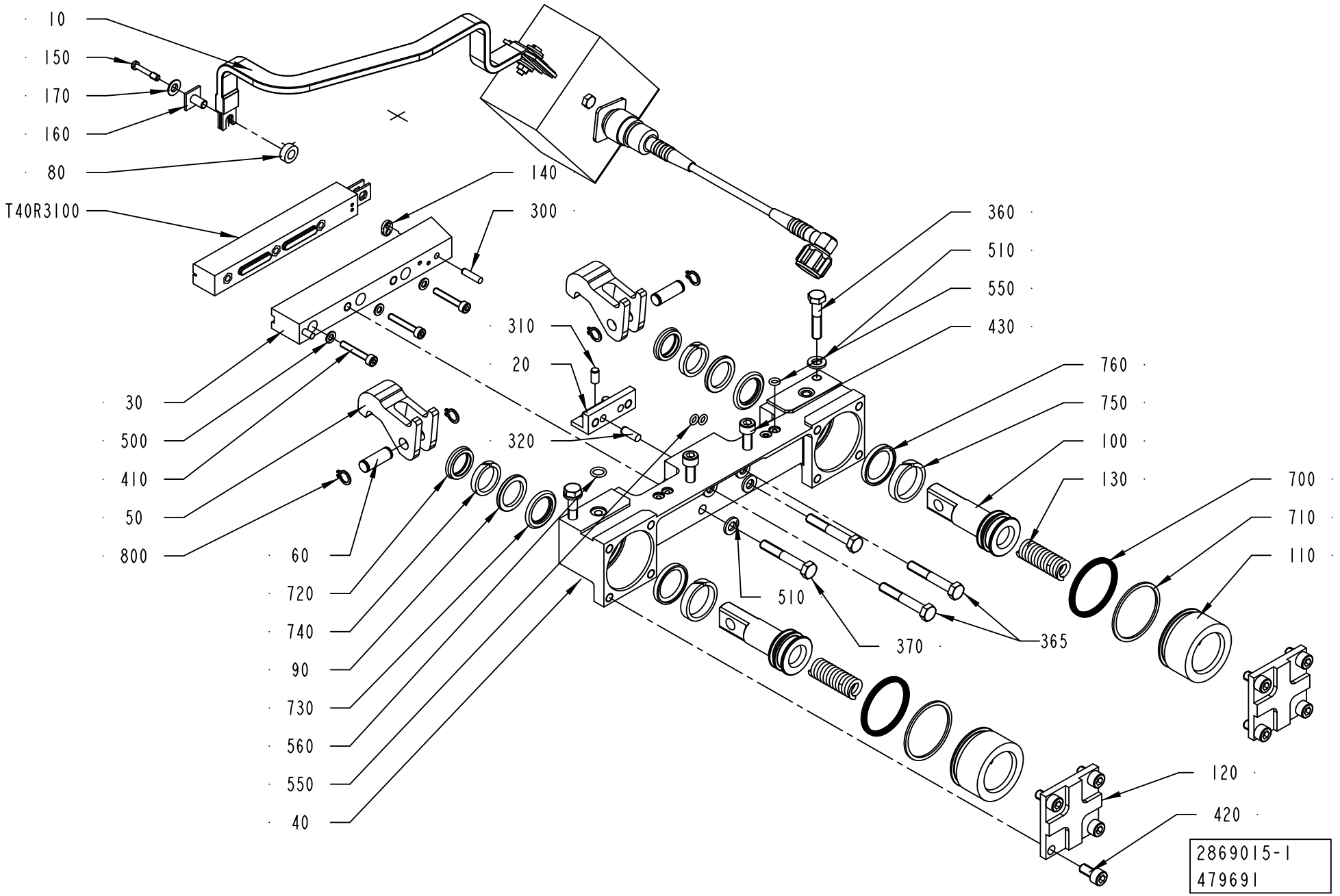
10
150
170
160
80
T40R3100
140
300
360
510
550
430
760
750
100
130
700
710
110
310
20
320
30
500
410
50
800
60
720
740
90
730
560
550
40
510
370
365
120
420
2869015-1
479691

ECM: 539994 - 20120202
Group number: 2869015-0100
Assembly Drawing: 2869015-1_1_AE

This list covers pages from 4-106 to 4-113

Pos	Part No	UN	Qty	Description	Page No
TBA 0080S (See drawing on page: 4-106)					
020	2916880-0000		1	SUPPORT	
030	2950886-0000		1	RAIL	
040	2835328-0000		1	BEARING HOUSING	
100	2934403-0000		2	PISTON	
110	2934402-0000		2	SLEEVE	
140	491681-0000		1	GASKET	
310	311103-0305		2	PARALLEL PIN ISO 2338 5M6X10 A1	
410	312115-0297		3	SCREW ISO4762 M4X25 A4 80	
430	312105-0372		2	SCREW, M6S ISO 4017 M6X25 A4 80	
500	315105-0136		3	WASHER PLAIN, 4,3X9X0,8 A4 BRB	
750	90091-0394		2	WEAR RING 20X25X5,6 MM	
760	90091-0393		2	PISTON SEAL GLYD RING T 17,5X25X3,2 MM	
T40R3200	1566981-0000		1	INDUCTOR	
TBA 0100B, TBA 0125S (See drawing on page: 4-106)					
020	2916880-0000		1	SUPPORT	
030	2915798-0000		1	RAIL	
040	2835328-0000		1	BEARING HOUSING	
100	2934403-0000		2	PISTON	
110	2934402-0000		2	SLEEVE	
140	315202-0102		2	O-RING 4,1X1,6 MM	
310	311103-0305		2	PARALLEL PIN ISO 2338 5M6X10 A1	
410	312115-0232		3	SCREW ISO4762 M3X25 A4 80	
430	312105-0372		2	SCREW, M6S ISO 4017 M6X25 A4 80	
500	315106-0124		3	WASHER PLAIN, M3 ISO7089-3-200 HV A4	
750	90091-0394		2	WEAR RING 20X25X5,6 MM	
760	90091-0393		2	PISTON SEAL GLYD RING T 17,5X25X3,2 MM	
T40R3100	2917498-0000		1	INDUCTOR	
TBA 0160S, TBA 0200S (See drawing on page: 4-106)					
020	3022266-0000		1	SUPPORT	
030	2835329-0000		1	RAIL	
040	2835328-0000		1	BEARING HOUSING	
100	929372-0000		2	PISTON	
110	929371-0000		2	SLEEVE	
140	491681-0000		1	GASKET	
365	312105-0378		2	SCREW, M6S ISO 4014 M6X40 A4 80	
410	312115-0297		3	SCREW ISO4762 M4X25 A4 80	
430	312115-0372		2	SCREW ISO4762 M6X25 A4 80	
500	315105-0136		3	WASHER PLAIN, 4,3X9X0,8 A4 BRB	
750	90091-0391		2	SEAL SLYDRING	
760	90091-0398		2	PISTON SEAL GLIDE RING T 20,5X28X3,2 MM	
T40R3100	1110532-0000		1	INDUCTOR	
TBA 0200B, TBA 0250B, TBA 0330S (See drawing on page: 4-106)					
020	2869202-0000		1	SUPPORT	
030	2835329-0000		1	RAIL	
040	2835328-0000		1	BEARING HOUSING	
100	929372-0000		2	PISTON	
110	929371-0000		2	SLEEVE	
140	491681-0000		1	GASKET	
310	311103-0305		2	PARALLEL PIN ISO 2338 5M6X10 A1	
410	312115-0297		3	SCREW ISO4762 M4X25 A4 80	
430	312115-0372		2	SCREW ISO4762 M6X25 A4 80	
500	315105-0136		3	WASHER PLAIN, 4,3X9X0,8 A4 BRB	
750	90091-0391		2	SEAL SLYDRING	
760	90091-0398		2	PISTON SEAL GLIDE RING T 20,5X28X3,2 MM	
T40R3100	1110534-0000		1	INDUCTOR	
TBA 0200E (See drawing on page: 4-112)					
020	3012782-0000		1	SUPPORT	
030	3092451-0000		1	RAIL	
040	3002880-0000		1	BEARING HOUSING	
100	929372-0000		2	PISTON	
110	929371-0000		2	SLEEVE	
140	491681-0000		1	GASKET	
180	3106750-0000		1	VOLUME BULGE	
190	3200712-0000		1	WEDGE	
195	3106754-0000		1	COVER	
310	311103-0305		2	PARALLEL PIN ISO 2338 5M6X10 A1	
365	312105-0376		2	SCREW, M6S ISO 4014 M6X35 A4 80	
430	312115-0372		2	SCREW ISO4762 M6X25 A4 80	
570	312155-0220		4	SCREW DIN 7991 MF6S M3X6 A4 70	
580	312115-0293		2	SCREW ISO4762 M4X16 A4 80	
750	90091-0391		2	SEAL SLYDRING	
760	90091-0398		2	PISTON SEAL GLIDE RING T 20,5X28X3,2 MM	
T40R3100	3089354-0000		1	INDUCTOR	
TBA 0200M, TBA 0250S (See drawing on page: 4-106)					
020	2869202-0000		1	SUPPORT	
030	2947183-0000		1	RAIL	
040	2835328-0000		1	BEARING HOUSING	
100	929372-0000		2	PISTON	
110	929371-0000		2	SLEEVE	
140	491681-0000		1	GASKET	
310	311103-0305		2	PARALLEL PIN ISO 2338 5M6X10 A1	
410	312115-0297		3	SCREW ISO4762 M4X25 A4 80	
430	312115-0372		2	SCREW ISO4762 M6X25 A4 80	

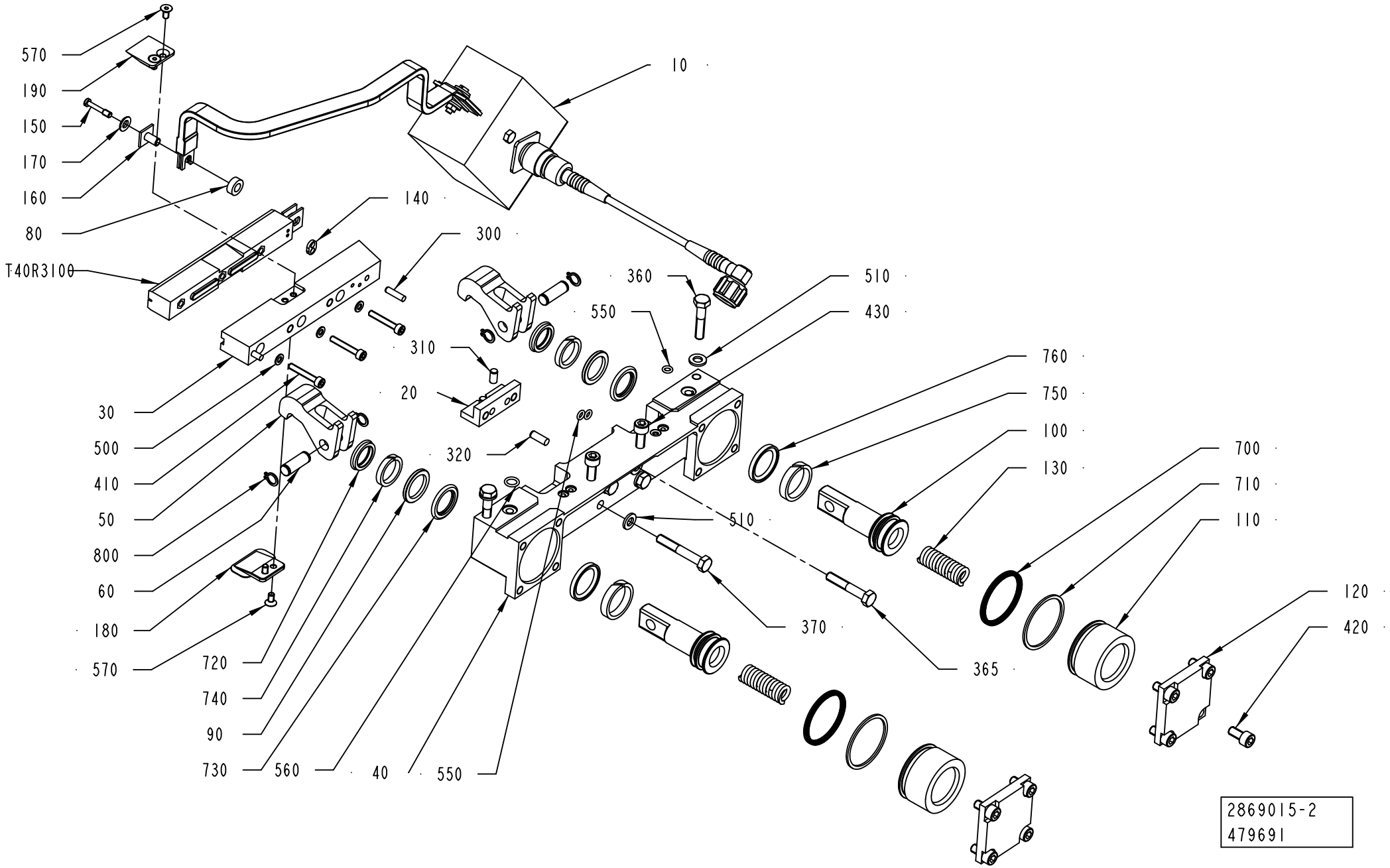
570
190
150
170
160
80
T40R3100
140
300
10
360
510
430
550
310
20
320
760
750
100
130
700
710
110
120
420
30
500
410
50
800
60
180
570
720
740
90
730
560
40
550
510
370
365
2869015-2
479691

Pos	Part No	UN	Qty	Description	Page No
TBA 0200M, TBA 0250S (Cont'd) (See drawing on page: 4-106)					
500	315105-0136		3	WASHER PLAIN, 4,3X9X0,8 A4 BRB	
750	90091-0391		2	SEAL SLYDRING	
760	90091-0398		2	PISTON SEAL GLIDE RING T 20,5X28X3,2 MM	
T40R3100	1110535-0000		1	INDUCTOR	
TBA 0200SQ, TBA 0250SQ (See drawing on page: 4-108)					
020	2964566-0000		1	SUPPORT	
030	2976821-0000		1	RAIL	
040	3002880-0000		1	BEARING HOUSING	
100	929372-0000		2	PISTON	
110	929371-0000		2	SLEEVE	
140	491681-0000		1	GASKET	
180	3006049-0000		1	VOLUME BULGE	
190	1539593-0000		1	COVER	
310	311103-0305		2	PARALLEL PIN ISO 2338 5M6X10 A1	
365	312105-0376		2	SCREW, M6S ISO 4014 M6X35 A4 80	
410	312115-0297		3	SCREW ISO4762 M4X25 A4 80	
430	312115-0372		2	SCREW ISO4762 M6X25 A4 80	
500	315105-0136		3	WASHER PLAIN, 4,3X9X0,8 A4 BRB	
570	312155-0287		4	SCREW DIN 7991 MF6S M4X8 A4 70	
750	90091-0391		2	SEAL SLYDRING	
760	90091-0398		2	PISTON SEAL GLIDE RING T 20,5X28X3,2 MM	
T40R3200	3044527-0000		1	INDUCTOR	
TBA 0284B, TBA 0300S (See drawing on page: 4-106)					
020	2964566-0000		1	SUPPORT	
030	2947183-0000		1	RAIL	
040	2835328-0000		1	BEARING HOUSING	
100	929372-0000		2	PISTON	
110	929371-0000		2	SLEEVE	
140	491681-0000		1	GASKET	
310	311103-0305		2	PARALLEL PIN ISO 2338 5M6X10 A1	
365	312105-0378		2	SCREW, M6S ISO 4014 M6X40 A4 80	
410	312115-0297		3	SCREW ISO4762 M4X25 A4 80	
430	312115-0372		2	SCREW ISO4762 M6X25 A4 80	
500	315105-0136		3	WASHER PLAIN, 4,3X9X0,8 A4 BRB	
570	312155-0287		4	SCREW DIN 7991 MF6S M4X8 A4 70	
750	90091-0391		2	SEAL SLYDRING	
760	90091-0398		2	PISTON SEAL GLIDE RING T 20,5X28X3,2 MM	
T40R3100	1110534-0000		1	INDUCTOR	
TBA 0375S (See drawing on page: 4-110)					
020	3067238-0000		1	SUPPORT	
030	2835329-0000		1	RAIL	
040	3002880-0000		1	BEARING HOUSING	
100	929372-0000		2	PISTON	
110	929371-0000		2	SLEEVE	
140	491681-0000		1	GASKET	
365	312105-0376		2	SCREW, M6S ISO 4014 M6X35 A4 80	
430	312115-0372		2	SCREW ISO4762 M6X25 A4 80	
750	90091-0391		2	SEAL SLYDRING	
760	90091-0398		2	PISTON SEAL GLIDE RING T 20,5X28X3,2 MM	
T40R3100	3089348-0000		1	INDUCTOR	
TPA 0125SQ (See drawing on page: 4-106)					
020	2869202-0000		1	SUPPORT	
030	2835329-0000		1	RAIL	
040	2835328-0000		1	BEARING HOUSING	
100	2934403-0000		2	PISTON	
110	2934402-0000		2	SLEEVE	
140	491681-0000		1	GASKET	
310	311103-0305		2	PARALLEL PIN ISO 2338 5M6X10 A1	
410	312115-0297		3	SCREW ISO4762 M4X25 A4 80	
430	312115-0372		2	SCREW ISO4762 M6X25 A4 80	
500	315105-0136		3	WASHER PLAIN, 4,3X9X0,8 A4 BRB	
750	90091-0394		2	WEAR RING 20X25X5,6 MM	
760	90091-0393		2	PISTON SEAL GLYD RING T 17,5X25X3,2 MM	
T40R3100	2975930-0000		1	INDUCTOR	
TPA 0250SQ, TPA 0200SQ (See drawing on page: 4-106)					
020	2964566-0000		1	SUPPORT	
030	2835329-0000		1	RAIL	
040	3002880-0000		1	BEARING HOUSING	
100	929372-0000		2	PISTON	
110	929371-0000		2	SLEEVE	
140	491681-0000		1	GASKET	
310	311103-0305		2	PARALLEL PIN ISO 2338 5M6X10 A1	
365	312105-0376		2	SCREW, M6S ISO 4014 M6X35 A4 80	
410	312115-0297		3	SCREW ISO4762 M4X25 A4 80	
430	312115-0372		2	SCREW ISO4762 M6X25 A4 80	
500	315105-0136		3	WASHER PLAIN, 4,3X9X0,8 A4 BRB	
750	90091-0391		2	SEAL SLYDRING	
760	90091-0398		2	PISTON SEAL GLIDE RING T 20,5X28X3,2 MM	
T40R3100	1110534-0000		1	INDUCTOR	
TPA 0330SQ (See drawing on page: 4-106)					
020	2964566-0000		1	SUPPORT	
030	3130390-0000		1	RAIL	
040	3002880-0000		1	BEARING HOUSING	

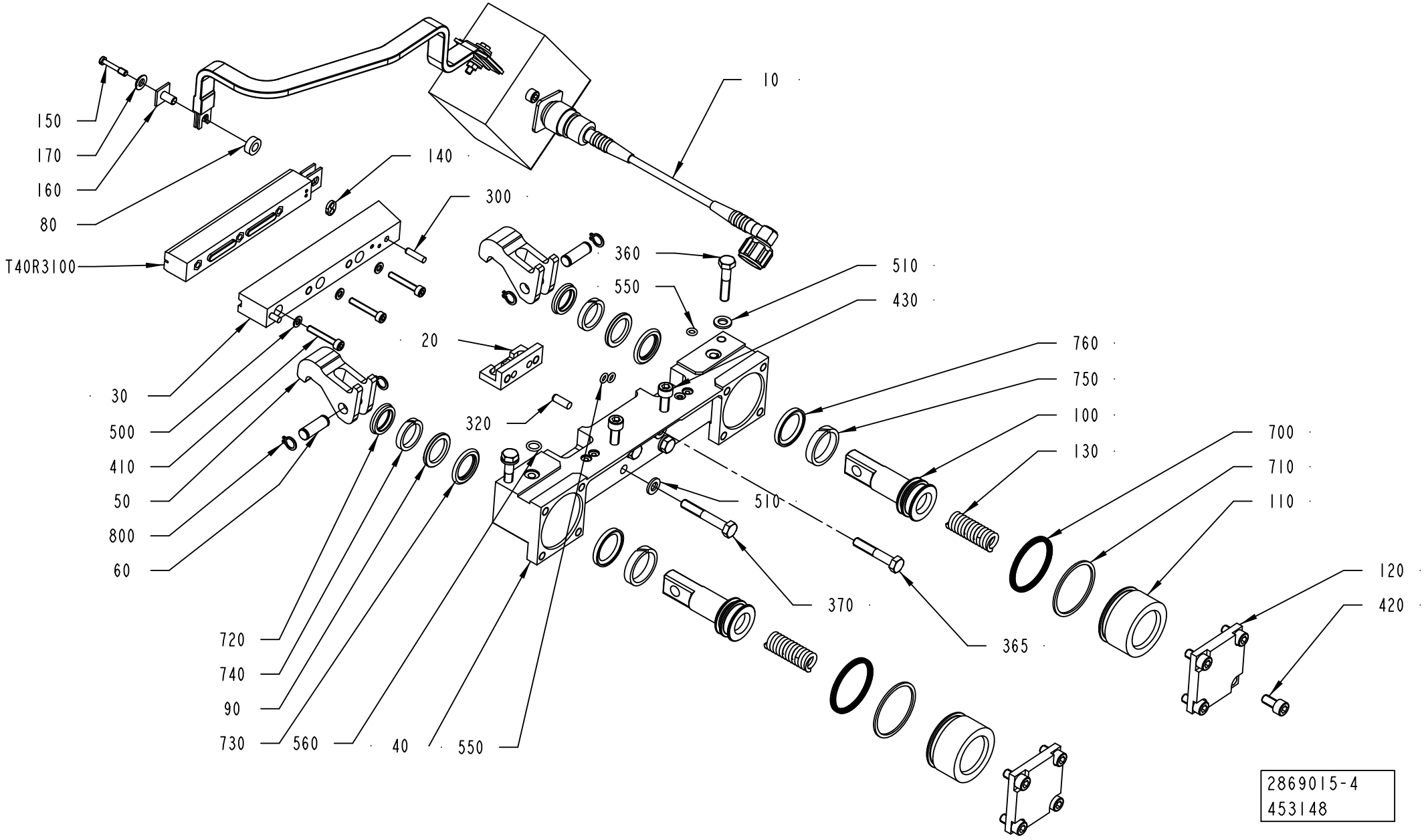
10
150
170
160
80
140
300
T40R3100
360
550
510
430
20
760
750
100
130
30
500
410
50
800
60
320
510
700
710
110
120
420
370
365
720
740
90
730
560
40
550
2869015-4
453148

Pos	Part No	UN	Qty	Description	Page No
TPA 0330SQ (Cont'd) (See drawing on page: 4-106)					
100	929372-0000		2	PISTON	
110	929371-0000		2	SLEEVE	
140	491681-0000		1	GASKET	
310	311103-0305		2	PARALLEL PIN ISO 2338 5M6X10 A1	
365	312105-0376		2	SCREW, M6S ISO 4014 M6X35 A4 80	
410	312115-0297		3	SCREW ISO4762 M4X25 A4 80	
430	312115-0372		2	SCREW ISO4762 M6X25 A4 80	
500	315105-0136		3	WASHER PLAIN, 4,3X9X0,8 A4 BRB	
570	312155-0287		4	SCREW DIN 7991 MF6S M4X8 A4 70	
750	90091-0391		2	SEAL SLYDRING	
760	90091-0398		2	PISTON SEAL GLIDE RING T 20,5X28X3,2 MM	
T40R3100	1110556-0000		1	INDUCTOR	
Common Parts					
010	2837086-0100		1	TRANSFORMER	**4-115**
050	2835327-0000		2	CATCH	
060	2835326-0000		2	SHAFT	
080	32644-0000		1	WASHER	
090	1038240-0000		2	SPACER	
120	2979699-0000		2	LID	
130	590369-0000		2	COMPRESSION SPRING	
150	271848-0000		1	SCREW	
160	271846-0000		1	INSULATION NUT	
170	256882-0000		1	WASHER	
300	311103-0270		2	PARALLEL PIN ISO 2338 4M6X16 A1	
320	311103-0307		2	PARALLEL PIN ISO 2338 5M6X14 A1	
360	312105-0374		2	SCREW, M6S ISO 4014 M6X30 A4 80	
370	312105-0378		2	SCREW, M6S ISO 4014 M6X40 A4 80	
420	312115-0366		8	SCREW ISO4762 M6X12 A4 80	
510	315105-0153		6	WASHER PLAIN, 6,4X12X1,5 A4 BRB	
550	315202-0102		4	O-RING 4,1X1,6 MM	
560	315202-0105		2	O-RING 7,1X1,6 MM	
700	90091-0359		2	X-SEAL 36,17X2,62 MM	
710	90091-0360		2	BACK-UP RING 37,5X1,4 MM	
720	90091-0362		2	SCRAPER, EXCLUDER 18X22,8X3,7 MM	
730	90091-0364		2	ROD SEAL, STEPSEAL 18X25,3X3,2 MM	
740	90091-0366		2	WEAR RING 18X23X3,9 MM	
800	90141-0015		4	RETAINING RING FOR SHAFT DIN 471 8 SS	

Pos	Part No	UN	Qty	Description	Page No

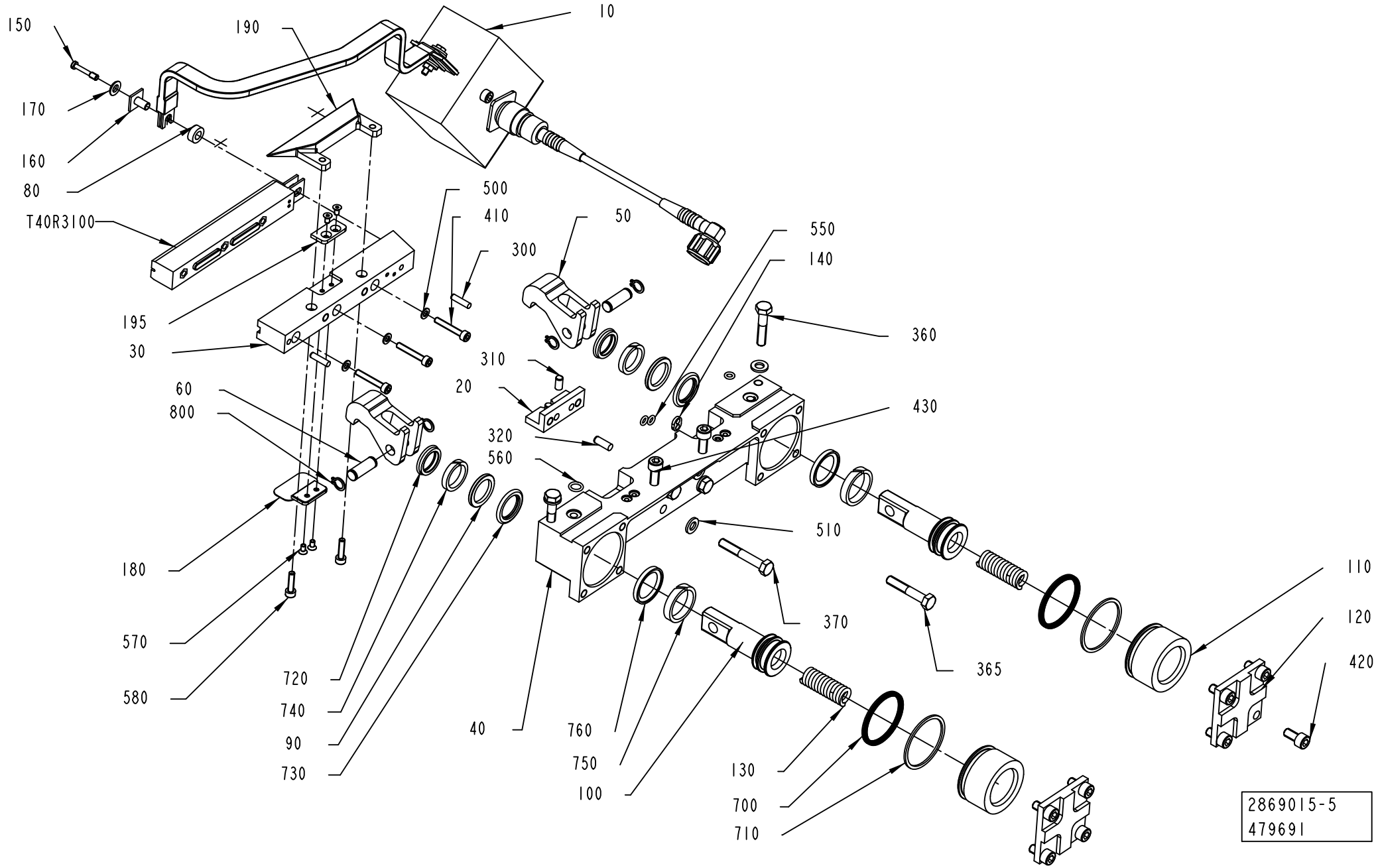
150
190
10
170
160
80
T40R3100
500
410
50
300
550
140
360
195
30
310
20
60
800
430
320
560
510
180
570
580
720
740
90
730
40
760
750
100
130
700
710
370
365
110
120
420
2869015-5
479691

ECM: 539994 - 20120202
Group number: 2869015-0100
Assembly Drawing: 2869015-5_1_AB

This list covers pages from 4-106 to 4-113

Pos	Part No	UN	Qty	Description	Page No
SEE PREVIOUS LISTS PAGES: 4-107, 4-109, 4-111.					

Pos	Part No	UN	Qty	Description	Page No

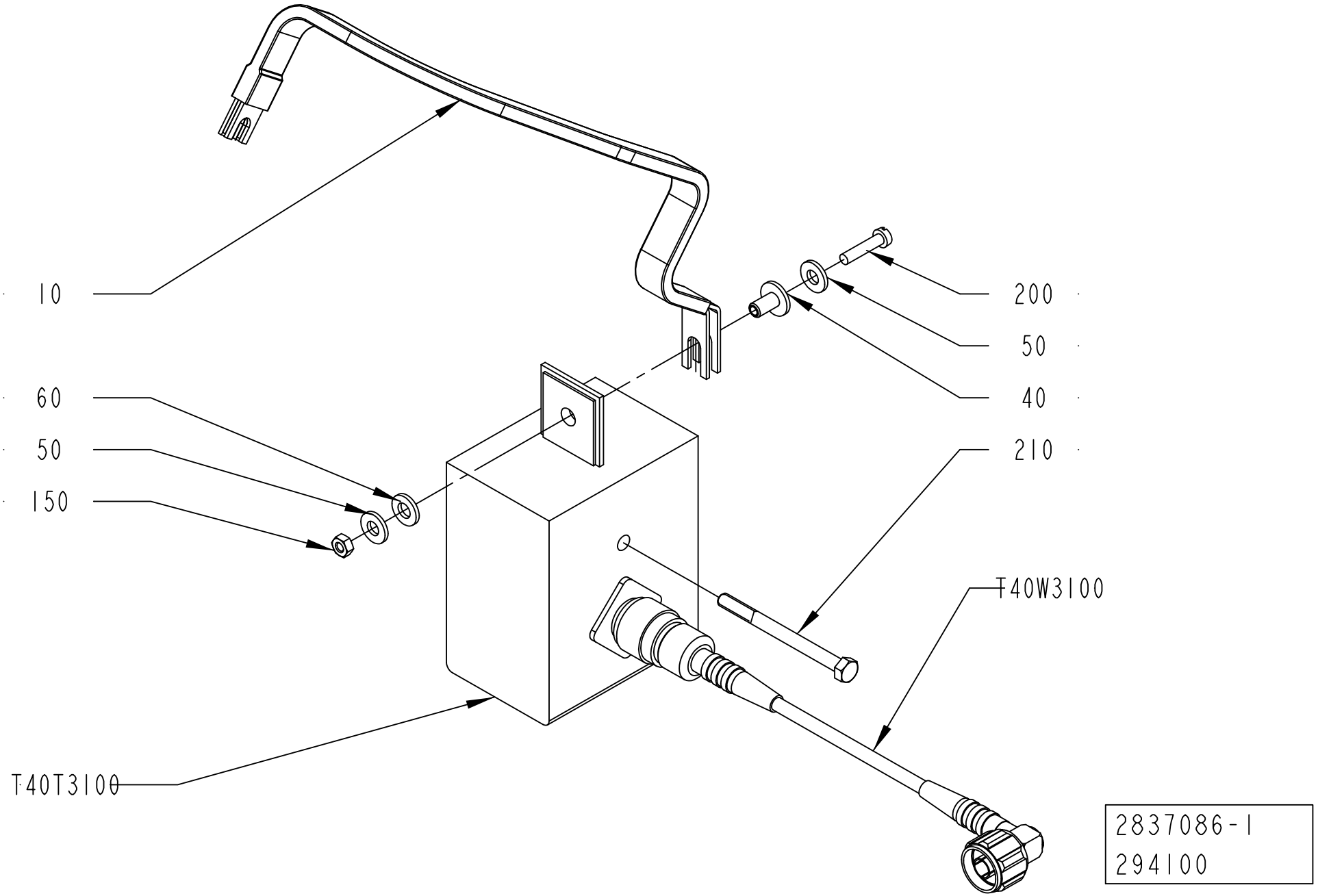
10
60
50
150
200
50
40
210
T40W3100
T40T3100
2837086-1
294100

ECM: 510088 - 20111001
Group number: 2837086-0100
Assembly Drawing: 2837086-1_1_AA

Pos	Part No	UN	Qty	Description	Page No
TBA 0080S					
010	2916878-0000		1	BUSBAR	
T40T3200	67379-0262		1	TRANSFORMER	
TBA 0100B, TBA 0125S					
010	2837076-0000		1	BUSBAR	
T40T3200	67379-0107		1	TRANSFORMER	
TBA 0160S, TBA 0200S					
010	2837076-0000		1	BUSBAR	
T40T3200	67379-0204		1	TRANSFORMER	
TBA 0200B, TBA 0284B, TBA 0250B, TBA 0300S, TBA 0330S					
010	2837076-0000		1	BUSBAR	
T40T3200	67379-0264		1	TRANSFORMER	
TBA 0200E					
010	2837076-0000		1	BUSBAR	
T40T3200	67379-0206		1	TRANSFORMER	
TBA 0200M, TBA 0250S					
010	2837076-0000		1	BUSBAR	
T40T3200	2837503-0105		1	TRANSFORMER	
TBA 0200SQ, TBA 0250SQ					
010	2837076-0000		1	BUSBAR	
T40T3200	67379-0269		1	TRANSFORMER	
TBA 0375S, TPA 0330SQ					
010	2837076-0000		1	BUSBAR	
T40T3200	67379-0115		1	TRANSFORMER	
TPA 0125SQ					
010	2837076-0000		1	BUSBAR	
T40T3200	67379-0248		1	TRANSFORMER	
TPA 0250SQ, TPA 0200SQ					
010	2837076-0000		1	BUSBAR	
T40T3200	67379-0254		1	TRANSFORMER	
Common Parts					
040	32544-0000		1	INSULATION NUT	
050	28509-0000		2	WASHER	
060	32079-0000		1	WASHER	
150	312602-0312		1	HEXAGON NUT, EN 24032 M6M M4 NIPLBR	
200	312105-0295		1	SCREW, M6S ISO 4017 M4X20 A4 70	
210	90458-0058		1	SCREW M5X60 A280	
T40W3100	2562736-0002		1	COAXIAL CABLE	

Pos	Part No	UN	Qty	Description	Page No

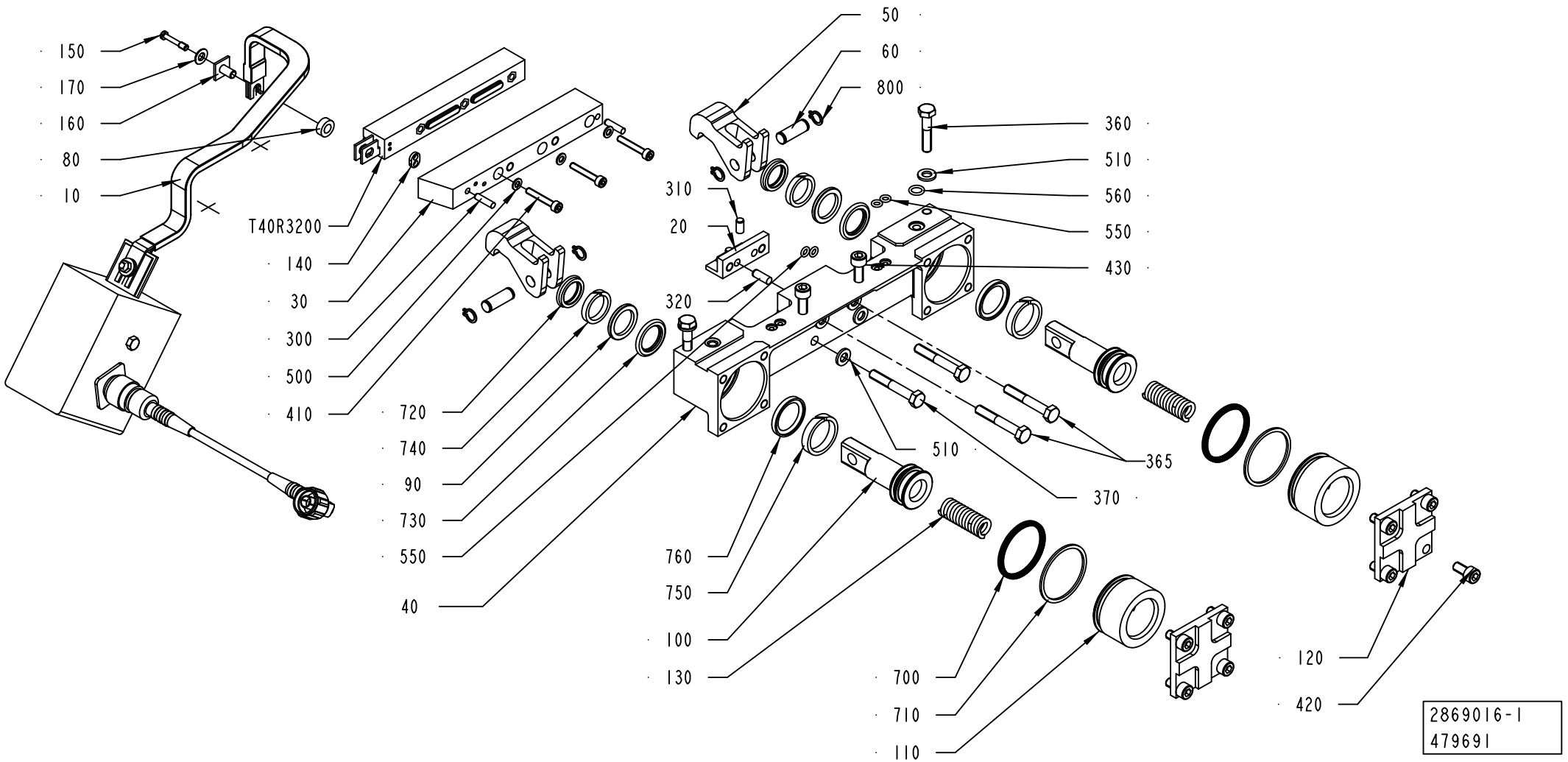
150
170
160
80
10
T40R3200
140
30
300
500
410
720
740
90
730
550
40
50
60
800
310
20
320
760
750
100
130
700
710
110
360
510
560
550
430
510
365
370
120
420
2869016-1
479691

ECM: 539995 - 20120202
Group number: 2869016-0100
Assembly Drawing: 2869016-1_1_AE

This list covers pages from 4-116 to 4-123

Pos	Part No	UN	Qty	Description	Page No
TBA 0080S (See drawing on page: 4-116)					
020	2916880-0000		1	SUPPORT	
030	2950887-0000		1	RAIL	
040	2835328-0000		1	BEARING HOUSING	
100	2934403-0000		2	PISTON	
110	2934402-0000		2	SLEEVE	
140	491681-0000		1	GASKET	
310	311103-0305		2	PARALLEL PIN ISO 2338 5M6X10 A1	
365	312105-0378		2	SCREW, M6S ISO 4014 M6X40 A4 80	
410	312115-0297		3	SCREW ISO4762 M4X25 A4 80	
430	312105-0372		2	SCREW, M6S ISO 4017 M6X25 A4 80	
500	315105-0136		3	WASHER PLAIN, 4,3X9X0,8 A4 BRB	
750	90091-0394		2	WEAR RING 20X25X5,6 MM	
760	90091-0393		2	PISTON SEAL GLYD RING T 17,5X25X3,2 MM	
T40R3200	1566981-0000		1	INDUCTOR	
TBA 0100B, TBA 0125S (See drawing on page: 4-116)					
020	2916880-0000		1	SUPPORT	
030	2944475-0000		1	RAIL	
040	2835328-0000		1	BEARING HOUSING	
100	2934403-0000		2	PISTON	
110	2934402-0000		2	SLEEVE	
140	315202-0102		2	O-RING 4,1X1,6 MM	
310	311103-0305		2	PARALLEL PIN ISO 2338 5M6X10 A1	
365	312105-0378		2	SCREW, M6S ISO 4014 M6X40 A4 80	
410	312115-0232		3	SCREW ISO4762 M3X25 A4 80	
430	312105-0372		2	SCREW, M6S ISO 4017 M6X25 A4 80	
500	315106-0124		3	WASHER PLAIN, M3 ISO7089-3-200 HV A4	
750	90091-0394		2	WEAR RING 20X25X5,6 MM	
760	90091-0393		2	PISTON SEAL GLYD RING T 17,5X25X3,2 MM	
T40R3200	2917498-0000		1	INDUCTOR	
TBA 0160S, TBA 0200S (See drawing on page: 4-116)					
020	3022266-0000		1	SUPPORT	
030	2835329-0000		1	RAIL	
040	2835328-0000		1	BEARING HOUSING	
100	929372-0000		2	PISTON	
110	929371-0000		2	SLEEVE	
140	491681-0000		1	GASKET	
365	312105-0378		2	SCREW, M6S ISO 4014 M6X40 A4 80	
410	312115-0297		3	SCREW ISO4762 M4X25 A4 80	
430	312115-0372		2	SCREW ISO4762 M6X25 A4 80	
500	315105-0136		3	WASHER PLAIN, 4,3X9X0,8 A4 BRB	
750	90091-0391		2	SEAL SLYDRING	
760	90091-0398		2	PISTON SEAL GLIDE RING T 20,5X28X3,2 MM	
T40R3200	1110532-0000		1	INDUCTOR	
TBA 0200B, TBA 0250B, TBA 0330S (See drawing on page: 4-116)					
020	2869202-0000		1	SUPPORT	
030	2835329-0000		1	RAIL	
040	2835328-0000		1	BEARING HOUSING	
100	929372-0000		2	PISTON	
110	929371-0000		2	SLEEVE	
140	491681-0000		1	GASKET	
310	311103-0305		2	PARALLEL PIN ISO 2338 5M6X10 A1	
365	312105-0378		2	SCREW, M6S ISO 4014 M6X40 A4 80	
410	312115-0297		3	SCREW ISO4762 M4X25 A4 80	
430	312115-0372		2	SCREW ISO4762 M6X25 A4 80	
500	315105-0136		3	WASHER PLAIN, 4,3X9X0,8 A4 BRB	
750	90091-0391		2	SEAL SLYDRING	
760	90091-0398		2	PISTON SEAL GLIDE RING T 20,5X28X3,2 MM	
T40R3200	1110534-0000		1	INDUCTOR	
TBA 0200E (See drawing on page: 4-122)					
020	3012782-0000		1	SUPPORT	
030	3092451-0000		1	RAIL	
040	3002880-0000		1	BEARING HOUSING	
100	929372-0000		2	PISTON	
110	929371-0000		2	SLEEVE	
140	491681-0000		1	GASKET	
180	3106750-0000		1	VOLUME BULGE	
190	3200712-0000		1	WEDGE	
195	3106754-0000		1	COVER	
310	311103-0305		2	PARALLEL PIN ISO 2338 5M6X10 A1	
365	312105-0376		2	SCREW, M6S ISO 4014 M6X35 A4 80	
430	312115-0372		2	SCREW ISO4762 M6X25 A4 80	
435	312105-0374		2	SCREW, M6S ISO 4014 M6X30 A4 80	
570	312155-0220		4	SCREW DIN 7991 MF6S M3X6 A4 70	
580	312115-0293		2	SCREW ISO4762 M4X16 A4 80	
750	90091-0391		2	SEAL SLYDRING	
760	90091-0398		2	PISTON SEAL GLIDE RING T 20,5X28X3,2 MM	
T40R3200	3089354-0000		1	INDUCTOR	
TBA 0200M, TBA 0250S (See drawing on page: 4-116)					
020	2869202-0000		1	SUPPORT	
030	2947183-0000		1	RAIL	
040	2835328-0000		1	BEARING HOUSING	
100	929372-0000		2	PISTON	
110	929371-0000		2	SLEEVE	

Machine Type | Group Description | Used-In | Group Number | Page No

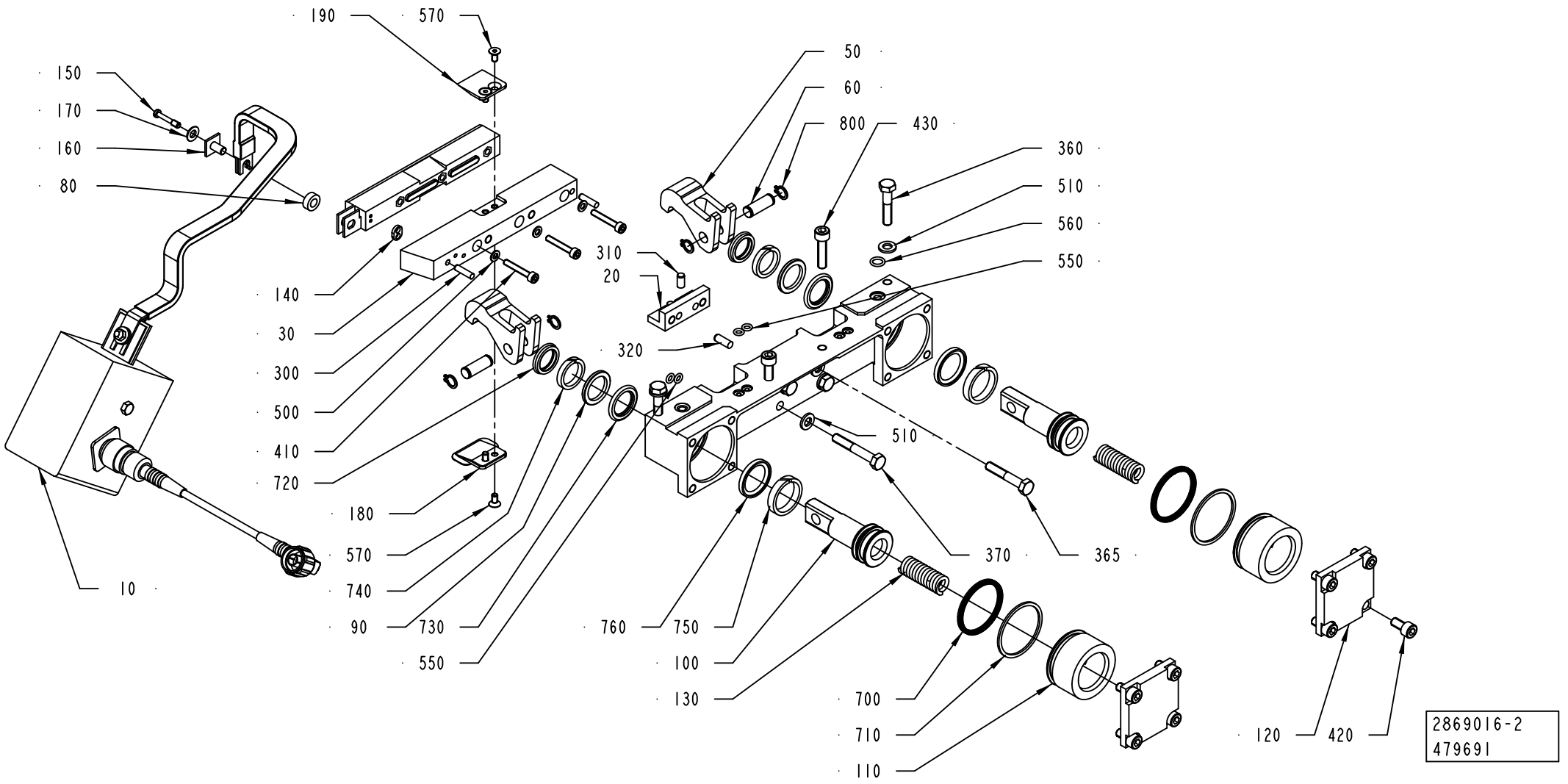
190
570
150
170
160
80
50
60
800
430
360
510
560
550
310
20
140
30
300
500
410
720
320
180
570
740
90
730
550
760
750
100
130
700
710
110
510
370
365
10
120
420
2869016-2
479691

Pos	Part No	UN	Qty	Description	Page No
TBA 0200M, TBA 0250S (Cont'd) (See drawing on page: 4-116)					
140	491681-0000		1	GASKET	
310	311103-0305		2	PARALLEL PIN ISO 2338 5M6X10 A1	
365	312105-0378		2	SCREW, M6S ISO 4014 M6X40 A4 80	
410	312115-0297		3	SCREW ISO4762 M4X25 A4 80	
430	312115-0372		2	SCREW ISO4762 M6X25 A4 80	
500	315105-0136		3	WASHER PLAIN, 4,3X9X0,8 A4 BRB	
750	90091-0391		2	SEAL SLYDRING	
760	90091-0398		2	PISTON SEAL GLIDE RING T 20,5X28X3,2 MM	
T40R3200	1110535-0000		1	INDUCTOR	
TBA 0200SQ, TBA 0250SQ (See drawing on page: 4-118)					
020	2964566-0000		1	SUPPORT	
030	2976821-0000		1	RAIL	
040	3002880-0000		1	BEARING HOUSING	
100	929372-0000		2	PISTON	
110	929371-0000		2	SLEEVE	
140	491681-0000		1	GASKET	
180	3006049-0000		1	VOLUME BULGE	
190	1539593-0000		1	COVER	
310	311103-0305		2	PARALLEL PIN ISO 2338 5M6X10 A1	
365	312105-0376		2	SCREW, M6S ISO 4014 M6X35 A4 80	
410	312115-0297		3	SCREW ISO4762 M4X25 A4 80	
430	312115-0372		2	SCREW ISO4762 M6X25 A4 80	
500	315105-0136		3	WASHER PLAIN, 4,3X9X0,8 A4 BRB	
570	312155-0287		4	SCREW DIN 7991 MF6S M4X8 A4 70	
750	90091-0391		2	SEAL SLYDRING	
760	90091-0398		2	PISTON SEAL GLIDE RING T 20,5X28X3,2 MM	
T40R3200	3044527-0000		1	INDUCTOR	
TBA 0284B, TBA 0300S (See drawing on page: 4-116)					
020	2964566-0000		1	SUPPORT	
030	2947183-0000		1	RAIL	
040	2835328-0000		1	BEARING HOUSING	
100	929372-0000		2	PISTON	
110	929371-0000		2	SLEEVE	
140	491681-0000		1	GASKET	
310	311103-0305		2	PARALLEL PIN ISO 2338 5M6X10 A1	
365	312105-0378		2	SCREW, M6S ISO 4014 M6X40 A4 80	
410	312115-0297		3	SCREW ISO4762 M4X25 A4 80	
430	312115-0372		2	SCREW ISO4762 M6X25 A4 80	
500	315105-0136		3	WASHER PLAIN, 4,3X9X0,8 A4 BRB	
570	312155-0287		4	SCREW DIN 7991 MF6S M4X8 A4 70	
750	90091-0391		2	SEAL SLYDRING	
760	90091-0398		2	PISTON SEAL GLIDE RING T 20,5X28X3,2 MM	
T40R3200	1110534-0000		1	INDUCTOR	
TBA 0375S (See drawing on page: 4-120)					
020	3067238-0000		1	SUPPORT	
030	2835329-0000		1	RAIL	
040	3002880-0000		1	BEARING HOUSING	
100	929372-0000		2	PISTON	
110	929371-0000		2	SLEEVE	
365	312105-0376		2	SCREW, M6S ISO 4014 M6X35 A4 80	
430	312115-0372		2	SCREW ISO4762 M6X25 A4 80	
750	90091-0391		2	SEAL SLYDRING	
760	90091-0398		2	PISTON SEAL GLIDE RING T 20,5X28X3,2 MM	
T40R3200	3089348-0000		1	INDUCTOR	
TPA 0125SQ (See drawing on page: 4-116)					
020	2869202-0000		1	SUPPORT	
030	2835329-0000		1	RAIL	
040	2835328-0000		1	BEARING HOUSING	
100	2934403-0000		2	PISTON	
110	2934402-0000		2	SLEEVE	
140	491681-0000		1	GASKET	
310	311103-0305		2	PARALLEL PIN ISO 2338 5M6X10 A1	
365	312105-0378		2	SCREW, M6S ISO 4014 M6X40 A4 80	
410	312115-0297		3	SCREW ISO4762 M4X25 A4 80	
430	312115-0372		2	SCREW ISO4762 M6X25 A4 80	
500	315105-0136		3	WASHER PLAIN, 4,3X9X0,8 A4 BRB	
750	90091-0394		2	WEAR RING 20X25X5,6 MM	
760	90091-0393		2	PISTON SEAL GLYD RING T 17,5X25X3,2 MM	
T40R3200	2975930-0000		1	INDUCTOR	
TPA 0250SQ, TPA 0200SQ (See drawing on page: 4-116)					
020	2964566-0000		1	SUPPORT	
030	2835329-0000		1	RAIL	
040	3002880-0000		1	BEARING HOUSING	
100	929372-0000		2	PISTON	
110	929371-0000		2	SLEEVE	
140	491681-0000		1	GASKET	
310	311103-0305		2	PARALLEL PIN ISO 2338 5M6X10 A1	
365	312105-0376		2	SCREW, M6S ISO 4014 M6X35 A4 80	
410	312115-0297		3	SCREW ISO4762 M4X25 A4 80	
430	312115-0372		2	SCREW ISO4762 M6X25 A4 80	
500	315105-0136		3	WASHER PLAIN, 4,3X9X0,8 A4 BRB	
750	90091-0391		2	SEAL SLYDRING	
760	90091-0398		2	PISTON SEAL GLIDE RING T 20,5X28X3,2 MM	

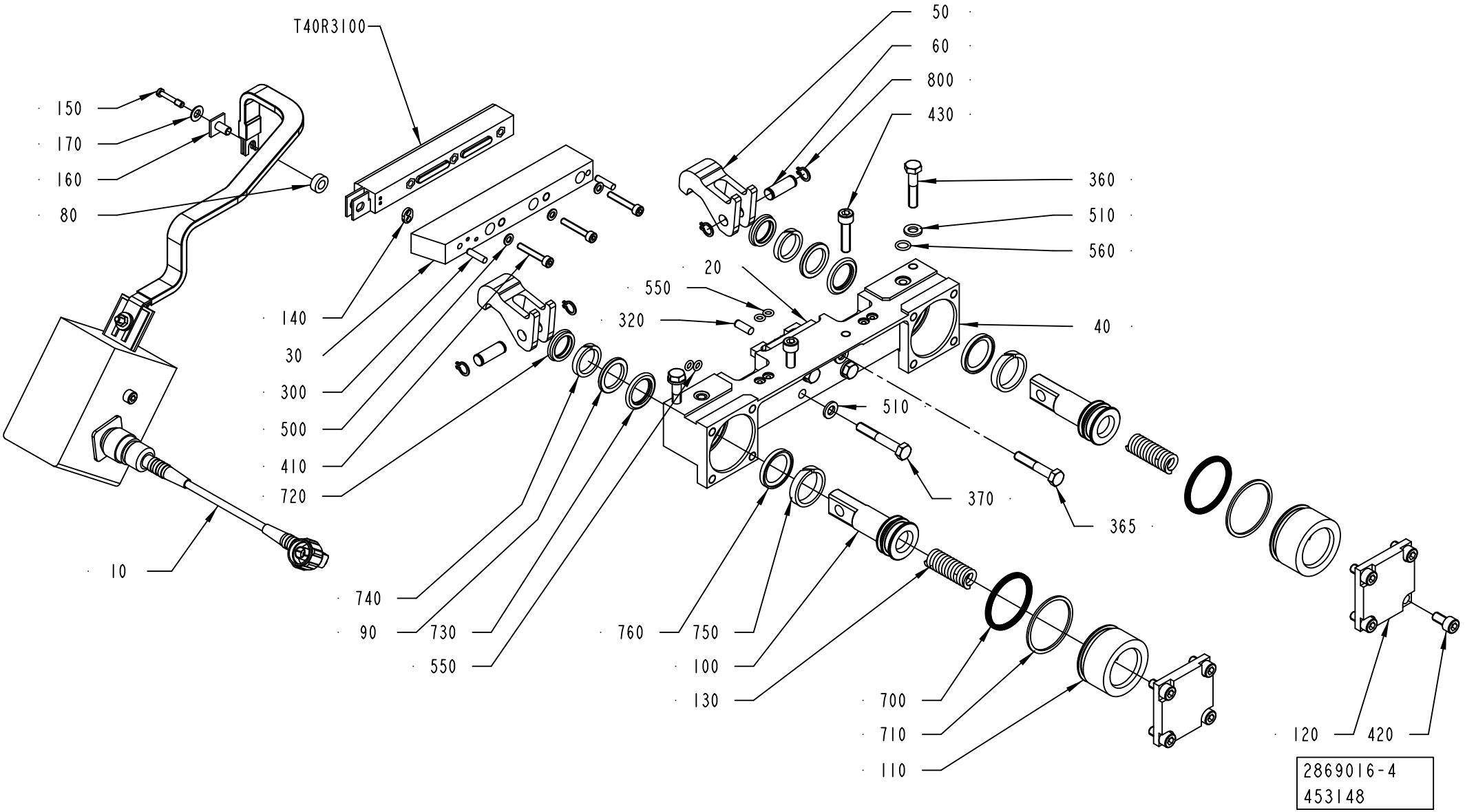
T40R3100
150
170
160
80
10
140
30
300
500
410
720
740
90
730
550
50
60
800
430
360
510
560
20
550
320
40
510
370
365
760
750
100
130
700
710
110
120
420
2869016-4
453148

Pos	Part No	UN	Qty	Description	Page No
TPA 0250SQ, TPA 0200SQ (Cont'd) (See drawing on page: 4-116)					
T40R3200	1110534-0000		1	INDUCTOR	
TPA 0330SQ (See drawing on page: 4-116)					
020	2964566-0000		1	SUPPORT	
030	3130390-0000		1	RAIL	
040	3002880-0000		1	BEARING HOUSING	
100	929372-0000		2	PISTON	
110	929371-0000		2	SLEEVE	
140	491681-0000		1	GASKET	
310	311103-0305		2	PARALLEL PIN ISO 2338 5M6X10 A1	
365	312105-0376		2	SCREW, M6S ISO 4014 M6X35 A4 80	
410	312115-0297		3	SCREW ISO4762 M4X25 A4 80	
430	312115-0372		2	SCREW ISO4762 M6X25 A4 80	
500	315105-0136		3	WASHER PLAIN, 4,3X9X0,8 A4 BRB	
570	312155-0287		4	SCREW DIN 7991 MF6S M4X8 A4 70	
750	90091-0391		2	SEAL SLYDRING	
760	90091-0398		2	PISTON SEAL GLIDE RING T 20,5X28X3,2 MM	
T40R3200	1110556-0000		1	INDUCTOR	
Common Parts					
010	2837085-0100		1	TRANSFORMER	**4-125**
050	2835327-0000		2	CATCH	
060	2835326-0000		2	SHAFT	
080	32644-0000		1	WASHER	
090	1038240-0000		2	SPACER	
120	2979699-0000		2	LID	
130	590369-0000		2	COMPRESSION SPRING	
150	271848-0000		1	SCREW	
160	271846-0000		1	INSULATION NUT	
170	256882-0000		1	WASHER	
300	311103-0270		2	PARALLEL PIN ISO 2338 4M6X16 A1	
320	311103-0307		2	PARALLEL PIN ISO 2338 5M6X14 A1	
360	312105-0374		2	SCREW, M6S ISO 4014 M6X30 A4 80	
370	312105-0378		2	SCREW, M6S ISO 4014 M6X40 A4 80	
420	312115-0366		8	SCREW ISO4762 M6X12 A4 80	
510	315105-0153		6	WASHER PLAIN, 6,4X12X1,5 A4 BRB	
550	315202-0102		4	O-RING 4,1X1,6 MM	
560	315202-0105		2	O-RING 7,1X1,6 MM	
700	90091-0359		2	X-SEAL 36,17X2,62 MM	
710	90091-0360		2	BACK-UP RING 37,5X1,4 MM	
720	90091-0362		2	SCRAPER, EXCLUDER 18X22,8X3,7 MM	
730	90091-0364		2	ROD SEAL, STEPSEAL 18X25,3X3,2 MM	
740	90091-0366		2	WEAR RING 18X23X3,9 MM	
800	90141-0015		4	RETAINING RING FOR SHAFT DIN 471 8 SS	

Machine Type | Group Description | Used-In | Group Number | Page No

PRESSURE JAW

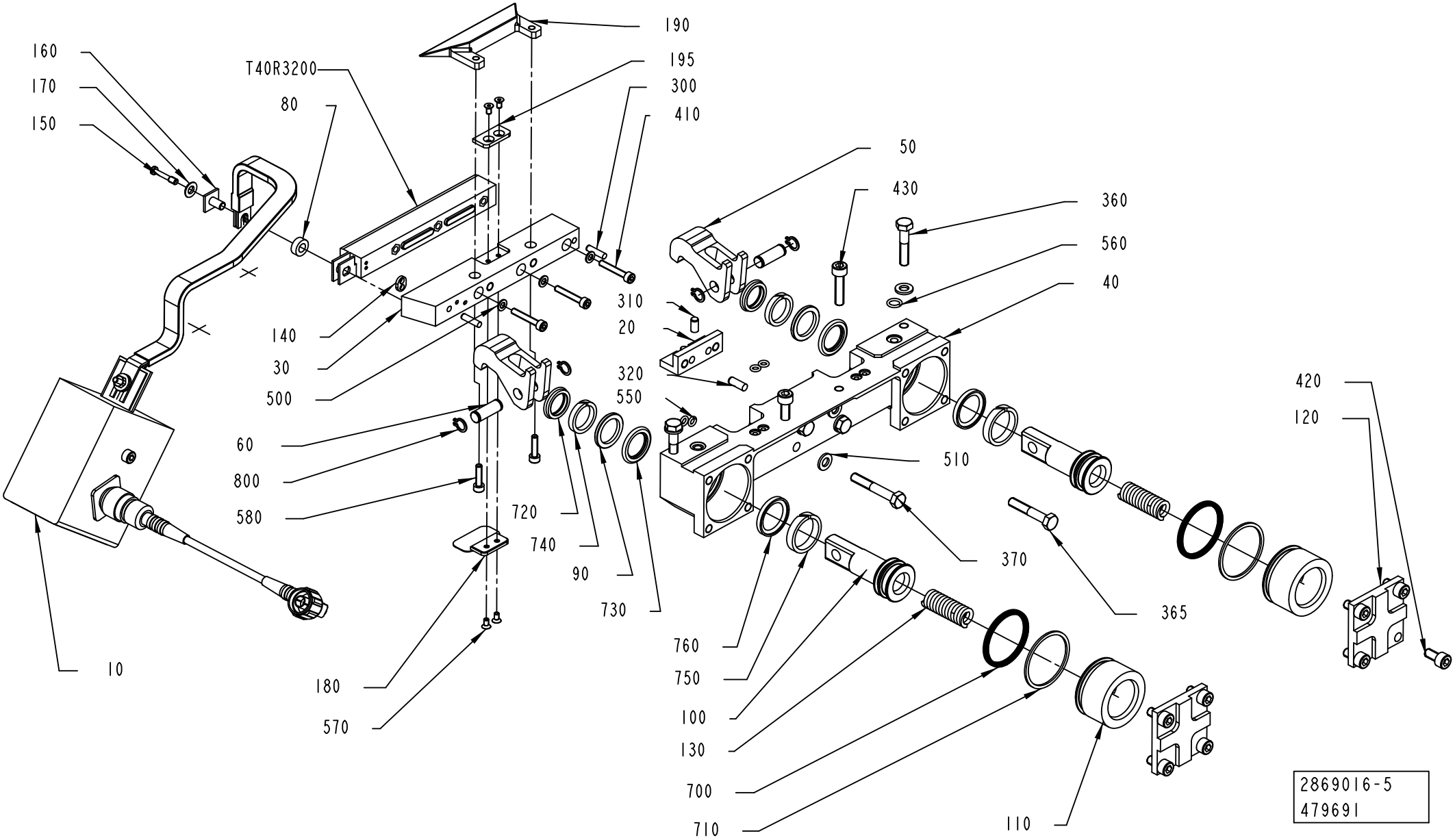

ECM: 539995 - 20120202
Group number: 2869016-0100
Assembly Drawing: 2869016-5_1_AB

This list covers pages from 4-116 to 4-123

Pos	Part No	UN	Qty	Description	Page No
SEE PREVIOUS LISTS PAGES: 4-117, 4-119, 4-121.					

Pos	Part No	UN	Qty	Description	Page No

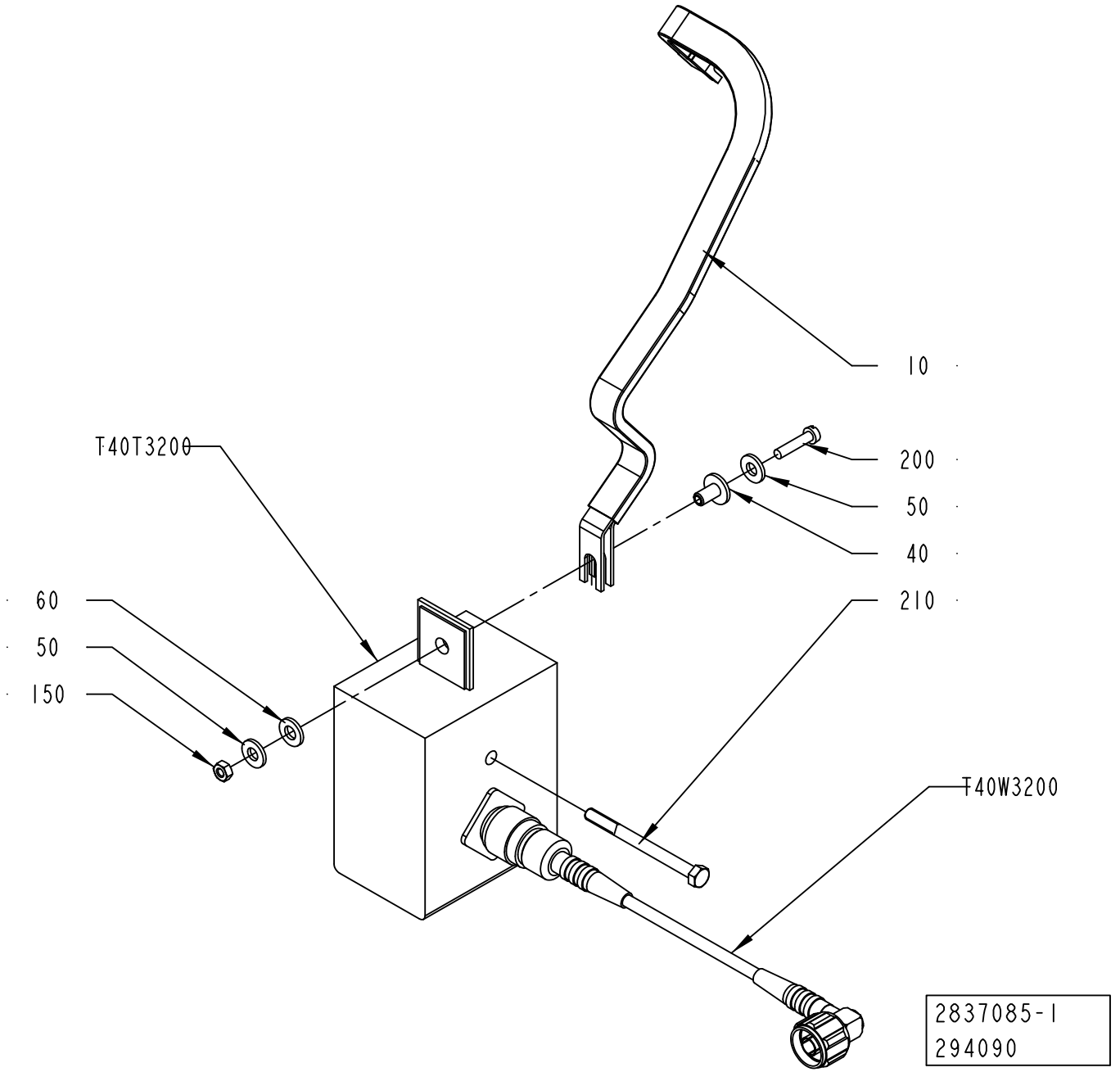
10
T40T3200
200
50
40
60
50
150
210
T40W3200
2837085-1
294090

ECM: 510089 - 20111001
Group number: 2837085-0100
Assembly Drawing: 2837085-1_1_AA

Pos	Part No	UN	Qty	Description	Page No
TBA 0080S					
010	2916877-0000		1	BUSBAR	
T40T3200	67379-0262		1	TRANSFORMER	
TBA 0100B, TBA 0125S					
010	2837077-0000		1	BUSBAR	
T40T3200	67379-0107		1	TRANSFORMER	
TBA 0160S, TBA 0200S					
010	2837077-0000		1	BUSBAR	
T40T3200	67379-0204		1	TRANSFORMER	
TBA 0200B, TBA 0284B, TBA 0250B, TBA 0300S, TBA 0330S					
010	2837077-0000		1	BUSBAR	
T40T3200	67379-0264		1	TRANSFORMER	
TBA 0200E					
010	2837077-0000		1	BUSBAR	
T40T3200	67379-0206		1	TRANSFORMER	
TBA 0200M, TBA 0250S					
010	2837077-0000		1	BUSBAR	
T40T3200	2837503-0105		1	TRANSFORMER	
TBA 0200SQ, TBA 0250SQ					
010	2837077-0000		1	BUSBAR	
T40T3200	67379-0269		1	TRANSFORMER	
TBA 0375S, TPA 0330SQ					
010	2837077-0000		1	BUSBAR	
T40T3200	67379-0115		1	TRANSFORMER	
TPA 0125SQ					
010	2837077-0000		1	BUSBAR	
T40T3200	67379-0248		1	TRANSFORMER	
TPA 0250SQ, TPA 0200SQ					
010	2837077-0000		1	BUSBAR	
T40T3200	67379-0254		1	TRANSFORMER	
Common Parts					
040	32544-0000		1	INSULATION NUT	
050	28509-0000		2	WASHER	
060	32079-0000		1	WASHER	
150	312602-0312		1	HEXAGON NUT, EN 24032 M6M M4 NIPLBR	
200	312105-0295		1	SCREW, M6S ISO 4017 M4X20 A4 70	
210	90458-0058		1	SCREW M5X60 A280	
T40W3200	2562736-0002		1	COAXIAL CABLE	

Pos	Part No	UN	Qty	Description	Page No

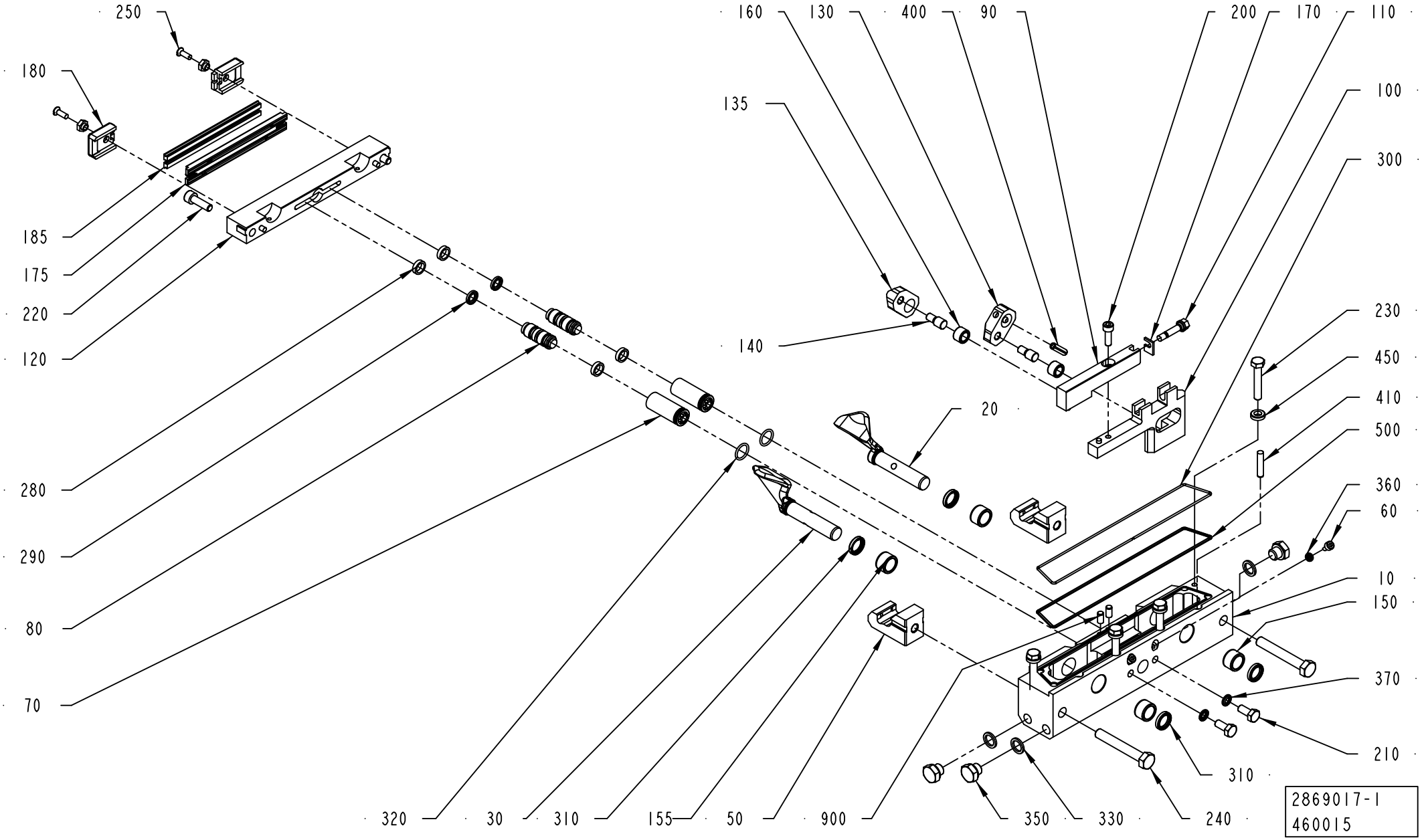
250
180
185
175
220
120
280
290
80
70
320
30
310
155
50
900
160
130
400
90
200
170
110
135
100
300
140
230
450
410
500
20
360
60
10
150
370
210
310
350
330
240
2869017-1
460015

ECM: 496743 - 20110701
Group number: 2869017-0100
Assembly Drawing: 2869017-1_1_AF

This list covers pages from 4-126 to 4-133

Pos	Part No	UN	Qty	Description	Page No
TBA 0080S (See drawing on page: 4-126)					
010	2950888-0000		1	BEARING HOUSING	
020	3147236-0000		1	FOLDING FLAP	
030	3147237-0000		1	FOLDING FLAP	
090	2950890-0000		1	CARRIER RULER	
100	2950889-0000		1	CARRIER RULER	
110	2950891-0000		1	ADJUSTING SCREW	
120	2950892-0000		1	CUTTING JAW	
130	2950893-0000		1	CARRIER	
135	2950894-0000		1	CARRIER	
150	33408-0000		2	BEARING	
155	33408-0000		2	BEARING	
175	2683961-0000		2	CUTTING RAIL	
180	272427-0000		2	BRACKET	
185	1566761-0000		2	DOLLY	
220	312115-0374		2	SCREW ISO4762 M6X30 A4 80	
230	312105-0376		4	SCREW, M6S ISO 4014 M6X35 A4 80	
250	312145-0289		2	SCREW ISO 2009 MFS M4X10 A4	
450	315115-0153		4	WASHER PLAIN, TBRB 6,4/12 H=3	
900	311103-0305		2	PARALLEL PIN ISO 2338 5M6X10 A1	
TBA 0100B, TBA 0125S (See drawing on page: 4-126)					
010	2916881-0000		1	BEARING HOUSING	
020	2597663-0000		1	FOLDING FLAP	
030	2532539-0000		1	FOLDING FLAP	
090	752015-0000		1	RULERPART R	
100	752014-0000		1	RULERPART R	
120	2927588-0000		1	CUTTING JAW	
130	2527724-0000		1	CARRIER	
135	2665718-0000		1	CARRIER	
150	33408-0000		2	BEARING	
155	33408-0000		2	BEARING	
175	2975162-0000		2	CUTTING RAIL	
180	2927589-0000		2	BRACKET	
185	2949862-0004		2	DOLLY	
220	312115-0374		2	SCREW ISO4762 M6X30 A4 80	
230	312105-0376		4	SCREW, M6S ISO 4014 M6X35 A4 80	
250	312145-0289		2	SCREW ISO 2009 MFS M4X10 A4	
450	315115-0153		4	WASHER PLAIN, TBRB 6,4/12 H=3	
900	311103-0305		2	PARALLEL PIN ISO 2338 5M6X10 A1	
TBA 0160S, TBA 0200S (See drawing on page: 4-126)					
010	2970615-0000		1	BEARING HOUSING	
020	2532542-0000		1	FOLDING FLAP	
030	2532543-0000		1	FOLDING FLAP	
090	752009-0000		1	RULERPART R	
100	752010-0000		1	RULERPART R	
110	751579-0000		1	ADJUSTING SCREW	
120	3113803-0000		1	CUTTING JAW	
130	272419-0000		1	CARRIER	
135	272419-0000		1	CARRIER	
150	33408-0000		2	BEARING	
155	33408-0000		2	BEARING	
175	2890692-0000		2	CUTTING RAIL	
180	1348053-0000		2	BRACKET	
185	1110083-0003		2	DOLLY	
220	312115-0370		2	SCREW ISO4762 M6X20 A4 80	
230	312105-0376		4	SCREW, M6S ISO 4014 M6X35 A4 80	
250	312145-0291		2	SCREW ISO 2009 MFS M4X12 A4	
450	315115-0153		4	WASHER PLAIN, TBRB 6,4/12 H=3	
TBA 0200B, TBA 0250B, TBA 0330S (See drawing on page: 4-126)					
010	2869201-0000		1	BEARING HOUSING	
020	3080559-0000		1	FOLDING FLAP	
030	3080560-0000		1	FOLDING FLAP	
090	751577-0000		1	RULERPART R	
100	751575-0000		1	RULERPART R	
110	751579-0000		1	ADJUSTING SCREW	
120	3113802-0000		1	CUTTING JAW	
130	272419-0000		1	CARRIER	
135	272419-0000		1	CARRIER	
150	33408-0000		2	BEARING	
155	33408-0000		2	BEARING	
175	2890692-0000		2	CUTTING RAIL	
180	1348053-0000		2	BRACKET	
185	1110083-0003		2	DOLLY	
220	312115-0370		2	SCREW ISO4762 M6X20 A4 80	
230	312105-0376		4	SCREW, M6S ISO 4014 M6X35 A4 80	
250	312145-0291		2	SCREW ISO 2009 MFS M4X12 A4	
450	315115-0153		4	WASHER PLAIN, TBRB 6,4/12 H=3	
900	311103-0305		2	PARALLEL PIN ISO 2338 5M6X10 A1	
TBA 0200E (See drawing on page: 4-132)					
010	2947184-0000		1	BEARING HOUSING	
020	3099249-0000		1	FLAP	
025	3013509-0000		1	SHAFT	
030	3099250-0000		1	FLAP	
035	3013512-0000		1	SHAFT	

Machine Type | Group Description | Used-In | Group Number | Page No

CUTTING JAW

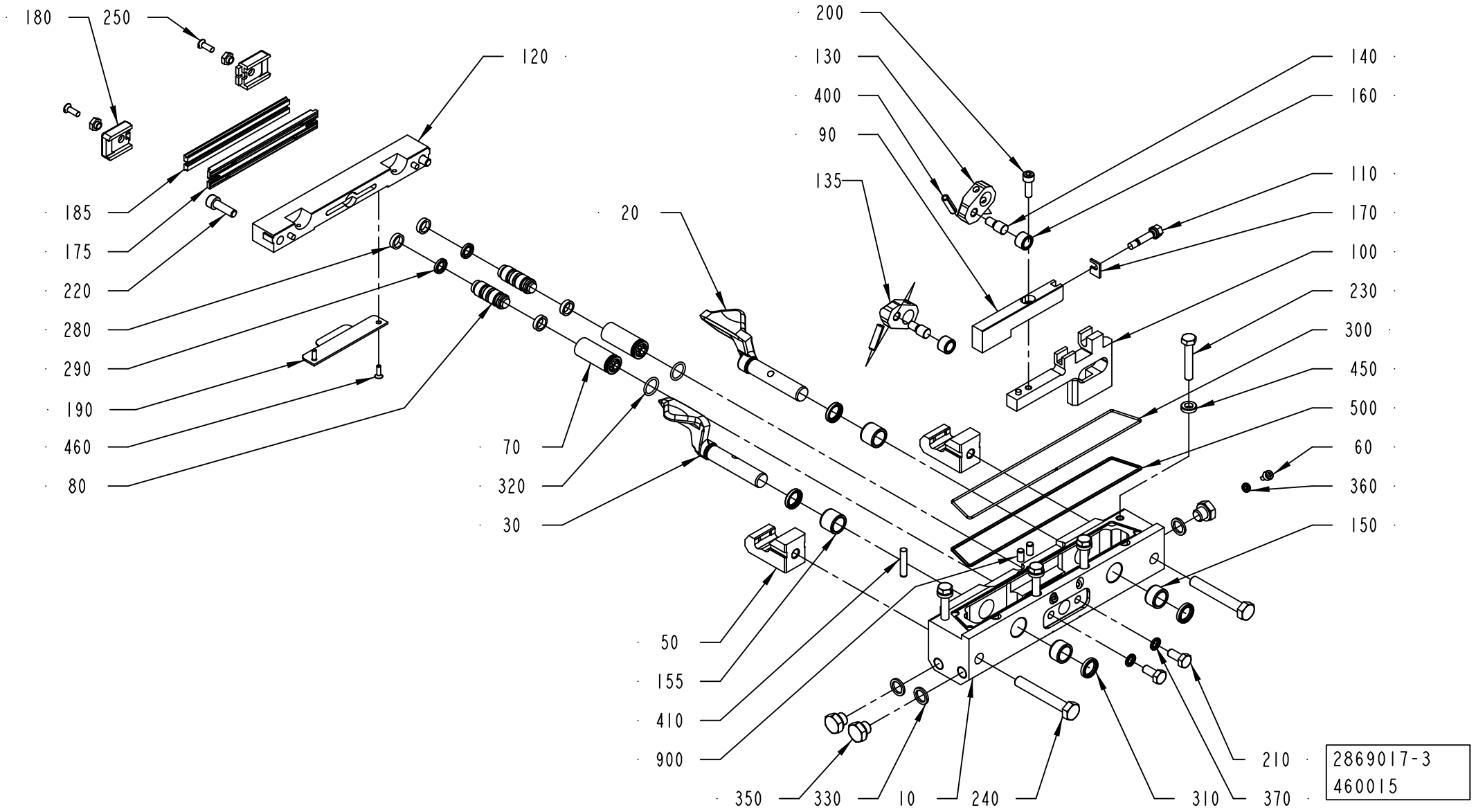
180
250
120
200
130
400
90
135
140
160
110
170
100
230
300
450
500
60
360
150
185
175
220
280
290
190
460
80
20
70
320
30
50
155
410
900
350
330
10
240
310
370
210
2869017-3
460015

Pos	Part No	UN	Qty	Description	Page No
TBA 0200E (Cont'd) (See drawing on page: 4-132)					
090	574370-0000		1	CARRIER RULER RIGHT	
100	574369-0000		1	CARRIER RULER RIGHT	
110	751579-0000		1	ADJUSTING SCREW	
120	3033995-0000		1	CUTTING JAW	
130	272419-0000		1	CARRIER	
135	272419-0000		1	CARRIER	
150	33408-0000		2	BEARING	
155	33408-0000		2	BEARING	
175	3033996-0000		2	CUTTING RAIL	
180	1348053-0000		2	BRACKET	
185	1110083-0003		2	DOLLY	
190	3035454-0000		1	VOLUME BULGE	
220	312115-0370		2	SCREW ISO4762 M6X20 A4 80	
230	312105-0376		4	SCREW, M6S ISO 4014 M6X35 A4 80	
250	312145-0291		2	SCREW ISO 2009 MFS M4X12 A4	
255	312115-0327		2	SCREW ISO4762 M5X12 A4 80	
450	315115-0153		4	WASHER PLAIN, TBRB 6,4/12 H=3	
460	312145-0220		2	SCREW ISO 2009 MFS M3X6 A4	
900	311103-0305		2	PARALLEL PIN ISO 2338 5M6X10 A1	
TBA 0200M, TBA 0250S (See drawing on page: 4-126)					
010	2947184-0000		1	BEARING HOUSING	
020	2532542-0000		1	FOLDING FLAP	
030	2532543-0000		1	FOLDING FLAP	
090	574370-0000		1	CARRIER RULER RIGHT	
100	574369-0000		1	CARRIER RULER RIGHT	
110	751579-0000		1	ADJUSTING SCREW	
120	3113804-0000		1	CUTTING JAW	
130	272419-0000		1	CARRIER	
135	272419-0000		1	CARRIER	
150	33408-0000		2	BEARING	
155	33408-0000		2	BEARING	
175	2890692-0000		2	CUTTING RAIL	
180	1348053-0000		2	BRACKET	
185	1110083-0003		2	DOLLY	
220	312115-0370		2	SCREW ISO4762 M6X20 A4 80	
230	312105-0376		4	SCREW, M6S ISO 4014 M6X35 A4 80	
250	312145-0291		2	SCREW ISO 2009 MFS M4X12 A4	
450	315115-0153		4	WASHER PLAIN, TBRB 6,4/12 H=3	
900	311103-0305		2	PARALLEL PIN ISO 2338 5M6X10 A1	
TBA 0200SQ, TBA 0250SQ (See drawing on page: 4-128)					
010	2976822-0000		1	BEARING HOUSING	
020	2976826-0000		1	FOLDING FLAP	
030	2976827-0000		1	FOLDING FLAP	
090	2976825-0000		1	CARRIER RULER	
100	2976824-0000		1	CARRIER RULER	
110	751579-0000		1	ADJUSTING SCREW	
120	3113805-0000		1	CUTTING JAW	
130	2976823-0000		1	CARRIER	
135	2976823-0000		1	CARRIER	
150	929316-0001		2	BEARING	
155	929316-0002		2	BEARING	
175	2890692-0000		2	CUTTING RAIL	
180	1348053-0000		2	BRACKET	
185	1110083-0003		2	DOLLY	
190	3006048-0000		1	VOLUME BULGE	
220	312115-0370		2	SCREW ISO4762 M6X20 A4 80	
230	312105-0376		4	SCREW, M6S ISO 4014 M6X35 A4 80	
250	312145-0291		2	SCREW ISO 2009 MFS M4X12 A4	
450	315115-0153		4	WASHER PLAIN, TBRB 6,4/12 H=3	
460	312145-0220		2	SCREW ISO 2009 MFS M3X6 A4	
900	311103-0305		2	PARALLEL PIN ISO 2338 5M6X10 A1	
TBA 0284B, TBA 0300S (See drawing on page: 4-126)					
010	3010757-0000		1	BEARING HOUSING	
020	3010758-0000		1	FOLDING FLAP	
030	3010759-0000		1	FOLDING FLAP	
090	3010761-0000		1	CARRIER RULER	
100	3010760-0000		1	CARRIER RULER	
110	751579-0000		1	ADJUSTING SCREW	
120	3113802-0000		1	CUTTING JAW	
130	272419-0000		1	CARRIER	
135	272419-0000		1	CARRIER	
150	33408-0000		2	BEARING	
175	2890692-0000		2	CUTTING RAIL	
180	1348053-0000		2	BRACKET	
185	1110083-0003		2	DOLLY	
220	312115-0370		2	SCREW ISO4762 M6X20 A4 80	
230	312105-0376		4	SCREW, M6S ISO 4014 M6X35 A4 80	
250	312145-0291		2	SCREW ISO 2009 MFS M4X12 A4	
450	315115-0153		4	WASHER PLAIN, TBRB 6,4/12 H=3	
900	311103-0305		2	PARALLEL PIN ISO 2338 5M6X10 A1	
TBA 0375S (See drawing on page: 4-130)					
010	3067239-0000		1	BEARING HOUSING	
020	3105452-0000		1	FOLDING FLAP	

Machine Type | Group Description | Used-In | Group Number | Page No

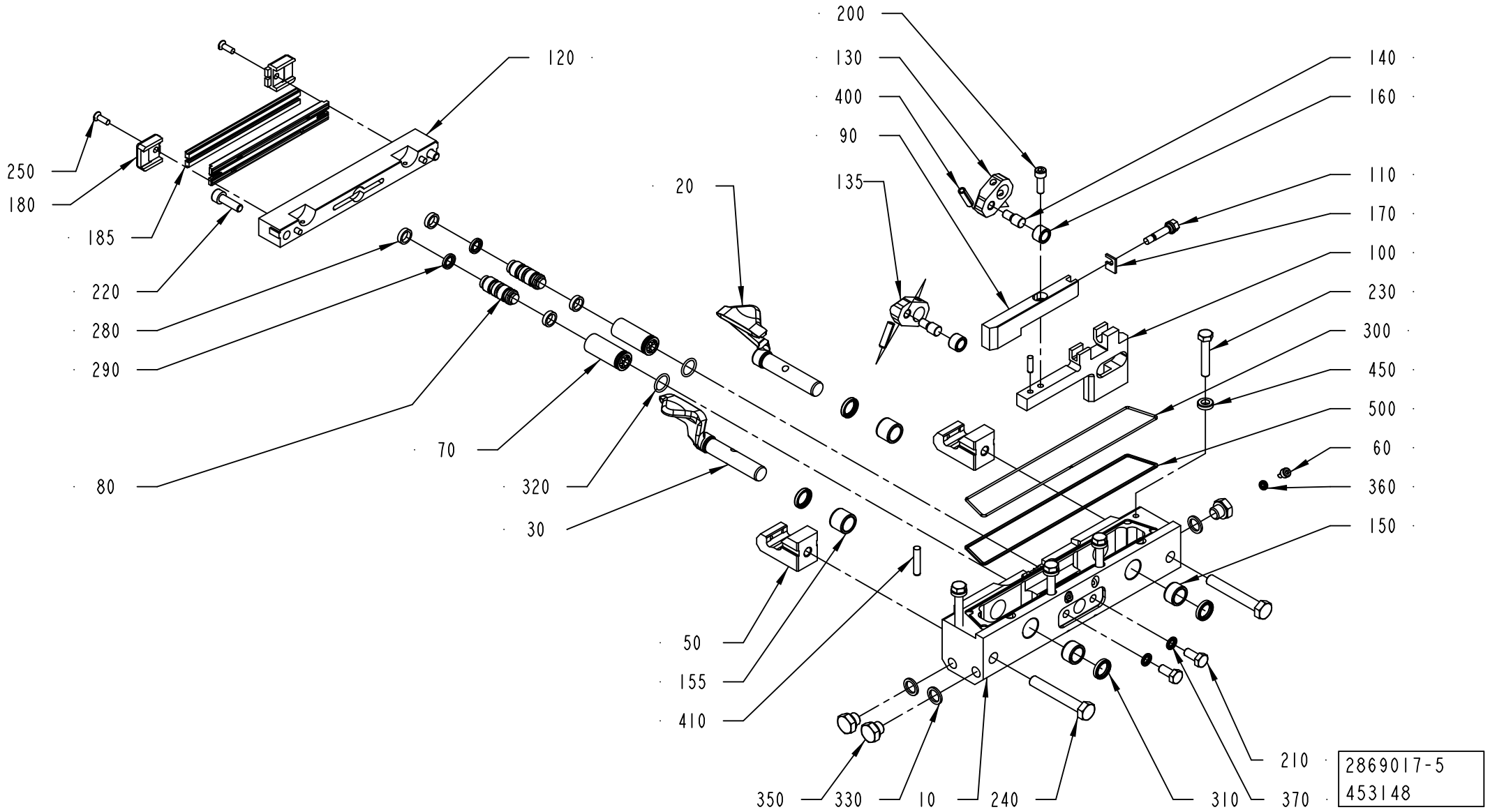
200
130
400
90
135
140
160
110
170
100
230
300
450
500
60
360
150
120
250
180
185
220
280
290
80
20
70
320
30
50
155
410
350
330
10
240
310
370
210
2869017-5
453148

ECM: 496743 - 20110701
Group number: 2869017-0100
Assembly Drawing: 2869017-5_1_AA

This list covers pages from 4-126 to 4-133

Pos	Part No	UN	Qty	Description	Page No
TBA 0375S (Cont'd) (See drawing on page: 4-130)					
030	3067241-0000		1	FOLDING FLAP	
090	3067242-0000		1	CARRIER RULER	
100	3067243-0000		1	CARRIER RULER	
110	751579-0000		1	ADJUSTING SCREW	
120	3067244-0000		1	CUTTING JAW	
130	2976823-0000		1	CARRIER	
135	2976823-0000		1	CARRIER	
150	929316-0001		2	BEARING	
155	929316-0002		2	BEARING	
175	3096232-0000		2	CUTTING RAIL	
180	3096233-0000		2	BRACKET	
185	1110083-0005		2	DOLLY	
220	312115-0370		2	SCREW ISO4762 M6X20 A4 80	
230	312105-0376		4	SCREW, M6S ISO 4014 M6X35 A4 80	
250	312145-0291		2	SCREW ISO 2009 MFS M4X12 A4	
450	315115-0153		4	WASHER PLAIN, TBRB 6,4/12 H=3	
TPA 0125SQ (See drawing on page: 4-126)					
010	2906021-0000		1	BEARING HOUSING	
020	2906019-0000		1	FOLDING FLAP	
030	2906020-0000		1	FOLDING FLAP	
090	2845903-0000		1	CARRIER RULER	
100	2906018-0000		1	CARRIER RULER	
110	751579-0000		1	ADJUSTING SCREW	
120	2907732-0000		1	CUTTING JAW	
130	2846012-0000		1	CARRIER	
135	2846012-0000		1	CARRIER	
150	33408-0000		2	BEARING	
155	33408-0000		2	BEARING	
175	2890692-0000		2	CUTTING RAIL	
180	1348053-0000		2	BRACKET	
185	1110083-0003		2	DOLLY	
220	312115-0370		2	SCREW ISO4762 M6X20 A4 80	
230	312105-0374		4	SCREW, M6S ISO 4014 M6X30 A4 80	
250	312145-0291		2	SCREW ISO 2009 MFS M4X12 A4	
450	315105-0153		4	WASHER PLAIN, 6,4X12X1,5 A4 BRB	
900	311103-0305		2	PARALLEL PIN ISO 2338 5M6X10 A1	
TPA 0250SQ, TPA 0200SQ (See drawing on page: 4-126)					
010	2962055-0000		1	BEARING HOUSING	
020	1350985-0000		1	FOLDING FLAP RIGHT	
030	1350986-0000		1	FOLDING FLAP LEFT	
090	1350996-0000		1	CARRIER RULER RIGHT	
100	2978920-0000		1	CARRIER RULER	
110	751579-0000		1	ADJUSTING SCREW	
120	2965110-0000		1	3UTTING JAW	
130	272419-0000		1	CARRIER	
135	272419-0000		1	CARRIER	
150	929316-0001		2	BEARING	
155	929316-0002		2	BEARING	
175	2890692-0000		2	CUTTING RAIL	
180	1348053-0000		2	BRACKET	
185	1110083-0003		2	DOLLY	
220	312115-0370		2	SCREW ISO4762 M6X20 A4 80	
230	312105-0376		4	SCREW, M6S ISO 4014 M6X35 A4 80	
250	312145-0291		2	SCREW ISO 2009 MFS M4X12 A4	
450	315115-0153		4	WASHER PLAIN, TBRB 6,4/12 H=3	
900	311103-0305		2	PARALLEL PIN ISO 2338 5M6X10 A1	
TPA 0330SQ (See drawing on page: 4-126)					
010	3002881-0000		1	BEARING HOUSING	
020	3002884-0000		1	FOLDING FLAP	
030	3002883-0000		1	FOLDING FLAP	
090	3002886-0000		1	CARRIER RULER	
100	3002885-0000		1	CARRIER RULER	
110	751579-0000		1	ADJUSTING SCREW	
120	3002882-0000		1	CUTTING JAW	
130	2976823-0000		1	CARRIER	
135	2976823-0000		1	CARRIER	
150	929316-0001		2	BEARING	
155	929316-0002		2	BEARING	
175	2890692-0000		2	CUTTING RAIL	
180	1348053-0000		2	BRACKET	
185	1110083-0003		2	DOLLY	
220	312115-0370		2	SCREW ISO4762 M6X20 A4 80	
230	312105-0376		4	SCREW, M6S ISO 4014 M6X35 A4 80	
250	312145-0291		2	SCREW ISO 2009 MFS M4X12 A4	
450	315115-0153		4	WASHER PLAIN, TBRB 6,4/12 H=3	
900	311103-0305		2	PARALLEL PIN ISO 2338 5M6X10 A1	
Common Parts					
050	2888463-0000		2	CATCH	
060	752476-0000		2	SCREW	
070	752288-0000		2	SLEEVE	
080	752115-0000		2	PLUNGER	
140	256607-0000		2	AXLE PIN	
160	22463-0000		2	ROLL	

Machine Type | Group Description | Used-In | Group Number | Page No

CUTTING JAW

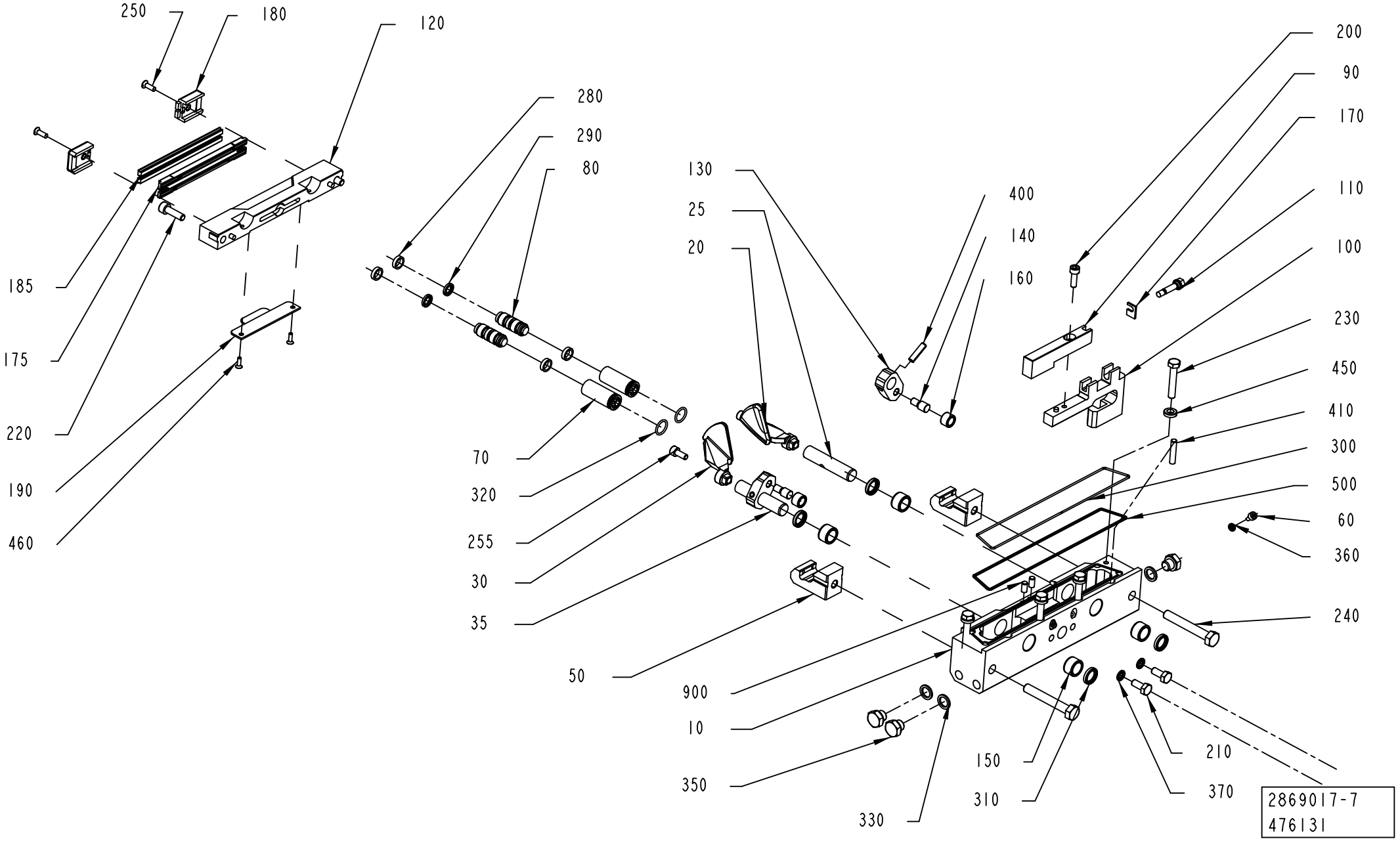
250
180
120
280
290
80
130
25
20
400
140
160
200
90
170
110
100
230
450
410
300
500
60
360
240
185
175
220
190
460
70
320
255
30
35
50
900
10
350
330
150
310
210
370
2869017-7
476131

ECM: 496743 - 20110701
Group number: 2869017-0100
Assembly Drawing: 2869017-7_1_AA

This list covers pages from 4-126 to 4-133

Pos	Part No	UN	Qty	Description	Page No
Common Parts (Cont'd)					
170	751580-0000		1	SHIM	
200	312115-0329		1	SCREW ISO4762 M5X16 A4 80	
210	312105-0367		2	SCREW, M6S ISO 4017 M6X14 A4 80	
240	312105-0462		2	SCREW, M6S ISO 4014 M8X55 A4 80	
280	90091-0169		4	WEAR RING 12X15X3,2 MM	
290	90091-0216		2	PISTON SEAL GLYD RING 7,1X12X2,2 MM	
300	90242-0093	MM	500	O-RING MATERIAL 1,5 MM	
310	90459-5936		4	BEARING SEAL 12X16X3 MM	
320	315202-0110		2	O-RING 12,1X1,6 MM	
330	315237-0109		3	WASHER,PL.RND.AL.10/14,H=1,5	
350	90330-0066		3	PLUG, G1/8EXT, G1/8	
360	315211-0101		2	BONDED SEAL SS/NBR90 M4	
370	315211-0103		2	BONDED SEAL SS/NBR90 M6	
400	311111-0308		2	SPRING PIN ISO 8752 5X20-ST	
410	311103-0312		1	PARALLEL PIN ISO 2338 5M6X25 A1	
500	90153-0015		1	ADHESIVE,LOCTITE IS 496/CYANOLOT 303	

Pos	Part No	UN	Qty	Description	Page No

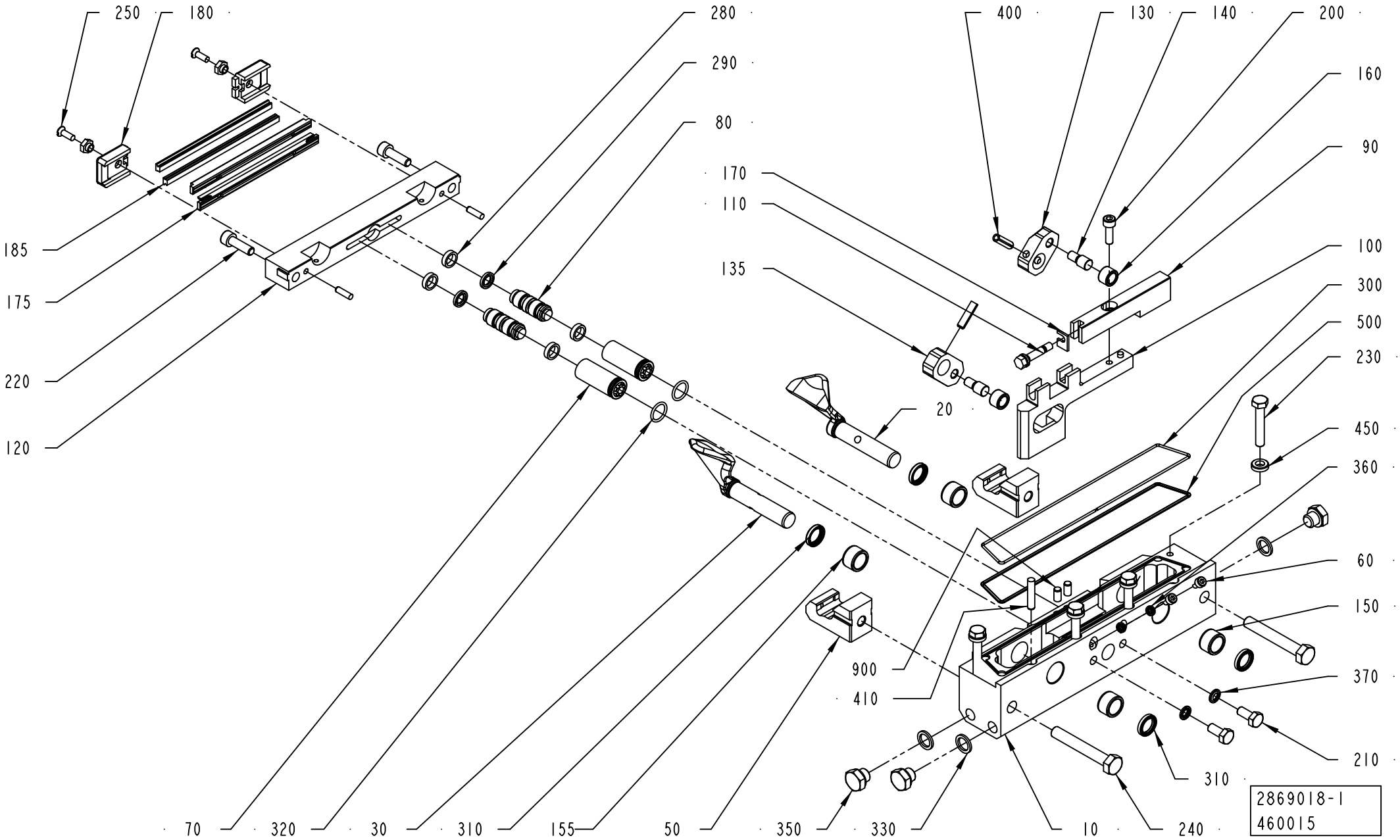
250
180
280
290
80
170
110
135
400
130
140
200
160
90
100
300
500
230
450
360
60
150
370
210
185
175
220
120
20
900
410
70
320
30
310
155
50
350
330
10
240
310
2869018-1
460015

ECM: 496742 - 20110701
Group number: 2869018-0100
Assembly Drawing: 2869018-1_1_AF

This list covers pages from 4-134 to 4-141

Pos	Part No	UN	Qty	Description	Page No
TBA 0080S (See drawing on page: 4-134)					
010	2950888-0000		1	BEARING HOUSING	
020	3147236-0000		1	FOLDING FLAP	
030	3147237-0000		1	FOLDING FLAP	
090	2950896-0000		1	CARRIER RULER	
100	2950895-0000		1	CARRIER RULER	
110	2950891-0000		1	ADJUSTING SCREW	
120	2950892-0000		1	CUTTING JAW	
130	2950893-0000		1	CARRIER	
135	2950894-0000		1	CARRIER	
150	33408-0000		2	BEARING	
155	33408-0000		2	BEARING	
175	2683961-0000		2	CUTTING RAIL	
180	272427-0000		2	BRACKET	
185	1566761-0000		2	DOLLY	
220	312105-0374		2	SCREW, M6S ISO 4014 M6X30 A4 80	
230	312105-0376		4	SCREW, M6S ISO 4014 M6X35 A4 80	
250	312145-0289		2	SCREW ISO 2009 MFS M4X10 A4	
450	315115-0153		4	WASHER PLAIN, TBRB 6,4/12 H=3	
900	311103-0305		2	PARALLEL PIN ISO 2338 5M6X10 A1	
TBA 0100B, TBA 0125S (See drawing on page: 4-134)					
010	2916881-0000		1	BEARING HOUSING	
020	2597663-0000		1	FOLDING FLAP	
030	2532539-0000		1	FOLDING FLAP	
090	752017-0000		1	RULERPART L	
100	752016-0000		1	RULERPART L	
110	751579-0000		1	ADJUSTING SCREW	
120	2927588-0000		1	CUTTING JAW	
130	2527724-0000		1	CARRIER	
135	2665718-0000		1	CARRIER	
150	33408-0000		2	BEARING	
155	33408-0000		2	BEARING	
175	2975162-0000		2	CUTTING RAIL	
180	2927589-0000		2	BRACKET	
185	2949862-0004		2	DOLLY	
220	312105-0374		2	SCREW, M6S ISO 4014 M6X30 A4 80	
230	312105-0376		4	SCREW, M6S ISO 4014 M6X35 A4 80	
250	312145-0289		2	SCREW ISO 2009 MFS M4X10 A4	
450	315115-0153		4	WASHER PLAIN, TBRB 6,4/12 H=3	
900	311103-0305		2	PARALLEL PIN ISO 2338 5M6X10 A1	
TBA 0160S, TBA 0200S (See drawing on page: 4-134)					
010	2970615-0000		1	BEARING HOUSING	
020	2532542-0000		1	FOLDING FLAP	
030	2532543-0000		1	FOLDING FLAP	
090	752011-0000		1	RULERPART L	
100	752012-0000		1	RULERPART L	
110	751579-0000		1	ADJUSTING SCREW	
120	3113803-0000		1	CUTTING JAW	
130	272419-0000		1	CARRIER	
135	272419-0000		1	CARRIER	
150	33408-0000		2	BEARING	
155	33408-0000		2	BEARING	
175	2890692-0000		2	CUTTING RAIL	
180	1348053-0000		2	BRACKET	
185	1110083-0003		2	DOLLY	
220	312115-0370		2	SCREW ISO4762 M6X20 A4 80	
230	312105-0376		4	SCREW, M6S ISO 4014 M6X35 A4 80	
250	312145-0291		2	SCREW ISO 2009 MFS M4X12 A4	
450	315115-0153		4	WASHER PLAIN, TBRB 6,4/12 H=3	
TBA 0200B, TBA 0250B, TBA 0330S (See drawing on page: 4-134)					
010	2869201-0000		1	BEARING HOUSING	
020	3080559-0000		1	FOLDING FLAP	
030	3080560-0000		1	FOLDING FLAP	
090	751578-0000		1	RULERPART L	
100	751576-0000		1	RULERPART L	
110	751579-0000		1	ADJUSTING SCREW	
120	3113802-0000		1	CUTTING JAW	
130	272419-0000		1	CARRIER	
135	272419-0000		1	CARRIER	
150	33408-0000		2	BEARING	
155	33408-0000		2	BEARING	
175	2890692-0000		2	CUTTING RAIL	
180	1348053-0000		2	BRACKET	
185	1110083-0003		2	DOLLY	
220	312115-0370		2	SCREW ISO4762 M6X20 A4 80	
230	312105-0376		4	SCREW, M6S ISO 4014 M6X35 A4 80	
250	312145-0291		2	SCREW ISO 2009 MFS M4X12 A4	
450	315115-0153		4	WASHER PLAIN, TBRB 6,4/12 H=3	
900	311103-0305		2	PARALLEL PIN ISO 2338 5M6X10 A1	
TBA 0200E (See drawing on page: 4-140)					
010	2947184-0000		1	BEARING HOUSING	
020	3099249-0000		1	FLAP	
025	3013509-0000		1	SHAFT	
030	3099250-0000		1	FLAP	

Machine Type | Group Description | Used-In | Group Number | Page No

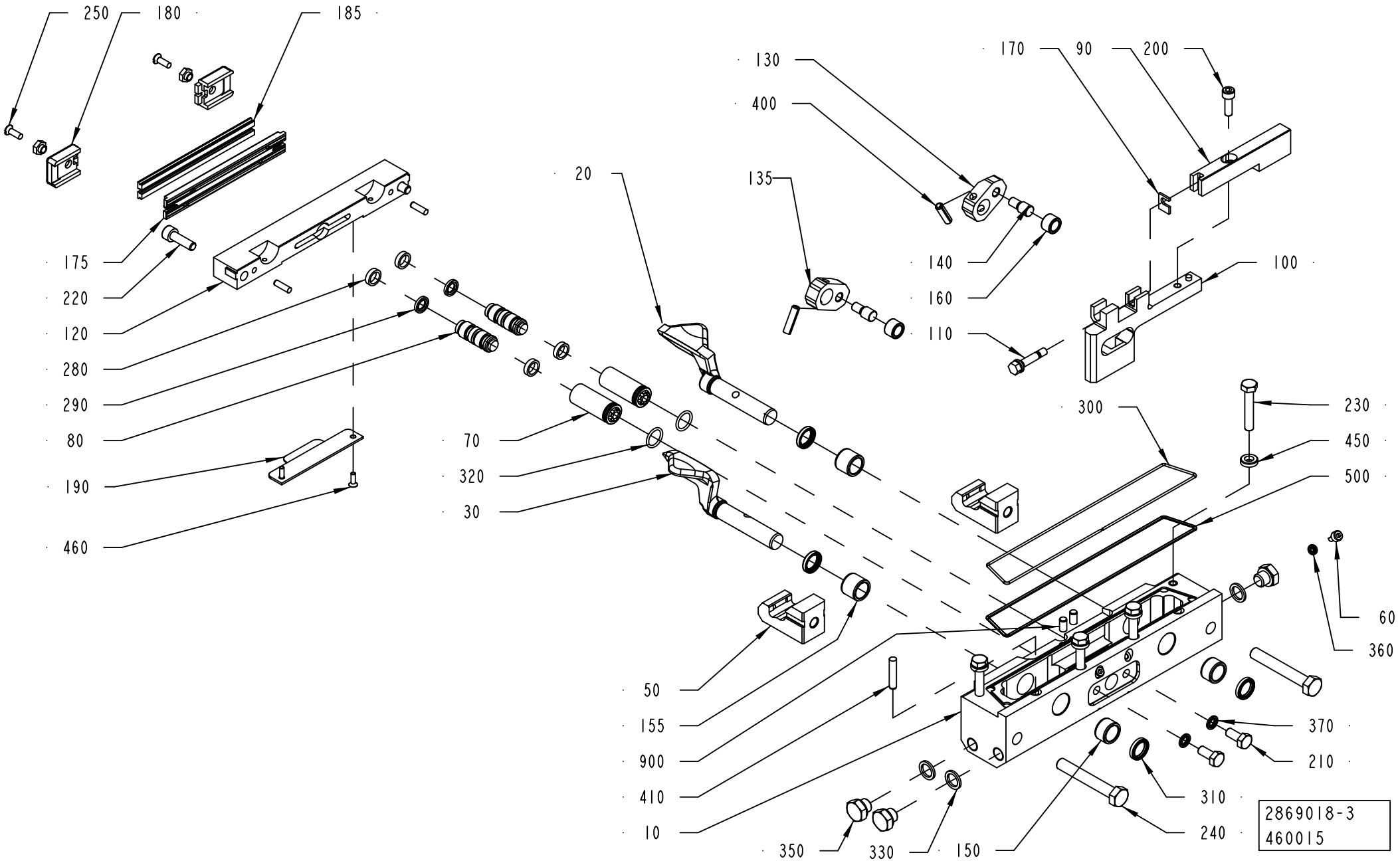
250
180
185
175
220
120
280
290
80
190
460
20
130
400
135
140
160
110
170
90
200
100
300
230
450
500
70
320
30
50
155
900
410
10
60
360
370
210
310
240
350
330
150
2869018-3
460015

Pos	Part No	UN	Qty	Description	Page No
TBA 0200E (Cont'd) (See drawing on page: 4-140)					
035	3013512-0000		1	SHAFT	
090	574372-0000		1	CARRIER RULER LEFT	
100	574371-0000		1	CARRIER RULER LEFT	
110	751579-0000		1	ADJUSTING SCREW	
120	3033995-0000		1	CUTTING JAW	
130	272419-0000		1	CARRIER	
135	272419-0000		1	CARRIER	
150	33408-0000		2	BEARING	
155	33408-0000		2	BEARING	
175	3033996-0000		2	CUTTING RAIL	
180	1348053-0000		2	BRACKET	
185	1110083-0003		2	DOLLY	
190	3035454-0000		1	VOLUME BULGE	
220	312115-0370		2	SCREW ISO4762 M6X20 A4 80	
230	312105-0376		4	SCREW, M6S ISO 4014 M6X35 A4 80	
250	312145-0291		2	SCREW ISO 2009 MFS M4X12 A4	
255	312115-0327		2	SCREW ISO4762 M5X12 A4 80	
450	315115-0153		4	WASHER PLAIN, TBRB 6,4/12 H=3	
460	312145-0220		2	SCREW ISO 2009 MFS M3X6 A4	
900	311103-0305		2	PARALLEL PIN ISO 2338 5M6X10 A1	
TBA 0200M, TBA 0250S (See drawing on page: 4-134)					
010	2947184-0000		1	BEARING HOUSING	
020	2532542-0000		1	FOLDING FLAP	
030	2532543-0000		1	FOLDING FLAP	
090	574372-0000		1	CARRIER RULER LEFT	
100	574371-0000		1	CARRIER RULER LEFT	
110	751579-0000		1	ADJUSTING SCREW	
120	3113804-0000		1	CUTTING JAW	
130	272419-0000		1	CARRIER	
135	272419-0000		1	CARRIER	
150	33408-0000		2	BEARING	
155	33408-0000		2	BEARING	
175	2890692-0000		2	CUTTING RAIL	
180	1348053-0000		2	BRACKET	
185	1110083-0003		2	DOLLY	
220	312115-0370		2	SCREW ISO4762 M6X20 A4 80	
230	312105-0376		4	SCREW, M6S ISO 4014 M6X35 A4 80	
250	312145-0291		2	SCREW ISO 2009 MFS M4X12 A4	
450	315115-0153		4	WASHER PLAIN, TBRB 6,4/12 H=3	
900	311103-0305		2	PARALLEL PIN ISO 2338 5M6X10 A1	
TBA 0200SQ, TBA 0250SQ (See drawing on page: 4-136)					
010	2976822-0000		1	BEARING HOUSING	
020	2976826-0000		1	FOLDING FLAP	
030	2976827-0000		1	FOLDING FLAP	
090	2976828-0000		1	CARRIER RULER	
100	2976829-0000		1	CARRIER RULER	
110	751579-0000		1	ADJUSTING SCREW	
120	3113805-0000		1	CUTTING JAW	
130	2976823-0000		1	CARRIER	
135	2976823-0000		1	CARRIER	
150	929316-0001		2	BEARING	
155	929316-0002		2	BEARING	
175	2890692-0000		2	CUTTING RAIL	
180	1348053-0000		2	BRACKET	
185	1110083-0003		2	DOLLY	
190	3006048-0000		1	VOLUME BULGE	
220	312115-0370		2	SCREW ISO4762 M6X20 A4 80	
230	312105-0376		4	SCREW, M6S ISO 4014 M6X35 A4 80	
250	312145-0291		2	SCREW ISO 2009 MFS M4X12 A4	
450	315115-0153		4	WASHER PLAIN, TBRB 6,4/12 H=3	
460	312145-0220		2	SCREW ISO 2009 MFS M3X6 A4	
900	311103-0305		2	PARALLEL PIN ISO 2338 5M6X10 A1	
TBA 0284B, TBA 0300S (See drawing on page: 4-134)					
010	3010757-0000		1	BEARING HOUSING	
020	3010758-0000		1	FOLDING FLAP	
030	3010759-0000		1	FOLDING FLAP	
090	3010762-0000		1	CARRIER RULER	
100	3010763-0000		1	CARRIER RULER	
110	751579-0000		1	ADJUSTING SCREW	
120	3113802-0000		1	CUTTING JAW	
130	272419-0000		1	CARRIER	
135	272419-0000		1	CARRIER	
150	33408-0000		2	BEARING	
155	33408-0000		2	BEARING	
175	2890692-0000		2	CUTTING RAIL	
180	1348053-0000		2	BRACKET	
185	1110083-0003		2	DOLLY	
220	312115-0370		2	SCREW ISO4762 M6X20 A4 80	
230	312105-0376		4	SCREW, M6S ISO 4014 M6X35 A4 80	
250	312145-0291		2	SCREW ISO 2009 MFS M4X12 A4	
450	315115-0153		4	WASHER PLAIN, TBRB 6,4/12 H=3	
900	311103-0305		2	PARALLEL PIN ISO 2338 5M6X10 A1	
TBA 0375S (See drawing on page: 4-138)					

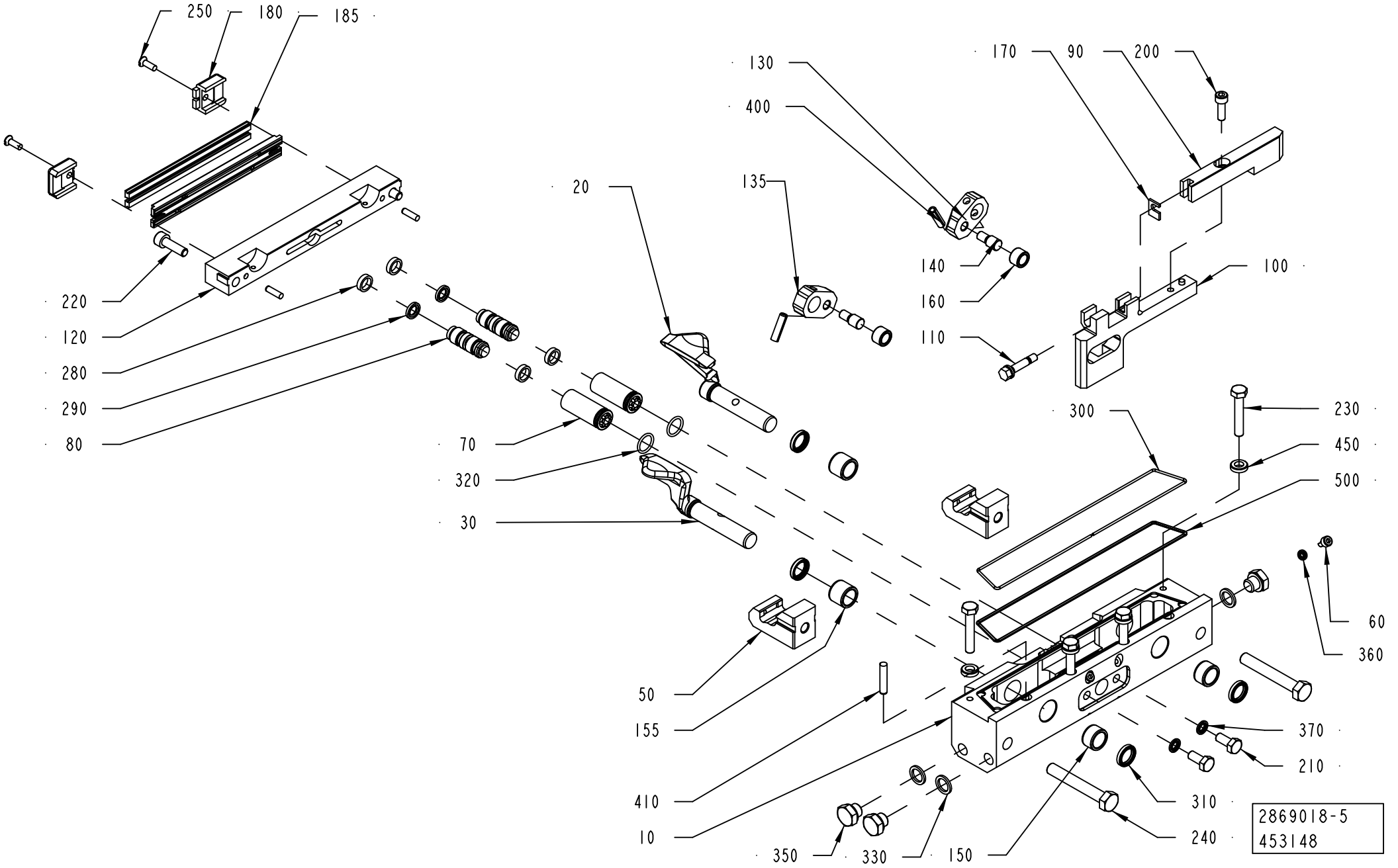
250
180
185
130
400
135
20
170
90
200
140
160
110
100
220
120
280
290
80
70
320
30
300
230
450
500
60
360
50
155
410
10
350
330
150
370
210
310
240
2869018-5
453148

ECM: 496742 - 20110701
Group number: 2869018-0100
Assembly Drawing: 2869018-5_1_AA

This list covers pages from 4-134 to 4-141

Pos	Part No	UN	Qty	Description	Page No
TBA 0375S (Cont'd) (See drawing on page: 4-138)					
010	3067239-0000		1	BEARING HOUSING	
020	3105452-0000		1	FOLDING FLAP	
030	3067241-0000		1	FOLDING FLAP	
090	3067245-0000		1	CARRIER RULER	
100	3067246-0000		1	CARRIER RULER	
110	751579-0000		1	ADJUSTING SCREW	
120	3067244-0000		1	CUTTING JAW	
130	2976823-0000		1	CARRIER	
135	2976823-0000		1	CARRIER	
150	929316-0001		2	BEARING	
155	929316-0002		2	BEARING	
175	3096232-0000		2	CUTTING RAIL	
180	3096233-0000		2	BRACKET	
185	1110083-0005		2	DOLLY	
220	312115-0370		2	SCREW ISO4762 M6X20 A4 80	
230	312105-0376		4	SCREW, M6S ISO 4014 M6X35 A4 80	
250	312145-0291		2	SCREW ISO 2009 MFS M4X12 A4	
450	315115-0153		4	WASHER PLAIN, TBRB 6,4/12 H=3	
TPA 0125SQ (See drawing on page: 4-134)					
010	2906021-0000		1	BEARING HOUSING	
020	2906019-0000		1	FOLDING FLAP	
030	2906020-0000		1	FOLDING FLAP	
090	2845909-0000		1	CARRIER RULER	
100	2906022-0000		1	CARRIER RULER	
110	751579-0000		1	ADJUSTING SCREW	
120	2907732-0000		1	CUTTING JAW	
130	2846012-0000		1	CARRIER	
135	2846012-0000		1	CARRIER	
150	33408-0000		2	BEARING	
155	33408-0000		2	BEARING	
175	2890692-0000		2	CUTTING RAIL	
180	1348053-0000		2	BRACKET	
185	1110083-0003		2	DOLLY	
220	312115-0370		2	SCREW ISO4762 M6X20 A4 80	
230	312105-0374		4	SCREW, M6S ISO 4014 M6X30 A4 80	
250	312145-0291		2	SCREW ISO 2009 MFS M4X12 A4	
450	315105-0153		4	WASHER PLAIN, 6,4X12X1,5 A4 BRB	
900	311103-0305		2	PARALLEL PIN ISO 2338 5M6X10 A1	
TPA 0250SQ, TPA 0200SQ (See drawing on page: 4-134)					
010	2962055-0000		1	BEARING HOUSING	
020	1350985-0000		1	FOLDING FLAP RIGHT	
030	1350986-0000		1	FOLDING FLAP LEFT	
090	1350998-0000		1	CARRIER RULER LEFT	
100	2978921-0000		1	CARRIER RULER	
110	751579-0000		1	ADJUSTING SCREW	
120	2965110-0000		1	3UTTING JAW	
130	272419-0000		1	CARRIER	
135	272419-0000		1	CARRIER	
150	929316-0001		2	BEARING	
155	929316-0002		2	BEARING	
175	2890692-0000		2	CUTTING RAIL	
180	1348053-0000		2	BRACKET	
185	1110083-0003		2	DOLLY	
220	312115-0370		2	SCREW ISO4762 M6X20 A4 80	
230	312105-0376		4	SCREW, M6S ISO 4014 M6X35 A4 80	
250	312145-0291		2	SCREW ISO 2009 MFS M4X12 A4	
450	315115-0153		4	WASHER PLAIN, TBRB 6,4/12 H=3	
900	311103-0305		2	PARALLEL PIN ISO 2338 5M6X10 A1	
TPA 0330SQ (See drawing on page: 4-134)					
010	3002881-0000		1	BEARING HOUSING	
020	3002884-0000		1	FOLDING FLAP	
030	3002883-0000		1	FOLDING FLAP	
090	3002887-0000		1	CARRIER RULER	
100	3002888-0000		1	CARRIER RULER	
110	751579-0000		1	ADJUSTING SCREW	
120	3002882-0000		1	CUTTING JAW	
130	2976823-0000		1	CARRIER	
135	2976823-0000		1	CARRIER	
150	929316-0001		2	BEARING	
155	929316-0002		2	BEARING	
175	2890692-0000		2	CUTTING RAIL	
180	1348053-0000		2	BRACKET	
185	1110083-0003		2	DOLLY	
220	312115-0370		2	SCREW ISO4762 M6X20 A4 80	
230	312105-0376		4	SCREW, M6S ISO 4014 M6X35 A4 80	
250	312145-0291		2	SCREW ISO 2009 MFS M4X12 A4	
450	315115-0153		4	WASHER PLAIN, TBRB 6,4/12 H=3	
900	311103-0305		2	PARALLEL PIN ISO 2338 5M6X10 A1	
Common Parts					
050	2888463-0000		2	CATCH	
060	752476-0000		2	SCREW	
070	752288-0000		2	SLEEVE	
080	752115-0000		2	PLUNGER	

Machine Type	Group Description	Used-In	Group Number	Page No

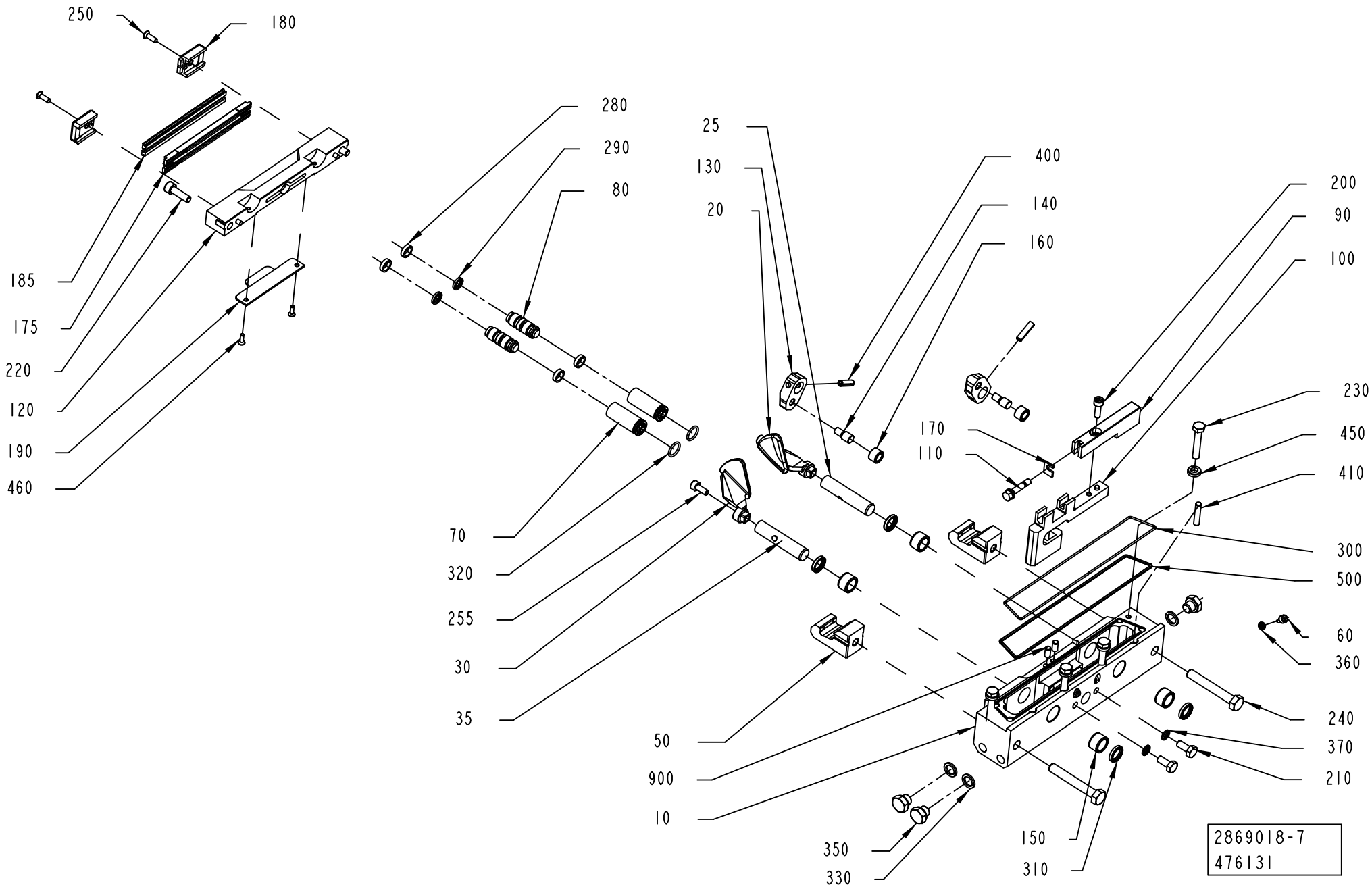
250
180
185
175
220
120
190
460
280
290
80
25
130
20
400
140
160
200
90
100
230
450
410
170
110
70
320
255
30
35
300
500
60
360
240
370
210
50
900
10
350
330
150
310
2869018-7
476131

ECM: 496742 - 20110701
Group number: 2869018-0100
Assembly Drawing: 2869018-7_1_AA

This list covers pages from 4-134 to 4-141

Pos	Part No	UN	Qty	Description	Page No
Common Parts (Cont'd)					
140	256607-0000		2	AXLE PIN	
160	22463-0000		2	ROLL	
170	751580-0000		1	SHIM	
200	312115-0329		1	SCREW ISO4762 M5X16 A4 80	
210	312105-0367		2	SCREW, M6S ISO 4017 M6X14 A4 80	
240	312105-0462		2	SCREW, M6S ISO 4014 M8X55 A4 80	
280	90091-0169		4	WEAR RING 12X15X3,2 MM	
290	90091-0216		2	PISTON SEAL GLYD RING 7,1X12X2,2 MM	
300	90242-0093	MM	500	O-RING MATERIAL 1,5 MM	
310	90459-5936		4	BEARING SEAL 12X16X3 MM	
320	315202-0110		2	O-RING 12,1X1,6 MM	
330	315237-0109		3	WASHER,PL.RND.AL.10/14,H=1,5	
350	90330-0066		3	PLUG, G1/8EXT, G1/8	
360	315211-0101		2	BONDED SEAL SS/NBR90 M4	
370	315211-0103		2	BONDED SEAL SS/NBR90 M6	
400	311111-0308		2	SPRING PIN ISO 8752 5X20-ST	
410	311103-0312		1	PARALLEL PIN ISO 2338 5M6X25 A1	
500	90153-0015		1	ADHESIVE,LOCTITE IS 496/CYANOLOT 303	

Pos	Part No	UN	Qty	Description	Page No

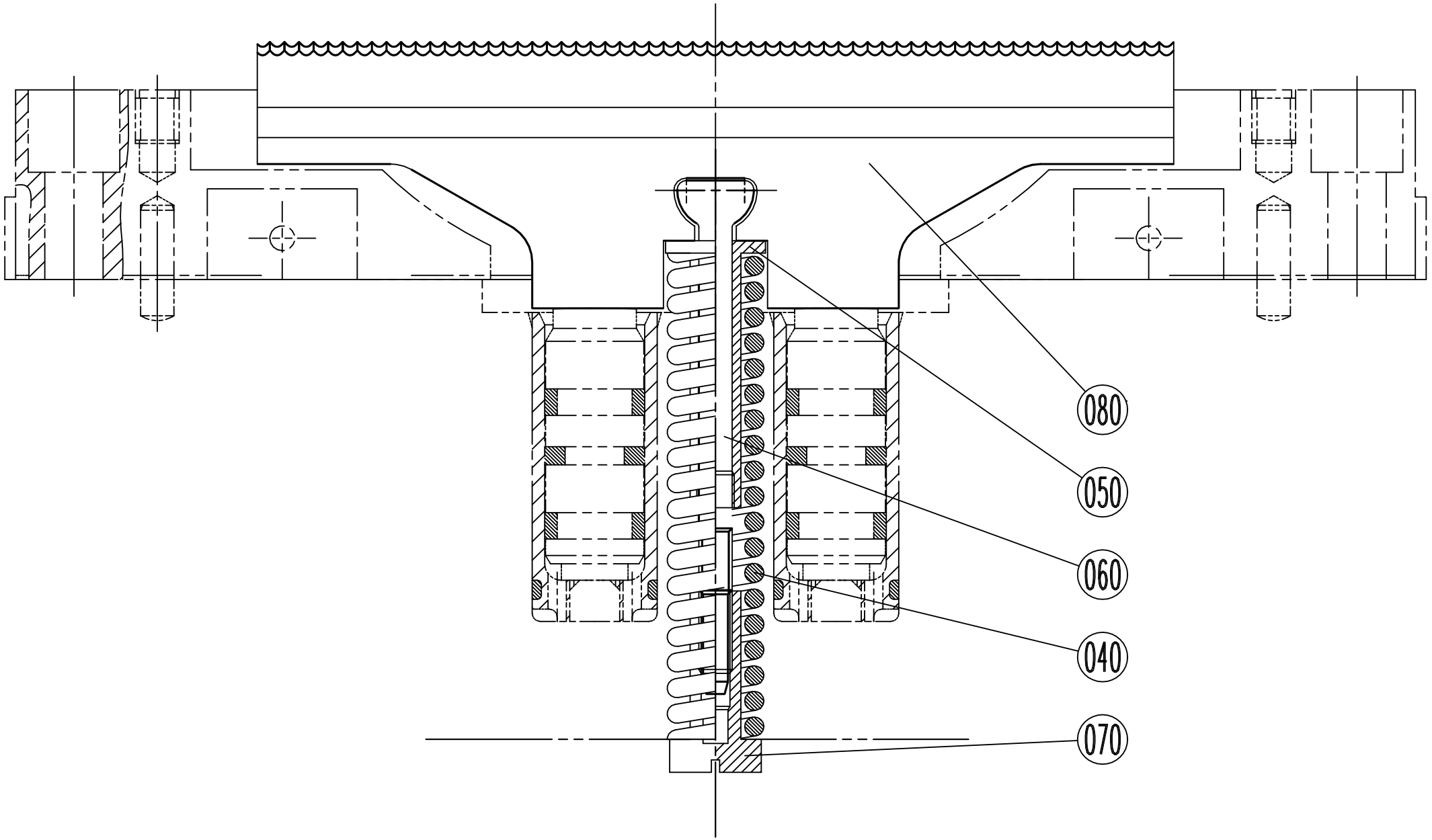
080
050
060
040
070

Pos	Part No	UN	Qty	Description	Page No
TBA 0100B IH, TBA 0125S IH, TPA 0125SQ, TBA 0080S (See drawing on page: 4-144)					
040	1538109-0000		1	COMPRESSION SPRING	
080	1282645-0000		1	KNIFE	
TBA 0160S IH, TBA 0200M IH, TBA 0200S IH, TBA 0250S IH, TBA 0200E (See drawing on page: 4-146)					
040	1538109-0000		1	COMPRESSION SPRING	
080	1282647-0000		1	KNIFE	
TBA 0200B IH, TBA 0200SQ IH, TBA 0250B IH, TBA 0300S IH, TBA 0284B IH, TBA 0330S IH, TPA 0250SQ IH, TPA 0330SQ IH, TPA 0200SQ IH, TBA 0250SQ IH (See drawing on page: 4-142)					
040	1538109-0000		1	COMPRESSION SPRING	
080	1282646-0000		1	KNIFE	
TBA 0375S (See drawing on page: 4-142)					
040	1538109-0000		1	COMPRESSION SPRING	
080	3096231-0000		1	KNIFE	
Common Parts					
050	272753-0000		1	STEERING	
060	456009-0000		1	LINK	
070	272755-0000		1	NUT	

Pos	Part No	UN	Qty	Description	Page No

KNIFE HOLDER

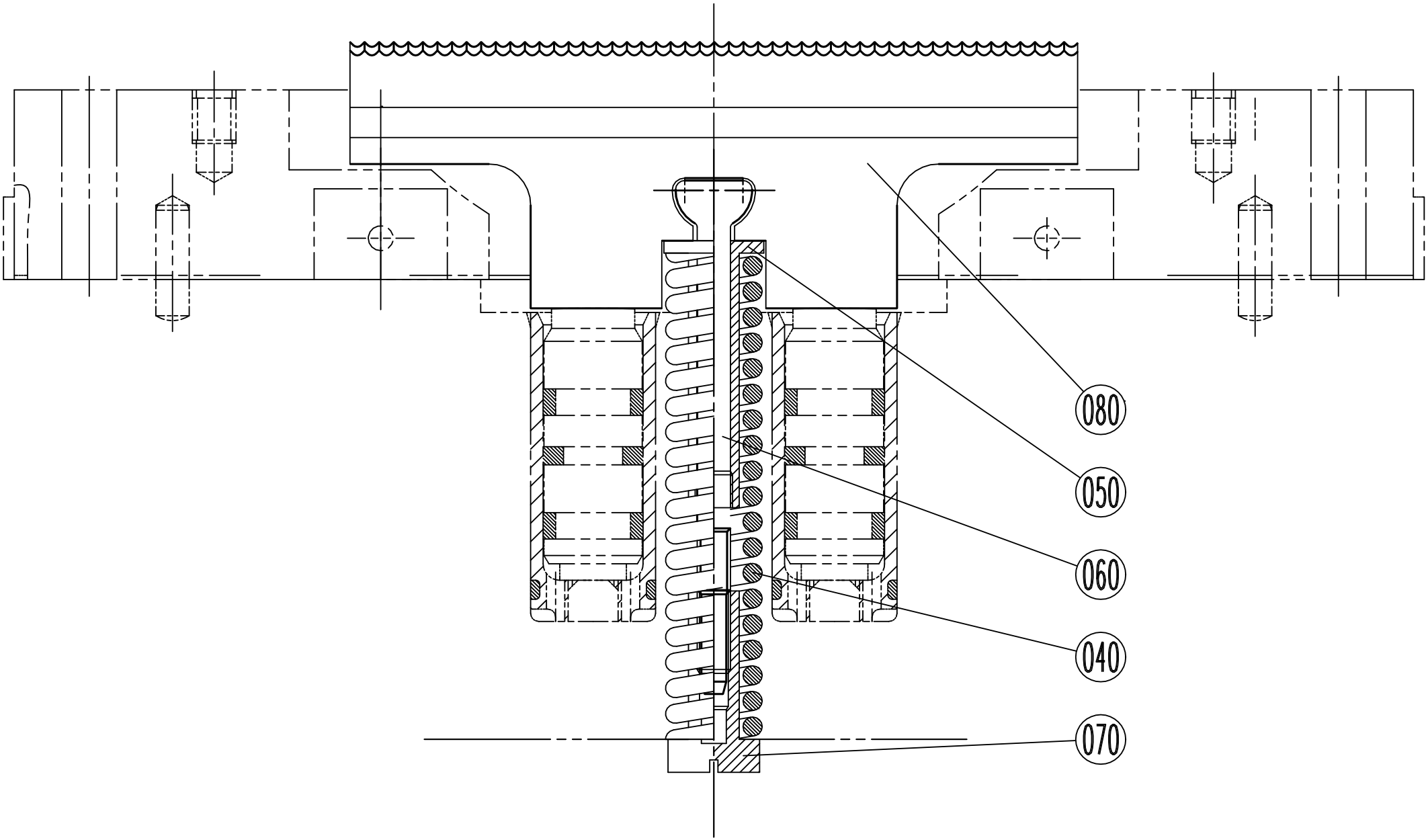

Pos	Part No	UN	Qty	Description	Page No
TBA 0100B IH, TBA 0125S IH, TPA 0125SQ, TBA 0080S (See drawing on page: 4-144)					
040	1538109-0000		1	COMPRESSION SPRING	
080	1282645-0000		1	KNIFE	
TBA 0160S IH, TBA 0200M IH, TBA 0200S IH, TBA 0250S IH, TBA 0200E (See drawing on page: 4-146)					
040	1538109-0000		1	COMPRESSION SPRING	
080	1282647-0000		1	KNIFE	
TBA 0200B IH, TBA 0200SQ IH, TBA 0250B IH, TBA 0300S IH, TBA 0284B IH, TBA 0330S IH, TPA 0250SQ IH, TPA 0330SQ IH, TPA 0200SQ IH, TBA 0250SQ IH (See drawing on page: 4-142)					
040	1538109-0000		1	COMPRESSION SPRING	
080	1282646-0000		1	KNIFE	
TBA 0375S (See drawing on page: 4-142)					
040	1538109-0000		1	COMPRESSION SPRING	
080	3096231-0000		1	KNIFE	
Common Parts					
050	272753-0000		1	STEERING	
060	456009-0000		1	LINK	
070	272755-0000		1	NUT	

Pos	Part No	UN	Qty	Description	Page No

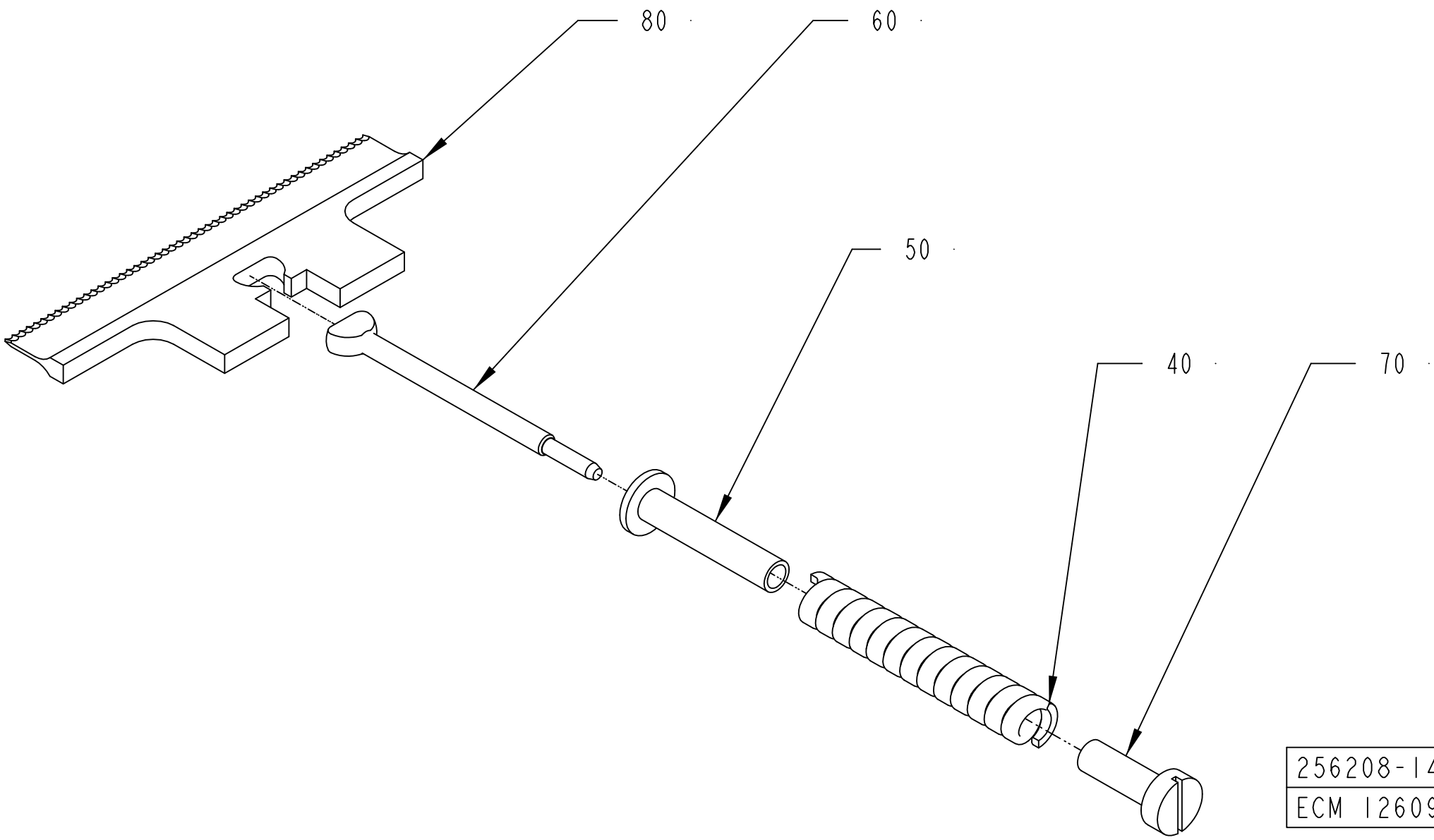
80
60
50
40
70
256208-14
ECM 126095

Pos	Part No	UN	Qty	Description	Page No
TBA 0100B IH, TBA 0125S IH, TPA 0125SQ, TBA 0080S (See drawing on page: 4-144)					
040	1538109-0000		1	COMPRESSION SPRING	
080	1282645-0000		1	KNIFE	
TBA 0160S IH, TBA 0200M IH, TBA 0200S IH, TBA 0250S IH, TBA 0200E (See drawing on page: 4-146)					
040	1538109-0000		1	COMPRESSION SPRING	
080	1282647-0000		1	KNIFE	
TBA 0200B IH, TBA 0200SQ IH, TBA 0250B IH, TBA 0300S IH, TBA 0284B IH, TBA 0330S IH, TPA 0250SQ IH, TPA 0330SQ IH, TPA 0200SQ IH, TBA 0250SQ IH (See drawing on page: 4-142)					
040	1538109-0000		1	COMPRESSION SPRING	
080	1282646-0000		1	KNIFE	
TBA 0375S (See drawing on page: 4-142)					
040	1538109-0000		1	COMPRESSION SPRING	
080	3096231-0000		1	KNIFE	
Common Parts					
050	272753-0000		1	STEERING	
060	456009-0000		1	LINK	
070	272755-0000		1	NUT	

Pos	Part No	UN	Qty	Description	Page No

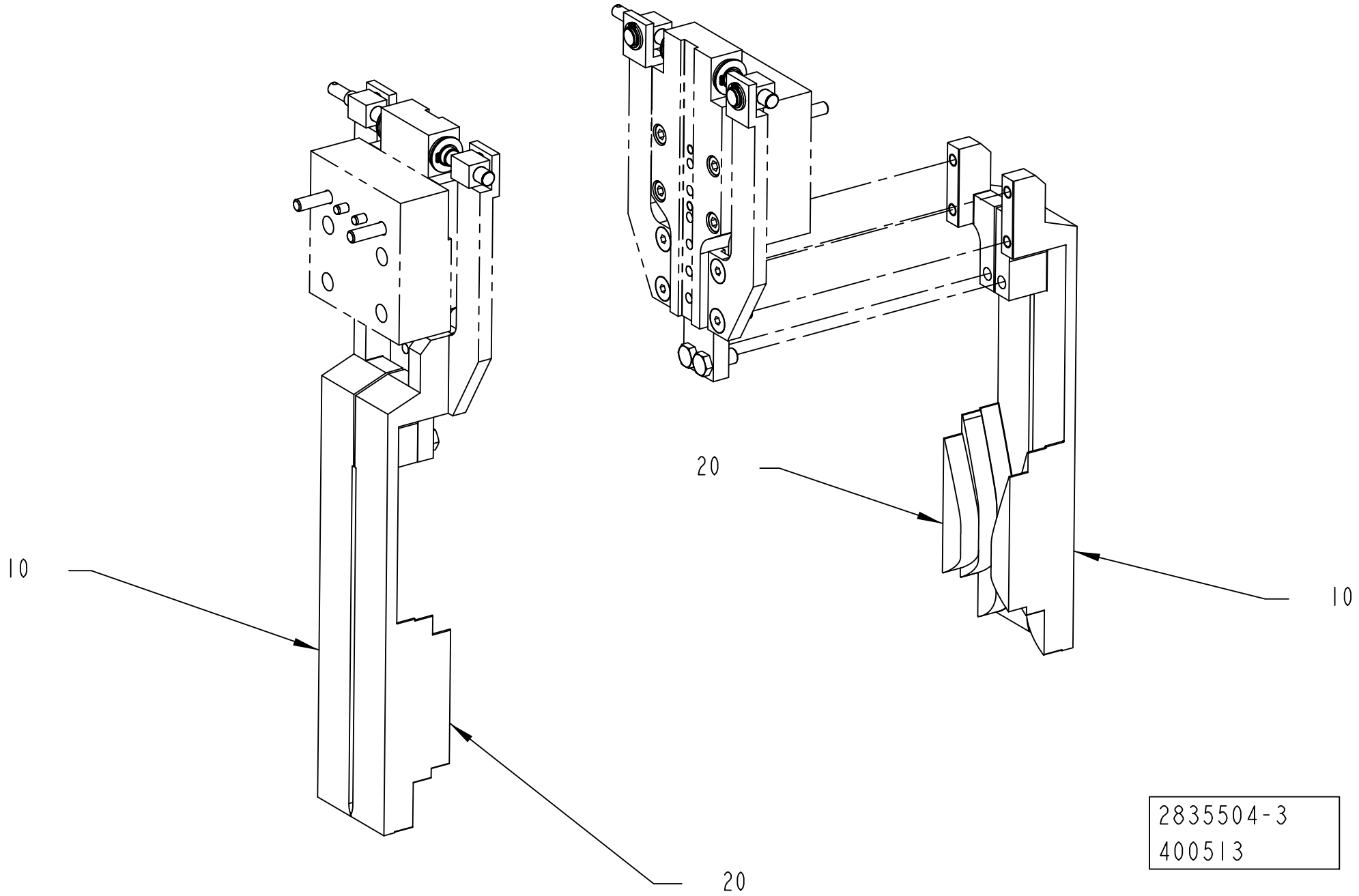
10
20
20
10
2835504-3
400513

Pos	Part No	UN	Qty	Description	Page No
TBA 0080S (See drawing on page: 4-148)					
010	2950899-0000		2	VOLUME CAM	
020	2950898-0000		2	VOLUME CAM	
TBA 0100B, TBA 0125S (See drawing on page: 4-148)					
010	2919188-0000		2	VOLUME CAM	
020	2919189-0000		2	VOLUME CAM	
TBA 0160S, TBA 0200S (See drawing on page: 4-148)					
010	3033710-0000		2	VOLUME CAM	
020	3033711-0000		2	VOLUME CAM	
TBA 0200B, TBA 0250B, TBA 0330S (See drawing on page: 4-148)					
010	2914861-0000		2	VOLUME CAM	
020	2914860-0000		2	VOLUME CAM	
TBA 0200E (See drawing on page: 4-150)					
010	3100667-0000		1	VOLUME CAM	
015	3100668-0000		1	VOLUME CAM	
020	3100669-0000		1	VOLUME CAM	
025	3100670-0000		1	VOLUME CAM	
TBA 0200M, TBA 0250S (See drawing on page: 4-148)					
010	2985871-0000		2	VOLUME CAM	
020	2985870-0000		2	VOLUME CAM	
TBA 0200SQ, TBA 0250SQ (See drawing on page: 4-148)					
010	2977885-0000		2	VOLUME CAM	
020	2977884-0000		2	VOLUME CAM	
TBA 0284B, TBA 0300S (See drawing on page: 4-148)					
010	3014099-0000		2	VOLUME CAM	
020	3014100-0000		2	VOLUME CAM	
TBA 0375S (See drawing on page: 4-148)					
010	3067290-0000		2	VOLUME CAM	
020	3067289-0000		2	VOLUME CAM	
TPA 0125SQ (See drawing on page: 4-148)					
010	2911790-0000		2	VOLUME CAM	
020	2911791-0000		2	VOLUME CAM	
TPA 0250SQ, TPA 0200SQ (See drawing on page: 4-148)					
010	2986989-0000		2	VOLUME CAM	
020	2986990-0000		2	VOLUME CAM	
TPA 0330SQ (See drawing on page: 4-148)					
010	3007870-0000		2	VOLUME CAM	
020	3007871-0000		2	VOLUME CAM	

Pos	Part No	UN	Qty	Description	Page No

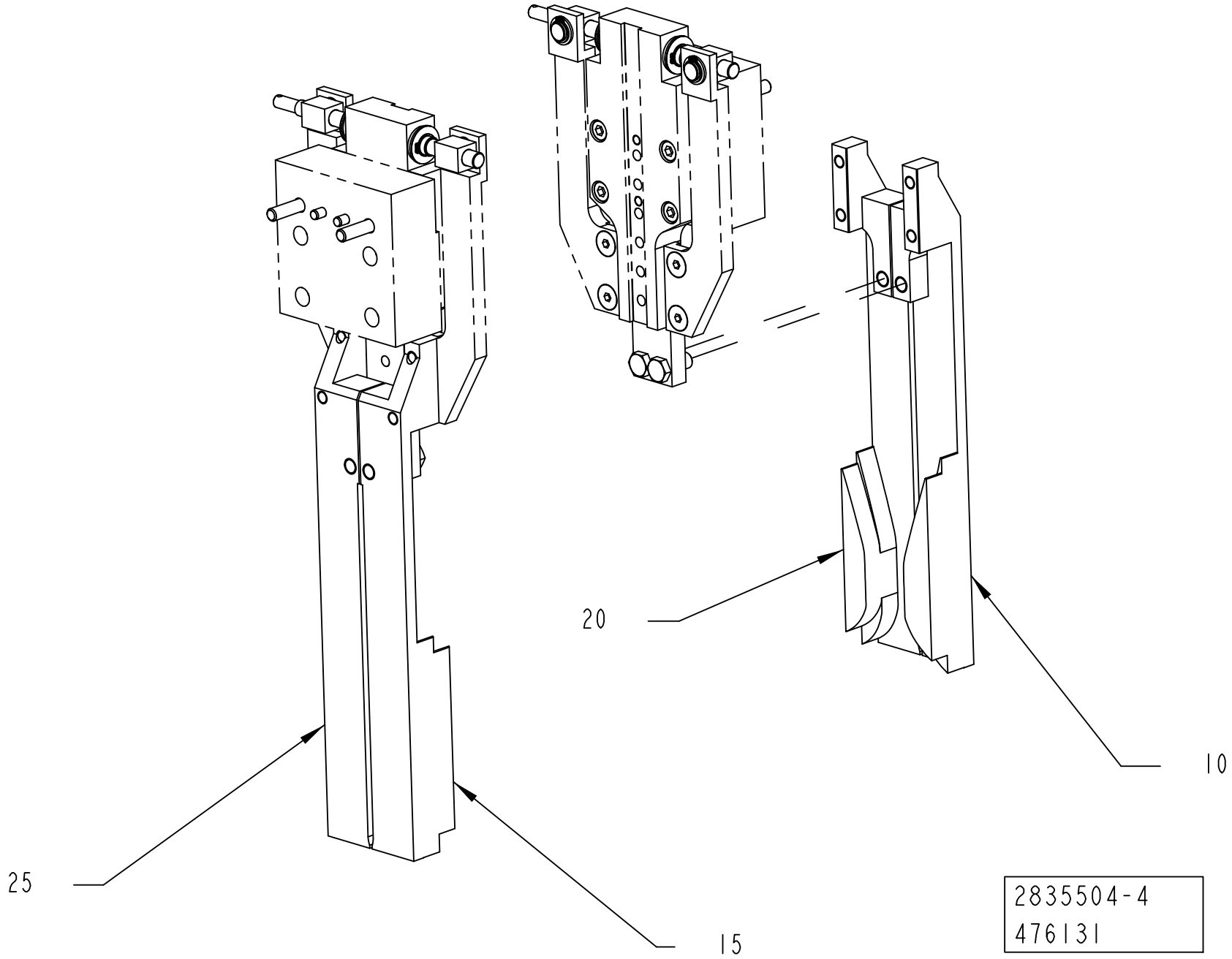
20
10
25
15
2835504-4
476131

Pos	Part No	UN	Qty	Description	Page No
TBA 0080S (See drawing on page: 4-148)					
010	2950899-0000		2	VOLUME CAM	
020	2950898-0000		2	VOLUME CAM	
TBA 0100B, TBA 0125S (See drawing on page: 4-148)					
010	2919188-0000		2	VOLUME CAM	
020	2919189-0000		2	VOLUME CAM	
TBA 0160S, TBA 0200S (See drawing on page: 4-148)					
010	3033710-0000		2	VOLUME CAM	
020	3033711-0000		2	VOLUME CAM	
TBA 0200B, TBA 0250B, TBA 0330S (See drawing on page: 4-148)					
010	2914861-0000		2	VOLUME CAM	
020	2914860-0000		2	VOLUME CAM	
TBA 0200E (See drawing on page: 4-150)					
010	3100667-0000		1	VOLUME CAM	
015	3100668-0000		1	VOLUME CAM	
020	3100669-0000		1	VOLUME CAM	
025	3100670-0000		1	VOLUME CAM	
TBA 0200M, TBA 0250S (See drawing on page: 4-148)					
010	2985871-0000		2	VOLUME CAM	
020	2985870-0000		2	VOLUME CAM	
TBA 0200SQ, TBA 0250SQ (See drawing on page: 4-148)					
010	2977885-0000		2	VOLUME CAM	
020	2977884-0000		2	VOLUME CAM	
TBA 0284B, TBA 0300S (See drawing on page: 4-148)					
010	3014099-0000		2	VOLUME CAM	
020	3014100-0000		2	VOLUME CAM	
TBA 0375S (See drawing on page: 4-148)					
010	3067290-0000		2	VOLUME CAM	
020	3067289-0000		2	VOLUME CAM	
TPA 0125SQ (See drawing on page: 4-148)					
010	2911790-0000		2	VOLUME CAM	
020	2911791-0000		2	VOLUME CAM	
TPA 0250SQ, TPA 0200SQ (See drawing on page: 4-148)					
010	2986989-0000		2	VOLUME CAM	
020	2986990-0000		2	VOLUME CAM	
TPA 0330SQ (See drawing on page: 4-148)					
010	3007870-0000		2	VOLUME CAM	
020	3007871-0000		2	VOLUME CAM	

Pos	Part No	UN	Qty	Description	Page No

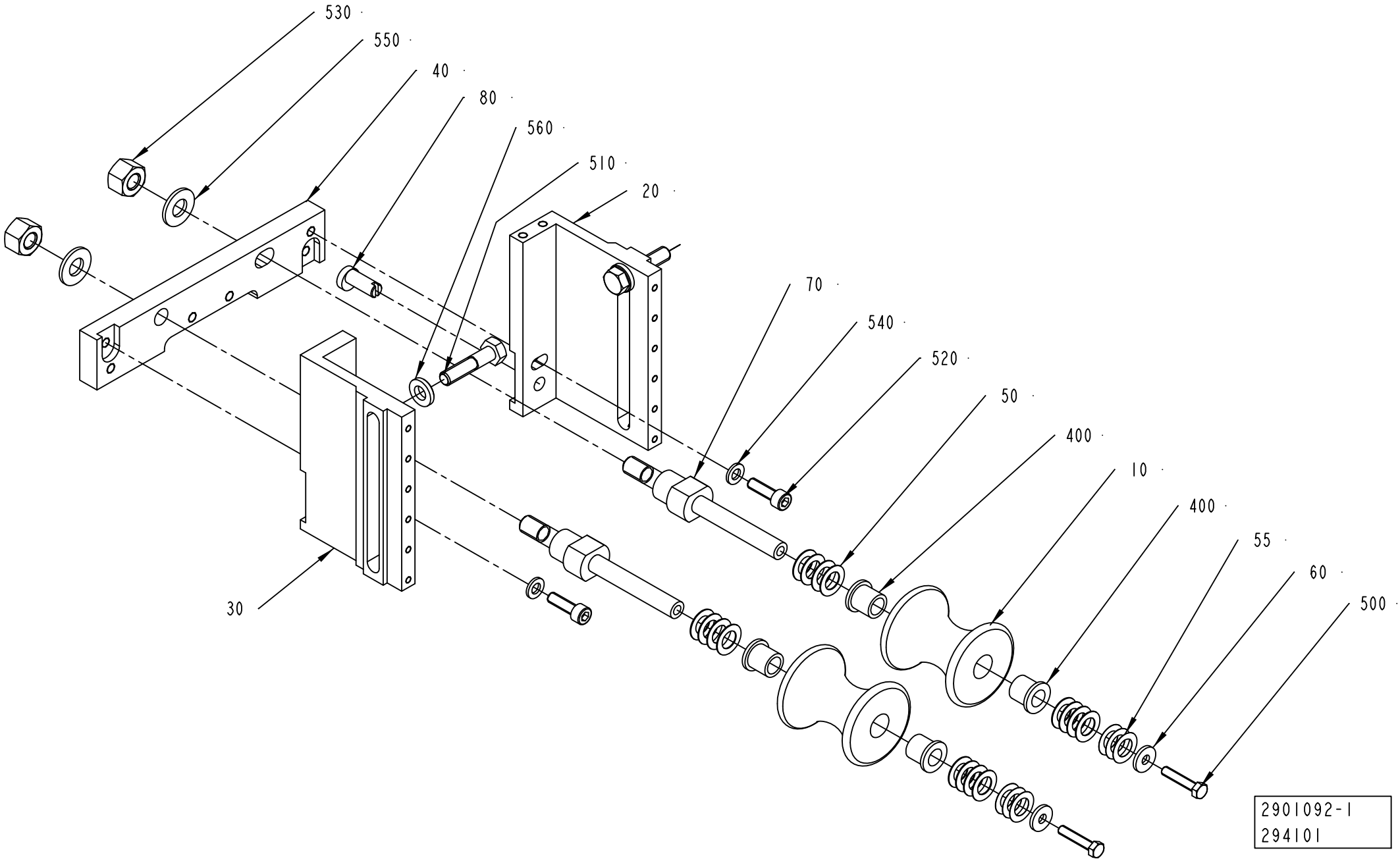
530
550
40
80
560
510
20
70
540
520
50
400
10
400
55
60
500
30
2901092-1
294101

ECM: 484762 - 20110401
Group number: 2901092-0100
Assembly Drawing: 2901092-1_1_AA

Pos	Part No	UN	Qty	Description	Page No
TBA 0080S					
010	2950897-0000		2	ROLLER	
040	2961520-0003		1	BRACKET	
050	2033-0009		16	WASHER	
055	2033-0014		6	WASHER	
070	2939843-0000		2	PIN	
TBA 0100B, TBA 0125S					
010	2964307-0000		2	ROLLER	
040	2961520-0003		1	BRACKET	
050	2033-0009		16	WASHER	
055	2033-0014		6	WASHER	
070	2939843-0000		2	PIN	
TBA 0160S, TBA 0200S					
010	2947531-0000		2	ROLLER	
040	2961520-0004		1	BRACKET	
050	2033-0009		16	WASHER	
055	2033-0014		6	WASHER	
070	2939843-0000		2	PIN	
TBA 0200B, TBA 0200SQ, TBA 0284B, TBA 0250B, TBA 0300S, TBA 0330S, TBA 0250SQ					
010	2959274-0000		2	ROLLER	
040	2961520-0002		1	BRACKET	
050	2033-0009		16	WASHER	
055	2033-0014		6	WASHER	
070	2939843-0000		2	PIN	
TBA 0200E					
010	574385-0000		2	ROLLER TBA250SL	
040	2961520-0001		1	BRACKET	
050	2033-0009		8	WASHER	
055	2033-0014		4	WASHER	
070	3047987-0000		2	PIN	
TBA 0200M, TBA 0250S					
010	574385-0000		2	ROLLER TBA250SL	
040	2961520-0001		1	BRACKET	
050	2033-0009		16	WASHER	
055	2033-0014		6	WASHER	
070	2939843-0000		2	PIN	
TBA 0375S					
010	3092802-0000		2	ROLLER	
040	2961520-0002		1	BRACKET	
050	2033-0009		16	WASHER	
055	2033-0014		6	WASHER	
070	2939843-0000		2	PIN	

Pos	Part No	UN	Qty	Description	Page No
TPA 0125SQ					
010	2950996-0000		2	ROLLER	
040	2961520-0003		1	BRACKET	
050	2033-0009		16	WASHER	
055	2033-0014		6	WASHER	
070	2939843-0000		2	PIN	
TPA 0250SQ, TPA 0200SQ					
010	978760-0000		2	ROLLER TBA200SL	
040	2961520-0004		1	BRACKET	
050	2033-0009		16	WASHER	
055	2033-0014		6	WASHER	
070	2939843-0000		2	PIN	
TPA 0330SQ					
010	929355-0000		2	ROLLER TPA 330	
040	2961520-0002		1	BRACKET	
050	2033-0009		16	WASHER	
055	2033-0014		6	WASHER	
070	2939843-0000		2	PIN	
Common Parts					
020	1511406-0000		1	BRACKET	
030	1511407-0000		1	BRACKET	
060	27815-0000		2	WASHER	
080	1511404-0000		1	ECCENTRIC SHAFT	
400	90240-0180		4	FLANGE BUSHING 10X14X15MM	
500	312105-0333		2	SCREW, M6S ISO 4017 M5X25 A4 80	
510	312105-0457		2	SCREW, M6S ISO 4014 M8X35 A4 80	
520	312115-0370		2	SCREW ISO4762 M6X20 A4 80	
530	312811-0320		2	NUT HEX.LOCK HELI COIL MID GRIP M10 SS	
540	315105-0153		2	WASHER PLAIN, 6,4X12X1,5 A4 BRB	
550	315105-0173		2	WASHER PLAIN, 10,5X22X2 A4 BRB	
560	315115-0165		2	WASHER PLAIN, TBRB 8,4/16 H=3	

Machine Type | Group Description | Used-In | Group Number | Page No

PHOTOCELL UNIT

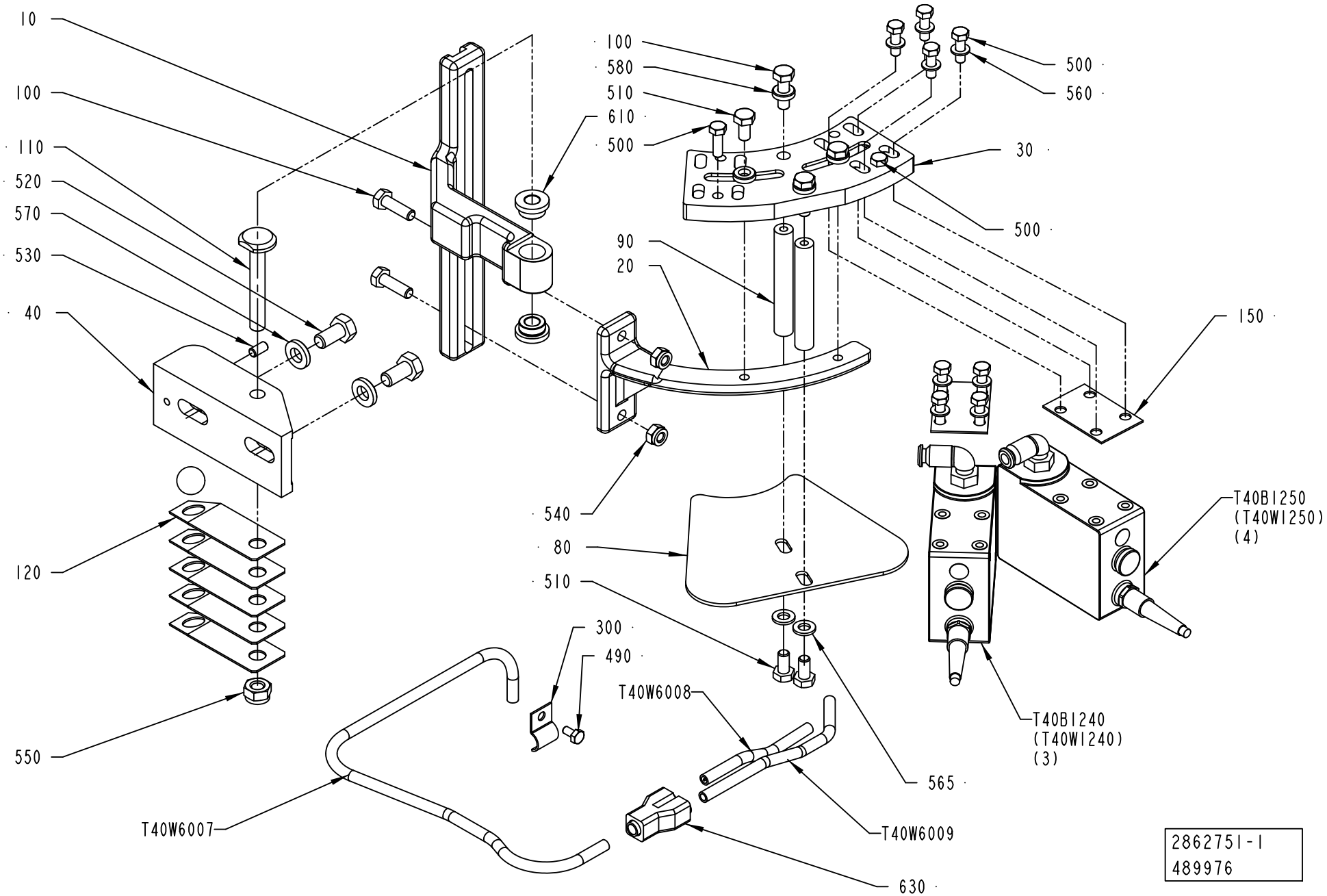

ECM: 496378 - 20110701
Group number: 2862751-0100
Assembly Drawing: 2862751-1_1_AC

This list covers pages from 4-154 to 4-157

Pos	Part No	UN	Qty	Description	Page No
TBA 0100B, TBA 0125S, TBA 0160S, TBA 0200M, TBA 0200S, TBA 0250S, TBA 0375S, TPA 0330SQ, TPA 0250SQ, TPA 0200SQ, TBA 0200E (See drawing on page: 4-156)					
020	751476-0000		1	CANTILEVER	
030	491880-0000		1	FASTENING PLATE	
060	752554-0000		4	SPACER	
080	1260487-0000		1	PLATE	
090	1260491-0000		2	NUT	
170	312109-0335		8	SCREW, M6S ISO 4017 M5X30 A4 80	
500	312105-0329		2	SCREW, M6S ISO 4017 M5X16 A4 80	
TBA 0200B, TBA 0200SQ, TBA 0284B, TBA 0250B, TBA 0300S, TBA 0330S, TBA 0250SQ (See drawing on page: 4-154)					
020	751457-0000		1	CANTILEVER	
030	978735-0000		1	FASTENING PLATE	
080	1260486-0000		1	PLATE	
090	1260490-0000		2	NUT	
150	536374-0000		2	WASHER	
500	312105-0329		10	SCREW, M6S ISO 4017 M5X16 A4 80	
TPA 0125SQ, TBA 0080S (See drawing on page: 4-156)					
020	2844252-0000		1	CANTILEVER	
030	2844253-0000		1	FASTENING PLATE	
060	752554-0000		4	SPACER	
080	1260487-0000		1	PLATE	
090	1260491-0000		2	NUT	
170	312109-0335		8	SCREW, M6S ISO 4017 M5X30 A4 80	
500	312105-0329		2	SCREW, M6S ISO 4017 M5X16 A4 80	
Common Parts					
010	2815756-0000		1	HOLDER	
040	490876-0000		1	BRACKET	
100	312105-0370		4	SCREW, M6S ISO 4017 M6X20 A4 80	
110	457367-0000		1	SHAFT	
120	457368-0000		5	SPRING	
300	90074-0001		1	CABLE CLIPS, D=10 MM	
310	90601-1727		1	STEEL BALL 15MM, RB-15 INOX316	
320	90166-0132	MM	750	TUBE 6 MM PA,TRANSP.	
490	312105-0287		1	SCREW, M6S ISO 4017 M4X8 A4 70	
510	312105-0366		4	SCREW, M6S ISO 4017 M6X12 A4 80	
520	312105-0449		2	SCREW, M6S ISO 4017 M8X16 A4 80	
530	312318-0325		1	SET SCREW, CUP END ISO4029 M5X10 A4	
540	312812-0316		2	HEXAGON NUT, NY-LOCK M6 A4 80	
550	312812-0318		1	HEXAGON NUT, NY-LOCK M8 A4 80	
560	315105-0146		8	WASHER PLAIN, 5,3X10X1 A4 BRB	
565	315105-0153		2	WASHER PLAIN, 6,4X12X1,5 A4 BRB	
570	315115-0165		2	WASHER PLAIN, TBRB 8,4/16 H=3	
580	315115-0153		4	WASHER PLAIN, TBRB 6,4/12 H=3	
610	321101-0143		2	FLANGE BUSHING, 8/14X8-18X3 MM	
630	90055-0100		1	Y-CONNECTION, 6-6	
T40B1240	90458-0601		1	CONTRAST SCANNER, KT15W-P2110S01	
	342732-0102		*1*	*ELBOW PIPE JOINT, EXT.THREAD, D=6MM-G1/8*	
T40B1250	90458-0601		1	CONTRAST SCANNER, KT15W-P2110S01	
	342732-0102		*1*	*ELBOW PIPE JOINT, EXT.THREAD, D=6MM-G1/8*	

Machine Type | Group Description | Used-In | Group Number | Page No

PHOTOCELL UNIT

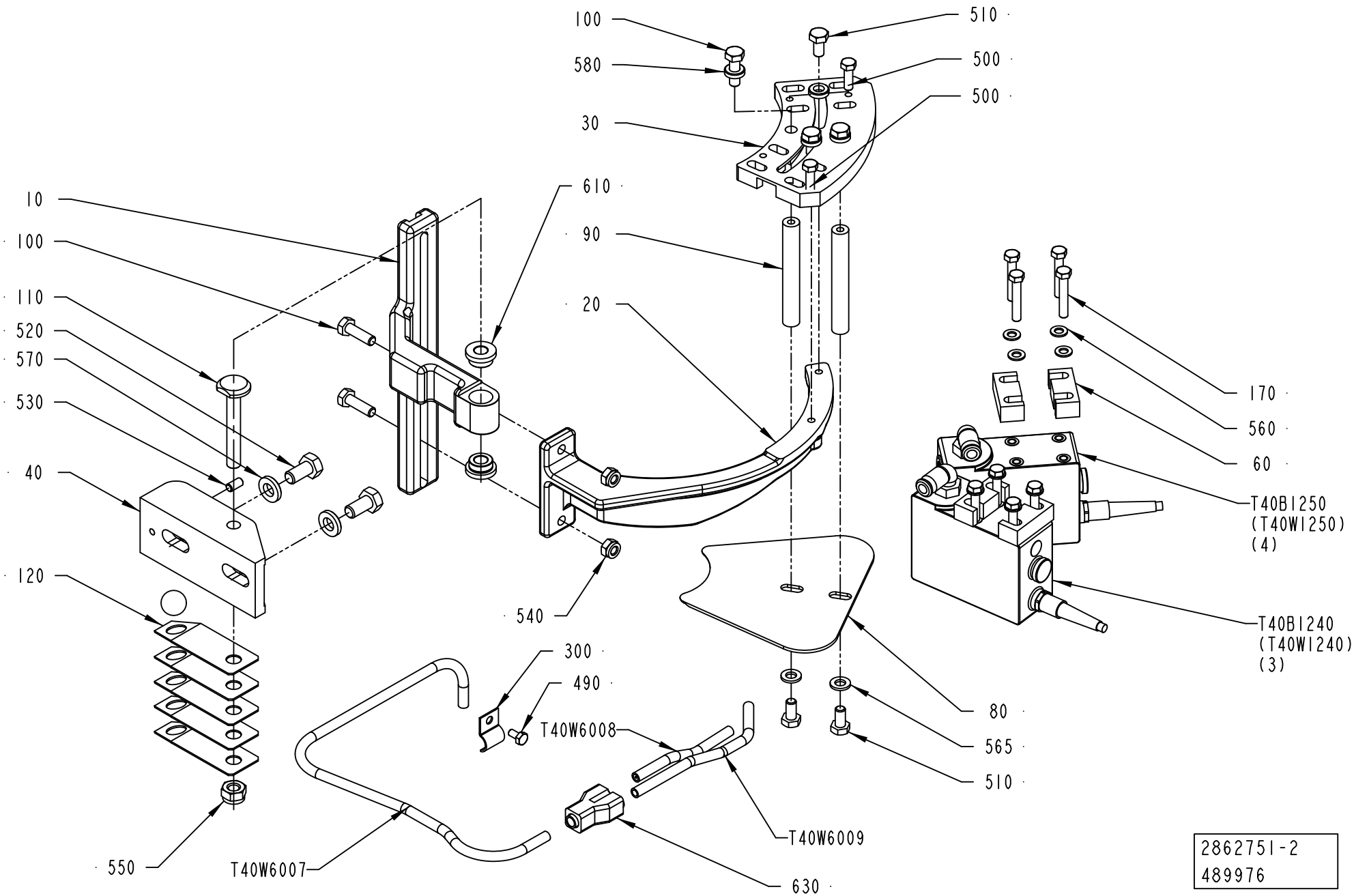

2862751-2
489976

ECM: 496378 - 20110701
Group number: 2862751-0100
Assembly Drawing: 2862751-2_1_AC

This list covers pages from 4-154 to 4-157

Pos	Part No	UN	Qty	Description	Page No
TBA 0100B, TBA 0125S, TBA 0160S, TBA 0200M, TBA 0200S, TBA 0250S, TBA 0375S, TPA 0330SQ, TPA 0250SQ, TPA 0200SQ, TBA 0200E (See drawing on page: 4-156)					
020	751476-0000		1	CANTILEVER	
030	491880-0000		1	FASTENING PLATE	
060	752554-0000		4	SPACER	
080	1260487-0000		1	PLATE	
090	1260491-0000		2	NUT	
170	312109-0335		8	SCREW, M6S ISO 4017 M5X30 A4 80	
500	312105-0329		2	SCREW, M6S ISO 4017 M5X16 A4 80	
TBA 0200B, TBA 0200SQ, TBA 0284B, TBA 0250B, TBA 0300S, TBA 0330S, TBA 0250SQ (See drawing on page: 4-154)					
020	751457-0000		1	CANTILEVER	
030	978735-0000		1	FASTENING PLATE	
080	1260486-0000		1	PLATE	
090	1260490-0000		2	NUT	
150	536374-0000		2	WASHER	
500	312105-0329		10	SCREW, M6S ISO 4017 M5X16 A4 80	
TPA 0125SQ, TBA 0080S (See drawing on page: 4-156)					
020	2844252-0000		1	CANTILEVER	
030	2844253-0000		1	FASTENING PLATE	
060	752554-0000		4	SPACER	
080	1260487-0000		1	PLATE	
090	1260491-0000		2	NUT	
170	312109-0335		8	SCREW, M6S ISO 4017 M5X30 A4 80	
500	312105-0329		2	SCREW, M6S ISO 4017 M5X16 A4 80	
Common Parts					
010	2815756-0000		1	HOLDER	
040	490876-0000		1	BRACKET	
100	312105-0370		4	SCREW, M6S ISO 4017 M6X20 A4 80	
110	457367-0000		1	SHAFT	
120	457368-0000		5	SPRING	
300	90074-0001		1	CABLE CLIPS, D=10 MM	
310	90601-1727		1	STEEL BALL 15MM, RB-15 INOX316	
320	90166-0132	MM	750	TUBE 6 MM PA,TRANSP.	
490	312105-0287		1	SCREW, M6S ISO 4017 M4X8 A4 70	
510	312105-0366		4	SCREW, M6S ISO 4017 M6X12 A4 80	
520	312105-0449		2	SCREW, M6S ISO 4017 M8X16 A4 80	
530	312318-0325		1	SET SCREW, CUP END ISO4029 M5X10 A4	
540	312812-0316		2	HEXAGON NUT, NY-LOCK M6 A4 80	
550	312812-0318		1	HEXAGON NUT, NY-LOCK M8 A4 80	
560	315105-0146		8	WASHER PLAIN, 5,3X10X1 A4 BRB	
565	315105-0153		2	WASHER PLAIN, 6,4X12X1,5 A4 BRB	
570	315115-0165		2	WASHER PLAIN, TBRB 8,4/16 H=3	
580	315115-0153		4	WASHER PLAIN, TBRB 6,4/12 H=3	
610	321101-0143		2	FLANGE BUSHING, 8/14X8-18X3 MM	
630	90055-0100		1	Y-CONNECTION, 6-6	
T40B1240	90458-0601		1	CONTRAST SCANNER, KT15W-P2110S01	
	342732-0102		*1*	*ELBOW PIPE JOINT, EXT.THREAD, D=6MM-G1/8*	
T40B1250	90458-0601		1	CONTRAST SCANNER, KT15W-P2110S01	
	342732-0102		*1*	*ELBOW PIPE JOINT, EXT.THREAD, D=6MM-G1/8*	

Machine Type | Group Description | Used-In | Group Number | Page No

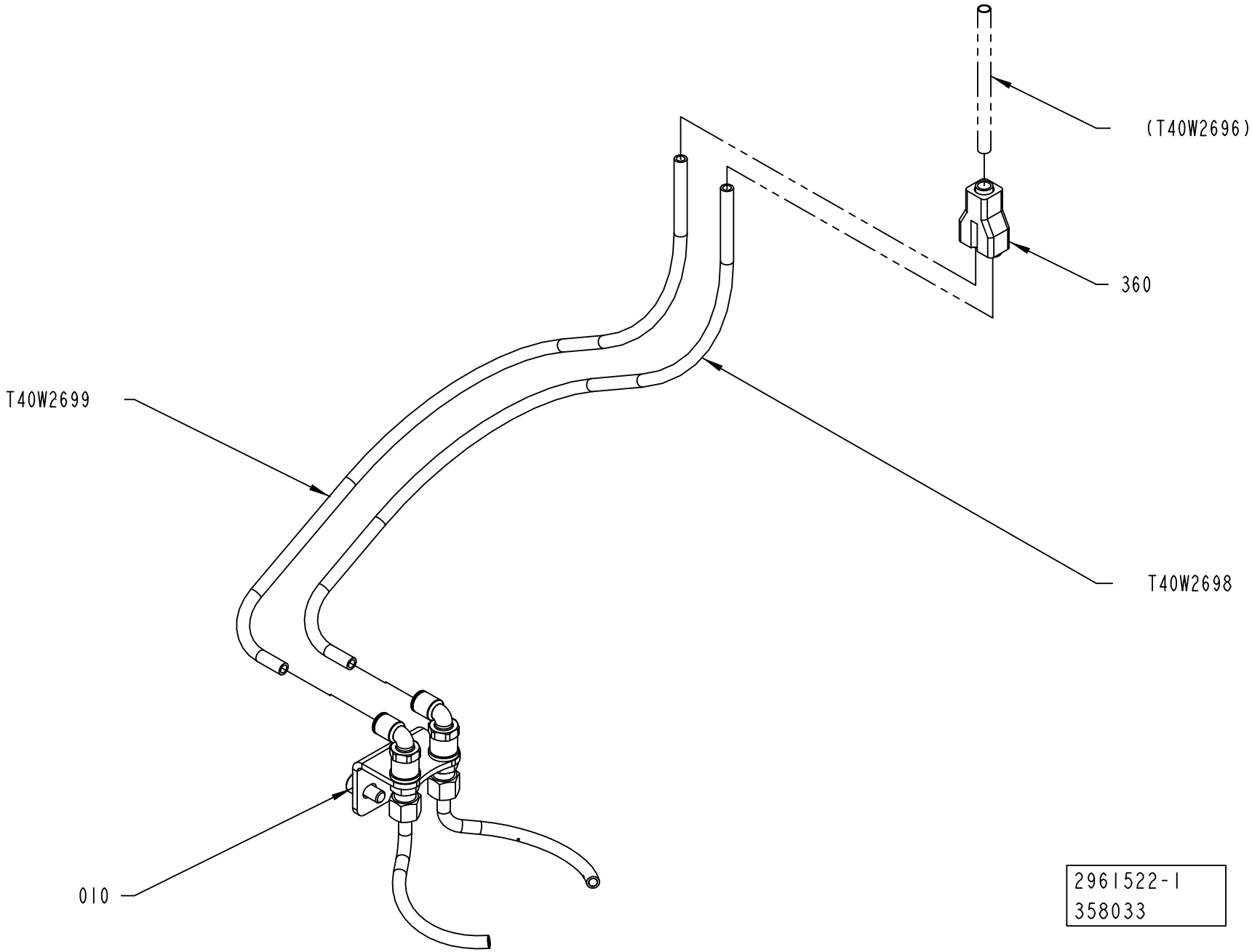
(T40W2696)
360
T40W2699
T40W2698
010
2961522-1
358033

ECM: 484764 - 20110401
Group number: 2961522-0100
Assembly Drawing: 2961522-1_1_AA

Pos	Part No	UN	Qty	Description	Page No
-					
010	2961521-0100		1	NOZZLE	**4-161**
360	90055-0100		1	Y-CONNECTION, 6-6	
T40W2698	90166-0132	MM	220	TUBE 6 MM PA,TRANSP.	
T40W2699	90166-0132	MM	200	TUBE 6 MM PA,TRANSP.	

Pos	Part No	UN	Qty	Description	Page No

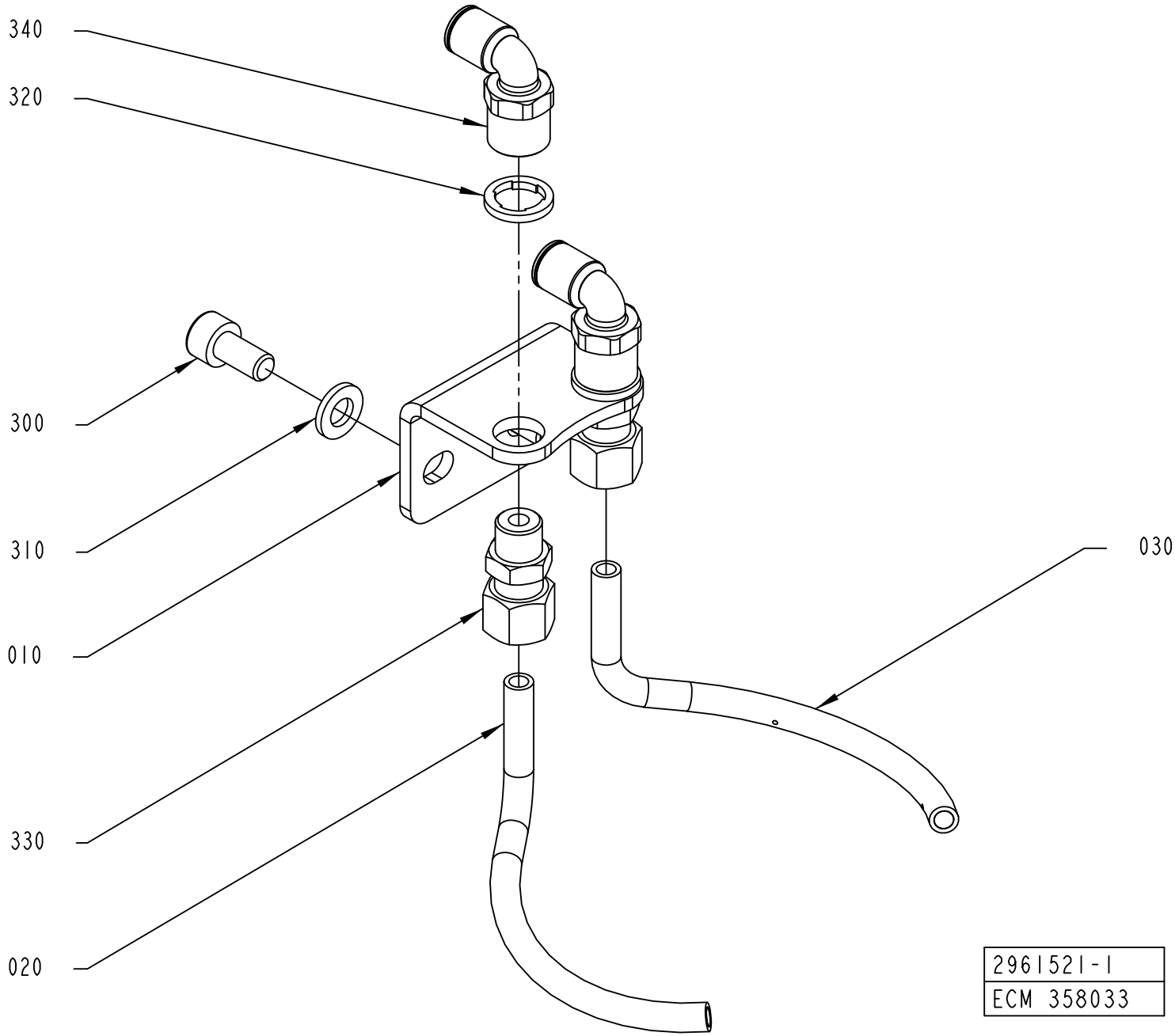
340
320
300
310
010
330
020
030
2961521-1
ECM 358033

ECM: 457152 - 20100614
Group number: 2961521-0100
Assembly Drawing: 2961521-1_1_AA

Pos	Part No	UN	Qty	Description	Page No
-					
010	2961517-0000		1	BRACKET	
020	2961518-0000		1	PIPE	
030	2961519-0000		1	PIPE	
300	312115-0366		2	SCREW ISO4762 M6X12 A4 80	
310	315105-0153		2	WASHER PLAIN, 6,4X12X1,5 A4 BRB	
320	315239-0109		2	NYLON WASHER G1/8, 1/8RRP	
330	90458-2039		2	CONN. STR., 6-R1/8, EXT. THREAD	
340	90458-2040		2	ELBOW PIPE JOINT, INT. THREAD, G1/8" D=6	
350	90602-4847		1	THREAD LOCKING, LOCTITE 243 50 ML	

Pos	Part No	UN	Qty	Description	Page No

Tetra Pak

SPC
Spare Parts Catalogue

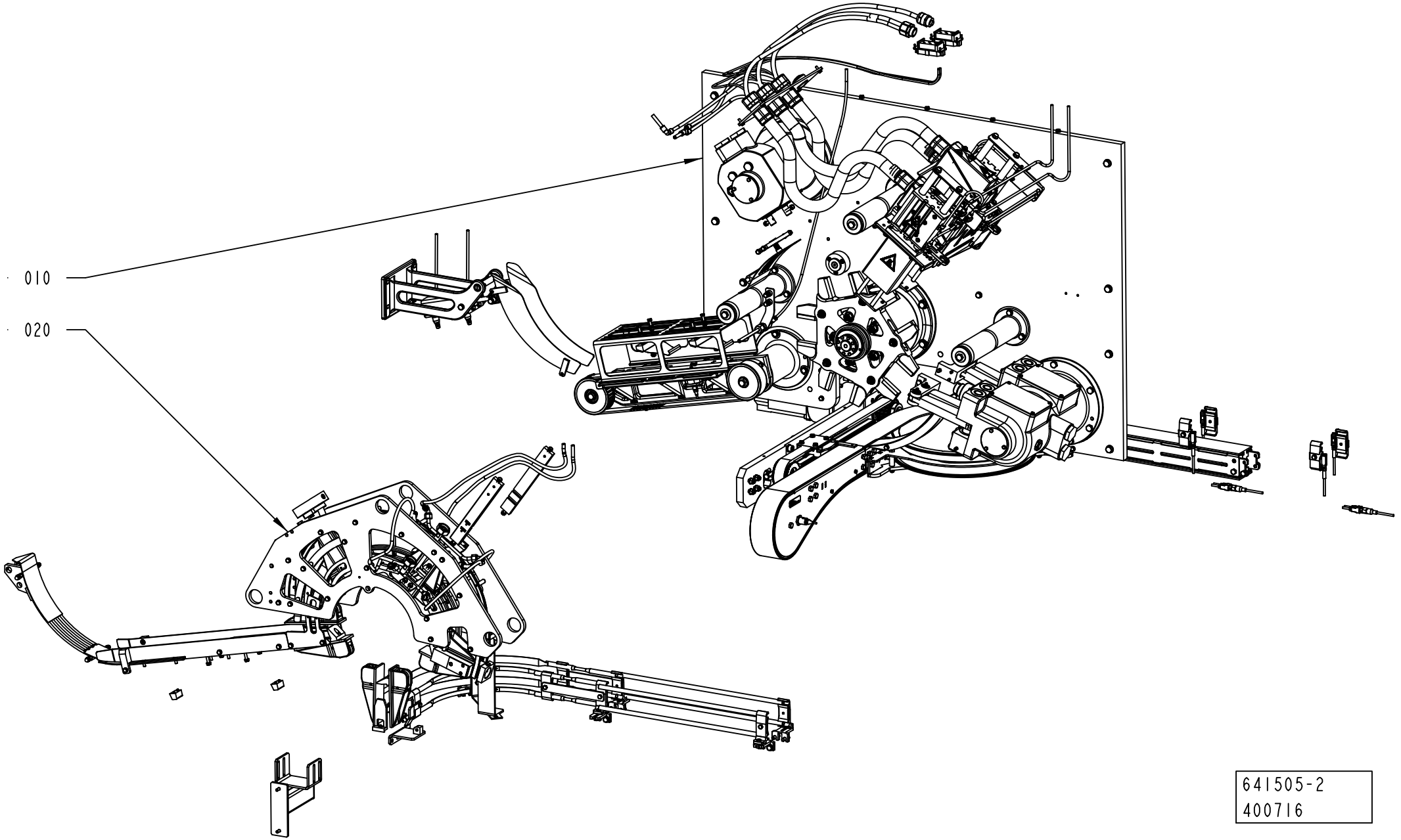
010
020
641505-2
400716

ECM: 479578 - 20101003
Group number: 641505-0200
Assembly Drawing: 641505-2_1_AA

Pos	Part No	UN	Qty	Description	Page No
-					
010	2819320-0200		1	BASE UNIT	**5-5**
020	2819319-0200		1	FORMING UNIT	**5-51**

Pos	Part No	UN	Qty	Description	Page No

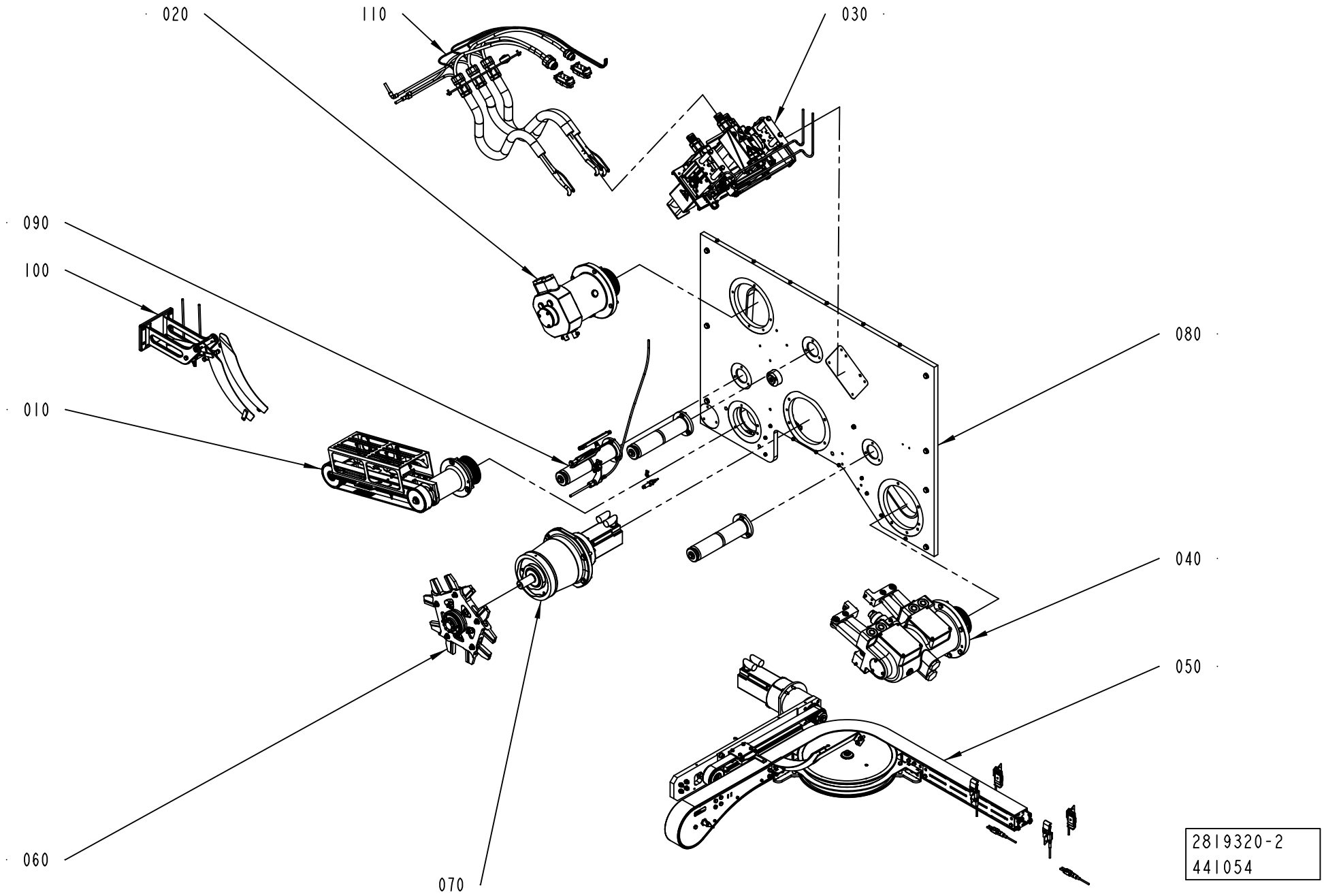
020
110
030
090
100
080
010
040
050
060
070
2819320-2
441054

ECM: 442364 - 20100701
Group number: 2819320-0200
Assembly Drawing: 2819320-2_1_AB

Pos	Part No	UN	Qty	Description	Page No
-					
010	2805989-0200		1	INFEED CONVEYOR	**5-7**
020	2805990-0100		1	PULL-DOWN DEVICE	**5-9**
030	2805991-0200		1	FLAP HEATER	**5-11**
040	2805992-0200		1	PRESSURE DEVICE	**5-15, 5-17**
050	2805993-0300		1	OUTFEEDER	**5-19**
060	2805994-0200		1	WHEEL	**5-33**
070	2805995-0200		1	DRIVE	**5-35**
080	2805996-0300		1	ASSEMBLY PLATE	**5-37, 5-39**
090	2805997-0200		1	FOLDING BAR	**5-45**
100	2805988-0100		1	DROP CHUTE	**5-47**
110	2882296-0200		1	CABLE CONNECTION	**5-49**

Pos	Part No	UN	Qty	Description	Page No

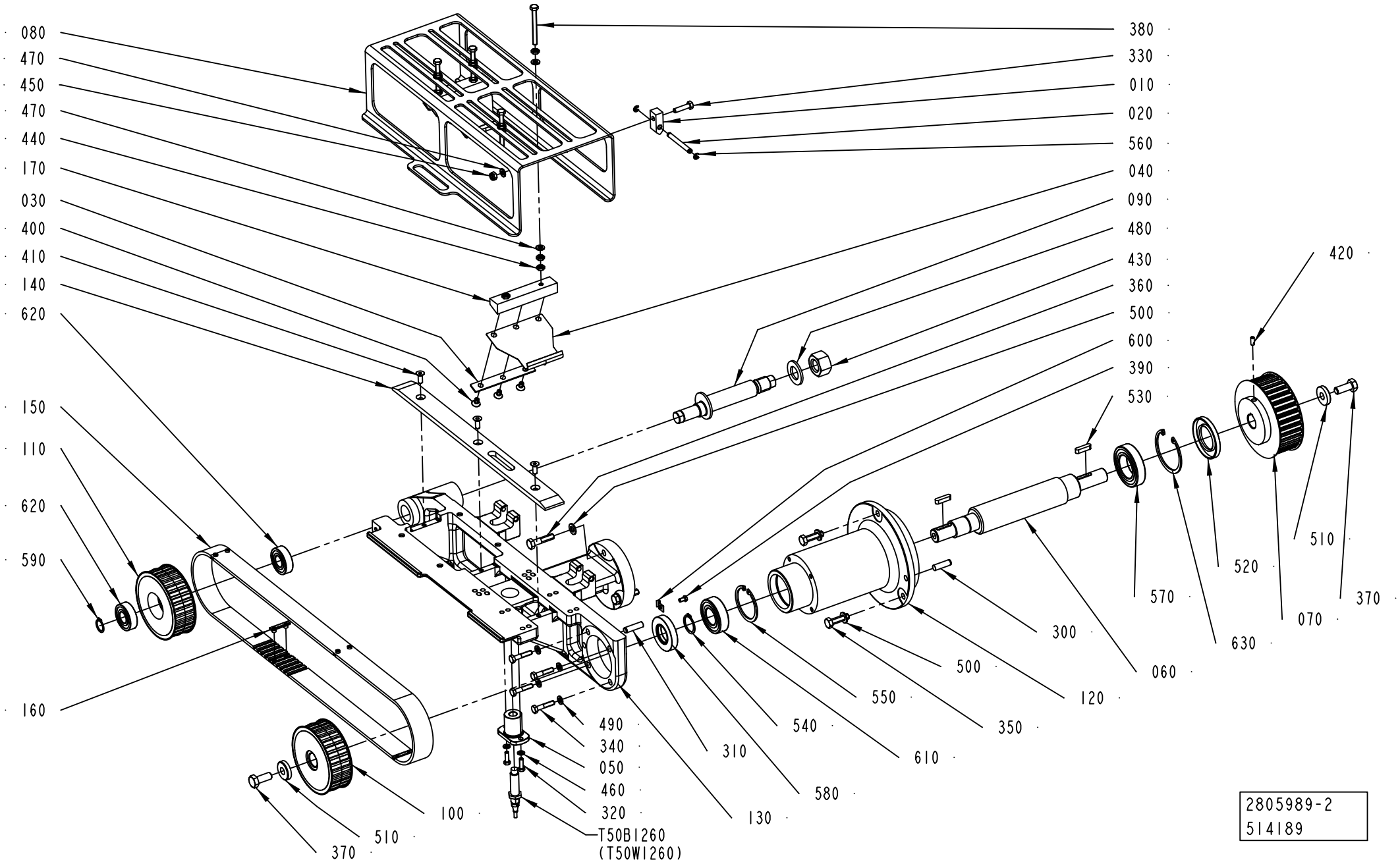
080
470
450
470
440
170
030
400
410
140
620
150
110
620
590
160
380
330
010
020
560
040
090
480
430
360
500
600
390
530
420
510
520
570
630
070
370
300
060
120
500
550
350
610
540
580
310
130
490
340
050
460
320
T50B1260
(T50W1260)
100
510
370
2805989-2
514189

ECM: 520757 - 20120101
Group number: 2805989-0200
Assembly Drawing: 2805989-2_1_AC

Pos	Part No	UN	Qty	Description	Page No
-					
010	1144668-0000		2	HINGE	
020	1144669-0000		2	PIN	
030	2540612-0000		2	PLATE	
040	2767621-0000		2	SPRING	
050	2807184-0000		1	BUSHING	
060	2819240-0000		1	SHAFT	
070	2819277-0000		1	TOOTHED PULLEY	
080	2819296-0000		1	COVER	
090	2819308-0000		1	SHAFT	
100	2819309-0000		1	COVER	
110	2819310-0000		1	PULLEY	
120	2819332-0000		1	SUPPORT	
130	2819333-0000		1	SUPPORT	
140	2852404-0000		1	GUIDE	
150	3010705-0000		1	BELT	
160	3010815-0000		4	PLATE	
170	3027099-0000		2	SUPPORT	
300	311103-0404		1	PARALLEL PIN ISO 2338 8M6X28 A1	
310	311103-0405		1	PARALLEL PIN ISO 2338 8M6X30 A1	
320	312105-0329		2	SCREW, M6S ISO 4017 M5X16 A4 80	
330	312105-0372		2	SCREW, M6S ISO 4017 M6X25 A4 80	
340	312105-0374		4	SCREW, M6S ISO 4014 M6X30 A4 80	
350	312105-0455		3	SCREW, M6S ISO 4017 M8X30 A4 80	
360	312105-0457		3	SCREW, M6S ISO 4014 M8X35 A4 80	
370	312105-0493		2	SCREW, M6S ISO 4017 M10X25 A4 80	
380	312109-0382		4	SCREW, M6S ISO 4017 M6X60 A4 80	
390	312105-0287		1	SCREW, M6S ISO 4017 M4X8 A4 70	
400	312155-0364		6	SCREW DIN 7991 MF6S M6X10 A4 70	
410	312155-0368		3	SCREW DIN 7991 MF6S M6X16 A4 70	
420	312318-0327		1	SET SCREW, CUP END ISO4029 M5X12 A4	
430	312605-0326		1	HEXAGON NUT, M6M M20 A280	
440	312625-0316		12	HEXAGON THIN NUT, EN 24035 ML6M M6 A4	
450	312812-0316		2	HEXAGON NUT, NY-LOCK M6 A4 80	
460	315105-0146		2	WASHER PLAIN, 5,3X10X1 A4 BRB	
470	315105-0153		10	WASHER PLAIN, 6,4X12X1,5 A4 BRB	
480	315105-0191		1	WASHER PLAIN, 20X36X3 A4 BRB	
490	315106-0153		4	WASHER PLAIN, M6 ISO7089-6-200 HV A4	
500	315106-0165		6	WASHER PLAIN, M8 ISO7089-8-200 HV A4	
510	315125-0173		2	WASHER HIGH, TBRSB 10,5X28X6 A4	
520	315221-0178		1	RADIAL SEAL 35X62X8 MM	
530	315705-0234		2	PARALLEL KEY W. ROUND ENDS, 6X6X25 MM	
540	315751-0119		1	RETAINING RING FOR SHAFT DIN 471 25 SS	
550	315753-0132		1	RETAINING RING FOR BORE DIN 472 52 SS	
560	315755-0106		4	RETAINING RING SHAFT DIN 6799 4 SS	
570	321306-0107		1	BALL BEARING 35/62X14	
580	90091-0438		1	RADIAL SEAL 25X52X10 MM DUST LIP	
590	90141-0017		1	RETAINING RING FOR SHAFT DIN 471 17 SS	
600	90165-0056		2	PIPE CLIP FOR TUBE, 4 MM	
610	90214-0096		1	BALL BEARING, 25X52X15 MM	
620	90214-0189		2	BALL BEARING, 17X40X12 MM	
630	90458-0048		1	RETAINING RING FOR BORE DIN 472 62 SS	
T50B1260	90600-0463		1	INDUCTIVE SWITCH,E2A-M12LN05-WP-B1-TP 5M	

Machine Type	Group Description	Used-In	Group Number	Page No

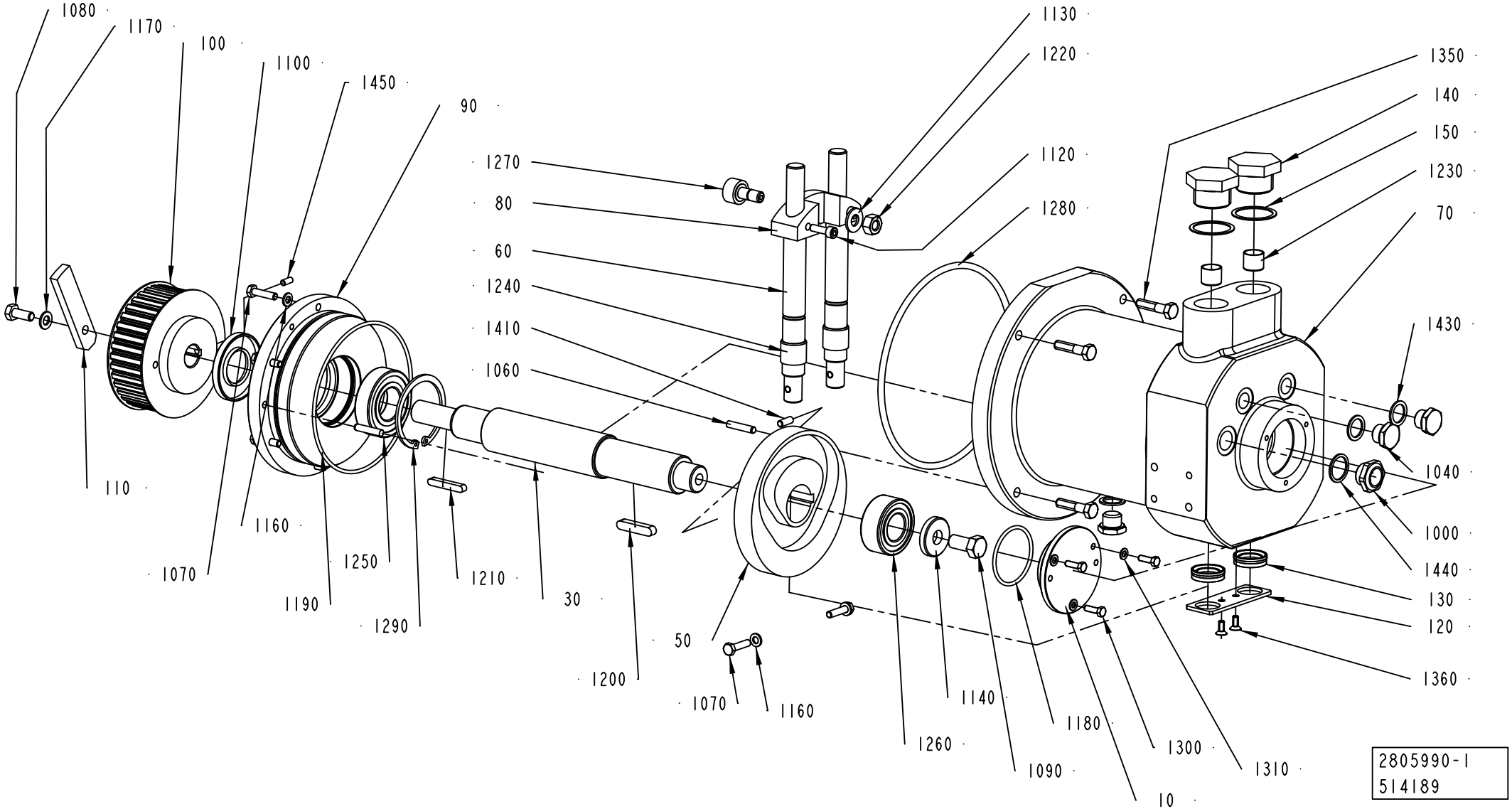
1080
1170
100
1100
1450
90
1270
80
60
1240
1410
1060
1130
1220
1120
1280
1350
140
150
1230
70
1430
1040
1000
1440
130
120
1360
110
1160
1070
1250
1190
1290
1210
30
1200
50
1070
1160
1140
1260
1180
1090
1300
1310
10
2805990-1
514189

ECM: 520756 - 20120101
Group number: 2805990-0100
Assembly Drawing: 2805990-1_1_AC

Pos	Part No	UN	Qty	Description	Page No
-					
010	2806001-0000		1	PLUG	
030	2806004-0000		1	SHAFT	
050	2806006-0000		1	CAM	
060	2852315-0000		2	SHAFT	
070	2806008-0000		1	BOX	
080	2806010-0000		1	BRACKET	
090	2806023-0000		1	FLANGE	
100	2819277-0000		1	TOOTHED PULLEY	
110	2819278-0000		1	ACTIVATOR	
120	2819322-0000		1	PLATE	
130	2871950-0000		2	SEAL	
140	2894732-0000		2	PLUG	
150	2894733-0000		2	WASHER	
1000	90199-0022		1	LEVEL GLAS	
1040	90330-0029		4	PLUG, G3/8EXT, R-236R3/8	
1060	311103-0357		2	PARALLEL PIN ISO 2338 6M6X30 A1	
1070	312105-0372		8	SCREW, M6S ISO 4017 M6X25 A4 80	
1080	312105-0451		1	SCREW, M6S ISO 4017 M8X20 A4 80	
1090	312105-0534		1	SCREW, M6S ISO 4017 M12X25 A4 80	
1100	315221-0171		1	RADIAL SEAL 30X62X7 MM	
1120	312115-0370		2	SCREW ISO4762 M6X20 A4 80	
1130	315105-0173		1	WASHER PLAIN, 10,5X22X2 A4 BRB	
1140	315121-0178		1	WASHER PLAIN, TBRSB 13/36 H=6	
1160	315105-0153		8	WASHER PLAIN, 6,4X12X1,5 A4 BRB	
1170	315105-0165		1	WASHER PLAIN, 8,4X16X1,6 A4 BRB	
1180	315202-0301		1	O-RING 49,5X3 MM	
1190	315204-0318		1	O-RING 134,5X3 MM	
1200	315701-0270		1	PARALLEL KEY W. ROUND ENDS, 8X7X40 MM	
1210	315705-0239		1	PARALLEL KEY W. ROUND ENDS, 6X6X40 MM	
1220	312601-0320		1	HEXAGON NUT, M10 8 FZB, ISO 4032	
1230	321135-0219		2	BUSHING, IGLIDUR X 16X18X15	
1240	321135-0260		2	BUSHING, IGLIDUR X 20X23X20	
1250	321309-0106		1	BALL BEARING 30/62X16	
1260	321330-0105		1	ANG. BALL BEAR 25/52X20,6	
1270	321582-0149		1	CAM ROLLER, 10X22X36 MM	
1280	315202-0327		1	O-RING 179,3X5,7 MM	
1290	315753-0137		1	RETAINING RING FOR BORE DIN 472 65 SS	
1300	312105-0329		3	SCREW, M6S ISO 4017 M5X16 A4 80	
1310	315105-0146		3	WASHER PLAIN, 5,3X10X1 A4 BRB	
1350	312105-0457		4	SCREW, M6S ISO 4014 M8X35 A4 80	
1360	312155-0327		2	SCREW DIN 7991 MF6S M5X12 A4 70	
1410	312318-0368		1	SET SCREW, CUP END ISO4029 M6X16 A4	
1420	90296-0072	L	0	SHELL OMALA OIL 150 (1PC=20L)	
1430	90201-0453		4	WASHER, SEALING, 17(3/8)/23, H=1,5 CU	
1440	315234-0113		1	WASHER PL.RND.CU.21,3//26 H=1,5	
1450	312318-0327		1	SET SCREW, CUP END ISO4029 M5X12 A4	

Machine Type	Group Description	Used-In	Group Number	Page No

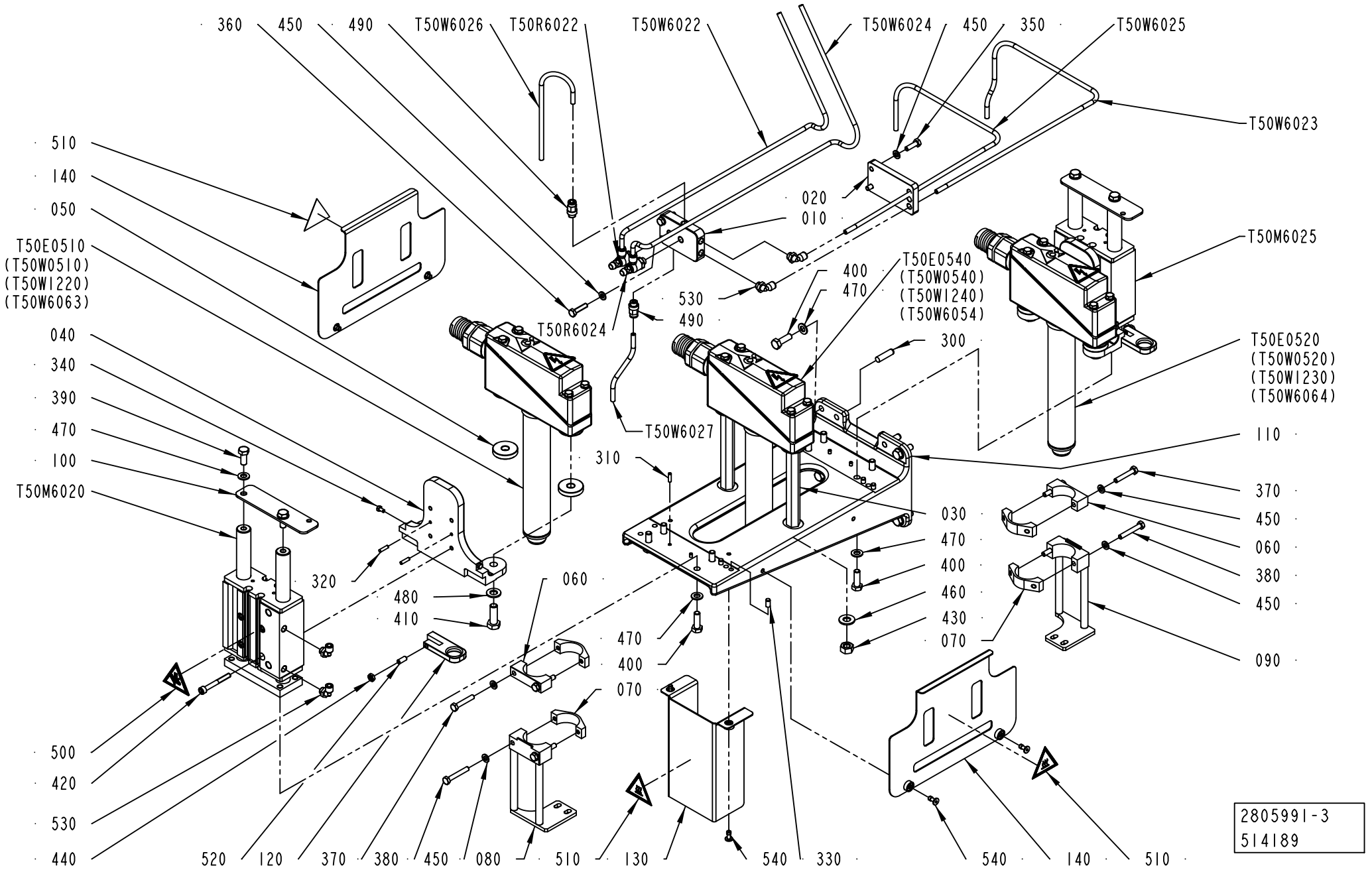
360
450
490
T50W6026
T50R6022
T50W6022
T50W6024
450
350
T50W6025
T50W6023
510
140
050
T50E0510
(T50W0510)
(T50W1220)
(T50W6063)
020
010
T50M6025
530
490
T50R6024
400
470
T50E0540
(T50W0540)
(T50W1240)
(T50W6054)
300
T50E0520
(T50W0520)
(T50W1230)
(T50W6064)
040
340
390
470
100
T50M6020
T50W6027
310
110
030
470
400
460
430
070
370
450
060
380
450
090
320
480
410
060
470
400
070
500
420
530
440
520
120
370
380
450
080
510
130
540
330
540
140
510
2805991-3
514189

ECM: 520755 - 20120101
Group number: 2805991-0200
Assembly Drawing: 2805991-3_1_AC

Pos	Part No	UN	Qty	Description	Page No
ANSI					
500	359725-0108		1	WARNING SIGN ANSI (H), MOVING PART	
510	359725-0117		3	WARNING SIGN ANSI (V), HOT SURFACE	
ISO					
500	359705-0005		1	WARNING SIGN ISO, MOVING PART	
510	359705-0007		3	WARNING SIGN ISO, HOT SURFACE	
Common Parts					
010	2772921-0000		1	PLATE	
020	2773080-0000		1	PLATE	
030	2819260-0000		2	SPACER	
040	2852363-0000		2	SUPPORT	
050	2852373-0000		4	INSULATOR	
060	2852374-0000		2	CLAMP	
070	2852375-0000		4	CLAMP	
080	2852376-0000		1	BRACKET	
090	2852377-0000		1	BRACKET	
100	2852393-0000		2	PLATE	
110	2852396-0000		1	FRAME	
120	2871958-0000		2	STOPPER	
130	3038088-0000		1	COVER	
140	3038089-0000		2	COVER	
300	311103-0405		2	PARALLEL PIN ISO 2338 8M6X30 A1	
310	311103-0269		4	PARALLEL PIN ISO 2338 4M6X14 A1	
320	311103-0270		4	PARALLEL PIN ISO 2338 4M6X16 A1	
330	311103-0349		4	PARALLEL PIN ISO 2338 6M6X12 A1	
340	312105-0287		4	SCREW, M6S ISO 4017 M4X8 A4 70	
350	312105-0370		2	SCREW, M6S ISO 4017 M6X20 A4 80	
360	312105-0372		2	SCREW, M6S ISO 4017 M6X25 A4 80	
370	312105-0376		4	SCREW, M6S ISO 4014 M6X35 A4 80	
380	312105-0378		4	SCREW, M6S ISO 4014 M6X40 A4 80	
390	312105-0451		4	SCREW, M6S ISO 4017 M8X20 A4 80	
400	312105-0453		12	SCREW, M6S ISO 4017 M8X25 A4 80	
410	312105-0495		4	SCREW, M6S ISO 4017 M10X30 A4 80	
420	312115-0380		8	SCREW ISO4762 M6X50 A4 80	
430	312605-0320		2	HEXAGON NUT, M6M M10 A280	
440	312625-0316		2	HEXAGON THIN NUT, EN 24035 ML6M M6 A4	
450	315105-0153		12	WASHER PLAIN, 6,4X12X1,5 A4 BRB	
460	315105-0173		2	WASHER PLAIN, 10,5X22X2 A4 BRB	
470	315106-0165		16	WASHER PLAIN, M8 ISO7089-8-200 HV A4	
480	315106-0173		4	WASHER PLAIN, M10 ISO7089-10-200 HV A4	
490	350001-0006		2	PUSH-IN FITTING QS-F-G1/8-6	
520	90287-0163		2	SCREW SPRINGLOAD. SLOTTED HEAD M6X14	
530	90458-2956		6	ELBOW PIPE JOINT, EXT.THREAD, D=6MM-G1/8	
540	90601-2046		6	CAPTIVE SCREW M6, GUTBG 6-4-12	
T50E0510	2871957-0200		1	HEATING ELEMENT	**5-13**
T50E0520	2871957-0200		1	HEATING ELEMENT	**5-13**
T50E0540	2871957-0200		1	HEATING ELEMENT	**5-13**
T50M6020	90600-2521		1	CYLINDER SPEC. WITH INT. GUIDING BORE 32	
T50M6025	90600-2521		1	CYLINDER SPEC. WITH INT. GUIDING BORE 32	
T50R6022	90235-0846		1	THROTTLE CHECK VALVE G1/8", MANUAL, 6	
T50R6024	90235-0846		1	THROTTLE CHECK VALVE G1/8", MANUAL, 6	
T50W6022	315400-0001	MM	700	TUBE PUN-H-6X1-BL	
T50W6023	315400-0001	MM	700	TUBE PUN-H-6X1-BL	
T50W6024	315400-0001	MM	700	TUBE PUN-H-6X1-BL	
T50W6025	315400-0001	MM	700	TUBE PUN-H-6X1-BL	
T50W6026	315400-0001	MM	250	TUBE PUN-H-6X1-BL	
T50W6027	315400-0001	MM	250	TUBE PUN-H-6X1-BL	

Machine Type | Group Description | Used-In | Group Number | Page No

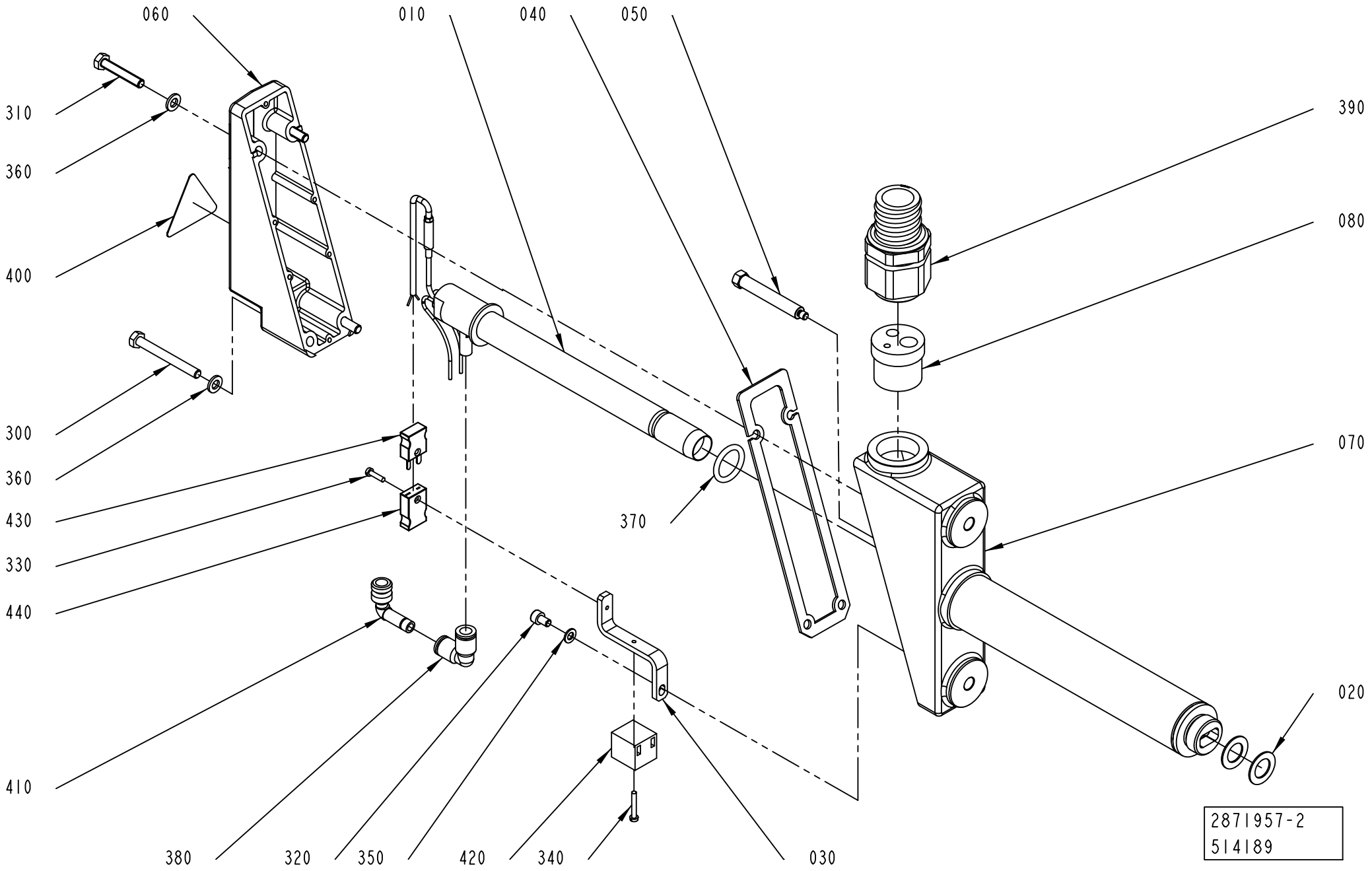
060
010
040
050
310
360
400
300
360
430
330
440
410
380
320
350
420
340
030
370
390
080
070
020
2871957-2
514189

ECM: 520748 - 20120101
Group number: 2871957-0200
Assembly Drawing: 2871957-2_1_AB

Pos	Part No	UN	Qty	Description	Page No
ANSI					
400	359715-0101		1	WARNING SIGN ANSI (V), ELECTRIC SHOCK	
ISO					
400	359705-0015		1	WARNING SIGN ISO, RISK OF ELECTRIC SHOCK	
Common Parts					
010	2773828-0000		1	HEATING ELEMENT	
020	2773832-0000		2	GASKET	
030	2818560-0000		1	BRACKET	
040	2833324-0000		1	GASKET	
050	2833326-0000		1	BRACKET	
060	2855849-0000		1	COVER	
070	2864951-0000		1	HEATING PIPE	
080	3038302-0000		1	INSERT	
300	312105-0381		2	SCREW, M6S ISO 4014 M6X55 A4 80	
310	312109-0376		2	SCREW, M6S ISO 4017 M6X35 A4 80	
320	312115-0323		1	SCREW ISO4762 M5X8 A4 80	
330	312125-0226		1	SLOTTED HEAD SCREW, ISO1207 M3X12 A4	
340	312125-0230		1	SLOTTED HEAD SCREW, ISO1207 M3X20 A4	
350	315105-0146		1	WASHER PLAIN, 5,3X10X1 A4 BRB	
360	315105-0153		4	WASHER PLAIN, 6,4X12X1,5 A4 BRB	
370	315205-0516		1	O-RING 20,22X3,53 MM	
380	342735-0103		1	ELBOW PIPE JOINT	
390	90458-0451		1	GLAND FITTING, 232552S10 UL21	
410	90055-0172		1	ELBOW WITH TAILPIECE 8/8 MM	
420	90195-0020		1	TERMINAL BLOCK, BK 2CRN, 0624 7200 00	
430	90458-0135		1	MALE PLUG, COD.220-0397	
440	90458-0136		1	FEMALE PLUG, COD 220-0381	

Pos	Part No	UN	Qty	Description	Page No

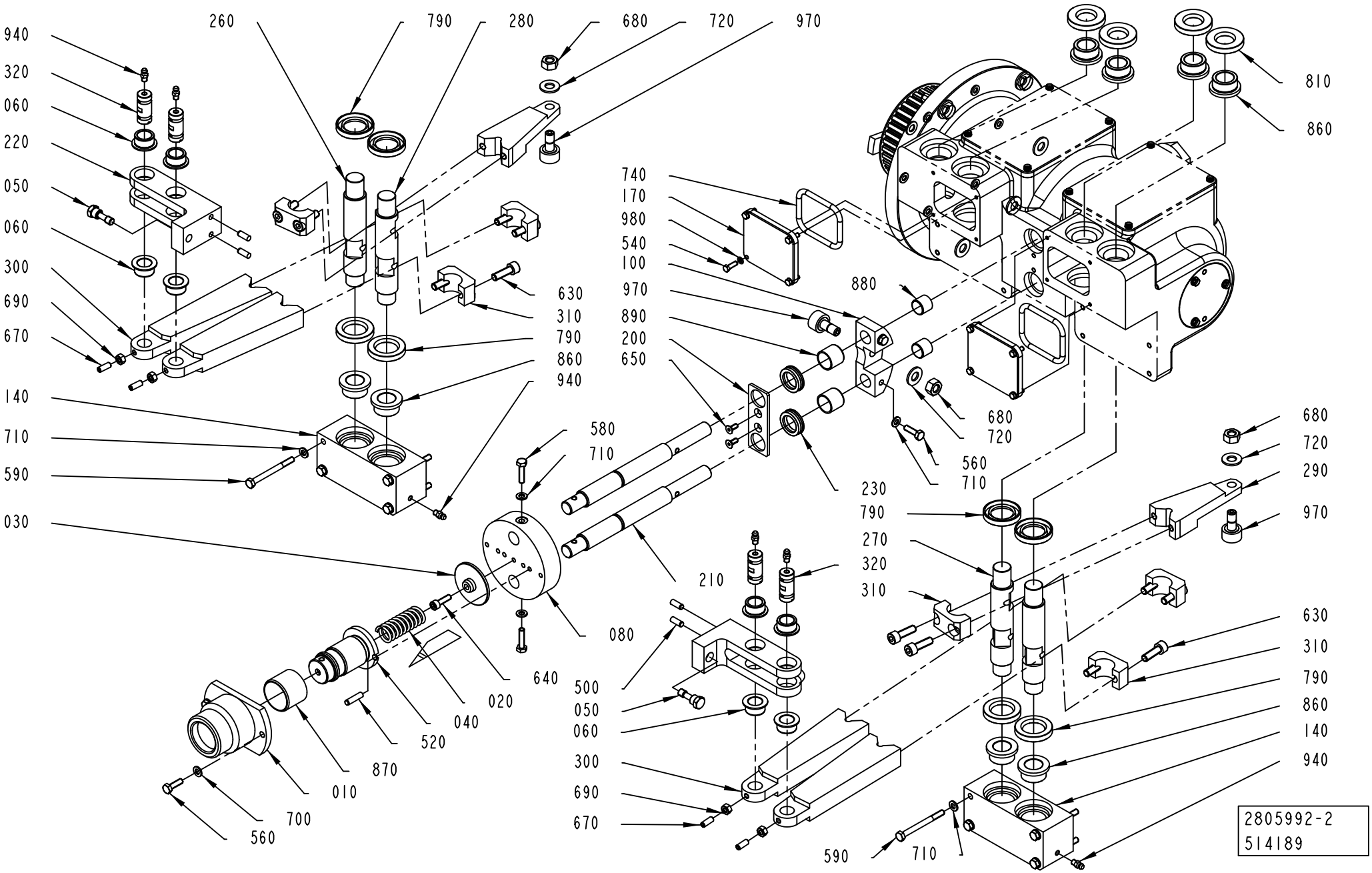
940
320
060
220
050
060
300
690
670
140
710
590
030
260
790
280
680
720
970
630
310
790
860
940
740
170
980
540
100
970
890
200
650
880
810
860
680
720
560
710
230
790
270
320
310
580
710
210
080
640
500
050
060
300
690
670
020
040
520
870
010
700
560
590
710
680
720
290
970
630
310
790
860
140
940
2805992-2
514189

ECM: 520754 - 20120101
Group number: 2805992-0200
Assembly Drawing: 2805992-2_1_AC

This list covers pages from 5-14 to 5-17

Pos	Part No	UN	Qty	Description	Page No
-					
010	1144489-0000		1	FLANGE	
020	1144492-0000		1	SPRING	
030	1144493-0000		1	WASHER	
040	1478189-0000		1	SUPPORT	
050	2761928-0000		2	KNOB	
060	2805193-0000		8	BUSHING	
070	2806001-0000		1	PLUG	
080	2806005-0000		1	PLATE	
090	2806006-0000		1	CAM	
100	2806010-0000		1	BRACKET	
110	2806013-0000		1	BOX	
120	2806014-0000		1	SHAFT	
130	2806016-0000		2	CAM	
140	2806022-0000		2	BOX	
150	2806023-0000		1	FLANGE	
160	2806026-0000		2	CAP	
170	2819237-0000		2	CAP	
180	2819277-0000		1	TOOTHED PULLEY	
190	2819278-0000		1	ACTIVATOR	
200	2819322-0000		1	PLATE	
210	2852315-0000		2	SHAFT	
220	2852408-0000		2	SUPPORT	
230	2871950-0000		2	SEAL	
240	2894732-0000		2	PLUG	
250	2894733-0000		2	WASHER	
260	3027107-0000		2	SHAFT	
270	2806017-0000		1	SHAFT	
280	2806019-0000		1	SHAFT	
290	2806018-0000		2	LEVER	
300	2806020-0000		4	LEVER	
310	2806021-0000		6	CLAMP	
320	3027103-0000		4	SHAFT	
500	311103-0351		4	PARALLEL PIN ISO 2338 6M6X16 A1	
510	311103-0357		1	PARALLEL PIN ISO 2338 6M6X30 A1	
520	311103-1355		1	PARALLEL PIN ISO 2338 6M6X24 A1	
530	311103-0405		1	PARALLEL PIN ISO 2338 8M6X30 A1	
540	312105-0292		16	SCREW, M6S ISO 4017 M4X14 A4 70	
550	312105-0329		3	SCREW, M6S ISO 4017 M5X16 A4 80	
560	312105-0370		4	SCREW, M6S ISO 4017 M6X20 A4 80	
570	312105-0372		6	SCREW, M6S ISO 4017 M6X25 A4 80	
580	312105-0372		2	SCREW, M6S ISO 4017 M6X25 A4 80	
590	312105-0382		8	SCREW, M6S ISO 4014 M6X60 A4 80	
600	312105-0451		1	SCREW, M6S ISO 4017 M8X20 A4 80	
610	312105-0497		5	SCREW, M6S ISO 4017 M10X35 A4 80	
620	312105-0534		1	SCREW, M6S ISO 4017 M12X25 A4 80	
630	312115-0453		12	SCREW ISO4762 M8X25 A4 80	
640	312115-0370		1	SCREW ISO4762 M6X20 A4 80	
650	312155-0327		2	SCREW DIN 7991 MF6S M5X12 A4 70	
660	312318-0327		1	SET SCREW, CUP END ISO4029 M5X12 A4	
670	312318-0368		9	SET SCREW, CUP END ISO4029 M6X16 A4	
680	312601-0320		3	HEXAGON NUT, M10 8 FZB, ISO 4032	
690	312605-0316		4	HEXAGON NUT, M6M M6 A280	
700	315103-0153		2	WASHER PLAIN, 6,4X12X1,5 BR NI PL	
710	315105-0153		18	WASHER PLAIN, 6,4X12X1,5 A4 BRB	
720	315105-0173		8	WASHER PLAIN, 10,5X22X2 A4 BRB	
730	315121-0178		1	WASHER PLAIN, TBRSB 13/36 H=6	
740	315202-0230		2	O-RING 64,2X5,7 MM	
750	315202-0242		2	O-RING 124,3X5,7 MM	
760	315202-0301		1	O-RING 49,5X3 MM	
770	315202-0318		1	O-RING 134,5X3 MM	
780	315202-0327		1	O-RING 179,3X5,7 MM	
790	315221-0158		8	RADIAL SEAL 25X42X7 MM	
800	315221-0171		1	RADIAL SEAL 30X62X7 MM	
810	315221-0820		4	RADIAL SEAL 20X42X7 MM	
820	315234-0113		1	WASHER PL.RND.CU.21,3//26 H=1,5	
830	315701-0270		3	PARALLEL KEY W. ROUND ENDS, 8X7X40 MM	
840	315705-0236		1	PARALLEL KEY W. ROUND ENDS, 6X6X30 MM	
850	315753-0137		1	RETAINING RING FOR BORE DIN 472 65 SS	
860	321101-0232		8	FLANGE BUSHING, 20/28X16-35X4 MM	
870	321133-0375		1	BUSHING IGLIDUR G 35X39X30	
880	321135-0219		2	BUSHING, IGLIDUR X 16X18X15	
890	321135-0260		2	BUSHING, IGLIDUR X 20X23X20	
900	321309-0106		1	BALL BEARING 30/62X16	
910	321330-0105		1	ANG. BALL BEAR 25/52X20,6	
920	90199-0022		1	LEVEL GLAS	
930	90201-0453		1	WASHER, SEALING, 17(3/8)/23, H=1,5 CU	
940	90286-0013		6	GREASE NIPPLE STRAIGHT, H1 M6X1 2346	
950	90296-0072	L	1	SHELL OMALA OIL 150 (1PC=20L)	
960	90330-0029		1	PLUG, G3/8EXT, R-236R3/8	
970	321582-0149		3	CAM ROLLER, 10X22X36 MM	
980	315105-0136		16	WASHER PLAIN, 4,3X9X0,8 A4 BRB	
990	315105-0146		3	WASHER PLAIN, 5,3X10X1 A4 BRB	
1020	315105-0165		1	WASHER PLAIN, 8,4X16X1,6 A4 BRB	

Machine Type	Group Description	Used-In	Group Number	Page No

PRESSURE DEVICE

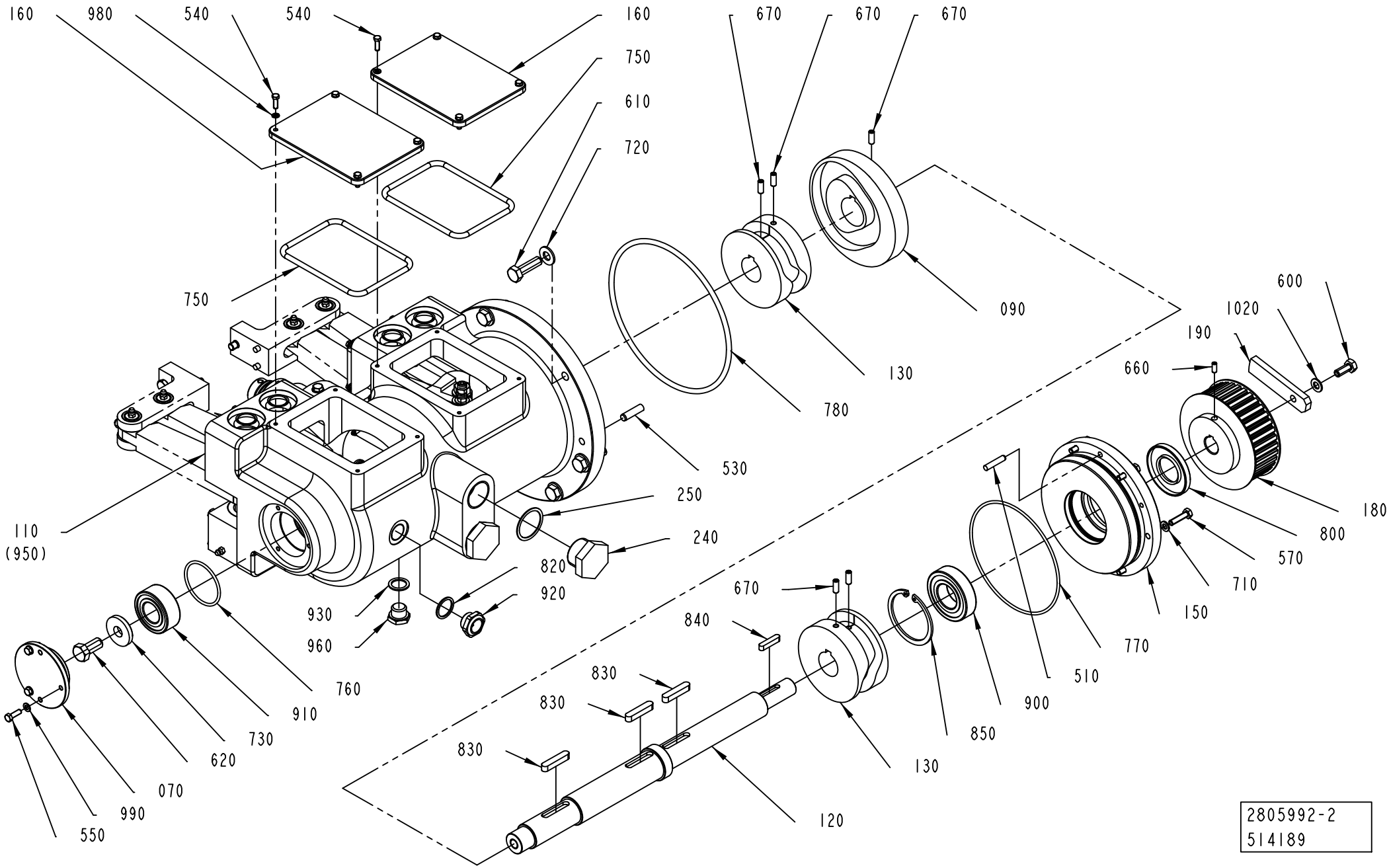

ECM: 520754 - 20120101
Group number: 2805992-0200
Assembly Drawing: 2805992-2_2_AC

This list covers pages from 5-14 to 5-17

Pos	Part No	UN	Qty	Description	Page No
-					
010	1144489-0000		1	FLANGE	
020	1144492-0000		1	SPRING	
030	1144493-0000		1	WASHER	
040	1478189-0000		1	SUPPORT	
050	2761928-0000		2	KNOB	
060	2805193-0000		8	BUSHING	
070	2806001-0000		1	PLUG	
080	2806005-0000		1	PLATE	
090	2806006-0000		1	CAM	
100	2806010-0000		1	BRACKET	
110	2806013-0000		1	BOX	
120	2806014-0000		1	SHAFT	
130	2806016-0000		2	CAM	
140	2806022-0000		2	BOX	
150	2806023-0000		1	FLANGE	
160	2806026-0000		2	CAP	
170	2819237-0000		2	CAP	
180	2819277-0000		1	TOOTHED PULLEY	
190	2819278-0000		1	ACTIVATOR	
200	2819322-0000		1	PLATE	
210	2852315-0000		2	SHAFT	
220	2852408-0000		2	SUPPORT	
230	2871950-0000		2	SEAL	
240	2894732-0000		2	PLUG	
250	2894733-0000		2	WASHER	
260	3027107-0000		2	SHAFT	
270	2806017-0000		1	SHAFT	
280	2806019-0000		1	SHAFT	
290	2806018-0000		2	LEVER	
300	2806020-0000		4	LEVER	
310	2806021-0000		6	CLAMP	
320	3027103-0000		4	SHAFT	
500	311103-0351		4	PARALLEL PIN ISO 2338 6M6X16 A1	
510	311103-0357		1	PARALLEL PIN ISO 2338 6M6X30 A1	
520	311103-1355		1	PARALLEL PIN ISO 2338 6M6X24 A1	
530	311103-0405		1	PARALLEL PIN ISO 2338 8M6X30 A1	
540	312105-0292		16	SCREW, M6S ISO 4017 M4X14 A4 70	
550	312105-0329		3	SCREW, M6S ISO 4017 M5X16 A4 80	
560	312105-0370		4	SCREW, M6S ISO 4017 M6X20 A4 80	
570	312105-0372		6	SCREW, M6S ISO 4017 M6X25 A4 80	
580	312105-0372		2	SCREW, M6S ISO 4017 M6X25 A4 80	
590	312105-0382		8	SCREW, M6S ISO 4014 M6X60 A4 80	
600	312105-0451		1	SCREW, M6S ISO 4017 M8X20 A4 80	
610	312105-0497		5	SCREW, M6S ISO 4017 M10X35 A4 80	
620	312105-0534		1	SCREW, M6S ISO 4017 M12X25 A4 80	
630	312115-0453		12	SCREW ISO4762 M8X25 A4 80	
640	312115-0370		1	SCREW ISO4762 M6X20 A4 80	
650	312155-0327		2	SCREW DIN 7991 MF6S M5X12 A4 70	
660	312318-0327		1	SET SCREW, CUP END ISO4029 M5X12 A4	
670	312318-0368		9	SET SCREW, CUP END ISO4029 M6X16 A4	
680	312601-0320		3	HEXAGON NUT, M10 8 FZB, ISO 4032	
690	312605-0316		4	HEXAGON NUT, M6M M6 A280	
700	315103-0153		2	WASHER PLAIN, 6,4X12X1,5 BR NI PL	
710	315105-0153		18	WASHER PLAIN, 6,4X12X1,5 A4 BRB	
720	315105-0173		8	WASHER PLAIN, 10,5X22X2 A4 BRB	
730	315121-0178		1	WASHER PLAIN, TBRSB 13/36 H=6	
740	315202-0230		2	O-RING 64,2X5,7 MM	
750	315202-0242		2	O-RING 124,3X5,7 MM	
760	315202-0301		1	O-RING 49,5X3 MM	
770	315202-0318		1	O-RING 134,5X3 MM	
780	315202-0327		1	O-RING 179,3X5,7 MM	
790	315221-0158		8	RADIAL SEAL 25X42X7 MM	
800	315221-0171		1	RADIAL SEAL 30X62X7 MM	
810	315221-0820		4	RADIAL SEAL 20X42X7 MM	
820	315234-0113		1	WASHER PL.RND.CU.21,3//26 H=1,5	
830	315701-0270		3	PARALLEL KEY W. ROUND ENDS, 8X7X40 MM	
840	315705-0236		1	PARALLEL KEY W. ROUND ENDS, 6X6X30 MM	
850	315753-0137		1	RETAINING RING FOR BORE DIN 472 65 SS	
860	321101-0232		8	FLANGE BUSHING, 20/28X16-35X4 MM	
870	321133-0375		1	BUSHING IGLIDUR G 35X39X30	
880	321135-0219		2	BUSHING, IGLIDUR X 16X18X15	
890	321135-0260		2	BUSHING, IGLIDUR X 20X23X20	
900	321309-0106		1	BALL BEARING 30/62X16	
910	321330-0105		1	ANG. BALL BEAR 25/52X20,6	
920	90199-0022		1	LEVEL GLAS	
930	90201-0453		1	WASHER, SEALING, 17(3/8)/23, H=1,5 CU	
940	90286-0013		6	GREASE NIPPLE STRAIGHT, H1 M6X1 2346	
950	90296-0072	L	1	SHELL OMALA OIL 150 (1PC=20L)	
960	90330-0029		1	PLUG, G3/8EXT, R-236R3/8	
970	321582-0149		3	CAM ROLLER, 10X22X36 MM	
980	315105-0136		16	WASHER PLAIN, 4,3X9X0,8 A4 BRB	
990	315105-0146		3	WASHER PLAIN, 5,3X10X1 A4 BRB	
1020	315105-0165		1	WASHER PLAIN, 8,4X16X1,6 A4 BRB	

Machine Type	Group Description	Used-In	Group Number	Page No

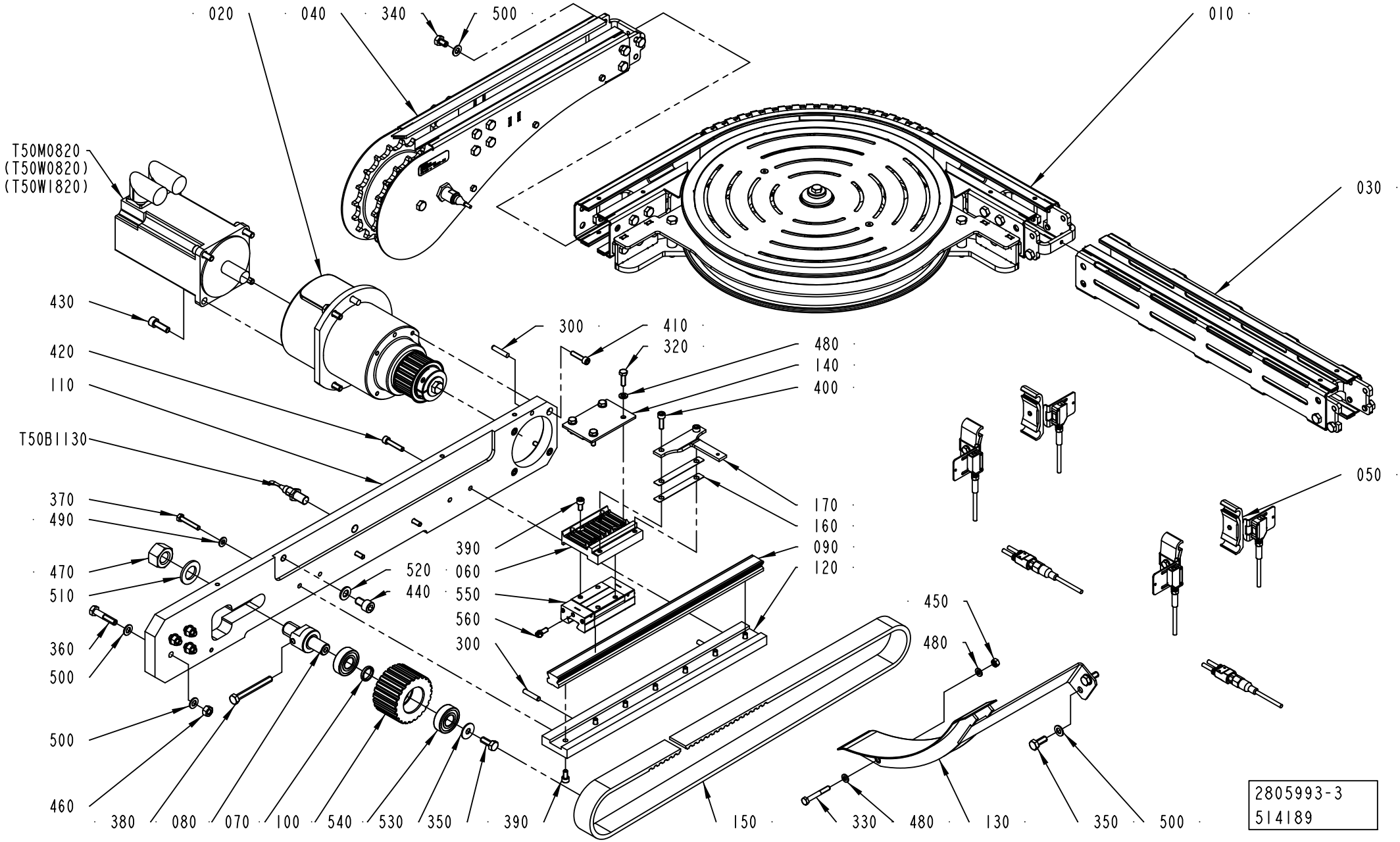
020
040
340
500
010
030
T50M0820
(T50W0820)
(T50W1820)
430
420
110
T50B1130
370
490
470
510
360
500
500
460
380
080
070
100
540
530
350
390
300
410
320
480
140
400
170
160
090
120
390
520
060
440
550
560
300
150
450
480
330
480
130
350
500
050
2805993-3
514189

ECM: 520753 - 20120101
Group number: 2805993-0300
Assembly Drawing: 2805993-3_1_AB

Pos	Part No	UN	Qty	Description	Page No
-					
010	1550698-0200		1	WHEEL CURVE 90 DEGREES	**5-21**
020	2762008-0100		1	DRIVE	**5-23**
030	2763616-0102		1	CONVEYOR BODY	**5-25**
040	2789200-0100		1	END UNIT	**5-27**
050	3002233-0100		1	PHOTOCELL UNIT	**5-31**
060	2761952-0000		1	PLATE	
070	2761962-0000		1	SPACER	
080	2761965-0000		1	COLUMN	
090	2774953-0000		1	RAIL	
100	2789208-0000		1	PULLEY	
110	2789209-0000		1	PLATE	
120	2789216-0000		1	PLATE	
130	2819290-0000		1	GUIDE	
140	2921645-0000		1	PLATE	
150	3027104-0000		1	BELT	
160	3039953-0000		3	SHIM	
170	3040198-0000		1	SUPPORT	
300	311103-0357		3	PARALLEL PIN ISO 2338 6M6X30 A1	
320	312105-0370		4	SCREW, M6S ISO 4017 M6X20 A4 80	
330	312105-0379		1	SCREW, M6S ISO 4014 M6X45 A4 80	
340	312105-0447		1	SCREW, M6S ISO 4017 M8X12 A4 80	
350	312105-0451		3	SCREW, M6S ISO 4017 M8X20 A4 80	
360	312105-0459		4	SCREW, M6S ISO 4014 M8X40 A4 80	
370	312109-0376		3	SCREW, M6S ISO 4017 M6X35 A4 80	
380	312109-0465		1	SCREW, M6S ISO 4017 M8X70 A4 80	
390	312115-0366		11	SCREW ISO4762 M6X12 A4 80	
400	312115-0370		2	SCREW ISO4762 M6X20 A4 80	
410	312115-0372		4	SCREW ISO4762 M6X25 A4 80	
420	312115-0374		1	SCREW ISO4762 M6X30 A4 80	
430	312115-0453		4	SCREW ISO4762 M8X25 A4 80	
440	312115-0489		1	SCREW ISO4762 M10X16 A4 80	
450	312605-0316		1	HEXAGON NUT, M6M M6 A280	
460	312605-0318		4	HEXAGON NUT, M6M M8 A280	
470	312605-0326		1	HEXAGON NUT, M6M M20 A280	
480	315105-0153		6	WASHER PLAIN, 6,4X12X1,5 A4 BRB	
490	315105-0156		3	WASHER PLAIN, 6,7X14X1,5 A4 BRB	
500	315105-0165		11	WASHER PLAIN, 8,4X16X1,6 A4 BRB	
510	315105-0192		1	WASHER PLAIN, 21X36X3 A4 BRB	
520	315106-0173		1	WASHER PLAIN, M10 ISO7089-10-200 HV A4	
530	90005-0105		1	WASHER PLAIN ROUND 8,4(M8)/24, H=1,5	
540	90214-0189		2	BALL BEARING, 17X40X12 MM	
550	90600-3595		1	CARRIAGE, SSR25XW1SSHHC1FME	
560	90601-4350		1	GREASE NIPPLE, B-M6F SUS(12L)	
T50B1130	90459-5835		1	INDUCTIVE SWITCH, E2A-M12KS04-WP-B1-5M	
T50M0820	90601-0669		1	SERVO MOTOR, MPL-B430P-MJ72AA SERIES A	

Machine Type	Group Description	Used-In	Group Number	Page No

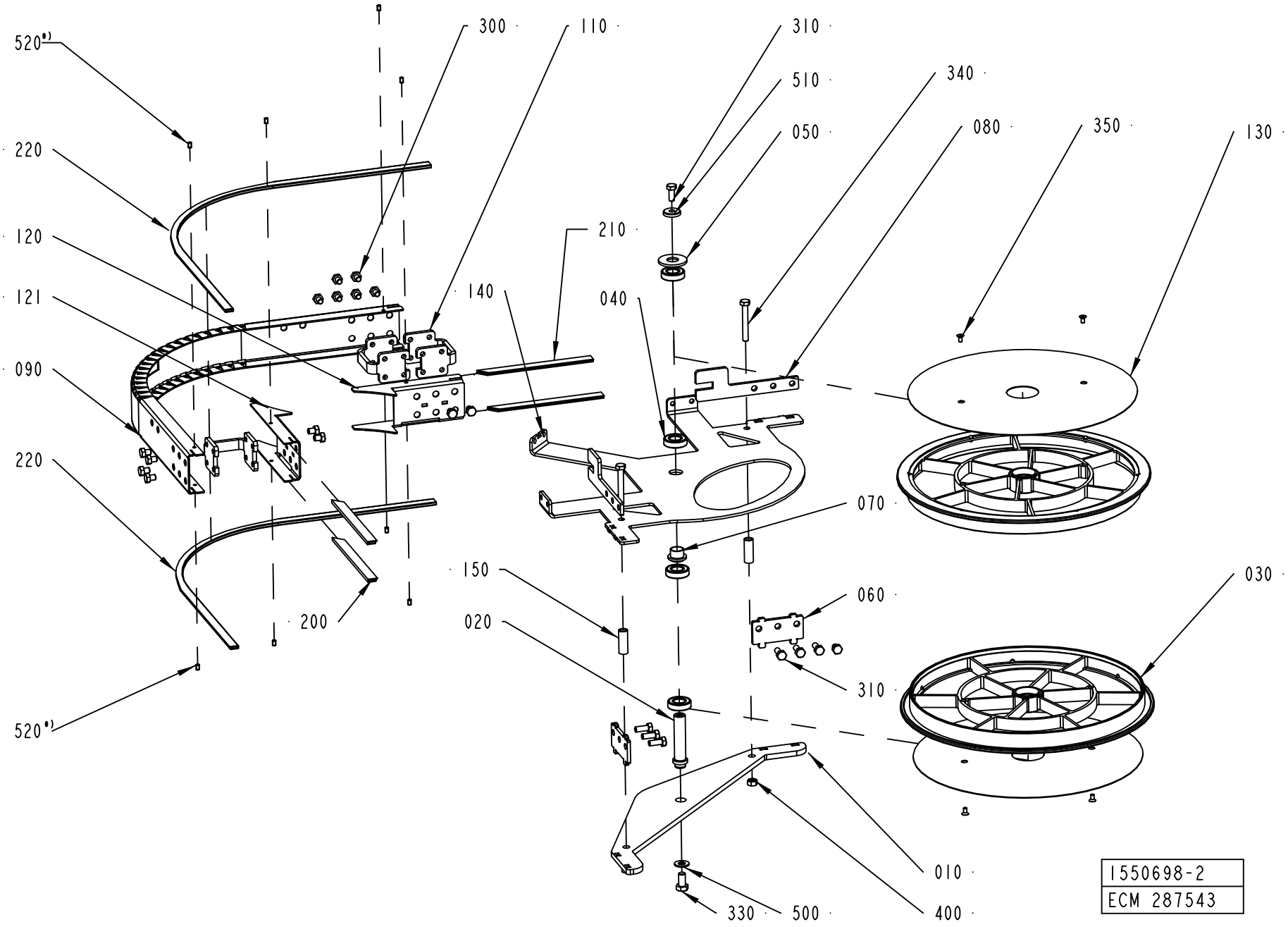
520*)
220
120
121
090
220
520*)
300
110
310
510
050
340
080
350
130
210
140
040
070
150
020
200
060
310
030
010
400
330
500
1550698-2
ECM 287543

ECM: 383372 - 20090115
Group number: 1550698-0200
Assembly Drawing: 1550698-2_1_AF

Pos	Part No	UN	Qty	Description	Page No
-					
010	1550667-0000		1	BOTTOM PANEL	
020	1550689-0000		1	SHAFT	
030	2656655-0000		2	WHEEL	
040	1550348-0001		4	BALL BEARING 17/35X10	
050	1550693-0000		1	WASHER	
060	2561257-0000		2	SPACER	
070	1550690-0000		1	SLEEVE	
080	2561603-0000		2	SPACER	
090	1550669-0000		1	SIDE PLATE	
110	2561206-0000		3	SPACER	
120	1550687-0001		1	SIDE PLATE	
121	1550687-0002		1	SIDE PLATE	
130	2561232-0000		2	COVER	
140	1550668-0000		1	BRACKET	
150	1550626-0005		2	SPACER	
200	1550595-1801		2	SLIDING STRIP	
210	1550595-1802		2	SLIDING STRIP	
220	2699584-0830		2	SLIDING STRIP	
300	90459-4735		15	SCREW, M6S ISO 4017 M8X10 A4 80	
310	312105-0451		7	SCREW, M6S ISO 4017 M8X20 A4 80	
330	312105-0491		1	SCREW, M6S ISO 4017 M10X20 A4 80	
340	312105-0463		2	SCREW, M6S ISO 4014 M8X60 A4 80	
350	312155-0325		4	SCREW DIN 7991 MF6S M5X10 A4 70	
400	312605-0318		2	HEXAGON NUT, M6M M8 A280	
500	315105-0173		1	WASHER PLAIN, 10,5X22X2 A4 BRB	
510	315125-0165		1	WASHER HIGH, TBRSB 8,4X26X5 A4	
520	90459-7293		8	SET SCREW DIN 551M5X8 PA66	

Pos	Part No	UN	Qty	Description	Page No

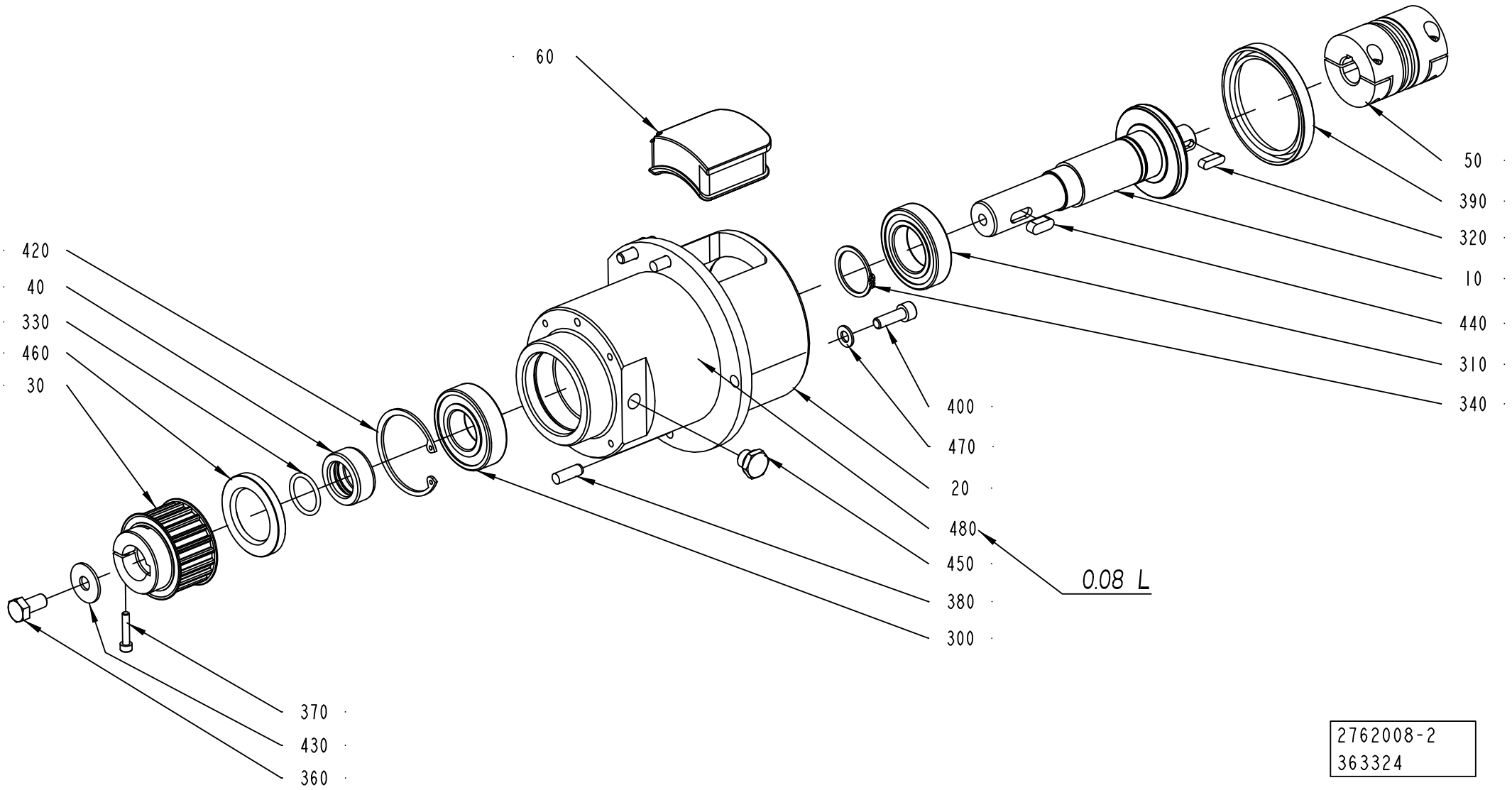
60
420
40
330
460
30
50
390
320
10
440
310
340
400
470
20
480
450
380
300
0.08 L
370
430
360
2762008-2
363324

ECM: 374474 - 20090102
Group number: 2762008-0100
Assembly Drawing: 2762008-2_1_AC

Pos	Part No	UN	Qty	Description	Page No
TBA, TPA					
030	2761956-0000		1	DRIVE PULLEY	
Common Parts					
010	2789197-0000		1	SHAFT	
020	2789196-0000		1	FLANGE	
040	2761957-0000		1	SPACER	
050	90600-5704		1	TORQUE RIGID COUPLING, 19X19 MM	
060	2945996-0000		1	PLUG	
300	90458-2362		1	BALL BEARING 30/62X16	
310	321308-0207		1	BALL BEARING 35/62X14	
320	315705-0232		1	PARALLEL KEY W. ROUND ENDS, 6X6X20 MM	
330	315202-0218		1	O-RING 26,2X3 MM	
340	315751-0124		1	RETAINING RING FOR SHAFT DIN 471 35 SS	
360	312105-0491		1	SCREW, M6S ISO 4017 M10X20 A4 80	
370	312115-0333		1	SCREW ISO4762 M5X25 A4 80	
380	311103-1403		2	PARALLEL PIN ISO 2338 8M6X24 A1	
390	315221-0221		1	RADIAL SEAL 70X90X10 MM	
400	312115-0453		3	SCREW ISO4762 M8X25 A4 80	
420	90458-0048		1	RETAINING RING FOR BORE DIN 472 62 SS	
430	90005-0140		1	WASHER PLAIN ROUND 10,5(M10)/30, H=2	
440	315705-0263		1	PARALLEL KEY W. ROUND ENDS, 8X7X20 MM	
450	90330-0026		1	PLUG, EXT. G-THREAD, G1/4	
460	315221-0185		1	RADIAL SEAL 40X62X7 MM	
470	315105-0165		3	WASHER PLAIN, 8,4X16X1,6 A4 BRB	
480	90296-0072	L	1	SHELL OMALA OIL 150 (1PC=20L)	

Pos	Part No	UN	Qty	Description	Page No

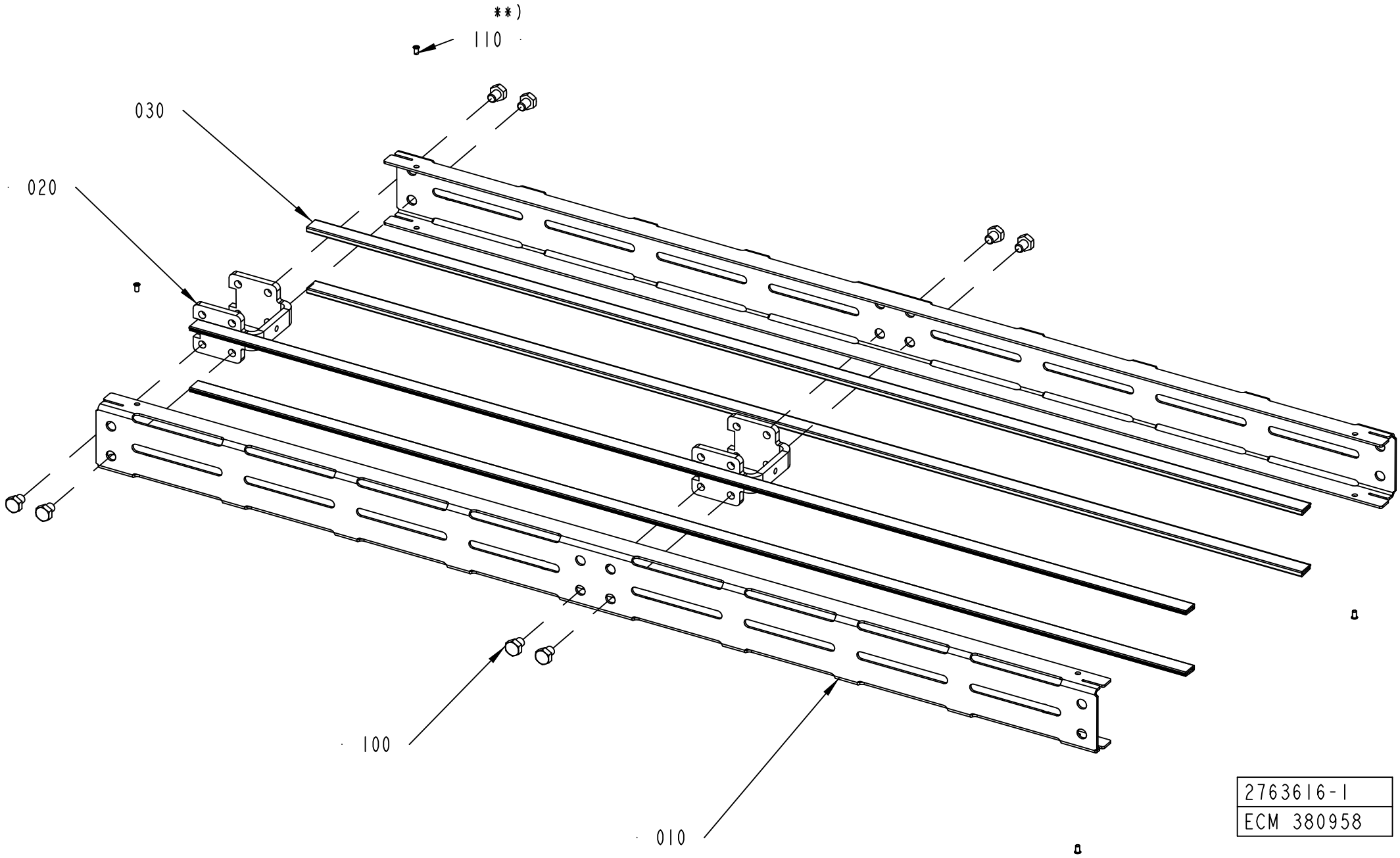
**)
110
030
020
100
010
2763616-1
ECM 380958

ECM: 380958 -
Group number: 2763616-0102
Assembly Drawing: 2763616-1_1_AB

Pos	Part No	UN	Qty	Description	Page No
L 0250					
020	2561206-0000		1	SPACER	
100	90459-4735		4	SCREW, M6S ISO 4017 M8X10 A4 80	
L 0500					
010	2763617-0002		2	SIDE PLATE	
020	2561206-0000		1	SPACER	
030	1550595-4960		4	SLIDING STRIP	
100	90459-4735		4	SCREW, M6S ISO 4017 M8X10 A4 80	
Common Parts					
110	90600-6183		4	TUBULAR RIVET 3,5X6,2	

Pos	Part No	UN	Qty	Description	Page No

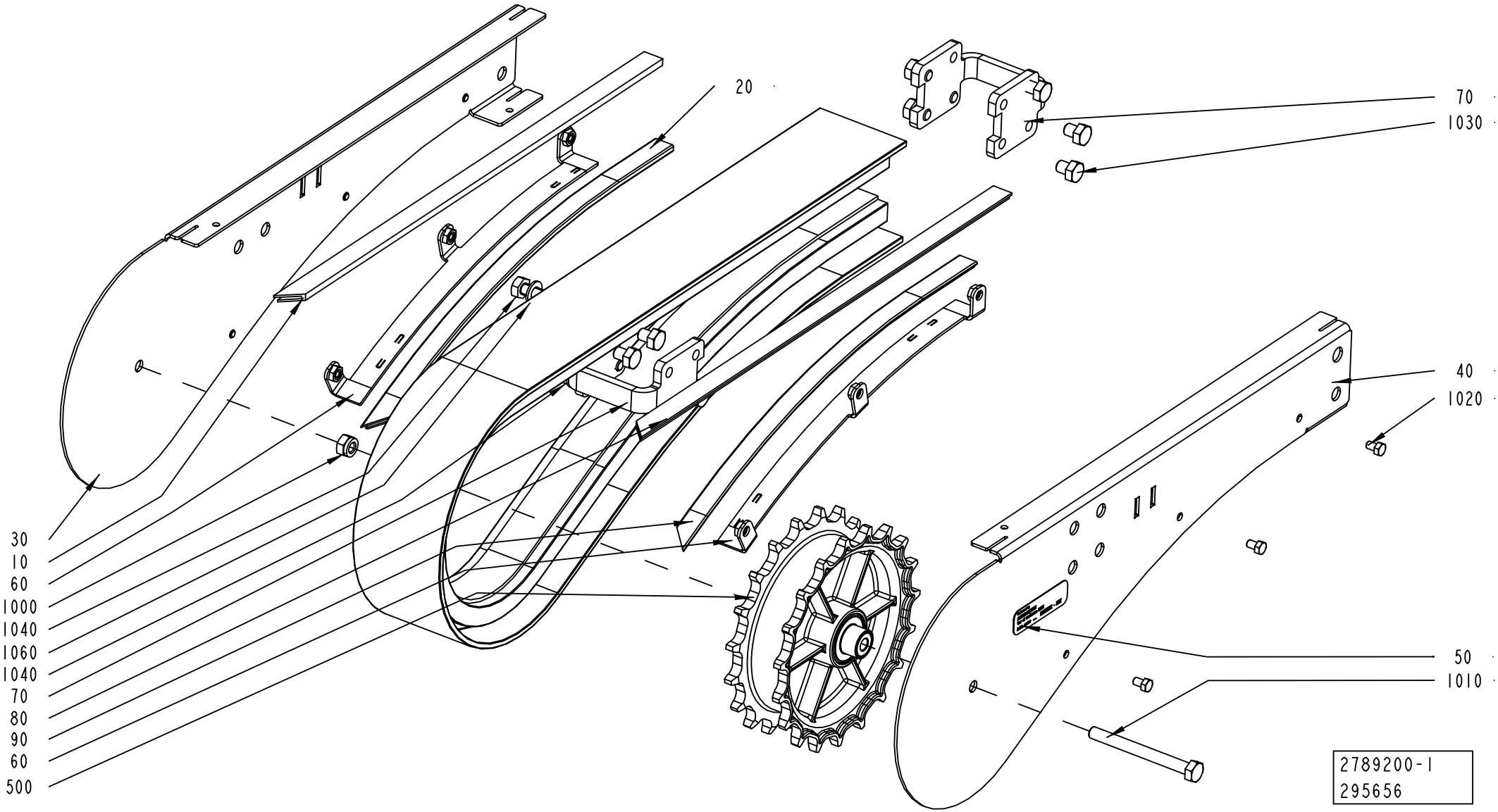
20
70
1030
40
1020
50
1010
30
10
60
1000
1040
1060
1040
70
80
90
60
500
2789200-1
295656

ECM: 369818 - 20090101
Group number: 2789200-0100
Assembly Drawing: 2789200-1_1_AB

Pos	Part No	UN	Qty	Description	Page No
-					
010	1550595-4153		1	SLIDING STRIP	
020	2589960-3353		1	SLIDING STRIP	
030	2656686-0000		1	SIDE PLATE	
040	2656687-0000		1	SIDE PLATE	
050	1086870-0000		1	SIGN	
060	2656407-0000		2	SLIDE RAIL	
070	2561206-0000		2	SPACER	
080	1550595-4154		1	SLIDING STRIP	
090	2589960-3354		1	SLIDING STRIP	
100	2561244-0200		1	DRIVE WHEEL	**5-29**
1000	312812-0318		1	HEXAGON NUT, NY-LOCK M8 A4 80	
1010	312105-0467		1	SCREW, M6S ISO 4014 M8X80 A4 80	
1020	312105-0323		6	SCREW, M6S ISO 4017 M5X8 A4 80	
1030	90459-4735		9	SCREW, M6S ISO 4017 M8X10 A4 80	
1040	312105-0449		4	SCREW, M6S ISO 4017 M8X16 A4 80	
1060	315105-0165		4	WASHER PLAIN, 8,4X16X1,6 A4 BRB	

Pos	Part No	UN	Qty	Description	Page No

Machine Type | Group Description | Used-In | Group Number | Page No

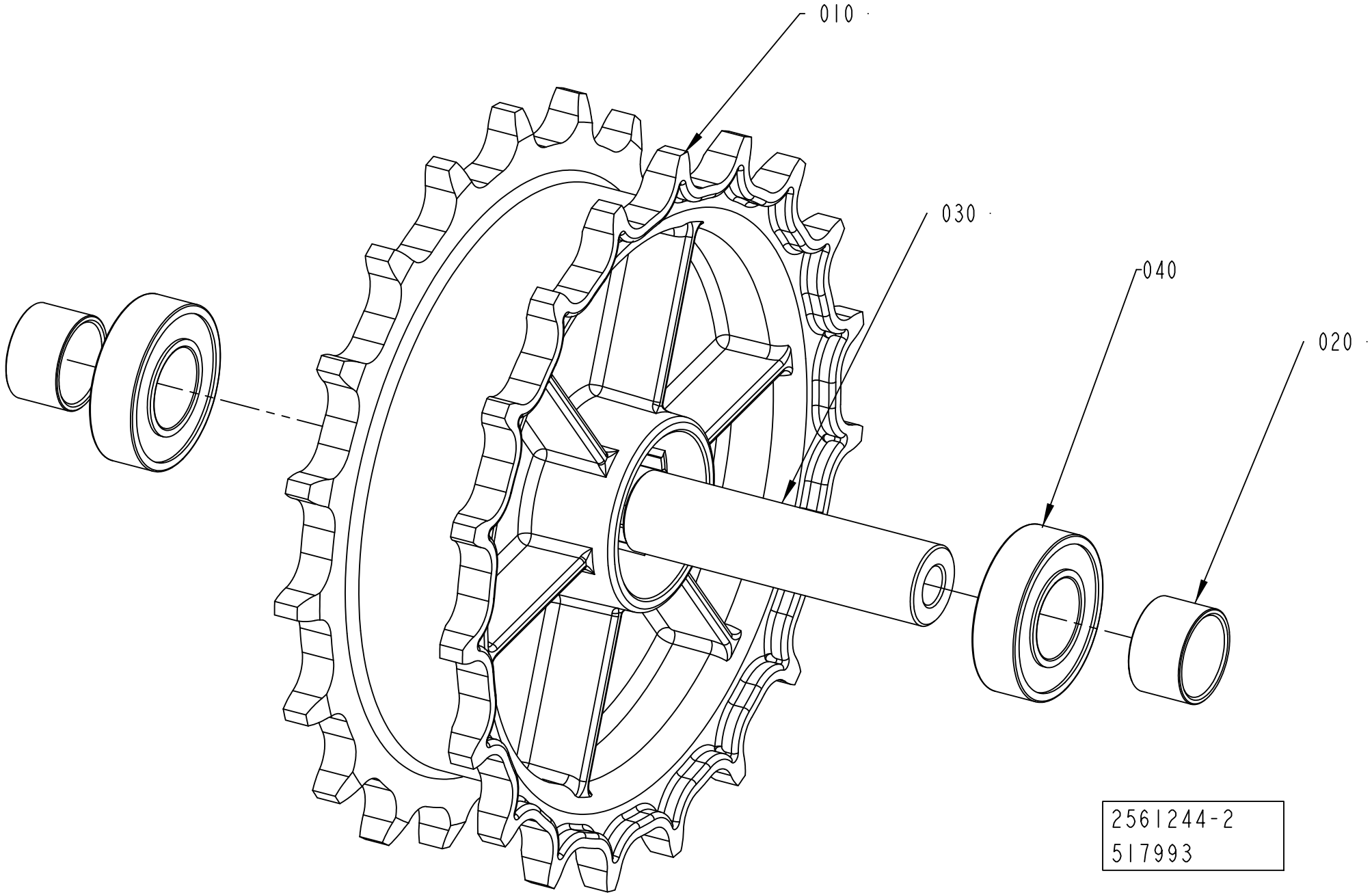
010
030
040
020
2561244-2
517993

ECM: 517993 - 20111102
Group number: 2561244-0200
Assembly Drawing: 2561244-2_1_AC

Pos	Part No	UN	Qty	Description	Page No
-					
010	2656672-0000		1	SPROCKET	
020	2656673-0000		2	SPACER	
030	2561267-0000		1	SHAFT	
040	90603-2325		2	BALL BEARING 17/35X10	

Pos	Part No	UN	Qty	Description	Page No

Machine Type	Group Description	Used-In	Group Number	Page No

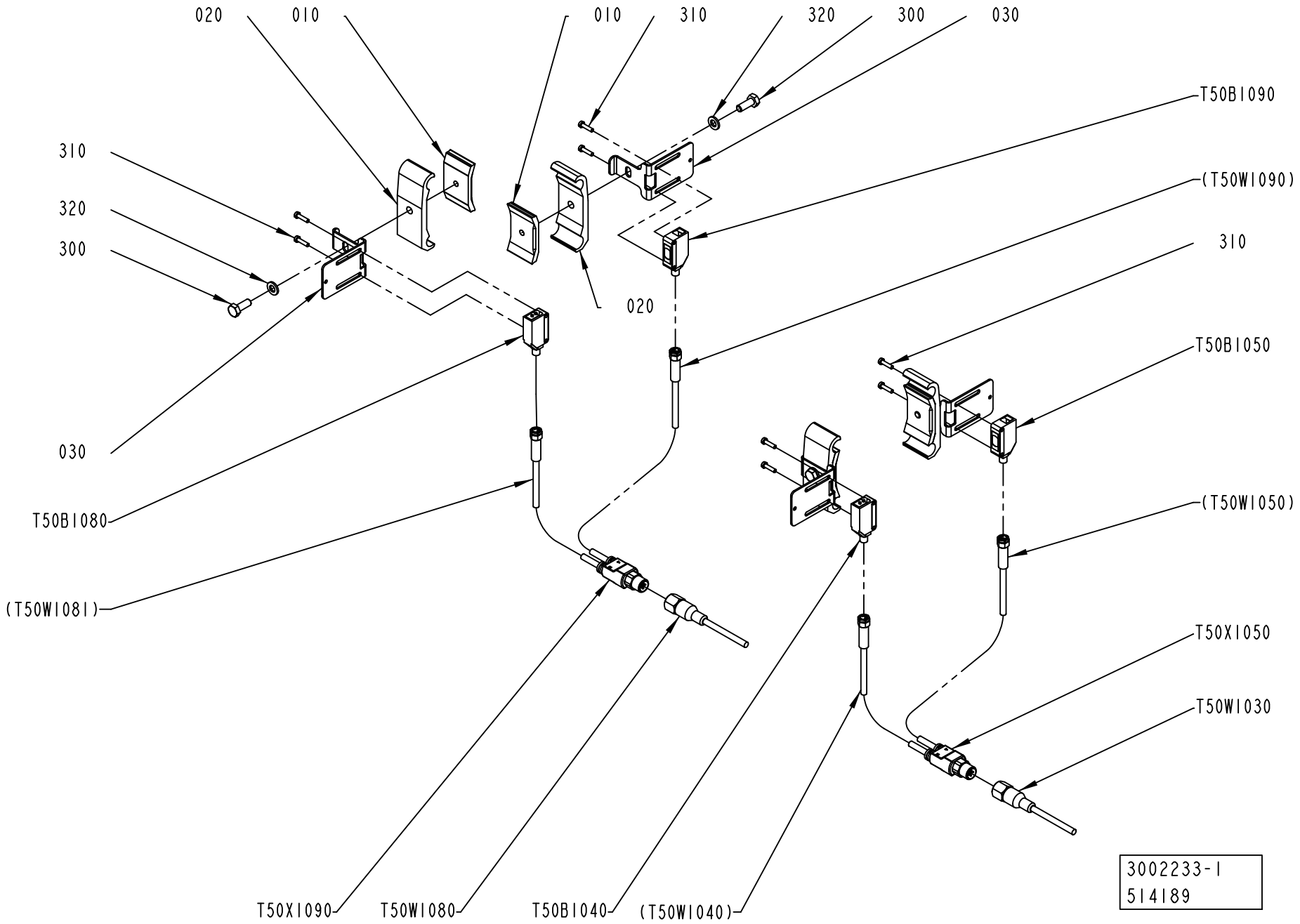
020
010
010
310
320
300
030
T50B1090
(T50W1090)
310
320
300
020
310
T50B1050
030
T50B1080
(T50W1081)
(T50W1050)
T50X1050
T50W1030
T50X1090
T50W1080
T50B1040
(T50W1040)
3002233-1
514189

ECM: 520746 - 20120101
Group number: 3002233-0100
Assembly Drawing: 3002233-1_1_AC

Pos	Part No	UN	Qty	Description	Page No
-					
010	1366727-0000		4	CLAMP	
020	1366750-0000		4	HOLDER	
030	3137457-0000		4	BRACKET	
300	312105-0368		4	SCREW, M6S ISO 4017 M6X16 A4 80	
310	312125-0226		8	SLOTTED HEAD SCREW, ISO1207 M3X12 A4	
320	315105-0153		4	WASHER PLAIN, 6,4X12X1,5 A4 BRB	
T50B1040	90459-5531		1	PHOTOCELL E3Z-T86A-D RECIEVER	
T50B1050	90459-5530		1	PHOTOCELL E3Z-T86A-L SENDER	
T50B1080	90459-5531		1	PHOTOCELL E3Z-T86A-D RECIEVER	
T50B1090	90459-5530		1	PHOTOCELL E3Z-T86A-L SENDER	
T50W1030	351309-0150		1	ACTUATOR/SENSOR CABLE PRKT 4-07/15M	
T50W1080	351309-0100		1	ACTUATOR/SENSOR CABLE PRKT 4-07/10M	
T50X1050	90459-6586		1	ACT/SENS.Y-CABLE, ASBN 2-PRKMV 4-07/0,6M	
T50X1090	90459-6586		1	ACT/SENS.Y-CABLE, ASBN 2-PRKMV 4-07/0,6M	

Pos	Part No	UN	Qty	Description	Page No

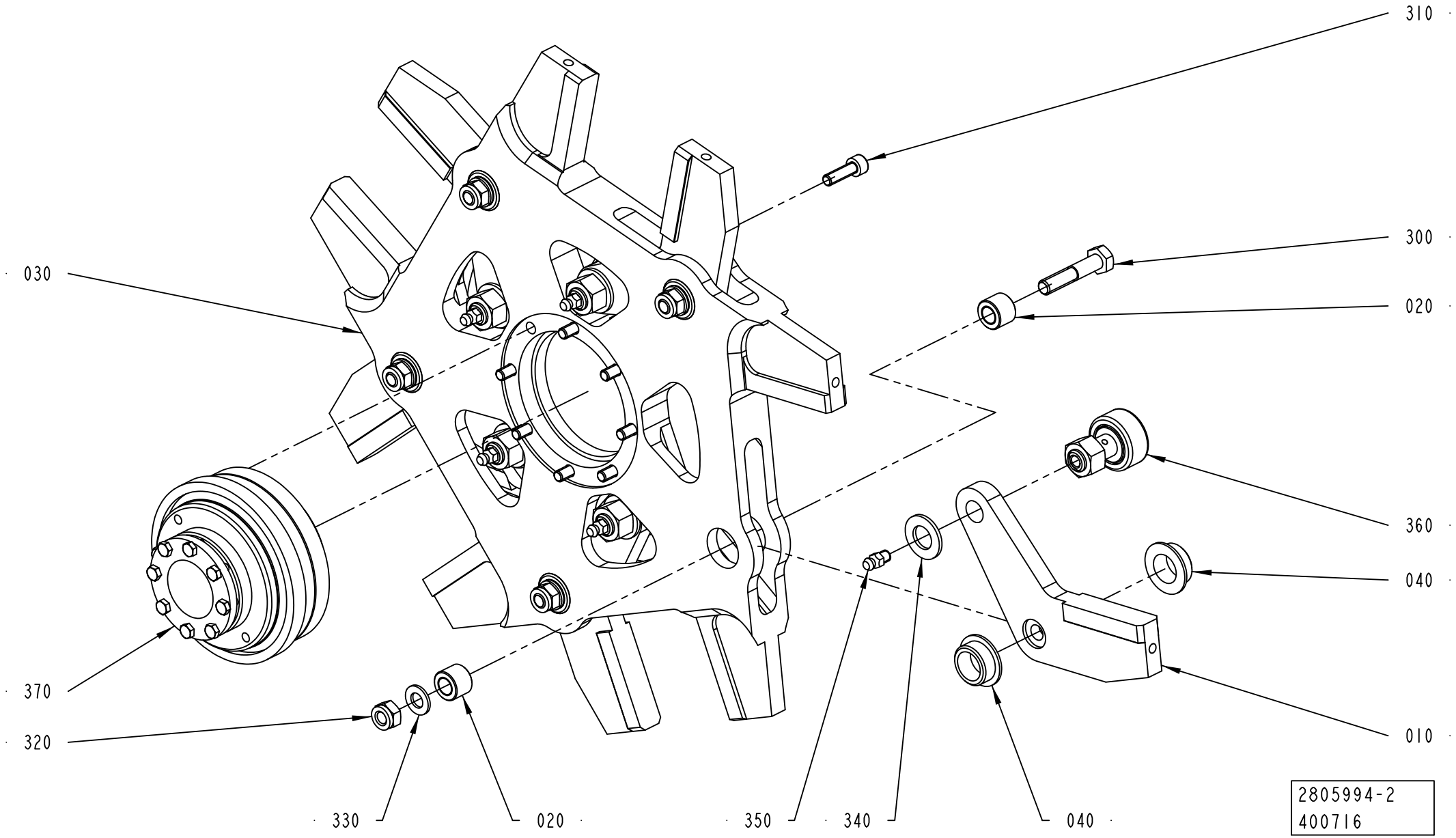
310
300
020
030
360
040
370
010
320
330
020
350
340
040
2805994-2
400716

ECM: 406689 - 20090710
Group number: 2805994-0200
Assembly Drawing: 2805994-2_1_AA

Pos	Part No	UN	Qty	Description	Page No
-					
010	2806032-0000		5	ARM	
020	2806033-0000		10	PIN	
030	2806037-0000		1	WHEEL	
040	3012854-0000		10	BUSHING	
300	312105-0459		5	SCREW, M6S ISO 4014 M8X40 A4 80	
310	312115-0370		8	SCREW ISO4762 M6X20 A4 80	
320	312812-0318		5	HEXAGON NUT, NY-LOCK M8 A4 80	
330	315105-0165		5	WASHER PLAIN, 8,4X16X1,6 A4 BRB	
340	315105-0178		5	WASHER PLAIN, 13X24X2,5 A4 BRB	
350	90286-0013		5	GREASE NIPPLE STRAIGHT, H1 M6X1 2346	
360	90600-0808		5	CAM ROLLER 12X30X40 MM, CFT 12 M UU N	
370	90600-2520		1	SAFETY CLUTCH, 32X32 MM	

Pos	Part No	UN	Qty	Description	Page No

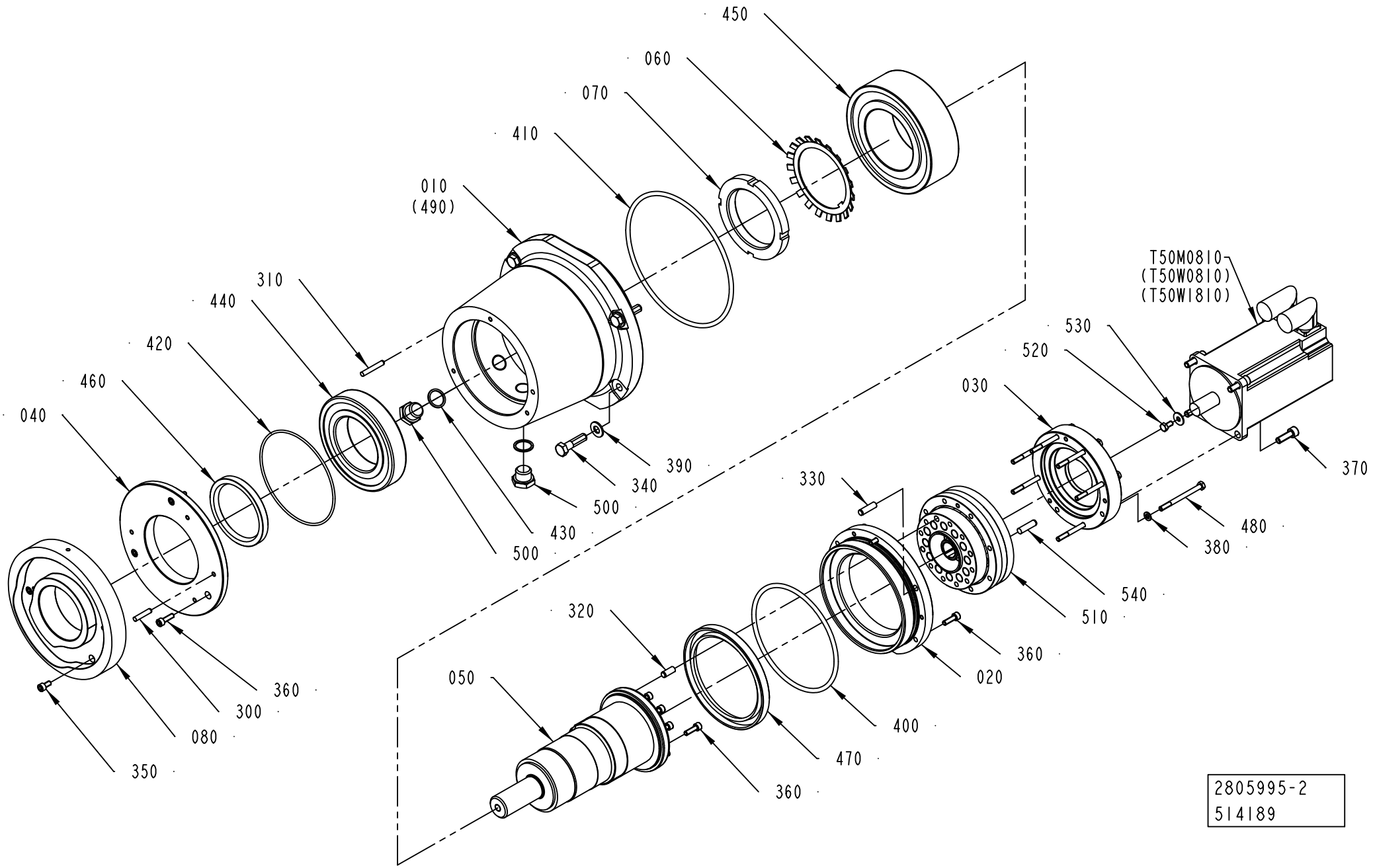
450
060
070
410
010
(490)
310
440
420
460
040
T50M0810
(T50W0810)
(T50W1810)
530
520
030
370
390
340
500
430
500
330
480
380
540
510
320
360
020
050
400
470
360
360
300
080
350
2805995-2
514189

ECM: 520752 - 20120101
Group number: 2805995-0200
Assembly Drawing: 2805995-2_1_AC

Pos	Part No	UN	Qty	Description	Page No
-					
010	2789217-0000		1	HUB	
020	2789232-0000		1	FLANGE	
030	2805185-0000		1	FLANGE	
040	2806029-0000		1	CAP	
050	2806030-0000		1	SHAFT	
060	2838219-0000		1	LOCK WASHER	
070	2838220-0000		1	ROUND NUT	
080	2975949-0000		1	CAM	
300	311103-0357		1	PARALLEL PIN ISO 2338 6M6X30 A1	
310	311103-0361		1	PARALLEL PIN ISO 2338 6M6X40 A1	
320	311103-0401		1	PARALLEL PIN ISO 2338 8M6X20 A1	
330	311103-0405		1	PARALLEL PIN ISO 2338 8M6X30 A1	
340	312105-0499		4	SCREW, M6S ISO 4014 M10X40 A4 80	
350	312115-0366		3	SCREW ISO4762 M6X12 A4 80	
360	312115-0370		18	SCREW ISO4762 M6X20 A4 80	
370	312115-0453		4	SCREW ISO4762 M8X25 A4 80	
380	315105-0153		7	WASHER PLAIN, 6,4X12X1,5 A4 BRB	
390	315105-0173		4	WASHER PLAIN, 10,5X22X2 A4 BRB	
400	315202-0321		1	O-RING 149,3X5,7 MM	
410	315202-0329		1	O-RING 189,3X5,7 MM	
420	315204-0318		1	O-RING 134,5X3 MM	
430	315234-0113		2	WASHER PL.RND.CU.21,3//26 H=1,5	
440	321309-0116		1	BALL BEARING 80/140X26	
450	321330-0118		1	ANG. BALL BEAR, 90X160X52,4 MM	
460	90091-0055		1	RADIAL SEAL 80X100X10 MM	
470	90091-0058		1	RADIAL SEAL 120X150X12 MM	
480	90287-0312		7	SCREW, M6S ISO 4014 M6X75 A4 80	
490	90296-0072	L	0	SHELL OMALA OIL 150 (1PC=20L)	
500	90330-0037		2	PLUG, G1/2EXT, G1/2	
510	90600-0415		1	GEARS, PLANETARY FC-A25G-29	
520	312105-0366		1	SCREW, M6S ISO 4017 M6X12 A4 80	
530	90005-0060		1	WASHER PLAIN, RBS 6,4/M6)/18,H=1,5	
540	311103-0404		1	PARALLEL PIN ISO 2338 8M6X28 A1	
T50M0810	90601-0669		1	SERVO MOTOR, MPL-B430P-MJ72AA SERIES A	

Pos	Part No	UN	Qty	Description	Page No

Machine Type | Group Description | Used-In | Group Number | Page No

ASSEMBLY PLATE

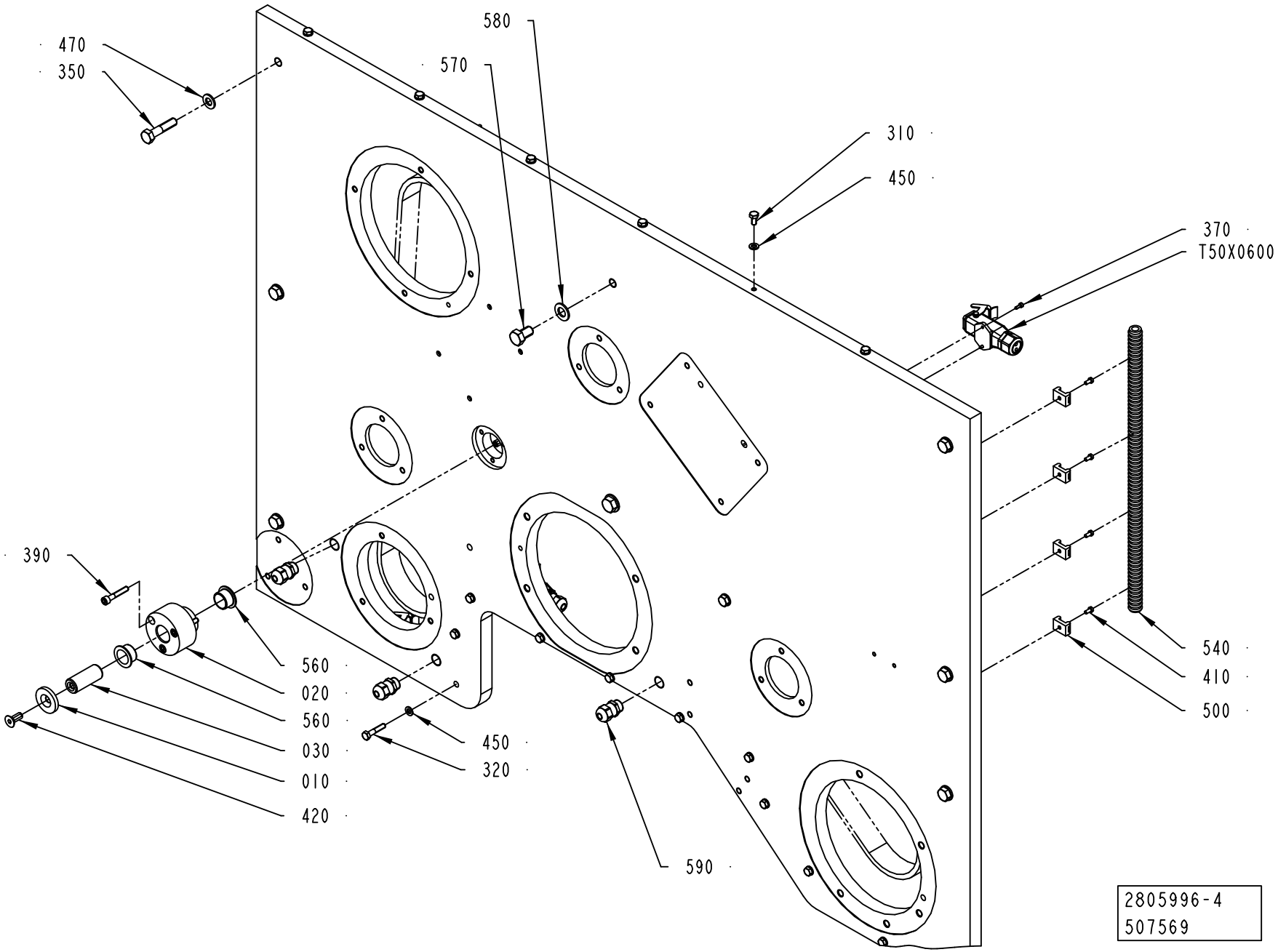

ECM: 509511 - 20111001
Group number: 2805996-0300
Assembly Drawing: 2805996-4_1_AC

This list covers pages from 5-36 to 5-39

Pos	Part No	UN	Qty	Description	Page No
-					
010	1188278-0000		1	WASHER	
020	2602696-0000		1	BEARING HOUSING	
030	2602697-0000		1	SHAFT	
040	2602708-0000		1	SPACER	
050	2806009-0000		1	BELT	
060	2819235-0000		1	SUPPORT	
070	2819236-0000		1	PULLEY	
080	2819292-0000		1	PLATE	
090	2852397-0000		2	SUPPORT	
100	2852400-0000		1	PLATE	
110	2852401-0000		1	TIGHTENING SCREW	
120	3015881-0000		2	SHAFT	
130	3015882-0000		3	ROLLER	
140	3016235-0000		3	SPACER	
150	3047962-0000		1	SHAFT	
300	312105-0325		4	SCREW, M6S ISO 4017 M5X10 A4 80	
310	312105-0366		6	SCREW, M6S ISO 4017 M6X12 A4 80	
320	312105-0374		10	SCREW, M6S ISO 4014 M6X30 A4 80	
330	312105-0449		3	SCREW, M6S ISO 4017 M8X16 A4 80	
340	312105-0453		6	SCREW, M6S ISO 4017 M8X25 A4 80	
350	312105-0500		7	SCREW, M6S ISO 4014 M10X45 A4 80	
360	312109-0457		1	SCREW, M6S ISO 4017 M8X35 A4 80	
370	312115-0222		8	SCREW ISO4762 M3X8 A4 80	
380	312115-0331		1	SCREW ISO4762 M5X20 A4 80	
390	312115-0376		3	SCREW ISO4762 M6X35 A4 80	
400	312115-0449		4	SCREW ISO4762 M8X16 A4 80	
410	312125-0287		4	SLOTTED HEAD SCREW, ISO1207 M4X8 A4	
420	312155-0451		4	SCREW DIN 7991 MF6S M8X20 A4 70	
430	312605-0318		1	HEXAGON NUT, M6M M8 A280	
440	312902-0318		1	NUT HEX. LEFT THREAD, M8 A280	
450	315105-0153		16	WASHER PLAIN, 6,4X12X1,5 A4 BRB	
460	315105-0165		7	WASHER PLAIN, 8,4X16X1,6 A4 BRB	
470	315106-0173		7	WASHER PLAIN, M10 ISO7089-10-200 HV A4	
480	315111-0165		2	WASHER PLAIN, TBRB 8,4/16 H=3	
490	315125-0165		3	WASHER HIGH, TBRSB 8,4X26X5 A4	
500	352113-0203		4	ANCHOR PLATES FOR STRIPS, TM3S8-M0	
510	90115-0139		1	ROD END, ID=8 MM, M8X1,25	
520	90115-0180		1	ROD END, ID=8 MM, M8X1,25 LH	
530	90141-0020		6	RETAINING RING FOR BORE DIN 472 42 SS	
540	90152-0058	MM	440	HOSE, SPIRAL CONDUIT, 15X9, UL 0909	
550	90214-0225		6	BALL BEARING, 20/42X12 SOLID OIL	
560	90459-0833		2	FLANGE BUSHING, IGLIDUR W300 20X23X14	
570	312105-0532		2	SCREW, M6S ISO 4017 M12X20 A4 80	
580	315105-0178		2	WASHER PLAIN, 13X24X2,5 A4 BRB	
590	90458-0314		3	CABLE GLAND, M16X1,5, 5311 1110	
T50B1290	90600-0463		1	INDUCTIVE SWITCH,E2A-M12LN05-WP-B1-TP 5M	
T50B1300	90600-0463		1	INDUCTIVE SWITCH,E2A-M12LN05-WP-B1-TP 5M	
T50M0800	90601-0669		1	SERVO MOTOR, MPL-B430P-MJ72AA SERIES A	
T50X0600	2871952-0100		1	CONNECTOR	5-41
T50X0610	2871951-0100		1	CONNECTOR	5-43
T50X0620	2871951-0100		1	CONNECTOR	5-43
T50X0630	2871951-0100		1	CONNECTOR	5-43

Machine Type	Group Description	Used-In	Group Number	Page No

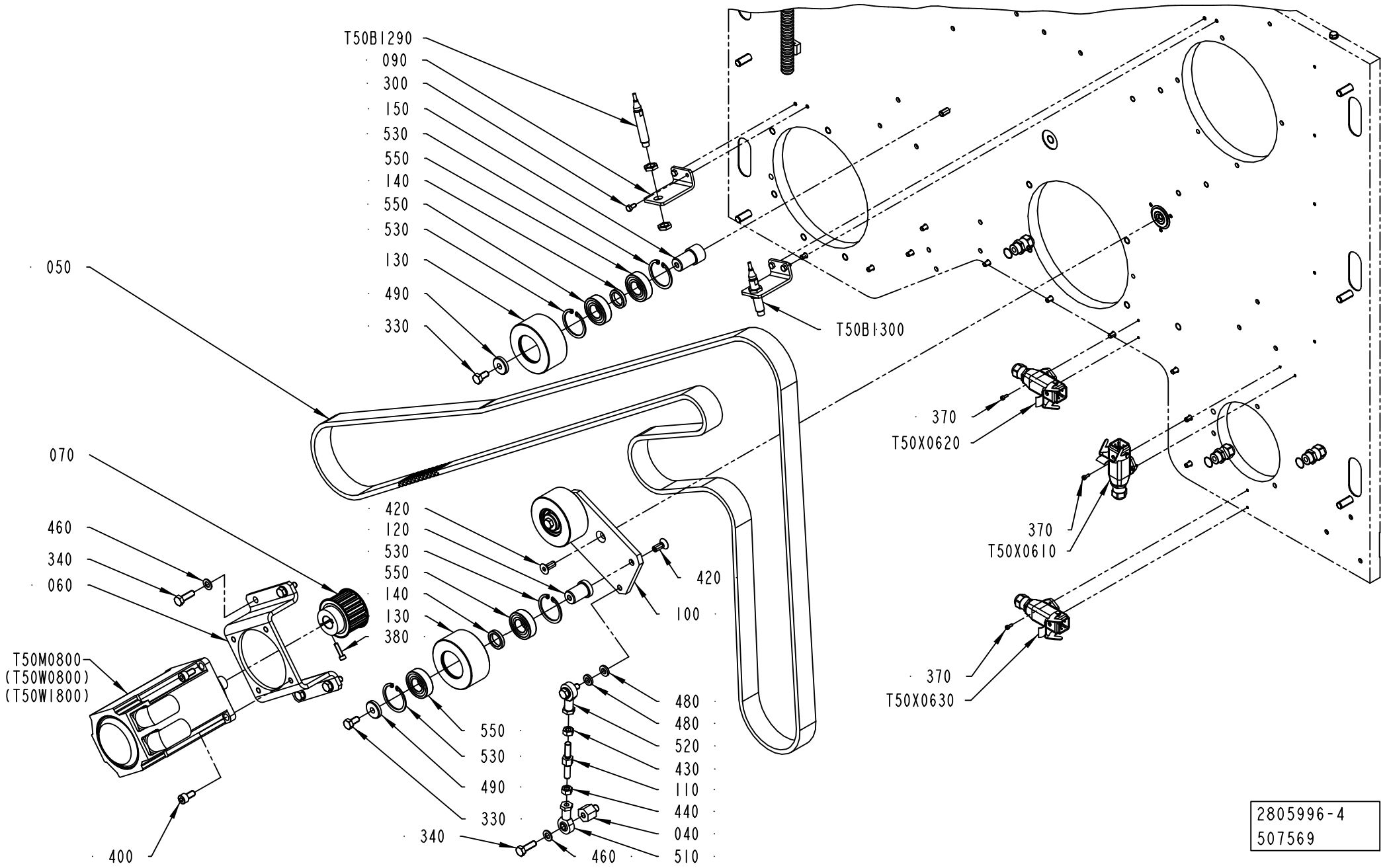
T50B1290
090
300
150
530
550
140
550
530
130
490
330
050
T50B1300
370
T50X0620
370
T50X0610
370
T50X0630
070
460
340
060
T50M0800
(T50W0800)
(T50W1800)
400
420
120
530
550
140
130
380
420
100
550
530
490
330
340
480
480
520
430
110
440
040
460
510
2805996-4
507569

ECM: 509511 - 20111001
Group number: 2805996-0300
Assembly Drawing: 2805996-4_2_AC

This list covers pages from 5-36 to 5-39

Pos	Part No	UN	Qty	Description	Page No
-					
010	1188278-0000		1	WASHER	
020	2602696-0000		1	BEARING HOUSING	
030	2602697-0000		1	SHAFT	
040	2602708-0000		1	SPACER	
050	2806009-0000		1	BELT	
060	2819235-0000		1	SUPPORT	
070	2819236-0000		1	PULLEY	
080	2819292-0000		1	PLATE	
090	2852397-0000		2	SUPPORT	
100	2852400-0000		1	PLATE	
110	2852401-0000		1	TIGHTENING SCREW	
120	3015881-0000		2	SHAFT	
130	3015882-0000		3	ROLLER	
140	3016235-0000		3	SPACER	
150	3047962-0000		1	SHAFT	
300	312105-0325		4	SCREW, M6S ISO 4017 M5X10 A4 80	
310	312105-0366		6	SCREW, M6S ISO 4017 M6X12 A4 80	
320	312105-0374		10	SCREW, M6S ISO 4014 M6X30 A4 80	
330	312105-0449		3	SCREW, M6S ISO 4017 M8X16 A4 80	
340	312105-0453		6	SCREW, M6S ISO 4017 M8X25 A4 80	
350	312105-0500		7	SCREW, M6S ISO 4014 M10X45 A4 80	
360	312109-0457		1	SCREW, M6S ISO 4017 M8X35 A4 80	
370	312115-0222		8	SCREW ISO4762 M3X8 A4 80	
380	312115-0331		1	SCREW ISO4762 M5X20 A4 80	
390	312115-0376		3	SCREW ISO4762 M6X35 A4 80	
400	312115-0449		4	SCREW ISO4762 M8X16 A4 80	
410	312125-0287		4	SLOTTED HEAD SCREW, ISO1207 M4X8 A4	
420	312155-0451		4	SCREW DIN 7991 MF6S M8X20 A4 70	
430	312605-0318		1	HEXAGON NUT, M6M M8 A280	
440	312902-0318		1	NUT HEX. LEFT THREAD, M8 A280	
450	315105-0153		16	WASHER PLAIN, 6,4X12X1,5 A4 BRB	
460	315105-0165		7	WASHER PLAIN, 8,4X16X1,6 A4 BRB	
470	315106-0173		7	WASHER PLAIN, M10 ISO7089-10-200 HV A4	
480	315111-0165		2	WASHER PLAIN, TBRB 8,4/16 H=3	
490	315125-0165		3	WASHER HIGH, TBRSB 8,4X26X5 A4	
500	352113-0203		4	ANCHOR PLATES FOR STRIPS, TM3S8-M0	
510	90115-0139		1	ROD END, ID=8 MM, M8X1,25	
520	90115-0180		1	ROD END, ID=8 MM, M8X1,25 LH	
530	90141-0020		6	RETAINING RING FOR BORE DIN 472 42 SS	
540	90152-0058	MM	440	HOSE, SPIRAL CONDUIT, 15X9, UL 0909	
550	90214-0225		6	BALL BEARING, 20/42X12 SOLID OIL	
560	90459-0833		2	FLANGE BUSHING, IGLIDUR W300 20X23X14	
570	312105-0532		2	SCREW, M6S ISO 4017 M12X20 A4 80	
580	315105-0178		2	WASHER PLAIN, 13X24X2,5 A4 BRB	
590	90458-0314		3	CABLE GLAND, M16X1,5, 5311 1110	
T50B1290	90600-0463		1	INDUCTIVE SWITCH,E2A-M12LN05-WP-B1-TP 5M	
T50B1300	90600-0463		1	INDUCTIVE SWITCH,E2A-M12LN05-WP-B1-TP 5M	
T50M0800	90601-0669		1	SERVO MOTOR, MPL-B430P-MJ72AA SERIES A	
T50X0600	2871952-0100		1	CONNECTOR	5-41
T50X0610	2871951-0100		1	CONNECTOR	5-43
T50X0620	2871951-0100		1	CONNECTOR	5-43
T50X0630	2871951-0100		1	CONNECTOR	5-43

Machine Type	Group Description	Used-In	Group Number	Page No

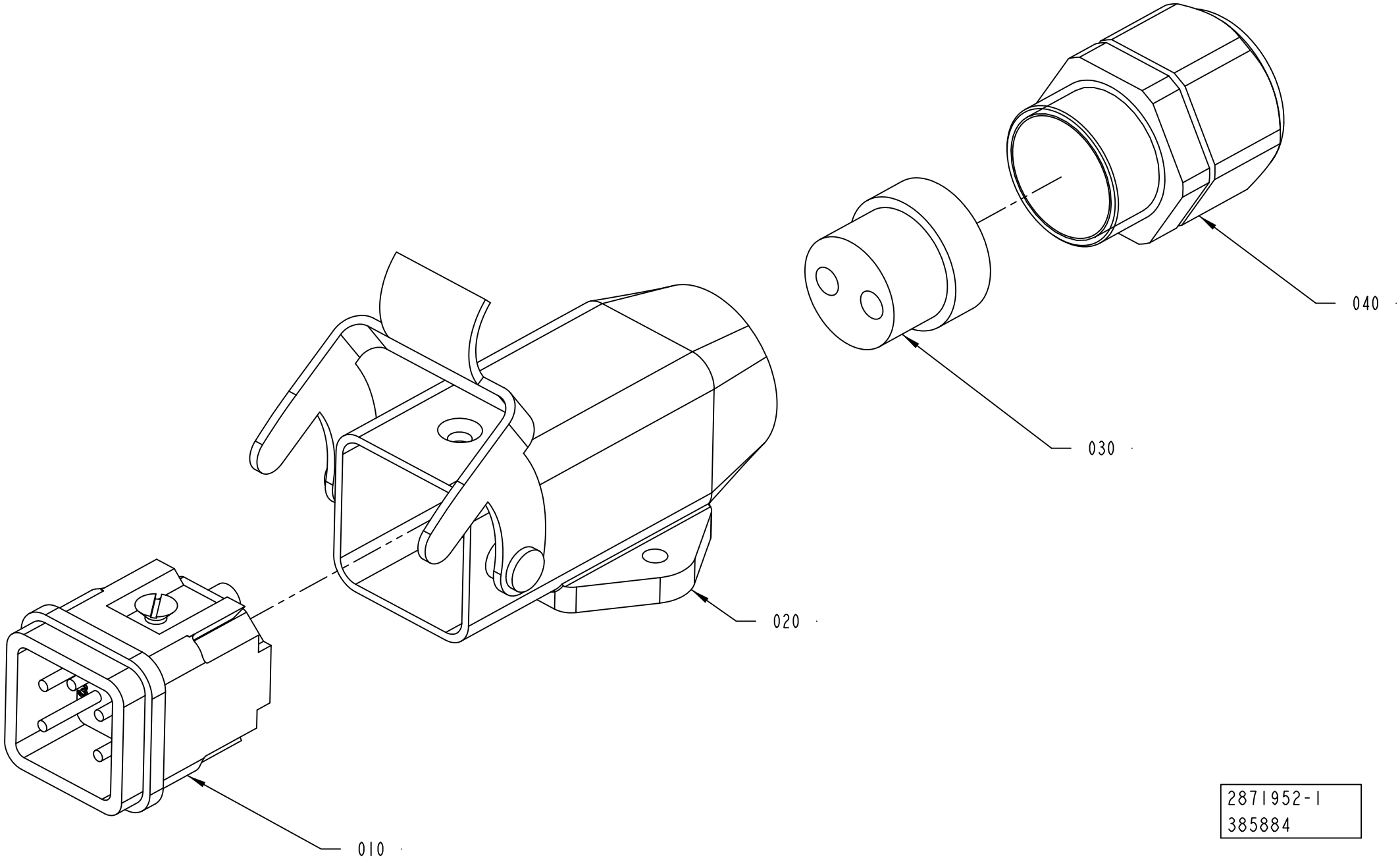

2871952-1
385884

ECM: 434159 - 20100201
Group number: 2871952-0100
Assembly Drawing: 2871952-1_1_AB

Pos	Part No	UN	Qty	Description	Page No
-					
010	90459-6821		1	MALE INSERT HAN 4A, 0920 0042 611	
020	90459-3081		1	HOUSING, 19 20 003 1250	
030	353249-0036		1	INSERT, MULTI HOLE, EK152M 2X4	
040	90458-0406		1	CABLE GLAND, VK 22052Y	

Pos	Part No	UN	Qty	Description	Page No

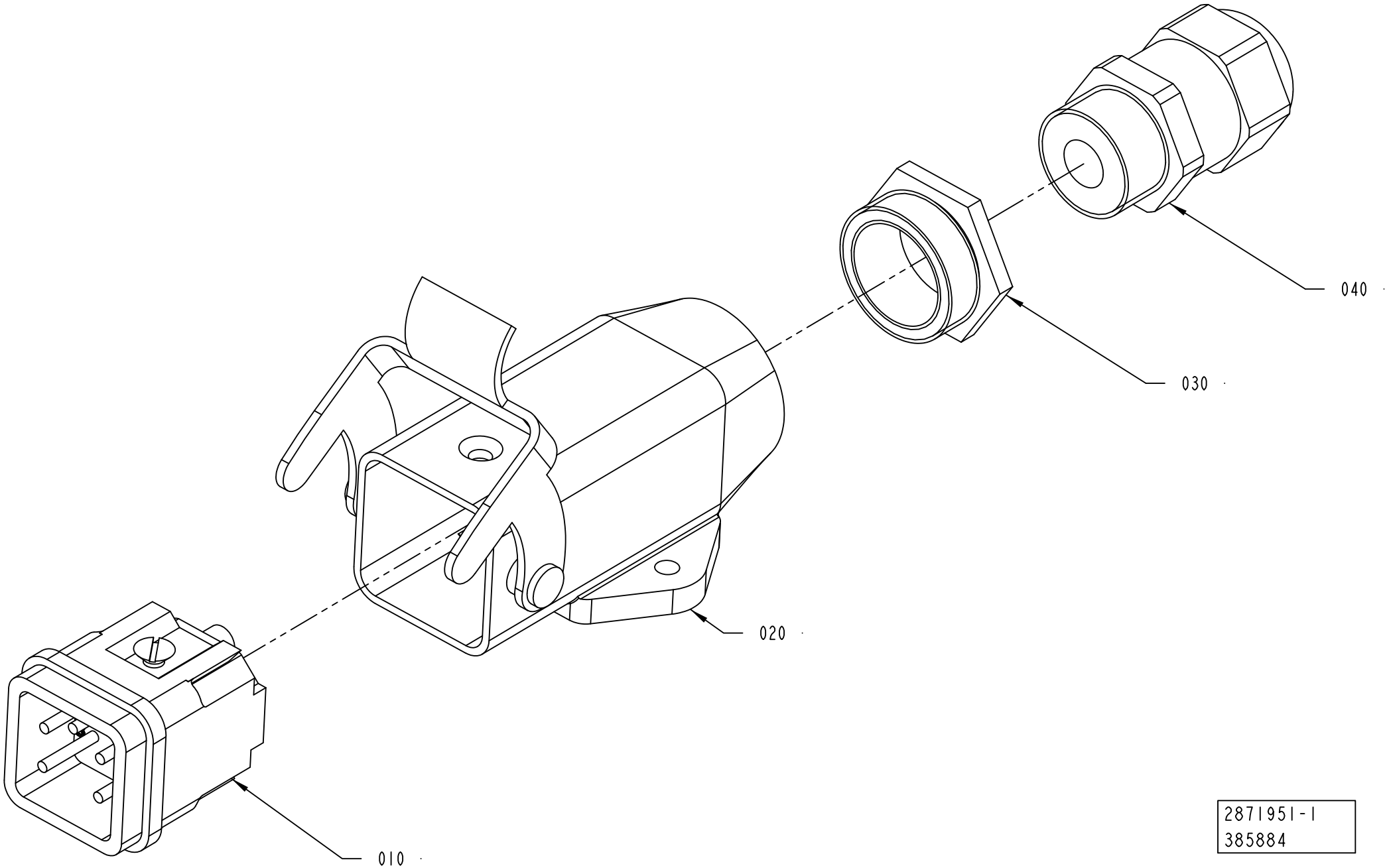
040
030
020
010
2871951-1
385884

ECM: 434158 - 20100201
Group number: 2871951-0100
Assembly Drawing: 2871951-1_1_AB

Pos	Part No	UN	Qty	Description	Page No
-					
010	90459-6821		1	MALE INSERT HAN 4A, 0920 0042 611	
020	90459-3081		1	HOUSING, 19 20 003 1250	
030	90459-7223		1	REDUCER, M20/M16	
040	90458-0314		1	CABLE GLAND, M16X1,5, 5311 1110	

Pos	Part No	UN	Qty	Description	Page No

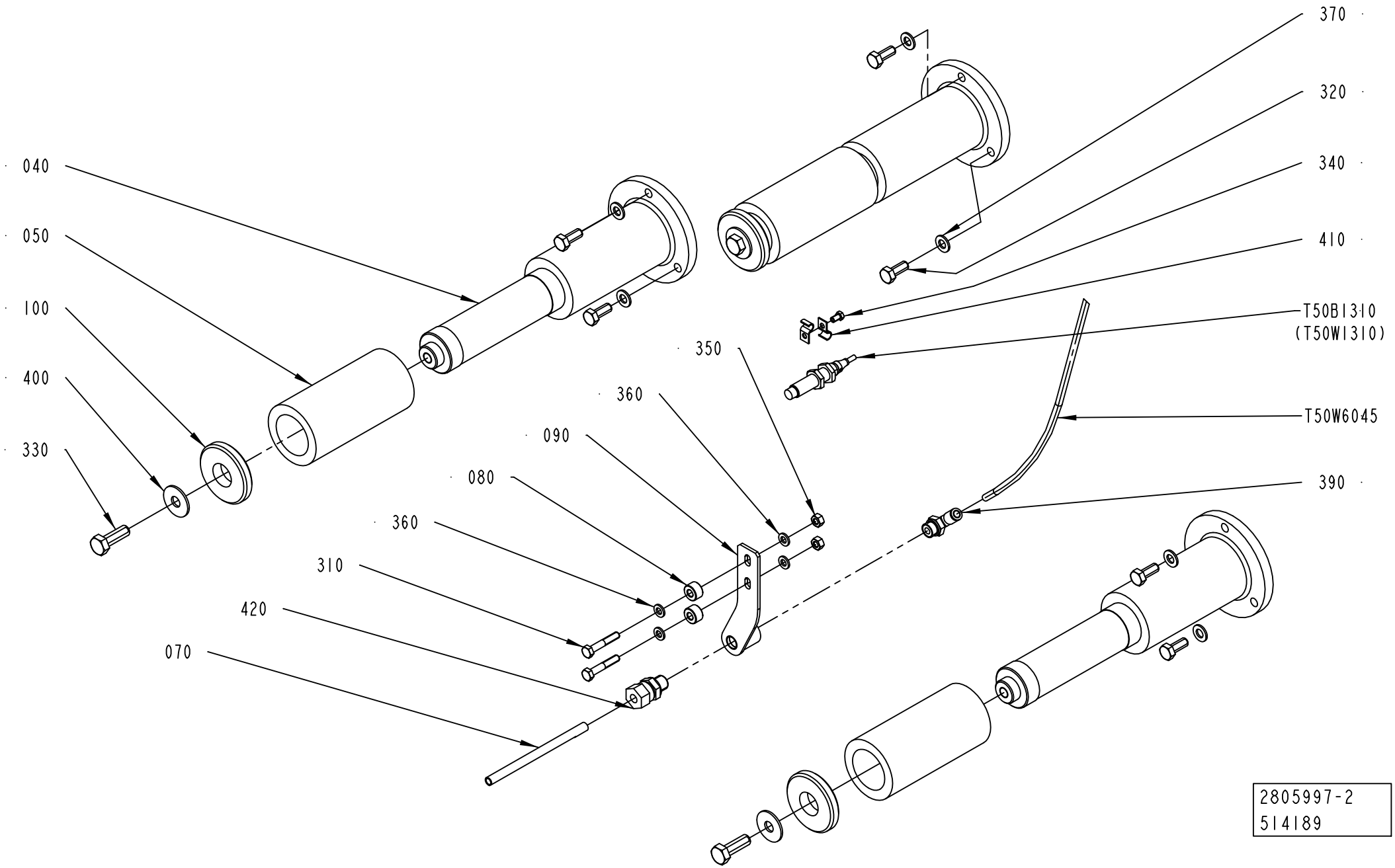
370
320
340
410
T50B1310
(T50W1310)
T50W6045
390
040
050
100
400
330
350
360
090
080
360
310
420
070
2805997-2
514189

ECM: 520751 - 20120101
Group number: 2805997-0200
Assembly Drawing: 2805997-2_1_AC

Pos	Part No	UN	Qty	Description	Page No
-					
040	2819282-0000		3	SUPPORT	
050	2819283-0000		3	SPACER	
070	2999217-0000		1	NOZZLE	
080	3020015-0001		2	SPACER	
090	3027101-0000		1	SUPPORT	
100	3027106-0000		3	WASHER	
310	312105-0376		2	SCREW, M6S ISO 4014 M6X35 A4 80	
320	312105-0451		9	SCREW, M6S ISO 4017 M8X20 A4 80	
330	312105-0495		3	SCREW, M6S ISO 4017 M10X30 A4 80	
340	312105-0287		1	SCREW, M6S ISO 4017 M4X8 A4 70	
350	312605-0316		2	HEXAGON NUT, M6M M6 A280	
360	315106-0153		4	WASHER PLAIN, M6 ISO7089-6-200 HV A4	
370	315106-0165		9	WASHER PLAIN, M8 ISO7089-8-200 HV A4	
390	350002-0008		1	PUSH-IN L-FITTING QSL-F-G1/4-6	
400	90005-0140		3	WASHER PLAIN ROUND 10,5(M10)/30, H=2	
410	90165-0057		2	PIPE CLIP FOR TUBE D=6 MM	
420	90030-0185		1	CONN. STR., GE08LRED71	
T50B1310	90600-0463		1	INDUCTIVE SWITCH,E2A-M12LN05-WP-B1-TP 5M	
T50W6045	315400-0001	MM	1500	TUBE PUN-H-6X1-BL	

Pos	Part No	UN	Qty	Description	Page No

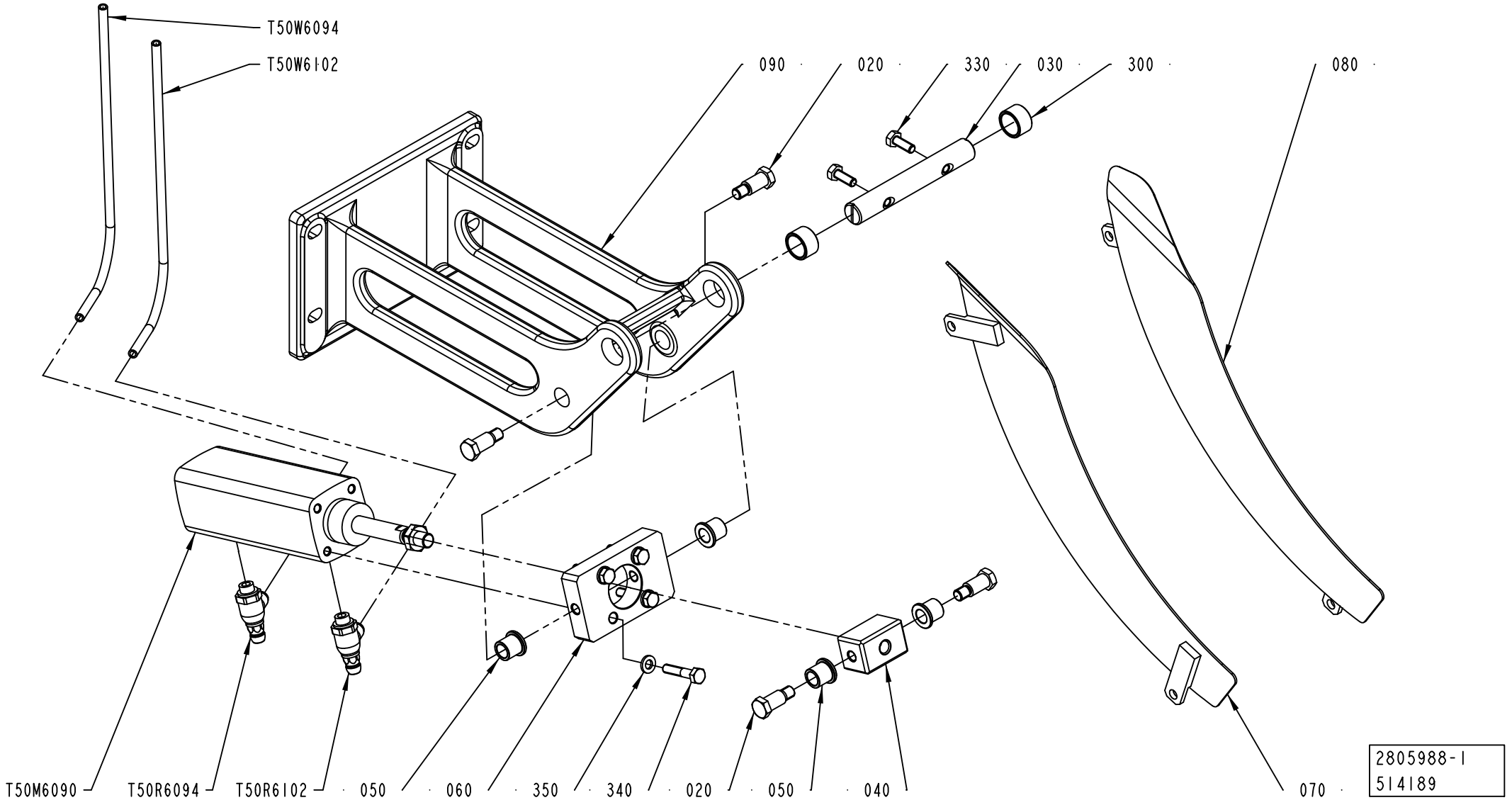
T50W6094
T50W6102
090
020
330
030
300
080
T50M6090
T50R6094
T50R6102
050
060
350
340
020
050
040
070
2805988-1
514189

ECM: 520758 - 20120101
Group number: 2805988-0100
Assembly Drawing: 2805988-1_1_AD

Pos	Part No	UN	Qty	Description	Page No
-					
020	2635112-0000		4	SHAFT	
030	1144579-0000		1	AXLE	
040	2869886-0000		1	BLOCK	
050	1478928-0000		4	BUSHING	
060	2869887-0000		1	PLATE	
070	2852411-0000		1	WALL	
080	2852412-0000		1	WALL	
090	2871954-0000		1	SUPPORT	
300	321116-0234		2	BUSHING W/O FLANGE, 16/20X12 MM	
330	312105-0368		2	SCREW, M6S ISO 4017 M6X16 A4 80	
340	312105-0374		4	SCREW, M6S ISO 4014 M6X30 A4 80	
350	315106-0153		4	WASHER PLAIN, M6 ISO7089-6-200 HV A4	
T50M6090	90459-4642		1	DOUBLE ACTING, PROFILE, CYL 32-40	
T50R6094	90235-0846		1	THROTTLE CHECK VALVE G1/8", MANUAL, 6	
T50R6102	90235-0846		1	THROTTLE CHECK VALVE G1/8", MANUAL, 6	
T50W6094	315400-0001	MM	1800	TUBE PUN-H-6X1-BL	
T50W6102	315400-0001	MM	1800	TUBE PUN-H-6X1-BL	

Pos	Part No	UN	Qty	Description	Page No

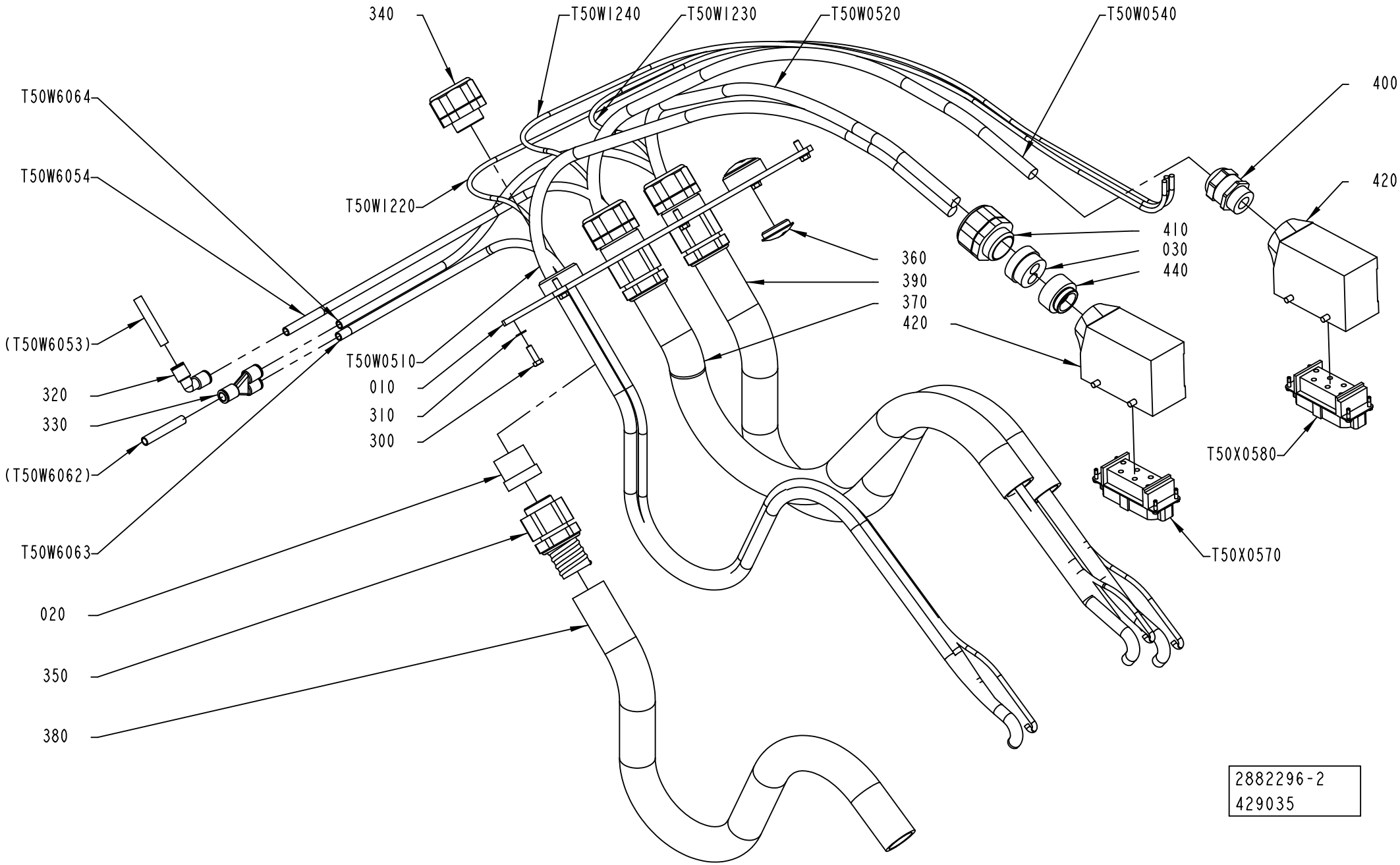
340
T50WI240
T50WI230
T50W0520
T50W0540
400
420
T50W6064
T50W6054
T50WI220
410
030
440
360
390
370
420
(T50W6053)
320
330
(T50W6062)
T50W0510
010
310
300
T50X0580
T50X0570
T50W6063
020
350
380
2882296-2
429035

ECM: 520747 - 20120101
Group number: 2882296-0200
Assembly Drawing: 2882296-2_1_AB

Pos	Part No	UN	Qty	Description	Page No
-					
010	2849956-0000		1	PLATE	
020	3038302-0000		3	INSERT	
030	3060488-0000		1	INSERT	
300	312105-0329		6	SCREW, M6S ISO 4017 M5X16 A4 80	
310	315105-0146		6	WASHER PLAIN, 5,3X10X1 A4 BRB	
320	350004-0003		1	PUSH-IN L-FITTING QSL-F-8	
330	350015-0003		1	PUSH-IN Y-CONNECTOR QSY-F-8	
340	353241-0003		3	COMPRESSION GLAND, VK 15455Y	
350	353247-0005		3	COMPRESSION GLAND, 15455P21S10 UL16	
360	90002-0012		2	BLANK-OFF PLUG, PR 28,3 SKINDICHT-BLK21	
370	90152-0070	MM	630	HOSE, SPIRAL CONDUIT, 32,5X26, UL 2621	
380	90152-0070	MM	630	HOSE, SPIRAL CONDUIT, 32,5X26, UL 2621	
390	90152-0070	MM	630	HOSE, SPIRAL CONDUIT, 32,5X26, UL 2621	
400	90458-0308		1	CABLE GLAND, M25X1,5, 5311 1030	
410	90458-0423		1	CABLE GLAND, VK 23255Y	
420	90459-6630		2	HOOD, SIDE ENTRY, 16B, 19 30 016 1521	
440	90459-7225		1	REDUCER, M32/M25	
T50W0510	351120-0146	MM	2300	CABLE Ã–LFLEX HEAT 180 SIHF 3X4	
T50W0520	351120-0146	MM	2300	CABLE Ã–LFLEX HEAT 180 SIHF 3X4	
T50W0540	351120-0146	MM	2300	CABLE Ã–LFLEX HEAT 180 SIHF 3X4	
T50W1220	90220-0034	MM	2600	THERMOC.CABLE, TEX/SITW-20F-KX 2X0,5MM2	
T50W1230	90220-0034	MM	2600	THERMOC.CABLE, TEX/SITW-20F-KX 2X0,5MM2	
T50W1240	90220-0034	MM	2600	THERMOC.CABLE, TEX/SITW-20F-KX 2X0,5MM2	
T50W6054	315400-0004	MM	2000	TUBE PUN-H-8X1,25-BL	
T50W6063	315400-0004	MM	2000	TUBE PUN-H-8X1,25-BL	
T50W6064	315400-0004	MM	2000	TUBE PUN-H-8X1,25-BL	
T50X0570	90110-0054		1	MALE INSERT, HAN 6 HSB, 0931 0062 601	
T50X0580	90110-0054		1	MALE INSERT, HAN 6 HSB, 0931 0062 601	

Pos	Part No	UN	Qty	Description	Page No

Machine Type	Group Description	Used-In	Group Number	Page No

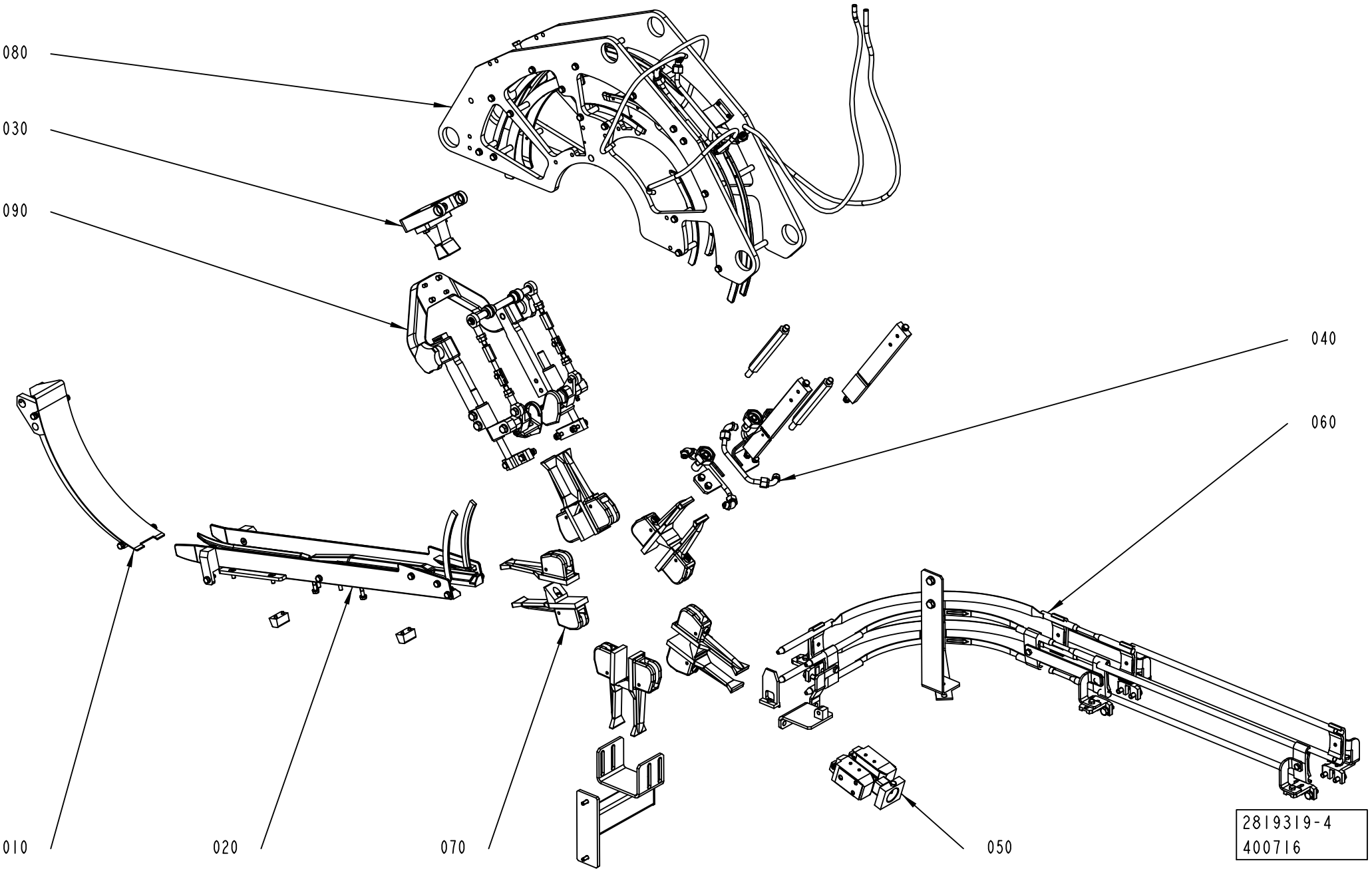
080
030
090
040
060
010
020
070
050
2819319-4
400716

ECM: 479586 - 20101003
Group number: 2819319-0200
Assembly Drawing: 2819319-4_1_AA

Pos	Part No	UN	Qty	Description	Page No
TPA 0200SQ					
090	2852382-0100		1	FIN FOLDER	**5-53, 5-55**
TPA 0250SQ					
090	2852382-0100		1	FIN FOLDER	**5-53, 5-55**
TPA 0330SQ					
090	2852382-0100		1	FIN FOLDER	**5-53, 5-55**
TBA 0200E					
090	2852382-0100		1	FIN FOLDER	**5-53, 5-55**
TBA 0200SQ					
090	2852382-0100		1	FIN FOLDER	**5-53, 5-55**
TBA 0250SQ					
090	2852382-0100		1	FIN FOLDER	**5-53, 5-55**
TPA 0125SQ					
090	2852382-0100		1	FIN FOLDER	**5-53, 5-55**
Common Parts					
010	2871929-0100		1	DROP CHUTE VARIANT	**5-57, 5-59, 5-61**
020	2819312-0200		1	INFEED CONVEYOR VARIANT	**5-63, 5-65, 5-67, 5-69**
030	2819313-0100		1	PULL-DOWN DEVICE	**5-71, 5-73**
040	2819314-0100		1	FLAP HEATER	**5-75, 5-77**
050	2819315-0100		1	PRESSURE DEVICE	**5-79, 5-81, 5-83, 5-85**
060	2819316-0200		1	OUTFEEDER	**5-87, 5-89, 5-91**
070	2819317-0200		1	WHEEL	**5-107, 5-109, 5-111**
080	2819318-0200		1	FOLDING BAR	**5-115, 5-117, 5-119, 5-121**

Pos	Part No	UN	Qty	Description	Page No

Machine Type | Group Description | Used-In | Group Number | Page No

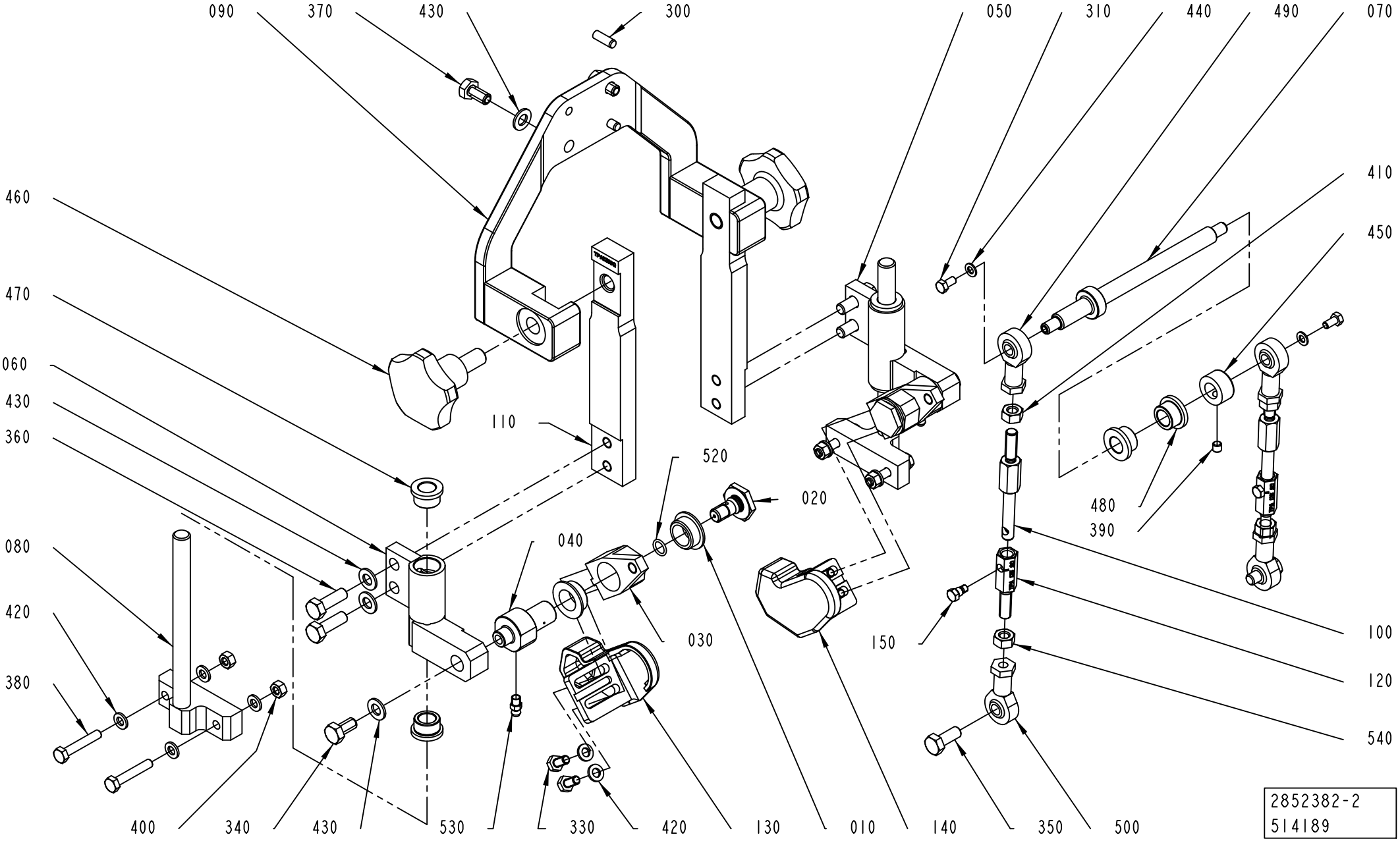
090
370
430
300
050
310
440
490
070
460
470
060
430
360
110
520
020
410
450
480
390
080
420
380
040
030
150
100
120
540
400
340
430
530
330
420
130
010
140
350
500
2852382-2
514189

ECM: 520749 - 20120101
Group number: 2852382-0100
Assembly Drawing: 2852382-2_1_AD

This list covers pages from 5-52 to 5-55

Pos	Part No	UN	Qty	Description	Page No
TBA 0200E (See drawing on page: 5-54)					
030	3017847-0000		2	LEVER	
040	3017851-0000		2	AXLE PIN	
070	3017848-0000		1	SHAFT	
100	2983847-0000		2	SPACER	
110	3052009-0000		2	PLATE	
120	3052010-0000		2	SHAFT	
130	3052011-0000		1	FOLDING DEVICE	
140	3052012-0000		1	FOLDING DEVICE	
160	3017852-0000		2	SPACER	
350	312105-0460		2	SCREW, M6S ISO 4014 M8X45 A4 80	
380	312105-0374		4	SCREW, M6S ISO 4014 M6X30 A4 80	
420	315105-0153		8	WASHER PLAIN, 6,4X12X1,5 A4 BRB	
TBA 0200SQ (See drawing on page: 5-52)					
030	1350440-0000		2	LEVER	
040	2647105-0000		2	AXLE PIN	
070	2852384-0000		1	SHAFT	
100	2852392-0000		2	SPACER	
110	2962133-0000		2	PLATE	
120	2852391-0000		2	SHAFT	
130	3027694-0000		1	FOLDING DEVICE	
140	3027695-0000		1	FOLDING DEVICE	
350	312105-0451		2	SCREW, M6S ISO 4017 M8X20 A4 80	
380	312109-0376		4	SCREW, M6S ISO 4017 M6X35 A4 80	
400	312605-0316		4	HEXAGON NUT, M6M M6 A280	
420	315105-0153		12	WASHER PLAIN, 6,4X12X1,5 A4 BRB	
TBA 0250SQ (See drawing on page: 5-52)					
030	1350440-0000		2	LEVER	
040	2647105-0000		2	AXLE PIN	
070	2852384-0000		1	SHAFT	
100	2852392-0000		2	SPACER	
110	2962133-0000		2	PLATE	
120	2852391-0000		2	SHAFT	
130	3027694-0000		1	FOLDING DEVICE	
140	3027695-0000		1	FOLDING DEVICE	
350	312105-0451		2	SCREW, M6S ISO 4017 M8X20 A4 80	
380	312109-0376		4	SCREW, M6S ISO 4017 M6X35 A4 80	
400	312605-0316		4	HEXAGON NUT, M6M M6 A280	
420	315105-0153		12	WASHER PLAIN, 6,4X12X1,5 A4 BRB	
TPA 0125SQ (See drawing on page: 5-52)					
030	1350440-0000		2	LEVER	
040	2647105-0000		2	AXLE PIN	
070	2852384-0000		1	SHAFT	
100	2852392-0000		2	SPACER	
110	2871959-0000		2	PLATE	
120	2871960-0000		2	SPACER	
130	2894725-0000		1	FOLDING DEVICE	
140	2894726-0000		1	FOLDING DEVICE	
350	312105-0451		2	SCREW, M6S ISO 4017 M8X20 A4 80	
380	312109-0376		4	SCREW, M6S ISO 4017 M6X35 A4 80	
400	312605-0316		4	HEXAGON NUT, M6M M6 A280	
420	315105-0153		12	WASHER PLAIN, 6,4X12X1,5 A4 BRB	
TPA 0200SQ (See drawing on page: 5-54)					
030	3017847-0000		2	LEVER	
040	3017851-0000		2	AXLE PIN	
070	3017848-0000		1	SHAFT	
100	2983847-0000		2	SPACER	
110	2976965-0000		2	PLATE	
120	2983848-0000		2	SHAFT	
130	3017845-0000		1	FOLDING DEVICE	
140	3017846-0000		1	FOLDING DEVICE	
160	3017852-0000		2	SPACER	
350	312105-0460		2	SCREW, M6S ISO 4014 M8X45 A4 80	
380	312105-0374		4	SCREW, M6S ISO 4014 M6X30 A4 80	
420	315105-0153		8	WASHER PLAIN, 6,4X12X1,5 A4 BRB	
TPA 0330SQ, TPA 0250SQ (See drawing on page: 5-54)					
030	3017847-0000		2	LEVER	
040	3017851-0000		2	AXLE PIN	
070	3017848-0000		1	SHAFT	
100	2983847-0000		2	SPACER	
110	2976965-0000		2	PLATE	
120	2983848-0000		2	SHAFT	
130	3017845-0000		1	FOLDING DEVICE	
140	3017846-0000		1	FOLDING DEVICE	
160	3017852-0000		2	SPACER	
350	312105-0460		2	SCREW, M6S ISO 4014 M8X45 A4 80	
380	312105-0374		4	SCREW, M6S ISO 4014 M6X30 A4 80	
420	315105-0153		8	WASHER PLAIN, 6,4X12X1,5 A4 BRB	
Common Parts					
010	1282708-0000		4	BUSHING	
020	1347496-0000		2	SCREW	
050	2668245-0000		1	SLIDER	
060	2668246-0000		1	SLIDER	
080	2852385-0000		2	SUPPORT	

Machine Type | Group Description | Used-In | Group Number | Page No

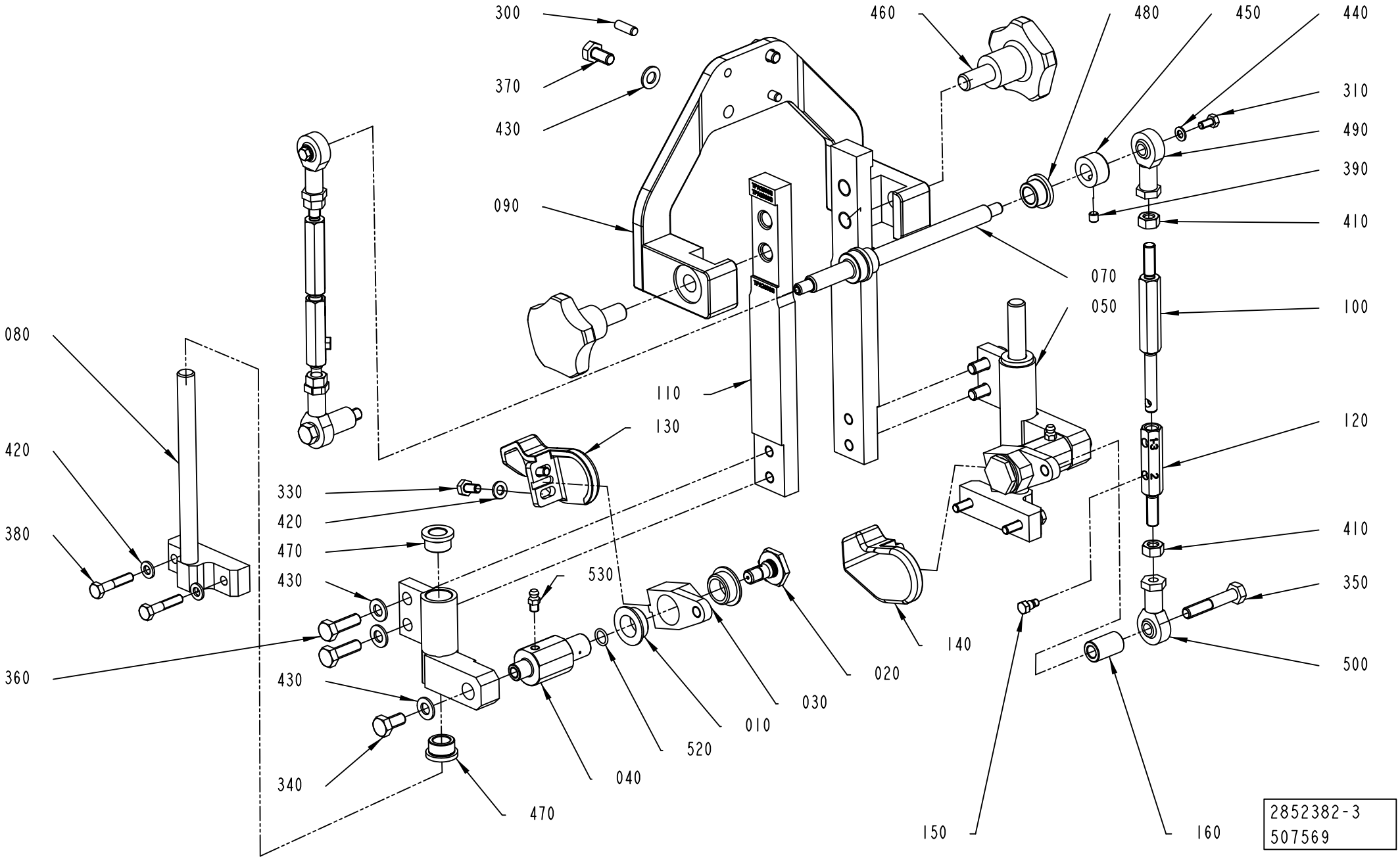
300
370
430
090
460
480
450
440
310
490
390
410
070
050
100
080
110
130
120
420
330
420
470
430
530
380
410
350
360
430
340
470
040
520
010
030
020
140
500
150
160
2852382-3
507569

Pos	Part No	UN	Qty	Description	Page No
Common Parts (Cont'd)					
090	3163272-0000		1	SUPPORT	
150	3017850-0000		2	SCREW	
300	311103-0352		2	PARALLEL PIN ISO 2338 6M6X18 A1	
310	312105-0325		2	SCREW, M6S ISO 4017 M5X10 A4 80	
330	312105-0366		4	SCREW, M6S ISO 4017 M6X12 A4 80	
340	312105-0449		2	SCREW, M6S ISO 4017 M8X16 A4 80	
360	312105-0453		4	SCREW, M6S ISO 4017 M8X25 A4 80	
370	312105-0449		2	SCREW, M6S ISO 4017 M8X16 A4 80	
390	312318-0360		2	SET SCREW, CUP END ISO4029 M6X6 A4	
410	312605-0318		4	HEXAGON NUT, M6M M8 A280	
430	315105-0165		8	WASHER PLAIN, 8,4X16X1,6 A4 BRB	
440	315106-0146		2	WASHER PLAIN, M5 ISO7089-5-200 HV A4	
450	315741-0108		1	RETAINING RING, DIN 705 A2 12	
460	318856-0115		2	KNOB, EXTERNAL THREAD. NO. 8306-0278	
470	321101-0173		4	FLANGE BUSHING, 12X18X12 MM	
480	321111-0159		2	FLANGE BUSHING, 12/18X12-24X3 MM	
490	90115-0139		2	ROD END, ID=8 MM, M8X1,25	
500	90115-0180		2	ROD END, ID=8 MM, M8X1,25 LH	
520	315202-0107		2	O-RING 9,1X1,6 MM	
530	90286-0013		2	GREASE NIPPLE STRAIGHT, H1 M6X1 2346	
540	312902-0318		4	NUT HEX. LEFT THREAD, M8 A280	

Pos	Part No	UN	Qty	Description	Page No

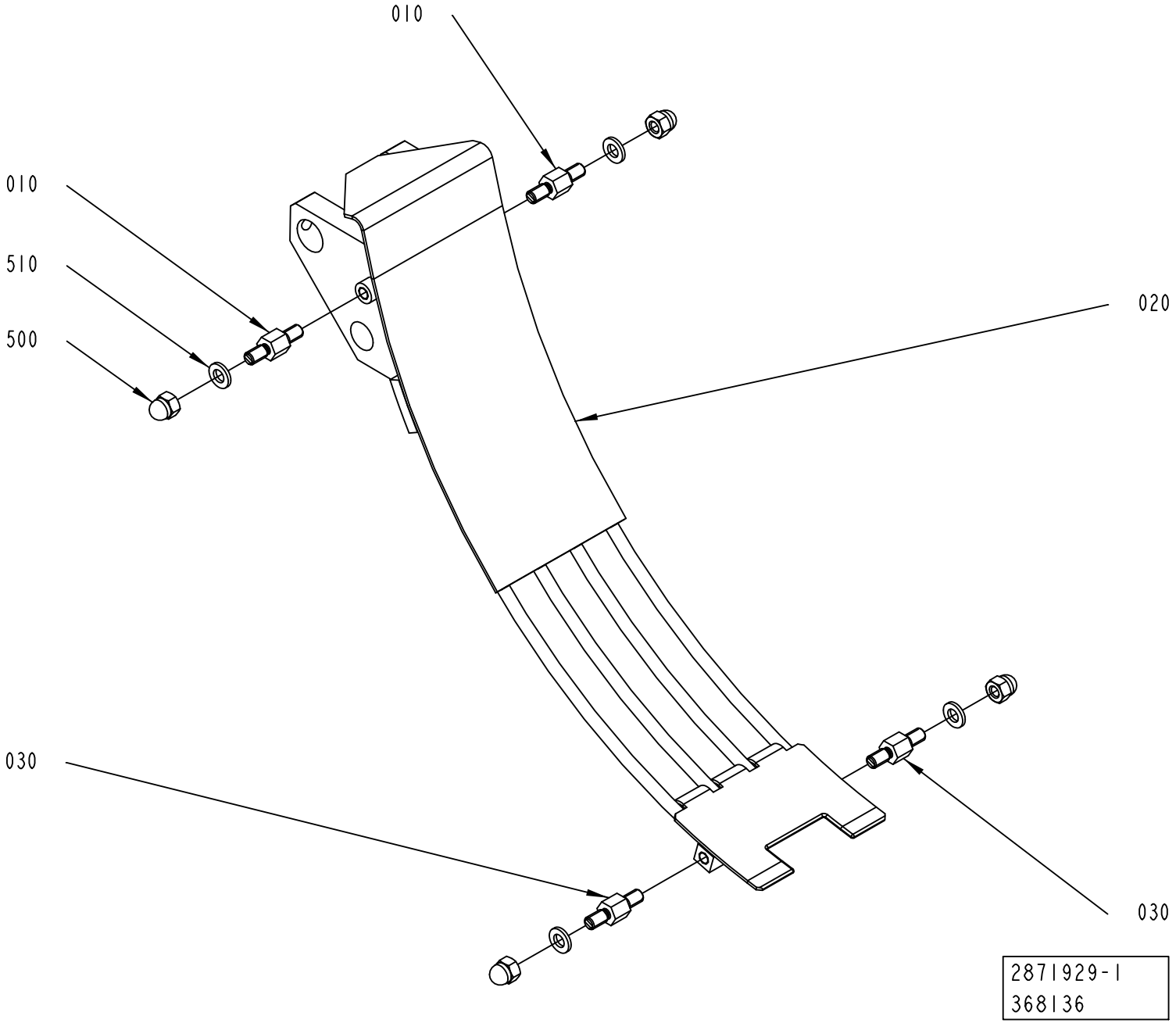
010
010
510
500
020
030
030
2871929-1
368136

ECM: 479588 - 20101003
Group number: 2871929-0100
Assembly Drawing: 2871929-1_1_AB

This list covers pages from 5-56 to 5-61

Pos	Part No	UN	Qty	Description	Page No
TBA 0080S (See drawing on page: 5-60)					
010	2871955-0005		2	SPACER	
020	2852409-0000		1	CRADLE	
500	312705-0316		2	HEX. DOMED CAP MHM-6 M6 A280	
520	312105-0366		2	SCREW, M6S ISO 4017 M6X12 A4 80	
TBA 0100B, TBA 0125S (See drawing on page: 5-56)					
010	2871955-0003		2	SPACER	
020	2852409-0000		1	CRADLE	
030	2871955-0006		2	SPACER	
500	312705-0316		4	HEX. DOMED CAP MHM-6 M6 A280	
TBA 0160S, TBA 0200S (See drawing on page: 5-56)					
010	2871955-0001		2	SPACER	
020	2852409-0000		1	CRADLE	
030	2871955-0008		2	SPACER	
500	312705-0316		4	HEX. DOMED CAP MHM-6 M6 A280	
TBA 0200B, TBA 0200SQ, TBA 0284B, TBA 0250B, TBA 0300S, TBA 0330S, TBA 0250SQ (See drawing on page: 5-56)					
010	2871955-0002		2	SPACER	
020	2852409-0000		1	CRADLE	
030	2871955-0007		2	SPACER	
500	312705-0316		4	HEX. DOMED CAP MHM-6 M6 A280	
TBA 0200M, TBA 0250S, TBA 0200E (See drawing on page: 5-56)					
010	2871955-0004		2	SPACER	
020	2852409-0000		1	CRADLE	
030	2871955-0004		2	SPACER	
500	312705-0316		4	HEX. DOMED CAP MHM-6 M6 A280	
TBA 0375S (See drawing on page: 5-56)					
010	2871955-0010		2	SPACER	
020	2852409-0000		1	CRADLE	
030	2871955-0002		2	SPACER	
500	312705-0316		4	HEX. DOMED CAP MHM-6 M6 A280	
TPA 0125SQ (See drawing on page: 5-58)					
020	2894673-0000		1	CHUTE	
500	312105-0366		4	SCREW, M6S ISO 4017 M6X12 A4 80	
TPA 0250SQ, TPA 0200SQ (See drawing on page: 5-56)					
010	2871955-0001		2	SPACER	
020	2852409-0000		1	CRADLE	
030	2871955-0001		2	SPACER	
500	312705-0316		4	HEX. DOMED CAP MHM-6 M6 A280	
TPA 0330SQ (See drawing on page: 5-56)					
010	2871955-0002		2	SPACER	
020	2852409-0000		1	CRADLE	
030	2871955-0009		2	SPACER	
500	312705-0316		4	HEX. DOMED CAP MHM-6 M6 A280	
Common Parts					
510	315106-0153		4	WASHER PLAIN, M6 ISO7089-6-200 HV A4	

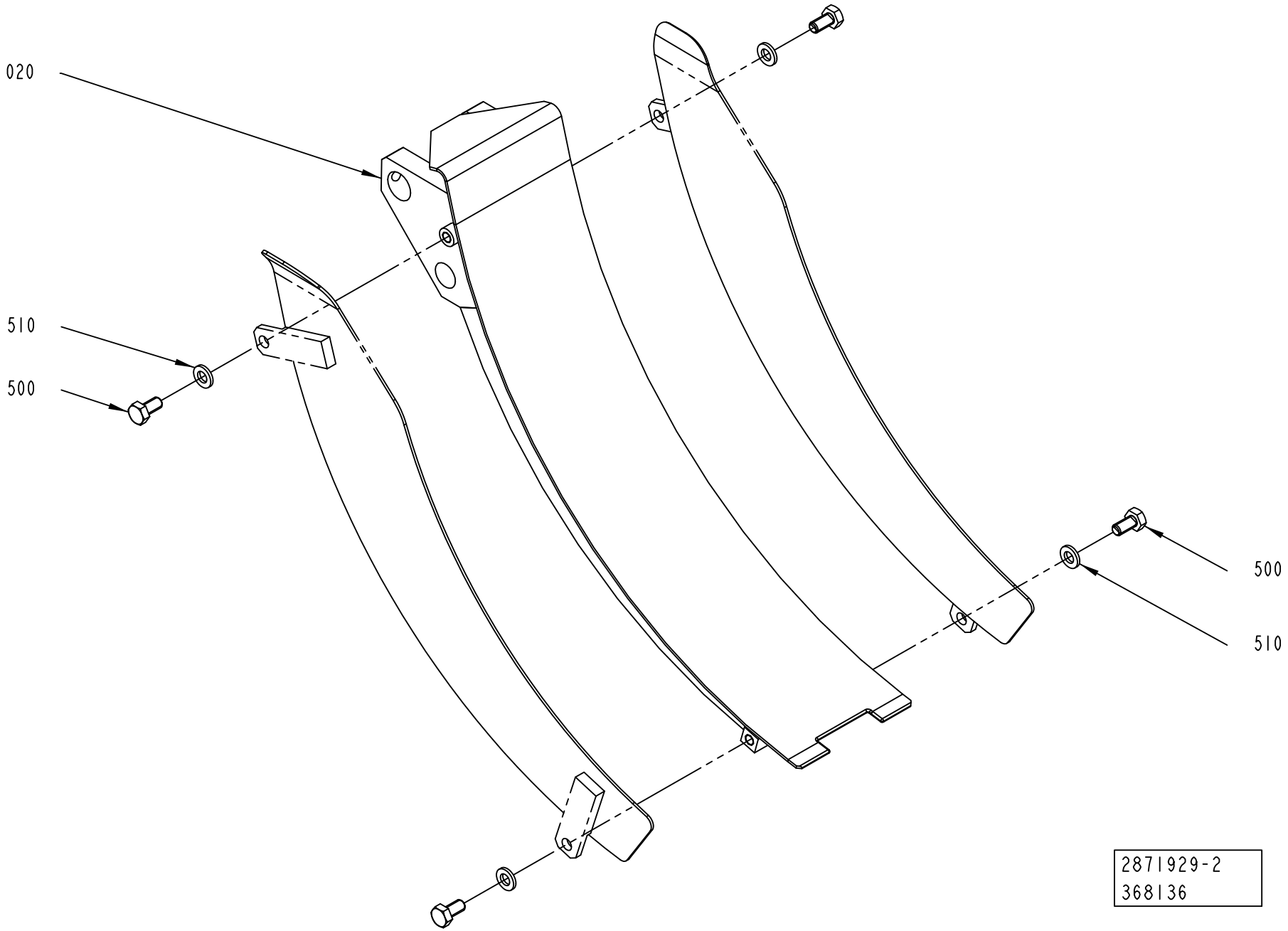
020
510
500
500
510
2871929-2
368136

ECM: 479588 - 20101003
Group number: 2871929-0100
Assembly Drawing: 2871929-2_1_AA

This list covers pages from 5-56 to 5-61

Pos	Part No	UN	Qty	Description	Page No
TBA 0080S (See drawing on page: 5-60)					
010	2871955-0005		2	SPACER	
020	2852409-0000		1	CRADLE	
500	312705-0316		2	HEX. DOMED CAP MHM-6 M6 A280	
520	312105-0366		2	SCREW, M6S ISO 4017 M6X12 A4 80	
TBA 0100B, TBA 0125S (See drawing on page: 5-56)					
010	2871955-0003		2	SPACER	
020	2852409-0000		1	CRADLE	
030	2871955-0006		2	SPACER	
500	312705-0316		4	HEX. DOMED CAP MHM-6 M6 A280	
TBA 0160S, TBA 0200S (See drawing on page: 5-56)					
010	2871955-0001		2	SPACER	
020	2852409-0000		1	CRADLE	
030	2871955-0008		2	SPACER	
500	312705-0316		4	HEX. DOMED CAP MHM-6 M6 A280	
TBA 0200B, TBA 0200SQ, TBA 0284B, TBA 0250B, TBA 0300S, TBA 0330S, TBA 0250SQ (See drawing on page: 5-56)					
010	2871955-0002		2	SPACER	
020	2852409-0000		1	CRADLE	
030	2871955-0007		2	SPACER	
500	312705-0316		4	HEX. DOMED CAP MHM-6 M6 A280	
TBA 0200M, TBA 0250S, TBA 0200E (See drawing on page: 5-56)					
010	2871955-0004		2	SPACER	
020	2852409-0000		1	CRADLE	
030	2871955-0004		2	SPACER	
500	312705-0316		4	HEX. DOMED CAP MHM-6 M6 A280	
TBA 0375S (See drawing on page: 5-56)					
010	2871955-0010		2	SPACER	
020	2852409-0000		1	CRADLE	
030	2871955-0002		2	SPACER	
500	312705-0316		4	HEX. DOMED CAP MHM-6 M6 A280	
TPA 0125SQ (See drawing on page: 5-58)					
020	2894673-0000		1	CHUTE	
500	312105-0366		4	SCREW, M6S ISO 4017 M6X12 A4 80	
TPA 0250SQ, TPA 0200SQ (See drawing on page: 5-56)					
010	2871955-0001		2	SPACER	
020	2852409-0000		1	CRADLE	
030	2871955-0001		2	SPACER	
500	312705-0316		4	HEX. DOMED CAP MHM-6 M6 A280	
TPA 0330SQ (See drawing on page: 5-56)					
010	2871955-0002		2	SPACER	
020	2852409-0000		1	CRADLE	
030	2871955-0009		2	SPACER	
500	312705-0316		4	HEX. DOMED CAP MHM-6 M6 A280	
Common Parts					
510	315106-0153		4	WASHER PLAIN, M6 ISO7089-6-200 HV A4	

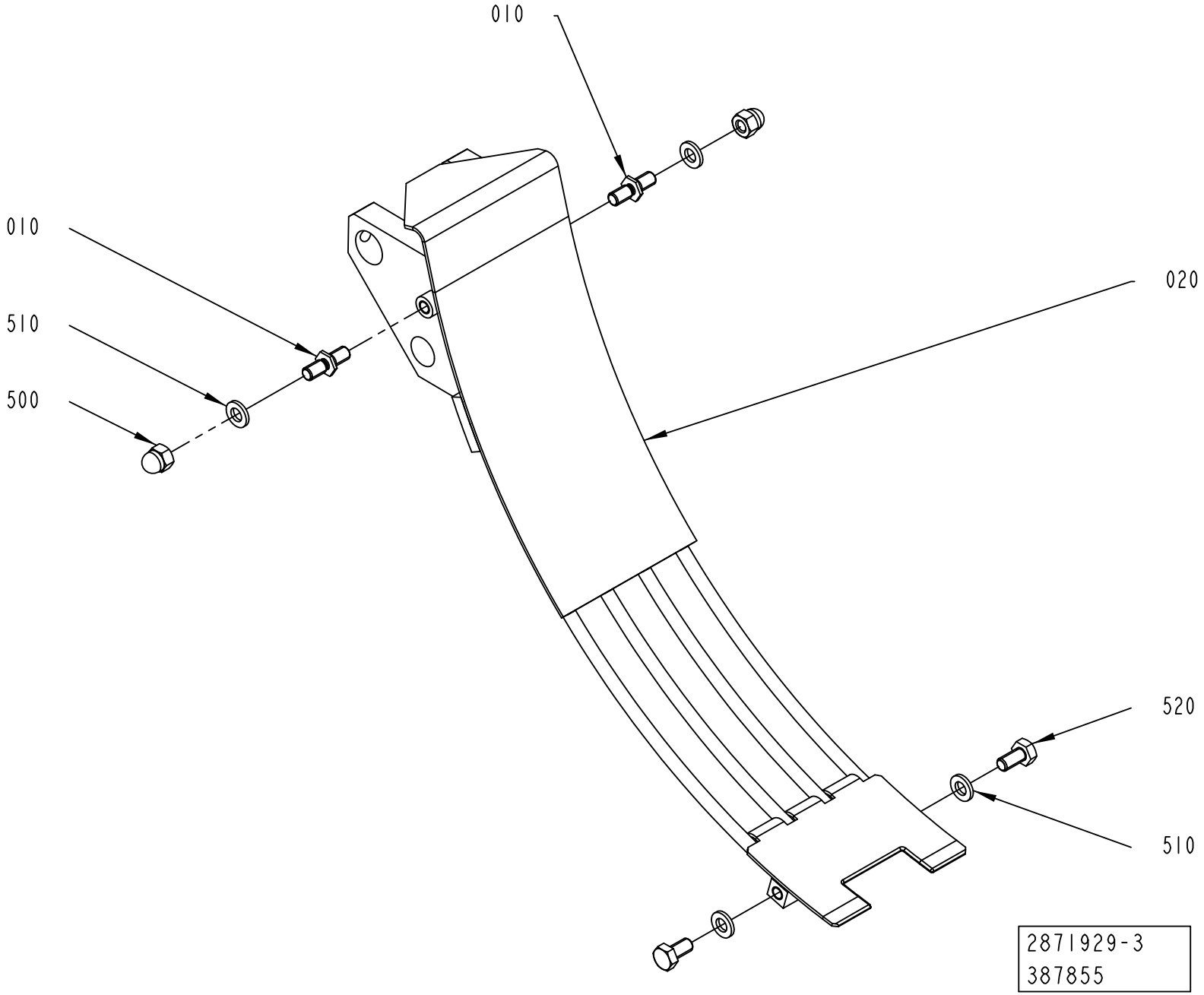
010
010
510
500
020
520
510
2871929-3
387855

ECM: 479588 - 20101003
Group number: 2871929-0100
Assembly Drawing: 2871929-3_1_AA

This list covers pages from 5-56 to 5-61

Pos	Part No	UN	Qty	Description	Page No
TBA 0080S (See drawing on page: 5-60)					
010	2871955-0005		2	SPACER	
020	2852409-0000		1	CRADLE	
500	312705-0316		2	HEX. DOMED CAP MHM-6 M6 A280	
520	312105-0366		2	SCREW, M6S ISO 4017 M6X12 A4 80	
TBA 0100B, TBA 0125S (See drawing on page: 5-56)					
010	2871955-0003		2	SPACER	
020	2852409-0000		1	CRADLE	
030	2871955-0006		2	SPACER	
500	312705-0316		4	HEX. DOMED CAP MHM-6 M6 A280	
TBA 0160S, TBA 0200S (See drawing on page: 5-56)					
010	2871955-0001		2	SPACER	
020	2852409-0000		1	CRADLE	
030	2871955-0008		2	SPACER	
500	312705-0316		4	HEX. DOMED CAP MHM-6 M6 A280	
TBA 0200B, TBA 0200SQ, TBA 0284B, TBA 0250B, TBA 0300S, TBA 0330S, TBA 0250SQ (See drawing on page: 5-56)					
010	2871955-0002		2	SPACER	
020	2852409-0000		1	CRADLE	
030	2871955-0007		2	SPACER	
500	312705-0316		4	HEX. DOMED CAP MHM-6 M6 A280	
TBA 0200M, TBA 0250S, TBA 0200E (See drawing on page: 5-56)					
010	2871955-0004		2	SPACER	
020	2852409-0000		1	CRADLE	
030	2871955-0004		2	SPACER	
500	312705-0316		4	HEX. DOMED CAP MHM-6 M6 A280	
TBA 0375S (See drawing on page: 5-56)					
010	2871955-0010		2	SPACER	
020	2852409-0000		1	CRADLE	
030	2871955-0002		2	SPACER	
500	312705-0316		4	HEX. DOMED CAP MHM-6 M6 A280	
TPA 0125SQ (See drawing on page: 5-58)					
020	2894673-0000		1	CHUTE	
500	312105-0366		4	SCREW, M6S ISO 4017 M6X12 A4 80	
TPA 0250SQ, TPA 0200SQ (See drawing on page: 5-56)					
010	2871955-0001		2	SPACER	
020	2852409-0000		1	CRADLE	
030	2871955-0001		2	SPACER	
500	312705-0316		4	HEX. DOMED CAP MHM-6 M6 A280	
TPA 0330SQ (See drawing on page: 5-56)					
010	2871955-0002		2	SPACER	
020	2852409-0000		1	CRADLE	
030	2871955-0009		2	SPACER	
500	312705-0316		4	HEX. DOMED CAP MHM-6 M6 A280	
Common Parts					
510	315106-0153		4	WASHER PLAIN, M6 ISO7089-6-200 HV A4	

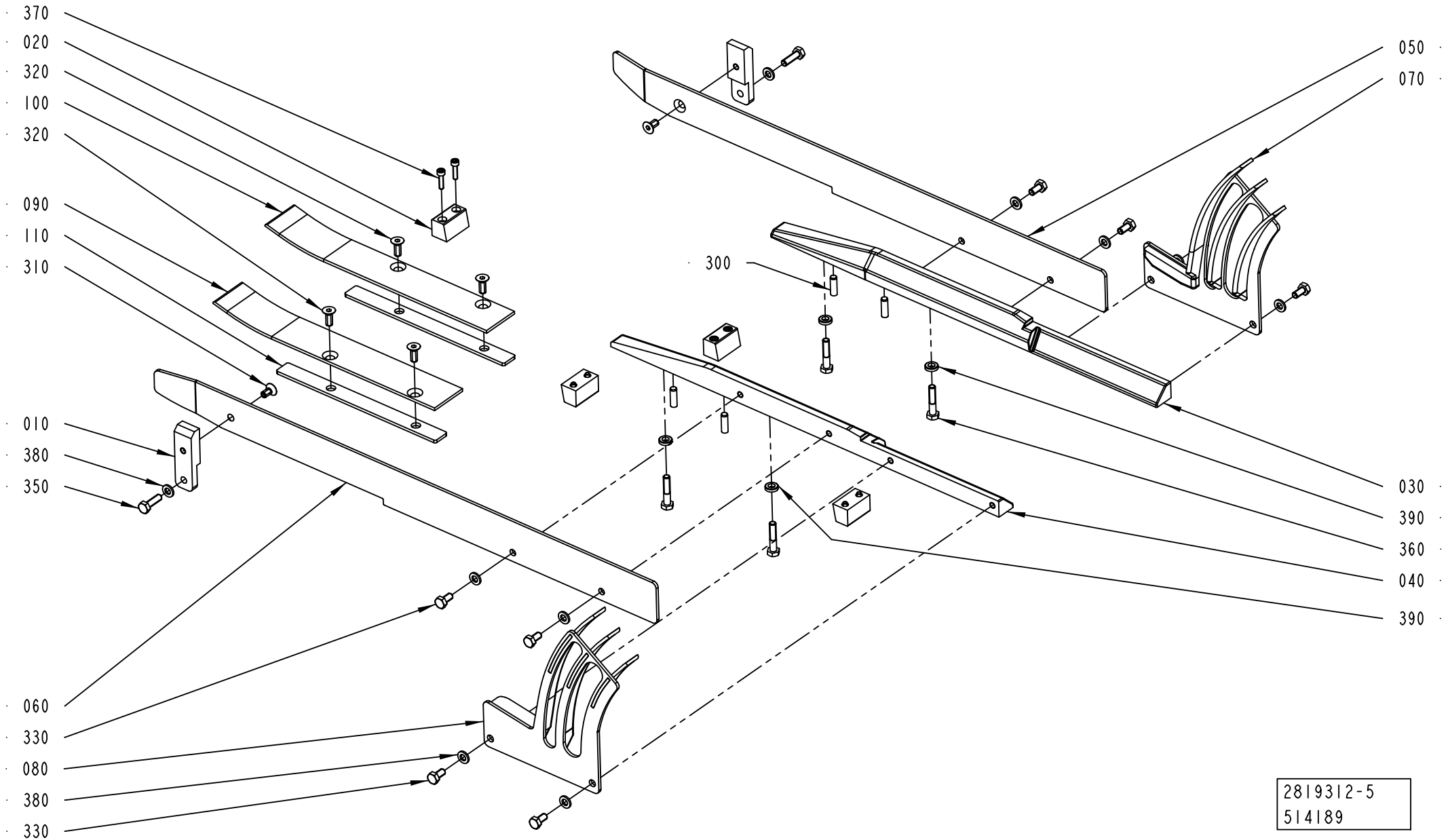
370
020
320
100
320
090
110
310
010
380
350
060
330
080
380
330
050
070
300
030
390
360
040
390
2819312-5
514189

ECM: 520750 - 20120101
Group number: 2819312-0200
Assembly Drawing: 2819312-5_1_AB

This list covers pages from 5-62 to 5-69

Pos	Part No	UN	Qty	Description	Page No
TBA 0080S (See drawing on page: 5-64)					
010	2894664-0000		2	SUPPORT	
020	2921574-0000		4	PUSHER	
030	3020453-0000		1	GUIDE	
040	3020454-0000		1	GUIDE	
050	3002054-0000		1	WALL	
060	3002053-0000		1	WALL	
070	3002052-0000		1	GUIDE	
080	3002051-0000		1	GUIDE	
090	2949928-0000		1	GUIDE	
100	2949929-0000		1	GUIDE	
320	312155-0366		4	SCREW DIN 7991 MF6S M6X12 A4 70	
330	312105-0364		8	SCREW, M6S ISO 4017 M6X10 A4 80	
370	312115-0293		8	SCREW ISO4762 M4X16 A4 80	
TBA 0100B, TBA 0125S (See drawing on page: 5-62)					
010	2894683-0000		2	SUPPORT	
020	2921574-0000		4	PUSHER	
030	2977492-0000		1	GUIDE	
040	2977491-0000		1	GUIDE	
050	2977496-0000		1	WALL	
060	2977495-0000		1	WALL	
070	3092001-0000		1	GUIDE	
080	2894684-0000		1	GUIDE	
090	2852413-0000		1	CHUTE	
100	2852414-0000		1	CHUTE	
110	2985491-0000		2	SHIM	
320	312155-0368		4	SCREW DIN 7991 MF6S M6X16 A4 70	
330	312105-0364		8	SCREW, M6S ISO 4017 M6X10 A4 80	
370	312115-0293		8	SCREW ISO4762 M4X16 A4 80	
TBA 0160S, TBA 0200S (See drawing on page: 5-62)					
010	3020016-0000		2	SUPPORT	
020	2921574-0000		4	PUSHER	
030	2871944-0000		1	GUIDE	
040	2871943-0000		1	GUIDE	
050	3015758-0000		1	WALL	
060	3015759-0000		1	WALL	
070	3089305-0000		1	GUIDE	
080	3015761-0000		1	GUIDE	
090	2852413-0000		1	CHUTE	
100	2852414-0000		1	CHUTE	
110	2985491-0000		2	SHIM	
320	312155-0368		4	SCREW DIN 7991 MF6S M6X16 A4 70	
330	312105-0366		8	SCREW, M6S ISO 4017 M6X12 A4 80	
370	312115-0293		8	SCREW ISO4762 M4X16 A4 80	
TBA 0200B, TBA 0250B, TBA 0330S (See drawing on page: 5-62)					
010	2852372-0000		2	SUPPORT	
020	2894700-0000		4	PUSHER	
030	2894714-0000		1	GUIDE	
040	2894713-0000		1	GUIDE	
050	2894716-0000		1	WALL	
060	2894715-0000		1	WALL	
070	3018830-0000		1	GUIDE	
080	2894718-0000		1	GUIDE	
090	2852413-0000		1	CHUTE	
100	2852414-0000		1	CHUTE	
110	2985491-0000		2	SHIM	
320	312155-0368		4	SCREW DIN 7991 MF6S M6X16 A4 70	
330	312105-0366		8	SCREW, M6S ISO 4017 M6X12 A4 80	
370	312115-0293		8	SCREW ISO4762 M4X16 A4 80	
TBA 0200E (See drawing on page: 5-62)					
010	2912412-0000		2	SUPPORT	
020	3037955-0000		4	PUSHER	
030	3074722-0000		1	GUIDE	
040	3074723-0000		1	GUIDE	
050	2918693-0000		1	WALL	
060	2918694-0000		1	WALL	
070	3051988-0000		1	GUIDE	
080	3051989-0000		1	GUIDE	
090	3074720-0000		1	GUIDE	
100	3074721-0000		1	GUIDE	
320	312155-0368		4	SCREW DIN 7991 MF6S M6X16 A4 70	
330	312105-0366		8	SCREW, M6S ISO 4017 M6X12 A4 80	
370	312115-0295		8	SCREW ISO4762 M4X20 A4 80	
TBA 0200M, TBA 0250S (See drawing on page: 5-62)					
010	2912412-0000		2	SUPPORT	
020	2921574-0000		4	PUSHER	
030	2912413-0000		1	GUIDE	
040	2912414-0000		1	GUIDE	
050	2918693-0000		1	WALL	
060	2918694-0000		1	WALL	
070	2918698-0000		1	GUIDE	
080	2918697-0000		1	GUIDE	
090	2852413-0000		1	CHUTE	
100	2852414-0000		1	CHUTE	

Machine Type | Group Description | Used-In | Group Number | Page No

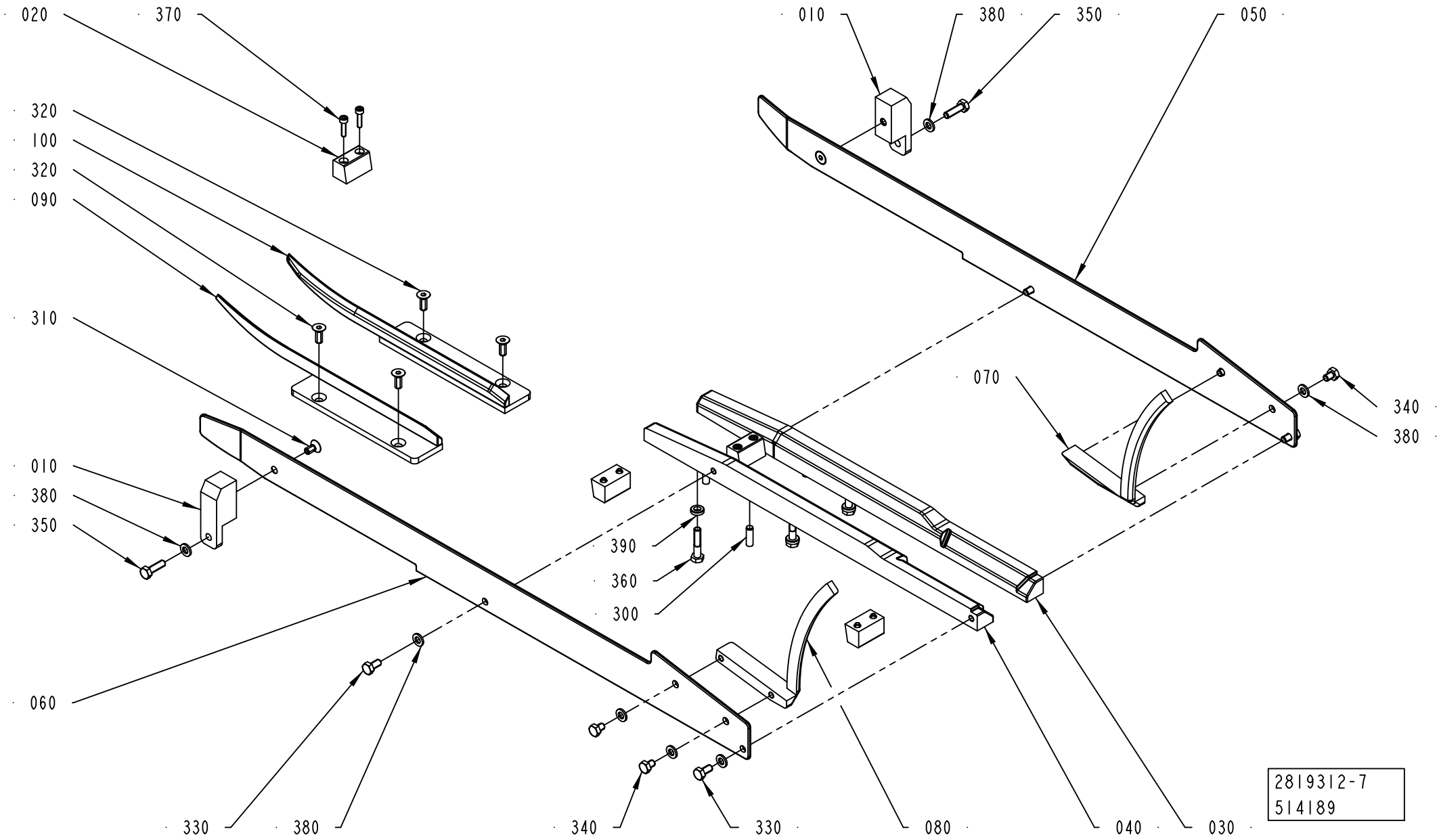
020
370
320
100
320
090
310
010
380
350
060
330
380
340
330
080
040
030
390
360
300
070
340
380
010
380
350
2819312-7
514189

Pos	Part No	UN	Qty	Description	Page No
TBA 0200M, TBA 0250S (Cont'd) (See drawing on page: 5-62)					
110	2985491-0000		2	SHIM	
320	312155-0368		4	SCREW DIN 7991 MF6S M6X16 A4 70	
330	312105-0366		8	SCREW, M6S ISO 4017 M6X12 A4 80	
370	312115-0293		8	SCREW ISO4762 M4X16 A4 80	
TBA 0200SQ, TBA 0250SQ (See drawing on page: 5-62)					
010	2852372-0000		2	SUPPORT	
020	3037955-0000		4	PUSHER	
030	2962114-0000		1	GUIDE	
040	2962115-0000		1	GUIDE	
050	2894716-0000		1	WALL	
060	2894715-0000		1	WALL	
070	2962117-0000		1	GUIDE	
080	2962127-0000		1	GUIDE	
090	2852413-0000		1	CHUTE	
100	2852414-0000		1	CHUTE	
110	2985491-0000		2	SHIM	
320	312155-0368		4	SCREW DIN 7991 MF6S M6X16 A4 70	
330	312105-0364		8	SCREW, M6S ISO 4017 M6X10 A4 80	
370	312115-0295		8	SCREW ISO4762 M4X20 A4 80	
TBA 0284B, TBA 0300S (See drawing on page: 5-66)					
010	2852372-0000		2	SUPPORT	
020	2894700-0000		4	PUSHER	
030	3060683-0000		1	GUIDE	
040	3060682-0000		1	GUIDE	
050	3002693-0000		1	WALL	
060	3002694-0000		1	WALL	
070	3067369-0000		1	GUIDE	
080	3067368-0000		1	GUIDE	
090	2852413-0000		1	CHUTE	
100	2852414-0000		1	CHUTE	
110	2985491-0000		2	SHIM	
320	312155-0368		4	SCREW DIN 7991 MF6S M6X16 A4 70	
330	312105-0366		8	SCREW, M6S ISO 4017 M6X12 A4 80	
340	312105-0362		4	SCREW, M6S ISO 4017 M6X8 A4 80	
370	312115-0293		8	SCREW ISO4762 M4X16 A4 80	
TBA 0375S (See drawing on page: 5-66)					
010	3067349-0000		2	SUPPORT	
020	3037955-0000		4	PUSHER	
030	3067351-0000		1	GUIDE	
040	3067350-0000		1	GUIDE	
050	3067355-0000		1	WALL	
060	3067354-0000		1	WALL	
070	3067353-0000		1	GUIDE	
080	3067352-0000		1	GUIDE	
090	2852413-0000		1	CHUTE	
100	2852414-0000		1	CHUTE	
110	2985491-0000		2	SHIM	
320	312155-0368		4	SCREW DIN 7991 MF6S M6X16 A4 70	
330	312105-0366		4	SCREW, M6S ISO 4017 M6X12 A4 80	
340	312105-0364		4	SCREW, M6S ISO 4017 M6X10 A4 80	
370	312115-0295		8	SCREW ISO4762 M4X20 A4 80	
TPA 0125SQ (See drawing on page: 5-64)					
010	2894664-0000		2	SUPPORT	
020	2894700-0000		4	PUSHER	
030	2871972-0000		1	GUIDE	
040	2871971-0000		1	GUIDE	
050	2894663-0000		1	WALL	
060	2871973-0000		1	WALL	
070	2894666-0000		1	GUIDE	
080	2894665-0000		1	GUIDE	
090	2894674-0000		1	GUIDE	
100	2894675-0000		1	GUIDE	
320	312155-0368		4	SCREW DIN 7991 MF6S M6X16 A4 70	
330	312105-0366		4	SCREW, M6S ISO 4017 M6X12 A4 80	
340	312105-0362		4	SCREW, M6S ISO 4017 M6X8 A4 80	
370	312115-0293		8	SCREW ISO4762 M4X16 A4 80	
TPA 0250SQ, TPA 0200SQ (See drawing on page: 5-68)					
010	2871945-0000		2	SUPPORT	
020	3037955-0000		4	PUSHER	
030	2976949-0000		1	GUIDE	
040	2976950-0000		1	GUIDE	
050	3024501-0000		1	WALL	
060	3024500-0000		1	WALL	
070	3045543-0000		1	GUIDE	
080	3045542-0000		1	GUIDE	
090	3024498-0000		1	GUIDE	
100	3024499-0000		1	GUIDE	
320	312155-0366		4	SCREW DIN 7991 MF6S M6X12 A4 70	
330	312105-0366		8	SCREW, M6S ISO 4017 M6X12 A4 80	
370	312115-0295		8	SCREW ISO4762 M4X20 A4 80	
TPA 0330SQ (See drawing on page: 5-64)					
010	2852372-0000		2	SUPPORT	
020	3037955-0000		4	PUSHER	

INFEED CONVEYOR VARIANT

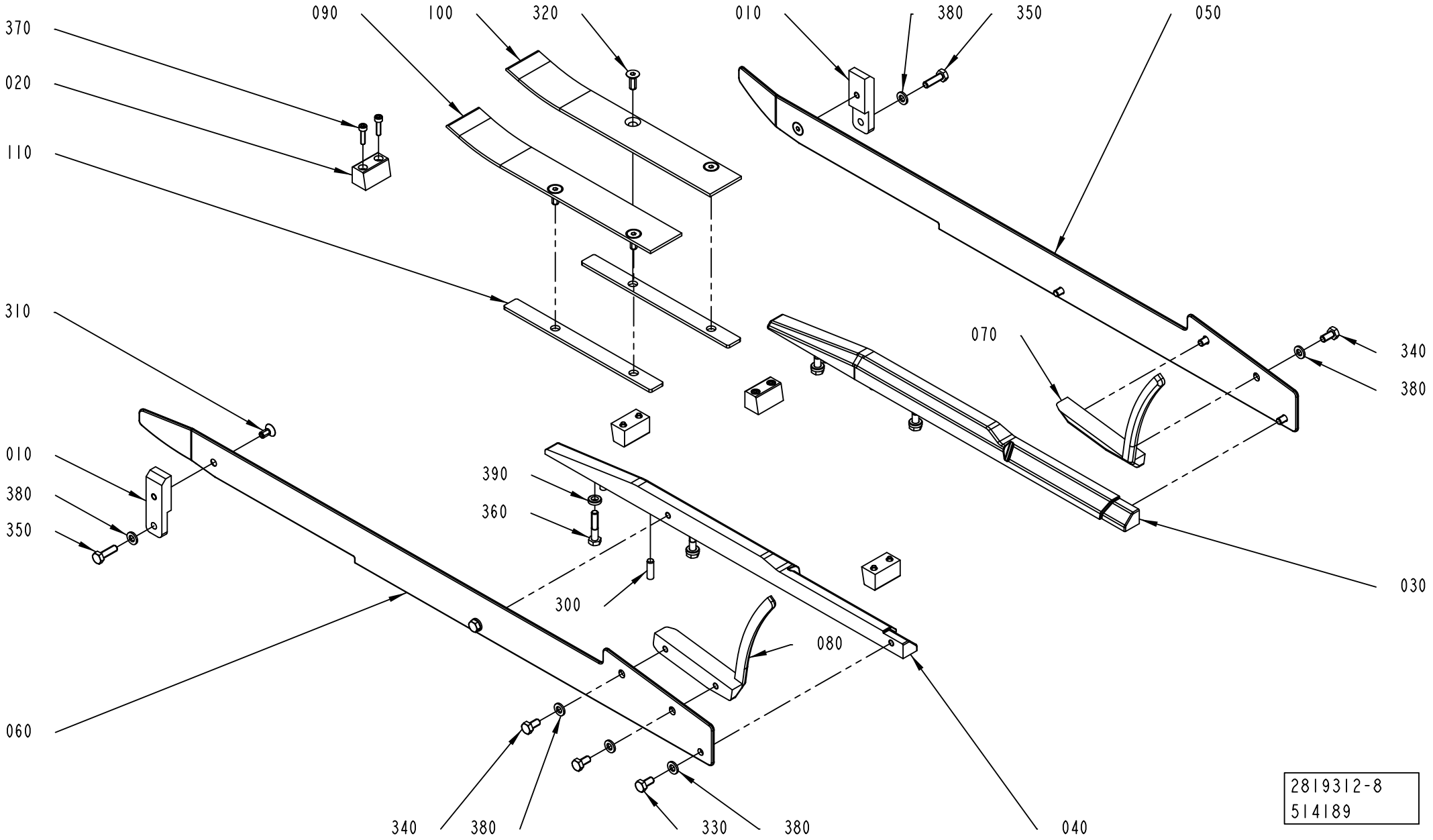

Pos	Part No	UN	Qty	Description	Page No
TPA 0330SQ (Cont'd) (See drawing on page: 5-64)					
030	2987097-0000		1	GUIDE	
040	2987098-0000		1	GUIDE	
050	3055889-0000		1	WALL	
060	3055888-0000		1	WALL	
070	2987095-0000		1	GUIDE	
080	2987096-0000		1	GUIDE	
090	2993462-0000		1	GUIDE	
100	2993463-0000		1	GUIDE	
320	312155-0368		4	SCREW DIN 7991 MF6S M6X16 A4 70	
330	312105-0366		8	SCREW, M6S ISO 4017 M6X12 A4 80	
370	312115-0295		8	SCREW ISO4762 M4X20 A4 80	
Common Parts					
300	311103-0353		4	PARALLEL PIN ISO 2338 6M6X20 A1	
310	312155-0366		2	SCREW DIN 7991 MF6S M6X12 A4 70	
350	312105-0370		2	SCREW, M6S ISO 4017 M6X20 A4 80	
360	312105-0374		4	SCREW, M6S ISO 4014 M6X30 A4 80	
380	315106-0153		10	WASHER PLAIN, M6 ISO7089-6-200 HV A4	
390	315115-0153		4	WASHER PLAIN, TBRB 6,4/12 H=3	

Pos	Part No	UN	Qty	Description	Page No

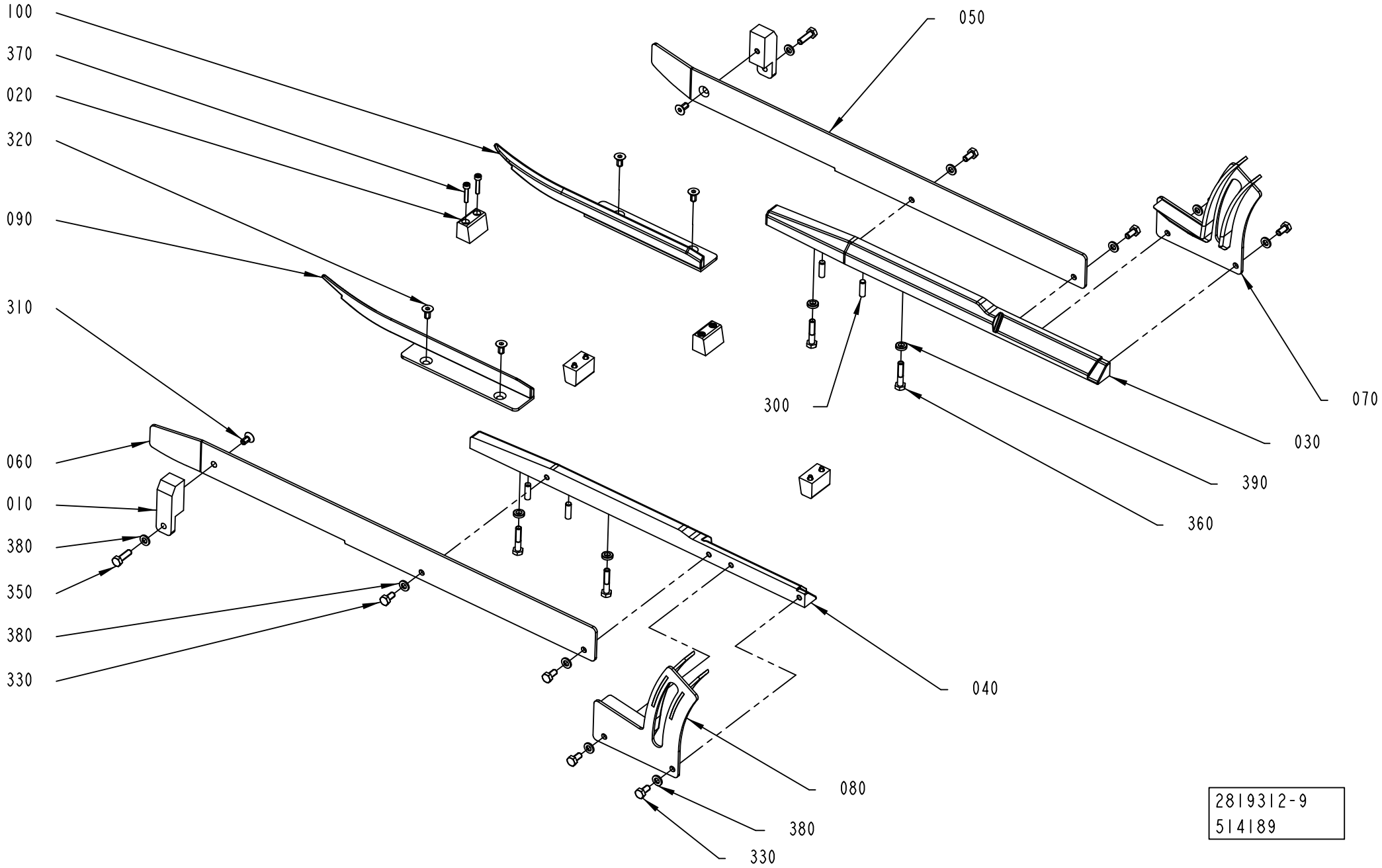
100
370
020
320
090
310
060
010
380
350
380
330
050
300
070
030
390
360
040
080
380
330
2819312-9
514189

Pos	Part No	UN	Qty	Description	Page No
SEE PREVIOUS LISTS PAGES: 5-63, 5-65, 5-67.					

Pos	Part No	UN	Qty	Description	Page No

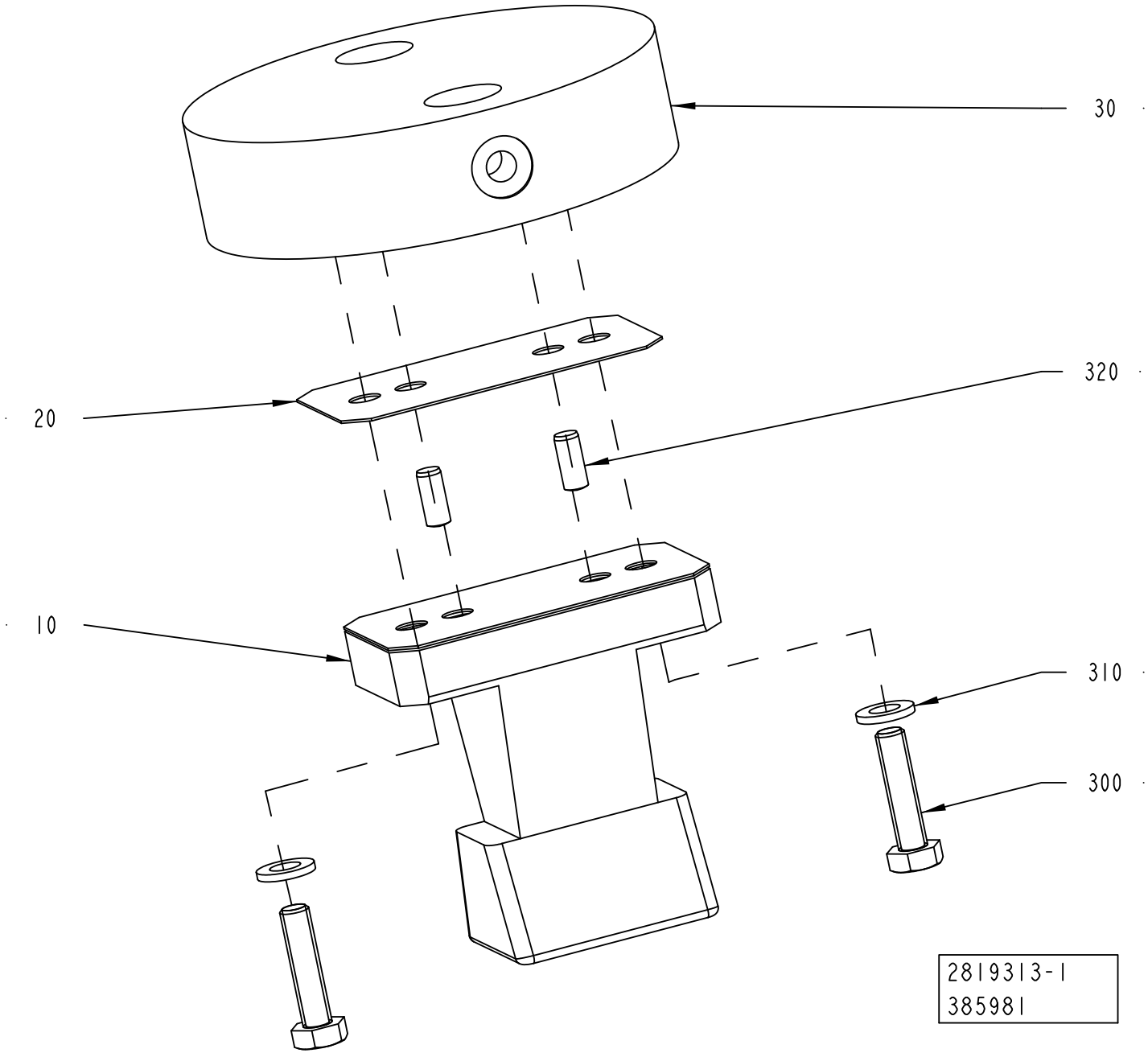
30
320
20
10
310
300
2819313-1
385981

ECM: 479580 - 20101003
Group number: 2819313-0100
Assembly Drawing: 2819313-1_1_AB

This list covers pages from 5-70 to 5-73

Pos	Part No	UN	Qty	Description	Page No
TBA 0080S (See drawing on page: 5-70)					
010	2949914-0000		1	BLOCK	
030	2806005-0000		1	PLATE	
300	312105-0372		2	SCREW, M6S ISO 4017 M6X25 A4 80	
TBA 0125S, TBA 0100B (See drawing on page: 5-70)					
010	2894686-0000		1	BLOCK	
030	2806005-0000		1	PLATE	
300	312105-0372		2	SCREW, M6S ISO 4017 M6X25 A4 80	
TBA 0160S, TBA 0200S (See drawing on page: 5-70)					
010	2806002-0000		1	BLOCK	
030	2806005-0000		1	PLATE	
300	312105-0372		2	SCREW, M6S ISO 4017 M6X25 A4 80	
TBA 0200B, TBA 0250B, TBA 0330S, TBA 0375S (See drawing on page: 5-70)					
010	2852321-0000		1	BLOCK	
030	2806005-0000		1	PLATE	
300	312105-0372		2	SCREW, M6S ISO 4017 M6X25 A4 80	
TBA 0200E (See drawing on page: 5-70)					
010	3051990-0000		1	BLOCK	
030	2852386-0000		1	PLATE	
300	312105-0370		2	SCREW, M6S ISO 4017 M6X20 A4 80	
TBA 0200M, TBA 0250S (See drawing on page: 5-70)					
010	2912419-0000		1	BLOCK	
030	2806005-0000		1	PLATE	
300	312105-0372		2	SCREW, M6S ISO 4017 M6X25 A4 80	
TBA 0200SQ, TBA 0250SQ (See drawing on page: 5-72)					
010	2962119-0000		1	BLOCK	
030	2852386-0000		1	PLATE	
300	312105-0370		2	SCREW, M6S ISO 4017 M6X20 A4 80	
TBA 0284B, TBA 0300S (See drawing on page: 5-70)					
010	3079740-0000		1	BLOCK	
030	2806005-0000		1	PLATE	
300	312105-0372		2	SCREW, M6S ISO 4017 M6X25 A4 80	
TPA 0125SQ (See drawing on page: 5-72)					
010	2871963-0000		1	BLOCK	
030	2852386-0000		1	PLATE	
300	312105-0370		2	SCREW, M6S ISO 4017 M6X20 A4 80	
TPA 0250SQ, TPA 0200SQ (See drawing on page: 5-72)					
010	2976960-0000		1	BLOCK	
030	2852386-0000		1	PLATE	
300	312105-0370		2	SCREW, M6S ISO 4017 M6X20 A4 80	
TPA 0330SQ (See drawing on page: 5-72)					
010	2987100-0000		1	BLOCK	
030	2852386-0000		1	PLATE	
300	312105-0370		2	SCREW, M6S ISO 4017 M6X20 A4 80	
Common Parts					
020	2806012-0000		3	SHIM	
310	315105-0153		2	WASHER PLAIN, 6,4X12X1,5 A4 BRB	
320	311103-0306		2	PARALLEL PIN ISO 2338 5M6X12 A1	

Machine Type | Group Description | Used-In | Group Number | Page No

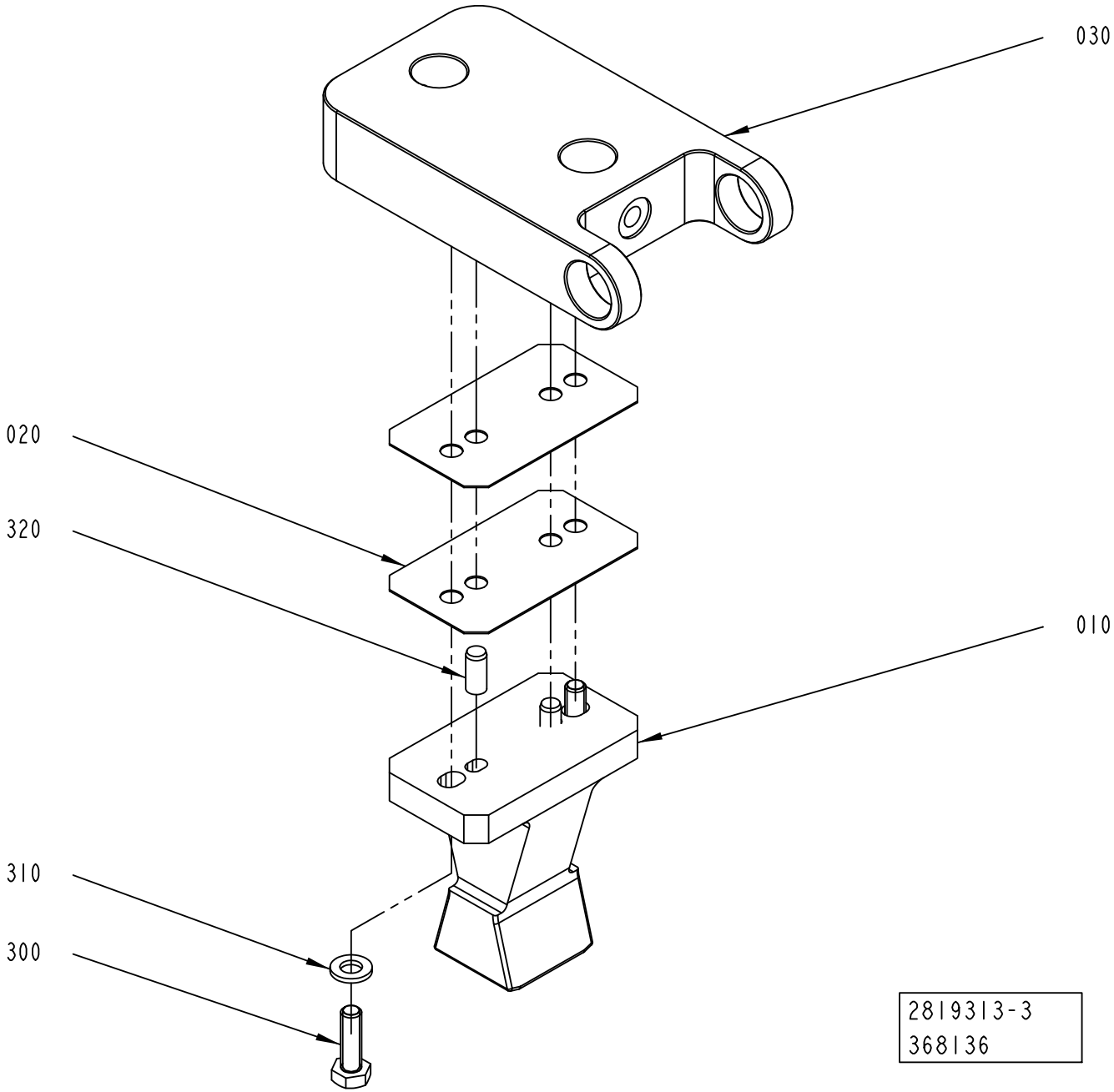
030
020
320
010
310
300
2819313-3
368136

ECM: 479580 - 20101003
Group number: 2819313-0100
Assembly Drawing: 2819313-3_1_AA

This list covers pages from 5-70 to 5-73

Pos	Part No	UN	Qty	Description	Page No
TBA 0080S (See drawing on page: 5-70)					
010	2949914-0000		1	BLOCK	
030	2806005-0000		1	PLATE	
300	312105-0372		2	SCREW, M6S ISO 4017 M6X25 A4 80	
TBA 0125S, TBA 0100B (See drawing on page: 5-70)					
010	2894686-0000		1	BLOCK	
030	2806005-0000		1	PLATE	
300	312105-0372		2	SCREW, M6S ISO 4017 M6X25 A4 80	
TBA 0160S, TBA 0200S (See drawing on page: 5-70)					
010	2806002-0000		1	BLOCK	
030	2806005-0000		1	PLATE	
300	312105-0372		2	SCREW, M6S ISO 4017 M6X25 A4 80	
TBA 0200B, TBA 0250B, TBA 0330S, TBA 0375S (See drawing on page: 5-70)					
010	2852321-0000		1	BLOCK	
030	2806005-0000		1	PLATE	
300	312105-0372		2	SCREW, M6S ISO 4017 M6X25 A4 80	
TBA 0200E (See drawing on page: 5-70)					
010	3051990-0000		1	BLOCK	
030	2852386-0000		1	PLATE	
300	312105-0370		2	SCREW, M6S ISO 4017 M6X20 A4 80	
TBA 0200M, TBA 0250S (See drawing on page: 5-70)					
010	2912419-0000		1	BLOCK	
030	2806005-0000		1	PLATE	
300	312105-0372		2	SCREW, M6S ISO 4017 M6X25 A4 80	
TBA 0200SQ, TBA 0250SQ (See drawing on page: 5-72)					
010	2962119-0000		1	BLOCK	
030	2852386-0000		1	PLATE	
300	312105-0370		2	SCREW, M6S ISO 4017 M6X20 A4 80	
TBA 0284B, TBA 0300S (See drawing on page: 5-70)					
010	3079740-0000		1	BLOCK	
030	2806005-0000		1	PLATE	
300	312105-0372		2	SCREW, M6S ISO 4017 M6X25 A4 80	
TPA 0125SQ (See drawing on page: 5-72)					
010	2871963-0000		1	BLOCK	
030	2852386-0000		1	PLATE	
300	312105-0370		2	SCREW, M6S ISO 4017 M6X20 A4 80	
TPA 0250SQ, TPA 0200SQ (See drawing on page: 5-72)					
010	2976960-0000		1	BLOCK	
030	2852386-0000		1	PLATE	
300	312105-0370		2	SCREW, M6S ISO 4017 M6X20 A4 80	
TPA 0330SQ (See drawing on page: 5-72)					
010	2987100-0000		1	BLOCK	
030	2852386-0000		1	PLATE	
300	312105-0370		2	SCREW, M6S ISO 4017 M6X20 A4 80	
Common Parts					
020	2806012-0000		3	SHIM	
310	315105-0153		2	WASHER PLAIN, 6,4X12X1,5 A4 BRB	
320	311103-0306		2	PARALLEL PIN ISO 2338 5M6X12 A1	

Machine Type | Group Description | Used-In | Group Number | Page No

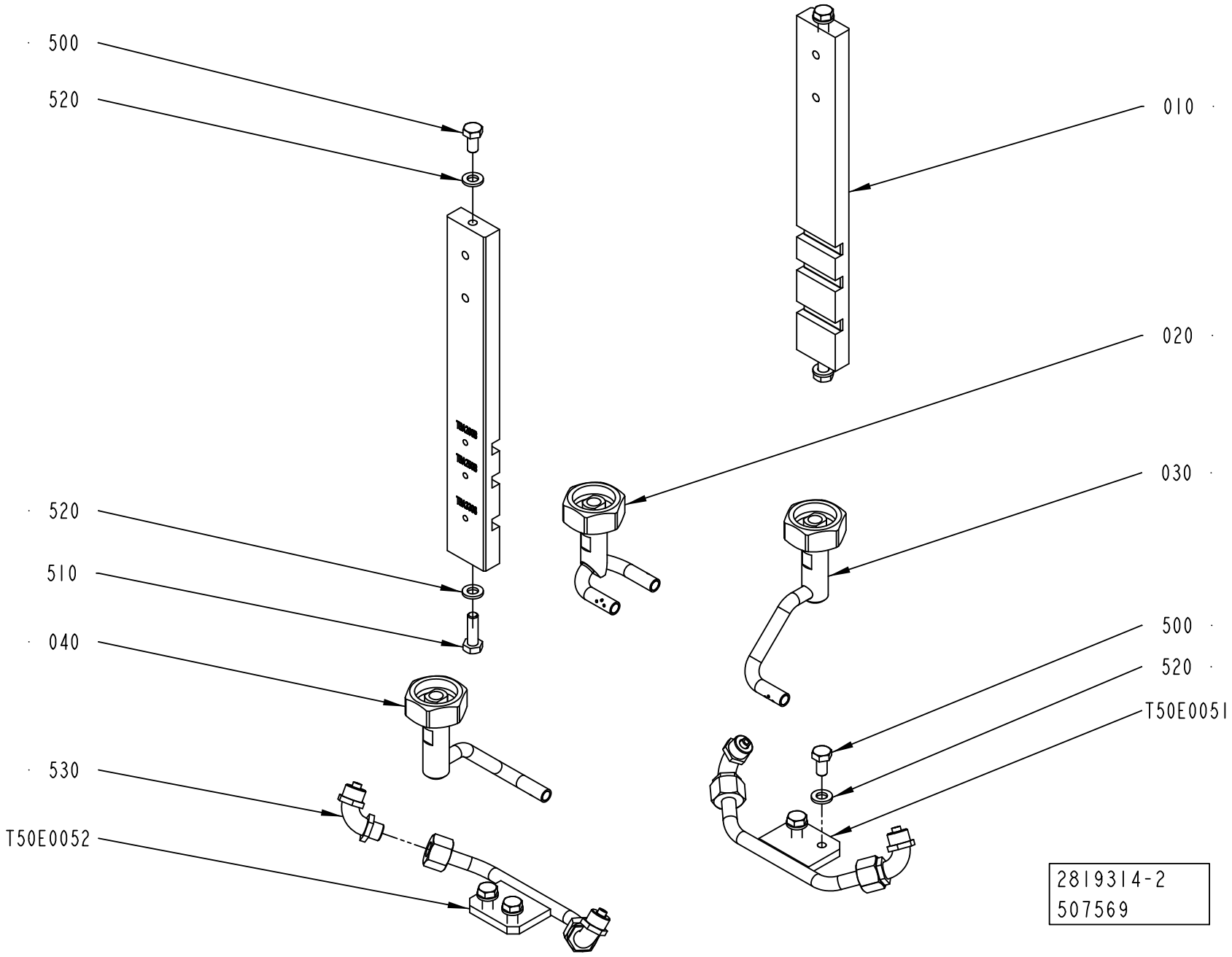
500
520
520
510
040
530
T50E0052
010
020
030
500
520
T50E0051
2819314-2
507569

ECM: 510875 - 20111001
Group number: 2819314-0100
Assembly Drawing: 2819314-2_1_AD

This list covers pages from 5-74 to 5-77

Pos	Part No	UN	Qty	Description	Page No
TBA 0080S					
010	2949915-0000		2	PLATE	
020	2949921-0000		1	NOZZLE	
030	2949922-0000		1	NOZZLE	
040	2949920-0000		1	NOZZLE	
T50E0051	2852331-0003		1	PIPE	
T50E0052	2852331-0003		1	PIPE	
TBA 0125S, TBA 0100B					
010	2894690-0000		2	PLATE	
020	2983395-0000		1	NOZZLE	
030	2990873-0000		1	NOZZLE	
040	2986078-0000		1	NOZZLE	
T50E0051	2852331-0001		1	PIPE	
T50E0052	2852331-0001		1	PIPE	
TBA 0160S, TBA 0200S					
010	2894719-0000		2	PLATE	
020	2976932-0000		1	NOZZLE	
030	2894688-0000		1	NOZZLE	
040	2894689-0000		1	NOZZLE	
T50E0051	2852331-0001		1	PIPE	
T50E0052	2852331-0001		1	PIPE	
TBA 0200B, TBA 0250B, TBA 0330S					
010	3120545-0000		2	PLATE	
020	2852324-0000		1	NOZZLE	
030	3120546-0000		1	NOZZLE	
040	3120547-0000		1	NOZZLE	
T50E0051	2852331-0002		1	PIPE	
T50E0052	2852331-0002		1	PIPE	
TBA 0200E					
010	3051994-0000		2	PLATE	
020	3051991-0000		1	NOZZLE	
030	3051992-0000		1	NOZZLE	
040	3051993-0000		1	NOZZLE	
T50E0051	3051996-0000		1	PIPE	
T50E0052	3051995-0000		1	PIPE	
TBA 0200M, TBA 0250S					
010	2912441-0000		2	PLATE	
020	2912437-0000		1	NOZZLE	
030	2912438-0000		1	NOZZLE	
040	2912440-0000		1	NOZZLE	
T50E0051	2852331-0004		1	PIPE	
T50E0052	2852331-0004		1	PIPE	
TBA 0200SQ, TBA 0250SQ					
010	2971768-0000		2	PLATE	
020	2962130-0000		1	NOZZLE	
030	2912438-0000		1	NOZZLE	
040	2912440-0000		1	NOZZLE	
T50E0051	2852331-0004		1	PIPE	
T50E0052	2852331-0004		1	PIPE	
TBA 0284B, TBA 0300S					
010	2998107-0000		2	PLATE	
020	2852324-0000		1	NOZZLE	
030	2852325-0000		1	NOZZLE	
040	2852326-0000		1	NOZZLE	
T50E0051	2852331-0002		1	PIPE	
T50E0052	2852331-0002		1	PIPE	
TBA 0375S					
010	3067357-0000		2	PLATE	
020	3067358-0000		1	NOZZLE	
030	2852325-0000		1	NOZZLE	
040	2852326-0000		1	NOZZLE	
T50E0051	2852331-0005		1	PIPE	
T50E0052	2852331-0005		1	PIPE	
TPA 0125SQ					
010	2871970-0000		2	PLATE	
020	2871969-0000		1	NOZZLE	
030	2871968-0000		1	NOZZLE	
040	2871967-0000		1	NOZZLE	
T50E0051	2852331-0003		1	PIPE	
T50E0052	2852331-0003		1	PIPE	
TPA 0250SQ, TPA 0200SQ					
010	2976963-0000		2	PLATE	
020	2984839-0000		1	NOZZLE	
030	3092257-0000		1	NOZZLE	
040	3092258-0000		1	NOZZLE	
T50E0051	2852331-0001		1	PIPE	
T50E0052	2852331-0001		1	PIPE	
TPA 0330SQ					
010	2987099-0000		2	PLATE	
020	2962130-0000		1	NOZZLE	
030	2912438-0000		1	NOZZLE	
040	2912440-0000		1	NOZZLE	
T50E0051	2852331-0004		1	PIPE	
T50E0052	2852331-0004		1	PIPE	

Machine Type | Group Description | Used-In | Group Number | Page No

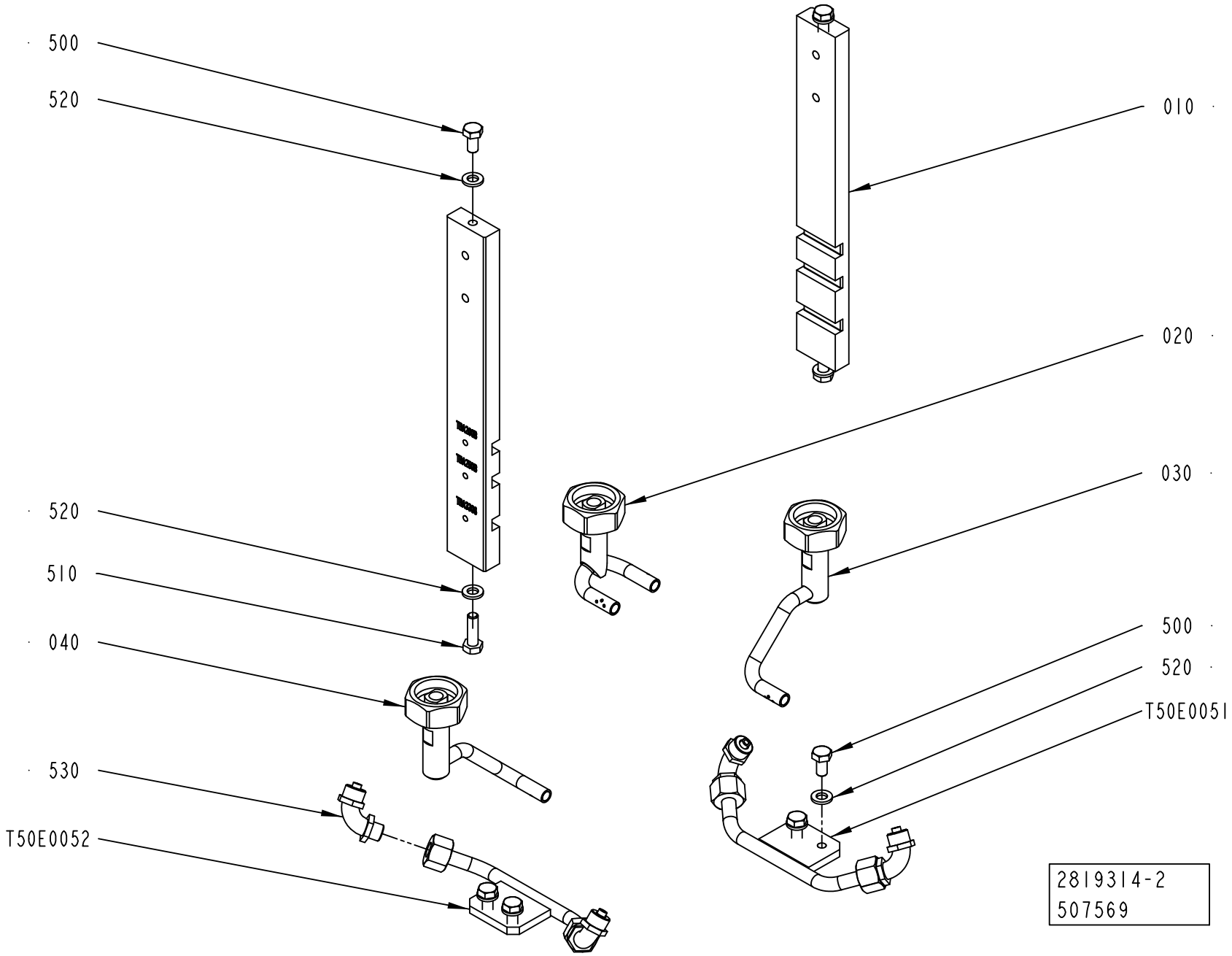
500
520
520
510
040
530
T50E0052
010
020
030
500
520
T50E0051
2819314-2
507569

Pos	Part No	UN	Qty	Description	Page No
Common Parts (Cont'd)					
500	312105-0366		6	SCREW, M6S ISO 4017 M6X12 A4 80	
510	312105-0370		2	SCREW, M6S ISO 4017 M6X20 A4 80	
520	315106-0153		8	WASHER PLAIN, M6 ISO7089-6-200 HV A4	
530	342931-0121		4	ELBOW 90 COUPL., EXT. THREAD 8/6-G1/8"	

Pos	Part No	UN	Qty	Description	Page No

PRESSURE DEVICE

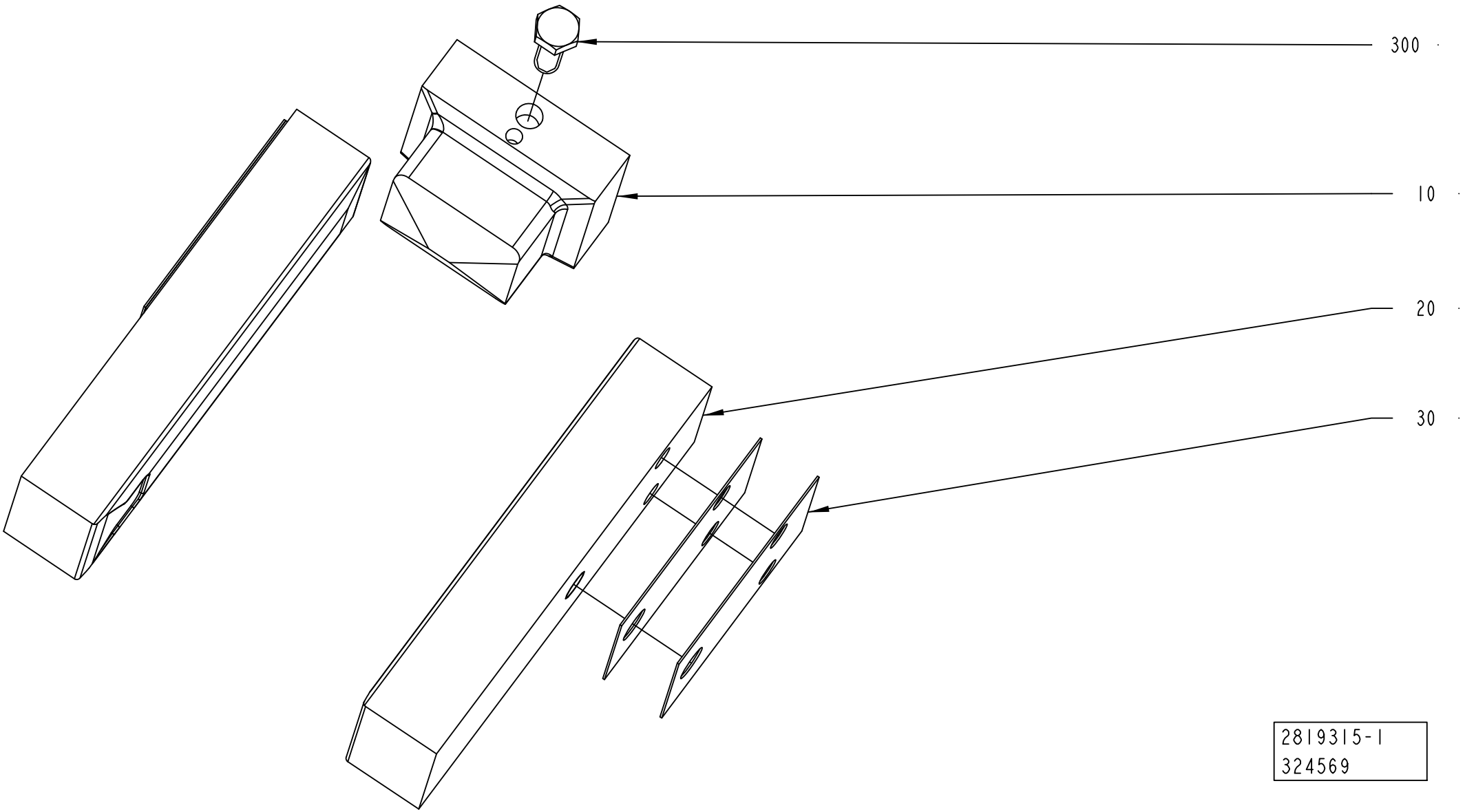

ECM: 509512 - 20111001
Group number: 2819315-0100
Assembly Drawing: 2819315-1_1_AA

This list covers pages from 5-78 to 5-85

Pos	Part No	UN	Qty	Description	Page No
TPA 0200SQ (See drawing on page: 5-82)					
010	3031464-0000		1	BLOCK	
020	3110111-0000		1	PUSHER	
025	3110110-0000		1	PUSHER	
050	3092452-0000		2	NAIL	
080	3097776-0000		6	SHIM	
330	315106-0136		2	WASHER PLAIN, M4 ISO7089-4-200 HV A4	
340	312115-0295		2	SCREW ISO4762 M4X20 A4 80	
TPA 0250SQ (See drawing on page: 5-82)					
010	3031464-0000		1	BLOCK	
020	3110108-0000		1	PUSHER	
025	3110109-0000		1	PUSHER	
050	3092452-0000		2	NAIL	
080	3097776-0000		6	SHIM	
330	315106-0136		2	WASHER PLAIN, M4 ISO7089-4-200 HV A4	
340	312115-0295		2	SCREW ISO4762 M4X20 A4 80	
TPA 0330SQ (See drawing on page: 5-82)					
010	2987105-0000		1	BLOCK	
020	2987110-0000		1	PUSHER	
025	2987109-0000		1	PUSHER	
050	3066842-0000		2	VOLUME BULGE	
080	3160954-0000		8	SHIM	
330	315106-0136		2	WASHER PLAIN, M4 ISO7089-4-200 HV A4	
340	312115-0293		2	SCREW ISO4762 M4X16 A4 80	
TBA 0080S (See drawing on page: 5-78)					
010	2949925-0000		1	BLOCK	
020	2949926-0000		2	PUSHER	
TBA 0100B (See drawing on page: 5-78)					
010	2894691-0000		1	BLOCK	
020	2894692-0000		2	PUSHER	
TBA 0125S (See drawing on page: 5-78)					
010	2894691-0000		1	BLOCK	
020	2894693-0000		2	PUSHER	
TBA 0160S (See drawing on page: 5-78)					
010	2806015-0000		1	BLOCK	
020	3015762-0000		2	PUSHER	
TBA 0200B (See drawing on page: 5-78)					
010	2852322-0000		1	BLOCK	
020	2852329-0000		2	PUSHER	
TBA 0200E (See drawing on page: 5-84)					
010	3051997-0000		1	BLOCK	
020	3074724-0000		1	PUSHER	
025	3074725-0000		1	PUSHER	
TBA 0200M (See drawing on page: 5-78)					
010	2912423-0000		1	BLOCK	
020	2912427-0000		2	PUSHER	
TBA 0200S (See drawing on page: 5-78)					
010	2806015-0000		1	BLOCK	
020	2871940-0000		2	PUSHER	
TBA 0200SQ (See drawing on page: 5-78)					
010	2962125-0000		1	BLOCK	
020	2962126-0000		2	PUSHER	
TBA 0250B (See drawing on page: 5-78)					
010	2852322-0000		1	BLOCK	
020	2852330-0000		2	PUSHER	
TBA 0250S (See drawing on page: 5-78)					
010	2912423-0000		1	BLOCK	
020	2912424-0000		2	PUSHER	
TBA 0250SQ (See drawing on page: 5-78)					
010	2962125-0000		1	BLOCK	
020	2966595-0000		2	PUSHER	
TBA 0284B, TBA 0300S (See drawing on page: 5-78)					
010	2852322-0000		1	BLOCK	
020	2998108-0000		2	PUSHER	
TBA 0330S (See drawing on page: 5-78)					
010	2852322-0000		1	BLOCK	
020	2852323-0000		2	PUSHER	
TBA 0375S (See drawing on page: 5-78)					
010	3067359-0000		1	BLOCK	
020	3067360-0000		2	PUSHER	
TPA 0125SQ (See drawing on page: 5-80)					
010	2871965-0000		1	BLOCK	
020	2871964-0000		1	PUSHER	
025	2871966-0000		1	BLOCK	
050	2894729-0000		1	VOLUME BULGE	
060	2894730-0000		1	VOLUME BULGE	
070	2941944-0000		4	VOLUME BULGE	
310	312155-0289		8	SCREW DIN 7991 MF6S M4X10 A4 70	
320	312605-0312		2	HEXAGON NUT, M6M M4 A280	
330	315106-0136		2	WASHER PLAIN, M4 ISO7089-4-200 HV A4	
Common Parts					
030	2852410-0000		8	SHIM	
300	312105-0370		1	SCREW, M6S ISO 4017 M6X20 A4 80	

Machine Type | Group Description | Used-In | Group Number | Page No

PRESSURE DEVICE

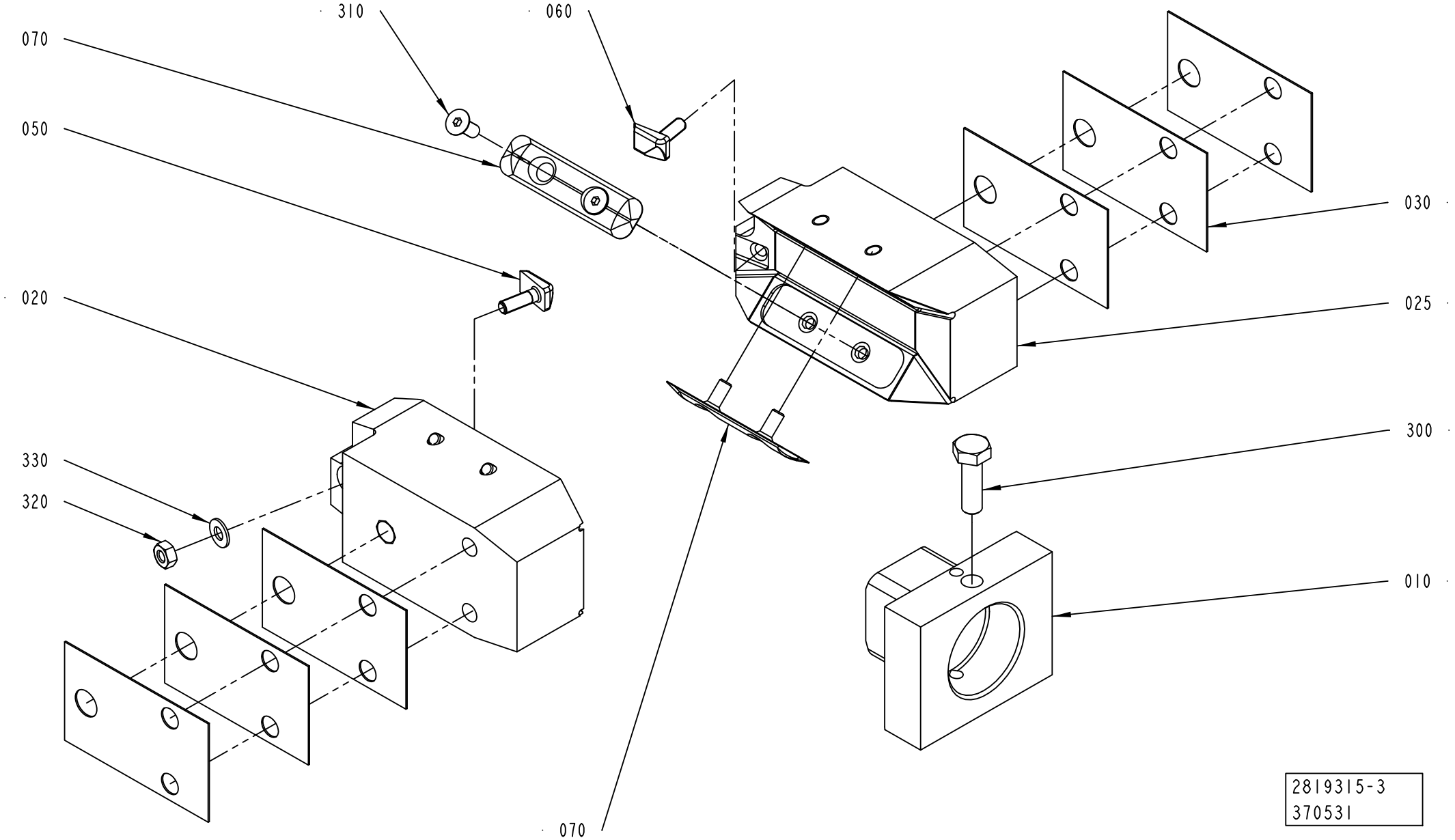

ECM: 509512 - 20111001
Group number: 2819315-0100
Assembly Drawing: 2819315-3_1_AA

This list covers pages from 5-78 to 5-85

Pos	Part No	UN	Qty	Description	Page No
TPA 0200SQ (See drawing on page: 5-82)					
010	3031464-0000		1	BLOCK	
020	3110111-0000		1	PUSHER	
025	3110110-0000		1	PUSHER	
050	3092452-0000		2	NAIL	
080	3097776-0000		6	SHIM	
330	315106-0136		2	WASHER PLAIN, M4 ISO7089-4-200 HV A4	
340	312115-0295		2	SCREW ISO4762 M4X20 A4 80	
TPA 0250SQ (See drawing on page: 5-82)					
010	3031464-0000		1	BLOCK	
020	3110108-0000		1	PUSHER	
025	3110109-0000		1	PUSHER	
050	3092452-0000		2	NAIL	
080	3097776-0000		6	SHIM	
330	315106-0136		2	WASHER PLAIN, M4 ISO7089-4-200 HV A4	
340	312115-0295		2	SCREW ISO4762 M4X20 A4 80	
TPA 0330SQ (See drawing on page: 5-82)					
010	2987105-0000		1	BLOCK	
020	2987110-0000		1	PUSHER	
025	2987109-0000		1	PUSHER	
050	3066842-0000		2	VOLUME BULGE	
080	3160954-0000		8	SHIM	
330	315106-0136		2	WASHER PLAIN, M4 ISO7089-4-200 HV A4	
340	312115-0293		2	SCREW ISO4762 M4X16 A4 80	
TBA 0080S (See drawing on page: 5-78)					
010	2949925-0000		1	BLOCK	
020	2949926-0000		2	PUSHER	
TBA 0100B (See drawing on page: 5-78)					
010	2894691-0000		1	BLOCK	
020	2894692-0000		2	PUSHER	
TBA 0125S (See drawing on page: 5-78)					
010	2894691-0000		1	BLOCK	
020	2894693-0000		2	PUSHER	
TBA 0160S (See drawing on page: 5-78)					
010	2806015-0000		1	BLOCK	
020	3015762-0000		2	PUSHER	
TBA 0200B (See drawing on page: 5-78)					
010	2852322-0000		1	BLOCK	
020	2852329-0000		2	PUSHER	
TBA 0200E (See drawing on page: 5-84)					
010	3051997-0000		1	BLOCK	
020	3074724-0000		1	PUSHER	
025	3074725-0000		1	PUSHER	
TBA 0200M (See drawing on page: 5-78)					
010	2912423-0000		1	BLOCK	
020	2912427-0000		2	PUSHER	
TBA 0200S (See drawing on page: 5-78)					
010	2806015-0000		1	BLOCK	
020	2871940-0000		2	PUSHER	
TBA 0200SQ (See drawing on page: 5-78)					
010	2962125-0000		1	BLOCK	
020	2962126-0000		2	PUSHER	
TBA 0250B (See drawing on page: 5-78)					
010	2852322-0000		1	BLOCK	
020	2852330-0000		2	PUSHER	
TBA 0250S (See drawing on page: 5-78)					
010	2912423-0000		1	BLOCK	
020	2912424-0000		2	PUSHER	
TBA 0250SQ (See drawing on page: 5-78)					
010	2962125-0000		1	BLOCK	
020	2966595-0000		2	PUSHER	
TBA 0284B, TBA 0300S (See drawing on page: 5-78)					
010	2852322-0000		1	BLOCK	
020	2998108-0000		2	PUSHER	
TBA 0330S (See drawing on page: 5-78)					
010	2852322-0000		1	BLOCK	
020	2852323-0000		2	PUSHER	
TBA 0375S (See drawing on page: 5-78)					
010	3067359-0000		1	BLOCK	
020	3067360-0000		2	PUSHER	
TPA 0125SQ (See drawing on page: 5-80)					
010	2871965-0000		1	BLOCK	
020	2871964-0000		1	PUSHER	
025	2871966-0000		1	BLOCK	
050	2894729-0000		1	VOLUME BULGE	
060	2894730-0000		1	VOLUME BULGE	
070	2941944-0000		4	VOLUME BULGE	
310	312155-0289		8	SCREW DIN 7991 MF6S M4X10 A4 70	
320	312605-0312		2	HEXAGON NUT, M6M M4 A280	
330	315106-0136		2	WASHER PLAIN, M4 ISO7089-4-200 HV A4	
Common Parts					
030	2852410-0000		8	SHIM	
300	312105-0370		1	SCREW, M6S ISO 4017 M6X20 A4 80	

Machine Type | Group Description | Used-In | Group Number | Page No

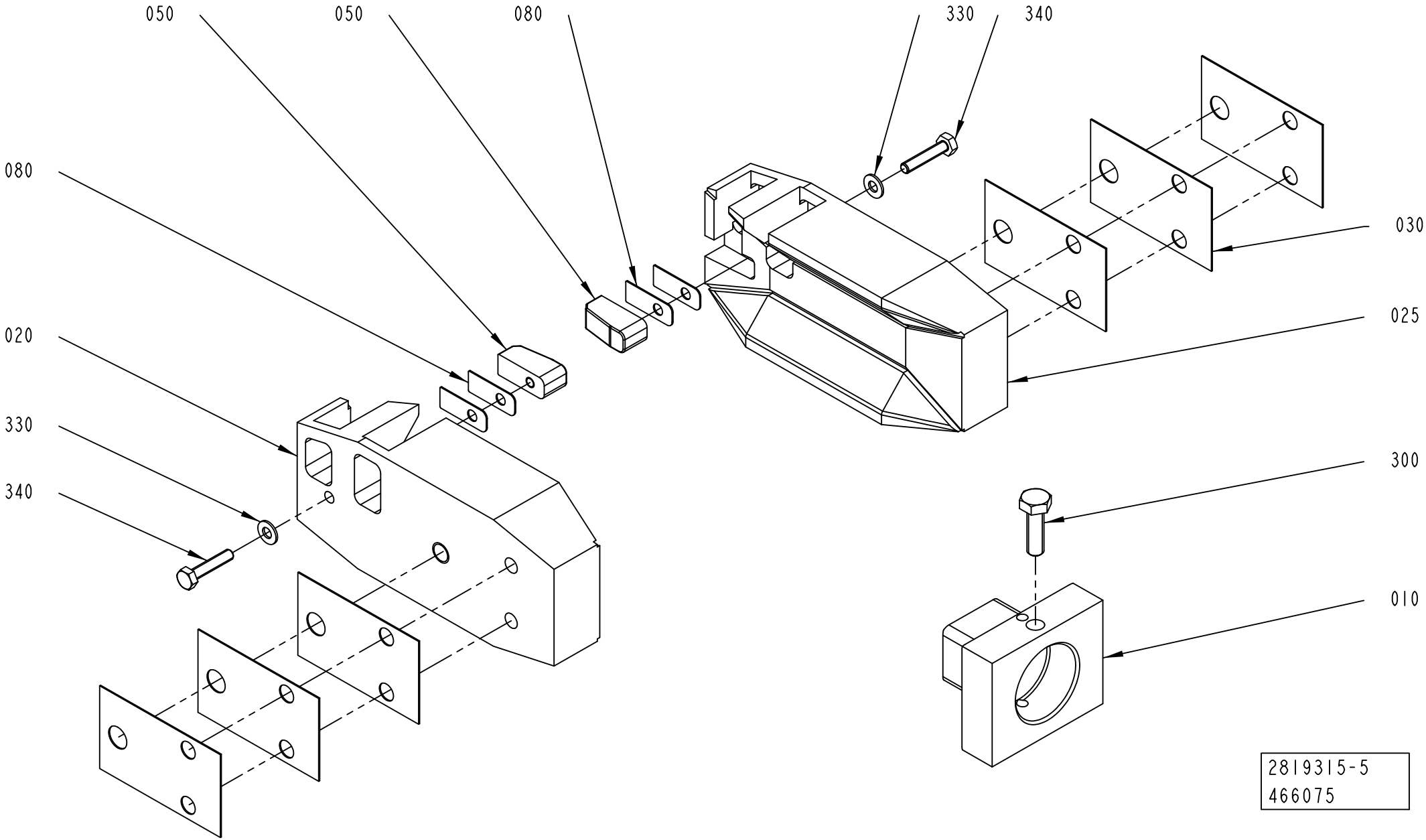
050
050
080
330
340
080
020
330
340
030
025
300
010
2819315-5
466075

ECM: 509512 - 20111001
Group number: 2819315-0100
Assembly Drawing: 2819315-5_1_AB

This list covers pages from 5-78 to 5-85

Pos	Part No	UN	Qty	Description	Page No
TPA 0200SQ (See drawing on page: 5-82)					
010	3031464-0000		1	BLOCK	
020	3110111-0000		1	PUSHER	
025	3110110-0000		1	PUSHER	
050	3092452-0000		2	NAIL	
080	3097776-0000		6	SHIM	
330	315106-0136		2	WASHER PLAIN, M4 ISO7089-4-200 HV A4	
340	312115-0295		2	SCREW ISO4762 M4X20 A4 80	
TPA 0250SQ (See drawing on page: 5-82)					
010	3031464-0000		1	BLOCK	
020	3110108-0000		1	PUSHER	
025	3110109-0000		1	PUSHER	
050	3092452-0000		2	NAIL	
080	3097776-0000		6	SHIM	
330	315106-0136		2	WASHER PLAIN, M4 ISO7089-4-200 HV A4	
340	312115-0295		2	SCREW ISO4762 M4X20 A4 80	
TPA 0330SQ (See drawing on page: 5-82)					
010	2987105-0000		1	BLOCK	
020	2987110-0000		1	PUSHER	
025	2987109-0000		1	PUSHER	
050	3066842-0000		2	VOLUME BULGE	
080	3160954-0000		8	SHIM	
330	315106-0136		2	WASHER PLAIN, M4 ISO7089-4-200 HV A4	
340	312115-0293		2	SCREW ISO4762 M4X16 A4 80	
TBA 0080S (See drawing on page: 5-78)					
010	2949925-0000		1	BLOCK	
020	2949926-0000		2	PUSHER	
TBA 0100B (See drawing on page: 5-78)					
010	2894691-0000		1	BLOCK	
020	2894692-0000		2	PUSHER	
TBA 0125S (See drawing on page: 5-78)					
010	2894691-0000		1	BLOCK	
020	2894693-0000		2	PUSHER	
TBA 0160S (See drawing on page: 5-78)					
010	2806015-0000		1	BLOCK	
020	3015762-0000		2	PUSHER	
TBA 0200B (See drawing on page: 5-78)					
010	2852322-0000		1	BLOCK	
020	2852329-0000		2	PUSHER	
TBA 0200E (See drawing on page: 5-84)					
010	3051997-0000		1	BLOCK	
020	3074724-0000		1	PUSHER	
025	3074725-0000		1	PUSHER	
TBA 0200M (See drawing on page: 5-78)					
010	2912423-0000		1	BLOCK	
020	2912427-0000		2	PUSHER	
TBA 0200S (See drawing on page: 5-78)					
010	2806015-0000		1	BLOCK	
020	2871940-0000		2	PUSHER	
TBA 0200SQ (See drawing on page: 5-78)					
010	2962125-0000		1	BLOCK	
020	2962126-0000		2	PUSHER	
TBA 0250B (See drawing on page: 5-78)					
010	2852322-0000		1	BLOCK	
020	2852330-0000		2	PUSHER	
TBA 0250S (See drawing on page: 5-78)					
010	2912423-0000		1	BLOCK	
020	2912424-0000		2	PUSHER	
TBA 0250SQ (See drawing on page: 5-78)					
010	2962125-0000		1	BLOCK	
020	2966595-0000		2	PUSHER	
TBA 0284B, TBA 0300S (See drawing on page: 5-78)					
010	2852322-0000		1	BLOCK	
020	2998108-0000		2	PUSHER	
TBA 0330S (See drawing on page: 5-78)					
010	2852322-0000		1	BLOCK	
020	2852323-0000		2	PUSHER	
TBA 0375S (See drawing on page: 5-78)					
010	3067359-0000		1	BLOCK	
020	3067360-0000		2	PUSHER	
TPA 0125SQ (See drawing on page: 5-80)					
010	2871965-0000		1	BLOCK	
020	2871964-0000		1	PUSHER	
025	2871966-0000		1	BLOCK	
050	2894729-0000		1	VOLUME BULGE	
060	2894730-0000		1	VOLUME BULGE	
070	2941944-0000		4	VOLUME BULGE	
310	312155-0289		8	SCREW DIN 7991 MF6S M4X10 A4 70	
320	312605-0312		2	HEXAGON NUT, M6M M4 A280	
330	315106-0136		2	WASHER PLAIN, M4 ISO7089-4-200 HV A4	
Common Parts					
030	2852410-0000		8	SHIM	
300	312105-0370		1	SCREW, M6S ISO 4017 M6X20 A4 80	

Machine Type | Group Description | Used-In | Group Number | Page No

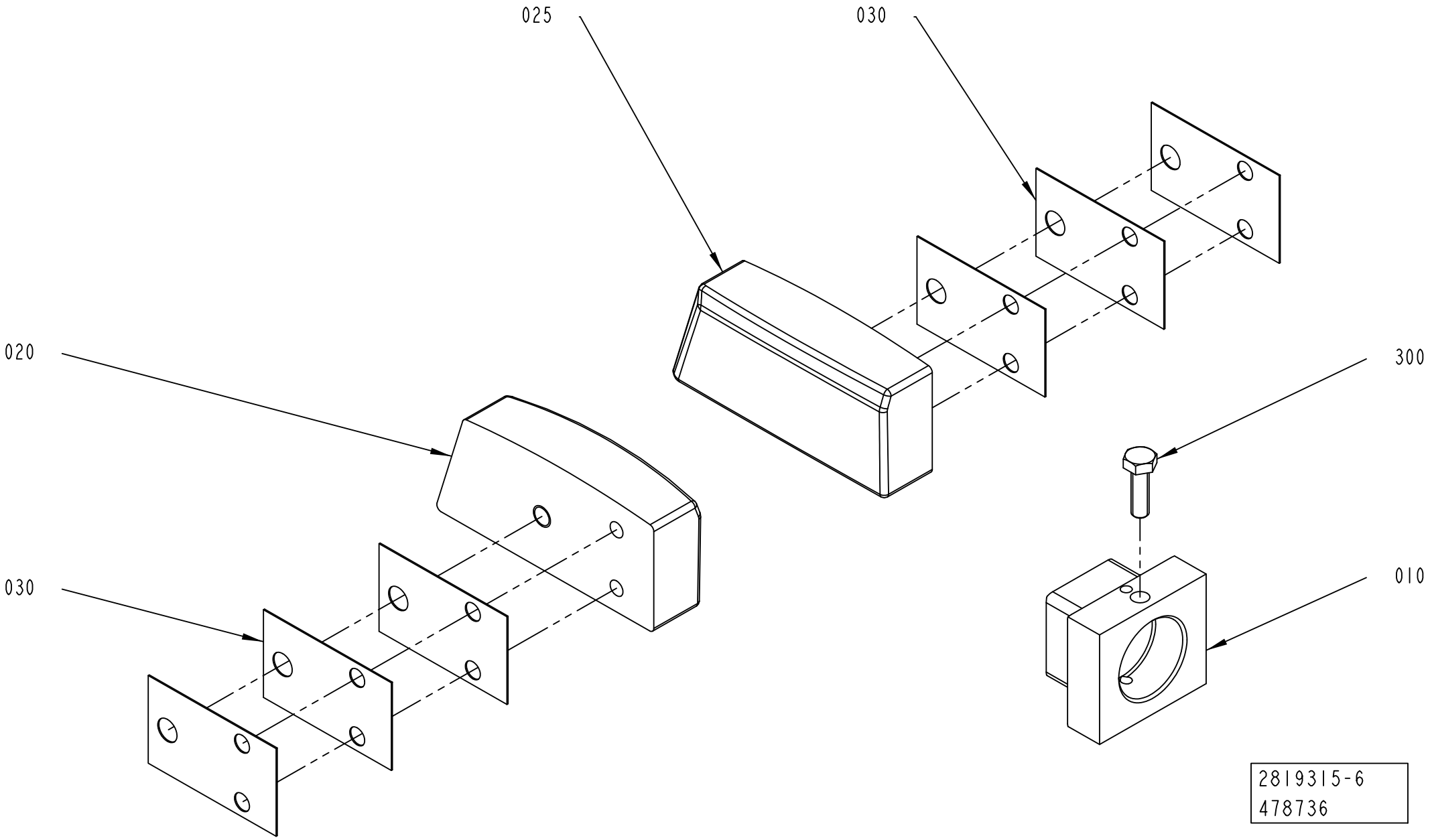
025
030
020
300
030
010
2819315-6
478736

ECM: 509512 - 20111001
Group number: 2819315-0100
Assembly Drawing: 2819315-6_1_AA

This list covers pages from 5-78 to 5-85

Pos	Part No	UN	Qty	Description	Page No
TPA 0200SQ (See drawing on page: 5-82)					
010	3031464-0000		1	BLOCK	
020	3110111-0000		1	PUSHER	
025	3110110-0000		1	PUSHER	
050	3092452-0000		2	NAIL	
080	3097776-0000		6	SHIM	
330	315106-0136		2	WASHER PLAIN, M4 ISO7089-4-200 HV A4	
340	312115-0295		2	SCREW ISO4762 M4X20 A4 80	
TPA 0250SQ (See drawing on page: 5-82)					
010	3031464-0000		1	BLOCK	
020	3110108-0000		1	PUSHER	
025	3110109-0000		1	PUSHER	
050	3092452-0000		2	NAIL	
080	3097776-0000		6	SHIM	
330	315106-0136		2	WASHER PLAIN, M4 ISO7089-4-200 HV A4	
340	312115-0295		2	SCREW ISO4762 M4X20 A4 80	
TPA 0330SQ (See drawing on page: 5-82)					
010	2987105-0000		1	BLOCK	
020	2987110-0000		1	PUSHER	
025	2987109-0000		1	PUSHER	
050	3066842-0000		2	VOLUME BULGE	
080	3160954-0000		8	SHIM	
330	315106-0136		2	WASHER PLAIN, M4 ISO7089-4-200 HV A4	
340	312115-0293		2	SCREW ISO4762 M4X16 A4 80	
TBA 0080S (See drawing on page: 5-78)					
010	2949925-0000		1	BLOCK	
020	2949926-0000		2	PUSHER	
TBA 0100B (See drawing on page: 5-78)					
010	2894691-0000		1	BLOCK	
020	2894692-0000		2	PUSHER	
TBA 0125S (See drawing on page: 5-78)					
010	2894691-0000		1	BLOCK	
020	2894693-0000		2	PUSHER	
TBA 0160S (See drawing on page: 5-78)					
010	2806015-0000		1	BLOCK	
020	3015762-0000		2	PUSHER	
TBA 0200B (See drawing on page: 5-78)					
010	2852322-0000		1	BLOCK	
020	2852329-0000		2	PUSHER	
TBA 0200E (See drawing on page: 5-84)					
010	3051997-0000		1	BLOCK	
020	3074724-0000		1	PUSHER	
025	3074725-0000		1	PUSHER	
TBA 0200M (See drawing on page: 5-78)					
010	2912423-0000		1	BLOCK	
020	2912427-0000		2	PUSHER	
TBA 0200S (See drawing on page: 5-78)					
010	2806015-0000		1	BLOCK	
020	2871940-0000		2	PUSHER	
TBA 0200SQ (See drawing on page: 5-78)					
010	2962125-0000		1	BLOCK	
020	2962126-0000		2	PUSHER	
TBA 0250B (See drawing on page: 5-78)					
010	2852322-0000		1	BLOCK	
020	2852330-0000		2	PUSHER	
TBA 0250S (See drawing on page: 5-78)					
010	2912423-0000		1	BLOCK	
020	2912424-0000		2	PUSHER	
TBA 0250SQ (See drawing on page: 5-78)					
010	2962125-0000		1	BLOCK	
020	2966595-0000		2	PUSHER	
TBA 0284B, TBA 0300S (See drawing on page: 5-78)					
010	2852322-0000		1	BLOCK	
020	2998108-0000		2	PUSHER	
TBA 0330S (See drawing on page: 5-78)					
010	2852322-0000		1	BLOCK	
020	2852323-0000		2	PUSHER	
TBA 0375S (See drawing on page: 5-78)					
010	3067359-0000		1	BLOCK	
020	3067360-0000		2	PUSHER	
TPA 0125SQ (See drawing on page: 5-80)					
010	2871965-0000		1	BLOCK	
020	2871964-0000		1	PUSHER	
025	2871966-0000		1	BLOCK	
050	2894729-0000		1	VOLUME BULGE	
060	2894730-0000		1	VOLUME BULGE	
070	2941944-0000		4	VOLUME BULGE	
310	312155-0289		8	SCREW DIN 7991 MF6S M4X10 A4 70	
320	312605-0312		2	HEXAGON NUT, M6M M4 A280	
330	315106-0136		2	WASHER PLAIN, M4 ISO7089-4-200 HV A4	
Common Parts					
030	2852410-0000		8	SHIM	
300	312105-0370		1	SCREW, M6S ISO 4017 M6X20 A4 80	

Machine Type	Group Description	Used-In	Group Number	Page No

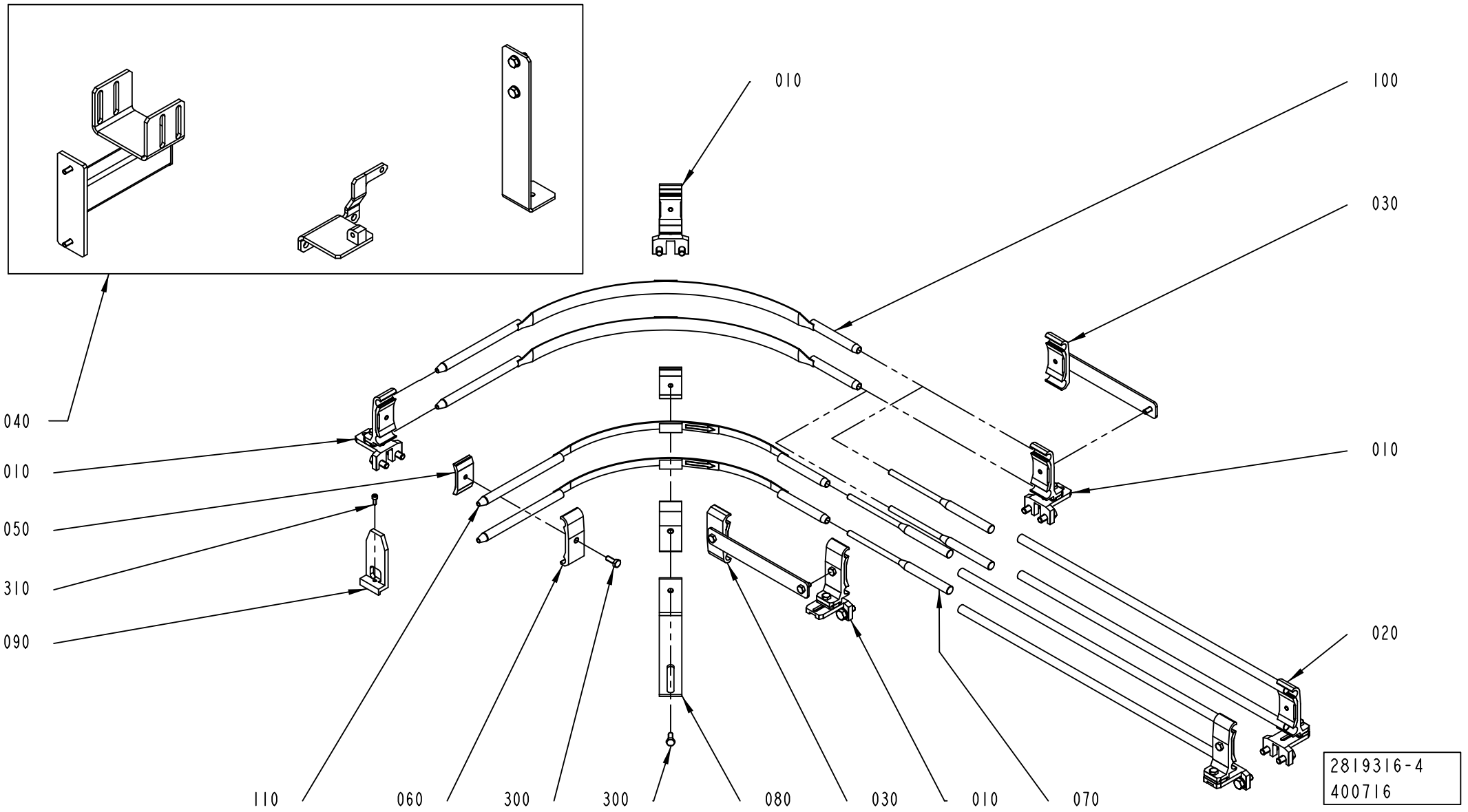
010
100
030
040
010
050
310
090
010
020
110
060
300
300
080
030
010
070
2819316-4
400716

Pos	Part No	UN	Qty	Description	Page No
TBA 0100B, TBA 0125S, TBA 0080S (See drawing on page: 5-86)					
010	1550743-0200		4	RAIL HOLDER	**5-93**
020	2561274-0102		1	RAILING	**5-95**
040	3039513-0100		1	SUPPORT	**5-97, 9-49**
090	2894694-0000		1	PUSHER	
TBA 0160S, TBA 0200M, TBA 0200B, TBA 0200S, TBA 0250S, TBA 0284B, TBA 0250B, TBA 0300S, TBA 0330S, TBA 0375S, TBA 0200E (See drawing on page: 5-86)					
010	1550743-0200		4	RAIL HOLDER	**5-93**
020	2561274-0102		1	RAILING	**5-95**
040	3039513-0100		1	SUPPORT	**5-97, 9-49**
090	2871956-0000		1	PUSHER	
TBA 0200SQ, TBA 0250SQ (See drawing on page: 5-90)					
010	1550743-0200		4	RAIL HOLDER	**5-93**
020	2561274-0102		1	RAILING	**5-95**
040	3039514-0100		1	SUPPORT	**5-99, 9-47**
090	2966591-0000		1	PUSHER	
TPA 0125SQ (See drawing on page: 5-88)					
010	2999197-0100		4	RAIL HOLDER	**5-101**
020	2999199-0100		1	RAILING	**5-103**
040	3039513-0100		1	SUPPORT	**5-97, 9-49**
090	2894737-0000		1	PUSHER	
TPA 0250SQ, TPA 0200SQ (See drawing on page: 5-86)					
010	1550743-0200		4	RAIL HOLDER	**5-93**
020	2561274-0102		1	RAILING	**5-95**
040	3039513-0100		1	SUPPORT	**5-97, 9-49**
090	2871956-0000		1	PUSHER	
TPA 0330SQ (See drawing on page: 5-90)					
010	1550743-0200		4	RAIL HOLDER	**5-93**
020	2561274-0102		1	RAILING	**5-95**
040	3039514-0100		1	SUPPORT	**5-99, 9-47**
090	2871956-0000		1	PUSHER	
Common Parts					
030	2561602-0100		2	RAIL HOLDER KIT	**5-105**
050	1366727-0000		2	CLAMP	
060	1366750-0000		2	HOLDER	
070	1550664-0000		4	DOWEL	
080	1550666-0000		1	HOLDER	
100	3044462-0000		2	ARCH	
110	3044463-0000		2	ARCH	
300	312105-0368		2	SCREW, M6S ISO 4017 M6X16 A4 80	
310	312115-0289		1	SCREW ISO4762 M4X10 A4 80	

Pos	Part No	UN	Qty	Description	Page No

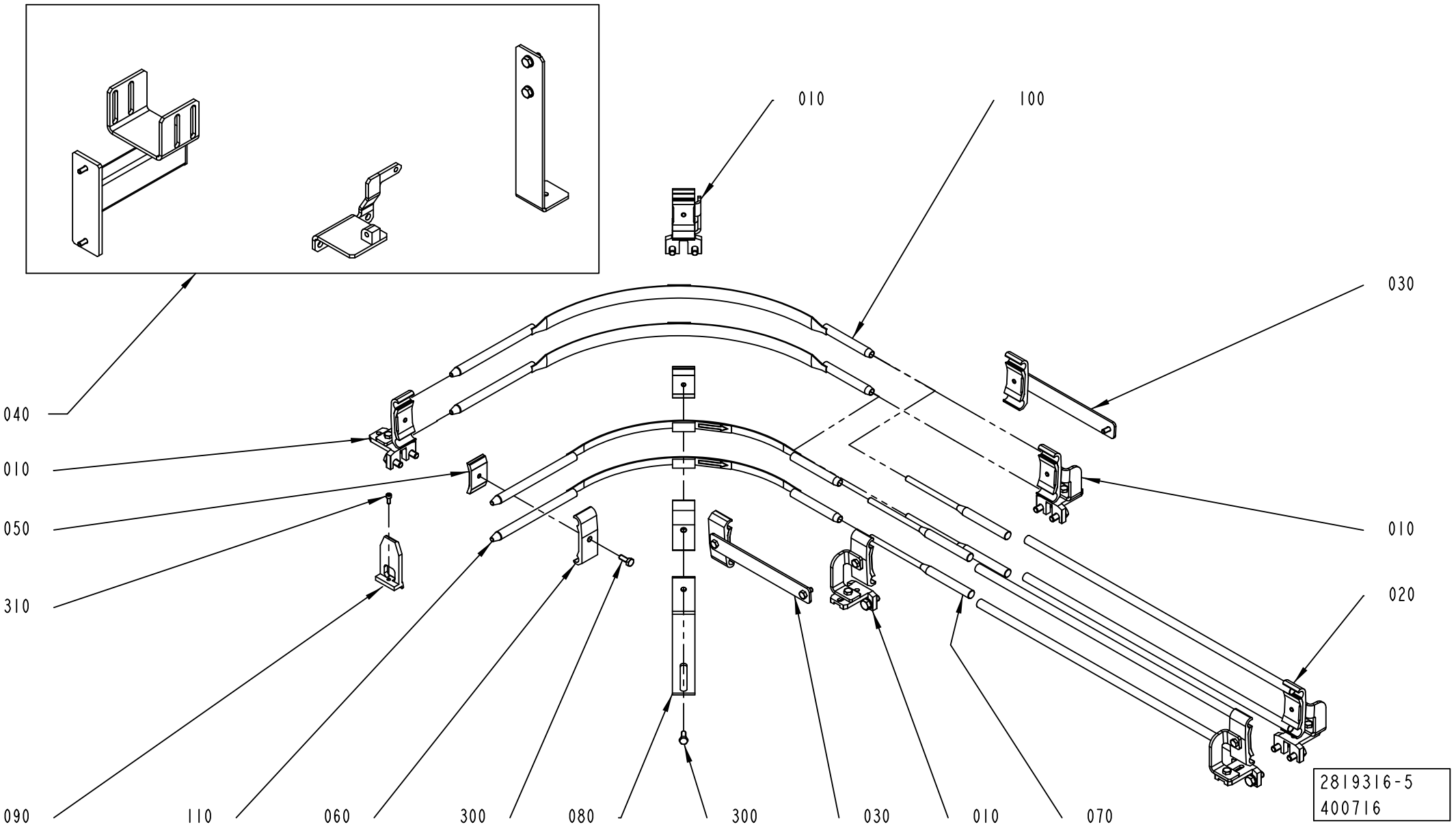
010
100
030
040
010
050
310
010
020
090
110
060
300
080
300
030
010
070
2819316-5
400716

Pos	Part No	UN	Qty	Description	Page No
TBA 0100B, TBA 0125S, TBA 0080S (See drawing on page: 5-86)					
010	1550743-0200		4	RAIL HOLDER	**5-93**
020	2561274-0102		1	RAILING	**5-95**
040	3039513-0100		1	SUPPORT	**5-97, 9-49**
090	2894694-0000		1	PUSHER	
TBA 0160S, TBA 0200M, TBA 0200B, TBA 0200S, TBA 0250S, TBA 0284B, TBA 0250B, TBA 0300S, TBA 0330S, TBA 0375S, TBA 0200E (See drawing on page: 5-86)					
010	1550743-0200		4	RAIL HOLDER	**5-93**
020	2561274-0102		1	RAILING	**5-95**
040	3039513-0100		1	SUPPORT	**5-97, 9-49**
090	2871956-0000		1	PUSHER	
TBA 0200SQ, TBA 0250SQ (See drawing on page: 5-90)					
010	1550743-0200		4	RAIL HOLDER	**5-93**
020	2561274-0102		1	RAILING	**5-95**
040	3039514-0100		1	SUPPORT	**5-99, 9-47**
090	2966591-0000		1	PUSHER	
TPA 0125SQ (See drawing on page: 5-88)					
010	2999197-0100		4	RAIL HOLDER	**5-101**
020	2999199-0100		1	RAILING	**5-103**
040	3039513-0100		1	SUPPORT	**5-97, 9-49**
090	2894737-0000		1	PUSHER	
TPA 0250SQ, TPA 0200SQ (See drawing on page: 5-86)					
010	1550743-0200		4	RAIL HOLDER	**5-93**
020	2561274-0102		1	RAILING	**5-95**
040	3039513-0100		1	SUPPORT	**5-97, 9-49**
090	2871956-0000		1	PUSHER	
TPA 0330SQ (See drawing on page: 5-90)					
010	1550743-0200		4	RAIL HOLDER	**5-93**
020	2561274-0102		1	RAILING	**5-95**
040	3039514-0100		1	SUPPORT	**5-99, 9-47**
090	2871956-0000		1	PUSHER	
Common Parts					
030	2561602-0100		2	RAIL HOLDER KIT	**5-105**
050	1366727-0000		2	CLAMP	
060	1366750-0000		2	HOLDER	
070	1550664-0000		4	DOWEL	
080	1550666-0000		1	HOLDER	
100	3044462-0000		2	ARCH	
110	3044463-0000		2	ARCH	
300	312105-0368		2	SCREW, M6S ISO 4017 M6X16 A4 80	
310	312115-0289		1	SCREW ISO4762 M4X10 A4 80	

Pos	Part No	UN	Qty	Description	Page No

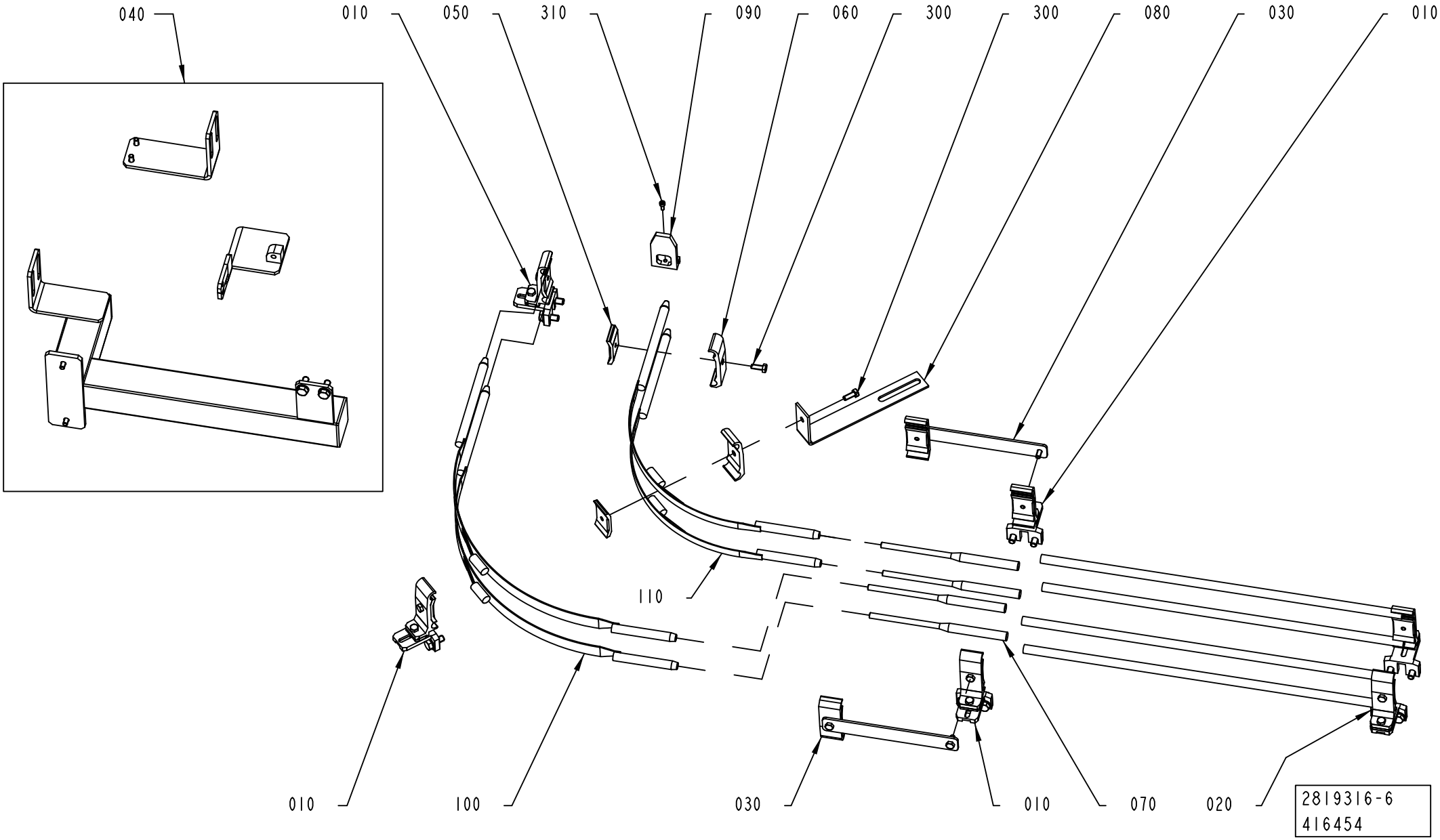
040
010
050
310
090
060
300
300
080
030
010
110
010
100
030
010
070
020
2819316-6
416454

ECM: 479583 - 20101003
Group number: 2819316-0200
Assembly Drawing: 2819316-6_1_AA

This list covers pages from 5-86 to 5-91

Pos	Part No	UN	Qty	Description	Page No
TBA 0100B, TBA 0125S, TBA 0080S (See drawing on page: 5-86)					
010	1550743-0200		4	RAIL HOLDER	**5-93**
020	2561274-0102		1	RAILING	**5-95**
040	3039513-0100		1	SUPPORT	**5-97, 9-49**
090	2894694-0000		1	PUSHER	
TBA 0160S, TBA 0200M, TBA 0200B, TBA 0200S, TBA 0250S, TBA 0284B, TBA 0250B, TBA 0300S, TBA 0330S, TBA 0375S, TBA 0200E (See drawing on page: 5-86)					
010	1550743-0200		4	RAIL HOLDER	**5-93**
020	2561274-0102		1	RAILING	**5-95**
040	3039513-0100		1	SUPPORT	**5-97, 9-49**
090	2871956-0000		1	PUSHER	
TBA 0200SQ, TBA 0250SQ (See drawing on page: 5-90)					
010	1550743-0200		4	RAIL HOLDER	**5-93**
020	2561274-0102		1	RAILING	**5-95**
040	3039514-0100		1	SUPPORT	**5-99, 9-47**
090	2966591-0000		1	PUSHER	
TPA 0125SQ (See drawing on page: 5-88)					
010	2999197-0100		4	RAIL HOLDER	**5-101**
020	2999199-0100		1	RAILING	**5-103**
040	3039513-0100		1	SUPPORT	**5-97, 9-49**
090	2894737-0000		1	PUSHER	
TPA 0250SQ, TPA 0200SQ (See drawing on page: 5-86)					
010	1550743-0200		4	RAIL HOLDER	**5-93**
020	2561274-0102		1	RAILING	**5-95**
040	3039513-0100		1	SUPPORT	**5-97, 9-49**
090	2871956-0000		1	PUSHER	
TPA 0330SQ (See drawing on page: 5-90)					
010	1550743-0200		4	RAIL HOLDER	**5-93**
020	2561274-0102		1	RAILING	**5-95**
040	3039514-0100		1	SUPPORT	**5-99, 9-47**
090	2871956-0000		1	PUSHER	
Common Parts					
030	2561602-0100		2	RAIL HOLDER KIT	**5-105**
050	1366727-0000		2	CLAMP	
060	1366750-0000		2	HOLDER	
070	1550664-0000		4	DOWEL	
080	1550666-0000		1	HOLDER	
100	3044462-0000		2	ARCH	
110	3044463-0000		2	ARCH	
300	312105-0368		2	SCREW, M6S ISO 4017 M6X16 A4 80	
310	312115-0289		1	SCREW ISO4762 M4X10 A4 80	

Pos	Part No	UN	Qty	Description	Page No

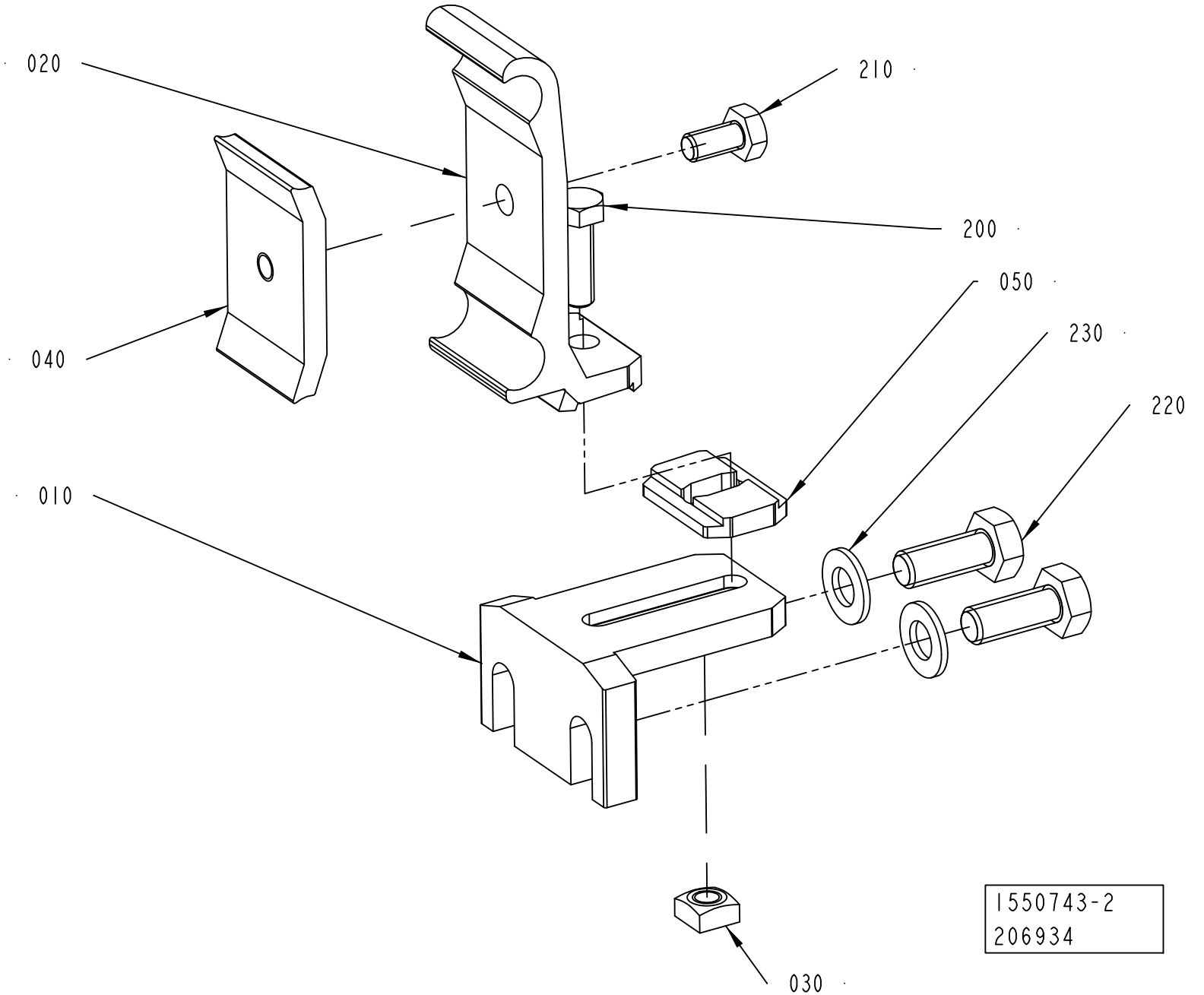
020
210
200
050
230
040
220
010
030
1550743-2
206934

ECM: 429045 - 20091201
Group number: 1550743-0200
Assembly Drawing: 1550743-2_1_AA

Pos	Part No	UN	Qty	Description	Page No
-					
010	1550772-0000		1	HOLDER	
020	2699437-0000		1	RAIL HOLDER	
030	1359565-0000		1	NUT	
040	1366727-0000		1	CLAMP	
050	2699436-0000		1	SPACER	
200	312105-0370		1	SCREW, M6S ISO 4017 M6X20 A4 80	
210	312105-0366		1	SCREW, M6S ISO 4017 M6X12 A4 80	
220	312105-0451		2	SCREW, M6S ISO 4017 M8X20 A4 80	
230	315105-0165		2	WASHER PLAIN, 8,4X16X1,6 A4 BRB	

Pos	Part No	UN	Qty	Description	Page No

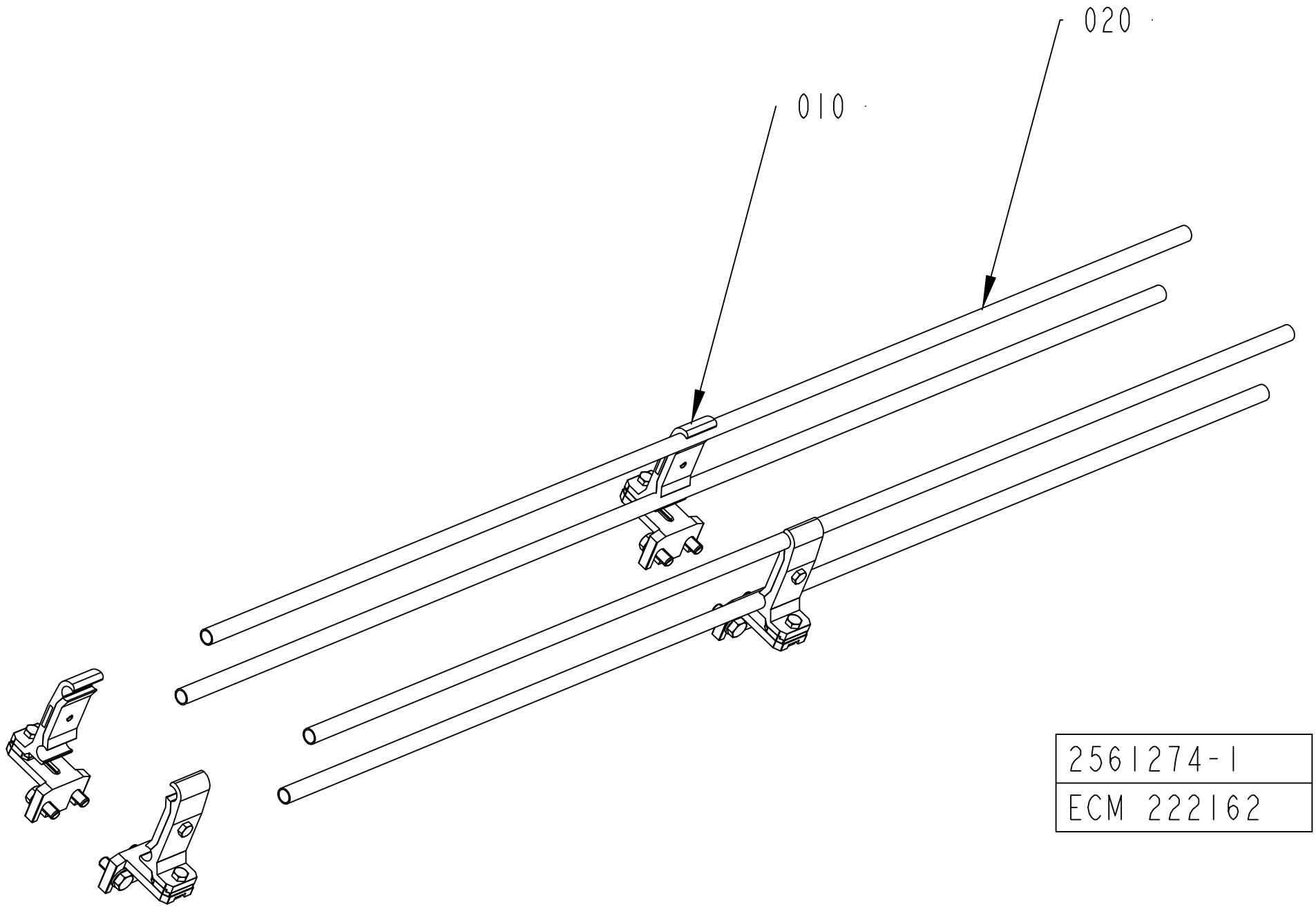
020
010
2561274-1
ECM 222162

ECM: 222162 -
Group number: 2561274-0102
Assembly Drawing: 2561274-1_1_AB

Pos	Part No	UN	Qty	Description	Page No
L 0250					
010	1550743-0200		2	RAIL HOLDER	**5-93**
L 0500					
010	1550743-0200		2	RAIL HOLDER	**5-93**
020	476221-0002		4	PIPE	

Pos	Part No	UN	Qty	Description	Page No

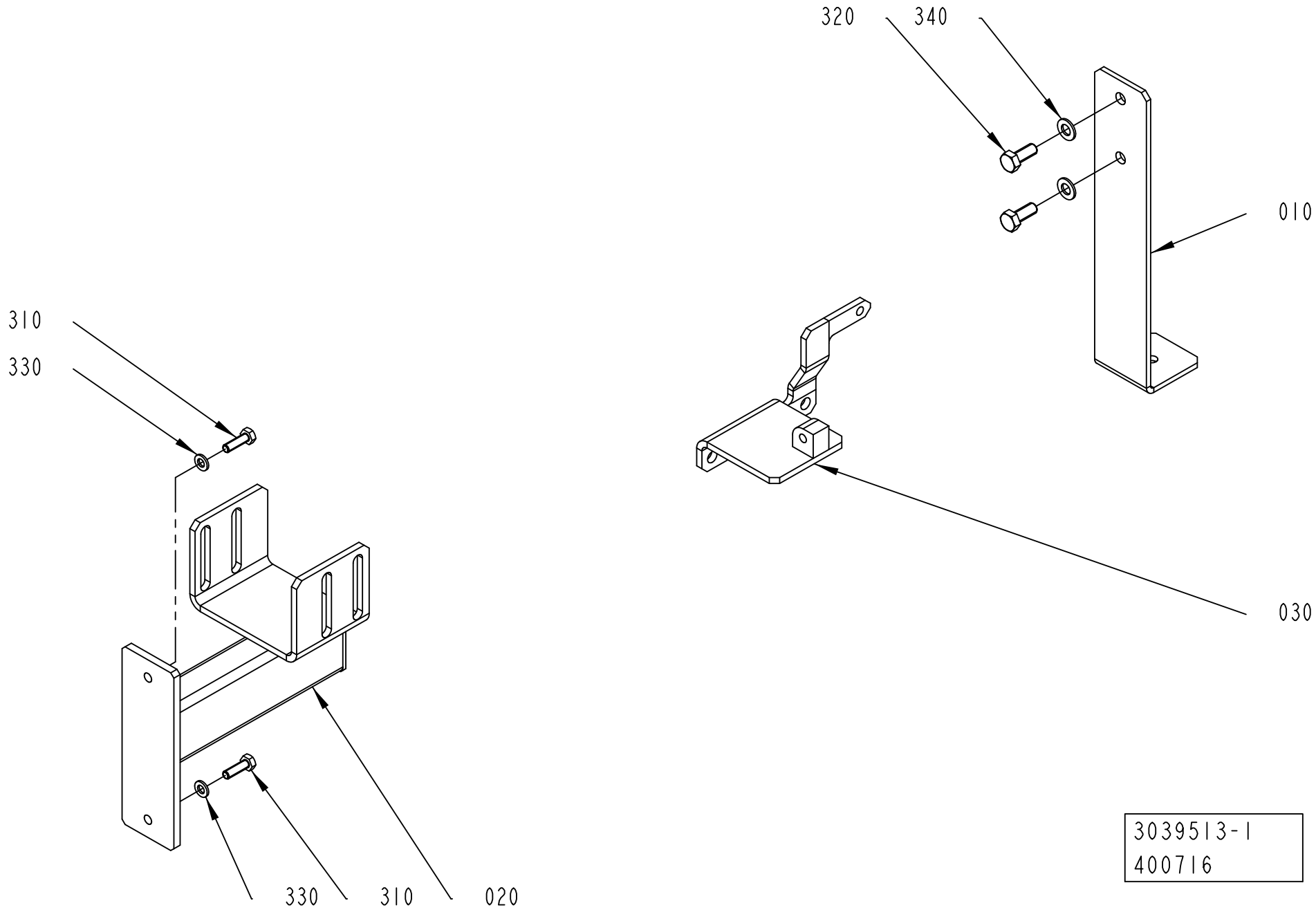
320
340
010
310
330
030
330
310
020
3039513-1
400716

ECM: 403673 - 20090710
Group number: 3039513-0100
Assembly Drawing: 3039513-1_1_AA

Pos	Part No	UN	Qty	Description	Page No
-					
010	2819302-0000		1	SUPPORT	
020	2852874-0000		1	SUPPORT	
030	2871949-0000		1	BRACKET	
300	312105-0368		1	SCREW, M6S ISO 4017 M6X16 A4 80	
310	312105-0370		2	SCREW, M6S ISO 4017 M6X20 A4 80	
320	312105-0451		2	SCREW, M6S ISO 4017 M8X20 A4 80	
330	315105-0153		2	WASHER PLAIN, 6,4X12X1,5 A4 BRB	
340	315105-0165		2	WASHER PLAIN, 8,4X16X1,6 A4 BRB	

Pos	Part No	UN	Qty	Description	Page No

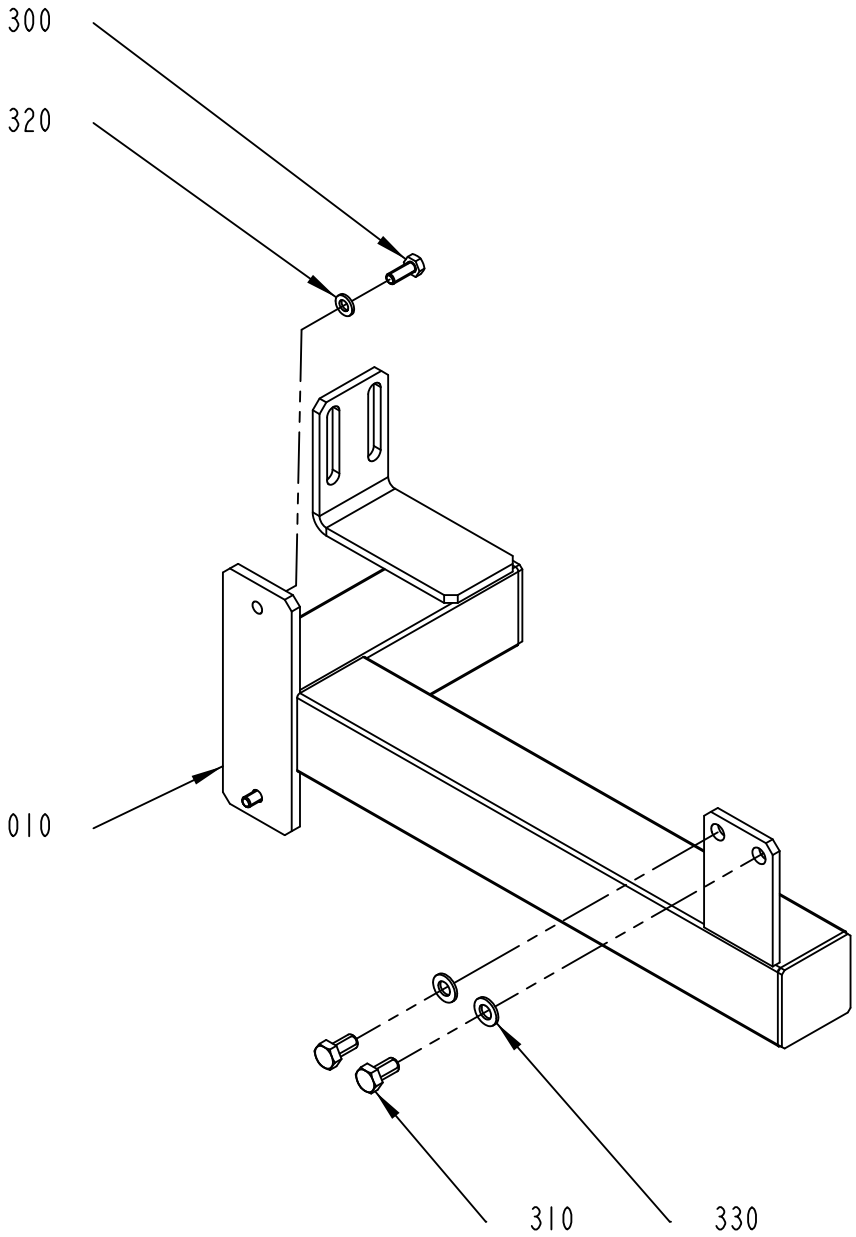

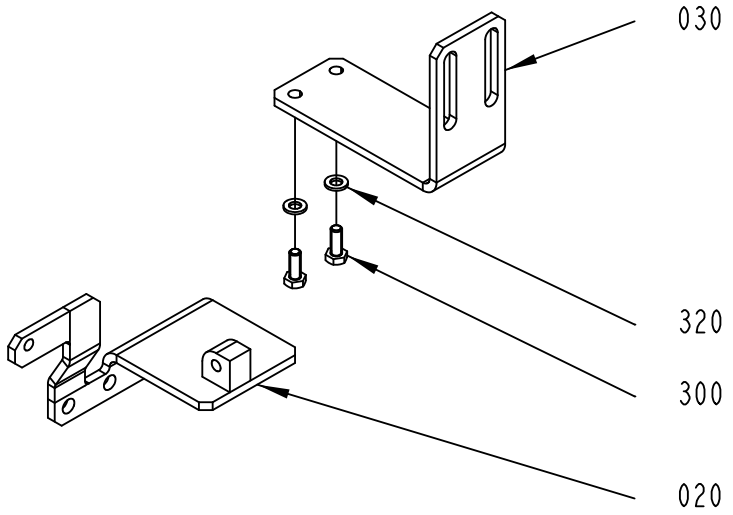

3039514-1
514189

ECM: 520745 - 20120101
Group number: 3039514-0100
Assembly Drawing: 3039514-1_1_AB

Pos	Part No	UN	Qty	Description	Page No
-					
010	2966592-0000		1	SUPPORT	
020	2966593-0000		1	BRACKET	
030	2966594-0000		1	BRACKET	
300	312105-0368		4	SCREW, M6S ISO 4017 M6X16 A4 80	
310	312105-0449		2	SCREW, M6S ISO 4017 M8X16 A4 80	
320	315105-0153		4	WASHER PLAIN, 6,4X12X1,5 A4 BRB	
330	315105-0165		2	WASHER PLAIN, 8,4X16X1,6 A4 BRB	

Pos	Part No	UN	Qty	Description	Page No

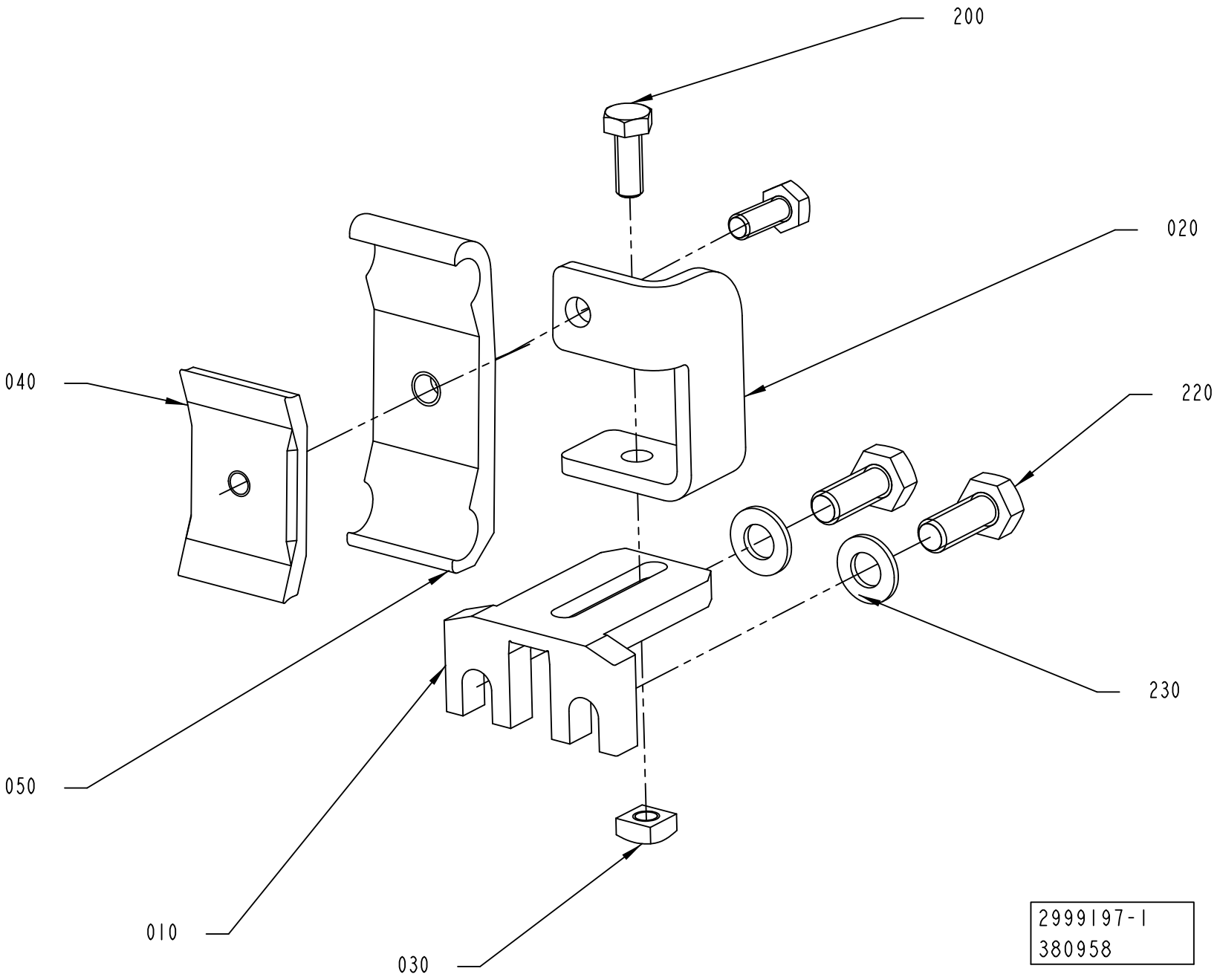
200
020
040
220
230
050
010
030
2999197-1
380958

ECM: 436838 - 20100222
Group number: 2999197-0100
Assembly Drawing: 2999197-1_1_AA

Pos	Part No	UN	Qty	Description	Page No
-					
010	1550772-0000		1	HOLDER	
020	2998006-0000		1	RAIL HOLDER	
030	1359565-0000		1	NUT	
040	1366727-0000		1	CLAMP	
050	1366750-0000		1	HOLDER	
200	312105-0368		2	SCREW, M6S ISO 4017 M6X16 A4 80	
220	312105-0451		2	SCREW, M6S ISO 4017 M8X20 A4 80	
230	315105-0165		2	WASHER PLAIN, 8,4X16X1,6 A4 BRB	

Pos	Part No	UN	Qty	Description	Page No

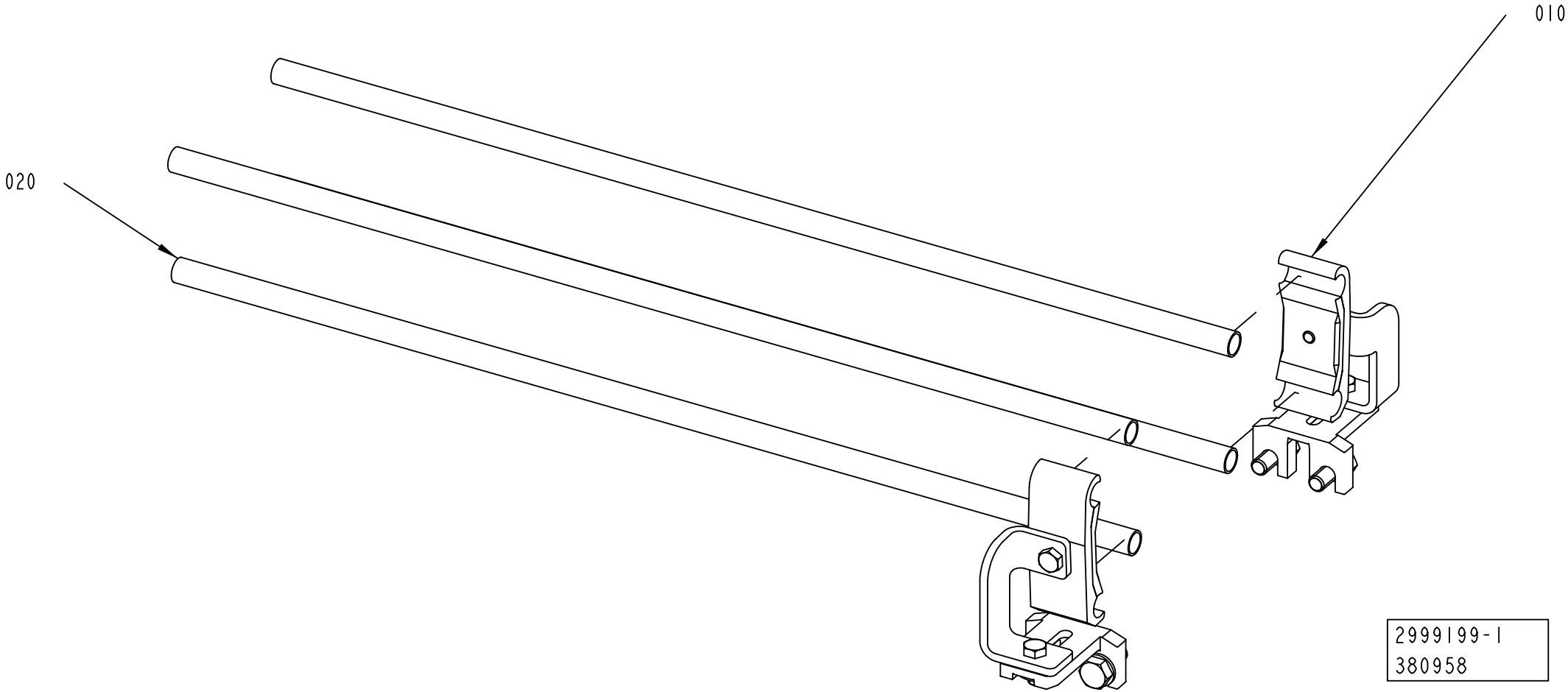
010
020
2999199-1
380958

ECM: 389050 - 20090602
Group number: 2999199-0100
Assembly Drawing: 2999199-1_1_AA

Pos	Part No	UN	Qty	Description	Page No
-					
010	2999197-0100		2	RAIL HOLDER	**5-101**
020	476221-0002		4	PIPE	

Pos	Part No	UN	Qty	Description	Page No

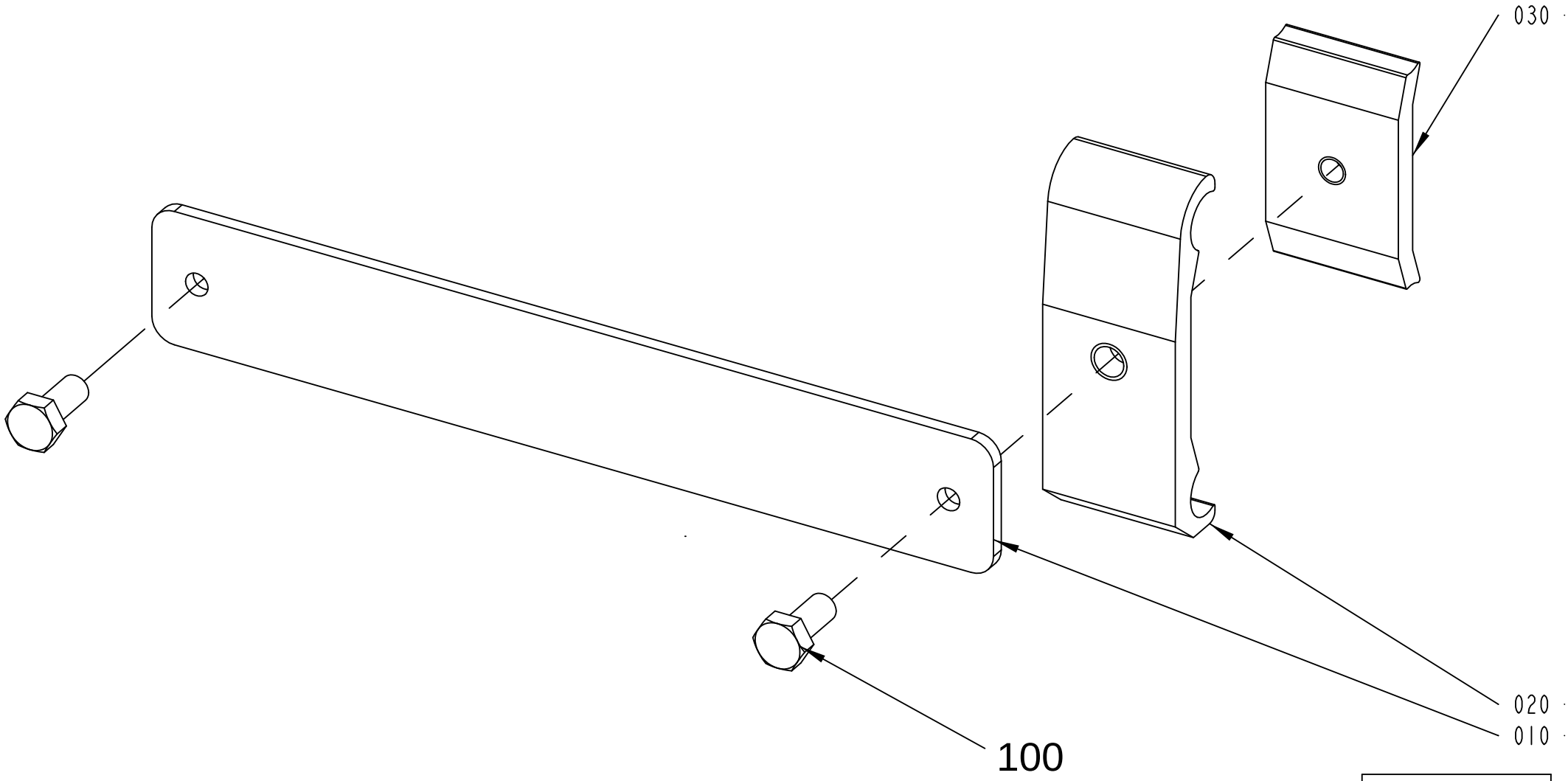

2561602-1
ECM 153837

ECM: 255321 - 20060302
Group number: 2561602-0100
Assembly Drawing: 2561602-1_1_AB

Pos	Part No	UN	Qty	Description	Page No
-					
010	2561596-0000		1	RAIL HOLDER KIT	
020	1366750-0000		1	HOLDER	
030	1366727-0000		1	CLAMP	
100	312105-0367		2	SCREW, M6S ISO 4017 M6X14 A4 80	

Pos	Part No	UN	Qty	Description	Page No

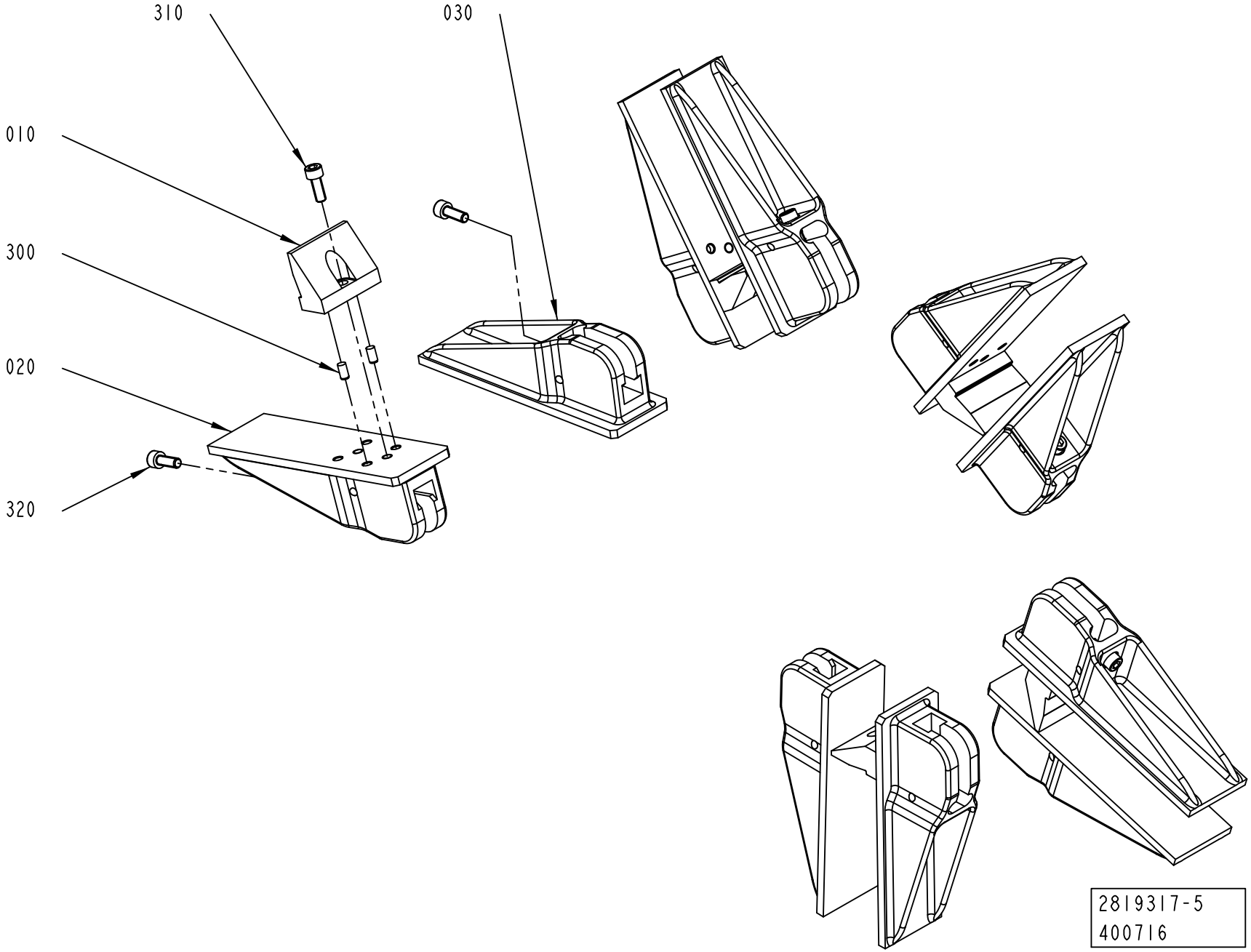
310
030
010
300
020
320
2819317-5
400716

ECM: 496649 - 20110701
Group number: 2819317-0200
Assembly Drawing: 2819317-5_1_AA

This list covers pages from 5-106 to 5-111

Pos	Part No	UN	Qty	Description	Page No
TPA 0200SQ (See drawing on page: 5-110)					
020	3043672-0100		5	FLAP	**5-113**
030	2976961-0000		5	FLAP	
TPA 0250SQ (See drawing on page: 5-110)					
020	3043672-0100		5	FLAP	**5-113**
030	2976964-0000		5	FLAP	
TPA 0330SQ (See drawing on page: 5-106)					
010	2987102-0000		5	BOTTOM	
020	2987101-0000		5	FLAP	
030	3076767-0000		5	FLAP	
300	311103-0305		10	PARALLEL PIN ISO 2338 5M6X10 A1	
310	312115-0368		5	SCREW ISO4762 M6X16 A4 80	
TBA 0080S (See drawing on page: 5-108)					
010	2949924-0000		5	BOTTOM	
020	2949923-0000		5	FLAP	
030	3019291-0000		5	FLAP	
300	311103-0305		10	PARALLEL PIN ISO 2338 5M6X10 A1	
310	312115-0329		5	SCREW ISO4762 M5X16 A4 80	
TBA 0100B (See drawing on page: 5-106)					
010	2894678-0000		5	BOTTOM	
020	2894677-0000		5	FLAP	
030	2978922-0000		5	FLAP	
300	311103-0305		10	PARALLEL PIN ISO 2338 5M6X10 A1	
310	312115-0329		5	SCREW ISO4762 M5X16 A4 80	
TBA 0125S (See drawing on page: 5-106)					
010	2894678-0000		5	BOTTOM	
020	2894677-0000		5	FLAP	
030	2978922-0000		5	FLAP	
300	311103-0305		10	PARALLEL PIN ISO 2338 5M6X10 A1	
310	312115-0329		5	SCREW ISO4762 M5X16 A4 80	
TBA 0160S (See drawing on page: 5-106)					
010	3016922-0000		5	BOTTOM	
020	3016921-0000		5	FLAP	
030	2894752-0000		5	FLAP	
300	311103-0305		10	PARALLEL PIN ISO 2338 5M6X10 A1	
310	312115-0368		5	SCREW ISO4762 M6X16 A4 80	
TBA 0200B (See drawing on page: 5-108)					
010	2852320-0000		5	BOTTOM	
020	3150927-0000		5	FLAP	
030	3150928-0000		5	FLAP	
300	311103-0305		10	PARALLEL PIN ISO 2338 5M6X10 A1	
310	312115-0329		10	SCREW ISO4762 M5X16 A4 80	
TBA 0200E (See drawing on page: 5-106)					
010	3052002-0000		5	BOTTOM	
020	3074726-0000		5	FLAP	
030	3052000-0000		5	FLAP	
300	311103-0305		10	PARALLEL PIN ISO 2338 5M6X10 A1	
310	312115-0368		5	SCREW ISO4762 M6X16 A4 80	
TBA 0200M (See drawing on page: 5-106)					
010	2912425-0000		5	BOTTOM	
020	2912426-0000		5	FLAP	
030	2980067-0000		5	FLAP	
300	311103-0305		10	PARALLEL PIN ISO 2338 5M6X10 A1	
310	312115-0329		5	SCREW ISO4762 M5X16 A4 80	
TBA 0200S (See drawing on page: 5-106)					
010	3016922-0000		5	BOTTOM	
020	3016921-0000		5	FLAP	
030	2894752-0000		5	FLAP	
300	311103-0305		10	PARALLEL PIN ISO 2338 5M6X10 A1	
310	312115-0368		5	SCREW ISO4762 M6X16 A4 80	
TBA 0200SQ (See drawing on page: 5-106)					
010	2962129-0000		5	BOTTOM	
020	2962128-0000		5	FLAP	
030	2966596-0000		5	FLAP	
300	311103-0305		10	PARALLEL PIN ISO 2338 5M6X10 A1	
310	312115-0331		5	SCREW ISO4762 M5X20 A4 80	
TBA 0250B (See drawing on page: 5-108)					
010	2852320-0000		5	BOTTOM	
020	3150927-0000		5	FLAP	
030	3150928-0000		5	FLAP	
300	311103-0305		10	PARALLEL PIN ISO 2338 5M6X10 A1	
310	312115-0329		10	SCREW ISO4762 M5X16 A4 80	
TBA 0250S (See drawing on page: 5-106)					
010	2912425-0000		5	BOTTOM	
020	2912426-0000		5	FLAP	
030	2980067-0000		5	FLAP	
300	311103-0305		10	PARALLEL PIN ISO 2338 5M6X10 A1	
310	312115-0329		5	SCREW ISO4762 M5X16 A4 80	
TBA 0250SQ (See drawing on page: 5-106)					
010	2962129-0000		5	BOTTOM	
020	2962128-0000		5	FLAP	
030	2966596-0000		5	FLAP	
300	311103-0305		10	PARALLEL PIN ISO 2338 5M6X10 A1	
310	312115-0331		5	SCREW ISO4762 M5X20 A4 80	

Machine Type | Group Description | Used-In | Group Number | Page No

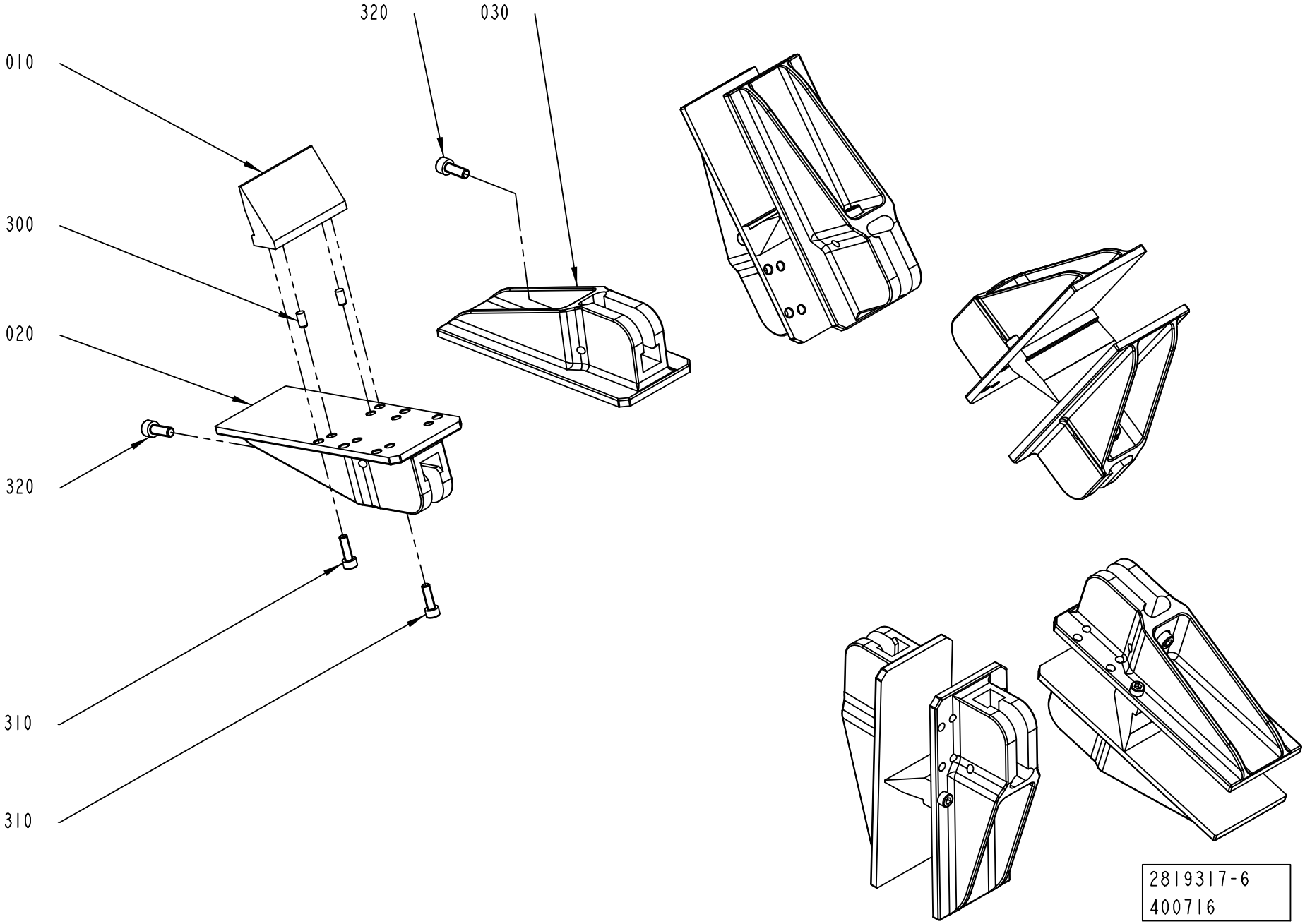
320
030
010
300
020
320
310
310
2819317-6
400716

Pos	Part No	UN	Qty	Description	Page No
TBA 0284B, TBA 0300S (Cont'd) (See drawing on page: 5-106)					
010	2852320-0000		5	BOTTOM	
020	3005197-0000		5	FLAP	
030	2894751-0000		5	FLAP	
300	311103-0305		10	PARALLEL PIN ISO 2338 5M6X10 A1	
310	312115-0329		10	SCREW ISO4762 M5X16 A4 80	
TBA 0330S (See drawing on page: 5-108)					
010	2852320-0000		5	BOTTOM	
020	3150927-0000		5	FLAP	
030	3150928-0000		5	FLAP	
300	311103-0305		10	PARALLEL PIN ISO 2338 5M6X10 A1	
310	312115-0329		10	SCREW ISO4762 M5X16 A4 80	
TBA 0375S (See drawing on page: 5-108)					
010	3067363-0000		5	BOTTOM	
020	3067362-0000		5	FLAP	
030	3067361-0000		5	FLAP	
300	311103-0305		10	PARALLEL PIN ISO 2338 5M6X10 A1	
310	312115-0329		10	SCREW ISO4762 M5X16 A4 80	
TPA 0125SQ (See drawing on page: 5-106)					
010	2871962-0000		5	BOTTOM	
020	2871961-0000		5	FLAP	
030	2894753-0000		5	FLAP	
300	311103-0305		10	PARALLEL PIN ISO 2338 5M6X10 A1	
310	312115-0368		5	SCREW ISO4762 M6X16 A4 80	
Common Parts					
320	312115-0368		10	SCREW ISO4762 M6X16 A4 80	

Pos	Part No	UN	Qty	Description	Page No

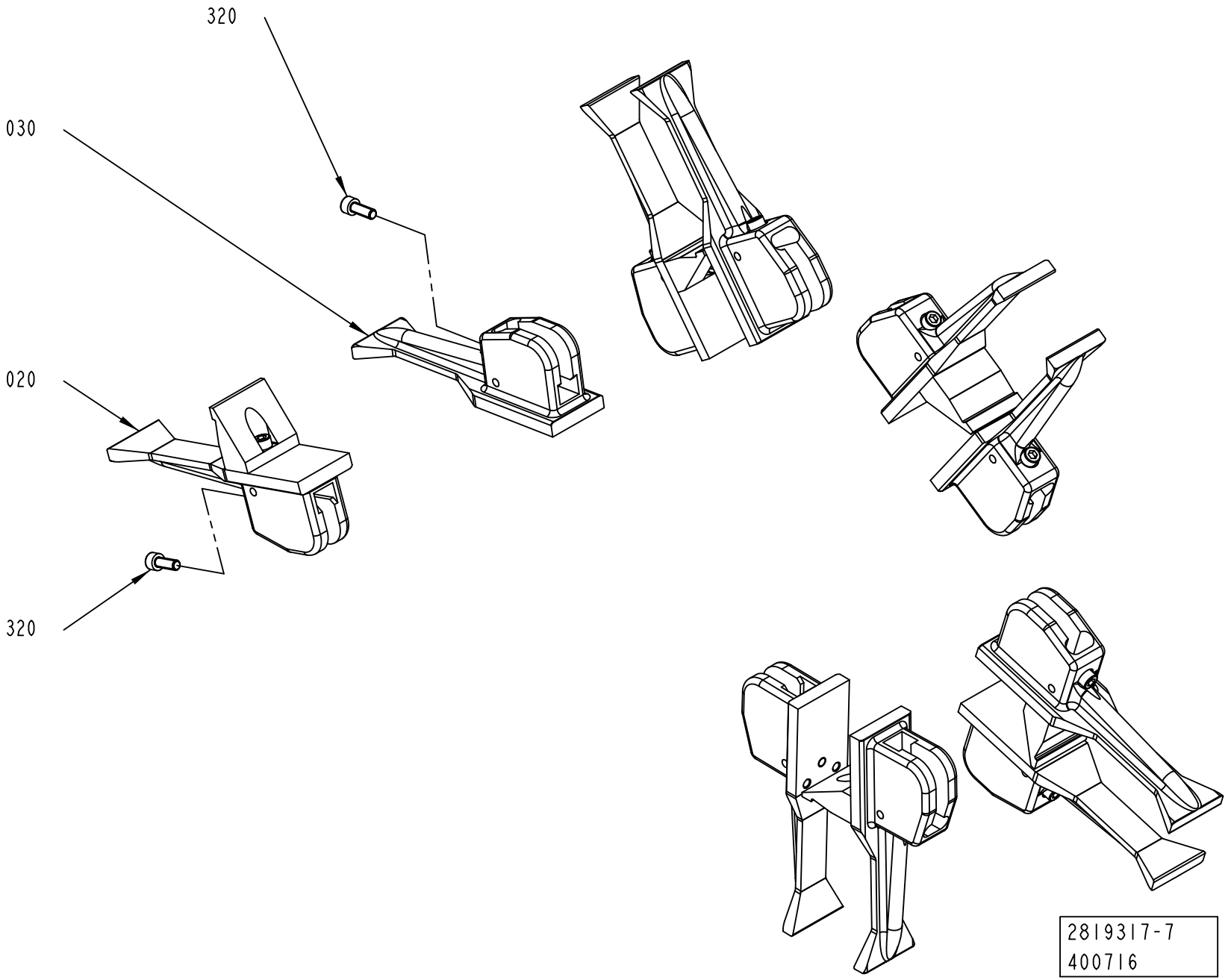
320
030
020
320
2819317-7
400716

ECM: 496649 - 20110701
Group number: 2819317-0200
Assembly Drawing: 2819317-7_1_AA

This list covers pages from 5-106 to 5-111

Pos	Part No	UN	Qty	Description	Page No
SEE PREVIOUS LISTS PAGES: 5-107, 5-109.					

Pos	Part No	UN	Qty	Description	Page No

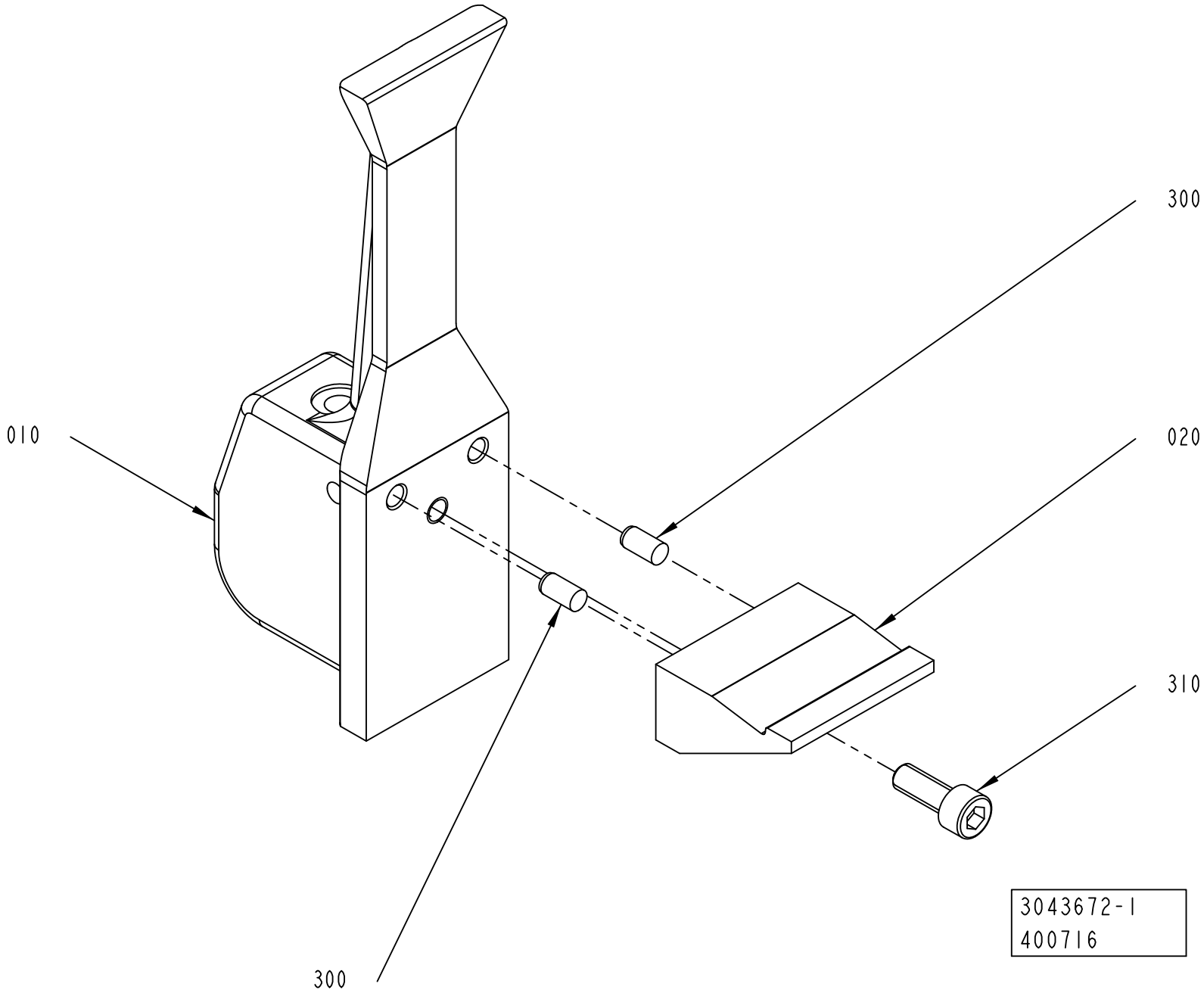
300
010
020
310
300
3043672-1
400716

ECM: 406444 - 20090710
Group number: 3043672-0100
Assembly Drawing: 3043672-1_1_AA

Pos	Part No	UN	Qty	Description	Page No
TPA 0200SQ					
010	2976961-0000		1	FLAP	
TPA 0250SQ					
010	2976964-0000		1	FLAP	
Common Parts					
020	2976962-0000		1	BOTTOM	
300	311103-0305		2	PARALLEL PIN ISO 2338 5M6X10 A1	
310	312115-0368		1	SCREW ISO4762 M6X16 A4 80	

Pos	Part No	UN	Qty	Description	Page No

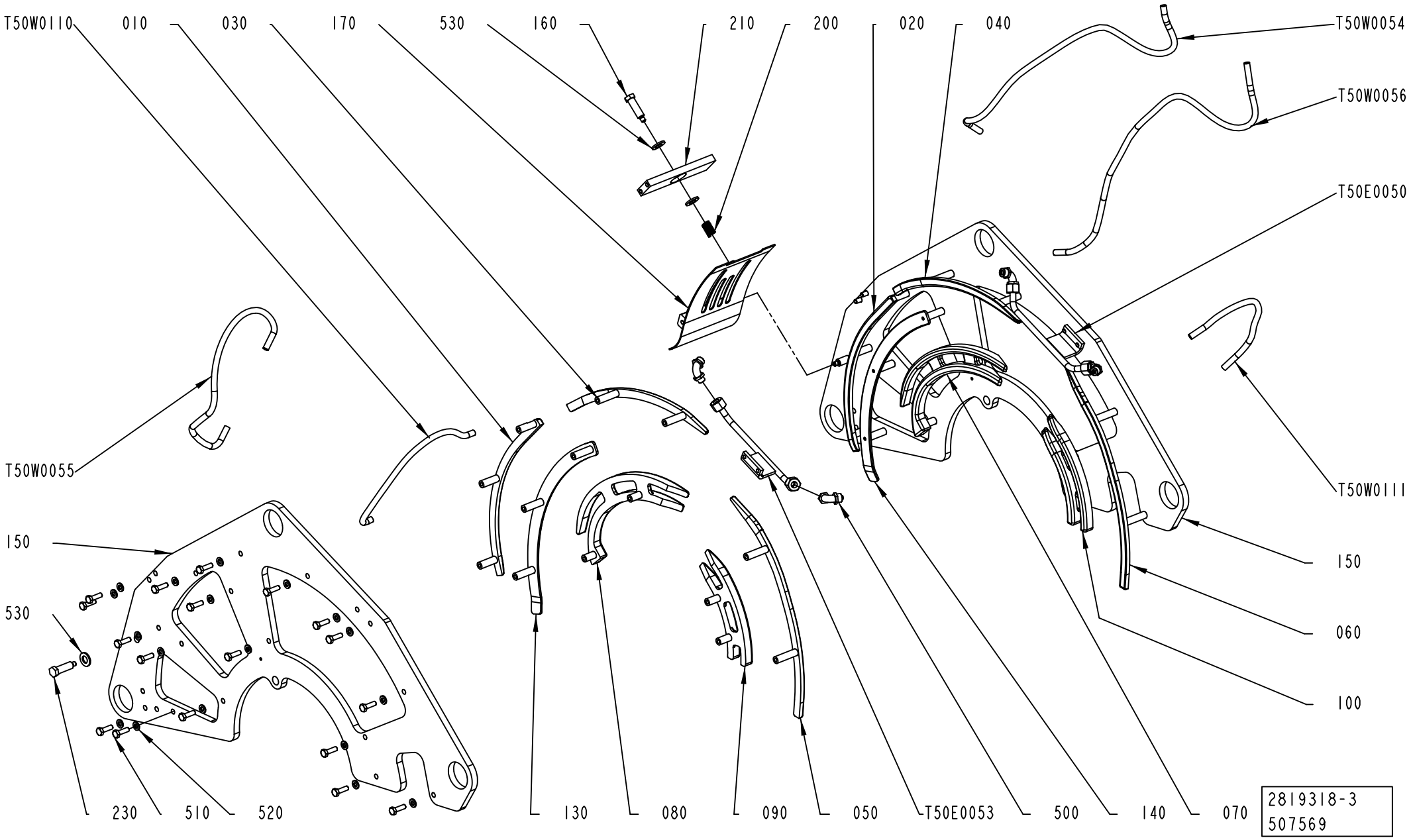
T50W0110
010
030
170
530
160
210
200
020
040
T50W0054
T50W0056
T50E0050
T50W0055
T50W0111
150
530
150
060
100
230
510
520
130
080
090
050
T50E0053
500
140
070
2819318-3
507569

ECM: 522613 - 20111014
Group number: 2819318-0200
Assembly Drawing: 2819318-3_1_AB

This list covers pages from 5-114 to 5-121

Pos	Part No	UN	Qty	Description	Page No
TBA 0080S (See drawing on page: 5-114)					
010	3010701-0000		1	FOLDING BAR	
020	3010702-0000		1	FOLDING BAR	
030	3014070-0000		1	FOLDING BAR	
040	3014069-0000		1	FOLDING BAR	
050	2871933-0003		1	FOLDING BAR	
060	2871937-0003		1	FOLDING BAR	
070	2949918-0000		1	FOLDING BAR	
080	2949916-0000		1	FOLDING BAR	
090	2949917-0000		1	FOLDING BAR	
100	2949919-0000		1	FOLDING BAR	
130	3014068-0000		1	WALL	
140	3014067-0000		1	WALL	
150	2894699-0000		2	PLATE	
160	1144976-0000		1	STOP SCREW	
170	3118145-0000		1	COVER	
500	342931-0121		4	ELBOW 90 COUPL., EXT. THREAD 8/6-G1/8"	
510	312105-0370		36	SCREW, M6S ISO 4017 M6X20 A4 80	
520	315106-0153		36	WASHER PLAIN, M6 ISO7089-6-200 HV A4	
T50E0050	2871927-0005		1	FOLDING BAR	
T50E0053	2871928-0005		1	FOLDING BAR	
TBA 0100B, TBA 0125S (See drawing on page: 5-114)					
010	2973927-0000		1	FOLDING BAR	
020	2973928-0000		1	FOLDING BAR	
030	2871932-0001		1	FOLDING BAR	
040	2871936-0001		1	FOLDING BAR	
050	2871933-0001		1	FOLDING BAR	
060	2871937-0001		1	FOLDING BAR	
070	2894697-0000		1	FOLDING BAR	
080	2894695-0000		1	FOLDING BAR	
090	2894696-0000		1	FOLDING BAR	
100	2894698-0000		1	FOLDING BAR	
130	2871934-0001		1	WALL	
140	2871938-0001		1	WALL	
150	2894699-0000		2	PLATE	
160	1144976-0000		1	STOP SCREW	
170	2819273-0000		1	COVER	
500	342931-0121		4	ELBOW 90 COUPL., EXT. THREAD 8/6-G1/8"	
510	312105-0370		36	SCREW, M6S ISO 4017 M6X20 A4 80	
520	315106-0153		36	WASHER PLAIN, M6 ISO7089-6-200 HV A4	
T50E0050	2871927-0001		1	FOLDING BAR	
T50E0053	2871928-0001		1	FOLDING BAR	

Pos	Part No	UN	Qty	Description	Page No
TBA 0160S, TBA 0200S (See drawing on page: 5-114)					
010	3019782-0000		1	FOLDING BAR	
020	3019783-0000		1	FOLDING BAR	
030	3139545-0001		1	FOLDING BAR	
040	3139546-0001		1	FOLDING BAR	
050	3139547-0001		1	FOLDING BAR	
060	3139548-0001		1	FOLDING BAR	
070	3015763-0000		1	FOLDING BAR	
080	3015764-0000		1	FOLDING BAR	
090	3015765-0000		1	FOLDING BAR	
100	3015766-0000		1	FOLDING BAR	
130	2871934-0001		1	WALL	
140	2871938-0001		1	WALL	
150	2894724-0000		2	PLATE	
160	1144976-0000		1	STOP SCREW	
170	2819273-0000		1	COVER	
500	342931-0121		4	ELBOW 90 COUPL., EXT. THREAD 8/6-G1/8"	
510	312105-0370		36	SCREW, M6S ISO 4017 M6X20 A4 80	
520	315106-0153		36	WASHER PLAIN, M6 ISO7089-6-200 HV A4	
T50E0050	2871927-0001		1	FOLDING BAR	
T50E0053	2871928-0001		1	FOLDING BAR	
TBA 0200B, TBA 0250B, TBA 0330S (See drawing on page: 5-114)					
010	2871931-0002		1	FOLDING BAR	
020	2871935-0002		1	FOLDING BAR	
030	3139545-0002		1	FOLDING BAR	
040	3139546-0002		1	FOLDING BAR	
050	3139547-0002		1	FOLDING BAR	
060	3139548-0002		1	FOLDING BAR	
070	2871925-0000		1	FOLDING BAR	
080	2852327-0000		1	FOLDING BAR	
090	2852328-0000		1	FOLDING BAR	
100	2871926-0000		1	FOLDING BAR	
130	2871934-0002		1	WALL	
140	2871938-0002		1	WALL	
150	2852333-0000		2	PLATE	
160	1144976-0000		1	STOP SCREW	
170	2819273-0000		1	COVER	
500	342931-0121		4	ELBOW 90 COUPL., EXT. THREAD 8/6-G1/8"	
510	312105-0370		40	SCREW, M6S ISO 4017 M6X20 A4 80	
520	315106-0153		40	WASHER PLAIN, M6 ISO7089-6-200 HV A4	
T50E0050	2871927-0002		1	FOLDING BAR	
T50E0053	2871928-0002		1	FOLDING BAR	

Machine Type | Group Description | Used-In | Group Number | Page No

FOLDING BAR

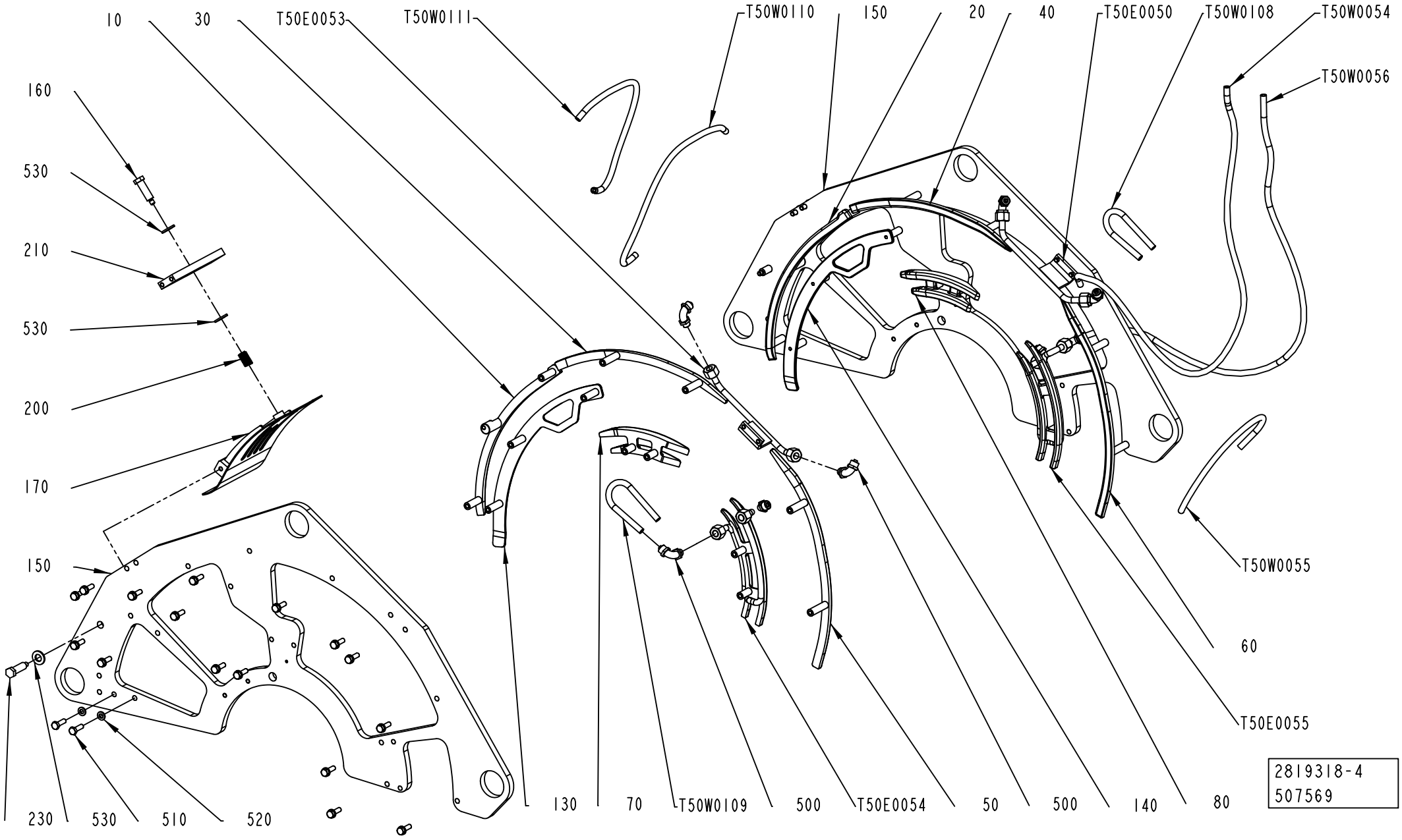
10
30
T50E0053
T50W0111
T50W0110
150
20
40
T50E0050
T50W0108
T50W0054
T50W0056
160
530
210
530
200
170
150
T50W0055
60
T50E0055
230
530
510
520
130
70
T50W0109
500
T50E0054
50
500
140
80
2819318-4
507569

Pos	Part No	UN	Qty	Description	Page No
TBA 0200E (Cont'd) (See drawing on page: 5-116)					
010	3052013-0000		1	FOLDING BAR	
020	3052014-0000		1	FOLDING BAR	
030	2871932-0005		1	FOLDING BAR	
040	2871936-0005		1	FOLDING BAR	
050	2871933-0008		1	FOLDING BAR	
060	2871937-0008		1	FOLDING BAR	
070	3052006-0000		1	FOLDING BAR	
080	3052005-0000		1	FOLDING BAR	
130	3052003-0000		1	WALL	
140	3052004-0000		1	WALL	
150	3017849-0000		2	PLATE	
160	3130467-0000		1	STOP SCREW	
170	2819273-0000		1	COVER	
500	342931-0121		8	ELBOW 90 COUPL., EXT. THREAD 8/6-G1/8"	
510	312105-0370		36	SCREW, M6S ISO 4017 M6X20 A4 80	
520	315106-0153		36	WASHER PLAIN, M6 ISO7089-6-200 HV A4	
T50E0050	2871927-0007		1	FOLDING BAR	
T50E0053	2871928-0007		1	FOLDING BAR	
T50E0054	3165602-0000		1	FOLDING BAR	
T50E0055	3165601-0000		1	FOLDING BAR	
T50W0108	315400-0006	MM	500	TUBE PUN-H-8X1,25-SW	
T50W0109	315400-0006	MM	500	TUBE PUN-H-8X1,25-SW	
TBA 0200M, TBA 0250S (See drawing on page: 5-114)					
010	2871931-0004		1	FOLDING BAR	
020	2871935-0004		1	FOLDING BAR	
030	3139545-0004		1	FOLDING BAR	
040	3139546-0004		1	FOLDING BAR	
050	3139547-0004		1	FOLDING BAR	
060	3139548-0004		1	FOLDING BAR	
070	2919059-0000		1	FOLDING BAR	
080	2919057-0000		1	FOLDING BAR	
090	2919058-0000		1	FOLDING BAR	
100	2919060-0000		1	FOLDING BAR	
130	2871934-0004		1	WALL	
140	2871938-0004		1	WALL	
150	2912442-0000		2	PLATE	
160	1144976-0000		1	STOP SCREW	
170	2819273-0000		1	COVER	
500	342931-0121		4	ELBOW 90 COUPL., EXT. THREAD 8/6-G1/8"	
510	312105-0370		36	SCREW, M6S ISO 4017 M6X20 A4 80	
520	315106-0153		36	WASHER PLAIN, M6 ISO7089-6-200 HV A4	
T50E0050	2871927-0004		1	FOLDING BAR	
T50E0053	2871928-0004		1	FOLDING BAR	
TBA 0200SQ, TBA 0250SQ (See drawing on page: 5-114)					
010	3037929-0000		1	FOLDING BAR	
020	3037930-0000		1	FOLDING BAR	
030	2871932-0004		1	FOLDING BAR	
040	2871936-0004		1	FOLDING BAR	
050	2871933-0007		1	FOLDING BAR	
060	2871937-0007		1	FOLDING BAR	
070	2966588-0000		1	FOLDING BAR	
080	2966587-0000		1	FOLDING BAR	
090	2966589-0000		1	FOLDING BAR	
100	2966590-0000		1	FOLDING BAR	
130	3037931-0000		1	WALL	
140	3037932-0000		1	WALL	
150	2894672-0000		2	PLATE	
160	1144976-0000		1	STOP SCREW	
170	2819273-0000		1	COVER	
500	342931-0121		4	ELBOW 90 COUPL., EXT. THREAD 8/6-G1/8"	
510	312105-0370		36	SCREW, M6S ISO 4017 M6X20 A4 80	
520	315106-0153		36	WASHER PLAIN, M6 ISO7089-6-200 HV A4	
T50E0050	2871927-0001		1	FOLDING BAR	
T50E0053	2871928-0001		1	FOLDING BAR	
TBA 0284B, TBA 0300S (See drawing on page: 5-114)					
010	2871931-0005		1	FOLDING BAR	
020	2871935-0005		1	FOLDING BAR	
030	2871932-0002		1	FOLDING BAR	
040	2871936-0002		1	FOLDING BAR	
050	2871933-0002		1	FOLDING BAR	
060	2871937-0002		1	FOLDING BAR	
070	3005196-0000		1	FOLDING BAR	
080	2998104-0000		1	FOLDING BAR	
090	2998106-0000		1	FOLDING BAR	
100	2998105-0000		1	FOLDING BAR	
130	2871934-0002		1	WALL	
140	2871938-0002		1	WALL	
150	2894724-0000		2	PLATE	
160	1144976-0000		1	STOP SCREW	
170	2819273-0000		1	COVER	
500	342931-0121		4	ELBOW 90 COUPL., EXT. THREAD 8/6-G1/8"	
510	312105-0370		36	SCREW, M6S ISO 4017 M6X20 A4 80	
520	315106-0153		36	WASHER PLAIN, M6 ISO7089-6-200 HV A4	

See previous drawings pages: 5-114, 5-116.

ECM: 522613 - 20111014
Group number: 2819318-0200
Assembly Drawing: 2819318-4_1_AA

This list covers pages from 5-114 to 5-121

Pos	Part No	UN	Qty	Description	Page No
TBA 0284B, TBA 0300S (Cont'd) (See drawing on page: 5-114)					
T50E0050	2871927-0002		1	FOLDING BAR	
T50E0053	2871928-0002		1	FOLDING BAR	
TBA 0375S (See drawing on page: 5-114)					
010	2871931-0002		1	FOLDING BAR	
020	2871935-0002		1	FOLDING BAR	
030	2871932-0002		1	FOLDING BAR	
040	2871936-0002		1	FOLDING BAR	
050	2871933-0002		1	FOLDING BAR	
060	2871937-0002		1	FOLDING BAR	
070	3067365-0000		1	FOLDING BAR	
080	3067364-0000		1	FOLDING BAR	
090	3067367-0000		1	FOLDING BAR	
100	3067366-0000		1	FOLDING BAR	
130	2871934-0002		1	WALL	
140	2871938-0002		1	WALL	
150	2852333-0000		2	PLATE	
160	1144976-0000		1	STOP SCREW	
170	2819273-0000		1	COVER	
500	342931-0121		4	ELBOW 90 COUPL., EXT. THREAD 8/6-G1/8"	
510	312105-0370		36	SCREW, M6S ISO 4017 M6X20 A4 80	
520	315106-0153		36	WASHER PLAIN, M6 ISO7089-6-200 HV A4	
T50E0050	2871927-0002		1	FOLDING BAR	
T50E0053	2871928-0002		1	FOLDING BAR	
TPA 0125SQ (See drawing on page: 5-114)					
010	2894755-0000		1	FOLDING BAR	
020	2894756-0000		1	FOLDING BAR	
030	2871932-0003		1	FOLDING BAR	
040	2871936-0003		1	FOLDING BAR	
050	2871933-0003		1	FOLDING BAR	
060	2871937-0003		1	FOLDING BAR	
070	2894728-0000		1	FOLDING BAR	
080	2894727-0000		1	FOLDING BAR	
090	2894667-0000		1	FOLDING BAR	
100	2894669-0000		1	FOLDING BAR	
130	2871934-0005		1	WALL	
140	2871938-0005		1	WALL	
150	2894672-0000		2	PLATE	
160	2994819-0000		1	STOP SCREW	
170	2819273-0000		1	COVER	
500	342931-0121		4	ELBOW 90 COUPL., EXT. THREAD 8/6-G1/8"	
510	312105-0370		36	SCREW, M6S ISO 4017 M6X20 A4 80	
520	315106-0153		36	WASHER PLAIN, M6 ISO7089-6-200 HV A4	
T50E0050	2871927-0003		1	FOLDING BAR	
T50E0053	2871928-0003		1	FOLDING BAR	
TPA 0250SQ, TPA 0200SQ (See drawing on page: 5-116)					
010	2973927-0000		1	FOLDING BAR	
020	2973928-0000		1	FOLDING BAR	
030	2871932-0005		1	FOLDING BAR	
040	2871936-0005		1	FOLDING BAR	
050	2871933-0005		1	FOLDING BAR	
060	2871937-0005		1	FOLDING BAR	
070	2976954-0000		1	FOLDING BAR	
080	2976953-0000		1	FOLDING BAR	
130	3031785-0000		1	WALL	
140	3031786-0000		1	WALL	
150	3017849-0000		2	PLATE	
160	1144976-0000		1	STOP SCREW	
170	2819273-0000		1	COVER	
500	342931-0121		8	ELBOW 90 COUPL., EXT. THREAD 8/6-G1/8"	
510	312105-0370		36	SCREW, M6S ISO 4017 M6X20 A4 80	
520	315106-0153		36	WASHER PLAIN, M6 ISO7089-6-200 HV A4	
T50E0050	2871927-0006		1	FOLDING BAR	
T50E0053	2871928-0006		1	FOLDING BAR	
T50E0054	3070289-0000		1	FOLDING BAR	
T50E0055	3070290-0000		1	FOLDING BAR	
T50W0108	315400-0006	MM	500	TUBE PUN-H-8X1,25-SW	
T50W0109	315400-0006	MM	500	TUBE PUN-H-8X1,25-SW	
TPA 0330SQ (See drawing on page: 5-114)					
010	3055890-0000		1	FOLDING BAR	
020	3055891-0000		1	FOLDING BAR	
030	2871932-0004		1	FOLDING BAR	
040	2871936-0004		1	FOLDING BAR	
050	2871933-0001		1	FOLDING BAR	
060	2871937-0001		1	FOLDING BAR	
070	2987091-0000		1	FOLDING BAR	
080	2987092-0000		1	FOLDING BAR	
090	2987093-0000		1	FOLDING BAR	
100	2987094-0000		1	FOLDING BAR	
130	3055892-0000		1	FOLDING BAR	
140	3055893-0000		1	FOLDING BAR	
150	3017849-0000		2	PLATE	
160	1144976-0000		1	STOP SCREW	
170	2819273-0000		1	COVER	

Machine Type | Group Description | Used-In | Group Number | Page No

See previous drawings pages: 5-114, 5-116.

ECM: 522613 - 20111014
Group number: 2819318-0200
Assembly Drawing: 2819318-4_1_AA

This list covers pages from 5-114 to 5-121

Pos	Part No	UN	Qty	Description	Page No
TPA 0330SQ (Cont'd) (See drawing on page: 5-114)					
500	342931-0121		4	ELBOW 90 COUPL., EXT. THREAD 8/6-G1/8"	
510	312105-0370		36	SCREW, M6S ISO 4017 M6X20 A4 80	
520	315106-0153		36	WASHER PLAIN, M6 ISO7089-6-200 HV A4	
T50E0050	2871927-0001		1	FOLDING BAR	
T50E0053	2871928-0001		1	FOLDING BAR	
Common Parts					
200	1317633-0000		1	SPRING	
210	2819305-0000		1	SUPPORT	
230	1144976-0000		2	STOP SCREW	
530	315106-0173		4	WASHER PLAIN, M10 ISO7089-10-200 HV A4	
T50W0054	315400-0006	MM	1100	TUBE PUN-H-8X1,25-SW	
T50W0055	315400-0006	MM	500	TUBE PUN-H-8X1,25-SW	
T50W0056	315400-0006	MM	900	TUBE PUN-H-8X1,25-SW	
T50W0110	315400-0006	MM	500	TUBE PUN-H-8X1,25-SW	
T50W0111	315400-0006	MM	500	TUBE PUN-H-8X1,25-SW	

Pos	Part No	UN	Qty	Description	Page No

Tetra Pak

SPC
Spare Parts Catalogue

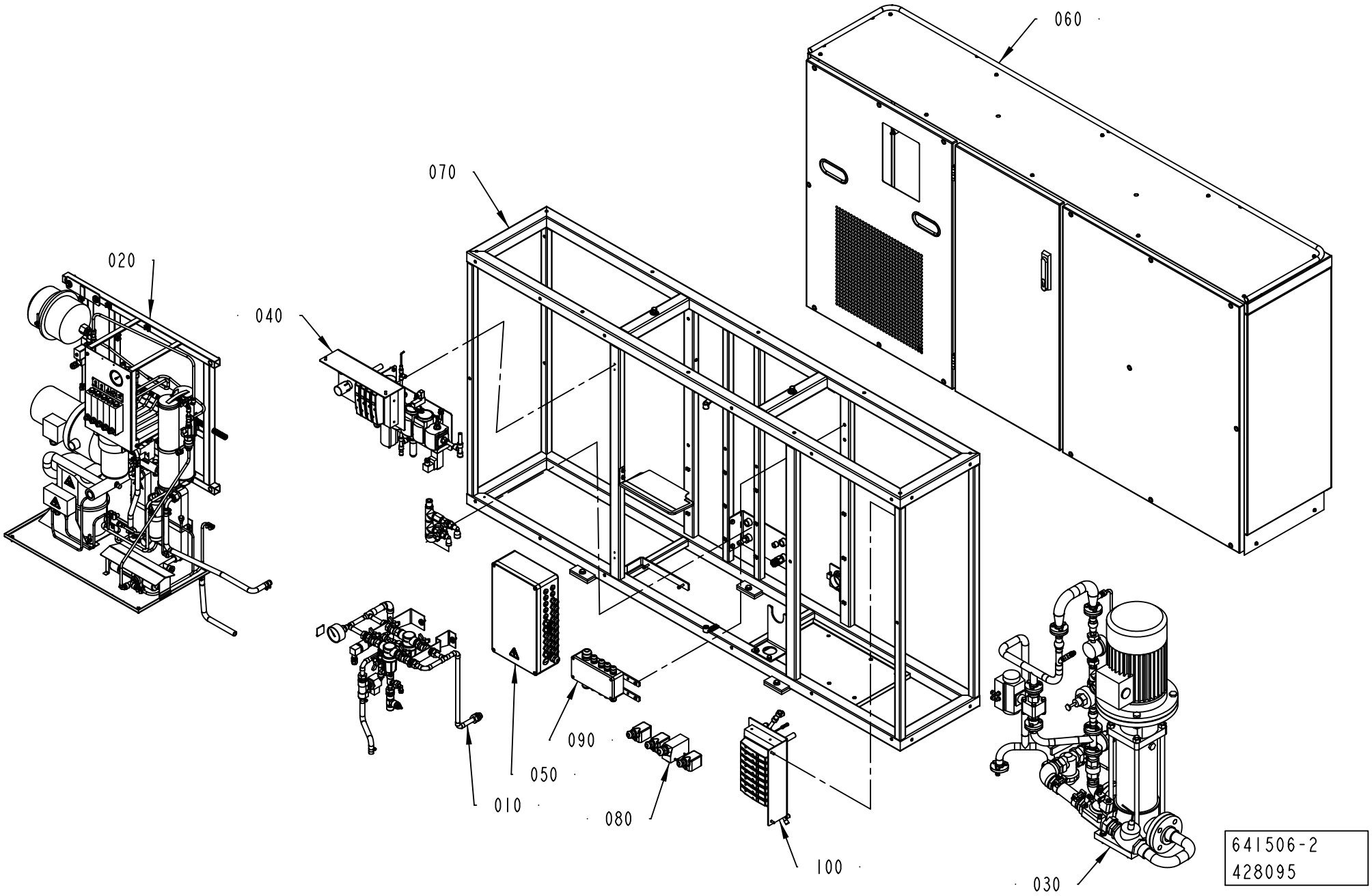
060
070
020
040
090
050
010
080
100
030
641506-2
428095

ECM: 428839 - 20100302
Group number: 641506-0200
Assembly Drawing: 641506-2_1_AB

Pos	Part No	UN	Qty	Description	Page No
ICU					
100	2986743-0100		1	PNEUMATIC PANEL	**6-5, 6-7**
Common Parts					
010	2864022-0200		1	PANEL	**6-11**
020	2864024-0100		1	COOLING WATER SYSTEM	**6-13**
030	2864025-0100		1	CLEANING SYSTEM	**6-25**
040	2864032-0100		1	SUPPLY SYSTEM	**6-35**
050	2871451-0200		1	CONNECTION BOX	**6-45**
060	2837504-0200		1	COVERING PANEL	**6-49**
070	2837513-0200		1	MACHINE BODY	**6-51**
080	2871491-0100		1	CABLE	**6-53**
090	2871480-0100		1	NET	**6-55**

Pos	Part No	UN	Qty	Description	Page No

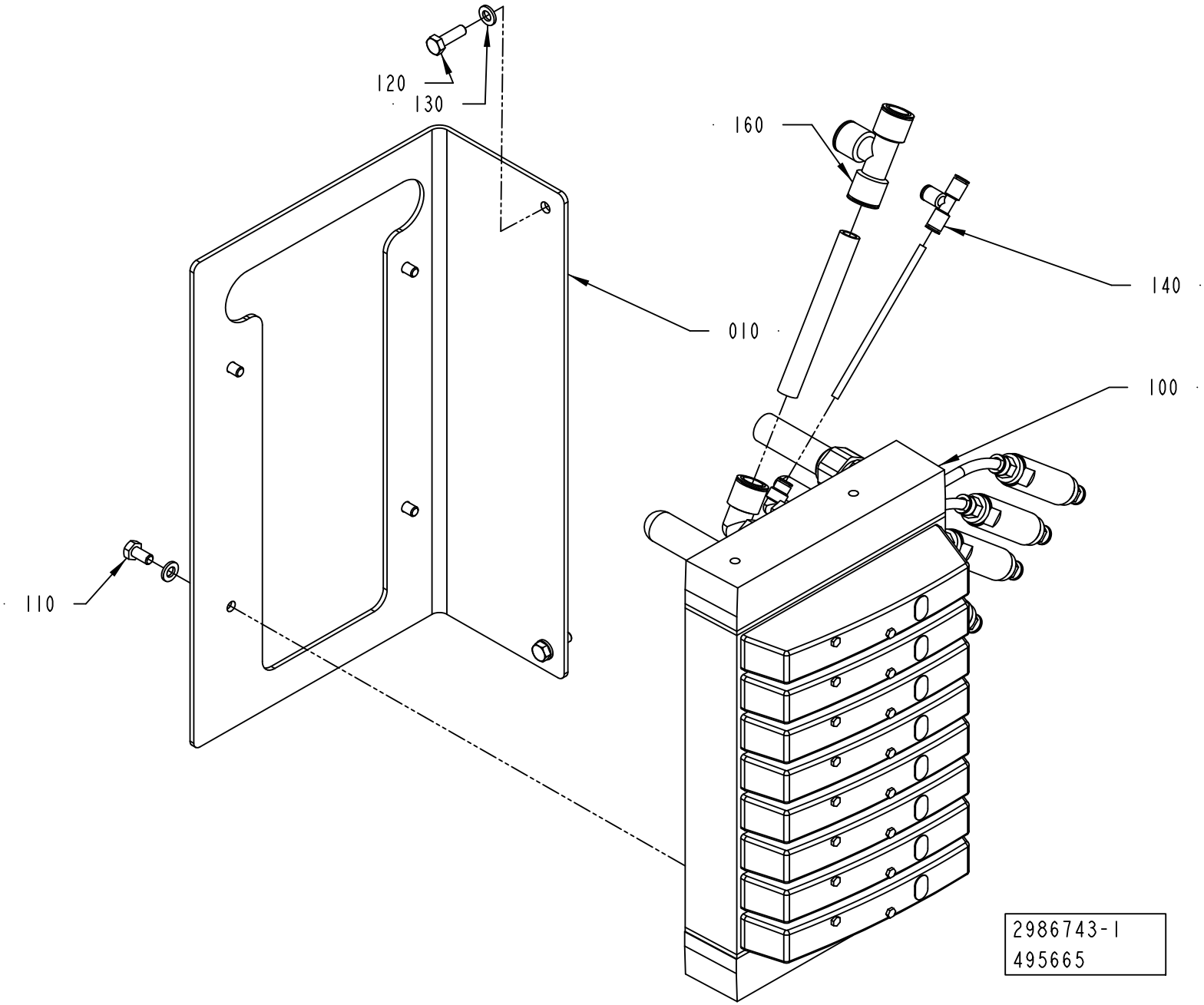
120
130
160
140
010
100
110
2986743-1
495665

ECM: 503896 - 20110701
Group number: 2986743-0100
Assembly Drawing: 2986743-1_1_AC

This list covers pages from 6-4 to 6-7

Pos	Part No	UN	Qty	Description	Page No
-					
010	2986745-0000		1	PLATE	
100	2986744-0100		1	VALVE RAMP	**6-9**
110	312105-0366		4	SCREW, M6S ISO 4017 M6X12 A4 80	
120	312105-0370		2	SCREW, M6S ISO 4017 M6X20 A4 80	
130	315105-0153		6	WASHER PLAIN, 6,4X12X1,5 A4 BRB	
140	350005-0001		1	PUSH-IN T-FITTING QST-F-4	
160	350005-0005		1	PUSH-IN T-FITTING QST-F-12	
170	350001-0008		12	PUSH-IN FITTING QS-F-G1/4-6	
V20R1230	90603-4854		1	PRESSURE REGULATOR IN-LINE, 638.04	
V20R1280	90603-4854		1	PRESSURE REGULATOR IN-LINE, 638.04	
V20R1290	90603-4854		1	PRESSURE REGULATOR IN-LINE, 638.04	
V20R1300	90603-4854		1	PRESSURE REGULATOR IN-LINE, 638.04	
V20R1310	90603-4854		1	PRESSURE REGULATOR IN-LINE, 638.04	
V20R1350	90603-4854		1	PRESSURE REGULATOR IN-LINE, 638.04	
V20W1282	315300-0001	MM	500	TUBE, 6 MM PE BLUE	
V20W1294	315300-0001	MM	500	TUBE, 6 MM PE BLUE	
V20W1302	315300-0001	MM	500	TUBE, 6 MM PE BLUE	
V20W1314	315300-0001	MM	500	TUBE, 6 MM PE BLUE	
V20W1334	315300-0001	MM	500	TUBE, 6 MM PE BLUE	
V20W1354	315300-0001	MM	500	TUBE, 6 MM PE BLUE	
V20W6005	315300-0016	M	2	TUBE 4MPE BLUE	
V20W6007	315300-0010	M	2	TUBE, 12 MM PE BLUE	

Pos	Part No	UN	Qty	Description	Page No

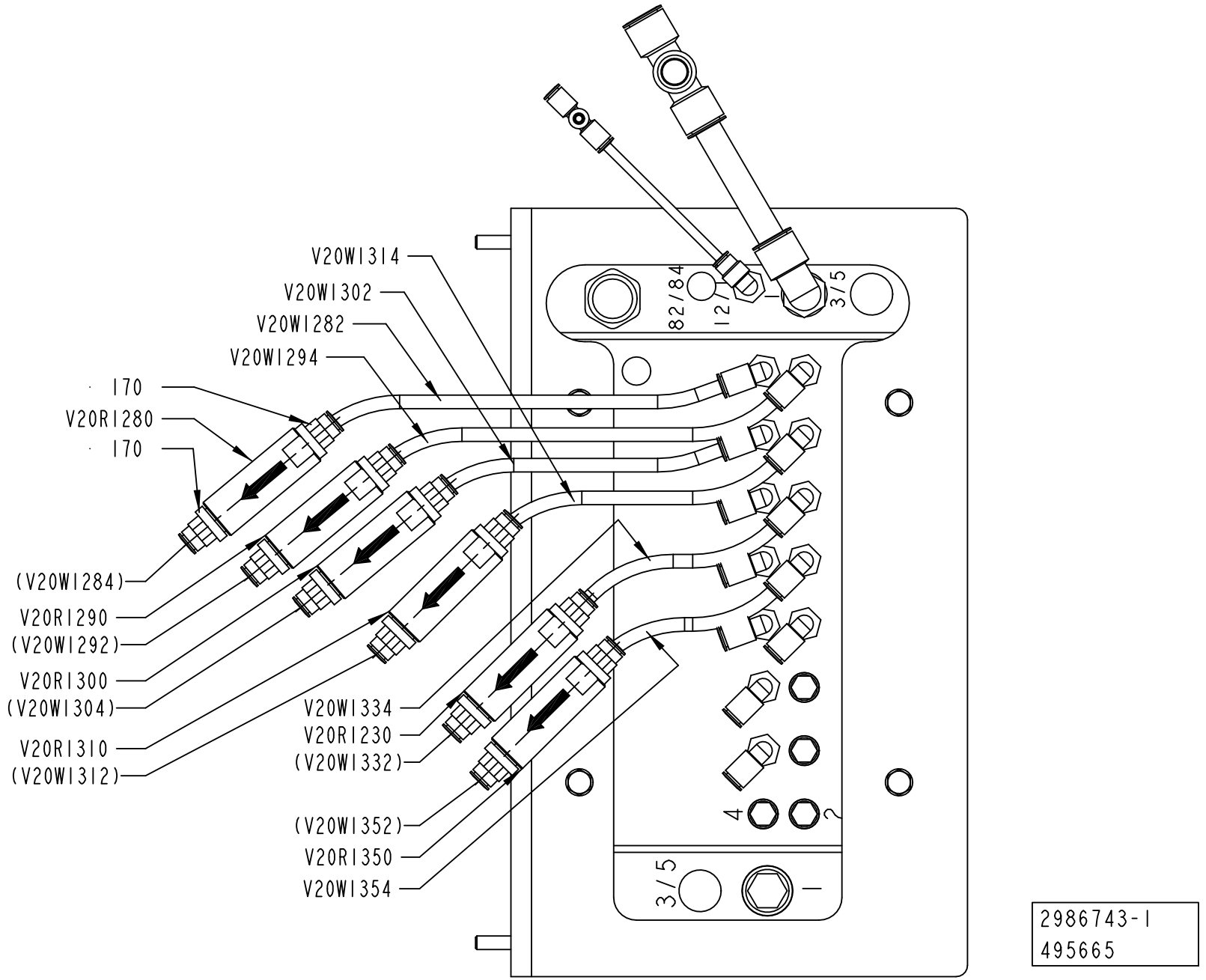
V20WI314
V20WI302
V20WI282
V20WI294
170
V20RI280
170
(V20WI284)
V20RI290
(V20WI292)
V20RI300
(V20WI304)
V20RI310
(V20WI312)
V20WI334
V20RI230
(V20WI332)
(V20WI352)
V20RI350
V20WI354
82/84
12/
3/5
4
2
3/5
2986743-1
495665

ECM: 503896 - 20110701
Group number: 2986743-0100
Assembly Drawing: 2986743-1_2_AC

This list covers pages from 6-4 to 6-7

Pos	Part No	UN	Qty	Description	Page No
-					
010	2986745-0000		1	PLATE	
100	2986744-0100		1	VALVE RAMP	**6-9**
110	312105-0366		4	SCREW, M6S ISO 4017 M6X12 A4 80	
120	312105-0370		2	SCREW, M6S ISO 4017 M6X20 A4 80	
130	315105-0153		6	WASHER PLAIN, 6,4X12X1,5 A4 BRB	
140	350005-0001		1	PUSH-IN T-FITTING QST-F-4	
160	350005-0005		1	PUSH-IN T-FITTING QST-F-12	
170	350001-0008		12	PUSH-IN FITTING QS-F-G1/4-6	
V20R1230	90603-4854		1	PRESSURE REGULATOR IN-LINE, 638.04	
V20R1280	90603-4854		1	PRESSURE REGULATOR IN-LINE, 638.04	
V20R1290	90603-4854		1	PRESSURE REGULATOR IN-LINE, 638.04	
V20R1300	90603-4854		1	PRESSURE REGULATOR IN-LINE, 638.04	
V20R1310	90603-4854		1	PRESSURE REGULATOR IN-LINE, 638.04	
V20R1350	90603-4854		1	PRESSURE REGULATOR IN-LINE, 638.04	
V20W1282	315300-0001	MM	500	TUBE, 6 MM PE BLUE	
V20W1294	315300-0001	MM	500	TUBE, 6 MM PE BLUE	
V20W1302	315300-0001	MM	500	TUBE, 6 MM PE BLUE	
V20W1314	315300-0001	MM	500	TUBE, 6 MM PE BLUE	
V20W1334	315300-0001	MM	500	TUBE, 6 MM PE BLUE	
V20W1354	315300-0001	MM	500	TUBE, 6 MM PE BLUE	
V20W6005	315300-0016	M	2	TUBE 4MPE BLUE	
V20W6007	315300-0010	M	2	TUBE, 12 MM PE BLUE	

Pos	Part No	UN	Qty	Description	Page No

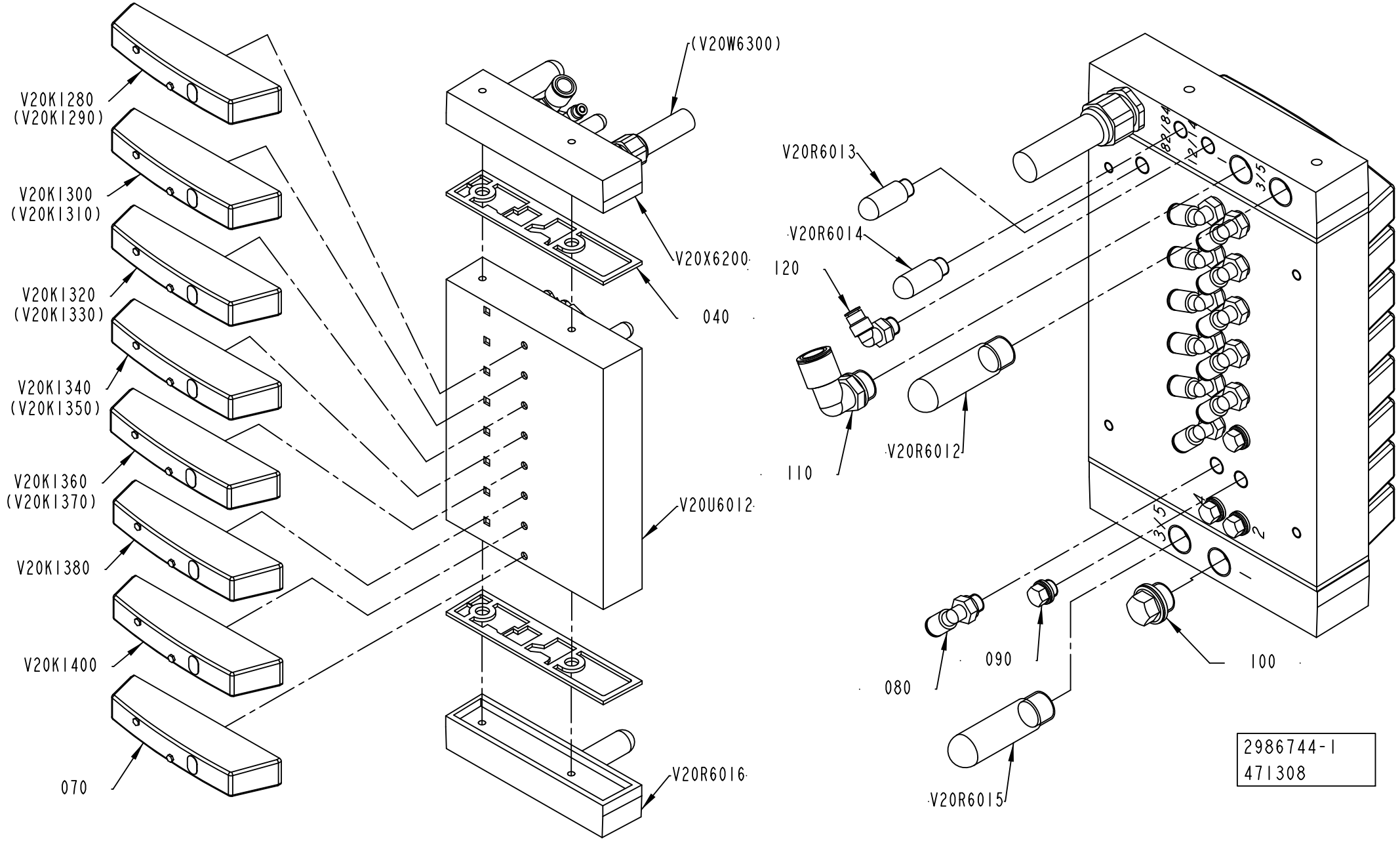
V20K1280
(V20K1290)
V20K1300
(V20K1310)
V20K1320
(V20K1330)
V20K1340
(V20K1350)
V20K1360
(V20K1370)
V20K1380
V20K1400
070
(V20W6300)
V20X6200
040
V20U6012
V20R6016
V20R6013
V20R6014
120
110
V20R6012
080
090
100
V20R6015
2986744-1
471308

ECM: 471308 - 20110101
Group number: 2986744-0100
Assembly Drawing: 2986744-1_1_AB

Pos	Part No	UN	Qty	Description	Page No
-					
040	90458-1207		2	SEALING, STANDARD	
070	90458-1215		1	COVER PLATE, EMPTY VALVE POSITION	
080	350002-0006		12	PUSH-IN L-FITTING QSL-F-G1/8-6	
090	90459-0698		4	PLUG, G1/8EXT, G1/8	
100	90459-0699		1	BLANKING PLUG, CDVI5.0-B-G3/8	
110	350002-0014		1	PUSH-IN L-FITTING QSL-F-G3/8-12	
120	350002-0005		1	PUSH-IN L-FITTING QSL-F-G1/8-4	
V20K1280	90458-1202		1	VALVES 2X3/2, CLOSED	
V20K1300	90458-1202		1	VALVES 2X3/2, CLOSED	
V20K1320	90458-1202		1	VALVES 2X3/2, CLOSED	
V20K1340	90458-1202		1	VALVES 2X3/2, CLOSED	
V20K1360	90458-1202		1	VALVES 2X3/2, CLOSED	
V20K1380	90458-1194		1	VALVE, 5/2 MONOSTABLE	
V20K1400	90458-1194		1	VALVE, 5/2 MONOSTABLE	
V20R6012	90328-0024		2	SILENCER, G3/8"	
V20R6013	90328-0047		2	SILENCER, G1/8"	
V20R6014	90328-0047		2	SILENCER, G1/8"	
V20R6015	90328-0024		2	SILENCER, G3/8"	
V20R6016	90458-1214		1	RIGHT ENDPL EXT. PILOT AIR,CDVI5.0-EPR-S	
V20U6012	90458-1205		1	BASIC SUB-BASE 8 VALVES, CDVI5.0-GB8-MP	
V20X6200	90458-1212		1	LEFT ENDPLATE INCL. 10M CABLE	

Pos	Part No	UN	Qty	Description	Page No

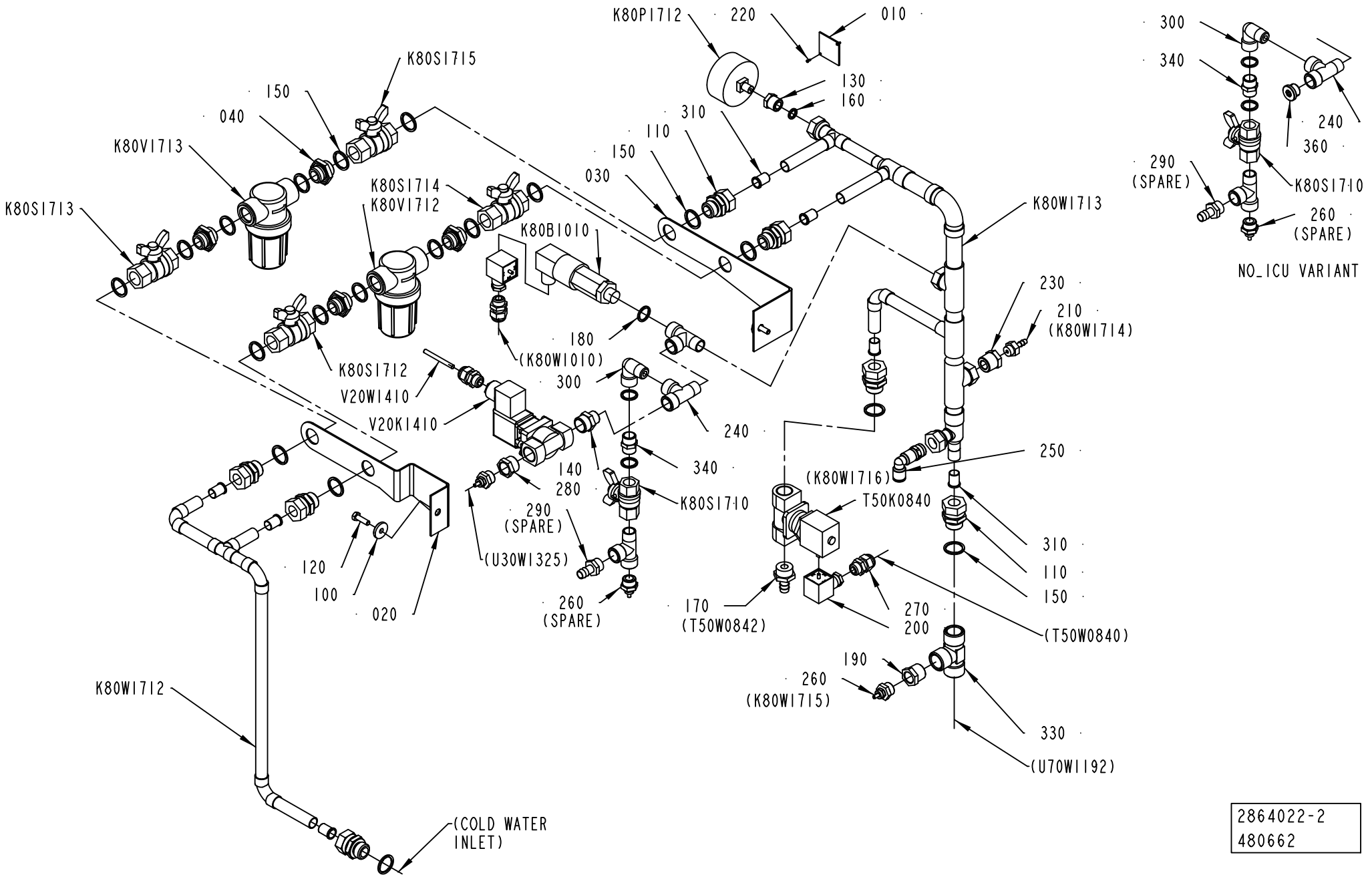
K80P1712
220
010
K80S1715
150
040
K80V1713
K80S1713
K80S1714
K80V1712
K80B1010
130
160
310
110
150
030
180
(K80W1010)
K80S1712
V20W1410
V20K1410
300
240
340
140
280
290
(SPARE)
K80S1710
(U30W1325)
260
(SPARE)
120
100
020
K80W1712
(COLD WATER
INLET)
K80W1713
230
210
(K80W1714)
250
(K80W1716)
T50K0840
310
110
150
(T50W0840)
270
200
170
(T50W0842)
190
260
(K80W1715)
330
(U70W1192)
300
340
240
360
290
(SPARE)
K80S1710
260
(SPARE)
NO_ICU VARIANT
2864022-2
480662

ECM: 485497 - 20110101
Group number: 2864022-0200
Assembly Drawing: 2864022-2_1_AC

Pos	Part No	UN	Qty	Description	Page No
ICU					
140	342700-0206		1	NIPPLE, EXT.THREAD, HEXAGON, G1/2-G3/8	
260	342921-0115		3	STRAIGHT COUPLING, EXT.THREAD 6/4-G3/8	
270	352103-0101		3	CABLE GLAND, ST 9, PR15,2/PG9	
280	342701-0206		1	BUSHING, INT/EXT, G 1/2 - G3/8	
V20K1410	90601-4450		1	SOLENOID VALVE, 5281 2/2 NC	
V20W1410	351150-0403	M	2	CABLE OLFLEX 3X0,75 MM2 LIGHT/GREY	
NO ICU					
260	342921-0115		2	STRAIGHT COUPLING, EXT.THREAD 6/4-G3/8	
270	352103-0101		2	CABLE GLAND, ST 9, PR15,2/PG9	
360	90600-1712		1	PLUG, EXT. THREAD HEX. SOCKET 09190017	
Common Parts					
010	273455-0000		1	SIGN, COLD WATER	
020	2547061-0000		1	HOLDER	
030	1037583-0000		1	HOLDER	
040	479261-0000		4	NIPPLE	
100	315125-0153		2	WASHER HIGH, TBRSB 6,4X22X4 A4	
110	342720-0114		7	CONN. STR. GA-15-G1/2	
120	312105-0370		2	SCREW, M6S ISO 4017 M6X20 A4 80	
130	342701-0202		1	BUSHING, INT/EXT, G 3/8 - G1/8	
150	315239-0113		19	NYLON WASHER G1/2, 1/2RRP	
160	315239-0109		1	NYLON WASHER G1/8, 1/8RRP	
170	342901-0105		1	HOSE NIPPLE, EXT.THR. G1/2-12 MM	
180	315239-0111		3	NYLON WASHER G3/8, 3/8RRP	
190	90330-0048		1	BUSHING, INT.EXT. THR. R1/2-G3/8	
200	90110-0095		2	CONNECTOR, PLUG SOCKET, MSSD-C-4P	
210	342901-0102		1	HOSE NIPPLE, EXT.THR. G1/4-7 MM	
220	312502-0120		2	DRIVE SCREW ROUND HEAD KDS 0X5	
230	90330-0085		1	BUSHING, INT.EXT. THR. R1/2-G1/4	
240	90140-0023		3	T-PIPE, INT. THREAD, NO. 2070-3/8-3/8	
250	344237-1038		1	SWIVEL ELBOW, 6309 10 17WP2	
290	90163-0041		1	HOSE NIPPLE, EXT.THR. G3/8-12 MM	
300	90140-0020		1	ELBOW, 90, INT/EXT, S2020-3/8	
310	342718-0109		7	SUPPORT SLEEVE FOR PIPE 15X1, VH13MSX	
330	90140-0010		1	T-PIPE, INT. THREAD, 20031/2	
340	342700-0111		1	NIPPLE, EXT.THREAD, HEXAGON, G3/8-G3/8	
350	90602-4847		1	THREAD LOCKING, LOCTITE 243 50 ML	
K80B1010	90274-0042		1	PRESSURE GUARD, 200 KPA	
K80P1712	90043-0006		1	PRESSURE GAUGE, 2041 D=63 MM	
K70S1712	90187-0029		1	BALL VALVE, G1/2, NPBR	
K70S1713	90187-0029		1	BALL VALVE, G1/2, NPBR	
K70S1714	90187-0029		1	BALL VALVE, G1/2, NPBR	
K70S1715	90187-0029		1	BALL VALVE, G1/2, NPBR	
K80S1710	90187-0089		1	BALL VALVE, G3/8, NPBR	
K80V1712	90458-0921		1	FILTER, SP 122-200	
	90458-2541		*1*	*FILTER, CP23174-7-304SS*	
K80V1713	90458-0921		1	FILTER, SP 122-200	
	90458-2541		*1*	*FILTER, CP23174-7-304SS*	
K80W1712	3037897-0000		1	PIPE	
K80W1713	3037857-0000		1	PIPE	
T50K0840	90042-0249		1	SOLENOID VALVE OFFICINE DI ENSINO	
T50W0842	90166-0121	MM	1500	HOSE	

Machine Type	Group Description	Used-In	Group Number	Page No

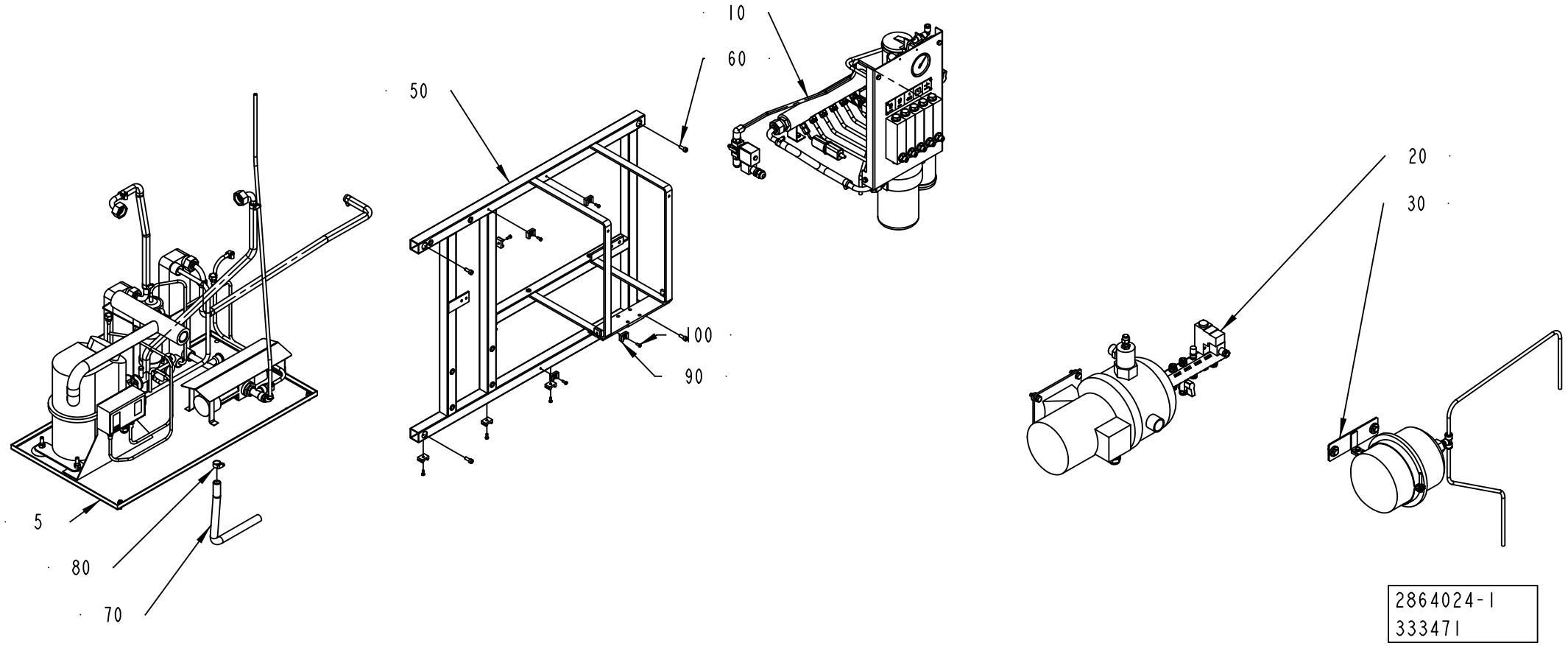
10
60
50
100
90
20
30
5
80
70
2864024-1
333471

ECM: 333471 - 20071221
Group number: 2864024-0100
Assembly Drawing: 2864024-1_1_AA

Pos	Part No	UN	Qty	Description	Page No
-					
005	2864031-0100		1	COMPRESSOR UNIT	**6-15**
010	2864023-0100		1	FLOW METER	**6-17**
020	2864030-0100		1	COOLING WATER PUMP	**6-21**
030	2864033-0100		1	EXPANSION VESSEL	**6-23**
050	2840901-0000		1	MACHINE BODY	
060	312115-0368		4	SCREW ISO4762 M6X16 A4 80	
070	90166-0121	MM	1000	HOSE	
080	342991-0101		1	HOSE CLIP,WORM DRIVE TYPE (11)-17	
090	352113-0203		9	ANCHOR PLATES FOR STRIPS, TM3S8-M0	
100	312125-0289		9	SCREW ISO 1207 M4X10 A4	

Pos	Part No	UN	Qty	Description	Page No

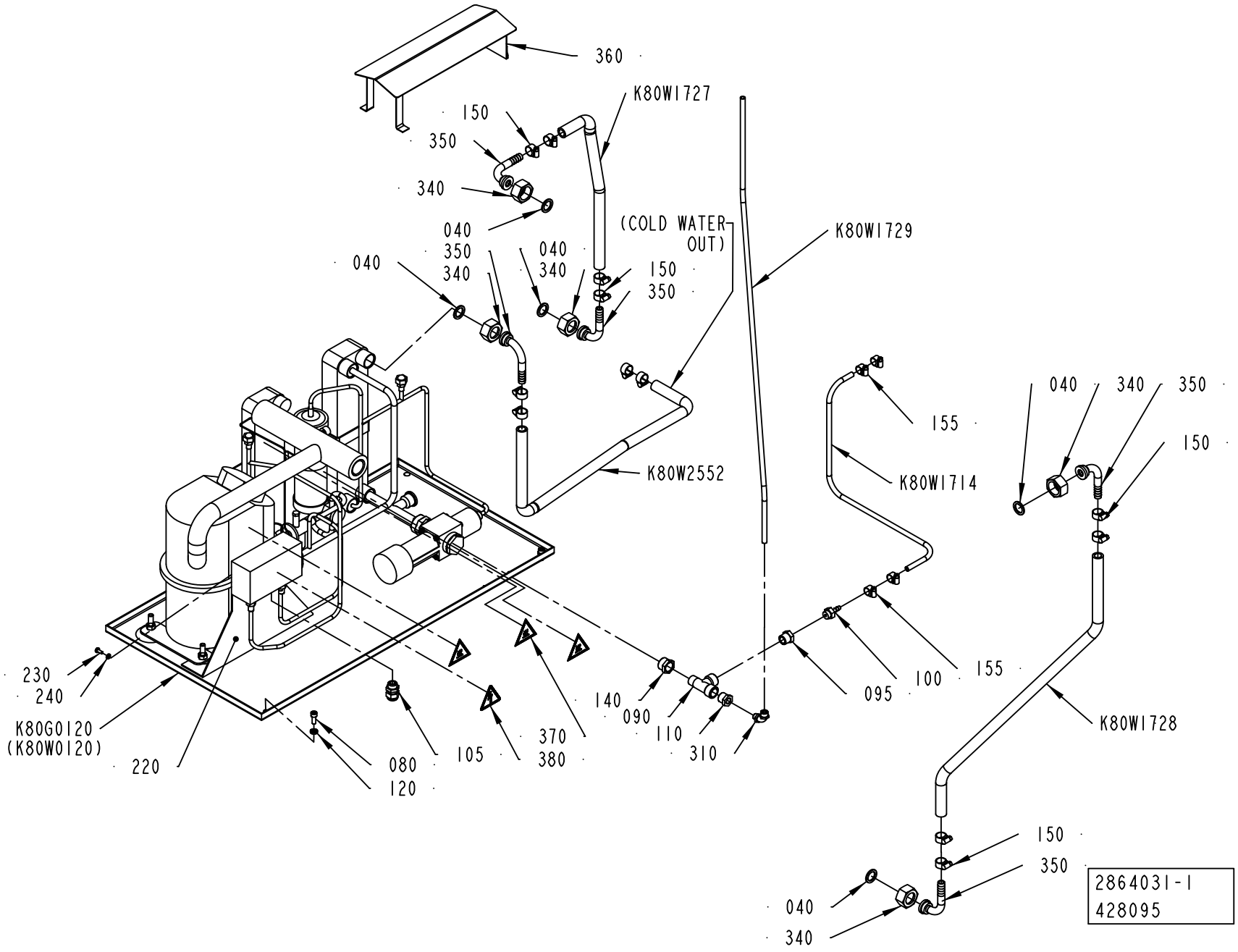
360
K80W1727
150
350
340
040
040
350
340
040
340
150
350
(COLD WATER OUT)
K80W1729
K80W2552
155
K80W1714
040
340
350
150
230
240
K80G0120
(K80W0120)
220
080
120
105
370
380
140
090
110
310
095
100
155
K80W1728
150
350
040
340
2864031-1
428095

ECM: 485494 - 20110101
Group number: 2864031-0100
Assembly Drawing: 2864031-1_1_AC

Pos	Part No	UN	Qty	Description	Page No
ANSI					
370	90459-7458		3	WARNING SIGN ANSI (H), HOT SURFACE	
380	359715-0100		1	WARNING SIGN ANSI (H), ELECTRIC SHOCK	
ISO					
370	359705-0007		3	WARNING SIGN ISO, HOT SURFACE	
380	359705-0015		1	WARNING SIGN ISO, RISK OF ELECTRIC SHOCK	
Common Parts					
040	90459-3339		5	GASKET NBR/PTFE 17X24X2 MM 3/4"	
080	312115-0368		2	SCREW ISO4762 M6X16 A4 80	
090	90140-0010		1	T-PIPE, INT. THREAD, 20031/2	
095	342701-0205		1	BUSHING, INT/EXT, G 1/2 - G1/4	
100	342901-0102		1	HOSE NIPPLE, EXT.THR. G1/4-7 MM	
105	352103-0101		1	CABLE GLAND, ST 9, PR15,2/PG9	
110	342701-0204		1	BUSHING, INT/EXT. G 1/2 - G 1/8	
120	315115-0153		2	WASHER PLAIN, TBRB 6,4/12 H=3	
130	90166-0045	MM	600	HOSE PVC TRANSP. 6/12	
140	342700-0113		1	NIPPLE, EXT.THREAD, HEXAGON, G1/2-G1/2	
150	342991-0101		12	HOSE CLIP,WORM DRIVE TYPE (11)-17	
155	342991-0100		4	HOSE CLIP,WORM DRIVE TYPE (8)-14	
160	359005-0050		1	MARKING LABEL KIT X, 04.841.4550.0	
170	359005-0010		1	MARKING LABEL KIT 0 - 9, 04.841.2150.0	
220	1361560-0000		1	PLATE	
230	312132-0289		4	SLOTTED HEAD, PAN SCREW, MSCS M4X10	
240	90062-0029		4	LOCK WASHER 5,1X 8,6, T= 1,5 DIN 7980	
310	344237-0818		1	SWIVEL ELBOW, 6309 08 10WP2	
340	2531423-0000		5	NUT	
350	2531245-0000		5	HOSE NIPPLE	
360	2532574-0000		1	COVER	
K80G0120	2846098-0000		1	COMPRESSOR UNIT	
01	*90459-6802*		*1*	*COMPRESSOR, TAJ4511Y*	
02	*90603-2598*		*1*	*HEAT EXCHANGER B8THX10/1P-SC-M4X3/4"*	
03	*90603-2637*		*1*	*HEAT EXCHANGER B8THX14/1P-SC-M 2X22U+2X1*	
04	*90459-6809*		*1*	*EXP. VALVE TUB ORIF 5 R134A, 068U2004*	
05	*90459-6800*		*1*	*CAPACITY REGULATOR, KVP 12*	
06	*90459-6799*		*1*	*THERMOST. VALVE,WVFX 15 3.5-16 BAR 1/2"*	
07	*90600-1008*		*1*	*PRESSURE SWITCH, KP 17W 060-1275*	
09	*90459-6798*		*1*	*DRYING FILTER, DMC 2032S*	
10	*342713-0213*		*1*	*PLUG, EXT THREAD HEX SOCKET 8638-00-120*	
11	*2840900-0000*		*1*	*WASTE BOX*	
K80W1714	90166-0045	MM	800	HOSE PVC TRANSP. 6/12	
K80W1727	90166-0121	MM	850	HOSE	
K80W1728	90166-0121	MM	750	HOSE	
K80W1729	344240-0805	MM	400	TUBE 8 MM PE FDA, 1015Y08F01	
K80W2552	90166-0121	MM	850	HOSE	

Machine Type	Group Description	Used-In	Group Number	Page No

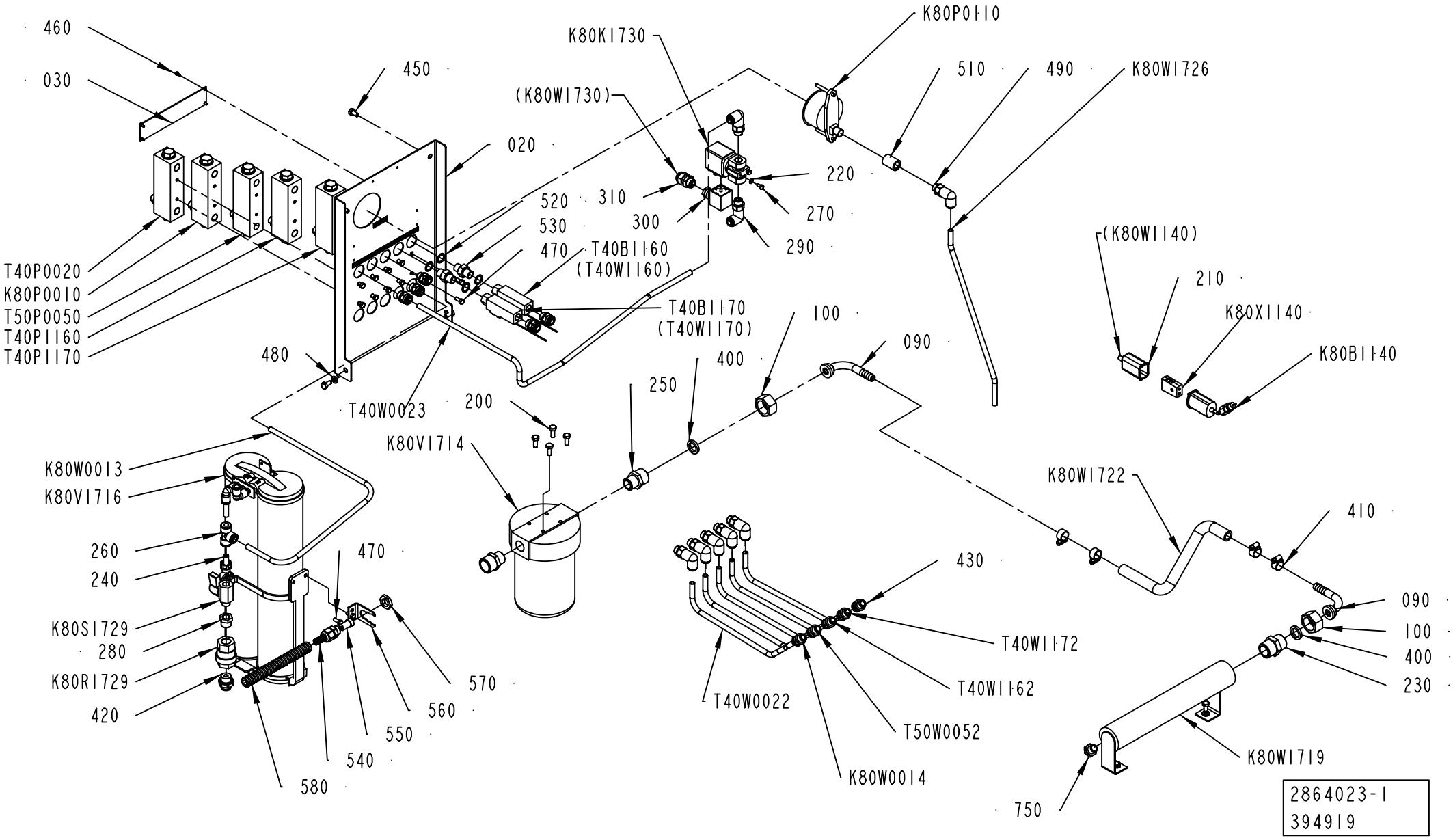
460
030
450
020
K80K1730
(K80W1730)
K80P0110
510
490
K80W1726
220
270
290
310
300
520
530
470
T40B1160
(T40W1160)
T40P0020
K80P0010
T50P0050
T40P1160
T40P1170
T40B1170
(T40W1170)
100
090
400
250
200
480
T40W0023
K80V1714
(K80W1140)
210
K80X1140
K80B1140
K80W0013
K80V1716
260
240
K80S1729
280
K80R1729
420
470
570
560
550
540
580
K80W1722
410
430
T40W1172
T40W1162
T50W0052
K80W0014
T40W0022
090
100
400
230
K80W1719
750
2864023-1
394919

ECM: 485498 - 20110101
Group number: 2864023-0100
Assembly Drawing: 2864023-1_1_AB

Pos	Part No	UN	Qty	Description	Page No
-					
020	2840899-0000		1	PIVOT BRACKET	
030	2840902-0000		1	SIGN	
090	2531245-0000		2	HOSE NIPPLE	
100	2531423-0000		2	NUT	
200	312105-0368		4	SCREW, M6S ISO 4017 M6X16 A4 80	
210	90326-0012		1	PROTECTIVE COVER, 03-001 10	
220	315105-0136		2	WASHER PLAIN, 4,3X9X0,8 A4 BRB	
230	90330-0004		1	NIPPLE, EXT.THREAD, HEXAGON, R3/4-R3/4	
240	90055-0260		1	NIPPLE-8 MM G1/4"	
250	90358-0091		2	REDUCING NIPPLE	
260	344234-0080		1	UNION TEE, 6304 08 00WP2	
270	312105-0287		2	SCREW, M6S ISO 4017 M4X8 A4 70	
280	90330-0042		1	BUSHING, INT.EXT. THR. R3/8-G1/4	
290	344237-0814		2	SWIVEL ELBOW, 6309 08 13WP2	
300	90110-0095		1	CONNECTOR, PLUG SOCKET, MSSD-C-4P	
310	352103-0101		1	CABLE GLAND, ST 9, PR15,2/PG9	
400	315229-0102		2	SQUARE RING, 16,8X23,8X3,7 MM 3/4" FDA	
410	342991-0101		4	HOSE CLIP,WORM DRIVE TYPE (11)-17	
420	344235-0838		1	MALE CONNECTOR, 6305 08 17WP2	
430	344235-0814		10	MALE CONNECTOR, 6305 08 13WP2	
450	312105-0366		6	SCREW, M6S ISO 4017 M6X12 A4 80	
460	312125-0220		4	SCREW ISO 1207 M3X6 A4	
470	312105-0327		12	SCREW, M6S ISO 4017 M5X12 A4 80	
480	315105-0153		4	WASHER PLAIN, 6,4X12X1,5 A4 BRB	
490	344237-0814		6	SWIVEL ELBOW, 6309 08 13WP2	
510	90330-0102		1	SLEEVE, INT, THREAD, NO., R-201R1/4	
520	315239-0110		4	NYLON WASHER G1/4, 1/4RRP	
530	90055-0042		2	NIPPLES, EXT. THREAD, HEXAGON, NO. 6835-	
540	353242-0005		1	GLAND FITTING, VKA 50YUL09	
550	353249-0067		1	INSERT, SINGLE HOLE, E150 7	
560	977527-0000		1	BRACKET	
570	90099-0104		1	PLUG, PR 15,2 (PG9)	
580	90152-0058	MM	1000	HOSE, SPIRAL CONDUIT, 15X9, UL 0909	
750	90330-0026		1	PLUG, EXT. G-THREAD, G1/4	
K80B1140	90326-0057		1	THERMOCOUPLE, 5110 057-000	
K80K1730	90042-0248		1	SOLENOID VALVE OFFICIENE DI ENSINO	
K80P0010	1129079-0000		1	FLOW METER	
K80P0110	90043-0100		1	PRESSURE GAUGE, 2948 D=63 MM	
K80R1729	90230-0028		1	NON-RETURN VALVE H 151 R 3/8"	
K80S1729	90187-0045		1	BALL VALVE, G1/4 CR PL	
K80V1714	90415-0065		1	FILTER	
010	*90415-0357*		*1*	*FILTER INSERT*	
K80V1716	2792119-0100		1	FILTER	6-19
K80W0013	344240-0805	MM	800	TUBE 8 MM PE FDA, 1015Y08F01	
K80W0014	344240-0805	MM	255	TUBE 8 MM PE FDA, 1015Y08F01	
K80W1719	1041984-0000		1	ATTACHMENT PIPE	
K80W1722	90166-0121	MM	400	HOSE	
K80W1726	344240-0805	MM	490	TUBE 8 MM PE FDA, 1015Y08F01	
K80X1140	90326-0020		1	SOCKET, FEMALE YELLOW CR-AL, 03-22000A	
T40B1150	90459-0180		1	FLOW SWITCH, 0,1 - 2,5 L/MIN	
T40B1160	90459-0180		1	FLOW SWITCH, 0,1 - 2,5 L/MIN	
T40P0020	1129079-0000		1	FLOW METER	
T40P1160	1129079-0000		1	FLOW METER	
T40P1170	1129079-0000		1	FLOW METER	
T50P0050	1041046-0000		1	FLOW METER	
T40W0022	344240-0805	MM	255	TUBE 8 MM PE FDA, 1015Y08F01	
T40W0023	344240-0805	MM	1000	TUBE 8 MM PE FDA, 1015Y08F01	
T40W1162	344240-0805	MM	255	TUBE 8 MM PE FDA, 1015Y08F01	
T40W1172	344240-0805	MM	255	TUBE 8 MM PE FDA, 1015Y08F01	
T50W0052	344240-0805	MM	255	TUBE 8 MM PE FDA, 1015Y08F01	

Machine Type | Group Description | Used-In | Group Number | Page No

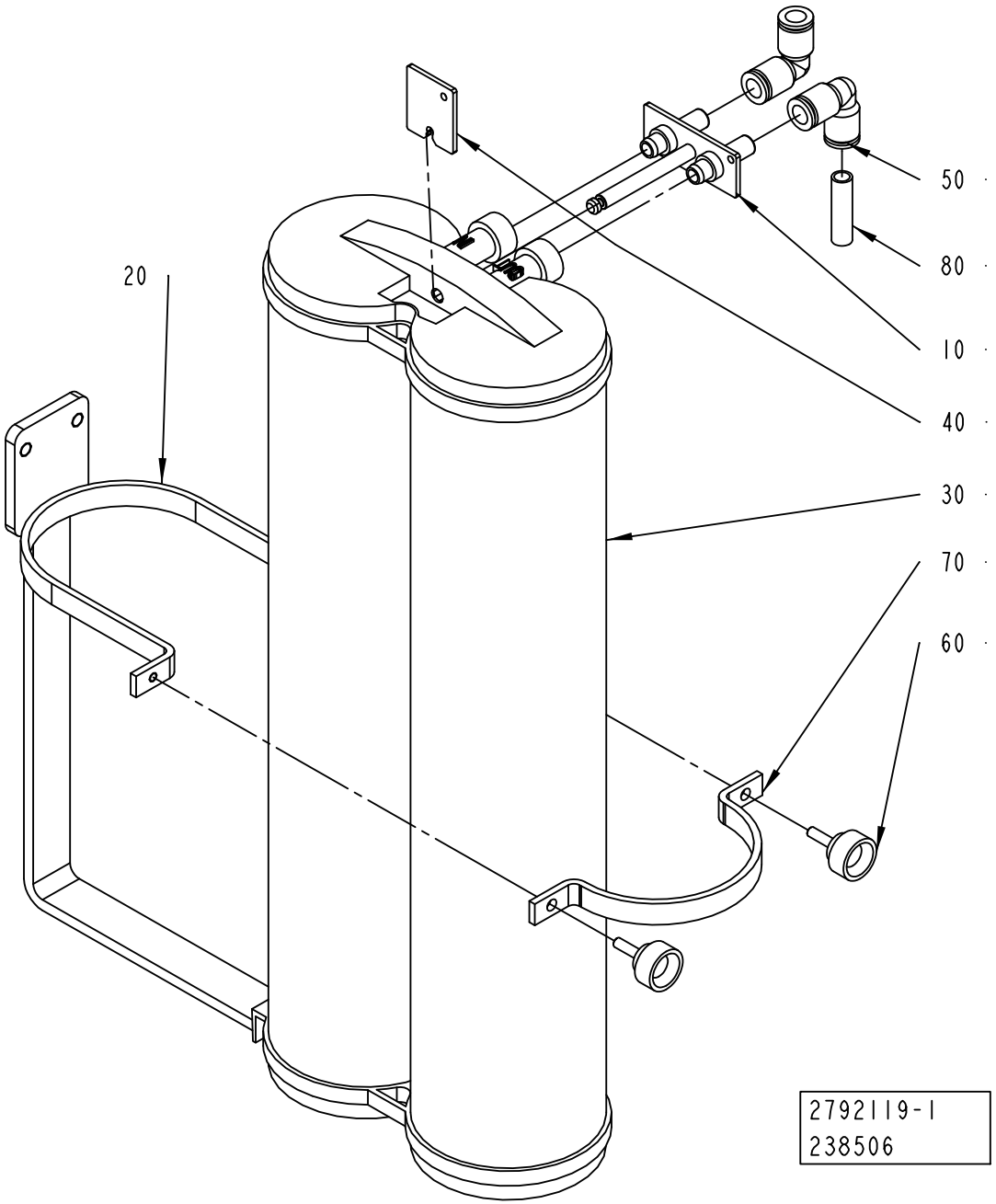
50
80
10
40
30
70
60
20
2792119-1
238506

ECM: 485496 - 20110101
Group number: 2792119-0100
Assembly Drawing: 2792119-1_1_AA

Pos	Part No	UN	Qty	Description	Page No
-					
010	2890241-0000		1	CONNECTOR	
020	2792118-0000		1	SUPPORT	
030	90459-7084		1	FILTER, CPDI0NJM1	
040	3102608-0000		1	FASTENING PLATE	
050	344237-0814		2	SWIVEL ELBOW, 6309 08 13WP2	
060	318856-0101		2	KNOB, EXTERNAL THREAD. NO. 8308-1011	
070	2792120-0000		1	SUPPORT	
080	344240-0805	MM	200	TUBE 8 MM PE FDA, 1015Y08F01	

Pos	Part No	UN	Qty	Description	Page No

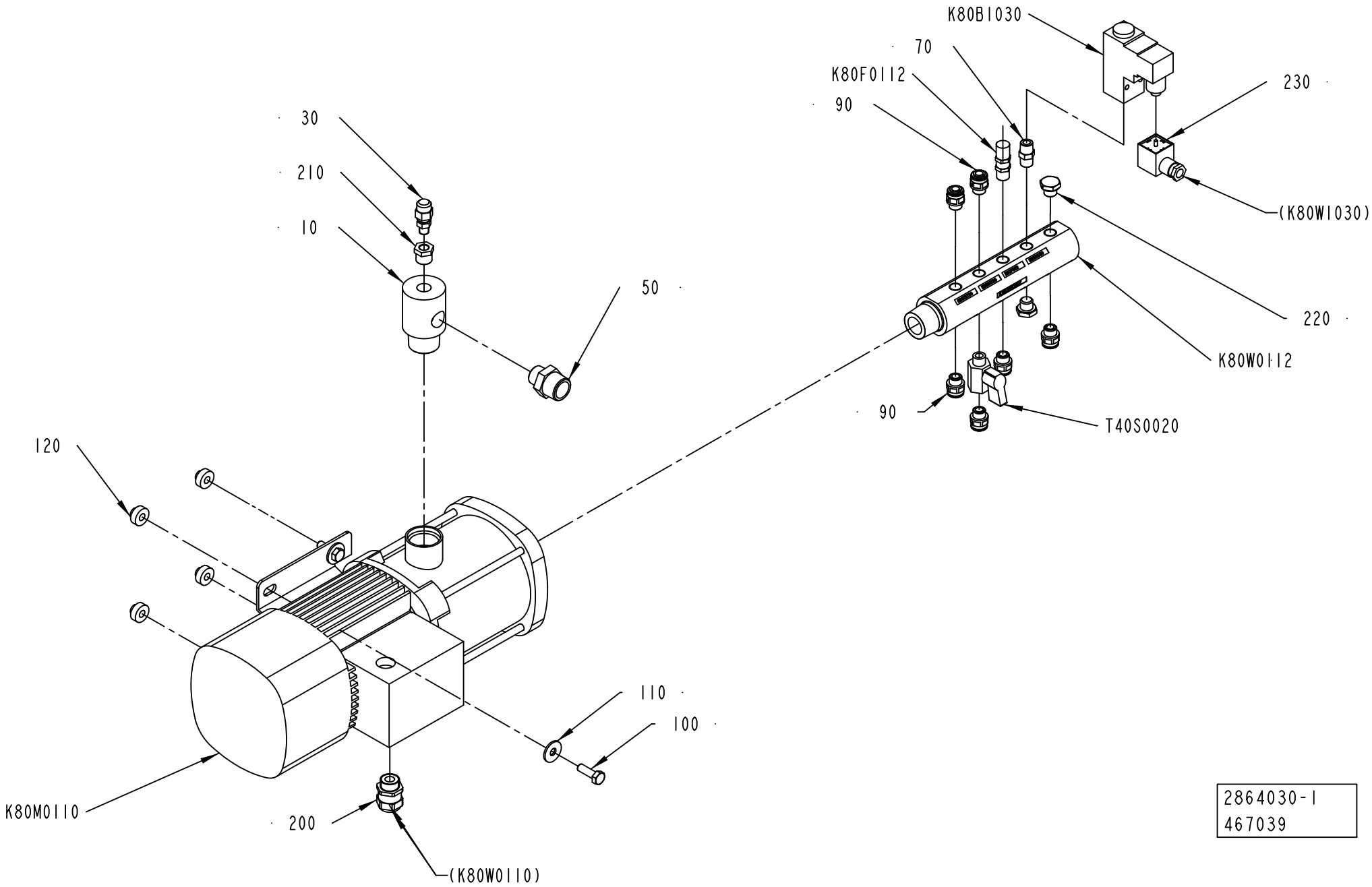

2864030-1
467039

ECM: 526728 - 20111202
Group number: 2864030-0100
Assembly Drawing: 2864030-1_1_AD

Pos	Part No	UN	Qty	Description	Page No
-					
010	2532806-0000		1	ATTACHMENT PIPE	
030	90459-1736		1	PURGE VALVE, 2RM-PG4L-SS	
050	90330-0080		1	NIPPLE, EXT.THREAD, HEXAGON, R3/4-R1/2	
070	90330-0043		1	NIPPLE, EXT.THREAD, HEXAGON, R1/4-R1/4	
090	344235-0814		6	MALE CONNECTOR, 6305 08 13WP2	
100	312105-0453		4	SCREW, M6S ISO 4017 M8X25 A4 80	
110	90005-0116		4	WASHER PLAIN ROUND 8,4(M8)/24, H=2	
120	90015-0037		4	RUBBER BUSHING, 8920001	
170	359005-0050		1	MARKING LABEL KIT X, 04.841.4550.0	
180	359005-0010		1	MARKING LABEL KIT 0 - 9, 04.841.2150.0	
200	90458-0307		1	CABLE GLAND, M20X1,5, 5311 1020	
210	342701-0202		1	BUSHING, INT/EXT, G 3/8 - G1/8	
220	90330-0026		2	PLUG, EXT. G-THREAD, G1/4	
230	90110-0095		1	CONNECTOR, PLUG SOCKET, MSSD-C-4P	
K80B1030	90274-0056		1	PRESS.SWITCH 1-12BAR, PEV-1/4-B-SA22358	
K80F0112	90230-0041		1	PRESSURE RELIEF VALVE, SS-4CPA2-RT-DG-3	
K80M0110	90604-3644		1	PUMP, CM3-6 X-R-G-V-AQQV O-A-A-N	
K80W0112	2922322-0003		1	RETURN PIPE	
T40S0020	90187-0045		1	BALL VALVE, G1/4 CR PL	

Pos	Part No	UN	Qty	Description	Page No

Machine Type	Group Description	Used-In	Group Number	Page No

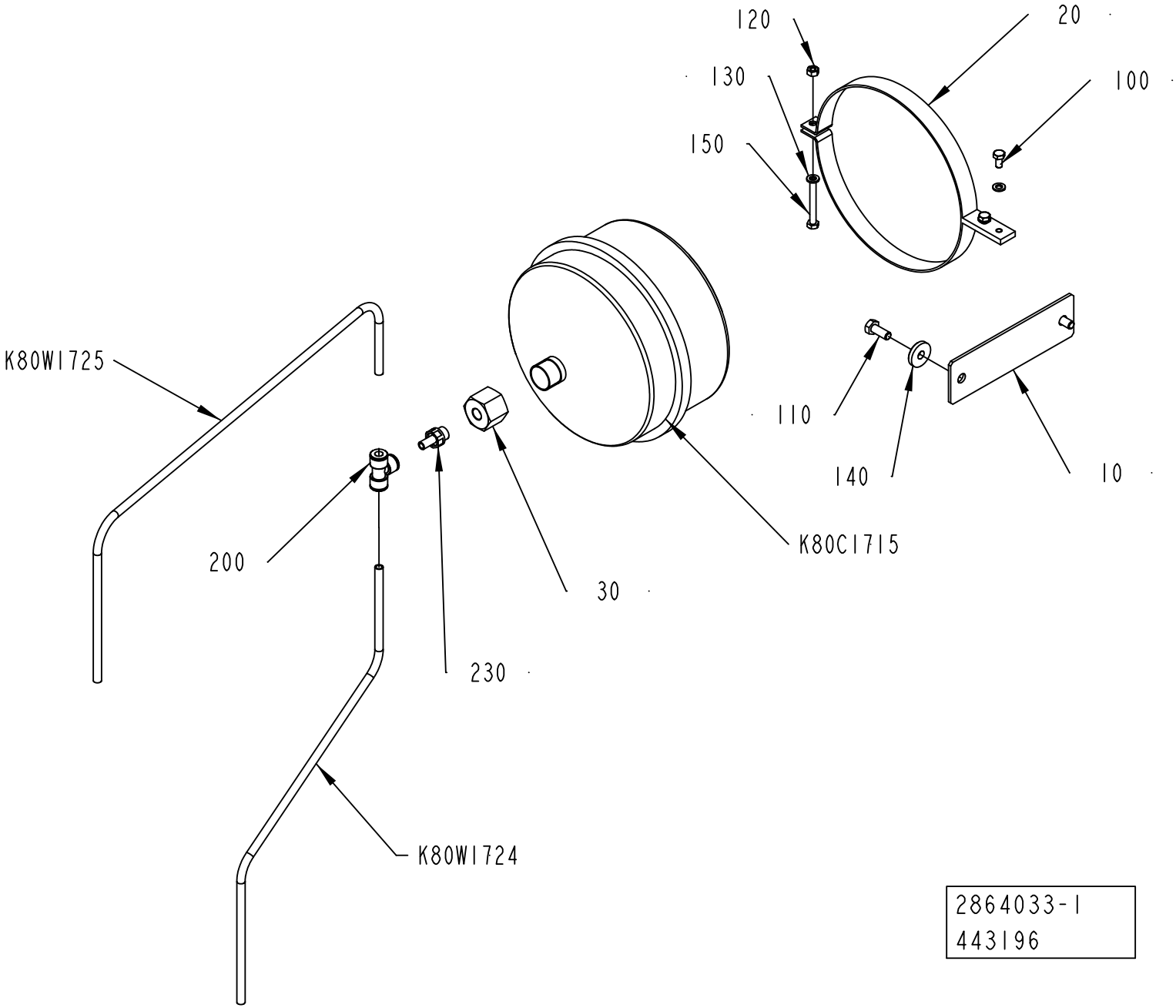
120
20
130
100
150
K80W1725
110
140
10
200
30
K80C1715
230
K80W1724
2864033-1
443196

ECM: 485495 - 20110101
Group number: 2864033-0100
Assembly Drawing: 2864033-1_1_AB

Pos	Part No	UN	Qty	Description	Page No
-					
010	2514087-0000		1	PLATE	
020	3057124-0000		1	BRACKET	
030	2514083-0000		1	REDUCTION NIPPLE	
100	312105-0366		2	SCREW, M6S ISO 4017 M6X12 A4 80	
110	312105-0451		2	SCREW, M6S ISO 4017 M8X20 A4 80	
120	312605-0316		1	HEXAGON NUT, M6M M6 A280	
130	315105-0153		3	WASHER PLAIN, 6,4X12X1,5 A4 BRB	
140	90005-0116		2	WASHER PLAIN ROUND 8,4(M8)/24, H=2	
150	312109-0380		1	SCREW, M6S ISO 4017 M6X50 A4 80	
200	344234-0080		1	UNION TEE, 6304 08 00WP2	
230	90055-0260		1	NIPPLE-8 MM G1/4"	
K80C1715	90602-3531		1	PRESSURE EXPANSION VESSEL, 13424	
K80W1724	344240-0805	MM	450	TUBE 8 MM PE FDA, 1015Y08F01	
K80W1725	344240-0805	MM	500	TUBE 8 MM PE FDA, 1015Y08F01	

Pos	Part No	UN	Qty	Description	Page No

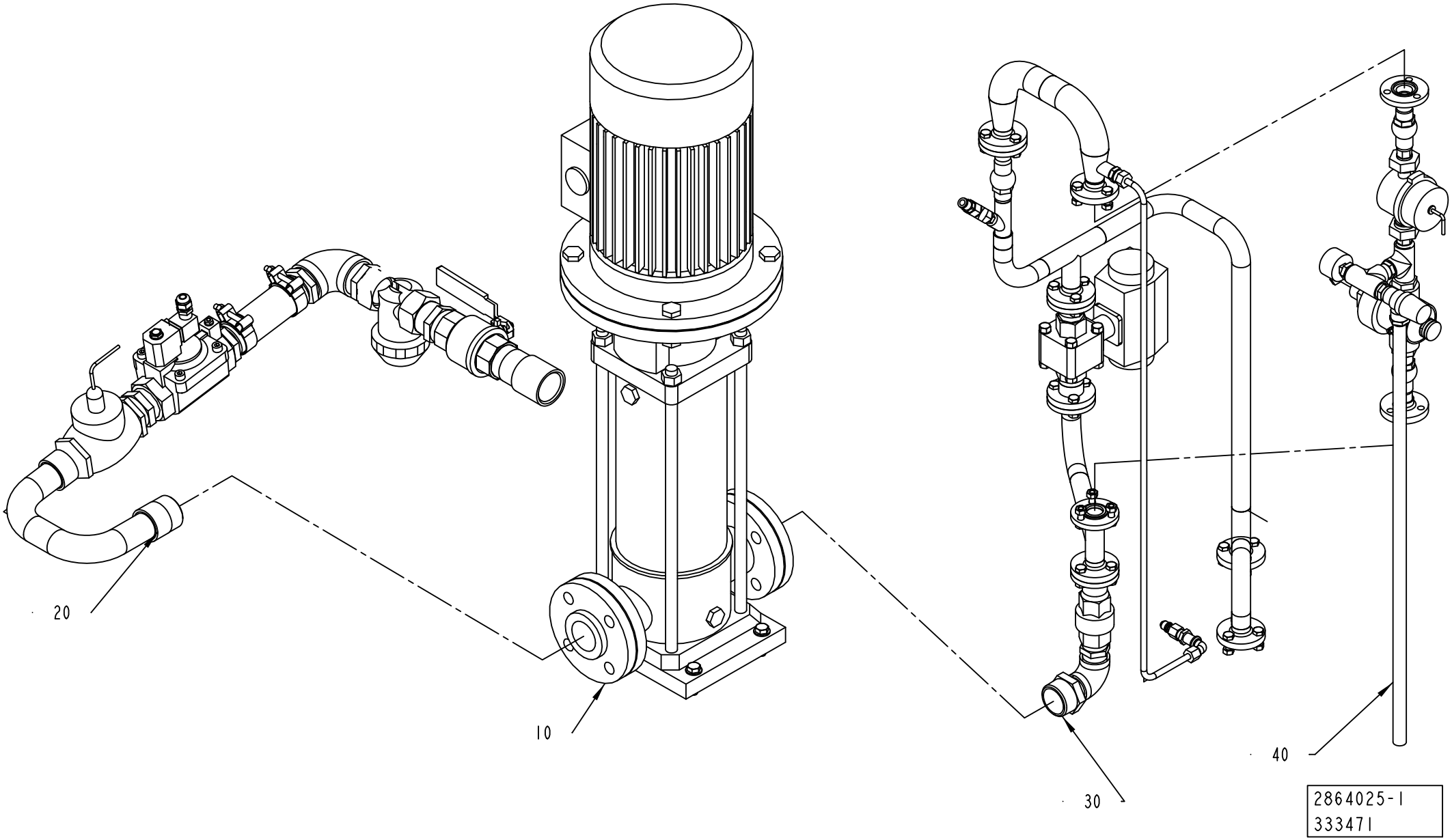
20
10
40
30
2864025-1
333471

ECM: 333471 - 20071221
Group number: 2864025-0100
Assembly Drawing: 2864025-1_1_AA

Pos	Part No	UN	Qty	Description	Page No
-					
010	2868113-0100		1	CLEANING PUMP	**6-27**
020	2868114-0100		1	PIPE	**6-29**
030	2868115-0100		1	BRANCHING PIPE	**6-31**
040	2871481-0100		1	PRESSURE SIDE	**6-33**

Pos	Part No	UN	Qty	Description	Page No

Machine Type | Group Description | Used-In | Group Number | Page No

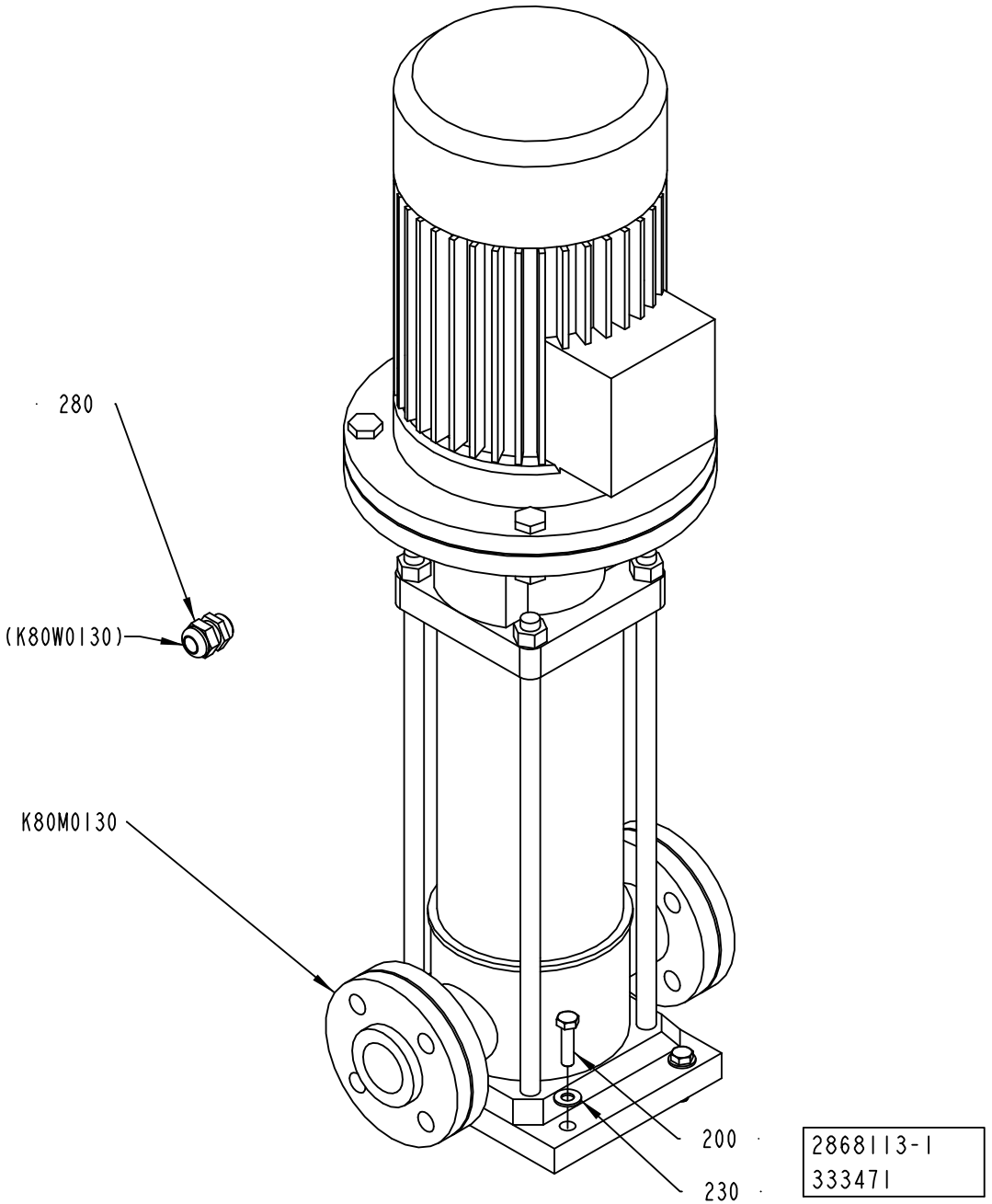
280
(K80W0130)
K80M0130
200
230
2868113-1
333471

ECM: 493432 - 20110701
Group number: 2868113-0100
Assembly Drawing: 2868113-1_1_AA

Pos	Part No	UN	Qty	Description	Page No
50HZ					
K80M0130	90603-2780		1	PUMP, 1016L1231YXXXC8	
60HZ					
K80M0130	90603-3664		1	PUMP, 1016L5621YXXXP7	
Common Parts					
200	312105-0499		4	SCREW, M6S ISO 4014 M10X40 A4 80	
230	315105-0173		4	WASHER PLAIN, 10,5X22X2 A4 BRB	
280	352103-0111		1	CABLE GLAND, ST 16, PR22,5/PG16	

Pos	Part No	UN	Qty	Description	Page No

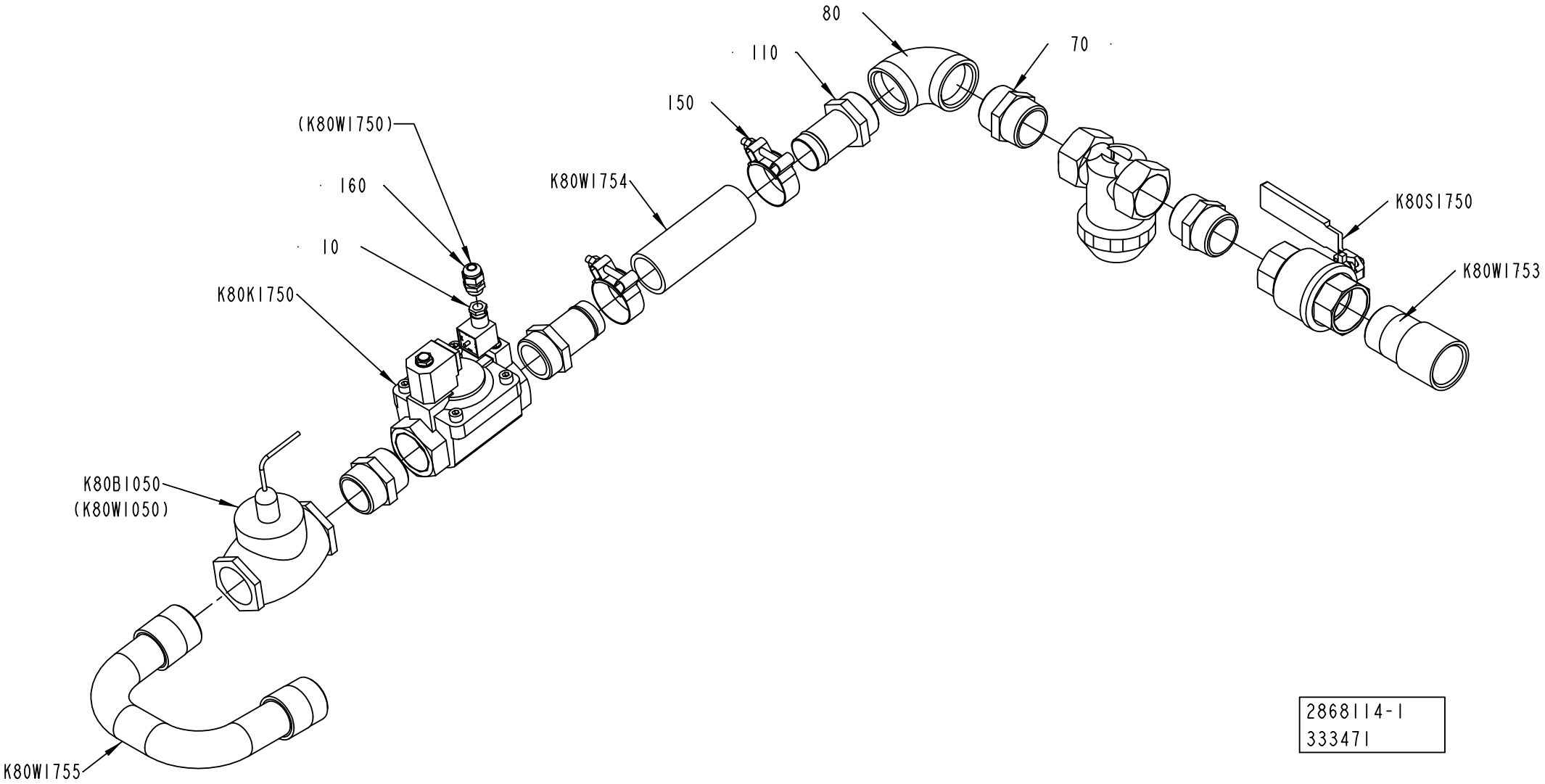
80
110
70
150
(K80W1750)
160
K80W1754
10
K80S1750
K80K1750
K80W1753
K80B1050
(K80W1050)
K80W1755
2868114-1
333471

ECM: 333471 - 20071221
Group number: 2868114-0100
Assembly Drawing: 2868114-1_1_AA

Pos	Part No	UN	Qty	Description	Page No
-					
010	90110-0095		1	CONNECTOR, PLUG SOCKET, MSSD-C-4P	
040	90144-0007	MM	1	TAPE	
070	90330-0056		3	NIPPLE, EXT.TH., HEXAGON, R1 1/2-R1 1/2	
080	90330-0057		1	ELBOW, 90 INT. THREAD, R-222R1 1/2	
110	90055-0166		2	HOSE NIPPLE, EXT.THR. R11/2X38 MM	
150	90458-2850		2	HOSE CLIP , 51 MM	
160	352103-0101		1	CABLE GLAND, ST 9, PR15,2/PG9	
K80B1050	90274-0082		1	FLOW SWITCH, 2 - 3 L/MIN	
	90274-0322		*1*	*SPARE PART KIT*	
K80K1750	90042-0254		1	SOLENOID VALVE, DIAPHRAGM R1 1/2	
	90458-2575		*1*	*SOLENOID V.DIAPH. R450466/B F.90042-0254*	
	90042-0557		*1*	*COIL V24DC-N3*	
K80S1750	90187-0147		1	BALL VALVE, G1 1/2	
K80V1750	90415-0032		1	FILTER / 3-02-00-1 1/2"	
	90415-0328		*1*	*FILTER INSERT*	
K80W1753	2837517-0000		1	PIPE	
K80W1754	90166-0236	MM	150	HOSE, 38/51 REINFORCED RUBBER	
K80W1755	1041925-0000		1	PIPE	

Pos	Part No	UN	Qty	Description	Page No

Machine Type | Group Description | Used-In | Group Number | Page No

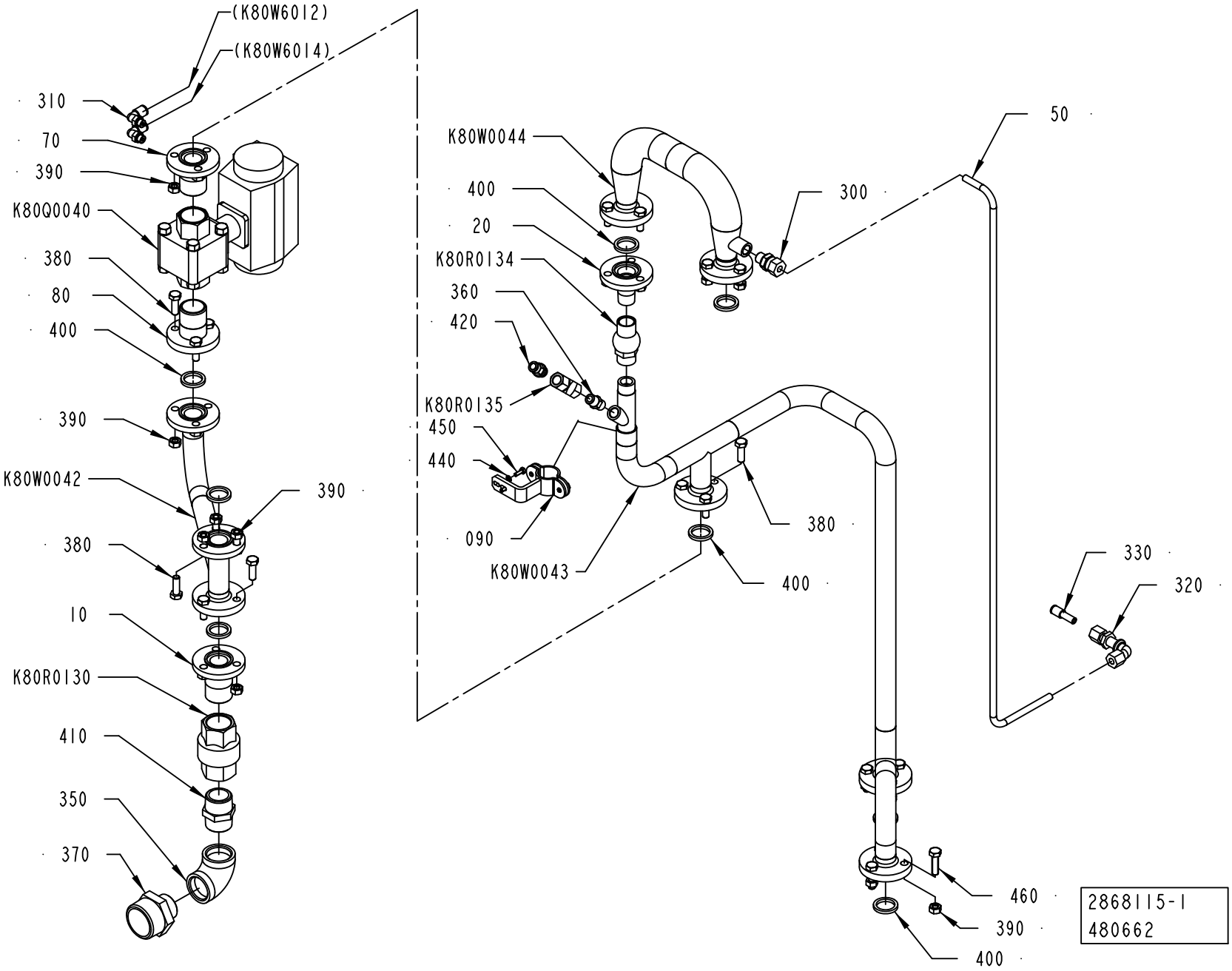
(K80W6012)
(K80W6014)
310
70
390
K80Q0040
380
80
400
390
K80W0042
390
380
10
K80R0130
410
350
370
K80W0044
400
20
K80R0134
360
420
K80R0135
450
440
090
K80W0043
300
50
380
400
330
320
460
390
400
2868115-1
480662

ECM: 507205 - 20111001
Group number: 2868115-0100
Assembly Drawing: 2868115-1_1_AC

Pos	Part No	UN	Qty	Description	Page No
-					
010	1036794-0000		1	PIPE	
020	1036827-0000		1	PIPE	
050	2840897-0000		1	PIPE	
070	2522148-0000		1	PIPE	
080	2522184-0000		1	PIPE	
090	3122505-0000		1	BRACKET	
300	90030-0185		1	CONN. STR., GE08LRED71	
310	350002-0007		2	PUSH-IN L-FITTING QSL-F-G1/8-8	
320	90030-0074		1	BULKHEAD LEAD-IN, ELBOW WSV 8	
330	342929-0121		1	STRAIGHT COUPLING,SOLDER 8/6-8	
350	90330-0014		1	ELBOW, 90 INT. THREAD, R-222R1	
360	90330-0043		1	NIPPLE, EXT.THREAD, HEXAGON, R1/4-R1/4	
370	90330-0045		1	NIPPLE, EXT.THREAD, HEXAGON, R1 1/2-R1	
380	312105-0453		18	SCREW, M6S ISO 4017 M8X25 A4 80	
390	312605-0318		24	HEXAGON NUT, M6M M8 A280	
400	315229-0103		8	SQUARE RING, 23,1X30,1X3,7 MM 1" FDA	
410	342203-0120		1	NIPPLES, EXT. THREAD, HEXAGON, NO. 209	
420	350001-0009		1	PUSH-IN FITTING QS-F-G1/4-8	
430	90144-0007	MM	1	TAPE	
440	315105-0136		2	WASHER PLAIN, 4,3X9X0,8 A4 BRB	
450	312105-0291		2	SCREW, M6S ISO 4017 M4X12 A4 70	
460	312105-0455		6	SCREW, M6S ISO 4017 M8X30 A4 80	
K80Q0040	90187-0148		1	BALL VALVE G1	
	90187-0319		*1*	*GASKET UNIT*	
K80R0130	90230-0044		1	NON-RETURN VALVE 1"	
	90230-0308		*1*	*SPARE PART KIT, 4968993*	
K80R0134	90230-0042		1	NON-RETURN VALVE 1/2"	
K80R0135	90235-0151		1	NON-RETURN VALVE, 534 098 110 0	
K80W0042	2840898-0000		1	PIPE	
K80W0043	2840896-0000		1	PIPE	
K80W0044	1036828-0000		1	TANK	

Pos	Part No	UN	Qty	Description	Page No

Machine Type	Group Description	Used-In	Group Number	Page No

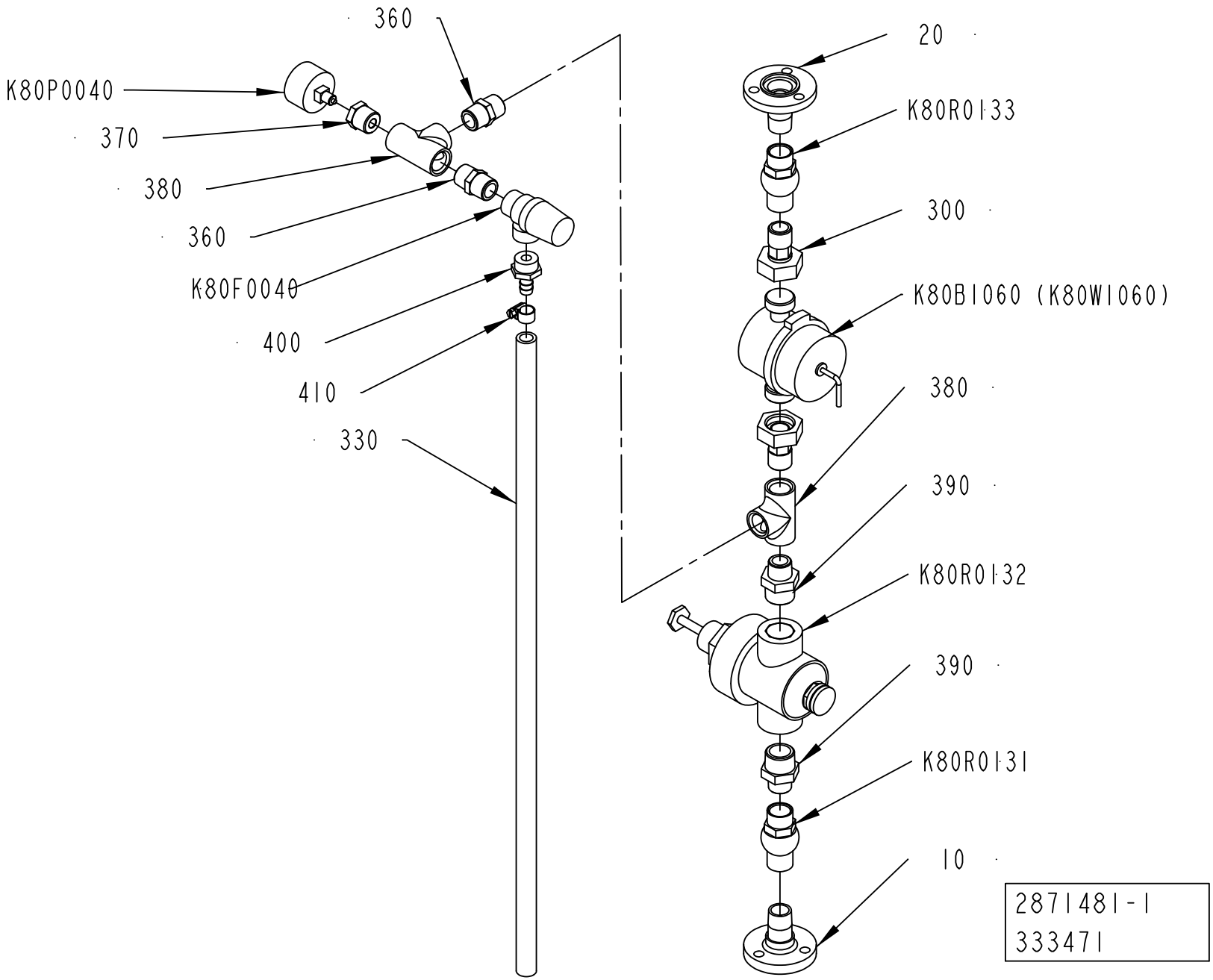
360
K80P0040
370
380
360
K80F0040
400
410
330
20
K80R0133
300
K80B1060 (K80W1060)
380
390
K80R0132
390
K80R0131
10
2871481-1
333471

ECM: 333471 - 20071221
Group number: 2871481-0100
Assembly Drawing: 2871481-1_1_AA

Pos	Part No	UN	Qty	Description	Page No
-					
010	1036826-0000		1	PIPE	
020	1036827-0000		1	PIPE	
300	90030-0465		2	STRAIGHT CONNECTION, MAD DN 15	
	90005-0156		*1*	*WASHER PLAIN ROUND 16/24, H=1,5*	
330	90166-0121	MM	700	HOSE	
360	90330-0021		2	NIPPLE, EXT.THREAD, HEXAGON, R1/2-R1/2	
370	90330-0036		1	BUSHING, INT.EXT. THR. G1/2-G1/8	
380	90330-0049		2	T-PIPE, INT. THREAD, R-221R1/2	
390	90330-0080		2	NIPPLE, EXT.THREAD, HEXAGON, R3/4-R1/2	
400	342901-0105		1	HOSE NIPPLE, EXT.THR. G1/2-12 MM	
410	342991-0100		1	HOSE CLIP,WORM DRIVE TYPE (8)-14	
K80B1060	90243-0245		1	MEASURING INSTRUMENT	
K80F0040	90187-0133		1	SAFETY VALVE, 10 BARS, R1/2, R1/2	
K80P0040	90043-0043		1	PRESSURE GAUGE, 2041D=40 MM	
K80R0131	90230-0042		1	NON-RETURN VALVE 1/2"	
K80R0132	90113-0098		1	PRESSURE REGULATOR	
K80R0133	90230-0042		1	NON-RETURN VALVE 1/2"	

Pos	Part No	UN	Qty	Description	Page No

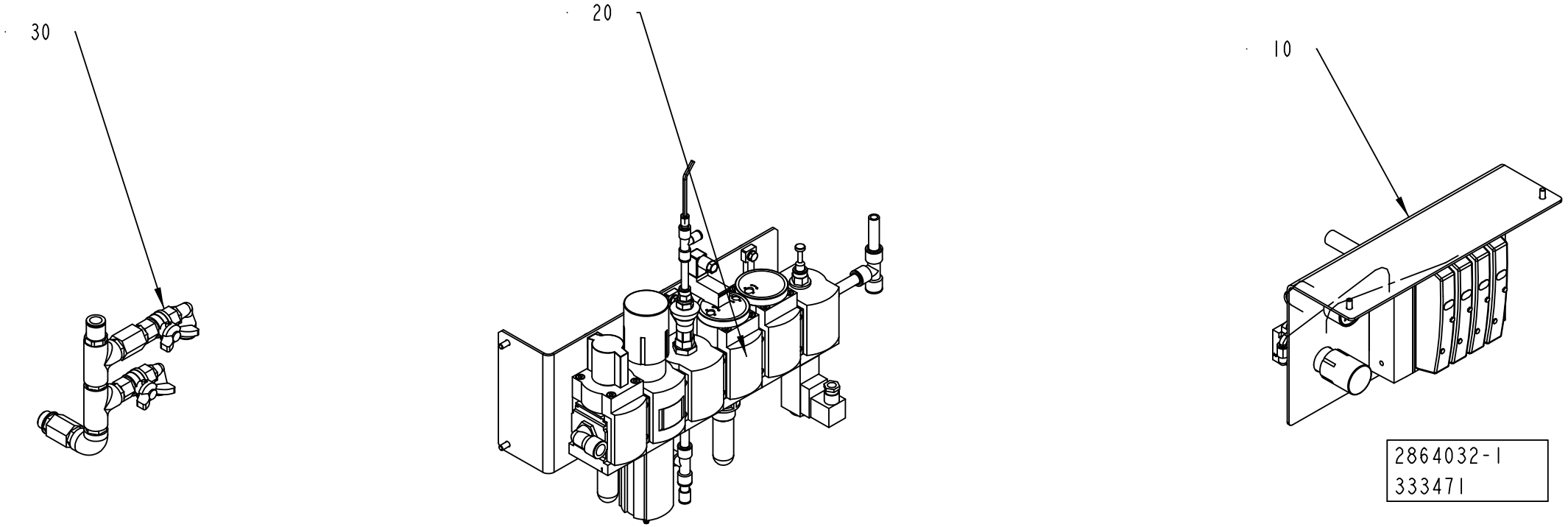
30
20
10
2864032-1
333471

ECM: 333471 - 20071221
Group number: 2864032-0100
Assembly Drawing: 2864032-1_1_AA

Pos	Part No	UN	Qty	Description	Page No
-					
010	2878267-0100		1	VALVE PANEL	**6-37**
020	2846102-0100		1	AIR PANEL	**6-41**
030	2864021-0100		1	PIPE WORK-AIR	**6-43**

Pos	Part No	UN	Qty	Description	Page No

Machine Type | Group Description | Used-In | Group Number | Page No

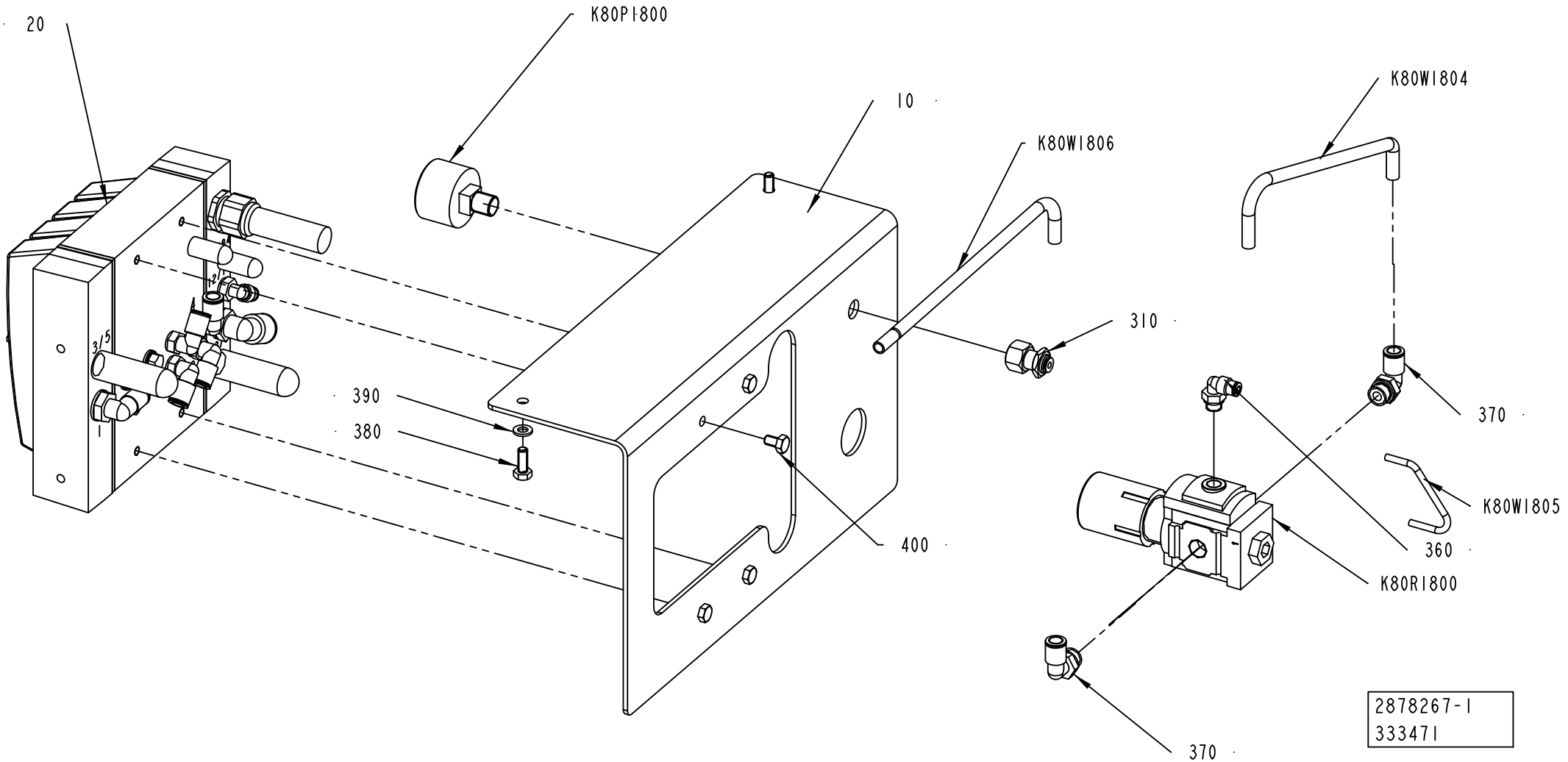
20
K80P1800
10
K80W1804
K80W1806
310
370
390
380
K80W1805
400
360
K80R1800
370
2878267-1
333471

ECM: 485392 - 20110102
Group number: 2878267-0100
Assembly Drawing: 2878267-1_1_AA

Pos	Part No	UN	Qty	Description	Page No
-					
010	2878264-0000		1	PLATE	
020	2878265-0100		1	VALVE GROUP	**6-39**
310	90459-7333		1	PUSH-IN FITTING QSSF-1/4-4-B	
360	350002-0005		1	PUSH-IN L-FITTING QSL-F-G1/8-4	
370	350002-0009		2	PUSH-IN L-FITTING QSL-F-G1/4-8	
380	312105-0368		2	SCREW, M6S ISO 4017 M6X16 A4 80	
390	315105-0153		2	WASHER PLAIN, 6,4X12X1,5 A4 BRB	
400	312105-0364		4	SCREW, M6S ISO 4017 M6X10 A4 80	
K80P1800	90459-7344		1	PRESSURE GAUGE, MA-40-6-R1/4-EN	
K80R1800	90459-5817		1	REGULATOR, MS4-LR-1/4-D6-A8-AS	
K80W1804	315300-0004	MM	250	TUBE, 8 MM PE BLUE	
K80W1805	315300-0016	MM	100	TUBE 4MPE BLUE	
K80W1806	315300-0004	MM	350	TUBE, 8 MM PE BLUE	

Pos	Part No	UN	Qty	Description	Page No

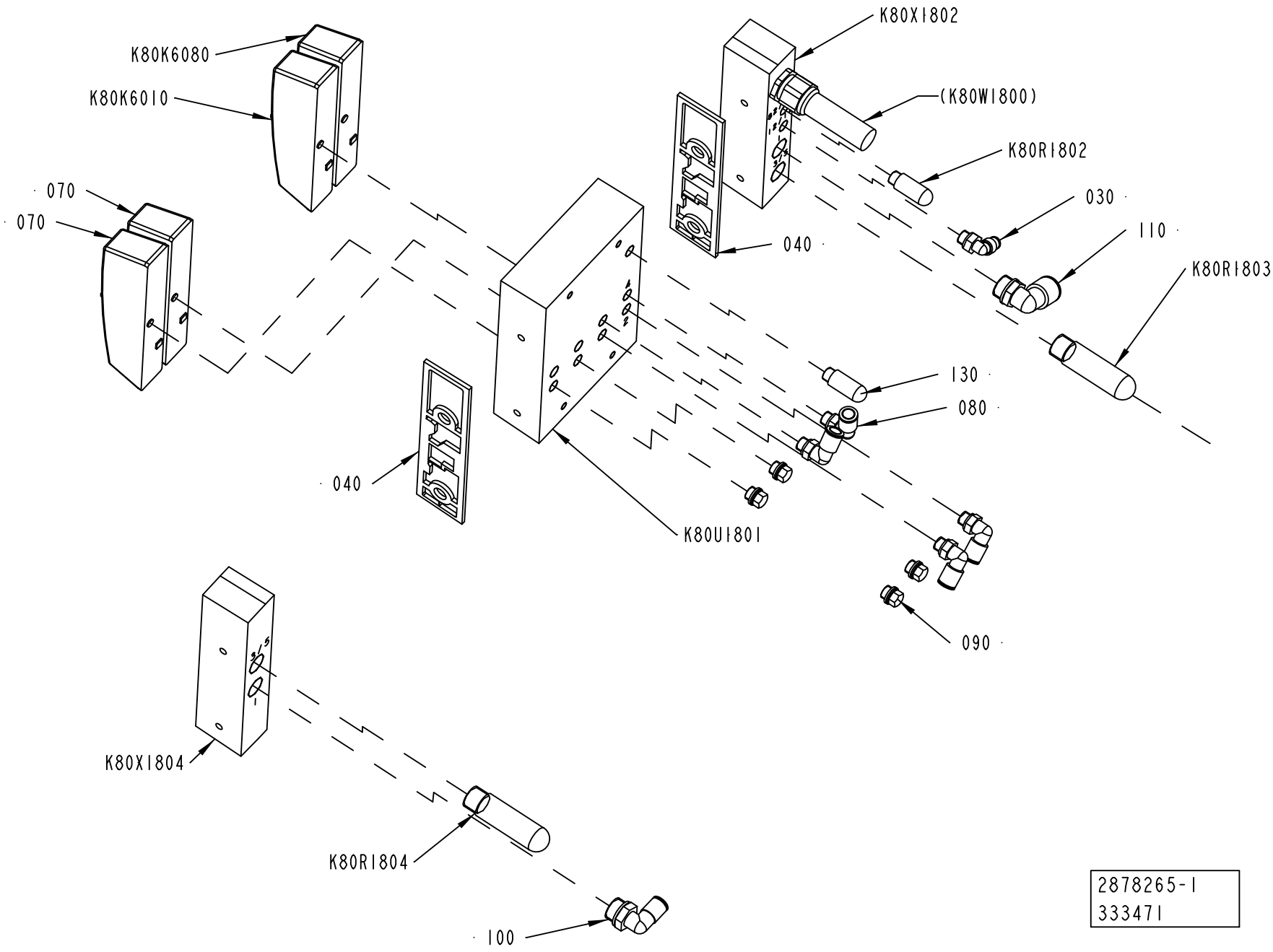
K80K6080
K80K6010
070
070
040
040
K80U1801
K80X1802
(K80W1800)
K80R1802
030
110
K80R1803
130
080
090
K80X1804
K80R1804
100
2878265-1
333471

ECM: 333471 - 20071221
Group number: 2878265-0100
Assembly Drawing: 2878265-1_1_AA

Pos	Part No	UN	Qty	Description	Page No
-					
030	350002-0005		1	PUSH-IN L-FITTING QSL-F-G1/8-4	
040	90458-1207		2	SEALING, STANDARD	
070	90458-1215		2	COVER PLATE, EMPTY VALVE POSITION	
080	350002-0007		4	PUSH-IN L-FITTING QSL-F-G1/8-8	
090	90459-0698		4	PLUG, G1/8EXT, G1/8	
100	350002-0012		1	PUSH-IN L-FITTING QSL-F-G3/8-8	
110	350002-0014		1	PUSH-IN L-FITTING QSL-F-G3/8-12	
130	90328-0047		2	SILENCER, G1/8"	
K80K6010	90458-1194		1	VALVE, 5/2 MONOSTABLE	
K80K6080	90600-2040		1	VALVE, 3/2 MONOSTABLE NC	
K80R1803	90328-0024		2	SILENCER, G3/8"	
K80R1804	90328-0024		2	SILENCER, G3/8"	
K80U1801	90458-1204		1	BASIC SUB-BASE 4 VALVES, CDVI5.0-GB4-MP	
K80X1802	90458-1212		1	LEFT ENDPLATE INCL. 10M CABLE	
K80X1804	90458-1214		1	RIGHT ENDPL EXT. PILOT AIR,CDVI5.0-EPR-S	

Pos	Part No	UN	Qty	Description	Page No

Machine Type | Group Description | Used-In | Group Number | Page No

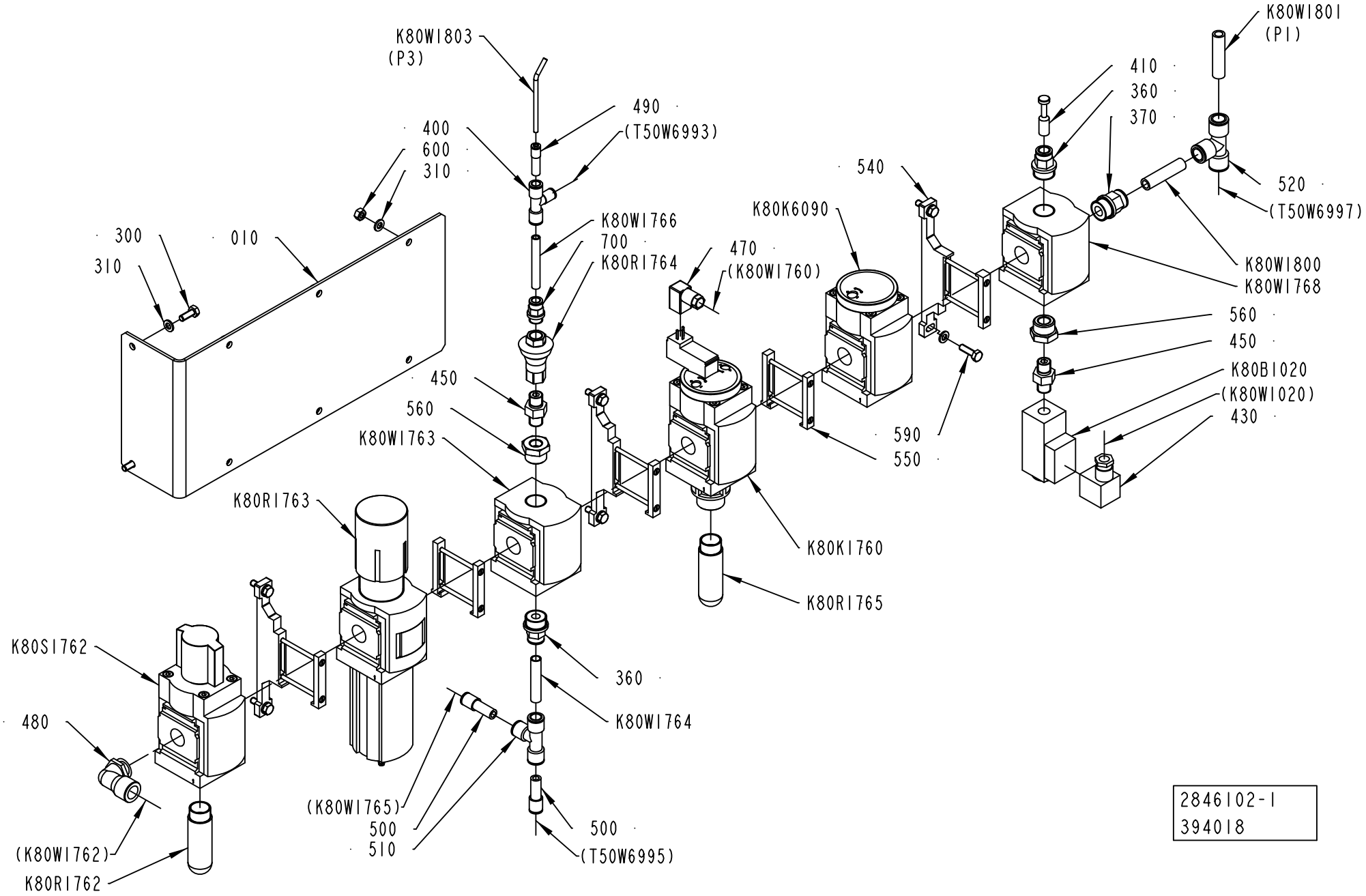

2846102-1
394018

ECM: 485389 - 20110102
Group number: 2846102-0100
Assembly Drawing: 2846102-1_1_AB

Pos	Part No	UN	Qty	Description	Page No
-					
010	2871459-0000		1	PLATE	
300	312105-0368		2	SCREW, M6S ISO 4017 M6X16 A4 80	
310	315105-0153		14	WASHER PLAIN, 6,4X12X1,5 A4 BRB	
360	350001-0015		2	PUSH-IN FITTING QS-F-G1/2-10	
370	350001-0016		1	PUSH-IN FITTING QS-F-G1/2-12	
400	350011-0002		1	PUSH-IN T-FITTING QST-F-8-6	
410	350013-0004		1	PLUG QSC-10H	
430	90110-0095		1	CONNECTOR, PLUG SOCKET, MSSD-C-4P	
450	90224-0372		2	NIPPLE, EXT.THREAD, HEXAGON, R1/4-R1/4	
470	90458-2837		1	CONNECTING CABLE KMEB-1-24-5-LED	
480	90458-2965		1	ELBOW PIPE JOINT, EXT.THREAD,D=14MM-G1/2	
490	350006-0002		1	PUSH-IN FITTING QS-F-8H-4	
500	350006-0006		2	PUSH-IN FITTING QS-F-10H-8	
510	350005-0004		1	PUSH-IN T-FITTING QST-F-10	
520	350005-0005		1	PUSH-IN T-FITTING QST-F-12	
540	90459-1858		3	BRACKET, MS6-WP	
550	90459-1859		2	BRACKET, MS6-MV	
	90459-4787		*1*	*SENSOR BRACKET, WSM-12-J-M5*	
560	90459-2216		2	BUSHING, INT/EXT, G1/4-G1/2	
590	312105-0370		6	SCREW, M6S ISO 4017 M6X20 A4 80	
600	312605-0316		6	HEXAGON NUT, M6M M6 A280	
700	350001-0009		1	PUSH-IN FITTING QS-F-G1/4-8	
K80B1020	90459-6426		1	PRESSURE GUARD PEV-1/4-B-OD	
K80K1760	90459-1854		1	SHUT OFF VALVE, MS6-EE-1/2-10V24	
K80K6090	90459-1855		1	SOFT START VALVE, MS6-DL-1/2	
K80R1762	90328-0025		1	SILENCER G1/2"	
K80R1763	90459-1853		1	FILTER REGULATOR, MS6-LFR-1/2-D7-ERV-AS	
	90459-3809		*1*	*FILTER CARTRIDGE, MS6-LFP-E*	
K80R1764	90459-2425		1	PRESSURE REGULATOR IN-LINE, BSP-1/4	
K80R1765	90328-0025		1	SILENCER G1/2"	
K80S1762	90459-1852		1	SHUT OFF VALVE, MS6-EM1-1/2	
K80W1763	90459-1856		1	DISTRIBUTOR, MS6-FRM-1/2	
K80W1764	315300-0007	MM	150	TUBE, 10 MM PE BLUE	
K80W1766	315300-0004	MM	100	TUBE, 8 MM PE BLUE	
K80W1768	90459-1856		1	DISTRIBUTOR, MS6-FRM-1/2	
K80W1800	315300-0010	MM	100	TUBE, 12 MM PE BLUE	
K80W1801	315300-0010	MM	2000	TUBE, 12 MM PE BLUE	
K80W1803	315300-0016	MM	2000	TUBE 4MPE BLUE	

Pos	Part No	UN	Qty	Description	Page No

Machine Type	Group Description	Used-In	Group Number	Page No

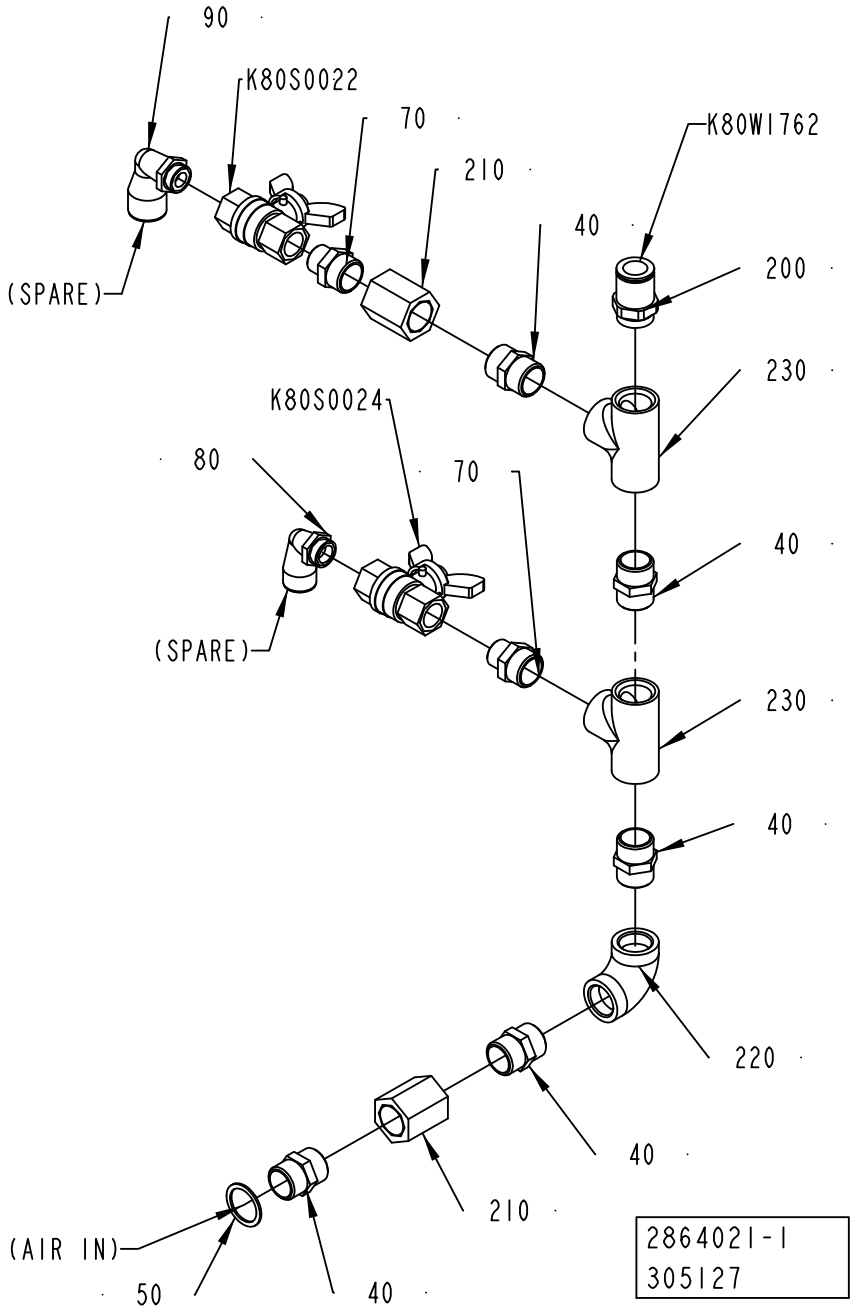
90
K80S0022
70
210
K80W1762
40
200
(SPARE)
230
K80S0024
80
70
40
(SPARE)
230
40
220
40
210
(AIR IN)
50
40
2864021-1
305127

ECM: 485390 - 20110102
Group number: 2864021-0100
Assembly Drawing: 2864021-1_1_AA

Pos	Part No	UN	Qty	Description	Page No
-					
040	342700-0113		5	NIPPLE, EXT.THREAD, HEXAGON, G1/2-G1/2	
050	315239-0113		1	NYLON WASHER G1/2, 1/2RRP	
070	342700-0206		2	NIPPLE, EXT.THREAD, HEXAGON, G1/2-G3/8	
080	350002-0014		1	PUSH-IN L-FITTING QSL-F-G3/8-12	
090	90458-2963		1	ELBOW PIPE JOINT, EXT.THREAD,D=14MM-G3/8	
200	90055-0097		1	STRAIGHT COUPLING	
210	90140-0079		2	SLEEVE, INT. THREAD, NO. 501-08	
220	90330-0020		1	ELBOW, 90 INT. THREAD, R-2221/2	
230	90330-0049		2	T-PIPE, INT. THREAD, R-221R1/2	
300	90144-0007		1	TAPE	
K80S0022	90187-0089		1	BALL VALVE, G3/8, NPBR	
K80S0024	90187-0089		1	BALL VALVE, G3/8, NPBR	
K80W1762	90166-0196	MM	770	TUBE 14MM PA BLUE	

Pos	Part No	UN	Qty	Description	Page No

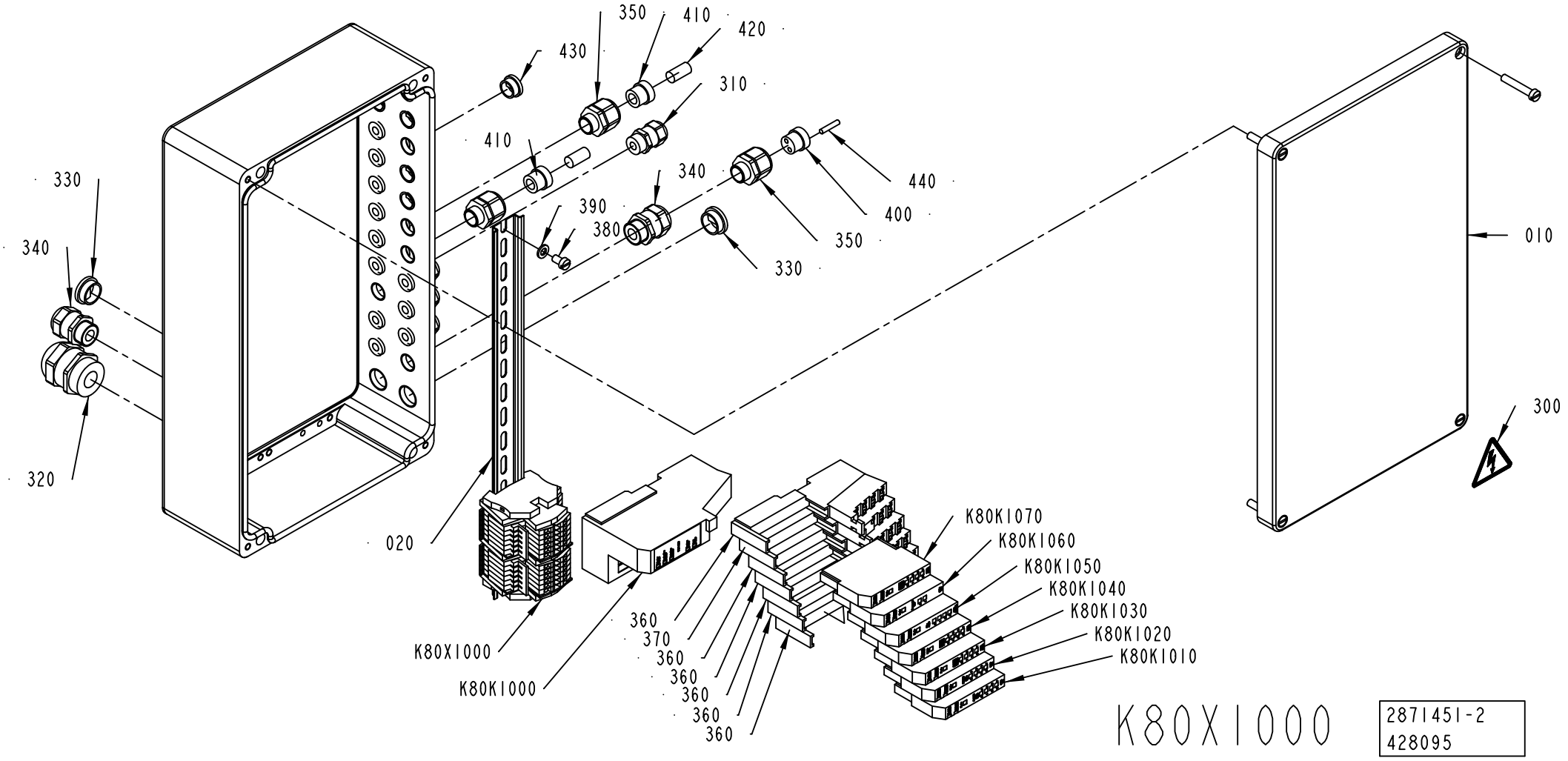
350
410
420
430
310
410
330
340
440
390
340
400
380
350
330
010
300
320
020
K80K1070
K80K1060
K80K1050
K80K1040
K80K1030
K80K1020
K80K1010
360
370
360
360
360
360
360
K80X1000
K80K1000
K80X1000
2871451-2
428095

ECM: 460635 - 20101001
Group number: 2871451-0200
Assembly Drawing: 2871451-2_1_AB

Pos	Part No	UN	Qty	Description	Page No
ANSI					
300	359715-0100		1	WARNING SIGN ANSI (H), ELECTRIC SHOCK	
ISO					
300	359705-0015		1	WARNING SIGN ISO, RISK OF ELECTRIC SHOCK	
Common Parts					
010	2785232-0000		1	CONNECTION BOX	
020	2839250-0000		1	RAIL	
310	90458-0306		12	CABLE GLAND, M16X1,5, 5311 1010	
320	90458-0309		1	CABLE GLAND, M32X1,5, 5311 1040	
330	90458-1308		2	BLIND PLUG CIRCULAR, M20X1,5 514GFK/220	
340	90458-0315		2	CABLE GLAND, M20X1,5, 5311 1120	
350	90458-0420		3	CABLE GLAND, VK 21652Y	
360	90459-2526		6	REMOTE I/O BASE MODULE 8 POINTS, 1734-TB	
370	90459-2528		1	REMOTE I/O BASE MODULE FOR THERMOCOUPLE	
380	312125-0364		2	SCREW ISO 1207 M6X10 A4	
390	315105-0153		2	WASHER PLAIN, 6,4X12X1,5 A4 BRB	
400	353249-0036		1	INSERT, MULTI HOLE, EK152M 2X4	
410	353249-0009		2	INSERT, SINGLE HOLE, EK152 9	
420	353249-0310		2	SEALING PIN, 10,0X20	
430	90458-1307		7	BLIND PLUG CIRCULAR, M16X1,5 514GFK/216	
440	353249-0301		1	SEALING PIN, 4,0X20	
K80K1000	90459-2494		1	DEVICENET I/O ADAPTER MODULE, 1734-ADN	
K80K1010	90459-6561		1	DIGITAL INPUT 8 PTS SINK, 1734-IB8/C	
K80K1020	90459-6561		1	DIGITAL INPUT 8 PTS SINK, 1734-IB8/C	
K80K1030	90459-6560		1	DIGITAL OUTPUT 8 PTS, 1734-OB8E/C	
K80K1040	90459-6560		1	DIGITAL OUTPUT 8 PTS, 1734-OB8E/C	
K80K1050	90459-5261		1	REMOTE I/O, RELAY OUTP. 4 PTS,1734-OW4/C	
K80K1060	90459-2512		1	REMOTE I/O THERMOCOUPLE INPUT 2 PTS	
K80K1070	90459-6560		1	DIGITAL OUTPUT 8 PTS, 1734-OB8E/C	
K80X1000	2871452-0200		1	TERMINAL BLOCK	**6-47**

Pos	Part No	UN	Qty	Description	Page No

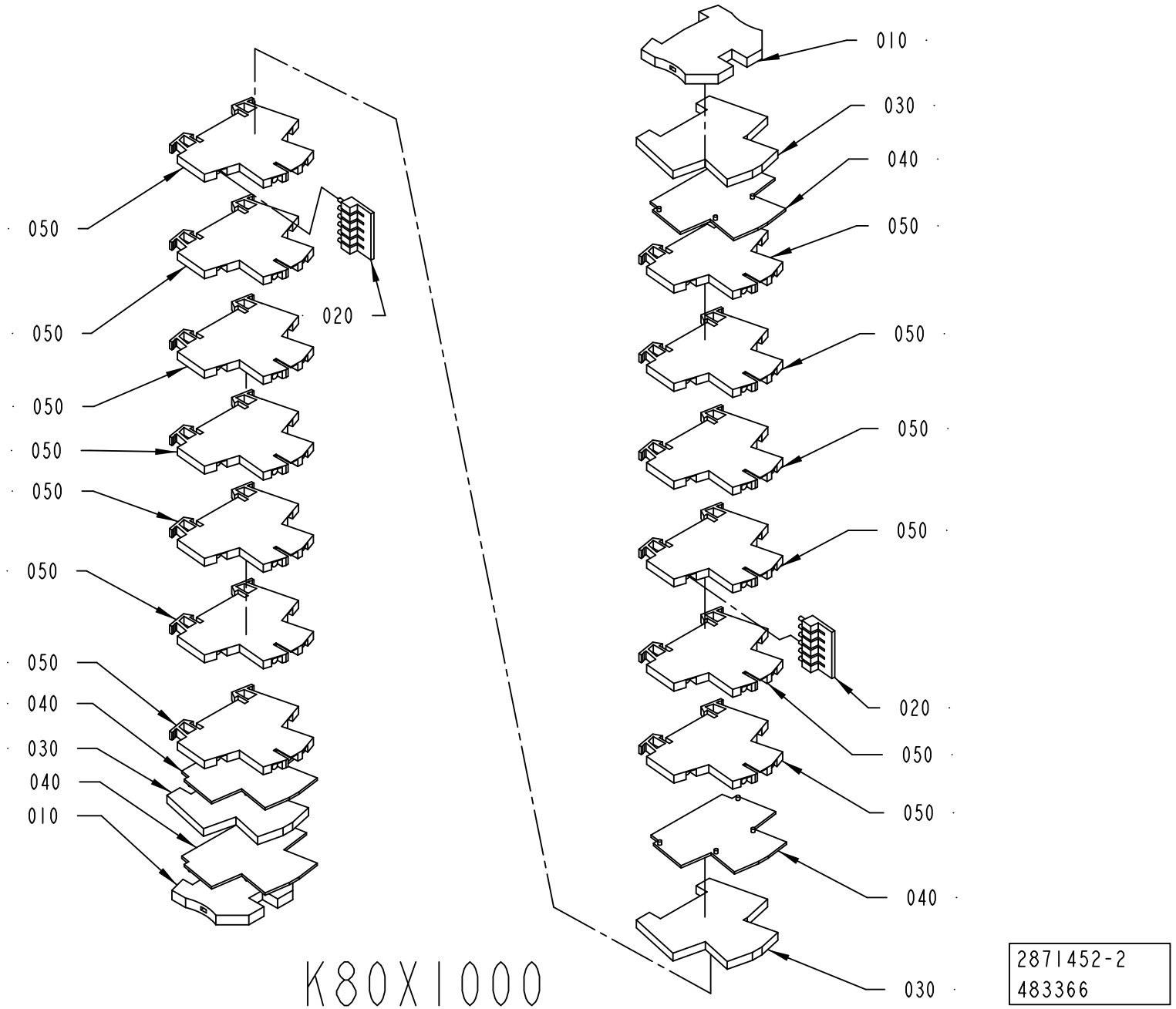
050
050
050
050
050
050
050
040
030
040
010
020
010
030
040
050
050
050
050
050
020
050
050
040
030
K80X1000
2871452-2
483366

ECM: 483393 - 20110101
Group number: 2871452-0200
Assembly Drawing: 2871452-2_1_AB

Pos	Part No	UN	Qty	Description	Page No
-					
010	353024-0205		2	EARTH TERMINAL WPE 4	
020	353034-0030		2	BRIDGE CONNECTOR WQV 2,5/10	
030	353024-0212		3	EARTH TERMINAL WDK 2,5 PE	
040	353032-0009		4	END PLATE, WAP WDK 2,5	
050	90459-5253		13	TERMINAL BLOCK WDK 2,5 V	
060	359011-0821		1	MARKING, DEK 6 FW 1-50	
070	359011-0834		1	MARKING, EARTH, DKE 6 GW ERDE I.KR.	
080	359011-0822		1	MARKING, DEK 6 FW 51-100	
090	359011-0823		1	MARKING, DEK 6 FW 101-150	

Pos	Part No	UN	Qty	Description	Page No

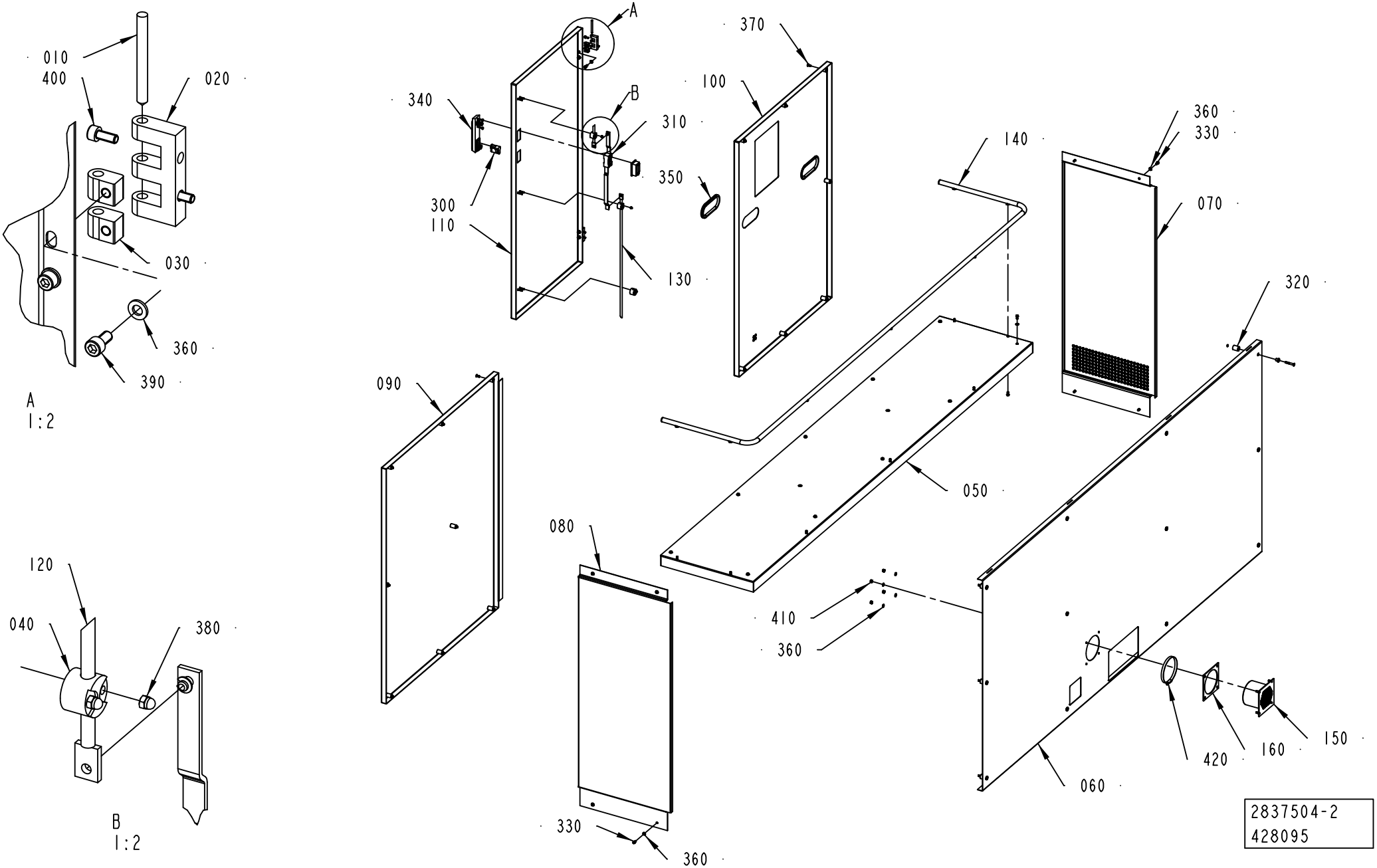
010
400
020
030
360
390
A
1:2
120
040
380
B
1:2
A
B
340
300
110
310
350
130
370
100
090
080
330
360
140
360
330
070
320
050
410
360
420
160
150
060
2837504-2
428095

ECM: 428835 - 20100302
Group number: 2837504-0200
Assembly Drawing: 2837504-2_1_AB

Pos	Part No	UN	Qty	Description	Page No
-					
010	988685-0000		2	PIN	
020	1035792-0000		2	E-HINGE	
030	1129770-0000		4	BLOCKING PIECE	
040	1129274-0000		3	GUIDE LUG	
050	3037849-0000		1	TOP COVER	
060	3037856-0000		1	FRONT COVER	
070	2837507-0000		1	COVER	
080	2837508-0000		1	COVER	
090	3037851-0000		1	COVER	
100	3037852-0000		1	COVER	
110	2837511-0000		1	DOOR	
120	1036304-0039		1	LOCKING ARM	
130	1036304-0040		1	LOCKING ARM	
140	3037853-0000		1	RAILING	
150	3031958-0000		1	HOSE CONNECTION	
160	3031959-0000		1	HOSE CONNECTION	
300	90237-0128		1	LOCK CYLINDER, 1109-SU125	
310	90237-0153		1	LOCK HOUSING, 1121-U26-0B	
320	90226-0458		12	MOUNTING SCREW	
330	90458-0072		25	SCREW ISO 7380 S M6X12 A2	
340	90237-0176		1	TURNING HANDLE, 1125-U190-A	
350	90143-0060	MM	300	EDGE STRIP 9,5X6,3MM BLACK PVC	
360	315105-0153		26	WASHER PLAIN, 6,4X12X1,5 A4 BRB	
370	90601-2046		15	CAPTIVE SCREW M6, GUTBG 6-4-12	
380	312705-0312		6	NUT HEX. DOMED CAP MHM-6 M4 A280	
390	312115-0366		4	SCREW ISO4762 M6X12 A4 80	
400	312115-0327		4	SCREW ISO4762 M5X12 A4 80	
410	312812-0316		4	HEXAGON NUT, NY-LOCK M6 A4 80	
420	342991-0114		1	HOSE CLIP,WORM DRIVE TYPE (87)-112	

Pos	Part No	UN	Qty	Description	Page No

Machine Type	Group Description	Used-In	Group Number	Page No

MACHINE BODY

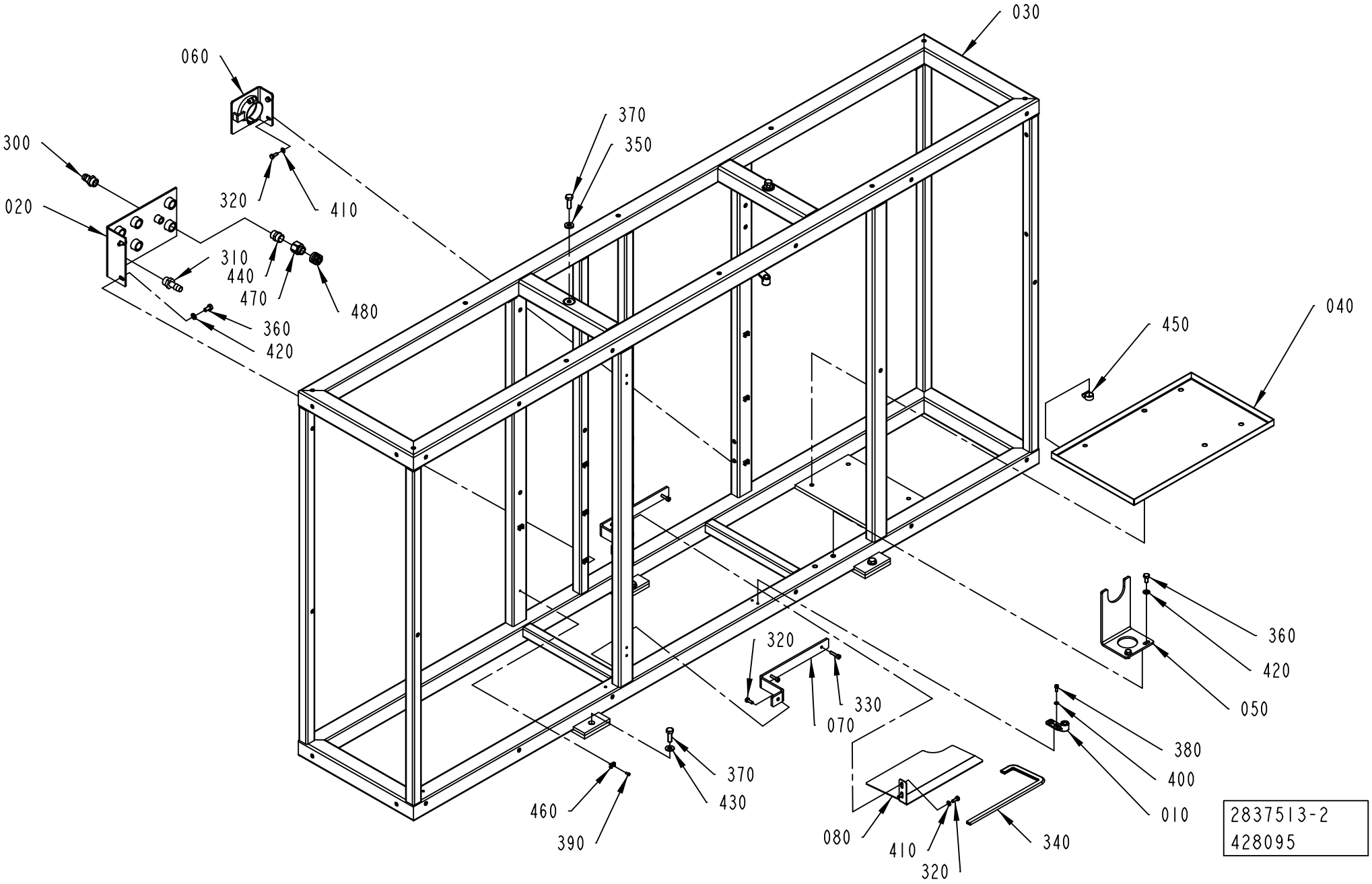

ECM: 428095 - 20100302
Group number: 2837513-0200
Assembly Drawing: 2837513-2_1_AA

Pos	Part No	UN	Qty	Description	Page No
-					
010	1538868-0000		2	BRACKET	
020	3037896-0000		1	CONNECTION TABLE	
030	2837512-0000		1	FRAME	
040	2837514-0000		1	WASTE BOX	
050	2837515-0000		1	HANGER	
060	2837516-0000		1	HOLDER	
070	2835891-0000		2	BRACKET	
080	2890052-0000		1	COVER	
300	90163-0039		1	HOSE NIPPLE EXT.THR. G1/2-17 MM	
310	90055-0033		1	HOSE NIPPLE, EXT.THR. R1/2-13 MM	
320	312105-0368		6	SCREW, M6S ISO 4017 M6X16 A4 80	
330	312115-0372		4	SCREW ISO4762 M6X25 A4 80	
340	90143-0097	M	0	SELF GRIPPING GASKET, 1011-24	
350	315115-0173		2	WASHER PLAIN, TBRB 10,5/22 H=4	
360	312105-0449		4	SCREW, M6S ISO 4017 M8X16 A4 80	
370	312105-0495		5	SCREW, M6S ISO 4017 M10X30 A4 80	
380	312115-0327		4	SCREW ISO4762 M5X12 A4 80	
390	312125-0287		12	SLOTTED HEAD SCREW, ISO1207 M4X8 A4	
400	315105-0146		4	WASHER PLAIN, 5,3X10X1 A4 BRB	
410	315105-0153		4	WASHER PLAIN, 6,4X12X1,5 A4 BRB	
420	315105-0165		4	WASHER PLAIN, 8,4X16X1,6 A4 BRB	
430	315105-0173		3	WASHER PLAIN, 10,5X22X2 A4 BRB	
440	342700-0113		1	NIPPLE, EXT.THREAD, HEXAGON, G1/2-G1/2	
450	342991-0102		1	HOSE CLIP,WORM DRIVE TYPE (13)-20	
460	352113-0205		12	ANCHOR PLATES FOR STRIPS, TM2S8-C100	
470	90600-4074		1	HEXAGON NIPPLE, WIROFLEX 260336	
480	90600-4081		1	ADAPTER, WIROFLEX 260459	

Pos	Part No	UN	Qty	Description	Page No

Machine Type | Group Description | Used-In | Group Number | Page No

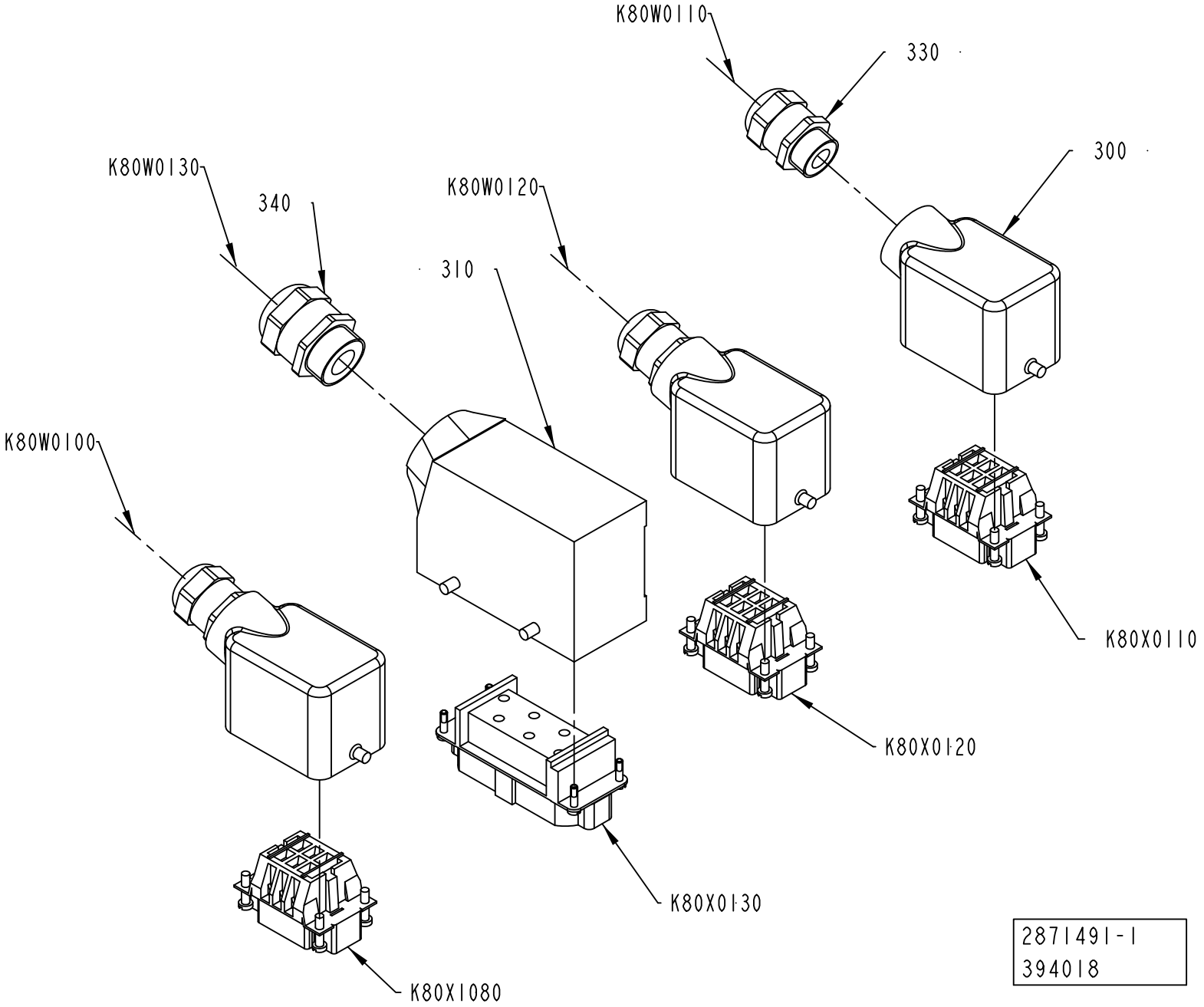
K80W0110
330
300
K80W0130
340
K80W0120
310
K80W0100
K80X0110
K80X0120
K80X0130
K80X1080
2871491-1
394018

ECM: 471703 - 20110101
Group number: 2871491-0100
Assembly Drawing: 2871491-1_1_AC

Pos	Part No	UN	Qty	Description	Page No
-					
010	90459-2517		1	DEVICE BOX 8 PORT THIN CABLE	
040	312105-0366		4	SCREW, M6S ISO 4017 M6X12 A4 80	
050	312115-0289		4	SCREW ISO4762 M4X10 A4 80	
060	351160-0102	M	20	WIRE AWM 1X0,75 MM2 DARKBLUE	
070	353001-0119		25	END SLEEVE H 1.0/14 YELLOW	
080	359009-0200		3	CABLE MARKING, YELLOW, PK 2/4" A"	
090	359009-0201		3	CABLE MARKING, YELLOW, PK 2/4" B"	
100	359011-0821		2	MARKING, DEK 6 FW 1-50	
110	359011-0834		1	MARKING, EARTH, DKE 6 GW ERDE I.KR.	
120	352113-0101		16	CABLE TIE, BLACK 92X2,5 MM	
300	90459-1458		3	HOOD, SIDE ENTRY, HAN6E, 19 30 006 1540	
310	90459-6630		1	HOOD, SIDE ENTRY, 16B, 19 30 016 1521	
330	90458-0307		3	CABLE GLAND, M20X1,5, 5311 1020	
340	90458-0308		1	CABLE GLAND, M25X1,5, 5311 1030	
K80W0100	351150-0406	M	3	CABLE OLFLEX 7X0,75 MM2 LIGHT/GREY	
K80W0110	351150-0418	M	3	CABLE OLFLEX 4X2,5 MM2 LIGHT/GREY	
K80W0120	351150-0418	M	3	CABLE OLFLEX 4X2,5 MM2 LIGHT/GREY	
K80W0130	351150-0166	M	3	CABLE OLFLEX 4X4 MM2 LIGHT/GREY	
K80W1000	90459-2530	M	2	DEVICENET CABLE THIN	
K80W1010	351150-0403	M	2	CABLE OLFLEX 3X0,75 MM2 LIGHT/GREY	
K80W1020	351150-0403	M	2	CABLE OLFLEX 3X0,75 MM2 LIGHT/GREY	
K80W1030	351150-0422	M	1	CABLE OLFLEX 3X4 MM2 LIGHT/GREY	
K80W1040	351150-0404	M	3	CABLE OLFLEX 4X0,75 MM2 LIGHT/GREY	
K80W1140	90220-0034	M	2	THERMOC.CABLE, TEX/SITW-20F-KX 2X0,5MM2	
K80W1730	351120-0142	M	2	CABLE Ã–LFLEX HEAT 180 SIHF 3X0,75	
K80W1750	351150-0403	M	3	CABLE OLFLEX 3X0,75 MM2 LIGHT/GREY	
K80W1760	351150-0403	M	3	CABLE OLFLEX 3X0,75 MM2 LIGHT/GREY	
K80X0110	90110-0052		1	MALE INSERT, HAN E06, 0933 0062 601	
K80X0120	90110-0052		1	MALE INSERT, HAN E06, 0933 0062 601	
K80X0130	90110-0054		1	MALE INSERT, HAN 6 HSB, 0931 0062 601	
K80X1080	90110-0054		1	MALE INSERT, HAN 6 HSB, 0931 0062 601	
T50W0840	351150-0403	M	1	CABLE OLFLEX 3X0,75 MM2 LIGHT/GREY	

Pos	Part No	UN	Qty	Description	Page No

Machine Type | Group Description | Used-In | Group Number | Page No

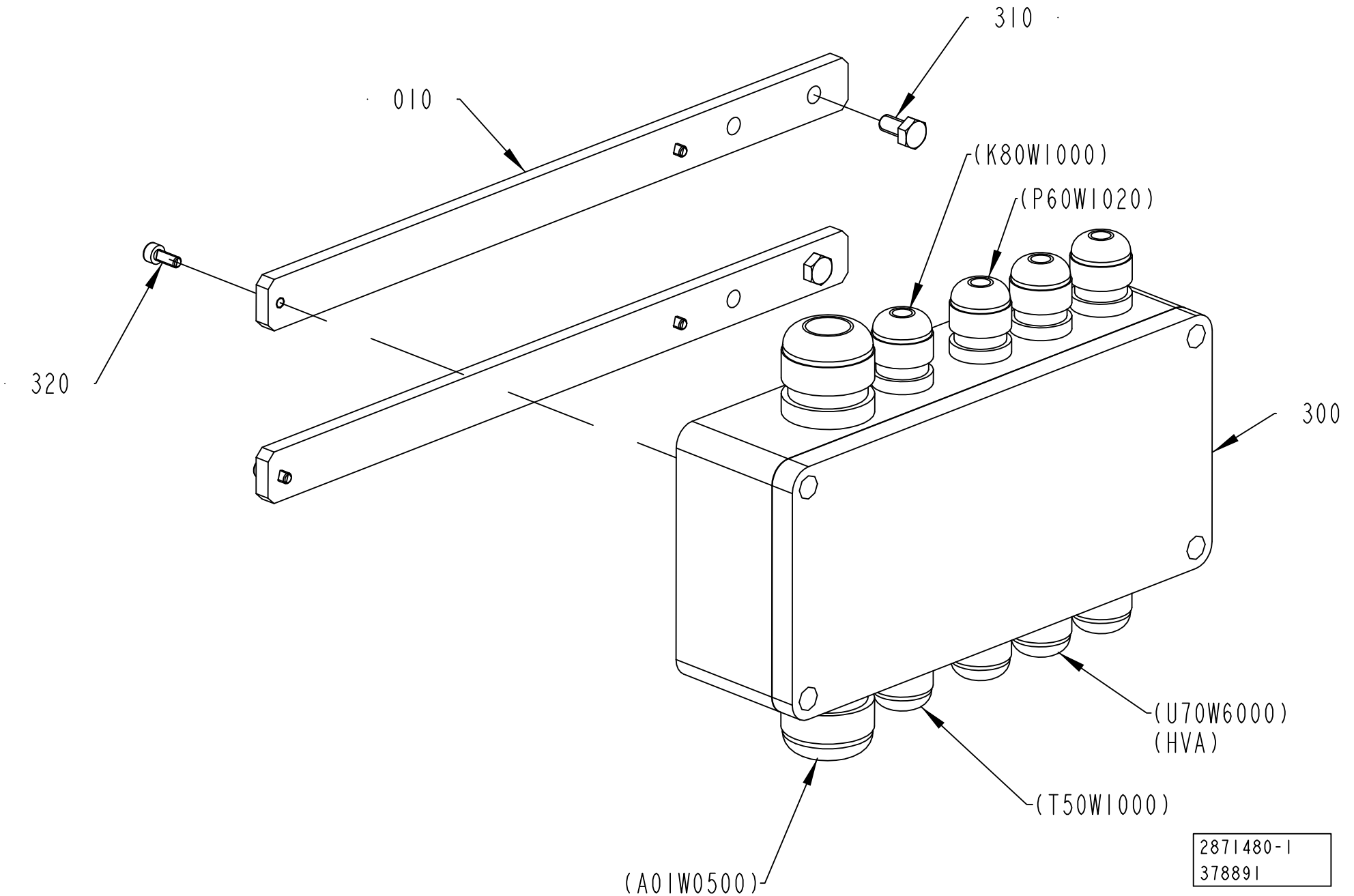
310
010
(K80W1000)
(P60W1020)
320
300
(U70W6000)
(HVA)
(T50W1000)
(A01W0500)
2871480-1
378891

ECM: 380856 - 20081218
Group number: 2871480-0100
Assembly Drawing: 2871480-1_1_AB

Pos	Part No	UN	Qty	Description	Page No
-					
010	2793364-0000		2	SUPPORT	
300	90459-2517		1	DEVICE BOX 8 PORT THIN CABLE	
310	312105-0366		2	SCREW, M6S ISO 4017 M6X12 A4 80	
320	312115-0289		4	SCREW ISO4762 M4X10 A4 80	

Pos	Part No	UN	Qty	Description	Page No

Tetra Pak

SPC
Spare Parts Catalogue

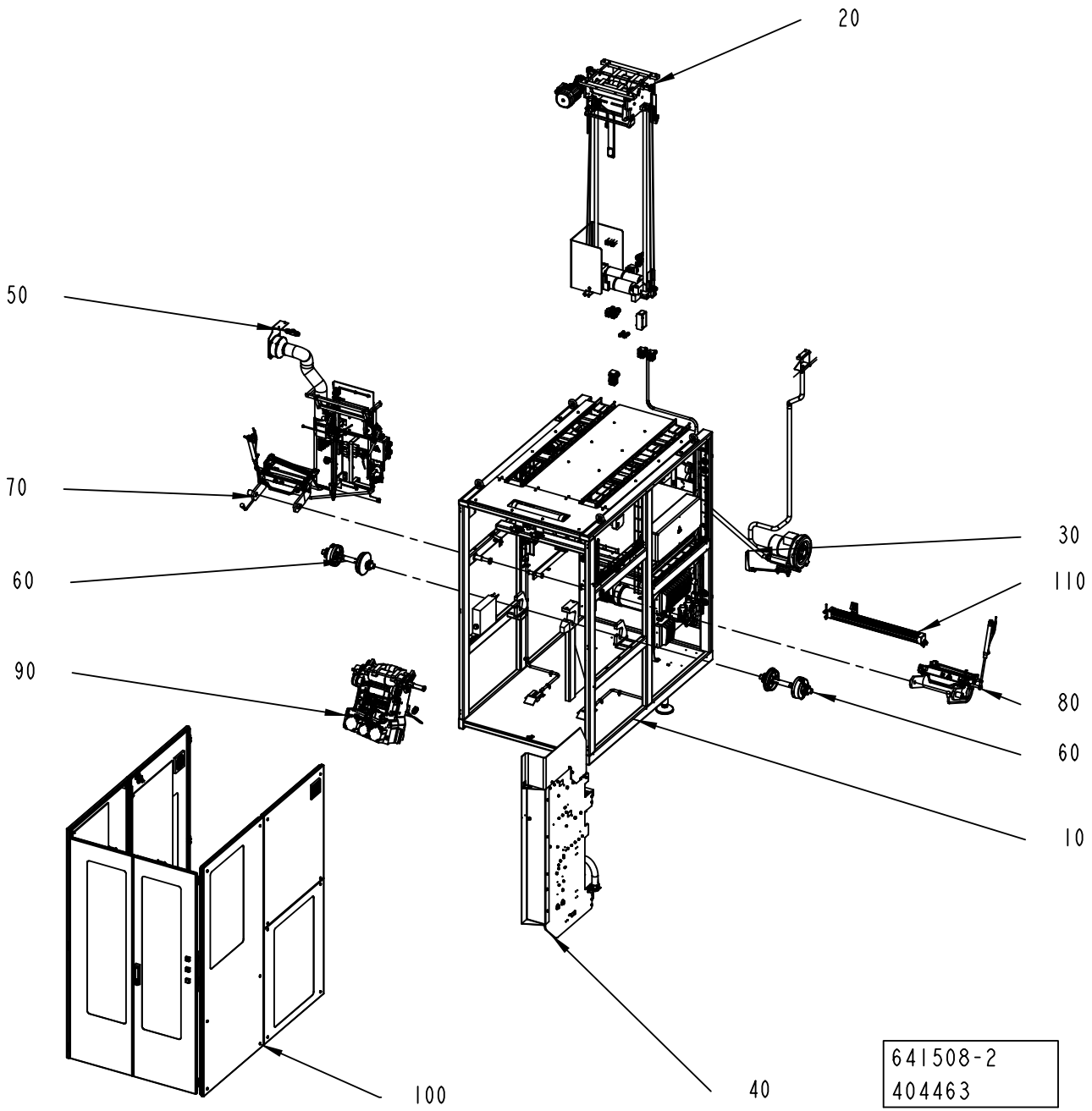
20
50
70
60
90
30
110
80
60
10
100
40
641508-2
404463

ECM: 405726 - 20090731
Group number: 641508-0200
Assembly Drawing: 641508-2_1_AA

Pos	Part No	UN	Qty	Description	Page No
-					
010	2844180-0200		1	MACHINE BODY	**7-5, 7-7, 7-9, 7-11**
020	2800180-0200		1	PAPER MAGAZINE	**7-53, 7-55**
030	2807529-0100		1	FAN SYSTEM	**7-79**
040	2807492-0300		1	STRIP MAGAZINE	**7-81**
050	2807512-0200		1	STRIP APPLICATOR	**7-111**
060	2832312-0100		2	PAPER REEL HOLDER	**7-127, 11-71**
070	2842962-0100		1	MATERIAL HOLDER L1	**7-129**
080	2842953-0100		1	MATERIAL HOLDER L2	**7-135**
090	2832322-0100		1	SPLICING DEVICE	**7-141**
100	2842972-0200		1	COVERING PANEL	**7-151**
110	2842977-0100		1	SIDE FEEDER	**7-171**

Pos	Part No	UN	Qty	Description	Page No

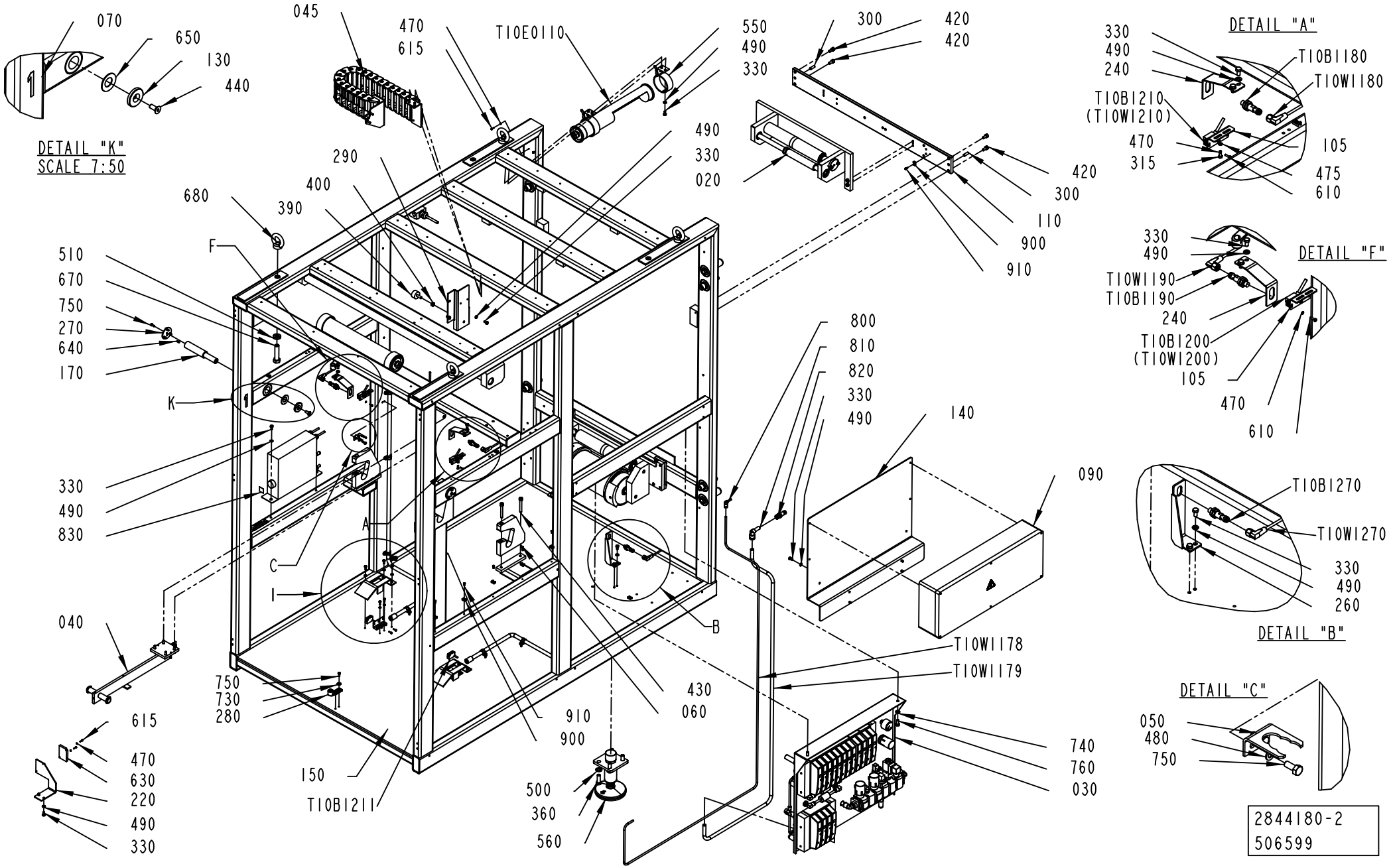
DETAIL "K"
SCALE 7:50
DETAIL "A"
DETAIL "F"
DETAIL "B"
DETAIL "C"
070
650
130
440
045
470
615
T10E0110
550
490
330
300
420
420
330
490
240
T10B1180
T10W1180
T10B1210
(T10W1210)
470
315
105
475
610
490
330
020
290
400
390
680
F
510
670
750
270
640
170
K
330
490
830
C
I
A
B
040
615
470
630
220
490
330
750
730
280
150
T10B1211
910
900
430
060
500
360
560
420
300
110
900
910
800
810
820
330
490
140
090
T10W1178
T10W1179
740
760
030
330
490
T10W1190
T10B1190
240
T10B1200
(T10W1200)
105
470
610
T10B1270
T10W1270
330
490
260
050
480
750
2844180-2
506599

ECM: 506601 - 20111001
Group number: 2844180-0200
Assembly Drawing: 2844180-2_1_AE

This list covers pages from 7-4 to 7-11

Pos	Part No	UN	Qty	Description	Page No
CE					
T10E0100	90164-0015		1	LIGHT FIXTURE, RL70CV-111 / 230V 50HZ	
	90297-0007		*1*	*FLUORESCENT TUBE, PLS 11*	
	92297-0301		*1*	*GLOW IGNITER 4-65W S\10, E 8219023*	
	90297-0007		*1*	*FLUORESCENT TUBE, PLS 11*	
	92297-0301		*1*	*GLOW IGNITER 4-65W S\10, E 8219023*	
T10E0110	90164-0015		1	LIGHT FIXTURE, RL70CV-111 / 230V 50HZ	
	90297-0007		*1*	*FLUORESCENT TUBE, PLS 11*	
	92297-0301		*1*	*GLOW IGNITER 4-65W S\10, E 8219023*	
	90297-0007		*1*	*FLUORESCENT TUBE, PLS 11*	
	92297-0301		*1*	*GLOW IGNITER 4-65W S\10, E 8219023*	
CSA					
T10E0100	90459-3784		1	LIGHT FIXTURE, RL70CE-118	
	90459-3785		*1*	*FLUORESCENT TUBE, PL-L 18*	
T10E0110	90459-3784		1	LIGHT FIXTURE, RL70CE-118	
	90459-3785		*1*	*FLUORESCENT TUBE, PL-L 18*	
Common Parts					
010	2815068-0100		1	BENDING ROLLER	**7-13**
015	3074528-0100		1	CABLE TRENCH	**7-17, 7-19**
020	2818684-0100		1	ROLLER	**7-21**
030	2832309-0200		1	PNEUMATIC PANEL	**7-23, 7-25**
040	2844184-0200		1	BRACKET	**7-37**
045	2850468-0100		1	CHAIN	**7-39**
050	977527-0000		1	BRACKET	
055	979548-0000		1	MACHINE PLATE	
060	1488005-0000		2	BEARING BLOCK	
065	3059773-0000		1	BRACKET	
070	3103279-0000		1	LABEL	
080	3103280-0000		1	LABEL	
090	2818714-0300		1	CONNECTION BOX	**7-41, 7-43**
095	3041557-0100		1	DOOR SAFETY SWITCH	**7-47**
100	2943508-0200		1	CABLE HARNESS	**7-49, 7-51**
105	3046707-0000		4	BRACKET	
110	2806665-0000		1	PLATE	
120	2815067-0000		1	SHAFT	
125	3046709-0000		1	COVER	
130	2832299-0000		2	COVER	
135	3046710-0000		2	COVER	
140	2832316-0000		1	BRACKET	
145	3046711-0000		1	COVER	
150	2832324-0000		1	FRAME	
160	2842965-0000		1	BEARING BLOCK	
170	2842973-0000		2	PIN	
180	2844188-0000		2	PIN	
210	2966437-0000		2	PROTECTION	
220	2867894-0000		1	BRACKET	
240	2850471-0000		2	BRACKET	
250	979593-0000		4	CAP	
260	2894763-0000		1	ANGLE BRACKET	
270	2850463-0000		2	FLANGE	
280	1538868-0000		4	BRACKET	
290	2867910-0000		1	BRACKET	
300	311103-1403		2	PARALLEL PIN ISO 2338 8M6X24 A1	
315	312105-0291		8	SCREW, M6S ISO 4017 M4X12 A4 70	
330	312105-0366		22	SCREW, M6S ISO 4017 M6X12 A4 80	
350	312105-0491		2	SCREW, M6S ISO 4017 M10X20 A4 80	
360	312105-0538		16	SCREW, M6S ISO 4017 M12X35 A4 80	
380	312403-0636		4	SCREW ISO4762 M16X80 12.9	
390	90347-0162		1	DAMPER	
400	312605-0318		1	HEXAGON NUT, M6M M8 A280	
420	312115-0449		4	SCREW ISO4762 M8X16 A4 80	
430	312115-0463		6	SCREW ISO4762 M8X60 A4 80	
440	312155-0451		2	SCREW DIN 7991 MF6S M8X20 A4 70	
460	312115-0327		10	SCREW ISO4762 M5X12 A4 80	
470	315105-0124		12	WASHER BRB 3,2X6 RFR	
475	315105-0136		10	WASHER BRB 4,3X8 RFR	
480	315105-0146		34	WASHER BRB 5,3X10 RFR	
490	315105-0153		22	WASHER BRB 6,4X12 RFR	
500	315105-0178		16	WASHER BRB 13X24 RFR	
510	315111-0186		8	WASHER PLAIN, TBRB 17/30 H=6	
520	90165-0039		10	PIPE CLAMP D=15 MM, GSK15/12	
530	90005-0140		2	WASHER PLAIN ROUND 10,5(M10)/30, H=2	
540	311523-0142		4	BLIND RIVET ISO 15983 -3.2X6 A2/A2	
550	90164-0303		4	LIGHT FIXTURE, BRACKET 70MM	
560	90600-0725		4	FOOT 32000N, 90600-0725	
570	90152-0058	M	1.4	HOSE, SPIRAL CONDUIT, 15X9, UL 0909	
575	90152-0058	M	1.4	HOSE, SPIRAL CONDUIT, 15X9, UL 0909	
610	90287-0175		8	SCREW M6S M3X12 A480	
615	312125-0226		4	SLOTTED HEAD SCREW, ISO1207 M3X12 A4	
630	90232-0333		1	REFLECTOR, E39-R1	
640	311112-0251		2	SPRING PIN, ISO 8752 4X10 A2	
650	90016-0020		2	DISC SPRING, CONICAL 40X20,4X1,5 MM	
670	312104-0634		4	SCREW M6S M16X70H FZB	
680	318302-0124		4	EYE BOLT NUT, TYPE, LH, M16	

Machine Type | Group Description | Used-In | Group Number | Page No

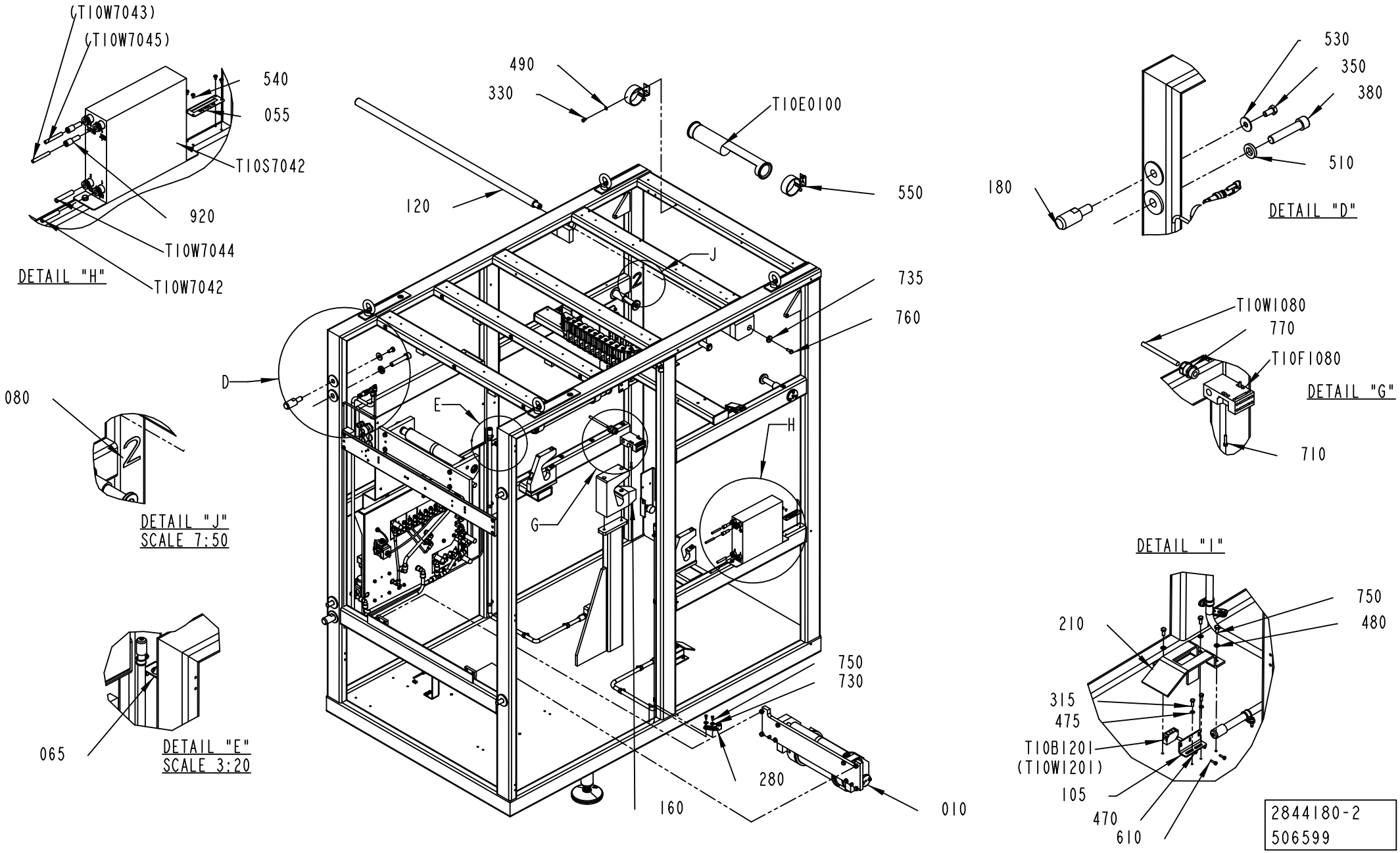
(T10W7043)
(T10W7045)
540
055
T10S7042
920
T10W7044
T10W7042
DETAIL "H"
490
330
T10E0100
550
120
J
735
760
D
E
H
G
080
DETAIL "J"
SCALE 7:50
065
DETAIL "E"
SCALE 3:20
750
730
280
160
010
530
350
380
510
180
DETAIL "D"
T10W1080
770
T10F1080
DETAIL "G"
710
DETAIL "I"
750
480
210
315
475
T10B1201
(T10W1201)
105
470
610
2844180-2
506599

Pos	Part No	UN	Qty	Description	Page No
Common Parts (Cont'd)					
710	312115-0295		2	SCREW ISO4762 M4X20 A4 80	
730	315125-0146		8	WASHER TBRSB 5.3X15X1 A4	
735	315125-0165		1	WASHER TBRSB 8,4X26X5 A4	
740	315106-0165		2	WASHER ISO 7089-8-200 HV A4	
750	312105-0327		50	SCREW, M6S ISO 4017 M5X12 A4 80	
760	312105-0451		3	SCREW, M6S ISO 4017 M8X20 A4 80	
770	90458-0315		1	CABLE GLAND, M20X1,5, 5311 1120	
800	90055-0222		1	ELBOW WITH TAILPIECE 6/6 MM	
810	90459-1825		1	ELBOW WITH TAILPIECE 12/12 MM	
820	342716-0211		1	REDUCER 12-14	
830	359301-0504		1	BUTTON SIGN, RESET	
900	352113-0205		19	ANCHOR PLATES FOR STRIPS, TM2S8-C100	
910	312125-0287		19	SLOTTED HEAD SCREW, ISO1207 M4X8 A4	
920	350006-0003		2	PUSH-IN FITTING QS-F-8H-6	
T10B1180	90600-0460		1	INDUCTIVE SWITCH, E2A-M12KN05-M1-B1-TP	
T10B1190	90600-0460		1	INDUCTIVE SWITCH, E2A-M12KN05-M1-B1-TP	
T10B1200	90600-7828		1	PHOTOCELL E3ZM-T81-D 5M	
T10B1201	90600-7827		1	PHOTOCELL E3ZM-T81-L 5M	
T10B1210	90600-7828		1	PHOTOCELL E3ZM-T81-D 5M	
T10B1211	90600-7827		1	PHOTOCELL E3ZM-T81-L 5M	
T10B1270	90600-0460		1	INDUCTIVE SWITCH, E2A-M12KN05-M1-B1-TP	
T10F1080	90459-1194		1	SAFETY SWITCH, AZ 16-03 ZVRK-M16	
T10S7042	90459-3832		1	VENTING BOX, P9852	
T10W1080	351150-0405	M	2.6	CABLE OLFLEX 5X0,75 MM2 LIGHT/GREY	
T10W1178	315400-0001	M	2.8	TUBE PUN-H-6X1-BL	
T10W1179	315400-0010	M	2.6	TUBE PUN-H-12X2-BL	
T10W1180	344254-0050		1	SENSOR CABLE, EVT004	
T10W1190	344254-0050		1	SENSOR CABLE, EVT004	
T10W1270	344254-0050		1	SENSOR CABLE, EVT004	
T10W7042	315400-0004	M	4.5	TUBE PUN-H-8X1,25-BL	
T10W7044	315400-0004	M	4.5	TUBE PUN-H-8X1,25-BL	

Pos	Part No	UN	Qty	Description	Page No

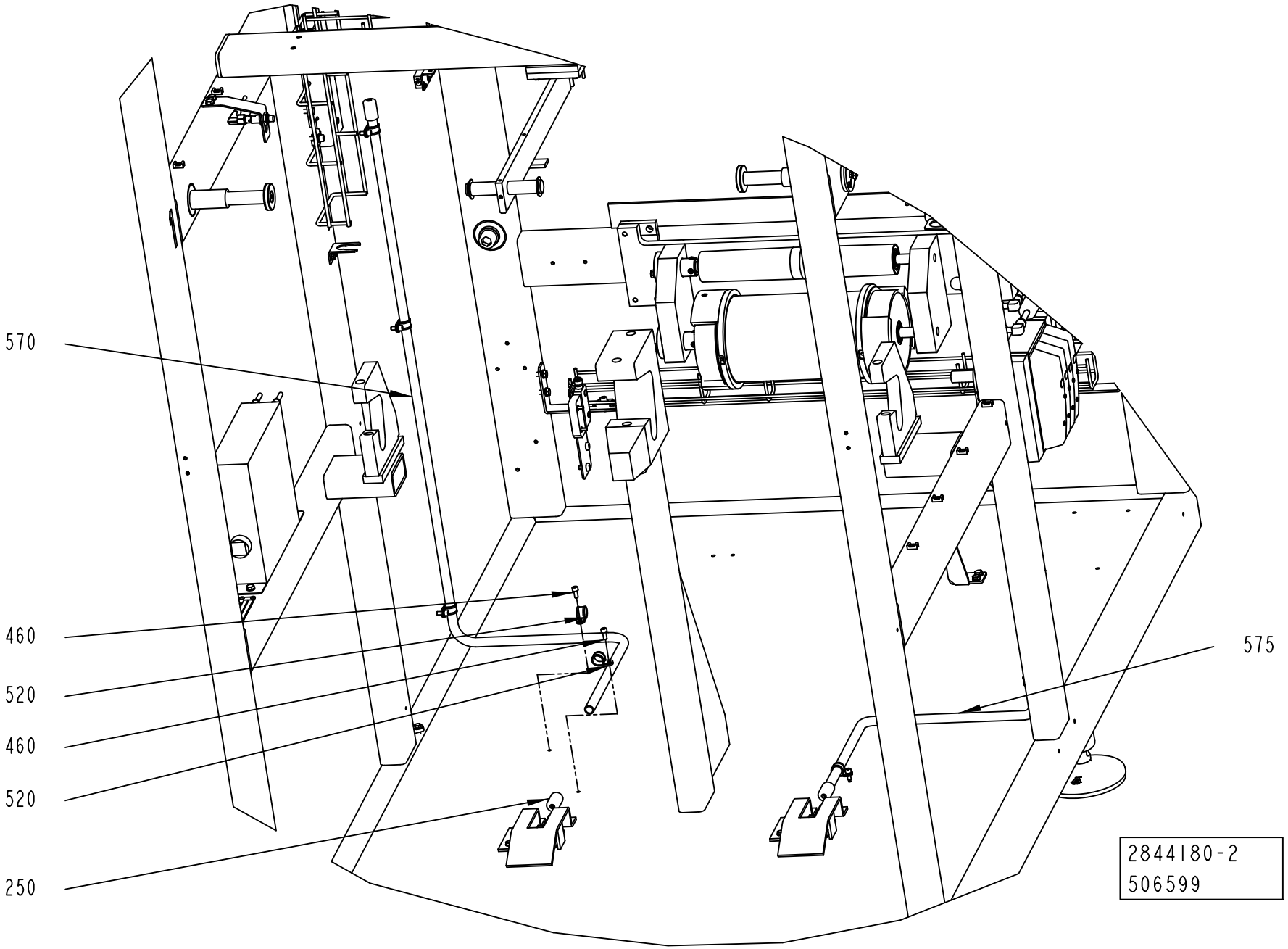
570
460
520
460
520
250
575
2844180-2
506599

ECM: 506601 - 20111001
Group number: 2844180-0200
Assembly Drawing: 2844180-2_3_AE

This list covers pages from 7-4 to 7-11

Pos	Part No	UN	Qty	Description	Page No
SEE PREVIOUS LISTS PAGES: 7-5, 7-7.					

Pos	Part No	UN	Qty	Description	Page No

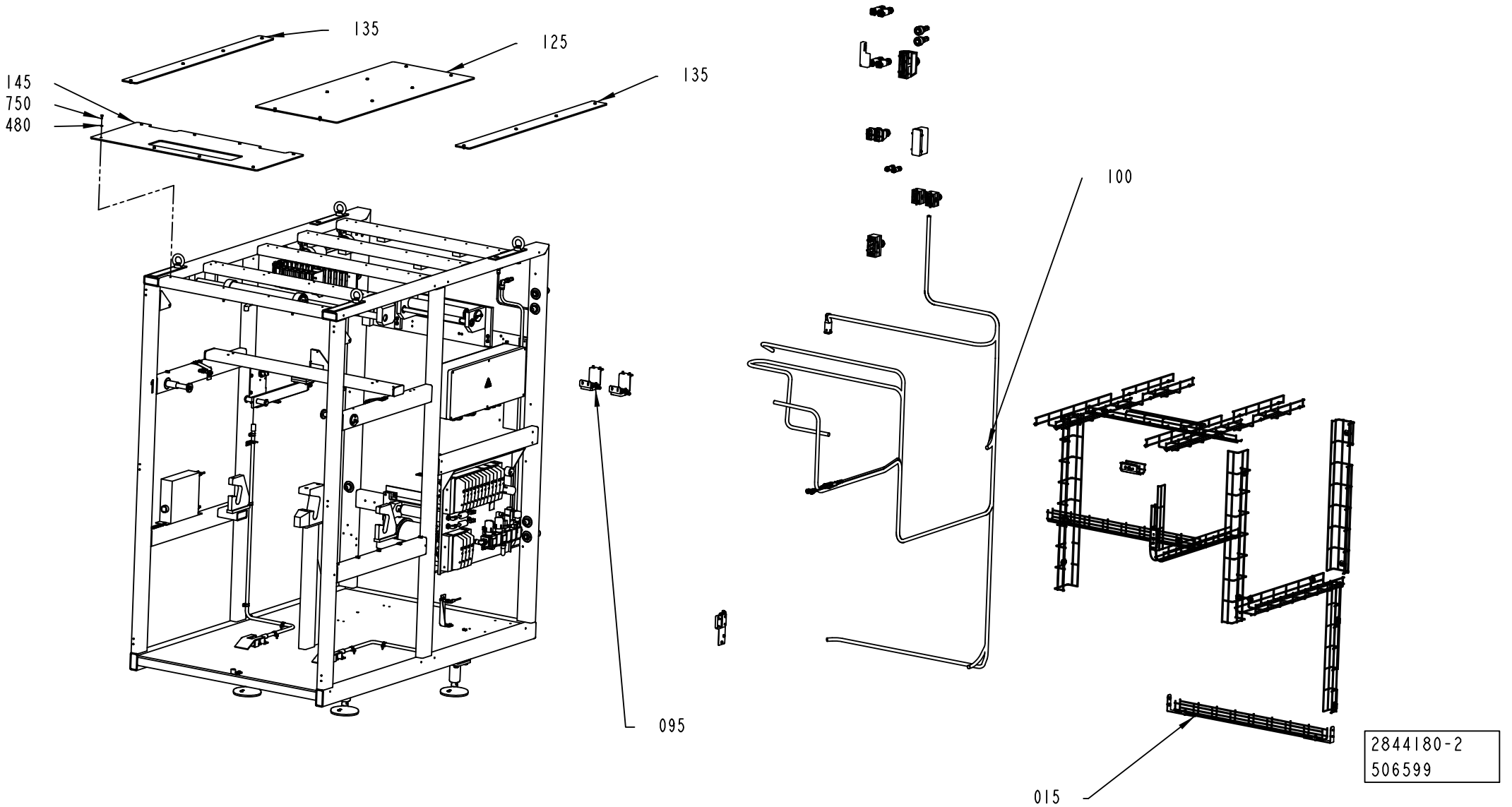
135
125
135
145
750
480
095
100
015
2844180-2
506599

ECM: 506601 - 20111001
Group number: 2844180-0200
Assembly Drawing: 2844180-2_4_AE

This list covers pages from 7-4 to 7-11

Pos	Part No	UN	Qty	Description	Page No
SEE PREVIOUS LISTS PAGES: 7-5, 7-7.					

Pos	Part No	UN	Qty	Description	Page No

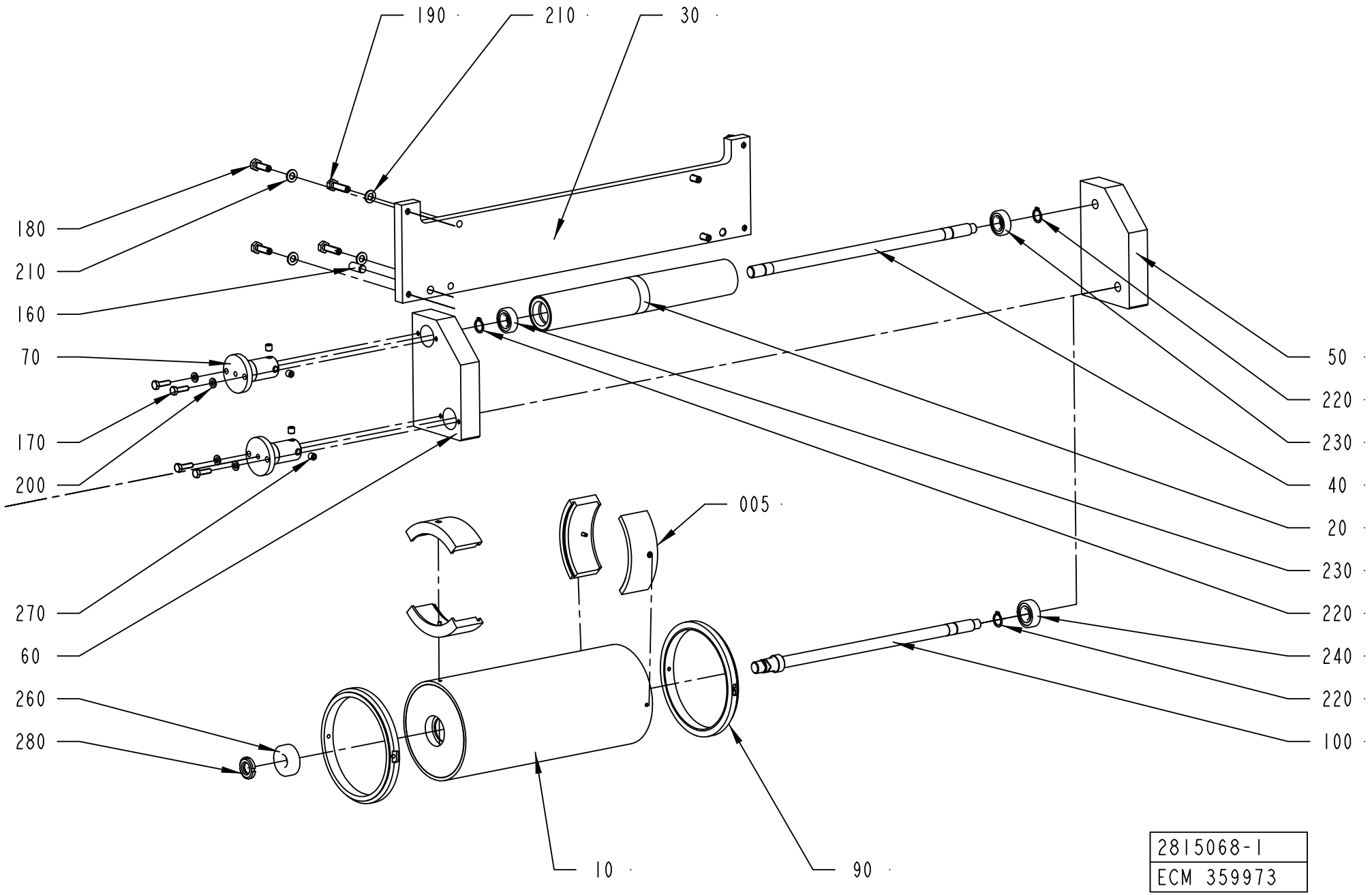
190
210
30
180
210
160
70
170
200
270
60
260
280
005
50
220
230
40
20
230
220
240
220
100
10
90
2815068-1
ECM 359973

ECM: 478875 - 20101003
Group number: 2815068-0100
Assembly Drawing: 2815068-1_1_AC

Pos	Part No	UN	Qty	Description	Page No
-					
005	2974074-0100		1	SPACER	**7-15**
010	2815069-0000		1	BENDING ROLLER	
020	2815070-0000		1	BENDING ROLLER	
030	2815072-0000		1	PLATE	
040	2815073-0000		1	SHAFT	
050	2887850-0000		1	PLATE	
060	2887851-0000		1	PLATE	
070	2818674-0000		2	STOPPER	
090	2701880-0000		2	FLANGE	
100	2959962-0000		1	SHAFT	
160	311103-1456		2	PARALLEL PIN ISO 2338 10M6X24 A1	
170	312105-0370		4	SCREW, M6S ISO 4017 M6X20 A4 80	
180	312105-0453		4	SCREW, M6S ISO 4017 M8X25 A4 80	
190	312105-0455		4	SCREW, M6S ISO 4017 M8X30 A4 80	
200	315106-0153		4	WASHER ISO 7089-6-200 HV A4	
210	315106-0165		8	WASHER ISO 7089-8-200 HV A4	
220	315751-0112		3	RETAINING RING FOR SHAFT DIN 471 15 SS	
230	321308-0202		2	BALL BEARING 15/32X9	
240	321313-0102		1	BALL BEARING 15/35X11	
260	90348-0029		1	FREE-WHEEL COUPLING, 17X40 MM	
270	312318-0443		4	SET SCREW, CUP END ISO4029 M8X8 A4	
280	312805-0103		1	NUT ROUND WITH SLOTS M17X1 FE	

Pos	Part No	UN	Qty	Description	Page No

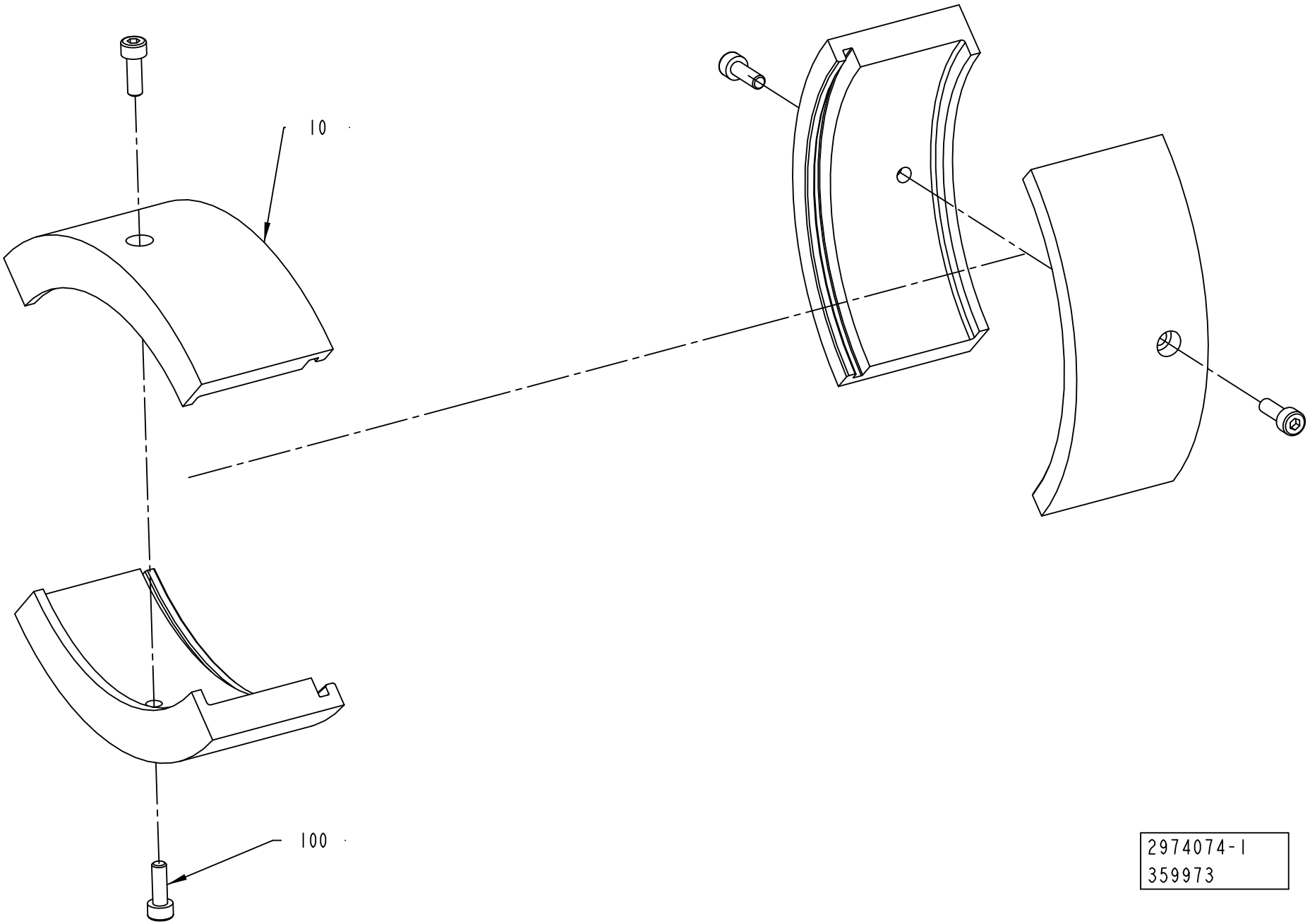

2974074-1
359973

ECM: 478876 - 20101003
Group number: 2974074-0100
Assembly Drawing: 2974074-1_1_AA

Pos	Part No	UN	Qty	Description	Page No
TBA 0080S					
010	2850474-0001		4	BRACKET	
TBA 0100B, TBA 0125S					
010	2850474-0002		4	BRACKET	
TBA 0160S, TBA 0200S, TPA 0250SQ, TPA 0200SQ					
010	2850474-0003		4	BRACKET	
TBA 0200B, TBA 0200SQ, TBA 0284B, TBA 0250B, TBA 0300S, TBA 0330S, TBA 0250SQ					
010	2850474-0005		4	BRACKET	
TBA 0200M, TBA 0250S, TBA 0200E					
010	2850474-0004		4	BRACKET	
TBA 0375S					
010	2850474-0006		4	BRACKET	
TPA 0125SQ					
010	2523766-0012		4	BRACKET	
TPA 0330SQ					
010	2523766-0001		4	BRACKET	
Common Parts					
100	312115-0291		4	SCREW ISO4762 M4X12 A4 80	

Pos	Part No	UN	Qty	Description	Page No

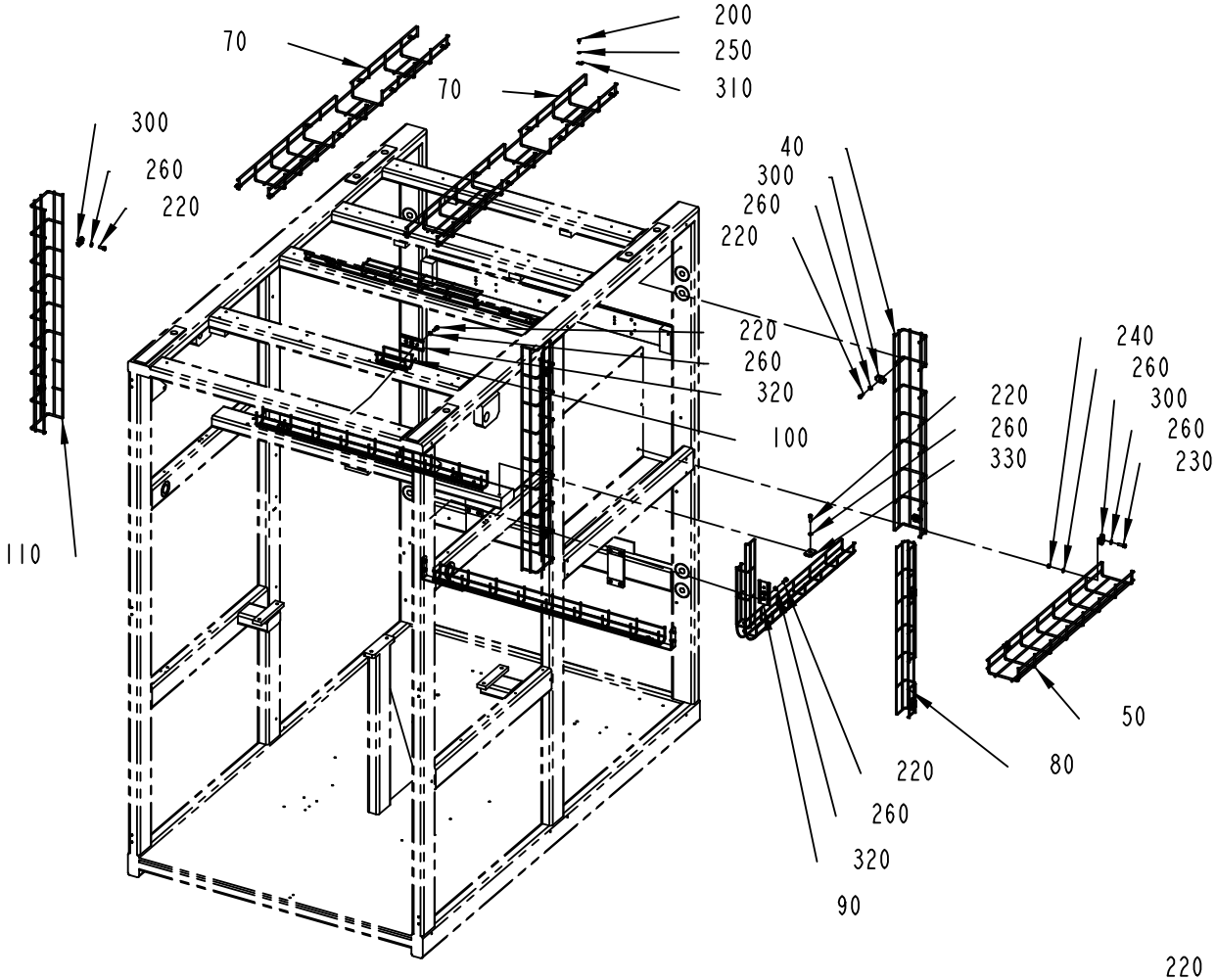
70
70
200
250
310
300
260
220
40
300
260
220
220
260
320
100
110
220
260
330
240
260
300
260
230
50
80
220
260
320
90

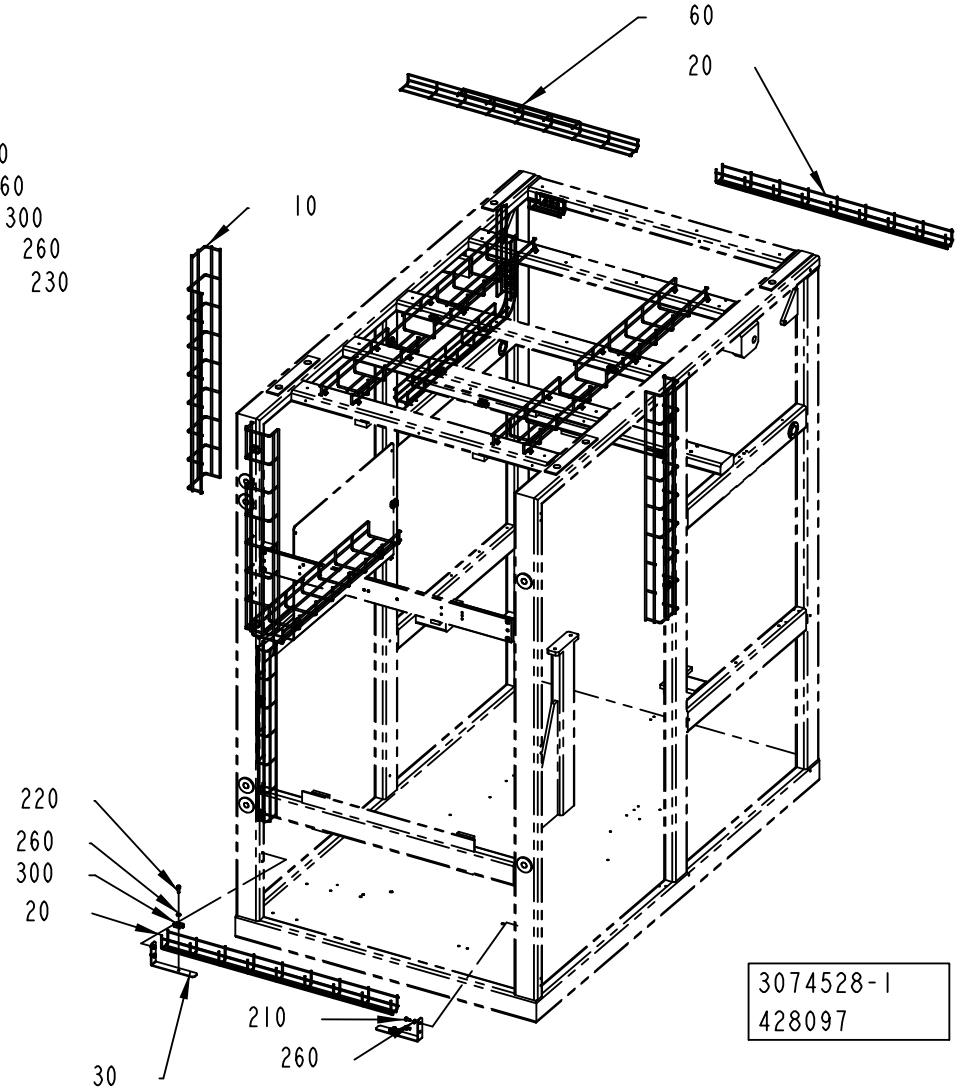
60
20
10
220
260
300
20
210
260
30
3074528-1
428097

ECM: 431574 - 20091223
Group number: 3074528-0100
Assembly Drawing: 3074528-1_1_AA

This list covers pages from 7-16 to 7-19

Pos	Part No	UN	Qty	Description	Page No
-					
010	2731244-0000		1	CABLE DUCT	
020	2845880-0000		2	CABLE DUCT	
030	2845881-0000		2	BRACKET	
040	2924156-0000		1	CABLE DUCT	
050	3018408-0000		1	CABLE DUCT	
060	3018409-0000		1	CABLE DUCT	
070	3013400-0000		2	CABLE DUCT	
080	3018410-0000		1	CABLE DUCT	
090	3046782-0000		1	CABLE DUCT	
100	3046783-0000		1	CABLE DUCT	
110	3059215-0000		1	CABLE DUCT	
200	312115-0287		16	SCREW ISO4762 M4X8 A4 80	
210	312105-0366		4	SCREW, M6S ISO 4017 M6X12 A4 80	
220	312115-0368		17	SCREW ISO4762 M6X16 A4 80	
230	312115-0370		2	SCREW ISO4762 M6X20 A4 80	
240	312605-0316		2	HEXAGON NUT, M6M M6 A280	
250	315105-0136		16	WASHER BRB 4,3X8 RFR	
260	315105-0153		25	WASHER BRB 6,4X12 RFR	
300	90600-2658		16	CLAMP, 6016 82 0	
310	90165-0024		16	PIPE CLIP FOR TUBE D=5 MM	
320	90600-3575		2	CABLE DUCT, FITTING, B1	
330	90600-3577		1	JOINT, 11.493.55	

Pos	Part No	UN	Qty	Description	Page No

TURN OF PIPES ON DUCT

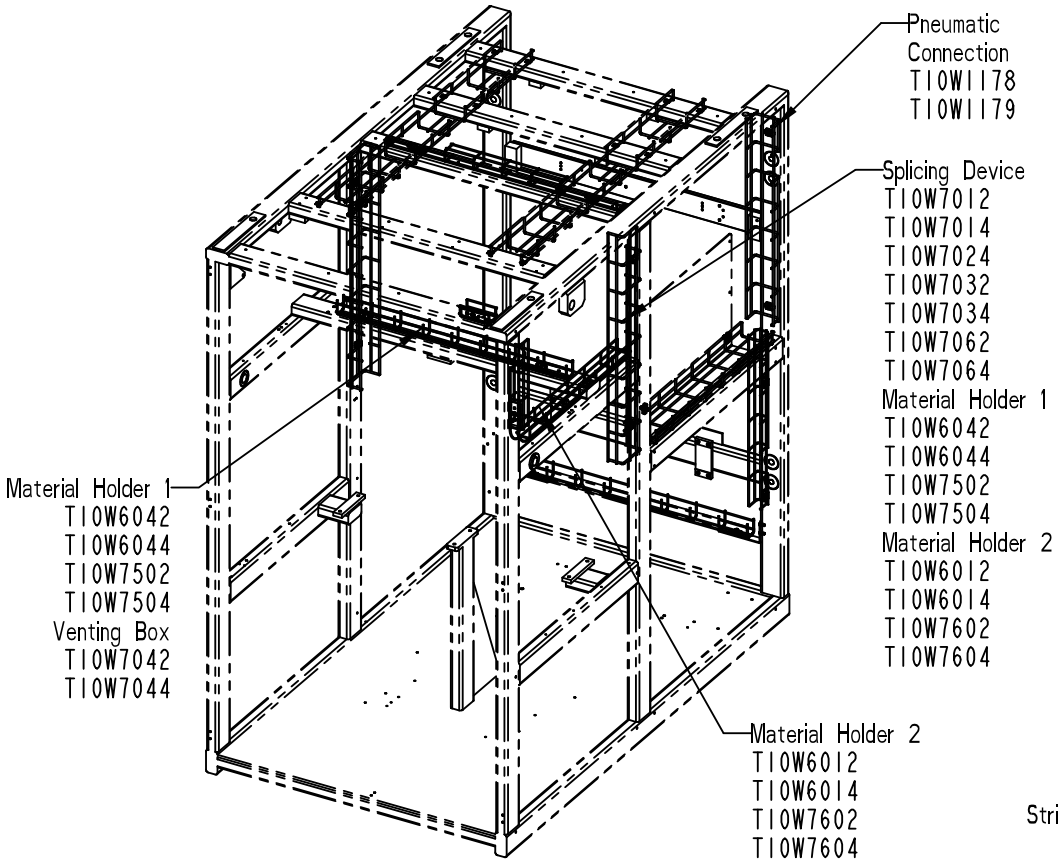

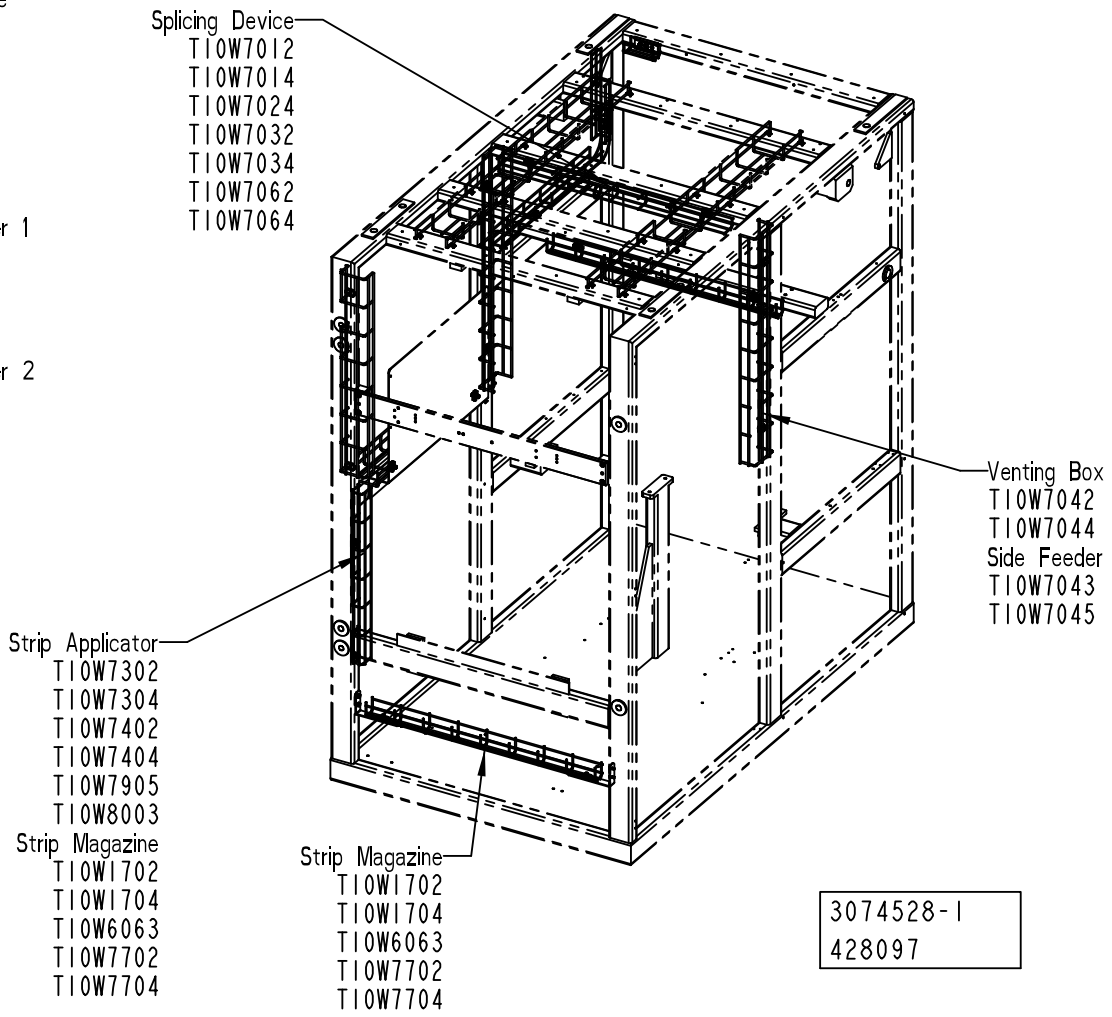

ECM: 431574 - 20091223
Group number: 3074528-0100
Assembly Drawing: 3074528-1_2_AA

This list covers pages from 7-16 to 7-19

Pos	Part No	UN	Qty	Description	Page No
-					
010	2731244-0000		1	CABLE DUCT	
020	2845880-0000		2	CABLE DUCT	
030	2845881-0000		2	BRACKET	
040	2924156-0000		1	CABLE DUCT	
050	3018408-0000		1	CABLE DUCT	
060	3018409-0000		1	CABLE DUCT	
070	3013400-0000		2	CABLE DUCT	
080	3018410-0000		1	CABLE DUCT	
090	3046782-0000		1	CABLE DUCT	
100	3046783-0000		1	CABLE DUCT	
110	3059215-0000		1	CABLE DUCT	
200	312115-0287		16	SCREW ISO4762 M4X8 A4 80	
210	312105-0366		4	SCREW, M6S ISO 4017 M6X12 A4 80	
220	312115-0368		17	SCREW ISO4762 M6X16 A4 80	
230	312115-0370		2	SCREW ISO4762 M6X20 A4 80	
240	312605-0316		2	HEXAGON NUT, M6M M6 A280	
250	315105-0136		16	WASHER BRB 4,3X8 RFR	
260	315105-0153		25	WASHER BRB 6,4X12 RFR	
300	90600-2658		16	CLAMP, 6016 82 0	
310	90165-0024		16	PIPE CLIP FOR TUBE D=5 MM	
320	90600-3575		2	CABLE DUCT, FITTING, B1	
330	90600-3577		1	JOINT, 11.493.55	

Pos	Part No	UN	Qty	Description	Page No

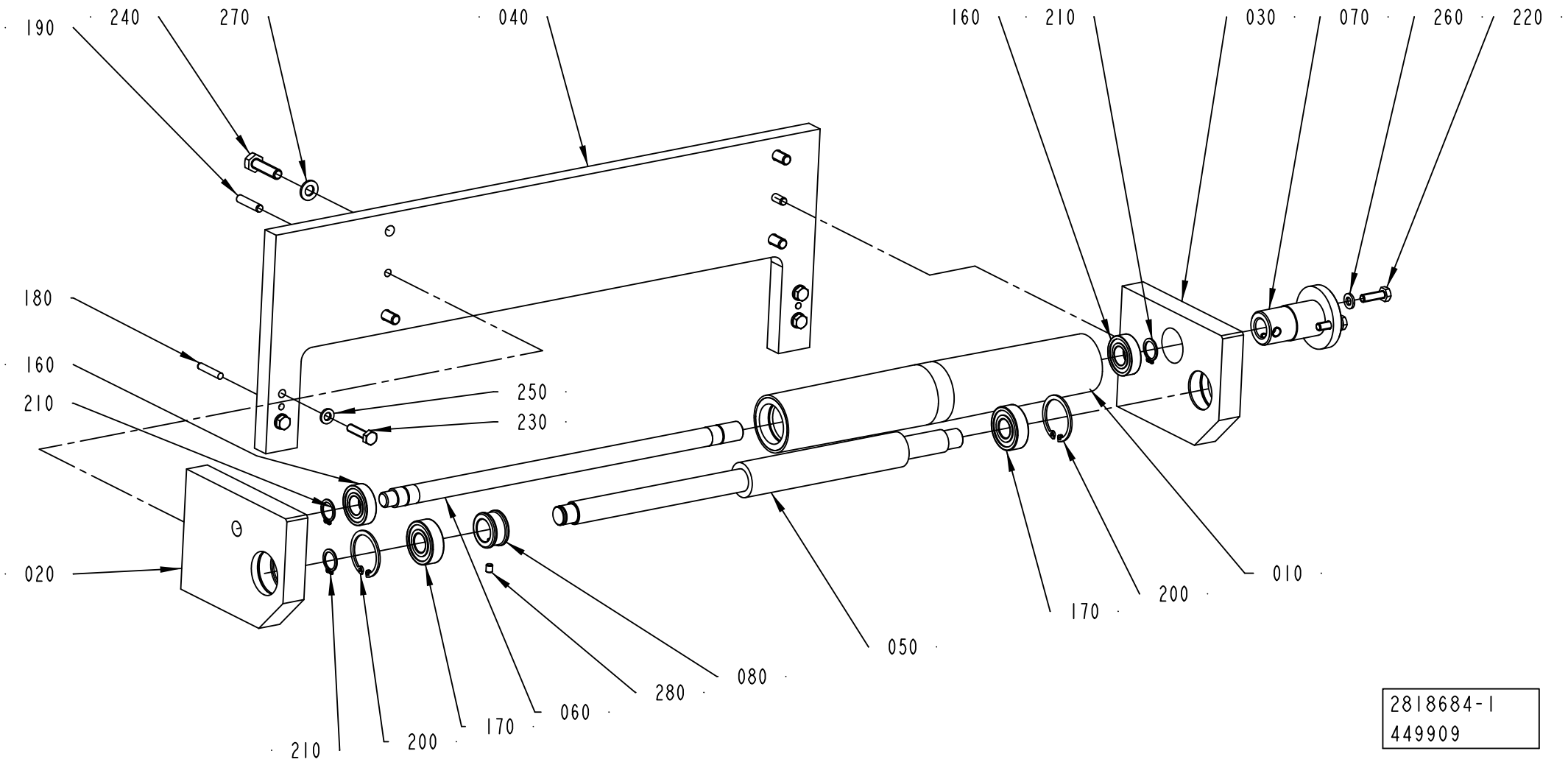
190
240
270
040
160
210
030
070
260
220
180
160
210
250
230
020
010
200
170
050
080
280
060
170
200
210
2818684-1
449909

ECM: 449909 - 20101001
Group number: 2818684-0100
Assembly Drawing: 2818684-1_1_AB

Pos	Part No	UN	Qty	Description	Page No
-					
010	2815070-0000		1	BENDING ROLLER	
020	2887849-0000		1	PLATE	
030	2887852-0000		1	PLATE	
040	2832310-0000		1	PLATE	
050	2832311-0000		1	ROLLER	
060	2818682-0000		1	SHAFT	
070	2818674-0000		1	STOPPER	
080	3022265-0000		1	RING	
160	321308-0202		2	BALL BEARING 15/32X9	
170	321313-0102		2	BALL BEARING 15/35X11	
180	311103-0313		2	PARALLEL PIN ISO 2338 5M6X28 A1	
190	311103-0356		2	PARALLEL PIN ISO 2338 6M6X28 A1	
200	315753-0124		2	RETAINING RING FOR BORE DIN 472 35 SS	
210	315751-0112		3	RETAINING RING FOR SHAFT DIN 471 15 SS	
220	312105-0370		2	SCREW, M6S ISO 4017 M6X20 A4 80	
230	312105-0372		4	SCREW, M6S ISO 4017 M6X25 A4 80	
240	312105-0455		4	SCREW, M6S ISO 4017 M8X30 A4 80	
250	315105-0153		4	WASHER BRB 6,4X12 RFR	
260	315106-0153		2	WASHER ISO 7089-6-200 HV A4	
270	315105-0165		4	WASHER BRB 8,4X16 RFR	
280	312318-0321		1	SET SCREW, CUP END ISO4029 M5X6 A4	

Pos	Part No	UN	Qty	Description	Page No

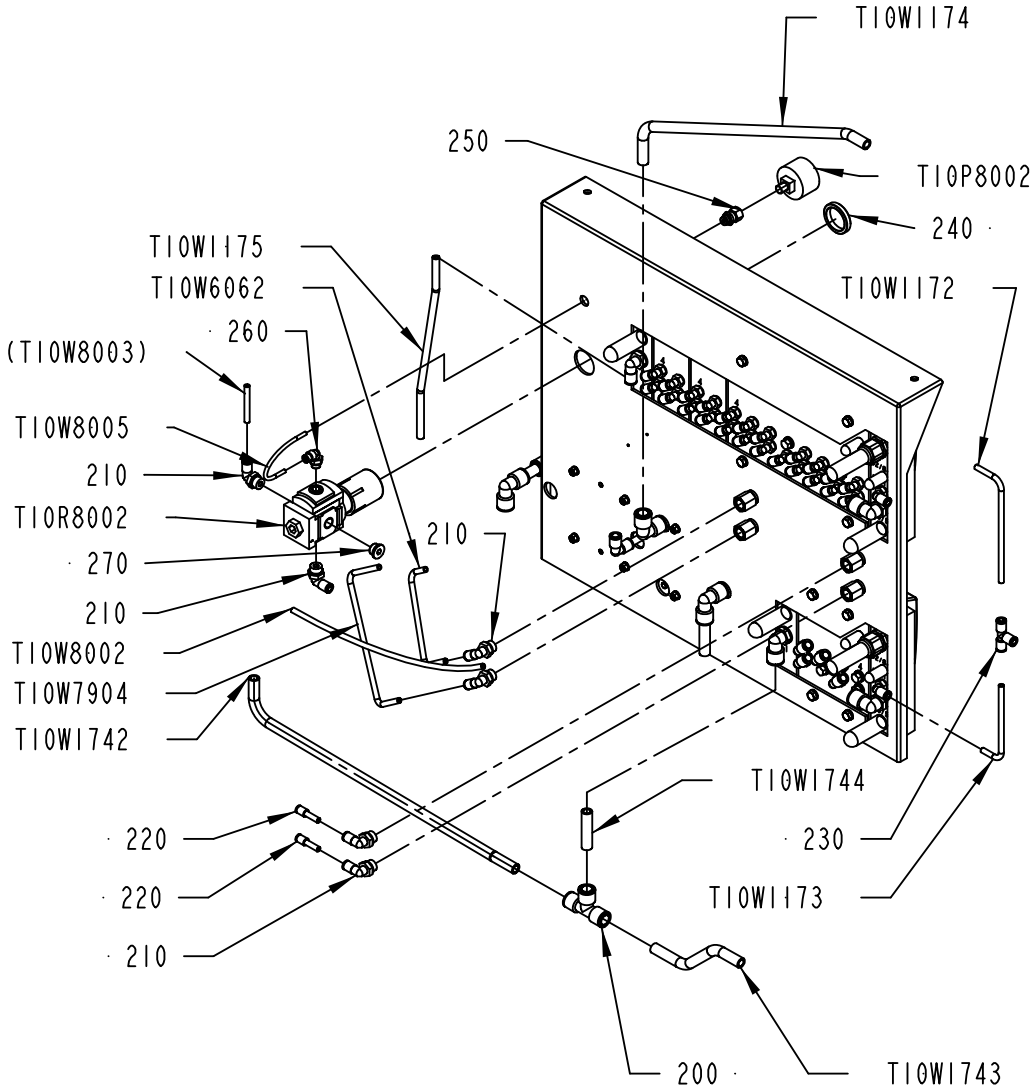
T10W1174
250
T10P8002
240
T10W1175
T10W6062
260
T10W1172
(T10W8003)
T10W8005
210
T10R8002
270
210
T10W8002
T10W7904
T10W1742
210
T10W1744
230
220
220
210
T10W1173
200
T10W1743

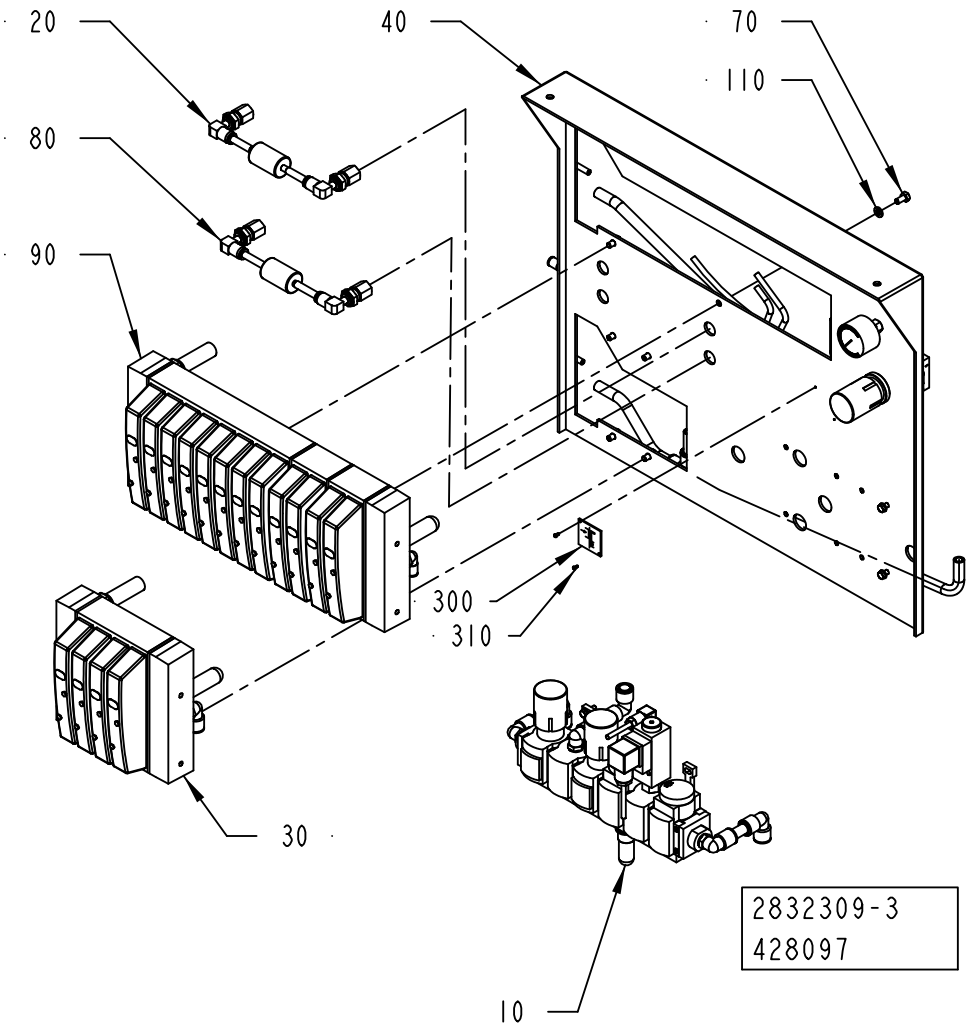
20
40
70
110
80
90
300
310
30
10
2832309-3
428097

ECM: 431554 - 20091223
Group number: 2832309-0200
Assembly Drawing: 2832309-3_1_AB

This list covers pages from 7-22 to 7-25

Pos	Part No	UN	Qty	Description	Page No
-					
010	2879023-0200		1	AIR SUPPLY UNIT	7-27
020	2879025-0100		1	FILTER	7-29
030	2879024-0100		1	VALVE GROUP	7-31
040	2879021-0000		1	PLATE	
050	312605-0314		6	HEXAGON NUT, M6M M5 A280	
060	312105-0329		6	SCREW, M6S ISO 4017 M5X16 A4 80	
070	312105-0366		8	SCREW, M6S ISO 4017 M6X12 A4 80	
080	2908982-0100		1	FILTER	7-33
090	2879022-0100		1	VALVE RAMP	7-35
100	315105-0146		12	WASHER BRB 5,3X10 RFR	
110	315106-0153		8	WASHER ISO 7089-6-200 HV A4	
200	350005-0005		1	PUSH-IN T-FITTING QST-F-12	
210	350002-0008		6	PUSH-IN L-FITTING QSL-F-G1/4-6	
220	350006-0001		2	PUSH-IN FITTING QS-F-6H-4	
230	350005-0002		1	PUSH-IN T-FITTING QST-F-6	
240	90459-2390		1	NUT, MS-LR-10	
250	90459-7332		1	PUSH-IN FITTING QSSF-1/8-4-B	
260	350002-0005		1	PUSH-IN L-FITTING QSL-F-G1/8-4	
270	342713-0210		1	PLUG, EXT THREAD HEX SOCKET	
300	2912327-0000		1	LABEL	
310	312502-0169		2	DRIVE SCREW ROUND HEAD KDS 2X5	
T10P8002	90458-2969		1	PRESSURE GAUGE, MAP-40-1-1/8-EN	
T10R8002	90459-4554		1	REGULATOR, MS4-LRB-1/4-D7-A8-AS	
T10W1172	315400-0001	M	0.15	TUBE PUN-H-6X1-BL	
T10W1173	315400-0001	M	0.15	TUBE PUN-H-6X1-BL	
T10W1174	315400-0010	M	0.45	TUBE PUN-H-12X2-BL	
T10W1175	315400-0004	M	0.25	TUBE PUN-H-8X1,25-BL	
T10W1742	315400-0010	M	0.45	TUBE PUN-H-12X2-BL	
T10W1743	315400-0010	M	0.16	TUBE PUN-H-12X2-BL	
T10W1744	315400-0010	MM	50	TUBE PUN-H-12X2-BL	
T10W6062	315400-0001	M	0.2	TUBE PUN-H-6X1-BL	
T10W7904	315400-0001	MM	300	TUBE PUN-H-6X1-BL	
T10W8002	315400-0001	M	1	TUBE PUN-H-6X1-BL	
T10W8005	315400-0016	M	0.2	TUBE PUN-H-4X0,75-BL	

Pos	Part No	UN	Qty	Description	Page No

Machine Type | Group Description | Used-In | Group Number | Page No

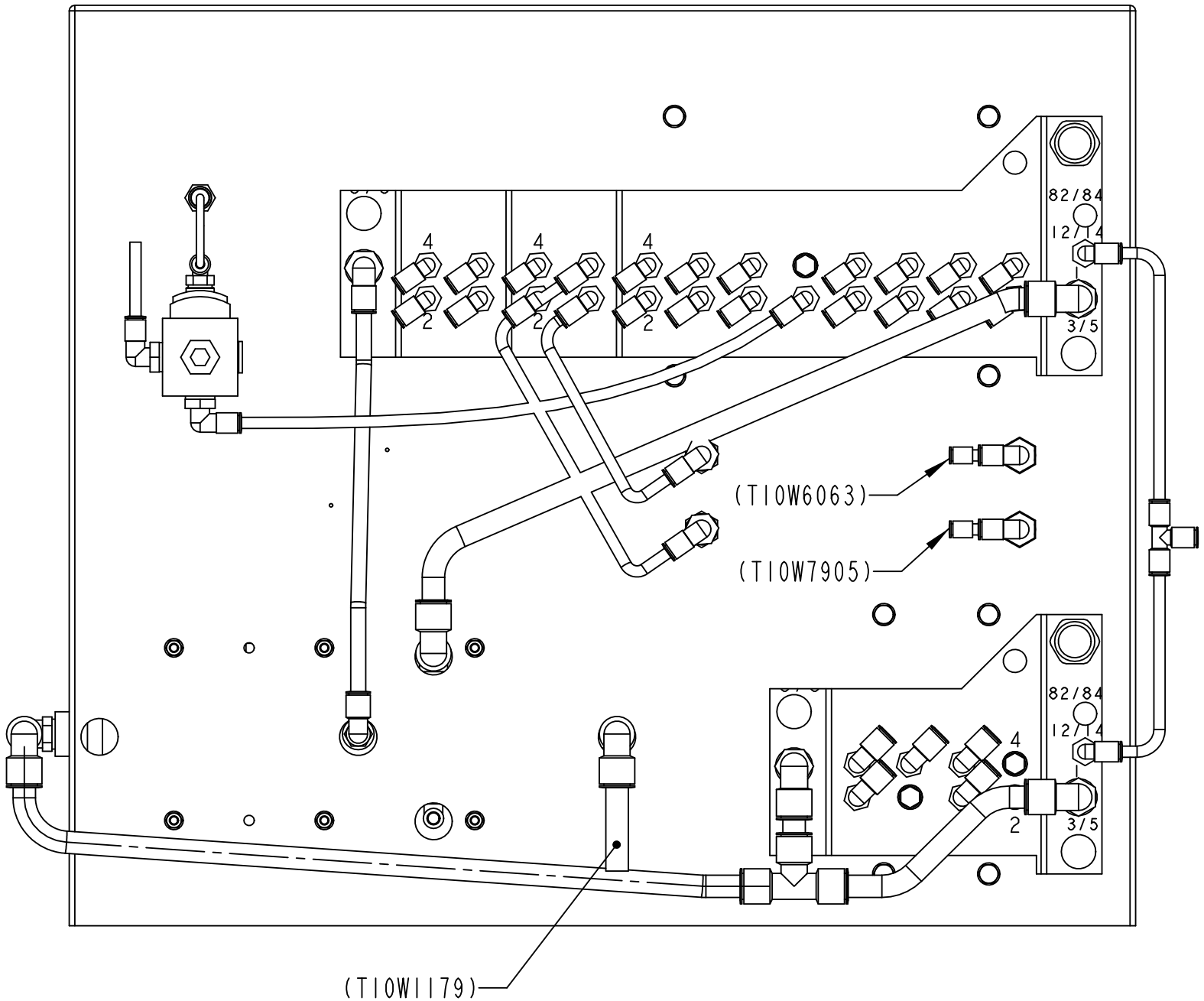

2832309-3
428097

Pos	Part No	UN	Qty	Description	Page No
-					
010	2879023-0200		1	AIR SUPPLY UNIT	**7-27**
020	2879025-0100		1	FILTER	**7-29**
030	2879024-0100		1	VALVE GROUP	**7-31**
040	2879021-0000		1	PLATE	
050	312605-0314		6	HEXAGON NUT, M6M M5 A280	
060	312105-0329		6	SCREW, M6S ISO 4017 M5X16 A4 80	
070	312105-0366		8	SCREW, M6S ISO 4017 M6X12 A4 80	
080	2908982-0100		1	FILTER	**7-33**
090	2879022-0100		1	VALVE RAMP	**7-35**
100	315105-0146		12	WASHER BRB 5,3X10 RFR	
110	315106-0153		8	WASHER ISO 7089-6-200 HV A4	
200	350005-0005		1	PUSH-IN T-FITTING QST-F-12	
210	350002-0008		6	PUSH-IN L-FITTING QSL-F-G1/4-6	
220	350006-0001		2	PUSH-IN FITTING QS-F-6H-4	
230	350005-0002		1	PUSH-IN T-FITTING QST-F-6	
240	90459-2390		1	NUT, MS-LR-10	
250	90459-7332		1	PUSH-IN FITTING QSSF-1/8-4-B	
260	350002-0005		1	PUSH-IN L-FITTING QSL-F-G1/8-4	
270	342713-0210		1	PLUG, EXT THREAD HEX SOCKET	
300	2912327-0000		1	LABEL	
310	312502-0169		2	DRIVE SCREW ROUND HEAD KDS 2X5	
T10P8002	90458-2969		1	PRESSURE GAUGE, MAP-40-1-1/8-EN	
T10R8002	90459-4554		1	REGULATOR, MS4-LRB-1/4-D7-A8-AS	
T10W1172	315400-0001	M	0.15	TUBE PUN-H-6X1-BL	
T10W1173	315400-0001	M	0.15	TUBE PUN-H-6X1-BL	
T10W1174	315400-0010	M	0.45	TUBE PUN-H-12X2-BL	
T10W1175	315400-0004	M	0.25	TUBE PUN-H-8X1,25-BL	
T10W1742	315400-0010	M	0.45	TUBE PUN-H-12X2-BL	
T10W1743	315400-0010	M	0.16	TUBE PUN-H-12X2-BL	
T10W1744	315400-0010	MM	50	TUBE PUN-H-12X2-BL	
T10W6062	315400-0001	M	0.2	TUBE PUN-H-6X1-BL	
T10W7904	315400-0001	MM	300	TUBE PUN-H-6X1-BL	
T10W8002	315400-0001	M	1	TUBE PUN-H-6X1-BL	
T10W8005	315400-0016	M	0.2	TUBE PUN-H-4X0,75-BL	

Pos	Part No	UN	Qty	Description	Page No

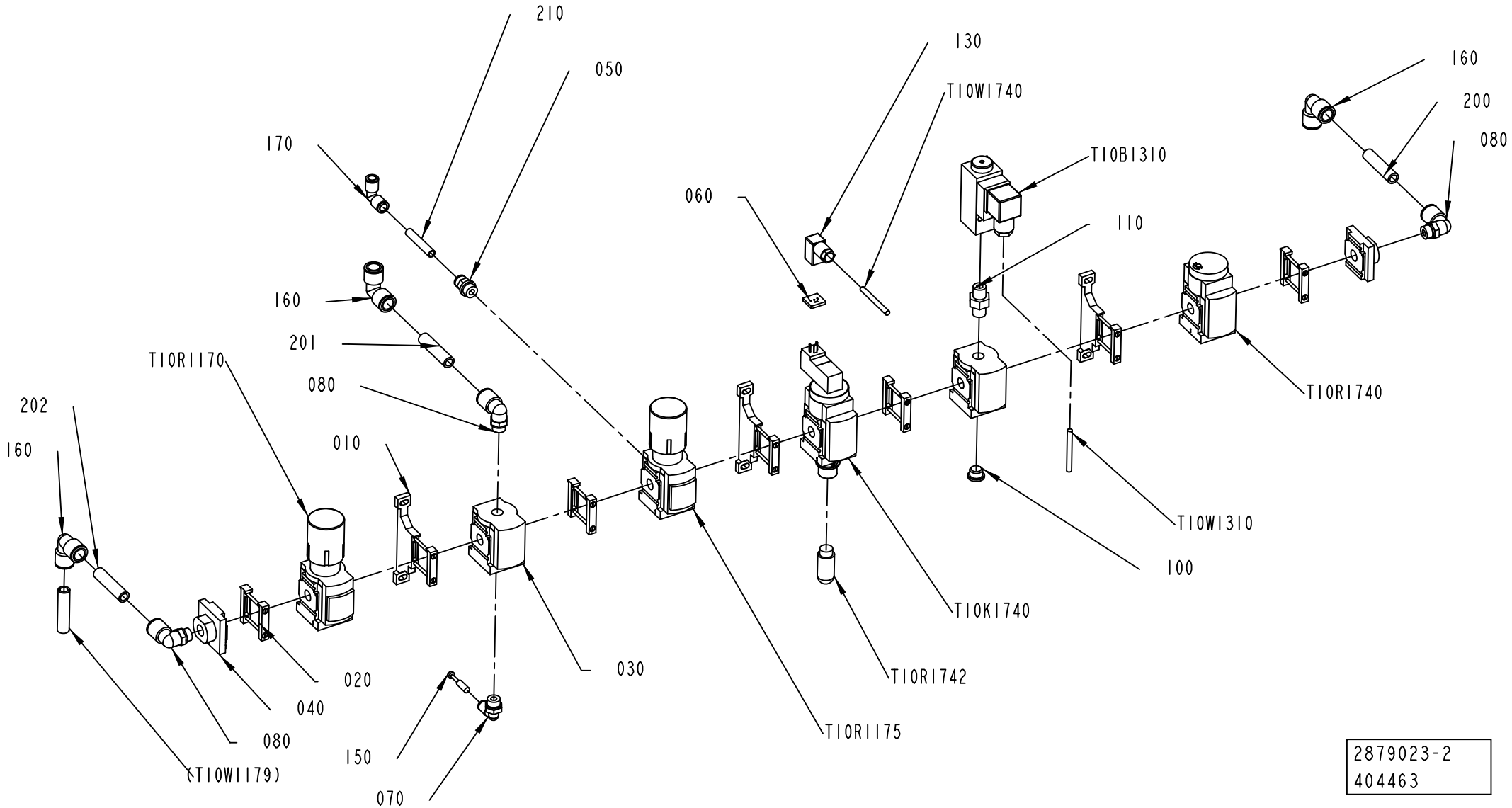

2879023-2
404463

ECM: 405732 - 20090731
Group number: 2879023-0200
Assembly Drawing: 2879023-2_1_AA

Pos	Part No	UN	Qty	Description	Page No
-					
010	90459-2247		3	BRACKET, MS4-WP	
020	90459-2248		4	BRACKET, MS4-MV	
030	90459-2245		2	DISTRIBUTOR, MS4-FRM-1/4	
040	90459-2246		2	END PLATE, MS4-AGB	
050	350001-0009		1	PUSH-IN FITTING QS-F-G1/4-8	
060	90459-2137		1	ILLUMINATING SEAL, MEB-LD-12-24DC	
070	350002-0008		1	PUSH-IN L-FITTING QSL-F-G1/4-6	
080	350002-0011		3	PUSH-IN L-FITTING QSL-F-G1/4-12	
100	342713-0210		1	PLUG, EXT THREAD HEX SOCKET	
110	90224-0372		1	NIPPLE, EXT.THREAD, HEXAGON, R1/4-R1/4	
130	90459-2138		1	CONNECTOR, PLUG SOCKET, MSSD-EB	
150	350013-0002		1	PLUG QSC-6H	
160	350004-0005		3	PUSH-IN L-FITTING QSL-F-12	
170	350004-0003		1	PUSH-IN L-FITTING QSL-F-8	
200	315400-0010	M	0.15	TUBE PUN-H-12X2-BL	
210	315400-0004	MM	45	TUBE PUN-H-8X1,25-BL	
T10B1310	90274-0103		1	PRESSURE SWITTCH PEV-1/4-B	
T10K1740	90459-2243		1	SHUT OFF VALVE, MS4-EE-1/4-10V24	
T10R1170	90459-2653		1	REGULATOR, MS4-LR-1/4-D6-AS	
T10R1175	90459-2241		1	REGULATOR, MS4-LRB-1/4-D5-AS	
T10R1740	90459-2244		1	SOFT START VALVE, MS4-DL-1/4	
T10R1742	90328-0026		1	SILENCER, G1/4"	
T10W1310	351150-0403	M	1.5	CABLE OLFLEX 3X0,75 MM2 LIGHT/GREY	
T10W1740	351150-0403	M	1.5	CABLE OLFLEX 3X0,75 MM2 LIGHT/GREY	

Pos	Part No	UN	Qty	Description	Page No

Machine Type | Group Description | Used-In | Group Number | Page No

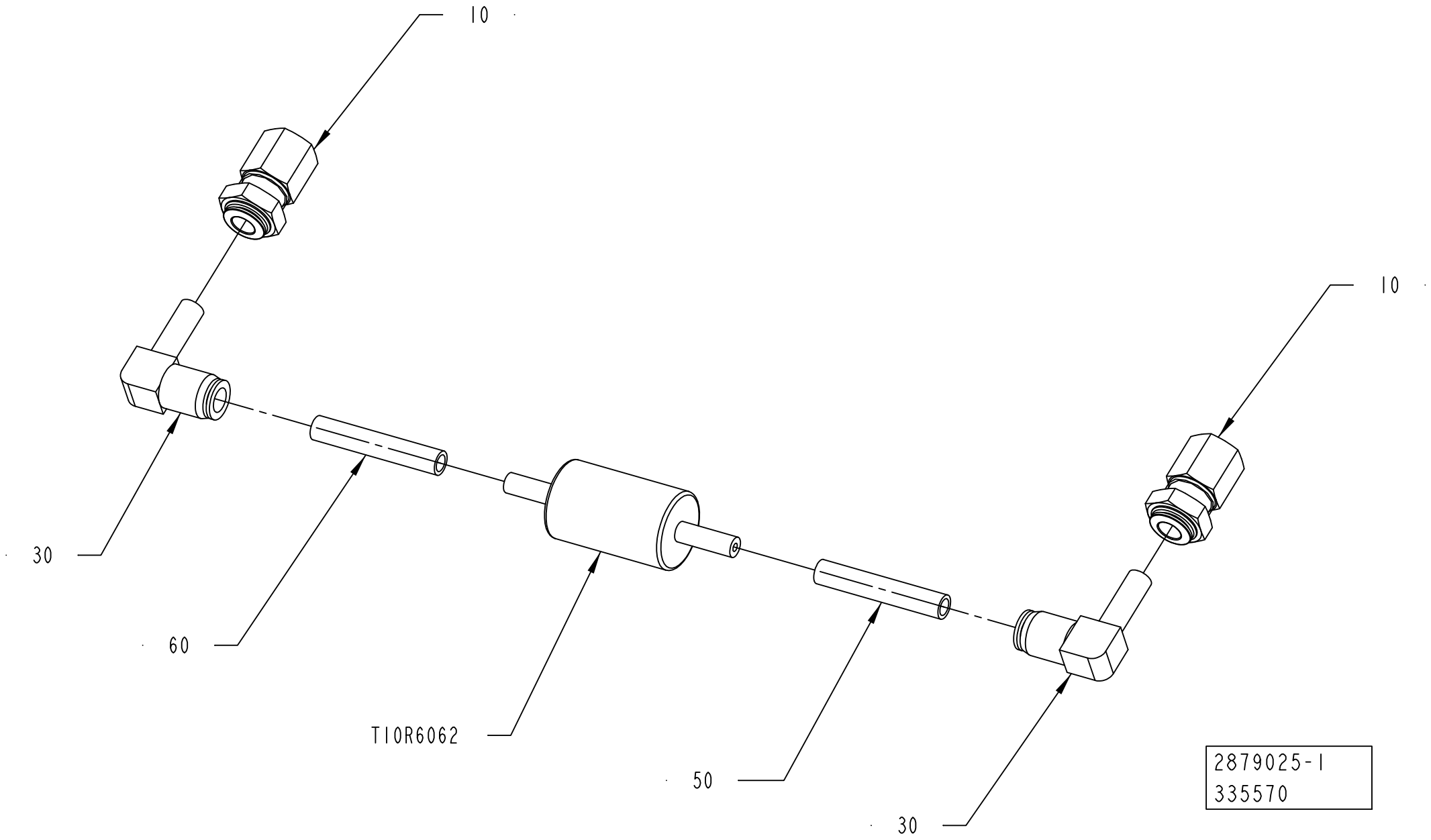
10
10
30
60
T10R6062
50
30
2879025-1
335570

ECM: 335570 - 20080116
Group number: 2879025-0100
Assembly Drawing: 2879025-1_1_AA

Pos	Part No	UN	Qty	Description	Page No
-					
010	90600-2029		2	PUSH-IN BULKHEAD FITTING QSSF-F-G1/4-8	
030	90600-1175		2	ELBOW WITH TAILPIECE 8/8 MM	
050	315400-0004	MM	45	TUBE PUN-H-8X1,25-BL	
060	315400-0004	MM	45	TUBE PUN-H-8X1,25-BL	
T10R6062	90277-0045		1	FILTER / 9900-05-BK	

Pos	Part No	UN	Qty	Description	Page No

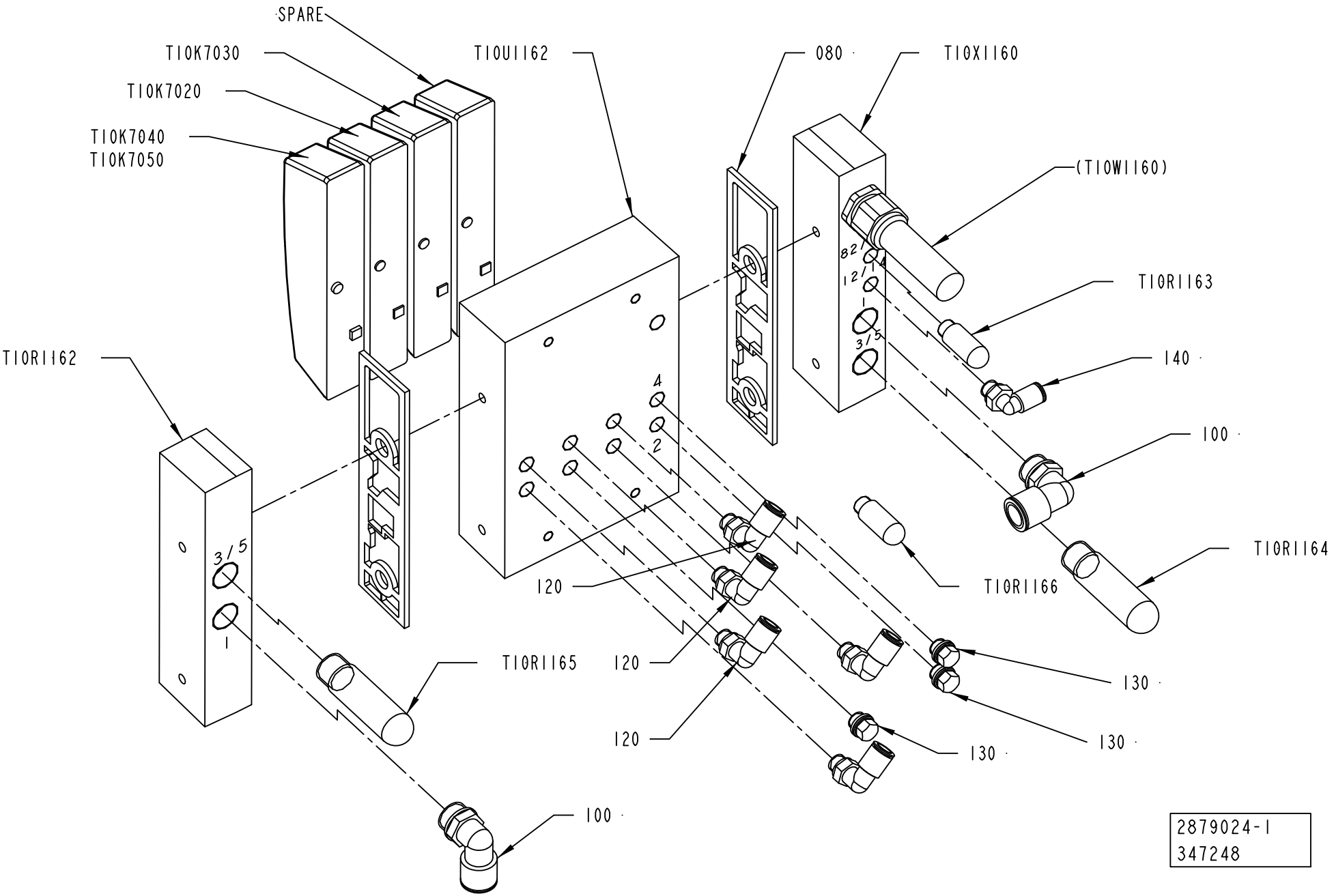
SPARE
TI0K7030
TI0K7020
TI0K7040
TI0K7050
TI0U1162
080
TI0X1160
(TI0W1160)
TI0R1163
140
100
TI0R1164
TI0R1166
TI0R1162
120
TI0R1165
120
120
130
130
130
100
2879024-1
347248

ECM: 347281 - 20080422
Group number: 2879024-0100
Assembly Drawing: 2879024-1_1_AB

Pos	Part No	UN	Qty	Description	Page No
-					
080	90458-1207		2	SEALING, STANDARD	
100	350002-0014		2	PUSH-IN L-FITTING QSL-F-G3/8-12	
120	350002-0007		5	PUSH-IN L-FITTING QSL-F-G1/8-8	
130	90459-0698		3	PLUG, G1/8EXT, G1/8	
140	350002-0006		1	PUSH-IN L-FITTING QSL-F-G1/8-6	
SPARE	90458-1215		1	COVER PLATE, EMPTY VALVE POSITION	
T10K7020	90458-1194		1	VALVE, 5/2 MONOSTABLE	
T10K7030	90458-1194		1	VALVE, 5/2 MONOSTABLE	
T10K7040	90458-1197		1	VALVE, 5/2 BISTABLE	
T10R1162	90458-1214		1	RIGHT ENDPL EXT. PILOT AIR,CDVI5.0-EPR-S	
T10R1163	90328-0047		1	SILENCER, G1/8"	
T10R1164	90328-0024		1	SILENCER, G3/8"	
T10R1165	90328-0024		1	SILENCER, G3/8"	
T10R1166	90328-0047		1	SILENCER, G1/8"	
T10U1162	90458-1204		1	BASIC SUB-BASE 4 VALVES, CDVI5.0-GB4-MP	
T10X1160	90458-1212		1	LEFT ENDPLATE INCL. 10M CABLE	

Pos	Part No	UN	Qty	Description	Page No

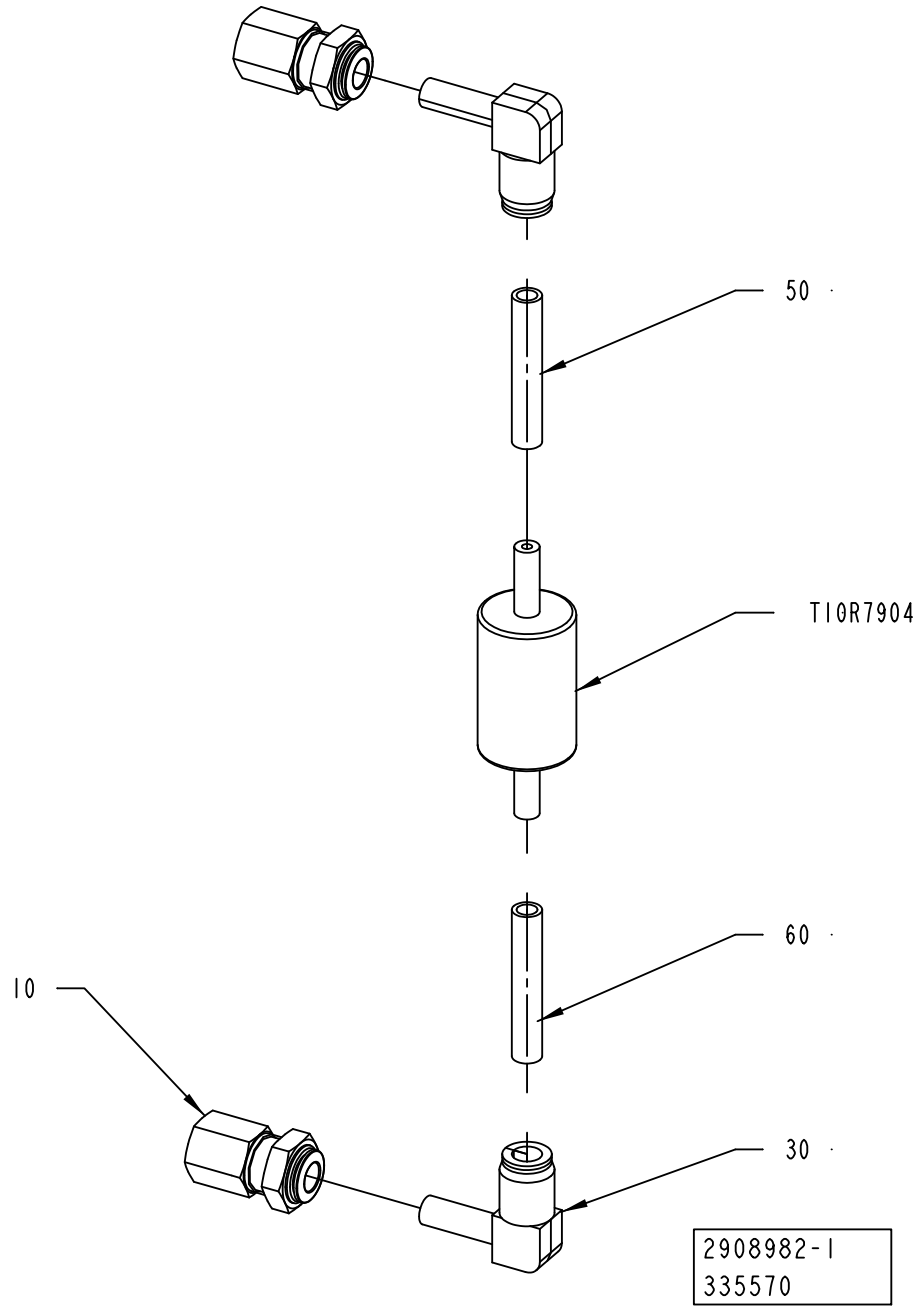
50
T10R7904
60
10
30
2908982-1
335570

ECM: 335570 - 20080116
Group number: 2908982-0100
Assembly Drawing: 2908982-1_1_AA

Pos	Part No	UN	Qty	Description	Page No
-					
010	90600-2029		2	PUSH-IN BULKHEAD FITTING QSSF-F-G1/4-8	
030	90600-1175		2	ELBOW WITH TAILPIECE 8/8 MM	
050	315400-0004	MM	45	TUBE PUN-H-8X1,25-BL	
060	315400-0004	MM	45	TUBE PUN-H-8X1,25-BL	
T10R7904	90277-0045		1	FILTER / 9900-05-BK	

Pos	Part No	UN	Qty	Description	Page No

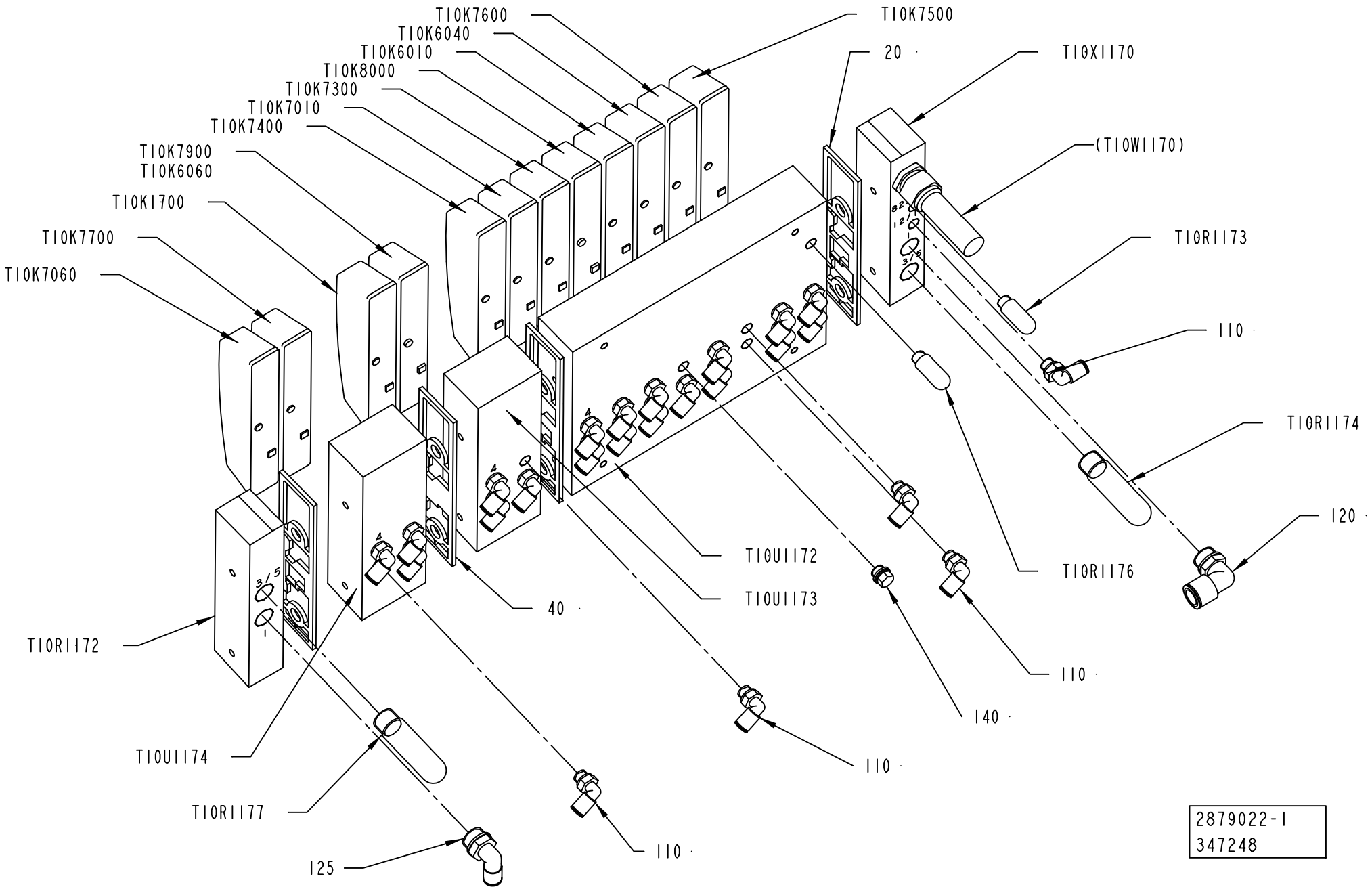
TI0K7600
TI0K6040
TI0K6010
TI0K8000
TI0K7300
TI0K7010
TI0K7400
TI0K7900
TI0K6060
TI0K1700
TI0K7700
TI0K7060
TI0K7500
20
TI0X1170
(TI0W1170)
TI0R1173
110
TI0R1174
120
TI0R1176
TI0U1172
TI0U1173
40
TI0R1172
110
140
TI0U1174
TI0R1177
125
110
2879022-1
347248

ECM: 347280 - 20080422
Group number: 2879022-0100
Assembly Drawing: 2879022-1_1_AB

Pos	Part No	UN	Qty	Description	Page No
-					
020	90458-1207		3	SEALING, STANDARD	
040	90458-1208		1	SEALING, CHANNEL 1 BLOCKED	
110	350002-0006		24	PUSH-IN L-FITTING QSL-F-G1/8-6	
120	350002-0014		1	PUSH-IN L-FITTING QSL-F-G3/8-12	
125	350002-0012		1	PUSH-IN L-FITTING QSL-F-G3/8-8	
140	90459-0698		1	PLUG, G1/8EXT, G1/8	
T10K1700	90458-1194		1	VALVE, 5/2 MONOSTABLE	
T10K6010	90458-1194		1	VALVE, 5/2 MONOSTABLE	
T10K6040	90458-1194		1	VALVE, 5/2 MONOSTABLE	
T10K7010	90458-1194		1	VALVE, 5/2 MONOSTABLE	
T10K7060	90458-1194		1	VALVE, 5/2 MONOSTABLE	
T10K7300	90458-1194		1	VALVE, 5/2 MONOSTABLE	
T10K7400	90458-1194		1	VALVE, 5/2 MONOSTABLE	
T10K7500	90458-1194		1	VALVE, 5/2 MONOSTABLE	
T10K7600	90458-1194		1	VALVE, 5/2 MONOSTABLE	
T10K7700	90458-1194		1	VALVE, 5/2 MONOSTABLE	
T10K7900	90458-1202		1	VALVES 2X3/2, CLOSED	
T10K8000	90458-1202		1	VALVES 2X3/2, CLOSED	
T10R1172	90458-1214		1	RIGHT ENDPL EXT. PILOT AIR,CDVI5.0-EPR-S	
T10R1173	90328-0047		1	SILENCER, G1/8"	
T10R1174	90328-0024		1	SILENCER, G3/8"	
T10R1176	90328-0047		1	SILENCER, G1/8"	
T10R1177	90328-0024		1	SILENCER, G3/8"	
T10U1172	90458-1205		1	BASIC SUB-BASE 8 VALVES, CDVI5.0-GB8-MP	
T10U1173	90458-1206		1	EXP. SUB-BASE 2 VALVES, CDVI5.0-EB	
T10U1174	90458-1206		1	EXP. SUB-BASE 2 VALVES, CDVI5.0-EB	
T10X1170	90458-1212		1	LEFT ENDPLATE INCL. 10M CABLE	

Pos	Part No	UN	Qty	Description	Page No

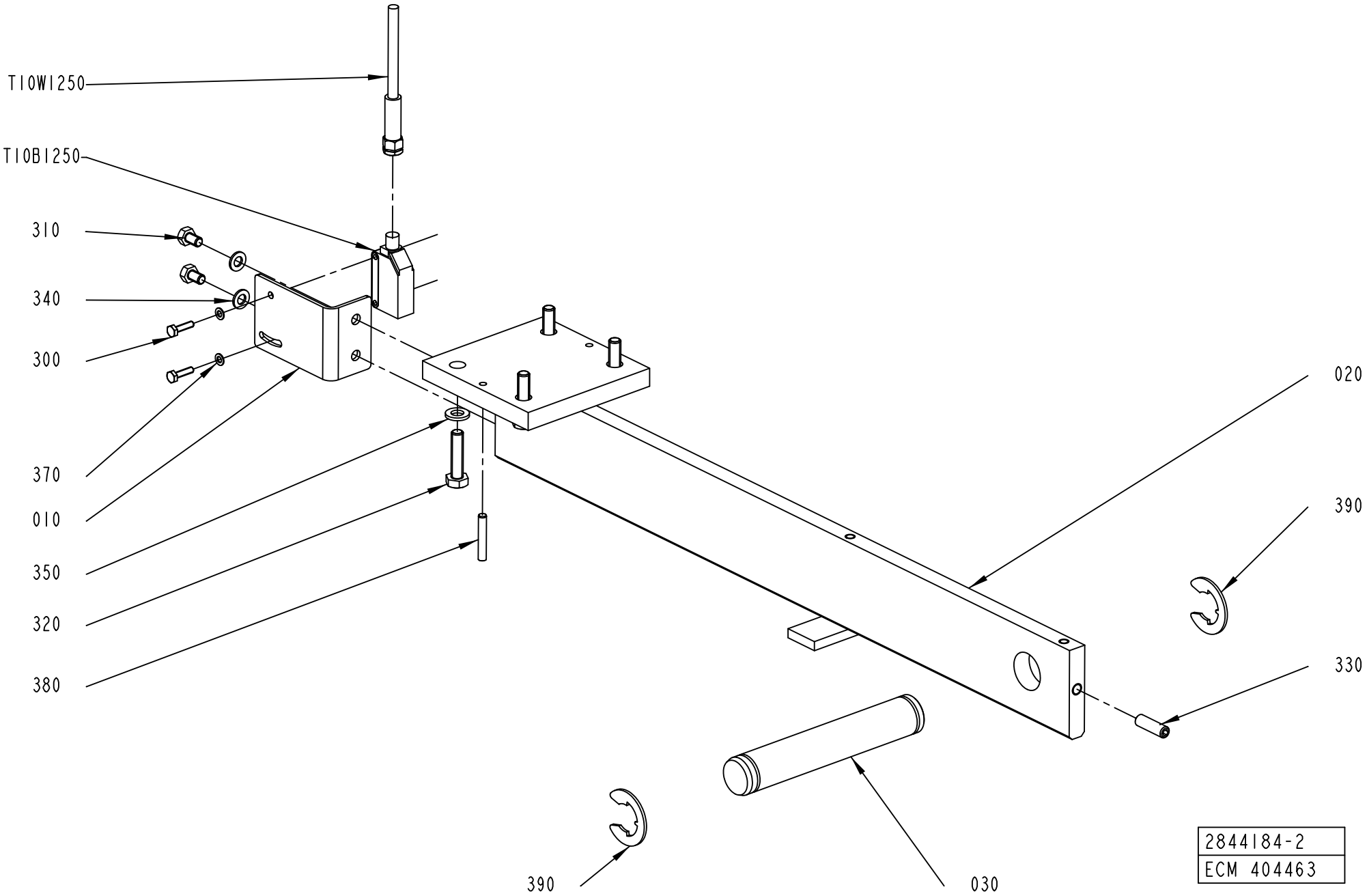
T10W1250
T10B1250
310
340
300
370
010
350
320
380
020
390
330
390
030
2844184-2
ECM 404463

ECM: 501313 - 20111001
Group number: 2844184-0200
Assembly Drawing: 2844184-2_1_AA

Pos	Part No	UN	Qty	Description	Page No
-					
010	3040940-0000		1	PLATE	
020	2844183-0000		1	BRACKET	
030	2844182-0000		1	PIN	
300	312125-0226		2	SLOTTED HEAD SCREW, ISO1207 M3X12 A4	
310	312105-0323		2	SCREW, M6S ISO 4017 M5X8 A4 80	
320	312105-0372		4	SCREW, M6S ISO 4017 M6X25 A4 80	
330	312318-0370		1	SET SCREW, CUP END ISO4029 M6X20 A4	
340	315105-0146		2	WASHER BRB 5,3X10 RFR	
350	315105-0153		4	WASHER BRB 6,4X12 RFR	
370	315105-0124		2	WASHER BRB 3,2X6 RFR	
380	311103-0274		2	PARALLEL PIN ISO 2338 4M6X25 A1	
390	315755-0113		2	RETAINING RING SHAFT DIN 6799 15 SS	
T10B1250	90459-7275		1	PHOTOCELL E3Z-R86	
T10W1250	351305-0050		1	ACTUATOR/SENSOR CABLE PRKMV 4-07/5M	

Pos	Part No	UN	Qty	Description	Page No

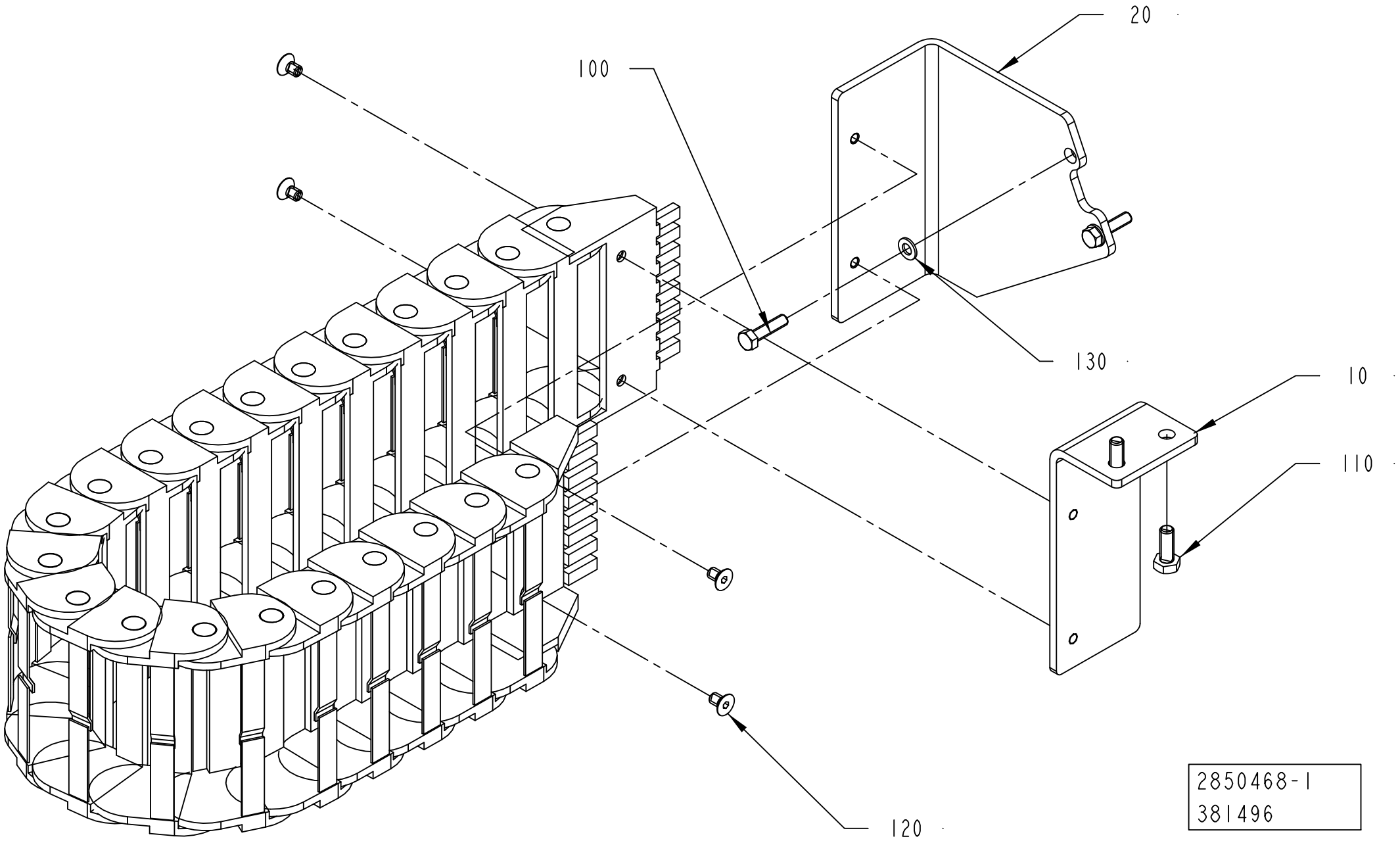
20
100
130
10
110
120
2850468-1
381496

ECM: 382224 - 20081223
Group number: 2850468-0100
Assembly Drawing: 2850468-1_1_AB

Pos	Part No	UN	Qty	Description	Page No
-					
010	2850466-0000		1	BRACKET	
020	2850467-0000		1	BRACKET	
030	2850465-0000		1	CHAIN	
100	312105-0331		2	SCREW, M6S ISO 4017 M5X20 A4 80	
110	312105-0368		2	SCREW, M6S ISO 4017 M6X16 A4 80	
120	312155-0323		4	SCREW DIN 7991 MF6S M5X8 A4 70	
130	315105-0146		2	WASHER BRB 5,3X10 RFR	

Pos	Part No	UN	Qty	Description	Page No

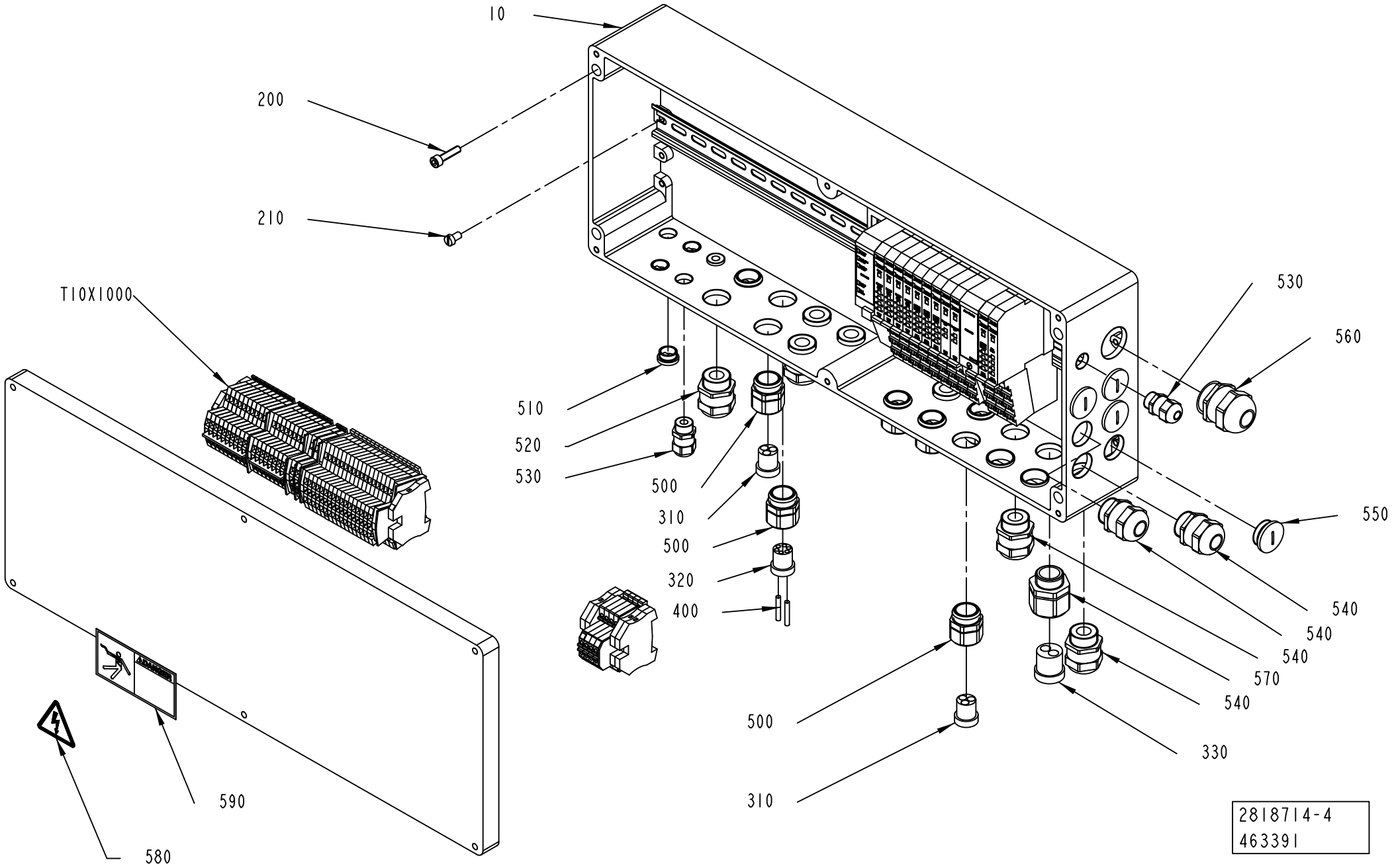
10
200
210
T10X1000
510
520
530
500
310
500
320
400
530
560
550
540
540
540
570
540
330
500
310
590
580
2818714-4
463391

ECM: 471991 - 20110401
Group number: 2818714-0300
Assembly Drawing: 2818714-4_1_AB

This list covers pages from 7-40 to 7-43

Pos	Part No	UN	Qty	Description	Page No
ASU ANSI (See drawing on pages: 7-40, 7-42)					
510	90458-1307		3	BLIND PLUG CIRCULAR, M16X1,5 514GFK/216	
520	90458-0316		5	CABLE GLAND, M25X1,5, 5311 1130	
530	90458-0306		3	CABLE GLAND, M16X1,5, 5311 1010	
550	90458-1309		6	BLIND PLUG CIRCULAR, M25X1,5 514GFK/225	
590	359715-0100		1	WARNING SIGN ANSI (H), ELECTRIC SHOCK	
ASU ISO (See drawing on pages: 7-40, 7-42)					
510	90458-1307		3	BLIND PLUG CIRCULAR, M16X1,5 514GFK/216	
520	90458-0316		5	CABLE GLAND, M25X1,5, 5311 1130	
530	90458-0306		3	CABLE GLAND, M16X1,5, 5311 1010	
550	90458-1309		6	BLIND PLUG CIRCULAR, M25X1,5 514GFK/225	
580	359705-0015		1	WARNING SIGN ISO, RISK OF ELECTRIC SHOCK	
Common Parts					
010	2859594-0000		1	CONNECTION BOX	
020	1347878-0000		1	RAIL	
200	312115-0372		4	SCREW ISO4762 M6X25 A4 80	
210	312121-0364		2	SCREW ISO 1207 M6X10 4.8-5.8 Z.PL.	
310	353249-0027		6	INSERT, MULTI HOLE, E153M 3X7	
320	353249-0026		1	INSERT, MULTI HOLE, E153M 6X4	
330	90459-3555		1	INSERT, MULTI HOLE, E154M 2X9	
400	353249-0302		2	SEALING PIN, 4,0X25	
500	90458-0407		7	CABLE GLAND, VK 22553Y	
540	90458-0308		4	CABLE GLAND, M25X1,5, 5311 1030	
560	90458-0309		1	CABLE GLAND, M32X1,5, 5311 1040	
570	90458-0426		1	CABLE GLAND, VK 22554Y	
600	90459-2526		9	REMOTE I/O BASE MODULE 8 POINTS, 1734-TB	
610	90459-2528		2	REMOTE I/O BASE MODULE FOR THERMOCOUPLE	
620	90459-5574		1	CONNECTOR, 1787-PLUG10R	
T10K1000	90459-2494		1	DEVICENET I/O ADAPTER MODULE, 1734-ADN	
T10K1010	90459-6561		1	DIGITAL INPUT 8 PTS SINK, 1734-IB8/C	
T10K1020	90459-6561		1	DIGITAL INPUT 8 PTS SINK, 1734-IB8/C	
T10K1030	90459-6561		1	DIGITAL INPUT 8 PTS SINK, 1734-IB8/C	
T10K1040	90459-6561		1	DIGITAL INPUT 8 PTS SINK, 1734-IB8/C	
T10K1050	90459-6560		1	DIGITAL OUTPUT 8 PTS, 1734-OB8E/C	
T10K1060	90459-6560		1	DIGITAL OUTPUT 8 PTS, 1734-OB8E/C	
T10K1070	90459-6560		1	DIGITAL OUTPUT 8 PTS, 1734-OB8E/C	
T10K1080	90459-2512		1	REMOTE I/O THERMOCOUPLE INPUT 2 PTS	
T10K1090	90459-2512		1	REMOTE I/O THERMOCOUPLE INPUT 2 PTS	
T10K1100	90459-2501		1	FIELD POWER DISTRIBUTOR, 1734-FPD	
T10K1110	90459-6560		1	DIGITAL OUTPUT 8 PTS, 1734-OB8E/C	
T10K1120	90459-5261		1	REMOTE I/O, RELAY OUTP. 4 PTS,1734-OW4/C	
T10R0010	90459-1250		1	RESISTANCE FIXED, 120 OHM, 0,5 W 1%	
T10X1000	2890281-0300		1	TERMINAL BLOCK	**7-45**

Machine Type | Group Description | Used-In | Group Number | Page No

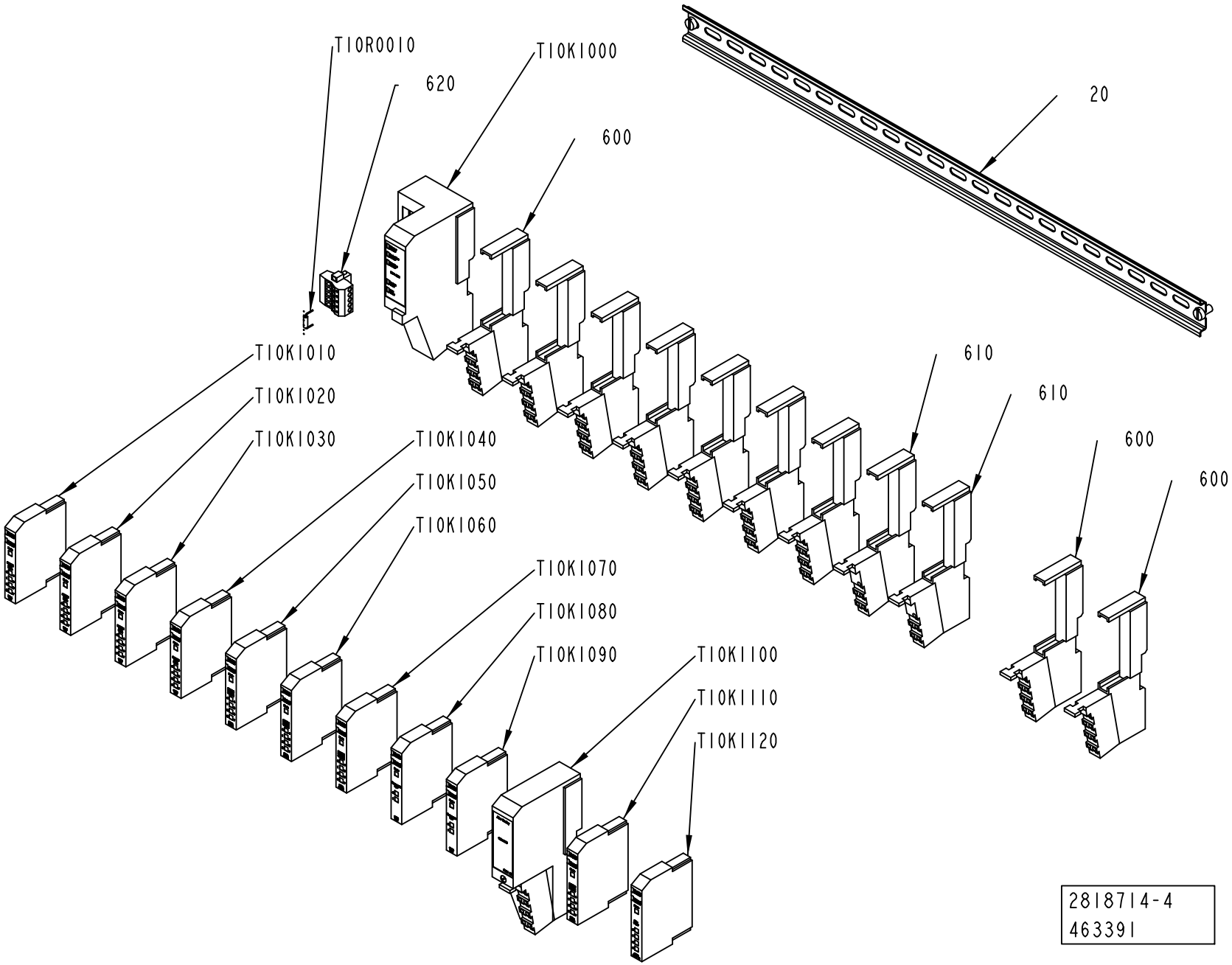
TI0R0010
620
TI0K1000
600
20
TI0K1010
TI0K1020
TI0K1030
TI0K1040
TI0K1050
TI0K1060
TI0K1070
TI0K1080
TI0K1090
TI0K1100
TI0K1110
TI0K1120
610
610
600
600
2818714-4
463391

ECM: 471991 - 20110401
Group number: 2818714-0300
Assembly Drawing: 2818714-4_2_AB

This list covers pages from 7-40 to 7-43

Pos	Part No	UN	Qty	Description	Page No
ASU ANSI (See drawing on pages: 7-40, 7-42)					
510	90458-1307		3	BLIND PLUG CIRCULAR, M16X1,5 514GFK/216	
520	90458-0316		5	CABLE GLAND, M25X1,5, 5311 1130	
530	90458-0306		3	CABLE GLAND, M16X1,5, 5311 1010	
550	90458-1309		6	BLIND PLUG CIRCULAR, M25X1,5 514GFK/225	
590	359715-0100		1	WARNING SIGN ANSI (H), ELECTRIC SHOCK	
ASU ISO (See drawing on pages: 7-40, 7-42)					
510	90458-1307		3	BLIND PLUG CIRCULAR, M16X1,5 514GFK/216	
520	90458-0316		5	CABLE GLAND, M25X1,5, 5311 1130	
530	90458-0306		3	CABLE GLAND, M16X1,5, 5311 1010	
550	90458-1309		6	BLIND PLUG CIRCULAR, M25X1,5 514GFK/225	
580	359705-0015		1	WARNING SIGN ISO, RISK OF ELECTRIC SHOCK	
Common Parts					
010	2859594-0000		1	CONNECTION BOX	
020	1347878-0000		1	RAIL	
200	312115-0372		4	SCREW ISO4762 M6X25 A4 80	
210	312121-0364		2	SCREW ISO 1207 M6X10 4.8-5.8 Z.PL.	
310	353249-0027		6	INSERT, MULTI HOLE, E153M 3X7	
320	353249-0026		1	INSERT, MULTI HOLE, E153M 6X4	
330	90459-3555		1	INSERT, MULTI HOLE, E154M 2X9	
400	353249-0302		2	SEALING PIN, 4,0X25	
500	90458-0407		7	CABLE GLAND, VK 22553Y	
540	90458-0308		4	CABLE GLAND, M25X1,5, 5311 1030	
560	90458-0309		1	CABLE GLAND, M32X1,5, 5311 1040	
570	90458-0426		1	CABLE GLAND, VK 22554Y	
600	90459-2526		9	REMOTE I/O BASE MODULE 8 POINTS, 1734-TB	
610	90459-2528		2	REMOTE I/O BASE MODULE FOR THERMOCOUPLE	
620	90459-5574		1	CONNECTOR, 1787-PLUG10R	
T10K1000	90459-2494		1	DEVICENET I/O ADAPTER MODULE, 1734-ADN	
T10K1010	90459-6561		1	DIGITAL INPUT 8 PTS SINK, 1734-IB8/C	
T10K1020	90459-6561		1	DIGITAL INPUT 8 PTS SINK, 1734-IB8/C	
T10K1030	90459-6561		1	DIGITAL INPUT 8 PTS SINK, 1734-IB8/C	
T10K1040	90459-6561		1	DIGITAL INPUT 8 PTS SINK, 1734-IB8/C	
T10K1050	90459-6560		1	DIGITAL OUTPUT 8 PTS, 1734-OB8E/C	
T10K1060	90459-6560		1	DIGITAL OUTPUT 8 PTS, 1734-OB8E/C	
T10K1070	90459-6560		1	DIGITAL OUTPUT 8 PTS, 1734-OB8E/C	
T10K1080	90459-2512		1	REMOTE I/O THERMOCOUPLE INPUT 2 PTS	
T10K1090	90459-2512		1	REMOTE I/O THERMOCOUPLE INPUT 2 PTS	
T10K1100	90459-2501		1	FIELD POWER DISTRIBUTOR, 1734-FPD	
T10K1110	90459-6560		1	DIGITAL OUTPUT 8 PTS, 1734-OB8E/C	
T10K1120	90459-5261		1	REMOTE I/O, RELAY OUTP. 4 PTS,1734-OW4/C	
T10R0010	90459-1250		1	RESISTANCE FIXED, 120 OHM, 0,5 W 1%	
T10X1000	2890281-0300		1	TERMINAL BLOCK	**7-45**

Machine Type | Group Description | Used-In | Group Number | Page No

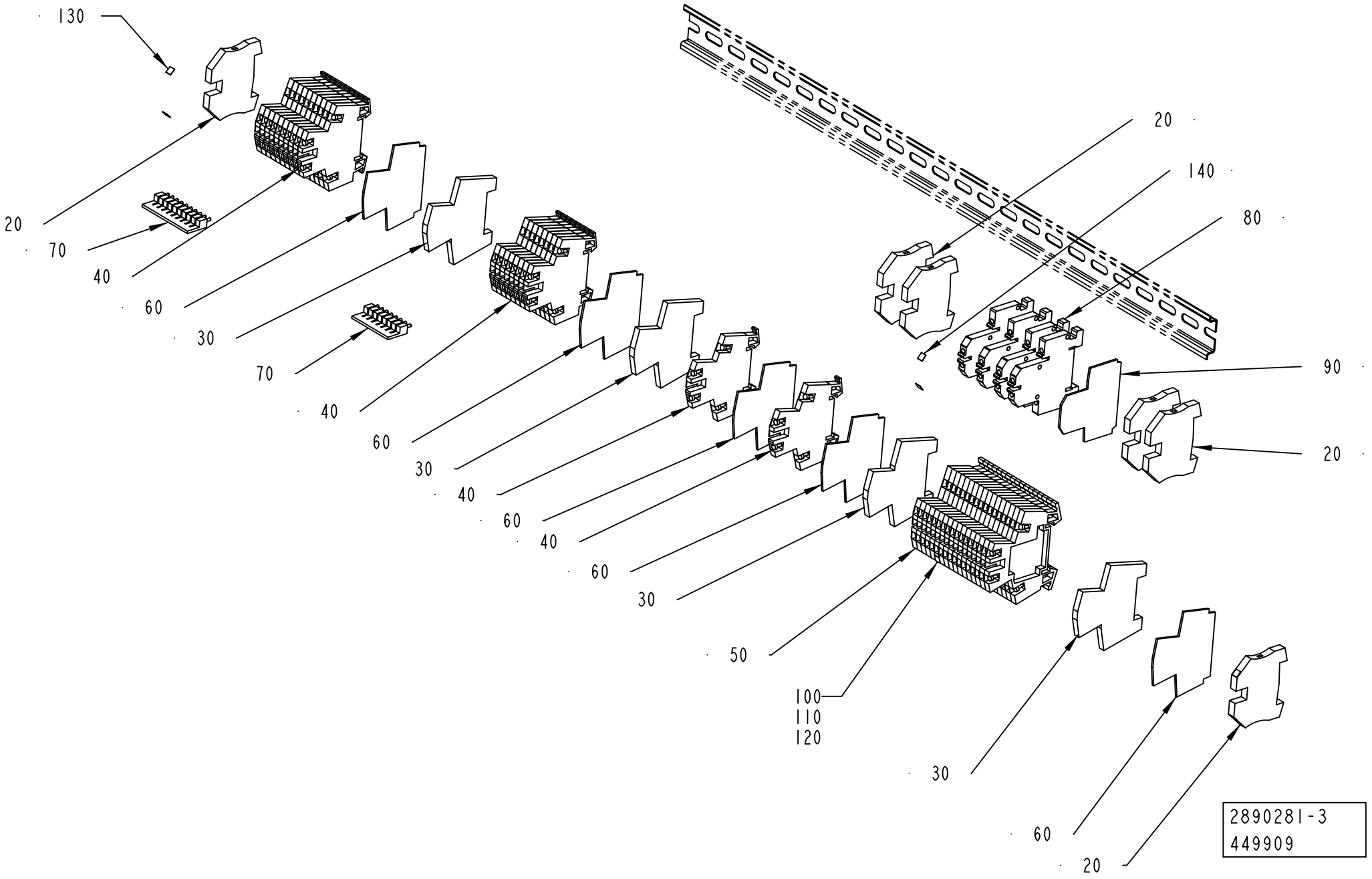
130
20
70
40
60
30
70
40
60
30
40
60
40
60
30
50
100
110
120
30
60
20
20
140
80
90
20
2890281-3
449909

ECM: 452849 - 20101001
Group number: 2890281-0300
Assembly Drawing: 2890281-3_1_AA

Pos	Part No	UN	Qty	Description	Page No
-					
020	353024-0205		6	EARTH TERMINAL WPE 4	
030	353024-0212		4	EARTH TERMINAL WDK 2,5 PE	
040	90459-5253		20	TERMINAL BLOCK WDK 2,5 V	
050	90077-0113		17	TERMINAL BLOCK WDK 2.5	
060	353032-0009		5	END PLATE, WAP WDK 2,5	
070	353034-0030		2	BRIDGE CONNECTOR WQV 2,5/10	
080	90602-5327		4	FEED THROUGH TERMINAL, WDK 4N	
090	90602-5347		1	END PLATE, WAP WDK 2.5/4 N	
100	359011-0807		1	MARKING, DEK 5 FW 1-50	
110	359011-0808		1	MARKING, DEK 5FW 51-100	
120	359011-0809		2	MARKING, DEK 5 FW 101-150	
130	359011-0819		1	MARKING, EARTH, DEK 5 GW ERDE I.KR.	
140	359011-0811		2	MARKING, DEK 5 FW 201-250	

Pos	Part No	UN	Qty	Description	Page No

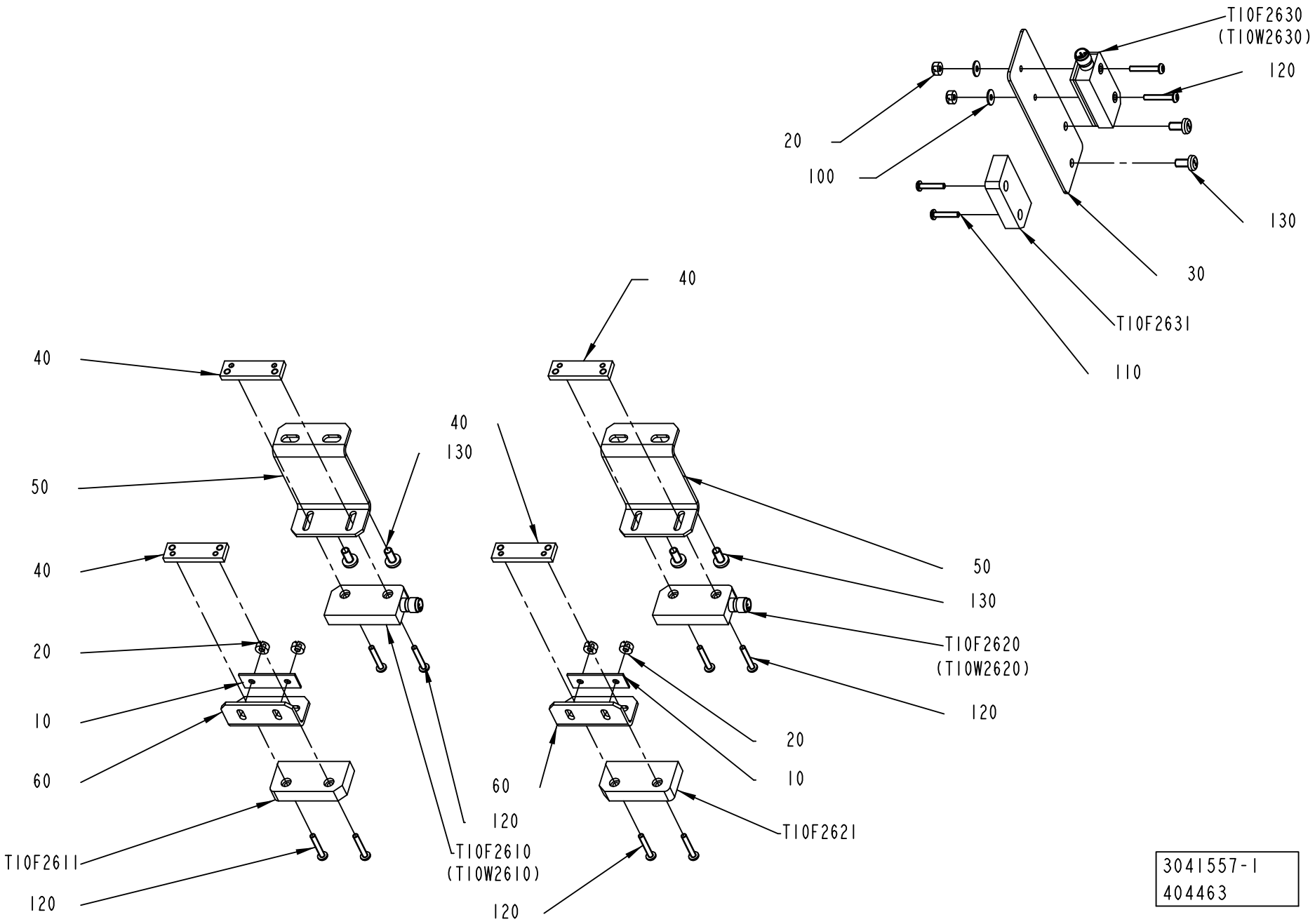
T10F2630
(T10W2630)
120
20
100
130
30
T10F2631
110
40
40
130
50
40
20
10
60
T10F2611
120
T10F2610
(T10W2610)
120
50
130
T10F2620
(T10W2620)
120
20
10
60
120
T10F2621
3041557-1
404463

ECM: 405734 - 20090731
Group number: 3041557-0100
Assembly Drawing: 3041557-1_1_AA

Pos	Part No	UN	Qty	Description	Page No
-					
010	1036563-0000		2	WASHER	
020	1539391-0000		6	ROUND NUT	
030	2815059-0000		1	PLATE	
040	2889350-0000		4	PLATE	
050	3009902-0000		2	PLATE	
060	3042558-0000		2	SUPPORT	
100	90005-0082		2	WASHER PLAIN ROUND 4,3(M4)/12,H=1	
110	90459-4164		2	SAFETY SCREW, SM4X20	
120	90459-4165		10	SAFETY SCREW, SM4X25	
130	90600-2563		6	SCREW PANHEAD SNAKE EYE SPANNER, M6X12	
T10F2610	90459-4142		1	SAFETY SENSOR, ADAM M12, 20-051-00	
T10F2611	90458-2794		1	SAFETY SENSOR, EVA 20-046-00	
T10F2620	90459-4142		1	SAFETY SENSOR, ADAM M12, 20-051-00	
T10F2621	90458-2794		1	SAFETY SENSOR, EVA 20-046-00	
T10F2630	90459-4142		1	SAFETY SENSOR, ADAM M12, 20-051-00	
T10F2631	90458-2794		1	SAFETY SENSOR, EVA 20-046-00	

Pos	Part No	UN	Qty	Description	Page No

Machine Type	Group Description	Used-In	Group Number	Page No

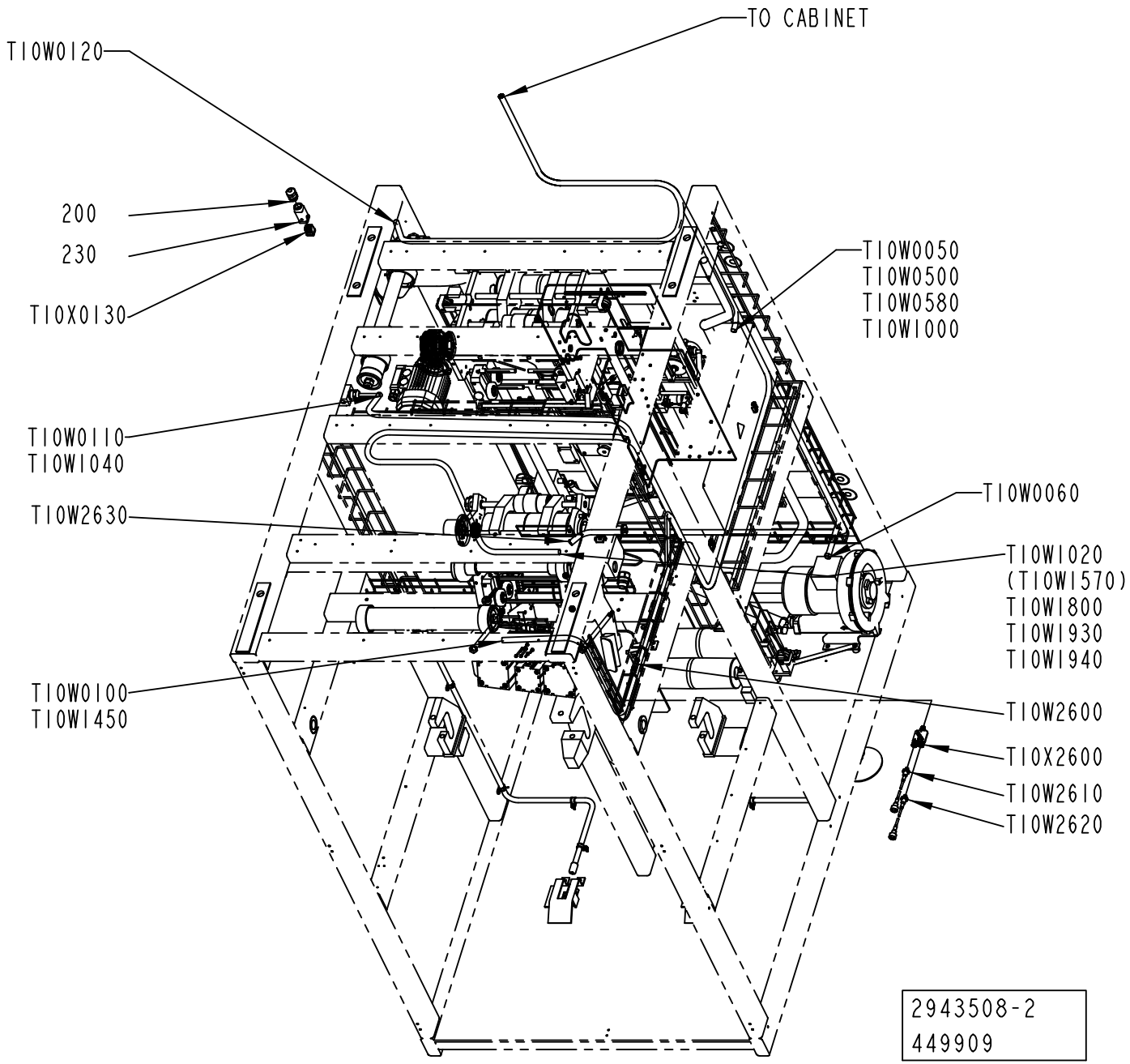
TO CABINET
T10W0120
200
230
T10X0130
T10W0050
T10W0500
T10W0580
T10W1000
T10W0110
T10W1040
T10W2630
T10W0060
T10W1020
(T10W1570)
T10W1800
T10W1930
T10W1940
T10W0100
T10W1450
T10W2600
T10X2600
T10W2610
T10W2620
2943508-2
449909

ECM: 501148 - 20111001
Group number: 2943508-0200
Assembly Drawing: 2943508-2_1_AC

This list covers pages from 7-48 to 7-51

Pos	Part No	UN	Qty	Description	Page No
-					
200	90458-0307		7	CABLE GLAND, M20X1,5, 5311 1020	
210	90458-0308		3	CABLE GLAND, M25X1,5, 5311 1030	
220	90458-0317		1	CABLE GLAND, M32X1,5, 5311 1140	
230	90459-3080		5	HOOD, HAN-BRID3A, 19 20 003 1443	
240	90459-6634		1	HOOD, TOP ENTRY, 16B, 19 30 016 1421	
250	90459-6632		2	HOOD, TOP ENTRY, 6B, 19 30 006 1440	
260	90459-6636		1	HOOD, TOP ENTRY, 24B, 19 30 024 0427	
270	90601-7130		2	HOOD, HAN MODULE COMPACT, 1914 0010 401	
280	90459-3852		2	HOUSING, 09 14 001 0311	
300	90110-0381		1	COVER, 310601-33 CYR24.4	
320	90459-6387		2	CONNECTOR 5-POL M12, RSCS 5/9	
T10W0050	351150-0425	M	6.9	CABLE OLFLEX 25X0,75 MM2 LIGHT/GREY	
T10W0060	351150-0413	M	5.7	CABLE OLFLEX 4GX1,5 MM2 LIGHT/GREY	
T10W0100	351150-0412	M	7.5	CABLE OLFLEX 3X1,5 MM2 LIGHT/GREY	
T10W0110	351150-0412	M	8	CABLE OLFLEX 3X1,5 MM2 LIGHT/GREY	
T10W0120	351150-0412	M	5	CABLE OLFLEX 3X1,5 MM2 LIGHT/GREY	
T10W0500	351120-0145	M	5	CABLE ÖLFLEX HEAT 180 SIHF 3X2,5	
T10W0580	351150-0186	M	5	CABLE OLFLEX 5X4 MM2 LIGHT/GREY	
T10W1000	90459-2530	M	7.1	DEVICENET CABLE THIN	
T10W1020	351422-0203	M	8.5	CABLE ÖLFLEX 150CY QUATTRO 4X1,5	
T10W1040	351422-0203	M	7.2	CABLE ÖLFLEX 150CY QUATTRO 4X1,5	
T10W1450	351150-0406	M	5	CABLE OLFLEX 7X0,75 MM2 LIGHT/GREY	
T10W1800	90600-1395		1	CABLE, 15M, 2030692	
T10W1930	90458-0603		1	CONNECTOR, CABLE RECEPTACLES	
T10W1940	90458-0603		1	CONNECTOR, CABLE RECEPTACLES	
T10W2600	90459-4252		1	CABLE M12-C101, 20-056-10	
T10W2610	90459-7095		1	FOCUS JUMPER CABLE M12 5P 1M, 20-056-20	
T10W2620	90459-7095		1	FOCUS JUMPER CABLE M12 5P 1M, 20-056-20	
T10W2630	90459-4252		1	CABLE M12-C101, 20-056-10	
T10X0050	90110-0056		1	MALE INSERT, HAN E 24, 0933 0242 601	
T10X0060	90459-6821		1	MALE INSERT, HAN 4A, 0920 0042 611	
T10X0100	90459-6821		1	MALE INSERT, HAN 4A, 0920 0042 611	
T10X0110	90459-6821		1	MALE INSERT, HAN 4A, 0920 0042 611	
T10X0120	90459-6821		1	MALE INSERT, HAN 4A, 0920 0042 611	
T10X0130	90459-6821		1	MALE INSERT, HAN 4A, 0920 0042 611	
T10X0200	90110-0235		1	CABLE CONTACT, PX0739/P	
T10X0201	90110-0235		1	CABLE CONTACT, PX0739/P	
T10X0500	90601-6217		1	MALE INSERT, HAN 3 MOD-M-S 40A	
T10X0570	90601-6217		1	MALE INSERT, HAN 3 MOD-M-S 40A	
T10X0580	90110-0054		1	MALE INSERT, HAN 6 HSB, 0931 0062 601	
T10X1020	90110-0052		1	MALE INSERT, HAN E06, 0933 0062 601	
T10X1040	90110-0052		1	MALE INSERT, HAN E06, 0933 0062 601	
T10X1800	90459-6679		1	CONN 15 P FEM, AUX. FEEDB,2090-K6CK-D15F	
T10X2600	90601-0026		1	JUNCTION BLOCK,TINA 11-A	

Machine Type	Group Description	Used-In	Group Number	Page No

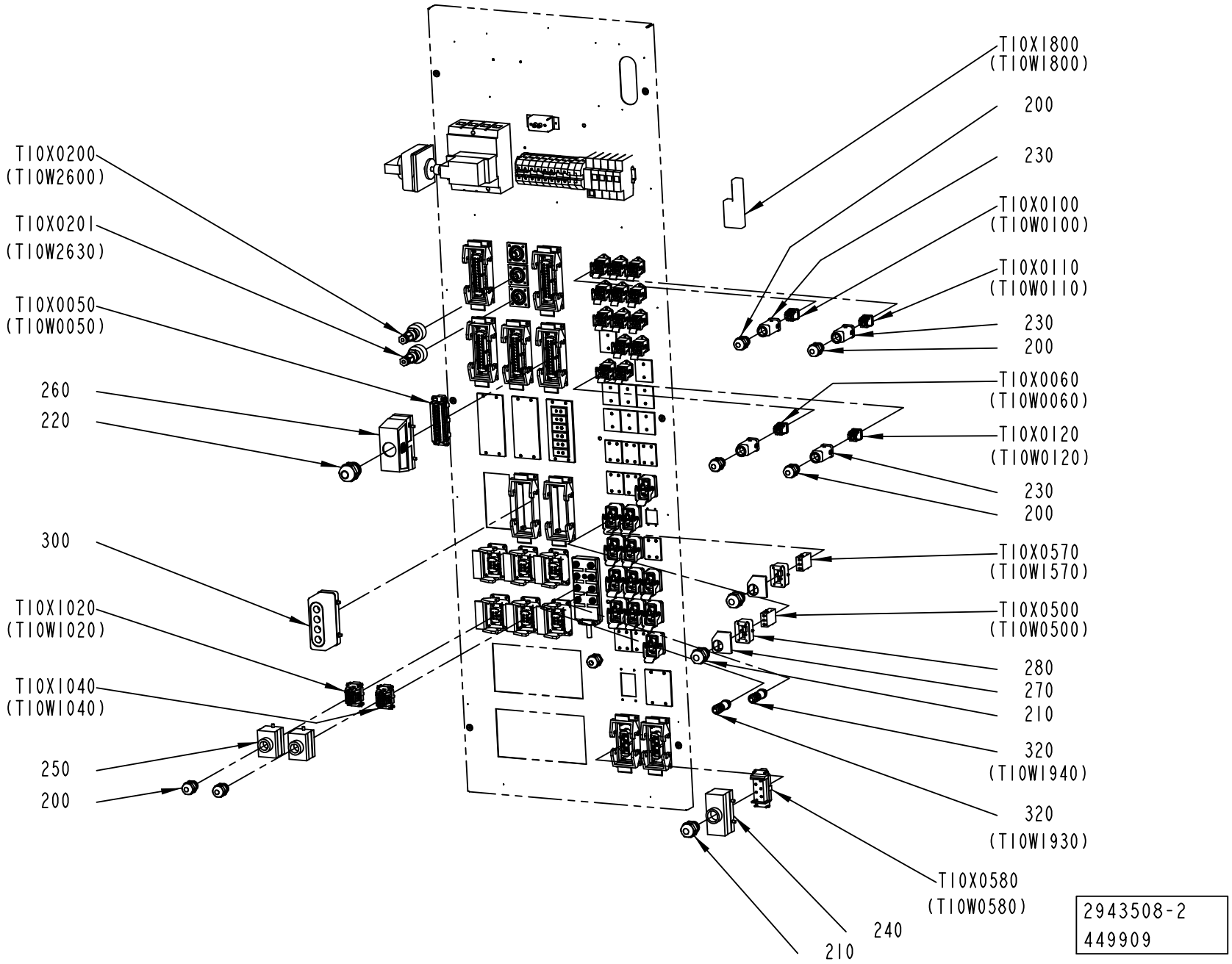
T10X1800
(T10W1800)
200
230
T10X0100
(T10W0100)
T10X0110
(T10W0110)
230
200
T10X0060
(T10W0060)
T10X0120
(T10W0120)
230
200
T10X0570
(T10W1570)
T10X0500
(T10W0500)
280
270
210
320
(T10W1940)
320
(T10W1930)
T10X0580
(T10W0580)
240
210
T10X0200
(T10W2600)
T10X0201
(T10W2630)
T10X0050
(T10W0050)
260
220
300
T10X1020
(T10W1020)
T10X1040
(T10W1040)
250
200
2943508-2
449909

ECM: 501148 - 20111001
Group number: 2943508-0200
Assembly Drawing: 2943508-2_2_AC

This list covers pages from 7-48 to 7-51

Pos	Part No	UN	Qty	Description	Page No
-					
200	90458-0307		7	CABLE GLAND, M20X1,5, 5311 1020	
210	90458-0308		3	CABLE GLAND, M25X1,5, 5311 1030	
220	90458-0317		1	CABLE GLAND, M32X1,5, 5311 1140	
230	90459-3080		5	HOOD, HAN-BRID3A, 19 20 003 1443	
240	90459-6634		1	HOOD, TOP ENTRY, 16B, 19 30 016 1421	
250	90459-6632		2	HOOD, TOP ENTRY, 6B, 19 30 006 1440	
260	90459-6636		1	HOOD, TOP ENTRY, 24B, 19 30 024 0427	
270	90601-7130		2	HOOD, HAN MODULE COMPACT, 1914 0010 401	
280	90459-3852		2	HOUSING, 09 14 001 0311	
300	90110-0381		1	COVER, 310601-33 CYR24.4	
320	90459-6387		2	CONNECTOR 5-POL M12, RSCS 5/9	
T10W0050	351150-0425	M	6.9	CABLE OLFLEX 25X0,75 MM2 LIGHT/GREY	
T10W0060	351150-0413	M	5.7	CABLE OLFLEX 4GX1,5 MM2 LIGHT/GREY	
T10W0100	351150-0412	M	7.5	CABLE OLFLEX 3X1,5 MM2 LIGHT/GREY	
T10W0110	351150-0412	M	8	CABLE OLFLEX 3X1,5 MM2 LIGHT/GREY	
T10W0120	351150-0412	M	5	CABLE OLFLEX 3X1,5 MM2 LIGHT/GREY	
T10W0500	351120-0145	M	5	CABLE ÖLFLEX HEAT 180 SIHF 3X2,5	
T10W0580	351150-0186	M	5	CABLE OLFLEX 5X4 MM2 LIGHT/GREY	
T10W1000	90459-2530	M	7.1	DEVICENET CABLE THIN	
T10W1020	351422-0203	M	8.5	CABLE ÖLFLEX 150CY QUATTRO 4X1,5	
T10W1040	351422-0203	M	7.2	CABLE ÖLFLEX 150CY QUATTRO 4X1,5	
T10W1450	351150-0406	M	5	CABLE OLFLEX 7X0,75 MM2 LIGHT/GREY	
T10W1800	90600-1395		1	CABLE, 15M, 2030692	
T10W1930	90458-0603		1	CONNECTOR, CABLE RECEPTACLES	
T10W1940	90458-0603		1	CONNECTOR, CABLE RECEPTACLES	
T10W2600	90459-4252		1	CABLE M12-C101, 20-056-10	
T10W2610	90459-7095		1	FOCUS JUMPER CABLE M12 5P 1M, 20-056-20	
T10W2620	90459-7095		1	FOCUS JUMPER CABLE M12 5P 1M, 20-056-20	
T10W2630	90459-4252		1	CABLE M12-C101, 20-056-10	
T10X0050	90110-0056		1	MALE INSERT, HAN E 24, 0933 0242 601	
T10X0060	90459-6821		1	MALE INSERT, HAN 4A, 0920 0042 611	
T10X0100	90459-6821		1	MALE INSERT, HAN 4A, 0920 0042 611	
T10X0110	90459-6821		1	MALE INSERT, HAN 4A, 0920 0042 611	
T10X0120	90459-6821		1	MALE INSERT, HAN 4A, 0920 0042 611	
T10X0130	90459-6821		1	MALE INSERT, HAN 4A, 0920 0042 611	
T10X0200	90110-0235		1	CABLE CONTACT, PX0739/P	
T10X0201	90110-0235		1	CABLE CONTACT, PX0739/P	
T10X0500	90601-6217		1	MALE INSERT, HAN 3 MOD-M-S 40A	
T10X0570	90601-6217		1	MALE INSERT, HAN 3 MOD-M-S 40A	
T10X0580	90110-0054		1	MALE INSERT, HAN 6 HSB, 0931 0062 601	
T10X1020	90110-0052		1	MALE INSERT, HAN E06, 0933 0062 601	
T10X1040	90110-0052		1	MALE INSERT, HAN E06, 0933 0062 601	
T10X1800	90459-6679		1	CONN 15 P FEM, AUX. FEEDB,2090-K6CK-D15F	
T10X2600	90601-0026		1	JUNCTION BLOCK,TINA 11-A	

Machine Type	Group Description	Used-In	Group Number	Page No

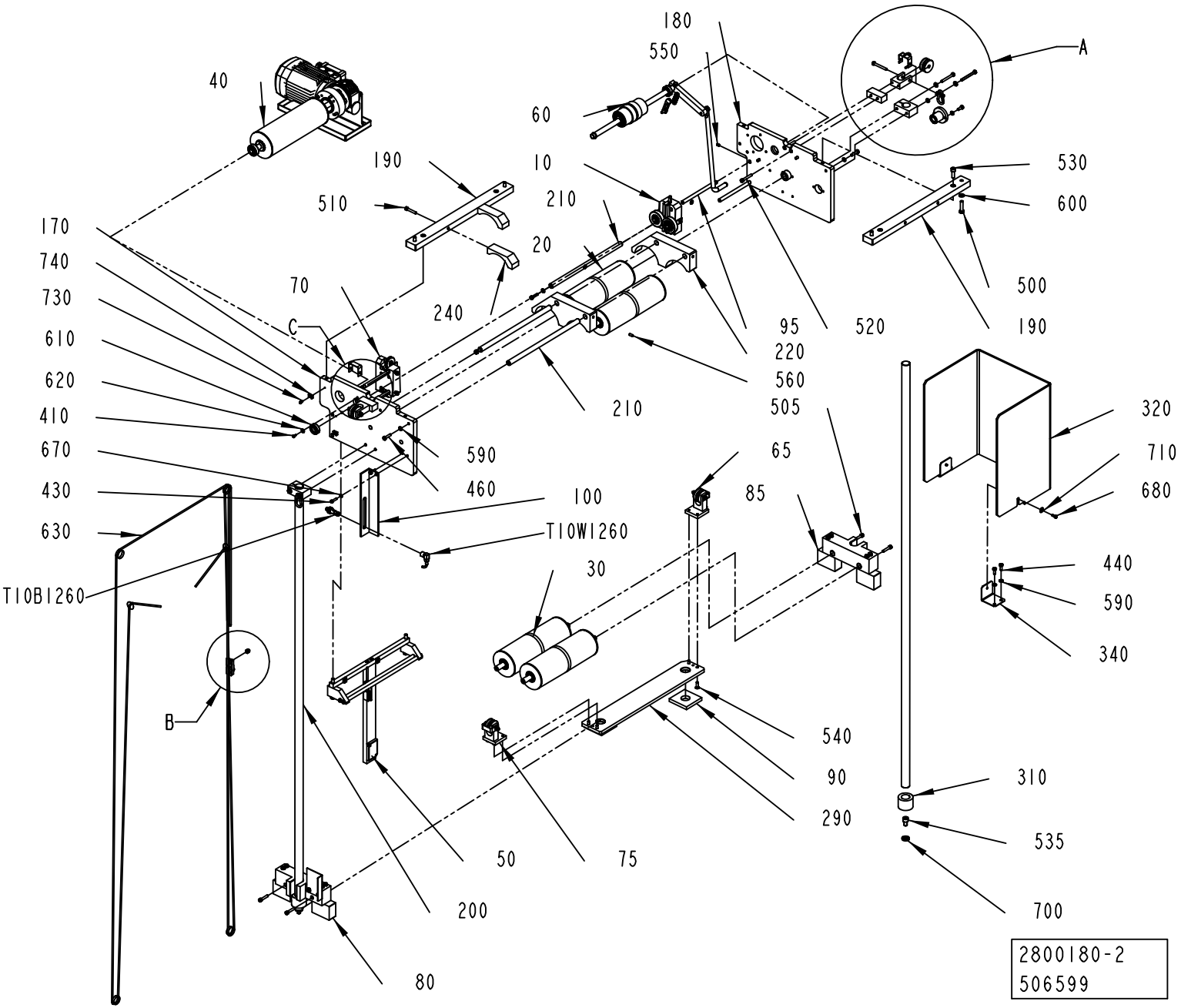
180
550
A
40
60
190
10
530
510
210
600
170
20
740
70
500
730
240
95
520
190
C
610
220
620
560
210
505
320
410
590
65
710
670
460
100
85
680
430
T10W1260
630
30
440
T10B1260
590
340
B
540
90
310
290
535
50
75
200
700
80
2800180-2
506599

ECM: 506599 - 20111001
Group number: 2800180-0200
Assembly Drawing: 2800180-2_1_AB

This list covers pages from 7-52 to 7-55

Pos	Part No	UN	Qty	Description	Page No
-					
010	1484745-0100		1	WEB GUIDE	7-57
020	2802863-0100		2	BENDING ROLLER	7-59
030	2802864-0100		2	BENDING ROLLER	7-61
040	2802870-0100		1	DRIVE UNIT	7-63
050	2802878-0200		1	BRACKET	7-65
060	2802879-0100		1	COUNTER ROLLER	7-67
065	2903069-0100		1	ROLLER	7-69
070	2529547-0100		1	PAPER GUIDE	7-71
075	2850462-0100		1	ROLLER	7-73
080	2850460-0100		1	SLIDER	7-75
085	2850461-0100		1	SLIDER	7-77
090	1487765-0000		2	SPACER	
095	1037546-0000		4	SHAFT	
100	1487550-0000		1	ANGLE BRACKET	
110	1519581-0000		2	ROLLER BAR	
120	1519586-0000		2	BRACKET	
130	1519592-0000		1	BOW	
140	2735075-0000		2	SPACER	
170	2802849-0000		1	PLATE	
180	2802850-0000		1	PLATE	
190	2802851-0000		2	PLATE	
200	2802852-0000		2	GUIDE ROD	
210	2802854-0000		3	SPACER	
220	2802856-0000		2	GUIDE	
230	2802857-0000		2	STOPPER	
240	2802866-0000		2	GUIDE	
270	2802886-0000		2	SUPPORT	
290	2802888-0000		1	PLATE	
310	2807499-0000		2	SPACER	
320	2902377-0000		1	PROTECTION	
340	2903815-0000		2	SUPPORT	
350	2925072-0000		1	BOW CLAMP	
410	312105-0287		4	SCREW, M6S ISO 4017 M4X8 A4 70	
430	312105-0331		2	SCREW, M6S ISO 4017 M5X20 A4 80	
440	312105-0368		8	SCREW, M6S ISO 4017 M6X16 A4 80	
460	312105-0372		6	SCREW, M6S ISO 4017 M6X25 A4 80	
470	312105-0380		2	SCREW, M6S ISO 4014 M6X50 A4 80	
490	312109-0380		2	SCREW, M6S ISO 4017 M6X50 A4 80	
495	312109-0382		2	SCREW, M6S ISO 4017 M6X60 A4 80	
500	312109-0457		4	SCREW, M6S ISO 4017 M8X35 A4 80	
505	312115-0374		4	SCREW ISO4762 M6X30 A4 80	
510	312115-0376		2	SCREW ISO4762 M6X35 A4 80	
520	312115-0378		4	SCREW ISO4762 M6X40 A4 80	
530	312115-0453		4	SCREW ISO4762 M8X25 A4 80	
535	312115-0489		2	SCREW ISO4762 M10X16 A4 80	
540	312155-0370		4	SCREW DIN 7991 MF6S M6X20 A4 70	
550	312318-0362		4	SET SCREW, CUP END ISO4029 M6X8 A4	
560	312318-0366		1	SET SCREW, CUP END ISO4029 M6X12 A4	
570	312605-0316		2	HEXAGON NUT, M6M M6 A280	
590	315106-0153		18	WASHER ISO 7089-6-200 HV A4	
600	315106-0165		4	WASHER ISO 7089-8-200 HV A4	
610	321308-0202		1	BALL BEARING 15/32X9	
620	90005-0082		4	WASHER PLAIN ROUND 4,3(M4)/12,H=1	
630	90319-0013	MM	8500	POLYESTER-SILKROPE 4MM 3900N, 102079	
650	90211-0002		1	WIRE LOCK, 5 MM	
660	312705-0316		2	HEX. DOMED CAP MHM-6 M6 A280	
670	315105-0146		2	WASHER BRB 5,3X10 RFR	
680	312105-0327		2	SCREW, M6S ISO 4017 M5X12 A4 80	
690	90459-2704		2	SNAP HOOK STAINLESS 50X5MM	
700	315115-0173		2	WASHER PLAIN, TBRB 10,5/22 H=4	
710	315125-0146		2	WASHER TBRSB 5.3X15X1 A4	
720	315105-0156		4	WASHER BRB 6,7X14 RFR	
730	312125-0287		2	SLOTTED HEAD SCREW, ISO1207 M4X8 A4	
740	352113-0205		2	ANCHOR PLATES FOR STRIPS, TM2S8-C100	
750	315115-0153		2	WASHER PLAIN, TBRB 6,4/12 H=3	
T10B1260	90600-0460		1	INDUCTIVE SWITCH, E2A-M12KN05-M1-B1-TP	
T10W1260	344254-0050		1	SENSOR CABLE, EVT004	

Machine Type	Group Description	Used-In	Group Number	Page No

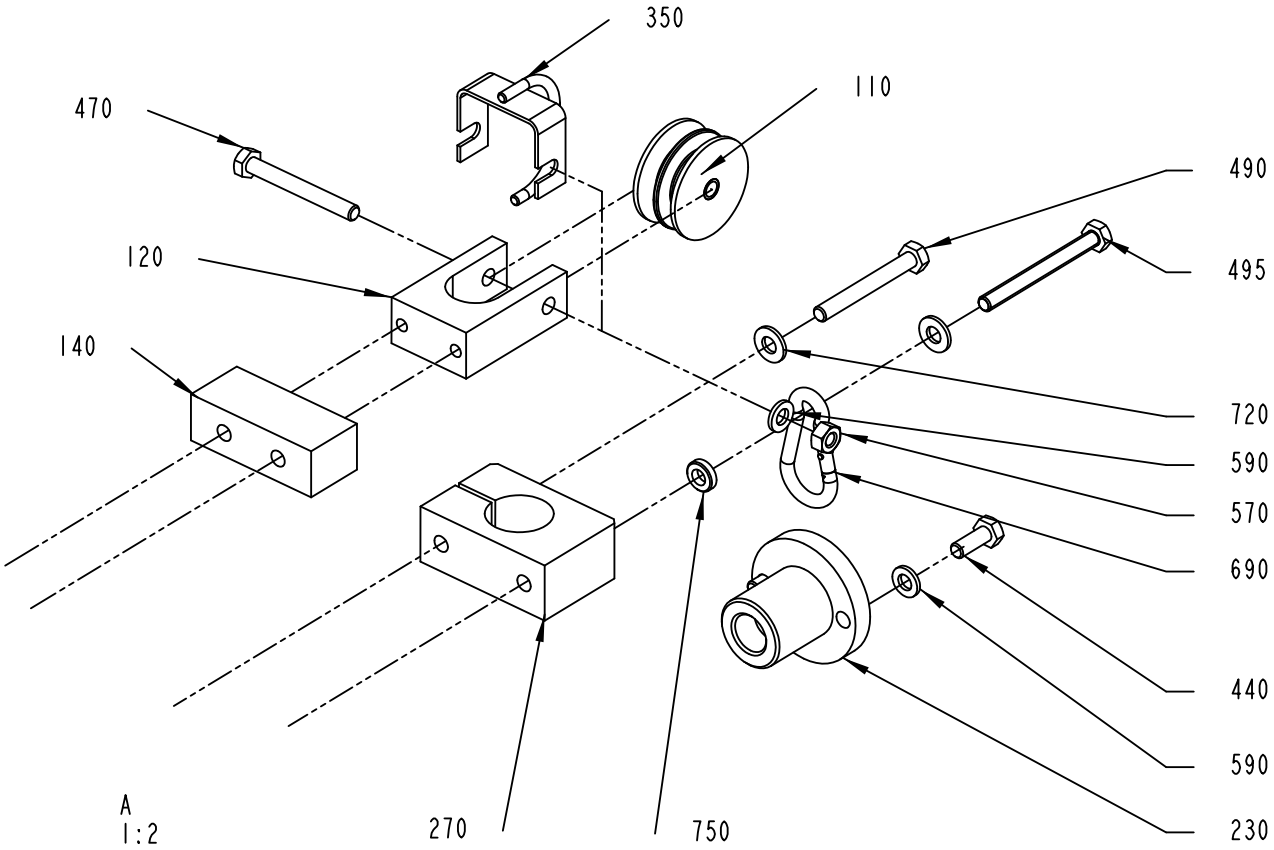

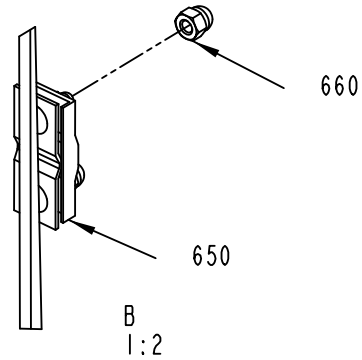

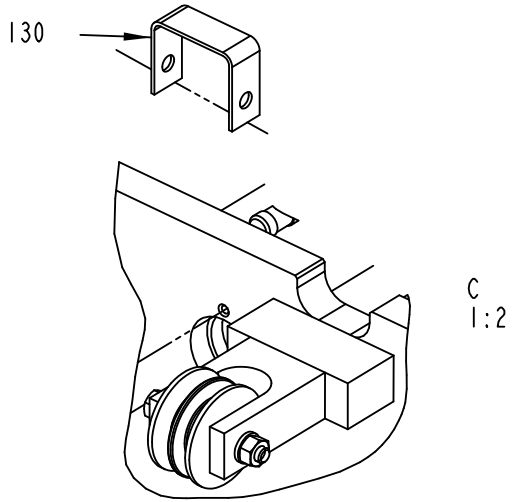

2800180-2
506599

ECM: 506599 - 20111001
Group number: 2800180-0200
Assembly Drawing: 2800180-2_2_AB

This list covers pages from 7-52 to 7-55

Pos	Part No	UN	Qty	Description	Page No
-					
010	1484745-0100		1	WEB GUIDE	**7-57**
020	2802863-0100		2	BENDING ROLLER	**7-59**
030	2802864-0100		2	BENDING ROLLER	**7-61**
040	2802870-0100		1	DRIVE UNIT	**7-63**
050	2802878-0200		1	BRACKET	**7-65**
060	2802879-0100		1	COUNTER ROLLER	**7-67**
065	2903069-0100		1	ROLLER	**7-69**
070	2529547-0100		1	PAPER GUIDE	**7-71**
075	2850462-0100		1	ROLLER	**7-73**
080	2850460-0100		1	SLIDER	**7-75**
085	2850461-0100		1	SLIDER	**7-77**
090	1487765-0000		2	SPACER	
095	1037546-0000		4	SHAFT	
100	1487550-0000		1	ANGLE BRACKET	
110	1519581-0000		2	ROLLER BAR	
120	1519586-0000		2	BRACKET	
130	1519592-0000		1	BOW	
140	2735075-0000		2	SPACER	
170	2802849-0000		1	PLATE	
180	2802850-0000		1	PLATE	
190	2802851-0000		2	PLATE	
200	2802852-0000		2	GUIDE ROD	
210	2802854-0000		3	SPACER	
220	2802856-0000		2	GUIDE	
230	2802857-0000		2	STOPPER	
240	2802866-0000		2	GUIDE	
270	2802886-0000		2	SUPPORT	
290	2802888-0000		1	PLATE	
310	2807499-0000		2	SPACER	
320	2902377-0000		1	PROTECTION	
340	2903815-0000		2	SUPPORT	
350	2925072-0000		1	BOW CLAMP	
410	312105-0287		4	SCREW, M6S ISO 4017 M4X8 A4 70	
430	312105-0331		2	SCREW, M6S ISO 4017 M5X20 A4 80	
440	312105-0368		8	SCREW, M6S ISO 4017 M6X16 A4 80	
460	312105-0372		6	SCREW, M6S ISO 4017 M6X25 A4 80	
470	312105-0380		2	SCREW, M6S ISO 4014 M6X50 A4 80	
490	312109-0380		2	SCREW, M6S ISO 4017 M6X50 A4 80	
495	312109-0382		2	SCREW, M6S ISO 4017 M6X60 A4 80	
500	312109-0457		4	SCREW, M6S ISO 4017 M8X35 A4 80	
505	312115-0374		4	SCREW ISO4762 M6X30 A4 80	
510	312115-0376		2	SCREW ISO4762 M6X35 A4 80	
520	312115-0378		4	SCREW ISO4762 M6X40 A4 80	
530	312115-0453		4	SCREW ISO4762 M8X25 A4 80	
535	312115-0489		2	SCREW ISO4762 M10X16 A4 80	
540	312155-0370		4	SCREW DIN 7991 MF6S M6X20 A4 70	
550	312318-0362		4	SET SCREW, CUP END ISO4029 M6X8 A4	
560	312318-0366		1	SET SCREW, CUP END ISO4029 M6X12 A4	
570	312605-0316		2	HEXAGON NUT, M6M M6 A280	
590	315106-0153		18	WASHER ISO 7089-6-200 HV A4	
600	315106-0165		4	WASHER ISO 7089-8-200 HV A4	
610	321308-0202		1	BALL BEARING 15/32X9	
620	90005-0082		4	WASHER PLAIN ROUND 4,3(M4)/12,H=1	
630	90319-0013	MM	8500	POLYESTER-SILKROPE 4MM 3900N, 102079	
650	90211-0002		1	WIRE LOCK, 5 MM	
660	312705-0316		2	HEX. DOMED CAP MHM-6 M6 A280	
670	315105-0146		2	WASHER BRB 5,3X10 RFR	
680	312105-0327		2	SCREW, M6S ISO 4017 M5X12 A4 80	
690	90459-2704		2	SNAP HOOK STAINLESS 50X5MM	
700	315115-0173		2	WASHER PLAIN, TBRB 10,5/22 H=4	
710	315125-0146		2	WASHER TBRSB 5.3X15X1 A4	
720	315105-0156		4	WASHER BRB 6,7X14 RFR	
730	312125-0287		2	SLOTTED HEAD SCREW, ISO1207 M4X8 A4	
740	352113-0205		2	ANCHOR PLATES FOR STRIPS, TM2S8-C100	
750	315115-0153		2	WASHER PLAIN, TBRB 6,4/12 H=3	
T10B1260	90600-0460		1	INDUCTIVE SWITCH, E2A-M12KN05-M1-B1-TP	
T10W1260	344254-0050		1	SENSOR CABLE, EVT004	

Machine Type	Group Description	Used-In	Group Number	Page No

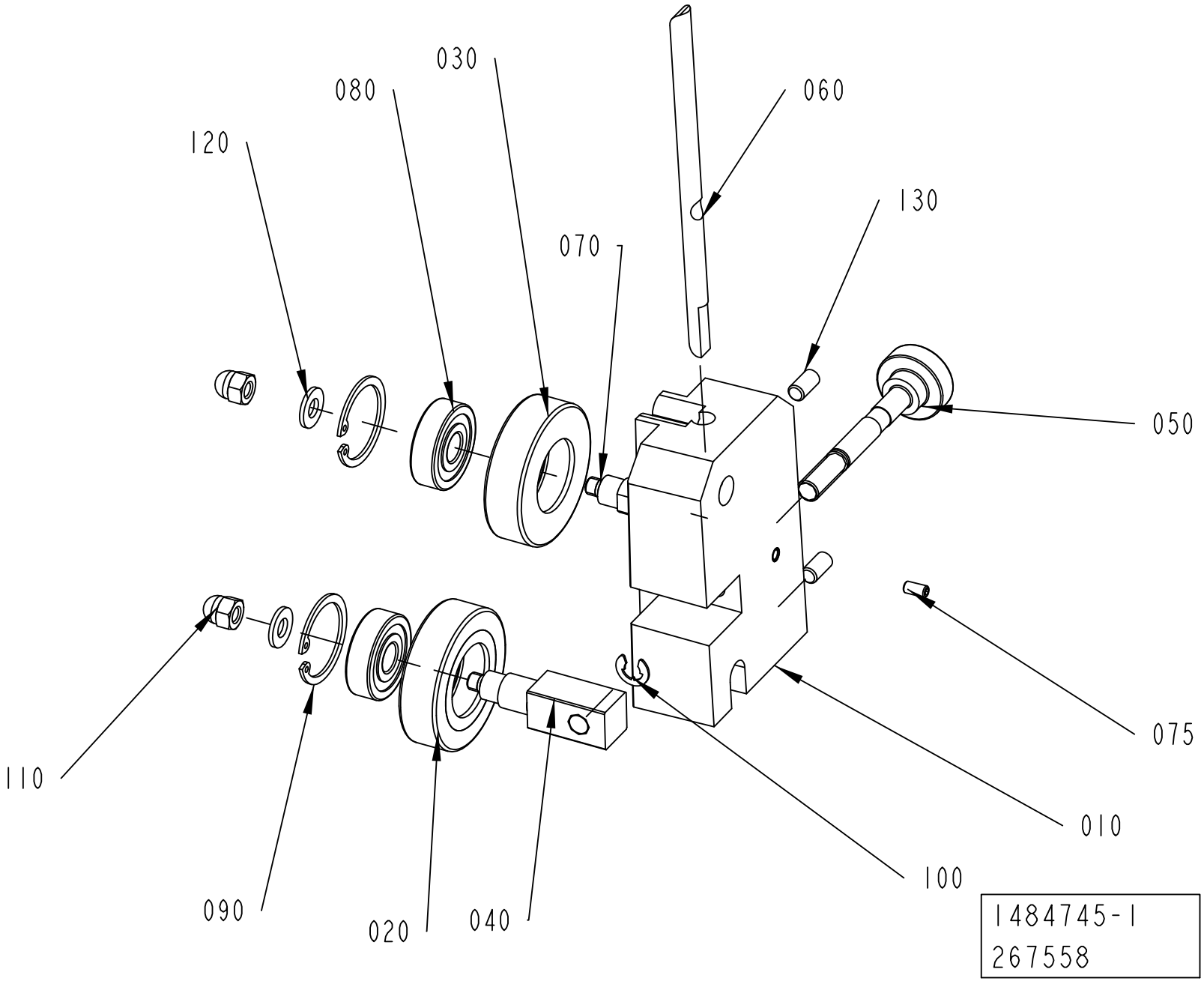
030
080
120
060
130
070
050
075
110
010
100
090
020
040
1484745-1
267558

ECM: 385846 - 20090404
Group number: 1484745-0100
Assembly Drawing: 1484745-1_1_AE

Pos	Part No	UN	Qty	Description	Page No
A3/COMPACTFLEX					
010	2831675-0000		1	BRACKET	
Common Parts					
020	1036623-0000		1	GUIDE ROLLER	
030	1036622-0000		1	GUIDE ROLLER	
040	1317711-0000		1	SHAFT	
050	1317712-0000		1	SHAFT	
060	1512526-0000		1	STEERING	
070	583727-0000		1	SHAFT	
075	312318-0287		1	SET SCREW, CUP END ISO4029 M4X8 A4	
080	321313-0100		2	BALL BEARING 10/30X9	
090	315753-0122		2	RETAINING RING FOR BORE DIN 472 30 SS	
100	315755-0108		1	RETAINING RING SHAFT DIN 6799 6 SS	
110	312705-0316		2	HEX. DOMED CAP MHM-6 M6 A280	
120	315105-0156		2	WASHER BRB 6,7X14 RFR	
130	312318-0366		2	SET SCREW, CUP END ISO4029 M6X12 A4	

Pos	Part No	UN	Qty	Description	Page No

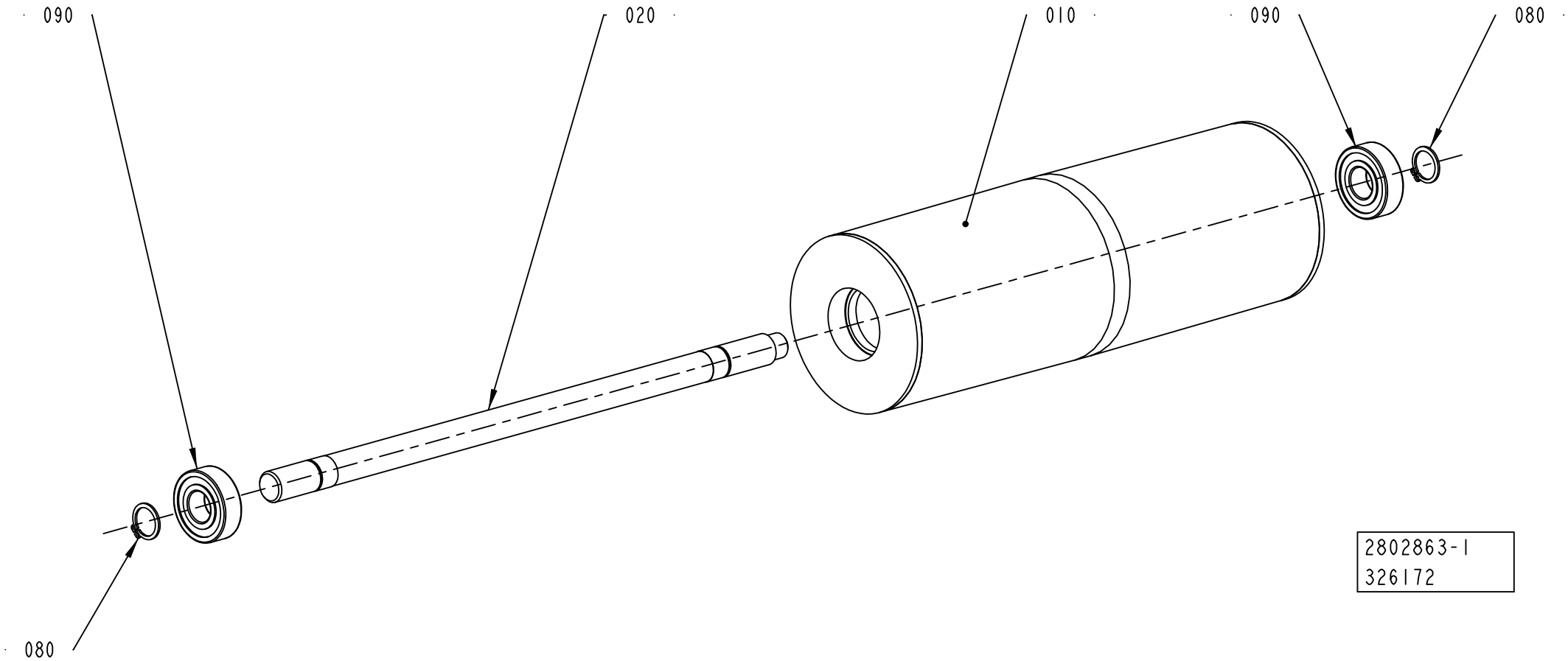
090
020
010
090
080
080
2802863-1
326172

ECM: 326172 - 20080116
Group number: 2802863-0100
Assembly Drawing: 2802863-1_1_AA

Pos	Part No	UN	Qty	Description	Page No
-					
010	2802861-0000		1	DANCER ROLLER	
020	2802853-0000		1	SHAFT	
080	315751-0112		2	RETAINING RING FOR SHAFT DIN 471 15 SS	
090	321313-0102		2	BALL BEARING 15/35X11	

Pos	Part No	UN	Qty	Description	Page No

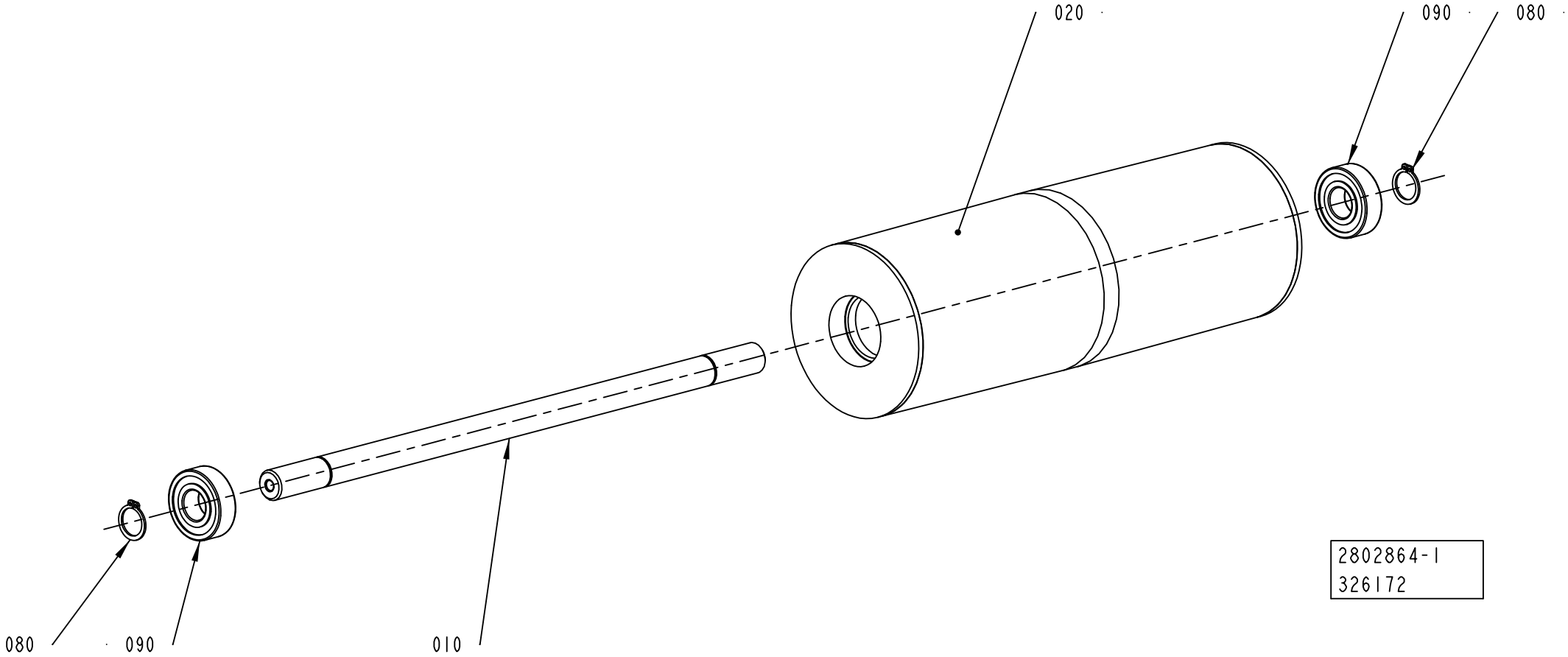
020
090
080
080
090
010
2802864-1
326172

ECM: 326172 - 20080116
Group number: 2802864-0100
Assembly Drawing: 2802864-1_1_AA

Pos	Part No	UN	Qty	Description	Page No
-					
010	2802858-0000		1	SHAFT	
020	2802861-0000		1	DANCER ROLLER	
080	315751-0112		2	RETAINING RING FOR SHAFT DIN 471 15 SS	
090	321313-0102		2	BALL BEARING 15/35X11	

Pos	Part No	UN	Qty	Description	Page No

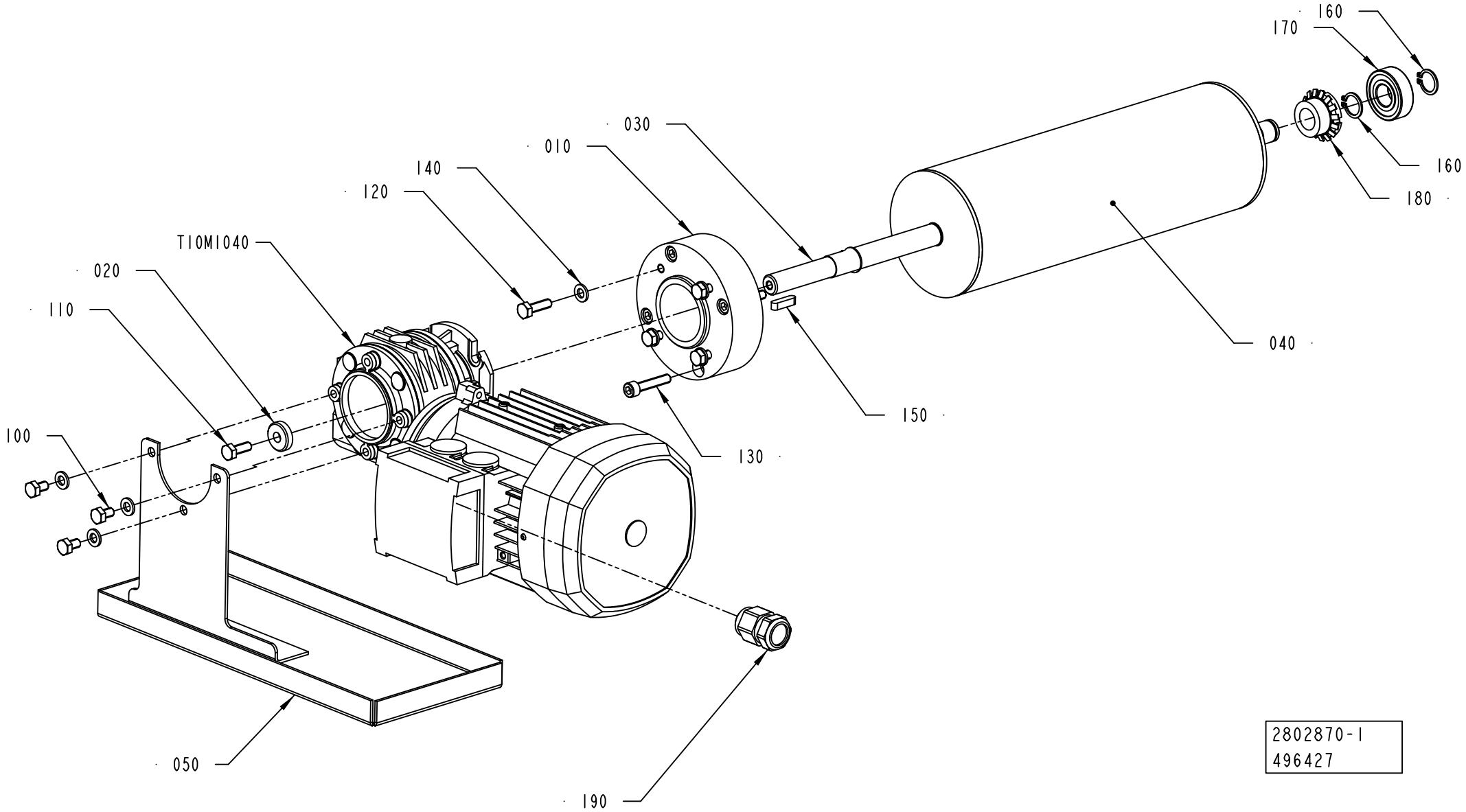
160
170
030
010
140
120
160
180
T10M1040
020
110
040
150
100
130
050
190
2802870-1
496427

ECM: 496601 - 20110701
Group number: 2802870-0100
Assembly Drawing: 2802870-1_1_AB

Pos	Part No	UN	Qty	Description	Page No
-					
010	2731247-0000		1	SPACER	
020	2731249-0000		1	COVER	
030	2802855-0000		1	SHAFT	
040	2802869-0000		1	BENDING ROLLER	
050	3132457-0000		1	PROTECTION	
100	312105-0364		3	SCREW, M6S ISO 4017 M6X10 A4 80	
110	312105-0368		1	SCREW, M6S ISO 4017 M6X16 A4 80	
120	312105-0370		4	SCREW, M6S ISO 4017 M6X20 A4 80	
130	312115-0374		4	SCREW ISO4762 M6X30 A4 80	
140	315105-0153		7	WASHER BRB 6,4X12 RFR	
150	315701-0201		1	PARALLEL KEY W. ROUND ENDS, 5X5X20 MM	
160	315751-0112		3	RETAINING RING FOR SHAFT DIN 471 15 SS	
170	321313-0102		1	BALL BEARING 15/35X11	
180	90600-2656		1	CLAMPING ELEMENT TLK 250L 14X25	
190	90458-0438		1	GLAND, EXTENDED WITH INSERT, M20X1,5	
T10M1040	90600-2657		1	GEARS, WORM MOTOR MVF 30F2 15 P63 B14 B3	

Pos	Part No	UN	Qty	Description	Page No

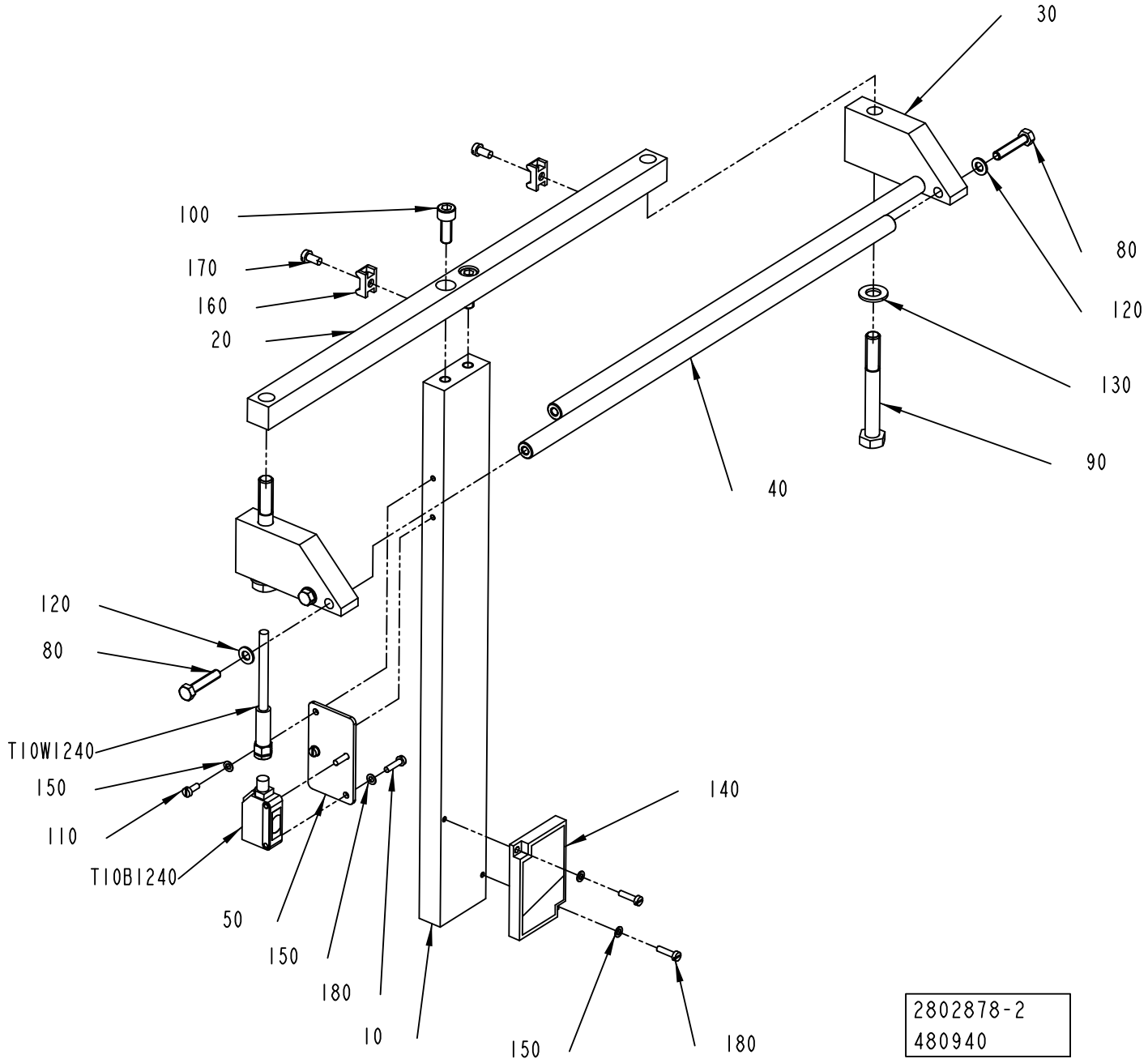
30
100
170
160
20
80
120
130
90
40
120
80
T10W1240
150
110
T10B1240
50
150
180
10
140
150
180
2802878-2
480940

ECM: 501150 - 20111001
Group number: 2802878-0200
Assembly Drawing: 2802878-2_1_AB

Pos	Part No	UN	Qty	Description	Page No
-					
010	2842974-0000		1	PLATE	
020	2802877-0000		1	PLATE	
030	2860209-0000		2	BRACKET	
040	2860210-0000		2	BRACKET	
050	3042559-0000		1	PHOTOCELL BRACKET	
080	312105-0333		4	SCREW, M6S ISO 4017 M5X25 A4 80	
090	312105-0464		2	SCREW, M6S ISO 4014 M8X65 A4 80	
100	312115-0368		2	SCREW ISO4762 M6X16 A4 80	
110	312125-0222		2	SLOTTED HEAD SCREW, ISO1207 M3X8 A4	
120	315105-0146		4	WASHER BRB 5,3X10 RFR	
130	315105-0165		2	WASHER BRB 8,4X16 RFR	
140	90232-0333		1	REFLECTOR, E39-R1	
150	315105-0124		6	WASHER BRB 3,2X6 RFR	
160	352113-0205		2	ANCHOR PLATES FOR STRIPS, TM2S8-C100	
170	312125-0287		2	SLOTTED HEAD SCREW, ISO1207 M4X8 A4	
180	312125-0226		4	SLOTTED HEAD SCREW, ISO1207 M3X12 A4	
T10B1240	90459-7275		1	PHOTOCELL E3Z-R86	
T10W1240	351305-0050		1	ACTUATOR/SENSOR CABLE PRKMV 4-07/5M	

Pos	Part No	UN	Qty	Description	Page No

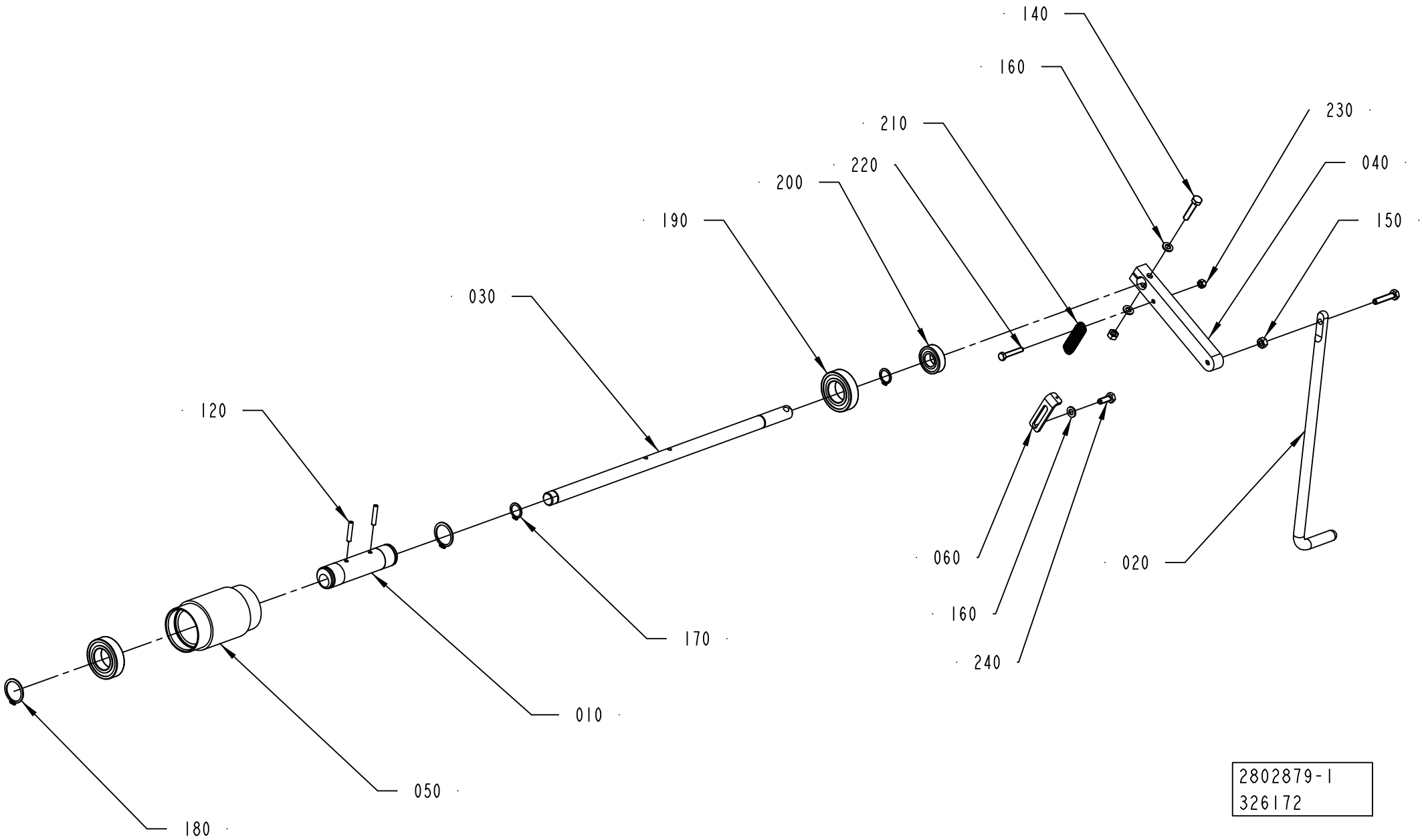
140
160
230
210
040
220
200
150
190
030
120
060
020
160
170
240
010
050
180
2802879-1
326172

ECM: 384230 - 20090403
Group number: 2802879-0100
Assembly Drawing: 2802879-1_1_AA

Pos	Part No	UN	Qty	Description	Page No
-					
010	1512267-0000		1	ECCENTRIC BUSHING	
020	2578455-0000		1	LIFTING HANDLE	
030	2802880-0000		1	SHAFT	
040	2802881-0000		1	ROCKER ARM	
050	2898537-0000		1	ROLLER	
060	2529549-0000		1	PLATE	
120	311112-0258		2	SPRING PIN, ISO 8752 4X24 A2	
140	312109-0374		2	SCREW, M6S ISO 4017 M6X30 A4 80	
150	312601-0316		2	HEXAGON NUT, DIN 934 M6 8 FZB	
160	315105-0153		3	WASHER BRB 6,4X12 RFR	
170	315751-0112		2	RETAINING RING FOR SHAFT DIN 471 15 SS	
180	315751-0119		2	RETAINING RING FOR SHAFT DIN 471 25 SS	
190	321308-0205		2	BALL BEARING 25/47X12	
200	321308-0202		1	BALL BEARING 15/32X9	
210	90335-0091		1	TENSION SPRING 41890, 1,2X13X48,2	
220	312109-0335		1	SCREW, M6S ISO 4017 M5X30 A4 80	
230	312601-0314		1	HEXAGON NUT, DIN 934 M5 8 FZB	
240	312105-0368		1	SCREW, M6S ISO 4017 M6X16 A4 80	

Pos	Part No	UN	Qty	Description	Page No

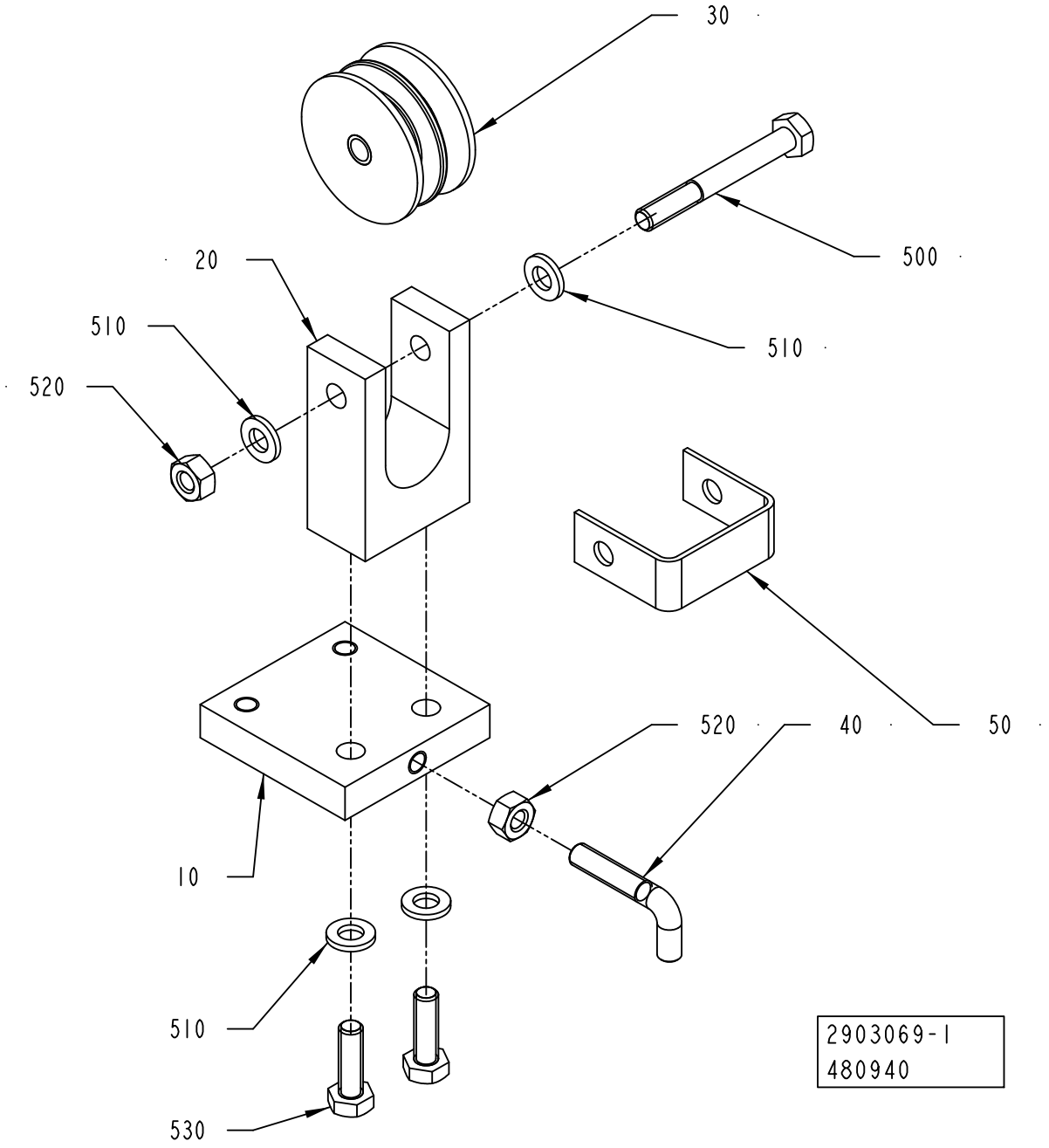
30
500
20
510
510
520
520
40
50
10
510
530
2903069-1
480940

ECM: 501311 - 20111001
Group number: 2903069-0100
Assembly Drawing: 2903069-1_1_AB

Pos	Part No	UN	Qty	Description	Page No
-					
010	2903072-0000		1	PLATE	
020	1519586-0000		1	BRACKET	
030	1519581-0000		1	ROLLER BAR	
040	2903071-0000		1	HOOK	
050	1519592-0000		1	BOW	
500	312105-0380		1	SCREW, M6S ISO 4014 M6X50 A4 80	
510	315106-0153		4	WASHER ISO 7089-6-200 HV A4	
520	312605-0316		2	HEXAGON NUT, M6M M6 A280	
530	312105-0370		2	SCREW, M6S ISO 4017 M6X20 A4 80	

Pos	Part No	UN	Qty	Description	Page No

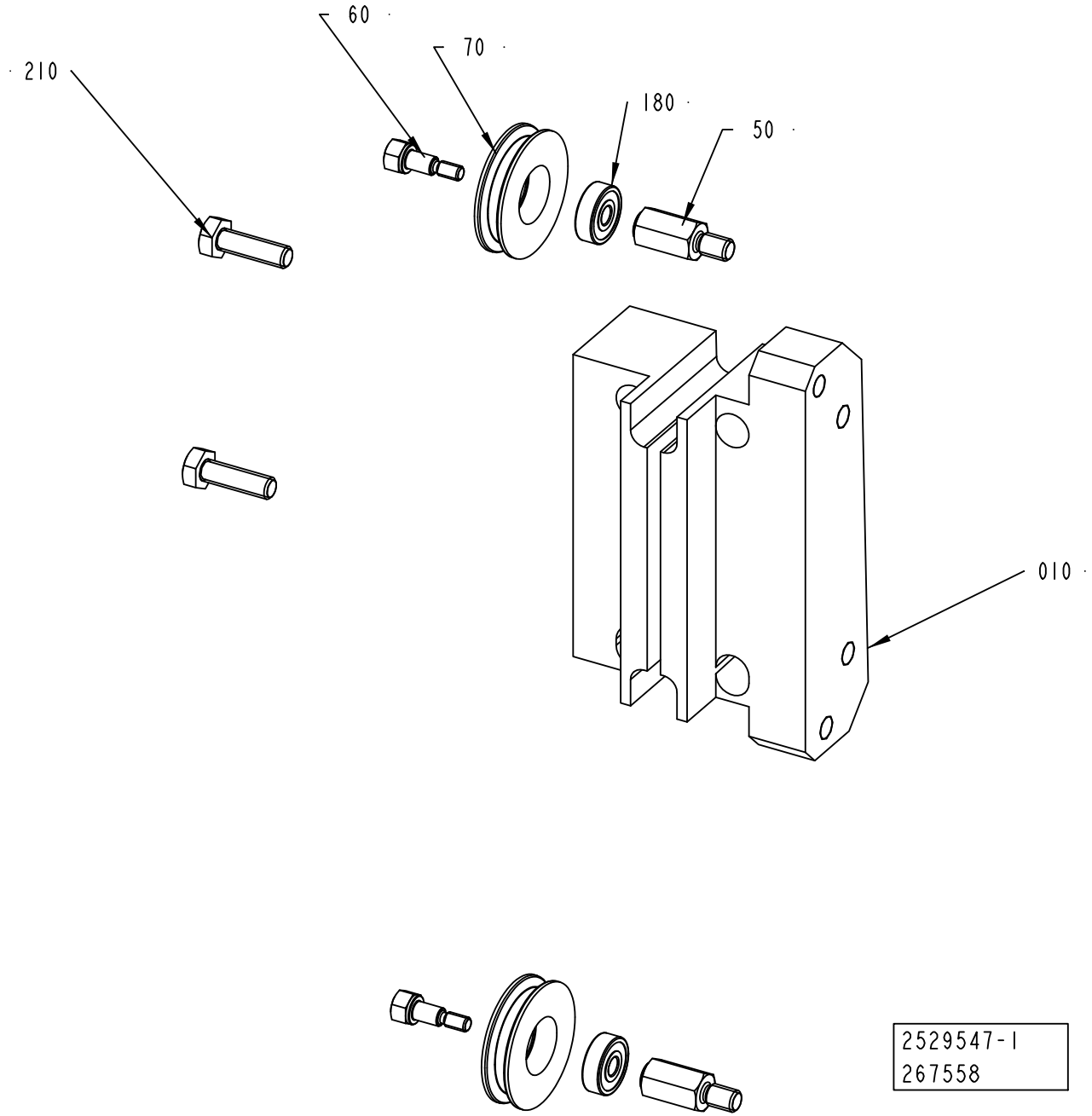
60
70
180
50
210
010
2529547-1
267558

ECM: 405759 - 20100610
Group number: 2529547-0100
Assembly Drawing: 2529547-1_1_AC

Pos	Part No	UN	Qty	Description	Page No
A3/COMPACTFLEX					
010	2831678-0000		1	SUPPORT	
Common Parts					
050	1558251-0000		2	SHAFT	
060	1558252-0000		2	SCREW	
070	1558253-0000		2	ROLLER	
180	90458-2950		2	BALL BEARING 5/16X5	
210	312105-0370		2	SCREW, M6S ISO 4017 M6X20 A4 80	

Pos	Part No	UN	Qty	Description	Page No

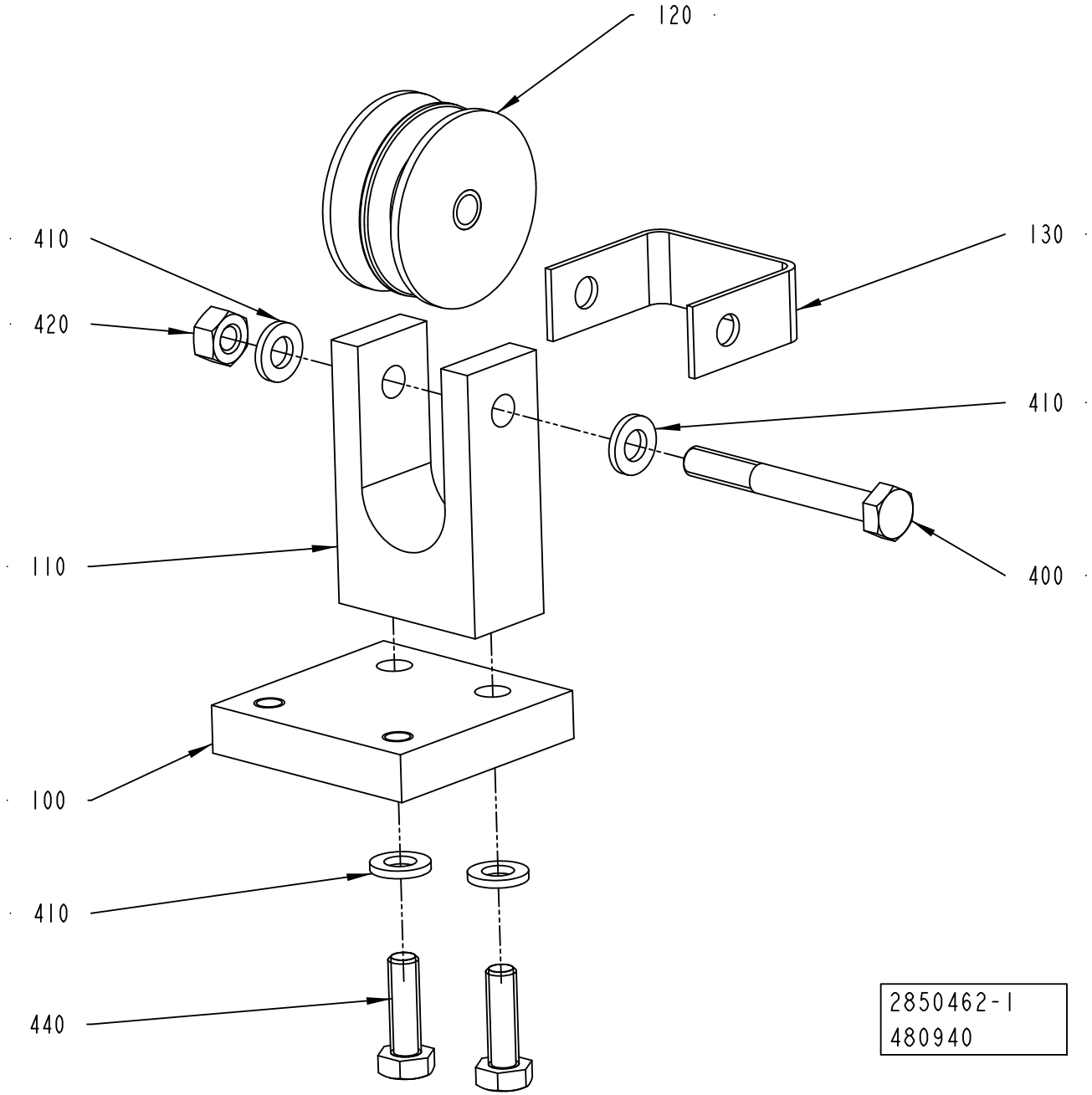
120
410
420
130
410
110
400
100
410
440
2850462-1
480940

ECM: 501314 - 20111001
Group number: 2850462-0100
Assembly Drawing: 2850462-1_1_AB

Pos	Part No	UN	Qty	Description	Page No
-					
100	2806659-0000		1	PLATE	
110	1519586-0000		1	BRACKET	
120	1519581-0000		1	ROLLER BAR	
130	1519592-0000		1	BOW	
400	312105-0380		1	SCREW, M6S ISO 4014 M6X50 A4 80	
410	315106-0153		4	WASHER ISO 7089-6-200 HV A4	
420	312601-0316		1	HEXAGON NUT, DIN 934 M6 8 FZB	
440	312105-0370		2	SCREW, M6S ISO 4017 M6X20 A4 80	

Pos	Part No	UN	Qty	Description	Page No

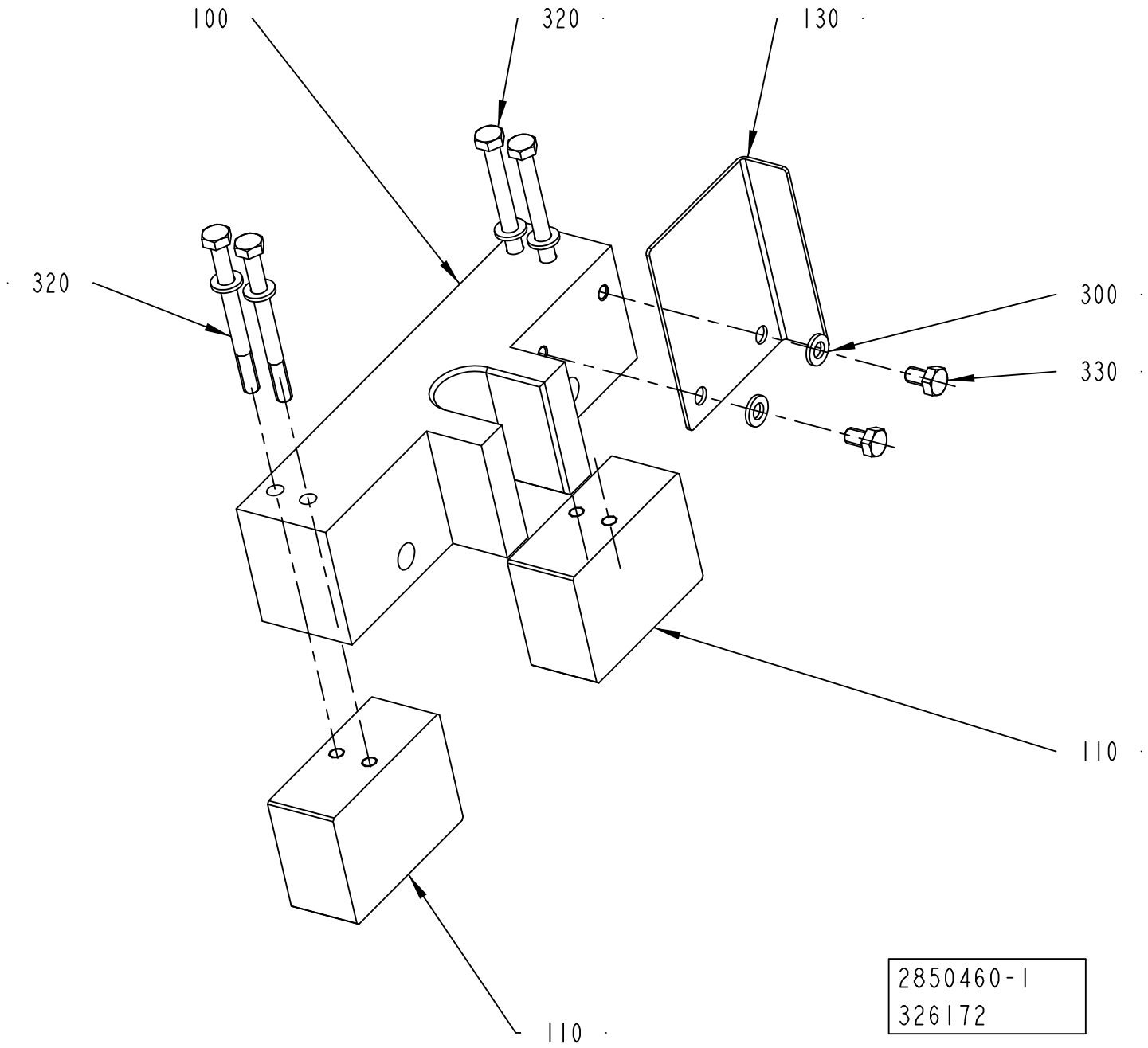
100
320
130
320
300
330
110
110
2850460-1
326172

ECM: 326172 - 20080116
Group number: 2850460-0100
Assembly Drawing: 2850460-1_1_AA

Pos	Part No	UN	Qty	Description	Page No
-					
100	2802874-0000		1	SLIDER	
110	2845879-0000		2	PLATE	
130	2802875-0000		1	PLATE	
300	315106-0153		6	WASHER ISO 7089-6-200 HV A4	
320	312105-0384		4	SCREW, M6S ISO 4014 M6X70 A4 80	
330	312105-0364		2	SCREW, M6S ISO 4017 M6X10 A4 80	

Pos	Part No	UN	Qty	Description	Page No

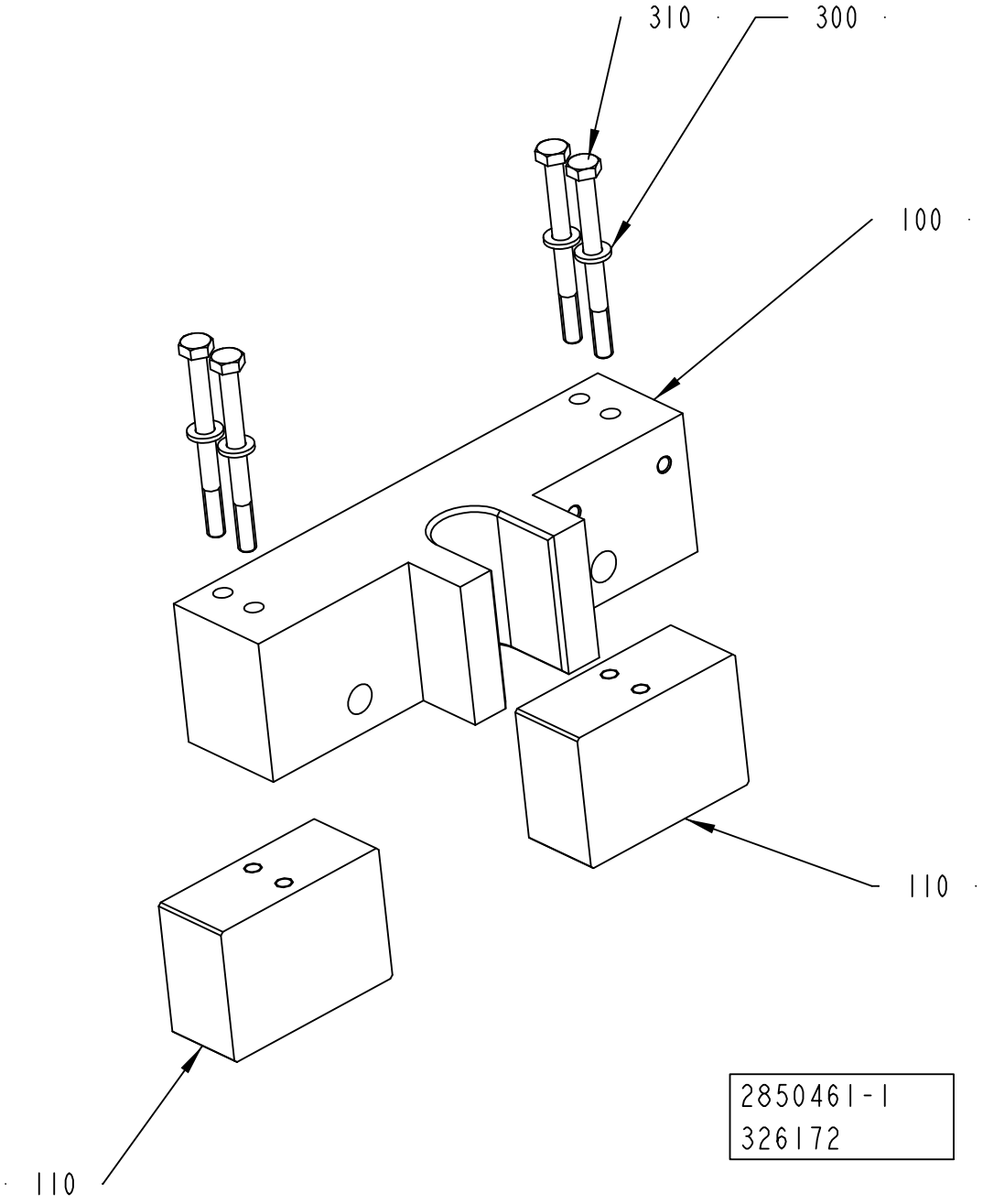
310
300
100
110
110
2850461-1
326172

ECM: 326172 - 20080116
Group number: 2850461-0100
Assembly Drawing: 2850461-1_1_AA

Pos	Part No	UN	Qty	Description	Page No
-					
100	2802874-0000		1	SLIDER	
110	2845879-0000		2	PLATE	
300	315106-0153		4	WASHER ISO 7089-6-200 HV A4	
310	312105-0384		4	SCREW, M6S ISO 4014 M6X70 A4 80	

Pos	Part No	UN	Qty	Description	Page No

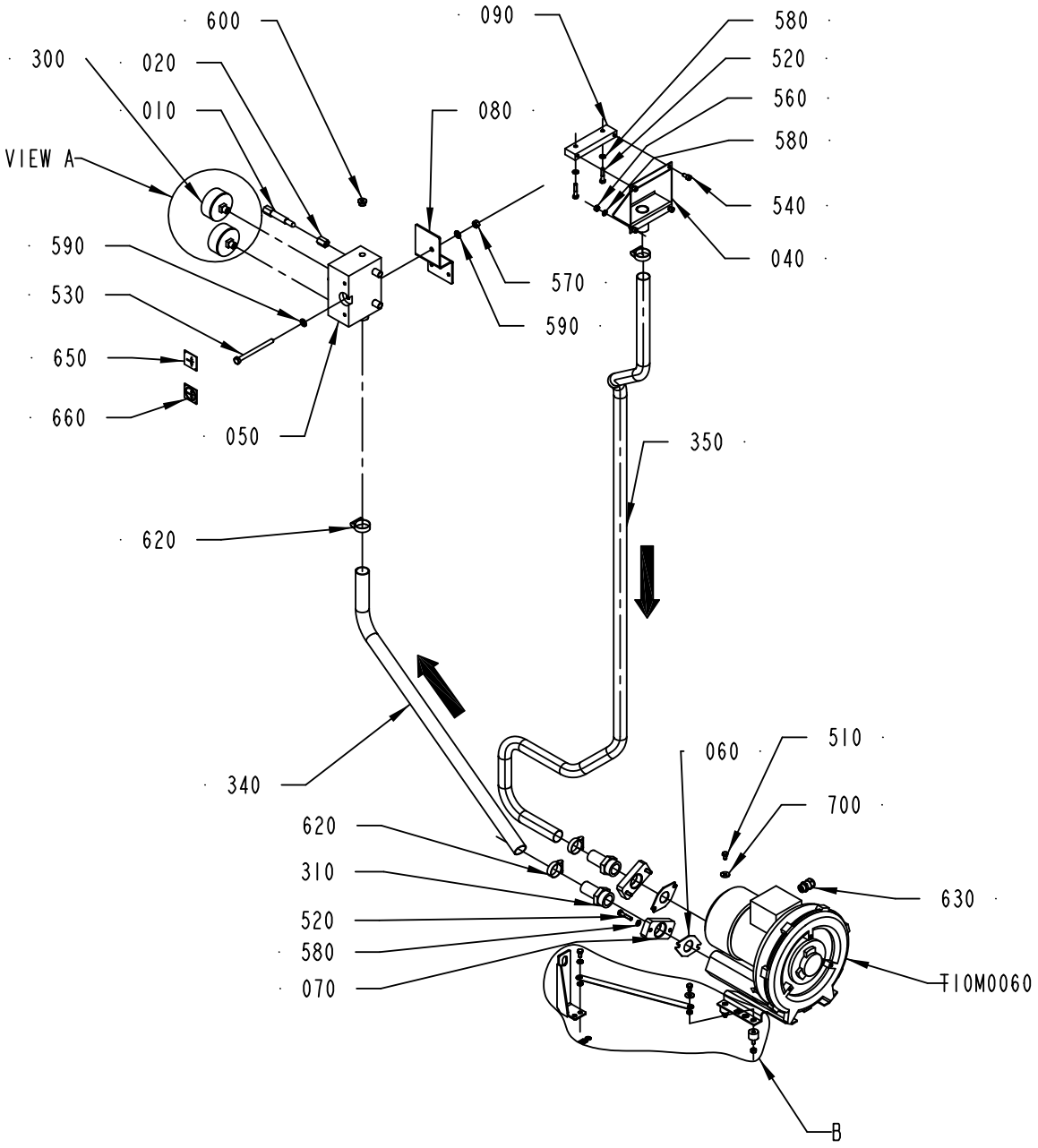

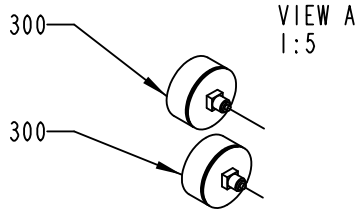

NOTE: APPLY LOCTITE 577

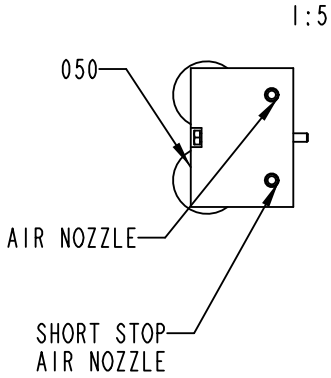

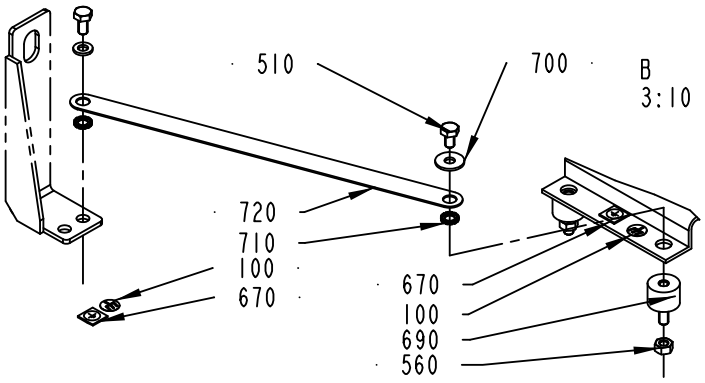

NOTE: FIX CABLE TRENCH TO
PHOTOCELL BRACKET OF PAPER MAGAZINE
FIX LABEL POS 100 AND 670 TO FRAME
NEAR THE PHOTOCELL BRACKET

2807529-1
ECM 383651

ECM: 452888 - 20101001
Group number: 2807529-0100
Assembly Drawing: 2807529-1_1_AC

Pos	Part No	UN	Qty	Description	Page No
-					
010	209145-0000		2	THROTTLE SCREW	
020	209146-0000		2	BARRIER NUT	
040	1488002-0000		1	PLATE	
050	2982734-0000		1	DISTRIBUTOR BLOCK	
060	1512273-0000		2	GASKET	
070	2807530-0000		2	FLANGE	
080	2850464-0000		1	BRACKET	
090	2919061-0000		1	PLATE	
100	2608177-0000		2	SIGN	
300	90043-0096		2	PRESSURE GAUGE 7169 MA -63-0, 25	
310	2945494-0000		2	HOSE NIPPLE	
340	90166-0274	M	1.4	HOT AIR HOSE, SIL-G2NB, ID=25 MM	
350	90166-0274	M	2.1	HOT AIR HOSE, SIL-G2NB, ID=25 MM	
510	312105-0364		4	SCREW, M6S ISO 4017 M6X10 A4 80	
520	312105-0374		6	SCREW, M6S ISO 4014 M6X30 A4 80	
530	312105-0471		1	SCREW, M6S ISO 4014 M8X100 A4 80	
540	312115-0366		4	SCREW ISO4762 M6X12 A4 80	
560	312605-0316		6	HEXAGON NUT, M6M M6 A280	
570	312605-0318		1	HEXAGON NUT, M6M M8 A280	
580	315105-0153		8	WASHER BRB 6,4X12 RFR	
590	315105-0165		2	WASHER BRB 8,4X16 RFR	
600	342713-0210		1	PLUG, EXT THREAD HEX SOCKET	
620	342991-0105		4	HOSE CLIP,WORM DRIVE TYPE (22)-32	
630	90458-0306		1	CABLE GLAND, M16X1,5, 5311 1010	
650	464176-0000		1	SIGN, STRIP APPLICATOR	
660	464177-0000		1	SIGN, STRIP APPLICATOR SHORT STOP	
670	90194-0152		2	SIGN, EARTH	
690	90347-0130		4	VIBRATION DAMPER, NO. 01255960	
700	90457-0192		4	WASHER PLAIN ROUND, 6,5/18, H=1,5	
710	90062-0015		2	LOCK WASHER SERRAT.EXT.GEAR,6,4/11 H=0,7	
720	90600-2904		1	EARTH BRAID, 250/16/8,5	
T10M0060	90264-0078		1	FAN, 2BH1300-7AH16	

Pos	Part No	UN	Qty	Description	Page No

Machine Type | Group Description | Used-In | Group Number | Page No

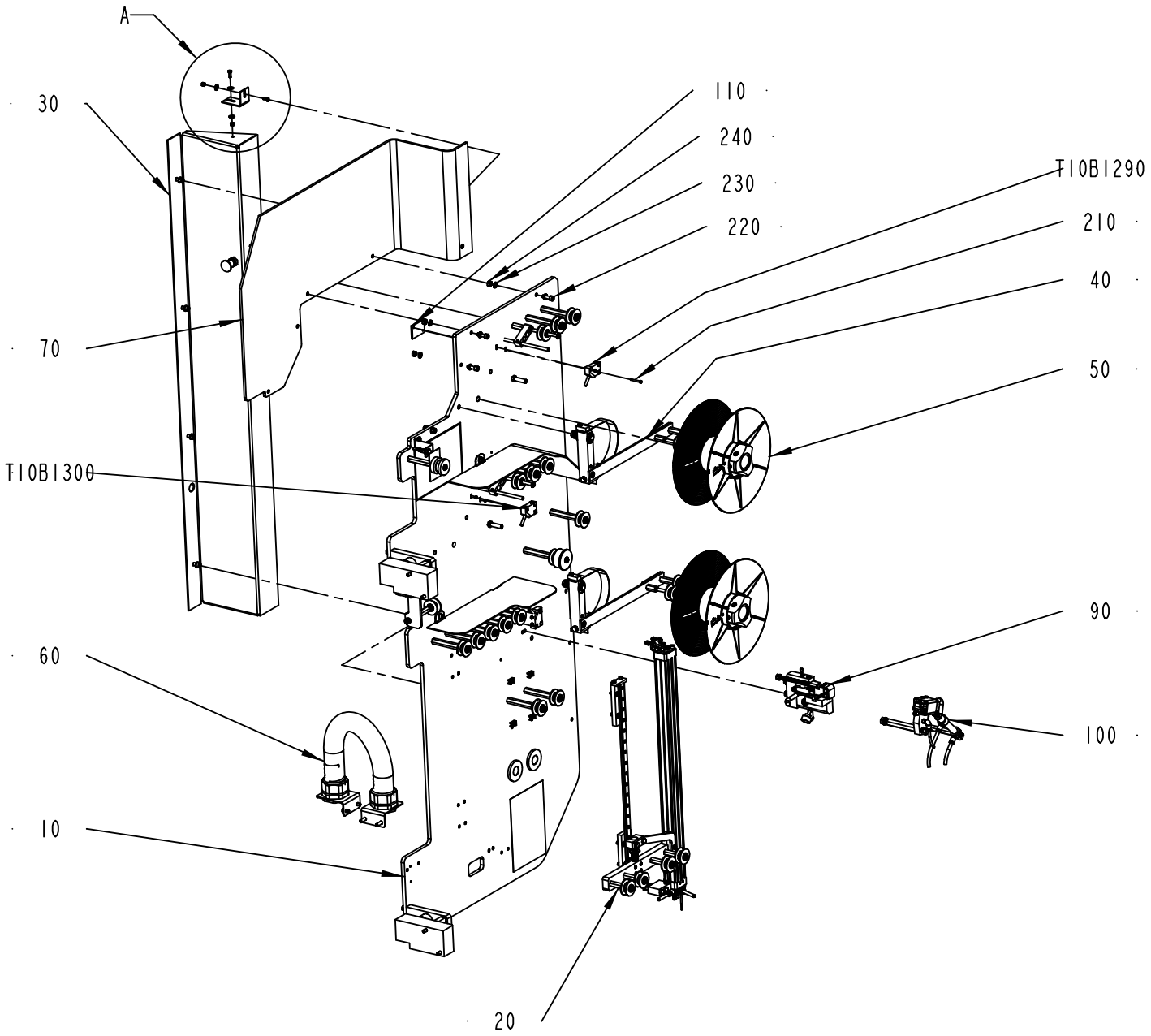
A
30
110
240
230
220
T10B1290
210
40
50
70
T10B1300
90
60
100
10
20

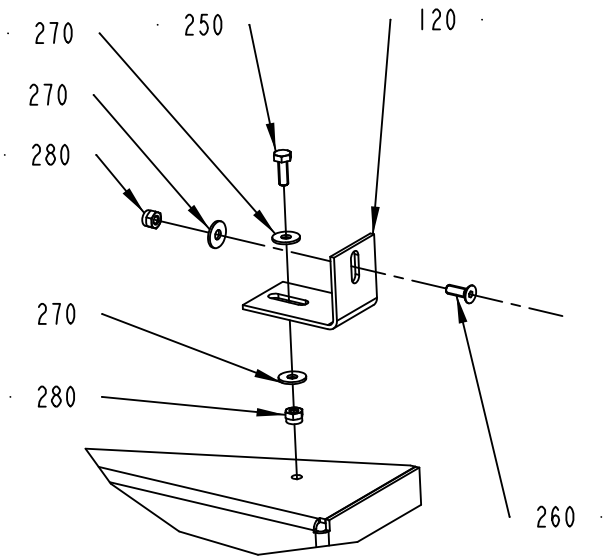
270
250
120
270
280
270
280
260

A
2:5

ECM: 405737 - 20090731
Group number: 2807492-0300
Assembly Drawing: 2807492-5_1_AA

Pos	Part No	UN	Qty	Description	Page No
-					
010	2924157-0200		1	MOUNTING PLATE	**7-83**
020	2924171-0100		1	MAGAZINE	**7-97**
030	2931679-0200		1	BRACKET	**7-99**
040	2947979-0100		2	BRAKE ARM	**7-101**
050	580042-0100		2	HUB JUMBO	**7-103**
060	2922002-0200		1	CABLE CONDUIT	**7-105**
070	2931680-0000		1	PROTECTION	
090	2807508-0200		1	CUTTING TABLE	**7-107**
100	2807507-0100		1	HEATING DEVICE	**7-109**
110	979669-0000		2	FORCE PLATE	
120	979698-0000		1	HOLDER	
210	312125-0232		4	SLOTTED HEAD SCREW, ISO1207 M3X25 A4	
220	312111-0370		4	SCREW HEX.SOCK.HD.MC6S-TT 6X20 88 FZB	
230	315103-0153		8	WASHER, BRB, 6,4/12,H=1,5 NIPL BR	
240	312601-0316		4	HEXAGON NUT, DIN 934 M6 8 FZB	
250	312105-0291		1	SCREW, M6S ISO 4017 M4X12 A4 70	
260	312155-0291		1	SCREW DIN 7991 MF6S M4X12 A4 70	
270	90005-0082		3	WASHER PLAIN ROUND 4,3(M4)/12,H=1	
280	312812-0312		2	HEXAGON NUT, NY-LOCK M4 A4 80	
T10B1290	90044-0194		1	INDUCTIVE SENSOR, IN 5329	
T10B1300	90044-0194		1	INDUCTIVE SENSOR, IN 5329	

Pos	Part No	UN	Qty	Description	Page No

MOUNTING PLATE

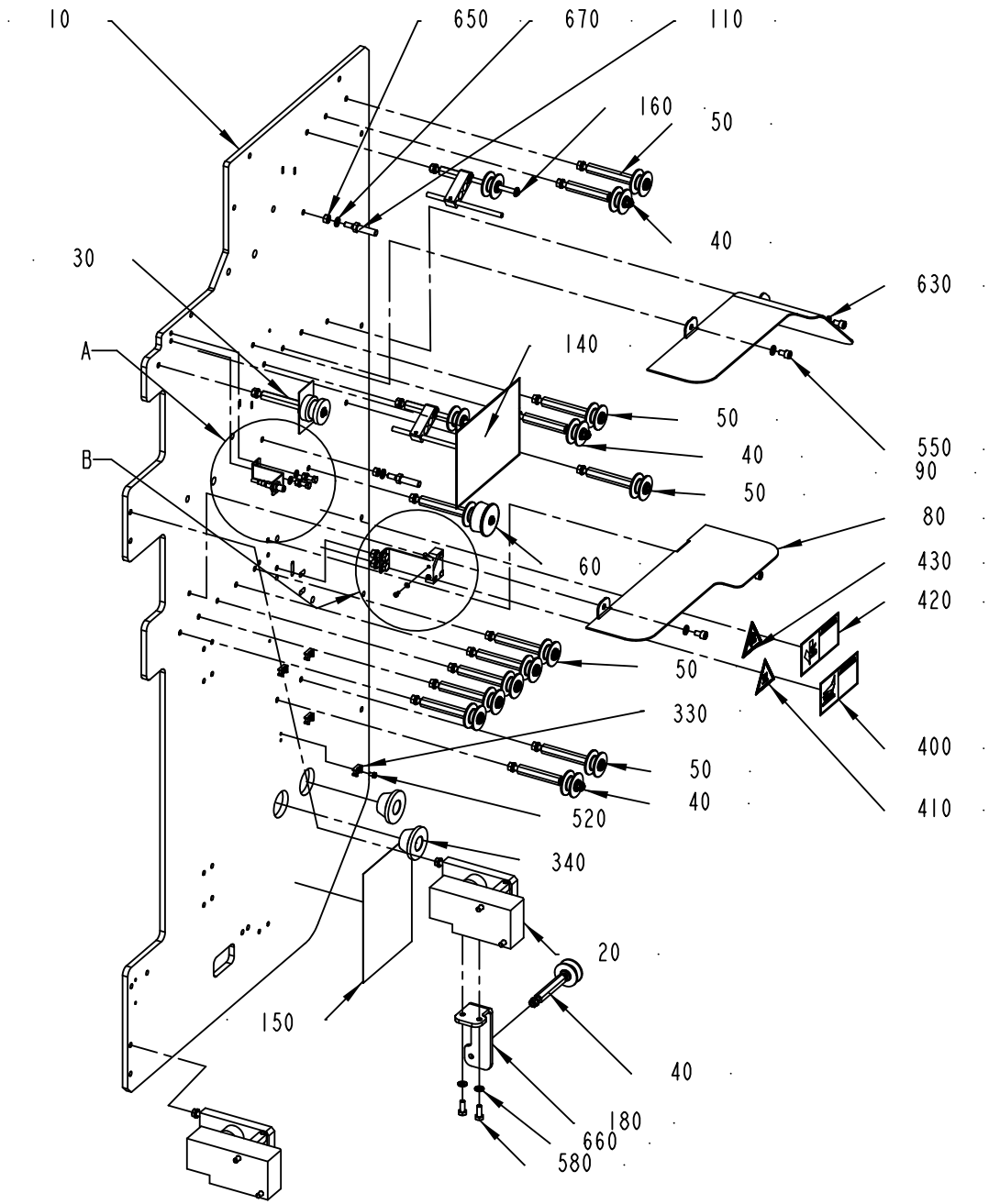

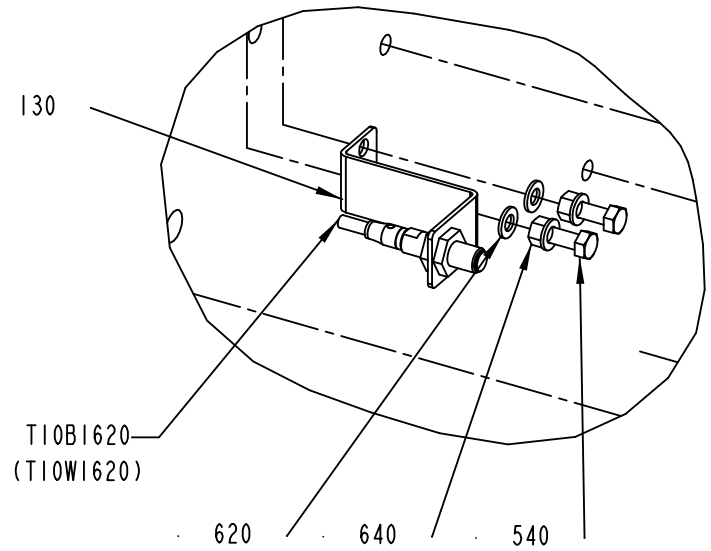

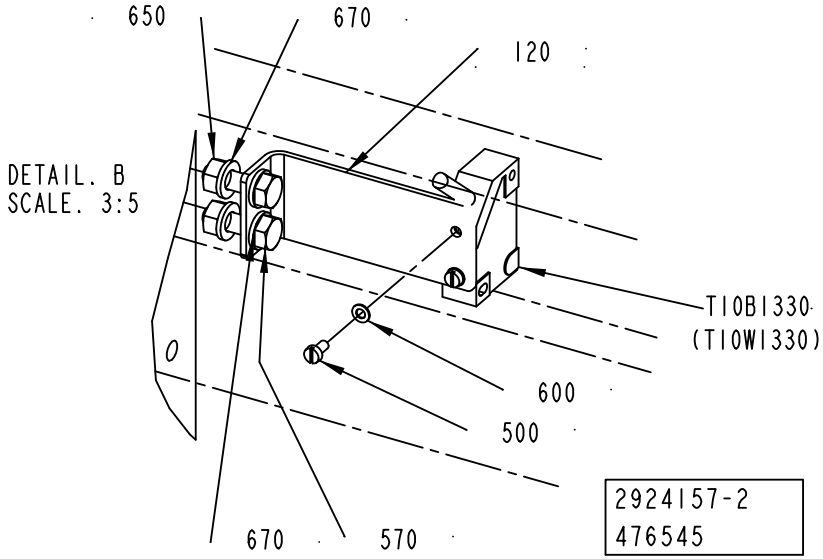

ECM: 478333 - 20110401
Group number: 2924157-0200
Assembly Drawing: 2924157-2_1_AB

Pos	Part No	UN	Qty	Description	Page No
ANSI					
400	90459-7458		1	WARNING SIGN ANSI (H), HOT SURFACE	
420	359725-0108		1	WARNING SIGN ANSI (H), MOVING PART	
ISO					
410	359705-0007		1	WARNING SIGN ISO, HOT SURFACE	
430	359705-0005		1	WARNING SIGN ISO, MOVING PART	
Common Parts					
010	2924170-0000		1	PLATE	
020	2832315-0100		2	LOCKING ARM	**7-85**
030	2924162-0100		1	ROTATION MONITOR	**7-87**
040	2924158-0100		4	ROLLER	**7-89**
050	2924159-0100		9	ROLLER	**7-91**
060	2924160-0100		1	ROLLER	**7-93**
080	2924181-0000		1	PROTECTION	
090	2924180-0000		1	PROTECTION	
110	2924172-0000		2	STOP	
120	3010130-0000		1	BRACKET	
130	2815036-0000		1	BRACKET	
140	2931692-0000		1	SIGN	
150	2931693-0000		1	SIGN	
160	2924178-0100		2	ROCKER ARM	**7-95**
180	2948044-0000		1	HOLDER	
330	352113-0205		7	ANCHOR PLATES FOR STRIPS, TM2S8-C100	
340	90015-0024		2	LEAD-IN, TET 20-26, E1458035	
500	312125-0220		2	SCREW ISO 1207 M3X6 A4	
520	312125-0285		7	SLOTTED HEAD SCREW, ISO1207 M4X6 A4	
540	312105-0329		2	SCREW, M6S ISO 4017 M5X16 A4 80	
550	312115-0364		4	SCREW ISO4762 M6X10 A4 80	
570	312105-0370		2	SCREW, M6S ISO 4017 M6X20 A4 80	
580	312105-0368		2	SCREW, M6S ISO 4017 M6X16 A4 80	
600	315105-0124		2	WASHER BRB 3,2X6 RFR	
620	315106-0146		4	WASHER ISO 7089-5-200 HV A4	
630	315103-0153		4	WASHER, BRB, 6,4/12,H=1,5 NIPL BR	
640	312607-0314		2	HEXAGON NUT, EN 24032 M6M M5 A480	
650	312605-0316		4	HEXAGON NUT, M6M M6 A280	
660	315106-0153		2	WASHER ISO 7089-6-200 HV A4	
670	315105-0153		6	WASHER BRB 6,4X12 RFR	
T10B1330	90044-0194		1	INDUCTIVE SENSOR, IN 5329	
T10B1620	90600-0473		1	INDUCTIVE SWITCH E2A-S08KS01-WP-B1-TP 5M	

Pos	Part No	UN	Qty	Description	Page No

Machine Type	Group Description	Used-In	Group Number	Page No

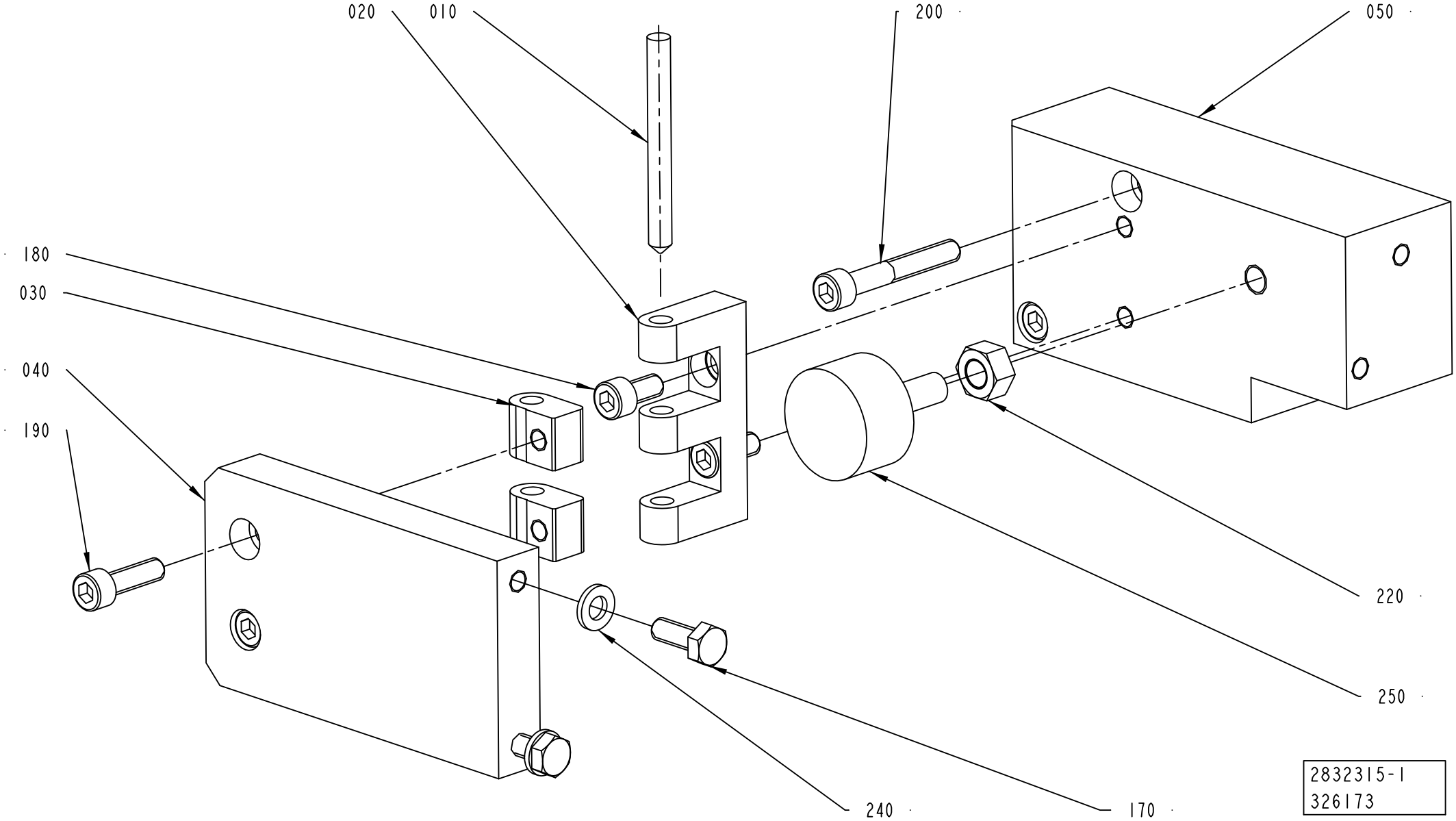
020
010
200
050
180
030
040
190
220
250
240
170
2832315-1
326173

ECM: 326173 - 20080116
Group number: 2832315-0100
Assembly Drawing: 2832315-1_1_AA

Pos	Part No	UN	Qty	Description	Page No
-					
010	988685-0000		1	PIN	
020	1035792-0000		1	E-HINGE	
030	1129770-0000		2	BLOCKING PIECE	
040	2815055-0000		1	PLATE	
050	2815056-0000		1	SPACER	
170	312105-0368		2	SCREW, M6S ISO 4017 M6X16 A4 80	
180	312115-0366		2	SCREW ISO4762 M6X12 A4 80	
190	312115-0370		2	SCREW ISO4762 M6X20 A4 80	
200	312115-0378		2	SCREW ISO4762 M6X40 A4 80	
220	312607-0318		1	HEXAGON NUT, EN 24032 M6M M8 A480	
240	315106-0153		2	WASHER ISO 7089-6-200 HV A4	
250	90347-0162		1	DAMPER	

Pos	Part No	UN	Qty	Description	Page No

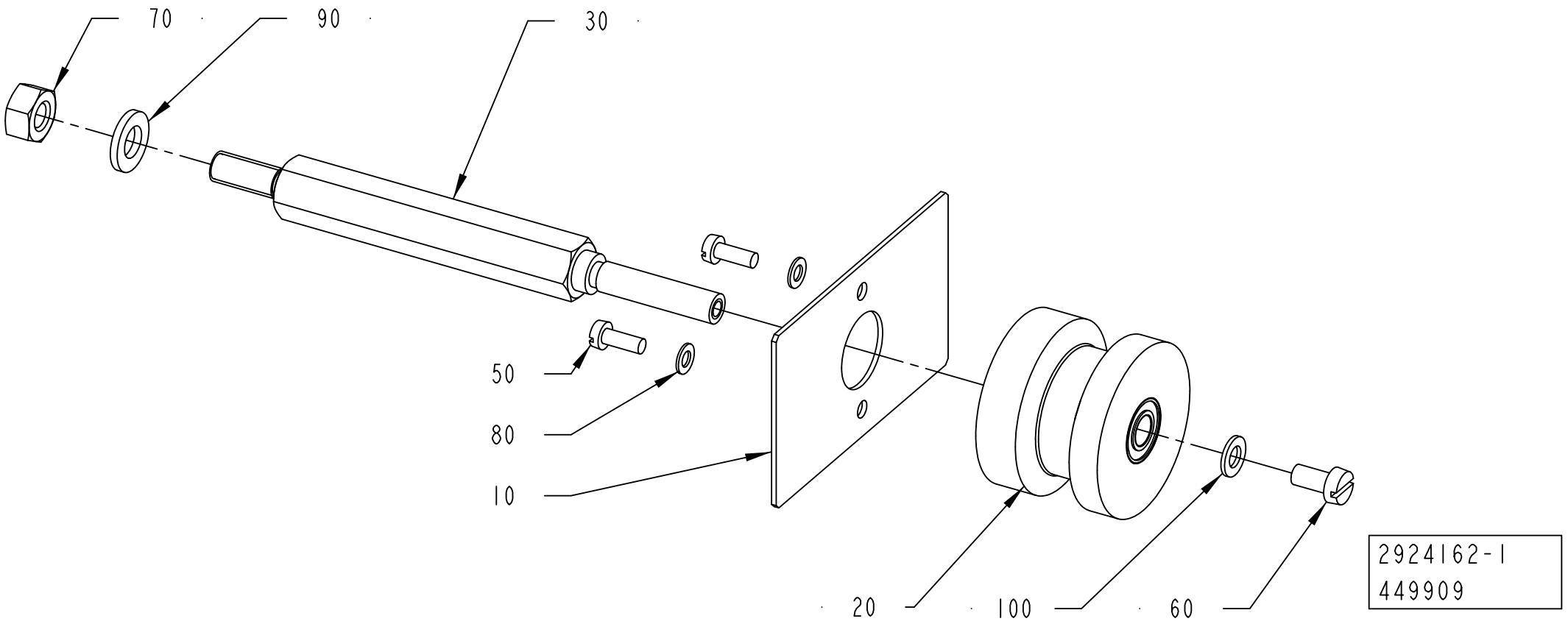
70
90
30
50
80
10
20
100
60
2924162-1
449909

ECM: 452848 - 20101001
Group number: 2924162-0100
Assembly Drawing: 2924162-1_1_AB

Pos	Part No	UN	Qty	Description	Page No
-					
010	1349581-0000		1	FLAG	
020	2931677-0000		1	ROLLER	
030	2923538-0000		1	AXLE PIN	
050	312125-0222		2	SLOTTED HEAD SCREW, ISO1207 M3X8 A4	
060	312125-0287		1	SLOTTED HEAD SCREW, ISO1207 M4X8 A4	
070	312605-0316		1	HEXAGON NUT, M6M M6 A280	
080	315105-0124		2	WASHER BRB 3,2X6 RFR	
090	315105-0153		1	WASHER BRB 6,4X12 RFR	
100	315105-0136		1	WASHER BRB 4,3X8 RFR	

Pos	Part No	UN	Qty	Description	Page No

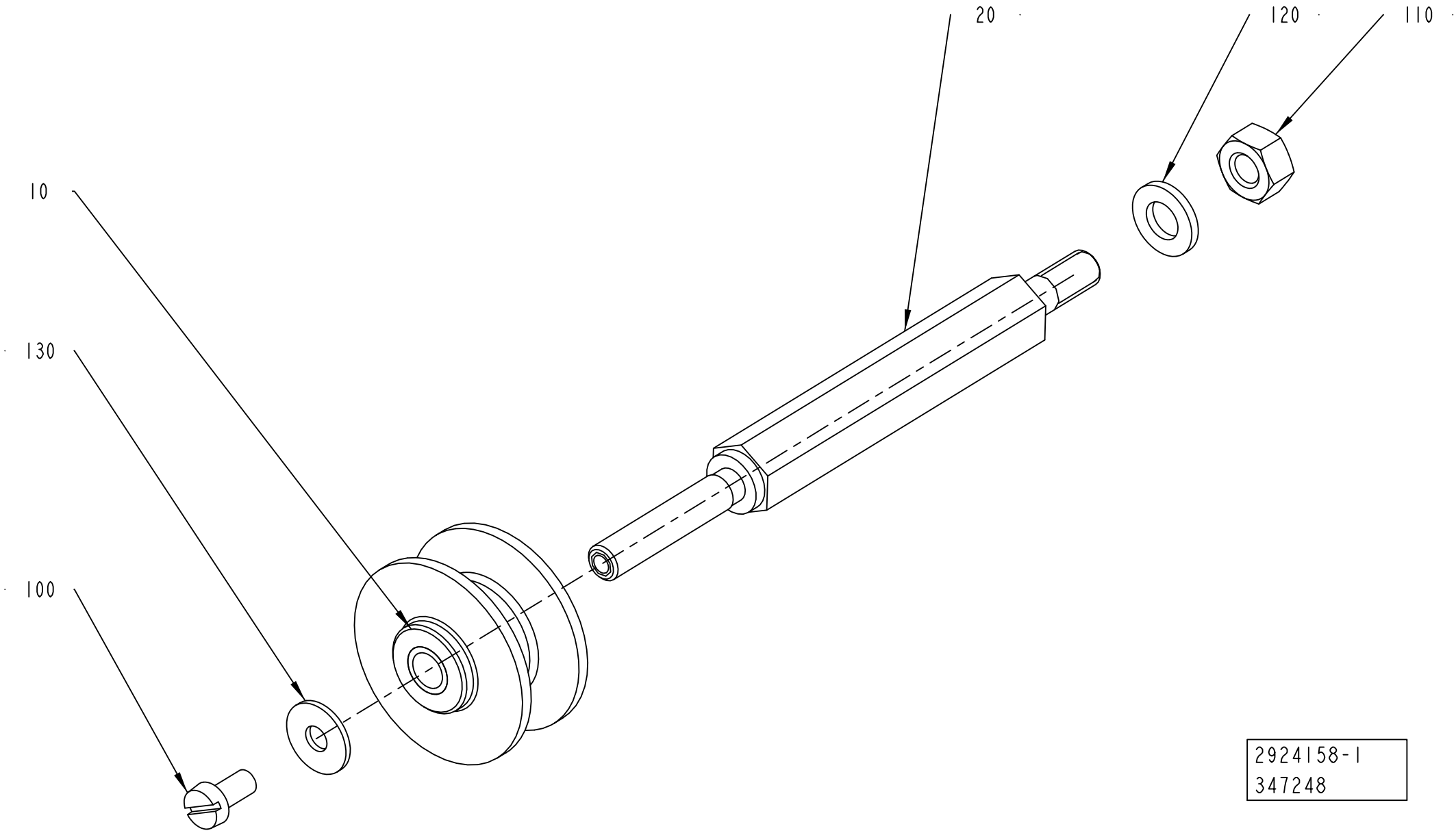
20
120
110
10
130
100
2924158-1
347248

ECM: 431568 - 20091223
Group number: 2924158-0100
Assembly Drawing: 2924158-1_1_AB

Pos	Part No	UN	Qty	Description	Page No
-					
010	1512583-0000		1	ROLLER	
	321120-0101		*2*	*BEARING BUSH W/O FLANGE, 6X8X6 MM*	
020	2815038-0000		1	AXLE PIN	
100	312125-0287		1	SLOTTED HEAD SCREW, ISO1207 M4X8 A4	
110	312605-0316		1	HEXAGON NUT, M6M M6 A280	
120	315105-0153		1	WASHER BRB 6,4X12 RFR	
130	90005-0082		1	WASHER PLAIN ROUND 4,3(M4)/12,H=1	

Pos	Part No	UN	Qty	Description	Page No

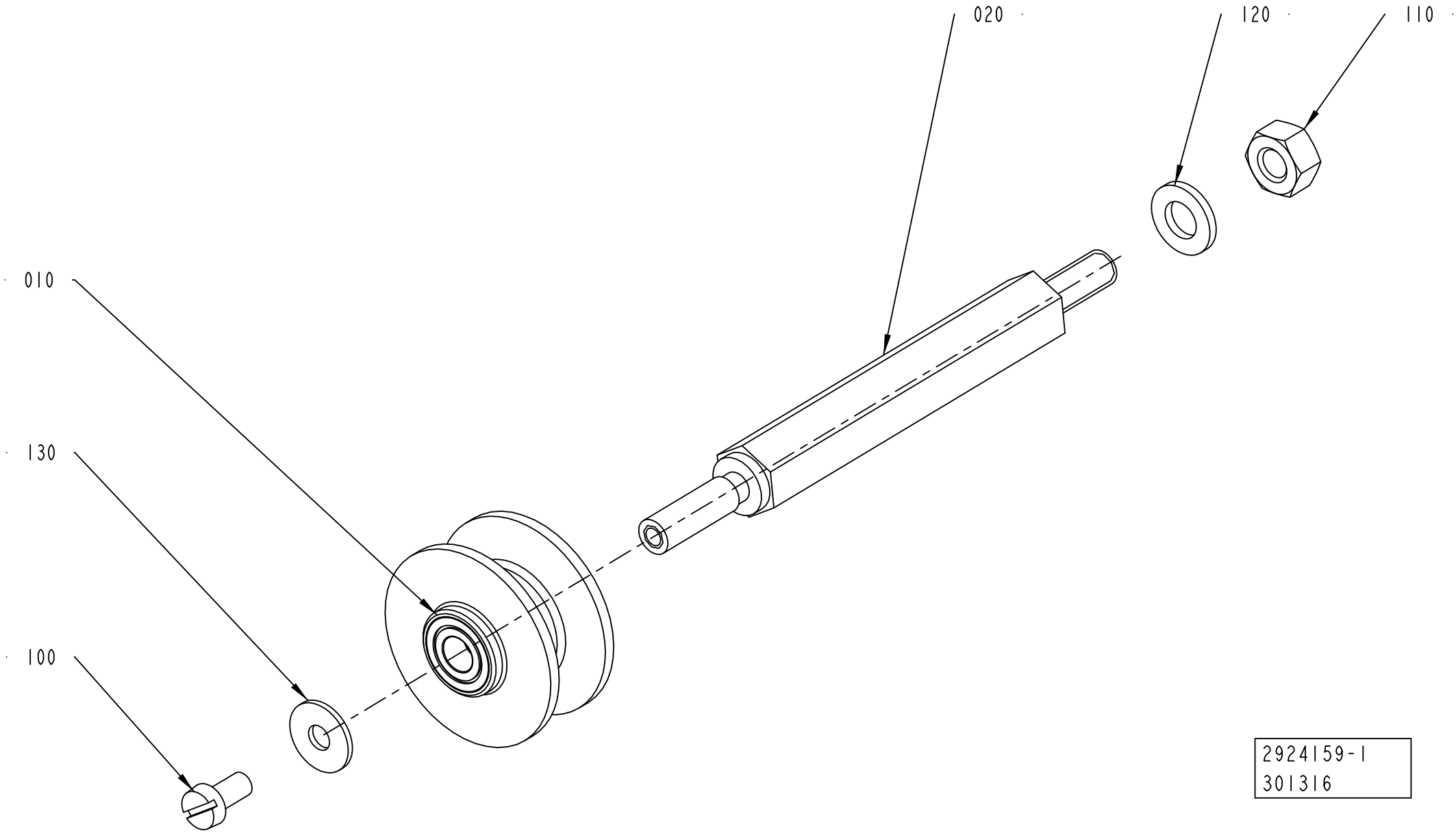
020
120
110
010
130
100
2924159-1
301316

ECM: 431569 - 20091223
Group number: 2924159-0100
Assembly Drawing: 2924159-1_1_AA

Pos	Part No	UN	Qty	Description	Page No
-					
010	2924164-0000		1	ROLLER	
020	2815037-0000		1	AXLE PIN	
100	312125-0287		1	SLOTTED HEAD SCREW, ISO1207 M4X8 A4	
110	312605-0316		1	HEXAGON NUT, M6M M6 A280	
120	315105-0153		1	WASHER BRB 6,4X12 RFR	
130	90005-0082		1	WASHER PLAIN ROUND 4,3(M4)/12,H=1	

Pos	Part No	UN	Qty	Description	Page No

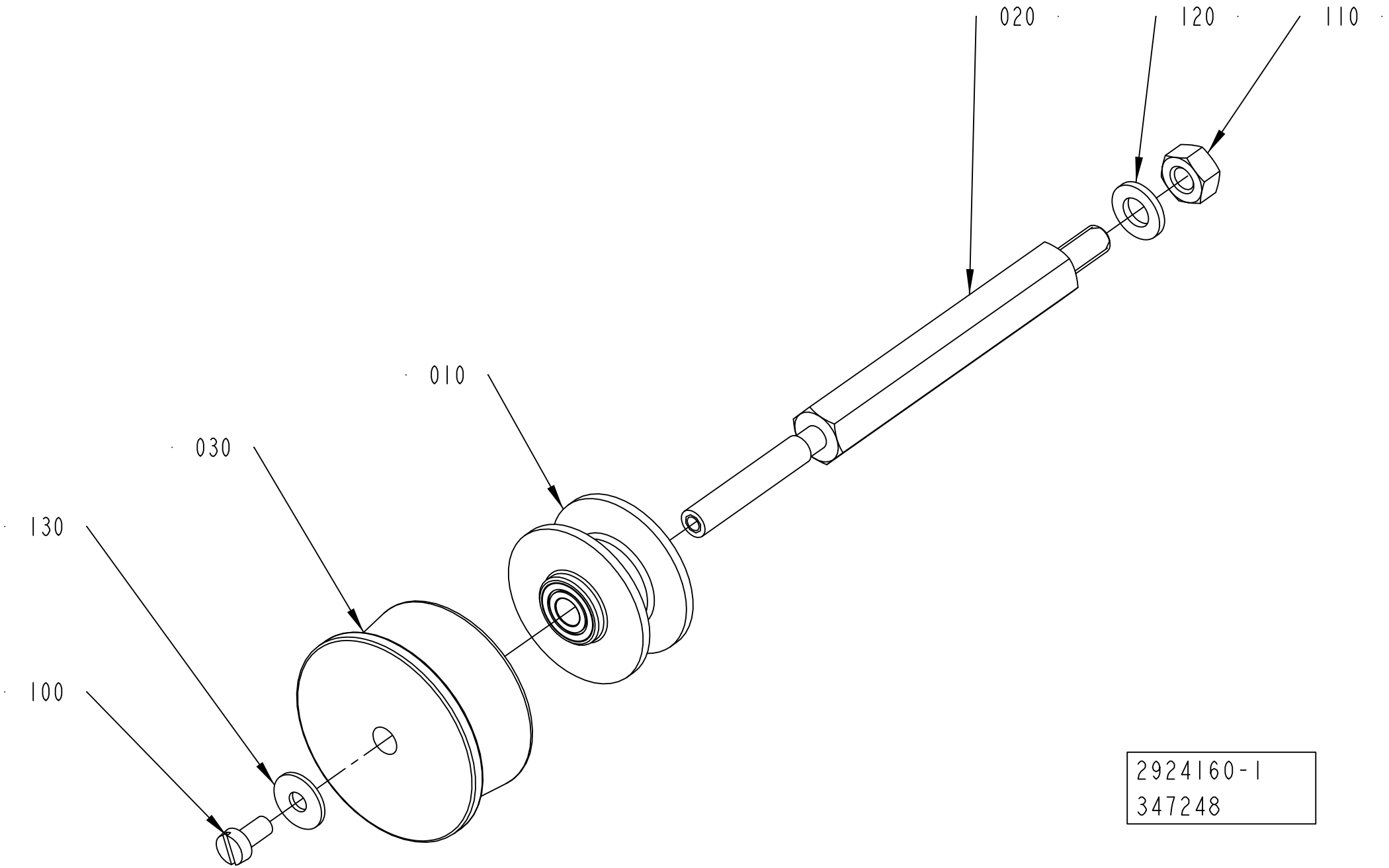
020
120
110
010
030
130
100
2924160-1
347248

ECM: 349262 - 20080422
Group number: 2924160-0100
Assembly Drawing: 2924160-1_1_AB

Pos	Part No	UN	Qty	Description	Page No
-					
010	2924164-0000		1	ROLLER	
020	2815039-0000		1	AXLE PIN	
030	2931690-0000		1	ROLLER	
100	312125-0287		1	SLOTTED HEAD SCREW, ISO1207 M4X8 A4	
110	312605-0316		1	HEXAGON NUT, M6M M6 A280	
120	315105-0153		1	WASHER BRB 6,4X12 RFR	
130	90005-0082		1	WASHER PLAIN ROUND 4,3(M4)/12,H=1	

Pos	Part No	UN	Qty	Description	Page No

ROCKER ARM

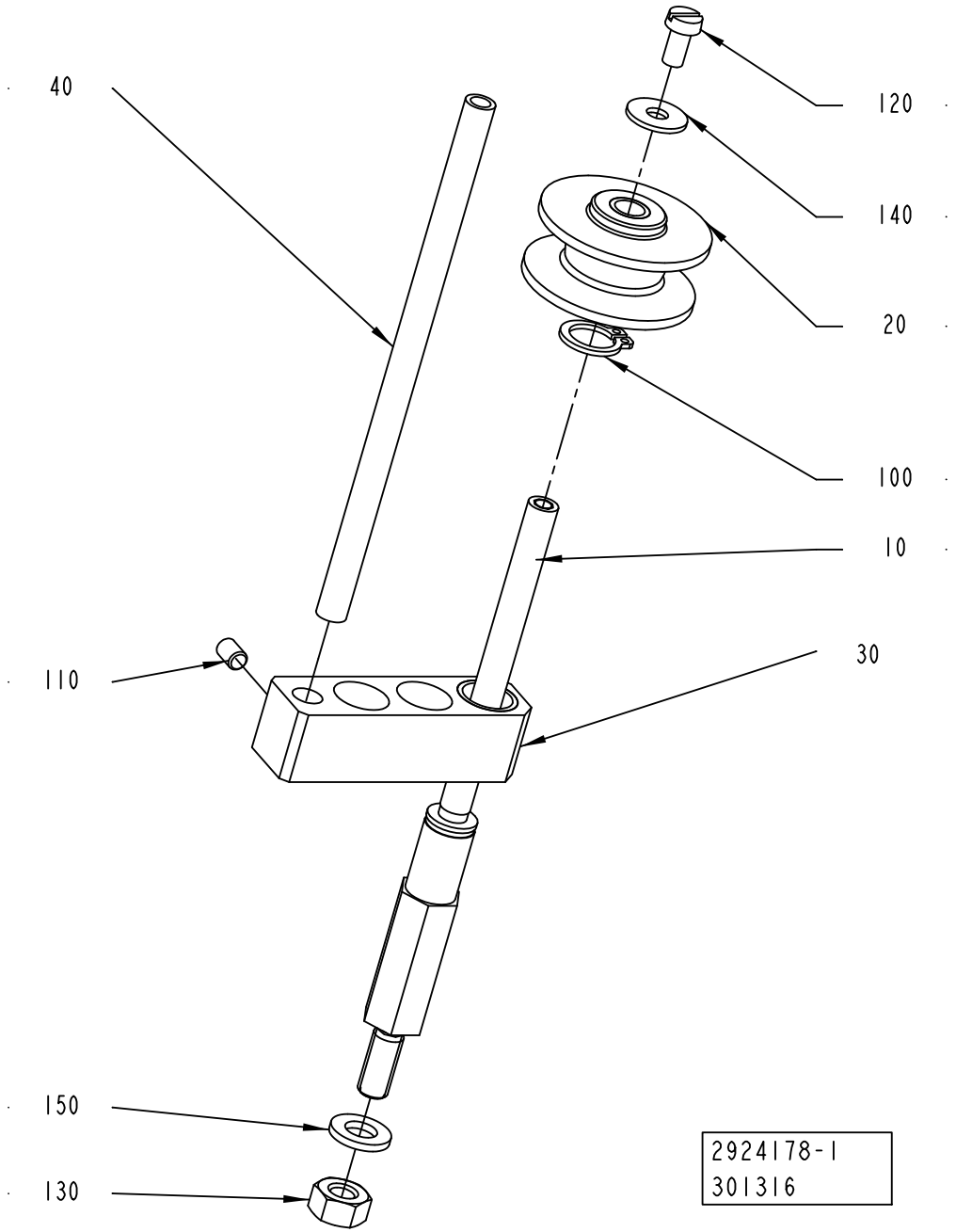

ECM: 337643 - 20080116
Group number: 2924178-0100
Assembly Drawing: 2924178-1_1_AA

Pos	Part No	UN	Qty	Description	Page No
-					
010	2924179-0000		1	AXLE PIN	
020	1512583-0000		1	ROLLER	
	321120-0101		*2*	*BEARING BUSH W/O FLANGE, 6X8X6 MM*	
030	979667-0000		1	ARM	
040	979668-0000		1	FINGER	
100	90141-0016		1	RETAINING RING FOR SHAFT DIN 471 10 SS	
110	312318-0285		1	SET SCREW, CUP END ISO4029 M4X6 A4	
120	312125-0287		1	SLOTTED HEAD SCREW, ISO1207 M4X8 A4	
130	312605-0316		1	HEXAGON NUT, M6M M6 A280	
140	90005-0082		1	WASHER PLAIN ROUND 4,3(M4)/12,H=1	
150	315105-0153		1	WASHER BRB 6,4X12 RFR	

Pos	Part No	UN	Qty	Description	Page No

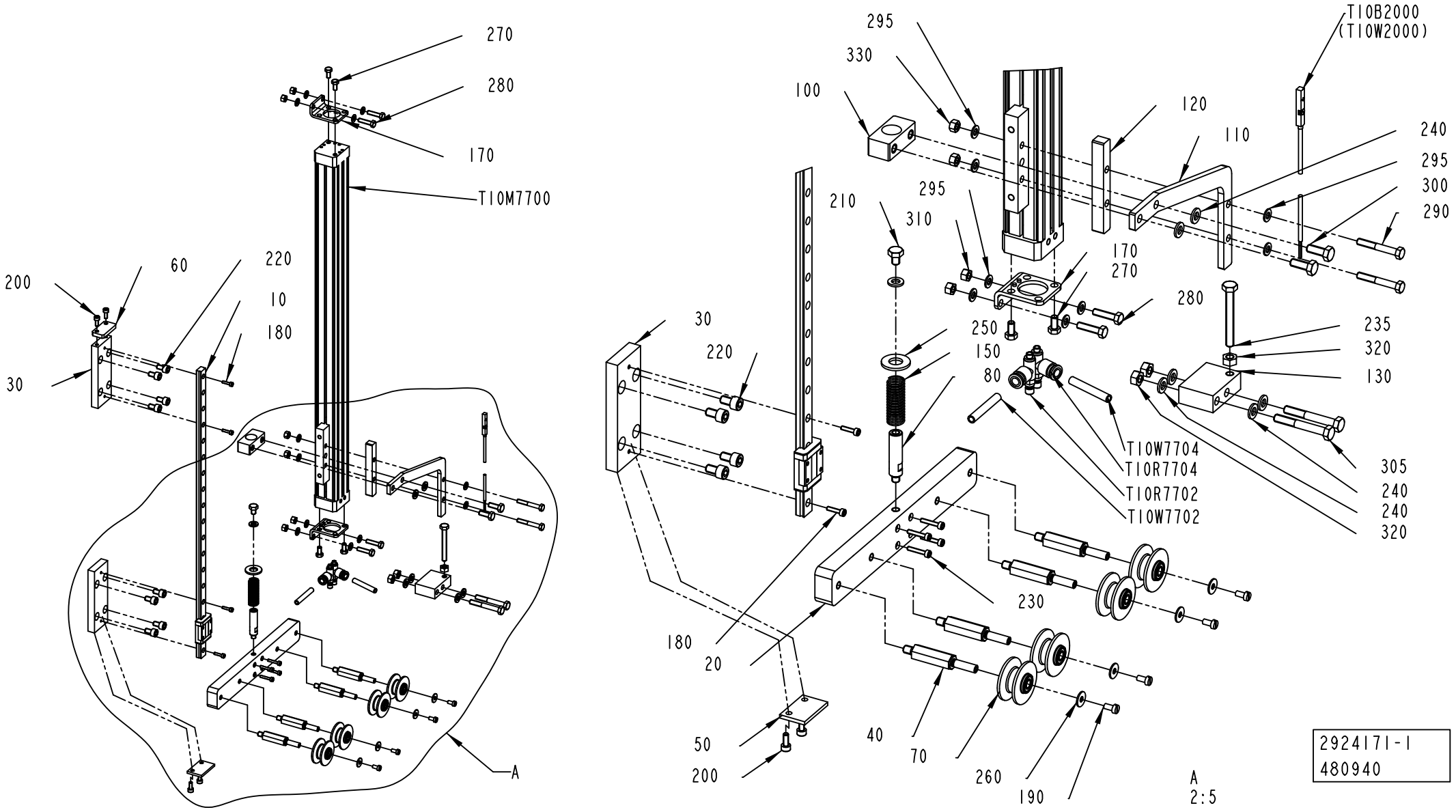
270
280
170
T10M7700
200
60
220
10
180
30
A
295
330
100
120
110
T10B2000
(T10W2000)
240
295
300
290
210
295
310
170
270
280
30
220
250
150
80
235
320
130
T10W7704
T10R7704
T10R7702
T10W7702
305
240
240
320
230
180
20
50
200
40
70
260
190
A
2:5
2924171-1
480940

ECM: 501154 - 20111001
Group number: 2924171-0100
Assembly Drawing: 2924171-1_1_AE

Pos	Part No	UN	Qty	Description	Page No
-					
010	2614876-0000		1	LINEAR UNIT	
020	2924175-0000		1	PLATE	
030	2924173-0000		2	PLATE	
040	2924174-0000		4	AXLE PIN	
050	2924176-0000		1	PLATE	
060	2951938-0000		1	PLATE	
070	2924164-0000		4	ROLLER	
080	2931684-0000		1	SPRING GUIDE	
100	2951936-0000		1	BLOCK	
110	2951935-0000		1	PLATE	
120	2951937-0000		1	PLATE	
130	2974728-0000		1	PLATE	
150	2931683-0000		1	COMPRESSION SPRING	
170	90600-4920		2	FOOT MOUNTING, HP-18	
180	312115-0226		4	SCREW ISO4762 M3X12 A4 80	
190	312125-0287		4	SLOTTED HEAD SCREW, ISO1207 M4X8 A4	
200	312115-0289		4	SCREW ISO4762 M4X10 A4 80	
210	312105-0362		1	SCREW, M6S ISO 4017 M6X8 A4 80	
220	312115-0364		8	SCREW ISO4762 M6X10 A4 80	
230	312115-0228		4	SCREW ISO4762 M3X16 A4 80	
235	312109-0380		1	SCREW, M6S ISO 4017 M6X50 A4 80	
240	315105-0153		7	WASHER BRB 6,4X12 RFR	
250	315105-0173		1	WASHER BRB 10,5X22 RFR	
260	90005-0082		4	WASHER PLAIN ROUND 4,3(M4)/12,H=1	
270	312105-0325		4	SCREW, M6S ISO 4017 M5X10 A4 80	
280	312105-0331		4	SCREW, M6S ISO 4017 M5X20 A4 80	
290	312105-0337		2	SCREW, M6S ISO 4014 M5X35 A4 80	
295	315105-0146		12	WASHER BRB 5,3X10 RFR	
300	312105-0368		2	SCREW, M6S ISO 4017 M6X16 A4 80	
305	312105-0379		2	SCREW, M6S ISO 4014 M6X45 A4 80	
310	312607-0314		4	HEXAGON NUT, EN 24032 M6M M5 A480	
320	312607-0316		3	HEXAGON NUT, EN 24032 M6M M6 A480	
330	312605-0314		2	HEXAGON NUT, M6M M5 A280	
T10B2000	90600-3272		1	PROX. SENSOR, SMT-8M-PS-24V-K-5,0-OE	
T10M7700	90600-4919		1	CYLINDER, RODLESS MECH. 18-400	
T10R7702	90459-3019		1	THROTTLE CHECK VALVE, M5, MANUAL, 6MM	
T10R7704	90459-3019		1	THROTTLE CHECK VALVE, M5, MANUAL, 6MM	
T10W7702	315400-0001	M	4	TUBE PUN-H-6X1-BL	
T10W7704	315400-0001	M	4	TUBE PUN-H-6X1-BL	

Pos	Part No	UN	Qty	Description	Page No

Machine Type	Group Description	Used-In	Group Number	Page No

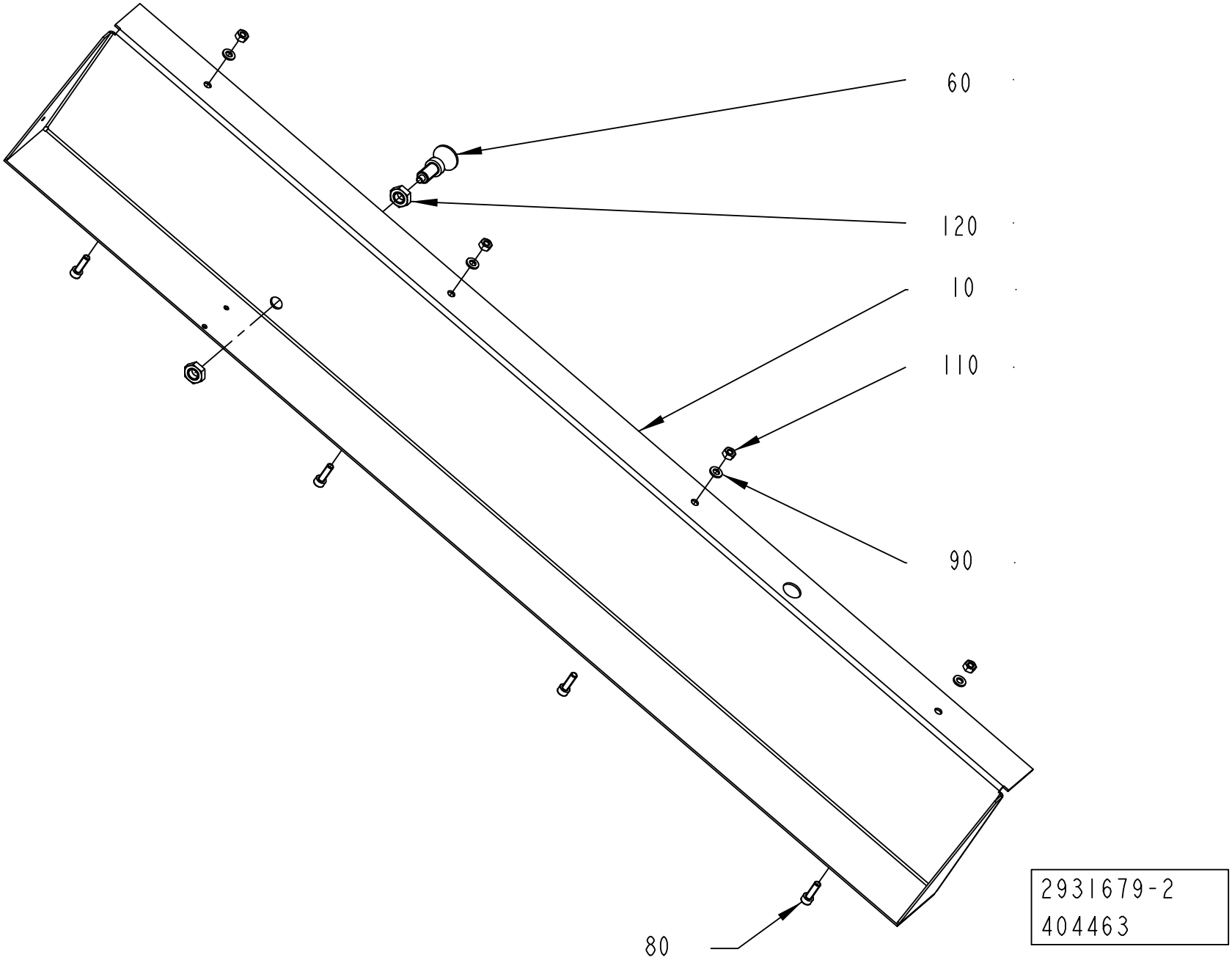
60
120
10
110
90
80
2931679-2
404463

ECM: 405754 - 20090731
Group number: 2931679-0200
Assembly Drawing: 2931679-2_1_AA

Pos	Part No	UN	Qty	Description	Page No
-					
010	2931678-0000		1	BRACKET	
060	90051-0125		1	LOCK KNOB, NO. GN 617-6-A-N1	
080	312111-0370		4	SCREW HEX.SOCK.HD.MC6S-TT 6X20 88 FZB	
090	315105-0153		8	WASHER BRB 6,4X12 RFR	
110	312601-0316		4	HEXAGON NUT, DIN 934 M6 8 FZB	
120	312632-0323		2	HEX.TH.NUT FINE,EN24035 ML6M M12X1,5 A4	

Pos	Part No	UN	Qty	Description	Page No

BRAKE ARM

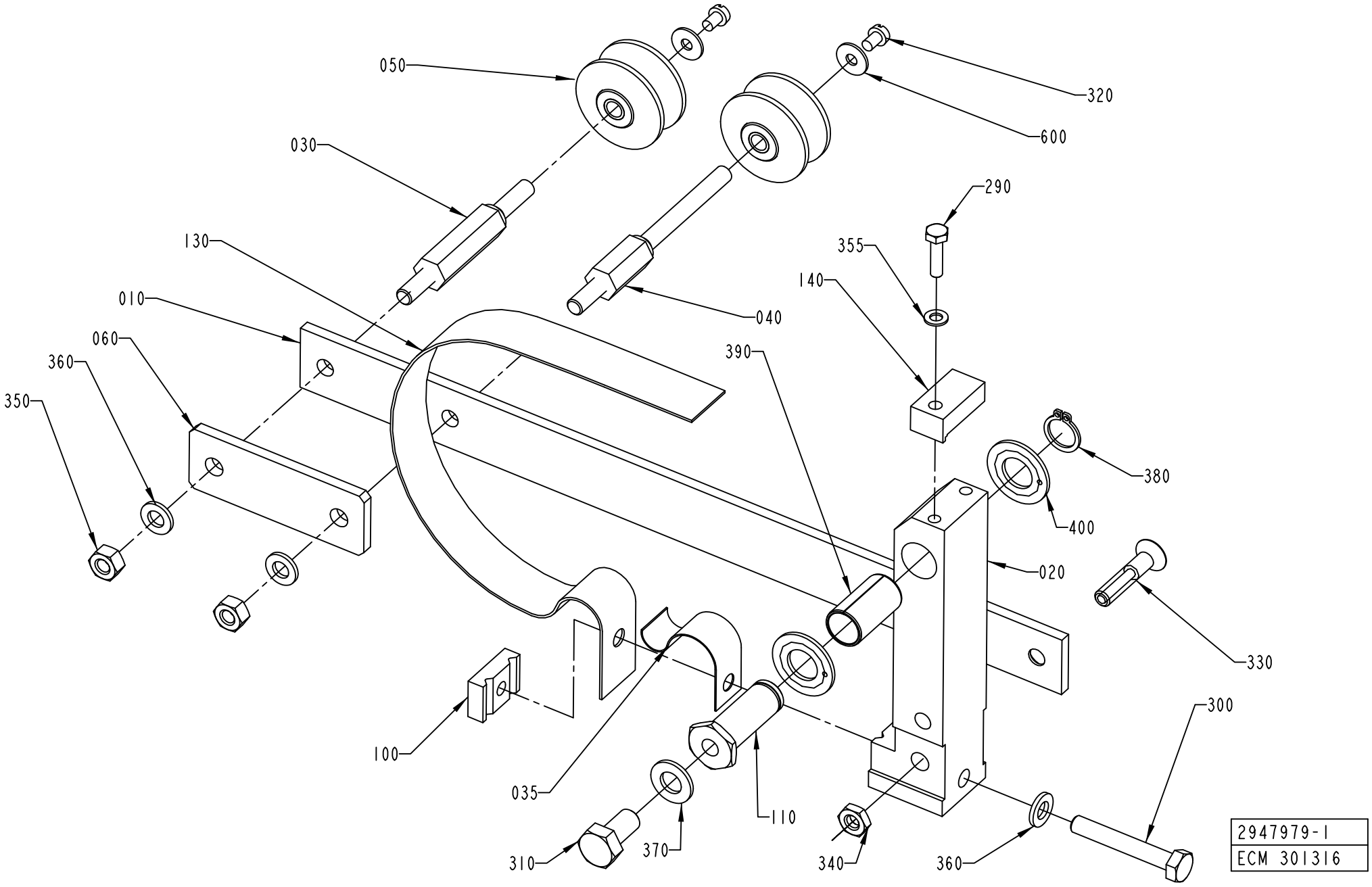
050
030
130
010
060
360
350
040
320
600
290
355
140
390
380
400
020
330
300
100
035
110
310
370
340
360
2947979-1
ECM 301316

ECM: 431572 - 20091223
Group number: 2947979-0100
Assembly Drawing: 2947979-1_1_AA

Pos	Part No	UN	Qty	Description	Page No
-					
010	2947980-0000		1	ARM	
020	1260678-0000		1	ARM	
030	2947982-0000		1	AXLE PIN	
035	1484486-0000		1	SPRING	
040	2947981-0000		1	AXLE PIN	
050	1512583-0000		2	ROLLER	
	321120-0101		*2*	*BEARING BUSH W/O FLANGE, 6X8X6 MM*	
060	2947983-0000		1	ARM	
100	583878-0000		1	SPRING BRACKET	
110	541070-0000		1	SHAFT	
130	979990-0000		1	BELT BRAKE	
140	979991-0000		1	BLOCK	
290	312105-0293		1	SCREW, M6S ISO 4017 M4X16 A4 70	
300	312105-0378		1	SCREW, M6S ISO 4014 M6X40 A4 80	
310	312105-0449		1	SCREW, M6S ISO 4017 M8X16 A4 80	
320	312125-0285		2	SLOTTED HEAD SCREW, ISO1207 M4X6 A4	
330	312155-0374		1	SCREW DIN 7991 MF6S M6X30 A4 70	
340	312625-0316		1	HEXAGON THIN NUT, EN 24035 ML6M M6 A4	
350	312605-0316		2	HEXAGON NUT, M6M M6 A280	
355	315105-0136		1	WASHER BRB 4,3X8 RFR	
360	315105-0153		3	WASHER BRB 6,4X12 RFR	
370	315105-0165		1	WASHER BRB 8,4X16 RFR	
380	315751-0109		1	RETAINING RING FOR SHAFT DIN 471 12 SS	
390	321141-0193		1	BEARING BUSHING, 12X14X25 MM	
400	321130-0180		2	THRUST WASHER, 12X24X1,5 MM	
600	90005-0082		2	WASHER PLAIN ROUND 4,3(M4)/12,H=1	

Pos	Part No	UN	Qty	Description	Page No

Machine Type | Group Description | Used-In | Group Number | Page No

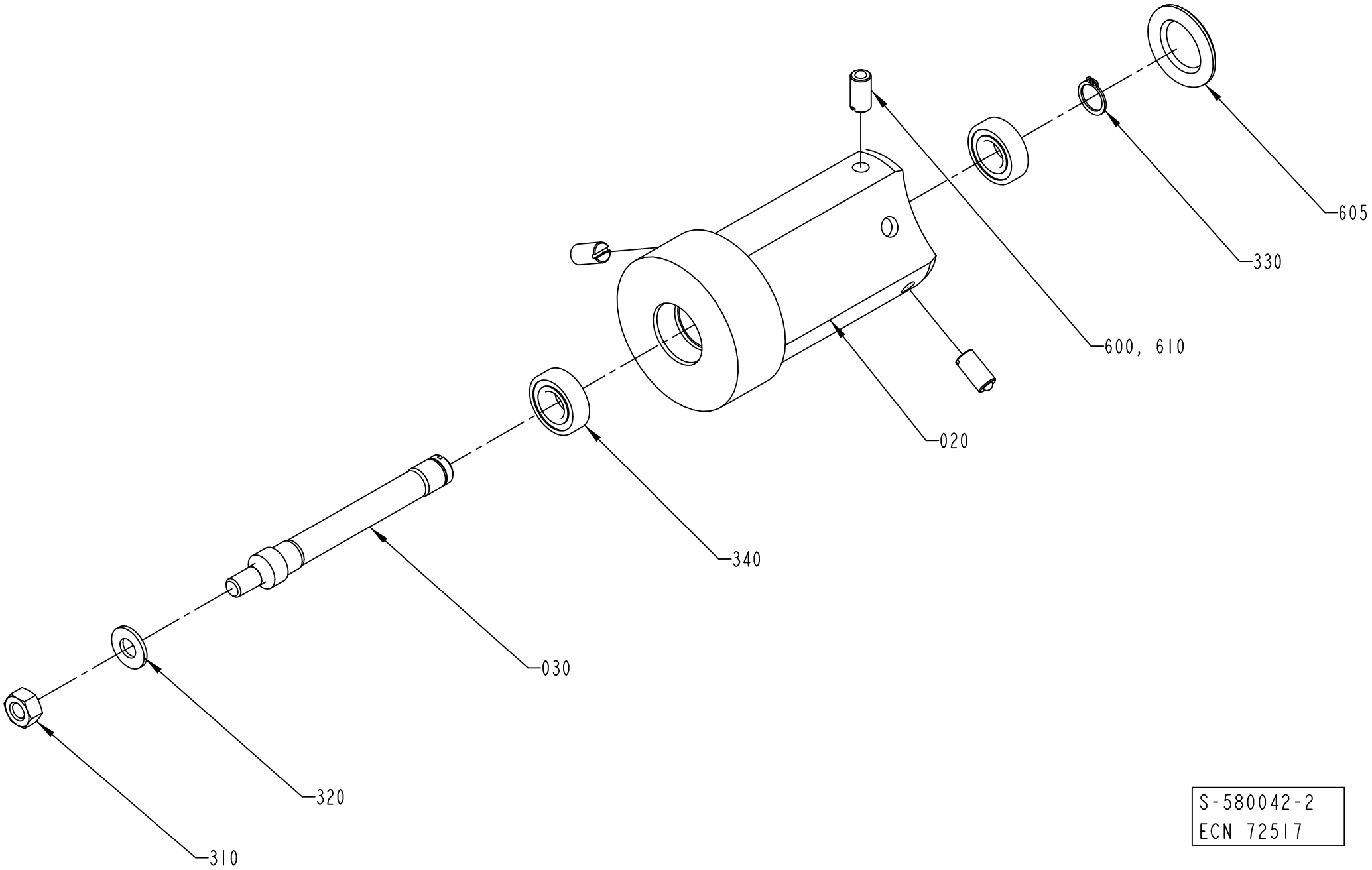

S-580042-2
ECN 72517

ECM: 501145 - 20111001
Group number: 580042-0100
Assembly Drawing: 580042-2_1_AB

Pos	Part No	UN	Qty	Description	Page No
A3/COMPACTFLEX					
340	90214-0207		2	BALL BEARING 15/32X9	
Common Parts					
010	541751-0000		1	CONICAL BOBBIN	
020	536913-0000		1	HUB	
030	537327-0000		1	SHAFT	
310	312605-0320		1	HEXAGON NUT, M6M M10 A280	
320	315105-0173		1	WASHER BRB 10,5X22 RFR	
330	315751-0112		1	RETAINING RING FOR SHAFT DIN 471 15 SS	
600	90602-4847		1	THREAD LOCKING, LOCTITE 243 50 ML	
605	90261-0049		1	PLUG, BLIND, PLASTIC, NO. SR1750	
610	90287-0106		3	SCREW SPRINGLOAD. SLOTTED HEAD M10X21	

Pos	Part No	UN	Qty	Description	Page No

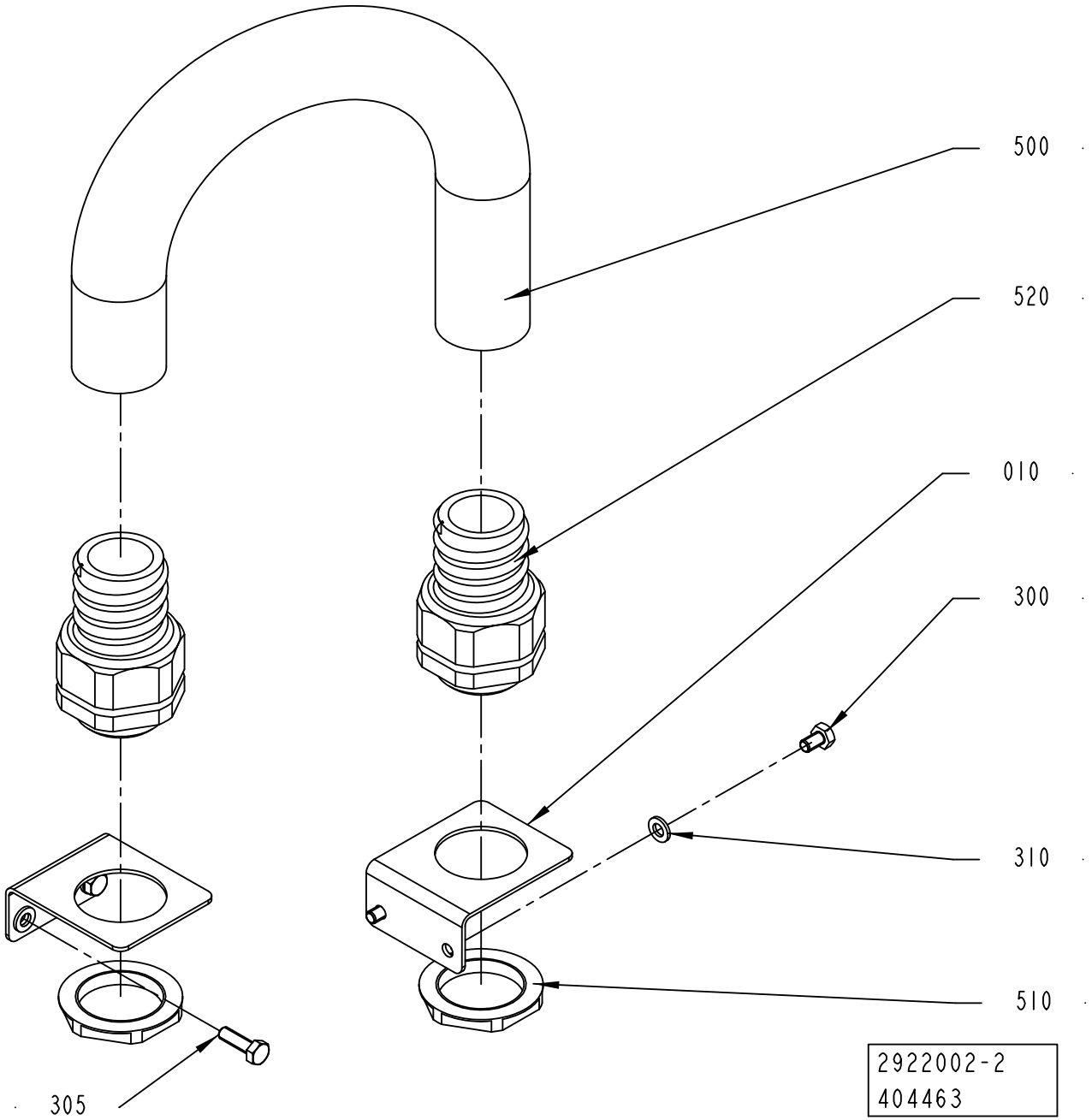
500
520
010
300
310
510
305
2922002-2
404463

ECM: 405741 - 20090731
Group number: 2922002-0200
Assembly Drawing: 2922002-2_1_AA

Pos	Part No	UN	Qty	Description	Page No
-					
010	2945496-0000		2	HOLDER	
300	312105-0364		2	SCREW, M6S ISO 4017 M6X10 A4 80	
305	312105-0370		2	SCREW, M6S ISO 4017 M6X20 A4 80	
310	315105-0153		4	WASHER BRB 6,4X12 RFR	
500	90152-0060	MM	340	HOSE, SPIRAL CONDUIT, 42X35, UL3529	
510	90458-0326		2	NUT, M40X1,5	
520	90458-0434		2	GLAND FITTING, VK 24056YUL29	

Pos	Part No	UN	Qty	Description	Page No

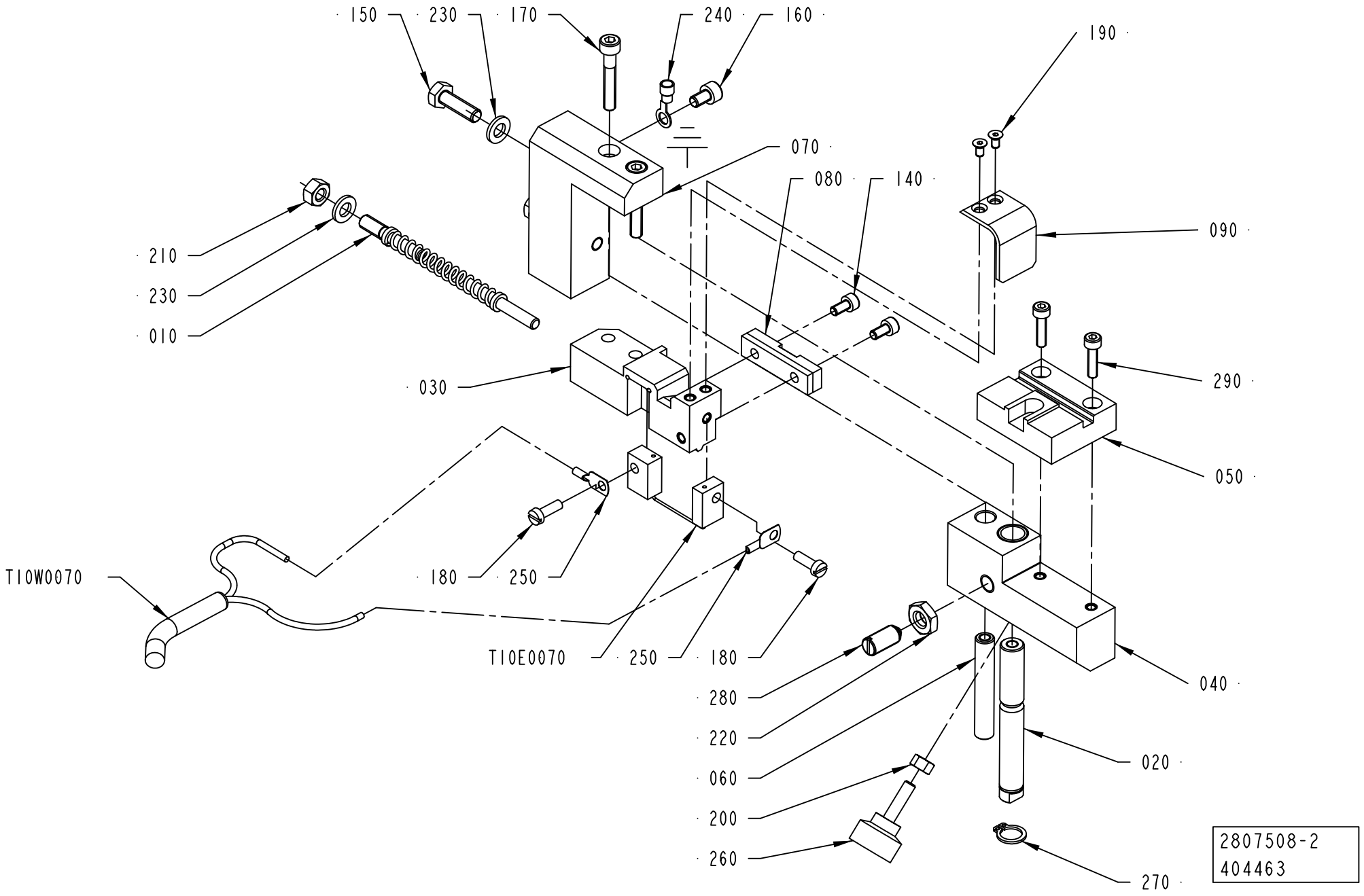
150
230
170
240
160
190
070
080
140
090
210
230
010
030
290
050
T10W0070
180
250
T10E0070
250
180
040
280
220
060
200
260
020
270
2807508-2
404463

ECM: 405753 - 20090731
Group number: 2807508-0200
Assembly Drawing: 2807508-2_1_AA

Pos	Part No	UN	Qty	Description	Page No
-					
010	3019834-0000		1	FINGER	
020	1517751-0000		1	SHAFT	
030	2523598-0000		1	SPLICING TABLE	
040	3034364-0000		1	SLIDER	
050	3034363-0000		1	PAD	
060	2523600-0000		1	PIN	
070	2807509-0000		1	BRACKET	
080	1349014-0000		1	PAD	
090	2579838-0000		1	TOUCH GUARD	
140	312115-0287		2	SCREW ISO4762 M4X8 A4 80	
150	312105-0370		2	SCREW, M6S ISO 4017 M6X20 A4 80	
160	312115-0323		1	SCREW ISO4762 M5X8 A4 80	
170	312115-0335		2	SCREW ISO4762 M5X30 A4 80	
180	312125-0291		2	SLOTTED HEAD SCREW, ISO1207 M4X12 A4	
190	312155-0220		2	SCREW DIN 7991 MF6S M3X6 A4 70	
200	312605-0314		1	HEXAGON NUT, M6M M5 A280	
210	312605-0316		1	HEXAGON NUT, M6M M6 A280	
220	312625-0318		1	HEXAGON THIN NUT, EN 24035 ML6M M8 A4	
230	315105-0153		3	WASHER BRB 6,4X12 RFR	
240	353101-0132		1	CABLE SHOE 1,5-2,5MM2 M5 BLUE	
250	353104-0130		2	CABLE SHOE, RING UNINS., YAV 025 M 4	
260	90051-0035		1	KNOB, EXTERNAL THREAD. NO. 8308-1135	
270	90141-0016		1	RETAINING RING FOR SHAFT DIN 471 10 SS	
280	90287-0112		1	SCREW SPRINGLOAD. SLOTTED HEAD M8X16	
290	312115-0293		2	SCREW ISO4762 M4X16 A4 80	
T10E0070	1524481-0000		1	SEALING BLOCK	
T10W0070	351120-0145	M	4	CABLE ÖLFLEX HEAT 180 SIHF 3X2,5	

Pos	Part No	UN	Qty	Description	Page No

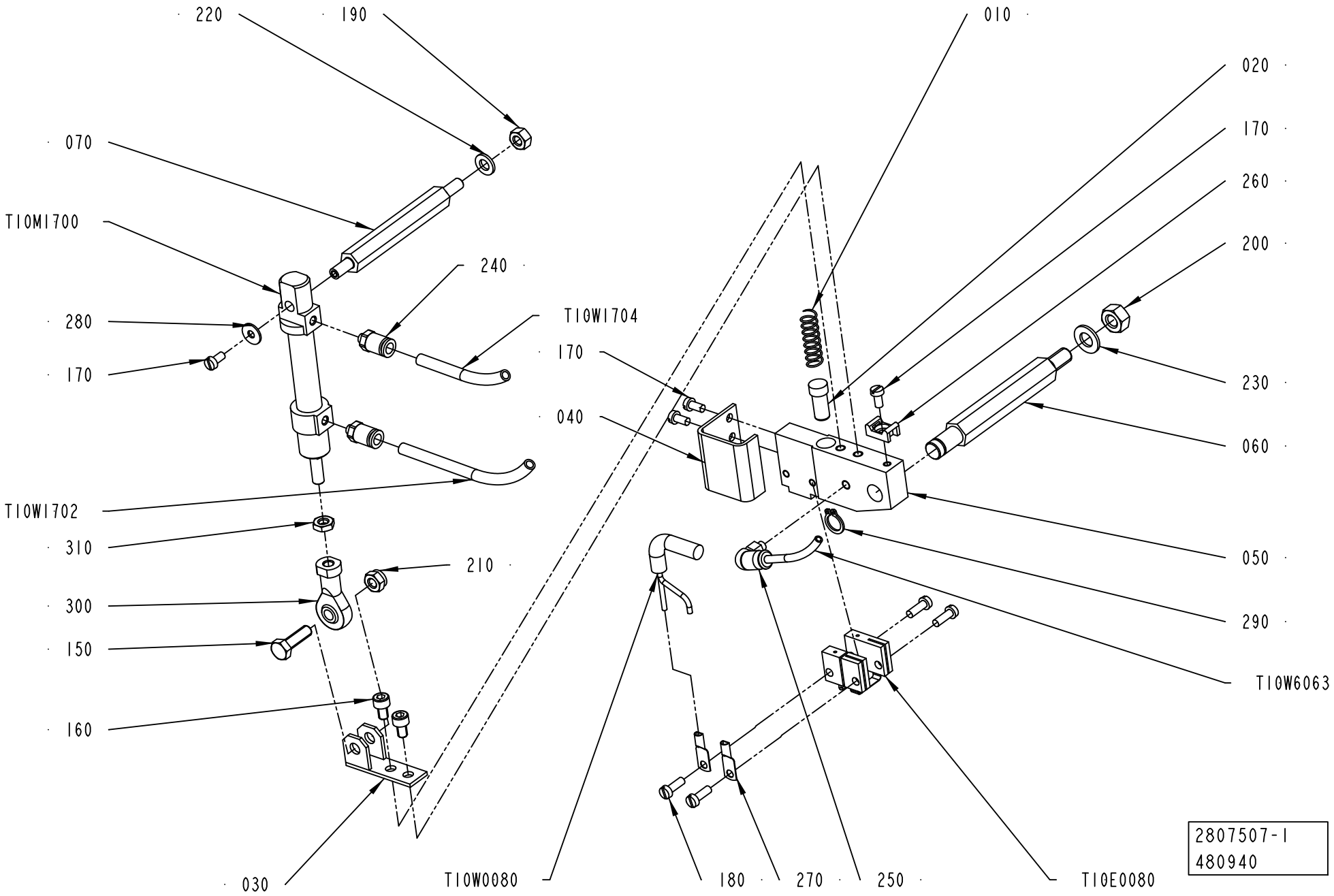
220
190
010
020
070
170
T10M1700
260
240
200
280
T10W1704
170
230
040
060
T10W1702
310
050
210
290
300
T10W6063
150
160
030
T10W0080
180
270
250
T10E0080
2807507-1
480940

ECM: 501151 - 20111001
Group number: 2807507-0100
Assembly Drawing: 2807507-1_1_AD

Pos	Part No	UN	Qty	Description	Page No
-					
010	400828-0000		1	SPRING	
020	400833-0000		1	PLUNGER	
030	1037124-0000		1	HOLDER	
040	2523596-0000		1	COVER	
050	1490804-0000		1	HOLDER	
060	2815042-0000		1	SHAFT	
070	2815043-0000		1	SHAFT	
150	312105-0370		1	SCREW, M6S ISO 4017 M6X20 A4 80	
160	312115-0323		2	SCREW ISO4762 M5X8 A4 80	
170	312125-0287		4	SLOTTED HEAD SCREW, ISO1207 M4X8 A4	
180	312125-0291		4	SLOTTED HEAD SCREW, ISO1207 M4X12 A4	
190	312605-0316		1	HEXAGON NUT, M6M M6 A280	
200	312605-0318		1	HEXAGON NUT, M6M M8 A280	
210	312812-0316		1	HEXAGON NUT, NY-LOCK M6 A4 80	
220	315105-0153		1	WASHER BRB 6,4X12 RFR	
230	315105-0165		1	WASHER BRB 8,4X16 RFR	
240	342722-0197		2	STRAIGHT COUPLING	
250	90458-2954		1	ELBOW PIPE JOINT, EXT.THREAD, D=4MM M5	
260	352113-0205		1	ANCHOR PLATES FOR STRIPS, TM2S8-C100	
270	353104-0140		2	CABLE SHOE, RING UNINS., YAV 06 M 4	
280	90005-0082		1	WASHER PLAIN ROUND 4,3(M4)/12,H=1	
290	90141-0016		1	RETAINING RING FOR SHAFT DIN 471 10 SS	
300	90239-0491		1	ROD END, BALL JOINT EYE, MINI-ISO M6	
310	312625-0316		1	HEXAGON THIN NUT, EN 24035 ML6M M6 A4	
T10E0080	1498047-0000		1	SEALING BLOCK	
T10M1700	90450-0306		1	DOUBLE ACTING, MINI-ISO, CYL. 12-25	
T10W0080	351120-0125	MM	4000	CABLE ÖLFLEX HEAT 180 SIHF 2X2,5	
T10W1702	315400-0001	MM	3000	TUBE PUN-H-6X1-BL	
T10W1704	315400-0001	MM	3000	TUBE PUN-H-6X1-BL	
T10W6063	315400-0016	MM	3000	TUBE PUN-H-4X0,75-BL	

Pos	Part No	UN	Qty	Description	Page No

Machine Type	Group Description	Used-In	Group Number	Page No

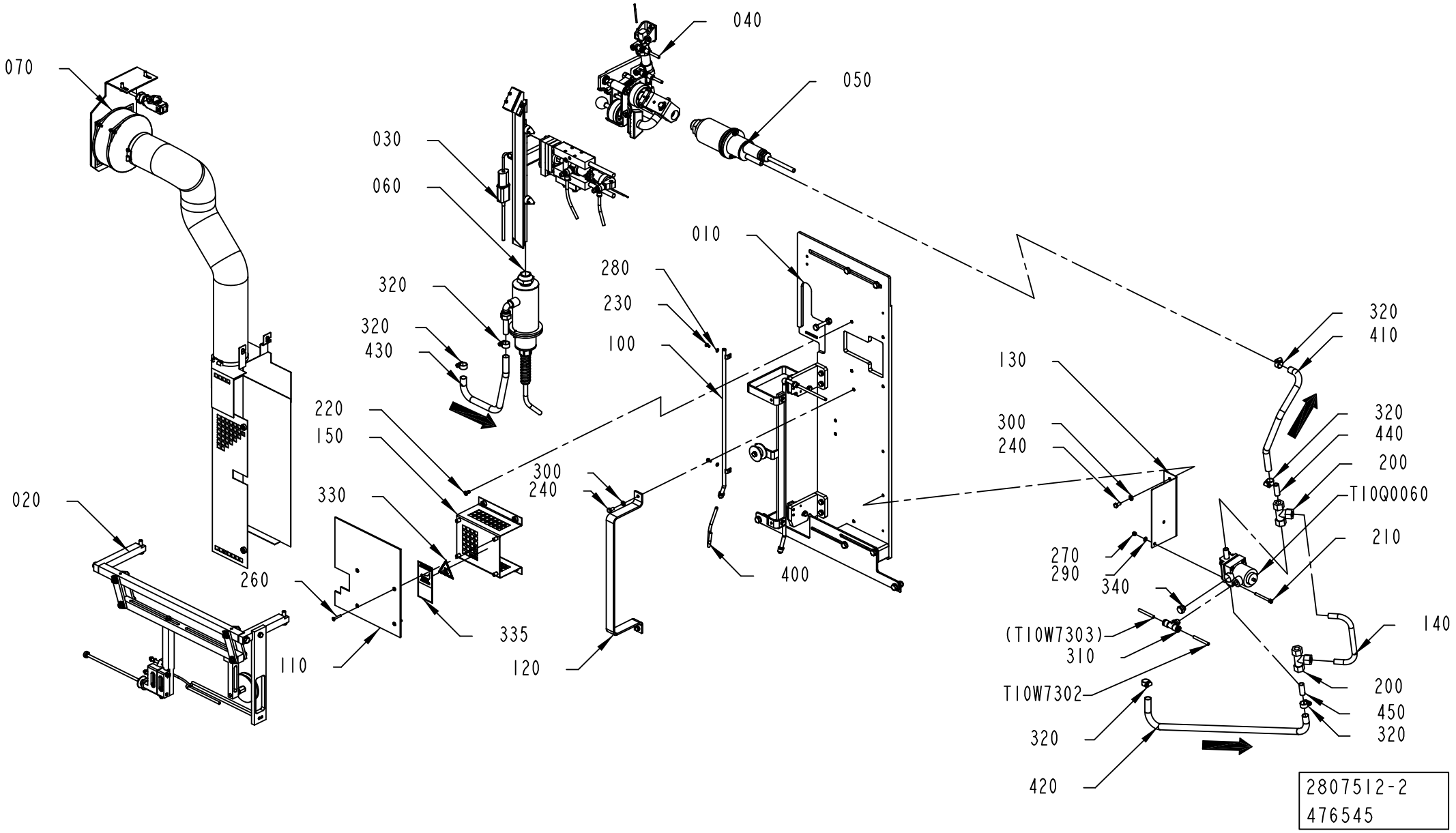
070
040
050
030
060
320
320
430
010
280
230
100
220
150
330
300
240
020
260
335
120
400
130
300
240
320
410
320
440
200
T10Q0060
210
270
290
340
(T10W7303)
310
T10W7302
320
420
140
200
450
320
2807512-2
476545

ECM: 476896 - 20110401
Group number: 2807512-0200
Assembly Drawing: 2807512-2_1_AC

Pos	Part No	UN	Qty	Description	Page No
ANSI					
335	359725-0117		1	WARNING SIGN ANSI (V), HOT SURFACE	
ISO					
330	359705-0007		1	WARNING SIGN ISO, HOT SURFACE	
Common Parts					
010	2894661-0200		1	MOUNTING PLATE	**7-113**
020	2860213-0200		1	STRIP GUIDE	**7-115**
030	2868278-0200		1	AIR NOZZLE	**7-117**
040	2887853-0200		1	SHORT STOP ELEMENT	**7-119**
050	2868280-0100		1	HOT AIR ELEMENT	**7-121**
060	2868281-0100		1	HOT AIR ELEMENT	**7-123**
070	2845889-0200		1	FAN SYSTEM	**7-125**
100	1539380-0000		1	AIR NOZZLE	
110	1539383-0000		1	PROTECTION	
120	1548191-0000		1	GUIDE PLATE	
130	3105407-0000		1	BRACKET	
140	2923818-0000		1	PIPE	
150	3044562-0000		1	TOUCH GUARD	
200	90030-0058		2	CONN. T-PIPE T12L71	
210	312115-0343		2	SCREW ISO4762 M5X60 A4 80	
220	90601-2046		4	CAPTIVE SCREW M6, GUTBG 6-4-12	
230	312105-0287		2	SCREW, M6S ISO 4017 M4X8 A4 70	
240	312105-0366		4	SCREW, M6S ISO 4017 M6X12 A4 80	
260	312155-0297		4	SCREW DIN 7991 MF6S M4X25 A4 70	
270	312605-0314		2	HEXAGON NUT, M6M M5 A280	
280	315105-0136		2	WASHER BRB 4,3X8 RFR	
290	315105-0146		2	WASHER BRB 5,3X10 RFR	
300	315105-0153		4	WASHER BRB 6,4X12 RFR	
310	342742-0103		1	T-COUPLING,ADJUST,F.PLASTIC TUBE 6-G1/4	
320	342991-0101		6	HOSE CLIP,WORM DRIVE TYPE (11)-17	
340	90257-0001		1	FILTER PLUG ART.NO.8145-00-140 TYPE F14	
400	90166-0081	MM	200	TUBE 6 MM PA BLUE	
410	90166-0273	MM	450	HOT AIR HOSE	
420	90166-0273	MM	1800	HOT AIR HOSE	
430	90166-0273	MM	1100	HOT AIR HOSE	
440	90266-0174	MM	45	TUBE 12X1 SS 2333-22	
450	90266-0174	MM	45	TUBE 12X1 SS 2333-22	
T10Q0060	90458-2434		1	DIAPHRAGM VALVE 12MM, NO WELD CONN.	
	90458-2436		*1*	*ACTUATOR 615, 9615000Z 2*	
	90458-0205		*1*	*DIAPHRAGM, 600 10 M13, 88037819*	
T10W7302	90166-0081	MM	1400	TUBE 6 MM PA BLUE	

Pos	Part No	UN	Qty	Description	Page No

MOUNTING PLATE

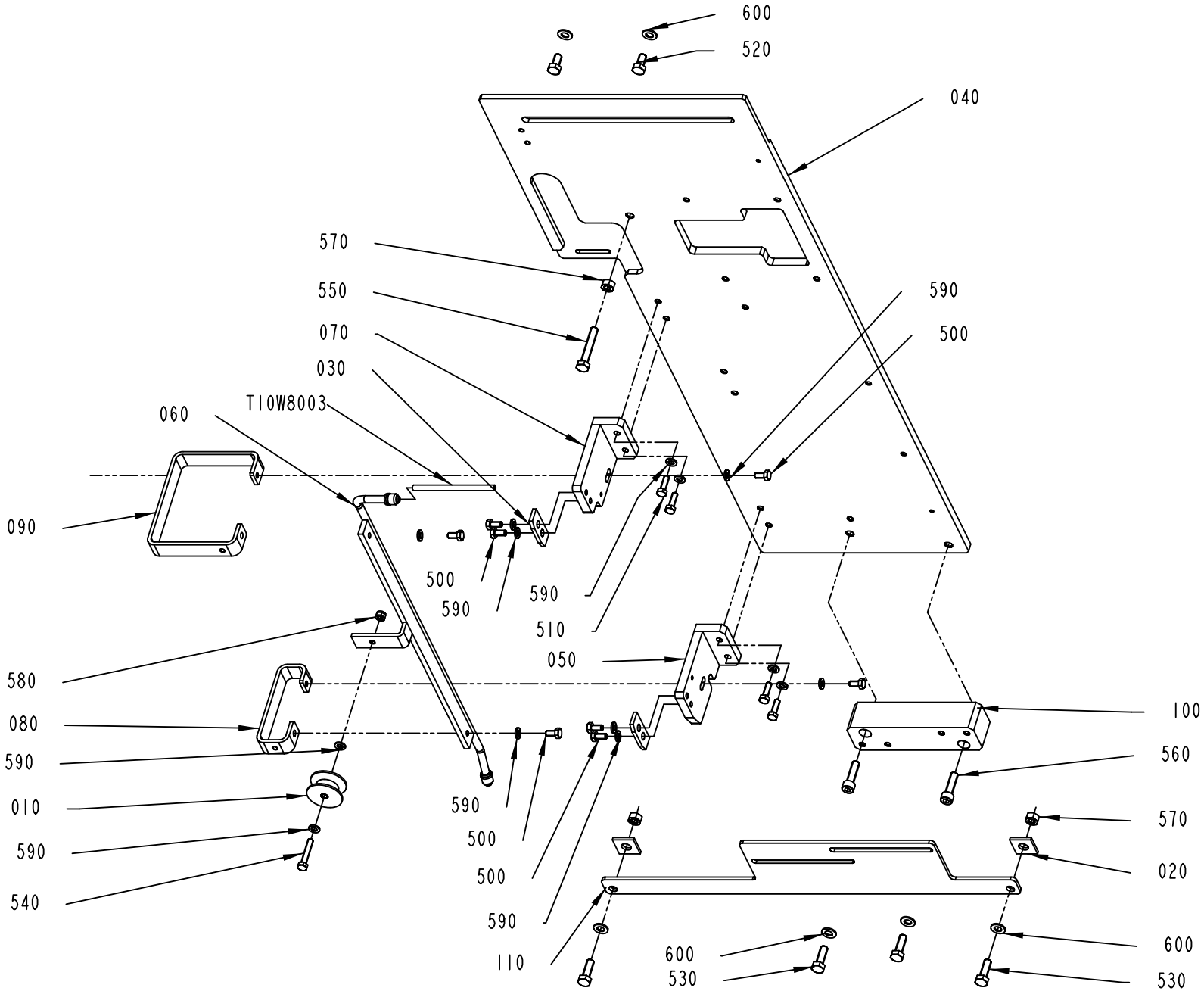

2894661-2
506599

ECM: 506599 - 20111001
Group number: 2894661-0200
Assembly Drawing: 2894661-2_1_AC

Pos	Part No	UN	Qty	Description	Page No
-					
010	2831684-0000		1	ROLLER	
020	1338224-0000		2	SHIM	
030	2613787-0000		2	PAPER SUPPORT	
040	3034256-0000		1	PLATE	
050	3040931-0000		1	BRACKET	
060	3040934-0000		1	HOLDER	
070	3042560-0000		1	BRACKET	
080	3042561-0000		1	PLATE	
090	3044559-0000		1	PLATE	
100	3044560-0000		1	SPACER	
110	3044561-0000		1	BRACKET	
500	312105-0366		8	SCREW, M6S ISO 4017 M6X12 A4 80	
510	312105-0370		4	SCREW, M6S ISO 4017 M6X20 A4 80	
520	312105-0449		2	SCREW, M6S ISO 4017 M8X16 A4 80	
530	312105-0453		4	SCREW, M6S ISO 4017 M8X25 A4 80	
540	312105-0376		1	SCREW, M6S ISO 4014 M6X35 A4 80	
550	312109-0461		1	SCREW, M6S ISO 4017 M8X50 A4 80	
560	312115-0455		2	SCREW ISO4762 M8X30 A4 80	
570	312605-0318		3	HEXAGON NUT, M6M M8 A280	
580	312812-0316		1	HEXAGON NUT, NY-LOCK M6 A4 80	
590	315105-0153		14	WASHER BRB 6,4X12 RFR	
600	315105-0165		6	WASHER BRB 8,4X16 RFR	
T10W8003	315400-0001	M	1.8	TUBE PUN-H-6X1-BL	

Pos	Part No	UN	Qty	Description	Page No

STRIP GUIDE

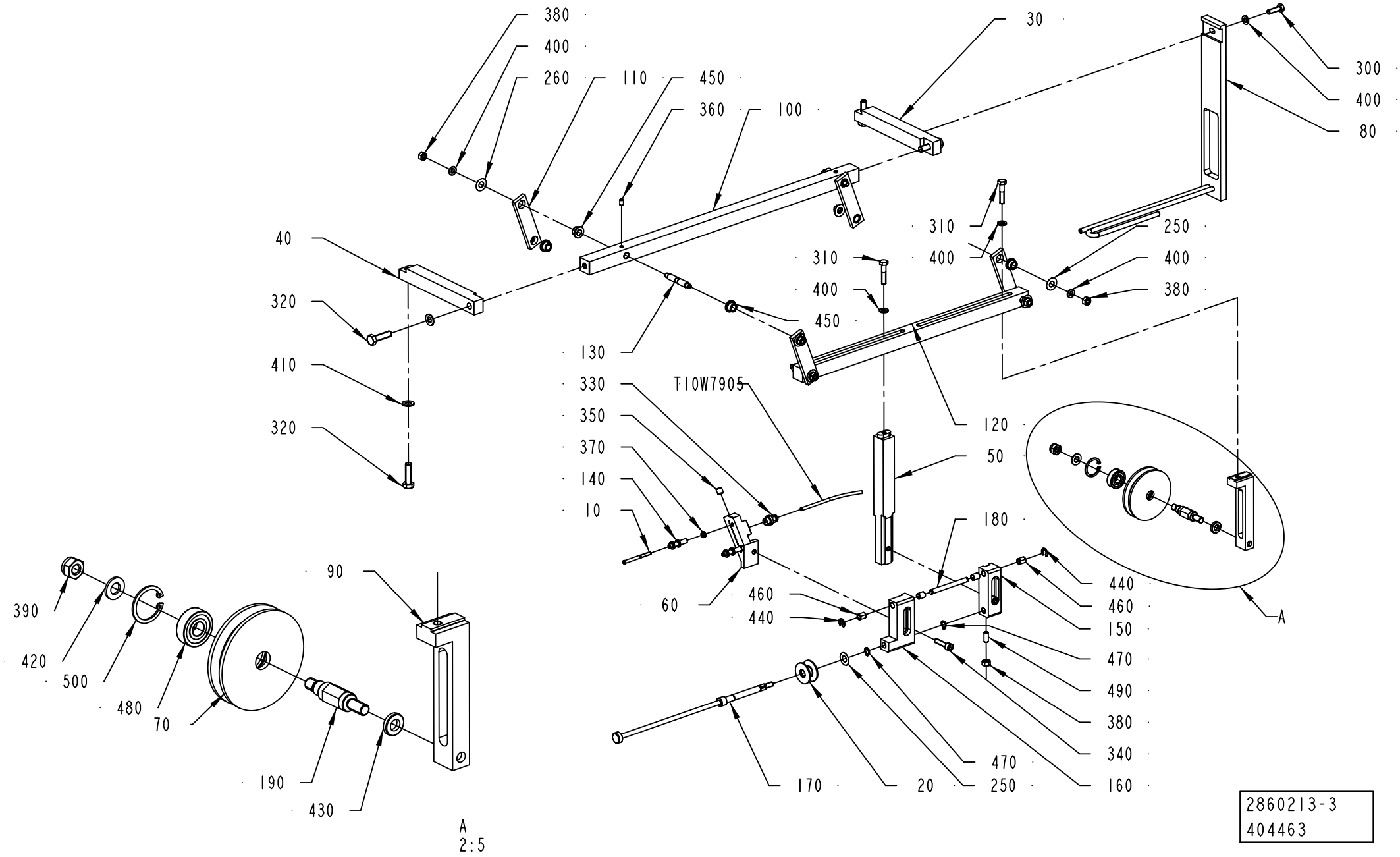

2860213-3
404463

ECM: 431562 - 20091223
Group number: 2860213-0200
Assembly Drawing: 2860213-3_1_AA

Pos	Part No	UN	Qty	Description	Page No
-					
010	469463-0000		2	SHAFT	
020	2504809-0000		1	ROLLER	
030	2897657-0000		1	BRACKET	
040	2897659-0000		1	BRACKET	
050	2902298-0000		1	BRACKET	
060	2902299-0000		1	BRACKET	
070	2941710-0000		1	GUIDE WHEEL	
010	*315751-0123*		*1*	*RETAINING RING FOR SHAFT DIN 471 32 SS*	
080	2943556-0000		1	PAPER GUIDE	
090	2943557-0000		1	BRACKET	
100	2943558-0000		1	ROD	
110	2943559-0000		4	PLATE	
120	2943560-0000		1	ROD	
130	2943561-0000		4	SHAFT	
140	2943562-0000		2	ROLLER	
150	2943563-0000		1	BRACKET	
160	2943564-0000		1	BRACKET	
170	2943565-0000		1	ADJUSTING SCREW	
180	2947461-0000		1	SHAFT	
190	3042557-0000		1	AXLE PIN	
250	2033-0007		5	WASHER	
260	2033-0011		4	WASHER	
300	312105-0370		1	SCREW, M6S ISO 4017 M6X20 A4 80	
310	312105-0374		2	SCREW, M6S ISO 4014 M6X30 A4 80	
320	312105-0455		4	SCREW, M6S ISO 4017 M8X30 A4 80	
330	350001-0005		1	PUSH-IN FITTING QS-F-G1/8-4	
340	312115-0372		2	SCREW ISO4762 M6X25 A4 80	
350	312306-0443		1	SCREW ISO4026 M8X8 FZB	
360	312318-0323		4	SET SCREW, CUP END ISO4029 M5X8 A4	
370	312605-0312		2	HEXAGON NUT, M6M M4 A280	
380	312605-0316		9	HEXAGON NUT, M6M M6 A280	
390	312812-0318		1	HEXAGON NUT, NY-LOCK M8 A4 80	
400	315105-0153		11	WASHER BRB 6,4X12 RFR	
410	315105-0165		4	WASHER BRB 8,4X16 RFR	
420	315106-0165		1	WASHER ISO 7089-8-200 HV A4	
430	315115-0165		1	WASHER PLAIN, TBRB 8,4/16 H=3	
440	315755-0108		2	RETAINING RING SHAFT DIN 6799 6 SS	
450	321111-0096		8	FLANGE BUSHING, 8/12X8-16X2 MM	
460	321141-0064		4	BEARING BUSHING, 6X8X10 MM	
470	90141-0015		2	RETAINING RING FOR SHAFT DIN 471 8 SS	
480	90214-0029		1	BALL BEARING 10/26X8	
490	90287-0163		1	SCREW SPRINGLOAD. SLOTTED HEAD M6X14	
500	90458-0506		1	RETAINING RING FOR BORE DIN 472 26 SS	
T10W7905	90166-0081	M	2.5	TUBE 6 MM PA BLUE	

Machine Type | Group Description | Used-In | Group Number | Page No

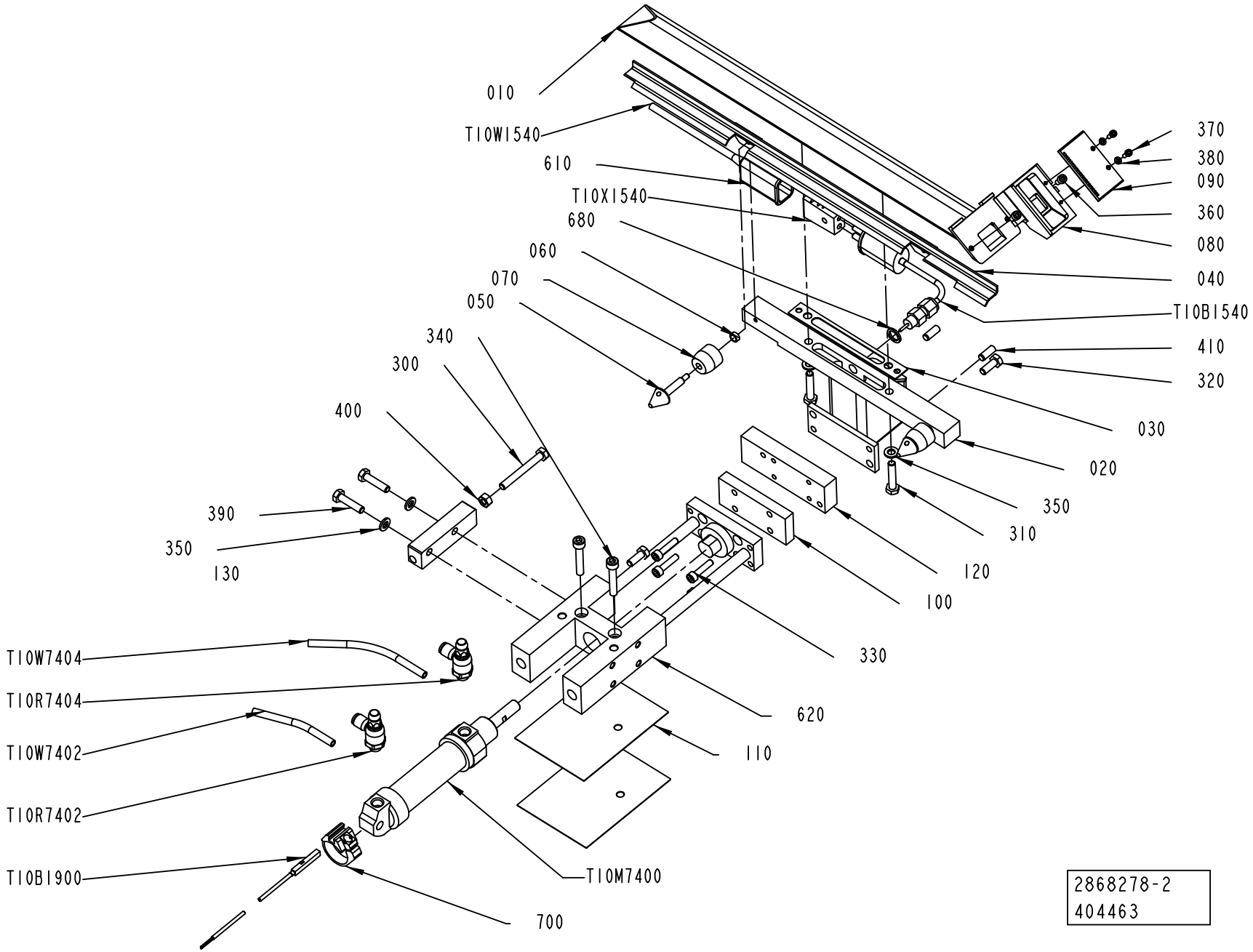
010
T10W1540
610
T10X1540
680
060
070
050
340
300
400
390
350
130
370
380
090
360
080
040
T10B1540
410
320
030
020
350
310
120
100
330
620
110
T10M7400
700
T10W7404
T10R7404
T10W7402
T10R7402
T10B1900
2868278-2
404463

ECM: 431563 - 20091223
Group number: 2868278-0200
Assembly Drawing: 2868278-2_1_AA

Pos	Part No	UN	Qty	Description	Page No
-					
010	2701838-0000		1	AIR NOZZLE	
020	3040937-0000		1	CONNECTION	
030	531735-0000		1	GASKET	
040	2931689-0000		1	AIR GUIDE	
050	2613786-0000		2	SHAFT	
060	2613790-0000		2	SPACER	
070	6161-0000		2	ROLL	
080	2701837-0000		1	VALVE HOUSING	
090	2701842-0000		1	NOZZLE	
100	3040938-0000		1	PLATE	
110	3015470-0000		2	SHIM	
120	3040939-0000		1	BLOCK	
130	3044563-0000		1	BLOCK	
300	312109-0380		1	SCREW, M6S ISO 4017 M6X50 A4 80	
310	312105-0374		2	SCREW, M6S ISO 4014 M6X30 A4 80	
320	312105-0368		2	SCREW, M6S ISO 4017 M6X16 A4 80	
330	312115-0332		4	SCREW ISO4762 M5X22 A4 80	
340	312115-0376		2	SCREW ISO4762 M6X35 A4 80	
350	315105-0153		4	WASHER BRB 6,4X12 RFR	
360	312115-0287		2	SCREW ISO4762 M4X8 A4 80	
370	312115-0222		2	SCREW ISO4762 M3X8 A4 80	
380	315105-0124		2	WASHER BRB 3,2X6 RFR	
390	312105-0372		2	SCREW, M6S ISO 4017 M6X25 A4 80	
400	312605-0316		1	HEXAGON NUT, M6M M6 A280	
410	311103-0351		2	PARALLEL PIN ISO 2338 6M6X16 A1	
610	90326-0012		1	PROTECTIVE COVER, 03-001 10	
620	90459-3920		1	LINEAR MOTION SYSTEM, 79X34X210 MM	
680	90005-0011		1	WASHER,PL.RND.CU.10/14,H=1,5	
700	90450-0808		1	SENSOR BRACKET, FOR CYL 25	
T10B1540	90326-0089		1	THERMOCOUPLE, 5110 089-000	
T10B1900	90600-3272		1	PROX. SENSOR, SMT-8M-PS-24V-K-5,0-OE	
T10M7400	90239-0829		1	DOUBLE ACTING, MINI-ISO, CYL.25-50	
T10R7402	90235-0846		1	THROTTLE CHECK VALVE G1/8", MANUAL, 6	
T10R7404	90235-0846		1	THROTTLE CHECK VALVE G1/8", MANUAL, 6	
T10W1540	90220-0034	MM	6000	THERMOC.CABLE, TEX/SITW-20F-KX 2X0,5MM2	
T10W7402	90166-0081	MM	2000	TUBE 6 MM PA BLUE	
T10W7404	90166-0081	MM	2000	TUBE 6 MM PA BLUE	
T10X1540	90326-0020		1	SOCKET, FEMALE YELLOW CR-AL, 03-22000A	

Pos	Part No	UN	Qty	Description	Page No

Machine Type | Group Description | Used-In | Group Number | Page No

SHORT STOP ELEMENT

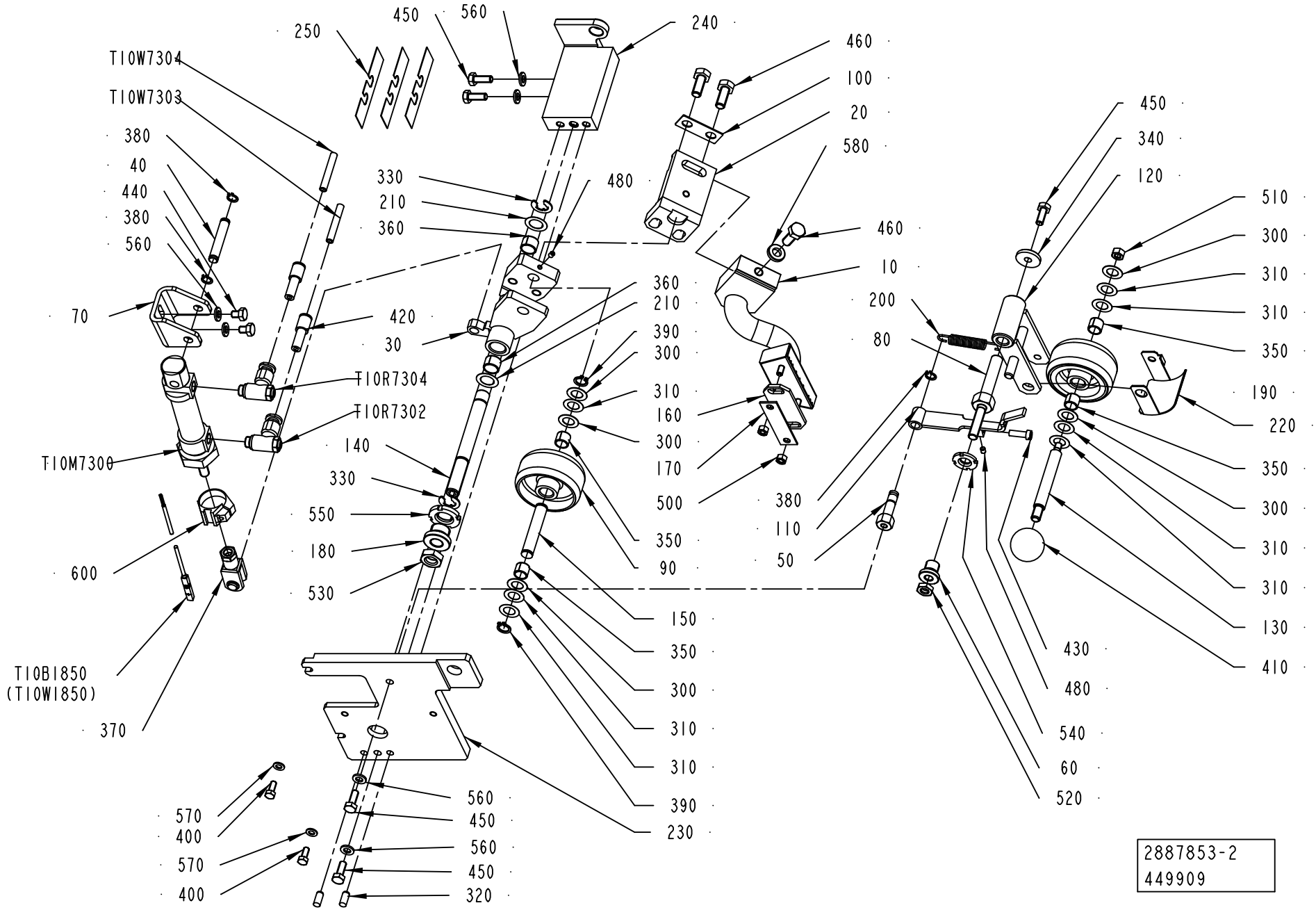

ECM: 460863 - 20101001
Group number: 2887853-0200
Assembly Drawing: 2887853-2_1_AC

Pos	Part No	UN	Qty	Description	Page No
-					
010	2887854-0000		1	NOZZLE	
020	2552819-0000		1	HOLDER	
030	2888282-0000		1	LEVER	
040	2888283-0000		1	SHAFT	
050	594292-0000		1	AXLE PIN	
060	2888284-0000		1	FLANGE	
070	2888285-0000		1	HOLDER	
080	2888286-0000		1	SHAFT	
090	21903-0000		1	ROLL	
	90166-0056	*M*	*0.03*	*SHRINKABLE HOSE (2,5")*	
100	2642921-0000		1	WASHER	
110	2896621-0000		1	CATCH	
120	251493-0000		1	FORK	
130	251495-0000		1	SHAFT	
140	2888288-0000		1	SHAFT	
150	266731-0000		1	SHAFT	
160	3018765-0000		1	PLATE	
170	255417-0000		1	WASHER	
180	2888287-0000		1	FLANGE	
190	2703634-0000		1	ROLLER	
200	2912588-0000		1	TENSION SPRING	
210	2658190-0000		2	WASHER	
220	2703632-0000		1	HEAT GUARD	
230	3040932-0000		1	BRACKET	
240	3040933-0000		1	BRACKET	
250	3111587-0000		3	SHIM	
300	2033-0009		5	WASHER	
310	2033-0014		7	WASHER	
320	311103-0350		2	PARALLEL PIN ISO 2338 6M6X14 A1	
330	315755-0110		2	RETAINING RING SHAFT DIN 6799 9 SS	
340	315125-0153		1	WASHER TBRSB 6,4X22X4 A4	
350	321141-0140		4	BEARING BUSHING, 10X12X10 MM	
360	321141-0178		2	BEARING BUSHING, 12X14X10 MM	
370	90239-0532		1	ROD END, CLEVIS WITH AXLE M8X1,25	
380	90141-0015		3	RETAINING RING FOR SHAFT DIN 471 8 SS	
390	90141-0016		2	RETAINING RING FOR SHAFT DIN 471 10 SS	
400	312105-0327		2	SCREW, M6S ISO 4017 M5X12 A4 80	
410	318800-0104		1	HANDLE,SPHERICAL KNOB,INT.THRE.,D.30-M8	
420	350006-0003		2	PUSH-IN FITTING QS-F-8H-6	
430	312125-0329		1	SLOTTED HEAD SCREW, ISO1207 M5X16 A4	
440	312105-0362		2	SCREW, M6S ISO 4017 M6X8 A4 80	
450	312105-0368		5	SCREW, M6S ISO 4017 M6X16 A4 80	
460	312105-0451		3	SCREW, M6S ISO 4017 M8X20 A4 80	
480	312318-0284		2	SET SCREW, CUP END ISO4029 M4X5 A4	
500	312605-0314		2	HEXAGON NUT, M6M M5 A280	
510	312605-0316		1	HEXAGON NUT, M6M M6 A280	
520	312625-0318		1	HEXAGON THIN NUT, EN 24035 ML6M M8 A4	
530	312625-0322		1	HEXAGON THIN NUT, EN 24035 ML6M M12 A4	
540	312805-0101		1	NUT ROUND WITH SLOTS M12X1 FE	
550	312805-0103		1	NUT ROUND WITH SLOTS M17X1 FE	
560	315105-0153		6	WASHER BRB 6,4X12 RFR	
570	315105-0146		2	WASHER BRB 5,3X10 RFR	
580	315115-0165		1	WASHER PLAIN, TBRB 8,4/16 H=3	
600	90458-0531		1	SENSOR BRACKET, FOR CYL 20	
T10B1850	90600-3272		1	PROX. SENSOR, SMT-8M-PS-24V-K-5,0-OE	
T10M7300	90459-5599		1	DOUBLE ACTING, MINI-ISO, CYL. 20-25	
T10R7302	90600-0754		1	THROTTLE CHECK VALVE, GRLA-1/8-QS-8-D	
T10R7304	90600-0754		1	THROTTLE CHECK VALVE, GRLA-1/8-QS-8-D	
T10W7303	315400-0001	M	0.8	TUBE PUN-H-6X1-BL	
T10W7304	315400-0001	M	2	TUBE PUN-H-6X1-BL	

Machine Type	Group Description	Used-In	Group Number	Page No

HOT AIR ELEMENT

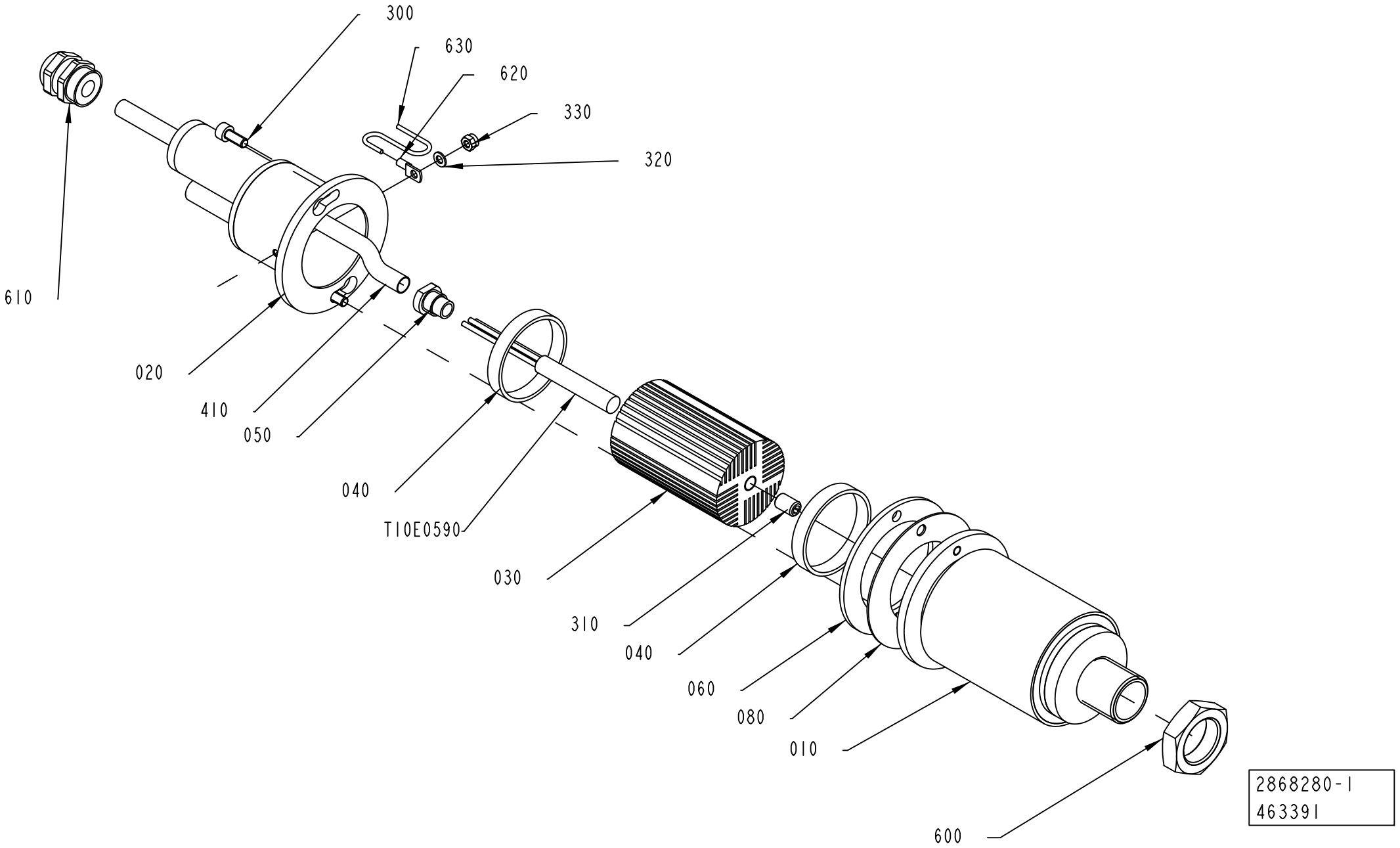

ECM: 471993 - 20110401
Group number: 2868280-0100
Assembly Drawing: 2868280-1_1_AC

Pos	Part No	UN	Qty	Description	Page No
-					
010	2552817-0000		1	TUBULAR JACKET	
020	2552818-0000		1	COVER	
030	2505007-0000		1	HEATING BLOCK	
040	2505011-0000		2	SPACER	
050	2505158-0000		1	SCREW	
060	2552822-0000		1	SPACING WASHER	
080	2556514-0000		1	WASHER	
300	312115-0327		2	SCREW ISO4762 M5X12 A4 80	
310	312318-0447		1	SET SCREW, CUP END ISO4029 M8X12 A4	
320	315105-0136		1	WASHER BRB 4,3X8 RFR	
330	312812-0312		1	HEXAGON NUT, NY-LOCK M4 A4 80	
400	90296-0051	KG	0.1	HEAT SINK COMPOUND 340	
410	90142-0005	M	0.5	HOSE	
600	90330-0003		1	NUT	
610	90459-3071		1	GLAND, WITH INSERT, M 20	
620	353106-0103		1	CABLE SHOE, RING, HEAT RESISTANT, 57N/4	
630	90459-5751	M	0.65	CABLE ÖLFLON PTFE 1X1,92 MM² GREEN/YELLO	
T10E0590	90601-0406		1	HEATING ELEMENT 400W 240V	

Pos	Part No	UN	Qty	Description	Page No

HOT AIR ELEMENT

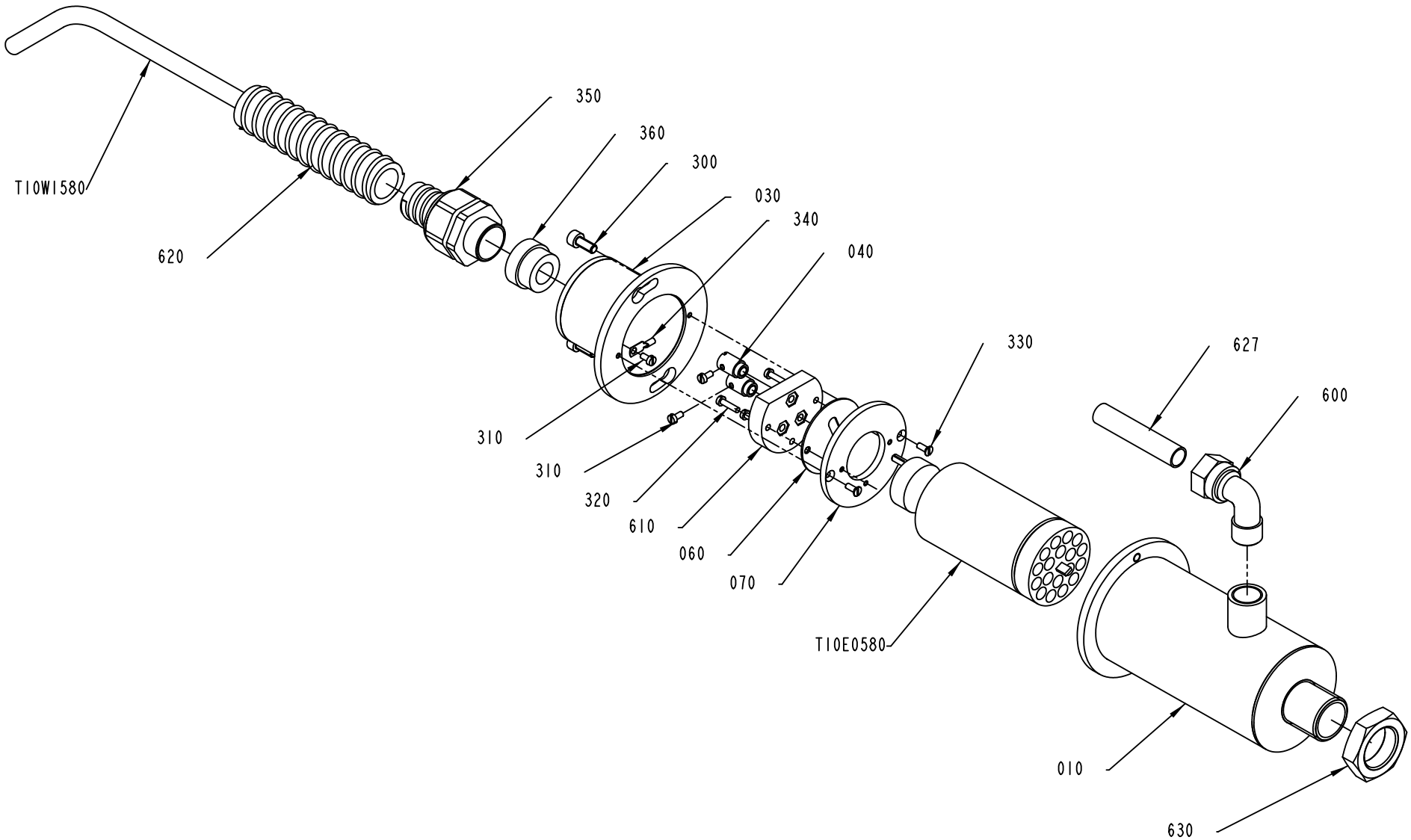

ECM: 501312 - 20111001
Group number: 2868281-0100
Assembly Drawing: 2868281-1_1_AB

Pos	Part No	UN	Qty	Description	Page No
-					
010	592136-0000		1	TUBULAR JACKET	
030	592138-0000		1	COVER	
040	266739-0000		2	CABLE GLAND	
060	590446-0000		1	GASKET	
070	592139-0000		1	WASHER	
300	312115-0327		2	SCREW ISO4762 M5X12 A4 80	
310	312125-0220		3	SCREW ISO 1207 M3X6 A4	
320	312125-0226		3	SLOTTED HEAD SCREW, ISO1207 M3X12 A4	
330	312145-0222		2	SCREW ISO 2009 MFS M3X8 A4	
340	353104-0129		1	CABLE SHOE, RING UNINS., YAV 025 M 35	
350	353243-0005		1	GLAND FITTING, VK 15354YUL16	
360	353249-0013		1	INSERT, SINGLE HOLE, EK154 13	
600	90030-0115		1	CONN. ELBOW, WE12LR71	
610	90125-0020		1	PLATE COMPLETE	
	294464-0000		*1*	*BASE PLATE*	
	270927-0000		*3*	*SCREW*	
	270926-0000		*6*	*NUT*	
620	90152-0051	M	0.65	HOSE, SPIRAL CONDUIT, 25X18, UL 1816	
627	90266-0174	M	0.06	TUBE 12X1 SS 2333-22	
630	90330-0003		1	NUT	
T10E0580	90206-0030		1	HEATING ELEMENT 3000W, 220V	
T10W1580	351120-0146	M	2.5	CABLE ÖLFLEX HEAT 180 SIHF 3X4	

Pos	Part No	UN	Qty	Description	Page No

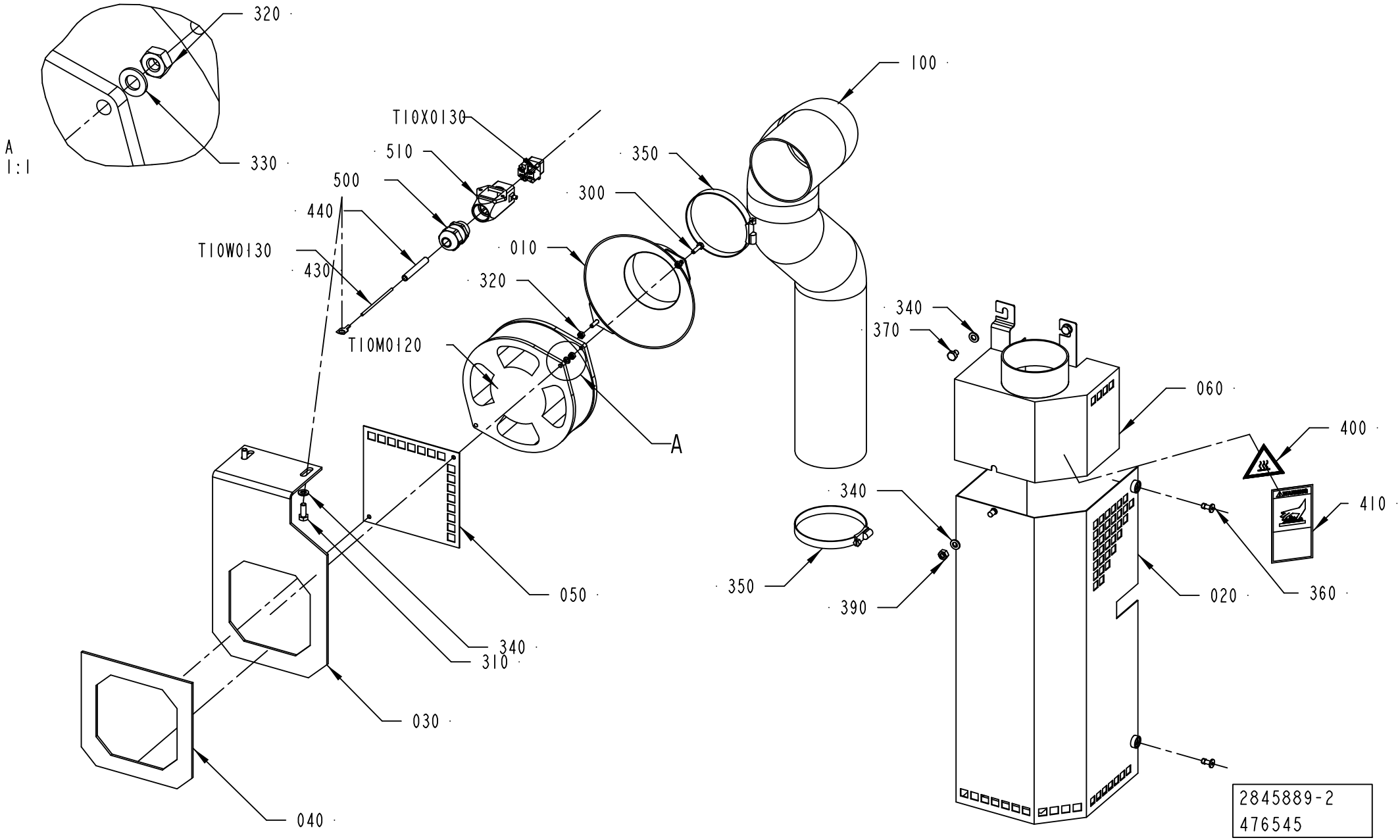
320
330
A
1:1
T10X0130
510
500
440
T10W0130
430
T10M0120
100
350
300
010
320
340
370
060
400
410
340
350
390
360
020
050
340
310
030
040
A
2845889-2
476545

ECM: 476889 - 20110401
Group number: 2845889-0200
Assembly Drawing: 2845889-2_1_AB

Pos	Part No	UN	Qty	Description	Page No
ANSI					
410	359725-0117		1	WARNING SIGN ANSI (V), HOT SURFACE	
ISO					
400	359705-0007		1	WARNING SIGN ISO, HOT SURFACE	
Common Parts					
010	1548593-0000		1	HOOD	
020	3040935-0000		1	TOUCH GUARD	
030	2845890-0000		1	BRACKET	
040	1558474-0000		1	GASKET	
050	1558475-0000		1	PROTECTION	
060	3040936-0000		1	PROTECTION	
100	90458-1862	M	0.75	HOSE, VENTILATING ID=80MM SILICONE	
300	312105-0293		2	SCREW, M6S ISO 4017 M4X16 A4 70	
310	312105-0368		2	SCREW, M6S ISO 4017 M6X16 A4 80	
320	312605-0312		4	HEXAGON NUT, M6M M4 A280	
330	315105-0136		4	WASHER BRB 4,3X8 RFR	
340	315105-0153		5	WASHER BRB 6,4X12 RFR	
350	342991-0112		2	HOSE CLIP,WORM DRIVE TYPE (68)-85	
360	90601-2046		2	CAPTIVE SCREW M6, GUTBG 6-4-12	
370	312105-0362		2	SCREW, M6S ISO 4017 M6X8 A4 80	
390	312605-0316		1	HEXAGON NUT, M6M M6 A280	
430	353104-0133		1	CABLE SHOE, RING UNINS., YAV 025 M 6	
440	90166-0111	M	0.4	SHRINKABLE HOSE 6.4 MM(1/4")BLACK	
500	90458-0307		1	CABLE GLAND, M20X1,5, 5311 1020	
510	90459-7219		1	HOUSING, 19 20 003 0220	
T10M0120	90600-8646		1	FAN, W2S130-AB03-15	
T10W0130	351162-0104	M	0.4	WIRE AWM 1X1,5 MM2 YELLOW-GREEN	
T10X0130	90459-6820		1	FEMALE INSERT, HAN 4 A, 09 20 004 2711	

Pos	Part No	UN	Qty	Description	Page No

PAPER REEL HOLDER

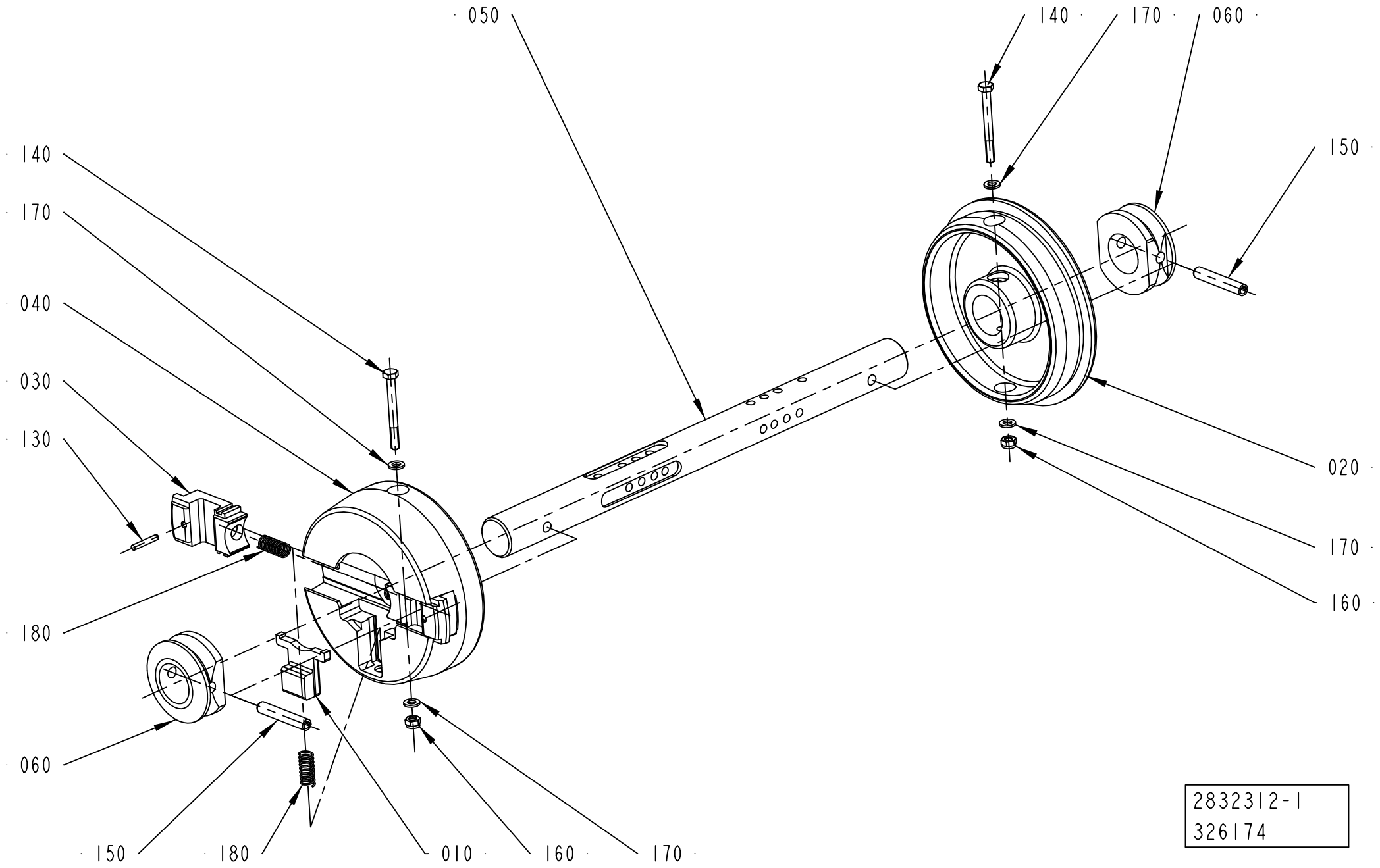

2832312-1
326174

ECM: 347262 - 20080422
Group number: 2832312-0100
Assembly Drawing: 2832312-1_1_AA

Pos	Part No	UN	Qty	Description	Page No
-					
010	272728-0000		1	BARRIER	
020	1512266-0000		1	SLEEVE	
030	2790926-0000		2	PLUNGER	
040	2790925-0000		1	SLEEVE	
050	2832313-0000		1	SHAFT	
060	2731212-0000		2	RING	
130	311103-0274		2	PARALLEL PIN ISO 2338 4M6X25 A1	
140	312105-0382		2	SCREW, M6S ISO 4014 M6X60 A4 80	
150	311112-0385		2	SPRING PIN, ISO 8752 8X50 A2	
160	312812-0316		2	HEXAGON NUT, NY-LOCK M6 A4 80	
170	315105-0153		4	WASHER PLAIN, 6,4X12X1,5 A4 BRB	
180	90335-0025		3	COMP. SPRING, 22010, 1X11X26	

Pos	Part No	UN	Qty	Description	Page No

MATERIAL HOLDER L1

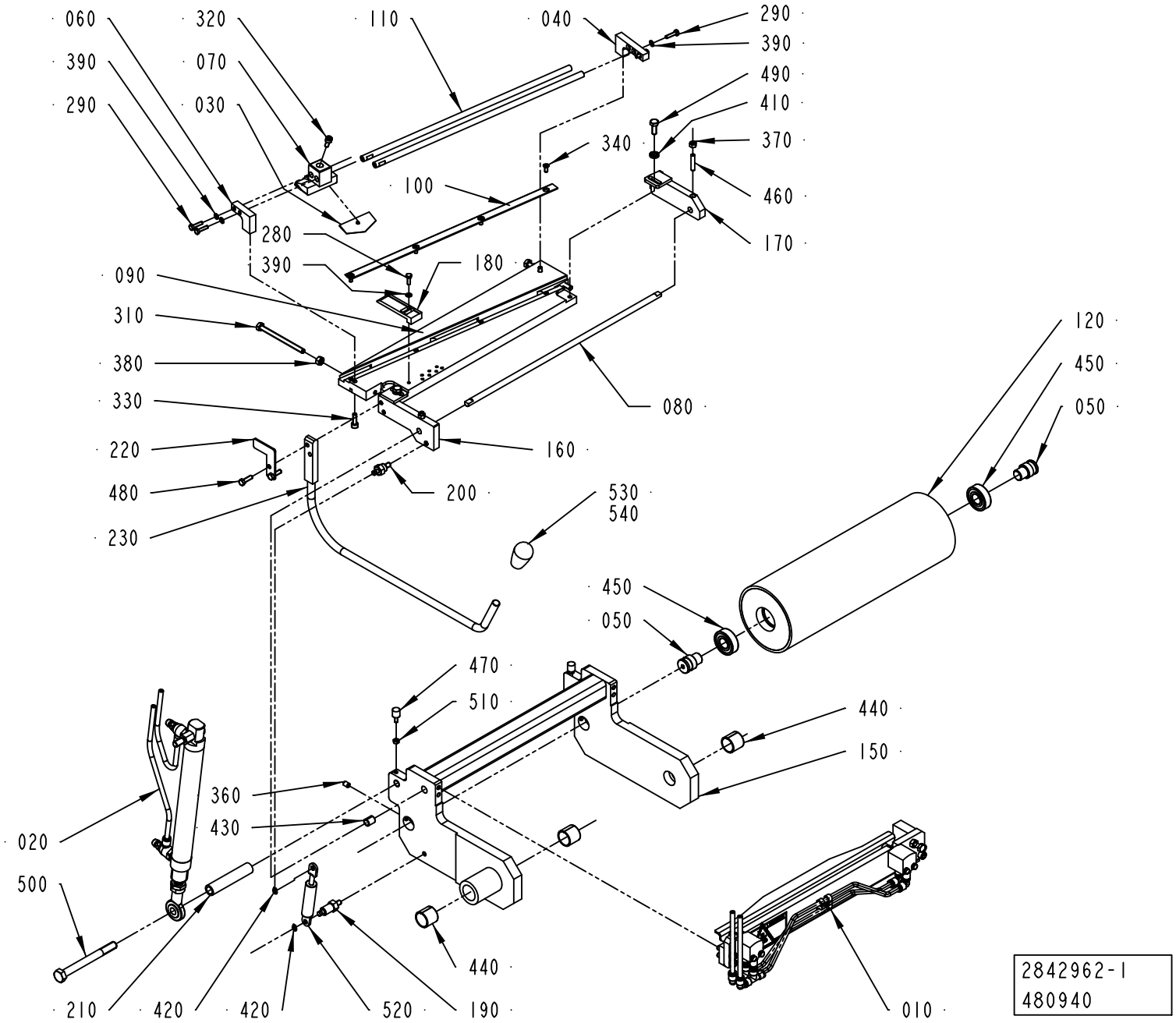

ECM: 501153 - 20111001
Group number: 2842962-0100
Assembly Drawing: 2842962-1_1_AB

Pos	Part No	UN	Qty	Description	Page No
-					
010	2842956-0100		1	LOCK	**7-131**
020	2842959-0100		1	CYLINDER	**7-133**
030	596678-0000		1	KNIFE	
040	1487781-0000		1	BRACKET	
050	1499582-0000		2	AXLE PIN	
060	2566118-0000		1	BRACKET	
070	2589791-0000		1	KNIFE HOLDER	
080	2931694-0000		1	SHAFT	
090	2832330-0000		1	CUTTING TABLE	
100	2832332-0000		1	RULER	
110	2832333-0000		2	SHAFT	
120	2832338-0000		1	BENDING ROLLER	
150	2842960-0000		1	BRACKET	
160	2842961-0000		1	ROCKER ARM	
170	2842964-0000		1	ROCKER ARM	
180	2844174-0000		1	ANGLE PIECE	
190	2844178-0000		1	PIN	
200	2844179-0000		1	PIN	
210	2842952-0000		1	SPACER	
220	2850472-0000		1	FLAG	
230	2867897-0000		1	ARM	
280	312105-0291		1	SCREW, M6S ISO 4017 M4X12 A4 70	
290	312105-0293		4	SCREW, M6S ISO 4017 M4X16 A4 70	
310	312109-0386		2	SCREW, M6S ISO 4017 M6X80 A4 80	
320	312115-0327		1	SCREW ISO4762 M5X12 A4 80	
330	312115-0329		2	SCREW ISO4762 M5X16 A4 80	
340	312155-0289		4	SCREW DIN 7991 MF6S M4X10 A4 70	
360	312318-0362		2	SET SCREW, CUP END ISO4029 M6X8 A4	
370	312605-0314		2	HEXAGON NUT, M6M M5 A280	
380	312605-0316		2	HEXAGON NUT, M6M M6 A280	
390	315105-0136		5	WASHER BRB 4,3X8 RFR	
410	315115-0153		2	WASHER PLAIN, TBRB 6,4/12 H=3	
420	315751-0103		2	RETAINING RING FOR SHAFT DIN 471 6X 0.7C	
430	321141-0104		2	BEARING BUSHING, 8X10X12 MM	
440	321141-0260		3	BEARING BUSHING, 20X23X20 MM	
450	321313-0102		2	BALL BEARING 15/35X11	
460	312318-0333		2	SET SCREW, CUP END ISO4029 M5X25 A4	
470	90459-0103		2	VIBRATION DAMPER D 10/10 NO.20-01542-01	
480	312105-0331		2	SCREW, M6S ISO 4017 M5X20 A4 80	
490	312105-0368		2	SCREW, M6S ISO 4017 M6X16 A4 80	
500	312105-0511		1	SCREW, M6S ISO 4014 M10X100 A4 80	
510	312607-0312		2	HEXAGON NUT, EN 24032 M6M M4 A480	
520	90600-2660		1	GAS SPRING LIFT-0-MAT 192945 (FI=200N)	
530	90600-2661		1	HANDLE, I.222/40N-10	
540	90602-4847		1	THREAD LOCKING, LOCTITE 243 50 ML	

Machine Type	Group Description	Used-In	Group Number	Page No

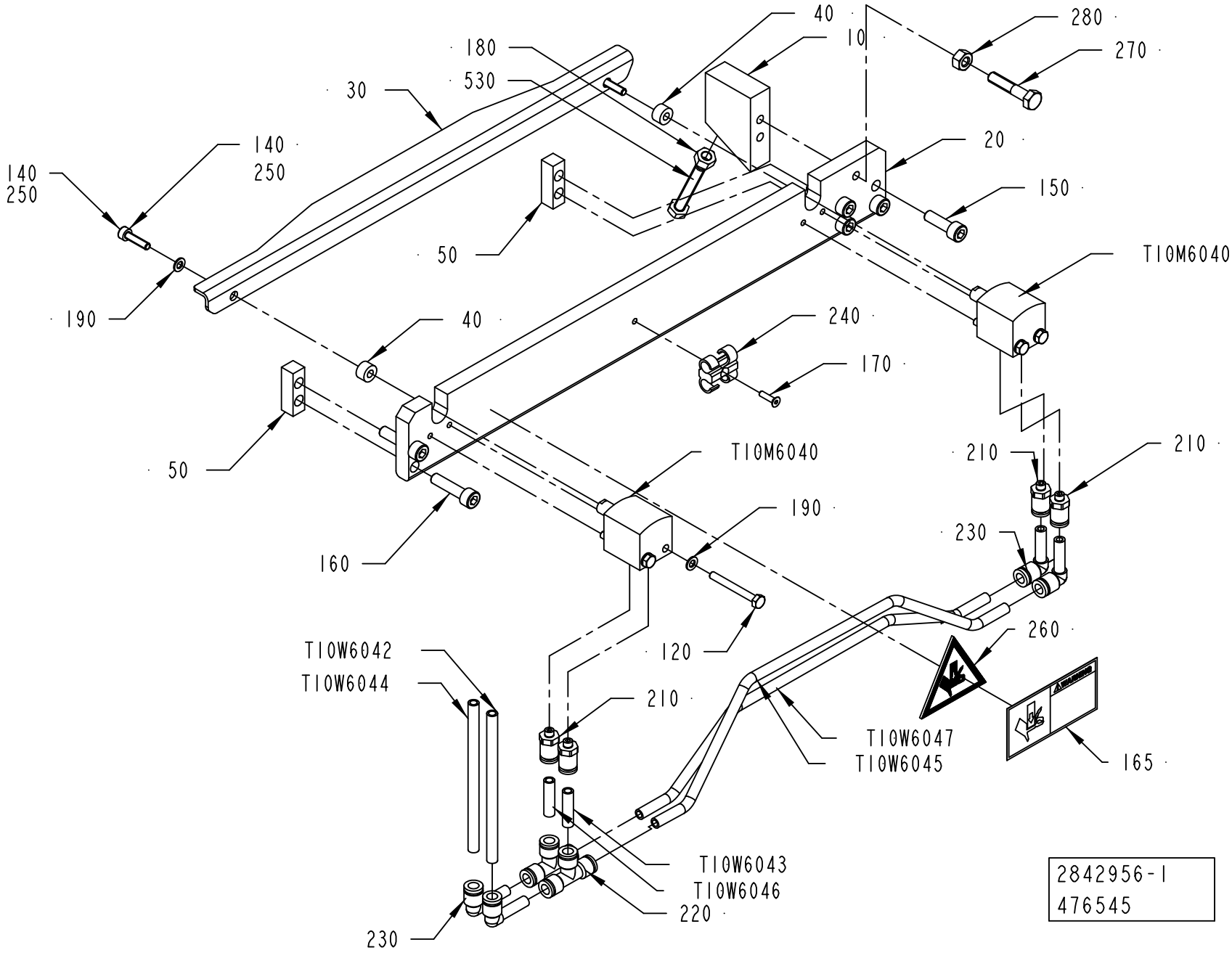
40
10
280
270
180
530
30
140
250
20
150
140
250
50
T10M6040
190
40
240
170
T10M6040
210
210
50
190
230
160
120
260
T10W6042
T10W6044
210
T10W6047
T10W6045
165
T10W6043
T10W6046
220
230
2842956-1
476545

ECM: 501147 - 20111001
Group number: 2842956-0100
Assembly Drawing: 2842956-1_1_AD

Pos	Part No	UN	Qty	Description	Page No
ANSI					
165	90458-1557		1	WARNING SIGN ANSI (H), MOVING PART	
ISO					
260	359705-0005		1	WARNING SIGN ISO, MOVING PART	
Common Parts					
010	2860211-0000		1	BLOCK	
020	2842949-0000		1	BASE PLATE	
030	2844175-0000		1	RAIL	
040	2844176-0000		2	SPACER	
050	2844185-0000		2	SPACER	
120	312105-0301		4	SCREW, M6S ISO 4017 M4X35 A4 70	
130	312109-0376		1	SCREW, M6S ISO 4017 M6X35 A4 80	
140	312115-0293		2	SCREW ISO4762 M4X16 A4 80	
150	312115-0370		2	SCREW ISO4762 M6X20 A4 80	
160	312115-0372		4	SCREW ISO4762 M6X25 A4 80	
170	312155-0226		1	SCREW DIN 7991 MF6S M3X12 A4 70	
180	312607-0316		1	HEXAGON NUT, EN 24032 M6M M6 A480	
190	315105-0136		6	WASHER BRB 4,3X8 RFR	
210	342722-0197		4	STRAIGHT COUPLING	
220	342748-0102		2	T-CONNECTION 6MM	
230	90055-0217		4	ELBOW PIPE JOINT	
240	90165-0087		1	T-CLIP T6 FOR TUBE D=6 - 7 MM	
250	90602-4847		1	THREAD LOCKING, LOCTITE 243 50 ML	
270	312109-0374		1	SCREW, M6S ISO 4017 M6X30 A4 80	
280	312605-0316		1	HEXAGON NUT, M6M M6 A280	
T10M6040	90459-0503		1	DOUBLE ACTING, SHORT STROKE, CYL 16-10	
T10M6045	90459-0503		1	DOUBLE ACTING, SHORT STROKE, CYL 16-10	
T10W6042	315400-0001	MM	5500	TUBE PUN-H-6X1-BL	
T10W6043	315400-0001	MM	30	TUBE PUN-H-6X1-BL	
T10W6044	315400-0001	MM	5500	TUBE PUN-H-6X1-BL	
T10W6045	315400-0001	MM	310	TUBE PUN-H-6X1-BL	
T10W6046	315400-0001	MM	30	TUBE PUN-H-6X1-BL	
T10W6047	315400-0001	MM	310	TUBE PUN-H-6X1-BL	

Pos	Part No	UN	Qty	Description	Page No

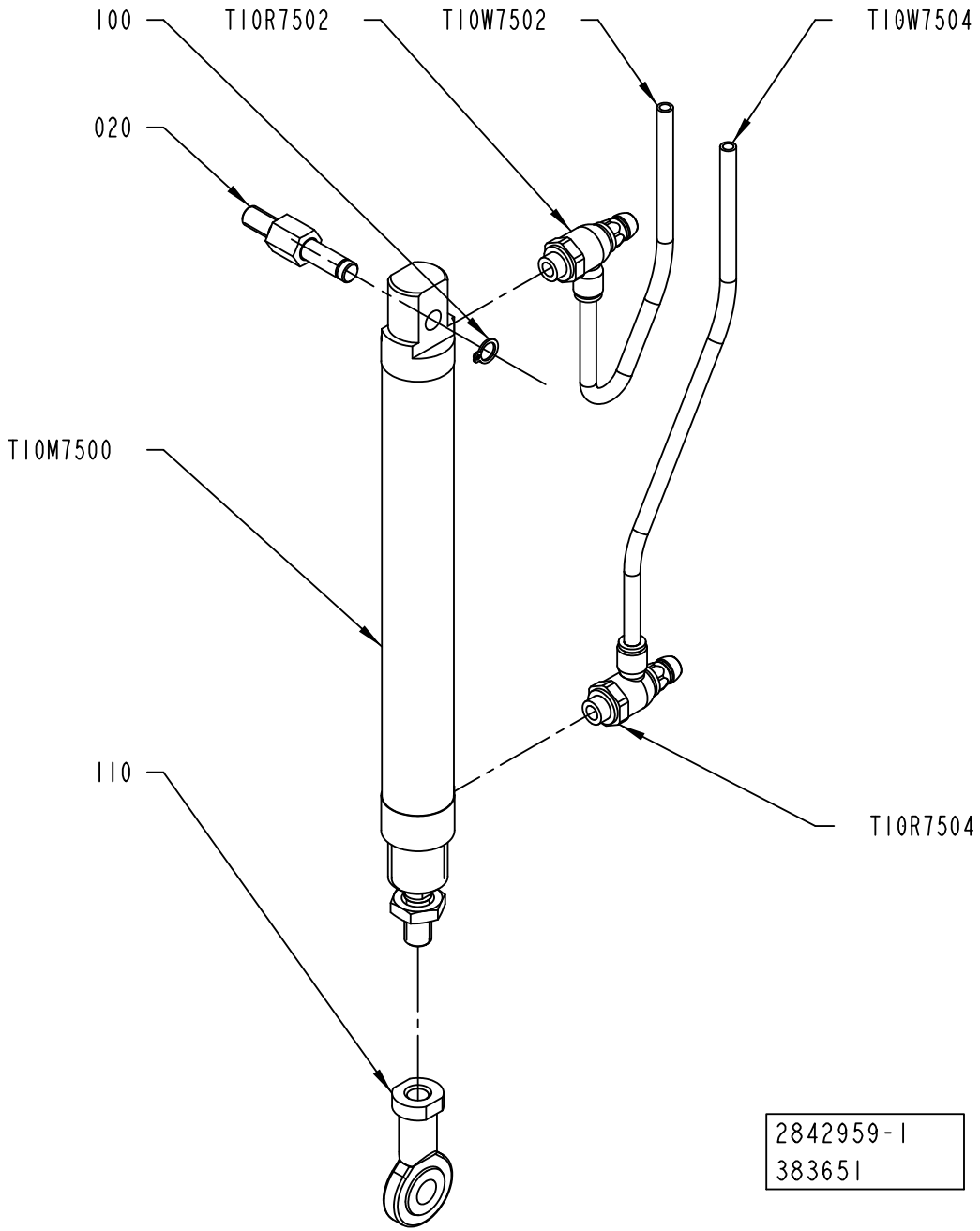
100
TI0R7502
TI0W7502
TI0W7504
020
TI0M7500
110
TI0R7504
2842959-1
383651

ECM: 501156 - 20111001
Group number: 2842959-0100
Assembly Drawing: 2842959-1_1_AC

Pos	Part No	UN	Qty	Description	Page No
-					
020	2844177-0000		1	CYLINDER	
100	90141-0015		1	RETAINING RING FOR SHAFT DIN 471 8 SS	
110	90239-0405		1	ROD END,BALL JOINT EYE M10X1,25	
T10M7500	90459-5608		1	DOUBLE ACTING, MINI-ISO, CYL. 25-160	
T10R7502	90235-0846		1	THROTTLE CHECK VALVE G1/8", MANUAL, 6	
T10R7504	90235-0846		1	THROTTLE CHECK VALVE G1/8", MANUAL, 6	
T10W7502	315400-0001	M	5	TUBE PUN-H-6X1-BL	
T10W7504	315400-0001	M	5	TUBE PUN-H-6X1-BL	

Pos	Part No	UN	Qty	Description	Page No

MATERIAL HOLDER L2

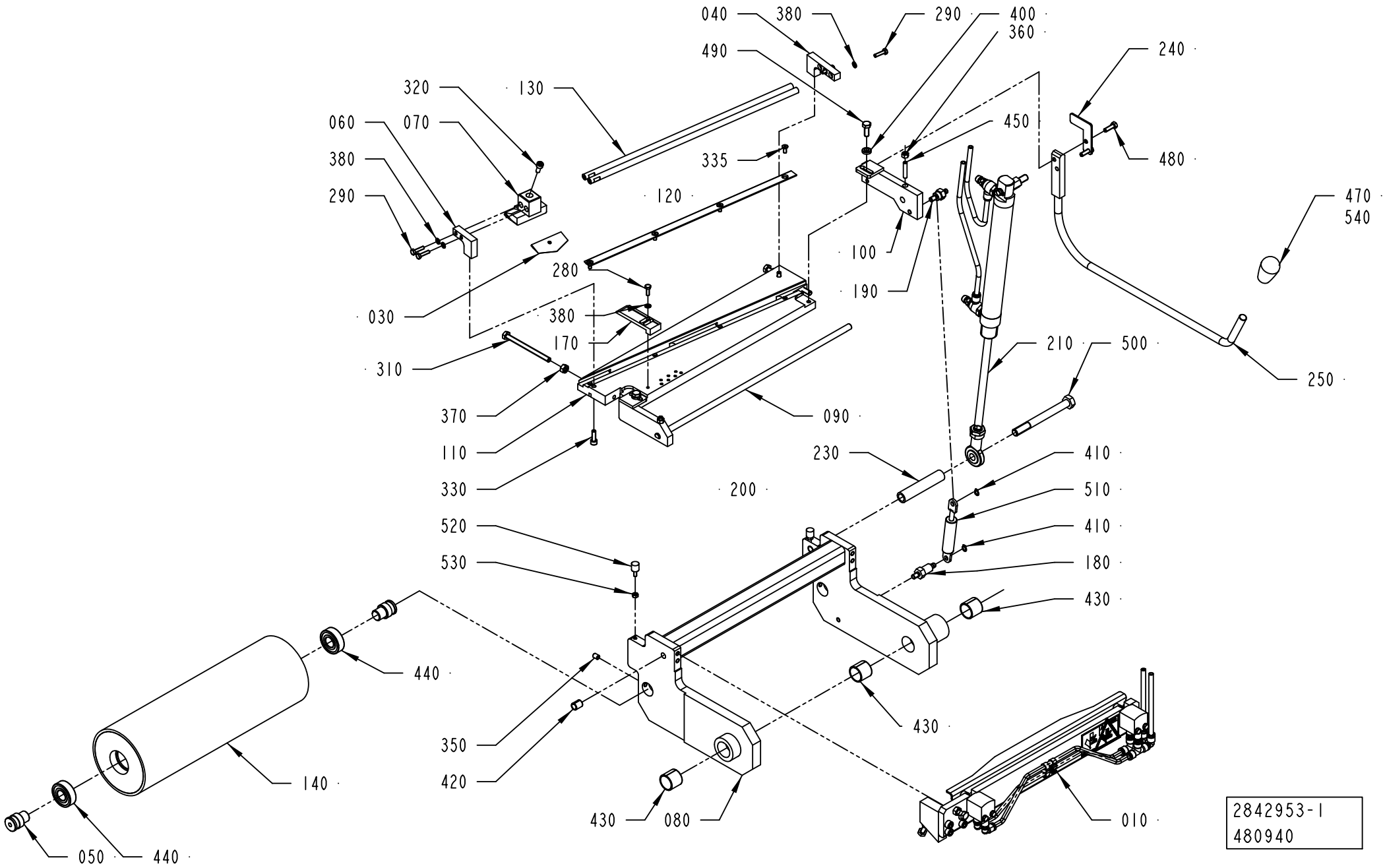

2842953-1
480940

ECM: 501152 - 20111001
Group number: 2842953-0100
Assembly Drawing: 2842953-1_1_AB

Pos	Part No	UN	Qty	Description	Page No
-					
010	2842948-0100		1	LOCK	7-137
030	596678-0000		1	KNIFE	
040	1487781-0000		1	BRACKET	
050	1499582-0000		2	AXLE PIN	
060	2566118-0000		1	BRACKET	
070	2589791-0000		1	KNIFE HOLDER	
080	2832327-0000		1	BRACKET	
090	2931694-0000		1	SHAFT	
100	2832329-0000		1	ROCKER ARM	
110	2832330-0000		1	CUTTING TABLE	
120	2832332-0000		1	RULER	
130	2832333-0000		2	SHAFT	
140	2832338-0000		1	BENDING ROLLER	
170	2844174-0000		1	ANGLE PIECE	
180	2844178-0000		1	PIN	
190	2844179-0000		1	PIN	
200	2844181-0000		1	ROCKER ARM	
210	2842951-0100		1	CYLINDER	7-139
230	2842952-0000		1	SPACER	
240	2850472-0000		1	FLAG	
250	2867897-0000		1	ARM	
280	312105-0291		1	SCREW, M6S ISO 4017 M4X12 A4 70	
290	312105-0293		4	SCREW, M6S ISO 4017 M4X16 A4 70	
310	312109-0386		2	SCREW, M6S ISO 4017 M6X80 A4 80	
320	312115-0327		1	SCREW ISO4762 M5X12 A4 80	
330	312115-0329		2	SCREW ISO4762 M5X16 A4 80	
335	312155-0289		4	SCREW DIN 7991 MF6S M4X10 A4 70	
350	312318-0362		2	SET SCREW, CUP END ISO4029 M6X8 A4	
360	312605-0314		2	HEXAGON NUT, M6M M5 A280	
370	312605-0316		2	HEXAGON NUT, M6M M6 A280	
380	315105-0136		5	WASHER BRB 4,3X8 RFR	
400	315115-0153		2	WASHER PLAIN, TBRB 6,4/12 H=3	
410	315751-0103		2	RETAINING RING FOR SHAFT DIN 471 6X 0.7C	
420	321141-0104		2	BEARING BUSHING, 8X10X12 MM	
430	321141-0260		3	BEARING BUSHING, 20X23X20 MM	
440	321313-0102		2	BALL BEARING 15/35X11	
450	312318-0333		2	SET SCREW, CUP END ISO4029 M5X25 A4	
470	90600-2661		1	HANDLE, I.222/40N-10	
480	312105-0331		2	SCREW, M6S ISO 4017 M5X20 A4 80	
490	312105-0368		2	SCREW, M6S ISO 4017 M6X16 A4 80	
500	312105-0511		1	SCREW, M6S ISO 4014 M10X100 A4 80	
510	90600-2660		1	GAS SPRING LIFT-0-MAT 192945 (FI=200N)	
520	90459-0103		2	VIBRATION DAMPER D 10/10 NO.20-01542-01	
530	312607-0312		2	HEXAGON NUT, EN 24032 M6M M4 A480	
540	90602-4847		1	THREAD LOCKING, LOCTITE 243 50 ML	

Machine Type	Group Description	Used-In	Group Number	Page No

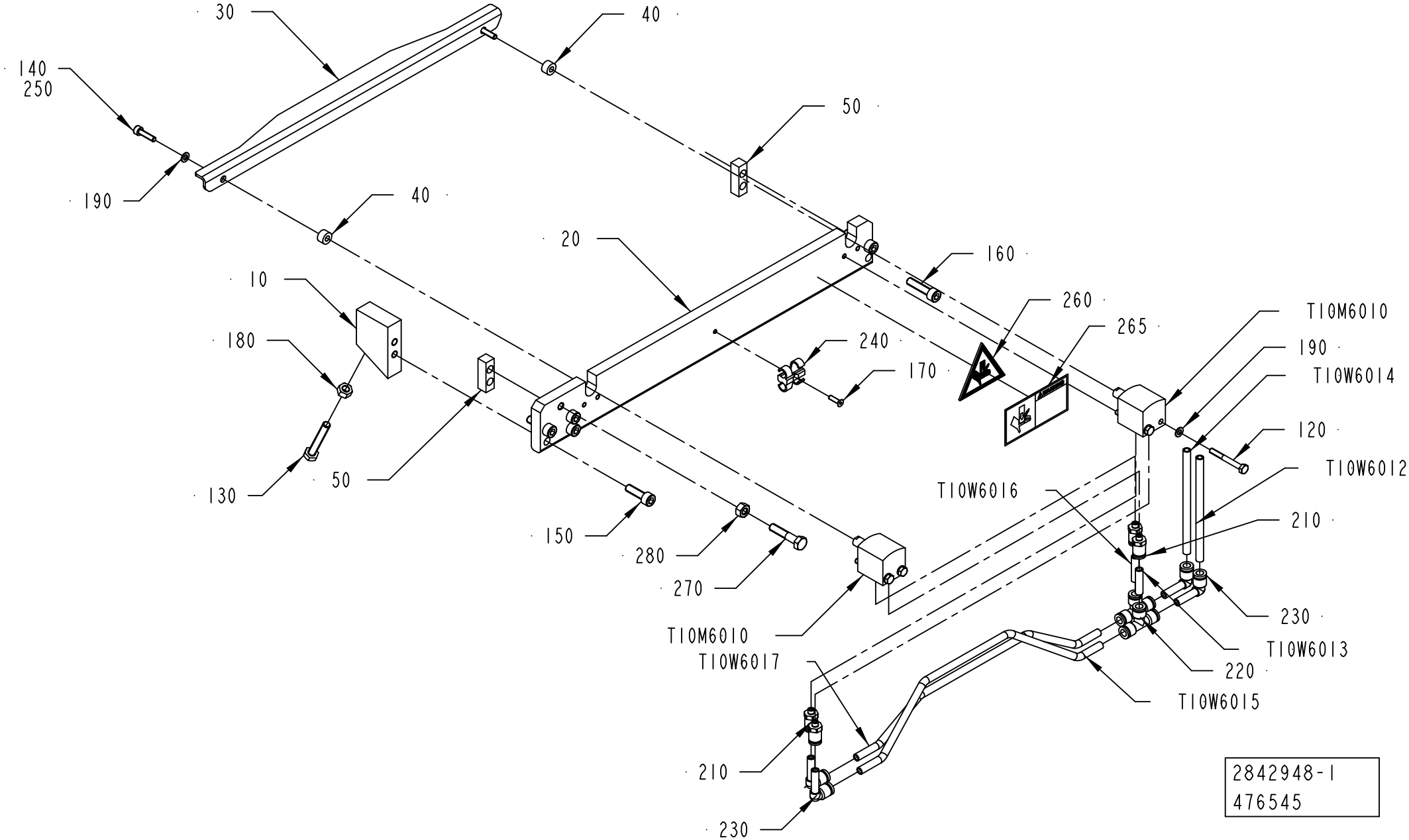
30
40
140
250
50
190
40
20
160
10
260
265
T10M6010
180
240
190
170
T10W6014
120
130
50
T10W6012
T10W6016
150
210
280
270
T10M6010
T10W6017
230
T10W6013
220
T10W6015
210
230
2842948-1
476545

ECM: 501146 - 20111001
Group number: 2842948-0100
Assembly Drawing: 2842948-1_1_AD

Pos	Part No	UN	Qty	Description	Page No
ANSI					
265	90458-1557		1	WARNING SIGN ANSI (H), MOVING PART	
ISO					
260	359705-0005		1	WARNING SIGN ISO, MOVING PART	
Common Parts					
010	2860211-0000		1	BLOCK	
020	2842949-0000		1	BASE PLATE	
030	2844175-0000		1	RAIL	
040	2844176-0000		2	SPACER	
050	2844185-0000		2	SPACER	
120	312105-0301		4	SCREW, M6S ISO 4017 M4X35 A4 70	
130	312109-0376		1	SCREW, M6S ISO 4017 M6X35 A4 80	
140	312115-0293		2	SCREW ISO4762 M4X16 A4 80	
150	312115-0370		2	SCREW ISO4762 M6X20 A4 80	
160	312115-0372		4	SCREW ISO4762 M6X25 A4 80	
170	312155-0226		1	SCREW DIN 7991 MF6S M3X12 A4 70	
180	312607-0316		1	HEXAGON NUT, EN 24032 M6M M6 A480	
190	315105-0136		6	WASHER BRB 4,3X8 RFR	
210	342722-0197		4	STRAIGHT COUPLING	
220	342748-0102		2	T-CONNECTION 6MM	
230	90055-0217		4	ELBOW PIPE JOINT	
240	90165-0087		1	T-CLIP T6 FOR TUBE D=6 - 7 MM	
250	90602-4847		1	THREAD LOCKING, LOCTITE 243 50 ML	
270	312109-0374		1	SCREW, M6S ISO 4017 M6X30 A4 80	
280	312605-0316		1	HEXAGON NUT, M6M M6 A280	
T10M6010	90459-0503		1	DOUBLE ACTING, SHORT STROKE, CYL 16-10	
T10M6015	90459-0503		1	DOUBLE ACTING, SHORT STROKE, CYL 16-10	
T10W6012	315400-0001	MM	5000	TUBE PUN-H-6X1-BL	
T10W6013	315400-0001	MM	30	TUBE PUN-H-6X1-BL	
T10W6014	315400-0001	MM	5000	TUBE PUN-H-6X1-BL	
T10W6015	315400-0001	MM	310	TUBE PUN-H-6X1-BL	
T10W6016	315400-0001	MM	30	TUBE PUN-H-6X1-BL	
T10W6017	315400-0001	MM	310	TUBE PUN-H-6X1-BL	

Pos	Part No	UN	Qty	Description	Page No

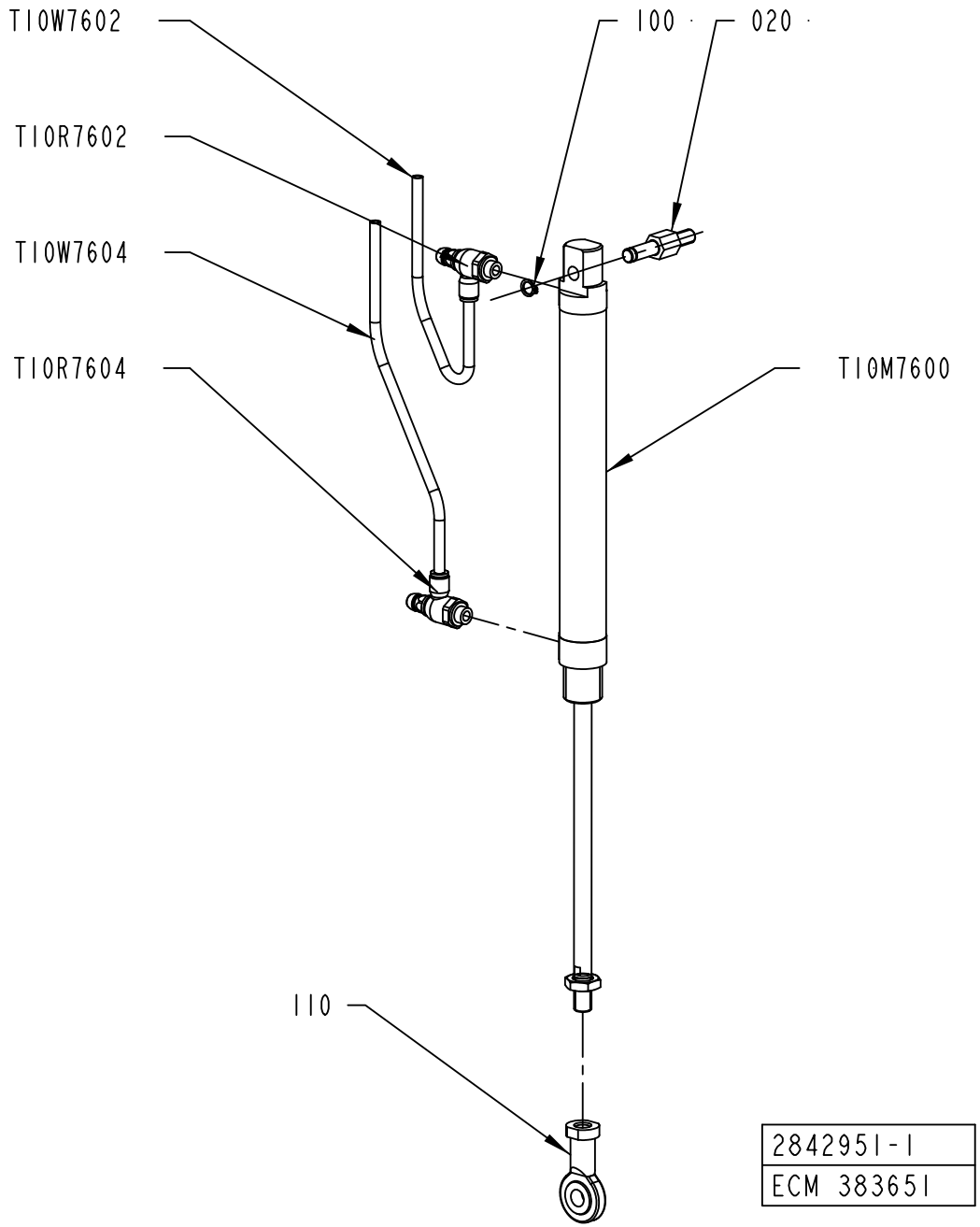
T10W7602
T10R7602
T10W7604
T10R7604
100
020
T10M7600
110
2842951-1
ECM 383651

ECM: 388100 - 20090424
Group number: 2842951-0100
Assembly Drawing: 2842951-1_1_AC

Pos	Part No	UN	Qty	Description	Page No
-					
020	2844177-0000		1	CYLINDER	
100	90141-0015		1	RETAINING RING FOR SHAFT DIN 471 8 SS	
110	90239-0405		1	ROD END,BALL JOINT EYE M10X1,25	
T10M7600	90459-5608		1	DOUBLE ACTING, MINI-ISO, CYL. 25-160	
T10R7602	90235-0846		1	THROTTLE CHECK VALVE G1/8", MANUAL, 6	
T10R7604	90235-0846		1	THROTTLE CHECK VALVE G1/8", MANUAL, 6	
T10W7602	315400-0001	M	3.2	TUBE PUN-H-6X1-BL	
T10W7604	315400-0001	M	3.2	TUBE PUN-H-6X1-BL	

Pos	Part No	UN	Qty	Description	Page No

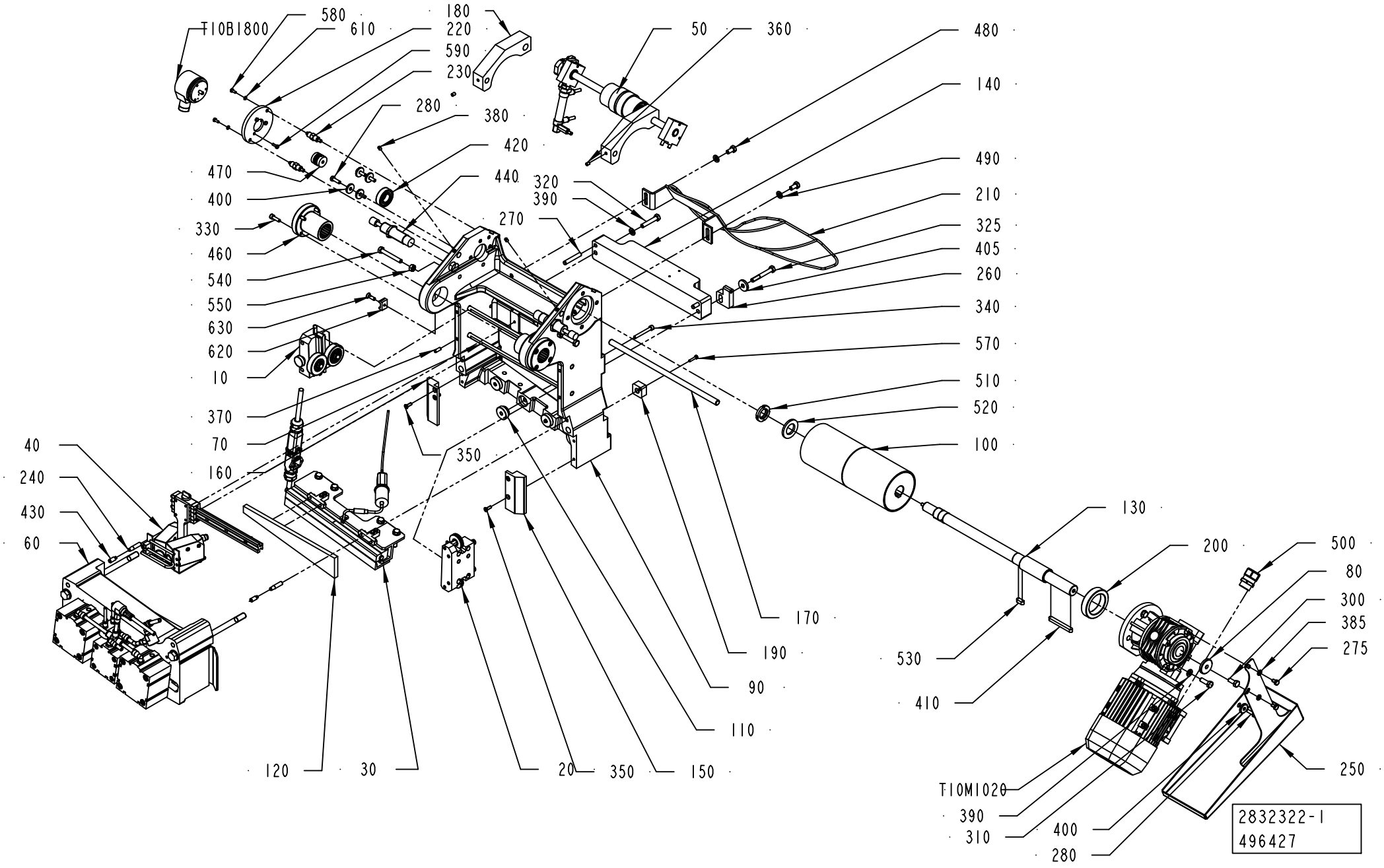
T10B1800
580
610
180
220
590
230
280
380
420
470
400
440
320
390
330
270
460
540
550
630
620
10
370
70
160
40
240
430
60
350
120
30
20
350
150
110
90
190
170
50
360
480
140
490
210
325
405
260
340
570
510
520
100
130
200
500
80
300
385
275
530
410
T10M1020
390
310
400
280
250
2832322-1
496427

ECM: 496606 - 20110701
Group number: 2832322-0100
Assembly Drawing: 2832322-1_1_AE

Pos	Part No	UN	Qty	Description	Page No
ASU					
160	2845893-0000		1	INFEEDER	
Common Parts					
010	1484745-0100		1	WEB GUIDE	**7-57**
020	2529547-0100		1	PAPER GUIDE	**7-71**
030	2850475-0100		1	HEATING UNIT	**7-143**
040	2832335-0100		1	BAR CODE READER	**7-145**
050	2832340-0100		1	COUNTER ROLLER	**7-147**
060	2842975-0100		1	PRESSURE JAW	**7-149**
070	2850476-0000		2	SHAFT	
080	2807510-0000		1	COVER	
090	2850477-0000		1	BRACKET	
100	2897977-0000		1	BENDING ROLLER	
110	2860198-0000		4	SPACER	
120	2887889-0000		1	PLATE	
130	2897978-0000		1	SHAFT	
140	2845883-0000		1	BRACKET	
150	2845892-0000		1	INFEEDER	
170	2931695-0000		1	SHAFT	
180	2878911-0000		2	PAPER GUIDE	
190	2850458-0000		2	WASHER	
200	2860205-0000		1	RING	
210	2897946-0000		1	SLIDE	
220	2860216-0000		1	FLANGE	
230	2867896-0000		2	PIN	
240	2984254-0000		2	PIN	
250	3132276-0000		1	PROTECTION	
260	3151399-0000		1	SUPPORT	
270	311103-0413		2	PARALLEL PIN ISO 2338 8M6X50 A1	
275	312105-0364		2	SCREW, M6S ISO 4017 M6X10 A4 80	
280	312105-0370		5	SCREW, M6S ISO 4017 M6X20 A4 80	
300	312105-0451		1	SCREW, M6S ISO 4017 M8X20 A4 80	
310	312105-0453		4	SCREW, M6S ISO 4017 M8X25 A4 80	
320	312105-0460		1	SCREW, M6S ISO 4014 M8X45 A4 80	
325	312105-0463		1	SCREW, M6S ISO 4014 M8X60 A4 80	
330	312115-0370		8	SCREW ISO4762 M6X20 A4 80	
340	312115-0380		2	SCREW ISO4762 M6X50 A4 80	
350	312155-0329		4	SCREW DIN 7991 MF6S M5X16 A4 70	
360	312306-0362		2	SCREW ISO4026 M6X8 FZB	
370	312318-0368		4	SET SCREW, CUP END ISO4029 M6X16 A4	
380	312318-0362		2	SET SCREW, CUP END ISO4029 M6X8 A4	
385	315105-0153		2	WASHER BRB 6,4X12 RFR	
390	315105-0165		5	WASHER BRB 8,4X16 RFR	
400	315125-0153		5	WASHER TBRSB 6,4X22X4 A4	
405	315125-0165		1	WASHER TBRSB 8,4X26X5 A4	
410	315701-0276		1	PARALLEL KEY W. ROUND ENDS, 8X7X70 MM	
420	321308-0204		1	BALL BEARING 20/42X12	
430	90287-0354		2	SET SCREW, DOGPOINT MT6SS 8X20 SS	
440	90347-0182		2	SHOCK ABSORBER, YSR-16-20-C	
460	90600-2662		2	FLANGE BUSHING, FJUM-01-30	
470	90600-2663		1	TORQUE RIGID COUPLING, 6X6 MM	
480	312105-0449		2	SCREW, M6S ISO 4017 M8X16 A4 80	
490	315106-0165		2	WASHER ISO 7089-8-200 HV A4	
500	90458-0440		1	GLAND, EXTENDED WITH INSERT, M25X1,5	
510	312805-0105		1	NUT ROUND WITH SLOTS M25X1,5 FE	
520	315105-0200		1	WASHER BRB 26X45 RFR	
530	315701-0263		1	PARALLEL KEY W.ROUND ENDS, 8X7X20 MM	
540	312109-0463		2	SCREW, M6S ISO 4017 M8X60 A4 80	
550	312605-0318		2	HEXAGON NUT, M6M M8 A280	
570	312105-0295		2	SCREW, M6S ISO 4017 M4X20 A4 70	
580	312105-0289		2	SCREW, M6S ISO 4017 M4X10 A4 70	
590	312105-0291		2	SCREW, M6S ISO 4017 M4X12 A4 70	
610	315105-0136		2	WASHER BRB 4,3X8 RFR	
620	352113-0203		1	ANCHOR PLATES FOR STRIPS, TM3S8-M0	
630	312155-0370		1	SCREW DIN 7991 MF6S M6X20 A4 70	
T10B1800	90459-6603		1	INCREMENTAL ENCODER, DGS60A1A02000	
T10M1020	90600-2664		1	GEARS,WORM MOTOR MVF 49 FI 18 P71 B14 V5	

Machine Type | Group Description | Used-In | Group Number | Page No

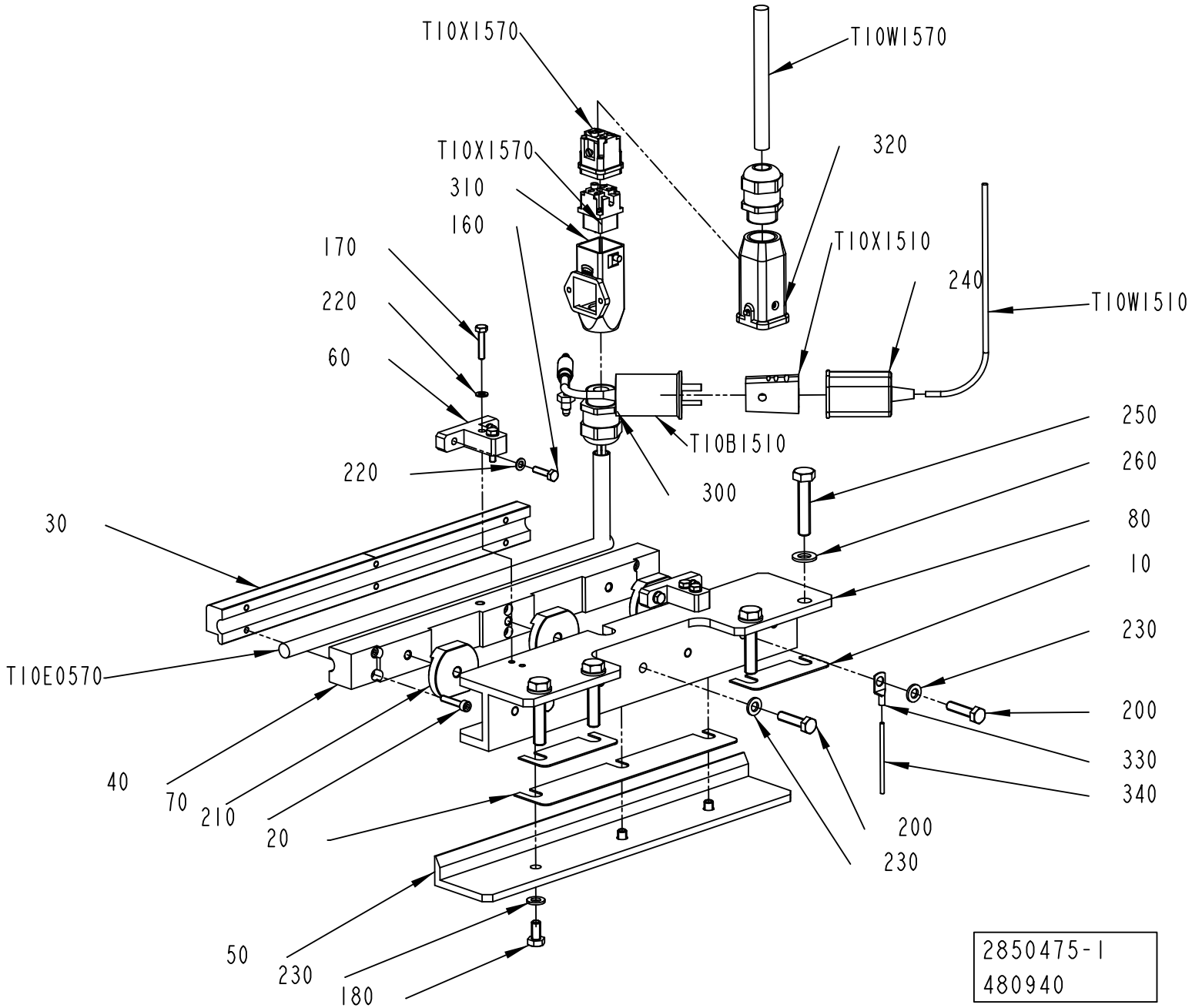
T10X1570
T10W1570
T10X1570
320
310
160
T10X1510
170
240
220
T10W1510
60
T10B1510
250
220
260
300
30
80
10
T10E0570
230
200
40
330
70
210
340
20
200
230
50
230
180
2850475-1
480940

ECM: 480940 - 20111001
Group number: 2850475-0100
Assembly Drawing: 2850475-1_1_AF

Pos	Part No	UN	Qty	Description	Page No
-					
010	2860199-0000		2	SHIM	
020	2860200-0000		1	SHIM	
030	2800198-0000		1	SEALING PLATE	
040	2832325-0000		1	SEALING PLATE	
050	2860201-0000		1	SCISSORS	
060	2860202-0000		2	BRACKET	
070	2874198-0000		3	SPACER	
080	2860204-0000		1	BRACKET	
160	312105-0293		4	SCREW, M6S ISO 4017 M4X16 A4 70	
170	312105-0295		4	SCREW, M6S ISO 4017 M4X20 A4 70	
180	312105-0366		3	SCREW, M6S ISO 4017 M6X12 A4 80	
200	312105-0372		3	SCREW, M6S ISO 4017 M6X25 A4 80	
210	312115-0295		6	SCREW ISO4762 M4X20 A4 80	
220	315105-0136		8	WASHER BRB 4,3X8 RFR	
230	315105-0153		6	WASHER BRB 6,4X12 RFR	
240	90326-0012		1	PROTECTIVE COVER, 03-001 10	
250	312109-0459		4	SCREW, M6S ISO 4017 M8X40 A4 80	
260	315106-0165		4	WASHER ISO 7089-8-200 HV A4	
300	90458-0307		2	CABLE GLAND, M20X1,5, 5311 1020	
310	90459-7219		1	HOUSING, 19 20 003 0220	
320	90459-3080		1	HOOD, HAN-BRID3A, 19 20 003 1443	
330	353106-0105		1	CABLE SHOE, RING, HEAT RESISTANT, 57N/6	
340	351121-0214	MM	700	CABLE RADOX 155 1X2,5 MM² YELLOW/GREEN	
800	90296-0051	KG	1	HEAT SINK COMPOUND 340	
T10B1510	90326-0054		1	THERMOCOUPLE, 5110 054-000	
T10E0570	90603-3727		1	HEATING CARTRIDGE, 800W 240V	
T10W1510	90220-0034	M	1	THERMOC.CABLE, TEX/SITW-20F-KX 2X0,5MM2	
T10W1570	351150-0417	M	8.5	CABLE OLFLEX 3X2,5 MM2 LIGHT/GREY	
T10X1510	90326-0020		1	SOCKET, FEMALE YELLOW CR-AL, 03-22000A	
T10X1570	90459-6820		1	FEMALE INSERT, HAN 4 A, 09 20 004 2711	
T10X1570	90459-6821		1	MALE INSERT, HAN 4A, 0920 0042 611	

Pos	Part No	UN	Qty	Description	Page No

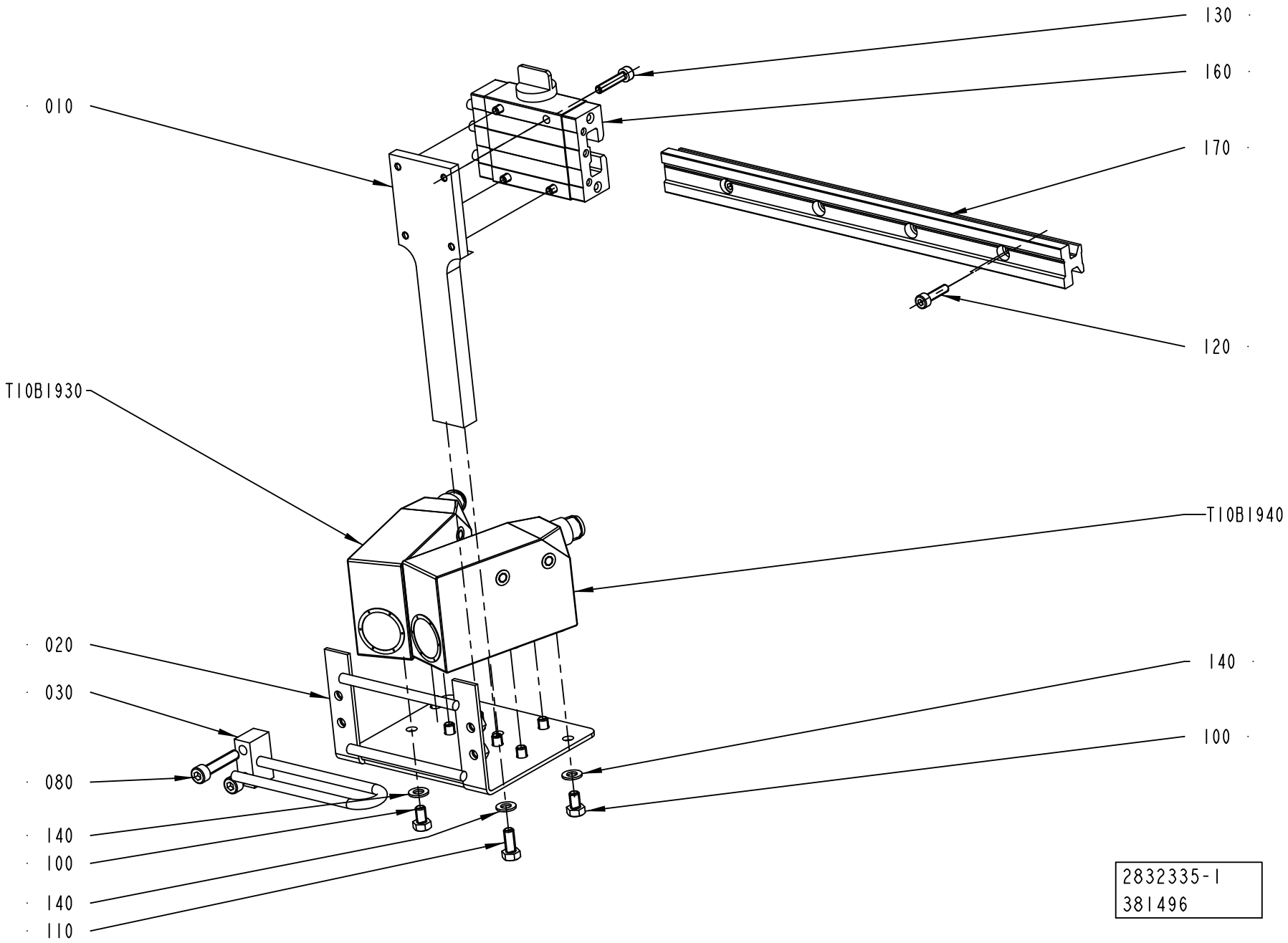
130
160
010
170
120
T10B1930
T10B1940
020
030
140
080
140
100
140
110
2832335-1
381496

ECM: 382229 - 20081223
Group number: 2832335-0100
Assembly Drawing: 2832335-1_1_AC

Pos	Part No	UN	Qty	Description	Page No
-					
010	2802868-0000		1	PLATE	
020	2832342-0000		1	PLATE	
030	2931696-0000		1	PIN	
080	312115-0333		2	SCREW ISO4762 M5X25 A4 80	
100	312105-0323		8	SCREW, M6S ISO 4017 M5X8 A4 80	
110	312105-0327		2	SCREW, M6S ISO 4017 M5X12 A4 80	
120	312115-0293		2	SCREW ISO4762 M4X16 A4 80	
130	312115-0295		4	SCREW ISO4762 M4X20 A4 80	
140	315105-0146		10	WASHER BRB 5,3X10 RFR	
150	90600-2666		1	GUIDE RAIL, 15X15,5X260 MM	
160	90600-2667		1	CARRIAGE, TW-01-15-HKA	
T10B1930	90458-0602		1	CONTRAST SCANNER, KT15W-P2213S02	
T10B1940	90458-0602		1	CONTRAST SCANNER, KT15W-P2213S02	

Pos	Part No	UN	Qty	Description	Page No

COUNTER ROLLER

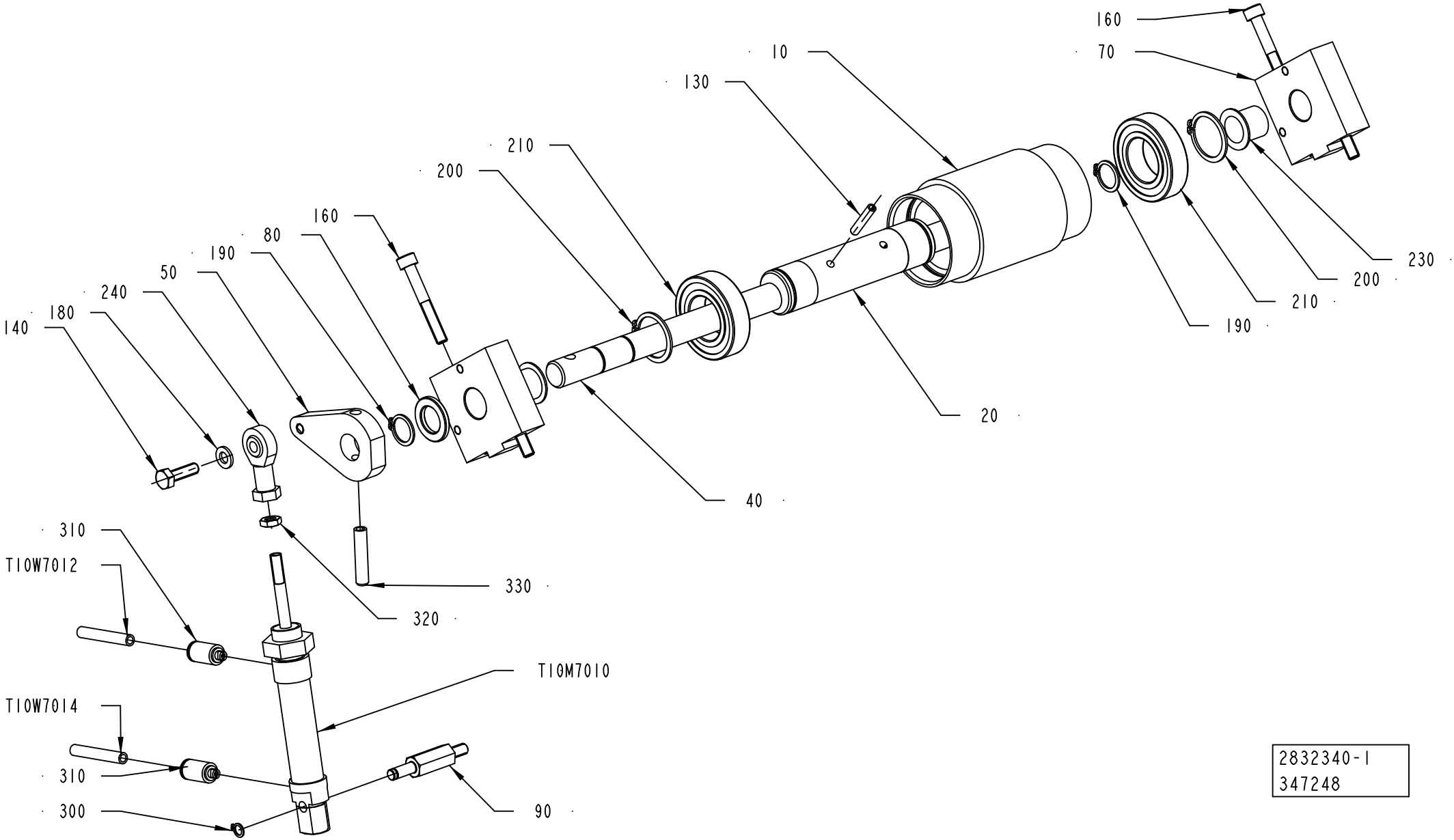

2832340-1
347248

ECM: 431555 - 20091223
Group number: 2832340-0100
Assembly Drawing: 2832340-1_1_AB

Pos	Part No	UN	Qty	Description	Page No
-					
010	2898537-0000		1	ROLLER	
020	1512267-0000		1	ECCENTRIC BUSHING	
040	2963397-0000		1	SHAFT	
050	2963398-0000		1	LEVER	
070	2878910-0000		2	BRACKET	
080	2845870-0000		1	SPACER	
090	2818678-0000		1	SHAFT	
130	311112-0258		2	SPRING PIN, ISO 8752 4X24 A2	
140	312105-0370		1	SCREW, M6S ISO 4017 M6X20 A4 80	
160	312115-0379		4	SCREW ISO4762 M6X45 A4 80	
180	315105-0153		1	WASHER BRB 6,4X12 RFR	
190	315751-0112		2	RETAINING RING FOR SHAFT DIN 471 15 SS	
200	315751-0119		2	RETAINING RING FOR SHAFT DIN 471 25 SS	
210	321308-0205		2	BALL BEARING 25/47X12	
230	90240-0264		2	FLANGE BUSHING, IGLIDUR X 15X17X17	
240	90115-0163		1	ROD END, ID=6 MM, M6X1	
300	315751-0103		1	RETAINING RING FOR SHAFT DIN 471 6X 0.7C	
310	350003-0010		2	PUSH-IN FITTING QS-F-M5-6-I	
320	312625-0316		1	HEXAGON THIN NUT, EN 24035 ML6M M6 A4	
330	311112-0345		1	SPRING PIN, ISO 8752 6X32 A2	
T10M7010	90457-0871		1	DOUBLE ACTING, MINI-ISO, CYL. 16-25	
T10W7012	315400-0001	M	4.5	TUBE PUN-H-6X1-BL	
T10W7014	315400-0001	M	4.5	TUBE PUN-H-6X1-BL	

Pos	Part No	UN	Qty	Description	Page No

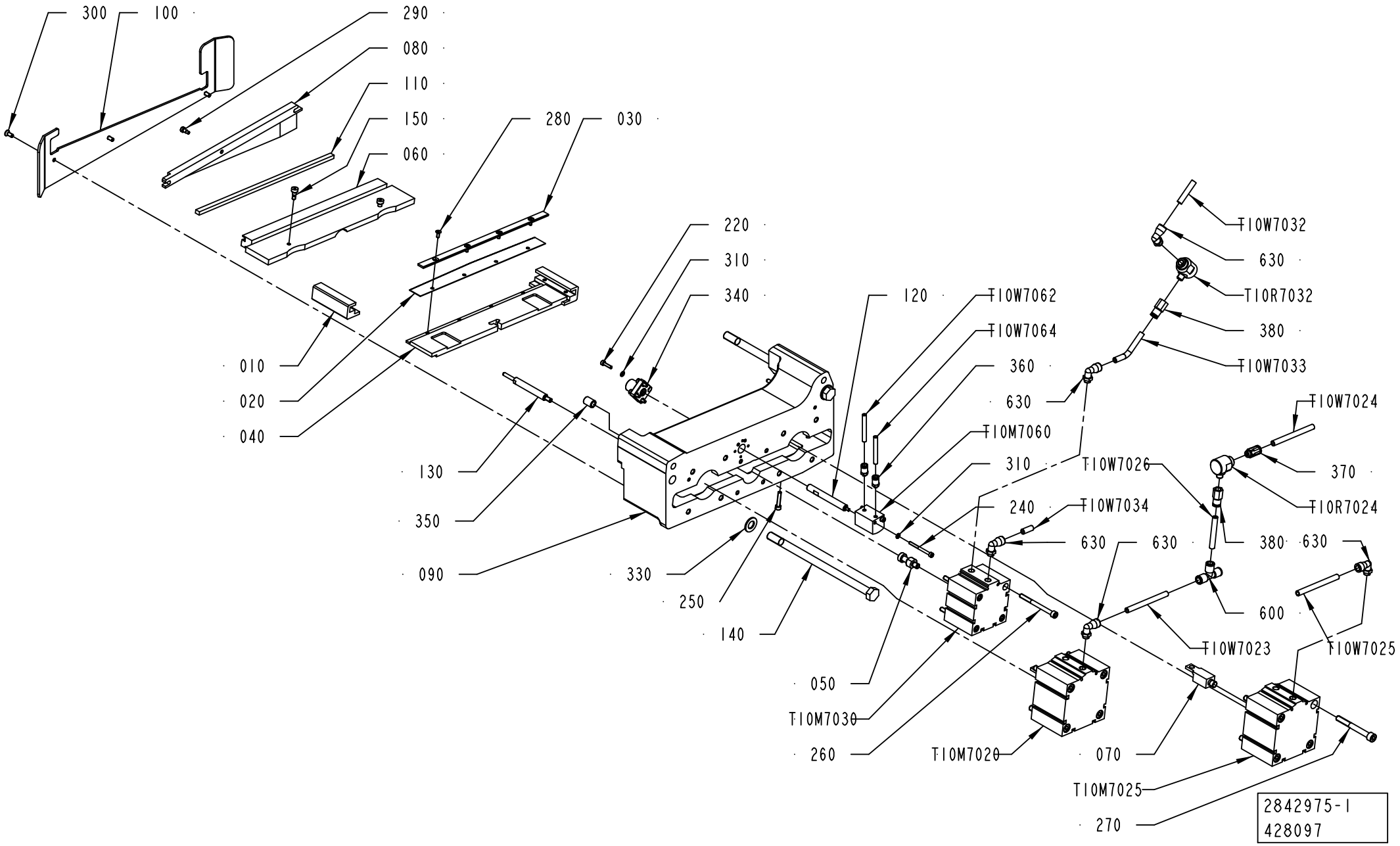
300
100
290
080
110
150
060
280
030
220
310
340
120
T10W7062
T10W7064
360
630
T10M7060
310
240
T10W7034
630
630
380
630
600
T10W7023
T10W7025
T10M7030
260
T10M7020
070
T10M7025
270
T10W7032
630
T10R7032
380
T10W7033
T10W7024
370
T10R7024
T10W7026
010
020
040
130
350
090
330
250
140
050
2842975-1
428097

ECM: 431558 - 20091223
Group number: 2842975-0100
Assembly Drawing: 2842975-1_1_AD

Pos	Part No	UN	Qty	Description	Page No
-					
010	2558148-0000		2	SLIDING STRIP	
020	2800215-0000		1	KNIFE	
030	2800222-0000		1	CLAMP	
040	2832331-0000		1	KNIFE HOLDER	
050	2832334-0000		1	COUPLING BOLT	
060	2832336-0000		1	PRESSURE RAIL	
070	2832337-0000		2	SPACER	
080	2887888-0000		1	RAIL	
090	2842976-0000		1	BRACKET	
100	2844189-0000		1	SLIDER	
110	2844190-0000		1	DOLLY	
120	2845896-0000		1	PIN	
130	2845897-0000		2	PIN	
140	2850459-0000		2	TIE ROD	
150	1558801-0000		2	SHOULDER SCREW	
220	312115-0293		4	SCREW ISO4762 M4X16 A4 80	
240	312115-0304		2	SCREW ISO4762 M4X45 A4 80	
250	312115-0333		4	SCREW ISO4762 M5X25 A4 80	
260	312115-0384		4	SCREW ISO4762 M6X70 A4 80	
270	312115-0465		8	SCREW ISO4762 M8X70 A4 80	
280	312155-0289		4	SCREW DIN 7991 MF6S M4X10 A4 70	
290	90287-0242		1	SHOULDER SCREW, 5X6/M4 SS	
300	312155-0327		3	SCREW DIN 7991 MF6S M5X12 A4 70	
310	315105-0136		6	WASHER BRB 4,3X8 RFR	
330	315105-0178		2	WASHER BRB 13X24 RFR	
340	90600-2665		1	FLANGE BUSHING, FJUM-02-10	
350	90240-0178		2	BEARING BUSHING W/O FL, 8X12X16 MM	
360	342722-0197		2	STRAIGHT COUPLING	
370	342722-0204		1	PIPE COUPLING	
380	342770-0107		2	STRAIGHT COUPLING INT, D=8 MM - G1/8	
600	350005-0003		1	PUSH-IN T-FITTING QST-F-8	
630	90458-2964		5	ELBOW PIPE JOINT, EXT.THREAD, D=8MM-G1/8	
T10M7020	90459-7184		1	SINGLE ACTING, SHORT STROKE, CYL 80-25	
T10M7025	90459-7184		1	SINGLE ACTING, SHORT STROKE, CYL 80-25	
T10M7030	90600-2566		1	DOUBLE ACTING, SHORT STROKE, CYL 63-25	
T10M7060	90600-2567		1	DOUBLE ACTING, SHORT STROKE, CYL 16-20	
T10R7024	90235-0206		1	QUICK EXHAUST VALVE, SEU-1/8	
T10R7032	90235-0206		1	QUICK EXHAUST VALVE, SEU-1/8	
T10W7023	315400-0004	M	0.08	TUBE PUN-H-8X1,25-BL	
T10W7024	315400-0004	M	5	TUBE PUN-H-8X1,25-BL	
T10W7025	315400-0004	M	0.08	TUBE PUN-H-8X1,25-BL	
T10W7026	315400-0004	M	0.06	TUBE PUN-H-8X1,25-BL	
T10W7032	315400-0004	M	5	TUBE PUN-H-8X1,25-BL	
T10W7033	315400-0004	M	0.07	TUBE PUN-H-8X1,25-BL	
T10W7034	315400-0004	M	5	TUBE PUN-H-8X1,25-BL	
T10W7062	315400-0001	M	5	TUBE PUN-H-6X1-BL	
T10W7064	315400-0001	M	5	TUBE PUN-H-6X1-BL	

Machine Type | Group Description | Used-In | Group Number | Page No

COVERING PANEL

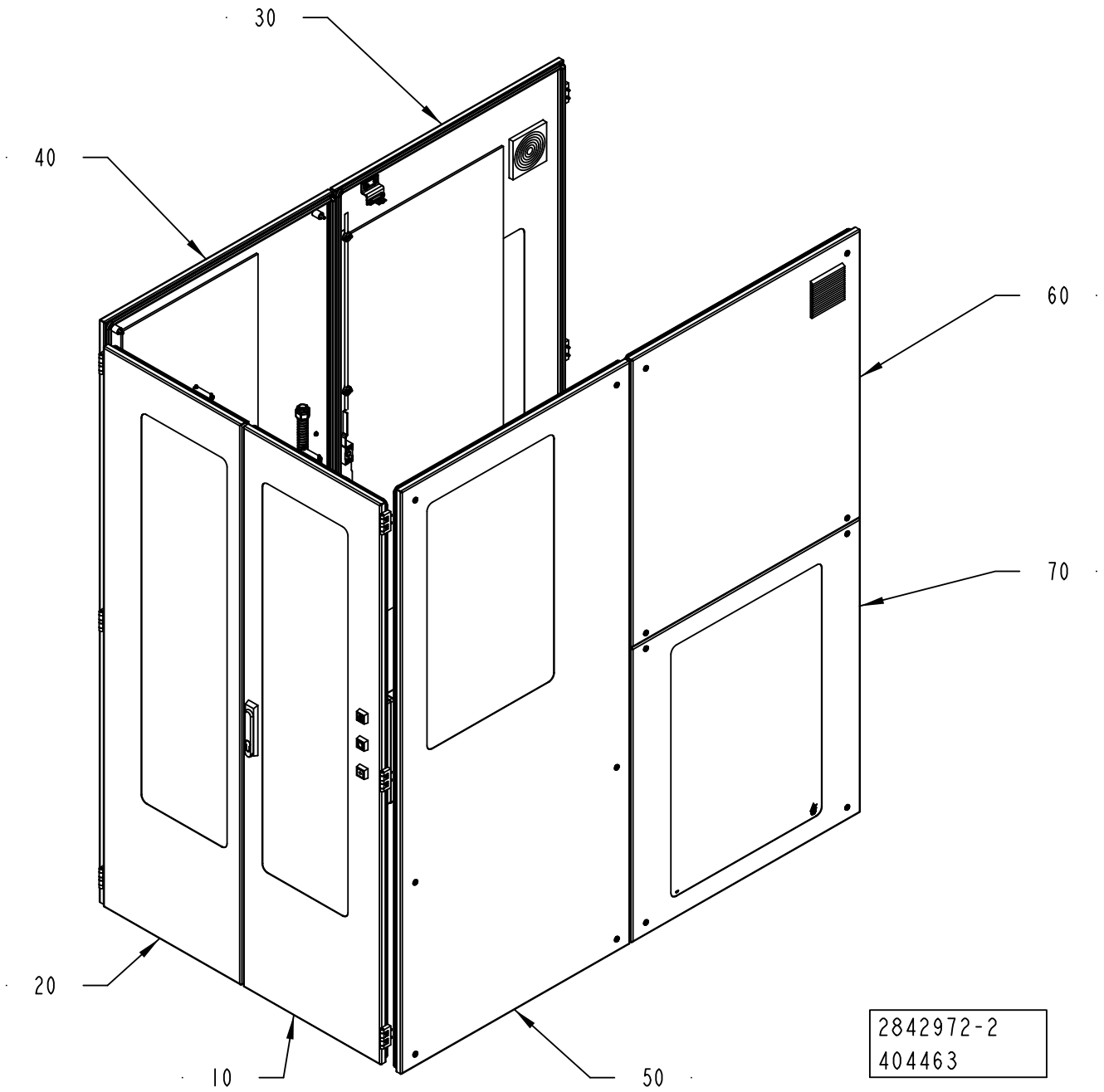

ECM: 405747 - 20090731
Group number: 2842972-0200
Assembly Drawing: 2842972-2_1_AA

Pos	Part No	UN	Qty	Description	Page No
-					
010	2845884-0200		1	DOOR	**7-153**
020	2845886-0200		1	DOOR	**7-157**
030	2867907-0100		1	DOOR	**7-159**
040	2867901-0200		1	DOOR	**7-161**
050	2867903-0100		1	DOOR	**7-165**
060	2921673-0100		1	DOOR	**7-167**
070	2921675-0100		1	DOOR	**7-169**

Pos	Part No	UN	Qty	Description	Page No

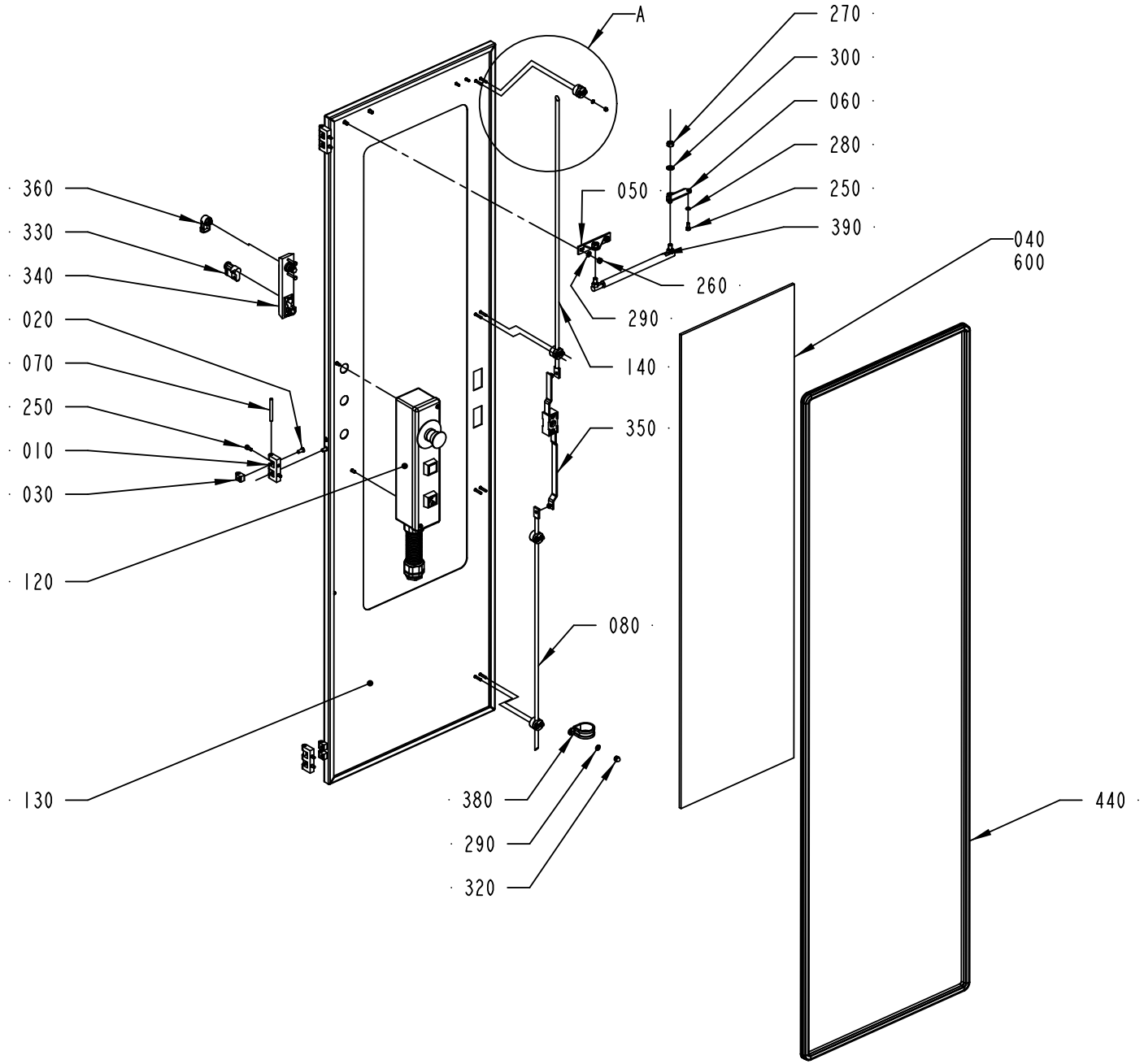

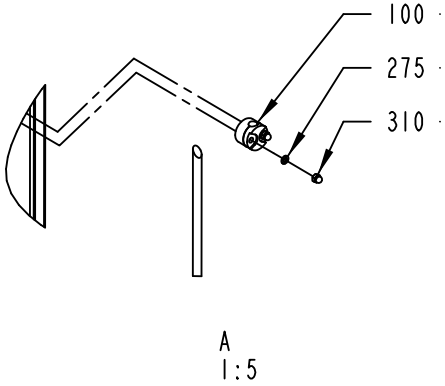

2845884-2
449909

ECM: 456223 - 20101001
Group number: 2845884-0200
Assembly Drawing: 2845884-2_1_AB

Pos	Part No	UN	Qty	Description	Page No
-					
010	1035792-0000		3	E-HINGE	
020	1129767-0000		6	SCREW	
030	1129770-0000		6	BLOCKING PIECE	
040	1498459-0001		1	GLASS PANE	
050	2746354-0000		1	BRACKET	
060	2746355-0000		1	BRACKET	
070	988685-0000		3	PIN	
080	2818697-0000		1	LOCKING ARM	
100	2550333-0000		4	GUIDE LUG	
120	2845888-0200		1	CONTROL PANEL	**7-155**
130	2845885-0000		1	DOOR	
140	2832321-0000		1	LOCKING ARM	
250	312115-0327		8	SCREW ISO4762 M5X12 A4 80	
260	312605-0316		2	HEXAGON NUT, M6M M6 A280	
270	312605-0318		2	HEXAGON NUT, M6M M8 A280	
275	315105-0136		8	WASHER BRB 4,3X8 RFR	
280	315105-0146		2	WASHER BRB 5,3X10 RFR	
290	315105-0153		3	WASHER BRB 6,4X12 RFR	
300	315105-0165		2	WASHER BRB 8,4X16 RFR	
310	312705-0312		8	NUT HEX. DOMED CAP MHM-6 M4 A280	
320	312705-0316		1	HEX. DOMED CAP MHM-6 M6 A280	
330	90237-0128		1	LOCK CYLINDER, 1109-SU125	
340	90237-0175		1	TURNING HANDLE, 1125-U185-0A	
350	90237-0153		1	LOCK HOUSING, 1121-U26-0B	
360	90237-0165		1	LATCH	
380	90165-0095		1	PIPE CLAMP, RSGU 1.34/25-W4, D=34 MM	
390	90600-2669		1	GAS SPRING, LIFT-0-MAT 5072DE (F1=50N)	
440	90143-0068	M	4.2	RUBBER STRIP EMKA 1011-06	
600	90157-0041	L	1	SEALING COMPOUND, RHODORSEAL 5651	

Pos	Part No	UN	Qty	Description	Page No

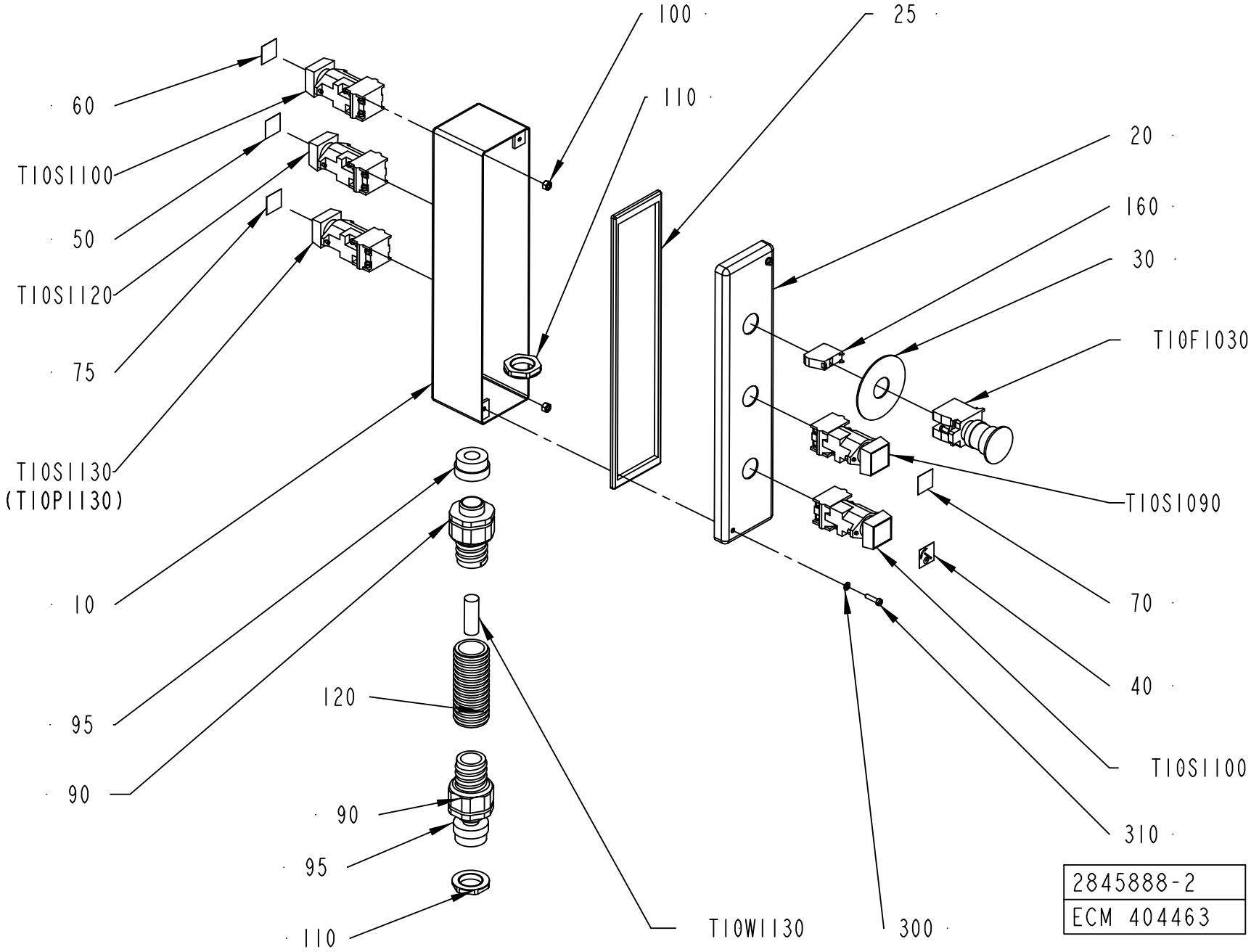
100
25
110
60
20
T10S1100
160
50
30
T10S1120
T10F1030
75
T10S1130
(T10P1130)
T10S1090
10
70
120
40
95
T10S1100
90
310
90
95
110
T10W1130
300
2845888-2
ECM 404463

ECM: 405749 - 20090731
Group number: 2845888-0200
Assembly Drawing: 2845888-2_1_AA

Pos	Part No	UN	Qty	Description	Page No
-					
010	2982642-0000		1	PUSH BUTTON BOX	
020	2658040-0000		1	COVER	
025	90143-0069	MM	850	RUBBER STRIP	
030	486826-0001		1	SIGN "EMERGENCY STOP"	
040	90457-0920		1	BUTTON SIGN, ROTATION OF MATERIAL HOLDER	
050	359301-0110		1	BUTTON SIGN, SHORT STOP	
060	359301-0100		1	BUTTON SIGN, SPLICING	
070	359301-0488		1	BUTTON SIGN, MATERIAL LOCKING	
075	359301-0504		1	BUTTON SIGN, RESET	
090	90458-0432		2	GLAND FITTING, VK 22555YUL21	
095	353249-0015		2	INSERT, SINGLE HOLE, EK155 16	
100	312605-0314		2	HEXAGON NUT, M6M M5 A280	
110	90458-0324		2	NUT, M25X1,5	
120	90152-0070	MM	1650	HOSE, SPIRAL CONDUIT, 32,5X26, UL 2621	
160	90459-1917		1	CONTACT BLOCK ZBE-102 NC	
300	315105-0136		2	WASHER BRB 4,3X8 RFR	
310	312125-0293		2	SLOTTED HEAD SCREW, ISO1207 M4X16 A4	
T10F1030	90458-1651		1	EMERGENCY STOP, ZB4-BS-844 ZB4-BZ-104	
T10S1090	90064-0082		1	PUSH BUTTON, WHITE	
	90036-0057		*1*	*LIGHT BULB, BA9S 28V*	
T10S1100	90064-0082		1	PUSH BUTTON, WHITE	
	90036-0057		*1*	*LIGHT BULB, BA9S 28V*	
T10S1110	90064-0082		1	PUSH BUTTON, WHITE	
	90036-0057		*1*	*LIGHT BULB, BA9S 28V*	
T10S1120	90064-0082		1	PUSH BUTTON, WHITE	
	90036-0057		*1*	*LIGHT BULB, BA9S 28V*	
T10S1130	90064-0098		1	PUSH BUTTON, WHITE	
T10W1130	351150-0424	MM	3.1	CABLE OLFLEX 18X0,75 MM2 LIGHT/GREY	

Pos	Part No	UN	Qty	Description	Page No

Machine Type | Group Description | Used-In | Group Number | Page No

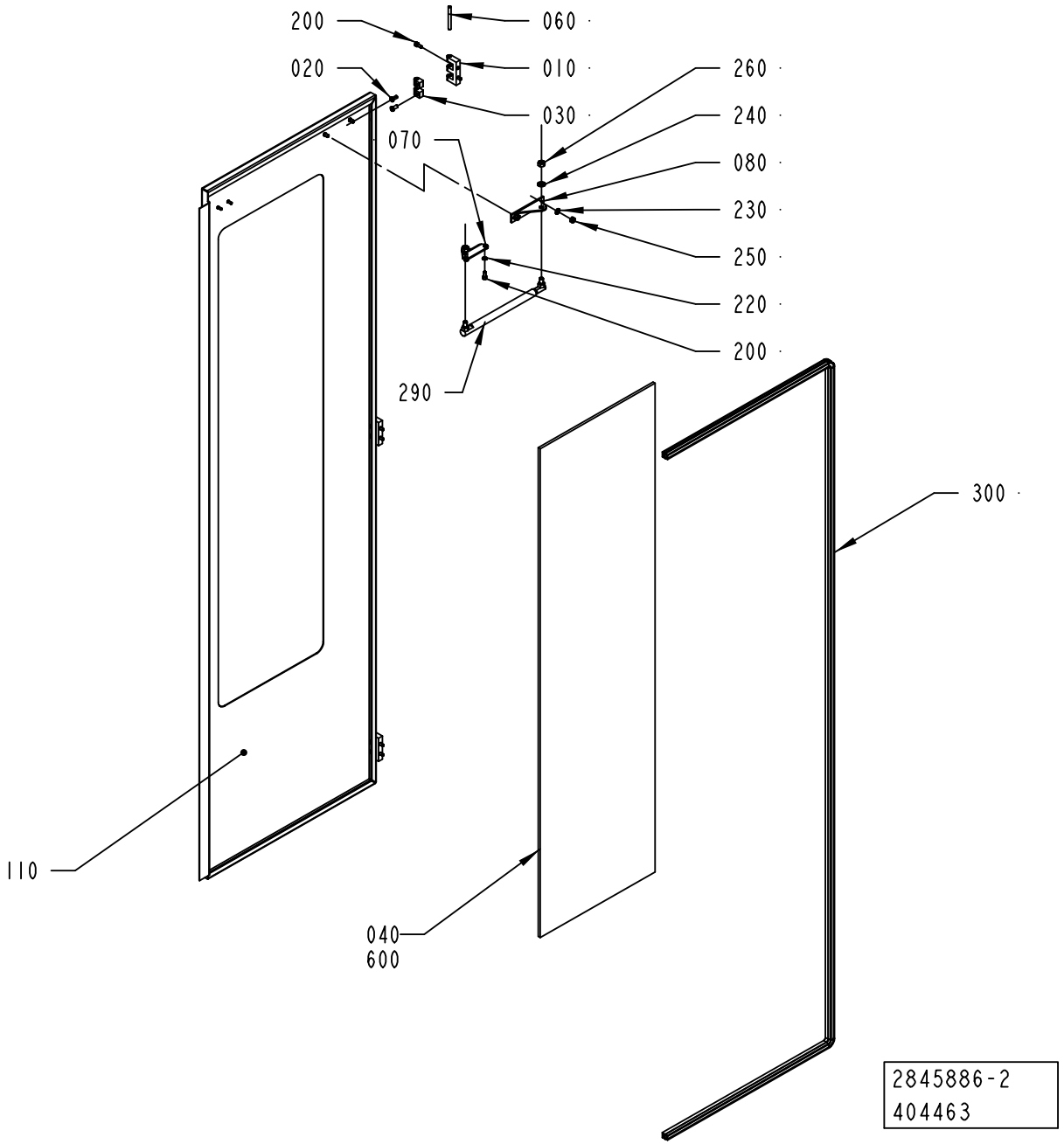
200
060
020
010
260
030
240
070
080
230
250
220
200
290
300
110
040
600
2845886-2
404463

ECM: 405750 - 20090731
Group number: 2845886-0200
Assembly Drawing: 2845886-2_1_AA

Pos	Part No	UN	Qty	Description	Page No
-					
010	1035792-0000		3	E-HINGE	
020	1129767-0000		6	SCREW	
030	1129770-0000		6	BLOCKING PIECE	
040	1498459-0001		1	GLASS PANE	
060	988685-0000		3	PIN	
070	2746355-0000		1	BRACKET	
080	2746358-0000		1	BRACKET	
110	2845887-0000		1	DOOR	
200	312115-0327		8	SCREW ISO4762 M5X12 A4 80	
220	315105-0146		2	WASHER BRB 5,3X10 RFR	
230	315105-0153		2	WASHER BRB 6,4X12 RFR	
240	315105-0165		2	WASHER BRB 8,4X16 RFR	
250	312605-0316		2	HEXAGON NUT, M6M M6 A280	
260	312605-0318		2	HEXAGON NUT, M6M M8 A280	
290	90600-2669		1	GAS SPRING, LIFT-0-MAT 5072DE (F1=50N)	
300	90143-0068	MM	2800	RUBBER STRIP EMKA 1011-06	
600	90157-0041	L	1	SEALING COMPOUND, RHODORSEAL 5651	

Pos	Part No	UN	Qty	Description	Page No

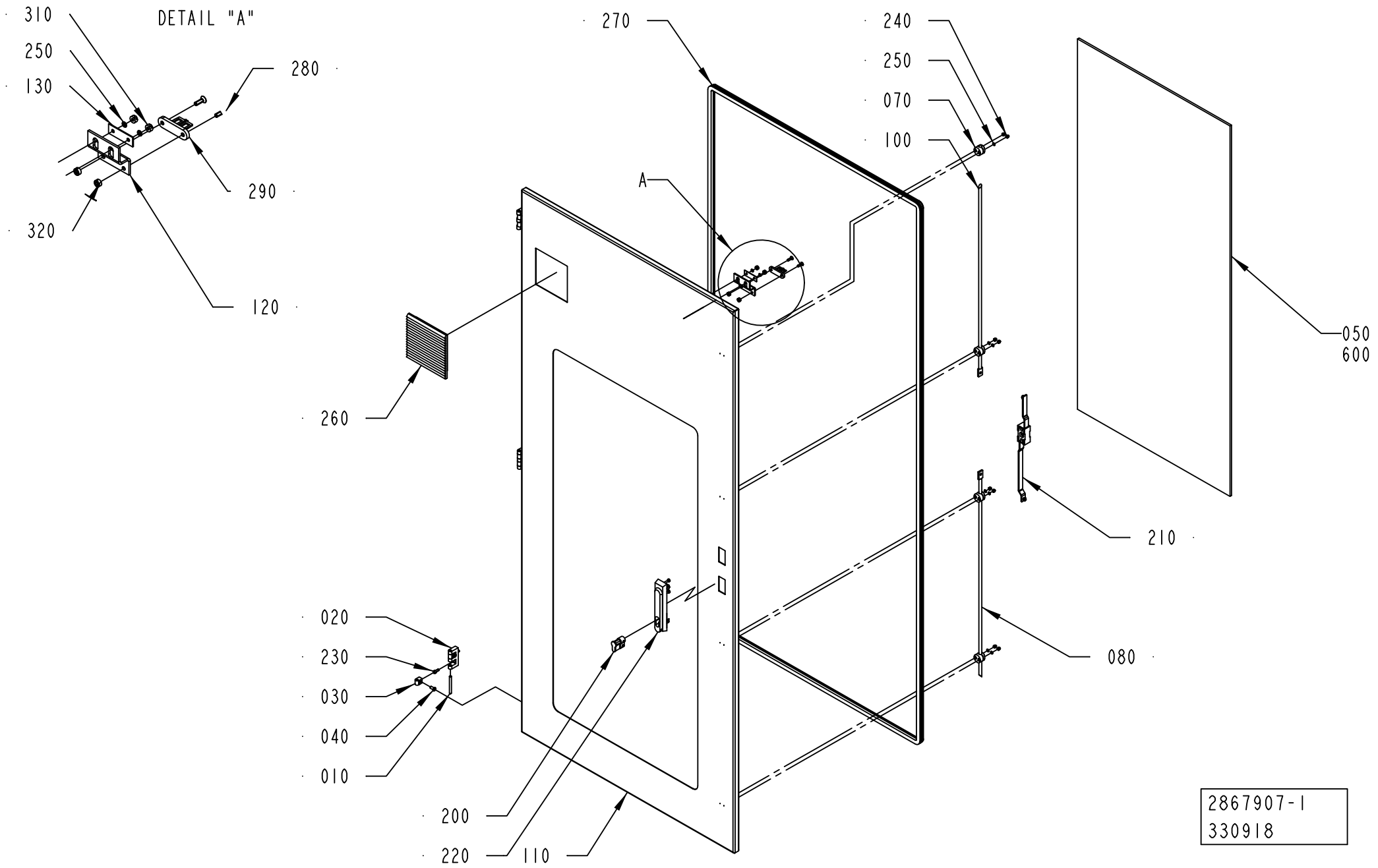
DETAIL "A"
310
250
130
280
290
320
120
270
240
250
070
100
A
050
600
260
210
020
230
030
040
010
080
200
220
110
2867907-1
330918

ECM: 471995 - 20110401
Group number: 2867907-0100
Assembly Drawing: 2867907-1_1_AA

Pos	Part No	UN	Qty	Description	Page No
-					
010	988685-0000		3	PIN	
020	1035792-0000		3	E-HINGE	
030	1129770-0000		6	BLOCKING PIECE	
040	1129767-0000		6	SCREW	
050	1498459-0002		1	GLASS PANE	
070	2550333-0000		4	GUIDE LUG	
080	2818701-0000		1	LOCKING ARM	
100	2818712-0000		1	LOCKING ARM	
110	2867908-0000		1	DOOR	
120	2841051-0000		1	SUPPORT	
130	1036563-0000		1	WASHER	
200	90237-0128		1	LOCK CYLINDER, 1109-SU125	
210	90237-0153		1	LOCK HOUSING, 1121-U26-0B	
220	90237-0175		1	TURNING HANDLE, 1125-U185-0A	
230	312115-0327		6	SCREW ISO4762 M5X12 A4 80	
240	312705-0312		8	NUT HEX. DOMED CAP MHM-6 M4 A280	
250	315105-0136		10	WASHER BRB 4,3X8 RFR	
260	3147612-0000		1	FILTER	
270	90143-0068	MM	5240	RUBBER STRIP EMKA 1011-06	
280	312155-0329		2	SCREW DIN 7991 MF6S M5X16 A4 70	
290	90044-0310		1	KEY, FOR SAFETY SWITCH AZ 15/16 B1	
310	1539391-0000		2	ROUND NUT	
320	575034-0000		2	ROUND NUT	
600	90157-0041	L	1	SEALING COMPOUND, RHODORSEAL 5651	

Pos	Part No	UN	Qty	Description	Page No

Machine Type | Group Description | Used-In | Group Number | Page No

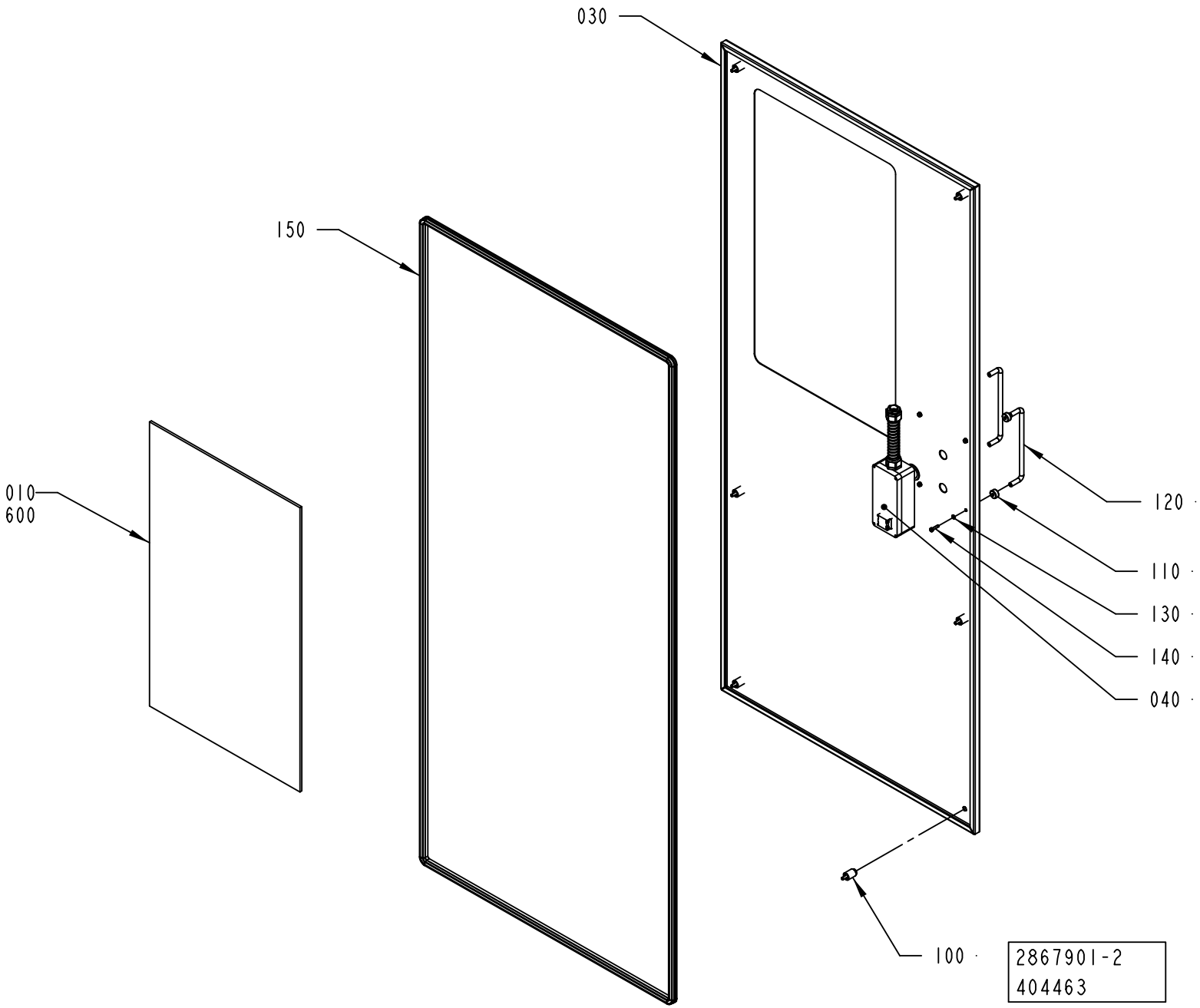
030
150
010
600
120
110
130
140
040
100
2867901-2
404463

ECM: 405751 - 20090731
Group number: 2867901-0200
Assembly Drawing: 2867901-2_1_AA

Pos	Part No	UN	Qty	Description	Page No
-					
010	2746361-0000		1	GLASS PANE	
030	2867902-0000		1	DOOR	
040	2845877-0200		1	CONTROL PANEL	**7-163**
100	90226-0458		6	MOUNTING SCREW	
110	2751586-0000		4	SPACER	
120	90600-2670		2	HANDLE, GN 425-10-200-NI	
130	315105-0146		4	WASHER BRB 5,3X10 RFR	
140	312105-0331		4	SCREW, M6S ISO 4017 M5X20 A4 80	
150	90143-0068	MM	5240	RUBBER STRIP EMKA 1011-06	
600	90157-0041	L	1	SEALING COMPOUND, RHODORSEAL 5651	

Pos	Part No	UN	Qty	Description	Page No

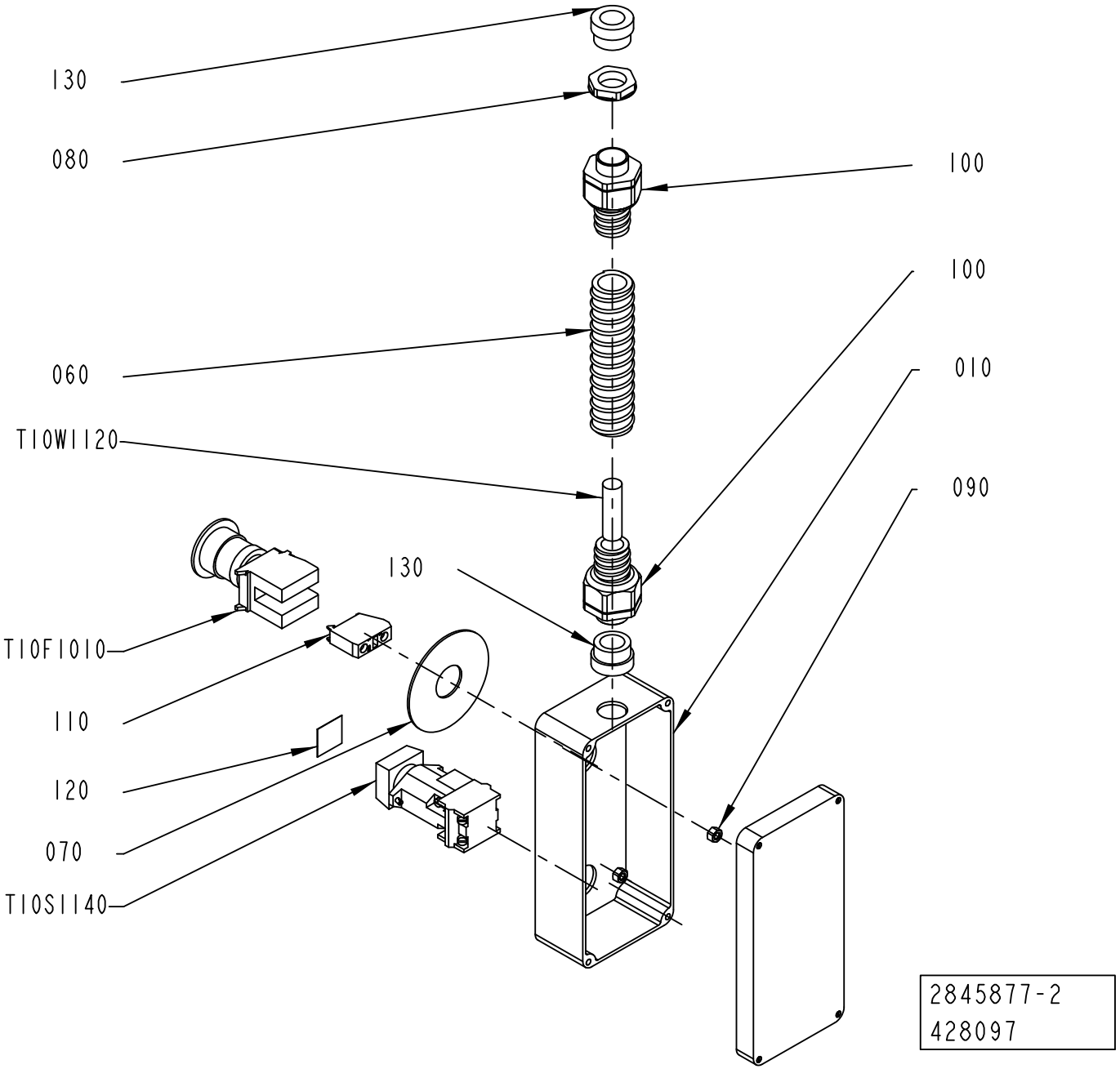
130
080
100
100
060
010
T10W1120
090
130
T10F1010
110
120
070
T10S1140
2845877-2
428097

ECM: 431561 - 20091223
Group number: 2845877-0200
Assembly Drawing: 2845877-2_1_AB

Pos	Part No	UN	Qty	Description	Page No
-					
010	2845878-0000		1	PUSH BUTTON BOX	
060	90152-0051	MM	300	HOSE, SPIRAL CONDUIT, 25X18, UL 1816	
070	486826-0001		1	SIGN "EMERGENCY STOP"	
080	90458-0323		1	NUT, M20X1,5	
090	312605-0314		2	HEXAGON NUT, M6M M5 A280	
100	90458-0430		2	GLAND FITTING, VK 22054YUL16	
110	90459-1917		1	CONTACT BLOCK ZBE-102 NC	
120	359301-0101		1	BUTTON SIGN, STRIP SPLICING ON	
130	353249-0014		2	INSERT, SINGLE HOLE, EK154 16	
T10F1010	90458-1651		1	EMERGENCY STOP, ZB4-BS-844 ZB4-BZ-104	
T10S1140	90064-0082		1	PUSH BUTTON, WHITE	
	90036-0057		*1*	*LIGHT BULB, BA9S 28V*	
T10W1120	351150-0407	MM	4000	CABLE OLFLEX 12X0,75 MM2 LIGHT/GREY	

Pos	Part No	UN	Qty	Description	Page No

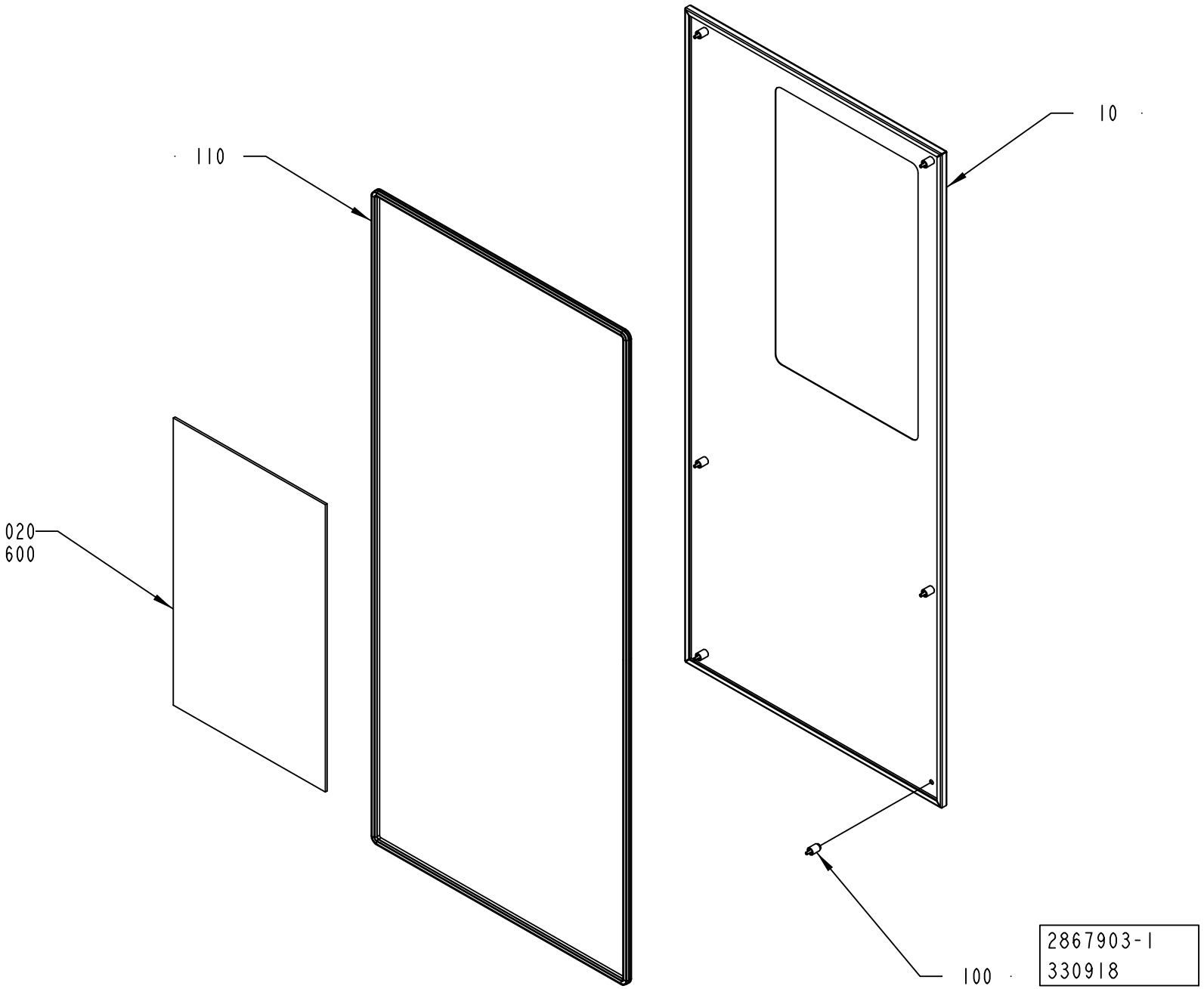
10
110
020
600
100
2867903-1
330918

ECM: 330918 - 20080116
Group number: 2867903-0100
Assembly Drawing: 2867903-1_1_AA

Pos	Part No	UN	Qty	Description	Page No
-					
010	2867904-0000		1	DOOR	
020	2746361-0000		1	GLASS PANE	
100	90226-0458		6	MOUNTING SCREW	
110	90143-0068	MM	5240	RUBBER STRIP EMKA 1011-06	
600	90157-0041	L	1	SEALING COMPOUND, RHODORSEAL 5651	

Pos	Part No	UN	Qty	Description	Page No

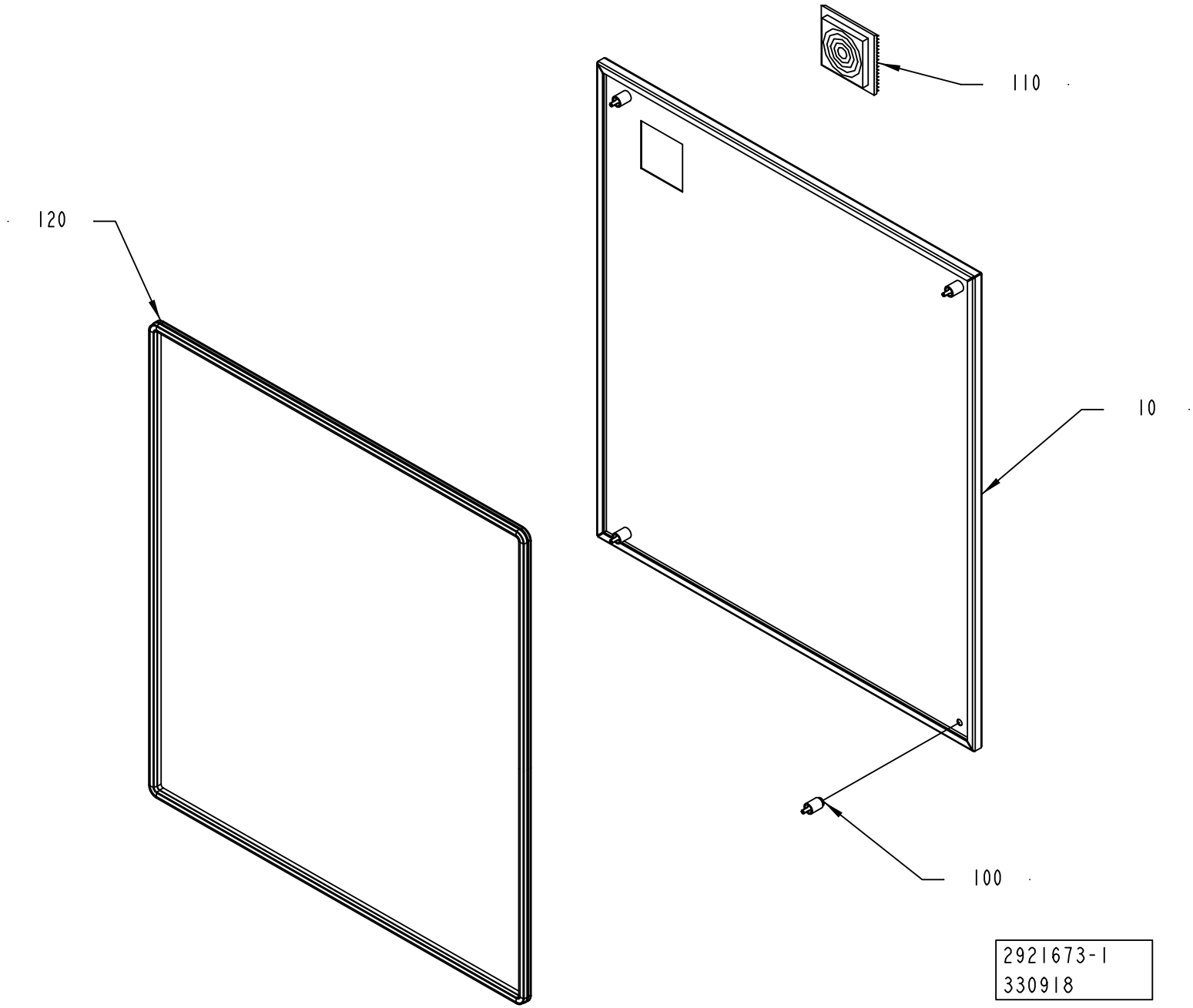
110
120
10
100
2921673-1
330918

ECM: 431567 - 20091223
Group number: 2921673-0100
Assembly Drawing: 2921673-1_1_AA

Pos	Part No	UN	Qty	Description	Page No
-					
010	2921674-0000		1	DOOR	
100	90226-0458		4	MOUNTING SCREW	
110	90459-1086		1	OUTLET FILTER, SK 3321.200	
120	90143-0068	MM	3380	RUBBER STRIP EMKA 1011-06	

Pos	Part No	UN	Qty	Description	Page No

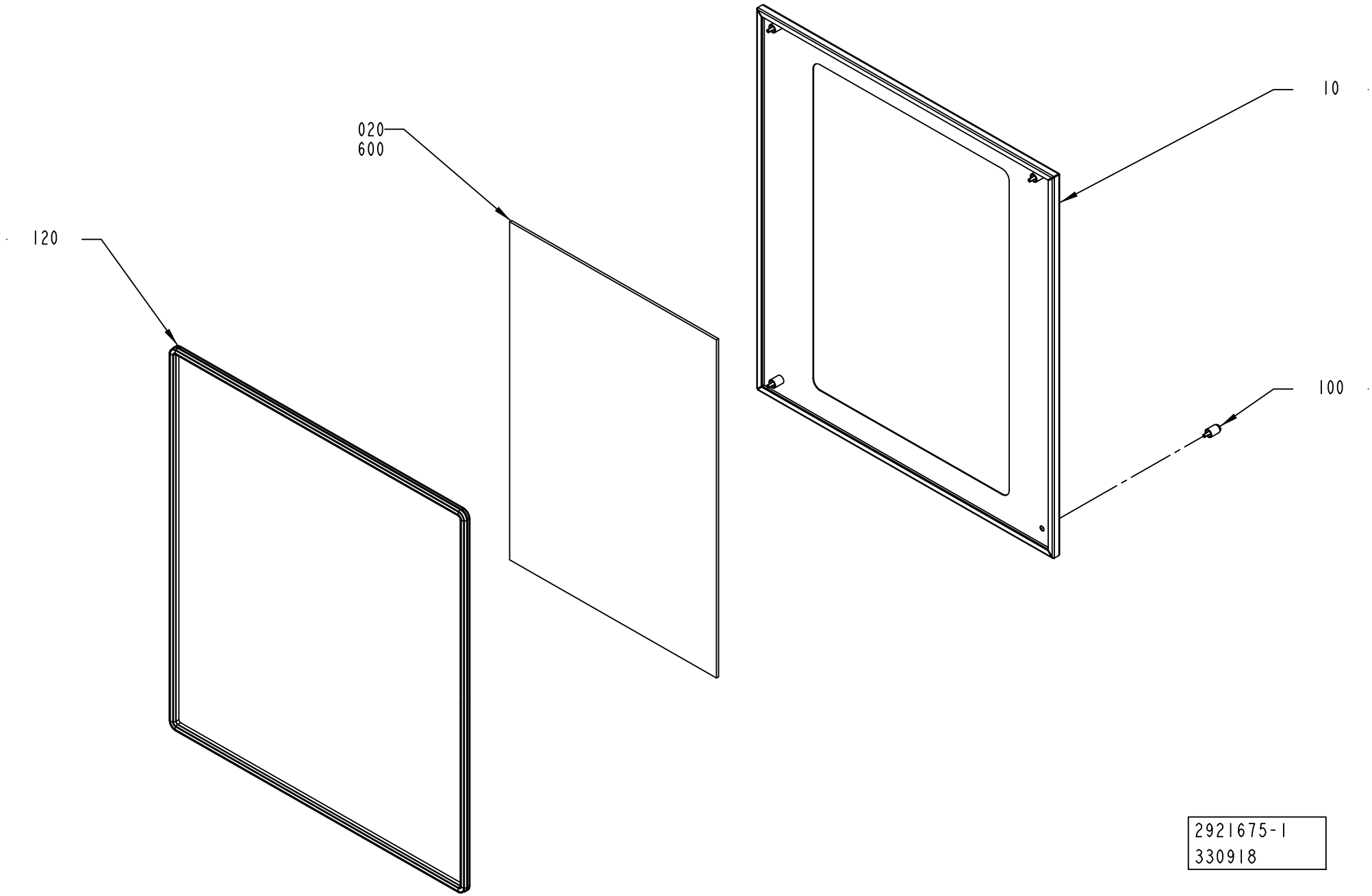
010
020
600
120
100
2921675-1
330918

ECM: 330926 - 20080116
Group number: 2921675-0100
Assembly Drawing: 2921675-1_1_AA

Pos	Part No	UN	Qty	Description	Page No
-					
010	2921676-0000		1	DOOR	
020	2921677-0000		1	GLASS PANE	
100	90226-0458		4	MOUNTING SCREW	
120	90143-0068	M	3.5	RUBBER STRIP EMKA 1011-06	
600	90157-0041	L	1	SEALING COMPOUND, RHODORSEAL 5651	

Pos	Part No	UN	Qty	Description	Page No

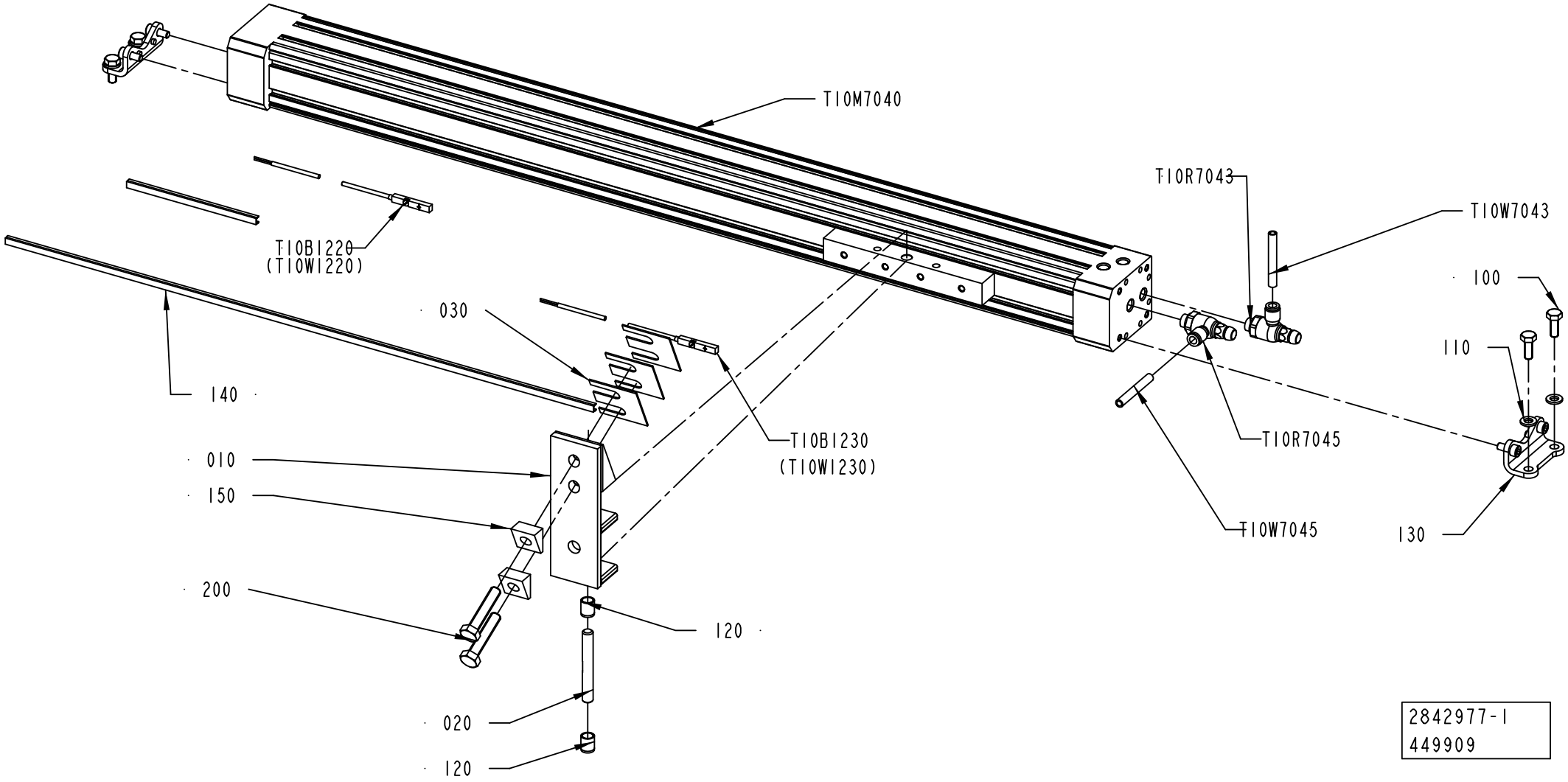

2842977-1
449909

ECM: 449909 - 20101001
Group number: 2842977-0100
Assembly Drawing: 2842977-1_1_AC

Pos	Part No	UN	Qty	Description	Page No
-					
010	2844171-0000		1	BRACKET	
020	2844173-0000		1	BRACKET	
030	2945386-0000		3	SHIM	
100	312105-0368		4	SCREW, M6S ISO 4017 M6X16 A4 80	
110	315105-0153		4	WASHER BRB 6,4X12 RFR	
120	321141-0104		2	BEARING BUSHING, 8X10X12 MM	
130	90450-0767		2	BRACKET, FOOT ANGLE, HALF HEIGHT 32	
140	90458-0273		1	SLOT COVER, ABP-5-S	
150	2867911-0000		2	SHIM	
200	312109-0459		2	SCREW, M6S ISO 4017 M8X40 A4 80	
T10B1220	90600-3272		1	PROX. SENSOR, SMT-8M-PS-24V-K-5,0-OE	
T10B1230	90600-3272		1	PROX. SENSOR, SMT-8M-PS-24V-K-5,0-OE	
T10M7040	90600-2671		1	DOUBLE ACTING, SHUTTLE, CYL. 32-500	
T10R7043	90235-0846		1	THROTTLE CHECK VALVE G1/8", MANUAL, 6	
T10R7045	90235-0846		1	THROTTLE CHECK VALVE G1/8", MANUAL, 6	
T10W7043	315400-0001	M	2	TUBE PUN-H-6X1-BL	
T10W7045	315400-0001	M	2	TUBE PUN-H-6X1-BL	

Pos	Part No	UN	Qty	Description	Page No

Tetra Pak

SPC
Spare Parts Catalogue

ELECTRICAL CABINET

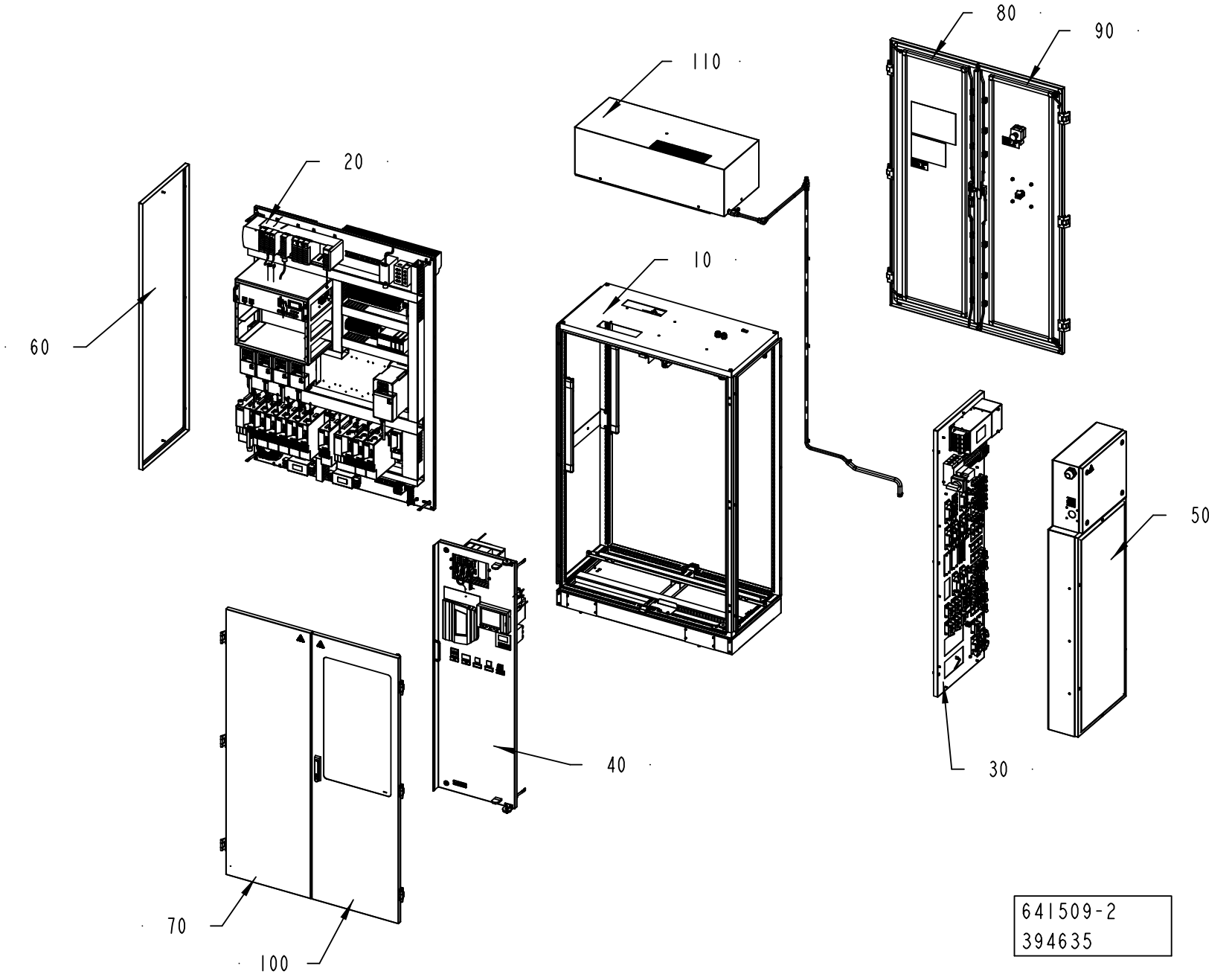

ECM: 485120 - 20110401
Group number: 641509-0200
Assembly Drawing: 641509-2_1_AA

Pos	Part No	UN	Qty	Description	Page No
-					
010	2832828-0200		1	FRAME	**8-5, 8-7, 8-9, 8-11**
020	2832838-0200		1	PLATE	**8-15, 8-17, 8-19**
030	2832836-0200		1	CONNECTION PLATE	**8-141, 8-143, 8-145, 8-147**
040	2832830-0200		1	COMPONENT DOOR	**8-157**
050	2832857-0200		1	CONNECTION BOX	**8-169, 8-171**
060	3042668-0100		1	PANEL	**8-177**
070	2918719-0200		1	DOOR	**8-179, 8-181**
080	2912660-0200		1	DOOR	**8-183, 8-185**
090	2912661-0200		1	DOOR	**8-187, 8-189**
100	2912659-0200		1	DOOR	**8-191, 8-193**
110	2931095-0100		1	COOLING UNIT	**8-195**

Pos	Part No	UN	Qty	Description	Page No

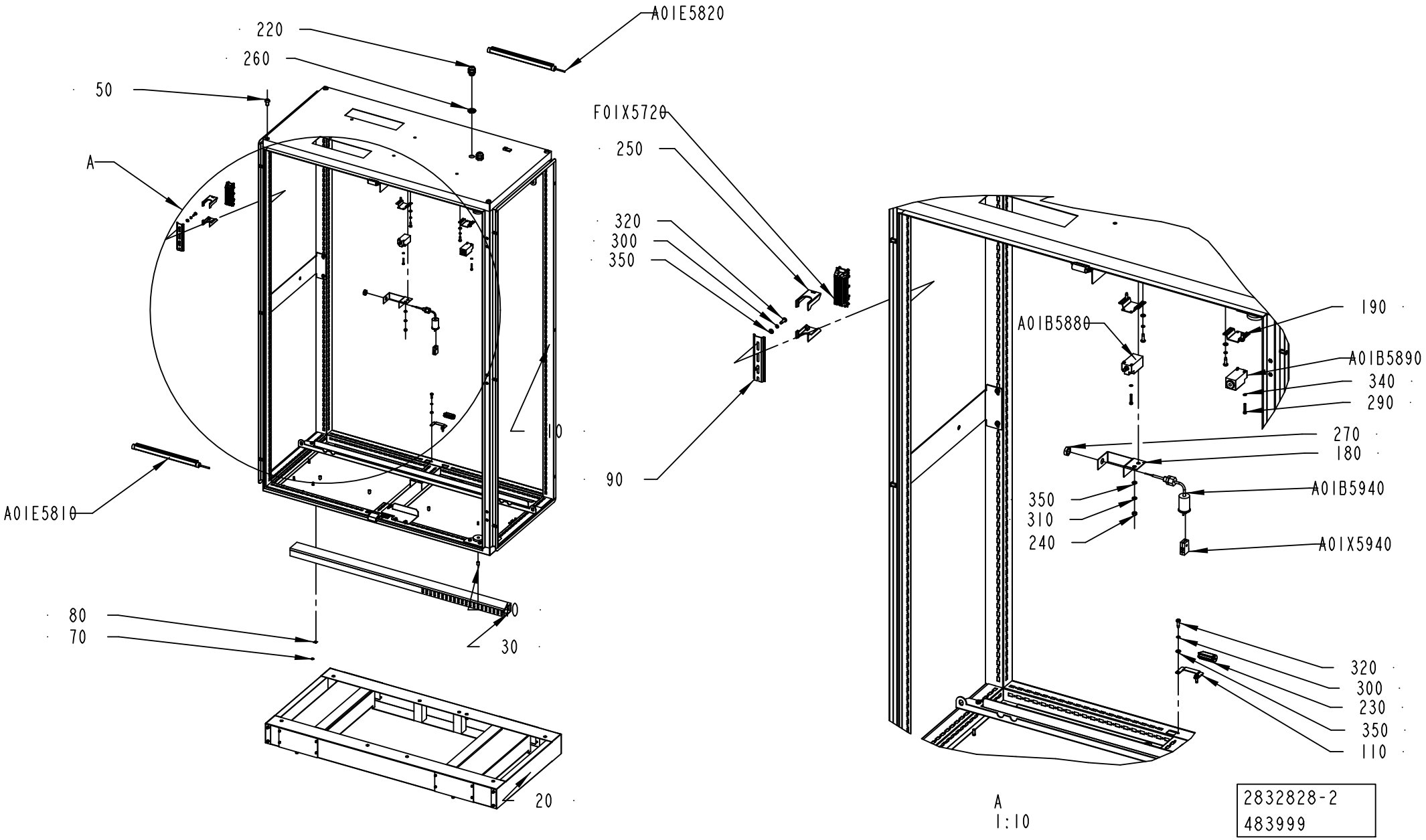
220
260
50
A
A01E5820
F01X5720
250
320
300
350
10
90
A01E5810
80
70
40
30
20
A01B5880
190
A01B5890
340
290
270
180
A01B5940
350
310
240
A01X5940
320
300
230
350
110
A
1:10
2832828-2
483999

ECM: 485121 - 20110401
Group number: 2832828-0200
Assembly Drawing: 2832828-2_1_AD

This list covers pages from 8-4 to 8-11

Pos	Part No	UN	Qty	Description	Page No
CE (See drawing on pages: 8-4, 8-6)					
240	312605-0316		8	HEXAGON NUT, M6M M6 A280	
350	315105-0153		46	WASHER BRB 6,4X12 RFR	
UL, CSA (See drawing on pages: 8-8, 8-10)					
240	312605-0316		12	HEXAGON NUT, M6M M6 A280	
350	315105-0153		50	WASHER BRB 6,4X12 RFR	
A01T5900	90459-3760		1	TRANSFORMER, 1-PH 700VA SEC 6,36A	
Common Parts					
010	2986640-0000		1	FRAME	
020	2832858-0200		1	FRAME	**8-13**
030	90181-0039	MM	1084	CABLE DUCT, PLASTIC, 60X40	
040	1285109-0000		4	NUT	
050	90600-3965		4	ROOF FASTENING SCREW, PS 4198.000	
050	318301-0122		4	LIFTING EYE BOLT, LT M12 FZB	
060	3059072-0000		4	SUPPORT	
070	2608177-0000		2	SIGN	
080	90194-0152		2	SIGN, EARTH	
090	353042-0004	MM	136	RAIL, TS 35/7,5	
100	2986638-0000		1	BRACKET	
110	2986617-0000		4	BRACKET	
120	2986639-0000		1	BRACKET	
130	2986643-0000		1	BRACKET	
140	3035760-0000		1	BRACKET	
160	3038017-0000		1	BRACKET	
170	2986613-0000		2	SPACER	
180	2927010-0000		1	BRACKET	
190	2986611-0000		2	SUPPORT	
200	2986645-0000		1	SUPPORT	
210	2986646-0000		1	SUPPORT	
220	352103-0110		2	CABLE GLAND, STR 16, PR22,5/PG16	
230	2986615-0000		4	GASKET	
250	90459-6859		1	HOUSING, 09 33 000 9980	
260	90099-0110		2	PLUG, PR 22,5 (PG16)	
270	90459-0459		1	NUT HEX. M14X1,5 SS	
280	312115-0222		4	SCREW ISO4762 M3X8 A4 80	
290	312115-0297		4	SCREW ISO4762 M4X25 A4 80	
300	315402-0146		38	LOCK WASHER, DIN127B 5,1 A4, M5-3/16	
310	315402-0156		2	LOCK WASHER, DIN127B 6,5 A4, 1/4	
320	312504-0451		38	TAPPING SCREW, ISO7049 A4-ST5,5X19-C-Z	
330	315105-0124		4	WASHER BRB 3,2X6 RFR	
340	315105-0136		4	WASHER BRB 4,3X8 RFR	
360	3062041-0000		2	SUPPORT	

Pos	Part No	UN	Qty	Description	Page No
A01B5880	90602-8807		1	LIMIT SW. SZ 4127.010	
A01B5890	90602-8807		1	LIMIT SW. SZ 4127.010	
A01B5940	90326-0053		1	THERMOCOUPLE, 5110 053-000	
A01E5810	90602-1250		1	LIGHT FIXTURE, SLIM LED 112-544-001	
A01E5820	90602-1250		1	LIGHT FIXTURE, SLIM LED 112-544-001	
A01X5940	90326-0020		1	SOCKET, FEMALE YELLOW CR-AL, 03-22000A	
F01X5720	90110-0057		1	FEMALE INSERT, HAN 24 E 09 33 002 4201	

Machine Type | Group Description | Used-In | Group Number | Page No

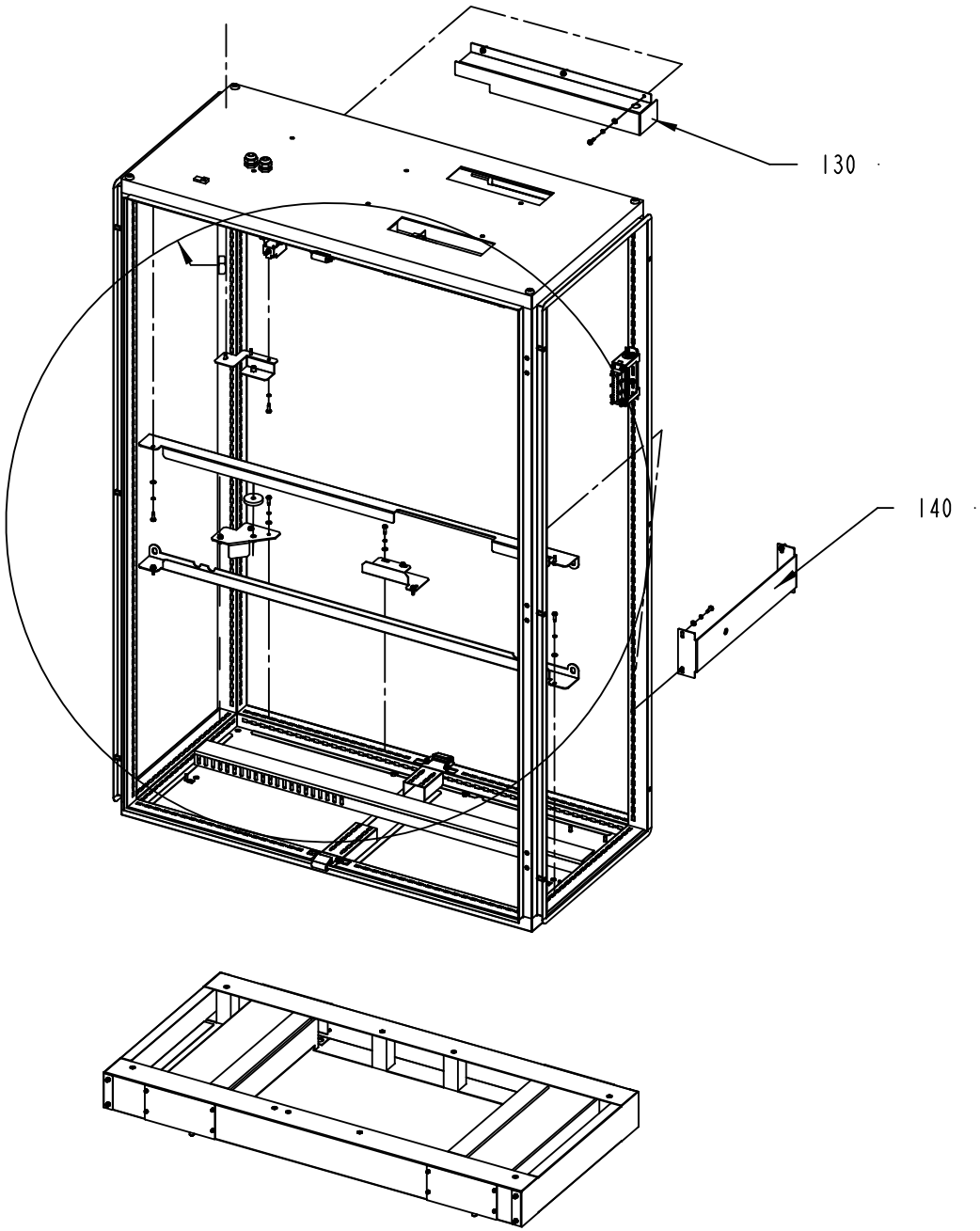

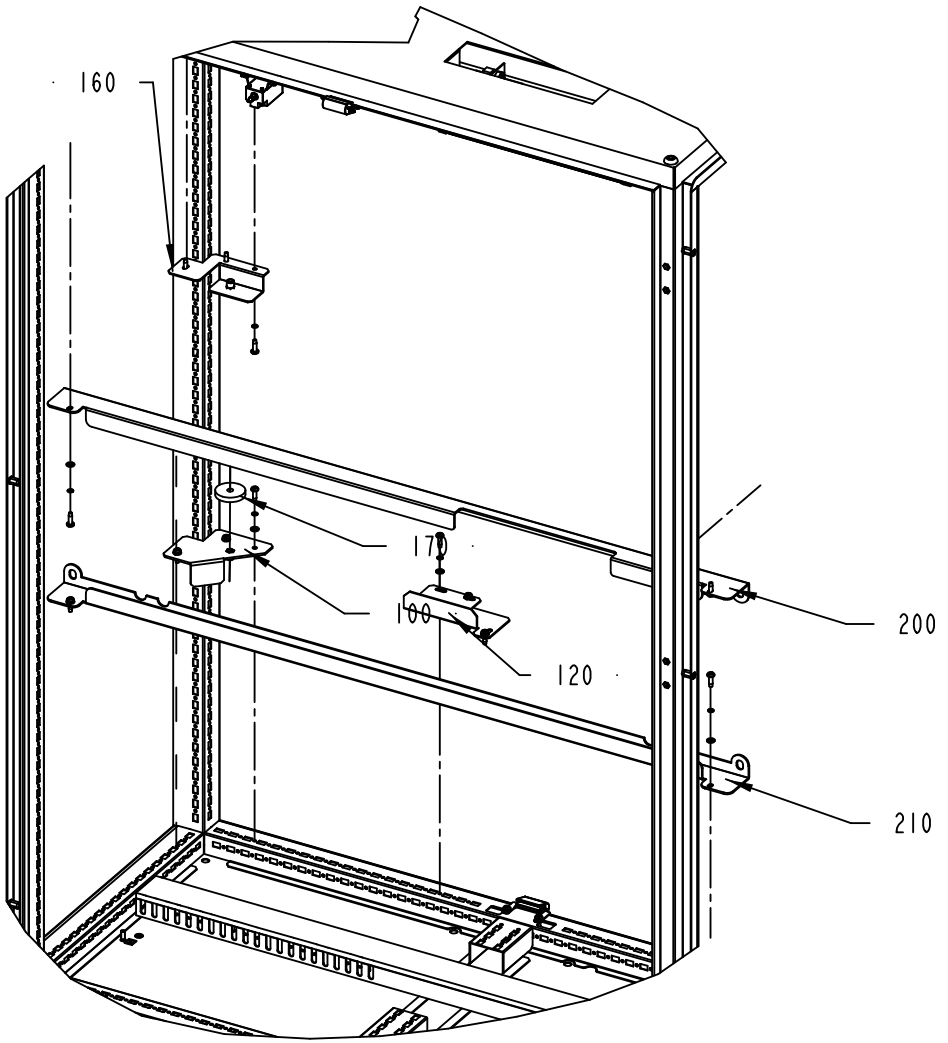

B
3:25

2832828-2
483999

ECM: 485121 - 20110401
Group number: 2832828-0200
Assembly Drawing: 2832828-2_2_AD

This list covers pages from 8-4 to 8-11

Pos	Part No	UN	Qty	Description	Page No
CE (See drawing on pages: 8-4, 8-6)					
240	312605-0316		8	HEXAGON NUT, M6M M6 A280	
350	315105-0153		46	WASHER BRB 6,4X12 RFR	
UL, CSA (See drawing on pages: 8-8, 8-10)					
240	312605-0316		12	HEXAGON NUT, M6M M6 A280	
350	315105-0153		50	WASHER BRB 6,4X12 RFR	
A01T5900	90459-3760		1	TRANSFORMER, 1-PH 700VA SEC 6,36A	
Common Parts					
010	2986640-0000		1	FRAME	
020	2832858-0200		1	FRAME	**8-13**
030	90181-0039	MM	1084	CABLE DUCT, PLASTIC, 60X40	
040	1285109-0000		4	NUT	
050	90600-3965		4	ROOF FASTENING SCREW, PS 4198.000	
050	318301-0122		4	LIFTING EYE BOLT, LT M12 FZB	
060	3059072-0000		4	SUPPORT	
070	2608177-0000		2	SIGN	
080	90194-0152		2	SIGN, EARTH	
090	353042-0004	MM	136	RAIL, TS 35/7,5	
100	2986638-0000		1	BRACKET	
110	2986617-0000		4	BRACKET	
120	2986639-0000		1	BRACKET	
130	2986643-0000		1	BRACKET	
140	3035760-0000		1	BRACKET	
160	3038017-0000		1	BRACKET	
170	2986613-0000		2	SPACER	
180	2927010-0000		1	BRACKET	
190	2986611-0000		2	SUPPORT	
200	2986645-0000		1	SUPPORT	
210	2986646-0000		1	SUPPORT	
220	352103-0110		2	CABLE GLAND, STR 16, PR22,5/PG16	
230	2986615-0000		4	GASKET	
250	90459-6859		1	HOUSING, 09 33 000 9980	
260	90099-0110		2	PLUG, PR 22,5 (PG16)	
270	90459-0459		1	NUT HEX. M14X1,5 SS	
280	312115-0222		4	SCREW ISO4762 M3X8 A4 80	
290	312115-0297		4	SCREW ISO4762 M4X25 A4 80	
300	315402-0146		38	LOCK WASHER, DIN127B 5,1 A4, M5-3/16	
310	315402-0156		2	LOCK WASHER, DIN127B 6,5 A4, 1/4	
320	312504-0451		38	TAPPING SCREW, ISO7049 A4-ST5,5X19-C-Z	
330	315105-0124		4	WASHER BRB 3,2X6 RFR	
340	315105-0136		4	WASHER BRB 4,3X8 RFR	
360	3062041-0000		2	SUPPORT	
A01B5880	90602-8807		1	LIMIT SW. SZ 4127.010	
A01B5890	90602-8807		1	LIMIT SW. SZ 4127.010	
A01B5940	90326-0053		1	THERMOCOUPLE, 5110 053-000	
A01E5810	90602-1250		1	LIGHT FIXTURE, SLIM LED 112-544-001	
A01E5820	90602-1250		1	LIGHT FIXTURE, SLIM LED 112-544-001	
A01X5940	90326-0020		1	SOCKET, FEMALE YELLOW CR-AL, 03-22000A	
F01X5720	90110-0057		1	FEMALE INSERT, HAN 24 E 09 33 002 4201	

Machine Type	Group Description	Used-In	Group Number	Page No

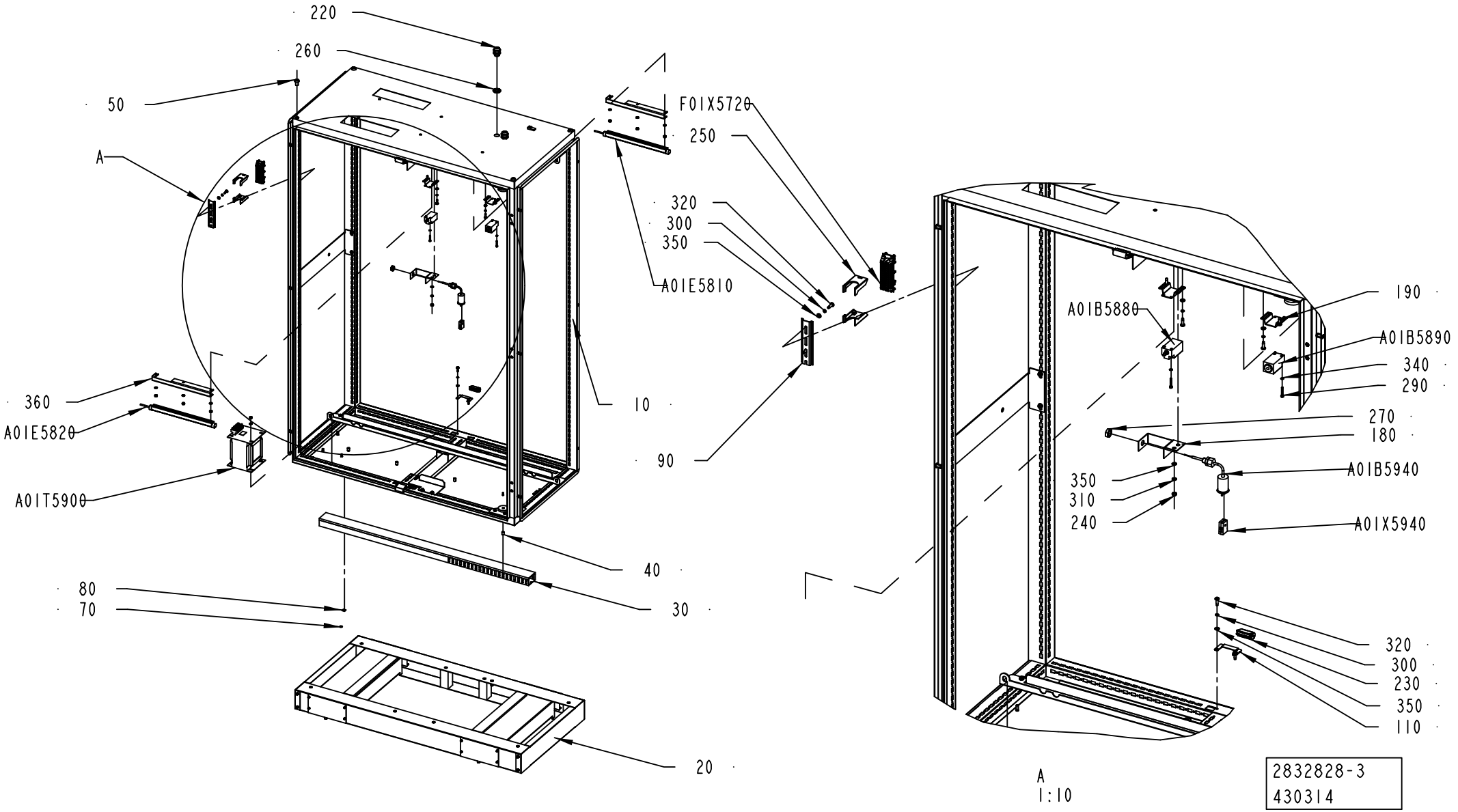
220
260
50
A
360
A01E5820
A01T5900
80
70
20
30
40
10
90
A01E5810
F01X5720
250
320
300
350
A01B5880
190
A01B5890
340
290
270
180
A01B5940
350
310
240
A01X5940
320
300
230
350
110
A
1:10
2832828-3
430314

ECM: 485121 - 20110401
Group number: 2832828-0200
Assembly Drawing: 2832828-3_1_AA

This list covers pages from 8-4 to 8-11

Pos	Part No	UN	Qty	Description	Page No
CE (See drawing on pages: 8-4, 8-6)					
240	312605-0316		8	HEXAGON NUT, M6M M6 A280	
350	315105-0153		46	WASHER BRB 6,4X12 RFR	
UL, CSA (See drawing on pages: 8-8, 8-10)					
240	312605-0316		12	HEXAGON NUT, M6M M6 A280	
350	315105-0153		50	WASHER BRB 6,4X12 RFR	
A01T5900	90459-3760		1	TRANSFORMER, 1-PH 700VA SEC 6,36A	
Common Parts					
010	2986640-0000		1	FRAME	
020	2832858-0200		1	FRAME	**8-13**
030	90181-0039	MM	1084	CABLE DUCT, PLASTIC, 60X40	
040	1285109-0000		4	NUT	
050	90600-3965		4	ROOF FASTENING SCREW, PS 4198.000	
050	318301-0122		4	LIFTING EYE BOLT, LT M12 FZB	
060	3059072-0000		4	SUPPORT	
070	2608177-0000		2	SIGN	
080	90194-0152		2	SIGN, EARTH	
090	353042-0004	MM	136	RAIL, TS 35/7,5	
100	2986638-0000		1	BRACKET	
110	2986617-0000		4	BRACKET	
120	2986639-0000		1	BRACKET	
130	2986643-0000		1	BRACKET	
140	3035760-0000		1	BRACKET	
160	3038017-0000		1	BRACKET	
170	2986613-0000		2	SPACER	
180	2927010-0000		1	BRACKET	
190	2986611-0000		2	SUPPORT	
200	2986645-0000		1	SUPPORT	
210	2986646-0000		1	SUPPORT	
220	352103-0110		2	CABLE GLAND, STR 16, PR22,5/PG16	
230	2986615-0000		4	GASKET	
250	90459-6859		1	HOUSING, 09 33 000 9980	
260	90099-0110		2	PLUG, PR 22,5 (PG16)	
270	90459-0459		1	NUT HEX. M14X1,5 SS	
280	312115-0222		4	SCREW ISO4762 M3X8 A4 80	
290	312115-0297		4	SCREW ISO4762 M4X25 A4 80	
300	315402-0146		38	LOCK WASHER, DIN127B 5,1 A4, M5-3/16	
310	315402-0156		2	LOCK WASHER, DIN127B 6,5 A4, 1/4	
320	312504-0451		38	TAPPING SCREW, ISO7049 A4-ST5,5X19-C-Z	
330	315105-0124		4	WASHER BRB 3,2X6 RFR	
340	315105-0136		4	WASHER BRB 4,3X8 RFR	
360	3062041-0000		2	SUPPORT	

Pos	Part No	UN	Qty	Description	Page No
A01B5880	90602-8807		1	LIMIT SW. SZ 4127.010	
A01B5890	90602-8807		1	LIMIT SW. SZ 4127.010	
A01B5940	90326-0053		1	THERMOCOUPLE, 5110 053-000	
A01E5810	90602-1250		1	LIGHT FIXTURE, SLIM LED 112-544-001	
A01E5820	90602-1250		1	LIGHT FIXTURE, SLIM LED 112-544-001	
A01X5940	90326-0020		1	SOCKET, FEMALE YELLOW CR-AL, 03-22000A	
F01X5720	90110-0057		1	FEMALE INSERT, HAN 24 E 09 33 002 4201	

Machine Type | Group Description | Used-In | Group Number | Page No

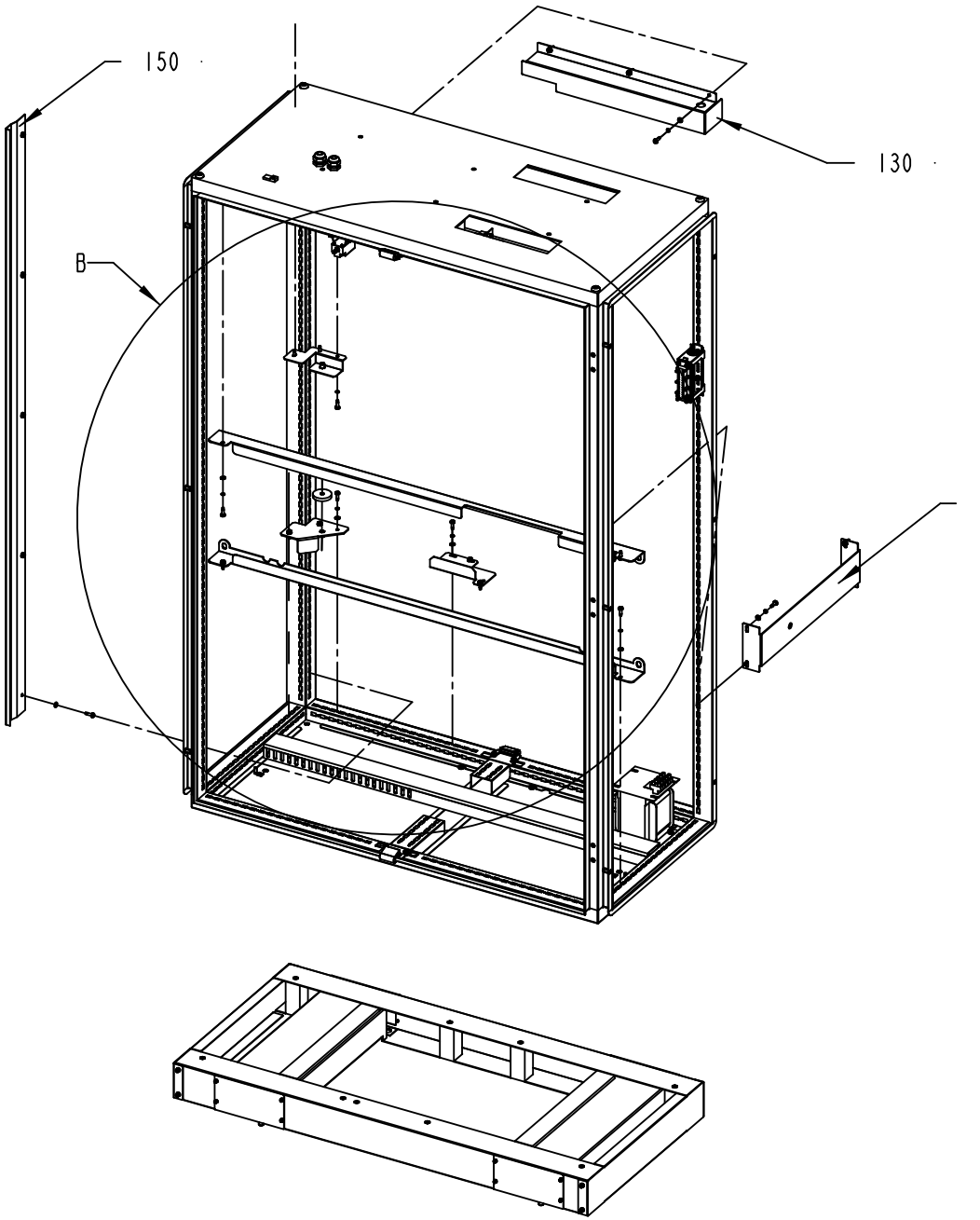

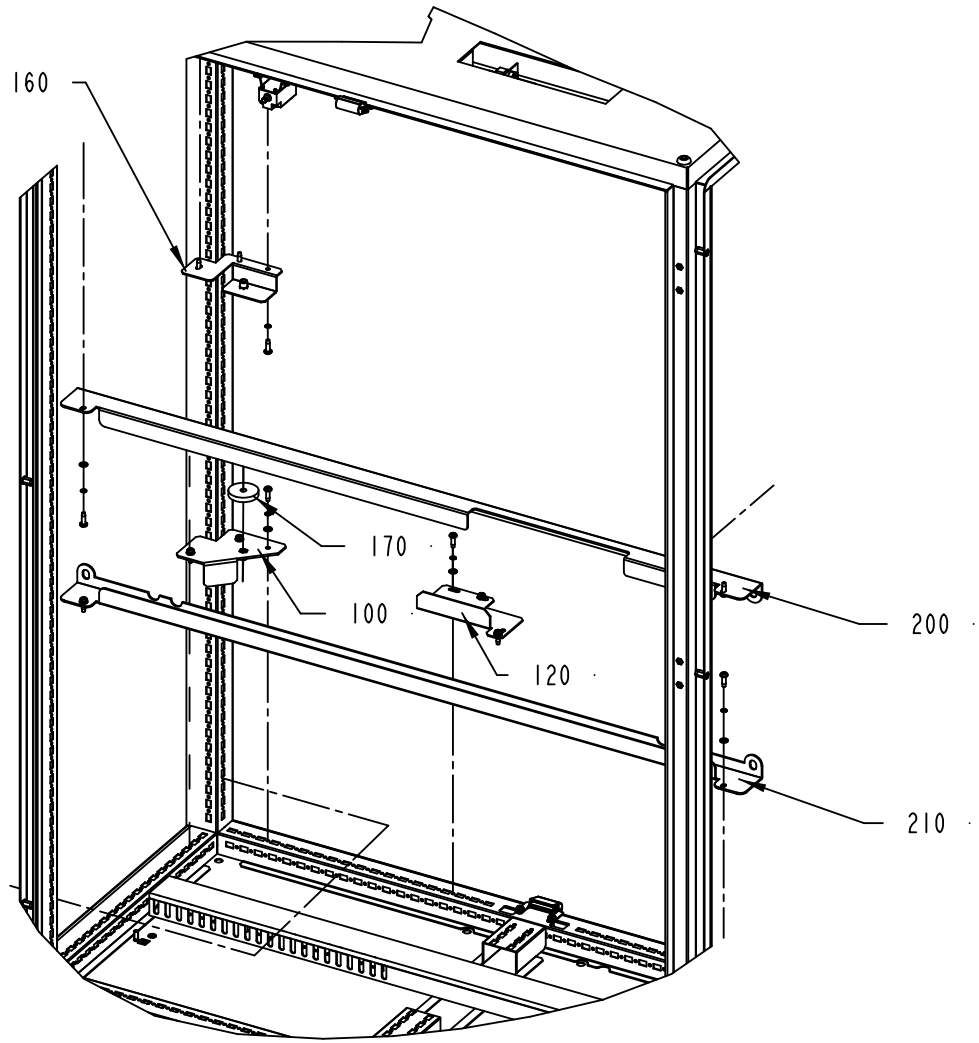

B
3:25

2832828-3
430314

ECM: 485121 - 20110401
Group number: 2832828-0200
Assembly Drawing: 2832828-3_2_AA

This list covers pages from 8-4 to 8-11

Pos	Part No	UN	Qty	Description	Page No
CE (See drawing on pages: 8-4, 8-6)					
240	312605-0316		8	HEXAGON NUT, M6M M6 A280	
350	315105-0153		46	WASHER BRB 6,4X12 RFR	
UL, CSA (See drawing on pages: 8-8, 8-10)					
240	312605-0316		12	HEXAGON NUT, M6M M6 A280	
350	315105-0153		50	WASHER BRB 6,4X12 RFR	
A01T5900	90459-3760		1	TRANSFORMER, 1-PH 700VA SEC 6,36A	
Common Parts					
010	2986640-0000		1	FRAME	
020	2832858-0200		1	FRAME	**8-13**
030	90181-0039	MM	1084	CABLE DUCT, PLASTIC, 60X40	
040	1285109-0000		4	NUT	
050	90600-3965		4	ROOF FASTENING SCREW, PS 4198.000	
050	318301-0122		4	LIFTING EYE BOLT, LT M12 FZB	
060	3059072-0000		4	SUPPORT	
070	2608177-0000		2	SIGN	
080	90194-0152		2	SIGN, EARTH	
090	353042-0004	MM	136	RAIL, TS 35/7,5	
100	2986638-0000		1	BRACKET	
110	2986617-0000		4	BRACKET	
120	2986639-0000		1	BRACKET	
130	2986643-0000		1	BRACKET	
140	3035760-0000		1	BRACKET	
160	3038017-0000		1	BRACKET	
170	2986613-0000		2	SPACER	
180	2927010-0000		1	BRACKET	
190	2986611-0000		2	SUPPORT	
200	2986645-0000		1	SUPPORT	
210	2986646-0000		1	SUPPORT	
220	352103-0110		2	CABLE GLAND, STR 16, PR22,5/PG16	
230	2986615-0000		4	GASKET	
250	90459-6859		1	HOUSING, 09 33 000 9980	
260	90099-0110		2	PLUG, PR 22,5 (PG16)	
270	90459-0459		1	NUT HEX. M14X1,5 SS	
280	312115-0222		4	SCREW ISO4762 M3X8 A4 80	
290	312115-0297		4	SCREW ISO4762 M4X25 A4 80	
300	315402-0146		38	LOCK WASHER, DIN127B 5,1 A4, M5-3/16	
310	315402-0156		2	LOCK WASHER, DIN127B 6,5 A4, 1/4	
320	312504-0451		38	TAPPING SCREW, ISO7049 A4-ST5,5X19-C-Z	
330	315105-0124		4	WASHER BRB 3,2X6 RFR	
340	315105-0136		4	WASHER BRB 4,3X8 RFR	
360	3062041-0000		2	SUPPORT	
A01B5880	90602-8807		1	LIMIT SW. SZ 4127.010	
A01B5890	90602-8807		1	LIMIT SW. SZ 4127.010	
A01B5940	90326-0053		1	THERMOCOUPLE, 5110 053-000	
A01E5810	90602-1250		1	LIGHT FIXTURE, SLIM LED 112-544-001	
A01E5820	90602-1250		1	LIGHT FIXTURE, SLIM LED 112-544-001	
A01X5940	90326-0020		1	SOCKET, FEMALE YELLOW CR-AL, 03-22000A	
F01X5720	90110-0057		1	FEMALE INSERT, HAN 24 E 09 33 002 4201	

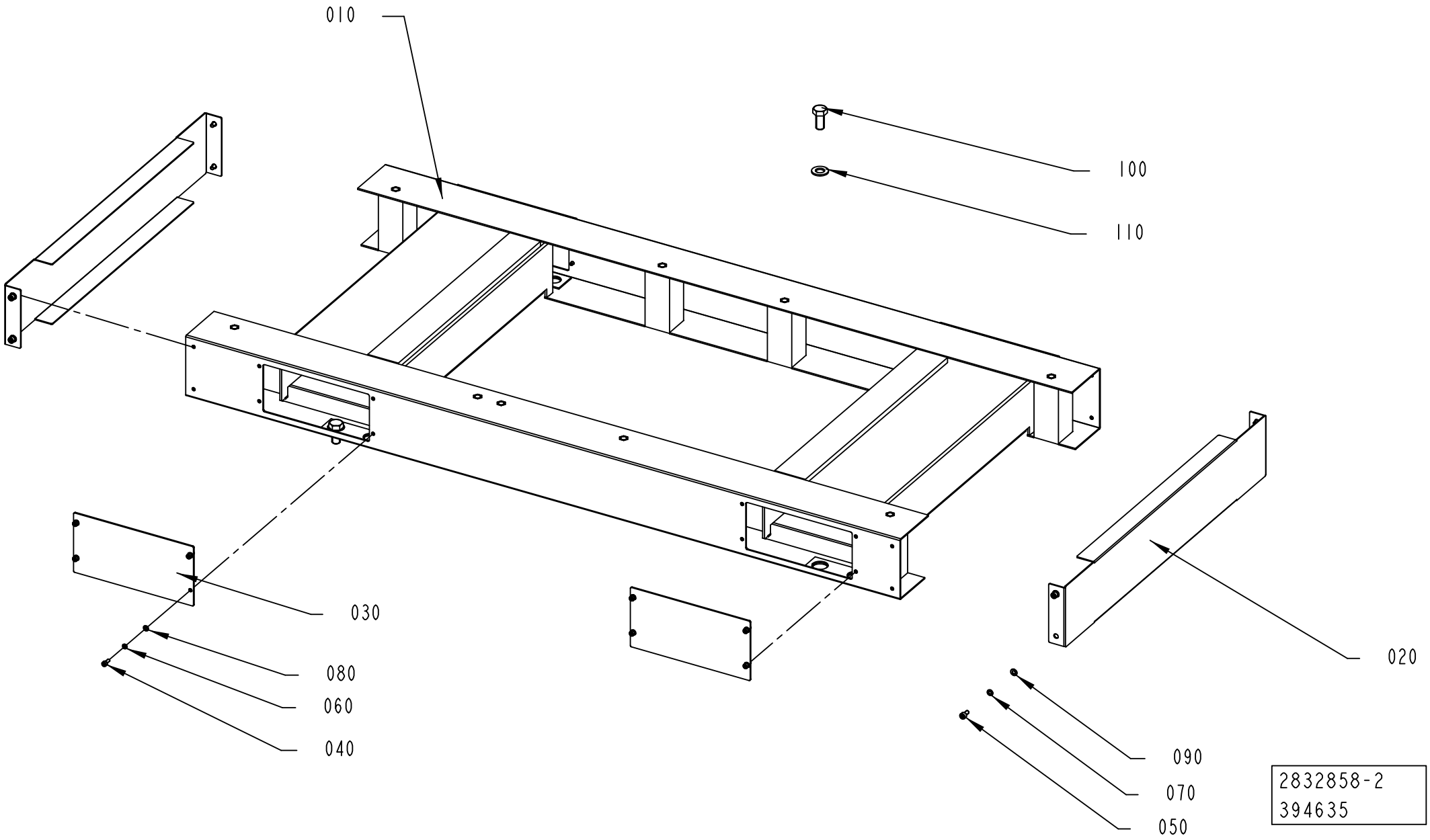
010
100
110
020
030
080
060
040
090
070
050
2832858-2
394635

ECM: 408011 - 20090710
Group number: 2832858-0200
Assembly Drawing: 2832858-2_1_AA

Pos	Part No	UN	Qty	Description	Page No
-					
010	3035761-0000		1	FRAME	
020	3036024-0000		2	FRAME	
030	1038408-0000		4	COVERING PLATE	
040	312115-0289		16	SCREW ISO4762 M4X10 A4 80	
050	312115-0325		8	SCREW ISO4762 M5X10 A4 80	
060	315402-0136		16	LOCK WASHER, DIN127B 4,1 A4, M4-5/32	
070	315402-0146		8	LOCK WASHER, DIN127B 5,1 A4, M5-3/16	
080	315105-0136		16	WASHER BRB 4,3X8 RFR	
090	315105-0146		8	WASHER BRB 5,3X10 RFR	
100	312105-0534		4	SCREW, M6S ISO 4017 M12X25 A4 80	
110	315105-0178		4	WASHER BRB 13X24 RFR	

Pos	Part No	UN	Qty	Description	Page No

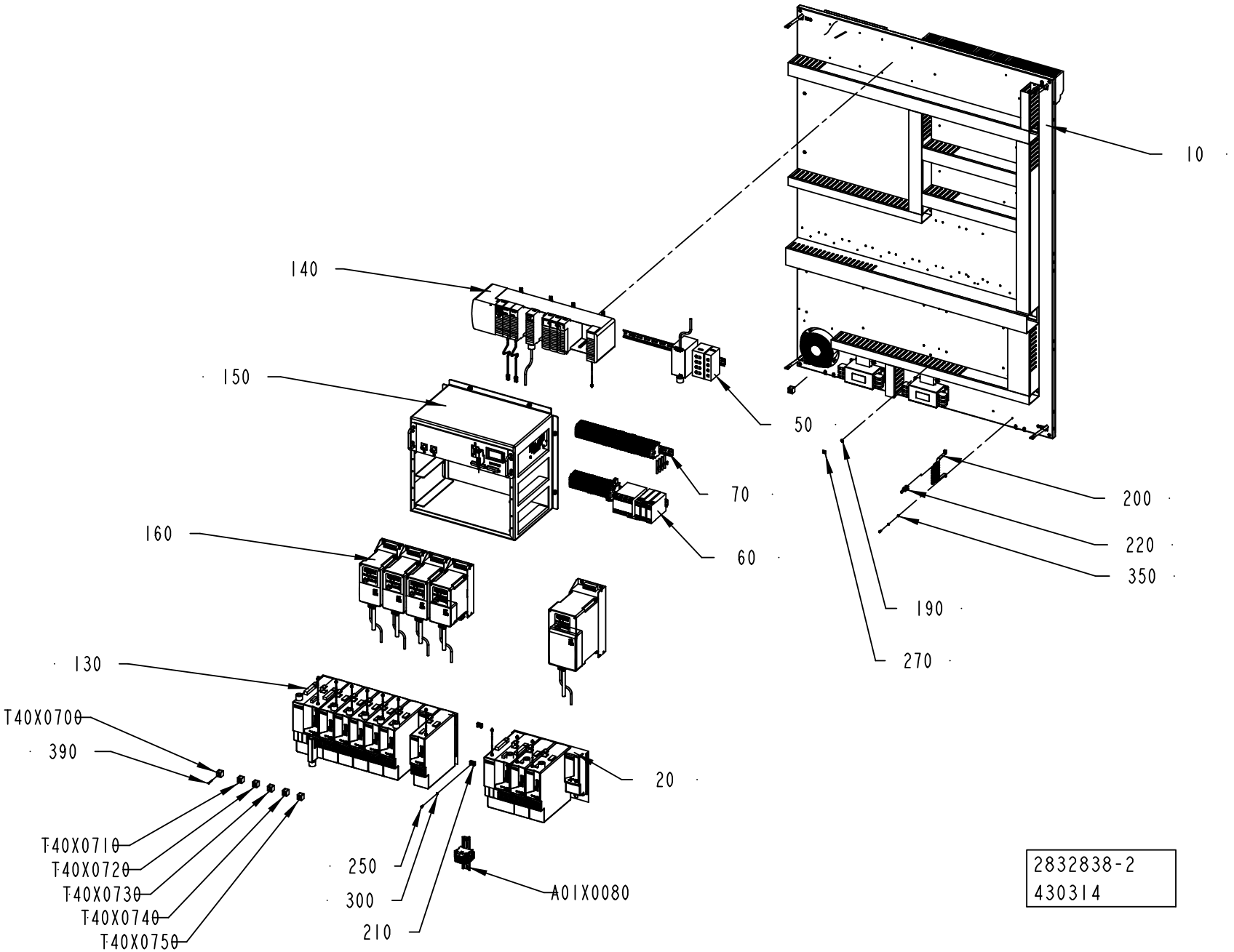
10
140
150
50
70
200
160
60
220
350
190
270
130
T40X0700
390
20
T40X0710
T40X0720
T40X0730
T40X0740
T40X0750
250
300
210
A01X0080
2832838-2
430314

ECM: 460646 - 20101001
Group number: 2832838-0200
Assembly Drawing: 2832838-2_1_AC

This list covers pages from 8-14 to 8-19

Pos	Part No	UN	Qty	Description	Page No
CE ASU (See drawing on pages: 8-14, 8-16)					
340	359705-0015		2	WARNING SIGN ISO, RISK OF ELECTRIC SHOCK	
UL ASU, CSA ASU (See drawing on page: 8-18)					
340	359715-0100		2	WARNING SIGN ANSI (H), ELECTRIC SHOCK	
Common Parts					
010	2832839-0200		1	PLATE	**8-21**
020	2861076-0100		1	BAR	**8-23**
030	2832841-0200		1	BAR	**8-25**
040	2832843-0200		1	BAR	**8-41, 8-43**
050	2832844-0200		1	BAR	**8-47, 8-49**
060	2832845-0200		1	BAR	**8-51**
070	2832846-0200		1	BAR	**8-77**
080	2832848-0200		1	BAR	**8-107**
090	2832849-0200		1	BAR	**8-109**
100	2832850-0200		1	BAR	**8-111, 8-113**
110	2832851-0200		1	BAR	**8-115**
120	2832853-0200		1	BAR	**8-117, 8-119**
130	2832852-0100		1	RACK	**8-121, 8-123**
140	2832842-0100		1	BAR	**8-125**
150	2832847-0200		1	BAR	**8-127**
160	3041517-0100		1	FREQUENCY CONVERTER WITH ACCESSORIES	**8-129, 8-131**
170	2986642-0000		1	COVER	
180	2986641-0000		1	PROTECTION	
190	2608177-0000		2	SIGN	
200	90600-1201		1	BUSBAR U-SHAPED, 790-191	
210	352113-0203		6	ANCHOR PLATES FOR STRIPS, TM3S8-M0	
220	90600-1200		8	SCREEN CLAMPING SADDLE, 790-108	
230	90459-0959		1	DISTRIBUTOR BLOCK 1492-PD3163	
240	312115-0226		1	SCREW ISO4762 M3X12 A4 80	
250	312115-0289		12	SCREW ISO4762 M4X10 A4 80	
260	312115-0364		8	SCREW ISO4762 M6X10 A4 80	
270	90194-0152		2	SIGN, EARTH	
280	1038275-0010		4	SPACER	
290	1038275-0011		4	SPACER	
300	315402-0136		18	LOCK WASHER, DIN127B 4,1 A4, M4-5/32	
310	315402-0156		8	LOCK WASHER, DIN127B 6,5 A4, 1/4	
330	90458-0258		1	TRANSFORMER, 1-PH 100VA SEC 8,3A	
350	315105-0136		12	WASHER BRB 4,3X8 RFR	
360	315105-0153		8	WASHER BRB 6,4X12 RFR	
370	312115-0293		6	SCREW ISO4762 M4X16 A4 80	
390	312115-0232		7	SCREW ISO4762 M3X25 A4 80	
400	3094532-0100		1	BAR	**8-133, 8-135**
410	3094533-0100		1	BAR	**8-137**
A01X0080	2868070-0200		1	BAR	**8-139**
T40X0700	90195-0020		1	TERMINAL BLOCK, BK 2CRN, 0624 7200 00	
T40X0710	90195-0020		1	TERMINAL BLOCK, BK 2CRN, 0624 7200 00	
T40X0720	90195-0020		1	TERMINAL BLOCK, BK 2CRN, 0624 7200 00	
T40X0730	90195-0020		1	TERMINAL BLOCK, BK 2CRN, 0624 7200 00	
T40X0740	90195-0020		1	TERMINAL BLOCK, BK 2CRN, 0624 7200 00	
T40X0750	90195-0020		1	TERMINAL BLOCK, BK 2CRN, 0624 7200 00	

Machine Type | Group Description | Used-In | Group Number | Page No

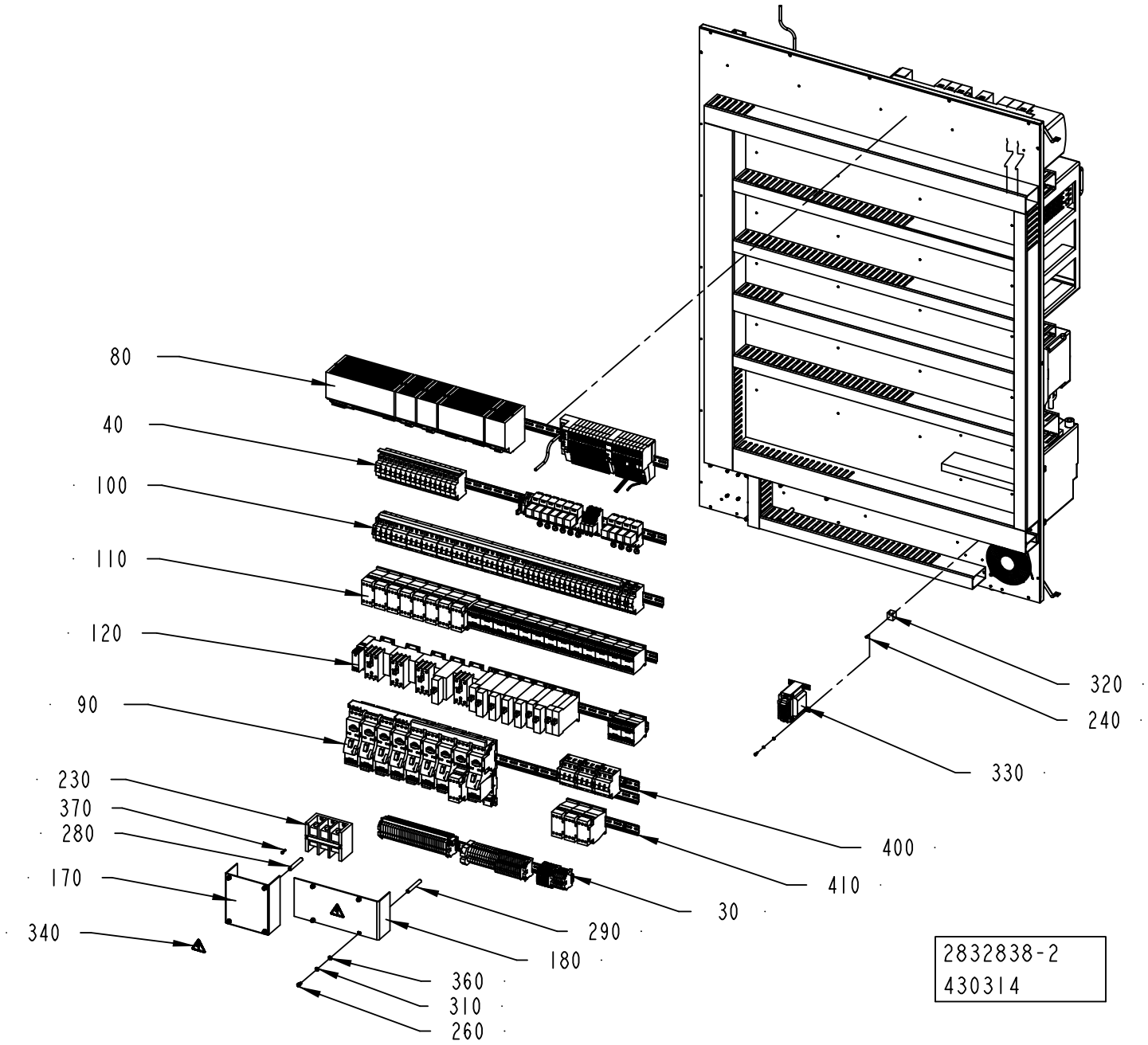
80
40
100
110
120
90
230
370
280
170
340
320
240
330
400
410
30
290
180
360
310
260
2832838-2
430314

ECM: 460646 - 20101001
Group number: 2832838-0200
Assembly Drawing: 2832838-2_2_AC

This list covers pages from 8-14 to 8-19

Pos	Part No	UN	Qty	Description	Page No
CE ASU (See drawing on pages: 8-14, 8-16)					
340	359705-0015		2	WARNING SIGN ISO, RISK OF ELECTRIC SHOCK	
UL ASU, CSA ASU (See drawing on page: 8-18)					
340	359715-0100		2	WARNING SIGN ANSI (H), ELECTRIC SHOCK	
Common Parts					
010	2832839-0200		1	PLATE	**8-21**
020	2861076-0100		1	BAR	**8-23**
030	2832841-0200		1	BAR	**8-25**
040	2832843-0200		1	BAR	**8-41, 8-43**
050	2832844-0200		1	BAR	**8-47, 8-49**
060	2832845-0200		1	BAR	**8-51**
070	2832846-0200		1	BAR	**8-77**
080	2832848-0200		1	BAR	**8-107**
090	2832849-0200		1	BAR	**8-109**
100	2832850-0200		1	BAR	**8-111, 8-113**
110	2832851-0200		1	BAR	**8-115**
120	2832853-0200		1	BAR	**8-117, 8-119**
130	2832852-0100		1	RACK	**8-121, 8-123**
140	2832842-0100		1	BAR	**8-125**
150	2832847-0200		1	BAR	**8-127**
160	3041517-0100		1	FREQUENCY CONVERTER WITH ACCESSORIES	**8-129, 8-131**
170	2986642-0000		1	COVER	
180	2986641-0000		1	PROTECTION	
190	2608177-0000		2	SIGN	
200	90600-1201		1	BUSBAR U-SHAPED, 790-191	
210	352113-0203		6	ANCHOR PLATES FOR STRIPS, TM3S8-M0	
220	90600-1200		8	SCREEN CLAMPING SADDLE, 790-108	
230	90459-0959		1	DISTRIBUTOR BLOCK 1492-PD3163	
240	312115-0226		1	SCREW ISO4762 M3X12 A4 80	
250	312115-0289		12	SCREW ISO4762 M4X10 A4 80	
260	312115-0364		8	SCREW ISO4762 M6X10 A4 80	
270	90194-0152		2	SIGN, EARTH	
280	1038275-0010		4	SPACER	
290	1038275-0011		4	SPACER	
300	315402-0136		18	LOCK WASHER, DIN127B 4,1 A4, M4-5/32	
310	315402-0156		8	LOCK WASHER, DIN127B 6,5 A4, 1/4	
330	90458-0258		1	TRANSFORMER, 1-PH 100VA SEC 8,3A	
350	315105-0136		12	WASHER BRB 4,3X8 RFR	
360	315105-0153		8	WASHER BRB 6,4X12 RFR	
370	312115-0293		6	SCREW ISO4762 M4X16 A4 80	
390	312115-0232		7	SCREW ISO4762 M3X25 A4 80	
400	3094532-0100		1	BAR	**8-133, 8-135**
410	3094533-0100		1	BAR	**8-137**
A01X0080	2868070-0200		1	BAR	**8-139**
T40X0700	90195-0020		1	TERMINAL BLOCK, BK 2CRN, 0624 7200 00	
T40X0710	90195-0020		1	TERMINAL BLOCK, BK 2CRN, 0624 7200 00	
T40X0720	90195-0020		1	TERMINAL BLOCK, BK 2CRN, 0624 7200 00	
T40X0730	90195-0020		1	TERMINAL BLOCK, BK 2CRN, 0624 7200 00	
T40X0740	90195-0020		1	TERMINAL BLOCK, BK 2CRN, 0624 7200 00	
T40X0750	90195-0020		1	TERMINAL BLOCK, BK 2CRN, 0624 7200 00	

Machine Type | Group Description | Used-In | Group Number | Page No

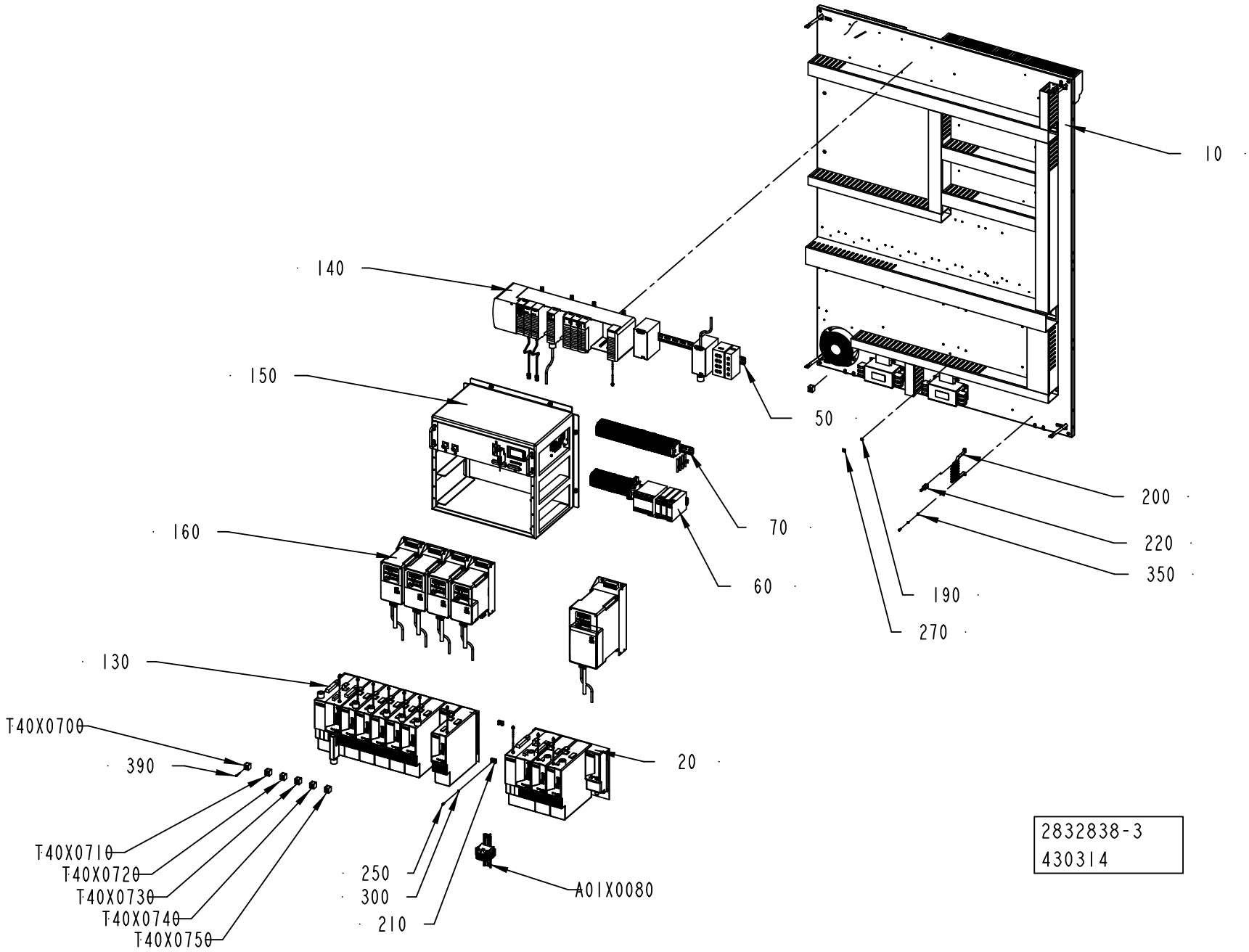
10
140
150
50
200
220
350
70
160
60
190
270
130
T40X0700
390
20
T40X0710
T40X0720
T40X0730
T40X0740
T40X0750
250
300
210
A01X0080
2832838-3
430314

ECM: 460646 - 20101001
Group number: 2832838-0200
Assembly Drawing: 2832838-3_1_AA

This list covers pages from 8-14 to 8-19

Pos	Part No	UN	Qty	Description	Page No
CE ASU (See drawing on pages: 8-14, 8-16)					
340	359705-0015		2	WARNING SIGN ISO, RISK OF ELECTRIC SHOCK	
UL ASU, CSA ASU (See drawing on page: 8-18)					
340	359715-0100		2	WARNING SIGN ANSI (H), ELECTRIC SHOCK	
Common Parts					
010	2832839-0200		1	PLATE	**8-21**
020	2861076-0100		1	BAR	**8-23**
030	2832841-0200		1	BAR	**8-25**
040	2832843-0200		1	BAR	**8-41, 8-43**
050	2832844-0200		1	BAR	**8-47, 8-49**
060	2832845-0200		1	BAR	**8-51**
070	2832846-0200		1	BAR	**8-77**
080	2832848-0200		1	BAR	**8-107**
090	2832849-0200		1	BAR	**8-109**
100	2832850-0200		1	BAR	**8-111, 8-113**
110	2832851-0200		1	BAR	**8-115**
120	2832853-0200		1	BAR	**8-117, 8-119**
130	2832852-0100		1	RACK	**8-121, 8-123**
140	2832842-0100		1	BAR	**8-125**
150	2832847-0200		1	BAR	**8-127**
160	3041517-0100		1	FREQUENCY CONVERTER WITH ACCESSORIES	**8-129, 8-131**
170	2986642-0000		1	COVER	
180	2986641-0000		1	PROTECTION	
190	2608177-0000		2	SIGN	
200	90600-1201		1	BUSBAR U-SHAPED, 790-191	
210	352113-0203		6	ANCHOR PLATES FOR STRIPS, TM3S8-M0	
220	90600-1200		8	SCREEN CLAMPING SADDLE, 790-108	
230	90459-0959		1	DISTRIBUTOR BLOCK 1492-PD3163	
240	312115-0226		1	SCREW ISO4762 M3X12 A4 80	
250	312115-0289		12	SCREW ISO4762 M4X10 A4 80	
260	312115-0364		8	SCREW ISO4762 M6X10 A4 80	
270	90194-0152		2	SIGN, EARTH	
280	1038275-0010		4	SPACER	
290	1038275-0011		4	SPACER	
300	315402-0136		18	LOCK WASHER, DIN127B 4,1 A4, M4-5/32	
310	315402-0156		8	LOCK WASHER, DIN127B 6,5 A4, 1/4	
330	90458-0258		1	TRANSFORMER, 1-PH 100VA SEC 8,3A	
350	315105-0136		12	WASHER BRB 4,3X8 RFR	
360	315105-0153		8	WASHER BRB 6,4X12 RFR	
370	312115-0293		6	SCREW ISO4762 M4X16 A4 80	
390	312115-0232		7	SCREW ISO4762 M3X25 A4 80	
400	3094532-0100		1	BAR	**8-133, 8-135**
410	3094533-0100		1	BAR	**8-137**
A01X0080	2868070-0200		1	BAR	**8-139**
T40X0700	90195-0020		1	TERMINAL BLOCK, BK 2CRN, 0624 7200 00	
T40X0710	90195-0020		1	TERMINAL BLOCK, BK 2CRN, 0624 7200 00	
T40X0720	90195-0020		1	TERMINAL BLOCK, BK 2CRN, 0624 7200 00	
T40X0730	90195-0020		1	TERMINAL BLOCK, BK 2CRN, 0624 7200 00	
T40X0740	90195-0020		1	TERMINAL BLOCK, BK 2CRN, 0624 7200 00	
T40X0750	90195-0020		1	TERMINAL BLOCK, BK 2CRN, 0624 7200 00	

Machine Type | Group Description | Used-In | Group Number | Page No

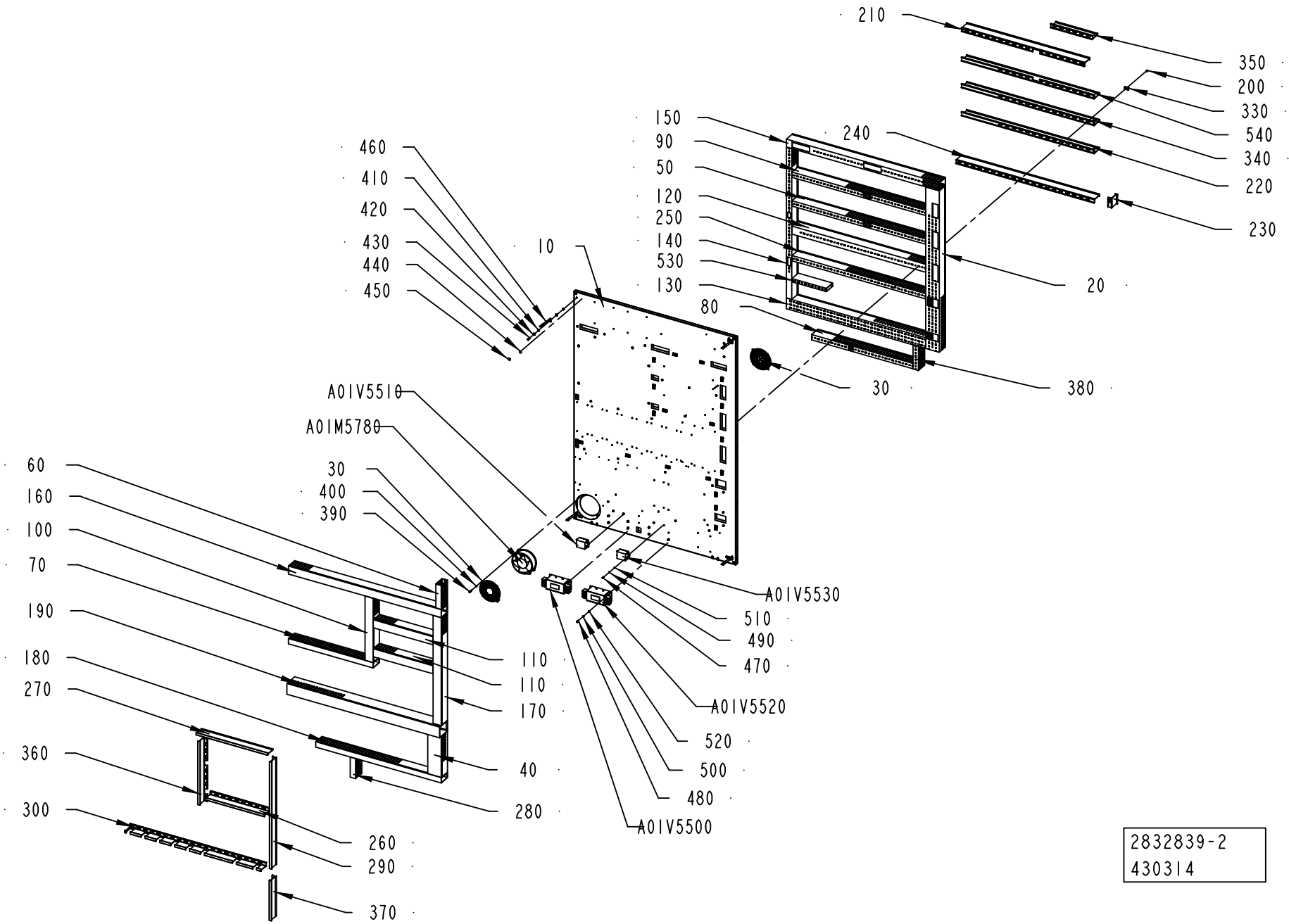
210
350
200
330
540
340
220
230
240
150
90
50
120
250
140
530
130
80
20
30
380
460
410
420
430
440
450
10
A01V5510
A01M5780
30
400
390
60
160
100
70
190
180
270
360
300
110
110
170
40
280
260
290
370
A01V5530
510
490
470
A01V5520
520
500
480
A01V5500
2832839-2
430314

ECM: 442629 - 20100326
Group number: 2832839-0200
Assembly Drawing: 2832839-2_1_AC

Pos	Part No	UN	Qty	Description	Page No
-					
010	2986633-0000		1	COMPONENT PLATES	
020	3037120-0000		1	CABLE DUCT	
030	90457-0057		2	GRID, LZ36	
040	3037131-0000		1	CABLE DUCT	
050	3037123-0000		1	CABLE DUCT	
060	3037130-0000		1	CABLE DUCT	
070	3037127-0000		1	CABLE DUCT	
080	3037128-0000		1	CABLE DUCT	
090	3037123-0000		1	CABLE DUCT	
100	3037117-0000		1	CABLE DUCT	
110	3037118-0000		1	CABLE DUCT	
120	3037126-0000		1	CABLE DUCT	
130	90181-0055	MM	1031	CABLE DUCT, PLASTIC, 80X80	
140	3037122-0000		1	CABLE DUCT	
150	3037119-0000		1	CABLE DUCT	
160	3037116-0000		1	CABLE DUCT	
170	3037115-0000		1	CABLE DUCT	
180	3037125-0000		1	CABLE DUCT	
190	3069629-0000		1	CABLE DUCT	
200	90181-0313		91	RIVET, DUCTAFIX R4	
210	3037132-0000		1	DIVIDER	
220	3037133-0000		1	DIVIDER	
230	3037135-0000		1	DIVIDER	
240	3037134-0000		1	DIVIDER	
250	3037124-0000		1	CABLE DUCT	
260	3037137-0000		1	DIVIDER	
270	3037141-0000		1	DIVIDER	
280	2986647-0000		1	CABLE DUCT	
290	3037140-0000		1	DIVIDER	
300	3037139-0000		1	DIVIDER	
320	3037989-0000		1	DIVIDER	
330	90600-2830		45	FASTENING ELEMENT, BLOCKSEP-E 01026	
340	3037133-0000		1	DIVIDER	
350	3037142-0000		1	DIVIDER	
360	3037143-0000		1	DIVIDER	
370	3037144-0000		1	DIVIDER	
380	3037144-0000		1	DIVIDER	
390	312115-0331		4	SCREW ISO4762 M5X20 A4 80	
400	315105-0136		4	WASHER BRB 4,3X8 RFR	
410	90062-0022		8	LOCK WASHER D=6,4/11	
420	315105-0156		8	WASHER BRB 6,7X14 RFR	
430	312115-0368		4	SCREW ISO4762 M6X16 A4 80	
440	2608177-0000		4	SIGN	
450	90194-0152		4	SIGN, EARTH	
460	90600-2904		4	EARTH BRAID, 250/16/8,5	
470	312115-0291		4	SCREW ISO4762 M4X12 A4 80	
480	312115-0327		8	SCREW ISO4762 M5X12 A4 80	
490	315402-0136		4	LOCK WASHER, DIN127B 4,1 A4, M4-5/32	
500	315402-0146		8	LOCK WASHER, DIN127B 5,1 A4, M5-3/16	
510	315105-0136		4	WASHER BRB 4,3X8 RFR	
520	315105-0146		8	WASHER BRB 5,3X10 RFR	
530	90181-0052	MM	255	CABLE DUCT, PLASTIC, 25X80	
A01M5780	90457-0056		1	FAN 7450 ES	
A01V5500	90600-5258		1	LINE FILTER, B84143A35R106	
A01V5510	90600-5253		1	LINE FILTER, B84113HB60	
A01V5520	90600-5258		1	LINE FILTER, B84143A35R106	
A01V5530	90600-5253		1	LINE FILTER, B84113HB60	

Machine Type	Group Description	Used-In	Group Number	Page No

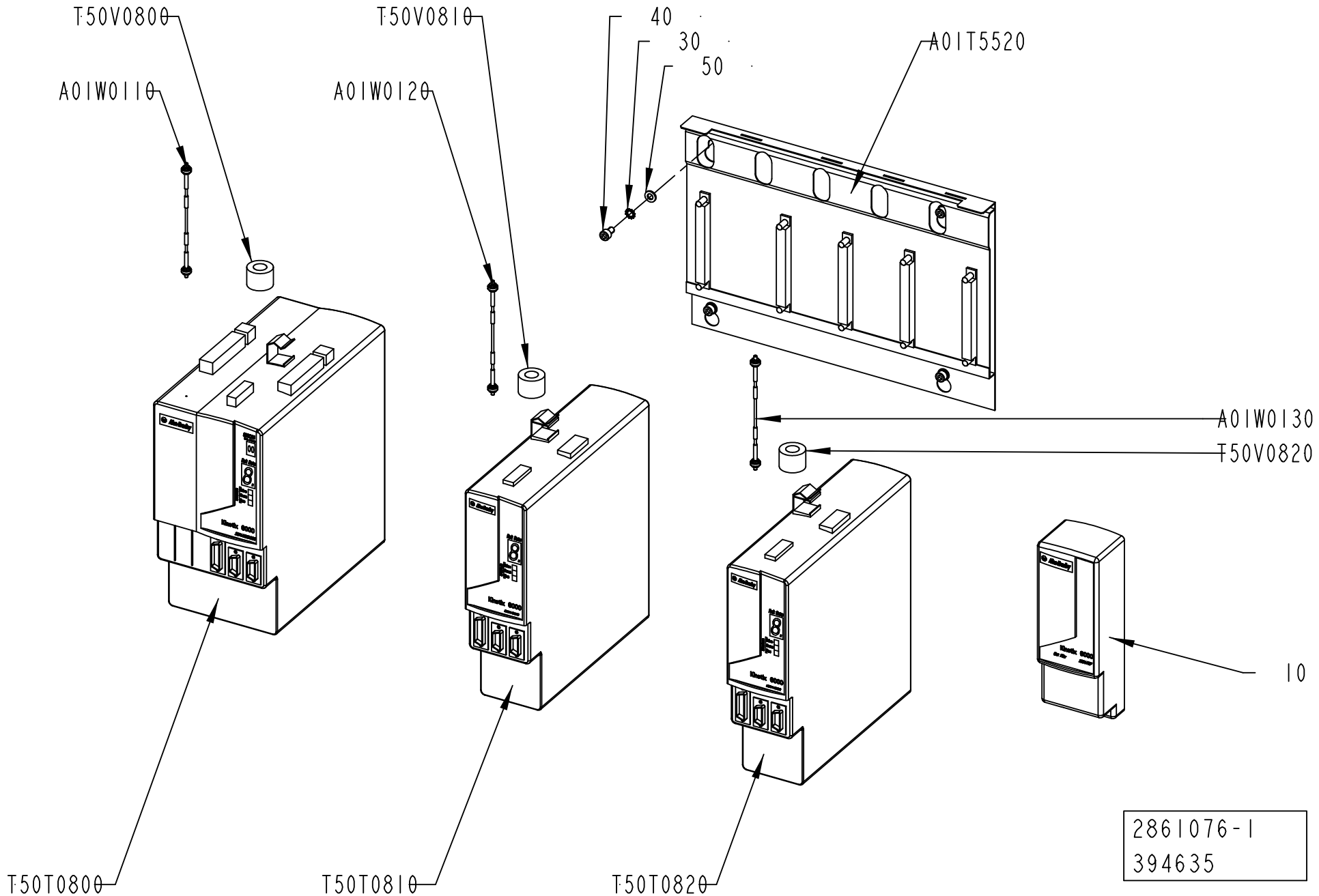
T50V080
A01W011
T50V081
A01W012
40
30
50
A01T5520
A01W013
T50V082
10
T50T080
T50T081
T50T082
2861076-1
394635

ECM: 408060 - 20090710
Group number: 2861076-0100
Assembly Drawing: 2861076-1_1_AC

Pos	Part No	UN	Qty	Description	Page No
-					
010	90459-2547		1	POWER RAIL SLOT FILLER, 2094-PRF	
030	90062-0022		4	LOCK WASHER D=6,4/11	
040	312115-0364		4	SCREW ISO4762 M6X10 A4 80	
050	315105-0153		4	WASHER BRB 6,4X12 RFR	
A01T5520	90459-5191		1	SLIM POW. RAIL, KINETIX, 4 AX, 2094-PRS4	
A01W0110	90459-2540		1	SERCOS CABLE 3.0M, 2090-SCEP3-0	
A01W0120	90459-2536		1	SERCOS CABLE 0.1M, 2090-SCEP0-1	
A01W0130	90459-2536		1	SERCOS CABLE 0.1M, 2090-SCEP0-1	
T50T0800	90600-5212		1	AXIS MOD. W. PS,2094-BC02-M02-S SERIES B	
T50T0810	90600-5216		1	AXIS MOD. KINETIX 6000,2094-BM02-S SER.B	
T50T0820	90600-5216		1	AXIS MOD. KINETIX 6000,2094-BM02-S SER.B	
T50V0800	90600-5249		1	FERRITE, B64290L616X38	
T50V0810	90600-5249		1	FERRITE, B64290L616X38	
T50V0820	90600-5249		1	FERRITE, B64290L616X38	

Pos	Part No	UN	Qty	Description	Page No

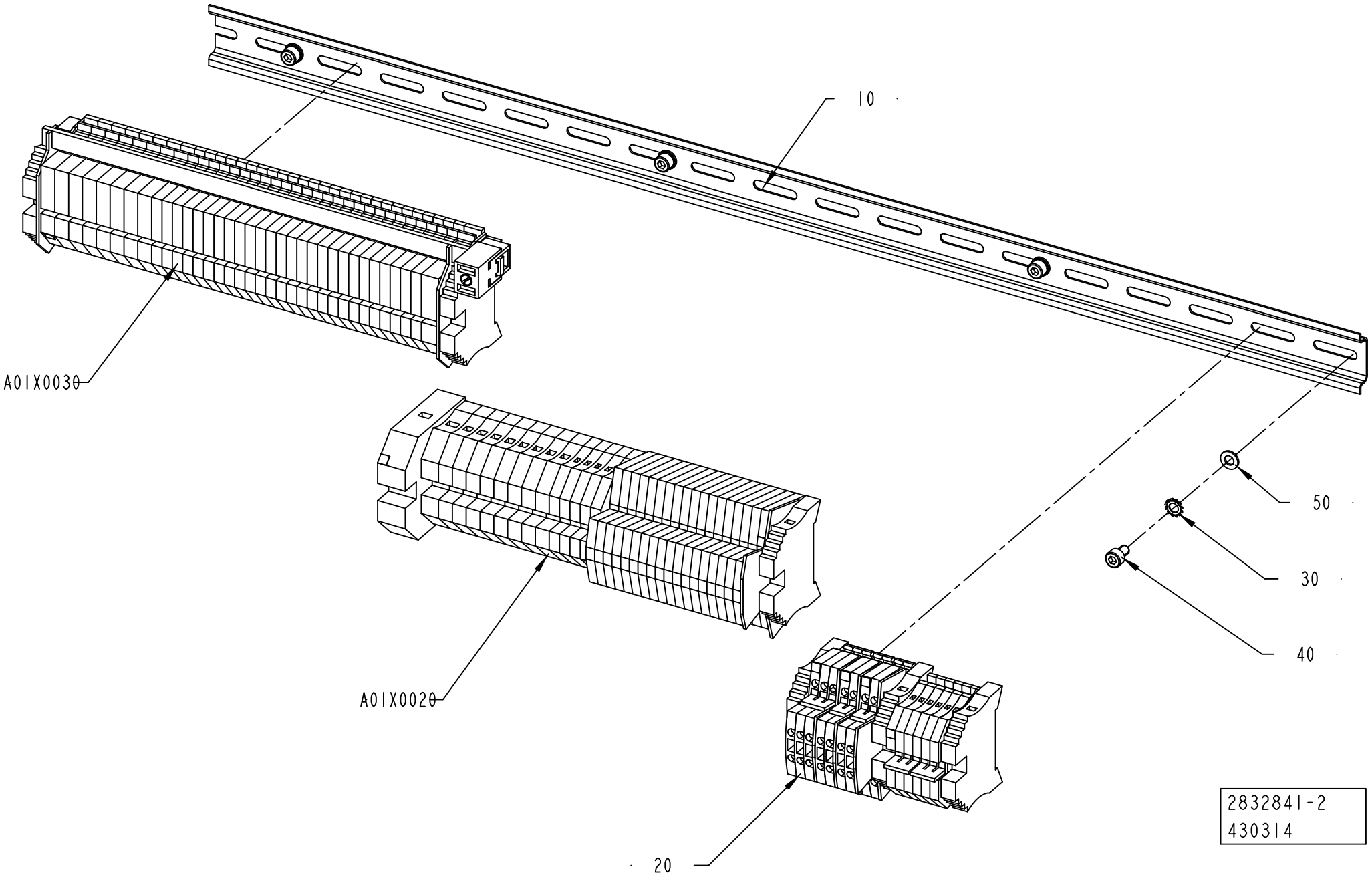
10
A01X0030
A01X0020
20
50
30
40
2832841-2
430314

ECM: 442633 - 20100326
Group number: 2832841-0200
Assembly Drawing: 2832841-2_1_AB

Pos	Part No	UN	Qty	Description	Page No
-					
010	353042-0004	MM	666	RAIL, TS 35/7,5	
020	2868069-0100		1	BAR	**8-27**
030	90062-0021		4	LOCK WASHER DIN 6797 TYPE A 5,3	
040	312115-0323		4	SCREW ISO4762 M5X8 A4 80	
050	315105-0146		4	WASHER BRB 5,3X10 RFR	
A01X0020	2868068-0200		1	BAR	**8-37**
A01X0030	2868067-0100		1	BAR	**8-39**

Pos	Part No	UN	Qty	Description	Page No

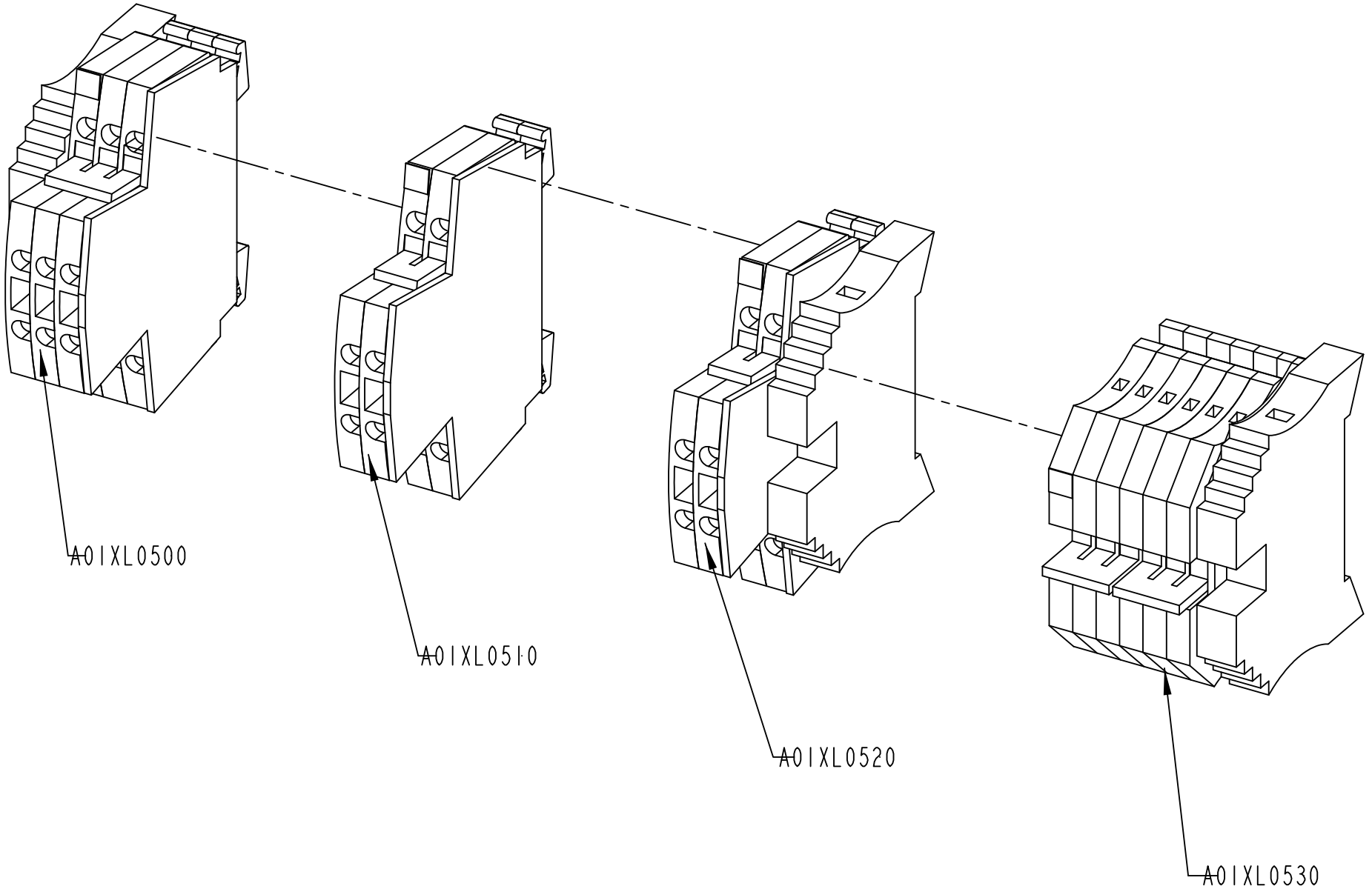
A01XL0500
A01XL0510
A01XL0520
A01XL0530
2868069-1
430314

ECM: 442635 - 20100326
Group number: 2868069-0100
Assembly Drawing: 2868069-1_1_AC

Pos	Part No	UN	Qty	Description	Page No
-					
A01XL0530	2963740-0100		1	BAR	8-29
A01XL0520	2868073-0100		1	BAR	8-31
A01XL0510	2868072-0100		1	BAR	8-33
A01XL0500	2868071-0100		1	BAR	8-35

Pos	Part No	UN	Qty	Description	Page No

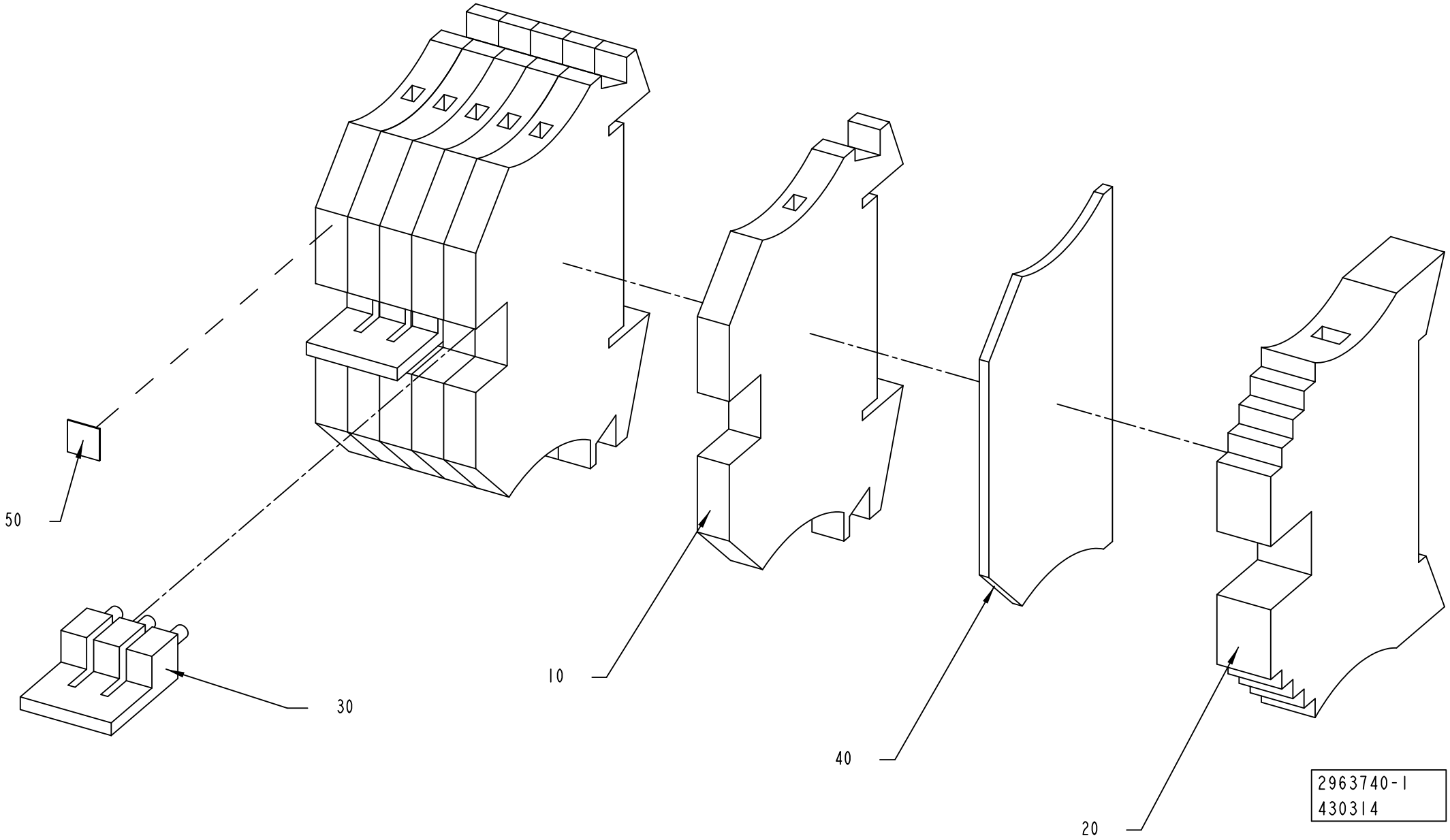
50
30
10
40
20
2963740-1
430314

ECM: 442640 - 20100326
Group number: 2963740-0100
Assembly Drawing: 2963740-1_1_AB

Pos	Part No	UN	Qty	Description	Page No
-					
010	353021-0212		6	FEED THROUGH TERMINAL, WDU 2,5	
020	353031-0203		1	END BRACKET, WEW 35/2	
030	353034-0030		1	BRIDGE CONNECTOR WQV 2,5/10	
040	353032-0004		1	END PLATE, WAP 2,5-10, BEIGE	
050	359011-0807		1	MARKING, DEK 5 FW 1-50	

Pos	Part No	UN	Qty	Description	Page No

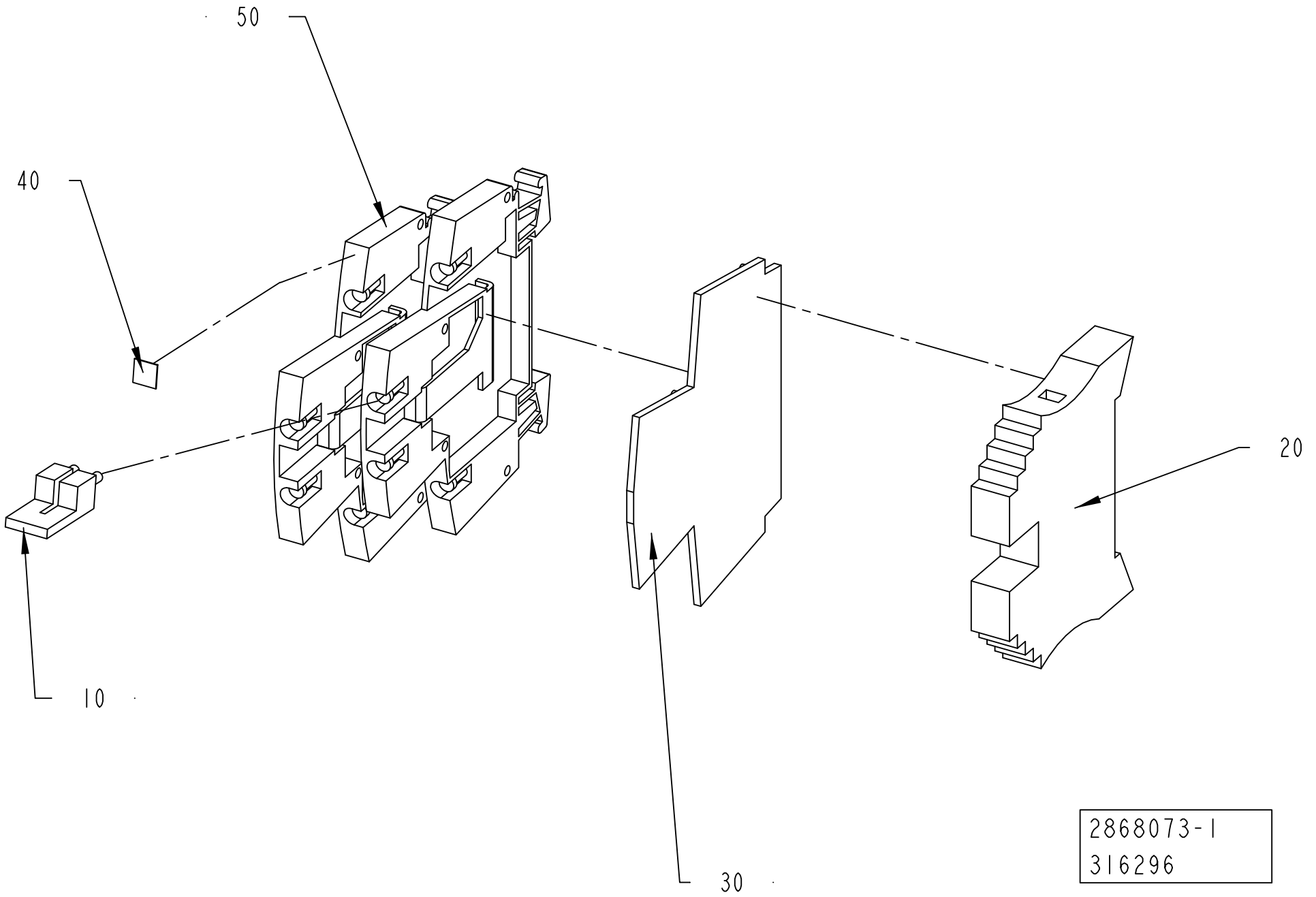
50
40
20
10
30
2868073-1
316296

ECM: 316296 - 20071220
Group number: 2868073-0100
Assembly Drawing: 2868073-1_1_AA

Pos	Part No	UN	Qty	Description	Page No
-					
010	353034-0030		1	BRIDGE CONNECTOR WQV 2,5/10	
020	353031-0203		1	END BRACKET, WEW 35/2	
030	353032-0009		1	END PLATE, WAP WDK 2,5	
040	359011-0809		1	MARKING, DEK 5 FW 101-150	
050	90457-0049		2	TERMINAL BLOCK WDK 2.5V, 102230	

Pos	Part No	UN	Qty	Description	Page No

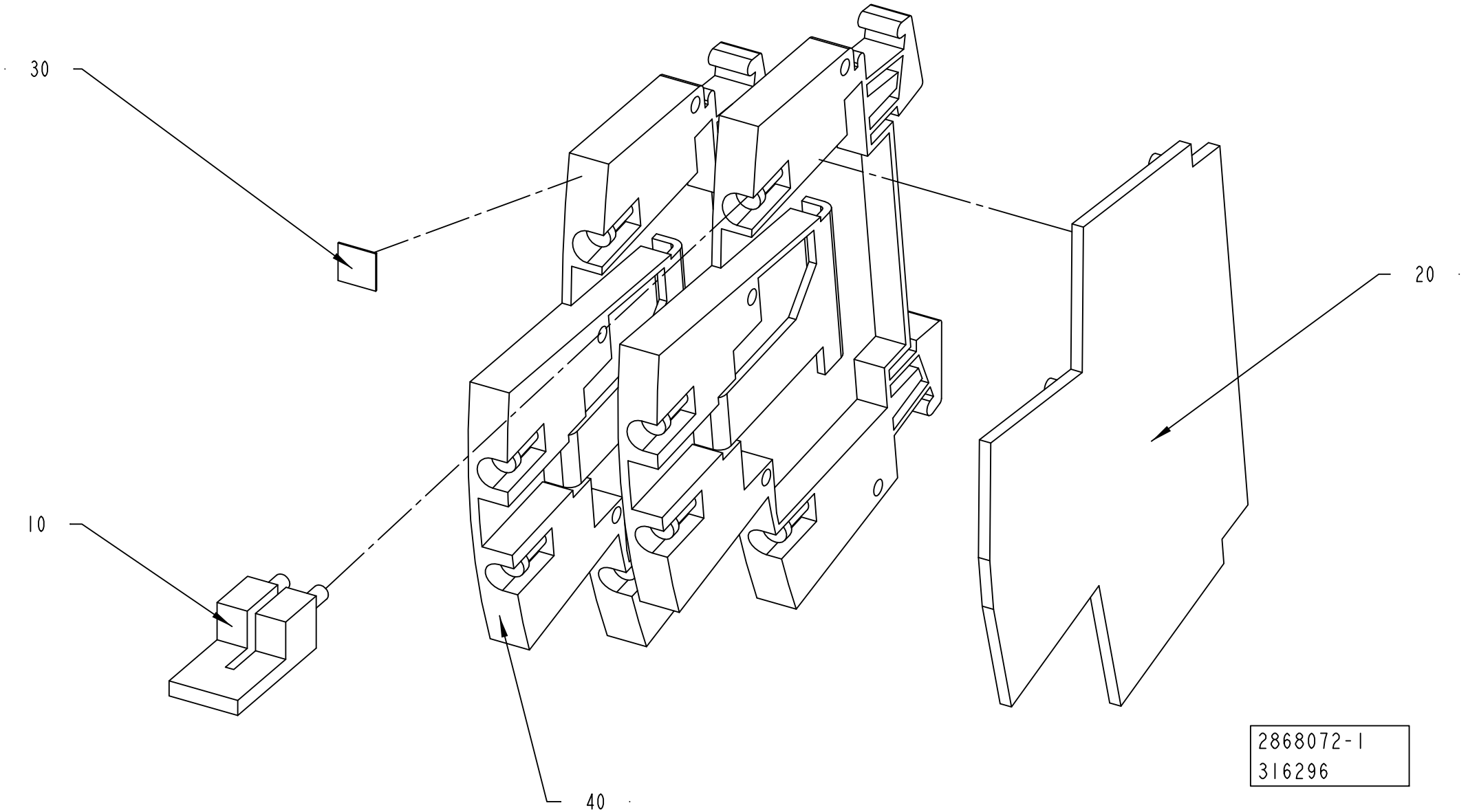
30
20
10
40
2868072-1
316296

ECM: 316296 - 20071220
Group number: 2868072-0100
Assembly Drawing: 2868072-1_1_AA

Pos	Part No	UN	Qty	Description	Page No
-					
010	353034-0030		1	BRIDGE CONNECTOR WQV 2,5/10	
020	353032-0009		1	END PLATE, WAP WDK 2,5	
030	359011-0807		1	MARKING, DEK 5 FW 1-50	
040	90457-0049		2	TERMINAL BLOCK WDK 2.5V, 102230	

Pos	Part No	UN	Qty	Description	Page No

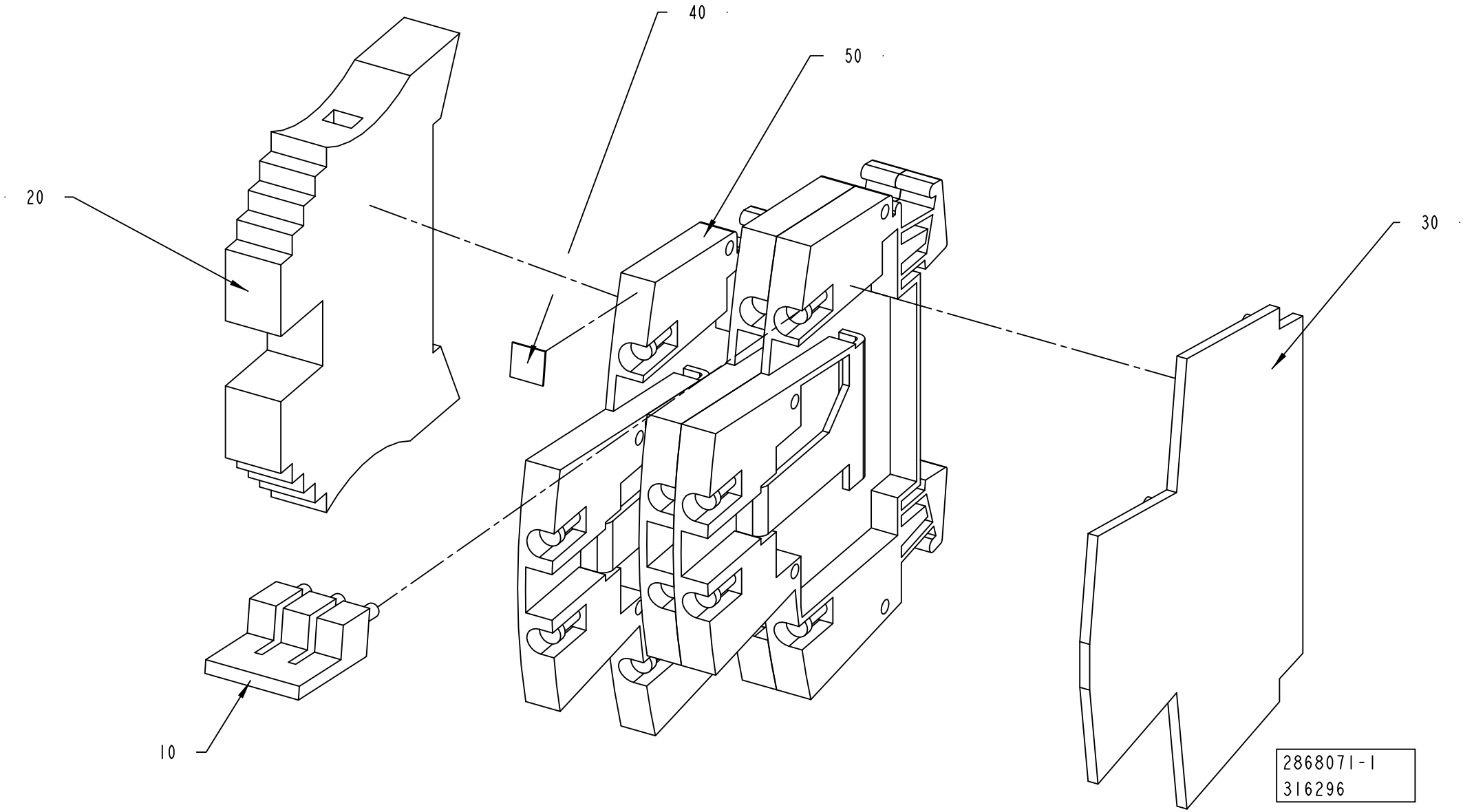
40
50
20
30
10
2868071-1
316296

ECM: 316296 - 20071220
Group number: 2868071-0100
Assembly Drawing: 2868071-1_1_AA

Pos	Part No	UN	Qty	Description	Page No
-					
010	353034-0030		1	BRIDGE CONNECTOR WQV 2,5/10	
020	353031-0203		1	END BRACKET, WEW 35/2	
030	353032-0009		1	END PLATE, WAP WDK 2,5	
040	359011-0807		1	MARKING, DEK 5 FW 1-50	
050	90457-0049		3	TERMINAL BLOCK WDK 2.5V, 102230	

Pos	Part No	UN	Qty	Description	Page No

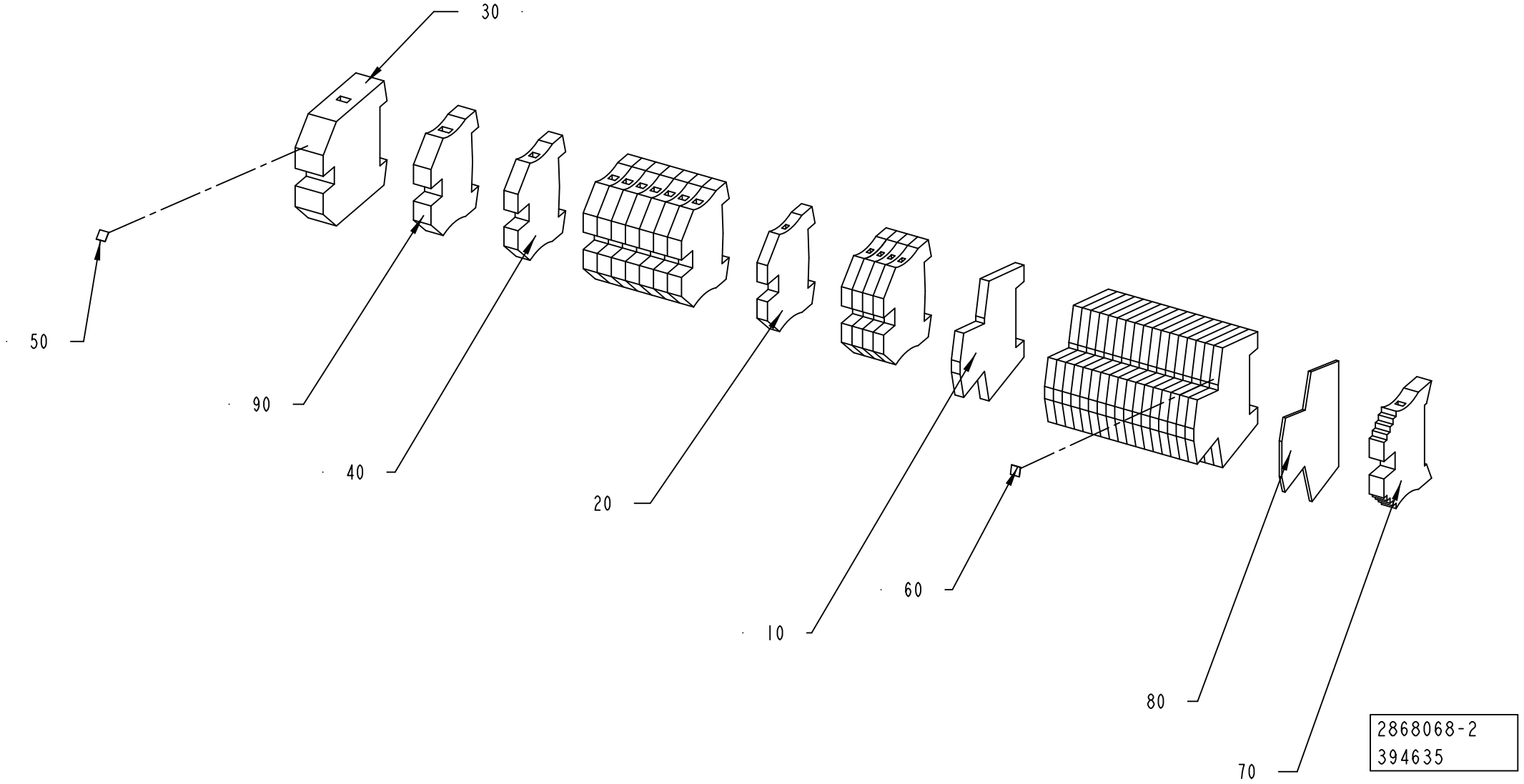
30
50
90
40
20
10
60
80
70
2868068-2
394635

ECM: 408061 - 20090710
Group number: 2868068-0200
Assembly Drawing: 2868068-2_1_AA

Pos	Part No	UN	Qty	Description	Page No
-					
010	353024-0212		18	EARTH TERMINAL WDK 2,5 PE	
020	353024-0205		5	EARTH TERMINAL WPE 4	
030	353024-0209		1	EARTH TERMINAL WPE 35	
040	353024-0206		8	EARTH TERMINAL WPE 6	
050	359011-0807		1	MARKING, DEK 5 FW 1-50	
060	359011-0808		1	MARKING, DEK 5FW 51-100	
070	353031-0203		1	END BRACKET, WEW 35/2	
080	90077-0114		1	END PLATE, WAP 16+35 WTW 2,5-10	
090	353024-0207		1	EARTH TERMINAL WPE 10	

Pos	Part No	UN	Qty	Description	Page No

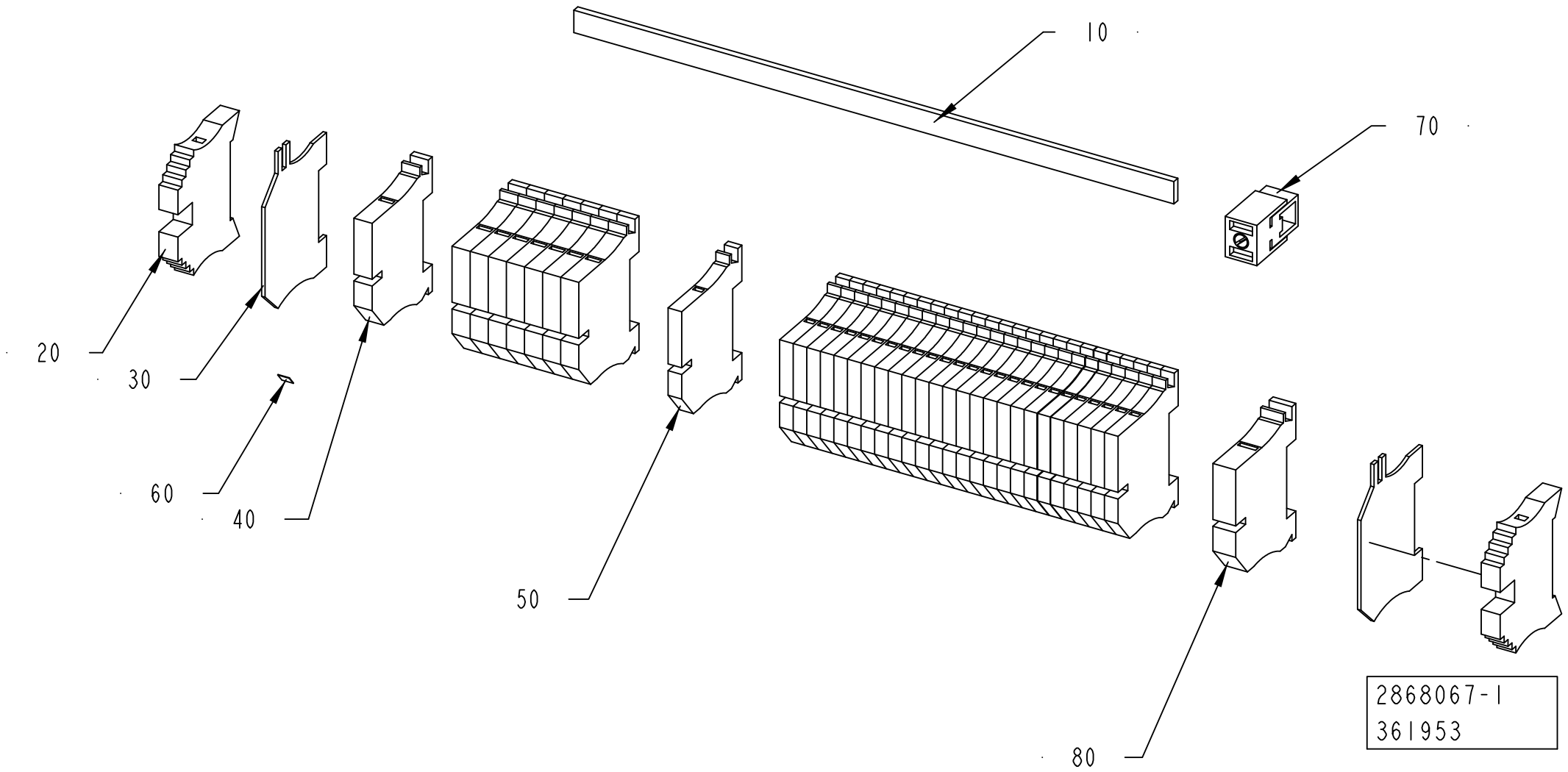
10
70
20
30
60
40
50
80
2868067-1
361953

ECM: 362068 - 20090313
Group number: 2868067-0100
Assembly Drawing: 2868067-1_1_AC

Pos	Part No	UN	Qty	Description	Page No
-					
010	353041-0001	MM	265	BUS BAR RAIL 10X3MM SSCH	
020	353031-0203		2	END BRACKET, WEW 35/2	
030	353033-0104		2	END PLATE, WHP2,5-35N/10X3 BL	
040	353022-0003		8	TERMINAL WNT 6 10X3	
050	353022-0002		26	TERMINAL WNT 4 10X3	
060	359011-0807		1	MARKING, DEK 5 FW 1-50	
070	353041-0106		1	HOLDER ZB35 K 5026.8	
080	353022-0004		1	TERMINAL WNT 10 10X3	

Pos	Part No	UN	Qty	Description	Page No

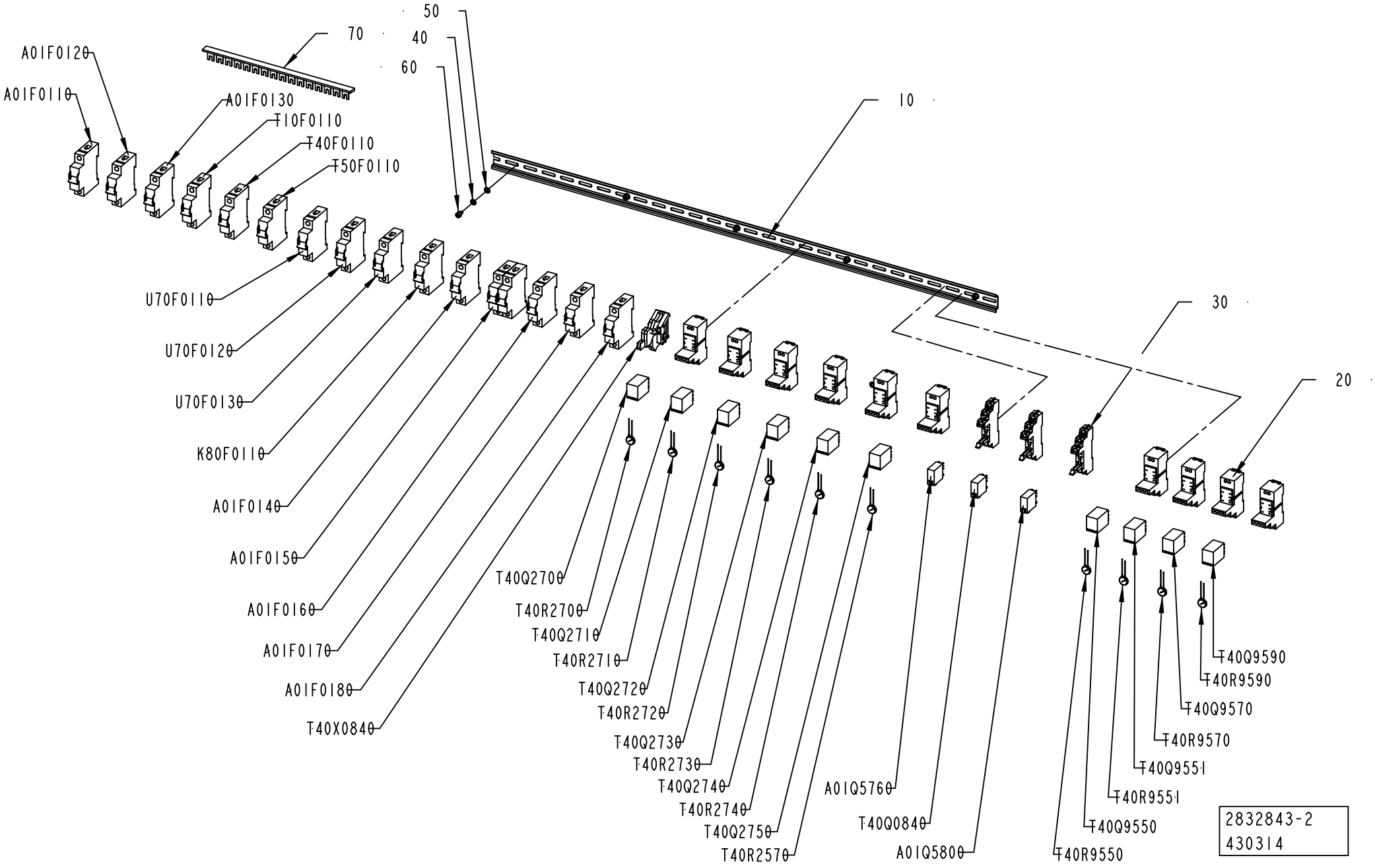
50
70
40
60
10
30
20
A01F0120
A01F0110
A01F0130
T10F0110
T40F0110
T50F0110
U70F0110
U70F0120
U70F0130
K80F0110
A01F0140
A01F0150
A01F0160
A01F0170
A01F0180
T40X0840
T40Q2700
T40R2700
T40Q2710
T40R2710
T40Q2720
T40R2720
T40Q2730
T40R2730
T40Q2740
T40R2740
T40Q2750
T40R2570
A01Q5760
T40Q0840
A01Q5800
T40R9550
T40Q9550
T40R9551
T40Q9551
T40R9570
T40Q9570
T40R9590
T40Q9590
2832843-2
430314

ECM: 442630 - 20100326
Group number: 2832843-0200
Assembly Drawing: 2832843-2_1_AC

This list covers pages from 8-40 to 8-43

Pos	Part No	UN	Qty	Description	Page No
CE ASU (See drawing on page: 8-40)					
070	90459-5883	MM	290	COMMONING BUSBAR, 1-P 1-PH 1X57 MOD 63A	
A01F0110	354000-0040		1	MINIATURE CIRCUIT BREAKER, FAZ-C4/1	
A01F0120	354000-0040		1	MINIATURE CIRCUIT BREAKER, FAZ-C4/1	
A01F0130	354000-0040		1	MINIATURE CIRCUIT BREAKER, FAZ-C4/1	
A01F0140	354000-0040		1	MINIATURE CIRCUIT BREAKER, FAZ-C4/1	
A01F0150	354000-0040		1	MINIATURE CIRCUIT BREAKER, FAZ-C4/1	
A01F0160	354000-0040		1	MINIATURE CIRCUIT BREAKER, FAZ-C4/1	
A01F0170	354000-0040		1	MINIATURE CIRCUIT BREAKER, FAZ-C4/1	
A01F0180	354000-0060		1	MINIATURE CIRCUIT BREAKER, FAZ-C6/1	
K80F0110	354000-0040		1	MINIATURE CIRCUIT BREAKER, FAZ-C4/1	
T10F0110	354000-0040		1	MINIATURE CIRCUIT BREAKER, FAZ-C4/1	
T40F0110	354000-0040		1	MINIATURE CIRCUIT BREAKER, FAZ-C4/1	
T50F0110	354000-0040		1	MINIATURE CIRCUIT BREAKER, FAZ-C4/1	
U70F0110	354000-0040		1	MINIATURE CIRCUIT BREAKER, FAZ-C4/1	
U70F0120	354000-0040		1	MINIATURE CIRCUIT BREAKER, FAZ-C4/1	
U70F0130	351416-0040		1	MINIATURE CIRC. BREAK., FAZ -D4 1-POLE	
UL ASU, CSA ASU (See drawing on page: 8-42)					
070	90600-5519		2	BUSBAR, Z-SV/UL-16/1P-1TE/12 104893	
A01F0110	315744-0040		1	MINIATURE CIRCUIT BREAKER, FAZ-C4/1-NA	
A01F0120	315744-0040		1	MINIATURE CIRCUIT BREAKER, FAZ-C4/1-NA	
A01F0130	315744-0040		1	MINIATURE CIRCUIT BREAKER, FAZ-C4/1-NA	
A01F0140	315744-0040		1	MINIATURE CIRCUIT BREAKER, FAZ-C4/1-NA	
A01F0150	315744-0040		1	MINIATURE CIRCUIT BREAKER, FAZ-C4/1-NA	
A01F0160	315744-0040		1	MINIATURE CIRCUIT BREAKER, FAZ-C4/1-NA	
A01F0170	315744-0040		1	MINIATURE CIRCUIT BREAKER, FAZ-C4/1-NA	
A01F0180	315744-0060		1	MINIATURE CIRCUIT BREAKER, FAZ-C6/1-NA	
K80F0110	315744-0040		1	MINIATURE CIRCUIT BREAKER, FAZ-C4/1-NA	
T10F0110	315744-0040		1	MINIATURE CIRCUIT BREAKER, FAZ-C4/1-NA	
T40F0110	315744-0040		1	MINIATURE CIRCUIT BREAKER, FAZ-C4/1-NA	
T50F0110	315744-0040		1	MINIATURE CIRCUIT BREAKER, FAZ-C4/1-NA	
U70F0110	315744-0040		1	MINIATURE CIRCUIT BREAKER, FAZ-C4/1-NA	
U70F0120	315744-0040		1	MINIATURE CIRCUIT BREAKER, FAZ-C4/1-NA	
U70F0130	315747-0040		1	MINIATURE CIRCUIT BREAKER, FAZ-D4/1-NA	
Common Parts					
010	353042-0004	MM	988	RAIL, TS 35/7,5	
020	90600-1219		10	SOCKET, 700-HN104	
030	90129-0018		3	BASE, P2RF-08-E	
040	90062-0021		5	LOCK WASHER DIN 6797 TYPE A 5,3	
050	315105-0146		5	WASHER BRB 5,3X10 RFR	
060	312115-0323		5	SCREW ISO4762 M5X8 A4 80	
A01Q5760	90119-0108		1	RELAY OMRON G2R-2-SNI-24DC	
	90129-0018		*1*	*BASE, P2RF-08-E*	
A01Q5800	90119-0108		1	RELAY OMRON G2R-2-SNI-24DC	
	90129-0018		*1*	*BASE, P2RF-08-E*	
T40Q0840	90119-0108		1	RELAY OMRON G2R-2-SNI-24DC	
	90129-0018		*1*	*BASE, P2RF-08-E*	
T40Q2700	90600-1214		1	SOLID STATE RELAY, 700-SCNN3Z26	
T40Q2710	90600-1214		1	SOLID STATE RELAY, 700-SCNN3Z26	
T40Q2720	90600-1214		1	SOLID STATE RELAY, 700-SCNN3Z26	
T40Q2730	90600-1214		1	SOLID STATE RELAY, 700-SCNN3Z26	
T40Q2740	90600-1214		1	SOLID STATE RELAY, 700-SCNN3Z26	
T40Q2750	90600-1214		1	SOLID STATE RELAY, 700-SCNN3Z26	
T40Q9550	90600-1214		1	SOLID STATE RELAY, 700-SCNN3Z26	
T40Q9551	90600-1214		1	SOLID STATE RELAY, 700-SCNN3Z26	
T40Q9570	90600-1214		1	SOLID STATE RELAY, 700-SCNN3Z26	
T40Q9590	90600-1214		1	SOLID STATE RELAY, 700-SCNN3Z26	
T40R2700	90601-2686		1	VARISTOR FILTER, B72210S0250K101	
T40R2710	90601-2686		1	VARISTOR FILTER, B72210S0250K101	
T40R2720	90601-2686		1	VARISTOR FILTER, B72210S0250K101	
T40R2730	90601-2686		1	VARISTOR FILTER, B72210S0250K101	
T40R2740	90601-2686		1	VARISTOR FILTER, B72210S0250K101	
T40R2750	90601-2686		1	VARISTOR FILTER, B72210S0250K101	
T40R9550	90601-2686		1	VARISTOR FILTER, B72210S0250K101	
T40R9551	90601-2686		1	VARISTOR FILTER, B72210S0250K101	
T40R9570	90601-2686		1	VARISTOR FILTER, B72210S0250K101	
T40R9590	90601-2686		1	VARISTOR FILTER, B72210S0250K101	
T40X0840	3038001-0100		1	BAR	**8-45**

Machine Type | Group Description | Used-In | Group Number | Page No

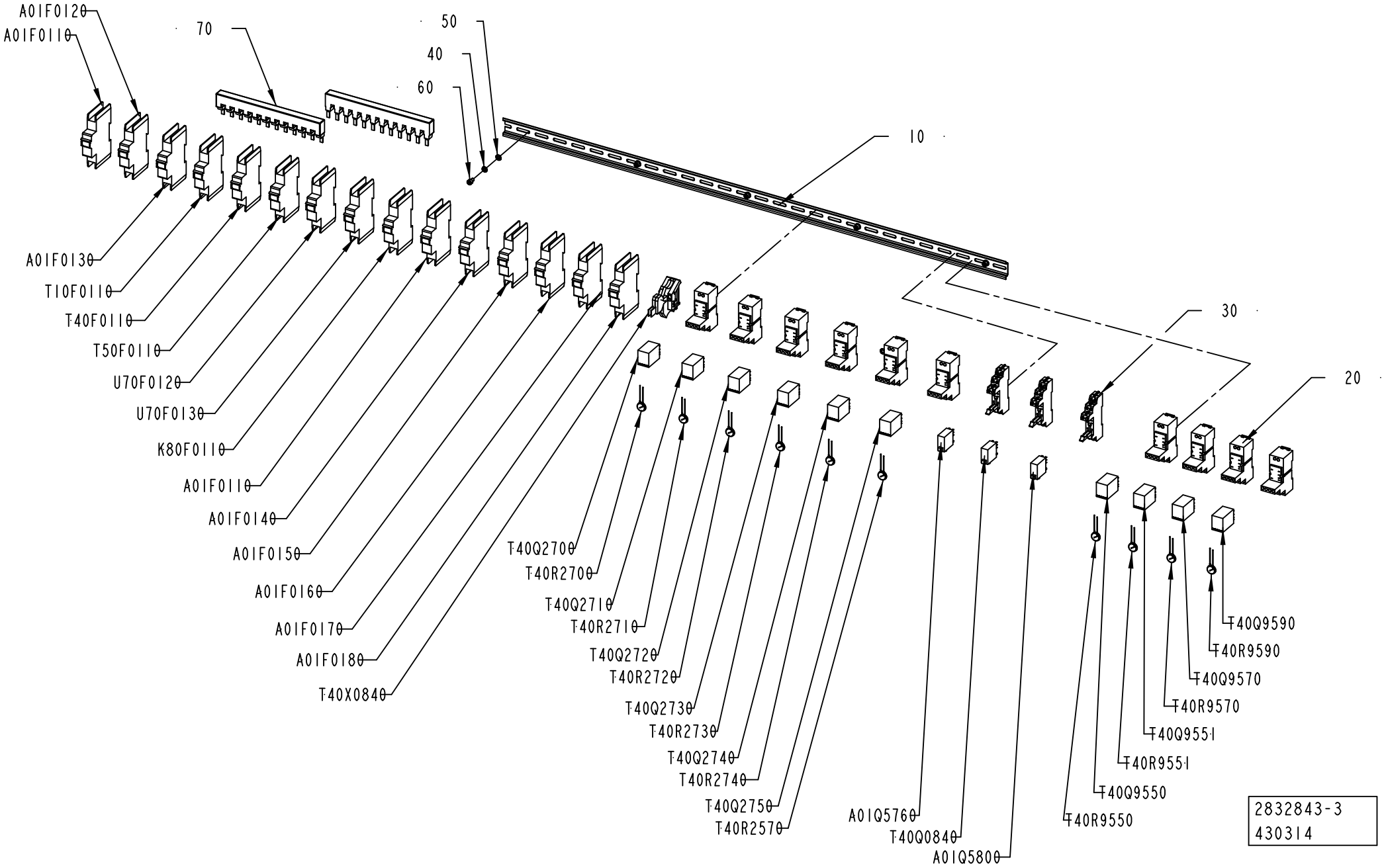
A01F0120
A01F0110
70
50
40
60
10
30
20
A01F0130
T10F0110
T40F0110
T50F0110
U70F0120
U70F0130
K80F0110
A01F0110
A01F0140
A01F0150
A01F0160
A01F0170
A01F0180
T40X0840
T40Q2700
T40R2700
T40Q2710
T40R2710
T40Q2720
T40R2720
T40Q2730
T40R2730
T40Q2740
T40R2740
T40Q2750
T40R2570
A01Q5760
T40Q0840
A01Q5800
T40R9550
T40Q9550
T40R9551
T40Q9551
T40R9570
T40Q9570
T40R9590
T40Q9590
2832843-3
430314

ECM: 442630 - 20100326
Group number: 2832843-0200
Assembly Drawing: 2832843-3_1_AA

This list covers pages from 8-40 to 8-43

Pos	Part No	UN	Qty	Description	Page No
CE ASU (See drawing on page: 8-40)					
070	90459-5883	MM	290	COMMONING BUSBAR, 1-P 1-PH 1X57 MOD 63A	
A01F0110	354000-0040		1	MINIATURE CIRCUIT BREAKER, FAZ-C4/1	
A01F0120	354000-0040		1	MINIATURE CIRCUIT BREAKER, FAZ-C4/1	
A01F0130	354000-0040		1	MINIATURE CIRCUIT BREAKER, FAZ-C4/1	
A01F0140	354000-0040		1	MINIATURE CIRCUIT BREAKER, FAZ-C4/1	
A01F0150	354000-0040		1	MINIATURE CIRCUIT BREAKER, FAZ-C4/1	
A01F0160	354000-0040		1	MINIATURE CIRCUIT BREAKER, FAZ-C4/1	
A01F0170	354000-0040		1	MINIATURE CIRCUIT BREAKER, FAZ-C4/1	
A01F0180	354000-0060		1	MINIATURE CIRCUIT BREAKER, FAZ-C6/1	
K80F0110	354000-0040		1	MINIATURE CIRCUIT BREAKER, FAZ-C4/1	
T10F0110	354000-0040		1	MINIATURE CIRCUIT BREAKER, FAZ-C4/1	
T40F0110	354000-0040		1	MINIATURE CIRCUIT BREAKER, FAZ-C4/1	
T50F0110	354000-0040		1	MINIATURE CIRCUIT BREAKER, FAZ-C4/1	
U70F0110	354000-0040		1	MINIATURE CIRCUIT BREAKER, FAZ-C4/1	
U70F0120	354000-0040		1	MINIATURE CIRCUIT BREAKER, FAZ-C4/1	
U70F0130	351416-0040		1	MINIATURE CIRC. BREAK., FAZ -D4 1-POLE	
UL ASU, CSA ASU (See drawing on page: 8-42)					
070	90600-5519		2	BUSBAR, Z-SV/UL-16/1P-1TE/12 104893	
A01F0110	315744-0040		1	MINIATURE CIRCUIT BREAKER, FAZ-C4/1-NA	
A01F0120	315744-0040		1	MINIATURE CIRCUIT BREAKER, FAZ-C4/1-NA	
A01F0130	315744-0040		1	MINIATURE CIRCUIT BREAKER, FAZ-C4/1-NA	
A01F0140	315744-0040		1	MINIATURE CIRCUIT BREAKER, FAZ-C4/1-NA	
A01F0150	315744-0040		1	MINIATURE CIRCUIT BREAKER, FAZ-C4/1-NA	
A01F0160	315744-0040		1	MINIATURE CIRCUIT BREAKER, FAZ-C4/1-NA	
A01F0170	315744-0040		1	MINIATURE CIRCUIT BREAKER, FAZ-C4/1-NA	
A01F0180	315744-0060		1	MINIATURE CIRCUIT BREAKER, FAZ-C6/1-NA	
K80F0110	315744-0040		1	MINIATURE CIRCUIT BREAKER, FAZ-C4/1-NA	
T10F0110	315744-0040		1	MINIATURE CIRCUIT BREAKER, FAZ-C4/1-NA	
T40F0110	315744-0040		1	MINIATURE CIRCUIT BREAKER, FAZ-C4/1-NA	
T50F0110	315744-0040		1	MINIATURE CIRCUIT BREAKER, FAZ-C4/1-NA	
U70F0110	315744-0040		1	MINIATURE CIRCUIT BREAKER, FAZ-C4/1-NA	
U70F0120	315744-0040		1	MINIATURE CIRCUIT BREAKER, FAZ-C4/1-NA	
U70F0130	315747-0040		1	MINIATURE CIRCUIT BREAKER, FAZ-D4/1-NA	
Common Parts					
010	353042-0004	MM	988	RAIL, TS 35/7,5	
020	90600-1219		10	SOCKET, 700-HN104	
030	90129-0018		3	BASE, P2RF-08-E	
040	90062-0021		5	LOCK WASHER DIN 6797 TYPE A 5,3	
050	315105-0146		5	WASHER BRB 5,3X10 RFR	
060	312115-0323		5	SCREW ISO4762 M5X8 A4 80	
A01Q5760	90119-0108		1	RELAY OMRON G2R-2-SNI-24DC	
	90129-0018		*1*	*BASE, P2RF-08-E*	
A01Q5800	90119-0108		1	RELAY OMRON G2R-2-SNI-24DC	
	90129-0018		*1*	*BASE, P2RF-08-E*	
T40Q0840	90119-0108		1	RELAY OMRON G2R-2-SNI-24DC	
	90129-0018		*1*	*BASE, P2RF-08-E*	
T40Q2700	90600-1214		1	SOLID STATE RELAY, 700-SCNN3Z26	
T40Q2710	90600-1214		1	SOLID STATE RELAY, 700-SCNN3Z26	
T40Q2720	90600-1214		1	SOLID STATE RELAY, 700-SCNN3Z26	
T40Q2730	90600-1214		1	SOLID STATE RELAY, 700-SCNN3Z26	
T40Q2740	90600-1214		1	SOLID STATE RELAY, 700-SCNN3Z26	
T40Q2750	90600-1214		1	SOLID STATE RELAY, 700-SCNN3Z26	
T40Q9550	90600-1214		1	SOLID STATE RELAY, 700-SCNN3Z26	
T40Q9551	90600-1214		1	SOLID STATE RELAY, 700-SCNN3Z26	
T40Q9570	90600-1214		1	SOLID STATE RELAY, 700-SCNN3Z26	
T40Q9590	90600-1214		1	SOLID STATE RELAY, 700-SCNN3Z26	
T40R2700	90601-2686		1	VARISTOR FILTER, B72210S0250K101	
T40R2710	90601-2686		1	VARISTOR FILTER, B72210S0250K101	
T40R2720	90601-2686		1	VARISTOR FILTER, B72210S0250K101	
T40R2730	90601-2686		1	VARISTOR FILTER, B72210S0250K101	
T40R2740	90601-2686		1	VARISTOR FILTER, B72210S0250K101	
T40R2750	90601-2686		1	VARISTOR FILTER, B72210S0250K101	
T40R9550	90601-2686		1	VARISTOR FILTER, B72210S0250K101	
T40R9551	90601-2686		1	VARISTOR FILTER, B72210S0250K101	
T40R9570	90601-2686		1	VARISTOR FILTER, B72210S0250K101	
T40R9590	90601-2686		1	VARISTOR FILTER, B72210S0250K101	
T40X0840	3038001-0100		1	BAR	**8-45**

Machine Type	Group Description	Used-In	Group Number	Page No

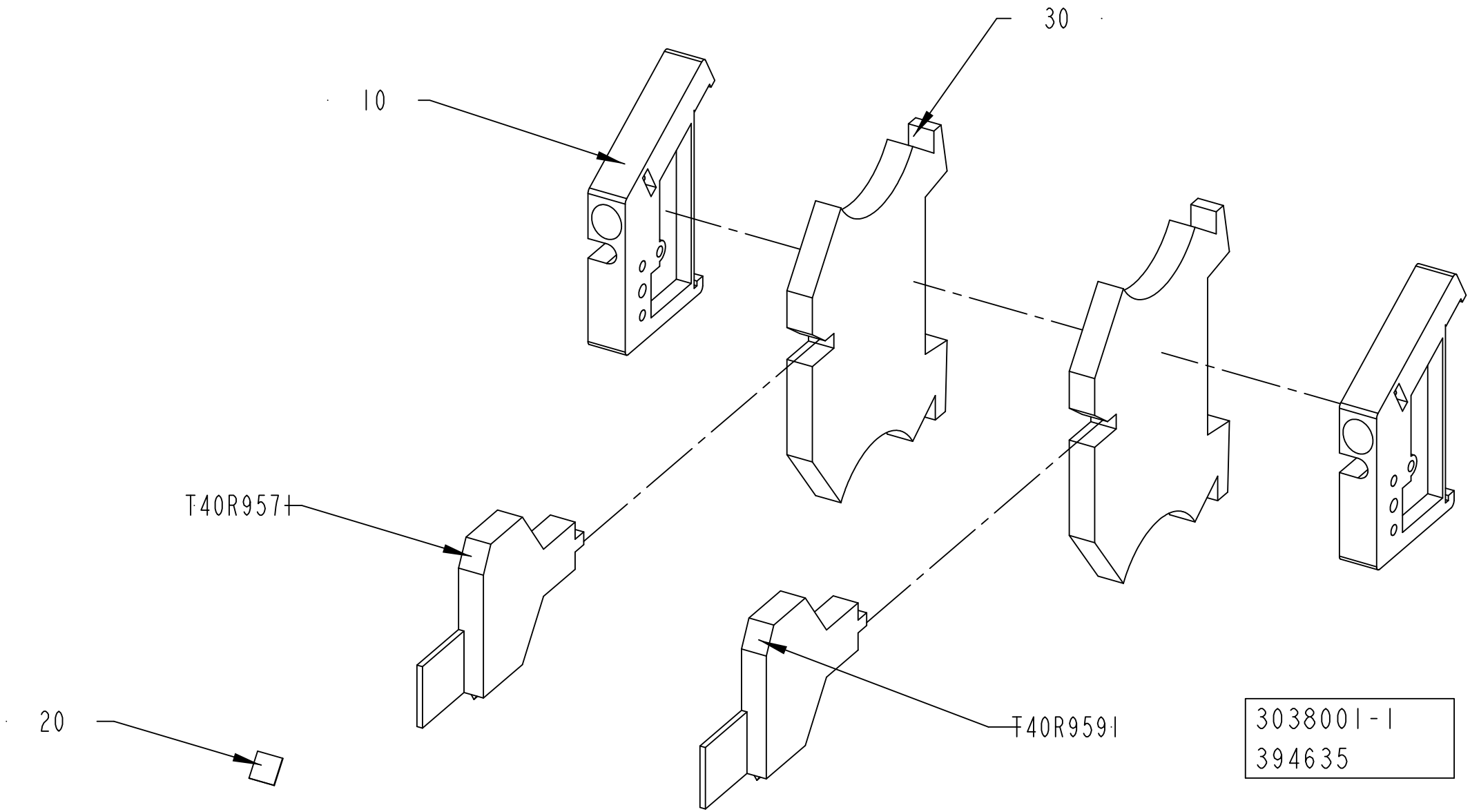
30
10
T40R957
20
T40R959
3038001-1
394635

ECM: 408069 - 20090710
Group number: 3038001-0100
Assembly Drawing: 3038001-1_1_AA

Pos	Part No	UN	Qty	Description	Page No
-					
010	353031-0201		2	END PLATE, EW35	
020	359011-0807		1	MARKING, DEK 5 FW 1-50	
030	90600-2134		2	TERMINAL DISCONNECATBLE, WTR 2,5/O.TNHE	
T40R9571	90600-2135		1	MODULE CONNECTOR 250V, BEST/D 1878560000	
T40R9591	90600-2135		1	MODULE CONNECTOR 250V, BEST/D 1878560000	

Pos	Part No	UN	Qty	Description	Page No

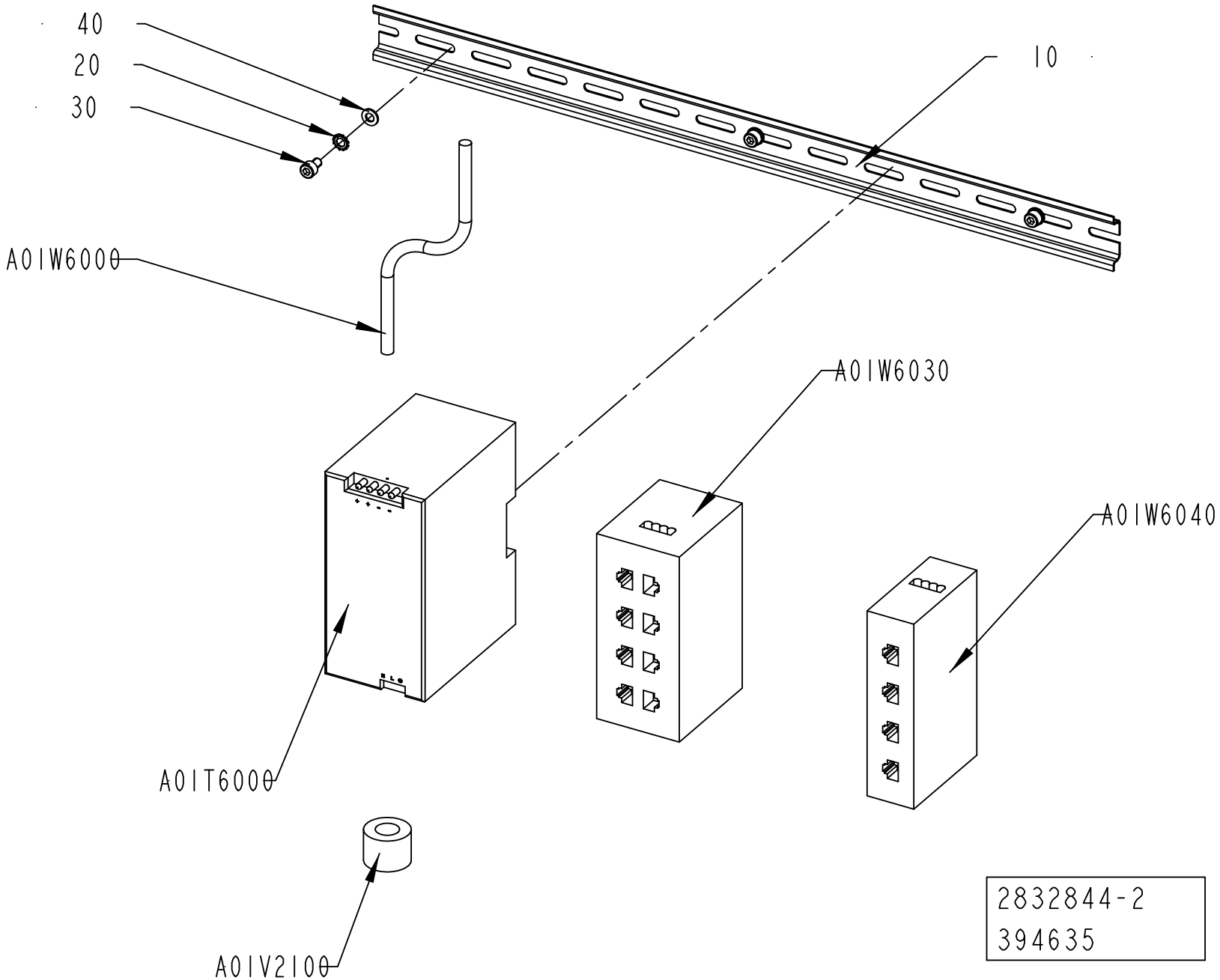
40
20
30
10
A01W6000
A01W6030
A01W6040
A01T6000
A01V2100
2832844-2
394635

ECM: 442631 - 20100326
Group number: 2832844-0200
Assembly Drawing: 2832844-2_1_AA

This list covers pages from 8-46 to 8-49

Pos	Part No	UN	Qty	Description	Page No
UL, CSA (See drawing on pages: 8-46, 8-48)					
A01T5450	90459-5886		1	POWER SUPPLY UNIT 115-230 VAC/24VDC100W	
Common Parts					
010	353042-0004	MM	475	RAIL, TS 35/7,5	
020	90062-0021		3	LOCK WASHER DIN 6797 TYPE A 5,3	
030	312115-0323		3	SCREW ISO4762 M5X8 A4 80	
040	315105-0146		3	WASHER BRB 5,3X10 RFR	
A01T6000	90459-5886		1	POWER SUPPLY UNIT 115-230 VAC/24VDC100W	
A01V2100	90600-5249		1	FERRITE, B64290L616X38	
A01W6000	90459-2530	MM	600	DEVICENET CABLE THIN	
A01W6030	90600-1848		1	ETHERNET SW, FL SWITCH SFN 8TX	
A01W6040	90600-1847		1	ETHERNET SWITCH, FL SWITCH SFN 5TX	

Pos	Part No	UN	Qty	Description	Page No

Machine Type | Group Description | Used-In | Group Number | Page No

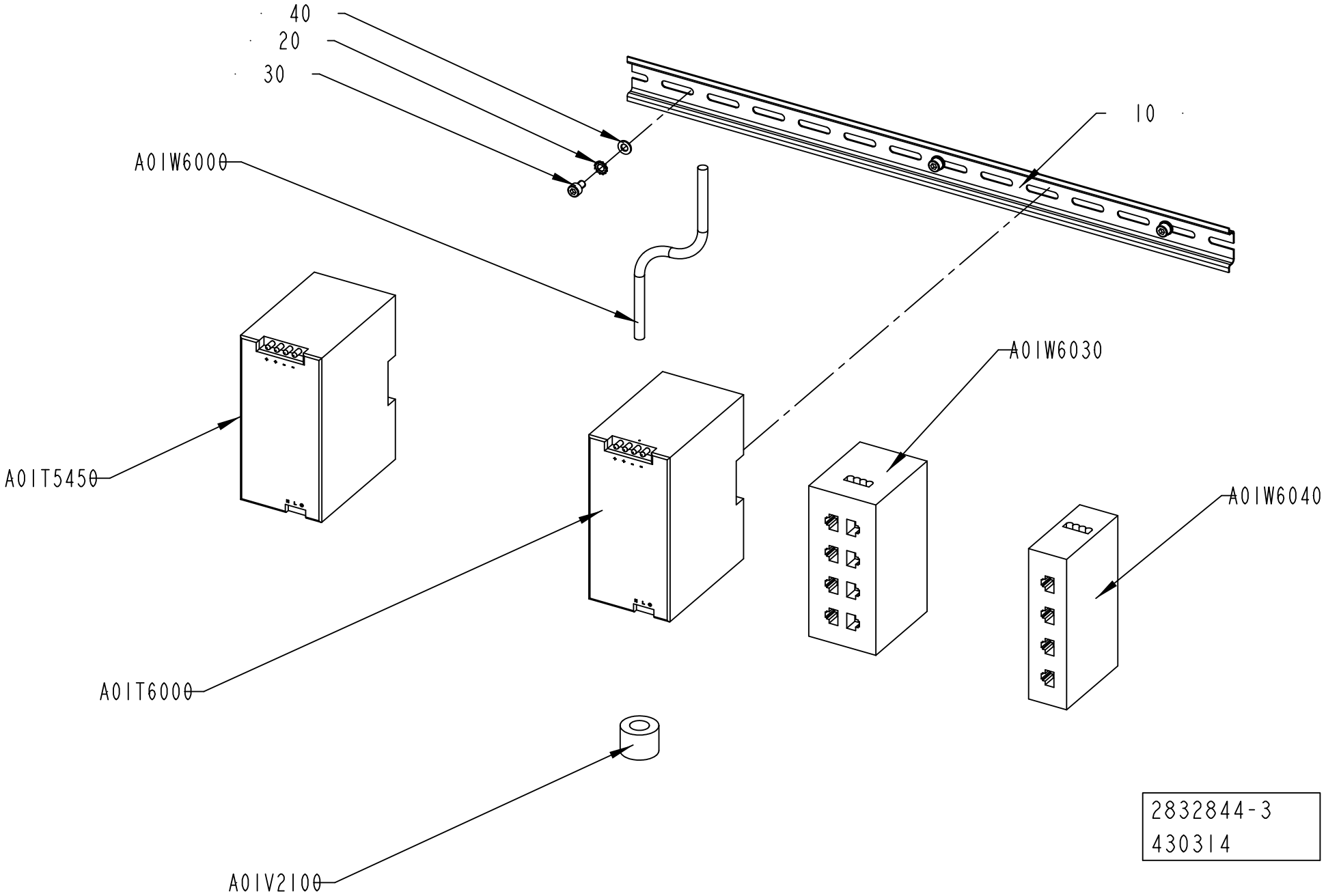
40
20
30
10
A01W6000
A01T5450
A01W6030
A01W6040
A01T6000
A01V2100
2832844-3
430314

ECM: 442631 - 20100326
Group number: 2832844-0200
Assembly Drawing: 2832844-3_1_AA

This list covers pages from 8-46 to 8-49

Pos	Part No	UN	Qty	Description	Page No
UL, CSA (See drawing on pages: 8-46, 8-48)					
A01T5450	90459-5886		1	POWER SUPPLY UNIT 115-230 VAC/24VDC100W	
Common Parts					
010	353042-0004	MM	475	RAIL, TS 35/7,5	
020	90062-0021		3	LOCK WASHER DIN 6797 TYPE A 5,3	
030	312115-0323		3	SCREW ISO4762 M5X8 A4 80	
040	315105-0146		3	WASHER BRB 5,3X10 RFR	
A01T6000	90459-5886		1	POWER SUPPLY UNIT 115-230 VAC/24VDC100W	
A01V2100	90600-5249		1	FERRITE, B64290L616X38	
A01W6000	90459-2530	MM	600	DEVICENET CABLE THIN	
A01W6030	90600-1848		1	ETHERNET SW, FL SWITCH SFN 8TX	
A01W6040	90600-1847		1	ETHERNET SWITCH, FL SWITCH SFN 5TX	

Pos	Part No	UN	Qty	Description	Page No

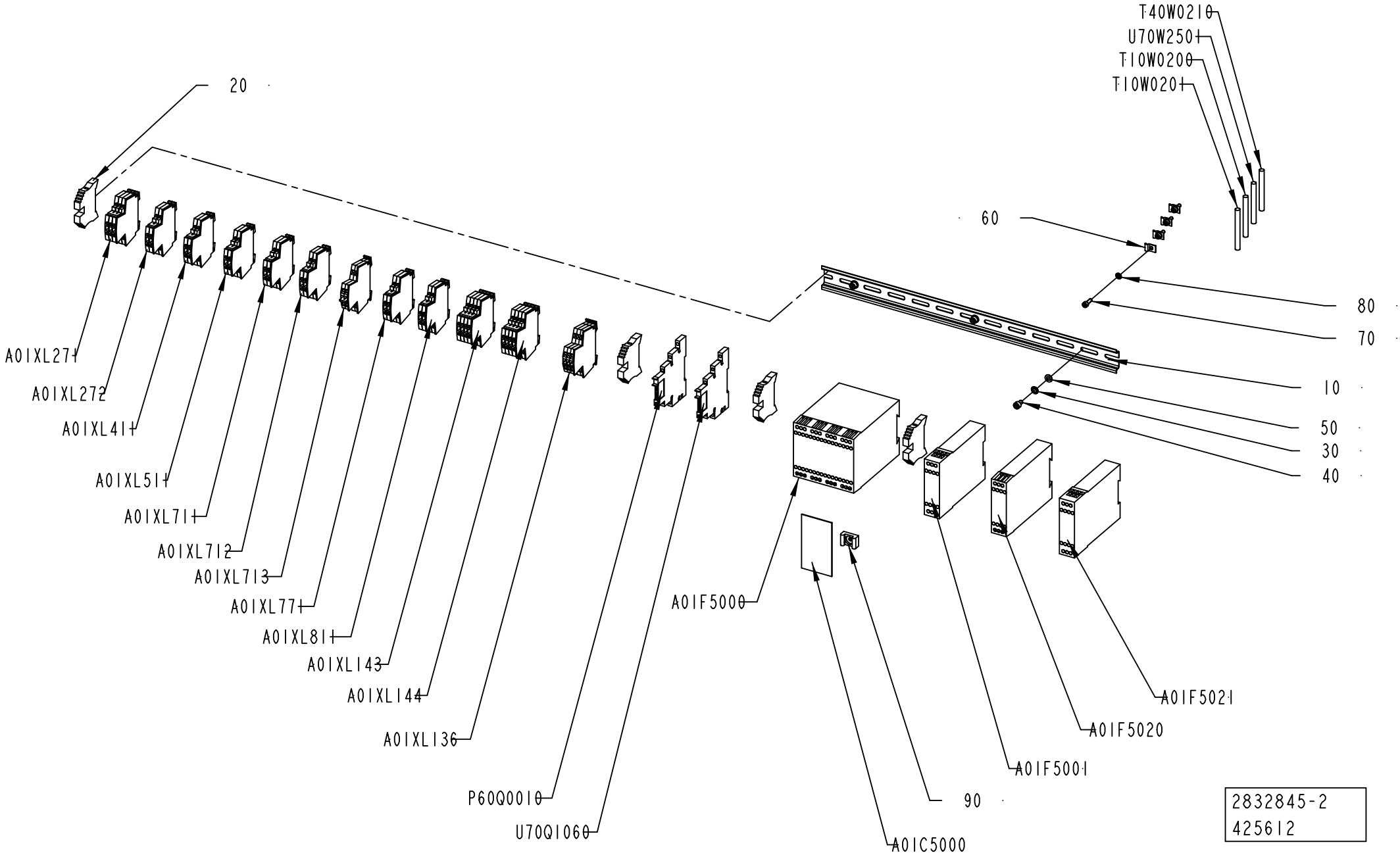
T40W0210
U70W2501
T10W0200
T10W0201
20
60
80
70
10
50
30
40
A01XL271
A01XL272
A01XL411
A01XL511
A01XL711
A01XL712
A01XL713
A01XL771
A01XL811
A01XL143
A01XL144
A01XL136
P60Q0010
U70Q1060
A01F5000
A01F5021
A01F5020
A01F5001
90
A01C5000
2832845-2
425612

ECM: 445734 - 20100326
Group number: 2832845-0200
Assembly Drawing: 2832845-2_1_AB

Pos	Part No	UN	Qty	Description	Page No
-					
010	353042-0004	MM	440	RAIL, TS 35/7,5	
020	353031-0203		4	END BRACKET, WEW 35/2	
030	90062-0021		3	LOCK WASHER DIN 6797 TYPE A 5,3	
040	312115-0323		3	SCREW ISO4762 M5X8 A4 80	
050	315105-0146		3	WASHER BRB 5,3X10 RFR	
060	90165-0022		4	PIPE CLIP, FOR TUBE D=2,5 MM, B-3570	
070	312115-0291		4	SCREW ISO4762 M4X12 A4 80	
080	315105-0136		4	WASHER BRB 4,3X8 RFR	
90	352113-0203		1	ANCHOR PLATES FOR STRIPS, TM3S8-M0	
A01C5000	90459-4891		1	IDENTIFIER, ID-FIX RW	
A01F5000	90601-7290		1	SAFETY PLC, PLUTO B46 20-070-17	
A01F5001	90459-1131		1	SAFETY RELAY, E1T	
A01F5020	90600-1454		1	SAFETY RELAY, E1T	
A01F5021	90459-1131		1	SAFETY RELAY, E1T	
A01XL713	3037136-0100		10	BAR	**8-53**
A01XL811	2861100-0100		1	BAR	**8-55**
A01XL771	2861099-0100		1	BAR	**8-57**
A01XL712	2861098-0100		1	BAR	**8-59**
A01XL711	2861097-0100		1	BAR	**8-61**
A01XL511	2861095-0100		1	BAR	**8-63**
A01XL411	2861094-0100		1	BAR	**8-65**
A01XL272	2861093-0100		1	BAR	**8-67**
A01XL271	2861087-0100		1	BAR	**8-69**
A01XL144	2897676-0100		1	BAR	**8-71**
A01XL143	2897675-0100		1	BAR	**8-73**
A01XL136	3041597-0100		1	BAR	**8-75**
P60Q0010	90600-1211		1	TERMINAL BLOCK RELAY, 700-HLT1Z24	
T10W0200	90220-0165	MM	1000	SCR. CABLE 5X0,34MM2	
T10W0201	90220-0165	MM	1000	SCR. CABLE 5X0,34MM2	
T40W0210	90220-0165	MM	1000	SCR. CABLE 5X0,34MM2	
U70Q1060	90600-1211		1	TERMINAL BLOCK RELAY, 700-HLT1Z24	
U70W2501	90220-0165	MM	1000	SCR. CABLE 5X0,34MM2	

Pos	Part No	UN	Qty	Description	Page No

Machine Type | Group Description | Used-In | Group Number | Page No

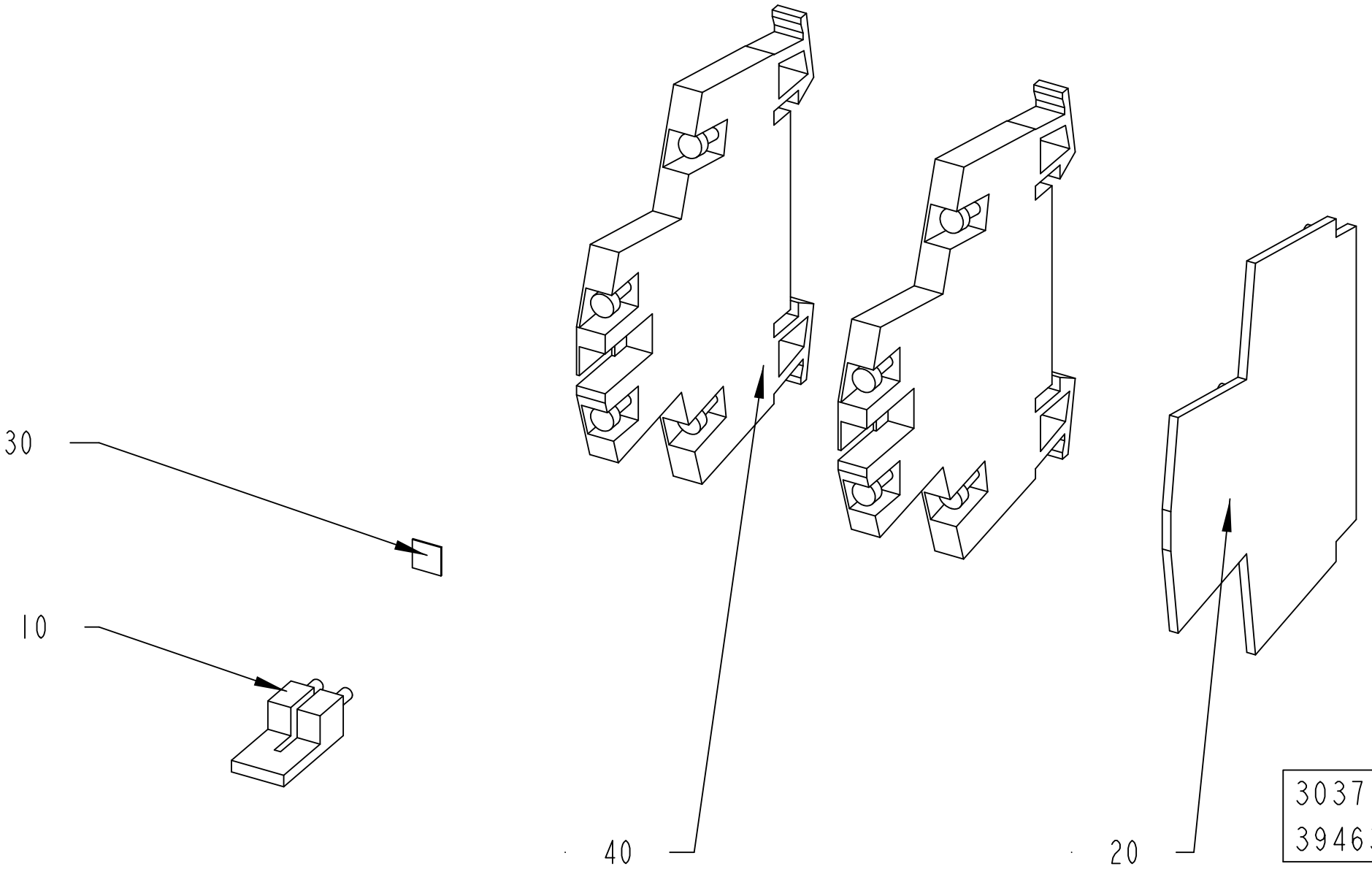
30
10
40
20
3037136-1
394635

ECM: 408067 - 20090710
Group number: 3037136-0100
Assembly Drawing: 3037136-1_1_AA

Pos	Part No	UN	Qty	Description	Page No
-					
010	353034-0030		1	BRIDGE CONNECTOR WQV 2,5/10	
020	353032-0009		1	END PLATE, WAP WDK 2,5	
030	359011-0809		1	MARKING, DEK 5 FW 101-150	
040	90459-5253		2	TERMINAL BLOCK WDK 2,5 V	

Pos	Part No	UN	Qty	Description	Page No

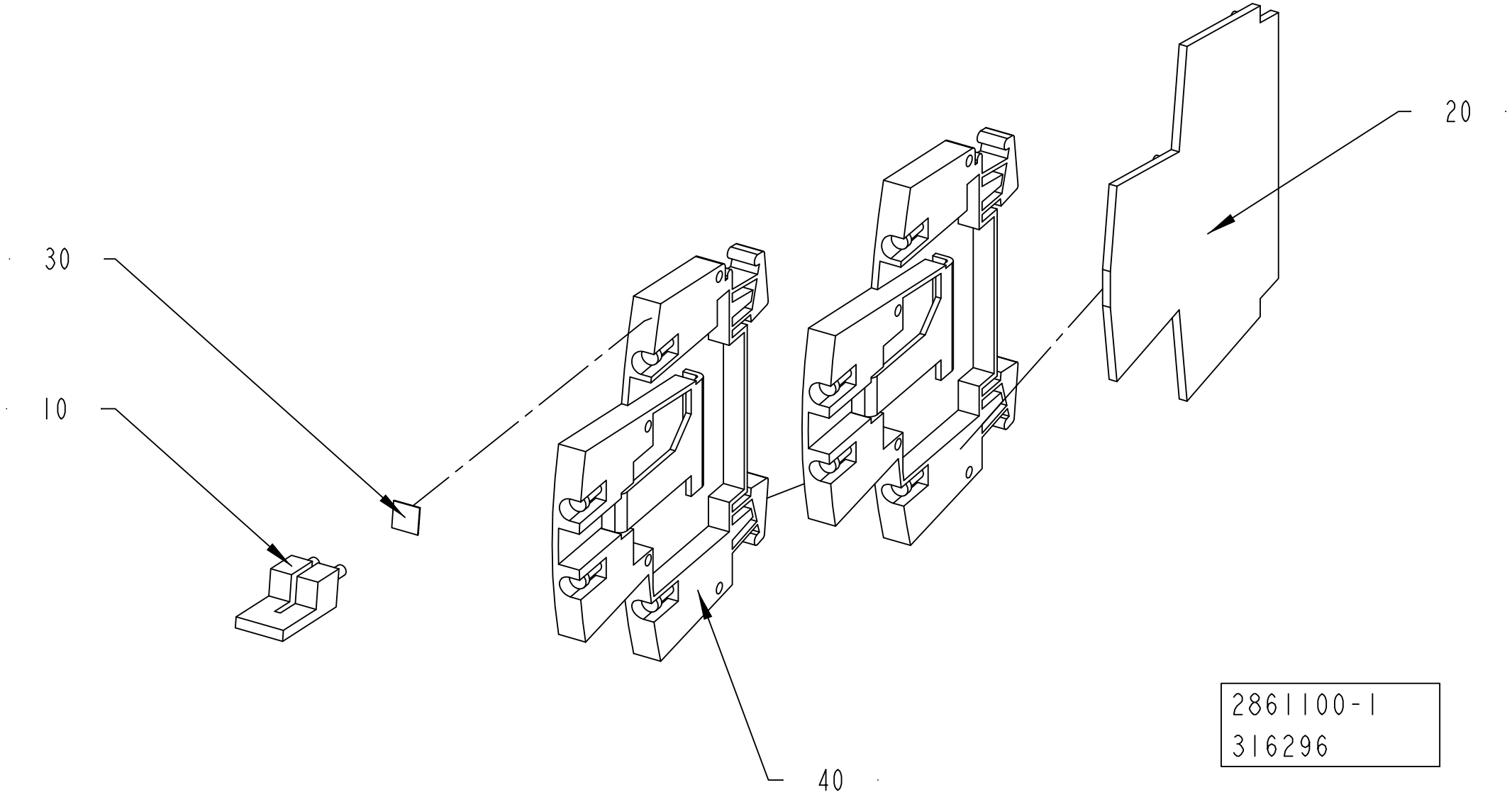
30
10
20
40
2861100-1
316296

ECM: 316296 - 20071220
Group number: 2861100-0100
Assembly Drawing: 2861100-1_1_AA

Pos	Part No	UN	Qty	Description	Page No
-					
010	353034-0030		1	BRIDGE CONNECTOR WQV 2,5/10	
020	353032-0009		1	END PLATE, WAP WDK 2,5	
030	359011-0809		1	MARKING, DEK 5 FW 101-150	
040	90457-0049		2	TERMINAL BLOCK WDK 2.5V, 102230	

Pos	Part No	UN	Qty	Description	Page No

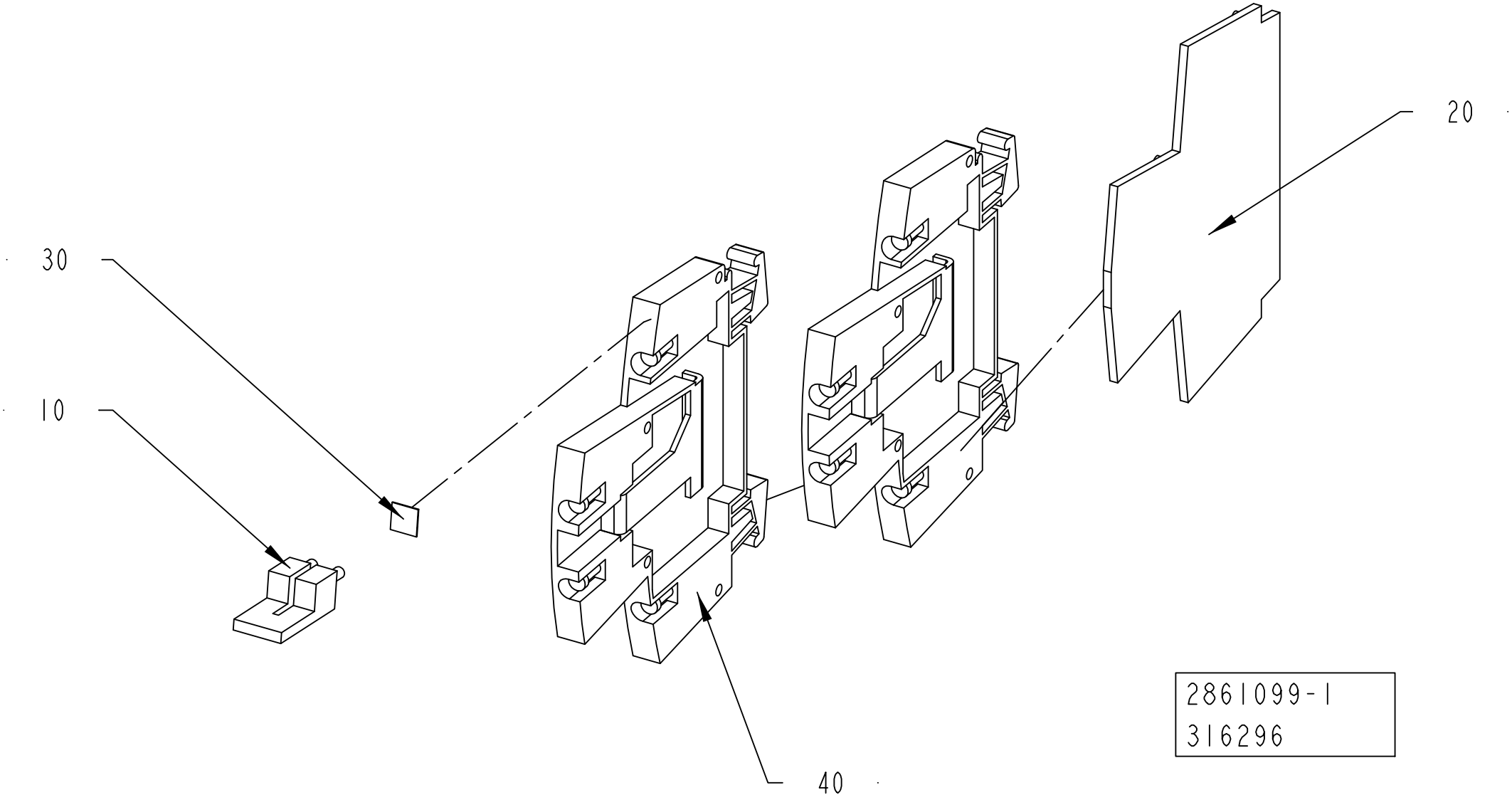
20
30
10
40
2861099-1
316296

ECM: 316296 - 20071220
Group number: 2861099-0100
Assembly Drawing: 2861099-1_1_AA

Pos	Part No	UN	Qty	Description	Page No
-					
010	353034-0030		1	BRIDGE CONNECTOR WQV 2,5/10	
020	353032-0009		1	END PLATE, WAP WDK 2,5	
030	359011-0809		1	MARKING, DEK 5 FW 101-150	
040	90457-0049		2	TERMINAL BLOCK WDK 2.5V, 102230	

Pos	Part No	UN	Qty	Description	Page No

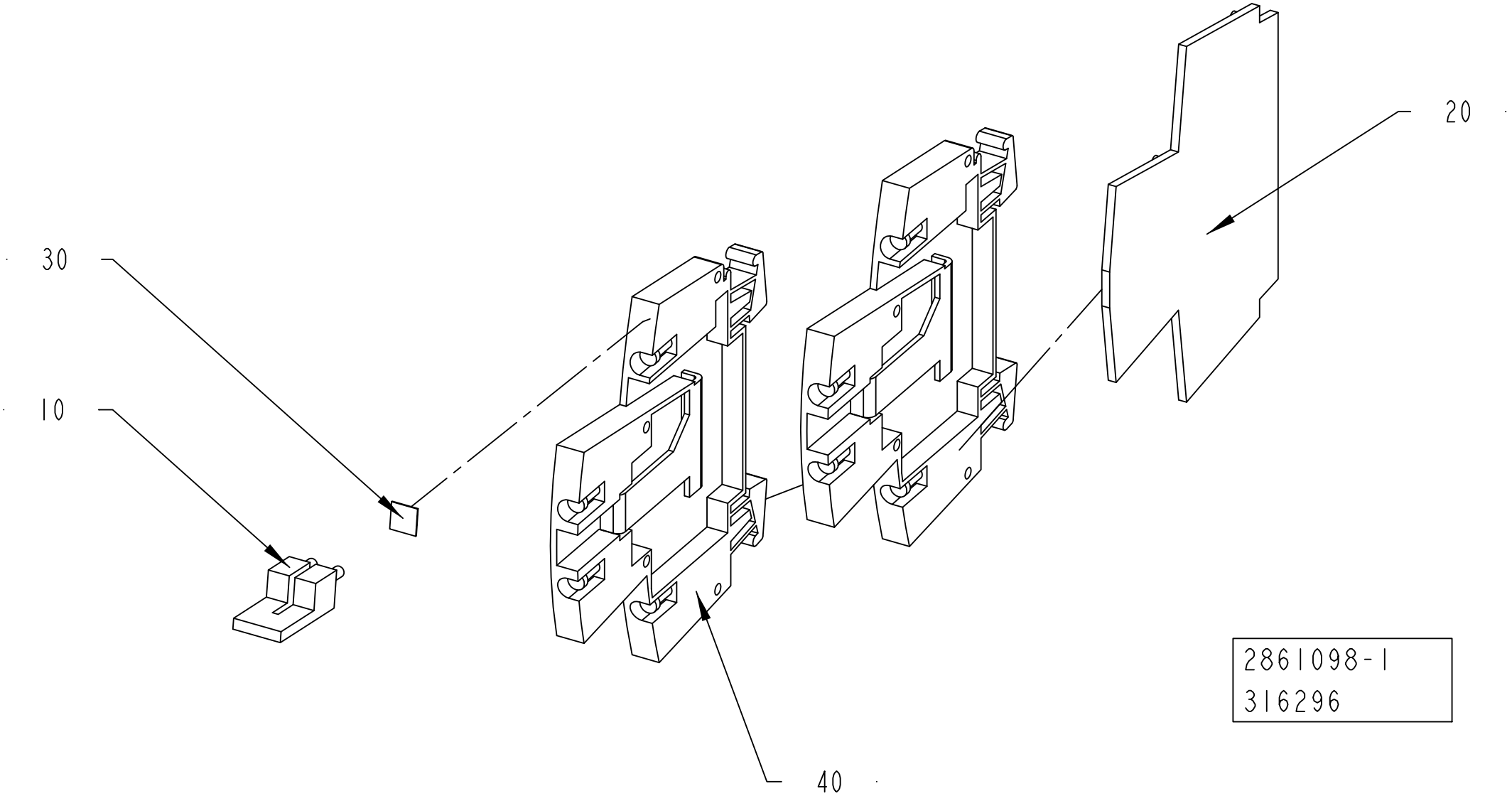
20
30
10
40
2861098-1
316296

ECM: 316296 - 20071220
Group number: 2861098-0100
Assembly Drawing: 2861098-1_1_AA

Pos	Part No	UN	Qty	Description	Page No
-					
010	353034-0030		1	BRIDGE CONNECTOR WQV 2,5/10	
020	353032-0009		1	END PLATE, WAP WDK 2,5	
030	359011-0809		1	MARKING, DEK 5 FW 101-150	
040	90457-0049		2	TERMINAL BLOCK WDK 2.5V, 102230	

Pos	Part No	UN	Qty	Description	Page No

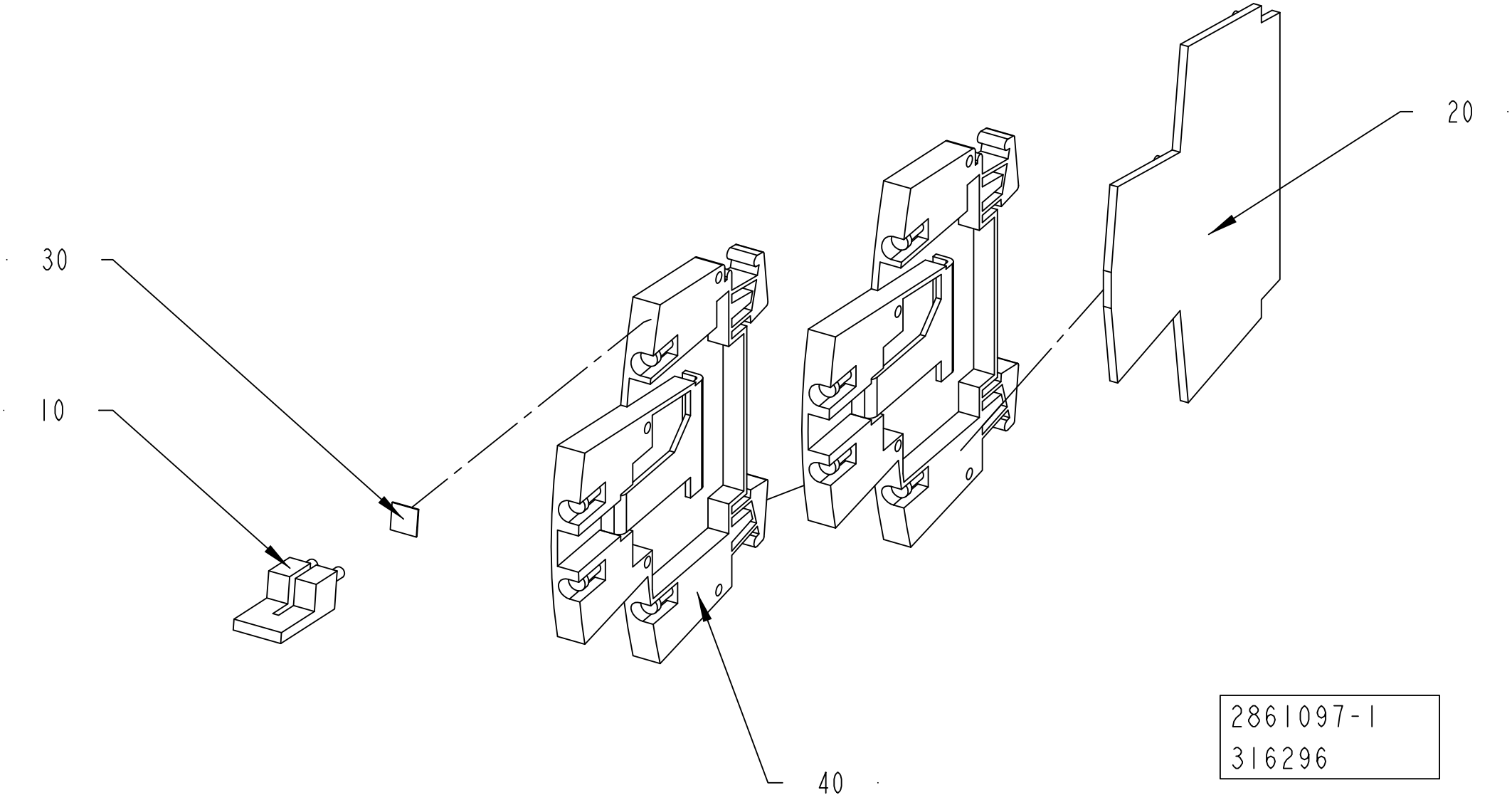
20
30
10
40
2861097-1
316296

ECM: 316296 - 20071220
Group number: 2861097-0100
Assembly Drawing: 2861097-1_1_AA

Pos	Part No	UN	Qty	Description	Page No
-					
010	353034-0030		1	BRIDGE CONNECTOR WQV 2,5/10	
020	353032-0009		1	END PLATE, WAP WDK 2,5	
030	359011-0809		1	MARKING, DEK 5 FW 101-150	
040	90457-0049		2	TERMINAL BLOCK WDK 2.5V, 102230	

Pos	Part No	UN	Qty	Description	Page No

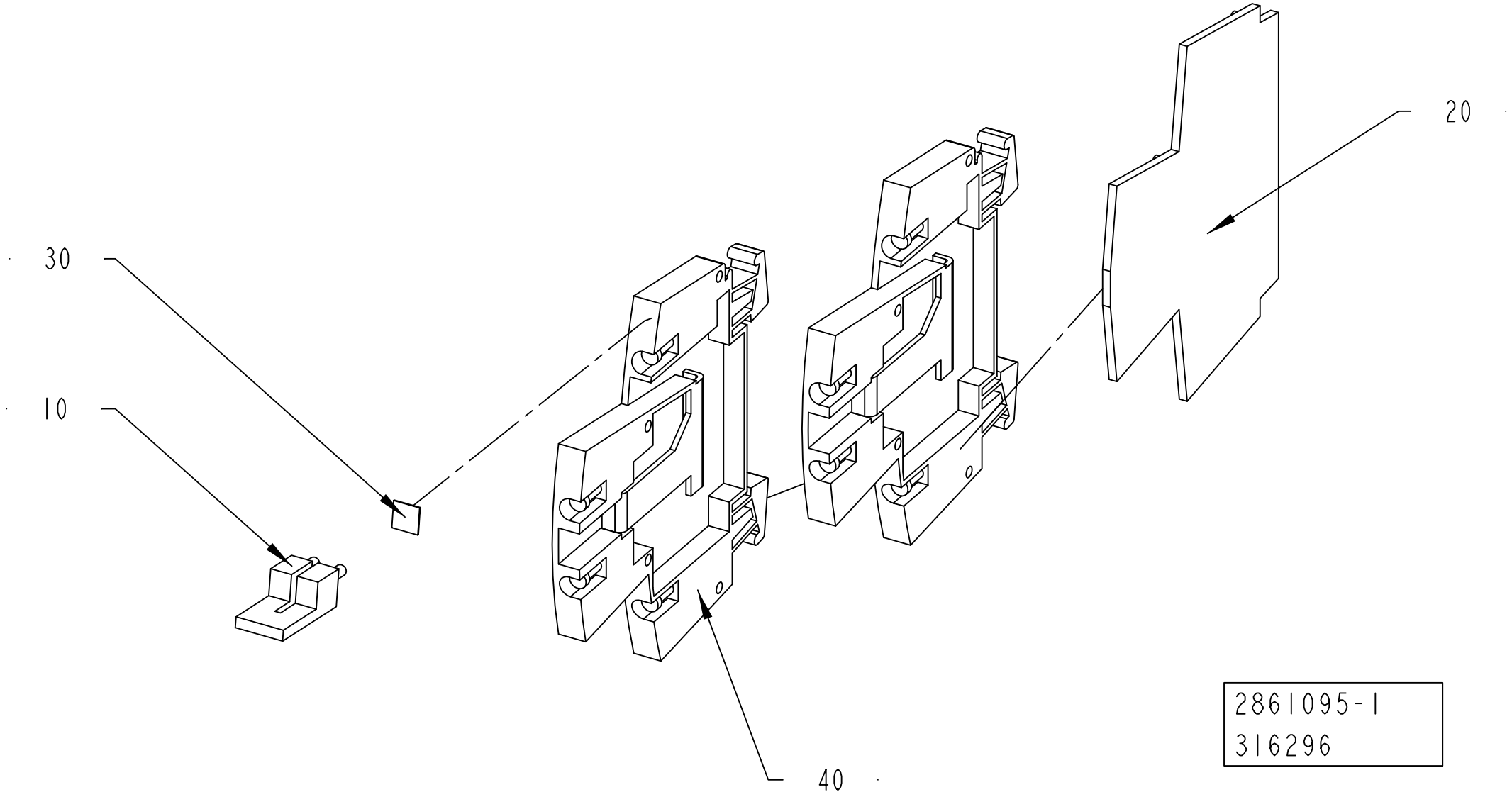
20
30
10
40
2861095-1
316296

ECM: 316296 - 20071220
Group number: 2861095-0100
Assembly Drawing: 2861095-1_1_AA

Pos	Part No	UN	Qty	Description	Page No
-					
010	353034-0030		1	BRIDGE CONNECTOR WQV 2,5/10	
020	353032-0009		1	END PLATE, WAP WDK 2,5	
030	359011-0809		1	MARKING, DEK 5 FW 101-150	
040	90457-0049		2	TERMINAL BLOCK WDK 2.5V, 102230	

Pos	Part No	UN	Qty	Description	Page No

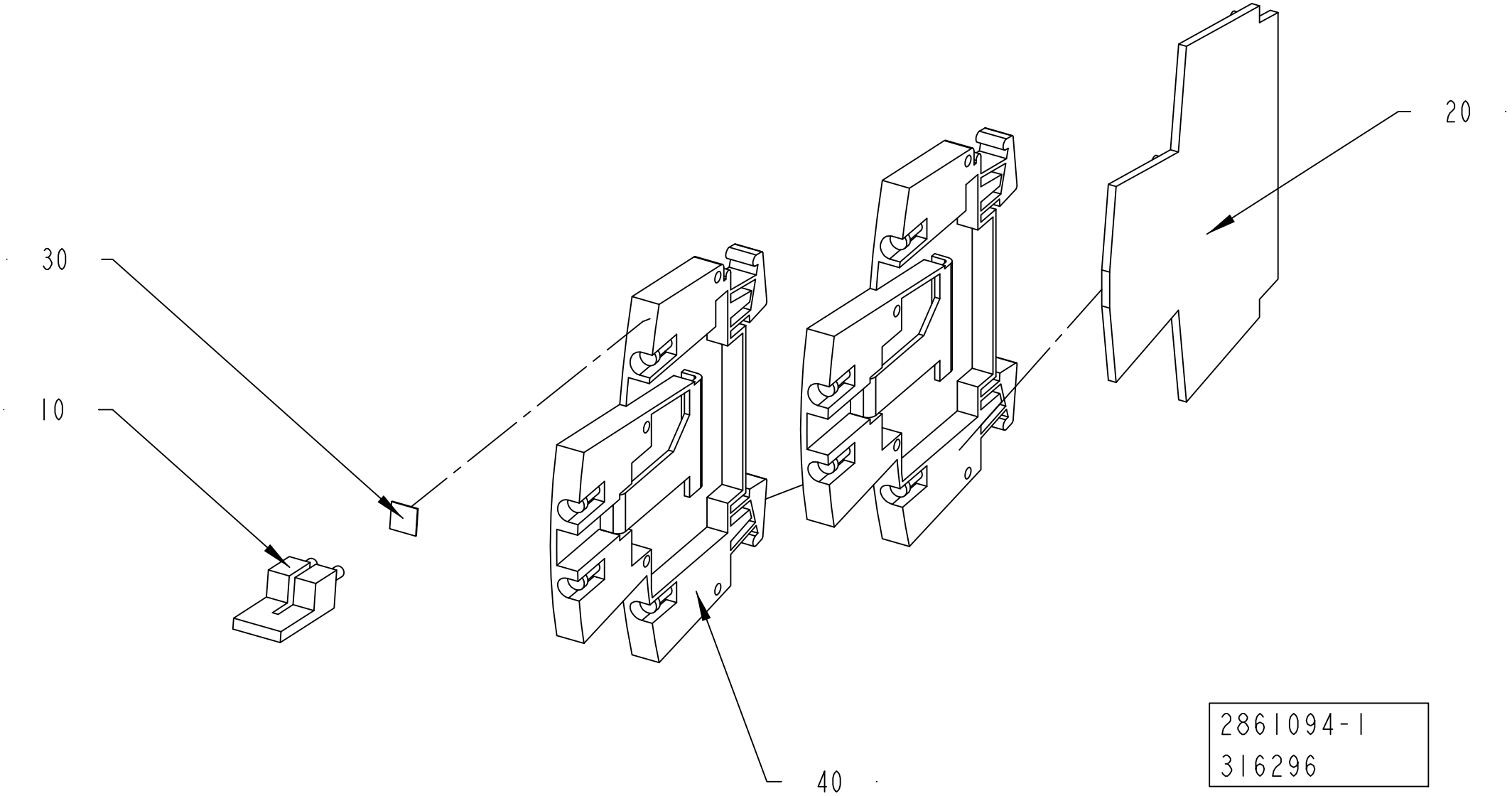
20
30
10
40
2861094-1
316296

ECM: 316296 - 20071220
Group number: 2861094-0100
Assembly Drawing: 2861094-1_1_AA

Pos	Part No	UN	Qty	Description	Page No
-					
010	353034-0030		1	BRIDGE CONNECTOR WQV 2,5/10	
020	353032-0009		1	END PLATE, WAP WDK 2,5	
030	359011-0809		1	MARKING, DEK 5 FW 101-150	
040	90457-0049		2	TERMINAL BLOCK WDK 2.5V, 102230	

Pos	Part No	UN	Qty	Description	Page No

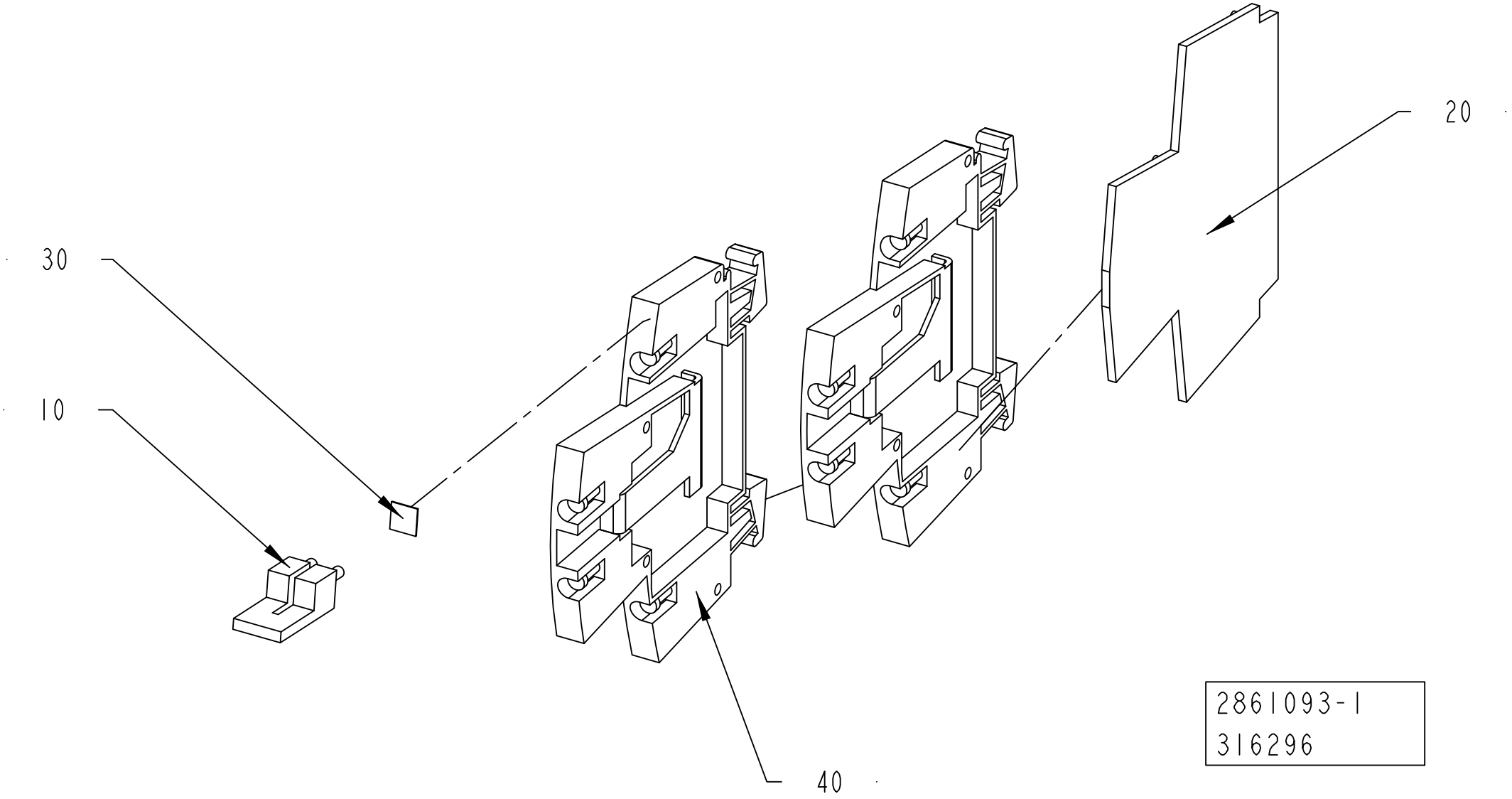
20
30
10
40
2861093-1
316296

ECM: 316296 - 20071220
Group number: 2861093-0100
Assembly Drawing: 2861093-1_1_AA

Pos	Part No	UN	Qty	Description	Page No
-					
010	353034-0030		1	BRIDGE CONNECTOR WQV 2,5/10	
020	353032-0009		1	END PLATE, WAP WDK 2,5	
030	359011-0809		1	MARKING, DEK 5 FW 101-150	
040	90457-0049		2	TERMINAL BLOCK WDK 2.5V, 102230	

Pos	Part No	UN	Qty	Description	Page No

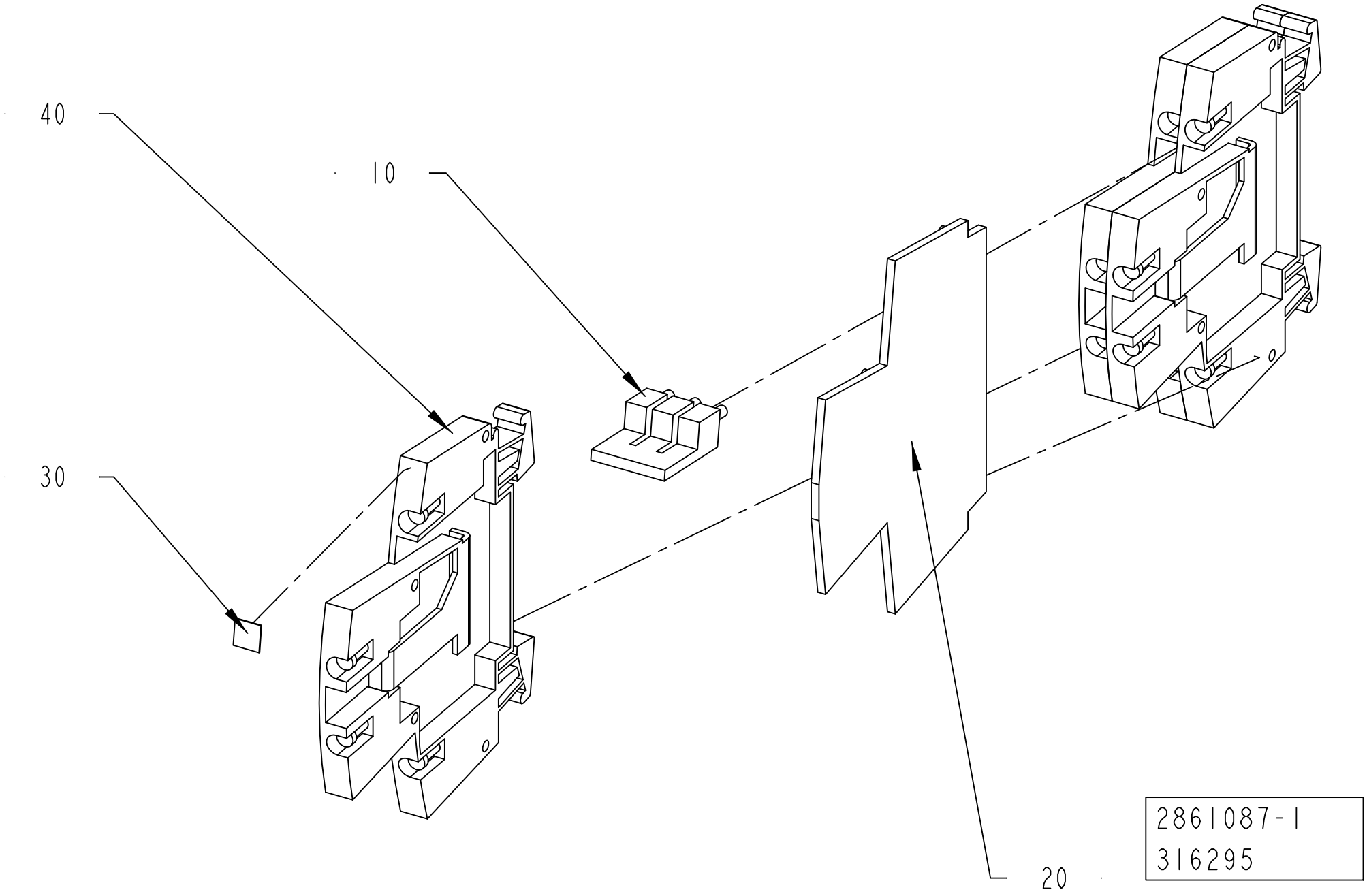
40
10
30
20
2861087-1
316295

ECM: 316295 - 20071220
Group number: 2861087-0100
Assembly Drawing: 2861087-1_1_AA

Pos	Part No	UN	Qty	Description	Page No
-					
010	353034-0030		1	BRIDGE CONNECTOR WQV 2,5/10	
020	353032-0009		1	END PLATE, WAP WDK 2,5	
030	359011-0809		1	MARKING, DEK 5 FW 101-150	
040	90457-0049		3	TERMINAL BLOCK WDK 2.5V, 102230	

Pos	Part No	UN	Qty	Description	Page No

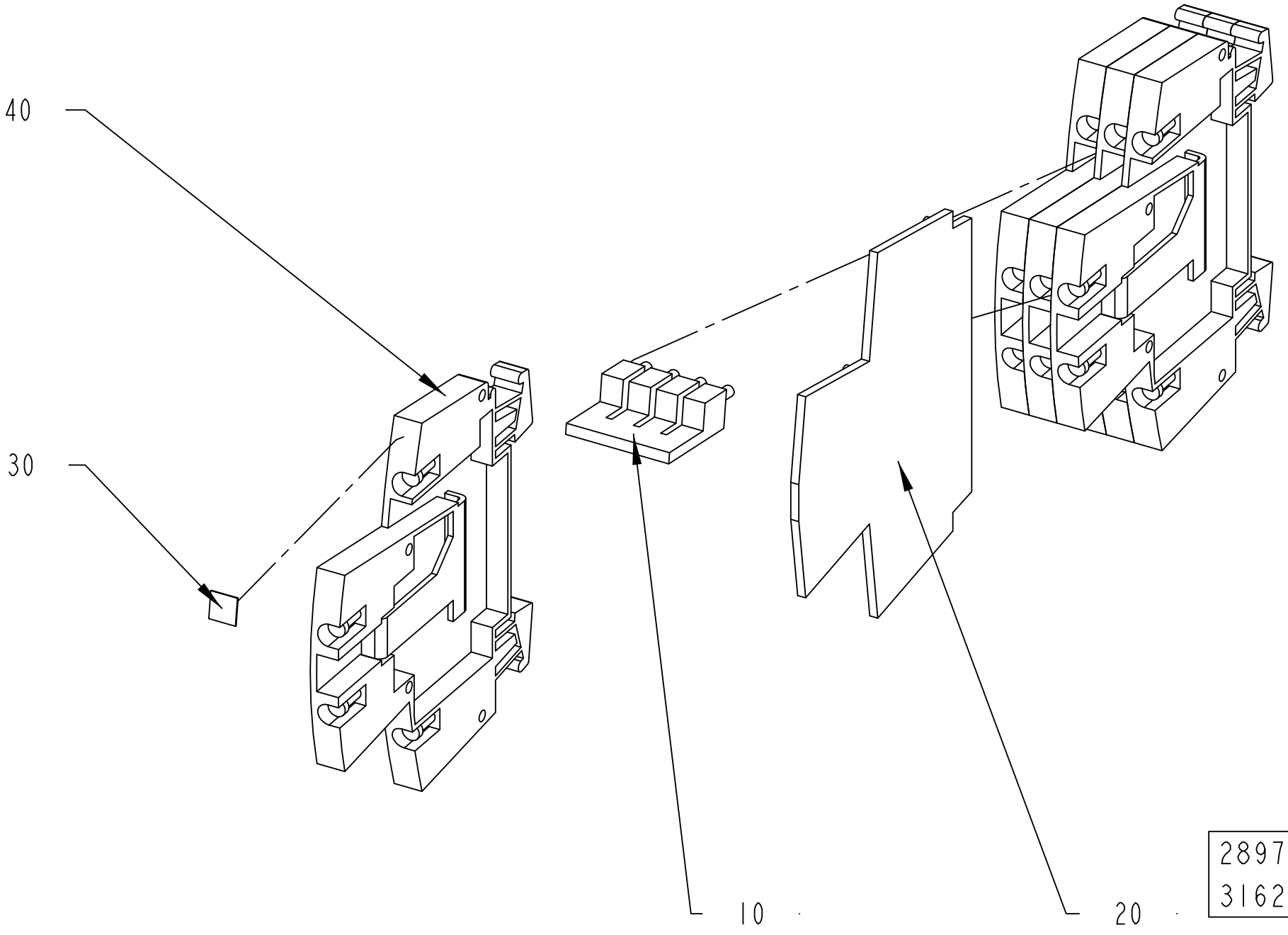
40
30
10
20
2897676-1
316296

ECM: 319413 - 20071220
Group number: 2897676-0100
Assembly Drawing: 2897676-1_1_AA

Pos	Part No	UN	Qty	Description	Page No
-					
010	353034-0030		1	BRIDGE CONNECTOR WQV 2,5/10	
020	353032-0009		1	END PLATE, WAP WDK 2,5	
030	359011-0809		1	MARKING, DEK 5 FW 101-150	
040	90457-0049		4	TERMINAL BLOCK WDK 2.5V, 102230	

Pos	Part No	UN	Qty	Description	Page No

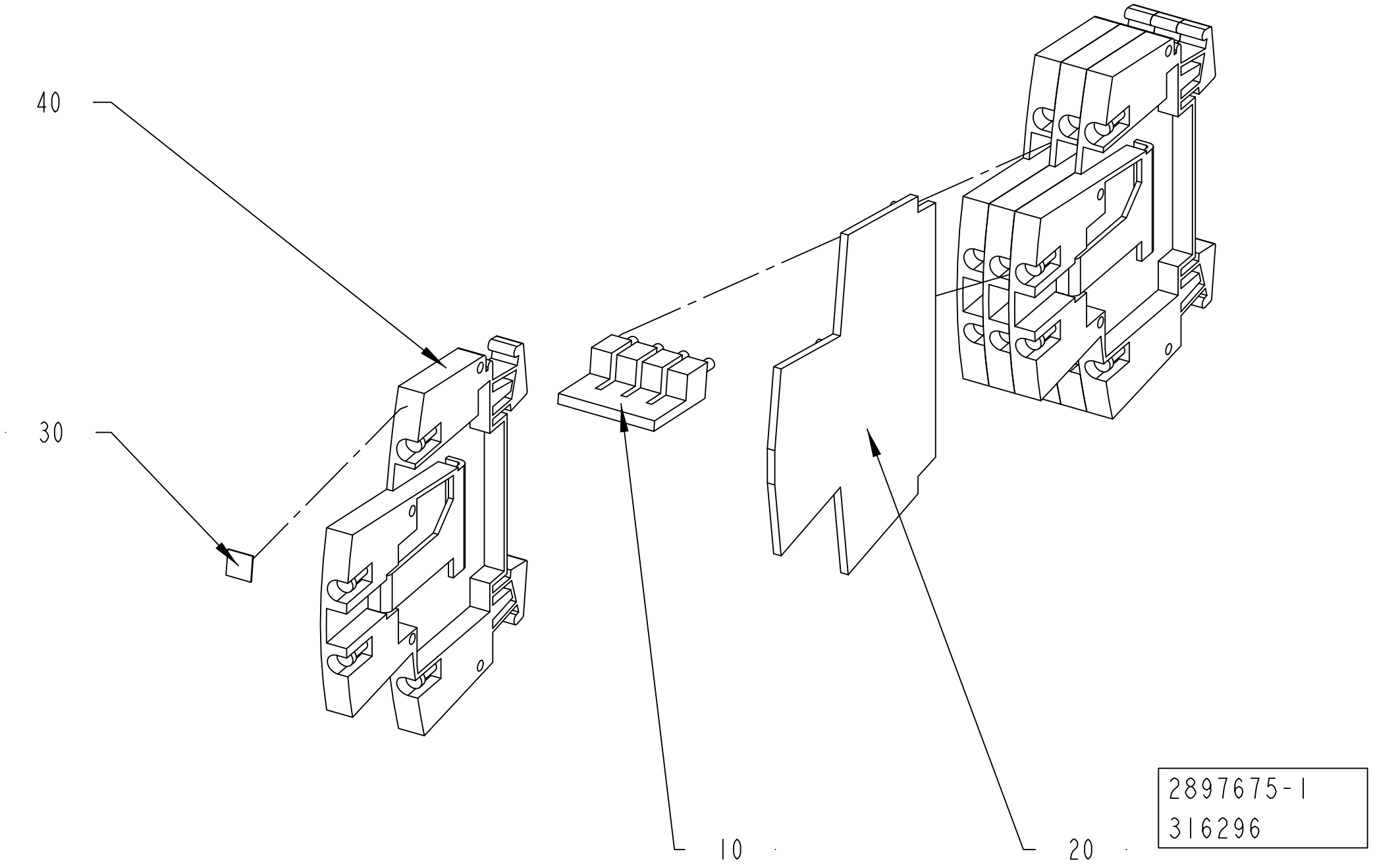
40
30
10
20
2897675-1
316296

ECM: 319412 - 20071220
Group number: 2897675-0100
Assembly Drawing: 2897675-1_1_AA

Pos	Part No	UN	Qty	Description	Page No
-					
010	353034-0030		1	BRIDGE CONNECTOR WQV 2,5/10	
020	353032-0009		1	END PLATE, WAP WDK 2,5	
030	359011-0809		1	MARKING, DEK 5 FW 101-150	
040	90457-0049		4	TERMINAL BLOCK WDK 2.5V, 102230	

Pos	Part No	UN	Qty	Description	Page No

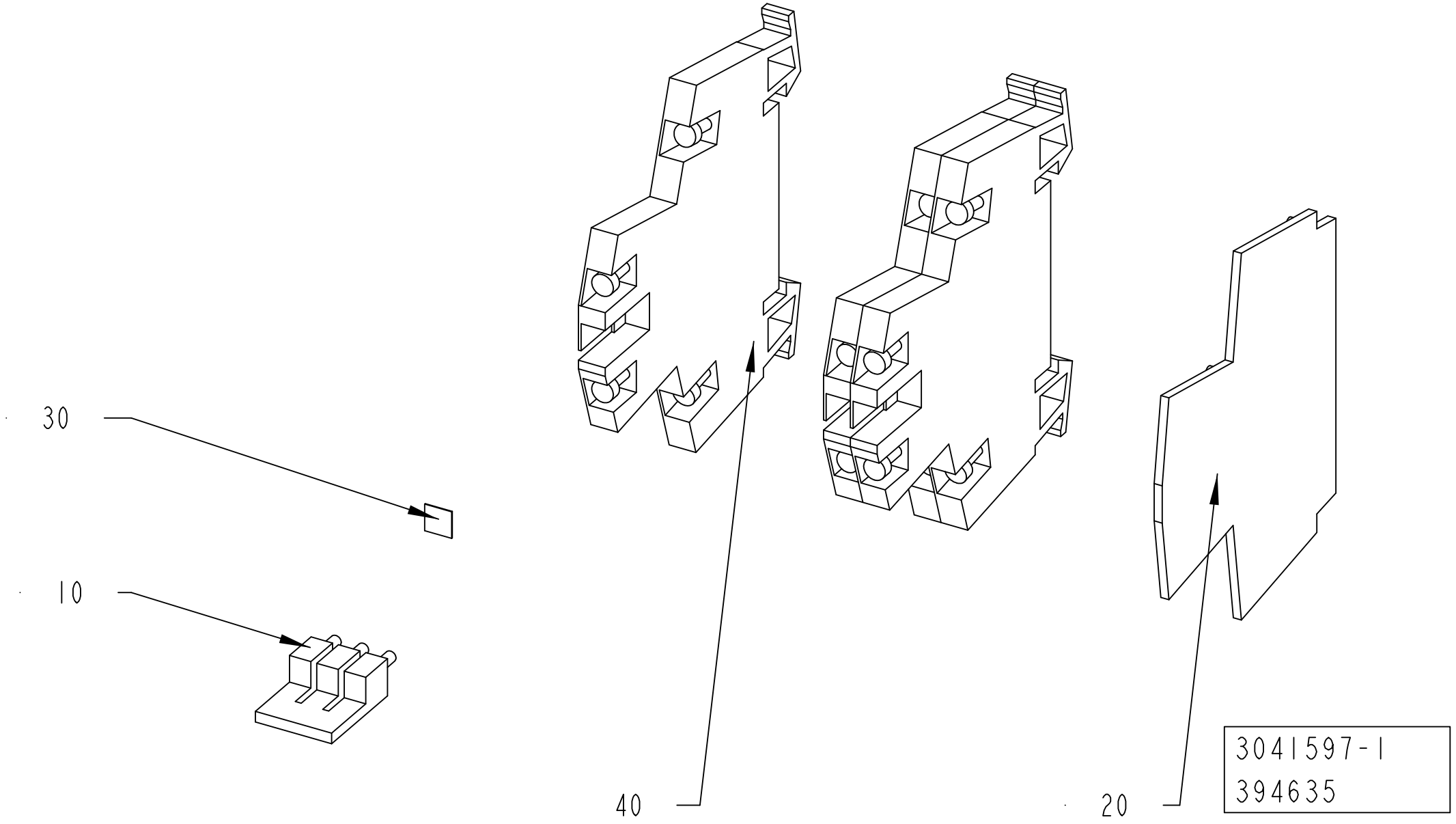
30
10
40
20
3041597-1
394635

ECM: 407267 - 20090710
Group number: 3041597-0100
Assembly Drawing: 3041597-1_1_AA

Pos	Part No	UN	Qty	Description	Page No
-					
010	353034-0030		1	BRIDGE CONNECTOR WQV 2,5/10	
020	353032-0009		1	END PLATE, WAP WDK 2,5	
030	359011-0809		1	MARKING, DEK 5 FW 101-150	
040	90459-5253		3	TERMINAL BLOCK WDK 2,5 V	

Pos	Part No	UN	Qty	Description	Page No

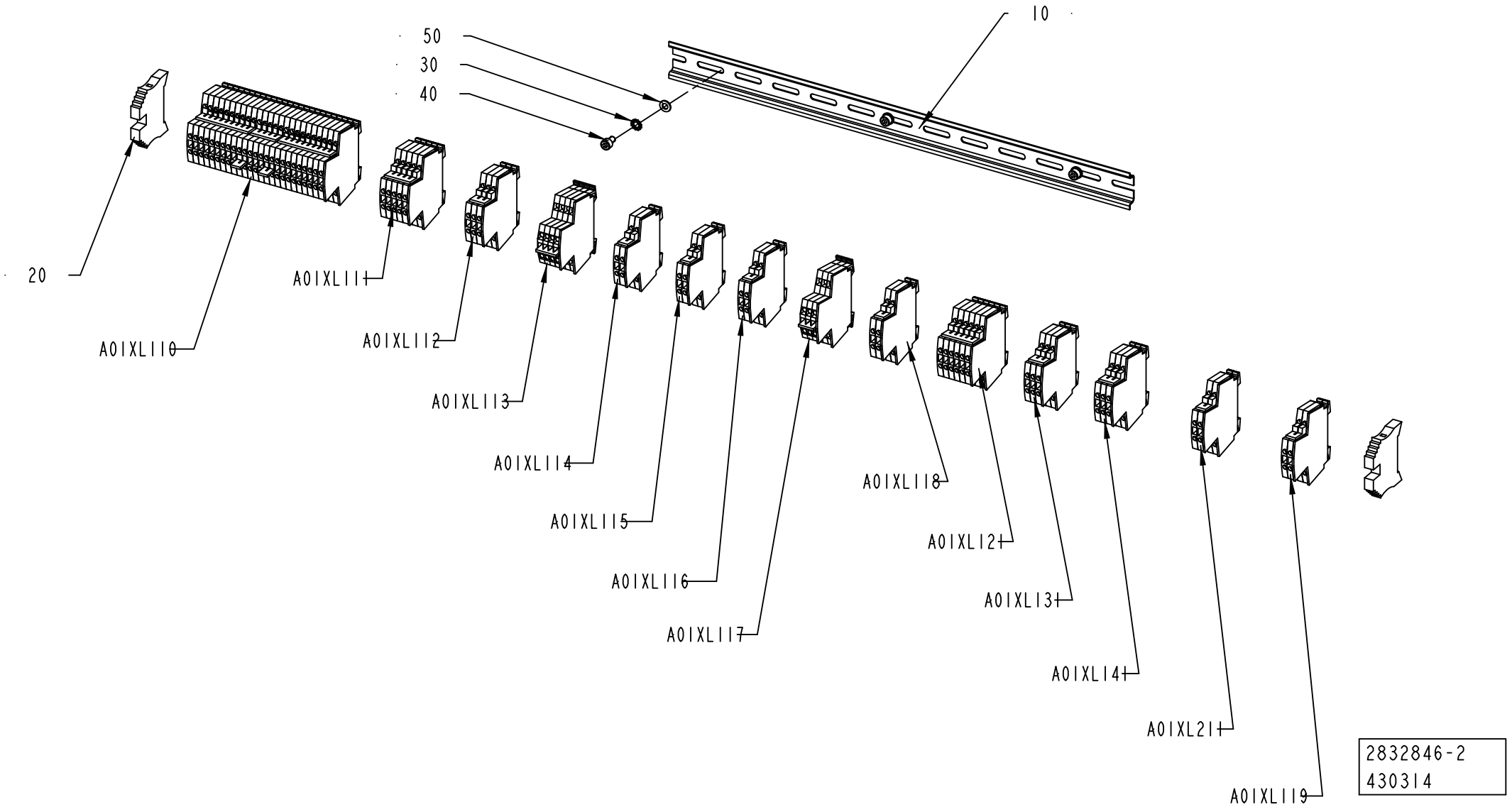
10
50
30
40
20
A01XL110
A01XL111
A01XL112
A01XL113
A01XL114
A01XL115
A01XL116
A01XL117
A01XL118
A01XL12
A01XL13
A01XL14
A01XL21
A01XL119
2832846-2
430314

ECM: 442632 - 20100326
Group number: 2832846-0200
Assembly Drawing: 2832846-2_1_AB

Pos	Part No	UN	Qty	Description	Page No
-					
010	353042-0004	MM	440	RAIL, TS 35/7,5	
020	353031-0203		2	END BRACKET, WEW 35/2	
030	90062-0021		3	LOCK WASHER DIN 6797 TYPE A 5,3	
040	312115-0323		3	SCREW ISO4762 M5X8 A4 80	
050	315105-0146		3	WASHER BRB 5,3X10 RFR	
A01XL119	3094531-0100		1	BAR	**8-79**
A01XL211	2861092-0100		1	BAR	**8-81**
A01XL141	2861085-0100		1	BAR	**8-83**
A01XL131	2861084-0100		1	BAR	**8-85**
A01XL121	2861080-0100		1	BAR	**8-87**
A01XL118	2861091-0100		1	BAR	**8-89**
A01XL117	2861083-0200		1	BAR	**8-91**
A01XL116	2861090-0100		1	BAR	**8-93**
A01XL115	2861089-0100		1	BAR	**8-95**
A01XL114	2861088-0100		1	BAR	**8-97**
A01XL113	2861082-0200		1	BAR	**8-99**
A01XL112	2861081-0100		1	BAR	**8-101**
A01XL111	2861079-0100		1	BAR	**8-103**
A01XL110	2861078-0100		1	BAR	**8-105**

Pos	Part No	UN	Qty	Description	Page No

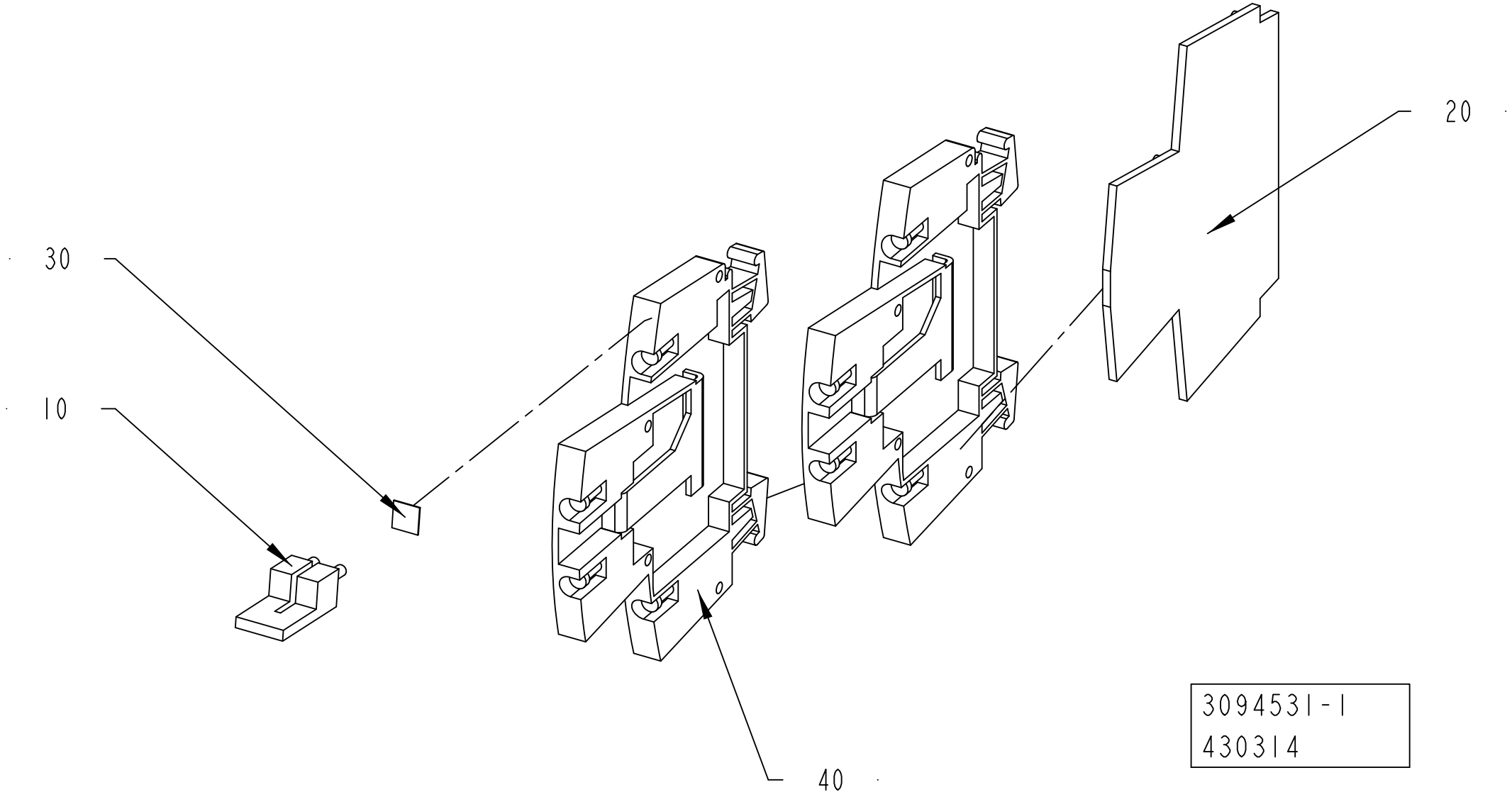
30
10
20
40
3094531-1
430314

ECM: 442642 - 20100326
Group number: 3094531-0100
Assembly Drawing: 3094531-1_1_AA

Pos	Part No	UN	Qty	Description	Page No
-					
010	353034-0030		1	BRIDGE CONNECTOR WQV 2,5/10	
020	353032-0009		1	END PLATE, WAP WDK 2,5	
030	359011-0809		1	MARKING, DEK 5 FW 101-150	
040	90459-5253		2	TERMINAL BLOCK WDK 2,5 V	

Pos	Part No	UN	Qty	Description	Page No

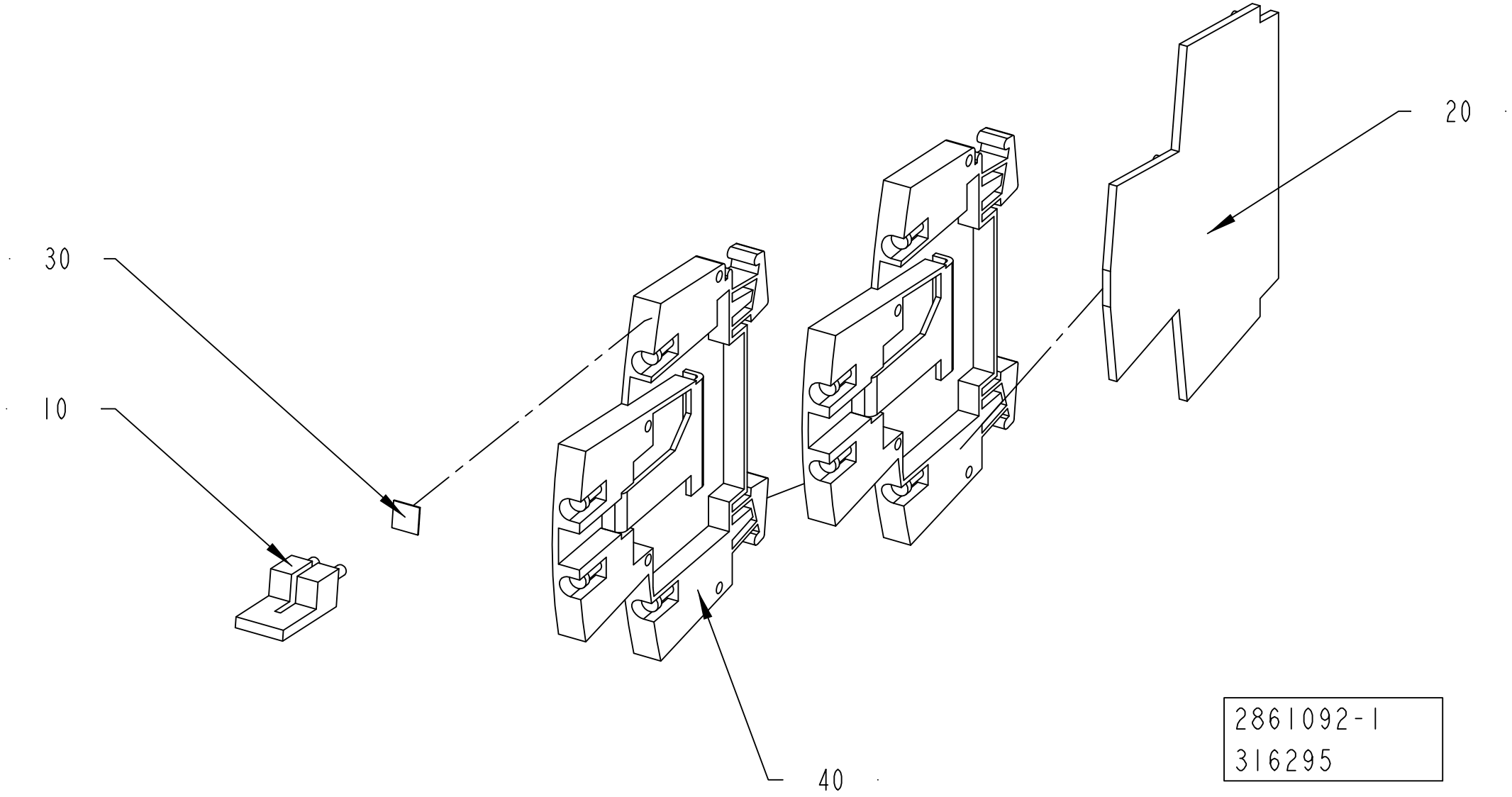
30
10
20
40
2861092-1
316295

ECM: 316295 - 20071220
Group number: 2861092-0100
Assembly Drawing: 2861092-1_1_AA

Pos	Part No	UN	Qty	Description	Page No
-					
010	353034-0030		1	BRIDGE CONNECTOR WQV 2,5/10	
020	353032-0009		1	END PLATE, WAP WDK 2,5	
030	359011-0809		1	MARKING, DEK 5 FW 101-150	
040	90457-0049		2	TERMINAL BLOCK WDK 2.5V, 102230	

Pos	Part No	UN	Qty	Description	Page No

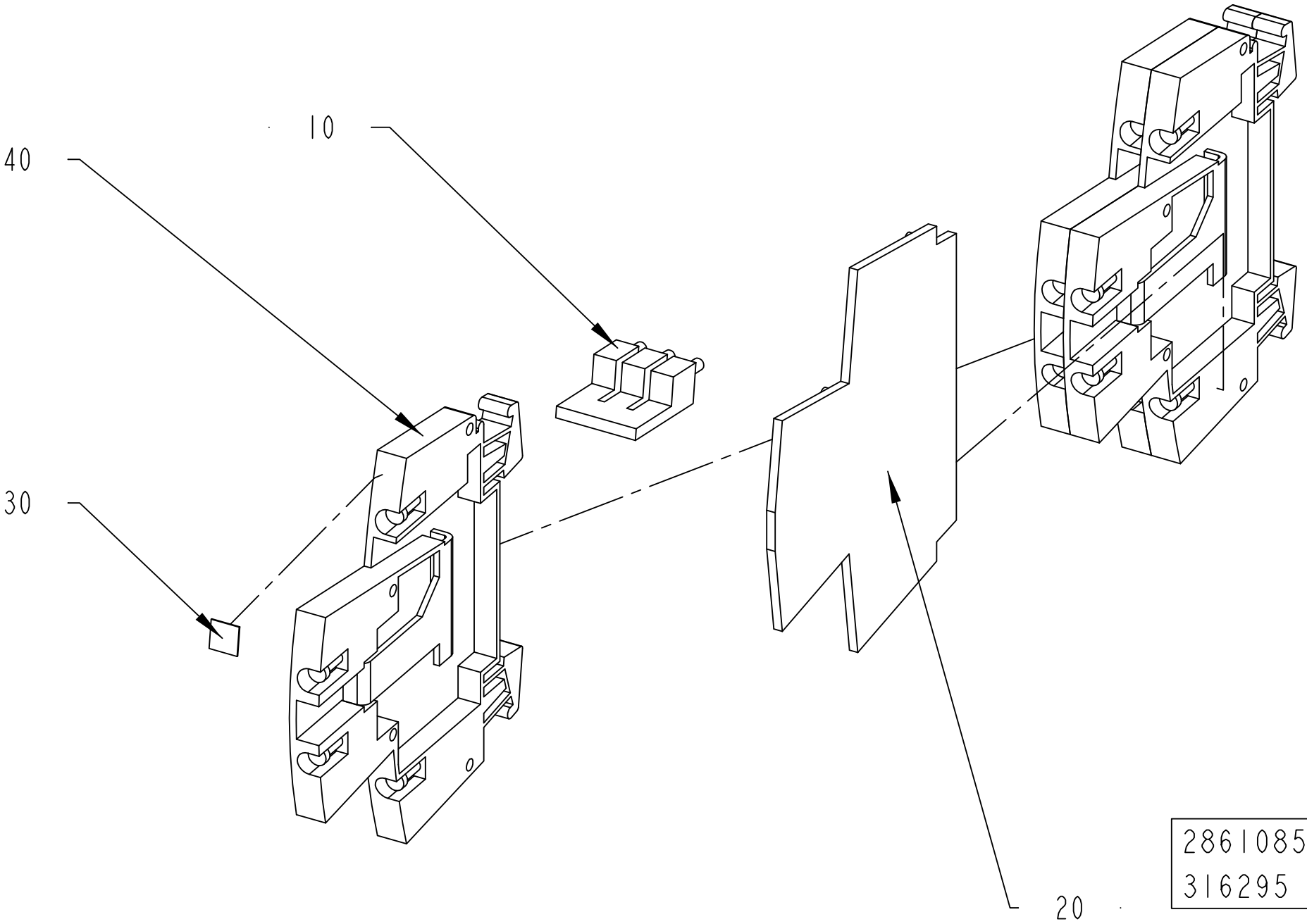
10
40
30
20
2861085-1
316295

ECM: 316295 - 20071220
Group number: 2861085-0100
Assembly Drawing: 2861085-1_1_AA

Pos	Part No	UN	Qty	Description	Page No
-					
010	353034-0030		1	BRIDGE CONNECTOR WQV 2,5/10	
020	353032-0009		1	END PLATE, WAP WDK 2,5	
030	359011-0809		1	MARKING, DEK 5 FW 101-150	
040	90457-0049		3	TERMINAL BLOCK WDK 2.5V, 102230	

Pos	Part No	UN	Qty	Description	Page No

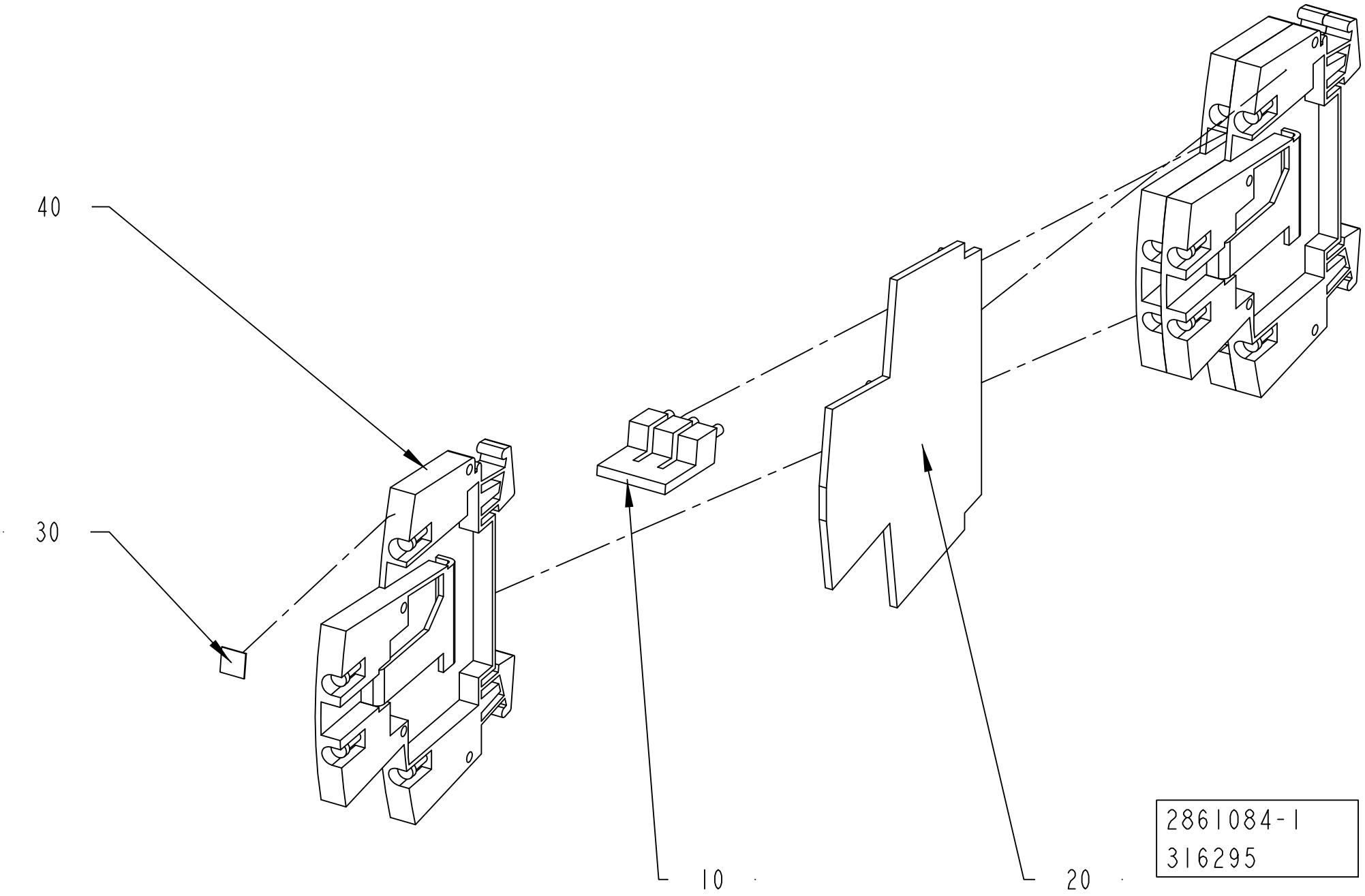
40
30
10
20
2861084-1
316295

ECM: 316295 - 20071220
Group number: 2861084-0100
Assembly Drawing: 2861084-1_1_AA

Pos	Part No	UN	Qty	Description	Page No
-					
010	353034-0030		1	BRIDGE CONNECTOR WQV 2,5/10	
020	353032-0009		1	END PLATE, WAP WDK 2,5	
030	359011-0809		1	MARKING, DEK 5 FW 101-150	
040	90457-0049		3	TERMINAL BLOCK WDK 2.5V, 102230	

Pos	Part No	UN	Qty	Description	Page No

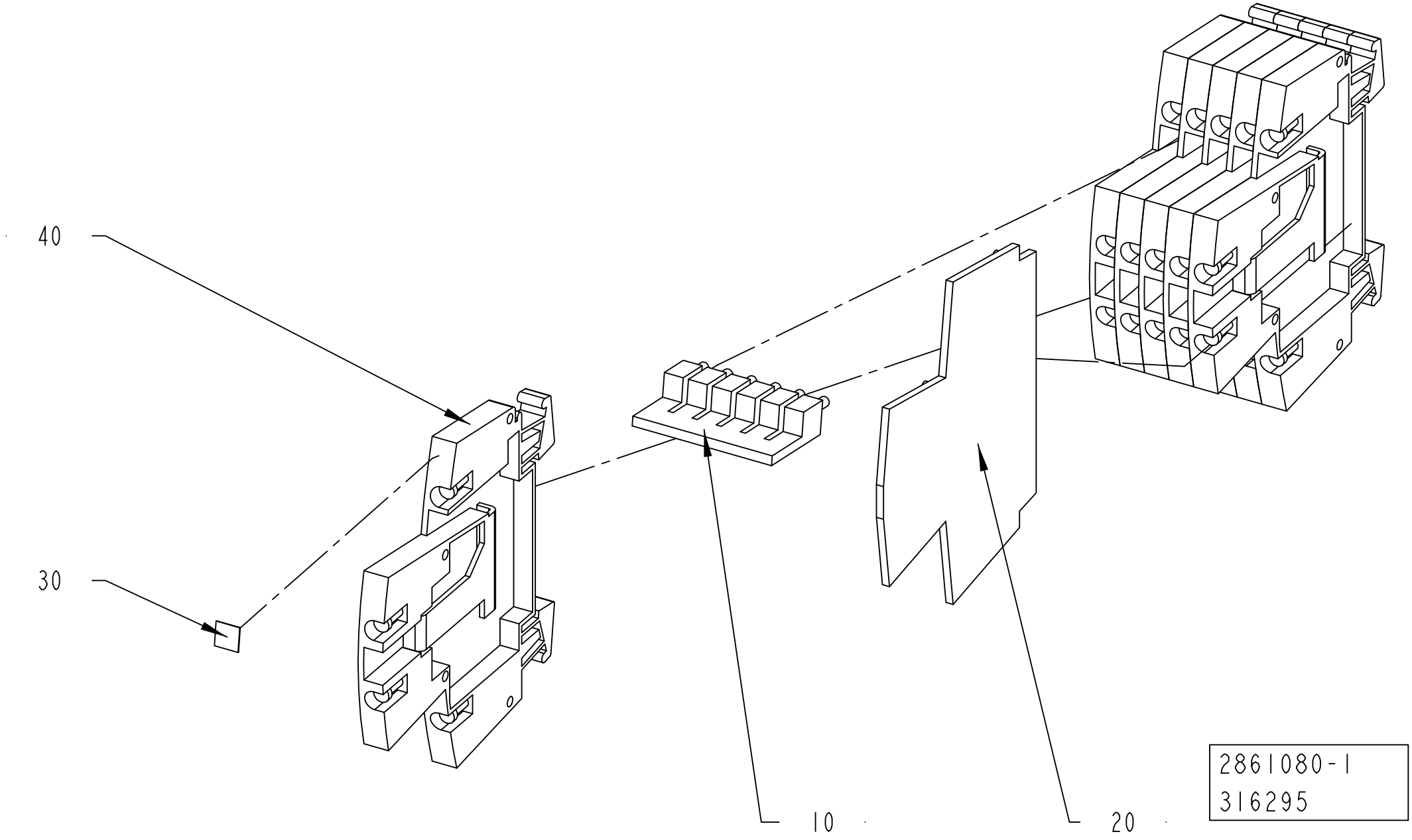
40
30
10
20
2861080-1
316295

ECM: 316295 - 20071220
Group number: 2861080-0100
Assembly Drawing: 2861080-1_1_AA

Pos	Part No	UN	Qty	Description	Page No
-					
010	353034-0030		1	BRIDGE CONNECTOR WQV 2,5/10	
020	353032-0009		1	END PLATE, WAP WDK 2,5	
030	359011-0809		1	MARKING, DEK 5 FW 101-150	
040	90457-0049		6	TERMINAL BLOCK WDK 2.5V, 102230	

Pos	Part No	UN	Qty	Description	Page No

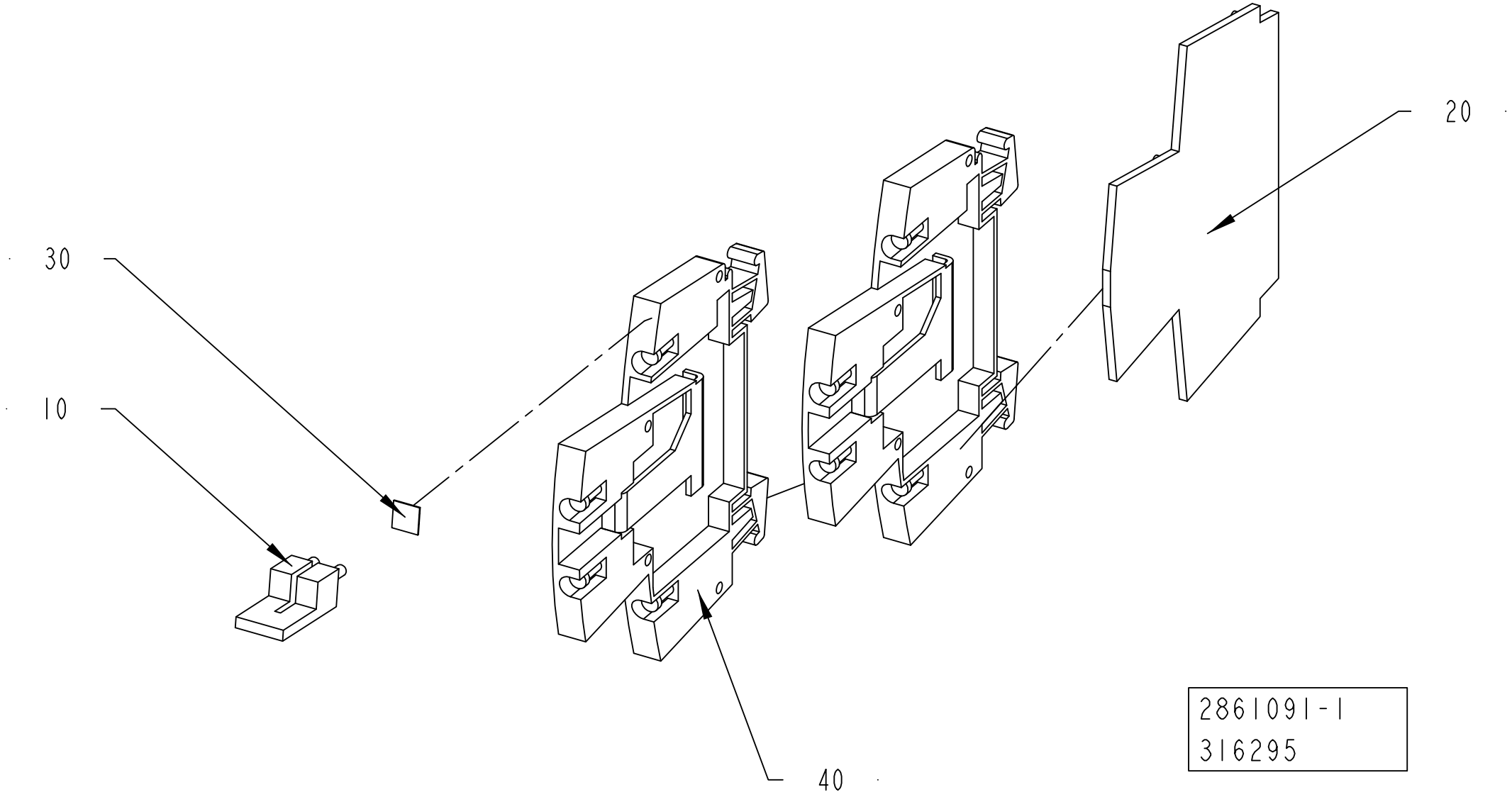
20
30
10
40
2861091-1
316295

ECM: 316295 - 20071220
Group number: 2861091-0100
Assembly Drawing: 2861091-1_1_AA

Pos	Part No	UN	Qty	Description	Page No
-					
010	353034-0030		1	BRIDGE CONNECTOR WQV 2,5/10	
020	353032-0009		1	END PLATE, WAP WDK 2,5	
030	359011-0809		1	MARKING, DEK 5 FW 101-150	
040	90457-0049		2	TERMINAL BLOCK WDK 2.5V, 102230	

Pos	Part No	UN	Qty	Description	Page No

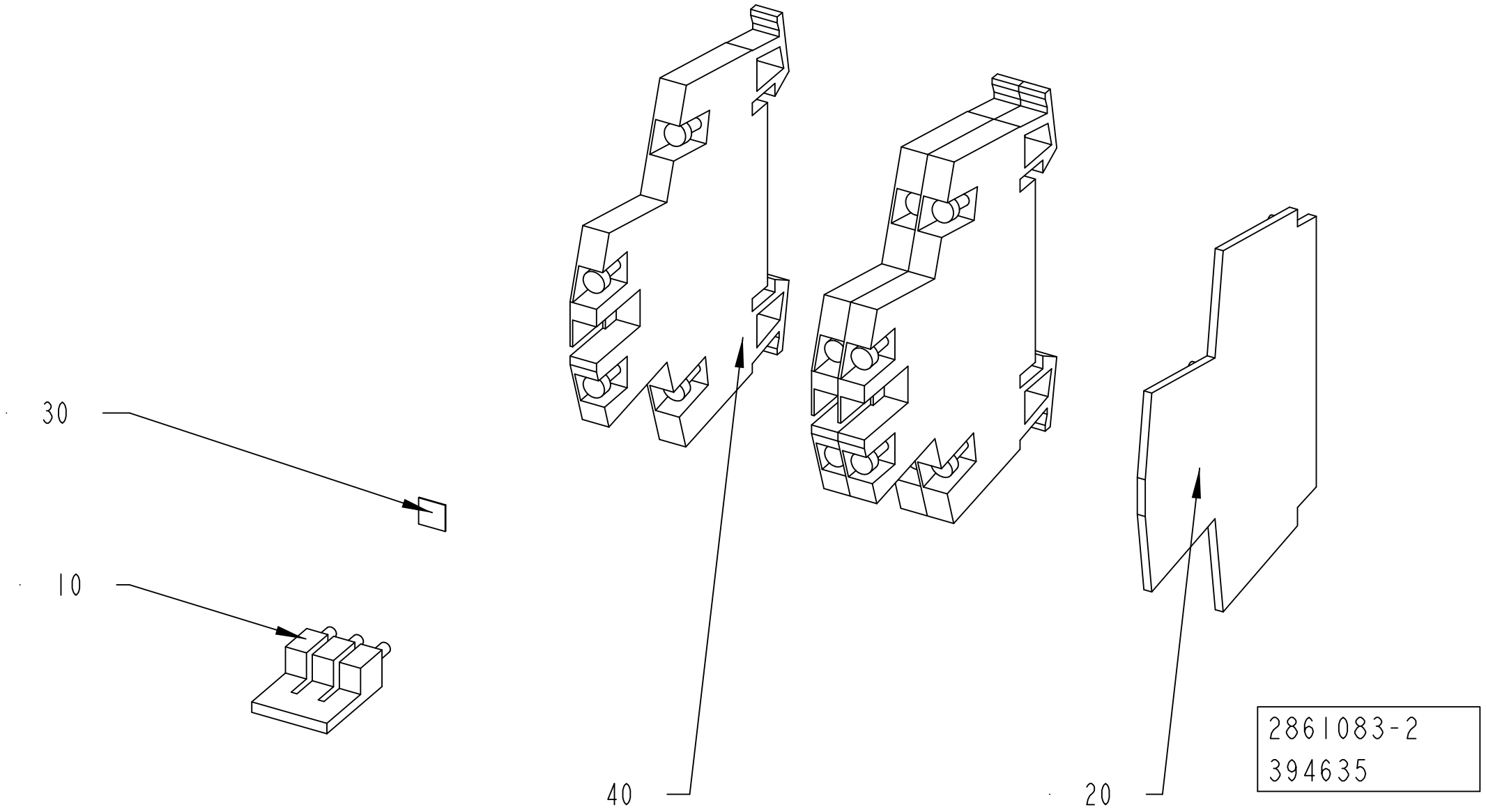
30
10
40
20
2861083-2
394635

ECM: 408016 - 20090710
Group number: 2861083-0200
Assembly Drawing: 2861083-2_1_AA

Pos	Part No	UN	Qty	Description	Page No
-					
010	353034-0030		1	BRIDGE CONNECTOR WQV 2,5/10	
020	353032-0009		1	END PLATE, WAP WDK 2,5	
030	359011-0809		1	MARKING, DEK 5 FW 101-150	
040	90459-5253		4	TERMINAL BLOCK WDK 2,5 V	

Pos	Part No	UN	Qty	Description	Page No

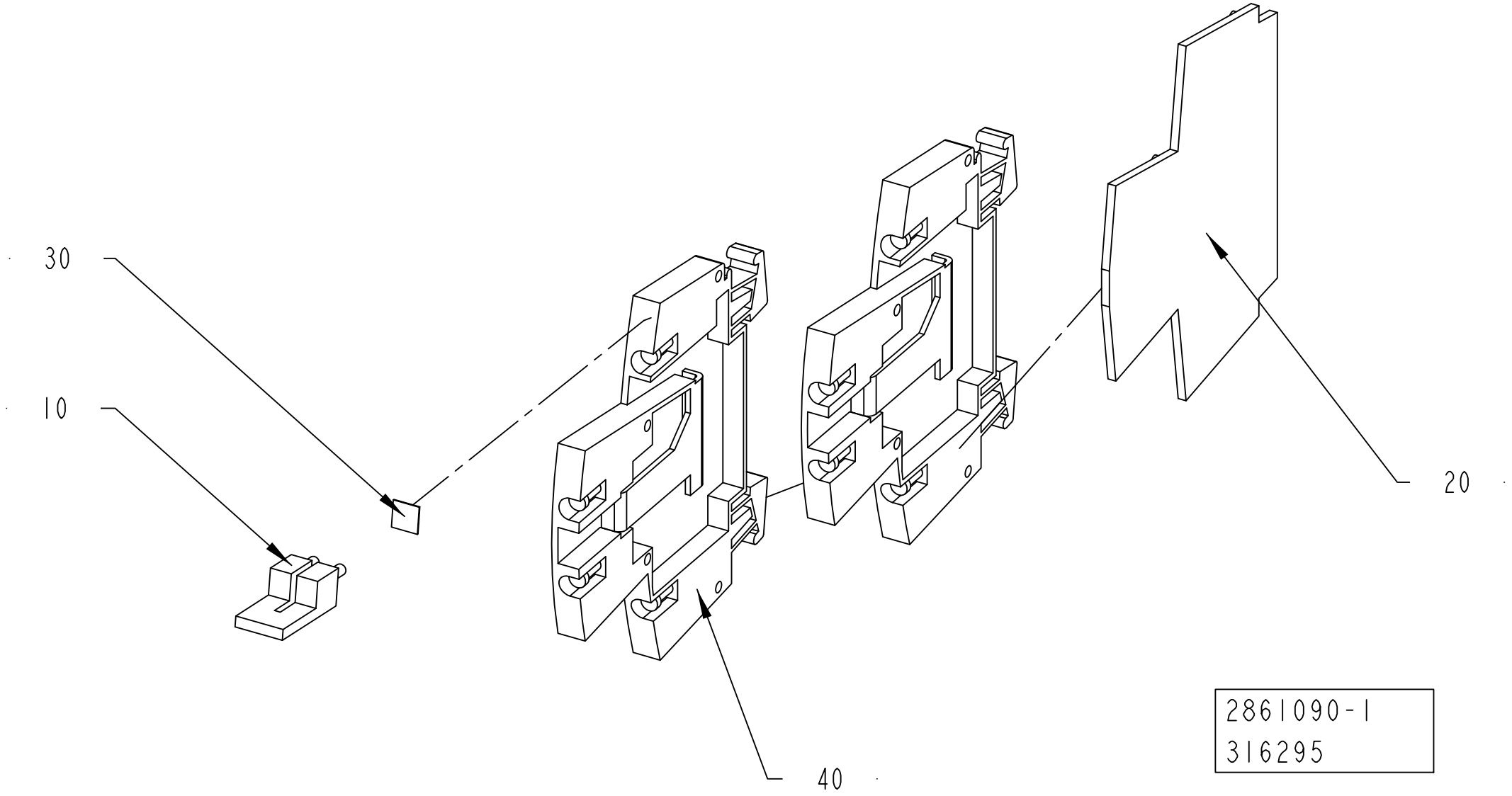
30
10
20
40
2861090-1
316295

ECM: 316295 - 20071220
Group number: 2861090-0100
Assembly Drawing: 2861090-1_1_AA

Pos	Part No	UN	Qty	Description	Page No
-					
010	353034-0030		1	BRIDGE CONNECTOR WQV 2,5/10	
020	353032-0009		1	END PLATE, WAP WDK 2,5	
030	359011-0809		1	MARKING, DEK 5 FW 101-150	
040	90457-0049		2	TERMINAL BLOCK WDK 2.5V, 102230	

Pos	Part No	UN	Qty	Description	Page No

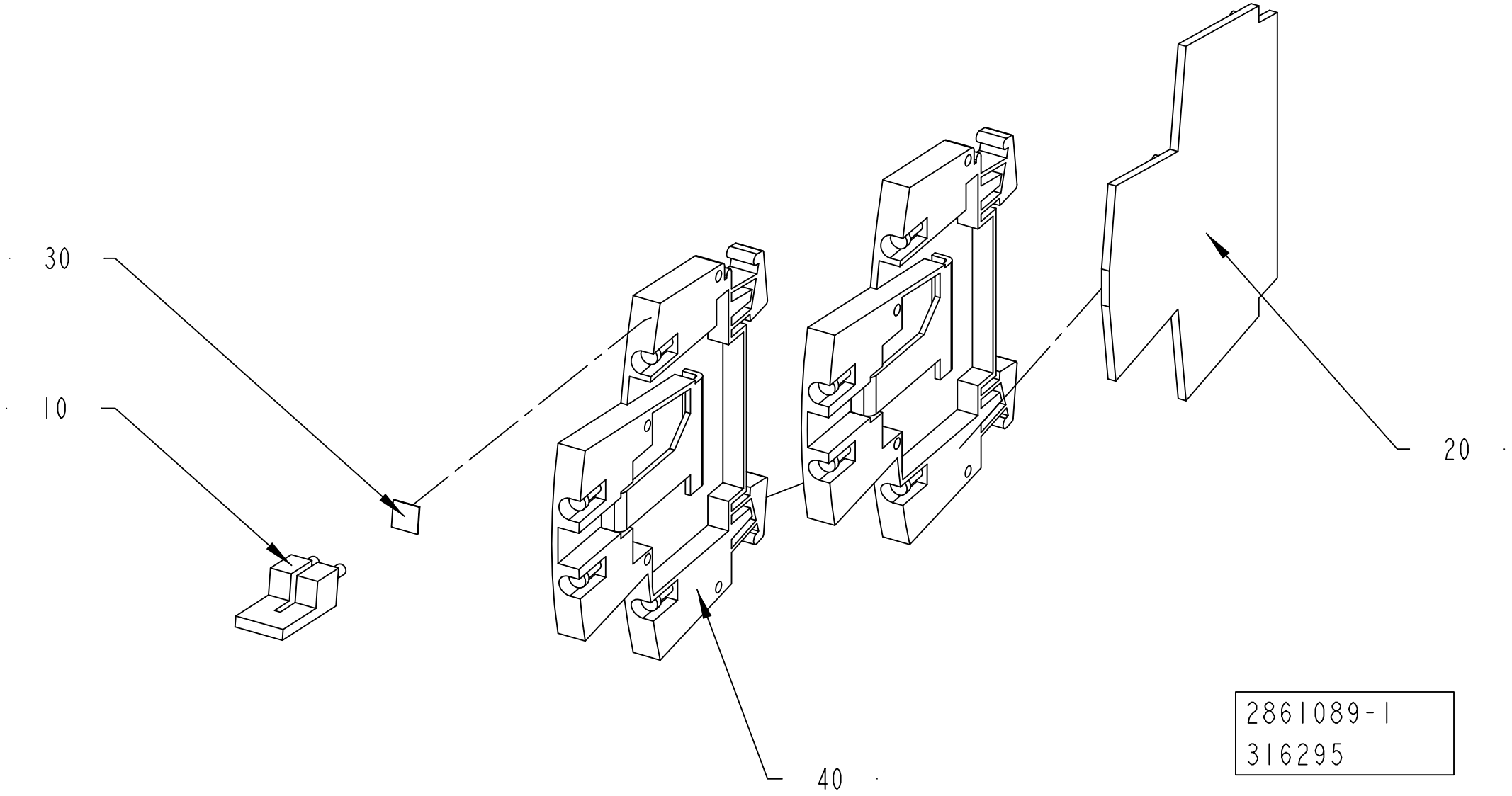
30
10
20
40
2861089-1
316295

ECM: 316295 - 20071220
Group number: 2861089-0100
Assembly Drawing: 2861089-1_1_AA

Pos	Part No	UN	Qty	Description	Page No
-					
010	353034-0030		1	BRIDGE CONNECTOR WQV 2,5/10	
020	353032-0009		1	END PLATE, WAP WDK 2,5	
030	359011-0809		1	MARKING, DEK 5 FW 101-150	
040	90457-0049		2	TERMINAL BLOCK WDK 2.5V, 102230	

Pos	Part No	UN	Qty	Description	Page No

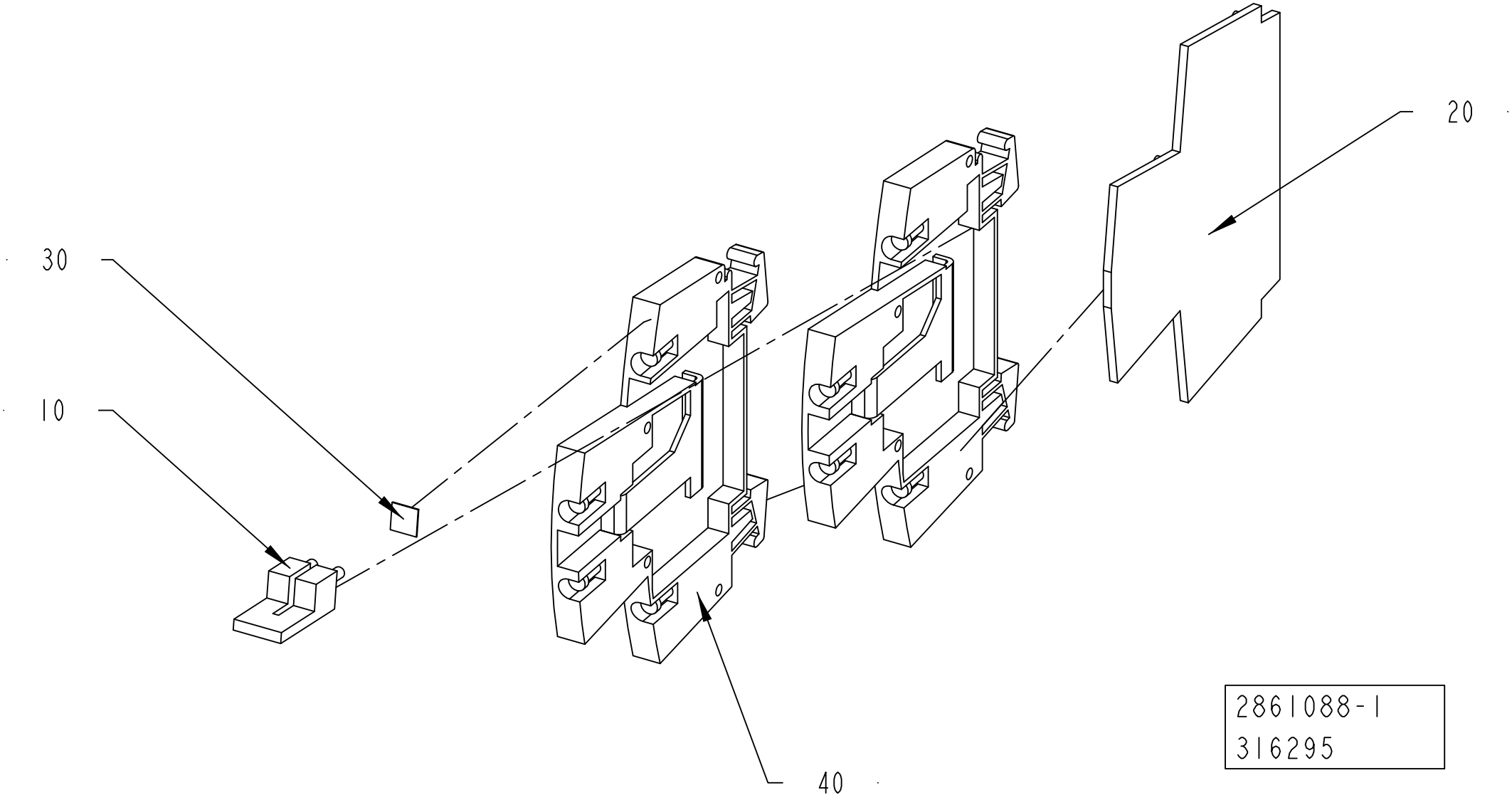
20
30
10
40
2861088-1
316295

ECM: 316295 - 20071220
Group number: 2861088-0100
Assembly Drawing: 2861088-1_1_AA

Pos	Part No	UN	Qty	Description	Page No
-					
010	353034-0030		1	BRIDGE CONNECTOR WQV 2,5/10	
020	353032-0009		1	END PLATE, WAP WDK 2,5	
030	359011-0809		1	MARKING, DEK 5 FW 101-150	
040	90457-0049		2	TERMINAL BLOCK WDK 2.5V, 102230	

Pos	Part No	UN	Qty	Description	Page No

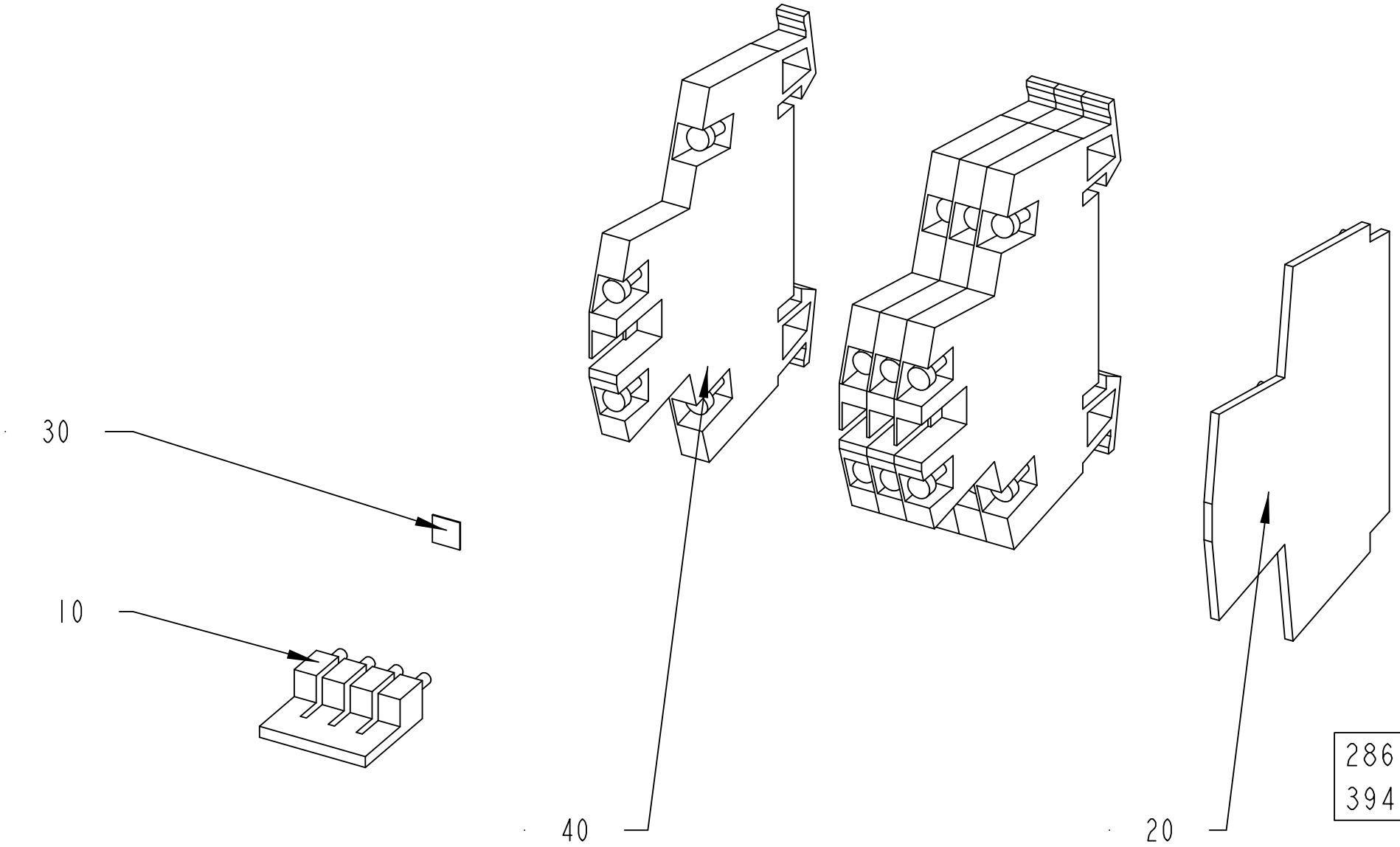
30
10
40
20
2861082-2
394635

ECM: 408015 - 20090710
Group number: 2861082-0200
Assembly Drawing: 2861082-2_1_AA

Pos	Part No	UN	Qty	Description	Page No
-					
010	353034-0030		1	BRIDGE CONNECTOR WQV 2,5/10	
020	353032-0009		1	END PLATE, WAP WDK 2,5	
030	359011-0809		1	MARKING, DEK 5 FW 101-150	
040	90459-5253		4	TERMINAL BLOCK WDK 2,5 V	

Pos	Part No	UN	Qty	Description	Page No

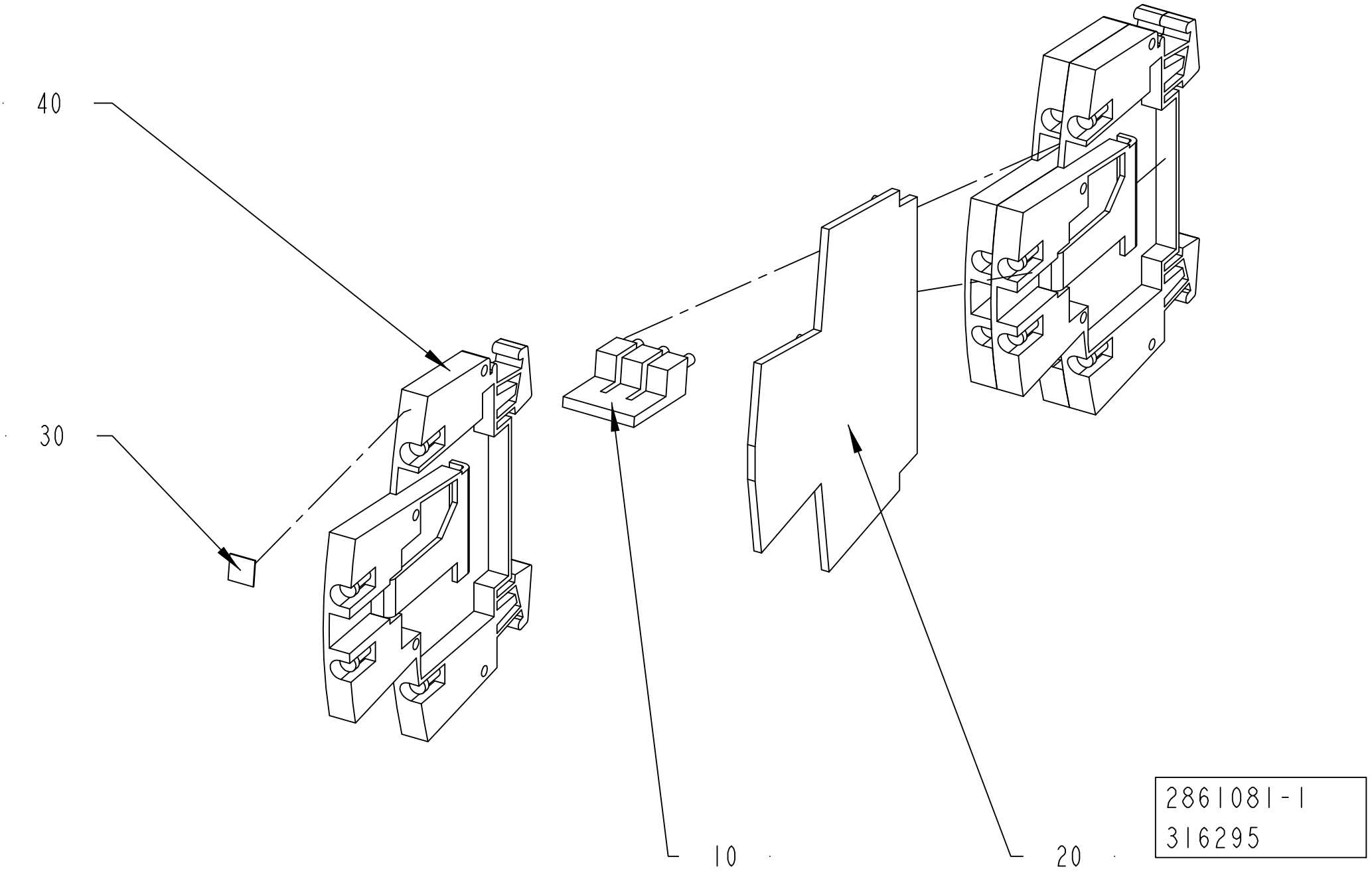
40
30
10
20
2861081-1
316295

ECM: 316295 - 20071220
Group number: 2861081-0100
Assembly Drawing: 2861081-1_1_AA

Pos	Part No	UN	Qty	Description	Page No
-					
010	353034-0030		1	BRIDGE CONNECTOR WQV 2,5/10	
020	353032-0009		1	END PLATE, WAP WDK 2,5	
030	359011-0809		1	MARKING, DEK 5 FW 101-150	
040	90457-0049		3	TERMINAL BLOCK WDK 2.5V, 102230	

Pos	Part No	UN	Qty	Description	Page No

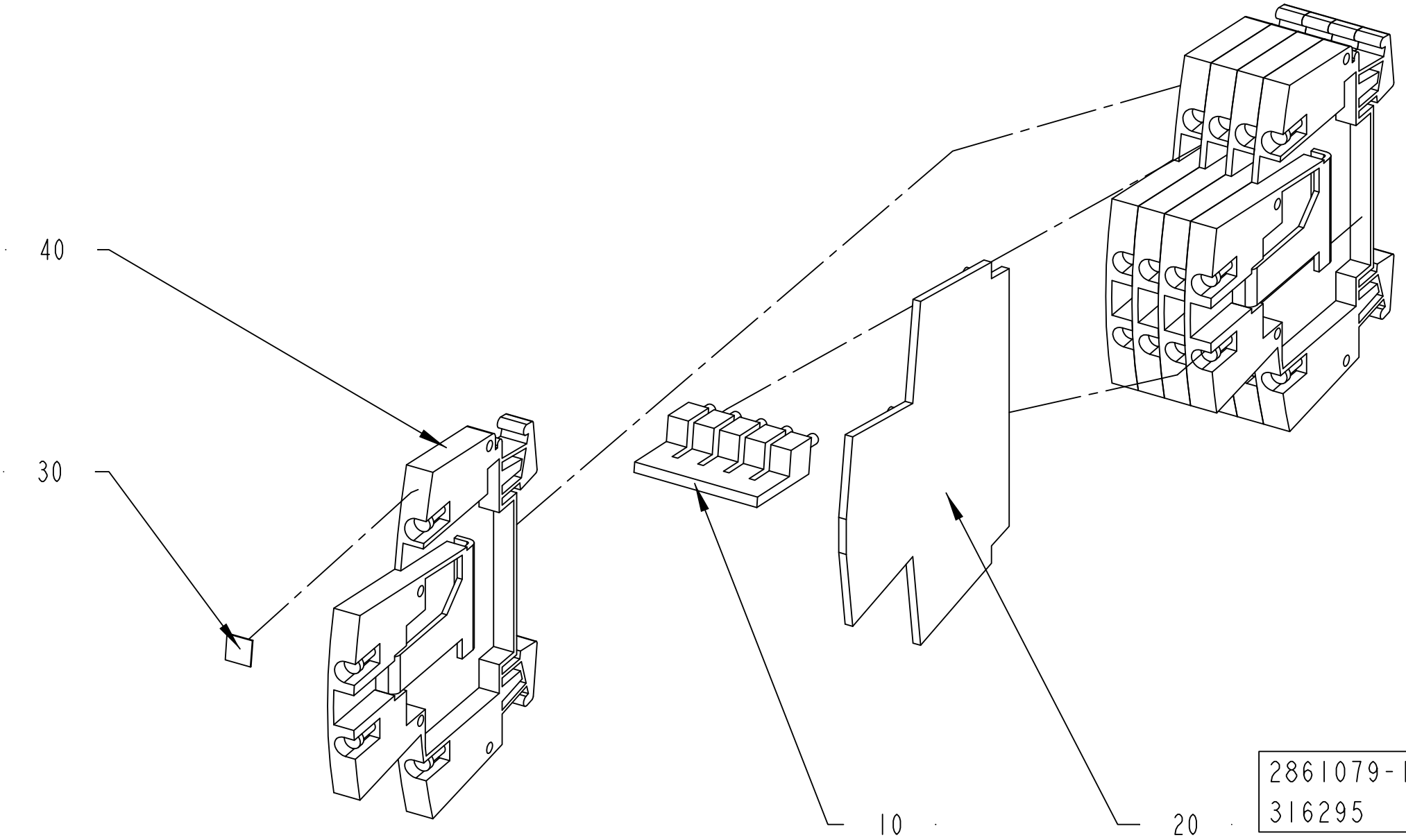
40
30
10
20
2861079-1
316295

ECM: 316295 - 20071220
Group number: 2861079-0100
Assembly Drawing: 2861079-1_1_AA

Pos	Part No	UN	Qty	Description	Page No
-					
010	353034-0030		1	BRIDGE CONNECTOR WQV 2,5/10	
020	353032-0009		1	END PLATE, WAP WDK 2,5	
030	359011-0809		1	MARKING, DEK 5 FW 101-150	
040	90457-0049		5	TERMINAL BLOCK WDK 2.5V, 102230	

Pos	Part No	UN	Qty	Description	Page No

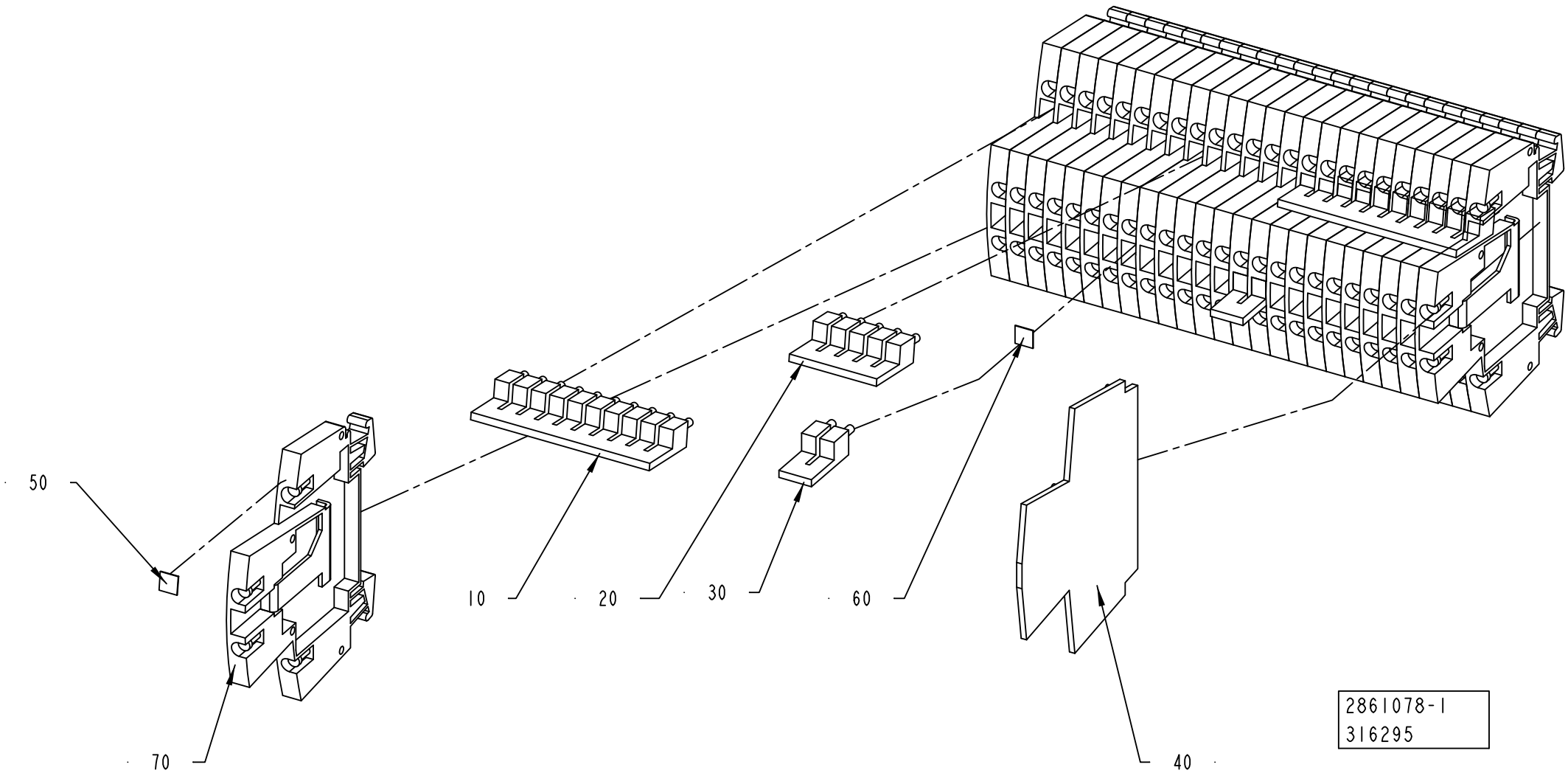
50
10
20
30
60
70
40
2861078-1
316295

ECM: 316295 - 20071220
Group number: 2861078-0100
Assembly Drawing: 2861078-1_1_AA

Pos	Part No	UN	Qty	Description	Page No
-					
010	353034-0030		2	BRIDGE CONNECTOR WQV 2,5/10	
020	353034-0030		1	BRIDGE CONNECTOR WQV 2,5/10	
030	353034-0030		2	BRIDGE CONNECTOR WQV 2,5/10	
040	353032-0009		1	END PLATE, WAP WDK 2,5	
050	359011-0809		1	MARKING, DEK 5 FW 101-150	
060	359011-0810		1	MARKING, DEK 5 FW 151-200	
070	90457-0049		25	TERMINAL BLOCK WDK 2.5V, 102230	

Pos	Part No	UN	Qty	Description	Page No

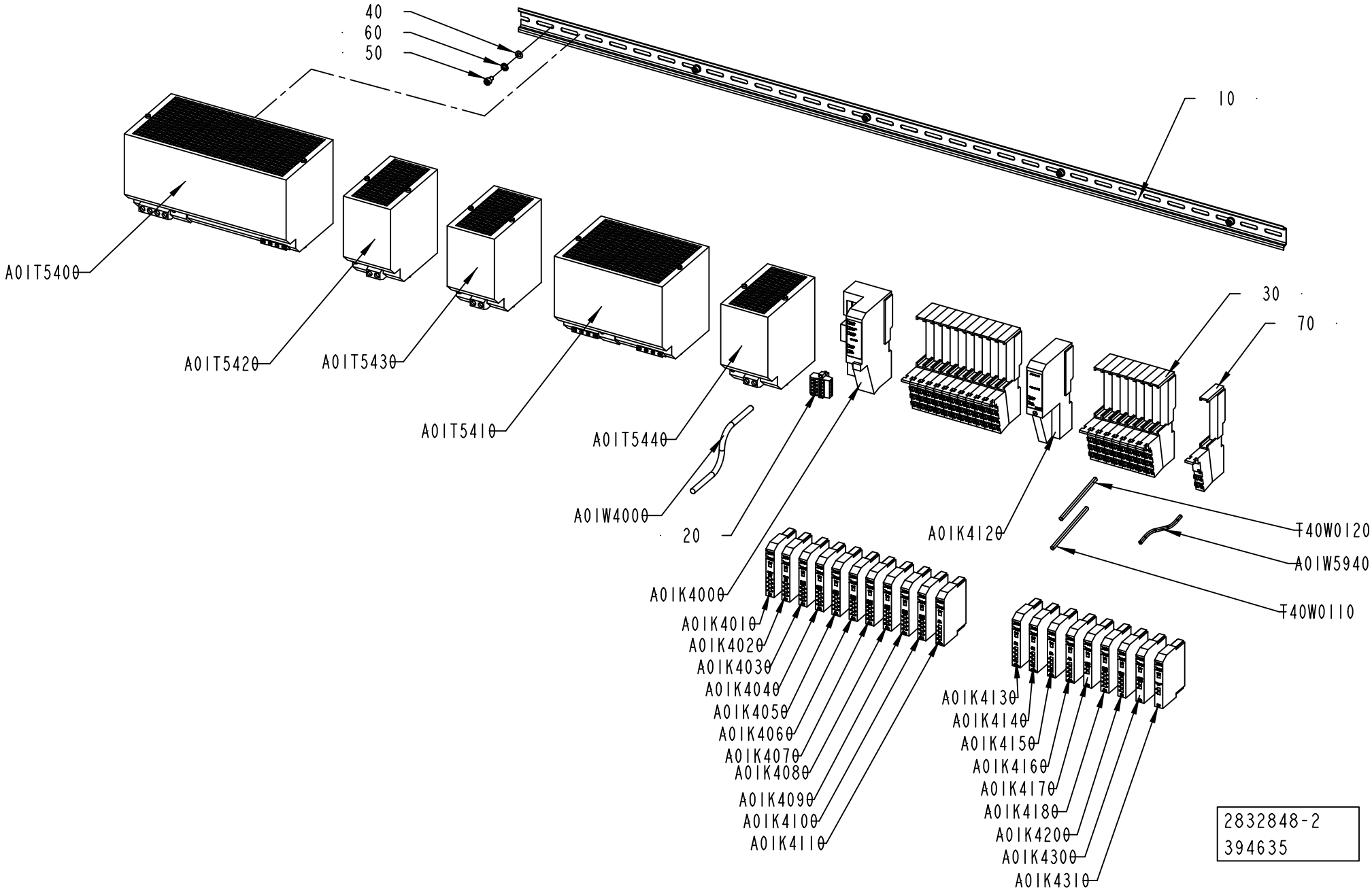
40
60
50
10
A01T5400
A01T5420
A01T5430
A01T5410
A01T5440
30
70
A01W4000
20
A01K4120
T40W0120
A01W5940
T40W0110
A01K4000
A01K4010
A01K4020
A01K4030
A01K4040
A01K4050
A01K4060
A01K4070
A01K4080
A01K4090
A01K4100
A01K4110
A01K4130
A01K4140
A01K4150
A01K4160
A01K4170
A01K4180
A01K4200
A01K4300
A01K4310
2832848-2
394635

ECM: 407278 - 20090710
Group number: 2832848-0200
Assembly Drawing: 2832848-2_1_AA

Pos	Part No	UN	Qty	Description	Page No
-					
010	353042-0004	MM	1135	RAIL, TS 35/7,5	
020	90459-5574		1	CONNECTOR, 1787-PLUG10R	
030	90459-2526		19	REMOTE I/O BASE MODULE 8 POINTS, 1734-TB	
040	315105-0146		5	WASHER BRB 5,3X10 RFR	
050	312115-0323		5	SCREW ISO4762 M5X8 A4 80	
060	90062-0021		5	LOCK WASHER DIN 6797 TYPE A 5,3	
070	90459-2528		1	REMOTE I/O BASE MODULE FOR THERMOCOUPLE	
A01K4000	90459-2494		1	DEVICENET I/O ADAPTER MODULE, 1734-ADN	
A01K4010	90459-6561		1	DIGITAL INPUT 8 PTS SINK, 1734-IB8/C	
A01K4020	90459-6561		1	DIGITAL INPUT 8 PTS SINK, 1734-IB8/C	
A01K4030	90459-6560		1	DIGITAL OUTPUT 8 PTS, 1734-OB8E/C	
A01K4040	90459-6560		1	DIGITAL OUTPUT 8 PTS, 1734-OB8E/C	
A01K4050	90459-6560		1	DIGITAL OUTPUT 8 PTS, 1734-OB8E/C	
A01K4060	90459-6560		1	DIGITAL OUTPUT 8 PTS, 1734-OB8E/C	
A01K4070	90459-6560		1	DIGITAL OUTPUT 8 PTS, 1734-OB8E/C	
A01K4080	90459-6560		1	DIGITAL OUTPUT 8 PTS, 1734-OB8E/C	
A01K4090	90459-6560		1	DIGITAL OUTPUT 8 PTS, 1734-OB8E/C	
A01K4100	90459-6560		1	DIGITAL OUTPUT 8 PTS, 1734-OB8E/C	
A01K4110	90459-5261		1	REMOTE I/O, RELAY OUTP. 4 PTS,1734-OW4/C	
A01K4120	90459-2500		1	EXPANSION POWER SUPPLY MODULE	
A01K4130	90459-5261		1	REMOTE I/O, RELAY OUTP. 4 PTS,1734-OW4/C	
A01K4140	90459-5261		1	REMOTE I/O, RELAY OUTP. 4 PTS,1734-OW4/C	
A01K4150	90459-5261		1	REMOTE I/O, RELAY OUTP. 4 PTS,1734-OW4/C	
A01K4160	90459-5261		1	REMOTE I/O, RELAY OUTP. 4 PTS,1734-OW4/C	
A01K4170	90459-2510		1	ANALOG OUTPUT VOLTAGE MODULE 2 PTS	
A01K4180	90459-6560		1	DIGITAL OUTPUT 8 PTS, 1734-OB8E/C	
A01K4200	90459-2509		1	REMOTE I/O ANALOG INPUT CURRENT 2 PTS	
A01K4300	90459-2510		1	ANALOG OUTPUT VOLTAGE MODULE 2 PTS	
A01K4310	90459-2512		1	REMOTE I/O THERMOCOUPLE INPUT 2 PTS	
A01T5400	90459-2938		1	POWER SUPPLY UNIT 6EP1 437-3BA00	
A01T5410	90459-4133		1	POWER SUPPLY UNIT 6EP1 436-3BA00	
A01T5420	90459-2939		1	BUFFER UNIT, 6EP1961-3BA01	
A01T5430	90459-2939		1	BUFFER UNIT, 6EP1961-3BA01	
A01T5440	90459-2939		1	BUFFER UNIT, 6EP1961-3BA01	
A01W4000	90459-2530	MM	2200	DEVICENET CABLE THIN	
A01W5940	90220-0034	MM	300	THERMOC.CABLE, TEX/SITW-20F-KX 2X0,5MM2	
T40W0110	90220-0183	MM	1820	SCR. CABLE 2X0,34MM2	
T40W0120	90220-0183	MM	1820	SCR. CABLE 2X0,34MM2	

Pos	Part No	UN	Qty	Description	Page No

Machine Type	Group Description	Used-In	Group Number	Page No

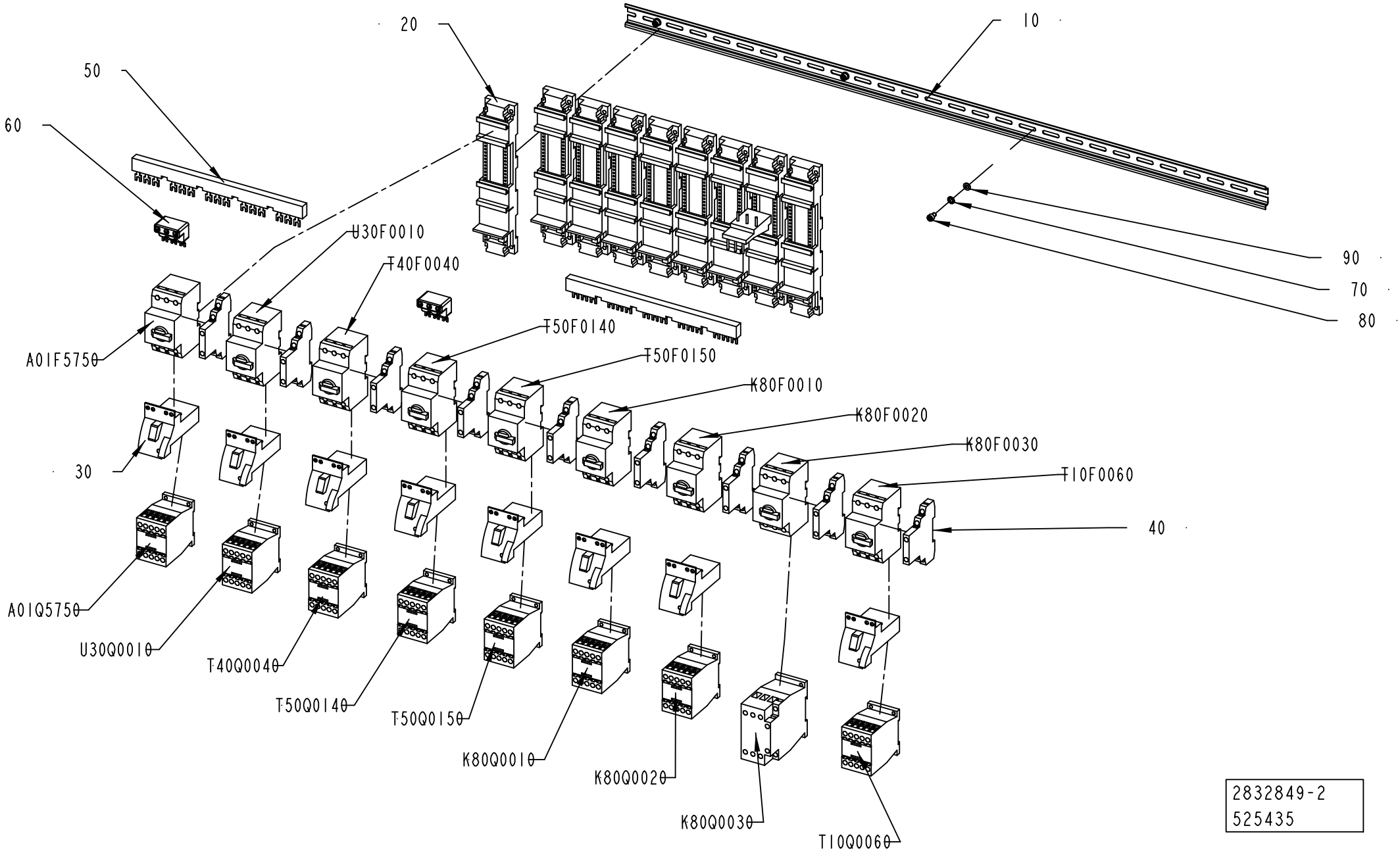

2832849-2
525435

ECM: 525487 - 20111001
Group number: 2832849-0200
Assembly Drawing: 2832849-2_1_AB

Pos	Part No	UN	Qty	Description	Page No
-					
010	353042-0004	MM	720	RAIL, TS 35/7,5	
020	90459-6851		9	CONNECTION, PKZM0-XDM32	
030	90459-6850		8	CONNECTION, PKZM0-XDM12	
040	90259-0313		9	AUXILIARY SWITCH, NHI21-PKZ0	
050	90458-0576		2	CIRCUIT BREAKER, B3.1/5-PKZ0	
060	90259-0308		1	INCOMING TERMINAL, BK25/3-PKZ0	
070	90062-0021		4	LOCK WASHER DIN 6797 TYPE A 5,3	
080	312115-0323		4	SCREW ISO4762 M5X8 A4 80	
090	315105-0146		4	WASHER BRB 5,3X10 RFR	
A01F5750	90459-5326		1	OVERLOAD PROTECTION, PKZM0-4	
A01Q5750	90459-5308		1	CONTACTOR 4KW 24VDC, DILM9-10	
K80F0010	90459-5326		1	OVERLOAD PROTECTION, PKZM0-4	
K80F0020	90459-5325		1	OVERLOAD PROTECTION, PKZM0-2,5	
K80F0030	90459-5330		1	OVERLOAD PROTECTION, PKZM0-16	
K80Q0010	90459-5440		1	CONTACTOR 4KW 24VDC, DILM9-01	
K80Q0020	90459-5440		1	CONTACTOR 4KW 24VDC, DILM9-01	
K80Q0030	90459-5441		1	CONTACTOR 7,5KW 24VDC, DILM17-01	
T10F0060	90459-5325		1	OVERLOAD PROTECTION, PKZM0-2,5	
T40F0040	90459-5326		1	OVERLOAD PROTECTION, PKZM0-4	
T50F0140	90459-5324		1	OVERLOAD PROTECTION, PKZM0-1,6	
T50F0150	90459-5324		1	OVERLOAD PROTECTION, PKZM0-1,6	
T10Q0060	90459-5440		1	CONTACTOR 4KW 24VDC, DILM9-01	
T40Q0040	90459-5440		1	CONTACTOR 4KW 24VDC, DILM9-01	
T50Q0140	90459-5440		1	CONTACTOR 4KW 24VDC, DILM9-01	
T50Q0150	90459-5440		1	CONTACTOR 4KW 24VDC, DILM9-01	
U30F0010	90459-5324		1	OVERLOAD PROTECTION, PKZM0-1,6	
U30Q0010	90459-5440		1	CONTACTOR 4KW 24VDC, DILM9-01	

Pos	Part No	UN	Qty	Description	Page No

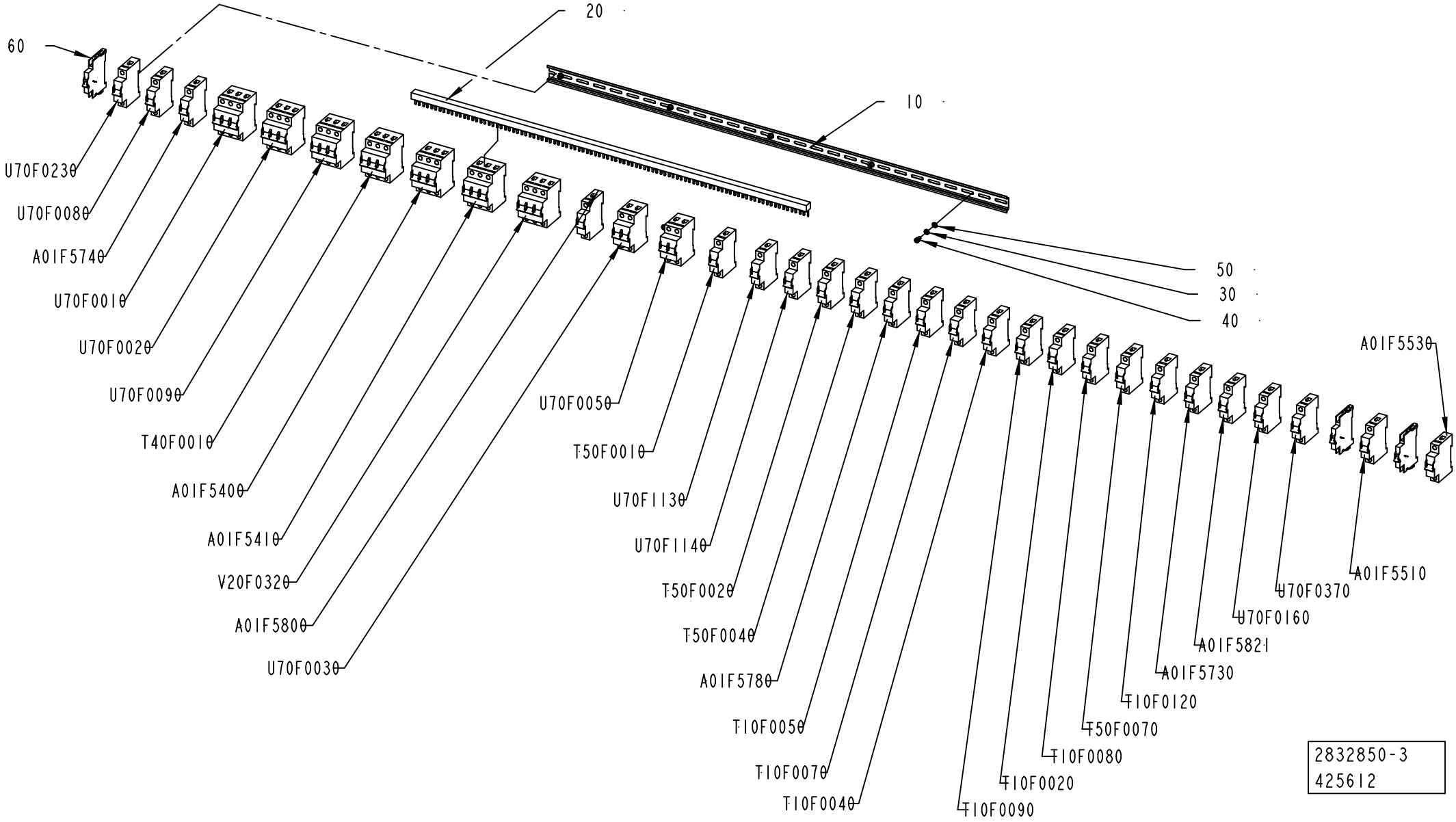
60
20
10
50
30
40
U70F0230
U70F0080
A01F5740
U70F0010
U70F0020
U70F0090
T40F0010
A01F5400
A01F5410
V20F0320
A01F5800
U70F0030
U70F0050
T50F0010
U70F1130
U70F1140
T50F0020
T50F0040
A01F5780
T10F0050
T10F0070
T10F0040
T10F0090
T10F0020
T10F0080
T50F0070
T10F0120
A01F5730
A01F5821
U70F0160
U70F0370
A01F5510
A01F5530
2832850-3
425612

ECM: 442634 - 20100326
Group number: 2832850-0200
Assembly Drawing: 2832850-3_1_AB

This list covers pages from 8-110 to 8-113

Pos	Part No	UN	Qty	Description	Page No
CE (See drawing on page: 8-110)					
020	90459-5884	MM	850	COMMONING BUSBAR, 3-P 3-PH 3X19 MOD 63A	
060	90459-5813		3	AUXILIARY CONTACT, FAZ-XHIN11	
A01F5400	354002-0100		1	IMINIATURE CIRCUIT BREAKER, FAZ-C10/3	
A01F5410	354002-0060		1	MINIATURE CIRCUIT BREAKER, FAZ-C6/3	
A01F5510	351416-0060		1	MINIATURE CIRC. BREAK., FAZ -D6 1-POLE	
A01F5530	351416-0060		1	MINIATURE CIRC. BREAK., FAZ -D6 1-POLE	
A01F5730	351416-0060		1	MINIATURE CIRC. BREAK., FAZ -D6 1-POLE	
A01F5740	351416-0060		1	MINIATURE CIRC. BREAK., FAZ -D6 1-POLE	
A01F5780	351416-0005		1	MINIATURE CIRC. BREAK., FAZ-D0,5 1-POLE	
A01F5800	351416-0010		1	MINIATURE CIRC. BREAK., FAZ -D1 1-POLE	
A01F5821	351416-0100		1	MINIATURE CIRC. BREAK., FAZ -D10 1-POLE	
T10F0020	351416-0160		1	MINIATURE CIRC. BREAK., FAZ -D16 1-POLE	
T10F0040	351416-0160		1	MINIATURE CIRC. BREAK., FAZ -D16 1-POLE	
T10F0050	354000-0010		1	MINIATURE CIRCUIT BREAKER, FAZ-C1/1	
T10F0070	354000-0040		1	MINIATURE CIRCUIT BREAKER, FAZ-C4/1	
T10F0080	354000-0160		1	MINIATURE CIRCUIT BREAKER, FAZ-C16/1	
T10F0090	354000-0020		1	MINIATURE CIRCUIT BREAKER, FAZ-C2/1	
T10F0120	351416-0005		1	MINIATURE CIRC. BREAK., FAZ-D0,5 1-POLE	
T40F0010	351418-0060		1	MINIATURE CIRC. BREAK., FAZ-D6/3 3-POLE	
T50F0010	354000-0160		1	MINIATURE CIRCUIT BREAKER, FAZ-C16/1	
T50F0020	354000-0160		1	MINIATURE CIRCUIT BREAKER, FAZ-C16/1	
T50F0040	354000-0160		1	MINIATURE CIRCUIT BREAKER, FAZ-C16/1	
T50F0070	351416-0160		1	MINIATURE CIRC. BREAK., FAZ -D16 1-POLE	
U70F0010	354002-0100		1	IMINIATURE CIRCUIT BREAKER, FAZ-C10/3	
U70F0020	354002-0100		1	IMINIATURE CIRCUIT BREAKER, FAZ-C10/3	
U70F0030	354001-0160		1	MINIATURE CIRCUIT BREAKER, FAZ-C16/2	
U70F0050	354001-0160		1	MINIATURE CIRCUIT BREAKER, FAZ-C16/2	
U70F0080	354000-0160		1	MINIATURE CIRCUIT BREAKER, FAZ-C16/1	
U70F0090	354002-0250		1	MINIATURE CIRCUIT BREAKER, FAZ-C25/3	
U70F0160	351416-0160		1	MINIATURE CIRC. BREAK., FAZ -D16 1-POLE	
U70F0230	354000-0010		1	MINIATURE CIRCUIT BREAKER, FAZ-C1/1	
U70F0370	354000-0100		1	MINIATURE CIRCUIT BREAKER, FAZ-C10/1	
U70F1130	354000-0100		1	MINIATURE CIRCUIT BREAKER, FAZ-C10/1	
U70F1140	354000-0160		1	MINIATURE CIRCUIT BREAKER, FAZ-C16/1	
V20F0320	351418-0100		1	MINIATURE CIRC. BREAK., FAZ-D10/3 3-POLE	
UL, CSA (See drawing on page: 8-112)					
020	90600-5526		3	BUSBAR, Z-SV/UL-16/3P-3TE/18 104900	
060	90600-5517		3	AUXILIARY CONTACT, Z-NHK 248434	
A01F5400	315746-0100		1	MINIATURE CIRCUIT BREAKER, FAZ-C10/3-NA	
A01F5410	315746-0060		1	MINIATURE CIRCUIT BREAKER, FAZ-C6/3-NA	
A01F5510	315747-0060		1	MINIATURE CIRCUIT BREAKER, FAZ-D6/1-NA	
A01F5530	315747-0060		1	MINIATURE CIRCUIT BREAKER, FAZ-D6/1-NA	
A01F5730	315747-0060		1	MINIATURE CIRCUIT BREAKER, FAZ-D6/1-NA	
A01F5740	315747-0060		1	MINIATURE CIRCUIT BREAKER, FAZ-D6/1-NA	
A01F5780	315747-0005		1	MINIATURE CIRCUIT BREAKER, FAZ-D0,5/1-NA	
A01F5800	315747-0010		1	MINIATURE CIRCUIT BREAKER, FAZ-D1/1-NA	
A01F5821	315747-0100		1	MINIATURE CIRCUIT BREAKER, FAZ-D10/1-NA	
A01F5900	315745-0040		1	MINIATURE CIRCUIT BREAKER, FAZ-C4/2-NA	
A01F5910	315744-0040		1	MINIATURE CIRCUIT BREAKER, FAZ-C4/1-NA	
T10F0020	315747-0160		1	MINIATURE CIRCUIT BREAKER, FAZ-D16/1-NA	
T10F0040	315747-0160		1	MINIATURE CIRCUIT BREAKER, FAZ-D16/1-NA	
T10F0050	315744-0010		1	MINIATURE CIRCUIT BREAKER, FAZ-C1/1-NA	
T10F0070	315744-0040		1	MINIATURE CIRCUIT BREAKER, FAZ-C4/1-NA	
T10F0080	315744-0160		1	MINIATURE CIRCUIT BREAKER, FAZ-C16/1-NA	
T10F0090	315744-0020		1	MINIATURE CIRCUIT BREAKER, FAZ-C2/1-NA	
T10F0120	315747-0005		1	MINIATURE CIRCUIT BREAKER, FAZ-D0,5/1-NA	
T40F0010	315749-0060		1	MINIATURE CIRCUIT BREAKER, FAZ-D6/3-NA	
T50F0010	315744-0160		1	MINIATURE CIRCUIT BREAKER, FAZ-C16/1-NA	
T50F0020	315744-0160		1	MINIATURE CIRCUIT BREAKER, FAZ-C16/1-NA	
T50F0040	315744-0160		1	MINIATURE CIRCUIT BREAKER, FAZ-C16/1-NA	
T50F0070	315747-0160		1	MINIATURE CIRCUIT BREAKER, FAZ-D16/1-NA	
U70F0010	315746-0100		1	MINIATURE CIRCUIT BREAKER, FAZ-C10/3-NA	
U70F0020	315746-0100		1	MINIATURE CIRCUIT BREAKER, FAZ-C10/3-NA	
U70F0030	315745-0160		1	MINIATURE CIRCUIT BREAKER, FAZ-C16/2-NA	
U70F0050	315745-0160		1	MINIATURE CIRCUIT BREAKER, FAZ-C16/2-NA	
U70F0080	315744-0160		1	MINIATURE CIRCUIT BREAKER, FAZ-C16/1-NA	
U70F0090	315746-0250		1	MINIATURE CIRCUIT BREAKER, FAZ-C25/3-NA	
U70F0160	315747-0160		1	MINIATURE CIRCUIT BREAKER, FAZ-D16/1-NA	
U70F0230	315744-0010		1	MINIATURE CIRCUIT BREAKER, FAZ-C1/1-NA	
U70F0370	315744-0100		1	MINIATURE CIRCUIT BREAKER, FAZ-C10/1-NA	
U70F1130	315744-0100		1	MINIATURE CIRCUIT BREAKER, FAZ-C10/1-NA	
U70F1140	315744-0160		1	MINIATURE CIRCUIT BREAKER, FAZ-C16/1-NA	
V20F0320	315749-0100		1	MINIATURE CIRCUIT BREAKER, FAZ-D10/3-NA	
Common Parts					
010	353042-0004	MM	988	RAIL, TS 35/7,5	
030	90062-0021		5	LOCK WASHER DIN 6797 TYPE A 5,3	
040	312115-0323		5	SCREW ISO4762 M5X8 A4 80	
050	315105-0146		5	WASHER BRB 5,3X10 RFR	

Machine Type | Group Description | Used-In | Group Number | Page No

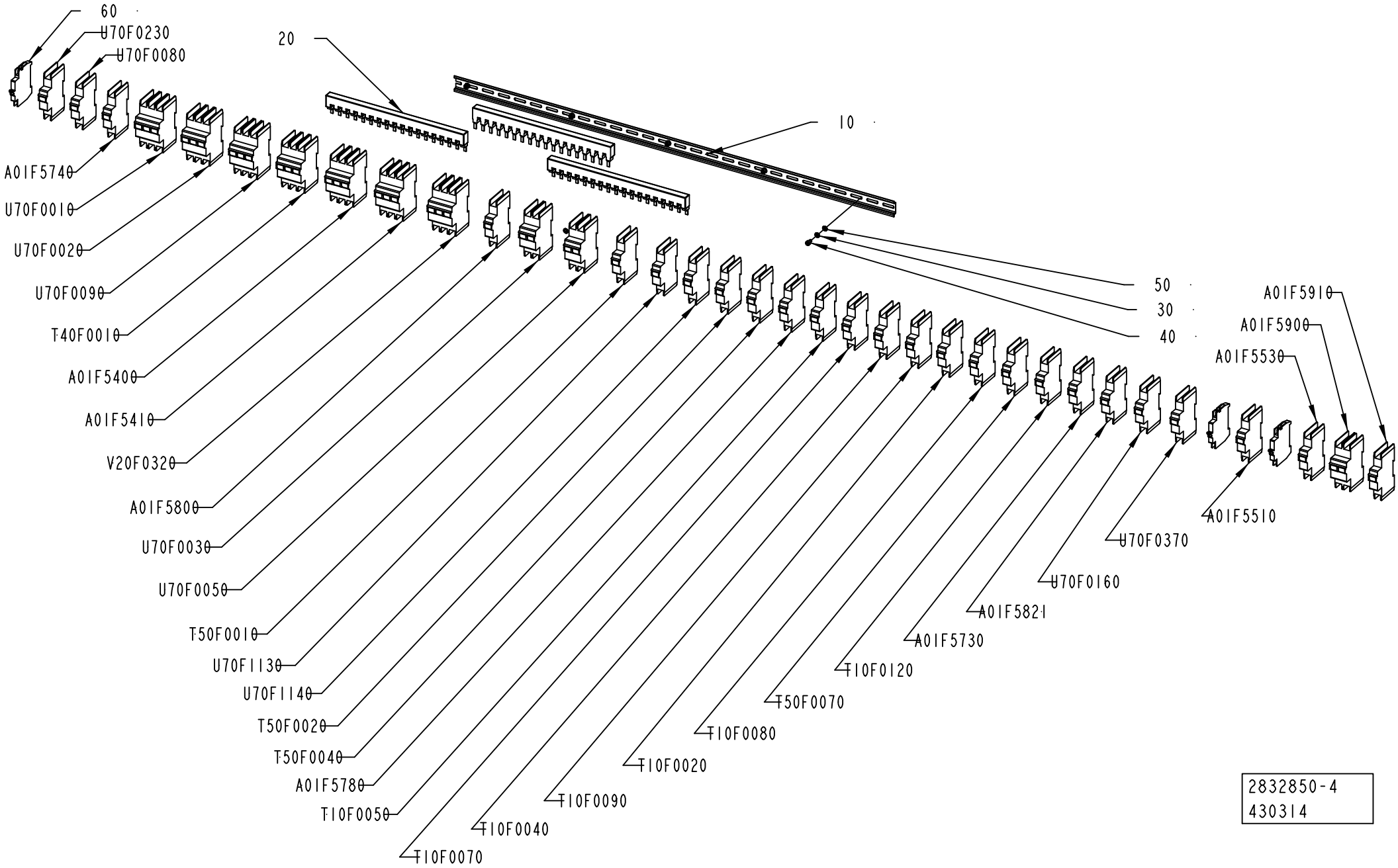
60
U70F0230
U70F0080
20
10
A01F5740
U70F0010
U70F0020
U70F0090
T40F0010
A01F5400
A01F5410
V20F0320
A01F5800
U70F0030
U70F0050
T50F0010
U70F1130
U70F1140
T50F0020
T50F0040
A01F5780
T10F0050
T10F0070
T10F0040
T10F0090
T10F0020
T10F0080
T50F0070
T10F0120
A01F5730
A01F5821
U70F0160
U70F0370
A01F5510
50
30
40
A01F5910
A01F5900
A01F5530
2832850-4
430314

ECM: 442634 - 20100326
Group number: 2832850-0200
Assembly Drawing: 2832850-4_1_AA

This list covers pages from 8-110 to 8-113

Pos	Part No	UN	Qty	Description	Page No
CE (See drawing on page: 8-110)					
020	90459-5884	MM	850	COMMONING BUSBAR, 3-P 3-PH 3X19 MOD 63A	
060	90459-5813		3	AUXILIARY CONTACT, FAZ-XHIN11	
A01F5400	354002-0100		1	IMINIATURE CIRCUIT BREAKER, FAZ-C10/3	
A01F5410	354002-0060		1	MINIATURE CIRCUIT BREAKER, FAZ-C6/3	
A01F5510	351416-0060		1	MINIATURE CIRC. BREAK., FAZ -D6 1-POLE	
A01F5530	351416-0060		1	MINIATURE CIRC. BREAK., FAZ -D6 1-POLE	
A01F5730	351416-0060		1	MINIATURE CIRC. BREAK., FAZ -D6 1-POLE	
A01F5740	351416-0060		1	MINIATURE CIRC. BREAK., FAZ -D6 1-POLE	
A01F5780	351416-0005		1	MINIATURE CIRC. BREAK., FAZ-D0,5 1-POLE	
A01F5800	351416-0010		1	MINIATURE CIRC. BREAK., FAZ -D1 1-POLE	
A01F5821	351416-0100		1	MINIATURE CIRC. BREAK., FAZ -D10 1-POLE	
T10F0020	351416-0160		1	MINIATURE CIRC. BREAK., FAZ -D16 1-POLE	
T10F0040	351416-0160		1	MINIATURE CIRC. BREAK., FAZ -D16 1-POLE	
T10F0050	354000-0010		1	MINIATURE CIRCUIT BREAKER, FAZ-C1/1	
T10F0070	354000-0040		1	MINIATURE CIRCUIT BREAKER, FAZ-C4/1	
T10F0080	354000-0160		1	MINIATURE CIRCUIT BREAKER, FAZ-C16/1	
T10F0090	354000-0020		1	MINIATURE CIRCUIT BREAKER, FAZ-C2/1	
T10F0120	351416-0005		1	MINIATURE CIRC. BREAK., FAZ-D0,5 1-POLE	
T40F0010	351418-0060		1	MINIATURE CIRC. BREAK., FAZ-D6/3 3-POLE	
T50F0010	354000-0160		1	MINIATURE CIRCUIT BREAKER, FAZ-C16/1	
T50F0020	354000-0160		1	MINIATURE CIRCUIT BREAKER, FAZ-C16/1	
T50F0040	354000-0160		1	MINIATURE CIRCUIT BREAKER, FAZ-C16/1	
T50F0070	351416-0160		1	MINIATURE CIRC. BREAK., FAZ -D16 1-POLE	
U70F0010	354002-0100		1	IMINIATURE CIRCUIT BREAKER, FAZ-C10/3	
U70F0020	354002-0100		1	IMINIATURE CIRCUIT BREAKER, FAZ-C10/3	
U70F0030	354001-0160		1	MINIATURE CIRCUIT BREAKER, FAZ-C16/2	
U70F0050	354001-0160		1	MINIATURE CIRCUIT BREAKER, FAZ-C16/2	
U70F0080	354000-0160		1	MINIATURE CIRCUIT BREAKER, FAZ-C16/1	
U70F0090	354002-0250		1	MINIATURE CIRCUIT BREAKER, FAZ-C25/3	
U70F0160	351416-0160		1	MINIATURE CIRC. BREAK., FAZ -D16 1-POLE	
U70F0230	354000-0010		1	MINIATURE CIRCUIT BREAKER, FAZ-C1/1	
U70F0370	354000-0100		1	MINIATURE CIRCUIT BREAKER, FAZ-C10/1	
U70F1130	354000-0100		1	MINIATURE CIRCUIT BREAKER, FAZ-C10/1	
U70F1140	354000-0160		1	MINIATURE CIRCUIT BREAKER, FAZ-C16/1	
V20F0320	351418-0100		1	MINIATURE CIRC. BREAK., FAZ-D10/3 3-POLE	
UL, CSA (See drawing on page: 8-112)					
020	90600-5526		3	BUSBAR, Z-SV/UL-16/3P-3TE/18 104900	
060	90600-5517		3	AUXILIARY CONTACT, Z-NHK 248434	
A01F5400	315746-0100		1	MINIATURE CIRCUIT BREAKER, FAZ-C10/3-NA	
A01F5410	315746-0060		1	MINIATURE CIRCUIT BREAKER, FAZ-C6/3-NA	
A01F5510	315747-0060		1	MINIATURE CIRCUIT BREAKER, FAZ-D6/1-NA	
A01F5530	315747-0060		1	MINIATURE CIRCUIT BREAKER, FAZ-D6/1-NA	
A01F5730	315747-0060		1	MINIATURE CIRCUIT BREAKER, FAZ-D6/1-NA	
A01F5740	315747-0060		1	MINIATURE CIRCUIT BREAKER, FAZ-D6/1-NA	
A01F5780	315747-0005		1	MINIATURE CIRCUIT BREAKER, FAZ-D0,5/1-NA	
A01F5800	315747-0010		1	MINIATURE CIRCUIT BREAKER, FAZ-D1/1-NA	
A01F5821	315747-0100		1	MINIATURE CIRCUIT BREAKER, FAZ-D10/1-NA	
A01F5900	315745-0040		1	MINIATURE CIRCUIT BREAKER, FAZ-C4/2-NA	
A01F5910	315744-0040		1	MINIATURE CIRCUIT BREAKER, FAZ-C4/1-NA	
T10F0020	315747-0160		1	MINIATURE CIRCUIT BREAKER, FAZ-D16/1-NA	
T10F0040	315747-0160		1	MINIATURE CIRCUIT BREAKER, FAZ-D16/1-NA	
T10F0050	315744-0010		1	MINIATURE CIRCUIT BREAKER, FAZ-C1/1-NA	
T10F0070	315744-0040		1	MINIATURE CIRCUIT BREAKER, FAZ-C4/1-NA	
T10F0080	315744-0160		1	MINIATURE CIRCUIT BREAKER, FAZ-C16/1-NA	
T10F0090	315744-0020		1	MINIATURE CIRCUIT BREAKER, FAZ-C2/1-NA	
T10F0120	315747-0005		1	MINIATURE CIRCUIT BREAKER, FAZ-D0,5/1-NA	
T40F0010	315749-0060		1	MINIATURE CIRCUIT BREAKER, FAZ-D6/3-NA	
T50F0010	315744-0160		1	MINIATURE CIRCUIT BREAKER, FAZ-C16/1-NA	
T50F0020	315744-0160		1	MINIATURE CIRCUIT BREAKER, FAZ-C16/1-NA	
T50F0040	315744-0160		1	MINIATURE CIRCUIT BREAKER, FAZ-C16/1-NA	
T50F0070	315747-0160		1	MINIATURE CIRCUIT BREAKER, FAZ-D16/1-NA	
U70F0010	315746-0100		1	MINIATURE CIRCUIT BREAKER, FAZ-C10/3-NA	
U70F0020	315746-0100		1	MINIATURE CIRCUIT BREAKER, FAZ-C10/3-NA	
U70F0030	315745-0160		1	MINIATURE CIRCUIT BREAKER, FAZ-C16/2-NA	
U70F0050	315745-0160		1	MINIATURE CIRCUIT BREAKER, FAZ-C16/2-NA	
U70F0080	315744-0160		1	MINIATURE CIRCUIT BREAKER, FAZ-C16/1-NA	
U70F0090	315746-0250		1	MINIATURE CIRCUIT BREAKER, FAZ-C25/3-NA	
U70F0160	315747-0160		1	MINIATURE CIRCUIT BREAKER, FAZ-D16/1-NA	
U70F0230	315744-0010		1	MINIATURE CIRCUIT BREAKER, FAZ-C1/1-NA	
U70F0370	315744-0100		1	MINIATURE CIRCUIT BREAKER, FAZ-C10/1-NA	
U70F1130	315744-0100		1	MINIATURE CIRCUIT BREAKER, FAZ-C10/1-NA	
U70F1140	315744-0160		1	MINIATURE CIRCUIT BREAKER, FAZ-C16/1-NA	
V20F0320	315749-0100		1	MINIATURE CIRCUIT BREAKER, FAZ-D10/3-NA	
Common Parts					
010	353042-0004	MM	988	RAIL, TS 35/7,5	
030	90062-0021		5	LOCK WASHER DIN 6797 TYPE A 5,3	
040	312115-0323		5	SCREW ISO4762 M5X8 A4 80	
050	315105-0146		5	WASHER BRB 5,3X10 RFR	

Machine Type	Group Description	Used-In	Group Number	Page No

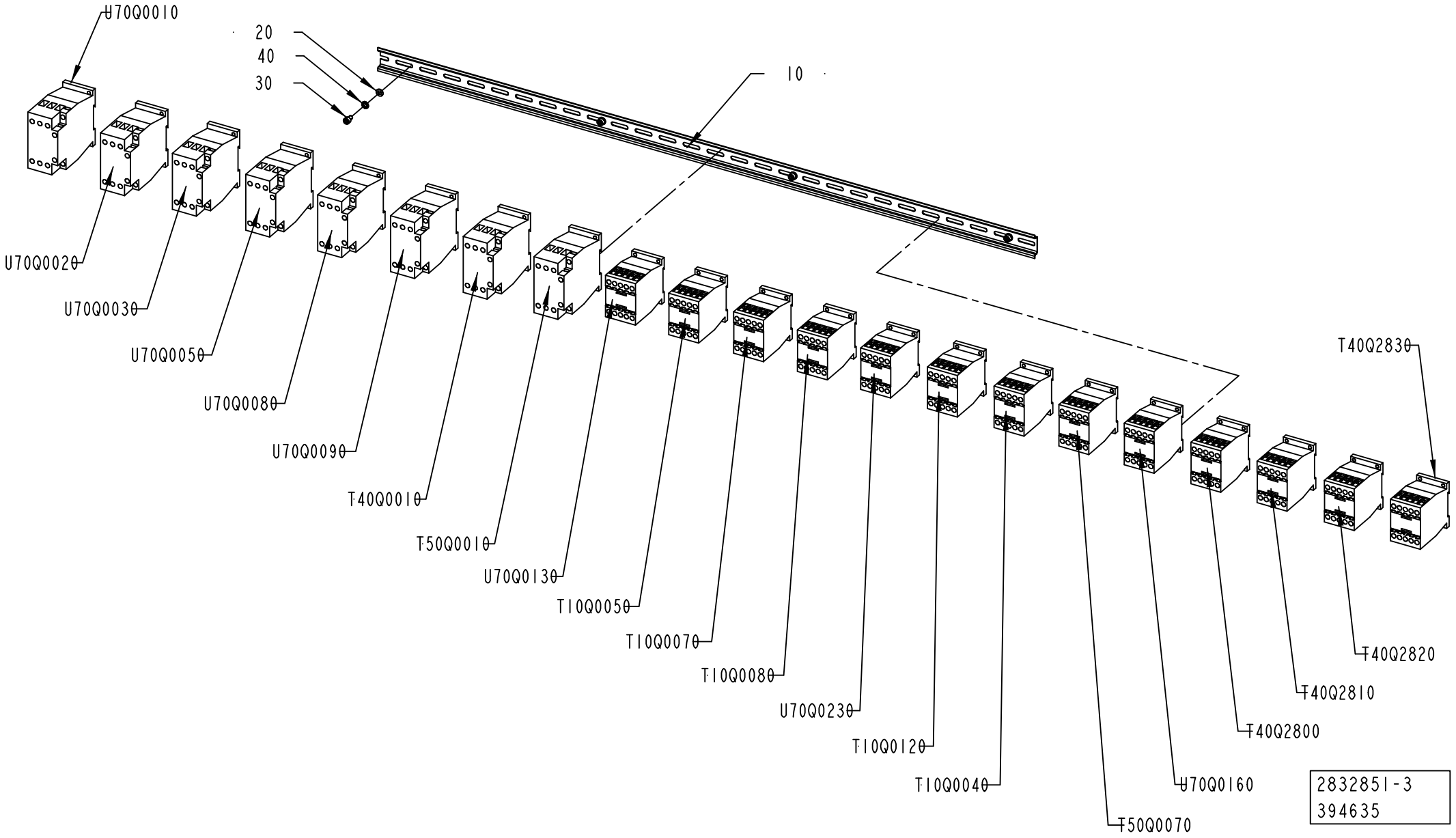
U70Q0010
20
40
30
10
U70Q0020
U70Q0030
U70Q0050
U70Q0080
U70Q0090
T40Q0010
T50Q0010
U70Q0130
T10Q0050
T10Q0070
T10Q0080
U70Q0230
T10Q0120
T10Q0040
T50Q0070
U70Q0160
T40Q2800
T40Q2810
T40Q2820
T40Q2830
2832851-3
394635

ECM: 407280 - 20090710
Group number: 2832851-0200
Assembly Drawing: 2832851-3_1_AA

Pos	Part No	UN	Qty	Description	Page No
-					
010	353042-0004	MM	988	RAIL, TS 35/7,5	
020	315105-0146		4	WASHER BRB 5,3X10 RFR	
030	312115-0323		4	SCREW ISO4762 M5X8 A4 80	
040	90062-0021		4	LOCK WASHER DIN 6797 TYPE A 5,3	
T10Q0040	90459-5440		1	CONTACTOR 4KW 24VDC, DILM9-01	
T10Q0050	90459-5440		1	CONTACTOR 4KW 24VDC, DILM9-01	
T10Q0070	90459-5440		1	CONTACTOR 4KW 24VDC, DILM9-01	
T10Q0080	90459-5440		1	CONTACTOR 4KW 24VDC, DILM9-01	
T10Q0120	90459-5440		1	CONTACTOR 4KW 24VDC, DILM9-01	
T40Q0010	90459-5441		1	CONTACTOR 7,5KW 24VDC, DILM17-01	
T40Q2800	90459-5440		1	CONTACTOR 4KW 24VDC, DILM9-01	
T40Q2810	90459-5440		1	CONTACTOR 4KW 24VDC, DILM9-01	
T40Q2820	90459-5440		1	CONTACTOR 4KW 24VDC, DILM9-01	
T40Q2830	90459-5440		1	CONTACTOR 4KW 24VDC, DILM9-01	
T50Q0010	90459-5441		1	CONTACTOR 7,5KW 24VDC, DILM17-01	
T50Q0070	90459-5440		1	CONTACTOR 4KW 24VDC, DILM9-01	
U70Q0010	90459-5441		1	CONTACTOR 7,5KW 24VDC, DILM17-01	
U70Q0020	90459-5441		1	CONTACTOR 7,5KW 24VDC, DILM17-01	
U70Q0030	90459-5441		1	CONTACTOR 7,5KW 24VDC, DILM17-01	
U70Q0050	90459-5441		1	CONTACTOR 7,5KW 24VDC, DILM17-01	
U70Q0080	90459-5441		1	CONTACTOR 7,5KW 24VDC, DILM17-01	
U70Q0090	90459-5444		1	CONTACTOR 15KW 24VDC, DILM32-01	
U70Q0130	90459-5440		1	CONTACTOR 4KW 24VDC, DILM9-01	
U70Q0160	90459-5440		1	CONTACTOR 4KW 24VDC, DILM9-01	
U70Q0230	90459-5440		1	CONTACTOR 4KW 24VDC, DILM9-01	

Pos	Part No	UN	Qty	Description	Page No

Machine Type | Group Description | Used-In | Group Number | Page No

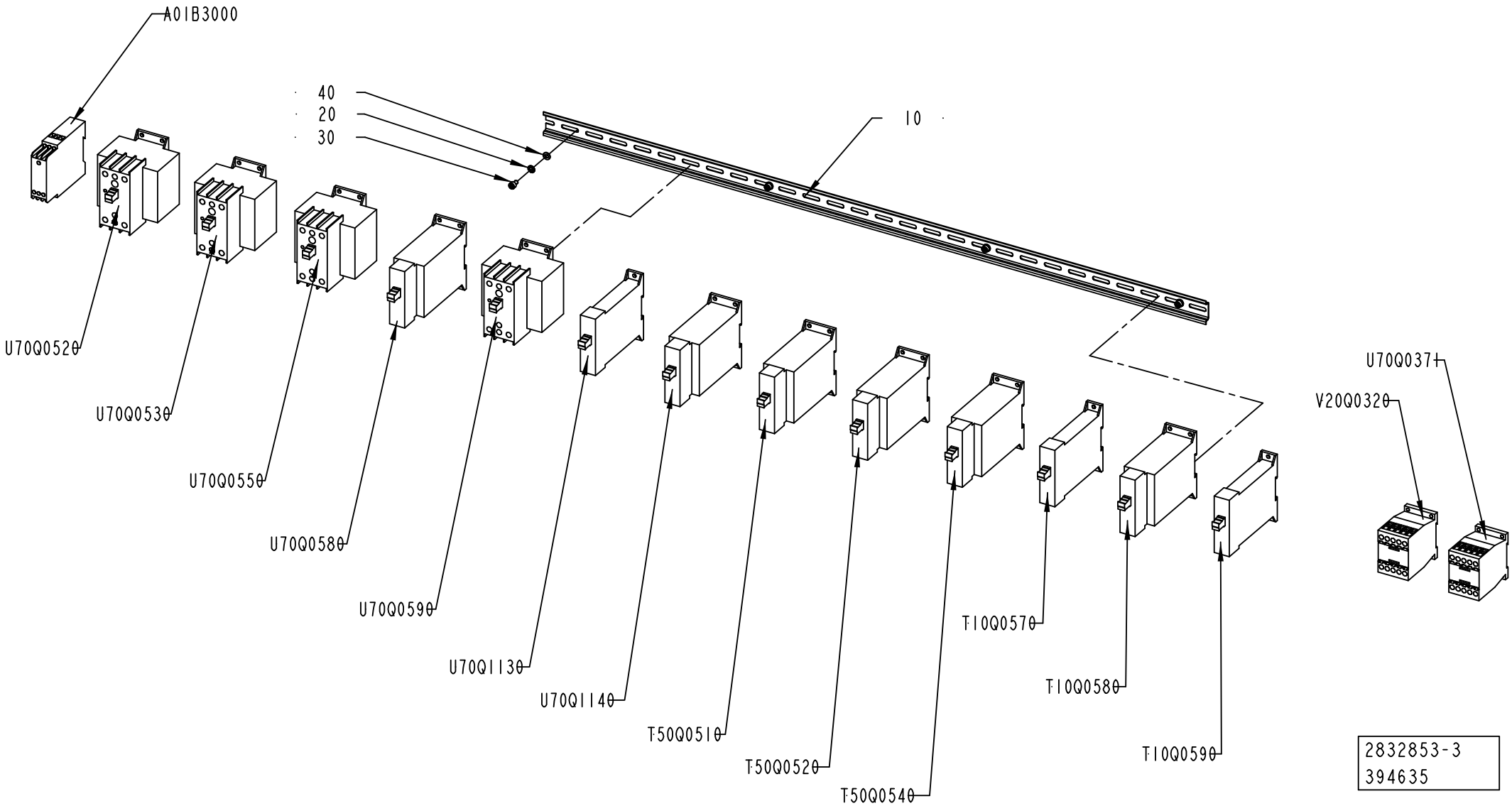
A01B3000
40
20
30
10
U70Q052θ
U70Q053θ
U70Q055θ
U70Q058θ
U70Q059θ
U70Q113θ
U70Q114θ
T50Q051θ
T50Q052θ
T50Q054θ
T10Q057θ
T10Q058θ
T10Q059θ
U70Q037
V20Q032θ
2832853-3
394635

ECM: 408009 - 20090710
Group number: 2832853-0200
Assembly Drawing: 2832853-3_1_AA

This list covers pages from 8-116 to 8-119

Pos	Part No	UN	Qty	Description	Page No
HI (See drawing on page: 8-118)					
U70Q0370	90600-0943		1	SOLID STATE RELAY, 3RF2320-1AA04	
Common Parts					
010	353042-0004	M	988	RAIL, TS 35/7,5	
020	90062-0021		4	LOCK WASHER DIN 6797 TYPE A 5,3	
030	312115-0323		4	SCREW ISO4762 M5X8 A4 80	
040	315105-0146		4	WASHER BRB 5,3X10 RFR	
A01B3000	90600-4814		1	PHASE MONITORING RELAY, EMR5-AWN280-1-F	
T10Q0570	90600-0943		1	SOLID STATE RELAY, 3RF2320-1AA04	
T10Q0580	90600-0944		1	SOLID STATE CONTACTOR, 3RF2330-1AA04	
T10Q0590	90600-0943		1	SOLID STATE RELAY, 3RF2320-1AA04	
T50Q0510	90600-0944		1	SOLID STATE CONTACTOR, 3RF2330-1AA04	
T50Q0520	90600-0944		1	SOLID STATE CONTACTOR, 3RF2330-1AA04	
T50Q0540	90600-0944		1	SOLID STATE CONTACTOR, 3RF2330-1AA04	
U70Q0371	90459-5440		1	CONTACTOR 4KW 24VDC, DILM9-01	
U70Q0520	90600-0948		1	SOLID STATE CONTACTOR, 3RF2430-1AB45	
U70Q0530	90600-0948		1	SOLID STATE CONTACTOR, 3RF2430-1AB45	
U70Q0550	90600-0948		1	SOLID STATE CONTACTOR, 3RF2430-1AB45	
U70Q0580	90600-0944		1	SOLID STATE CONTACTOR, 3RF2330-1AA04	
U70Q0590	90600-0948		1	SOLID STATE CONTACTOR, 3RF2430-1AB45	
U70Q1130	90600-0943		1	SOLID STATE RELAY, 3RF2320-1AA04	
U70Q1140	90600-0944		1	SOLID STATE CONTACTOR, 3RF2330-1AA04	
V20Q0320	90459-5440		1	CONTACTOR 4KW 24VDC, DILM9-01	

Pos	Part No	UN	Qty	Description	Page No

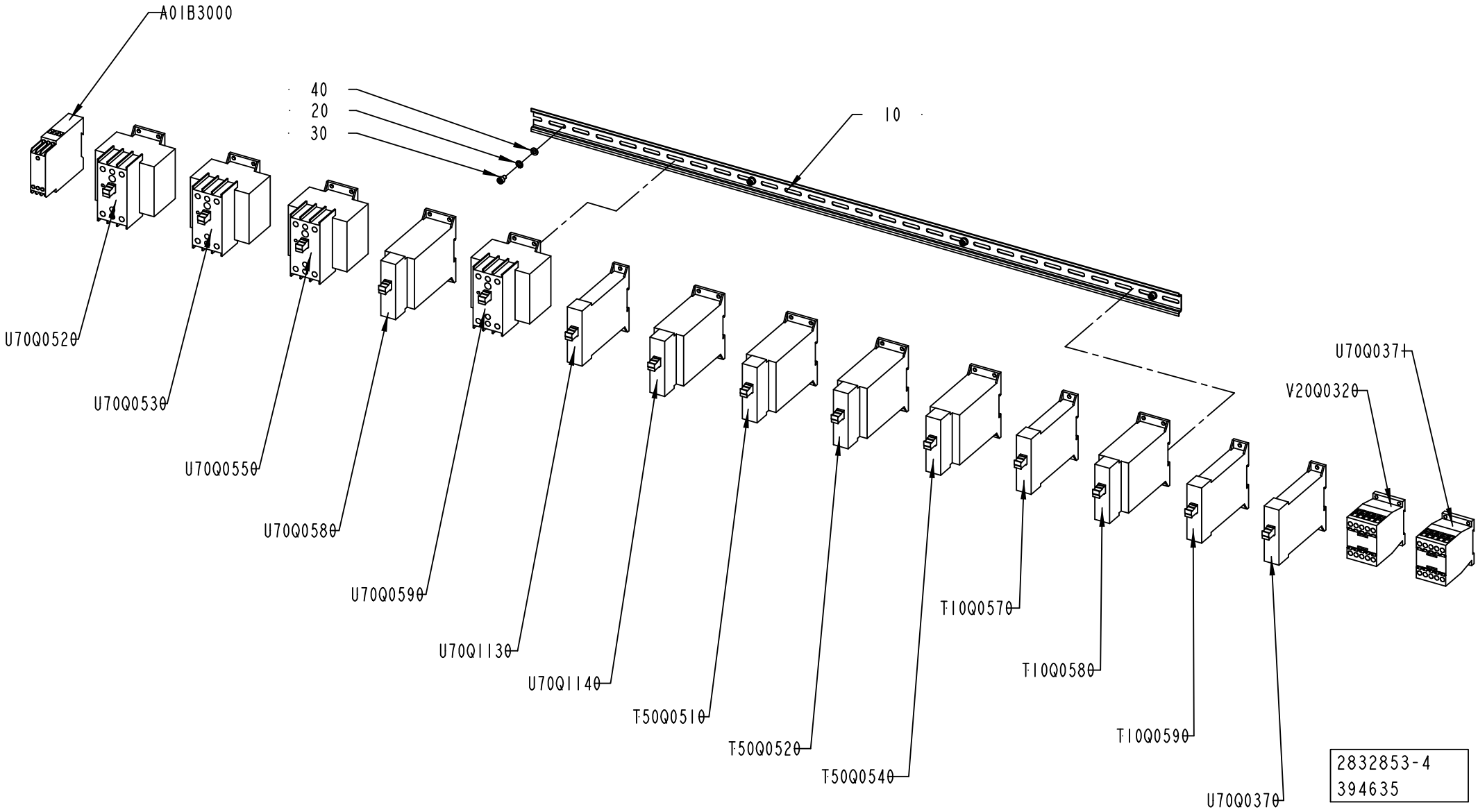
A01B3000
40
20
30
10
U70Q052θ
U70Q053θ
U70Q055θ
U70Q058θ
U70Q059θ
U70Q113θ
U70Q114θ
T50Q051θ
T50Q052θ
T50Q054θ
T10Q057θ
T10Q058θ
T10Q059θ
U70Q037θ
V20Q032θ
U70Q037
2832853-4
394635

ECM: 408009 - 20090710
Group number: 2832853-0200
Assembly Drawing: 2832853-4_1_AA

This list covers pages from 8-116 to 8-119

Pos	Part No	UN	Qty	Description	Page No
HI (See drawing on page: 8-118)					
U70Q0370	90600-0943		1	SOLID STATE RELAY, 3RF2320-1AA04	
Common Parts					
010	353042-0004	M	988	RAIL, TS 35/7,5	
020	90062-0021		4	LOCK WASHER DIN 6797 TYPE A 5,3	
030	312115-0323		4	SCREW ISO4762 M5X8 A4 80	
040	315105-0146		4	WASHER BRB 5,3X10 RFR	
A01B3000	90600-4814		1	PHASE MONITORING RELAY, EMR5-AWN280-1-F	
T10Q0570	90600-0943		1	SOLID STATE RELAY, 3RF2320-1AA04	
T10Q0580	90600-0944		1	SOLID STATE CONTACTOR, 3RF2330-1AA04	
T10Q0590	90600-0943		1	SOLID STATE RELAY, 3RF2320-1AA04	
T50Q0510	90600-0944		1	SOLID STATE CONTACTOR, 3RF2330-1AA04	
T50Q0520	90600-0944		1	SOLID STATE CONTACTOR, 3RF2330-1AA04	
T50Q0540	90600-0944		1	SOLID STATE CONTACTOR, 3RF2330-1AA04	
U70Q0371	90459-5440		1	CONTACTOR 4KW 24VDC, DILM9-01	
U70Q0520	90600-0948		1	SOLID STATE CONTACTOR, 3RF2430-1AB45	
U70Q0530	90600-0948		1	SOLID STATE CONTACTOR, 3RF2430-1AB45	
U70Q0550	90600-0948		1	SOLID STATE CONTACTOR, 3RF2430-1AB45	
U70Q0580	90600-0944		1	SOLID STATE CONTACTOR, 3RF2330-1AA04	
U70Q0590	90600-0948		1	SOLID STATE CONTACTOR, 3RF2430-1AB45	
U70Q1130	90600-0943		1	SOLID STATE RELAY, 3RF2320-1AA04	
U70Q1140	90600-0944		1	SOLID STATE CONTACTOR, 3RF2330-1AA04	
V20Q0320	90459-5440		1	CONTACTOR 4KW 24VDC, DILM9-01	

Pos	Part No	UN	Qty	Description	Page No

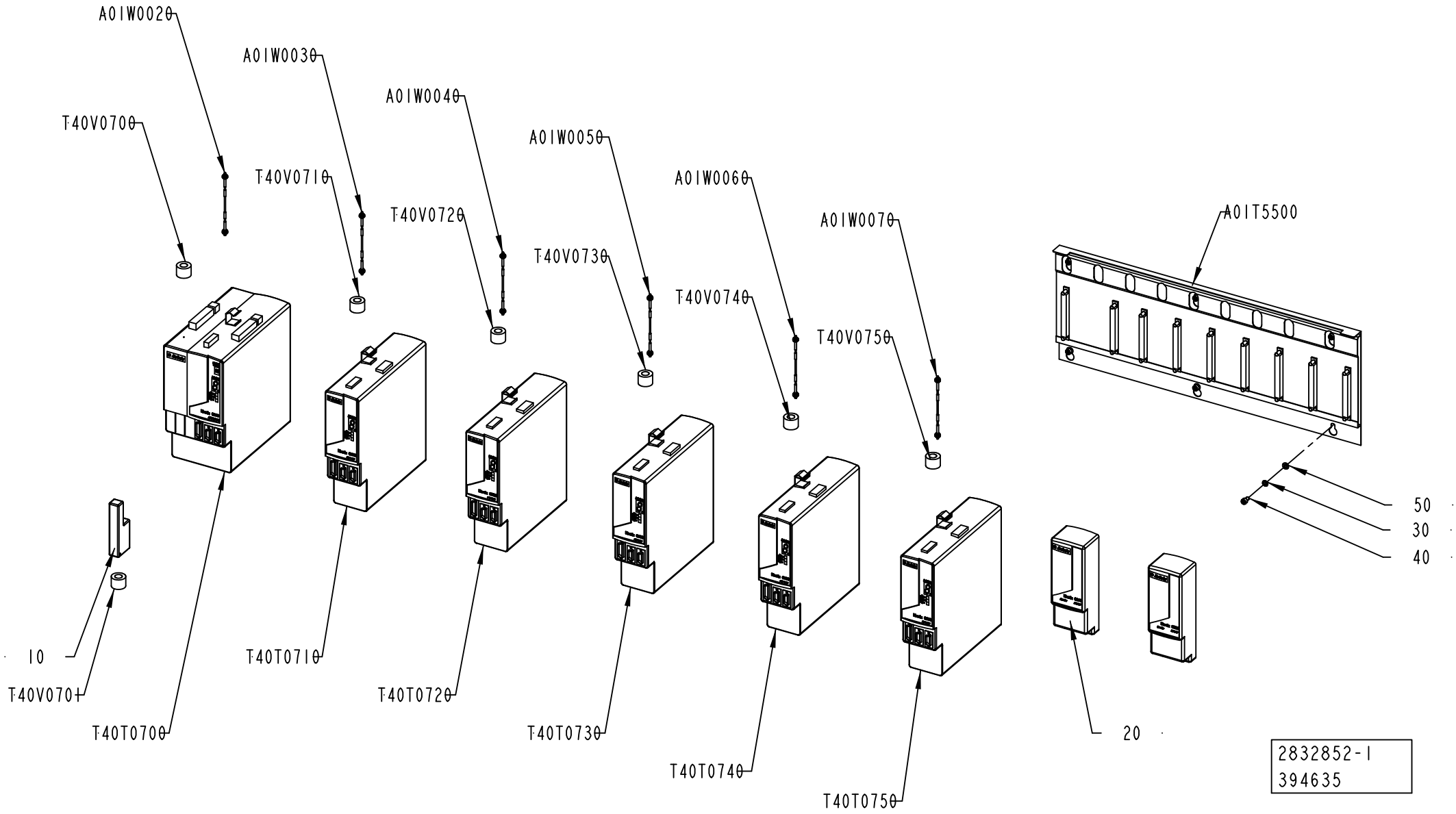
A01W002θ
A01W003θ
A01W004θ
A01W005θ
A01W006θ
A01W007θ
A01T5500
T40V070θ
T40V071θ
T40V072θ
T40V073θ
T40V074θ
T40V075θ
50
30
40
10
20
T40V070I
T40T070θ
T40T071θ
T40T072θ
T40T073θ
T40T074θ
T40T075θ
2832852-1
394635

ECM: 408008 - 20090710
Group number: 2832852-0100
Assembly Drawing: 2832852-1_1_AB

This list covers pages from 8-120 to 8-123

Pos	Part No	UN	Qty	Description	Page No
HVA (See drawing on page: 8-122)					
020	90459-2547		1	POWER RAIL SLOT FILLER, 2094-PRF	
A01W0090	90459-2537		1	SERCOS CABLE 0.3M	
U70T6200	90600-5214		1	AXIS MOD. KINETIX 6000,2094-BM01-S SER.B	
NOHVA (See drawing on page: 8-120)					
020	90459-2547		2	POWER RAIL SLOT FILLER, 2094-PRF	
Common Parts					
010	90459-2550		1	I/O CONNECTOR 26 PIN MALE, 2090-K6CK-D26	
030	90062-0022		6	LOCK WASHER D=6,4/11	
040	312115-0364		6	SCREW ISO4762 M6X10 A4 80	
050	315105-0153		6	WASHER BRB 6,4X12 RFR	
A01T5500	90459-5195		1	SLIM POWER RAIL,KINETIX,8 AXIS,2094-PRS8	
A01W0020	90459-2536		1	SERCOS CABLE 0.1M, 2090-SCEP0-1	
A01W0030	90459-2536		1	SERCOS CABLE 0.1M, 2090-SCEP0-1	
A01W0040	90459-2536		1	SERCOS CABLE 0.1M, 2090-SCEP0-1	
A01W0050	90459-2536		1	SERCOS CABLE 0.1M, 2090-SCEP0-1	
A01W0060	90459-2536		1	SERCOS CABLE 0.1M, 2090-SCEP0-1	
A01W0070	90459-2539		1	SERCOS CABLE 1.0M, 2090-SCEP1-0	
T40T0700	90600-5212		1	AXIS MOD. W. PS,2094-BC02-M02-S SERIES B	
T40T0710	90600-5216		1	AXIS MOD. KINETIX 6000,2094-BM02-S SER.B	
T40T0720	90600-5216		1	AXIS MOD. KINETIX 6000,2094-BM02-S SER.B	
T40T0730	90600-5216		1	AXIS MOD. KINETIX 6000,2094-BM02-S SER.B	
T40T0740	90600-5214		1	AXIS MOD. KINETIX 6000,2094-BM01-S SER.B	
T40T0750	90600-5214		1	AXIS MOD. KINETIX 6000,2094-BM01-S SER.B	
T40V0700	90600-5249		1	FERRITE, B64290L616X38	
T40V0701	90600-5249		1	FERRITE, B64290L616X38	
T40V0710	90600-5249		1	FERRITE, B64290L616X38	
T40V0720	90600-5249		1	FERRITE, B64290L616X38	
T40V0730	90600-5249		1	FERRITE, B64290L616X38	
T40V0740	90600-5249		1	FERRITE, B64290L616X38	
T40V0750	90600-5249		1	FERRITE, B64290L616X38	

Pos	Part No	UN	Qty	Description	Page No

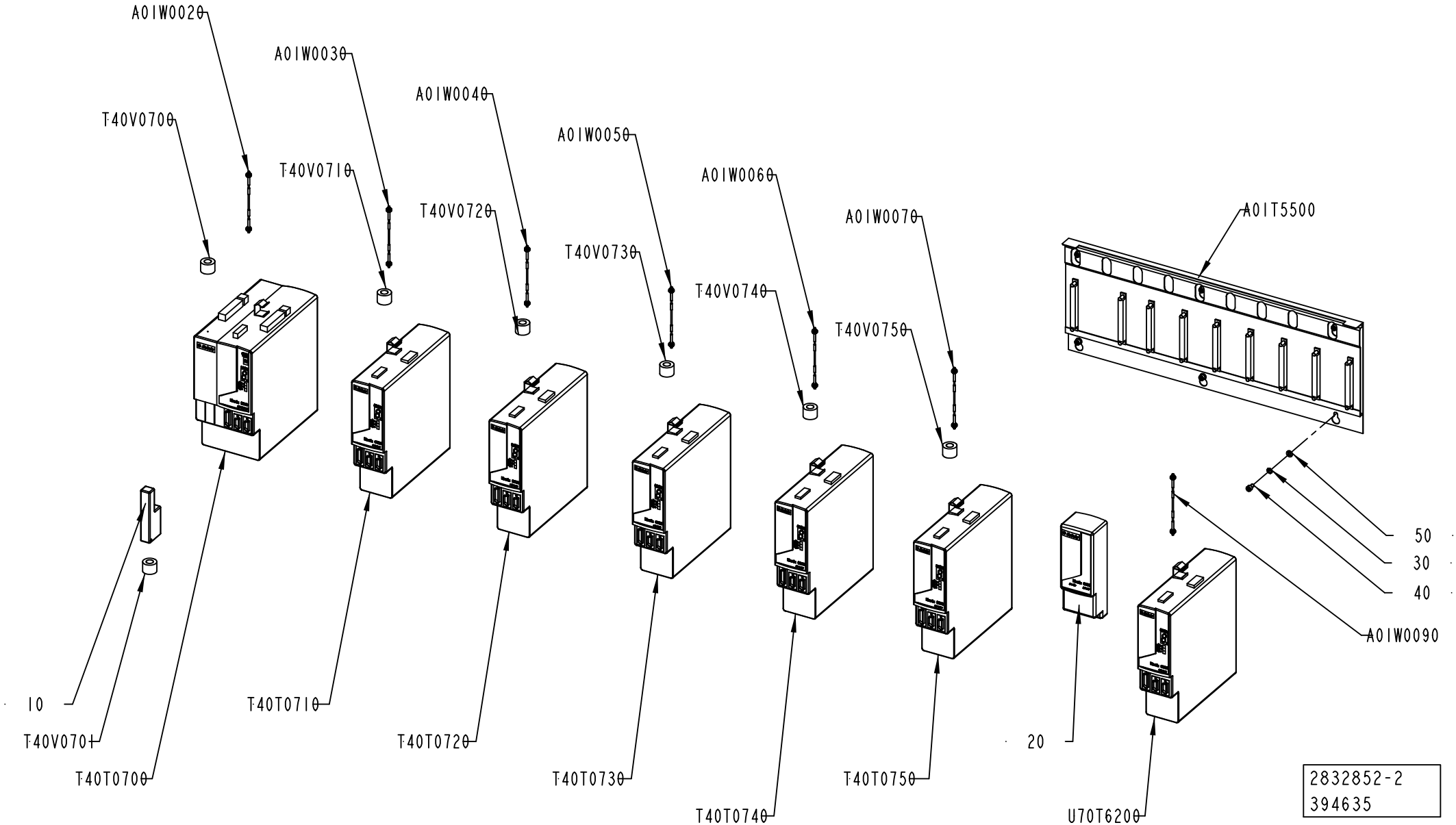
A01W0020
A01W0030
A01W0040
A01W0050
A01W0060
A01W0070
A01T5500
T40V0700
T40V0710
T40V0720
T40V0730
T40V0740
T40V0750
50
30
40
A01W0090
10
T40V0701
T40T0700
T40T0710
T40T0720
T40T0730
T40T0740
T40T0750
20
U70T6200
2832852-2
394635

ECM: 408008 - 20090710
Group number: 2832852-0100
Assembly Drawing: 2832852-2_1_AB

This list covers pages from 8-120 to 8-123

Pos	Part No	UN	Qty	Description	Page No
HVA (See drawing on page: 8-122)					
020	90459-2547		1	POWER RAIL SLOT FILLER, 2094-PRF	
A01W0090	90459-2537		1	SERCOS CABLE 0.3M	
U70T6200	90600-5214		1	AXIS MOD. KINETIX 6000,2094-BM01-S SER.B	
NOHVA (See drawing on page: 8-120)					
020	90459-2547		2	POWER RAIL SLOT FILLER, 2094-PRF	
Common Parts					
010	90459-2550		1	I/O CONNECTOR 26 PIN MALE, 2090-K6CK-D26	
030	90062-0022		6	LOCK WASHER D=6,4/11	
040	312115-0364		6	SCREW ISO4762 M6X10 A4 80	
050	315105-0153		6	WASHER BRB 6,4X12 RFR	
A01T5500	90459-5195		1	SLIM POWER RAIL,KINETIX,8 AXIS,2094-PRS8	
A01W0020	90459-2536		1	SERCOS CABLE 0.1M, 2090-SCEP0-1	
A01W0030	90459-2536		1	SERCOS CABLE 0.1M, 2090-SCEP0-1	
A01W0040	90459-2536		1	SERCOS CABLE 0.1M, 2090-SCEP0-1	
A01W0050	90459-2536		1	SERCOS CABLE 0.1M, 2090-SCEP0-1	
A01W0060	90459-2536		1	SERCOS CABLE 0.1M, 2090-SCEP0-1	
A01W0070	90459-2539		1	SERCOS CABLE 1.0M, 2090-SCEP1-0	
T40T0700	90600-5212		1	AXIS MOD. W. PS,2094-BC02-M02-S SERIES B	
T40T0710	90600-5216		1	AXIS MOD. KINETIX 6000,2094-BM02-S SER.B	
T40T0720	90600-5216		1	AXIS MOD. KINETIX 6000,2094-BM02-S SER.B	
T40T0730	90600-5216		1	AXIS MOD. KINETIX 6000,2094-BM02-S SER.B	
T40T0740	90600-5214		1	AXIS MOD. KINETIX 6000,2094-BM01-S SER.B	
T40T0750	90600-5214		1	AXIS MOD. KINETIX 6000,2094-BM01-S SER.B	
T40V0700	90600-5249		1	FERRITE, B64290L616X38	
T40V0701	90600-5249		1	FERRITE, B64290L616X38	
T40V0710	90600-5249		1	FERRITE, B64290L616X38	
T40V0720	90600-5249		1	FERRITE, B64290L616X38	
T40V0730	90600-5249		1	FERRITE, B64290L616X38	
T40V0740	90600-5249		1	FERRITE, B64290L616X38	
T40V0750	90600-5249		1	FERRITE, B64290L616X38	

Pos	Part No	UN	Qty	Description	Page No

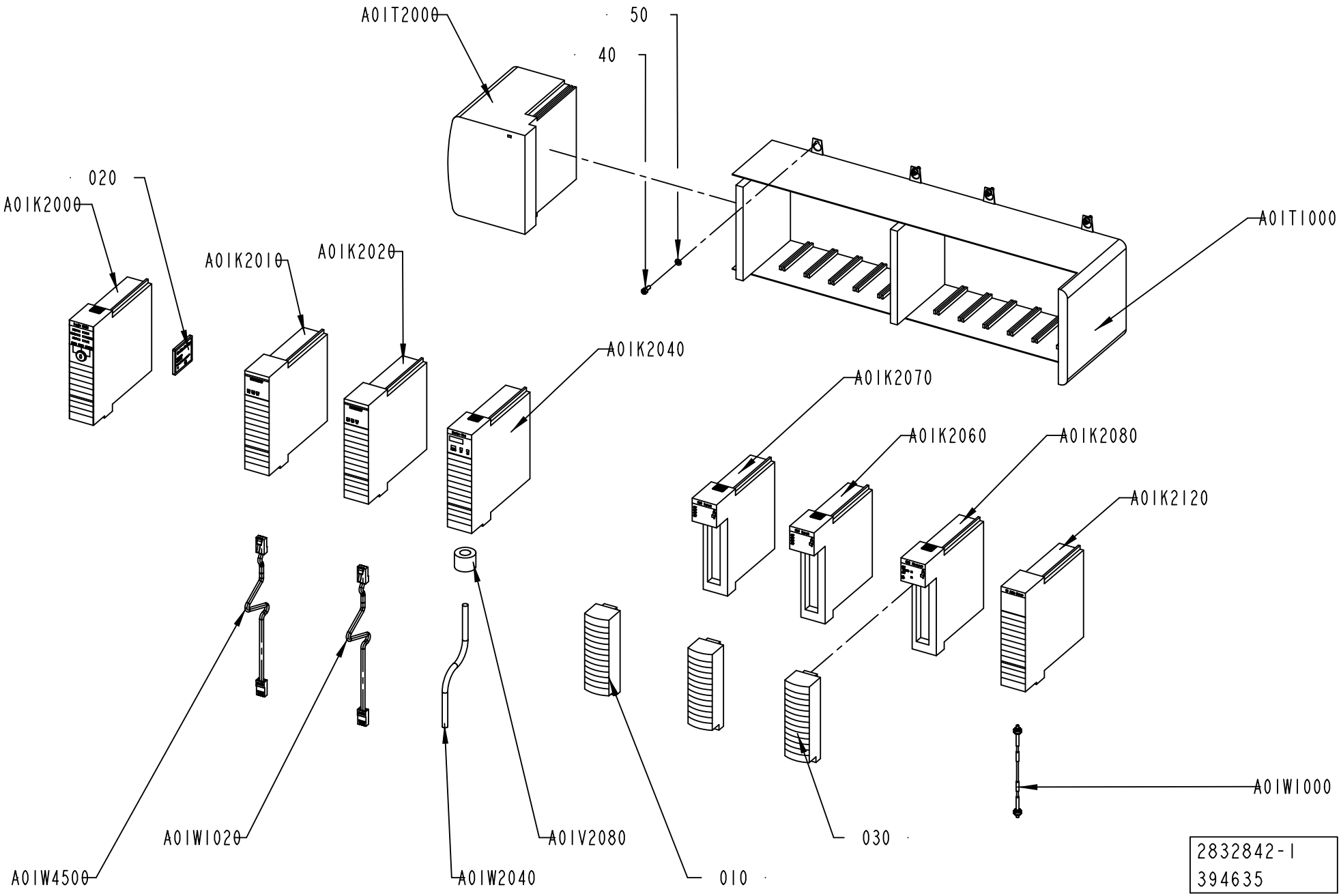
A01T2000
50
40
020
A01K2000
A01K2010
A01K2020
A01K2040
A01T1000
A01K2070
A01K2060
A01K2080
A01K2120
A01W1000
A01W4500
A01W1020
A01W2040
A01V2080
010
030
2832842-1
394635

ECM: 407274 - 20090710
Group number: 2832842-0100
Assembly Drawing: 2832842-1_1_AC

Pos	Part No	UN	Qty	Description	Page No
-					
010	90459-2488		2	REMOVABLE TERMINAL BLOCK 36 POINTS	
020	90459-3145		1	FLASH MEMORY 64MBYTE, 1784-CF64	
030	90459-2487		1	REMOVABLE TERMINAL BLOCK 20 POINTS	
040	312115-0289		8	SCREW ISO4762 M4X10 A4 80	
050	315105-0136		8	WASHER BRB 4,3X8 RFR	
060	90459-5574		1	CONNECTOR, 1787-PLUG10R	
A01K2000	90459-6559		1	PROCESSOR L63, SERIES B, 1756-L63/B	
	90459-6726		*1*	*SPARE BATTERY FOR CONTROLLOGIX, 1756-BA2*	
A01K2010	90459-2477		1	ETHERNET I/P BRIDGE MODULE, 1756-ENBT	
A01K2020	90459-2477		1	ETHERNET I/P BRIDGE MODULE, 1756-ENBT	
A01K2040	90600-5840		1	PLC DEVICEN. BR./SCAN MOD, 1756-DNB, D	
A01K2060	90459-6556		1	PLC DIGITAL INPUT 32PTS, 1756-IB32/B	
A01K2070	90459-6556		1	PLC DIGITAL INPUT 32PTS, 1756-IB32/B	
A01K2080	90459-2474		1	PLC,DIGIT. OUTPUT MODULE 16 PTS 10-31VDC	
A01K2120	90459-2481		1	PLC 16-AXIS SERCOS MOTION MODULE	
A01T1000	90459-2459		1	BASEPLATE, 13 SLOT CONTROLLOGIX CHASSIS	
A01T2000	90459-7267		1	POWER SUPPLY 24VDC, 1756-PB75/B	
A01V2080	90600-5249		1	FERRITE, B64290L616X38	
A01W1000	90459-2540		1	SERCOS CABLE 3.0M, 2090-SCEP3-0	
A01W1020	90459-0554		1	CABLE, ETHERNET RJ 45 CROSS. SCREEN.2M	
A01W2040	90459-2530	MM	1400	DEVICENET CABLE THIN	
A01W4500	90459-0554		1	CABLE, ETHERNET RJ 45 CROSS. SCREEN.2M	

Pos	Part No	UN	Qty	Description	Page No

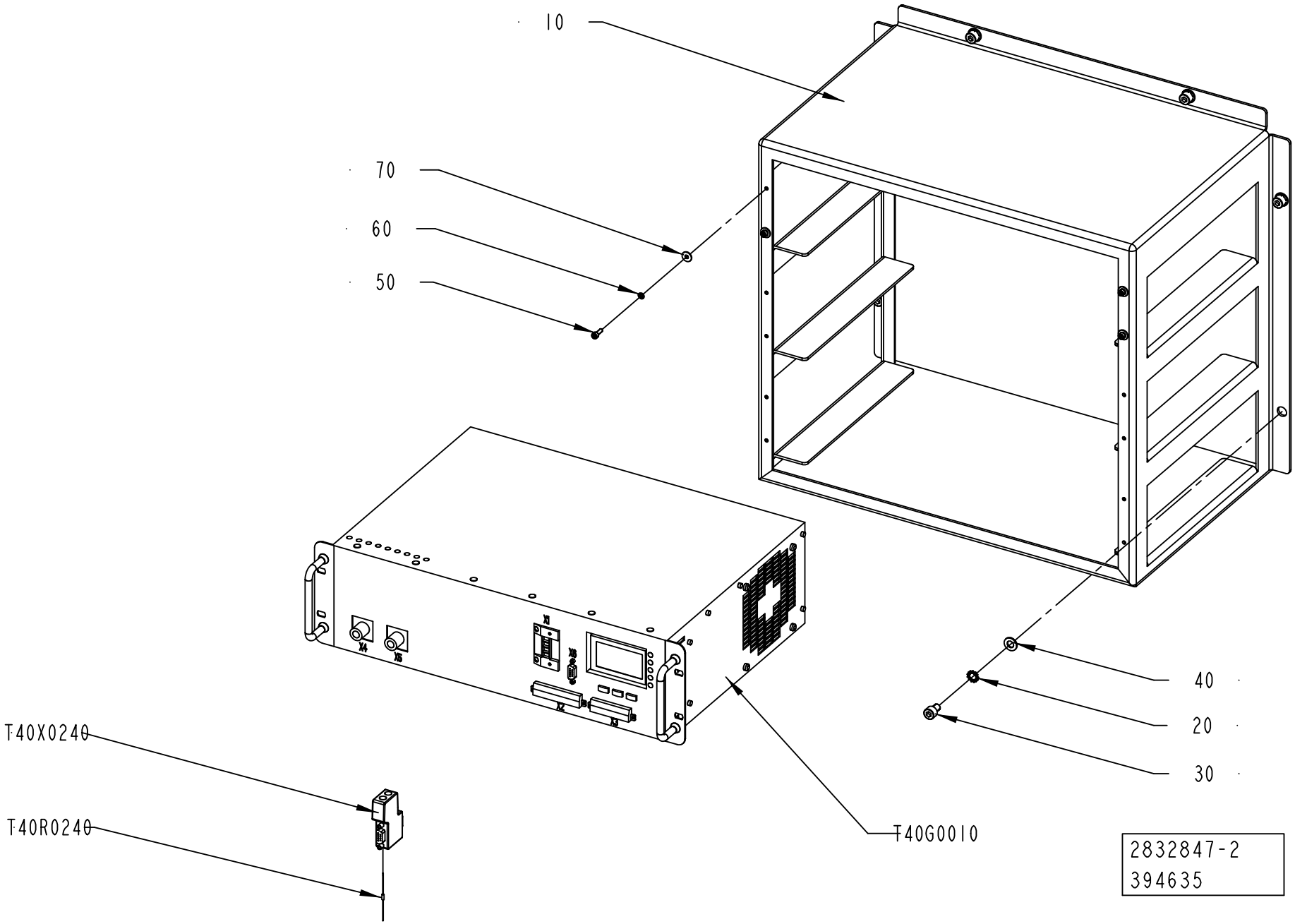
10
70
60
50
40
20
30
T40X0240
T40R0240
T40G0010
2832847-2
394635

ECM: 407277 - 20090710
Group number: 2832847-0200
Assembly Drawing: 2832847-2_1_AA

Pos	Part No	UN	Qty	Description	Page No
-					
010	3041519-0000		1	FRAME	
020	90062-0016		6	LOCK WASHER SERRAT.EXT.GEAR,8,4/15 H=0,8	
030	312115-0447		6	SCREW ISO4762 M8X12 A4 80	
040	315105-0165		6	WASHER BRB 8,4X16 RFR	
050	312115-0291		4	SCREW ISO4762 M4X12 A4 80	
060	315402-0136		4	LOCK WASHER, DIN127B 4,1 A4, M4-5/32	
070	90005-0082		4	WASHER PLAIN ROUND 4,3(M4)/12,H=1	
T40G0010	1499642-0301		1	TPIH GENERATOR	
T40R0240	90459-1297		1	RESISTANCE FIXED, 120 OHM, 0,25 W	
T40X0240	90459-0184		1	INTERFACE CONNECTOR FOR TPIH 2500 GENER.	

Pos	Part No	UN	Qty	Description	Page No

FREQUENCY CONVERTER WITH ACCESSORIES

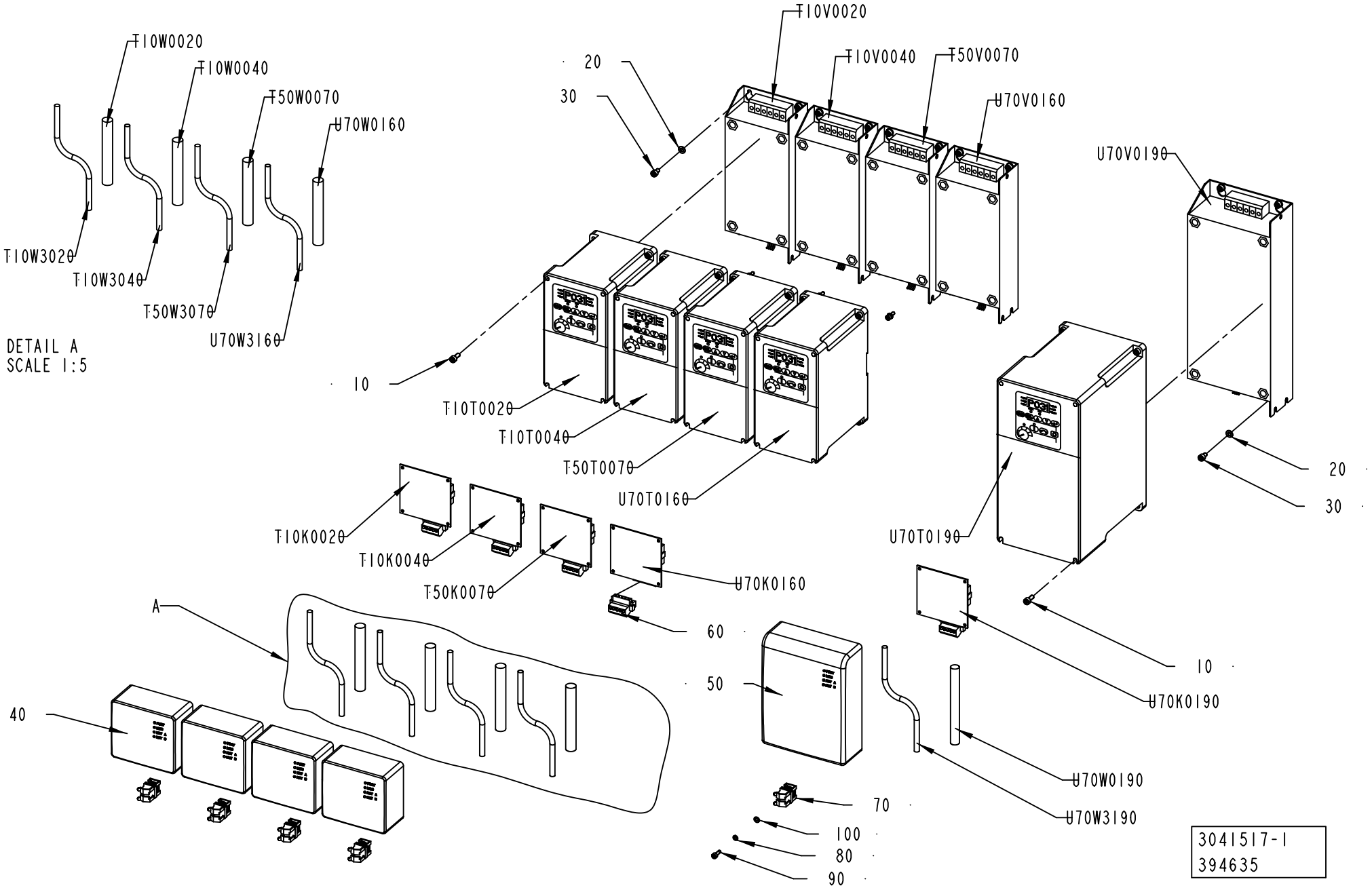

ECM: 428714 - 20091209
Group number: 3041517-0100
Assembly Drawing: 3041517-1_1_AA

This list covers pages from 8-128 to 8-131

Pos	Part No	UN	Qty	Description	Page No
INTEGRATCIP (See drawing on page: 8-130)					
010	312115-0327		24	SCREW ISO4762 M5X12 A4 80	
020	315105-0146		24	WASHER BRB 5,3X10 RFR	
030	312115-0323		24	SCREW ISO4762 M5X8 A4 80	
040	90459-2795		5	FRONT LID FOR POWERFLEX 40, 22B-CCB	
060	90459-5574		6	CONNECTOR, 1787-PLUG10R	
070	90135-0039		6	CLAMPING YOKE, KLBU 4-13.5	
080	315402-0136		6	LOCK WASHER, DIN127B 4,1 A4, M4-5/32	
090	312115-0291		6	SCREW ISO4762 M4X12 A4 80	
100	315105-0136		6	WASHER BRB 4,3X8 RFR	
V20K0320	90459-2614		1	DEVICENET ADAPTER POWERFLEX 40 22-COMM-D	
V20T0320	90459-2607		1	FREQ. CONV., 22B-D6P0N104	
V20V0320	90459-3458		1	FOOTPRINT FILTER 3 PHASE 12A	
V20W0321	90220-0104	MM	1200	SCR. CABLE 4X1,5MM2	
V20W3320	90459-2530	MM	250	DEVICENET CABLE THIN	
MANUALCIP (See drawing on page: 8-128)					
010	312115-0327		20	SCREW ISO4762 M5X12 A4 80	
020	315105-0146		20	WASHER BRB 5,3X10 RFR	
030	312115-0323		20	SCREW ISO4762 M5X8 A4 80	
040	90459-2795		4	FRONT LID FOR POWERFLEX 40, 22B-CCB	
060	90459-5574		5	CONNECTOR, 1787-PLUG10R	
070	90135-0039		5	CLAMPING YOKE, KLBU 4-13.5	
080	315402-0136		5	LOCK WASHER, DIN127B 4,1 A4, M4-5/32	
090	312115-0291		5	SCREW ISO4762 M4X12 A4 80	
100	315105-0136		5	WASHER BRB 4,3X8 RFR	
Common Parts					
050	90459-2796		1	FRONT LID FOR POWERFLEX 40, 22B-CCC	
T10K0020	90459-2614		1	DEVICENET ADAPTER POWERFLEX 40 22-COMM-D	
T10K0040	90459-2614		1	DEVICENET ADAPTER POWERFLEX 40 22-COMM-D	
T50K0070	90459-2614		1	DEVICENET ADAPTER POWERFLEX 40 22-COMM-D	
T10T0020	90459-3442		1	FREQ. CONV., 22B-A5P0N104	
T10T0040	90459-3442		1	FREQ. CONV., 22B-A5P0N104	
T50T0070	90459-3442		1	FREQ. CONV., 22B-A5P0N104	
T10V0020	90459-3454		1	FOOTPRINT FILTER 1 PHASE 18A	
T10V0040	90459-3454		1	FOOTPRINT FILTER 1 PHASE 18A	
T50V0070	90459-3454		1	FOOTPRINT FILTER 1 PHASE 18A	
T10W0020	90220-0104	MM	1850	SCR. CABLE 4X1,5MM2	
T10W0040	90220-0104	MM	1650	SCR. CABLE 4X1,5MM2	
T10W3020	90459-2530	MM	250	DEVICENET CABLE THIN	
T10W3040	90459-2530	MM	250	DEVICENET CABLE THIN	
T50W0070	90220-0104	MM	1600	SCR. CABLE 4X1,5MM2	
T50W3040	90459-2530	MM	250	DEVICENET CABLE THIN	
U70K0160	90459-2614		1	DEVICENET ADAPTER POWERFLEX 40 22-COMM-D	
U70K0190	90459-2614		1	DEVICENET ADAPTER POWERFLEX 40 22-COMM-D	
U70T0160	90459-3442		1	FREQ. CONV., 22B-A5P0N104	
U70T0190	90459-3446		1	FREQ. CONV., 22B-D012N104	
U70V0160	90459-3454		1	FOOTPRINT FILTER 1 PHASE 18A	
U70V0190	90459-3459		1	FOOTPRINT FILTER 3 PHASE 18A	
U70W0160	90220-0104	MM	1500	SCR. CABLE 4X1,5MM2	
U70W0190	90220-0105	MM	1100	SCR. CABLE 4X2,5MM2	
U70W3160	90459-2530	MM	250	DEVICENET CABLE THIN	
U70W3190	90459-2530	MM	1900	DEVICENET CABLE THIN	

Machine Type | Group Description | Used-In | Group Number | Page No

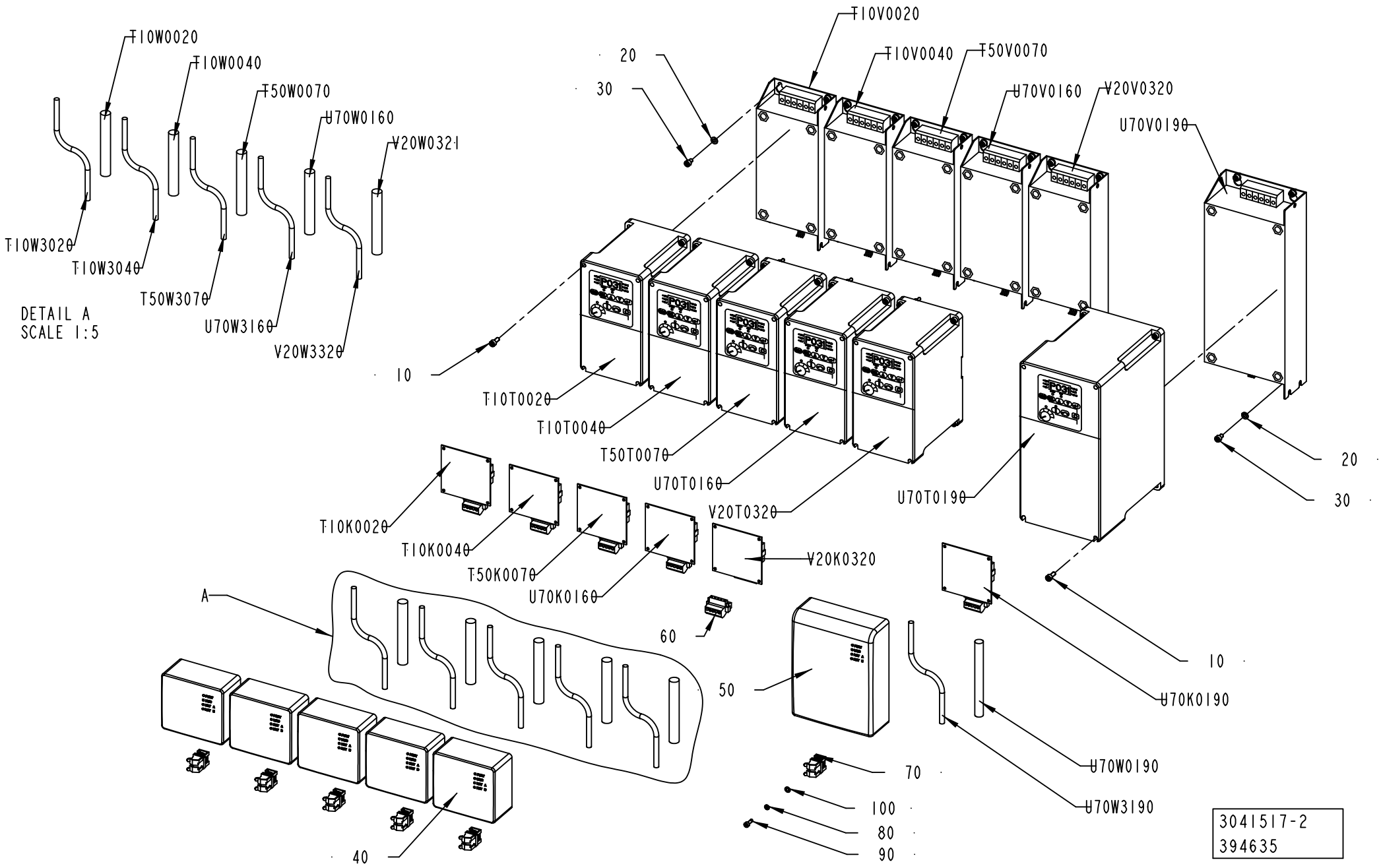
T10W0020
T10W0040
T50W0070
U70W0160
V20W0321
T10W3020
T10W3040
T50W3070
U70W3160
V20W3320
DETAIL A
SCALE 1:5
T10V0020
T10V0040
T50V0070
U70V0160
V20V0320
U70V0190
20
30
10
T10T0020
T10T0040
T50T0070
U70T0160
V20T0320
U70T0190
T10K0020
T10K0040
T50K0070
U70K0160
V20K0320
U70K0190
A
60
50
70
100
80
90
40
U70W0190
U70W3190
3041517-2
394635

ECM: 428714 - 20091209
Group number: 3041517-0100
Assembly Drawing: 3041517-2_1_AA

This list covers pages from 8-128 to 8-131

Pos	Part No	UN	Qty	Description	Page No
INTEGRATCIP (See drawing on page: 8-130)					
010	312115-0327		24	SCREW ISO4762 M5X12 A4 80	
020	315105-0146		24	WASHER BRB 5,3X10 RFR	
030	312115-0323		24	SCREW ISO4762 M5X8 A4 80	
040	90459-2795		5	FRONT LID FOR POWERFLEX 40, 22B-CCB	
060	90459-5574		6	CONNECTOR, 1787-PLUG10R	
070	90135-0039		6	CLAMPING YOKE, KLBU 4-13.5	
080	315402-0136		6	LOCK WASHER, DIN127B 4,1 A4, M4-5/32	
090	312115-0291		6	SCREW ISO4762 M4X12 A4 80	
100	315105-0136		6	WASHER BRB 4,3X8 RFR	
V20K0320	90459-2614		1	DEVICENET ADAPTER POWERFLEX 40 22-COMM-D	
V20T0320	90459-2607		1	FREQ. CONV., 22B-D6P0N104	
V20V0320	90459-3458		1	FOOTPRINT FILTER 3 PHASE 12A	
V20W0321	90220-0104	MM	1200	SCR. CABLE 4X1,5MM2	
V20W3320	90459-2530	MM	250	DEVICENET CABLE THIN	
MANUALCIP (See drawing on page: 8-128)					
010	312115-0327		20	SCREW ISO4762 M5X12 A4 80	
020	315105-0146		20	WASHER BRB 5,3X10 RFR	
030	312115-0323		20	SCREW ISO4762 M5X8 A4 80	
040	90459-2795		4	FRONT LID FOR POWERFLEX 40, 22B-CCB	
060	90459-5574		5	CONNECTOR, 1787-PLUG10R	
070	90135-0039		5	CLAMPING YOKE, KLBU 4-13.5	
080	315402-0136		5	LOCK WASHER, DIN127B 4,1 A4, M4-5/32	
090	312115-0291		5	SCREW ISO4762 M4X12 A4 80	
100	315105-0136		5	WASHER BRB 4,3X8 RFR	
Common Parts					
050	90459-2796		1	FRONT LID FOR POWERFLEX 40, 22B-CCC	
T10K0020	90459-2614		1	DEVICENET ADAPTER POWERFLEX 40 22-COMM-D	
T10K0040	90459-2614		1	DEVICENET ADAPTER POWERFLEX 40 22-COMM-D	
T50K0070	90459-2614		1	DEVICENET ADAPTER POWERFLEX 40 22-COMM-D	
T10T0020	90459-3442		1	FREQ. CONV., 22B-A5P0N104	
T10T0040	90459-3442		1	FREQ. CONV., 22B-A5P0N104	
T50T0070	90459-3442		1	FREQ. CONV., 22B-A5P0N104	
T10V0020	90459-3454		1	FOOTPRINT FILTER 1 PHASE 18A	
T10V0040	90459-3454		1	FOOTPRINT FILTER 1 PHASE 18A	
T50V0070	90459-3454		1	FOOTPRINT FILTER 1 PHASE 18A	
T10W0020	90220-0104	MM	1850	SCR. CABLE 4X1,5MM2	
T10W0040	90220-0104	MM	1650	SCR. CABLE 4X1,5MM2	
T10W3020	90459-2530	MM	250	DEVICENET CABLE THIN	
T10W3040	90459-2530	MM	250	DEVICENET CABLE THIN	
T50W0070	90220-0104	MM	1600	SCR. CABLE 4X1,5MM2	
T50W3040	90459-2530	MM	250	DEVICENET CABLE THIN	
U70K0160	90459-2614		1	DEVICENET ADAPTER POWERFLEX 40 22-COMM-D	
U70K0190	90459-2614		1	DEVICENET ADAPTER POWERFLEX 40 22-COMM-D	
U70T0160	90459-3442		1	FREQ. CONV., 22B-A5P0N104	
U70T0190	90459-3446		1	FREQ. CONV., 22B-D012N104	
U70V0160	90459-3454		1	FOOTPRINT FILTER 1 PHASE 18A	
U70V0190	90459-3459		1	FOOTPRINT FILTER 3 PHASE 18A	
U70W0160	90220-0104	MM	1500	SCR. CABLE 4X1,5MM2	
U70W0190	90220-0105	MM	1100	SCR. CABLE 4X2,5MM2	
U70W3160	90459-2530	MM	250	DEVICENET CABLE THIN	
U70W3190	90459-2530	MM	1900	DEVICENET CABLE THIN	

Machine Type | Group Description | Used-In | Group Number | Page No

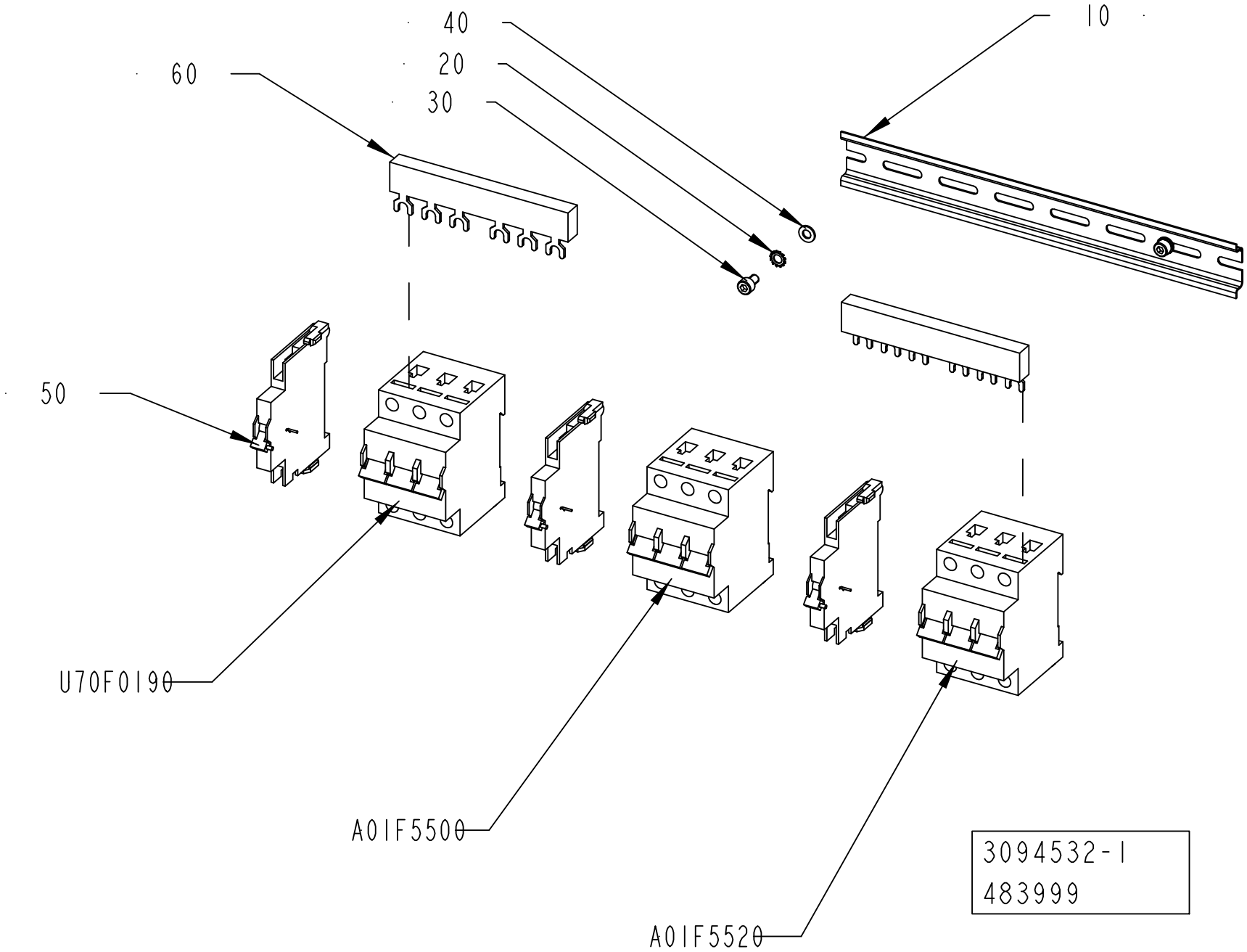
40
20
30
60
10
50
U70F0190
A01F5500
A01F5520
3094532-1
483999

ECM: 485123 - 20110401
Group number: 3094532-0100
Assembly Drawing: 3094532-1_1_AB

This list covers pages from 8-132 to 8-135

Pos	Part No	UN	Qty	Description	Page No
CE (See drawing on page: 8-132)					
050	90459-5813		3	AUXILIARY CONTACT, FAZ-XHIN11	
060	90603-3178		2	COMMONING BUSBAR, 3-P 3-PH 6 80A	
A01F5500	351418-0250		1	MINIATURE CIRC. BREAK.,FAZ-D25/3 3-POLE	
A01F5520	351418-0250		1	MINIATURE CIRC. BREAK.,FAZ-D25/3 3-POLE	
U70F0190	351418-0160		1	MINIATURE CIRC. BREAK.,FAZ-D16/3 3-POLE	
UL, CSA (See drawing on page: 8-134)					
050	90600-5517		3	AUXILIARY CONTACT, Z-NHK 248434	
A01F5500	315749-0250		1	MINIATURE CIRCUIT BREAKER, FAZ-D25/3-NA	
A01F5520	315749-0250		1	MINIATURE CIRCUIT BREAKER, FAZ-D25/3-NA	
U70F0190	315749-0160		1	MINIATURE CIRCUIT BREAKER, FAZ-D16/3-NA	
Common Parts					
010	353042-0004	MM	255	RAIL, TS 35/7,5	
020	90062-0021		2	LOCK WASHER DIN 6797 TYPE A 5,3	
030	312115-0323		2	SCREW ISO4762 M5X8 A4 80	
040	315105-0146		2	WASHER BRB 5,3X10 RFR	

Pos	Part No	UN	Qty	Description	Page No

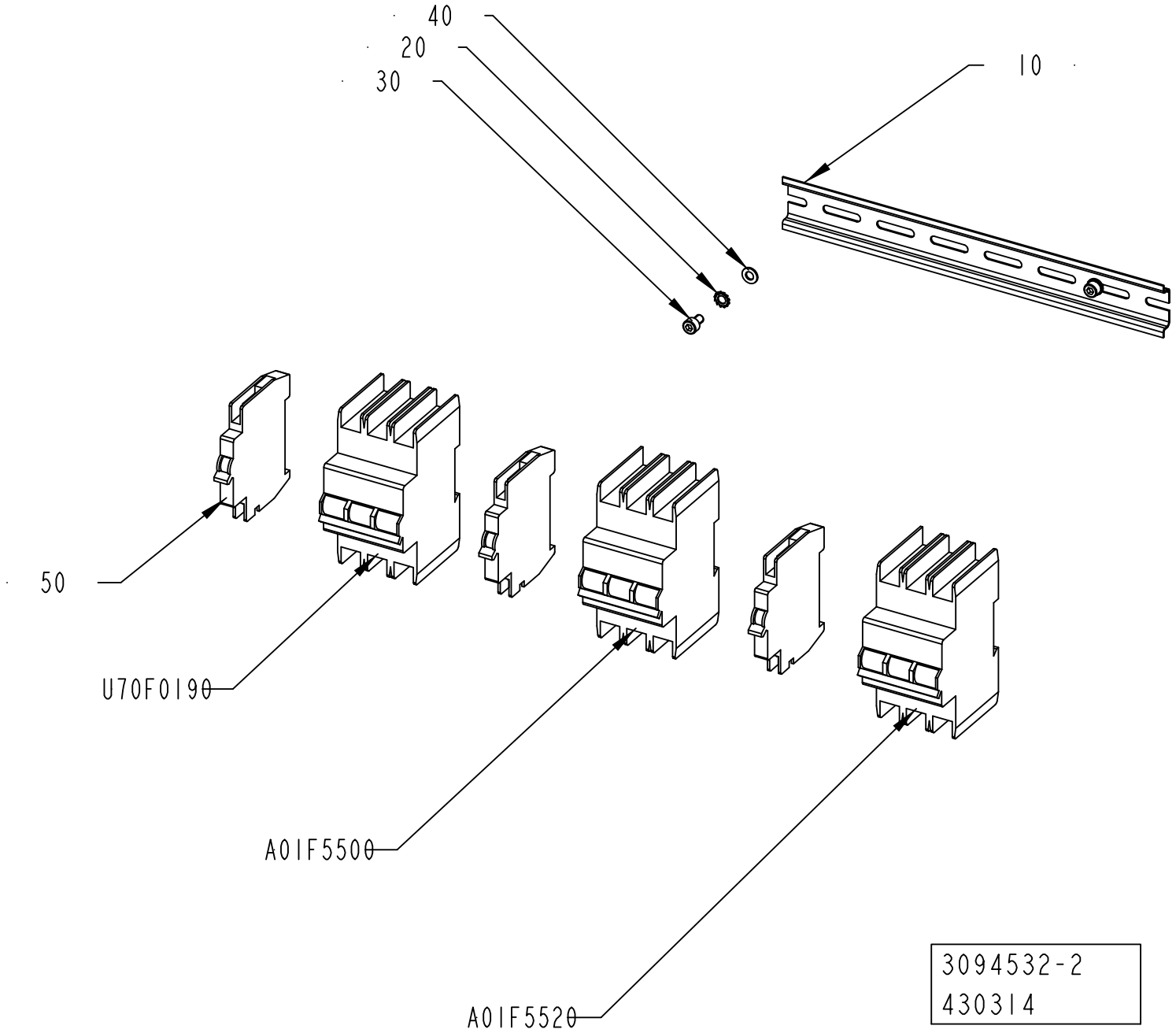
40
20
30
10
50
U70F0190
A01F5500
A01F5520
3094532-2
430314

ECM: 485123 - 20110401
Group number: 3094532-0100
Assembly Drawing: 3094532-2_1_AA

This list covers pages from 8-132 to 8-135

Pos	Part No	UN	Qty	Description	Page No
CE (See drawing on page: 8-132)					
050	90459-5813		3	AUXILIARY CONTACT, FAZ-XHIN11	
060	90603-3178		2	COMMONING BUSBAR, 3-P 3-PH 6 80A	
A01F5500	351418-0250		1	MINIATURE CIRC. BREAK.,FAZ-D25/3 3-POLE	
A01F5520	351418-0250		1	MINIATURE CIRC. BREAK.,FAZ-D25/3 3-POLE	
U70F0190	351418-0160		1	MINIATURE CIRC. BREAK.,FAZ-D16/3 3-POLE	
UL, CSA (See drawing on page: 8-134)					
050	90600-5517		3	AUXILIARY CONTACT, Z-NHK 248434	
A01F5500	315749-0250		1	MINIATURE CIRCUIT BREAKER, FAZ-D25/3-NA	
A01F5520	315749-0250		1	MINIATURE CIRCUIT BREAKER, FAZ-D25/3-NA	
U70F0190	315749-0160		1	MINIATURE CIRCUIT BREAKER, FAZ-D16/3-NA	
Common Parts					
010	353042-0004	MM	255	RAIL, TS 35/7,5	
020	90062-0021		2	LOCK WASHER DIN 6797 TYPE A 5,3	
030	312115-0323		2	SCREW ISO4762 M5X8 A4 80	
040	315105-0146		2	WASHER BRB 5,3X10 RFR	

Pos	Part No	UN	Qty	Description	Page No

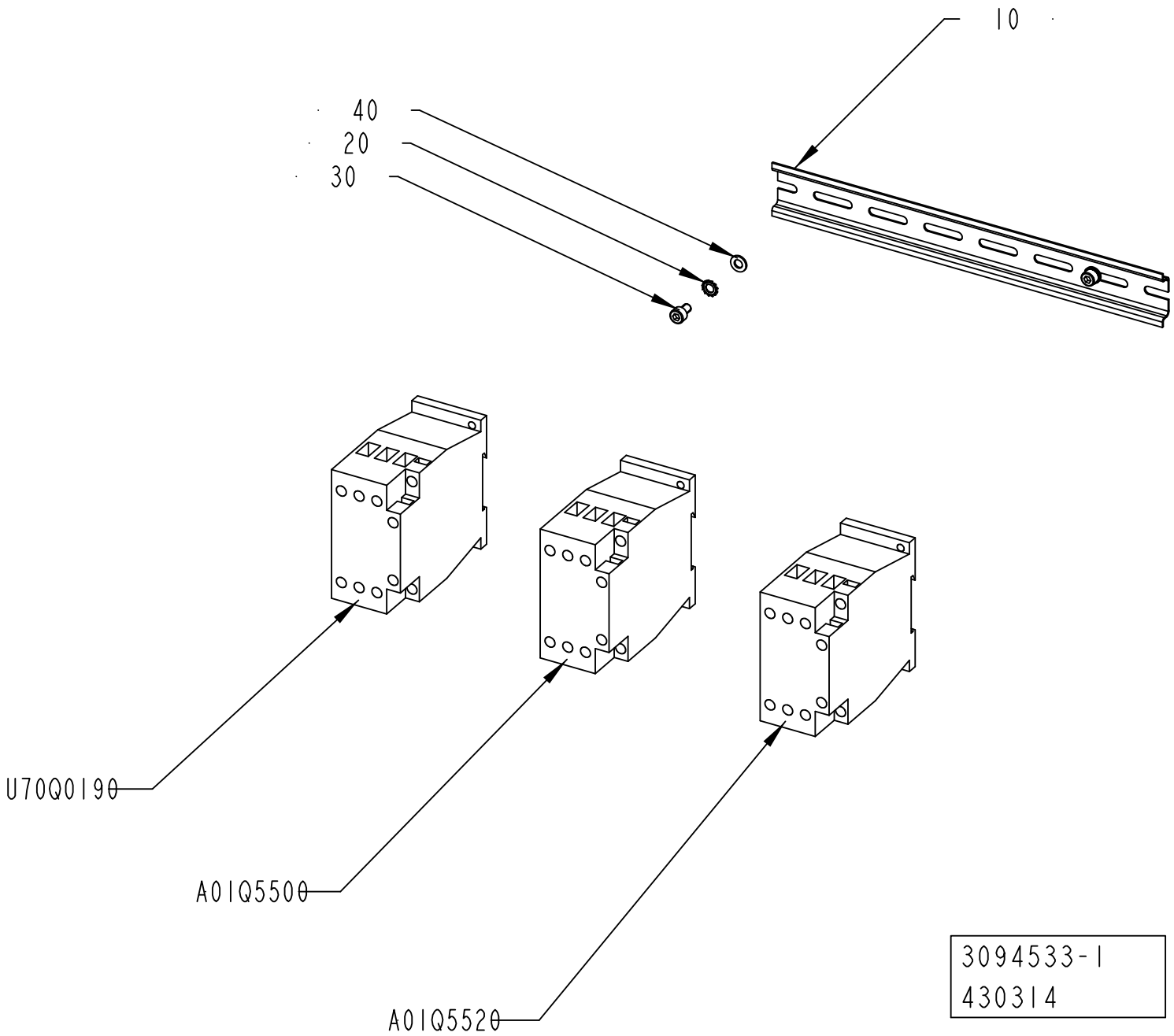
10
40
20
30
U70Q0190
A01Q5500
A01Q5520
3094533-1
430314

ECM: 442644 - 20100326
Group number: 3094533-0100
Assembly Drawing: 3094533-1_1_AA

Pos	Part No	UN	Qty	Description	Page No
-					
010	353042-0004	MM	255	RAIL, TS 35/7,5	
020	90062-0021		2	LOCK WASHER DIN 6797 TYPE A 5,3	
030	312115-0323		2	SCREW ISO4762 M5X8 A4 80	
040	315105-0146		2	WASHER BRB 5,3X10 RFR	
A01Q5500	90459-5444		1	CONTACTOR 15KW 24VDC, DILM32-01	
A01Q5520	90459-5444		1	CONTACTOR 15KW 24VDC, DILM32-01	
U70Q0190	90459-5441		1	CONTACTOR 7,5KW 24VDC, DILM17-01	

Pos	Part No	UN	Qty	Description	Page No

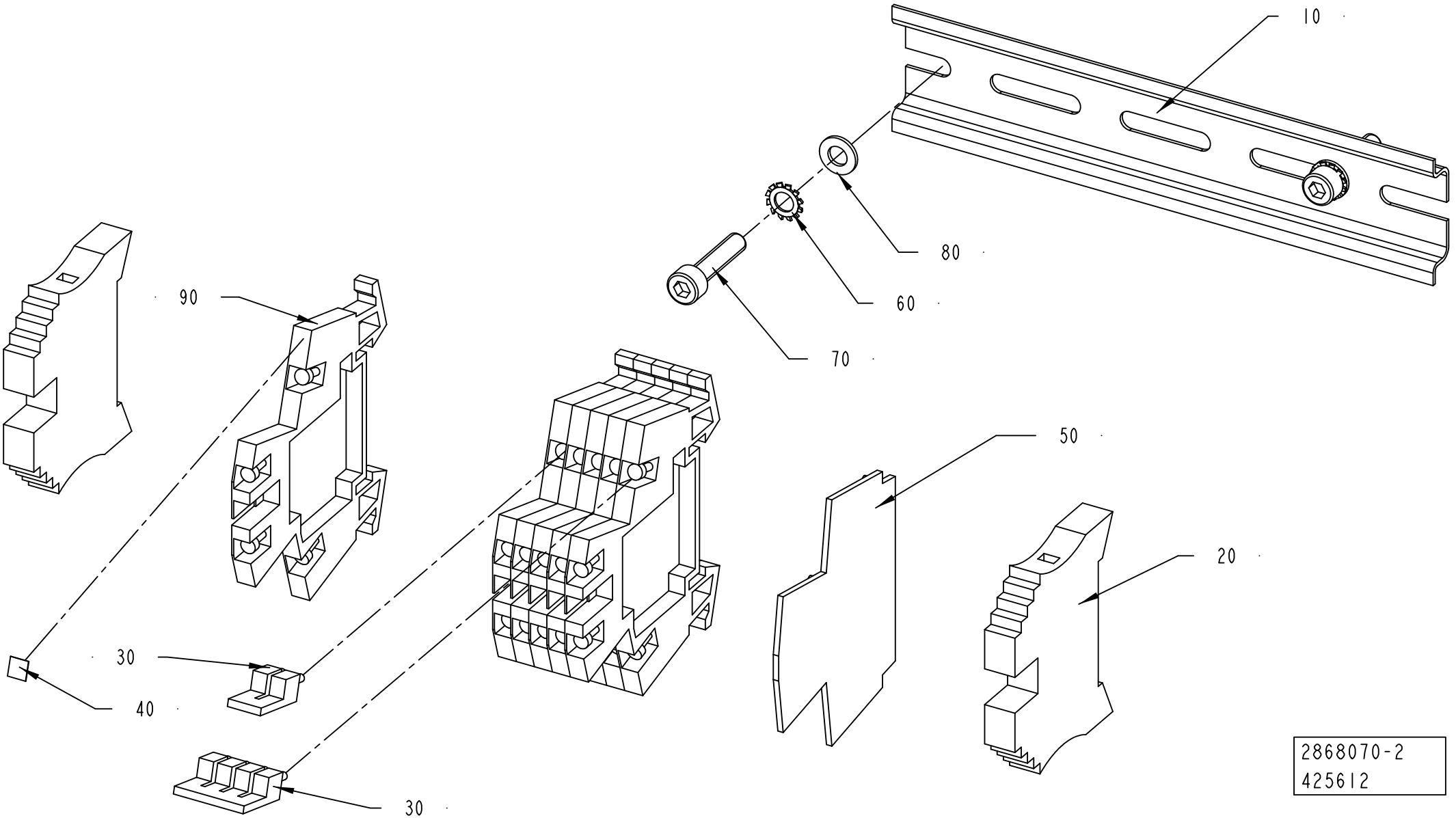
10
80
60
70
90
50
20
30
40
30
2868070-2
425612

ECM: 428815 - 20091209
Group number: 2868070-0200
Assembly Drawing: 2868070-2_1_AB

Pos	Part No	UN	Qty	Description	Page No
-					
010	353042-0004	MM	150	RAIL, TS 35/7,5	
020	353031-0203		2	END BRACKET, WEW 35/2	
030	353034-0030		1	BRIDGE CONNECTOR WQV 2,5/10	
040	359011-0807		1	MARKING, DEK 5 FW 1-50	
050	353032-0009		1	END PLATE, WAP WDK 2,5	
060	90062-0021		2	LOCK WASHER DIN 6797 TYPE A 5,3	
070	312115-0332		2	SCREW ISO4762 M5X22 A4 80	
080	315105-0146		2	WASHER BRB 5,3X10 RFR	
090	90077-0113		6	TERMINAL BLOCK WDK 2.5	

Pos	Part No	UN	Qty	Description	Page No

CONNECTION PLATE

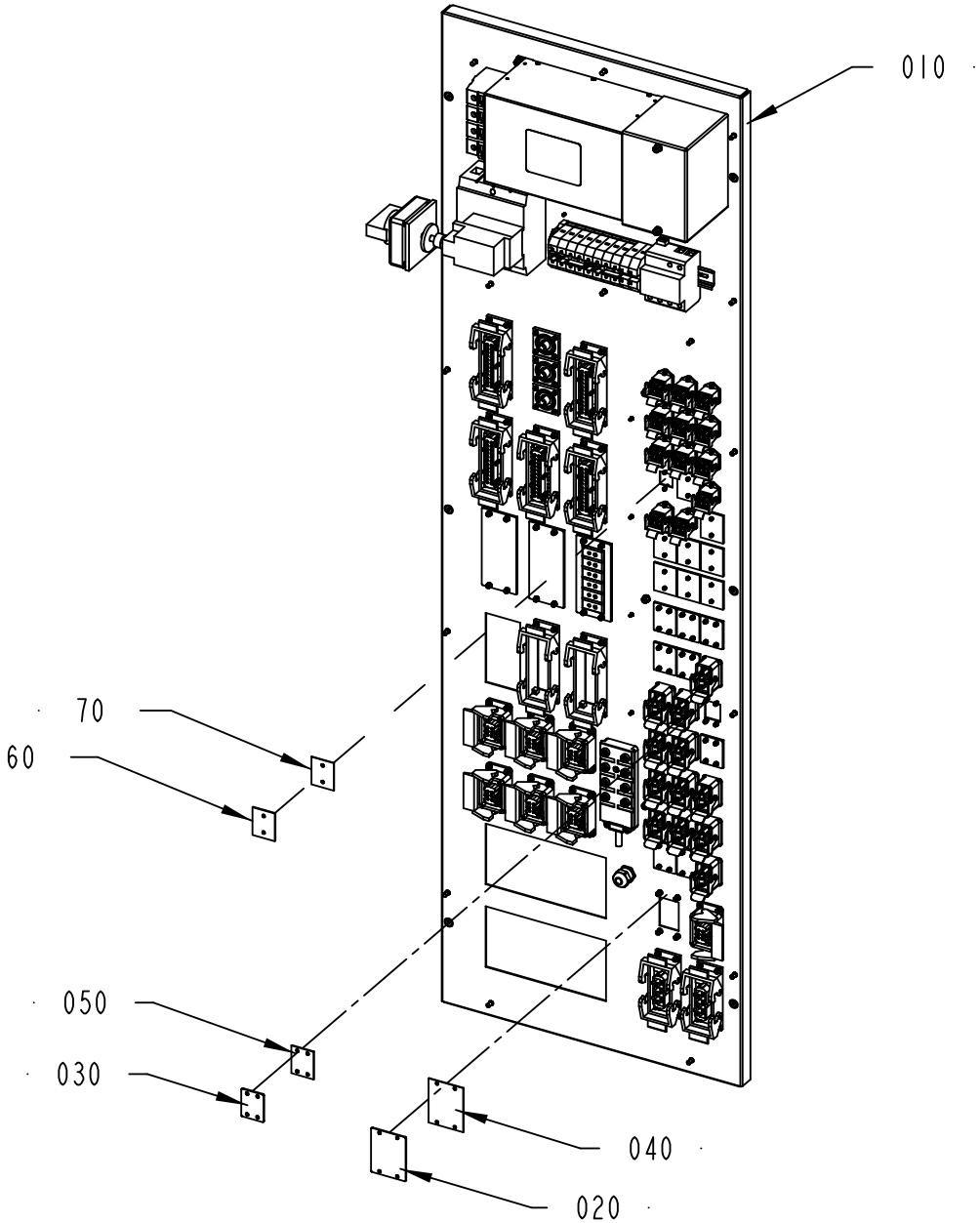

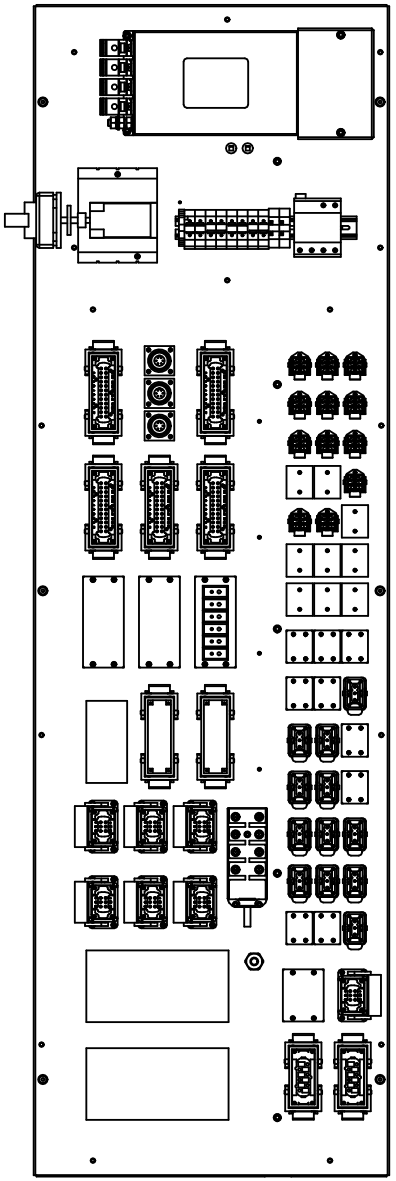

2832836-3
430314

ECM: 445733 - 20100326
Group number: 2832836-0200
Assembly Drawing: 2832836-3_1_AB

This list covers pages from 8-140 to 8-147

Pos	Part No	UN	Qty	Description	Page No
HI INTEGRATCIP ASU (See drawing on page: 8-144)					
040	90110-0123		1	HOUSING, 09 30 006 0301	
050	90459-3853		1	HOUSING, 09 14 001 0301	
060	1487430-0000		2	COVER	
070	1487431-0000		2	GASKET	
U70X0370	90601-6215		1	FEMALE INSERT, HAN C AXIAL 0914 003 2701	
V20X0320	90459-6624		1	FEMALE INSERT, HAN E AV, 09 33 006 4735	
HI MANUALCIP ASU (See drawing on page: 8-146)					
030	3038026-0000		1	COVER PLATE	
040	90110-0123		1	HOUSING, 09 30 006 0301	
050	3038027-0000		1	GASKET	
060	1487430-0000		2	COVER	
070	1487431-0000		2	GASKET	
U70X0370	90601-6215		1	FEMALE INSERT, HAN C AXIAL 0914 003 2701	
NO HI INTEGRATCIP ASU (See drawing on page: 8-142)					
020	1037572-0000		1	COVER PLATE	
040	1037573-0000		1	GASKET	
050	90459-3853		1	HOUSING, 09 14 001 0301	
060	1487430-0000		2	COVER	
070	1487431-0000		2	GASKET	
V20X0320	90459-6624		1	FEMALE INSERT, HAN E AV, 09 33 006 4735	
NO HI MANUALCIP ASU (See drawing on page: 8-140)					
020	1037572-0000		1	COVER PLATE	
030	3038026-0000		1	COVER PLATE	
040	1037573-0000		1	GASKET	
050	3038027-0000		1	GASKET	
060	1487430-0000		2	COVER	
070	1487431-0000		2	GASKET	
Common Parts					
010	2986637-0100		1	PANEL	**8-149, 8-151**

Pos	Part No	UN	Qty	Description	Page No

CONNECTION PLATE

Drawing file: 2832836-4_1_AB.hpgl

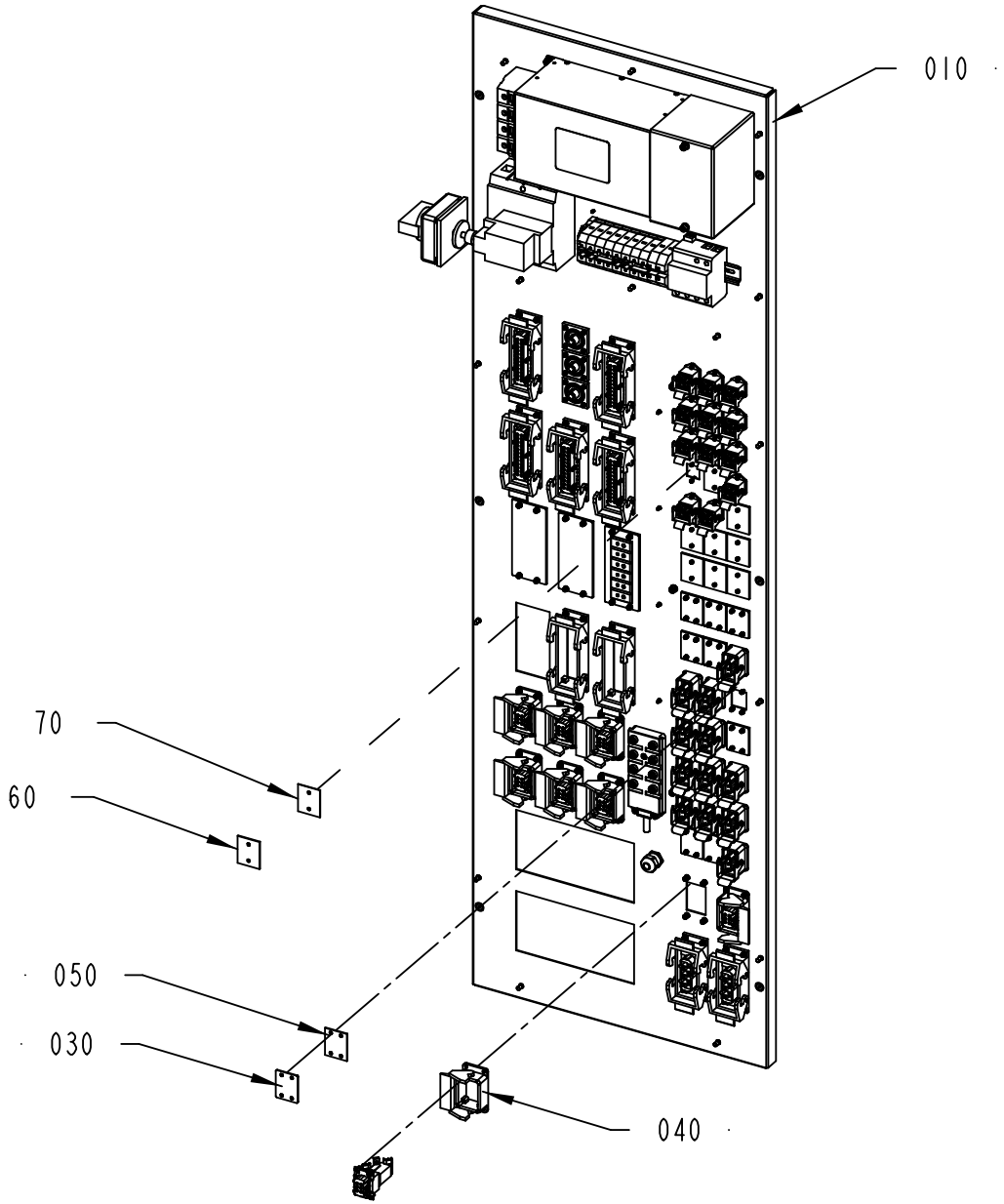

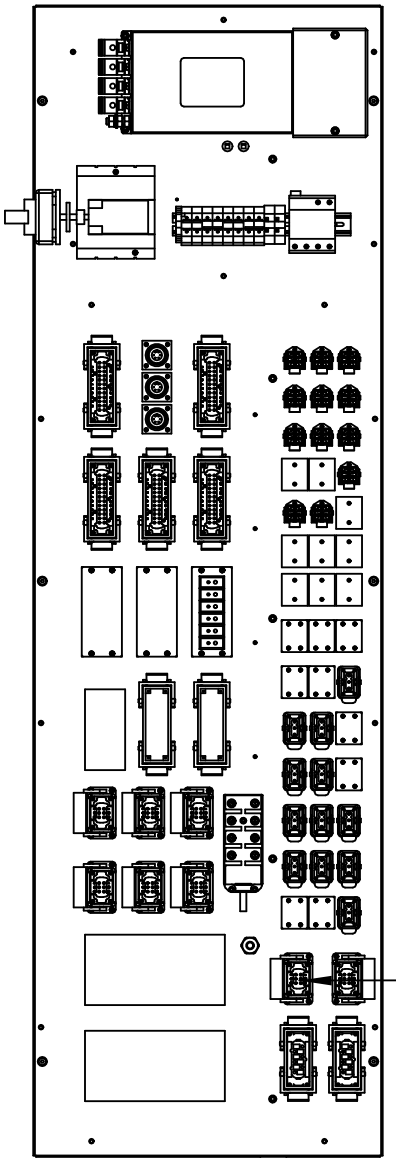

2832836-4
430314

Pos	Part No	UN	Qty	Description	Page No
HI INTEGRATCIP ASU (See drawing on page: 8-144)					
040	90110-0123		1	HOUSING, 09 30 006 0301	
050	90459-3853		1	HOUSING, 09 14 001 0301	
060	1487430-0000		2	COVER	
070	1487431-0000		2	GASKET	
U70X0370	90601-6215		1	FEMALE INSERT, HAN C AXIAL 0914 003 2701	
V20X0320	90459-6624		1	FEMALE INSERT, HAN E AV, 09 33 006 4735	
HI MANUALCIP ASU (See drawing on page: 8-146)					
030	3038026-0000		1	COVER PLATE	
040	90110-0123		1	HOUSING, 09 30 006 0301	
050	3038027-0000		1	GASKET	
060	1487430-0000		2	COVER	
070	1487431-0000		2	GASKET	
U70X0370	90601-6215		1	FEMALE INSERT, HAN C AXIAL 0914 003 2701	
NO HI INTEGRATCIP ASU (See drawing on page: 8-142)					
020	1037572-0000		1	COVER PLATE	
040	1037573-0000		1	GASKET	
050	90459-3853		1	HOUSING, 09 14 001 0301	
060	1487430-0000		2	COVER	
070	1487431-0000		2	GASKET	
V20X0320	90459-6624		1	FEMALE INSERT, HAN E AV, 09 33 006 4735	
NO HI MANUALCIP ASU (See drawing on page: 8-140)					
020	1037572-0000		1	COVER PLATE	
030	3038026-0000		1	COVER PLATE	
040	1037573-0000		1	GASKET	
050	3038027-0000		1	GASKET	
060	1487430-0000		2	COVER	
070	1487431-0000		2	GASKET	
Common Parts					
010	2986637-0100		1	PANEL	**8-149, 8-151**

Pos	Part No	UN	Qty	Description	Page No

CONNECTION PLATE

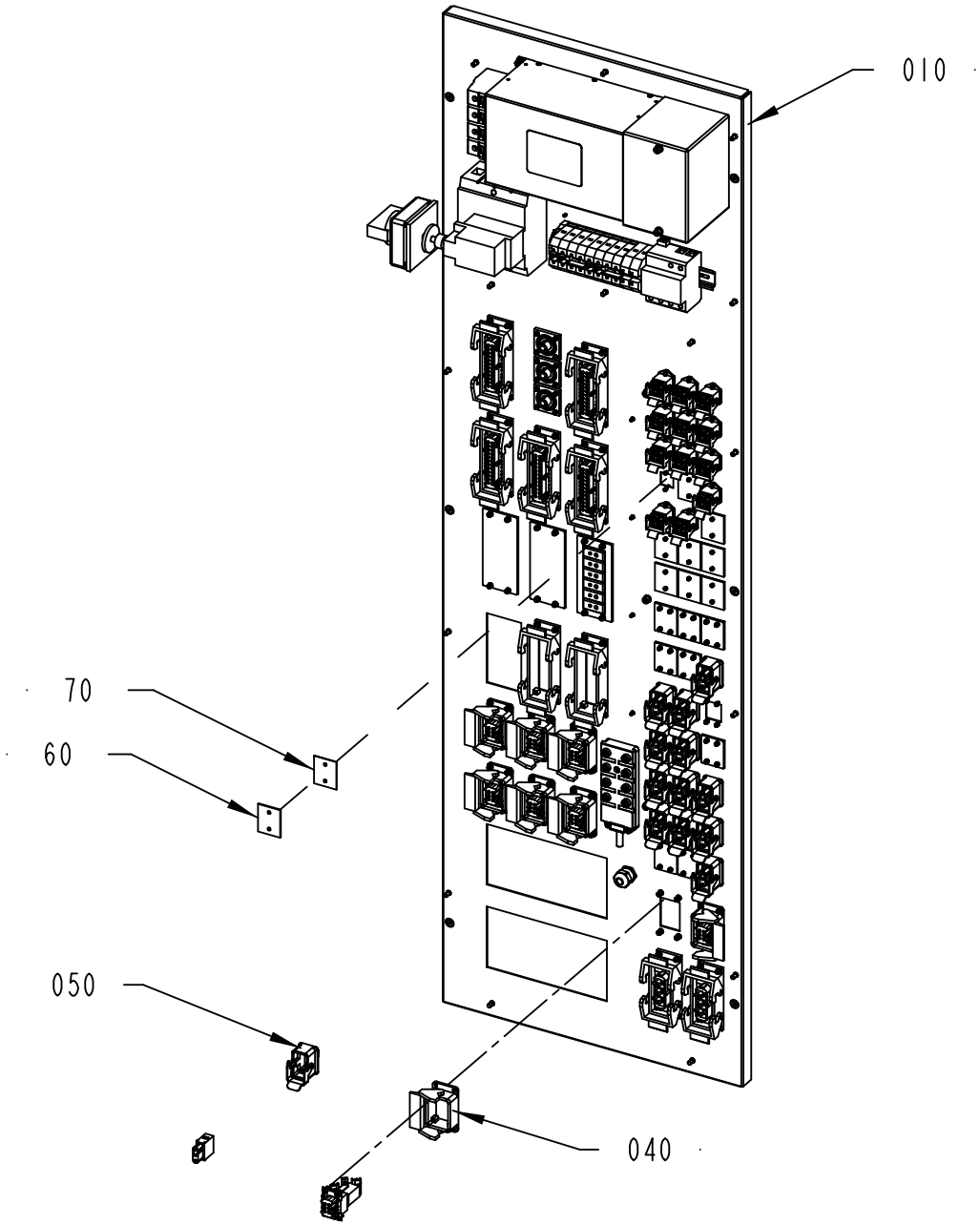

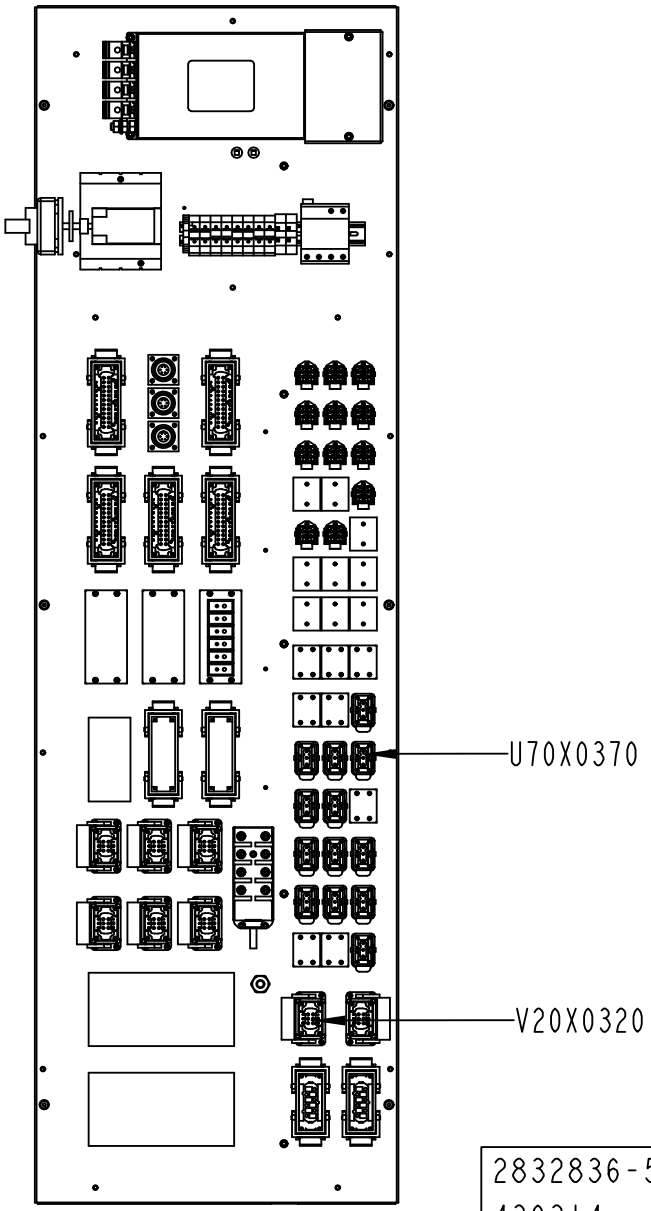

2832836-5
430314

ECM: 445733 - 20100326
Group number: 2832836-0200
Assembly Drawing: 2832836-5_1_AB

This list covers pages from 8-140 to 8-147

Pos	Part No	UN	Qty	Description	Page No
HI INTEGRATCIP ASU (See drawing on page: 8-144)					
040	90110-0123		1	HOUSING, 09 30 006 0301	
050	90459-3853		1	HOUSING, 09 14 001 0301	
060	1487430-0000		2	COVER	
070	1487431-0000		2	GASKET	
U70X0370	90601-6215		1	FEMALE INSERT, HAN C AXIAL 0914 003 2701	
V20X0320	90459-6624		1	FEMALE INSERT, HAN E AV, 09 33 006 4735	
HI MANUALCIP ASU (See drawing on page: 8-146)					
030	3038026-0000		1	COVER PLATE	
040	90110-0123		1	HOUSING, 09 30 006 0301	
050	3038027-0000		1	GASKET	
060	1487430-0000		2	COVER	
070	1487431-0000		2	GASKET	
U70X0370	90601-6215		1	FEMALE INSERT, HAN C AXIAL 0914 003 2701	
NO HI INTEGRATCIP ASU (See drawing on page: 8-142)					
020	1037572-0000		1	COVER PLATE	
040	1037573-0000		1	GASKET	
050	90459-3853		1	HOUSING, 09 14 001 0301	
060	1487430-0000		2	COVER	
070	1487431-0000		2	GASKET	
V20X0320	90459-6624		1	FEMALE INSERT, HAN E AV, 09 33 006 4735	
NO HI MANUALCIP ASU (See drawing on page: 8-140)					
020	1037572-0000		1	COVER PLATE	
030	3038026-0000		1	COVER PLATE	
040	1037573-0000		1	GASKET	
050	3038027-0000		1	GASKET	
060	1487430-0000		2	COVER	
070	1487431-0000		2	GASKET	
Common Parts					
010	2986637-0100		1	PANEL	**8-149, 8-151**

Pos	Part No	UN	Qty	Description	Page No

CONNECTION PLATE

Drawing file: 2832836-6_1_AB.hpgl

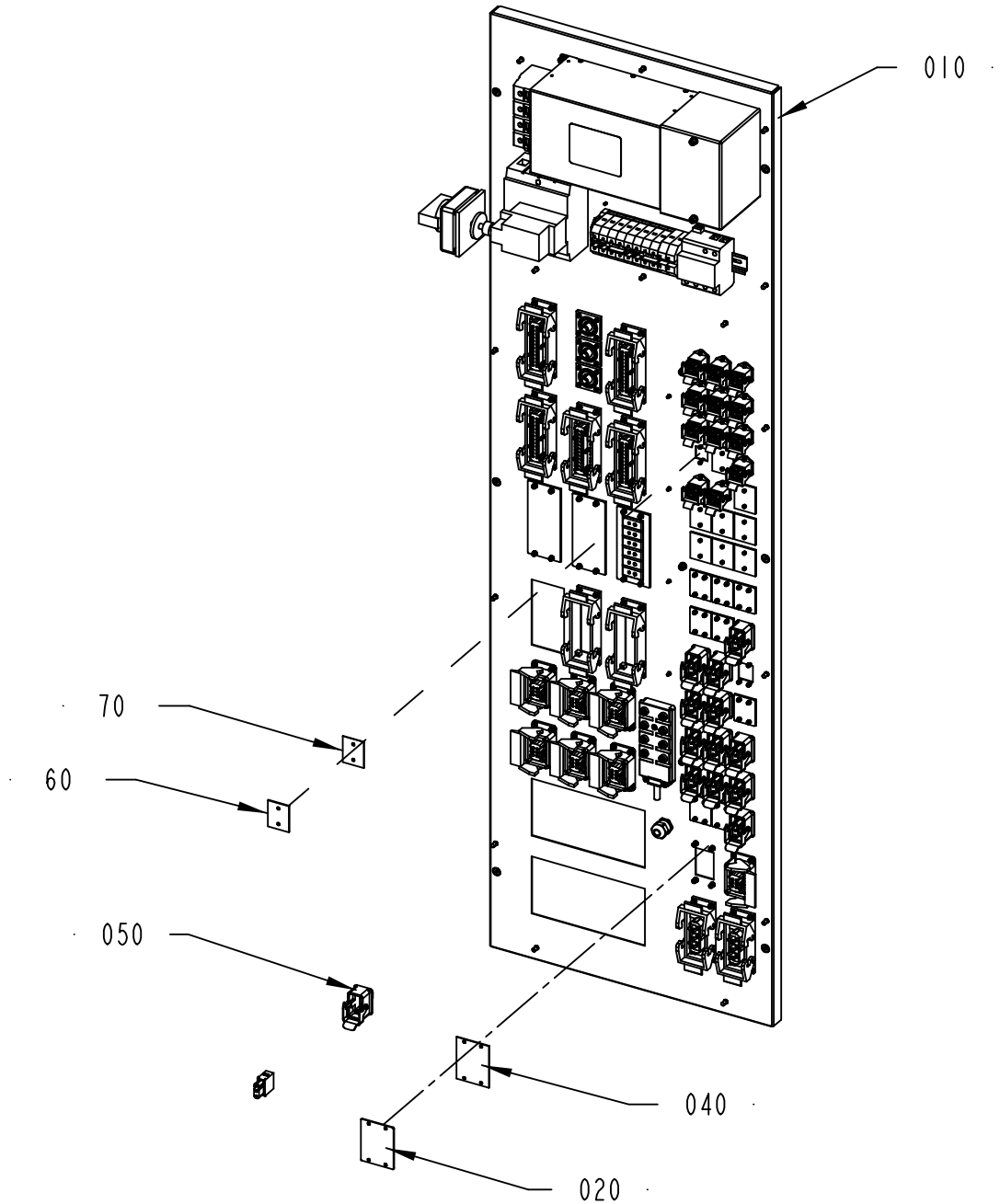

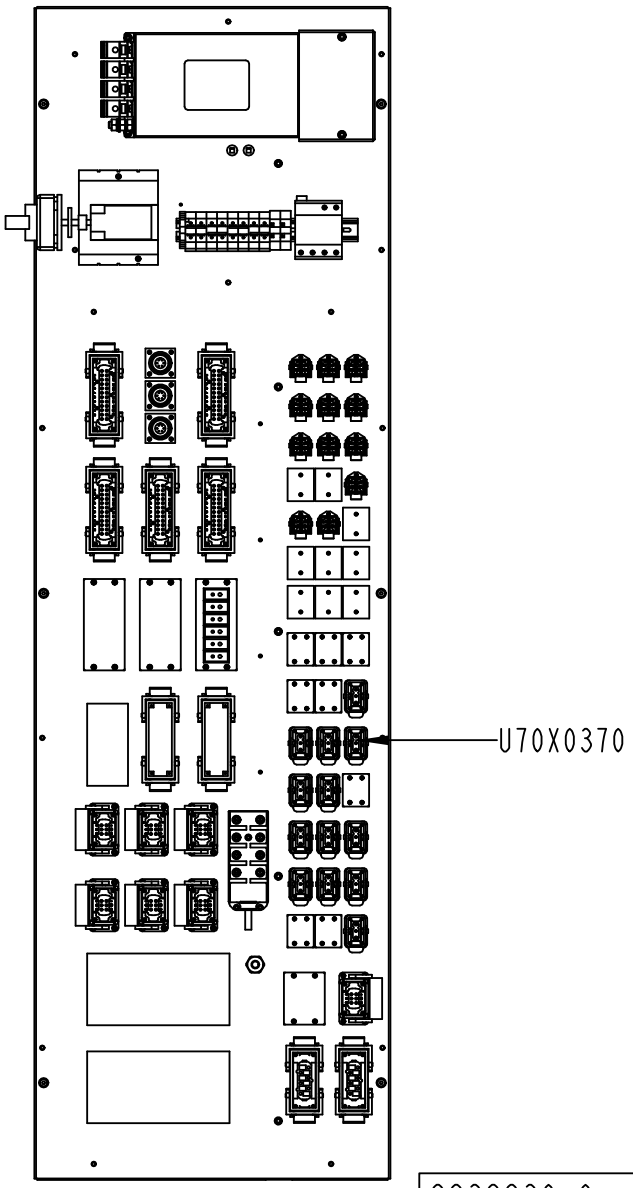

2832836-6
430314

ECM: 445733 - 20100326
Group number: 2832836-0200
Assembly Drawing: 2832836-6_1_AB

This list covers pages from 8-140 to 8-147

Pos	Part No	UN	Qty	Description	Page No
HI INTEGRATCIP ASU (See drawing on page: 8-144)					
040	90110-0123		1	HOUSING, 09 30 006 0301	
050	90459-3853		1	HOUSING, 09 14 001 0301	
060	1487430-0000		2	COVER	
070	1487431-0000		2	GASKET	
U70X0370	90601-6215		1	FEMALE INSERT, HAN C AXIAL 0914 003 2701	
V20X0320	90459-6624		1	FEMALE INSERT, HAN E AV, 09 33 006 4735	
HI MANUALCIP ASU (See drawing on page: 8-146)					
030	3038026-0000		1	COVER PLATE	
040	90110-0123		1	HOUSING, 09 30 006 0301	
050	3038027-0000		1	GASKET	
060	1487430-0000		2	COVER	
070	1487431-0000		2	GASKET	
U70X0370	90601-6215		1	FEMALE INSERT, HAN C AXIAL 0914 003 2701	
NO HI INTEGRATCIP ASU (See drawing on page: 8-142)					
020	1037572-0000		1	COVER PLATE	
040	1037573-0000		1	GASKET	
050	90459-3853		1	HOUSING, 09 14 001 0301	
060	1487430-0000		2	COVER	
070	1487431-0000		2	GASKET	
V20X0320	90459-6624		1	FEMALE INSERT, HAN E AV, 09 33 006 4735	
NO HI MANUALCIP ASU (See drawing on page: 8-140)					
020	1037572-0000		1	COVER PLATE	
030	3038026-0000		1	COVER PLATE	
040	1037573-0000		1	GASKET	
050	3038027-0000		1	GASKET	
060	1487430-0000		2	COVER	
070	1487431-0000		2	GASKET	
Common Parts					
010	2986637-0100		1	PANEL	**8-149, 8-151**

Pos	Part No	UN	Qty	Description	Page No

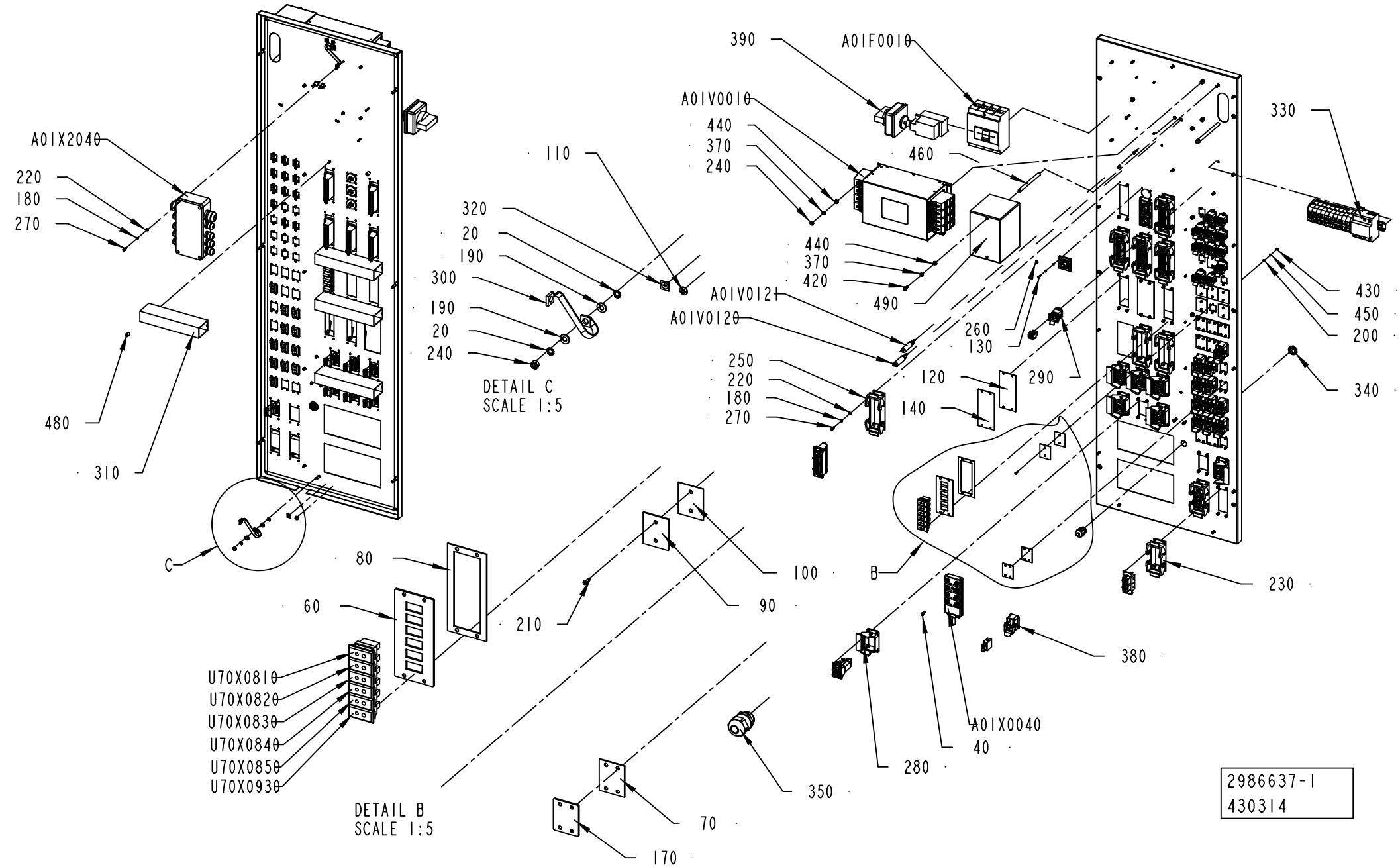
A01X2040
220
180
270
480
310
C
110
320
20
190
300
190
20
240
DETAIL C
SCALE 1:5
390
A01F0010
A01V0010
440
370
240
460
330
440
370
420
490
A01V012
A01V0120
260
130
120
290
140
250
220
180
270
430
450
200
340
B
230
380
A01X0040
40
280
80
60
U70X0810
U70X0820
U70X0830
U70X0840
U70X0850
U70X0930
210
100
90
350
70
170
DETAIL B
SCALE 1:5
2986637-1
430314

ECM: 442641 - 20100326
Group number: 2986637-0100
Assembly Drawing: 2986637-1_1_AC

This list covers pages from 8-148 to 8-151

Pos	Part No	UN	Qty	Description	Page No
CE (See drawing on page: 8-148)					
A01F0010	90459-5809		1	CIRCUIT BREAKER, NZMN1-4-A100	
UL, CSA (See drawing on page: 8-150)					
A01F0010	90459-5810		1	CIRCUIT BREAKER, NZMN1-A100-NA	
Common Parts					
010	2986636-0000		1	CONNECTION PLATE	
020	90062-0022		4	LOCK WASHER D=6,4/11	
030	90226-0458		6	MOUNTING SCREW	
040	312115-0328		3	SCREW ISO4762 M5X14 A4 80	
050	312115-0367		5	SCREW ISO4762 M6X14 A4 80	
060	2869590-0000		1	COVER PLATE	
070	3038027-0000		8	GASKET	
080	1129550-0000		1	GASKET	
090	1487430-0000		7	COVER	
100	1487431-0000		7	GASKET	
110	2608177-0000		2	SIGN	
120	1037575-0000		2	GASKET	
130	312115-0226		12	SCREW ISO4762 M3X12 A4 80	
140	1037574-0000		2	COVER PLATE	
150	1037573-0000		1	GASKET	
160	1037572-0000		1	COVER PLATE	
170	3038026-0000		8	COVER PLATE	
180	315402-0136		84	LOCK WASHER, DIN127B 4,1 A4, M4-5/32	
190	315105-0156		4	WASHER BRB 6,7X14 RFR	
200	315105-0124		182	WASHER BRB 3,2X6 RFR	
210	312115-0224		126	SCREW ISO4762 M3X10 A4 80	
220	315105-0136		86	WASHER BRB 4,3X8 RFR	
230	90459-6638		2	HOUSING, 09 30 016 0301	
240	312605-0316		6	HEXAGON NUT, M6M M6 A280	
250	90459-6639		7	HOUSING, 09 30 024 0301	
260	90005-0056		5	WASHER PL.RND.NYL.6/8,5,H=1	
270	312115-0289		84	SCREW ISO4762 M4X10 A4 80	
280	90110-0123		7	HOUSING, 09 30 006 0301	
290	90459-6822		12	HOUSING, 09 20 003 0301	
300	90600-2904		2	EARTH BRAID, 250/16/8,5	
310	90181-0045	M	225	CABLE DUCT, PLASTIC, 40X60	
320	90194-0152		2	SIGN, EARTH	
330	2832837-0100		1	BAR	**8-153**
340	90458-0323		1	NUT, M20X1,5	
350	90458-0307		1	CABLE GLAND, M20X1,5, 5311 1020	
360	312929-0102		3	RIVET NUT M4, CLAMP. LENGTH 0,5 - 2,0	
370	315402-0156		11	LOCK WASHER, DIN127B 6,5 A4, 1/4	
380	90459-3853		12	HOUSING, 09 14 001 0301	
390	90459-4182		1	MAIN SWITCH, NZM1-XS-R	
400	312115-0222		2	SCREW ISO4762 M3X8 A4 80	
410	312115-0303		2	SCREW ISO4762 M4X40 A4 80	
420	312115-0366		2	SCREW ISO4762 M6X12 A4 80	
430	312605-0310		42	HEXAGON NUT, M6M M3 A280	
440	315105-0153		6	WASHER BRB 6,4X12 RFR	
450	315402-0128		138	LOCK WASHER, DIN127B 3,6 A4, M3,5	
460	1038275-0022		2	SPACER	
480	1285109-0000		8	NUT	
490	3041518-0000		1	COVER	
A01V0010	90600-5264		1	LINE FILTER, B84144A150R120	
A01V0120	90600-5266		1	FEED THROUGH FILTER, B85321A2502W160	
A01V0121	90600-5266		1	FEED THROUGH FILTER, B85321A2502W160	
A01X0040	90459-0839		1	DISTRIBUTION FRAME, ASBV 8 5-135/10M	
A01X2040	90459-2517		1	DEVICE BOX 8 PORT THIN CABLE	
K80X0010	90459-6820		1	FEMALE INSERT, HAN 4 A, 09 20 004 2711	
K80X0020	90459-6820		1	FEMALE INSERT, HAN 4 A, 09 20 004 2711	
K80X0030	90601-6215		1	FEMALE INSERT, HAN C AXIAL 0914 003 2701	
K80X0580	90459-6624		1	FEMALE INSERT, HAN E AV, 09 33 006 4735	
T10X0050	90459-6627		1	FEMALE INSERT, HAN E AV, 09 33 024 4735	
T10X0060	90459-6820		1	FEMALE INSERT, HAN 4 A, 09 20 004 2711	
T10X0100	90459-6820		1	FEMALE INSERT, HAN 4 A, 09 20 004 2711	
T10X0110	90459-6820		1	FEMALE INSERT, HAN 4 A, 09 20 004 2711	
T10X0120	90459-6820		1	FEMALE INSERT, HAN 4 A, 09 20 004 2711	
T10X0200	90110-0236		1	CHASSIS CONTACT PX0767/S	
T10X0201	90110-0236		1	CHASSIS CONTACT PX0767/S	
T10X0500	90601-6215		1	FEMALE INSERT, HAN C AXIAL 0914 003 2701	
T10X0570	90601-6215		1	FEMALE INSERT, HAN C AXIAL 0914 003 2701	
T10X0580	90110-0055		1	FEMALE INSERT, HAN 6 HSB 09 31 006 2701	
T10X1020	90459-6624		1	FEMALE INSERT, HAN E AV, 09 33 006 4735	
T10X1040	90459-6624		1	FEMALE INSERT, HAN E AV, 09 33 006 4735	
T40X0010	90459-6820		1	FEMALE INSERT, HAN 4 A, 09 20 004 2711	
T40X0040	90459-6624		1	FEMALE INSERT, HAN E AV, 09 33 006 4735	
T40X0210	90459-6627		1	FEMALE INSERT, HAN E AV, 09 33 024 4735	
T40X0520	90459-6627		1	FEMALE INSERT, HAN E AV, 09 33 024 4735	
T50X0060	90459-6820		1	FEMALE INSERT, HAN 4 A, 09 20 004 2711	
T50X0140	90459-6820		1	FEMALE INSERT, HAN 4 A, 09 20 004 2711	
T50X0150	90459-6820		1	FEMALE INSERT, HAN 4 A, 09 20 004 2711	
T50X0530	90459-6627		1	FEMALE INSERT, HAN E AV, 09 33 024 4735	
T50X0550	90601-6215		1	FEMALE INSERT, HAN C AXIAL 0914 003 2701	
T50X0551	90601-6215		1	FEMALE INSERT, HAN C AXIAL 0914 003 2701	

Machine Type | Group Description | Used-In | Group Number | Page No

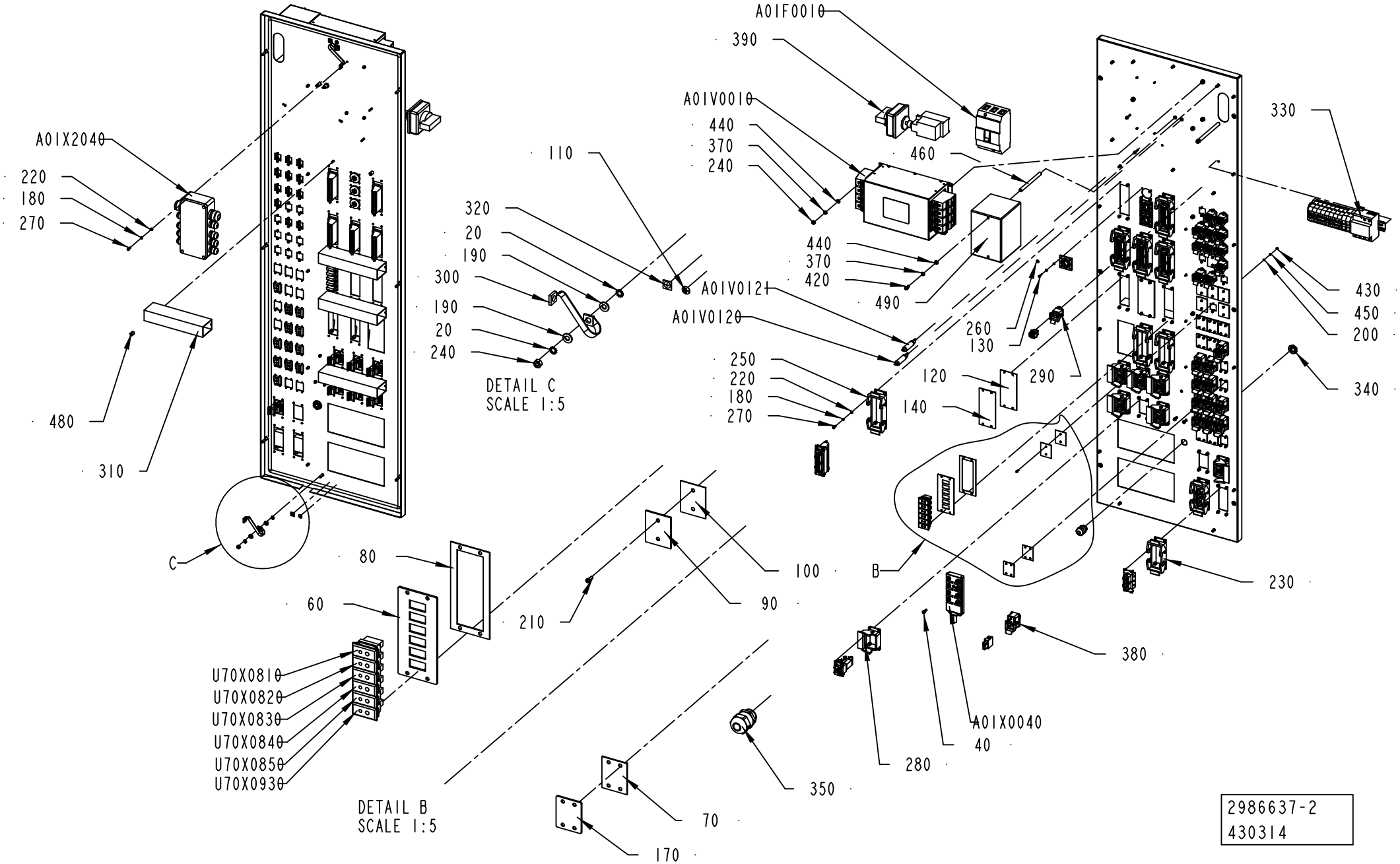
A01X2040
220
180
270
480
310
C
110
320
20
190
300
190
20
240
DETAIL C
SCALE 1:5
A01F0010
390
A01V0010
440
370
240
460
330
440
370
420
490
A01V012I
A01V0120
260
130
430
450
200
250
220
180
270
120
290
140
340
B
230
80
60
210
100
90
380
U70X0810
U70X0820
U70X0830
U70X0840
U70X0850
U70X0930
A01X0040
40
280
350
DETAIL B
SCALE 1:5
70
170
2986637-2
430314

Pos	Part No	UN	Qty	Description	Page No
Common Parts (Cont'd)					
T50X0560	90601-6215		1	FEMALE INSERT, HAN C AXIAL 0914 003 2701	
T50X1070	90459-6624		1	FEMALE INSERT, HAN E AV, 09 33 006 4735	
U30X0010	90459-6820		1	FEMALE INSERT, HAN 4 A, 09 20 004 2711	
U70X0010	90601-6215		1	FEMALE INSERT, HAN C AXIAL 0914 003 2701	
U70X0020	90601-6215		1	FEMALE INSERT, HAN C AXIAL 0914 003 2701	
U70X0080	90601-6215		1	FEMALE INSERT, HAN C AXIAL 0914 003 2701	
U70X0090	90601-0086		1	FEMALE NSERT, HAN C AXIAL 09 14 003 2702	
U70X0230	90459-6820		1	FEMALE INSERT, HAN 4 A, 09 20 004 2711	
U70X0450	90110-0055		1	FEMALE INSERT, HAN 6 HSB 09 31 006 2701	
U70X0560	90459-6627		1	FEMALE INSERT, HAN E AV, 09 33 024 4735	
U70X0810	90459-4928		1	PANEL CONNECTOR FEMALE, TYPE K	
U70X0820	90459-4928		1	PANEL CONNECTOR FEMALE, TYPE K	
U70X0830	90459-4928		1	PANEL CONNECTOR FEMALE, TYPE K	
U70X0840	90459-4928		1	PANEL CONNECTOR FEMALE, TYPE K	
U70X0850	90459-4928		1	PANEL CONNECTOR FEMALE, TYPE K	
U70X0930	90459-4928		1	PANEL CONNECTOR FEMALE, TYPE K	
U70X1130	90601-6215		1	FEMALE INSERT, HAN C AXIAL 0914 003 2701	
U70X1140	90601-6215		1	FEMALE INSERT, HAN C AXIAL 0914 003 2701	
U70X1160	90459-6624		1	FEMALE INSERT, HAN E AV, 09 33 006 4735	
U70X1190	90459-6624		1	FEMALE INSERT, HAN E AV, 09 33 006 4735	
U70X2501	90110-0236		1	CHASSIS CONTACT PX0767/S	

Pos	Part No	UN	Qty	Description	Page No

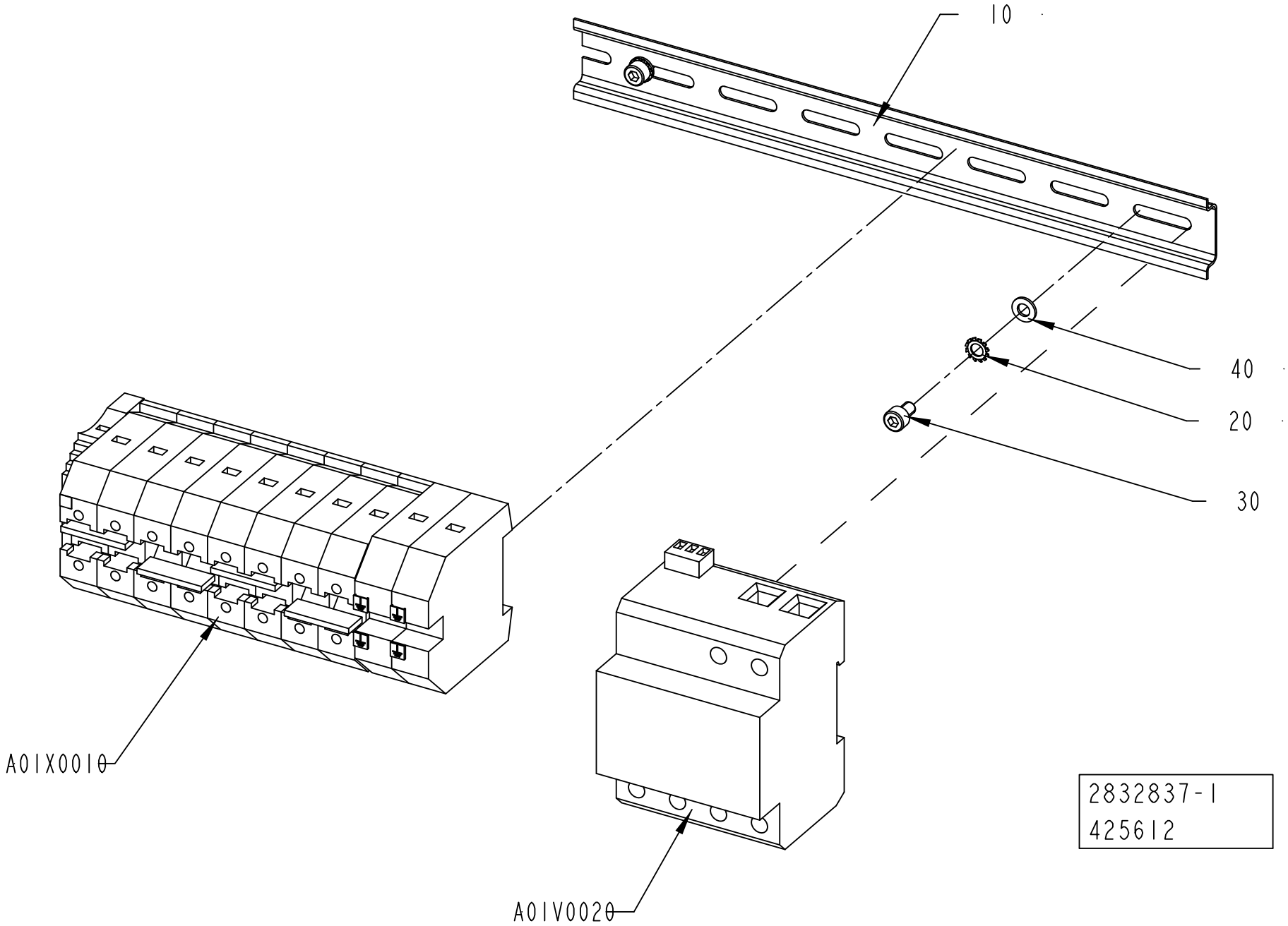
10
40
20
30
A01X0010
A01V0020
2832837-1
425612

ECM: 428705 - 20091209
Group number: 2832837-0100
Assembly Drawing: 2832837-1_1_AC

Pos	Part No	UN	Qty	Description	Page No
-					
010	353042-0004	MM	275	RAIL, TS 35/7,5	
020	90062-0021		2	LOCK WASHER DIN 6797 TYPE A 5,3	
030	312115-0323		2	SCREW ISO4762 M5X8 A4 80	
040	315105-0146		2	WASHER BRB 5,3X10 RFR	
A01V0020	90600-7487		1	SURGE PROTECTION DEV., VAL-MS 230/3+1 FM	
	90600-7489		*1*	*SURGE PROTECTION DEV., SP, F-MS 12 ST*	
	90600-7488		*1*	*SURGE PROTECTION DEV., SP, VAL-MS 230 ST*	
A01X3100	2861074-0100		1	BAR	**8-155**

Pos	Part No	UN	Qty	Description	Page No

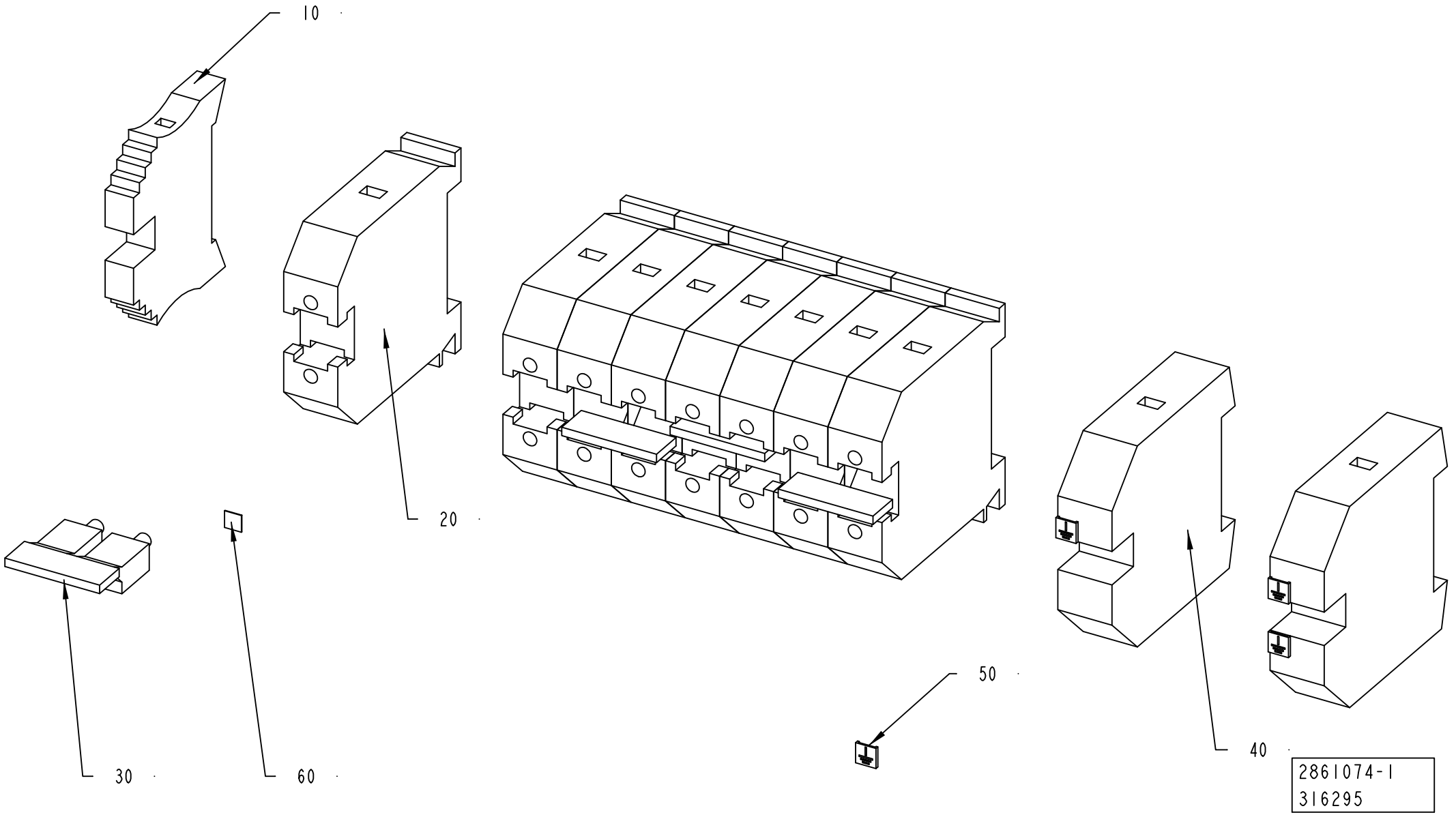
10
20
30
40
50
60
2861074-1
316295

ECM: 316295 - 20071220
Group number: 2861074-0100
Assembly Drawing: 2861074-1_1_AA

Pos	Part No	UN	Qty	Description	Page No
-					
010	353031-0203		1	END BRACKET, WEW 35/2	
020	353021-0219		8	FEED THROUGH TERMINAL, WDU 35	
030	353034-0026		4	BRIDGE CONNECTOR WQV 35/2	
040	353024-0209		2	EARTH TERMINAL WPE 35	
050	359011-0834		4	MARKING, EARTH, DKE 6 GW ERDE I.KR.	
060	359011-0807		1	MARKING, DEK 5 FW 1-50	

Pos	Part No	UN	Qty	Description	Page No

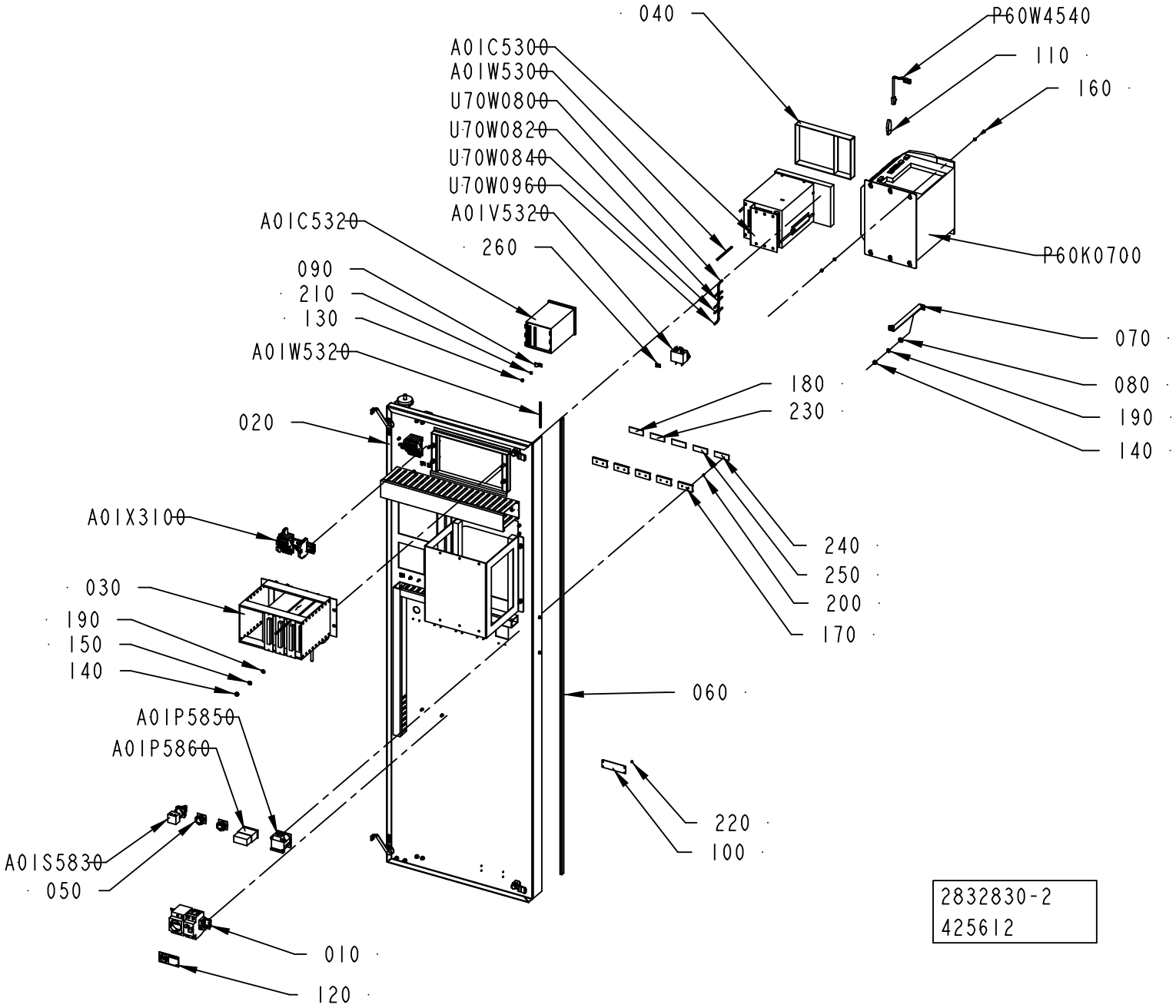
040
P60W4540
110
160
A01C5300
A01W5300
U70W0800
U70W0820
U70W0840
U70W0960
A01V5320
260
P60K0700
A01C5320
090
210
130
A01W5320
070
080
190
140
180
230
020
A01X3100
240
250
200
170
030
190
150
140
060
A01P5850
A01P5860
220
100
A01S5830
050
010
120
2832830-2
425612

ECM: 460647 - 20101001
Group number: 2832830-0200
Assembly Drawing: 2832830-2_1_AB

Pos	Part No	UN	Qty	Description	Page No
ANSI					
120	90459-2267		1	WARNING SIGN ANSI (H), READ MAINT. MAN.	
ISO					
120	90459-1738		1	MANDATORY ACTION SIGN ISO, READ MAINTENA	
Common Parts					
010	2832834-0100		1	BAR	**8-159, 8-161**
020	2986635-0100		1	COMPONENT DOOR	**8-163**
030	2832832-0100		1	RACK	**8-165**
040	2986618-0000		1	SUPPORT	
050	90459-3279		2	BLANK PLUG BLACK, SQUARE, PLASTIC ZB5SZ5	
060	90143-0097	M	1	SELF GRIPPING GASKET, 1011-24	
070	90600-2904		1	EARTH BRAID, 250/16/8,5	
080	315105-0156		4	WASHER BRB 6,7X14 RFR	
090	90165-0007		1	PIPE CLIP FOR TUBE D=8 MM	
100	979548-0000		1	MACHINE PLATE	
110	90600-5745		1	INTOUCH OEM 10.000 V.9,5 HW KEY USB	
130	312605-0312		15	HEXAGON NUT, M6M M4 A280	
140	312605-0316		6	HEXAGON NUT, M6M M6 A280	
150	315105-0153		4	WASHER BRB 6,4X12 RFR	
160	312115-0291		6	SCREW ISO4762 M4X12 A4 80	
170	359240-0100		5	SIGN HOLDER FOR 359240-0001	
180	359241-0133		1	SIGN: SERVICE SWITCH	
190	90062-0022		7	LOCK WASHER D=6,4/11	
200	311520-0320		10	RIVET, BLANK 2,4X6	
210	315105-0136		21	WASHER BRB 4,3X8 RFR	
220	311520-0315		4	RIVET, BLANK 2,4X4	
230	359240-0001		2	SIGN, NOT ENGRAVED	
240	359241-0201		1	SIGN: " HOUR METER"	
250	359241-0482		1	SIGN "PACKAGE COUNTER"	
260	90165-0022		6	PIPE CLIP, FOR TUBE D=2,5 MM, B-3570	
A01C5300	90459-4033		1	RECORDER 12-CHANNEL PAPERLESS FDA-APPR	
A01C5320	90459-5187		1	CONDUCTIVITY TRANSMITTER	
A01P5850	90070-0017		1	WORKING HOURS COUNTER, 7991 DR H?NLE	
A01P5860	90053-0029		1	COUNTER, F524.800FA3C 24VDC	
A01S5830	90111-0122		1	KEY SWITCH, 2 NO CONTACTS	
A01V5320	90600-5250		1	LINE FILTER, B84111FB30	
A01W5300	90220-0183	MM	3000	SCR. CABLE 2X0,34MM2	
A01W5320	90220-0183	MM	1350	SCR. CABLE 2X0,34MM2	
A01X3100	2841925-0200		1	BAR	**8-167**
P60K0700	90601-1326		1	COMPUTOR APC620, 5P62:TETRAPAK-30	
P60W4540	90459-0554		1	CABLE, ETHERNET RJ 45 CROSS. SCREEN.2M	
U70W0800	90220-0034	MM	1000	THERMOC.CABLE, TEX/SITW-20F-KX 2X0,5MM2	
U70W0820	90220-0034	MM	1000	THERMOC.CABLE, TEX/SITW-20F-KX 2X0,5MM2	
U70W0840	90220-0034	MM	1000	THERMOC.CABLE, TEX/SITW-20F-KX 2X0,5MM2	
U70W0960	90220-0034	MM	1000	THERMOC.CABLE, TEX/SITW-20F-KX 2X0,5MM2	

Machine Type | Group Description | Used-In | Group Number | Page No

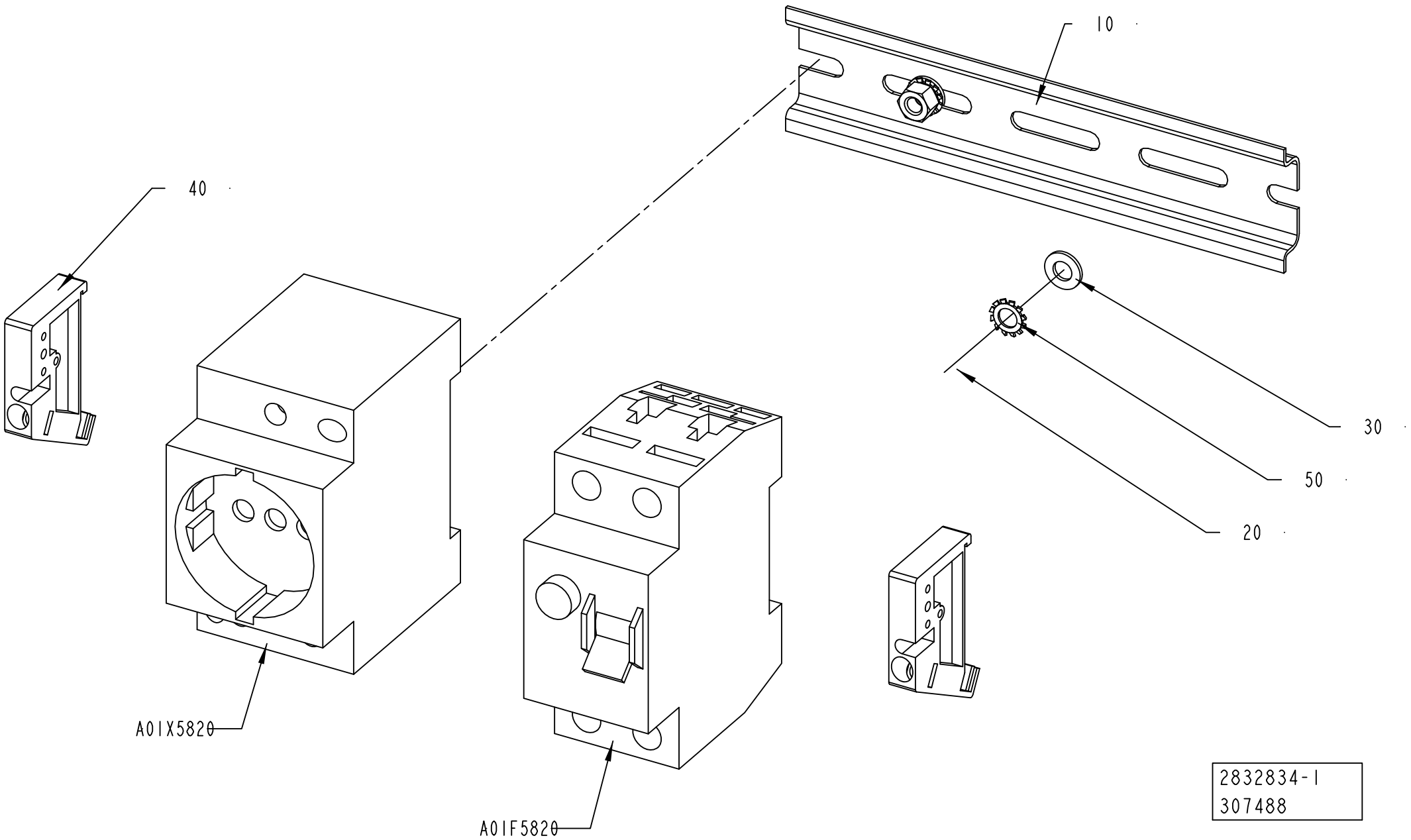
10
40
30
50
20
A01X5820
A01F5820
2832834-1
307488

ECM: 442627 - 20100326
Group number: 2832834-0100
Assembly Drawing: 2832834-1_1_AA

This list covers pages from 8-158 to 8-161

Pos	Part No	UN	Qty	Description	Page No
CE (See drawing on page: 8-158)					
040	353031-0201		2	END PLATE, EW35	
A01F5820	90459-5811		1	RESIDUAL CURRENT DEVICE, FI-25/2/003-A	
A01X5820	90459-3845		1	WALL SOCKET, Z-SD230	
Common Parts					
010	353042-0004	MM	140	RAIL, TS 35/7,5	
020	312605-0314		2	HEXAGON NUT, M6M M5 A280	
030	315105-0146		2	WASHER BRB 5,3X10 RFR	
050	90062-0021		2	LOCK WASHER DIN 6797 TYPE A 5,3	

Pos	Part No	UN	Qty	Description	Page No

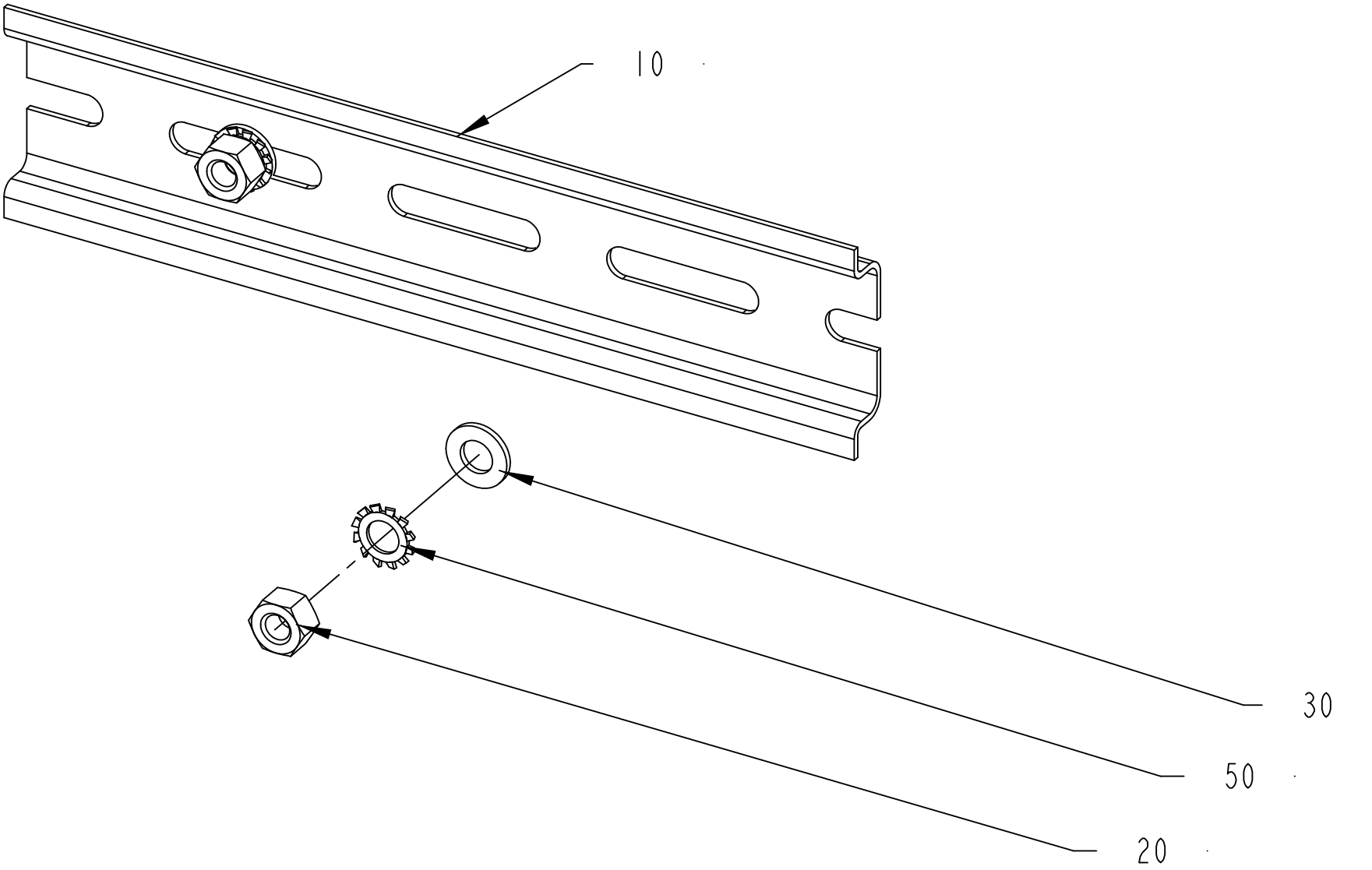

2832834-2
430314

ECM: 442627 - 20100326
Group number: 2832834-0100
Assembly Drawing: 2832834-2_1_AA

This list covers pages from 8-158 to 8-161

Pos	Part No	UN	Qty	Description	Page No
CE (See drawing on page: 8-158)					
040	353031-0201		2	END PLATE, EW35	
A01F5820	90459-5811		1	RESIDUAL CURRENT DEVICE, FI-25/2/003-A	
A01X5820	90459-3845		1	WALL SOCKET, Z-SD230	
Common Parts					
010	353042-0004	MM	140	RAIL, TS 35/7,5	
020	312605-0314		2	HEXAGON NUT, M6M M5 A280	
030	315105-0146		2	WASHER BRB 5,3X10 RFR	
050	90062-0021		2	LOCK WASHER DIN 6797 TYPE A 5,3	

Pos	Part No	UN	Qty	Description	Page No

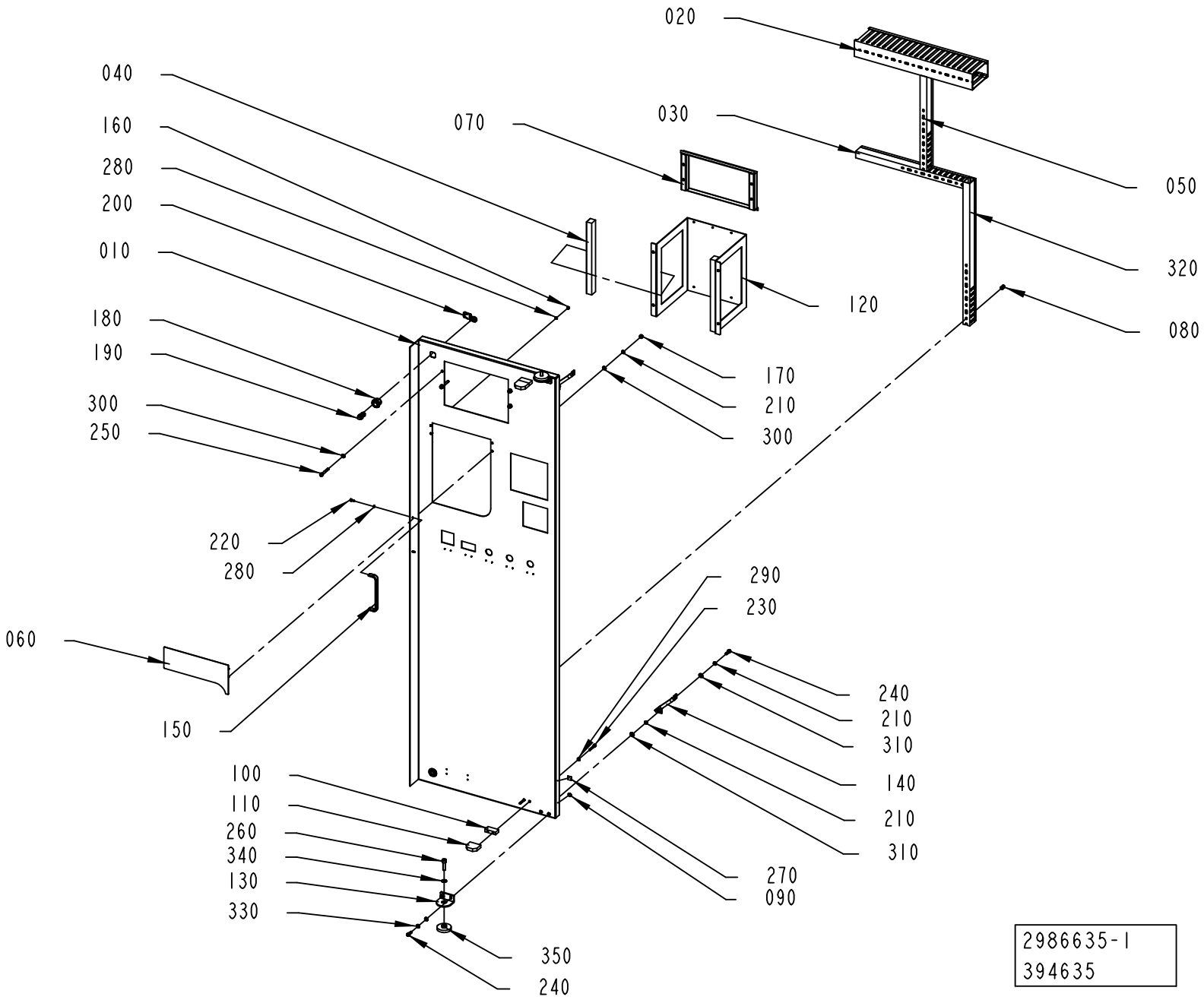
020
040
160
280
200
010
180
190
300
250
070
030
050
320
080
120
170
210
300
220
280
060
150
290
230
240
210
310
140
210
310
270
090
100
110
260
340
130
330
350
240
2986635-1
394635

ECM: 407264 - 20090710
Group number: 2986635-0100
Assembly Drawing: 2986635-1_1_AA

Pos	Part No	UN	Qty	Description	Page No
-					
010	2986634-0000		1	DOOR	
020	90181-0061	MM	440	CABLE DUCT, PLASTIC, 60X100	
030	90181-0037	MM	400	CABLE DUCT, PLASTIC, 25X40	
040	2927022-0000		2	GASKET	
050	90181-0037	MM	355	CABLE DUCT, PLASTIC, 25X40	
060	2918720-0000		1	COVER	
070	2832831-0000		1	FRAME	
080	1285109-0000		10	NUT	
090	2608177-0000		2	SIGN	
100	1548116-0000		2	SPACER	
110	970215-0000		2	STOP BLOCK	
120	2912644-0000		1	SUPPORT	
130	2986593-0000		2	SUPPORT	
140	90600-2904		1	EARTH BRAID, 250/16/8,5	
150	90600-5161		1	HANDLE, 116.11.644	
160	312605-0312		4	HEXAGON NUT, M6M M4 A280	
170	312605-0316		4	HEXAGON NUT, M6M M6 A280	
180	90237-0319		2	LOCK HOUSING, 1000-U134	
190	90237-0320		2	LOCK HOUSING, 1000-U136	
200	90237-0157		2	LOCK BOLT, 1000-230	
210	90062-0022		9	LOCK WASHER D=6,4/11	
220	312115-0289		2	SCREW ISO4762 M4X10 A4 80	
230	312115-0335		4	SCREW ISO4762 M5X30 A4 80	
240	312115-0368		6	SCREW ISO4762 M6X16 A4 80	
250	312115-0378		4	SCREW ISO4762 M6X40 A4 80	
260	312115-0455		2	SCREW ISO4762 M8X30 A4 80	
270	90194-0152		2	SIGN, EARTH	
280	315105-0136		6	WASHER BRB 4,3X8 RFR	
290	315105-0146		4	WASHER BRB 5,3X10 RFR	
300	315105-0153		12	WASHER BRB 6,4X12 RFR	
310	315105-0156		4	WASHER BRB 6,7X14 RFR	
320	90181-0037	MM	536	CABLE DUCT, PLASTIC, 25X40	
330	315402-0156		4	LOCK WASHER, DIN127B 6,5 A4, 1/4	
340	315105-0165		2	WASHER BRB 8,4X16 RFR	
350	2986613-0000		2	SPACER	

Pos	Part No	UN	Qty	Description	Page No

Machine Type | Group Description | Used-In | Group Number | Page No

This page is intentionally left blank.

ECM: - -
Group number: 2832832-0100
Assembly Drawing:

Pos	Part No	UN	Qty	Description	Page No	Pos	Part No	UN	Qty	Description	Page No

THIS GROUP HAS NO LIST.

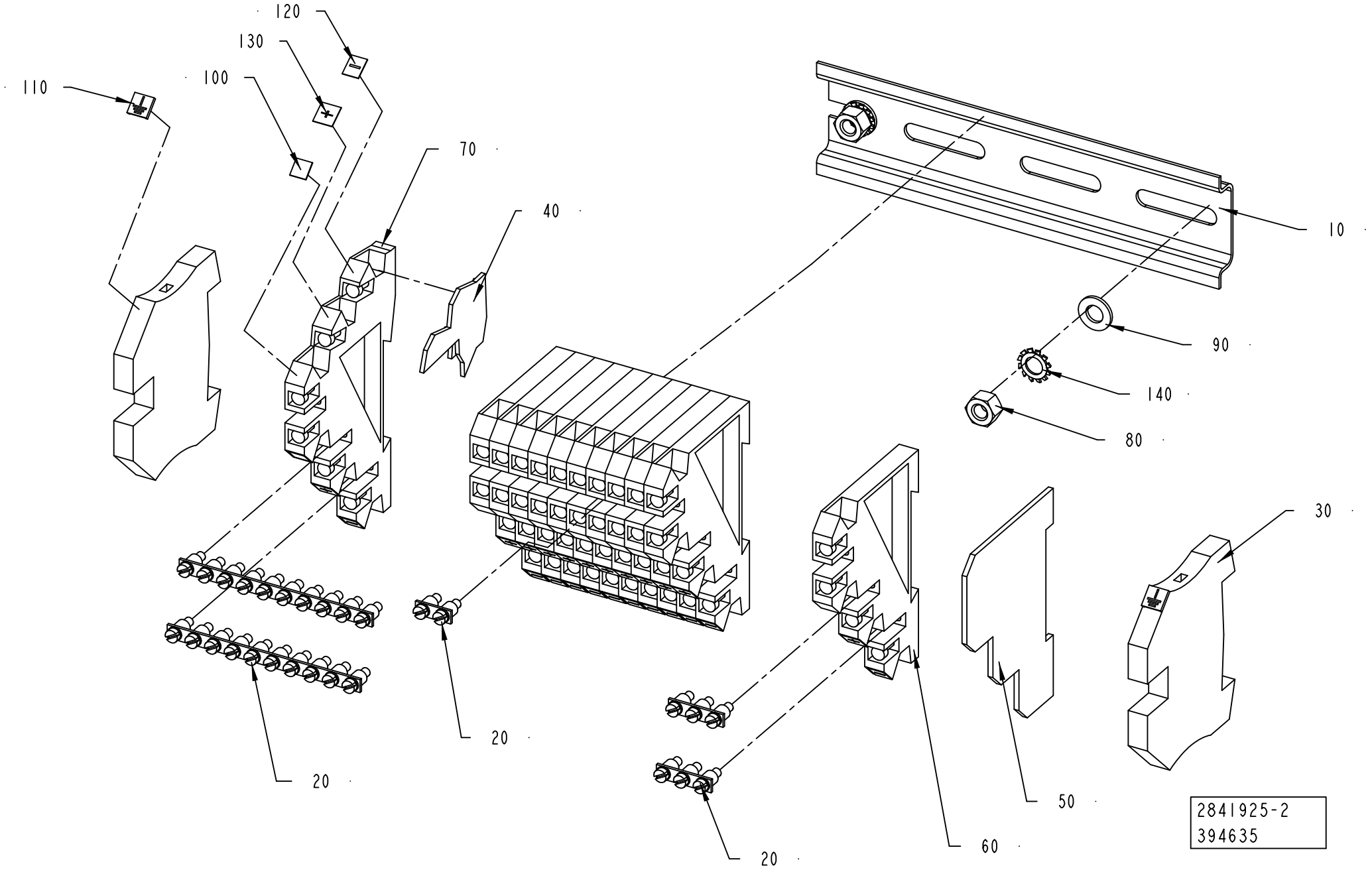
120
130
100
110
70
40
10
90
140
80
30
20
20
20
50
60
2841925-2
394635

ECM: 408012 - 20090710
Group number: 2841925-0200
Assembly Drawing: 2841925-2_1_AA

Pos	Part No	UN	Qty	Description	Page No
-					
010	353042-0004	M	125	RAIL, TS 35/7,5	
020	353034-0404		3	BRIDGE CONNECTOR Q 10 DLI	
030	353024-0205		2	EARTH TERMINAL WPE 4	
040	353032-0013		1	END PLATE, AP, 138 186	
050	353032-0301		1	END PLATE, AP/DLI, 131 326	
060	353021-0301		11	TERMINAL, DLI 2,5/35	
070	353021-0302		1	TERMINAL, DLD 2,5/35	
080	312605-0314		2	HEXAGON NUT, M6M M5 A280	
090	315105-0146		2	WASHER BRB 5,3X10 RFR	
100	359011-0807		2	MARKING, DEK 5 FW 1-50	
110	359011-0834		2	MARKING, EARTH, DKE 6 GW ERDE I.KR.	
120	359011-0818		13	MARKING, DEK 5GW (-)	
130	359011-0817		13	MARKING, DEK 5GW (+)	
140	90062-0021		2	LOCK WASHER DIN 6797 TYPE A 5,3	

Pos	Part No	UN	Qty	Description	Page No

CONNECTION BOX

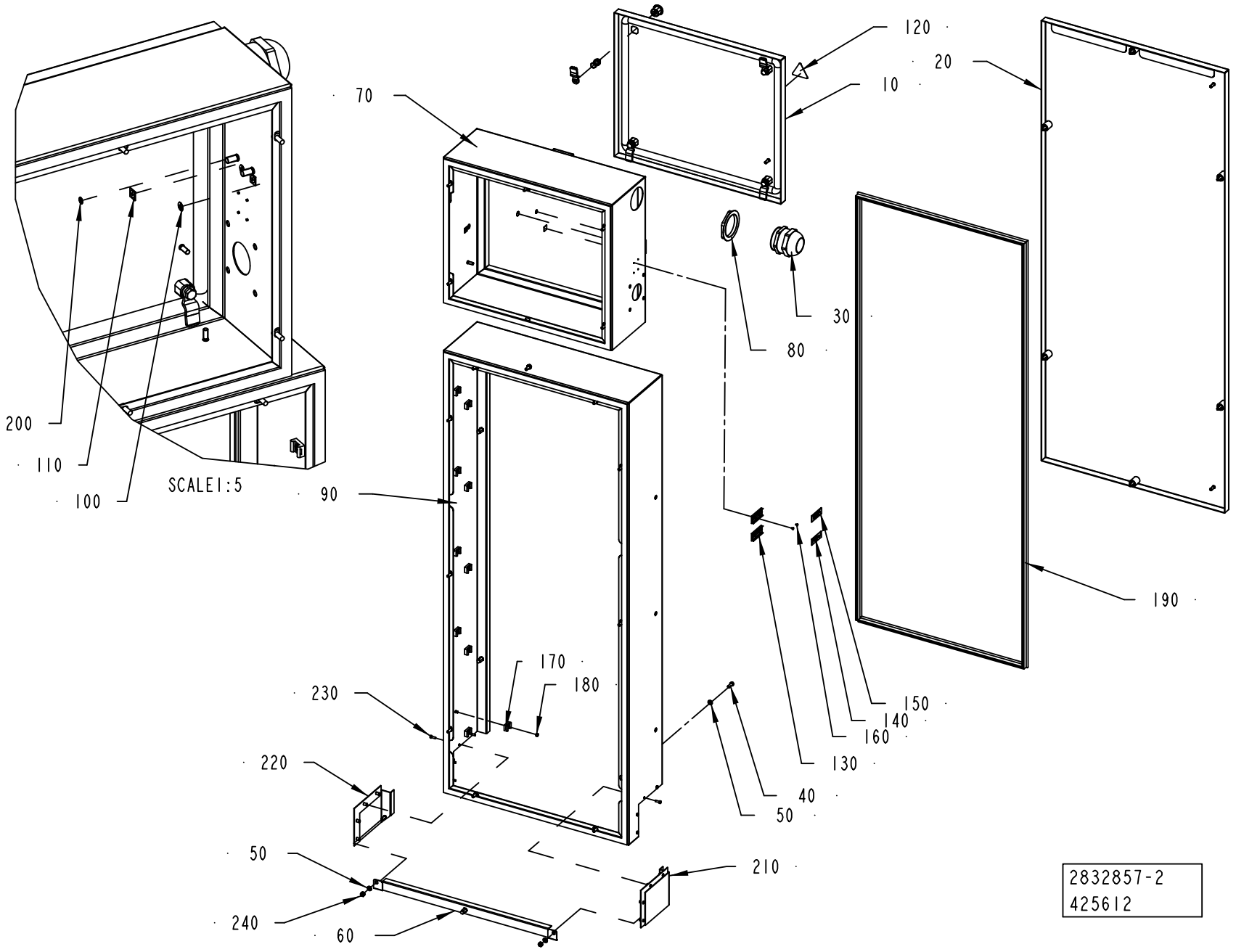

Pos	Part No	UN	Qty	Description	Page No
CE 50HZ (See drawing on page: 8-168)					
120	359705-0015		1	WARNING SIGN ISO, RISK OF ELECTRIC SHOCK	
150	3075274-0000		1	LABEL	
CSA 60HZ, CE 60HZ, UL 60HZ (See drawing on page: 8-170)					
120	359715-0100		1	WARNING SIGN ANSI (H), ELECTRIC SHOCK	
150	3075275-0000		1	LABEL	
250	90600-5811		1	ELECTRICAL EQUIPMENT SIGN, TEMPLATE	
Common Parts					
010	2841942-0200		1	COVERING PANEL	**8-173**
020	2841943-0200		1	COVERING PANEL	**8-175**
030	90458-0320		1	CABLE GLAND, M63X1,5, 5311 1170	
040	312125-0368		16	SLOTTED HEAD SCREW, ISO1207 M6X16 A4	
050	315101-0153		18	WASHER PLAIN, BRB, 6,4/12 H=1,5	
060	3042669-0000		1	BRACKET	
070	3042671-0000		1	BOX	
080	90458-0328		1	NUT, M63X1,5	
090	3042670-0000		1	BOX	
100	2608177-0000		3	SIGN	
110	90194-0152		3	SIGN, EARTH	
130	359240-0100		2	SIGN HOLDER FOR 359240-0001	
140	359241-0431		1	SIGN: " MAIN SWITCH"	
160	311520-0315		4	RIVET, BLANK 2,4X4	
170	352113-0203		20	ANCHOR PLATES FOR STRIPS, TM3S8-M0	
180	312605-0312		20	HEXAGON NUT, M6M M4 A280	
190	90143-0057	M	1	STRIP EMKA 1011-05 21X11MM	
200	90111-0344		1	SIGN, PE, GREEN/YELLOW	
210	3074206-0000		1	PLATE	
220	3074207-0000		1	PLATE	
230	312125-0291		8	SLOTTED HEAD SCREW, ISO1207 M4X12 A4	
240	312605-0316		2	HEXAGON NUT, M6M M6 A280	

Pos	Part No	UN	Qty	Description	Page No

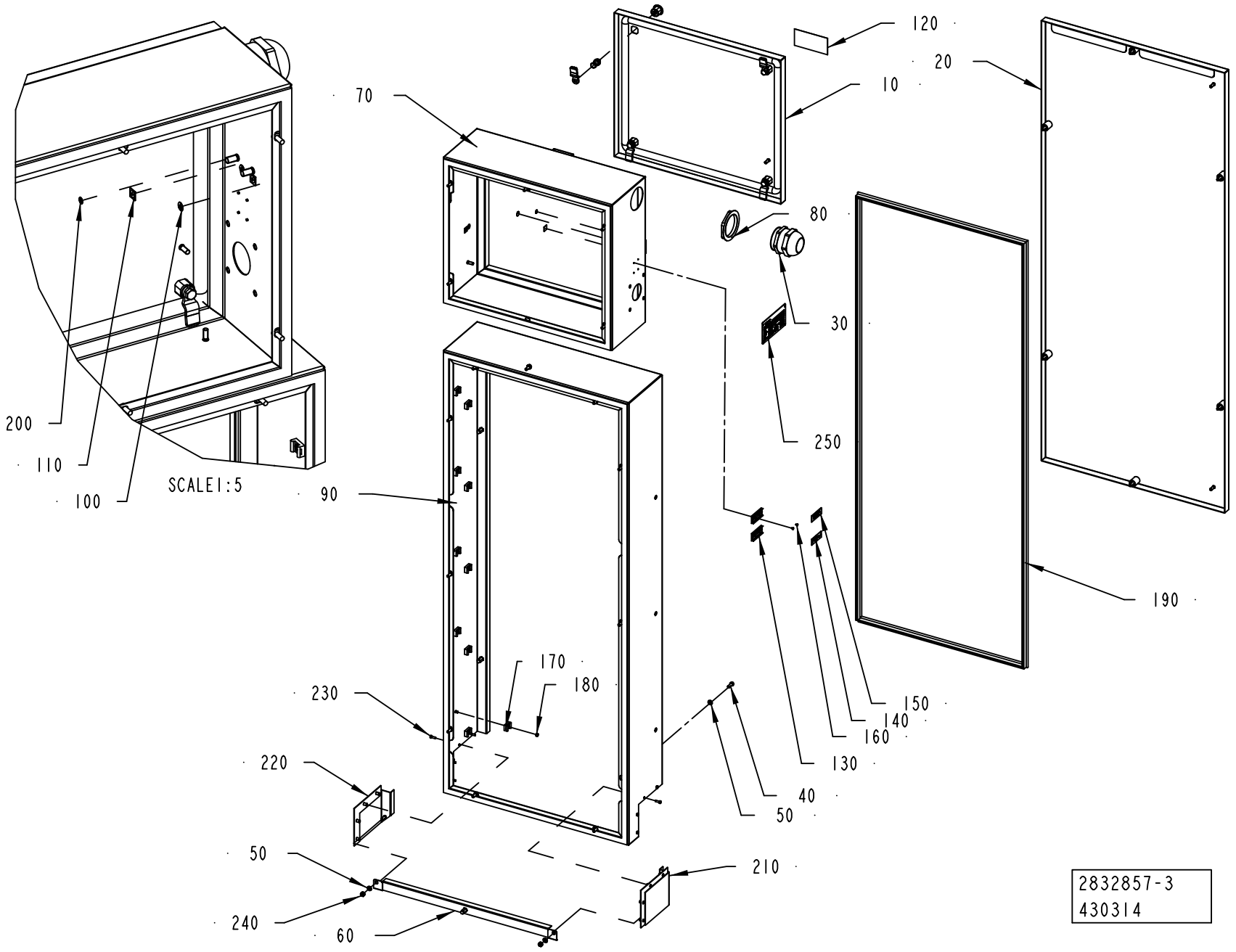
120
20
10
70
80
30
250
200
110
100
SCALE1:5
90
190
170
180
230
150
140
160
130
220
40
50
50
210
240
60
2832857-3
430314

Pos	Part No	UN	Qty	Description	Page No
CE 50HZ (See drawing on page: 8-168)					
120	359705-0015		1	WARNING SIGN ISO, RISK OF ELECTRIC SHOCK	
150	3075274-0000		1	LABEL	
CSA 60HZ, CE 60HZ, UL 60HZ (See drawing on page: 8-170)					
120	359715-0100		1	WARNING SIGN ANSI (H), ELECTRIC SHOCK	
150	3075275-0000		1	LABEL	
250	90600-5811		1	ELECTRICAL EQUIPMENT SIGN, TEMPLATE	
Common Parts					
010	2841942-0200		1	COVERING PANEL	**8-173**
020	2841943-0200		1	COVERING PANEL	**8-175**
030	90458-0320		1	CABLE GLAND, M63X1,5, 5311 1170	
040	312125-0368		16	SLOTTED HEAD SCREW, ISO1207 M6X16 A4	
050	315101-0153		18	WASHER PLAIN, BRB, 6,4/12 H=1,5	
060	3042669-0000		1	BRACKET	
070	3042671-0000		1	BOX	
080	90458-0328		1	NUT, M63X1,5	
090	3042670-0000		1	BOX	
100	2608177-0000		3	SIGN	
110	90194-0152		3	SIGN, EARTH	
130	359240-0100		2	SIGN HOLDER FOR 359240-0001	
140	359241-0431		1	SIGN: " MAIN SWITCH"	
160	311520-0315		4	RIVET, BLANK 2,4X4	
170	352113-0203		20	ANCHOR PLATES FOR STRIPS, TM3S8-M0	
180	312605-0312		20	HEXAGON NUT, M6M M4 A280	
190	90143-0057	M	1	STRIP EMKA 1011-05 21X11MM	
200	90111-0344		1	SIGN, PE, GREEN/YELLOW	
210	3074206-0000		1	PLATE	
220	3074207-0000		1	PLATE	
230	312125-0291		8	SLOTTED HEAD SCREW, ISO1207 M4X12 A4	
240	312605-0316		2	HEXAGON NUT, M6M M6 A280	

Pos	Part No	UN	Qty	Description	Page No

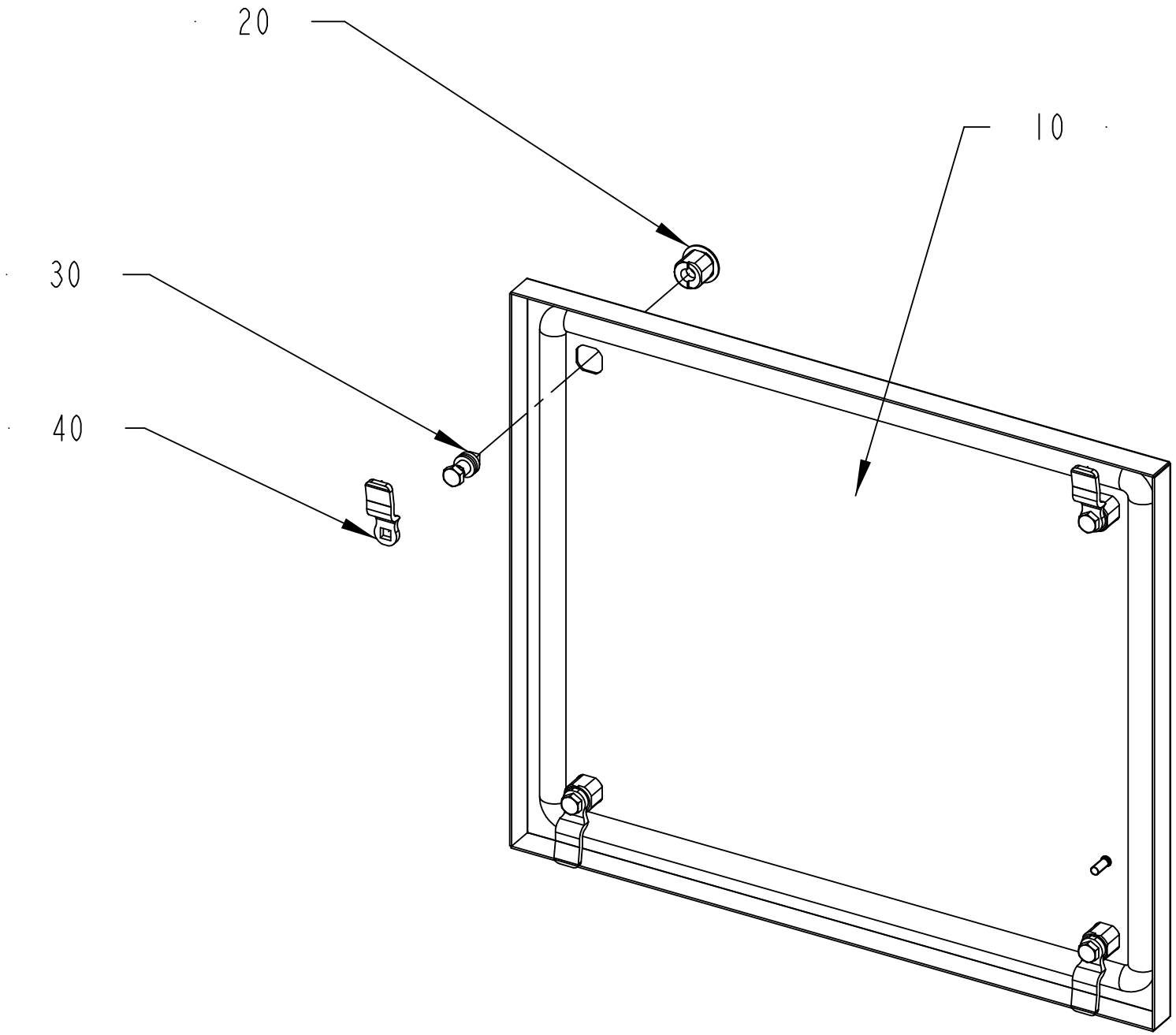

2841942-2
394635

ECM: 408013 - 20090710
Group number: 2841942-0200
Assembly Drawing: 2841942-2_1_AA

Pos	Part No	UN	Qty	Description	Page No
-					
010	3038002-0000		1	PANEL	
020	90237-0319		4	LOCK HOUSING, 1000-U134	
030	90237-0320		4	LOCK HOUSING, 1000-U136	
040	90237-0157		4	LOCK BOLT, 1000-230	

Pos	Part No	UN	Qty	Description	Page No

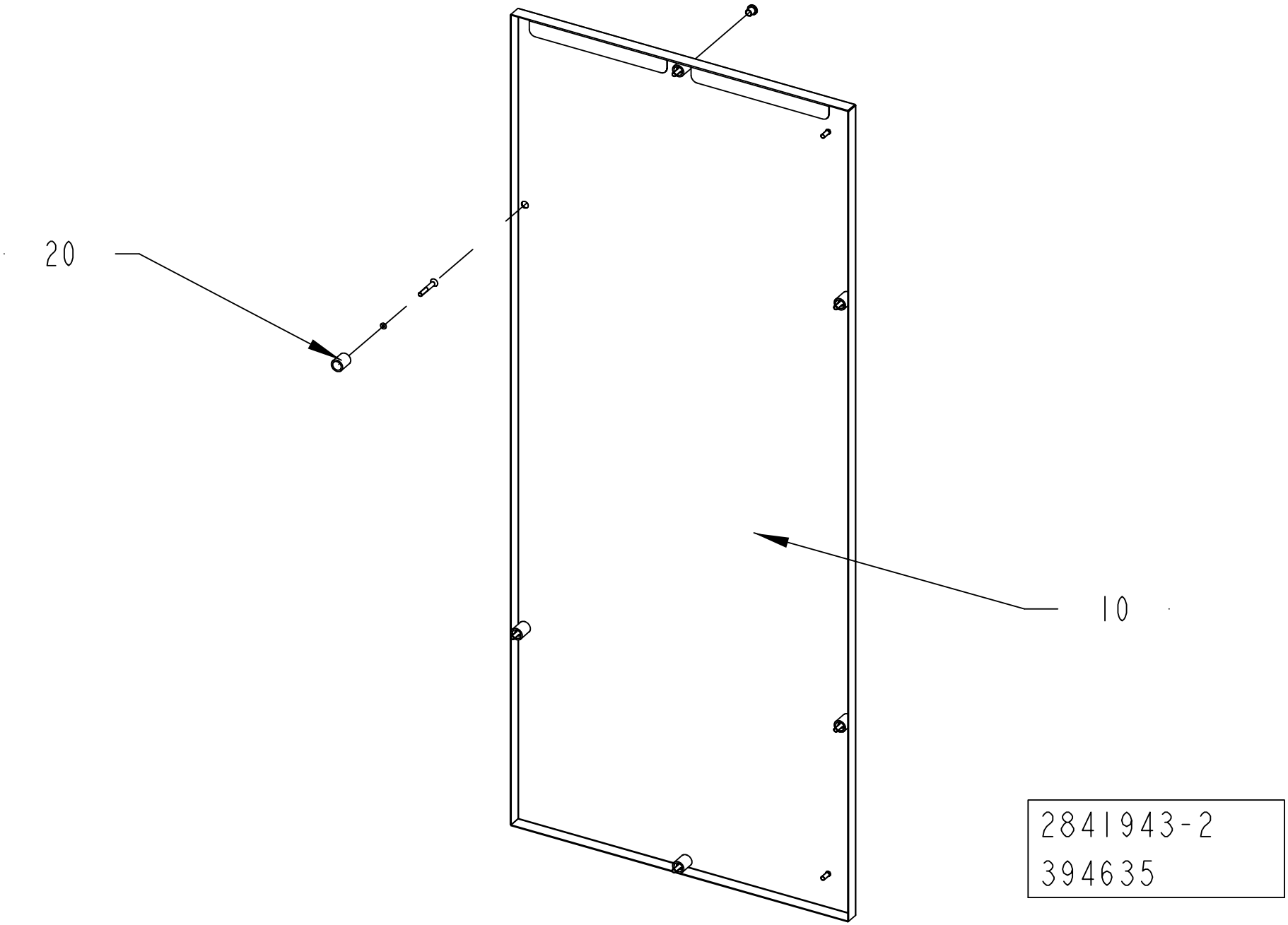
20
10
2841943-2
394635

ECM: 408014 - 20090710
Group number: 2841943-0200
Assembly Drawing: 2841943-2_1_AA

Pos	Part No	UN	Qty	Description	Page No
-					
010	3038004-0000		1	PANEL	
020	90226-0458		6	MOUNTING SCREW	

Pos	Part No	UN	Qty	Description	Page No

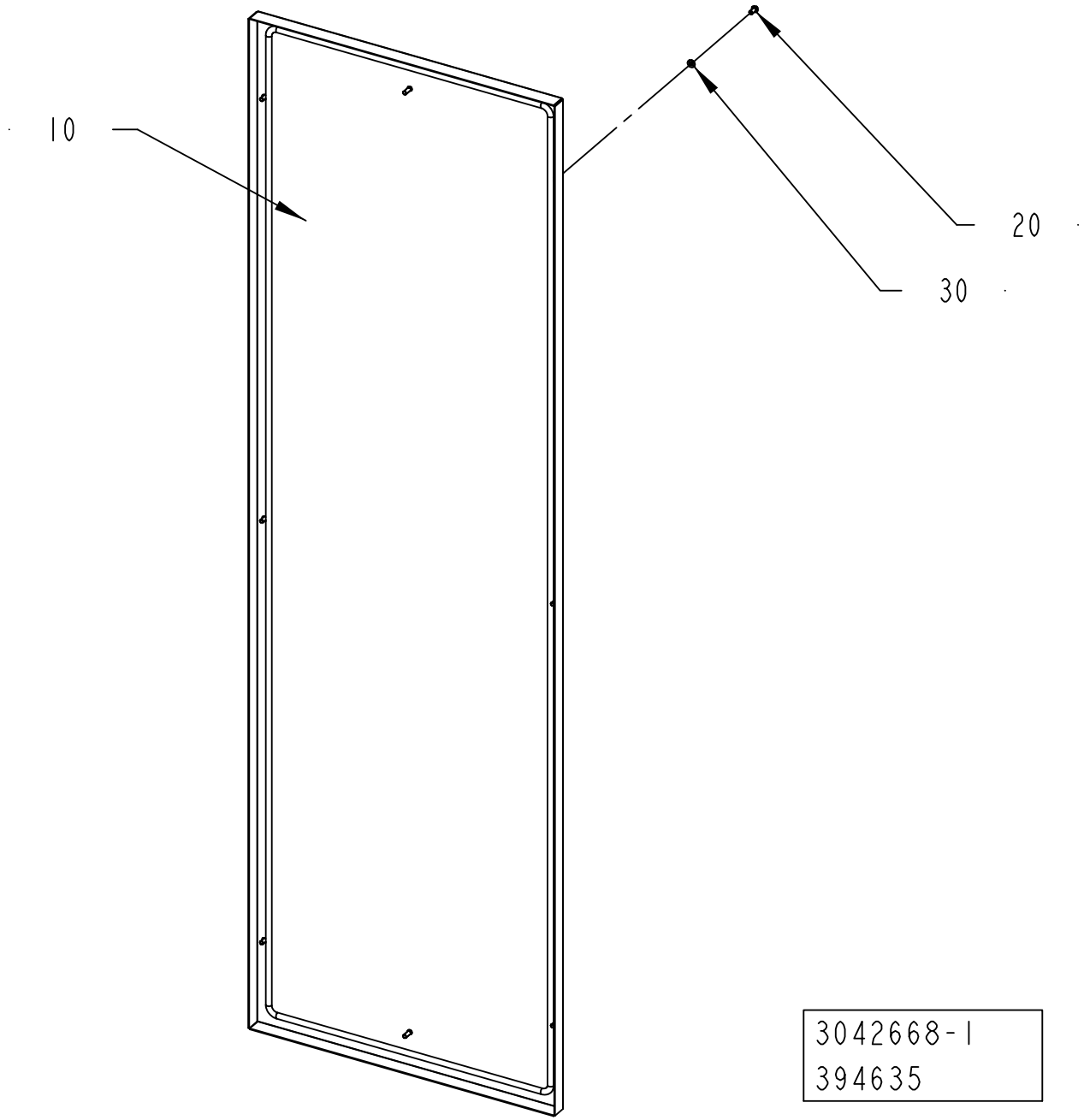
10
20
30
3042668-1
394635

ECM: 407268 - 20090710
Group number: 3042668-0100
Assembly Drawing: 3042668-1_1_AA

Pos	Part No	UN	Qty	Description	Page No
-					
010	2986652-0000		1	PANEL	
020	90458-0072		6	SCREW ISO 7380 S M6X12 A2	
030	315105-0153		6	WASHER BRB 6,4X12 RFR	

Pos	Part No	UN	Qty	Description	Page No

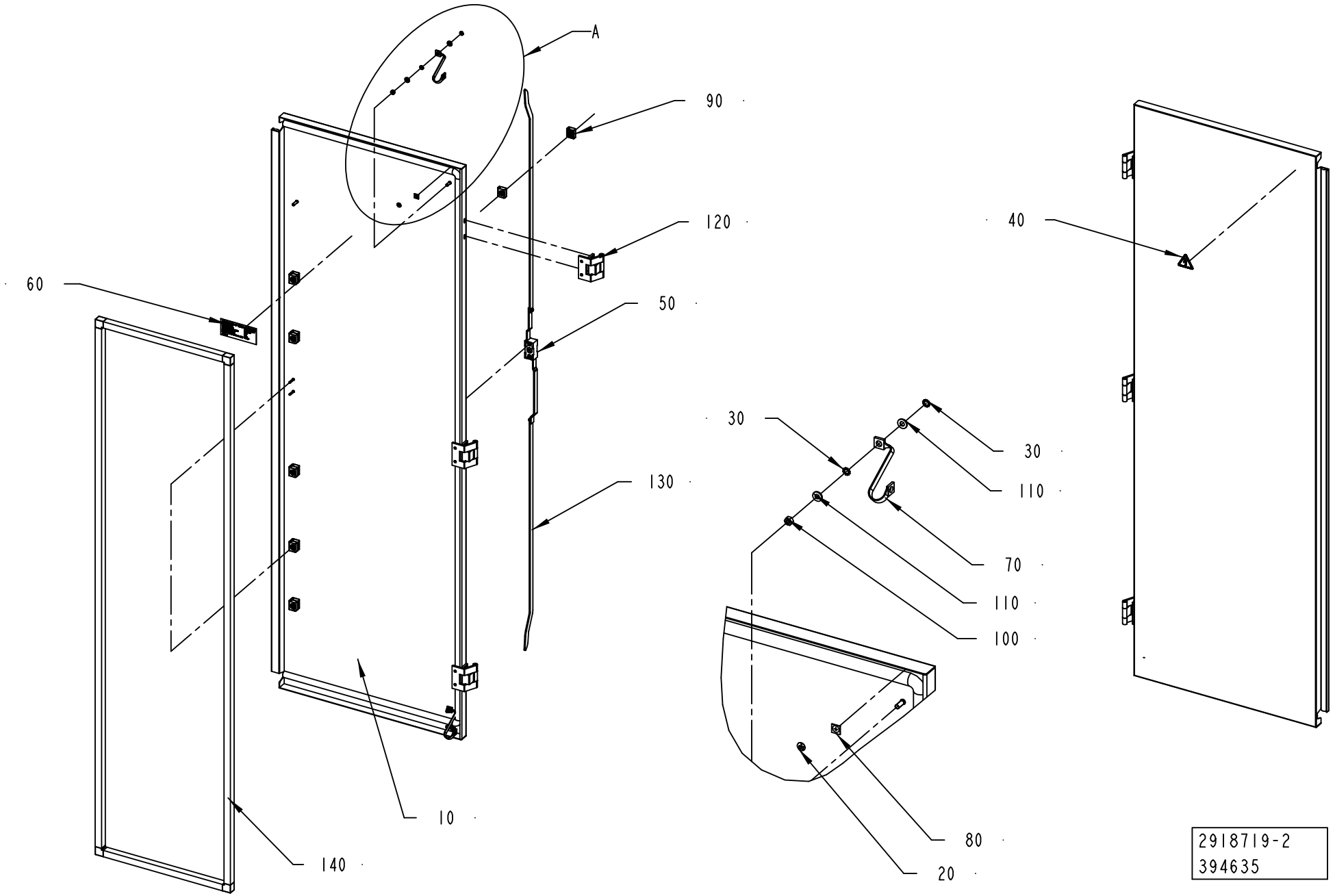
A
90
120
60
50
130
10
140
30
30
110
70
110
100
80
20
40
2918719-2
394635

Pos	Part No	UN	Qty	Description	Page No
CE (See drawing on page: 8-178)					
040	359705-0015		1	WARNING SIGN ISO, RISK OF ELECTRIC SHOCK	
UL, CSA (See drawing on page: 8-180)					
040	359715-0100		1	WARNING SIGN ANSI (H), ELECTRIC SHOCK	
Common Parts					
010	2986650-0000		1	DOOR	
020	2608177-0000		2	SIGN	
030	90062-0022		4	LOCK WASHER D=6,4/11	
050	90237-0153		1	LOCK HOUSING, 1121-U26-0B	
060	90459-7229		1	IDENTIF. OF SINGLE CONDUCTORS, TEMPLATE	
070	90600-2904		2	EARTH BRAID, 250/16/8,5	
080	90194-0152		2	SIGN, EARTH	
090	90600-6028		6	GUIDE FOR PLATE 3X14MM, 1121-U71-N	
100	312605-0316		2	HEXAGON NUT, M6M M6 A280	
110	315105-0156		4	WASHER BRB 6,7X14 RFR	
120	2986583-0000		3	HINGE	
130	3035764-0000		2	BRACKET	
140	3035765-0000		1	REINFORCEMENT	

Pos	Part No	UN	Qty	Description	Page No

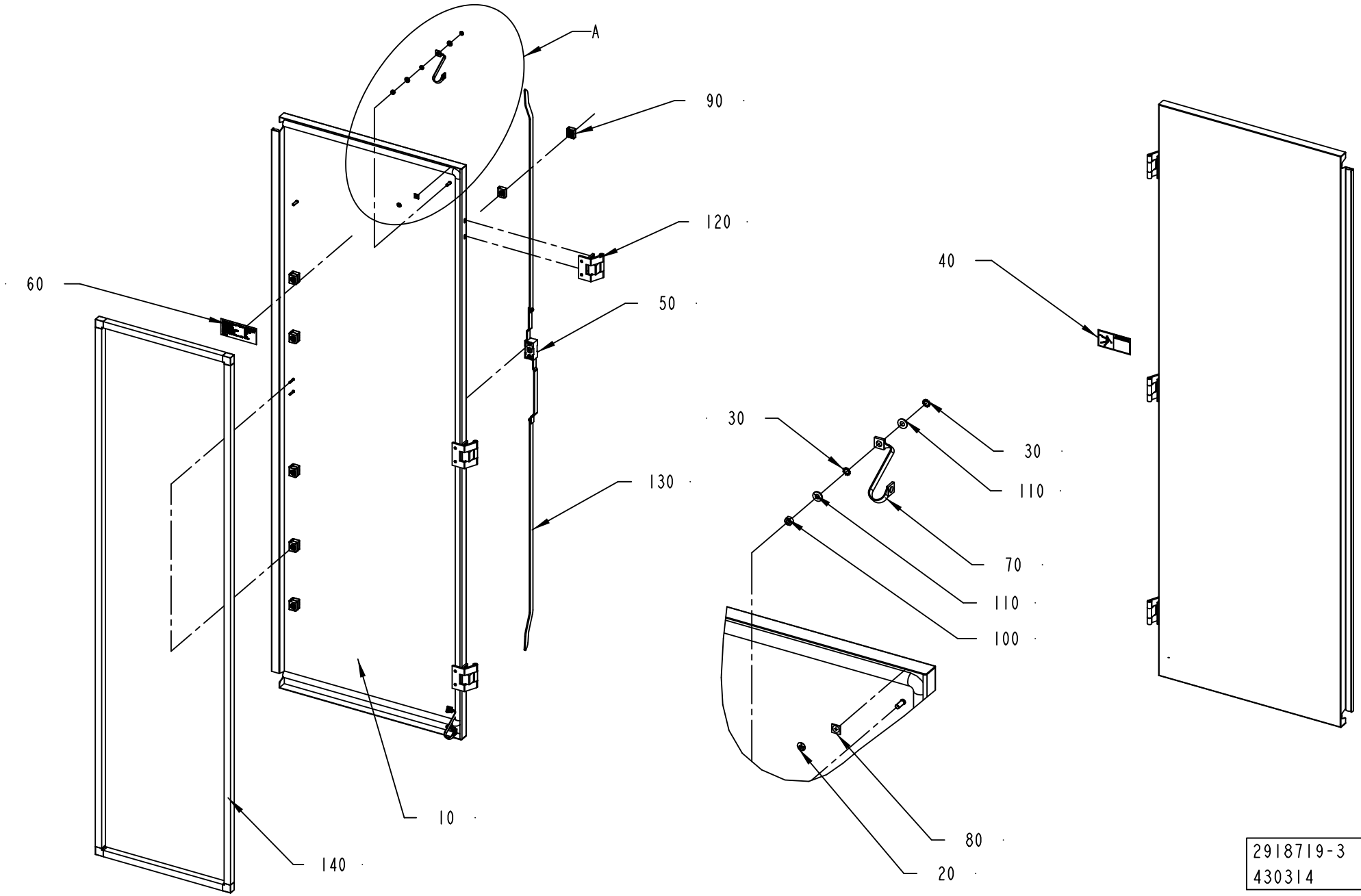
A
90
120
60
50
130
10
140
40
30
30
110
70
110
100
80
20
2918719-3
430314

ECM: 442639 - 20100326
Group number: 2918719-0200
Assembly Drawing: 2918719-3_1_AA

This list covers pages from 8-178 to 8-181

Pos	Part No	UN	Qty	Description	Page No
CE (See drawing on page: 8-178)					
040	359705-0015		1	WARNING SIGN ISO, RISK OF ELECTRIC SHOCK	
UL, CSA (See drawing on page: 8-180)					
040	359715-0100		1	WARNING SIGN ANSI (H), ELECTRIC SHOCK	
Common Parts					
010	2986650-0000		1	DOOR	
020	2608177-0000		2	SIGN	
030	90062-0022		4	LOCK WASHER D=6,4/11	
050	90237-0153		1	LOCK HOUSING, 1121-U26-0B	
060	90459-7229		1	IDENTIF. OF SINGLE CONDUCTORS, TEMPLATE	
070	90600-2904		2	EARTH BRAID, 250/16/8,5	
080	90194-0152		2	SIGN, EARTH	
090	90600-6028		6	GUIDE FOR PLATE 3X14MM, 1121-U71-N	
100	312605-0316		2	HEXAGON NUT, M6M M6 A280	
110	315105-0156		4	WASHER BRB 6,7X14 RFR	
120	2986583-0000		3	HINGE	
130	3035764-0000		2	BRACKET	
140	3035765-0000		1	REINFORCEMENT	

Pos	Part No	UN	Qty	Description	Page No

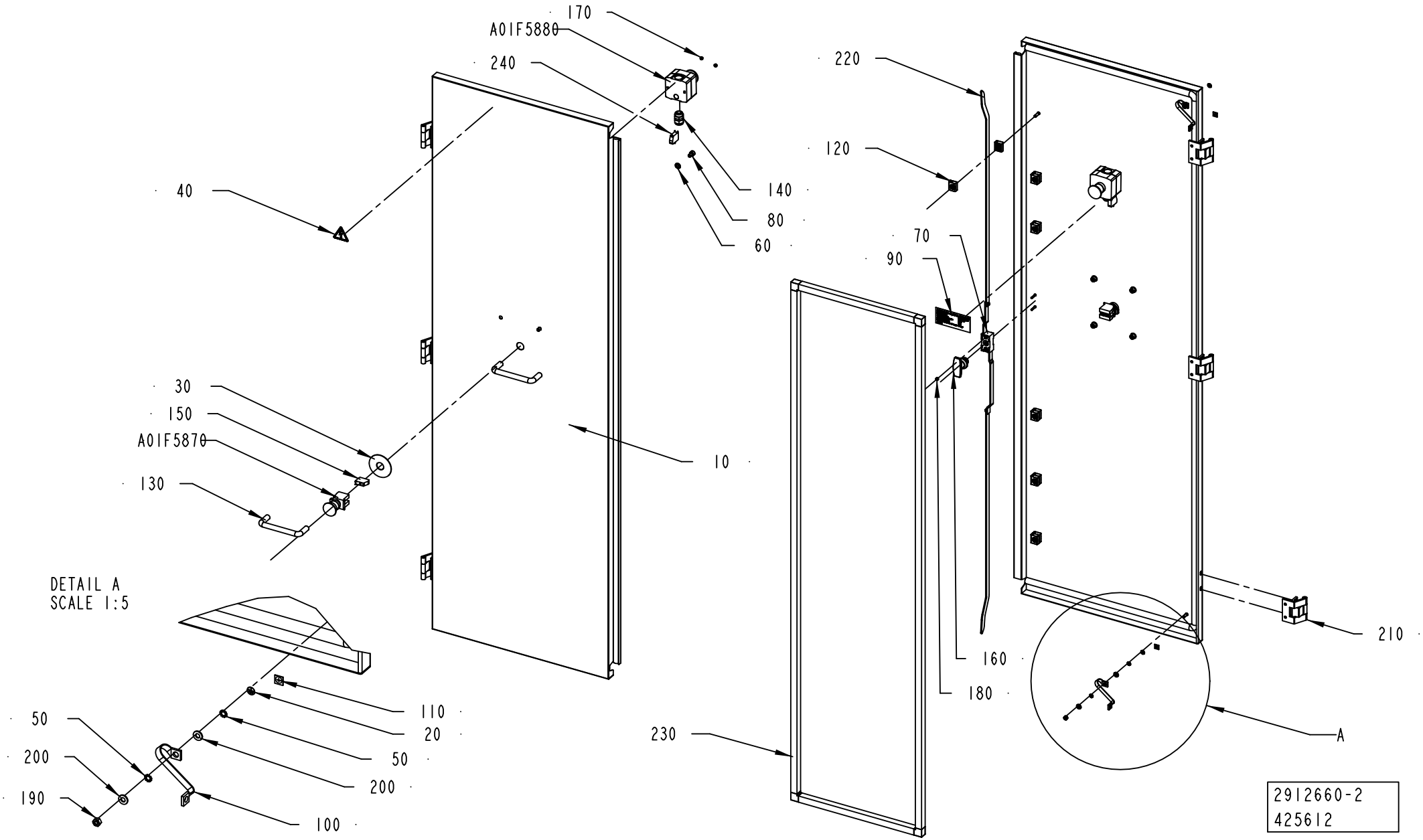
170
A01F5880
240
40
140
80
60
220
120
70
90
30
150
A01F5870
130
10
DETAIL A
SCALE 1:5
110
20
50
200
100
50
200
190
230
160
180
210
A
2912660-2
425612

ECM: 442637 - 20100326
Group number: 2912660-0200
Assembly Drawing: 2912660-2_1_AB

This list covers pages from 8-182 to 8-185

Pos	Part No	UN	Qty	Description	Page No
CE (See drawing on page: 8-182)					
040	359705-0015		1	WARNING SIGN ISO, RISK OF ELECTRIC SHOCK	
UL, CSA (See drawing on page: 8-184)					
040	359715-0100		1	WARNING SIGN ANSI (H), ELECTRIC SHOCK	
Common Parts					
010	2986649-0000		1	DOOR	
020	2608177-0000		2	SIGN	
030	486826-0001		1	SIGN "EMERGENCY STOP"	
050	90062-0022		4	LOCK WASHER D=6,4/11	
060	315105-0165		4	WASHER BRB 8,4X16 RFR	
070	90237-0153		1	LOCK HOUSING, 1121-U26-0B	
080	312115-0447		4	SCREW ISO4762 M8X12 A4 80	
090	90459-7229		1	IDENTIF. OF SINGLE CONDUCTORS, TEMPLATE	
100	90600-2904		2	EARTH BRAID, 250/16/8,5	
110	90194-0152		2	SIGN, EARTH	
120	90600-6028		6	GUIDE FOR PLATE 3X14MM, 1121-U71-N	
130	90017-0016		2	HANDLE, NO. 14.4012.02.120	
140	352103-0108		1	CABLE GLAND, ST 13,5 , PR20,4/PG13,5	
150	90459-1917		1	CONTACT BLOCK ZBE-102 NC	
160	90600-6029		1	T-HANDLE, 1000-U775	
170	312607-0312		2	HEXAGON NUT, EN 24032 M6M M4 A480	
180	312605-0312		2	HEXAGON NUT, M6M M4 A280	
190	312605-0316		2	HEXAGON NUT, M6M M6 A280	
200	315105-0156		4	WASHER BRB 6,7X14 RFR	
210	2986583-0000		3	HINGE	
220	3035764-0000		2	BRACKET	
230	3035765-0000		1	REINFORCEMENT	
240	90600-1949		1	CONTACT BLOCK 1NC, ZEN L1121	
A01F5870	90458-1651		1	EMERGENCY STOP, ZB4-BS-844 ZB4-BZ-104	
A01F5880	90459-1130		1	EM. STOP XAL-K178F	

Pos	Part No	UN	Qty	Description	Page No

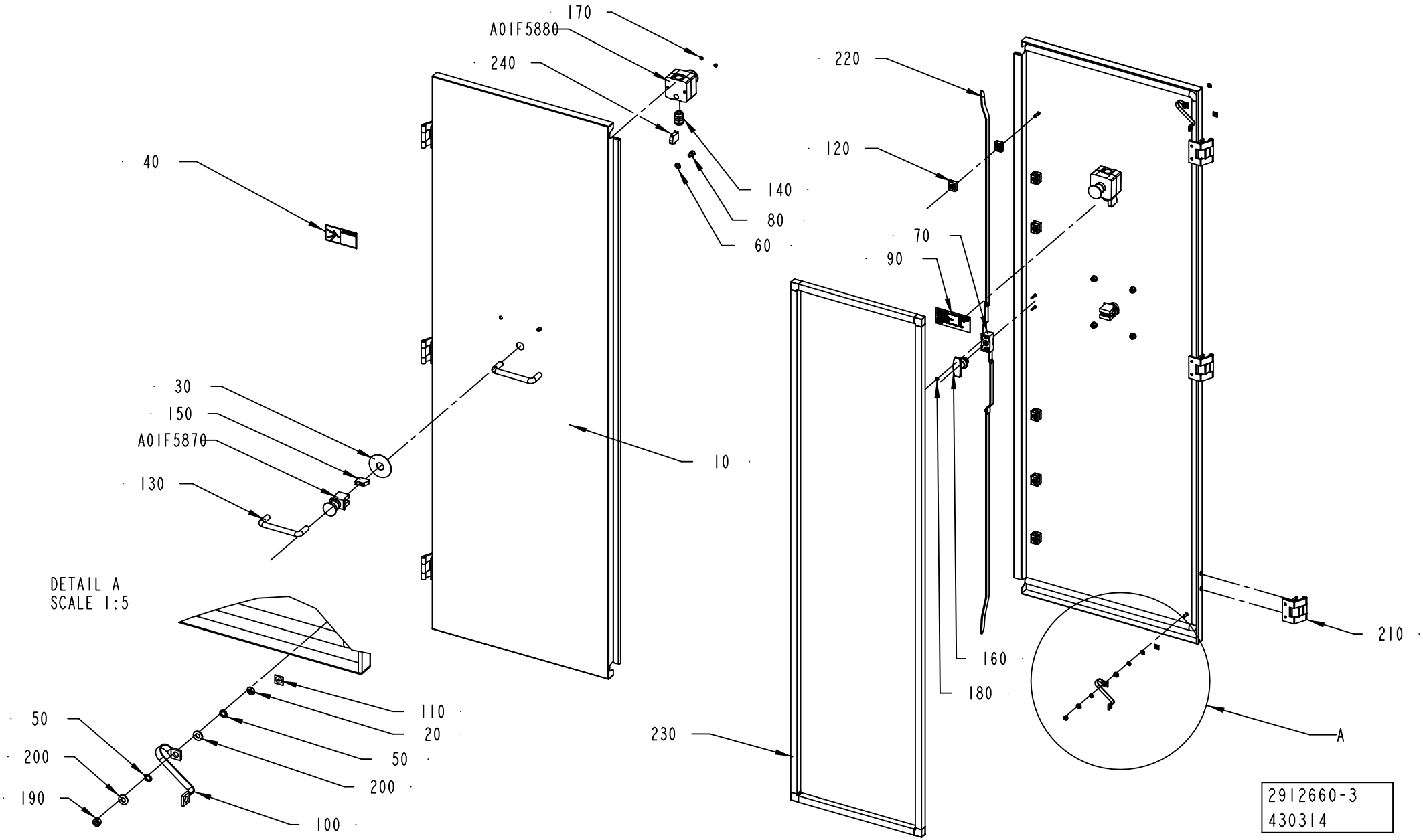
170
A01F5880
240
40
140
80
60
220
120
70
90
30
150
A01F5870
130
10
DETAIL A
SCALE 1:5
110
20
50
200
100
50
200
190
230
160
180
210
A
2912660-3
430314

ECM: 442637 - 20100326
Group number: 2912660-0200
Assembly Drawing: 2912660-3_1_AA

This list covers pages from 8-182 to 8-185

Pos	Part No	UN	Qty	Description	Page No
CE (See drawing on page: 8-182)					
040	359705-0015		1	WARNING SIGN ISO, RISK OF ELECTRIC SHOCK	
UL, CSA (See drawing on page: 8-184)					
040	359715-0100		1	WARNING SIGN ANSI (H), ELECTRIC SHOCK	
Common Parts					
010	2986649-0000		1	DOOR	
020	2608177-0000		2	SIGN	
030	486826-0001		1	SIGN "EMERGENCY STOP"	
050	90062-0022		4	LOCK WASHER D=6,4/11	
060	315105-0165		4	WASHER BRB 8,4X16 RFR	
070	90237-0153		1	LOCK HOUSING, 1121-U26-0B	
080	312115-0447		4	SCREW ISO4762 M8X12 A4 80	
090	90459-7229		1	IDENTIF. OF SINGLE CONDUCTORS, TEMPLATE	
100	90600-2904		2	EARTH BRAID, 250/16/8,5	
110	90194-0152		2	SIGN, EARTH	
120	90600-6028		6	GUIDE FOR PLATE 3X14MM, 1121-U71-N	
130	90017-0016		2	HANDLE, NO. 14.4012.02.120	
140	352103-0108		1	CABLE GLAND, ST 13,5 , PR20,4/PG13,5	
150	90459-1917		1	CONTACT BLOCK ZBE-102 NC	
160	90600-6029		1	T-HANDLE, 1000-U775	
170	312607-0312		2	HEXAGON NUT, EN 24032 M6M M4 A480	
180	312605-0312		2	HEXAGON NUT, M6M M4 A280	
190	312605-0316		2	HEXAGON NUT, M6M M6 A280	
200	315105-0156		4	WASHER BRB 6,7X14 RFR	
210	2986583-0000		3	HINGE	
220	3035764-0000		2	BRACKET	
230	3035765-0000		1	REINFORCEMENT	
240	90600-1949		1	CONTACT BLOCK 1NC, ZEN L1121	
A01F5870	90458-1651		1	EMERGENCY STOP, ZB4-BS-844 ZB4-BZ-104	
A01F5880	90459-1130		1	EM. STOP XAL-K178F	

Pos	Part No	UN	Qty	Description	Page No

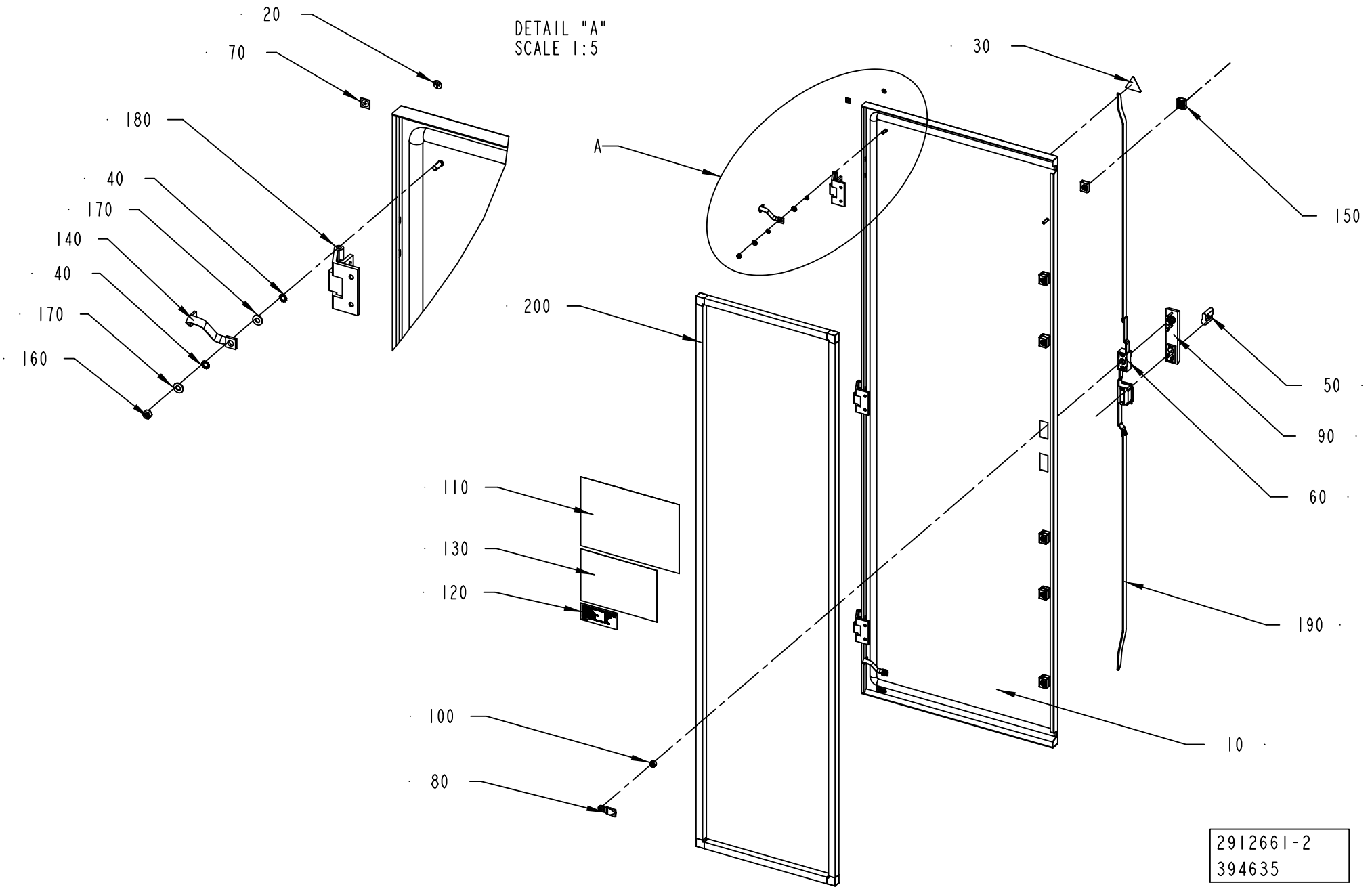
20
70
180
40
170
140
40
170
160
DETAIL "A"
SCALE 1:5
30
A
150
200
50
90
60
110
130
120
190
100
10
80
2912661-2
394635

ECM: 442638 - 20100326
Group number: 2912661-0200
Assembly Drawing: 2912661-2_1_AA

This list covers pages from 8-186 to 8-189

Pos	Part No	UN	Qty	Description	Page No
CE (See drawing on page: 8-186)					
030	359705-0015		1	WARNING SIGN ISO, RISK OF ELECTRIC SHOCK	
UL, CSA (See drawing on page: 8-188)					
030	359715-0100		1	WARNING SIGN ANSI (H), ELECTRIC SHOCK	
Common Parts					
010	2986651-0000		1	DOOR	
020	2608177-0000		2	SIGN	
040	90062-0022		4	LOCK WASHER D=6,4/11	
050	90237-0129		1	LOCK CYLINDER, 1109-U6	
060	90237-0153		1	LOCK HOUSING, 1121-U26-0B	
070	90194-0152		2	SIGN, EARTH	
080	90237-0156		1	LOCK BOLT, 1000-16	
090	90237-0176		1	TURNING HANDLE, 1125-U190-A	
100	90237-0214		1	LOCK ADAPTER, 1121-U40	
110	2927025-0000		1	FUSE PANEL LABEL	
120	90459-7229		1	IDENTIF. OF SINGLE CONDUCTORS, TEMPLATE	
130	90600-2068		1	DELIVERED DESIGN SIGN, 90600-2068	
140	90600-2904		2	EARTH BRAID, 250/16/8,5	
150	90600-6028		6	GUIDE FOR PLATE 3X14MM, 1121-U71-N	
160	312605-0316		2	HEXAGON NUT, M6M M6 A280	
170	315105-0156		4	WASHER BRB 6,7X14 RFR	
180	2986583-0000		3	HINGE	
190	3035764-0000		2	BRACKET	
200	3035765-0000		1	REINFORCEMENT	

Pos	Part No	UN	Qty	Description	Page No

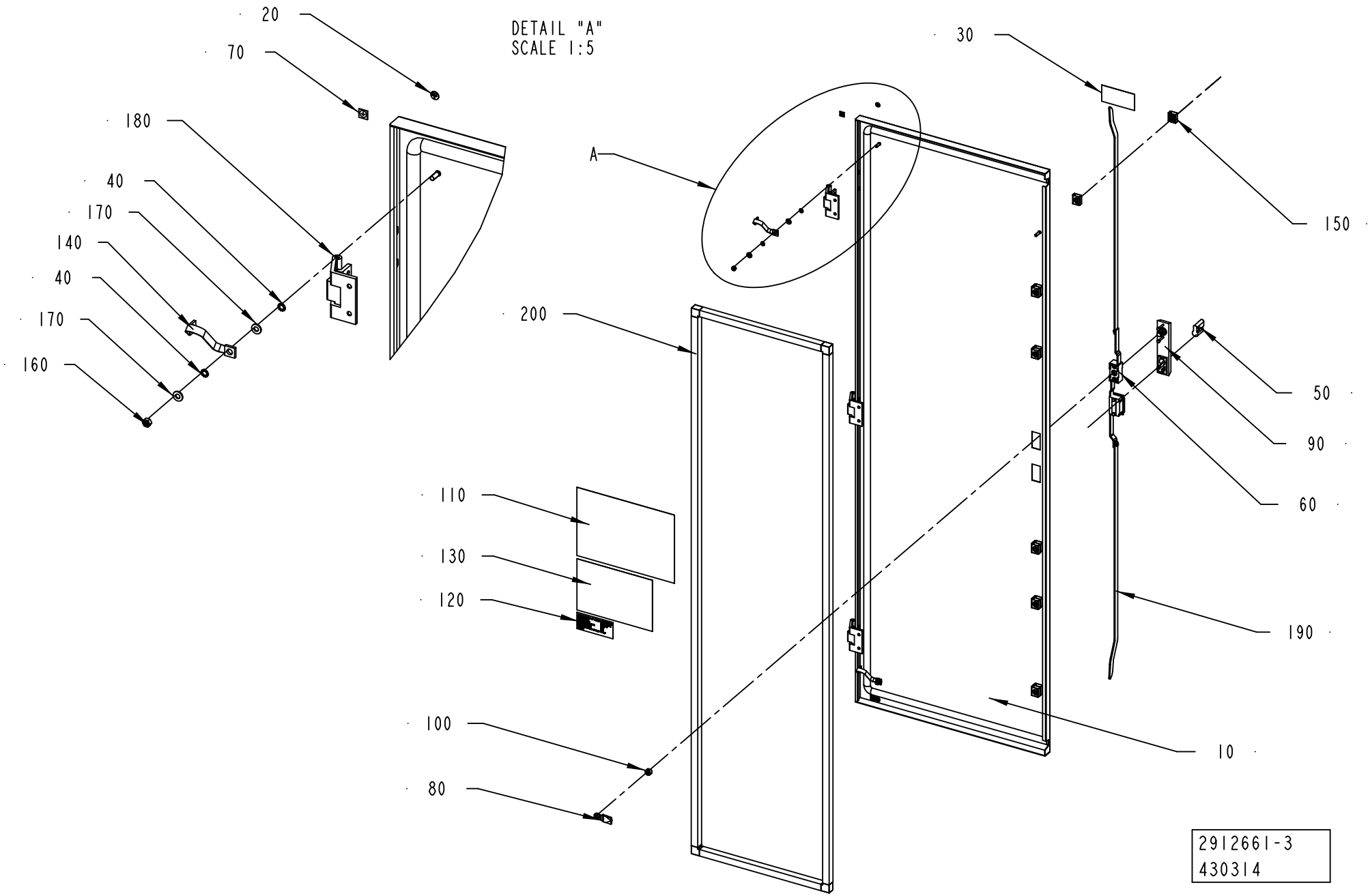
20
70
180
40
170
140
40
170
160
DETAIL "A"
SCALE 1:5
A
30
150
200
50
90
60
110
130
120
190
100
10
80
2912661-3
430314

ECM: 442638 - 20100326
Group number: 2912661-0200
Assembly Drawing: 2912661-3_1_AA

This list covers pages from 8-186 to 8-189

Pos	Part No	UN	Qty	Description	Page No
CE (See drawing on page: 8-186)					
030	359705-0015		1	WARNING SIGN ISO, RISK OF ELECTRIC SHOCK	
UL, CSA (See drawing on page: 8-188)					
030	359715-0100		1	WARNING SIGN ANSI (H), ELECTRIC SHOCK	
Common Parts					
010	2986651-0000		1	DOOR	
020	2608177-0000		2	SIGN	
040	90062-0022		4	LOCK WASHER D=6,4/11	
050	90237-0129		1	LOCK CYLINDER, 1109-U6	
060	90237-0153		1	LOCK HOUSING, 1121-U26-0B	
070	90194-0152		2	SIGN, EARTH	
080	90237-0156		1	LOCK BOLT, 1000-16	
090	90237-0176		1	TURNING HANDLE, 1125-U190-A	
100	90237-0214		1	LOCK ADAPTER, 1121-U40	
110	2927025-0000		1	FUSE PANEL LABEL	
120	90459-7229		1	IDENTIF. OF SINGLE CONDUCTORS, TEMPLATE	
130	90600-2068		1	DELIVERED DESIGN SIGN, 90600-2068	
140	90600-2904		2	EARTH BRAID, 250/16/8,5	
150	90600-6028		6	GUIDE FOR PLATE 3X14MM, 1121-U71-N	
160	312605-0316		2	HEXAGON NUT, M6M M6 A280	
170	315105-0156		4	WASHER BRB 6,7X14 RFR	
180	2986583-0000		3	HINGE	
190	3035764-0000		2	BRACKET	
200	3035765-0000		1	REINFORCEMENT	

Pos	Part No	UN	Qty	Description	Page No

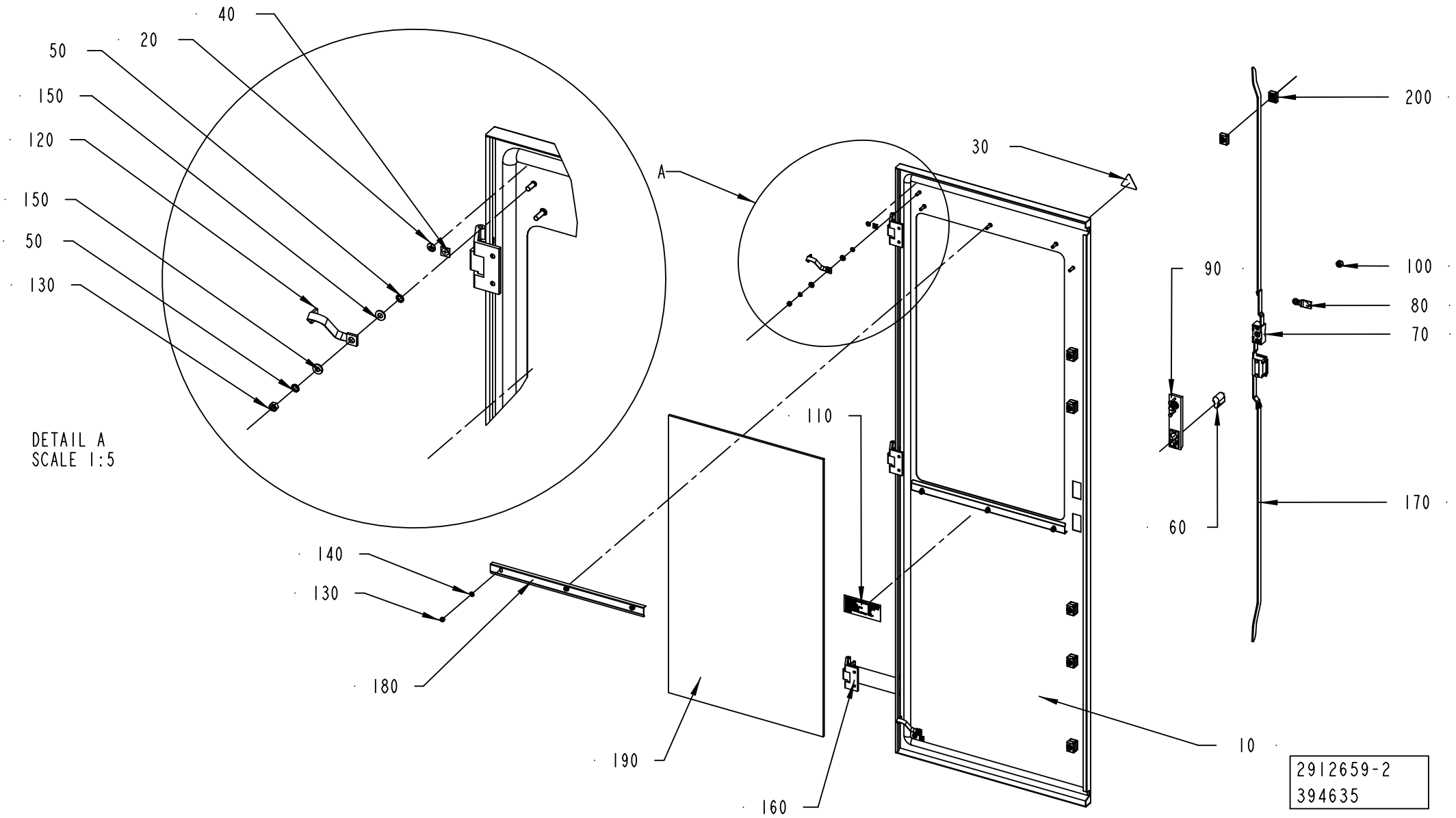
40
20
50
150
120
150
50
130
DETAIL A
SCALE 1:5
A
30
200
90
100
80
70
110
170
60
140
130
180
190
160
10
2912659-2
394635

ECM: 442636 - 20100326
Group number: 2912659-0200
Assembly Drawing: 2912659-2_1_AA

This list covers pages from 8-190 to 8-193

Pos	Part No	UN	Qty	Description	Page No
CE (See drawing on page: 8-190)					
030	359705-0015		1	WARNING SIGN ISO, RISK OF ELECTRIC SHOCK	
UL, CSA (See drawing on page: 8-192)					
030	359715-0100		1	WARNING SIGN ANSI (H), ELECTRIC SHOCK	
Common Parts					
010	2986648-0000		1	DOOR	
020	2608177-0000		2	SIGN	
040	90194-0152		2	SIGN, EARTH	
050	90062-0022		4	LOCK WASHER D=6,4/11	
060	90237-0129		1	LOCK CYLINDER, 1109-U6	
070	90237-0153		1	LOCK HOUSING, 1121-U26-0B	
080	90237-0156		1	LOCK BOLT, 1000-16	
090	90237-0176		1	TURNING HANDLE, 1125-U190-A	
100	90237-0214		1	LOCK ADAPTER, 1121-U40	
110	90459-7229		1	IDENTIF. OF SINGLE CONDUCTORS, TEMPLATE	
120	90600-2904		2	EARTH BRAID, 250/16/8,5	
130	312605-0316		8	HEXAGON NUT, M6M M6 A280	
140	315105-0153		6	WASHER BRB 6,4X12 RFR	
150	315105-0156		4	WASHER BRB 6,7X14 RFR	
160	2986583-0000		3	HINGE	
170	3035764-0000		2	BRACKET	
180	3035762-0000		2	BRACKET	
190	3035763-0000		1	GLASS PANE	
200	90600-6028		6	GUIDE FOR PLATE 3X14MM, 1121-U71-N	

Pos	Part No	UN	Qty	Description	Page No

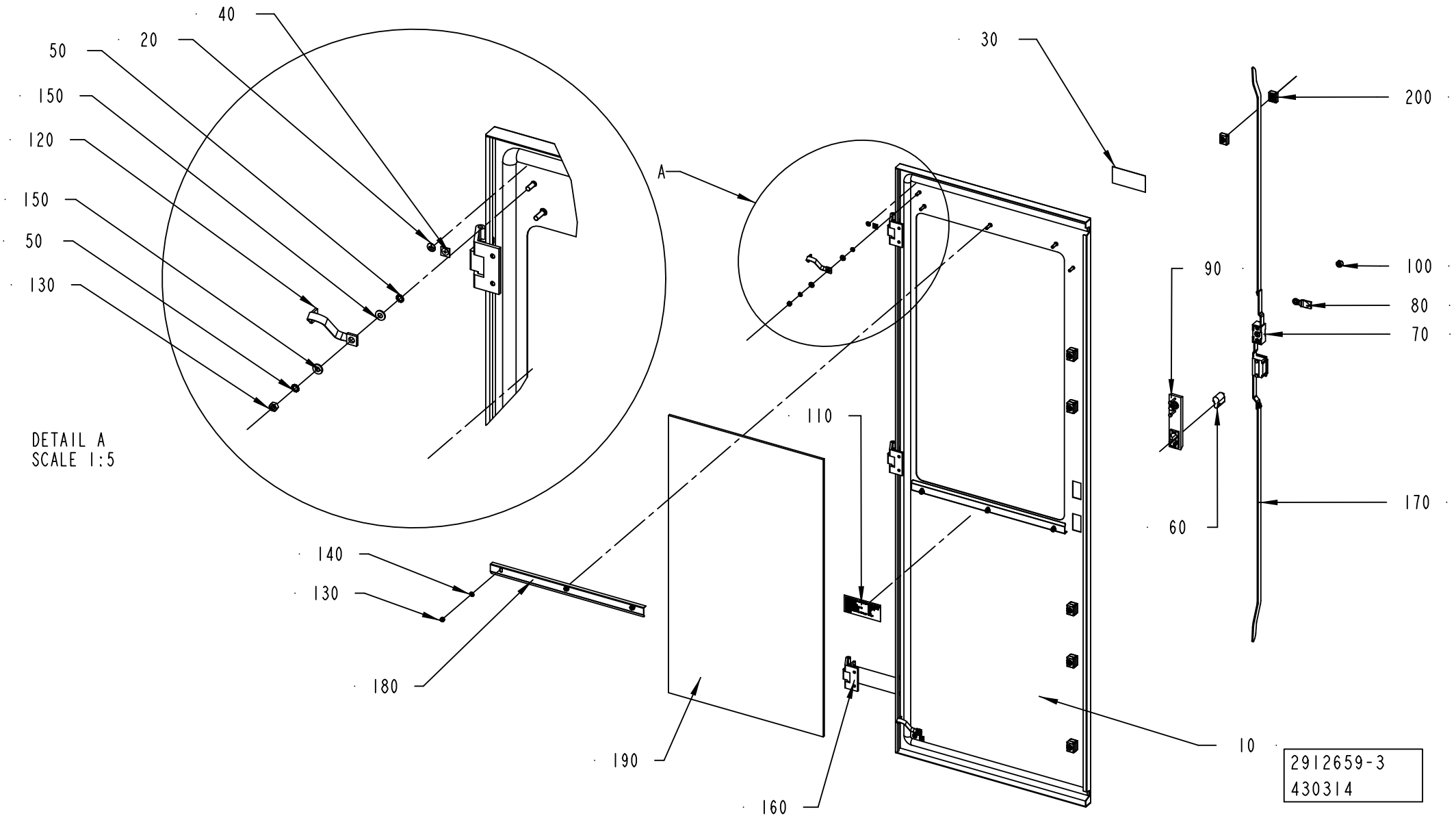
40
20
50
150
120
150
50
130
DETAIL A
SCALE 1:5
A
30
200
90
100
80
70
110
170
60
140
130
180
190
160
10
2912659-3
430314

ECM: 442636 - 20100326
Group number: 2912659-0200
Assembly Drawing: 2912659-3_1_AA

This list covers pages from 8-190 to 8-193

Pos	Part No	UN	Qty	Description	Page No
CE (See drawing on page: 8-190)					
030	359705-0015		1	WARNING SIGN ISO, RISK OF ELECTRIC SHOCK	
UL, CSA (See drawing on page: 8-192)					
030	359715-0100		1	WARNING SIGN ANSI (H), ELECTRIC SHOCK	
Common Parts					
010	2986648-0000		1	DOOR	
020	2608177-0000		2	SIGN	
040	90194-0152		2	SIGN, EARTH	
050	90062-0022		4	LOCK WASHER D=6,4/11	
060	90237-0129		1	LOCK CYLINDER, 1109-U6	
070	90237-0153		1	LOCK HOUSING, 1121-U26-0B	
080	90237-0156		1	LOCK BOLT, 1000-16	
090	90237-0176		1	TURNING HANDLE, 1125-U190-A	
100	90237-0214		1	LOCK ADAPTER, 1121-U40	
110	90459-7229		1	IDENTIF. OF SINGLE CONDUCTORS, TEMPLATE	
120	90600-2904		2	EARTH BRAID, 250/16/8,5	
130	312605-0316		8	HEXAGON NUT, M6M M6 A280	
140	315105-0153		6	WASHER BRB 6,4X12 RFR	
150	315105-0156		4	WASHER BRB 6,7X14 RFR	
160	2986583-0000		3	HINGE	
170	3035764-0000		2	BRACKET	
180	3035762-0000		2	BRACKET	
190	3035763-0000		1	GLASS PANE	
200	90600-6028		6	GUIDE FOR PLATE 3X14MM, 1121-U71-N	

Pos	Part No	UN	Qty	Description	Page No

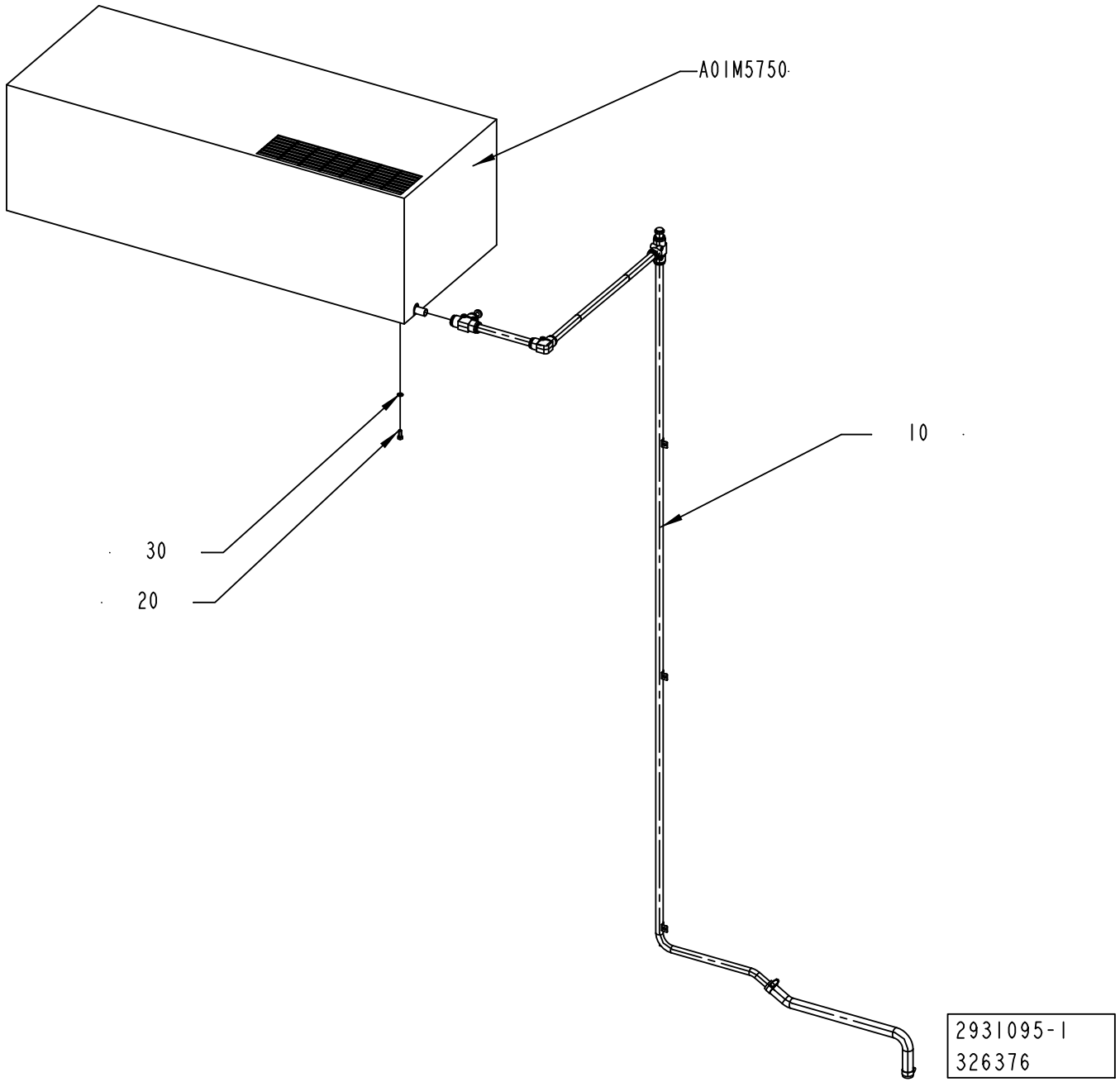
A01M5750
10
30
20
2931095-1
326376

ECM: 444404 - 20100326
Group number: 2931095-0100
Assembly Drawing: 2931095-1_1_AA

Pos	Part No	UN	Qty	Description	Page No
CE					
A01M5750	90600-3761		1	COOLING UNIT, KB40A62675.00	
	90600-5074		*1*	*FAN, RB2C-250/073 K097 I-1849*	
	90600-5073		*1*	*GRID, A11519AA*	
	90600-5072		*1*	*FILTER, A11518AA*	
	90600-5071		*1*	*GASKET, A11530AA*	
	90600-0673		*1*	*THERMOSTAT, KELVIN TMI0000218*	
	90600-0672		*1*	*FAN, VBA0001499 , 50HZ_3UF , 60HZ_2UF*	
UL, CSA					
A01M5750	3097062-0000		1	COOLING UNIT	
	3097063-0000		*2*	*FAN*	
	90600-5073		*1*	*GRID, A11519AA*	
	90600-5072		*1*	*FILTER, A11518AA*	
	90600-5071		*1*	*GASKET, A11530AA*	
	90600-0673		*1*	*THERMOSTAT, KELVIN TMI0000218*	
Common Parts					
010	2924037-0100		1	COOLING PIPE	**8-197**
020	312105-0368		6	SCREW, M6S ISO 4017 M6X16 A4 80	
030	315105-0153		6	WASHER BRB 6,4X12 RFR	

Pos	Part No	UN	Qty	Description	Page No

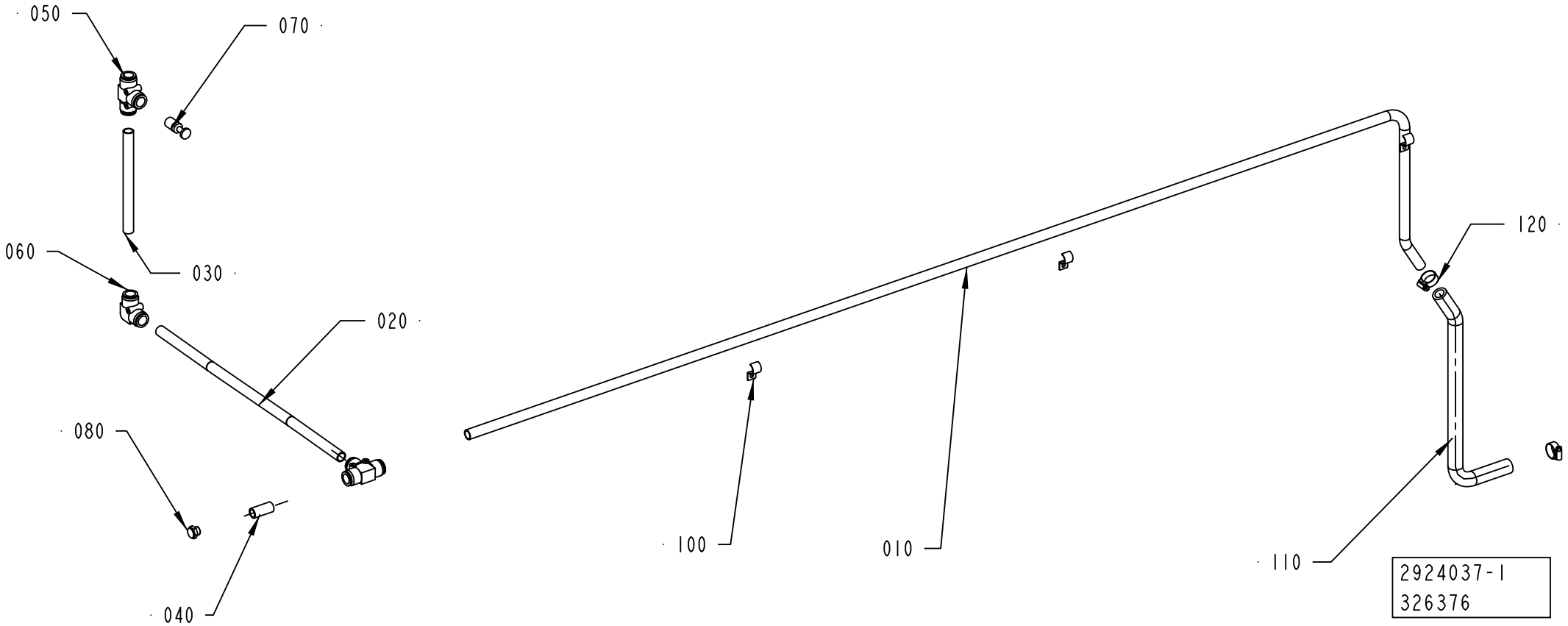
050
070
060
030
020
080
040
100
010
120
110
2924037-1
326376

ECM: 328767 - 20071220
Group number: 2924037-0100
Assembly Drawing: 2924037-1_1_AA

Pos	Part No	UN	Qty	Description	Page No
-					
010	2924040-0000		1	HOSE	
020	2924039-0000		2	HOSE	
030	2924038-0000		1	HOSE	
040	2800104-0000		1	HOSE	
050	90459-2555		2	PUSH-IN T-FITTING QST-16	
060	90459-2553		1	PUSH-IN L-FITTING QSL 16	
070	90459-2557		1	BLIND PLUG 16 MM	
080	90257-0001		1	FILTER PLUG ART.NO.8145-00-140 TYPE F14	
100	90074-0004		3	CABLE CLIPS, D=16 MM	
110	315400-0014	MM	800	TUBE PUN-H-16X2,5-NT	
120	342991-0103		2	HOSE CLIP,WORM DRIVE TYPE (15)-24	

Pos	Part No	UN	Qty	Description	Page No

Tetra Pak

SPC
Spare Parts Catalogue

This page is intentionally left blank.

ECM: 501078 - 20111001
Group number: 641512-0200
Assembly Drawing:

Pos	Part No	UN	Qty	Description	Page No
HI DOMINO					
120	3069594-0100		1	OK PRINTER DOMINO	**9-5**
130	3116339-0100		1	VOLUME BULGE	**9-17**
HI NO DOMINO					
130	3116339-0100		1	VOLUME BULGE	**9-17**
NOHI DOMINO					
120	3069594-0100		1	OK PRINTER DOMINO	**9-5**
Common Parts					
005	3117678-0100		1	INSTALLATION DRAWING	
010	2889625-0100		1	START-UP KIT	**9-19**
020	531345-0200		1	PERSONAL PROTECT. EQ H2O2	**9-31**
030	2906135-0200		1	TEMPLATE	**9-33**
040	90603-3401		1	PAPER TROLLEY, 015-119-002	**9-35**
050	2950404-0000		1	TRANSPORT EQUIPMENT	
060	2894712-0100		1	TOOL	**9-37**
080	2890357-0100		1	ROLLER	**9-39**
100	2876196-0200		1	DIAGRAM	**9-41**
110	3046820-0100		1	SUPPORT	**9-45**

Pos	Part No	UN	Qty	Description	Page No

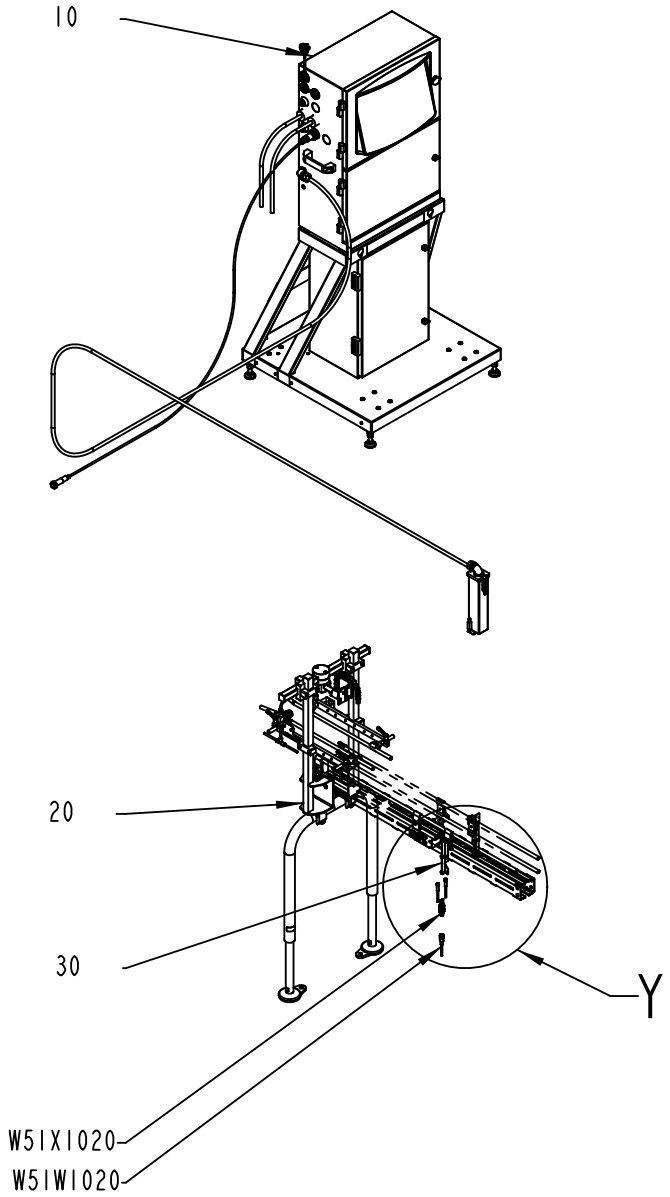

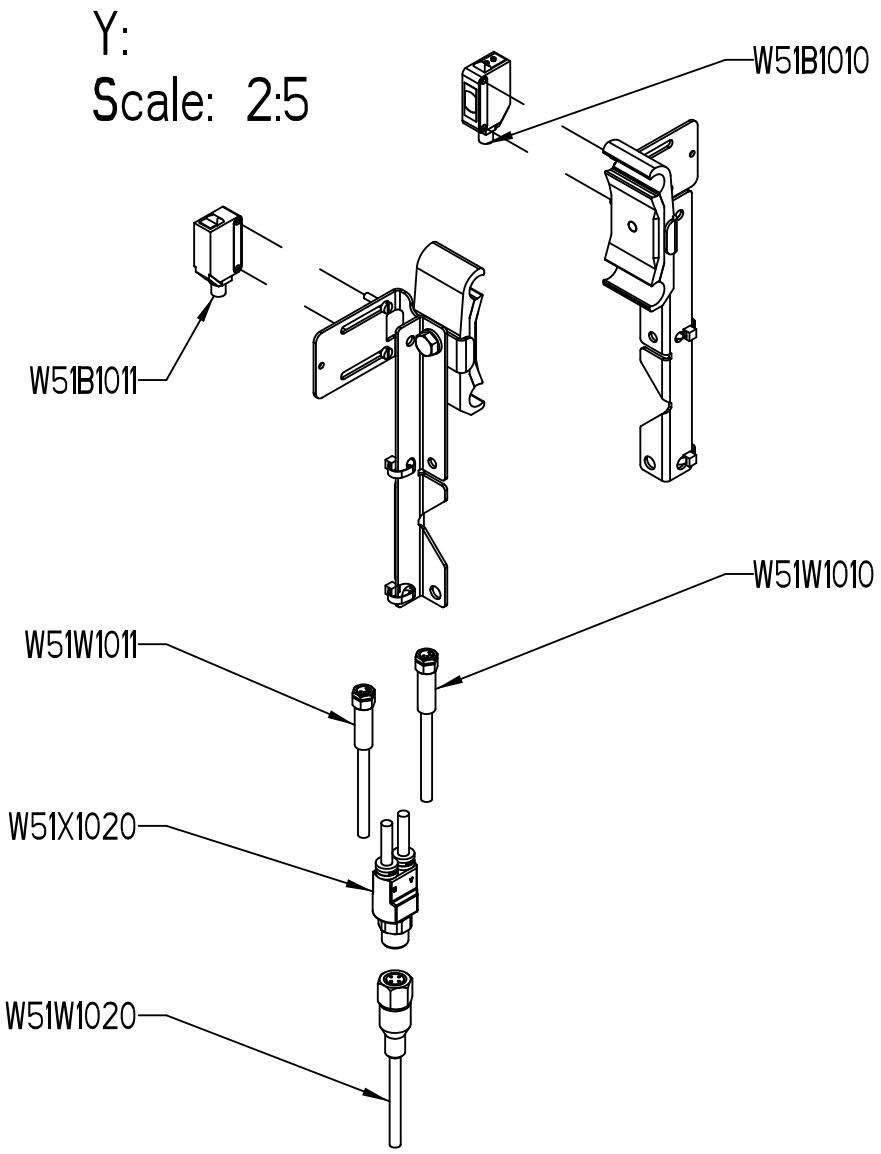

3069594-2
429234

ECM: 431840 - 20100102
Group number: 3069594-0100
Assembly Drawing: 3069594-2_1_AA

Pos	Part No	UN	Qty	Description	Page No
A3/COMPACTFLEX -0200					
030	3078580-0100		1	QUEUE GUARD	**9-7**
W51W1020	351309-0050		1	ACTUATOR/SENSOR CABLE PRKT 4-07/5M	
W51X1020	90459-6586		1	ACT/SENS.Y-CABLE, ASBN 2-PRKMV 4-07/0,6M	
Common Parts					
010	3005198-0100		1	INK JET PRINTER	**9-11**
020	2775770-0201		1	BRACKET	**9-13**

Pos	Part No	UN	Qty	Description	Page No

QUEUE GUARD

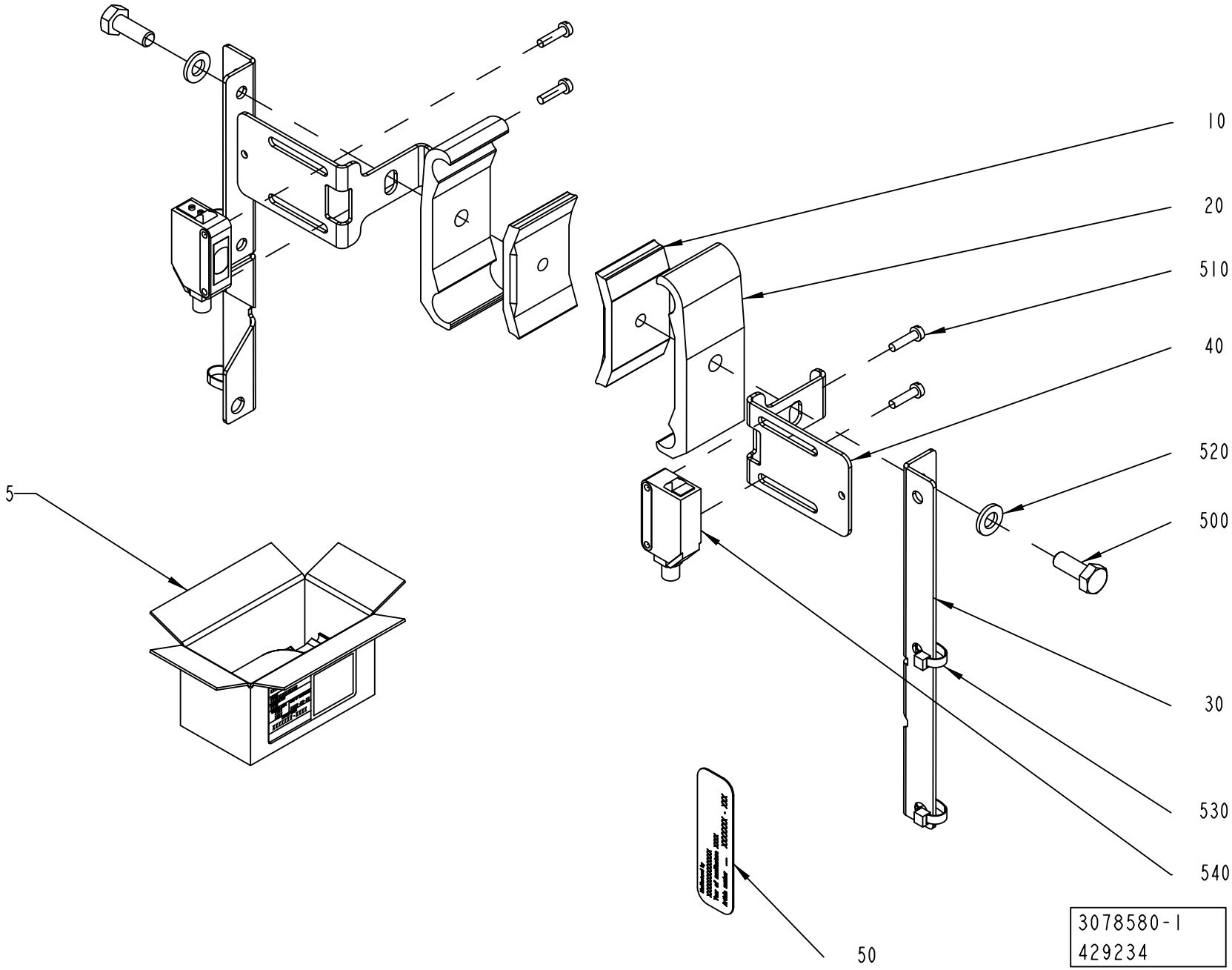

ECM: 432039 - 20100102
Group number: 3078580-0100
Assembly Drawing: 3078580-1_1_AA

Pos	Part No	UN	Qty	Description	Page No
-					
005	2808044-0100		1	PACKING DESCRIPTION	**9-9**
010	1366727-0000		2	CLAMP	
020	1366750-0000		2	HOLDER	
030	2989228-0000		2	CABLE DUCT	
040	3071102-0000		2	BRACKET	
050	1086870-0000		1	SIGN	
500	312105-0368		2	SCREW, M6S ISO 4017 M6X16 A4 80	
510	312121-0226		4	SCREW ISO 1207 M3X12 4.8-5.8 Z.PL.	
520	315105-0153		2	WASHER BRB 6,4X12 RFR	
530	352113-0101		4	CABLE TIE, BLACK 92X2,5 MM	
540	90459-5529		1	PHOTOCELL E3Z-T86A, SENDER+RECIEVER	

Pos	Part No	UN	Qty	Description	Page No

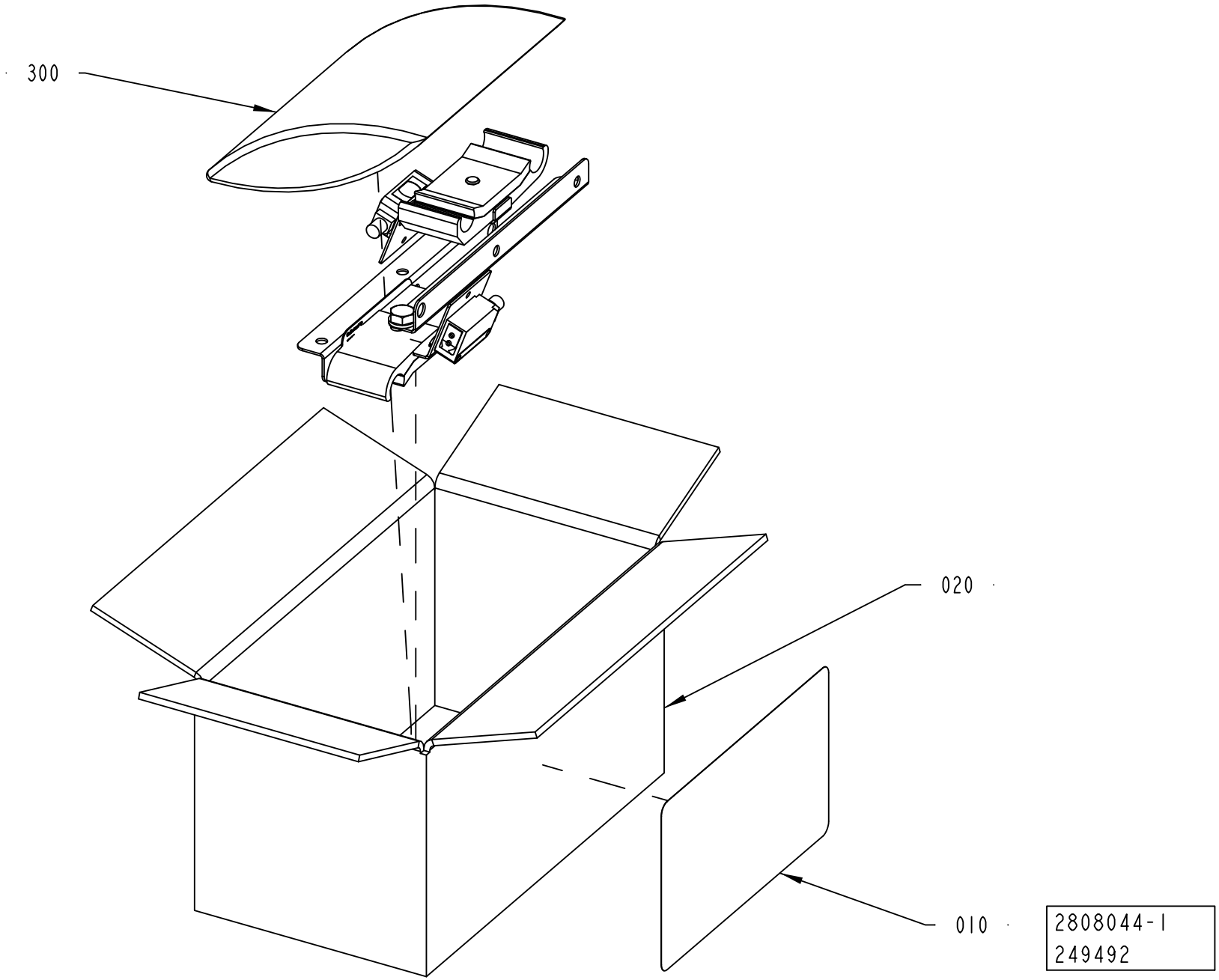
300
020
010
2808044-1
249492

ECM: 270816 - 20060922
Group number: 2808044-0100
Assembly Drawing: 2808044-1_1_AA

Pos	Part No	UN	Qty	Description	Page No
-					
010	1086871-0000		1	LABEL TAPE	
020	1550589-0000		1	CORRUGATED CARDBOARD BOX	
300	90003-0019		1	BAG	

Pos	Part No	UN	Qty	Description	Page No

This page is intentionally left blank.

ECM: 379173 - 20081130
Group number: 3005198-0100
Assembly Drawing:

Pos	Part No	UN	Qty	Description	Page No
PRINTER LANG ARABIC					
	90600-5584		1	INK JET PRINTER A300+ARAB, TP 90600-5584	
PRINTER LANG EUROPEAN					
	90600-5583		1	INK JET PRINTER A300+EUR, TP 90600-5583	
PRINTER LANG GREEK, PRINTER LANG RUSSIAN					
	90600-5587		1	INK JET PRI. A300+GR/RUSS, TP 90600-5587	
PRINTER LANG JAPANESE					
	90600-5586		1	INK JET PRINTER A300+JAPA, TP 90600-5586	
PRINTER LANG TRAD CHINESE					
	90600-5585		1	INK JET PRINTER A300+CHIN, TP 90600-5585	

Pos	Part No	UN	Qty	Description	Page No

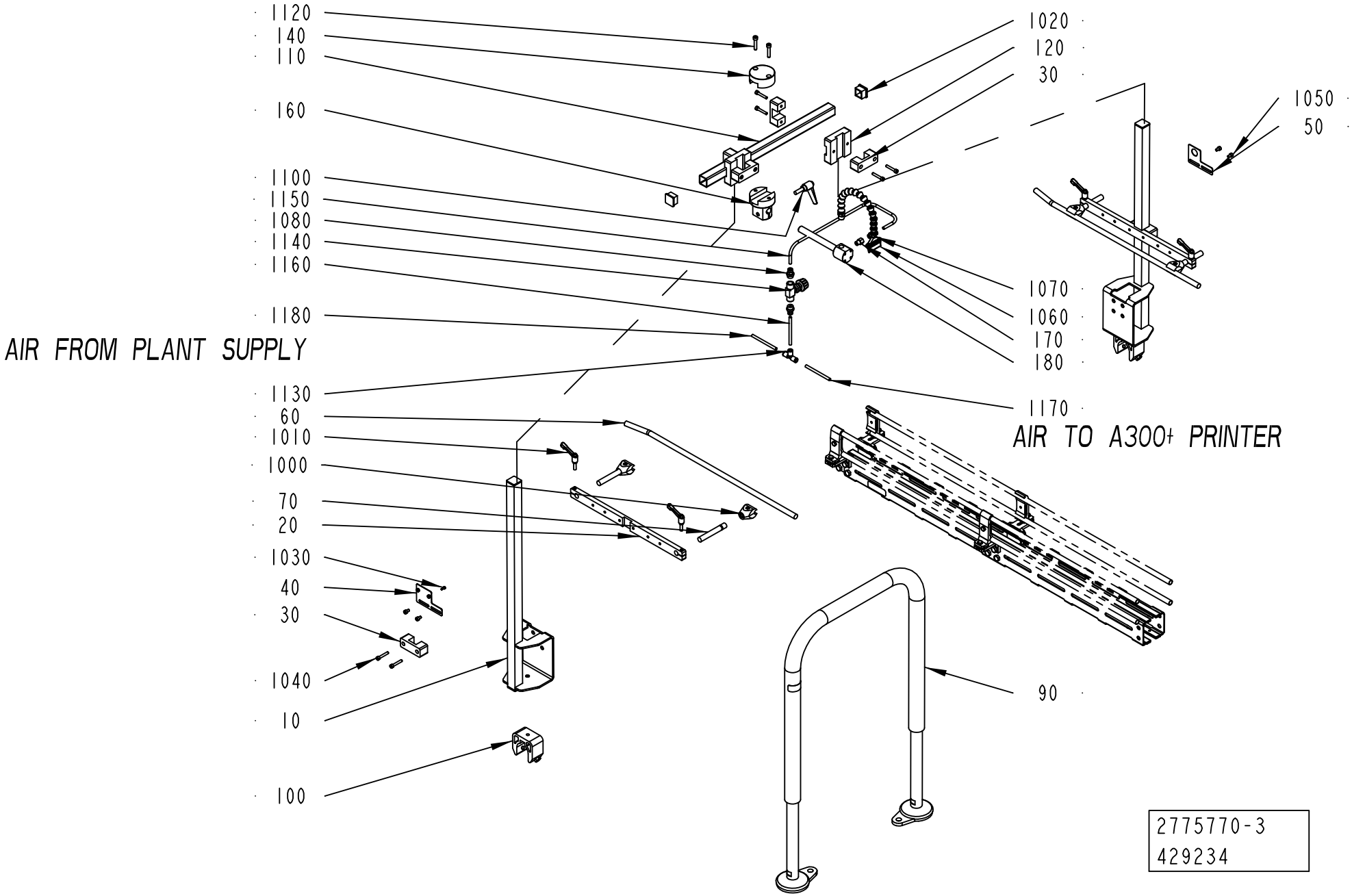
1120
140
110
160
1100
1150
1080
1140
1160
1180
AIR FROM PLANT SUPPLY
1130
60
1010
1000
70
20
1030
40
30
1040
10
100
1020
120
30
1050
50
1070
1060
170
180
1170
AIR TO A300+ PRINTER
90
2775770-3
429234

ECM: 429234 -
Group number: 2775770-0201
Assembly Drawing: 2775770-3_1_AA

Pos	Part No	UN	Qty	Description	Page No
-					
010	2895213-0000		2	BRACKET	
020	2763627-0000		2	BRACKET	
030	2763628-0000		6	BRACKET	
040	2763632-0000		1	PLATE	
050	2763633-0000		1	PLATE	
060	2763629-0000		2	RAILING	
070	2775586-0000		4	BRACKET	
090	2807605-0100		1	LEG,CONVEYOR	**9-15**
100	2807592-0000		2	MULTI BRACKET SINGLE	
110	3004384-0000		1	BEAM	
120	3004387-0000		2	BLOCK	
140	3004385-0000		1	BLOCK	
160	3004388-0000		1	CLAMPING PIECE	
170	3004389-0000		1	REDUCER	
180	3004386-0000		1	SUPPORT	
1000	90068-0312		4	CLAMPING PIECE, T 12 / 12	
1010	90458-2911		4	LOCKING HANDLE, M6/M	
1020	90261-0048		6	SQUARE PLUG GPN 260/Q2525	
1030	312115-0222		2	SCREW ISO4762 M3X8 A4 80	
1040	312115-0335		12	SCREW ISO4762 M5X30 A4 80	
1050	312115-0323		4	SCREW ISO4762 M5X8 A4 80	
1060	90600-8708		1	AIR KNIFE, LL40100	
1070	350001-0006		1	PUSH-IN FITTING QS-F-G1/8-6	
1080	350001-0008		2	PUSH-IN FITTING QS-F-G1/4-6	
1100	90459-2596		1	LOCKING HANDLE, M8X25M	
1120	312115-0374		2	SCREW ISO4762 M6X30 A4 80	
1130	350005-0002		1	PUSH-IN T-FITTING QST-F-6	
1140	90187-0149		1	THROTTLE VALVE, G1/4, G1/4, MALE	
1150	315400-0001	M	1	TUBE PUN-H-6X1-BL	
1160	315400-0001	M	1	TUBE PUN-H-6X1-BL	
1170	315400-0001	M	1	TUBE PUN-H-6X1-BL	
1180	315400-0001	M	1	TUBE PUN-H-6X1-BL	

Pos	Part No	UN	Qty	Description	Page No

Machine Type | Group Description | Used-In | Group Number | Page No

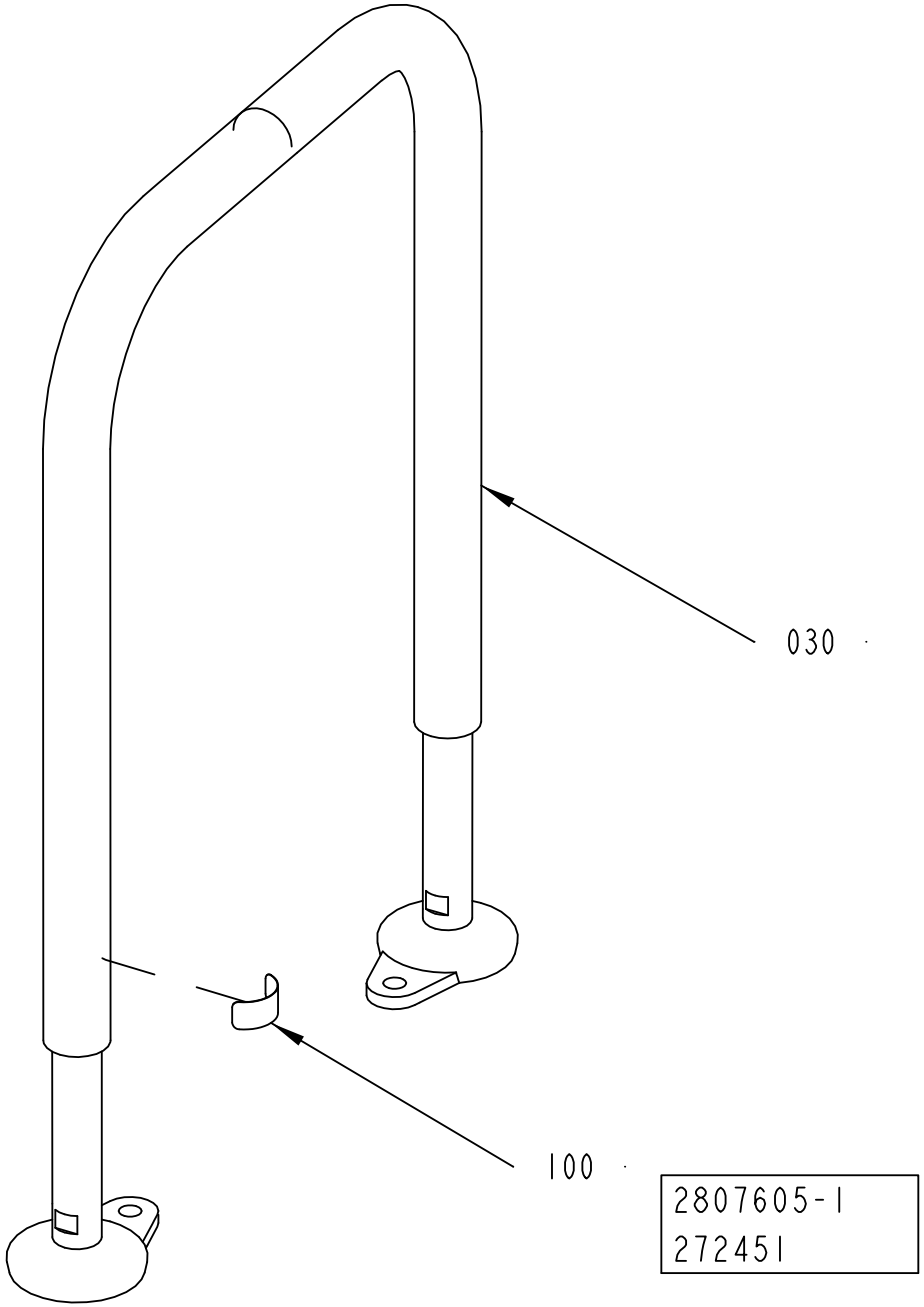
030
100
2807605-1
272451

ECM: 272451 - 20060922
Group number: 2807605-0100
Assembly Drawing: 2807605-1_1_AA

Pos	Part No	UN	Qty	Description	Page No
-					
030	2807615-0000		1	LEG,CONVEYOR	
100	1086870-0000		1	SIGN	

Pos	Part No	UN	Qty	Description	Page No

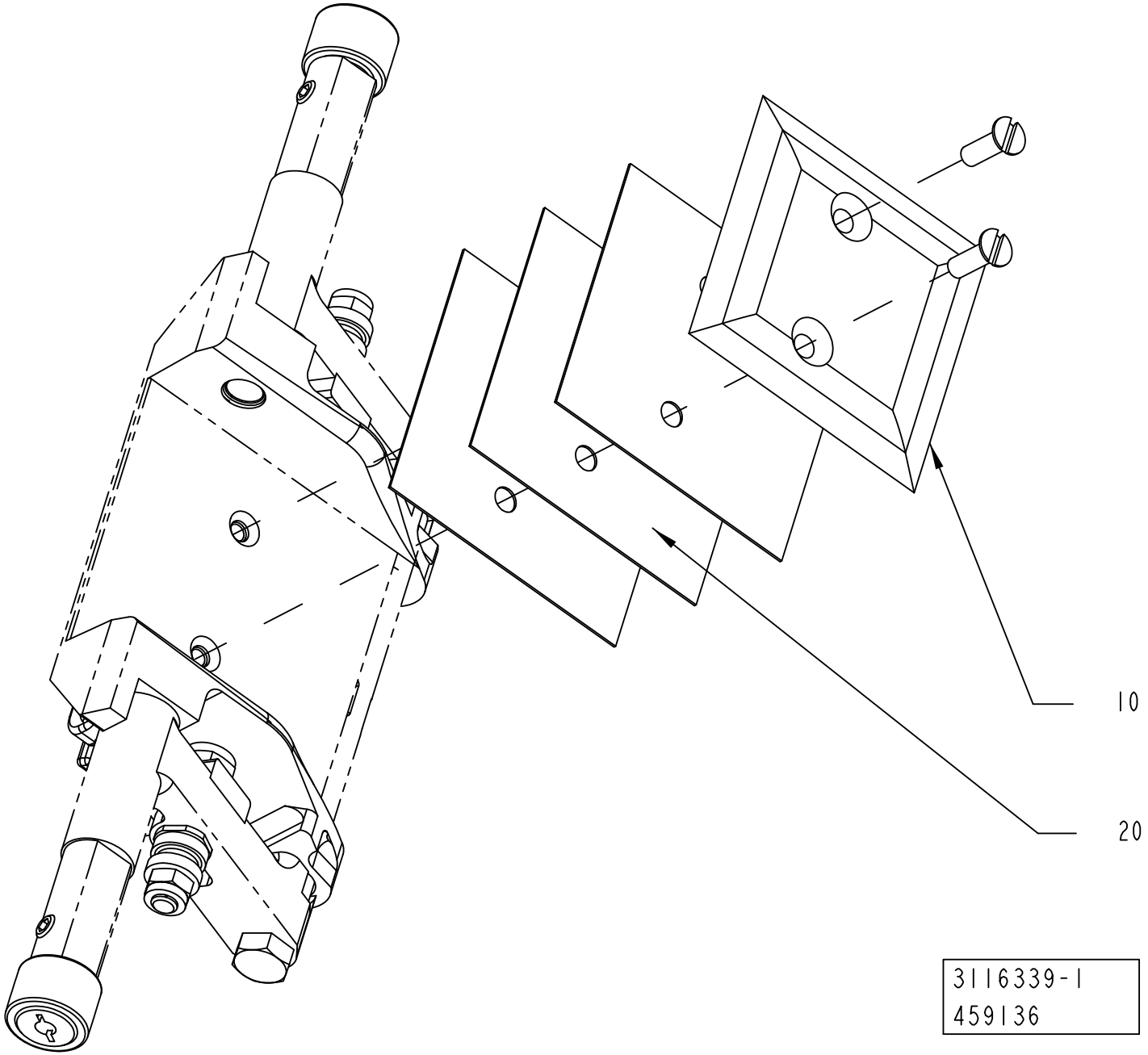
10
20
3116339-1
459136

ECM: 509401 - 20111001
Group number: 3116339-0100
Assembly Drawing: 3116339-1_1_AA

Pos	Part No	UN	Qty	Description	Page No
TBA 0080S					
020	3000073-0000		4	VOLUME BULGE	
090	2950902-0000		8	VOLUME SHIM	
TBA 0100B					
020	979755-0000		4	VOLUME BULGE 100	
090	979754-0000		12	VOLUME SHIM 100	
TBA 0125S					
020	491868-0000		4	VOLUME BULGE	
090	272987-0000		12	VOLUME SHIM	
TBA 0200B					
020	456005-0003		4	VOLUME BULGE	
090	272986-0003		12	VOLUME SHIM	
TBA 0200M					
020	979860-0000		4	VOLUME BULGE	
090	979861-0000		12	VOLUME SHIM	
TBA 0200S					
020	2947787-0000		4	VOLUME BULGE	
090	2947788-0000		12	VOLUME SHIM	
TBA 0250S					
020	3002255-0000		4	VOLUME BULGE	
090	3002257-0000		12	VOLUME SHIM	

Pos	Part No	UN	Qty	Description	Page No

This page is intentionally left blank.

ECM: 481485 - 20110401
Group number: 2889625-0100
Assembly Drawing:

Pos	Part No	UN	Qty	Description	Page No
HVA					
SS10	2945430-0200		1	PRESSURE FLANGE	**9-21**
Common Parts					
010	2889626-0100		1	START-UP KIT	**9-23, 9-25, 9-27**
AS60	90206-0030		1	HEATING ELEMENT 3000W, 220V	
AS50	90601-0406		1	HEATING ELEMENT 400W 240V	
AS40	1498047-0000		1	SEALING BLOCK	
AS30	90600-2632		1	HEATING ELEMENT 800W 240V	
AS20	2844190-0000		1	DOLLY	
AS10	2800215-0000		1	KNIFE	
FF20	2852410-0000		4	SHIM	
FF10	2773828-0000		1	HEATING ELEMENT	
SU90	342850-0304		4	GASKET 35,4X49,1X5,2 1"1/2 FDA, 3-A	
SU80	342850-0305		2	GASKET 47,8X62,6X5,2 MM 2" FDA 3-A	
SU70	90459-4179		2	GASKET 30,5X42X4 MM FDA	
SU60	3092164-0000		2	GASKET	
SU50	3024322-0000		4	GASKET	
SU40	736514-0000		1	SHOCK ABSORBER	
SU30	925998-0000		2	DIAPHRAGM	
SU20	491418-0001		1	O-RING 284X3 FPM	
SU190	90600-2508		1	O-RING 17,3X2,4 MM FDA, 3-A	
SU180	90600-0473		1	INDUCTIVE SWITCH E2A-S08KS01-WP-B1-TP 5M	
SU170	315229-0105		2	SQUARE RING, 48,5X55,5X3,7 MM 2" FDA	
SU160	315229-0104		2	SQUARE RING, 35,8X42,8X3,7 MM 1"1/2 FD	
SU150	315229-0103		2	SQUARE RING, 23,1X30,1X3,7 MM 1" FDA	
SU140	315229-0101		2	SQUARE RING, 10,4X17,4X3,7 MM 1/2" FDA	
SU130	342850-0404		2	GASKET 35,4X49,1X5,2 MM 1"1/2 FDA 3-A	
SU120	315229-0206		4	GASKET 60,2X68,2X3,7 MM 2"1/2	
SU110	315229-0205		4	GASKET 47,5X55,5X3,7 MM 2 INCH	
SU100	315229-0204		4	GASKET 34,8X42,8X3,7 MM 1"1/2	
SU10	90457-0866		1	HEATING ELEMENT 2000W/230V	
SU05	1296877-0100		1	SEAL KIT	**9-29**

Pos	Part No	UN	Qty	Description	Page No

This page is intentionally left blank.

ECM: 460161 - 20100610
Group number: 2945430-0200
Assembly Drawing:

Pos	Part No	UN	Qty	Description	Page No
TBA 0100B, TBA 0125S					
010	2966688-0000		1	PRESSURE FLANGE	
020	2966689-0000		1	PRESSURE FLANGE	
030	2966691-0000		1	PRESSURE FLANGE	
TBA 0160S, TBA 0200S, TPA 0250SQ, TPA 0200SQ					
010	3076856-0000		1	PRESSURE FLANGE	
020	3076858-0000		1	PRESSURE FLANGE	
030	3076859-0000		1	PRESSURE FLANGE	
TBA 0200B, TBA 0200SQ, TBA 0250B, TBA 0330S, TBA 0250SQ					
010	2966681-0000		1	PRESSURE FLANGE	
020	2966682-0000		1	PRESSURE FLANGE	
030	2966683-0000		1	PRESSURE FLANGE	
TBA 0200M, TBA 0250S					
010	3076857-0000		1	PRESSURE FLANGE	
020	3076860-0000		1	PRESSURE FLANGE	
030	3076861-0000		1	PRESSURE FLANGE	
TBA 0284B, TBA 0300S					
010	3058531-0000		1	PRESSURE FLANGE	
020	3089560-0000		1	PRESSURE FLANGE	
030	3089561-0000		1	PRESSURE FLANGE	
TBA 0375S					
010	3089594-0000		1	PRESSURE FLANGE	
020	3089595-0000		1	PRESSURE FLANGE	
030	3089596-0000		1	PRESSURE FLANGE	
TPA 0330SQ					
010	3058527-0000		1	PRESSURE FLANGE	
020	3058528-0000		1	PRESSURE FLANGE	
030	3058529-0000		1	PRESSURE FLANGE	

Pos	Part No	UN	Qty	Description	Page No

Machine Type | Group Description | Used-In | Group Number | Page No

This page is intentionally left blank.

ECM: 478588 - 20101003
Group number: 2889626-0100
Assembly Drawing:

This list covers pages from 9-22 to 9-27

Pos	Part No	UN	Qty	Description	Page No
TPA 0125SQ					
FF20	2921574-0000		2	PUSHER	
FF10	2894737-0000		1	PUSHER	
JS40	1282645-0000		1	KNIFE	
JS30	2908756-0000		20	VOLUME SHIM	
JS20	2975930-0000		2	INDUCTOR	
JS10	1110083-0003		12	DOLLY	
SU20	255977-0000		1	SHAFT	
SU10	2932253-0000		1	PRESSURE ROLLER (PACK 10)	
TPA 0200SQ					
FF20	3037955-0000		2	PUSHER	
FF10	2871956-0000		1	PUSHER	
JS40	1282646-0000		1	KNIFE	
JS30	3019316-0000		8	SHIM	
JS20	1110534-0000		2	INDUCTOR	
JS10	1110083-0003		12	DOLLY	
SU20	255977-0000		1	SHAFT	
SU10	2932253-0000		1	PRESSURE ROLLER (PACK 10)	
TPA 0250SQ					
FF20	3037955-0000		2	PUSHER	
FF10	2871956-0000		1	PUSHER	
JS40	1282646-0000		1	KNIFE	
JS30	3019317-0000		8	SHIM	
JS20	1110534-0000		2	INDUCTOR	
JS10	1110083-0003		12	DOLLY	
SU20	255977-0000		1	SHAFT	
SU10	2932253-0000		1	PRESSURE ROLLER (PACK 10)	
TPA 0330SQ					
FF20	2921574-0000		2	PUSHER	
FF10	2871956-0000		1	PUSHER	
JS40	1282646-0000		1	KNIFE	
JS30	3003863-0000		16	VOLUME SHIM	
JS20	1110556-0000		2	INDUCTOR	
JS10	1110083-0003		12	DOLLY	
SU20	295376-0000		1	SHAFT	
SU10	2909367-0000		1	PRESSURE ROLLER (PACK 10)	
TBA 0080S					
FF20	2921574-0000		2	PUSHER	
FF10	2894694-0000		1	PUSHER	
JS40	1282645-0000		1	KNIFE	
JS30	2950902-0000		8	VOLUME SHIM	
JS20	1566981-0000		2	INDUCTOR	
JS10	1566761-0000		12	DOLLY	
SU20	255977-0000		1	SHAFT	
SU10	2932253-0000		1	PRESSURE ROLLER (PACK 10)	
TBA 0100B					
FF20	2921574-0000		2	PUSHER	
FF10	2894694-0000		1	PUSHER	
JS40	1282645-0000		1	KNIFE	
JS30	979754-0000		8	VOLUME SHIM 100	
JS20	2917498-0000		2	INDUCTOR	
JS10	2949862-0004		12	DOLLY	
SU20	255977-0000		1	SHAFT	
SU10	2932253-0000		1	PRESSURE ROLLER (PACK 10)	
TBA 0125S					
FF20	2921574-0000		2	PUSHER	
FF10	2894694-0000		1	PUSHER	
JS40	1282645-0000		1	KNIFE	
JS30	272987-0000		8	VOLUME SHIM	
JS20	2917498-0000		2	INDUCTOR	
JS10	2949862-0004		12	DOLLY	
SU20	255977-0000		1	SHAFT	
SU10	2932253-0000		1	PRESSURE ROLLER (PACK 10)	
TBA 0160S					
FF20	2921574-0000		2	PUSHER	
FF10	2871956-0000		1	PUSHER	
JS40	1282647-0000		1	KNIFE	
JS30	3022276-0000		8	VOLUME SHIM	
JS20	1110532-0000		2	INDUCTOR	
JS10	1110083-0003		12	DOLLY	
SU20	255977-0000		1	SHAFT	
SU10	2932253-0000		1	PRESSURE ROLLER (PACK 10)	
TBA 0200B					
FF20	2894700-0000		2	PUSHER	
FF10	2871956-0000		1	PUSHER	
JS40	1282646-0000		1	KNIFE	
JS30	272986-0003		8	VOLUME SHIM	
JS20	1110534-0000		2	INDUCTOR	
JS10	1110083-0003		12	DOLLY	
SU20	295376-0000		1	SHAFT	
SU10	2909368-0000		1	PRESSURE ROLLER (PACK 10)	
TBA 0200E					
FF20	3037955-0000		2	PUSHER	
FF10	2871956-0000		1	PUSHER	

Machine Type | Group Description | Used-In | Group Number | Page No

This page is intentionally left blank.

Pos	Part No	UN	Qty	Description	Page No
TBA 0200E (Cont'd)					
JS40	1282647-0000		1	KNIFE	
JS30	3067286-0000		8	VOLUME SHIM	
JS30	3111045-0000		8	VOLUME SHIM	
JS20	3089354-0000		2	INDUCTOR	
JS10	1110083-0003		12	DOLLY	
SU20	255977-0000		1	SHAFT	
SU10	2932253-0000		1	PRESSURE ROLLER (PACK 10)	
TBA 0200M					
FF20	2921574-0000		2	PUSHER	
FF10	2871956-0000		1	PUSHER	
JS40	1282647-0000		1	KNIFE	
JS30	979861-0000		8	VOLUME SHIM	
JS20	1110535-0000		2	INDUCTOR	
JS10	1110083-0003		12	DOLLY	
SU20	255977-0000		1	SHAFT	
SU10	2932253-0000		1	PRESSURE ROLLER (PACK 10)	
TBA 0200S					
FF20	2921574-0000		2	PUSHER	
FF10	2871956-0000		1	PUSHER	
JS40	1282647-0000		1	KNIFE	
JS30	272991-0000		8	VOLUME SHIM	
JS20	1110532-0000		2	INDUCTOR	
JS10	1110083-0003		12	DOLLY	
SU20	255977-0000		1	SHAFT	
SU10	2932253-0000		1	PRESSURE ROLLER (PACK 10)	
TBA 0200SQ					
FF20	3037955-0000		2	PUSHER	
FF10	2966591-0000		1	PUSHER	
JS40	1282646-0000		1	KNIFE	
JS30	1519222-0000		8	VOLUME SHIM	
JS20	3044527-0000		2	INDUCTOR	
JS10	1110083-0003		12	DOLLY	
SU20	295376-0000		1	SHAFT	
SU10	2909368-0000		1	PRESSURE ROLLER (PACK 10)	
TBA 0250B					
FF20	2894700-0000		2	PUSHER	
FF10	2871956-0000		1	PUSHER	
JS40	1282646-0000		1	KNIFE	
JS30	272986-0001		8	VOLUME SHIM	
JS20	1110534-0000		2	INDUCTOR	
JS10	1110083-0003		12	DOLLY	
SU20	295376-0000		1	SHAFT	
SU10	2909368-0000		1	PRESSURE ROLLER (PACK 10)	
TBA 0250S					
FF20	2921574-0000		2	PUSHER	
FF10	2871956-0000		1	PUSHER	
JS40	1282647-0000		1	KNIFE	
JS30	3002257-0000		8	VOLUME SHIM	
JS20	1110535-0000		2	INDUCTOR	
JS10	1110083-0003		12	DOLLY	
SU20	255977-0000		1	SHAFT	
SU10	2932253-0000		1	PRESSURE ROLLER (PACK 10)	
TBA 0250SQ					
FF20	3037955-0000		2	PUSHER	
FF10	2966591-0000		1	PUSHER	
JS40	1282646-0000		1	KNIFE	
JS30	2977544-0000		8	SHIM	
JS20	3044527-0000		2	INDUCTOR	
JS10	1110083-0003		12	DOLLY	
SU20	295376-0000		1	SHAFT	
SU10	2909368-0000		1	PRESSURE ROLLER (PACK 10)	
TBA 0284B					
FF20	2894700-0000		2	PUSHER	
FF10	2871956-0000		1	PUSHER	
JS40	1282646-0000		1	KNIFE	
JS30	3010756-0000		8	VOLUME SHIM	
JS20	1110534-0000		2	INDUCTOR	
JS10	1110083-0003		12	DOLLY	
SU20	295376-0000		1	SHAFT	
SU10	2909368-0000		1	PRESSURE ROLLER (PACK 10)	
TBA 0300S					
FF20	2894700-0000		2	PUSHER	
FF10	2871956-0000		1	PUSHER	
JS40	1282646-0000		1	KNIFE	
JS30	3047358-0000		8	VOLUME SHIM	
JS20	1110534-0000		2	INDUCTOR	
JS10	1110083-0003		12	DOLLY	
SU20	295376-0000		1	SHAFT	
SU10	2909368-0000		1	PRESSURE ROLLER (PACK 10)	
TBA 0330S					
FF20	2894700-0000		2	PUSHER	
FF10	2871956-0000		1	PUSHER	
JS40	1282646-0000		1	KNIFE	

Machine Type | Group Description | Used-In | Group Number | Page No

This page is intentionally left blank.

Pos	Part No	UN	Qty	Description	Page No
TBA 0330S (Cont'd)					
JS30	272986-0006		8	VOLUME SHIM 330S	
JS20	1110534-0000		2	INDUCTOR	
JS10	1110083-0003		12	DOLLY	
SU20	295376-0000		1	SHAFT	
SU10	2909368-0000		1	PRESSURE ROLLER (PACK 10)	
TBA 0375S					
FF20	3037955-0000		2	PUSHER	
FF10	2871956-0000		1	PUSHER	
JS40	3096231-0000		1	KNIFE	
JS30	3067274-0000		8	SHIM	
JS20	3089348-0000		2	INDUCTOR	
JS10	1110083-0005		12	DOLLY	
SU20	295376-0000		1	SHAFT	
SU10	2909367-0000		1	PRESSURE ROLLER (PACK 10)	

Pos	Part No	UN	Qty	Description	Page No

This page is intentionally left blank.

ECM: 348443 - 20091001
Group number: 1296877-0100
Assembly Drawing:

Pos	Part No	UN	Qty	Description	Page No
-					
010	2826441-0000		4	SEAL RING	
020	2826440-0000		1	SEAL RING	
030	2826443-0000		1	DIAPHRAGM	
040	539212-0000		1	GASKET	
050	90091-0266		2	SEAL RING 10,4X16,3X2,5 MM	
060	90207-0363		1	GASKET 75X85X1,8 MM 3" FDA 3-A	
070	90207-0365		1	GASKET 53X63X1,8 MM 2,5" FDA 3-A	
100	315204-0215		1	O-RING 19,2X3 MM	
110	315204-0301		1	O-RING 49,5X3 MM	

Pos	Part No	UN	Qty	Description	Page No

This page is intentionally left blank.

ECM: 72190 - 19990628
Group number: 531345-0200
Assembly Drawing:

Pos	Part No	UN	Qty	Description	Page No
-					
	90303-0013		1	APRON	
	90303-0012		1	PROTECTIVE GLOVES	
	90303-0011		1	PROTECTIVE GOGGLES	

Pos	Part No	UN	Qty	Description	Page No

Machine Type | Group Description | Used-In | Group Number | Page No

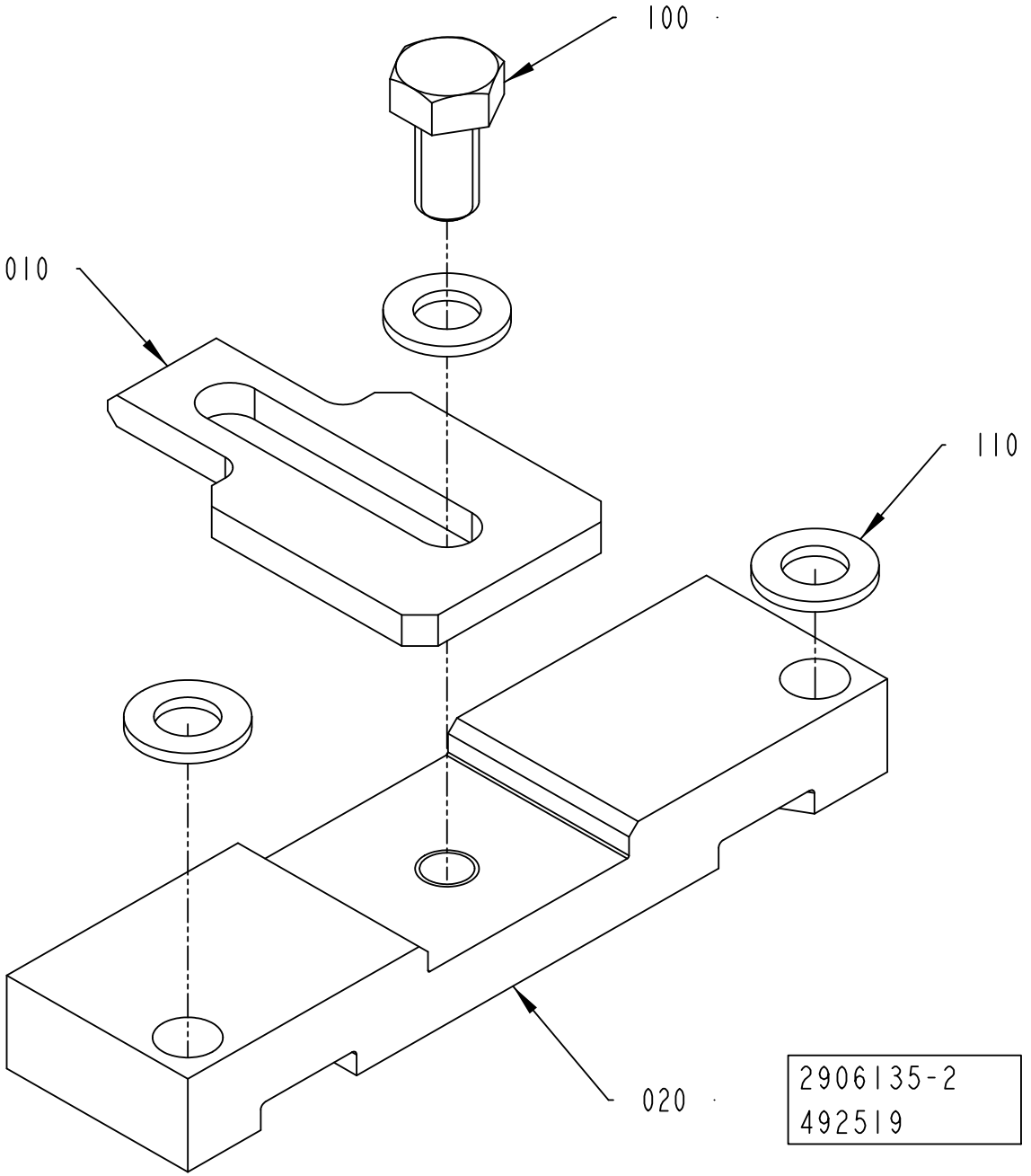
100
010
110
020
2906135-2
492519

ECM: 492720 - 20110101
Group number: 2906135-0200
Assembly Drawing: 2906135-2_1_AA

Pos	Part No	UN	Qty	Description	Page No
TBA 0100B, TBA 0125S, TBA 0160S, TBA 0200S, TPA 0250SQ, TPA 0200SQ					
020	3151763-0000		1	PLATE	
TBA 0200B, TBA 0200SQ, TBA 0284B, TBA 0250B, TBA 0300S, TBA 0330S, TBA 0375S, TPA 0330SQ, TBA 0250SQ					
020	3151764-0000		1	PLATE	
TBA 0200M, TBA 0250S, TBA 0200E					
020	3151765-0000		1	PLATE	
TPA 0125SQ, TBA 0080S					
020	3151762-0000		1	PLATE	
Common Parts					
010	2736719-0000		1	PLATE	
100	312105-0325		1	SCREW, M6S ISO 4017 M5X10 A4 80	
110	315105-0146		3	WASHER BRB 5,3X10 RFR	

Pos	Part No	UN	Qty	Description	Page No

PAPER TROLLEY, 015-119-002

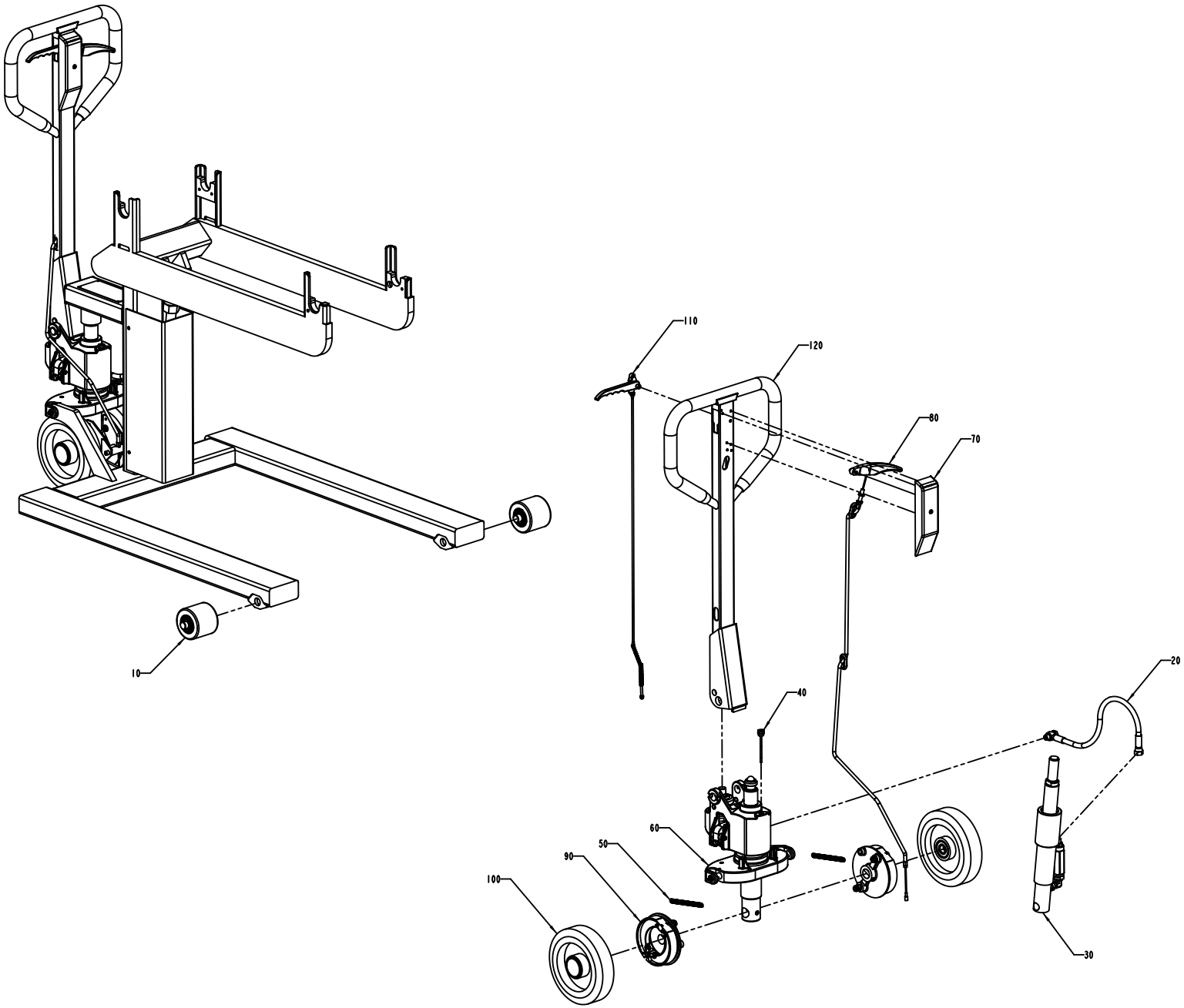

ECM: 526597 - 20111020
Group number: 90603-3401
Assembly Drawing: 90603-3401_2_AB

Pos	Part No	UN	Qty	Description	Page No
-					
10	90603-9953		2	WHEEL	
20	90604-0333		1	HYDRAULIC HOSE	
30	90604-0373		1	CYLINDER	
40	90604-0393		1	OIL SEAL (LÖVALOCK)	
50	90604-0413		2	SPRING	
60	90604-0453		1	PUMP GROUP	
70	90604-1373		1	COVER	
80	90604-1395		1	HANDLE	
90	90604-1414		2	BRAKE UNIT	
100	90604-1453		2	WHEEL	
110	90604-1654		1	LEVER MECHANISM	
120	90604-1827		1	HANDLE	

Pos	Part No	UN	Qty	Description	Page No

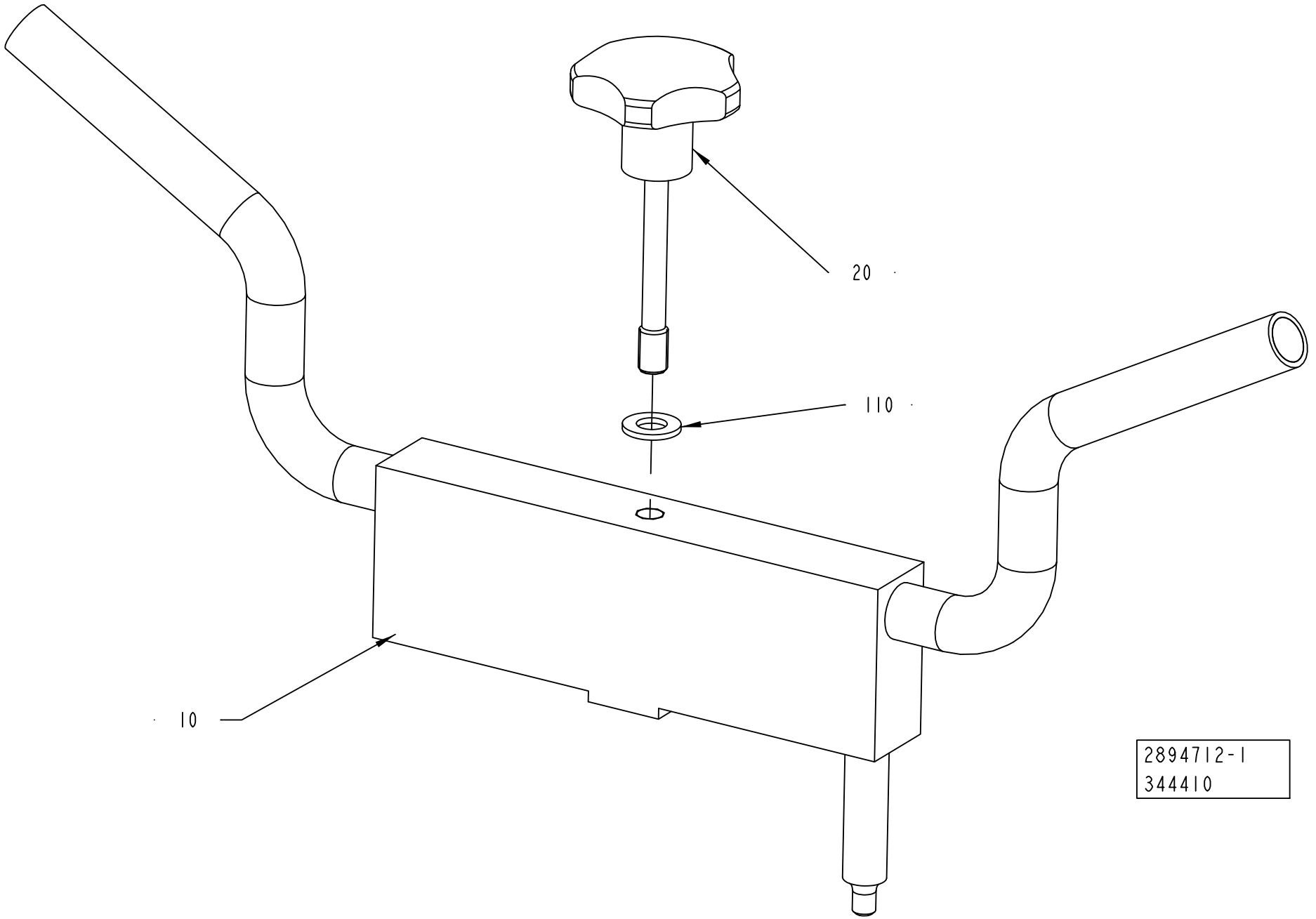
20
110
10
2894712-1
344410

ECM: 344415 - 20080411
Group number: 2894712-0100
Assembly Drawing: 2894712-1_1_AA

Pos	Part No	UN	Qty	Description	Page No
-					
010	2894710-0000		1	WHEEL	
020	2894711-0000		1	SCREW	
110	315106-0173		1	WASHER ISO 7089-10-200 HV A4	

Pos	Part No	UN	Qty	Description	Page No

This page is intentionally left blank.

ECM: 479631 - 20101003
Group number: 2890357-0100
Assembly Drawing:

Pos	Part No	UN	Qty	Description	Page No
TBA 0080S					
010	2922709-0003		2	TRIMMING ROLLER PLUS	
020	2922709-0002		2	TRIMMING ROLLER MINUS	
030	2945446-0003		1	TRIMMING ROLLER PLUS	
040	2945446-0002		1	TRIMMING ROLLER MINUS	
TBA 0100B, TBA 0125S					
010	752466-0000		2	TRIMMING ROLLER PLUS	
020	752467-0000		2	TRIMMING ROLLER MINUS	
030	2969725-0003		1	TRIMMING ROLLER PLUS	
040	2969725-0002		1	TRIMMING ROLLER MINUS	
TBA 0160S, TBA 0200S					
010	752464-0000		2	TRIMMING ROLLER PLUS	
020	752465-0000		2	TRIMMING ROLLER MINUS	
030	2966599-0003		1	TRIMMING ROLLER PLUS	
040	2966599-0002		1	TRIMMING ROLLER MINUS	
TBA 0200B, TBA 0200SQ, TBA 0250B, TBA 0330S, TBA 0250SQ					
010	752462-0000		2	TRIMMING ROLLER PLUS	
020	752463-0000		2	TRIMMING ROLLER MINUS	
030	2966602-0003		1	TRIMMING ROLLER PLUS	
040	2966602-0002		1	TRIMMING ROLLER MINUS	
TBA 0200E					
010	3089567-0003		2	ROLLER	
020	3089567-0002		2	ROLLER	
030	3089568-0003		1	ROLLER	
040	3089568-0002		1	ROLLER	
TBA 0200M, TBA 0250S					
010	574446-0000		2	TRIMMING ROLLER PLUS	
020	574447-0000		2	TRIMMING ROLLER MINUS	
030	3006309-0003		1	TRIMMING ROLLER PLUS	
040	3006309-0002		1	TRIMMING ROLLER MINUS	
TBA 0284B, TBA 0300S					
010	2922717-0003		2	TRIMMING ROLLER PLUS	
020	2922717-0002		2	TRIMMING ROLLER MINUS	
030	2945469-0003		1	TRIMMING ROLLER PLUS	
040	2945469-0002		1	TRIMMING ROLLER MINUS	
TBA 0375S					
010	3058446-0003		2	ROLLER	
020	3058446-0002		2	ROLLER	
030	3058447-0003		1	ROLLER	
040	3058447-0002		1	ROLLER	
TPA 0125SQ					
010	2890091-0003		2	TRIMMING ROLLER PLUS	
020	2890091-0002		2	TRIMMING ROLLER MINUS	
030	2966605-0003		1	TRIMMING ROLLER PLUS	
040	2966605-0002		1	TRIMMING ROLLER MINUS	
TPA 0250SQ, TPA 0200SQ					
010	2922767-0003		2	TRIMMING ROLLER PLUS	
020	2922767-0002		2	TRIMMING ROLLER MINUS	
030	2945467-0003		1	TRIMMING ROLLER PLUS	
040	2945467-0002		1	TRIMMING ROLLER MINUS	
TPA 0330SQ					
010	929282-0000		2	TRIMMING ROLLER PLUS	
020	929283-0000		2	TRIMMING ROLLER MINUS	
030	2986698-0003		1	TRIMMING ROLLER PLUS	
040	2986698-0002		1	TRIMMING ROLLER MINUS	

Machine Type | Group Description | Used-In | Group Number | Page No

This page is intentionally left blank.

ECM: 477033 - 20101105
Group number: 2876196-0200
Assembly Drawing:

Pos	Part No	UN	Qty	Description	Page No
HI ICU					
SS030	3023426-0000		1	DIAGRAM	
SS020	3044309-0000		1	PNEUMATIC DIAGRAM	
HI NOICU					
SS020	3044309-0000		1	PNEUMATIC DIAGRAM	
HVA ICU					
SS040	3037860-0000		1	DIAGRAM	
SS030	3023426-0000		1	DIAGRAM	
HVA NOICU					
SS040	3037860-0000		1	DIAGRAM	
NO HI ICU, NOHVA ICU					
SS030	3023426-0000		1	DIAGRAM	
Common Parts					
AS010	3138754-0100		1	PNEUMATIC DIAGRAM	**9-43**
FM050	3044278-0000		1	DIAGRAM	
FM040	3044279-0000		1	LUBRICATION DIAGRAM	
FM030	3044280-0000		1	HYDRAULIC SYSTEM	
FM020	3042009-0000		1	WATER DIAGRAM	
FM010	3044283-0000		1	PNEUMATIC DIAGRAM	
MB010	3044282-0000		1	PNEUMATIC DIAGRAM	
SU010	3044281-0000		1	PNEUMATIC DIAGRAM	
SS010	3037706-0000		1	PNEUMATIC DIAGRAM	

Pos	Part No	UN	Qty	Description	Page No

This page is intentionally left blank.

ECM: 477011 - 20101105
Group number: 3138754-0100
Assembly Drawing:

Pos	Part No	UN	Qty	Description	Page No
ASU					
010	3043531-0000		1	PNEUMATIC DIAGRAM	

Pos	Part No	UN	Qty	Description	Page No

Machine Type | Group Description | Used-In | Group Number | Page No

This page is intentionally left blank.

ECM: 480105 - 20101003
Group number: 3046820-0100
Assembly Drawing:

Pos	Part No	UN	Qty	Description	Page No
TBA 0100B, TBA 0125S, TBA 0160S, TBA 0200M, TBA 0200B, TBA 0200S, TBA 0250S, TBA 0284B, TBA 0250B, TBA 0300S, TBA 0330S, TBA 0375S, TPA 0250SQ, TPA 0200SQ, TPA 0125SQ, TBA 0080S, TBA 0200E					
020	3039514-0100		1	SUPPORT	**5-99, 9-47**
TBA 0200SQ, TPA 0330SQ, TBA 0250SQ					
010	3039513-0100		1	SUPPORT	**5-97, 9-49**

Pos	Part No	UN	Qty	Description	Page No

Machine Type | Group Description | Used-In | Group Number | Page No

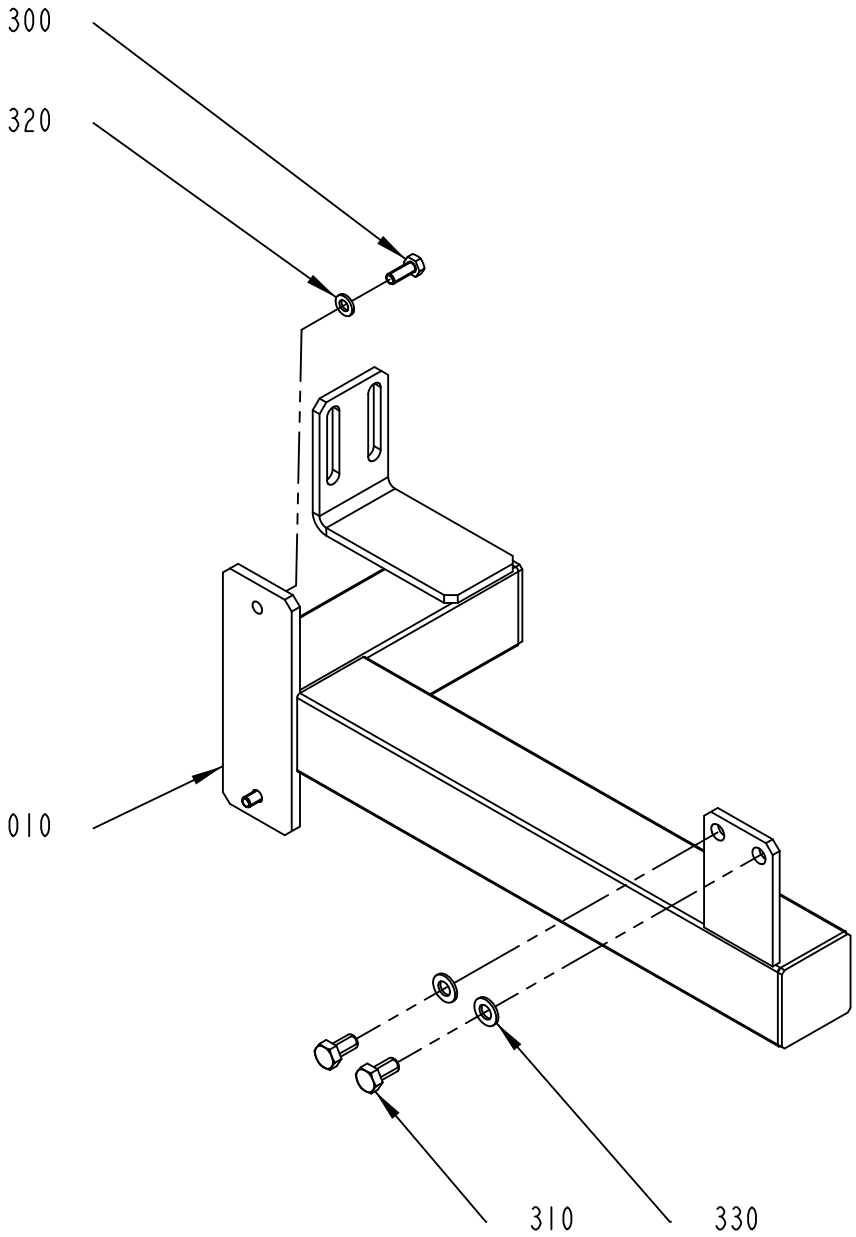

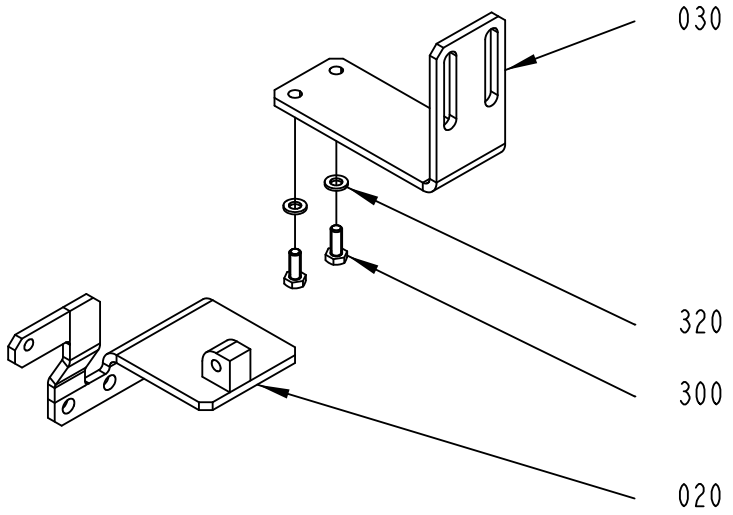

3039514-1
514189

ECM: 520745 - 20120101
Group number: 3039514-0100
Assembly Drawing: 3039514-1_1_AB

Pos	Part No	UN	Qty	Description	Page No
-					
010	2966592-0000		1	SUPPORT	
020	2966593-0000		1	BRACKET	
030	2966594-0000		1	BRACKET	
300	312105-0368		4	SCREW, M6S ISO 4017 M6X16 A4 80	
310	312105-0449		2	SCREW, M6S ISO 4017 M8X16 A4 80	
320	315105-0153		4	WASHER PLAIN, 6,4X12X1,5 A4 BRB	
330	315105-0165		2	WASHER PLAIN, 8,4X16X1,6 A4 BRB	

Pos	Part No	UN	Qty	Description	Page No

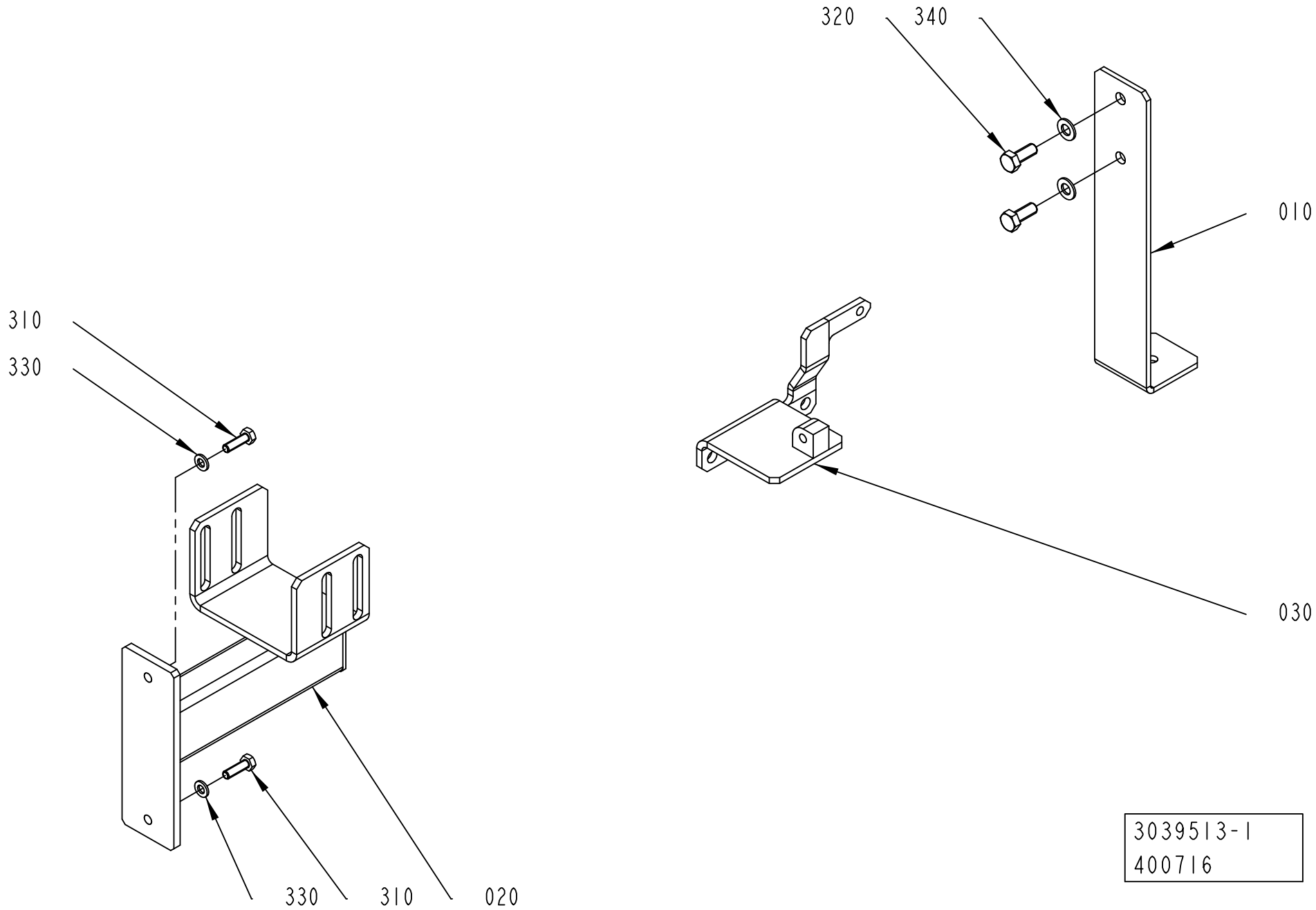
320
340
010
310
330
030
330
310
020
3039513-1
400716

ECM: 403673 - 20090710
Group number: 3039513-0100
Assembly Drawing: 3039513-1_1_AA

Pos	Part No	UN	Qty	Description	Page No
-					
010	2819302-0000		1	SUPPORT	
020	2852874-0000		1	SUPPORT	
030	2871949-0000		1	BRACKET	
300	312105-0368		1	SCREW, M6S ISO 4017 M6X16 A4 80	
310	312105-0370		2	SCREW, M6S ISO 4017 M6X20 A4 80	
320	312105-0451		2	SCREW, M6S ISO 4017 M8X20 A4 80	
330	315105-0153		2	WASHER PLAIN, 6,4X12X1,5 A4 BRB	
340	315105-0165		2	WASHER PLAIN, 8,4X16X1,6 A4 BRB	

Pos	Part No	UN	Qty	Description	Page No

Tetra Pak

SPC
Spare Parts Catalogue

This page is intentionally left blank.

ECM: 427820 - 20091201
Group number: 649495-0200
Assembly Drawing:

Pos	Part No	UN	Qty	Description	Page No
-					
0010	2922287-0200		1	ELECTRICAL DOCUMENT	
0020	2922286-0200		1	SOFTWARE	**10-5**

Pos	Part No	UN	Qty	Description	Page No

This page is intentionally left blank.

ECM: 539797 - 20120101
Group number: 2922286-0200
Assembly Drawing:

Pos	Part No	UN	Qty	Description	Page No
-					
0010	3072085-0009		1	SOFTWARE CD	
0020	2912228-0003		1	TPOP BASIC V 3.2	
0030	2923820-0008		1	PLMS CENTRE 200 BASIC SP1	

Pos	Part No	UN	Qty	Description	Page No

Tetra Pak

SPC
Spare Parts Catalogue

This page is intentionally left blank.

ECM: 404329 - 20090724
Group number: 641513-0200
Assembly Drawing:

Pos	Part No	UN	Qty	Description	Page No
-					
010	2843002-0100		1	SETTING TOOL	**11-5**
020	2889884-0100		1	TOOL	**11-49**
030	2889624-0200		1	ACCESSORIES	**11-69**

Pos	Part No	UN	Qty	Description	Page No

This page is intentionally left blank.

ECM: 536012 - 20120401
Group number: 2843002-0100
Assembly Drawing:

Pos	Part No	UN	Qty	Description	Page No
A3/COMPACTFLEX -0200					
FM10	3163420-0100		1	ASEPTIC QUALIFICATION KIT	**11-7, 11-9, 11-11, 11-13, 11-15, 11-17**
JS70	3134257-0000		1	TOOL	
Common Parts					
FF10	1478583-0100		1	PRESSURE GAUGE	**11-21**
JS60	2908997-0100		1	TOOL	**11-23**
JS50	76304-0100		1	COMPRESSION SPRING	**11-25**
JS40	2842982-0100		1	TEMPLATE	**11-27**
JS30	2843695-0100		1	CLAMPING PIECE	**11-29**
JS20	2889628-0100		1	SETTING TOOL	**11-31, 11-33**
JS10	2843012-0100		1	TEMPLATE	**11-35**
PT10	2983304-0100		1	TOOLS AND TEMPLATES PT	**11-37**
SU60	2986717-0000		1	TEMPLATE	
SU30	90243-0203		1	MEASURING INSTRUMENT- ZONOSCOPE	
SU70	3107113-0100		1	TEMPLATE	**11-43**
SU20	74767-0102		1	DYNAMOMETER	**11-45**
SU10	2871510-0200		1	LS TEMPLATE	**11-47**

Pos	Part No	UN	Qty	Description	Page No

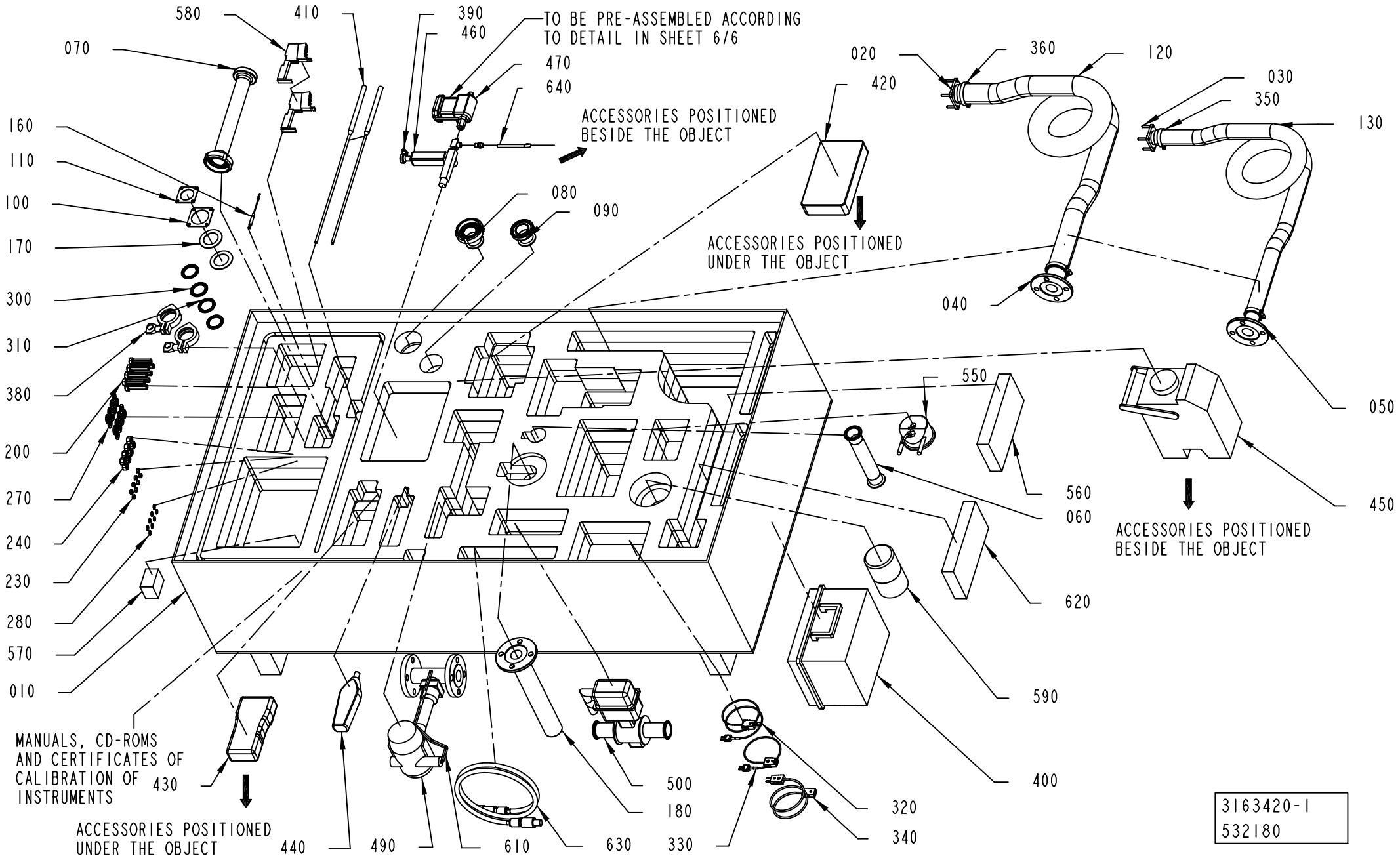
580
410
390
460
070
TO BE PRE-ASSEMBLED ACCORDING TO DETAIL IN SHEET 6/6
470
640
ACCESSORIES POSITIONED BESIDE THE OBJECT
020
420
360
120
030
350
130
160
110
100
080
090
170
ACCESSORIES POSITIONED UNDER THE OBJECT
040
300
310
380
550
050
200
270
560
060
450
240
230
280
620
570
010
590
MANUALS, CD-ROMS AND CERTIFICATES OF CALIBRATION OF INSTRUMENTS
430
500
180
320
400
340
ACCESSORIES POSITIONED UNDER THE OBJECT
440
490
610
630
330
3163420-1
532180

ECM: 538131 - 20120101
Group number: 3163420-0100
Assembly Drawing: 3163420-1_1_AD

This list covers pages from 11-6 to 11-17

Pos	Part No	UN	Qty	Description	Page No
-					
010	3170420-0000		1	BOX	
020	3112770-0000		1	FLANGE	
030	3114709-0000		1	FLANGE	
040	3114710-0000		1	FLANGE	
050	3114711-0000		1	FLANGE	
060	3114713-0000		1	SPACER PIPE	
070	3114715-0000		1	SPACER PIPE	
080	3114717-0000		1	ADAPTER	
090	3114718-0000		1	ADAPTER	
100	3169794-0000		1	GASKET	
110	3169795-0000		1	GASKET	
120	3104604-0000		1	HOSE	
130	3114716-0000		1	HOSE	
160	3031848-0000		1	RESISTANCE	
170	3182368-0000		2	GASKET	
180	3182369-0000		1	FLANGE	
200	312104-0543		8	SCREW M6S M12X55H FZB	
230	312605-0316		8	HEXAGON NUT, M6M M6 A280	
240	312601-0322		8	HEXAGON NUT, DIN 934 M12 8 FZB	
270	315101-0178		16	WASHER PLAIN, BRB, 13/24 H=2	
280	315106-0153		8	WASHER PLAIN, M6 ISO7089-6-200 HV A4	
300	342850-0304		2	GASKET 35,4X49,1X5,2 1"1/2 FDA, 3-A	
310	3024322-0000		2	GASKET	
320	90458-0915		1	THERMOCOUPLE CABLE FOR 90458-0914/MALE5M	
330	90458-1073		1	THERMOCOUPLE CABLE FOR 90458-0914/FEMALE	
340	90604-1826		1	T/C CALIBRATION KIT, T/C CABLE 04-22140	
350	342991-0108		2	HOSE CLIP,WORM DRIVE TYPE (38)-50	
360	342991-0110		2	HOSE CLIP,WORM DRIVE TYPE (50)-65	
380	344215-0103		2	CLAMP RING A13MHM 1X1 1/2", 211053	
390	342921-0113		2	STRAIGHT COUPLING, EXT.THREAD 6/4-G1/8	
400	90603-4996		1	THERMOMETER CALIBRATOR, 9009-B	
410	90603-4999		2	TEMPERATURE PROBE, 5609-15-J +PLASTIC CA	
420	90603-5000		1	DOCUMENTING PROCESS CALIBRATOR 741B	
430	90603-5001		1	TEMPERATURE CALIBRATOR, 724	
440	90603-5002		1	TEMPERATURE HUMIDITY METER, 971	
450	90603-5003		1	CALIBRATION EQUIPMENT MICRO BATH, 6102	
460	90603-5004		1	VACUUM PUMP	
470	90603-5005		1	PRESSURE SENSOR, 700P01	
490	90603-5008		1	FLOW METER, ST4.0.1.2.1.32.Q.A.1.3.A.2.E	
500	90603-5009		1	FLOW METER, DF23.T.P.40.F.D.4.A.S.A.1.H.	
550	90604-2253		1	CALIBRATION EQUIPMENT, A0805145	
560	90604-2257		1	CALIBR. SOL. 13,50BRIX,CHFSITBX13.510F25	
570	90194-0113		100	ADHESIVE LABEL, CALIBRATED & DATE	
580	90459-2526		2	REMOTE I/O BASE MODULE 8 POINTS, 1734-TB	
590	3198222-0100		1	SET OF INSERTS	**11-19**
610	90220-0093	M	10	CABLE, PAIR TWISTED 4X2X0,25MM2	
620	90604-2258		1	CALIBR. SOL. 0,00BRIX, CHFSITBX00010F25	
630	90604-2255		1	CABLE, A0804384	
640	90166-0176	MM	500	RUBBER HOSE	

Machine Type | Group Description | Used-In | Group Number | Page No

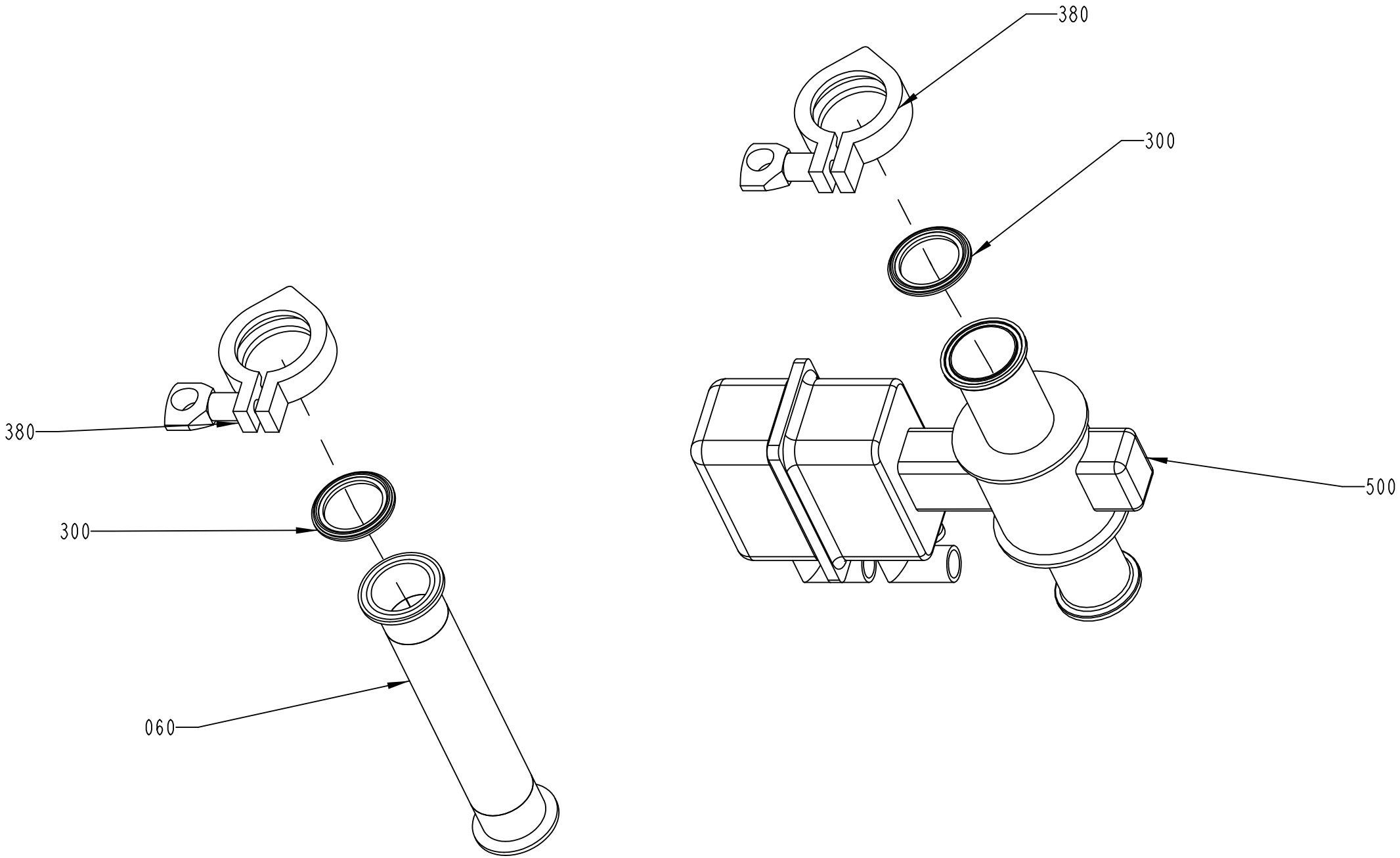
380
300
060
380
300
500

ECM: 538131 - 20120101
Group number: 3163420-0100
Assembly Drawing: 3163420-1_2_AD

This list covers pages from 11-6 to 11-17

Pos	Part No	UN	Qty	Description	Page No
-					
010	3170420-0000		1	BOX	
020	3112770-0000		1	FLANGE	
030	3114709-0000		1	FLANGE	
040	3114710-0000		1	FLANGE	
050	3114711-0000		1	FLANGE	
060	3114713-0000		1	SPACER PIPE	
070	3114715-0000		1	SPACER PIPE	
080	3114717-0000		1	ADAPTER	
090	3114718-0000		1	ADAPTER	
100	3169794-0000		1	GASKET	
110	3169795-0000		1	GASKET	
120	3104604-0000		1	HOSE	
130	3114716-0000		1	HOSE	
160	3031848-0000		1	RESISTANCE	
170	3182368-0000		2	GASKET	
180	3182369-0000		1	FLANGE	
200	312104-0543		8	SCREW M6S M12X55H FZB	
230	312605-0316		8	HEXAGON NUT, M6M M6 A280	
240	312601-0322		8	HEXAGON NUT, DIN 934 M12 8 FZB	
270	315101-0178		16	WASHER PLAIN, BRB, 13/24 H=2	
280	315106-0153		8	WASHER PLAIN, M6 ISO7089-6-200 HV A4	
300	342850-0304		2	GASKET 35,4X49,1X5,2 1"1/2 FDA, 3-A	
310	3024322-0000		2	GASKET	
320	90458-0915		1	THERMOCOUPLE CABLE FOR 90458-0914/MALE5M	
330	90458-1073		1	THERMOCOUPLE CABLE FOR 90458-0914/FEMALE	
340	90604-1826		1	T/C CALIBRATION KIT, T/C CABLE 04-22140	
350	342991-0108		2	HOSE CLIP,WORM DRIVE TYPE (38)-50	
360	342991-0110		2	HOSE CLIP,WORM DRIVE TYPE (50)-65	
380	344215-0103		2	CLAMP RING A13MHM 1X1 1/2", 211053	
390	342921-0113		2	STRAIGHT COUPLING, EXT.THREAD 6/4-G1/8	
400	90603-4996		1	THERMOMETER CALIBRATOR, 9009-B	
410	90603-4999		2	TEMPERATURE PROBE, 5609-15-J +PLASTIC CA	
420	90603-5000		1	DOCUMENTING PROCESS CALIBRATOR 741B	
430	90603-5001		1	TEMPERATURE CALIBRATOR, 724	
440	90603-5002		1	TEMPERATURE HUMIDITY METER, 971	
450	90603-5003		1	CALIBRATION EQUIPMENT MICRO BATH, 6102	
460	90603-5004		1	VACUUM PUMP	
470	90603-5005		1	PRESSURE SENSOR, 700P01	
490	90603-5008		1	FLOW METER, ST4.0.1.2.1.32.Q.A.1.3.A.2.E	
500	90603-5009		1	FLOW METER, DF23.T.P.40.F.D.4.A.S.A.1.H.	
550	90604-2253		1	CALIBRATION EQUIPMENT, A0805145	
560	90604-2257		1	CALIBR. SOL. 13,50BRIX,CHFSITBX13.510F25	
570	90194-0113		100	ADHESIVE LABEL, CALIBRATED & DATE	
580	90459-2526		2	REMOTE I/O BASE MODULE 8 POINTS, 1734-TB	
590	3198222-0100		1	SET OF INSERTS	**11-19**
610	90220-0093	M	10	CABLE, PAIR TWISTED 4X2X0,25MM2	
620	90604-2258		1	CALIBR. SOL. 0,00BRIX, CHFSITBX00010F25	
630	90604-2255		1	CABLE, A0804384	
640	90166-0176	MM	500	RUBBER HOSE	

Machine Type | Group Description | Used-In | Group Number | Page No

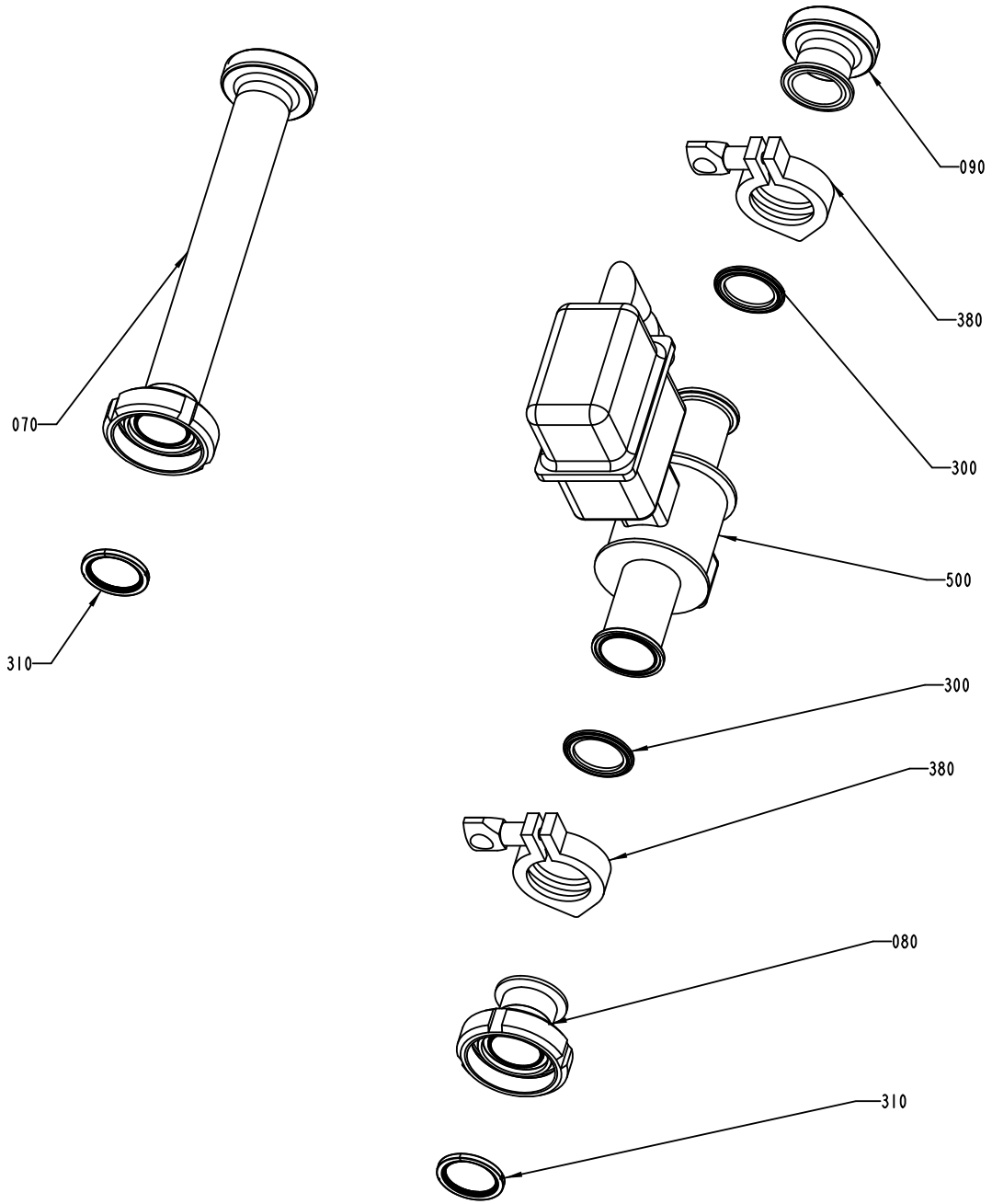
070
310
090
380
300
500
300
380
080
310

ECM: 538131 - 20120101
Group number: 3163420-0100
Assembly Drawing: 3163420-1_3_AD

This list covers pages from 11-6 to 11-17

Pos	Part No	UN	Qty	Description	Page No
-					
010	3170420-0000		1	BOX	
020	3112770-0000		1	FLANGE	
030	3114709-0000		1	FLANGE	
040	3114710-0000		1	FLANGE	
050	3114711-0000		1	FLANGE	
060	3114713-0000		1	SPACER PIPE	
070	3114715-0000		1	SPACER PIPE	
080	3114717-0000		1	ADAPTER	
090	3114718-0000		1	ADAPTER	
100	3169794-0000		1	GASKET	
110	3169795-0000		1	GASKET	
120	3104604-0000		1	HOSE	
130	3114716-0000		1	HOSE	
160	3031848-0000		1	RESISTANCE	
170	3182368-0000		2	GASKET	
180	3182369-0000		1	FLANGE	
200	312104-0543		8	SCREW M6S M12X55H FZB	
230	312605-0316		8	HEXAGON NUT, M6M M6 A280	
240	312601-0322		8	HEXAGON NUT, DIN 934 M12 8 FZB	
270	315101-0178		16	WASHER PLAIN, BRB, 13/24 H=2	
280	315106-0153		8	WASHER PLAIN, M6 ISO7089-6-200 HV A4	
300	342850-0304		2	GASKET 35,4X49,1X5,2 1"1/2 FDA, 3-A	
310	3024322-0000		2	GASKET	
320	90458-0915		1	THERMOCOUPLE CABLE FOR 90458-0914/MALE5M	
330	90458-1073		1	THERMOCOUPLE CABLE FOR 90458-0914/FEMALE	
340	90604-1826		1	T/C CALIBRATION KIT, T/C CABLE 04-22140	
350	342991-0108		2	HOSE CLIP,WORM DRIVE TYPE (38)-50	
360	342991-0110		2	HOSE CLIP,WORM DRIVE TYPE (50)-65	
380	344215-0103		2	CLAMP RING A13MHM 1X1 1/2", 211053	
390	342921-0113		2	STRAIGHT COUPLING, EXT.THREAD 6/4-G1/8	
400	90603-4996		1	THERMOMETER CALIBRATOR, 9009-B	
410	90603-4999		2	TEMPERATURE PROBE, 5609-15-J +PLASTIC CA	
420	90603-5000		1	DOCUMENTING PROCESS CALIBRATOR 741B	
430	90603-5001		1	TEMPERATURE CALIBRATOR, 724	
440	90603-5002		1	TEMPERATURE HUMIDITY METER, 971	
450	90603-5003		1	CALIBRATION EQUIPMENT MICRO BATH, 6102	
460	90603-5004		1	VACUUM PUMP	
470	90603-5005		1	PRESSURE SENSOR, 700P01	
490	90603-5008		1	FLOW METER, ST4.0.1.2.1.32.Q.A.1.3.A.2.E	
500	90603-5009		1	FLOW METER, DF23.T.P.40.F.D.4.A.S.A.1.H.	
550	90604-2253		1	CALIBRATION EQUIPMENT, A0805145	
560	90604-2257		1	CALIBR. SOL. 13,50BRIX,CHFSITBX13.510F25	
570	90194-0113		100	ADHESIVE LABEL, CALIBRATED & DATE	
580	90459-2526		2	REMOTE I/O BASE MODULE 8 POINTS, 1734-TB	
590	3198222-0100		1	SET OF INSERTS	**11-19**
610	90220-0093	M	10	CABLE, PAIR TWISTED 4X2X0,25MM2	
620	90604-2258		1	CALIBR. SOL. 0,00BRIX, CHFSITBX00010F25	
630	90604-2255		1	CABLE, A0804384	
640	90166-0176	MM	500	RUBBER HOSE	

Machine Type | Group Description | Used-In | Group Number | Page No

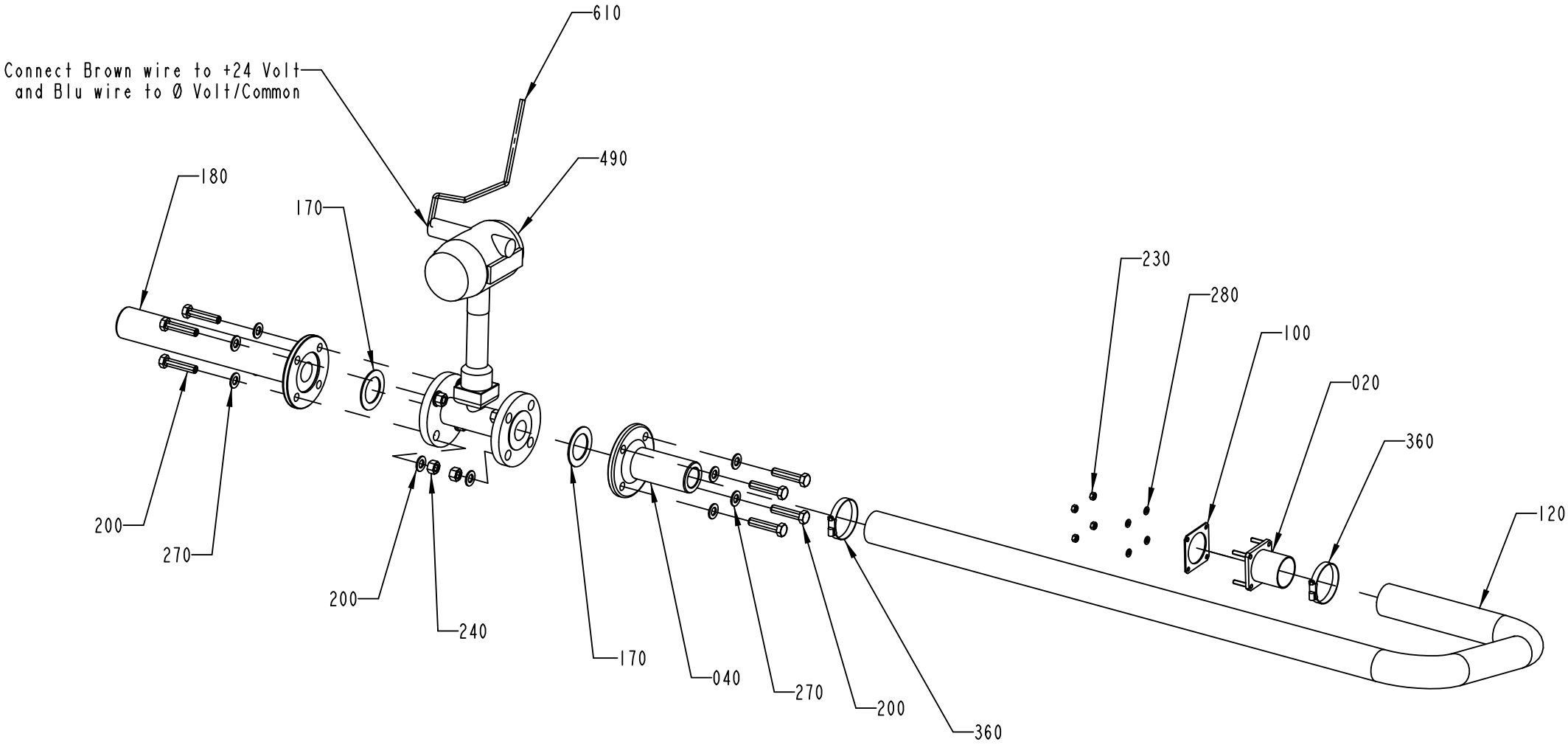
Connect Brown wire to +24 Volt
and Blu wire to Ø Volt/Common
610
490
180
170
200
270
200
240
170
040
270
200
360
230
280
100
020
360
120

ECM: 538131 - 20120101
Group number: 3163420-0100
Assembly Drawing: 3163420-1_4_AD

This list covers pages from 11-6 to 11-17

Pos	Part No	UN	Qty	Description	Page No
-					
010	3170420-0000		1	BOX	
020	3112770-0000		1	FLANGE	
030	3114709-0000		1	FLANGE	
040	3114710-0000		1	FLANGE	
050	3114711-0000		1	FLANGE	
060	3114713-0000		1	SPACER PIPE	
070	3114715-0000		1	SPACER PIPE	
080	3114717-0000		1	ADAPTER	
090	3114718-0000		1	ADAPTER	
100	3169794-0000		1	GASKET	
110	3169795-0000		1	GASKET	
120	3104604-0000		1	HOSE	
130	3114716-0000		1	HOSE	
160	3031848-0000		1	RESISTANCE	
170	3182368-0000		2	GASKET	
180	3182369-0000		1	FLANGE	
200	312104-0543		8	SCREW M6S M12X55H FZB	
230	312605-0316		8	HEXAGON NUT, M6M M6 A280	
240	312601-0322		8	HEXAGON NUT, DIN 934 M12 8 FZB	
270	315101-0178		16	WASHER PLAIN, BRB, 13/24 H=2	
280	315106-0153		8	WASHER PLAIN, M6 ISO7089-6-200 HV A4	
300	342850-0304		2	GASKET 35,4X49,1X5,2 1"1/2 FDA, 3-A	
310	3024322-0000		2	GASKET	
320	90458-0915		1	THERMOCOUPLE CABLE FOR 90458-0914/MALE5M	
330	90458-1073		1	THERMOCOUPLE CABLE FOR 90458-0914/FEMALE	
340	90604-1826		1	T/C CALIBRATION KIT, T/C CABLE 04-22140	
350	342991-0108		2	HOSE CLIP,WORM DRIVE TYPE (38)-50	
360	342991-0110		2	HOSE CLIP,WORM DRIVE TYPE (50)-65	
380	344215-0103		2	CLAMP RING A13MHM 1X1 1/2", 211053	
390	342921-0113		2	STRAIGHT COUPLING, EXT.THREAD 6/4-G1/8	
400	90603-4996		1	THERMOMETER CALIBRATOR, 9009-B	
410	90603-4999		2	TEMPERATURE PROBE, 5609-15-J +PLASTIC CA	
420	90603-5000		1	DOCUMENTING PROCESS CALIBRATOR 741B	
430	90603-5001		1	TEMPERATURE CALIBRATOR, 724	
440	90603-5002		1	TEMPERATURE HUMIDITY METER, 971	
450	90603-5003		1	CALIBRATION EQUIPMENT MICRO BATH, 6102	
460	90603-5004		1	VACUUM PUMP	
470	90603-5005		1	PRESSURE SENSOR, 700P01	
490	90603-5008		1	FLOW METER, ST4.0.1.2.1.32.Q.A.1.3.A.2.E	
500	90603-5009		1	FLOW METER, DF23.T.P.40.F.D.4.A.S.A.1.H.	
550	90604-2253		1	CALIBRATION EQUIPMENT, A0805145	
560	90604-2257		1	CALIBR. SOL. 13,50BRIX,CHFSITBX13.510F25	
570	90194-0113		100	ADHESIVE LABEL, CALIBRATED & DATE	
580	90459-2526		2	REMOTE I/O BASE MODULE 8 POINTS, 1734-TB	
590	3198222-0100		1	SET OF INSERTS	**11-19**
610	90220-0093	M	10	CABLE, PAIR TWISTED 4X2X0,25MM2	
620	90604-2258		1	CALIBR. SOL. 0,00BRIX, CHFSITBX00010F25	
630	90604-2255		1	CABLE, A0804384	
640	90166-0176	MM	500	RUBBER HOSE	

Machine Type | Group Description | Used-In | Group Number | Page No

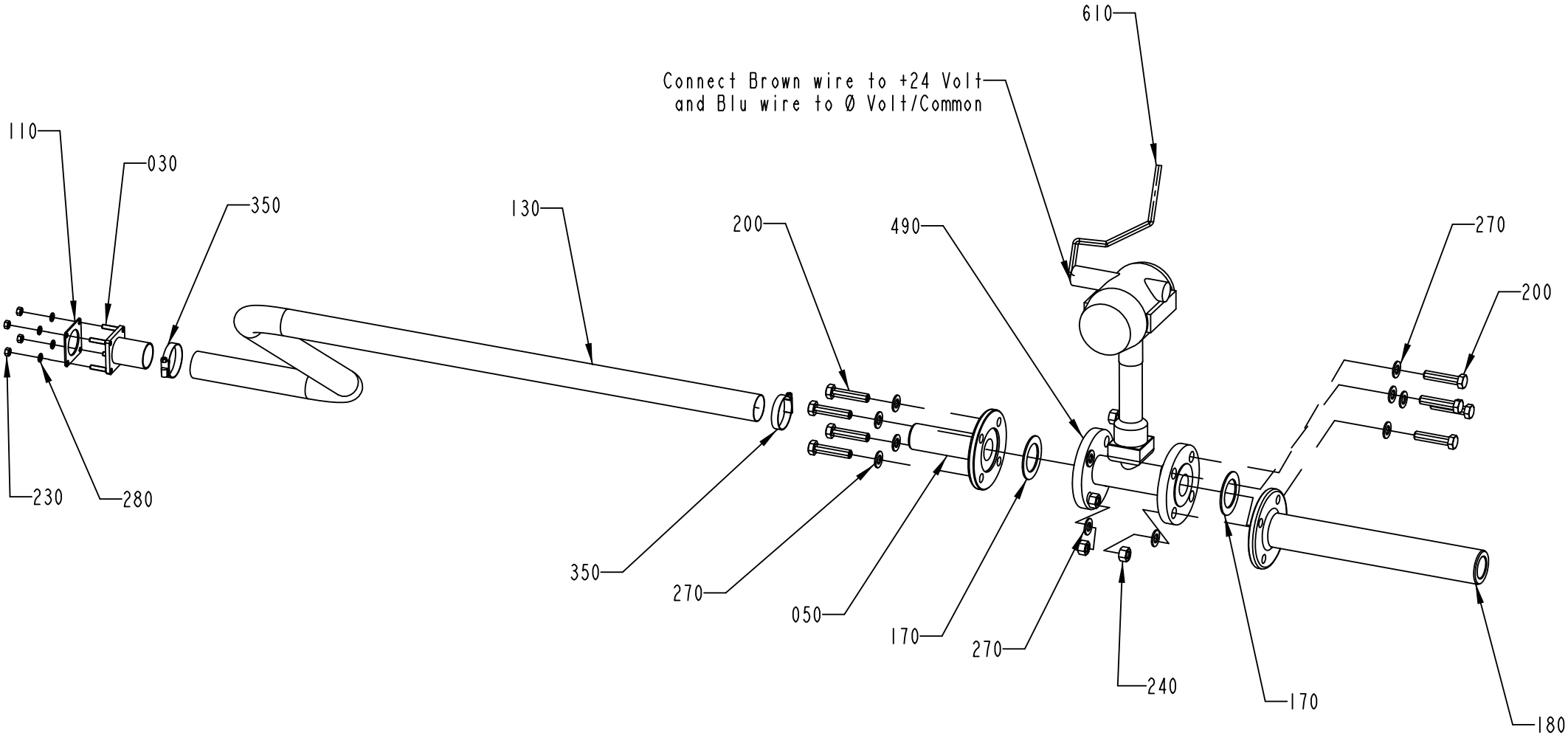
610
Connect Brown wire to +24 Volt
and Blu wire to Ø Volt/Common
110
030
350
130
200
490
270
200
230
280
350
270
050
170
270
240
170
180

ECM: 538131 - 20120101
Group number: 3163420-0100
Assembly Drawing: 3163420-1_5_AD

This list covers pages from 11-6 to 11-17

Pos	Part No	UN	Qty	Description	Page No
-					
010	3170420-0000		1	BOX	
020	3112770-0000		1	FLANGE	
030	3114709-0000		1	FLANGE	
040	3114710-0000		1	FLANGE	
050	3114711-0000		1	FLANGE	
060	3114713-0000		1	SPACER PIPE	
070	3114715-0000		1	SPACER PIPE	
080	3114717-0000		1	ADAPTER	
090	3114718-0000		1	ADAPTER	
100	3169794-0000		1	GASKET	
110	3169795-0000		1	GASKET	
120	3104604-0000		1	HOSE	
130	3114716-0000		1	HOSE	
160	3031848-0000		1	RESISTANCE	
170	3182368-0000		2	GASKET	
180	3182369-0000		1	FLANGE	
200	312104-0543		8	SCREW M6S M12X55H FZB	
230	312605-0316		8	HEXAGON NUT, M6M M6 A280	
240	312601-0322		8	HEXAGON NUT, DIN 934 M12 8 FZB	
270	315101-0178		16	WASHER PLAIN, BRB, 13/24 H=2	
280	315106-0153		8	WASHER PLAIN, M6 ISO7089-6-200 HV A4	
300	342850-0304		2	GASKET 35,4X49,1X5,2 1"1/2 FDA, 3-A	
310	3024322-0000		2	GASKET	
320	90458-0915		1	THERMOCOUPLE CABLE FOR 90458-0914/MALE5M	
330	90458-1073		1	THERMOCOUPLE CABLE FOR 90458-0914/FEMALE	
340	90604-1826		1	T/C CALIBRATION KIT, T/C CABLE 04-22140	
350	342991-0108		2	HOSE CLIP,WORM DRIVE TYPE (38)-50	
360	342991-0110		2	HOSE CLIP,WORM DRIVE TYPE (50)-65	
380	344215-0103		2	CLAMP RING A13MHM 1X1 1/2", 211053	
390	342921-0113		2	STRAIGHT COUPLING, EXT.THREAD 6/4-G1/8	
400	90603-4996		1	THERMOMETER CALIBRATOR, 9009-B	
410	90603-4999		2	TEMPERATURE PROBE, 5609-15-J +PLASTIC CA	
420	90603-5000		1	DOCUMENTING PROCESS CALIBRATOR 741B	
430	90603-5001		1	TEMPERATURE CALIBRATOR, 724	
440	90603-5002		1	TEMPERATURE HUMIDITY METER, 971	
450	90603-5003		1	CALIBRATION EQUIPMENT MICRO BATH, 6102	
460	90603-5004		1	VACUUM PUMP	
470	90603-5005		1	PRESSURE SENSOR, 700P01	
490	90603-5008		1	FLOW METER, ST4.0.1.2.1.32.Q.A.1.3.A.2.E	
500	90603-5009		1	FLOW METER, DF23.T.P.40.F.D.4.A.S.A.1.H.	
550	90604-2253		1	CALIBRATION EQUIPMENT, A0805145	
560	90604-2257		1	CALIBR. SOL. 13,50BRIX,CHFSITBX13.510F25	
570	90194-0113		100	ADHESIVE LABEL, CALIBRATED & DATE	
580	90459-2526		2	REMOTE I/O BASE MODULE 8 POINTS, 1734-TB	
590	3198222-0100		1	SET OF INSERTS	**11-19**
610	90220-0093	M	10	CABLE, PAIR TWISTED 4X2X0,25MM2	
620	90604-2258		1	CALIBR. SOL. 0,00BRIX, CHFSITBX00010F25	
630	90604-2255		1	CABLE, A0804384	
640	90166-0176	MM	500	RUBBER HOSE	

Machine Type | Group Description | Used-In | Group Number | Page No

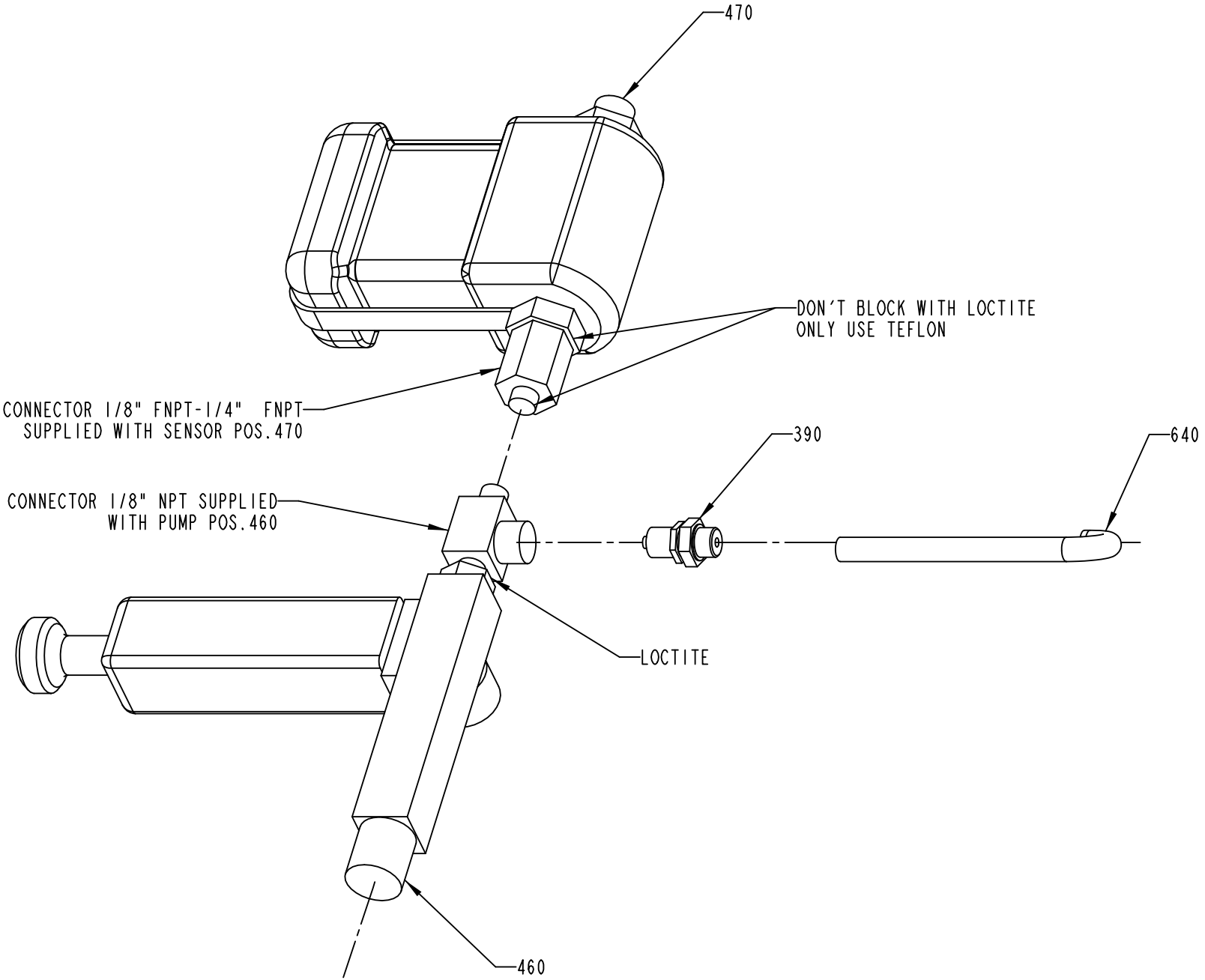
470
DON'T BLOCK WITH LOCTITE
ONLY USE TEFLON
CONNECTOR 1/8" FNPT-1/4" FNPT
SUPPLIED WITH SENSOR POS.470
390
640
CONNECTOR 1/8" NPT SUPPLIED
WITH PUMP POS.460
LOCTITE
460

ECM: 538131 - 20120101
Group number: 3163420-0100
Assembly Drawing: 3163420-1_6_AD

This list covers pages from 11-6 to 11-17

Pos	Part No	UN	Qty	Description	Page No
-					
010	3170420-0000		1	BOX	
020	3112770-0000		1	FLANGE	
030	3114709-0000		1	FLANGE	
040	3114710-0000		1	FLANGE	
050	3114711-0000		1	FLANGE	
060	3114713-0000		1	SPACER PIPE	
070	3114715-0000		1	SPACER PIPE	
080	3114717-0000		1	ADAPTER	
090	3114718-0000		1	ADAPTER	
100	3169794-0000		1	GASKET	
110	3169795-0000		1	GASKET	
120	3104604-0000		1	HOSE	
130	3114716-0000		1	HOSE	
160	3031848-0000		1	RESISTANCE	
170	3182368-0000		2	GASKET	
180	3182369-0000		1	FLANGE	
200	312104-0543		8	SCREW M6S M12X55H FZB	
230	312605-0316		8	HEXAGON NUT, M6M M6 A280	
240	312601-0322		8	HEXAGON NUT, DIN 934 M12 8 FZB	
270	315101-0178		16	WASHER PLAIN, BRB, 13/24 H=2	
280	315106-0153		8	WASHER PLAIN, M6 ISO7089-6-200 HV A4	
300	342850-0304		2	GASKET 35,4X49,1X5,2 1"1/2 FDA, 3-A	
310	3024322-0000		2	GASKET	
320	90458-0915		1	THERMOCOUPLE CABLE FOR 90458-0914/MALE5M	
330	90458-1073		1	THERMOCOUPLE CABLE FOR 90458-0914/FEMALE	
340	90604-1826		1	T/C CALIBRATION KIT, T/C CABLE 04-22140	
350	342991-0108		2	HOSE CLIP,WORM DRIVE TYPE (38)-50	
360	342991-0110		2	HOSE CLIP,WORM DRIVE TYPE (50)-65	
380	344215-0103		2	CLAMP RING A13MHM 1X1 1/2", 211053	
390	342921-0113		2	STRAIGHT COUPLING, EXT.THREAD 6/4-G1/8	
400	90603-4996		1	THERMOMETER CALIBRATOR, 9009-B	
410	90603-4999		2	TEMPERATURE PROBE, 5609-15-J +PLASTIC CA	
420	90603-5000		1	DOCUMENTING PROCESS CALIBRATOR 741B	
430	90603-5001		1	TEMPERATURE CALIBRATOR, 724	
440	90603-5002		1	TEMPERATURE HUMIDITY METER, 971	
450	90603-5003		1	CALIBRATION EQUIPMENT MICRO BATH, 6102	
460	90603-5004		1	VACUUM PUMP	
470	90603-5005		1	PRESSURE SENSOR, 700P01	
490	90603-5008		1	FLOW METER, ST4.0.1.2.1.32.Q.A.1.3.A.2.E	
500	90603-5009		1	FLOW METER, DF23.T.P.40.F.D.4.A.S.A.1.H.	
550	90604-2253		1	CALIBRATION EQUIPMENT, A0805145	
560	90604-2257		1	CALIBR. SOL. 13,50BRIX,CHFSITBX13.510F25	
570	90194-0113		100	ADHESIVE LABEL, CALIBRATED & DATE	
580	90459-2526		2	REMOTE I/O BASE MODULE 8 POINTS, 1734-TB	
590	3198222-0100		1	SET OF INSERTS	**11-19**
610	90220-0093	M	10	CABLE, PAIR TWISTED 4X2X0,25MM2	
620	90604-2258		1	CALIBR. SOL. 0,00BRIX, CHFSITBX00010F25	
630	90604-2255		1	CABLE, A0804384	
640	90166-0176	MM	500	RUBBER HOSE	

Machine Type | Group Description | Used-In | Group Number | Page No

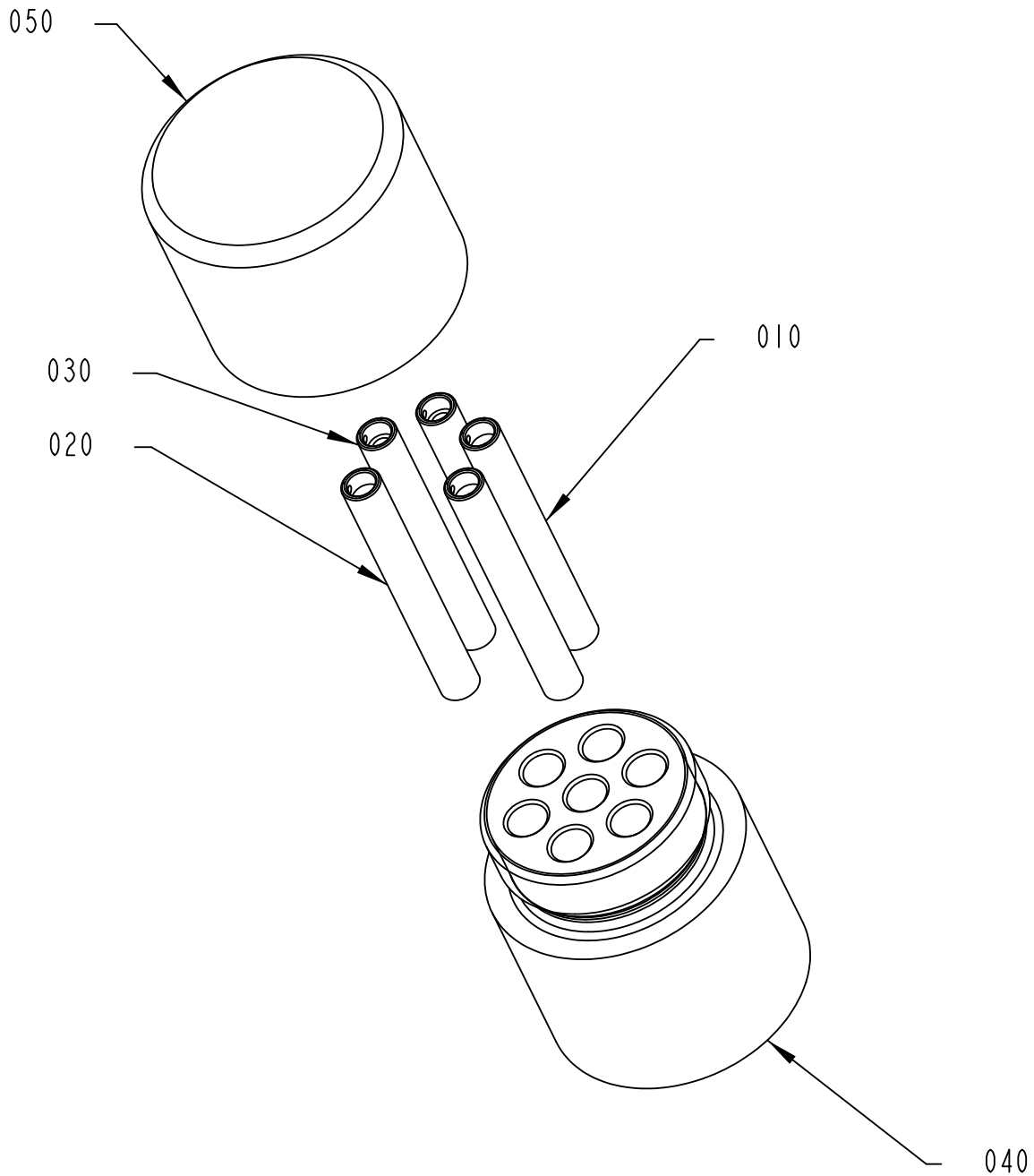
050
010
030
020
040

ECM: 523187 - 20111001
Group number: 3198222-0100
Assembly Drawing: 3198222-1_1_AA

Pos	Part No	UN	Qty	Description	Page No
-					
010	3167355-0000		2	INSERT	
020	3167356-0000		2	INSERT	
030	3198219-0000		1	INSERT	
040	3198220-0000		1	CASE	
050	3198221-0000		1	COVER	

Pos	Part No	UN	Qty	Description	Page No

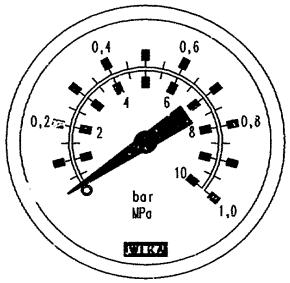
0,1
0,6
0,2
0,8
2
4
6
8
10
bar
MPa
1,0
WIKA

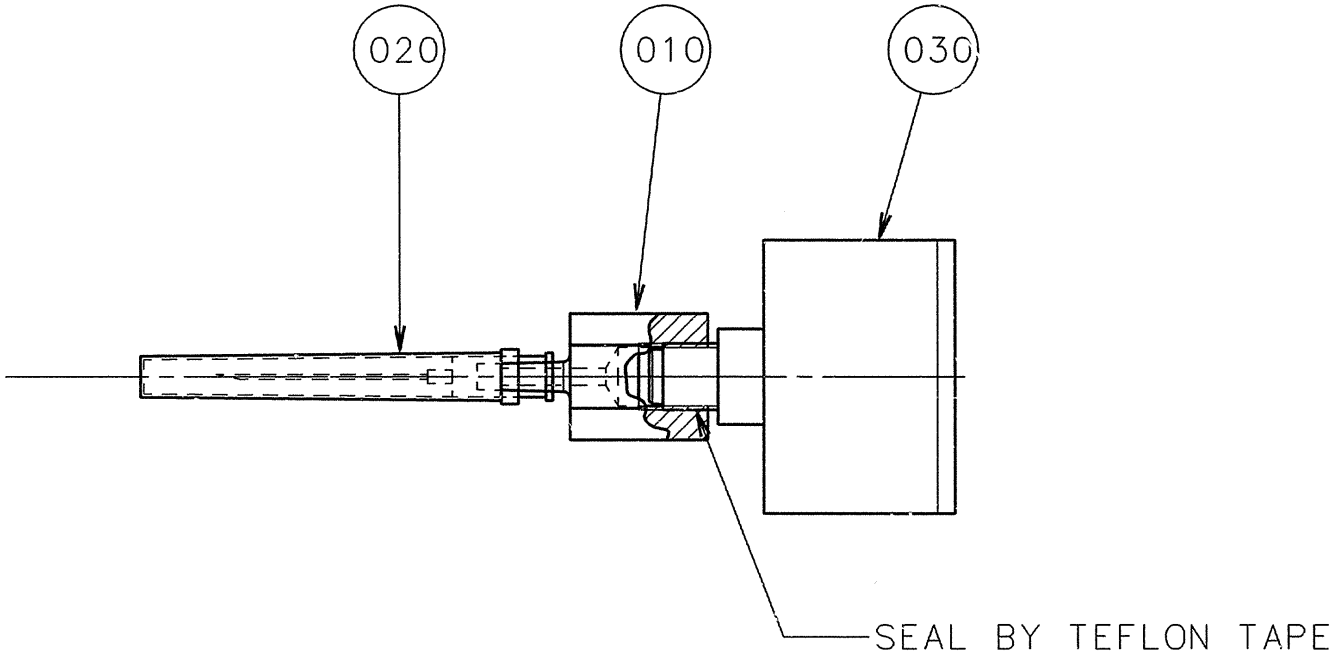
020
010
030
SEAL BY TEFLON TAPE

ECM: 390677 - 20090310
Group number: 1478583-0100
Assembly Drawing: 1478583-1_1_AA

Pos	Part No	UN	Qty	Description	Page No
-					
010	1478584-0000		1	NIPPLE	
020	1478585-0000		1	NEEDLE	
030	90458-2969		1	PRESSURE GAUGE, MAP-40-1-1/8-EN	

Pos	Part No	UN	Qty	Description	Page No

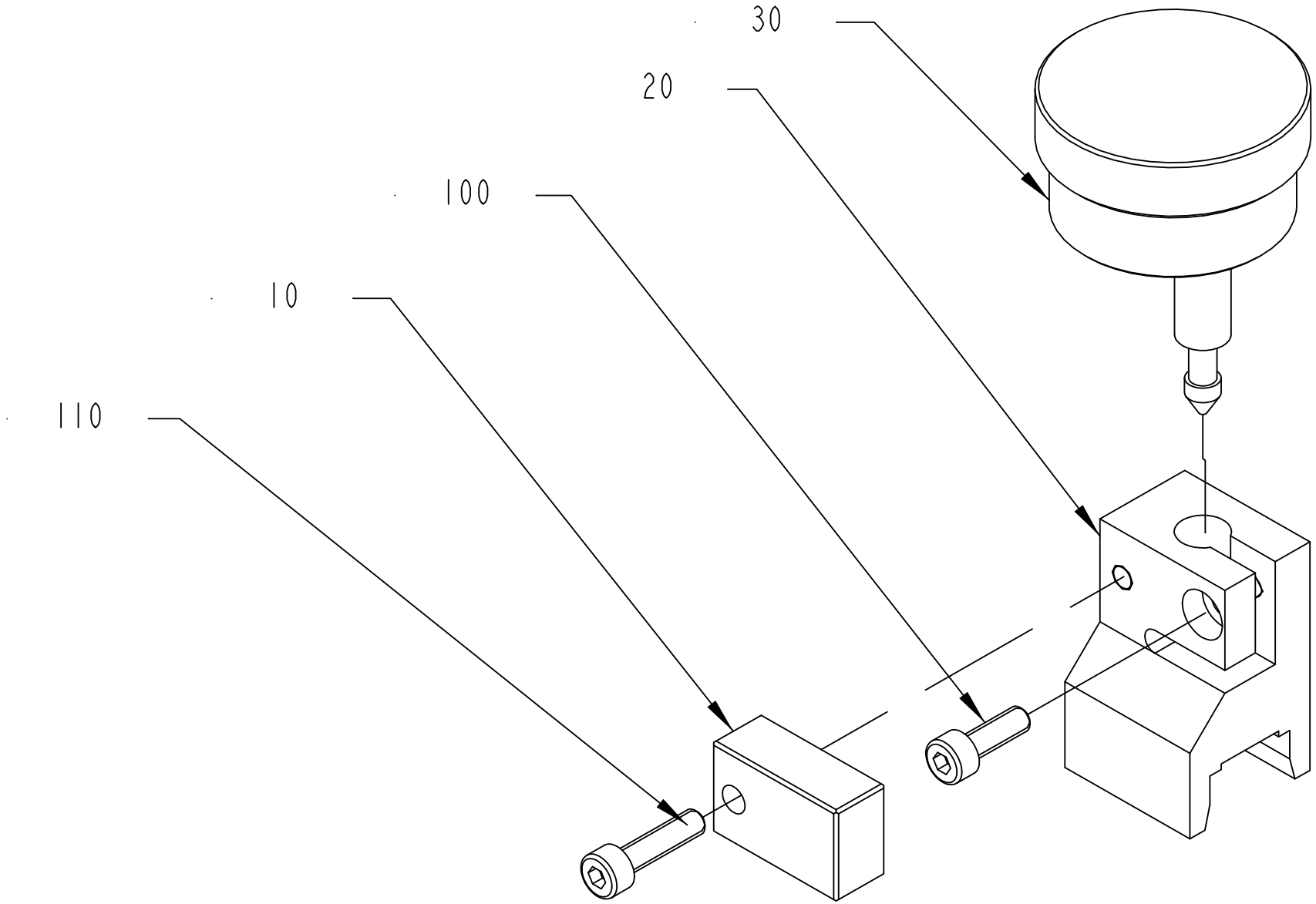

2908997-1
311572

ECM: 503624 - 20110702
Group number: 2908997-0100
Assembly Drawing: 2908997-1_1_AA

Pos	Part No	UN	Qty	Description	Page No
TBA 0100B, TBA 0125S, TBA 0080S					
010	2984760-0000		1	TOOL	
020	2984759-0000		1	TOOL	
TBA 0160S, TBA 0200M, TBA 0200B, TBA 0200SQ, TBA 0200S, TBA 0250S, TBA 0284B, TBA 0250B, TBA 0300S, TBA 0330S, TBA 0375S, TPA 0330SQ, TPA 0250SQ, TPA 0200SQ, TBA 0250SQ, TPA 0125SQ, TBA 1000M, TBA 0200E					
010	2908996-0000		1	TOOL	
020	2908923-0000		1	TOOL	
Common Parts					
030	90600-3053		1	DIAL GAUGE MITUTOYO 1160	
100	312115-0291		1	SCREW ISO4762 M4X12 A4 80	
110	312115-0293		1	SCREW ISO4762 M4X16 A4 80	

Pos	Part No	UN	Qty	Description	Page No

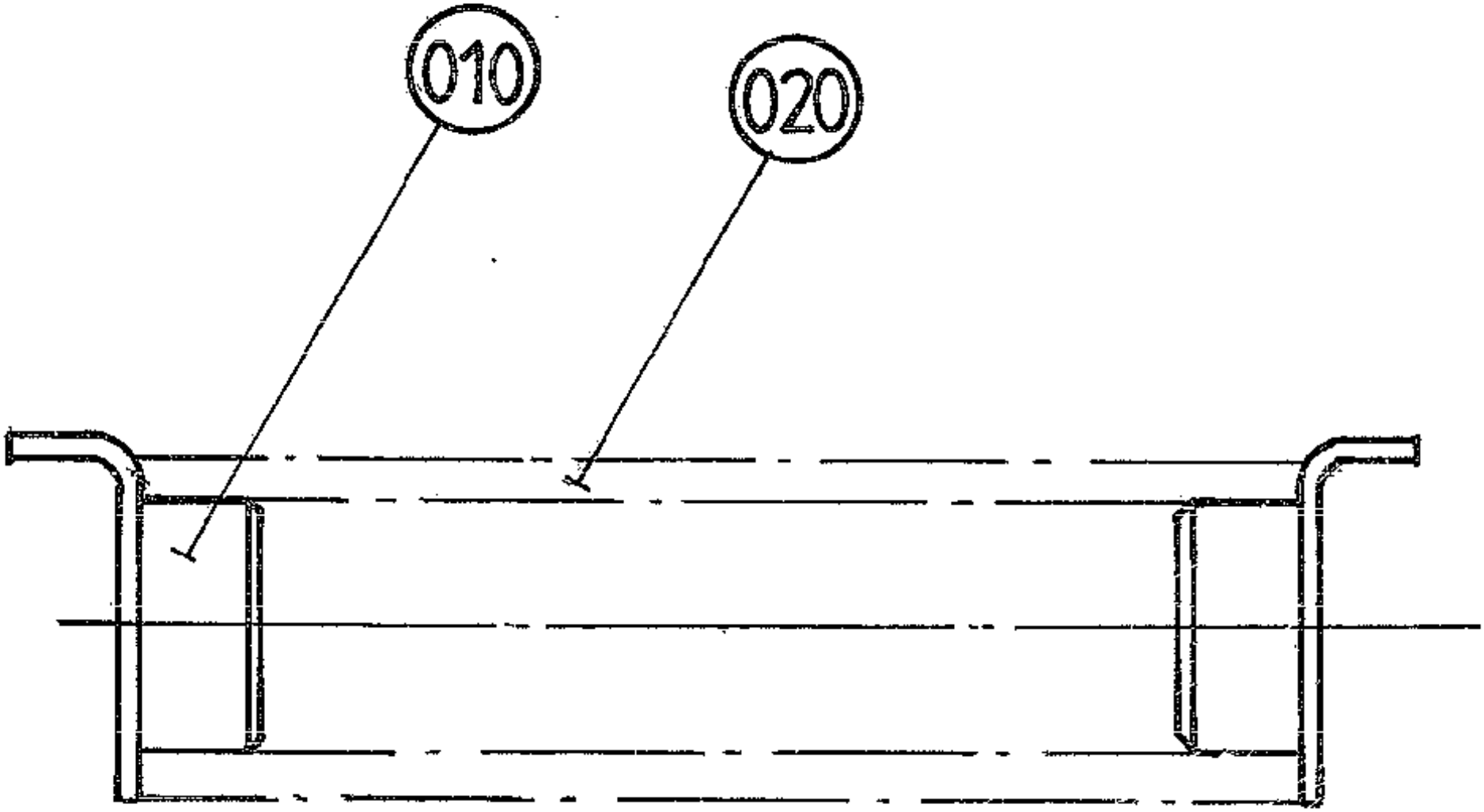
010
020

ECM: - -
Group number: 76304-0100
Assembly Drawing: 76304-1_1_AA

Pos	Part No	UN	Qty	Description	Page No
-					
010	76305-0000		2	BRACKET	
020	90335-0052		1	COMP. SPRING, 23400, 3,2X28,2X94,5	

Pos	Part No	UN	Qty	Description	Page No

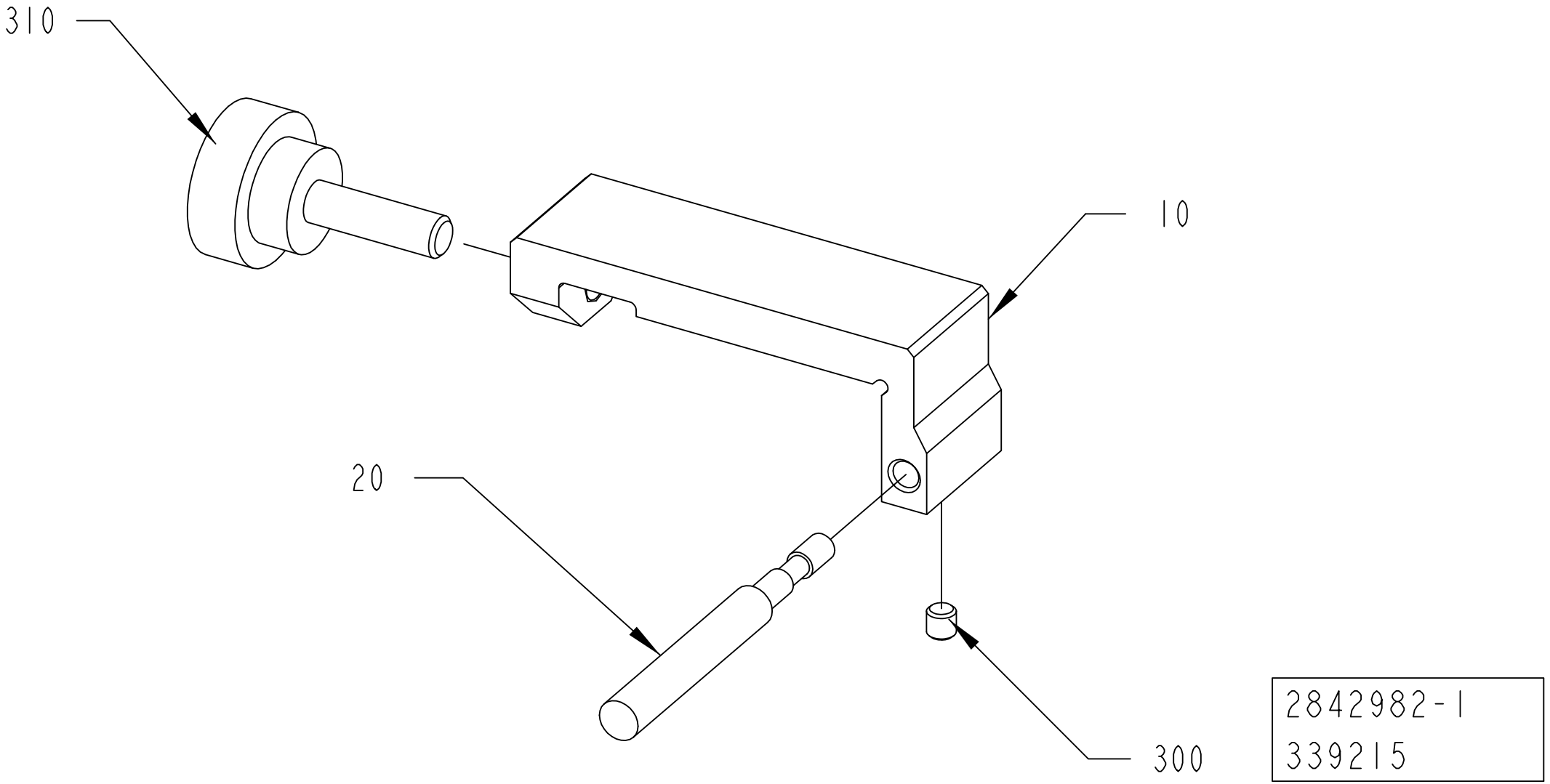
310
10
20
300
2842982-1
339215

ECM: 339215 - 20080116
Group number: 2842982-0100
Assembly Drawing: 2842982-1_1_AA

Pos	Part No	UN	Qty	Description	Page No
-					
010	2842984-0000		2	TOOL	
020	2842985-0000		2	TOOL	
300	312318-0283		1	SET SCREW, CUP END ISO4029 M4X4 A4	
310	90459-5725		2	KNOB CIRCULAR, EXT THREAD, VPZ-22 M6X20	

Pos	Part No	UN	Qty	Description	Page No

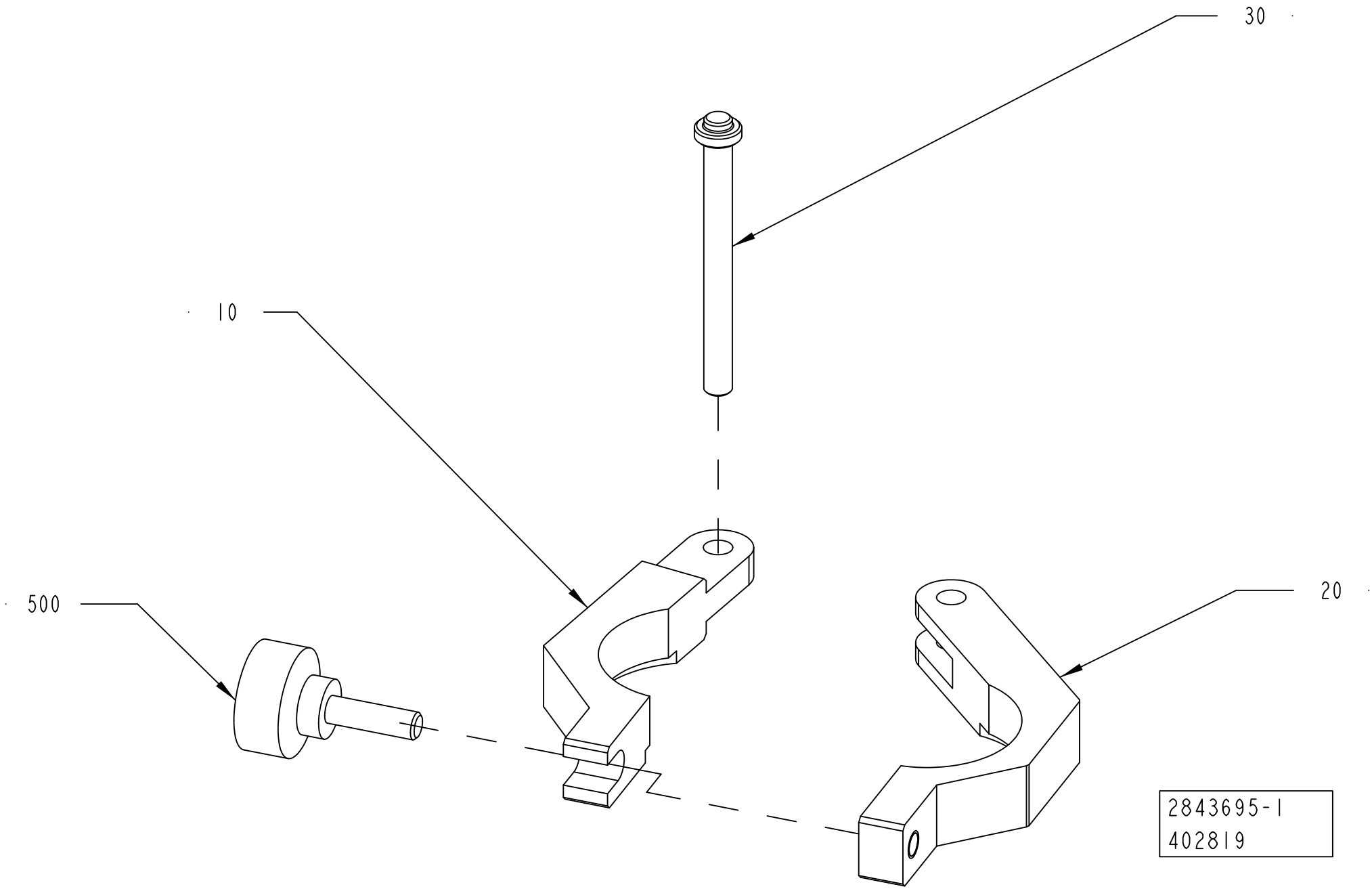
30
10
500
20
2843695-1
402819

ECM: 404310 - 20090724
Group number: 2843695-0100
Assembly Drawing: 2843695-1_1_AC

Pos	Part No	UN	Qty	Description	Page No
-					
010	3006602-0000		1	CLAMP	
020	3006603-0000		1	CLAMP	
030	2843709-0000		1	SHAFT	
500	90051-0083		1	KNOB, EXTERNAL THREAD. NO. 8308-1321	

Pos	Part No	UN	Qty	Description	Page No

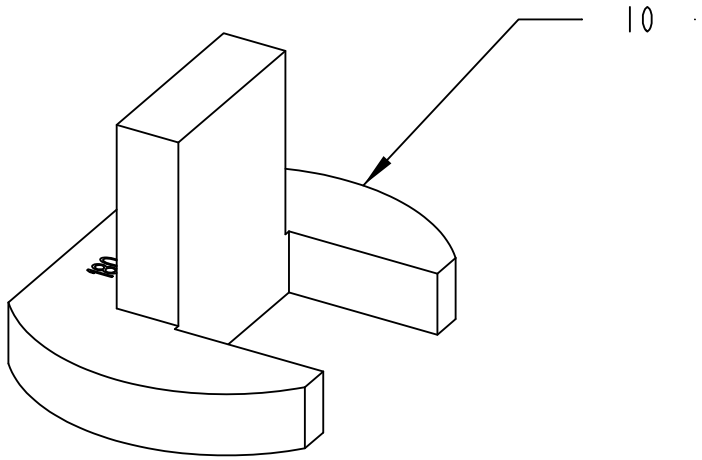
10

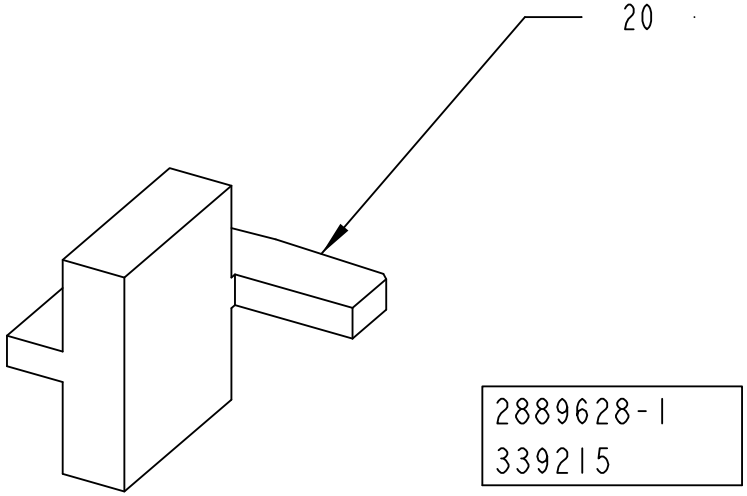
20
2889628-1
339215

Pos	Part No	UN	Qty	Description	Page No
TBA 0080S (See drawing on page: 11-30)					
010	2960530-0000		1	TEMPLATE	
020	2960531-0000		1	TEMPLATE	
TBA 0100B, TBA 0125S (See drawing on page: 11-30)					
010	75937-0000		1	TEMPLATE	
020	75943-0000		1	TEMPLATE	
TBA 0160S, TBA 0200S (See drawing on page: 11-30)					
010	76176-0000		1	TEMPLATE	
020	75944-0000		1	TEMPLATE	
TBA 0200B, TBA 0284B, TBA 0250B, TBA 0300S, TBA 0330S (See drawing on page: 11-30)					
010	75936-0000		1	TEMPLATE	
020	75939-0000		1	TEMPLATE	
TBA 0200E (See drawing on page: 11-32)					
010	3180559-0000		1	TOOL	
020	3122501-0000		1	TOOL	
025	3137764-0000		1	TOOL	
TBA 0200M, TBA 0250S (See drawing on page: 11-30)					
010	574454-0000		1	TEMPLATE	
020	574455-0000		1	TEMPLATE	
TBA 0200SQ, TBA 0250SQ (See drawing on page: 11-30)					
010	75936-0000		1	TEMPLATE	
020	1538757-0000		1	TOOL	
TBA 0375S (See drawing on page: 11-30)					
010	3072777-0000		1	TEMPLATE	
020	3073526-0000		1	TEMPLATE	
TPA 0125SQ (See drawing on page: 11-30)					
010	2909729-0000		1	TEMPLATE	
020	2909730-0000		1	TEMPLATE	
TPA 0250SQ, TPA 0200SQ (See drawing on page: 11-30)					
010	76176-0000		1	TEMPLATE	
020	1539893-0000		1	TEMPLATE	
TPA 0330SQ (See drawing on page: 11-30)					
010	929328-0000		1	TEMPLATE	
020	1539892-0000		1	TEMPLATE	

Pos	Part No	UN	Qty	Description	Page No

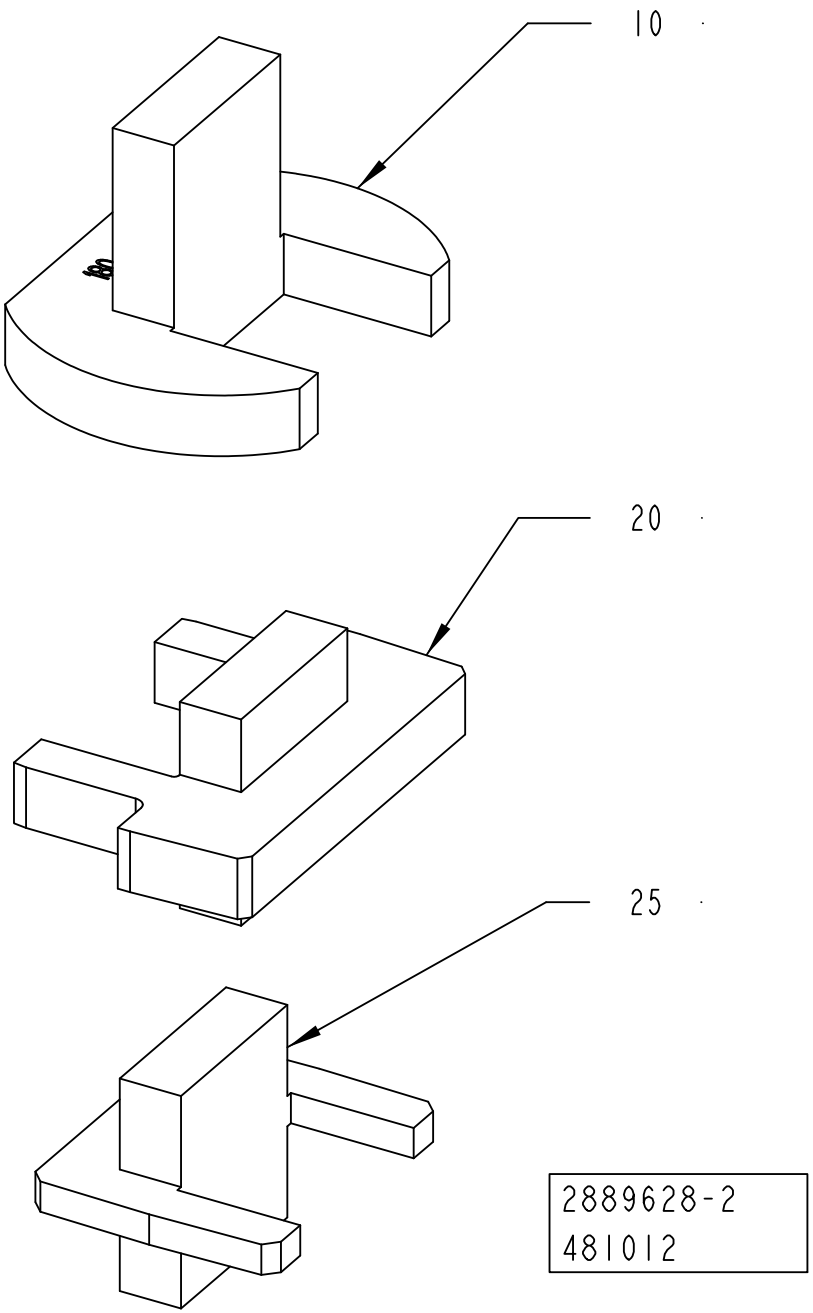
10
20
25
2889628-2
481012

ECM: 521070 - 20111003
Group number: 2889628-0100
Assembly Drawing: 2889628-2_1_AB

This list covers pages from 11-30 to 11-33

Pos	Part No	UN	Qty	Description	Page No
TBA 0080S (See drawing on page: 11-30)					
010	2960530-0000		1	TEMPLATE	
020	2960531-0000		1	TEMPLATE	
TBA 0100B, TBA 0125S (See drawing on page: 11-30)					
010	75937-0000		1	TEMPLATE	
020	75943-0000		1	TEMPLATE	
TBA 0160S, TBA 0200S (See drawing on page: 11-30)					
010	76176-0000		1	TEMPLATE	
020	75944-0000		1	TEMPLATE	
TBA 0200B, TBA 0284B, TBA 0250B, TBA 0300S, TBA 0330S (See drawing on page: 11-30)					
010	75936-0000		1	TEMPLATE	
020	75939-0000		1	TEMPLATE	
TBA 0200E (See drawing on page: 11-32)					
010	3180559-0000		1	TOOL	
020	3122501-0000		1	TOOL	
025	3137764-0000		1	TOOL	
TBA 0200M, TBA 0250S (See drawing on page: 11-30)					
010	574454-0000		1	TEMPLATE	
020	574455-0000		1	TEMPLATE	
TBA 0200SQ, TBA 0250SQ (See drawing on page: 11-30)					
010	75936-0000		1	TEMPLATE	
020	1538757-0000		1	TOOL	
TBA 0375S (See drawing on page: 11-30)					
010	3072777-0000		1	TEMPLATE	
020	3073526-0000		1	TEMPLATE	
TPA 0125SQ (See drawing on page: 11-30)					
010	2909729-0000		1	TEMPLATE	
020	2909730-0000		1	TEMPLATE	
TPA 0250SQ, TPA 0200SQ (See drawing on page: 11-30)					
010	76176-0000		1	TEMPLATE	
020	1539893-0000		1	TEMPLATE	
TPA 0330SQ (See drawing on page: 11-30)					
010	929328-0000		1	TEMPLATE	
020	1539892-0000		1	TEMPLATE	

Pos	Part No	UN	Qty	Description	Page No

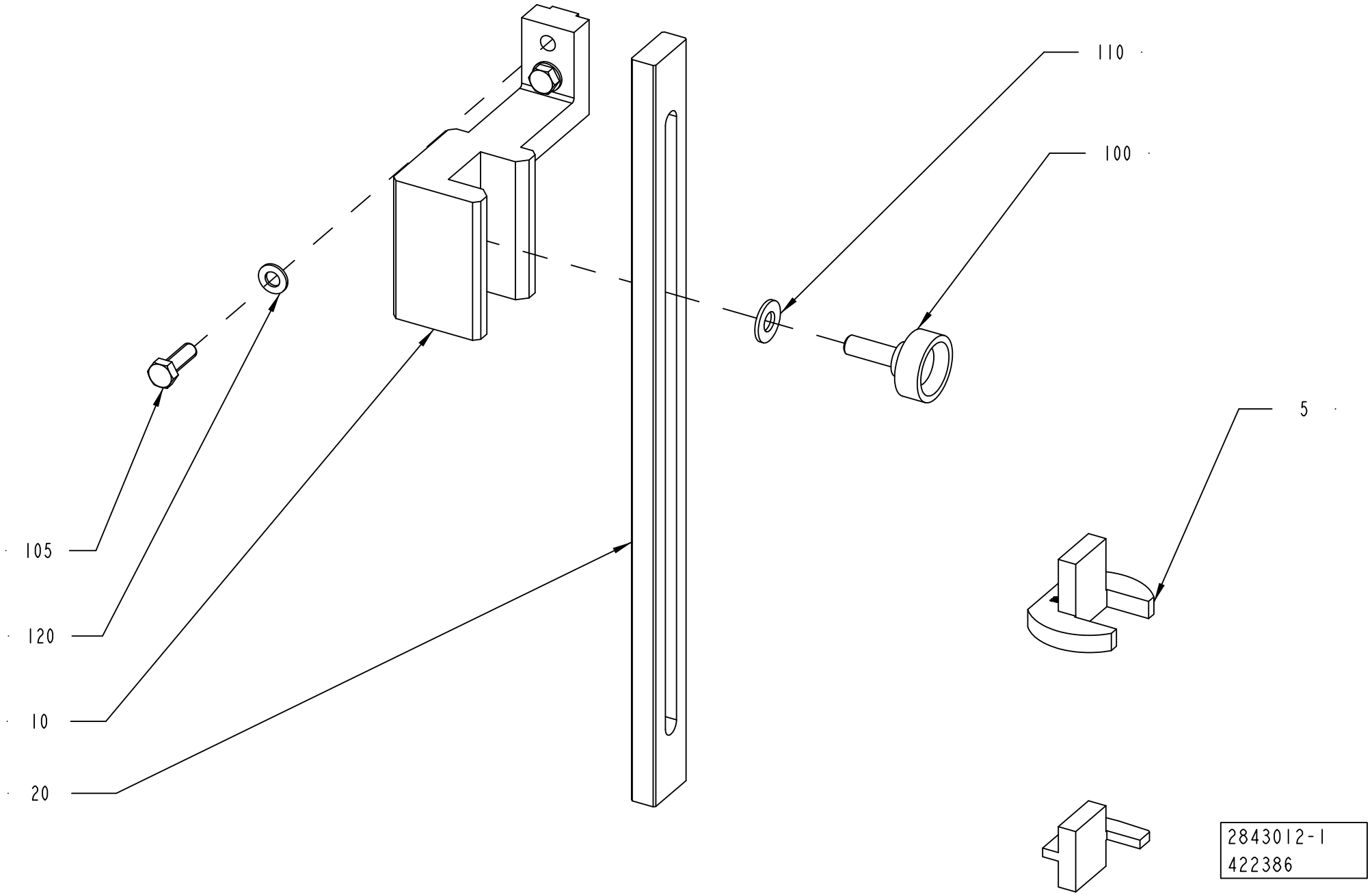
110
100
5
105
120
10
20
2843012-1
422386

ECM: 423664 - 20091125
Group number: 2843012-0100
Assembly Drawing: 2843012-1_1_AB

Pos	Part No	UN	Qty	Description	Page No
-					
005	2889628-0100		1	SETTING TOOL	**11-31, 11-33**
007	76304-0100		1	COMPRESSION SPRING	**11-25**
010	3047996-0000		1	TOOL	
020	2640814-0000		1	RULER	
100	318856-0109		1	KNOB, EXTERNAL THREAD. NO. 8308-1658	
110	315105-0173		1	WASHER PLAIN, 10,5X22X2 A4 BRB	

Pos	Part No	UN	Qty	Description	Page No

This page is intentionally left blank.

ECM: 444299 - 20100517
Group number: 2983304-0100
Assembly Drawing:

Pos	Part No	UN	Qty	Description	Page No
-					
010	2564074-0100		1	TOOLS AND TEMPLATES	**11-39**
030	2868283-0000		1	TOOL	
040	90600-1266		4	SCREW M10X80, GN 913.3-M10-80-MS	

Pos	Part No	UN	Qty	Description	Page No

This page is intentionally left blank.

ECM: 334204 - 20080401
Group number: 2564074-0100
Assembly Drawing:

Pos	Part No	UN	Qty	Description	Page No
-					
010	1532459-0100		1	SETTING TOOL	**11-41**
100	90600-4088		1	HOOK WRENCH SQUARE PIN, 282108	

Pos	Part No	UN	Qty	Description	Page No

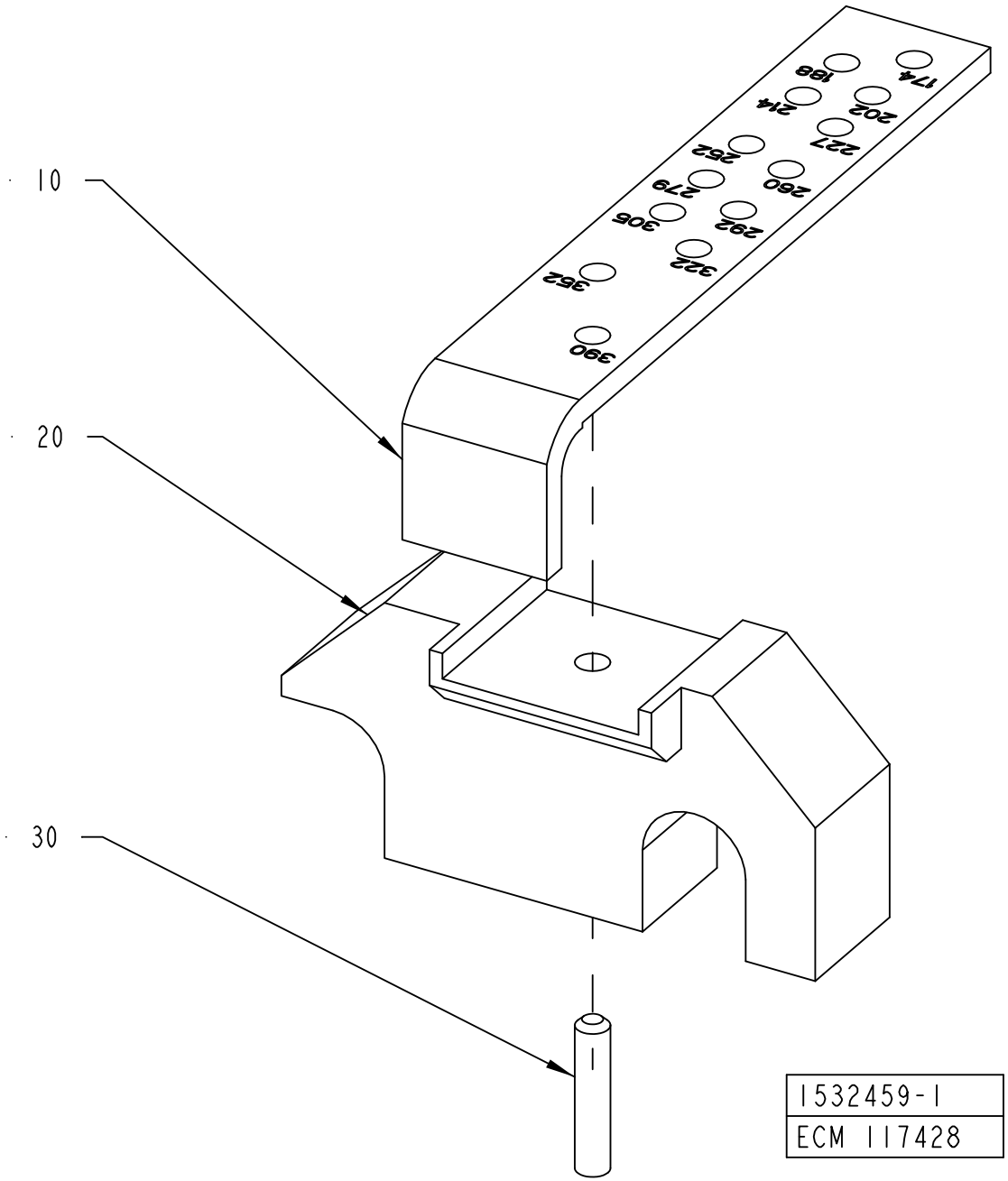
10
20
30
174
188
202
214
227
262
260
279
292
306
322
362
390
1532459-1
ECM 117428

ECM: 185718 - 20041005
Group number: 1532459-0100
Assembly Drawing: 1532459-1_1_AB

Pos	Part No	UN	Qty	Description	Page No
-					
010	1538234-0000		1	SPACER	
020	1532466-0000		1	BRACKET	
030	311103-0351		1	PARALLEL PIN ISO 2338 6M6X16 A1	

Pos	Part No	UN	Qty	Description	Page No

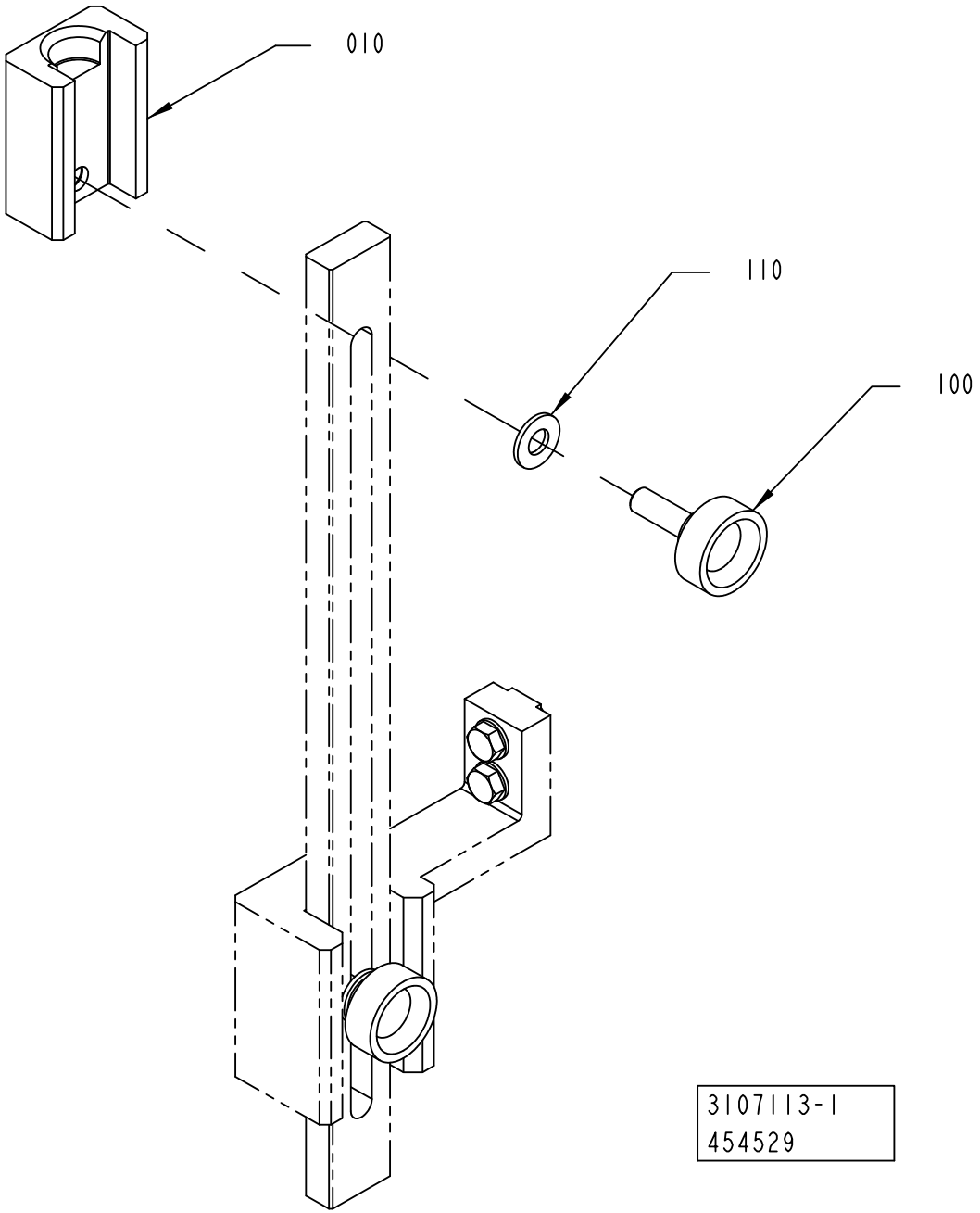
010
110
100
3107113-1
454529

ECM: 454533 - 20100610
Group number: 3107113-0100
Assembly Drawing: 3107113-1_1_AA

Pos	Part No	UN	Qty	Description	Page No
-					
010	3093440-0000		1	TEMPLATE	
100	318856-0109		1	KNOB, EXTERNAL THREAD. NO. 8308-1658	
110	315105-0173		1	WASHER PLAIN, 10,5X22X2 A4 BRB	

Pos	Part No	UN	Qty	Description	Page No

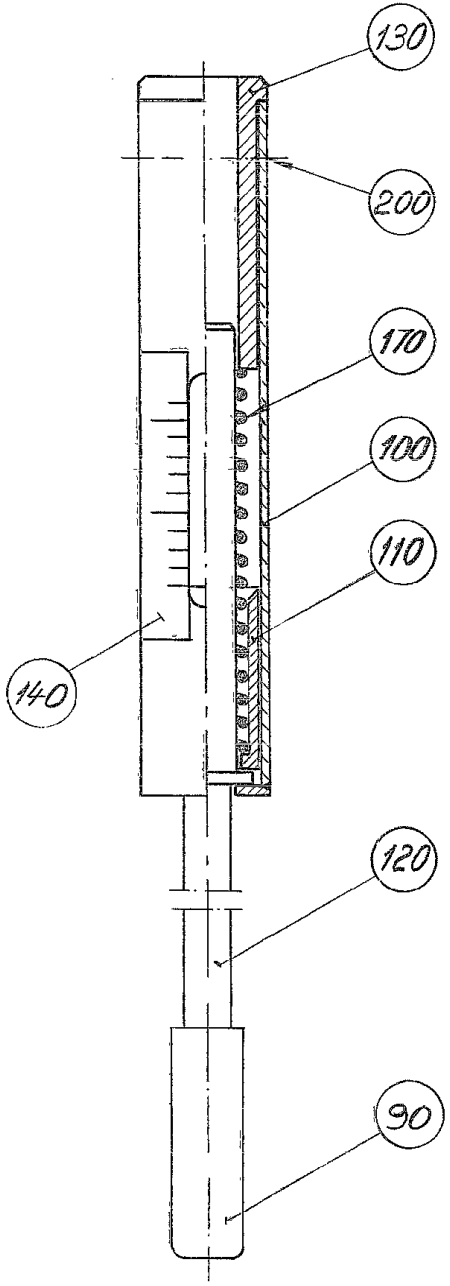
130
200
170
100
110
140
120
90

ECM: 71001 - 19970802
Group number: 74767-0102
Assembly Drawing: 74767-1_1_AA

Pos	Part No	UN	Qty	Description	Page No
-					
090	74912-0000		1	DOWEL	
100	74768-0000		1	SLEEVE	
110	74769-0000		1	SLEEVE	
120	74770-0000		1	ROD	
130	74771-0000		1	STEERING	
140	74772-0000		1	DIAL	
170	107000-0000		1	SPRING	
200	312125-0285		2	SLOTTED HEAD SCREW, ISO1207 M4X6 A4	

Pos	Part No	UN	Qty	Description	Page No

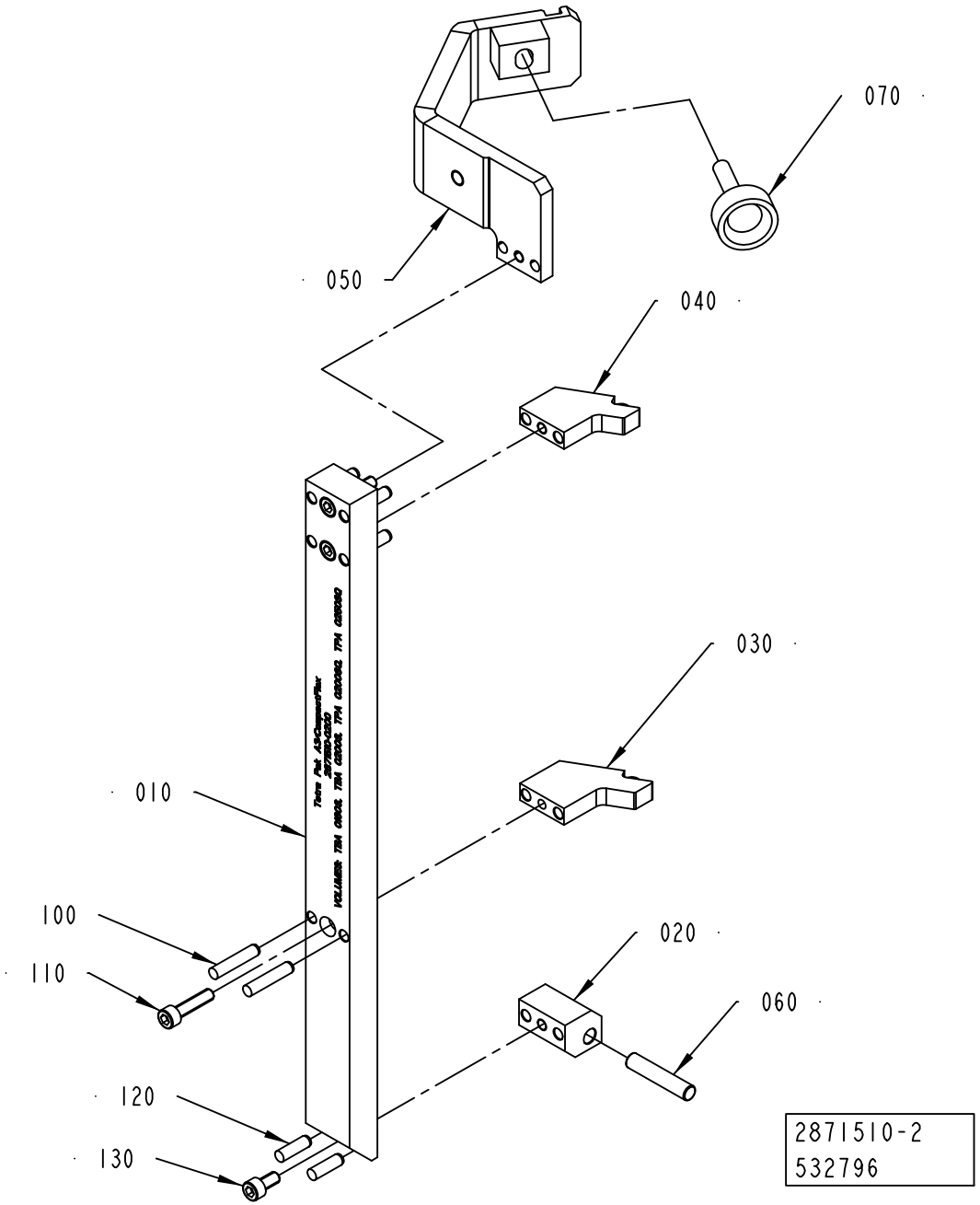
070
050
040
030
010
100
110
020
060
120
130
2871510-2
532796

ECM: 532796 - 20120401
Group number: 2871510-0200
Assembly Drawing: 2871510-2_1_AB

Pos	Part No	UN	Qty	Description	Page No
TBA 0080S					
010	3151752-0000		1	RULER	
020	3151760-0000		1	BRACKET	
030	3151758-0000		1	STOPPER	
040	3151759-0000		1	STOPPER	
050	3212442-0000		1	BRACKET	
060	263655-0003		1	SHAFT	
100	311103-0314		6	PARALLEL PIN ISO 2338 5M6X30 A1	
120	311103-0310		2	PARALLEL PIN ISO 2338 5M6X20 A1	
TBA 0100B, TBA 0125S					
010	3151748-0000		1	RULER	
020	2871511-0000		1	BRACKET	
030	2871513-0000		1	STOPPER	
040	2871517-0000		1	STOPPER	
050	3212441-0000		1	BRACKET	
060	2873-0000		1	SHAFT	
100	311103-0357		6	PARALLEL PIN ISO 2338 6M6X30 A1	
120	311103-0353		2	PARALLEL PIN ISO 2338 6M6X20 A1	
TBA 0160S, TBA 0200S, TPA 0250SQ, TPA 0200SQ					
010	3151749-0000		1	RULER	
020	2871511-0000		1	BRACKET	
030	2871514-0000		1	STOPPER	
040	2871518-0000		1	STOPPER	
050	3212438-0000		1	BRACKET	
060	2873-0000		1	SHAFT	
100	311103-0357		6	PARALLEL PIN ISO 2338 6M6X30 A1	
120	311103-0353		2	PARALLEL PIN ISO 2338 6M6X20 A1	
TBA 0200B, TBA 0200SQ, TBA 0284B, TBA 0250B, TBA 0300S, TBA 0330S, TBA 0250SQ					
010	3151751-0000		1	RULER	
020	2871512-0000		1	BRACKET	
030	2871515-0000		1	STOPPER	
040	2871519-0000		1	STOPPER	
050	3212439-0000		1	BRACKET	
060	263655-0006		1	SHAFT	
100	311103-0357		6	PARALLEL PIN ISO 2338 6M6X30 A1	
120	311103-0353		2	PARALLEL PIN ISO 2338 6M6X20 A1	
TBA 0200M, TBA 0250S, TBA 0200E					
010	3151750-0000		1	RULER	
020	2871511-0000		1	BRACKET	
030	2871516-0000		1	STOPPER	
040	2871520-0000		1	STOPPER	
050	3212440-0000		1	BRACKET	
060	2873-0000		1	SHAFT	
100	311103-0357		6	PARALLEL PIN ISO 2338 6M6X30 A1	
120	311103-0353		2	PARALLEL PIN ISO 2338 6M6X20 A1	
TBA 0375S					
010	3151755-0000		1	RULER	
020	3089572-0000		1	BRACKET	
030	3058483-0000		1	STOPPER	
040	3058484-0000		1	STOPPER	
050	3212439-0000		1	BRACKET	
060	263655-0006		1	SHAFT	
100	311103-0357		6	PARALLEL PIN ISO 2338 6M6X30 A1	
120	311103-0353		2	PARALLEL PIN ISO 2338 6M6X20 A1	
TPA 0125SQ					
010	3151753-0000		1	RULER	
020	3151760-0000		1	BRACKET	
030	3151756-0000		1	STOPPER	
040	3151757-0000		1	STOPPER	
050	3212442-0000		1	BRACKET	
060	263655-0003		1	SHAFT	
100	311103-0314		6	PARALLEL PIN ISO 2338 5M6X30 A1	
120	311103-0310		2	PARALLEL PIN ISO 2338 5M6X20 A1	
TPA 0330SQ					
010	3151754-0000		1	RULER	
020	2871512-0000		1	BRACKET	
030	3058438-0000		1	STOPPER	
040	3058439-0000		1	STOPPER	
050	3212439-0000		1	BRACKET	
060	263655-0006		1	SHAFT	
100	311103-0357		6	PARALLEL PIN ISO 2338 6M6X30 A1	
120	311103-0353		2	PARALLEL PIN ISO 2338 6M6X20 A1	
Common Parts					
070	90051-0059		1	KNOB, EXTERNAL THREAD. NO. 8308-1550	
110	312115-0372		3	SCREW ISO4762 M6X25 A4 80	
130	312115-0366		1	SCREW ISO4762 M6X12 A4 80	

Machine Type | Group Description | Used-In | Group Number | Page No

This page is intentionally left blank.

ECM: 536013 - 20120401
Group number: 2889884-0100
Assembly Drawing:

Pos	Part No	UN	Qty	Description	Page No
TBA 0100B, TBA 0125S, TBA 0080S, TPA 0125SQ					
JS20	2984255-0000		1	ASSEMBLY TOOL	
TBA 0160S, TBA 0200M, TBA 0200B, TBA 0200SQ, TBA 0200S, TBA 0250S, TBA 0284B, TBA 0250B, TBA 0300S, TBA 0330S, TBA 0375S, TPA 0330SQ, TPA 0250SQ, TPA 0200SQ, TBA 0250SQ, TBA 0200E					
JS20	90091-0387		1	ASSEMBLY TOOL	
Common Parts					
EC010	3219692-0100		1	TOOLS AND TEMPLATES EC	**11-51**
FF20	2852318-0000		1	PIN	
FF10	2819311-0000		1	WHEEL	
FM010	3097617-0100		1	GREASE GUN	**11-59**
JS10	76131-0000		1	ASSEMBLY CONE	
JS10	76132-0000		1	ASSEMBLY TOOL	
JS10	78801-0000		1	CALIBRATION TOOL	
SS40	3047649-0200		1	PRODUCT LINE LEAKAGE DETECTOR	**11-61**
SS30	74305-0100		1	PULLER	**11-63**
SS20	565536-0100		1	PRESSURE TEST EQUIPMENT	**11-65**
SS10	449969-0100		1	TOOL DISMOUNTING	**11-67**

Pos	Part No	UN	Qty	Description	Page No

This page is intentionally left blank.

ECM: 535832 - 20120401
Group number: 3219692-0100
Assembly Drawing:

Pos	Part No	UN	Qty	Description	Page No
-					
010	2559112-0100		1	CALIBRATION EQUIPMENT	**11-53**
030	351501-0100		1	ETHERNET PATCH CABLE, FL CAT5 PATCH 10,0	
040	90459-6033		1	PROGRAMMING CABLE FOR PLUTO, 20-070-56	
050	90602-3870		1	PROGRAMMING CABLE USB, 2TLA020070R5800	
060	3024743-0001		1	COMPACT FLASH CLONER 1.0	
070	2972771-0200		1	BARCODE SCANNER	**11-55, 11-57**
A01C2000	90604-3590		1	MEMORY CARD SD 1GB, 1784-SD1, SERIES A	

Pos	Part No	UN	Qty	Description	Page No

This page is intentionally left blank.

ECM: 520572 - 20110928
Group number: 2559112-0100
Assembly Drawing:

Pos	Part No	UN	Qty	Description	Page No
-					
10	90458-0914		1	THERMOCOUPLE CALIBRATOR, 714	
20	90458-0915		1	THERMOCOUPLE CABLE FOR 90458-0914/MALE5M	
30	90410-0337		1	CALIBRATION INSTRUMENT, 5100071-001	
40	90326-0310		1	THERMOCOUPLE, 5130020-000	

Pos	Part No	UN	Qty	Description	Page No

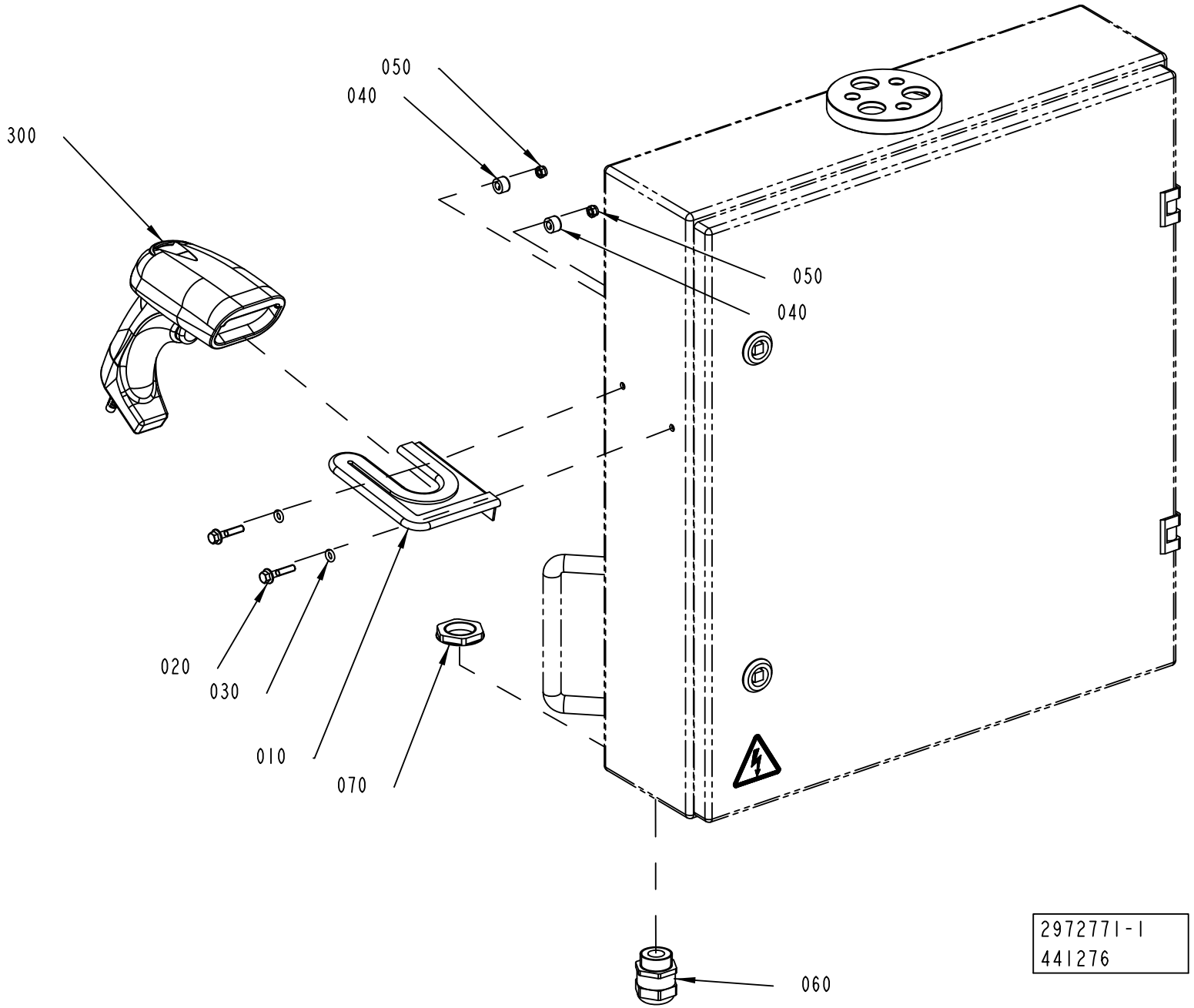
050
040
300
050
040
020
030
010
070
060
2972771-1
441276

ECM: 441281 - 20100416
Group number: 2972771-0200
Assembly Drawing: 2972771-1_1_AB

This list covers pages from 11-54 to 11-57

Pos	Part No	UN	Qty	Description	Page No
-					
010	3060156-0101		1	SCANNER SUPPORT	
020	312108-0333		2	SCREW EN 1665 TYPE F M5X25 A270	
030	315202-0204		2	O-RING 5,3X2,4 MM	
040	315741-0102		2	RETAINING RING, DIN 705 A2 6	
050	312812-0314		2	HEXAGON NUT, NY-LOCK M5 A4 80	
060	90458-0316		1	CABLE GLAND, M25X1,5, 5311 1130	
070	90458-0324		1	NUT, M25X1,5	
090	90601-6430		1	USB CABLE, 90601-6430	
300	90600-2982		1	BARCODE READER, D-131 CAB-463	
	90600-4084		*1*	*BARCODE READER COILED CABLE, CAB-463*	
500	312105-0287		2	SCREW, M6S ISO 4017 M4X8 A4 70	
510	315106-0136		2	WASHER PLAIN, M4 ISO7089-4-200 HV A4	

Pos	Part No	UN	Qty	Description	Page No

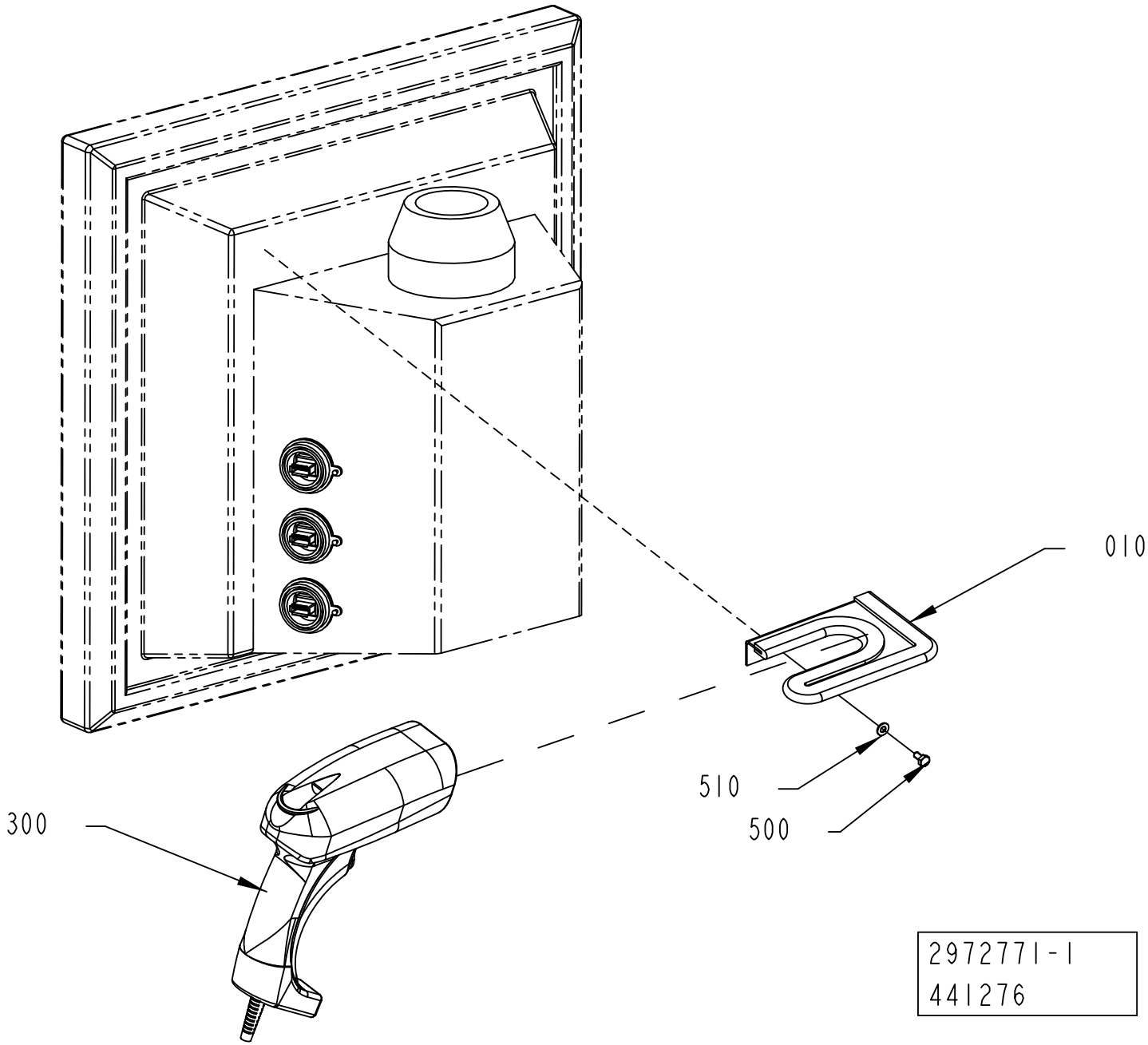
010
510
500
300
2972771-1
441276

ECM: 441281 - 20100416
Group number: 2972771-0200
Assembly Drawing: 2972771-1_2_AB

This list covers pages from 11-54 to 11-57

Pos	Part No	UN	Qty	Description	Page No
-					
010	3060156-0101		1	SCANNER SUPPORT	
020	312108-0333		2	SCREW EN 1665 TYPE F M5X25 A270	
030	315202-0204		2	O-RING 5,3X2,4 MM	
040	315741-0102		2	RETAINING RING, DIN 705 A2 6	
050	312812-0314		2	HEXAGON NUT, NY-LOCK M5 A4 80	
060	90458-0316		1	CABLE GLAND, M25X1,5, 5311 1130	
070	90458-0324		1	NUT, M25X1,5	
090	90601-6430		1	USB CABLE, 90601-6430	
300	90600-2982		1	BARCODE READER, D-131 CAB-463	
	90600-4084		*1*	*BARCODE READER COILED CABLE, CAB-463*	
500	312105-0287		2	SCREW, M6S ISO 4017 M4X8 A4 70	
510	315106-0136		2	WASHER PLAIN, M4 ISO7089-4-200 HV A4	

Pos	Part No	UN	Qty	Description	Page No

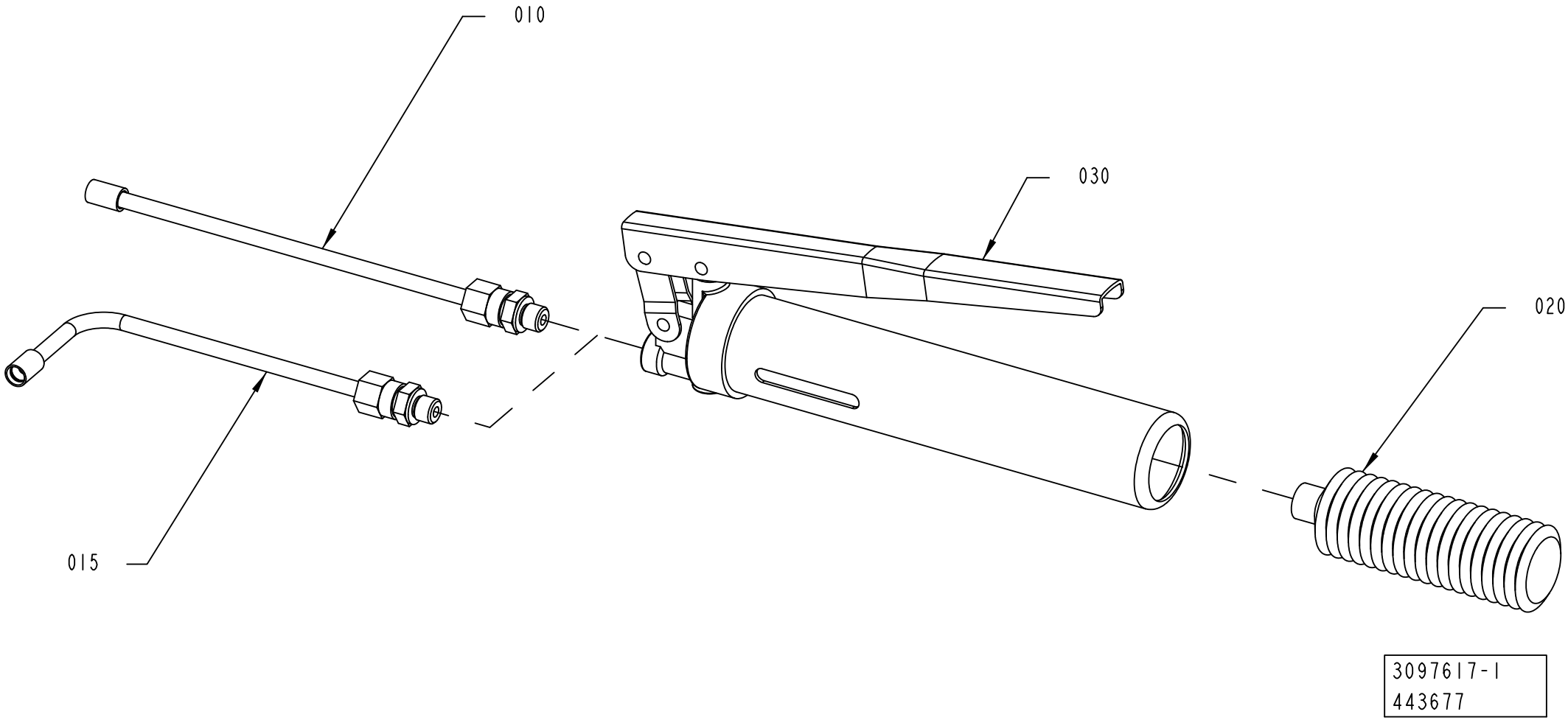
010
030
020
015
3097617-1
443677

ECM: 444298 - 20100517
Group number: 3097617-0100
Assembly Drawing: 3097617-1_1_AA

Pos	Part No	UN	Qty	Description	Page No
-					
010	3087780-0000		1	NOZZLE	
015	3102688-0000		1	NOZZLE	
020	90459-5182		1	GREASE GUN UNIT, MG70 - 285301000000000	
030	90459-5183		1	GREASE AFC 70 GRAMM, 035630026	

Pos	Part No	UN	Qty	Description	Page No

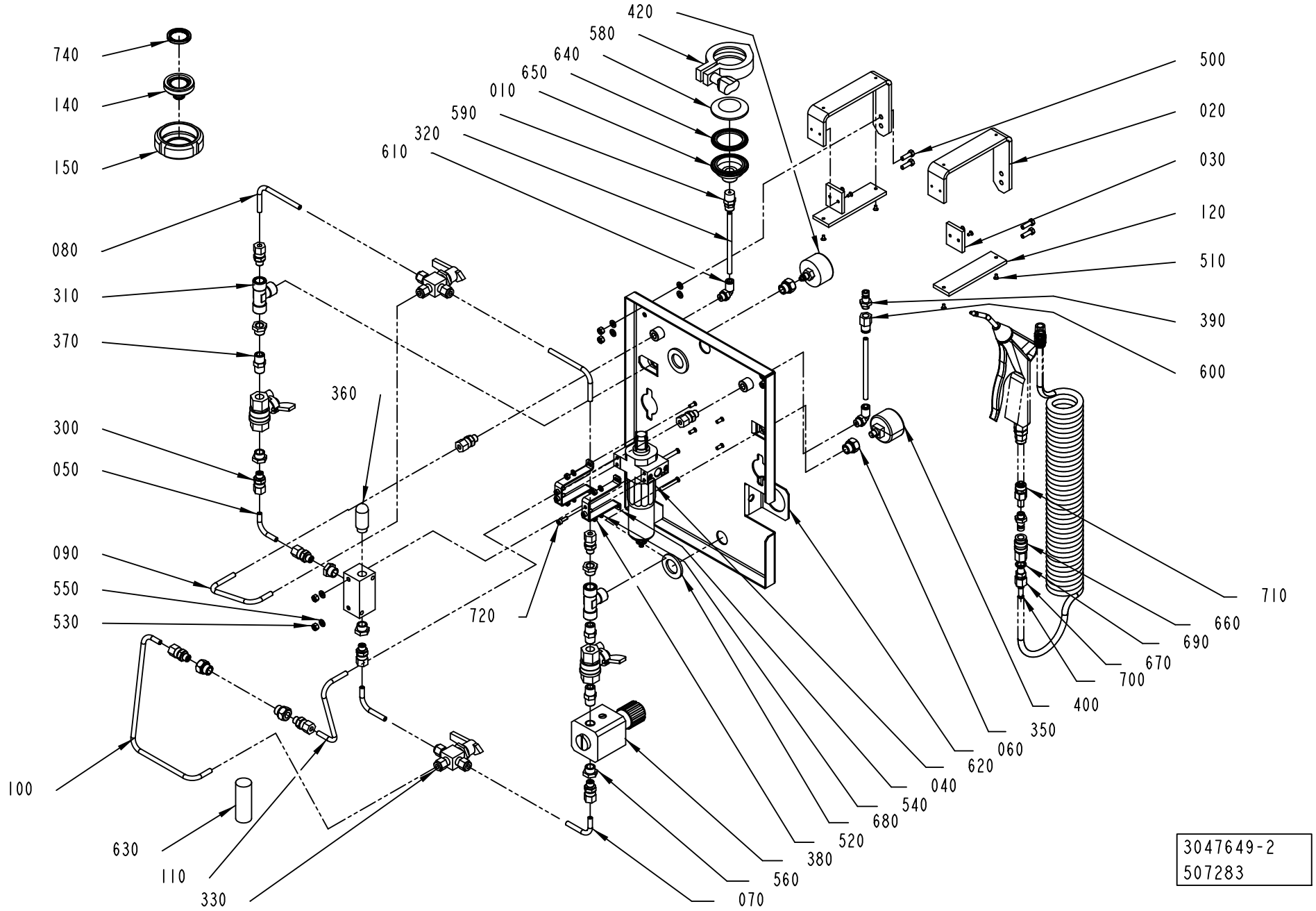
420
580
640
650
010
590
320
610
740
140
150
080
310
370
360
300
050
090
550
530
720
100
630
110
330
070
560
380
520
680
540
040
620
060
350
400
700
670
690
660
710
500
020
030
120
510
390
600
3047649-2
507283

ECM: 535527 - 20111222
Group number: 3047649-0200
Assembly Drawing: 3047649-2_1_AA

Pos	Part No	UN	Qty	Description	Page No
-					
	3059128-0105		1	REBUILDING MANUAL	
	3222106-0101		1	UPDATE PAGES	
010	3031515-0000		1	FLANGE	
020	3031536-0000		2	PLATE	
030	3047392-0000		2	PLATE	
040	3047393-0000		2	BRACKET	
050	3047647-0000		1	PIPE	
060	3047650-0000		1	PANEL	
070	3047651-0000		2	PIPE	
080	3047652-0000		2	PIPE	
090	3047653-0000		1	PIPE	
100	3047654-0000		1	PIPE	
110	3047655-0000		1	PIPE	
120	3047656-0000		2	PLATE	
130	3075023-0000		1	BOX	
140	3109309-0000		1	LID	
150	3061353-0000		1	LOCKING RING	
300	90030-0184		10	CONN. STR., GE06LRED71	
310	90140-0018		2	T-PIPE, INT. THREAD, 2003-1/4	
320	315300-0001	MM	3000	TUBE, 6 MM PE BLUE	
330	90187-0067		2	BALL VALVE, 6 MM	
	90187-0310		*1*	*ASSEMBLY BRACKET, MS-MB-43*	
	90187-0309		*1*	*ACTUATOR FOR 90187-0067 AND -0310*	
340	90187-0088		2	BALL VALVE, G1/4, NPBR	
350	90224-0090		4	REDUCER, ART. NO RMM 1418	
360	90328-0026		1	SILENCER, G1/4"	
370	90330-0043		3	NIPPLE, EXT.THREAD, HEXAGON, R1/4-R1/4	
380	90459-0672		1	PRECISION PRESSURE REGULATOR, LRP-1/4-4	
390	90163-0057		2	QUICK COUPLING, (M) 5150-1/8	
400	90459-0671		1	PRESSURE GAUGE, MAP-40-4-1/8-EN	
410	90459-5624		1	FESTO VAD-1/4	
420	90600-5540		1	PRESSURE GAUGE, VAM-40-V1/0-R1/8-EN	
500	312105-0329		4	SCREW, M6S ISO 4017 M5X16 A4 80	
510	312155-0220		8	SCREW DIN 7991 MF6S M3X6 A4 70	
520	312605-0312		4	HEXAGON NUT, M6M M4 A280	
530	312605-0314		6	HEXAGON NUT, M6M M5 A280	
540	315105-0136		4	WASHER PLAIN, 4,3X9X0,8 A4 BRB	
550	315105-0146		10	WASHER PLAIN, 5,3X10X1 A4 BRB	
560	342701-0201		6	BUSHING, INT/EXT, G1/4-G1/8	
580	6-2110 53		1	CLAMP SINGLE HINGE A13MHM-1 1/5-S	
590	342920-0114		1	STRAIGHT COUPLING, EXT.THREAD 6/4-R1/4	
600	342923-0113		1	STRAIGHT COUPL.,INT.THREADED 6/4-G1/8"	
610	350002-0006		2	PUSH-IN L-FITTING QSL-F-G1/8-6	
620	90601-9510		1	FILTER, LFMA-1/4-D-MINI-DA-A	
630	90601-9550		1	FILTER CARTRIDGE, MS4/D-MINI-LFM-A	
640	90217-0332		1	SOLID END CAP ISO2852, FOR TUBE 38,1 MM	
650	342850-0304		1	GASKET 35,4X49,1X5,2 1"1/2 FDA, 3-A	
660	90163-0062		1	QUICK COUPLING, (F) 5053-1/8	
670	90030-0290		2	CONN. STR. GE08LLR71	
680	315105-0192		2	WASHER PLAIN, 21X36X3 A4 BRB	
690	315237-0109		1	WASHER,PL.RND.AL.10/14,H=1,5	
700	342706-0148		1	STIFFNER SLEEVE FOR HOSE 8X1	
710	342923-0121		1	STRAIGHT COUPL.,INT.THREADED 8/6-G1/8"	
720	312115-0291		4	SCREW ISO4762 M4X12 A4 80	
730	90144-0073	MM	1500	TREBOFLON-TAPE W=13MM	
740	3092164-0000		1	GASKET	

Machine Type	Group Description	Used-In	Group Number	Page No

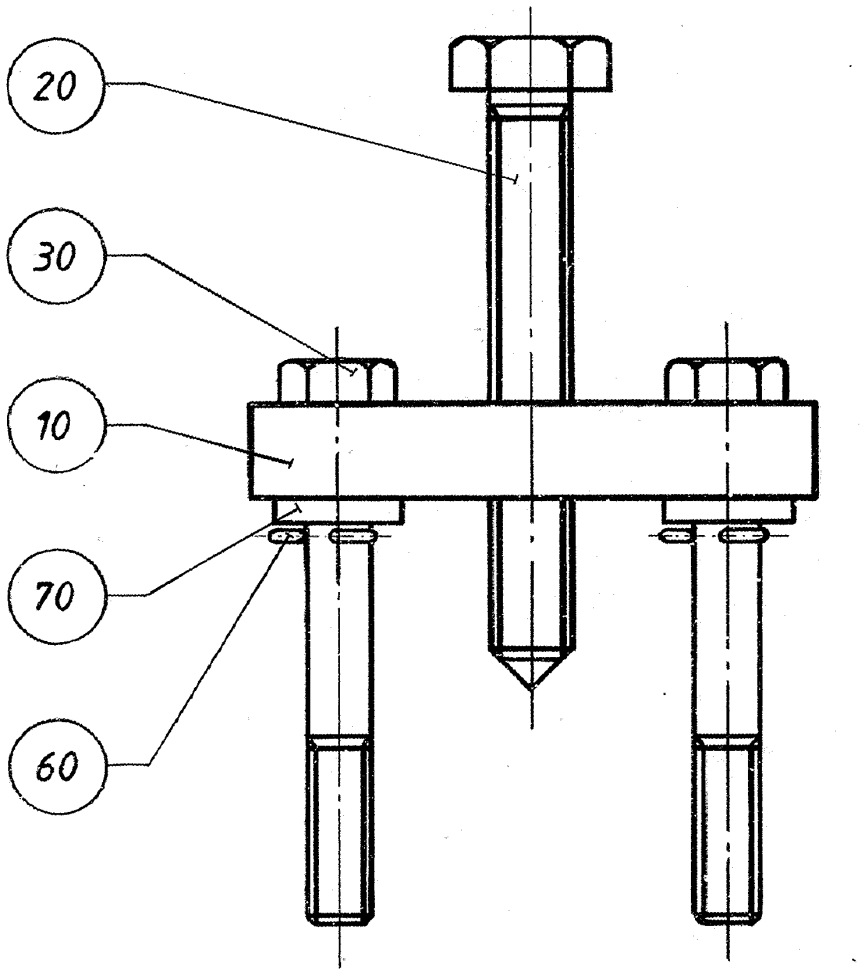
20
30
10
70
60

ECM: - -
Group number: 74305-0100
Assembly Drawing: 74305-1_1_AA

Pos	Part No	UN	Qty	Description	Page No
-					
010	74363-0000		1	FASTENING PLATE	
020	74364-0000		1	EXTRACTOR BOLT	
030	74365-0000		2	SCREW	
060	311411-0152		2	SPLIT PIN SP2X16RFR	
070	315115-0165		2	WASHER PLAIN, TBRB 8,4/16 H=3	

Pos	Part No	UN	Qty	Description	Page No

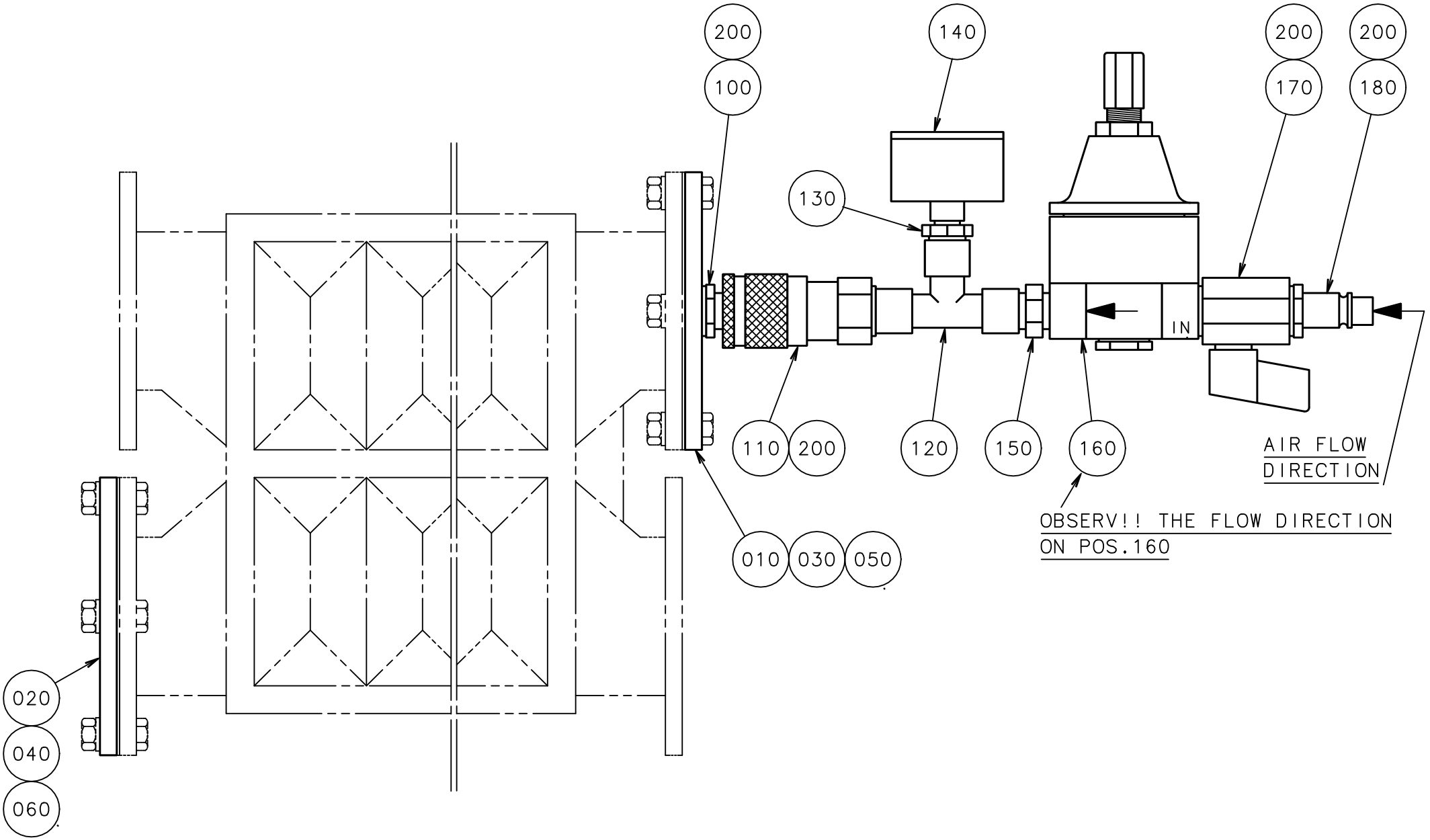
200
100
140
200
170
200
180
130
IN
110
200
120
150
160
AIR FLOW DIRECTION
OBSERV!! THE FLOW DIRECTION ON POS.160
010
030
050
020
040
060

ECM: 70020 - 19960722
Group number: 565536-0100
Assembly Drawing: 565536-1_1_AB

Pos	Part No	UN	Qty	Description	Page No
-					
010	565534-0000		1	FLANGE	
020	565532-0000		1	BLANK-OFF FLANGE	
030	565535-0000		1	FLANGE	
040	565533-0000		1	BLANK-OFF FLANGE	
050	979951-0000		1	FLANGE	
060	979952-0000		1	BLANK FLANGE	
100	90163-0113		1	QUICK COUPLING, (M) LP-006-1-WR013-22	
110	90163-0016		1	QUICK COUPLING, (F) LP 006-0-WR013	
120	90140-0018		1	T-PIPE, INT. THREAD, 2003-1/4	
130	342701-0201		1	BUSHING, INT/EXT, G1/4-G1/8	
140	90043-0021		1	PRESSURE GAUGE, 2041 D=40 MM	
150	342700-0110		1	NIPPLE, EXT.THREAD, HEXAGON, G1/4-G1/4	
160	90113-0056		1	REGULATOR, 11-818-998	
170	90187-0045		1	BALL VALVE, G1/4 CR PL	
180	90163-0007		1	CONNECTION	
200	315233-0110		4	WASHER CAPTIVE SEALING G1/4	
210	567372-0000		1	INSTRUCTION FOR USE	

Pos	Part No	UN	Qty	Description	Page No

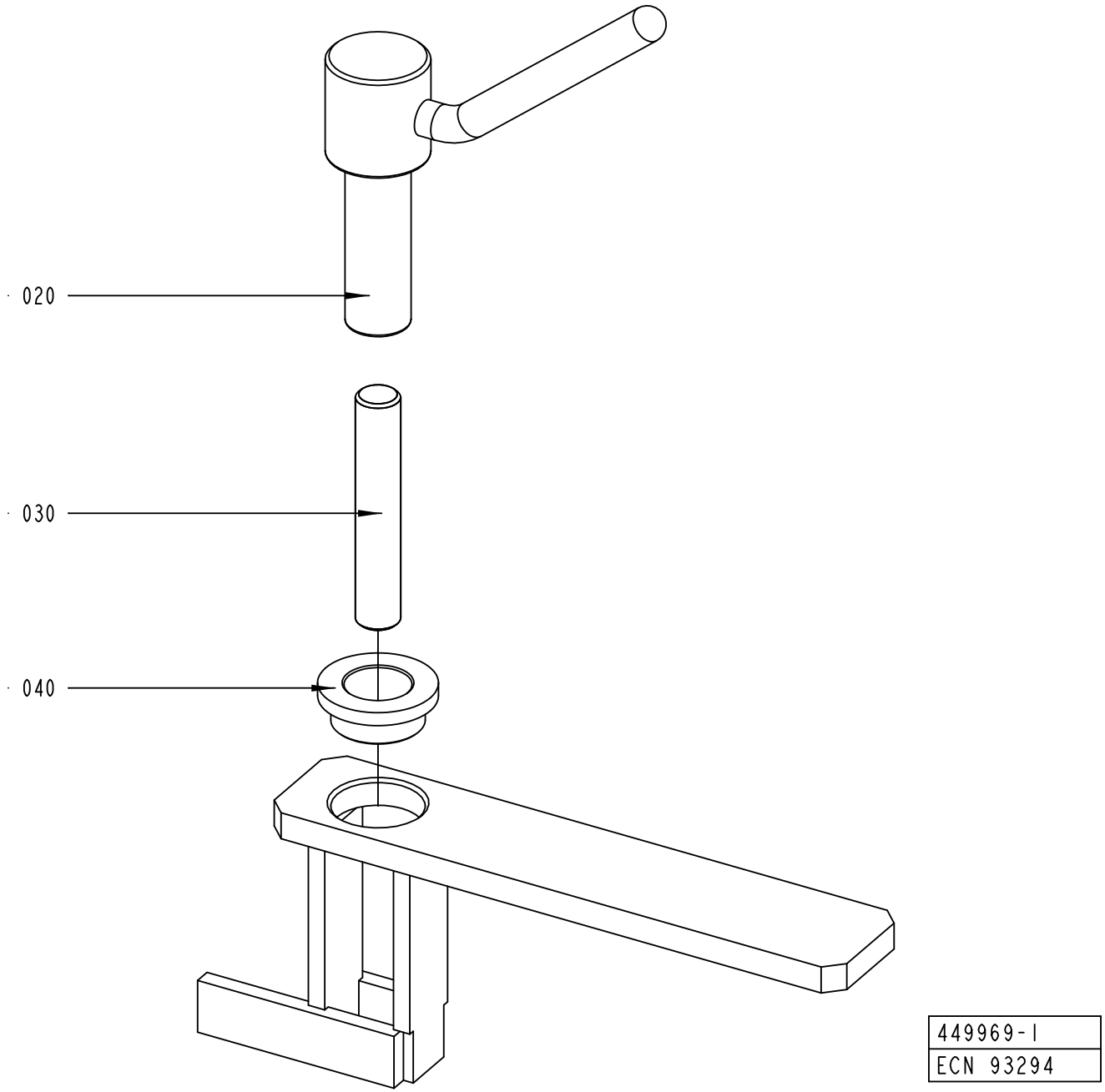
020
030
040
449969-1
ECN 93294

ECM: 479165 - 20101104
Group number: 449969-0100
Assembly Drawing: 449969-1_1_AB

Pos	Part No	UN	Qty	Description	Page No
-					
010	449970-0000		1	HOLDER	
020	449971-0000		1	SPINDLE	
030	312306-0546		1	SCREW ISO4026 M12X70 FZB	
040	321101-0222		1	FLANGE BUSHING, 18/25X12-32X4 MM	

Pos	Part No	UN	Qty	Description	Page No

This page is intentionally left blank.

ECM: 525977 - 20111020
Group number: 2889624-0200
Assembly Drawing:

Pos	Part No	UN	Qty	Description	Page No
-					
020	2832312-0100		1	PAPER REEL HOLDER	**7-127, 11-71**
040	527898-0100		1	CONTAINER H2O2	**2-215, 11-73**
050	532210-0100		1	PEROXIDE CONTAINER TROLLEY	**11-75**
060	90245-0024		1	MATCHING TRANSF. 65 KVA SEC 93,4A	
070	90048-0022		1	MANUAL PUMP INCL. BARROW 50-60 L	
	90048-0448		*1*	*REPAIR KIT, 1115487*	
080	2844595-0100		1	LEG STAND	**11-77**
090	1520633-0003		1	DOLLY	
100	2720716-0000		1	LIFTING DEVICE	
110	2846656-0100		1	LIFTING UNIT	**11-79**
120	529345-0100		1	FILLING STATION H2O2	**11-81**
130	3040856-0100		1	ILINE XT AUXILIARY CUTTING TABLE	**11-83, 11-85**
140	3134631-0100		1	SETTING TEMPLATE	**11-113**
150	3137386-0100		1	SETTING PLATE	**11-115**
160	2972771-0200		1	BARCODE SCANNER	**11-55, 11-57**

Pos	Part No	UN	Qty	Description	Page No

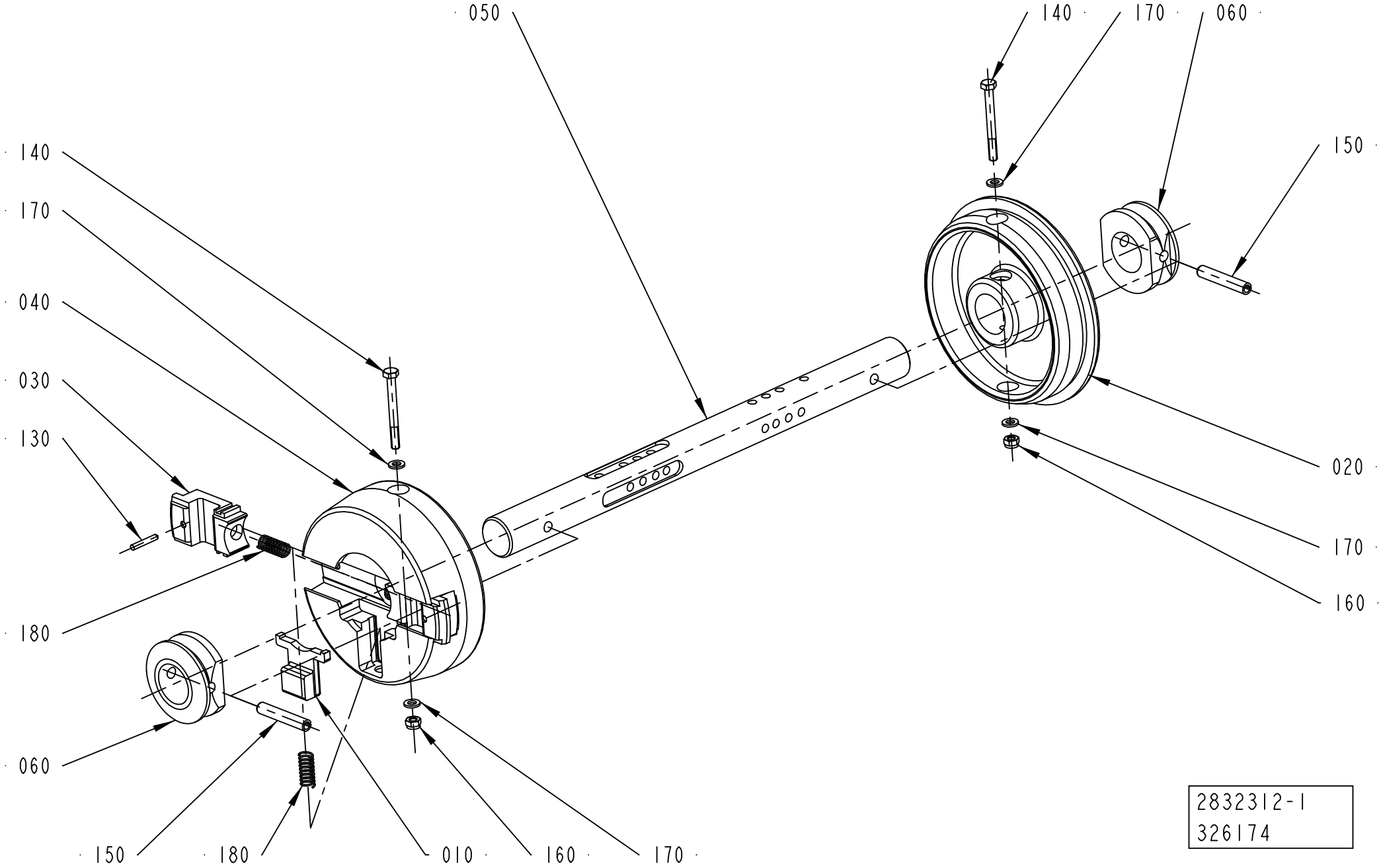
050
140
170
060
150
140
170
040
030
130
020
170
160
180
060
150
180
010
160
170
2832312-1
326174

ECM: 347262 - 20080422
Group number: 2832312-0100
Assembly Drawing: 2832312-1_1_AA

Pos	Part No	UN	Qty	Description	Page No
-					
010	272728-0000		1	BARRIER	
020	1512266-0000		1	SLEEVE	
030	2790926-0000		2	PLUNGER	
040	2790925-0000		1	SLEEVE	
050	2832313-0000		1	SHAFT	
060	2731212-0000		2	RING	
130	311103-0274		2	PARALLEL PIN ISO 2338 4M6X25 A1	
140	312105-0382		2	SCREW, M6S ISO 4014 M6X60 A4 80	
150	311112-0385		2	SPRING PIN, ISO 8752 8X50 A2	
160	312812-0316		2	HEXAGON NUT, NY-LOCK M6 A4 80	
170	315105-0153		4	WASHER PLAIN, 6,4X12X1,5 A4 BRB	
180	90335-0025		3	COMP. SPRING, 22010, 1X11X26	

Pos	Part No	UN	Qty	Description	Page No

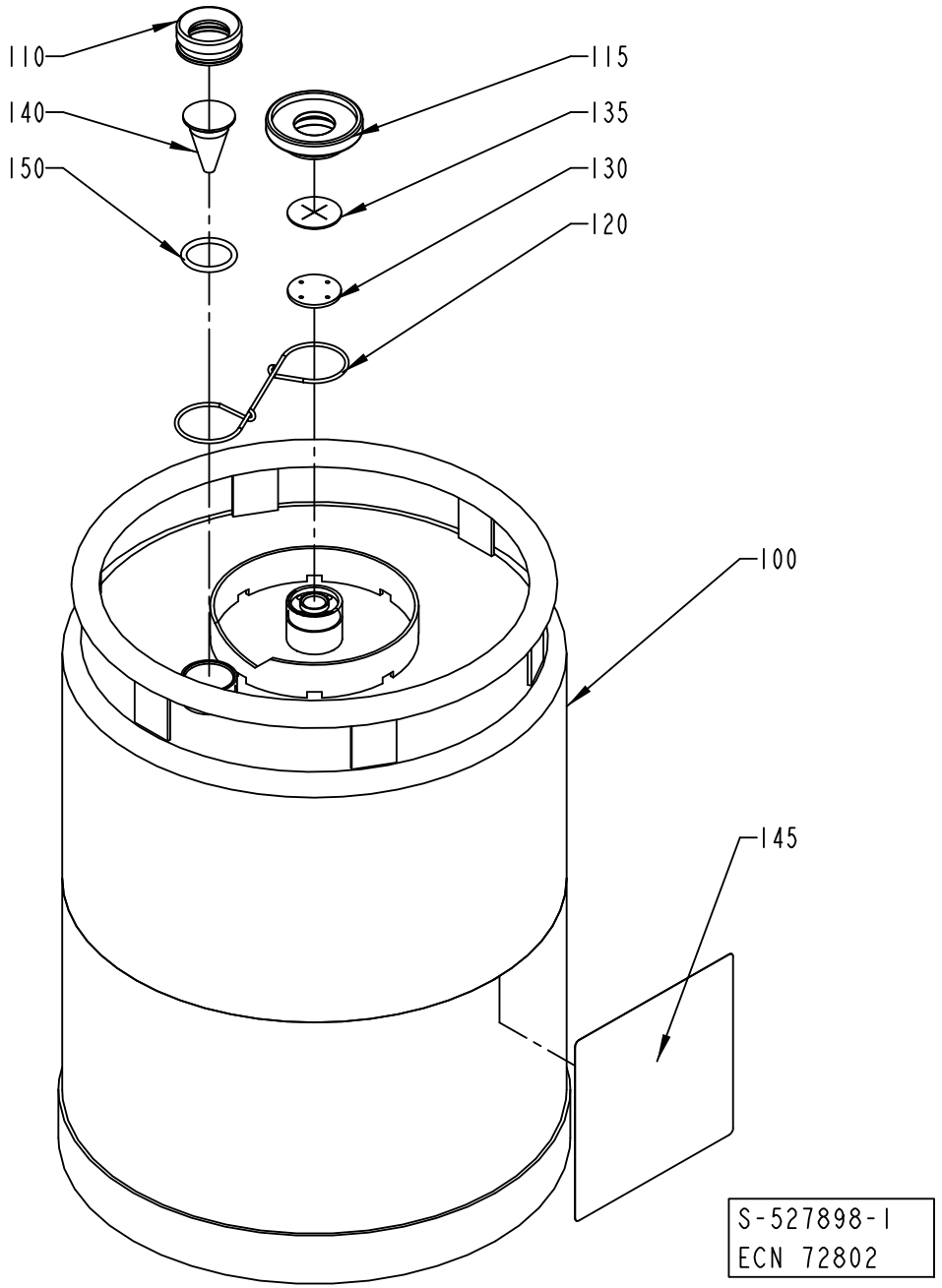
110
115
140
135
150
130
120
100
145
S-527898-1
ECN 72802

ECM: 224840 - 20050831
Group number: 527898-0100
Assembly Drawing: 527898-1_1_AB

Pos	Part No	UN	Qty	Description	Page No
-					
100	561427-0000		1	CONTAINER	
110	273977-0000		1	NUT	
115	273996-0000		1	NUT	
120	273980-0000		1	SPRING	
130	565250-0000		1	WASHER	
135	565251-0000		1	VALVE	
140	273978-0000		1	LEVEL GLAS	
145	532655-0000		1	CAUTION SIGN	
150	927422-0003		1	O.RING 24.2X3 SILICONE	

Pos	Part No	UN	Qty	Description	Page No

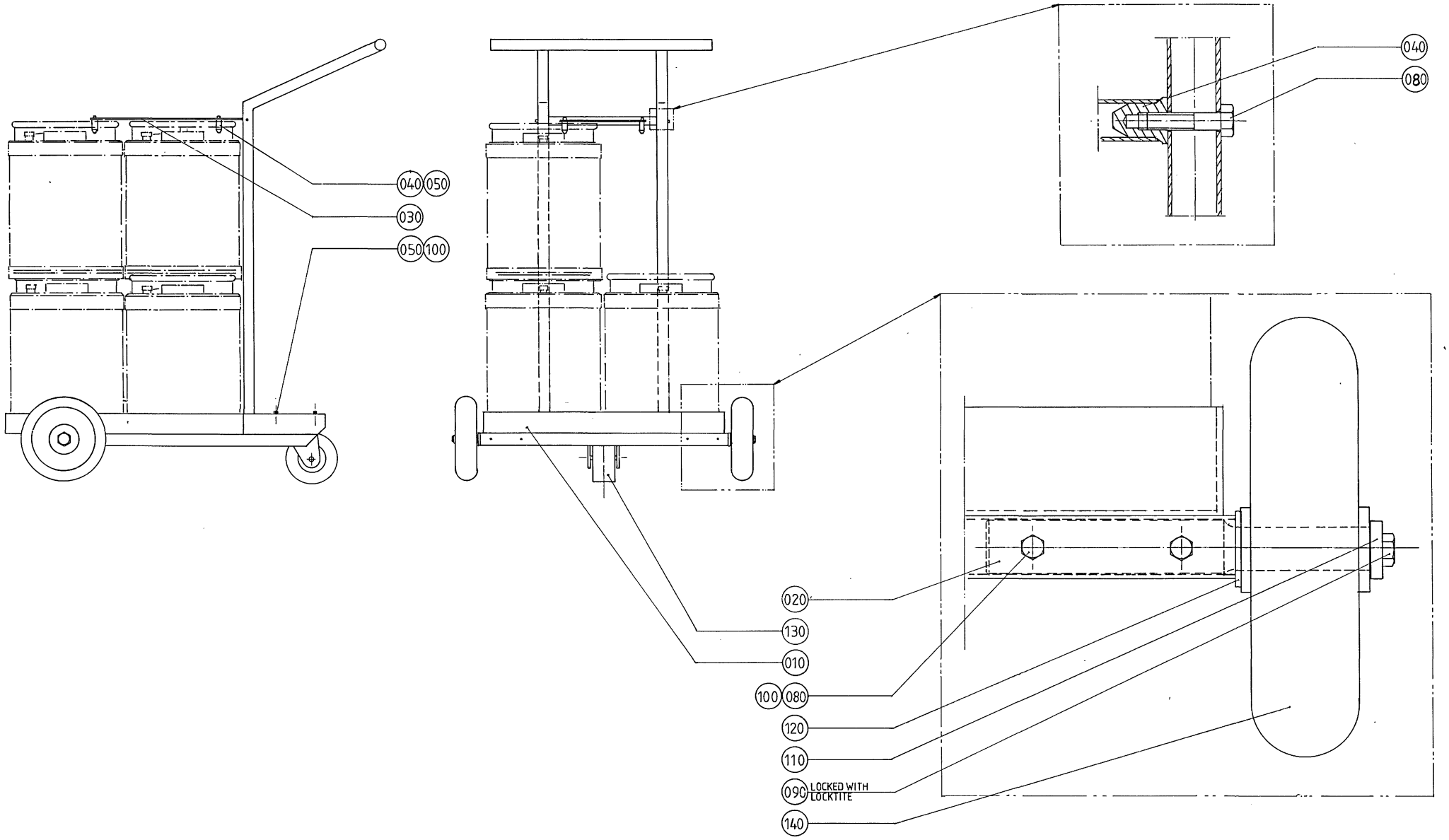
040
050
030
050
100
040
080
020
130
010
100
080
120
110
090
LOCKED WITH LOCKTITE
140

ECM: 384881 - 20090126
Group number: 532210-0100
Assembly Drawing: 532210-1_1_AA

Pos	Part No	UN	Qty	Description	Page No
-					
010	273985-0000		1	CARRIAGE	
020	532208-0000		2	SHAFT	
030	532209-0000		1	SHEET	
040	532211-0000		6	DOWEL	
050	312105-0449		8	SCREW, M6S ISO 4017 M8X16 A4 80	
080	312105-0459		6	SCREW, M6S ISO 4014 M8X40 A4 80	
090	312105-0491		2	SCREW, M6S ISO 4017 M10X20 A4 80	
100	312605-0318		4	HEXAGON NUT, M6M M8 A280	
110	315115-0173		2	WASHER PLAIN, TBRB 10,5/22 H=4	
120	315105-0192		2	WASHER PLAIN, 21X36X3 A4 BRB	
130	90191-0060		1	CASTOR WHEEL, NO. 1599PRT	
140	90191-0047		2	WHEEL, NO.798 821	

Pos	Part No	UN	Qty	Description	Page No

LEG STAND

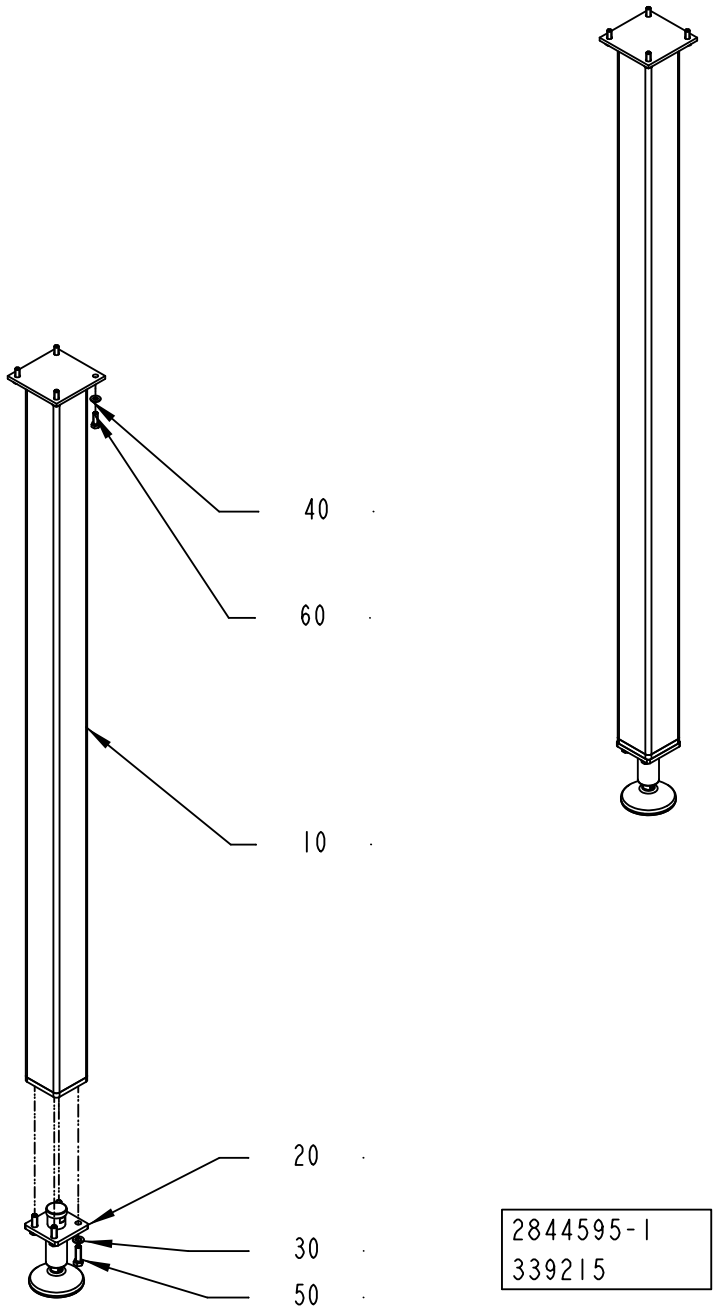

2844595-1
339215

ECM: 339215 - 20080116
Group number: 2844595-0100
Assembly Drawing: 2844595-1_1_AA

Pos	Part No	UN	Qty	Description	Page No
-					
010	2844596-0000		2	LEG	
020	90600-0725		2	FOOT 32000N, 90600-0725	
030	315105-0178		8	WASHER PLAIN, 13X24X2,5 A4 BRB	
040	315105-0173		8	WASHER PLAIN, 10,5X22X2 A4 BRB	
050	312105-0540		8	SCREW, M6S ISO 4017 M12X40 A4 80	
060	312105-0495		8	SCREW, M6S ISO 4017 M10X30 A4 80	

Pos	Part No	UN	Qty	Description	Page No

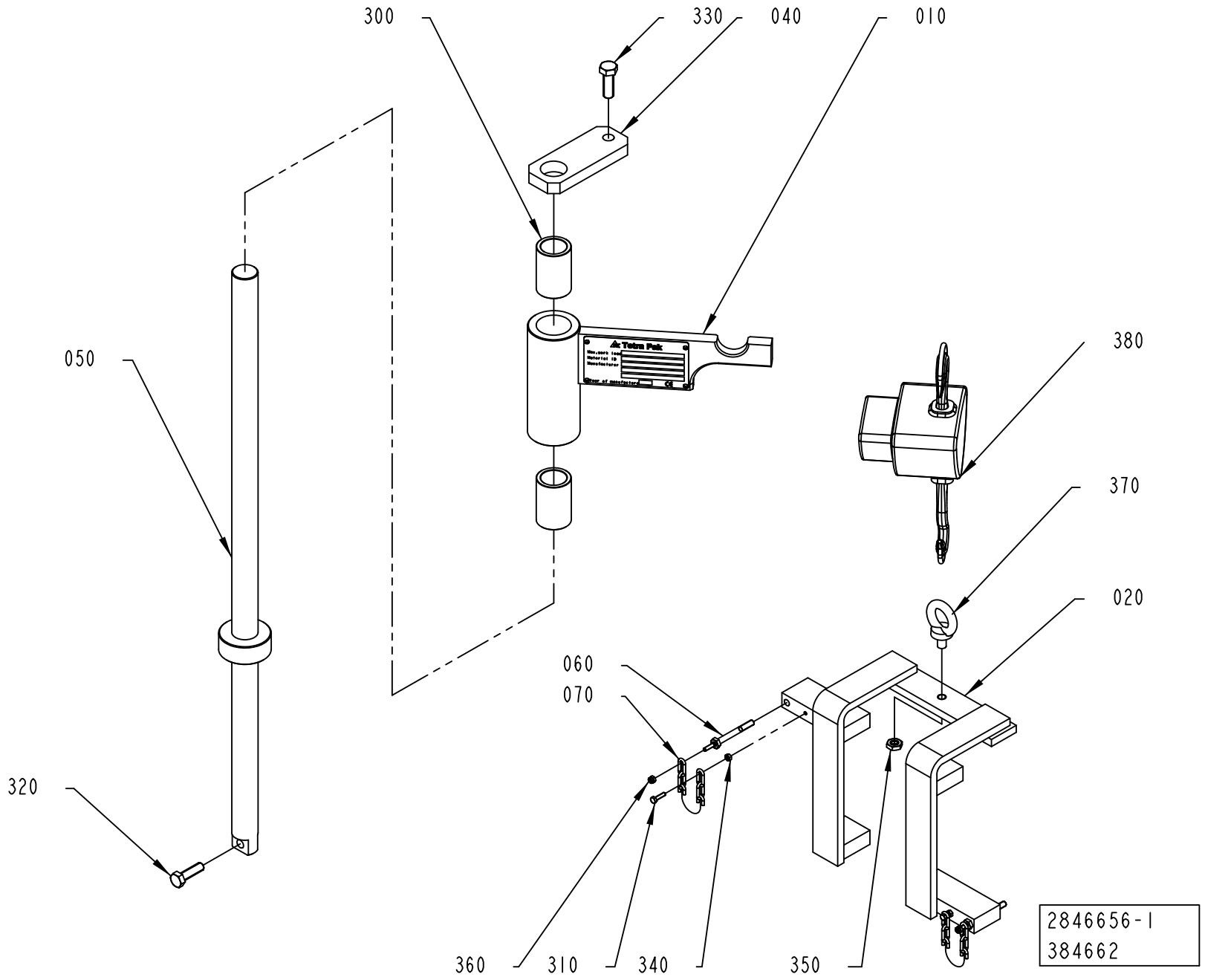
300
330
040
010
050
380
370
020
060
070
320
360
310
340
350
2846656-1
384662

ECM: 441670 - 20100304
Group number: 2846656-0100
Assembly Drawing: 2846656-1_1_AA

Pos	Part No	UN	Qty	Description	Page No
-					
	3047200-0102		1	REBUILDING MANUAL	
010	2846652-0000		1	FLAG	
020	2846653-0000		1	HOLDER	
040	2846655-0000		1	HOLDER	
050	2846657-0000		1	SHAFT	
060	2956671-0000		2	SCREW	
070	2662211-0000		2	CHAIN	
300	321105-0275		2	BUSHING W/O FLANGE, 30/40X60 MM	
310	312101-0293		2	SCREW M6S M4X16 FZB	
320	312101-0497		1	SCREW M6S M10X35 FZB	
330	312101-0538		1	SCREW M6S M12X35 FZB	
340	312607-0312		2	HEXAGON NUT, EN 24032 M6M M4 A480	
350	312621-0320		1	NUT ML6M10FZB	
360	312812-0312		2	HEXAGON NUT, NY-LOCK M4 A4 80	
370	318301-0120		1	LIFTING EYE BOLT, LT M10 FZB	
380	90600-6052		1	HAND OPERATED CHAIN-HOIST, 250KG	

Pos	Part No	UN	Qty	Description	Page No

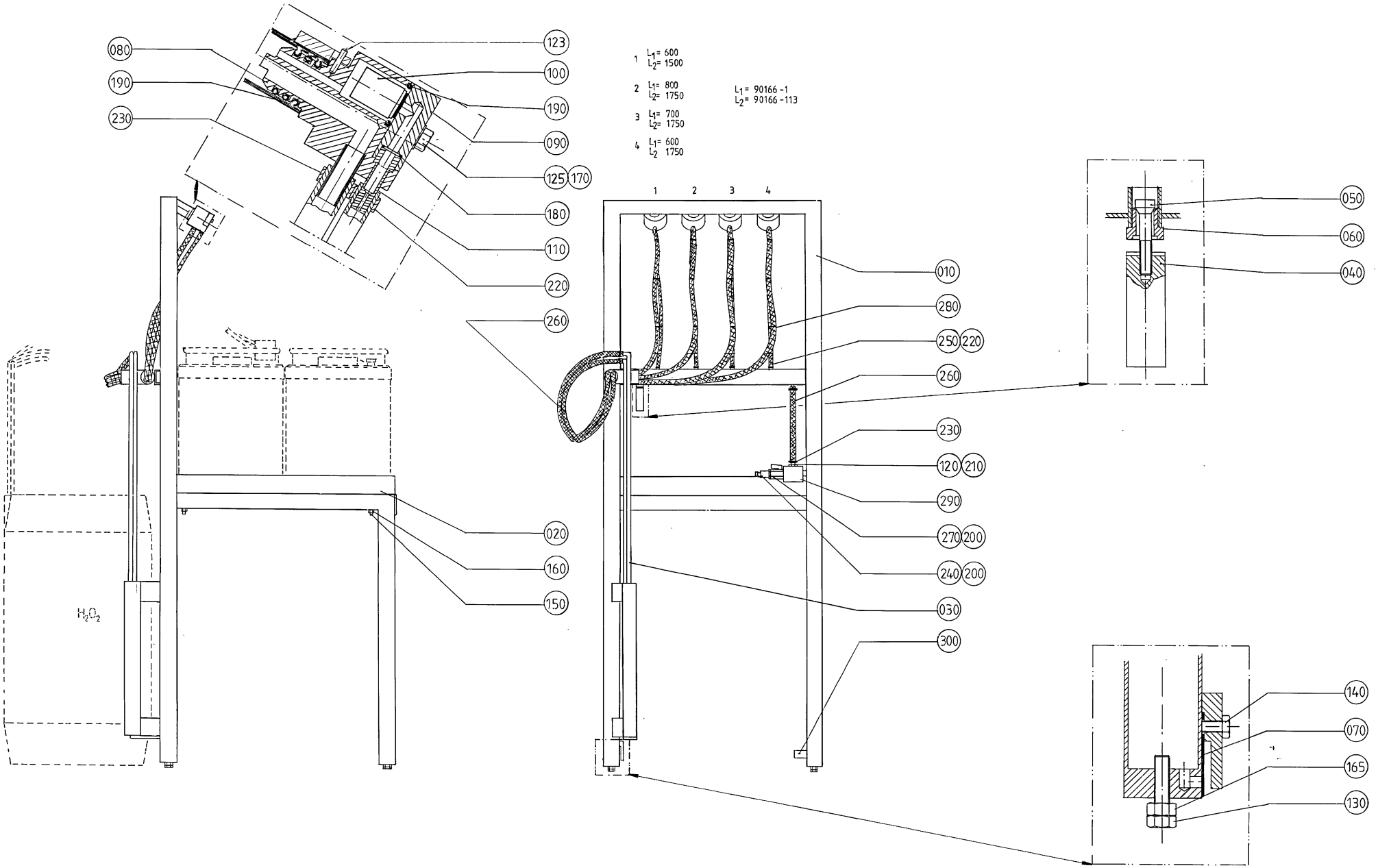
080
190
230
123
100
190
090
125
170
180
110
220
260
020
160
150
1 L1= 600 L2= 1500
2 L1= 800 L2= 1750
3 L1= 700 L2= 1750
4 L1= 600 L2 1750
L1= 90166 -1
L2= 90166 -113
1 2 3 4
010
280
250
220
260
230
120
210
290
270
200
240
200
030
300
050
060
040
140
070
165
130
H2O2

ECM: 384880 - 20090126
Group number: 529345-0100
Assembly Drawing: 529345-1_1_AA

Pos	Part No	UN	Qty	Description	Page No
-					
010	534692-0000		1	FRAME SECTION	
020	534693-0000		1	PLATE	
030	534694-0000		1	SUCTIONPIPE	
040	534695-0000		1	WEIGHT	
050	534696-0000		1	VALVE	
060	534697-0000		1	VALVE HOUSING	
070	534691-0000		1	DIAPHRAGM	
080	534637-0000		4	ATTACHMENT	
090	534636-0000		4	LEVEL GLAS	
100	534635-0000		4	VALVE	
110	534634-0000		4	PIPE	
120	534698-0000		1	NIPPLE	
123	311103-0235		1	PARALLEL PIN ISO 2338 3M6X14 A1	
125	312105-0374		8	SCREW, M6S ISO 4014 M6X30 A4 80	
130	312105-0455		4	SCREW, M6S ISO 4017 M8X30 A4 80	
140	312125-0327		1	SLOTTED HEAD SCREW, ISO1207 M5X12 A4	
150	312145-0380		4	SCREW ISO 2009 MFS M6X50 A4	
160	312812-0316		4	HEXAGON NUT, NY-LOCK M6 A4 80	
165	312605-0318		4	HEXAGON NUT, M6M M8 A280	
170	315105-0153		8	WASHER PLAIN, 6,4X12X1,5 A4 BRB	
180	927421-0005		4	O-RING 7.3X2.4 SILICONE	
190	927422-0001		16	2X3 SILICONE	
200	315233-0110		2	WASHER CAPTIVE SEALING G1/4	
210	315233-0113		2	WASHER CAPTIVE SEALING G1/2	
220	342991-0100		8	HOSE CLIP,WORM DRIVE TYPE (8)-14	
230	342991-0101		10	HOSE CLIP,WORM DRIVE TYPE (11)-17	
240	90163-0007		1	CONNECTION	
250	90166-0045	MM	3500	HOSE PVC TRANSP. 6/12	
260	90166-0113	MM	7500	HOSE	
270	90187-0045		1	BALL VALVE, G1/4 CR PL	
280	352113-0102		30	CABLE TIE, BLACK 188X4,8 MM	
290	90425-0016		1	MECMAN TYPE E120 735-120-000	
300	90328-0025		1	SILENCER G1/2"	

Pos	Part No	UN	Qty	Description	Page No

Machine Type | Group Description | Used-In | Group Number | Page No

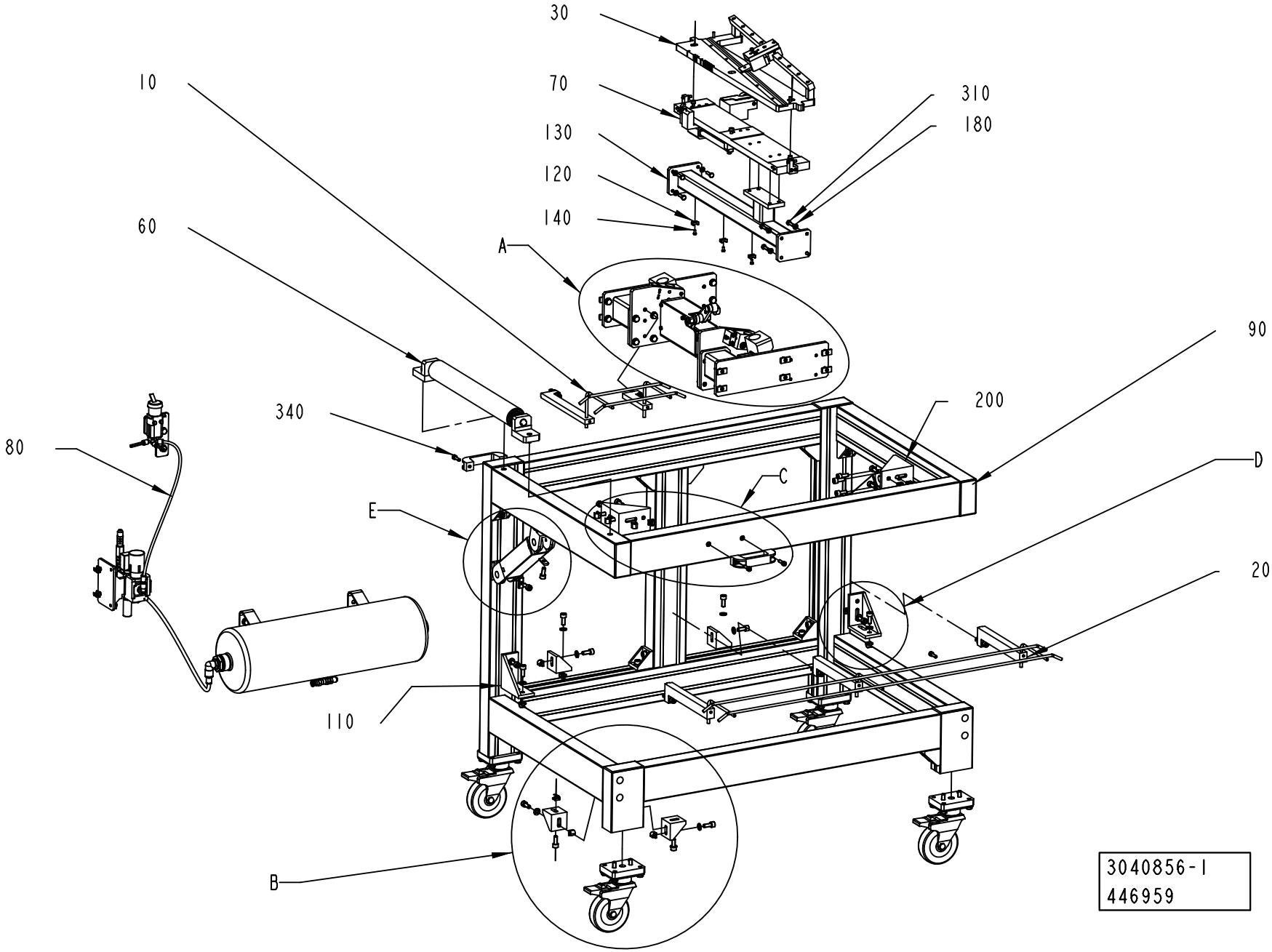
30
10
70
310
180
130
120
140
60
A
90
340
200
80
C
D
E
20
110
B
3040856-1
446959

ECM: 472964 - 20101105
Group number: 3040856-0100
Assembly Drawing: 3040856-1_1_AA

This list covers pages from 11-82 to 11-85

Pos	Part No	UN	Qty	Description	Page No
-					
010	3057008-0100		1	CANTILEVER	**11-87**
020	3058052-0100		1	CANTILEVER	**11-89**
030	3007891-0100		1	CUTTING TABLE	**11-91**
040	3051907-0100		1	LEVER MECHANISM	**11-93, 11-95**
060	3057001-0100		1	INFEED ROLLER	**11-99**
070	3007899-0100		1	SUPPORT PLATE	**11-101**
080	3051903-0100		1	PIPE WORK-PNEUMATIC	**11-103**
090	3040857-0100		1	GROUPING TOP SUPPORT	**11-107, 11-109**
100	3076811-0100		4	WHEEL UNIT	**11-111**
110	3123121-0000		2	BRACKET	
120	352113-0205		3	ANCHOR PLATES FOR STRIPS, TM2S8-C100	
130	3048003-0000		1	HOLDER	
140	312125-0287		3	SLOTTED HEAD SCREW, ISO1207 M4X8 A4	
160	1511310-0000		41	NUT	
170	3123119-0000		2	HANDLE	
180	315105-0153		8	WASHER PLAIN, 6,4X12X1,5 A4 BRB	
190	315105-0165		32	WASHER PLAIN, 8,4X16X1,6 A4 BRB	
200	3123122-0000		2	BRACKET	
300	3108955-0000		1	PNEUMATIC DIAGRAM	
310	312105-0370		8	SCREW, M6S ISO 4017 M6X20 A4 80	
340	312115-0370		4	SCREW ISO4762 M6X20 A4 80	
360	312115-0451		52	SCREW ISO4762 M8X20 A4 80	

Pos	Part No	UN	Qty	Description	Page No

A
1:5

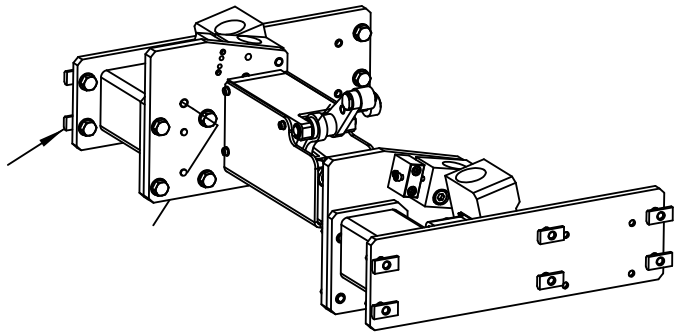

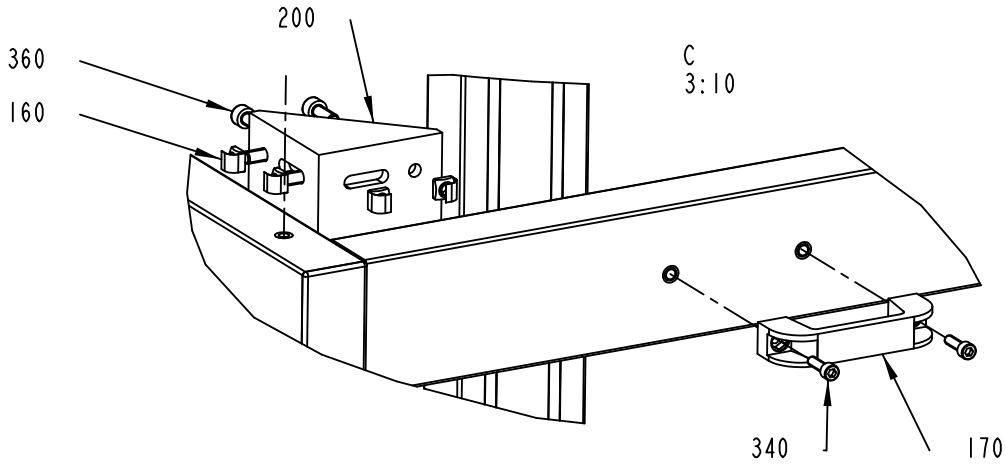

B
1:5

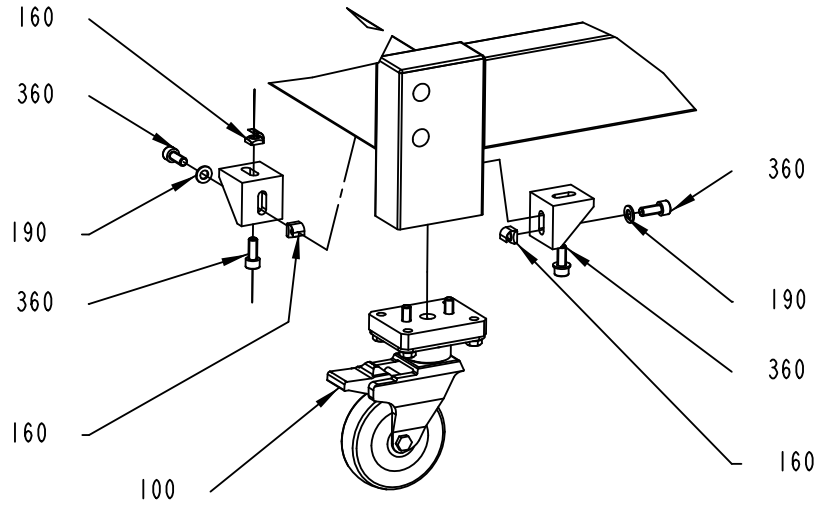

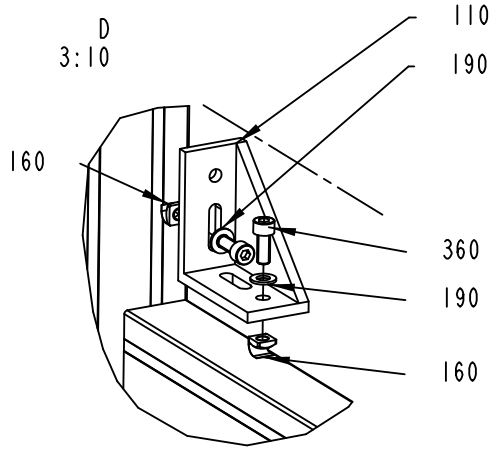

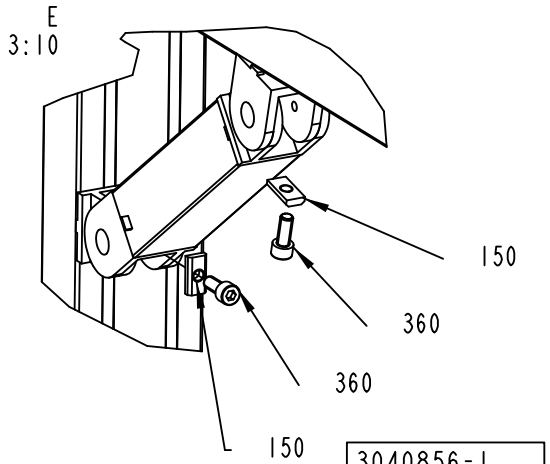

3040856-1
446959

ECM: 472964 - 20101105
Group number: 3040856-0100
Assembly Drawing: 3040856-1_2_AA

This list covers pages from 11-82 to 11-85

Pos	Part No	UN	Qty	Description	Page No
-					
010	3057008-0100		1	CANTILEVER	**11-87**
020	3058052-0100		1	CANTILEVER	**11-89**
030	3007891-0100		1	CUTTING TABLE	**11-91**
040	3051907-0100		1	LEVER MECHANISM	**11-93, 11-95**
060	3057001-0100		1	INFEED ROLLER	**11-99**
070	3007899-0100		1	SUPPORT PLATE	**11-101**
080	3051903-0100		1	PIPE WORK-PNEUMATIC	**11-103**
090	3040857-0100		1	GROUPING TOP SUPPORT	**11-107, 11-109**
100	3076811-0100		4	WHEEL UNIT	**11-111**
110	3123121-0000		2	BRACKET	
120	352113-0205		3	ANCHOR PLATES FOR STRIPS, TM2S8-C100	
130	3048003-0000		1	HOLDER	
140	312125-0287		3	SLOTTED HEAD SCREW, ISO1207 M4X8 A4	
160	1511310-0000		41	NUT	
170	3123119-0000		2	HANDLE	
180	315105-0153		8	WASHER PLAIN, 6,4X12X1,5 A4 BRB	
190	315105-0165		32	WASHER PLAIN, 8,4X16X1,6 A4 BRB	
200	3123122-0000		2	BRACKET	
300	3108955-0000		1	PNEUMATIC DIAGRAM	
310	312105-0370		8	SCREW, M6S ISO 4017 M6X20 A4 80	
340	312115-0370		4	SCREW ISO4762 M6X20 A4 80	
360	312115-0451		52	SCREW ISO4762 M8X20 A4 80	

Pos	Part No	UN	Qty	Description	Page No

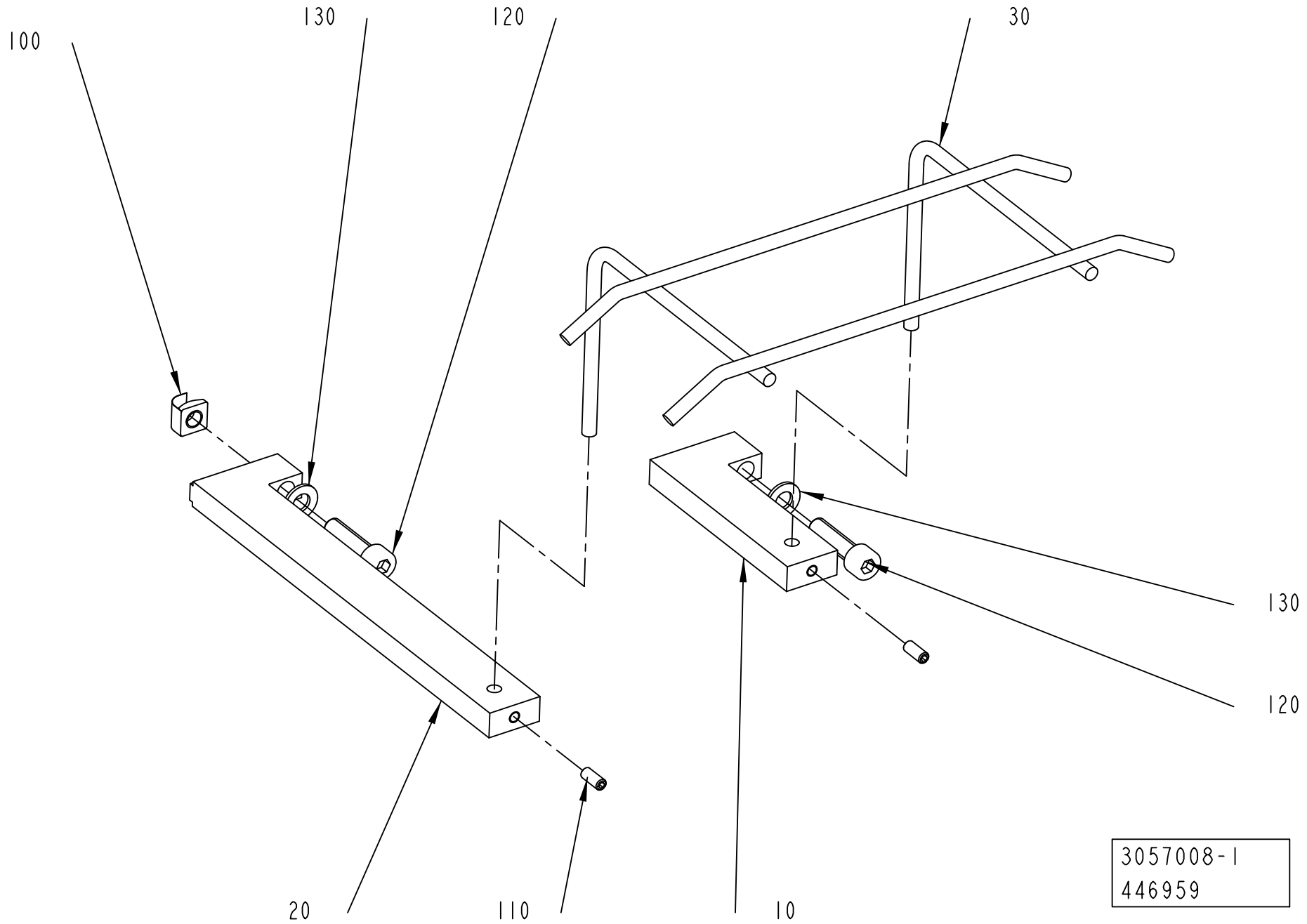
100
130
120
30
130
120
20
110
10
3057008-1
446959

ECM: 472505 - 20101105
Group number: 3057008-0100
Assembly Drawing: 3057008-1_1_AA

Pos	Part No	UN	Qty	Description	Page No
-					
010	3048006-0000		1	HOLDER	
020	3057007-0000		1	HOLDER	
030	3048005-0000		1	PAPER SUPPORT	
100	1511310-0000		1	NUT	
110	312318-0327		2	SET SCREW, CUP END ISO4029 M5X12 A4	
120	312115-0455		2	SCREW ISO4762 M8X30 A4 80	
130	315105-0165		2	WASHER PLAIN, 8,4X16X1,6 A4 BRB	

Pos	Part No	UN	Qty	Description	Page No

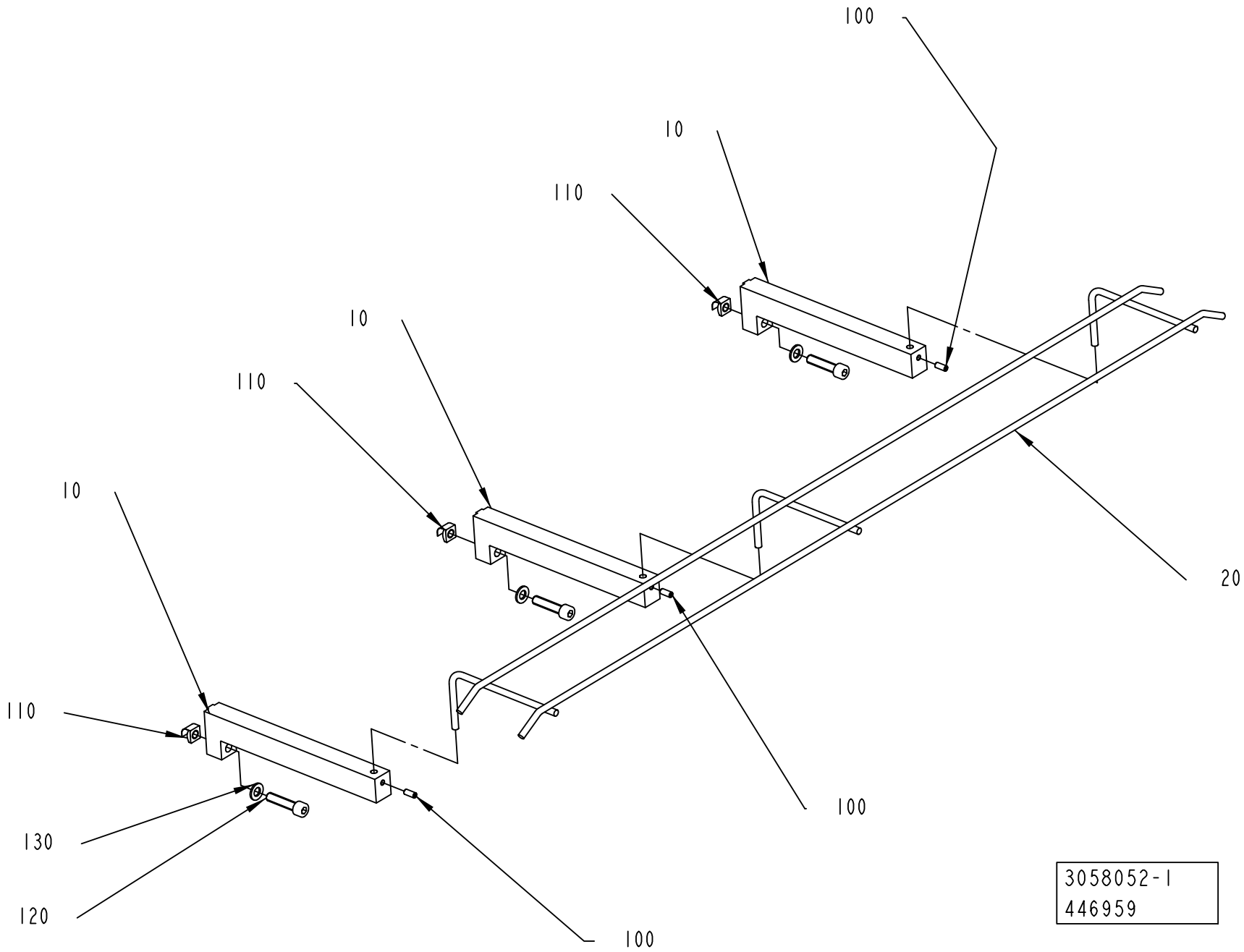
100
10
110
10
110
10
20
110
100
130
120
100
3058052-1
446959

ECM: 466078 - 20101105
Group number: 3058052-0100
Assembly Drawing: 3058052-1_1_AA

Pos	Part No	UN	Qty	Description	Page No
-					
010	3058054-0000		3	HOLDER	
020	3058053-0000		1	PAPER SUPPORT	
100	312318-0327		3	SET SCREW, CUP END ISO4029 M5X12 A4	
110	1511310-0000		3	NUT	
120	312115-0457		3	SCREW ISO4762 M8X35 A4 80	
130	315105-0165		3	WASHER PLAIN, 8,4X16X1,6 A4 BRB	

Pos	Part No	UN	Qty	Description	Page No

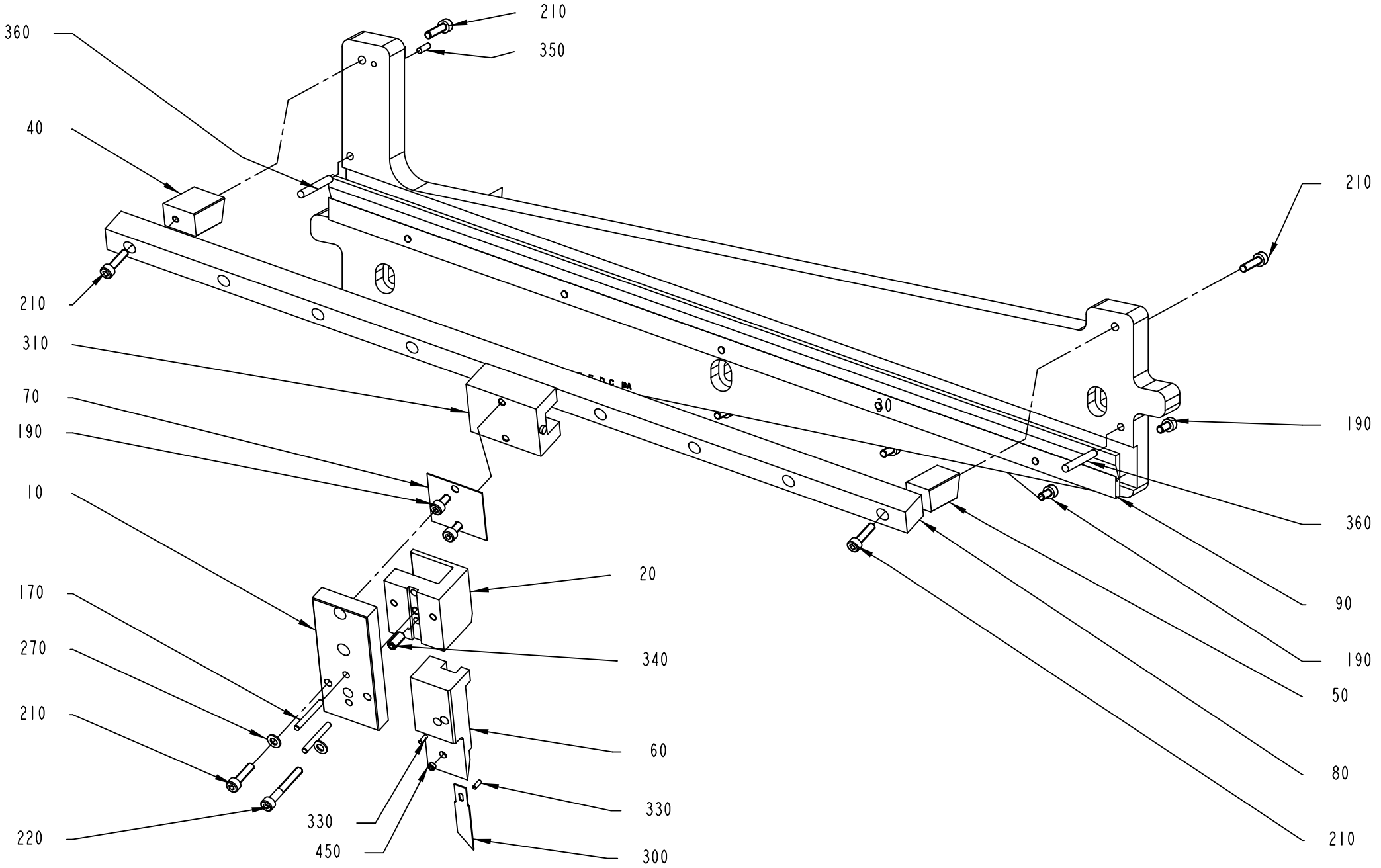
360
210
350
40
210
210
310
70
190
10
170
270
210
220
330
450
20
340
60
330
300
30
190
360
90
190
50
80
210

ECM: 472501 - 20101105
Group number: 3007891-0100
Assembly Drawing: 3007891-1_1_AA

Pos	Part No	UN	Qty	Description	Page No
-					
010	3007897-0000		1	BRACKET	
020	3007898-0000		1	BRACKET	
030	3007892-0000		1	TABLE	
040	3007894-0000		1	SHOE	
050	3007895-0000		1	SHOE	
060	2771108-0000		1	HOLDER	
010	*311102-0185*		*2*	*PARALLEL PIN ISO 2338 2M6X6 ST*	
070	3007896-0000		3	SHIM	
080	3007908-0000		1	RAIL	
090	3007893-0000		1	RULER	
170	311103-0238		2	PARALLEL PIN ISO 2338 3M6X20 A1	
190	312115-0287		5	SCREW ISO4762 M4X8 A4 80	
210	312115-0293		5	SCREW ISO4762 M4X16 A4 80	
220	312115-0299		1	SCREW ISO4762 M4X30 A4 80	
270	315105-0136		2	WASHER PLAIN, 4,3X9X0,8 A4 BRB	
300	90600-3039		1	BLADE, C5321 ART: 27.50	
310	90600-3040		1	RUNNER BLOCK, 1666-114-20	
330	311102-0185		2	PARALLEL PIN ISO 2338 2M6X6 ST	
340	90459-7283		1	SCREW HEX.SOCK.SET CONEPT.MS6SS M5X12 A2	
350	311103-0233		1	PARALLEL PIN ISO 2338 3M6X10 A1	
360	311103-0276		2	PARALLEL PIN ISO 2338 4M6X30 A1	
450	90459-1395		1	SCREW HEX.SOCK.SET CONEPT.MS6SS M4X4 A2	

Pos	Part No	UN	Qty	Description	Page No

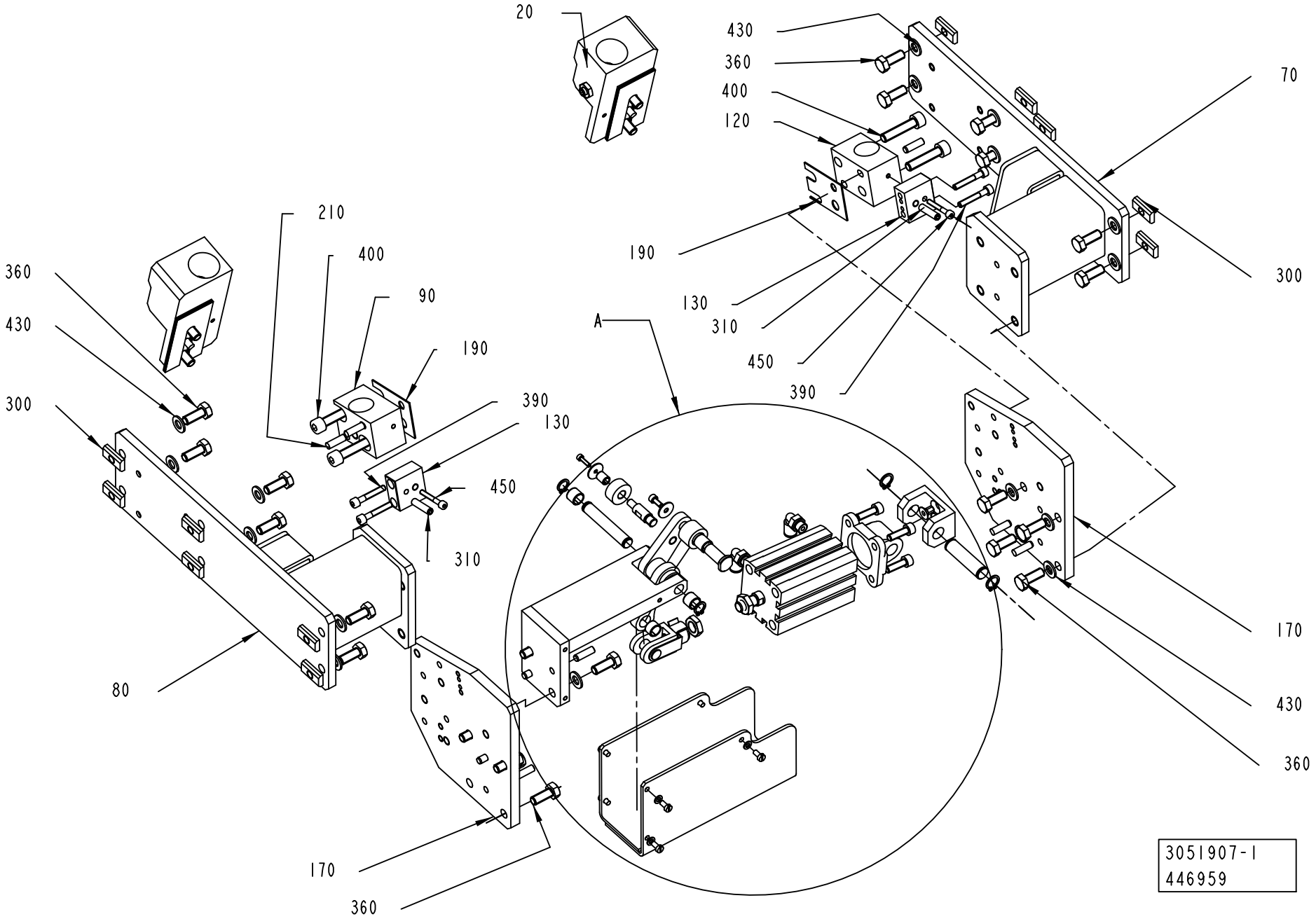
20
430
360
400
120
70
210
400
90
190
360
430
300
190
130
310
450
390
A
300
390
130
450
310
80
170
430
360
170
360
3051907-1
446959

ECM: 470971 - 20101105
Group number: 3051907-0100
Assembly Drawing: 3051907-1_1_AA

This list covers pages from 11-92 to 11-95

Pos	Part No	UN	Qty	Description	Page No
-					
010	3058050-0000		1	BRACKET	
020	3136404-0100		1	CATCH HOLDER	**11-97**
030	3058049-0000		1	HOLDER	
040	3051908-0000		1	LEVER	
050	3020491-0000		1	PIN	
060	3058056-0000		1	PIN	
070	3048001-0000		1	CANTILEVER	
080	3048002-0000		1	CANTILEVER	
090	3058055-0000		1	BLOCK	
100	90603-1616		1	DOUBLE ACTING, COMPACT, CYL 40-25	
110	3126981-0000		1	COVER PANEL	
120	3126982-0000		1	BLOCK	
130	3057766-0000		2	BRACKET	
140	3127354-0000		1	BUSHING	
150	3127355-0000		1	BUSHING	
160	3127356-0000		1	PIN	
170	3051901-0000		2	PLATE	
180	3127775-0000		1	SHAFT	
190	3126983-0000		2	SHIM	
200	3022291-0000		2	WASHER	
210	311103-0353		10	PARALLEL PIN ISO 2338 6M6X20 A1	
220	90141-0016		2	RETAINING RING FOR SHAFT DIN 471 10 SS	
230	315751-0109		2	RETAINING RING FOR SHAFT DIN 471 12 SS	
240	312155-0364		2	SCREW DIN 7991 MF6S M6X10 A4 70	
250	312105-0451		2	SCREW, M6S ISO 4017 M8X20 A4 80	
260	350002-0006		2	PUSH-IN L-FITTING QSL-F-G1/8-6	
270	312115-0370		4	SCREW ISO4762 M6X20 A4 80	
280	321141-0138		1	BEARING BUSHING, 10X12X8 MM	
290	321141-0140		2	BEARING BUSHING, 10X12X10 MM	
300	1511308-0000		12	NUT PLATE	
310	312318-0372		2	SET SCREW, CUP END ISO4029 M6X25 A4	
320	315105-0165		2	WASHER PLAIN, 8,4X16X1,6 A4 BRB	
330	90459-2394		1	SWIWEL FLANGE 40	
340	90459-2881		1	ROD CLEVIS SG-M10X1,25	
350	312125-0287		6	SLOTTED HEAD SCREW, ISO1207 M4X8 A4	
360	312105-0451		20	SCREW, M6S ISO 4017 M8X20 A4 80	
370	312115-0226		1	SCREW ISO4762 M3X12 A4 80	
380	312115-0289		1	SCREW ISO4762 M4X10 A4 80	
390	312115-0335		4	SCREW ISO4762 M5X30 A4 80	
400	312115-0457		4	SCREW ISO4762 M8X35 A4 80	
410	321141-0064		1	BEARING BUSHING, 6X8X10 MM	
420	315105-0136		6	WASHER PLAIN, 4,3X9X0,8 A4 BRB	
430	315105-0165		20	WASHER PLAIN, 8,4X16X1,6 A4 BRB	
440	321141-0142		1	BEARING BUSHING, 10X12X12 MM	
450	312115-0299		2	SCREW ISO4762 M4X30 A4 80	
460	3127358-0000		1	WASHER	

Machine Type | Group Description | Used-In | Group Number | Page No

LEVER MECHANISM

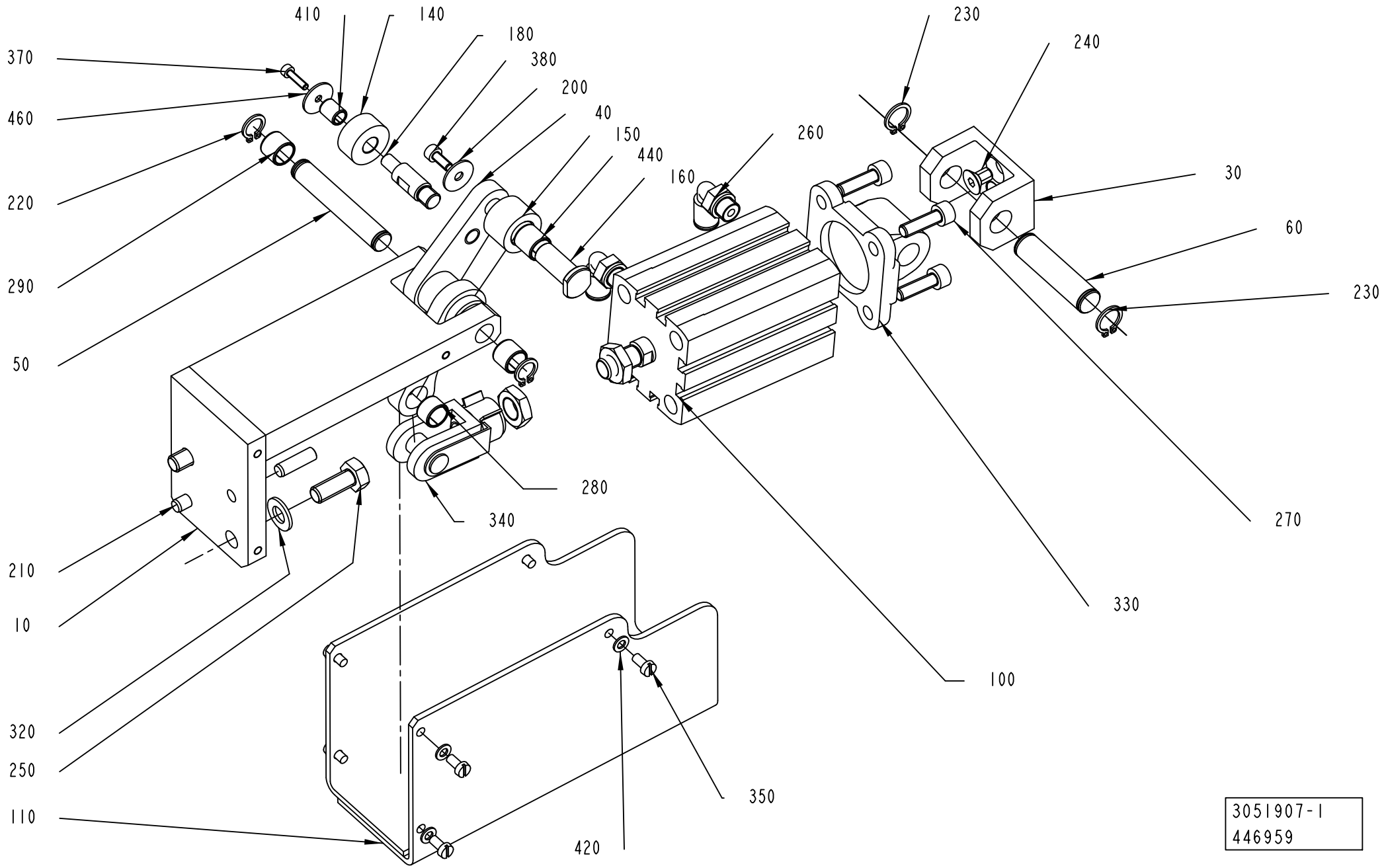

3051907-1
446959

ECM: 470971 - 20101105
Group number: 3051907-0100
Assembly Drawing: 3051907-1_2_AA

This list covers pages from 11-92 to 11-95

Pos	Part No	UN	Qty	Description	Page No
-					
010	3058050-0000		1	BRACKET	
020	3136404-0100		1	CATCH HOLDER	**11-97**
030	3058049-0000		1	HOLDER	
040	3051908-0000		1	LEVER	
050	3020491-0000		1	PIN	
060	3058056-0000		1	PIN	
070	3048001-0000		1	CANTILEVER	
080	3048002-0000		1	CANTILEVER	
090	3058055-0000		1	BLOCK	
100	90603-1616		1	DOUBLE ACTING, COMPACT, CYL 40-25	
110	3126981-0000		1	COVER PANEL	
120	3126982-0000		1	BLOCK	
130	3057766-0000		2	BRACKET	
140	3127354-0000		1	BUSHING	
150	3127355-0000		1	BUSHING	
160	3127356-0000		1	PIN	
170	3051901-0000		2	PLATE	
180	3127775-0000		1	SHAFT	
190	3126983-0000		2	SHIM	
200	3022291-0000		2	WASHER	
210	311103-0353		10	PARALLEL PIN ISO 2338 6M6X20 A1	
220	90141-0016		2	RETAINING RING FOR SHAFT DIN 471 10 SS	
230	315751-0109		2	RETAINING RING FOR SHAFT DIN 471 12 SS	
240	312155-0364		2	SCREW DIN 7991 MF6S M6X10 A4 70	
250	312105-0451		2	SCREW, M6S ISO 4017 M8X20 A4 80	
260	350002-0006		2	PUSH-IN L-FITTING QSL-F-G1/8-6	
270	312115-0370		4	SCREW ISO4762 M6X20 A4 80	
280	321141-0138		1	BEARING BUSHING, 10X12X8 MM	
290	321141-0140		2	BEARING BUSHING, 10X12X10 MM	
300	1511308-0000		12	NUT PLATE	
310	312318-0372		2	SET SCREW, CUP END ISO4029 M6X25 A4	
320	315105-0165		2	WASHER PLAIN, 8,4X16X1,6 A4 BRB	
330	90459-2394		1	SWIWEL FLANGE 40	
340	90459-2881		1	ROD CLEVIS SG-M10X1,25	
350	312125-0287		6	SLOTTED HEAD SCREW, ISO1207 M4X8 A4	
360	312105-0451		20	SCREW, M6S ISO 4017 M8X20 A4 80	
370	312115-0226		1	SCREW ISO4762 M3X12 A4 80	
380	312115-0289		1	SCREW ISO4762 M4X10 A4 80	
390	312115-0335		4	SCREW ISO4762 M5X30 A4 80	
400	312115-0457		4	SCREW ISO4762 M8X35 A4 80	
410	321141-0064		1	BEARING BUSHING, 6X8X10 MM	
420	315105-0136		6	WASHER PLAIN, 4,3X9X0,8 A4 BRB	
430	315105-0165		20	WASHER PLAIN, 8,4X16X1,6 A4 BRB	
440	321141-0142		1	BEARING BUSHING, 10X12X12 MM	
450	312115-0299		2	SCREW ISO4762 M4X30 A4 80	
460	3127358-0000		1	WASHER	

Machine Type	Group Description	Used-In	Group Number	Page No

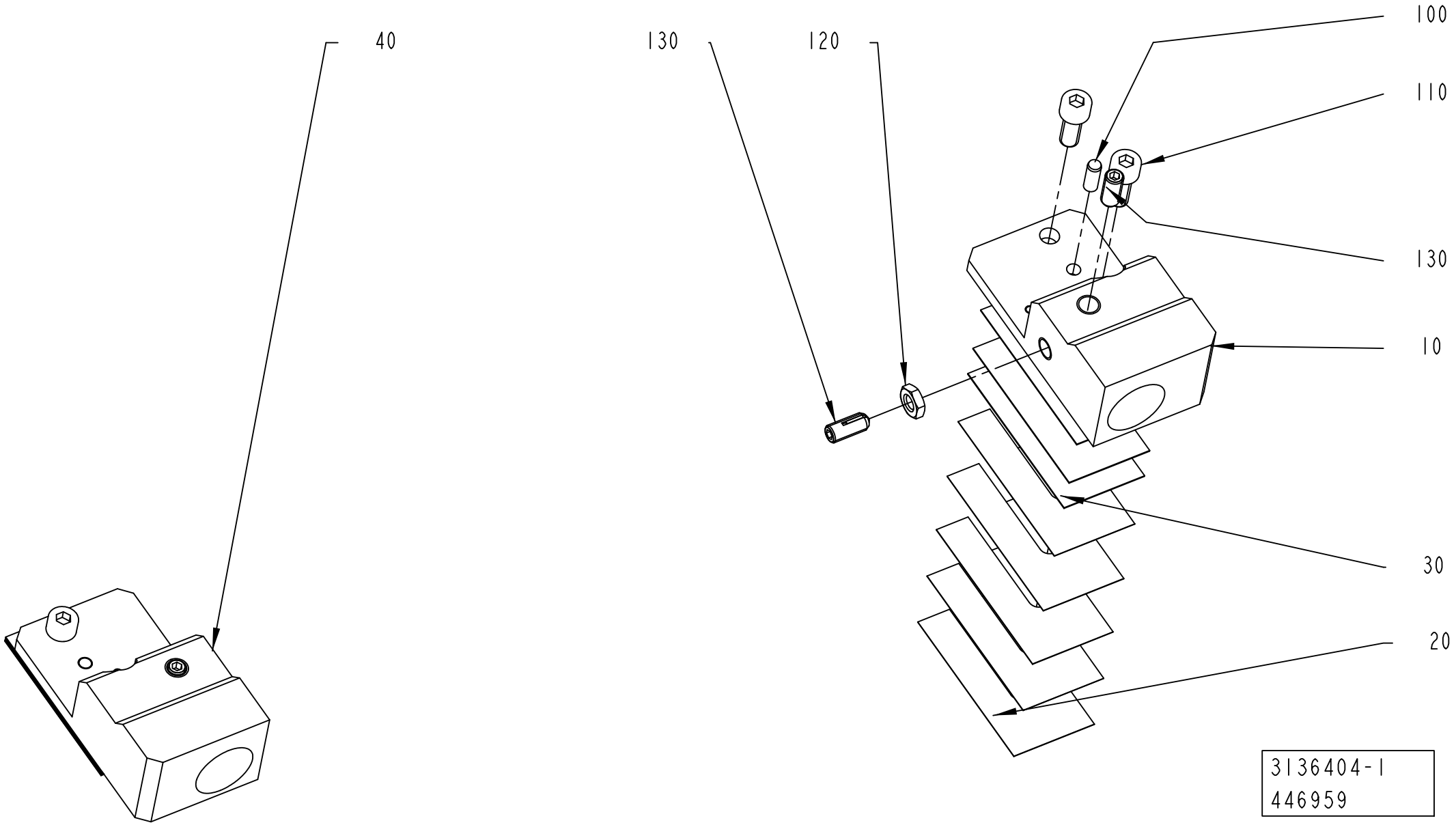
40
130
120
100
110
130
10
30
20
3136404-1
446959

ECM: 475787 - 20101105
Group number: 3136404-0100
Assembly Drawing: 3136404-1_1_AA

Pos	Part No	UN	Qty	Description	Page No
-					
010	3079215-0000		1	BLOCK	
020	3007869-0000		10	SPACER	
030	3007868-0000		8	SPACER	
040	3079216-0000		1	BLOCK	
100	311103-0351		2	PARALLEL PIN ISO 2338 6M6X16 A1	
110	312115-0451		4	SCREW ISO4762 M8X20 A4 80	
120	312625-0318		2	HEXAGON THIN NUT, EN 24035 ML6M M8 A4	
130	90458-1517		4	SCREW SPRINGLOAD. SOCK. HEX HEAD M8X18	

Pos	Part No	UN	Qty	Description	Page No

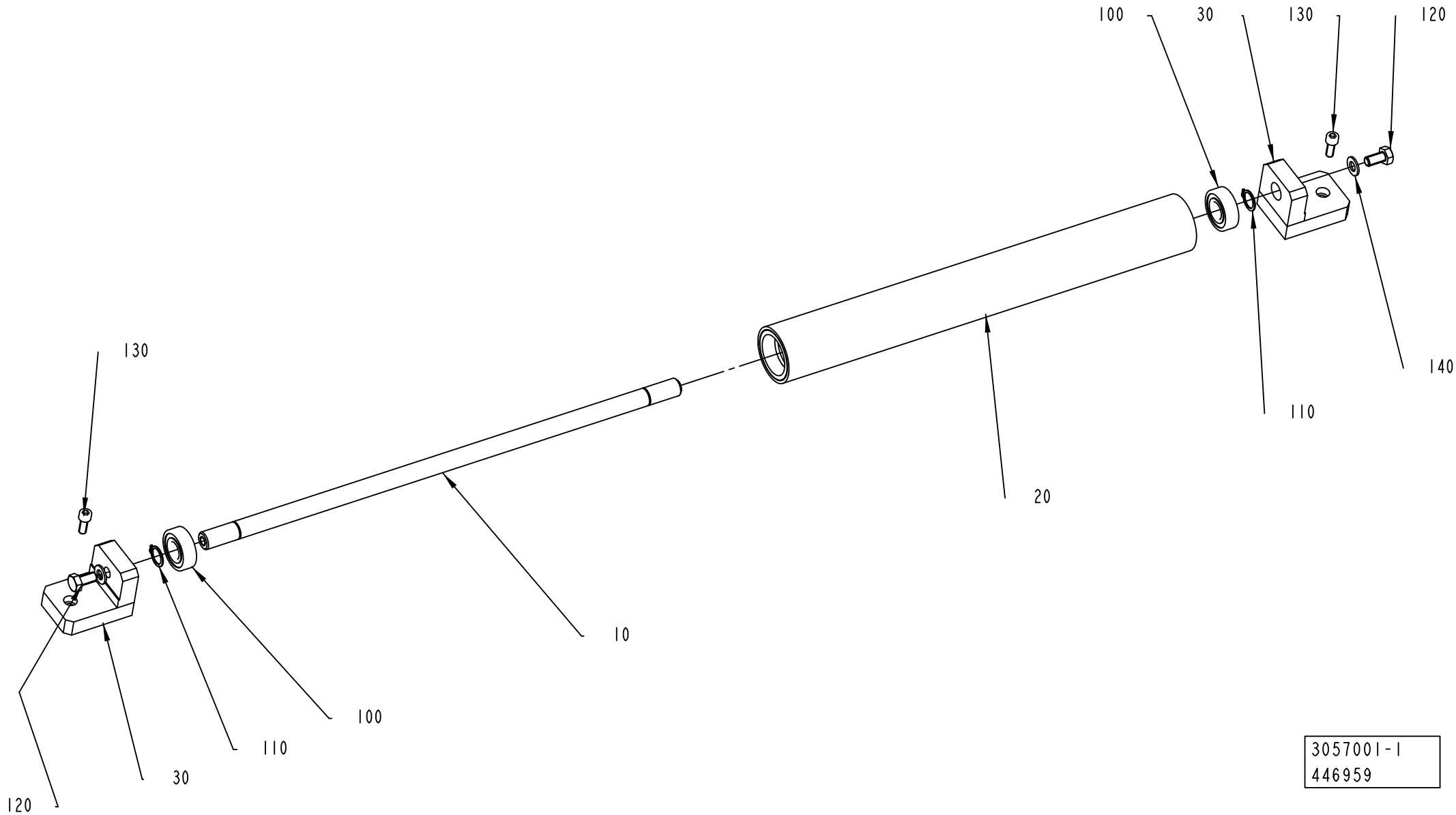
100
30
130
120
130
140
110
20
10
100
110
30
120
3057001-1
446959

ECM: 472506 - 20101105
Group number: 3057001-0100
Assembly Drawing: 3057001-1_1_AA

Pos	Part No	UN	Qty	Description	Page No
-					
010	3057000-0000		1	SHAFT	
020	3056999-0000		1	BENDING ROLLER	
030	3051904-0000		2	BRACKET	
100	321309-0102		2	BALL BEARING 15/35X11	
110	315751-0112		2	RETAINING RING FOR SHAFT DIN 471 15 SS	
120	312105-0449		2	SCREW, M6S ISO 4017 M8X16 A4 80	
130	312115-0368		2	SCREW ISO4762 M6X16 A4 80	
140	315105-0165		2	WASHER PLAIN, 8,4X16X1,6 A4 BRB	

Pos	Part No	UN	Qty	Description	Page No

SUPPORT PLATE

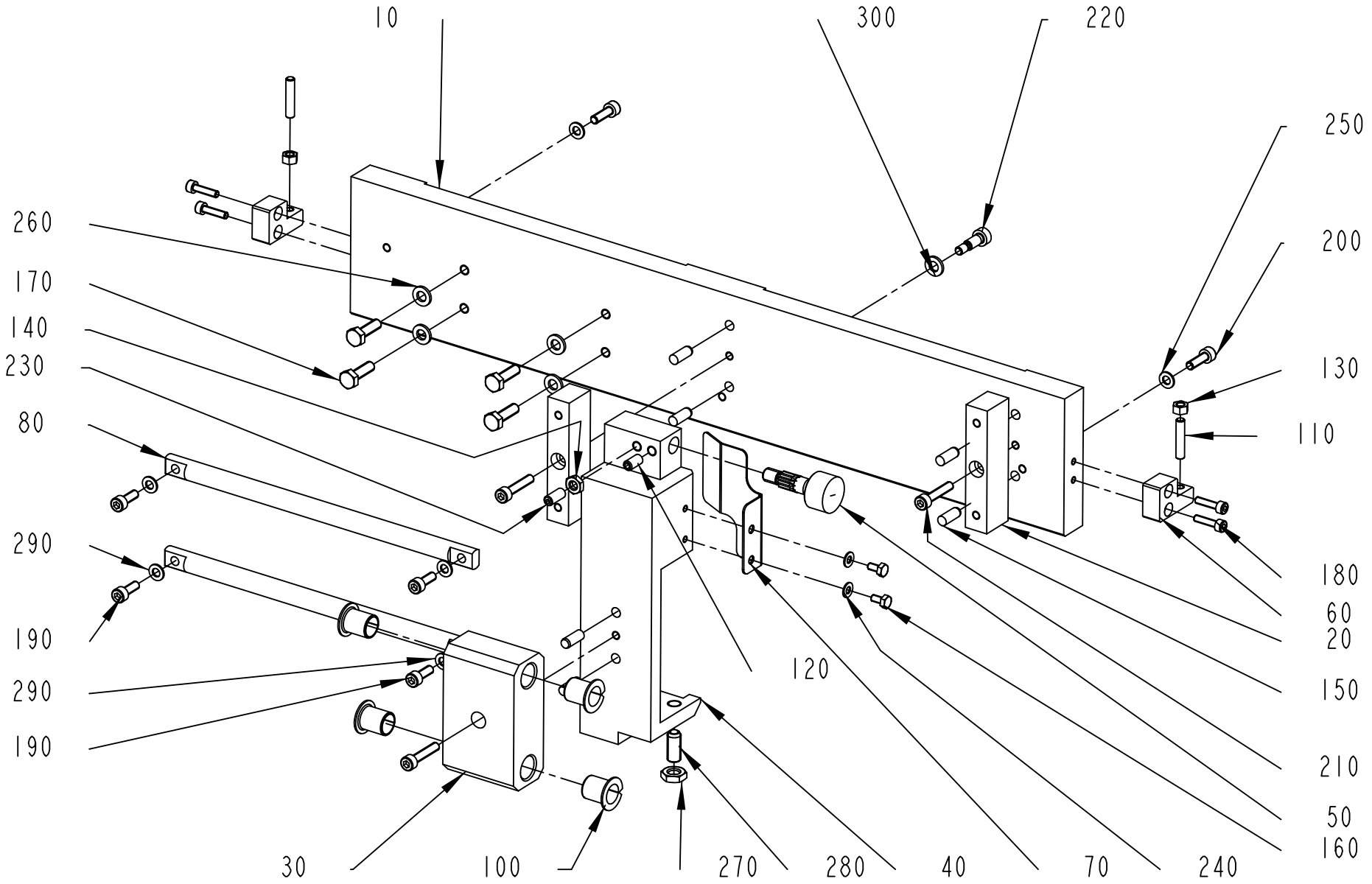

3007899-1
446959

ECM: 470974 - 20101105
Group number: 3007899-0100
Assembly Drawing: 3007899-1_1_AA

Pos	Part No	UN	Qty	Description	Page No
-					
010	3007900-0000		1	BAR	
020	3007901-0000		2	BLOCK	
030	3007902-0000		1	GUIDE	
040	3007903-0000		1	ANGLE PIECE	
050	2891814-0000		1	ADJUSTING SCREW	
060	3007905-0000		2	BLOCK	
070	3007906-0000		1	STOP LUG	
080	3007907-0000		2	BAR	
100	321161-0185		4	FLANGE BEARING, 12X14X17 MM	
110	312318-0333		2	SET SCREW, CUP END ISO4029 M5X25 A4	
120	312318-0366		1	SET SCREW, CUP END ISO4029 M6X12 A4	
130	312607-0314		2	HEXAGON NUT, EN 24032 M6M M5 A480	
140	312625-0316		1	HEXAGON THIN NUT, EN 24035 ML6M M6 A4	
150	311103-0351		6	PARALLEL PIN ISO 2338 6M6X16 A1	
160	312105-0287		2	SCREW, M6S ISO 4017 M4X8 A4 70	
170	312105-0370		4	SCREW, M6S ISO 4017 M6X20 A4 80	
180	312115-0293		4	SCREW ISO4762 M4X16 A4 80	
190	312115-0329		4	SCREW ISO4762 M5X16 A4 80	
200	312115-0329		2	SCREW ISO4762 M5X16 A4 80	
210	312115-0333		3	SCREW ISO4762 M5X25 A4 80	
220	312180-0366		1	SHOULDER SCREW, ISO7379 6X12/M5 12.9	
230	90287-0163		1	SCREW SPRINGLOAD. SLOTTED HEAD M6X14	
240	315106-0136		2	WASHER PLAIN, M4 ISO7089-4-200 HV A4	
250	315105-0146		2	WASHER PLAIN, 5,3X10X1 A4 BRB	
260	315105-0153		4	WASHER PLAIN, 6,4X12X1,5 A4 BRB	
270	312625-0318		1	HEXAGON THIN NUT, EN 24035 ML6M M8 A4	
280	90458-1517		1	SCREW SPRINGLOAD. SOCK. HEX HEAD M8X18	
290	315105-0146		4	WASHER PLAIN, 5,3X10X1 A4 BRB	
300	315105-0153		1	WASHER PLAIN, 6,4X12X1,5 A4 BRB	

Pos	Part No	UN	Qty	Description	Page No

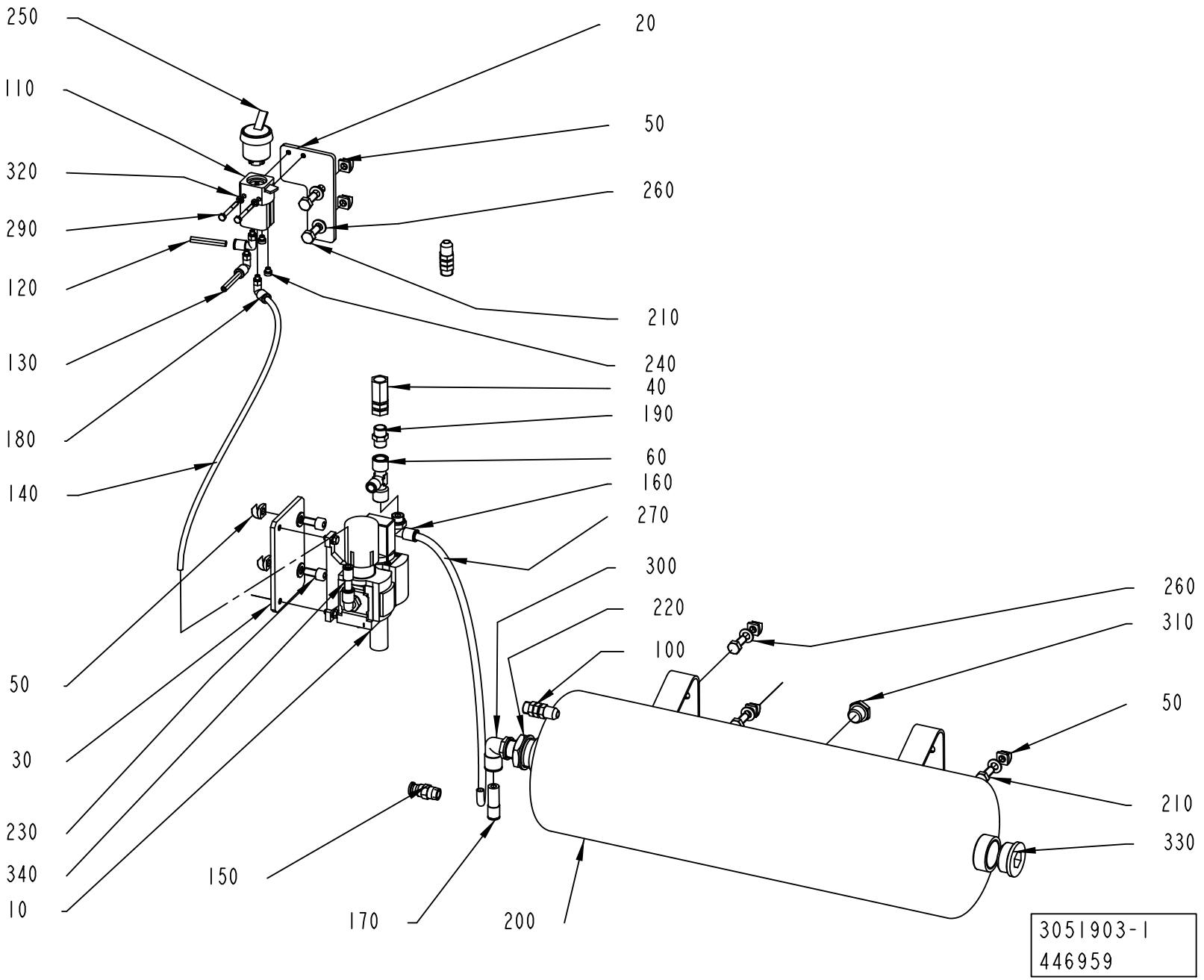
250
110
320
290
120
130
180
140
50
30
230
340
10
20
50
260
210
240
40
190
60
160
270
300
220
100
150
170
200
260
310
50
210
330
3051903-1
446959

ECM: 470973 - 20101105
Group number: 3051903-0100
Assembly Drawing: 3051903-1_1_AA

Pos	Part No	UN	Qty	Description	Page No
-					
010	3096451-0100		1	VALVE GROUP	**11-105**
020	3060719-0000		1	HOLDER	
030	3051906-0000		1	HOLDER	
040	3123123-0000		1	VALVE	
050	1511310-0000		7	NUT	
060	3126448-0000		1	CONNECTION	
100	90152-0016		1	HOSE (SPIRAL)	
110	90235-0756		1	FRONT PANEL VALVE, SV-5-M5-B	
120	315400-0001	MM	1500	TUBE PUN-H-6X1-BL	
130	315400-0001	MM	1500	TUBE PUN-H-6X1-BL	
140	315400-0001	MM	400	TUBE PUN-H-6X1-BL	
150	90601-0748		1	PUSH-IN FITTING CRQS-1/4-8	
160	350002-0009		1	PUSH-IN L-FITTING QSL-F-G1/4-8	
170	350006-0008		1	PUSH-IN FITTING QS-F-12H-8	
180	350002-0002		3	PUSH-IN L-FITTING QSL-F-M5-6	
190	342700-0110		1	NIPPLE, EXT.THREAD, HEXAGON, G1/4-G1/4	
200	90458-1600		1	ACCUMULATOR CRVZS-10	
210	312105-0451		5	SCREW, M6S ISO 4017 M8X20 A4 80	
220	90459-6424		1	BUSHING, INT/EXT, G1/2-G1	
230	312115-0449		2	SCREW ISO4762 M8X16 A4 80	
240	342713-0208		2	PLUG, EXT. THREAD HEX. SOCKET. BPM05	
250	90235-0459		1	TOGGLE ACTUATER	
260	315105-0165		7	WASHER PLAIN, 8,4X16X1,6 A4 BRB	
270	315400-0004	MM	600	TUBE PUN-H-8X1,25-BL	
290	312105-0301		2	SCREW, M6S ISO 4017 M4X35 A4 70	
300	350002-0016		1	PUSH-IN L-FITTING QSL-F-G1/2-12	
310	90330-0029		1	PLUG, G3/8EXT, R-236R3/8	
320	315105-0136		2	WASHER PLAIN, 4,3X9X0,8 A4 BRB	
330	342713-0216		1	PLUG, EXT. THREAD HEX. SOCKET. BPM10	
340	350006-0003		1	PUSH-IN FITTING QS-F-8H-6	

Pos	Part No	UN	Qty	Description	Page No

Machine Type | Group Description | Used-In | Group Number | Page No

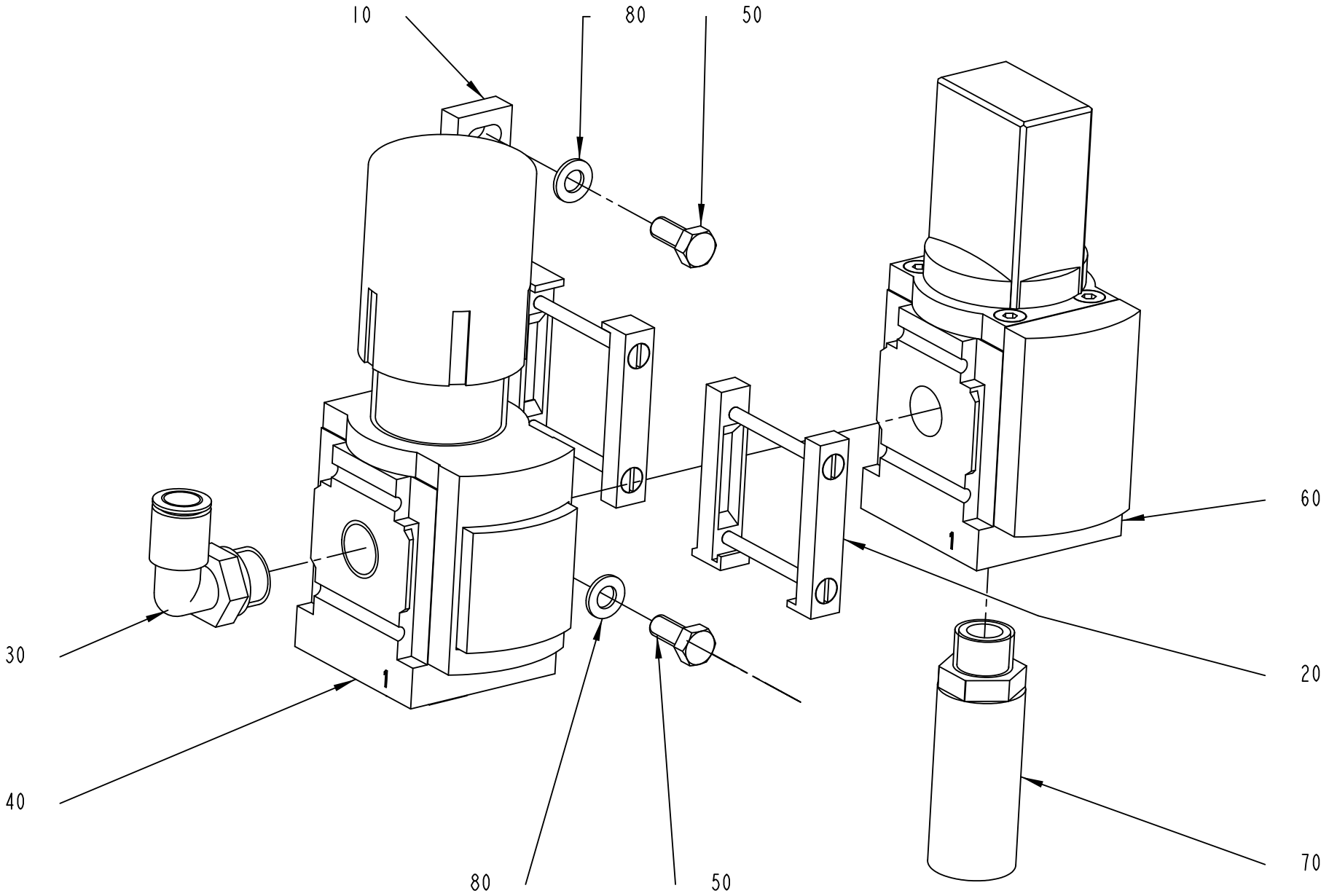

3096451-1
446959

ECM: 470972 - 20101105
Group number: 3096451-0100
Assembly Drawing: 3096451-1_1_AA

Pos	Part No	UN	Qty	Description	Page No
-					
010	90459-2247		1	BRACKET, MS4-WP	
020	90459-2248		1	BRACKET, MS4-MV	
030	350002-0009		1	PUSH-IN L-FITTING QSL-F-G1/4-8	
040	90459-2653		1	REGULATOR, MS4-LR-1/4-D6-AS	
050	312105-0327		2	SCREW, M6S ISO 4017 M5X12 A4 80	
060	90459-2337		1	SHUT OFF VALVE, MS4-EM1-1/4	
070	90328-0027		1	SILENCER	
080	315105-0146		2	WASHER PLAIN, 5,3X10X1 A4 BRB	

Pos	Part No	UN	Qty	Description	Page No

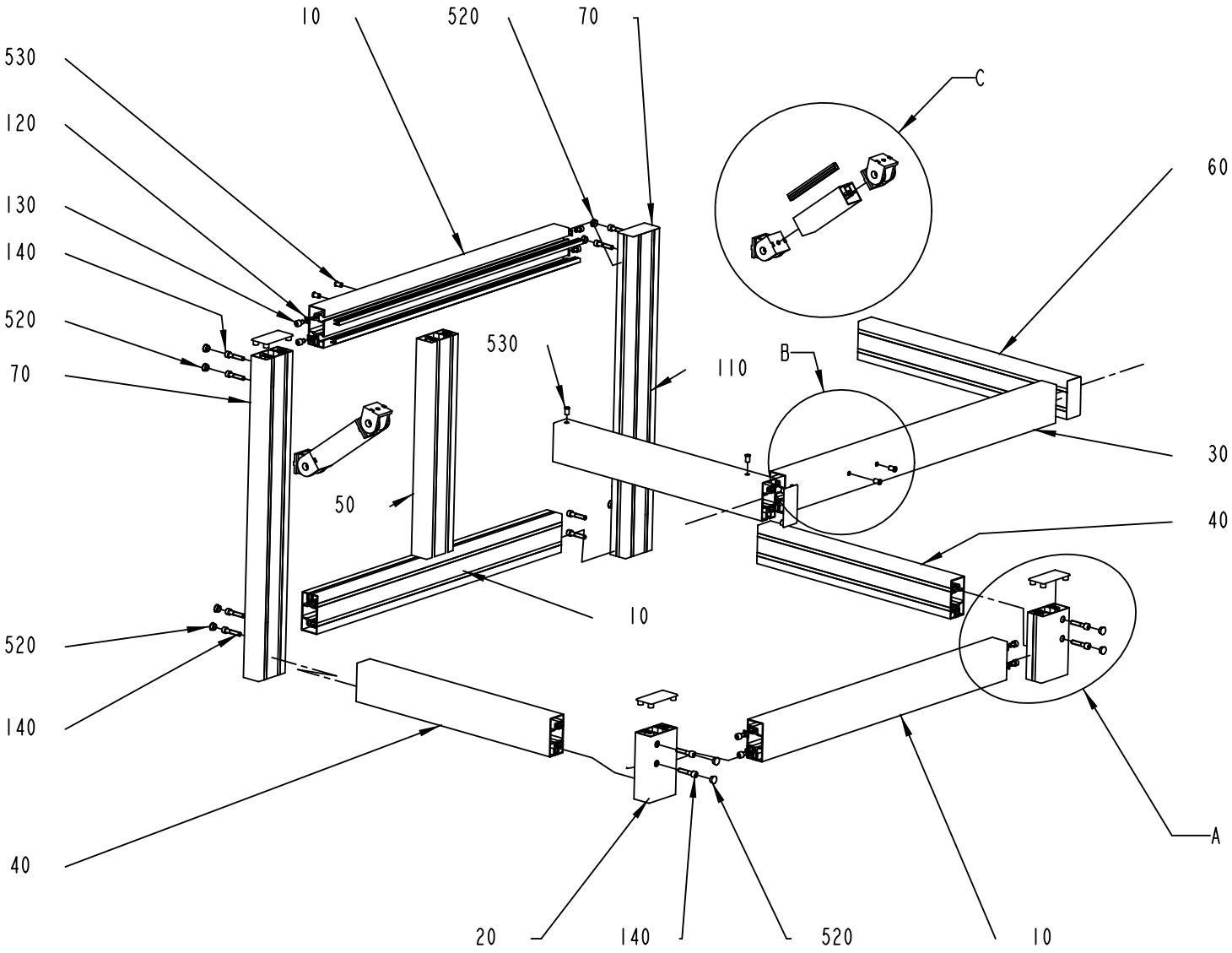

Close channels Profiles
with GASKET :
COD. 3123116

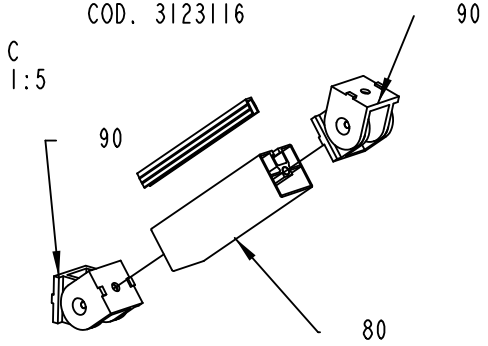

B
1:5
Insert Blind Rivet nut
COD. M6(2x)
312927-0131

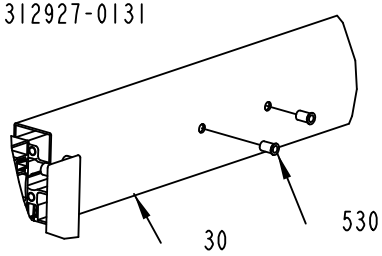

CLOSING PLUG
COD. 3123117

A
1:5

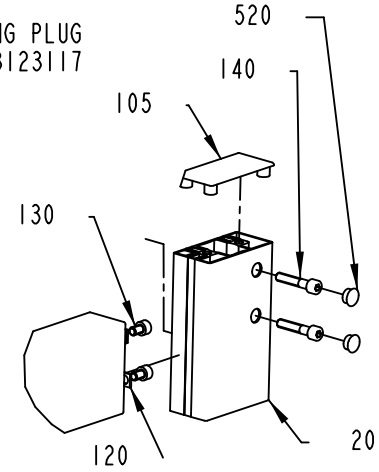

ECM: 472502 - 20101105
Group number: 3040857-0100
Assembly Drawing: 3040857-1_1_AA

This list covers pages from 11-106 to 11-109

Pos	Part No	UN	Qty	Description	Page No
-					
010	3126979-0000		3	PROFILE	
020	3040859-0000		2	PROFILE	
030	3040860-0000		1	PROFILE	
040	3047997-0000		2	PROFILE	
050	3048000-0000		1	PROFILE	
060	3058057-0000		2	PROFILE	
070	3058058-0000		2	PROFILE	
080	3058051-0000		2	PROFILE	
090	3123118-0000		4	PROFILE	
105	3060723-0000		6	PLUG	
110	3123116-0000		1	GASKET	
120	3123115-0000		8	WASHER	
130	312115-0447		8	SCREW ISO4762 M8X12 A4 80	
140	312115-0459		12	SCREW ISO4762 M8X40 A4 80	
520	3123117-0000		12	PLUG	
530	312927-0131		6	RIVET NUT M6, CLAMP. LENGTH 1,5 - 3,0	

Pos	Part No	UN	Qty	Description	Page No

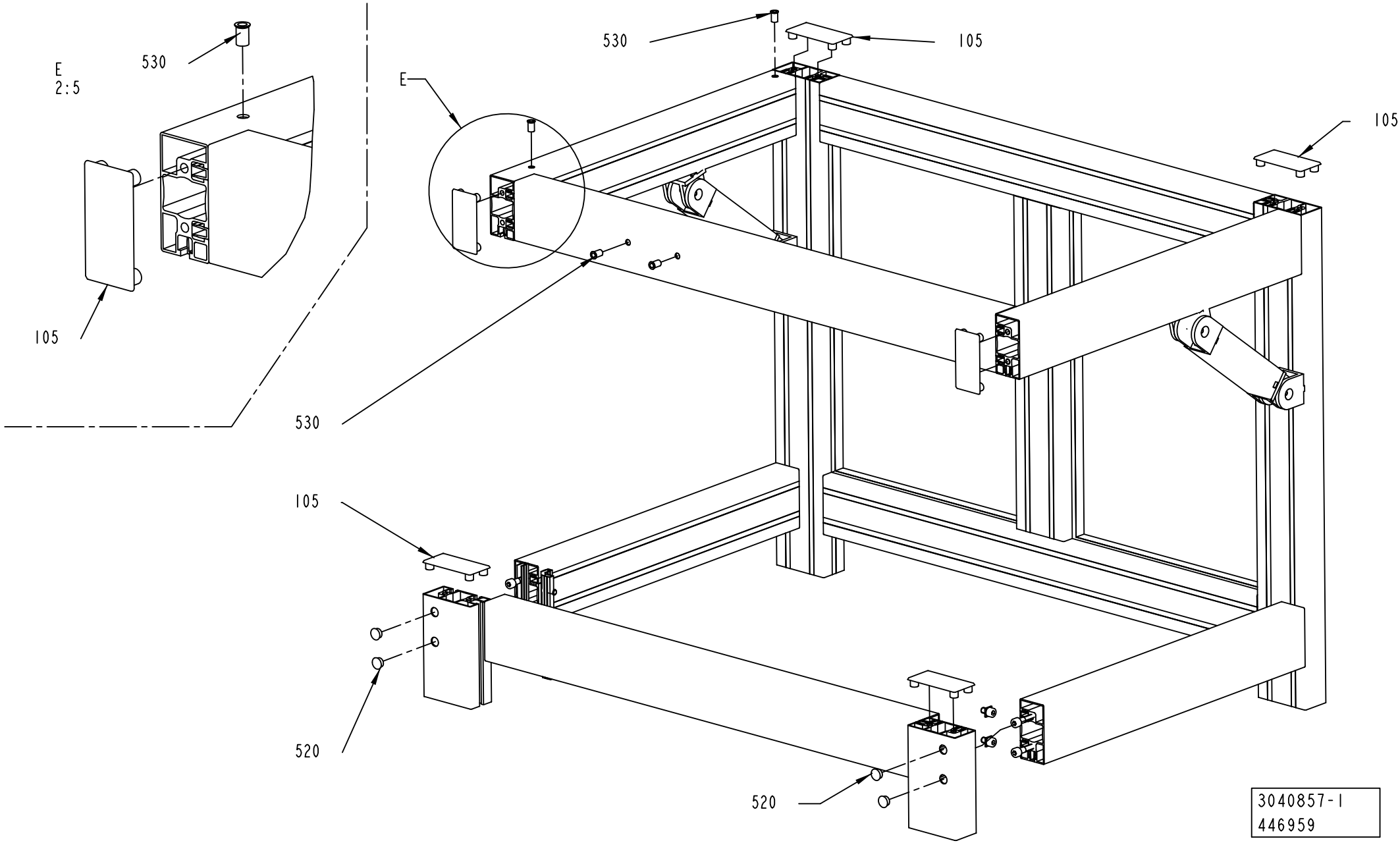
E
2:5
530
105
530
E
105
105
530
105
520
520
3040857-1
446959

ECM: 472502 - 20101105
Group number: 3040857-0100
Assembly Drawing: 3040857-1_2_AA

This list covers pages from 11-106 to 11-109

Pos	Part No	UN	Qty	Description	Page No
-					
010	3126979-0000		3	PROFILE	
020	3040859-0000		2	PROFILE	
030	3040860-0000		1	PROFILE	
040	3047997-0000		2	PROFILE	
050	3048000-0000		1	PROFILE	
060	3058057-0000		2	PROFILE	
070	3058058-0000		2	PROFILE	
080	3058051-0000		2	PROFILE	
090	3123118-0000		4	PROFILE	
105	3060723-0000		6	PLUG	
110	3123116-0000		1	GASKET	
120	3123115-0000		8	WASHER	
130	312115-0447		8	SCREW ISO4762 M8X12 A4 80	
140	312115-0459		12	SCREW ISO4762 M8X40 A4 80	
520	3123117-0000		12	PLUG	
530	312927-0131		6	RIVET NUT M6, CLAMP. LENGTH 1,5 - 3,0	

Pos	Part No	UN	Qty	Description	Page No

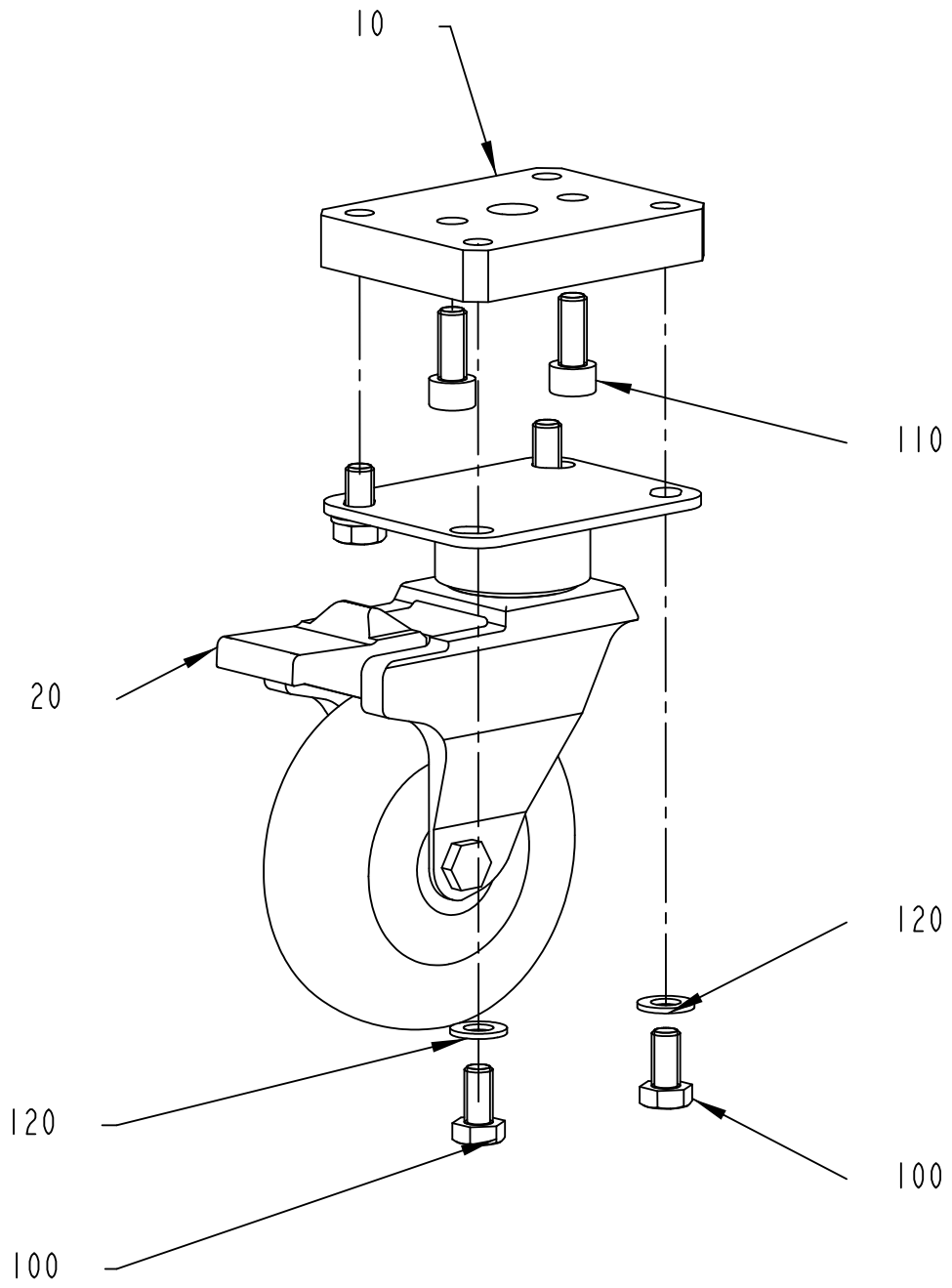

3076811-1
446959

ECM: 472997 - 20101105
Group number: 3076811-0100
Assembly Drawing: 3076811-1_1_AA

Pos	Part No	UN	Qty	Description	Page No
-					
010	3040861-0000		1	FLANGE	
020	3123120-0000		1	WHEEL	
100	312105-0449		4	SCREW, M6S ISO 4017 M8X16 A4 80	
110	312115-0451		2	SCREW ISO4762 M8X20 A4 80	
120	315105-0165		4	WASHER PLAIN, 8,4X16X1,6 A4 BRB	

Pos	Part No	UN	Qty	Description	Page No

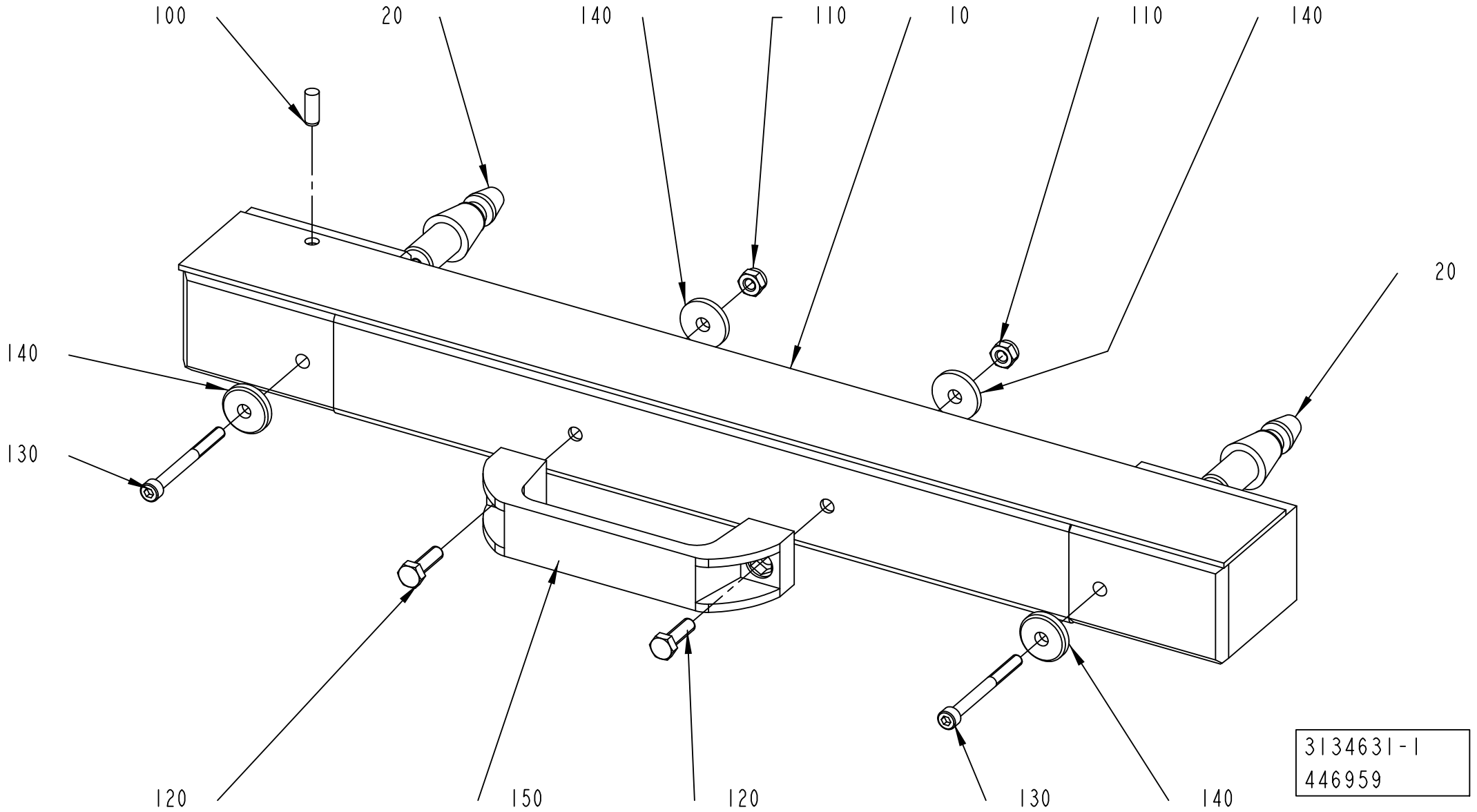
100
20
140
110
10
110
140
20
140
130
120
150
120
130
140
3134631-1
446959

ECM: 475928 - 20101105
Group number: 3134631-0100
Assembly Drawing: 3134631-1_1_AA

Pos	Part No	UN	Qty	Description	Page No
-					
010	3110786-0000		1	SETTING PLATE	
020	3025086-0000		2	PIN	
100	311103-0351		1	PARALLEL PIN ISO 2338 6M6X16 A1	
110	312812-0316		2	HEXAGON NUT, NY-LOCK M6 A4 80	
120	312105-0370		2	SCREW, M6S ISO 4017 M6X20 A4 80	
130	312115-0341		2	SCREW ISO4762 M5X50 A4 80	
140	315125-0153		4	WASHER HIGH, TBRSB 6,4X22X4 A4	
150	90017-0035		1	HANDLE, NO. 1095-05	

Pos	Part No	UN	Qty	Description	Page No

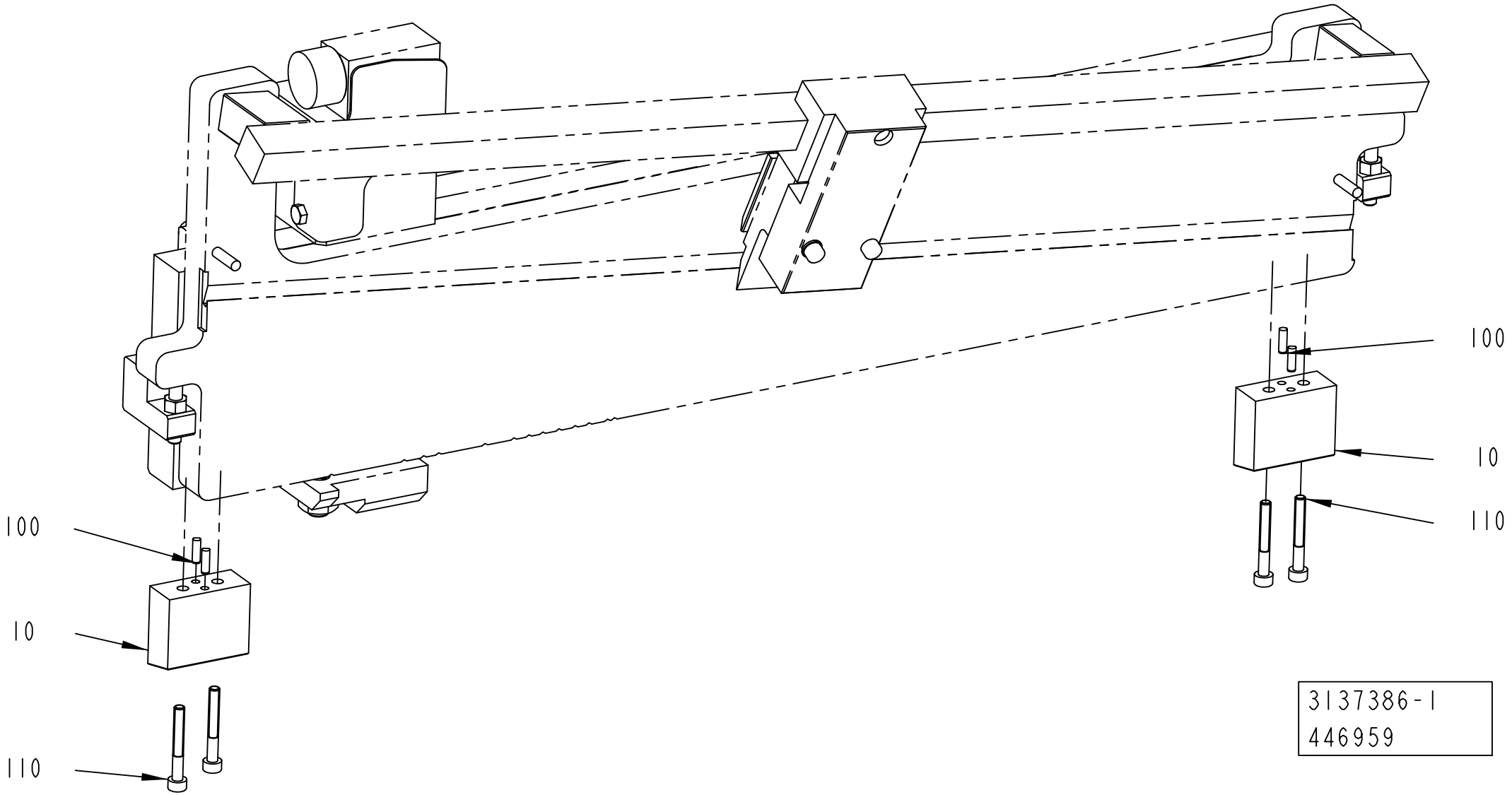
100
10
110
100
10
110
3137386-1
446959

ECM: 476083 - 20101105
Group number: 3137386-0100
Assembly Drawing: 3137386-1_1_AA

Pos	Part No	UN	Qty	Description	Page No
-					
010	3110785-0000		2	SPACER	
100	311103-0233		4	PARALLEL PIN ISO 2338 3M6X10 A1	
110	312115-0299		4	SCREW ISO4762 M4X30 A4 80	

Pos	Part No	UN	Qty	Description	Page No

Tetra Pak

SPC
Spare Parts Catalogue

Part No	Description	Page No
6-2110 53	CLAMP SINGLE HINGE A13MHM-1 1/5-S	11-61
6-210854 00	END CAP 16AMP SOLID TC 1" & 1.5" 316L	2-219
6-990262 53	O-RING 88.57X2.62 AL113 3038-76 FPM	1-115, 1-117, 1-121, 1-129, 1-139
1755-0001	WASHER	4-47
1755-0002	WASHER	4-47
1755-0003	WASHER	4-47
2033-0007	WASHER	1-273, 1-275, 7-115
2033-0008	WASHER	1-293, 1-295, 1-297
2033-0009	WASHER	4-153, 7-119
2033-0011	WASHER	1-279, 1-281, 1-283, 1-285, 1-287, 1-291, 1-293, 1-295, 1-297, 7-115
2033-0014	WASHER	4-153, 7-119
2873-0000	SHAFT	11-47
6161-0000	ROLL	7-117
12242-0001	GASKET 32X25X5,5	1-123
12242-0003	GASKET 48X38X5,5	1-301
12242-0005	GASKET 61X51X5,5	1-163, 1-301
12242-0006	GASKET	1-301
12242-0007	GASKET	1-301
20494-0000	COMPRESSION SPRING	4-9, 4-19
21903-0000	ROLL	7-119
22463-0000	ROLL	4-127, 4-129, 4-131, 4-133, 4-135, 4-137, 4-139, 4-141
27815-0000	WASHER	1-279, 1-281, 4-153
28509-0000	WASHER	4-115, 4-125
29876-0000	COVER	1-167
29886-0000	LACE	4-9, 4-19
30298-0000	INSULATION	1-167
31838-0000	PLUNGER	4-9, 4-19
32079-0000	WASHER	4-115, 4-125
32544-0000	INSULATION NUT	4-115, 4-125
32644-0000	WASHER	4-107, 4-109, 4-111, 4-117, 4-119, 4-121
32957-0000	SCREW	4-15, 4-23
33408-0000	BEARING	4-127, 4-129, 4-131, 4-133, 4-135, 4-137, 4-139, 4-141
35918-0000	SHAFT	1-283, 1-285, 1-287
35919-0000	COMPRESSION SPRING	1-283, 1-285, 1-287
36325-0000	KNOB	1-283, 1-285, 1-287
36753-0000	RING	4-11
67379-0107	TRANSFORMER	4-115, 4-125
67379-0115	TRANSFORMER	4-115, 4-125
67379-0204	TRANSFORMER	4-115, 4-125
67379-0206	TRANSFORMER	4-115, 4-125
67379-0248	TRANSFORMER	4-115, 4-125
67379-0254	TRANSFORMER	4-115, 4-125
67379-0262	TRANSFORMER	4-115, 4-125
67379-0264	TRANSFORMER	4-115, 4-125
67379-0269	TRANSFORMER	4-115, 4-125
74305-0100	PULLER	11-49
74363-0000	FASTENING PLATE	11-63
74364-0000	EXTRACTOR BOLT	11-63
74365-0000	SCREW	11-63
74767-0102	DYNAMOMETER	11-5
74768-0000	SLEEVE	11-45
74769-0000	SLEEVE	11-45
74770-0000	ROD	11-45
74771-0000	STEERING	11-45
74772-0000	DIAL	11-45
74912-0000	DOWEL	11-45
75936-0000	TEMPLATE	11-31, 11-33
75937-0000	TEMPLATE	11-31, 11-33
75939-0000	TEMPLATE	11-31, 11-33
75943-0000	TEMPLATE	11-31, 11-33
75944-0000	TEMPLATE	11-31, 11-33
76131-0000	ASSEMBLY CONE	11-49
76132-0000	ASSEMBLY TOOL	11-49
76176-0000	TEMPLATE	11-31, 11-33
76304-0100	COMPRESSION SPRING	11-5, 11-35
76305-0000	BRACKET	11-25
78801-0000	CALIBRATION TOOL	11-49
90002-0012	BLANK-OFF PLUG, PR 28,3 SKINDICHT-BLK21	5-49
90003-0019	BAG	9-9
90005-0011	WASHER,PL.RND.CU.10/14,H=1,5	7-117
90005-0047	WASHER,PL.RND.CU.12,2/ H=1,5	4-47
90005-0052	WASHER,PL.RND.CU.8/18 H=2	4-91, 4-93, 4-95, 4-97
90005-0056	WASHER PL.RND.NYL.6/8,5,H=1	8-149, 8-151
90005-0060	WASHER PLAIN, RBS 6,4/M6)/18,H=1,5	1-103, 1-119, 1-131, 1-153, 1-233, 1-235, 1-237, 1-255, 1-257, 1-283, 1-285, 1-287, 5-35
90005-0082	WASHER PLAIN ROUND 4,3(M4)/12,H=1	7-47, 7-53, 7-55, 7-81, 7-89, 7-91, 7-93, 7-95, 7-97, 7-101, 7-109, 8-127
90005-0105	WASHER PLAIN ROUND 8,4(M8)/24, H=1,5	2-45, 5-19
90005-0114	WASHER PLAIN ROUND 5,3(M5)/15, H=1	1-97
90005-0116	WASHER PLAIN ROUND 8,4(M8)/24, H=2	1-103, 6-21, 6-23
90005-0129	WASHER PLAIN ROUND 14,3/34,9, H=2,77	1-83
90005-0140	WASHER PLAIN ROUND 10,5(M10)/30, H=2	5-23, 5-45, 7-5, 7-7
90015-0020	LEAD-IN, TET5-7, E-1458016	2-33, 2-45
90015-0021	LEAD-IN, TET 10-14, E1458023	2-59

Part No	Description	Page No
90015-0022	LEAD-IN, TET 14-20, E1458029	2-7
90015-0023	LEAD-IN, TET 7-10, E1458019	2-33, 2-185, 2-187
90015-0024	LEAD-IN, TET 20-26, E1458035	7-83
90015-0037	RUBBER BUSHING, 8920001	6-21
90016-0020	DISC SPRING, CONICAL 40X20,4X1,5 MM	7-5, 7-7
90017-0016	HANDLE, NO. 14.4012.02.120	8-183, 8-185
90017-0022	HANDLE, NO. EL-037311	1-15
90017-0035	HANDLE, NO. 1095-05	11-113
90020-0027	SLEEVE	1-29
90028-0020	CONE TUBE 2,5MM	4-29, 4-31
90028-0021	CONE TUBE 4 MM	2-47, 4-29, 4-31
90028-0022	CONE TUBE 6 MM	2-45, 2-47
90028-0025	CONE TUBE 6 MM	4-29, 4-31
90030-0030	CONN. BULKHEAD SV12L71	1-35, 1-37, 1-39
90030-0058	CONN. T-PIPE T12L71	1-35, 1-37, 1-39, 1-185, 7-111
90030-0065	PIPE CONNECTION	2-41
90030-0066	CONN. BULKHEAD SV06L71	2-185, 2-187
90030-0071	CONN. ELBOW, WE08LR71	2-223
90030-0074	BULKHEAD LEAD-IN, ELBOW WSV 8	6-31
90030-0076	CONN. T-PIPE T06L71	2-45
90030-0092	STRAIGHT CONN., 6-R1/4,EXT. TAPPERED	1-215, 1-217
90030-0096	ELBOW CONNECTION 12	1-41, 1-69
90030-0098	PROGRESSIVE RING 8	4-43
90030-0106	PIPE CONNECTION G 12	1-41, 1-69, 1-183, 2-209
90030-0109	STRAIGHT PIPE CONN. GE12LR1/271	1-37, 1-39, 1-81, 2-37, 2-39, 2-209
90030-0115	CONN. ELBOW, WE12LR71	7-123
90030-0147	ADJUSTABLE ELBOW CONNECTION 10-G1/4	2-37, 2-39
90030-0154	NIPPLES, REDUCING, INT. THR. NO. 2520	2-37, 2-39
90030-0159	CONN. BULKHEAD SV15L71	2-33
90030-0166	NIPPLE, REDUCING, G1/4EXR-G1/4INT	2-65, 2-67
90030-0171	ADJUSTABLE ELBOW CONNECTION 6-G1/8	1-203
90030-0180	CONN. STR. GE12L1/2NPT71	1-41, 1-69, 1-183
90030-0184	CONN. STR., GE06LRED71	1-143, 1-145, 1-161, 1-203, 1-245, 11-61
90030-0185	CONN. STR., GE08LRED71	2-223, 5-45, 6-31
90030-0186	CONN. STR. GE10LRED71	2-41
90030-0187	CONN. STR. GE12LRED71	1-37, 1-39, 1-69, 1-143, 1-145, 1-185, 1-203
90030-0188	CONN. STR. GE15LRED71	1-163, 1-165, 2-205
90030-0191	CONN. STR. GE18LRED71	1-37, 1-39
90030-0202	CONN. STR., 6-G1/4, EXT. THREAD	1-159, 1-203
90030-0203	ADJUSTABLE ELBOW CONNECTION 6-G1/4	1-203
90030-0207	NIPPLE	1-19
90030-0213	CONN. STR. M12MSC1/2K-316	1-37, 1-39
90030-0219	BULKHEAD LEAD-IN, ELBOW WSV 6	2-47, 4-43
90030-0241	ADJUSTABLE ELBOW CONNECTION 12-G3/8	2-37, 2-39
90030-0257	CONN. ELBOW, WE08LLR71	1-17
90030-0278	CONN. STR., 12GC1/4R-316	1-81
90030-0290	CONN. STR. GE08LLR71	11-61
90030-0336	CONN. STRAIGHT, 316L-12M-BVCO-3	1-173
90030-0338	NUT, PIPE & CONNECTORS, SS-8-BVCO-4	1-173
90030-0339	CONN. STR. EVGE12LREDCF	2-37, 2-39
90030-0340	NIPPLES, EXT. THREAD, HEXAGON, RA-G1/2A3	2-37, 2-39
90030-0416	CONN. STR. M12MSC1/2K-316	1-37, 1-39
90030-0462	CONN. BULKHEAD DE04-00	1-215, 1-217
90030-0465	STRAIGHT CONNECTION, MAD DN 15	6-33
90030-0477	PIPE CONNECTION SMC 8	2-185, 2-187
90030-0485	CONN. BULKHEAD BMC8-316	1-73, 2-185, 2-187
90030-0571	CONN. T-PIPE SS-6MO-3	1-99, 2-185, 2-187
90032-0043	DISTRIBUTION BLOCK 3 WAYS	2-45, 2-47
90032-0046	DISTRIBUTION BLOCK 6 WAYS	2-47
90038-0049	DIODE	1-243
90042-0171	SOLENOID VALVE, 330 3/2 NC	1-89
90042-0203	SOLENOID VALVE, 331 3/2 NC	1-97, 1-203
90042-0206	SOLENOID VALVE, G1/8 444-111-000-1	2-211
90042-0248	SOLENOID VALVE OFFICIENE DI ENSINO	2-63, 6-17
90042-0249	SOLENOID VALVE OFFICINE DI ENSINO	6-11
90042-0254	SOLENOID VALVE, DIAPHRAGM R1 1/2	6-29
90042-0487	COIL, 04983-197-18	2-211
90043-0002	PRESSURE GAUGE, 2040 D=63 MM	2-209
90043-0006	PRESSURE GAUGE, 2041 D=63 MM	6-11
90043-0021	PRESSURE GAUGE, 2041 D=40 MM	11-65
90043-0034	PRESSURE GAUGE	1-215, 1-217
90043-0043	PRESSURE GAUGE, 2041D=40 MM	6-33
90043-0069	PRESSURE GAUGE 0-4BAR WIEGAND 2040	1-43
90043-0082	PRESSURE GAUGE, 2840, D=63 MM	1-37, 1-39, 1-41, 1-69, 1-81, 1-163, 1-183
90043-0095	PRESSURE GAUGE, 2750, D=63 MM, GLYC.	1-165
90043-0096	PRESSURE GAUGE 7169 MA -63-0, 25	7-79
90043-0100	PRESSURE GAUGE, 2948 D=63 MM	6-17
90043-0302	SCREW	1-215, 1-217
90044-0194	INDUCTIVE SENSOR, IN 5329	1-113, 1-123, 1-149, 1-151, 1-171, 1-211, 7-81, 7-83
90044-0310	KEY, FOR SAFETY SWITCH AZ 15/16 B1	7-159
90045-0162	MOTOR 4G42X25	2-191
90048-0022	MANUAL PUMP INCL. BARROW 50-60 L	11-69
90051-0035	KNOB, EXTERNAL THREAD. NO. 8308-1135	1-111, 7-107
90051-0045	STELLAR KNOB, NO. 8323-257	1-135

Part No	Description	Page No
90051-0059	KNOB, EXTERNAL THREAD. NO. 8308-1550	11-47
90051-0083	KNOB, EXTERNAL THREAD. NO. 8308-1321	11-29
90051-0125	LOCK KNOB, NO. GN 617-6-A-N1	7-99
90053-0029	COUNTER, F524.800FA3C 24VDC	8-157
90055-0033	HOSE NIPPLE, EXT.THR. R1/2-13 MM	6-51
90055-0042	NIPPLES, EXT. THREAD, HEXAGON, NO. 6835-	6-17
90055-0051	HOSE NIPPLE, EXT.THR. R3/8X13 MM	2-199
90055-0097	STRAIGHT COUPLING	6-43
90055-0100	Y-CONNECTION, 6-6	1-215, 1-217, 4-155, 4-157, 4-159
90055-0166	HOSE NIPPLE, EXT.THR. R11/2X38 MM	6-29
90055-0172	ELBOW WITH TAILPIECE 8/8 MM	5-13
90055-0191	HOSE NIPPLE, EXT.THR. R1/2X16 MM	1-165, 2-205
90055-0204	ELBOW WITH TAILPIECE 8/8 MM LONG	1-47, 1-49, 1-51
90055-0217	ELBOW PIPE JOINT	1-47, 1-49, 1-51, 7-131, 7-137
90055-0222	ELBOW WITH TAILPIECE 6/6 MM	7-5, 7-7
90055-0237	HOSE,NIPPLE,REDUCER,TUBE, 4/6MM	1-219, 1-221
90055-0260	NIPPLE-8 MM G1/4"	6-17, 6-23
90062-0015	LOCK WASHER SERRAT.EXT.GEAR,6,4/11 H=0,7	7-79
90062-0016	LOCK WASHER SERRAT.EXT.GEAR,8,4/15 H=0,8	8-127
90062-0021	LOCK WASHER DIN 6797 TYPE A 5,3	8-25, 8-41, 8-43, 8-47, 8-49, 8-51, 8-77, 8-107, 8-109, 8-111, 8-113, 8-115, 8-117, 8-119, 8-133, 8-135, 8-137, 8-139, 8-153, 8-159, 8-161, 8-167
90062-0022	LOCK WASHER D=6,4/11	8-21, 8-23, 8-121, 8-123, 8-149, 8-151, 8-157, 8-163, 8-179, 8-181, 8-183, 8-185, 8-187, 8-189, 8-191, 8-193
90062-0029	LOCK WASHER 5,1X 8,6, T= 1,5 DIN 7980	6-15
90062-0050	LOCK WASHER NORD-LOCK,6,5/10,8, H=1,6	1-103
90064-0082	PUSH BUTTON, WHITE	7-155, 7-163
90064-0098	PUSH BUTTON, WHITE	2-135, 7-155
90068-0312	CLAMPING PIECE, T 12 / 12	9-13
90070-0017	WORKING HOURS COUNTER, 7991 DR H?NLE	8-157
90074-0001	CABLE CLIPS, D=10 MM	4-155, 4-157
90074-0004	CABLE CLIPS, D=16 MM	8-197
90077-0113	TERMINAL BLOCK WDK 2.5	1-95, 1-243, 2-25, 2-57, 7-45, 8-139
90077-0114	END PLATE, WAP WDK 2.5 1059100000	1-57, 1-95, 8-37
90087-0019	PLUG M10X1 STAINLESS	2-45, 2-47, 4-29, 4-31
90087-0046	PLUG, EXT. 1/8 NPT-THREAD, 2PH-SS	1-17
90091-0055	RADIAL SEAL 80X100X10 MM	5-35
90091-0058	RADIAL SEAL 120X150X12 MM	5-35
90091-0091	ROD SEAL 10X14X1,7 MM	4-99, 4-101, 4-103, 4-105
90091-0159	GASKET 330X308X9 MM	2-37, 2-39
90091-0169	WEAR RING 12X15X3,2 MM	4-127, 4-129, 4-131, 4-133, 4-135, 4-137, 4-139, 4-141
90091-0216	PISTON SEAL GLYD RING 7,1X12X2,2 MM	4-127, 4-129, 4-131, 4-133, 4-135, 4-137, 4-139, 4-141
90091-0218	SCRAPER 40X48X7 MM	4-9, 4-19
90091-0237	ROD SEAL GLYD RING 20X27,5X3 MM	1-23, 1-31, 1-175, 1-177, 1-179
90091-0238	WEAR RING 20X22X10 MM	1-23, 1-31, 1-175, 1-177, 1-179
90091-0266	SEAL RING 10,4X16,3X2,5 MM	1-35, 1-37, 1-39, 1-61, 1-173, 9-29
90091-0335	PISTON SEAL GLYD RING 62,5X70X3,2 MM	1-177
90091-0336	PISTON SEAL GLYD RING 79X90X4,2 MM	1-23, 1-31, 1-175, 1-179
90091-0359	X-SEAL 36,17X2,62 MM	4-107, 4-109, 4-111, 4-117, 4-119, 4-121
90091-0360	BACK-UP RING 37,5X1,4 MM	4-107, 4-109, 4-111, 4-117, 4-119, 4-121
90091-0362	SCRAPER, EXCLUDER 18X22,8X3,7 MM	4-107, 4-109, 4-111, 4-117, 4-119, 4-121
90091-0364	ROD SEAL, STEPSEAL 18X25,3X3,2 MM	4-107, 4-109, 4-111, 4-117, 4-119, 4-121
90091-0366	WEAR RING 18X23X3,9 MM	4-107, 4-109, 4-111, 4-117, 4-119, 4-121
90091-0387	ASSEMBLY TOOL	11-49
90091-0391	SEAL SLYDRING	4-107, 4-109, 4-111, 4-117, 4-119, 4-121
90091-0393	PISTON SEAL GLYD RING T 17,5X25X3,2 MM	4-107, 4-109, 4-111, 4-117, 4-119, 4-121
90091-0394	WEAR RING 20X25X5,6 MM	4-107, 4-109, 4-111, 4-117, 4-119, 4-121
90091-0398	PISTON SEAL GLIDE RING T 20,5X28X3,2 MM	4-107, 4-109, 4-111, 4-117, 4-119, 4-121
90091-0429	SEALING RING, VARILIP 15X26X7 MM	1-119
90091-0436	RADIAL SEAL 20X40X7 MM DUST LIP	4-39, 4-41
90091-0438	RADIAL SEAL 25X52X10 MM DUST LIP	5-7
90092-0052	METERING VALVE 10 MM3	4-29, 4-31
90092-0053	METERING VALVE 30 MM3	2-47
90092-0054	METERING VALVE 50 MM3	4-29, 4-31
90099-0027	HEXAGON NUT, M14, DIN936	1-113
90099-0053	HEXAGON NUT, M14X1,5, SMS2176	1-263
90099-0095	NUT HEX. M18X1,5	1-111
90099-0104	PLUG, PR 15,2 (PG9)	1-97, 2-47, 6-17
90099-0110	PLUG, PR 22,5 (PG16)	8-5, 8-7, 8-9, 8-11
90099-0117	PLUG, PR 18,6 (PG11)	2-207
90099-0187	HEXAGON NUT, LOCK, M14, DIN985	3-27
90110-0052	MALE INSERT, HAN E06, 0933 0062 601	1-71, 1-247, 1-249, 2-173, 2-175, 6-53, 7-49, 7-51
90110-0053	FEMALE INSERT, HAN 6 E 09 33 006 2701	2-27
90110-0054	MALE INSERT, HAN 6 HSB, 0931 0062 601	5-49, 6-53, 7-49, 7-51
90110-0055	FEMALE INSERT, HAN 6 HSB 09 31 006 2701	2-27, 8-149, 8-151
90110-0056	MALE INSERT, HAN E 24, 0933 0242 601	1-247, 1-249, 2-173, 2-175, 7-49, 7-51
90110-0057	FEMALE INSERT, HAN 24 E 09 33 002 4201	8-5, 8-7, 8-9, 8-11
90110-0095	CONNECTOR, PLUG SOCKET, MSSD-C-4P	2-211, 6-11, 6-17, 6-21, 6-29, 6-41
90110-0123	HOUSING, 09 30 006 0301	8-141, 8-143, 8-145, 8-147, 8-149, 8-151
90110-0127	COAXIAL CONNECTOR, GE 15057C10HBNT-2PT	4-43
90110-0144	CONNECTOR, COVER, 8655MH0911LF	1-251, 2-173, 2-175
90110-0147	CONNECTOR, D-SUB, DE09S064TLF	1-251, 2-173, 2-175
90110-0156	MALE INSERT 70.210.0653.0	1-247, 1-249
90110-0235	CABLE CONTACT, PX0739/P	1-239, 1-247, 1-249, 7-49, 7-51
90110-0236	CHASSIS CONTACT PX0767/S	8-149, 8-151

Part No	Description	Page No
90110-0381	COVER, 310601-33 CYR24.4	1-247, 1-249, 7-49, 7-51
90111-0122	KEY SWITCH, 2 NO CONTACTS	8-157
90111-0344	SIGN, PE, GREEN/YELLOW	8-169, 8-171
90113-0056	REGULATOR, 11-818-998	2-49, 11-65
90113-0098	PRESSURE REGULATOR	6-33
90113-0472	FILTER 0,01 MICRON, F72C-2GD-AEO	1-219, 1-221
90115-0139	ROD END, ID=8 MM, M8X1,25	5-37, 5-39, 5-53, 5-55
90115-0163	ROD END, ID=6 MM, M6X1	7-147
90115-0180	ROD END, ID=8 MM, M8X1,25 LH	5-37, 5-39, 5-53, 5-55
90119-0104	OPTO COUPLER AMMS 50070	2-21, 2-23
90119-0108	RELAY OMRON G2R-2-SNI-24DC	8-41, 8-43
90121-0127	RESISTANCE FIXED, 1,5 KOHM, 0,25 W	1-243
90121-0132	RESISTANCE FIXED, 0,51 KOHM, 0,25 W	1-251
90125-0020	PLATE COMPLETE	7-123
90129-0018	BASE, P2RF-08-E	8-41, 8-43
90132-0021	HOSE CLIP 6-10MM	1-99, 2-211
90132-0030	SUPORTE MV 87177 KS 580T	1-163, 1-165
90134-0030	SLEEVE FOR PLASTIC TUBE	2-47
90134-0031	SLEEVE FOR PLASTIC TUBE	4-29, 4-31
90134-0038	BUSHING/NUT INLET/OUTLET 4 MM	4-29, 4-31
90134-0039	BUSHING VALVE CONNECTION 2,5 MM	4-29, 4-31
90134-0040	BUSHING VALVE CONNECTION 4 MM	2-47, 4-29, 4-31
90134-0051	SPACING COLLAR DOSING BLOCK	4-29, 4-31
90134-0054	BLOCK CONNECTION M10X1	2-47
90134-0055	BUSHING/NUT INLET/OUTLET 6 MM	2-45, 2-47, 4-29, 4-31
90134-0058	CONNECTION	4-29, 4-31, 4-99, 4-101, 4-103, 4-105
90134-0068	CONNECTION	4-35, 4-37
90135-0039	CLAMPING YOKE, KLBU 4-13.5	8-129, 8-131
90140-0010	T-PIPE, INT. THREAD, 20031/2	2-33, 2-165, 6-11, 6-15
90140-0011	T-PIPE, INT. THREAD, NO. 2070-1/2-1/2	2-165
90140-0013	ELBOW, 90 INT/EXT, S2020-1/4-1/4	1-163, 2-63, 2-65, 2-67
90140-0018	T-PIPE, INT. THREAD, 2003-1/4	2-63, 11-61, 11-65
90140-0019	ELBOW, 90, INT. THREAD, NO. 2013-1/4	2-63
90140-0020	ELBOW, 90, INT/EXT, S2020-3/8	6-11
90140-0023	T-PIPE, INT. THREAD, NO. 2070-3/8-3/8	6-11
90140-0079	SLEEVE, INT. THREAD, NO. 501-08	6-43
90141-0015	RETAINING RING FOR SHAFT DIN 471 8 SS	1-113, 1-123, 1-153, 4-107, 4-109, 4-111, 4-117, 4-119, 4-121, 7-115, 7-119, 7-133, 7-139
90141-0016	RETAINING RING FOR SHAFT DIN 471 10 SS	1-207, 7-95, 7-107, 7-109, 7-119, 11-93, 11-95
90141-0017	RETAINING RING FOR SHAFT DIN 471 17 SS	5-7
90141-0020	RETAINING RING FOR BORE DIN 472 42 SS	2-191, 5-37, 5-39
90141-0022	SNAP RING B 16	1-157, 1-161
90142-0005	HOSE	7-121
90143-0020	STRIP	2-203
90143-0043	STRIP SELLOTAPE 3,2X6MM	2-155
90143-0057	STRIP EMKA 1011-05 21X11MM	8-169, 8-171
90143-0060	EDGE STRIP 9,5X6,3MM BLACK PVC	1-13, 6-49
90143-0068	RUBBER STRIP EMKA 1011-06	1-15, 2-127, 2-129, 2-131, 2-133, 2-137, 2-139, 2-141, 2-143, 2-147, 2-149, 2-151, 2-153, 2-155, 2-157, 2-159, 7-153, 7-157, 7-159, 7-161, 7-165, 7-167, 7-169
90143-0069	RUBBER STRIP	7-155
90143-0073	FLAT GASKET TAPE W. ADHESIVE, 15X3.0	2-7
90143-0097	SELF GRIPPING GASKET, 1011-2489	1-111, 1-219, 1-221, 1-255, 1-257, 2-33, 2-59, 6-51, 8-157
90144-0007	TAPE	1-159, 6-29, 6-31, 6-43
90144-0030	TAPE	1-53, 1-187, 1-189, 1-191, 1-233, 1-235, 1-237
90144-0073	TREBOFLON-TAPE W=13MM	1-163, 1-165, 1-193, 1-197, 1-199, 2-185, 2-187, 2-193, 2-195, 2-199, 2-207, 2-209, 2-213, 11-61
90148-0037	HYDRAULIC HOSE	4-43
90148-0038	HYDRAULIC HOSE	4-43
90152-0016	HOSE (SPIRAL)	11-103
90152-0017	HOSE (SPIRAL)	2-15
90152-0050	HOSE, SPIRAL CONDUIT, 20X13, UL 1313	1-87, 1-247, 1-249, 2-145, 2-207
90152-0051	HOSE, SPIRAL CONDUIT, 25X18, UL 1816	1-71, 1-247, 1-249, 2-103, 2-135, 2-207, 2-213, 7-123, 7-163
90152-0058	HOSE, SPIRAL CONDUIT, 15X9, UL 0909	1-73, 1-81, 1-247, 1-249, 5-37, 5-39, 6-17, 7-5, 7-7
90152-0059	HOSE, SPIRAL CONDUIT, 18X12, UL 1211	1-247, 1-249
90152-0060	HOSE, SPIRAL CONDUIT, 42X35, UL3529	7-105
90152-0070	HOSE, SPIRAL CONDUIT, 32,5X26, UL 2621	1-247, 1-249, 5-49, 7-155
90153-0015	ADHESIVE,LOCTITE IS 496/CYANOLOT 3031	4-127, 4-129, 4-131, 4-133, 4-135, 4-137, 4-139, 4-141
90153-0020	ADHESIVE, BOSTIK 1782 125ML	1-167
90153-0023	ADHESIVE, SILICON 251470 TUB 90CC(UN1993	1-103, 2-203
90153-0048	ADHESIVE, LOCTITE HYSOL 3430 A&B	2-199
90155-0016	CHAIN LONG LINK, LLB-3-R	1-75, 1-77, 1-233, 1-235, 1-237
90157-0021	LOCKING FLUID LOCTITE 270	2-17, 4-47
90157-0037	THREAD SEALANT LOCTITE 542	1-163, 1-165, 2-33, 2-207, 2-209
90157-0041	SEALING COMPOUND, RHODORSEAL 5651	1-81, 2-129, 2-131, 2-133, 2-139, 2-143, 2-147, 2-149, 2-155, 2-159, 7-153, 7-157, 7-159, 7-161, 7-165, 7-169
90163-0007	CONNECTION	11-65, 11-81
90163-0016	QUICK COUPLING, (F) LP 006-0-WR013	11-65
90163-0039	HOSE NIPPLE EXT.THR. G1/2-17 MM	2-33, 6-51
90163-0041	HOSE NIPPLE, EXT.THR. G3/8-12 MM	6-11
90163-0052	HOSE NIPPLE, EXT.THR. G1/4-12 MM	2-45
90163-0057	QUICK COUPLING, (M) 5150-1/8	1-47, 1-49, 1-51, 1-215, 1-217, 11-61
90163-0062	QUICK COUPLING, (F) 5053-1/8	1-47, 1-49, 1-51, 1-215, 1-217, 11-61
90163-0064	QUICK COUPLING, (M) LP-006-2-WR517	2-37, 2-39, 2-45

Part No	Description	Page No
90163-0076	QUICK COUPLING, (F) LP-006-0-WR021	2-37, 2-39
90163-0113	QUICK COUPLING, (M) LP-006-1-WR013-22	11-65
90163-0141	QUICK-RELEASE COUPLING SS-QTM2A-B-8M0-K2	2-193
90163-0172	QUICK-RELEASE COUPLING SS-QTM2A-B-8M0-K4	2-193
90163-0304	QUICK COUPLING, LP-006-5-74-KU (DUST CAP	2-37, 2-39, 2-45
90164-0015	LIGHT FIXTURE, RL70CV-111 / 230V 50HZ	2-19, 2-53, 7-5, 7-7
90164-0303	LIGHT FIXTURE, BRACKET 70MM	7-5, 7-7
90165-0007	PIPE CLIP FOR TUBE D=8 MM	8-157
90165-0019	TOOL CLIP, 81/3, OPEN, 20 - 30 MM	1-219, 1-221
90165-0022	PIPE CLIP, FOR TUBE D=2,5 MM, B-3570	8-51, 8-157
90165-0024	PIPE CLIP FOR TUBE D=5 MM	7-17, 7-19
90165-0039	PIPE CLAMP D=15 MM, GSK15/12	1-163, 2-7, 2-165, 7-5, 7-7
90165-0048	PIPE CLAMP, D=25 MM, RAP325X	2-9, 2-167
90165-0056	PIPE CLIP FOR TUBE, 4 MM	5-7
90165-0057	PIPE CLIP FOR TUBE D=6 MM	5-45
90165-0087	T-CLIP T6 FOR TUBE D=6 - 7 MM	7-131, 7-137
90165-0095	PIPE CLAMP, RSGU 1.34/25-W4, D=34 MM	7-153
90165-0114	PIPE CLAMP, D=38 MM, RAN538X	1-255, 1-257, 2-11
90166-0008	HOSE 7/10 PVC TRANSP.	2-223
90166-0045	HOSE PVC TRANSP. 6/12	6-15, 11-81
90166-0081	TUBE 6 MM PA BLUE	7-111, 7-115, 7-117
90166-0087	HOSE 15/23 REINF.PVC TRANSP.	2-33, 2-201, 2-205
90166-0096	TUBE, 22 MM PA BLUE	1-149, 1-151
90166-0101	HOSE, SILICONE, 60 SHORE, 6/10 MM	2-211
90166-0108	TUBE 6 MM PA TRANSP.	2-45, 2-47, 4-43
90166-0109	TUBE 4 MM PA TRANSP.	4-29, 4-31
90166-0111	SHRINKABLE HOSE 6.4 MM(1/4")BLACK	7-125
90166-0113	HOSE	11-81
90166-0118	TUBE 8 MM PA BLACK	4-43
90166-0121	HOSE	1-163, 1-165, 2-33, 2-45, 2-165, 2-195, 6-11, 6-13, 6-15, 6-17, 6-33
90166-0132	TUBE 6 MM PA,TRANSP.	4-155, 4-157, 4-159
90166-0135	TUBE 10 MM PA BLACK	2-15
90166-0138	HOSE	2-199
90166-0143	TUBE 2,5 MM PA TRANSP.	4-29, 4-31
90166-0151	HOSE SILICONE, 20/27 MM	2-199
90166-0158	HOSE	2-33, 2-201, 2-209
90166-0161	HOSE	2-211
90166-0176	RUBBER HOSE	1-245, 11-7, 11-9, 11-11, 11-13, 11-15, 11-17
90166-0196	TUBE 14MM PA BLUE	2-69, 6-43
90166-0225	HOSE	2-185, 2-187, 2-193
90166-0236	HOSE, 38/51 REINFORCED RUBBER	6-29
90166-0260	HOSE	2-9
90166-0273	HOT AIR HOSE	7-111
90166-0274	HOT AIR HOSE, SIL-G2NB, ID=25 MM	7-79
90181-0037	CABLE DUCT, PLASTIC, 25X40	8-163
90181-0039	CABLE DUCT, PLASTIC, 60X40	8-5, 8-7, 8-9, 8-11
90181-0045	CABLE DUCT, PLASTIC, 40X60	8-149, 8-151
90181-0052	CABLE DUCT, PLASTIC, 25X80	8-21
90181-0055	CABLE DUCT, PLASTIC, 80X80	8-21
90181-0061	CABLE DUCT, PLASTIC, 60X100	8-163
90181-0182	BRACKET, 1149354	1-33, 1-215, 1-217, 1-253
90181-0183	CABLE DUCT, FITTING, B2	2-171
90181-0186	CABLE DUCT, ELBOW BRACKET, B27	1-33
90181-0190	CABLE DUCT, WALL BRACKET, B4 MINI	2-171
90181-0191	CABLE DUCT, PLATE HOLDER, B38	1-33
90181-0313	RIVET, DUCTAFIX R4	8-21
90187-0029	BALL VALVE, G1/2, NPBR	2-195, 6-11
90187-0045	BALL VALVE, G1/4 CR PL	6-17, 6-21, 11-65, 11-81
90187-0059	BALL VALVE, FOR HYDR.PER. G1/2 3MM HOLE	2-199, 2-201
90187-0062	BALL VALVE, G1/2, NPBR	1-163, 2-209
90187-0067	BALL VALVE, 6 MM	11-61
90187-0088	BALL VALVE, G1/4, NPBR	11-61
90187-0089	BALL VALVE, G3/8, NPBR	6-11, 6-43
90187-0110	DIAPHRAGM VALVE, DN15, NC WELD CONN.	1-185
90187-0133	SAFETY VALVE, 10 BARS, R1/2, R1/2	6-33
90187-0147	BALL VALVE, G1 1/2	6-29
90187-0148	BALL VALVE G1	6-31
90187-0149	THROTTLE VALVE, G1/4, G1/4, MALE	9-13
90191-0047	WHEEL, NO.798 821	11-75
90191-0060	CASTOR WHEEL, NO. 1599PRT	11-75
90194-0113	ADHESIVE LABEL, CALIBRATED & DATE	11-7, 11-9, 11-11, 11-13, 11-15, 11-17
90194-0152	SIGN, EARTH	7-79, 8-5, 8-7, 8-9, 8-11, 8-15, 8-17, 8-19, 8-21, 8-149, 8-151, 8-163, 8-169, 8-171, 8-179, 8-181, 8-183, 8-185, 8-187, 8-189, 8-191, 8-193
90195-0020	TERMINAL BLOCK, BK 2CRN, 0624 7200 00	2-191, 5-13, 8-15, 8-17, 8-19
90195-0029	CONN. LINK NO324 FOR -28	1-167
90199-0022	LEVEL GLAS	5-9, 5-15, 5-17
90201-0442	GASKET, NO. 313162	2-37, 2-39
90201-0453	WASHER, SEALING, 17(3/8)/23, H=1,5 CU	5-9, 5-15, 5-17
90206-0030	HEATING ELEMENT 3000W, 220V	1-143, 7-123, 9-19
90206-0070	HEATING ELEMENT 6000W 380/220V	2-207
90206-0322	GASKET	1-145
90206-0326	CONNECTION BOX K2 FOR 90206-56 AND -70	2-207
90207-0363	GASKET 75X85X1,8 MM 3" FDA 3-A	1-25, 1-61, 1-173, 9-29
90207-0365	GASKET 53X63X1,8 MM 2,5" FDA 3-A	1-25, 1-173, 9-29

Part No	Description	Page No
90211-0002	WIRE LOCK, 5 MM	7-53, 7-55
90214-0029	BALL BEARING 10/26X8	7-115
90214-0037	BALL BEARING 5/16X5	1-209
90214-0096	BALL BEARING, 25X52X15 MM	5-7
90214-0112	BALL BEARING 12/24X6	1-119
90214-0165	BALL BEARING, 25X47X12 MM	1-129
90214-0189	BALL BEARING, 17X40X12 MM	5-7, 5-19
90214-0194	SPHERICAL BALL BEAR 15/35X14 SOLID OIL	4-39, 4-41
90214-0207	BALL BEARING 15/32X9	7-103
90214-0225	BALL BEARING, 20/42X12 SOLID OIL	5-37, 5-39
90214-0303	SEALING RING, 18,6X35X2 MM	1-113
90217-0332	SOLID END CAP ISO2852, FOR TUBE 38,1 MM	11-61
90220-0034	THERMOC.CABLE, TEX/SITW-20F-KX 2X0,5MM2	1-91, 1-99, 1-247, 1-249, 2-173, 2-175, 2-199, 2-207, 5-49, 6-53, 7-117, 7-143, 8-107, 8-157
90220-0046	SCR. CABLE 16X0,34MM2 GREEN/YELLOW	2-173, 2-175
90220-0059	THERMOCOUPLE CABLE, P/PTW-20F-K 2X0,5MM2	1-37, 1-39
90220-0091	CABLE, PAIR TWISTED 2X2X0,25MM2	1-247, 1-249, 1-251, 2-173, 2-175
90220-0093	CABLE, PAIR TWISTED 4X2X0,25MM2	11-7, 11-9, 11-11, 11-13, 11-15, 11-17
90220-0104	SCR. CABLE 4X1,5MM2	8-129, 8-131
90220-0105	SCR. CABLE 4X2,5MM2	8-129, 8-131
90220-0165	SCR. CABLE 5X0,34MM2	1-91, 8-51
90220-0183	SCR. CABLE 2X0,34MM2	8-107, 8-157
90224-0090	REDUCER, ART. NO RMM 1418	11-61
90224-0308	CONN. BANJO, ART. NO. 2023-1/8-1/8	1-47, 1-49, 1-51, 1-215, 1-217
90224-0329	ELBOW 90 COUPL., EXT. THREAD 6/4-G1/4"	2-63
90224-0349	CONN. BULKHEAD. 1250-6	1-47, 1-49, 1-51, 1-71, 1-75, 1-77, 1-79, 1-81, 1-87, 1-215, 1-217
90224-0372	NIPPLE, EXT.THREAD, HEXAGON, R1/4-R1/4	6-41, 7-27
90226-0458	MOUNTING SCREW	2-157, 6-49, 7-161, 7-165, 7-167, 7-169, 8-149, 8-151, 8-175
90230-0028	NON-RETURN VALVE H 151 R 3/8"	2-63, 6-17
90230-0041	PRESSURE RELIEF VALVE, SS-4CPA2-RT-DG-3	6-21
90230-0042	NON-RETURN VALVE 1/2"	2-165, 6-31, 6-33
90230-0044	NON-RETURN VALVE 1"	6-31
90230-0064	CHECK VALVE, 6 MM HIGH TEMP.	1-87
90232-0333	REFLECTOR, E39-R1	7-5, 7-7, 7-65
90235-0048	VALVE	1-43
90235-0151	NON-RETURN VALVE, 534 098 110 0	6-31
90235-0206	QUICK EXHAUST VALVE, SEU-1/8	7-149
90235-0259	VALVE	1-19
90235-0459	TOGGLE ACTUATER	11-103
90235-0748	THROTTLE CHECK VALVE, GRA-1/4-B	1-219, 1-221
90235-0756	FRONT PANEL VALVE, SV-5-M5-B	11-103
90235-0844	THROTTLE CHECK VALVE M5, MANUAL, 6MM	1-113, 1-123
90235-0845	THROTTLE CHECK VALVE M5, MANUAL, 4MM	1-127, 1-153
90235-0846	THROTTLE CHECK VALVE G1/8", MANUAL, 6	1-103, 1-143, 1-145, 5-11, 5-47, 7-117, 7-133, 7-139, 7-171
90236-0041	BRACKET, 74504-50	1-89
90237-0070	SNAP-IN BALL LOCK, 69X19 MM	1-43
90237-0128	LOCK CYLINDER, 1109-SU125	2-127, 2-129, 2-131, 2-133, 2-137, 2-141, 2-143, 2-147, 2-153, 2-159, 6-49, 7-153, 7-159
90237-0129	LOCK CYLINDER, 1109-U6	8-187, 8-189, 8-191, 8-193
90237-0142	LOCK HOUSING, 1000-U45	1-15
90237-0153	LOCK HOUSING, 1121-U26-0B	2-133, 2-137, 2-141, 2-143, 2-153, 6-49, 7-153, 7-159, 8-179, 8-181, 8-183, 8-185, 8-187, 8-189, 8-191, 8-193
90237-0156	LOCK BOLT, 1000-16	8-187, 8-189, 8-191, 8-193
90237-0157	LOCK BOLT, 1000-230	8-163, 8-173
90237-0165	LATCH	2-137, 2-141, 7-153
90237-0175	TURNING HANDLE, 1125-U185-0A	7-153, 7-159
90237-0176	TURNING HANDLE, 1125-U190-0A	2-133, 2-137, 2-141, 2-143, 2-153, 6-49, 8-187, 8-189, 8-191, 8-193
90237-0214	LOCK ADAPTER, 1121-U40	8-187, 8-189, 8-191, 8-193
90237-0319	LOCK HOUSING, 1000-U134	1-255, 1-257, 8-163, 8-173
90237-0320	LOCK HOUSING, 1000-U136	8-163, 8-173
90237-0323	LOCK O-RING, 1000-24	1-255, 1-257
90237-0335	LOCKING CATCH	1-15, 1-255, 1-257
90237-0337	LOCK HANDLE FOR 90237-319	1-15, 1-255, 1-257
90239-0405	ROD END,BALL JOINT EYE M10X1,25	7-133, 7-139
90239-0487	REAR, CLEVIS, MINI-ISO 20-25	1-145
90239-0489	ROD END, CLEVIS WITH AXLE M6X1,25	1-127
90239-0491	ROD END, BALL JOINT EYE, MINI-ISO M6	7-109
90239-0532	ROD END, CLEVIS WITH AXLE M8X1,25	1-145, 7-119
90239-0829	DOUBLE ACTING, MINI-ISO, CYL.25-50	7-117
90240-0172	FLANGE BUSHING, 8X12X10 MM	1-279, 1-281, 1-283, 1-285, 1-287, 1-291, 1-293, 1-295, 1-297
90240-0178	BEARING BUSHING W/O FL, 8X12X16 MM	7-149
90240-0180	FLANGE BUSHING 10X14X15MM	4-153
90240-0264	FLANGE BUSHING, IGLIDUR X 15X17X17	7-147
90240-0315	SPHER. BEARING, 30X47X22 PLASTIC MM	2-167
90242-0093	O-RING MATERIAL 1,5 MM	4-127, 4-129, 4-131, 4-133, 4-135, 4-137, 4-139, 4-141
90242-0223	O-RING 47,35X1,78 MM	2-191
90242-0224	O-RING 44,17X1,78 MM	2-191
90243-0169	BINDER CLIP, DIAM.29 MM, NO. 4670819	1-15
90243-0203	MEASURING INSTRUMENT- ZONOSCOPE	11-5
90243-0245	MEASURING INSTRUMENT	1-163, 6-33
90245-0024	MATCHING TRANSF. 65 KVA SEC 93,4A	11-69
90257-0001	FILTER PLUG ART.NO.8145-00-140 TYPE F14	7-111, 8-197
90258-0031	PIN, STRAIGHT SLOTTED SPRING FRP 3X20	1-135, 4-45

Part No	Description	Page No
90259-0308	INCOMING TERMINAL, BK25/3-PKZ0	8-109
90259-0313	AUXILIARY SWITCH, NHI21-PKZ0	8-109
90261-0018	PLUG, BLIND, PLASTIC GPN300F-183	2-7
90261-0033	PLUG, BLIND, PLASTIC GPN300F182	2-87, 2-89, 2-111, 2-113
90261-0048	SQUARE PLUG GPN 260/Q2525	9-13
90261-0049	PLUG, BLIND, PLASTIC, NO. SR1750	7-103
90261-0057	PLUG, BLIND, PLASTIC	2-33, 4-47
90261-0070	PLASTIC PLUG SS 0082.31	2-33
90264-0078	FAN, 2BH1300-7AH16	7-79
90266-0019	PIPE	4-29, 4-31
90266-0165	BRASS PIPE	4-29, 4-31, 4-35, 4-37
90266-0174	TUBE 12X1 SS 2333-22	7-111, 7-123
90274-0042	PRESSURE GUARD, 200 KPA	6-11
90274-0056	PRESS.SWITCH 1-12BAR, PEV-1/4-B-SA22358	6-21
90274-0082	FLOW SWITCH, 2 - 3 L/MIN	6-29
90274-0084	PRESSURE GUARD, 1800 KPA	2-45
90274-0103	PRESSURE SWITTCH PEV-1/4-B	2-49, 7-27
90277-0045	FILTER / 9900-05-BK	2-49, 7-29, 7-33
90277-0046	FILTER / 9933-05-101	2-49
90277-0104	FILTER F64B-2GN-ARO	1-89
90277-0323	FILTER HOUSING / ART.NO 95S6-1/4 S 5430	1-89
90277-0333	GASKET KIT / ART.NO ACS 0325 EH	1-61
90286-0013	GREASE NIPPLE STRAIGHT, H1 M6X1 2346	5-15, 5-17, 5-33, 5-53, 5-55
90287-0075	SCREW SLOT. PAN HEAD LKCS M6X12	2-155
90287-0076	SCREW SLOT. PAN HEAD LKCS M6X20	1-33
90287-0106	SCREW SPRINGLOAD. SLOTTED HEAD M10X21	7-103
90287-0112	SCREW SPRINGLOAD. SLOTTED HEAD M8X16	7-107
90287-0118	SCREW SPRINGLOAD. SOCK. HEX HEAD M5X18	1-157
90287-0159	SET SCREW, DOGPOINT M6X16 A4	2-213
90287-0163	SCREW SPRINGLOAD. SLOTTED HEAD M6X14	2-97, 5-11, 7-115, 11-101
90287-0175	SCREW M6S M3X12 A480	4-39, 4-41, 7-5, 7-7
90287-0199	SCREW, M6S ISO 4017 M5X6 A4 80	1-307, 4-65, 4-67, 4-69
90287-0229	SCREW, HEX.SOCK.HEAD SHOULD. M5X6	1-301
90287-0238	SHOULDER SCREW, 6X25/M5 SS	1-15
90287-0242	SHOULDER SCREW, 5X6/M4 SS	7-149
90287-0261	SCREW MC6S M5X55 A270	2-37, 2-39
90287-0295	SCREW HEX.SOCK.COUNT.MF6S M3X8 A280	1-99, 1-255, 1-257
90287-0312	SCREW, M6S ISO 4014 M6X75 A4 80	5-35
90287-0354	SET SCREW, DOGPOINT MT6SS 8X20 SS	7-141
90296-0051	HEAT SINK COMPOUND 340	1-187, 1-189, 1-191, 7-121, 7-143
90296-0070	SHELL ALVANIA GREASE EP 1	1-17
90296-0072	SHELL OMALA OIL 150 (1PC=20L)	5-9, 5-15, 5-17, 5-23, 5-35
90296-0073	OIL	1-17
90296-0091	LUBRICATION GREASE, FLUOLUB 210	1-113
90303-0011	PROTECTIVE GOGGLES	9-31
90303-0012	PROTECTIVE GLOVES	9-31
90303-0013	APRON	9-31
90304-0307	ATTACHMENT PIPE	2-209
90319-0013	POLYESTER-SILKROPE 4MM 3900N, 102079	7-53, 7-55
90321-0102	PUMP, MG209XD0TT10000	2-191
90321-0128	CHEMICAL PUMP UNIT 081778	2-223
90321-0134	CIRCULATING PUMP, 105 006 120	2-207
90321-0135	CIRCULATING PUMP, 105 006 121	2-207
90321-0490	O-RING	1-61
90321-0491	O-RING, NAKAMURA A/CMXT 2500,3500 POS35	1-61
90321-0492	O-RING	1-61
90321-0493	O-RING	1-61
90321-0496	O-RING	1-61
90321-0498	O-RING	1-61
90321-0500	O-RING	1-61
90321-0504	O-RING, NAKAMURA AMXT 2500,3500 POS59	1-61
90326-0012	PROTECTIVE COVER, 03-001 10	1-37, 1-39, 1-87, 1-111, 1-143, 1-145, 1-149, 1-151, 1-163, 1-167, 1-185, 1-197, 1-199, 2-199, 2-207, 6-17, 7-117, 7-143
90326-0020	SOCKET, FEMALE YELLOW CR-AL, 03-22000A	1-37, 1-39, 1-87, 1-99, 1-111, 1-143, 1-145, 1-149, 1-151, 1-163, 1-167, 1-185, 1-197, 1-199, 2-173, 2-175, 2-199, 2-207, 6-17, 7-117, 7-143, 8-5, 8-7, 8-9, 8-11
90326-0022	PLUG, MALE YELLOW CR-AL, 03-21000A	1-91, 1-99, 1-247, 1-249
90326-0048	THERMOCOUPLE, 5110 048-000	1-143, 1-145
90326-0051	THERMOCOUPLE, 5110 051-000	1-163, 1-167
90326-0053	THERMOCOUPLE, 5110 053-000	1-87, 1-197, 1-199, 8-5, 8-7, 8-9, 8-11
90326-0054	THERMOCOUPLE, 5110 054-000	7-143
90326-0057	THERMOCOUPLE, 5110 057-000	1-149, 1-151, 2-207, 6-17
90326-0060	THERMOCOUPLE, 5110060-000 CR-AL	1-99
90326-0089	THERMOCOUPLE, 5110 089-000	1-37, 1-39, 1-143, 1-145, 1-185, 7-117
90326-0304	COMPRESSION GLAND, 5101 015-005	1-299, 1-307
90326-0306	GLAND FITTING, 5101 015-010	1-143, 1-145, 2-199
90326-0310	THERMOCOUPLE, 5130020-000	11-53
90328-0003	SILENCER, 338/110	1-19
90328-0024	SILENCER, G3/8"	1-45, 1-227, 1-229, 1-231, 2-51, 6-9, 6-39, 7-31, 7-35
90328-0025	SILENCER G1/2"	6-41, 11-81
90328-0026	SILENCER, G1/4"	1-19, 1-79, 1-81, 1-193, 1-219, 1-221, 7-27, 11-61
90328-0027	SILENCER	11-105
90328-0029	SILENCER, M5	1-37, 1-39
90328-0047	SILENCER, G1/8"	1-45, 1-185, 1-227, 1-229, 1-231, 2-51, 6-9, 6-39, 7-31, 7-35

Part No	Description	Page No
90330-0003	NUT	7-121, 7-123
90330-0004	NIPPLE, EXT.THREAD, HEXAGON, R3/4-R3/4	6-17
90330-0011	SLEEVE, REDUCTION, INT, R-2023/8X1/4	1-183
90330-0014	ELBOW, 90 INT. THREAD, R-222R1	6-31
90330-0019	NIPPLE, EXT.THREAD, HEXAGON, R1/2-R3/8	2-165
90330-0020	ELBOW, 90 INT. THREAD, R-2221/2	6-43
90330-0021	NIPPLE, EXT.THREAD, HEXAGON, R1/2-R1/2	1-163, 2-201, 2-209, 6-33
90330-0022	SLEEVE, REDUCTION, INT, R-202 3/4X1/2	1-163
90330-0026	PLUG, EXT. G-THREAD, G1/4	5-23, 6-17, 6-21
90330-0029	PLUG, G3/8EXT, R-236R3/8	1-103, 5-9, 5-15, 5-17, 11-103
90330-0032	NIPPLE, EXT.THREAD, HEXAGON, R1/8-R1/8	1-17
90330-0036	BUSHING, INT.EXT. THR. G1/2-G1/8	6-33
90330-0037	PLUG, G1/2EXT, G1/2	5-35
90330-0042	BUSHING, INT.EXT. THR. R3/8-G1/4	6-17
90330-0043	NIPPLE, EXT.THREAD, HEXAGON, R1/4-R1/4	2-207, 6-21, 6-31, 11-61
90330-0045	NIPPLE, EXT.THREAD, HEXAGON, R1 1/2-R1	6-31
90330-0048	BUSHING, INT.EXT. THR. R1/2-G3/8	6-11
90330-0049	T-PIPE, INT. THREAD, R-221R1/2	1-163, 1-165, 2-205, 2-209, 6-33, 6-43
90330-0054	SLEEVE, INT. THREAD, NO. R-201R1/2	2-201
90330-0056	NIPPLE, EXT.TH., HEXAGON, R1 1/2-R1 1/2	6-29
90330-0057	ELBOW, 90 INT. THREAD, R-222R1 1/2	6-29
90330-0066	PLUG, G1/8EXT, G1/8	1-103, 1-185, 4-127, 4-129, 4-131, 4-133, 4-135, 4-137, 4-139, 4-141
90330-0080	NIPPLE, EXT.THREAD, HEXAGON, R3/4-R1/2	6-21, 6-33
90330-0085	BUSHING, INT.EXT. THR. R1/2-G1/4	6-11
90330-0093	NUT, HEXAGON SS, G1/2	2-65, 2-67
90330-0094	SLEEVE, INT, THREAD, NO., R-2011/8	1-17
90330-0102	SLEEVE, INT, THREAD, NO., R-201R1/4	6-17
90330-0105	NUT, HEXAGON SS, G 3/8	1-215, 1-217
90330-0120	NUT, HEXAGON SS, G1/4	2-45
90330-0172	ELBOW, 90 INT/EXT, 3/8 NPT	1-183
90335-0025	COMP. SPRING, 22010, 1X11X26	7-127, 11-71
90335-0052	COMP. SPRING, 23400, 3,2X28,2X94,5	11-25
90335-0089	TENSION SPRING, 41490, 0,9X10X23	1-211
90335-0091	TENSION SPRING 41890, 1,2X13X48,2	7-67
90337-0315	FILTER INSERT / MCS 4463	1-41, 1-69, 1-183
90342-0024	RUBBER BELLOWS, 100X100 MM	2-17
90344-0073	TOOTHED WHEEL	2-167
90347-0007	VIBRATION DAMPER	2-61
90347-0009	VIBRATION DAMPER S1860740	2-85
90347-0034	VIBRATION DAMPER	4-7
90347-0054	ROTARY DASHPOT, S-CRD-P277	1-207
90347-0104	VIBRATION DAMPER NO. 1861220	1-71
90347-0130	VIBRATION DAMPER, NO. 01255960	7-79
90347-0132	VIBRATION DAMPER, NO. 66639HARDNESS A	2-199
90347-0144	VIBRATION DAMPER, NO. RA 40EM-A	1-155
90347-0162	DAMPER	7-5, 7-7, 7-85
90347-0182	SHOCK ABSORBER, YSR-16-20-C	7-141
90348-0029	FREE-WHEEL COUPLING, 17X40 MM	7-13
90358-0091	REDUCING NIPPLE	6-17
90360-0020	STEAM TRAP / MK36/51 3/8 INCH	1-37, 1-39, 1-69, 1-185
90360-0305	FLOAT, ART NO 10739920	1-165
90410-0337	CALIBRATION INSTRUMENT, 5100071-001	11-53
90411-0001	INSULATING MAT, WIRED 100 6000X600X30MM	1-87
90411-0005	INSULATION 1200MM SERIE 21 89/154X30	1-167
90415-0032	FILTER / 3-02-00-1 1/2"	6-29
90415-0033	OIL FILTER REFILLING UC-HP-1229-25	2-45
90415-0052	FILTER ART NO 12565 C-340-6E FOTVENTI EP	2-193, 2-223
90415-0065	FILTER	6-17
90425-0016	MECMAN TYPE E120 735-120-000	11-81
90426-0003	HAND SHOWER, 361100	2-15
90450-0281	DOUBLE ACTING,PROF.CYL 32-80	1-161
90450-0306	DOUBLE ACTING, MINI-ISO, CYL. 12-25	7-109
90450-0669	SENSOR, BRACKET SERIES 168	1-161
90450-0725	ROD END, CLEVIS WITH AXLE M6	1-113, 1-123, 1-125, 1-143, 1-153
90450-0767	BRACKET, FOOT ANGLE, HALF HEIGHT 32	7-171
90450-0808	SENSOR BRACKET, FOR CYL 25	7-117
90457-0047	SENSOR 2750-1-5111-1 W.ADAPTER PNP	1-161
90457-0049	TERMINAL BLOCK WDK 2.5V, 102230	8-31, 8-33, 8-35, 8-55, 8-57, 8-59, 8-61, 8-63, 8-65, 8-67, 8-69, 8-71, 8-73, 8-81, 8-83, 8-85, 8-87, 8-89, 8-93, 8-95, 8-97, 8-101, 8-103, 8-105
90457-0056	FAN 7450 ES	8-21
90457-0057	GRID, LZ36	8-21
90457-0086	BULKHEAD CONNECTOR 6MM	1-47, 1-49, 1-51
90457-0141	BULKHEAD CONNECTOR, 8MM	1-47, 1-49, 1-51
90457-0146	GLAND FITTING, VK 15154YUL16	1-111, 1-153
90457-0147	INSERT, MULTI HOLE, EK154M 2X7	1-241
90457-0192	WASHER PLAIN ROUND, 6,5/18, H=1,5	7-79
90457-0866	HEATING ELEMENT 2000W/230V	1-145, 9-19
90457-0871	DOUBLE ACTING, MINI-ISO, CYL. 16-25	1-125, 7-147
90457-0920	BUTTON SIGN, ROTATION OF MATERIAL HOLDER	7-155
90457-0934	CONN. STR., GE10LR3/8ED71	2-41
90458-0048	RETAINING RING FOR BORE DIN 472 62 SS	5-7, 5-23
90458-0058	SCREW M5X60 A280	4-115, 4-125
90458-0072	SCREW ISO 7380 S M6X12 A2	2-85, 2-87, 2-89, 2-91, 2-93, 2-99, 2-101, 2-107, 2-111, 2-113, 2-167, 6-49, 8-177

Part No	Description	Page No
90458-0073	WASHER 6,4/30, H=1,5	2-85, 2-87, 2-89, 2-91, 2-93, 2-99, 2-101, 2-107, 2-111, 2-113, 3-11
90458-0135	MALE PLUG, COD.220-0397	5-13
90458-0136	FEMALE PLUG, COD 220-0381	5-13
90458-0190	SPIRALE TUBE, 6 MM TEFLON	1-43, 1-47, 1-49, 1-51
90458-0191	SPIRALE TUBE, 8 MM TEFLON	1-43, 1-47, 1-49, 1-51
90458-0200	PEROX. SAFETY VALVE, NO. 527-430 1/2X3/4	2-209
90458-0201	FLUID AUT. FEEDER, ALINOX 1/2 46.04.00	2-209
90458-0256	PROX.SWITCH IIA 3010-BPKG/6M	2-33
90458-0258	TRANSFORMER, 1-PH 100VA SEC 8,3A	8-15, 8-17, 8-19
90458-0273	SLOT COVER, ABP-5-S	7-171
90458-0305	CABLE GLAND, M12X1,5, 5311 1000	1-43, 1-55, 2-7
90458-0306	CABLE GLAND, M16X1,5, 5311 1010	1-55, 1-91, 1-171, 1-203, 2-7, 2-21, 2-23, 2-55, 6-45, 7-41, 7-43, 7-79
90458-0307	CABLE GLAND, M20X1,5, 5311 1020	1-107, 1-241, 1-247, 1-249, 2-7, 2-21, 2-23, 2-27, 2-45, 2-55, 2-173, 2-175, 6-21, 6-53, 7-49, 7-51, 7-125, 7-143, 8-149, 8-151
90458-0308	CABLE GLAND, M25X1,5, 5311 1030	1-241, 1-247, 1-249, 2-27, 2-173, 2-175, 5-49, 6-53, 7-41, 7-43, 7-49, 7-51
90458-0309	CABLE GLAND, M32X1,5, 5311 1040	1-241, 1-247, 1-249, 2-21, 2-23, 2-55, 2-173, 2-175, 6-45, 7-41, 7-43
90458-0314	CABLE GLAND, M16X1,5, 5311 1110	1-241, 5-37, 5-39, 5-43
90458-0315	CABLE GLAND, M20X1,5, 5311 1120	1-55, 1-241, 6-45, 7-5, 7-7
90458-0316	CABLE GLAND, M25X1,5, 5311 1130	2-21, 2-23, 2-55, 2-173, 2-175, 7-41, 7-43, 11-55, 11-57
90458-0317	CABLE GLAND, M32X1,5, 5311 1140	7-49, 7-51
90458-0320	CABLE GLAND, M63X1,5, 5311 1170	8-169, 8-171
90458-0321	NUT, M12X1,5	1-43
90458-0322	NUT, M16X1,5	1-137, 1-153, 1-171, 1-203, 1-211, 1-241
90458-0323	NUT, M20X1,5	1-107, 1-111, 1-149, 1-151, 1-157, 1-233, 1-235, 1-237, 1-241, 1-247, 1-249, 2-33, 2-103, 7-163, 8-149, 8-151
90458-0324	NUT, M25X1,5	1-241, 2-33, 7-155, 11-55, 11-57
90458-0325	NUT, M32X1,5	1-241
90458-0326	NUT, M40X1,5	7-105
90458-0328	NUT, M63X1,5	8-169, 8-171
90458-0341	THERMOCOUPLE, 5130 050-001	1-111
90458-0406	CABLE GLAND, VK 22052Y	1-241, 1-247, 1-249, 5-41
90458-0407	CABLE GLAND, VK 22553Y	2-161, 7-41, 7-43
90458-0410	CABLE GLAND, VK 24055Y	2-7, 2-155
90458-0414	GLAND FITTING, VK 22553YUL13	1-87, 1-145, 1-247, 1-249
90458-0420	CABLE GLAND, VK 21652Y	6-45
90458-0421	CABLE GLAND, VK 22052Y	1-241
90458-0422	CABLE GLAND, VK 22053Y	1-241
90458-0423	CABLE GLAND, VK 23255Y	2-27, 2-173, 2-175, 5-49
90458-0426	CABLE GLAND, VK 22554Y	1-241, 7-41, 7-43
90458-0427	GLAND FITTING, VK 21652YUL11	1-137, 1-153, 1-171, 1-211, 1-241
90458-0429	GLAND FITTING, VK 22053YUL13	1-163, 1-241
90458-0430	GLAND FITTING, VK 22054YUL16	1-71, 1-149, 1-151, 1-157, 1-233, 1-235, 1-237, 1-247, 1-249, 2-59, 2-103, 7-163
90458-0431	GLAND FITTING, VK 22554YUL16	1-129, 1-143, 1-149, 1-151, 1-241, 1-247, 1-249, 2-135, 2-207, 2-213
90458-0432	GLAND FITTING, VK 22555YUL21	1-247, 1-249, 7-155
90458-0434	GLAND FITTING, VK 24056YUL29	7-105
90458-0438	GLAND, EXTENDED WITH INSERT, M20X1,5	7-63
90458-0440	GLAND, EXTENDED WITH INSERT, M25X1,5	1-155, 7-141
90458-0450	GLAND FITTING, 2205416S08 UL16	1-71
90458-0451	GLAND FITTING, 232552S10 UL21	5-13
90458-0454	GLAND FITTING, VK 22053 D UL13	1-87
90458-0457	GLAND FITTING, VK 22555 D UL21	1-167
90458-0506	RETAINING RING FOR BORE DIN 472 26 SS	7-115
90458-0531	SENSOR BRACKET, FOR CYL 20	1-145, 7-119
90458-0576	CIRCUIT BREAKER, B3.1/5-PKZ0	8-109
90458-0601	CONTRAST SCANNER, KT15W-P2110S01	4-155, 4-157
90458-0602	CONTRAST SCANNER, KT15W-P2213S02	7-145
90458-0603	CONNECTOR, CABLE RECEPTACLES	7-49, 7-51
90458-0639	SEALING RING, VARILIP 20X30X7 MM	1-113, 1-125
90458-0751	BUSHING, INT/EXT, G3/4-G1/2	2-209
90458-0806	FLOW METER, COPA-XF DF23-DN32	1-187, 1-189, 1-191
90458-0914	THERMOCOUPLE CALIBRATOR, 714	11-53
90458-0915	THERMOCOUPLE CABLE FOR 90458-0914/MALE	11-7, 11-9, 11-11, 11-13, 11-15, 11-17, 11-53
90458-0921	FILTER, SP 122-200	6-11
90458-1073	THERMOCOUPLE CABLE FOR 90458-0914/FEMALE	11-7, 11-9, 11-11, 11-13, 11-15, 11-17
90458-1092	PROPORTIONAL VALVE, 0-10V/0-6 BAR	1-219, 1-221
90458-1173	MULTI DIAMETER MODULE, CM 30W40	2-173, 2-175
90458-1174	MULTI DIAMETER MODULE, CM 20W40	2-173, 2-175
90458-1175	MULTI DIAMETER MODULE, CM 15W40	2-173, 2-175
90458-1178	FRAME, CF 8	2-173, 2-175
90458-1179	FRAME, CF 32	2-173, 2-175
90458-1194	VALVE, 5/2 MONOSTABLE	1-45, 1-227, 1-229, 1-231, 2-51, 6-9, 6-39, 7-31, 7-35
90458-1197	VALVE, 5/2 BISTABLE	7-31
90458-1200	VALVE OPEN IN MID-POSITION 5/3	2-51
90458-1201	VALVES 2X3/2, OPEN	2-51
90458-1202	VALVES 2X3/2, CLOSED	1-45, 1-227, 1-229, 1-231, 2-51, 6-9, 7-35
90458-1204	BASIC SUB-BASE 4 VALVES, CDVI5.0-GB4-MP	6-39, 7-31
90458-1205	BASIC SUB-BASE 8 VALVES, CDVI5.0-GB8-MP	1-45, 1-227, 1-229, 1-231, 2-51, 6-9, 7-35
90458-1206	EXP. SUB-BASE 2 VALVES, CDVI5.0-EB	1-227, 1-229, 1-231, 2-51, 7-35
90458-1207	SEALING, STANDARD	1-45, 1-227, 1-229, 1-231, 2-51, 6-9, 6-39, 7-31, 7-35

Part No	Description	Page No
90458-1208	SEALING, CHANNEL 1 BLOCKED	1-227, 1-229, 1-231, 2-51, 7-35
90458-1212	LEFT ENDPLATE INCL. 10M CABLE	1-45, 1-227, 1-229, 1-231, 2-51, 6-9, 6-39, 7-31, 7-35
90458-1214	RIGHT ENDPL EXT. PILOT AIR,CDVI5.0-EPR-S	1-45, 1-227, 1-229, 1-231, 2-51, 6-9, 6-39, 7-31, 7-35
90458-1215	COVER PLATE, EMPTY VALVE POSITION	1-45, 1-227, 1-229, 1-231, 2-51, 6-9, 6-39, 7-31
90458-1228	LEAD-IN, BUSHING, DA 230/300/60	2-7
90458-1239	INSERT, MULTI HOLE, EK154M 1X9, 1X5,5	1-241
90458-1262	CONNECTOR, FOR PROP.VALVE, 131028001	1-89
90458-1306	BLIND PLUG CIRCULAR, M12X1,5 514GFK/212	1-55
90458-1307	BLIND PLUG CIRCULAR, M16X1,5 514GFK/216	1-55, 1-91, 1-241, 2-55, 6-45, 7-41, 7-43
90458-1308	BLIND PLUG CIRCULAR, M20X1,5 514GFK/220	1-91, 1-241, 2-7, 2-21, 2-23, 2-33, 6-45
90458-1309	BLIND PLUG CIRCULAR, M25X1,5 514GFK/225	1-241, 2-21, 2-23, 2-33, 2-55, 7-41, 7-43
90458-1310	BLIND PLUG CIRCULAR, M32X1,5 514GFK/232	2-21, 2-23, 2-55
90458-1477	CONNECTOR 6-1/8 NPT, EXT. TAPERED	2-217
90458-1478	BALL VALVE SS-43GS6MM-SH	2-217
90458-1517	SCREW SPRINGLOAD. SOCK. HEX HEAD M8X18	4-17, 4-25, 4-45, 11-97, 11-101
90458-1531	ACTUATOR, N.O., PA 38/100	2-221
90458-1537	HOLDER FOR SENSORS, PA38/PO-TET-PTFE	2-221
90458-1541	DIAPHRAGM, NA 38/25 PFTE	2-221
90458-1557	WARNING SIGN ANSI (H), MOVING PART	7-131, 7-137
90458-1595	CONNECTION, BKS-S 33M-00	2-199
90458-1600	ACCUMULATOR CRVZS-10	11-103
90458-1651	EMERGENCY STOP, ZB4-BS-844 ZB4-BZ-104	2-135, 2-145, 7-155, 7-163, 8-183, 8-185
90458-1704	BALL BEARING 15/35X11	1-113, 1-115, 1-117, 1-121, 1-129, 1-139
90458-1740	AIR GUN ASSEMBLY, CEJN 199589668	2-13
90458-1849	CONN. STR., 1050-6-1/8	1-47, 1-49, 1-51, 1-215, 1-217
90458-1862	HOSE, VENTILATING ID=80MM SILICONE	7-125
90458-1977	REFRACTOMETER SET DA15FC15A DFTP A	2-217
90458-2006	CONN. STR., 12-R1/2	1-163
90458-2039	CONN. STR., 6-R1/8, EXT. THREAD	4-161
90458-2040	ELBOW PIPE JOINT, INT. THREAD, G1/8" D=6	4-161
90458-2071	RETAINING RING FOR BORE DIN 472 24 SS	1-119
90458-2241	PRESSURE SWITCH 0,5-10 BAR ADJUSTABLE	1-89
90458-2264	PRESSURE REGULATOR ARC-30-1/2"	1-37, 1-39, 1-183
90458-2301	SPRING, YELLOW SPRING G40X115	3-9
90458-2303	CLAMPING ELEMENT WITH SLEEVE, 38X50 MM	3-19, 3-37
90458-2358	FLOATING MAGNET, BTL2-S-4414-4Z	2-199
90458-2362	BALL BEARING 30/62X16	5-23
90458-2385	COOLER FOR MANOMETER, HIGH TEMP. G1/2	1-37, 1-39
90458-2434	DIAPHRAGM VALVE 12MM, NO WELD CONN.	7-111
90458-2554	STERILE GRADE MEMBRANE FILTER 0,2µM	1-47, 1-49, 1-51
90458-2581	FOOT PLATE, M50-16-70	1-71, 1-83
90458-2633	HANDLE, 1045-05	2-29
90458-2738	THROTTLE CHECK VALVE, GRLA-1/8-B	1-215, 1-217
90458-2794	SAFETY SENSOR, EVA 20-046-00	1-105, 1-135, 1-137, 2-161, 7-47
90458-2837	CONNECTING CABLE KMEB-1-24-5-LED	6-41
90458-2850	HOSE CLIP , 51 MM	6-29
90458-2911	LOCKING HANDLE, M6/M	9-13
90458-2950	BALL BEARING 5/16X5	7-71
90458-2954	ELBOW PIPE JOINT, EXT.THREAD, D=4MM M5	7-109
90458-2955	ELBOW PIPE JOINT, EXT.THREAD,	1-193
90458-2956	ELBOW PIPE JOINT, EXT.THREAD, D=6MM-G1/8	1-99, 1-185, 1-193, 1-203, 5-11
90458-2963	ELBOW PIPE JOINT, EXT.THREAD,D=14MM-G3/8	6-43
90458-2964	ELBOW PIPE JOINT, EXT.THREAD, D=8MM-G1/8	7-149
90458-2965	ELBOW PIPE JOINT, EXT.THREAD,D=14MM-G1/2	6-41
90458-2969	PRESSURE GAUGE, MAP-40-1-1/8-EN	1-219, 1-221, 2-49, 7-23, 7-25, 11-21
90459-0075	HINGE, 1056-U30	1-99
90459-0103	VIBRATION DAMPER D 10/10 NO.20-01542-01	7-129, 7-135
90459-0106	SPRAY NOZZLE, 103 DEG B1/4 HH - SS 14W	1-163
90459-0180	FLOW SWITCH, 0,1 - 2,5 L/MIN	6-17
90459-0184	INTERFACE CONNECTOR FOR TPIH 2500 GENER.	8-127
90459-0221	TUBE, 6 MM PE BLACK	2-63, 2-185, 2-187
90459-0399	BRACKET, REAR, EYE WITH AXLE 32	1-143
90459-0400	BRACKET, REAR CLEVIS FLANGE FOOT, 32	1-143
90459-0459	NUT HEX. M14X1,5 SS	8-5, 8-7, 8-9, 8-11
90459-0462	CANISTER LY 500-10	2-185, 2-187
90459-0503	DOUBLE ACTING, SHORT STROKE, CYL 16-10	7-131, 7-137
90459-0554	CABLE, ETHERNET RJ 45 CROSS. SCREEN.2M	8-125, 8-157
90459-0671	PRESSURE GAUGE, MAP-40-4-1/8-EN	1-219, 1-221, 11-61
90459-0672	PRECISION PRESSURE REGULATOR, LRP-1/4-4	11-61
90459-0698	PLUG, G1/8EXT, G1/8	1-227, 1-229, 1-231, 2-51, 6-9, 6-39, 7-31, 7-35
90459-0699	BLANKING PLUG, CDVI5.0-B-G3/8	6-9
90459-0713	DOUBLE ACTING, MINI-ISO, CYL. 12-80	1-153
90459-0750	FLANGE BEARING 16X73X17,5 MM	4-45
90459-0799	SENSOR BRACKET, SMBR-12 FOR CYL 12	1-153
90459-0805	BUSHING, IGLIDUR A200 10X14X8	1-119
90459-0828	BRIDGE CONNECTOR WQV 4/2	1-243
90459-0829	PROX. SENSOR, SMTO-4U-PS-K-LED-24	1-153
90459-0833	FLANGE BUSHING, IGLIDUR W300 20X23X14	5-37, 5-39
90459-0839	DISTRIBUTION FRAME, ASBV 8 5-135/10M	8-149, 8-151
90459-0941	QUICK COUPLING, PLCD 130-M8	2-65, 2-67
90459-0959	DISTRIBUTOR BLOCK 1492-PD3163	8-15, 8-17, 8-19
90459-0960	QUICK COUPLING, PLCD 200-M8	2-65, 2-67
90459-1018	ROD END, BALL JOINT EYE M10X1,25	1-119
90459-1058	FLANGE BUSHING, IGLIDUR G 25X28X11,5	1-125

Part No	Description	Page No
90459-1086	OUTLET FILTER, SK 3321.200	7-167
90459-1130	EM. STOP XAL-K178F	1-107, 8-183, 8-185
90459-1131	SAFETY RELAY, E1T	8-51
90459-1148	SEALING RING, VARILIP 14X24X7 MM	1-131
90459-1189	O-RING 56,87X1,78 MM	1-153
90459-1194	SAFETY SWITCH, AZ 16-03 ZVRK-M16	7-5, 7-7
90459-1226	GEARS, WORM MOTOR VF 44P-10+BN71B 0.37KW	1-129
90459-1235	ANGLE SEAT VALVE, N.C. DN13 TYPE 2002	1-81
90459-1241	ANGLE SEAT VALVE, TRI-CLAMP, N.C. DN20	1-79
90459-1250	RESISTANCE FIXED, 120 OHM, 0,5 W 1%	7-41, 7-43
90459-1297	RESISTANCE FIXED, 120 OHM, 0,25 W	1-251, 8-127
90459-1395	SCREW HEX.SOCK.SET CONEPT.MS6SS M4X4 A2	11-91
90459-1420	PROPORTIONAL VALVE 0 - 10V/0-6 BAR	1-89
90459-1424	CONN. STR., 6-G1/8, EXT. THREAD	1-97, 1-99, 2-185, 2-187
90459-1425	CONN. T-PIPE 8	2-185, 2-187
90459-1426	CONN. ELBOW, INT 8	2-185, 2-187
90459-1427	QUICK-RELEASE COUPLING, SS-QTM2-D-8M0-K2	2-185, 2-187
90459-1430	QUICK-RELEASE COUPLING, SS-QTM2-D-8M0-K4	2-185, 2-187
90459-1458	HOOD, SIDE ENTRY, HAN6E, 19 30 006 1540	6-53
90459-1650	SEALING RING, VARILIP 30X40X7 MM	1-129
90459-1728	SET SCREW, CUP END ISO4029 M6X45 A4	1-113
90459-1733	TORQUE RIGID COUPLING, 15X15 MM	4-35, 4-37
90459-1736	PURGE VALVE, 2RM-PG4L-SS	6-21
90459-1738	MANDATORY ACTION SIGN ISO, READ MAINTENA	1-255, 1-257, 8-157
90459-1775	INSULATING TUBE ø38, 1627-0038	1-75, 1-77
90459-1825	ELBOW WITH TAILPIECE 12/12 MM	7-5, 7-7
90459-1852	SHUT OFF VALVE, MS6-EM1-1/2	6-41
90459-1853	FILTER REGULATOR, MS6-LFR-1/2-D7-ERV-AS	6-41
90459-1854	SHUT OFF VALVE, MS6-EE-1/2-10V24	6-41
90459-1855	SOFT START VALVE, MS6-DL-1/2	6-41
90459-1856	DISTRIBUTOR, MS6-FRM-1/2	6-41
90459-1858	BRACKET, MS6-WP	6-41
90459-1859	BRACKET, MS6-MV	6-41
90459-1917	CONTACT BLOCK ZBE-102 NC	2-135, 2-145, 7-155, 7-163, 8-183, 8-185
90459-1927	WARNING SIGN ANSI (H), EYE PROTECTION	2-185, 2-187
90459-1948	BONDED SEAL SS/VITON G1/4	1-37, 1-39
90459-2106	CABLE CONNECTOR, C091 31D004 100 2	1-251
90459-2122	THERMOCOUPLE, 5130 060-001	1-87
90459-2137	ILLUMINATING SEAL, MEB-LD-12-24DC	7-27
90459-2138	CONNECTOR, PLUG SOCKET, MSSD-EB	7-27
90459-2216	BUSHING, INT/EXT, G1/4-G1/2	6-41
90459-2241	REGULATOR, MS4-LRB-1/4-D5-AS	7-27
90459-2243	SHUT OFF VALVE, MS4-EE-1/4-10V24	7-27
90459-2244	SOFT START VALVE, MS4-DL-1/4	7-27
90459-2245	DISTRIBUTOR, MS4-FRM-1/4	7-27
90459-2246	END PLATE, MS4-AGB	2-49, 7-27
90459-2247	BRACKET, MS4-WP	2-49, 7-27, 11-105
90459-2248	BRACKET, MS4-MV	1-219, 1-221, 2-49, 7-27, 11-105
90459-2267	WARNING SIGN ANSI (H), READ MAINT. MAN.	1-255, 1-257, 8-157
90459-2337	SHUT OFF VALVE, MS4-EM1-1/4	11-105
90459-2338	FILTER, MS4-LF-1/4-CRV	2-49
90459-2390	NUT, MS-LR-10	2-49, 7-23, 7-25
90459-2394	SWIWEL FLANGE 40	11-93, 11-95
90459-2409	INDUCTIVE SENSOR, IN 5230	1-19, 1-25
90459-2425	PRESSURE REGULATOR IN-LINE, BSP-1/4	1-43, 6-41
90459-2459	BASEPLATE, 13 SLOT CONTROLLOGIX CHASSIS	8-125
90459-2474	PLC,DIGIT. OUTPUT MODULE 16 PTS 10-31VDC	8-125
90459-2477	ETHERNET I/P BRIDGE MODULE, 1756-ENBT	8-125
90459-2481	PLC 16-AXIS SERCOS MOTION MODULE	8-125
90459-2487	REMOVABLE TERMINAL BLOCK 20 POINTS	8-125
90459-2488	REMOVABLE TERMINAL BLOCK 36 POINTS	8-125
90459-2494	DEVICENET I/O ADAPTER MODULE, 1734-ADN	1-57, 1-93, 1-241, 2-21, 2-23, 2-55, 6-45, 7-41, 7-43, 8-107
90459-2500	EXPANSION POWER SUPPLY MODULE	1-241, 2-21, 2-23, 8-107
90459-2501	FIELD POWER DISTRIBUTOR, 1734-FPD	1-241, 7-41, 7-43
90459-2503	DIGITAL INPUT 4 PTS SINK, 1734-IB4	1-93
90459-2505	DIGITAL OUTPUT 4 PTS, 1734-OB4E	1-93
90459-2508	REMOTE I/O ANALOG INPUT VOLTAGE 2 PTS	1-93, 1-241, 2-55
90459-2509	REMOTE I/O ANALOG INPUT CURRENT 2 PTS	1-93, 1-241, 2-55, 8-107
90459-2510	ANALOG OUTPUT VOLTAGE MODULE 2 PTS	1-57, 1-93, 1-241, 8-107
90459-2512	REMOTE I/O THERMOCOUPLE INPUT 2 PTS	1-57, 1-93, 1-241, 2-21, 2-23, 2-55, 6-45, 7-41, 7-43, 8-107
90459-2517	DEVICE BOX 8 PORT THIN CABLE	6-53, 6-55, 8-149, 8-151
90459-2526	REMOTE I/O BASE MODULE 8 POINTS, 1734-TB	1-57, 1-93, 1-241, 2-21, 2-23, 2-55, 6-45, 7-41, 7-43, 8-107, 11-7, 11-9, 11-11, 11-13, 11-15, 11-17
90459-2527	REMOTE I/O BASE MODULE 12 POINTS	1-93
90459-2528	REMOTE I/O BASE MODULE FOR THERMOCOUPLE	1-57, 1-93, 1-241, 2-21, 2-23, 2-55, 6-45, 7-41, 7-43, 8-107
90459-2530	DEVICENET CABLE THIN	1-91, 1-247, 1-249, 2-173, 2-175, 6-53, 7-49, 7-51, 8-47, 8-49, 8-107, 8-125, 8-129, 8-131
90459-2536	SERCOS CABLE 0.1M, 2090-SCEP0-1	8-23, 8-121, 8-123
90459-2537	SERCOS CABLE 0.3M	8-121, 8-123
90459-2539	SERCOS CABLE 1.0M, 2090-SCEP1-0	8-121, 8-123
90459-2540	SERCOS CABLE 3.0M, 2090-SCEP3-0	8-23, 8-125

Part No	Description	Page No
90459-2547	POWER RAIL SLOT FILLER, 2094-PRF	8-23, 8-121, 8-123
90459-2550	I/O CONNECTOR 26 PIN MALE, 2090-K6CK-D26	2-173, 2-175, 8-121, 8-123
90459-2551	CONNECTOR, MOTOR FEEDBACK 15 PIN MALE	1-17, 2-173, 2-175
90459-2553	PUSH-IN L-FITTING QSL 16	8-197
90459-2555	PUSH-IN T-FITTING QST-16	1-149, 1-151, 8-197
90459-2557	BLIND PLUG 16 MM	8-197
90459-2565	MOTOR POW.CABLE 16 AWG 2090-XXNPMP-16S09	1-17
90459-2568	MOTOR FEEDBACK CABLE 2090-XXNFMP-S09	1-17
90459-2589	SERVO MOTOR, MPL-B430P-MK22AA	1-17
90459-2590	ROD END, CLEVIS WITH AXLE M8	1-153
90459-2596	LOCKING HANDLE, M8X25M	9-13
90459-2607	FREQ. CONV., 22B-D6P0N104	8-129, 8-131
90459-2614	DEVICENET ADAPTER POWERFLEX 40 22-COMM-D	8-129, 8-131
90459-2653	REGULATOR, MS4-LR-1/4-D6-AS	7-27, 11-105
90459-2704	SNAP HOOK STAINLESS 50X5MM	7-53, 7-55
90459-2738	PLUG, EXT. THR. HEX. SOCK. VSTI1/8EDA3C	2-37, 2-39
90459-2742	LEVEL CONTROL RELAY, RM4-LA32MW	1-95, 1-243
90459-2795	FRONT LID FOR POWERFLEX 40, 22B-CCB	8-129, 8-131
90459-2796	FRONT LID FOR POWERFLEX 40, 22B-CCC	8-129, 8-131
90459-2804	REDUCING VALVE G1/2", 51.04.70	1-163
90459-2881	ROD CLEVIS SG-M10X1,25	1-103, 11-93, 11-95
90459-2938	POWER SUPPLY UNIT 6EP1 437-3BA00	8-107
90459-2939	BUFFER UNIT, 6EP1961-3BA01	8-107
90459-3019	THROTTLE CHECK VALVE, M5, MANUAL, 6MM	7-97
90459-3071	GLAND, WITH INSERT, M 20	7-121
90459-3080	HOOD, HAN-BRID3A, 19 20 003 1443	2-173, 2-175, 7-49, 7-51, 7-143
90459-3081	HOUSING, 19 20 003 1250	5-41, 5-43
90459-3145	FLASH MEMORY 64MBYTE, 1784-CF64	8-125
90459-3154	CABLE, PTFE HEAT 1X4,72MM2 YELLOW/GREEN	1-87
90459-3165	CABLE, PTFE HEAT 1X4,72MM2 BLACK	1-87
90459-3279	BLANK PLUG BLACK, SQUARE, PLASTIC ZB5SZ5	8-157
90459-3339	GASKET NBR/PTFE 17X24X2 MM 3/4"	6-15
90459-3355	SWIVEL FLANGE 32	1-103
90459-3442	FREQ. CONV., 22B-A5P0N104	8-129, 8-131
90459-3446	FREQ. CONV., 22B-D012N104	8-129, 8-131
90459-3454	FOOTPRINT FILTER 1 PHASE 18A	8-129, 8-131
90459-3458	FOOTPRINT FILTER 3 PHASE 12A	8-129, 8-131
90459-3459	FOOTPRINT FILTER 3 PHASE 18A	8-129, 8-131
90459-3555	INSERT, MULTI HOLE, E154M 2X9	1-241, 7-41, 7-43
90459-3557	DOUBLE ACTING, COMPACT, CYL 32-60	1-103, 1-143
90459-3642	SEAL KIT, 88232960	1-37, 1-39
90459-3650	DOUBLE ACTING, MINI-ISO, CYL. 25-40	1-119
90459-3682	ROTARY POSITION SENSOR RPNS090AA1B11A	1-119
90459-3709	CONNECTOR 3-POLE AMP 282087-1	1-119
90459-3760	TRANSFORMER, 1-PH 700VA SEC 6,36A	8-5, 8-7, 8-9, 8-11
90459-3784	LIGHT FIXTURE, RL70CE-118	2-19, 2-53, 7-5, 7-7
90459-3832	VENTING BOX, P9852	7-5, 7-7
90459-3845	WALL SOCKET, Z-SD230	8-159, 8-161
90459-3852	HOUSING, 09 14 001 0311	1-87, 1-247, 1-249, 2-173, 2-175, 7-49, 7-51
90459-3853	HOUSING, 09 14 001 0301	8-141, 8-143, 8-145, 8-147, 8-149, 8-151
90459-3920	LINEAR MOTION SYSTEM, 79X34X210 MM	7-117
90459-4032	HYDR.ACC., SBO-210-1.4E1/112U-210AK	2-37, 2-39
90459-4033	RECORDER 12-CHANNEL PAPERLESS FDA-APPR	8-157
90459-4055	REMOTE I/O RELAY OUTPUT 2 PTS	1-241, 2-21, 2-23
90459-4056	REMOTE I/O RTD INPUT 2PTS	1-241
90459-4077	WIRE SEAL , AMP 281934	1-119
90459-4079	MINI MIC SRS, AMP 183035-1	1-119
90459-4089	SAFETY SENSOR, EVA E, 20-046-06	2-161
90459-4133	POWER SUPPLY UNIT 6EP1 436-3BA00	8-107
90459-4142	SAFETY SENSOR, ADAM M12, 20-051-00	1-105, 1-135, 1-137, 2-161, 7-47
90459-4148	CONN. STR., 1/2"-1/4 ISO 7/1, EXT. THREA	1-97
90459-4164	SAFETY SCREW, SM4X20	1-105, 1-135, 1-137, 2-161, 7-47
90459-4165	SAFETY SCREW, SM4X25	1-105, 1-135, 1-137, 2-161, 7-47
90459-4179	GASKET 30,5X42X4 MM FDA	1-187, 1-189, 1-191, 9-19
90459-4182	MAIN SWITCH, NZM1-XS-R	8-149, 8-151
90459-4186	REDUCER, M32/M25	1-155
90459-4252	CABLE M12-C101, 20-056-10	2-161, 7-49, 7-51
90459-4511	CONN. ELBOW, 6	1-87
90459-4554	REGULATOR, MS4-LRB-1/4-D7-A8-AS	1-219, 1-221, 2-49, 7-23, 7-25
90459-4558	SWIVEL FLANGE 25	1-113, 1-123, 1-153
90459-4642	DOUBLE ACTING, PROFILE, CYL 32-40	5-47
90459-4686	NON RETURN VALVE, M12A-C6L-1-EPR-SS	1-183
90459-4705	LOCKING PLUG, S 103 A 053-130+ AND 90220	2-225
90459-4735	SCREW, M6S ISO 4017 M8X10 A4 80	5-21, 5-25, 5-27
90459-4810	PRESS TRANSD (DIFF) 0 - 2000PA, 2681-20C	1-245
90459-4876	FOCUS JUMPER CABLE M12 5P 3M, 20-056-21	1-239, 2-161
90459-4891	IDENTIFIER, ID-FIX RW	8-51
90459-4928	PANEL CONNECTOR FEMALE, TYPE K	8-149, 8-151
90459-4977	LINEAR ACTUATOR, LA 1 SP-SP36 17A16-04	1-157
90459-5018	SEALING RING, VARILIP 20X35X7 MM	2-213
90459-5076	SET SCREW ISO4026 M4X5 HRC 45	2-63
90459-5177	ANGLE SEAT VALVE, W. FLANGES,NO, 8498668	2-205
90459-5178	ANGLE SEAT VALVE, W. FLANGES,NO, 8498669	2-205
90459-5182	GREASE GUN UNIT, MG70 - 285301000000000	11-59

Part No	Description	Page No
90459-5183	GREASE AFC 70 GRAMM, 035630026	11-59
90459-5187	CONDUCTIVITY TRANSMITTER	8-157
90459-5191	SLIM POW. RAIL, KINETIX, 4 AX, 2094-PRS4	8-23
90459-5195	SLIM POWER RAIL,KINETIX,8 AXIS,2094-PRS8	8-121, 8-123
90459-5253	TERMINAL BLOCK WDK 2,5 1-57, 1-95, 1-243, 2-25, 2-57, 6-47, 7-45, 8-53, 8-75, 8-79, 8-91, 8-99
90459-5261	REMOTE I/O, RELAY OUTP. 4 PTS,1734-OW4/C 1-241, 2-21, 2-23, 2-55, 6-45, 7-41, 7-43	8-107
90459-5308	CONTACTOR 4KW 24VDC, DILM9-10	8-109
90459-5324	OVERLOAD PROTECTION, PKZM0-1,6	8-109
90459-5325	OVERLOAD PROTECTION, PKZM0-2,5	8-109
90459-5326	OVERLOAD PROTECTION, PKZM0-4	8-109
90459-5330	OVERLOAD PROTECTION, PKZM0-16	8-109
90459-5440	CONTACTOR 4KW 24VDC, DILM9-01	8-109, 8-115, 8-117, 8-119
90459-5441	CONTACTOR 7,5KW 24VDC, DILM17-01	8-109, 8-115, 8-137
90459-5444	CONTACTOR 15KW 24VDC, DILM32-01	8-115, 8-137
90459-5472	FLOW CONTROL VALVE, CFM360612E	2-63
90459-5481	OIL PUMP 3L, 10P-P3	2-45
90459-5522	CONN. BANJO, COR8PB6M10	2-45
90459-5529	PHOTOCELL E3Z-T86A, SENDER+RECIEVER	9-7
90459-5530	PHOTOCELL E3Z-T86A-L SENDER	5-31
90459-5531	PHOTOCELL E3Z-T86A-D RECIEVER	5-31
90459-5574	CONNECTOR, 1787-PLUG10R	1-93, 1-241, 7-41, 7-43, 8-107, 8-125, 8-129, 8-131
90459-5578	ACTUATOR/SENSOR CABLE PRKT 5-56/5M	1-247, 1-249
90459-5599	DOUBLE ACTING, MINI-ISO, CYL. 20-25	7-119
90459-5608	DOUBLE ACTING, MINI-ISO, CYL. 25-160	7-133, 7-139
90459-5624	FESTO VAD-1/4	11-61
90459-5627	CONNECTION, TINA 1-A	1-239, 2-161
90459-5633	GUIDE CONSOLE 30X13X750, FR1105/750	2-35
90459-5650	LUBRICATION BLOCK, HFS4662	2-47, 4-29, 4-31
90459-5652	LUBRICATION BLOCK, HFS4666	4-29, 4-31
90459-5725	KNOB CIRCULAR, EXT THREAD, VPZ-22 M6X20	11-27
90459-5751	CABLE ÖLFLON PTFE 1X1,92 MM² GREEN/YELLO	7-121
90459-5809	CIRCUIT BREAKER, NZMN1-4-A100	8-149, 8-151
90459-5810	CIRCUIT BREAKER, NZMN1-A100-NA	8-149, 8-151
90459-5811	RESIDUAL CURRENT DEVICE, FI-25/2/003-A	8-159, 8-161
90459-5813	AUXILIARY CONTACT, FAZ-XHIN11	8-111, 8-113, 8-133, 8-135
90459-5817	REGULATOR, MS4-LR-1/4-D6-A8-AS	6-37
90459-5835	INDUCTIVE SWITCH, E2A-M12KS04-WP-B1-5M	5-19
90459-5845	DOUBLE ACTING, MINI-ISO, CYL. 20-40	1-145
90459-5883	COMMONING BUSBAR, 1-P 1-PH 1X57 MOD 63A	8-41, 8-43
90459-5884	COMMONING BUSBAR, 3-P 3-PH 3X19 MOD 63A	8-111, 8-113
90459-5886	POWER SUPPLY UNIT 115-230 VAC/24VDC100W	8-47, 8-49
90459-5901	DIAPHRAGM, 425 EPM SIZE 15	1-185
90459-5936	BEARING SEAL 12X16X3 MM	4-127, 4-129, 4-131, 4-133, 4-135, 4-137, 4-139, 4-141
90459-6033	PROGRAMMING CABLE FOR PLUTO, 20-070-56	11-51
90459-6083	WARNING SIGN ANSI (H), HAZARDOUS ROTATIN	2-29, 2-155, 3-17, 3-35, 4-39, 4-41
90459-6084	WARNING SIGN ISO, HAZARDOUS ROTATING BEL	2-29, 2-155, 3-17, 3-35, 4-39, 4-41
90459-6178	TEMPERATURE SENSOR, , 902522/10-386-1003	1-187, 1-189, 1-191
90459-6215	FLOW SWITCH BFS-10-N-G1/4-MS-NO-ST	1-89
90459-6255	COMP. SPRING, 23460, 3,2X35,2X190	1-157
90459-6323	GEARS, WORM MOTOR VF 30F2 15 P63 B14 B3	2-167
90459-6335	BALL BEARING 8/22X7	1-211
90459-6387	CONNECTOR 5-POL M12, RSCS 5/9	2-173, 2-175, 7-49, 7-51
90459-6424	BUSHING, INT/EXT, G1/2-G1	11-103
90459-6426	PRESSURE GUARD PEV-1/4-B-OD	6-41
90459-6556	PLC DIGITAL INPUT 32PTS, 1756-IB32/B	8-125
90459-6559	PROCESSOR L63, SERIES B, 1756-L63/B	8-125
90459-6560	DIGITAL OUTPUT 8 PTS, 1734-OB8E/C 1-57, 1-241, 2-21, 2-23, 2-55, 6-45, 7-41, 7-43, 8-107
90459-6561	DIGITAL INPUT 8 PTS SINK, 1734-IB8/C 1-57, 1-241, 2-21, 2-23, 2-55, 6-45, 7-41, 7-43, 8-107
90459-6578	ELBOW FITTING ADJ., EW 18-PL	2-37, 2-39
90459-6586	ACT/SENS.Y-CABLE, ASBN 2-PRKMV 4-07/0,6M	5-31, 9-5
90459-6603	INCREMENTAL ENCODER, DGS60A1A02000	7-141
90459-6624	FEMALE INSERT, HAN E AV, 09 33 006 4735	8-141, 8-143, 8-145, 8-147, 8-149, 8-151
90459-6627	FEMALE INSERT, HAN E AV, 09 33 024 4735	8-149, 8-151
90459-6630	HOOD, SIDE ENTRY, 16B, 19 30 016 1521	5-49, 6-53
90459-6632	HOOD, TOP ENTRY, 6B, 19 30 006 1440	1-71, 1-247, 1-249, 2-173, 2-175, 7-49, 7-51
90459-6634	HOOD, TOP ENTRY, 16B, 19 30 016 1421	1-247, 1-249, 7-49, 7-51
90459-6636	HOOD, TOP ENTRY, 24B, 19 30 024 0427	1-247, 1-249, 2-173, 2-175, 7-49, 7-51
90459-6638	HOUSING, 09 30 016 0301	8-149, 8-151
90459-6639	HOUSING, 09 30 024 0301	8-149, 8-151
90459-6640	HOUSING, 19 30 006 1250	2-27
90459-6642	HOUSING, 19 30 016 1231	2-27
90459-6679	CONN 15 P FEM, AUX. FEEDB,2090-K6CK-D15F	7-49, 7-51
90459-6690	HOSE PVC, 12/16 MM	2-209
90459-6820	FEMALE INSERT, HAN 4 A, 09 20 004 2711	2-173, 2-175, 7-125, 7-143, 8-149, 8-151
90459-6821	MALE INSERT HAN 4A, 0920 0042 611	2-173, 2-175, 5-41, 5-43, 7-49, 7-51, 7-143
90459-6822	HOUSING, 09 20 003 0301	8-149, 8-151
90459-6850	CONNECTION, PKZM0-XDM12	8-109
90459-6851	CONNECTION, PKZM0-XDM32	8-109
90459-6859	HOUSING, 09 33 000 9980	8-5, 8-7, 8-9, 8-11
90459-6881	SPHERICAL WASHER M10 DIN 6319 C SHAPE	1-103
90459-6882	CONICAL WASHER M10 DIN 6319 D SHAPE	1-103
90459-6924	DOUBLE ACTING, COMPACT, 25-25	1-113, 1-123
90459-6975	SOLENOID VALVE G1/4, 2401186082702400	1-203

Part No	Description	Page No
90459-6977	SOLENOID VALVE G1/4, V04B286N-B423A	1-203
90459-7081	CABLE GLAND, EXTENDED, M16X1,5	1-245
90459-7084	FILTER, CPDI0NJM1	6-19
90459-7095	FOCUS JUMPER CABLE M12 5P 1M, 20-056-20	1-239, 7-49, 7-51
90459-7110	BRACKET, 4224-50	1-219, 1-221
90459-7184	SINGLE ACTING, SHORT STROKE, CYL 80-25	7-149
90459-7219	HOUSING, 19 20 003 0220	7-125, 7-143
90459-7223	REDUCER, M20/M16	5-43
90459-7225	REDUCER, M32/M25	2-27, 5-49
90459-7229	IDENTIF. OF SINGLE CONDUCTORS, TEMPLATE	8-179, 8-181, 8-183, 8-185, 8-187, 8-189, 8-191, 8-193
90459-7245	PLUG, BLIND, PLASTIC GPN300F11	2-7
90459-7267	POWER SUPPLY 24VDC, 1756-PB75/B	8-125
90459-7275	PHOTOCELL E3Z-R86	7-37, 7-65
90459-7283	SCREW HEX.SOCK.SET CONEPT.MS6SS M5X12 A2	1-187, 1-189, 1-191, 11-91
90459-7293	SET SCREW DIN 551M5X8 PA66	5-21
90459-7332	PUSH-IN FITTING QSSF-1/8-4-B	1-219, 1-221, 2-49, 7-23, 7-25
90459-7333	PUSH-IN FITTING QSSF-1/4-4-B	1-219, 1-221, 2-49, 6-37
90459-7344	PRESSURE GAUGE, MA-40-6-R1/4-EN	1-219, 1-221, 2-49, 6-37
90459-7458	WARNING SIGN ANSI (H), HOT SURFACE	1-17, 1-43, 1-73, 1-87, 1-105, 1-135, 1-137, 2-207, 6-15, 7-83
90600-0190	INSULATION TUBE Ø21/13 MM, 1627-0013	1-35, 1-41, 1-69, 1-73, 1-81
90600-0260	CLAMPING PIECE, 10503.000.400.14	1-165
90600-0276	SNAP-IN BALL LOCK, 43X14,5 MM	1-99, 1-255, 1-257
90600-0415	GEARS, PLANETARY FC-A25G-29	5-35
90600-0460	INDUCTIVE SWITCH, E2A-M12KN05-M1-B1-TP	7-5, 7-7, 7-53, 7-55
90600-0462	INDUCTIVE SWITCH, E2A-M12LN05-M1-B1-TP	1-17, 1-187, 1-189, 1-191
90600-0463	INDUCTIVE SWITCH,E2A-M12LN05-WP-B1-TP 5M	1-99, 1-103, 1-111, 1-187, 1-189, 1-191, 1-207, 1-233, 1-235, 1-237, 5-7, 5-37, 5-39, 5-45
90600-0473	INDUCTIVE SWITCH E2A-S08KS01-WP-B1-TP 5M	1-193, 2-185, 2-187, 2-221, 4-39, 4-41, 7-83, 9-19
90600-0477	LOCK HOUSING, 1121-U139	2-127, 2-129, 2-131, 2-147, 2-159
90600-0495	O-RING 4X2 MM	1-99, 1-233, 1-235, 1-237
90600-0527	LEVEL SWITCH, BTL5-A11-M0320-B-S32	2-199
90600-0528	THERMOCOUPLE, 5120 001-001	2-199
90600-0529	FLOW METER, PROWIRL 72W40-SD0BA1AAA0BW	1-163
90600-0604	INSERT, MULTI HOLE, EK154M 2X10	1-241
90600-0614	BLANK PLUG, 16AMP-316-1/2"-3/4"-AR	1-99
90600-0657	SCREW UNC 1/4-20 X10	1-41, 1-69, 1-183
90600-0708	O-RING 375X3 MM	1-103
90600-0709	O-RING 452X3 MM	1-111
90600-0725	FOOT 32000N, 90600-0725	2-7, 2-33, 2-95, 7-5, 7-7, 11-77
90600-0754	THROTTLE CHECK VALVE, GRLA-1/8-QS-8-D	7-119
90600-0775	BALL VALVE G1/4, 406F-1/4"	2-37, 2-39, 2-65, 2-67, 2-207, 4-43
90600-0808	CAM ROLLER 12X30X40 MM, CFT 12 M UU N	5-33
90600-0821	LEVEL PR.,LEVELFLEX-M FMP41C-AKTJKB11A2Y	1-73
90600-0822	HINGE, 1056-U13-PH	2-55
90600-0873	CONN. STR., 12,7-G1/2, EXT THREAD	1-79
90600-0937	PIPE CONNECTION 12-8	1-35
90600-0943	SOLID STATE RELAY, 3RF2320-1AA04	8-117, 8-119
90600-0944	SOLID STATE CONTACTOR, 3RF2330-1AA04	8-117, 8-119
90600-0948	SOLID STATE CONTACTOR, 3RF2430-1AB45	8-117, 8-119
90600-0976	INSERT, SINGLE HOLE, HI.TEMP, EK153 I 9	1-87
90600-1154	FLOW METER,D-6230-HGB-BB-AV-99-0-N2/IP65	1-89
90600-1167	PLUG, EXT. R-THREAD, R1/4	1-219, 1-221
90600-1169	PLUG G1/4, B-1/4-NPT	1-219, 1-221, 2-49
90600-1175	ELBOW WITH TAILPIECE 8/8 MM	1-219, 1-221, 7-29, 7-33
90600-1200	SCREEN CLAMPING SADDLE, 790-108	8-15, 8-17, 8-19
90600-1201	BUSBAR U-SHAPED, 790-191	8-15, 8-17, 8-19
90600-1211	TERMINAL BLOCK RELAY, 700-HLT1Z24	8-51
90600-1214	SOLID STATE RELAY, 700-SCNN3Z26	8-41, 8-43
90600-1219	SOCKET, 700-HN104	8-41, 8-43
90600-1266	SCREW M10X80, GN 913.3-M10-80-MS	11-37
90600-1269	HEAT EXCHANGER M18-10	2-37, 2-39
90600-1280	FLEXIBLE COUPLING, 17,29X24 MM	2-37, 2-39
90600-1281	BELLHOUSING, PL 200/02/03	2-37, 2-39
90600-1282	NON-RETURN VALVE, NO. S8 A1,0/	2-37, 2-39
90600-1283	PUMP, AZPF -12-004RH030PB	2-37, 2-39
90600-1284	PRESSURE GAUGE, D=63 MM ABZMM 63-160BAR/	2-37, 2-39
90600-1286	FILTER, R996087121	2-37, 2-39
90600-1287	BREATHER FILTER, ELFP 3 F03W1.X/	2-37, 2-39
90600-1288	PRESS. SENS. 0-420 BAR VD5C.0,R900001431	2-37, 2-39
90600-1289	HYDRAULIC VALVE, AG 32 L783-1-1-2	2-37, 2-39
90600-1291	PRESSURE RELIEF VALVE,ZDBK 6 VP2-1X/210V	2-37, 2-39
90600-1292	PRESSURE RED. VALVE, ZDR 6 DP2-4X/150YM	2-37, 2-39
90600-1293	CHECK VALVE, NO. Z1S 6 F05-4X/V	2-37, 2-39
90600-1294	NON-RETURN VALVE, NO. Z1S 6 T05-4X/V	2-37, 2-39
90600-1296	CONNECTOR 2 POLE + PE, Z4-A GRIG	2-37, 2-39
90600-1297	CONNECTOR, 03POL Z4 M SW (BLACK)	2-37, 2-39
90600-1298	CONNECTOR, 03POL Z4 M SW (BLACK)	2-37, 2-39
90600-1301	LEVEL GUARD, ABZMS-35-1X /120F050S-K24	2-37, 2-39
90600-1304	PUMP ELBOW W. FIXING HOLES, R996087365	2-37, 2-39
90600-1305	PUMP ELBOW W. FIXING HOLES, R996087364	2-37, 2-39
90600-1306	MANOMETER GAUGE CONN., AB20-11 M 1/4"	2-37, 2-39
90600-1307	MEASURING HOSE, AB20-11/1000	2-37, 2-39

Part No	Description	Page No
90600-1308	HOSE ATTACHMENT, AB20-11/K1 1/4G	2-37, 2-39
90600-1395	CABLE, 15M, 2030692	7-49, 7-51
90600-1435	STRAIGHT COUPL., EXT. THREADED 6/4-G1/8	1-245
90600-1448	CLAMP, 6016 82 0	1-253
90600-1454	SAFETY RELAY, E1T	8-51
90600-1712	PLUG, EXT. THREAD HEX. SOCKET 09190017	1-155, 6-11
90600-1717	REGULATOR, MS4-LRB-1/4-D5-A8-AS	1-219, 1-221
90600-1738	WARNING SIGN ISO, ELECTRIC SHOCK	4-13, 4-21
90600-1768	ACTUATOR/SENSOR CABLE RKTS 5-298/5M	1-43
90600-1847	ETHERNET SWITCH, FL SWITCH SFN 5TX	8-47, 8-49
90600-1848	ETHERNET SW, FL SWITCH SFN 8TX	8-47, 8-49
90600-1890	TIMING BELT 50ATL10/1900 PU	3-15
90600-1894	TIMING BELT 10T5/690 PU	4-45
90600-1946	SEAT VALVE, 3A. 9613320304	1-75, 1-77
90600-1949	CONTACT BLOCK, ZEN L1121, 1NC	1-107, 8-183, 8-185
90600-1954	CABLE DUCT, CABLE CLIP, 1149379	1-33, 1-253
90600-2005	SELF ADJ.SPHER.17X30X14 MM	3-27
90600-2007	HEATING ELEM.15KW 3X230/400V,T90600-2007	1-167
90600-2029	PUSH-IN BULKHEAD FITTING QSSF-F-G1/4-8	1-219, 1-221, 7-29, 7-33
90600-2040	VALVE, 3/2 MONOSTABLE NC	6-39
90600-2065	HOSE, 10X1 MM PTFE TRANSPARENT	1-47, 1-49, 1-51
90600-2068	DELIVERED DESIGN SIGN, 90600-2068	8-187, 8-189
90600-2107	LEVEL SWITCH, FTL20H-0TCJ2B	1-165
90600-2133	MODULE CONNECTOR 250V, BEST 1833100000	1-243
90600-2134	TERMINAL DISCONNECATBLE, WTR 2,5/O.TNHE	1-243, 8-45
90600-2135	MODULE CONNECTOR 250V, BEST/D 1878560000	8-45
90600-2347	TIMING BELT 5MR-580-25	4-39, 4-41
90600-2445	HOSE CLIP, 7,0 RER	2-185, 2-187
90600-2508	O-RING 17,3X2,4 MM FDA, 3-A	1-99, 1-303, 1-305, 9-19
90600-2520	SAFETY CLUTCH, 32X32 MM	5-33
90600-2521	CYLINDER SPEC. WITH INT. GUIDING BORE 32	5-11
90600-2526	LINEAR UNIT, SHS25LC1QZSSFME+600LKF	3-13, 3-33
90600-2563	SCREW PANHEAD SNAKE EYE SPANNER, M6X12	2-161, 7-47
90600-2566	DOUBLE ACTING, SHORT STROKE, CYL 63-25	7-149
90600-2567	DOUBLE ACTING, SHORT STROKE, CYL 16-20	7-149
90600-2632	HEATING ELEMENT 800W 240V	9-19
90600-2646	ROT.SPRAY NOZZLE, 599.186.1Y.AF.00.0	2-165
90600-2656	CLAMPING ELEMENT TLK 250L 14X25	7-63
90600-2657	GEARS, WORM MOTOR MVF 30F2 15 P63 B14 B3	7-63
90600-2658	CLAMP, 6016 82 0	7-17, 7-19
90600-2660	GAS SPRING LIFT-0-MAT 192945 (FI=200N)	7-129, 7-135
90600-2661	HANDLE, I.222/40N-10	7-129, 7-135
90600-2662	FLANGE BUSHING, FJUM-01-30	7-141
90600-2663	TORQUE RIGID COUPLING, 6X6 MM	7-141
90600-2664	GEARS,WORM MOTOR MVF 49 FI 18 P71 B14 V5	7-141
90600-2665	FLANGE BUSHING, FJUM-02-10	7-149
90600-2666	GUIDE RAIL, 15X15,5X260 MM	7-145
90600-2667	CARRIAGE, TW-01-15-HKA	7-145
90600-2669	GAS SPRING, LIFT-0-MAT 5072DE (F1=50N)	7-153, 7-157
90600-2670	HANDLE, GN 425-10-200-NI	2-133, 2-143, 2-211, 7-161
90600-2671	DOUBLE ACTING, SHUTTLE, CYL. 32-500	7-171
90600-2724	REDUCER, G 1/4- G 1/2 X40,0SW30-A3C	2-37, 2-39
90600-2830	FASTENING ELEMENT, BLOCKSEP-E 01026	8-21
90600-2904	EARTH BRAID, 250/16/8,5	7-79, 8-21, 8-149, 8-151, 8-157, 8-163, 8-179, 8-181, 8-183, 8-185, 8-187, 8-189, 8-191, 8-193
90600-2982	BARCODE READER, D-131 CAB-463	11-55, 11-57
90600-3000	HOSE 16X2MM, WIROFLEX 26002 2	2-65, 2-67, 2-165
90600-3039	BLADE, C5321 ART: 27.50	11-91
90600-3040	RUNNER BLOCK, 1666-114-20	11-91
90600-3050	REGULATOR, 574612	2-49
90600-3053	DIAL GAUGE MITUTOYO 1160	11-23
90600-3159	FILTER HOUSING, MDS4463G58383	1-41, 1-69, 1-183
90600-3198	ACTUATOR, NC, 9550 10Z 510G1	1-37, 1-39
90600-3199	ACTUATOR, NO, 9550 10Z 520G1	1-37, 1-39
90600-3272	PROX. SENSOR, SMT-8M-PS-24V-K-5,0-OE	1-103, 1-143, 1-145, 1-153, 7-97, 7-117, 7-119, 7-171
90600-3293	MOTOR PWWER CABLE 2090-XXNPMF-16S09	2-173, 2-175
90600-3294	MOTOR FEEDBACK CABLE 2090-XXNFMF-S09/C	2-173, 2-175
90600-3388	O-RING 284X3 MM	1-303, 1-305
90600-3558	GASKET 16,2X21,8X4,45 MM 3/4"	1-71, 1-73, 1-79, 1-81
90600-3559	CLAMPING PIECE, 211290	1-71, 1-73, 1-79, 1-81
90600-3575	CABLE DUCT, FITTING, B1	7-17, 7-19
90600-3577	JOINT, 11.493.55	7-17, 7-19
90600-3595	CARRIAGE, SSR25XW1SSHHC1FME	5-19
90600-3668	CONN. STR SS-8MO-1-2RT	1-17
90600-3697	SDL FLEX CABLE 10M, 5CASDL.0100-03	2-173, 2-175
90600-3701	BALL VALVE, 1/2NPT	1-41, 1-69, 1-183
90600-3761	COOLING UNIT, KB40A62675.00	8-195
90600-3837	DOUBLE ACTING, COMPACT, CYL 25-50/80	1-153
90600-3924	CONDUCTIVITY SENSOR CLS 54-ACS1022	1-233, 1-235, 1-237
90600-3964	SWIVEL FLANGE 16	1-127
90600-3965	ROOF FASTENING SCREW, PS 4198.000	8-5, 8-7, 8-9, 8-11
90600-4074	HEXAGON NIPPLE, WIROFLEX 260336	1-79, 2-65, 2-67, 2-165, 6-51
90600-4075	ELBOW PIPE CONN., WIROFLEX 260121	2-65, 2-67, 2-165

Part No	Description	Page No
90600-4076	HEXAGON NIPPLE, WIROFLEX 260374	2-165
90600-4077	ELBOW PIPE CONN., WIROFLEX 260435	2-165
90600-4078	T-PIPE, EXT. THREAD, 1/2",WIROFL. 260152	2-165
90600-4080	ADAPTER, WIROFLEX 260480	2-165
90600-4081	ADAPTER, WIROFLEX 260459	1-79, 2-65, 2-67, 2-165, 6-51
90600-4082	ELBOW PIPE CONN., WIROFLEX 260299	2-65, 2-67, 2-165
90600-4088	HOOK WRENCH SQUARE PIN, 282108	11-39
90600-4219	CONN. PIPE REDUCTION 8-6	2-185, 2-187
90600-4266	PUSH-IN L-FITTING CRQSL-1/8-6	2-185, 2-187
90600-4354	PROP. PRESS. REG., VPPE-3-1/8-6-010	1-43
90600-4437	ROT. LOBE PUMP AVMXT 3500DA	1-17
90600-4501	HYDRAULIC HOSE, 919-ID-ID-8-8-5C-5-420	1-99, 2-185, 2-187
90600-4814	PHASE MONITORING RELAY, EMR5-AWN280-1-F	8-117, 8-119
90600-4876	CONNECTION BOX TINA 8A , 20-054-05	2-161
90600-4919	CYLINDER, RODLESS MECH. 18-400	7-97
90600-4920	FOOT MOUNTING, HP-18	7-97
90600-5002	OPERATOR PANEL, 5AP920_1505-K42-C0	2-163
90600-5084	LEVER MECHANISM, 1125-SU404	2-127, 2-129, 2-131, 2-147, 2-159
90600-5161	HANDLE, 116.11.644	8-163
90600-5212	AXIS MOD. W. PS,2094-BC02-M02-S SERIES B	8-23, 8-121, 8-123
90600-5214	AXIS MOD. KINETIX 6000,2094-BM01-S SER.B	8-121, 8-123
90600-5216	AXIS MOD. KINETIX 6000,2094-BM02-S SER.B	8-23, 8-121, 8-123
90600-5249	FERRITE, B64290L616X38	2-173, 2-175, 8-23, 8-47, 8-49, 8-121, 8-123, 8-125
90600-5250	LINE FILTER, B84111FB30	8-157
90600-5253	LINE FILTER, B84113HB60	8-21
90600-5258	LINE FILTER, B84143A35R106	8-21
90600-5264	LINE FILTER, B84144A150R120	8-149, 8-151
90600-5266	FEED THROUGH FILTER, B85321A2502W160	8-149, 8-151
90600-5517	AUXILIARY CONTACT, Z-NHK 248434	8-111, 8-113, 8-133, 8-135
90600-5519	BUSBAR, Z-SV/UL-16/1P-1TE/12 104893	8-41, 8-43
90600-5526	BUSBAR, Z-SV/UL-16/3P-3TE/18 104900	8-111, 8-113
90600-5539	BEARING SEAL 17X26X5	1-141
90600-5540	PRESSURE GAUGE, VAM-40-V1/0-R1/8-EN	11-61
90600-5541	DOUBLE ACTING, COMPACT, CYL 16-25	1-127
90600-5583	INK JET PRINTER A300+EUR, TP 90600-5583	9-11
90600-5584	INK JET PRINTER A300+ARAB, TP 90600-5584	9-11
90600-5585	INK JET PRINTER A300+CHIN, TP 90600-5585	9-11
90600-5586	INK JET PRINTER A300+JAPA, TP 90600-5586	9-11
90600-5587	INK JET PRI. A300+GR/RUSS, TP 90600-5587	9-11
90600-5606	CONN. PIPE REDUCTION 8-6	1-99
90600-5704	TORQUE RIGID COUPLING, 19X19 MM	5-23
90600-5745	INTOUCH OEM 10.000 V.9,5 HW KEY USB	8-157
90600-5802	PLUG, BLIND, PLASTIC GPN 300 F 25	2-7
90600-5811	ELECTRICAL EQUIPMENT SIGN, TEMPLATE	8-169, 8-171
90600-5840	PLC DEVICEN. BR./SCAN MOD, 1756-DNB, D	8-125
90600-5852	DOOR LOCKING DEVICE, DALTON M315	2-161
90600-5885	GEARS, PLAN SP075F-MC1-4-1E1-2K/MPL-B430	1-17
90600-5926	SAFETY SENSOR, ADAM E M12 5M CABLE	2-161
90600-5957	FLEXIBLE COUPLING, 22X24 MM	1-17
90600-5981	PROTECTIVE GLOVES HEAT PROTECTION, 9A/50	1-59
90600-6015	VENTING VALVE, 12003 (+ 11163)	2-207
90600-6028	GUIDE FOR PLATE 3X14MM, 1121-U71-N8-179, 8-181, 8-183, 8-185, 8-187, 8-189, 8-191, 8-193	
90600-6029	T-HANDLE, 1000-U775	8-183, 8-185
90600-6052	HAND OPERATED CHAIN-HOIST, 250KG	11-79
90600-6183	TUBULAR RIVET 3,5X6,2	5-25
90600-7487	SURGE PROTECTION DEV., VAL-MS 230/3+1 FM	8-153
90600-7827	PHOTOCELL E3ZM-T81-L 5M	7-5, 7-7
90600-7828	PHOTOCELL E3ZM-T81-D 5M	7-5, 7-7
90600-8226	RUBBER STRIP, 10.2520.8989	2-123, 2-125
90600-8346	SCREW M5X130 10.9, R91300516	2-37, 2-39
90600-8347	VALVE PLATE, R996009791	2-37, 2-39
90600-8349	OIL LEVEL INDICATOR, HGFT. 40-2-C9-RE	2-37, 2-39
90600-8646	FAN, W2S130-AB03-15	7-125
90600-8708	AIR KNIFE, LL40100	9-13
90600-8806	BUSHING, 15X19X12 MM	1-141
90600-8826	BUSHING, 15X21X20 MM	1-141
90601-0026	JUNCTION BLOCK,TINA 11-A	7-49, 7-51
90601-0067	DIRECTIONAL VALVE,4WE 6 J61/EG24N9K4/B15	2-37, 2-39
90601-0068	DIRECTIONAL VALVE, NO. 4WE 6 D6X/EG24N9K	2-37, 2-39
90601-0086	FEMALE NSERT, HAN C AXIAL 09 14 003 2702	8-149, 8-151
90601-0087	MALE INSERT, HAN 3 MOD-M-S 40A	1-247, 1-249
90601-0406	HEATING ELEMENT 400W 240V	7-121, 9-19
90601-0669	SERVO MOTOR, MPL-B430P-MJ72AA SERIES A	5-19, 5-35, 5-37, 5-39
90601-0748	PUSH-IN FITTING CRQS-1/4-8	11-103
90601-0926	SEAT VALVE, 0968.50085	1-73
90601-1027	LIMIT SWITCH, D4C-1G01 5M	1-197, 1-199
90601-1326	COMPUTOR APC620, 5P62:TETRAPAK-30	8-157
90601-1727	STEEL BALL 15MM, RB-15 INOX316	4-155, 4-157
90601-2046	CAPTIVE SCREW M6, GUTBG 6-4-12	1-13, 1-87, 1-99, 1-111, 1-143, 1-145, 1-149, 1-151 1-187, 1-189, 1-191, 1-255, 1-257, 1-259, 2-91, 2-93, 2-155, 2-223, 3-17, 3-19, 3-35, 3-37, 4-39 4-41, 5-11, 6-49, 7-111, 7-125
90601-2466	CAPTIVE SCREW M6, GUTBG 6-4-20	1-185, 2-155
90601-2686	VARISTOR FILTER, B72210S0250K101	8-41, 8-43
90601-4350	GREASE NIPPLE, B-M6F SUS(12L)	5-19

Part No	Description	Page No
90601-4450	SOLENOID VALVE, 5281 2/2 NC	1-163, 2-205, 6-11
90601-4870	SERVO MOTOR, MPL-B330P-SJ74AA, SERIES A	4-39, 4-41
90601-5110	BALL VALVE G1/2, 3861-1/2"	2-37, 2-39
90601-6215	FEMALE INSERT, HAN C AXIAL 0914 003 2701	8-141, 8-143, 8-145, 8-147, 8-149, 8-151
90601-6217	MALE INSERT, HAN 3 MOD-M-S 40A	1-87, 1-247, 1-249, 2-173, 2-175, 7-49, 7-51
90601-6430	USB CABLE, 90601-6430	11-55, 11-57
90601-7130	HOOD, HAN MODULE COMPACT, 1914 0010 401	1-87, 1-247, 1-249, 2-173, 2-175, 7-49, 7-51
90601-7290	SAFETY PLC, PLUTO B46 20-070-17	8-51
90601-8435	CONN. BULKHEAD SS-1210-61	1-71, 1-79
90601-8470	PRESSURE REGULATOR, GD-30S G 1/2	1-37, 1-39, 1-81
90601-9510	FILTER, LFMA-1/4-D-MINI-DA-A	11-61
90601-9550	FILTER CARTRIDGE, MS4/D-MINI-LFM-A	11-61
90602-1250	LIGHT FIXTURE, SLIM LED 112-544-001	8-5, 8-7, 8-9, 8-11
90602-2813	SERVO MOTOR, MPL-B680B-M-X227,ESM	3-19, 3-37
90602-2911	O-RING 19,2X3 MM FDA, 3-A	1-177
90602-2912	O-RING 49,5X3 MM FDA, 3-A	1-177
90602-3330	PRESSURE TRANSMITTER 0-200 BAR 8251.33.2	2-37, 2-39
90602-3432	PLUG, INT. G-THREAD, NO.R-231-3/8	1-185
90602-3531	PRESSURE EXPANSION VESSEL, 13424	6-23
90602-3850	INSULATION TUBE Ø33/25MM, 1627-0025	1-35, 2-9
90602-3870	PROGRAMMING CABLE USB, 2TLA020070R5800	11-51
90602-3913	PRESSURE EXPANSION VESSEL, 13224	2-209
90602-4058	CONNECTION BOX TINA 4A, 20-054-03	1-239
90602-4060	LIGHT ELEMENT, BLUE, PSD-S OE LED BU	2-105, 2-109
90602-4061	LIGHT ELEMENT, GREEN, PSD-S OE LED GN	2-105, 2-109
90602-4062	LIGHT ELEMENT, RED, PSD-S OE LED RD	2-105, 2-109
90602-4063	LIGHT ELEMENT, YELLOW, PSD-S OE LED YE	2-105, 2-109
90602-4626	TERMINAL ELEMENT, PSD-S CE-SM SPRING	2-105, 2-109
90602-4631	SIREN 100DB, PSD-S AE SM8-5 100DB/1	2-105
90602-4727	REDUCING, R1/2EXT-G1/2INT	2-37, 2-39
90602-4847	THREAD LOCKING, LOCTITE 243 50 ML	4-161, 6-11, 7-103, 7-129, 7-131, 7-135, 7-137
90602-5327	FEED THROUGH TERMINAL, WDK 4N	7-45
90602-5347	END PLATE, WAP WDK 2.5/4 N	7-45
90602-6227	COMPRESSOR, 2BV2070-8ZH03-8S	1-155
90602-8107	CABLE	2-173, 2-175
90602-8807	LIMIT SW. SZ 4127.010	8-5, 8-7, 8-9, 8-11
90602-9317	MOTOR 1LA9073-2KA12	2-213
90603-1575	MOTOR PLINTH, 19901	1-167
90603-1615	HOSE 4/6, PFAN-6X1-NT	2-185, 2-187
90603-1616	DOUBLE ACTING, COMPACT, CYL 40-25	11-93, 11-95
90603-1861	DIAPHRAGM VALVE, 650 8D 1345A10T1 DA88	2-185, 2-187
90603-1867	CONN. STR. M6MSC1/4R-316	2-185, 2-187
90603-2325	BALL BEARING 17/35X10	5-29
90603-2780	PUMP, 1016L1231YXXXC8	6-27
90603-3178	COMMONING BUSBAR, 3-P 3-PH 6 80A	8-133, 8-135
90603-3401	PAPER TROLLEY, 015-119-002	9-3
90603-3664	PUMP, 1016L5621YXXXP7	6-27
90603-3727	HEATING CARTRIDGE, 800W 240V	7-143
90603-4518	LEVEL SWITCH, T FTL20-9095	1-197, 1-199
90603-4854	PRESSURE REGULATOR IN-LINE, 638.04	6-5, 6-7
90603-4996	THERMOMETER CALIBRATOR, 9009-B	11-7, 11-9, 11-11, 11-13, 11-15, 11-17
90603-4999	TEMPERATURE PROBE, 5609-15-J +PLASTIC CA	11-7, 11-9, 11-11, 11-13, 11-15, 11-17
90603-5000	DOCUMENTING PROCESS CALIBRATOR 741B	11-7, 11-9, 11-11, 11-13, 11-15, 11-17
90603-5001	TEMPERATURE CALIBRATOR, 724	11-7, 11-9, 11-11, 11-13, 11-15, 11-17
90603-5002	TEMPERATURE HUMIDITY METER, 971	11-7, 11-9, 11-11, 11-13, 11-15, 11-17
90603-5003	CALIBRATION EQUIPMENT MICRO BATH, 6102	11-7, 11-9, 11-11, 11-13, 11-15, 11-17
90603-5004	VACUUM PUMP	11-7, 11-9, 11-11, 11-13, 11-15, 11-17
90603-5005	PRESSURE SENSOR, 700P01	11-7, 11-9, 11-11, 11-13, 11-15, 11-17
90603-5008	FLOW METER, ST4.0.1.2.1.32.Q.A.1.3.A.2.E	11-7, 11-9, 11-11, 11-13, 11-15, 11-17
90603-5009	FLOW METER, DF23.T.P.40.F.D.4.A.S.A.1.H.	11-7, 11-9, 11-11, 11-13, 11-15, 11-17
90603-9953	WHEEL	9-35
90604-0333	HYDRAULIC HOSE	9-35
90604-0373	CYLINDER	9-35
90604-0393	OIL SEAL (LÖVALOCK)	9-35
90604-0413	SPRING	9-35
90604-0453	PUMP GROUP	9-35
90604-0953	CABLE GLAND, PG9, NO.5203 2520	2-191
90604-1373	COVER	9-35
90604-1395	HANDLE	9-35
90604-1414	BRAKE UNIT	9-35
90604-1453	WHEEL	9-35
90604-1654	LEVER MECHANISM	9-35
90604-1826	T/C CALIBRATION KIT, T/C CABLE 04-22140	11-7, 11-9, 11-11, 11-13, 11-15, 11-17
90604-1827	HANDLE	9-35
90604-2253	CALIBRATION EQUIPMENT, A0805145	11-7, 11-9, 11-11, 11-13, 11-15, 11-17
90604-2255	CABLE, A0804384	11-7, 11-9, 11-11, 11-13, 11-15, 11-17
90604-2257	CALIBR. SOL. 13,50BRIX,CHFSITBX13.510F25	11-7, 11-9, 11-11, 11-13, 11-15, 11-17
90604-2258	CALIBR. SOL. 0,00BRIX, CHFSITBX00010F25	11-7, 11-9, 11-11, 11-13, 11-15, 11-17
90604-3045	MOTOR 3GAA 092 314-BSE	2-37, 2-39
90604-3590	MEMORY CARD SD 1GB, 1784-SD1, SERIES A	11-51
90604-3644	PUMP, CM3-6 X-R-G-V-AQQV O-A-A-N	6-21
107000-0000	SPRING	11-45
209145-0000	THROTTLE SCREW	7-79
209146-0000	BARRIER NUT	1-149, 1-151, 7-79

Part No	Description	Page No
209183-0000 ..	RING	1-75, 1-77, 1-233, 1-235, 1-237
239874-0000 ..	WASHER	4-11
240797-0000 ..	HANDLE	4-45
246513-0000 ..	BEARING	4-11
247358-0000 ..	SHIFTER HANDLE	1-131
251493-0000 ..	FORK	7-119
251495-0000 ..	SHAFT	7-119
255417-0000 ..	WASHER	7-119
255742-0000 ..	COMPRESSION SPRING	4-99, 4-101, 4-103, 4-105
255801-0000 ..	RETAINING RING	4-99, 4-101, 4-103, 4-105
255977-0000 ..	SHAFT	1-303, 1-305, 9-23, 9-25, 9-27
255978-0000 ..	FORK	1-303, 1-305
256163-0000 ..	SHAFT	1-103
256208-0400 ..	KNIFE HOLDER	4-49, 4-51
256607-0000 ..	AXLE PIN	4-127, 4-129, 4-131, 4-133, 4-135, 4-137, 4-139, 4-141
256626-0000 ..	EAR	4-99, 4-101, 4-103, 4-105
256628-0000 ..	PIECE	4-17, 4-25
256629-0001 ..	AXLE PIN	4-17, 4-25
256882-0000 ..	WASHER	4-107, 4-109, 4-111, 4-117, 4-119, 4-121
257042-0000 ..	BRACKET	1-279, 1-281
257043-0000 ..	ANGLE BRACKET	1-279, 1-281
257175-0000 ..	WASHER	1-283, 1-285, 1-287
257362-0000 ..	LACE	4-99, 4-101, 4-103, 4-105
263655-0003 ..	SHAFT	11-47
263655-0006 ..	SHAFT	1-273, 1-275, 11-47
263655-0018 ..	SHAFT	1-273, 1-275
266731-0000 ..	SHAFT	7-119
266737-0000 ..	WASHER	1-211
266739-0000 ..	CABLE GLAND	1-145, 7-123
270927-0000 ..	SCREW	1-143, 1-145
271269-0000 ..	BUSHING	1-143
271846-0000 ..	INSULATION NUT	4-107, 4-109, 4-111, 4-117, 4-119, 4-121
271848-0000 ..	SCREW	4-107, 4-109, 4-111, 4-117, 4-119, 4-121
271860-0000 ..	CLAMP BLOCK	1-105, 1-135, 1-137
272095-0000 ..	SHAFT	1-307
272286-0000 ..	AXLE SUPPORT	1-143
272419-0000 ..	CARRIER	4-127, 4-129, 4-131, 4-133, 4-135, 4-137, 4-139, 4-141
272427-0000 ..	BRACKET	4-127, 4-129, 4-131, 4-133, 4-135, 4-137, 4-139, 4-141
272728-0000 ..	BARRIER	7-127, 11-71
272753-0000 ..	STEERING	4-143, 4-145, 4-147
272755-0000 ..	NUT	4-143, 4-145, 4-147
272973-0000 ..	DOWEL	4-47
272986-0001 ..	VOLUME SHIM	4-55, 4-57, 4-59, 4-61, 4-63, 9-23, 9-25, 9-27
272986-0003 ..	VOLUME SHIM	4-55, 4-57, 4-59, 4-61, 4-63, 9-17, 9-23, 9-25, 9-27
272986-0006 ..	VOLUME SHIM 330S	4-55, 4-57, 4-59, 4-61, 4-63, 9-23, 9-25, 9-27
272987-0000 ..	VOLUME SHIM	4-55, 4-57, 4-59, 4-61, 4-63, 9-17, 9-23, 9-25, 9-27
272991-0000 ..	VOLUME SHIM	9-23, 9-25, 9-27
273429-0000 ..	WASHER	1-299, 1-307
273450-0000 ..	SIGN, AIR SPRAY	1-219, 1-221
273452-0000 ..	SIGN, ROLLING MACHINE FOR FABRICS	1-219, 1-221
273455-0000 ..	SIGN, COLD WATER	6-11
273977-0000 ..	NUT	2-215, 11-73
273978-0000 ..	LEVEL GLAS	2-215, 11-73
273980-0000 ..	SPRING	2-215, 11-73
273981-0000 ..	GASKET	2-211
273985-0000 ..	CARRIAGE	11-75
273996-0000 ..	NUT	2-215, 11-73
276360-0000 ..	SPRING	1-123
279008-0000 ..	BUSHING	1-131
279589-0000 ..	NUT	1-149, 1-151
292456-0000 ..	BEARING COVER	2-213
294464-0000 ..	BASE PLATE	1-143, 1-145
295376-0000 ..	SHAFT	1-303, 1-305, 9-23, 9-25, 9-27
295377-0001 ..	HOOD	1-303, 1-305
295377-0002 ..	HOOD	1-303, 1-305
295377-0004 ..	HOOD	1-303, 1-305
295377-0005 ..	HOOD	1-303, 1-305
295426-0000 ..	CAP	1-103
295427-0000 ..	LOCK	1-103
295428-0000 ..	HINGE	1-103
295429-0000 ..	HANDLE	1-103
295909-0000 ..	BUSHING	1-143
295910-0000 ..	BUSHING	1-145
295936-0000 ..	BUSHING	1-145
295984-0000 ..	DRIP GUARD	1-303, 1-305
311102-0185 ..	PARALLEL PIN ISO 2338 2M6X6 ST	11-91
311103-0233 ..	PARALLEL PIN ISO 2338 3M6X10 A1	11-91, 11-115
311103-0235 ..	PARALLEL PIN ISO 2338 3M6X14 A1	1-119, 11-81
311103-0236 ..	PARALLEL PIN ISO 2338 3M6X16 A1	1-157
311103-0238 ..	PARALLEL PIN ISO 2338 3M6X20 A1	1-279, 1-281, 11-91
311103-0267 ..	PARALLEL PIN ISO 2338 4M6X10 A1	4-91, 4-93, 4-95, 4-97, 4-99, 4-101, 4-103, 4-105
311103-0268 ..	PARALLEL PIN ISO 2338 4M6X12 A1	1-279, 1-281
311103-0269 ..	PARALLEL PIN ISO 2338 4M6X14 A1	5-11
311103-0270 ..	PARALLEL PIN ISO 2338 4M6X16 A1	4-107, 4-109, 4-111, 4-117, 4-119, 4-121, 5-11

Part No	Description	Page No
311103-0274 ..	PARALLEL PIN ISO 2338 4M6X25 A1	7-37, 7-127, 11-71
311103-0276 ..	PARALLEL PIN ISO 2338 4M6X30 A1	11-91
311103-0305 ..	PARALLEL PIN ISO 2338 5M6X10 A1	1-153, 4-17, 4-25, 4-107, 4-109, 4-111, 4-117, 4-119, 4-121, 4-127, 4-129, 4-131, 4-133, 4-135, 4-137, 4-139, 4-141, 5-107, 5-109, 5-113
311103-0306 ..	PARALLEL PIN ISO 2338 5M6X12 A1	5-71, 5-73
311103-0307 ..	PARALLEL PIN ISO 2338 5M6X14 A1	1-153, 4-107, 4-109, 4-111, 4-117, 4-119, 4-121
311103-0308 ..	PARALLEL PIN ISO 2338 5M6X16 A1	3-13, 3-33
311103-0310 ..	PARALLEL PIN ISO 2338 5M6X20 A1	1-133, 1-273, 1-275, 11-47
311103-0312 ..	PARALLEL PIN ISO 2338 5M6X25 A1	4-127, 4-129, 4-131, 4-133, 4-135, 4-137, 4-139, 4-141
311103-0313 ..	PARALLEL PIN ISO 2338 5M6X28 A1	1-273, 1-275, 7-21
311103-0314 ..	PARALLEL PIN ISO 2338 5M6X30 A1	11-47
311103-0349 ..	PARALLEL PIN ISO 2338 6M6X12 A1	5-11
311103-0350 ..	PARALLEL PIN ISO 2338 6M6X14 A1	7-119
311103-0351 ..	PARALLEL PIN ISO 2338 6M6X16 A1	4-35, 4-37, 5-15, 5-17, 7-117, 11-41, 11-97, 11-101, 11-113
311103-0352 ..	PARALLEL PIN ISO 2338 6M6X18 A1	3-9, 5-53, 5-55
311103-0353 ..	PARALLEL PIN ISO 2338 6M6X20 A1	5-63, 5-65, 5-67, 11-47, 11-93, 11-95
311103-0354 ..	PARALLEL PIN ISO 2338 6M6X22 A1	4-39, 4-41
311103-0356 ..	PARALLEL PIN ISO 2338 6M6X28 A1	7-21
311103-0357 ..	PARALLEL PIN ISO 2338 6M6X30 A1	5-9, 5-15, 5-17, 5-19, 5-35, 11-47
311103-0361 ..	PARALLEL PIN ISO 2338 6M6X40 A1	4-47, 5-35
311103-0367 ..	PARALLEL PIN ISO 2338 6M6X55 A1	1-123
311103-0401 ..	PARALLEL PIN ISO 2338 8M6X20 A1	5-35
311103-0404 ..	PARALLEL PIN ISO 2338 8M6X28 A1	1-205, 5-7, 5-35
311103-0405 ..	PARALLEL PIN ISO 2338 8M6X30 A1	5-7, 5-11, 5-15, 5-17, 5-35
311103-0409 ..	PARALLEL PIN ISO 2338 8M6X40 A1	3-9
311103-0413 ..	PARALLEL PIN ISO 2338 8M6X50 A1	1-105, 1-135, 1-137, 7-141
311103-0454 ..	PARALLEL PIN ISO 2338 10M6X20 A1	3-13, 3-33
311103-1312 ..	PARALLEL PIN ISO 2338 5M6X24 A1	1-283, 1-285, 1-287
311103-1355 ..	PARALLEL PIN ISO 2338 6M6X24 A1	4-47, 5-15, 5-17
311103-1403 ..	PARALLEL PIN ISO 2338 8M6X24 A1	1-197, 1-199, 5-23, 7-5, 7-7
311103-1456 ..	PARALLEL PIN ISO 2338 10M6X24 A1	4-7, 7-13
311111-0207 ..	SPRING PIN ISO 8752 3X14-ST	4-99, 4-101, 4-103, 4-105
311111-0308 ..	SPRING PIN ISO 8752 5X20-ST	4-127, 4-129, 4-131, 4-133, 4-135, 4-137, 4-139, 4-141
311112-0251 ..	SPRING PIN, ISO 8752 4X10 A2	7-5, 7-7
311112-0256 ..	SPRING PIN, ISO 8752 4X20 A2	1-103, 2-213
311112-0258 ..	SPRING PIN, ISO 8752 4X24 A2	7-67, 7-147
311112-0262 ..	SPRING PIN, ISO 8752 4X32 A2	1-131
311112-0345 ..	SPRING PIN, ISO 8752 6X32 A2	7-147
311112-0385 ..	SPRING PIN, ISO 8752 8X50 A2	7-127, 11-71
311411-0152 ..	SPLIT PIN SP2X16RFR	11-63
311411-0169 ..	SPLIT PIN SP2,5X25RFR	2-213
311520-0315 ..	RIVET, BLANK 2,4X4	8-157, 8-169, 8-171
311520-0320 ..	RIVET, BLANK 2,4X6	8-157
311521-0143 ..	RIVET, BLANK 3,2X8	1-13
311523-0142 ..	BLIND RIVET ISO 15983 -3.2X6 A2/A2	2-143, 7-5, 7-7
312101-0293 ..	SCREW M6S M4X16 FZB	11-79
312101-0497 ..	SCREW M6S M10X35 FZB	11-79
312101-0504 ..	SCREW M6S M10X65 FZB	1-63
312101-0538 ..	SCREW M6S M12X35 FZB	11-79
312104-0461 ..	SCREW M6S M8X50H FZB	2-85
312104-0543 ..	SCREW M6S M12X55H FZB	11-7, 11-9, 11-11, 11-13, 11-15, 11-17
312104-0634 ..	SCREW M6S M16X70H FZB	7-5, 7-7
312105-0285 ..	SCREW, M6S ISO 4017 M4X6 A4 70	4-65, 4-67, 4-69, 4-73, 4-77, 4-89
312105-0287 ..	SCREW, M6S ISO 4017 M4X8 A4 70	1-19, 1-25, 1-89, 1-167, 1-171, 1-193, 1-299, 1-307, 4-79, 4-81, 4-83, 4-85, 4-155, 4-157, 5-7, 5-11, 5-45, 6-17, 7-53, 7-55, 7-111, 11-55, 11-57, 11-101
312105-0289 ..	SCREW, M6S ISO 4017 M4X10 A4 70	1-25, 1-43, 1-89, 1-111, 1-171, 2-63, 7-141
312105-0291 ..	SCREW, M6S ISO 4017 M4X12 A4 70	1-89, 1-119, 6-31, 7-5, 7-7, 7-81, 7-129, 7-135, 7-141
312105-0292 ..	SCREW, M6S ISO 4017 M4X14 A4 70	2-29, 5-15, 5-17
312105-0293 ..	SCREW, M6S ISO 4017 M4X16 A4 70	1-203, 7-101, 7-125, 7-129, 7-135, 7-143
312105-0295 ..	SCREW, M6S ISO 4017 M4X20 A4 70	1-211, 2-47, 4-115, 4-125, 7-141, 7-143
312105-0297 ..	SCREW, M6S ISO 4017 M4X25 A4 70	2-45
312105-0301 ..	SCREW, M6S ISO 4017 M4X35 A4 70	1-89, 7-131, 7-137, 11-103
312105-0303 ..	SCREW, M6S ISO 4017 M4X40 A4 70	1-187, 1-189, 1-191
312105-0323 ..	SCREW, M6S ISO 4017 M5X8 A4 80	1-111, 1-307, 4-99, 4-101, 4-103, 4-105, 5-27, 7-37, 7-145
312105-0325 ..	SCREW, M6S ISO 4017 M5X10 A4 80	1-99, 1-119, 1-167, 1-265, 1-279, 1-281, 1-283, 1-285, 1-287, 2-7, 2-33, 2-49, 2-103, 3-27, 5-37, 5-39, 5-53, 5-55, 7-97, 9-33
312105-0327 ..	SCREW, M6S ISO 4017 M5X12 A4 80	1-17, 1-113, 1-115, 1-127, 1-153, 1-201, 1-283, 1-285, 1-287, 4-13, 4-21, 4-45, 4-65, 4-67, 4-69, 6-17, 7-5, 7-7, 7-53, 7-55, 7-119, 7-145, 11-105
312105-0328 ..	SCREW M6S ISO 4017 M5X14 A4 80	4-55, 4-57, 4-59, 4-61, 4-63, 4-79, 4-81, 4-83, 4-85
312105-0329 ..	SCREW, M6S ISO 4017 M5X16 A4 80	1-99, 1-123, 1-127, 1-205, 1-211, 1-255, 1-257, 1-279, 1-281, 1-283, 1-285, 1-287, 1-291, 2-167, 2-185, 2-187, 2-211, 4-13, 4-21, 4-155, 4-157, 5-7, 5-9, 5-15, 5-17, 5-49, 7-23, 7-25, 7-83, 11-61
312105-0331 ..	SCREW, M6S ISO 4017 M5X20 A4 80	1-157, 1-185, 1-211, 2-133, 2-143, 4-39, 4-41, 7-39, 7-53, 7-55, 7-97, 7-129, 7-135, 7-161
312105-0333 ..	SCREW, M6S ISO 4017 M5X25 A4 80	1-97, 1-99, 1-307, 4-153, 7-65
312105-0335 ..	SCREW, M6S ISO 4014 M5X30 A4 80	4-11
312105-0337 ..	SCREW, M6S ISO 4014 M5X35 A4 80	2-49, 7-97
312105-0340 ..	SCREW, M6S ISO 4014 M5X45 A4 80	1-203
312105-0341 ..	SCREW, M6S ISO 4014 M5X50 A4 80	1-283, 1-285, 1-287
312105-0362 ..	SCREW, M6S ISO 4017 M6X8 A4 80	1-43, 4-9, 4-17, 4-19, 4-25, 4-99, 4-101, 4-103, 4-105, 5-63, 5-65, 5-67, 7-97, 7-119, 7-125
312105-0364 ..	SCREW, M6S ISO 4017 M6X10 A4 80	1-119, 1-145, 1-241, 1-279, 1-281, 1-299, 1-303, 1-305, 2-45, 2-167, 2-185, 2-187, 5-63, 5-65, 5-67, 6-37, 7-63, 7-75, 7-79, 7-105, 7-141
312105-0366 ..	SCREW, M6S ISO 4017 M6X12 A4 80	1-13, 1-17, 1-19, 1-37, 1-39, 1-43, 1-71, 1-75, 1-77, 1-87

Part No	Description	Page No
		1-89, 1-97, 1-103, 1-111, 1-115, 1-117, 1-119, 1-121, 1-123, 1-125, 1-129, 1-131, 1-139, 1-143
		1-145, 1-153, 1-193, 1-203, 1-219, 1-221, 1-293, 1-295, 1-297, 1-307, 2-7, 2-9, 2-11, 2-49, 2-63
		2-127, 2-129, 2-131, 2-147, 2-155, 2-159, 2-167, 2-171, 2-207, 2-209, 2-217, 2-219, 3-11, 4-9, 4-19
		4-39, 4-41, 4-155, 4-157, 5-35, 5-37, 5-39, 5-53, 5-55, 5-57, 5-59, 5-61, 5-63, 5-65, 5-67, 5-75
		... 5-77, 5-93, 6-5, 6-7, 6-17, 6-23, 6-53, 6-55, 7-5, 7-7, 7-17, 7-19, 7-23, 7-25, 7-111, 7-113, 7-143
312105-0367 ..	SCREW, M6S ISO 4017 M6X14 A4 80	4-127, 4-129, 4-131, 4-133, 4-135, 4-137, 4-139, 4-141, 5-105
312105-0368 ..	SCREW, M6S ISO 4017 M6X16 A4 80	1-13, 1-33, 1-87, 1-89, 1-97, 1-105, 1-111, 1-127, 1-129
		1-135, 1-137, 1-139, 1-143, 1-145, 1-149, 1-151, 1-183, 1-203, 1-253, 1-255, 1-257, 1-273, 1-275
		1-279, 1-281, 2-19, 2-21, 2-23, 2-33, 2-53, 2-127, 2-129, 2-131, 2-133, 2-137, 2-141, 2-143, 2-147
		2-153, 2-159, 2-167, 2-185, 2-187, 2-207, 2-209, 2-211, 2-219, 2-223, 4-45, 5-31, 5-47, 5-87, 5-89
		5-91, 5-97, 5-99, 5-101, 6-17, 6-37, 6-41, 6-51, 7-39, 7-53, 7-55, 7-63, 7-67, 7-83, 7-85, 7-97
		..... 7-117, 7-119, 7-125, 7-129, 7-135, 7-171, 8-195, 9-7, 9-47, 9-49
312105-0370 ..	SCREW, M6S ISO 4017 M6X20 A4 80	1-13, 1-33, 1-37, 1-39, 1-43, 1-47, 1-49, 1-51, 1-103
		1-111, 1-113, 1-115, 1-117, 1-119, 1-121, 1-123, 1-125, 1-127, 1-129, 1-131, 1-133, 1-139, 1-143
		1-145, 1-153, 1-161, 1-193, 1-197, 1-199, 1-207, 1-215, 1-217, 1-233, 1-235, 1-237, 1-253, 1-255
		1-257, 1-293, 1-295, 1-297, 1-307, 2-7, 2-87, 2-89, 2-107, 2-195, 2-213, 4-45, 4-65, 4-67, 4-69
		4-73, 4-77, 4-89, 4-155, 4-157, 5-11, 5-15, 5-17, 5-19, 5-63, 5-65, 5-67, 5-71, 5-73, 5-75, 5-77
		5-79, 5-81, 5-83, 5-85, 5-93, 5-97, 5-115, 5-117, 5-119, 5-121, 6-5, 6-7, 6-11, 6-41, 7-13, 7-21
		7-63, 7-69, 7-71, 7-73, 7-83, 7-105, 7-107, 7-109, 7-113, 7-115, 7-141, 7-147, 9-49, 11-83, 11-85
		..... 11-101, 11-113
312105-0372 ..	SCREW, M6S ISO 4017 M6X25 A4 80	1-41, 1-55, 1-75, 1-77, 1-81, 1-103, 1-119, 1-125, 1-127
		1-129, 1-131, 1-143, 1-149, 1-151, 1-201, 1-203, 1-207, 1-233, 1-235, 1-237, 1-253, 1-255, 1-257
		1-259, 1-273, 1-275, 1-301, 1-303, 1-305, 2-7, 2-205, 3-21, 4-17, 4-25, 4-35, 4-37, 4-107, 4-109
		4-111, 4-117, 4-119, 4-121, 5-7, 5-9, 5-11, 5-15, 5-17, 5-71, 5-73, 7-21, 7-37, 7-53, 7-55, 7-117, 7-143
312105-0374 ..	SCREW, M6S ISO 4014 M6X30 A4 80	1-273, 1-275, 1-279, 1-281, 4-55, 4-57, 4-59, 4-61, 4-63
		4-107, 4-109, 4-111, 4-117, 4-119, 4-121, 4-127, 4-129, 4-131, 4-133, 4-135, 4-137, 4-139, 4-141
		..... 5-7, 5-37, 5-39, 5-47, 5-53, 5-55, 5-63, 5-65, 5-67, 7-79, 7-115, 7-117, 11-81
312105-0376 ..	SCREW, M6S ISO 4014 M6X35 A4 80	1-163, 4-91, 4-93, 4-95, 4-97, 4-99, 4-101, 4-103, 4-105
		4-107, 4-109, 4-111, 4-117, 4-119, 4-121, 4-127, 4-129, 4-131, 4-133, 4-135, 4-137, 4-139, 4-141
		..... 5-11, 5-45, 7-113
312105-0378 ..	SCREW, M6S ISO 4014 M6X40 A4 80	1-273, 1-275, 4-43, 4-107, 4-109, 4-111, 4-117, 4-119
		..... 4-121, 5-11, 7-101
312105-0379 ..	SCREW, M6S ISO 4014 M6X45 A4 80	2-211, 4-55, 4-57, 4-59, 4-61, 4-63, 4-79, 4-81, 4-83, 4-85
		..... 5-19, 7-97
312105-0380 ..	SCREW, M6S ISO 4014 M6X50 A4 80	..... 1-17, 7-53, 7-55, 7-69, 7-73
312105-0381 ..	SCREW, M6S ISO 4014 M6X55 A4 80	..... 1-165, 1-197, 1-199, 5-13
312105-0382 ..	SCREW, M6S ISO 4014 M6X60 A4 80	..... 2-213, 5-15, 5-17, 7-127, 11-71
312105-0384 ..	SCREW, M6S ISO 4014 M6X70 A4 80	..... 7-75, 7-77
312105-0447 ..	SCREW, M6S ISO 4017 M8X12 A4 80	1-103, 1-155, 2-85, 2-185, 2-187, 2-195, 4-91, 4-93, 4-95
		..... 4-97, 5-19
312105-0449 ..	SCREW, M6S ISO 4017 M8X16 A4 80	1-83, 1-153, 1-197, 1-199, 2-7, 2-59, 2-85, 2-167, 2-185
		2-187, 2-199, 2-201, 2-205, 2-207, 2-217, 4-155, 4-157, 5-27, 5-37, 5-39, 5-53, 5-55, 5-99, 6-51
		..... 7-101, 7-113, 7-141, 9-47, 11-75, 11-99, 11-111
312105-0451 ..	SCREW, M6S ISO 4017 M8X20 A4 80	1-71, 1-79, 1-91, 1-105, 1-111, 1-113, 1-119, 1-123
		1-125, 1-135, 1-137, 1-149, 1-151, 1-197, 1-199, 1-201, 1-279, 1-281, 1-291, 2-7, 2-45, 2-85, 2-97
		2-201, 2-205, 2-211, 2-225, 4-39, 4-41, 5-9, 5-11, 5-15, 5-17, 5-19, 5-21, 5-45, 5-53, 5-55, 5-93
		..... 5-97, 5-101, 6-23, 7-5, 7-7, 7-119, 7-141, 9-49, 11-93, 11-95, 11-103
312105-0453 ..	SCREW, M6S ISO 4017 M8X25 A4 80	1-17, 1-25, 1-83, 1-99, 1-103, 1-149, 1-151, 1-157, 1-161
		1-167, 1-171, 1-201, 1-205, 1-255, 1-257, 1-259, 2-7, 2-59, 2-107, 2-205, 4-17, 4-25, 4-39, 4-41
		..... 4-65, 4-67, 4-69, 4-73, 4-77, 4-89, 5-11, 5-37, 5-39, 5-53, 5-55, 6-21, 6-31, 7-13, 7-113, 7-141
312105-0455 ..	SCREW, M6S ISO 4017 M8X30 A4 80	1-17, 1-25, 1-79, 1-103, 1-111, 1-155, 1-187, 1-189
		1-191, 1-197, 1-199, 1-201, 1-283, 1-285, 1-287, 2-91, 2-93, 2-95, 2-97, 2-167, 2-185, 2-187
		..... 2-205, 2-207, 3-19, 3-37, 4-15, 4-23, 5-7, 6-31, 7-13, 7-21, 7-115, 11-81
312105-0457 ..	SCREW, M6S ISO 4014 M8X35 A4 80	..... 1-145, 1-167, 2-61, 4-153, 5-7, 5-9
312105-0459 ..	SCREW, M6S ISO 4014 M8X40 A4 80	..... 5-19, 5-33, 11-75
312105-0460 ..	SCREW, M6S ISO 4014 M8X45 A4 80	..... 2-195, 5-53, 5-55, 7-141
312105-0462 ..	SCREW, M6S ISO 4014 M8X55 A4 80	. 4-127, 4-129, 4-131, 4-133, 4-135, 4-137, 4-139, 4-141
312105-0463 ..	SCREW, M6S ISO 4014 M8X60 A4 80	..... 1-143, 4-7, 5-21, 7-141
312105-0464 ..	SCREW, M6S ISO 4014 M8X65 A4 80	 7-65
312105-0466 ..	SCREW, M6S ISO 4014 M8X75 A4 80	 2-203
312105-0467 ..	SCREW, M6S ISO 4014 M8X80 A4 80	 5-27
312105-0471 ..	SCREW, M6S ISO 4014 M8X100 A4 80	 7-79
312105-0489 ..	SCREW, M6S ISO 4017 M10X16 A4 80	..... 1-205, 2-199
312105-0491 ..	SCREW, M6S ISO 4017 M10X20 A4 80	..... 1-73, 2-207, 5-21, 5-23, 7-5, 7-7, 11-75
312105-0493 ..	SCREW, M6S ISO 4017 M10X25 A4 80	..... 1-205, 2-37, 2-39, 2-99, 2-101, 2-167, 5-7
312105-0495 ..	SCREW, M6S ISO 4017 M10X30 A4 80	..... 1-73, 1-279, 1-281, 2-85, 5-11, 5-45, 6-51, 11-77
312105-0497 ..	SCREW, M6S ISO 4017 M10X35 A4 80	..... 1-155, 1-205, 5-15, 5-17
312105-0499 ..	SCREW, M6S ISO 4014 M10X40 A4 80	..... 5-35, 6-27
312105-0500 ..	SCREW, M6S ISO 4014 M10X45 A4 80	..... 5-37, 5-39
312105-0501 ..	SCREW, M6S ISO 4014 M10X50 A4 80	 1-17
312105-0505 ..	SCREW, M6S ISO 4014 M10X70 A4 80	 1-13
312105-0511 ..	SCREW, M6S ISO 4014 M10X100 A4 80	..... 7-129, 7-135
312105-0532 ..	SCREW, M6S ISO 4017 M12X20 A4 80	..... 1-255, 1-257, 5-37, 5-39
312105-0534 ..	SCREW, M6S ISO 4017 M12X25 A4 80	..... 2-95, 5-9, 5-15, 5-17, 8-13
312105-0536 ..	SCREW, M6S ISO 4017 M12X30 A4 80	..... 1-103, 1-205, 2-85, 2-91, 2-93, 2-111, 2-113
312105-0538 ..	SCREW, M6S ISO 4017 M12X35 A4 80	..... 1-103, 7-5, 7-7
312105-0540 ..	SCREW, M6S ISO 4017 M12X40 A4 80	..... 2-7, 2-91, 2-93, 3-17, 3-19, 3-35, 3-37, 11-77
312105-0542 ..	SCREW, M6S ISO 4014 M12X50 A4 80	 1-83
312105-0544 ..	SCREW, M6S ISO 4014 M12X60 A4 80	..... 2-99, 2-101
312105-0550 ..	SCREW, M6S ISO 4014 M12X90 A4 80	..... 1-17, 4-7
312105-0552 ..	SCREW, M6S ISO 4014 M12X100 A4 80	 4-7
312105-0556 ..	SCREW, M6S ISO 4014 M12X120 A4 80	 2-7
312105-0622 ..	SCREW, M6S ISO 4017 M16X25 A4 80	..... 1-255, 1-257, 2-85
312105-0626 ..	SCREW, M6S ISO 4017 M16X35 A4 80	 2-7

Part No	Description	Page No
312105-0628 ..	SCREW, M6S ISO 4017 M16X40 A4 80	2-99, 2-101, 2-107
312105-0629 ..	SCREW, M6S ISO 4017 M16X45 A4 80	2-7
312105-0630 ..	SCREW, M6S ISO 4017 M16X50 A4 80	2-99, 2-101
312105-0638 ..	SCREW, M6S ISO 4014 M16X90 A4 80	2-7
312105-0646 ..	SCREW, M6S ISO 4014 M16X130 A4 80	2-7
312105-0648 ..	SCREW, M6S ISO 4014 M16X150 A4 80	2-33
312107-0312 ..	HEXAGON FLANGE NUT ISO 4161 M4 A2	1-15
312107-0314 ..	HEXAGON FLANGE NUT ISO 4161 M5 A2	1-15
312108-0333 ..	SCREW EN 1665 TYPE F M5X25 A270	11-55, 11-57
312108-0449 ..	SCREW EN 1665 TYPE F M8X16 A270	1-15
312109-0335 ..	SCREW, M6S ISO 4017 M5X30 A4 80	4-55, 4-57, 4-59, 4-61, 4-63, 4-79, 4-81, 4-83, 4-85, 4-155, 4-157, 7-67
312109-0374 ..	SCREW, M6S ISO 4017 M6X30 A4 80	1-37, 1-39, 1-127, 2-199, 3-13, 3-25, 3-33, 4-13, 4-21, 4-55, 4-57, 4-59, 4-61, 4-63, 4-79, 4-81, 4-83, 4-85, 7-67, 7-131, 7-137
312109-0376 ..	SCREW, M6S ISO 4017 M6X35 A4 80	1-143, 5-13, 5-19, 5-53, 5-55, 7-131, 7-137
312109-0378 ..	SCREW, M6S ISO 4017 M6X40 A4 80	1-203, 2-99, 2-101
312109-0380 ..	SCREW, M6S ISO 4017 M6X50 A4 80	2-167, 6-23, 7-53, 7-55, 7-97, 7-117
312109-0381 ..	SCREW, M6S ISO 4017 M6X55 A4 80	4-39, 4-41
312109-0382 ..	SCREW, M6S ISO 4017 M6X60 A4 80	5-7, 7-53, 7-55
312109-0386 ..	SCREW, M6S ISO 4017 M6X80 A4 80	7-129, 7-135
312109-0457 ..	SCREW, M6S ISO 4017 M8X35 A4 80	1-87, 1-103, 1-149, 1-151, 3-13, 3-33, 5-37, 5-39, 7-53, 7-55
312109-0459 ..	SCREW, M6S ISO 4017 M8X40 A4 80	4-15, 4-23, 7-143, 7-171
312109-0460 ..	SCREW, M6S ISO 4017 M8X45 A4 80	4-9, 4-19
312109-0461 ..	SCREW, M6S ISO 4017 M8X50 A4 80	7-113
312109-0463 ..	SCREW, M6S ISO 4017 M8X60 A4 80	7-141
312109-0465 ..	SCREW, M6S ISO 4017 M8X70 A4 80	3-9, 5-19
312109-0500 ..	SCREW, M6S ISO 4017 M10X45 A4 80	1-103
312111-0370 ..	SCREW HEX.SOCK.HD.MC6S-TT 6X20 88 FZB	7-81, 7-99
312111-0630 ..	SCREW HEX.SOCK.HD.MC6S-TT 16X50 88 FZB	2-85, 2-87, 2-89, 2-111, 2-113, 2-115, 2-117, 2-119, 2-121
312115-0222 ..	SCREW ISO4762 M3X8 A4 80	2-191, 5-37, 5-39, 7-117, 8-5, 8-7, 8-9, 8-11, 8-149, 8-151, 9-13
312115-0224 ..	SCREW ISO4762 M3X10 A4 80	8-149, 8-151
312115-0226 ..	SCREW ISO4762 M3X12 A4 80	1-143, 7-97, 8-15, 8-17, 8-19, 8-149, 8-151, 11-93, 11-95
312115-0228 ..	SCREW ISO4762 M3X16 A4 80	1-211, 7-97
312115-0232 ..	SCREW ISO4762 M3X25 A4 80	4-107, 4-109, 4-111, 4-117, 4-119, 4-121, 8-15, 8-17, 8-19
312115-0285 ..	SCREW ISO4762 M4X6 A4 80	1-219, 1-221
312115-0287 ..	SCREW ISO4762 M4X8 A4 80	1-87, 1-99, 1-193, 7-17, 7-19, 7-107, 7-117, 11-91
312115-0289 ..	SCREW ISO4762 M4X10 A4 80	1-107, 1-123, 5-87, 5-89, 5-91, 6-53, 6-55, 7-97, 8-13, 8-15, 8-17, 8-19, 8-125, 8-149, 8-151, 8-163, 11-93, 11-95
312115-0291 ..	SCREW ISO4762 M4X12 A4 80	1-179, 2-161, 7-15, 8-21, 8-51, 8-127, 8-129, 8-131, 8-157, 11-23, 11-61
312115-0293 ..	SCREW ISO4762 M4X16 A4 80	4-107, 4-109, 4-111, 4-117, 4-119, 4-121, 5-63, 5-65, 5-67, 5-79, 5-81, 5-83, 5-85, 7-107, 7-131, 7-137, 7-145, 7-149, 8-15, 8-17, 8-19, 11-23, 11-91, 11-101
312115-0295 ..	SCREW ISO4762 M4X20 A4 80	5-63, 5-65, 5-67, 5-79, 5-81, 5-83, 5-85, 7-5, 7-7, 7-143, 7-145
312115-0297 ..	SCREW ISO4762 M4X25 A4 80	4-107, 4-109, 4-111, 4-117, 4-119, 4-121, 8-5, 8-7, 8-9, 8-11
312115-0299 ..	SCREW ISO4762 M4X30 A4 80	11-91, 11-93, 11-95, 11-115
312115-0303 ..	SCREW ISO4762 M4X40 A4 80	8-149, 8-151
312115-0304 ..	SCREW ISO4762 M4X45 A4 80	7-149
312115-0305 ..	SCREW ISO4762 M4X50 A4 80	1-89, 1-219, 1-221
312115-0323 ..	SCREW ISO4762 M5X8 A4 80	5-13, 7-107, 7-109, 8-25, 8-41, 8-43, 8-47, 8-49, 8-51, 8-77, 8-107, 8-109, 8-111, 8-113, 8-115, 8-117, 8-119, 8-129, 8-131, 8-133, 8-135, 8-137, 8-153, 9-13
312115-0325 ..	SCREW ISO4762 M5X10 A4 80	1-255, 1-257, 2-37, 2-39, 2-107, 4-91, 4-93, 4-95, 4-97, 4-99, 4-101, 4-103, 4-105, 8-13
312115-0327 ..	SCREW ISO4762 M5X12 A4 80	1-89, 1-123, 1-157, 1-219, 1-221, 1-255, 1-257, 2-49, 2-85, 2-99, 2-101, 2-131, 2-137, 2-141, 2-147, 2-151, 2-159, 2-161, 4-91, 4-93, 4-95, 4-97, 4-99, 4-101, 4-103, 4-105, 4-127, 4-129, 4-131, 4-133, 4-135, 4-137, 4-139, 4-141, 6-49, 6-51, 7-5, 7-7, 7-121, 7-123, 7-129, 7-135, 7-153, 7-157, 7-159, 8-21, 8-129, 8-131
312115-0328 ..	SCREW ISO4762 M5X14 A4 80	8-149, 8-151
312115-0329 ..	SCREW ISO4762 M5X16 A4 80	1-197, 1-199, 1-255, 1-257, 2-127, 2-129, 2-149, 2-153, 4-11, 4-127, 4-129, 4-131, 4-133, 4-135, 4-137, 4-139, 4-141, 5-107, 5-109, 7-129, 7-135, 11-101
312115-0331 ..	SCREW ISO4762 M5X20 A4 80	1-123, 4-91, 4-93, 4-95, 4-97, 5-37, 5-39, 5-107, 5-109, 8-21
312115-0332 ..	SCREW ISO4762 M5X22 A4 80	7-117, 8-139
312115-0333 ..	SCREW ISO4762 M5X25 A4 80	5-23, 7-145, 7-149, 11-101
312115-0335 ..	SCREW ISO4762 M5X30 A4 80	7-107, 8-163, 9-13, 11-93, 11-95
312115-0341 ..	SCREW ISO4762 M5X50 A4 80	11-113
312115-0343 ..	SCREW ISO4762 M5X60 A4 80	7-111
312115-0362 ..	SCREW ISO4762 M6X8 A4 80	2-171
312115-0364 ..	SCREW ISO4762 M6X10 A4 80	7-83, 7-97, 8-15, 8-17, 8-19, 8-23, 8-121, 8-123
312115-0366 ..	SCREW ISO4762 M6X12 A4 80	1-255, 1-257, 1-267, 2-127, 2-129, 2-131, 2-133, 2-137, 2-139, 2-141, 2-143, 2-147, 2-149, 2-151, 2-153, 2-159, 3-9, 4-39, 4-41, 4-99, 4-101, 4-103, 4-105, 4-107, 4-109, 4-111, 4-117, 4-119, 4-121, 4-161, 5-19, 5-35, 6-49, 7-79, 7-85, 8-149, 8-151, 11-47
312115-0367 ..	SCREW ISO4762 M6X14 A4 80	2-37, 2-39, 8-149, 8-151
312115-0368 ..	SCREW ISO4762 M6X16 A4 80	2-33, 2-213, 4-39, 4-41, 5-107, 5-109, 5-113, 6-13, 6-15, 7-17, 7-19, 7-65, 8-21, 8-163, 11-99
312115-0370 ..	SCREW ISO4762 M6X20 A4 80	1-143, 1-245, 1-255, 1-257, 1-273, 1-275, 2-37, 2-39, 2-213, 4-39, 4-41, 4-127, 4-129, 4-131, 4-133, 4-135, 4-137, 4-139, 4-141, 4-153, 5-9, 5-15, 5-17, 5-19, 5-33, 5-35, 7-17, 7-19, 7-85, 7-131, 7-137, 7-141, 11-83, 11-85, 11-93, 11-95
312115-0372 ..	SCREW ISO4762 M6X25 A4 80	2-7, 2-21, 2-23, 2-55, 4-107, 4-109, 4-111, 4-117, 4-119, 4-121, 5-19, 6-51, 7-41, 7-43, 7-115, 7-131, 7-137, 11-47
312115-0374 ..	SCREW ISO4762 M6X30 A4 80	1-55, 1-91, 1-207, 2-167, 4-127, 4-129, 4-131, 4-133, 5-19, 7-53, 7-55, 7-63, 9-13
312115-0376 ..	SCREW ISO4762 M6X35 A4 80	1-43, 2-9, 2-167, 3-13, 3-33, 5-37, 5-39, 7-53, 7-55, 7-117
312115-0378 ..	SCREW ISO4762 M6X40 A4 80	7-53, 7-55, 7-85, 8-163
312115-0379 ..	SCREW ISO4762 M6X45 A4 80	7-147

Part No	Description	Page No
312115-0380 ..	SCREW ISO4762 M6X50 A4 80	5-11, 7-141
312115-0382 ..	SCREW ISO4762 M6X60 A4 80	1-255, 1-257, 2-11, 2-33
312115-0384 ..	SCREW ISO4762 M6X70 A4 80	7-149
312115-0447 ..	SCREW ISO4762 M8X12 A4 80	8-127, 8-183, 8-185, 11-107, 11-109
312115-0449 ..	SCREW ISO4762 M8X16 A4 80	2-37, 2-39, 4-9, 4-19, 5-37, 5-39, 7-5, 7-7, 11-103
312115-0451 ..	SCREW ISO4762 M8X20 A4 80	11-83, 11-85, 11-97, 11-111
312115-0453 ..	SCREW ISO4762 M8X25 A4 80	1-197, 1-199, 5-15, 5-17, 5-19, 5-23, 5-35, 7-53, 7-55
312115-0455 ..	SCREW ISO4762 M8X30 A4 80	1-303, 1-305, 2-37, 2-39, 7-113, 8-163, 11-87
312115-0457 ..	SCREW ISO4762 M8X35 A4 80	1-83, 2-41, 11-89, 11-93, 11-95
312115-0459 ..	SCREW ISO4762 M8X40 A4 80	4-47, 11-107, 11-109
312115-0460 ..	SCREW ISO4762 M8X45 A4 80	4-47
312115-0462 ..	SCREW ISO4762 M8X55 A4 80	4-15, 4-23
312115-0463 ..	SCREW ISO4762 M8X60 A4 80	7-5, 7-7
312115-0465 ..	SCREW ISO4762 M8X70 A4 80	7-149
312115-0489 ..	SCREW ISO4762 M10X16 A4 80	2-37, 2-39, 5-19, 7-53, 7-55
312115-0499 ..	SCREW ISO4762 M10X40 A4 80	2-17
312115-0501 ..	SCREW ISO4762 M10X50 A4 80	2-33
312115-0540 ..	SCREW ISO4762 M12X40 A4 80	2-33
312115-0541 ..	SCREW ISO4762 M12X45 A4 80	3-19, 3-37
312115-0634 ..	SCREW ISO4762 M16X70 A4 80	2-99, 2-101
312121-0226 ..	SCREW ISO 1207 M3X12 4.8-5.8 Z.PL.	9-7
312121-0364 ..	SCREW ISO 1207 M6X10 4.8-5.8 Z.PL.	1-55, 7-41, 7-43
312125-0220 ..	SCREW ISO 1207 M3X6 A4	1-143, 1-145, 2-191, 6-17, 7-83, 7-123
312125-0222 ..	SLOTTED HEAD SCREW, ISO1207 M3X8 A4	1-207, 7-65, 7-87
312125-0226 ..	SLOTTED HEAD SCREW, ISO1207 M3X12 A4	4-43, 5-13, 5-31, 7-5, 7-7, 7-37, 7-65, 7-123
312125-0228 ..	SLOTTED HEAD SCREW, ISO1207 M3X16 A4	1-19, 1-25, 1-113, 1-123
312125-0230 ..	SLOTTED HEAD SCREW, ISO1207 M3X20 A4	1-25, 1-149, 1-151, 1-171, 1-245, 2-191, 5-13
312125-0232 ..	SLOTTED HEAD SCREW, ISO1207 M3X25 A4	7-81
312125-0234 ..	SLOTTED HEAD SCREW, ISO1207 M3X30 A4	1-19
312125-0285 ..	SLOTTED HEAD SCREW, ISO1207 M4X6 A4	1-13, 1-143, 1-145, 1-161, 1-203, 2-199, 7-83, 7-101, 11-45
312125-0287 ..	SLOTTED HEAD SCREW, ISO1207 M4X8 A4	1-89, 1-207, 2-27, 5-37, 5-39, 6-51, 7-5, 7-7, 7-53, 7-55, 7-65, 7-87, 7-89, 7-91, 7-93, 7-95, 7-97, 7-109, 11-83, 11-85, 11-93, 11-95
312125-0289 ..	SCREW ISO 1207 M4X10 A4	6-13
312125-0291 ..	SLOTTED HEAD SCREW, ISO1207 M4X12 A4	1-145, 1-239, 7-107, 7-109, 8-169, 8-171
312125-0293 ..	SLOTTED HEAD SCREW, ISO1207 M4X16 A4	7-155
312125-0297 ..	SLOTTED HEAD SCREW, ISO1207 M4X25 A4	1-43
312125-0299 ..	SLOTTED HEAD SCREW, ISO1207 M4X30 A4	2-45
312125-0307 ..	SCREW ISO 1207 M4X60 A4	1-43
312125-0323 ..	SLOTTED HEAD SCREW, ISO1207 M5X8 A4	1-23, 1-163, 1-167, 1-175, 1-177, 1-179, 1-245
312125-0325 ..	SCREW ISO 1207 M5X10 A4	1-241
312125-0327 ..	SLOTTED HEAD SCREW, ISO1207 M5X12 A4	11-81
312125-0329 ..	SLOTTED HEAD SCREW, ISO1207 M5X16 A4	7-119
312125-0331 ..	SLOTTED HEAD SCREW, ISO1207 M5X20 A4	1-167
312125-0333 ..	SLOTTED HEAD SCREW, ISO1207 M5X25 A4	1-143
312125-0364 ..	SCREW ISO 1207 M6X10 A4	1-111, 1-167, 1-205, 1-241, 2-21, 2-23, 2-55, 2-103, 6-45
312125-0366 ..	SLOTTED HEAD SCREW, ISO1207 M6X12 A4	1-95, 1-219, 1-221, 2-7
312125-0368 ..	SLOTTED HEAD SCREW, ISO1207 M6X16 A4	8-169, 8-171
312125-0370 ..	SLOTTED HEAD SCREW, ISO1207 M6X20 A4	2-211
312132-0289 ..	SLOTTED HEAD, PAN SCREW, MSCS M4X10	1-15, 6-15
312145-0220 ..	SCREW ISO 2009 MFS M3X6 A4	4-127, 4-129, 4-131, 4-133, 4-135, 4-137, 4-139, 4-141
312145-0222 ..	SCREW ISO 2009 MFS M3X8 A4	7-123
312145-0228 ..	SCREW ISO 2009 MFS M3X16 A4	1-99, 1-145
312145-0287 ..	SCREW ISO 2009 MFS M4X8 A4	4-13, 4-15, 4-21, 4-23, 4-55, 4-57, 4-59, 4-61, 4-63
312145-0289 ..	SCREW ISO 2009 MFS M4X10 A4	4-127, 4-129, 4-131, 4-133, 4-135, 4-137, 4-139, 4-141
312145-0291 ..	SCREW ISO 2009 MFS M4X12 A4	4-55, 4-57, 4-59, 4-61, 4-63, 4-127, 4-129, 4-131, 4-133, 4-135, 4-137, 4-139, 4-141
312145-0325 ..	SCREW ISO 2009 MFS M5X10 A4	4-65, 4-67, 4-69, 4-73, 4-77, 4-89
312145-0327 ..	SCREW ISO 2009 MFS M5X12 A4	1-111
312145-0370 ..	SCREW ISO 2009 MFS M6X20 A4	1-207
312145-0380 ..	SCREW ISO 2009 MFS M6X50 A4	11-81
312155-0220 ..	SCREW DIN 7991 MF6S M3X6 A4 70	4-107, 4-109, 4-111, 4-117, 4-119, 4-121, 7-107, 11-61
312155-0226 ..	SCREW DIN 7991 MF6S M3X12 A4 70	7-131, 7-137
312155-0287 ..	SCREW DIN 7991 MF6S M4X8 A4 70	2-167, 4-55, 4-57, 4-59, 4-61, 4-63, 4-79, 4-81, 4-83, 4-85, 4-107, 4-109, 4-111, 4-117, 4-119, 4-121
312155-0289 ..	SCREW DIN 7991 MF6S M4X10 A4 70	5-79, 5-81, 5-83, 5-85, 7-129, 7-135, 7-149
312155-0291 ..	SCREW DIN 7991 MF6S M4X12 A4 70	1-43, 7-81
312155-0293 ..	SCREW DIN 7991 MF6S M4X16 A4 70	1-13
312155-0295 ..	SCREW DIN 7991 MF6S M4X20 A4 70	4-29, 4-31
312155-0297 ..	SCREW DIN 7991 MF6S M4X25 A4 70	7-111
312155-0323 ..	SCREW DIN 7991 MF6S M5X8 A4 70	1-29, 2-35, 7-39
312155-0325 ..	SCREW DIN 7991 MF6S M5X10 A4 70	5-21
312155-0327 ..	SCREW DIN 7991 MF6S M5X12 A4 70	1-99, 2-161, 2-167, 4-13, 4-21, 5-9, 5-15, 5-17, 7-149
312155-0329 ..	SCREW DIN 7991 MF6S M5X16 A4 70	2-33, 2-127, 2-129, 2-131, 2-147, 2-159, 7-141, 7-159
312155-0364 ..	SCREW DIN 7991 MF6S M6X10 A4 70	1-267, 5-7, 11-93, 11-95
312155-0366 ..	SCREW DIN 7991 MF6S M6X12 A4 70	5-63, 5-65, 5-67
312155-0368 ..	SCREW DIN 7991 MF6S M6X16 A4 70	1-99, 5-7, 5-63, 5-65, 5-67
312155-0370 ..	SCREW DIN 7991 MF6S M6X20 A4 70	2-91, 2-93, 7-53, 7-55, 7-141
312155-0374 ..	SCREW DIN 7991 MF6S M6X30 A4 70	7-101
312155-0378 ..	SCREW DIN 7991 MF6S M6X40 A4 70	2-127, 2-155
312155-0447 ..	SCREW DIN 7991 MF6S M8X12 A4 70	2-55
312155-0449 ..	SCREW DIN 7991 MF6S M8X16 A4 70	2-97
312155-0451 ..	SCREW DIN 7991 MF6S M8X20 A4 70	2-35, 2-55, 4-47, 5-37, 5-39, 7-5, 7-7
312155-0453 ..	SCREW DIN 7991 MF6S M8X25 A4 70	4-47

Part No	Description	Page No
312180-0364 ..	SCREW ISO7379 H6X10	3-13, 3-33
312180-0366 ..	SHOULDER SCREW, ISO7379 6X12/M5 12.9	11-101
312306-0362 ..	SCREW ISO4026 M6X8 FZB	7-141
312306-0443 ..	SCREW ISO4026 M8X8 FZB	7-115
312306-0546 ..	SCREW ISO4026 M12X70 FZB	11-67
312311-0327 ..	SET SCREW, DOG POINT ISO4028 M5X12 FZB	2-17
312316-0320 ..	SET SCREW, CUP END ISO4029 M5X5 FZB	1-123
312318-0283 ..	SET SCREW, CUP END ISO4029 M4X4 A4	1-157, 11-27
312318-0284 ..	SET SCREW, CUP END ISO4029 M4X5 A4	7-119
312318-0285 ..	SET SCREW, CUP END ISO4029 M4X6 A4	1-279, 1-281, 1-283, 1-285, 1-287, 2-191, 7-95
312318-0287 ..	SET SCREW, CUP END ISO4029 M4X8 A4	1-209, 7-57
312318-0289 ..	SET SCREW, CUP END ISO4029 M4X10 A4	1-207, 4-17, 4-25
312318-0320 ..	SET SCREW, CUP END ISO4029 M5X5 A4	4-55, 4-57, 4-59, 4-61, 4-63, 4-79, 4-81, 4-83, 4-85
312318-0321 ..	SET SCREW, CUP END ISO4029 M5X6 A4	7-21
312318-0323 ..	SET SCREW, CUP END ISO4029 M5X8 A4	7-115
312318-0325 ..	SET SCREW, CUP END ISO4029 M5X10 A4	4-155, 4-157
312318-0327 ..	SET SCREW, CUP END ISO4029 M5X12 A4	5-7, 5-9, 5-15, 5-17, 11-87, 11-89
312318-0333 ..	SET SCREW, CUP END ISO4029 M5X25 A4	7-129, 7-135, 11-101
312318-0360 ..	SET SCREW, CUP END ISO4029 M6X6 A4	2-33, 5-53, 5-55
312318-0362 ..	SET SCREW, CUP END ISO4029 M6X8 A4	1-131, 3-11, 3-23, 4-35, 4-37, 7-53, 7-55, 7-129, 7-135, 7-141
312318-0364 ..	SET SCREW, CUP END ISO4029 M6X10 A4	2-61
312318-0366 ..	SET SCREW, CUP END ISO4029 M6X12 A4	1-207, 7-53, 7-55, 7-57, 11-101
312318-0368 ..	SET SCREW, CUP END ISO4029 M6X16 A4	5-9, 5-15, 5-17, 7-141
312318-0370 ..	SET SCREW, CUP END ISO4029 M6X20 A4	7-37
312318-0372 ..	SET SCREW, CUP END ISO4029 M6X25 A4	11-93, 11-95
312318-0376 ..	SET SCREW, CUP END ISO4029 M6X35 A4	1-123
312318-0443 ..	SET SCREW, CUP END ISO4029 M8X8 A4	2-167, 7-13
312318-0445 ..	SET SCREW, CUP END ISO4029 M8X10 A4	2-33
312318-0447 ..	SET SCREW, CUP END ISO4029 M8X12 A4	7-121
312318-0449 ..	SET SCREW, CUP END ISO4029 M8X16 A4	1-17, 4-13, 4-15, 4-21, 4-23
312318-0451 ..	SET SCREW, CUP END ISO4029 M8X20 A4	1-279, 1-281
312318-0453 ..	SET SCREW, CUP END ISO4029 M8X25 A4	2-87, 2-89, 2-111, 2-113, 2-115, 2-117, 2-119, 2-121
312403-0636 ..	SCREW ISO4762 M16X80 12.9	7-5, 7-7
312502-0120 ..	DRIVE SCREW ROUND HEAD KDS 0X5	1-215, 1-217, 1-219, 1-221, 6-11
312502-0169 ..	DRIVE SCREW ROUND HEAD KDS 2X5	7-23, 7-25
312504-0348 ..	TAPPING SCREW, ISO7049 A2-ST4,2X25-C-Z	2-127, 2-129, 2-131, 2-147, 2-159
312504-0451 ..	TAPPING SCREW, ISO7049 A4-ST5,5X19-C-Z	8-5, 8-7, 8-9, 8-11
312601-0314 ..	HEXAGON NUT, DIN 934 M5 8 FZB	7-67
312601-0316 ..	HEXAGON NUT, DIN 934 M6 8 FZB	7-67, 7-73, 7-81, 7-99
312601-0320 ..	HEXAGON NUT, M10 8 FZB, ISO 4032	5-9, 5-15, 5-17
312601-0322 ..	HEXAGON NUT, DIN 934 M12 8 FZB	11-7, 11-9, 11-11, 11-13, 11-15, 11-17
312602-0312 ..	HEXAGON NUT, EN 24032 M6M M4 NIPLBR	4-115, 4-125
312605-0310 ..	HEXAGON NUT, M6M M3 A280	1-25, 1-149, 1-151, 1-171, 8-149, 8-151
312605-0312 ..	HEXAGON NUT, M6M M4 A280	1-13, 1-43, 1-87, 1-97, 1-197, 1-199, 1-203, 1-211, 1-279, 1-281, 1-307, 4-17, 4-25, 5-79, 5-81, 5-83, 5-85, 7-115, 7-125, 8-157, 8-163, 8-169, 8-171, 8-183, 8-185, 11-61
312605-0314 ..	HEXAGON NUT, M6M M5 A280	1-43, 1-157, 1-203, 1-211, 2-33, 7-23, 7-25, 7-97, 7-107, 7-111, 7-119, 7-129, 7-135, 7-155, 7-163, 8-159, 8-161, 8-167, 11-61
312605-0316 ..	HEXAGON NUT, M6M M6 A280	1-13, 1-33, 1-43, 1-89, 1-91, 1-103, 1-111, 1-113, 1-115, 1-117, 1-119, 1-121, 1-123, 1-125, 1-127, 1-129, 1-131, 1-139, 1-143, 1-149, 1-151, 1-153, 1-163, 1-183, 1-185, 1-197, 1-199, 1-201, 1-203, 1-233, 1-235, 1-237, 1-253, 1-255, 1-257, 2-11, 2-19, 2-27, 2-53, 2-61, 2-97, 2-99, 2-101, 2-107, 2-155, 2-167, 2-185, 2-187, 2-195, 2-201, 2-205, 2-211, 2-213, 4-13, 4-21, 4-39, 4-41, 4-45, 5-15, 5-17, 5-19, 5-45, 5-53, 5-55, 6-23, 6-41, 7-17, 7-19, 7-53, 7-55, 7-69, 7-79, 7-83, 7-87, 7-89, 7-91, 7-93, 7-95, 7-101, 7-107, 7-109, 7-115, 7-117, 7-119, 7-125, 7-129, 7-131, 7-135, 7-137, 7-153, 7-157, 8-5, 8-7, 8-9, 8-11, 8-149, 8-151, 8-157, 8-163, 8-169, 8-171, 8-179, 8-181, 8-183, 8-185, 8-187, 8-189, 8-191, 8-193, 11-7, 11-9, 11-11, 11-13, 11-15, 11-17
312605-0318 ..	HEXAGON NUT, M6M M8 A280	1-79, 1-87, 1-99, 1-103, 1-149, 1-151, 1-153, 1-155, 1-157, 1-161, 1-167, 1-187, 1-189, 1-191, 1-197, 1-199, 1-201, 1-207, 1-279, 1-281, 1-303, 1-305, 2-59, 2-85, 2-97, 2-195, 2-203, 2-205, 2-207, 4-15, 4-23, 4-99, 4-101, 4-103, 4-105, 5-19, 5-21, 5-37, 5-39, 5-53, 5-55, 6-31, 7-5, 7-7, 7-79, 7-109, 7-113, 7-141, 7-153, 7-157, 11-75, 11-81
312605-0320 ..	HEXAGON NUT, M6M M10 A280	1-17, 1-73, 1-211, 1-279, 1-281, 2-213, 5-11, 7-103
312605-0324 ..	HEXAGON NUT, M6M M16 A280	2-7, 2-85
312605-0326 ..	HEXAGON NUT, M6M M20 A280	5-7, 5-19
312607-0312 ..	HEXAGON NUT, EN 24032 M6M M4 A480	7-129, 7-135, 8-183, 8-185, 11-79
312607-0314 ..	HEXAGON NUT, EN 24032 M6M M5 A480	7-83, 7-97, 11-101
312607-0316 ..	HEXAGON NUT, EN 24032 M6M M6 A480	1-215, 1-217, 2-207, 2-209, 4-17, 4-25, 7-97, 7-131, 7-137
312607-0318 ..	HEXAGON NUT, EN 24032 M6M M8 A480	7-85
312621-0320 ..	NUT ML6M10FZB	11-79
312625-0316 ..	HEXAGON THIN NUT, EN 24035 ML6M M6 A4	1-209, 4-39, 4-41, 5-7, 5-11, 7-101, 7-109, 7-147, 11-101
312625-0318 ..	HEXAGON THIN NUT, EN 24035 ML6M M8 A4	4-17, 4-25, 4-45, 7-107, 7-119, 11-97, 11-101
312625-0322 ..	HEXAGON THIN NUT, EN 24035 ML6M M12 A4	1-157, 7-119
312625-0326 ..	HEXAGON THIN NUT, EN 24035 ML6M M20 A4	1-215, 1-217
312632-0323 ..	HEX.TH.NUT FINE,EN24035 ML6M M12X1,5 A4	7-99
312635-0320 ..	NUT M6M 10X1 STAINLESS A2 80	4-15, 4-23
312705-0312 ..	NUT HEX. DOMED CAP MHM-6 M4 A280	1-43, 1-105, 1-135, 1-137, 2-127, 2-129, 2-131, 2-133, 2-137, 2-141, 2-143, 2-147, 2-153, 2-159, 6-49, 7-153, 7-159
312705-0316 ..	HEX. DOMED CAP MHM-6 M6 A280	1-33, 1-103, 1-255, 1-257, 1-283, 1-285, 1-287, 1-293, 1-295, 1-297, 5-57, 5-59, 5-61, 7-53, 7-55, 7-57, 7-153
312705-0320 ..	NUT HEX. DOMED CAP MHM-6 M10 A280	1-141
312705-0322 ..	NUT HEX. DOMED CAP MHM-6 M12 A2	1-157

Part No	Description	Page No
312715-0116 ..	WING NUT DIN 315 A2 MVM-K M6	1-197, 1-199
312805-0101 ..	NUT ROUND WITH SLOTS M12X1 FE	7-119
312805-0103 ..	NUT ROUND WITH SLOTS M17X1 FE	7-13, 7-119
312805-0105 ..	NUT ROUND WITH SLOTS M25X1,5 FE	7-141
312810-0320 ..	HEXAGON NUT, NY-LOCK M10 FZB	4-45
312811-0316 ..	NUT HEX.LOCK HELI COIL MID GRIP M6 SS	1-301, 2-213
312811-0318 ..	NUT HEX.LOCK HELI COIL M8 SS	4-17, 4-25
312811-0320 ..	NUT HEX.LOCK HELI COIL MID GRIP M10 SS	4-153
312812-0312 ..	HEXAGON NUT, NY-LOCK M4 A4 80	2-45, 2-129, 2-131, 2-139, 2-147, 2-149, 2-159, 7-81, 7-121, 11-79
312812-0314 ..	HEXAGON NUT, NY-LOCK M5 A4 80	1-99, 1-211, 2-161, 4-55, 4-57, 4-59, 4-61, 4-63, 4-79, 4-81, 4-83, 4-85, 11-55, 11-57
312812-0316 ..	HEXAGON NUT, NY-LOCK M6 A4 80	1-17, 1-89, 1-111, 1-119, 1-197, 1-199, 2-7, 2-167, 2-209, 2-219, 2-227, 4-55, 4-57, 4-59, 4-61, 4-63, 4-79, 4-81, 4-83, 4-85, 4-155, 4-157, 5-7, 6-49, 7-109, 7-113, 7-127, 11-71, 11-81, 11-113
312812-0318 ..	HEXAGON NUT, NY-LOCK M8 A4 80	2-35, 2-45, 2-167, 4-13, 4-15, 4-21, 4-23, 4-35, 4-37, 4-155, 4-157, 5-27, 5-33, 7-115
312812-0320 ..	HEXAGON NUT, NY-LOCK M10 A4 80	2-167, 4-39, 4-41
312902-0318 ..	NUT HEX. LEFT THREAD, M8 A280	5-37, 5-39, 5-53, 5-55
312927-0131 ..	RIVET NUT M6, CLAMP. LENGTH 1,5 - 3,0	11-107, 11-109
312929-0102 ..	RIVET NUT M4, CLAMP. LENGTH 0,5 - 2,0	8-149, 8-151
315101-0153 ..	WASHER PLAIN, BRB, 6,4/12 H=1,5	2-223, 8-169, 8-171
315101-0173 ..	WASHER PLAIN, BRB, 10,5/22 H=2	1-63
315101-0178 ..	WASHER PLAIN, BRB, 13/24 H=2	11-7, 11-9, 11-11, 11-13, 11-15, 11-17
315103-0153 ..	WASHER PLAIN, 6,4X12X1,5 BR NI PL	5-15, 5-17, 7-81, 7-83
315105-0124 ..	WASHER PLAIN, 3,2X6X0,5 A4 BRB	1-19, 1-25, 1-113, 1-123, 1-149, 1-151, 1-171, 1-211, 4-39, 4-41, 4-43, 7-5, 7-7, 7-37, 7-65, 7-83, 7-87, 7-117, 8-5, 8-7, 8-9, 8-11, 8-149, 8-151
315105-0136 ..	WASHER PLAIN, 4,3X9X0,8 A4 BRB	1-13, 1-19, 1-25, 1-43, 1-87, 1-89, 1-97, 1-111, 1-171, 1-187, 1-189, 1-191, 1-193, 1-197, 1-199, 1-203, 1-219, 1-221, 1-239, 1-283, 1-285, 1-287, 1-299, 2-29, 2-45, 2-47, 2-63, 2-127, 2-129, 2-131, 2-133, 2-137, 2-139, 2-141, 2-143, 2-147, 2-149, 2-153, 2-159, 2-199, 4-79, 4-81, 4-83, 4-85, 4-107, 4-109, 4-111, 4-117, 4-119, 4-121, 5-15, 5-17, 6-17, 6-31, 7-5, 7-7, 7-17, 7-19, 7-87, 7-101, 7-111, 7-121, 7-125, 7-129, 7-131, 7-135, 7-137, 7-141, 7-143, 7-149, 7-153, 7-155, 7-159, 8-5, 8-7, 8-9, 8-11, 8-13, 8-15, 8-17, 8-19, 8-21, 8-51, 8-125, 8-129, 8-131, 8-149, 8-151, 8-157, 8-163, 11-61, 11-91, 11-93, 11-95, 11-103
315105-0146 ..	WASHER PLAIN, 5,3X10X1 A4 BRB	1-17, 1-97, 1-99, 1-167, 1-203, 1-205, 1-211, 1-241, 1-255, 1-257, 1-265, 1-307, 2-7, 2-85, 2-103, 2-133, 2-143, 2-167, 2-185, 2-187, 2-211, 4-39, 4-41, 4-55, 4-57, 4-59, 4-61, 4-63, 4-79, 4-81, 4-83, 4-85, 4-155, 4-157, 5-7, 5-9, 5-13, 5-15, 5-17, 5-49, 6-51, 7-5, 7-7, 7-23, 7-25, 7-37, 7-39, 7-53, 7-55, 7-65, 7-97, 7-111, 7-119, 7-145, 7-153, 7-157, 7-161, 8-13, 8-21, 8-25, 8-41, 8-43, 8-47, 8-49, 8-51, 8-77, 8-107, 8-109, 8-111, 8-113, 8-115, 8-117, 8-119, 8-129, 8-131, 8-133, 8-135, 8-137, 8-139, 8-153, 8-159, 8-161, 8-163, 8-167, 9-33, 11-61, 11-101, 11-105
315105-0153 ..	WASHER PLAIN, 6,4X12X1,5 A4 BRB	1-13, 1-17, 1-19, 1-33, 1-37, 1-39, 1-41, 1-43, 1-47, 1-49, 1-51, 1-55, 1-71, 1-75, 1-77, 1-81, 1-87, 1-89, 1-95, 1-97, 1-103, 1-111, 1-131, 1-133, 1-143, 1-145, 1-149, 1-151, 1-163, 1-193, 1-197, 1-199, 1-203, 1-207, 1-219, 1-221, 1-233, 1-235, 1-237, 1-241, 1-253, 1-255, 1-257, 1-259, 1-267, 1-279, 1-281, 1-293, 1-295, 1-297, 1-299, 1-301, 1-307, 2-7, 2-9, 2-11, 2-19, 2-21, 2-23, 2-27, 2-33, 2-45, 2-53, 2-63, 2-127, 2-129, 2-131, 2-133, 2-137, 2-139, 2-141, 2-143, 2-147, 2-149, 2-151, 2-153, 2-155, 2-159, 2-167, 2-171, 2-185, 2-187, 2-195, 2-199, 2-207, 2-209, 2-211, 2-213, 2-217, 2-219, 2-227, 3-13, 3-25, 3-33, 4-9, 4-13, 4-17, 4-19, 4-21, 4-25, 4-35, 4-37, 4-39, 4-41, 4-45, 4-65, 4-67, 4-69, 4-73, 4-77, 4-89, 4-91, 4-93, 4-95, 4-97, 4-107, 4-109, 4-111, 4-117, 4-119, 4-121, 4-127, 4-129, 4-131, 4-133, 4-135, 4-137, 4-139, 4-141, 4-153, 4-155, 4-157, 4-161, 5-7, 5-9, 5-11, 5-13, 5-15, 5-17, 5-19, 5-31, 5-35, 5-37, 5-39, 5-53, 5-55, 5-71, 5-73, 5-97, 5-99, 6-5, 6-7, 6-17, 6-23, 6-37, 6-41, 6-45, 6-49, 6-51, 7-5, 7-7, 7-17, 7-19, 7-21, 7-37, 7-63, 7-67, 7-79, 7-83, 7-87, 7-89, 7-91, 7-93, 7-95, 7-97, 7-99, 7-101, 7-105, 7-107, 7-109, 7-111, 7-113, 7-115, 7-117, 7-119, 7-125, 7-127, 7-141, 7-143, 7-147, 7-153, 7-157, 7-171, 8-5, 8-7, 8-9, 8-11, 8-15, 8-17, 8-19, 8-23, 8-121, 8-123, 8-149, 8-151, 8-157, 8-163, 8-177, 8-191, 8-193, 8-195, 9-7, 9-47, 9-49, 11-71, 11-81, 11-83, 11-85, 11-101
315105-0156 ..	WASHER PLAIN, 6,7X14X1,5 A4 BRB	1-131, 1-143, 1-153, 1-209, 5-19, 7-53, 7-55, 7-57, 8-21, 8-149, 8-151, 8-157, 8-163, 8-179, 8-181, 8-183, 8-185, 8-187, 8-189, 8-191, 8-193
315105-0165 ..	WASHER PLAIN, 8,4X16X1,6 A4 BRB	1-17, 1-71, 1-79, 1-83, 1-87, 1-91, 1-99, 1-103, 1-157, 1-167, 1-187, 1-189, 1-191, 1-197, 1-199, 1-201, 1-207, 1-211, 1-255, 1-257, 1-259, 1-279, 1-281, 1-283, 1-285, 1-287, 2-7, 2-59, 2-61, 2-85, 2-91, 2-93, 2-95, 2-97, 2-107, 2-167, 2-185, 2-187, 2-195, 2-199, 2-201, 2-205, 2-207, 2-211, 2-217, 3-9, 3-13, 3-33, 4-9, 4-13, 4-15, 4-17, 4-19, 4-21, 4-23, 4-25, 4-39, 4-41, 4-65, 4-67, 4-69, 4-73, 4-77, 4-89, 5-9, 5-15, 5-17, 5-19, 5-23, 5-27, 5-33, 5-37, 5-39, 5-53, 5-55, 5-93, 5-97, 5-99, 5-101, 6-51, 7-21, 7-65, 7-79, 7-101, 7-109, 7-113, 7-115, 7-141, 7-153, 7-157, 8-127, 8-163, 8-183, 8-185, 9-47, 9-49, 11-83, 11-85, 11-87, 11-89, 11-93, 11-95, 11-99, 11-103, 11-111
315105-0173 ..	WASHER PLAIN, 10,5X22X2 A4 BRB	1-17, 1-73, 1-119, 1-211, 2-47, 2-85, 2-99, 2-101, 2-207, 2-213, 4-45, 4-153, 5-9, 5-11, 5-15, 5-17, 5-21, 5-35, 6-27, 6-51, 7-97, 7-103, 11-35, 11-43, 11-77
315105-0178 ..	WASHER PLAIN, 13X24X2,5 A4 BRB	1-157, 2-7, 2-33, 2-85, 2-91, 2-93, 2-111, 2-113, 3-17, 3-19, 3-35, 3-37, 4-7, 5-33, 5-37, 5-39, 7-5, 7-7, 7-149, 8-13, 11-77
315105-0179 ..	WASHER PLAIN, 13,5X242 A4 BRB	2-99, 2-101
315105-0186 ..	WASHER PLAIN, 17X30X3 A4 BRB	1-255, 1-257, 2-7, 2-33, 2-85, 2-99, 2-101, 2-107, 3-9, 4-13, 4-21
315105-0191 ..	WASHER PLAIN, 20X36X3 A4 BRB	5-7
315105-0192 ..	WASHER PLAIN, 21X36X3 A4 BRB	5-19, 11-61, 11-75
315105-0195 ..	WASHER PLAIN, 23X40X3 A4 BRB	2-33
315105-0200 ..	WASHER BRB 26X45 RFR	7-141
315106-0124 ..	WASHER PLAIN, M3 ISO7089-3-200 HV A4	4-107, 4-109, 4-111, 4-117, 4-119, 4-121
315106-0136 ..	WASHER PLAIN, M4 ISO7089-4-200 HV A4	4-65, 4-67, 4-69, 4-73, 4-77, 4-89, 5-79, 5-81, 5-83, 5-85, 11-55, 11-57, 11-101
315106-0146 ..	WASHER PLAIN, M5 ISO7089-5-200 HV A4	1-43, 2-49, 5-53, 5-55, 7-83
315106-0153 ..	WASHER PLAIN, M6 ISO7089-6-200 HV A4	1-215, 1-217, 5-7, 5-45, 5-47, 5-57, 5-59, 5-61, 5-63, 5-65, 5-67, 5-75, 5-77, 5-115, 5-117, 5-119, 5-121, 7-13, 7-21, 7-23, 7-25, 7-53, 7-55, 7-69, 7-73, 7-75, 7-77, 7-83, 7-85, 11-7, 11-9, 11-11, 11-13, 11-15, 11-17
315106-0165 ..	WASHER ISO 7089-8-200 HV A4	3-19, 3-37, 5-7, 5-11, 5-45, 7-5, 7-7, 7-13, 7-53, 7-55, 7-115

Part No	Description	Page No
		7-141, 7-143
315106-0173 ..	WASHER PLAIN, M10 ISO7089-10-200 HV A4	1-25, 2-167, 5-11, 5-19, 5-37, 5-39, 5-115, 5-117
		5-119, 5-121, 9-37
315111-0165 ..	WASHER PLAIN, TBRB 8,4/16 H=3	5-37, 5-39
315111-0186 ..	WASHER PLAIN, TBRB 17/30 H=6	2-85, 2-87, 2-89, 2-111, 2-113, 2-115, 2-117, 2-119, 2-121
		7-5, 7-7
315115-0153 ..	WASHER PLAIN, TBRB 6,4/12 H=3	1-207, 1-301, 4-99, 4-101, 4-103, 4-105, 4-127, 4-129
		4-131, 4-133, 4-135, 4-137, 4-139, 4-141, 4-155, 4-157, 5-63, 5-65, 5-67, 6-15, 7-53, 7-55, 7-129, 7-135
315115-0165 ..	WASHER PLAIN, TBRB 8,4/16 H=3	1-103, 1-145, 1-279, 1-281, 2-225, 4-7, 4-153, 4-155, 4-157
		7-115, 7-119, 11-63
315115-0173 ..	WASHER PLAIN, TBRB 10,5/22 H=4	1-205, 4-39, 4-41, 6-51, 7-53, 7-55, 11-75
315115-0178 ..	WASHER PLAIN, TBRB 13/24 H=4	1-103, 2-95
315121-0178 ..	WASHER PLAIN, TBRSB 13/36 H=6	5-9, 5-15, 5-17
315125-0146 ..	WASHER HIGH, TBRSB 5.3X15X1 A4	2-7, 4-45, 7-5, 7-7, 7-53, 7-55
315125-0153 ..	WASHER HIGH, TBRSB 6,4X22X4 A4	1-37, 1-39, 1-111, 1-143, 1-255, 1-257, 1-273, 1-275
		1-303, 1-305, 2-87, 2-89, 2-99, 2-101, 2-107, 4-39, 4-41, 4-45, 6-11, 7-119, 7-141, 11-113
315125-0165 ..	WASHER HIGH, TBRSB 8,4X26X5 A4	1-25, 1-143, 1-171, 4-39, 4-41, 5-21, 5-37, 5-39, 7-5, 7-7, 7-141
315125-0173 ..	WASHER HIGH, TBRSB 10,5X28X6 A4	1-13, 2-99, 2-101, 5-7
315202-0102 ..	O-RING 4,1X1,6 MM	4-107, 4-109, 4-111, 4-117, 4-119, 4-121
315202-0105 ..	O-RING 7,1X1,6 MM	4-107, 4-109, 4-111, 4-117, 4-119, 4-121
315202-0107 ..	O-RING 9,1X1,6 MM	5-53, 5-55
315202-0110 ..	O-RING 12,1X1,6 MM	4-127, 4-129, 4-131, 4-133, 4-135, 4-137, 4-139, 4-141
315202-0119 ..	O-RING 25,1X1,6 MM	2-135, 2-145
315202-0124 ..	O-RING 37,1X1,6 MM	3-19, 3-37
315202-0204 ..	O-RING 5,3X2,4 MM	11-55, 11-57
315202-0211 ..	O-RING 13,3X2,4 MM	4-43
315202-0218 ..	O-RING 26,2X3 MM	5-23
315202-0230 ..	O-RING 64,2X5,7 MM	5-15, 5-17
315202-0242 ..	O-RING 124,3X5,7 MM	5-15, 5-17
315202-0265 ..	O-RING 12,3X2,4 MM	4-99, 4-101, 4-103, 4-105
315202-0301 ..	O-RING 49,5X3 MM	5-9, 5-15, 5-17
315202-0304 ..	O-RING 64,5X3 MM	1-29, 1-177
315202-0308 ..	O-RING 84,5X3 MM	1-31, 1-179
315202-0318 ..	O-RING 134,5X3 MM	5-15, 5-17
315202-0321 ..	O-RING 149,3X5,7 MM	5-35
315202-0327 ..	O-RING 179,3X5,7 MM	5-9, 5-15, 5-17
315202-0329 ..	O-RING 189,3X5,7 MM	5-35
315202-0701 ..	O-RING 10,82X1,78 MM	2-191
315202-0729 ..	O-RING 39,34X2,62 MM	2-191
315204-0103 ..	O-RING 5,1X1,6 MM	2-211
315204-0123 ..	O-RING 35,1X1,6 MM	1-131
315204-0206 ..	O-RING 7,3X2,4 MM	1-153
315204-0207 ..	O-RING 8,3X2,4 MM	2-223
315204-0208 ..	O-RING 9,3X2,4 MM	1-99
315204-0215 ..	O-RING 19,2X3 MM	1-23, 1-29, 1-31, 1-175, 1-179, 9-29
315204-0301 ..	O-RING 49,5X3 MM	9-29
315204-0303 ..	O-RING 59,5X3 MM	1-143
315204-0308 ..	O-RING 84,5X3 MM	1-23, 1-175
315204-0309 ..	O-RING 89,5X3 MM	1-273, 1-275
315204-0317 ..	O-RING 129,5X3 MM	1-163, 1-165
315204-0318 ..	O-RING 134,5X3 MM	5-9, 5-35
315205-0516 ..	O-RING 20,22X3,53 MM	5-13
315205-0704 ..	O-RING 15,60X1,78 MM	1-111, 1-263
315205-0709 ..	O-RING 23,52X1,78 MM	1-127
315205-0713 ..	O-RING 29,87X1,78 MM	1-115, 1-117, 1-121, 1-139
315205-0714 ..	O-RING 31,47X1,78 MM	1-131
315205-0715 ..	O-RING 33,05X1,78 MM	1-119, 1-125
315205-0716 ..	O-RING 34,65X1,78 MM	1-113
315205-0736 ..	O-RING 50,47X2,62 MM	1-115, 1-117, 1-121, 1-139
315205-0739 ..	O-RING 55,25X2,62 MM	1-129
315205-0802 ..	O-RING 41,00X1,78 MM	1-115, 1-117, 1-121, 1-129, 1-139, 1-197, 1-199
315205-0804 ..	O-RING 47,35X1,78 MM	1-123, 1-125
315205-0807 ..	O-RING 94,97X1,78 MM	1-153
315205-0808 ..	O-RING 7,59X2,62 MM	1-263
315206-0506 ..	O-RING 7,65X1,78 MM	2-185, 2-187
315206-0711 ..	O-RING 26,70X1,78 MM	1-197, 1-199
315206-0740 ..	O-RING 56,82X2,62 MM	1-133
315211-0101 ..	BONDED SEAL SS/NBR90 M4	4-127, 4-129, 4-131, 4-133, 4-135, 4-137, 4-139, 4-141
315211-0103 ..	BONDED SEAL SS/NBR90 M6	4-127, 4-129, 4-131, 4-133, 4-135, 4-137, 4-139, 4-141
315217-0111 ..	BONDED SEAL SS/VITON G1/2	1-37, 1-39
315220-0156 ..	V-RING 22X30X10,5 MM V-25S	2-9
315220-0183 ..	V-RING 36X46X13 MM V-40S	2-219
315221-0158 ..	RADIAL SEAL 25X42X7 MM	5-15, 5-17
315221-0171 ..	RADIAL SEAL 30X62X7 MM	5-9, 5-15, 5-17
315221-0178 ..	RADIAL SEAL 35X62X8 MM	5-7
315221-0185 ..	RADIAL SEAL 40X62X7 MM	5-23
315221-0221 ..	RADIAL SEAL 70X90X10 MM	5-23
315221-0820 ..	RADIAL SEAL 20X42X7 MM	5-15, 5-17
315229-0101 ..	SQUARE RING, 10,4X17,4X3,7 MM 1/2" FDA	1-201, 1-203, 2-205, 9-19
315229-0102 ..	SQUARE RING, 16,8X23,8X3,7 MM 3/4" FDA	6-17
315229-0103 ..	SQUARE RING, 23,1X30,1X3,7 MM 1" FDA	2-165, 2-201, 2-205, 2-207, 6-31, 9-19
315229-0104 ..	SQUARE RING, 35,8X42,8X3,7 MM 1"1/2 FD	1-79, 1-201, 2-205, 2-207, 9-19
315229-0105 ..	SQUARE RING, 48,5X55,5X3,7 MM 2" FDA	1-155, 1-201, 2-205, 9-19
315229-0106 ..	SQUARE RING, 61,2X68,2X3,7 MM 2"1/2 FDA	1-201

Part No	Description	Page No
315229-0107 ..	SQUARE RING, 73,9X80,9X3,7 MM 2"1/2 FDA	2-205
315229-0203 ..	GASKET 22,1X30,1X3,7 MM 1"	1-149, 1-151
315229-0204 ..	GASKET 34,8X42,8X3,7 MM 1"1/2	1-149, 1-151, 1-163, 1-167, 9-19
315229-0205 ..	GASKET 47,5X55,5X3,7 MM 2 INCH	1-149, 1-151, 1-157, 1-161, 1-167, 9-19
315229-0206 ..	GASKET 60,2X68,2X3,7 MM 2"1/2	1-149, 1-151, 1-157, 1-161, 1-167, 9-19
315229-0208 ..	GASKET 97,4X105,4X3,7 MM 4"	1-87
315233-0110 ..	WASHER CAPTIVE SEALING G1/4	11-65, 11-81
315233-0113 ..	WASHER CAPTIVE SEALING G1/2	11-81
315234-0109 ..	WASHER,PL.RND.CU.10,3/13,5 H=1,0	1-143, 1-145, 1-167
315234-0110 ..	WASHER,PL.RND.CU.13,5/18 H=1,5	1-87, 2-37, 2-39
315234-0113 ..	WASHER PL.RND.CU.21,3//26 H=1,5	2-37, 2-39, 5-9, 5-15, 5-17, 5-35
315237-0106 ..	WASHER,PL.RND.AL.6/10,H=1	4-99, 4-101, 4-103, 4-105
315237-0108 ..	WASHER,PL.RND.AL.5,2/8,H=0,5	4-99, 4-101, 4-103, 4-105
315237-0109 ..	WASHER,PL.RND.AL.10/14,H=1,5	1-47, 1-49, 1-51, 1-215, 1-217, 4-127, 4-129, 4-131, 4-133, 4-135, 4-137, 4-139, 4-141, 11-61
315237-0110 ..	WASHER,PL.RND.AL.13,5/18,H=1,5	1-111, 1-197, 1-199, 4-91, 4-93, 4-95, 4-97
315239-0101 ..	NYLON WASHER M5, M5RRP	1-23, 1-175, 1-177, 1-179
315239-0109 ..	NYLON WASHER G1/8, 1/8RRP	4-161, 6-11
315239-0110 ..	NYLON WASHER G1/4, 1/4RRP	2-45, 2-63, 6-17
315239-0111 ..	NYLON WASHER G3/8, 3/8RRP	6-11
315239-0113 ..	NYLON WASHER G1/2, 1/2RRP	2-165, 6-11, 6-43
315300-0001 ..	TUBE, 6 MM PE BLUE	2-45, 2-49, 2-63, 2-69, 2-205, 2-211, 2-223, 6-5, 6-7, 11-61
315300-0004 ..	TUBE, 8 MM PE BLUE	1-89, 2-13, 2-49, 2-69, 6-37, 6-41
315300-0006 ..	TUBE, 8 MM PE BLACK	2-65, 2-67, 2-223
315300-0007 ..	TUBE, 10 MM PE BLUE	6-41
315300-0010 ..	TUBE, 12 MM PE BLUE	2-49, 2-69, 6-5, 6-7, 6-41
315300-0016 ..	TUBE 4MPE BLUE	2-49, 2-69, 6-5, 6-7, 6-37, 6-41
315400-0001 ..	TUBE PUN-H-6X1-BL	1-71, 1-75, 1-77, 1-79, 1-81, 1-87, 1-89, 1-97, 1-99, 1-215, 1-217, 1-219, 1-221, 5-11, 5-45, 5-47, 7-5, 7-7, 7-23, 7-25, 7-97, 7-109, 7-113, 7-119, 7-131, 7-133, 7-137, 7-139, 7-147, 7-149, 7-171, 9-13, 11-103
315400-0004 ..	TUBE PUN-H-8X1,25-BL	1-89, 1-219, 1-221, 5-49, 7-5, 7-7, 7-23, 7-25, 7-27, 7-29, 7-33, 7-149, 11-103
315400-0006 ..	TUBE PUN-H-8X1,25-SW	5-115, 5-117, 5-119, 5-121
315400-0010 ..	TUBE PUN-H-12X2-BL	1-219, 1-221, 7-5, 7-7, 7-23, 7-25, 7-27
315400-0014 ..	TUBE PUN-H-16X2,5-NT	8-197
315400-0016 ..	TUBE PUN-H-4X0,75-BL	1-215, 1-217, 1-219, 1-221, 2-49, 7-23, 7-25, 7-109
315401-0173 ..	WASHER FBH10,2FZB	2-199
315402-0128 ..	LOCK WASHER, DIN127B 3,6 A4, M3,5	8-149, 8-151
315402-0136 ..	LOCK WASHER, DIN127B 4,1 A4, M4-5/32	1-179, 8-13, 8-15, 8-17, 8-19, 8-21, 8-127, 8-129, 8-131, 8-149, 8-151
315402-0146 ..	LOCK WASHER, DIN127B 5,1 A4, M5-3/16	1-167, 8-5, 8-7, 8-9, 8-11, 8-13, 8-21
315402-0156 ..	LOCK WASHER, DIN127B 6,5 A4, 1/4	1-129, 8-5, 8-7, 8-9, 8-11, 8-15, 8-17, 8-19, 8-149, 8-151, 8-163
315402-0173 ..	LOCK WASHER, DIN127B 10,2 A4, M10	2-17
315701-0165 ..	PARALLEL KEY W. ROUND ENDS 4X4X10 MM	4-39, 4-41
315701-0201 ..	PARALLEL KEY W. ROUND ENDS, 5X5X20 MM	7-63
315701-0263 ..	PARALLEL KEY W.ROUND ENDS, 8X7X20 MM	7-141
315701-0266 ..	PARALLEL KEY W. ROUND ENDS, 8X7X28 MM	1-17
315701-0270 ..	PARALLEL KEY W. ROUND ENDS, 8X7X40 MM	5-9, 5-15, 5-17
315701-0276 ..	PARALLEL KEY W. ROUND ENDS, 8X7X70 MM	7-141
315705-0164 ..	PARALLEL KEY W. ROUND ENDS, 4X4X8 MM	2-167
315705-0196 ..	PARALLEL KEY W. ROUND ENDS, 5X5X10 MM	2-213
315705-0198 ..	PARALLEL KEY W. ROUND ENDS, 5X5X14 MM	1-125
315705-0201 ..	PARALLEL KEY W. ROUND ENDS, 5X5X20 MM	2-167
315705-0232 ..	PARALLEL KEY W. ROUND ENDS, 6X6X20 MM	5-23
315705-0234 ..	PARALLEL KEY W. ROUND ENDS, 6X6X25 MM	5-7
315705-0236 ..	PARALLEL KEY W. ROUND ENDS, 6X6X30 MM	5-15, 5-17
315705-0238 ..	PARALLEL KEY W. ROUND ENDS, 6X6X36 MM	2-167
315705-0239 ..	PARALLEL KEY W. ROUND ENDS, 6X6X40 MM	1-129, 3-9, 5-9
315705-0263 ..	PARALLEL KEY W. ROUND ENDS, 8X7X20 MM	5-23
315741-0102 ..	RETAINING RING, DIN 705 A2 6	11-55, 11-57
315741-0108 ..	RETAINING RING, DIN 705 A2 12	5-53, 5-55
315741-0122 ..	RETAINING RING, DIN 705 A2 30	2-167
315744-0010 ..	MINIATURE CIRCUIT BREAKER, FAZ-C1/1-NA	8-111, 8-113
315744-0020 ..	MINIATURE CIRCUIT BREAKER, FAZ-C2/1-NA	8-111, 8-113
315744-0040 ..	MINIATURE CIRCUIT BREAKER, FAZ-C4/1-NA	8-41, 8-43, 8-111, 8-113
315744-0060 ..	MINIATURE CIRCUIT BREAKER, FAZ-C6/1-NA	8-41, 8-43
315744-0100 ..	MINIATURE CIRCUIT BREAKER, FAZ-C10/1-NA	8-111, 8-113
315744-0160 ..	MINIATURE CIRCUIT BREAKER, FAZ-C16/1-NA	8-111, 8-113
315745-0040 ..	MINIATURE CIRCUIT BREAKER, FAZ-C4/2-NA	8-111, 8-113
315745-0160 ..	MINIATURE CIRCUIT BREAKER, FAZ-C16/2-NA	8-111, 8-113
315746-0060 ..	MINIATURE CIRCUIT BREAKER, FAZ-C6/3-NA	8-111, 8-113
315746-0100 ..	MINIATURE CIRCUIT BREAKER, FAZ-C10/3-NA	8-111, 8-113
315746-0250 ..	MINIATURE CIRCUIT BREAKER, FAZ-C25/3-NA	8-111, 8-113
315747-0005 ..	MINIATURE CIRCUIT BREAKER, FAZ-D0,5/1-NA	8-111, 8-113
315747-0010 ..	MINIATURE CIRCUIT BREAKER, FAZ-D1/1-NA	8-111, 8-113
315747-0040 ..	MINIATURE CIRCUIT BREAKER, FAZ-D4/1-NA	8-41, 8-43
315747-0060 ..	MINIATURE CIRCUIT BREAKER, FAZ-D6/1-NA	8-111, 8-113
315747-0100 ..	MINIATURE CIRCUIT BREAKER, FAZ-D10/1-NA	8-111, 8-113
315747-0160 ..	MINIATURE CIRCUIT BREAKER, FAZ-D16/1-NA	8-111, 8-113
315749-0060 ..	MINIATURE CIRCUIT BREAKER, FAZ-D6/3-NA	8-111, 8-113
315749-0100 ..	MINIATURE CIRCUIT BREAKER, FAZ-D10/3-NA	8-111, 8-113
315749-0160 ..	MINIATURE CIRCUIT BREAKER, FAZ-D16/3-NA	8-133, 8-135
315749-0250 ..	MINIATURE CIRCUIT BREAKER, FAZ-D25/3-NA	8-133, 8-135
315751-0103 ..	RETAINING RING FOR SHAFT DIN 471 6X 0.7C	1-127, 1-153, 2-127, 2-155, 7-129, 7-135, 7-147
315751-0109 ..	RETAINING RING FOR SHAFT DIN 471 12 SS	1-211, 1-279, 1-281, 7-101, 11-93, 11-95

Part No	Description	Page No
315751-0112 ..	RETAINING RING FOR SHAFT DIN 471 15 SS	1-115, 1-117, 1-121, 1-129, 4-39, 4-41, 7-13
		7-21, 7-59, 7-61, 7-63, 7-67, 7-103, 7-147, 11-99
315751-0113 ..	RETAINING RING FOR SHAFT DIN 471 16 SS	2-17, 4-45
315751-0119 ..	RETAINING RING FOR SHAFT DIN 471 25 SS	5-7, 7-67, 7-147
315751-0124 ..	RETAINING RING FOR SHAFT DIN 471 35 SS	5-23
315753-0122 ..	RETAINING RING FOR BORE DIN 472 30 SS	1-209, 7-57
315753-0124 ..	RETAINING RING FOR BORE DIN 472 35 SS	4-39, 4-41, 7-21
315753-0130 ..	RETAINING RING FOR BORE DIN 472 47 SS	1-129
315753-0132 ..	RETAINING RING FOR BORE DIN 472 52 SS	5-7
315753-0133 ..	RETAINING RING FOR BORE DIN 472 55 SS	4-9, 4-19
315753-0137 ..	RETAINING RING FOR BORE DIN 472 65 SS	5-9, 5-15, 5-17
315754-0113 ..	RETAINING RING SHAFT DIN 6799 15	1-23, 1-29, 1-175, 1-177, 1-179
315755-0106 ..	RETAINING RING SHAFT DIN 6799 4 SS	1-125, 1-157, 5-7
315755-0107 ..	RETAINING RING SHAFT DIN 6799 5 SS	1-119, 2-127, 2-129, 2-131, 2-147, 2-159
315755-0108 ..	RETAINING RING SHAFT DIN 6799 6 SS	1-207, 7-57, 7-115
315755-0110 ..	RETAINING RING SHAFT DIN 6799 9 SS	1-111, 1-255, 1-257, 1-259, 2-199, 4-47, 7-119
315755-0113 ..	RETAINING RING SHAFT DIN 6799 15 SS	1-125, 7-37
315755-0801 ..	RETAINING RING SHAFT DIN 6799 8 SS	2-61
315756-0009 ..	ÖLFLEX CONTROL TM CY 4G1,5, 281604CY	1-71
318301-0120 ..	LIFTING EYE BOLT, LT M10 FZB	1-13, 11-79
318301-0122 ..	LIFTING EYE BOLT, LT M12 FZB	3-17, 3-35, 8-5, 8-7, 8-9, 8-11
318302-0124 ..	EYE BOLT NUT, TYPE, LH, M16	7-5, 7-7
318800-0103 ..	HANDLES,SPHERICAL KNOB,INT.THRE.,D.25-M6	1-103
318800-0104 ..	HANDLE,SPHERICAL KNOB,INT.THRE.,D.30-M8	7-119
318800-0105 ..	HANDLE,SPHERICAL KNOB,INT.THRE.,D.35-M10	1-123
318856-0101 ..	KNOB, EXTERNAL THREAD. NO. 8308-1011	6-19
318856-0109 ..	KNOB, EXTERNAL THREAD. NO. 8308-1658	11-35, 11-43
318856-0115 ..	KNOB, EXTERNAL THREAD. NO. 8306-0278	5-53, 5-55
318873-0103 ..	KNOB, CIRCUL, THREADED BUSH, M6 21X17 MM	1-43
321101-0143 ..	FLANGE BUSHING, 8/14X8-18X3 MM	4-155, 4-157
321101-0162 ..	FLANGE BUSHING, 10/16X8-20X3 MM	4-35, 4-37
321101-0163 ..	FLANGE BUSHING, 10/16X10-20X3 MM	4-17, 4-25
321101-0173 ..	FLANGE BUSHING, 12X18X12 MM	4-47, 5-53, 5-55
321101-0203 ..	FLANGE BUSHING, 16/22X16-28X4 MM	4-35, 4-37
321101-0222 ..	FLANGE BUSHING, 18/25X12-32X4 MM	4-27, 11-67
321101-0223 ..	FLANGE BUSHING, 18/25X16-32X4 MM	4-27
321101-0232 ..	FLANGE BUSHING, 20/28X16-35X4 MM	5-15, 5-17
321105-0275 ..	BUSHING W/O FLANGE, 30/40X60 MM	11-79
321111-0096 ..	FLANGE BUSHING, 8/12X8-16X2 MM	7-115
321111-0159 ..	FLANGE BUSHING, 12/18X12-24X3 MM	5-53, 5-55
321116-0234 ..	BUSHING W/O FLANGE, 16/20X12 MM	5-47
321130-0180 ..	THRUST WASHER, 12X24X1,5 MM	7-101
321133-0180 ..	BUSHING IGLIDUR G 12X14X12	1-127
321133-0375 ..	BUSHING IGLIDUR G 35X39X30	5-15, 5-17
321135-0219 ..	BUSHING, IGLIDUR X 16X18X15	5-9, 5-15, 5-17
321135-0260 ..	BUSHING, IGLIDUR X 20X23X20	5-9, 5-15, 5-17
321141-0064 ..	BEARING BUSHING, 6X8X10 MM	7-115, 11-93, 11-95
321141-0104 ..	BEARING BUSHING, 8X10X12 MM	7-129, 7-135, 7-171
321141-0138 ..	BEARING BUSHING, 10X12X8 MM	1-209, 11-93, 11-95
321141-0140 ..	BEARING BUSHING, 10X12X10 MM	7-119, 11-93, 11-95
321141-0142 ..	BEARING BUSHING, 10X12X12 MM	11-93, 11-95
321141-0178 ..	BEARING BUSHING, 12X14X10 MM	7-119
321141-0183 ..	BEARING BUSHING, 12X14X15 MM	1-211
321141-0193 ..	BEARING BUSHING, 12X14X25 MM	7-101
321141-0260 ..	BEARING BUSHING, 20X23X20 MM	7-129, 7-135
321158-0221 ..	FLANGE BUSHING, IGLIDUR J 16X18X17	1-125
321161-0185 ..	FLANGE BEARING, 12X14X17 MM	11-101
321161-0221 ..	FLANGE BEARING, 16X18X17 MM	2-17
321306-0107 ..	BALL BEARING 35/62X14	5-7
321308-0202 ..	BALL BEARING 15/32X9	7-13, 7-21, 7-53, 7-55, 7-67
321308-0204 ..	BALL BEARING 20/42X12	7-141
321308-0205 ..	BALL BEARING 25/47X12	7-67, 7-147
321308-0207 ..	BALL BEARING 35/62X14	5-23
321309-0102 ..	BALL BEARING 15/35X11	11-99
321309-0106 ..	BALL BEARING 30/62X16	5-9, 5-15, 5-17
321309-0116 ..	BALL BEARING 80/140X26	5-35
321313-0100 ..	BALL BEARING 10/30X9	1-209, 7-57
321313-0102 ..	BALL BEARING 15/35X11	1-207, 2-61, 7-13, 7-21, 7-59, 7-61, 7-63, 7-129, 7-135
321316-0205 ..	BALL BEARING 25/62X17	3-11
321330-0105 ..	ANG. BALL BEAR 25/52X20,6	5-9, 5-15, 5-17
321330-0118 ..	ANG. BALL BEAR, 90X160X52,4 MM	5-35
321582-0149 ..	CAM ROLLER, 10X22X36 MM	5-9, 5-15, 5-17
342203-0120 ..	NIPPLES, EXT. THREAD, HEXAGON, NO. 209	6-31
342206-0109 ..	BUSHING, INT.EXT. THR. R3/4-G1/2	1-165, 2-209
342245-0102 ..	T-PIPE, INT. THREAD, R1/4XKR1/4	2-63
342700-0110 ..	NIPPLE, EXT.THREAD, HEXAGON, G1/4-G1/4	11-65, 11-103
342700-0111 ..	NIPPLE, EXT.THREAD, HEXAGON, G3/8-G3/8	6-11
342700-0113 ..	NIPPLE, EXT.THREAD, HEXAGON, G1/2-G1/2	2-165, 2-209, 6-15, 6-43, 6-51
342700-0203 ..	NIPPLE, EXT.THREAD, HEXAGON, G3/8-G1/4	2-45, 2-63
342700-0206 ..	NIPPLE, EXT.THREAD, HEXAGON, G1/2-G3/8	6-11, 6-43
342701-0201 ..	BUSHING, INT/EXT, G1/4-G1/8	1-19, 11-61, 11-65
342701-0202 ..	BUSHING, INT/EXT, G 3/8 - G1/8	6-11, 6-21
342701-0203 ..	BUSHING, INT/EXT. G 3/8 - G 1/4	2-209
342701-0204 ..	BUSHING, INT/EXT. G 1/2 - G 1/8	6-15

Part No	Description	Page No
342701-0205 ..	BUSHING, INT/EXT, G 1/2 - G1/4	1-37, 1-39, 2-15, 6-15
342701-0206 ..	BUSHING, INT/EXT, G 1/2 - G3/8	6-11
342703-0208 ..	CONE NUT M8, NUT M-8 SS	1-263, 2-41, 4-43
342706-0114 ..	STIFFNER SLEEVE FOR HOSE 4X0,75	1-215, 1-217
342706-0130 ..	STIFFNER SLEEVE FOR HOSE 6X1	1-47, 1-49, 1-51, 1-71, 1-75, 1-77, 1-79, 1-81, 1-87, 1-215, 1-217, 2-45, 2-185, 2-187
342706-0148 ..	STIFFNER SLEEVE FOR HOSE 8X1	11-61
342713-0208 ..	PLUG, EXT. THREAD HEX. SOCKET. BPM05	11-103
342713-0209 ..	PLUG, EXT THREAD HEX SOCKET 8638-00-180	1-37, 1-39
342713-0210 ..	PLUG, EXT THREAD HEX SOCKET	1-89, 7-23, 7-25, 7-27, 7-79
342713-0211 ..	PLUG, EXT THREAD HEX SOCKET 8638-00-380	2-209
342713-0216 ..	PLUG, EXT. THREAD HEX. SOCKET. BPM10	11-103
342713-0310 ..	PLUG, EXT. THREAD HEX. SOCKET. BPS14	2-37, 2-39
342713-0311 ..	PLUG, EXT. THREAD HEX. SOCKET. BPS38	2-37, 2-39
342713-0313 ..	PLUG, EXT. THREAD HEX. SOCKET. BPS12	2-37, 2-39
342714-0221 ..	TUBE END REDUCER 22 - 18	2-37, 2-39
342715-0102 ..	BLIND PLUG 6 MM	1-47, 1-49, 1-51
342715-0106 ..	BLIND PLUG 14 MM	2-33
342716-0211 ..	REDUCER 12-14	2-69, 7-5, 7-7
342718-0109 ..	SUPPORT SLEEVE FOR PIPE 15X1, VH13MSX	6-11
342720-0103 ..	CONN. STR. GA-8-G1/8	4-43
342720-0114 ..	CONN. STR. GA-15-G1/2	6-11
342722-0197 ..	STRAIGHT COUPLING	7-109, 7-131, 7-137, 7-149
342722-0202 ..	PIPE COUPLING 1/8" D=6MM	1-119
342722-0204 ..	PIPE COUPLING	7-149
342724-0102 ..	CONN. STR. PIPE GAI06LRCF	1-215, 1-217
342725-0114 ..	CONN. STR. PIPE GAI15LR71	1-163
342735-0103 ..	ELBOW PIPE JOINT	5-13
342738-0125 ..	ADJUSTABLE ELBOW CONNECTION 18-G1/2	2-37, 2-39
342738-0208 ..	ADJUSTABLE ELBOW CONNECTION 8-G1/4	2-41, 4-91, 4-93, 4-95, 4-97
342738-0221 ..	ADJUSTABLE ELBOW CONNECTION 15-G1/2	1-165, 2-205, 2-209
342741-0209 ..	CONN. T-PIPE TE-12-R3/8	1-183
342742-0103 ..	T-COUPLING,ADJUST,F.PLASTIC TUBE 6-G1/4	7-111
342744-0109 ..	ADJUSTABLE ELBOW CONNECTION 12	2-37, 2-39
342748-0102 ..	T-CONNECTION 6MM	7-131, 7-137
342748-0103 ..	T-CONNECTION 8MM	1-89
342752-0104 ..	CONN. STR. GE10LREDCF	2-37, 2-39
342752-0110 ..	CONN. STR. GE12LREDCF	2-37, 2-39
342752-0118 ..	CONN. STR. GE18LREDCF	2-37, 2-39
342752-0119 ..	CONN. STR. GE22LREDCF	2-37, 2-39
342759-0109 ..	ASSEMBLED ADJUSTABLE LPIPE CONNECTION 12	1-149, 1-151
342767-0100 ..	BULKHEAD LEAD-IN, G1/8	1-245
342767-0104 ..	BULKHEAD LEAD-IN, G1/4	2-13, 2-15, 2-41
342768-0102 ..	BULKHEAD CONNECTOR, 6 MM	1-89, 1-99
342768-0110 ..	BULKHEAD CONNECTOR, 14 MM	2-33
342770-0107 ..	STRAIGHT COUPLING INT, D=8 MM - G1/8	7-149
342790-0309 ..	MAV PRESSURE GAUGE CONNECTOR 12	1-37, 1-39
342796-0118 ..	CONN. BANJO,WH 18-G1/2	2-37, 2-39
342796-0119 ..	CONN. BANJO,WH 22-G3/4	2-37, 2-39
342797-0121 ..	BANJO CONN., RINGPIECE 6-1/8	1-75, 1-77, 1-215, 1-217
342797-0122 ..	BANJO CONN., RINGPIECE 6-1/4	1-71, 1-79, 1-81, 1-183
342800-1102 ..	DIAPHRAGM, FDA PTFE/EPDM 5E, SEAT S. 10	1-19, 1-61
342800-1103 ..	DIAPHRAGM, FDA PTFE/EPDM 5E, SEAT S. 25	1-71
342800-1202 ..	ACTUATOR, SS, N.C. SEAT S. 10	1-19
342800-1302 ..	ACTUATOR, SS, N.O. SEAT S. 10	1-19
342800-1303 ..	ACTUATOR, SS, N.O. SEAT S. 25	1-71
342800-1502 ..	VALVE ASSEMBLING KIT, SEAT S. 10	1-19
342800-1503 ..	VALVE ASSEMBLING KIT, SEAT S. 25	1-71
342840-0101 ..	CLAMP, 12,7 AND 19,1 MM 3-A PCS+PMCS	1-99
342840-0103 ..	CLAMPING PIECE DN 1-11/2, GH13LAH112304N	1-99
342840-0105 ..	CLAMPING PIECE, GH13LAH2304NO79612011202	1-171
342841-0104 ..	FERRULE, 3-A, GC-CLAMP 38,1 MM (1 1/2")	1-233, 1-235, 1-237
342841-0505 ..	FERRULE, 3-A, GC-CLAMP 50,8 MM (2")	1-19
342850-0107 ..	GASKET 72,9X89,6X5,2 MM 3" FDA 3-A	2-11
342850-0303 ..	GASKET 22,7X49,1X5,2 MM 1" FDA, 3-A	1-73, 1-79, 2-9
342850-0304 ..	GASKET 35,4X49,1X5,2 1"1/2 FDA, 3-A	1-71, 1-73, 1-75, 1-77, 1-79, 1-149, 1-151, 1-233, 1-235, 1-237, 1-301, 2-11, 2-219, 9-19, 11-7, 11-9, 11-11, 11-13, 11-15, 11-17, 11-61
342850-0305 ..	GASKET 47,8X62,6X5,2 MM 2" FDA 3-A	1-19, 1-71, 1-171, 1-233, 1-235, 1-237, 9-19
342850-0404 ..	GASKET 35,4X49,1X5,2 MM 1"1/2 FDA 3-A	1-163, 1-165, 9-19
342850-0408 ..	GASKET 97X117,7X5,2 MM 4" FDA 3-A	1-165
342901-0101 ..	HOSE NIPPLE, EXT.THR. G1/8-7 MM	2-211
342901-0102 ..	HOSE NIPPLE, EXT.THR. G1/4-7 MM	6-11, 6-15
342901-0105 ..	HOSE NIPPLE, EXT.THR. G1/2-12 MM	1-163, 1-165, 2-165, 2-195, 2-209, 6-11, 6-33
342920-0114 ..	STRAIGHT COUPLING, EXT.THREAD 6/4-R1/4	11-61
342920-0121 ..	STRAIGHT COUPLING, EXT.THREAD 8/6-R1/8	4-91, 4-93, 4-95, 4-97
342920-0122 ..	STRAIGHT COUPLING, EXT.THREAD 8/6-R1/4	2-13
342920-0132 ..	STRAIGHT COUPLING, EXT.THREAD 10/8-R1/4	2-15
342921-0113 ..	STRAIGHT COUPLING, EXT.THREAD 6/4-G1/8	2-63, 11-7, 11-9, 11-11, 11-13, 11-15, 11-17
342921-0114 ..	STRAIGHT COUPLING, EXT.THREAD 6/4-G1/4	2-63
342921-0115 ..	STRAIGHT COUPLING, EXT.THREAD 6/4-G3/8	2-63, 6-11
342921-0122 ..	STRAIGHT COUPLING, EXT.THREAD 8/6-G1/4	1-89, 2-65, 2-67, 2-223
342923-0113 ..	STRAIGHT COUPL.,INT.THREADED 6/4-G1/8"	11-61
342923-0121 ..	STRAIGHT COUPL.,INT.THREADED 8/6-G1/8"	11-61
342923-0122 ..	STRAIGHT COUPL.,INT.THREADED 8/6-G1/4"	2-65, 2-67, 2-223

Machine Type Group Description Page No

Part No	Description	Page No
342929-0121 ..	STRAIGHT COUPLING,SOLDER 8/6-8	6-31
342930-0114 ..	ELBOW 90 COULP., EXT. THREAD 6/4-R1/4"	1-89
342931-0121 ..	ELBOW 90 COUPL., EXT. THREAD 8/6-G1/8"	5-75, 5-77, 5-115, 5-117, 5-119, 5-121
342931-0122 ..	ELBOW 90 COUPL., EXT. THREAD 8/6-G1/4"	1-89, 2-65, 2-67
342936-0122 ..	ELBOW 90 COUPL.,UNION 8/6	2-65, 2-67
342941-0122 ..	T-COUPLING,EXT.THREAD 8/6-G1/4"	1-89
342980-0121 ..	HOSE FITTING, BANJO RING L PO G1/8 8/6	4-91, 4-93, 4-95, 4-97
342980-0303 ..	BANJO-HOLLOW BOLT COUPL,EXT.THR.01-G1/8	1-47, 1-49, 1-51, 1-75, 1-77, 1-215, 1-217, 4-91, 4-93, 4-95, 4-97
342980-0304 ..	BANJO-HOLLOW BOLT COUPL,EXT.THR.01-G1/4	1-71, 1-79, 1-81, 1-183
342991-0100 ..	HOSE CLIP,WORM DRIVE TYPE (8)-14	1-47, 1-49, 1-51, 2-223, 6-15, 6-33, 11-81
342991-0101 ..	HOSE CLIP,WORM DRIVE TYPE (11)-17	1-163, 1-165, 2-45, 2-185, 2-187, 2-193, 2-195, 2-199, 2-211, 6-13, 6-15, 6-17, 7-111, 11-81
342991-0102 ..	HOSE CLIP,WORM DRIVE TYPE (13)-20	2-33, 2-165, 2-209, 6-51
342991-0103 ..	HOSE CLIP,WORM DRIVE TYPE (15)-24	1-149, 1-151, 2-33, 2-201, 2-205, 8-197
342991-0104 ..	HOSE CLIP,WORM DRIVE TYPE (19)-28	2-9, 2-199
342991-0105 ..	HOSE CLIP,WORM DRIVE TYPE (22)-32	7-79
342991-0106 ..	HOSE CLIP,WORM DRIVE TYPE (26)-38	2-33, 2-201, 2-209
342991-0108 ..	HOSE CLIP,WORM DRIVE TYPE (38)-50	11-7, 11-9, 11-11, 11-13, 11-15, 11-17
342991-0110 ..	HOSE CLIP,WORM DRIVE TYPE (50)-65	2-199, 11-7, 11-9, 11-11, 11-13, 11-15, 11-17
342991-0112 ..	HOSE CLIP,WORM DRIVE TYPE (68)-85	7-125
342991-0114 ..	HOSE CLIP,WORM DRIVE TYPE (87)-112	2-17, 2-227, 6-49
344215-0103 ..	CLAMP RING A13MHM 1X1 1/2", 211053	1-71, 1-73, 1-75, 1-77, 1-79, 1-149, 1-151, 1-163, 1-165, 1-233, 1-235, 1-237, 2-9, 2-11, 2-219, 11-7, 11-9, 11-11, 11-13, 11-15, 11-17
344215-0105 ..	CLAMP RING A13MHM 2", 211054	1-19, 1-71, 1-233, 1-235, 1-237
344215-0107 ..	CLAMP RING A13MHM 3", 211056	2-11
344234-0080 ..	UNION TEE, 6304 08 00WP2	6-17, 6-23
344235-0814 ..	MALE CONNECTOR, 6305 08 13WP2	6-17, 6-21
344235-0838 ..	MALE CONNECTOR, 6305 08 17WP2	6-17
344237-0814 ..	SWIVEL ELBOW, 6309 08 13WP2	6-17, 6-19
344237-0818 ..	SWIVEL ELBOW, 6309 08 10WP2	6-15
344237-1038 ..	SWIVEL ELBOW, 6309 10 17WP2	6-11
344240-0805 ..	TUBE 8 MM PE FDA, 1015Y08F01	6-15, 6-17, 6-19, 6-23
344254-0050 ..	SENSOR CABLE, EVT004	7-5, 7-7, 7-53, 7-55
346800-0110 ..	SILENCER FILTER R1/4"	1-89, 1-203
350001-0005 ..	PUSH-IN FITTING QS-F-G1/8-4	7-115
350001-0006 ..	PUSH-IN FITTING QS-F-G1/8-6	1-19, 2-221, 5-11, 9-13
350001-0008 ..	PUSH-IN FITTING QS-F-G1/4-6	1-43, 1-219, 1-221, 2-205, 6-5, 6-7, 9-13
350001-0009 ..	PUSH-IN FITTING QS-F-G1/4-8	1-43, 2-49, 6-31, 6-41, 7-27
350001-0015 ..	PUSH-IN FITTING QS-F-G1/2-10	6-41
350001-0016 ..	PUSH-IN FITTING QS-F-G1/2-12	6-41
350002-0001 ..	PUSH-IN L-FITTING QSL-F-M5-4	1-125
350002-0002 ..	PUSH-IN L-FITTING QSL-F-M5-6	1-37, 1-39, 11-103
350002-0005 ..	PUSH-IN L-FITTING QSL-F-G1/8-4	1-219, 1-221, 1-227, 1-229, 1-231, 2-49, 6-9, 6-37, 6-39, 7-23, 7-25
350002-0006 ..	PUSH-IN L-FITTING QSL-F-G1/8-6	1-19, 1-43, 1-45, 1-97, 1-227, 1-229, 1-231, 2-51, 2-211, 2-223, 6-9, 7-31, 7-35, 11-61, 11-93, 11-95
350002-0007 ..	PUSH-IN L-FITTING QSL-F-G1/8-8	1-227, 1-229, 1-231, 2-51, 6-31, 6-39, 7-31
350002-0008 ..	PUSH-IN L-FITTING QSL-F-G1/4-6	1-19, 1-219, 1-221, 2-49, 5-45, 7-23, 7-25, 7-27
350002-0009 ..	PUSH-IN L-FITTING QSL-F-G1/4-8	1-219, 1-221, 2-49, 6-37, 11-103, 11-105
350002-0010 ..	PUSH-IN L-FITTING QSL-F-G1/4-10	1-37, 1-39, 1-43
350002-0011 ..	PUSH-IN L-FITTING QSL-F-G1/4-12	1-219, 1-221, 7-27
350002-0012 ..	PUSH-IN L-FITTING QSL-F-G3/8-8	1-45, 1-227, 1-229, 1-231, 2-51, 6-39, 7-35
350002-0014 ..	PUSH-IN L-FITTING QSL-F-G3/8-12	1-227, 1-229, 1-231, 2-51, 6-9, 6-39, 6-43, 7-31, 7-35
350002-0016 ..	PUSH-IN L-FITTING QSL-F-G1/2-12	11-103
350003-0010 ..	PUSH-IN FITTING QS-F-M5-6-I	7-147
350004-0002 ..	PUSH-IN L-FITTING QSL-F-6	2-49, 2-63
350004-0003 ..	PUSH-IN L-FITTING QSL-F-8	2-49, 5-49, 7-27
350004-0005 ..	PUSH-IN L-FITTING QSL-F-12	1-219, 1-221, 2-49, 7-27
350005-0001 ..	PUSH-IN T-FITTING QST-F-4	6-5, 6-7
350005-0002 ..	PUSH-IN T-FITTING QST-F-6	2-69, 7-23, 7-25, 9-13
350005-0003 ..	PUSH-IN T-FITTING QST-F-8	2-49, 2-69, 7-149
350005-0004 ..	PUSH-IN T-FITTING QST-F-10	6-41
350005-0005 ..	PUSH-IN T-FITTING QST-F-12	1-219, 1-221, 2-69, 6-5, 6-7, 6-41, 7-23, 7-25
350006-0001 ..	PUSH-IN FITTING QS-F-6H-4	1-219, 1-221, 2-49, 7-23, 7-25
350006-0002 ..	PUSH-IN FITTING QS-F-8H-4	1-219, 1-221, 6-41
350006-0003 ..	PUSH-IN FITTING QS-F-8H-6	2-49, 7-5, 7-7, 7-119, 11-103
350006-0006 ..	PUSH-IN FITTING QS-F-10H-8	6-41
350006-0007 ..	PUSH-IN FITTING QS-F-12H-6	1-219, 1-221
350006-0008 ..	PUSH-IN FITTING QS-F-12H-8	11-103
350007-0005 ..	PUSH-IN T-FITTING QST-F-G1/8-4	1-229, 1-231
350007-0008 ..	PUSH-IN T-FITTING QST-F-G1/4-6	1-219, 1-221
350007-0009 ..	PUSH-IN T-FITTING QST-F-G1/4-8	1-219, 1-221
350007-0011 ..	PUSH-IN T-FITTING QST-F-G1/4-12	1-219, 1-221, 2-49
350008-0004 ..	PUSH-IN FITTING QSF-F-G1/4-6	2-63
350010-0002 ..	PUSH-IN BULKHEAD FITTING QSS-F-6	2-33, 2-69
350010-0003 ..	PUSH-IN BULKHEAD FITTING QSS-F-8	2-49
350010-0005 ..	PUSH-IN BULKHEAD FITTING QSS-F-12	2-33
350011-0001 ..	PUSH-IN T-FITTING QST-F-6-4	2-49
350011-0002 ..	PUSH-IN T-FITTING QST-F-8-6	1-43, 2-49, 6-41
350012-0002 ..	SLEEVE QSH-F-6	2-49, 2-69
350012-0003 ..	SLEEVE QSH-F-8	2-49
350012-0005 ..	SLEEVE QSH-F-12	1-219, 1-221, 2-49
350013-0002 ..	PLUG QSC-6H	1-45, 1-219, 1-221, 1-227, 7-27

Part No	Description	Page No
350013-0003 ..	PLUG QSC-8H	1-45
350013-0004 ..	PLUG QSC-10H	6-41
350013-0005 ..	PLUG QSC-12H	1-219, 1-221
350015-0001 ..	PUSH-IN Y-CONNECTOR QSY-F-6	2-69
350015-0002 ..	PUSH-IN Y-CONNECTOR QSY-F-6-4	2-69
350015-0003 ..	PUSH-IN Y-CONNECTOR QSY-F-8	1-43, 5-49
351120-0125 ..	CABLE ÖLFLEX HEAT 180 SIHF 2X2,5	7-109
351120-0142 ..	CABLE Ã–LFLEX HEAT 180 SIHF 3X0,75	6-53
351120-0144 ..	CABLE Ã–LFLEX HEAT 180 SIHF 3X1,5	2-207
351120-0145 ..	CABLE ÖLFLEX HEAT 180 SIHF 3X2,5	1-247, 1-249, 7-49, 7-51, 7-107
351120-0146 ..	CABLE ÖLFLEX HEAT 180 SIHF 3X4	1-247, 1-249, 2-173, 2-175, 5-49, 7-123
351120-0265 ..	CABLE Ã–LFLEX HEAT 180 SIHF 4X2,5	2-207
351120-0267 ..	CABLE ÖLFLEX HEAT 180 SIHF 4X6	1-247, 1-249
351121-0214 ..	CABLE RADOX 155 1X2,5 MM² YELLOW/GREEN	7-143
351150-0166 ..	CABLE OLFLEX 4X4 MM2 LIGHT/GREY	2-173, 2-175, 6-53
351150-0186 ..	CABLE OLFLEX 5X4 MM2 LIGHT/GREY	7-49, 7-51
351150-0403 ..	CABLE OLFLEX 3X0,75 MM2 LIGHT/GREY	1-55, 1-91, 1-247, 1-249, 2-173, 2-175, 2-185, 2-187, 2-205, 2-211, 6-11, 6-53, 7-27
351150-0404 ..	CABLE OLFLEX 4X0,75 MM2 LIGHT/GREY	1-91, 1-247, 1-249, 2-173, 2-175, 2-185, 2-187, 6-53
351150-0405 ..	CABLE OLFLEX 5X0,75 MM2 LIGHT/GREY	2-173, 2-175, 7-5, 7-7
351150-0406 ..	CABLE OLFLEX 7X0,75 MM2 LIGHT/GREY	1-91, 1-247, 1-249, 2-173, 2-175, 6-53, 7-49, 7-51
351150-0407 ..	CABLE OLFLEX 12X0,75 MM2 LIGHT/GREY	2-173, 2-175, 7-163
351150-0412 ..	CABLE OLFLEX 3X1,5 MM2 LIGHT/GREY	1-247, 1-249, 2-173, 2-175, 7-49, 7-51
351150-0413 ..	CABLE OLFLEX 4GX1,5 MM2 LIGHT/GREY	2-173, 2-175, 2-213, 7-49, 7-51
351150-0417 ..	CABLE OLFLEX 3X2,5 MM2 LIGHT/GREY	7-143
351150-0418 ..	CABLE OLFLEX 4X2,5 MM2 LIGHT/GREY	2-173, 2-175, 6-53
351150-0420 ..	CABLE OLFLEX 7X2,5 MM2 LIGHT/GREY	1-247, 1-249
351150-0422 ..	CABLE OLFLEX 3X4 MM2 LIGHT/GREY	6-53
351150-0424 ..	CABLE OLFLEX 18X0,75 MM2 LIGHT/GREY	7-155
351150-0425 ..	CABLE OLFLEX 25X0,75 MM2 LIGHT/GREY	1-247, 1-249, 2-173, 2-175, 7-49, 7-51
351160-0102 ..	WIRE AWM 1X0,75 MM2 DARKBLUE	6-53
351162-0102 ..	WIRE AWM 1X0,75 MM2 YELLOW-GREEN	2-191
351162-0104 ..	WIRE AWM 1X1,5 MM2 YELLOW-GREEN	7-125
351301-0050 ..	ACTUATOR/SENSOR CABLE PRKMV 3-06/5M	1-19, 1-25, 1-247, 1-249
351305-0050 ..	ACTUATOR/SENSOR CABLE PRKMV 4-07/5M	7-37, 7-65
351309-0050 ..	ACTUATOR/SENSOR CABLE PRKT 4-07/5M	9-5
351309-0100 ..	ACTUATOR/SENSOR CABLE PRKT 4-07/10M	1-247, 1-249, 5-31
351309-0150 ..	ACTUATOR/SENSOR CABLE PRKT 4-07/15M	5-31
351310-0050 ..	ACTUATOR/SENSOR CABLE PRKWT 4-07/5M	1-17, 1-55
351416-0005 ..	MINIATURE CIRC. BREAK., FAZ-D0,5 1-POLE	8-111, 8-113
351416-0010 ..	MINIATURE CIRC. BREAK., FAZ -D1 1-POLE	8-111, 8-113
351416-0040 ..	MINIATURE CIRC. BREAK., FAZ -D4 1-POLE	8-41, 8-43
351416-0060 ..	MINIATURE CIRC. BREAK., FAZ -D6 1-POLE	8-111, 8-113
351416-0100 ..	MINIATURE CIRC. BREAK., FAZ -D10 1-POLE	8-111, 8-113
351416-0160 ..	MINIATURE CIRC. BREAK., FAZ -D16 1-POLE	8-111, 8-113
351418-0060 ..	MINIATURE CIRC. BREAK., FAZ-D6/3 3-POLE	8-111, 8-113
351418-0100 ..	MINIATURE CIRC. BREAK., FAZ-D10/3 3-POLE	8-111, 8-113
351418-0160 ..	MINIATURE CIRC. BREAK.,FAZ-D16/3 3-POLE	8-133, 8-135
351418-0250 ..	MINIATURE CIRC. BREAK.,FAZ-D25/3 3-POLE	8-133, 8-135
351422-0203 ..	CABLE Ã–LFLEX 150CY QUATTRO 4X1,5	2-173, 2-175, 7-49, 7-51
351422-0302 ..	CABLE ÖLFLEX 150CY QUATTRO 4X2,5	1-247, 1-249
351423-0005 ..	CABLE UNITRONIC LICY 4X0,34	2-173, 2-175, 2-199
351423-0006 ..	CABLE UNITRONIC LICY 5X0,34	1-239, 1-247, 1-249
351423-0008 ..	CABLE UNITRONIC LICY 2X0,5	1-73, 1-247, 1-249
351501-0075 ..	ETHERNET PATCH CABLE, FL CAT5 PATCH 7,5	2-173, 2-175
351501-0100 ..	ETHERNET PATCH CABLE, FL CAT5 PATCH 10,0	11-51
352103-0096 ..	CABLE GLAND, ST 7, PR 12,5/PG7	1-89
352103-0101 ..	CABLE GLAND, ST 9, PR15,2/PG9	1-89, 1-97, 1-203, 2-45, 2-47, 2-63, 2-211, 6-11, 6-15, 6-17, 6-29
352103-0105 ..	CABLE GLAND, STR 11, PR 18,6/PG11	1-203
352103-0106 ..	CABLE GLAND, ST 11, PR18,6/PG11	1-89, 1-97, 1-165
352103-0108 ..	CABLE GLAND, ST 13,5 , PR20,4/PG13,5	8-183, 8-185
352103-0110 ..	CABLE GLAND, STR 16, PR22,5/PG16	8-5, 8-7, 8-9, 8-11
352103-0111 ..	CABLE GLAND, ST 16, PR22,5/PG16	6-27
352113-0101 ..	CABLE TIE, BLACK 92X2,5 MM	1-215, 1-217, 1-247, 1-249, 6-53, 9-7
352113-0102 ..	CABLE TIE, BLACK 188X4,8 MM	1-13, 2-103, 2-225, 11-81
352113-0104 ..	CABLE TIE, BLACK 300X4,8 MM	1-165
352113-0203 ..	ANCHOR PLATES FOR STRIPS, TM3S8-M0	1-89, 5-37, 5-39, 6-13, 7-141, 8-15, 8-17, 8-19, 8-51, 8-169, 8-171
352113-0204 ..	ANCHOR PLATES FOR STRIPS, TM3S25-M	1-111, 1-205, 1-219, 1-221, 2-103
352113-0205 ..	ANCHOR PLATES FOR STRIPS, TM2S8-C100	1-13, 1-207, 6-51, 7-5, 7-7, 7-53, 7-55, 7-65, 7-83, 7-109, 11-83, 11-85
353001-0119 ..	END SLEEVE H 1.0/14 YELLOW	1-247, 1-249, 6-53
353021-0212 ..	FEED THROUGH TERMINAL, WDU 2,5	1-95, 8-29
353021-0213 ..	FEED THROUGH TERMINAL, WDU 4	1-243, 2-25
353021-0219 ..	FEED THROUGH TERMINAL, WDU 35	8-155
353021-0301 ..	TERMINAL, DLI 2,5/35	8-167
353021-0302 ..	TERMINAL, DLD 2,5/35	8-167
353022-0002 ..	TERMINAL WNT 4 10X3	8-39
353022-0003 ..	TERMINAL WNT 6 10X3	8-39
353022-0004 ..	TERMINAL WNT 10 10X3	8-39
353024-0204 ..	EARTH TERMINAL WPE 2,5	1-95
353024-0205 ..	EARTH TERMINAL WPE 4	1-243, 2-25, 2-57, 6-47, 7-45, 8-37, 8-167
353024-0206 ..	EARTH TERMINAL WPE 6	8-37
353024-0207 ..	EARTH TERMINAL WPE 10	8-37

Part No	Description	Page No
353024-0209 ..	EARTH TERMINAL WPE 35	8-37, 8-155
353024-0212 ..	EARTH TERMINAL WDK 2,5 PE	1-57, 1-95, 1-243, 2-25, 2-57, 6-47, 7-45, 8-37
353031-0201 ..	END PLATE, EW35	8-45, 8-159, 8-161
353031-0203 ..	END BRACKET, WEW 35/2	1-57, 1-95, 8-29, 8-31, 8-35, 8-37, 8-39, 8-51, 8-77, 8-139, 8-155
353032-0004 ..	END PLATE, WAP 2,5-10, BEIGE	8-29
353032-0009 ..	END PLATE, WAP WDK 2,5	1-243, 2-25, 2-57, 6-47, 7-45, 8-31, 8-33, 8-35, 8-53, 8-55, 8-57 8-59, 8-61, 8-63, 8-65, 8-67, 8-69, 8-71, 8-73, 8-75, 8-79, 8-81, 8-83, 8-85, 8-87, 8-89, 8-91, 8-93 8-95, 8-97, 8-99, 8-101, 8-103, 8-105, 8-139
353032-0013 ..	END PLATE, AP, 138 186	8-167
353032-0301 ..	END PLATE, AP/DLI, 131 326	8-167
353033-0104 ..	END PLATE, WHP2,5-35N/10X3 BL	8-39
353034-0026 ..	BRIDGE CONNECTOR WQV 35/2	8-155
353034-0030 ..	BRIDGE CONNECTOR WQV 2,5/10	1-57, 1-95, 1-243, 2-25, 2-57, 6-47, 7-45, 8-29, 8-31, 8-33 8-35, 8-53, 8-55, 8-57, 8-59, 8-61, 8-63, 8-65, 8-67, 8-69, 8-71, 8-73, 8-75, 8-79, 8-81, 8-83, 8-85 8-87, 8-89, 8-91, 8-93, 8-95, 8-97, 8-99, 8-101, 8-103, 8-105, 8-139
353034-0404 ..	BRIDGE CONNECTOR Q 10 DLI	8-167
353041-0001 ..	BUS BAR RAIL 10X3MM SSCH	8-39
353041-0106 ..	HOLDER ZB35 K 5026.8	8-39
353042-0004 ..	RAIL, TS 35/7,5	8-5, 8-7, 8-9, 8-11, 8-25, 8-41, 8-43, 8-47, 8-49, 8-51, 8-77, 8-107, 8-109, 8-111 8-113, 8-115, 8-117, 8-119, 8-133, 8-135, 8-137, 8-139, 8-153, 8-159, 8-161, 8-167
353101-0118 ..	CABLE SHOE 0,5-1,5MM2 M3 RED	2-191
353101-0120 ..	CABLE SHOE 0,5-1,5MM2 M4 RED	1-143, 1-145
353101-0132 ..	CABLE SHOE 1,5-2,5MM2 M5 BLUE	7-107
353104-0129 ..	CABLE SHOE, RING UNINS., YAV 025 M 35	7-123
353104-0130 ..	CABLE SHOE, RING UNINS., YAV 025 M 4	7-107
353104-0133 ..	CABLE SHOE, RING UNINS., YAV 025 M 6	7-125
353104-0140 ..	CABLE SHOE, RING UNINS., YAV 06 M 4	7-109
353105-0117 ..	PIN CABLE SHOE 0,75-1,5MM2 RED A1519SR	2-191
353106-0103 ..	CABLE SHOE, RING, HEAT RESISTANT, 57N/4	7-121
353106-0105 ..	CABLE SHOE, RING, HEAT RESISTANT, 57N/6	7-143
353106-0107 ..	CABLE SHOE, RING, HEAT RESISTANT, 58N/5	1-87
353241-0003 ..	COMPRESSION GLAND, VK 15455Y	5-49
353242-0002 ..	COMPRESSION GLAND, VK 153YUL13	2-145
353242-0005 ..	GLAND FITTING, VKA 50YUL09	6-17
353243-0003 ..	GLAND FITTING, VK 15153YUL13	2-207
353243-0005 ..	GLAND FITTING, VK 15354YUL16	7-123
353247-0005 ..	COMPRESSION GLAND, 15455P21S10 UL16	5-49
353249-0005 ..	INSERT, SINGLE HOLE, E153 13	1-87
353249-0008 ..	INSERT, SINGLE HOLE, EK152 7	1-171, 1-211, 1-241
353249-0009 ..	INSERT, SINGLE HOLE, EK152 9	1-137, 6-45
353249-0011 ..	INSERT, SINGLE HOLE, EK153 11	1-145, 1-163, 1-241, 1-247, 1-249, 2-207
353249-0012 ..	INSERT, SINGLE HOLE, EK154 11	2-59, 2-103, 2-207
353249-0013 ..	INSERT, SINGLE HOLE, EK154 13	1-71, 1-143, 1-149, 1-151, 1-247, 1-249, 2-213, 7-123
353249-0014 ..	INSERT, SINGLE HOLE, EK154 16	1-129, 1-247, 1-249, 7-163
353249-0015 ..	INSERT, SINGLE HOLE, EK155 16	7-155
353249-0016 ..	INSERT, SINGLE HOLE, EK155 18	1-167, 1-247, 1-249
353249-0025 ..	INSERT, MULTI HOLE, E152M 3X4	1-153, 1-241
353249-0026 ..	INSERT, MULTI HOLE, E153M 6X4	1-241, 7-41, 7-43
353249-0027 ..	INSERT, MULTI HOLE, E153M 3X7	7-41, 7-43
353249-0036 ..	INSERT, MULTI HOLE, EK152M 2X4	1-247, 1-249, 5-41, 6-45
353249-0044 ..	INSERT, SOLID, E155 G	2-7
353249-0051 ..	INSERT, MULTI HOLE, E154M 4X6	1-241
353249-0060 ..	INSERT, MULTI HOLE, E155M 2X13	2-173, 2-175
353249-0067 ..	INSERT, SINGLE HOLE, E150 7	6-17
353249-0069 ..	INSERT, SINGLE HOLE, E153 11	2-145
353249-0083 ..	INSERT, MULTI HOLE, EK153M 2X8	1-241
353249-0301 ..	SEALING PIN, 4,0X20	6-45
353249-0302 ..	SEALING PIN, 4,0X25	7-41, 7-43
353249-0303 ..	SEALING PIN, 5,3X25	1-149, 1-151
353249-0308 ..	SEALING PIN, 8,0X20	1-241
353249-0309 ..	SEALING PIN, 9,3X20	1-241
353249-0310 ..	SEALING PIN, 10,0X20	1-241, 6-45
353249-0312 ..	SEALING PIN, 13,0X25	2-173, 2-175
353250-0016 ..	GLAND LOCK NUT, M16X1,5	2-7
353250-0020 ..	GLAND LOCK NUT, M20X1,5	1-219, 1-221, 2-7, 2-59
353250-0025 ..	GLAND LOCK NUT, M25X1,5	2-173, 2-175, 2-207
353250-0032 ..	GLAND LOCK NUT, M32X1,5	1-155
353250-0040 ..	GLAND LOCK NUT, M40X1,5	2-7, 2-155
354000-0010 ..	MINIATURE CIRCUIT BREAKER, FAZ-C1/1	8-111, 8-113
354000-0020 ..	MINIATURE CIRCUIT BREAKER, FAZ-C2/1	8-111, 8-113
354000-0040 ..	MINIATURE CIRCUIT BREAKER, FAZ-C4/1	8-41, 8-43, 8-111, 8-113
354000-0060 ..	MINIATURE CIRCUIT BREAKER, FAZ-C6/1	8-41, 8-43
354000-0100 ..	MINIATURE CIRCUIT BREAKER, FAZ-C10/1	8-111, 8-113
354000-0160 ..	MINIATURE CIRCUIT BREAKER, FAZ-C16/1	8-111, 8-113
354001-0160 ..	MINIATURE CIRCUIT BREAKER, FAZ-C16/2	8-111, 8-113
354002-0060 ..	MINIATURE CIRCUIT BREAKER, FAZ-C6/3	8-111, 8-113
354002-0100 ..	IMINIATURE CIRCUIT BREAKER, FAZ-C10/3	8-111, 8-113
354002-0250 ..	MINIATURE CIRCUIT BREAKER, FAZ-C25/3	8-111, 8-113
359000-0101 ..	WIRE MARKING, YELLOW, PY01/3"1"	2-191
359000-0102 ..	WIRE MARKING, YELLOW, PY01/3"2"	2-191
359005-0010 ..	MARKING LABEL KIT 0 - 9, 04.841.2150.0	6-15, 6-21
359005-0050 ..	MARKING LABEL KIT X, 04.841.4550.0	6-15, 6-21
359009-0200 ..	CABLE MARKING, YELLOW, PK 2/4" A"	6-53
359009-0201 ..	CABLE MARKING, YELLOW, PK 2/4" B"	6-53

Part No	Description	Page No
359011-0807 ..	MARKING, DEK 5 FW 1-50	1-95, 2-25, 2-57, 7-45, 8-29, 8-33, 8-35, 8-37, 8-39, 8-45, 8-139 8-155, 8-167
359011-0808 ..	MARKING, DEK 5FW 51-100	1-95, 2-25, 2-57, 7-45, 8-37
359011-0809 ..	MARKING, DEK 5 FW 101-150	1-95, 2-25, 2-57, 7-45, 8-31, 8-53, 8-55, 8-57, 8-59, 8-61, 8-63 8-65, 8-67, 8-69, 8-71, 8-73, 8-75, 8-79, 8-81, 8-83, 8-85, 8-87, 8-89, 8-91, 8-93, 8-95, 8-97, 8-99 8-101, 8-103, 8-105
359011-0810 ..	MARKING, DEK 5 FW 151-200	1-95, 2-25, 2-57, 8-105
359011-0811 ..	MARKING, DEK 5 FW 201-250	2-25, 7-45
359011-0813 ..	MARKING, DEK 5 FW 301-350	1-243
359011-0814 ..	MARKING, DEK 5 FW 350-400	1-243
359011-0817 ..	MARKING, DEK 5GW (+)	8-167
359011-0818 ..	MARKING, DEK 5GW (-)	8-167
359011-0819 ..	MARKING, EARTH, DEK 5 GW ERDE I.KR.	1-95, 2-25, 2-57, 7-45
359011-0821 ..	MARKING, DEK 6 FW 1-50	1-243, 6-47, 6-53
359011-0822 ..	MARKING, DEK 6 FW 51-100	1-243, 6-47
359011-0823 ..	MARKING, DEK 6 FW 101-150	1-243, 6-47
359011-0824 ..	MARKING, DEK 6 FW 151-200	1-243
359011-0825 ..	MARKING, DEK 6 FW 201-250	1-243
359011-0834 ..	MARKING, EARTH, DKE 6 GW ERDE I.KR.	1-243, 6-47, 6-53, 8-155, 8-167
359240-0001 ..	SIGN, NOT ENGRAVED	8-157
359240-0100 ..	SIGN HOLDER FOR 359240-0001	8-157, 8-169, 8-171
359241-0133 ..	SIGN: SERVICE SWITCH	8-157
359241-0201 ..	SIGN: " HOUR METER"	8-157
359241-0431 ..	SIGN: " MAIN SWITCH"	8-169, 8-171
359241-0482 ..	SIGN "PACKAGE COUNTER"	8-157
359301-0100 ..	BUTTON SIGN, SPLICING	7-155
359301-0101 ..	BUTTON SIGN, STRIP SPLICING ON	7-163
359301-0110 ..	BUTTON SIGN, SHORT STOP	7-155
359301-0488 ..	BUTTON SIGN, MATERIAL LOCKING	7-155
359301-0504 ..	BUTTON SIGN, RESET	2-135, 7-5, 7-7, 7-155
359605-0002 ..	MANDATORY SIGN ISO, EYE PROTECTION	2-185, 2-187
359705-0003 ..	WARNING SIGN ISO, DANGEROUS CHEMICALS	1-73, 1-233, 1-235, 1-237, 2-155, 2-195
359705-0004 ..	WARNING SIGN ISO, DANGEROUS CHEMICALS	1-197, 1-199, 2-185, 2-187, 2-199
359705-0005 ..	WARNING SIGN ISO, MOVING PART	5-11, 7-83, 7-131, 7-137
359705-0007 ..	WARNING SIGN ISO, HOT SURFACE	1-17, 1-43, 1-73, 1-87, 1-105, 1-135, 1-137, 1-201, 2-207 5-11, 6-15, 7-83, 7-111, 7-125
359705-0008 ..	WARNING SIGN ISO, HOT SURFACE	1-111
359705-0015 ..	WARNING SIGN ISO, RISK OF ELECTRIC SHOCK	1-55, 1-87, 1-91, 1-167, 1-241, 2-21, 2-23 2-55, 2-207, 5-13, 6-15, 6-45, 7-41, 7-43, 8-15, 8-17, 8-19, 8-169, 8-171, 8-179, 8-181, 8-183 8-185, 8-187, 8-189, 8-191, 8-193
359710-0001 ..	WARNING SIGN ISO, HOT SURFACE	1-187, 1-189, 1-191, 1-255, 1-257, 1-259
359715-0100 ..	WARNING SIGN ANSI (H), ELECTRIC SHOCK	1-55, 1-87, 1-91, 1-167, 1-241, 2-21, 2-23, 2-55
359715-0101 ..	WARNING SIGN ANSI (V), ELECTRIC SHOCK	2-207, 5-13
359725-0104 ..	WARNING SIGN ANSI (H), CHEMICAL HAZARD	1-73, 2-155, 2-185, 2-187, 2-195
359725-0105 ..	WARNING SIGN ANSI (V), CHEMICAL HAZARD	1-197, 1-199, 1-233, 1-235, 1-237, 2-199
359725-0108 ..	WARNING SIGN ANSI (H), MOVING PART	5-11, 7-83
359725-0116 ..	WARNING SIGN ANSI (H), HOT SURFACE	1-111, 1-187, 1-189, 1-191, 1-259
359725-0117 ..	WARNING SIGN ANSI (V), HOT SURFACE	1-201, 1-255, 1-257, 5-11, 7-111, 7-125
400828-0000 ..	SPRING	7-109
400833-0000 ..	PLUNGER	7-109
436781-0000 ..	GASKET	1-201
440633-0000 ..	CYLINDER HOUSING	1-29
440646-0000 ..	PISTON	1-29
440652-0000 ..	WASHER	1-29
440654-0000 ..	SPACER SLEEVE	1-29
440655-0000 ..	RING	1-23, 1-175
440656-0000 ..	WASHER	1-29
440659-0000 ..	CYLINDRICAL PIN	1-179
440660-0000 ..	COMPRESSION SPRING	1-179
440661-0000 ..	COMPRESSION SPRING	1-179
440662-0000 ..	COMPRESSION SPRING	1-29, 1-177
440663-0000 ..	COMPRESSION SPRING	1-23, 1-175, 1-179
440695-0000 ..	END SECTION	1-29
441706-0000 ..	WASHER	4-17, 4-25
441737-0000 ..	WASHER	1-105, 1-135, 1-137
441739-0000 ..	WASHER	1-105, 1-135, 1-137
441871-0000 ..	PENDULUM SUSPENSION	1-161
445848-0000 ..	ELASTIC COUPLING	2-167
449969-0100 ..	TOOL DISMOUNTING	11-49
449970-0000 ..	HOLDER	11-67
449971-0000 ..	SPINDLE	11-67
450457-0000 ..	FLANGE	2-33
450833-0000 ..	FILTER	1-97, 1-203
451148-0000 ..	BRACKET	1-283, 1-285, 1-287
451149-0000 ..	SHAFT	1-283, 1-285, 1-287
456005-0001 ..	VOLUME BULGE	4-55, 4-57, 4-59, 4-61, 4-63
456005-0003 ..	VOLUME BULGE	4-55, 4-57, 4-59, 4-61, 4-63, 9-17
456009-0000 ..	LINK	4-143, 4-145, 4-147
456181-0000 ..	SPACER	1-283, 1-285, 1-287
456198-0000 ..	LOCK PLATE	1-283, 1-285, 1-287
456199-0000 ..	LOCK PLATE	1-283, 1-285, 1-287
456794-0000 ..	RING	1-273, 1-275

Part No	Description	Page No
456796-0000 ..	ROLLER	1-273, 1-275
456797-0000 ..	AXLE SUPPORT	1-273, 1-275
456872-0000 ..	LOCK PLATE	1-283, 1-285, 1-287
457367-0000 ..	SHAFT	4-155, 4-157
457368-0000 ..	SPRING	4-155, 4-157
464173-0000 ..	LABEL HOLDER	1-215, 1-217
464174-0000 ..	SIGN, LONGITUDINAL SEALING	1-215, 1-217
464175-0000 ..	SIGN, LONGITUDINAL SEALING SHORT STOP	1-215, 1-217
464176-0000 ..	SIGN, STRIP APPLICATOR	7-79
464177-0000 ..	SIGN, STRIP APPLICATOR SHORT STOP	7-79
469463-0000 ..	SHAFT	7-115
469466-0000 ..	PLATE	1-307
476221-0002 ..	PIPE	5-95, 5-103
479261-0000 ..	NIPPLE	1-163, 6-11
486826-0001 ..	SIGN "EMERGENCY STOP"	2-135, 2-145, 7-155, 7-163, 8-183, 8-185
490876-0000 ..	BRACKET	4-155, 4-157
490902-0000 ..	AXLE SUPPORT	1-273, 1-275
490903-0000 ..	SHAFT	1-273, 1-275
491305-0000 ..	CONN.DIAGRAM AIR SUPERH.	1-167
491418-0001 ..	O-RING 284X3 FPM	9-19
491487-0000 ..	BUSHING	1-143
491545-0000 ..	BRACKET	1-145
491681-0000 ..	GASKET	4-107, 4-109, 4-111, 4-117, 4-119, 4-121
491868-0000 ..	VOLUME BULGE	4-55, 4-57, 4-59, 4-61, 4-63, 9-17
491880-0000 ..	FASTENING PLATE	4-155, 4-157
491929-0000 ..	IMPELLER WHEEL	2-213
497748-0000 ..	PIN	1-21, 1-27
497933-0000 ..	BUSHING	1-29
527898-0100 ..	CONTAINER H2O2	2-197, 11-69
527912-0000 ..	NON-RETURN VALVE	2-211
529345-0100 ..	FILLING STATION H2O2	11-69
530551-0000 ..	WASHER	2-211
530587-0000 ..	WASHER	1-177
530591-0000 ..	HOLDER	1-179
530597-0000 ..	WASHER	1-179
530598-0000 ..	WASHER	1-179
530599-0000 ..	RING	1-161, 1-179
531345-0200 ..	PERSONAL PROTECT. EQ H2O2	9-3
531616-0000 ..	HOLDER	2-155
531731-0000 ..	GASKET	1-167
531735-0000 ..	GASKET	7-117
532117-0000 ..	CLAMP RING	1-21
532118-0000 ..	CLAMP RING	1-27
532208-0000 ..	SHAFT	11-75
532209-0000 ..	SHEET	11-75
532210-0100 ..	PEROXIDE CONTAINER TROLLEY	11-69
532211-0000 ..	DOWEL	11-75
532349-0000 ..	PLAIN BEARING	1-157, 1-161
532413-0000 ..	REDUCING NIPPLE	2-63
532655-0000 ..	CAUTION SIGN	2-215, 11-73
533169-0000 ..	DIAPHRAGM	1-23, 1-175
534634-0000 ..	PIPE	11-81
534635-0000 ..	VALVE	11-81
534636-0000 ..	LEVEL GLAS	11-81
534637-0000 ..	ATTACHMENT	11-81
534691-0000 ..	DIAPHRAGM	11-81
534692-0000 ..	FRAME SECTION	11-81
534693-0000 ..	PLATE	11-81
534694-0000 ..	SUCTIONPIPE	11-81
534695-0000 ..	WEIGHT	11-81
534696-0000 ..	VALVE	11-81
534697-0000 ..	VALVE HOUSING	11-81
534698-0000 ..	NIPPLE	11-81
536374-0000 ..	WASHER	4-155, 4-157
536704-0000 ..	WASHER	4-13, 4-15, 4-21, 4-23
536913-0000 ..	HUB	7-103
537327-0000 ..	SHAFT	7-103
539212-0000 ..	GASKET	1-25, 1-173, 9-29
541070-0000 ..	SHAFT	7-101
541163-0200 ..	CLAMP RING	1-19, 1-25, 1-173
541164-0200 ..	CLAMP RING	1-25, 1-173
541165-0000 ..	WASHER	1-21, 1-27
541166-0000 ..	WASHER	1-23, 1-175
541751-0000 ..	CONICAL BOBBIN	7-103
546929-0000 ..	FILTER	1-163, 1-165
549267-0000 ..	LID	1-203
553586-0000 ..	SPACER	1-301
553607-0000 ..	SLEEVE	1-23, 1-29, 1-175, 1-177, 1-179
554141-0000 ..	FILTER	1-97, 1-203
554142-0000 ..	FILTER HOUSING	1-97, 1-203
554162-0000 ..	SCREW	1-21, 1-27
554585-0000 ..	STUD SCREW	1-203
555458-0000 ..	SEALING WASHER	1-179
556133-0000 ..	SEALING WASHER	1-177

Part No	Description	Page No
556898-0000 ..	LID	1-75, 1-77
561427-0000 ..	CONTAINER	2-215, 11-73
563285-0000 ..	BLIND PLUG	2-211
565250-0000 ..	WASHER	2-215, 11-73
565251-0000 ..	VALVE	2-215, 11-73
565532-0000 ..	BLANK-OFF FLANGE	11-65
565533-0000 ..	BLANK-OFF FLANGE	11-65
565534-0000 ..	FLANGE	11-65
565535-0000 ..	FLANGE	11-65
565536-0100 ..	PRESSURE TEST EQUIPMENT	11-49
566171-0000 ..	CUP SPRING	2-203
566194-0000 ..	WEIGHT	2-203
566195-0000 ..	LID	2-203
566196-0100 ..	LID WITH WEIGHT	2-201
567018-0000 ..	STEAM HOUSE	1-25, 1-173
567372-0000 ..	INSTRUCTION FOR USE	11-65
568577-0000 ..	AIR NOZZLE	1-307
568578-0000 ..	AIR NOZZLE	1-307
568581-0000 ..	DISTRIBUTOR WING	1-307
568583-0000 ..	FORK	1-303, 1-305
568828-0000 ..	FLOAT GUARD	1-165
571537-0000 ..	RING	1-273, 1-275
571538-0000 ..	RING	1-273, 1-275
571539-0000 ..	RING	1-273, 1-275
571540-0000 ..	PIN	1-273, 1-275
574334-0000 ..	RING	1-273, 1-275
574335-0000 ..	RING	1-273, 1-275
574338-0000 ..	LOCK PLATE	1-283, 1-285, 1-287
574369-0000 ..	CARRIER RULER RIGHT	4-127, 4-129, 4-131, 4-133
574370-0000 ..	CARRIER RULER RIGHT	4-127, 4-129, 4-131, 4-133
574371-0000 ..	CARRIER RULER LEFT	4-135, 4-137, 4-139, 4-141
574372-0000 ..	CARRIER RULER LEFT	4-135, 4-137, 4-139, 4-141
574385-0000 ..	ROLLER TBA250SL	4-153
574393-0000 ..	LOCK PLATE	1-283, 1-285, 1-287
574394-0000 ..	LOCK PLATE	1-283, 1-285, 1-287
574395-0000 ..	SHAFT	1-283, 1-285, 1-287
574397-0000 ..	ROLL	1-283, 1-285, 1-287
574400-0000 ..	ROLL	1-283, 1-285, 1-287
574403-0000 ..	ROLL	1-283, 1-285, 1-287
574446-0000 ..	TRIMMING ROLLER PLUS	9-39
574447-0000 ..	TRIMMING ROLLER MINUS	9-39
574454-0000 ..	TEMPLATE	11-31, 11-33
574455-0000 ..	TEMPLATE	11-31, 11-33
575034-0000 ..	ROUND NUT	2-161, 7-159
576437-0100 ..	C-CYLINDER	1-173
576438-0100 ..	B-CYLINDER	1-173
576439-0000 ..	CYLINDER HOUSING	1-23, 1-175, 1-179
576440-0000 ..	END SECTION	1-23, 1-175, 1-179
576441-0000 ..	PISTON	1-23, 1-175, 1-179
576442-0000 ..	PISTON ROD	1-179
576443-0000 ..	CYLINDER HOUSING	1-177
576444-0000 ..	END SECTION	1-177
576445-0000 ..	PISTON	1-177
576446-0000 ..	PISTON ROD	1-23, 1-175
576447-0000 ..	PISTON ROD	1-177
576448-0000 ..	SPACER	1-23, 1-175
576449-0000 ..	SPACER	1-23, 1-175
576450-0000 ..	SPACER	1-179
576451-0000 ..	SPACER	1-177
577770-0000 ..	GASKET	2-213
577771-0000 ..	SHAFT	2-213
579637-0000 ..	CATCH	1-301
579771-0000 ..	CATCH	1-301
580042-0100 ..	HUB JUMBO	7-81
583727-0000 ..	SHAFT	7-57
583878-0000 ..	SPRING BRACKET	7-101
590369-0000 ..	COMPRESSION SPRING	4-107, 4-109, 4-111, 4-117, 4-119, 4-121
590446-0000 ..	GASKET	7-123
591341-0000 ..	PIN	2-33
592136-0000 ..	TUBULAR JACKET	7-123
592138-0000 ..	COVER	7-123
592139-0000 ..	WASHER	7-123
594292-0000 ..	AXLE PIN	7-119
596678-0000 ..	KNIFE	7-129, 7-135
735503-0000 ..	HINGE	1-43
735630-0000 ..	RING	1-29
735632-0000 ..	PISTON ROD	1-29
735921-0000 ..	SCREW	1-13
735922-0000 ..	WASHER	1-17
736514-0000 ..	SHOCK ABSORBER	1-193, 9-19
751009-0000 ..	INSULATION	1-167
751023-0000 ..	GASKET	1-143, 1-145
751230-0000 ..	PLAIN BEARING	1-273, 1-275
751316-0000 ..	ELBOW PIPE	2-213

Part No	Description	Page No
751395-0000 ..	FLANGE	2-213
751457-0000 ..	CANTILEVER	4-155, 4-157
751476-0000 ..	CANTILEVER	4-155, 4-157
751496-0000 ..	ROLL	1-283, 1-285, 1-287
751497-0000 ..	ROLL	1-283, 1-285, 1-287
751498-0000 ..	ROLL	1-283, 1-285, 1-287
751499-0000 ..	ROLL	1-283, 1-285, 1-287
751500-0000 ..	ROLL	1-283, 1-285, 1-287
751502-0000 ..	ROLLER	1-279, 1-281
751575-0000 ..	RULERPART R	4-127, 4-129, 4-131, 4-133
751576-0000 ..	RULERPART L	4-135, 4-137, 4-139, 4-141
751577-0000 ..	RULERPART R	4-127, 4-129, 4-131, 4-133
751578-0000 ..	RULERPART L	4-135, 4-137, 4-139, 4-141
751579-0000 ..	ADJUSTING SCREW	4-127, 4-129, 4-131, 4-133, 4-135, 4-137, 4-139, 4-141
751580-0000 ..	SHIM	4-127, 4-129, 4-131, 4-133, 4-135, 4-137, 4-139, 4-141
752009-0000 ..	RULERPART R	4-127, 4-129, 4-131, 4-133
752010-0000 ..	RULERPART R	4-127, 4-129, 4-131, 4-133
752011-0000 ..	RULERPART L	4-135, 4-137, 4-139, 4-141
752012-0000 ..	RULERPART L	4-135, 4-137, 4-139, 4-141
752014-0000 ..	RULERPART R	4-127, 4-129, 4-131, 4-133
752015-0000 ..	RULERPART R	4-127, 4-129, 4-131, 4-133
752016-0000 ..	RULERPART L	4-135, 4-137, 4-139, 4-141
752017-0000 ..	RULERPART L	4-135, 4-137, 4-139, 4-141
752038-0000 ..	SHIM	1-279, 1-281
752115-0000 ..	PLUNGER	4-127, 4-129, 4-131, 4-133, 4-135, 4-137, 4-139, 4-141
752131-0000 ..	FORMING ROLLER	1-283, 1-285, 1-287
752132-0000 ..	FORMING ROLLER	1-283, 1-285, 1-287
752133-0000 ..	FORMING ROLLER	1-283, 1-285, 1-287
752134-0000 ..	FORMING ROLLER	1-283, 1-285, 1-287
752135-0000 ..	FORMING ROLLER	1-283, 1-285, 1-287
752138-0000 ..	FORMING ROLLER	1-279, 1-281
752149-0000 ..	FORMING ROLLER	1-283, 1-285, 1-287
752150-0000 ..	FORMING ROLLER	1-283, 1-285, 1-287
752153-0000 ..	FORMING ROLLER	1-279, 1-281
752156-0000 ..	FLANGE BUSHING	1-283, 1-285, 1-287
752185-0000 ..	SHAFT	1-283, 1-285, 1-287
752186-0002 ..	SHAFT	1-283, 1-285, 1-287
752186-0003 ..	SHAFT	1-283, 1-285, 1-287
752186-0004 ..	SHAFT	1-283, 1-285, 1-287, 1-291
752186-0005 ..	SHAFT	1-279, 1-281, 1-283, 1-285, 1-287
752186-0006 ..	SHAFT	1-283, 1-285, 1-287, 1-291
752186-0013 ..	SHAFT	1-279, 1-281
752186-0014 ..	SHAFT	1-283, 1-285, 1-287
752186-0019 ..	SHAFT	1-283, 1-285, 1-287, 1-291
752186-0020 ..	SHAFT	1-291
752186-0021 ..	SHAFT	1-283, 1-285, 1-287, 1-291
752186-0022 ..	SHAFT	1-291
752218-0000 ..	ATTACHMENT	1-307
752288-0000 ..	SLEEVE	4-127, 4-129, 4-131, 4-133, 4-135, 4-137, 4-139, 4-141
752462-0000 ..	TRIMMING ROLLER PLUS	9-39
752463-0000 ..	TRIMMING ROLLER MINUS	9-39
752464-0000 ..	TRIMMING ROLLER PLUS	9-39
752465-0000 ..	TRIMMING ROLLER MINUS	9-39
752466-0000 ..	TRIMMING ROLLER PLUS	9-39
752467-0000 ..	TRIMMING ROLLER MINUS	9-39
752476-0000 ..	SCREW	4-127, 4-129, 4-131, 4-133, 4-135, 4-137, 4-139, 4-141
752499-0000 ..	RING	1-301
752519-0002 ..	PIN	1-273, 1-275
752554-0000 ..	SPACER	4-155, 4-157
779910-0101 ..	PADLOCK, 250/40 W 2 KEYS	1-41, 1-69, 1-183
794246-0000 ..	DIAPHRAGM	1-29
794247-0000 ..	SEAL RING HOLDER	1-29
794248-0000 ..	WASHER	1-29
924897-0000 ..	SCREW	1-23
925419-0100 ..	BED	1-59
925436-0000 ..	STEAM PIPE	1-17
925457-0000 ..	TOUCH GUARD	1-43
925471-0000 ..	SEAL HOLDER	1-31
925472-0000 ..	SEAL HOLDER	1-31
925765-0000 ..	BED	1-63
925998-0000 ..	DIAPHRAGM	1-193, 9-19
926907-0000 ..	SCREW	1-193
926934-0000 ..	SUPPORT	1-193
926937-0200 ..	C-CYLINDER	1-25
927044-0000 ..	SPACER	1-193
927203-0000 ..	COVER	1-193
927244-0100 ..	PUMP	2-185, 2-187
927339-0000 ..	ADAPTER	2-191
927340-0000 ..	DISC	2-191
927341-0000 ..	HOLDER	2-191
927342-0000 ..	CYLINDER	2-191
927362-0000 ..	MAGNET	2-191
927363-0000 ..	PLUG	2-191
927420-0001 ..	O-RING 5.1X1.6 SILICONE	1-97, 1-203

Part No	Description	Page No
927421-0002 ..	O-RING 12.3X2.4 SILICONE	1-203
927421-0003 ..	O-RING 13.3X2.4 SILICONE	1-97, 1-203
927421-0004 ..	O-RING 15.3X2.4 SILICONE	1-97, 1-203
927421-0005 ..	O-RING 7.3X2.4 SILICONE	11-81
927422-0001 ..	O-RING 19.2X3 SILICONE	1-97, 1-203, 11-81
927422-0003 ..	O.RING 24.2X3 SILICONE	2-215, 11-73
927422-0004 ..	O-RING 29.2X3 SILICONE	2-213
927422-0006 ..	O-RING 42.2X3 SILICONE	1-97
927422-0007 ..	O-RING 44.2X3 SILICONE	1-97, 1-203, 2-213
927422-0009 ..	O-RING 54.5X3 SILICONE	1-203
927422-0016 ..	O-RING 79.5X3 SILICONE	2-199
928025-0000 ..	PLUG	2-193
929279-0000 ..	ROLLER	1-279, 1-281
929282-0000 ..	TRIMMING ROLLER PLUS	9-39
929283-0000 ..	TRIMMING ROLLER MINUS	9-39
929284-0000 ..	ROLLER	1-273, 1-275
929316-0001 ..	BEARING	4-127, 4-129, 4-131, 4-133, 4-135, 4-137, 4-139, 4-141
929316-0002 ..	BEARING	4-127, 4-129, 4-131, 4-133, 4-135, 4-137, 4-139, 4-141
929328-0000 ..	TEMPLATE	11-31, 11-33
929355-0000 ..	ROLLER TPA 330	4-153
929371-0000 ..	SLEEVE	4-107, 4-109, 4-111, 4-117, 4-119, 4-121
929372-0000 ..	PISTON	4-107, 4-109, 4-111, 4-117, 4-119, 4-121
929391-0000 ..	SPRING	4-91, 4-93, 4-95, 4-97
970215-0000 ..	STOP BLOCK	8-163
977527-0000 ..	BRACKET	2-103, 6-17, 7-5, 7-7
978603-0000 ..	SIGN	2-49
978735-0000 ..	FASTENING PLATE	4-155, 4-157
978760-0000 ..	ROLLER TBA200SL	4-153
979434-0000 ..	FERRULE	1-193
979548-0000 ..	MACHINE PLATE	1-13, 1-207, 7-5, 7-7, 8-157
979593-0000 ..	CAP	1-73, 1-81, 1-247, 1-249, 7-5, 7-7
979667-0000 ..	ARM	7-95
979668-0000 ..	FINGER	7-95
979669-0000 ..	FORCE PLATE	7-81
979698-0000 ..	HOLDER	7-81
979728-0000 ..	CATCH	1-301
979754-0000 ..	VOLUME SHIM 100	4-55, 4-57, 4-59, 4-61, 4-63, 9-17, 9-23, 9-25, 9-27
979755-0000 ..	VOLUME BULGE 100	4-55, 4-57, 4-59, 4-61, 4-63, 9-17
979860-0000 ..	VOLUME BULGE	4-55, 4-57, 4-59, 4-61, 4-63, 9-17
979861-0000 ..	VOLUME SHIM	4-55, 4-57, 4-59, 4-61, 4-63, 9-17, 9-23, 9-25, 9-27
979931-0000 ..	VOLUME BULGE	4-55, 4-57, 4-59, 4-61, 4-63
979951-0000 ..	FLANGE	11-65
979952-0000 ..	BLANK FLANGE	11-65
979990-0000 ..	BELT BRAKE	7-101
979991-0000 ..	BLOCK	7-101
985328-0000 ..	CONNECTION	2-87, 2-89, 2-111, 2-113, 2-115, 2-117, 2-119, 2-121
988685-0000 ..	PIN	1-89, 1-219, 1-221, 1-255, 1-257, 2-49, 2-127, 2-129, 2-131, 2-137, 2-141, 2-147, 2-149, 2-151, 2-153, 2-159, 6-49, 7-85, 7-153, 7-157, 7-159
1035792-0000 .	E-HINGE	1-89, 1-219, 1-221, 1-255, 1-257, 2-49, 2-127, 2-129, 2-131, 2-137, 2-141, 2-147, 2-149, 2-151, 2-153, 2-159, 6-49, 7-85, 7-153, 7-157, 7-159
1036187-0000 .	T-PIPE	1-157, 1-161
1036188-0000 .	SHAFT	1-161
1036189-0000 .	SPINDEL GUIDE	1-161
1036191-0000 .	SEAL HOLDER	1-161
1036192-0000 .	SPACER ROD	1-157, 1-161
1036193-0000 .	CYLINDER BRACKET	1-161
1036194-0000 .	T-PIPE	1-157, 1-161
1036294-0000 .	GASKET	1-149, 1-151
1036304-0039 .	LOCKING ARM	6-49
1036304-0040 .	LOCKING ARM	6-49
1036475-0000 .	PIN	1-135
1036563-0000 .	WASHER	7-47, 7-159
1036610-0000 .	BRACKET	1-97, 1-137, 1-153, 1-203, 1-211
1036615-0000 .	SHAFT	4-17, 4-25
1036616-0000 .	WASHER	4-17, 4-25
1036618-0000 .	ROLL	4-17, 4-25
1036620-0000 .	SHAFT	4-17, 4-25
1036622-0000 .	GUIDE ROLLER	7-57
1036623-0000 .	GUIDE ROLLER	1-209, 7-57
1036794-0000 .	PIPE	6-31
1036811-0000 .	CLAMP	1-165
1036826-0000 .	PIPE	6-33
1036827-0000 .	PIPE	6-31, 6-33
1036828-0000 .	TANK	6-31
1037012-0000 .	AXLE PIN	2-61
1037093-0000 .	SENSOR BRACKET	1-171
1037102-0000 .	SPACER PIPE	2-199
1037104-0000 .	LOCATING PIECE	4-9, 4-19
1037106-0000 .	SLEEVE	4-9, 4-19
1037124-0000 .	HOLDER	7-109
1037130-0000 .	,CONNECTION BOX	2-145
1037391-0000 .	CANTILEVER	2-85
1037539-0000 .	BRACKET	2-211
1037546-0000 .	SHAFT	7-53, 7-55

Part No	Description	Page No
1037571-0000	.GUIDE BUSHING	2-99, 2-101
1037572-0000	.COVER PLATE	8-141, 8-143, 8-145, 8-147, 8-149, 8-151
1037573-0000	.GASKET	8-141, 8-143, 8-145, 8-147, 8-149, 8-151
1037574-0000	.COVER PLATE	8-149, 8-151
1037575-0000	.GASKET	8-149, 8-151
1037583-0000	.HOLDER	6-11
1037849-0000	.SLEEVE	4-27
1037851-0000	.LINK	4-27
1037853-0000	.SHAFT	4-13, 4-15, 4-21, 4-23
1038021-0000	.WASHER	4-27
1038240-0000	.SPACER	4-107, 4-109, 4-111, 4-117, 4-119, 4-121
1038275-0010	.SPACER	8-15, 8-17, 8-19
1038275-0011	.SPACER	8-15, 8-17, 8-19
1038275-0022	.SPACER	8-149, 8-151
1038408-0000	.COVERING PLATE	8-13
1038464-0000	.SPROCKET	1-131
1038509-0000	.WASHER	4-9, 4-19
1038634-0000	.DRAINING	1-165
1040840-0000	.FLANGE	2-199
1040841-0000	.FLANGE	2-199
1040852-0000	.SEALING RING	2-199
1040853-0000	.SEALING RING	2-199
1041046-0000	.FLOW METER	6-17
1041603-0000	.BRACKET	2-61
1041925-0000	.PIPE	6-29
1041937-0000	.SIGN	1-219, 1-221
1041978-0000	.HINGE FLANGE	1-105, 1-135, 1-137
1041979-0000	.HINGE FLANGE	1-105, 1-135, 1-137
1041984-0000	.ATTACHMENT PIPE	6-17
1086870-0000	.SIGN	5-27, 9-7, 9-15
1086871-0000	.LABEL TAPE	9-9
1095681-0300	.SPRAY GUN	2-5
1095682-0300	.AIR JET GUN	2-5
1110083-0003	.DOLLY	4-127, 4-129, 4-131, 4-133, 4-135, 4-137, 4-139, 4-141, 9-23, 9-25, 9-27
1110083-0005	.DOLLY	4-127, 4-129, 4-131, 4-133, 4-135, 4-137, 4-139, 4-141, 9-23, 9-25, 9-27
1110532-0000	.INDUCTOR	4-107, 4-109, 4-111, 4-117, 4-119, 4-121, 9-23, 9-25, 9-27
1110534-0000	.INDUCTOR	4-107, 4-109, 4-111, 4-117, 4-119, 4-121, 9-23, 9-25, 9-27
1110535-0000	.INDUCTOR	4-107, 4-109, 4-111, 4-117, 4-119, 4-121, 9-23, 9-25, 9-27
1110556-0000	.INDUCTOR	4-107, 4-109, 4-111, 4-117, 4-119, 4-121, 9-23, 9-25, 9-27
1129079-0000	.FLOW METER	6-17
1129086-0000	.BRACKET	1-111, 1-149, 1-151, 1-157
1129274-0000	.GUIDE LUG	2-127, 2-129, 2-131, 2-133, 2-137, 2-141, 2-143, 2-147, 2-153, 2-159, 6-49
1129275-0000	.BOX FOR DIAGRAM	2-133
1129328-0000	.ATTACHMENT	2-211
1129370-0000	.SIGN	2-49
1129432-0000	.LID	2-223
1129550-0000	.GASKET	8-149, 8-151
1129599-0000	.CRAMP	4-43
1129767-0000	.SCREW	7-153, 7-157, 7-159
1129770-0000	.BLOCKING PIECE	1-89, 1-219, 1-221, 1-255, 1-257, 2-49, 2-127, 2-129, 2-131, 2-133, 2-137, 2-139, 2-141, 2-143, 2-147, 2-149, 2-151, 2-153, 2-159, 6-49, 7-85, 7-153, 7-157, 7-159
1140034-0000	.SIGN	1-219, 1-221
1140129-0000	.HOLDER	2-19, 2-53
1144489-0000	.FLANGE	5-15, 5-17
1144492-0000	.SPRING	5-15, 5-17
1144493-0000	.WASHER	5-15, 5-17
1144579-0000	.AXLE	5-47
1144606-0000	.SIGN	2-49
1144607-0000	.SIGN	2-49
1144668-0000	.HINGE	5-7
1144669-0000	.PIN	5-7
1144976-0000	.STOP SCREW	5-115, 5-117, 5-119, 5-121
1188278-0000	.WASHER	5-37, 5-39
1195397-0000	.COMPRESSION SPRING	1-193
1254025-0000	.STRIP	2-89, 2-91, 2-93, 2-99, 2-101, 2-107, 2-111, 2-113
1254027-0000	.CORNER STRIP	2-107
1254028-0000	.FASTENING PLATE	2-99, 2-101, 2-107
1254494-0000	.SPACER	2-17
1255117-0000	.PLAIN BEARING	4-35, 4-37
1260486-0000	.PLATE	4-155, 4-157
1260487-0000	.PLATE	4-155, 4-157
1260490-0000	.NUT	4-155, 4-157
1260491-0000	.NUT	4-155, 4-157
1260678-0000	.ARM	7-101
1279086-0000	.LOCKING PLATE	1-283, 1-285, 1-287
1279090-0000	.LOCKING PLATE	1-283, 1-285, 1-287
1279093-0000	.LOCKING PLATE	1-283, 1-285, 1-287
1279094-0000	.LOCKING PLATE	1-283, 1-285, 1-287
1282645-0000	.KNIFE	4-143, 4-145, 4-147, 9-23, 9-25, 9-27
1282646-0000	.KNIFE	4-143, 4-145, 4-147, 9-23, 9-25, 9-27
1282647-0000	.KNIFE	4-143, 4-145, 4-147, 9-23, 9-25, 9-27
1282708-0000	.BUSHING	5-53, 5-55
1282906-0000	.NIPPLE	2-199
1285109-0000	.NUT	8-5, 8-7, 8-9, 8-11, 8-149, 8-151, 8-163

Part No	Description	Page No
1285307-0000	.SPACER	1-143
1285308-0000	.GASKET	1-143
1296849-0000	.DISCHARGE TRAY	1-167
1296850-0000	.DISCHARGE TRAY	1-167
1296877-0100	.SEAL KIT	9-19
1317226-0000	.WEIGHT	2-211
1317228-0000	.WASHER	2-127, 2-155
1317633-0000	.SPRING	5-115, 5-117, 5-119, 5-121
1317640-0200	.START-UP KIT	1-59
1317711-0000	.SHAFT	7-57
1317712-0000	.SHAFT	7-57
1317713-0000	.SHAFT	1-207
1317784-0000	.BRACKET	2-211
1334507-0000	.TUBE	2-207
1338224-0000	.SHIM	7-113
1346568-0000	.HEAT EXCHANGER	2-207
1346890-0000	.SPACER	3-11
1347496-0000	.SCREW	5-53, 5-55
1347839-0000	.PULLEY	3-19, 3-37
1347878-0000	.RAIL	2-21, 2-23, 2-55, 7-41, 7-43
1348053-0000	.BRACKET	4-127, 4-129, 4-131, 4-133, 4-135, 4-137, 4-139, 4-141
1348196-0000	.FASTENING PLATE	4-21
1348386-0000	.BEARING HOUSING	2-167
1348529-0000	.STRAINER	2-205
1348530-0000	.LID	2-205
1348669-0000	.SCREW	4-17, 4-25
1349014-0000	.PAD	7-107
1349581-0000	.FLAG	7-87
1349867-0000	.FASTENING PLATE	4-13
1349868-0000	.FASTENING PLATE	4-13, 4-21
1350440-0000	.LEVER	5-53, 5-55
1350959-0000	.VOLUME BULGE P48 250	4-55, 4-57, 4-59, 4-61, 4-63, 4-79, 4-81, 4-83, 4-85
1350985-0000	.FOLDING FLAP RIGHT	4-127, 4-129, 4-131, 4-133, 4-135, 4-137, 4-139, 4-141
1350986-0000	.FOLDING FLAP LEFT	4-127, 4-129, 4-131, 4-133, 4-135, 4-137, 4-139, 4-141
1350996-0000	.CARRIER RULER RIGHT	4-127, 4-129, 4-131, 4-133
1350998-0000	.CARRIER RULER LEFT	4-135, 4-137, 4-139, 4-141
1359565-0000	.NUT	5-93, 5-101
1361560-0000	.PLATE	6-15
1366727-0000	.CLAMP	5-31, 5-87, 5-89, 5-91, 5-93, 5-101, 5-105, 9-7
1366750-0000	.HOLDER	5-31, 5-87, 5-89, 5-91, 5-101, 5-105, 9-7
1478000-0000	.HOSE	4-13, 4-21
1478001-0000	.HOSE	4-13, 4-21
1478170-0000	.CONTAINER	1-203
1478189-0000	.SUPPORT	5-15, 5-17
1478583-0100	.PRESSURE GAUGE	11-5
1478584-0000	.NIPPLE	11-21
1478585-0000	.NEEDLE	11-21
1478813-0000	.SPACER	1-193
1478814-0000	.SENSOR	1-193
1478928-0000	.BUSHING	5-47
1484067-0000	.BRACKET	1-205
1484486-0000	.SPRING	7-101
1484745-0100	.WEB GUIDE	7-53, 7-55, 7-141
1487430-0000	.COVER	8-141, 8-143, 8-145, 8-147, 8-149, 8-151
1487431-0000	.GASKET	8-141, 8-143, 8-145, 8-147, 8-149, 8-151
1487550-0000	.ANGLE BRACKET	7-53, 7-55
1487765-0000	.SPACER	7-53, 7-55
1487781-0000	.BRACKET	7-129, 7-135
1488002-0000	.PLATE	7-79
1488005-0000	.BEARING BLOCK	7-5, 7-7
1490046-0000	.PIN	2-33
1490714-0000	.GUIDE	1-267
1490715-0000	.DOLLY	1-267
1490804-0000	.HOLDER	7-109
1490963-0000	.PIPE	1-165
1498047-0000	.SEALING BLOCK	7-109, 9-19
1498130-0000	.PLATE	1-113
1498131-0000	.BRACKET	1-113
1498134-0000	.PLATE	1-113
1498459-0001	.GLASS PANE	7-153, 7-157
1498459-0002	.GLASS PANE	7-159
1498855-0000	.GASKET	2-219
1498856-0000	.FLANGE	2-219
1498858-0000	.FLANGE	2-219
1499582-0000	.AXLE PIN	7-129, 7-135
1499642-0301	.TPIH GENERATOR	8-127
1511195-0000	.SHAFT	3-11
1511308-0000	.NUT PLATE	11-93, 11-95
1511310-0000	.NUT	11-83, 11-85, 11-87, 11-89, 11-103
1511404-0000	.ECCENTRIC SHAFT	4-153
1511406-0000	.BRACKET	4-153
1511407-0000	.BRACKET	4-153
1511503-0000	.PIPE	1-161
1511512-0000	.BEARING BUSHING	1-119

Part No	Description	Page No
1511600-0000	.SPACER	1-193
1511755-0000	.NET	1-161
1511759-0000	.SPRING	1-197, 1-199
1512266-0000	.SLEEVE	7-127, 11-71
1512267-0000	.ECCENTRIC BUSHING	7-67, 7-147
1512273-0000	.GASKET	7-79
1512405-0000	.NUT	1-159
1512526-0000	.STEERING	7-57
1512583-0000	.ROLLER	7-89, 7-95, 7-101
1517182-0000	.SPACER	2-127, 2-129, 2-131, 2-137, 2-141, 2-147, 2-149, 2-151, 2-153, 2-159
1517707-0000	.BRACKET	2-207
1517751-0000	.SHAFT	7-107
1519150-0000	.PIN	1-103, 1-205
1519158-0000	.LID	1-123
1519159-0000	.BUSHING	1-123
1519166-0000	.BUSHING	1-123
1519222-0000	.VOLUME SHIM	4-55, 4-57, 4-59, 4-61, 4-63, 9-23, 9-25, 9-27
1519417-0000	.STAIR	2-97
1519421-0000	.BUSHING	2-97
1519422-0000	.BUSHING	2-97
1519424-0000	.SUPPORT	2-97
1519425-0000	.SPACER	2-97
1519482-0000	.PIPE	1-167
1519483-0000	.HEATING PIPE	1-167
1519486-0000	.FILTER HOUSING	1-97, 1-203
1519581-0000	.ROLLER BAR	7-53, 7-55, 7-69, 7-73
1519586-0000	.BRACKET	7-53, 7-55, 7-69, 7-73
1519592-0000	.BOW	7-53, 7-55, 7-69, 7-73
1519601-0000	.BUSHING	1-167
1520633-0003	.DOLLY	11-69
1523061-0000	.FLANGE	2-213
1523154-0003	.SPRAY NOZZLE	1-99
1523154-0004	.SPRAY NOZZLE	1-99
1523154-0005	.SPRAY NOZZLE	1-99
1523154-0006	.SPRAY NOZZLE	1-99
1523179-0000	.FLANGE	1-127
1523222-0000	.PLATE	1-303, 1-305
1523223-0000	.NUT	1-303, 1-305
1523224-0000	.NUT	1-303, 1-305
1523225-0000	.FASTENING PLATE	1-303, 1-305
1523805-0000	.PIN	1-197, 1-199
1523808-0000	.GASKET	1-201
1524167-0000	.CORNER STRIP	2-87, 2-89
1524168-0000	.CORNER STRIP	2-111, 2-113
1524176-0000	.CLAMP	2-85
1524185-0000	.EXTENSION PIECE	2-85
1524188-0000	.STAIR	2-85
1524236-0000	.VALVE HOUSING	1-153
1524481-0000	.SEALING BLOCK	7-107
1524674-0000	.REDUCTION SLEEVE	1-215, 1-217
1532459-0100	.SETTING TOOL	11-39
1532466-0000	.BRACKET	11-41
1538109-0000	.COMPRESSION SPRING	4-143, 4-145, 4-147
1538163-0000	.LEVER	1-127
1538234-0000	.SPACER	11-41
1538494-0000	.LID	1-133
1538757-0000	.TOOL	11-31, 11-33
1538782-0000	.VOLUME BULGE P48 200	4-55, 4-57, 4-59, 4-61, 4-63, 4-79, 4-81, 4-83, 4-85
1538868-0000	.BRACKET	2-127, 2-129, 2-131, 2-133, 2-137, 2-141, 2-143, 2-147, 2-153, 2-159, 6-51, 7-5, 7-7
1539102-0000	.ARM	4-47
1539103-0000	.ARM	4-47
1539108-0000	.TIMING BELT PULLEY	4-45
1539380-0000	.AIR NOZZLE	7-111
1539383-0000	.PROTECTION	7-111
1539391-0000	.ROUND NUT	7-47, 7-159
1539593-0000	.COVER	4-107, 4-109, 4-111, 4-117, 4-119, 4-121
1539726-0000	.SHAFT	1-197, 1-199
1539727-0000	.WHEEL	1-197, 1-199
1539729-0000	.BRACKET	1-197, 1-199
1539741-0000	.COVER	1-153
1539743-0000	.SHUTTER	1-153
1539745-0000	.LEVER	1-153
1539750-0000	.SHAFT	1-153
1539751-0000	.COVER	1-153
1539892-0000	.TEMPLATE	11-31, 11-33
1539893-0000	.TEMPLATE	11-31, 11-33
1548001-0000	.SIGN	1-219, 1-221
1548116-0000	.SPACER	8-163
1548191-0000	.GUIDE PLATE	7-111
1548593-0000	.HOOD	7-125
1548742-0000	.SPACER	1-153
1548751-0000	.BUSHING	1-129
1548869-0000	.SPACER	1-245
1548870-0000	.SPACER	1-55, 1-91

Part No	Description	Page No
1548941-0000	.VOLUME BULGE	4-55, 4-57, 4-59, 4-61, 4-63
1549526-0000	.CONTAINER	1-149, 1-151
1549545-0000	.FLANGE	1-119
1549548-0000	.FLANGE	1-119
1549981-0000	.FLANGE	1-131
1549982-0000	.FLANGE	1-131
1550348-0001	.BALL BEARING 17/35X10	5-21
1550589-0000	.CORRUGATED CARDBOARD BOX	9-9
1550595-1801	.SLIDING STRIP	5-21
1550595-1802	.SLIDING STRIP	5-21
1550595-4153	.SLIDING STRIP	5-27
1550595-4154	.SLIDING STRIP	5-27
1550595-4960	.SLIDING STRIP	5-25
1550626-0005	.SPACER	5-21
1550664-0000	.DOWEL	5-87, 5-89, 5-91
1550666-0000	.HOLDER	5-87, 5-89, 5-91
1550667-0000	.BOTTOM PANEL	5-21
1550668-0000	.BRACKET	5-21
1550669-0000	.SIDE PLATE	5-21
1550687-0001	.SIDE PLATE	5-21
1550687-0002	.SIDE PLATE	5-21
1550689-0000	.SHAFT	5-21
1550690-0000	.SLEEVE	5-21
1550693-0000	.WASHER	5-21
1550698-0200	.WHEEL CURVE 90 DEGREES	5-19
1550743-0200	.RAIL HOLDER	5-87, 5-89, 5-91, 5-95
1550772-0000	.HOLDER	5-93, 5-101
1558251-0000	.SHAFT	7-71
1558252-0000	.SCREW	7-71
1558253-0000	.ROLLER	7-71
1558254-0000	.SHAFT	1-209
1558327-0000	.LID	2-199
1558358-0000	.WHEEL	1-119
1558427-0000	.LID	1-201
1558474-0000	.GASKET	7-125
1558475-0000	.PROTECTION	7-125
1558768-0000	.WASHER	1-139
1558801-0000	.SHOULDER SCREW	7-149
1558945-0000	.PIVOT PIN	2-17
1566761-0000	.DOLLY	4-127, 4-129, 4-131, 4-133, 4-135, 4-137, 4-139, 4-141, 9-23, 9-25, 9-27
1566981-0000	.INDUCTOR	4-107, 4-109, 4-111, 4-117, 4-119, 4-121, 9-23, 9-25, 9-27
2500088-0200	.3-WAY VALVE	2-219
2501292-0000	.VALVE HOUSING	2-221
2501519-0000	.PIPE	1-161
2503436-0000	.SHAFT	1-209
2503438-0000	.LEVER	1-209
2504784-0200	.BENDING ROLLER	2-31
2504809-0000	.ROLLER	7-115
2505007-0000	.HEATING BLOCK	7-121
2505011-0000	.SPACER	7-121
2505158-0000	.SCREW	7-121
2506338-0000	.SHAFT	4-39, 4-41
2506340-0000	.ECCENTRIC SHAFT	4-35, 4-37
2506392-0000	.SPACER	4-39, 4-41
2508200-0000	.SHAFT	2-167
2509656-0000	.PIPE	2-205
2510372-0000	.BUSHING	2-213
2511330-0000	.SPACER	1-89
2512939-0000	.DISTRIBUTOR BLOCK	1-97
2514083-0000	.REDUCTION NIPPLE	6-23
2514087-0000	.PLATE	6-23
2517371-0000	.CLAMP	1-185
2519442-0000	.TUBE	2-205, 2-209
2519556-0000	.BRACKET	2-217
2522148-0000	.PIPE	6-31
2522184-0000	.PIPE	6-31
2522213-0003	.SHAFT	1-291
2522213-0004	.SHAFT	1-291
2522213-0006	.SHAFT	1-283, 1-285, 1-287
2522213-0009	.SHAFT	1-279, 1-281
2522213-0012	.SHAFT	1-291
2522213-0015	.SHAFT	1-291
2522213-0018	.SHAFT	1-291
2522213-0020	.SHAFT	1-291
2523596-0000	.COVER	7-109
2523598-0000	.SPLICING TABLE	7-107
2523600-0000	.PIN	7-107
2523766-0001	.BRACKET	7-15
2523766-0012	.BRACKET	7-15
2525570-0000	.COVER	3-9
2526820-0000	.LINK	1-127
2526842-0000	.LINK	1-127
2526849-0000	.PLATE	1-127
2527724-0000	.CARRIER	4-127, 4-129, 4-131, 4-133, 4-135, 4-137, 4-139, 4-141

Part No	Description	Page No
2528110-0000	.HOUSING	1-207
2528114-0000	.COVER PLATE	1-293, 1-295, 1-297
2528118-0001	.LOCK PLATE	1-279, 1-281, 1-283, 1-285, 1-287
2528119-0001	.LOCK PLATE	1-279, 1-281, 1-283, 1-285, 1-287
2528123-0001	.LOCK PLATE	1-279, 1-281, 1-291
2528123-0002	.LOCK PLATE	1-279, 1-281
2528123-0003	.LOCK PLATE	1-291
2528123-0004	.LOCK PLATE	1-279, 1-281
2528123-0008	.LOCK PLATE	1-283, 1-285, 1-287
2528123-0009	.LOCK PLATE	1-283, 1-285, 1-287
2528128-0000	.SHAFT	1-211
2528133-0000	.WASHER	1-111
2528134-0000	.GASKET	1-111
2529547-0100	.PAPER GUIDE	7-53, 7-55, 7-141
2529549-0000	.PLATE	7-67
2529670-0000	.WASHER	2-167
2531083-0000	.SLEEVE	1-75, 1-77
2531245-0000	.HOSE NIPPLE	6-15, 6-17
2531423-0000	.NUT	6-15, 6-17
2532539-0000	.FOLDING FLAP	4-127, 4-129, 4-131, 4-133, 4-135, 4-137, 4-139, 4-141
2532542-0000	.FOLDING FLAP	4-127, 4-129, 4-131, 4-133, 4-135, 4-137, 4-139, 4-141
2532543-0000	.FOLDING FLAP	4-127, 4-129, 4-131, 4-133, 4-135, 4-137, 4-139, 4-141
2532544-0000	.BUSHING	4-65, 4-67, 4-69, 4-73, 4-77, 4-89
2532574-0000	.COVER	6-15
2532806-0000	.ATTACHMENT PIPE	6-21
2532895-0002	.LOCK PLATE	1-291
2532895-0011	.LOCK PLATE	1-291
2532915-0000	.WASHER	1-123
2532969-0000	.SHAFT	1-113
2532983-0000	.FLANGE	1-115, 1-117, 1-121, 1-139
2533671-0000	.SCREW	1-209
2533672-0000	.SHAFT	1-209
2533673-0000	.ROLLER	1-209
2540612-0000	.PLATE	5-7
2540767-0000	.PIPE	2-105, 2-109
2541639-0000	.LID	1-115, 1-117, 1-121, 1-129, 1-139
2541643-0000	.FLANGE	1-113
2541648-0000	.LID	1-115, 1-117, 1-121, 1-129, 1-139
2541661-0000	.LID	1-127
2541673-0000	.WASHER	2-91, 2-93
2541681-0000	.WASHER	1-113
2541682-0000	.BUSHING	1-113
2542488-0000	.NUT	4-7
2544312-0000	.FLOAT	2-185, 2-187
2544314-0000	.PIPE	2-193
2544318-0000	.PIPE	2-185, 2-187
2544330-0000	.PLUG	2-185, 2-187
2547061-0000	.HOLDER	6-11
2547391-0100	.NOZZLE	1-147
2547565-0000	.HOLDER	1-207
2550333-0000	.GUIDE LUG	7-153, 7-159
2552201-0000	.LOCKING DEVICE	1-99, 1-187, 1-189, 1-191
2552817-0000	.TUBULAR JACKET	7-121
2552818-0000	.COVER	7-121
2552819-0000	.HOLDER	7-119
2552822-0000	.SPACING WASHER	7-121
2553124-0000	.PIN	2-99, 2-101
2553167-0000	.LID	1-97
2556514-0000	.WASHER	7-121
2558148-0000	.SLIDING STRIP	7-149
2559045-0003	.ELECTRODE	1-203
2559045-0004	.ELECTRODE	1-203
2559095-0000	.BRACKET	1-171
2559112-0100	.CALIBRATION EQUIPMENT	11-51
2559461-0000	.SPACER	2-185, 2-187
2559977-0000	.HOSE	2-185, 2-187
2561206-0000	.SPACER	5-21, 5-25, 5-27
2561232-0000	.COVER	5-21
2561244-0200	.DRIVE WHEEL	5-27
2561257-0000	.SPACER	5-21
2561267-0000	.SHAFT	5-29
2561274-0102	.RAILING	5-87, 5-89, 5-91
2561596-0000	.RAIL HOLDER KIT	5-105
2561602-0100	.RAIL HOLDER KIT	5-87, 5-89, 5-91
2561603-0000	.SPACER	5-21
2562315-0000	.PLUG	1-87
2562704-0000	.BODY	1-193
2562736-0002	.COAXIAL CABLE	4-115, 4-125
2563759-0000	.SPRAY SYSTEM	1-159
2563760-0000	.EXTENSION	1-159
2563761-0000	.NUT	1-159
2563762-0000	.SPACER	1-159
2564074-0100	.TOOLS AND TEMPLATES	11-37
2564107-0000	.LID	1-201, 1-203

Part No	Description	Page No
2565386-0000	.HOOK	2-85
2566118-0000	.BRACKET	7-129, 7-135
2566211-0000	.LABEL	2-155, 2-185, 2-187, 2-195
2566212-0000	.LABEL	2-155, 2-185, 2-187, 2-195
2578455-0000	.LIFTING HANDLE	7-67
2578486-0000	.BRACKET	1-203
2579838-0000	.TOUCH GUARD	7-107
2589791-0000	.KNIFE HOLDER	7-129, 7-135
2589960-3353	.SLIDING STRIP	5-27
2589960-3354	.SLIDING STRIP	5-27
2591782-0000	.SPRING	1-209
2594125-0000	.SLEEVE	1-209
2594126-0000	.GUIDE ROLLER	1-209
2594624-0000	.PLUG	1-111
2597663-0000	.FOLDING FLAP	4-127, 4-129, 4-131, 4-133, 4-135, 4-137, 4-139, 4-141
2598084-0000	.PLATE	1-87
2598085-0000	.SPACER	1-87
2601483-0100	.PAPER GUIDE	1-207
2602696-0000	.BEARING HOUSING	5-37, 5-39
2602697-0000	.SHAFT	5-37, 5-39
2602708-0000	.SPACER	5-37, 5-39
2605877-0000	.BENDING ROLLER	2-61
2605879-0000	.CANTILEVER	2-61
2605880-0000	.SHAFT	2-61
2608177-0000	.SIGN	7-79, 8-5, 8-7, 8-9, 8-11, 8-15, 8-17, 8-19, 8-21, 8-149, 8-151, 8-163, 8-169, 8-171, 8-179, 8-181, 8-183, 8-185, 8-187, 8-189, 8-191, 8-193
2611009-0000	.SHAFT	1-119
2613786-0000	.SHAFT	7-117
2613787-0000	.PAPER SUPPORT	7-113
2613790-0000	.SPACER	7-117
2614876-0000	.LINEAR UNIT	7-97
2634917-0000	.SIGN	1-219, 1-221
2635112-0000	.SHAFT	5-47
2640354-0000	.ROLLER	1-293, 1-295, 1-297
2640814-0000	.RULER	11-35
2640822-0000	.SIGN	1-219, 1-221
2640826-0000	.NUT	3-9
2642921-0000	.WASHER	7-119
2644623-0000	.SHOULDER SCREW	3-15
2647105-0000	.AXLE PIN	5-53, 5-55
2651987-0000	.LID	3-25
2651988-0000	.GASKET	3-25
2651989-0000	.LID	3-25
2651990-0100	.LINK SYSTEM GASKET	3-21, 3-27
2652891-0000	.TOOTHED PULLEY	4-39, 4-41
2653607-0000	.SCREW	1-119
2656407-0000	.SLIDE RAIL	5-27
2656655-0000	.WHEEL	5-21
2656672-0000	.SPROCKET	5-29
2656673-0000	.SPACER	5-29
2656686-0000	.SIDE PLATE	5-27
2656687-0000	.SIDE PLATE	5-27
2657865-0000	.PIPE CONNECTION	1-97
2658040-0000	.COVER	7-155
2658077-0000	.SHAFT	1-119
2658190-0000	.WASHER	7-119
2662211-0000	.CHAIN	11-79
2665718-0000	.CARRIER	4-127, 4-129, 4-131, 4-133, 4-135, 4-137, 4-139, 4-141
2668245-0000	.SLIDER	5-53, 5-55
2668246-0000	.SLIDER	5-53, 5-55
2672942-0000	.SYMBOLSIGN	1-219, 1-221
2672972-0000	.BOLT	1-97
2672973-0000	.ELECTRODE	1-97
2672974-0000	.BUSHING	1-97
2679560-0000	.SHAFT	1-123
2683961-0000	.CUTTING RAIL	4-127, 4-129, 4-131, 4-133, 4-135, 4-137, 4-139, 4-141
2685303-0000	.SHUTTER	1-127
2685314-0000	.COIL	1-87
2685339-0000	.GASKET	1-87
2685340-0000	.COVER	1-87
2685341-0000	.COVER	1-87
2685350-0000	.THREADED ROD	1-163
2685375-0000	.RETAINING RING	1-165
2685380-0000	.SPACER	1-197, 1-199
2686318-0000	.HOLDER	2-35
2691183-0000	.FLANGED SHAFT	1-119
2693622-0000	.SPACER	1-193
2695434-0000	.HOLDER	1-123
2695992-0000	.PIPE	1-37, 1-39, 1-183
2696109-0000	.PLUG	1-99
2699436-0000	.SPACER	5-93
2699437-0000	.RAIL HOLDER	5-93
2699584-0830	.SLIDING STRIP	5-21
2701837-0000	.VALVE HOUSING	7-117

Part No	Description	Page No
2701838-0000	.AIR NOZZLE	7-117
2701842-0000	.NOZZLE	7-117
2701880-0000	.FLANGE	7-13
2703632-0000	.HEAT GUARD	7-119
2703634-0000	.ROLLER	7-119
2708584-0000	.CONNECTION PIPE	1-201
2709274-0000	.FLANGE	1-103
2709281-0000	.SHIM	1-103
2709291-0000	.SEAL RING	1-157
2709308-0100	.STAIR	2-91, 2-93
2709309-0000	.SUPPORT	2-97
2709310-0000	.PLATE	2-97
2709311-0000	.PLATE	2-97
2709788-0000	.SHAFT	1-157
2710507-0000	.KNOB	2-63
2715602-0000	.PIPE	1-99
2720716-0000	.LIFTING DEVICE	11-69
2720847-0000	.SUPPORT FLANGE	1-157
2720848-0000	.SHAFT	1-157
2720849-0000	.FLANGE	1-157
2720850-0000	.BRACKET	1-157
2720852-0000	.PIN	1-157
2720853-0000	.GUIDE	1-157
2721151-0000	.CANTILEVER	2-63
2721239-0000	.SPACER	1-187, 1-189, 1-191
2730770-0000	.SPACER	3-19, 3-37
2731212-0000	.RING	7-127, 11-71
2731244-0000	.CABLE DUCT	7-17, 7-19
2731247-0000	.SPACER	7-63
2731249-0000	.COVER	7-63
2731437-0000	.SHAFT	1-123
2735075-0000	.SPACER	7-53, 7-55
2736707-0000	.PIPE	1-87
2736719-0000	.PLATE	9-33
2746354-0000	.BRACKET	7-153
2746355-0000	.BRACKET	7-153, 7-157
2746358-0000	.BRACKET	7-157
2746361-0000	.GLASS PANE	7-161, 7-165
2751507-0000	.FLANGE	1-125
2751586-0000	.SPACER	2-133, 2-143, 7-161
2758079-0000	.BLOCK	1-111
2758080-0000	.BLOCK	1-111
2758082-0000	.LEVER	1-119
2758083-0000	.SUPPORT	1-119
2761928-0000	.KNOB	5-15, 5-17
2761952-0000	.PLATE	5-19
2761956-0000	.DRIVE PULLEY	5-23
2761957-0000	.SPACER	5-23
2761962-0000	.SPACER	5-19
2761965-0000	.COLUMN	5-19
2762008-0100	.DRIVE	5-19
2763616-0102	.CONVEYOR BODY	5-19
2763617-0002	.SIDE PLATE	5-25
2763627-0000	.BRACKET	9-13
2763628-0000	.BRACKET	9-13
2763629-0000	.RAILING	9-13
2763632-0000	.PLATE	9-13
2763633-0000	.PLATE	9-13
2763956-0000	.LEVER	1-119
2763967-0000	.PIPE	1-203
2763968-0000	.SPACER	1-203
2763969-0000	.REDUCER	1-203
2764010-0000	.LID	1-125
2764890-0200	.HYDRAULIC UNIT	2-35
2764892-0000	.LID	2-37, 2-39
2764894-0000	.PIPE	2-37, 2-39
2764897-0000	.PIPE	2-37, 2-39
2764898-0000	.PIPE	2-37, 2-39
2767621-0000	.SPRING	5-7
2771108-0000	.HOLDER	11-91
2772921-0000	.PLATE	5-11
2773080-0000	.PLATE	5-11
2773828-0000	.HEATING ELEMENT	5-13, 9-19
2773832-0000	.GASKET	5-13
2774953-0000	.RAIL	5-19
2775096-0000	.STUD	1-157
2775586-0000	.BRACKET	9-13
2775770-0201	.BRACKET	9-5
2777971-0000	.SHAFT	1-123
2783025-0000	.FLANGE	1-129
2783089-0000	.SHAFT	1-125
2783090-0000	.LEVER	1-125
2783092-0000	.LID	1-125
2785232-0000	.CONNECTION BOX	6-45

Part No	Description	Page No
2789196-0000	.FLANGE	5-23
2789197-0000	.SHAFT	5-23
2789200-0100	.END UNIT	5-19
2789208-0000	.PULLEY	5-19
2789209-0000	.PLATE	5-19
2789216-0000	.PLATE	5-19
2789217-0000	.HUB	5-35
2789232-0000	.FLANGE	5-35
2790433-0000	.BODY	1-193
2790925-0000	.SLEEVE	7-127, 11-71
2790926-0000	.PLUNGER	7-127, 11-71
2792118-0000	.SUPPORT	6-19
2792119-0100	.FILTER	6-17
2792120-0000	.SUPPORT	6-19
2792156-0000	.RULER	4-7
2792158-0000	.STRUT	4-35, 4-37
2792160-0100	.DESIGN CORRECTION DEVICE	4-33
2792161-0100	.DESIGN CORRECTION DEVICE	4-33
2793364-0000	.SUPPORT	6-55
2794931-0000	.BUSHING	3-9
2794932-0000	.ROCKER	3-9
2795376-0000	.CATCH	1-301
2795385-0000	.RING	1-273, 1-275
2795386-0000	.RING	1-273, 1-275
2795387-0000	.ROLLER	1-273, 1-275
2796072-0001	.LOCKING FORK	1-303, 1-305
2796072-0002	.LOCKING FORK	1-303, 1-305
2798536-0000	.ECCENTRIC SHAFT	4-35, 4-37
2798537-0000	.FOLDING FLAP CAM	4-35, 4-37
2799892-0000	.CLAMP	1-187, 1-189, 1-191
2800104-0000	.HOSE	8-197
2800180-0200	.PAPER MAGAZINE	7-3
2800198-0000	.SEALING PLATE	7-143
2800215-0000	.KNIFE	7-149, 9-19
2800222-0000	.CLAMP	7-149
2802611-0000	.SUPPORT PULLEY	3-11
2802624-0000	.AXLE PIN	3-11
2802625-0000	.SHAFT	3-9
2802756-0000	.PULLEY	3-11
2802849-0000	.PLATE	7-53, 7-55
2802850-0000	.PLATE	7-53, 7-55
2802851-0000	.PLATE	7-53, 7-55
2802852-0000	.GUIDE ROD	7-53, 7-55
2802853-0000	.SHAFT	7-59
2802854-0000	.SPACER	7-53, 7-55
2802855-0000	.SHAFT	7-63
2802856-0000	.GUIDE	7-53, 7-55
2802857-0000	.STOPPER	7-53, 7-55
2802858-0000	.SHAFT	7-61
2802861-0000	.DANCER ROLLER	7-59, 7-61
2802863-0100	.BENDING ROLLER	7-53, 7-55
2802864-0100	.BENDING ROLLER	7-53, 7-55
2802866-0000	.GUIDE	7-53, 7-55
2802868-0000	.PLATE	7-145
2802869-0000	.BENDING ROLLER	7-63
2802870-0100	.DRIVE UNIT	7-53, 7-55
2802874-0000	.SLIDER	7-75, 7-77
2802875-0000	.PLATE	7-75
2802877-0000	.PLATE	7-65
2802878-0200	.BRACKET	7-53, 7-55
2802879-0100	.COUNTER ROLLER	7-53, 7-55
2802880-0000	.SHAFT	7-67
2802881-0000	.ROCKER ARM	7-67
2802886-0000	.SUPPORT	7-53, 7-55
2802888-0000	.PLATE	7-53, 7-55
2803072-0100	.PULLEY	3-7, 3-31
2805185-0000	.FLANGE	5-35
2805193-0000	.BUSHING	5-15, 5-17
2805988-0100	.DROP CHUTE	5-5
2805989-0200	.INFEED CONVEYOR	5-5
2805990-0100	.PULL-DOWN DEVICE	5-5
2805991-0200	.FLAP HEATER	5-5
2805992-0200	.PRESSURE DEVICE	5-5
2805993-0300	.OUTFEEDER	5-5
2805994-0200	.WHEEL	5-5
2805995-0200	.DRIVE	5-5
2805996-0300	.ASSEMBLY PLATE	5-5
2805997-0200	.FOLDING BAR	5-5
2806001-0000	.PLUG	5-9, 5-15, 5-17
2806002-0000	.BLOCK	5-71, 5-73
2806004-0000	.SHAFT	5-9
2806005-0000	.PLATE	5-15, 5-17, 5-71, 5-73
2806006-0000	.CAM	5-9, 5-15, 5-17
2806008-0000	.BOX	5-9

Part No	Description	Page No
2806009-0000	.BELT	5-37, 5-39
2806010-0000	.BRACKET	5-9, 5-15, 5-17
2806012-0000	.SHIM	5-71, 5-73
2806013-0000	.BOX	5-15, 5-17
2806014-0000	.SHAFT	5-15, 5-17
2806015-0000	.BLOCK	5-79, 5-81, 5-83, 5-85
2806016-0000	.CAM	5-15, 5-17
2806017-0000	.SHAFT	5-15, 5-17
2806018-0000	.LEVER	5-15, 5-17
2806019-0000	.SHAFT	5-15, 5-17
2806020-0000	.LEVER	5-15, 5-17
2806021-0000	.CLAMP	5-15, 5-17
2806022-0000	.BOX	5-15, 5-17
2806023-0000	.FLANGE	5-9, 5-15, 5-17
2806026-0000	.CAP	5-15, 5-17
2806029-0000	.CAP	5-35
2806030-0000	.SHAFT	5-35
2806032-0000	.ARM	5-33
2806033-0000	.PIN	5-33
2806037-0000	.WHEEL	5-33
2806659-0000	.PLATE	7-73
2806665-0000	.PLATE	7-5, 7-7
2807184-0000	.BUSHING	5-7
2807492-0300	.STRIP MAGAZINE	7-3
2807499-0000	.SPACER	7-53, 7-55
2807507-0100	.HEATING DEVICE	7-81
2807508-0200	.CUTTING TABLE	7-81
2807509-0000	.BRACKET	7-107
2807510-0000	.COVER	7-141
2807512-0200	.STRIP APPLICATOR	7-3
2807529-0100	.FAN SYSTEM	7-3
2807530-0000	.FLANGE	7-79
2807592-0000	.MULTI BRACKET SINGLE	9-13
2807605-0100	.LEG,CONVEYOR	9-13
2807615-0000	.LEG,CONVEYOR	9-15
2808044-0100	.PACKING DESCRIPTION	9-7
2808142-0000	.SHAFT	1-113
2808143-0000	.SHAFT	1-113, 1-123
2808144-0000	.ROLLER	1-113, 1-115
2808145-0100	.CALENDER ROLLER	1-109
2808146-0000	.FLANGE	1-115, 1-117, 1-121, 1-129, 1-139
2808147-0000	.FLANGE	1-115, 1-117, 1-121, 1-139
2808148-0000	.SHAFT	1-115
2808150-0100	.SQUEE-GEE ROLLER	1-109
2808152-0000	.SHAFT	1-131
2808153-0000	.CARRIER	1-131
2808154-0000	.CHAIN	1-131
2808155-0100	.BENDING ROLLER	1-109
2808156-0000	.WHEEL	1-121
2808157-0000	.LID	1-115, 1-117, 1-121, 1-139
2808158-0000	.FLANGE	1-133
2808159-0000	.GASKET	1-111
2808160-0100	.PENDULUM ROLLER	1-109
2808161-0000	.LID	1-111
2808162-0000	.ROD	1-125
2808165-0100	.BENDING ROLLER	1-109
2808167-0000	.SHAFT	1-119
2808168-0000	.SHAFT	1-119
2808169-0000	.PILLAR	1-103
2808170-0100	.AIR KNIFE	1-109
2808171-0000	.AIR DISTRIBUTOR	1-123
2808172-0000	.AIR DISTRIBUTOR	1-123
2808173-0000	.AIR GUIDE	1-123
2808175-0200	.PRESSURE ROLLER	1-109
2808177-0000	.PLATE	1-123
2808178-0000	.ARM	1-123
2808179-0000	.ARM	1-123
2808180-0100	.VALVE	1-109
2808181-0000	.SUPPORT	1-123
2808183-0000	.STOP	1-123
2808184-0000	.SHAFT	1-131
2808185-0100	.VALVE	1-109
2808186-0000	.HOUSING	1-111
2808188-0000	.GASKET	1-135
2808190-0100	.DRIVE ROLLER	1-109
2808192-0000	.GASKET	1-137
2808194-0000	.LID	1-135
2808195-0100	.CRANK	1-109
2808196-0100	.COMPRESSOR UNIT	1-147
2808197-0000	.FLANGE	1-155
2808198-0000	.PIPE	1-155
2808199-0200	.DILUTION TANK	2-197
2808200-0000	.TANK	2-201
2808202-0100	.PEROXIDE TANK	2-197

Part No	Description	Page No
2808204-0000	.PIPE	2-199
2808207-0000	.TUBE	2-205
2808210-0000	.HOSE	1-79
2808211-0000	.TUBE	2-205
2808212-0000	.PIPE	2-205
2808213-0000	.PIPE	2-205
2808214-0000	.PIPE	2-205
2808215-0000	.TUBE	2-205
2808216-0100	.HEATING UNIT	2-197
2808217-0000	.PIPE	2-207
2808218-0000	.PIPE	2-207
2808219-0000	.PIPE	2-207
2808220-0200	.PRESSURE UNIT	2-197
2808221-0000	.PIPE	2-209
2808224-0100	.AIR PIPE-LINE	2-197
2808225-0000	.SPLASH PLATE	2-211
2808226-0200	.SEPARATOR	1-147
2808228-0000	.UPPER SECTION	1-165
2808229-0200	.BATH	1-195
2808230-0000	.GASKET	1-197, 1-199
2808231-0000	.BENDING ROLLER	1-197, 1-199
2808232-0000	.LID	1-197, 1-199
2808234-0000	.COVER	1-197, 1-199
2808235-0000	.RESISTANCE	1-197, 1-199
2808236-0000	.PLATE	1-197, 1-199
2808238-0000	.PEROXIDE CHAMBER	1-197, 1-199
2808239-0000	.BOTTOM SECTION	1-197, 1-199
2808240-0000	.GASKET	1-197, 1-199
2808243-0000	.PIPE	1-201
2808245-0200	.HYDROGEN PEROXIDE	2-181
2808246-0200	.HYDROGEN PEROXIDE	1-5, 1-7, 1-9
2808247-0200	.SCRUBBER	1-147
2808248-0000	.UPPER SECTION	1-163
2808249-0000	.CONTAINER	1-163
2808250-0100	.PILLAR	1-101
2808251-0200	.HEATER	1-147
2808252-0000	.PIPE	1-167
2808253-0000	.SUPPORT	1-167
2808254-0100	.HEAT EXCHANGER VALVE	1-147
2808255-0200	.PIPE WORK-AIR	1-147
2808256-0100	.VALVE	1-149, 1-151
2808262-0000	.PIPE	1-149, 1-151
2808263-0000	.PIPE	1-149, 1-151
2808264-0000	.PIPE	1-149, 1-151
2808265-0100	.VALVE	1-147
2808269-0100	.STEAM PIPE	1-181
2808271-0200	.STERILE AIR SYSTEM	1-5, 1-7, 1-9
2808275-0200	.DOOR	1-109
2808276-0000	.GASKET	1-135
2808280-0200	.DOOR	1-109
2808285-0150	.UPPER FORMING RING	1-271
2808289-0000	.SHAFT	1-283, 1-285, 1-287
2808290-0150	.LOWER FORMING RING	1-271
2808291-0000	.SCREW	1-283, 1-285, 1-287
2808292-0000	.BUSHING	1-283, 1-285, 1-287
2808293-0000	.BRACKET	1-283, 1-285, 1-287
2808294-0000	.SCREW	1-283, 1-285, 1-287
2808295-0100	.EDGE ROLLER	1-271
2808296-0000	.TANK	2-199
2808297-0000	.INSULATION CLOTH	2-199
2808298-0000	.PLUG	1-283, 1-285, 1-287
2808299-0000	.BRACKET	1-283, 1-285, 1-287
2808300-0200	.FRAME HOUSING	1-109
2808305-0200	.FORMING SECTION	1-269
2808307-0000	.COUNTER ROLLER	1-279, 1-281
2808308-0000	.COUNTER ROLLER	1-279, 1-281
2808310-0200	.DRYING CHAMBER	1-5, 1-7, 1-9
2808311-0000	.FORK	1-279, 1-281
2808312-0000	.FORK	1-279, 1-281
2808315-0200	.SEAL RING	1-271
2808318-0000	.SHAFT2781168-0000	1-279, 1-281
2808319-0000	.BRACKET	1-293, 1-295, 1-297
2808320-0200	.ASEPTIC CHAMBER	1-5, 1-7, 1-9
2808321-0200	.STEAM SYSTEM	1-169
2808325-0000	.PIPE	1-183
2808329-0000	.BLOCK	1-127
2808330-0200	.HOT AIR ELEMENT	1-5, 1-7, 1-9
2808331-0000	.CANTILEVER	1-127
2808332-0000	.AXLE PIN	1-127
2808333-0000	.FLANGE	1-129
2808335-0200	.HOT AIR ELEMENT	1-5, 1-7, 1-9
2808336-0000	.GASKET	1-105
2808339-0000	.PLATE	1-103
2808340-0200	.AIR NOZZLE	1-269

Part No	Description	Page No
2808343-0000	.FRAME	2-207
2808344-0000	.COVER	2-201
2808345-0000	.GASKET	2-201
2808346-0000	.HOLDER	2-207
2808347-0000	.PROTECTION	2-207
2808348-0000	.HOSE	2-205
2808349-0000	.PLASTIC HOSE	1-201
2808350-0000	.HOSE	2-199
2808351-0000	.HOLDER	2-209
2808354-0000	.BENDING ROLLER	1-117, 1-121
2808355-0200	.DOOR	1-101
2808356-0000	.BENDING ROLLER	1-129
2808358-0000	.SHAFT	1-145
2808359-0000	.BUSHING	1-145
2808362-0000	.FLANGE	1-143
2808363-0000	.PIVOT ARM	1-143
2808365-0000	.BRACKET	1-299
2808366-0000	.BRACKET	1-299
2808368-0000	.AXLE SUPPORT	1-145
2808370-0000	.FORK	1-279, 1-281
2808376-0000	.PIPE	1-203
2808378-0000	.BRACKET	1-299
2808379-0000	.BRACKET	1-299
2808381-0100	.FRAME SECTION,UPPER	1-5, 1-7, 1-9
2808382-0000	.FRAME	1-205
2808383-0000	.FRAME	1-205
2808400-0100	.BENDING ROLLER	1-109
2808402-0000	.CLAMP	1-307
2808403-0000	.ELBOW PIPE	1-307
2808410-0000	.FRAME	1-205
2808413-0000	.GASKET	1-143
2808415-0000	.BRACKET	1-143
2808416-0000	.RING	1-143
2808418-0100	.PEROXIDE PUMP	2-197
2808419-0000	.EXTENSION PIPE	2-213
2808420-0000	.BRACKET	1-103
2808422-0000	.FILTER	1-163
2808424-0000	.BRACKET	1-197, 1-199
2808425-0000	.BRACKET	1-197, 1-199
2808430-0000	.PIPE	1-149, 1-151
2808431-0000	.PIPE	1-149, 1-151
2808432-0000	.PIPE	1-149, 1-151
2808434-0000	.BUSHING	1-103, 1-279, 1-281
2808435-0000	.SPACER	1-103
2808440-0000	.PIPE	1-149, 1-151
2810394-0000	.BUSHING	4-65, 4-67, 4-69, 4-73, 4-77, 4-89
2812313-0000	.BLOCK	4-7
2812315-0000	.CLAMP	4-7
2813401-0000	.FRAME	2-33
2815036-0000	.BRACKET	7-83
2815037-0000	.AXLE PIN	7-91
2815038-0000	.AXLE PIN	7-89
2815039-0000	.AXLE PIN	7-93
2815042-0000	.SHAFT	7-109
2815043-0000	.SHAFT	7-109
2815055-0000	.PLATE	7-85
2815056-0000	.SPACER	7-85
2815059-0000	.PLATE	7-47
2815067-0000	.SHAFT	7-5, 7-7
2815068-0100	.BENDING ROLLER	7-5, 7-7
2815069-0000	.BENDING ROLLER	7-13
2815070-0000	.BENDING ROLLER	7-13, 7-21
2815072-0000	.PLATE	7-13
2815073-0000	.SHAFT	7-13
2815756-0000	.HOLDER	4-155, 4-157
2818090-0100	.YOKE	4-5
2818091-0000	.YOKE	4-19
2818092-0000	.BUSHING	4-9, 4-19
2818093-0000	.LID	4-9, 4-19
2818094-0000	.SPRING HOUSING	4-9, 4-19
2818095-0000	.ARM	4-23
2818096-0000	.TOOTHED SEGMENT	4-15, 4-23
2818097-0000	.ROD	4-15, 4-23
2818098-0000	.BOW CLAMP	4-15, 4-23
2818099-0000	.NUT	4-15, 4-23
2818100-0000	.SHAFT	4-13, 4-15, 4-21, 4-23
2818101-0100	.CUTTING ARM	4-5
2818102-0100	.PRESSURE ARM	4-5
2818103-0000	.ARM	4-21
2818104-0000	.TOOTHED SEGMENT	4-13, 4-21
2818105-0000	.YOKE	4-9
2818106-0100	.YOKE	4-5
2818107-0000	.ARM	4-13
2818108-0100	.PRESSURE ARM	4-5

Part No	Description	Page No
2818109-0000	.ARM	4-15
2818110-0100	.CUTTING ARM	4-5
2818111-0000	.SEAL	4-13, 4-21
2818112-0000	.SCREW	4-13, 4-21
2818113-0000	.COVER	4-13, 4-21
2818114-0000	.GASKET	4-13, 4-21
2818115-0100	.BEARING UNIT	4-9, 4-19
2818116-0200	.GUIDE	4-5
2818117-0100	.DESIGN CORRECTION	4-23
2818118-0000	.BRACKET	4-25
2818119-0000	.ARM	4-25
2818121-0100	.DESIGN CORRECTION	4-15
2818122-0000	.ARM	4-17
2818125-0000	.OPERATING ROD	4-99, 4-101, 4-103, 4-105
2818126-0000	.BEARING PLATE	4-99, 4-101, 4-103, 4-105
2818127-0200	.DESIGN CORRECTION	4-5
2818560-0000	.BRACKET	5-13
2818674-0000	.STOPPER	7-13, 7-21
2818678-0000	.SHAFT	7-147
2818682-0000	.SHAFT	7-21
2818684-0100	.ROLLER	7-5, 7-7
2818697-0000	.LOCKING ARM	7-153
2818701-0000	.LOCKING ARM	7-159
2818712-0000	.LOCKING ARM	7-159
2818714-0300	.CONNECTION BOX	7-5, 7-7
2819235-0000	.SUPPORT	5-37, 5-39
2819236-0000	.PULLEY	5-37, 5-39
2819237-0000	.CAP	5-15, 5-17
2819240-0000	.SHAFT	5-7
2819260-0000	.SPACER	5-11
2819273-0000	.COVER	5-115, 5-117, 5-119, 5-121
2819277-0000	.TOOTHED PULLEY	5-7, 5-9, 5-15, 5-17
2819278-0000	.ACTIVATOR	5-9, 5-15, 5-17
2819282-0000	.SUPPORT	5-45
2819283-0000	.SPACER	5-45
2819290-0000	.GUIDE	5-19
2819292-0000	.PLATE	5-37, 5-39
2819296-0000	.COVER	5-7
2819302-0000	.SUPPORT	5-97, 9-49
2819305-0000	.SUPPORT	5-115, 5-117, 5-119, 5-121
2819308-0000	.SHAFT	5-7
2819309-0000	.COVER	5-7
2819310-0000	.PULLEY	5-7
2819311-0000	.WHEEL	11-49
2819312-0200	.INFEED CONVEYOR VARIANT	5-51
2819313-0100	.PULL-DOWN DEVICE	5-51
2819314-0100	.FLAP HEATER	5-51
2819315-0100	.PRESSURE DEVICE	5-51
2819316-0200	.OUTFEEDER	5-51
2819317-0200	.WHEEL	5-51
2819318-0200	.FOLDING BAR	5-51
2819319-0200	.FORMING UNIT	5-3
2819320-0200	.BASE UNIT	5-3
2819322-0000	.PLATE	5-9, 5-15, 5-17
2819332-0000	.SUPPORT	5-7
2819333-0000	.SUPPORT	5-7
2824755-0200	.BASE UNIT	4-3
2824756-0200	.FORMING UNIT	4-3
2826439-0000	.VALVE CONE	1-29, 1-177
2826440-0000	.SEAL RING	1-29, 1-177, 9-29
2826441-0000	.SEAL RING	1-23, 1-31, 1-161, 1-175, 1-179, 9-29
2826442-0000	.VALVE CONE	1-161, 1-175, 1-179
2826443-0000	.DIAPHRAGM	9-29
2828687-0200	.HYDRAULIC UNIT	2-31
2828688-0200	.PIPE WORK-HYDRAULIC	2-35
2828689-0000	.PIPE CLAMP	2-41
2829754-0200	.FRAME	3-7
2829755-0200	.FRAME	3-31
2829760-0000	.HOLDER	3-13, 3-33
2829762-0000	.MOTOR BRACKET	3-19
2829766-0000	.SEALING	1-73
2831675-0000	.BRACKET	7-57
2831678-0000	.SUPPORT	7-71
2831684-0000	.ROLLER	7-113
2832088-0000	.CABLE DUCT	2-59
2832089-0000	.LID	2-59
2832090-0200	.CABLE DUCT	2-31
2832091-0000	.LID	2-59
2832092-0000	.LID	2-59
2832114-0000	.CABLE DUCT	2-59
2832236-0000	.SUPPORT	2-55
2832237-0100	.LUBRICATION UNIT	2-43
2832238-0000	.PIPE	2-45
2832239-0000	.PLATE	2-45

Part No	Description	Page No
2832240-0000	.PIPE	2-45
2832299-0000	.COVER	7-5, 7-7
2832309-0200	.PNEUMATIC PANEL	7-5, 7-7
2832310-0000	.PLATE	7-21
2832311-0000	.ROLLER	7-21
2832312-0100	.PAPER REEL HOLDER	7-3, 11-69
2832313-0000	.SHAFT	7-127, 11-71
2832315-0100	.LOCKING ARM	7-83
2832316-0000	.BRACKET	7-5, 7-7
2832321-0000	.LOCKING ARM	7-153
2832322-0100	.SPLICING DEVICE	7-3
2832324-0000	.FRAME	7-5, 7-7
2832325-0000	.SEALING PLATE	7-143
2832327-0000	.BRACKET	7-135
2832329-0000	.ROCKER ARM	7-135
2832330-0000	.CUTTING TABLE	7-129, 7-135
2832331-0000	.KNIFE HOLDER	7-149
2832332-0000	.RULER	7-129, 7-135
2832333-0000	.SHAFT	7-129, 7-135
2832334-0000	.COUPLING BOLT	7-149
2832335-0100	.BAR CODE READER	7-141
2832336-0000	.PRESSURE RAIL	7-149
2832337-0000	.SPACER	7-149
2832338-0000	.BENDING ROLLER	7-129, 7-135
2832340-0100	.COUNTER ROLLER	7-141
2832342-0000	.PLATE	7-145
2832463-0000	.SUPPORT	1-209
2832828-0200	.FRAME	8-3
2832830-0200	.COMPONENT DOOR	8-3
2832831-0000	.FRAME	8-163
2832832-0100	.RACK	8-157
2832834-0100	.BAR	8-157
2832836-0200	.CONNECTION PLATE	8-3
2832837-0100	.BAR	8-149, 8-151
2832838-0200	.PLATE	8-3
2832839-0200	.PLATE	8-15, 8-17, 8-19
2832841-0200	.BAR	8-15, 8-17, 8-19
2832842-0100	.BAR	8-15, 8-17, 8-19
2832843-0200	.BAR	8-15, 8-17, 8-19
2832844-0200	.BAR	8-15, 8-17, 8-19
2832845-0200	.BAR	8-15, 8-17, 8-19
2832846-0200	.BAR	8-15, 8-17, 8-19
2832847-0200	.BAR	8-15, 8-17, 8-19
2832848-0200	.BAR	8-15, 8-17, 8-19
2832849-0200	.BAR	8-15, 8-17, 8-19
2832850-0200	.BAR	8-15, 8-17, 8-19
2832851-0200	.BAR	8-15, 8-17, 8-19
2832852-0100	.RACK	8-15, 8-17, 8-19
2832853-0200	.BAR	8-15, 8-17, 8-19
2832857-0200	.CONNECTION BOX	8-3
2832858-0200	.FRAME	8-5, 8-7, 8-9, 8-11
2833037-0000	.SEAL RING	1-175
2833039-0000	.PIPE	1-171
2833049-0000	.SPINDLE GUIDE	1-157
2833052-0000	.WHEEL	1-131
2833054-0000	.ROLLER	1-207
2833159-0000	.BRACKET	1-215, 1-217
2833324-0000	.GASKET	5-13
2833326-0000	.BRACKET	5-13
2833336-0200	.MACHINE BODY	2-5
2833337-0000	.FRAME	2-7
2834035-0000	.THERMOCOUPLE	2-37, 2-39
2834103-0000	.PROFILE	2-7
2835279-0200	.PRODUCT LINES	1-169
2835291-0000	.PIPE	1-149, 1-151
2835292-0000	.BRACKET	1-149, 1-151
2835293-0000	.FLOW CONTROLLER	1-163
2835294-0000	.PLUG	1-149, 1-151
2835303-0100	.PRODUCT VALVE	1-169
2835305-0000	.BRACKET	1-171
2835307-0200	.FILLING SYSTEM	1-5, 1-7, 1-9
2835309-0100	.HOSE INSTALLATION	1-213
2835311-0000	.PIPE	1-215, 1-217
2835312-0000	.PIPE	1-215, 1-217
2835313-0000	.PIPE	1-215, 1-217
2835314-0000	.PIPE	1-215, 1-217
2835315-0000	.PIPE	1-215, 1-217
2835316-0000	.PIPE	1-215, 1-217
2835317-0000	.PIPE	1-215, 1-217
2835318-0000	.PIPE	1-37, 1-39, 1-183
2835319-0000	.PIPE	1-215, 1-217
2835322-0000	.BRACKET	1-211
2835323-0100	.SPLICE DETECTOR	1-207
2835324-0100	.BENDING ROLLER	1-205

Part No	Description	Page No
2835326-0000	.SHAFT	4-107, 4-109, 4-111, 4-117, 4-119, 4-121
2835327-0000	.CATCH	4-107, 4-109, 4-111, 4-117, 4-119, 4-121
2835328-0000	.BEARING HOUSING	4-107, 4-109, 4-111, 4-117, 4-119, 4-121
2835329-0000	.RAIL	4-107, 4-109, 4-111, 4-117, 4-119, 4-121
2835504-0200	.VOLUME CURVE PIECE	4-49, 4-51
2835891-0000	.BRACKET	6-51
2835898-0200	.CENTRAL MODULE	2-3
2835927-0000	.PIN	2-33
2836229-0100	.DRAINING	2-5
2836230-0000	.DRAINING	2-11
2836488-0200	.MOTOR BRACKET	3-7
2836489-0200	.MOTOR BRACKET	3-31
2836490-0000	.MOTOR BRACKET	3-37
2836491-0000	.STIFFENING PLATE	3-19, 3-37
2836494-0000	.PIN	3-19, 3-37
2836502-0000	.SCREW	3-19, 3-37
2837076-0000	.BUSBAR	4-115
2837077-0000	.BUSBAR	4-125
2837085-0100	.TRANSFORMER	4-117, 4-119, 4-121
2837086-0100	.TRANSFORMER	4-107, 4-109, 4-111
2837089-0200	.CONNECTION BOX	2-5
2837091-0200	.CONNECTION BOX	2-31
2837093-0000	.BRACKET	4-17
2837094-0000	.SHIM	4-91, 4-93, 4-95, 4-97
2837503-0105	.TRANSFORMER	4-115, 4-125
2837504-0200	.COVERING PANEL	6-3
2837507-0000	.COVER	6-49
2837508-0000	.COVER	6-49
2837511-0000	.DOOR	6-49
2837512-0000	.FRAME	6-51
2837513-0200	.MACHINE BODY	6-3
2837514-0000	.WASTE BOX	6-51
2837515-0000	.HANGER	6-51
2837516-0000	.HOLDER	6-51
2837517-0000	.PIPE	6-29
2837634-0000	.PIPE	2-219
2837721-0000	.TUBE	4-43
2838020-0200	.DOOR	2-123, 2-125
2838021-0000	.BEAM	2-7
2838022-0200	.DOOR	2-123, 2-125
2838024-0000	.DOOR	2-137
2838025-0100	.DOOR	2-123, 2-125
2838026-0200	.DOOR	2-123, 2-125
2838047-0100	.DOOR	2-123, 2-125
2838048-0000	.DOOR	2-141
2838049-0200	.DOOR	2-123, 2-125
2838068-0000	.PLATFORM	2-99, 2-101, 2-107
2838069-0000	.PLATFORM	2-107
2838071-0200	.FRONT PLATFORM	2-71, 2-73, 2-75, 2-77, 2-79, 2-81
2838074-0000	.PLATE	2-7
2838076-0000	.COVER	2-7
2838095-0000	.DOOR	2-143
2838096-0200	.DOOR	2-123, 2-125
2838098-0200	.DOOR	2-123, 2-125
2838100-0200	.DOORS AND COVERS	2-3
2838103-0200	.DOOR	2-123, 2-125
2838219-0000	.LOCK WASHER	5-35
2838220-0000	.ROUND NUT	5-35
2838279-0200	.DOOR	2-123, 2-125
2838288-0000	.DOOR	2-131, 2-133, 2-137, 2-141, 2-143, 2-147, 2-159
2838346-0000	.TUBE	4-43
2838347-0000	.BLOCK	2-37, 2-39
2838995-0200	.CLEANING SYSTEM	2-3
2838998-0000	.SIDE PLATE	2-167
2839000-0200	.FRONT MODULE	2-3
2839231-0000	.WHEEL	1-207
2839232-0000	.ROD	1-207
2839233-0000	.PLATE	1-207
2839234-0000	.FLANGE	1-207
2839235-0000	.ROLLER	1-207
2839240-0200	.FILLING PIPE	1-269
2839242-0000	.BRACKET	1-187, 1-189, 1-191
2839243-0000	.BRACKET	1-103
2839244-0100	.PNEUMATIC SYSTEM	1-5, 1-7, 1-9
2839248-0200	.CABLE	1-5, 1-7, 1-9
2839250-0000	.RAIL	1-57, 6-45
2839254-0000	.CONNECTION BOX	1-245
2839255-0100	.PRESSURE SWITCH	1-5, 1-7, 1-9
2839256-0000	.BRACKET	1-245
2839258-0000	.SPACER	1-245
2839259-0100	.CLEANING CUP	1-269
2839265-0300	.COVERING PANEL	1-5, 1-7, 1-9
2839270-0100	.HYDROGEN PEROXIDE	2-197
2839271-0000	.TUBE	2-217

Part No	Description	Page No
2839272-0000	.TUBE	2-217
2839273-0000	.TUBE	2-217
2839275-0000	.BRACKET	1-255, 1-257, 1-259
2839278-0000	.BRACKET	1-205
2839516-0000	.PANEL	2-49
2839628-0100	.VALVE PANEL	2-31
2839823-0100	.DRAINING	2-181
2839826-0000	.GASKET	2-33
2839827-0000	.COVER	2-33
2839829-0100	.LEVEL CONTROL DEVICE	2-181
2839830-0200	.CABLE CONNECTION	2-5
2839832-0000	.SCREW	2-99, 2-101
2839869-0000	.TOE PLATE	2-107
2839870-0000	.TOE PLATE	2-107
2839871-0000	.TOE PLATE	2-107
2839872-0000	.CHECKER PLATE	2-107
2839873-0000	.CHECKER PLATE	2-107
2840039-0000	.SHUTTER	1-193
2840040-0100	.REGULATING VALVE	1-187, 1-189, 1-191
2840047-0000	.CHECKER PLATE	2-99, 2-101
2840049-0000	.TOE PLATE	2-99, 2-101
2840050-0000	.CHECKER PLATE	2-99, 2-101
2840051-0000	.CHECKER PLATE	2-99, 2-101
2840057-0000	.CHECKER PLATE	2-107
2840686-0200	.FRONT COVER	2-123, 2-125
2840896-0000	.PIPE	6-31
2840897-0000	.PIPE	6-31
2840898-0000	.PIPE	6-31
2840899-0000	.PIVOT BRACKET	6-17
2840901-0000	.MACHINE BODY	6-13
2840902-0000	.SIGN	6-17
2841050-0200	.DOOR	2-5
2841051-0000	.SUPPORT	7-159
2841055-0200	.DOOR SAFETY SWITCH	2-3
2841056-0200	.PIVOT ARM	2-5
2841057-0000	.BLOCKING PIECE	2-17
2841058-0000	.MOTOR COVER	2-167
2841496-0100	.CABLE CONNECTION	4-5
2841568-0000	.PIPE	4-43
2841925-0200	.BAR	8-157
2841942-0200	.COVERING PANEL	8-169, 8-171
2841943-0200	.COVERING PANEL	8-169, 8-171

Part No	Description	Page No
2842734-0000	.COVER PLATE	2-59
2842948-0100	.LOCK	7-135
2842949-0000	.BASE PLATE	7-131, 7-137
2842951-0100	.CYLINDER	7-135
2842952-0000	.SPACER	7-129, 7-135
2842953-0100	.MATERIAL HOLDER L2	7-3
2842956-0100	.LOCK	7-129
2842959-0100	.CYLINDER	7-129
2842960-0000	.BRACKET	7-129
2842961-0000	.ROCKER ARM	7-129
2842962-0100	.MATERIAL HOLDER L1	7-3
2842964-0000	.ROCKER ARM	7-129
2842965-0000	.BEARING BLOCK	7-5, 7-7
2842972-0200	.COVERING PANEL	7-3
2842973-0000	.PIN	7-5, 7-7
2842974-0000	.PLATE	7-65
2842975-0100	.PRESSURE JAW	7-141
2842976-0000	.BRACKET	7-149
2842977-0100	.SIDE FEEDER	7-3
2842982-0100	.TEMPLATE	11-5
2842984-0000	.TOOL	11-27
2842985-0000	.TOOL	11-27
2843002-0100	.SETTING TOOL	11-3
2843012-0100	.TEMPLATE	11-5
2843327-0000	.GASKET	2-7
2843328-0000	.GASKET	2-7
2843329-0000	.GASKET	2-7
2843330-0000	.GASKET	2-7
2843331-0000	.GASKET	2-7
2843695-0100	.CLAMPING PIECE	11-5
2843709-0000	.SHAFT	11-29
2843998-0000	.TUBE	1-163
2844048-0000	.TUBE	2-205
2844051-0000	.TUBE	1-163
2844052-0000	.TUBE	1-163
2844053-0000	.TUBE	2-205
2844171-0000	.BRACKET	7-171
2844173-0000	.BRACKET	7-171
2844174-0000	.ANGLE PIECE	7-129, 7-135
2844175-0000	.RAIL	7-131, 7-137
2844176-0000	.SPACER	7-131, 7-137
2844177-0000	.CYLINDER	7-133, 7-139

Part No	Description	Page No
2844178-0000	.PIN	7-129, 7-135
2844179-0000	.PIN	7-129, 7-135
2844180-0200	.MACHINE BODY	7-3
2844181-0000	.ROCKER ARM	7-135
2844182-0000	.PIN	7-37
2844183-0000	.BRACKET	7-37
2844184-0200	.BRACKET	7-5, 7-7
2844185-0000	.SPACER	7-131, 7-137
2844188-0000	.PIN	7-5, 7-7
2844189-0000	.SLIDER	7-149
2844190-0000	.DOLLY	7-149, 9-19
2844252-0000	.CANTILEVER	4-155, 4-157
2844253-0000	.FASTENING PLATE	4-155, 4-157
2844532-0000	.RAILING	2-115, 2-117, 2-119, 2-121
2844591-0000	.PIPE	2-11
2844593-0100	.LUBRICATION UNIT	2-43
2844594-0100	.LUBRICATING SYSTEM	2-31
2844595-0100	.LEG STAND	11-69
2844596-0000	.LEG	11-77
2844597-0000	.BRACKET	2-167
2844598-0000	.BRACKET	2-167
2845288-0000	.SIDE PLATE	2-167
2845289-0000	.SIDE PLATE	2-167
2845290-0100	.WASTE CONVEYOR	2-3
2845292-0000	.SHAFT	2-167
2845294-0000	.CONVEYOR CHAIN	2-167
2845716-0100	.PIPE WORK-WATER	2-31
2845870-0000	.SPACER	7-147
2845877-0200	.CONTROL PANEL	7-161
2845878-0000	.PUSH BUTTON BOX	7-163
2845879-0000	.PLATE	7-75, 7-77
2845880-0000	.CABLE DUCT	7-17, 7-19
2845881-0000	.BRACKET	7-17, 7-19
2845883-0000	.BRACKET	7-141
2845884-0200	.DOOR	7-151
2845885-0000	.DOOR	7-153
2845886-0200	.DOOR	7-151
2845887-0000	.DOOR	7-157
2845888-0200	.CONTROL PANEL	7-153
2845889-0200	.FAN SYSTEM	7-111
2845890-0000	.BRACKET	7-125
2845892-0000	.INFEEDER	7-141
2845893-0000	.INFEEDER	7-141
2845896-0000	.PIN	7-149
2845897-0000	.PIN	7-149
2845903-0000	.CARRIER RULER	4-127, 4-129, 4-131, 4-133
2845909-0000	.CARRIER RULER	4-135, 4-137, 4-139, 4-141
2846012-0000	.CARRIER	4-127, 4-129, 4-131, 4-133, 4-135, 4-137, 4-139, 4-141
2846027-0000	.CLAMP LUG	1-13
2846076-0000	.BRACKET	1-111
2846077-0000	.PLATE	1-111
2846079-0000	.BRACKET	1-111
2846080-0000	.SHIM	1-103
2846083-0000	.BRACKET	1-185
2846090-0100	.SPRAY SYSTEM	1-195
2846091-0000	.BRACKET	1-203
2846094-0000	.PIPE	1-203
2846095-0100	.PEROXIDE PIPE	1-195
2846096-0000	.PIPE	1-203
2846097-0000	.PIPE	1-203
2846098-0000	.COMPRESSOR UNIT	6-15
2846099-0100	.VALVE PANEL	1-213
2846102-0100	.AIR PANEL	6-35
2846106-0000	.SUPPORT	1-205
2846108-0000	.FORMING ROLLER	1-283, 1-285, 1-287
2846109-0100	.CLEANING SYSTEM	1-5, 1-7, 1-9
2846111-0000	.BRACKET	1-233, 1-235, 1-237
2846112-0000	.BENDING ROLLER	1-139
2846115-0100	.CABLE TRENCH	1-5, 1-7, 1-9
2846117-0000	.COVER	1-253
2846123-0000	.RAIL	1-123
2846124-0100	.LUBRICATION UNIT	4-5
2846571-0002	.INSTALLATION DRAWING	1-59
2846652-0000	.FLAG	11-79
2846653-0000	.HOLDER	11-79
2846655-0000	.HOLDER	11-79
2846656-0100	.LIFTING UNIT	11-69
2846657-0000	.SHAFT	11-79
2847235-0000	.RAIL	1-95
2847310-0000	.CONNECTION	1-99
2847313-0000	.NUT	1-233, 1-235, 1-237
2847375-0100	.LUBRICATION UNIT	4-5
2847933-0000	.BELT HOLDER	3-15
2847936-0000	.CONNECTION CLAMP	3-23

Part No	Description	Page No
2847940-0000	.SPACER	3-27
2849951-0000	.JOINT	4-25
2849952-0000	.JOINT	4-17
2849953-0000	.BAR	4-35, 4-37
2849955-0000	.CABLE	2-171
2849956-0000	.PLATE	5-49
2849957-0000	.LOCKING ARM	2-137, 2-141
2849958-0000	.SUPPORT	2-21, 2-23
2849959-0000	.SHAFT	2-167
2850458-0000	.WASHER	7-141
2850459-0000	.TIE ROD	7-149
2850460-0100	.SLIDER	7-53, 7-55
2850461-0100	.SLIDER	7-53, 7-55
2850462-0100	.ROLLER	7-53, 7-55
2850463-0000	.FLANGE	7-5, 7-7
2850464-0000	.BRACKET	7-79
2850465-0000	.CHAIN	7-39
2850466-0000	.BRACKET	7-39
2850467-0000	.BRACKET	7-39
2850468-0100	.CHAIN	7-5, 7-7
2850471-0000	.BRACKET	7-5, 7-7
2850472-0000	.FLAG	7-129, 7-135
2850474-0001	.BRACKET	7-15
2850474-0002	.BRACKET	7-15
2850474-0003	.BRACKET	7-15
2850474-0004	.BRACKET	7-15
2850474-0005	.BRACKET	7-15
2850474-0006	.BRACKET	7-15
2850475-0100	.HEATING UNIT	7-141
2850476-0000	.SHAFT	7-141
2850477-0000	.BRACKET	7-141
2852315-0000	.SHAFT	5-9, 5-15, 5-17
2852318-0000	.PIN	11-49
2852320-0000	.BOTTOM	5-107, 5-109
2852321-0000	.BLOCK	5-71, 5-73
2852322-0000	.BLOCK	5-79, 5-81, 5-83, 5-85
2852323-0000	.PUSHER	5-79, 5-81, 5-83, 5-85
2852324-0000	.NOZZLE	5-75, 5-77
2852325-0000	.NOZZLE	5-75, 5-77
2852326-0000	.NOZZLE	5-75, 5-77
2852327-0000	.FOLDING BAR	5-115, 5-117, 5-119, 5-121
2852328-0000	.FOLDING BAR	5-115, 5-117, 5-119, 5-121
2852329-0000	.PUSHER	5-79, 5-81, 5-83, 5-85
2852330-0000	.PUSHER	5-79, 5-81, 5-83, 5-85
2852331-0001	.PIPE	5-75, 5-77
2852331-0002	.PIPE	5-75, 5-77
2852331-0003	.PIPE	5-75, 5-77
2852331-0004	.PIPE	5-75, 5-77
2852331-0005	.PIPE	5-75, 5-77
2852333-0000	.PLATE	5-115, 5-117, 5-119, 5-121
2852363-0000	.SUPPORT	5-11
2852372-0000	.SUPPORT	5-63, 5-65, 5-67
2852373-0000	.INSULATOR	5-11
2852374-0000	.CLAMP	5-11
2852375-0000	.CLAMP	5-11
2852376-0000	.BRACKET	5-11
2852377-0000	.BRACKET	5-11
2852382-0100	.FIN FOLDER	5-51
2852384-0000	.SHAFT	5-53, 5-55
2852385-0000	.SUPPORT	5-53, 5-55
2852386-0000	.PLATE	5-71, 5-73
2852391-0000	.SHAFT	5-53, 5-55
2852392-0000	.SPACER	5-53, 5-55
2852393-0000	.PLATE	5-11
2852396-0000	.FRAME	5-11
2852397-0000	.SUPPORT	5-37, 5-39
2852400-0000	.PLATE	5-37, 5-39
2852401-0000	.TIGHTENING SCREW	5-37, 5-39
2852404-0000	.GUIDE	5-7
2852408-0000	.SUPPORT	5-15, 5-17
2852409-0000	.CRADLE	5-57, 5-59, 5-61
2852410-0000	.SHIM	5-79, 5-81, 5-83, 5-85, 9-19
2852411-0000	.WALL	5-47
2852412-0000	.WALL	5-47
2852413-0000	.CHUTE	5-63, 5-65, 5-67
2852414-0000	.CHUTE	5-63, 5-65, 5-67
2852425-0300	.STEAM TRAP	1-181
2852874-0000	.SUPPORT	5-97, 9-49
2854316-0000	.SUPPORT	4-39, 4-41
2854317-0000	.TOOTHED PULLEY	4-39, 4-41
2854318-0000	.BRACKET	4-41
2854319-0000	.SUPPORT	4-39, 4-41
2854320-0300	.DRIVE UNIT	4-33
2854324-0000	.SPACER	4-39, 4-41

Part No	Description	Page No
2854325-0000	.BRACKET	4-39
2854326-0300	.DRIVE UNIT	4-33
2855849-0000	.COVER	5-13
2856954-0000	.COAXIAL CABLE	2-173, 2-175, 4-43
2859594-0000	.CONNECTION BOX	7-41, 7-43
2859983-0000	.GASKET	4-39, 4-41
2860198-0000	.SPACER	7-141
2860199-0000	.SHIM	7-143
2860200-0000	.SHIM	7-143
2860201-0000	.SCISSORS	7-143
2860202-0000	.BRACKET	7-143
2860204-0000	.BRACKET	7-143
2860205-0000	.RING	7-141
2860209-0000	.BRACKET	7-65
2860210-0000	.BRACKET	7-65
2860211-0000	.BLOCK	7-131, 7-137
2860213-0200	.STRIP GUIDE	7-111
2860216-0000	.FLANGE	7-141
2861074-0100	.BAR	8-153
2861076-0100	.BAR	8-15, 8-17, 8-19
2861078-0100	.BAR	8-77
2861079-0100	.BAR	8-77
2861080-0100	.BAR	8-77
2861081-0100	.BAR	8-77
2861082-0200	.BAR	8-77
2861083-0200	.BAR	8-77
2861084-0100	.BAR	8-77
2861085-0100	.BAR	8-77
2861087-0100	.BAR	8-51
2861088-0100	.BAR	8-77
2861089-0100	.BAR	8-77
2861090-0100	.BAR	8-77
2861091-0100	.BAR	8-77
2861092-0100	.BAR	8-77
2861093-0100	.BAR	8-51
2861094-0100	.BAR	8-51
2861095-0100	.BAR	8-51
2861097-0100	.BAR	8-51
2861098-0100	.BAR	8-51
2861099-0100	.BAR	8-51
2861100-0100	.BAR	8-51
2861202-0000	.COLUMN	4-7
2861205-0000	.CHECKER PLATE	2-107
2861457-0000	.SUPPORT	2-107
2861837-0000	.CHECKER PLATE	2-107
2861851-0200	.DOOR	2-123, 2-125
2861853-0200	.DOOR	2-123, 2-125
2861854-0200	.DOOR	2-123, 2-125
2861857-0000	.LOCKING ARM	2-153
2861858-0000	.LOCKING ARM	2-127, 2-129
2862409-0000	.CHECKER PLATE	2-99, 2-101
2862751-0100	.PHOTOCELL UNIT	4-49, 4-51
2863096-0000	.PANEL	1-219, 1-221
2863097-0100	.VALVE RAMP	1-219, 1-221
2863098-0100	.VALVE RAMP	1-219, 1-221
2863377-0100	.VALVE GROUP	2-49
2863998-0000	.SHAFT	1-293, 1-295, 1-297
2863999-0000	.BRACKET	1-293, 1-295, 1-297
2864004-0000	.DOOR	1-255, 1-257
2864005-0100	.PRODUCT VALVE	1-171
2864006-0000	.BRACKET	1-215, 1-217
2864007-0000	.PIPE	1-215, 1-217
2864008-0000	.PIPE	1-215, 1-217
2864014-0000	.BRACKET	1-215, 1-217
2864015-0000	.PIPE	1-215, 1-217
2864016-0000	.PIPE	1-215, 1-217
2864017-0000	.BRACKET	1-215, 1-217
2864018-0000	.BRACKET	1-215, 1-217
2864019-0000	.PIPE	1-215, 1-217
2864021-0100	.PIPE WORK-AIR	6-35
2864022-0200	.PANEL	6-3
2864023-0100	.FLOW METER	6-13
2864024-0100	.COOLING WATER SYSTEM	6-3
2864025-0100	.CLEANING SYSTEM	6-3
2864030-0100	.COOLING WATER PUMP	6-13
2864031-0100	.COMPRESSOR UNIT	6-13
2864032-0100	.SUPPLY SYSTEM	6-3
2864033-0100	.EXPANSION VESSEL	6-13
2864035-0000	.CABLE TRENCH	1-253
2864036-0000	.CABLE TRENCH	1-253
2864037-0000	.CABLE TRENCH	1-253
2864038-0000	.CABLE TRENCH	1-253
2864039-0000	.CABLE TRENCH	1-253
2864040-0000	.CABLE TRENCH	1-253

Part No	Description	Page No
2864041-0000	.BRACKET	1-253
2864042-0000	.CABLE TRENCH	1-253
2864045-0000	.DRAIN PLATE	2-155
2864046-0000	.BEAM	2-7
2864048-0000	.SPLASH PLATE	2-155
2864049-0000	.BRACKET	4-45
2864144-0000	.BACK PLATE	2-167
2864204-0000	.CABLE DUCT	2-59
2864951-0000	.HEATING PIPE	5-13
2867520-0100	.VOLUME ADJUSTER	4-5
2867521-0000	.SHAFT	4-45
2867523-0000	.ROLLER	4-45
2867530-0200	.DRAINING	2-5
2867894-0000	.BRACKET	7-5, 7-7
2867896-0000	.PIN	7-141
2867897-0000	.ARM	7-129, 7-135
2867901-0200	.DOOR	7-151
2867902-0000	.DOOR	7-161
2867903-0100	.DOOR	7-151
2867904-0000	.DOOR	7-165
2867907-0100	.DOOR	7-151
2867908-0000	.DOOR	7-159
2867910-0000	.BRACKET	7-5, 7-7
2867911-0000	.SHIM	7-171
2868067-0100	.BAR	8-25
2868068-0200	.BAR	8-25
2868069-0100	.BAR	8-25
2868070-0200	.BAR	8-15, 8-17, 8-19
2868071-0100	.BAR	8-27
2868072-0100	.BAR	8-27
2868073-0100	.BAR	8-27
2868113-0100	.CLEANING PUMP	6-25
2868114-0100	.PIPE	6-25
2868115-0100	.BRANCHING PIPE	6-25
2868278-0200	.AIR NOZZLE	7-111
2868280-0100	.HOT AIR ELEMENT	7-111
2868281-0100	.HOT AIR ELEMENT	7-111
2868283-0000	.TOOL	11-37
2868610-0000	.CABLE DUCT	2-171
2868611-0000	.CABLE DUCT	2-171
2868612-0000	.CABLE DUCT	2-171
2868613-0000	.CABLE DUCT	2-171
2868614-0100	.ELECTRIC EQUIPMENT	2-169
2868788-0000	.SPACER	3-9
2869011-0100	.CARRIER PRESSURE	4-49, 4-51
2869012-0100	.CARRIER PRESSURE	4-49, 4-51
2869013-0100	.CARRIER CUTTING	4-49, 4-51
2869014-0100	.CARRIER CUTTING	4-49, 4-51
2869015-0100	.PRESSURE JAW	4-49, 4-51
2869016-0100	.PRESSURE JAW	4-49, 4-51
2869017-0100	.CUTTING JAW	4-49, 4-51
2869018-0100	.CUTTING JAW	4-49, 4-51
2869019-0200	.VOLUME FLAP	4-49, 4-51
2869175-0000	.PLUG	1-233, 1-235, 1-237
2869193-0000	.PIN	4-65, 4-67, 4-69, 4-73, 4-77, 4-89
2869194-0000	.DAMPER	4-65, 4-67, 4-69, 4-73, 4-77, 4-89
2869195-0000	.STOP	4-65, 4-67, 4-69, 4-73, 4-77, 4-89
2869196-0000	.BLOCK	4-91, 4-93, 4-95, 4-97
2869199-0000	.BLOCK	4-99, 4-101, 4-103, 4-105
2869200-0000	.CARRIER	4-99, 4-101
2869201-0000	.BEARING HOUSING	4-127, 4-129, 4-131, 4-133, 4-135, 4-137, 4-139, 4-141
2869202-0000	.SUPPORT	4-107, 4-109, 4-111, 4-117, 4-119, 4-121
2869203-0000	.CARRIER	4-103, 4-105
2869204-0000	.CARRIER	4-95, 4-97
2869205-0000	.CARRIER	4-91, 4-93
2869206-0200	.SHOCK ABSORBER	4-53, 4-75
2869207-0200	.VOLUME FLAP	4-53, 4-71, 4-75, 4-87
2869590-0000	.COVER PLATE	8-149, 8-151
2869632-0000	.PIPE	1-149, 1-151
2869886-0000	.BLOCK	5-47
2869887-0000	.PLATE	5-47
2870078-0000	.CONNECTION	1-123
2870080-0000	.HOLDER	4-65, 4-67, 4-69
2870941-0000	.PIPE	1-149, 1-151
2870942-0000	.PIPE	1-149, 1-151
2871042-0000	.THROTTLE SCREW	1-149, 1-151
2871444-0000	.HOSE HOLDER	1-215, 1-217
2871449-0200	.TERMINAL BLOCK	1-241
2871450-0200	.CONNECTION BOX	1-5, 1-7, 1-9
2871451-0200	.CONNECTION BOX	6-3
2871452-0200	.TERMINAL BLOCK	6-45
2871457-0000	.CONNECTION BOX	1-241
2871459-0000	.PLATE	6-41
2871461-0000	.BRACKET	1-205

Part No	Description	Page No
2871471-0000	.BRACKET	1-145
2871480-0100	.NET	6-3
2871481-0100	.PRESSURE SIDE	6-25
2871489-0000	.PIPE	1-215, 1-217
2871490-0000	.INSERT	1-111
2871491-0100	.CABLE	6-3
2871496-0000	.BRACKET	1-111
2871497-0000	.HEATING PIPE	1-145
2871499-0000	.PIPE	1-215, 1-217
2871502-0000	.INSERT	1-157
2871510-0200	.LS TEMPLATE	11-5
2871511-0000	.BRACKET	11-47
2871512-0000	.BRACKET	11-47
2871513-0000	.STOPPER	11-47
2871514-0000	.STOPPER	11-47
2871515-0000	.STOPPER	11-47
2871516-0000	.STOPPER	11-47
2871517-0000	.STOPPER	11-47
2871518-0000	.STOPPER	11-47
2871519-0000	.STOPPER	11-47
2871520-0000	.STOPPER	11-47
2871525-0200	.PRESSURE ROLLER	1-109
2871529-0000	.BLOCK	1-203
2871530-0000	.ROLLER	1-283, 1-285, 1-287
2871532-0000	.ROLLER	1-283, 1-285, 1-287
2871534-0000	.ROLLER	1-283, 1-285, 1-287
2871536-0000	.ROLLER	1-283, 1-285, 1-287
2871540-0100	.AIR NOZZLE	1-271
2871883-0000	.HEATING PIPE	1-143
2871925-0000	.FOLDING BAR	5-115, 5-117, 5-119, 5-121
2871926-0000	.FOLDING BAR	5-115, 5-117, 5-119, 5-121
2871927-0001	.FOLDING BAR	5-115, 5-117, 5-119, 5-121
2871927-0002	.FOLDING BAR	5-115, 5-117, 5-119, 5-121
2871927-0003	.FOLDING BAR	5-115, 5-117, 5-119, 5-121
2871927-0004	.FOLDING BAR	5-115, 5-117, 5-119, 5-121
2871927-0005	.FOLDING BAR	5-115, 5-117, 5-119, 5-121
2871927-0006	.FOLDING BAR	5-115, 5-117, 5-119, 5-121
2871927-0007	.FOLDING BAR	5-115, 5-117, 5-119, 5-121
2871928-0001	.FOLDING BAR	5-115, 5-117, 5-119, 5-121
2871928-0002	.FOLDING BAR	5-115, 5-117, 5-119, 5-121
2871928-0003	.FOLDING BAR	5-115, 5-117, 5-119, 5-121
2871928-0004	.FOLDING BAR	5-115, 5-117, 5-119, 5-121
2871928-0005	.FOLDING BAR	5-115, 5-117, 5-119, 5-121
2871928-0006	.FOLDING BAR	5-115, 5-117, 5-119, 5-121
2871928-0007	.FOLDING BAR	5-115, 5-117, 5-119, 5-121
2871929-0100	.DROP CHUTE VARIANT	5-51
2871931-0002	.FOLDING BAR	5-115, 5-117, 5-119, 5-121
2871931-0004	.FOLDING BAR	5-115, 5-117, 5-119, 5-121
2871931-0005	.FOLDING BAR	5-115, 5-117, 5-119, 5-121
2871932-0001	.FOLDING BAR	5-115, 5-117, 5-119, 5-121
2871932-0002	.FOLDING BAR	5-115, 5-117, 5-119, 5-121
2871932-0003	.FOLDING BAR	5-115, 5-117, 5-119, 5-121
2871932-0004	.FOLDING BAR	5-115, 5-117, 5-119, 5-121
2871932-0005	.FOLDING BAR	5-115, 5-117, 5-119, 5-121
2871933-0001	.FOLDING BAR	5-115, 5-117, 5-119, 5-121
2871933-0002	.FOLDING BAR	5-115, 5-117, 5-119, 5-121
2871933-0003	.FOLDING BAR	5-115, 5-117, 5-119, 5-121
2871933-0005	.FOLDING BAR	5-115, 5-117, 5-119, 5-121
2871933-0007	.FOLDING BAR	5-115, 5-117, 5-119, 5-121
2871933-0008	.FOLDING BAR	5-115, 5-117, 5-119, 5-121
2871934-0001	.WALL	5-115, 5-117, 5-119, 5-121
2871934-0002	.WALL	5-115, 5-117, 5-119, 5-121
2871934-0004	.WALL	5-115, 5-117, 5-119, 5-121
2871934-0005	.WALL	5-115, 5-117, 5-119, 5-121
2871935-0002	.FOLDING BAR	5-115, 5-117, 5-119, 5-121
2871935-0004	.FOLDING BAR	5-115, 5-117, 5-119, 5-121
2871935-0005	.FOLDING BAR	5-115, 5-117, 5-119, 5-121
2871936-0001	.FOLDING BAR	5-115, 5-117, 5-119, 5-121
2871936-0002	.FOLDING BAR	5-115, 5-117, 5-119, 5-121
2871936-0003	.FOLDING BAR	5-115, 5-117, 5-119, 5-121
2871936-0004	.FOLDING BAR	5-115, 5-117, 5-119, 5-121
2871936-0005	.FOLDING BAR	5-115, 5-117, 5-119, 5-121
2871937-0001	.FOLDING BAR	5-115, 5-117, 5-119, 5-121
2871937-0002	.FOLDING BAR	5-115, 5-117, 5-119, 5-121
2871937-0003	.FOLDING BAR	5-115, 5-117, 5-119, 5-121
2871937-0005	.FOLDING BAR	5-115, 5-117, 5-119, 5-121
2871937-0007	.FOLDING BAR	5-115, 5-117, 5-119, 5-121
2871937-0008	.FOLDING BAR	5-115, 5-117, 5-119, 5-121
2871938-0001	.WALL	5-115, 5-117, 5-119, 5-121
2871938-0002	.WALL	5-115, 5-117, 5-119, 5-121
2871938-0004	.WALL	5-115, 5-117, 5-119, 5-121
2871938-0005	.WALL	5-115, 5-117, 5-119, 5-121
2871940-0000	.PUSHER	5-79, 5-81, 5-83, 5-85
2871943-0000	.GUIDE	5-63, 5-65, 5-67

Machine Type Group Description Page No

Part No	Description	Page No
2871944-0000	.GUIDE	5-63, 5-65, 5-67
2871945-0000	.SUPPORT	5-63, 5-65, 5-67
2871949-0000	.BRACKET	5-97, 9-49
2871950-0000	.SEAL	5-9, 5-15, 5-17
2871951-0100	.CONNECTOR	5-37, 5-39
2871952-0100	.CONNECTOR	5-37, 5-39
2871954-0000	.SUPPORT	5-47
2871955-0001	.SPACER	5-57, 5-59, 5-61
2871955-0002	.SPACER	5-57, 5-59, 5-61
2871955-0003	.SPACER	5-57, 5-59, 5-61
2871955-0004	.SPACER	5-57, 5-59, 5-61
2871955-0005	.SPACER	5-57, 5-59, 5-61
2871955-0006	.SPACER	5-57, 5-59, 5-61
2871955-0007	.SPACER	5-57, 5-59, 5-61
2871955-0008	.SPACER	5-57, 5-59, 5-61
2871955-0009	.SPACER	5-57, 5-59, 5-61
2871955-0010	.SPACER	5-57, 5-59, 5-61
2871956-0000	.PUSHER	5-87, 5-89, 5-91, 9-23, 9-25, 9-27
2871957-0200	.HEATING ELEMENT	5-11
2871958-0000	.STOPPER	5-11
2871959-0000	.PLATE	5-53, 5-55
2871960-0000	.SPACER	5-53, 5-55
2871961-0000	.FLAP	5-107, 5-109
2871962-0000	.BOTTOM	5-107, 5-109
2871963-0000	.BLOCK	5-71, 5-73
2871964-0000	.PUSHER	5-79, 5-81, 5-83, 5-85
2871965-0000	.BLOCK	5-79, 5-81, 5-83, 5-85
2871966-0000	.BLOCK	5-79, 5-81, 5-83, 5-85
2871967-0000	.NOZZLE	5-75, 5-77
2871968-0000	.NOZZLE	5-75, 5-77
2871969-0000	.NOZZLE	5-75, 5-77
2871970-0000	.PLATE	5-75, 5-77
2871971-0000	.GUIDE	5-63, 5-65, 5-67
2871972-0000	.GUIDE	5-63, 5-65, 5-67
2871973-0000	.WALL	5-63, 5-65, 5-67
2872387-0000	.PIPE	2-165
2872390-0000	.PIPE	2-165
2872393-0000	.HOLDER	2-33
2874198-0000	.SPACER	7-143
2874301-0000	.HEATER	1-149, 1-151
2874647-0000	.SUPPORT	2-167
2874702-0000	.PIPE	1-185
2874823-0000	.SUPPORT	2-165
2875858-0200	.CHEMICALS	2-181
2876196-0200	.DIAGRAM	9-3
2876321-0000	.SUPPORT	2-171
2876614-0200	.CENTRAL MODULE	2-31
2877368-0000	.HOLDER	2-33
2877590-0100	.TUBE FLUSHING	2-31
2877756-0000	.PROTECTION	1-245
2878264-0000	.PLATE	6-37
2878265-0100	.VALVE GROUP	6-37
2878267-0100	.VALVE PANEL	6-35
2878910-0000	.BRACKET	7-147
2878911-0000	.PAPER GUIDE	7-141
2879021-0000	.PLATE	7-23, 7-25
2879022-0100	.VALVE RAMP	7-23, 7-25
2879023-0200	.AIR SUPPLY UNIT	7-23, 7-25
2879024-0100	.VALVE GROUP	7-23, 7-25
2879025-0100	.FILTER	7-23, 7-25
2879216-0000	.STEAM PIPE	1-35
2879217-0000	.STEAM PIPE	1-35
2879218-0000	.STEAM PIPE	1-35
2882296-0200	.CABLE CONNECTION	5-5
2882428-0000	.HORN	1-149, 1-151
2883295-0000	.BUSHING	1-153
2887849-0000	.PLATE	7-21
2887850-0000	.PLATE	7-13
2887851-0000	.PLATE	7-13
2887852-0000	.PLATE	7-21
2887853-0200	.SHORT STOP ELEMENT	7-111
2887854-0000	.NOZZLE	7-119
2887888-0000	.RAIL	7-149
2887889-0000	.PLATE	7-141
2888282-0000	.LEVER	7-119
2888283-0000	.SHAFT	7-119
2888284-0000	.FLANGE	7-119
2888285-0000	.HOLDER	7-119
2888286-0000	.SHAFT	7-119
2888287-0000	.FLANGE	7-119
2888288-0000	.SHAFT	7-119
2888463-0000	.CATCH	4-127, 4-129, 4-131, 4-133, 4-135, 4-137, 4-139, 4-141
2889350-0000	.PLATE	7-47
2889624-0200	.ACCESSORIES	11-3

Part No	Description	Page No
2889625-0100	.START-UP KIT	9-3
2889626-0100	.START-UP KIT	9-19
2889628-0100	.SETTING TOOL	11-5, 11-35
2889884-0100	.TOOL	11-3
2889885-0000	.BLOCK	4-13, 4-21
2889946-0000	.HOSE	4-13, 4-21
2889947-0000	.HOSE	4-13, 4-21
2890041-0000	.WASHER	1-153
2890043-0000	.ROLLER	1-279, 1-281
2890044-0000	.ROLLER	1-283, 1-285, 1-287
2890045-0200	.BASE UNIT	1-3
2890046-0000	.BRACKET	1-99
2890047-0000	.VALVE BODY	1-99
2890048-0000	.PIPE	1-99
2890049-0000	.VALVE BODY	1-99
2890050-0200	.FORMING UNIT	1-3
2890051-0000	.RAIL	1-241, 1-243
2890052-0000	.COVER	6-51
2890054-0000	.GLASS PANE	1-105
2890056-0000	.GLASS PANE	1-135
2890057-0000	.GLASS PANE	1-137
2890058-0000	.GLASS PANE	1-255, 1-257
2890060-0200	.HEAD SPACE BY INJECTION	1-5, 1-7, 1-9
2890065-0200	.NOZZLE UNIT	1-85
2890073-0000	.BRACKET	1-255, 1-257
2890074-0000	.BRACKET	1-255, 1-257
2890075-0100	.PNEUMATIC PANEL	1-85
2890077-0000	.BRACKET	1-255, 1-257
2890079-0000	.BRACKET	1-255, 1-257
2890080-0200	.HEATER	1-85
2890090-0100	.LOWER SUPPORT ROLLERS	1-271
2890091-0001	.ROLLER	1-279, 1-281
2890091-0002	.TRIMMING ROLLER MINUS	9-39
2890091-0003	.TRIMMING ROLLER PLUS	9-39
2890093-0000	.FORK	1-279, 1-281
2890102-0000	.ROLLER	1-283, 1-285, 1-287
2890103-0000	.ROLLER	1-283, 1-285, 1-287
2890104-0000	.ROLLER	1-283, 1-285, 1-287
2890105-0000	.ROLLER	1-283, 1-285, 1-287
2890106-0000	.ROLLER	1-283, 1-285, 1-287
2890107-0000	.ROLLER	1-283, 1-285, 1-287
2890108-0000	.ROLLER	1-283, 1-285, 1-287
2890110-0000	.SHAFT	1-283, 1-285, 1-287
2890111-0000	.CLEANING PIPE	1-301
2890114-0000	.LOCK PLATE	1-283, 1-285, 1-287
2890115-0000	.ROLLER	1-293, 1-295, 1-297
2890117-0000	.ROLLER	1-307
2890118-0000	.SHAFT	1-307
2890119-0000	.SHAFT	1-293, 1-295, 1-297
2890132-0000	.BRACKET	1-87
2890133-0000	.PIPE	1-87
2890134-0000	.PIPE	1-87
2890241-0000	.CONNECTOR	6-19
2890279-0200	.TERMINAL BLOCK	2-55
2890280-0200	.TERMINAL BLOCK	2-21, 2-23
2890281-0300	.TERMINAL BLOCK	7-41, 7-43
2890357-0100	.ROLLER	9-3
2890411-0100	.SUPPORT	3-31
2890412-0100	.LINK	3-21, 3-27
2890413-0100	.SUPPORT	3-7
2890414-0100	.LINK	3-5, 3-29
2890415-0100	.LINK	3-5, 3-29
2890416-0100	.BELT UNIT	3-13, 3-33
2890417-0000	.LOCK COMPONENT	3-13, 3-33
2890418-0000	.LOCK COMPONENT	3-13, 3-33
2890419-0000	.LOCK COMPONENT	3-13
2890420-0000	.LOCK COMPONENT	3-33
2890421-0000	.LINK	3-23
2890422-0000	.LINK	3-21
2890692-0000	.CUTTING RAIL	4-127, 4-129, 4-131, 4-133, 4-135, 4-137, 4-139, 4-141
2890879-0000	.PIPE	2-219
2890880-0000	.CLEANING PIPE	1-301
2891814-0000	.ADJUSTING SCREW	11-101
2893286-0200	.EMERGENCY STOP	2-143
2893407-0200	.SIGNAL LAMP	2-99, 2-101
2893457-0200	.SIGNAL LAMP	2-107
2894661-0200	.MOUNTING PLATE	7-111
2894663-0000	.WALL	5-63, 5-65, 5-67
2894664-0000	.SUPPORT	5-63, 5-65, 5-67
2894665-0000	.GUIDE	5-63, 5-65, 5-67
2894666-0000	.GUIDE	5-63, 5-65, 5-67
2894667-0000	.FOLDING BAR	5-115, 5-117, 5-119, 5-121
2894669-0000	.FOLDING BAR	5-115, 5-117, 5-119, 5-121
2894672-0000	.PLATE	5-115, 5-117, 5-119, 5-121

Part No	Description	Page No
2894673-0000	.CHUTE	5-57, 5-59, 5-61
2894674-0000	.GUIDE	5-63, 5-65, 5-67
2894675-0000	.GUIDE	5-63, 5-65, 5-67
2894677-0000	.FLAP	5-107, 5-109
2894678-0000	.BOTTOM	5-107, 5-109
2894683-0000	.SUPPORT	5-63, 5-65, 5-67
2894684-0000	.GUIDE	5-63, 5-65, 5-67
2894686-0000	.BLOCK	5-71, 5-73
2894688-0000	.NOZZLE	5-75, 5-77
2894689-0000	.NOZZLE	5-75, 5-77
2894690-0000	.PLATE	5-75, 5-77
2894691-0000	.BLOCK	5-79, 5-81, 5-83, 5-85
2894692-0000	.PUSHER	5-79, 5-81, 5-83, 5-85
2894693-0000	.PUSHER	5-79, 5-81, 5-83, 5-85
2894694-0000	.PUSHER	5-87, 5-89, 5-91, 9-23, 9-25, 9-27
2894695-0000	.FOLDING BAR	5-115, 5-117, 5-119, 5-121
2894696-0000	.FOLDING BAR	5-115, 5-117, 5-119, 5-121
2894697-0000	.FOLDING BAR	5-115, 5-117, 5-119, 5-121
2894698-0000	.FOLDING BAR	5-115, 5-117, 5-119, 5-121
2894699-0000	.PLATE	5-115, 5-117, 5-119, 5-121
2894700-0000	.PUSHER	5-63, 5-65, 5-67, 9-23, 9-25, 9-27
2894710-0000	.WHEEL	9-37
2894711-0000	.SCREW	9-37
2894712-0100	.TOOL	9-3
2894713-0000	.GUIDE	5-63, 5-65, 5-67
2894714-0000	.GUIDE	5-63, 5-65, 5-67
2894715-0000	.WALL	5-63, 5-65, 5-67
2894716-0000	.WALL	5-63, 5-65, 5-67
2894718-0000	.GUIDE	5-63, 5-65, 5-67
2894719-0000	.PLATE	5-75, 5-77
2894724-0000	.PLATE	5-115, 5-117, 5-119, 5-121
2894725-0000	.FOLDING DEVICE	5-53, 5-55
2894726-0000	.FOLDING DEVICE	5-53, 5-55
2894727-0000	.FOLDING BAR	5-115, 5-117, 5-119, 5-121
2894728-0000	.FOLDING BAR	5-115, 5-117, 5-119, 5-121
2894729-0000	.VOLUME BULGE	5-79, 5-81, 5-83, 5-85
2894730-0000	.VOLUME BULGE	5-79, 5-81, 5-83, 5-85
2894732-0000	.PLUG	5-9, 5-15, 5-17
2894733-0000	.WASHER	5-9, 5-15, 5-17
2894737-0000	.PUSHER	5-87, 5-89, 5-91, 9-23, 9-25, 9-27
2894751-0000	.FLAP	5-107, 5-109
2894752-0000	.FLAP	5-107, 5-109
2894753-0000	.FLAP	5-107, 5-109
2894755-0000	.FOLDING BAR	5-115, 5-117, 5-119, 5-121
2894756-0000	.FOLDING BAR	5-115, 5-117, 5-119, 5-121
2894763-0000	.ANGLE BRACKET	7-5, 7-7
2895213-0000	.BRACKET	9-13
2896621-0000	.CATCH	7-119
2897657-0000	.BRACKET	7-115
2897659-0000	.BRACKET	7-115
2897675-0100	.BAR	8-51
2897676-0100	.BAR	8-51
2897946-0000	.SLIDE	7-141
2897977-0000	.BENDING ROLLER	7-141
2897978-0000	.SHAFT	7-141
2898134-0000	.FLANGE	2-165
2898537-0000	.ROLLER	7-67, 7-147
2898805-0000	.BLOCK	1-143
2898806-0000	.ARM	1-143
2898807-0000	.PLATE	1-143
2898808-0000	.SHAFT	1-143
2898823-0000	.GASKET	1-143
2898880-0001	.SCREW	1-153
2898880-0002	.SCREW	1-153
2898880-0003	.SCREW	1-153
2898880-0004	.SCREW	1-153
2899066-0300	.CABLE HARNESS	2-169
2899554-0000	.PLATE	3-15
2901092-0100	.SUPPORT ROLLER	4-49, 4-51
2901593-0200	.ELECTRIC EQUIPMENT	2-3
2902298-0000	.BRACKET	7-115
2902299-0000	.BRACKET	7-115
2902377-0000	.PROTECTION	7-53, 7-55
2902962-0000	.AIR NOZZLE	1-299
2903069-0100	.ROLLER	7-53, 7-55
2903070-0000	.HEAT GUARD	1-299
2903071-0000	.HOOK	7-69
2903072-0000	.PLATE	7-69
2903815-0000	.SUPPORT	7-53, 7-55
2905199-0000	.HOLDER	4-55, 4-57, 4-59, 4-61, 4-63, 4-65, 4-67, 4-69, 4-73, 4-77, 4-79, 4-81, 4-83, 4-85, 4-89
2906017-0000	.OPERATING ROD	4-99, 4-101, 4-103, 4-105
2906018-0000	.CARRIER RULER	4-127, 4-129, 4-131, 4-133
2906019-0000	.FOLDING FLAP	4-127, 4-129, 4-131, 4-133, 4-135, 4-137, 4-139, 4-141
2906020-0000	.FOLDING FLAP	4-127, 4-129, 4-131, 4-133, 4-135, 4-137, 4-139, 4-141

Part No	Description	Page No
2906021-0000	.BEARING HOUSING	4-127, 4-129, 4-131, 4-133, 4-135, 4-137, 4-139, 4-141
2906022-0000	.CARRIER RULER	4-135, 4-137, 4-139, 4-141
2906023-0000	.CARRIER	4-55, 4-57, 4-59, 4-61, 4-63, 4-79, 4-81, 4-83, 4-85
2906024-0000	.CARRIER	4-55, 4-57, 4-59, 4-61, 4-63, 4-79, 4-81, 4-83, 4-85
2906025-0000	.SHAFT	4-55, 4-57, 4-59, 4-61, 4-63, 4-79, 4-81, 4-83, 4-85
2906064-0000	.SHAFT	1-279, 1-281
2906065-0000	.ROLLER	1-279, 1-281
2906067-0000	.PIPE	1-87
2906068-0000	.PIPE	1-201
2906069-0000	.PIPE	1-97
2906070-0100	.SPRAY TANK	1-85
2906071-0000	.PIPE	1-97
2906072-0000	.PIPE	1-203
2906083-0000	.BRACKET	1-97
2906086-0000	.BRACKET	1-99
2906087-0000	.BRACKET	1-99
2906090-0100	.CONNECTION BOX	1-85
2906091-0100	.TERMINAL BLOCK	1-91
2906094-0100	.CABLE	1-247, 1-249
2906095-0000	.BRACKET	1-89
2906096-0000	.CONNECTION BOX	1-91
2906099-0000	.DISTRIBUTOR WING	1-307
2906103-0000	.ROLLER	1-291
2906104-0000	.ROLLER	1-291
2906105-0000	.ROLLER	1-291
2906111-0000	.BRACKET	1-89
2906116-0000	.SPRING	1-303, 1-305
2906117-0000	.SPRING	1-303, 1-305
2906118-0000	.LOWER SUPPORT ROLLERS	1-291
2906119-0000	.ROLLER	1-291
2906120-0000	.ROLLER	1-291
2906121-0000	.ROLLER	1-291
2906125-0000	.SPACER	1-153
2906131-0000	.BUSHING	1-153
2906135-0200	.TEMPLATE	9-3
2906139-0000	.GLASS PANE	1-255, 1-257
2906140-0100	.INTEGRATED CLEANING UNIT	1-5, 1-7, 1-9
2906141-0000	.PIPE	1-71
2906142-0000	.PIPE	1-75, 1-77
2906143-0000	.LID	1-73
2906144-0000	.PIPE	1-75, 1-77
2906145-0100	.CLEANING TANK	1-65, 1-67
2906147-0000	.TANK	1-73
2906148-0000	.STEAM PIPE	1-73
2906149-0000	.STEAM PIPE	1-81
2906150-0200	.CENTRIFUGAL PUMP	1-65, 1-67
2906152-0000	.PIPE	1-81
2906155-0100	.PIPE-LINE	1-65, 1-67
2906160-0100	.PIPE WORK	1-65, 1-67
2906161-0000	.FRAME	2-91, 2-93
2906162-0000	.FRAME	1-13
2906170-0000	.HOLDER	4-65, 4-67, 4-69
2907726-0000	.VOLUME FLAP	4-55, 4-57, 4-59, 4-61, 4-63
2907727-0000	.VOLUME FLAP	4-79, 4-81, 4-83, 4-85
2907728-0200	.VOLUME FLAP	4-75, 4-87
2907729-0200	.VOLUME FLAP	4-49, 4-51
2907732-0000	.CUTTING JAW	4-127, 4-129, 4-131, 4-133, 4-135, 4-137, 4-139, 4-141
2908756-0000	.VOLUME SHIM	4-55, 4-57, 4-59, 4-61, 4-63, 4-79, 4-81, 4-83, 4-85, 9-23, 9-25, 9-27
2908923-0000	.TOOL	11-23
2908982-0100	.FILTER	7-23, 7-25
2908996-0000	.TOOL	11-23
2908997-0100	.TOOL	11-5
2909139-0000	.BRACKET	4-47
2909367-0000	.PRESSURE ROLLER (PACK 10)	1-303, 1-305, 9-23, 9-25, 9-27
2909368-0000	.PRESSURE ROLLER (PACK 10)	1-303, 1-305, 9-23, 9-25, 9-27
2909729-0000	.TEMPLATE	11-31, 11-33
2909730-0000	.TEMPLATE	11-31, 11-33
2910371-0000	.VOLUME FLAP	4-55, 4-57, 4-59, 4-61, 4-63
2910399-0200	.PEROXIDE PIPE	2-197
2910400-0000	.PIPE	2-205
2910401-0000	.PIPE	2-205
2910402-0000	.CONNECTING PIPE	2-205
2910403-0000	.PIPE	1-201
2911790-0000	.VOLUME CAM	4-149, 4-151
2911791-0000	.VOLUME CAM	4-149, 4-151
2912228-0003	.TPOP BASIC V 3.2	10-5
2912327-0000	.LABEL	7-23, 7-25
2912412-0000	.SUPPORT	5-63, 5-65, 5-67
2912413-0000	.GUIDE	5-63, 5-65, 5-67
2912414-0000	.GUIDE	5-63, 5-65, 5-67
2912419-0000	.BLOCK	5-71, 5-73
2912423-0000	.BLOCK	5-79, 5-81, 5-83, 5-85
2912424-0000	.PUSHER	5-79, 5-81, 5-83, 5-85
2912425-0000	.BOTTOM	5-107, 5-109

Part No	Description	Page No
2912426-0000	.FLAP	5-107, 5-109
2912427-0000	.PUSHER	5-79, 5-81, 5-83, 5-85
2912437-0000	.NOZZLE	5-75, 5-77
2912438-0000	.NOZZLE	5-75, 5-77
2912440-0000	.NOZZLE	5-75, 5-77
2912441-0000	.PLATE	5-75, 5-77
2912442-0000	.PLATE	5-115, 5-117, 5-119, 5-121
2912588-0000	.TENSION SPRING	7-119
2912637-0000	.ROLLER	1-283, 1-285, 1-287
2912644-0000	.SUPPORT	8-163
2912659-0200	.DOOR	8-3
2912660-0200	.DOOR	8-3
2912661-0200	.DOOR	8-3
2912663-0000	.FRAME	3-17, 3-35
2913350-0000	.SUPPORT RING	1-291
2913722-0000	.BRACKET	1-17
2913723-0000	.BRACKET	1-17
2913729-0000	.BLOCK	1-43
2913732-0000	.PISTON ROD	1-31
2914727-0000	.AXLE	4-55, 4-57, 4-59, 4-61, 4-63
2914728-0000	.SHAFT	4-55, 4-57, 4-59, 4-61, 4-63
2914729-0000	.SHAFT	4-55, 4-57, 4-59, 4-61, 4-63
2914730-0000	.ROLLER	4-55, 4-57, 4-59, 4-61, 4-63, 4-79, 4-81, 4-83, 4-85
2914808-0002	.PRESSURE FLANGE	1-303, 1-305
2914808-0003	.PRESSURE FLANGE	1-303, 1-305
2914860-0000	.VOLUME CAM	4-149, 4-151
2914861-0000	.VOLUME CAM	4-149, 4-151
2915064-0000	.BRACKET	1-13
2915798-0000	.RAIL	4-107, 4-109, 4-111
2916179-0000	.SHAFT	4-55, 4-57, 4-59, 4-61, 4-63, 4-79, 4-81, 4-83, 4-85
2916870-0000	.CARRIER	4-91, 4-93
2916871-0000	.BLOCK	4-91, 4-93, 4-95, 4-97
2916872-0000	.CARRIER	4-95, 4-97
2916873-0000	.CARRIER	4-99, 4-101
2916875-0000	.BLOCK	4-99, 4-101, 4-103, 4-105
2916876-0000	.CARRIER	4-103, 4-105
2916877-0000	.BUSBAR	4-125
2916878-0000	.BUSBAR	4-115
2916880-0000	.SUPPORT	4-107, 4-109, 4-111, 4-117, 4-119, 4-121
2916881-0000	.BEARING HOUSING	4-127, 4-129, 4-131, 4-133, 4-135, 4-137, 4-139, 4-141
2916883-0000	.HOLDER	4-65, 4-67, 4-69
2916887-0000	.SHAFT	4-55, 4-57, 4-59, 4-61, 4-63
2917498-0000	.INDUCTOR	4-107, 4-109, 4-111, 4-117, 4-119, 4-121, 9-23, 9-25, 9-27
2918693-0000	.WALL	5-63, 5-65, 5-67
2918694-0000	.WALL	5-63, 5-65, 5-67
2918697-0000	.GUIDE	5-63, 5-65, 5-67
2918698-0000	.GUIDE	5-63, 5-65, 5-67
2918719-0200	.DOOR	8-3
2918720-0000	.COVER	8-163
2919057-0000	.FOLDING BAR	5-115, 5-117, 5-119, 5-121
2919058-0000	.FOLDING BAR	5-115, 5-117, 5-119, 5-121
2919059-0000	.FOLDING BAR	5-115, 5-117, 5-119, 5-121
2919060-0000	.FOLDING BAR	5-115, 5-117, 5-119, 5-121
2919061-0000	.PLATE	7-79
2919188-0000	.VOLUME CAM	4-149, 4-151
2919189-0000	.VOLUME CAM	4-149, 4-151
2919303-0000	.VOLUME FLAP	4-55, 4-57, 4-59, 4-61, 4-63
2919304-0000	.VOLUME FLAP	4-55, 4-57, 4-59, 4-61, 4-63
2920982-0000	.BRACKET	4-45
2920983-0000	.SUPPORT	4-45
2920987-0000	.TIMING BELT PULLEY	4-45
2921571-0000	.SHAFT	4-55, 4-57, 4-59, 4-61, 4-63, 4-79, 4-81, 4-83, 4-85
2921574-0000	.PUSHER	5-63, 5-65, 5-67, 9-23, 9-25, 9-27
2921645-0000	.PLATE	5-19
2921673-0100	.DOOR	7-151
2921674-0000	.DOOR	7-167
2921675-0100	.DOOR	7-151
2921676-0000	.DOOR	7-169
2921677-0000	.GLASS PANE	7-169
2921683-0000	.LOCKING CATCH	2-33
2922002-0200	.CABLE CONDUIT	7-81
2922030-0000	.CHECKER PLATE	2-107
2922286-0200	.SOFTWARE	10-3
2922287-0200	.ELECTRICAL DOCUMENT	10-3
2922322-0003	.RETURN PIPE	6-21
2922703-0000	.BRACKET	1-25
2922705-0100	.STEAM PIPE	1-65, 1-67
2922709-0001	.ROLLER	1-279, 1-281
2922709-0002	.TRIMMING ROLLER MINUS	9-39
2922709-0003	.TRIMMING ROLLER PLUS	9-39
2922715-0100	.VALVE GROUP B-C	1-11
2922717-0001	.ROLLER	1-279, 1-281
2922717-0002	.TRIMMING ROLLER MINUS	9-39
2922717-0003	.TRIMMING ROLLER PLUS	9-39

Part No	Description	Page No
2922718-0000	.PIPE	1-75, 1-77
2922720-0100	.PRODUCT LINES	1-11
2922722-0000	.STEAM PIPE	1-37, 1-39
2922724-0000	.CLEANING PIPE	1-301
2922725-0200	.STEAM SYSTEM	1-11
2922726-0000	.COVER	1-153
2922727-0000	.BRACKET	1-153
2922729-0000	.SHUTTER	1-153
2922730-0100	.PRODUCT VALVE	1-11
2922731-0000	.SHOULDER SCREW	1-153
2922732-0000	.SHAFT	1-153
2922733-0000	.LEVER	1-153
2922735-0100	.A-CYLINDER	1-173
2922737-0000	.STEAM PIPE	1-35
2922738-0000	.STEAM PIPE	1-35
2922740-0100	.PNEUMATIC CIRCUIT	1-11
2922741-0000	.CHECKER PLATE	2-91, 2-93
2922744-0000	.RAILING	2-115, 2-117, 2-119, 2-121
2922748-0000	.PLATFORM	2-91, 2-93
2922749-0000	.PLATFORM	2-91, 2-93
2922752-0000	.TOE PLATE	2-91, 2-93
2922753-0000	.RAILING	2-115, 2-117, 2-119, 2-121
2922754-0000	.RAILING	2-115, 2-117, 2-119, 2-121
2922756-0000	.CHECKER PLATE	2-91, 2-93
2922757-0000	.CHECKER PLATE	2-91, 2-93
2922758-0000	.CHECKER PLATE	2-91, 2-93
2922767-0001	.ROLLER	1-279, 1-281
2922767-0002	.TRIMMING ROLLER MINUS	9-39
2922767-0003	.TRIMMING ROLLER PLUS	9-39
2922770-0200	.FRAME	1-11
2922772-0000	.HOLDER	1-103
2922773-0000	.BRACKET	1-187, 1-189, 1-191
2922774-0000	.PIPE	1-47, 1-49, 1-51
2922776-0000	.PIPE	1-47, 1-49, 1-51
2922777-0000	.PIPE	1-47, 1-49, 1-51
2922778-0000	.PIPE	1-47, 1-49, 1-51
2922779-0000	.BRACKET	1-91
2922780-0100	.STEAM UNIT	1-35
2922783-0000	.BRACKET	1-255, 1-257
2922784-0000	.DOOR	1-255, 1-257
2922786-0000	.BRACKET	1-255, 1-257
2922787-0000	.PLATFORM	2-107
2922788-0000	.PLATFORM	2-107
2922789-0000	.PLATFORM	2-107
2922790-0100	.CONNECTION BOX	1-11
2922795-0100	.TERMINAL BLOCK	1-55
2922800-0100	.VALVE PANEL	1-11
2922801-0000	.BRACKET	1-19, 1-25
2923538-0000	.AXLE PIN	7-87
2923818-0000	.PIPE	7-111
2923820-0008	.PLMS CENTRE 200 BASIC SP1	10-5
2924037-0100	.COOLING PIPE	8-195
2924038-0000	.HOSE	8-197
2924039-0000	.HOSE	8-197
2924040-0000	.HOSE	8-197
2924151-0000	.ARM	1-113
2924156-0000	.CABLE DUCT	7-17, 7-19
2924157-0200	.MOUNTING PLATE	7-81
2924158-0100	.ROLLER	7-83
2924159-0100	.ROLLER	7-83
2924160-0100	.ROLLER	7-83
2924162-0100	.ROTATION MONITOR	7-83
2924164-0000	.ROLLER	7-91, 7-93, 7-97
2924170-0000	.PLATE	7-83
2924171-0100	.MAGAZINE	7-81
2924172-0000	.STOP	7-83
2924173-0000	.PLATE	7-97
2924174-0000	.AXLE PIN	7-97
2924175-0000	.PLATE	7-97
2924176-0000	.PLATE	7-97
2924178-0100	.ROCKER ARM	7-83
2924179-0000	.AXLE PIN	7-95
2924180-0000	.PROTECTION	7-83
2924181-0000	.PROTECTION	7-83
2924205-0000	.BLANK NUT	1-17
2924214-0000	.SUPPORT	1-41
2925072-0000	.BOW CLAMP	7-53, 7-55
2926384-0000	.HOLDER	2-225
2927010-0000	.BRACKET	8-5, 8-7, 8-9, 8-11
2927022-0000	.GASKET	8-163
2927025-0000	.FUSE PANEL LABEL	8-187, 8-189
2927588-0000	.CUTTING JAW	4-127, 4-129, 4-131, 4-133, 4-135, 4-137, 4-139, 4-141
2927589-0000	.BRACKET	4-127, 4-129, 4-131, 4-133, 4-135, 4-137, 4-139, 4-141
2930304-0000	.ROLLER	1-291

Part No	Description	Page No
2931095-0100	.COOLING UNIT	8-3
2931510-0200	.DRIVE UNIT RIGHT	3-3
2931511-0200	.DRIVE UNIT LEFT	3-3
2931512-0200	.SUPPORT	3-5
2931513-0200	.SUPPORT	3-29
2931514-0100	.BELT TENSIONER	3-7, 3-31
2931677-0000	.ROLLER	7-87
2931678-0000	.BRACKET	7-99
2931679-0200	.BRACKET	7-81
2931680-0000	.PROTECTION	7-81
2931683-0000	.COMPRESSION SPRING	7-97
2931684-0000	.SPRING GUIDE	7-97
2931689-0000	.AIR GUIDE	7-117
2931690-0000	.ROLLER	7-93
2931692-0000	.SIGN	7-83
2931693-0000	.SIGN	7-83
2931694-0000	.SHAFT	7-129, 7-135
2931695-0000	.SHAFT	7-141
2931696-0000	.PIN	7-145
2931911-0000	.BEARING COVER	1-113
2932253-0000	.PRESSURE ROLLER (PACK 10)	1-303, 1-305, 9-23, 9-25, 9-27
2933520-0000	.SCREW	4-65, 4-67, 4-69, 4-77, 4-89
2934402-0000	.SLEEVE	4-107, 4-109, 4-111, 4-117, 4-119, 4-121
2934403-0000	.PISTON	4-107, 4-109, 4-111, 4-117, 4-119, 4-121
2935999-0000	.CATCH LEVER	1-123
2937883-0200	.TPOP	2-3
2939843-0000	.PIN	4-153
2939863-0000	.CLAMP	1-99
2941710-0000	.GUIDE WHEEL	7-115
2941944-0000	.VOLUME BULGE	5-79, 5-81, 5-83, 5-85
2943508-0200	.CABLE HARNESS	7-5, 7-7
2943556-0000	.PAPER GUIDE	7-115
2943557-0000	.BRACKET	7-115
2943558-0000	.ROD	7-115
2943559-0000	.PLATE	7-115
2943560-0000	.ROD	7-115
2943561-0000	.SHAFT	7-115
2943562-0000	.ROLLER	7-115
2943563-0000	.BRACKET	7-115
2943564-0000	.BRACKET	7-115
2943565-0000	.ADJUSTING SCREW	7-115
2944449-0000	.SPLASH PLATE	2-211
2944475-0000	.RAIL	4-117, 4-119, 4-121
2945386-0000	.SHIM	7-171
2945393-0000	.STEAM PIPE	1-35
2945394-0000	.CONNECTION BOX	1-55
2945395-0100	.VALVE GROUP	1-43
2945396-0000	.BRACKET	1-55
2945400-0200	.STEAM SYSTEM	1-35
2945401-0000	.PLATE	1-43
2945407-0000	.BRACKET	1-47, 1-49, 1-51
2945408-0000	.BRACKET	1-17
2945410-0200	.HIGH VISCOSITY ASEPTIC HVA	1-5, 1-7, 1-9
2945414-0000	.CABLE CONDUIT	1-13
2945416-0000	.COVER	1-17
2945418-0000	.BRACKET	1-17
2945420-0100	.PUMP GROUP	1-11
2945423-0000	.FLOAT	1-303, 1-305
2945430-0200	.PRESSURE FLANGE	9-19
2945431-0000	.BRACKET	1-293, 1-295, 1-297
2945432-0000	.BRACKET	1-293, 1-295, 1-297
2945435-0100	.CABLE TRENCH	1-11
2945443-0000	.ROLLER	1-273, 1-275
2945445-0000	.COUNTER ROLLER	1-279, 1-281
2945446-0001	.ROLLER	1-279, 1-281
2945446-0002	.TRIMMING ROLLER MINUS	9-39
2945446-0003	.TRIMMING ROLLER PLUS	9-39
2945447-0000	.ROLLER	1-283, 1-285, 1-287
2945448-0000	.ROLLER	1-283, 1-285, 1-287
2945449-0000	.ROLLER	1-283, 1-285, 1-287
2945450-0000	.ROLLER	1-283, 1-285, 1-287
2945451-0000	.ROLLER	1-283, 1-285, 1-287
2945452-0000	.ROLLER	1-283, 1-285, 1-287
2945453-0000	.ROLLER	1-283, 1-285, 1-287
2945457-0000	.LOWER SUPPORT ROLLERS	1-291
2945466-0000	.COUNTER ROLLER	1-279, 1-281
2945467-0001	.ROLLER	1-279, 1-281
2945467-0002	.TRIMMING ROLLER MINUS	9-39
2945467-0003	.TRIMMING ROLLER PLUS	9-39
2945469-0001	.ROLLER	1-279, 1-281
2945469-0002	.TRIMMING ROLLER MINUS	9-39
2945469-0003	.TRIMMING ROLLER PLUS	9-39
2945494-0000	.HOSE NIPPLE	7-79
2945496-0000	.HOLDER	7-105

Part No	Description	Page No
2945996-0000	.PLUG	5-23
2946785-0000	.OUTFEED CONVEYOR	2-167
2947016-0000	.GUARD PLATE	2-167
2947183-0000	.RAIL	4-107, 4-109, 4-111, 4-117, 4-119, 4-121
2947184-0000	.BEARING HOUSING	4-127, 4-129, 4-131, 4-133, 4-135, 4-137, 4-139, 4-141
2947185-0000	.HOLDER	4-65, 4-67, 4-69
2947186-0000	.VOLUME FLAP	4-55, 4-57, 4-59, 4-61, 4-63
2947187-0000	.VOLUME FLAP	4-55, 4-57, 4-59, 4-61, 4-63
2947414-0000	.GUARD PLATE	2-167
2947461-0000	.SHAFT	7-115
2947531-0000	.ROLLER	4-153
2947787-0000	.VOLUME BULGE	4-55, 4-57, 4-59, 4-61, 4-63, 9-17
2947788-0000	.VOLUME SHIM	4-55, 4-57, 4-59, 4-61, 4-63, 9-17
2947979-0100	.BRAKE ARM	7-81
2947980-0000	.ARM	7-101
2947981-0000	.AXLE PIN	7-101
2947982-0000	.AXLE PIN	7-101
2947983-0000	.ARM	7-101
2948044-0000	.HOLDER	7-83
2949862-0004	.DOLLY	4-127, 4-129, 4-131, 4-133, 4-135, 4-137, 4-139, 4-141, 9-23, 9-25, 9-27
2949914-0000	.BLOCK	5-71, 5-73
2949915-0000	.PLATE	5-75, 5-77
2949916-0000	.FOLDING BAR	5-115, 5-117, 5-119, 5-121
2949917-0000	.FOLDING BAR	5-115, 5-117, 5-119, 5-121
2949918-0000	.FOLDING BAR	5-115, 5-117, 5-119, 5-121
2949919-0000	.FOLDING BAR	5-115, 5-117, 5-119, 5-121
2949920-0000	.NOZZLE	5-75, 5-77
2949921-0000	.NOZZLE	5-75, 5-77
2949922-0000	.NOZZLE	5-75, 5-77
2949923-0000	.FLAP	5-107, 5-109
2949924-0000	.BOTTOM	5-107, 5-109
2949925-0000	.BLOCK	5-79, 5-81, 5-83, 5-85
2949926-0000	.PUSHER	5-79, 5-81, 5-83, 5-85
2949928-0000	.GUIDE	5-63, 5-65, 5-67
2949929-0000	.GUIDE	5-63, 5-65, 5-67
2950404-0000	.TRANSPORT EQUIPMENT	9-3
2950886-0000	.RAIL	4-107, 4-109, 4-111
2950887-0000	.RAIL	4-117, 4-119, 4-121
2950888-0000	.BEARING HOUSING	4-127, 4-129, 4-131, 4-133, 4-135, 4-137, 4-139, 4-141
2950889-0000	.CARRIER RULER	4-127, 4-129, 4-131, 4-133
2950890-0000	.CARRIER RULER	4-127, 4-129, 4-131, 4-133
2950891-0000	.ADJUSTING SCREW	4-127, 4-129, 4-131, 4-133, 4-135, 4-137, 4-139, 4-141
2950892-0000	.CUTTING JAW	4-127, 4-129, 4-131, 4-133, 4-135, 4-137, 4-139, 4-141
2950893-0000	.CARRIER	4-127, 4-129, 4-131, 4-133, 4-135, 4-137, 4-139, 4-141
2950894-0000	.CARRIER	4-127, 4-129, 4-131, 4-133, 4-135, 4-137, 4-139, 4-141
2950895-0000	.CARRIER RULER	4-135, 4-137, 4-139, 4-141
2950896-0000	.CARRIER RULER	4-135, 4-137, 4-139, 4-141
2950897-0000	.ROLLER	4-153
2950898-0000	.VOLUME CAM	4-149, 4-151
2950899-0000	.VOLUME CAM	4-149, 4-151
2950900-0000	.HOLDER	4-65, 4-67, 4-69
2950901-0000	.VOLUME FLAP	4-55, 4-57, 4-59, 4-61, 4-63
2950902-0000	.VOLUME SHIM	4-55, 4-57, 4-59, 4-61, 4-63, 9-17, 9-23, 9-25, 9-27
2950908-0000	.VOLUME FLAP	4-79, 4-81, 4-83, 4-85
2950910-0000	.TENSION SPRING	4-65, 4-67, 4-69
2950996-0000	.ROLLER	4-153
2951935-0000	.PLATE	7-97
2951936-0000	.BLOCK	7-97
2951937-0000	.PLATE	7-97
2951938-0000	.PLATE	7-97
2954994-0000	.VOLUME FLAP	4-55, 4-57, 4-59, 4-61, 4-63
2956671-0000	.SCREW	11-79
2957795-0000	.SECTIONING PLATE	2-171
2957797-0000	.SECTIONING PLATE	2-171
2957798-0000	.SECTIONING PLATE	2-171
2958511-0000	.VOLUME FLAP	4-55, 4-57, 4-59, 4-61, 4-63
2958512-0000	.VOLUME FLAP	4-55, 4-57, 4-59, 4-61, 4-63
2959274-0000	.ROLLER	4-153
2959957-0001	.HOLDER	4-77
2959957-0002	.HOLDER	4-73
2959957-0003	.HOLDER	4-89
2959957-0004	.HOLDER	4-65, 4-67, 4-69
2959962-0000	.SHAFT	7-13
2960530-0000	.TEMPLATE	11-31, 11-33
2960531-0000	.TEMPLATE	11-31, 11-33
2961517-0000	.BRACKET	4-161
2961518-0000	.PIPE	4-161
2961519-0000	.PIPE	4-161
2961520-0001	.BRACKET	4-153
2961520-0002	.BRACKET	4-153
2961520-0003	.BRACKET	4-153
2961520-0004	.BRACKET	4-153
2961521-0100	.NOZZLE	4-159
2961522-0100	.TUBE FLUSHING	4-49, 4-51

Part No	Description	Page No
2962050-0000	.CARRIER	4-95, 4-97
2962051-0000	.CARRIER	4-91, 4-93
2962052-0000	.CARRIER	4-99, 4-101
2962053-0000	.CARRIER	4-103, 4-105
2962055-0000	.BEARING HOUSING	4-127, 4-129, 4-131, 4-133, 4-135, 4-137, 4-139, 4-141
2962056-0000	.PIPE	2-223
2962114-0000	.GUIDE	5-63, 5-65, 5-67
2962115-0000	.GUIDE	5-63, 5-65, 5-67
2962117-0000	.GUIDE	5-63, 5-65, 5-67
2962119-0000	.BLOCK	5-71, 5-73
2962125-0000	.BLOCK	5-79, 5-81, 5-83, 5-85
2962126-0000	.PUSHER	5-79, 5-81, 5-83, 5-85
2962127-0000	.GUIDE	5-63, 5-65, 5-67
2962128-0000	.FLAP	5-107, 5-109
2962129-0000	.BOTTOM	5-107, 5-109
2962130-0000	.NOZZLE	5-75, 5-77
2962133-0000	.PLATE	5-53, 5-55
2963397-0000	.SHAFT	7-147
2963398-0000	.LEVER	7-147
2963740-0100	.BAR	8-27
2964307-0000	.ROLLER	4-153
2964389-0000	.VOLUME FLAP	4-55, 4-57, 4-59, 4-61, 4-63
2964390-0000	.VOLUME FLAP	4-55, 4-57, 4-59, 4-61, 4-63
2964391-0000	.VOLUME FLAP	4-79, 4-81, 4-83, 4-85
2964541-0000	.SHAFT	4-55, 4-57, 4-59, 4-61, 4-63, 4-79, 4-81, 4-83, 4-85
2964542-0000	.SHAFT	4-55, 4-57, 4-59, 4-61, 4-63, 4-79, 4-81, 4-83, 4-85
2964566-0000	.SUPPORT	4-107, 4-109, 4-111, 4-117, 4-119, 4-121
2964567-0000	.BLOCK	4-99, 4-101, 4-103, 4-105
2965109-0001	.HOLDER	4-77
2965109-0002	.HOLDER	4-73
2965109-0003	.HOLDER	4-89
2965109-0004	.HOLDER	4-65, 4-67, 4-69
2965110-0000	.3UTTING JAW	4-127, 4-129, 4-131, 4-133, 4-135, 4-137, 4-139, 4-141
2966437-0000	.PROTECTION	7-5, 7-7
2966463-0000	.SCREW	4-65, 4-67, 4-69, 4-73, 4-77, 4-89
2966464-0200	.SHOCK ABSORBER	4-75
2966465-0200	.VOLUME FLAP	4-49, 4-51
2966466-0200	.SHOCK ABSORBER	4-71
2966467-0200	.VOLUME FLAP	4-49, 4-51
2966468-0200	.SHOCK ABSORBER	4-87
2966587-0000	.FOLDING BAR	5-115, 5-117, 5-119, 5-121
2966588-0000	.FOLDING BAR	5-115, 5-117, 5-119, 5-121
2966589-0000	.FOLDING BAR	5-115, 5-117, 5-119, 5-121
2966590-0000	.FOLDING BAR	5-115, 5-117, 5-119, 5-121
2966591-0000	.PUSHER	5-87, 5-89, 5-91, 9-23, 9-25, 9-27
2966592-0000	.SUPPORT	5-99, 9-47
2966593-0000	.BRACKET	5-99, 9-47
2966594-0000	.BRACKET	5-99, 9-47
2966595-0000	.PUSHER	5-79, 5-81, 5-83, 5-85
2966596-0000	.FLAP	5-107, 5-109
2966598-0000	.COUNTER ROLLER	1-279, 1-281
2966599-0001	.ROLLER	1-279, 1-281
2966599-0002	.TRIMMING ROLLER MINUS	9-39
2966599-0003	.TRIMMING ROLLER PLUS	9-39
2966601-0000	.COUNTER ROLLER	1-279, 1-281
2966602-0001	.ROLLER	1-279, 1-281
2966602-0002	.TRIMMING ROLLER MINUS	9-39
2966602-0003	.TRIMMING ROLLER PLUS	9-39
2966604-0000	.COUNTER ROLLER	1-279, 1-281
2966605-0001	.ROLLER	1-279, 1-281
2966605-0002	.TRIMMING ROLLER MINUS	9-39
2966605-0003	.TRIMMING ROLLER PLUS	9-39
2966612-0000	.ROLLER	1-283, 1-285, 1-287
2966613-0000	.ROLLER	1-283, 1-285, 1-287
2966614-0000	.ROLLER	1-283, 1-285, 1-287
2966615-0000	.ROLLER	1-283, 1-285, 1-287
2966620-0100	.STERILE AIR PIPE	1-263
2966621-0000	.PIPE	1-263
2966622-0000	.NOZZLE	1-265
2966623-0000	.ANGLE BRACKET	1-267
2966624-0000	.SPRING HOLDER	1-267
2966625-0100	.GUIDE	1-261
2966627-0000	.ROLLER	1-273, 1-275
2966629-0000	.ROLLER	1-273, 1-275
2966630-0100	.STERILE AIR BLOWER	1-5, 1-7, 1-9
2966639-0000	.UPPER FILLING TUBE	1-303, 1-305
2966640-0000	.LOWER FILLING TUBE	1-303, 1-305
2966641-0000	.PRESSURE FLANGE	1-303, 1-305
2966644-0000	.LOWER FILLING TUBE	1-303, 1-305
2966645-0000	.LOWER FILLING TUBE	1-303, 1-305
2966646-0000	.PRESSURE FLANGE	1-303, 1-305
2966647-0000	.UPPER FILLING TUBE	1-303, 1-305
2966648-0000	.UPPER FILLING TUBE	1-303, 1-305
2966649-0000	.FORK	1-303, 1-305

Part No	Description	Page No
2966651-0000	.CLEANING PIPE	1-301
2966653-0000	.LOWER FILLING TUBE	1-303, 1-305
2966654-0000	.LOWER FILLING TUBE	1-303, 1-305
2966656-0000	.LOWER FILLING TUBE	1-303, 1-305
2966660-0000	.PRESSURE FLANGE	1-303, 1-305
2966672-0000	.UPPER FILLING TUBE	1-303, 1-305
2966681-0000	.PRESSURE FLANGE	9-21
2966682-0000	.PRESSURE FLANGE	9-21
2966683-0000	.PRESSURE FLANGE	9-21
2966688-0000	.PRESSURE FLANGE	9-21
2966689-0000	.PRESSURE FLANGE	9-21
2966691-0000	.PRESSURE FLANGE	9-21
2968251-0000	.MACHINE SIGN	2-143
2968260-0000	.LEVEL PROBE	2-225
2969725-0001	.ROLLER (STANDARD SIZE)	1-279, 1-281
2969725-0002	.TRIMMING ROLLER MINUS	9-39
2969725-0003	.TRIMMING ROLLER PLUS	9-39
2969939-0000	.COUNTER ROLLER	1-279, 1-281
2970443-0000	.ROLLER	1-273, 1-275
2970615-0000	.BEARING HOUSING	4-127, 4-129, 4-131, 4-133, 4-135, 4-137, 4-139, 4-141
2971768-0000	.PLATE	5-75, 5-77
2971940-0000	.VOLUME BULGE	4-55, 4-57, 4-59, 4-61, 4-63, 4-79, 4-81, 4-83, 4-85
2972771-0200	.BARCODE SCANNER	11-51, 11-69
2973927-0000	.FOLDING BAR	5-115, 5-117, 5-119, 5-121
2973928-0000	.FOLDING BAR	5-115, 5-117, 5-119, 5-121
2974074-0100	.SPACER	7-13
2974728-0000	.PLATE	7-97
2974829-0000	.SUPPORT	2-167
2975162-0000	.CUTTING RAIL	4-127, 4-129, 4-131, 4-133, 4-135, 4-137, 4-139, 4-141
2975930-0000	.INDUCTOR	4-107, 4-109, 4-111, 4-117, 4-119, 4-121, 9-23, 9-25, 9-27
2975949-0000	.CAM	5-35
2976256-0000	.ROLLER	1-291
2976821-0000	.RAIL	4-107, 4-109, 4-111, 4-117, 4-119, 4-121
2976822-0000	.BEARING HOUSING	4-127, 4-129, 4-131, 4-133, 4-135, 4-137, 4-139, 4-141
2976823-0000	.CARRIER	4-127, 4-129, 4-131, 4-133, 4-135, 4-137, 4-139, 4-141
2976824-0000	.CARRIER RULER	4-127, 4-129, 4-131, 4-133
2976825-0000	.CARRIER RULER	4-127, 4-129, 4-131, 4-133
2976826-0000	.FOLDING FLAP	4-127, 4-129, 4-131, 4-133, 4-135, 4-137, 4-139, 4-141
2976827-0000	.FOLDING FLAP	4-127, 4-129, 4-131, 4-133, 4-135, 4-137, 4-139, 4-141
2976828-0000	.CARRIER RULER	4-135, 4-137, 4-139, 4-141
2976829-0000	.CARRIER RULER	4-135, 4-137, 4-139, 4-141
2976830-0001	.HOLDER	4-77
2976830-0002	.HOLDER	4-73
2976830-0003	.HOLDER	4-89
2976830-0004	.HOLDER	4-65, 4-67, 4-69
2976916-0000	.VOLUME FLAP	4-55, 4-57, 4-59, 4-61, 4-63
2976920-0000	.SHAFT	4-55, 4-57, 4-59, 4-61, 4-63, 4-79, 4-81, 4-83, 4-85
2976921-0000	.VOLUME FLAP	4-55, 4-57, 4-59, 4-61, 4-63
2976922-0200	.VOLUME CURVE PIECE	4-45
2976923-0000	.SHAFT	4-55, 4-57, 4-59, 4-61, 4-63
2976932-0000	.NOZZLE	5-75, 5-77
2976949-0000	.GUIDE	5-63, 5-65, 5-67
2976950-0000	.GUIDE	5-63, 5-65, 5-67
2976953-0000	.FOLDING BAR	5-115, 5-117, 5-119, 5-121
2976954-0000	.FOLDING BAR	5-115, 5-117, 5-119, 5-121
2976960-0000	.BLOCK	5-71, 5-73
2976961-0000	.FLAP	5-107, 5-109, 5-113
2976962-0000	.BOTTOM	5-113
2976963-0000	.PLATE	5-75, 5-77
2976964-0000	.FLAP	5-107, 5-109, 5-113
2976965-0000	.PLATE	5-53, 5-55
2977491-0000	.GUIDE	5-63, 5-65, 5-67
2977492-0000	.GUIDE	5-63, 5-65, 5-67
2977495-0000	.WALL	5-63, 5-65, 5-67
2977496-0000	.WALL	5-63, 5-65, 5-67
2977544-0000	.SHIM	4-55, 4-57, 4-59, 4-61, 4-63, 9-23, 9-25, 9-27
2977545-0000	.VOLUME BULGE	4-55, 4-57, 4-59, 4-61, 4-63
2977884-0000	.VOLUME CAM	4-149, 4-151
2977885-0000	.VOLUME CAM	4-149, 4-151
2978920-0000	.CARRIER RULER	4-127, 4-129, 4-131, 4-133
2978921-0000	.CARRIER RULER	4-135, 4-137, 4-139, 4-141
2978922-0000	.FLAP	5-107, 5-109
2979699-0000	.LID	4-107, 4-109, 4-111, 4-117, 4-119, 4-121
2979711-0000	.VOLUME BULGE	4-55, 4-57, 4-59, 4-61, 4-63, 4-79, 4-81, 4-83, 4-85
2980067-0000	.FLAP	5-107, 5-109
2980077-0000	.HOLDER	1-25
2980078-0000	.SEAL HOLDER	1-23
2980079-0000	.HATCH	1-15
2980080-0200	.HATCH	1-13
2980081-0100	.A-CYLINDER	1-19
2980082-0000	.STEAM PIPE	1-37, 1-39
2980083-0000	.STEAM PIPE	1-37, 1-39
2980084-0000	.BRACKET	1-13
2980085-0000	.LEAD-IN PLATE	1-37, 1-39

Machine Type Group Description Page No

Part No	Description	Page No
2981777-0000	.PIPE	1-163
2982642-0000	.PUSH BUTTON BOX	7-155
2982734-0000	.DISTRIBUTOR BLOCK	7-79
2982739-0000	.RETAINING RING	4-35, 4-37
2983173-0000	.SHAFT	3-21
2983304-0100	.TOOLS AND TEMPLATES PT	11-5
2983395-0000	.NOZZLE	5-75, 5-77
2983847-0000	.SPACER	5-53, 5-55
2983848-0000	.SHAFT	5-53, 5-55
2984254-0000	.PIN	7-141
2984255-0000	.ASSEMBLY TOOL	11-49
2984573-0000	.BRACKET	1-33
2984759-0000	.TOOL	11-23
2984760-0000	.TOOL	11-23
2984839-0000	.NOZZLE	5-75, 5-77
2985491-0000	.SHIM	5-63, 5-65, 5-67
2985870-0000	.VOLUME CAM	4-149, 4-151
2985871-0000	.VOLUME CAM	4-149, 4-151
2986078-0000	.NOZZLE	5-75, 5-77
2986240-0000	.LINK HEAD	3-27
2986241-0000	.FLANGE	3-27
2986255-0000	.CHECKER PLATE	2-99, 2-101
2986256-0000	.CHECKER PLATE	2-99, 2-101
2986276-0000	.AXLE PIN	1-127
2986379-0000	.CHECKER PLATE	2-99, 2-101
2986544-0100	.CABLE CONDUIT	2-99, 2-101
2986583-0000	.HINGE	8-179, 8-181, 8-183, 8-185, 8-187, 8-189, 8-191, 8-193
2986593-0000	.SUPPORT	8-163
2986611-0000	.SUPPORT	8-5, 8-7, 8-9, 8-11
2986613-0000	.SPACER	8-5, 8-7, 8-9, 8-11, 8-163
2986615-0000	.GASKET	8-5, 8-7, 8-9, 8-11
2986617-0000	.BRACKET	8-5, 8-7, 8-9, 8-11
2986618-0000	.SUPPORT	8-157
2986633-0000	.COMPONENT PLATES	8-21
2986634-0000	.DOOR	8-163
2986635-0100	.COMPONENT DOOR	8-157
2986636-0000	.CONNECTION PLATE	8-149, 8-151
2986637-0100	.PANEL	8-141, 8-143, 8-145, 8-147
2986638-0000	.BRACKET	8-5, 8-7, 8-9, 8-11
2986639-0000	.BRACKET	8-5, 8-7, 8-9, 8-11
2986640-0000	.FRAME	8-5, 8-7, 8-9, 8-11
2986641-0000	.PROTECTION	8-15, 8-17, 8-19
2986642-0000	.COVER	8-15, 8-17, 8-19
2986643-0000	.BRACKET	8-5, 8-7, 8-9, 8-11
2986645-0000	.SUPPORT	8-5, 8-7, 8-9, 8-11
2986646-0000	.SUPPORT	8-5, 8-7, 8-9, 8-11
2986647-0000	.CABLE DUCT	8-21
2986648-0000	.DOOR	8-191, 8-193
2986649-0000	.DOOR	8-183, 8-185
2986650-0000	.DOOR	8-179, 8-181
2986651-0000	.DOOR	8-187, 8-189
2986652-0000	.PANEL	8-177
2986698-0001	.ROLLER	1-279, 1-281
2986698-0002	.TRIMMING ROLLER MINUS	9-39
2986698-0003	.TRIMMING ROLLER PLUS	9-39
2986699-0000	.COUNTER ROLLER	1-279, 1-281
2986702-0000	.LOWER FILLING TUBE	1-303, 1-305
2986705-0000	.LOWER FILLING TUBE	1-303, 1-305
2986706-0000	.PRESSURE FLANGE	1-303, 1-305
2986708-0000	.PIPE	1-99
2986709-0000	.PIPE	1-99
2986710-0000	.AIR NOZZLE	1-299
2986711-0000	.HEAT GUARD	1-299
2986716-0000	.LOWER SUPPORT ROLLERS	1-291
2986717-0000	.TEMPLATE	11-5
2986721-0000	.COVER	1-111
2986722-0000	.PLATE	1-111
2986731-0000	.NOZZLE	1-265
2986733-0000	.LOWER FILLING TUBE	1-303, 1-305
2986735-0000	.ROLL	1-283, 1-285, 1-287
2986736-0000	.ROLL	1-283, 1-285, 1-287
2986737-0000	.PIPE	1-79
2986739-0000	.ROLLER	1-291
2986740-0000	.LOWER SUPPORT ROLLERS	1-291
2986741-0000	.PIPE	1-79
2986742-0000	.DRAIN PIPE	1-71
2986743-0100	.PNEUMATIC PANEL	6-3
2986744-0100	.VALVE RAMP	6-5, 6-7
2986745-0000	.PLATE	6-5, 6-7
2986750-0200	.CHEMICALS	2-183
2986763-0000	.PIPE	1-79
2986768-0000	.PIPE	1-79
2986769-0000	.PIPE	1-71
2986771-0000	.PIPE	1-75, 1-77

Part No	Description	Page No
2986772-0000	.ROLLER	1-291
2986773-0000	.ROLLER	1-291
2986774-0000	.ROLLER	1-291
2986776-0000	.SUPPORT RING	1-291
2986781-0000	.PIPE HOLDER	1-75, 1-77
2986782-0000	.PIPE HOLDER	1-75, 1-77
2986783-0000	.PIPE HOLDER	1-75, 1-77
2986784-0000	.PIPE	2-185, 2-187
2986786-0000	.PIPE	2-185, 2-187
2986787-0000	.PIPE	2-185, 2-187
2986795-0000	.BRACKET	2-185, 2-187
2986796-0000	.PIPE	2-193
2986989-0000	.VOLUME CAM	4-149, 4-151
2986990-0000	.VOLUME CAM	4-149, 4-151
2987037-0200	.AIR PIPE-LINE	2-31
2987089-0000	.PUMP HOUSING	2-213
2987091-0000	.FOLDING BAR	5-115, 5-117, 5-119, 5-121
2987092-0000	.FOLDING BAR	5-115, 5-117, 5-119, 5-121
2987093-0000	.FOLDING BAR	5-115, 5-117, 5-119, 5-121
2987094-0000	.FOLDING BAR	5-115, 5-117, 5-119, 5-121
2987095-0000	.GUIDE	5-63, 5-65, 5-67
2987096-0000	.GUIDE	5-63, 5-65, 5-67
2987097-0000	.GUIDE	5-63, 5-65, 5-67
2987098-0000	.GUIDE	5-63, 5-65, 5-67
2987099-0000	.PLATE	5-75, 5-77
2987100-0000	.BLOCK	5-71, 5-73
2987101-0000	.FLAP	5-107, 5-109
2987102-0000	.BOTTOM	5-107, 5-109
2987105-0000	.BLOCK	5-79, 5-81, 5-83, 5-85
2987109-0000	.PUSHER	5-79, 5-81, 5-83, 5-85
2987110-0000	.PUSHER	5-79, 5-81, 5-83, 5-85
2987115-0000	.PIPE	1-163
2989228-0000	.CABLE DUCT	9-7
2990407-0000	.PIN	1-259
2990873-0000	.NOZZLE	5-75, 5-77
2990953-0000	.BRACKET	2-85
2991044-0000	.STOP SCREW	4-65, 4-67, 4-69
2991233-0000	.PLATFORM	2-99, 2-101
2991234-0000	.PLATFORM	2-99, 2-101
2992940-0000	.CARRIER	4-55, 4-57, 4-59, 4-61, 4-63
2992941-0000	.STOP	4-55, 4-57, 4-59, 4-61, 4-63, 4-79, 4-81, 4-83, 4-85
2993250-0000	.CARRIER	4-55, 4-57, 4-59, 4-61, 4-63
2993461-0000	.STOP	4-65, 4-67, 4-69
2993462-0000	.GUIDE	5-63, 5-65, 5-67
2993463-0000	.GUIDE	5-63, 5-65, 5-67
2993995-0000	.CABLE DUCT	1-33
2993996-0000	.CABLE DUCT	1-33
2993997-0000	.CABLE DUCT	1-33
2993998-0000	.CABLE DUCT	1-33
2993999-0000	.CABLE DUCT	1-33
2994000-0000	.LID	1-33
2994001-0000	.LID	1-33
2994002-0000	.LID	1-33
2994003-0000	.LID	1-33
2994004-0000	.SEPARATOR	1-33
2994005-0000	.SEPARATOR	1-33
2994006-0000	.SEPARATOR	1-33
2994298-0000	.BRACKET	1-215, 1-217
2994299-0100	.B-CYLINDER	1-25
2994819-0000	.STOP SCREW	5-115, 5-117, 5-119, 5-121
2994950-0000	.BRACKET	1-33
2996617-0300	.COVERS	1-255, 1-257
2997957-0100	.LINK ARM	4-5
2998006-0000	.RAIL HOLDER	5-101
2998104-0000	.FOLDING BAR	5-115, 5-117, 5-119, 5-121
2998105-0000	.FOLDING BAR	5-115, 5-117, 5-119, 5-121
2998106-0000	.FOLDING BAR	5-115, 5-117, 5-119, 5-121
2998107-0000	.PLATE	5-75, 5-77
2998108-0000	.PUSHER	5-79, 5-81, 5-83, 5-85
2998978-0000	.BRACKET	1-13
2998979-0000	.ADAPTER	1-17
2998980-0000	.PROTECTION	1-53
2998981-0000	.PROTECTION	1-187, 1-189, 1-191
2998982-0000	.PROTECTION	1-187, 1-189, 1-191
2999197-0100	.RAIL HOLDER	5-87, 5-89, 5-91, 5-103
2999199-0100	.RAILING	5-87, 5-89, 5-91
2999217-0000	.NOZZLE	5-45
3000073-0000	.VOLUME BULGE	4-55, 4-57, 4-59, 4-61, 4-63, 9-17
3002051-0000	.GUIDE	5-63, 5-65, 5-67
3002052-0000	.GUIDE	5-63, 5-65, 5-67
3002053-0000	.WALL	5-63, 5-65, 5-67
3002054-0000	.WALL	5-63, 5-65, 5-67
3002233-0100	.PHOTOCELL UNIT	5-19
3002255-0000	.VOLUME BULGE	4-55, 4-57, 4-59, 4-61, 4-63, 9-17

Part No	Description	Page No
3002257-0000	.VOLUME SHIM	4-55, 4-57, 4-59, 4-61, 4-63, 9-17, 9-23, 9-25, 9-27
3002693-0000	.WALL	5-63, 5-65, 5-67
3002694-0000	.WALL	5-63, 5-65, 5-67
3002813-0000	.PIPE	1-35
3002880-0000	.BEARING HOUSING	4-107, 4-109, 4-111, 4-117, 4-119, 4-121
3002881-0000	.BEARING HOUSING	4-127, 4-129, 4-131, 4-133, 4-135, 4-137, 4-139, 4-141
3002882-0000	.CUTTING JAW	4-127, 4-129, 4-131, 4-133, 4-135, 4-137, 4-139, 4-141
3002883-0000	.FOLDING FLAP	4-127, 4-129, 4-131, 4-133, 4-135, 4-137, 4-139, 4-141
3002884-0000	.FOLDING FLAP	4-127, 4-129, 4-131, 4-133, 4-135, 4-137, 4-139, 4-141
3002885-0000	.CARRIER RULER	4-127, 4-129, 4-131, 4-133
3002886-0000	.CARRIER RULER	4-127, 4-129, 4-131, 4-133
3002887-0000	.CARRIER RULER	4-135, 4-137, 4-139, 4-141
3002888-0000	.CARRIER RULER	4-135, 4-137, 4-139, 4-141
3002889-0000	.VOLUME FLAP	4-55, 4-57, 4-59, 4-61, 4-63
3002890-0001	.HOLDER	4-77
3002890-0002	.HOLDER	4-73
3002890-0003	.HOLDER	4-89
3002890-0004	.HOLDER	4-65, 4-67, 4-69
3002891-0000	.CARRIER	4-55, 4-57, 4-59, 4-61, 4-63, 4-79, 4-81, 4-83, 4-85
3002893-0000	.SHAFT	4-55, 4-57, 4-59, 4-61, 4-63, 4-79, 4-81, 4-83, 4-85
3002894-0000	.CARRIER	4-55, 4-57, 4-59, 4-61, 4-63, 4-79, 4-81, 4-83, 4-85
3003477-0000	.VOLUME FLAP	4-79, 4-81, 4-83, 4-85
3003494-0000	.SCREW	4-65, 4-67, 4-69
3003573-0000	.PROTECTION	1-233, 1-235, 1-237
3003574-0000	.PROTECTION	1-233, 1-235, 1-237
3003575-0000	.PROTECTION	1-233, 1-235, 1-237
3003576-0000	.PROTECTION	1-233, 1-235, 1-237
3003577-0000	.PROTECTION	1-233, 1-235, 1-237
3003578-0000	.PROTECTION	1-233, 1-235, 1-237
3003860-0000	.SHAFT	4-55, 4-57, 4-59, 4-61, 4-63, 4-79, 4-81, 4-83, 4-85
3003861-0000	.SCREW	4-65, 4-67, 4-69, 4-73, 4-77, 4-89
3003862-0000	.VOLUME BULGE	4-55, 4-57, 4-59, 4-61, 4-63, 4-79, 4-81, 4-83, 4-85
3003863-0000	.VOLUME SHIM	4-55, 4-57, 4-59, 4-61, 4-63, 4-79, 4-81, 4-83, 4-85, 9-23, 9-25, 9-27
3004384-0000	.BEAM	9-13
3004385-0000	.BLOCK	9-13
3004386-0000	.SUPPORT	9-13
3004387-0000	.BLOCK	9-13
3004388-0000	.CLAMPING PIECE	9-13
3004389-0000	.REDUCER	9-13
3005112-0000	.ROLLER	1-283, 1-285, 1-287
3005196-0000	.FOLDING BAR	5-115, 5-117, 5-119, 5-121
3005197-0000	.FLAP	5-107, 5-109
3005198-0100	.INK JET PRINTER	9-5
3005962-0000	.BRACKET	1-255, 1-257
3006048-0000	.VOLUME BULGE	4-127, 4-129, 4-131, 4-133, 4-135, 4-137, 4-139, 4-141
3006049-0000	.VOLUME BULGE	4-107, 4-109, 4-111, 4-117, 4-119, 4-121
3006309-0001	.ROLLER	1-279, 1-281
3006309-0002	.TRIMMING ROLLER MINUS	9-39
3006309-0003	.TRIMMING ROLLER PLUS	9-39
3006310-0000	.ROLLER	1-279, 1-281
3006596-0000	.SPACER	1-59
3006597-0100	.REGULAR ACCESSORIES	1-11
3006602-0000	.CLAMP	11-29
3006603-0000	.CLAMP	11-29
3007781-0000	.STOP	4-55, 4-57, 4-59, 4-61, 4-63, 4-79, 4-81, 4-83, 4-85
3007868-0000	.SPACER	11-97
3007869-0000	.SPACER	11-97
3007870-0000	.VOLUME CAM	4-149, 4-151
3007871-0000	.VOLUME CAM	4-149, 4-151
3007891-0100	.CUTTING TABLE	11-83, 11-85
3007892-0000	.TABLE	11-91
3007893-0000	.RULER	11-91
3007894-0000	.SHOE	11-91
3007895-0000	.SHOE	11-91
3007896-0000	.SHIM	11-91
3007897-0000	.BRACKET	11-91
3007898-0000	.BRACKET	11-91
3007899-0100	.SUPPORT PLATE	11-83, 11-85
3007900-0000	.BAR	11-101
3007901-0000	.BLOCK	11-101
3007902-0000	.GUIDE	11-101
3007903-0000	.ANGLE PIECE	11-101
3007905-0000	.BLOCK	11-101
3007906-0000	.STOP LUG	11-101
3007907-0000	.BAR	11-101
3007908-0000	.RAIL	11-91
3009902-0000	.PLATE	7-47
3009960-0000	.ROLL	1-307
3010130-0000	.BRACKET	7-83
3010701-0000	.FOLDING BAR	5-115, 5-117, 5-119, 5-121
3010702-0000	.FOLDING BAR	5-115, 5-117, 5-119, 5-121
3010705-0000	.BELT	5-7
3010750-0001	.HOLDER	4-77
3010750-0002	.HOLDER	4-73

Part No	Description	Page No
3010750-0003	.HOLDER	4-89
3010750-0004	.HOLDER	4-65, 4-67, 4-69
3010751-0000	.VOLUME FLAP	4-55, 4-57, 4-59, 4-61, 4-63
3010752-0000	.CARRIER	4-55, 4-57, 4-59, 4-61, 4-63
3010753-0000	.CARRIER	4-55, 4-57, 4-59, 4-61, 4-63
3010754-0000	.STOP	4-55, 4-57, 4-59, 4-61, 4-63
3010755-0000	.VOLUME BULGE	4-55, 4-57, 4-59, 4-61, 4-63
3010756-0000	.VOLUME SHIM	4-55, 4-57, 4-59, 4-61, 4-63, 9-23, 9-25, 9-27
3010757-0000	.BEARING HOUSING	4-127, 4-129, 4-131, 4-133, 4-135, 4-137, 4-139, 4-141
3010758-0000	.FOLDING FLAP	4-127, 4-129, 4-131, 4-133, 4-135, 4-137, 4-139, 4-141
3010759-0000	.FOLDING FLAP	4-127, 4-129, 4-131, 4-133, 4-135, 4-137, 4-139, 4-141
3010760-0000	.CARRIER RULER	4-127, 4-129, 4-131, 4-133
3010761-0000	.CARRIER RULER	4-127, 4-129, 4-131, 4-133
3010762-0000	.CARRIER RULER	4-135, 4-137, 4-139, 4-141
3010763-0000	.CARRIER RULER	4-135, 4-137, 4-139, 4-141
3010815-0000	.PLATE	5-7
3011830-0000	.CONNECTION BOX	2-55
3011831-0000	.CONNECTION BOX	2-21, 2-23
3012782-0000	.SUPPORT	4-107, 4-109, 4-111, 4-117, 4-119, 4-121
3012854-0000	.BUSHING	5-33
3013400-0000	.CABLE DUCT	7-17, 7-19
3013509-0000	.SHAFT	4-127, 4-129, 4-131, 4-133, 4-135, 4-137, 4-139, 4-141
3013512-0000	.SHAFT	4-127, 4-129, 4-131, 4-133, 4-135, 4-137, 4-139, 4-141
3013513-0000	.CARRIER	4-99, 4-101
3013514-0000	.CARRIER	4-103, 4-105
3013566-0000	.SCREW	4-65, 4-67, 4-69, 4-73, 4-77, 4-89
3014067-0000	.WALL	5-115, 5-117, 5-119, 5-121
3014068-0000	.WALL	5-115, 5-117, 5-119, 5-121
3014069-0000	.FOLDING BAR	5-115, 5-117, 5-119, 5-121
3014070-0000	.FOLDING BAR	5-115, 5-117, 5-119, 5-121
3014099-0000	.VOLUME CAM	4-149, 4-151
3014100-0000	.VOLUME CAM	4-149, 4-151
3015470-0000	.SHIM	7-117
3015758-0000	.WALL	5-63, 5-65, 5-67
3015759-0000	.WALL	5-63, 5-65, 5-67
3015761-0000	.GUIDE	5-63, 5-65, 5-67
3015762-0000	.PUSHER	5-79, 5-81, 5-83, 5-85
3015763-0000	.FOLDING BAR	5-115, 5-117, 5-119, 5-121
3015764-0000	.FOLDING BAR	5-115, 5-117, 5-119, 5-121
3015765-0000	.FOLDING BAR	5-115, 5-117, 5-119, 5-121
3015766-0000	.FOLDING BAR	5-115, 5-117, 5-119, 5-121
3015881-0000	.SHAFT	5-37, 5-39
3015882-0000	.ROLLER	5-37, 5-39
3016235-0000	.SPACER	5-37, 5-39
3016921-0000	.FLAP	5-107, 5-109
3016922-0000	.BOTTOM	5-107, 5-109
3017845-0000	.FOLDING DEVICE	5-53, 5-55
3017846-0000	.FOLDING DEVICE	5-53, 5-55
3017847-0000	.LEVER	5-53, 5-55
3017848-0000	.SHAFT	5-53, 5-55
3017849-0000	.PLATE	5-115, 5-117, 5-119, 5-121
3017850-0000	.SCREW	5-53, 5-55
3017851-0000	.AXLE PIN	5-53, 5-55
3017852-0000	.SPACER	5-53, 5-55
3018408-0000	.CABLE DUCT	7-17, 7-19
3018409-0000	.CABLE DUCT	7-17, 7-19
3018410-0000	.CABLE DUCT	7-17, 7-19
3018765-0000	.PLATE	7-119
3018830-0000	.GUIDE	5-63, 5-65, 5-67
3018882-0000	.SUPPORT	4-65, 4-67, 4-69, 4-73, 4-77, 4-89
3019128-0000	.BRACKET	2-195
3019129-0000	.BRACKET	2-195
3019131-0000	.CONTAINER	2-195
3019132-0000	.LID	2-195
3019291-0000	.FLAP	5-107, 5-109
3019316-0000	.SHIM	4-55, 4-57, 4-59, 4-61, 4-63, 9-23, 9-25, 9-27
3019317-0000	.SHIM	4-55, 4-57, 4-59, 4-61, 4-63, 9-23, 9-25, 9-27
3019716-0000	.DOOR	2-151
3019717-0000	.DOOR	2-153
3019718-0000	.DOOR	2-157
3019719-0000	.SUPPORT	2-7
3019720-0000	.INSERT	2-155
3019721-0000	.INSERT	2-155
3019725-0000	.CONTAINER	2-195
3019726-0000	.LID	2-195
3019727-0000	.PLATE	2-195
3019782-0000	.FOLDING BAR	5-115, 5-117, 5-119, 5-121
3019783-0000	.FOLDING BAR	5-115, 5-117, 5-119, 5-121
3019834-0000	.FINGER	7-107
3020015-0001	.SPACER	5-45
3020016-0000	.SUPPORT	5-63, 5-65, 5-67
3020045-0200	.COVERING PANEL	2-123, 2-125
3020050-0000	.HEAT EXCHANGER	1-167
3020051-0000	.PIPE	1-79

Part No	Description	Page No
3020052-0000	.PIPE	1-79
3020058-0000	.BRACKET	1-153
3020067-0000	.PIPE	2-201
3020069-0000	.NUT	1-141
3020070-0000	.WHEEL	1-141
3020071-0000	.SHAFT	1-141
3020072-0000	.PIN	1-125
3020073-0000	.PIPE	2-209
3020074-0000	.PLATE	1-137
3020075-0000	.FRAME	1-135
3020076-0000	.FRAME	1-105
3020077-0000	.TOUCH GUARD	1-111
3020078-0000	.PIPE	2-205
3020079-0000	.PIPE	2-205
3020080-0000	.SPLASH PLATE	1-149, 1-151
3020084-0000	.TOUCH GUARD	1-149, 1-151
3020085-0000	.TOUCH GUARD	1-149, 1-151
3020086-0000	.COVER	1-255, 1-257
3020087-0000	.SUPPORT	1-255, 1-257
3020089-0000	.TOUCH GUARD	1-255, 1-257
3020090-0000	.TOUCH GUARD	1-255, 1-257
3020091-0000	.TOUCH GUARD	1-187, 1-189, 1-191
3020092-0000	.TOUCH GUARD	1-187, 1-189, 1-191
3020098-0000	.TOUCH GUARD	1-259
3020099-0000	.BUSHING	1-111, 1-255, 1-257, 1-259
3020100-0000	.TOUCH GUARD	1-255, 1-257
3020103-0000	.TOUCH GUARD	1-259
3020104-0000	.TOUCH GUARD	1-255, 1-257
3020105-0000	.PLATE	1-255, 1-257
3020106-0000	.HEAT GUARD	1-143
3020107-0000	.HEAT GUARD	1-145
3020108-0000	.COVER	2-91, 2-93
3020109-0000	.COVER	2-91, 2-93
3020119-0000	.HEATING ELEMENT	1-87
3020447-0000	.LOCKING RING	1-233, 1-235, 1-237
3020453-0000	.GUIDE	5-63, 5-65, 5-67
3020454-0000	.GUIDE	5-63, 5-65, 5-67
3020491-0000	.PIN	11-93, 11-95
3020525-0000	.BODY	1-173
3021305-0000	.BRACKET	2-11
3021577-0000	.TANK	1-73
3021604-0000	.SEAL RING	1-273, 1-275
3021605-0000	.SEAL RING	1-273, 1-275
3021606-0000	.SEAL RING	1-273, 1-275
3022265-0000	.RING	7-21
3022266-0000	.SUPPORT	4-107, 4-109, 4-111, 4-117, 4-119, 4-121
3022267-0001	.HOLDER	4-77
3022267-0002	.HOLDER	4-73
3022267-0003	.HOLDER	4-89
3022267-0004	.HOLDER	4-65, 4-67, 4-69
3022268-0000	.SCREW	4-65, 4-67, 4-69, 4-73, 4-77, 4-89
3022269-0000	.SCREW	4-65, 4-67, 4-69, 4-73, 4-77, 4-89
3022271-0000	.CARRIER	4-55, 4-57, 4-59, 4-61, 4-63
3022272-0000	.CARRIER	4-55, 4-57, 4-59, 4-61, 4-63
3022273-0000	.SCREW	4-55, 4-57, 4-59, 4-61, 4-63, 4-79, 4-81, 4-83, 4-85
3022275-0000	.STOP	4-55, 4-57, 4-59, 4-61, 4-63
3022276-0000	.VOLUME SHIM	4-55, 4-57, 4-59, 4-61, 4-63, 9-23, 9-25, 9-27
3022278-0000	.VOLUME BULGE	4-55, 4-57, 4-59, 4-61, 4-63
3022291-0000	.WASHER	11-93, 11-95
3022594-0000	.PRESSURE FLANGE	1-303, 1-305
3022733-0000	.COVER	2-33
3022743-0000	.STOP	4-65, 4-67, 4-69, 4-73
3023426-0000	.DIAGRAM	9-41
3023522-0000	.SEAL RING	1-273, 1-275
3023523-0000	.SEAL RING	1-273, 1-275
3023524-0000	.SEAL RING	1-273, 1-275
3023659-0000	.SEAL RING	1-273, 1-275
3024046-0000	.HOLDER	4-55, 4-57, 4-59, 4-61, 4-63, 4-65, 4-67, 4-69
3024322-0000	.GASKET	1-19, 1-25, 1-53, 1-61, 1-75, 1-77, 1-99, 1-187, 1-189, 1-191, 1-233, 1-235, 1-237, 9-19, 11-7, 11-9, 11-11, 11-13, 11-15, 11-17
3024345-0000	.VOLUME FLAP	4-55, 4-57, 4-59, 4-61, 4-63
3024498-0000	.GUIDE	5-63, 5-65, 5-67
3024499-0000	.GUIDE	5-63, 5-65, 5-67
3024500-0000	.WALL	5-63, 5-65, 5-67
3024501-0000	.WALL	5-63, 5-65, 5-67
3024743-0001	.COMPACT FLASH CLONER 1.0	11-51
3025064-0000	.PROTECTIVE COVER	2-223
3025086-0000	.PIN	11-113
3027099-0000	.SUPPORT	5-7
3027101-0000	.SUPPORT	5-45
3027103-0000	.SHAFT	5-15, 5-17
3027104-0000	.BELT	5-19
3027106-0000	.WASHER	5-45
3027107-0000	.SHAFT	5-15, 5-17

Part No	Description	Page No
3027694-0000	.FOLDING DEVICE	5-53, 5-55
3027695-0000	.FOLDING DEVICE	5-53, 5-55
3030256-0000	.PUSH BUTTON BOX	2-135
3030257-0100	.PUSH BUTTON BOX	2-133
3030309-0000	.PIPE	2-37, 2-39
3031346-0000	.PLATE	2-161
3031464-0000	.BLOCK	5-79, 5-81, 5-83, 5-85
3031515-0000	.FLANGE	11-61
3031536-0000	.PLATE	11-61
3031785-0000	.WALL	5-115, 5-117, 5-119, 5-121
3031786-0000	.WALL	5-115, 5-117, 5-119, 5-121
3031848-0000	.RESISTANCE	11-7, 11-9, 11-11, 11-13, 11-15, 11-17
3031958-0000	.HOSE CONNECTION	2-227, 6-49
3031959-0000	.HOSE CONNECTION	2-227, 6-49
3032218-0100	.CONNECTION BOX	1-5, 1-7, 1-9
3032222-0000	.INSERT	2-161
3032296-0000	.HOSE	2-227
3032804-0000	.HYDRAULIC PIPE	2-41
3032805-0000	.HYDRAULIC PIPE	2-41
3032806-0000	.HYDRAULIC PIPE	2-41
3032807-0000	.HYDRAULIC PIPE	2-41
3033488-0000	.TOP FRAME	2-7
3033492-0000	.RAILING	2-85
3033493-0000	.RAILING	2-85
3033496-0000	.RIM	2-85
3033500-0100	.VENTILATION SYSTEM	2-181
3033502-0000	.LEG	2-85
3033505-0100	.LIGHT FIXTURE	2-5
3033506-0100	.LIGHT FIXTURE	2-31
3033510-0000	.DOOR	2-133
3033511-0000	.SPACER PLATE	2-161
3033512-0000	.SPACER PLATE	2-161
3033710-0000	.VOLUME CAM	4-149, 4-151
3033711-0000	.VOLUME CAM	4-149, 4-151
3033995-0000	.CUTTING JAW	4-127, 4-129, 4-131, 4-133, 4-135, 4-137, 4-139, 4-141
3033996-0000	.CUTTING RAIL	4-127, 4-129, 4-131, 4-133, 4-135, 4-137, 4-139, 4-141
3034256-0000	.PLATE	7-113
3034363-0000	.PAD	7-107
3034364-0000	.SLIDER	7-107
3035454-0000	.VOLUME BULGE	4-127, 4-129, 4-131, 4-133, 4-135, 4-137, 4-139, 4-141
3035760-0000	.BRACKET	8-5, 8-7, 8-9, 8-11
3035761-0000	.FRAME	8-13
3035762-0000	.BRACKET	8-191, 8-193
3035763-0000	.GLASS PANE	8-191, 8-193
3035764-0000	.BRACKET	8-179, 8-181, 8-183, 8-185, 8-187, 8-189, 8-191, 8-193
3035765-0000	.REINFORCEMENT	8-179, 8-181, 8-183, 8-185, 8-187, 8-189
3036024-0000	.FRAME	8-13
3037015-0000	.COVER	3-17, 3-35
3037016-0000	.COVER	3-17, 3-35
3037017-0000	.COVER	3-19, 3-37
3037115-0000	.CABLE DUCT	8-21
3037116-0000	.CABLE DUCT	8-21
3037117-0000	.CABLE DUCT	8-21
3037118-0000	.CABLE DUCT	8-21
3037119-0000	.CABLE DUCT	8-21
3037120-0000	.CABLE DUCT	8-21
3037122-0000	.CABLE DUCT	8-21
3037123-0000	.CABLE DUCT	8-21
3037124-0000	.CABLE DUCT	8-21
3037125-0000	.CABLE DUCT	8-21
3037126-0000	.CABLE DUCT	8-21
3037127-0000	.CABLE DUCT	8-21
3037128-0000	.CABLE DUCT	8-21
3037130-0000	.CABLE DUCT	8-21
3037131-0000	.CABLE DUCT	8-21
3037132-0000	.DIVIDER	8-21
3037133-0000	.DIVIDER	8-21
3037134-0000	.DIVIDER	8-21
3037135-0000	.DIVIDER	8-21
3037136-0100	.BAR	8-51
3037137-0000	.DIVIDER	8-21
3037139-0000	.DIVIDER	8-21
3037140-0000	.DIVIDER	8-21
3037141-0000	.DIVIDER	8-21
3037142-0000	.DIVIDER	8-21
3037143-0000	.DIVIDER	8-21
3037144-0000	.DIVIDER	8-21
3037706-0000	.PNEUMATIC DIAGRAM	9-41
3037829-0000	.CLAMP	1-99, 1-149, 1-151
3037830-0000	.COVER	1-13
3037831-0000	.COVER	1-13
3037832-0000	.COVER	1-13
3037833-0000	.COVER	1-13
3037834-0000	.COVER	1-13

Part No	Description	Page No
3037835-0000	.PEROXIDE CHAMBER	1-197, 1-199
3037836-0000	.INTERMEDIARY SECTION	1-165
3037837-0000	.SPACER	1-87
3037838-0000	.SPACER	1-87
3037839-0000	.COVER	1-87
3037840-0000	.COVER	1-99
3037841-0000	.COVER	1-99
3037842-0000	.TOUCH GUARD	1-99
3037843-0000	.COVER	1-143
3037844-0000	.COVER	1-145
3037845-0000	.CLAMP	1-99
3037846-0100	.EMERGENCY STOP	1-101
3037847-0000	.PIN	1-157
3037848-0000	.CONNECTION	1-167
3037849-0000	.TOP COVER	6-49
3037851-0000	.COVER	6-49
3037852-0000	.COVER	6-49
3037853-0000	.RAILING	6-49
3037854-0000	.SPLASH PLATE	1-149, 1-151
3037855-0000	.PIPE	1-149, 1-151
3037856-0000	.FRONT COVER	6-49
3037857-0000	.PIPE	6-11
3037859-0000	.BRACKET	1-141
3037860-0000	.DIAGRAM	9-41
3037861-0000	.SHAFT	1-307
3037862-0000	.ROLLER	1-307
3037864-0000	.PIPE	1-233, 1-235, 1-237
3037865-0000	.PIPE	2-219
3037866-0000	.PIPE	1-79
3037868-0000	.PIPE	1-79
3037869-0000	.VALVE BODY	1-25
3037870-0000	.VALVE BODY	1-19
3037873-0000	.BRACKET	2-185, 2-187
3037880-0000	.TUNNEL	2-155
3037881-0000	.COVER	2-155
3037882-0000	.COVER	2-155
3037883-0000	.SPLASH PLATE	2-155
3037884-0000	.BRACKET	2-185, 2-187
3037885-0000	.BRACKET	2-185, 2-187
3037888-0000	.PLATE	2-185, 2-187
3037891-0000	.PIPE	2-185, 2-187
3037892-0000	.PIPE	2-193
3037893-0000	.CONTAINER	2-195
3037894-0000	.CONTAINER	2-195
3037895-0100	.REFILLING	2-183
3037896-0000	.CONNECTION TABLE	6-51
3037897-0000	.PIPE	6-11
3037898-0000	.PIPE	1-185
3037899-0000	.PIPE	1-185
3037900-0100	.STORAGE	2-183
3037901-0000	.PIPE	1-185
3037902-0000	.BRACKET	1-255, 1-257
3037903-0000	.BRACKET	1-259
3037905-0000	.DOOR	1-255, 1-257
3037907-0000	.BRACKET	1-255, 1-257
3037908-0000	.BRACKET	1-255, 1-257
3037910-0000	.PIPE	1-185
3037911-0000	.TOUCH GUARD	1-185
3037912-0000	.BRACKET	1-183
3037913-0000	.PIPE	1-69
3037914-0000	.PIPE	1-69
3037924-0000	.ROLLER	1-283, 1-285, 1-287
3037925-0000	.ROLLER	1-283, 1-285, 1-287
3037926-0000	.ROLLER	1-283, 1-285, 1-287
3037929-0000	.FOLDING BAR	5-115, 5-117, 5-119, 5-121
3037930-0000	.FOLDING BAR	5-115, 5-117, 5-119, 5-121
3037931-0000	.WALL	5-115, 5-117, 5-119, 5-121
3037932-0000	.WALL	5-115, 5-117, 5-119, 5-121
3037955-0000	.PUSHER	5-63, 5-65, 5-67, 9-23, 9-25, 9-27
3037989-0000	.DIVIDER	8-21
3038001-0100	.BAR	8-41, 8-43
3038002-0000	.PANEL	8-173
3038003-0000	.SUPPORT	1-241
3038004-0000	.PANEL	8-175
3038017-0000	.BRACKET	8-5, 8-7, 8-9, 8-11
3038026-0000	.COVER PLATE	8-141, 8-143, 8-145, 8-147, 8-149, 8-151
3038027-0000	.GASKET	8-141, 8-143, 8-145, 8-147, 8-149, 8-151
3038088-0000	.COVER	5-11
3038089-0000	.COVER	5-11
3038302-0000	.INSERT	5-13, 5-49
3038338-0000	.COVER	4-41
3038339-0000	.COVER	4-39
3039305-0000	.BRACKET	2-195
3039513-0100	.SUPPORT	5-87, 5-89, 5-91, 9-45

Part No	Description	Page No
3039514-0100	.SUPPORT	5-87, 5-89, 5-91, 9-45
3039953-0000	.SHIM	5-19
3040198-0000	.SUPPORT	5-19
3040850-0000	.TENSION SPRING	4-65, 4-67, 4-69, 4-73, 4-77, 4-89
3040856-0100	.ILINE XT AUXILIARY CUTTING TABLE	11-69
3040857-0100	.GROUPING TOP SUPPORT	11-83, 11-85
3040859-0000	.PROFILE	11-107, 11-109
3040860-0000	.PROFILE	11-107, 11-109
3040861-0000	.FLANGE	11-111
3040930-0000	.ECCENTRIC	1-187, 1-189, 1-191
3040931-0000	.BRACKET	7-113
3040932-0000	.BRACKET	7-119
3040933-0000	.BRACKET	7-119
3040934-0000	.HOLDER	7-113
3040935-0000	.TOUCH GUARD	7-125
3040936-0000	.PROTECTION	7-125
3040937-0000	.CONNECTION	7-117
3040938-0000	.PLATE	7-117
3040939-0000	.BLOCK	7-117
3040940-0000	.PLATE	7-37
3041517-0100	.FREQUENCY CONVERTER WITH ACCESSORIES	8-15, 8-17, 8-19
3041518-0000	.COVER	8-149, 8-151
3041519-0000	.FRAME	8-127
3041557-0100	.DOOR SAFETY SWITCH	7-5, 7-7
3041597-0100	.BAR	8-51
3042009-0000	.WATER DIAGRAM	9-41
3042384-0000	.PIPE	2-37, 2-39
3042504-0000	.NUT	4-55, 4-57, 4-59, 4-61, 4-63, 4-65, 4-67, 4-69
3042505-0000	.SUPPORT	4-65, 4-67, 4-69
3042518-0000	.SUPPORT	4-55, 4-57, 4-59, 4-61, 4-63
3042519-0000	.STOP	4-55, 4-57, 4-59, 4-61, 4-63
3042521-0000	.STOP	4-55, 4-57, 4-59, 4-61, 4-63, 4-79, 4-81, 4-83, 4-85
3042522-0000	.STOP	4-55, 4-57, 4-59, 4-61, 4-63
3042523-0000	.STOP	4-55, 4-57, 4-59, 4-61, 4-63
3042525-0000	.CARRIER	4-55, 4-57, 4-59, 4-61, 4-63
3042526-0000	.CARRIER	4-55, 4-57, 4-59, 4-61, 4-63
3042527-0000	.CARRIER	4-55, 4-57, 4-59, 4-61, 4-63
3042528-0000	.CARRIER	4-55, 4-57, 4-59, 4-61, 4-63, 4-79, 4-81, 4-83, 4-85
3042529-0000	.CARRIER	4-55, 4-57, 4-59, 4-61, 4-63
3042530-0000	.CARRIER	4-55, 4-57, 4-59, 4-61, 4-63
3042557-0000	.AXLE PIN	7-115
3042558-0000	.SUPPORT	7-47
3042559-0000	.PHOTOCELL BRACKET	7-65
3042560-0000	.BRACKET	7-113
3042561-0000	.PLATE	7-113
3042605-0000	.TANK	2-37, 2-39
3042663-0000	.PIPE	2-37, 2-39
3042664-0000	.PIPE	2-37, 2-39
3042666-0000	.PIPE	2-37, 2-39
3042667-0000	.PIPE	2-37, 2-39
3042668-0100	.PANEL	8-3
3042669-0000	.BRACKET	8-169, 8-171
3042670-0000	.BOX	8-169, 8-171
3042671-0000	.BOX	8-169, 8-171
3043267-0000	.PLATE	2-7
3043531-0000	.PNEUMATIC DIAGRAM	9-43
3043672-0100	.FLAP	5-107, 5-109
3044278-0000	.DIAGRAM	9-41
3044279-0000	.LUBRICATION DIAGRAM	9-41
3044280-0000	.HYDRAULIC SYSTEM	9-41
3044281-0000	.PNEUMATIC DIAGRAM	9-41
3044282-0000	.PNEUMATIC DIAGRAM	9-41
3044283-0000	.PNEUMATIC DIAGRAM	9-41
3044309-0000	.PNEUMATIC DIAGRAM	9-41
3044462-0000	.ARCH	5-87, 5-89, 5-91
3044463-0000	.ARCH	5-87, 5-89, 5-91
3044511-0000	.INSERT	1-153, 1-233, 1-235, 1-237
3044527-0000	.INDUCTOR	4-107, 4-109, 4-111, 4-117, 4-119, 4-121, 9-23, 9-25, 9-27
3044559-0000	.PLATE	7-113
3044560-0000	.SPACER	7-113
3044561-0000	.BRACKET	7-113
3044562-0000	.TOUCH GUARD	7-111
3044563-0000	.BLOCK	7-117
3045542-0000	.GUIDE	5-63, 5-65, 5-67
3045543-0000	.GUIDE	5-63, 5-65, 5-67
3046470-0000	.PROFILE	2-7
3046472-0000	.PIPE BRACKET	2-17
3046473-0000	.DOOR	2-29
3046474-0000	.PIPE	2-165
3046475-0000	.COVER	2-155
3046476-0000	.COVER	2-155
3046477-0000	.SPACER PLATE	2-161
3046478-0000	.COVER	2-155
3046707-0000	.BRACKET	7-5, 7-7

Part No	Description	Page No
3046709-0000	.COVER	7-5, 7-7
3046710-0000	.COVER	7-5, 7-7
3046711-0000	.COVER	7-5, 7-7
3046754-0000	.FRONT COVER	2-155
3046756-0000	.PIPE	2-165
3046757-0000	.BRACKET	2-161
3046758-0000	.PIPE	2-165
3046759-0000	.DOOR	2-159
3046760-0000	.DOOR	2-139
3046761-0000	.DOOR	2-131
3046762-0000	.DOOR	2-129
3046763-0000	.DOOR	2-149
3046782-0000	.CABLE DUCT	7-17, 7-19
3046783-0000	.CABLE DUCT	7-17, 7-19
3046820-0100	.SUPPORT	9-3
3046888-0000	.DOOR	2-147
3046889-0000	.SUPPORT	2-27
3046890-0000	.COVER	2-33
3046891-0000	.PLATE	2-99, 2-101
3047200-0102	.REBUILDING MANUAL	11-79
3047317-0000	.VOLUME BULGE	4-55, 4-57, 4-59, 4-61, 4-63
3047319-0000	.WASHER	3-27
3047358-0000	.VOLUME SHIM	4-55, 4-57, 4-59, 4-61, 4-63, 9-23, 9-25, 9-27
3047392-0000	.PLATE	11-61
3047393-0000	.BRACKET	11-61
3047647-0000	.PIPE	11-61
3047649-0200	.PRODUCT LINE LEAKAGE DETECTOR	11-49
3047650-0000	.PANEL	11-61
3047651-0000	.PIPE	11-61
3047652-0000	.PIPE	11-61
3047653-0000	.PIPE	11-61
3047654-0000	.PIPE	11-61
3047655-0000	.PIPE	11-61
3047656-0000	.PLATE	11-61
3047962-0000	.SHAFT	5-37, 5-39
3047987-0000	.PIN	4-153
3047996-0000	.TOOL	11-35
3047997-0000	.PROFILE	11-107, 11-109
3048000-0000	.PROFILE	11-107, 11-109
3048001-0000	.CANTILEVER	11-93, 11-95
3048002-0000	.CANTILEVER	11-93, 11-95
3048003-0000	.HOLDER	11-83, 11-85
3048005-0000	.PAPER SUPPORT	11-87
3048006-0000	.HOLDER	11-87
3051901-0000	.PLATE	11-93, 11-95
3051903-0100	.PIPE WORK-PNEUMATIC	11-83, 11-85
3051904-0000	.BRACKET	11-99
3051906-0000	.HOLDER	11-103
3051907-0100	.LEVER MECHANISM	11-83, 11-85
3051908-0000	.LEVER	11-93, 11-95
3051988-0000	.GUIDE	5-63, 5-65, 5-67
3051989-0000	.GUIDE	5-63, 5-65, 5-67
3051990-0000	.BLOCK	5-71, 5-73
3051991-0000	.NOZZLE	5-75, 5-77
3051992-0000	.NOZZLE	5-75, 5-77
3051993-0000	.NOZZLE	5-75, 5-77
3051994-0000	.PLATE	5-75, 5-77
3051995-0000	.PIPE	5-75, 5-77
3051996-0000	.PIPE	5-75, 5-77
3051997-0000	.BLOCK	5-79, 5-81, 5-83, 5-85
3052000-0000	.FLAP	5-107, 5-109
3052002-0000	.BOTTOM	5-107, 5-109
3052003-0000	.WALL	5-115, 5-117, 5-119, 5-121
3052004-0000	.WALL	5-115, 5-117, 5-119, 5-121
3052005-0000	.FOLDING BAR	5-115, 5-117, 5-119, 5-121
3052006-0000	.FOLDING BAR	5-115, 5-117, 5-119, 5-121
3052009-0000	.PLATE	5-53, 5-55
3052010-0000	.SHAFT	5-53, 5-55
3052011-0000	.FOLDING DEVICE	5-53, 5-55
3052012-0000	.FOLDING DEVICE	5-53, 5-55
3052013-0000	.FOLDING BAR	5-115, 5-117, 5-119, 5-121
3052014-0000	.FOLDING BAR	5-115, 5-117, 5-119, 5-121
3055041-0000	.FRAME	2-85
3055042-0000	.FRAME	2-111, 2-113
3055043-0000	.TOE PLATE	2-85
3055044-0000	.CHECKER PLATE	2-85
3055045-0000	.CHECKER PLATE	2-111, 2-113
3055046-0000	.TOE PLATE	2-111, 2-113
3055047-0000	.RAILING	2-87, 2-89
3055048-0000	.RAILING	2-85
3055049-0100	.LINK	2-71, 2-73, 2-75, 2-77, 2-79, 2-81
3055050-0100	.STAIRCASE	2-83
3055888-0000	.WALL	5-63, 5-65, 5-67
3055889-0000	.WALL	5-63, 5-65, 5-67

Part No	Description	Page No
3055890-0000	.FOLDING BAR	5-115, 5-117, 5-119, 5-121
3055891-0000	.FOLDING BAR	5-115, 5-117, 5-119, 5-121
3055892-0000	.FOLDING BAR	5-115, 5-117, 5-119, 5-121
3055893-0000	.FOLDING BAR	5-115, 5-117, 5-119, 5-121
3056999-0000	.BENDING ROLLER	11-99
3057000-0000	.SHAFT	11-99
3057001-0100	.INFEED ROLLER	11-83, 11-85
3057007-0000	.HOLDER	11-87
3057008-0100	.CANTILEVER	11-83, 11-85
3057124-0000	.BRACKET	2-209, 6-23
3057766-0000	.BRACKET	11-93, 11-95
3058049-0000	.HOLDER	11-93, 11-95
3058050-0000	.BRACKET	11-93, 11-95
3058051-0000	.PROFILE	11-107, 11-109
3058052-0100	.CANTILEVER	11-83, 11-85
3058053-0000	.PAPER SUPPORT	11-89
3058054-0000	.HOLDER	11-89
3058055-0000	.BLOCK	11-93, 11-95
3058056-0000	.PIN	11-93, 11-95
3058057-0000	.PROFILE	11-107, 11-109
3058058-0000	.PROFILE	11-107, 11-109
3058432-0000	.ROLLER	1-283, 1-285, 1-287
3058433-0000	.ROLLER	1-283, 1-285, 1-287
3058434-0000	.ROLLER	1-283, 1-285, 1-287
3058435-0000	.BRACKET	1-283, 1-285, 1-287
3058438-0000	.STOPPER	11-47
3058439-0000	.STOPPER	11-47
3058444-0000	.COUNTER ROLLER	1-279, 1-281
3058446-0001	.ROLLER	1-279, 1-281
3058446-0002	.ROLLER	9-39
3058446-0003	.ROLLER	9-39
3058447-0001	.ROLLER	1-279, 1-281
3058447-0002	.ROLLER	9-39
3058447-0003	.ROLLER	9-39
3058448-0000	.SEAL RING	1-273, 1-275
3058449-0000	.ROLLER	1-273, 1-275
3058450-0000	.BRACKET	1-299
3058452-0000	.FORK	1-279, 1-281
3058457-0000	.PRESSURE FLANGE	1-303, 1-305
3058468-0000	.LOCK PLATE	1-283, 1-285, 1-287
3058469-0000	.ROLLER	1-283, 1-285, 1-287
3058470-0000	.ROLLER	1-283, 1-285, 1-287
3058471-0000	.ROLLER	1-283, 1-285, 1-287
3058472-0000	.ROLLER	1-283, 1-285, 1-287
3058473-0000	.ROLLER	1-283, 1-285, 1-287
3058474-0000	.ROLLER	1-283, 1-285, 1-287
3058475-0000	.ROLLER	1-283, 1-285, 1-287
3058476-0000	.LOCK PLATE	1-283, 1-285, 1-287
3058477-0000	.SUPPORT RING	1-291
3058478-0000	.ROLLER	1-291
3058479-0000	.ROLLER	1-291
3058480-0000	.BRACKET	1-283, 1-285, 1-287
3058481-0000	.ROLLER	1-291
3058483-0000	.STOPPER	11-47
3058484-0000	.STOPPER	11-47
3058488-0000	.CLAMP	1-307
3058489-0000	.ELBOW PIPE	1-307
3058490-0000	.PIPE	2-9
3058491-0000	.PIPE	2-9
3058492-0000	.PLUG	2-9
3058493-0000	.NOZZLE	1-265
3058495-0100	.STERILE AIR PIPE	1-261
3058498-0000	.PIPE	2-167
3058500-0000	.PROFILE	2-7
3058502-0000	.STEAM PIPE	1-35
3058503-0000	.STEAM DISTRIBUTOR	1-37, 1-39
3058504-0000	.STEAM PIPE	1-41
3058505-0000	.STEAM PIPE	1-41
3058506-0000	.BRACKET	1-41
3058507-0000	.STEAM PIPE	1-41
3058508-0000	.STEAM PIPE	1-37, 1-39
3058509-0000	.STEAM PIPE	1-37, 1-39
3058510-0000	.STEAM PIPE	1-35
3058512-0000	.BRACKET	1-73
3058513-0000	.PIPE	1-149, 1-151
3058517-0000	.STEAM PIPE	1-81
3058518-0000	.FRAME	1-83
3058519-0000	.HOSE	1-71
3058520-0100	.STEAM SYSTEM	1-65, 1-67
3058521-0000	.HOSE	1-73
3058522-0000	.SPACER	1-83
3058523-0000	.SPACER	1-83
3058524-0000	.BRACKET	1-71
3058525-0100	.INTEGRATED CLEANING UNIT	2-181

Part No	Description	Page No
3058526-0000	.BRACKET	1-83
3058527-0000	.PRESSURE FLANGE	9-21
3058528-0000	.PRESSURE FLANGE	9-21
3058529-0000	.PRESSURE FLANGE	9-21
3058530-0100	.TRANSPORT EQUIPMENT	1-65, 1-67
3058531-0000	.PRESSURE FLANGE	9-21
3059072-0000	.SUPPORT	8-5, 8-7, 8-9, 8-11
3059128-0105	.REBUILDING MANUAL	11-61
3059215-0000	.CABLE DUCT	7-17, 7-19
3059773-0000	.BRACKET	7-5, 7-7
3060156-0101	.SCANNER SUPPORT	11-55, 11-57
3060488-0000	.INSERT	2-27, 5-49
3060682-0000	.GUIDE	5-63, 5-65, 5-67
3060683-0000	.GUIDE	5-63, 5-65, 5-67
3060719-0000	.HOLDER	11-103
3060723-0000	.PLUG	11-107, 11-109
3061353-0000	.LOCKING RING	1-75, 1-77, 11-61
3062041-0000	.SUPPORT	8-5, 8-7, 8-9, 8-11
3066842-0000	.VOLUME BULGE	5-79, 5-81, 5-83, 5-85
3067238-0000	.SUPPORT	4-107, 4-109, 4-111, 4-117, 4-119, 4-121
3067239-0000	.BEARING HOUSING	4-127, 4-129, 4-131, 4-133, 4-135, 4-137, 4-139, 4-141
3067241-0000	.FOLDING FLAP	4-127, 4-129, 4-131, 4-133, 4-135, 4-137, 4-139, 4-141
3067242-0000	.CARRIER RULER	4-127, 4-129, 4-131, 4-133
3067243-0000	.CARRIER RULER	4-127, 4-129, 4-131, 4-133
3067244-0000	.CUTTING JAW	4-127, 4-129, 4-131, 4-133, 4-135, 4-137, 4-139, 4-141
3067245-0000	.CARRIER RULER	4-135, 4-137, 4-139, 4-141
3067246-0000	.CARRIER RULER	4-135, 4-137, 4-139, 4-141
3067247-0001	.HOLDER	4-77
3067247-0002	.HOLDER	4-73
3067247-0003	.HOLDER	4-89
3067247-0004	.HOLDER	4-65, 4-67, 4-69
3067248-0000	.VOLUME FLAP	4-55, 4-57, 4-59, 4-61, 4-63
3067249-0000	.VOLUME BULGE	4-55, 4-57, 4-59, 4-61, 4-63
3067250-0000	.CARRIER	4-55, 4-57, 4-59, 4-61, 4-63
3067251-0000	.CARRIER	4-55, 4-57, 4-59, 4-61, 4-63
3067273-0000	.SHAFT	4-55, 4-57, 4-59, 4-61, 4-63
3067274-0000	.SHIM	4-55, 4-57, 4-59, 4-61, 4-63, 9-23, 9-25, 9-27
3067286-0000	.VOLUME SHIM	9-23, 9-25, 9-27
3067289-0000	.VOLUME CAM	4-149, 4-151
3067290-0000	.VOLUME CAM	4-149, 4-151
3067349-0000	.SUPPORT	5-63, 5-65, 5-67
3067350-0000	.GUIDE	5-63, 5-65, 5-67
3067351-0000	.GUIDE	5-63, 5-65, 5-67
3067352-0000	.GUIDE	5-63, 5-65, 5-67
3067353-0000	.GUIDE	5-63, 5-65, 5-67
3067354-0000	.WALL	5-63, 5-65, 5-67
3067355-0000	.WALL	5-63, 5-65, 5-67
3067357-0000	.PLATE	5-75, 5-77
3067358-0000	.NOZZLE	5-75, 5-77
3067359-0000	.BLOCK	5-79, 5-81, 5-83, 5-85
3067360-0000	.PUSHER	5-79, 5-81, 5-83, 5-85
3067361-0000	.FLAP	5-107, 5-109
3067362-0000	.FLAP	5-107, 5-109
3067363-0000	.BOTTOM	5-107, 5-109
3067364-0000	.FOLDING BAR	5-115, 5-117, 5-119, 5-121
3067365-0000	.FOLDING BAR	5-115, 5-117, 5-119, 5-121
3067366-0000	.FOLDING BAR	5-115, 5-117, 5-119, 5-121
3067367-0000	.FOLDING BAR	5-115, 5-117, 5-119, 5-121
3067368-0000	.GUIDE	5-63, 5-65, 5-67
3067369-0000	.GUIDE	5-63, 5-65, 5-67
3067387-0000	.RAILING	2-115, 2-117, 2-119, 2-121
3067388-0000	.TOE PLATE	2-87, 2-89
3067389-0000	.TOE PLATE	2-99, 2-101
3067390-0000	.RAILING	2-111, 2-113
3067391-0000	.RAILING	2-111, 2-113
3067392-0000	.RAILING	2-87, 2-111, 2-113
3067393-0000	.TOE PLATE	2-111, 2-113
3067394-0000	.RAILING	2-87, 2-89
3067395-0100	.RAILING	2-83
3067587-0000	.PRESSURE FLANGE	1-303, 1-305
3069052-0000	.RAILING	2-111, 2-113
3069053-0000	.RAILING	2-111, 2-113
3069054-0000	.CHECKER PLATE	2-111, 2-113
3069056-0000	.PLATE	2-89, 2-111, 2-113
3069057-0000	.PLATFORM	2-99, 2-101
3069059-0000	.PIN	2-85, 2-111, 2-113
3069060-0000	.CHECKER PLATE	2-85
3069061-0000	.PLATE	2-87, 2-89
3069588-0000	.ELBOW PIPE JOINT	2-37, 2-39
3069589-0000	.REDUCER	2-37, 2-39
3069591-0000	.REDUCER	2-65, 2-67
3069594-0100	.OK PRINTER DOMINO	9-3
3069629-0000	.CABLE DUCT	8-21
3070289-0000	.FOLDING BAR	5-115, 5-117, 5-119, 5-121

Part No	Description	Page No
3070290-0000	.FOLDING BAR	5-115, 5-117, 5-119, 5-121
3071102-0000	.BRACKET	9-7
3072085-0009	.SOFTWARE CD	10-5
3072777-0000	.TEMPLATE	11-31, 11-33
3073526-0000	.TEMPLATE	11-31, 11-33
3074193-0000	.TOE PLATE	2-99, 2-101
3074194-0000	.BEAM	2-99, 2-101
3074195-0000	.PLATFORM	2-99, 2-101
3074196-0000	.TOE PLATE	2-99, 2-101
3074197-0000	.RAILING	2-115, 2-117, 2-119, 2-121
3074198-0000	.PLATFORM	2-99, 2-101
3074199-0000	.PLATFORM	2-99, 2-101
3074200-0100	.REAR PLATFORM	2-71, 2-73, 2-75, 2-77, 2-79, 2-81
3074201-0000	.TOE PLATE	2-99, 2-101
3074202-0000	.TOE PLATE	2-99, 2-101
3074203-0000	.RAILING	2-115, 2-117, 2-119, 2-121
3074204-0100	.RAILING	2-71, 2-73, 2-75, 2-77, 2-79, 2-81
3074206-0000	.PLATE	8-169, 8-171
3074207-0000	.PLATE	8-169, 8-171
3074419-0100	.STAIR	2-71, 2-73, 2-75, 2-77, 2-79, 2-81
3074420-0100	.PLATFORM	2-3
3074528-0100	.CABLE TRENCH	7-5, 7-7
3074535-0000	.RAILING	2-115, 2-117, 2-119, 2-121
3074720-0000	.GUIDE	5-63, 5-65, 5-67
3074721-0000	.GUIDE	5-63, 5-65, 5-67
3074722-0000	.GUIDE	5-63, 5-65, 5-67
3074723-0000	.GUIDE	5-63, 5-65, 5-67
3074724-0000	.PUSHER	5-79, 5-81, 5-83, 5-85
3074725-0000	.PUSHER	5-79, 5-81, 5-83, 5-85
3074726-0000	.FLAP	5-107, 5-109
3074728-0000	.CHECKER PLATE	2-91, 2-93
3074730-0000	.RAILING	2-89
3075023-0000	.BOX	11-61
3075274-0000	.LABEL	8-169, 8-171
3075275-0000	.LABEL	8-169, 8-171
3075932-0000	.STRAIGHT CONNECTION	1-185
3075956-0000	.CHECKER PLATE	2-91, 2-93
3076767-0000	.FLAP	5-107, 5-109
3076811-0100	.WHEEL UNIT	11-83, 11-85
3076856-0000	.PRESSURE FLANGE	9-21
3076857-0000	.PRESSURE FLANGE	9-21
3076858-0000	.PRESSURE FLANGE	9-21
3076859-0000	.PRESSURE FLANGE	9-21
3076860-0000	.PRESSURE FLANGE	9-21
3076861-0000	.PRESSURE FLANGE	9-21
3077097-0100	.RAILING	2-83
3078317-0000	.RAILING	2-115, 2-117, 2-119, 2-121
3078318-0000	.RAILING	2-115, 2-117, 2-119, 2-121
3078319-0000	.TOE PLATE	2-91, 2-93
3078320-0000	.PLATFORM	2-91, 2-93
3078321-0100	.EXTENDED PLATFORM	2-71, 2-73, 2-75, 2-77, 2-79, 2-81
3078547-0000	.ROLLER	1-283, 1-285, 1-287
3078580-0100	.QUEUE GUARD	9-5
3078685-0000	.PIPE	2-37, 2-39
3079215-0000	.BLOCK	11-97
3079216-0000	.BLOCK	11-97
3079740-0000	.BLOCK	5-71, 5-73
3080559-0000	.FOLDING FLAP	4-127, 4-129, 4-131, 4-133, 4-135, 4-137, 4-139, 4-141
3080560-0000	.FOLDING FLAP	4-127, 4-129, 4-131, 4-133, 4-135, 4-137, 4-139, 4-141
3087780-0000	.NOZZLE	11-59
3089305-0000	.GUIDE	5-63, 5-65, 5-67
3089348-0000	.INDUCTOR	4-107, 4-109, 4-111, 4-117, 4-119, 4-121, 9-23, 9-25, 9-27
3089354-0000	.INDUCTOR	4-107, 4-109, 4-111, 4-117, 4-119, 4-121, 9-23, 9-25, 9-27
3089560-0000	.PRESSURE FLANGE	9-21
3089561-0000	.PRESSURE FLANGE	9-21
3089562-0000	.BRACKET	1-83
3089565-0000	.PRESSURE FLANGE	1-303, 1-305
3089566-0000	.PRESSURE FLANGE	1-303, 1-305
3089567-0001	.ROLLER	1-279, 1-281
3089567-0002	.ROLLER	9-39
3089567-0003	.ROLLER	9-39
3089568-0001	.ROLLER	1-279, 1-281
3089568-0002	.ROLLER	9-39
3089568-0003	.ROLLER	9-39
3089569-0000	.ROLLER	1-279, 1-281
3089571-0000	.PRESSURE FLANGE	1-303, 1-305
3089572-0000	.BRACKET	11-47
3089589-0000	.WASHER	1-279, 1-281
3089594-0000	.PRESSURE FLANGE	9-21
3089595-0000	.PRESSURE FLANGE	9-21
3089596-0000	.PRESSURE FLANGE	9-21
3089599-0000	.LOWER FORMING RING	1-279, 1-281
3089600-0000	.UPPER FORMING RING	1-283, 1-285, 1-287
3089601-0000	.UPPER FORMING RING	1-283, 1-285, 1-287

Part No	Description	Page No
3089602-0000	.UPPER FORMING RING	1-283, 1-285, 1-287
3089603-0000	.UPPER FORMING RING	1-283, 1-285, 1-287
3089604-0000	.UPPER FORMING RING	1-283, 1-285, 1-287
3089605-0000	.UPPER FORMING RING	1-283, 1-285, 1-287
3089606-0000	.LOWER FORMING RING	1-279, 1-281
3089607-0000	.SHIM	1-283, 1-285, 1-287
3089608-0000	.SHIM	1-283, 1-285, 1-287
3089695-0000	.PLUG	2-85
3090032-0000	.PROFILE	2-85
3090033-0000	.PROFILE	2-85
3092001-0000	.GUIDE	5-63, 5-65, 5-67
3092163-0000	.GASKET	1-19, 1-61
3092164-0000	.GASKET	1-35, 1-37, 1-39, 1-61, 1-75, 1-77, 1-99, 1-149, 1-151, 1-187, 1-189, 1-191, 1-233, 1-235, 1-237, 9-19, 11-61
3092257-0000	.NOZZLE	5-75, 5-77
3092258-0000	.NOZZLE	5-75, 5-77
3092451-0000	.RAIL	4-107, 4-109, 4-111, 4-117, 4-119, 4-121
3092452-0000	.NAIL	5-79, 5-81, 5-83, 5-85
3092802-0000	.ROLLER	4-153
3092917-0000	.PIPE	1-19
3092918-0000	.BLANK	1-19
3092919-0000	.PIPE	1-35
3092920-0000	.WASTE PIPE	1-35
3092921-0000	.WASTE PIPE	1-35
3092922-0000	.WASTE BOX	1-37, 1-39
3092923-0000	.WASTE PIPE	1-37, 1-39
3092924-0000	.PIPE	1-53
3092925-0000	.PIPE	1-53
3092926-0000	.PIPE	1-53
3092927-0000	.PIPE	1-53
3092928-0000	.PIPE	1-149, 1-151
3092929-0000	.PIPE	1-149, 1-151
3092930-0000	.PIPE	1-149, 1-151
3092931-0000	.PIPE	1-187, 1-189, 1-191
3092932-0000	.PIPE	1-187, 1-189, 1-191
3092933-0000	.PRODUCTION LINE	1-187, 1-189, 1-191
3092934-0000	.PIPE	1-187, 1-189, 1-191
3092935-0000	.PIPE	1-187, 1-189, 1-191
3092938-0000	.CLEANING PIPE	1-233, 1-235, 1-237
3092940-0000	.PIPE	1-233, 1-235, 1-237
3092941-0000	.LID	1-233, 1-235, 1-237
3093272-0000	.GASKET	1-103
3093440-0000	.TEMPLATE	11-43
3094531-0100	.BAR	8-77
3094532-0100	.BAR	8-15, 8-17, 8-19
3094533-0100	.BAR	8-15, 8-17, 8-19
3096231-0000	.KNIFE	4-143, 4-145, 4-147, 9-23, 9-25, 9-27
3096232-0000	.CUTTING RAIL	4-127, 4-129, 4-131, 4-133, 4-135, 4-137, 4-139, 4-141
3096233-0000	.BRACKET	4-127, 4-129, 4-131, 4-133, 4-135, 4-137, 4-139, 4-141
3096451-0100	.VALVE GROUP	11-103
3097062-0000	.COOLING UNIT	8-195
3097403-0000	.BUSHING	4-65, 4-67, 4-69, 4-73, 4-77, 4-89
3097404-0001	.HOLDER	4-77
3097404-0003	.HOLDER	4-89
3097405-0002	.HOLDER	4-73
3097405-0004	.HOLDER	4-65, 4-67, 4-69
3097407-0000	.CARRIER	4-55, 4-57, 4-59, 4-61, 4-63
3097408-0000	.CARRIER	4-55, 4-57, 4-59, 4-61, 4-63
3097409-0000	.CARRIER	4-79, 4-81, 4-83, 4-85
3097580-0000	.CARRIER	4-79, 4-81, 4-83, 4-85
3097581-0000	.STOP	4-79, 4-81, 4-83, 4-85
3097582-0000	.STOP	4-55, 4-57, 4-59, 4-61, 4-63
3097617-0100	.GREASE GUN	11-49
3097776-0000	.SHIM	5-79, 5-81, 5-83, 5-85
3099249-0000	.FLAP	4-127, 4-129, 4-131, 4-133, 4-135, 4-137, 4-139, 4-141
3099250-0000	.FLAP	4-127, 4-129, 4-131, 4-133, 4-135, 4-137, 4-139, 4-141
3099357-0000	.BRACKET	1-293, 1-295, 1-297
3100273-0000	.BRACKET	1-293, 1-295, 1-297
3100667-0000	.VOLUME CAM	4-149, 4-151
3100668-0000	.VOLUME CAM	4-149, 4-151
3100669-0000	.VOLUME CAM	4-149, 4-151
3100670-0000	.VOLUME CAM	4-149, 4-151
3100994-0000	.LOWER FORMING RING	1-279, 1-281
3100995-0000	.SUPPORT	1-279, 1-281
3101168-0000	.JOINT	4-47
3101169-0000	.JOINT	4-47
3101170-0000	.SPINDLE	4-47
3102608-0000	.FASTENING PLATE	6-19
3102688-0000	.NOZZLE	11-59
3103279-0000	.LABEL	7-5, 7-7
3103280-0000	.LABEL	7-5, 7-7
3103340-0000	.SCREW	1-255, 1-257, 1-259
3103341-0000	.BRACKET	1-255, 1-257
3103342-0000	.BRACKET	1-255, 1-257

Part No	Description	Page No
3104458-0000	.VOLUME BULGE	4-55, 4-57, 4-59, 4-61, 4-63
3104459-0000	.SHIM	4-55, 4-57, 4-59, 4-61, 4-63
3104604-0000	.HOSE	11-7, 11-9, 11-11, 11-13, 11-15, 11-17
3105407-0000	.BRACKET	7-111
3105452-0000	.FOLDING FLAP	4-127, 4-129, 4-131, 4-133, 4-135, 4-137, 4-139, 4-141
3106750-0000	.VOLUME BULGE	4-107, 4-109, 4-111, 4-117, 4-119, 4-121
3106754-0000	.COVER	4-107, 4-109, 4-111, 4-117, 4-119, 4-121
3106859-0000	.VOLUME BULGE	4-55, 4-57, 4-59, 4-61, 4-63
3106860-0000	.SHIM	4-55, 4-57, 4-59, 4-61, 4-63
3106891-0000	.FLOAT	1-303, 1-305
3107112-0000	.INSERT	1-241
3107113-0100	.TEMPLATE	11-5
3108955-0000	.PNEUMATIC DIAGRAM	11-83, 11-85
3109309-0000	.LID	1-75, 1-77, 11-61
3109310-0000	.PIPE	1-75, 1-77
3109311-0000	.PIPE	1-75, 1-77
3109585-0000	.RULING GUIDE	1-103
3109943-0100	.SUPERSTRUCTURE CHEMICAL UNIT	2-3
3110105-0000	.VOLUME BULGE	4-55, 4-57, 4-59, 4-61, 4-63
3110108-0000	.PUSHER	5-79, 5-81, 5-83, 5-85
3110109-0000	.PUSHER	5-79, 5-81, 5-83, 5-85
3110110-0000	.PUSHER	5-79, 5-81, 5-83, 5-85
3110111-0000	.PUSHER	5-79, 5-81, 5-83, 5-85
3110785-0000	.SPACER	11-115
3110786-0000	.SETTING PLATE	11-113
3111043-0000	.WASHER	1-125
3111045-0000	.VOLUME SHIM	4-55, 4-57, 4-59, 4-61, 4-63, 9-23, 9-25, 9-27
3111587-0000	.SHIM	7-119
3112770-0000	.FLANGE	11-7, 11-9, 11-11, 11-13, 11-15, 11-17
3112808-0000	.WASHER	1-179
3112979-0000	.DOOR	2-155
3113413-0000	.DOOR	2-127
3113414-0000	.DOOR	2-127
3113415-0000	.DOOR	2-127
3113802-0000	.CUTTING JAW	4-127, 4-129, 4-131, 4-133, 4-135, 4-137, 4-139, 4-141
3113803-0000	.CUTTING JAW	4-127, 4-129, 4-131, 4-133, 4-135, 4-137, 4-139, 4-141
3113804-0000	.CUTTING JAW	4-127, 4-129, 4-131, 4-133, 4-135, 4-137, 4-139, 4-141
3113805-0000	.CUTTING JAW	4-127, 4-129, 4-131, 4-133, 4-135, 4-137, 4-139, 4-141
3113831-0000	.BOX	2-185, 2-187
3113832-0000	.COVER	2-185, 2-187
3114709-0000	.FLANGE	11-7, 11-9, 11-11, 11-13, 11-15, 11-17
3114710-0000	.FLANGE	11-7, 11-9, 11-11, 11-13, 11-15, 11-17
3114711-0000	.FLANGE	11-7, 11-9, 11-11, 11-13, 11-15, 11-17
3114713-0000	.SPACER PIPE	11-7, 11-9, 11-11, 11-13, 11-15, 11-17
3114715-0000	.SPACER PIPE	11-7, 11-9, 11-11, 11-13, 11-15, 11-17
3114716-0000	.HOSE	11-7, 11-9, 11-11, 11-13, 11-15, 11-17
3114717-0000	.ADAPTER	11-7, 11-9, 11-11, 11-13, 11-15, 11-17
3114718-0000	.ADAPTER	11-7, 11-9, 11-11, 11-13, 11-15, 11-17
3115221-0000	.FORK	1-303, 1-305
3115484-0000	.VOLUME BULGE	4-55, 4-57, 4-59, 4-61, 4-63
3115485-0000	.VOLUME SHIM	4-55, 4-57, 4-59, 4-61, 4-63
3116330-0000	.GLASS PANE	2-131, 2-139, 2-159
3116331-0000	.GLASS PANE	2-147
3116332-0000	.GLASS PANE	2-149
3116333-0000	.GLASS PANE	2-129, 2-155
3116339-0100	.VOLUME BULGE	9-3
3116508-0000	.PIPE	1-233, 1-235, 1-237
3117678-0100	.INSTALLATION DRAWING	9-3
3118145-0000	.COVER	5-115, 5-117, 5-119, 5-121
3118981-0000	.PIPE	1-163
3119098-0000	.COLUMN	3-17
3119249-0000	.SPACER	2-33
3119250-0000	.CHECKER PLATE	2-107
3120545-0000	.PLATE	5-75, 5-77
3120546-0000	.NOZZLE	5-75, 5-77
3120547-0000	.NOZZLE	5-75, 5-77
3120862-0000	.BRACKET	1-279, 1-281
3120863-0000	.PIN	1-279, 1-281
3120865-0000	.CENTRIFUGAL PUMP	1-71
3122374-0000	.VOLUME FLAP	4-79, 4-81, 4-83, 4-85
3122501-0000	.TOOL	11-31, 11-33
3122505-0000	.BRACKET	6-31
3122618-0000	.PIPE	1-233, 1-235, 1-237
3122813-0000	.HEXAGON NIPPLE	2-65, 2-67
3122818-0000	.VOLUME BULGE	4-55, 4-57, 4-59, 4-61, 4-63
3122819-0000	.VOLUME SHIM	4-55, 4-57, 4-59, 4-61, 4-63
3123029-0000	.VOLUME BULGE	4-79, 4-81, 4-83, 4-85
3123115-0000	.WASHER	11-107, 11-109
3123116-0000	.GASKET	11-107, 11-109
3123117-0000	.PLUG	11-107, 11-109
3123118-0000	.PROFILE	11-107, 11-109
3123119-0000	.HANDLE	11-83, 11-85
3123120-0000	.WHEEL	11-111
3123121-0000	.BRACKET	11-83, 11-85

Part No	Description	Page No
3123122-0000	.BRACKET	11-83, 11-85
3123123-0000	.VALVE	11-103
3123350-0000	.PIPE	1-75, 1-77
3123351-0000	.PIPE	1-233, 1-235, 1-237
3123352-0000	.PIPE	1-233, 1-235, 1-237
3123577-0000	.VOLUME FLAP	4-55, 4-57, 4-59, 4-61, 4-63
3123940-0000	.BUSHING	1-197, 1-199
3124262-0000	.PIPE	1-99
3124263-0000	.PIPE	1-99
3124264-0000	.PIPE	1-99
3124265-0000	.BRACKET	1-19
3124655-0000	.BRACKET	1-25
3126448-0000	.CONNECTION	11-103
3126678-0000	.PLATE	2-167
3126979-0000	.PROFILE	11-107, 11-109
3126981-0000	.COVER PANEL	11-93, 11-95
3126982-0000	.BLOCK	11-93, 11-95
3126983-0000	.SHIM	11-93, 11-95
3127354-0000	.BUSHING	11-93, 11-95
3127355-0000	.BUSHING	11-93, 11-95
3127356-0000	.PIN	11-93, 11-95
3127358-0000	.WASHER	11-93, 11-95
3127429-0000	.UPPER FORMING RING	1-283, 1-285, 1-287
3127434-0000	.LOWER FORMING RING	1-279, 1-281
3127435-0000	.LOWER FORMING RING	1-279, 1-281
3127436-0000	.UPPER FORMING RING	1-283, 1-285, 1-287
3127437-0000	.UPPER FORMING RING	1-283, 1-285, 1-287
3127438-0000	.UPPER FORMING RING	1-283, 1-285, 1-287
3127439-0000	.UPPER FORMING RING	1-283, 1-285, 1-287
3127440-0000	.UPPER FORMING RING	1-283, 1-285, 1-287
3127441-0000	.UPPER FORMING RING	1-283, 1-285, 1-287
3127442-0000	.SHIM	1-283, 1-285, 1-287
3127549-0000	.SHAFT	1-279, 1-281
3127775-0000	.SHAFT	11-93, 11-95
3128970-0000	.PIPE	1-233, 1-235, 1-237
3128999-0000	.CHECKER PLATE	2-107
3130390-0000	.RAIL	4-107, 4-109, 4-111, 4-117, 4-119, 4-121
3130467-0000	.STOP SCREW	5-115, 5-117, 5-119, 5-121
3131207-0000	.PIPE	1-233, 1-235, 1-237
3132276-0000	.PROTECTION	7-141
3132457-0000	.PROTECTION	7-63
3133483-0000	.FITTING	1-233, 1-235, 1-237
3133918-0000	.BRACKET	4-47
3133957-0000	.STOP	4-77, 4-89
3134257-0000	.TOOL	11-5
3134631-0100	.SETTING TEMPLATE	11-69
3136404-0100	.CATCH HOLDER	11-93, 11-95
3137386-0100	.SETTING PLATE	11-69
3137457-0000	.BRACKET	5-31
3137518-0000	.CONTAINER	1-133
3137764-0000	.TOOL	11-31, 11-33
3138754-0100	.PNEUMATIC DIAGRAM	9-41
3139545-0001	.FOLDING BAR	5-115, 5-117, 5-119, 5-121
3139545-0002	.FOLDING BAR	5-115, 5-117, 5-119, 5-121
3139545-0004	.FOLDING BAR	5-115, 5-117, 5-119, 5-121
3139546-0001	.FOLDING BAR	5-115, 5-117, 5-119, 5-121
3139546-0002	.FOLDING BAR	5-115, 5-117, 5-119, 5-121
3139546-0004	.FOLDING BAR	5-115, 5-117, 5-119, 5-121
3139547-0001	.FOLDING BAR	5-115, 5-117, 5-119, 5-121
3139547-0002	.FOLDING BAR	5-115, 5-117, 5-119, 5-121
3139547-0004	.FOLDING BAR	5-115, 5-117, 5-119, 5-121
3139548-0001	.FOLDING BAR	5-115, 5-117, 5-119, 5-121
3139548-0002	.FOLDING BAR	5-115, 5-117, 5-119, 5-121
3139548-0004	.FOLDING BAR	5-115, 5-117, 5-119, 5-121
3142884-0000	.PIPE	1-245
3142887-0000	.BRACKET	1-279, 1-281
3142888-0000	.BRACKET	1-279, 1-281
3142889-0000	.BRACKET	1-279, 1-281
3142890-0000	.BRACKET	1-279, 1-281
3144125-0000	.INSERT	1-111, 1-149, 1-151
3144484-0100	.TERMINAL BLOCK	1-93
3146832-0000	.AXLE PIN	3-27
3147236-0000	.FOLDING FLAP	4-127, 4-129, 4-131, 4-133, 4-135, 4-137, 4-139, 4-141
3147237-0000	.FOLDING FLAP	4-127, 4-129, 4-131, 4-133, 4-135, 4-137, 4-139, 4-141
3147608-0000	.GUIDE	4-7
3147612-0000	.FILTER	7-159
3149720-0000	.PLUG	4-15, 4-23
3149896-0000	.GASKET	1-133
3150927-0000	.FLAP	5-107, 5-109
3150928-0000	.FLAP	5-107, 5-109
3151399-0000	.SUPPORT	7-141
3151748-0000	.RULER	11-47
3151749-0000	.RULER	11-47
3151750-0000	.RULER	11-47

Part No	Description	Page No
3151751-0000	.RULER	11-47
3151752-0000	.RULER	11-47
3151753-0000	.RULER	11-47
3151754-0000	.RULER	11-47
3151755-0000	.RULER	11-47
3151756-0000	.STOPPER	11-47
3151757-0000	.STOPPER	11-47
3151758-0000	.STOPPER	11-47
3151759-0000	.STOPPER	11-47
3151760-0000	.BRACKET	11-47
3151762-0000	.PLATE	9-33
3151763-0000	.PLATE	9-33
3151764-0000	.PLATE	9-33
3151765-0000	.PLATE	9-33
3151766-0000	.LOCK PLATE	1-279, 1-281
3153330-0000	.SHAFT	1-211
3158205-0000	.FLOAT	1-303, 1-305
3159703-0000	.FLOAT	1-303, 1-305
3160954-0000	.SHIM	5-79, 5-81, 5-83, 5-85
3162414-0000	.DIAPHRAGM VALVE	2-185, 2-187
3162415-0000	.DIAPHRAGM VALVE	2-185, 2-187
3162416-0000	.DIAPHRAGM VALVE	2-185, 2-187
3162417-0000	.PIPE	2-185, 2-187
3162418-0000	.PIPE	2-185, 2-187
3162419-0000	.DIAPHRAGM VALVE	2-185, 2-187
3162420-0000	.DIAPHRAGM VALVE	2-185, 2-187
3162421-0000	.PIPE	2-185, 2-187
3162422-0000	.PIPE	2-185, 2-187
3162423-0000	.BONDED SEAL	2-185, 2-187
3162667-0000	.PLATE	1-103
3163272-0000	.SUPPORT	5-53, 5-55
3163420-0100	.ASEPTIC QUALIFICATION KIT	11-5
3165601-0000	.FOLDING BAR	5-115, 5-117, 5-119, 5-121
3165602-0000	.FOLDING BAR	5-115, 5-117, 5-119, 5-121
3167355-0000	.INSERT	11-19
3167356-0000	.INSERT	11-19
3167562-0000	.SUPPORT	4-91, 4-93, 4-95, 4-97
3169794-0000	.GASKET	11-7, 11-9, 11-11, 11-13, 11-15, 11-17
3169795-0000	.GASKET	11-7, 11-9, 11-11, 11-13, 11-15, 11-17
3170420-0000	.BOX	11-7, 11-9, 11-11, 11-13, 11-15, 11-17
3171037-0000	.SPACER	1-25
3172208-0000	.SPACER	1-25
3172209-0000	.SPACER	1-25
3174445-0000	.VOLUME BULGE	4-55, 4-57, 4-59, 4-61, 4-63
3174446-0000	.VOLUME SHIM	4-55, 4-57, 4-59, 4-61, 4-63
3174957-0000	.PLATE	1-211
3175070-0000	.BRACKET	1-207
3178940-0000	.CABLE GLAND	1-143
3179058-0000	.CYLINDER BRACKET	1-103
3180559-0000	.TOOL	11-31, 11-33
3182368-0000	.GASKET	11-7, 11-9, 11-11, 11-13, 11-15, 11-17
3182369-0000	.FLANGE	11-7, 11-9, 11-11, 11-13, 11-15, 11-17
3190643-0100	.FOOT	2-91, 2-93
3190647-0000	.COLUMN	2-95
3192415-0000	.NUT	2-191
3198219-0000	.INSERT	11-19
3198220-0000	.CASE	11-19
3198221-0000	.COVER	11-19
3198222-0100	.SET OF INSERTS	11-7, 11-9, 11-11, 11-13, 11-15, 11-17
3199906-0000	.OPERATING ROD	4-99, 4-101, 4-103, 4-105
3200712-0000	.WEDGE	4-107, 4-109, 4-111, 4-117, 4-119, 4-121
3212438-0000	.BRACKET	11-47
3212439-0000	.BRACKET	11-47
3212440-0000	.BRACKET	11-47
3212441-0000	.BRACKET	11-47
3212442-0000	.BRACKET	11-47
3219692-0100	.TOOLS AND TEMPLATES EC	11-49
3222106-0101	.UPDATE PAGES	11-61
3222718-0000	.VOLUME BULGE	4-55, 4-57, 4-59, 4-61, 4-63
3222719-0000	.VOLUME SHIM	4-55, 4-57, 4-59, 4-61, 4-63

Tetra Pak

SPC
Spare Parts Catalogue

Pos	Part No	Description	Page No
A			
A01XL0500	2868071-0100 ..	BAR	8-27
A01XL0510	2868072-0100 ..	BAR	8-27
A01XL0520	2868073-0100 ..	BAR	8-27
A01XL0530	2963740-0100 ..	BAR	8-27
AS10	2800215-0000 ..	KNIFE	9-19
AS010	3138754-0100 ..	PNEUMATIC DIAGRAM	9-41
AS20	2844190-0000 ..	DOLLY	9-19
AS30	90600-2632	HEATING ELEMENT 800W 240V	9-19
AS40	1498047-0000 ..	SEALING BLOCK	9-19
AS50	90601-0406	HEATING ELEMENT 400W 240V	9-19
AS60	90206-0030	HEATING ELEMENT 3000W, 220V	9-19
B			
A01B3000	90600-4814	PHASE MONITORING RELAY, EMR5-AWN280-1-F	8-117, 8-119
A01B5880	90602-8807	LIMIT SW. SZ 4127.010	8-5, 8-7, 8-9, 8-11
A01B5890	90602-8807	LIMIT SW. SZ 4127.010	8-5, 8-7, 8-9, 8-11
A01B5940	90326-0053	THERMOCOUPLE, 5110 053-000	8-5, 8-7, 8-9, 8-11
K80B1010	90274-0042	PRESSURE GUARD, 200 KPA	6-11
K80B1020	90459-6426	PRESSURE GUARD PEV-1/4-B-OD	6-41
K80B1030	90274-0056	PRESS.SWITCH 1-12BAR, PEV-1/4-B-SA22358	6-21
K80B1050	90274-0082	FLOW SWITCH, 2 - 3 L/MIN	6-29
K80B1060	90243-0245	MEASURING INSTRUMENT	6-33
K80B1140	90326-0057	THERMOCOUPLE, 5110 057-000	6-17
T10B1180	90600-0460	INDUCTIVE SWITCH, E2A-M12KN05-M1-B1-TP	7-5, 7-7
T10B1190	90600-0460	INDUCTIVE SWITCH, E2A-M12KN05-M1-B1-TP	7-5, 7-7
T10B1200	90600-7828	PHOTOCELL E3ZM-T81-D 5M	7-5, 7-7
T10B1201	90600-7827	PHOTOCELL E3ZM-T81-L 5M	7-5, 7-7
T10B1210	90600-7828	PHOTOCELL E3ZM-T81-D 5M	7-5, 7-7
T10B1211	90600-7827	PHOTOCELL E3ZM-T81-L 5M	7-5, 7-7
T10B1220	90600-3272	PROX. SENSOR, SMT-8M-PS-24V-K-5,0-OE	7-171
T10B1230	90600-3272	PROX. SENSOR, SMT-8M-PS-24V-K-5,0-OE	7-171
T10B1240	90459-7275	PHOTOCELL E3Z-R86	7-65
T10B1250	90459-7275	PHOTOCELL E3Z-R86	7-37
T10B1260	90600-0460	INDUCTIVE SWITCH, E2A-M12KN05-M1-B1-TP	7-53, 7-55
T10B1270	90600-0460	INDUCTIVE SWITCH, E2A-M12KN05-M1-B1-TP	7-5, 7-7
T10B1290	90044-0194	INDUCTIVE SENSOR, IN 5329	7-81
T10B1300	90044-0194	INDUCTIVE SENSOR, IN 5329	7-81
T10B1310	90274-0103	PRESSURE SWITTCH PEV-1/4-B	7-27
T10B1330	90044-0194	INDUCTIVE SENSOR, IN 5329	7-83
T10B1510	90326-0054	THERMOCOUPLE, 5110 054-000	7-143
T10B1540	90326-0089	THERMOCOUPLE, 5110 089-000	7-117
T10B1620	90600-0473	INDUCTIVE SWITCH E2A-S08KS01-WP-B1-TP 5M	7-83
T10B1800	90459-6603	INCREMENTAL ENCODER, DGS60A1A02000	7-141
T10B1850	90600-3272	PROX. SENSOR, SMT-8M-PS-24V-K-5,0-OE	7-119
T10B1900	90600-3272	PROX. SENSOR, SMT-8M-PS-24V-K-5,0-OE	7-117
T10B1930	90458-0602	CONTRAST SCANNER, KT15W-P2213S02	7-145
T10B1940	90458-0602	CONTRAST SCANNER, KT15W-P2213S02	7-145
T10B2000	90600-3272	PROX. SENSOR, SMT-8M-PS-24V-K-5,0-OE	7-97
T40B1060	90600-0473	INDUCTIVE SWITCH E2A-S08KS01-WP-B1-TP 5M	2-221
T40B1070	90600-0473	INDUCTIVE SWITCH E2A-S08KS01-WP-B1-TP 5M	4-39
T40B1080	90600-0473	INDUCTIVE SWITCH E2A-S08KS01-WP-B1-TP 5M	4-41
T40B1100	90274-0084	PRESSURE GUARD, 1800 KPA	2-45
T40B1130	90600-1288	PRESS. SENS. 0-420 BAR VD5C.0,R900001431	2-37, 2-39
T40B1150	90459-0180	FLOW SWITCH, 0,1 - 2,5 L/MIN	6-17
T40B1150	90600-1301	LEVEL GUARD, ABZMS-35-1X /120F050S-K24	2-37, 2-39
T40B1160	90459-0180	FLOW SWITCH, 0,1 - 2,5 L/MIN	6-17
T40B1240	90458-0601	CONTRAST SCANNER, KT15W-P2110S01	4-155, 4-157
T40B1250	90458-0601	CONTRAST SCANNER, KT15W-P2110S01	4-155, 4-157
T40B1370	2834035-0000 ..	THERMOCOUPLE	2-37, 2-39
T40B1390	90602-3330	PRESSURE TRANSMITTER 0-200 BAR 8251.33.2	2-37, 2-39
T40B9510	90602-3330	PRESSURE TRANSMITTER 0-200 BAR 8251.33.2	2-37, 2-39
T40B9520	90602-3330	PRESSURE TRANSMITTER 0-200 BAR 8251.33.2	2-37, 2-39
T50B1040	90459-5531	PHOTOCELL E3Z-T86A-D RECIEVER	5-31
T50B1050	90459-5530	PHOTOCELL E3Z-T86A-L SENDER	5-31
T50B1080	90459-5531	PHOTOCELL E3Z-T86A-D RECIEVER	5-31
T50B1090	90459-5530	PHOTOCELL E3Z-T86A-L SENDER	5-31
T50B1130	90459-5835	INDUCTIVE SWITCH, E2A-M12KS04-WP-B1-5M	5-19
T50B1260	90600-0463	INDUCTIVE SWITCH,E2A-M12LN05-WP-B1-TP 5M	5-7
T50B1290	90600-0463	INDUCTIVE SWITCH,E2A-M12LN05-WP-B1-TP 5M	5-37, 5-39
T50B1300	90600-0463	INDUCTIVE SWITCH,E2A-M12LN05-WP-B1-TP 5M	5-37, 5-39
T50B1310	90600-0463	INDUCTIVE SWITCH,E2A-M12LN05-WP-B1-TP 5M	5-45
T50B6110	90274-0103	PRESSURE SWITTCH PEV-1/4-B	2-49
U30B1100	90458-1977	REFRACTOMETER SET DA15FC15A DFTP A	2-217
U30B1180	90600-0527	LEVEL SWITCH, BTL5-A11-M0320-B-S32	2-199
U30B1200	90600-0528	THERMOCOUPLE, 5120 001-001	2-199
U70B0290	90458-0806	FLOW METER, COPA-XF DF23-DN32	1-187, 1-189, 1-191
U70B0300	2968260-0000 ..	LEVEL PROBE	2-225
U70B1010	90243-0245	MEASURING INSTRUMENT	1-163
U70B1020	90457-0047	SENSOR 2750-1-5111-1 W.ADAPTER PNP	1-161
U70B1040	90601-1027	LIMIT SWITCH, D4C-1G01 5M	1-197, 1-199
U70B1050	90601-1027	LIMIT SWITCH, D4C-1G01 5M	1-197, 1-199
U70B1060	90044-0194	INDUCTIVE SENSOR, IN 5329	1-149, 1-151
U70B1070	90044-0194	INDUCTIVE SENSOR, IN 5329	1-149, 1-151

Pos	Part No	Description	Page No
B			
U70B1250	90326-0057	THERMOCOUPLE, 5110 057-000	2-207
U70B1260	90326-0053	THERMOCOUPLE, 5110 053-000	1-197, 1-199
U70B1270	90326-0051	THERMOCOUPLE, 5110 051-000	1-163
U70B1280	90600-0463	INDUCTIVE SWITCH,E2A-M12LN05-WP-B1-TP 5M	1-207
U70B1300	90600-0529	FLOW METER, PROWIRL 72W40-SD0BA1AAA0BW	1-163
U70B1330	90600-3272	PROX. SENSOR, SMT-8M-PS-24V-K-5,0-OE	1-143
U70B1340	90600-3272	PROX. SENSOR, SMT-8M-PS-24V-K-5,0-OE	1-145
U70B1350	90600-0463	INDUCTIVE SWITCH,E2A-M12LN05-WP-B1-TP 5M	1-187, 1-189, 1-191
U70B1360	90600-0463	INDUCTIVE SWITCH,E2A-M12LN05-WP-B1-TP 5M	1-187, 1-189, 1-191
U70B1370	90600-0463	INDUCTIVE SWITCH,E2A-M12LN05-WP-B1-TP 5M	1-103
U70B1380	90600-0463	INDUCTIVE SWITCH,E2A-M12LN05-WP-B1-TP 5M	1-111
U70B1390	90600-0463	INDUCTIVE SWITCH,E2A-M12LN05-WP-B1-TP 5M	1-233, 1-235, 1-237
U70B1700	90603-4518	LEVEL SWITCH, T FTL20-9095	1-197, 1-199
U70B2000	90600-3924	CONDUCTIVITY SENSOR CLS 54-ACS1022	1-233, 1-235, 1-237
U70B2020	90600-3272	PROX. SENSOR, SMT-8M-PS-24V-K-5,0-OE	1-153
U70B2060	90458-0256	PROX.SWITCH IIA 3010-BPKG/6M	2-33
U70B2100	90600-3272	PROX. SENSOR, SMT-8M-PS-24V-K-5,0-OE	1-103
U70B2120	90044-0194	INDUCTIVE SENSOR, IN 5329	1-113
U70B2190	90459-0829	PROX. SENSOR, SMTO-4U-PS-K-LED-24	1-153
U70B2200	90459-0829	PROX. SENSOR, SMTO-4U-PS-K-LED-24	1-153
U70B2210	90044-0194	INDUCTIVE SENSOR, IN 5329	1-123
U70B2211	90044-0194	INDUCTIVE SENSOR, IN 5329	1-123
U70B2240	90459-4810	PRESS TRANSD (DIFF) 0 - 2000PA, 2681-20C	1-245
U70B2260	90459-3682	ROTARY POSITION SENSOR RPNS090AA1B11A	1-119
U70B2280	90326-0057	THERMOCOUPLE, 5110 057-000	1-149, 1-151
U70B2290	90326-0057	THERMOCOUPLE, 5110 057-000	1-149, 1-151
U70B2300	90458-0341	THERMOCOUPLE, 5130 050-001	1-111
U70B2310	90044-0194	INDUCTIVE SENSOR, IN 5329	1-211
U70B2700	2559045-0003	ELECTRODE	1-203
U70B2701	2559045-0004	ELECTRODE	1-203
U70B2730	90600-2107	LEVEL SWITCH, FTL20H-0TCJ2B	1-165
U70B3010	90044-0194	INDUCTIVE SENSOR, IN 5329	1-171
U70B3020	90044-0194	INDUCTIVE SENSOR, IN 5329	1-171
U70B3030	90044-0194	INDUCTIVE SENSOR, IN 5329	1-171
U70B3090	90600-0473	INDUCTIVE SWITCH E2A-S08KS01-WP-B1-TP 5M	1-193
U70B3200	90326-0051	THERMOCOUPLE, 5110 051-000	1-167
U70B3210	90326-0048	THERMOCOUPLE, 5110 048-000	1-145
U70B3211	90326-0089	THERMOCOUPLE, 5110 089-000	1-145
U70B3230	90326-0089	THERMOCOUPLE, 5110 089-000	1-143
U70B3240	90326-0048	THERMOCOUPLE, 5110 048-000	1-143
U70B3250	90326-0089	THERMOCOUPLE, 5110 089-000	1-185
U70B3260	90459-6178	TEMPERATURE SENSOR, , 902522/10-386-1003	1-187, 1-189, 1-191
U70B3270	90326-0051	THERMOCOUPLE, 5110 051-000	1-163
U70B3700	1478814-0000	SENSOR	1-193
U70B3780	90600-3272	PROX. SENSOR, SMT-8M-PS-24V-K-5,0-OE	1-153
U70B3790	90600-3272	PROX. SENSOR, SMT-8M-PS-24V-K-5,0-OE	1-153
U70B4010	90458-2241	PRESSURE SWITCH 0,5-10 BAR ADJUSTABLE	1-89
U70B4020	90600-0463	INDUCTIVE SWITCH,E2A-M12LN05-WP-B1-TP 5M	1-99
U70B4030	90600-0463	INDUCTIVE SWITCH,E2A-M12LN05-WP-B1-TP 5M	1-99
U70B4040	90600-0463	INDUCTIVE SWITCH,E2A-M12LN05-WP-B1-TP 5M	1-99
U70B4050	90600-0463	INDUCTIVE SWITCH,E2A-M12LN05-WP-B1-TP 5M	1-99
U70B4060	2672972-0000	BOLT	1-97
U70B4061	2672973-0000	ELECTRODE	1-97
U70B4070	90600-0463	INDUCTIVE SWITCH,E2A-M12LN05-WP-B1-TP 5M	1-99
U70B4080	90459-6215	FLOW SWITCH BFS-10-N-G1/4-MS-NO-ST	1-89
U70B4090	90600-0463	INDUCTIVE SWITCH,E2A-M12LN05-WP-B1-TP 5M	1-99
U70B4290	90600-1154	FLOW METER,D-6230-HGB-BB-AV-99-0-N2/IP65	1-89
U70B4350	90459-2122	THERMOCOUPLE, 5130 060-001	1-87
U70B4360	90326-0053	THERMOCOUPLE, 5110 053-000	1-87
U70B4370	90326-0060	THERMOCOUPLE, 5110060-000 CR-AL	1-99
U70B6050	90326-0089	THERMOCOUPLE, 5110 089-000	1-37, 1-39
U70B6500	90459-2409	INDUCTIVE SENSOR, IN 5230	1-25
U70B6510	90459-2409	INDUCTIVE SENSOR, IN 5230	1-25
U70B6520	90459-2409	INDUCTIVE SENSOR, IN 5230	1-19
U70B6530	90459-2409	INDUCTIVE SENSOR, IN 5230	1-19
U70B6540	90459-2409	INDUCTIVE SENSOR, IN 5230	1-19
U70B6550	90600-0462	INDUCTIVE SWITCH, E2A-M12LN05-M1-B1-TP	1-17
U70B6565	90326-0089	THERMOCOUPLE, 5110 089-000	1-37, 1-39
U70B6566	90326-0089	THERMOCOUPLE, 5110 089-000	1-37, 1-39
U70B6570	90600-0462	INDUCTIVE SWITCH, E2A-M12LN05-M1-B1-TP	1-187, 1-189, 1-191
U70B6580	90459-2409	INDUCTIVE SENSOR, IN 5230	1-19
U70B6590	90459-2409	INDUCTIVE SENSOR, IN 5230	1-25
V20B1020	90600-0473	INDUCTIVE SWITCH E2A-S08KS01-WP-B1-TP 5M	2-185, 2-187
V20B1030	2544312-0000	FLOAT	2-185, 2-187
V20B1070	2544312-0000	FLOAT	2-185, 2-187
V20B1090	90600-0473	INDUCTIVE SWITCH E2A-S08KS01-WP-B1-TP 5M	2-185, 2-187
V20B1130	90459-1235	ANGLE SEAT VALVE, N.C. DN13 TYPE 2002	1-81
V20B2480	90600-0821	LEVEL PR.,LEVELFLEX-M FMP41C-AKTJKB11A2Y	1-73
C			
A01C2000	90604-3590	MEMORY CARD SD 1GB, 1784-SD1, SERIES A	11-51
A01C5000	90459-4891	IDENTIFIER, ID-FIX RW	8-51
A01C5300	90459-4033	RECORDER 12-CHANNEL PAPERLESS FDA-APPR	8-157

Machine Type Group Description Page No

Pos	Part No	Description	Page No
C			
A01C5320	90459-5187	CONDUCTIVITY TRANSMITTER	8-157
K80C1715	90602-3531	PRESSURE EXPANSION VESSEL, 13424	6-23
T40C0040	3042605-0000	TANK	2-37, 2-39
T40C0041	90459-4032	HYDR.ACC., SBO-210-1.4E1/112U-210AK	2-37, 2-39
U70C0231	90602-3913	PRESSURE EXPANSION VESSEL, 13224	2-209
E			
EC010	3219692-0100	TOOLS AND TEMPLATES EC	11-49
A01E5810	90602-1250	LIGHT FIXTURE, SLIM LED 112-544-001	8-5, 8-7, 8-9, 8-11
A01E5820	90602-1250	LIGHT FIXTURE, SLIM LED 112-544-001	8-5, 8-7, 8-9, 8-11
T10E0070	1524481-0000	SEALING BLOCK	7-107
T10E0080	1498047-0000	SEALING BLOCK	7-109
T10E0100	90164-0015	LIGHT FIXTURE, RL70CV-111 / 230V 50HZ	7-5, 7-7
T10E0100	90459-3784	LIGHT FIXTURE, RL70CE-118	7-5, 7-7
T10E0110	90164-0015	LIGHT FIXTURE, RL70CV-111 / 230V 50HZ	7-5, 7-7
T10E0110	90459-3784	LIGHT FIXTURE, RL70CE-118	7-5, 7-7
T10E0570	90603-3727	HEATING CARTRIDGE, 800W 240V	7-143
T10E0580	90206-0030	HEATING ELEMENT 3000W, 220V	7-123
T10E0590	90601-0406	HEATING ELEMENT 400W 240V	7-121
T40E0010	90164-0015	LIGHT FIXTURE, RL70CV-111 / 230V 50HZ	2-19
T40E0010	90459-3784	LIGHT FIXTURE, RL70CE-118	2-19
T40E7040	90600-1269	HEAT EXCHANGER M18-10	2-37, 2-39
T50E0050	2871927-0001	FOLDING BAR	5-115, 5-117, 5-119, 5-121
T50E0050	2871927-0002	FOLDING BAR	5-115, 5-117, 5-119, 5-121
T50E0050	2871927-0003	FOLDING BAR	5-115, 5-117, 5-119, 5-121
T50E0050	2871927-0004	FOLDING BAR	5-115, 5-117, 5-119, 5-121
T50E0050	2871927-0005	FOLDING BAR	5-115, 5-117, 5-119, 5-121
T50E0050	2871927-0006	FOLDING BAR	5-115, 5-117, 5-119, 5-121
T50E0050	2871927-0007	FOLDING BAR	5-115, 5-117, 5-119, 5-121
T50E0051	2852331-0001	PIPE	5-75, 5-77
T50E0051	2852331-0002	PIPE	5-75, 5-77
T50E0051	2852331-0003	PIPE	5-75, 5-77
T50E0051	2852331-0004	PIPE	5-75, 5-77
T50E0051	2852331-0005	PIPE	5-75, 5-77
T50E0051	3051996-0000	PIPE	5-75, 5-77
T50E0052	2852331-0001	PIPE	5-75, 5-77
T50E0052	2852331-0002	PIPE	5-75, 5-77
T50E0052	2852331-0003	PIPE	5-75, 5-77
T50E0052	2852331-0004	PIPE	5-75, 5-77
T50E0052	2852331-0005	PIPE	5-75, 5-77
T50E0052	3051995-0000	PIPE	5-75, 5-77
T50E0053	2871928-0001	FOLDING BAR	5-115, 5-117, 5-119, 5-121
T50E0053	2871928-0002	FOLDING BAR	5-115, 5-117, 5-119, 5-121
T50E0053	2871928-0003	FOLDING BAR	5-115, 5-117, 5-119, 5-121
T50E0053	2871928-0004	FOLDING BAR	5-115, 5-117, 5-119, 5-121
T50E0053	2871928-0005	FOLDING BAR	5-115, 5-117, 5-119, 5-121
T50E0053	2871928-0006	FOLDING BAR	5-115, 5-117, 5-119, 5-121
T50E0053	2871928-0007	FOLDING BAR	5-115, 5-117, 5-119, 5-121
T50E0054	3070289-0000	FOLDING BAR	5-115, 5-117, 5-119, 5-121
T50E0054	3165602-0000	FOLDING BAR	5-115, 5-117, 5-119, 5-121
T50E0055	3070290-0000	FOLDING BAR	5-115, 5-117, 5-119, 5-121
T50E0055	3165601-0000	FOLDING BAR	5-115, 5-117, 5-119, 5-121
T50E0060	90164-0015	LIGHT FIXTURE, RL70CV-111 / 230V 50HZ	2-53
T50E0060	90459-3784	LIGHT FIXTURE, RL70CE-118	2-53
T50E0510	2871957-0200	HEATING ELEMENT	5-11
T50E0520	2871957-0200	HEATING ELEMENT	5-11
T50E0540	2871957-0200	HEATING ELEMENT	5-11
U70E0010	90206-0070	HEATING ELEMENT 6000W 380/220V	2-207
U70E0020	90206-0070	HEATING ELEMENT 6000W 380/220V	2-207
U70E0030	2808235-0000	RESISTANCE	1-197, 1-199
U70E0040	2808235-0000	RESISTANCE	1-197, 1-199
U70E0050	2808235-0000	RESISTANCE	1-197, 1-199
U70E0060	2808235-0000	RESISTANCE	1-197, 1-199
U70E0080	2874301-0000	HEATER	1-149, 1-151
U70E0090	90600-2007	HEATING ELEM.15KW 3X230/400V,T90600-2007	1-167
U70E1130	90457-0866	HEATING ELEMENT 2000W/230V	1-145
U70E1140	90206-0030	HEATING ELEMENT 3000W, 220V	1-143
F			
FF10	1478583-0100	PRESSURE GAUGE	11-5
FF10	2773828-0000	HEATING ELEMENT	9-19
FF10	2819311-0000	WHEEL	11-49
FF10	2871956-0000	PUSHER	9-23, 9-25, 9-27
FF10	2894694-0000	PUSHER	9-23, 9-25, 9-27
FF10	2894737-0000	PUSHER	9-23, 9-25, 9-27
FF10	2966591-0000	PUSHER	9-23, 9-25, 9-27
FF20	2852318-0000	PIN	11-49
FF20	2852410-0000	SHIM	9-19
FF20	2894700-0000	PUSHER	9-23, 9-25, 9-27
FF20	2921574-0000	PUSHER	9-23, 9-25, 9-27
FF20	3037955-0000	PUSHER	9-23, 9-25, 9-27
FM010	3044283-0000	PNEUMATIC DIAGRAM	9-41
FM010	3097617-0100	GREASE GUN	11-49
FM10	3163420-0100	ASEPTIC QUALIFICATION KIT	11-5

Pos	Part No	Description	Page No
F			
FM020	3042009-0000 ..	WATER DIAGRAM	9-41
FM030	3044280-0000 ..	HYDRAULIC SYSTEM	9-41
FM040	3044279-0000 ..	LUBRICATION DIAGRAM	9-41
FM050	3044278-0000 ..	DIAGRAM	9-41
A01F0010	90459-5809	CIRCUIT BREAKER, NZMN1-4-A100	8-149, 8-151
A01F0010	90459-5810	CIRCUIT BREAKER, NZMN1-A100-NA	8-149, 8-151
A01F0110	315744-0040	MINIATURE CIRCUIT BREAKER, FAZ-C4/1-NA	8-41, 8-43
A01F0110	354000-0040	MINIATURE CIRCUIT BREAKER, FAZ-C4/1	8-41, 8-43
A01F0120	315744-0040	MINIATURE CIRCUIT BREAKER, FAZ-C4/1-NA	8-41, 8-43
A01F0120	354000-0040	MINIATURE CIRCUIT BREAKER, FAZ-C4/1	8-41, 8-43
A01F0130	315744-0040	MINIATURE CIRCUIT BREAKER, FAZ-C4/1-NA	8-41, 8-43
A01F0130	354000-0040	MINIATURE CIRCUIT BREAKER, FAZ-C4/1	8-41, 8-43
A01F0140	315744-0040	MINIATURE CIRCUIT BREAKER, FAZ-C4/1-NA	8-41, 8-43
A01F0140	354000-0040	MINIATURE CIRCUIT BREAKER, FAZ-C4/1	8-41, 8-43
A01F0150	315744-0040	MINIATURE CIRCUIT BREAKER, FAZ-C4/1-NA	8-41, 8-43
A01F0150	354000-0040	MINIATURE CIRCUIT BREAKER, FAZ-C4/1	8-41, 8-43
A01F0160	315744-0040	MINIATURE CIRCUIT BREAKER, FAZ-C4/1-NA	8-41, 8-43
A01F0160	354000-0040	MINIATURE CIRCUIT BREAKER, FAZ-C4/1	8-41, 8-43
A01F0170	315744-0040	MINIATURE CIRCUIT BREAKER, FAZ-C4/1-NA	8-41, 8-43
A01F0170	354000-0040	MINIATURE CIRCUIT BREAKER, FAZ-C4/1	8-41, 8-43
A01F0180	315744-0060	MINIATURE CIRCUIT BREAKER, FAZ-C6/1-NA	8-41, 8-43
A01F0180	354000-0060	MINIATURE CIRCUIT BREAKER, FAZ-C6/1	8-41, 8-43
A01F5000	90601-7290	SAFETY PLC, PLUTO B46 20-070-17	8-51
A01F5001	90459-1131	SAFETY RELAY, E1T	8-51
A01F5020	90600-1454	SAFETY RELAY, E1T	8-51
A01F5021	90459-1131	SAFETY RELAY, E1T	8-51
A01F5400	315746-0100	MINIATURE CIRCUIT BREAKER, FAZ-C10/3-NA	8-111, 8-113
A01F5400	354002-0100	IMINIATURE CIRCUIT BREAKER, FAZ-C10/3	8-111, 8-113
A01F5410	315746-0060	MINIATURE CIRCUIT BREAKER, FAZ-C6/3-NA	8-111, 8-113
A01F5410	354002-0060	MINIATURE CIRCUIT BREAKER, FAZ-C6/3	8-111, 8-113
A01F5500	315749-0250	MINIATURE CIRCUIT BREAKER, FAZ-D25/3-NA	8-133, 8-135
A01F5500	351418-0250	MINIATURE CIRC. BREAK.,FAZ-D25/3 3-POLE	8-133, 8-135
A01F5510	315747-0060	MINIATURE CIRCUIT BREAKER, FAZ-D6/1-NA	8-111, 8-113
A01F5510	351416-0060	MINIATURE CIRC. BREAK., FAZ -D6 1-POLE	8-111, 8-113
A01F5520	315749-0250	MINIATURE CIRCUIT BREAKER, FAZ-D25/3-NA	8-133, 8-135
A01F5520	351418-0250	MINIATURE CIRC. BREAK.,FAZ-D25/3 3-POLE	8-133, 8-135
A01F5530	315747-0060	MINIATURE CIRCUIT BREAKER, FAZ-D6/1-NA	8-111, 8-113
A01F5530	351416-0060	MINIATURE CIRC. BREAK., FAZ -D6 1-POLE	8-111, 8-113
A01F5730	315747-0060	MINIATURE CIRCUIT BREAKER, FAZ-D6/1-NA	8-111, 8-113
A01F5730	351416-0060	MINIATURE CIRC. BREAK., FAZ -D6 1-POLE	8-111, 8-113
A01F5740	315747-0060	MINIATURE CIRCUIT BREAKER, FAZ-D6/1-NA	8-111, 8-113
A01F5740	351416-0060	MINIATURE CIRC. BREAK., FAZ -D6 1-POLE	8-111, 8-113
A01F5750	90459-5326	OVERLOAD PROTECTION, PKZM0-4	8-109
A01F5780	315747-0005	MINIATURE CIRCUIT BREAKER, FAZ-D0,5/1-NA	8-111, 8-113
A01F5780	351416-0005	MINIATURE CIRC. BREAK., FAZ-D0,5 1-POLE	8-111, 8-113
A01F5800	315747-0010	MINIATURE CIRCUIT BREAKER, FAZ-D1/1-NA	8-111, 8-113
A01F5800	351416-0010	MINIATURE CIRC. BREAK., FAZ -D1 1-POLE	8-111, 8-113
A01F5820	90459-5811	RESIDUAL CURRENT DEVICE, FI-25/2/003-A	8-159, 8-161
A01F5821	315747-0100	MINIATURE CIRCUIT BREAKER, FAZ-D10/1-NA	8-111, 8-113
A01F5821	351416-0100	MINIATURE CIRC. BREAK., FAZ -D10 1-POLE	8-111, 8-113
A01F5870	90458-1651	EMERGENCY STOP, ZB4-BS-844 ZB4-BZ-104	8-183, 8-185
A01F5880	90459-1130	EM. STOP XAL-K178F	8-183, 8-185
A01F5900	315745-0040	MINIATURE CIRCUIT BREAKER, FAZ-C4/2-NA	8-111, 8-113
A01F5910	315744-0040	MINIATURE CIRCUIT BREAKER, FAZ-C4/1-NA	8-111, 8-113
K80F0010	90459-5326	OVERLOAD PROTECTION, PKZM0-4	8-109
K80F0020	90459-5325	OVERLOAD PROTECTION, PKZM0-2,5	8-109
K80F0030	90459-5330	OVERLOAD PROTECTION, PKZM0-16	8-109
K80F0040	90187-0133	SAFETY VALVE, 10 BARS, R1/2, R1/2	6-33
K80F0110	315744-0040	MINIATURE CIRCUIT BREAKER, FAZ-C4/1-NA	8-41, 8-43
K80F0110	354000-0040	MINIATURE CIRCUIT BREAKER, FAZ-C4/1	8-41, 8-43
K80F0112	90230-0041	PRESSURE RELIEF VALVE, SS-4CPA2-RT-DG-3	6-21
T10F0020	315747-0160	MINIATURE CIRCUIT BREAKER, FAZ-D16/1-NA	8-111, 8-113
T10F0020	351416-0160	MINIATURE CIRC. BREAK., FAZ -D16 1-POLE	8-111, 8-113
T10F0040	315747-0160	MINIATURE CIRCUIT BREAKER, FAZ-D16/1-NA	8-111, 8-113
T10F0040	351416-0160	MINIATURE CIRC. BREAK., FAZ -D16 1-POLE	8-111, 8-113
T10F0050	315744-0010	MINIATURE CIRCUIT BREAKER, FAZ-C1/1-NA	8-111, 8-113
T10F0050	354000-0010	MINIATURE CIRCUIT BREAKER, FAZ-C1/1	8-111, 8-113
T10F0060	90459-5325	OVERLOAD PROTECTION, PKZM0-2,5	8-109
T10F0070	315744-0040	MINIATURE CIRCUIT BREAKER, FAZ-C4/1-NA	8-111, 8-113
T10F0070	354000-0040	MINIATURE CIRCUIT BREAKER, FAZ-C4/1	8-111, 8-113
T10F0080	315744-0160	MINIATURE CIRCUIT BREAKER, FAZ-C16/1-NA	8-111, 8-113
T10F0080	354000-0160	MINIATURE CIRCUIT BREAKER, FAZ-C16/1	8-111, 8-113
T10F0090	315744-0020	MINIATURE CIRCUIT BREAKER, FAZ-C2/1-NA	8-111, 8-113
T10F0090	354000-0020	MINIATURE CIRCUIT BREAKER, FAZ-C2/1	8-111, 8-113
T10F0110	315744-0040	MINIATURE CIRCUIT BREAKER, FAZ-C4/1-NA	8-41, 8-43
T10F0110	354000-0040	MINIATURE CIRCUIT BREAKER, FAZ-C4/1	8-41, 8-43
T10F0120	315747-0005	MINIATURE CIRCUIT BREAKER, FAZ-D0,5/1-NA	8-111, 8-113
T10F0120	351416-0005	MINIATURE CIRC. BREAK., FAZ-D0,5 1-POLE	8-111, 8-113
T10F1010	90458-1651	EMERGENCY STOP, ZB4-BS-844 ZB4-BZ-104	7-163
T10F1030	90458-1651	EMERGENCY STOP, ZB4-BS-844 ZB4-BZ-104	7-155
T10F1080	90459-1194	SAFETY SWITCH, AZ 16-03 ZVRK-M16	7-5, 7-7
T10F2610	90459-4142	SAFETY SENSOR, ADAM M12, 20-051-00	7-47

Pos	Part No	Description	Page No
F			
T10F2611	90458-2794	SAFETY SENSOR, EVA 20-046-00	7-47
T10F2620	90459-4142	SAFETY SENSOR, ADAM M12, 20-051-00	7-47
T10F2621	90458-2794	SAFETY SENSOR, EVA 20-046-00	7-47
T10F2630	90459-4142	SAFETY SENSOR, ADAM M12, 20-051-00	7-47
T10F2631	90458-2794	SAFETY SENSOR, EVA 20-046-00	7-47
T40F0010	315749-0060	MINIATURE CIRCUIT BREAKER, FAZ-D6/3-NA	8-111, 8-113
T40F0010	351418-0060	MINIATURE CIRC. BREAK., FAZ-D6/3 3-POLE	8-111, 8-113
T40F0040	90459-5326	OVERLOAD PROTECTION, PKZM0-4	8-109
T40F0110	315744-0040	MINIATURE CIRCUIT BREAKER, FAZ-C4/1-NA	8-41, 8-43
T40F0110	354000-0040	MINIATURE CIRCUIT BREAKER, FAZ-C4/1	8-41, 8-43
T40F1020	90600-5852	DOOR LOCKING DEVICE, DALTON M315	2-161
T40F1040	90600-5852	DOOR LOCKING DEVICE, DALTON M315	2-161
T40F2010	90459-4142	SAFETY SENSOR, ADAM M12, 20-051-00	2-161
T40F2011	90458-2794	SAFETY SENSOR, EVA 20-046-00	2-161
T40F2020	90459-4142	SAFETY SENSOR, ADAM M12, 20-051-00	2-161
T40F2021	90458-2794	SAFETY SENSOR, EVA 20-046-00	2-161
T40F2030	90459-4142	SAFETY SENSOR, ADAM M12, 20-051-00	2-161
T40F2031	90458-2794	SAFETY SENSOR, EVA 20-046-00	2-161
T40F2040	90459-4142	SAFETY SENSOR, ADAM M12, 20-051-00	2-161
T40F2041	90458-2794	SAFETY SENSOR, EVA 20-046-00	2-161
T40F2830	90458-1651	EMERGENCY STOP, ZB4-BS-844 ZB4-BZ-104	2-145
T40F2840	90458-1651	EMERGENCY STOP, ZB4-BS-844 ZB4-BZ-104	2-135
T50F0010	315744-0160	MINIATURE CIRCUIT BREAKER, FAZ-C16/1-NA	8-111, 8-113
T50F0010	354000-0160	MINIATURE CIRCUIT BREAKER, FAZ-C16/1	8-111, 8-113
T50F0020	315744-0160	MINIATURE CIRCUIT BREAKER, FAZ-C16/1-NA	8-111, 8-113
T50F0020	354000-0160	MINIATURE CIRCUIT BREAKER, FAZ-C16/1	8-111, 8-113
T50F0040	315744-0160	MINIATURE CIRCUIT BREAKER, FAZ-C16/1-NA	8-111, 8-113
T50F0040	354000-0160	MINIATURE CIRCUIT BREAKER, FAZ-C16/1	8-111, 8-113
T50F0070	315747-0160	MINIATURE CIRCUIT BREAKER, FAZ-D16/1-NA	8-111, 8-113
T50F0070	351416-0160	MINIATURE CIRC. BREAK., FAZ -D16 1-POLE	8-111, 8-113
T50F0110	315744-0040	MINIATURE CIRCUIT BREAKER, FAZ-C4/1-NA	8-41, 8-43
T50F0110	354000-0040	MINIATURE CIRCUIT BREAKER, FAZ-C4/1	8-41, 8-43
T50F0140	90459-5324	OVERLOAD PROTECTION, PKZM0-1,6	8-109
T50F0150	90459-5324	OVERLOAD PROTECTION, PKZM0-1,6	8-109
T50F1530	90600-5852	DOOR LOCKING DEVICE, DALTON M315	2-161
T50F2510	90600-5926	SAFETY SENSOR, ADAM E M12 5M CABLE	2-161
T50F2511	90459-4089	SAFETY SENSOR, EVA E, 20-046-06	2-161
T50F2520	90459-4142	SAFETY SENSOR, ADAM M12, 20-051-00	2-161
T50F2521	90458-2794	SAFETY SENSOR, EVA 20-046-00	2-161
U30F0010	90459-5324	OVERLOAD PROTECTION, PKZM0-1,6	8-109
U70F0010	315746-0100	MINIATURE CIRCUIT BREAKER, FAZ-C10/3-NA	8-111, 8-113
U70F0010	354002-0100	IMINIATURE CIRCUIT BREAKER, FAZ-C10/3	8-111, 8-113
U70F0020	315746-0100	MINIATURE CIRCUIT BREAKER, FAZ-C10/3-NA	8-111, 8-113
U70F0020	354002-0100	IMINIATURE CIRCUIT BREAKER, FAZ-C10/3	8-111, 8-113
U70F0030	315745-0160	MINIATURE CIRCUIT BREAKER, FAZ-C16/2-NA	8-111, 8-113
U70F0030	354001-0160	MINIATURE CIRCUIT BREAKER, FAZ-C16/2	8-111, 8-113
U70F0050	315745-0160	MINIATURE CIRCUIT BREAKER, FAZ-C16/2-NA	8-111, 8-113
U70F0050	354001-0160	MINIATURE CIRCUIT BREAKER, FAZ-C16/2	8-111, 8-113
U70F0080	315744-0160	MINIATURE CIRCUIT BREAKER, FAZ-C16/1-NA	8-111, 8-113
U70F0080	354000-0160	MINIATURE CIRCUIT BREAKER, FAZ-C16/1	8-111, 8-113
U70F0090	315746-0250	MINIATURE CIRCUIT BREAKER, FAZ-C25/3-NA	8-111, 8-113
U70F0090	354002-0250	MINIATURE CIRCUIT BREAKER, FAZ-C25/3	8-111, 8-113
U70F0110	315744-0040	MINIATURE CIRCUIT BREAKER, FAZ-C4/1-NA	8-41, 8-43
U70F0110	354000-0040	MINIATURE CIRCUIT BREAKER, FAZ-C4/1	8-41, 8-43
U70F0120	315744-0040	MINIATURE CIRCUIT BREAKER, FAZ-C4/1-NA	8-41, 8-43
U70F0120	354000-0040	MINIATURE CIRCUIT BREAKER, FAZ-C4/1	8-41, 8-43
U70F0130	315747-0040	MINIATURE CIRCUIT BREAKER, FAZ-D4/1-NA	8-41, 8-43
U70F0130	351416-0040	MINIATURE CIRC. BREAK., FAZ -D4 1-POLE	8-41, 8-43
U70F0160	315747-0160	MINIATURE CIRCUIT BREAKER, FAZ-D16/1-NA	8-111, 8-113
U70F0160	351416-0160	MINIATURE CIRC. BREAK., FAZ -D16 1-POLE	8-111, 8-113
U70F0190	315749-0160	MINIATURE CIRCUIT BREAKER, FAZ-D16/3-NA	8-133, 8-135
U70F0190	351418-0160	MINIATURE CIRC. BREAK.,FAZ-D16/3 3-POLE	8-133, 8-135
U70F0230	315744-0010	MINIATURE CIRCUIT BREAKER, FAZ-C1/1-NA	8-111, 8-113
U70F0230	354000-0010	MINIATURE CIRCUIT BREAKER, FAZ-C1/1	8-111, 8-113
U70F0232	90458-0200	PEROX. SAFETY VALVE, NO. 527-430 1/2X3/4	2-209
U70F0370	315744-0100	MINIATURE CIRCUIT BREAKER, FAZ-C10/1-NA	8-111, 8-113
U70F0370	354000-0100	MINIATURE CIRCUIT BREAKER, FAZ-C10/1	8-111, 8-113
U70F1130	315744-0100	MINIATURE CIRCUIT BREAKER, FAZ-C10/1-NA	8-111, 8-113
U70F1130	354000-0100	MINIATURE CIRCUIT BREAKER, FAZ-C10/1	8-111, 8-113
U70F1140	315744-0160	MINIATURE CIRCUIT BREAKER, FAZ-C16/1-NA	8-111, 8-113
U70F1140	354000-0160	MINIATURE CIRCUIT BREAKER, FAZ-C16/1	8-111, 8-113
U70F2010	90459-1130	EM. STOP XAL-K178F	1-107
U70F2510	90459-4142	SAFETY SENSOR, ADAM M12, 20-051-00	1-137
U70F2511	90458-2794	SAFETY SENSOR, EVA 20-046-00	1-137
U70F2520	90459-4142	SAFETY SENSOR, ADAM M12, 20-051-00	1-105
U70F2521	90458-2794	SAFETY SENSOR, EVA 20-046-00	1-105
U70F2530	90459-4142	SAFETY SENSOR, ADAM M12, 20-051-00	1-135
U70F2531	90458-2794	SAFETY SENSOR, EVA 20-046-00	1-135
U70F7044	90113-0472	FILTER 0,01 MICRON, F72C-2GD-AEO	1-219, 1-221
V20F0320	315749-0100	MINIATURE CIRCUIT BREAKER, FAZ-D10/3-NA	8-111, 8-113
V20F0320	351418-0100	MINIATURE CIRC. BREAK., FAZ-D10/3 3-POLE	8-111, 8-113

Pos	Part No	Description	Page No
G			
K80G0120	2846098-0000	COMPRESSOR UNIT	6-15
T40G0010	1499642-0301	TPIH GENERATOR	8-127
T40G0040	90600-1283	PUMP, AZPF -12-004RH030PB	2-37, 2-39
U70G6592	90600-4437	ROT. LOBE PUMP AVMXT 3500DA	1-17
J			
JS10	76131-0000	ASSEMBLY CONE	11-49
JS10	76132-0000	ASSEMBLY TOOL	11-49
JS10	78801-0000	CALIBRATION TOOL	11-49
JS10	1110083-0003	DOLLY	9-23, 9-25, 9-27
JS10	1110083-0005	DOLLY	9-23, 9-25, 9-27
JS10	1566761-0000	DOLLY	9-23, 9-25, 9-27
JS10	2843012-0100	TEMPLATE	11-5
JS10	2949862-0004	DOLLY	9-23, 9-25, 9-27
JS20	90091-0387	ASSEMBLY TOOL	11-49
JS20	1110532-0000	INDUCTOR	9-23, 9-25, 9-27
JS20	1110534-0000	INDUCTOR	9-23, 9-25, 9-27
JS20	1110535-0000	INDUCTOR	9-23, 9-25, 9-27
JS20	1110556-0000	INDUCTOR	9-23, 9-25, 9-27
JS20	1566981-0000	INDUCTOR	9-23, 9-25, 9-27
JS20	2889628-0100	SETTING TOOL	11-5
JS20	2917498-0000	INDUCTOR	9-23, 9-25, 9-27
JS20	2975930-0000	INDUCTOR	9-23, 9-25, 9-27
JS20	2984255-0000	ASSEMBLY TOOL	11-49
JS20	3044527-0000	INDUCTOR	9-23, 9-25, 9-27
JS20	3089348-0000	INDUCTOR	9-23, 9-25, 9-27
JS20	3089354-0000	INDUCTOR	9-23, 9-25, 9-27
JS30	272986-0001	VOLUME SHIM	9-23, 9-25, 9-27
JS30	272986-0003	VOLUME SHIM	9-23, 9-25, 9-27
JS30	272986-0006	VOLUME SHIM 330S	9-23, 9-25, 9-27
JS30	272987-0000	VOLUME SHIM	9-23, 9-25, 9-27
JS30	272991-0000	VOLUME SHIM	9-23, 9-25, 9-27
JS30	979754-0000	VOLUME SHIM 100	9-23, 9-25, 9-27
JS30	979861-0000	VOLUME SHIM	9-23, 9-25, 9-27
JS30	1519222-0000	VOLUME SHIM	9-23, 9-25, 9-27
JS30	2843695-0100	CLAMPING PIECE	11-5
JS30	2908756-0000	VOLUME SHIM	9-23, 9-25, 9-27
JS30	2950902-0000	VOLUME SHIM	9-23, 9-25, 9-27
JS30	2977544-0000	SHIM	9-23, 9-25, 9-27
JS30	3002257-0000	VOLUME SHIM	9-23, 9-25, 9-27
JS30	3003863-0000	VOLUME SHIM	9-23, 9-25, 9-27
JS30	3010756-0000	VOLUME SHIM	9-23, 9-25, 9-27
JS30	3019316-0000	SHIM	9-23, 9-25, 9-27
JS30	3019317-0000	SHIM	9-23, 9-25, 9-27
JS30	3022276-0000	VOLUME SHIM	9-23, 9-25, 9-27
JS30	3047358-0000	VOLUME SHIM	9-23, 9-25, 9-27
JS30	3067274-0000	SHIM	9-23, 9-25, 9-27
JS30	3067286-0000	VOLUME SHIM	9-23, 9-25, 9-27
JS30	3111045-0000	VOLUME SHIM	9-23, 9-25, 9-27
JS40	1282645-0000	KNIFE	9-23, 9-25, 9-27
JS40	1282646-0000	KNIFE	9-23, 9-25, 9-27
JS40	1282647-0000	KNIFE	9-23, 9-25, 9-27
JS40	2842982-0100	TEMPLATE	11-5
JS40	3096231-0000	KNIFE	9-23, 9-25, 9-27
JS50	76304-0100	COMPRESSION SPRING	11-5
JS60	2908997-0100	TOOL	11-5
JS70	3134257-0000	TOOL	11-5
K			
A01K2000	90459-6559	PROCESSOR L63, SERIES B, 1756-L63/B	8-125
A01K2010	90459-2477	ETHERNET I/P BRIDGE MODULE, 1756-ENBT	8-125
A01K2020	90459-2477	ETHERNET I/P BRIDGE MODULE, 1756-ENBT	8-125
A01K2040	90600-5840	PLC DEVICEN. BR./SCAN MOD, 1756-DNB, D	8-125
A01K2060	90459-6556	PLC DIGITAL INPUT 32PTS, 1756-IB32/B	8-125
A01K2070	90459-6556	PLC DIGITAL INPUT 32PTS, 1756-IB32/B	8-125
A01K2080	90459-2474	PLC,DIGIT. OUTPUT MODULE 16 PTS 10-31VDC	8-125
A01K2120	90459-2481	PLC 16-AXIS SERCOS MOTION MODULE	8-125
A01K4000	90459-2494	DEVICENET I/O ADAPTER MODULE, 1734-ADN	8-107
A01K4010	90459-6561	DIGITAL INPUT 8 PTS SINK, 1734-IB8/C	8-107
A01K4020	90459-6561	DIGITAL INPUT 8 PTS SINK, 1734-IB8/C	8-107
A01K4030	90459-6560	DIGITAL OUTPUT 8 PTS, 1734-OB8E/C	8-107
A01K4040	90459-6560	DIGITAL OUTPUT 8 PTS, 1734-OB8E/C	8-107
A01K4050	90459-6560	DIGITAL OUTPUT 8 PTS, 1734-OB8E/C	8-107
A01K4060	90459-6560	DIGITAL OUTPUT 8 PTS, 1734-OB8E/C	8-107
A01K4070	90459-6560	DIGITAL OUTPUT 8 PTS, 1734-OB8E/C	8-107
A01K4080	90459-6560	DIGITAL OUTPUT 8 PTS, 1734-OB8E/C	8-107
A01K4090	90459-6560	DIGITAL OUTPUT 8 PTS, 1734-OB8E/C	8-107
A01K4100	90459-6560	DIGITAL OUTPUT 8 PTS, 1734-OB8E/C	8-107
A01K4110	90459-5261	REMOTE I/O, RELAY OUTP. 4 PTS,1734-OW4/C	8-107
A01K4120	90459-2500	EXPANSION POWER SUPPLY MODULE	8-107
A01K4130	90459-5261	REMOTE I/O, RELAY OUTP. 4 PTS,1734-OW4/C	8-107
A01K4140	90459-5261	REMOTE I/O, RELAY OUTP. 4 PTS,1734-OW4/C	8-107
A01K4150	90459-5261	REMOTE I/O, RELAY OUTP. 4 PTS,1734-OW4/C	8-107
A01K4160	90459-5261	REMOTE I/O, RELAY OUTP. 4 PTS,1734-OW4/C	8-107

Pos	Part No	Description	Page No
K			
A01K4170	90459-2510	ANALOG OUTPUT VOLTAGE MODULE 2 PTS	8-107
A01K4180	90459-6560	DIGITAL OUTPUT 8 PTS, 1734-OB8E/C	8-107
A01K4200	90459-2509	REMOTE I/O ANALOG INPUT CURRENT 2 PTS	8-107
A01K4300	90459-2510	ANALOG OUTPUT VOLTAGE MODULE 2 PTS	8-107
A01K4310	90459-2512	REMOTE I/O THERMOCOUPLE INPUT 2 PTS	8-107
K80K1000	90459-2494	DEVICENET I/O ADAPTER MODULE, 1734-ADN	6-45
K80K1010	90459-6561	DIGITAL INPUT 8 PTS SINK, 1734-IB8/C	6-45
K80K1020	90459-6561	DIGITAL INPUT 8 PTS SINK, 1734-IB8/C	6-45
K80K1030	90459-6560	DIGITAL OUTPUT 8 PTS, 1734-OB8E/C	6-45
K80K1040	90459-6560	DIGITAL OUTPUT 8 PTS, 1734-OB8E/C	6-45
K80K1050	90459-5261	REMOTE I/O, RELAY OUTP. 4 PTS,1734-OW4/C	6-45
K80K1060	90459-2512	REMOTE I/O THERMOCOUPLE INPUT 2 PTS	6-45
K80K1070	90459-6560	DIGITAL OUTPUT 8 PTS, 1734-OB8E/C	6-45
K80K1730	90042-0248	SOLENOID VALVE OFFICIENE DI ENSINO	6-17
K80K1750	90042-0254	SOLENOID VALVE, DIAPHRAGM R1 1/2	6-29
K80K1760	90459-1854	SHUT OFF VALVE, MS6-EE-1/2-10V24	6-41
K80K6010	90458-1194	VALVE, 5/2 MONOSTABLE	6-39
K80K6080	90600-2040	VALVE, 3/2 MONOSTABLE NC	6-39
K80K6090	90459-1855	SOFT START VALVE, MS6-DL-1/2	6-41
P60K0700	90601-1326	COMPUTOR APC620, 5P62:TETRAPAK-30	8-157
T10K0020	90459-2614	DEVICENET ADAPTER POWERFLEX 40 22-COMM-D	8-129, 8-131
T10K0040	90459-2614	DEVICENET ADAPTER POWERFLEX 40 22-COMM-D	8-129, 8-131
T10K1000	90459-2494	DEVICENET I/O ADAPTER MODULE, 1734-ADN	7-41, 7-43
T10K1010	90459-6561	DIGITAL INPUT 8 PTS SINK, 1734-IB8/C	7-41, 7-43
T10K1020	90459-6561	DIGITAL INPUT 8 PTS SINK, 1734-IB8/C	7-41, 7-43
T10K1030	90459-6561	DIGITAL INPUT 8 PTS SINK, 1734-IB8/C	7-41, 7-43
T10K1040	90459-6561	DIGITAL INPUT 8 PTS SINK, 1734-IB8/C	7-41, 7-43
T10K1050	90459-6560	DIGITAL OUTPUT 8 PTS, 1734-OB8E/C	7-41, 7-43
T10K1060	90459-6560	DIGITAL OUTPUT 8 PTS, 1734-OB8E/C	7-41, 7-43
T10K1070	90459-6560	DIGITAL OUTPUT 8 PTS, 1734-OB8E/C	7-41, 7-43
T10K1080	90459-2512	REMOTE I/O THERMOCOUPLE INPUT 2 PTS	7-41, 7-43
T10K1090	90459-2512	REMOTE I/O THERMOCOUPLE INPUT 2 PTS	7-41, 7-43
T10K1100	90459-2501	FIELD POWER DISTRIBUTOR, 1734-FPD	7-41, 7-43
T10K1110	90459-6560	DIGITAL OUTPUT 8 PTS, 1734-OB8E/C	7-41, 7-43
T10K1120	90459-5261	REMOTE I/O, RELAY OUTP. 4 PTS,1734-OW4/C	7-41, 7-43
T10K1700	90458-1194	VALVE, 5/2 MONOSTABLE	7-35
T10K1740	90459-2243	SHUT OFF VALVE, MS4-EE-1/4-10V24	7-27
T10K6010	90458-1194	VALVE, 5/2 MONOSTABLE	7-35
T10K6040	90458-1194	VALVE, 5/2 MONOSTABLE	7-35
T10K7010	90458-1194	VALVE, 5/2 MONOSTABLE	7-35
T10K7020	90458-1194	VALVE, 5/2 MONOSTABLE	7-31
T10K7030	90458-1194	VALVE, 5/2 MONOSTABLE	7-31
T10K7040	90458-1197	VALVE, 5/2 BISTABLE	7-31
T10K7060	90458-1194	VALVE, 5/2 MONOSTABLE	7-35
T10K7300	90458-1194	VALVE, 5/2 MONOSTABLE	7-35
T10K7400	90458-1194	VALVE, 5/2 MONOSTABLE	7-35
T10K7500	90458-1194	VALVE, 5/2 MONOSTABLE	7-35
T10K7600	90458-1194	VALVE, 5/2 MONOSTABLE	7-35
T10K7700	90458-1194	VALVE, 5/2 MONOSTABLE	7-35
T10K7900	90458-1202	VALVES 2X3/2, CLOSED	7-35
T10K8000	90458-1202	VALVES 2X3/2, CLOSED	7-35
T40K1000	90459-2494	DEVICENET I/O ADAPTER MODULE, 1734-ADN	2-55
T40K1010	90459-6561	DIGITAL INPUT 8 PTS SINK, 1734-IB8/C	2-55
T40K1020	90459-6561	DIGITAL INPUT 8 PTS SINK, 1734-IB8/C	2-55
T40K1030	90459-6560	DIGITAL OUTPUT 8 PTS, 1734-OB8E/C	2-55
T40K1040	90459-6560	DIGITAL OUTPUT 8 PTS, 1734-OB8E/C	2-55
T40K1050	90459-6560	DIGITAL OUTPUT 8 PTS, 1734-OB8E/C	2-55
T40K1060	90459-2509	REMOTE I/O ANALOG INPUT CURRENT 2 PTS	2-55
T40K1070	90459-2508	REMOTE I/O ANALOG INPUT VOLTAGE 2 PTS	2-55
T40K1080	90459-2512	REMOTE I/O THERMOCOUPLE INPUT 2 PTS	2-55
T40K1090	90459-2512	REMOTE I/O THERMOCOUPLE INPUT 2 PTS	2-55
T40K1100	90459-5261	REMOTE I/O, RELAY OUTP. 4 PTS,1734-OW4/C	2-55
T40K2690	90042-0248	SOLENOID VALVE OFFICIENE DI ENSINO	2-63
T40K9550	90601-0067	DIRECTIONAL VALVE,4WE 6 J61/EG24N9K4/B15	2-37, 2-39
T40K9570	90601-0068	DIRECTIONAL VALVE, NO. 4WE 6 D6X/EG24N9K	2-37, 2-39
T40K9590	90601-0068	DIRECTIONAL VALVE, NO. 4WE 6 D6X/EG24N9K	2-37, 2-39
T50K0070	90459-2614	DEVICENET ADAPTER POWERFLEX 40 22-COMM-D	8-129, 8-131
T50K0840	90042-0249	SOLENOID VALVE OFFICINE DI ENSINO	6-11
T50K1000	90459-2494	DEVICENET I/O ADAPTER MODULE, 1734-ADN	2-21, 2-23
T50K1010	90459-6561	DIGITAL INPUT 8 PTS SINK, 1734-IB8/C	2-21, 2-23
T50K1020	90459-6561	DIGITAL INPUT 8 PTS SINK, 1734-IB8/C	2-21, 2-23
T50K1030	90459-6561	DIGITAL INPUT 8 PTS SINK, 1734-IB8/C	2-21, 2-23
T50K1040	90459-6560	DIGITAL OUTPUT 8 PTS, 1734-OB8E/C	2-21, 2-23
T50K1050	90459-5261	REMOTE I/O, RELAY OUTP. 4 PTS,1734-OW4/C	2-21, 2-23
T50K1060	90459-5261	REMOTE I/O, RELAY OUTP. 4 PTS,1734-OW4/C	2-21, 2-23
T50K1070	90459-5261	REMOTE I/O, RELAY OUTP. 4 PTS,1734-OW4/C	2-21, 2-23
T50K1080	90459-2500	EXPANSION POWER SUPPLY MODULE	2-21, 2-23
T50K1090	90459-2512	REMOTE I/O THERMOCOUPLE INPUT 2 PTS	2-21, 2-23
T50K1100	90459-2512	REMOTE I/O THERMOCOUPLE INPUT 2 PTS	2-21, 2-23
T50K1110	90459-6561	DIGITAL INPUT 8 PTS SINK, 1734-IB8/C	2-21, 2-23
T50K1120	90459-5261	REMOTE I/O, RELAY OUTP. 4 PTS,1734-OW4/C	2-21, 2-23
T50K1130	90459-4055	REMOTE I/O RELAY OUTPUT 2 PTS	2-21, 2-23

Pos	Part No	Description	Page No
K			
T50K6020	90458-1194	VALVE, 5/2 MONOSTABLE	2-51
T50K6030	90458-1194	VALVE, 5/2 MONOSTABLE	2-51
T50K6040	90458-1202	VALVES 2X3/2, CLOSED	2-51
T50K6050	90458-1201	VALVES 2X3/2, OPEN	2-51
T50K6090	90458-1200	VALVE OPEN IN MID-POSITION 5/3	2-51
U30K1800	90042-0206	SOLENOID VALVE, G1/8 444-111-000-1	2-211
U30K6020	90458-1202	VALVES 2X3/2, CLOSED	2-51
U30K6040	90458-1202	VALVES 2X3/2, CLOSED	2-51
U70K0160	90459-2614	DEVICENET ADAPTER POWERFLEX 40 22-COMM-D	8-129, 8-131
U70K0190	90459-2614	DEVICENET ADAPTER POWERFLEX 40 22-COMM-D	8-129, 8-131
U70K1000	90459-2494	DEVICENET I/O ADAPTER MODULE, 1734-ADN	1-241
U70K1010	90459-6561	DIGITAL INPUT 8 PTS SINK, 1734-IB8/C	1-241
U70K1020	90459-6561	DIGITAL INPUT 8 PTS SINK, 1734-IB8/C	1-241
U70K1030	90459-6561	DIGITAL INPUT 8 PTS SINK, 1734-IB8/C	1-241
U70K1040	90459-6561	DIGITAL INPUT 8 PTS SINK, 1734-IB8/C	1-241
U70K1050	90459-6560	DIGITAL OUTPUT 8 PTS, 1734-OB8E/C	1-241
U70K1060	90459-6560	DIGITAL OUTPUT 8 PTS, 1734-OB8E/C	1-241
U70K1070	90459-6560	DIGITAL OUTPUT 8 PTS, 1734-OB8E/C	1-241
U70K1080	90459-2509	REMOTE I/O ANALOG INPUT CURRENT 2 PTS	1-241
U70K1090	90459-2509	REMOTE I/O ANALOG INPUT CURRENT 2 PTS	1-241
U70K1100	90459-2508	REMOTE I/O ANALOG INPUT VOLTAGE 2 PTS	1-241
U70K1110	90459-2510	ANALOG OUTPUT VOLTAGE MODULE 2 PTS	1-241
U70K1120	90459-4055	REMOTE I/O RELAY OUTPUT 2 PTS	1-241
U70K1130	90459-2500	EXPANSION POWER SUPPLY MODULE	1-241
U70K1140	90459-2512	REMOTE I/O THERMOCOUPLE INPUT 2 PTS	1-241
U70K1150	90459-2512	REMOTE I/O THERMOCOUPLE INPUT 2 PTS	1-241
U70K1160	90459-2512	REMOTE I/O THERMOCOUPLE INPUT 2 PTS	1-241
U70K1170	90459-2512	REMOTE I/O THERMOCOUPLE INPUT 2 PTS	1-241
U70K1180	90459-2512	REMOTE I/O THERMOCOUPLE INPUT 2 PTS	1-241
U70K1190	90459-5261	REMOTE I/O, RELAY OUTP. 4 PTS,1734-OW4/C	1-241
U70K1200	90459-2500	EXPANSION POWER SUPPLY MODULE	1-241
U70K1210	90459-2512	REMOTE I/O THERMOCOUPLE INPUT 2 PTS	1-241
U70K1220	90459-2512	REMOTE I/O THERMOCOUPLE INPUT 2 PTS	1-241
U70K1230	90459-2512	REMOTE I/O THERMOCOUPLE INPUT 2 PTS	1-241
U70K1240	90459-4056	REMOTE I/O RTD INPUT 2PTS	1-241
U70K1250	90459-6561	DIGITAL INPUT 8 PTS SINK, 1734-IB8/C	1-241
U70K1300	90459-2501	FIELD POWER DISTRIBUTOR, 1734-FPD	1-241
U70K1310	90459-6560	DIGITAL OUTPUT 8 PTS, 1734-OB8E/C	1-241
U70K1450	90458-1202	VALVES 2X3/2, CLOSED	1-227
U70K1710	90601-4450	SOLENOID VALVE, 5281 2/2 NC	1-163
U70K1720	90601-4450	SOLENOID VALVE, 5281 2/2 NC	2-205
U70K1730	90601-4450	SOLENOID VALVE, 5281 2/2 NC	2-205
U70K1760	90458-1194	VALVE, 5/2 MONOSTABLE	1-227
U70K1770	90458-1194	VALVE, 5/2 MONOSTABLE	1-229, 1-231
U70K2700	90459-2742	LEVEL CONTROL RELAY, RM4-LA32MW	1-243
U70K2740	90042-0203	SOLENOID VALVE, 331 3/2 NC	1-203
U70K2750	90042-0203	SOLENOID VALVE, 331 3/2 NC	1-203
U70K2860	90459-6975	SOLENOID VALVE G1/4, 2401186082702400	1-203
U70K2870	90459-6977	SOLENOID VALVE G1/4, V04B286N-B423A	1-203
U70K3700	90459-2742	LEVEL CONTROL RELAY, RM4-LA32MW	1-243
U70K3790	90458-1194	VALVE, 5/2 MONOSTABLE	1-227
U70K4000	90458-1194	VALVE, 5/2 MONOSTABLE	1-229, 1-231
U70K4010	90458-1194	VALVE, 5/2 MONOSTABLE	1-229, 1-231
U70K4020	90458-1194	VALVE, 5/2 MONOSTABLE	1-227
U70K4030	90458-1194	VALVE, 5/2 MONOSTABLE	1-227
U70K4050	90458-1194	VALVE, 5/2 MONOSTABLE	1-227
U70K4060	90458-1194	VALVE, 5/2 MONOSTABLE	1-227
U70K4061	90459-2742	LEVEL CONTROL RELAY, RM4-LA32MW	1-95
U70K4070	90458-1194	VALVE, 5/2 MONOSTABLE	1-227
U70K4090	90458-1194	VALVE, 5/2 MONOSTABLE	1-229, 1-231
U70K4210	90042-0203	SOLENOID VALVE, 331 3/2 NC	1-97
U70K4220	90042-0203	SOLENOID VALVE, 331 3/2 NC	1-97
U70K4230	90042-0171	SOLENOID VALVE, 330 3/2 NC	1-89
U70K4240	90042-0171	SOLENOID VALVE, 330 3/2 NC	1-89
U70K6000	90459-2494	DEVICENET I/O ADAPTER MODULE, 1734-ADN	1-57
U70K6010	90459-6561	DIGITAL INPUT 8 PTS SINK, 1734-IB8/C	1-57
U70K6015	90459-6561	DIGITAL INPUT 8 PTS SINK, 1734-IB8/C	1-57
U70K6020	90459-6560	DIGITAL OUTPUT 8 PTS, 1734-OB8E/C	1-57
U70K6030	90459-6560	DIGITAL OUTPUT 8 PTS, 1734-OB8E/C	1-57
U70K6040	90459-2512	REMOTE I/O THERMOCOUPLE INPUT 2 PTS	1-57
U70K6050	90459-2512	REMOTE I/O THERMOCOUPLE INPUT 2 PTS	1-57
U70K6060	90459-2510	ANALOG OUTPUT VOLTAGE MODULE 2 PTS	1-57
U70K6500	90458-1194	VALVE, 5/2 MONOSTABLE	1-45
U70K6520	90458-1194	VALVE, 5/2 MONOSTABLE	1-45
U70K6530	90458-1194	VALVE, 5/2 MONOSTABLE	1-45
U70K6540	90458-1202	VALVES 2X3/2, CLOSED	1-45
U70K6560	90458-1202	VALVES 2X3/2, CLOSED	1-45
U70K6580	90458-1202	VALVES 2X3/2, CLOSED	1-45
U70K6610	90458-1202	VALVES 2X3/2, CLOSED	1-45
U70K7040	90458-1194	VALVE, 5/2 MONOSTABLE	1-227
U70K7050	90458-1202	VALVES 2X3/2, CLOSED	1-229, 1-231
U70K7060	90458-1194	VALVE, 5/2 MONOSTABLE	1-229, 1-231

Machine Type Group Description Page No

Pos	Part No	Description	Page No
K			
U70K7070	90458-1194	VALVE, 5/2 MONOSTABLE	1-229, 1-231
U70K7080	90458-1194	VALVE, 5/2 MONOSTABLE	1-229, 1-231
U70K7090	90458-1194	VALVE, 5/2 MONOSTABLE	1-229, 1-231
U70K7100	90458-1194	VALVE, 5/2 MONOSTABLE	1-229, 1-231
U70K9000	90459-2494	DEVICENET I/O ADAPTER MODULE, 1734-ADN	1-93
U70K9010	90459-2503	DIGITAL INPUT 4 PTS SINK, 1734-IB4	1-93
U70K9020	90459-2503	DIGITAL INPUT 4 PTS SINK, 1734-IB4	1-93
U70K9040	90459-2505	DIGITAL OUTPUT 4 PTS, 1734-OB4E	1-93
U70K9060	90459-2509	REMOTE I/O ANALOG INPUT CURRENT 2 PTS	1-93
U70K9070	90459-2508	REMOTE I/O ANALOG INPUT VOLTAGE 2 PTS	1-93
U70K9080	90459-2510	ANALOG OUTPUT VOLTAGE MODULE 2 PTS	1-93
U70K9090	90459-2512	REMOTE I/O THERMOCOUPLE INPUT 2 PTS	1-93
U70K9100	90459-2512	REMOTE I/O THERMOCOUPLE INPUT 2 PTS	1-93
U70K9110	90459-2503	DIGITAL INPUT 4 PTS SINK, 1734-IB4	1-93
V20K0320	90459-2614	DEVICENET ADAPTER POWERFLEX 40 22-COMM-D	8-129, 8-131
V20K1280	90458-1202	VALVES 2X3/2, CLOSED	6-9
V20K1300	90458-1202	VALVES 2X3/2, CLOSED	6-9
V20K1320	90458-1202	VALVES 2X3/2, CLOSED	6-9
V20K1340	90458-1202	VALVES 2X3/2, CLOSED	6-9
V20K1360	90458-1202	VALVES 2X3/2, CLOSED	6-9
V20K1380	90458-1194	VALVE, 5/2 MONOSTABLE	6-9
V20K1400	90458-1194	VALVE, 5/2 MONOSTABLE	6-9
V20K1410	90601-4450	SOLENOID VALVE, 5281 2/2 NC	6-11
W51K1700	90119-0104	OPTO COUPLER AMMS 50070	2-21, 2-23
M			
MB010	3044282-0000	PNEUMATIC DIAGRAM	9-41
A01M5750	90600-3761	COOLING UNIT, KB40A62675.00	8-195
A01M5750	3097062-0000	COOLING UNIT	8-195
A01M5780	90457-0056	FAN 7450 ES	8-21
K80M0110	90604-3644	PUMP, CM3-6 X-R-G-V-AQQV O-A-A-N	6-21
K80M0130	90603-2780	PUMP, 1016L1231YXXXC8	6-27
K80M0130	90603-3664	PUMP, 1016L5621YXXXP7	6-27
T10M0060	90264-0078	FAN, 2BH1300-7AH16	7-79
T10M0120	90600-8646	FAN, W2S130-AB03-15	7-125
T10M1020	90600-2664	GEARS,WORM MOTOR MVF 49 FI 18 P71 B14 V5	7-141
T10M1040	90600-2657	GEARS, WORM MOTOR MVF 30F2 15 P63 B14 B3	7-63
T10M1700	90450-0306	DOUBLE ACTING, MINI-ISO, CYL. 12-25	7-109
T10M6010	90459-0503	DOUBLE ACTING, SHORT STROKE, CYL 16-10	7-137
T10M6015	90459-0503	DOUBLE ACTING, SHORT STROKE, CYL 16-10	7-137
T10M6040	90459-0503	DOUBLE ACTING, SHORT STROKE, CYL 16-10	7-131
T10M6045	90459-0503	DOUBLE ACTING, SHORT STROKE, CYL 16-10	7-131
T10M7010	90457-0871	DOUBLE ACTING, MINI-ISO, CYL. 16-25	7-147
T10M7020	90459-7184	SINGLE ACTING, SHORT STROKE, CYL 80-25	7-149
T10M7025	90459-7184	SINGLE ACTING, SHORT STROKE, CYL 80-25	7-149
T10M7030	90600-2566	DOUBLE ACTING, SHORT STROKE, CYL 63-25	7-149
T10M7040	90600-2671	DOUBLE ACTING, SHUTTLE, CYL. 32-500	7-171
T10M7060	90600-2567	DOUBLE ACTING, SHORT STROKE, CYL 16-20	7-149
T10M7300	90459-5599	DOUBLE ACTING, MINI-ISO, CYL. 20-25	7-119
T10M7400	90239-0829	DOUBLE ACTING, MINI-ISO, CYL.25-50	7-117
T10M7500	90459-5608	DOUBLE ACTING, MINI-ISO, CYL. 25-160	7-133
T10M7600	90459-5608	DOUBLE ACTING, MINI-ISO, CYL. 25-160	7-139
T10M7700	90600-4919	CYLINDER, RODLESS MECH. 18-400	7-97
T40M0040	90604-3045	MOTOR 3GAA 092 314-BSE	2-37, 2-39
T40M0700	90602-2813	SERVO MOTOR, MPL-B680B-M-X227,ESM	3-19
T40M0710	90602-2813	SERVO MOTOR, MPL-B680B-M-X227,ESM	3-19
T40M0720	90602-2813	SERVO MOTOR, MPL-B680B-M-X227,ESM	3-37
T40M0730	90602-2813	SERVO MOTOR, MPL-B680B-M-X227,ESM	3-37
T40M0740	90601-4870	SERVO MOTOR, MPL-B330P-SJ74AA, SERIES A	4-39
T40M0750	90601-4870	SERVO MOTOR, MPL-B330P-SJ74AA, SERIES A	4-41
T50M0140	90459-6323	GEARS, WORM MOTOR VF 30F2 15 P63 B14 B3	2-167
T50M0800	90601-0669	SERVO MOTOR, MPL-B430P-MJ72AA SERIES A	5-37, 5-39
T50M0810	90601-0669	SERVO MOTOR, MPL-B430P-MJ72AA SERIES A	5-35
T50M0820	90601-0669	SERVO MOTOR, MPL-B430P-MJ72AA SERIES A	5-19
T50M6020	90600-2521	CYLINDER SPEC. WITH INT. GUIDING BORE 32	5-11
T50M6025	90600-2521	CYLINDER SPEC. WITH INT. GUIDING BORE 32	5-11
T50M6030	90321-0128	CHEMICAL PUMP UNIT 081778	2-223
T50M6090	90459-4642	DOUBLE ACTING, PROFILE, CYL 32-40	5-47
U30M0010	90602-9317	MOTOR 1LA9073-2KA12	2-213
U30M6040	90459-5481	OIL PUMP 3L, 10P-P3	2-45
U70M0230	90321-0134	CIRCULATING PUMP, 105 006 120	2-207
U70M0230	90321-0135	CIRCULATING PUMP, 105 006 121	2-207
U70M0320	3120865-0000	CENTRIFUGAL PUMP	1-71
U70M1100	90459-4977	LINEAR ACTUATOR, LA 1 SP-SP36 17A16-04	1-157
U70M1160	90459-1226	GEARS, WORM MOTOR VF 44P-10+BN71B 0.37KW	1-129
U70M1171	90459-6924	DOUBLE ACTING, COMPACT, 25-25	1-123
U70M1172	90459-6924	DOUBLE ACTING, COMPACT, 25-25	1-123
U70M1190	90602-6227	COMPRESSOR, 2BV2070-8ZH03-8S	1-155
U70M1760	90459-6924	DOUBLE ACTING, COMPACT, 25-25	1-113
U70M1765	90459-6924	DOUBLE ACTING, COMPACT, 25-25	1-113
U70M1768	2864016-0000	PIPE	1-215, 1-217
U70M1769	2864016-0000	PIPE	1-215, 1-217
U70M3790	90600-3837	DOUBLE ACTING, COMPACT, CYL 25-50/80	1-153

Pos	Part No	Description	Page No
M			
U70M4000	90459-3557	DOUBLE ACTING, COMPACT, CYL 32-60	1-103
U70M4010	90459-3557	DOUBLE ACTING, COMPACT, CYL 32-60	1-143
U70M4020	90459-5845	DOUBLE ACTING, MINI-ISO, CYL. 20-40	1-145
U70M4030	90450-0281	DOUBLE ACTING,PROF.CYL 32-80	1-161
U70M4050	90459-0713	DOUBLE ACTING, MINI-ISO, CYL. 12-80	1-153
U70M4070	90600-5541	DOUBLE ACTING, COMPACT, CYL 16-25	1-127
U70M4071	2864015-0000	PIPE	1-215, 1-217
U70M4073	2864015-0000	PIPE	1-215, 1-217
U70M4075	315400-0016	TUBE PUN-H-4X0,75-BL	1-215, 1-217
U70M4076	315400-0016	TUBE PUN-H-4X0,75-BL	1-215, 1-217
U70M4077	315400-0016	TUBE PUN-H-4X0,75-BL	1-215, 1-217
U70M4078	315400-0016	TUBE PUN-H-4X0,75-BL	1-215, 1-217
U70M4080	90459-3650	DOUBLE ACTING, MINI-ISO, CYL. 25-40	1-119
U70M4090	90457-0871	DOUBLE ACTING, MINI-ISO, CYL. 16-25	1-125
U70M6200	90459-2589	SERVO MOTOR, MPL-B430P-MK22AA	1-17
V20M1570	927244-0100	PUMP	2-185, 2-187
V20M1590	927244-0100	PUMP	2-185, 2-187
P			
PT10	2983304-0100	TOOLS AND TEMPLATES PT	11-5
A01P5850	90070-0017	WORKING HOURS COUNTER, 7991 DR H?NLE	8-157
A01P5860	90053-0029	COUNTER, F524.800FA3C 24VDC	8-157
K80P0010	1129079-0000	FLOW METER	6-17
K80P0040	90043-0043	PRESSURE GAUGE, 2041D=40 MM	6-33
K80P0110	90043-0100	PRESSURE GAUGE, 2948 D=63 MM	6-17
K80P1712	90043-0006	PRESSURE GAUGE, 2041 D=63 MM	6-11
K80P1800	90459-7344	PRESSURE GAUGE, MA-40-6-R1/4-EN	6-37
T10P1450	2893407-0200	SIGNAL LAMP	2-99, 2-101
T10P1451	90602-4061	LIGHT ELEMENT, GREEN, PSD-S OE LED GN	2-105
T10P1452	90602-4060	LIGHT ELEMENT, BLUE, PSD-S OE LED BU	2-105
T10P1453	90602-4063	LIGHT ELEMENT, YELLOW, PSD-S OE LED YE	2-105
T10P1454	90602-4062	LIGHT ELEMENT, RED, PSD-S OE LED RD	2-105
T10P1455	90602-4631	SIREN 100DB, PSD-S AE SM8-5 100DB/1	2-105
T10P8002	90458-2969	PRESSURE GAUGE, MAP-40-1-1/8-EN	7-23, 7-25
T40P0020	1129079-0000	FLOW METER	6-17
T40P0040	90600-1284	PRESSURE GAUGE, D=63 MM ABZMM 63-160BAR/	2-37, 2-39
T40P0042	90600-8349	OIL LEVEL INDICATOR, HGFT. 40-2-C9-RE	2-37, 2-39
T40P1160	1129079-0000	FLOW METER	6-17
T40P1170	1129079-0000	FLOW METER	6-17
T40P9550	90600-1284	PRESSURE GAUGE, D=63 MM ABZMM 63-160BAR/	2-37, 2-39
T50P0050	1041046-0000	FLOW METER	6-17
T50P1120	2893457-0200	SIGNAL LAMP	2-107
T50P1121	90602-4061	LIGHT ELEMENT, GREEN, PSD-S OE LED GN	2-109
T50P1122	90602-4062	LIGHT ELEMENT, RED, PSD-S OE LED RD	2-109
T50P1123	90602-4063	LIGHT ELEMENT, YELLOW, PSD-S OE LED YE	2-109
T50P1124	90602-4060	LIGHT ELEMENT, BLUE, PSD-S OE LED BU	2-109
T50P6005	90458-2969	PRESSURE GAUGE, MAP-40-1-1/8-EN	2-49
T50P6044	90459-7344	PRESSURE GAUGE, MA-40-6-R1/4-EN	2-49
T50P6054	90459-7344	PRESSURE GAUGE, MA-40-6-R1/4-EN	2-49
T50P6062	90459-7344	PRESSURE GAUGE, MA-40-6-R1/4-EN	2-49
U30P1802	90458-2969	PRESSURE GAUGE, MAP-40-1-1/8-EN	2-49
U70P1170	90459-7344	PRESSURE GAUGE, MA-40-6-R1/4-EN	1-219, 1-221
U70P1710	90459-2804	REDUCING VALVE G1/2", 51.04.70	1-163
U70P1711	90043-0082	PRESSURE GAUGE, 2840, D=63 MM	1-163
U70P1740	90459-7344	PRESSURE GAUGE, MA-40-6-R1/4-EN	1-219, 1-221
U70P2740	90459-0671	PRESSURE GAUGE, MAP-40-4-1/8-EN	1-219, 1-221
U70P3100	90459-7344	PRESSURE GAUGE, MA-40-6-R1/4-EN	1-219, 1-221
U70P4090	90459-7344	PRESSURE GAUGE, MA-40-6-R1/4-EN	1-219, 1-221
U70P6592	90043-0082	PRESSURE GAUGE, 2840, D=63 MM	1-37, 1-39
U70P6593	90043-0082	PRESSURE GAUGE, 2840, D=63 MM	1-41
U70P6594	90043-0082	PRESSURE GAUGE, 2840, D=63 MM	1-37, 1-39
U70P6602	90043-0069	PRESSURE GAUGE 0-4BAR WIEGAND 2040	1-43
U70P7044	90458-2969	PRESSURE GAUGE, MAP-40-1-1/8-EN	1-219, 1-221
U70P7060	90043-0082	PRESSURE GAUGE, 2840, D=63 MM	1-183
U70P7061	90043-0082	PRESSURE GAUGE, 2840, D=63 MM	1-183
U70P7150	90459-7344	PRESSURE GAUGE, MA-40-6-R1/4-EN	1-219, 1-221
U70P9700	90459-7344	PRESSURE GAUGE, MA-40-6-R1/4-EN	1-219, 1-221
V20P1380	90043-0082	PRESSURE GAUGE, 2840, D=63 MM	1-81
V20P1381	90043-0082	PRESSURE GAUGE, 2840, D=63 MM	1-41, 1-69
Q			
A01Q5500	90459-5444	CONTACTOR 15KW 24VDC, DILM32-01	8-137
A01Q5520	90459-5444	CONTACTOR 15KW 24VDC, DILM32-01	8-137
A01Q5750	90459-5308	CONTACTOR 4KW 24VDC, DILM9-10	8-109
A01Q5760	90119-0108	RELAY OMRON G2R-2-SNI-24DC	8-41, 8-43
A01Q5800	90119-0108	RELAY OMRON G2R-2-SNI-24DC	8-41, 8-43
K80Q0010	90459-5440	CONTACTOR 4KW 24VDC, DILM9-01	8-109
K80Q0020	90459-5440	CONTACTOR 4KW 24VDC, DILM9-01	8-109
K80Q0030	90459-5441	CONTACTOR 7,5KW 24VDC, DILM17-01	8-109
K80Q0040	90187-0148	BALL VALVE G1	6-31
P60Q0010	90600-1211	TERMINAL BLOCK RELAY, 700-HLT1Z24	8-51
T10Q0040	90459-5440	CONTACTOR 4KW 24VDC, DILM9-01	8-115
T10Q0050	90459-5440	CONTACTOR 4KW 24VDC, DILM9-01	8-115
T10Q0060	90458-2434	DIAPHRAGM VALVE 12MM, NO WELD CONN.	7-111

Q

Pos	Part No	Description	Page No
T10Q0060	90459-5440	CONTACTOR 4KW 24VDC, DILM9-01	8-109
T10Q0070	90459-5440	CONTACTOR 4KW 24VDC, DILM9-01	8-115
T10Q0080	90459-5440	CONTACTOR 4KW 24VDC, DILM9-01	8-115
T10Q0120	90459-5440	CONTACTOR 4KW 24VDC, DILM9-01	8-115
T10Q0570	90600-0943	SOLID STATE RELAY, 3RF2320-1AA04	8-117, 8-119
T10Q0580	90600-0944	SOLID STATE CONTACTOR, 3RF2330-1AA04	8-117, 8-119
T10Q0590	90600-0943	SOLID STATE RELAY, 3RF2320-1AA04	8-117, 8-119
T40Q0010	90459-5441	CONTACTOR 7,5KW 24VDC, DILM17-01	8-115
T40Q0040	90459-5440	CONTACTOR 4KW 24VDC, DILM9-01	8-109
T40Q0040	90600-0775	BALL VALVE G1/4, 406F-1/4"	2-37, 2-39
T40Q0041	90601-5110	BALL VALVE G1/2, 3861-1/2"	2-37, 2-39
T40Q0840	90119-0108	RELAY OMRON G2R-2-SNI-24DC	8-41, 8-43
T40Q2700	90600-1214	SOLID STATE RELAY, 700-SCNN3Z26	8-41, 8-43
T40Q2710	90600-1214	SOLID STATE RELAY, 700-SCNN3Z26	8-41, 8-43
T40Q2720	90600-1214	SOLID STATE RELAY, 700-SCNN3Z26	8-41, 8-43
T40Q2730	90600-1214	SOLID STATE RELAY, 700-SCNN3Z26	8-41, 8-43
T40Q2740	90600-1214	SOLID STATE RELAY, 700-SCNN3Z26	8-41, 8-43
T40Q2750	90600-1214	SOLID STATE RELAY, 700-SCNN3Z26	8-41, 8-43
T40Q2800	90459-5440	CONTACTOR 4KW 24VDC, DILM9-01	8-115
T40Q2810	90459-5440	CONTACTOR 4KW 24VDC, DILM9-01	8-115
T40Q2820	90459-5440	CONTACTOR 4KW 24VDC, DILM9-01	8-115
T40Q2830	90459-5440	CONTACTOR 4KW 24VDC, DILM9-01	8-115
T40Q9550	90600-1214	SOLID STATE RELAY, 700-SCNN3Z26	8-41, 8-43
T40Q9551	90600-1214	SOLID STATE RELAY, 700-SCNN3Z26	8-41, 8-43
T40Q9570	90600-1214	SOLID STATE RELAY, 700-SCNN3Z26	8-41, 8-43
T40Q9590	90600-1214	SOLID STATE RELAY, 700-SCNN3Z26	8-41, 8-43
T50Q0010	90459-5441	CONTACTOR 7,5KW 24VDC, DILM17-01	8-115
T50Q0070	90459-5440	CONTACTOR 4KW 24VDC, DILM9-01	8-115
T50Q0140	90459-5440	CONTACTOR 4KW 24VDC, DILM9-01	8-109
T50Q0150	90459-5440	CONTACTOR 4KW 24VDC, DILM9-01	8-109
T50Q0510	90600-0944	SOLID STATE CONTACTOR, 3RF2330-1AA04	8-117, 8-119
T50Q0520	90600-0944	SOLID STATE CONTACTOR, 3RF2330-1AA04	8-117, 8-119
T50Q0540	90600-0944	SOLID STATE CONTACTOR, 3RF2330-1AA04	8-117, 8-119
U30Q0010	90459-5440	CONTACTOR 4KW 24VDC, DILM9-01	8-109
U30Q6020	90459-5178	ANGLE SEAT VALVE, W. FLANGES,NO, 8498669	2-205
U30Q6030	90459-5177	ANGLE SEAT VALVE, W. FLANGES,NO, 8498668	2-205
U70Q0010	90459-5441	CONTACTOR 7,5KW 24VDC, DILM17-01	8-115
U70Q0020	90459-5441	CONTACTOR 7,5KW 24VDC, DILM17-01	8-115
U70Q0030	90459-5441	CONTACTOR 7,5KW 24VDC, DILM17-01	8-115
U70Q0050	90459-5441	CONTACTOR 7,5KW 24VDC, DILM17-01	8-115
U70Q0080	90459-5441	CONTACTOR 7,5KW 24VDC, DILM17-01	8-115
U70Q0090	90459-5444	CONTACTOR 15KW 24VDC, DILM32-01	8-115
U70Q0130	90459-5440	CONTACTOR 4KW 24VDC, DILM9-01	8-115
U70Q0160	90459-5440	CONTACTOR 4KW 24VDC, DILM9-01	8-115
U70Q0190	90459-5441	CONTACTOR 7,5KW 24VDC, DILM17-01	8-137
U70Q0230	90459-5440	CONTACTOR 4KW 24VDC, DILM9-01	8-115
U70Q0370	90600-0943	SOLID STATE RELAY, 3RF2320-1AA04	8-117, 8-119
U70Q0371	90459-5440	CONTACTOR 4KW 24VDC, DILM9-01	8-117, 8-119
U70Q0520	90600-0948	SOLID STATE CONTACTOR, 3RF2430-1AB45	8-117, 8-119
U70Q0530	90600-0948	SOLID STATE CONTACTOR, 3RF2430-1AB45	8-117, 8-119
U70Q0550	90600-0948	SOLID STATE CONTACTOR, 3RF2430-1AB45	8-117, 8-119
U70Q0580	90600-0944	SOLID STATE CONTACTOR, 3RF2330-1AA04	8-117, 8-119
U70Q0590	90600-0948	SOLID STATE CONTACTOR, 3RF2430-1AB45	8-117, 8-119
U70Q1060	90600-1211	TERMINAL BLOCK RELAY, 700-HLT1Z24	8-51
U70Q1130	90600-0943	SOLID STATE RELAY, 3RF2320-1AA04	8-117, 8-119
U70Q1140	90600-0944	SOLID STATE CONTACTOR, 3RF2330-1AA04	8-117, 8-119
U70Q1452	2890047-0000	VALVE BODY	1-99
U70Q1454	2890049-0000	VALVE BODY	1-99
U70Q2274	90458-1531	ACTUATOR, N.O., PA 38/100	2-221
U70Q3090	2840040-0100	REGULATING VALVE	1-187, 1-189, 1-191
U70Q6502	2980081-0100	A-CYLINDER	1-19
U70Q6503	90235-0259	VALVE	1-19
U70Q6512	2980081-0100	A-CYLINDER	1-19
U70Q6513	90235-0259	VALVE	1-19
U70Q6522	2994299-0100	B-CYLINDER	1-25
U70Q6532	926937-0200	C-CYLINDER	1-25
U70Q6544	90600-3199	ACTUATOR, NO, 9550 10Z 520G1	1-37, 1-39
U70Q6552	342800-1302	ACTUATOR, SS, N.O. SEAT S. 10	1-19
U70Q6564	342800-1302	ACTUATOR, SS, N.O. SEAT S. 10	1-19
U70Q6572	342800-1202	ACTUATOR, SS, N.C. SEAT S. 10	1-19
U70Q6584	342800-1302	ACTUATOR, SS, N.O. SEAT S. 10	1-19
U70Q6592	90600-3198	ACTUATOR, NC, 9550 10Z 510G1	1-37, 1-39
U70Q6593	90600-3701	BALL VALVE, 1/2NPT	1-41
U70Q7050	90187-0110	DIAPHRAGM VALVE, DN15, NC WELD CONN.	1-185
U70Q7060	90458-2264	PRESSURE REGULATOR ARC-30-1/2"	1-183
U70Q7160	2864019-0000	PIPE	1-215, 1-217
V20Q0320	90459-5440	CONTACTOR 4KW 24VDC, DILM9-01	8-117, 8-119
V20Q1280	3162416-0000	DIAPHRAGM VALVE	2-185, 2-187
V20Q1290	3162415-0000	DIAPHRAGM VALVE	2-185, 2-187
V20Q1300	3162416-0000	DIAPHRAGM VALVE	2-185, 2-187
V20Q1310	3162420-0000	DIAPHRAGM VALVE	2-185, 2-187
V20Q1320	3162414-0000	DIAPHRAGM VALVE	2-185, 2-187

Pos	Part No	Description	Page No
Q			
V20Q1330	90603-1861	DIAPHRAGM VALVE, 650 8D 1345A10T1 DA88	2-185, 2-187
V20Q1340	90603-1861	DIAPHRAGM VALVE, 650 8D 1345A10T1 DA88	2-185, 2-187
V20Q1350	3162419-0000	DIAPHRAGM VALVE	2-185, 2-187
V20Q1360	90600-1946	SEAT VALVE, 3A. 9613320304	1-75, 1-77
V20Q1370	90459-1241	ANGLE SEAT VALVE, TRI-CLAMP, N.C. DN20	1-79
V20Q1381	90600-3701	BALL VALVE, 1/2NPT	1-41, 1-69
V20Q1400	342800-1303	ACTUATOR, SS, N.O. SEAT S. 25	1-71
R			
K80R0130	90230-0044	NON-RETURN VALVE 1"	6-31
K80R0131	90230-0042	NON-RETURN VALVE 1/2"	6-33
K80R0132	90113-0098	PRESSURE REGULATOR	6-33
K80R0133	90230-0042	NON-RETURN VALVE 1/2"	6-33
K80R0134	90230-0042	NON-RETURN VALVE 1/2"	6-31
K80R0135	90235-0151	NON-RETURN VALVE, 534 098 110 0	6-31
K80R1729	90230-0028	NON-RETURN VALVE H 151 R 3/8"	6-17
K80R1762	90328-0025	SILENCER G1/2"	6-41
K80R1763	90459-1853	FILTER REGULATOR, MS6-LFR-1/2-D7-ERV-AS	6-41
K80R1764	90459-2425	PRESSURE REGULATOR IN-LINE, BSP-1/4	6-41
K80R1765	90328-0025	SILENCER G1/2"	6-41
K80R1800	90459-5817	REGULATOR, MS4-LR-1/4-D6-A8-AS	6-37
K80R1803	90328-0024	SILENCER, G3/8"	6-39
K80R1804	90328-0024	SILENCER, G3/8"	6-39
T10R0010	90459-1250	RESISTANCE FIXED, 120 OHM, 0,5 W 1%	7-41, 7-43
T10R1162	90458-1214	RIGHT ENDPL EXT. PILOT AIR,CDVI5.0-EPR-S	7-31
T10R1163	90328-0047	SILENCER, G1/8"	7-31
T10R1164	90328-0024	SILENCER, G3/8"	7-31
T10R1165	90328-0024	SILENCER, G3/8"	7-31
T10R1166	90328-0047	SILENCER, G1/8"	7-31
T10R1170	90459-2653	REGULATOR, MS4-LR-1/4-D6-AS	7-27
T10R1172	90458-1214	RIGHT ENDPL EXT. PILOT AIR,CDVI5.0-EPR-S	7-35
T10R1173	90328-0047	SILENCER, G1/8"	7-35
T10R1174	90328-0024	SILENCER, G3/8"	7-35
T10R1175	90459-2241	REGULATOR, MS4-LRB-1/4-D5-AS	7-27
T10R1176	90328-0047	SILENCER, G1/8"	7-35
T10R1177	90328-0024	SILENCER, G3/8"	7-35
T10R1740	90459-2244	SOFT START VALVE, MS4-DL-1/4	7-27
T10R1742	90328-0026	SILENCER, G1/4"	7-27
T10R6062	90277-0045	FILTER / 9900-05-BK	7-29
T10R7024	90235-0206	QUICK EXHAUST VALVE, SEU-1/8	7-149
T10R7032	90235-0206	QUICK EXHAUST VALVE, SEU-1/8	7-149
T10R7043	90235-0846	THROTTLE CHECK VALVE G1/8", MANUAL, 6	7-171
T10R7045	90235-0846	THROTTLE CHECK VALVE G1/8", MANUAL, 6	7-171
T10R7302	90600-0754	THROTTLE CHECK VALVE, GRLA-1/8-QS-8-D	7-119
T10R7304	90600-0754	THROTTLE CHECK VALVE, GRLA-1/8-QS-8-D	7-119
T10R7402	90235-0846	THROTTLE CHECK VALVE G1/8", MANUAL, 6	7-117
T10R7404	90235-0846	THROTTLE CHECK VALVE G1/8", MANUAL, 6	7-117
T10R7502	90235-0846	THROTTLE CHECK VALVE G1/8", MANUAL, 6	7-133
T10R7504	90235-0846	THROTTLE CHECK VALVE G1/8", MANUAL, 6	7-133
T10R7602	90235-0846	THROTTLE CHECK VALVE G1/8", MANUAL, 6	7-139
T10R7604	90235-0846	THROTTLE CHECK VALVE G1/8", MANUAL, 6	7-139
T10R7702	90459-3019	THROTTLE CHECK VALVE, M5, MANUAL, 6MM	7-97
T10R7704	90459-3019	THROTTLE CHECK VALVE, M5, MANUAL, 6MM	7-97
T10R7904	90277-0045	FILTER / 9900-05-BK	7-33
T10R8002	90459-4554	REGULATOR, MS4-LRB-1/4-D7-A8-AS	7-23, 7-25
T40R0040	90600-1308	HOSE ATTACHMENT, AB20-11/K1 1/4G	2-37, 2-39
T40R0240	90459-1297	RESISTANCE FIXED, 120 OHM, 0,25 W	8-127
T40R1130	90600-1282	NON-RETURN VALVE, NO. S8 A1,0/	2-37, 2-39
T40R2692	90459-5472	FLOW CONTROL VALVE, CFM360612E	2-63
T40R2693	90230-0028	NON-RETURN VALVE H 151 R 3/8"	2-63
T40R2694	90230-0028	NON-RETURN VALVE H 151 R 3/8"	2-63
T40R2700	90601-2686	VARISTOR FILTER, B72210S0250K101	8-41, 8-43
T40R2710	90601-2686	VARISTOR FILTER, B72210S0250K101	8-41, 8-43
T40R2720	90601-2686	VARISTOR FILTER, B72210S0250K101	8-41, 8-43
T40R2730	90601-2686	VARISTOR FILTER, B72210S0250K101	8-41, 8-43
T40R2740	90601-2686	VARISTOR FILTER, B72210S0250K101	8-41, 8-43
T40R2750	90601-2686	VARISTOR FILTER, B72210S0250K101	8-41, 8-43
T40R3100	1110532-0000	INDUCTOR	4-107, 4-109, 4-111
T40R3100	1110534-0000	INDUCTOR	4-107, 4-109, 4-111
T40R3100	1110535-0000	INDUCTOR	4-107, 4-109, 4-111
T40R3100	1110556-0000	INDUCTOR	4-107, 4-109, 4-111
T40R3100	2917498-0000	INDUCTOR	4-107, 4-109, 4-111
T40R3100	2975930-0000	INDUCTOR	4-107, 4-109, 4-111
T40R3100	3089348-0000	INDUCTOR	4-107, 4-109, 4-111
T40R3100	3089354-0000	INDUCTOR	4-107, 4-109, 4-111
T40R3200	1110532-0000	INDUCTOR	4-117, 4-119, 4-121
T40R3200	1110534-0000	INDUCTOR	4-117, 4-119, 4-121
T40R3200	1110535-0000	INDUCTOR	4-117, 4-119, 4-121
T40R3200	1110556-0000	INDUCTOR	4-117, 4-119, 4-121
T40R3200	1566981-0000	INDUCTOR	4-107, 4-109, 4-111, 4-117, 4-119, 4-121
T40R3200	2917498-0000	INDUCTOR	4-117, 4-119, 4-121
T40R3200	2975930-0000	INDUCTOR	4-117, 4-119, 4-121
T40R3200	3044527-0000	INDUCTOR	4-107, 4-109, 4-111, 4-117, 4-119, 4-121

Pos	Part No	Description	Page No
R			
T40R3200	3089348-0000 ..	INDUCTOR	4-117, 4-119, 4-121
T40R3200	3089354-0000 ..	INDUCTOR	4-117, 4-119, 4-121
T40R9550	90600-1292	PRESSURE RED. VALVE, ZDR 6 DP2-4X/150YM	2-37, 2-39
T40R9550	90601-2686	VARISTOR FILTER, B72210S0250K101	8-41, 8-43
T40R9551	90601-2686	VARISTOR FILTER, B72210S0250K101	8-41, 8-43
T40R9552	90600-1308	HOSE ATTACHMENT, AB20-11/K1 1/4G	2-37, 2-39
T40R9553	90600-1294	NON-RETURN VALVE, NO. Z1S 6 T05-4X/V	2-37, 2-39
T40R9570	90601-2686	VARISTOR FILTER, B72210S0250K101	8-41, 8-43
T40R9571	90600-1293	CHECK VALVE, NO. Z1S 6 F05-4X/V	2-37, 2-39
T40R9571	90600-2135	MODULE CONNECTOR 250V, BEST/D 1878560000	8-45
T40R9572	90600-8347	VALVE PLATE, R996009791	2-37, 2-39
T40R9590	90600-1293	CHECK VALVE, NO. Z1S 6 F05-4X/V	2-37, 2-39
T40R9590	90601-2686	VARISTOR FILTER, B72210S0250K101	8-41, 8-43
T40R9591	90600-2135	MODULE CONNECTOR 250V, BEST/D 1878560000	8-45
T40R9592	90600-1291	PRESSURE RELIEF VALVE,ZDBK 6 VP2-1X/210V	2-37, 2-39
T50R0843	90230-0042	NON-RETURN VALVE 1/2"	2-165
T50R0844	90230-0042	NON-RETURN VALVE 1/2"	2-165
T50R6000	90458-1214	RIGHT ENDPL EXT. PILOT AIR,CDVI5.0-EPR-S	2-51
T50R6002	90459-2338	FILTER, MS4-LF-1/4-CRV	2-49
T50R6005	90600-3050	REGULATOR, 574612	2-49
T50R6006	90277-0045	FILTER / 9900-05-BK	2-49
T50R6007	90277-0046	FILTER / 9933-05-101	2-49
T50R6022	90235-0846	THROTTLE CHECK VALVE G1/8", MANUAL, 6	5-11
T50R6024	90235-0846	THROTTLE CHECK VALVE G1/8", MANUAL, 6	5-11
T50R6044	90459-4554	REGULATOR, MS4-LRB-1/4-D7-A8-AS	2-49
T50R6054	90459-4554	REGULATOR, MS4-LRB-1/4-D7-A8-AS	2-49
T50R6062	90459-4554	REGULATOR, MS4-LRB-1/4-D7-A8-AS	2-49
T50R6094	90235-0846	THROTTLE CHECK VALVE G1/8", MANUAL, 6	5-47
T50R6102	90235-0846	THROTTLE CHECK VALVE G1/8", MANUAL, 6	5-47
U10R0101	90328-0024	SILENCER, G3/8"	2-51
U10R0102	90328-0047	SILENCER, G1/8"	2-51
U10R0103	90328-0024	SILENCER, G3/8"	2-51
U10R0104	90328-0047	SILENCER, G1/8"	2-51
U30R1802	90113-0056	REGULATOR, 11-818-998	2-49
U30R6040	90163-0064	QUICK COUPLING, (M) LP-006-2-WR517	2-45
U70R0230	90458-0201	FLUID AUT. FEEDER, ALINOX 1/2 46.04.00	2-209
U70R0370	3020119-0000 ..	HEATING ELEMENT	1-87
U70R0380	90121-0132	RESISTANCE FIXED, 0,51 KOHM, 0,25 W	1-251
U70R0390	90121-0132	RESISTANCE FIXED, 0,51 KOHM, 0,25 W	1-251
U70R0400	90459-1297	RESISTANCE FIXED, 120 OHM, 0,25 W	1-251
U70R0410	90459-1297	RESISTANCE FIXED, 120 OHM, 0,25 W	1-251
U70R1173	90235-0844	THROTTLE CHECK VALVE M5, MANUAL, 6MM	1-123
U70R1174	90235-0844	THROTTLE CHECK VALVE M5, MANUAL, 6MM	1-123
U70R1175	90235-0844	THROTTLE CHECK VALVE M5, MANUAL, 6MM	1-123
U70R1176	90235-0844	THROTTLE CHECK VALVE M5, MANUAL, 6MM	1-123
U70R1290	90121-0127	RESISTANCE FIXED, 1,5 KOHM, 0,25 W	1-243
U70R1300	90038-0049	DIODE	1-243
U70R1740	90459-4554	REGULATOR, MS4-LRB-1/4-D7-A8-AS	1-219, 1-221
U70R1741	90458-1214	RIGHT ENDPL EXT. PILOT AIR,CDVI5.0-EPR-S	1-227
U70R1743	90328-0047	SILENCER, G1/8"	1-227
U70R1744	90328-0024	SILENCER, G3/8"	1-227
U70R1745	90328-0047	SILENCER, G1/8"	1-227
U70R1746	90458-1214	RIGHT ENDPL EXT. PILOT AIR,CDVI5.0-EPR-S	1-229, 1-231
U70R1747	90328-0024	SILENCER, G3/8"	1-229, 1-231
U70R1748	90328-0047	SILENCER, G1/8"	1-229, 1-231
U70R1749	90328-0024	SILENCER, G3/8"	1-229, 1-231
U70R1751	90328-0047	SILENCER, G1/8"	1-229, 1-231
U70R1763	90235-0844	THROTTLE CHECK VALVE M5, MANUAL, 6MM	1-113
U70R1765	90235-0844	THROTTLE CHECK VALVE M5, MANUAL, 6MM	1-113
U70R1766	90235-0844	THROTTLE CHECK VALVE M5, MANUAL, 6MM	1-113
U70R1767	90235-0844	THROTTLE CHECK VALVE M5, MANUAL, 6MM	1-113
U70R2740	90600-1717	REGULATOR, MS4-LRB-1/4-D5-A8-AS	1-219, 1-221
U70R3792	90235-0845	THROTTLE CHECK VALVE M5, MANUAL, 4MM	1-153
U70R4002	90235-0846	THROTTLE CHECK VALVE G1/8", MANUAL, 6	1-103
U70R4004	90235-0846	THROTTLE CHECK VALVE G1/8", MANUAL, 6	1-103
U70R4012	90235-0846	THROTTLE CHECK VALVE G1/8", MANUAL, 6	1-143
U70R4014	90235-0846	THROTTLE CHECK VALVE G1/8", MANUAL, 6	1-143
U70R4022	90235-0846	THROTTLE CHECK VALVE G1/8", MANUAL, 6	1-145
U70R4024	90235-0846	THROTTLE CHECK VALVE G1/8", MANUAL, 6	1-145
U70R4052	90235-0845	THROTTLE CHECK VALVE M5, MANUAL, 4MM	1-153
U70R4054	90235-0845	THROTTLE CHECK VALVE M5, MANUAL, 4MM	1-153
U70R4062	90235-0845	THROTTLE CHECK VALVE M5, MANUAL, 4MM	1-153
U70R4064	90235-0845	THROTTLE CHECK VALVE M5, MANUAL, 4MM	1-153
U70R4072	90235-0845	THROTTLE CHECK VALVE M5, MANUAL, 4MM	1-127
U70R4074	90235-0845	THROTTLE CHECK VALVE M5, MANUAL, 4MM	1-127
U70R4090	90459-4554	REGULATOR, MS4-LRB-1/4-D7-A8-AS	1-219, 1-221
U70R4212	90230-0064	CHECK VALVE, 6 MM HIGH TEMP.	1-87
U70R4242	90230-0064	CHECK VALVE, 6 MM HIGH TEMP.	1-87
U70R6024	90328-0047	SILENCER, G1/8"	1-45
U70R6025	90458-1214	RIGHT ENDPL EXT. PILOT AIR,CDVI5.0-EPR-S	1-45
U70R6026	90328-0047	SILENCER, G1/8"	1-45
U70R6027	90328-0024	SILENCER, G3/8"	1-45

Pos	Part No	Description	Page No
R			
U70R6028	90328-0024	SILENCER, G3/8"	1-45
U70R6029	90459-2425	PRESSURE REGULATOR IN-LINE, BSP-1/4	1-43
U70R6503	90328-0003	SILENCER, 338/110	1-19
U70R6512	90328-0003	SILENCER, 338/110	1-19
U70R6513	90328-0003	SILENCER, 338/110	1-19
U70R6532	90235-0048	VALVE	1-43
U70R6534	90235-0048	VALVE	1-43
U70R6592	90601-8470	PRESSURE REGULATOR, GD-30S G 1/2	1-37, 1-39
U70R6603	90458-2264	PRESSURE REGULATOR ARC-30-1/2"	1-37, 1-39
U70R7044	90235-0748	THROTTLE CHECK VALVE, GRA-1/4-B	1-219, 1-221
U70R7150	90459-4554	REGULATOR, MS4-LRB-1/4-D7-A8-AS	1-219, 1-221
U70R9700	90459-4554	REGULATOR, MS4-LRB-1/4-D7-A8-AS	1-219, 1-221
V20R1230	90603-4854	PRESSURE REGULATOR IN-LINE, 638.04	6-5, 6-7
V20R1280	90603-4854	PRESSURE REGULATOR IN-LINE, 638.04	6-5, 6-7
V20R1290	90603-4854	PRESSURE REGULATOR IN-LINE, 638.04	6-5, 6-7
V20R1300	90603-4854	PRESSURE REGULATOR IN-LINE, 638.04	6-5, 6-7
V20R1310	90603-4854	PRESSURE REGULATOR IN-LINE, 638.04	6-5, 6-7
V20R1350	90603-4854	PRESSURE REGULATOR IN-LINE, 638.04	6-5, 6-7
V20R1380	90601-8470	PRESSURE REGULATOR, GD-30S G 1/2	1-81
V20R6012	90328-0024	SILENCER, G3/8"	6-9
V20R6013	90328-0047	SILENCER, G1/8"	6-9
V20R6014	90328-0047	SILENCER, G1/8"	6-9
V20R6015	90328-0024	SILENCER, G3/8"	6-9
V20R6016	90458-1214	RIGHT ENDPL EXT. PILOT AIR,CDVI5.0-EPR-S	6-9
S			
SPARE	90458-1215	COVER PLATE, EMPTY VALVE POSITION	7-31
SS10	449969-0100	TOOL DISMOUNTING	11-49
SS10	2945430-0200	PRESSURE FLANGE	9-19
SS010	3037706-0000	PNEUMATIC DIAGRAM	9-41
SS20	565536-0100	PRESSURE TEST EQUIPMENT	11-49
SS020	3044309-0000	PNEUMATIC DIAGRAM	9-41
SS30	74305-0100	PULLER	11-49
SS030	3023426-0000	DIAGRAM	9-41
SS040	3037860-0000	DIAGRAM	9-41
SS40	3047649-0200	PRODUCT LINE LEAKAGE DETECTOR	11-49
SU05	1296877-0100	SEAL KIT	9-19
SU10	90457-0866	HEATING ELEMENT 2000W/230V	9-19
SU10	2871510-0200	LS TEMPLATE	11-5
SU10	2909367-0000	PRESSURE ROLLER (PACK 10)	9-23, 9-25, 9-27
SU10	2909368-0000	PRESSURE ROLLER (PACK 10)	9-23, 9-25, 9-27
SU10	2932253-0000	PRESSURE ROLLER (PACK 10)	9-23, 9-25, 9-27
SU010	3044281-0000	PNEUMATIC DIAGRAM	9-41
SU20	74767-0102	DYNAMOMETER	11-5
SU20	255977-0000	SHAFT	9-23, 9-25, 9-27
SU20	295376-0000	SHAFT	9-23, 9-25, 9-27
SU20	491418-0001	O-RING 284X3 FPM	9-19
SU30	90243-0203	MEASURING INSTRUMENT- ZONOSCOPE	11-5
SU30	925998-0000	DIAPHRAGM	9-19
SU40	736514-0000	SHOCK ABSORBER	9-19
SU50	3024322-0000	GASKET	9-19
SU60	2986717-0000	TEMPLATE	11-5
SU60	3092164-0000	GASKET	9-19
SU70	90459-4179	GASKET 30,5X42X4 MM FDA	9-19
SU70	3107113-0100	TEMPLATE	11-5
SU80	342850-0305	GASKET 47,8X62,6X5,2 MM 2" FDA 3-A	9-19
SU90	342850-0304	GASKET 35,4X49,1X5,2 1"1/2 FDA, 3-A	9-19
SU100	315229-0204	GASKET 34,8X42,8X3,7 MM 1"1/2	9-19
SU110	315229-0205	GASKET 47,5X55,5X3,7 MM 2 INCH	9-19
SU120	315229-0206	GASKET 60,2X68,2X3,7 MM 2"1/2	9-19
SU130	342850-0404	GASKET 35,4X49,1X5,2 MM 1"1/2 FDA 3-A	9-19
SU140	315229-0101	SQUARE RING, 10,4X17,4X3,7 MM 1/2" FDA	9-19
SU150	315229-0103	SQUARE RING, 23,1X30,1X3,7 MM 1" FDA	9-19
SU160	315229-0104	SQUARE RING, 35,8X42,8X3,7 MM 1"1/2 FD	9-19
SU170	315229-0105	SQUARE RING, 48,5X55,5X3,7 MM 2" FDA	9-19
SU180	90600-0473	INDUCTIVE SWITCH E2A-S08KS01-WP-B1-TP 5M	9-19
SU190	90600-2508	O-RING 17,3X2,4 MM FDA, 3-A	9-19
A01S5830	90111-0122	KEY SWITCH, 2 NO CONTACTS	8-157
K70S1712	90187-0029	BALL VALVE, G1/2, NPBR	6-11
K70S1713	90187-0029	BALL VALVE, G1/2, NPBR	6-11
K70S1714	90187-0029	BALL VALVE, G1/2, NPBR	6-11
K70S1715	90187-0029	BALL VALVE, G1/2, NPBR	6-11
K80S0022	90187-0089	BALL VALVE, G3/8, NPBR	6-43
K80S0024	90187-0089	BALL VALVE, G3/8, NPBR	6-43
K80S1710	90187-0089	BALL VALVE, G3/8, NPBR	6-11
K80S1729	90187-0045	BALL VALVE, G1/4 CR PL	6-17
K80S1750	90187-0147	BALL VALVE, G1 1/2	6-29
K80S1762	90459-1852	SHUT OFF VALVE, MS6-EM1-1/2	6-41
K80S6004	90458-1740	AIR GUN ASSEMBLY, CEJN 199589668	2-13
T10S1090	90064-0082	PUSH BUTTON, WHITE	7-155
T10S1100	90064-0082	PUSH BUTTON, WHITE	7-155
T10S1110	90064-0082	PUSH BUTTON, WHITE	7-155
T10S1120	90064-0082	PUSH BUTTON, WHITE	7-155

Pos	Part No	Description	Page No
S			
T10S1130	90064-0098	PUSH BUTTON, WHITE	7-155
T10S1140	90064-0082	PUSH BUTTON, WHITE	7-163
T10S7042	90459-3832	VENTING BOX, P9852	7-5, 7-7
T40S0020	90187-0045	BALL VALVE, G1/4 CR PL	6-21
T40S0050	90600-0775	BALL VALVE G1/4, 406F-1/4"	2-65, 2-67
T40S0051	90600-0775	BALL VALVE G1/4, 406F-1/4"	2-65, 2-67
T40S2841	90064-0098	PUSH BUTTON, WHITE	2-135
T40S3100	90600-0775	BALL VALVE G1/4, 406F-1/4"	2-65, 2-67
T40S3101	90600-0775	BALL VALVE G1/4, 406F-1/4"	2-65, 2-67
T40S3200	90600-0775	BALL VALVE G1/4, 406F-1/4"	2-65, 2-67
T40S3201	90600-0775	BALL VALVE G1/4, 406F-1/4"	2-65, 2-67
T50S7016	90426-0003	HAND SHOWER, 361100	2-15
T			
A01T1000	90459-2459	BASEPLATE, 13 SLOT CONTROLLOGIX CHASSIS	8-125
A01T2000	90459-7267	POWER SUPPLY 24VDC, 1756-PB75/B	8-125
A01T5400	90459-2938	POWER SUPPLY UNIT 6EP1 437-3BA00	8-107
A01T5410	90459-4133	POWER SUPPLY UNIT 6EP1 436-3BA00	8-107
A01T5420	90459-2939	BUFFER UNIT, 6EP1961-3BA01	8-107
A01T5430	90459-2939	BUFFER UNIT, 6EP1961-3BA01	8-107
A01T5440	90459-2939	BUFFER UNIT, 6EP1961-3BA01	8-107
A01T5450	90459-5886	POWER SUPPLY UNIT 115-230 VAC/24VDC100W	8-47, 8-49
A01T5500	90459-5195	SLIM POWER RAIL,KINETIX,8 AXIS,2094-PRS8	8-121, 8-123
A01T5520	90459-5191	SLIM POW. RAIL, KINETIX, 4 AX, 2094-PRS4	8-23
A01T5900	90459-3760	TRANSFORMER, 1-PH 700VA SEC 6,36A	8-5, 8-7, 8-9, 8-11
A01T6000	90459-5886	POWER SUPPLY UNIT 115-230 VAC/24VDC100W	8-47, 8-49
T10T0020	90459-3442	FREQ. CONV., 22B-A5P0N104	8-129, 8-131
T10T0040	90459-3442	FREQ. CONV., 22B-A5P0N104	8-129, 8-131
T40T0700	90600-5212	AXIS MOD. W. PS,2094-BC02-M02-S SERIES B	8-121, 8-123
T40T0710	90600-5216	AXIS MOD. KINETIX 6000,2094-BM02-S SER.B	8-121, 8-123
T40T0720	90600-5216	AXIS MOD. KINETIX 6000,2094-BM02-S SER.B	8-121, 8-123
T40T0730	90600-5216	AXIS MOD. KINETIX 6000,2094-BM02-S SER.B	8-121, 8-123
T40T0740	90600-5214	AXIS MOD. KINETIX 6000,2094-BM01-S SER.B	8-121, 8-123
T40T0750	90600-5214	AXIS MOD. KINETIX 6000,2094-BM01-S SER.B	8-121, 8-123
T40T3200	67379-0107	TRANSFORMER	4-115, 4-125
T40T3200	67379-0115	TRANSFORMER	4-115, 4-125
T40T3200	67379-0204	TRANSFORMER	4-115, 4-125
T40T3200	67379-0206	TRANSFORMER	4-115, 4-125
T40T3200	67379-0248	TRANSFORMER	4-115, 4-125
T40T3200	67379-0254	TRANSFORMER	4-115, 4-125
T40T3200	67379-0262	TRANSFORMER	4-115, 4-125
T40T3200	67379-0264	TRANSFORMER	4-115, 4-125
T40T3200	67379-0269	TRANSFORMER	4-115, 4-125
T40T3200	2837503-0105	TRANSFORMER	4-115, 4-125
T50T0070	90459-3442	FREQ. CONV., 22B-A5P0N104	8-129, 8-131
T50T0800	90600-5212	AXIS MOD. W. PS,2094-BC02-M02-S SERIES B	8-23
T50T0810	90600-5216	AXIS MOD. KINETIX 6000,2094-BM02-S SER.B	8-23
T50T0820	90600-5216	AXIS MOD. KINETIX 6000,2094-BM02-S SER.B	8-23
U70T0160	90459-3442	FREQ. CONV., 22B-A5P0N104	8-129, 8-131
U70T0190	90459-3446	FREQ. CONV., 22B-D012N104	8-129, 8-131
U70T1170	90458-1092	PROPORTIONAL VALVE, 0-10V/0-6 BAR	1-219, 1-221
U70T3100	90458-1092	PROPORTIONAL VALVE, 0-10V/0-6 BAR	1-219, 1-221
U70T4330	90459-1420	PROPORTIONAL VALVE 0 - 10V/0-6 BAR	1-89
U70T6200	90600-5214	AXIS MOD. KINETIX 6000,2094-BM01-S SER.B	8-121, 8-123
U70T6600	90600-4354	PROP. PRESS. REG., VPPE-3-1/8-6-010	1-43
V20T0320	90459-2607	FREQ. CONV., 22B-D6P0N104	8-129, 8-131
U			
K80U1801	90458-1204	BASIC SUB-BASE 4 VALVES, CDVI5.0-GB4-MP	6-39
T10U1162	90458-1204	BASIC SUB-BASE 4 VALVES, CDVI5.0-GB4-MP	7-31
T10U1172	90458-1205	BASIC SUB-BASE 8 VALVES, CDVI5.0-GB8-MP	7-35
T10U1173	90458-1206	EXP. SUB-BASE 2 VALVES, CDVI5.0-EB	7-35
T10U1174	90458-1206	EXP. SUB-BASE 2 VALVES, CDVI5.0-EB	7-35
T50U6000	2863377-0100	VALVE GROUP	2-49
T50U6001	90458-1205	BASIC SUB-BASE 8 VALVES, CDVI5.0-GB8-MP	2-51
T50U6002	90458-1206	EXP. SUB-BASE 2 VALVES, CDVI5.0-EB	2-51
U70U1741	2863097-0100	VALVE RAMP	1-219, 1-221
U70U1742	2863098-0100	VALVE RAMP	1-219, 1-221
U70U1743	90458-1205	BASIC SUB-BASE 8 VALVES, CDVI5.0-GB8-MP	1-227
U70U1744	90458-1206	EXP. SUB-BASE 2 VALVES, CDVI5.0-EB	1-227
U70U1745	90458-1205	BASIC SUB-BASE 8 VALVES, CDVI5.0-GB8-MP	1-229, 1-231
U70U1746	90458-1206	EXP. SUB-BASE 2 VALVES, CDVI5.0-EB	1-229, 1-231
U70U6025	90458-1205	BASIC SUB-BASE 8 VALVES, CDVI5.0-GB8-MP	1-45
V20U6012	90458-1205	BASIC SUB-BASE 8 VALVES, CDVI5.0-GB8-MP	6-9
V			
A01V0010	90600-5264	LINE FILTER, B84144A150R120	8-149, 8-151
A01V0020	90600-7487	SURGE PROTECTION DEV., VAL-MS 230/3+1 FM	8-153
A01V0120	90600-5266	FEED THROUGH FILTER, B85321A2502W160	8-149, 8-151
A01V0121	90600-5266	FEED THROUGH FILTER, B85321A2502W160	8-149, 8-151
A01V2080	90600-5249	FERRITE, B64290L616X38	8-125
A01V2100	90600-5249	FERRITE, B64290L616X38	8-47, 8-49
A01V5320	90600-5250	LINE FILTER, B84111FB30	8-157
A01V5500	90600-5258	LINE FILTER, B84143A35R106	8-21
A01V5510	90600-5253	LINE FILTER, B84113HB60	8-21

Pos	Part No	Description	Page No
V			
A01V5520	90600-5258	LINE FILTER, B84143A35R106	8-21
A01V5530	90600-5253	LINE FILTER, B84113HB60	8-21
K80V1712	90458-0921	FILTER, SP 122-200	6-11
K80V1713	90458-0921	FILTER, SP 122-200	6-11
K80V1714	90415-0065	FILTER	6-17
K80V1716	2792119-0100	FILTER	6-17
K80V1750	90415-0032	FILTER / 3-02-00-1 1/2"	6-29
T10V0020	90459-3454	FOOTPRINT FILTER 1 PHASE 18A	8-129, 8-131
T10V0040	90459-3454	FOOTPRINT FILTER 1 PHASE 18A	8-129, 8-131
T40V0040	90600-1287	BREATHER FILTER, ELFP 3 F03W1.X/	2-37, 2-39
T40V0700	90600-5249	FERRITE, B64290L616X38	8-121, 8-123
T40V0701	90600-5249	FERRITE, B64290L616X38	8-121, 8-123
T40V0710	90600-5249	FERRITE, B64290L616X38	8-121, 8-123
T40V0720	90600-5249	FERRITE, B64290L616X38	8-121, 8-123
T40V0730	90600-5249	FERRITE, B64290L616X38	8-121, 8-123
T40V0740	90600-5249	FERRITE, B64290L616X38	8-121, 8-123
T40V0750	90600-5249	FERRITE, B64290L616X38	8-121, 8-123
T40V1130	90600-1286	FILTER, R996087121	2-37, 2-39
T50V0070	90459-3454	FOOTPRINT FILTER 1 PHASE 18A	8-129, 8-131
T50V0600	90600-5249	FERRITE, B64290L616X38	2-173, 2-175
T50V0610	90600-5249	FERRITE, B64290L616X38	2-173, 2-175
T50V0800	90600-5249	FERRITE, B64290L616X38	8-23
T50V0810	90600-5249	FERRITE, B64290L616X38	8-23
T50V0811	90600-5249	FERRITE, B64290L616X38	2-173, 2-175
T50V0820	90600-5249	FERRITE, B64290L616X38	8-23
T50V0821	90600-5249	FERRITE, B64290L616X38	2-173, 2-175
U30V6040	90415-0033	OIL FILTER REFILLING UC-HP-1229-25	2-45
U70V0160	90459-3454	FOOTPRINT FILTER 1 PHASE 18A	8-129, 8-131
U70V0190	90459-3459	FOOTPRINT FILTER 3 PHASE 18A	8-129, 8-131
U70V4220	554141-0000	FILTER	1-97
U70V4232	90277-0104	FILTER F64B-2GN-ARO	1-89
U70V4233	90277-0323	FILTER HOUSING / ART.NO 95S6-1/4 S 5430	1-89
U70V6532	90360-0020	STEAM TRAP / MK36/51 3/8 INCH	1-37, 1-39
U70V6584	90360-0020	STEAM TRAP / MK36/51 3/8 INCH	1-37, 1-39
U70V6592	90360-0020	STEAM TRAP / MK36/51 3/8 INCH	1-37, 1-39
U70V6593	90600-3159	FILTER HOUSING, MDS4463G58383	1-41
U70V6594	90360-0020	STEAM TRAP / MK36/51 3/8 INCH	1-37, 1-39
U70V6602	90458-2554	STERILE GRADE MEMBRANE FILTER 0,2µM	1-47, 1-49, 1-51
U70V7050	90360-0020	STEAM TRAP / MK36/51 3/8 INCH	1-185
U70V7051	90360-0020	STEAM TRAP / MK36/51 3/8 INCH	1-185
V20V0320	90459-3458	FOOTPRINT FILTER 3 PHASE 12A	8-129, 8-131
V20V1381	90600-3159	FILTER HOUSING, MDS4463G58383	1-41, 1-69
V20V1382	90360-0020	STEAM TRAP / MK36/51 3/8 INCH	1-37, 1-39, 1-69
W			
A01W0020	90459-2536	SERCOS CABLE 0.1M, 2090-SCEP0-1	8-121, 8-123
A01W0030	90459-2536	SERCOS CABLE 0.1M, 2090-SCEP0-1	8-121, 8-123
A01W0040	90459-2536	SERCOS CABLE 0.1M, 2090-SCEP0-1	8-121, 8-123
A01W0050	90459-2536	SERCOS CABLE 0.1M, 2090-SCEP0-1	8-121, 8-123
A01W0060	90459-2536	SERCOS CABLE 0.1M, 2090-SCEP0-1	8-121, 8-123
A01W0070	90459-2539	SERCOS CABLE 1.0M, 2090-SCEP1-0	8-121, 8-123
A01W0090	90459-2537	SERCOS CABLE 0.3M	8-121, 8-123
A01W0110	90459-2540	SERCOS CABLE 3.0M, 2090-SCEP3-0	8-23
A01W0120	90459-2536	SERCOS CABLE 0.1M, 2090-SCEP0-1	8-23
A01W0130	90459-2536	SERCOS CABLE 0.1M, 2090-SCEP0-1	8-23
A01W0500	90459-2530	DEVICENET CABLE THIN	2-173, 2-175
A01W1000	90459-2540	SERCOS CABLE 3.0M, 2090-SCEP3-0	8-125
A01W1020	90459-0554	CABLE, ETHERNET RJ 45 CROSS. SCREEN.2M	8-125
A01W2040	90459-2530	DEVICENET CABLE THIN	8-125
A01W4000	90459-2530	DEVICENET CABLE THIN	8-107
A01W4500	90459-0554	CABLE, ETHERNET RJ 45 CROSS. SCREEN.2M	8-125
A01W5300	90220-0183	SCR. CABLE 2X0,34MM2	8-157
A01W5320	90220-0183	SCR. CABLE 2X0,34MM2	8-157
A01W5940	90220-0034	THERMOC.CABLE, TEX/SITW-20F-KX 2X0,5MM2	8-107
A01W6000	90459-2530	DEVICENET CABLE THIN	8-47, 8-49
A01W6030	90600-1848	ETHERNET SW, FL SWITCH SFN 8TX	8-47, 8-49
A01W6040	90600-1847	ETHERNET SWITCH, FL SWITCH SFN 5TX	8-47, 8-49
K80W0010	351150-0413	CABLE OLFLEX 4GX1,5 MM2 LIGHT/GREY	2-173, 2-175
K80W0013	344240-0805	TUBE 8 MM PE FDA, 1015Y08F01	6-17
K80W0014	344240-0805	TUBE 8 MM PE FDA, 1015Y08F01	6-17
K80W0020	351150-0413	CABLE OLFLEX 4GX1,5 MM2 LIGHT/GREY	2-173, 2-175
K80W0025	90166-0196	TUBE 14MM PA BLUE	2-69
K80W0030	351150-0166	CABLE OLFLEX 4X4 MM2 LIGHT/GREY	2-173, 2-175
K80W0042	2840898-0000	PIPE	6-31
K80W0043	2840896-0000	PIPE	6-31
K80W0044	1036828-0000	TANK	6-31
K80W0100	351150-0406	CABLE OLFLEX 7X0,75 MM2 LIGHT/GREY	6-53
K80W0110	351150-0418	CABLE OLFLEX 4X2,5 MM2 LIGHT/GREY	6-53
K80W0112	2922322-0003	RETURN PIPE	6-21
K80W0120	351150-0418	CABLE OLFLEX 4X2,5 MM2 LIGHT/GREY	6-53
K80W0130	351150-0166	CABLE OLFLEX 4X4 MM2 LIGHT/GREY	6-53
K80W1000	90459-2530	DEVICENET CABLE THIN	6-53
K80W1010	351150-0403	CABLE OLFLEX 3X0,75 MM2 LIGHT/GREY	6-53

Pos	Part No	Description	Page No
W			
K80W1020	351150-0403	CABLE OLFLEX 3X0,75 MM2 LIGHT/GREY	6-53
K80W1030	351150-0422	CABLE OLFLEX 3X4 MM2 LIGHT/GREY	6-53
K80W1040	351150-0404	CABLE OLFLEX 4X0,75 MM2 LIGHT/GREY	6-53
K80W1080	351150-0406	CABLE OLFLEX 7X0,75 MM2 LIGHT/GREY	2-173, 2-175
K80W1140	90220-0034	THERMOC.CABLE, TEX/SITW-20F-KX 2X0,5MM2	6-53
K80W1343	315300-0004	TUBE, 8 MM PE BLUE	2-13
K80W1712	3037897-0000	PIPE	6-11
K80W1713	3037857-0000	PIPE	6-11
K80W1714	90166-0045	HOSE PVC TRANSP. 6/12	6-15
K80W1719	1041984-0000	ATTACHMENT PIPE	6-17
K80W1722	90166-0121	HOSE	6-17
K80W1724	344240-0805	TUBE 8 MM PE FDA, 1015Y08F01	6-23
K80W1725	344240-0805	TUBE 8 MM PE FDA, 1015Y08F01	6-23
K80W1726	344240-0805	TUBE 8 MM PE FDA, 1015Y08F01	6-17
K80W1727	90166-0121	HOSE	6-15
K80W1728	90166-0121	HOSE	6-15
K80W1729	344240-0805	TUBE 8 MM PE FDA, 1015Y08F01	6-15
K80W1730	351120-0142	CABLE Ã–LFLEX HEAT 180 SIHF 3X0,75	6-53
K80W1750	351150-0403	CABLE OLFLEX 3X0,75 MM2 LIGHT/GREY	6-53
K80W1753	2837517-0000	PIPE	6-29
K80W1754	90166-0236	HOSE, 38/51 REINFORCED RUBBER	6-29
K80W1755	1041925-0000	PIPE	6-29
K80W1760	351150-0403	CABLE OLFLEX 3X0,75 MM2 LIGHT/GREY	6-53
K80W1762	90166-0196	TUBE 14MM PA BLUE	6-43
K80W1763	90459-1856	DISTRIBUTOR, MS6-FRM-1/2	6-41
K80W1764	315300-0007	TUBE, 10 MM PE BLUE	6-41
K80W1766	315300-0004	TUBE, 8 MM PE BLUE	6-41
K80W1768	90459-1856	DISTRIBUTOR, MS6-FRM-1/2	6-41
K80W1800	315300-0010	TUBE, 12 MM PE BLUE	6-41
K80W1801	315300-0010	TUBE, 12 MM PE BLUE	6-41
K80W1803	315300-0016	TUBE 4MPE BLUE	6-41
K80W1804	315300-0004	TUBE, 8 MM PE BLUE	6-37
K80W1805	315300-0016	TUBE 4MPE BLUE	6-37
K80W1806	315300-0004	TUBE, 8 MM PE BLUE	6-37
K80W2552	90166-0121	HOSE	6-15
P60W0730	90600-3697	SDL FLEX CABLE 10M, 5CASDL.0100-03	2-173, 2-175
P60W1000	351150-0407	CABLE OLFLEX 12X0,75 MM2 LIGHT/GREY	2-173, 2-175
P60W1020	90459-2530	DEVICENET CABLE THIN	2-173, 2-175
P60W4540	90459-0554	CABLE, ETHERNET RJ 45 CROSS. SCREEN.2M	8-157
T10W0020	90220-0104	SCR. CABLE 4X1,5MM2	8-129, 8-131
T10W0040	90220-0104	SCR. CABLE 4X1,5MM2	8-129, 8-131
T10W0050	351150-0425	CABLE OLFLEX 25X0,75 MM2 LIGHT/GREY	7-49, 7-51
T10W0060	351150-0413	CABLE OLFLEX 4GX1,5 MM2 LIGHT/GREY	7-49, 7-51
T10W0070	351120-0145	CABLE ÖLFLEX HEAT 180 SIHF 3X2,5	7-107
T10W0080	351120-0125	CABLE ÖLFLEX HEAT 180 SIHF 2X2,5	7-109
T10W0100	351150-0412	CABLE OLFLEX 3X1,5 MM2 LIGHT/GREY	7-49, 7-51
T10W0110	351150-0412	CABLE OLFLEX 3X1,5 MM2 LIGHT/GREY	7-49, 7-51
T10W0120	351150-0412	CABLE OLFLEX 3X1,5 MM2 LIGHT/GREY	7-49, 7-51
T10W0130	351162-0104	WIRE AWM 1X1,5 MM2 YELLOW-GREEN	7-125
T10W0200	90220-0165	SCR. CABLE 5X0,34MM2	8-51
T10W0201	90220-0165	SCR. CABLE 5X0,34MM2	8-51
T10W0500	351120-0145	CABLE ÖLFLEX HEAT 180 SIHF 3X2,5	7-49, 7-51
T10W0580	351150-0186	CABLE OLFLEX 5X4 MM2 LIGHT/GREY	7-49, 7-51
T10W1000	90459-2530	DEVICENET CABLE THIN	7-49, 7-51
T10W1020	351422-0203	CABLE ÖLFLEX 150CY QUATTRO 4X1,5	7-49, 7-51
T10W1040	351422-0203	CABLE ÖLFLEX 150CY QUATTRO 4X1,5	7-49, 7-51
T10W1080	351150-0405	CABLE OLFLEX 5X0,75 MM2 LIGHT/GREY	7-5, 7-7
T10W1120	351150-0407	CABLE OLFLEX 12X0,75 MM2 LIGHT/GREY	7-163
T10W1130	351150-0424	CABLE OLFLEX 18X0,75 MM2 LIGHT/GREY	7-155
T10W1172	315400-0001	TUBE PUN-H-6X1-BL	7-23, 7-25
T10W1173	315400-0001	TUBE PUN-H-6X1-BL	7-23, 7-25
T10W1174	315400-0010	TUBE PUN-H-12X2-BL	7-23, 7-25
T10W1175	315400-0004	TUBE PUN-H-8X1,25-BL	7-23, 7-25
T10W1176	315300-0001	TUBE, 6 MM PE BLUE	2-69
T10W1177	315300-0010	TUBE, 12 MM PE BLUE	2-69
T10W1178	315400-0001	TUBE PUN-H-6X1-BL	7-5, 7-7
T10W1179	315400-0010	TUBE PUN-H-12X2-BL	7-5, 7-7
T10W1180	344254-0050	SENSOR CABLE, EVT004	7-5, 7-7
T10W1190	344254-0050	SENSOR CABLE, EVT004	7-5, 7-7
T10W1240	351305-0050	ACTUATOR/SENSOR CABLE PRKMV 4-07/5M	7-65
T10W1250	351305-0050	ACTUATOR/SENSOR CABLE PRKMV 4-07/5M	7-37
T10W1260	344254-0050	SENSOR CABLE, EVT004	7-53, 7-55
T10W1270	344254-0050	SENSOR CABLE, EVT004	7-5, 7-7
T10W1310	351150-0403	CABLE OLFLEX 3X0,75 MM2 LIGHT/GREY	7-27
T10W1450	351150-0406	CABLE OLFLEX 7X0,75 MM2 LIGHT/GREY	7-49, 7-51
T10W1510	90220-0034	THERMOC.CABLE, TEX/SITW-20F-KX 2X0,5MM2	7-143
T10W1540	90220-0034	THERMOC.CABLE, TEX/SITW-20F-KX 2X0,5MM2	7-117
T10W1570	351150-0417	CABLE OLFLEX 3X2,5 MM2 LIGHT/GREY	7-143
T10W1580	351120-0146	CABLE ÖLFLEX HEAT 180 SIHF 3X4	7-123
T10W1702	315400-0001	TUBE PUN-H-6X1-BL	7-109
T10W1704	315400-0001	TUBE PUN-H-6X1-BL	7-109
T10W1740	351150-0403	CABLE OLFLEX 3X0,75 MM2 LIGHT/GREY	7-27

Pos	Part No	Description	Page No
W			
T10W1742	315400-0010	TUBE PUN-H-12X2-BL	7-23, 7-25
T10W1743	315400-0010	TUBE PUN-H-12X2-BL	7-23, 7-25
T10W1744	315400-0010	TUBE PUN-H-12X2-BL	7-23, 7-25
T10W1800	90600-1395	CABLE, 15M, 2030692	7-49, 7-51
T10W1930	90458-0603	CONNECTOR, CABLE RECEPTACLES	7-49, 7-51
T10W1940	90458-0603	CONNECTOR, CABLE RECEPTACLES	7-49, 7-51
T10W2600	90459-4252	CABLE M12-C101, 20-056-10	7-49, 7-51
T10W2610	90459-7095	FOCUS JUMPER CABLE M12 5P 1M, 20-056-20	7-49, 7-51
T10W2620	90459-7095	FOCUS JUMPER CABLE M12 5P 1M, 20-056-20	7-49, 7-51
T10W2630	90459-4252	CABLE M12-C101, 20-056-10	7-49, 7-51
T10W3020	90459-2530	DEVICENET CABLE THIN	8-129, 8-131
T10W3040	90459-2530	DEVICENET CABLE THIN	8-129, 8-131
T10W6012	315400-0001	TUBE PUN-H-6X1-BL	7-137
T10W6013	315400-0001	TUBE PUN-H-6X1-BL	7-137
T10W6014	315400-0001	TUBE PUN-H-6X1-BL	7-137
T10W6015	315400-0001	TUBE PUN-H-6X1-BL	7-137
T10W6016	315400-0001	TUBE PUN-H-6X1-BL	7-137
T10W6017	315400-0001	TUBE PUN-H-6X1-BL	7-137
T10W6042	315400-0001	TUBE PUN-H-6X1-BL	7-131
T10W6043	315400-0001	TUBE PUN-H-6X1-BL	7-131
T10W6044	315400-0001	TUBE PUN-H-6X1-BL	7-131
T10W6045	315400-0001	TUBE PUN-H-6X1-BL	7-131
T10W6046	315400-0001	TUBE PUN-H-6X1-BL	7-131
T10W6047	315400-0001	TUBE PUN-H-6X1-BL	7-131
T10W6062	315400-0001	TUBE PUN-H-6X1-BL	7-23, 7-25
T10W6063	315400-0016	TUBE PUN-H-4X0,75-BL	7-109
T10W7012	315400-0001	TUBE PUN-H-6X1-BL	7-147
T10W7014	315400-0001	TUBE PUN-H-6X1-BL	7-147
T10W7023	315400-0004	TUBE PUN-H-8X1,25-BL	7-149
T10W7024	315400-0004	TUBE PUN-H-8X1,25-BL	7-149
T10W7025	315400-0004	TUBE PUN-H-8X1,25-BL	7-149
T10W7026	315400-0004	TUBE PUN-H-8X1,25-BL	7-149
T10W7032	315400-0004	TUBE PUN-H-8X1,25-BL	7-149
T10W7033	315400-0004	TUBE PUN-H-8X1,25-BL	7-149
T10W7034	315400-0004	TUBE PUN-H-8X1,25-BL	7-149
T10W7042	315400-0004	TUBE PUN-H-8X1,25-BL	7-5, 7-7
T10W7043	315400-0001	TUBE PUN-H-6X1-BL	7-171
T10W7044	315400-0004	TUBE PUN-H-8X1,25-BL	7-5, 7-7
T10W7045	315400-0001	TUBE PUN-H-6X1-BL	7-171
T10W7062	315400-0001	TUBE PUN-H-6X1-BL	7-149
T10W7064	315400-0001	TUBE PUN-H-6X1-BL	7-149
T10W7302	90166-0081	TUBE 6 MM PA BLUE	7-111
T10W7303	315400-0001	TUBE PUN-H-6X1-BL	7-119
T10W7304	315400-0001	TUBE PUN-H-6X1-BL	7-119
T10W7402	90166-0081	TUBE 6 MM PA BLUE	7-117
T10W7404	90166-0081	TUBE 6 MM PA BLUE	7-117
T10W7502	315400-0001	TUBE PUN-H-6X1-BL	7-133
T10W7504	315400-0001	TUBE PUN-H-6X1-BL	7-133
T10W7602	315400-0001	TUBE PUN-H-6X1-BL	7-139
T10W7604	315400-0001	TUBE PUN-H-6X1-BL	7-139
T10W7702	315400-0001	TUBE PUN-H-6X1-BL	7-97
T10W7704	315400-0001	TUBE PUN-H-6X1-BL	7-97
T10W7904	315400-0001	TUBE PUN-H-6X1-BL	7-23, 7-25
T10W7905	90166-0081	TUBE 6 MM PA BLUE	7-115
T10W8002	315400-0001	TUBE PUN-H-6X1-BL	7-23, 7-25
T10W8003	315400-0001	TUBE PUN-H-6X1-BL	7-113
T10W8005	315400-0016	TUBE PUN-H-4X0,75-BL	7-23, 7-25
T40W0010	351150-0412	CABLE OLFLEX 3X1,5 MM2 LIGHT/GREY	2-173, 2-175
T40W0020	315300-0006	TUBE, 8 MM PE BLACK	2-65, 2-67
T40W0022	344240-0805	TUBE 8 MM PE FDA, 1015Y08F01	6-17
T40W0023	344240-0805	TUBE 8 MM PE FDA, 1015Y08F01	6-17
T40W0025	315300-0006	TUBE, 8 MM PE BLACK	2-65, 2-67
T40W0026	315300-0006	TUBE, 8 MM PE BLACK	2-65, 2-67
T40W0027	315300-0006	TUBE, 8 MM PE BLACK	2-65, 2-67
T40W0028	315300-0006	TUBE, 8 MM PE BLACK	2-65, 2-67
T40W0029	315300-0006	TUBE, 8 MM PE BLACK	2-65, 2-67
T40W0040	351150-0413	CABLE OLFLEX 4GX1,5 MM2 LIGHT/GREY	2-173, 2-175
T40W0042	3042667-0000	PIPE	2-37, 2-39
T40W0043	3042666-0000	PIPE	2-37, 2-39
T40W0044	2764897-0000	PIPE	2-37, 2-39
T40W0045	2764898-0000	PIPE	2-37, 2-39
T40W0046	3078685-0000	PIPE	2-37, 2-39
T40W0047	2764894-0000	PIPE	2-37, 2-39
T40W0048	3030309-0000	PIPE	2-37, 2-39
T40W0049	3042664-0000	PIPE	2-37, 2-39
T40W0052	3042663-0000	PIPE	2-37, 2-39
T40W0053	3042384-0000	PIPE	2-37, 2-39
T40W0054	90600-1307	MEASURING HOSE, AB20-11/1000	2-37, 2-39
T40W0055	90600-1307	MEASURING HOSE, AB20-11/1000	2-37, 2-39
T40W0110	90220-0183	SCR. CABLE 2X0,34MM2	8-107
T40W0120	90220-0183	SCR. CABLE 2X0,34MM2	8-107
T40W0210	90220-0165	SCR. CABLE 5X0,34MM2	8-51

W

Pos	Part No	Description	Page No
T40W0260	351423-0005	CABLE UNITRONIC LICY 4X0,34	2-173, 2-175
T40W0270	351423-0005	CABLE UNITRONIC LICY 4X0,34	2-173, 2-175
T40W0520	351150-0425	CABLE OLFLEX 25X0,75 MM2 LIGHT/GREY	2-173, 2-175
T40W0700	90602-8107	CABLE	2-173, 2-175
T40W0704	315300-0016	TUBE 4MPE BLUE	2-69
T40W0705	315300-0001	TUBE, 6 MM PE BLUE	2-69
T40W0710	90602-8107	CABLE	2-173, 2-175
T40W0714	315300-0016	TUBE 4MPE BLUE	2-69
T40W0720	90602-8107	CABLE	2-173, 2-175
T40W0723	315300-0001	TUBE, 6 MM PE BLUE	2-69
T40W0724	315300-0016	TUBE 4MPE BLUE	2-69
T40W0730	90602-8107	CABLE	2-173, 2-175
T40W0734	315300-0016	TUBE 4MPE BLUE	2-69
T40W0740	90600-3293	MOTOR PWWER CABLE 2090-XXNPMF-16S09	2-173, 2-175
T40W0750	90600-3293	MOTOR PWWER CABLE 2090-XXNPMF-16S09	2-173, 2-175
T40W0800	351150-0403	CABLE OLFLEX 3X0,75 MM2 LIGHT/GREY	2-173, 2-175
T40W0810	351150-0403	CABLE OLFLEX 3X0,75 MM2 LIGHT/GREY	2-173, 2-175
T40W0820	351150-0403	CABLE OLFLEX 3X0,75 MM2 LIGHT/GREY	2-173, 2-175
T40W0830	351150-0403	CABLE OLFLEX 3X0,75 MM2 LIGHT/GREY	2-173, 2-175
T40W1000	90459-2530	DEVICENET CABLE THIN	2-173, 2-175
T40W1021	90459-4252	CABLE M12-C101, 20-056-10	2-161
T40W1041	90459-4252	CABLE M12-C101, 20-056-10	2-161
T40W1090	351150-0403	CABLE OLFLEX 3X0,75 MM2 LIGHT/GREY	2-173, 2-175
T40W1100	351150-0403	CABLE OLFLEX 3X0,75 MM2 LIGHT/GREY	2-173, 2-175
T40W1110	351150-0404	CABLE OLFLEX 4X0,75 MM2 LIGHT/GREY	2-173, 2-175
T40W1130	351150-0403	CABLE OLFLEX 3X0,75 MM2 LIGHT/GREY	2-173, 2-175
T40W1150	351150-0404	CABLE OLFLEX 4X0,75 MM2 LIGHT/GREY	2-173, 2-175
T40W1162	344240-0805	TUBE 8 MM PE FDA, 1015Y08F01	6-17
T40W1172	344240-0805	TUBE 8 MM PE FDA, 1015Y08F01	6-17
T40W1370	90220-0034	THERMOC.CABLE, TEX/SITW-20F-KX 2X0,5MM2	2-173, 2-175
T40W1390	90220-0091	CABLE, PAIR TWISTED 2X2X0,25MM2	2-173, 2-175
T40W1700	90600-3294	MOTOR FEEDBACK CABLE 2090-XXNFMF-S09/C	2-173, 2-175
T40W1702	315300-0001	TUBE, 6 MM PE BLUE	2-63
T40W1710	90600-3294	MOTOR FEEDBACK CABLE 2090-XXNFMF-S09/C	2-173, 2-175
T40W1720	90600-3294	MOTOR FEEDBACK CABLE 2090-XXNFMF-S09/C	2-173, 2-175
T40W1730	90600-3294	MOTOR FEEDBACK CABLE 2090-XXNFMF-S09/C	2-173, 2-175
T40W1740	90600-3294	MOTOR FEEDBACK CABLE 2090-XXNFMF-S09/C	2-173, 2-175
T40W1750	90600-3294	MOTOR FEEDBACK CABLE 2090-XXNFMF-S09/C	2-173, 2-175
T40W2010	90459-4876	FOCUS JUMPER CABLE M12 5P 3M, 20-056-21	2-161
T40W2020	90459-4876	FOCUS JUMPER CABLE M12 5P 3M, 20-056-21	2-161
T40W2030	90459-4876	FOCUS JUMPER CABLE M12 5P 3M, 20-056-21	2-161
T40W2040	90459-4876	FOCUS JUMPER CABLE M12 5P 3M, 20-056-21	2-161
T40W2690	351150-0403	CABLE OLFLEX 3X0,75 MM2 LIGHT/GREY	2-173, 2-175
T40W2692	90459-0221	TUBE, 6 MM PE BLACK	2-63
T40W2693	90459-0221	TUBE, 6 MM PE BLACK	2-63
T40W2694	90459-0221	TUBE, 6 MM PE BLACK	2-63
T40W2695	90459-0221	TUBE, 6 MM PE BLACK	2-63
T40W2696	90459-0221	TUBE, 6 MM PE BLACK	2-63
T40W2697	90459-0221	TUBE, 6 MM PE BLACK	2-63
T40W2698	90166-0132	TUBE 6 MM PA,TRANSP.	4-159
T40W2699	90166-0132	TUBE 6 MM PA,TRANSP.	4-159
T40W2830	351150-0406	CABLE OLFLEX 7X0,75 MM2 LIGHT/GREY	2-173, 2-175
T40W2840	351150-0407	CABLE OLFLEX 12X0,75 MM2 LIGHT/GREY	2-173, 2-175
T40W3100	2562736-0002	COAXIAL CABLE	4-115
T40W3101	2856954-0000	COAXIAL CABLE	2-173, 2-175, 4-43
T40W3103	315300-0006	TUBE, 8 MM PE BLACK	2-65, 2-67
T40W3104	315300-0006	TUBE, 8 MM PE BLACK	2-65, 2-67
T40W3105	90166-0118	TUBE 8 MM PA BLACK	4-43
T40W3106	90166-0118	TUBE 8 MM PA BLACK	4-43
T40W3107	315300-0006	TUBE, 8 MM PE BLACK	2-65, 2-67
T40W3108	315300-0006	TUBE, 8 MM PE BLACK	2-65, 2-67
T40W3200	2562736-0002	COAXIAL CABLE	4-125
T40W3201	2856954-0000	COAXIAL CABLE	2-173, 2-175, 4-43
T40W3203	315300-0006	TUBE, 8 MM PE BLACK	2-65, 2-67
T40W3204	315300-0006	TUBE, 8 MM PE BLACK	2-65, 2-67
T40W3205	90166-0118	TUBE 8 MM PA BLACK	4-43
T40W3206	90166-0118	TUBE 8 MM PA BLACK	4-43
T40W3207	315300-0006	TUBE, 8 MM PE BLACK	2-65, 2-67
T40W3208	315300-0006	TUBE, 8 MM PE BLACK	2-65, 2-67
T40W3850	90220-0046	SCR. CABLE 16X0,34MM2 GREEN/YELLOW	2-173, 2-175
T40W6008	315300-0001	TUBE, 6 MM PE BLUE	2-69
T40W6042	90166-0108	TUBE 6 MM PA TRANSP.	2-47
T40W6043	90166-0108	TUBE 6 MM PA TRANSP.	2-47
T40W6045	90166-0108	TUBE 6 MM PA TRANSP.	4-43
T40W6046	90166-0108	TUBE 6 MM PA TRANSP.	4-43
T40W6047	90166-0108	TUBE 6 MM PA TRANSP.	2-47
T40W6048	90166-0108	TUBE 6 MM PA TRANSP.	2-47
T40W6049	90166-0108	TUBE 6 MM PA TRANSP.	2-47
T40W8009	90166-0109	TUBE 4 MM PA TRANSP.	4-29
T40W8010	90266-0165	BRASS PIPE	4-31
T40W8011	90266-0165	BRASS PIPE	4-31
T40W8012	90266-0165	BRASS PIPE	4-29

Pos	Part No	Description	Page No
W			
T40W8013	90266-0165	BRASS PIPE	4-29
T40W8014	90166-0109	TUBE 4 MM PA TRANSP.	4-31
T40W8015	90166-0109	TUBE 4 MM PA TRANSP.	4-29
T40W8016	90266-0019	PIPE	4-31
T40W8017	90266-0019	PIPE	4-31
T40W8018	90266-0019	PIPE	4-31
T40W8019	90266-0019	PIPE	4-31
T40W8020	90266-0019	PIPE	4-31
T40W8021	90266-0019	PIPE	4-31
T40W8022	90266-0019	PIPE	4-31
T40W8023	90266-0019	PIPE	4-31
T40W8024	90266-0019	PIPE	4-31
T40W8025	90266-0019	PIPE	4-31
T40W8026	90166-0143	TUBE 2,5 MM PA TRANSP.	4-31
T40W8027	90266-0019	PIPE	4-31
T40W8028	90166-0143	TUBE 2,5 MM PA TRANSP.	4-31
T40W8029	90166-0143	TUBE 2,5 MM PA TRANSP.	4-31
T40W8030	90166-0143	TUBE 2,5 MM PA TRANSP.	4-31
T40W8031	90266-0019	PIPE	4-31
T40W8032	90266-0165	BRASS PIPE	4-37
T40W8033	90266-0165	BRASS PIPE	4-37
T40W8034	90266-0019	PIPE	4-29
T40W8035	90266-0019	PIPE	4-29
T40W8036	90266-0019	PIPE	4-29
T40W8037	90266-0019	PIPE	4-29
T40W8038	90266-0019	PIPE	4-29
T40W8039	90266-0019	PIPE	4-29
T40W8040	90266-0019	PIPE	4-29
T40W8041	90266-0019	PIPE	4-29
T40W8042	90266-0019	PIPE	4-29
T40W8043	90266-0019	PIPE	4-29
T40W8044	90166-0143	TUBE 2,5 MM PA TRANSP.	4-29
T40W8045	90266-0019	PIPE	4-29
T40W8046	90166-0143	TUBE 2,5 MM PA TRANSP.	4-29
T40W8047	90166-0143	TUBE 2,5 MM PA TRANSP.	4-29
T40W8048	90166-0143	TUBE 2,5 MM PA TRANSP.	4-29
T40W8049	90266-0019	PIPE	4-29
T40W8050	90266-0165	BRASS PIPE	4-35
T40W8051	90266-0165	BRASS PIPE	4-35
T40W8088	90166-0109	TUBE 4 MM PA TRANSP.	4-31
T40W9510	90220-0091	CABLE, PAIR TWISTED 2X2X0,25MM2	2-173, 2-175
T40W9520	90220-0091	CABLE, PAIR TWISTED 2X2X0,25MM2	2-173, 2-175
T40W9550	351150-0403	CABLE OLFLEX 3X0,75 MM2 LIGHT/GREY	2-173, 2-175
T40W9552	3032804-0000	HYDRAULIC PIPE	2-41
T40W9553	90148-0038	HYDRAULIC HOSE	4-43
T40W9554	90148-0038	HYDRAULIC HOSE	4-43
T40W9555	3032805-0000	HYDRAULIC PIPE	2-41
T40W9560	351150-0403	CABLE OLFLEX 3X0,75 MM2 LIGHT/GREY	2-173, 2-175
T40W9572	3032806-0000	HYDRAULIC PIPE	2-41
T40W9573	90148-0037	HYDRAULIC HOSE	4-43
T40W9580	351150-0403	CABLE OLFLEX 3X0,75 MM2 LIGHT/GREY	2-173, 2-175
T40W9592	3032807-0000	HYDRAULIC PIPE	2-41
T40W9593	90148-0037	HYDRAULIC HOSE	4-43
T40W9600	351150-0403	CABLE OLFLEX 3X0,75 MM2 LIGHT/GREY	2-173, 2-175
T50W0052	344240-0805	TUBE 8 MM PE FDA, 1015Y08F01	6-17
T50W0053	315300-0006	TUBE, 8 MM PE BLACK	2-65, 2-67
T50W0054	315400-0006	TUBE PUN-H-8X1,25-SW	5-115, 5-117, 5-119, 5-121
T50W0055	315400-0006	TUBE PUN-H-8X1,25-SW	5-115, 5-117, 5-119, 5-121
T50W0056	315400-0006	TUBE PUN-H-8X1,25-SW	5-115, 5-117, 5-119, 5-121
T50W0057	315300-0006	TUBE, 8 MM PE BLACK	2-65, 2-67
T50W0060	351150-0412	CABLE OLFLEX 3X1,5 MM2 LIGHT/GREY	2-173, 2-175
T50W0070	90220-0104	SCR. CABLE 4X1,5MM2	8-129, 8-131
T50W0102	315300-0010	TUBE, 12 MM PE BLUE	2-49
T50W0108	315400-0006	TUBE PUN-H-8X1,25-SW	5-115, 5-117, 5-119, 5-121
T50W0109	315400-0006	TUBE PUN-H-8X1,25-SW	5-115, 5-117, 5-119, 5-121
T50W0110	315400-0006	TUBE PUN-H-8X1,25-SW	5-115, 5-117, 5-119, 5-121
T50W0111	315400-0006	TUBE PUN-H-8X1,25-SW	5-115, 5-117, 5-119, 5-121
T50W0140	351150-0413	CABLE OLFLEX 4GX1,5 MM2 LIGHT/GREY	2-173, 2-175
T50W0150	351150-0418	CABLE OLFLEX 4X2,5 MM2 LIGHT/GREY	2-173, 2-175
T50W0510	351120-0146	CABLE Ã–LFLEX HEAT 180 SIHF 3X4	5-49
T50W0520	351120-0146	CABLE Ã–LFLEX HEAT 180 SIHF 3X4	5-49
T50W0530	351150-0425	CABLE OLFLEX 25X0,75 MM2 LIGHT/GREY	2-173, 2-175
T50W0540	351120-0146	CABLE Ã–LFLEX HEAT 180 SIHF 3X4	5-49
T50W0550	351120-0146	CABLE Ã–LFLEX HEAT 180 SIHF 3X4	2-173, 2-175
T50W0551	351120-0146	CABLE Ã–LFLEX HEAT 180 SIHF 3X4	2-173, 2-175
T50W0560	351120-0146	CABLE Ã–LFLEX HEAT 180 SIHF 3X4	2-173, 2-175
T50W0600	351423-0005	CABLE UNITRONIC LICY 4X0,34	2-173, 2-175
T50W0610	351423-0005	CABLE UNITRONIC LICY 4X0,34	2-173, 2-175
T50W0620	351423-0005	CABLE UNITRONIC LICY 4X0,34	2-173, 2-175
T50W0630	351423-0005	CABLE UNITRONIC LICY 4X0,34	2-173, 2-175
T50W0800	90600-3293	MOTOR PWWER CABLE 2090-XXNPMF-16S09	2-173, 2-175
T50W0810	90600-3293	MOTOR PWWER CABLE 2090-XXNPMF-16S09	2-173, 2-175

Pos	Part No	Description	Page No
W			
T50W0820	90600-3293	MOTOR PWWER CABLE 2090-XXNPMF-16S09	2-173, 2-175
T50W0840	351150-0403	CABLE OLFLEX 3X0,75 MM2 LIGHT/GREY	6-53
T50W0842	90166-0121	HOSE	2-165, 6-11
T50W0845	90600-3000	HOSE 16X2MM, WIROFLEX 26002 2	2-165
T50W0846	90600-3000	HOSE 16X2MM, WIROFLEX 26002 2	2-165
T50W0847	90600-3000	HOSE 16X2MM, WIROFLEX 26002 2	2-165
T50W0848	90600-3000	HOSE 16X2MM, WIROFLEX 26002 2	2-165
T50W0849	90600-3000	HOSE 16X2MM, WIROFLEX 26002 2	2-165
T50W0852	90600-3000	HOSE 16X2MM, WIROFLEX 26002 2	2-165
T50W0853	90600-3000	HOSE 16X2MM, WIROFLEX 26002 2	2-165
T50W0854	90600-3000	HOSE 16X2MM, WIROFLEX 26002 2	2-165
T50W0855	90600-3000	HOSE 16X2MM, WIROFLEX 26002 2	2-165
T50W0856	90600-3000	HOSE 16X2MM, WIROFLEX 26002 2	2-165
T50W0857	90600-3000	HOSE 16X2MM, WIROFLEX 26002 2	2-165
T50W0858	90600-3000	HOSE 16X2MM, WIROFLEX 26002 2	2-165
T50W0859	90600-3000	HOSE 16X2MM, WIROFLEX 26002 2	2-165
T50W0862	3046758-0000	PIPE	2-165
T50W0863	2872390-0000	PIPE	2-165
T50W0864	2872390-0000	PIPE	2-165
T50W0865	3046756-0000	PIPE	2-165
T50W0866	3046474-0000	PIPE	2-165
T50W0867	2872387-0000	PIPE	2-165
T50W0868	2872387-0000	PIPE	2-165
T50W1000	90459-2530	DEVICENET CABLE THIN	2-173, 2-175
T50W1030	351150-0405	CABLE OLFLEX 5X0,75 MM2 LIGHT/GREY	2-173, 2-175
T50W1030	351309-0150	ACTUATOR/SENSOR CABLE PRKT 4-07/15M	5-31
T50W1070	351422-0203	CABLE Ã–LFLEX 150CY QUATTRO 4X1,5	2-173, 2-175
T50W1080	351309-0100	ACTUATOR/SENSOR CABLE PRKT 4-07/10M	5-31
T50W1120	351150-0406	CABLE OLFLEX 7X0,75 MM2 LIGHT/GREY	2-173, 2-175
T50W1220	90220-0034	THERMOC.CABLE, TEX/SITW-20F-KX 2X0,5MM2	5-49
T50W1230	90220-0034	THERMOC.CABLE, TEX/SITW-20F-KX 2X0,5MM2	5-49
T50W1240	90220-0034	THERMOC.CABLE, TEX/SITW-20F-KX 2X0,5MM2	5-49
T50W1531	90459-4252	CABLE M12-C101, 20-056-10	2-161
T50W1800	90600-3294	MOTOR FEEDBACK CABLE 2090-XXNFMF-S09/C	2-173, 2-175
T50W1810	90600-3294	MOTOR FEEDBACK CABLE 2090-XXNFMF-S09/C	2-173, 2-175
T50W1820	90600-3294	MOTOR FEEDBACK CABLE 2090-XXNFMF-S09/C	2-173, 2-175
T50W2000	90220-0091	CABLE, PAIR TWISTED 2X2X0,25MM2	2-173, 2-175
T50W2010	351501-0075	ETHERNET PATCH CABLE, FL CAT5 PATCH 7,5	2-173, 2-175
T50W2020	351501-0075	ETHERNET PATCH CABLE, FL CAT5 PATCH 7,5	2-173, 2-175
T50W2030	351150-0405	CABLE OLFLEX 5X0,75 MM2 LIGHT/GREY	2-173, 2-175
T50W2520	90459-4876	FOCUS JUMPER CABLE M12 5P 3M, 20-056-21	2-161
T50W3040	90459-2530	DEVICENET CABLE THIN	8-129, 8-131
T50W6002	315300-0001	TUBE, 6 MM PE BLUE	2-49
T50W6004	315300-0004	TUBE, 8 MM PE BLUE	2-69
T50W6005	315300-0004	TUBE, 8 MM PE BLUE	2-49
T50W6006	315300-0004	TUBE, 8 MM PE BLUE	2-49
T50W6008	315300-0010	TUBE, 12 MM PE BLUE	2-69
T50W6009	315300-0001	TUBE, 6 MM PE BLUE	2-69
T50W6011	315300-0016	TUBE 4MPE BLUE	2-49
T50W6022	315300-0001	TUBE, 6 MM PE BLUE	2-69
T50W6022	315400-0001	TUBE PUN-H-6X1-BL	5-11
T50W6023	315400-0001	TUBE PUN-H-6X1-BL	5-11
T50W6024	315300-0001	TUBE, 6 MM PE BLUE	2-69
T50W6024	315400-0001	TUBE PUN-H-6X1-BL	5-11
T50W6025	315400-0001	TUBE PUN-H-6X1-BL	5-11
T50W6026	315400-0001	TUBE PUN-H-6X1-BL	5-11
T50W6027	315400-0001	TUBE PUN-H-6X1-BL	5-11
T50W6032	315300-0001	TUBE, 6 MM PE BLUE	2-223
T50W6034	315300-0001	TUBE, 6 MM PE BLUE	2-223
T50W6043	315300-0001	TUBE, 6 MM PE BLUE	2-49
T50W6044	315300-0001	TUBE, 6 MM PE BLUE	2-69
T50W6045	315400-0001	TUBE PUN-H-6X1-BL	5-45
T50W6046	315300-0016	TUBE 4MPE BLUE	2-49
T50W6053	315300-0004	TUBE, 8 MM PE BLUE	2-49
T50W6054	315400-0004	TUBE PUN-H-8X1,25-BL	5-49
T50W6055	315300-0004	TUBE, 8 MM PE BLUE	2-49
T50W6056	315300-0016	TUBE 4MPE BLUE	2-49
T50W6062	315300-0004	TUBE, 8 MM PE BLUE	2-49
T50W6063	315400-0004	TUBE PUN-H-8X1,25-BL	5-49
T50W6064	315400-0004	TUBE PUN-H-8X1,25-BL	5-49
T50W6065	315300-0004	TUBE, 8 MM PE BLUE	2-49
T50W6066	315300-0016	TUBE 4MPE BLUE	2-49
T50W6094	315400-0001	TUBE PUN-H-6X1-BL	5-47
T50W6102	315400-0001	TUBE PUN-H-6X1-BL	5-47
T50W6110	351150-0403	CABLE OLFLEX 3X0,75 MM2 LIGHT/GREY	2-173, 2-175
T50W6112	315300-0004	TUBE, 8 MM PE BLUE	2-49
T50W6113	315300-0004	TUBE, 8 MM PE BLUE	2-49
T50W6114	315300-0004	TUBE, 8 MM PE BLUE	2-49
T50W6993	315300-0001	TUBE, 6 MM PE BLUE	2-69
T50W6995	315300-0004	TUBE, 8 MM PE BLUE	2-69
T50W6997	315300-0010	TUBE, 12 MM PE BLUE	2-69
T50W7022	90166-0135	TUBE 10 MM PA BLACK	2-15

Pos	Part No	Description	Page No
W			
T50W7023	90152-0017	HOSE (SPIRAL)	2-15
U30W0010	351150-0413	CABLE OLFLEX 4GX1,5 MM2 LIGHT/GREY	2-213
U30W1102	2832238-0000	PIPE	2-45
U30W1180	351423-0005	CABLE UNITRONIC LICY 4X0,34	2-199
U30W1200	90220-0034	THERMOC.CABLE, TEX/SITW-20F-KX 2X0,5MM2	2-199
U30W1720	351150-0403	CABLE OLFLEX 3X0,75 MM2 LIGHT/GREY	2-205
U30W1730	351150-0403	CABLE OLFLEX 3X0,75 MM2 LIGHT/GREY	2-205
U30W1800	351150-0403	CABLE OLFLEX 3X0,75 MM2 LIGHT/GREY	2-211
U30W1802	315300-0001	TUBE, 6 MM PE BLUE	2-211
U30W1803	315300-0016	TUBE 4MPE BLUE	2-49
U30W6024	315300-0001	TUBE, 6 MM PE BLUE	2-205
U30W6032	315300-0001	TUBE, 6 MM PE BLUE	2-205
U30W6042	90166-0108	TUBE 6 MM PA TRANSP.	2-47
U30W6044	315300-0001	TUBE, 6 MM PE BLUE	2-45
U70W0010	351120-0265	CABLE Ã–LFLEX HEAT 180 SIHF 4X2,5	2-207
U70W0020	351120-0265	CABLE Ã–LFLEX HEAT 180 SIHF 4X2,5	2-207
U70W0080	351120-0146	CABLE ÖLFLEX HEAT 180 SIHF 3X4	1-247, 1-249
U70W0090	351120-0267	CABLE ÖLFLEX HEAT 180 SIHF 4X6	1-247, 1-249
U70W0160	90220-0104	SCR. CABLE 4X1,5MM2	8-129, 8-131
U70W0190	90220-0105	SCR. CABLE 4X2,5MM2	8-129, 8-131
U70W0230	351120-0144	CABLE Ã–LFLEX HEAT 180 SIHF 3X1,5	2-207
U70W0280	90220-0091	CABLE, PAIR TWISTED 2X2X0,25MM2	1-247, 1-249, 1-251
U70W0300	90459-4705	LOCKING PLUG, S 103 A 053-130+ AND 90220	2-225
U70W0320	315756-0009	ÖLFLEX CONTROL TM CY 4G1,5, 281604CY	1-71
U70W0370	90459-3165	CABLE, PTFE HEAT 1X4,72MM2 BLACK	1-87
U70W0450	351150-0420	CABLE OLFLEX 7X2,5 MM2 LIGHT/GREY	1-247, 1-249
U70W0560	351150-0425	CABLE OLFLEX 25X0,75 MM2 LIGHT/GREY	1-247, 1-249
U70W0800	90220-0034	THERMOC.CABLE, TEX/SITW-20F-KX 2X0,5MM2	8-157
U70W0810	90220-0034	THERMOC.CABLE, TEX/SITW-20F-KX 2X0,5MM2	1-247, 1-249
U70W0820	90220-0034	THERMOC.CABLE, TEX/SITW-20F-KX 2X0,5MM2	8-157
U70W0830	90220-0034	THERMOC.CABLE, TEX/SITW-20F-KX 2X0,5MM2	1-247, 1-249
U70W0840	90220-0034	THERMOC.CABLE, TEX/SITW-20F-KX 2X0,5MM2	8-157
U70W0850	90220-0034	THERMOC.CABLE, TEX/SITW-20F-KX 2X0,5MM2	1-247, 1-249
U70W0930	90220-0034	THERMOC.CABLE, TEX/SITW-20F-KX 2X0,5MM2	1-91
U70W0960	90220-0034	THERMOC.CABLE, TEX/SITW-20F-KX 2X0,5MM2	8-157
U70W1000	90459-2530	DEVICENET CABLE THIN	1-247, 1-249
U70W1100	90459-5578	ACTUATOR/SENSOR CABLE PRKT 5-56/5M	1-247, 1-249
U70W1120	315400-0016	TUBE PUN-H-4X0,75-BL	1-219, 1-221
U70W1121	315400-0016	TUBE PUN-H-4X0,75-BL	1-219, 1-221
U70W1123	315300-0010	TUBE, 12 MM PE BLUE	2-69
U70W1123	315400-0010	TUBE PUN-H-12X2-BL	1-219, 1-221
U70W1124	315400-0010	TUBE PUN-H-12X2-BL	1-219, 1-221
U70W1126	315400-0010	TUBE PUN-H-12X2-BL	1-219, 1-221
U70W1127	315400-0010	TUBE PUN-H-12X2-BL	1-219, 1-221
U70W1130	351120-0145	CABLE ÖLFLEX HEAT 180 SIHF 3X2,5	1-247, 1-249
U70W1140	351120-0146	CABLE ÖLFLEX HEAT 180 SIHF 3X4	1-247, 1-249
U70W1141	315400-0004	TUBE PUN-H-8X1,25-BL	1-219, 1-221
U70W1142	315400-0016	TUBE PUN-H-4X0,75-BL	1-219, 1-221
U70W1143	315300-0004	TUBE, 8 MM PE BLUE	2-69
U70W1160	351422-0302	CABLE ÖLFLEX 150CY QUATTRO 4X2,5	1-247, 1-249
U70W1170	315400-0016	TUBE PUN-H-4X0,75-BL	1-219, 1-221
U70W1170	351423-0006	CABLE UNITRONIC LICY 5X0,34	1-247, 1-249
U70W1172	315400-0001	TUBE PUN-H-6X1-BL	1-215, 1-217
U70W1173	315400-0001	TUBE PUN-H-6X1-BL	1-215, 1-217
U70W1190	351422-0302	CABLE ÖLFLEX 150CY QUATTRO 4X2,5	1-247, 1-249
U70W1192	90600-3000	HOSE 16X2MM, WIROFLEX 26002 2	2-65, 2-67
U70W1193	90600-3000	HOSE 16X2MM, WIROFLEX 26002 2	2-65, 2-67
U70W1250	90220-0034	THERMOC.CABLE, TEX/SITW-20F-KX 2X0,5MM2	2-207
U70W1260	90220-0034	THERMOC.CABLE, TEX/SITW-20F-KX 2X0,5MM2	1-247, 1-249
U70W1270	90220-0034	THERMOC.CABLE, TEX/SITW-20F-KX 2X0,5MM2	1-247, 1-249
U70W1290	351301-0050	ACTUATOR/SENSOR CABLE PRKMV 3-06/5M	1-247, 1-249
U70W1300	351150-0412	CABLE OLFLEX 3X1,5 MM2 LIGHT/GREY	1-247, 1-249
U70W1452	315400-0001	TUBE PUN-H-6X1-BL	1-99
U70W1453	315400-0001	TUBE PUN-H-6X1-BL	1-99
U70W1454	315400-0001	TUBE PUN-H-6X1-BL	1-99
U70W1700	351309-0100	ACTUATOR/SENSOR CABLE PRKT 4-07/10M	1-247, 1-249
U70W1710	351150-0403	CABLE OLFLEX 3X0,75 MM2 LIGHT/GREY	1-247, 1-249
U70W1741	315300-0001	TUBE, 6 MM PE BLUE	2-69
U70W1762	315400-0001	TUBE PUN-H-6X1-BL	1-215, 1-217
U70W1763	315400-0001	TUBE PUN-H-6X1-BL	1-215, 1-217
U70W1764	315400-0001	TUBE PUN-H-6X1-BL	1-215, 1-217
U70W1765	315400-0001	TUBE PUN-H-6X1-BL	1-215, 1-217
U70W1772	315400-0001	TUBE PUN-H-6X1-BL	1-215, 1-217
U70W1774	315400-0001	TUBE PUN-H-6X1-BL	1-215, 1-217
U70W1775	315400-0001	TUBE PUN-H-6X1-BL	1-215, 1-217
U70W1776	315400-0001	TUBE PUN-H-6X1-BL	1-215, 1-217
U70W1777	315400-0001	TUBE PUN-H-6X1-BL	1-215, 1-217
U70W1778	315400-0001	TUBE PUN-H-6X1-BL	1-215, 1-217
U70W2010	351150-0406	CABLE OLFLEX 7X0,75 MM2 LIGHT/GREY	1-247, 1-249
U70W2240	351423-0008	CABLE UNITRONIC LICY 2X0,5	1-247, 1-249
U70W2260	351423-0006	CABLE UNITRONIC LICY 5X0,34	1-247, 1-249
U70W2280	90220-0034	THERMOC.CABLE, TEX/SITW-20F-KX 2X0,5MM2	1-247, 1-249

W

Pos	Part No	Description	Page No
U70W2290	90220-0034	THERMOC.CABLE, TEX/SITW-20F-KX 2X0,5MM2	1-247, 1-249
U70W2300	90220-0034	THERMOC.CABLE, TEX/SITW-20F-KX 2X0,5MM2	1-247, 1-249
U70W2500	351423-0006	CABLE UNITRONIC LICY 5X0,34	1-239, 1-247, 1-249
U70W2501	90220-0165	SCR. CABLE 5X0,34MM2	8-51
U70W2510	90459-4876	FOCUS JUMPER CABLE M12 5P 3M, 20-056-21	1-239
U70W2520	90459-4876	FOCUS JUMPER CABLE M12 5P 3M, 20-056-21	1-239
U70W2530	90459-7095	FOCUS JUMPER CABLE M12 5P 1M, 20-056-20	1-239
U70W2700	351150-0404	CABLE OLFLEX 4X0,75 MM2 LIGHT/GREY	1-247, 1-249
U70W2730	351150-0404	CABLE OLFLEX 4X0,75 MM2 LIGHT/GREY	1-247, 1-249
U70W2740	351150-0403	CABLE OLFLEX 3X0,75 MM2 LIGHT/GREY	1-247, 1-249
U70W2742	315400-0001	TUBE PUN-H-6X1-BL	1-215, 1-217
U70W2743	315400-0016	TUBE PUN-H-4X0,75-BL	1-219, 1-221
U70W2750	351150-0403	CABLE OLFLEX 3X0,75 MM2 LIGHT/GREY	1-247, 1-249
U70W2860	351150-0403	CABLE OLFLEX 3X0,75 MM2 LIGHT/GREY	1-247, 1-249
U70W2870	351150-0403	CABLE OLFLEX 3X0,75 MM2 LIGHT/GREY	1-247, 1-249
U70W3093	315400-0001	TUBE PUN-H-6X1-BL	1-215, 1-217
U70W3094	315400-0001	TUBE PUN-H-6X1-BL	1-219, 1-221
U70W3095	315400-0016	TUBE PUN-H-4X0,75-BL	1-219, 1-221
U70W3100	351423-0006	CABLE UNITRONIC LICY 5X0,34	1-247, 1-249
U70W3160	90459-2530	DEVICENET CABLE THIN	8-129, 8-131
U70W3190	90459-2530	DEVICENET CABLE THIN	8-129, 8-131
U70W3200	90220-0034	THERMOC.CABLE, TEX/SITW-20F-KX 2X0,5MM2	1-247, 1-249
U70W3210	90220-0034	THERMOC.CABLE, TEX/SITW-20F-KX 2X0,5MM2	1-247, 1-249
U70W3211	90220-0034	THERMOC.CABLE, TEX/SITW-20F-KX 2X0,5MM2	1-247, 1-249
U70W3230	90220-0034	THERMOC.CABLE, TEX/SITW-20F-KX 2X0,5MM2	1-247, 1-249
U70W3240	90220-0034	THERMOC.CABLE, TEX/SITW-20F-KX 2X0,5MM2	1-247, 1-249
U70W3250	90220-0034	THERMOC.CABLE, TEX/SITW-20F-KX 2X0,5MM2	1-247, 1-249
U70W3270	90220-0034	THERMOC.CABLE, TEX/SITW-20F-KX 2X0,5MM2	1-247, 1-249
U70W3700	351150-0403	CABLE OLFLEX 3X0,75 MM2 LIGHT/GREY	1-247, 1-249
U70W3792	315400-0016	TUBE PUN-H-4X0,75-BL	1-215, 1-217
U70W3794	315400-0016	TUBE PUN-H-4X0,75-BL	1-215, 1-217
U70W4002	315400-0001	TUBE PUN-H-6X1-BL	1-215, 1-217
U70W4004	315400-0001	TUBE PUN-H-6X1-BL	1-215, 1-217
U70W4006	2835319-0000	PIPE	1-215, 1-217
U70W4010	351150-0403	CABLE OLFLEX 3X0,75 MM2 LIGHT/GREY	1-91
U70W4012	315400-0001	TUBE PUN-H-6X1-BL	1-215, 1-217
U70W4014	315400-0001	TUBE PUN-H-6X1-BL	1-215, 1-217
U70W4022	315400-0001	TUBE PUN-H-6X1-BL	1-215, 1-217
U70W4024	315400-0001	TUBE PUN-H-6X1-BL	1-215, 1-217
U70W4031	2864007-0000	PIPE	1-215, 1-217
U70W4033	2864008-0000	PIPE	1-215, 1-217
U70W4035	315400-0001	TUBE PUN-H-6X1-BL	1-215, 1-217
U70W4036	315400-0001	TUBE PUN-H-6X1-BL	1-215, 1-217
U70W4037	315400-0001	TUBE PUN-H-6X1-BL	1-215, 1-217
U70W4038	315400-0001	TUBE PUN-H-6X1-BL	1-215, 1-217
U70W4052	315400-0016	TUBE PUN-H-4X0,75-BL	1-215, 1-217
U70W4054	315400-0016	TUBE PUN-H-4X0,75-BL	1-215, 1-217
U70W4060	351150-0404	CABLE OLFLEX 4X0,75 MM2 LIGHT/GREY	1-91
U70W4062	315400-0016	TUBE PUN-H-4X0,75-BL	1-215, 1-217
U70W4064	315400-0016	TUBE PUN-H-4X0,75-BL	1-215, 1-217
U70W4080	351150-0403	CABLE OLFLEX 3X0,75 MM2 LIGHT/GREY	1-91
U70W4091	2871489-0000	PIPE	1-215, 1-217
U70W4093	2871489-0000	PIPE	1-215, 1-217
U70W4094	315400-0001	TUBE PUN-H-6X1-BL	1-219, 1-221
U70W4095	315400-0016	TUBE PUN-H-4X0,75-BL	1-219, 1-221
U70W4096	315400-0016	TUBE PUN-H-4X0,75-BL	1-215, 1-217
U70W4097	315400-0016	TUBE PUN-H-4X0,75-BL	1-215, 1-217
U70W4098	315400-0016	TUBE PUN-H-4X0,75-BL	1-215, 1-217
U70W4099	315400-0016	TUBE PUN-H-4X0,75-BL	1-215, 1-217
U70W4210	351150-0403	CABLE OLFLEX 3X0,75 MM2 LIGHT/GREY	1-91
U70W4212	2890134-0000	PIPE	1-87
U70W4213	2736707-0000	PIPE	1-87
U70W4220	351150-0403	CABLE OLFLEX 3X0,75 MM2 LIGHT/GREY	1-91
U70W4230	351150-0403	CABLE OLFLEX 3X0,75 MM2 LIGHT/GREY	1-91
U70W4231	315400-0004	TUBE PUN-H-8X1,25-BL	1-89
U70W4232	315400-0004	TUBE PUN-H-8X1,25-BL	1-89
U70W4233	315400-0004	TUBE PUN-H-8X1,25-BL	1-89
U70W4234	315400-0004	TUBE PUN-H-8X1,25-BL	1-89
U70W4235	315400-0004	TUBE PUN-H-8X1,25-BL	1-89
U70W4236	315400-0004	TUBE PUN-H-8X1,25-BL	1-89
U70W4237	315400-0004	TUBE PUN-H-8X1,25-BL	1-89
U70W4238	315400-0004	TUBE PUN-H-8X1,25-BL	1-89
U70W4239	315400-0001	TUBE PUN-H-6X1-BL	1-89
U70W4240	351150-0403	CABLE OLFLEX 3X0,75 MM2 LIGHT/GREY	1-91
U70W4241	315400-0001	TUBE PUN-H-6X1-BL	1-87
U70W4242	2890133-0000	PIPE	1-87
U70W4243	2736707-0000	PIPE	1-87
U70W4244	2736707-0000	PIPE	1-87
U70W4245	2906067-0000	PIPE	1-87
U70W4246	2890048-0000	PIPE	1-99
U70W4247	2715602-0000	PIPE	1-99
U70W4248	2986708-0000	PIPE	1-99

Pos	Part No	Description	Page No
W			
U70W4249	90600-4501	HYDRAULIC HOSE, 919-ID-ID-8-8-5C-5-420	1-99
U70W4250	2986709-0000	PIPE	1-99
U70W4290	90220-0165	SCR. CABLE 5X0,34MM2	1-91
U70W4330	90220-0165	SCR. CABLE 5X0,34MM2	1-91
U70W4350	90220-0034	THERMOC.CABLE, TEX/SITW-20F-KX 2X0,5MM2	1-91
U70W4360	90220-0034	THERMOC.CABLE, TEX/SITW-20F-KX 2X0,5MM2	1-91
U70W4370	90220-0034	THERMOC.CABLE, TEX/SITW-20F-KX 2X0,5MM2	1-99
U70W6024	90458-0191	SPIRALE TUBE, 8 MM TEFLON	1-47, 1-49, 1-51
U70W6025	90458-0191	SPIRALE TUBE, 8 MM TEFLON	1-43
U70W6026	90458-0191	SPIRALE TUBE, 8 MM TEFLON	1-43
U70W6027	90458-0191	SPIRALE TUBE, 8 MM TEFLON	1-43
U70W6028	90458-0191	SPIRALE TUBE, 8 MM TEFLON	1-43
U70W6029	90458-0190	SPIRALE TUBE, 6 MM TEFLON	1-43
U70W6050	90220-0059	THERMOCOUPLE CABLE, P/PTW-20F-K 2X0,5MM2	1-37, 1-39
U70W6100	351150-0403	CABLE OLFLEX 3X0,75 MM2 LIGHT/GREY	1-55
U70W6200	90459-2565	MOTOR POW.CABLE 16 AWG 2090-XXNPMP-16S09	1-17
U70W6210	90459-2568	MOTOR FEEDBACK CABLE 2090-XXNFMP-S09	1-17
U70W6500	351301-0050	ACTUATOR/SENSOR CABLE PRKMV 3-06/5M	1-25
U70W6502	90458-0190	SPIRALE TUBE, 6 MM TEFLON	1-47, 1-49, 1-51
U70W6504	90458-0190	SPIRALE TUBE, 6 MM TEFLON	1-47, 1-49, 1-51
U70W6510	351301-0050	ACTUATOR/SENSOR CABLE PRKMV 3-06/5M	1-25
U70W6512	90458-0190	SPIRALE TUBE, 6 MM TEFLON	1-47, 1-49, 1-51
U70W6520	351301-0050	ACTUATOR/SENSOR CABLE PRKMV 3-06/5M	1-19
U70W6522	90458-0190	SPIRALE TUBE, 6 MM TEFLON	1-47, 1-49, 1-51
U70W6523	90458-0190	SPIRALE TUBE, 6 MM TEFLON	1-47, 1-49, 1-51
U70W6524	90458-0190	SPIRALE TUBE, 6 MM TEFLON	1-47, 1-49, 1-51
U70W6525	90458-0190	SPIRALE TUBE, 6 MM TEFLON	1-47, 1-49, 1-51
U70W6526	2922777-0000	PIPE	1-47, 1-49, 1-51
U70W6527	2922776-0000	PIPE	1-47, 1-49, 1-51
U70W6527	2922778-0000	PIPE	1-47, 1-49, 1-51
U70W6530	351301-0050	ACTUATOR/SENSOR CABLE PRKMV 3-06/5M	1-19
U70W6532	90458-0190	SPIRALE TUBE, 6 MM TEFLON	1-43
U70W6533	90458-0190	SPIRALE TUBE, 6 MM TEFLON	1-47, 1-49, 1-51
U70W6534	90458-0190	SPIRALE TUBE, 6 MM TEFLON	1-43
U70W6535	90458-0190	SPIRALE TUBE, 6 MM TEFLON	1-47, 1-49, 1-51
U70W6536	90458-0190	SPIRALE TUBE, 6 MM TEFLON	1-47, 1-49, 1-51
U70W6538	90458-0190	SPIRALE TUBE, 6 MM TEFLON	1-47, 1-49, 1-51
U70W6539	2922774-0000	PIPE	1-47, 1-49, 1-51
U70W6540	351301-0050	ACTUATOR/SENSOR CABLE PRKMV 3-06/5M	1-19
U70W6544	90458-0190	SPIRALE TUBE, 6 MM TEFLON	1-47, 1-49, 1-51
U70W6550	351310-0050	ACTUATOR/SENSOR CABLE PRKWT 4-07/5M	1-17
U70W6552	90458-0190	SPIRALE TUBE, 6 MM TEFLON	1-47, 1-49, 1-51
U70W6564	90458-0190	SPIRALE TUBE, 6 MM TEFLON	1-47, 1-49, 1-51
U70W6565	90220-0059	THERMOCOUPLE CABLE, P/PTW-20F-K 2X0,5MM2	1-37, 1-39
U70W6566	90220-0059	THERMOCOUPLE CABLE, P/PTW-20F-K 2X0,5MM2	1-37, 1-39
U70W6570	351310-0050	ACTUATOR/SENSOR CABLE PRKWT 4-07/5M	1-55
U70W6572	90458-0190	SPIRALE TUBE, 6 MM TEFLON	1-47, 1-49, 1-51
U70W6580	351301-0050	ACTUATOR/SENSOR CABLE PRKMV 3-06/5M	1-19
U70W6584	90458-0190	SPIRALE TUBE, 6 MM TEFLON	1-47, 1-49, 1-51
U70W6590	351301-0050	ACTUATOR/SENSOR CABLE PRKMV 3-06/5M	1-25
U70W6592	90458-0190	SPIRALE TUBE, 6 MM TEFLON	1-47, 1-49, 1-51
U70W6600	90600-1768	ACTUATOR/SENSOR CABLE RKTS 5-298/5M	1-43
U70W6602	90458-0190	SPIRALE TUBE, 6 MM TEFLON	1-43
U70W6603	90458-0190	SPIRALE TUBE, 6 MM TEFLON	1-43
U70W6604	90600-2065	HOSE, 10X1 MM PTFE TRANSPARENT	1-47, 1-49, 1-51
U70W6605	90600-2065	HOSE, 10X1 MM PTFE TRANSPARENT	1-47, 1-49, 1-51
U70W6614	90458-0190	SPIRALE TUBE, 6 MM TEFLON	1-47, 1-49, 1-51
U70W7044	315400-0004	TUBE PUN-H-8X1,25-BL	1-219, 1-221
U70W7045	315400-0004	TUBE PUN-H-8X1,25-BL	1-219, 1-221
U70W7045	315400-0016	TUBE PUN-H-4X0,75-BL	1-215, 1-217
U70W7046	315400-0004	TUBE PUN-H-8X1,25-BL	1-219, 1-221
U70W7047	315400-0004	TUBE PUN-H-8X1,25-BL	1-219, 1-221
U70W7048	315400-0016	TUBE PUN-H-4X0,75-BL	1-219, 1-221
U70W7054	315400-0001	TUBE PUN-H-6X1-BL	1-215, 1-217
U70W7064	315400-0001	TUBE PUN-H-6X1-BL	1-215, 1-217, 1-219, 1-221
U70W7072	315400-0001	TUBE PUN-H-6X1-BL	1-215, 1-217
U70W7074	315400-0001	TUBE PUN-H-6X1-BL	1-215, 1-217
U70W7075	2835314-0000	PIPE	1-215, 1-217
U70W7076	2835315-0000	PIPE	1-215, 1-217
U70W7077	2835313-0000	PIPE	1-215, 1-217
U70W7082	315400-0001	TUBE PUN-H-6X1-BL	1-215, 1-217
U70W7084	315400-0001	TUBE PUN-H-6X1-BL	1-215, 1-217
U70W7086	2835311-0000	PIPE	1-215, 1-217
U70W7088	2835312-0000	PIPE	1-215, 1-217
U70W7092	315400-0001	TUBE PUN-H-6X1-BL	1-215, 1-217
U70W7094	315400-0001	TUBE PUN-H-6X1-BL	1-215, 1-217
U70W7096	2835316-0000	PIPE	1-215, 1-217
U70W7098	2835317-0000	PIPE	1-215, 1-217
U70W7104	315400-0004	TUBE PUN-H-8X1,25-BL	1-219, 1-221
U70W7105	315400-0001	TUBE PUN-H-6X1-BL	1-215, 1-217
U70W7105	315400-0016	TUBE PUN-H-4X0,75-BL	1-219, 1-221
U70W9000	90459-2530	DEVICENET CABLE THIN	1-91

Pos	Part No	Description	Page No
W			
U70W9001	351150-0406	CABLE OLFLEX 7X0,75 MM2 LIGHT/GREY	1-91
U70W9260	2871499-0000	PIPE	1-215, 1-217
U70W9703	315400-0001	TUBE PUN-H-6X1-BL	1-97
U70W9704	315400-0016	TUBE PUN-H-4X0,75-BL	1-219, 1-221
V20W0321	90220-0104	SCR. CABLE 4X1,5MM2	8-129, 8-131
V20W1030	351150-0404	CABLE OLFLEX 4X0,75 MM2 LIGHT/GREY	2-185, 2-187
V20W1070	351150-0404	CABLE OLFLEX 4X0,75 MM2 LIGHT/GREY	2-185, 2-187
V20W1130	351150-0404	CABLE OLFLEX 4X0,75 MM2 LIGHT/GREY	1-81
V20W1282	315300-0001	TUBE, 6 MM PE BLUE	6-5, 6-7
V20W1284	90603-1615	HOSE 4/6, PFAN-6X1-NT	2-185, 2-187
V20W1292	90603-1615	HOSE 4/6, PFAN-6X1-NT	2-185, 2-187
V20W1294	315300-0001	TUBE, 6 MM PE BLUE	6-5, 6-7
V20W1302	315300-0001	TUBE, 6 MM PE BLUE	6-5, 6-7
V20W1304	90603-1615	HOSE 4/6, PFAN-6X1-NT	2-185, 2-187
V20W1313	90603-1615	HOSE 4/6, PFAN-6X1-NT	2-185, 2-187
V20W1314	315300-0001	TUBE, 6 MM PE BLUE	6-5, 6-7
V20W1324	90603-1615	HOSE 4/6, PFAN-6X1-NT	2-185, 2-187
V20W1332	90603-1615	HOSE 4/6, PFAN-6X1-NT	2-185, 2-187
V20W1334	315300-0001	TUBE, 6 MM PE BLUE	6-5, 6-7
V20W1344	90603-1615	HOSE 4/6, PFAN-6X1-NT	2-185, 2-187
V20W1352	90603-1615	HOSE 4/6, PFAN-6X1-NT	2-185, 2-187
V20W1354	315300-0001	TUBE, 6 MM PE BLUE	6-5, 6-7
V20W1364	315400-0001	TUBE PUN-H-6X1-BL	1-75, 1-77
V20W1372	315400-0001	TUBE PUN-H-6X1-BL	1-79
V20W1374	90600-3000	HOSE 16X2MM, WIROFLEX 26002 2	2-65, 2-67
V20W1384	315400-0001	TUBE PUN-H-6X1-BL	1-81
V20W1404	315400-0001	TUBE PUN-H-6X1-BL	1-71
V20W1410	351150-0403	CABLE OLFLEX 3X0,75 MM2 LIGHT/GREY	6-11
V20W1415	90459-0221	TUBE, 6 MM PE BLACK	2-185, 2-187
V20W1416	90459-0221	TUBE, 6 MM PE BLACK	2-185, 2-187
V20W1418	90459-0221	TUBE, 6 MM PE BLACK	2-185, 2-187
V20W1570	351150-0403	CABLE OLFLEX 3X0,75 MM2 LIGHT/GREY	2-185, 2-187
V20W1590	351150-0403	CABLE OLFLEX 3X0,75 MM2 LIGHT/GREY	2-185, 2-187
V20W2480	351423-0008	CABLE UNITRONIC LICY 2X0,5	1-73
V20W3320	90459-2530	DEVICENET CABLE THIN	8-129, 8-131
V20W6005	315300-0016	TUBE 4MPE BLUE	6-5, 6-7
V20W6007	315300-0010	TUBE, 12 MM PE BLUE	6-5, 6-7
W51W1020	351309-0050	ACTUATOR/SENSOR CABLE PRKT 4-07/5M	9-5
W51W9500	351501-0075	ETHERNET PATCH CABLE, FL CAT5 PATCH 7,5	2-173, 2-175
X			
A01X0020	2868068-0200	BAR	8-25
A01X0030	2868067-0100	BAR	8-25
A01X0040	90459-0839	DISTRIBUTION FRAME, ASBV 8 5-135/10M	8-149, 8-151
A01X0080	2868070-0200	BAR	8-15, 8-17, 8-19
A01X2000	90110-0147	CONNECTOR, D-SUB, DE09S064TLF	2-173, 2-175
A01X2040	90459-2517	DEVICE BOX 8 PORT THIN CABLE	8-149, 8-151
A01X3100	2841925-0200	BAR	8-157
A01X3100	2861074-0100	BAR	8-153
A01X5820	90459-3845	WALL SOCKET, Z-SD230	8-159, 8-161
A01X5940	90326-0020	SOCKET, FEMALE YELLOW CR-AL, 03-22000A	8-5, 8-7, 8-9, 8-11
F01X5720	90110-0057	FEMALE INSERT, HAN 24 E 09 33 002 4201	8-5, 8-7, 8-9, 8-11
K80X0010	90459-6820	FEMALE INSERT, HAN 4 A, 09 20 004 2711	8-149, 8-151
K80X0010	90459-6821	MALE INSERT HAN 4A, 0920 0042 611	2-173, 2-175
K80X0020	90459-6820	FEMALE INSERT, HAN 4 A, 09 20 004 2711	8-149, 8-151
K80X0020	90459-6821	MALE INSERT HAN 4A, 0920 0042 611	2-173, 2-175
K80X0030	90601-6215	FEMALE INSERT, HAN C AXIAL 0914 003 2701	8-149, 8-151
K80X0030	90601-6217	MALE INSERT, HAN 3 MOD-M-S 40A	2-173, 2-175
K80X0110	90110-0052	MALE INSERT, HAN E06, 0933 0062 601	6-53
K80X0110	90110-0053	FEMALE INSERT, HAN 6 E 09 33 006 2701	2-27
K80X0120	90110-0052	MALE INSERT, HAN E06, 0933 0062 601	6-53
K80X0120	90110-0053	FEMALE INSERT, HAN 6 E 09 33 006 2701	2-27
K80X0130	90110-0054	MALE INSERT, HAN 6 HSB, 0931 0062 601	6-53
K80X0130	90110-0055	FEMALE INSERT, HAN 6 HSB 09 31 006 2701	2-27
K80X0580	90110-0052	MALE INSERT, HAN E06, 0933 0062 601	2-173, 2-175
K80X0580	90459-6624	FEMALE INSERT, HAN E AV, 09 33 006 4735	8-149, 8-151
K80X1000	2871452-0200	TERMINAL BLOCK	6-45
K80X1080	90110-0053	FEMALE INSERT, HAN 6 E 09 33 006 2701	2-27
K80X1080	90110-0054	MALE INSERT, HAN 6 HSB, 0931 0062 601	6-53
K80X1140	90326-0020	SOCKET, FEMALE YELLOW CR-AL, 03-22000A	6-17
K80X1802	90458-1212	LEFT ENDPLATE INCL. 10M CABLE	6-39
K80X1804	90458-1214	RIGHT ENDPL EXT. PILOT AIR,CDVI5.0-EPR-S	6-39
T10X0050	90110-0056	MALE INSERT, HAN E 24, 0933 0242 601	7-49, 7-51
T10X0050	90459-6627	FEMALE INSERT, HAN E AV, 09 33 024 4735	8-149, 8-151
T10X0060	90459-6820	FEMALE INSERT, HAN 4 A, 09 20 004 2711	8-149, 8-151
T10X0060	90459-6821	MALE INSERT, HAN 4A, 0920 0042 611	7-49, 7-51
T10X0100	90459-6820	FEMALE INSERT, HAN 4 A, 09 20 004 2711	8-149, 8-151
T10X0100	90459-6821	MALE INSERT, HAN 4A, 0920 0042 611	7-49, 7-51
T10X0110	90459-6820	FEMALE INSERT, HAN 4 A, 09 20 004 2711	8-149, 8-151
T10X0110	90459-6821	MALE INSERT, HAN 4A, 0920 0042 611	7-49, 7-51
T10X0120	90459-6820	FEMALE INSERT, HAN 4 A, 09 20 004 2711	8-149, 8-151
T10X0120	90459-6821	MALE INSERT, HAN 4A, 0920 0042 611	7-49, 7-51
T10X0130	90459-6820	FEMALE INSERT, HAN 4 A, 09 20 004 2711	7-125

Pos	Part No	Description	Page No
X			
T10X0130	90459-6821	MALE INSERT, HAN 4A, 0920 0042 611	7-49, 7-51
T10X0200	90110-0235	CABLE CONTACT, PX0739/P	7-49, 7-51
T10X0200	90110-0236	CHASSIS CONTACT PX0767/S	8-149, 8-151
T10X0201	90110-0235	CABLE CONTACT, PX0739/P	7-49, 7-51
T10X0201	90110-0236	CHASSIS CONTACT PX0767/S	8-149, 8-151
T10X0500	90601-6215	FEMALE INSERT, HAN C AXIAL 0914 003 2701	8-149, 8-151
T10X0500	90601-6217	MALE INSERT, HAN 3 MOD-M-S 40A	7-49, 7-51
T10X0570	90601-6215	FEMALE INSERT, HAN C AXIAL 0914 003 2701	8-149, 8-151
T10X0570	90601-6217	MALE INSERT, HAN 3 MOD-M-S 40A	7-49, 7-51
T10X0580	90110-0054	MALE INSERT, HAN 6 HSB, 0931 0062 601	7-49, 7-51
T10X0580	90110-0055	FEMALE INSERT, HAN 6 HSB 09 31 006 2701	8-149, 8-151
T10X1000	2890281-0300	TERMINAL BLOCK	7-41, 7-43
T10X1020	90110-0052	MALE INSERT, HAN E06, 0933 0062 601	7-49, 7-51
T10X1020	90459-6624	FEMALE INSERT, HAN E AV, 09 33 006 4735	8-149, 8-151
T10X1040	90110-0052	MALE INSERT, HAN E06, 0933 0062 601	7-49, 7-51
T10X1040	90459-6624	FEMALE INSERT, HAN E AV, 09 33 006 4735	8-149, 8-151
T10X1160	90458-1212	LEFT ENDPLATE INCL. 10M CABLE	7-31
T10X1170	90458-1212	LEFT ENDPLATE INCL. 10M CABLE	7-35
T10X1510	90326-0020	SOCKET, FEMALE YELLOW CR-AL, 03-22000A	7-143
T10X1540	90326-0020	SOCKET, FEMALE YELLOW CR-AL, 03-22000A	7-117
T10X1570	90459-6820	FEMALE INSERT, HAN 4 A, 09 20 004 2711	7-143
T10X1570	90459-6821	MALE INSERT, HAN 4A, 0920 0042 611	7-143
T10X1800	90459-6679	CONN 15 P FEM, AUX. FEEDB,2090-K6CK-D15F	7-49, 7-51
T10X2600	90601-0026	JUNCTION BLOCK,TINA 11-A	7-49, 7-51
T40X0010	90459-6820	FEMALE INSERT, HAN 4 A, 09 20 004 2711	8-149, 8-151
T40X0010	90459-6821	MALE INSERT HAN 4A, 0920 0042 611	2-173, 2-175
T40X0040	90110-0052	MALE INSERT, HAN E06, 0933 0062 601	2-173, 2-175
T40X0040	90163-0076	QUICK COUPLING, (F) LP-006-0-WR021	2-37, 2-39
T40X0040	90459-6624	FEMALE INSERT, HAN E AV, 09 33 006 4735	8-149, 8-151
T40X0041	90163-0064	QUICK COUPLING, (M) LP-006-2-WR517	2-37, 2-39
T40X0042	90600-1289	HYDRAULIC VALVE, AG 32 L783-1-1-2	2-37, 2-39
T40X0210	90110-0056	MALE INSERT, HAN E 24, 0933 0242 601	2-173, 2-175
T40X0210	90459-6627	FEMALE INSERT, HAN E AV, 09 33 024 4735	8-149, 8-151
T40X0240	90459-0184	INTERFACE CONNECTOR FOR TPIH 2500 GENER.	8-127
T40X0520	90110-0056	MALE INSERT, HAN E 24, 0933 0242 601	2-173, 2-175
T40X0520	90459-6627	FEMALE INSERT, HAN E AV, 09 33 024 4735	8-149, 8-151
T40X0700	90195-0020	TERMINAL BLOCK, BK 2CRN, 0624 7200 00	8-15, 8-17, 8-19
T40X0710	90195-0020	TERMINAL BLOCK, BK 2CRN, 0624 7200 00	8-15, 8-17, 8-19
T40X0720	90195-0020	TERMINAL BLOCK, BK 2CRN, 0624 7200 00	8-15, 8-17, 8-19
T40X0730	90195-0020	TERMINAL BLOCK, BK 2CRN, 0624 7200 00	8-15, 8-17, 8-19
T40X0740	90195-0020	TERMINAL BLOCK, BK 2CRN, 0624 7200 00	8-15, 8-17, 8-19
T40X0750	90195-0020	TERMINAL BLOCK, BK 2CRN, 0624 7200 00	8-15, 8-17, 8-19
T40X0840	3038001-0100	BAR	8-41, 8-43
T40X1000	2890279-0200	TERMINAL BLOCK	2-55
T40X1700	90459-2551	CONNECTOR, MOTOR FEEDBACK 15 PIN MALE	2-173, 2-175
T40X1710	90459-2551	CONNECTOR, MOTOR FEEDBACK 15 PIN MALE	2-173, 2-175
T40X1720	90459-2551	CONNECTOR, MOTOR FEEDBACK 15 PIN MALE	2-173, 2-175
T40X1730	90459-2551	CONNECTOR, MOTOR FEEDBACK 15 PIN MALE	2-173, 2-175
T40X1740	90459-2551	CONNECTOR, MOTOR FEEDBACK 15 PIN MALE	2-173, 2-175
T40X1750	90459-2551	CONNECTOR, MOTOR FEEDBACK 15 PIN MALE	2-173, 2-175
T40X3100	90110-0127	COAXIAL CONNECTOR, GE 15057C10HBNT-2PT	4-43
T40X3200	90110-0127	COAXIAL CONNECTOR, GE 15057C10HBNT-2PT	4-43
T40X3850	90600-4876	CONNECTION BOX TINA 8A , 20-054-05	2-161
T40X3860	90459-5627	CONNECTION, TINA 1-A	2-161
T40X3870	90459-5627	CONNECTION, TINA 1-A	2-161
T40X9550	90600-1296	CONNECTOR 2 POLE + PE, Z4-A GRIG	2-37, 2-39
T40X9560	90600-1297	CONNECTOR, 03POL Z4 M SW (BLACK)	2-37, 2-39
T40X9580	90600-1296	CONNECTOR 2 POLE + PE, Z4-A GRIG	2-37, 2-39
T40X9600	90600-1296	CONNECTOR 2 POLE + PE, Z4-A GRIG	2-37, 2-39
T50X0060	90459-6820	FEMALE INSERT, HAN 4 A, 09 20 004 2711	8-149, 8-151
T50X0060	90459-6821	MALE INSERT HAN 4A, 0920 0042 611	2-173, 2-175
T50X0140	90459-6820	FEMALE INSERT, HAN 4 A, 09 20 004 2711	8-149, 8-151
T50X0140	90459-6821	MALE INSERT HAN 4A, 0920 0042 611	2-173, 2-175
T50X0150	90459-6820	FEMALE INSERT, HAN 4 A, 09 20 004 2711	8-149, 8-151
T50X0150	90459-6821	MALE INSERT HAN 4A, 0920 0042 611	2-173, 2-175
T50X0530	90110-0056	MALE INSERT, HAN E 24, 0933 0242 601	2-173, 2-175
T50X0530	90459-6627	FEMALE INSERT, HAN E AV, 09 33 024 4735	8-149, 8-151
T50X0550	90601-6215	FEMALE INSERT, HAN C AXIAL 0914 003 2701	8-149, 8-151
T50X0550	90601-6217	MALE INSERT, HAN 3 MOD-M-S 40A	2-173, 2-175
T50X0551	90601-6215	FEMALE INSERT, HAN C AXIAL 0914 003 2701	8-149, 8-151
T50X0551	90601-6217	MALE INSERT, HAN 3 MOD-M-S 40A	2-173, 2-175
T50X0560	90601-6215	FEMALE INSERT, HAN C AXIAL 0914 003 2701	8-149, 8-151
T50X0560	90601-6217	MALE INSERT, HAN 3 MOD-M-S 40A	2-173, 2-175
T50X0570	90110-0054	MALE INSERT, HAN 6 HSB, 0931 0062 601	5-49
T50X0570	90110-0055	FEMALE INSERT, HAN 6 HSB 09 31 006 2701	2-27
T50X0580	90110-0054	MALE INSERT, HAN 6 HSB, 0931 0062 601	5-49
T50X0580	90110-0055	FEMALE INSERT, HAN 6 HSB 09 31 006 2701	2-27
T50X0600	90459-6820	FEMALE INSERT, HAN 4 A, 09 20 004 2711	2-173, 2-175
T50X0600	2871952-0100	CONNECTOR	5-37, 5-39
T50X0610	90459-6820	FEMALE INSERT, HAN 4 A, 09 20 004 2711	2-173, 2-175
T50X0610	2871951-0100	CONNECTOR	5-37, 5-39
T50X0620	90459-6820	FEMALE INSERT, HAN 4 A, 09 20 004 2711	2-173, 2-175

Pos	Part No	Description	Page No
X			
T50X0620	2871951-0100 ..	CONNECTOR	5-37, 5-39
T50X0630	90459-6820	FEMALE INSERT, HAN 4 A, 09 20 004 2711	2-173, 2-175
T50X0630	2871951-0100 ..	CONNECTOR	5-37, 5-39
T50X1000	2890280-0200 ..	TERMINAL BLOCK	2-21, 2-23
T50X1050	90459-6586	ACT/SENS.Y-CABLE, ASBN 2-PRKMV 4-07/0,6M	5-31
T50X1070	90110-0052	MALE INSERT, HAN E06, 0933 0062 601	2-173, 2-175
T50X1070	90459-6624	FEMALE INSERT, HAN E AV, 09 33 006 4735	8-149, 8-151
T50X1090	90459-6586	ACT/SENS.Y-CABLE, ASBN 2-PRKMV 4-07/0,6M	5-31
T50X1800	90459-2551	CONNECTOR, MOTOR FEEDBACK 15 PIN MALE	2-173, 2-175
T50X1810	90459-2551	CONNECTOR, MOTOR FEEDBACK 15 PIN MALE	2-173, 2-175
T50X1820	90459-2551	CONNECTOR, MOTOR FEEDBACK 15 PIN MALE	2-173, 2-175
T50X6000	90458-1212	LEFT ENDPLATE INCL. 10M CABLE	2-51
U30X0010	90459-6820	FEMALE INSERT, HAN 4 A, 09 20 004 2711	8-149, 8-151
U30X0010	90459-6821	MALE INSERT HAN 4A, 0920 0042 611	2-173, 2-175
U30X1180	90458-1595	CONNECTION, BKS-S 33M-00	2-199
U30X1200	90326-0020	SOCKET, FEMALE YELLOW CR-AL, 03-22000A	2-199
U70X0010	90601-6215	FEMALE INSERT, HAN C AXIAL 0914 003 2701	8-149, 8-151
U70X0010	90601-6217	MALE INSERT, HAN 3 MOD-M-S 40A	2-173, 2-175
U70X0020	90601-6215	FEMALE INSERT, HAN C AXIAL 0914 003 2701	8-149, 8-151
U70X0020	90601-6217	MALE INSERT, HAN 3 MOD-M-S 40A	2-173, 2-175
U70X0080	90601-6215	FEMALE INSERT, HAN C AXIAL 0914 003 2701	8-149, 8-151
U70X0080	90601-6217	MALE INSERT, HAN 3 MOD-M-S 40A	1-247, 1-249
U70X0090	90601-0086	FEMALE NSERT, HAN C AXIAL 09 14 003 2702	8-149, 8-151
U70X0090	90601-0087	MALE INSERT, HAN 3 MOD-M-S 40A	1-247, 1-249
U70X0230	90459-6820	FEMALE INSERT, HAN 4 A, 09 20 004 2711	8-149, 8-151
U70X0230	90459-6821	MALE INSERT HAN 4A, 0920 0042 611	2-173, 2-175
U70X0280	90459-2106	CABLE CONNECTOR, C091 31D004 100 2	1-251
U70X0370	90601-6215	FEMALE INSERT, HAN C AXIAL 0914 003 2701	8-141, 8-143, 8-145, 8-147
U70X0370	90601-6217	MALE INSERT, HAN 3 MOD-M-S 40A	1-87
U70X0390	90110-0147	CONNECTOR, D-SUB, DE09S064TLF	1-251
U70X0450	90110-0055	FEMALE INSERT, HAN 6 HSB 09 31 006 2701	8-149, 8-151
U70X0450	90110-0156	MALE INSERT 70.210.0653.0	1-247, 1-249
U70X0560	90110-0056	MALE INSERT, HAN E 24, 0933 0242 601	1-247, 1-249
U70X0560	90459-6627	FEMALE INSERT, HAN E AV, 09 33 024 4735	8-149, 8-151
U70X0810	90326-0022	PLUG, MALE YELLOW CR-AL, 03-21000A	1-247, 1-249
U70X0810	90459-4928	PANEL CONNECTOR FEMALE, TYPE K	8-149, 8-151
U70X0820	90459-4928	PANEL CONNECTOR FEMALE, TYPE K	8-149, 8-151
U70X0830	90326-0022	PLUG, MALE YELLOW CR-AL, 03-21000A	1-247, 1-249
U70X0830	90459-4928	PANEL CONNECTOR FEMALE, TYPE K	8-149, 8-151
U70X0840	90459-4928	PANEL CONNECTOR FEMALE, TYPE K	8-149, 8-151
U70X0850	90326-0022	PLUG, MALE YELLOW CR-AL, 03-21000A	1-247, 1-249
U70X0850	90459-4928	PANEL CONNECTOR FEMALE, TYPE K	8-149, 8-151
U70X0930	90326-0022	PLUG, MALE YELLOW CR-AL, 03-21000A	1-91
U70X0930	90459-4928	PANEL CONNECTOR FEMALE, TYPE K	8-149, 8-151
U70X1000	2871449-0200 ..	TERMINAL BLOCK	1-241
U70X1130	90601-6215	FEMALE INSERT, HAN C AXIAL 0914 003 2701	8-149, 8-151
U70X1130	90601-6217	MALE INSERT, HAN 3 MOD-M-S 40A	1-247, 1-249
U70X1140	90601-6215	FEMALE INSERT, HAN C AXIAL 0914 003 2701	8-149, 8-151
U70X1140	90601-6217	MALE INSERT, HAN 3 MOD-M-S 40A	1-247, 1-249
U70X1160	90110-0052	MALE INSERT, HAN E06, 0933 0062 601	1-247, 1-249
U70X1160	90459-6624	FEMALE INSERT, HAN E AV, 09 33 006 4735	8-149, 8-151
U70X1190	90110-0052	MALE INSERT, HAN E06, 0933 0062 601	1-247, 1-249
U70X1190	90459-6624	FEMALE INSERT, HAN E AV, 09 33 006 4735	8-149, 8-151
U70X1250	90326-0020	SOCKET, FEMALE YELLOW CR-AL, 03-22000A	2-207
U70X1260	90326-0020	SOCKET, FEMALE YELLOW CR-AL, 03-22000A	1-197, 1-199
U70X1270	90326-0020	SOCKET, FEMALE YELLOW CR-AL, 03-22000A	1-163
U70X1741	90458-1212	LEFT ENDPLATE INCL. 10M CABLE	1-229, 1-231
U70X1743	90458-1212	LEFT ENDPLATE INCL. 10M CABLE	1-227
U70X2260	90459-3709	CONNECTOR 3-POLE AMP 282087-1	1-119
U70X2280	90326-0020	SOCKET, FEMALE YELLOW CR-AL, 03-22000A	1-149, 1-151
U70X2290	90326-0020	SOCKET, FEMALE YELLOW CR-AL, 03-22000A	1-149, 1-151
U70X2300	90326-0020	SOCKET, FEMALE YELLOW CR-AL, 03-22000A	1-111
U70X2500	90602-4058	CONNECTION BOX TINA 4A, 20-054-03	1-239
U70X2501	90110-0235	CABLE CONTACT, PX0739/P	1-239, 1-247, 1-249
U70X2501	90110-0236	CHASSIS CONTACT PX0767/S	8-149, 8-151
U70X2540	90459-5627	CONNECTION, TINA 1-A	1-239
U70X3200	90326-0020	SOCKET, FEMALE YELLOW CR-AL, 03-22000A	1-167
U70X3210	90326-0020	SOCKET, FEMALE YELLOW CR-AL, 03-22000A	1-145
U70X3211	90326-0020	SOCKET, FEMALE YELLOW CR-AL, 03-22000A	1-145
U70X3230	90326-0020	SOCKET, FEMALE YELLOW CR-AL, 03-22000A	1-143
U70X3240	90326-0020	SOCKET, FEMALE YELLOW CR-AL, 03-22000A	1-143
U70X3250	90326-0020	SOCKET, FEMALE YELLOW CR-AL, 03-22000A	1-185
U70X3270	90326-0020	SOCKET, FEMALE YELLOW CR-AL, 03-22000A	1-163
U70X4000	3144484-0100 ..	TERMINAL BLOCK	1-93
U70X4330	90458-1262	CONNECTOR, FOR PROP.VALVE, 131028001	1-89
U70X4350	90326-0020	SOCKET, FEMALE YELLOW CR-AL, 03-22000A	1-87
U70X4360	90326-0020	SOCKET, FEMALE YELLOW CR-AL, 03-22000A	1-87
U70X4370	90326-0020	SOCKET, FEMALE YELLOW CR-AL, 03-22000A	1-99
U70X4371	90326-0022	PLUG, MALE YELLOW CR-AL, 03-21000A	1-99
U70X6025	90458-1212	LEFT ENDPLATE INCL. 10M CABLE	1-45
U70X6050	90326-0020	SOCKET, FEMALE YELLOW CR-AL, 03-22000A	1-37, 1-39
U70X6210	90459-2551	CONNECTOR, MOTOR FEEDBACK 15 PIN MALE	1-17

Pos	Part No	Description	Page No
X			
U70X6565	90326-0020	SOCKET, FEMALE YELLOW CR-AL, 03-22000A	1-37, 1-39
V20X0320	90110-0052	MALE INSERT, HAN E06, 0933 0062 601	1-71
V20X0320	90459-6624	FEMALE INSERT, HAN E AV, 09 33 006 4735	8-141, 8-143, 8-145, 8-147
V20X6200	90458-1212	LEFT ENDPLATE INCL. 10M CABLE	6-9
W51X1020	90459-6586	ACT/SENS.Y-CABLE, ASBN 2-PRKMV 4-07/0,6M	9-5
A01XL110	2861078-0100	BAR	8-77
A01XL111	2861079-0100	BAR	8-77
A01XL121	2861080-0100	BAR	8-77
A01XL112	2861081-0100	BAR	8-77
A01XL113	2861082-0200	BAR	8-77
A01XL117	2861083-0200	BAR	8-77
A01XL131	2861084-0100	BAR	8-77
A01XL141	2861085-0100	BAR	8-77
A01XL271	2861087-0100	BAR	8-51
A01XL114	2861088-0100	BAR	8-77
A01XL115	2861089-0100	BAR	8-77
A01XL116	2861090-0100	BAR	8-77
A01XL118	2861091-0100	BAR	8-77
A01XL211	2861092-0100	BAR	8-77
A01XL272	2861093-0100	BAR	8-51
A01XL411	2861094-0100	BAR	8-51
A01XL511	2861095-0100	BAR	8-51
A01XL711	2861097-0100	BAR	8-51
A01XL712	2861098-0100	BAR	8-51
A01XL771	2861099-0100	BAR	8-51
A01XL811	2861100-0100	BAR	8-51
A01XL143	2897675-0100	BAR	8-51
A01XL144	2897676-0100	BAR	8-51
A01XL713	3037136-0100	BAR	8-51
A01XL136	3041597-0100	BAR	8-51
A01XL119	3094531-0100	BAR	8-77

Tetra Pak

Label for 80 mm binder **Note!** *This page is generated* **automatically.**

Tetra Pak A3/CompactFlex
641550-0200 Issue 2012-03
Doc No. SPC-3044481-0117

Tetra Pak A3/CompactFlex
641550-0200 Issue 2012-03
Doc No. SPC-3044481-0117

Tetra Pak A3/CompactFlex
641550-0200 Issue 2012-03
Doc No. SPC-3044481-0117

Tetra Pak A3/CompactFlex 1(3)
641550-0200 Issue 2012-03
Doc No. SPC-3044481-0117

Tetra Pak A3/CompactFlex 1(2)
641550-0200 Issue 2012-03
Doc No. SPC-3044481-0117

Tetra Pak A3/CompactFlex 2(3)
641550-0200 Issue 2012-03
Doc No. SPC-3044481-0117

Tetra Pak A3/CompactFlex 2(2)
641550-0200 Issue 2012-03
Doc No. SPC-3044481-0117

Tetra Pak A3/CompactFlex 3(3)
641550-0200 Issue 2012-03
Doc No. SPC-3044481-0117

Label for 55 mm binder **Note!** *This page is generated* **automatically.**

Tetra Pak A3/CompactFlex
641550-0200 Issue 2012-03
Doc No. SPC-3044481-0117

Tetra Pak A3/CompactFlex 1(2)
641550-0200 Issue 2012-03
Doc No. SPC-3044481-0117

Tetra Pak A3/CompactFlex
641550-0200 Issue 2012-03
Doc No. SPC-3044481-0117

Tetra Pak A3/CompactFlex 2(2)
641550-0200 Issue 2012-03
Doc No. SPC-3044481-0117

Tetra Pak A3/CompactFlex
641550-0200 Issue 2012-03
Doc No. SPC-3044481-0117

Tetra Pak A3/CompactFlex 1(3)
641550-0200 Issue 2012-03
Doc No. SPC-3044481-0117

Tetra Pak A3/CompactFlex
641550-0200 Issue 2012-03
Doc No. SPC-3044481-0117

Tetra Pak A3/CompactFlex 2(3)
641550-0200 Issue 2012-03
Doc No. SPC-3044481-0117

Tetra Pak A3/CompactFlex
641550-0200 Issue 2012-03
Doc No. SPC-3044481-0117

Tetra Pak A3/CompactFlex 3(3)
641550-0200 Issue 2012-03
Doc No. SPC-3044481-0117

Tetra Pak A3/CompactFlex
641550-0200 Issue 2012-03
Doc No. SPC-3044481-0117

Tetra Pak A3/CompactFlex 3(3)
641550-0200 Issue 2012-03
Doc No. SPC-3044481-0117

Label for 40 mm binder **Note!** *This page is generated* **automatically.**

Tetra Pak A3/CompactFlex
641550-0200 Issue 2012-03
Doc No. SPC-3044481-0117

Tetra Pak A3/CompactFlex 1(2)
641550-0200 Issue 2012-03
Doc No. SPC-3044481-0117

Tetra Pak A3/CompactFlex
641550-0200 Issue 2012-03
Doc No. SPC-3044481-0117

Tetra Pak A3/CompactFlex 2(2)
641550-0200 Issue 2012-03
Doc No. SPC-3044481-0117

Tetra Pak A3/CompactFlex
641550-0200 Issue 2012-03
Doc No. SPC-3044481-0117

Tetra Pak A3/CompactFlex 1(2)
641550-0200 Issue 2012-03
Doc No. SPC-3044481-0117

Tetra Pak A3/CompactFlex
641550-0200 Issue 2012-03
Doc No. SPC-3044481-0117

Tetra Pak A3/CompactFlex 2(2)
641550-0200 Issue 2012-03
Doc No. SPC-3044481-0117

Tetra Pak A3/CompactFlex
641550-0200 Issue 2012-03
Doc No. SPC-3044481-0117

Tetra Pak A3/CompactFlex 1(3)
641550-0200 Issue 2012-03
Doc No. SPC-3044481-0117

Tetra Pak A3/CompactFlex
641550-0200 Issue 2012-03
Doc No. SPC-3044481-0117

Tetra Pak A3/CompactFlex 2(3)
641550-0200 Issue 2012-03
Doc No. SPC-3044481-0117

Tetra Pak A3/CompactFlex
641550-0200 Issue 2012-03
Doc No. SPC-3044481-0117

Tetra Pak A3/CompactFlex 3(3)
641550-0200 Issue 2012-03
Doc No. SPC-3044481-0117

Tetra Pak A3/CompactFlex
641550-0200 Issue 2012-03
Doc No. SPC-3044481-0117

Tetra Pak A3/CompactFlex 3(3)
641550-0200 Issue 2012-03
Doc No. SPC-3044481-0117