SPC

Spare Parts Catalogue

VCK A3/CompactFlex

641515-0200

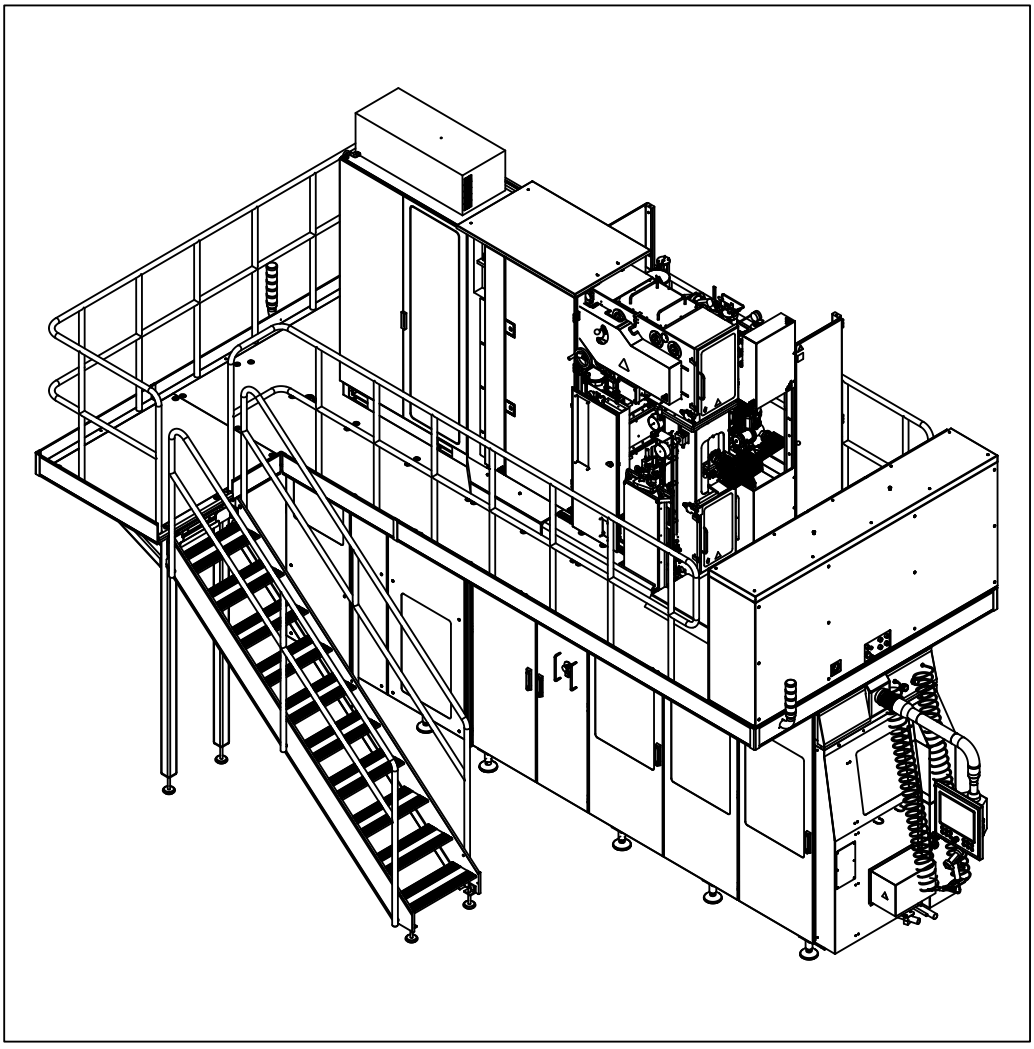

Tetra Pak®

Doc. No: SPC-3046796-0119

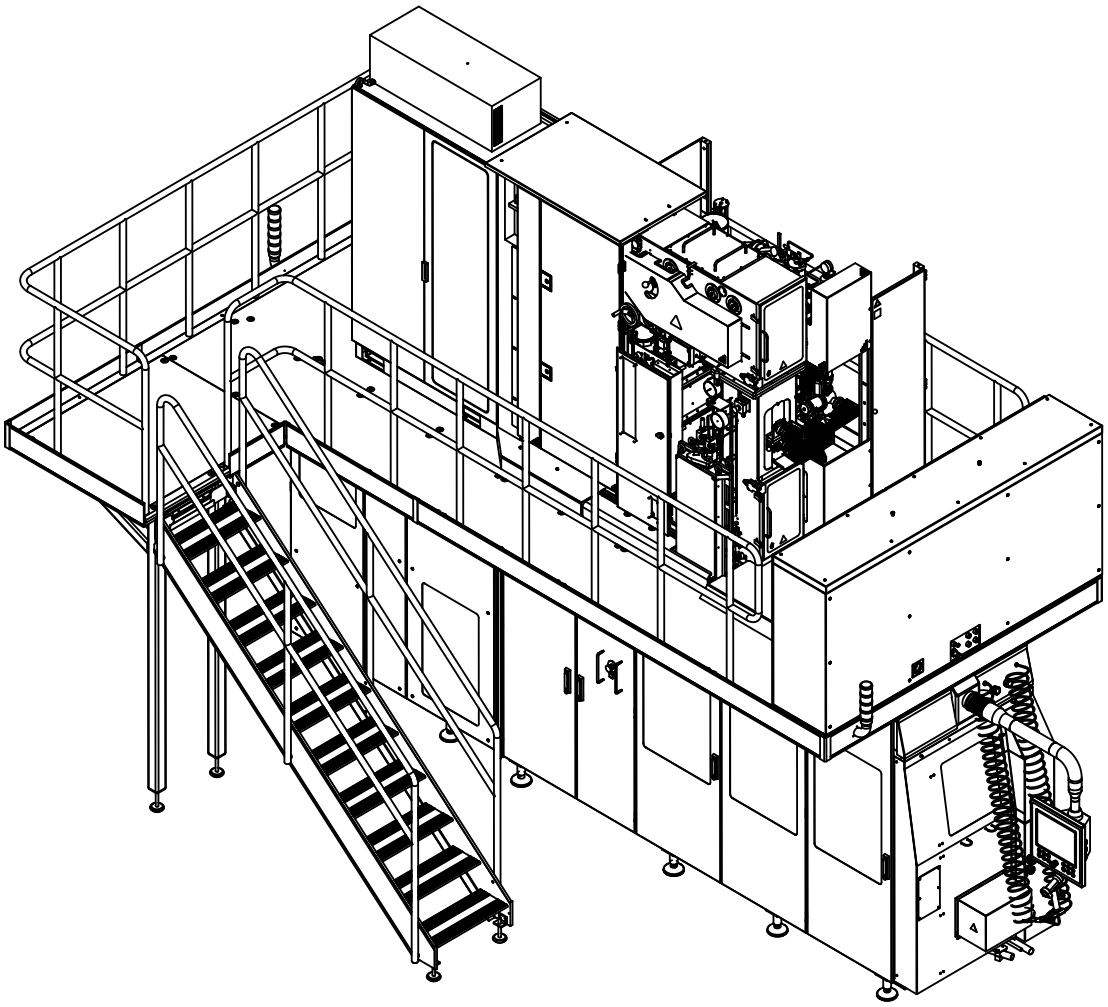

The position numbers in the illustration correspond with the chapter numbers listed on the next page.

Copyright © 2014 Tetra Pak International SA

All rights reserved. No part of this document may be reproduced or copied in any form or by any means without written permission from Tetra Pak Packaging Solutions

, Tetra Pak, and all other trademarks displayed in this document are the property of the Tetra Pak International SA. Tetra Pak Packaging Solutions together with Tetra Pak International SA form part of 'the Tetra Pak Group'. The content of this manual is in accordance with the design and construction of the machine or equipment at the time of publishing. Tetra Pak Group reserves the right to introduce design modifications without prior notice.

This document was produced and printed by:

Tetra Pak Packaging Solutions
Via Delfini 1
41123 Modena
ITALY

Doc. No. SPC-3046796-0119

Issue 2014-09

This document is valid for:

Series No. / Machine No.
Year of Manufacture Sign.

i Introduction
1 VCK A3/CompactFlex
ii Part Number Index
iii Ref. Des. Parts Index

SPC

Spare Parts Catalogue

VCK A3/CompactFlex
641515-0200

Machine or equipment configurations that this catalogue is valid for are described on the next page.

Doc. No: SPC-3046796-0119

Issue 2014-09

Tetra Pak®
Tetra Pak Packaging Solutions

Valid for:

Name	Drawing Specification and Development Step	Additional Information
VCK A3/CompactFlex	641515-0200	Valid from T-order: 22365/00192

Update Log for Doc. No. SPC-3046796-0119

This table shows all changes made to this catalogue, including installed rebuilding kits, added or removed pages. Page numbering on added pages begins with UP.

Date	Installed Kit	Added Pages (Doc. No.)	Removed Pages	Signature

Date	Installed Kit	Added Pages (Doc. No.)	Removed Pages	Signature

i Introduction

en About the Introduction Chapter
This chapter contains basic information about this catalogue and related Tetra Pak® equipment.

bg За уводната глава
Тази глава съдържа основна информация за този каталог и приложимото Tetra Pak® оборудване.

cs O kapitole Úvod
Tato kapitola obsahuje základní informace o této příručce a souvisejícím zařízení Tetra Pak®.

da Om indledningen
Kapitlet indeholder grundlæggende oplysninger om dette katalog og tilhørende Tetra Pak®-udstyr.

de Über das Einleitungskapitel
Diese Kapitel enthält grundlegende Informationen über diesen Katalog und die zugehörige Tetra Pak®-Ausrüstung.

el Σχετικά με το Κεφάλαιο 'Εισαγωγή'
Αυτό το κεφάλαιο περιέχει βασικές πληροφορίες για τον παρόντα κατάλογο και τον σχετικό εξοπλισμό της Tetra Pak®.

es Acerca del capítulo Introducción
Este capítulo contiene información básica sobre este catálogo y el equipo Tetra Pak® relacionado.

et Sissejuhatava peatüki kohta
See peatükk sisaldab teavet käesoleva kataloogi ja sellega seonduva Tetra Pak®i seadme kohta.

fi Tietoja Johdanto-luvusta
Tässä luvussa on perustietoja tästä luettelosta ja Tetra Pak®-laitteesta.

fr À propos du chapitre Introduction
Ce chapitre contient les informations de base à propos de ce catalogue et de l'équipement Tetra Pak® concerné.

hr O uvodnom poglavlju
Ovo poglavlje sadrži osnovne informacije o ovome Katalogu i o povezanoj Tetra Pak® opremi.

hu A Bevezetés fejezetről
Ez a fejezet alapvető információkat tartalmaz a katalógusról és a hozzá tartozó Tetra Pak® berendezésről.

is Um inngangskaflann
Þessi kafli inniheldur grundvallarupplýsingar um þennan vörulista og tengdan Tetra Pak® búnað.

it Informazioni sul capitolo Introduzione
Questo capitolo contiene informazioni generali sul presente catalogo e sulla relativa macchina Tetra Pak®.

lt Apie įvadinį skyrių
Šiame skyriuje pateikta pagrindinė informacija apie šį katalogą ir su juo susijusią "Tetra Pak®" įrangą.

lv Par Ievada nodaļu
Šī nodaļa ietver galveno informāciju par šo katalogu un saistītajām Tetra Pak® iekārtām.

nl Over de inleiding
Dit hoofdstuk bevat basisinformatie omtrent deze catalogus en aanverwante Tetra Pak®-installatie.

no Om kapitlet Introduksjon
Dette kapitlet inneholder grunnleggende informasjon om denne katalogen og relatert Tetra Pak®-ustyr.

pl Informacje na temat rozdziału wprowadzającego
Rozdział wprowadzający zawiera podstawowe informacje dotyczące niniejszego katalogu i związanej z nim maszyny Tetra Pak®.

pt Acerca do Capítulo de Introdução
Este capítulo contém informações básicas sobre este catálogo e os equipamentos relacionados da Tetra Pak®.

pt-br Sobre o capítulo Introdução
Este capítulo contém as informações básicas sobre este manual e o relativo equipamento Tetra Pak®.

ro Despre capitolul introductiv
Acest capitol conţine informaţii de bază despre acest catalog şi despre echipamentul Tetra Pak® corelat.

sk O kapitole Úvod
Táto kapitola obsahuje základné informácie o tomto návode a informácie súvisiace so zariadením Tetra Pak®.

sl O uvodnem poglavju
To poglavje vsebuje osnovne informacije o tem katalogu in opremi Tetra Pak®.

sv Om inledningskapitlet
Det här kapitlet innehåller grundläggande information om katalogen och Tetra Pak®-utrustningen.

This page intentionally left blank

Manual Information

Illustrations . . . . . i - 9

English Text . . . . . i - 11

Информация за ръководството

Илюстрации . . . . . i - 9

Текст на български език . . . . . i - 17

Informace o příručce

Obrázky . . . . . i - 9

Český text . . . . . i - 23

Oplysninger om vejledninger

Illustrationer . . . . . i - 9

Dansk tekst . . . . . i - 29

Handbuch-Informationen

Abbildungen . . . . . i - 9

Deutscher Text . . . . . i - 35

Πληροφορίες εγχειριδίου

Εικόνες . . . . . i - 9

Ελληνικό Κείμενο . . . . . i - 41

Información del manual

Ilustraciones . . . . . i - 9

Texto en español . . . . . i - 47

Manuaali informatsioon

Joonised . . . . . i - 9

Eestikeelne tekst . . . . . i - 53

Tiedot käsikirjasta

Kuvat . . . . . i - 9

Suomenkielinen teksti . . . . . i - 59

Information sur le manuel

Illustrations . . . . . i - 9

Texte français . . . . . i - 65

Informacije o priručnicima

Ilustracije . . . . . i - 9

Hrvatska tekst . . . . . i - 71

Kézikönyv információ

Ábrák . . . . . i - 9

Magyar szöveg . . . . . i - 77

Handbókaupplýsingar

Skýringarmyndir . . . . . i - 9

Íslenskur texti . . . . . i - 83

Informazioni sul manuale

Figure . . . . . i - 9

Testo in italiano . . . . . i - 89

Vadovo informacija

Paveikslėliai . . . . . i - 9

Lietuviškas tekstas . . . . . i - 95

Informācija par instrukciju

Ilustrācijas . . . . . i - 9

Teksts latviešu valodā . . . . . i - 101

Handboekinformatie

Afbeeldingen . . . . . i - 9

Nederlands tekst . . . . . i - 107

Informasjon om manualen

Illustrasjoner . . . . . i - 9

Norsk tekst . . . . . i - 113

Informacje na temat instrukcji

Rysunki . . . . . i - 9

Tekst polski . . . . . i - 119

Informação do Manual

Ilustrações . . . . . i - 9

Texto em português . . . . . i - 125

Informações sobre os manuais

Ilustrações . . . . . i - 9

Texto Brasileiro-Português . . . . . i - 131

Informaţiile de manual

Ilustraţii . . . . . i - 9

Text în limba română . . . . . i - 137

Informácie o príručke

Ilustrácie . . . . . i - 9

Slovenský text . . . . . i - 143

Informacije o navodilu

Slike . . . . . i - 9

Slovensko besedilo . . . . . i - 149

Information om handboken

Bilder . . . . . i - 9

Svensk text . . . . . i - 155

This page intentionally left blank

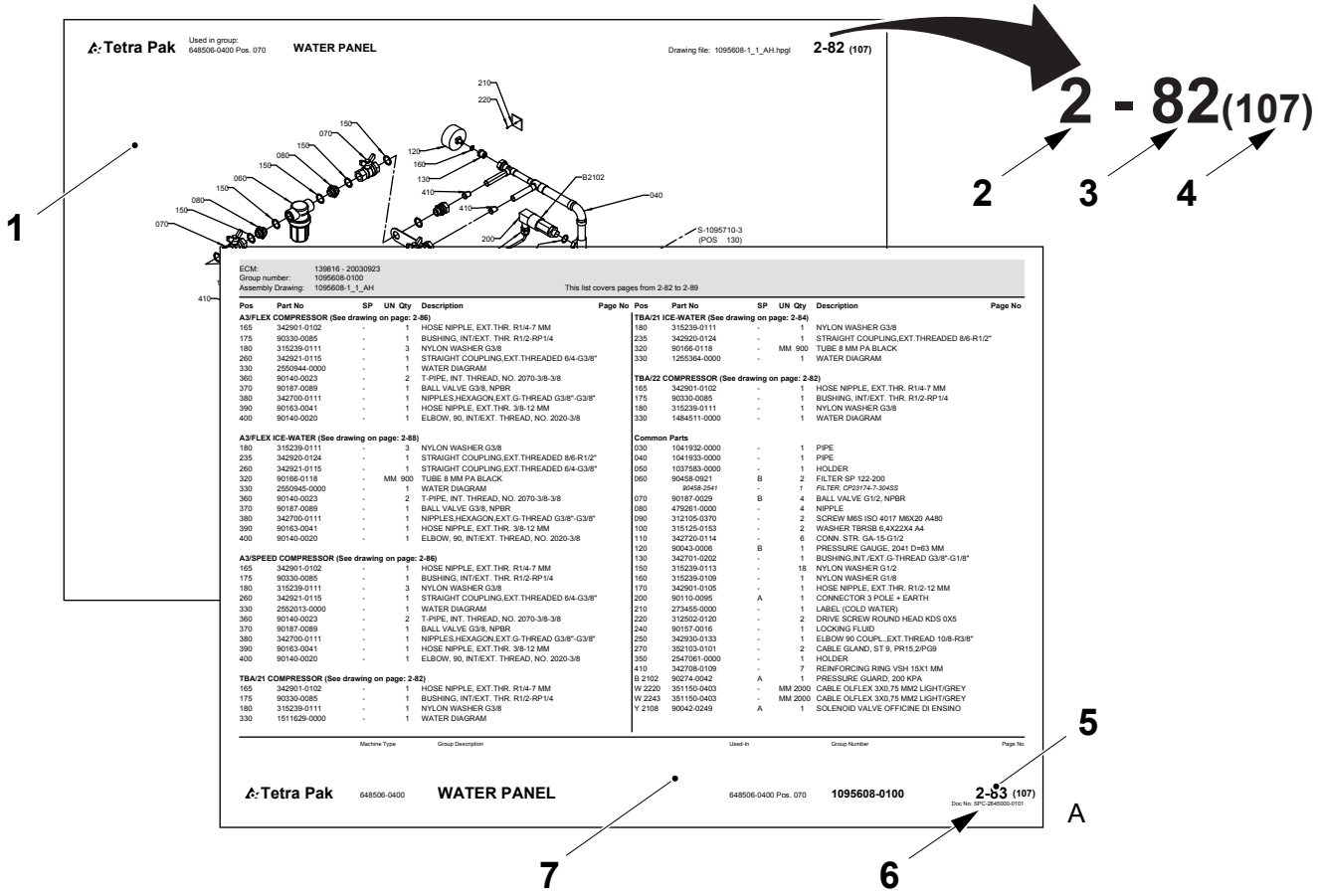
Tetra Pak
Used in group:
648506-0400 Pos. 070
WATER PANEL
Drawing file: 1095608-1_1_AH.hpgl
2-82 (107)
2 - 82(107)
1
2
3
4
5
6
7
A
ECM: 139816 - 20030923
Group number: 1095608-0100
Assembly Drawing: 1095608-1_1_AH
This list covers pages from 2-82 to 2-89
Tetra Pak 648506-0400 WATER PANEL 648506-0400 Pos. 070 1095608-0100 2-83 (107)

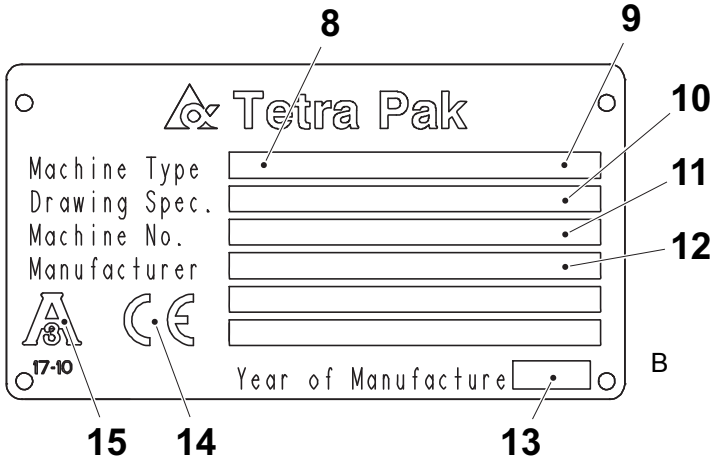
8
9
10
11
12
Tetra Pak
Machine Type
Drawing Spec.
Machine No.
Manufacturer
17-10
Year of Manufacture
B
15
14
13

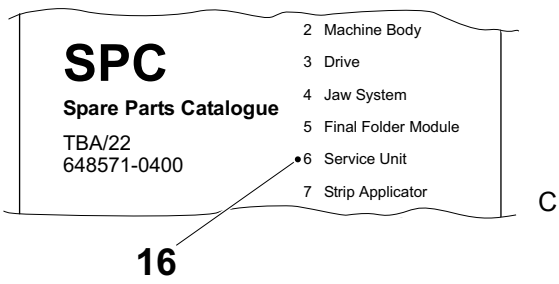
SPC
Spare Parts Catalogue
TBA/22
648571-0400
2 Machine Body
3 Drive
4 Jaw System
5 Final Folder Module
6 Service Unit
7 Strip Applicator
C
16

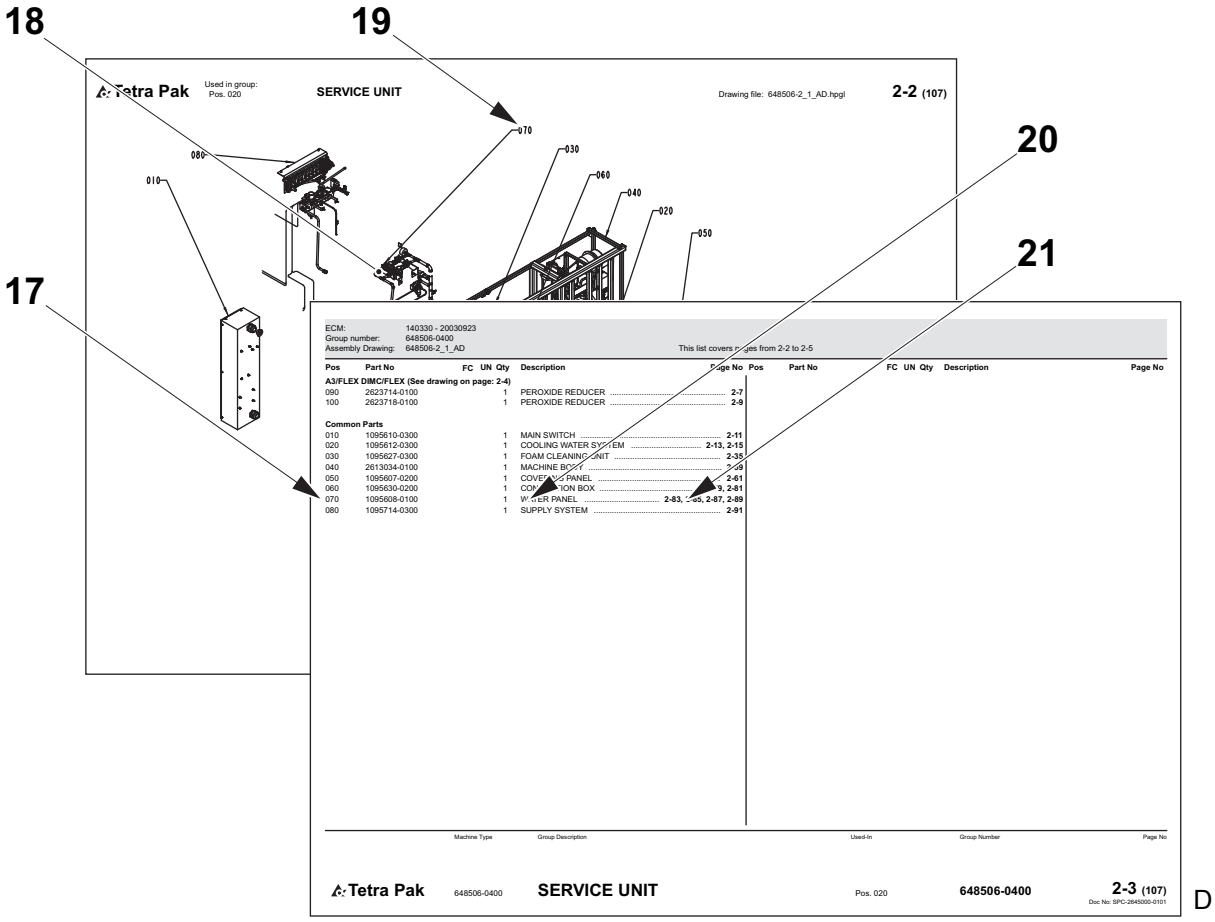
18
19
20
21
17
Tetra Pak
Used in group:
Pos. 020
SERVICE UNIT
Drawing file: 648506-2_1_AD.hpgl
2-2 (107)
070
030
060
040
020
050
080
010
ECM: 140330 - 20030923
Group number: 648506-0400
Assembly Drawing: 648506-2_1_AD
This list covers pages from 2-2 to 2-5
Pos Part No FC UN Qty Description Page No
A3/FLEX DIMC/FLEX (See drawing on page: 2-4)
090 2623714-0100 1 PEROXIDE REDUCER 2-7
100 2623718-0100 1 PEROXIDE REDUCER 2-9
Common Parts
010 1095610-0300 1 MAIN SWITCH 2-11
020 1095612-0300 1 COOLING WATER SYSTEM 2-13, 2-15
030 1095627-0300 1 FOAM CLEANING UNIT 2-35
040 2613034-0100 1 MACHINE BODY 2-39
050 1095607-0200 1 COVER, SIDE PANEL 2-61
060 1095630-0200 1 CONNECTION BOX 2-81
070 1095608-0100 1 WATER PANEL 2-83, 2-85, 2-87, 2-89
080 1095714-0300 1 SUPPLY SYSTEM 2-91
Pos Part No FC UN Qty Description Page No
Machine Type
Group Description
Used-In
Group Number
Page No
Tetra Pak
648506-0400
SERVICE UNIT
Pos. 020
648506-0400
2-3 (107)
Doc No: SPC-2645000-0101

D

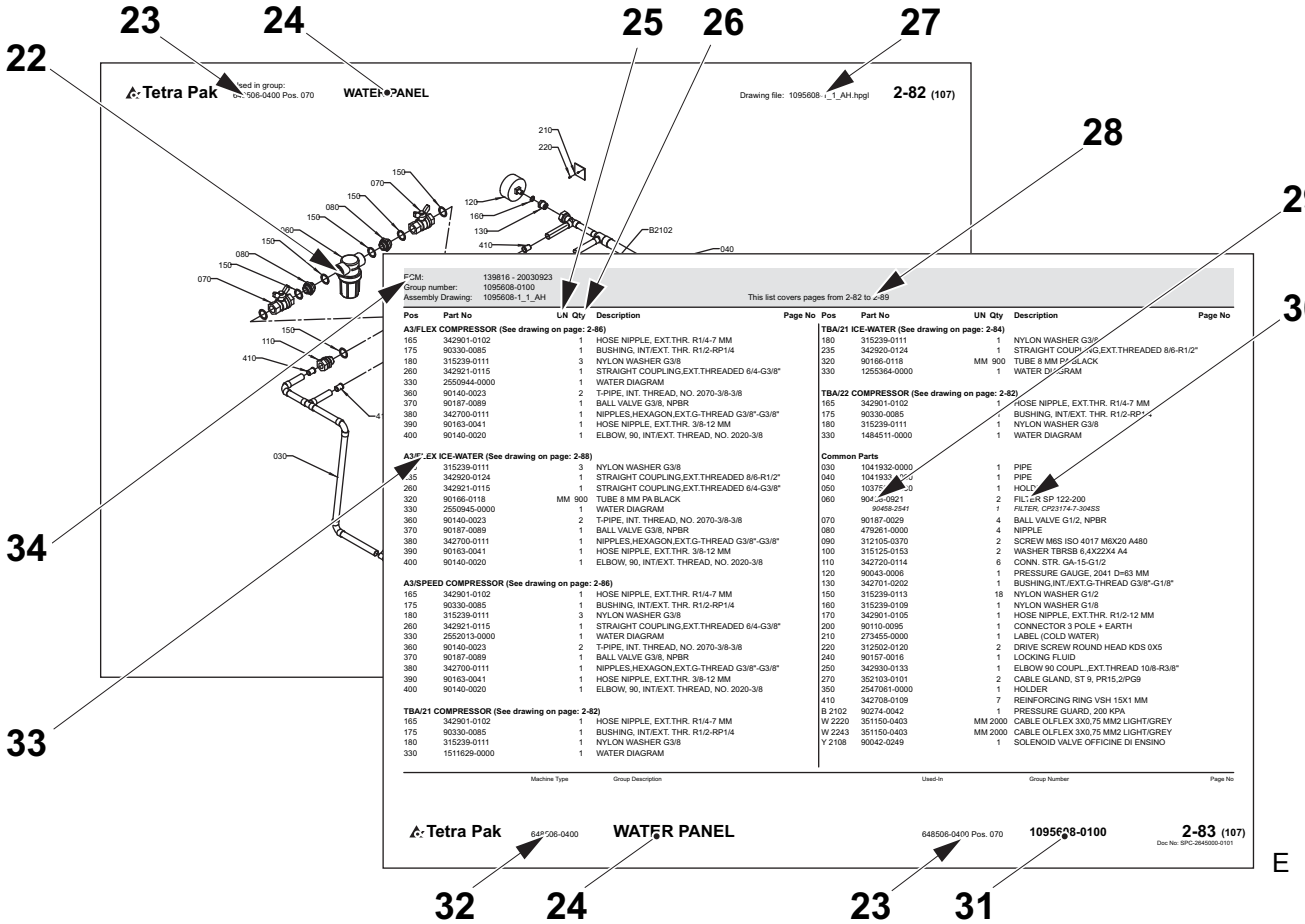
23
24
25
26
27
22
28
29
30
34
33
Tetra Pak
Used in group:
Pos. 070
WATER PANEL
Drawing file: 1095608-1_1_AH.hpgl
2-82 (107)
210
220
150
070
080
060
120
160
130
B2102
410
040
110
030
ECM: 139816 - 20030923
Group number: 1095608-0100
Assembly Drawing: 1095608-1_1_AH
This list covers pages from 2-82 to 2-89
Pos Part No UN Qty Description Page No
A3/FLEX COMPRESSOR (See drawing on page: 2-86)
165 342901-0102 1 HOSE NIPPLE, EXT.THR. R1/4-7 MM
175 90330-0085 1 BUSHING, INT/EXT. THR. R1/2-RP1/4
180 315239-0111 3 NYLON WASHER G3/8
260 342921-0115 1 STRAIGHT COUPLING,EXT.THREADED 6/4-G3/8"
330 2550944-0000 1 WATER DIAGRAM
360 90140-0023 2 T-PIPE, INT. THREAD, NO. 2070-3/8-3/8
370 90187-0089 1 BALL VALVE G3/8, NPBR
380 342700-0111 1 NIPPLES,HEXAGON,EXT.G-THREAD G3/8"-G3/8"
390 90163-0041 1 HOSE NIPPLE, EXT.THR. 3/8-12 MM
400 90140-0020 1 ELBOW, 90, INT/EXT. THREAD, NO. 2020-3/8
A3/FLEX ICE-WATER (See drawing on page: 2-88)
235 315239-0111 3 NYLON WASHER G3/8
240 342920-0124 1 STRAIGHT COUPLING,EXT.THREADED 8/6-R1/2"
260 342921-0115 1 STRAIGHT COUPLING,EXT.THREADED 6/4-G3/8"
320 90166-0118 MM 900 TUBE 8 MM PA BLACK
330 2550945-0000 1 WATER DIAGRAM
360 90140-0023 2 T-PIPE, INT. THREAD, NO. 2070-3/8-3/8
370 90187-0089 1 BALL VALVE G3/8, NPBR
380 342700-0111 1 NIPPLES,HEXAGON,EXT.G-THREAD G3/8"-G3/8"
390 90163-0041 1 HOSE NIPPLE, EXT.THR. 3/8-12 MM
400 90140-0020 1 ELBOW, 90, INT/EXT. THREAD, NO. 2020-3/8
A3/SPEED COMPRESSOR (See drawing on page: 2-86)
165 342901-0102 1 HOSE NIPPLE, EXT.THR. R1/4-7 MM
175 90330-0085 1 BUSHING, INT/EXT. THR. R1/2-RP1/4
180 315239-0111 3 NYLON WASHER G3/8
260 342921-0115 1 STRAIGHT COUPLING,EXT.THREADED 6/4-G3/8"
330 2552013-0000 1 WATER DIAGRAM
360 90140-0023 2 T-PIPE, INT. THREAD, NO. 2070-3/8-3/8
370 90187-0089 1 BALL VALVE G3/8, NPBR
380 342700-0111 1 NIPPLES,HEXAGON,EXT.G-THREAD G3/8"-G3/8"
390 90163-0041 1 HOSE NIPPLE, EXT.THR. 3/8-12 MM
400 90140-0020 1 ELBOW, 90, INT/EXT. THREAD, NO. 2020-3/8
TBA/21 COMPRESSOR (See drawing on page: 2-82)
165 342901-0102 1 HOSE NIPPLE, EXT.THR. R1/4-7 MM
175 90330-0085 1 BUSHING, INT/EXT. THR. R1/2-RP1/4
180 315239-0111 1 NYLON WASHER G3/8
330 1511629-0000 1 WATER DIAGRAM
TBA/21 ICE-WATER (See drawing on page: 2-84)
180 315239-0111 1 NYLON WASHER G3/8
235 342920-0124 1 STRAIGHT COUPLING,EXT.THREADED 8/6-R1/2"
320 90166-0118 MM 900 TUBE 8 MM PA BLACK
330 1255364-0000 1 WATER DIAGRAM
TBA/22 COMPRESSOR (See drawing on page: 2-82)
165 342901-0102 1 HOSE NIPPLE, EXT.THR. R1/4-7 MM
175 90330-0085 1 BUSHING, INT/EXT. THR. R1/2-RP1/4
180 315239-0111 1 NYLON WASHER G3/8
330 1484511-0000 1 WATER DIAGRAM
Common Parts
030 1041932-0000 1 PIPE
040 1041933-0000 1 PIPE
050 1037[illegible] 1 HOLDER
060 90458-0821 2 FILTER SP 122-200
90458-2541 1 FILTER, CP23174-7-3045S
070 90187-0029 4 BALL VALVE G1/2, NPBR
080 479261-0000 4 NIPPLE
090 312105-0370 2 SCREW M6S ISO 4017 M6X20 A480
100 315125-0153 2 WASHER TBRSB 6,4X22X4 A4
110 342720-0114 6 CONN. STR. GA-15-G1/2
120 90043-0006 1 PRESSURE GAUGE, 2041 D=63 MM
130 342701-0202 1 BUSHING,INT./EXT.G-THREAD G3/8"-G1/8"
150 315239-0113 18 NYLON WASHER G1/2
160 315239-0109 1 NYLON WASHER G1/8
170 342901-0105 1 HOSE NIPPLE, EXT.THR. R1/2-12 MM
200 90110-0095 1 CONNECTOR 3 POLE + EARTH
210 273455-0000 1 LABEL (COLD WATER)
220 312502-0120 2 DRIVE SCREW ROUND HEAD KDS 0X5
240 90157-0016 1 LOCKING FLUID
250 342930-0133 1 ELBOW 90 COUPL.,EXT.THREAD 10/8-R3/8"
270 352103-0101 2 CABLE GLAND, ST 9, PR15,2/PG9
350 2547061-0000 1 HOLDER
410 342708-0109 7 REINFORCING RING VSH 15X1 MM
B 2102 90274-0042 1 PRESSURE GUARD, 200 KPA
W 2220 351150-0403 MM 2000 CABLE OLFLEX 3X0,75 MM2 LIGHT/GREY
W 2243 351150-0403 MM 2000 CABLE OLFLEX 3X0,75 MM2 LIGHT/GREY
Y 2108 90042-0249 1 SOLENOID VALVE OFFICINE DI ENSINO
Pos Part No UN Qty Description Page No
Machine Type
Group Description
Used-In
Group Number
Page No
Tetra Pak
648506-0400
WATER PANEL
648506-0400 Pos. 070
1095608-0100
2-83 (107)
Doc No: SPC-2645000-0101
32
24
23
31

E

Manual Information

The Tetra Pak Group recommends reading all delivered manuals carefully. Make sure that the delivered manuals are available to personnel who operate or maintain the equipment.

It is important to keep this catalogue for the lifetime of the equipment and to pass the catalogue on to any subsequent holder or user.

The Tetra Pak Group will not be held responsible for any damage, loss, injury, or death caused by not following the instructions in the manuals that accompany this equipment.

Delivered Manuals

Manuals delivered with this equipment:

CM

The Conversion Manual provides technicians with information on converting the equipment between different production modes.

EM

The Electrical Manual provides technicians with information about the equipment's electrical system.

IM

The Installation Manual provides technicians with information required to safely install the equipment.

MaSP

The Maintenance & Spare Parts Manual provides information on how to maintain the component. It also provides the information necessary to order spare parts from the Tetra Pak Group for the component.

MM

The Maintenance Manual provides technicians with information on maintaining the equipment.

OM

The Operation Manual provides the operator with information on handling and operating the equipment before, during, and after production.

RM

The Rebuilding Manual provides technicians with information required to safely install a kit to an installed machine or equipment.

(Cont'd)

(Cont'd)

SPC

The Spare Parts Catalogue provides the information necessary to order spare parts from the Tetra Pak Group.

TeM

The Technical Manual provides technicians with information which can be:

- information required to safely install the equipment
- information required to maintaining the equipment
- information about the machine's/equipment's electrical system
- information necessary to order spare parts from the Tetra Pak Group
- other technical information

UP

The Update Pages provides new pages to update existing machine manuals.

Page Layout

Refer to the illustration (A) on page i-9: The main pages in a Spare Parts Catalogue consist of an illustration page (1) and a corresponding list page (7). The page number (5) is shown in the header of an illustration page and in the footer of a list page. The document number (6) is shown in the footer of a list page.

Page Numbering

Refer to the illustration (A) on page i-9: A page number (5) has three parts:

- chapter number (2)
- consecutive page number within the chapter (3)
- total number of pages in the chapter (4)

Note! The letters UP may replace the chapter number (2) if the manual includes update pages. The consecutive page number (3) and the total number of pages (4) of update pages do not follow the existing sequential page numbering of the chapter.

Machine Introduction

Manufacturer

For the manufacturer’s name and address, see the second page of this catalogue.

Service

The Tetra Pak Group does not accept responsibility for any damages or any injuries to equipment, staff or consumers that is caused by spare parts that are not genuine Tetra Pak® spare parts.

To order genuine Tetra Pak spare parts for this machine contact the nearest Tetra Pak office.

Identification

CE Classification

This equipment complies with the basic health and safety regulations of the European Economic Area (EEA).

(Cont'd)

(Cont'd)

3-A Compliance

If the machine plate contains the 3-A mark (15) (see illustration (B) on page i-9), this equipment complies with the 3-A Sanitary Standards for Formers, Fillers, and Sealers of Containers for Fluid Milk and Fluid Milk Products, Number 17-10.

Machine Plate

The illustration (B) on page i-9 shows an example of a machine plate.
An illustration of the valid machine plate and its location on the equipment is shown in the Introduction chapter of the manuals delivered with this equipment. The machine plate contains the data listed below, needed when contacting the Tetra Pak Group concerning this specific equipment.

- Machine type (8)
- Volume (9)
- Drawing specifications (10)
- Machine serial number (11)
- Manufacturer (12)
- Year of manufacture (13)
- CE mark (14)
- 3-A mark (if applicable) (15)

Make sure that the equipment data in the front pages of this manual corresponds to the machine plate data and the machine specification.

How to Use This Spare Parts Catalogue

Locate a Spare Part Number

a) Refer to the illustration (C) on page i-9: Go to the chapter number (16) indicated beside the main group that contains the part you want to locate.

Items b) and c) refer to the illustration (D) on page i-10.

b) On the main group illustration, look for the machine subgroup (18) that contains the part or subgroup you are looking for. Note the position number (19) and go to the list page that follows the illustration.

c) Look for the position number/reference designation (17) or the subgroup name (20). Go to the corresponding page number (21) listed in the right-hand column. The Tetra Pak Group has chosen to always use the function oriented structure for reference designation. The prefix indicating function oriented structure (=) is not shown in the reference designation

(Cont'd)

(Cont'd)

Items d) and e) refer to the illustration (E) on page i-10.

d) Locate the part (22) that you are looking for on the subgroup illustration and note the part's position number.

e) The part number (29) and part description (30) are listed beside the position number on the list page.

Information Listed in a Spare Parts Catalogue

The list below refers to the illustration (E) on page i-10. A Spare Parts Catalogue contains the following information about groups, subgroups, and spare parts for the equipment:

- Group structure reference (23). Indicates the next higher group in the equipment list structure.
- Group name (24)
- Unit of measure (25)
- Quantity (26)
- Assembly drawing number (27)
- List page range (28). Included if there are multiple pages in the group illustration or list.
- Part or subgroup number (29)
- Subgroup name or part description (30)
- Group number (31)
- Equipment number (32)
- Group information heading (33). Indicates if the section below the heading is for a specific machine variant or if it is a list of common parts. If a list has more than one variant and each variant has its own assembly drawing, a page reference to the variant's assembly drawing is shown.
- Internal information (34)

Assistance and Inquiries

For assistance when operating this equipment, or other inquiries, comments, or suggestions, submit the questions or give feedback by using the QuTI-P tool. Type QuTI-P in the address field of your browser. If access to QuTI-P is not available, request access by contacting the Global Service Desk.

If access to the Tetra Pak® intranet is not available, contact the nearest Tetra Pak representative.

Информация за ръководството

Tetra Pak Group препоръчва внимателното прочитане на всички доставени ръководства. Уверете се, че всички доставени ръководства са достъпни за персонала, който работи с оборудването или го поддържа.

Важно е да съхранявате това ръководство през целия експлоатационен срок на оборудването и да го предадете на всеки следващ собственик или ползвател.

Tetra Pak Group няма да носи отговорност за никакви повреди на оборудването, предизвикани от неспазването на инструкциите, дадени в ръководството, което придружава това оборудване.

Доставени ръководства

Ръководства, доставени с това оборудване:

CM

Ръководството за преустройство предоставя на техниците информация за преустройство на оборудването за различните производствени режими.

EM

Електрическият наръчник осигурява на техниците информация за електрическата система на оборудването.

IM

Наръчникът за инсталацията осигурява на техниците информация за безопасно инсталиране на оборудването.

MaSP

Ръководството за техническо обслужване и резервни части предоставя информация относно техническото обслужване на компонента. То предоставя и необходимата информация за заявка на резервни части за компонента от Tetra Pak Group.

MM

Наръчникът за поддръжка осигурява на техниците информация за поддържане на оборудването.

OM

Ръководството за експлоатация предоставя на оператора информацията, която му е необходима за работата и експлоатацията на оборудването, преди, по време на и след производство.

RM

Ръководството за възстановяване предоставя на техниците информация, необходима за безопасно монтиране на .принадлежности на инсталирана машина или оборудване.

(Продължение)

(Продължение)

SPC

Каталогът за резервни части осигурява информация за поръчка на резервни части от Tetra Pak Group.

TeM

Техническите ръководства, осигуряват на техниците информация, която може да бъде:

- информация, необходима за безопасното инсталиране на оборудването
- информация, необходима за поддръжката на оборудването
- информацията за електрическата система на оборудването/машината
- предоставя информацията необходима за поръчката на резервни части от Tetra Pak Group
- друга техническа информация.

UP

Страниците с актуализации предоставят нови страници за актуализиране на вече съществуващите ръководства за машината.

Разположение на страниците

Вижте илюстрация (A) на страница i-9: Основните страници на Каталога с резервни части съдържат страница с илюстрация (1) и страница със съответен списък (7). Номерът на страниците (5) е даден в горната част на илюстрованата страница и в долната част на страниците със списък.. Номерът на документа (6) е даден в долната част на списъчната страница.

Номериране на страниците

Вижте илюстрация (A) на страница i-9: Номерът на страница (5) има три части:

- номер на глава (2)
- пореден номер на страница (3) в рамките на главата
- общ брой страници (4) в главата.

Забележка! Буквите UP може да заместват номера на главата (2), ако ръководството включва страници с актуализации. Поредният номер на страница (3) и общият брой страници (4) на страниците с актуализации не следват съществуващата поредност в номерата на страниците на главата.

Въведение на машината

Производител

За името на производителя и адреса му, виж на втора страница от този каталог.

Обслужване

Tetra Pak Group не носи отговорност за щети или наранявания на оборудване, персонал или клиенти, които са причинени от резервни части, които не са оригинални резервни части Tetra Pak®.

За да поръчате оригинални резервни части Tetra Pak за тази машина, свържете се с най-близкия офис на Tetra Pak.

Идентификация

CE Класификация

Това оборудване съответства на основните разпоредби за опазване на здравето и безопасност на Европейската Икономическа Зона (EEA).

(Продължение)

(Продължение)

3-A Съответствие

Ако табелката на машината съдържа означението 3-A (15) (виж илюстрация (B) на страница i-7), оборудването съответства на 3-A Санитарните стандарти за формоващи, пълнещи и запечатващи устройства за контейнери за течно мляко и течни млечни продукти, номер 17-10.

Табела с технически данни на машината

Илюстрация (B) на страница i-9 показва примерна табела с технически данни на машината.
Илюстрация на реална табела с технически данни на машината и нейното местоположение върху оборудването е дадена в глава Въведение на ръководството, придружаващо оборудването. Табелата с технически данни за машината съдържа данните, описани по-долу, необходими, когато се свързвате с Tetra Pak Group относно това оборудване.

- Тип на машината (8)
- Обем (9)
- Спецификации (10)
- Сериен номер на машината (11)
- Производител (12)
- Година на производство (13)
- CE маркировка (14)
- 3-A маркировка (ако е приложимо) (15)

Уверете се, че данните за оборудването, дадени на първите страници на това ръководство съответстват на данните върху табелата с технически спецификации, и спецификацията на машината.

Как да ползвате Каталога за резервни части

Откриване номер на резервна част

a) Вижте илюстрация (C) на страница i-9: Преминете на глава номер (16), посочена .до основната група, която съдържа частта, която желаете да откриете.

Позиции b) и c) вижте на илюстрации (D) на страница i-10.

b) На главната илюстрация на група, потърсете машинната подгрупа (18), която съдържа частта или подгрупата, която търсите. Отбележете номера на позицията (19) и отидете на страницата със списъка, който следва илюстрацията.

c) Потърсете номера на позиция/вижте обозначението (17) или наименованието на подгрупата (20). Преминете на съответния номер на страница (21), вписан в дясната колона.
От Tetra Pak Group са избрали, винаги да се използва функционално ориентирана структура за обозначение препратка.
Представката посочва функционално ориентирана структура (=) не се показва в обозначението препратка.

(Продължение)

(Продължение)

Позиции d) и e) вижте на илюстрация (E) на страница i-10.

d) Открийте частта (22), която търсите на илюстрацията с подгрупи и отбележете номера на позицията на частта.

e) Номерът на частта (29) и описанието на частта (30) са вписани до номера на позицията на страницата със списъка.

Информация в Каталога за резервни части

Списъкът по-долу се отнася за илюстрация (E) на страница i-10. Каталогът за резервни части съдържа следната информация за групи, подгрупи и резервни части за оборудването:

- Препратка към структура на групата (23). Посочва по-горната група в структурата на оборудването.
- Наименование на групата (24)
- Мерна единица (25)
- Количество (26)
- Номер от сборния чертеж (27)
- Серия страници със списък (28). Включен, ако има няколко страници в групова илюстрация или списък
- Част или номер на подгрупа (29)
- Наименование на подгрупа или описание на част (30)
- Номер на група (31)
- Номер на оборудването (32)
- Информационен надпис за група (33). Индицира, че раздела под заглавието е за определен модел машина или че е списък на унифицирани части. Ако списъкът има повече от един вариант и всеки вариант има своя монтажна схема, е показана препратка към страница със сборния чертеж.
- Международна информация (34)

Помощ и съдействие

За помощ при експлоатация на оборудването, запитвания, коментари или предложения, отправяйте вашите въпроси или предоставяйте обратна информация, като използвате инструмента QuTI-P. Въведете QuTI-P в адресното поле на вашия браузер. Ако няма достъп до QuTI-P, направете искане за такъв достъп от Гишето за глобална техническа помощ.

Ако няма достъп до интранет мрежата на Tetra Pak®, свържете се с най-близкия представител на Tetra Pak.

Informace o příručce

Skupina Tetra Pak Group doporučuje se důkladně seznámit se všemi dodanými příručkami. Dodané příručky musí být k dispozici pracovníkům, kteří provádějí obsluhu nebo údržbu zařízení.

Tento katalog je třeba uchovávat po celou dobu životnosti zařízení a předat jej každému dalšímu vlastníkovi nebo uživateli.

Skupina Tetra Pak Group nezodpovídá za škody na zařízení způsobené nedodržováním pokynů uvedených v příručkách, které doprovází toto zařízení.

Dodané příručky

Příručky dodávané s tímto zařízením:

CM

Příručka pro konverzi poskytuje technikům informace o konverzi zařízení mezi různými produkčními režimy.

EM

Příručka elektrického zařízení (EM) poskytuje technikům informace o elektrickém systému zařízení.

IM

Montážní příručka (IM) poskytuje technikům informace nutné pro bezpečné provedení montáže zařízení.

MaSP

Příručka pro údržbu a náhradní díly poskytuje informace o způsobu údržby komponent. Podává také informace, potřebné pro objednání náhradních dílů daných komponent u společnosti Tetra Pak Group.

MM

Příručky údržby (MM) poskytuje technikům informace o údržbě zařízení.

OM

Návod k obsluze poskytuje technikům informace o manipulaci a provozu zařízení před, během a po ukončení výroby.

RM

Příručka pro rekonstrukci poskytuje technikům informace požadované pro bezpečnou instalaci soupravy na nainstalovaný stroj nebo zařízení.

(Pokračování)

(Pokračování)

SPC

Katalog náhradních dílů (SPC) obsahuje informace nezbytné pro objednávání náhradních dílů od Tetra Pak Group.

TeM

Technická příručka poskytuje technikům informace, kterými mohou být:

- potřebné informace pro bezpečnou instalaci zařízení
- potřebné pro údržbu zařízení
- informace o elektrickém systému zařízení/stroje
- informace nezbytné pro objednávání náhradních dílů od Tetra Pak Group
- ostatní technické informace

UP

Aktualizované stránky poskytují nové stránky k existujícím příručkám k zařízení.

Vzhled stránky

Podívejte se na obrázek (A) na straně i-9: hlavní stránky v Katalogu náhradních dílů tvoří stránky s ilustracemi (1) a odpovídající stránka se seznamem (7). Číslo stránky (5) je uvedeno v záhlaví stránky s ilustrací a v zápatí stránky se seznamem. Číslo dokumentu (6) je uvedeno v zápatí stránky se seznamem.

Číslování stránek

Podívejte se na obrázek (A) na straně i-9: číslo stránky (5) má tři části:

- číslo kapitoly (2)
- číslo další stránky v rámci kapitoly (3),
- celkového počtu stránek v kapitole (4)

Poznámka! Písmena UP mohou nahradit číslo kapitoly (2) v případě, že manuál obsahuje aktualizované stránky. Následující číslo stránky (3) a celkový počet stran (4) aktualizovaných stránek se nedrží existujícího sekvenčního číslování stránek v této kapitole.

Seznámení se zařízením

Výrobce

Jméno a adresu výrobce najdete na druhé straně tohoto katalogu.

Servis

Skupina Tetra Pak Group nepřebírá odpovědnost za jakékoli škody na zařízení nebo za zranění zaměstnance nebo spotřebitele, které budou způsobeny tím, že se nepoužijí originální náhradní díly Tetra Pak®.

Chcete-li pro tento stroj objednat originální náhradní díly Tetra Pak, kontaktujte nejbližší kancelář společnosti Tetra Pak.

Označení

Klasifikace CE

Toto zařízení vyhovuje základním zdravotním a bezpečnostním směrnicím EU.

(Pokračování)

(Pokračování)

3-A Soulad

Pokud štítek stroje obsahuje označení 3-A (15) (viz obrázek (B) na straně i-7), pak je toto zařízení v souladu s hygienickými normami 3-A pro formování, plnění a uzavírání obalů pro tekuté mléko a tekuté mléčné výrobky, číslo 17-10.

Typový štítek

Obrázek (B) na straně i-9 ukazuje příklad typového štítku.
Obrázek platného typového štítku a jeho umístění na zařízení je uvedeno v úvodní kapitole příruček dodaných s tímto zařízením.
Typový štítek obsahuje údaje uvedené níže, tyto údaje jsou zapotřebí, když kontaktujete Tetra Pak Group ve věci týkající se tohoto specifického vybavení.

- Typ stroje (8)
- Objem (9)
- Specifikace výkresů (10)
- Sériové číslo stroje (11)
- Výrobce (12)
- Rok výroby (13)
- Symbol CE (14)
- Symbol 3-A (pokud se používá) (15)

Údaje o zařízení uvedené na předních stránkách této příručky musí souhlasit s údaji na typovém štítku a specifikacím zařízení.

Jak používat tento katalog náhradních dílů

Vyhledat číslo náhradního dílu

a) Viz obrázek (C) na straně i-9: Přejít na číslo kapitoly (16) uvedené vedle hlavní skupiny, která obsahuje díl, který chcete najít.

Položky b) a c) se vztahují k obrázku (D) na straně i-10.

b) Na obrázku hlavní skupiny se podívejte na podskupinu stroje (18), která obsahuje díly nebo podskupiny, které hledáte. Poznamenejte si číslo pozice (19) a přejděte na stránku seznamu, který následuje za obrázkem.

c) Podívejte se na číslo pozice/označení reference (17) nebo na název podskupiny (20). Přejděte na odpovídající číslo strany (21) uvedené v seznamu ve sloupci na pravé straně. Skupina Tetra Pak Group si pro referenční označení zvolila vždy používat funkčně orientovanou strukturu. Předpona označující funkčně orientovanou strukturu (=) není uvedena v referenčním označení.

(Pokračování)

(Pokračování)

Položky d) a e) se vztahují k obrázku (E) na straně i-10.

d) Lokalizujte díl (22), který hledáte, na obrázku podskupiny a poznamenejte si číslo pozice dílu.

e) Číslo dílu (29) a popis dílu (30) jsou uvedeny vedle čísla pozice na stránce se seznamem.

Informace uvedené v katalogu náhradních dílů

Níže uvedený seznam se odkazuje na obrázek (E) na stránce i-10.
Katalog náhradních dílů obsahuje následující informace o skupinách, podskupinách a náhradních dílech pro zařízení:

- Reference struktury skupiny (23). Označuje následující vyšší skupinu ve struktuře seznamu výbavy.
- Název skupiny (24)
- Měrná jednotka (25)
- Množství (26)
- Číslo montážního výkresu (27)
- Rozsah stránek se seznamem (28). Zahrnuty, pokud existuje více stránek ve skupině obrázků nebo seznamu.
- Číslo dílu nebo podskupiny (29)
- Název podskupiny nebo popis dílu (30)
- Číslo skupiny (31)
- Číslo výbavy (32)
- Záhlaví informací o skupině (33). Označuje, zdali se část pod záhlavím týká konkrétní varianty stroje, nebo zdali se jedná o seznam společných dílů. Pokud seznam obsahuje více než jednu variantu a každá varianta má své vlastní montážní výkresy, je zobrazen odkaz na stránku s montážním výkresem varianty.
- Vnitřní informace (34)

Podpora a zpětná vazba

Vyžadujete-li pomoc s činností tohoto zařízení, nebo máte jiné požadavky, poznámky nebo návrhy, položte otázku, nebo získejte zpětnou vazbu pomocí nástroje QuTI-P. Do adresního řádku svého prohlížeče napište QuTI-P. Pokud přístup k QuTI-P není dostupný, vyžádejte si přístup kontaktováním Global Service Desk.

Pokud nemáte přístup na intranet Tetra Pak®, kontaktujte nejbližšího zástupce Tetra Pak.

Oplysninger om vejledninger

Tetra Pak Group anbefaler, at alle leverede vejledninger læses grundigt.
Sørg for, at de leverede vejledninger er til rådighed for det personale, som betjener eller vedligeholder udstyret.

Det er vigtigt, at dette katalog opbevares i hele udstyrets levetid og overdrages til en efterfølgende ejer eller bruger.

Tetra Pak Group kan ikke holdes ansvarlig for skader, tab, kvæstelser eller dødsfald forårsaget af, at anvisningerne i de vejledninger, der følger med dette udstyr, ikke overholdes.

Leverede vejledninger

Vejledninger, der leveres sammen med dette udstyr:

CM

Konverteringsvejledningen forsyner teknikere med oplysninger om konvertering af udstyret mellem forskellige produktionstilstande.

EM

Den elektriske vejledning forsyner teknikere med oplysninger om udstyrets elektriske system.

IM

Installationsvejledningen forsyner teknikere med oplysninger, som er nødvendige til sikker installation af udstyret.

MaSP

Vedligeholdelses- og reservedelsvejledningen giver oplysninger om vedligeholdelse af komponenter. Den giver også oplysninger, der er nødvendige til bestilling af reservedele fra Tetra Pak Group.

MM

Vedligeholdelsesvejledningen forsyner teknikere med oplysninger om vedligeholdelsen af udstyret.

OM

Driftsvejledningen forsyner operatøren med oplysninger om håndteringen og betjeningen af udstyret før, under og efter produktion.

RM

Ombygningsvejledningen forsyner teknikere med oplysninger, der er nødvendige til sikker installation af et sæt på en installeret maskine eller installeret udstyr.

(Forts.)

(Forts.)

SPC

Reservedelskataloget indeholder de oplysninger, som er nødvendige til at bestille reservedele fra Tetra Pak Group.

TeM

Den Tekniske vejledning forsyner tekniker med oplysninger, der kan være:

- nødvendige oplysninger til sikker installation af udstyret
- nødvendige oplysninger til vedligeholdelse af udstyret
- oplysninger om maskinens/udstyrets elektriske system
- oplysninger, som er nødvendige til bestilling af reservedele fra Tetra Pak Group
- andre tekniske oplysninger

UP

Opdateringssiderne indeholder nye sider til opdatering af eksisterende maskinvejledninger.

Sidelayout

Se illustrationen (A) på side i-9: Hovedsiden i et reservedelskatalog består af en illustrationsside (1) og en tilsvarende listeside (7). Sidetallet (5) vises i overskriften på en illustrationsside og i fodteksten på en listeside. Dokumentnumret (6) vises i fodteksten på en listeside.

Sidenummerering

Se illustrationen (A) på side i-9: Et sidetal (5) har tre dele:

- kapitelnummer (2)
- fortløbende sidetal inden for kapitlet (3)
- det samlede antal sider i kapitlet (4)

Bemærk! Bogstaverne UP kan erstatte kapitelnumret (2), hvis vejledningen inkluderer opdateringssider. Det fortløbende sidetal (3) og det samlede antal sider (4) af opdateringssider følger ikke kapitlets eksisterende fortløbende sidenummerering.

Præsentation af maskinen

Producent

For producentens navn og adresse se anden side i dette katalog.

Service

Tetra Pak Group påtager sig intet ansvar for skader på udstyret eller kvæstelser af personale eller forbrugere, som forårsages af reservedele, der ikke er ægte reservedele fra Tetra Pak®.

For at bestille ægte reservedele fra Tetra Pak til denne maskine kontakt det nærmeste Tetra Pak-kontor.

Identifikation

CE-klassificering

Dette udstyr overholder det Europæiske Økonomiske Samarbejdsområdes (EØS) grundlæggende sundheds- og sikkerhedsbestemmelser.

(Forts.)

(Forts.)

3-A overholdelse

Hvis typeskiltet indeholder 3-A-mærket (15) (se illustration (B) på side i-7), overholder dette udstyr 3-A-sanitetsstandarderne for formnings-, fylde- og forseglingsmaskiner for beholdere til flydende mælk og flydende mælkeprodukter, nummer 17-10.

Maskinens typeskilt

Illustration (B) på side i-9 viser et eksempel på et typeskilt.
En illustration af maskinens gældende typeskilt og dens placering på udstyret vises i kapitlet Indledning af de vejledninger, der leveres sammen med dette udstyr.
Maskinens typeskilt indeholder de data, der opføres nedenfor og om der er brug for, hvis der rettes henvendelse til Tetra Pak Group vedrørende det specifikke udstyr.

- Maskintype (8)
- Volumen (9)
- Tegningsspecifikationer (10)
- Maskinens serienummer (11)
- Producent (12)
- Fremstillingsår (13)
- CE-mærke (14)
- 3-A mærke (i givet fald) (15)

Kontrollér, at udstyrsdataene på de første sider i denne vejledning svarer til dataene på typeskiltet og maskinens specifikation.

Sådan bruges dette reservedelskatalog

Sådan finder men et reservedelsnummer

a) Se illustrationen (C) på side i-9: Gå til kapitelnumret (16), der vises ved siden af hovedgruppen, som indeholder den del, der skal findes.

Punkterne b) og c) refererer til illustrationen (D) på side i-10.

b) På hovedgruppens illustration søg efter den maskinundergruppe (18), der indeholder den del eller undergruppe, der ledes efter.
Notér positionsnumret (19) og gå til den listeside, der følger illustrationen.

c) Søg efter positionsnumret/henvisningsbetegnelsen (17) eller undergruppens navn (20). Gå til det tilsvarende sidetal (21), der er opført i højre spalte.
Tetra Pak Group har valgt altid at bruge funktionen orienteret struktur til henvisningsbetegnelse. Det præfiks, der angiver funktionsorienteret struktur (=) vises ikke i henvisningsbetegnelsen.

(Forts.)

(Forts.)

Punkterne d) og e) refererer til illustrationen (E) på side i-10.

d) Find den del (22), der ledes efter, på undergruppens illustration og notér delens positionsnummer.

e) Delnumret (29) og delbeskrivelsen (30) er opført ved siden af positionsnumret på listesiden.

Oplysninger, der er opført i et reservedelskatalog

Listen nedenfor refererer til illustrationen (E) på side i-10.
Et reservedelskatalog indeholder følgende oplysninger om grupper, undergrupper og reservedele for udstyret:

- Gruppens strukturhenvisning (23). Viser den næste højere gruppe i udstyrets listestruktur.
- Gruppenavn (24)
- Måleenhed (25)
- Mængde (26)
- Monteringstegningens nummer (27)
- Listesideområde (28). Inkluderet, hvis gruppeillustrationen eller listen har flere sider.
- Del- eller undergruppenummer (29)
- Undergruppenavn eller delbeskrivelse (30)
- Gruppenummer (31)
- Udstyrsnummer (32)
- Gruppeinformationsoverskrift (33). Angiver, om afsnittet under overskriften gælder for en bestemt maskinversion eller om det er en liste over fælles dele. Hvis en liste har mere end en version og hver version har en egen monteringstegning, vises der en sidehenvisning til versionens monteringstegning.
- Interne oplysninger (34)

Hjælp og forespørgsler

Hvis man har brug for hjælp med betjeningen af dette udstyr eller har andre forespørgsler, kommentarer eller forslag, kan man stille spørgsmål eller give feedback ved hjælp af værktøjet QuTI-P. Indtast QuTI-P i browserens adressefelt. Hvis man ikke har adgang til QuTI-P, kan man bede om adgang ved at kontakte den globale Service Desk.

Hvis adgang til Tetra Pak® intranet ikke er til rådighed, kontakt den nærmeste Tetra Pak®-repræsentant.

Handbuch-Informationen

Die Tetra Pak Group empfiehlt, alle gelieferten Handbücher sorgfältig zu lesen. Es muss sichergestellt werden, dass die gelieferten Handbücher dem Bediener- oder Wartungspersonal der Ausrüstung verfügbar sind.

Es ist wichtig, diesen Katalog während der Lebensdauer der Ausrüstung vorzuhalten und an nachfolgende Halter oder Benutzer weiterzugeben.

Die Tetra Pak Group übernimmt keine Verantwortung für Schäden, Verluste, erletzungen oder Todesfälle, die sich aus der Nichteinhaltung der Anweisungen in den dieser Ausrüstung beigefügten Handbüchern ergeben.

Gelieferte Handbücher

Mit dieser Ausrüstung gelieferte Handbücher

CM

Das Umbauhandbuch liefert den Technikern Informationen über den Umbau der Ausrüstung zwischen den verschiedenen Produktionsweisen.

EM

Das Elektrohandbuch liefert den Technikern Informationen zum Elektrosystem der Ausrüstung.

IM

Das Installationshandbuch liefert den Technikern Informationen für die sichere Installation der Ausrüstung.

MaSP

Das Wartungs- und Ersatzteilhandbuch liefert Informationen über die Wartung der Bauteile. Darüber hinaus enthält es die notwendigen Daten zur Bestellung von Ersatzteilen für die betreffenden Bauteile bei Tetra Pak Group.

MM

Das Wartungshandbuch liefert den Technikern Informationen über die Wartung der Ausrüstung.

OM

Das Betriebshandbuch enthält Informationen für den Bediener zu Handhabung und Betrieb der Ausrüstung vor, während und nach der Produktion.

RM

Das Umbauhandbuchliefert Informationen an die Techniker, die diese benötigen, um die Ausrüstung aus dem Kit sicher zu installieren.

(Forts.)

(Forts.)

SPC

Der Ersatzteilkatalog liefert die für die Bestellung von Ersatzteilen bei die Tetra Pak Group erforderlichen Informationen.

TeM

Das Technische Handbuch liefert den Technikern folgende Informationen:

- Informationen für die sichere Installation der Ausrüstung
- Informationen für die Wartung der Ausrüstung
- Informationen über das Elektrosystem der Maschine/Ausrüstung.
- Notwendige Informationen für die Bestellung von Ersatzteilen bei die Tetra Pak Group.
- andere technische Informationen

UP

Die Aktualisierungsseiten sind neu, um die Maschinenhandbücher zu aktualisieren.

Seitenlayout

Siehe die Abbildung (A) auf Seite i-9: Die Hauptseiten in einem Ersatzteilkatalog bestehen auf dem Abbildungsseite (1) und einer entsprechenden Listenseite (7). Die Seitennummer (5) ist im Kopf einer Abbildungsseite und im Fuß einer Listenseite aufgeführt.
Die Dokumentennummer (6) ist im Fuß einer Listenseite angegeben.

Seitennummerierung

Siehe die Abbildung (A) auf Seite i-9: Eine Seitennummer (5) hat drei Teile

- Kapitel Nummer (2)
- Fortlaufende Seitennummer (2) innerhalb des Kapitels (3)
- Gesamtanzahl der Seiten im Kapitel (4)

Hinweis! Die Buchstaben UP können die Kapitelnummer (2) ersetzen, wenn das Handbuch aktualisierte Seiten enthält. Die fortlaufende Seitennummer (3) und die Gesamtanzahl der Seiten (4) der aktualisierten Seiten folgen nicht der laufenden Seitennummerierung des Kapitels.

Einführung in die Maschine

Hersteller

Die zweite Seite des Katalogs enthält Name und Anschrift des Herstellers.

Service

Die Tetra Pak Group übernimmt keine Verantwortung für Schäden an Ausrüstungen und Verletzungen von Personen, verursacht durch Ersatzteile, die keine echten Tetra Pak®-Ersatzteile sind.

Für die Bestellung echter Tetra Pak-Ersatzteile für die Maschine wende man sich an die nächstgelegene Tetra Pak-Stelle.

Identifizierung

CE-Klassifizierung

Diese Ausrüstung entspricht den grundlegenden Gesundheits- und Sicherheitsvorschriften des Europäischen Wirtschaftsraumes (EWR).

(Forts.)

(Forts.)

3-A Erfüllung

Wenn die Maschinenplatte eine 3-A Markierung (15) enthält (siehe Abbildung (B) auf Seite i-7), entspricht diese Ausrüstung den 3-A Sanitärnormen für Former, Füller und Versiegler von Containern für lose Milch und Milchprodukte Nummer 17-10.

Maschinenschild

Die Abbildung (B) auf Seite i-9 zeigt ein Beispiel eines Maschinenschildes.
Eine Abbildung eines gültigen Maschinenschildes und dessen Lage an der Ausrüstung finden Sie in der Einleitung zu dem mit der Ausrüstung gelieferten Handbuch. Das Maschinenschild enthält die nachstehenden Daten, erforderlich für die Kontaktnahme mit die Tetra Pak Group bezüglich dieser spezifischen Ausrüstung.

- Maschinentyp (8)
- Volumen (9)
- Zeichnungsspezifikationen (10)
- Serien-Nummer der Maschine (11)
- Hersteller (12)
- Baujahr (13)
- CE-Markierung (14)
- 3-A Markierung (falls zutreffend) (15)

Es muss sichergestellt sein, dass die in den Frontseiten dieses Handbuchs aufgeführten Ausrüstungsdaten mit den Daten des Maschinenschildes und der Maschinenspezifikation übereinstimmen.

Benutzung dieses Ersatzteilkatalogs

Lokalisieren einer Teilenummer

a) Bezugnahme auf Abbildung (C) auf Seite i-9: Weiter zu Kapitel Nummer (16) neben der Hauptgruppe, die das entsprechende Teil enthält.

Pos. b) und c) beziehen sich auf die Abb. (D) auf Seite i-10.

b) Auf der Abbildung der Hauptgruppe die Untergruppe (18) der Maschine suchen, welche das Teil oder die Untergruppe enthält, das/die Sie suchen. Die Positionsnummer (19) notieren und zu der Listenseite gehen, die auf die Abbildung folgt.

c) Suchen Sie die Positionsnummer/Referenzbezeichnung (17) oder den Untergruppennamen (20). Weiter zur entsprechenden Seitennummer (21) in der rechten Spalte. Die Tetra Pak Group verwendet die funktionsorientierte Struktur für die Referenzbezeichnung. Präfix zur funktionsorientierten Struktur (=) ist in der Referenzbezeichnung nicht dargestellt.

(Forts.)

(Forts.)

Pos. d) und e) beziehen sich auf die Abbildung (E) auf Seite i-10.

d) Das gesuchte Teil (22) auf der Untergruppen-Abbildung suchen und die Positionsnummer (060) des Teils notieren.

e) Die Teilenummer (29) und die Beschreibung (30) des Teils sind neben der Positionsnummer auf der Listenseite angegeben.

Information in einem Ersatzteilkatalog

Nachstehende Liste bezieht sich auf die Abbildung (E) auf Seite i-10.
Ein Ersatzteilkatalog enthält folgende Informationen zu Gruppen, Untergruppen und Ersatzteile der Ausrüstung.

- Verweis auf Gruppenstruktur (23). zeigt die nächsthöhere Gruppe in der Listenstruktur.
- Gruppenbezeichnung (24)
- Maßeinheit (25)
- Menge (26)
- Nummer der Montagezeichnung (27)
- Liste Seitenbereich (28). vorhanden, wenn mehrere Seiten in der Gruppenabbildung oder Liste vorhanden sind.
- Teile- oder Untergruppen-Nummer (29)
- Untergruppenbezeichnung oder Beschreibung des Teils (30)
- Gruppennummer (31)
- Gerätenummer (32)
- Gruppeninformations-Überschrift (33). erläutert, ob der Abschnitt unter der Überschrift für eine spezifische Maschinenvariante gilt oder ob es sich um eine Liste allgemeiner Teile handelt. Hat eine Liste mehr als eine Variante und ist jeder Variante eine eigene Montagezeichnung zugeordnet, wird ein Seiten-Querverweis auf die Montagezeichnung der Variante angegeben.
- Interne Informationen (34)

Unterstützung und Nachfragen

Für Unterstützung beim Betrieb dieser Ausrüstung oder Nachfragen, Kommentare oder Anregungen verwenden Sie bitte das QuTI-P Tool. Geben Sie hierzu QuTI-P in das Adressfeld Ihres Browsers ein. Wenn kein Zugang zu QuTI-P verfügbar ist, wenden Sie sich hierzu bitte an den Global Service Desk.

Wenn kein Zugang zum Tetra Pak® Intranet verfügbar ist, wenden Sie sich an den Tetra Pak Vertreter in Ihrer Nähe.

Πληροφορίες εγχειριδίου

Ο Όμιλος Tetra Pak συνιστά να διαβάζετε προσεκτικά όλα τα παρεχόμενα εγχειρίδια. Βεβαιωθείτε ότι τα παρεχόμενα εγχειρίδια είναι διαθέσιμα στο προσωπικό που χειρίζεται ή συντηρεί τον εξοπλισμό.

Είναι σημαντικό να διατηρήσετε το εγχειρίδιο αυτό καθ' όλη τη διάρκεια ζωής του εξοπλισμού και να το μεταβιβάσετε σε οποιονδήποτε επακόλουθο κάτοχο ή χρήστη.

Ο Όμιλος Tetra Pak δεν μπορεί να καταστεί υπεύθυνη για οποιαδήποτε ζημιά στον εξοπλισμό που οφείλεται σε μη τήρηση των οδηγιών που παρατίθενται στα εγχειρίδια που συνοδεύουν τον εξοπλισμό.

Παρεχόμενα εγχειρίδια

Τα εγχειρίδια παρέχονται μαζί με αυτό τον εξοπλισμό:

CM

Το Εγχειρίδιο Μετατροπών (CM) παρέχει πληροφορίες στους τεχνικούς σχετικά με τη μετατροπή του εξοπλισμού για τους διαφορετικούς τρόπους παραγωγής.

EM

Το Ηλεκτρολογικό Εγχειρίδιο (EM) παρέχει στους τεχνικούς τις πληροφορίες για το ηλεκτρικό σύστημα του εξοπλισμού.

IM

Το Εγχειρίδιο Εγκατάστασης (IM) παρέχει στους τεχνικούς τις πληροφορίες που απαιτούνται για την ασφαλή τοποθέτηση του εξοπλισμού.

MaSP

Το εγχειρίδιο συντήρησης & ανταλλακτικών παρέχει πληροφορίες για τον τρόπο συντήρησης του στοιχείου. Παρέχει επίσης τος πληροφορίες που απαιτούνται για την παραγγελία ανταλλακτικών για το στοιχείο από τον Όμιλο Tetra Pak.

MM

Το Εγχειρίδιο Συντήρησης (MM) παρέχει στους τεχνικούς πληροφορίες σχετικά με τη συντήρηση του εξοπλισμού.

OM

Το Εγχειρίδιο Χειρισμού (OM) παρέχει στο χειριστή πληροφορίες σχετικά με το χειρισμό και τη λειτουργία του εξοπλισμού πριν, κατά και μετά την παραγωγή.

RM

Το Εγχειρίδιο Μετασκευής (RM) παρέχει πληροφορίες στους τεχνικούς σχετικά με την ασφαλή εγκατάσταση ενός κιτ σε μια εγκατεστημένη μηχανή ή εξοπλισμό.

(Συνέχεια)

(Συνέχεια)

SPC

Ο Κατάλογος Ανταλλακτικών (SPC) παρέχει πληροφορίες που είναι απαραίτητες για την παραγγελία ανταλλακτικών από την Ο Όμιλος Tetra Pak.

TeM

Το Τεχνικό Εγχειρίδιο (TeM) παρέχει στους τεχνικούς πληροφορίες που μπορεί να είναι:

- πληροφορίες που είναι απαραίτητες για την ασφαλή εγκατάσταση του εξοπλισμού
- πληροφορίες που απαιτούνται για τη συντήρηση του εξοπλισμού
- πληροφορίες σχετικά με το ηλεκτρικό σύστημα της μηχανής/εξοπλισμού.
- απαραίτητες πληροφορίες για να παραγγείλετε ανταλλακτικά από την Ο Όμιλος Tetra Pak.
- άλλες τεχνικές πληροφορίες

UP

Οι Σελίδες Ενημέρωσης παρέχουν νέες σελίδες για την ενημέρωση των υφιστάμενων εγχειριδίων της μηχανής.

Διάταξη σελίδας

Βλέπε εικόνα (A) στη σελίδα i-9: Οι κύριες σελίδες του Καταλόγου Ανταλλακτικών αποτελούνται από μία σελίδα με εικόνα (1) και μια σελίδα με αντίστοιχη λίστα (7). Ο αριθμός σελίδας (5) αναγράφεται στο πάνω μέρος της σελίδας με την εικόνα και στο κάτω μέρος της σελίδες με τη λίστα.
Ο αριθμός εγγράφου (6) αναγράφεται στο κάτω μέρος της σελίδας με τη λίστα.

Αρίθμηση σελίδων

Βλέπε εικόνα (A) στη σελίδα i-9: Ο αριθμός σελίδας (5) αποτελείται από τρία μέρη:

- τον αριθμό κεφαλαίου (2)
- τον αύξοντα αριθμό σελίδας (3) εντός του κεφαλαίου
- τον συνολικό αριθμό σελίδων (4) στο κεφάλαιο

Σημειωση! Αν το εγχειρίδιο περιέχει σελίδες ενημέρωσης, ο αριθμός κεφαλαίου (2) μπορεί να αντικαθίσταται με τα γράμματα «UP».
Ο αύξων αριθμός σελίδας (3) και ο συνολικός αριθμός σελίδων (4) των σελίδων ενημέρωσης δεν ακολουθούν την αρχική αύξουσα αρίθμηση σελίδων του κεφαλαίου.

Εισαγωγικές πληροφορίες για τη μηχανή

Κατασκευαστής

Για το όνομα και τη διεύθυνση του κατασκευαστή, βλέπε τη δεύτερη σελίδα αυτού του καταλόγου.

Τεχνική εξυπηρέτηση

Ο Όμιλος Tetra Pak δεν αναλαμβάνει καμία ευθύνη για οποιαδήποτε ζημιά στον εξοπλισμό ή τραυματισμό του προσωπικού ή των καταναλωτών που οφείλεται σε χρήση ανταλλακτικών που δεν είναι γνήσια ανταλλακτικά της Tetra Pak®.

Για να παραγγείλετε γνήσια ανταλλακτικά της Tetra Pak για αυτή τη μηχανή, επικοινωνήστε με το πλησιέστερο γραφείο Tetra Pak.

Αναγνώριση

Ταξινόμηση CE

Ο εξοπλισμός αυτός συμμορφώνεται με τους βασικούς κανονισμούς υγείας και ασφάλειας του Ευρωπαϊκού Οικονομικού Χώρου (EEA).

(Συνέχεια)

(Συνέχεια)

Συμμόρφωση 3-A

Αν η πλάκα μηχανής περιλαμβάνει το σήμα 3-A (15) (βλέπε απεικόνιση (B) στη σελίδα i-7), ο εξοπλισμός αυτός συμμορφώνεται με τα υγειονομικά πρότυπα για διαμορφωτές, γεμιστικές μηχανές και διατάξεις σφράγισης των περιεκτών για υγρό γάλα και προϊόντα υγρού γάλακτος, αριθμός 17-10.

Πινακίδα χαρακτηριστικών μηχανής

Η εικόνα (B) στη σελίδα i-9 δείχνει ένα παράδειγμα μιας πινακίδας τύπου.
Για μια εικόνα της πινακίδας τύπου της συγκεκριμένης μηχανής και της θέσης της πάνω στον εξοπλισμό, βλέπε το κεφάλαιο «Εισαγωγή» των εγχειριδίων που παραδίδονται μαζί με τον εξοπλισμό. Η πινακίδα τύπου περιέχει τα παρακάτω στοιχεία, τα οποία θα χρειάζεστε όταν επικοινωνείτε με την Ο Όμιλος Tetra Pak σχετικά με τον συγκεκριμένο εξοπλισμό.

- Τύπος μηχανής (8)
- Όγκος (9)
- Στοιχεία σχεδίου (10)
- Αριθμός σειράς μηχανής (11)
- Κατασκευαστής (12)
- Έτος κατασκευής (13)
- Σήμανση CE (14)
- Σήμανση 3-A (εάν εφαρμόζεται) (15)

Βεβαιωθείτε ότι τα δεδομένα εξοπλισμού στις μπροστινές σελίδες αυτού του εγχειριδίου αντιστοιχούν στην πινακίδα χαρακτηριστικών της μηχανής και τις προδιαγραφής αυτής.

Πως να χρησιμοποιήσετε αυτό τον Κατάλογο Ανταλλακτικών

Παράδειγμα: Εντοπισμός αριθμού ανταλλακτικού

a) Βλέπε εικόνα (C) στη σελίδα i-9: Ανοίξτε το κεφάλαιο (16) που αναφέρεται δίπλα στην κυρίως ομάδα που περιέχει το εξάρτημα που θέλετε να εντοπίσετε.

Τα στοιχεία b) και c) αναφέρονται στην εικόνα (D) στη σελίδα i-10.

b) Στην απεικόνιση της k:yriaw ομάδας αναζητήστε την υπoομάδα της μηχανής (18) που περιλαμβάνει το εξάρτημα ή την υποομάδα που αναζητάτε. Σημειώστε τον αριθμό θέσης (19) και μεταβείτε στη σελίδα λίστας που ακολουθεί την απεικόνιση.

c) Αναζητήστε τον αριθμό θέσης / χαρακτηρισμό αναφοράς (17) ή το όνομα της υπο-ομάδας (20). Ανοίξτε την αντίστοιχη σελίδα (21) που αναφέρεται στη δεξιά στήλη. Ο Όμιλος Tetra Pak έχει επιλέξει να χρησιμοποιεί πάντα τη διάρθρωση που προσανατολίζεται στη λειτουργία για τον ορισμό αναφοράς. Το πρόθεμα που υποδεικνύει διάρθρωση που προσανατολίζεται στη λειτουργία (=) δεν εμφανίζεται στον ορισμό αναφοράς.

(Συνέχεια)

(Συνέχεια)

Τα στοιχεία d) και e) αναφέρονται στην εικόνα (E) στη σελίδα i-10.

d) Εντοπίστε το εξάρτημα (22) που αναζητάτε στην απεικόνιση της υποομάδας και σημειώστε τον αριθμο θέσης του εξαρτήματος.

e) Ο αριθμός εξαρτήματος (29) και η περιγραφή εξαρτήματος (30) παρατίθενται δίπλα στον αριθμό θέσης στη σελίδα λίστας.

Πληροφορίες που αναφέρονται στον Κατάλογο ανταλλακτικών

Η λίστα που ακολουθεί παραπέμπει στην εικόνα (E) στη σελίδα i-10.
Ο Κατάλογος Ανταλλακτικών περιέχει τις εξής πληροφορίες σχετικά με ομάδες, υπο-ομάδες και ανταλλακτικά για τον εξοπλισμό:

- Αναφορά στη δομή της ομάδας (23). Δείχνει την αμέσως μεγαλύτερη ομάδα στη δομή του καταλόγου του εξοπλισμού.
- Όνομα ομάδας (24)
- Μονάδα μέτρησης (25)
- Ποσότητα (26)
- Αριθμός σχεδίου συναρμολόγησης (27)
- Εύρος σελίδων της λίστας (28). Περιλαμβάνεται όταν υπάρχουν πολλαπλές σελίδες στην ομάδα ή στη λίστα.
- Αριθμός εξαρτήματος ή υποομάδας (29)
- Όνομα υποομάδας ή περιγραφή εξαρτήματος (30)
- Αριθμός ομάδας (31)
- Αριθμός εξοπλισμού (32)
- Επικεφαλίδα πληροφοριών ομάδας (33). Δείχνει αν το τμήμα της λίστας κάτω από την επικεφαλίδα ισχύει για συγκεκριμένη παραλλαγή της μηχανής ή αν πρόκειται για κατάλογο κοινών εξαρτημάτων.
  Αν μια λίστα αναφέρεται σε περισσότερες από μία παραλλαγές και κάθε παραλλαγή έχει το δικό της σχέδιο συναρμολόγησης, υπάρχει εδώ μια παραμπομπή στη σελίδα που δείχνει το σχέδιο συναρμολόγησης της παραλλαγής.
- Εσωτερικές πληροφορίες (34)

Βοήθεια και απορίες

Για βοήθεια κατά τη χρήση αυτού του εξοπλισμού ή άλλα ερωτήματα, σχόλια ή προτάσεις, υποβάλλετε τα ερωτήματα ή τα σχόλια μέσω του εργαλείου QuTI-P. Πληκτρολογήστε QuTI-P στη γραμμή διεύθυνσης του προγράμματος περιήγησης. Αν η πρόσβαση στο QuTI-P δεν είναι διαθέσιμη, κάντε αίτηση πρόσβασης επικοινωνώντας με το Γραφείο Παγκόσμιας Εξυπηρέτησης.

Αν δεν έχετε πρόσβαση στο Intranet της Tetra Pak® επικοινωνήστε με τον πλησιέστερο αντιπρόσωπο της Tetra Pak.

Información del manual

Tetra Pak Group recomienda que se lean cuidadosamente todos los manuales entregados. Comprobar que todos los manuales entregados estén disponibles para el personal que efectúe la operación o el mantenimiento del equipo.

Es importante conservar este manual durante la vida útil del equipo, así como facilitárselo a cualquier propietario o usuario posterior.

Tetra Pak Group no será responsable de cualquier daño, pérdida, lesión o muerte causada por no seguir las instrucciones en los manuales que acompañan a este equipo.

Manuales entregados

Manuales entregados con este equipo:

CM

El Manual de conversión proporciona a los técnicos información sobre cómo convertir el equipo entre diferentes modos de producción.

EM

El Manual eléctrico proporciona a los técnicos información acerca del sistema eléctrico del equipo.

IM

El Manual de instalación proporciona a los técnicos la información requerida para instalar el equipo con seguridad.

MaSP

El Manual de Mantenimiento y Piezas de Recambio proporciona información sobre el mantenimiento del componente específico. Además, proporciona información necesaria para pedir piezas de recambio del componente específico a Tetra Pak Group.

MM

El Manual de mantenimiento proporciona a los técnicos información sobre el mantenimiento del equipo.

OM

El Manual de servicio proporciona a los operadores información sobre la manipulación y operación del equipo antes, durante y después de la producción.

RM

El Manual de Modificación provee la información necesaria a los técnicos para instalar con seguridad un kit en una máquina o equipo ya instalado.

(Continúa)

(Continuación)

SPC

El Catálogo de piezas de recambio proporciona la información necesaria para pedir piezas de recambio de Tetra Pak Group.

TeM

El Manual técnico proporciona información a los técnicos, que puede ser:

- la información requerida para instalar el equipo con seguridad
- información requerida para el mantenimiento del equipo
- información acerca del sistema eléctrico de la máquina/del equipo
- la información necesaria para pedir piezas de recambio a Tetra Pak Group
- otras informaciones técnicas

UP

Las Páginas de Actualización suministran nuevas páginas para actualizar los manuales de máquinas ya existentes.

Organización de las páginas

Remitirse a la ilustración (A) en la página i-9: Las páginas principales en un Catálogo de piezas de recambio se componen de una página de ilustración (1) y una página de lista correspondiente (7). El número de la página (5) se muestra en el encabezado de una página de ilustración y en el pie de página de una página de lista. El número del documento (6) se muestra en el pie de página de una página de lista.

Numeración de las páginas

Remitirse a la ilustración (A) en la página i-9:
Un número de página (5) se compone de tres partes:

- Número de capítulo (2)
- número de página consecutivo dentro del capítulo (3)
- número total de páginas del capítulo (4).

¡Nota! Las letras UP pueden reemplazar el número del capítulo (2) si el manual incluye páginas de actualización. El número de página consecutivo (3) y el número total de páginas (4) de páginas de actualización no siguen la numeración secuencial de páginas del capítulo.

Introducción a la máquina

Fabricante

Para el nombre y la dirección del fabricante, ver la segunda página de este catálogo.

Servicio

Tetra Pak Group no se hace responsable de cualquier daño o lesión al equipo, personal o consumidores que sea causado por piezas de recambio que no sean piezas Tetra Pak® genuinas.

Para pedir piezas de recambio Tetra Pak genuinas para esta máquina, comunicarse con la oficina de Tetra Pak más cercana.

Identificación

Clasificación de la CE

Este equipo cumple los requisitos esenciales relativos a la salud y la seguridad del Área Económica Europea (EEA).

(Continúa)

(Continuación)

Conformidad con 3-A

Si la placa de la máquina contiene la marca 3-A (15) (consultar la ilustración (B) en la página i-7), este equipo cumple con las Normas sanitarias 3-A para formadoras, llenadoras y selladoras de envases para para leche fluida y productos de leche fluida 17-10.

Placa de la máquina

La ilustración (B) en la página i-9 muestra un ejemplo de placa de máquina.
En la Introducción del capítulo de los manuales entregados con este equipo se muestra una ilustración de la placa de máquina válida y su ubicación en el equipo
La placa de máquina contiene los datos listados a continuación requeridos al contactar con Tetra Pak Group en relación a este equipo específico.

- Tipo de máquina (8)
- Volumen (9)
- Especificaciones de plano (10)
- Número de serie de la máquina (11)
- Fabricante (12)
- Año de fabricación (13)
- Marca de la CE (14)
- Marca 3-A (si procede) (15)

Asegúrese que los datos de equipo listados en las páginas de cubierta de este manual corresponden a los datos de la placa de máquina y a la especificación máquina.

Cómo utilizar este Catálogo de piezas de recambio

Localizar un número de pieza de recambio

a) Remitirse a la ilustración (C) en la página i-9: Ir al número de capítulo (16) indicado al lado del grupo principal que contiene la pieza que usted desea localizar.

Los items b) y c) se refieren a la ilustración (D) en la página i-10.

b) En la ilustración del grupo principal, buscar el subgrupo máquina (18) que contiene la pieza o subgrupo que usted busca.
Anote el número de posición (19) y vaya a la página de lista que sigue a la ilustración.

c) Buscar el número de posición/designación de referencia (17) o el nombre del subgrupo (20). Vaya al número de página correspondiente (21) listado en la columna de la derecha. Tetra Pak Group ha elegido utilizar siempre la estructura orientada a la función para la designación de referencia. El prefijo que indica la estructura orientada a la función (=) no se muestra en la designación de referencia

(Continúa)

(Continuación)

Los Items d) y e) se refieren a la ilustración (E) en la página i-10.

d) Localizar la pieza (22) que busca en la ilustración del subgrupo y anotar el número de posición de la pieza.

e) El número de la pieza (29) y la descripción de la pieza (30) están listados al lado del número de posición en la página de lista.

Información listada en un Catálogo de piezas de recambio

La lista a continuación remite a la ilustración (E) en la página i-10.
Un Catálogo de piezas de recambio contiene la siguiente información sobre grupos, subgrupos y piezas de recambio para el equipo:

- Referencia de estructura de grupo (23). Indica el siguiente grupo más alto en la estructura de lista del equipo.
- Nombre de grupo (24)
- Unidad de medida (25)
- Cantidad (26)
- Número de plano de montaje (27)
- Rango de la página de lista (28). Incluida si hay páginas múltiples en la ilustración o lista de grupo.
- Número de pieza o subgrupo (29)
- Nombre del subgrupo o descripción de la pieza (30)
- Número de grupo (31)
- Número de equipo (32)
- Encabezado de información de grupo (33). Indica si la sección debajo del encabezado es para una variante máquina específica o si es una lista de piezas comunes. Si la lista tiene más de una variante y cada variante tiene su propio plano de conjunto, se muestra una referencia página para el plano de conjunto de la variante.
- Información interna (34)

Asistencia y consultas

Para obtener asistencia al trabajar con este equipo, o para otras consultas, comentarios o sugerencias, envíe las preguntas o los comentarios utilizando la herramienta QuTI-P. Escriba QuTI-P en el campo de la dirección del navegador. Si el acceso a QuTI-P no estuviera disponible, solicite el acceso poniéndose en contacto con Global Service Desk.

Si el acceso a la intranet de Tetra Pak® no estuviera disponible, póngase en contacto con el representante de Tetra Pak más cercano.

Manuaali informatsioon

Tetra Pak Group soovitab kõiki saadetud manuaale hoolikalt lugeda. Kindlustage saadetud manuaalide kättesaadavus seadmetega töötavale või neid hooldavale personalile.

Kataloog tuleb seadmete eluea jooksul alles hoida ning anda üle seadmete järgmisele omanikule või kasutajale.

Tetra Pak Group ei vastuta seadmete kahjustuste eest, mis on tekkinud seadmetega kaasapandud juhendites antud juhiste eiramise tagajärjel.

Kättetoimetatud manuaalid

Antud seadmega kaasasolevad manuaalid:

CM

Muutmise juhend annab tehnikutele informatsiooni seadmete muutmiseks vastavalt erinevatele tootmisrežiimidele.

EM

Elektrialane kasutusjuhend annab tehnikutele informatsiooni seadmete elektrisüsteemi kohta.

IM

Paigaldusjuhend annab tehnikutele seadmete turvaliseks paigaldamiseks vajalikku informatsiooni.

MaSP

Hoolduse ja varuosade juhendist saate teavet komponendi hoolduse kohta. Sealt leiate ka vajalikku infot selle kohta kuidas Tetra Pak Grouplit komponendile varuosasid tellida.

MM

Hooldusjuhend annab tehnikutele informatsiooni seadmete hooldamiseks.

OM

Kasutusjuhend annab operaatorile informatsiooni seadmete käsitsemiseks ja nendega töötamiseks enne tootmise alustamist, tootmise ajal ja pärast selle lõpetamist.

RM

Ümberehituse juhend annab tehnikutele vajalikku informatsiooni komplekti ohutuks paigaldamiseks eelnevalt paigaldatud masinale või seadmetele.

(Jätkub)

(Jätkub)

SPC

Varuosade kataloog annab vajalikku informatsiooni Tetra Pak Group varuosade tellimiseks.

TeM

Tehniline juhend annab tehnikutele informatsiooni, mis võib olla näiteks:

- vajalik informatsioon seadmete ohutuks paigaldamiseks
- vajalik informatsioon seadmete hooldamiseks
- informatsioon masina/seadmestiku elektrisüsteemi kohta
- vajalik informatsioon tagavaraosade tellimiseks Tetra Pak Group
- muu tehniline informatsioon

UP

Ajakohastatud leheküljed sisaldavad uusi lehekülgi olemasolevate masina juhendite ajakohastamiseks.

Lehekülje kujundus

Vaadake joonist (A) leheküljel i-9: varuosade kataloogi põhileheküljed koosnevad joonise leheküljest (1) ja vastava loendi leheküljest (7).
Lehekülje number (5) näidatakse joonise lehekülje päises ja loendi lehekülje jaluses. Dokumendi number (6) näidatakse loendi lehekülje jaluses.

Lehekülgede nummerdamine

Vaadake joonist (A) leheküljel i-9: lehekülje numbril (5) on kolm osa:

- peatüki number (2)
- järjestikune lehekülje number peatükis (3)
- lehekülgede koguarv (4) peatükis

Pange tähele! Kui juhend sisaldab ajakohastatud lehekülgi, võivad peatüki numbrit (2) asendada tähed UP. Ajakohastatud lehekülgede järjestikune lehekülje number (3) ja lehekülgede koguarv (4) ei järgi peatüki olemasolevat järjestikust lehekülgede nummerdamist.

Masina sissejuhatus

Tootja

Tootja nime ja aadressi leiate kataloogi teiselt leheküljelt.

Teenindus

Tetra Pak Group ei vastuta seadmetele, töötajatele või tarbijatele põhjustatud kahjustuste või kehavigastuste eest, mis on tekkinud selliste varuosade kasutamise tagajärjel, mis ei ole Tetra Paki originaalvaruosad.

Tetra Pak®i originaalvaruosade tellimiseks käesoleva masina jaoks pöörduge lähimasse Tetra Paki kontorisse.

Identifikatsioon

CE klassifikatsioon

Need seadmed on vastavuses Euroopa Majanduspiirkonna (EEA) tervisekaitse ja ohutusmeetmete põhireeglitega.

(Jätkub)

(Jätkub)

3-A vastavus

Kui masina andmeplaadil on märk "3-A" (15) (vt joonist (B) lk i-7), vastab käesolev seadmestik piima- ja piimatoodete mahutite vormimis-, villimis- ja sulgemisseadmete sanitaarnormidele 3-A, number 17-10.

Seadmeplaat

Masina andmeplaadi näidis on toodud leheküljel i-9 oleval joonisel (B).
Kehtiv andmeplaat ja selle asukoht seadmel on näidatud joonisel, mille leiate koos seadmestikuga tarnitud juhendite sissejuhatavast peatükist.
Masina andmeplaat sisaldab allpool loetletud andmeid, mida Te vajate antud seadme asjus Tetra Pak Group ühenduse võtmisel.

- Masina tüüp (8)
- Maht (9)
- Joonise spetsifikatsioonid (10)
- Masina seerianumber (11)
- Tootja (12)
- Valmistamise aasta (13)
- CE-märgistus (14)
- 3-A-märgistus (kui on asjakohane) (15)

Veenduge, et antud juhendi esilehtedel olevad andmed vastaksid masina andmesildil olevatele andmetele ja masina tehnilistele andmetele.

Varuosade kataloogi kasutamine

Leidke varuosa number

a) Vaadake joonist (C) leheküljel i-9: minge peatüki juurde, mille number (16) on näidatud selle põhigrupi kõrval, mis sisaldab Teie poolt otsitavat varuosa.

Elemendid b) ja c) viitavad joonisele (D) leheküljel i-10.

b) Põhigrupi joonisel otsige masina alamgruppi (18), mis sisaldab Teie poolt otsitavat varuosa või alamgruppi. Märkige üles positsiooni number (19) ja minge loendi leheküljele, mis järgneb joonisele.

c) Otsige üles positsiooni number/viitetähis (17) või alamgrupi nimi (20). Minge vastavale leheküljele, mille numbri (21) leiate parempoolses veerus olevast loetelust. Tetra Pak Group kasutab viitetähistes alati funktsioonile orienteeritud struktuuri. Prefiksit, mis näitab funktsioonile orienteeritud struktuuri (=), viitetähises ei näidata.

(Jätkub)

(Jätkub)

Elemendid d) ja e) viitavad joonisele (E) leheküljel i-10.

d) Leidke alamgrupi jooniselt üles otsitav varuosa (22) ja pange kirja varuosa positsiooni number.

e) Varuosa numbri (29) ja varuosa kirjelduse (30) leiate loendi leheküljelt positsiooni numbri kõrvalt.

Varuosade kataloogis loetletud informatsioon

Allpool antud loend viitab joonisele (E) leheküljel i-10.
Varuosade kataloog sisaldab alljärgnevat informatsiooni seadmete gruppide, alamgruppide ja varuosade kohta:

- Grupi struktuuri viide (23). Näitab järgmist kõrgemat gruppi seadmete loetelu struktuuris.
- Grupi nimetus (24)
- Mõõtühik (25)
- Kogus (26)
- Koostejoonise number (27)
- Loendi lehekülgede vahemik (28). Lisatakse juhul, kui grupi joonis või loend paiknevad mitmel leheküljel.
- Varuosa või alamgrupi number (29)
- Alamgrupi nimetus või varuosa kirjeldus (30)
- Grupi number (31)
- Seadme number (32)
- Grupis sisalduva informatsiooni pealkiri (33). Näitab, kas pealkirja all olev lõik puudutab konkreetset masina varianti või sisaldab see üldiste varuosade loendit. Kui loendis on variante rohkem kui üks ning nendel kõigil on eraldi koostejoonised, siis näidatakse konkreetse variandi koostejoonise lehekülgede numbrid.
- Siseinformatsioon (34)

Abi ja päringud

Kui vajate selle seadmega töötamisel abi või soovite esitada muid küsimusi, kommentaare või soovitusi, saatke oma küsimused või tagasiside QuTI-Pi tööriista kaudu. Sisestage oma brauseri aadressiväljale QuTI-P. Kui juurdepääs üksusesse QuTI-P pole saadaval, paluge endale juurdepääs, pöördudes ülemaailmse teeninduse infolaua Global Service Desk poole.

Kui juurdepääs Tetra Pak®i intranetile puudub, võtke ühendust lähima Tetra Paki esindajaga.

Tiedot käsikirjasta

Tetra Pak Group suosittelee kaikkien toimitettujen käyttöohjeiden huolellista lukemista. Varmista että toimitetut käsikirjat ovat niiden henkilöiden käytettävissä, jotka käyttävät tai huoltavat laitetta.

On tärkeää, että käsikirjaa pidetään tallella koko laitteen käyttöiän ajan ja että käsikirja annetaan jokaiselle laitteen tulevalle omistajalle tai käyttäjälle.

Tetra Pak Group ei ole vastuussa mistään laitteille aiheutuneista vahingoista, jotka ovat johtuneet tämän käsikirjan ohjeiden noudattamatta jättämisestä.

Toimitetut käsikirjat

Laitteen mukana toimitetut käsikirjat:

CM

Muunnoskäsikirja (CM) palvelee teknikoita antamalla tiedot laitteen muuntamisesta erilaisiin tuotantotiloihin.

EM

Sähkökäsikirja (EM) palvelee teknikoita antamalla tiedot laitteen sähköjärjestelmästä.

IM

Asennuskäsikirja (IM) palvelee teknikoita antamalla tiedot laitteiden turvalliseksi asentamiseksi.

MaSP

Huolto - & varaosaoppaasta löytyvät tiedot komponentin huoltoa varten. Sieltä saa myös tarvittavat ohjeet komponetin varaosien tilaamista varten Tetra Pak Groupilta.

MM

Huoltokäsikirja (MM) palvelee teknikoita antamalla tiedot laitteiden huoltamisesta.

OM

Käyttäjän käsikirja (OM) palvelee käyttäjää antamalla tiedot laitteen käyttämisestä ennen tuotantoa, sen aikana ja sen jälkeen.

RM

Korjaus käsikirja antaa teknikoille vaadittavat tiedot turvallisesti asentaa rakennussarja valmiiseen koneeseen tai laitteeseen.

(Jatkuu)

(Jatkoa)

SPC

Varaosaluettelo antaa ne tarpeelliset tiedot, joiden avulla voi tilata varaosia Tetra Pak Group

TeM

Tekninen käsikirja antaa teknikoille tietoja, joka voi olla:

- tietoja laitteen turvallista asennusta varten
- tietoja, joita tarvitaan laitteita huollettaessa
- tietoja koneen/laitteen sähköjärjestelmästä
- tietoja, joita tarvitaan tilattaessa varaosia Tetra Pak Group
- muita teknisiä tietoja.

UP

Sivujen Päivitys tarjoaa uusia sivuja jo olemassa oleviin koneen käyttöohjeisiin.

Sivutaitto

Katso kuvaa (A) sivulla i-9: Varaosaluettelon pääsivut koostuvat kuvitetusta sivusta (1) ja sitä vastaavasta luettelo sivusta (7). Sivunumero (5) näkyy kuvasivun otsikossa ja luettelo sivun alatunnisteessa.
Dokumentin numero (6) näkyy luettelo sivun alatunnisteessa.

Sivunumerointi

Katso kuvaa (A) sivulla i-9: sivunumerossa (5) on kolme osaa:

- kappaleen numero (2)
- juokseva sivunumero kappaleessa (2)
- kappaleen kokonaissivumäärä (3)

Huom! Kirjaimet SP voivat korvata kappaleen numeron (2) jos sivujen päivitys sisältyy käyttöohjeisiin. Peräkkäisten sivujen numero (3) ja päivitys sivujen kokonaismäärä (4) eivät noudata käytössä olevaa kappaleiden juoksevaa sivunumerointia.

Koneen esittely

Valmistaja

Katso valmistajan nimi ja osoite tämän luettelon toiselta sivulta.

Huolto

Tetra Pak Group ei vastaa sellaisista vahingoista tai mistään työvälineiden, henkilöstön tai kuluttajien vaurioista, jotka johtuvat varaosista, jotka eivät ole aitoja Tetra Pak®in varaosia.

Aitoja Tetra Pakin tämän laitteen varaosia voi tilata ottamalla yhteys lähimpään Tetra Pak toimistoon.

Koneen tunnistaminen

CE-luokitus

Tämä laite täyttää Euroopan talousalueen (ETA) perus turvallisuus- ja terveysvaatimukset.

(Jatkuu)

(Jatkoa)

3-A Soveltuvuus

Jos konekilvessä on merkintä A-3 (15) (ks. kuvasta (B) sivulla i-7) se tarkoittaa, että laite täyttää A-3 -standardin puhtausvaatimukset muotoilimille, täyttimille ja tiivisteille astioissa, jotka on tarkoitettu maidolle ja maitotuotteille, numero 17-10.

Konekilpi

Kuva (B) sivulla i-9 näyttää esimerkin konekilvestä.
Esimerkki voimassa olevasta konekilvestä ja sen sijainnista laitteessa näkyy tämän laitteen mukana toimitettujen käyttöohjeiden johdanto luvussa. Konekilpi sisältää alla luetellut tiedot, joita tarvitaan kun otetaan yhteyttä Tetra Pak Group koskien erityisesti tätä laitetta.

- Koneen tyyppi (8)
- Teho (9)
- Piirustus erittelyt (10)
- Koneen sarjanumero (11)
- Valmistaja (12)
- Valmistusvuosi (13)
- CE-merkintä (14)
- 3-A merkintä (tarvittaessa) (15)

Varmista, että tämän käsikirjan etusivuilla olevat tuotetiedot vastaavat konekilven tietoja ja laitteen teknistä erittelyä.

Kuinka tätä varaosaluetteloa käytetään

Löydä ensin varaosan numero

a) Katso kuvaa (C) sivulla i-9: Mene pääryhmän vieressä ilmoitettuun kappaleeseen (16), joka sisältää sen osan, jonka haluat löytää.

Osat b) ja c) katso kuvaa (D) sivulla i-10.

b) Pääryhmän kuvassa etsi sitä koneen alaryhmää (18), joka sisältää etsimäsi osan tai alaryhmän. Huomioi sijaintinumero (19) ja siirry kuvaa seuraavaa luettelosivulle.

c) Etsi sijaintinumeroa/viitenimitystä (17) tai alaryhmän nimeä (20).
Siirry vastaavalle sivunumerolle (21), joka on mainittu oikeanpuoleisessa sarakkeessa. Tetra Pak Group käyttää aina viitteissä toiminnallisia rakenteita. Prefiksi ilmaisin toiminto rakenne (=) ei näy viitenimityksissä.

(Jatkuu)

(Jatkoa)

Osat d) ja e) katso kuvaa (E) sivulla i-10.

d) Paikanna etsimäsi osa (22) alaryhmän piirroksessa ja huomioi osan sijaintinumero.

e) Osanumero (29) ja osan kuvaus (30) on luetteloitu sijaintinumeron vieressä luettelosivulla.

Varaosaluettelossa luetellut tiedot

Seuraava luettelo viittaa kuvaan (E) sivulla i-10. Varaosaluettelo sisältää seuraavat tiedot ryhmistä, alaryhmistä ja varaosista laitteelle:

- Viite ryhmän rakenteeseen (23). Osoittaa seuraavan ylemmän ryhmän laiteluettelon rakenteessa.
- Ryhmän nimi (24)
- Mittayksikkö (25)
- Määrä (26)
- Kokoamispiirustus numero (27)
- Luettelon sivualue (28). Sisällytetty, jos ryhmän kuvissa tai luetteloisssa on useita sivuja.
- Osan tai alaryhmän numero (29)
- Alaryhmän nimi tai osan kuvaus (30)
- Ryhmän numero (31)
- Laitteen numero (32)
- Ryhmätietojen otsikko (33). Ilmoittaa, onko otsikon alla oleva kohta erityiselle konevaihtoehdolle vai onko se luettelo yhteisistä osista.
  Jos luettelossa on useampi kuin yksi muunnos ja kullakin muunnoksella on oma asennuspiirroksensa, näytetään sivuviite muunnoksen asennuspiirustukseen.
- Sisäinen tiedotus (34)

Tuki ja kysymykset

Jos tarvitset tukea laitteen käyttämiseen, sinulla on muuta kysyttävää tai haluat esittää kommentteja tai ehdotuksia, lähetä kysymykset tai anna palautetta käyttämällä QuTI-P työkalua. Kirjoita QuTI-P selaimesi osoitekenttään. Jos QuTI-P-sovellus ei ole käytettävissä, pyydä käyttöoikeutta ottamalla yhteyttä maailmanlaajuiseen tukipalveluun.

Jos Tetra Pakin intranet ei ole käytettävissä, ota yhteyttä lähimpään Tetra Pakin edustajaan.

Information sur le manuel

Le Groupe Tetra Pak recommande de lire attentivement tous les manuels fournis. S'assurer que les manuels fournis sont accessibles au personnel qui s'occupe du fonctionnement ou de la maintenance de l'équipement.

Il est important de conserver ce manuel pendant toute la durée d'utilisation de la machine et de le transmettre à tout détenteur ou utilisateur ultérieur.

Le Groupe Tetra Pak ne sera pas tenu pour responsable d'un dommage, d'une perte, d'une blessure ou d'un décès survenus à cause du non-respect des instructions contenues dans les manuels qui accompagnent cet équipement.

Manuels fournis

Manuels fournis avec l'équipement:

CM

Le Manuel de Conversion fournit aux techniciens les informations nécessaires pour convertir la machine en vue des différents modes de production.

EM

Ce manuel électrique fournit aux techniciens les informations sur le système électrique de la machine.

IM

Ce manuel de Mise en place fournit aux techniciens les informations nécessaires pour l'installation de la machine en toute sécurité.

MaSP

Le Manuel de Maintenance et de Pièces de Rechange fournit des informations sur la maintenance du composant. Il fournit également les informations nécessaires à la commande de pièces de rechange auprès de Tetra Pak Group pour le composant.

MM

Ce manuel de Maintenance fournit aux techniciens les informations pour la maintenance.

OM

Le Manuel d'Opérateur fournit à l'opérateur les informations sur la manutention et le fonctionnement de l'équipement avant, pendant et après la production.

RM

Le Manuel de Conversion fournit aux techniciens les renseignements nécessaires pour installer en toute sécurité un ensemble sur une machine ou un équipement mis en place.

(Suite à la page suivante)

(Suite de la page précédente)

SPC

Le Catalogue de pièces de rechange fournit les renseignements nécessaires pour commander les pièces de rechange chez le Groupe Tetra Pak.

TeM

Le Manuel technique offre aux techniciens des informations qui peuvent être:

- des informations nécessaires pour installer l'équipement en toute sécurité,
- des informations nécessaires pour entretenir l'équipement
- des informations concernant le système électrique de l'équipement/des machines.
- des informations nécessaires à la commande de pièces de rechange auprès de le Groupe Tetra Pak
- d'autres informations techniques.

UP

Les pages de Mise à Jour fournissent de nouvelles pages pour mettre à jour les manuels de machine existants.

Présentation d'une page

Se référer à la figure (A) à la page i-9: Les pages principales du Catalogue des Pièces de Rechange sont composées d'une page de figure (1) et d'une page de liste correspondante (7). Le numéro de page (5) est indiqué dans le titre de la page de figure et dans le bas de page d'une page de liste.
Le numéro de document (6) est indiqué dans le bas de page de la page de liste.

Numérotation de page

Se référer (A) à la page i-9: Un numéro de page (5) possède trois parties:

- Numéro de chapitre (2)
- numéro de page consécutif (2) à l'intérieur du chapitre (3)
- nombre total de pages dans le chapitre (4)

Remarque! Les lettres UP peuvent remplacer le numéro de chapitre (2), si le manuel comprend des pages de mise à jour. Le numéro de page consécutif (3) et le nombre total de pages (4) des pages de mise à jour ne suivent pas la pagination séquentielle du chapitre.

Présentation de la machine

Fabricant

Pour le nom et l'adresse du fabricant, voir la deuxième page de ce catalogue.

Assistance technique

Le Groupe Tetra Pak ne sera pas tenu responsable des dommages sur l'équipement ou des blessures au personnel ou aux consommateurs qui pourraient être causés par des pièces de rechange qui ne sont pas des pièces de rechange Tetra Pak® originales.

Pour commander les pièces de rechange originales de cette machine, prendre contact avec le bureau Tetra Pak le plus proche.

Identification

Certification CE

Cet équipement est conforme aux réglementations essentielles d'hygiène et de sécurité de la Communauté Économique Européenne (CEE).

(Suite à la page suivante)

(Suite de la page précédente)

3-A Conformité

Si la plaque de machine contient le repère 3-A (15) (voir la figure (B) à la page i-7), cet équipement est conforme aux Normes Sanitaires 3-A pour les moules, les remplisseuses et systèmes de soudure de conteneurs pour lait liquide et produits laitiers liquides, Numéro 17-10.

Plaque signalétique de la machine

La figure (B) à la page i-9 montre un exemple d'une plaque signalétique de machine.
Une représentation de la plaque de machine valable et son emplacement sur l'équipement est indiquée au chapitre Introduction des manuels fournis avec l'équipement. La plaque de machine contient les caractéristiques figurant dans la liste ci-dessous, nécessaires pour prendre contact avec le Groupe Tetra Pak au sujet de cet équipement spécifique.

- Type de machine (8)
- Volume (9)
- Spécifications du plan (10)
- Numéro de série de la machine (11)
- Fabricant (12)
- Année de fabrication (13)
- Marquage CE (14)
- Repère 3-A (s'il y a lieu) (15)

S'assurer que les caractéristiques de l'équipement figurant dans la liste des pages de garde de ce manuel correspondent aux caractéristiques de la plaque signalétique de la machine et à ses spécifications.

Comment utiliser ce Catalogue de Pièces de Rechange

Localiser un Numéro de Pièce de rechange.

a) Se référer à la figure (C) à la page i-9: Aller au numéro de chapitre (16) indiqué à côté du groupe principal qui contient la pièce que vous souhaitez localiser.

Les articles b) et c) se réfèrent à la figure (D) à la page i-10.

b) Sur la figure du groupe principal, chercher la sous-groupe de machine (18) qui contient la pièce ou le sous-groupe que recherché. Noter le numéro de repère (19) et aller à la page de liste qui suit la figure.

c) Rechercher le numéro de repère/la désignation de référence (17) ou le nom de sous-groupe (20). Aller au numéro de page correspondant (21) figurant dans la liste de la colonne de droite. Le Groupe Tetra Pak a choisi de toujours utiliser la structure orientée vers la fonction pour la désignation de référence. Le préfixe indiquant la structure orientée vers la fonction (=) n'est pas indiquée dans la désignation de référence.

(Suite à la page suivante)

(Suite de la page précédente)

Les articles d) et e) se réfèrent à la figure (E) à la page i-10.

d) Localiser la pièce (22) recherchée sur la figure de sous-groupe et noter le numéro de repère de la pièce.

e) Le numéro de pièce (29) et la description de la pièce (30) figurent dans la liste à côté du numéro de repère sur la page de liste.

Informations figurant dans la Liste dans un Catalogue de Pièces de Rechange.

La liste ci-dessous se réfère à la figure (E) à la page i-10. Un Catalogue de Pièces de Rechange contient les renseignements suivants relatifs aux groupes, sous-groupes et pièces de rechange de l'équipement.

- Référence de structure de groupe (23). Indique le groupe supérieur suivant dans la structure de liste d'équipement.
- Nom du groupe (24)
- Unité de mesure (25)
- Quantité (26)
- Numéro de plan de montage (27)
- Gamme de la page de liste (28). Incluse s'il y a des pages multiples dans la figure de groupe ou dans la liste.
- Numéro de pièce ou de sous-groupe (29)
- Nom de sous-groupe ou description de la pièce (30)
- No. de groupe (31)
- Numéro de l'équipement (32)
- Titre des informations de groupe (33). Indique si la section sous le titre est pour une variante de machine spécifique ou s'il y a une liste de pièces communes. Si une liste comporte plus d'une variante et que chaque variante possède son propre plan de montage, une référence de page au plan de montage de la variante est alors indiqué.
- Informations internes (34)

Assistance et demandes

Pour toute assistance relative au fonctionnement de cet équipement, ou autres demandes, commentaires, ou suggestions, envoyez vos questions ou vos réactions par le biais de l'outil QuTI-P. Saisir QuTI-P dans le champ d'adresse de votre navigateur. Si l'accès à QuTI-P est indisponible, contactez le service après vente global pour solliciter un accès.

Si l'accès Intranet de Tetra Pak® est indisponible, contactez votre représentant Tetra Pak le plus proche.

Informacije o priručnicima

Grupa Tetra Pak preporučuje da temeljito pročitate sve isporučene priručnike. Osigurajte da su isporučeni priručnici na raspolaganju osobama koje će rukovati ili održavati uređaj.

Sačuvajte ovaj priručnik do isteka radnog vijeka opreme te ga predajte budućim vlasnicima ili korisnicima.

Grupa Tetra Pak ne prihvaća odgovornost za štetu, gubitke, ozljede ili smrtne slučajeve nastale zbog nepridržavanja uputa u priručnicima uz opremu.

Isporučeni priručnici

Priručnici isporučeni uz ovu opremu:

CM

Priručnik pruža tehničarima informacije o načinu prebacivanja opreme u različite načine rada.

EM

Priručnik pruža tehničarima informacije o električnom sustavu opreme.

IM

Priručnik pruža tehničarima informacije potrebne za sigurnu ugradnju opreme.

MaSP

Priručnik za održavanje i rezervne dijelove pruža informacije o održavanju komponenti. Također pruža informacije potrebne za naručivanje rezervnih dijelova komponenti od tvrtke Tetra Pak Group.

MM

Priručnik pruža tehničarimainformacije potrebne za održavanje opreme.

OM

Priručnik za rukovanje pruža rukovateljima informacije o rukovanju i radu opreme prije, za vrijeme i nakon proizvodnje.

RM

Pruža tehničarima informacije potrebne za sigurnu montažu novih komponenti na već instalirani stroj ili opremu.

(nastavak)

(nastavak)

SPC

Daje informacije potrebne za naručivanje rezervnih dijelova od tvrtke Grupa Tetra Pak.

TeM

Daje tehničarima informacije koje mogu biti sljedeće naravi:

- informacije potrebne za sigurno instaliranje opreme
- informacije potrebne za održavanje opreme
- informacije o električnom sustavu stroja/opreme
- informacije potrebne za naručivanje rezervnih dijelova od tvrtke Grupa Tetra Pak
- ostale tehničke informacije

UP

Sadrži nove stranice za ažuriranje postojećih priručnika uz stroj.

Izgled stranica

Pogledajte sliku (A) na stranici i-9: glavne stranice Kataloga rezervnih dijelova sastoje se od stranice s ilustracijom (1) i stranice s odgovarajućim popisom (7). Broj stranice (5) prikazan je u zaglavlju ilustracijske stranice i u podnožju stranice s popisom. Broj dokumenta (6) nalazi se u podnožju stranice s popisom.

Numeriranje stranica

Pogledajte sliku (A) na strani i-9: broj stranice (5) sastoji se od tri dijela:

- broja poglavlja (2)
- rednog broja stranice (3) u poglavlju
- ukupnog broja stranica (4) u poglavlju

Napomena! Slova UP mogu zamijeniti broj poglavlja (2) ako priručnik sadrži ažurirane stranice. Redni broj stranice (3) i ukupni broj stranica (4) ažuriranih stranica ne prate uzastopnu numeraciju poglavlja.

Uvodno o stroju

Proizvođač

Za naziv i adresu proizvođača vidjeti drugu stranicu ovog priručnika.

Rad

Grupa Tetra Pak ne preuzima odgovornost za bilo kakove štete ili ozljede nastale po opremu, osoblje ili potrošače zbog nekorištenja originalnih rezervnih dijelova proizvođača Tetra Pak®.

Za nabavu originalnih Tetra Pak rezervnih dijelova za ovaj stroj obratite se najbližem uredu Tetra Pak.

Identifikacija

CE klasifikacija

Ovaj uređaj usklađen je s osnovnim propisima za zdravlje i sigurnost Europske ekonomske zone (EEZ).

(nastavak)

(nastavak)

3-A usklađenost

Ako se na natpisnoj pločici stroja nalazi oznaka 3-A (15) (vidjeti sliku (B) na stranici i-9), oprema je sukladna s 3-A Sanitarnim normama za proizvođače, punitelje i zatvaratelje ambalaže za tekuće mlijeko i tekuće mliječne proizvode, broj 17-10.

Natpisna pločica

Ilustracija (B) na stranici i-9 prikazuje primjer natpisne pločice.
Ilustracija valjane natpisne pločice i njenog smještaja na opremi nalazi se u uvodnim poglavljima priručnika isporučenih uz ovu opremu.
Natpisna pločica sadrži dolje navedene podatke, potrebne za kontakt s tvrtkom Grupa Tetra Pak u vezi s konkretnom opremom.

- Tip stroja (8)
- Volumen (9)
- Specifikacija tehničkog crteža (10)
- Serijski broj stroja (11)
- Proizvođač (12)
- Godina proizvodnje (13)
- CE oznaka (14)
- 3-A oznaka (ako je primjenjivo) (15)

Provjerite da li podaci o uređaju na početnim stranicama ovoga priručnika odgovaraju podacima na natpisnoj pločici stroja i tehničkim karakteristikama stroja.

Kako se koristiti ovim Katalogom rezervnih dijelova

Pronađite broj rezervnog dijela

a) Pogledajte ilustraciju (C) na stranici i-9: idite na broj poglavlja (16) naveden uz glavnu skupinu koja sadrži dio koji želite pronaći.

Stavci b) i c) odnose se na ilustraciju (D) na stranici i-10.

b) Na prikazu glavne skupine pronađite podskupinu stroja (18) koja sadrži dio ili podgrupu koju tražite. Zabilježite broj pozicije (19) i pogledajte stranicu s popisom koja se nalazi iza stranice s ilustracijom.

c) Potražite broj pozicije/referentnu oznaku (17) ili naziv podskupine (20). Otiđite na odgovarajući broj stranice (21) naveden u desnom stupcu. Grupa Tetra Pak uvijek koristi funkcijski usmjereno strukturiranje referentnih oznaka. Prefiks koji pokazuje funkcijski usmjerenu strukturu (=) nije sadržan u referentnoj oznaci.

(nastavak)

(nastavak)

Stavci d) i e) odnose se na ilustraciju (E) na stranici i-10.

d) Na ilustraciji podskupine pronađite dio (22) koji tražite i zabilježite njegov broj pozicije.

e) Broj dijela (29) i opis (30) nalaze se uz broj pozicije na stranici s popisom.

Informacije navedene u Katalogu rezervnih dijelova

Donji popis odnosi se na sliku (E) na stranici i-10. U Katalogu rezervnih dijelova nalaze se sljedeći podaci o skupinama, podskupinama i rezervnim dijelovima opreme:

- Strukturna referenca skupine (23).
  Označava sljedeću višu skupinu u strukturi popisa opreme.
- Naziv skupine (24)
- Jedinica mjere (25)
- Količina (26)
- Broj konstrukcijskog crteža (27)
- Slijed stranice s popisom (28).
  Naveden je ako se u ilustraciji skupine ili popisu nalazi više stranica.
- Broj dijela ili podskupine (29)
- Naziv podskupine ili opis dijela (30)
- Broj skupine (31)
- Broj opreme (32)
- Naslov informacije o skupini (33). Ukazuje odnosi li se odjeljak ispod naslova na određeni tip stroja ili je to popis zajedničkih dijelova.
  Ako se na popisu nalazi više tipova i svaki ima svoj vlastiti konstrukcijski crtež, navedena je uputa na stranicu na kojoj je prikazan konstrukcijski crtež.
- Interne informacije (34)

Pomoć i upiti

Za pomoć u radu s ovom opremom ili za druge upite, komentare i prijedloge, pošaljite pitanja ili pružite povratne informacije korištenjem alata QuTI-P. Upišite QuTI-P u polje za adresu na svom pregledniku. Ako nemate pristup za QuTI-P, zatražite ga kontaktiranjem globalne servisne službe.

Ako nemate pristup intranetu tvrtke Tetra Pak®, obratite se najbližem predstavniku tvrtke Tetra Pak.

Kézikönyv információ

A Tetra Pak Group az összes leszállított kézikönyv alapos átolvasását javasolja. Gondoskodjon arról, hogy a készüléket üzemeltető és karbantartó személyzet számára elérhetőek legyenek a leszállított kézikönyvek.

Fontos, hogy a kézikönyvet a berendezés teljes élettartama alatt megőrizzék, és továbbadják azt minden későbbi tulajdonosnak és felhasználónak.

A Tetra Pak Group nem felel semmilyen kárért, veszteségért vagy sérülésért, melyek jelen berendezéshez mellékelt kézikönyvben lévő utasítások be nem tartásának következménye.

Leszállított kézikönyvek

A berendezéssel leszállított kézikönyvek:

CM

A CM Átállítási kézikönyv ellátja a szakembereket a különböző gyártási üzemmódokra való átállításról szóló információkkal.

EM

Az EM Elektromossági kézikönyv ellátja a szakembereket a készülék elektromos rendszerével kapcsolatos információkkal.

IM

Az IM Telepítési kézikönyv a készülék biztonságos telepítéséhez szolgáltat információkat a szakemberek számára.

MaSP

A Karbantartás és pótalkatrészek kézikönyv tájékoztatást nyújt a gépegység karbantartásáról. Emellett tartalmazza azokat az információkat is, amelyek ahhoz szükségesek, hogy pótalkatrészeket rendeljen a gépegységhez a Tetra Pak Csoporttól.

MM

Az MM Karbantartási kézikönyv a készülék karbantartásával kapcsolatosan szolgáltat információkat a szakemberek számára.

OM

Az OM Üzemeltetési kézikönyv a kezelők részére szolgáltat információkat a berendezés kezeléséről és működtetéséről a gyártás előtt, alatt és után.

RM

Az RM újraépítési kézikönyv ellátja a szakembereket azokkal az információkkal, amelyek egy készletnek a már telepített gépre való biztonságos felszereléséhez szükségesek.

(Folyt.)

(Folyt.)

SPC

Az SPC Alkatrész-katalógus a Tetra Pak Group megrendelhető alkatrészek megrendeléséhez szükséges információkat tartalmazza.

TeM

A TeM Műszaki útmutató az alábbi információkkal látja el a technikusokat:

- a berendezés biztonságos felszereléséhez szükséges információkkal,
- a berendezés karbantartásához szükséges információkkal,
- a gép/berendezés elektromos rendszerével kapcsolatos információkkal,
- A Tetra Pak Group történő cserealkatrész rendeléshez szükséges információkkal,
- egyéb műszaki információkkal.

UP

A UP Termékfrissítési oldalak új oldalakkal frissíti a gépkönyveket.

Oldal elrendezés

Lásd az (A) ábrát a(z) i-9 oldalon: Az Alkatrész-katalógus fő oldalai egy ábrákat tartalmazó oldalból (1) és a megfelelő listát tartalmazó oldalból (7) állnak. Az oldalszám (5) az ábrákat tartalmazó oldal fejlécében és a listát tartalmazó oldal láblécében jelenik meg. A dokumentumszám a listát tartalmazó oldal (6) láblécében jelenik meg.

Oldalszámozás

Lásd az ábrát (A) a(z) i-9 oldalon: Az oldalszám (5) három részből áll:

- fejezetszám (2)
- fejezeten belüli egymást követő oldalak száma (3)
- a fejezet összoldalszáma (4)

Megjegyzés! A UP betűk helyettesíthetik a fejezetszámot (2), ha a kézikönyv termékfrissítési oldalakat tartalmaz. A termékfrissítési oldalak egymást követő oldalai (3) és összoldalszáma (4) nem igazodik a fejezet egymást követő oldalszámozásához.

Gép bevezetés

Gyártó

A gyártó neve és címe a katalógus második oldalán található.

Szerviz

A Tetra Pak Group nem vállal felelősséget a berendezés, személyzet vagy fogyasztók olyan sérüléseiért, amelyet nem eredeti Tetra Pak® pótalkatrészek használata okozott.

Eredeti Tetra Pak pótalkatrészeket a legközelebbi Tetra Pak irodából rendelhet.

Azonosítás

CE besorolás

A berendezés megfelel az Európai Gazdasági Térség (EEA) alapvető egészségügyi és biztonsági előírásainak.

(Folyt.)

(Folyt.)

3-A megfelelőség

Ha a gép adattáblája tartalmazza a 3-A jelzést (15) (lásd (B) ábra az i-7 oldalon), akkor ez a berendezés megfelelő a 3-A Egészségügyi szabványok folyékony tej és folyékony tejtermékek csomagolásának alakító, töltő és lezáró eszközeire, 17-10. sz.

Géptábla

A (B) ábra a(z) i-9 oldalon egy példa a géptáblára.
Az érvényes géptáblát és annak a gépen elfoglalt helyét bemutató ábra a berendezéshez mellékelt kézikönyvek bevezető fejezetében található. A géptábla az alább felsorolt adatokat tartalmazza, amelyekre akkor van szükség, amikor felveszi a kapcsolatot a Tetra Pak Group ezzel a sajátos berendezéssel kapcsolatban.

- Géptípus (8)
- Térfogat (9)
- Tervrajz specifikációk (10)
- Gép gyártási száma (11)
- Gyártó (12)
- Gyártási év (13)
- CE jelölés (14)
- 3-A jelölés (ha van ilyen) (15)

Bizonyosodjon meg arról, hogy a kézikönyv első oldalán található berendezés-adatok megfelelnek a géptábla adatainak és a gép specifikációinak.

Az Alkatrész-katalógus használata

Keresse meg az alkatrész-számot

a) Lásd a (C) ábrát a(z) i-9 oldalon: Ugorjon a fejezetszámra (16), amely a keresett alkatrészt tartalmazó fő csoport mellett található.

A(z) b) és c) adatok a(z) i-10 oldalon található (D) ábrára vonatkoznak.

b) A főcsoport ábráját lásd a gép alcsoportban (18), amely a keresett alkatrészt vagy alcsoportot tartalmazza. Jegyezze fel a pozíció számot (19) és ugorjon az illusztrációt követő lista oldalra.

c) Keresse a pozíció számot/referencia elnevezést (17) vagy az alcsoport nevét (20). Ugorjon a jobboldali oszlopban feltüntetett megfelelő oldalszámra (21). A Tetra Pak Group úgy döntött, hogy referencia elnevezésre mindig a funkcióorientált szerkezetet alkalmazza. A funkcióorientált szerkezetet jelző előtag (=) nem jelenik meg a referencia elnevezésben.

(Folyt.)

(Folyt.)

A(z) d) és e) adatok a(z) i-10 oldalon található (E) ábrára vonatkoznak.

d) Keresse meg az alkatrészt (22) az alcsoport ábrán és jegyezze fel az alkatrész pozíció számát.

e) Az alkatrész-szám (29) és az alkatrész leírása (30) a lista oldalon a pozíció szám mellett van feltüntetve.

Az Alkatrész-katalógusban feltüntetett információk

Az alábbi lista a(z) i-10 oldalon lévő (E) ábrára vonatkozik.
Az Alkatrész-katalógus a következő információkat tartalmazza a berendezés alcsoportokról, csoportokról és alkatrészekről.

- Csoportszerkezet referencia (23). A következő nagyobb csoportot jelzi a berendezés listaszerkezetében.
- Csoportnév (24)
- Mértékegység (25)
- Mennyiség (26)
- Szerelési rajz száma (27)
- Listaoldal tartomány (28). Akkor található meg, ha több oldalt tartalmaz a csoportábrában vagy a listában.
- Alkatrész vagy alcsoport szám (29)
- Alcsoport név vagy alkatrész leírás (30)
- Csoportszám (31)
- Berendezés szám (32)
- Csoportinformáció címsor (33). Azt jelzi, hogy az alábbi szakaszban a címsor egy bizonyos gépváltozatra vonatkozik, vagy általános alkatrészek egy listája Ha egy lista egynél több változattal rendelkezik, és mindegyik változatnak saját összeszerelési rajza van, a változatok szerelési rajzának egy oldal-hivatkozása jelenik meg.
- Belső információk (34)

Segítség és tájékoztatás

Jelen berendezés használata során a QuTI-P eszköz segítségével kérhet segítséget, illetve más tájékoztatást, valamint feltehet kérdéseket és visszajelzést is adhat. Böngészőjén a címmezőbe írja be a QuTI-P szöveget. Ha a QuTI-P nem elérhető, a hozzáférést a globális internetes ügyfélszolgálattól (Global Service Desk) kérheti.

Ha a Tetra Pak® intranet nem érhető el, forduljon a legközelebbi Tetra Pak képviselethez.

Handbókaupplýsingar

Tetra Pak Group mælir með því að allar handbækur séu lesnar vandlega. Gangið úr skugga um að afhentar handbækur séu tiltækar starfsmönnum sem reka tækin eða viðhalda þeim.

Mikilvægt er geyma þessa handbók á endingartíma búnaðarins og afhenda hana arftökum eða öðrum notendum.

Tetra Pak Group ber ekki ábyrgð á neinu tjóni á tækjunum sem stafar af því að ekki var farið eftir leiðbeiningum í þessari handbók.

Afhentar handbækur

Handbækur sem afhentar voru með þessum tækjum:

CM

Breytingahandbók veitir tæknimönnum upplýsingar um breytingar á tækjunum svo að þau hæfi hinum ýmsu framleiðsluháttum.

EM

Raftækjahandbók veitir tæknimönnum upplýsingar um rafkerfi tækjanna.

IM

Uppsetningarhandbók veitir tæknimönnum nauðsynlegar upplýsingar um örugga uppsetningu tækjanna.

MaSP

Handbækur um viðhald og varahluti veita upplýsingar um hvernig eigi að viðhalda íhlutnum. Þær veita líka nauðsynlegar upplýsingar um hvernig skuli panta varahluti frá Tetra Pak Group fyrir íhlutinn.

MM

Viðhaldshandbók veitir tæknimönnum upplýsingar um viðhald tækjanna.

OM

Rekstrarhandbók veitir stjórnanda upplýsingar um meðhöndlun og rekstur tækjanna fyrir og eftir framleiðslu.

RM

Endurbyggingarhandbók veitir tæknimönnum nauðsynlegar upplýsingar um örugga uppsetningu viðbótarbúnaðar við þegar uppsetta vél eða tæki.

(frh.)

(frh.)

SPC

Varahlutalisti veitir upplýsingar sem nauðsynlegar eru til að panta varahluti frá Tetra Pak Group.

TeM

Í Tæknihandbókinni eru tæknimönnum veittar upplýsingar, svo sem:

- upplýsingar um örugga uppsetningu tækjanna
- upplýsingar um viðhald tækjanna
- upplýsingar um rafkerfi vélarinnar/búnaðarins
- nauðsynlegar upplýsingar um pantanir varahluta frá Tetra Pak Group
- aðrar tæknilegar upplýsingar

UP

Uppfærslublaðsíður eru nýjar blaðsíður til að uppfæra eldri vélahandbækur.

Umbrot

Vísað er til myndar (A) á bls. i-9: Meginblaðsíður í Varahlutalistanum eru myndablaðsíða (1) og samsvarandi listablaðsíða (7). Blaðsíða númer (5) er sýnd í fyrirsögn myndablaðsíðu og neðst á listablaðsíðu. Skjalsnúmer (6) er neðst á listablaðsíðu.

Blaðsíðunúmer

Vísað er til myndar (A) á blaðsíðu i-9: Blaðsíðunúmer (5) skiptist í þrjá hluta:

- kaflanúmer (2)
- raðnúmer (3) innan kaflans
- heildarfjölda blaðsíðna (4) í kaflanum.

Ath.! Stafirnir UP kunna að koma í stað kaflanúmers (2) ef uppfærslublaðsíður eru í handbókinni. Raðnúmer blaðsíðu (3) og heildarfjöldi síðna (4) af uppfærslublaðsíðum sýna ekki eldri raðnúmer í kaflanum.

Inngangur um vélina

Framleiðandi

Nafn og heimilisfang framleiðanda er birt á 2. bls. þessa vörulista.

Þjónusta

Tetra Pak Group ber enga ábyrgð á tjóni eða slysum á tækjum, starfsmönnum eða neytendum af völdum varahluta sem eru ekki ekta Tetra Pak®-varahlutir.

Pantanir á ekta Tetra Pak-varahlutum í þessa vél skulu sendar næstu skrifstofu Tetra Pak.

Auðkenni

CE flokkun

Þessi tæki fullnægja grundvallarheilbrigðis- og öryggisreglugerðum Evrópska efnahagssvæðisins (EES).

(frh.)

(frh.)

3-A samræmi

Ef vélarplatan inniheldur 3-A merkingu (15) (sjá mynd (B) á bls. i-7) er þessi búnaður í samræmi við 3-A hreinlætisstaðla fyrir mótara, áfyllara og lokara íláta fyrir mjólkurvökva og mjólkurvökvavörur, nr. 17-10.

Vélarskilti

Myndin (B) á bls. i-9 sýnir dæmi um vélarskilti.
Mynd af gildandi vélarskilti og staðsetning þess á búnaðinun er birt í inngangskafla handbókanna sem afhentar eru með þessum búnaði.
Á vélarskiltinu er að finna þau gögn sem talin eru upp hér að neðan og þörf er fyrir þegar haft er samband við Tetra Pak Group vegna þessa sérstaka búnaðar.

- Vélargerð (8)
- Magn (9)
- Tækniteikningar (10)
- Raðnúmer vélar (11)
- Framleiðandi vélar (12)
- Framleiðsluár(13)
- CE-merki (14)
- 3-A-merki (ef við á) (15)

Gangið úr skugga um að gögn um búnaðinn á fyrstu blaðsíðum þessarar handbókar komi heim og saman við vélarskiltið og tæknilýsingu vélarinnar.

Notkun þessa varahlutalista

Finna ber númer varahlutar

a) Vísað er til myndar (C) á bls. i-9: Fletta skal upp á kafla (16) sem birtist við hlið meginhópsins sem hefur að geyma þann hlut sem ætlunin er að finna.

Atriði b) og c) vísa til myndar (D) á bls. i-10.

b) Á mynd af meginhópnum ber að gá að undirflokki (18) vélar sem hefur að geyma hlut eða undirflokk sem leitað er að.
Aðgæta skal staðsetningarnúmerið (19) og fletta upp á listablaðsíðu sem fylgir myndinni.

c) Finna ber staðsetningarnúmer/tilvísaða skilgreiningu (17) eða heiti undirhóps (20). Aðgæta skal viðeigandi blaðsíðunúmer (21) sem birt er í dálkinum hægra megin. Tetra Pak Group hefur valið að nota ávallt virkniform sem skilgreiningarhlut. Forskeytið, sem bendir til virkniformsins (=), er ekki sýnt í skilgreiningarhlutnum

(frh.)

(frh.)

Atriði d) og e) eiga við um mynd (E) á bls. i-10.

d) Finna ber hlutinn (22) sem leitað er að í undirhópsmyndinni og aðgæta hvert er staðsetningarnúmer hlutarins.

e) Hlutarnúmerið (29) og lýsing hlutarins (30) eru listuð við hlið staðsetningarnúmersins á listablaðsíðunni.

Upplýsingar sem birtar eru í Varahlutalistanum

Listinn hér að neðan á við um mynd (E) á bls. i-10. Í Varahlutalista er að finna eftirfarandi upplýsingar um hópa, undirhópa og varahluti fyrir tækin:

- Skilgreining uppbyggingar hóps (23). Bendir til næsta hóps fyrir ofan í uppbyggingu hlutalistans.
- Heiti hóps (24)
- Mælieiningar (25)
- Magn (26)
- Númer á samsetningarteikningu (27)
- Svið listablaðsíðu (28). Fylgir með ef um er að ræða margar blaðsíður á hópmyndninni eða listanum.
- Númer hlutar eða undirflokks (29)
- Heiti undirhóps eða lýsing hlutar (30)
- Hópnúmer (31)
- Númer búnaðar (32)
- Fyrirsögn upplýsingar um hóp (33). Bendir til þess hvort kaflinn undir fyrirsögninni fjalli um sérstaka gerð vélar eða í honum sé listi yfir almenna hluti. Ef í listanum er að finna fleiri en einn frábrugðinn hlut og birt er samsetningarteikning fyrir sérhvern frábrugðinn hlut er vísað til blaðsíðunnar með samsetningarteikningu hins frábrugðna hlutar.
- Innri upplýsingar (34)

Aðstoð og fyrirspurnir

Þegar þörf er á aðstoð þegar þessi búnaður er notaður eða aðstoð vegna fyrirspurna, athugasemda eða tillagna, sendið spurningar eða athugasemdir með því að nota QuTI-P-tækið. Skráið QuTI-P í reitinn fyrir vistfang í vafrann þinn. Ef aðgangur að QuTI-P er ekki í boði skal óska eftir aðgangi með því að hafa samband við Global Service Desk (þjónustuborð).

Ef ekki er um að ræða aðgang að Tetra Pak® heimasíðunni ber að hafa samband við næsta umboðsmann Tetra Pak.

Informazioni sul manuale

Tetra Pak Group raccomanda di leggere con attenzione tutti i manuali forniti. Assicurarsi che i manuali forniti siano disponibili per il personale che opera o mantiene in efficienza l'equipaggiamento.

E' importante conservare questo catalogo per tutta la durata dell'equipaggiamento e consegnarlo ad ogni successivo possessore o utilizzatore.

Tetra Pak Group non si assume alcuna responsabilità per eventuali danni, perdite, lesioni o morte causati dall'inosservanza delle istruzioni contenute nei manuali forniti con questo equipaggiamento.

Manuali forniti

Manuali forniti con questo equipaggiamento:

CM

Il Manuale di Conversione fornisce ai tecnici le informazioni sulla conversione dell'equipaggiamento tra i diversi modi di produzione.

EM

Il Manuale Elettrico fornisce ai tecnici le informazioni sul sistema elettrico dell'equipaggiamento.

IM

Il Manuale d'Installazione fornisce ai tecnici le informazioni necessarie per installare facilmente l'equipaggiamento.

MaSP

Il Manuale di Manutenzione e Parti di ricambio fornisce informazioni su come effettuare la manutenzione del componente. Inoltre fornisce le informazioni necessarie per ordinare al Gruppo Tetra Pak pezzi di ricambio per il componente.

MM

Il Manuale di Manutenzione fornisce ai tecnici le informazioni sulla manutenzione dell'equipaggiamento.

OM

Il Manuale Operativo fornisce all'operatore informazioni su come movimentare ed azionare l'equipaggiamento prima, durante e dopo la produzione.

RM

Il Manuale di modifica fornisce ai tecnici le informazioni necessarie per installare facilmente un kit ad una macchina o ad un equipaggiamento.

(Continua)

(Continuazione)

SPC

Il Catalogo parti di ricambio fornisce informazioni necessarie per ordinare le parti di ricambio da Tetra Pak Group.

TeM

Il Manuale Tecnico fornisce le informazioni ai tecnici che possono essere:

- informazioni necessarie per installare in modo sicuro l'equipaggiamento
- informazioni necessarie per la manutenzione dell'equipaggiamento
- informazioni sul sistema elettrico della macchina/equipaggiamento
- informazioni necessarie per ordinare le parti di ricambio a Tetra Pak Group.
- altre informazioni tecniche

UP

Le pagine di aggiornamento forniscono nuove pagine per aggiornare i manuali delle macchine esistenti.

Schema pagina

Fare riferimento alla figura (A) a pagina i-9: Le pagine principali in un catalogo parti di ricambio consistono di una pagina di illustrazione (1) ed una corrispondente pagina della lista (7). Il numero di pagina (5) è indicato nell'intestazione di una pagina di illustrazione e nel piè di pagina di una pagina della lista. Il numero di documento (6) è indicato nel piè di pagina di una pagina della lista.

Numerazione pagina

Fare riferimento alla figura (A) a pagina i-9: Un numero di pagina (5) ha tre parti:

- numero capitolo (2)
- numero pagina consecutivo nel capitolo (3)
- numero totale di pagine nel capitolo (4)

Nota! Le lettere UP possono sostituire il numero del capitolo (2) se il manuale include le pagine di aggiornamento. Il numero di pagina consecutivo (3) ed il numero totale di pagine (4) delle pagine di aggiornamento non seguono la numerazione esistente sequenziale delle pagine del capitolo.

Introduzione macchina

Fabbricante

Per il nome e l'indirizzo del fabbricante, vedere la seconda pagina di questo catalogo.

Assistenza

Tetra Pak Group non si assume alcuna responsabilità per qualsiasi danno all'equipaggiamento, o lesioni al personale o ai clienti che sia stato causato da parti di ricambio non originali Tetra Pak®.

Per ordinare le parti di ricambio originali Tetra Pak per questa macchina, contattare l'ufficio Tetra Pak più vicino.

Identificazione

Classificazione CE

Questa macchina è conforme alle norme sanitarie e di sicurezza dell'Area Economica Europea (EEA).

(Continua)

(Continuazione)

Conformità 3-A

Se la targhetta macchina contiene il marchio 3-A (15) (vedere la figura (B) a pagina i-7), questo equipaggiamento è conforme alle norme sanitarie 3-A per formatrici, riempitrici e saldatori di contenitori per latte liquido e prodotti lattiero-caseari liquidi, numero 17-10.

Targhetta macchina

La figura (B) a pagina i-9 mostra un esempio della targhetta della macchina. Una figura della targhetta della macchina valida e la relativa posizione sull'equipaggiamento è mostrata nel capitolo Introduzione dei manuali forniti con questo equipaggiamento. La targhetta della macchina contiene i dati elencati in basso, necessari quando si contatta Tetra Pak® in merito a questo specifico equipaggiamento.

- Tipo di macchina (8)
- Volume (9)
- Specifiche disegni (10)
- Numero di serie della macchina (11)
- Fabbricante (12)
- Anno di fabbricazione (13)
- Sigla CE (14)
- Marcatura 3-A (se applicabile) (15)

Assicurarsi che i dati dell'equipaggiamento nelle pagine anteriori di questo manuale corrispondano alla targhetta della macchina ed alle specifiche della macchina stessa.

Come usare questo catalogo parti di ricambio

Individuazione di un numero di parte di ricambio

a) Fare riferimento alla figura (C) a pagina i-9: Passare al numero del capitolo (16) indicato accanto al gruppo principale che contiene la parte che si vuole individuare.

Punti b) e c) fare riferimento alla figura (D) a pagina i-10.

b) Sulla figura del gruppo principale, cercare il sottogruppo della macchina (18) che contiene la parte o il sottogruppo che si sta cercando. Annotare il numero di posizione (19) e passare alla pagina della lista che segue la figura.

c) Cercare il numero di posizione/denominazione di riferimento (17) o il nome del sottogruppo (20). Passare al numero di pagina corrispondente (21) elencato nella colonna destra. Tetra Pak Group ha scelto di utilizzare sempre la funzione della struttura orientata per la denominazione di riferimento. Il prefisso che indica la funzione della struttura orientata (=) non è mostrato nella denominazione di riferimento

(Continua)

(Continuazione)

Punti d) e e) fare riferimento alla figura (E) a pagina i-10 .

d) Individuare la parte (22) che si sta cercando sulla figura del sottogruppo ed annotare il numero di posizione della parte.

e) Il numero della parte (29) e la descrizione della parte (30) sono elencati accanto al numero di posizione nella pagina della lista.

Informazioni elencate nel catalogo parti di ricambio

La lista in basso si riferisce alla figura (E) a pagina i-10. Un catalogo parti di ricambio contiene le seguenti informazioni sui gruppi, sottogruppi e parti di ricambio per l'equipaggiamento:

- Riferimento struttura gruppo (23). Indica il gruppo successivo superiore nella struttura della lista dell'equipaggiamento.
- Nome del gruppo (24)
- Unità di misura (25)
- Quantità (26)
- Numero disegno di montaggio (27)
- Gamma di pagine della lista (28). Inclusa se ci sono pagine multiple nella figura del gruppo o della lista.
- Numero della parte o del sottogruppo (29)
- Nome del sottogruppo o descrizione della parte (30)
- Numero gruppo (31)
- Numero dell'equipaggiamento (32)
- Sezione informazioni del gruppo (33). Indica se la sezione sotto l'intestazione è per una variante macchina specifica o se è una lista di parti comuni. Se una lista ha più di una variante e ogni variante ha il proprio disegno di montaggio, un riferimento della pagina è indicato nel disegno di montaggio della variante.
- Informazioni interne (34)

Assistenza e richieste di informazioni

Per ricevere assistenza durante l'utilizzo della macchina o formulare altre richieste, commenti o suggerimenti, utilizzare lo strumento QuTI-P. Digitare QuTI-P nel campo dell'indirizzo del browser. Se l'accesso a QuTI-P non è disponibile, richiederlo contattando il servizio di assistenza globale.

Se l'accesso all'intranet Tetra Pak® non è disponibile, contattare il rappresentante Tetra Pak più vicino.

Vadovo informacija

Tetra Pak Group rekomenduoja atidžiai perskaityti visus pristatomus vadovus. Įsitikinkite, kad pristatomi vadovai yra prieinami personalui, kuris dirba su įranga arba ją prižiūri.

Svarbu saugoti šį vadovą visam įrangos gyvavimo laikotarpiui ir perduoti vadovą kiekvienam sekančiam savininkui arba naudotojui.

Tetra Pak Group neatsako už bet kokius įrangos gedimus, atsiradusius nesilaikant šią įrangą lydinčiuose vadovuose pateiktų instrukcijų.

Pristatomi vadovai

Kartu su šia įranga pristatomi vadovai:

CM

Perjungimų vadove specialistams suteikiama informacija apie įrangos perjungimą tarp įvairių gamybos režimų.

EM

Elektrinės dalies vadove pateikiama informacija specialistams apie įrangos elektros sistemą.

IM

Montavimo vadove pateikiama specialistams informacija, reikalinga saugiam įrangos montavimui.

MaSP

Techninės priežiūros ir atsarginių dalių vadove pateikiama informacija, kaip prižiūrėti komponentą. Jame taip pat pateikiama informacija, reikalinga norint iš „Tetra Pak Group“ užsisakyti komponento atsarginių dalių.

MM

Priežiūros vadove pateikiama specialistams informacija, reikalinga prižiūrint įrangą.

OM

Darbo vadove pateikiama informacija operatoriams apie darbą su įranga ir įrangos valdymą prieš gamybą, gamybos metu ir po gamybos.

RM

Restauravimo vadove pateikiama specialistams informacija, reikalinga saugiai sumontuoti komplektą dalių į sumontuotą mašiną ar įrangą.

(Tęsiama)

(Tęsiama)

SPC

Atsarginių dalių kataloge pateikiama informacija, reikalinga užsakant atsargines dalis iš Tetra Pak Group.

TeM

Techniniame vadove pateikiama specialistams informacija, kuri gali būti:

- informacija, reikalinga saugiam įrangos montavimui
- informacija, reikalinga atliekant techninę įrangos priežiūrą
- informacija apie mašinos / įrangos elektros sistemą
- informacija, reikalinga užsakant atsargines dalis iš Tetra Pak Group
- kitokia techninė informacija

UP

Nauji puslapiai skirti esamų mašinos vadovų atnaujinimui naujais puslapiais.

Puslapio išdėstymas

Vadovaukitės (A) paveikslėliu i-9 puslapyje: atsarginių dalių katalogo pagrindinius puslapius sudaro paveikslėlių puslapis (1) ir atitinkamo sąrašo puslapis (7). Puslapio numeris (5) nurodytas paveikslėlių puslapio antraštėje ir apatinėje sąrašo puslapio poraštėje. Dokumento numeris (6) nurodytas apatinėje sąrašo puslapio poraštėje.

Puslapių numeravimas

Vadovaukitės (A) paveikslėliu i-9 puslapyje: puslapio numerį (5) sudaro trys dalys:

- skyriaus numeris (2)
- puslapio eilės numeris (3) skyriuje
- bendras puslapių skaičius (4) skyriuje

Pastaba! Jei vadove yra atnaujinimų puslapiai, UP raidės gali būti vietoje skyriaus numerio (2). Atnaujinimo puslapio eilės numeris (3) ir bendras atnaujinimo puslapių skaičius (4) neatitinka nuoseklios skyriaus puslapių numeracijos.

Mašinos įvadas

Gamintojas

Apie gamintojo įmonės pavadinimą ir adresą skaitykite antrame šio katalogo puslapyje.

Aptarnavimas

Tetra Pak Group neprisiims jokios atsakomybės už žalą ir įrangos gedimus ar darbuotojų arba vartotojų traumas, patirtas naudojant atsargines dalis, kurios nėra originalios Tetra Pak® atsarginės dalys.

Norėdami užsakyti originalias Tetra Pak atsargines dalis susisiekite su artimiausia Tetra Pak įstaiga.

Identifikacija

CE klasifikacija

Ši įranga tenkina pagrindines Europos Ekonominės Zonos (EEA) sveikatos ir saugumo taisykles.

(Tęsiama)

(Tęsiama)

3-A atitiktis

Jei mašinos lentelėje yra ženklas 3-A (15) (žr. (B) iliustraciją i-7 puslapyje), ši įranga atitinka 3-A higienos standartus skysto pieno ir skysto prieno produktų talpyklų formuotojams, pripildytojams ir sandarikliams, numeris 17-10.

Mašinos plokštė

Paveikslėlyje (B), esančiame i-9 puslapyje, pavaizduotas įrenginio kortelės pavyzdys.
Mašinos galiojančios kortelės paveikslėlis ir kortelės vieta ant įrangos nurodyta kartu su įranga tiekiamų vadovų įžanginiame skyriuje. Įrangos kortelėje pateikiami išvardinti duomenys, kurių reikia kreipiantis į Tetra Pak Group dėl konkrečios įrangos.

- Mašinos tipas (8)
- Tūris (9)
- Brėžinio specifikacijos (10)
- Mašinos serijos numeris (11)
- Gamintojas (12)
- Pagaminimo metai (13)
- CE ženklas (14)
- 3-A ženklas (jei taikomas) (15)

Įsitikinkite, kad šio vadovo pirmuose puslapiuose pateikti įrangos duomenis atitinka duomenis pateiktus mašinos informacinėje lentelėje ir mašinos specifikacijoje.

Kaip naudotis šiuo atsarginių dalių katalogu?

Nustatykite atsarginės dalies numerį

a) Vadovaukitės (C) paveikslėliu, esančiu i-9 puslapyje: atsiverskite skyrių, kurio numeris (16) nurodytas prieš pagrindinę grupę, kurioje yra reikiama surasti dalis.

Elementai b) ir c) atitinka (D) paveikslėlį, esantį i-10 puslapyje.

b) Pagrindinės grupės paveikslėlyje ieškokite mašinos dalinės grupės (18), kurioje yra ieškoma dalis ar dalinė grupė. Įsidėmėkite pozicijos numerį (19) ir atsiverskite už paveikslėlio esantį sąrašo puslapį.

c) Suraskite pozicijos numerio / nuorodos aprašymą (17) ar dalinės grupės pavadinimą (20). Atsiverskite atitinkamą puslapio numerį (21), nurodytą dešiniajame stulpelyje. Tetra Pak Group nuorodų aprašymams pasirinko visuomet naudoti su atliekama funkcija susietą struktūrą. Nuorodos aprašyme nenaudojamas priešdėlis, pažymintis su atliekama funkciją susietą struktūrą (=)

(Tęsiama)

(Tęsiama)

Elementai d) ir e) atitinka (E) paveikslėlį, esantį i-10 puslapyje.

d) Ieškomą dalį (22) suraskite dalinės grupės paveikslėlyje ir įsidėmėkite dalies pozicijos numerį.

e) Dalies numeris (29) ir dalies aprašymas (30) nurodyti sąrašo puslapyje prie pozicijos numerio.

Atsarginių dalių kataloge pateikiama informacija

Pateiktas sąrašas atitinka (E) paveikslėlį, esantį i-10 puslapyje. Atsarginių dalių kataloge pateikiama tokia informacija apie įrangos grupes, dalines grupes ir atsargines dalis:

- Grupės struktūros apibūdinimas (23). Nurodo kitą aukščiausią grupę įrangos sąrašo struktūroje.
- Grupės pavadinimas (24)
- Mato vienetas (25)
- Kiekis (26)
- Surinkimo brėžinio numeris (27)
- Sąrašo puslapių intervalas (28). Nurodomas tuomet, kai grupės paveikslėlį ar sąrašą sudaro keli puslapiai.
- Dalies ar dalinės grupės numeris (29)
- Dalinės grupės pavadinimas arba dalies aprašymas (30)
- Grupės numeris (31)
- Įrangos numeris (32)
- Grupės informacijos antraštė (33). Pažymi, ar po antrašte esantis skyrius skirtas konkrečiam mašinos variantui, ar tai bendrų dalių sąrašas. Jei sąrašą sudaro daugiau kaip vienas variantas ir kiekvienas iš jų atitinka skirtingą surinkimo numerį, pateikiama varianto surinkimo brėžinio puslapio nuoroda.
- Vidinė informacija (34)

Pagalba ir užklausos

Jei reikia pagalbos dėl šios įrangos eksploatacijos arba turite kitų užklausų, komentarų ar pasiūlymų, pateikite klausimus arba atsiliepimus naudodamiesi priemone „QuTI-P“. Įveskite „QuTI-P“ į savo naršyklės adreso lauką. Jei „QuTI-P“ prieigos neturite, paprašykite jos susisiekę su Pasauliniu aptarnavimo centru.

Jei neturite prieigos prie „Tetra Pak®“ intraneto, susisiekite su artimiausiu „Tetra Pak“ atstovu.

Informācija par instrukciju

Tetra Pak Group iesaka uzmanīgi izlasīt visas piegādātās instrukcijas. Nodrošiniet, lai piegādātās instrukcijas būtu pieejamas personālam, kurš ekspluatē un apkalpo iekārtu.

Ir svarīgi saglabāt šo katalogu visā ierīces kalpošanas laikā un nodot to jebkuram sekojošam īpašniekam vai lietotājam.

Tetra Pak Group neuzņemas atbildību par jebkādiem šīs iekārtas bojājumiem, ko izraisa šim aprīkojumam pievienotajās rokasgrāmatās sniegto instrukciju neievērošana.

Piegādātās instrukcijas

Ar iekārtu piegādātās instrukcijas:

CM

Šī Maiņas instrukcija (CM) nodrošina tehnisko personālu ar informāciju par iekārtas pārvēršanu dažādiem ražošanas režīmiem.

EM

Elektrisko savienojumu instrukcija (EM) nodrošina tehniķus ar informāciju par iekārtas elektrisko sistēmu.

IM

Instalācijas instrukcija (IM) nodrošina tehniķus ar informāciju, kas ir nepieciešama drošai iekārtas instalācijai.

MaSP

Apkopes un rezerves daļu rokasgrāmatā sniegta informācija, kā uzturēt komponentu labā tehniskā stāvoklī. Šajā rokasgrāmatā sniegta arī informācija, kas nepieciešama komponenta rezerves daļu pasūtīšanai no Tetra Pak Group.

MM

Tehniskās apkopes instrukcija (MM) sniedz tehniķiem informāciju par aprīkojuma tehnisko apkopi.

OM

Ekspluatācijas instrukcija (OM) nodrošina operatorus ar informāciju par rīcību ar iekārtu un tās ekspluatāciju pirms un pēc ražošanas procesa, kā arī tā laikā.

RM

Pārveidošanas instrukcija (RM) sniedz tehniķiem informāciju, kas nepieciešama, lai uz uzstādītas iekārtas vai aprīkojuma droši uzstādītu komplektu.

(Turpinājums seko)

(Turpinājums seko)

SPC

Rezerves daļu katalogs (SPC) sniedz informāciju, kas ir nepieciešama rezerves daļu pasūtīšanai no Tetra Pak Group.

TeM

Tehniskā instrukcija (TeM) sniedz tehniķiem informāciju, kas var būt:

- informācija, kura nepieciešama, lai droši uzstādītu aprīkojumu;
- informācija, kura nepieciešama, lai veiktu aprīkojuma tehnisko apkopi;
- informācija par iekārtas/ aprīkojuma elektrosistēmu;
- informācija, kura nepieciešama rezerves daļu pasūtīšanai no Tetra Pak Group;
- cita tehniskā informācija.

UP

Atjauninājuma lappuses ir jaunas lapas, kas nepieciešamas, lai atjauninātu iekārtas esošās rokasgrāmatas.

Lappuses formāts

Skatiet attēlu (A) lappusē i-9: Rezerves daļu kataloga (SPC) galvenās lapas iekļauj ilustrāciju lapu (1) un attiecīgo saraksta lapu (7). Lappuses numurs (5) ir attēlots ilustrācijas lapas galvenes daļā un saraksta lapas kājenes daļā. Dokumenta numurs (6) ir attēlots saraksta lapas kājenes daļā.

Lappušu numerācija

Skatiet attēlu (A) lappusē i-9: lappuses numuram (5) ir trīs daļas:

- sadaļas numurs (2);
- lappuses kārtas numurs (2) sadaļā;
- kopējais lappušu skaits (3) sadaļā.

Piezīme! Burti UP var aizvietot sadaļas numuru (2), ja rokasgrāmata iekļauj atjauninājumu lappuses. Lappuses kārtas numurs (3) un atjauninājumu lappušu kopējais lappušu skaits (4) neatbilst sadaļas esošajai secīgajai lappušu numerācijai.

Ievads par ierīci

Ražotājs

Ražotāja nosaukumu un adresi skatiet šī kataloga otrajā lappusē.

Serviss

Tetra Pak Group neuzņemas atbildību par bojājumiem vai kaitējumu aprīkojumam, personālam vai klientiem, ko rada tādu rezerves daļu izmantošana, kas nav oriģinālas Tetra Pak® rezerves daļas.

Lai pasūtītu oriģinālas Tetra Pak rezerves daļas šai iekārtai, sazinieties ar tuvāko Tetra Pak biroju.

Identifikācija

CE klasifikācija

Šī iekārta atbilst Eiropas Ekonomiskās Telpas (EEA) galvenajiem veselības un drošības noteikumiem.

(Turpinājums seko)

(Turpinājums seko)

3-A atbilstība

Ja uz iekārtas datu plāksnītes ir 3-A marķējums (15) (skatīt attēlu (B) lappusē i-7), šāds aprīkojums atbilst 3-A Šķidrā piena un šķidro piena produktu iepakojuma formētāju, pildītāju un sakausētāju sanitārajām normām Nr. 17-10.

Iekārtas datu plāksne

Attēlā (B) lappusē i-9 ir attēlots iekārtas datu plāksnes piemērs.
Iekārtas datu plāksnes attēls, kā arī šīs plāksnes atrašanās vieta uz aprīkojuma ir attēlota līdz ar šo iekārtu piegādāto rokasgrāmatu ievada sadaļā. Iekārtas datu plāksnē ir iekļauti tālāk norādītie dati, kas ir nepieciešami, sazinoties ar Tetra Pak Group jautājumos, kuri saistīti ar šo specifisko aprīkojumu.

- Iekārtas tips (8)
- Tilpums (9)
- Rasējuma specifikācijas (10)
- Iekārtas sērijas numurs (11)
- Ražotājs (12)
- Ražošanas gads (13)
- CE marķējums (14)
- 3-A marķējums (ja piemērojams) (15)

Pārliecinieties, vai iekārtas dati šīs instrukcijas pirmajā lappusē atbilst datiem iekārtas datu plāksnē un iekārtas specifikācijai.

Kā lietot šo Rezerves daļu katalogu

Atrodiet rezerves daļas numuru

a) Skatiet attēlu (C) lappusē i-9: atrodiet sadaļas numuru (16), kas norādīts līdzās galvenajai grupai, kur atrodas meklējamā detaļa.

Punkti b) un c) attiecas uz attēlu (D) lappusē i-10.

b) Galvenās grupas attēlā atrodiet iekārtas apakšgrupu (18), kur atrodas meklējamā detaļa vai apakšgrupa. Atcerieties pozīcijas numuru (19) un skatiet sarakstu, kas seko pēc šī attēla.

c) Atrodiet pozīcijas numuru/ atsauces apzīmējumu (17) vai apakšgrupas nosaukumu (20). Atšķiriet attiecīgo lappusi (21), kas norādīta labajā ailē. Atsauču apzīmējumiem Tetra Pak Group vienmēr izvēlas lietot uz funkciju orientētu struktūru. Prefikss, kas apzīmē uz funkciju orientēto struktūru (=), atsauču apzīmējumos nav norādīts.

(Turpinājums seko)

(Turpinājums seko)

Punkti d) un e) attiecas uz attēlu (E) lappusē i-10.

d) Apakšgrupas attēlā atrodiet meklēto detaļu (22) un atcerieties detaļas pozīcijas numuru.

e) Detaļas numurs (29) un detaļas apraksts (30) ir sniegts saraksta lapā blakus pozīcijas numuram.

Informācija, kas sniegta Rezerves daļu katalogā

Tālāk sniegtais saraksts attiecas uz attēlu (E) lappusē i-10.
Rezerves daļu katalogs satur šādu informāciju par grupām, apakšgrupām un aprīkojuma rezerves daļām:

- grupas struktūras atsauci (23). Norāda uz aprīkojuma saraksta struktūras nākamo augstāko grupu.
- Grupas nosaukumu (24).
- Mērvienība (25)
- Daudzums (26)
- Montāžas rasējuma numurs (27)
- Saraksta lappušu diapazons (28). Ja grupas attēli vai saraksts iekļauj vairākas lappuses.
- Detaļas vai apakšgrupas numurs (29)
- Apakšgrupas nosaukums vai detaļas apraksts (30)
- Grupas numurs (31)
- Aprīkojuma numurs (32)
- Grupas informācijas virsraksts (33). Ja sadaļa, kas seko pēc virsraksta, attiecas uz specifisku iekārtas versiju, vai kopēju detaļu saraksta gadījumā. Ja sarakstā ir vairāk nekā viena versija un katrai versijai ir savs montāžas rasējums, ir sniegta atsauce uz konkrētās versijas montāžas rasējuma lappusi.
- Iekšējā informācija (34)

Palīdzība un jautājumi

Lai šīs iekārtas izmantošanas laikā saņemtu palīdzību vai ja radušies citi jautājumi, komentāri vai ierosinājumi, iesniedziet jautājumus vai sniedziet atsauksmes, izmantojot QuTI-P rīku. Pārlūkprogrammas adreses laukā ierakstiet QuTI-P. Ja QuTI-P nav pieejams, pieprasiet tam piekļuvi, sazinoties ar vispasaules klientu apkalpošanas daļu.

Ja piekļuve Tetra Pak® iekštīklam nav iespējama, sazinieties ar tuvāko Tetra Pak pārstāvniecību.

Handboekinformatie

De Tetra Pak Groep raadt aan alle geleverde documentatie zorgvuldig te lezen. Ga na of de geleverde documentatie ter beschikking is van het personeel dat de machine moet bedienen of servicewerkzaamheden moet uitvoeren.

Het is belangrijk deze catalogus voor de duur van de machine te bewaren en de catalogus door te geven aan elke volgende eigenaar of gebruiker.

De Tetra Pak Groep aanvaardt geen verantwoordelijkheid voor om het even welke soort beschadiging aan de machine als gevolg van het niet opvolgen van de in dit handboek gegeven instructies.

Meegeleverde handboeken

Met deze apparatuur meegeleverde handboeken:

CM

Dit conversiehandboek geeft technici informatie over het ombouwen van de apparatuur tussen verschillende productiemodi.

EM

Het Elektrisch Handboek geeft technici informatie betreffende het elektrisch systeem van de apparatuur.

IM

Het Installatiehandboek geeft technici informatie om op veilige wijze de apparatuur te installeren.

MaSP

Het Onderhouds- en reserveonderdelenhandboek geeft informatie over het onderhoud van de component. Verder geeft het informatie die nodig is om reserveonderdelen voor de component te bestellen bij de Tetra Pak Group.

MM

Het Onderhoudshandboek geeft technici informatie over het onderhoud van de apparatuur.

OM

Het Bedieningshandboek geeft operators informatie over hoe de machine moet worden bediend en hoe ermee moet worden omgegaan voor, tijdens en na productie.

RM

Het Ombouwhandboek bevat de nodige informatie voor technici om een kit veilig aan een geïnstalleerde machine of apparatuur te installeren.

(Zie volg. blz.)

(Vervolg)

SPC

De Catalogus Reservedelen geeft informatie die nodig is om reserveonderdelen bij de Tetra Pak Groep bestellen.

TeM

Het Technische Handboek bevat informatie voor technici betreffende:

- het veilig installeren van de apparatuur
- het onderhoud van de apparatuur
- het elektrische systeem van de machine/apparatuur.
- het bestellen van reserveonderdelen bij de Tetra Pak Groep
- andere technische informatie

UP

De Update Pages bevat nieuwe bladzijden voor het updaten van de bestaande machinehandboeken.

Pagina lay-out

Zie de illustratie (A) op bladzijde i-9: De belangrijkste bladzijden van een Catalogus Reserveonderdelen bestaan uit een bladzijde met een illustratie (1) en een corresponderende bladzijde met een lijst (7).
Het bladzijdenummer (5) is te vinden in de kop van een illustratiebladzijde en in de voetnoot van de lijstbladzijde. Het documentnummer (6) is te vinden in de voetnoot van een lijstbladzijde.

Bladzijdenummering

Zie de illustratie (A) op bladzijde i-9: een bladzijdenummer (5) bestaat uit drie delen.

- hoofdstuknummer (2)
- opeenvolgende bladzijdenummer in het hoofdstuk (3)
- totaal aantal bladzijden in het hoofdstuk (4)

N.B.! De letters UP kunnen het hoofdstuknummer (2) vervangen als het handboek update-bladzijden omvat. Het opeenvolgende bladzijdenummer (3) en het totale aantal bladzijden (4) van de updatebladzijden volgen niet de bestaande volgordenummering van het hoofdstuk.

Introductie van de machine

Fabrikant

Voor naam en adres van de fabrikant, zie de tweede bladzijde van deze catalogus.

Service

De Tetra Pak Groep wijst elke verantwoordelijkheid af voor schade aan machines of letsels aan personeel of consumenten die zijn veroorzaakt door reserveonderdelen die geen originele Tetra Pak®-reserveonderdelen zijn.

Neem voor het bestellen van originele Tetra Pak-reserveonderdelen voor deze machine contact op met het dichtstbijzijnde Tetra Pak-kantoor.

Identificatie

CE-classificatie

Deze apparatuur voldoet aan de basiseisen voor gezondheid en veiligheid voor de Europese Economische Ruimte (EEA).

(Zie volg. blz.)

(Vervolg)

3-A Naleving

Als het machineplaatje het 3-A merkteken bevat (15) (zie illustratie (B) op bladzijde i-7), voldoet deze apparatuur aan de 3-A hygiënenormen voor vorm-, vul- en sluitmachines van containers voor vloeibare melk en vloeibare melkproducten, nummer 17-10.

Machineplaatje

De illustratie (B) op bladzijde i-9 toont een voorbeeld van een machineplaatje.
Een illustratie van het wettige machineplaatje en de plaatsing ervan wordt getoond in het hoofdstuk Introductie van de handboeken, meegeleverd met deze apparatuur.
Het machineplaatje bevat onderstaande gegevens die nodig zijn wanneer de Tetra Pak Groep moet worden gecontacteerd betreffende deze apparatuur.

- Machinetype (8)
- Volume (9)
- Tekeningspecificaties (10)
- Serienummer machine (11)
- Fabrikant (12)
- Fabricagejaar (13)
- CE-markering (14)
- Markering 3-A (indien van toepassing) (15)

Controleer of de gegevens betreffende de apparatuur in de voorste bladzijden van dit handboek overeenkomen met de gegevens op het machineplaatje en de machinespecificatie.

Hoe dient deze catalogus reserveonderdelen te worden gebruikt.

Lokaliseren van een nummer van een reserveonderdeel

a) Zie de illustratie (C) op bladzijde i-9: ga naar het hoofdstuknummer (16), naast de hoofdgroep die het gewenste deel bevat.

Items b) en c) refereren naar de illustratie (D) op bladzijde i-10.

b) Zoek in de illustratie van de hoofdgroep de machinesubgroep (18) op die het deel van de gewenste subgroep bevat. Noteer het positienummer (19) en ga naar de lijstbladzijde die op de illustratie volgt.

c) Zoek het positienummer/referentiebenaming (17) of de naam van de subgroep (20). Ga naar het corresponderende bladzijdenummer (21), aangegeven in de rechterkolom. De Tetra Pak Groep heeft altijd gekozen voor een functiegerichte structuur voor referentiebenaming. Het prefix dat de functiegerichte structuur aangeeft (=) wordt niet getoond in de referentiebenaming.

(Zie volg. blz.)

(Vervolg)

Items d) en e) refereren naar de illustratie (E) op bladzijde i-10.

d) Lokaliseer het gewenste onderdeel (22) in de illustratie van de subgroep en noteer het positienummer van het onderdeel.

e) Het onderdeelnummer (29) en de beschrijving ervan (30) worden naast het positienummer op de lijstbladzijde weergegeven.

Informatie die in een Catalogus reserveonderdelen wordt gegeven

Onderstaande lijst verwijst naar de illustratie (E) op bladzijde i-10.
Een Catalogus reserveonderdelen bevat de volgende informatie betreffende groepen, subgroepen en reserveonderdelen voor de apparatuur.

- Referentie groepsstructuur (23). Geeft de volgende hoogste groep in de structuur van de apparatuur aan.
- Groepsnaam (24)
- Meeteenheid (25)
- Hoeveelheid (26)
- Nummer montagetekening (27)
- Bereik lijstbladzijde (28). Inclusief indien er meerdere bladzijden in de groepsillustratie of lijst voorkomen.
- Onderdeel of subgroepsnummer (29)
- Naam subgroep of beschrijving onderdeel (30)
- Groepsnummer (31)
- Apparatuurnummer (32)
- Kopregel groepsinformatie (33). Geeft aan of het deel onder de titel bedoeld is voor een specifieke machinevariant dan wel of het een lijst is met algemene onderdelen. Indien een lijst meer dan één variant bevat en elke variant heeft zijn eigen montagetekening, wordt een bladzijdereferentie naar de montagetekening van de variant gegeven.
- Interne informatie (34)

Ondersteuning en vragen

Voor ondersteuning bij het gebruik van deze apparatuur, of voor andere vragen, commentaar of suggesties, kunt u de vragen stellen of feedback geven met behulp van het QuTI-P-instrument. Typ QuTI-P in het adresveld van uw browser. Vraag, als toegang tot QuTI-P niet beschikbaar is, toegang aan door contact op te nemen met de Global Service Desk.

Neem contact op met de dichtstbijzijnde vertegenwoordiger van Tetra Pak® als het intranet van Tetra Pak niet beschikbaar is.

Informasjon om manualen

Tetra Pak Group anbefaler at du leser alle medfølgende manualer nøye. Kontroller at personalet som bruker eller vedlikeholder utstyret har adgang til de medfølgende manualene.

Det er viktig at denne manualen oppbevares trygt gjennom hele utstyrets levetid, og at den gis videre til senere eiere eller brukere av utstyret.

Tetra Pak Group kan ikke holdes ansvarlig for skader på utstyr som skyldes at instruksjonene i manualene som følger dette utstyret ikke er fulgt.

Medfølgende manualer

Manualer som følger med dette utstyret:

CM

Konverteringsmanualen gir teknikere opplysninger om konvertering av utstyret mellom forskjellige produksjonsmodus.

EM

Denne manualen gir teknikere opplysninger om utstyrets elektriske system.

IM

Denne manualen gir teknikere informasjonen som trengs for sikker installasjon av utstyret.

MaSP

Vedlikeholds- og reservedelshåndboken gir informasjon om vedlikehold av komponenten. Her finner du også nødvendig informasjon om bestilling av reservedeler til komponenten fra Tetra Pak Group.

MM

Denne manualen gir teknikere informasjon om vedlikehold av utstyret.

OM

Driftsmanualen gir operatørene informasjon om håndtering og drift av utstyret før, under og etter produksjon.

RM

Ombyggingsmanualen gir teknikere informasjon som kreves for å installere et sett trygt på en installert maskin eller et utstyr.

(Forts.)

(Forts.)

SPC

Reservedelskatalogen gir nødvendige opplysninger for å kunne bestille reservedeler fra Tetra Pak Group.

TeM

Den tekniske manualen gir teknikerne informasjon som kan være:

- informasjon som kreves for en trygg installering av utstyret
- informasjon som kreves for vedlikehold av utstyret
- informasjon om maskinens/utstyrets elektriske system
- nødvendig informasjon for å bestille reservedeler fra Tetra Pak Group.
- annen teknisk informasjon

UP

Oppdateringssidene har nye sider for å oppdatere eksisterende maskinmanualer.

Sideoppsett

Gå til illustrasjonen (A) på side i-9: Hovedsidene i en reservedelskatalog består av en illustrasjonsside (1) og en korresponderende oversiktsside (7). Sidenummeret (5) vises i overskriften på en illustrasjonsside og i fotnoten på en oversiktsside. Dokumentnummeret (6) vises i fotnoten på en oversiktsside.

Sidenummerering

Gå til illustrasjon (A) på side i-9: Et sidenummer (5) har tre deler:

- kapittelnummer (2)
- neste sidenummer innen kapitlet (3)
- totalt antall sider i kapitlet (4)

Merk! Bokstavene UP kan erstatte kapittelnummer (2) hvis manualen inkluderer oppdateringssidene. Følgende sidenummer (3) og totalt antall sider (4) på oppdateringssidene følger ikke eksisterende sekvensnummerering av sidene i kapitlet.

Innføring i maskinen

Produsent

For produsentens navn og adresse, se andre siden i denne katalogen.

Service

Tetra Pak Group aksepter ikke ansvar for skader eller personskader på utstyr, ansatte eller brukere forårsaket av reservedeler som ikke er originale Tetra Pak® reservedeler.

For å bestille originale Tetra Pak reservedeler til denne maskinen, kontakt nærmeste Tetra Pak kontor.

Identifikasjon

CE-klassifisering

Dette utstyret tilfredsstiller grunnleggende helse- og sikkerhetskrav i Det europeiske økonomiske samarbeidsområde (EØS).

(Forts.)

(Forts.)

3-A samsvar

Hvis maskinplaten er 3-A-merket (15) (se illustrasjon (B) på side i-7), er dette utstyret i samsvar med 3-A Sanitærstandarder for formings-, påfyllings-, og tetningssystemer for beholdere for flytende melkeprodukter, nummer 17-10.

Merkeplate

Illustrasjonen (B) på side i-9 viser et eksempel på en maskinplate.
En illustrasjon av gyldig maskinplate og dennes plassering på utstyret vises i introduksjonskapitlet i manualene som følger dette utstyret.
Maskinplaten inneholder dataen som er oppført under, som er nødvendig når du kontakter Tetra Pak Group om dette spesifikke utstyret.

- Maskintype (8)
- Volum (9)
- Tegnespesifikasjoner (10)
- Maskinens serienummer (11)
- Produsent (12)
- Produksjonsår (13)
- CE merke (14)
- 3-A merke (hvis relevant) (15)

Pass på at utstyrsdataen på forsidene i denne manualen stemmer overens med merkeplaten og maskinspesifikasjonen.

Hvordan bruke denne reservedelskatalogen

Finn et reservedelsnummer

a) Gå til illustrasjonen (C) på side i-9: Gå til kapittelnummer (16) som er indikert ved siden av hovedgruppen som inneholder delen du ønsker å lokalisere.

Deler b) og c) viser til illustrasjonen (D) på side i-10.

b) På hovedgruppeillustrasjonen, se etter maskinundergruppen (18) som inneholder delen eller undergruppen du ser etter.
Merk posisjonsnummeret (19) og gå til oversiktssiden som følger illustrasjonen.

c) Se etter posisjonsnummer /referanseanvisning (17) eller undergruppenavnet (20). Gå til korresponderende sidenummer (21) oppført i søylen på høyre hånd.
Tetra Pak Group har valgt alltid å bruke funksjonsorientert struktur for referansebestemmelse.
Forinnstilt indikering av funksjonsorientert struktur (=) vises ikke i referansehenvisningen

(Forts.)

(Forts.)

Deler d) og e) viser til illustrasjonen (E) på side i-10.

d) Finn delen (22) som du leter etter i undergruppeillustrasjonen og merk delens posisjonsnummer.

e) Delenummeret (29) og delebeskrivelsen (30) er oppført ved siden av posisjonsnummeret på listesiden.

Informasjon oppført i en reservedelskatalog

Listen under viser til illustrasjonen (E) på side i-10. En reservedelskatalog inneholder følgende informasjon om grupper, undergrupper og reservedeler for utstyret:

- Gruppestrukturreferanse (23). Indikerer den neste gruppen over i utstyrslistestrukturen.
- Gruppenavn (24)
- Måleenhet (25)
- Antall (26)
- Monteringstegningens nummer (27)
- Oversiktssideomfang (28). Inkludert hvis det er mange sider i gruppeillustrasjonen eller listen.
- Delenummer eller undergruppenummer (29)
- Undergruppenavn eller delebeskrivelse (30)
- Gruppenavn (31)
- Utstyrsnummer (32)
- Gruppeinformasjon overskrift (33). Indikerer om seksjonen under overskriften er for en spesiell maskinvariant eller om det er en liste med fellesdeler. Hvis en liste har mer enn en variant og hver variant har sin egen monteringstegning, vil det vises en sidereferanse til denne variantens monteringstegning.
- Intern informasjon (34)

Assistanse og spørsmål

For hjelp ved drift av dette utstyret eller for andre spørsmål, kommentarer eller forslag, send spørsmålene eller kom med tilbakemeldinger ved å bruke QuTI-P-verktøyet. Skriv inn QuTI-P i din nettlesers adressefelt. Hvis du ikke har tilgang til QuTI-P, be om tilgang ved å ta kontakt med det internasjonale servicekontoret (Global Service Desk).

Hvis du ikke har tilgang til Tetra Pak® intranett, ta kontakt med din nærmeste Tetra Pak-representant.

Informacje na temat instrukcji

Tetra Pak Group zaleca, aby uważnie przeczytano dostarczone instrukcje. Należy dopilnować, aby instrukcje zostały udostępnione pracownikom, którzy obsługują lub wykonują przeglądy urządzenia.

Ważne jest, aby zachować niniejszy katalog przez okres użytkowania maszyny i przekazać go kolejnemu właścicielowi lub użytkownikowi.

Tetra Pak Group nie ponosi odpowiedzialności za uszkodzenia maszyny spowodowane nieprzestrzeganiem wskazówek podanych w niniejszej instrukcji dołączonej do maszyny.

Dostarczone instrukcje

Instrukcje dostarczone w raz z maszyną:

CM

Instrukcja przestawienia dostarcza technikom informacji na temat przestawiania maszyny między różnymi trybami produkcji.

EM

Instrukcja elektryczna dostarcza technikom informacji na temat układu elektrycznego maszyny.

IM

Instrukcja instalacyjna dostarcza technikom informacji niezbędnych do bezpiecznej instalacji maszyny.

MaSP

Instrukcja konserwacji i części zapasowych przedstawia informacje na temat serwisowania podzespołów. Zawiera także informacje niezbędne do zamawiania części zamiennych do podzespołu w firmie Tetra Pak Group.

MM

Instrukcja serwisowa dostarcza technikom informacji na temat przeglądów i napraw maszyny.

OM

Instrukcja obsługi dostarcza operatorowi informacji na temat obsługi maszyny przed, w trakcie i po zakończeniu produkcji.

RM

Instrukcja przebudowy dostarcza technikom informacji niezbędnych do wykonania bezpiecznej instalacji zestawu do przebudowy w zainstalowanej maszynie lub wyposażeniu.

(Ciąg dalszy)

(Ciąg dalszy)

SPC

Katalog części zamiennych dostarcza informacji niezbędnych do zamawiania części zamiennych w Tetra Pak Group.

TeM

Instrukcja techniczna dostarcza technikom informacji, które mogą być:

- informacjami wymaganymi do bezpiecznej instalacji wyposażenia
- informacjami wymaganymi do wykonywania przeglądów i napraw wyposażenia
- informacjami o systemie elektrycznym maszyny/wyposażenia.
- informacjami niezbędnymi do zamawiania części zamiennych w Tetra Pak Group.
- innymi informacjami technicznymi

UP

Rozdział Strony aktualizacji zawiera nowe strony użyte do aktualizacji istniejących instrukcji maszyny.

Układ strony

Zapoznaj się z rysunkiem (A) na stronie i-9: Główne strony w Katalogu Części Zamiennych zawierają stronę z rysunkiem (1) i odpowiednią stronę z wykazem (7). Numer strony (5) znajduje się w nagłówku strony z rysunkiem oraz w stopce strony z wykazem.
Numer dokumentu (6) znajduje się w stopce strony z wykazem.

Numeracja stron

Zapoznaj się z rysunkiem (A) na stronie i-9: Numer strony (5) składa się z trzech części:

- numer rozdziału (2)
- kolejny numer strony (3) w danym rozdziale
- całkowita ilość stron (4) w rozdziale

Uwaga! Litery UP mogą zastępować numer rozdziału (2) jeśli instrukcja zawiera strony aktualizacji. Kolejny numer strony (3) i całkowita ilość stron (4) aktualizacji nie odpowiada istniejącej numeracji stron rozdziału.

Informacje na temat maszyny

Producent

Nazwa i adres producenta, patrz druga strona niniejszego katalogu.

Serwis

Tetra Pak Group nie odpowiada za wszelkie uszkodzenia wyposażenia, obrażenia personelu lub konsumentów spowodowane przez części zamienne, które nie są oryginalnymi częściami zamiennymi Tetra Pak®.

W celu zamówienia oryginalnych części zamiennych Tetra Pak dla maszyny, skontaktuj się z najbliższym biurem Tetra Pak.

Identyfikacja

Znak CE

Oznacza on, iż urządzenie spełnia wymagania określone w podstawowych przepisach dotyczących bezpieczeństwa i zdrowia, obowiązujących w Europejskiej Strefie Ekonomicznej (EEA).

(Ciąg dalszy)

(Ciąg dalszy)

Zgodność z normą 3-A

Jeśli tabliczka znamionowa maszyny zawiera znak 3-A (15) (patrz rysunek (B) na stronie i-7), oznacza to, że wyposażenie jest zgodne z normami sanitarnymi 3-A dla jednostek formowania, maszyn napełniających i zgrzewarek pojemników dla mleka płynnego i płynnych produktów mlecznych, numer 17-10.

Tabliczka znamionowa

Na rysunku (B) na stronie i-9 pokazano przykład tabliczki znamionowej.
Rysunek tabliczki znamionowej i jej lokalizacja na wyposażeniu znajduje się w rozdziale Wstęp instrukcji dostarczonych wraz z wyposażeniem. Tabliczka znamionowa zawiera dane przedstawione poniżej, które trzeba podać kontaktując się z Tetra Pak Group w sprawach dotyczących określonego wyposażenia.

- Typ maszyny (8)
- Pojemność (9)
- Specyfikacje rysunkowe (10)
- Numer seryjny maszyny (11)
- Producent (12)
- Rok produkcji (13)
- Znak CE (14)
- Znak 3-A (jeśli ma zastosowanie) (15)

Upewnij się, czy dane wyposażenia na pierwszych stronach niniejszej instrukcji odpowiadają danym przedstawionym na tabliczce znamionowej maszyny i specyfikacji maszyny.

Jak korzystać z Katalogu Części Zamiennych

Lokalizacja numeru części zamiennej

a) Zapoznaj się z rysunkiem (C) na stronie i-9: Przejdź do numeru rozdziału (16) wskazanego obok głównej grupy, która zawiera część, którą chcesz zlokalizować.

Pozycje b) i c) dotyczą rysunku (D) na stronie i-10.

b) Na rysunku głównej grupy, poszukaj podgrupy maszyny (18), która zawiera część lub podgrupę, której szukasz. Zanotuj numer pozycji (19) i przejdź na stronę z wykazem odpowiadającym rysunkowi.

c) Poszukaj numeru pozycji/oznaczenia referencyjnego (17) lub nazwy podgrupy (20). Przejdź na odpowiedni numer strony (21) podany w prawej kolumnie. Do oznaczania referencyjnego firma Tetra Pak Group zdecydowała się zawsze wykorzystywać strukturę zorientowaną na funkcję. Przedrostek wskazujący strukturę zorientowaną na funkcję (=) nie jest uwzględniony w oznaczeniu referencyjnym.

(Ciąg dalszy)

(Ciąg dalszy)

Pozycje d) i e) dotyczą rysunku (E) na stronie i-10.

d) Zlokalizuj część (22), której szukasz na rysunku podgrupy i zanotuj jej numer pozycji.

e) Numer części (29) i opis części (30) znajdują się obok numeru pozycji na stronie z wykazem.

Informacje podane w Katalogu Części Zamiennych

Poniższy wykaz dotyczy rysunku (E) na stronie i-10.
Katalog Części Zamiennych zawiera następujące informacje o grupach, podgrupach i częściach zamiennych wyposażenia.

- Odnośnik struktury grupy (23). Wskazuje następną wyższą grupę w strukturze wykazu wyposażenia.
- Nazwa grupy (24)
- Jednostka miary (25)
- Ilość (26)
- Numer rysunku zespołu (27)
- Zakres stron (28). Dołączony, jeśli na wykazie lub rysunku grupy znajdują się strony o numerach wieloczęściowych.
- Numer części lub podgrupy (29)
- Nazwa podgrupy lub opis części (30)
- Numer grupy (31)
- Numer wyposażenia (32)
- Nagłówek z informacją o grupie (33). Wskazuje czy sekcja poniżej nagłówka przynależy do określonej wersji maszyny, lub czy jest wykazem części. Jeśli wykaz ma więcej niż jedną wersję i każda wersja ma swój własny rysunek montażowy, podany będzie numer strony z rysunkiem montażowym danej wersji.
- Informacje wewnętrzne (34)

Pomoc i pytania

Pomoc w zakresie obsługi tego sprzętu lub inne zapytania, komentarze czy sugestie można przekazywać za pośrednictwem narzędzia QuTI-P. Wpisz QuTI-P w pasku adresu przeglądarki internetowej. W przypadku braku dostępu do QuTI-P prosimy o kontakt za pośrednictwem globalnego działu obsługi.

W przypadku braku dostępu do sieci intranet firmy Tetra Pak®, prosimy o kontakt z najbliższym przedstawicielem firmy Tetra Pak.

Informação do Manual

O Grupo Tetra Pak recomenda ler cuidadosamente todos os manuais fornecidos. Verificar se os manuais fornecidos estão ao dispor do pessoal que trabalha com o equipamento ou que faz a manutenção do mesmo.

É importante guardar este catálogo durante o tempo útil de vida da máquina ou do equipamento e de entregar o catálogo a qualquer proprietário ou utilizador subsequente.

O Grupo Tetra Pak não toma a responsabilidade por quaisquer danos no equipamento causados devido ao facto de que as instruções dadas nos manuais que acompanham este equipamento não foram seguidas.

Manuais fornecidos

Manuais fornecidos com este equipamento:

CM

O Manual de conversão fornece aos técnicos as informações sobre a conversão do equipamento entre os diferentes modos de produção.

EM

Este Manual Eléctrico fornece aos técnicos as informações sobre o sistema eléctrico do equipamento.

IM

Este Manual de Instalação fornece aos técnicos as informações necessárias para instalar seguramente o equipamento.

MaSP

O Manual de Manutenção e Peças Sobresselentes fornece informações sobre como realizar a manutenção do componente. Também fornece as informações necessárias para encomendar peças sobresselentes à Tetra Pak Group para o componente em questão.

MM

Este Manual de Manutenção fornece aos técnicos as informações para a manutenção do equipamento.

OM

O Manual de Operação fornece ao operador as informações que ele necessita para manusear e accionar o equipamento antes, durante e depois da produção.

RM

O Manual de Remodelação fornece aos técnicos as informações necessárias para instalar seguramente um conjunto numa máquina ou equipamento instalado.

(Cont.)

(Cont.)

SPC

O Catálogo de Peças Sobressalentes fornece as informações necessárias para se encomendar peças sobressalentes o Grupo Tetra Pak.

TeM

O Manual Técnico fornece os técnicos com informações que podem ser:

- informações necessárias para instalar seguramente o equipamento,
- informações necessárias para a manutenção do equipamento
- informações sobre o sistema eléctrico da máquina/do equipamento.
- informações necessárias para encomendar peças sobressalentes o Grupo Tetra Pak.
- outras informações técnicas

UP

As Páginas de Actualização fornecem novas páginas para actualizar os manuais existentes da máquina.

Disposição da página

Referência à ilustração (A) na página i-9: As páginas principais num Catálogo de Peças Sobressalentes consistem numa página ilustrada (1) e numa página com a lista correspondente (7). O número da página (5) é mostrado no cabeçalho de uma página ilustrada e no rodapé de uma página com lista. O número do documento (6) é mostrado no rodapé de uma página com lista.

Numeração da página

Referência à ilustração (A) na página i-9: Um número de página (5) tem três partes:

- Número do capítulo (2)
- número consecutivo da página dentro do capítulo (3)
- número total de páginas no capítulo (4)

Nota! As letras UP podem substituir o número do capítulo (2) se o manual incluir páginas de actualização. O número consecutivo da página (3) e o número total de páginas (4) das páginas de actualização não seguem a numeração sequente das páginas do capítulo.

Introdução da máquina

Fabricante

Para o nome e morada do fabricante, ver a segunda página deste catálogo.

Assistência técnica

O Grupo Tetra Pak não aceita responsabilidade por quaisquer danos ou prejuízos no equipamento, equipa ou consumidores que sejam causados por peças sobressalentes não originais da Tetra Pak®.

Para encomendar as peças sobressalentes originais para esta máquina, contactar o representante Tetra Pak mais próximo.

Identificação

Classificação CE

Este equipamento está de acordo com os regulamentos de segurança e saúde da Área Económica Europeia (EEA).

(Cont.)

(Cont.)

3-A Concordância

Se a placa da máquina conter a marca 3-A (15) (ver a ilustração (B) na página i-7), este equipamento cumpre com as Normas Sanitárias 3-A para Formadores, Enchedores e Vedadores de Recipientes para Leite Líquido e Produtos de Leite Líquido, Número 17-10.

Placa da máquina

A ilustração (B) na página i-9 mostra um exemplo de uma placa da máquina. Uma ilustração da placa da máquina válida e a sua localização no equipamento é mostrada no capítulo Introdução dos manuais fornecidos com este equipamento. A placa da máquina contem os dados alistados em baixo, necessários quando se contactar o Grupo Tetra Pak relacionando-se a este equipamento em específico.

- Tipo da máquina (8)
- Volume (9)
- Especificações dos desenhos (10)
- Número de série da máquina (11)
- Fabricante (12)
- Ano de construção (13)
- Marca CE (14)
- Marca 3-A (se aplicável) (15)

Verificar se os dados do equipamento indicados nas páginas da frente deste manual correspondem aos dados na placa da máquina e à especificação da máquina.

Como usar este Catálogo de Peças Sobressalentes

Localizar um Número da peça sobressalente

a) Referência à ilustração (C) na página i-9: Para o número do capítulo (16) indicado ao lado do grupo principal que contem a peça que quer localizar.

Itens b) e c) referem-se à ilustração (D) na página i-10.

b) Na ilustração do grupo principal, procurar o subgrupo da máquina (18) que contem a peça ou subgrupo que está à procura. Anotar o número da posição (19) e passar para a página da lista que segue a ilustração.

c) Procurar o número/referência da posição (17) ou o nome do subgrupo (20). Passar para o número da página correspondente (21) alistado na coluna do lado direito. O Grupo Tetra Pak escolheu para usar sempre a estrutura orientada na função para a designação da referência.
O prefixo indicando a estrutura orientada na função (=) não está mostrada na designação de referência.

(Cont.)

(Cont.)

Itens d) e e) referem-se à ilustração (E) na página i-10.

d) Localizar a peça (22) que está à procura na ilustração do subgrupo e anotar o número da posição da peça.

e) O número da peça (29) e a descrição da peça (30) estão alistados ao lado do número da posição na página da lista.

Informações indicadas num Catálogo de Peças Sobressalentes

A lista em baixo refere-se à ilustração (E) na página i-10.
Um Catálogo de Peças Sobressalentes contem as seguintes informações sobre grupos, subgrupos e peças sobressalentes para o equipamento:

- Referência da estrutura do grupo (23). Indica o grupo a seguir mais elevado na estrutura da lista do equipamento.
- Nome do grupo (24)
- Unidade de medição (25)
- Quantidade (26)
- Número do desenho de montagem (27)
- Gama da página de lista (28). Incluída se houver páginas múltiplas na ilustração do grupo ou lista.
- Número da peça ou do subgrupo (29)
- Nome do subgrupo ou descrição da peça (30)
- Número do grupo (31)
- Número do equipamento (32)
- Título da informação do grupo (33). Indica se a secção abaixo do título é para uma variante de máquina específica ou se é uma lista de peças comuns. Se uma lista tiver mais do que uma variante e cada variante tiver o seu próprio desenho de montagem, é mostrada uma referência para a página do desenho de montagem da variante.
- Informação interna (34)

Assistência e apoio

Para assistência durante a utilização deste equipamento ou outras questões, comentários ou sugestões, enviar as perguntas ou transmitir informações utilizando a ferramenta QuTI-P. Digitar QuTI-P no campo de endereço do seu navegador. Se o acesso a QuTI-P não estiver disponível, contactar o Global Service Desk para pedir o acesso.

Se o acesso à intranet da Tetra Pak® não estiver disponível, contactar o representante Tetra Pak mais próximo.

Informações sobre os manuais

O Grupo Tetra Pak recomenda a leitura atenta de todos os manuais fornecidos. Certificar-se de que todos os manuais fornecidos estejam disponíveis ao pessoal que trabalha com o equipamento ou que realiza a sua manutenção.

É muito importante conservar este catálogo durante toda a vida útil do equipamento e entregá-lo a qualquer proprietário ou usuário subsequente do equipamento.

O Grupo A Tetra Pak declina toda e qualquer responsabilidade por danos, perdas, ferimentos ou morte decorrentes do descumprimento das instruções fornecidas nos manuais que acompanham o equipamento.

Manuais fornecidos

Manuais fornecidos com este equipamento:

CM

O Manual de Conversão fornece aos técnicos as informações acerca da possibilidade de conversão do equipamento para diferentes modos de produção.

EM

O Manual Elétrico fornece aos técnicos as informações sobre o sistema elétrico do equipamento.

IM

O Manual de Instalação fornece aos técnicos as informações necessárias para instalar o equipamento em condições de segurança.

MaSP

O Manual de Manutenção e Peças de reposição fornece informações sobre como efetuar a manutenção do componente. Além disso, fornece as informações necessárias para a encomenda de peças de reposição ao Grupo Tetra Pak.

MM

O Manual de Manutenção fornece aos técnicos as informações sobre como realizar a manutenção do equipamento.

OM

O Manual de Operação fornece ao operador as informações que ele necessita para gerenciar e trabalhar com o equipamento antes, durante e depois da produção.

RM

O Manual de Reforma fornece aos técnicos as informações necessárias para instalar um kit em uma máquina ou um equipamento instalado, em condições de segurança.

(Cont.)

(Cont'd)

SPC

O Catálogo de Peças de Reposição fornece as informações necessárias para encomenda de peças de reposição ao Grupo Tetra Pak.

TeM

O Manual Técnico fornece aos técnicos informações que podem ser:

- as informações necessárias para instalar o equipamento em condições de segurança
- as informações necessárias para fazer a manutenção do equipamento
- as informações acerca do sistema elétrico da máquina/equipamento
- as informações necessárias para encomendar peças de reposição ao Grupo Tetra Pak
- outras informações técnicas

UP

As Páginas de atualização fornecem as novas páginas para atualizar os manuais existentes da máquina.

Esquema das páginas

Consultar a figura (A) na página i-9: As páginas principais em um Catálogo de Peças Sobressalentes (SPC) consistem de uma página de ilustração (1) e de uma página com a lista correspondente (7). O número da página (5) é exibido no cabeçalho da página de ilustração e no rodapé da página de lista. O número do documento (6) é exibido no rodapé da página de lista.

Numeração das páginas

Consultar a figura (A) na página i-9: Um número das página (5) é composto por três partes:

- número do capítulo (2)
- número consecutivo da página dentro do capítulo (3)
- número total de páginas (4) no capítulo.

Nota! As letras UP podem substituir o número do capítulo (2) caso o manual inclua páginas de atualização. O número consecutivo da página (3) e o número total de páginas (4) das páginas de atualização não seguem a numeração sequencial existente das páginas do capítulo.

Introdução relativa à máquina

Fabricante

Para ver o nome e endereço do fabricante, consultar a segunda página deste catálogo.

Serviço

O Grupo Tetra Pak não aceita a responsabilidade por quaisquer danos ou lesões causadas ao equipamento, equipe ou consumidores, causadas por peças de reposição que não sejam peças de reposição originais Tetra Pak®.

Para encomendar peças de reposição originais Tetra Pak para este equipamento, entrar em contato com o escritório mais próximo da Tetra Pak.

Identificação

Classificação CE

Este equipamento está em conformidade com os regulamentos básicos de segurança e saúde da Área Econômica Europeia (AEE).

(Cont.)

(Cont'd)

Conformidade com as normas 3-A

Se a placa de identificação da máquina apresentar a marca 3-A (15) (ver a figura (B) na página i-9), este equipamento cumpre os requisitos das normas sanitárias 3-A para máquinas de formar, encher e soldar recipientes para leite líquido e para produtos lácteos líquidos, número 17-10.

Placa de identificação da máquina

A ilustração (B) na página i-9 mostra um exemplo de uma placa de identificação da máquina.
Uma ilustração da placa de identificação válida da máquina e a sua localização no equipamento é mostrada no capítulo Introdução dos manuais fornecidos com este equipamento. A placa de identificação da máquina contém os dados necessários quando contatar a Tetra Pak referindo-se especificamente a este equipamento.

- Tipo de máquina (8)
- Volume (9)
- Especificações dos desenhos (10)
- Número de série da máquina (11)
- Fabricante (12)
- Ano de fabricação (13)
- Marca CE (14)
- Marca 3-A (se aplicável) (15)

Certificar-se de que os dados do equipamento, indicados nas páginas frontais deste manual, coincidam com os dados indicados na placa de identificação da máquina e com a especificação da máquina.

Como usar este Catálogo de Peças de Reposição

Localizar um número de peça de reposição

a) Consultar a ilustração (C) na página i-9: Ir para o número do capítulo (16) indicado ao lado do grupo principal que contém a peça sendo procurado.

Os itens b) e c) referem-se à ilustração (D) na página i-10:

b) Na ilustração do grupo principal, procurar o subgrupo da máquina (18) que contém a peça ou o subgrupo sendo procurado. Anotar o número da posição (19) e passar para a página da lista que segue a figura.

c) Procurara o número de posição/designação de referência (17) ou o nome do subgrupo (20). Ir para o número de página correspondente (21) listado na coluna da direita. O Grupo Tetra Pak optou por utilizar sempre uma estrutura baseada em funções para a designação de referência. O prefixo que indica a estrutura baseada em funções (=) não é mostrado na designação de referência.

(Cont.)

(Cont'd)

Os itens d) e e) referem-se à ilustração (E) na página i-10:

d) Localizar a peça (22) sendo procurada na ilustração do subgrupo e anotar o número de posição da peça.

e) O número da peça (29) e a descrição da peça (30) estão indicadas ao lado do número de posição na página da lista.

Informações listadas no Catálogo de Peças de Reposição

A lista abaixo refere-se à ilustração (E) na página i-10: Um Catálogo de Peças de Reposição contém as seguintes informações sobre grupos, subgrupos e peças de reposição para a equipamento:

- Referência da estrutura do grupo (23). Indica o grupo seguinte mais elevado na estrutura da lista do equipamento.
- Nome do grupo (24)
- Unidade de medida (25)
- Quantidade (26)
- Número do desenho de montagem (27)
- Gama da página de lista (28). Incluída se houver páginas múltiplas na ilustração do grupo ou na lista.
- Número da peça ou do subgrupo (29)
- Nome do subgrupo ou descrição da peça (30)
- Número do grupo (31)
- Número do equipamento (32)
- Cabeçalho de informações do grupo (33) Indica se a seção abaixo do cabeçalho é para uma variante de máquina específica ou se é uma lista de peças comuns. Se uma lista tiver mais do que uma variante e cada variante tiver o seu próprio desenho de montagem, uma referência da página para o desenho de montagem da variante é mostrada.
- Informações internas (34)

Assistência e consultas

Para obter assistência ao trabalhar com este equipamento ou para quaisquer outras necessidades, comentários ou sugestões, formular as perguntas ou fornecer o feedback usando a ferramenta QuTI-P. Digitar QuTI-P no campo de endereço do seu navegador. Se o acesso a QuTI-P não estiver disponível, pedir acesso entrando em contato com Global Service Desk.

Se o acesso à intranet da Tetra Pak® não estiver disponível, entrar em contato com o representante Tetra Pak mais próximo.

Informaţiile de manual

Tetra Pak Group recomandă citirea cu atenţie a tuturor manualelor livrate. Asiguraţi-vă că manualele livrate sunt adecvate pentru personalul ce manipulează sau întreţine instalaţia.

Este important să păstraţi acest catalog pe tot parcursul funcţionării instalaţiei şi să-l transmiteţi următorului utilizator sau proprietar.

Tetra Pak Group nu îşi asumă nicio responsabilitate pentru nicio defecţiune a instalaţiei cauzată de nerespectarea instrucţiunilor din manualul care însoţeşte instalaţia.

Manuale livrate

Manualele livrate împreună cu instalaţia

CM

Manualul de conversie (CM) furnizează tehnicienilor informaţii pentru conversia (adaptarea) echipamentului la diferite moduri de producţie.

EM

Manualul electric oferă tehnicienilor informaţii despre sistemul electric al instalaţiei.

IM

Manualul de instalare oferă tehnicienilor informaţii legate de montarea în siguranţă a instalaţiei.

MaSP

Manualul de întreţinere şi piese de schimb oferă informaţii despre întreţinerea componentei. De asemenea, manualul oferă informaţiile necesare pentru a comanda piese de schimb de la Tetra Pak Group pentru această componentă.

MM

Manualul de întreţinere oferă tehnicienilor informaţii privind întreţinerea instalaţiei.

OM

Manualul de funcţionare (OM) oferă operatorului informaţii despre manipularea şi funcţionarea echipamentului înainte, în timpul şi după procesul tehnologic.

RM

Manualul de reconstrucţie oferă tehnicienilor informaţii necesare pentru montarea în siguranţă a unui set pe un utilaj sau echipament montat.

(se continuă)

(se continuă)

SPC

Catalogul cu piese de schimb oferă informaţii necesare pentru comandarea pieselor de schimb de la Tetra Pak Group.

TeM

Manualul tehnic furnizează informaţii tehnicienilor ca de exemplu:

- informaţii necesare pentru a instala în condiţii de siguranţă echipamentul
- informaţii necesare pentru a întreţine echipamentul
- informaţii privind sistemul electric al utilajului/echipamentului
- informaţiile necesare pentru a comanda piesele de schimb de la Tetra Pak Group.
- alte informaţii tehnice

UP

Paginile pentru actualizare furnizează pagini noi pentru actualizarea manualelor existente ale utilajelor.

Configuraţia paginii

Consultaţi ilustraţia (A) de la pagina i-9: Paginile principale din Catalogul pieselor de schimb sunt formate dintr-o pagină a ilustraţiilor (1) şi o pagină a listei corespunzătoare (7). Numărul paginii (5) este prezentat în antetul unei pagini cu ilustraţii şi în subsolul unei pagini cu lista.
Numărul documentului (6) este prezentat în subsolul unei pagini cu lista.

Numerotarea paginilor

Consultaţi ilustraţia (A) de la pagina i-9: Numărul paginii (5) are trei părţi:

- numărul capitolului (2)
- numărul consecutiv al paginii din cadrul capitolului (3)
- numărul total de pagini din capitol (4)

Notă! Literele UP pot înlocui numărul capitolului (2) dacă manualul include pagini actualizate. Numărul consecutiv al paginii (3) şi numărul total de pagini (4) al paginilor actualizate nu urmează numerotarea existentă, secvenţială a paginilor din cadrul capitolului.

Prezentarea aparatului

Producător

Pentru numele şi adresa producătorului, vezi pagina a doua a acestui catalog.

Service

Tetra Pak Group nu îşi asumă responsabilitatea pentru nicio avarie sau rănire asupra echipamentului, personalului sau clienţilor, produsă de piese de schimb care nu sunt piese de schimb originale Tetra Pak®.

Pentru a comanda piese de schimb originale Tetra Pak pentru acest utilaj, adresaţi-vă celui mai apropiat birou Tetra Pak.

Identificare

Clasificare CE

Acest echipament este în conformitate cu regulamentele de bază sanitare şi de protecţie ale Agenţie Europene de Mediu (EEA).

(se continuă)

(se continuă)

Conformitatea 3-A

Dacă plăcuţa cu numele utilajului conţine marcajul 3-A (15) (vezi ilustraţia (B) de la pagina i-7), acest echipament respectă standardele sanitare 3-A pentru dispozitive de formare, umplere şi etanşare a containerelor pentru lapte lichid şi produse lactate lichide, numărul 17-10.

Plăcuţa maşinii

Ilustraţia (B) de la pagina i-9 prezintă un exemplu al plăcuţei maşinii.
O ilustraţie a plăcuţei valabile a maşinii şi a amplasării sale pe echipament este prezentată în capitolul Introducere al manualelor livrate cu acest echipament.
Plăcuţa maşinii conţine datele prezentate mai jos, necesare când vă adresaţi Tetra Pak Group referitor la acest echipament.

- Tipul utilajului (8)
- Volum (9)
- Specificaţiile desenului (10)
- Numărul de serie al utilajului (11)
- Producător (12)
- Anul de fabricaţie (13)
- Marcaj CE (14)
- Marcaj 3-A (dacă este cazul) (15)

Verificaţi dacă datele instalaţiei din primele pagini ale acestui manual corespund cu datele de pe plăcuţa maşinii şi cu specificaţia maşinii.

Cum să folosiţi acest catalog pentru piese de schimb

Localizaţi numărul piesei de schimb

a) Consultaţi ilustraţia (C) de la pagina i-9: Mergeţi la numărul capitolului (16) indicat lângă grupul principal care conţine piesa pe care doriţi să o localizaţi.

Elementele b) şi c) se referă la ilustraţia (D) de la pagina i-10.

b) Pe ilustraţia grupului principal, căutaţi subgrupul maşinii (18) care conţine piesa sau subgrupul pe care îl căutaţi. Notaţi numărul poziţiei (19) şi mergeţi la pagina listei de după ilustraţie.

c) Căutaţi numărul poziţiei/denumirea referinţei (17) sau numele subgrupului (20). Mergeţi la numărul corespunzător al paginii (21) precizat în coloana din dreapta. Tetra Pak Group a ales să utilizeze întotdeuana structura orientată pe funcţii pentru denumirea referinţei. Prefixul care indică structura orientată pe funcţii (=) nu este prezentat în denumirea referinţei.

(se continuă)

(se continuă)

Elementele d) şi e) se referă la ilustraţia (E) de la pagina i-10.

d) Localizaţi piesa (22) pe care o căutaţi în ilustraţia subgrupului şi notaţi numărul poziţiei piesei.

e) Numărul piesei (29) şi descrierea piesei (30) sunt listate lângă numărul poziţiei de pe pagina listei.

Informaţiile enumerate în catalogul pentru piese de schimb

Lista de mai jos se referă la ilustraţia (E) de la pagina i-10.
Un Catalog cu piese de schimb conţine următoarele informaţii despre grupuri, subgrupuri şi piese de schimb pentru echipament.

- Referinţa structurii grupului (23). Indică următorul grup superior din structura listei echipamentului.
- Numele grupului (24)
- Unitate de măsură (25)
- Cantitate (26)
- Numărul desenului de ansamblu (27)
- Domeniul paginii listei (28). Inclus dacă există mai multe pagini în ilustraţia sau lista grupului.
- Numărul piesei sau subgrupului (29)
- Numele subgrupului sau descrierea piesei (30)
- Numărul grupului (31)
- Numărul echipamentului (32)
- Titlul cu informaţiile grupului (33). Indică dacă secţiunea de sub titlu este pentru o anumită variantă de maşină sau este o listă de piese comune. Dacă o maşină are mai mult de o variantă şi fiecare variantă îşi are propriul desen de ansamblu, este prezentată o referinţă a paginii la desenul de ansamblu al variantei.
- Informaţii interne (34)

Asistenţă şi întrebări

Pentru asistenţă în timpul operării acestui echipament sau alte întrebări, comentarii ori sugestii, trimiteţi întrebările sau feedback-ul utilizând unealta QuTI-P. Tastaţi QuTI-P în câmpul pentru adresă al browserului dvs. Dacă nu este disponibil accesul la QuTI-P, solicitaţi accesul contactând Reprezentanţa tehnică globală.

Dacă nu este disponibil accesul la intranetul Tetra Pak®, adresaţi-vă celui mai apropiat reprezentant Tetra Pak.

Informácie o príručke

Tetra Pak Group odporúča, aby ste si pozorne prečítali všetky dodané príručky. Presvedčite sa, či sú dodané príručky k dispozícii personálu, ktorý obsluhuje alebo vykonáva údržbu zariadenia.

Je dôležité, aby ste uchovávali tento katalóg po celý čas životnosti zariadenia, a odovzdali katalóg každému ďalšiemu vlastníkovi alebo užívateľovi zariadenia.

Spoločnosť Tetra Pak Group nezodpovedá za škody na zariadení spôsobené nedodržaním pokynov uvedených v príručkách, ktoré doprevádzajú toto zariadenie.

Dodané príručky

Príručky dodávané s týmto zariadením:

CM

Príručka na adaptáciu poskytuje technikom informácie o adaptácii zariadenia medzi rôznymi výrobnými režimami.

EM

Táto Elektrická príručka poskytuje technikom informácie o elektrickom systéme zariadenia.

IM

Táto Inštalačná príručka poskytuje technikom informácie potrebné pre bezpečnú inštaláciu zariadenia.

MaSP

Príručka o údržbe a náhradných dieloch poskytuje informácie o údržbe komponentu zariadenia. Okrem toho poskytuje informácie potrebné pri objednávaní náhradných dielov komponentu od spoločnosti Tetra Pak Group.

MM

Táto Údržbárska príručka poskytuje technikom informácie o vykonávaní údržby zariadenia.

OM

Tento Návod na obsluhu poskytuje operátorovi informácie o tom, ako treba manipulovať so strojom a obsluhovať ho pred, počas a po výrobe.

RM

Príručka na prestavbu poskytuje technikom informácie potrebné pre bezpečnú inštaláciu súpravy na nainštalovaný stroj alebo zariadenie.

(Pokrač.)

(Pokrač.)

SPC

Katalóg náhradných dielov poskytuje informácie potrebné pre objednanie náhradných dielov od Tetra Pak Group.

TeM

Technická príručka poskytuje technikom informácie, ktorými môžu byť:

- potrebné informácie pre bezpečnú inštaláciu zariadenia
- potrebné informácie pre údržbu zariadenia
- informácie o elektrickom systéme stroja/zariadenia.
- poskytuje informácie potrebné na objednanie náhradných dielov od firmy Tetra Pak Group
- ostatné technické informácie

UP

Aktualizované stránky poskytujú nové stránky k existujúcim príručkám na zariadenie.

Usporiadanie strany

Pozrite sa na obrázok (A) na strane i-9: hlavné stránky v Katalógu náhradných dielov tvorí stránky s ilustráciami (1) a odpovedajúca stránka so zoznamom (7). Číslo stránky (5) je uvedené v záhlaví stránky s obrázkom a v zápätí stránky so zoznamom. Číslo dokumentu (6) je uvedené v zápätí stránky so zoznamom.

Číslovanie strán

Pozrite sa na obrázok (A) na strane i-9: číslo stránky (5) má tri časti:

- číslo kapitoly (2)
- číslo ďalšej stránky v rámci kapitoly (3),
- celkový počet stránok v kapitole (4)

Poznámka! Písmena UP môžu nahradiť číslo kapitoly (2) v prípade, že manuál obsahuje aktualizované stránky. Nasledujúce číslo stránky (3) a celkový počet strán (4) aktualizovaných stránok sa nedrží existujúceho sekvenčného číslovania stránok v tejto kapitole.

Úvod k zariadeniu

Výrobca

Meno a adresu výrobcu nájdete na druhej strane tohto katalógu.

Servis

Tetra Pak Group nepreberá zodpovednosť za akúkoľvek škodu na zariadení alebo za zranení zamestnanca alebo spotrebiteľa, ktoré budú spôsobené tým, že sa nepoužijú originálne náhradné diele Tetra Pak®.

Ak chcete pre tento stroj objednať originálne náhradné diely Tetra Pak, kontaktujte najbližšiu kanceláriu spoločnosti Tetra Pak.

Identifikácia

Klasifikácia CE

Toto zariadenie vyhovuje základným zdravotným a bezpečnostným predpisom Európskej hospodárskej oblasti (EEA).

(Pokrač.)

(Pokrač.)

3-A Súlad

Ak štítok stroja obsahuje označenie 3-A (15) (pozri obrázok (B) na strane i-7), potom je toto zariadenie v súlade s hygienickými normami 3-A pre formovanie, plnenie a uzatváranie obalov na tekuté mlieko a tekuté mliečne výrobky, číslo 17 -10.

Štítok zariadenia

Obrázok (B) na strane i-9 ukazuje príklad typového štítku.
Obrázok platného typového štítku a jeho umiestnenia na zariadení je uvedený v úvodnej kapitole príručiek dodaných s týmto zariadením.
Typový štítok obsahuje údaje uvedené niže, tieto údaje sú treba, keď kontaktujete spoločnosť Tetra Pak Group vo veci týkajúcej sa tohto špecifického vybavenia.

- Typ stroja (8)
- Objem (9)
- Špecifikácie výkresov (10)
- Sériové číslo stroja (11)
- Výrobca (12)
- Rok výroby (13)
- Symbol CE (14)
- Symbol 3-A (ak sa používa) (15)

Presvedčte sa, či dáta uvedené na čelnej strane tohoto manuálu korešpondujú s údajmi na identifikačnom typovom štítku stroja a so špecifikáciou stroja.

Ako používať tento katalóg náhradných dielov

Vyhľadať číslo náhradného dielu

a) Pozrite obrázok (C) na strane i-9: Prejsť na číslo kapitoly (16) uvedené vedľa hlavnej skupiny, ktorá obsahuje diel, ktorý chcete nájsť.

Položky b) a c) sa vzťahujú na obrázok (D) na strane i-10.

b) Na obrázku hlavnej skupiny sa pozrite na podskupinu stroja (18), ktorá obsahuje diely alebo podskupiny, ktoré hľadáte. Poznamenajte si číslo pozície (19) a prejdite na stránku zoznamu, ktorý nasleduje za obrázkom.

c) Pozrite sa na číslo pozície/označenie referencie (17) alebo na názov podskupiny (20). Prejdite na odpovedajúce číslo strany (21) uvedené v zozname v stĺpci na pravej strane. Spoločnosť Tetra Pak Group si zvolila vždy používať pre referenčné označenie štruktúru zameranú na funkciu. Predpona označujúca funkčne orientovanú štruktúru (=) nie je uvedená v referenčnom označení.

(Pokrač.)

(Pokrač.)

Položky d) a e) sa vzťahujú na obrázok (E) na strane i-10.

d) Lokalizujte diel (22), ktorý hľadáte, na obrázku podskupiny a poznamenajte si číslo pozície dielu.

e) Číslo dielu (29) a popis dielu (30) sú uvedené vedľa čísla pozície na stránke so zoznamom.

Informácie uvedené v katalógu náhradných dielov

Niže uvedený zoznam sa odkazuje na obrázok (E) na stránke i-10.
Katalóg náhradných dielov obsahuje nasledujúce informácie o skupinách, podskupinách a náhradných dieloch pre zariadenie:

- Referencia štruktúry skupiny (23). Označuje nasledujúcu vyššiu skupinu vo štruktúre zoznamu výbavy.
- Názov skupiny (24)
- Merná jednotka (25)
- Množstvo (26)
- Číslo montážneho výkresu (27)
- Rozsah stránok so zoznamom (28). Zahrnuté, ak existuje viac stránok v skupine obrázkov alebo v zozname.
- Číslo dielu alebo podskupiny (29)
- Názov podskupiny alebo popis dielu (30)
- Číslo skupiny (31)
- Číslo výbavy (32)
- Záhlavie informácií o skupine (33). Označuje, či sa časť pod záhlavím týka konkrétneho variantu stroja, alebo či sa jedná o zoznam spoločných dielov. Ak zoznam obsahuje viac ako jeden variant a každý variant má svoje vlastné montážne výkresy, je zobrazený odkaz na stránku s montážnym výkresom variantu.
- Vnútorné informácie (34)

Pomoc a otázky

Ak potrebujete pomoc pri obsluhe tohto zariadenia, ak máte ďalšie otázky, pripomienky alebo odporúčania, alebo ak chcete položiť otázky či poskytnúť svoj vlastný názor, použite nástroj QuTI-P. V poli svojho prehliadača pre adresu zadajte QuTI-P. Ak nemáte prístup ku QuTI-P, požiadajte o prístup kontaktovaním Global Service Desk (Globálne servisné oddelenie).

Ak nemáte prístup na internú sieť Tetra Pak®, kontaktujte najbližšieho zástupcu spoločnosti Tetra Pak.

Informacije o navodilu

Tetra Pak Group priporoča, da vsa dobavljena navodila pazljivo prebrete. Prepričajte se, da so dobavljena navodila na razpolagu osebju, ki dela s strojem ali pa izvaja vzdrževalna dela na opremi.

Ta navodila je potrebno shraniti do konca življenjske dobe opreme in navodilo predati vsakemu naslednjemu imetniku ali uporabniku.

Tetra Pak Group ne nosi odgovornosti za poškodbo na opremi, do katere je prišlo zaradi neupoštevanja teh navodilih.

Dobavljena navodila

Navodila, ki se dobavljajo s to opremo:

CM

Navodila za spremembo (CM) oskrbujejo tehnike z informacijami glede zamenjav opreme med različnimi načini proizvodnje.

EM

Električna navodila oskrbujejo tehnike z informacijami glede električnega sistema opreme.

IM

Navodila za inštalacijo oskrbujejo tehnike z informacijami, ki so potrebne za varno inštalacijo opreme.

MaSP

Priročnik z navodili za vzdrževanje in naročanje nadomestnih delov vsebuje informacije o načinu vzdrževanja komponente. Poleg tega vsebuje tudi podatke, ki so potrebni za naročanje nadomestnih delov komponente pri družbi Tetra Pak Group.

MM

Navodila za vzdrževanje oskrbujejo tehnika z informacijami glede vzdrževanja opreme.

OM

Navodila za delovanje (OM) oskrbijo strojnike z informacijami glede rokovanja z opremo in delovanjem le-te pred, med in po proizvodnji.

RM

Navodila za predelavo (RM) oskrbujejo tehnike z informacijami, ki so potrebne za varno inštalacijo opreme na inštalirani stroj ali opremo.

(Obrnite)

(Obrnite)

SPC

Katalog rezervnih delov prinaša informacije, ki so potrebne za naročanje rezervnih delov iz podjetja Tetra Pak Group.

TeM

Tehnološka navodila tehnikom podajo informacije, ki so lahko:

- potrebne za varno inštalacijo opreme
- potrebne za vzdževanje opreme
- vezane na električni sistem stroja/opreme
- ponujajo informacije, ki so potrebna za naročanje nadomestnih delov pri Tetra Pak Group
- druge tehnične informacije

UP

Strani za posodobitev podajo nove strani za posodabljanje obstoječih navodil stroja.

Ureditev strani

Sklicujte se na ilustracijo (A) na strani i-9: Glavne strani v katalogu rezervnih delov so sestavljene iz strani z ilustracijami (1) in stranjo s seznamom (7). Številka strani (5) je prikazana v glavi strani z ilustracijo in v nogi strani s seznamom. Številka dokumenta (6) je prikazana v nogi strani s seznamom.

Oštevilčenje strani

Sklicujte se na ilustracijo (A) na strani i-9: Številka strani (5) ima tri dele:

- številko poglavja (2)
- zaporedno številko strani (2) znotraj poglavja (3)
- skupno število strani v poglavju (4)

Opomba! Črke UP lahko zamenjajo številko poglavja (2), če so v navodilih vključene posodobljene strani. Zaporedna številka strani (3) in skupno število strani (4) posodobljenih strani se ne ujemajo z obstoječim zaporedjem strani v poglavju.

Predstavitev stroja

Proizvajalec

Ime in naslov proizvajalca se nahajata na drugi strani tega kataloga.

Servisiranje

Tetra Pak Group ne prevzema odgovornosti za okvare ali poškodbe opreme, osebja ali potrošnikov, ki ga povzročijo rezervni deli, ki niso originalni Tetra Pak® rezervni deli.

Za naročanje originalnih Tetra Pak rezervnih delov kontaktirajte najbližjo pisarno Tetra Pak.

Identifikacija

CE klasifikacija

Ta oprema izpolnjuje osnovne zdravstvene in varnostne ukrepe Evropskega ekonomskega prostora (EEA).

(Obrnite)

(Obrnite)

3-A Skladnost

Če ploščica stroja vsebuje oznako 3-A (15) (glejte ilustracijo (B) na strani i-7), ta oprema ustreza sanitetnim standardom 3-A za kalupe, polnilce in tesnila zbiralnikov za tekoče mleko in izdelke iz tekočega mleka, številka 17-10.

Strojna plošča

Ilustracija (B) na strani i-9 prikazuje primer ploščice za identifikacijo stroja. Ilustracija veljavne ploščice za identifikacijo stroja in njene lokacije na opremi je prikazana v uvodnem poglavju navodil, ki so bila dostavljena s to opremo. Ploščica za identifikacijo stroja vsebuje spodaj navedene podatke, ki so potrebni ob kontaktiranju podjetja 9 glede te specifične opreme.

- Tip stroja (8)
- Prostornina (9)
- Specifikacije skice (10)
- Serijska številka stroja (11)
- Proizvajalec (12)
- Leto izdelave (13)
- CE oznaka (14)
- 3-A oznaka (če obstaja) (15)

Prepričajte se, da se podatki o opremi, ki se nahajajo na sprednjih straneh teh navodil, v skladu s podatki strojne plošče in specifikacije stroja.

Kako uporabljati ta katalog rezrevnih delov

Poiščite številko rezervnega dela

a) Sklicujte se na ilustracijo (C) na strani i-9: Pojdite na številko poglavja (16), ki se nahaja poleg glavne skupine in ki vsebuje del, ki ga želite poiskati.

Predmeti b) in c) se nanašajo na ilustracijo (D) na strani i-10.

b) Na ilustraciji glavne skupine poiščite podskupino stroja (18), ki vsebuje del ali podskupino, ki jo iščete. Opazite položaj številke (19) in pojdite na stran seznama, ki sledi ilustraciji.

c) Poiščite številko lokacije/referenco (17) ali pa ime podskupine (20). Pojdite na ustrezno številko strani (21), ki je navedena v stolpcu na desni strani. Tetra Pak Group se je odločil za to, da vedno uporablja funkcijsko naravnano strukturo kot referenco. Predpona, ki nakazuje funkcijsko naravnano strukturo (=), ni prikazana v referenci.

(Obrnite)

(Obrnite)

Predmeti d) in e) se nanašajo na ilustracijo (E) na strani i-10.

d) Poiščite del (22), ki ga iščete, na ilustraciji podskupine in zabeležite številko lokacije dela.

e) Številka dela (29) in opis dela (30) sta navedena poleg lokacije številke na strani s seznamom.

Informacije, ki so navedene v katalogu rezervnih delov

Spodnji seznam se nanaša na ilustracijo (E) na strani i-10. Katalog rezervnih delov vsebuje naslednje informacije o skupinah, podskupinah in rezervnih delih za opremo.

- Referenca strukture skupine (23). Določa naslednjo višjo skupino v strukturi seznama opreme.
- Ime skupine (24)
- Enota merjenja (25)
- Količina (26)
- Številka skice sistema (27)
- Razpon seznama strani (28). Vključeno, če obstaja več strani v ilustraciji skupine ali na seznamu.
- Del ali številka podskupine (29)
- Ime podskupine ali opis dela (30)
- Številka skupine (31)
- Številka opreme (32)
- Naslov informacije o skupini (33). Nakazuje ali je spodnji odsek naslov specifične različice stroja ali pa če gre za seznam splošnih delov.
  Če ima seznam več kot eno različico in ima vsaka različica svojo skico sistema, je prikazana referenca strani na skici sistema vsake različice.
- Notranje informacije (34)

Pomoč in poizvedbe

Če potrebujete pomoč pri delu s to opremo ali imate kakršne koli druge zahteve, pripombe ali predloge, lahko vprašanja ali povratne informacije posredujete s pomočjo orodja QuTI-P. Vstipkajte QuTI-P v naslovno vrstico vašega brskalnika Če dostop do QuTI-P ni na voljo, stopite v stik z oddelkom za pomoč in zaprosite za dostop.

Če dostop do intraneta Tetra Pak® ni na voljo, stopite v stik z najbližjim zastopnikom podjetja Tetra Pak.

Information om handboken

Tetra Pak Group rekommenderar att alla handböcker läses noggrant.
Se till att handböckerna är tillgängliga för personalen som använder eller underhåller utrustningen.

Det är viktigt att denna katalog behålls under utrustningens livslängd, och att katalogen överlämnas till varje efterföljande innehavare eller användare.

Tetra Pak Group kan inte hållas ansvarig för eventuell egendomsskada, förlust, personskada eller dödsfall som orsakas av man inte följer de instruktioner som ges i de handböcker som medföljer denna utrustning.

Medföljande handböcker

Handböcker som levereras tillsammans med denna utrustning:

CM

Konverteringshandboken ger tekniker information om konvertering av utrustningen mellan olika produktionssätt.

EM

Den elektriska handboken ger teknikerna information om utrustningens elektriska system.

IM

Installationshandboken ger teknikerna information som krävs för att kunna installera utrustningen säkert.

MaSP

I underhålls- & reservdelsmanualen finns information om underhåll av komponenten. Den innehåller också information om hur man beställer reservdelar för komponenten från Tetra Pak Group.

MM

Underhållshandboken ger teknikerna information om hur utrustningen ska underhållas.

OM

Drifthandboken ger operatören information om hur utrustningen ska hanteras före, under och efter produktion.

RM

Ombyggnadshandboken ger teknikerna den information som krävs för att säkert installera en sats på en installerad maskin eller utrustning.

(Forts.)

(Forts.)

SPC

Reservdelskatalogen (SPC) ger den information som krävs för att kunna beställa reservdelar från Tetra Pak Group.

TeM

Teknisk handbok ger tekniker information i form av:

- information som krävs för att säkert kunna installera utrustningen
- information som krävs för att underhålla utrustningen
- information om maskinens/utrustningens elsystem
- information som krävs för beställning av reservdelar från Tetra Pak Group
- annan teknisk information

UP

Uppdateringssidorna innehåller nya sidor för att uppdatera befintliga maskinhandböcker.

Sidlayout

Se illustration (A) på sidan i-9: Huvudsidorna i en Reservdelskatalog består av en illustrationssida (1) och en tillhörande listsida (7).
Sidnumret (5) visas i sidhuvudet på en illustrationssida och i sidfoten på en listsida.
Dokumentnumret (6) visas i sidfoten på listsidan.

Sidnumrering

Se illustration (A) på sidan i-9: Ett sidnummer (5) har tre delar:

- kapitelnummer (2)
- löpande sidnummer inom kapitlet (3)
- totalt sidantal i kapitlet (4)

OBS! Bokstäverna UP kan ersätta kapitelnumret (2) om handboken innehåller uppdateringssidor. Det löpande sidnumret (3) och det totala antalet sidor (4) för uppdateringssidor följer inte den befintliga löpande sidnumreringen av kapitlet.

Introduktion till maskinen

Tillverkare

För tillverkarens namn and adress, se andra sidan i denna katalog.

Service

Tetra Pak Group tar inte något ansvar för eventuella skador eller eventuella personskador på utrustning, personal eller konsumenter som orsakas av att reservdelarna inte är original Tetra Pak® reservdelar.

Vid beställning av original Tetra Pak reservdelar för denna maskin, kontakta närmaste Tetra Pak-kontor.

Identifiering

CE-klassificering

Denna utrustning uppfyller de grundläggande hälso- och säkerhetskraven inom European Economic Area (EEA).

(Forts.)

(Forts.)

3-A överensstämmelse

Om maskinskylten är märkt med 3-A (15) (se bild (B) på sidan i-7), uppfyller denna utrustning 3-A Hygienstandarder för resare, fyllare och förseglare av behållare för flytande mjölk och flytande mjölkprodukter, Nummer 17-10.

Maskinskylt

Illustration (B) på sidan i-9 visar ett exempel på en maskinskylt.
En illustration av gällande maskinskylt och dess placering på utrustningen visas i Introduktion-kapitlet i de handböcker som levereras med denna utrustning.
Maskinskylten innehåller data som listas nedan, vilken behövs för att kontakta Tetra Pak Group rörande denna specifika utrustning.

- Maskintyp (8)
- Volym (9)
- Ritningsspecifikationer (10)
- Maskinnummer (11)
- Tillverkare (12)
- Tillverkningsår (13)
- CE-märkning (14)
- 3A-märke (om tillämpligt) (15)

Kontrollera att utrustningsdata som finns på de inledande sidorna i denna handbok överensstämmer med maskinskyltens data och maskinspecifikationen.

Hur man använder denna reservdelskatalog

Hitta ett reservdelsnummer

a) Se illustration (C) på sidan i-9: Gå till det kapitelnummer (16) som anges bredvid huvudgruppen som innehåller delen du vill lokalisera.

Punkterna b) och c) refererar till illustration (D) på sidan i-10.

b) Leta på huvudgruppens bild upp den undergrupp (18) i maskinen som innehåller delen eller undergruppen du letar efter. Notera positionsnumret (19) och gå till listsidan som följer på bilden.

c) Leta upp positionsnummer/referensbeteckning (17) eller undergruppens namn (20). Gå till motsvarande sidnummer (21) som anges i den högra kolumnen. Tetra Pak Group har valt att alltid använda en funktionsorienterad struktur för referensbeteckning. Prefix som anger funktionsorienterad struktur (=) visas inte i referensbeteckningen.

(Forts.)

(Forts.)

Punkterna d) och e) refererar till illustration (E) på sidan i-10.

d) Leta upp den del (22) som du letar efter på undergruppens bild och notera delens positionsnummer.

e) Artikelnumret (29) och artikelbeskrivningen (30) anges bredvid positionsnumret på listsidan.

Information som anges i en Reservdelskatalog

Listan nedan refererar till illustration (E) på sidan i-10. En Reservdelskatalog innehåller följande information om grupper, undergrupper och reservdelar för utrustningen:

- Gruppstrukturreferens (23). Anger närmast högre grupp i utrustningens liststruktur.
- Gruppnamn (24)
- Måttenhet (25)
- Antal (26)
- Sammanställningsritningens nummer (27)
- Listans sidomfång (28). Anges om det finns flera sidor i gruppens bild eller lista.
- Artikel- eller undergruppnummer (29)
- Undergruppens namn eller beskrivning av delen (30)
- Gruppnummer (31)
- Utrustningsnummer (32)
- Gruppinformationsrubrik (33). Anger om avsnittet under rubriken gäller för en specifik maskinvariant eller om det är en lista över gemensamma delar. Om en lista har mer än en variant och varje variant har sin egen sammanställningsritning, visas en sidreferens till variantens sammanställningsritning.
- Intern information (34)

Assistans och förfrågningar

För assistans vid användning av denna utrustning, eller för andra förfrågningar, kommentarer eller förslag, kan ni ställa frågor eller ge feedback genom att använda QuTI-P verktyget. Skriv QuTI-P din webbläsares adressfält. Om tillgång till QuTI-P inte föreligger, begär tillgång genom att kontakta Global Service Desk.

Om tillgång till Tetra Pak® intranät inte föreligger, kontakta närmaste Tetra Pak-representant.

SPC
Spare Parts Catalogue

This page is intentionally left blank.

ECM: 631690 - 20131001
Group number: 641515-0200
Assembly Drawing:

Pos	Part No	UN	Qty	Description	Page No
	List Remark				
	List - 641515-0200				
	Remark : Machine variant "VCK QC" collects ONLY				
	following combinations:				
	VCK TBA 0125S for Fill.Mach. TBA 0100B				
	VCK TBA 0100B for Fill.Mach. TBA 0125S				
	VCK TPA 0200SQ for Fill.Mach. TPA 0250SQ				
	VCK TPA 0250SQ for Fill.Mach. TPA 0200SQ				
	VCK TBA 0200M for Fill.Mach. TBA 0250S				
	VCK TBA 0250S for Fill.Mach. TBA 0200M				
	VCK TBA 0200B for Fill.Mach. TBA 0250B				
	VCK TBA 0250B for Fill.Mach. TBA 0200B				
	VCK TBA 0200B for Fill.Mach. TBA 0330S				
	VCK TBA 0330S for Fill.Mach. TBA 0200B				
	VCK TBA 0250B for Fill.Mach. TBA 0330S				
	VCK TBA 0330S for Fill.Mach. TBA 0250B				
	VCK TBA 0200SQ for Fill.Mach. TBA 0250SQ				
	VCK TBA 0250SQ for Fill.Mach. TBA 0200SQ				
	VCK TBA 0284B for Fill.Mach. TBA 0300S				
	VCK TBA 0300S for Fill.Mach. TBA 0284B				
	VCK TBA 0160S for Fill.Mach. TBA 0200S				
	VCK TBA 0200S for Fill.Mach. TBA 0160S				
	Machine variant "VCK NOQC INTERM" collects ONLY				
	following combinations:				
	VCK TBA 0180S for Fill.Mach. TBA 0200S				
	VCK TBA 0180S for Fill.Mach. TBA 0160S				
	All other are considered as VCK NOQC				
VCK NOQC					
010	2974071-0200		1	VOLUME CONVERSION KIT NOQC	**1-5**
VCK NOQC INTERM					
010	2974072-0200		1	VOLUME CONVERSION KIT QC	**1-409**
020	3309022-0100		1	NO QUICKCHANGE INTERMEDIATE	**1-415**
VCK QC					
010	2974072-0200		1	VOLUME CONVERSION KIT QC	**1-409**

Pos	Part No	UN	Qty	Description	Page No

Machine Type | Group Description | Used-In | Group Number | Page No

This page is intentionally left blank.

ECM: 408044 - 20090730
Group number: 2974071-0200
Assembly Drawing:

Pos	Part No	UN	Qty	Description	Page No
-					
010	2976945-0200		1	BOX 1 NOQC	**1-7, 1-9**
020	2976946-0200		1	BOX 2 NOQC	**1-195**

Pos	Part No	UN	Qty	Description	Page No

Machine Type | Group Description | Used-In | Group Number | Page No

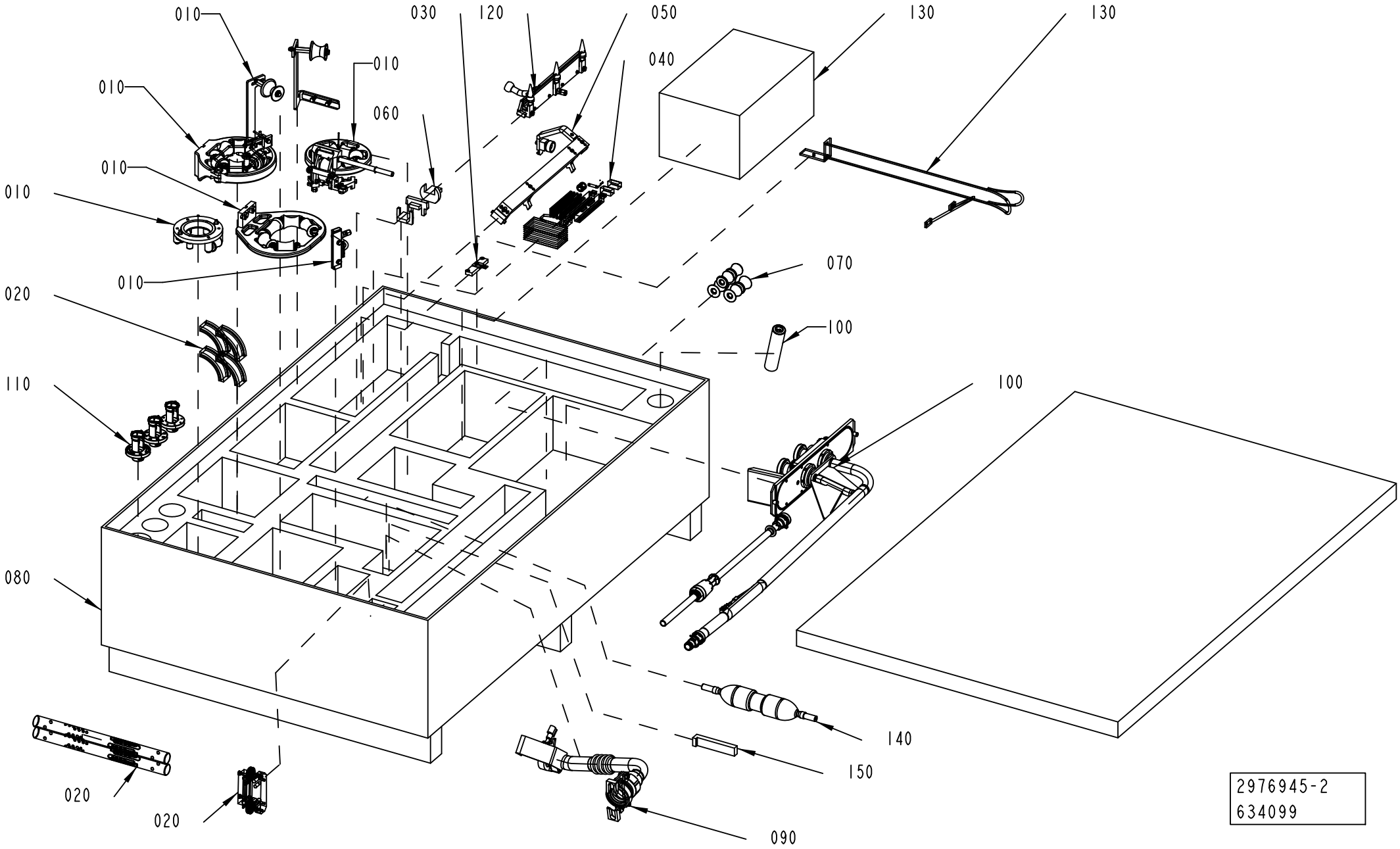
010
010
010
010
010
010
030
120
050
040
060
130
130
070
100
100
020
110
080
020
020
140
150
090
2976945-2
634099

ECM: 692703 - 20141001
Group number: 2976945-0200
Assembly Drawing: 2976945-2_1_AH

This list covers pages from 1-6 to 1-9

Pos	Part No	UN	Qty	Description	Page No
ST FM HVA NOPT					
110	2945430-0200		1	PRESSURE FLANGE	**1-11**
ST FM HVA PT/CF					
110	2945430-0200		1	PRESSURE FLANGE	**1-11**
130	3106811-0100		1	PT COMPACTFLEX HOLES	**1-13**
ST FM NOHVA PT/CF					
130	3106811-0100		1	PT COMPACTFLEX HOLES	**1-13**
TBA 0375S (See drawing on pages: 1-6, 1-8)					
160	3298664-0100		1	GUIDE ROLLER	**1-125**
Common Parts					
010	2808305-0200		1	FORMING SECTION	**1-127**
020	3190294-0100		1	ASU MODIFICATION	**1-165**
030	2906135-0200		1	TEMPLATE	**1-171**
040	2889626-0100		1	START-UP KIT	**1-173, 1-175**
050	2871510-0200		1	LS TEMPLATE	**1-177**
060	2889628-0100		1	SETTING TOOL	**1-179, 1-181**
070	2890357-0100		1	ROLLER	**1-161, 1-163**
080	2988051-0000		1	BOX 1 NOQC	
090	2839259-0100		1	CLEANING CUP	**1-183**
100	2839240-0200		1	FILLING PIPE	**1-185, 1-187**
120	2808340-0300		1	AIR NOZZLE	**1-189**
140	3320065-0100		1	ROLLER	**1-191**
150	3320066-0100		1	SETTING TOOL	**1-193**

Pos	Part No	UN	Qty	Description	Page No

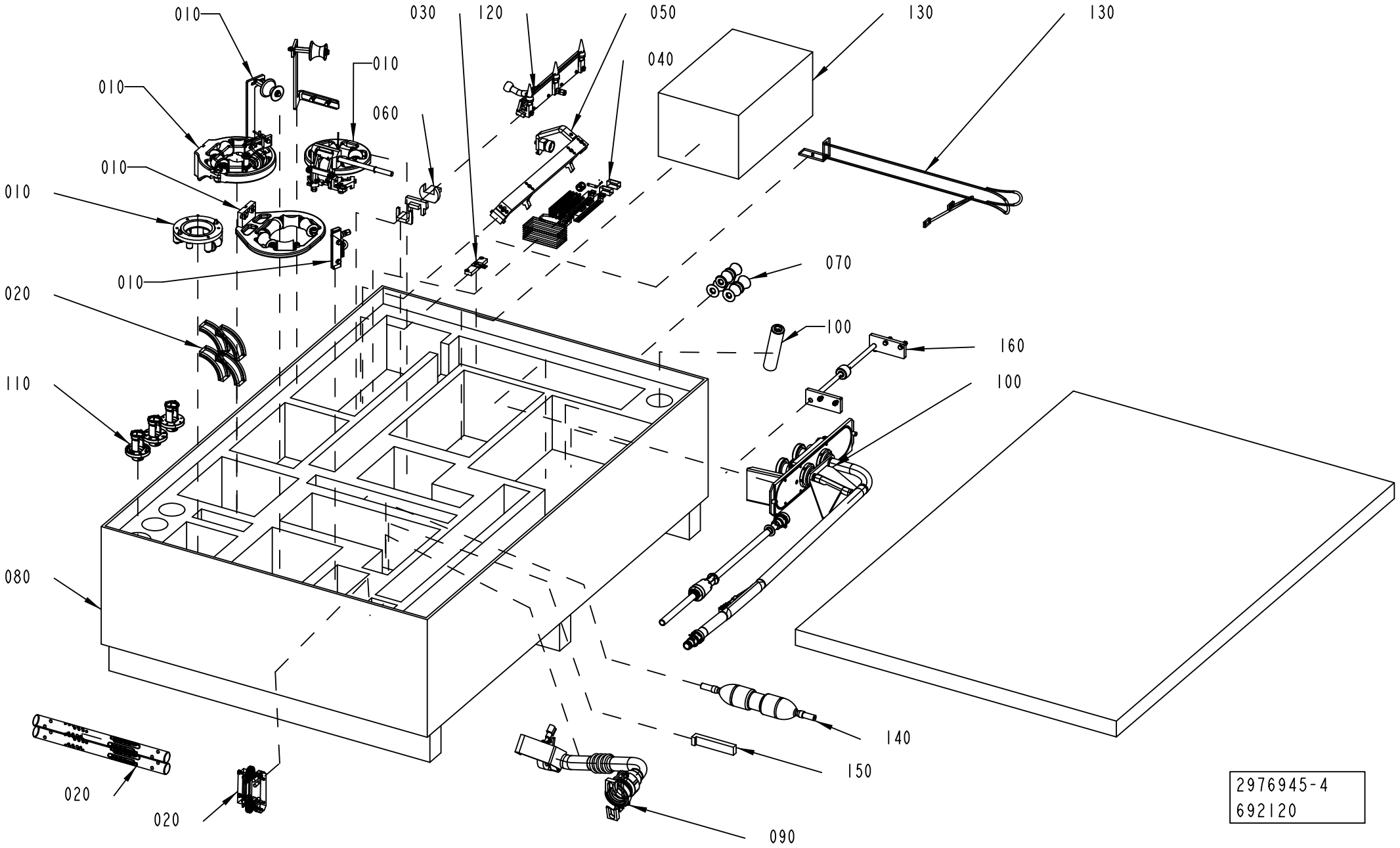
010
010
010
010
010
030
120
050
040
060
130
130
070
100
160
100
020
110
080
020
020
140
150
090
2976945-4
692120

ECM: 692703 - 20141001
Group number: 2976945-0200
Assembly Drawing: 2976945-4_1_AA

This list covers pages from 1-6 to 1-9

Pos	Part No	UN	Qty	Description	Page No
ST FM HVA NOPT					
110	2945430-0200		1	PRESSURE FLANGE	**1-11**
ST FM HVA PT/CF					
110	2945430-0200		1	PRESSURE FLANGE	**1-11**
130	3106811-0100		1	PT COMPACTFLEX HOLES	**1-13**
ST FM NOHVA PT/CF					
130	3106811-0100		1	PT COMPACTFLEX HOLES	**1-13**
TBA 0375S (See drawing on pages: 1-6, 1-8)					
160	3298664-0100		1	GUIDE ROLLER	**1-125**
Common Parts					
010	2808305-0200		1	FORMING SECTION	**1-127**
020	3190294-0100		1	ASU MODIFICATION	**1-165**
030	2906135-0200		1	TEMPLATE	**1-171**
040	2889626-0100		1	START-UP KIT	**1-173, 1-175**
050	2871510-0200		1	LS TEMPLATE	**1-177**
060	2889628-0100		1	SETTING TOOL	**1-179, 1-181**
070	2890357-0100		1	ROLLER	**1-161, 1-163**
080	2988051-0000		1	BOX 1 NOQC	
090	2839259-0100		1	CLEANING CUP	**1-183**
100	2839240-0200		1	FILLING PIPE	**1-185, 1-187**
120	2808340-0300		1	AIR NOZZLE	**1-189**
140	3320065-0100		1	ROLLER	**1-191**
150	3320066-0100		1	SETTING TOOL	**1-193**

Pos	Part No	UN	Qty	Description	Page No

PRESSURE FLANGE

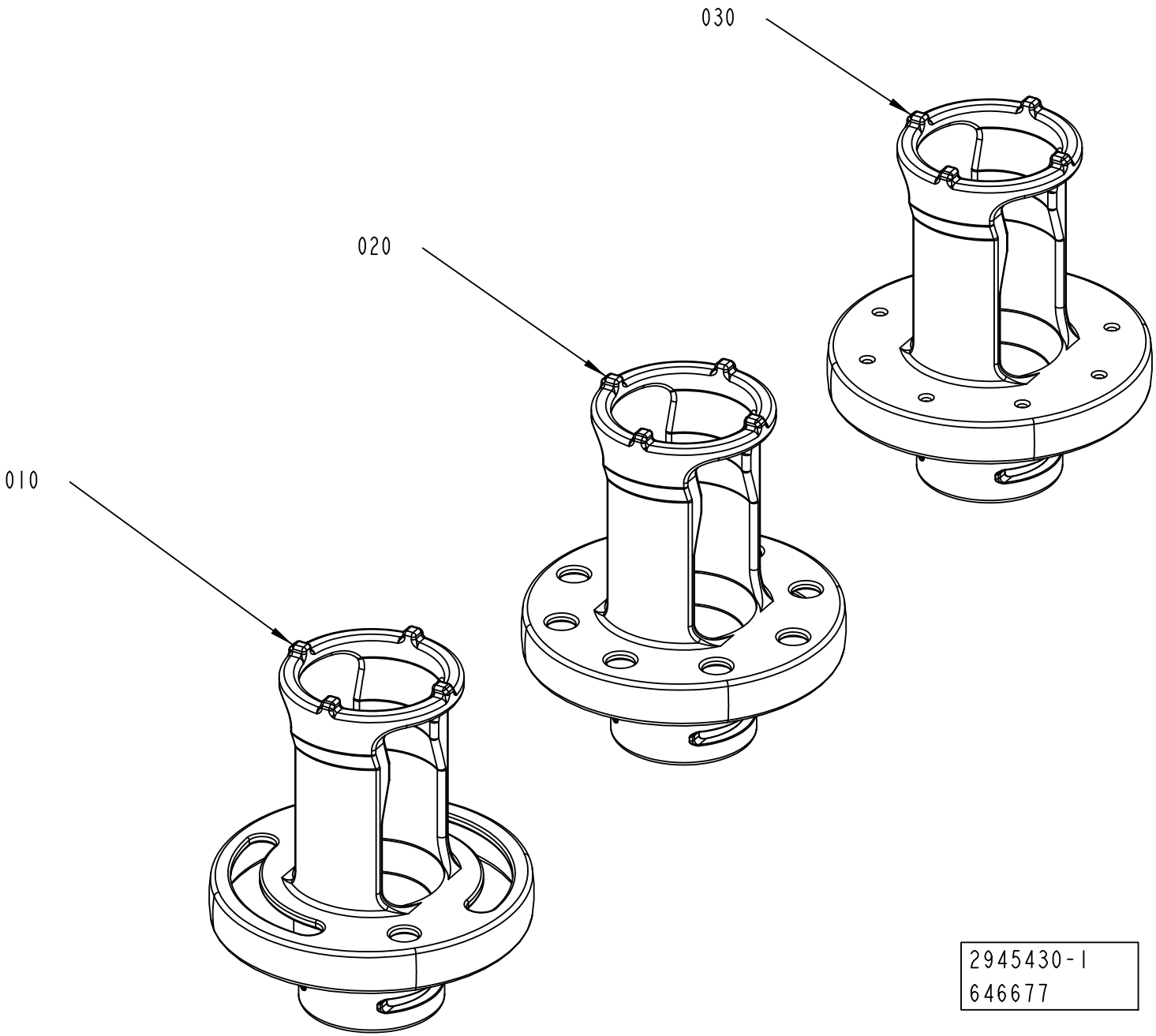

ECM: 646711 - 20140401
Group number: 2945430-0200
Assembly Drawing: 2945430-1_1_AA

Pos	Part No	UN	Qty	Description	Page No
TBA 0100B, TBA 0125S					
010	2966688-0000		1	PRESSURE FLANGE	
020	2966689-0000		1	PRESSURE FLANGE	
030	2966691-0000		1	PRESSURE FLANGE	
TBA 0160S, TBA 0200S, TB 0200S, TPA 0250SQ, TPA 0200SQ, TBA 0180S					
010	3076856-0000		1	PRESSURE FLANGE	
020	3076858-0000		1	PRESSURE FLANGE	
030	3076859-0000		1	PRESSURE FLANGE	
TBA 0200B, TBA 0200SQ, TBA 0250B, TBA 0330S					
010	2966681-0000		1	PRESSURE FLANGE	
020	2966682-0000		1	PRESSURE FLANGE	
030	2966683-0000		1	PRESSURE FLANGE	
TBA 0200M, TBA 0250S, TB 0200M, TBA 0200E, TBA 0250E					
010	3076857-0000		1	PRESSURE FLANGE	
020	3076860-0000		1	PRESSURE FLANGE	
030	3076861-0000		1	PRESSURE FLANGE	
TBA 0375S					
010	3089594-0000		1	PRESSURE FLANGE	
020	3089595-0000		1	PRESSURE FLANGE	
030	3089596-0000		1	PRESSURE FLANGE	
TPA 0330SQ					
010	3058527-0000		1	PRESSURE FLANGE	
020	3058528-0000		1	PRESSURE FLANGE	
030	3058529-0000		1	PRESSURE FLANGE	

Pos	Part No	UN	Qty	Description	Page No

Machine Type | Group Description | Used-In | Group Number | Page No

This page is intentionally left blank.

ECM: 535881 - 20120401
Group number: 3106811-0100
Assembly Drawing:

Pos	Part No	UN	Qty	Description	Page No
PT/CF					
	3220006-0101		1	UPDATE PAGES	
	3106812-0102		1	REBUILDING MANUAL	
010	3106813-0100		1	MECHANICAL REBUILDING	**1-15, 1-17, 1-19**
020	2564076-0100		1	START-UP KIT	**1-121**
030	2984535-0100		1	OPENING SPECIFICATION	**1-123**

Pos	Part No	UN	Qty	Description	Page No

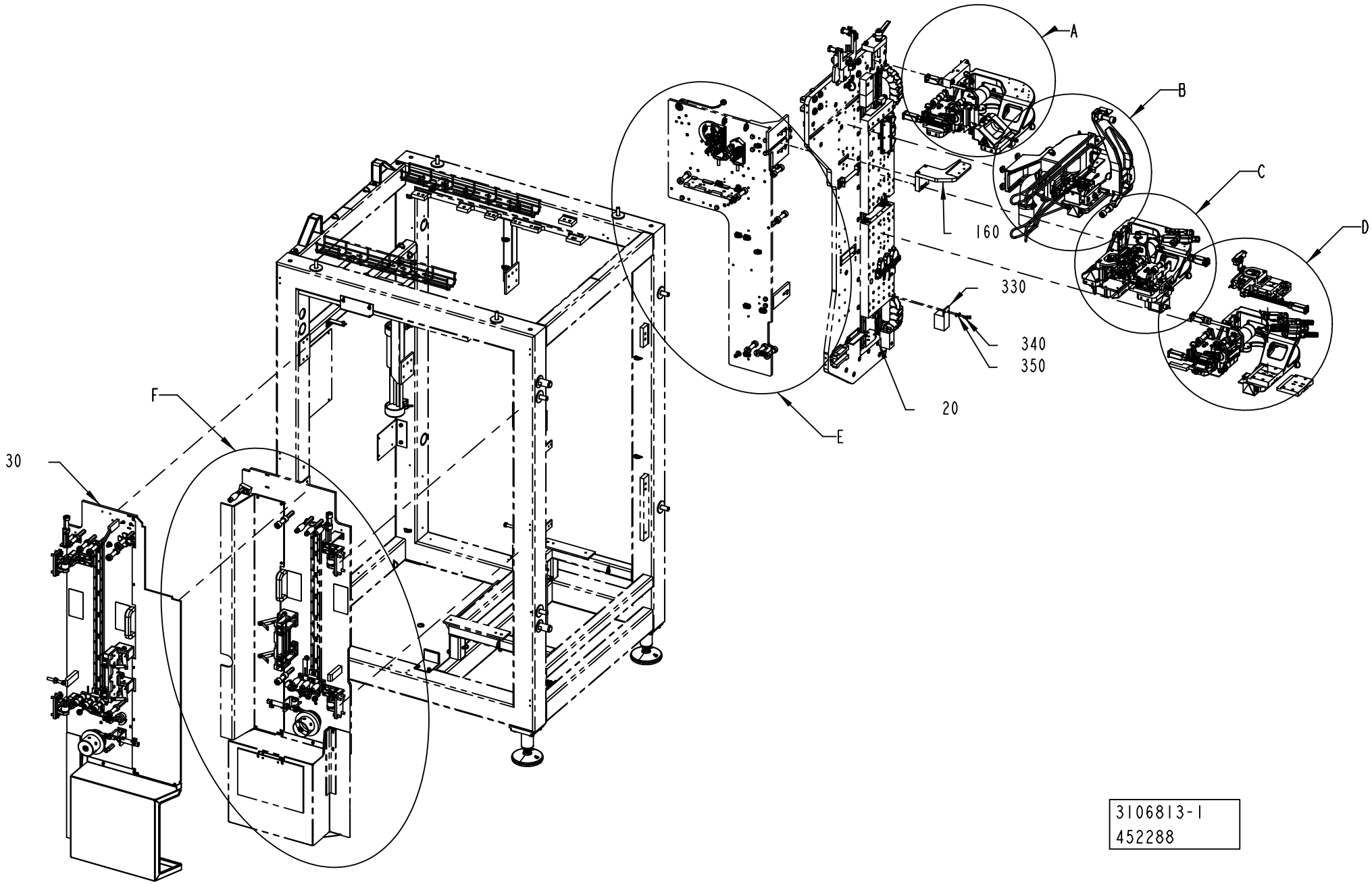
A
B
C
D
E
F
160
330
340
350
20
30
3106813-1
452288

ECM: 535882 - 20120401
Group number: 3106813-0100
Assembly Drawing: 3106813-1_1_AA

This list covers pages from 1-14 to 1-19

Pos	Part No	UN	Qty	Description	Page No
NO OUTER PATCH					
025	3106969-0100		1	PANEL	**1-21**
070	2546297-0100		1	OUTER PATCH FEEDER	**1-23**
120	2553327-0000		1	PLATE	
310	1548377-0000		1	PAPER GUIDE	
320	2525378-0000		1	PAPER GUIDE	
OUTER PATCH					
010	2963819-0300		1	OUTER PATCH APPLICATOR	**1-25**
020	3106864-0100		1	PANEL	**1-55**
030	2951583-0300		1	OUTER PATCH MAGAZINE	**1-59, 1-61, 1-63**
035	2869530-0100		1	OUTER PATCH MAGAZINE	**1-81**
110	1548368-0000		1	PLATE	
270	2693161-0100		1	INSTALLATION MATERIAL	**1-83**
300	2709603-0000		1	BOX	
320	2525378-0000		1	PAPER GUIDE	
330	2931715-0000		1	SPRING BRACKET	
340	312105-0366		2	SCREW, M6S ISO 4017 M6X12 A4 80	
350	315105-0153		2	WASHER PLAIN, 6,4X12X1,5 A4 BRB	
Common Parts					
040	2546278-0100		1	PUNCH UNIT	**1-87**
050	2564058-0100		1	TURNING DEVICE	**1-89**
080	2564059-0100		1	TAB FEEDER	**1-91**
090	2984539-0100		1	TAB FEEDER	**1-93**
100	2984541-0100		1	TAB C'JAW	**1-95**
130	2984544-0100		1	PATCH C'JAW	**1-97**
140	2511291-0100		1	PATCH FEEDER	**1-99**
150	2564060-0100		1	PATCH FEEDER	**1-101**
160	2773842-0100		1	BAR CODE READER	**1-103, 1-105**
200	2533684-0100		1	SPLICING TABLE	**1-107**
220	2533682-0100		1	BOBBIN HOLDER	**1-109**
230	2564057-0100		1	TAB MAGAZINE	**1-111**
240	2533681-0100		1	BOBBIN HOLDER	**1-113**
250	2533685-0100		1	SPLICING TABLE	**1-115**
260	2868038-0100		1	STRIP MAGAZINE	**1-117**
290	2710800-0100		1	PATCH MAGAZINE	**1-119**

Pos	Part No	UN	Qty	Description	Page No

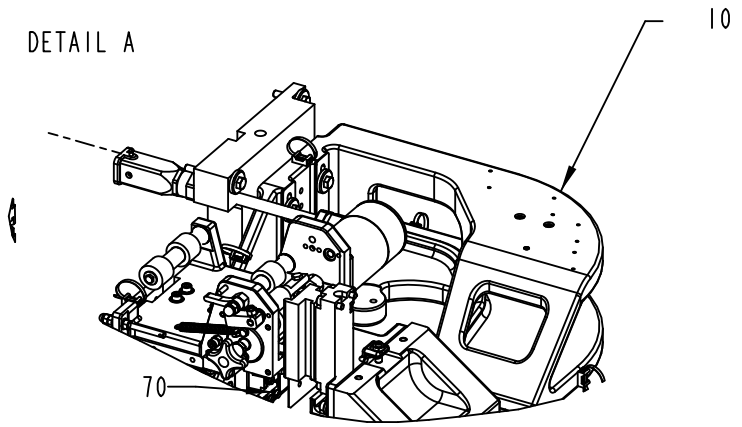

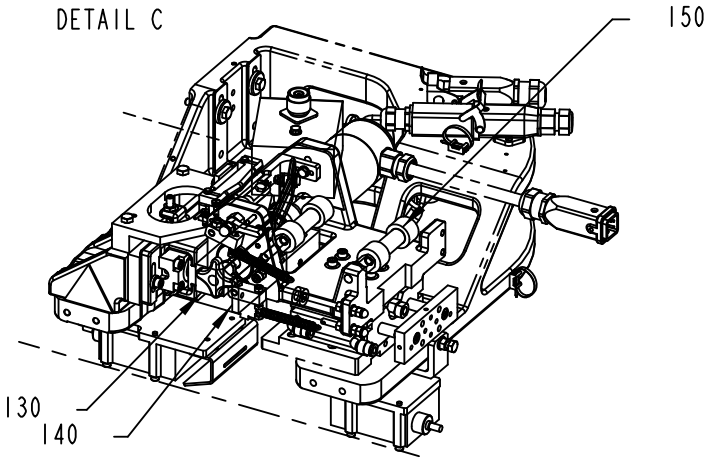

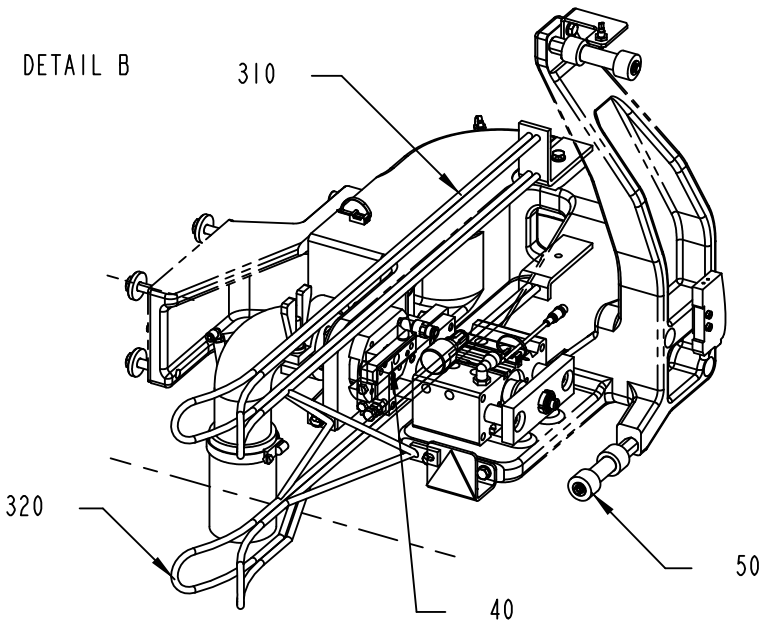

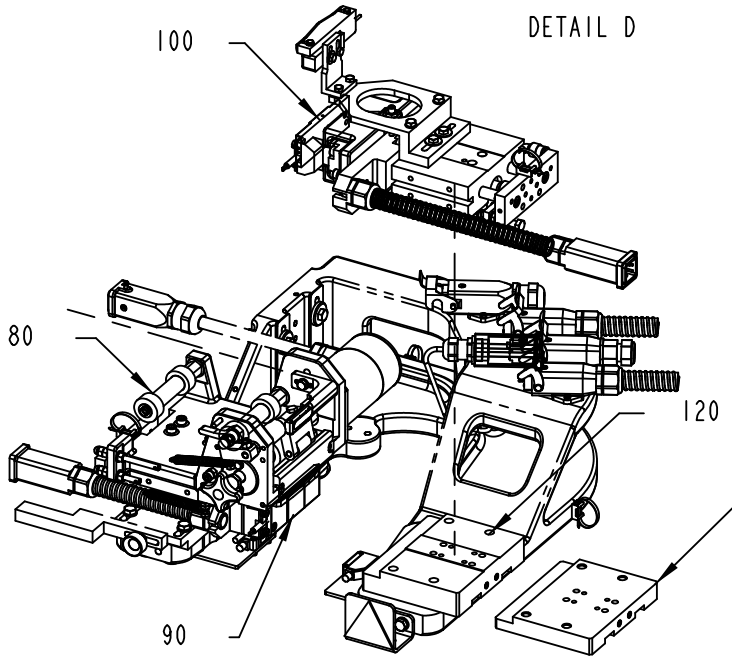

3106813-1
452288

ECM: 535882 - 20120401
Group number: 3106813-0100
Assembly Drawing: 3106813-1_2_AA

This list covers pages from 1-14 to 1-19

Pos	Part No	UN	Qty	Description	Page No
NO OUTER PATCH					
025	3106969-0100		1	PANEL	**1-21**
070	2546297-0100		1	OUTER PATCH FEEDER	**1-23**
120	2553327-0000		1	PLATE	
310	1548377-0000		1	PAPER GUIDE	
320	2525378-0000		1	PAPER GUIDE	
OUTER PATCH					
010	2963819-0300		1	OUTER PATCH APPLICATOR	**1-25**
020	3106864-0100		1	PANEL	**1-55**
030	2951583-0300		1	OUTER PATCH MAGAZINE	**1-59, 1-61, 1-63**
035	2869530-0100		1	OUTER PATCH MAGAZINE	**1-81**
110	1548368-0000		1	PLATE	
270	2693161-0100		1	INSTALLATION MATERIAL	**1-83**
300	2709603-0000		1	BOX	
320	2525378-0000		1	PAPER GUIDE	
330	2931715-0000		1	SPRING BRACKET	
340	312105-0366		2	SCREW, M6S ISO 4017 M6X12 A4 80	
350	315105-0153		2	WASHER PLAIN, 6,4X12X1,5 A4 BRB	
Common Parts					
040	2546278-0100		1	PUNCH UNIT	**1-87**
050	2564058-0100		1	TURNING DEVICE	**1-89**
080	2564059-0100		1	TAB FEEDER	**1-91**
090	2984539-0100		1	TAB FEEDER	**1-93**
100	2984541-0100		1	TAB C'JAW	**1-95**
130	2984544-0100		1	PATCH C'JAW	**1-97**
140	2511291-0100		1	PATCH FEEDER	**1-99**
150	2564060-0100		1	PATCH FEEDER	**1-101**
160	2773842-0100		1	BAR CODE READER	**1-103, 1-105**
200	2533684-0100		1	SPLICING TABLE	**1-107**
220	2533682-0100		1	BOBBIN HOLDER	**1-109**
230	2564057-0100		1	TAB MAGAZINE	**1-111**
240	2533681-0100		1	BOBBIN HOLDER	**1-113**
250	2533685-0100		1	SPLICING TABLE	**1-115**
260	2868038-0100		1	STRIP MAGAZINE	**1-117**
290	2710800-0100		1	PATCH MAGAZINE	**1-119**

Pos	Part No	UN	Qty	Description	Page No

DETAIL F

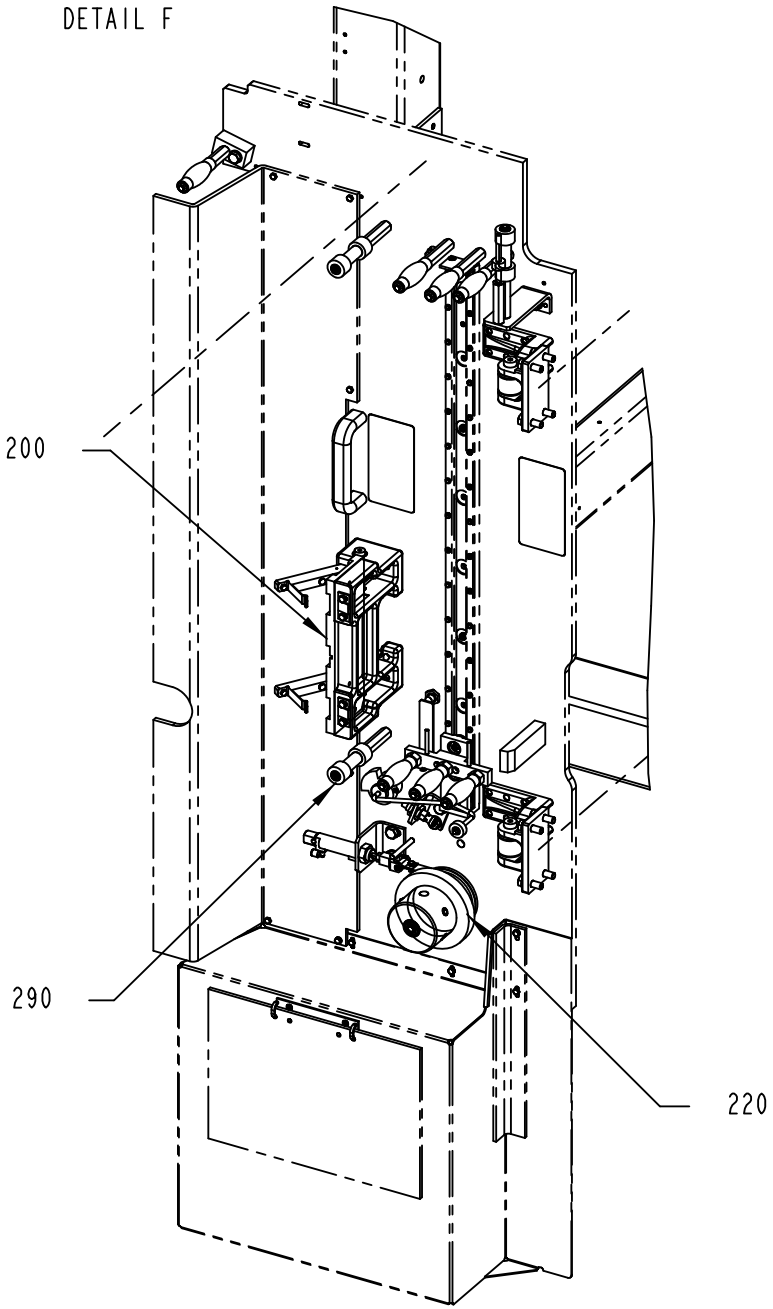

DETAIL E

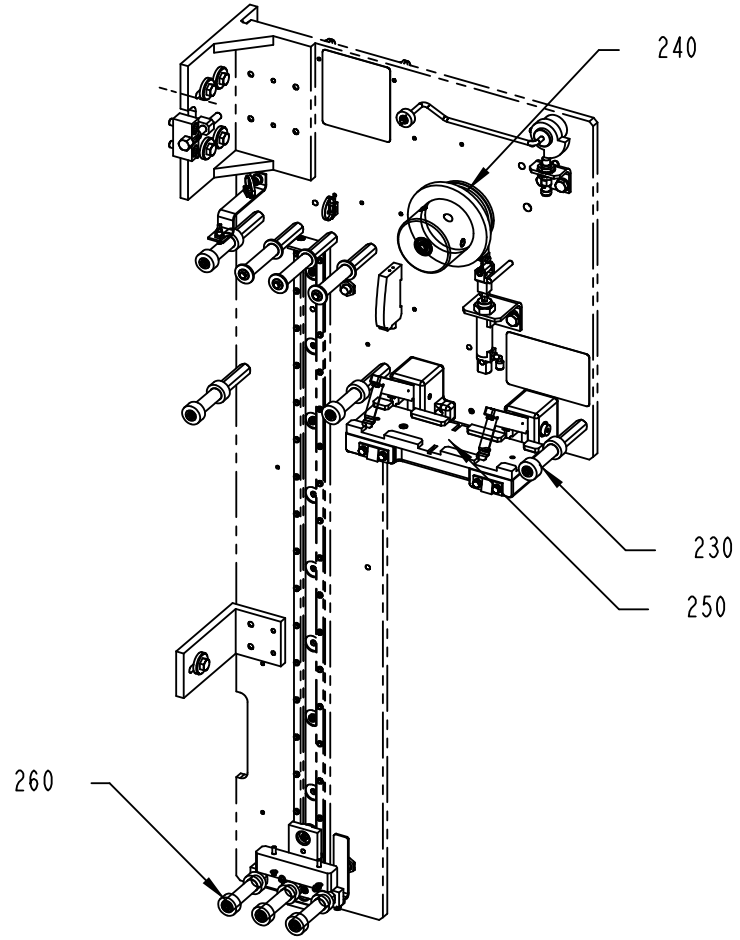

3106813-1
452288

Pos	Part No	UN	Qty	Description	Page No
NO OUTER PATCH					
025	3106969-0100		1	PANEL	**1-21**
070	2546297-0100		1	OUTER PATCH FEEDER	**1-23**
120	2553327-0000		1	PLATE	
310	1548377-0000		1	PAPER GUIDE	
320	2525378-0000		1	PAPER GUIDE	
OUTER PATCH					
010	2963819-0300		1	OUTER PATCH APPLICATOR	**1-25**
020	3106864-0100		1	PANEL	**1-55**
030	2951583-0300		1	OUTER PATCH MAGAZINE	**1-59, 1-61, 1-63**
035	2869530-0100		1	OUTER PATCH MAGAZINE	**1-81**
110	1548368-0000		1	PLATE	
270	2693161-0100		1	INSTALLATION MATERIAL	**1-83**
300	2709603-0000		1	BOX	
320	2525378-0000		1	PAPER GUIDE	
330	2931715-0000		1	SPRING BRACKET	
340	312105-0366		2	SCREW, M6S ISO 4017 M6X12 A4 80	
350	315105-0153		2	WASHER PLAIN, 6,4X12X1,5 A4 BRB	
Common Parts					
040	2546278-0100		1	PUNCH UNIT	**1-87**
050	2564058-0100		1	TURNING DEVICE	**1-89**
080	2564059-0100		1	TAB FEEDER	**1-91**
090	2984539-0100		1	TAB FEEDER	**1-93**
100	2984541-0100		1	TAB C'JAW	**1-95**
130	2984544-0100		1	PATCH C'JAW	**1-97**
140	2511291-0100		1	PATCH FEEDER	**1-99**
150	2564060-0100		1	PATCH FEEDER	**1-101**
160	2773842-0100		1	BAR CODE READER	**1-103, 1-105**
200	2533684-0100		1	SPLICING TABLE	**1-107**
220	2533682-0100		1	BOBBIN HOLDER	**1-109**
230	2564057-0100		1	TAB MAGAZINE	**1-111**
240	2533681-0100		1	BOBBIN HOLDER	**1-113**
250	2533685-0100		1	SPLICING TABLE	**1-115**
260	2868038-0100		1	STRIP MAGAZINE	**1-117**
290	2710800-0100		1	PATCH MAGAZINE	**1-119**

Pos	Part No	UN	Qty	Description	Page No

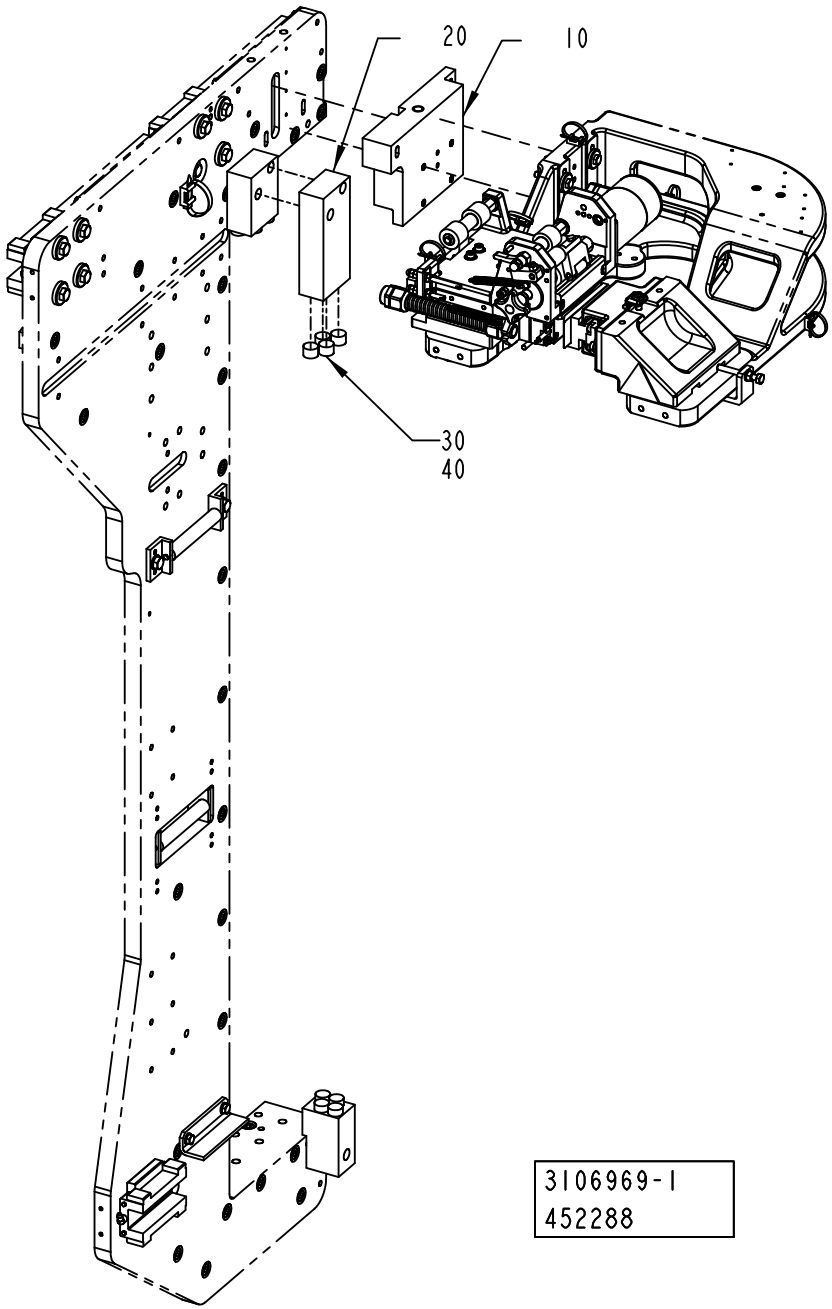
20
10
30
40
3106969-1
452288

ECM: 462862 - 20101002
Group number: 3106969-0100
Assembly Drawing: 3106969-1_1_AA

Pos	Part No	UN	Qty	Description	Page No
HOLE48					
010	2921028-0000		1	FASTENING BRACKET	
020	2837527-0000		1	SPRING BRACKET	
HOLE72					
010	2921028-0000		1	FASTENING BRACKET	
020	2837527-0000		1	SPRING BRACKET	
035	2715294-0000		1	TEMPLATE	
HOLE73					
010	2921029-0000		1	FASTENING BRACKET	
020	3017891-0000		1	SPRING BRACKET	
HOLE95, HOLE92					
020	2837527-0000		1	SPRING BRACKET	
Common Parts					
030	2837523-0000		4	SPRING	
040	90600-0386	L	1	ADHESIVE LOCTITE HYSOL 9455 , 250 GR	

Pos	Part No	UN	Qty	Description	Page No

OUTER PATCH FEEDER

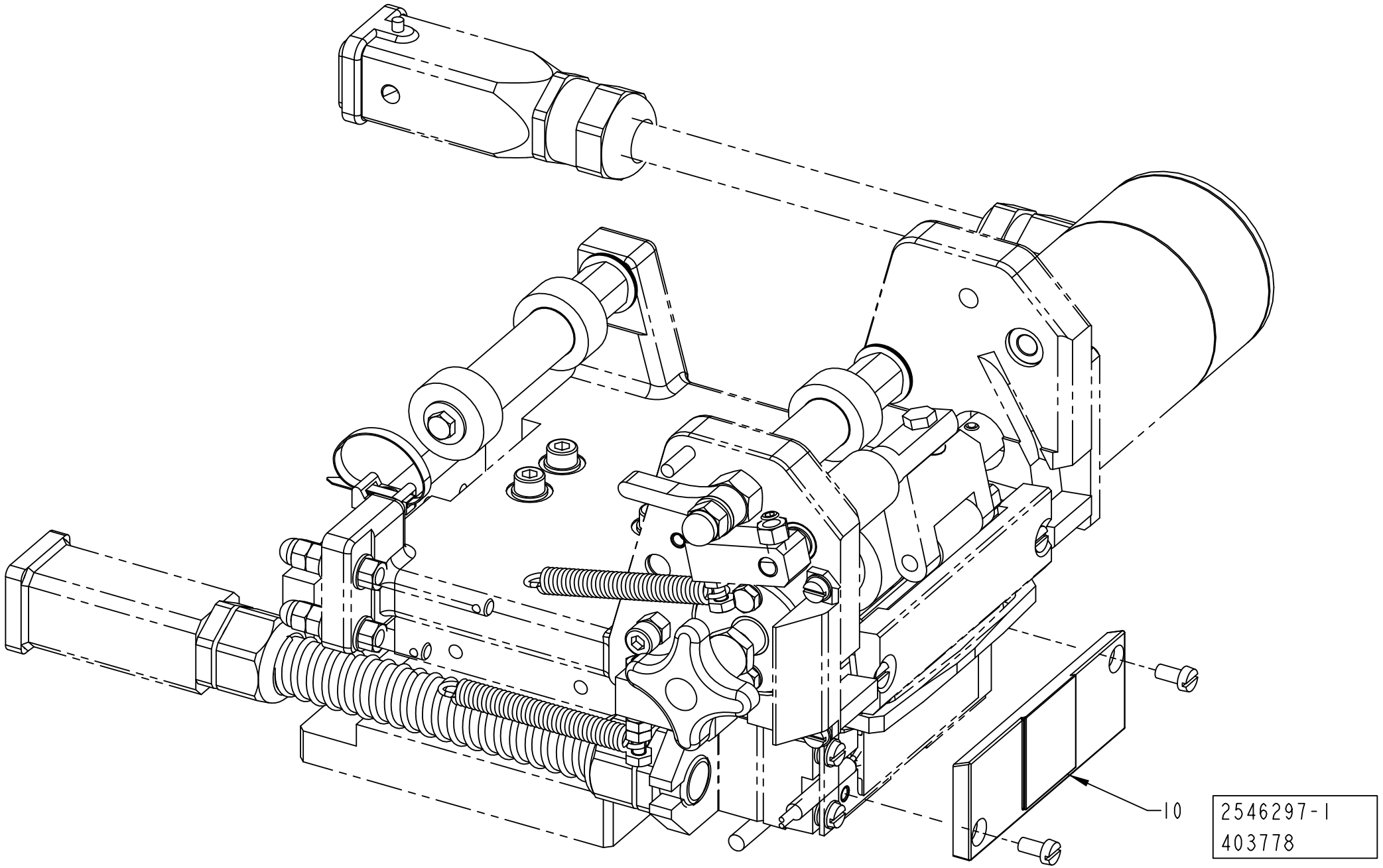

ECM: 409850 - 20090915
Group number: 2546297-0100
Assembly Drawing: 2546297-1_1_AC

Pos	Part No	UN	Qty	Description	Page No
HOLE48					
010	2511643-0000		1	SEALING PLATE	
HOLE72					
010	2504616-0000		1	SEALING PLATE	
HOLE73					
010	3022744-0000		1	SEALING PLATE	

Pos	Part No	UN	Qty	Description	Page No

OUTER PATCH APPLICATOR

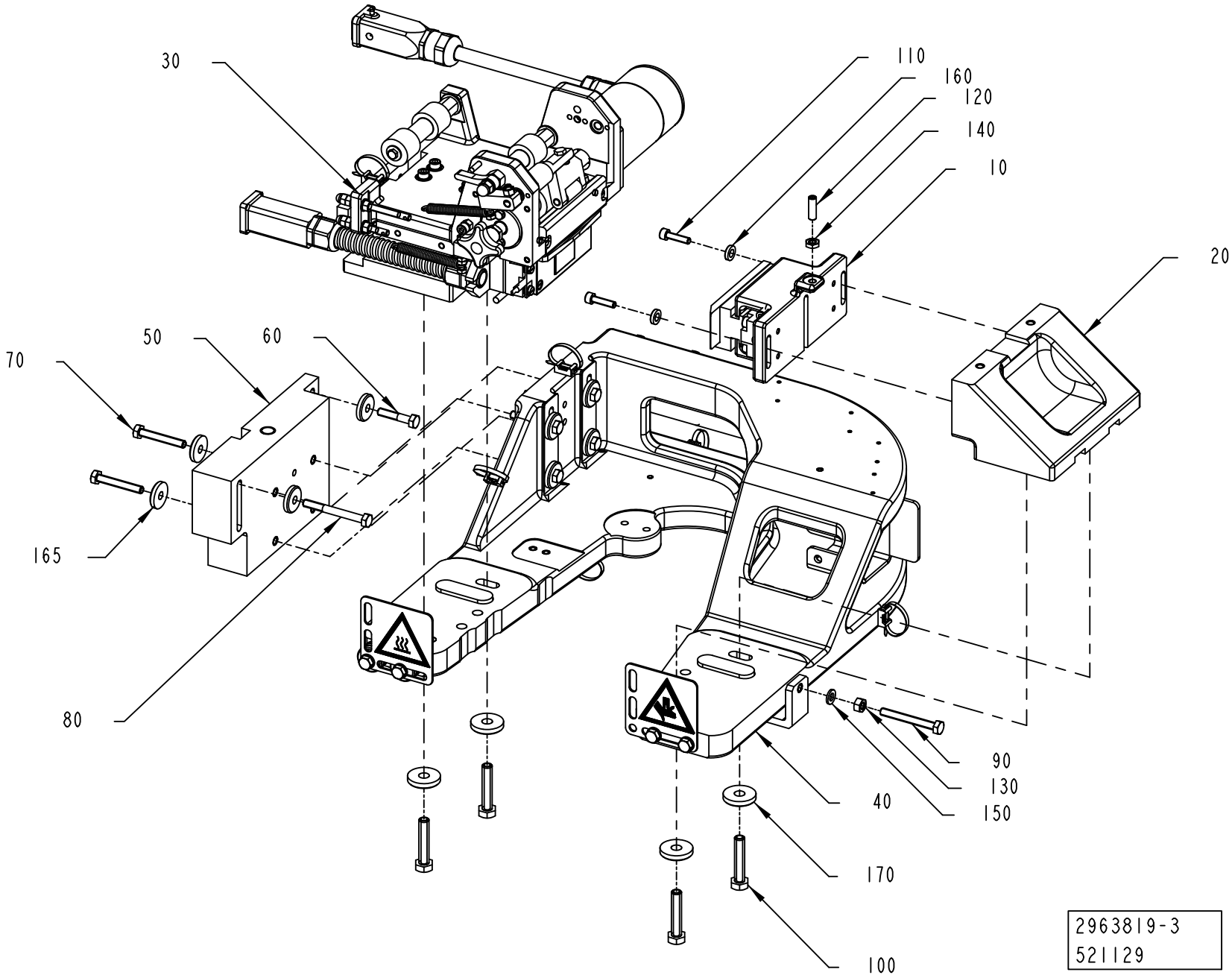

ECM: 523287 - 20120401
Group number: 2963819-0300
Assembly Drawing: 2963819-3_1_AA

Pos	Part No	UN	Qty	Description	Page No
HOLE72, HOLE48					
050	2921028-0000		1	FASTENING BRACKET	
HOLE73					
050	2921029-0000		1	FASTENING BRACKET	
Common Parts					
010	2837535-0100		1	SEALING UNIT	**1-27**
020	2546296-0100		1	OUTER PATCH C'JAW	**1-31**
030	3042196-0200		1	OUTER PATCH FEEDER	**1-33**
040	2963820-0200		1	MOUNTING BRACKET	**1-45**
060	312105-0374		1	SCREW, M6S ISO 4014 M6X30 A4 80	
070	312109-0378		2	SCREW, M6S ISO 4017 M6X40 A4 80	
080	312105-0381		1	SCREW, M6S ISO 4014 M6X55 A4 80	
090	312109-0380		1	SCREW, M6S ISO 4017 M6X50 A4 80	
100	312109-0459		4	SCREW, M6S ISO 4017 M8X40 A4 80	
110	312115-0331		2	SCREW ISO4762 M5X20 A4 80	
120	312318-0370		1	SET SCREW, CUP END ISO4029 M6X20 A4	
130	312605-0316		1	HEXAGON NUT, M6M M6 A280	
140	312625-0316		1	HEXAGON THIN NUT, EN 24035 ML6M M6 A4	
150	315105-0153		1	WASHER PLAIN, 6,4X12X1,5 A4 BRB	
160	315115-0153		2	WASHER PLAIN, TBRB 6,4/12 H=3	
165	315125-0153		4	WASHER HIGH, TBRSB 6,4X22X4 A4	
170	315125-0165		4	WASHER HIGH, TBRSB 8,4X26X5 A4	

Pos	Part No	UN	Qty	Description	Page No

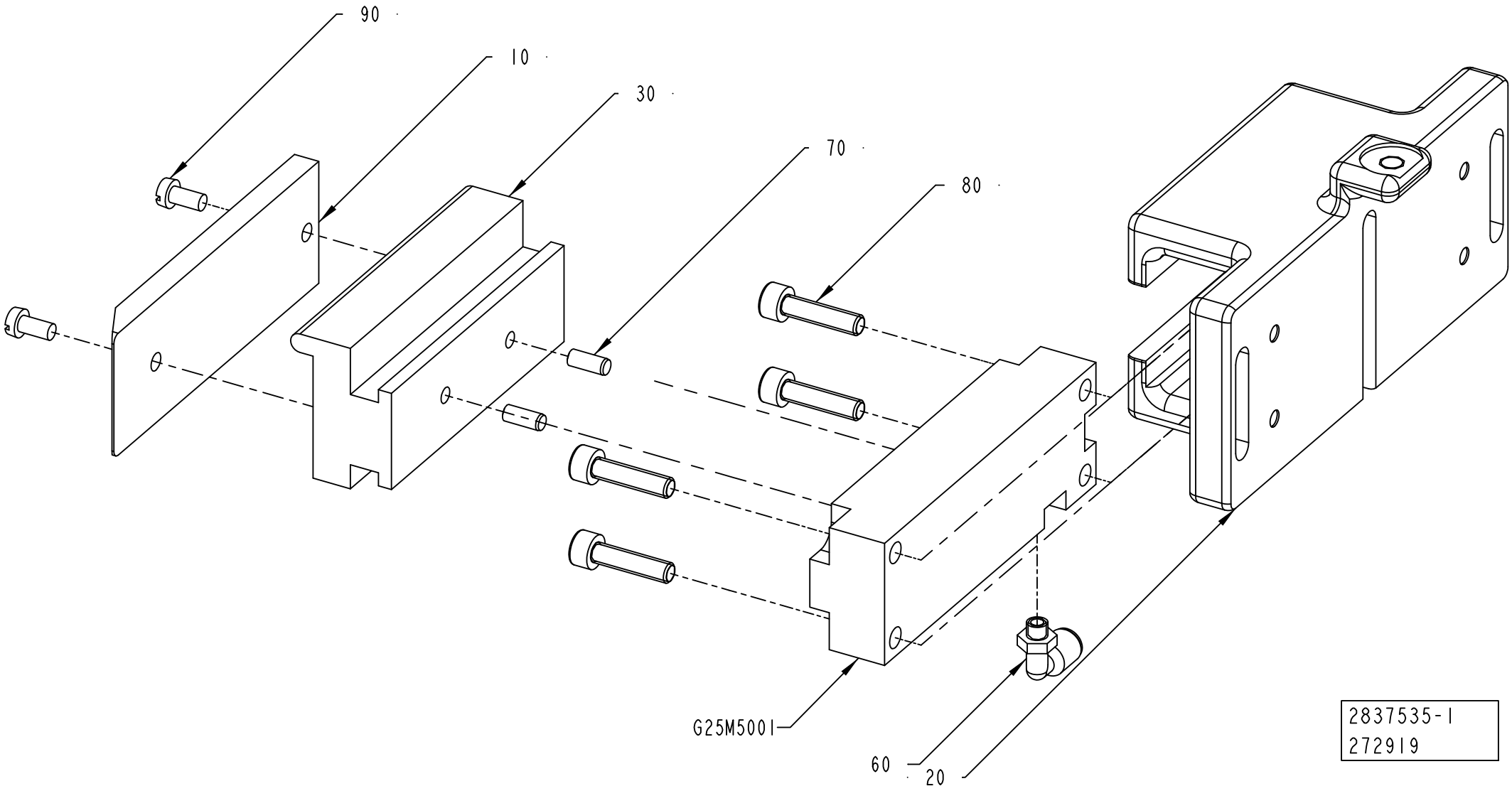
90
10
30
70
80
G25M5001
60
20
2837535-1
272919

ECM: 274091 - 20061101
Group number: 2837535-0100
Assembly Drawing: 2837535-1_1_AA

Pos	Part No	UN	Qty	Description	Page No
-					
010	2546294-0100		1	OUTER PATCH C'JAW	**1-29**
020	1498496-0000		1	GUIDE	
030	1498115-0000		1	BLOCK	
060	90458-2954		1	ELBOW PIPE JOINT, EXT.THREAD, D=4MM M5	
070	311103-0267		2	PARALLEL PIN ISO 2338 4M6X10 A1	
080	312115-0331		4	SCREW ISO4762 M5X20 A4 80	
090	312125-0287		2	SLOTTED HEAD SCREW, ISO1207 M4X8 A4	
G25M5001	90450-0380		1	SINGLE ACTING, PANCAKE EV-20/75-5	

Pos	Part No	UN	Qty	Description	Page No

OUTER PATCH C'JAW

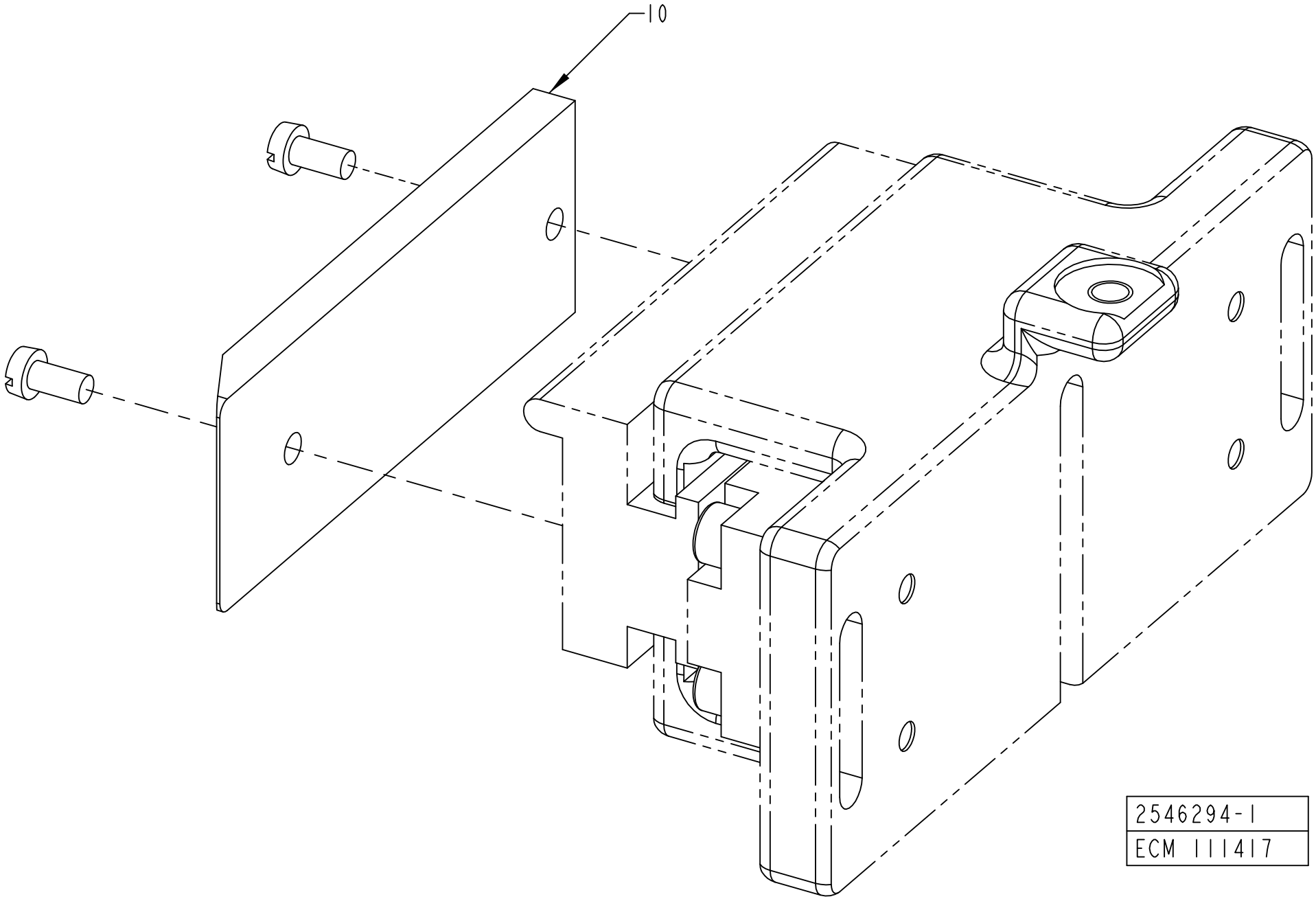

ECM: 409845 - 20090915
Group number: 2546294-0100
Assembly Drawing: 2546294-1_1_AA

Pos	Part No	UN	Qty	Description	Page No
HOLE72, HOLE48, HOLE73					
010	2546303-0000		1	SEALING PLATE	

Pos	Part No	UN	Qty	Description	Page No

Machine Type | Group Description | Used-In | Group Number | Page No

Used in group:
2963819-0300 Pos. 020

OUTER PATCH C'JAW

Drawing file: 2546296-1_1_AA.hpgl

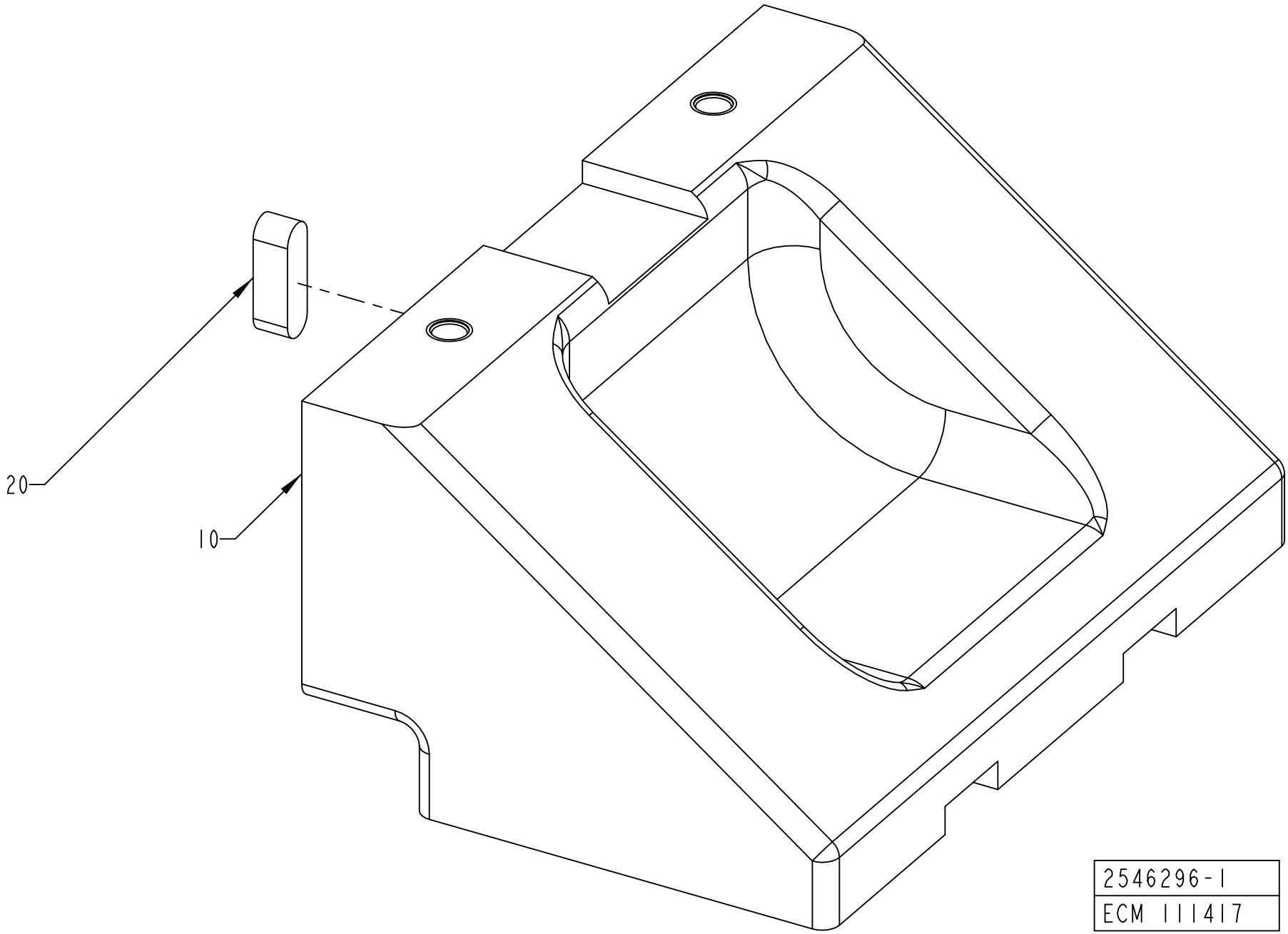

ECM: 185957 - 20041005
Group number: 2546296-0100
Assembly Drawing: 2546296-1_1_AA

Pos	Part No	UN	Qty	Description	Page No
-					
010	1498113-0000		1	BRACKET	
020	315705-0232		1	PARALLEL KEY W. ROUND ENDS, 6X6X20 MM	

Pos	Part No	UN	Qty	Description	Page No

OUTER PATCH FEEDER

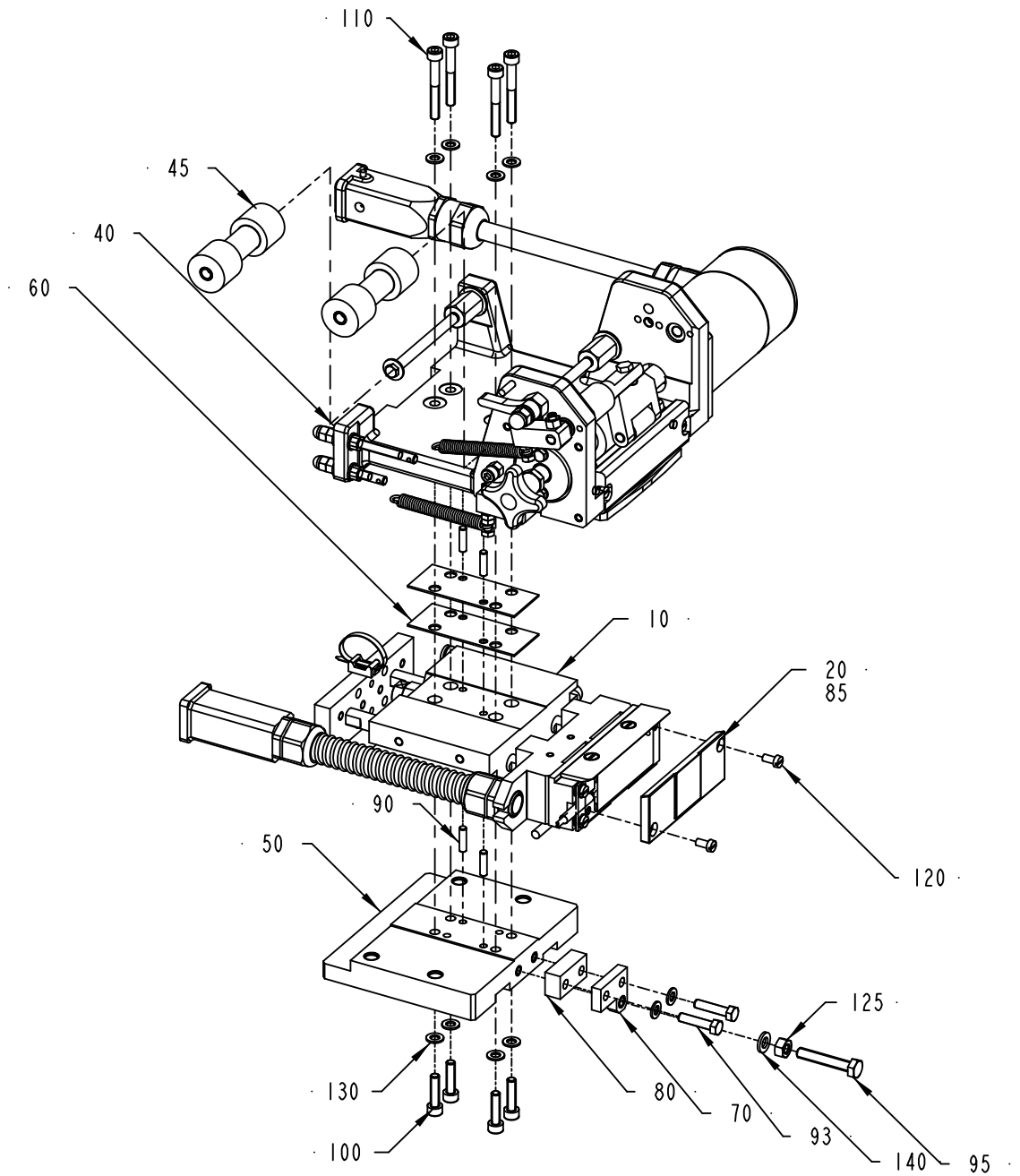

3042196-2
521129

ECM: 523285 - 20120401
Group number: 3042196-0200
Assembly Drawing: 3042196-2_1_AA

Pos	Part No	UN	Qty	Description	Page No
-					
010	2837538-0200		1	SEALING UNIT	**1-35**
020	2546297-0100		1	OUTER PATCH FEEDER	**1-23**
040	3042197-0200		1	OUTER PATCH FEEDER	**1-37**
045	2564061-0100		1	OUTER PATCH FEEDER	**1-43**
050	1548368-0000		1	PLATE	
060	2533680-0000		2	SHIM	
070	2511313-0000		1	BRACKET	
080	2710802-0000		1	SPACER	
085	90298-0033		1	WATLUBE HEAT LIQUID	
090	311101-0270		2	PARALLEL PIN ISO 2338 4H6X16 ST	
093	312105-0331		2	SCREW, M6S ISO 4017 M5X20 A4 80	
095	312109-0376		1	SCREW, M6S ISO 4017 M6X35 A4 80	
100	312115-0331		4	SCREW ISO4762 M5X20 A4 80	
110	312115-0339		4	SCREW ISO4762 M5X40 A4 80	
120	312125-0287		2	SLOTTED HEAD SCREW, ISO1207 M4X8 A4	
125	312605-0316		1	HEXAGON NUT, M6M M6 A280	
130	315105-0146		10	WASHER PLAIN, 5,3X10X1 A4 BRB	
140	315105-0153		1	WASHER PLAIN, 6,4X12X1,5 A4 BRB	

Pos	Part No	UN	Qty	Description	Page No

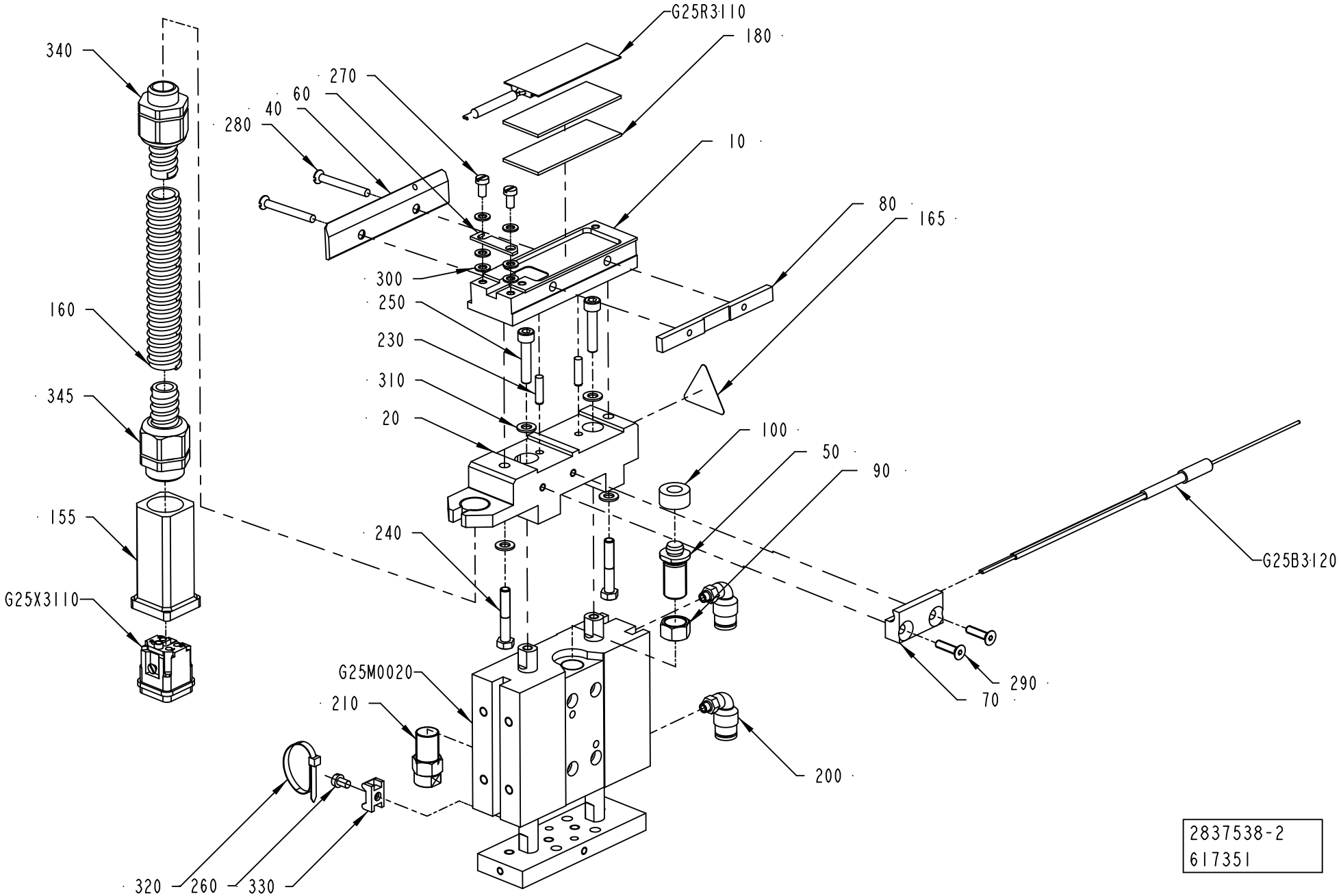

2837538-2
617351

ECM: 619011 - 20131001
Group number: 2837538-0200
Assembly Drawing: 2837538-2_1_AB

Pos	Part No	UN	Qty	Description	Page No
-					
010	1519364-0000		1	INSULATING RAIL	
020	2737447-0000		1	HOLDER	
040	1519379-0000		1	FLAT KNIFE	
050	2512836-0000		1	STOP SCREW	
060	1349916-0000		1	CLAMP	
070	1478479-0000		1	HOLDER	
080	1487264-0000		1	PLATE	
090	2525377-0000		1	NUT	
100	2526700-0000		1	SPRING	
155	90459-3670		1	HOOD, HAN3A, 19 20 003 1440	
160	90152-0059	M	1	HOSE, SPIRAL CONDUIT, 18X12, UL 1211	
165	90194-0143		1	WARNING SIGN ISO, HOT SURFACE	
180	90411-0018		2	INSULATOR, ALU-SILICATE HM 15643	
200	90458-2164		2	ELBOW PIPE JOINT, EXT.THREAD,D=6MM M5	
210	90600-5982		1	ADJ. MECH. STOP M12X1, FOR CYL. 2711	
230	311103-0270		2	PARALLEL PIN ISO 2338 4M6X16 A1	
240	312105-0335		2	SCREW, M6S ISO 4014 M5X30 A4 80	
250	312115-0333		2	SCREW ISO4762 M5X25 A4 80	
260	312125-0285		1	SLOTTED HEAD SCREW, ISO1207 M4X6 A4	
270	312125-0287		2	SLOTTED HEAD SCREW, ISO1207 M4X8 A4	
280	312145-0301		2	SCREW ISO 2009 MFS M4X35 A4	
290	312155-0293		2	SCREW DIN 7991 MF6S M4X16 A4 70	
300	315105-0136		6	WASHER PLAIN, 4,3X8X0,8 A4 BRB	
310	315105-0146		4	WASHER PLAIN, 5,3X10X1 A4 BRB	
320	352113-0101		1	CABLE TIE,BLACK 92X	
330	352113-0205		1	ANCHOR PLATES FOR STRIPS, TM2S8-C100	
340	90458-0427		1	GLAND FITTING, VK 21652YUL11	
345	90458-0428		1	GLAND FITTING, VK 22052YUL11	
G25B3120	344301-0160		1	THERMOCOUPLE, 5110160-001	
G25M0020	90603-5291		1	CYLINDER WITH INT. GUIDING BORE 25	
G25R3110	90600-2602		1	THERMOFOIL HEATER, HM15643	
G25X3110	90459-6821		1	MALE INSERT HAN 4A, 0920 0042 611	

Pos	Part No	UN	Qty	Description	Page No

Machine Type | Group Description | Used-In | Group Number | Page No

OUTER PATCH FEEDER

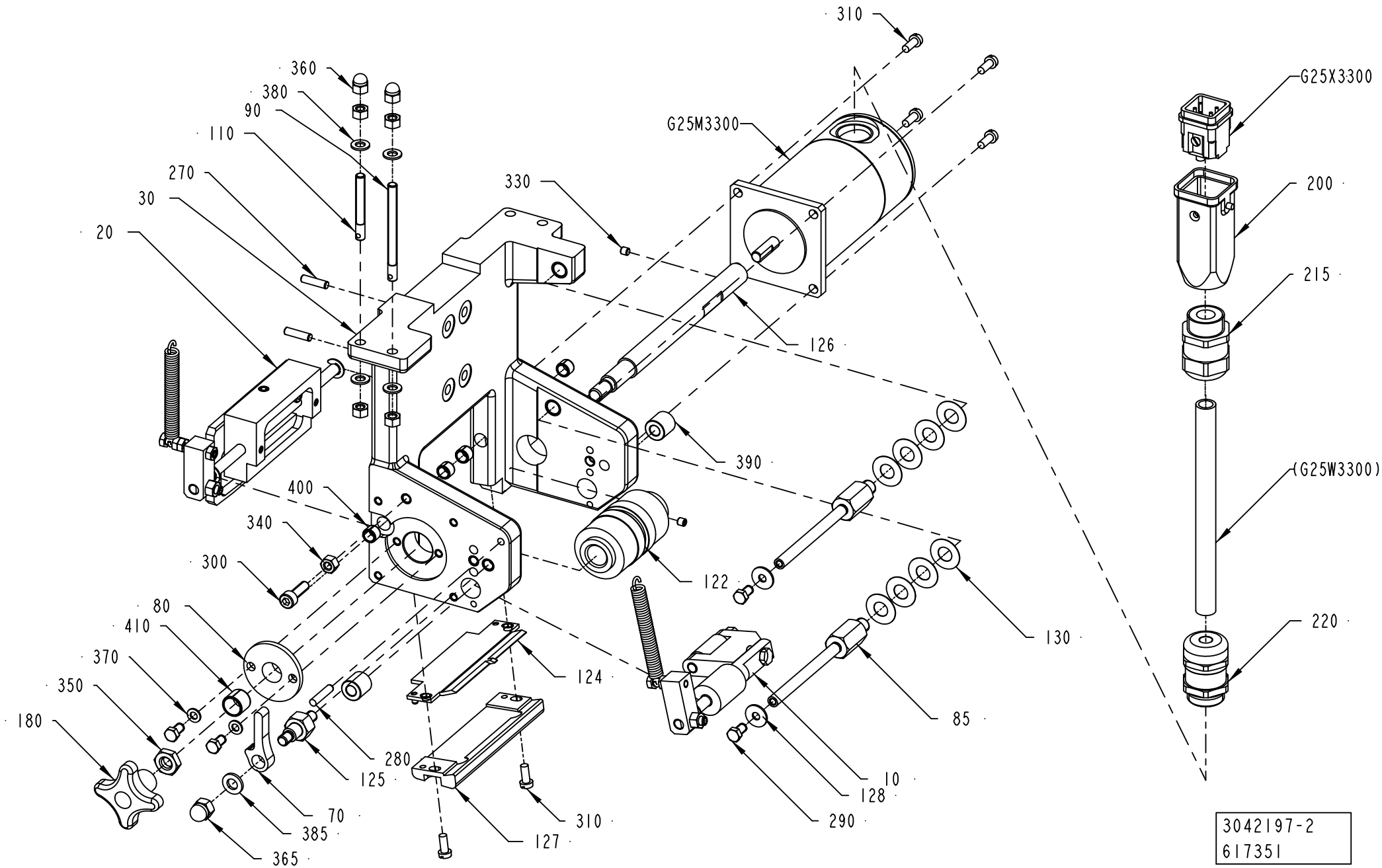

ECM: 619076 - 20131001
Group number: 3042197-0200
Assembly Drawing: 3042197-2_1_AB

Pos	Part No	UN	Qty	Description	Page No
-					
010	1558230-0200		1	COUNTER ROLLER	**1-39**
020	1558231-0100		1	KNIFE	**1-41**
030	2746416-0000		1	BRACKET	
070	1498704-0000		1	LEVER	
080	1140548-0000		1	FLANGED BEARING BUSHING	
085	1519544-0000		2	SHAFT	
090	1519996-0000		1	SHAFT	
110	1538231-0000		1	SHAFT	
122	2887701-0000		1	ROLLER	
124	2887897-0000		1	GUIDE	
125	2587325-0000		1	SHAFT	
126	2564064-0000		1	SHAFT	
127	2887775-0000		1	STRIP GUIDE	
128	2033-0005		2	WASHER	
130	2033-0008		8	WASHER	
180	90051-0007		1	STELLAR KNOB, INT. THREAD, NO. 40	
200	90459-7222		1	HOOD, TOP ENTRY, 3A, 19 20 003 0420	
215	90458-0307		1	CABLE GLAND, M20X1,5, 5311 1020	
220	344202-0003		1	CABLE GLAND; MS-SC-M, 7-12,5MM, M20X1,5	
270	311101-0270		2	PARALLEL PIN ISO 2338 4H6X16 ST	
280	311101-0272		1	PARALLEL PIN ISO 2338 4H6X20 ST	
290	312105-0287		4	SCREW, M6S ISO 4017 M4X8 A4 70	
300	312115-0329		1	SCREW ISO4762 M5X16 A4 80	
310	312125-0289		6	SCREW	
330	312318-0283		2	SET SCREW, CUP END ISO4029 M4X4 A4	
340	312605-0314		5	HEXAGON NUT, M6M M5 A280	
350	312621-0318		1	ROD END,NUT M8	
360	312705-0314		2	NUT HEX. DOMED CAP MHM-6 M5 A280	
365	312705-0316		1	HEX. DOMED CAP MHM-6 M6 A280	
370	315105-0136		2	WASHER PLAIN, 4,3X8X0,8 A4 BRB	
380	315105-0146		4	WASHER PLAIN, 5,3X10X1 A4 BRB	
385	315105-0153		1	WASHER PLAIN, 6,4X12X1,5 A4 BRB	
390	321105-0127		2	BUSHING W/O FLANGE, 6/12X12 MM	
400	321141-0060		4	BEARING BUSHING, 6X8X6 MM	
410	321141-0140		1	BEARING BUSHING, 10X12X10 MM	
G25M3300	90458-0523		1	STEP MOTOR, SM 56.2.18J3 Z(202)	
G25X3300	90459-6821		1	MALE INSERT HAN 4A, 0920 0042 611	

Pos	Part No	UN	Qty	Description	Page No

Machine Type	Group Description	Used-In	Group Number	Page No

COUNTER ROLLER

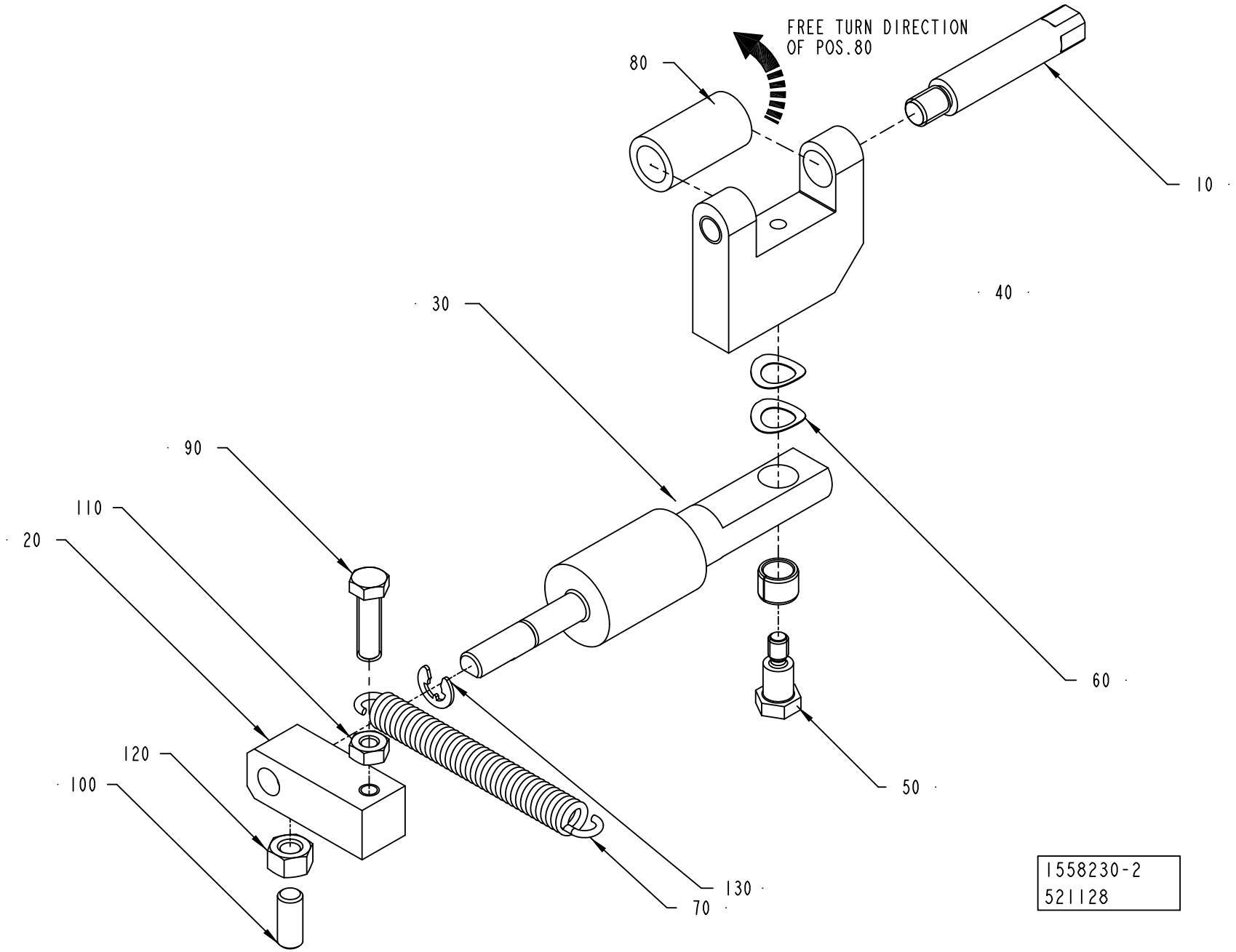

ECM: 523197 - 20120401
Group number: 1558230-0200
Assembly Drawing: 1558230-2_1_AA

Pos	Part No	UN	Qty	Description	Page No
-					
010	905413-0000		1	SHAFT	
020	1519543-0000		1	HOLDER	
030	1523168-0000		1	SHAFT	
040	1523169-0000		1	BRACKET	
050	905415-0000		1	SHAFT	
060	90600-2603		2	SPRING WASHER, CURVED 6,83X10,74X0,17 MM	
070	90600-2604		1	TENSION SPRING, EO300-055-2500-S	
080	90603-4573		1	FREE-WHEEL COUPLING, 8X12 MM	
090	312105-0293		1	SCREW, M6S ISO 4017 M4X16 A4 70	
100	312318-0327		1	SET SCREW, CUP END ISO4029 M5X12 A4	
110	312605-0312		1	HEXAGON NUT, M6M M4 A280	
120	312605-0314		1	HEXAGON NUT, M6M M5 A280	
130	315755-0106		1	RETAINING RING SHAFT DIN 6799 4 SS	
140	321141-0060		1	BEARING BUSHING, 6X8X6 MM	

Pos	Part No	UN	Qty	Description	Page No

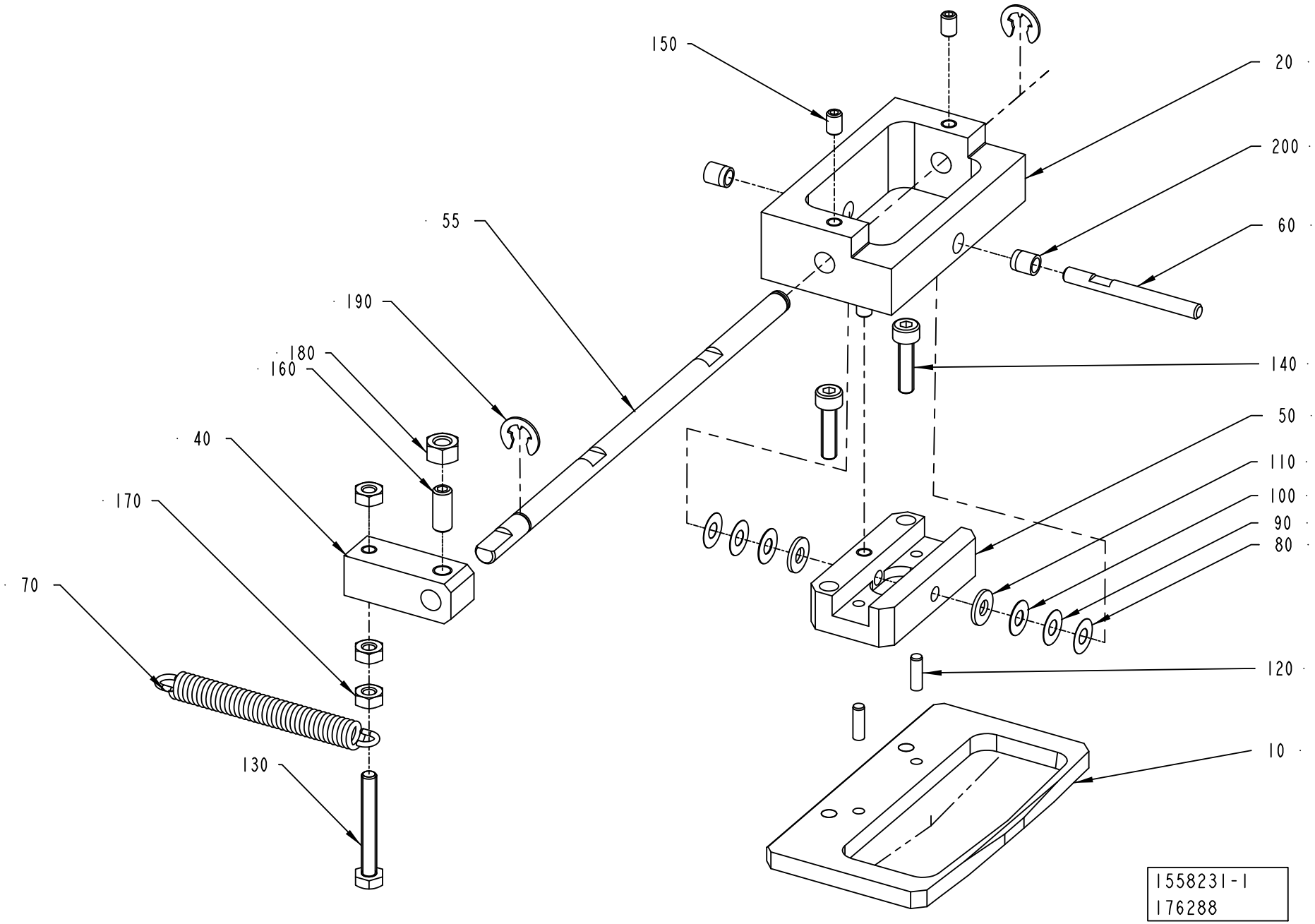
150
20
200
60
55
190
180
160
140
40
50
110
170
100
90
80
70
120
130
10
1558231-1
176288

ECM: 335703 - 20080401
Group number: 1558231-0100
Assembly Drawing: 1558231-1_1_AC

Pos	Part No	UN	Qty	Description	Page No
-					
010	2500097-0000		1	KNIFE SUPPORT	
020	1519365-0000		1	PIVOT PLATE	
040	1519543-0000		1	HOLDER	
050	1523159-0000		1	PIVOT PLATE	
055	2564066-0000		1	SHAFT	
060	1523160-0000		1	PIN	
070	90600-2604		1	TENSION SPRING, EO300-055-2500-S	
080	1350785-0001		1	SHIM	
090	1350785-0002		1	SHIM	
100	1350785-0003		1	SHIM	
110	1350785-0004		1	SHIM	
120	311103-0233		2	PARALLEL PIN ISO 2338 3M6X10 A1	
130	312105-0299		1	SCREW, M6S ISO 4017 M4X30 A4 70	
140	312115-0293		2	SCREW ISO4762 M4X16 A4 80	
150	312318-0285		3	SET SCREW, CUP END ISO4029 M4X6 A4	
160	312318-0327		1	SET SCREW, CUP END ISO4029 M5X12 A4	
170	312605-0312		3	HEXAGON NUT, M6M M4 A280	
180	312605-0314		1	HEXAGON NUT, M6M M5 A280	
190	315755-0107		2	RETAINING RING SHAFT DIN 6799 5 SS	
200	321141-0040		2	BEARING BUSHING, 4X5,5X6 MM	

Pos	Part No	UN	Qty	Description	Page No

OUTER PATCH FEEDER

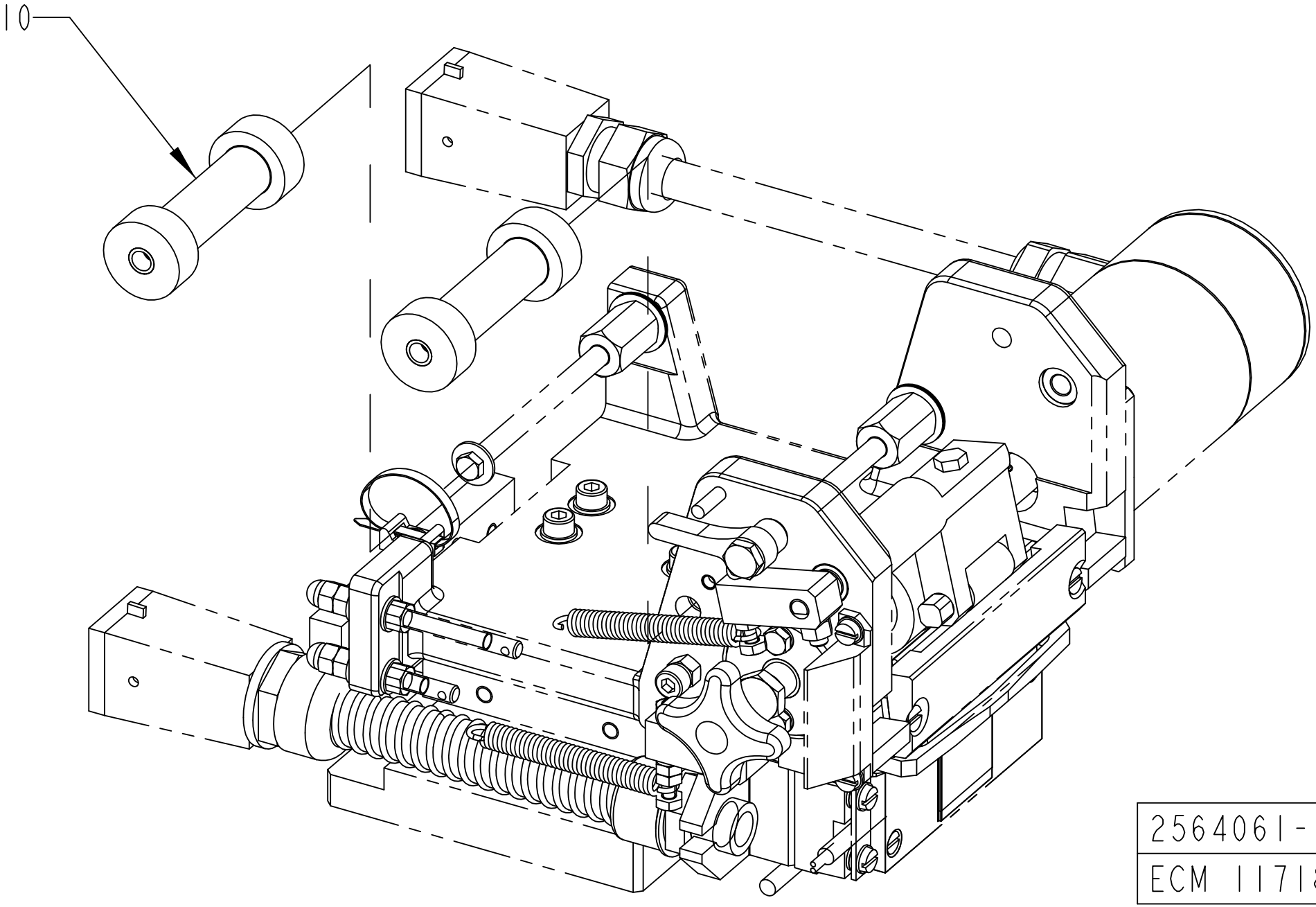

2564061-1
ECM 117180

ECM: 409846 - 20090915
Group number: 2564061-0100
Assembly Drawing: 2564061-1_1_AA

Pos	Part No	UN	Qty	Description	Page No
HOLE72, HOLE48, HOLE73					
010	2564044-0004		2	ROLLER	

Pos	Part No	UN	Qty	Description	Page No

MOUNTING BRACKET

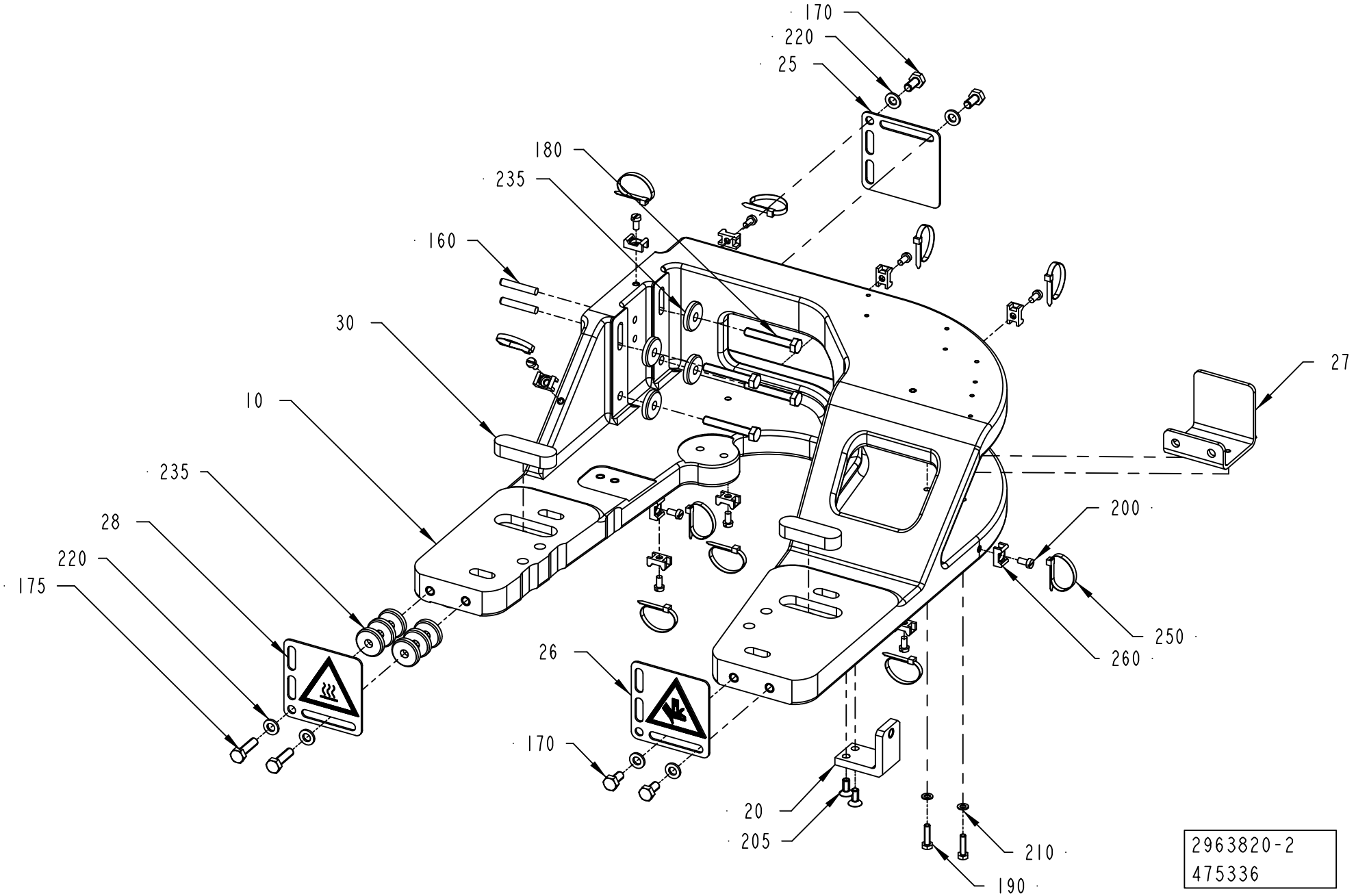

ECM: 475484 - 20110401
Group number: 2963820-0200
Assembly Drawing: 2963820-2_1_AC

Pos	Part No	UN	Qty	Description	Page No
-					
010	2660825-0000		1	BRACKET	
020	2511314-0000		1	BRACKET	
025	3139352-0100		1	LABEL	**1-47**
026	3139392-0100		1	LABEL	**1-49**
027	3139285-0100		1	LABEL	**1-51**
028	3144283-0100		1	LABEL	**1-53**
030	3038087-0000		2	KEY	
160	311103-0314		2	PARALLEL PIN ISO 2338 5M6X30 A1	
170	312105-0366		4	SCREW, M6S ISO 4017 M6X12 A4 80	
175	312105-0372		2	SCREW, M6S ISO 4017 M6X25 A4 80	
180	312109-0378		4	SCREW, M6S ISO 4017 M6X40 A4 80	
190	312105-0293		2	SCREW, M6S ISO 4017 M4X16 A4 70	
200	312125-0287		11	SLOTTED HEAD SCREW, ISO1207 M4X8 A4	
205	312155-0327		2	SCREW DIN 7991 MF6S M5X12 A4 70	
210	315105-0136		2	WASHER PLAIN, 4,3X8X0,8 A4 BRB	
220	315105-0153		6	WASHER PLAIN, 6,4X12X1,5 A4 BRB	
235	315125-0153		10	WASHER HIGH, TBRSB 6,4X22X4 A4	
250	352113-0101		11	CABLE TIE,BLACK 92X	
260	352113-0205		11	ANCHOR PLATES FOR STRIPS, TM2S8-C100	

Pos	Part No	UN	Qty	Description	Page No

ISO VERSION

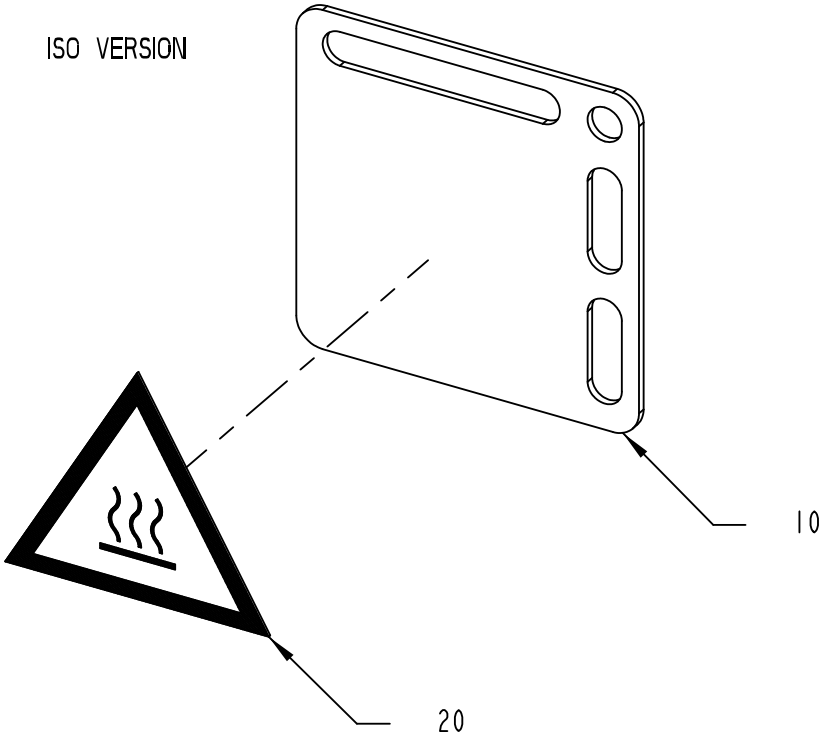

ANSI VERSION

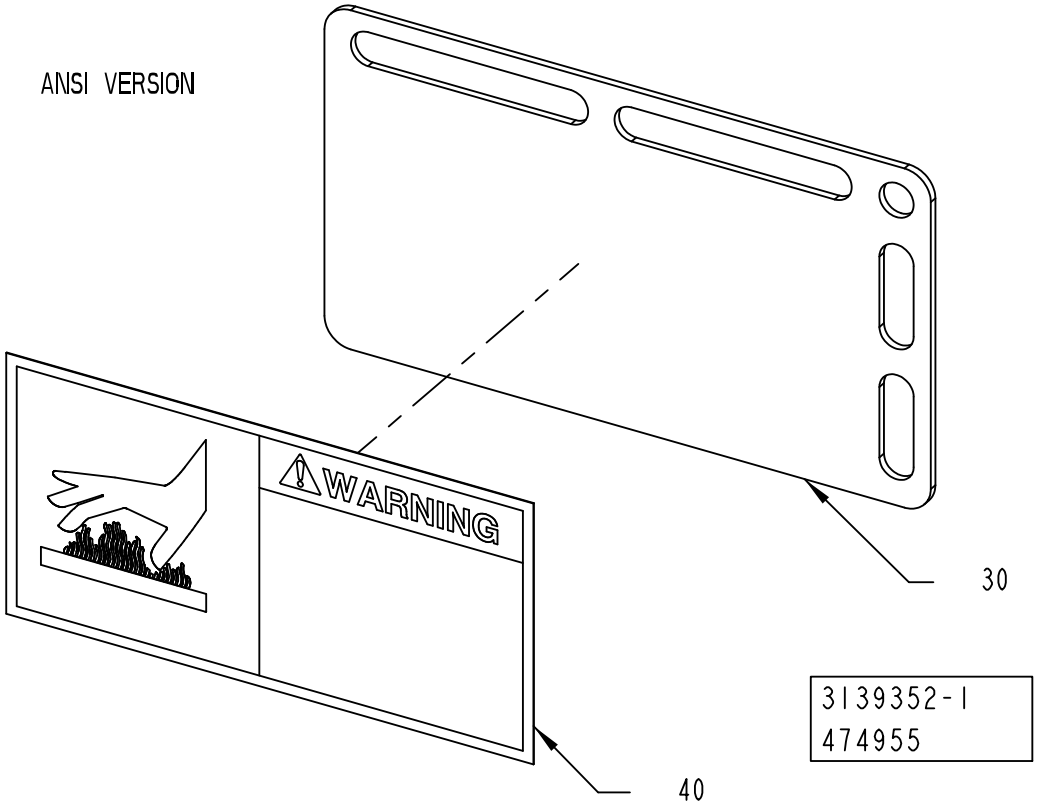

3139352-1
474955

ECM: 477381 - 20110401
Group number: 3139352-0100
Assembly Drawing: 3139352-1_1_AA

Pos	Part No	UN	Qty	Description	Page No
ANSI					
030	2790193-0000		1	PLATE	
040	90459-7458		1	WARNING SIGN ANSI (H), HOT SURFACE	
ISO					
010	3139351-0000		1	PLATE	
020	359705-0007		1	WARNING SIGN ISO, HOT SURFACE	

Pos	Part No	UN	Qty	Description	Page No

ISO VERSION

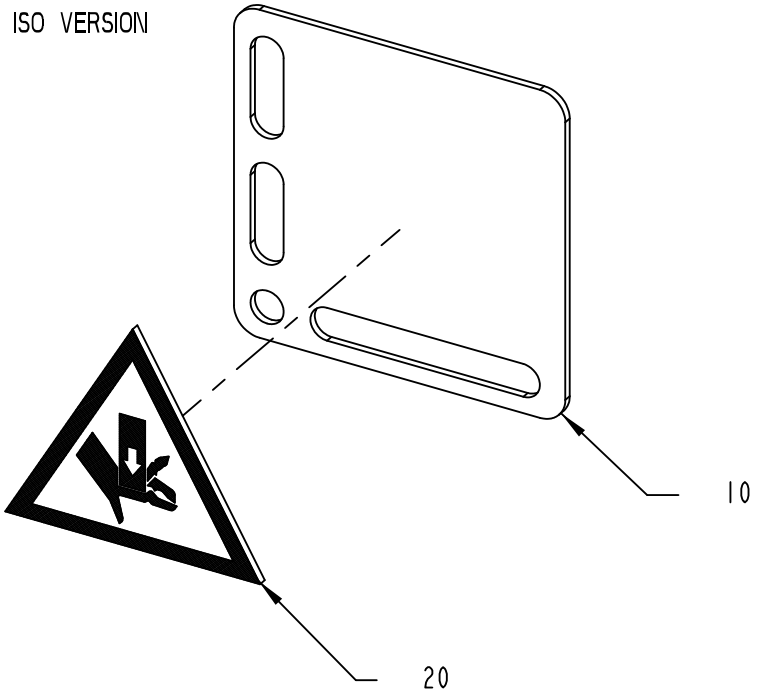

ANSI VERSION

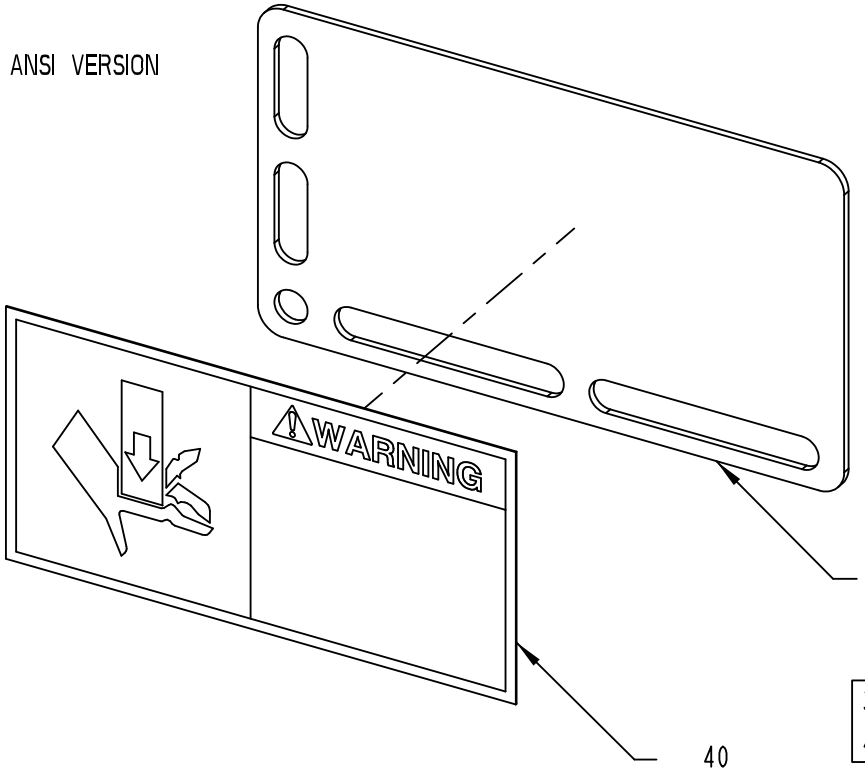

3139392-1
474955

ECM: 477583 - 20110401
Group number: 3139392-0100
Assembly Drawing: 3139392-1_1_AA

Pos	Part No	UN	Qty	Description	Page No
ANSI					
030	2790193-0000		1	PLATE	
040	359725-0108		1	WARNING SIGN ANSI (H), MOVING PART	
ISO					
010	3139351-0000		1	PLATE	
020	359705-0005		1	WARNING SIGN ISO, MOVING PART	

Pos	Part No	UN	Qty	Description	Page No

ISO VERSION

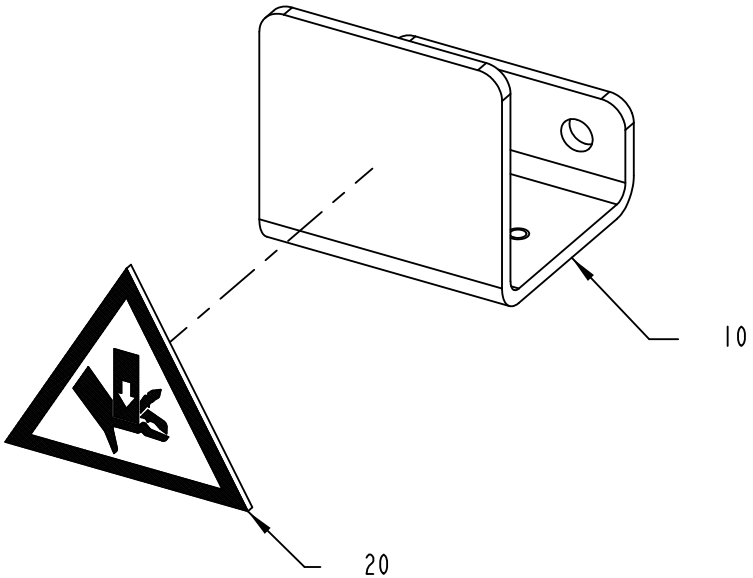

ANSI VERSION

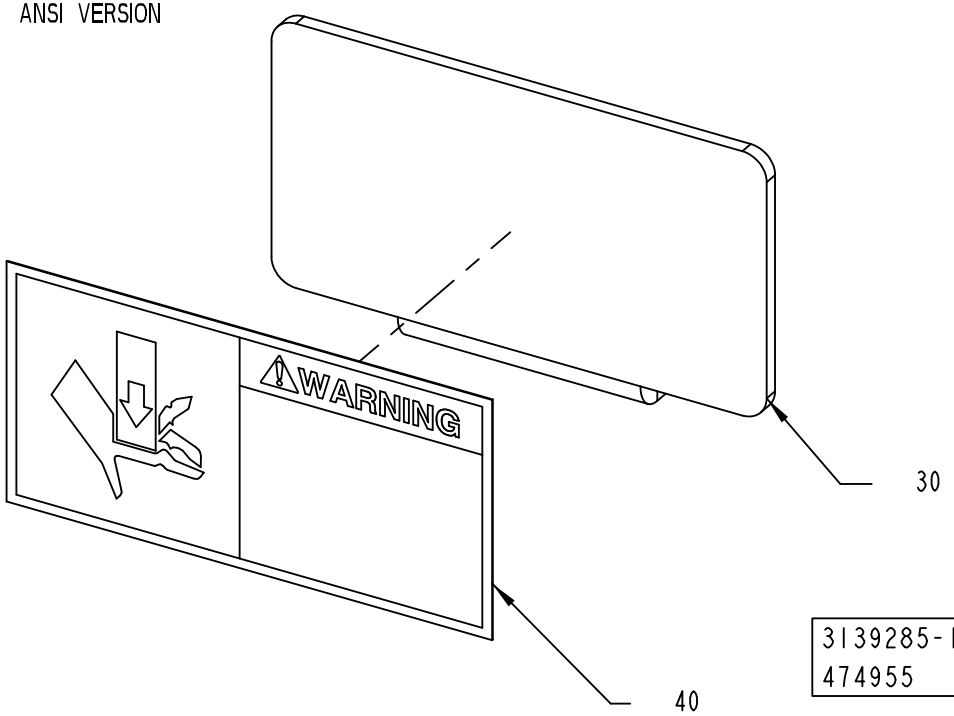

3139285-1
474955

ECM: 477331 - 20110401
Group number: 3139285-0100
Assembly Drawing: 3139285-1_1_AA

Pos	Part No	UN	Qty	Description	Page No
ANSI					
030	3134331-0000		1	BRACKET	
040	359725-0108		1	WARNING SIGN ANSI (H), MOVING PART	
ISO					
010	3035991-0000		1	BRACKET	
020	359705-0005		1	WARNING SIGN ISO, MOVING PART	

Pos	Part No	UN	Qty	Description	Page No

ISO VERSION

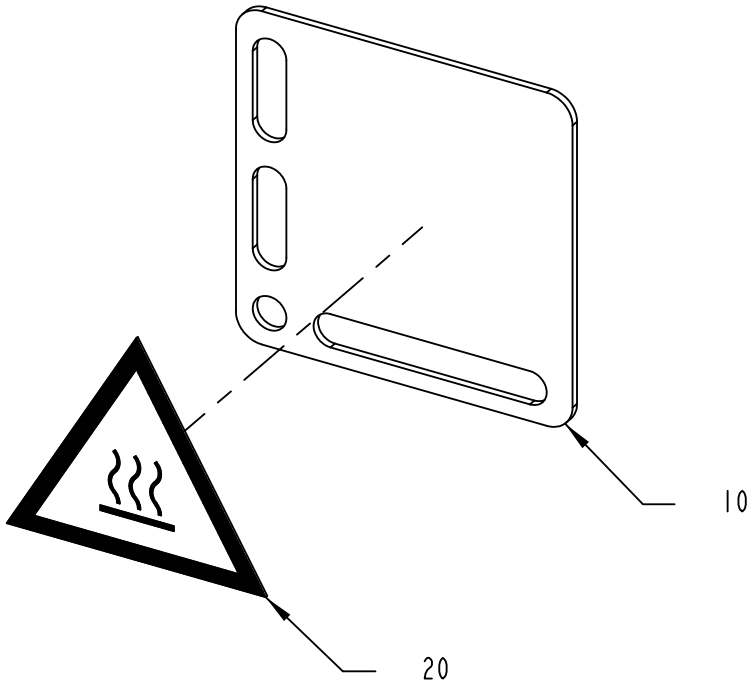

ANSI VERSION

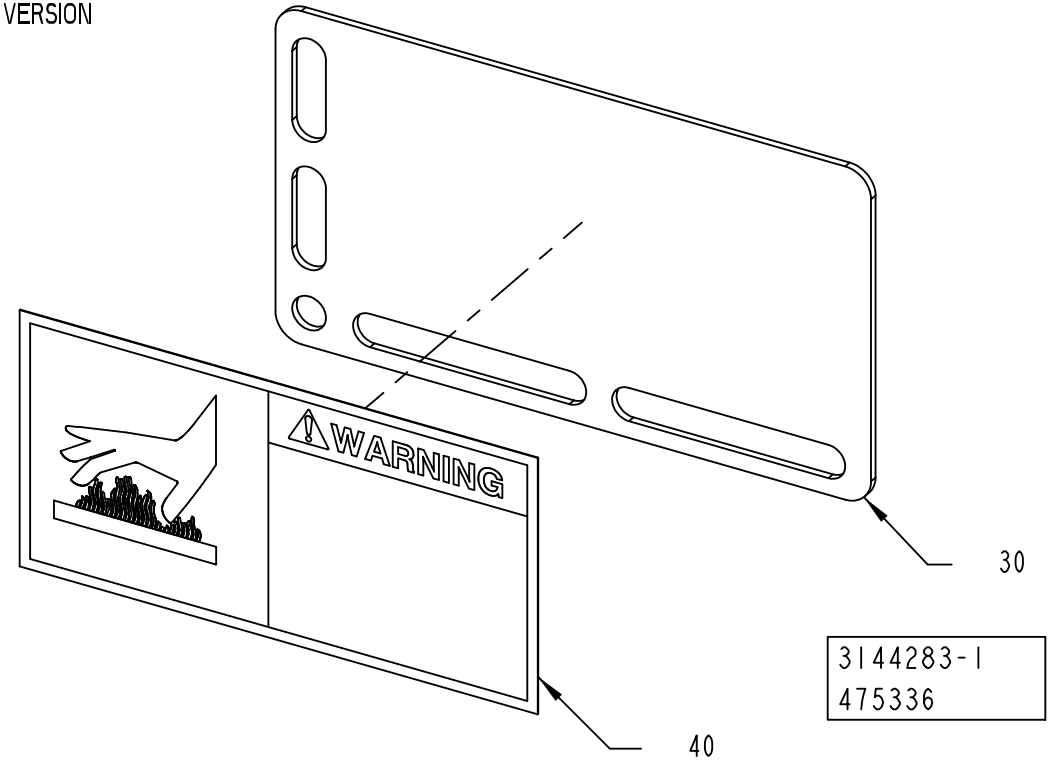

3144283-1
475336

ECM: 480873 - 20110401
Group number: 3144283-0100
Assembly Drawing: 3144283-1_1_AA

Pos	Part No	UN	Qty	Description	Page No
ANSI					
030	2790193-0000		1	PLATE	
040	90459-7458		1	WARNING SIGN ANSI (H), HOT SURFACE	
ISO					
010	3139351-0000		1	PLATE	
020	359705-0007		1	WARNING SIGN ISO, HOT SURFACE	

Pos	Part No	UN	Qty	Description	Page No

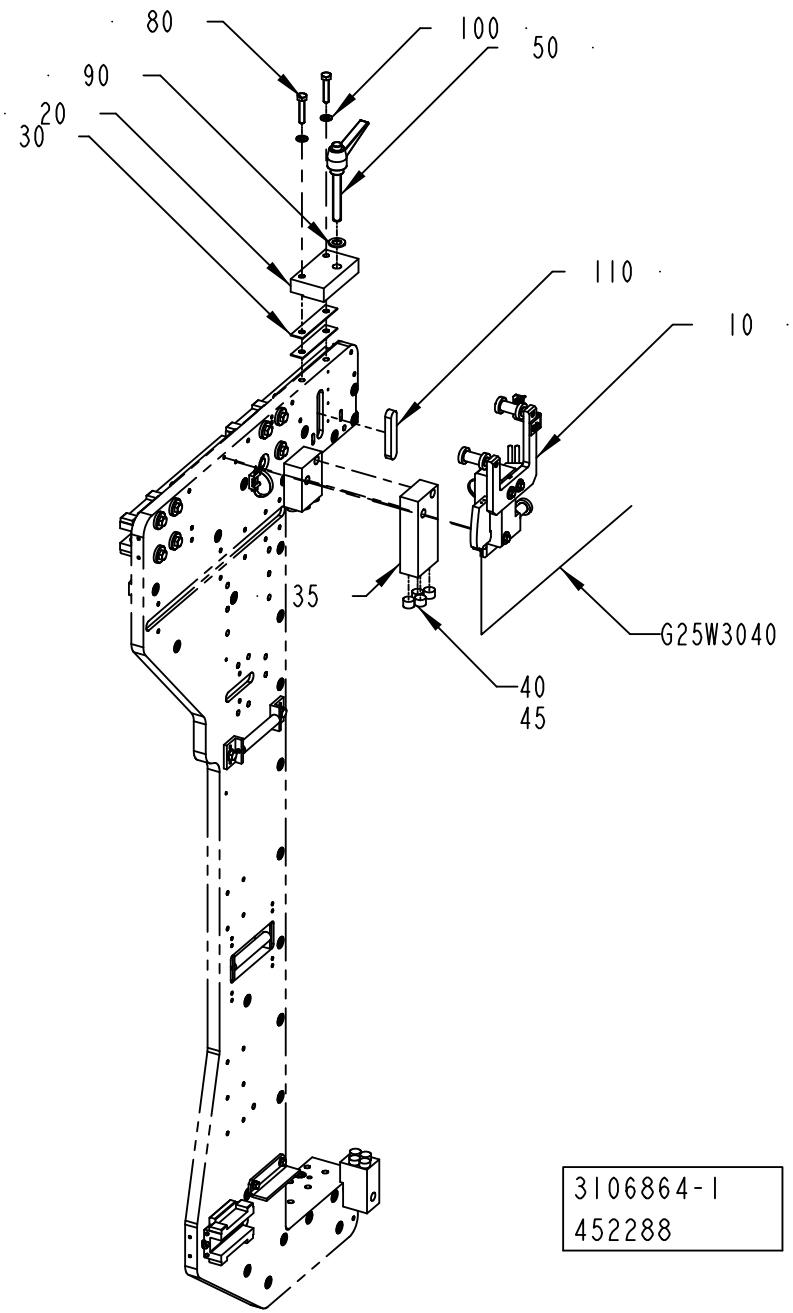
80
100
50
90
20
30
110
10
35
G25W3040
40
45
3106864-1
452288

ECM: 535891 - 20120401
Group number: 3106864-0100
Assembly Drawing: 3106864-1_1_AA

Pos	Part No	UN	Qty	Description	Page No
HOLE72					
043	2715294-0000		1	TEMPLATE	
HOLE73					
035	3017891-0000		1	SPRING BRACKET	
040	2837523-0000		4	SPRING	
045	90600-0386	L	1	ADHESIVE LOCTITE HYSOL 9455 , 250 GR	
Common Parts					
010	3100494-0200		1	TURNING DEVICE	**1-57**
020	2525382-0000		1	BRACKET	
030	3108956-0000		2	SHIM	
050	90459-5939		1	LOCKING LEVER, 142365 MRX.80 P-M12X80	
080	312109-0459		2	SCREW, M6S ISO 4017 M8X40 A4 80	
090	315105-0178		1	WASHER PLAIN, 13X24X2,5 A4 BRB	
100	315105-0165		2	FWAS080G0-0S, WASHER PLAIN	
110	315701-0401		1	PARALLEL KEY W. ROUND ENDS, 16X10X80 MM	
G25W3040	351409-0020		1	ACTU/SENS. CABLE PRST 4-PRKMV 4-07/2,0M	

Pos	Part No	UN	Qty	Description	Page No

TURNING DEVICE

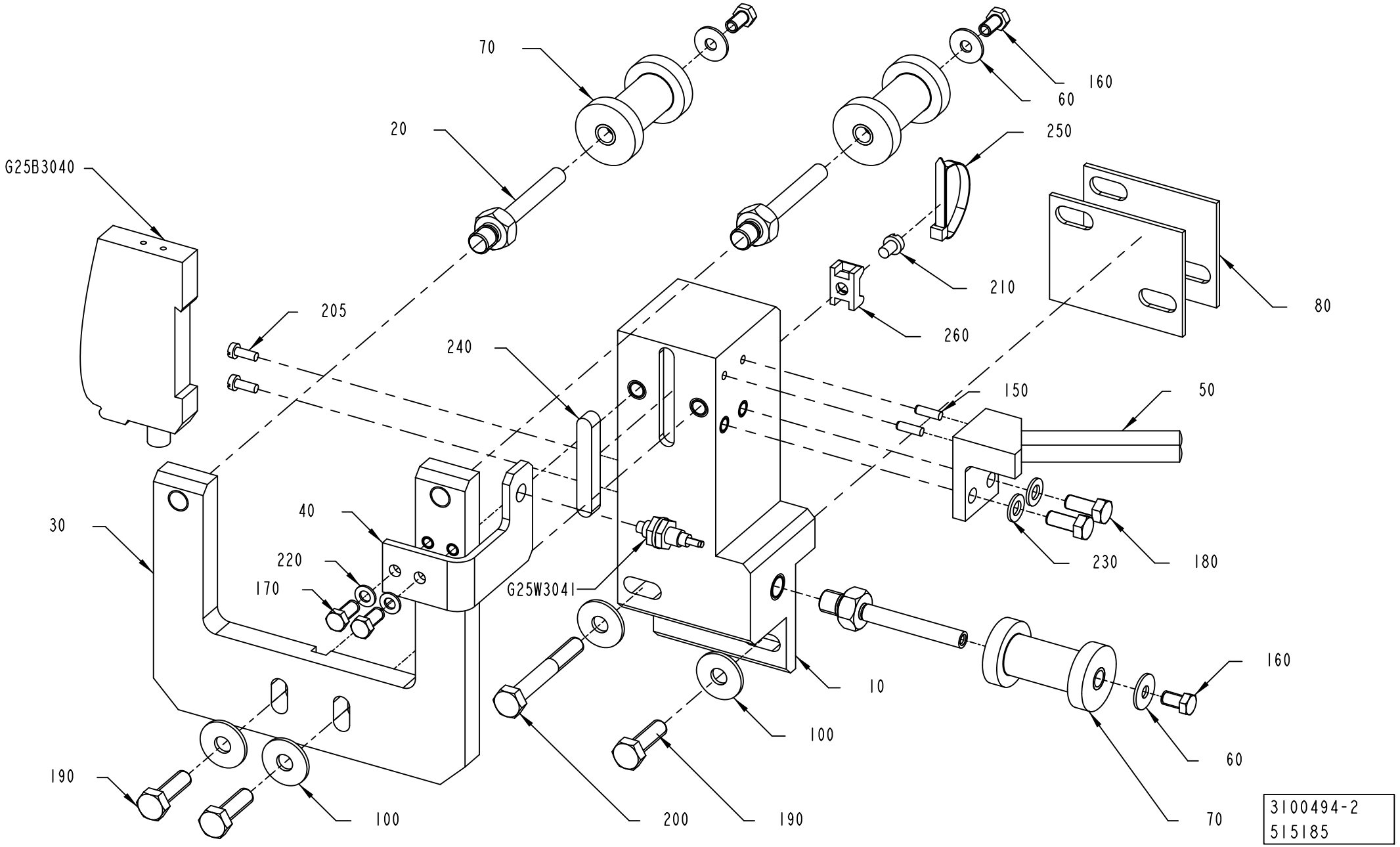

ECM: 528311 - 20120401
Group number: 3100494-0200
Assembly Drawing: 3100494-2_1_AA

Pos	Part No	UN	Qty	Description	Page No
-					
010	3100463-0000		1	SUPPORT	
020	3100466-0000		3	AXLE PIN	
030	3100465-0000		1	SUPPORT	
040	3100469-0000		1	BRACKET	
050	3100478-0000		1	GUIDE FORK	
010	*311103-0371*		*2*	*PARALLEL PIN ISO 2338 6M6X65 A1*	
060	2033-0005		3	WASHER	
070	3100471-0000		3	ROLLER	
010	*321138-0060*		*2*	*BUSHING, IGLIDUR J 6X8X6*	
080	3112804-0000		2	SHIM	
100	90005-0060		4	WASHER PLAIN, RBS 6,4/M6)/18,H=1,5	
150	311103-0233		2	PARALLEL PIN ISO 2338 3M6X10 A1	
160	312105-0287		3	SCREW, M6S ISO 4017 M4X8 A4 70	
170	312105-0289		2	SCREW, M6S ISO 4017 M4X10 A4 70	
180	312105-0327		2	"SCREW, M6S ISO 4017 M5X12 A4 80"	
190	312105-0370		3	SCREW, M6S ISO 4017 M6X20 A4 80	
200	312105-0379		1	SCREW, M6S ISO 4014 M6X45 A4 80	
205	312125-0222		2	SLOTTED HEAD SCREW, ISO1207 M3X8 A4	
210	312125-0285		1	SLOTTED HEAD SCREW, ISO1207 M4X6 A4	
220	315105-0136		2	WASHER PLAIN, 4,3X8X0,8 A4 BRB	
230	315105-0146		2	WASHER PLAIN, 5,3X10X1 A4 BRB	
240	315701-0239		1	PARALLEL KEY W. ROUND ENDS, 6X6X40 MM	
250	352113-0104		1	CABLE TIE, BLACK 300X4,8 MM	
260	352113-0205		1	ANCHOR PLATES FOR STRIPS, TM2S8-C100	
G25B3040	90459-7361		1	FIBRE OPTIC UNIT, WLL170-2P460	
G25W3041	90232-0325		1	FIBRE, E32-DC200	

Pos	Part No	UN	Qty	Description	Page No

Machine Type	Group Description	Used-In	Group Number	Page No

OUTER PATCH MAGAZINE

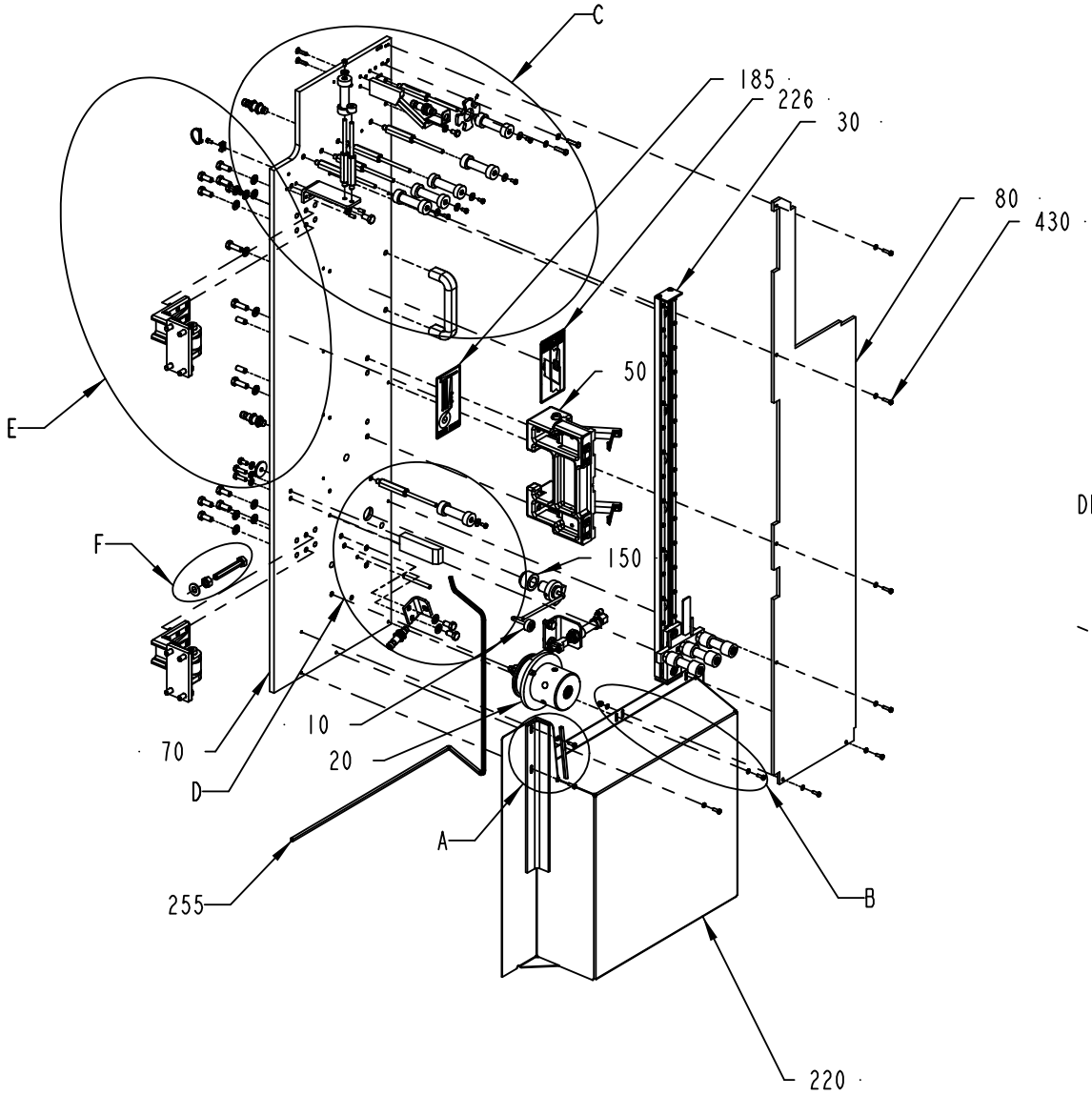

DETAIL A

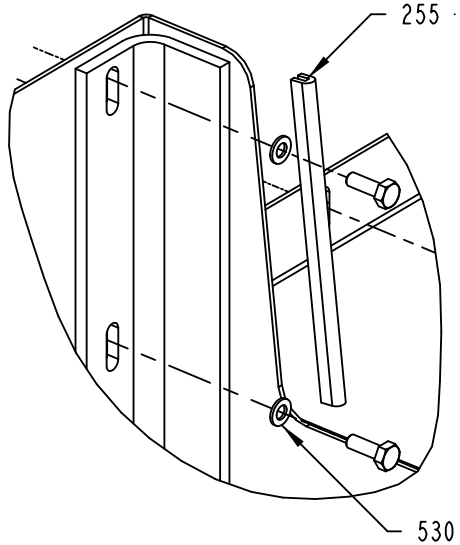

DETAIL B

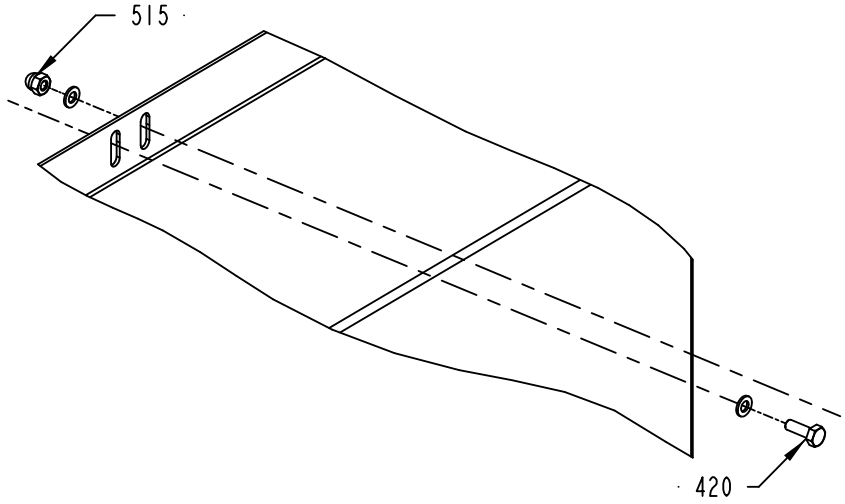

2951583-3
521129

ECM: 523113 - 20120401
Group number: 2951583-0300
Assembly Drawing: 2951583-3_1_AA

This list covers pages from 1-58 to 1-63

Pos	Part No	UN	Qty	Description	Page No
-					
010	1499255-0100		1	DETECTOR	**1-65**
020	2837537-0200		1	BOBBIN HOLDER	**1-67**
030	2816257-0200		1	STRIP MAGAZINE	**1-71**
040	2525358-0100		2	HINGE	**1-73**
050	2525366-0100		1	SPLICING TABLE	**1-75**
060	2564053-0100		1	OUTER PATCH MAGAZINE	**1-79**
070	2710788-0000		1	PANEL DOOR	
080	2553338-0000		1	PROTECTION	
120	1499251-0002		8	AXLE PIN	
130	1539125-0000		1	BRACKET	
134	2800317-0000		1	BRACKET	
135	2033-0005		7	WASHER	
140	1498347-0000		1	WASHER	
150	1499253-0000		1	BUSHING	
160	1523262-0000		1	FLAG	
170	1523263-0001		1	BRACKET	
180	2525373-0000		1	WHEEL	
185	2564073-0000		1	LABEL	
220	2951584-0000		1	PROTECTION	
225	2758237-0000		1	SPACER	
226	2947655-0000		1	LABEL	
227	90287-0330		1	SCREW, M6S ISO 4017 M10X70 A4 80	
230	90017-0022		1	HANDLE, NO. EL-037311	
255	90143-0060	M	1.2	EDGE STRIP 9,5X6,3MM BLACK PVC	
325	2639394-0000		1	GUIDE FORK	
380	311103-0306		2	PARALLEL PIN ISO 2338 5M6X12 A1	
390	311103-0369		1	PARALLEL PIN ISO 2338 6M6X60 A1	
400	311103-0401		2	PARALLEL PIN ISO 2338 8M6X20 A1	
410	312105-0287		7	SCREW, M6S ISO 4017 M4X8 A4 70	
420	312105-0291		6	SCREW, M6S ISO 4017 M4X12 A4 70	
430	312105-0293		4	SCREW, M6S ISO 4017 M4X16 A4 70	
435	312155-0331		2	SCREW DIN 7991 MF6S M5X20 A4 70	
440	312105-0364		1	"SCREW, M6S ISO 4017 M6X10 A4 80"	
450	312105-0366		1	SCREW, M6S ISO 4017 M6X12 A4 80	
457	312105-0370		2	SCREW, M6S ISO 4017 M6X20 A4 80	
460	312105-0449		3	SCREW, M6S ISO 4017 M8X16 A4 80	
465	312105-0451		8	SCREW, M6S ISO 4017 M8X20 A4 80	
470	312105-0453		4	SCREW, M6S ISO 4017 M8X25 A4 80	
478	312105-0331		2	SCREW, M6S ISO 4017 M5X20 A4 80	
490	312125-0287		7	SLOTTED HEAD SCREW, ISO1207 M4X8 A4	
500	312318-0220		2	SET SCREW, CUP END ISO4029 M3X6 A4	
511	312605-0320		1	HEXAGON NUT, M6M M10 A280	
515	312705-0312		2	NUT HEX. DOMED CAP MHM-6 M4 A280	
530	315105-0136		12	WASHER PLAIN, 4,3X8X0,8 A4 BRB	
535	315105-0146		2	WASHER PLAIN, 5,3X10X1 A4 BRB	
540	315105-0153		4	WASHER PLAIN, 6,4X12X1,5 A4 BRB	
550	315105-0165		15	FWAS080G0-0S, WASHER PLAIN	
555	315105-0173		1	WASHER PLAIN, 10,5X22X2 A4 BRB	
560	352113-0101		7	CABLE TIE,BLACK 92X	
570	352113-0205		7	ANCHOR PLATES FOR STRIPS, TM2S8-C100	
G25B3000	90600-7887		1	"INDUCTIVE SENSOR, IFT 200"	
G25B3010	90600-7887		1	"INDUCTIVE SENSOR, IFT 200"	
G25B3020	90600-7887		1	"INDUCTIVE SENSOR, IFT 200"	
G25B3050	90600-7887		1	"INDUCTIVE SENSOR, IFT 200"	

Machine Type | Group Description | Used-In | Group Number | Page No

OUTER PATCH MAGAZINE

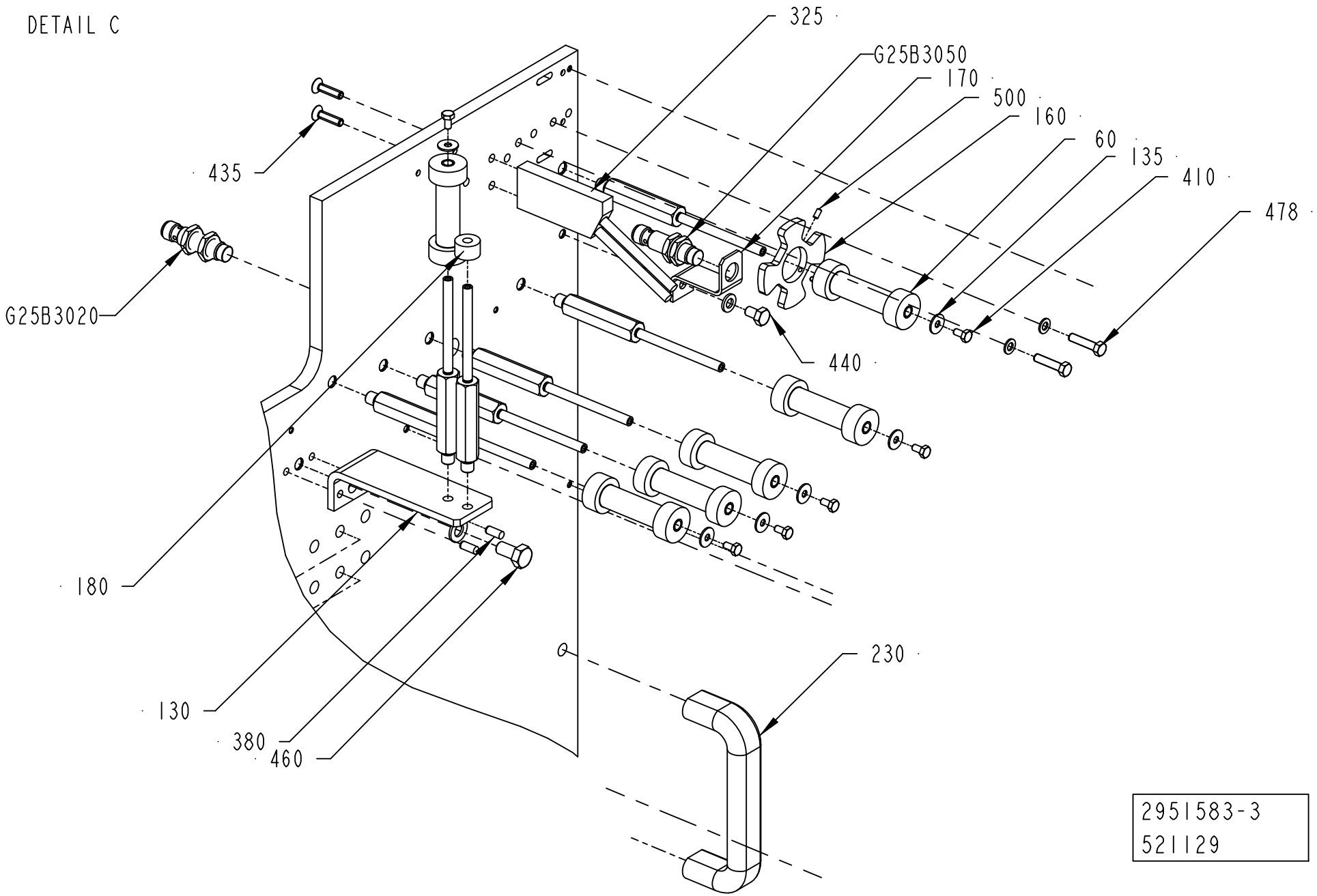

2951583-3
521129

ECM: 523113 - 20120401
Group number: 2951583-0300
Assembly Drawing: 2951583-3_2_AA

This list covers pages from 1-58 to 1-63

Pos	Part No	UN	Qty	Description	Page No
-					
010	1499255-0100		1	DETECTOR	**1-65**
020	2837537-0200		1	BOBBIN HOLDER	**1-67**
030	2816257-0200		1	STRIP MAGAZINE	**1-71**
040	2525358-0100		2	HINGE	**1-73**
050	2525366-0100		1	SPLICING TABLE	**1-75**
060	2564053-0100		1	OUTER PATCH MAGAZINE	**1-79**
070	2710788-0000		1	PANEL DOOR	
080	2553338-0000		1	PROTECTION	
120	1499251-0002		8	AXLE PIN	
130	1539125-0000		1	BRACKET	
134	2800317-0000		1	BRACKET	
135	2033-0005		7	WASHER	
140	1498347-0000		1	WASHER	
150	1499253-0000		1	BUSHING	
160	1523262-0000		1	FLAG	
170	1523263-0001		1	BRACKET	
180	2525373-0000		1	WHEEL	
185	2564073-0000		1	LABEL	
220	2951584-0000		1	PROTECTION	
225	2758237-0000		1	SPACER	
226	2947655-0000		1	LABEL	
227	90287-0330		1	SCREW, M6S ISO 4017 M10X70 A4 80	
230	90017-0022		1	HANDLE, NO. EL-037311	
255	90143-0060	M	1.2	EDGE STRIP 9,5X6,3MM BLACK PVC	
325	2639394-0000		1	GUIDE FORK	
380	311103-0306		2	PARALLEL PIN ISO 2338 5M6X12 A1	
390	311103-0369		1	PARALLEL PIN ISO 2338 6M6X60 A1	
400	311103-0401		2	PARALLEL PIN ISO 2338 8M6X20 A1	
410	312105-0287		7	SCREW, M6S ISO 4017 M4X8 A4 70	
420	312105-0291		6	SCREW, M6S ISO 4017 M4X12 A4 70	
430	312105-0293		4	SCREW, M6S ISO 4017 M4X16 A4 70	
435	312155-0331		2	SCREW DIN 7991 MF6S M5X20 A4 70	
440	312105-0364		1	"SCREW, M6S ISO 4017 M6X10 A4 80"	
450	312105-0366		1	SCREW, M6S ISO 4017 M6X12 A4 80	
457	312105-0370		2	SCREW, M6S ISO 4017 M6X20 A4 80	
460	312105-0449		3	SCREW, M6S ISO 4017 M8X16 A4 80	
465	312105-0451		8	SCREW, M6S ISO 4017 M8X20 A4 80	
470	312105-0453		4	SCREW, M6S ISO 4017 M8X25 A4 80	
478	312105-0331		2	SCREW, M6S ISO 4017 M5X20 A4 80	
490	312125-0287		7	SLOTTED HEAD SCREW, ISO1207 M4X8 A4	
500	312318-0220		2	SET SCREW, CUP END ISO4029 M3X6 A4	
511	312605-0320		1	HEXAGON NUT, M6M M10 A280	
515	312705-0312		2	NUT HEX. DOMED CAP MHM-6 M4 A280	
530	315105-0136		12	WASHER PLAIN, 4,3X8X0,8 A4 BRB	
535	315105-0146		2	WASHER PLAIN, 5,3X10X1 A4 BRB	
540	315105-0153		4	WASHER PLAIN, 6,4X12X1,5 A4 BRB	
550	315105-0165		15	FWAS080G0-0S, WASHER PLAIN	
555	315105-0173		1	WASHER PLAIN, 10,5X22X2 A4 BRB	
560	352113-0101		7	CABLE TIE,BLACK 92X	
570	352113-0205		7	ANCHOR PLATES FOR STRIPS, TM2S8-C100	
G25B3000	90600-7887		1	"INDUCTIVE SENSOR, IFT 200"	
G25B3010	90600-7887		1	"INDUCTIVE SENSOR, IFT 200"	
G25B3020	90600-7887		1	"INDUCTIVE SENSOR, IFT 200"	
G25B3050	90600-7887		1	"INDUCTIVE SENSOR, IFT 200"	

Machine Type | Group Description | Used-In | Group Number | Page No

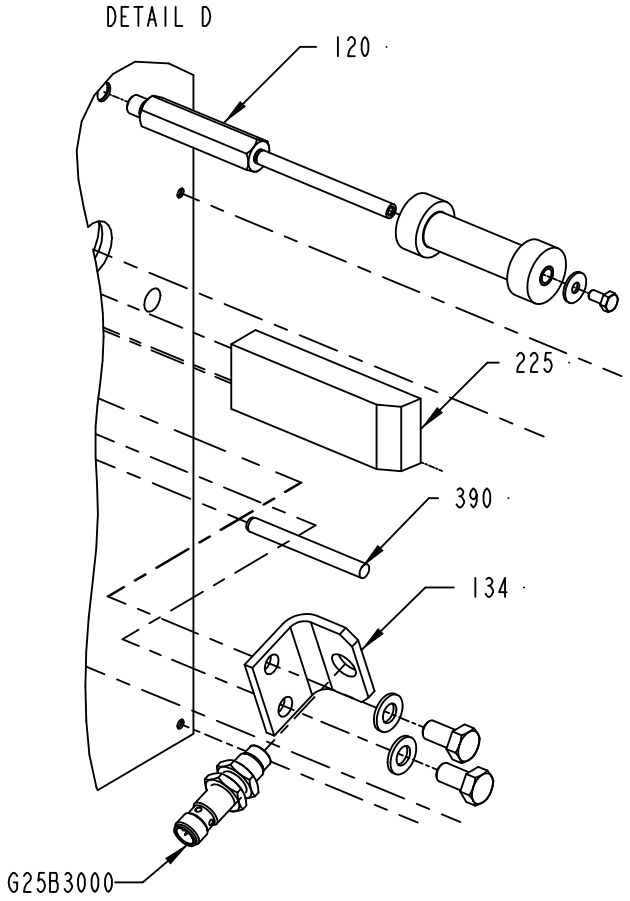
DETAIL D
120
225
390
134
G25B3000

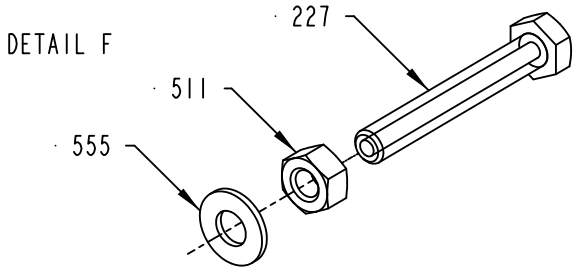
DETAIL F
227
511
555

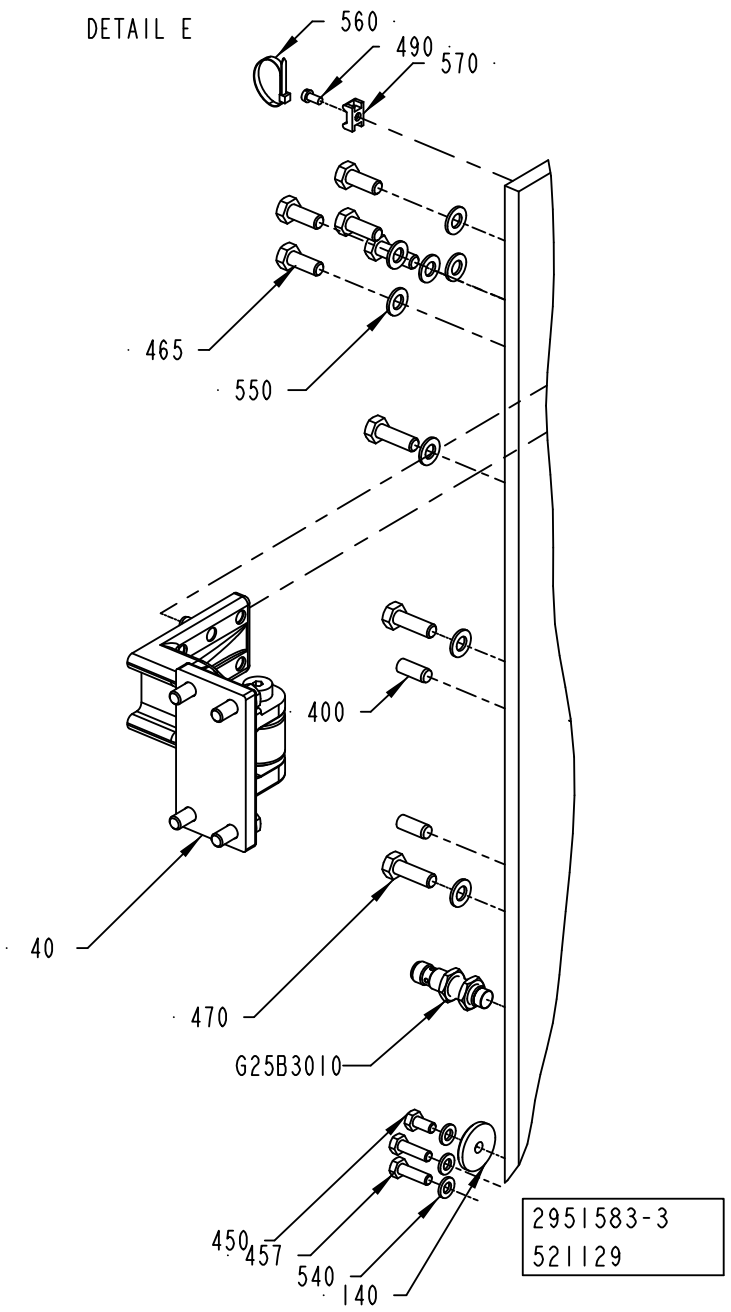
DETAIL E
560
490
570
465
550
400
40
470
G25B3010
450
457
540
140
2951583-3
521129

ECM: 523113 - 20120401
Group number: 2951583-0300
Assembly Drawing: 2951583-3_3_AA

This list covers pages from 1-58 to 1-63

Pos	Part No	UN	Qty	Description	Page No
-					
010	1499255-0100		1	DETECTOR	**1-65**
020	2837537-0200		1	BOBBIN HOLDER	**1-67**
030	2816257-0200		1	STRIP MAGAZINE	**1-71**
040	2525358-0100		2	HINGE	**1-73**
050	2525366-0100		1	SPLICING TABLE	**1-75**
060	2564053-0100		1	OUTER PATCH MAGAZINE	**1-79**
070	2710788-0000		1	PANEL DOOR	
080	2553338-0000		1	PROTECTION	
120	1499251-0002		8	AXLE PIN	
130	1539125-0000		1	BRACKET	
134	2800317-0000		1	BRACKET	
135	2033-0005		7	WASHER	
140	1498347-0000		1	WASHER	
150	1499253-0000		1	BUSHING	
160	1523262-0000		1	FLAG	
170	1523263-0001		1	BRACKET	
180	2525373-0000		1	WHEEL	
185	2564073-0000		1	LABEL	
220	2951584-0000		1	PROTECTION	
225	2758237-0000		1	SPACER	
226	2947655-0000		1	LABEL	
227	90287-0330		1	SCREW, M6S ISO 4017 M10X70 A4 80	
230	90017-0022		1	HANDLE, NO. EL-037311	
255	90143-0060	M	1.2	EDGE STRIP 9,5X6,3MM BLACK PVC	
325	2639394-0000		1	GUIDE FORK	
380	311103-0306		2	PARALLEL PIN ISO 2338 5M6X12 A1	
390	311103-0369		1	PARALLEL PIN ISO 2338 6M6X60 A1	
400	311103-0401		2	PARALLEL PIN ISO 2338 8M6X20 A1	
410	312105-0287		7	SCREW, M6S ISO 4017 M4X8 A4 70	
420	312105-0291		6	SCREW, M6S ISO 4017 M4X12 A4 70	
430	312105-0293		4	SCREW, M6S ISO 4017 M4X16 A4 70	
435	312155-0331		2	SCREW DIN 7991 MF6S M5X20 A4 70	
440	312105-0364		1	"SCREW, M6S ISO 4017 M6X10 A4 80"	
450	312105-0366		1	SCREW, M6S ISO 4017 M6X12 A4 80	
457	312105-0370		2	SCREW, M6S ISO 4017 M6X20 A4 80	
460	312105-0449		3	SCREW, M6S ISO 4017 M8X16 A4 80	
465	312105-0451		8	SCREW, M6S ISO 4017 M8X20 A4 80	
470	312105-0453		4	SCREW, M6S ISO 4017 M8X25 A4 80	
478	312105-0331		2	SCREW, M6S ISO 4017 M5X20 A4 80	
490	312125-0287		7	SLOTTED HEAD SCREW, ISO1207 M4X8 A4	
500	312318-0220		2	SET SCREW, CUP END ISO4029 M3X6 A4	
511	312605-0320		1	HEXAGON NUT, M6M M10 A280	
515	312705-0312		2	NUT HEX. DOMED CAP MHM-6 M4 A280	
530	315105-0136		12	WASHER PLAIN, 4,3X8X0,8 A4 BRB	
535	315105-0146		2	WASHER PLAIN, 5,3X10X1 A4 BRB	
540	315105-0153		4	WASHER PLAIN, 6,4X12X1,5 A4 BRB	
550	315105-0165		15	FWAS080G0-0S, WASHER PLAIN	
555	315105-0173		1	WASHER PLAIN, 10,5X22X2 A4 BRB	
560	352113-0101		7	CABLE TIE,BLACK 92X	
570	352113-0205		7	ANCHOR PLATES FOR STRIPS, TM2S8-C100	
G25B3000	90600-7887		1	"INDUCTIVE SENSOR, IFT 200"	
G25B3010	90600-7887		1	"INDUCTIVE SENSOR, IFT 200"	
G25B3020	90600-7887		1	"INDUCTIVE SENSOR, IFT 200"	
G25B3050	90600-7887		1	"INDUCTIVE SENSOR, IFT 200"	

Machine Type | Group Description | Used-In | Group Number | Page No

DETECTOR

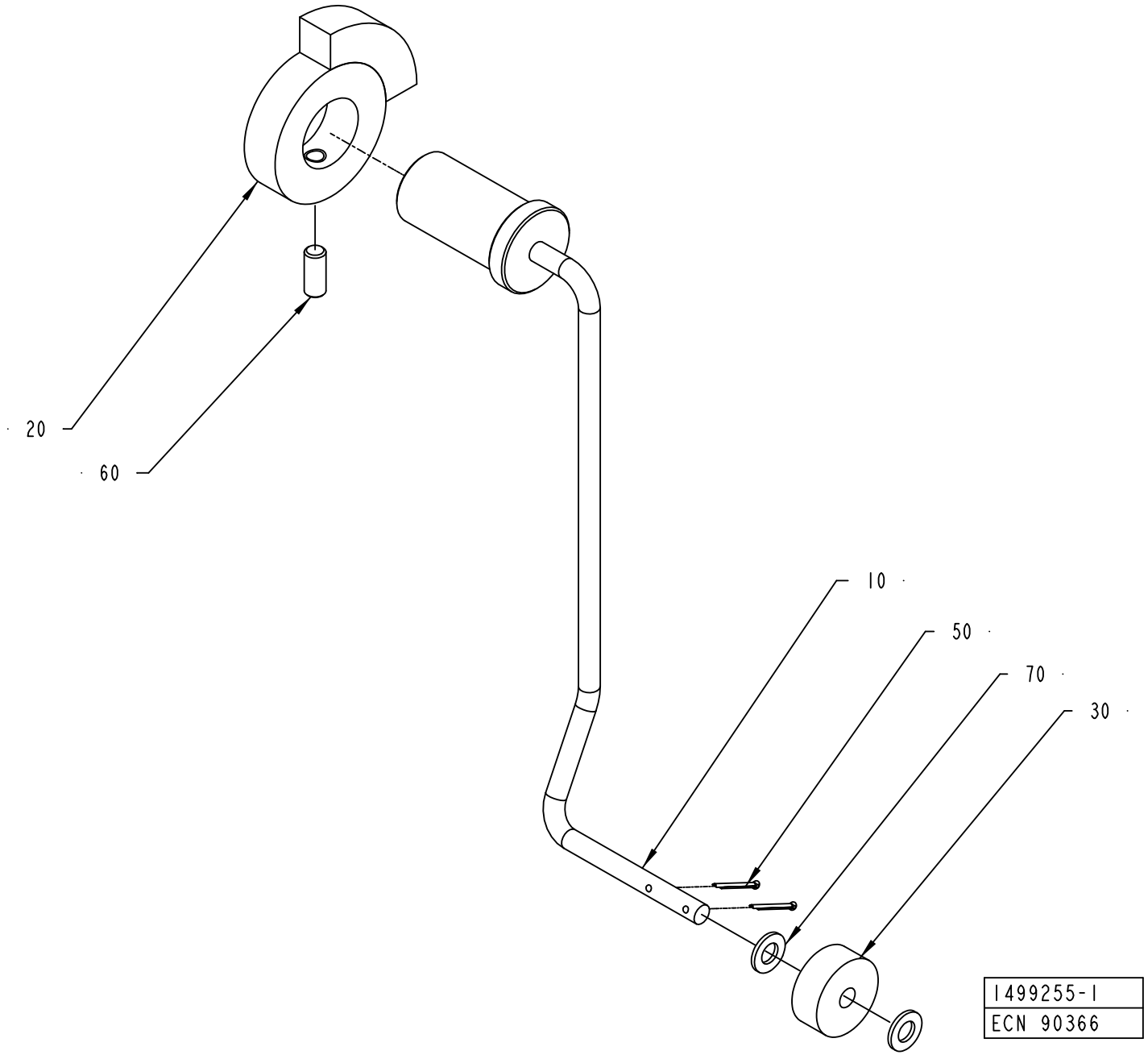

ECM: 211632 - 20060117
Group number: 1499255-0100
Assembly Drawing: 1499255-1_1_AA

Pos	Part No	UN	Qty	Description	Page No
-					
010	1499252-0000		1	ARM	
020	533972-0000		1	INDICATOR CURVE	
030	234844-0000		1	WHEEL	
050	311411-0138		2	SPLIT PIN SP1,6X12RFR	
060	312318-0327		1	SET SCREW, CUP END ISO4029 M5X12 A4	
070	315105-0146		2	WASHER PLAIN, 5,3X10X1 A4 BRB	

Pos	Part No	UN	Qty	Description	Page No

BOBBIN HOLDER

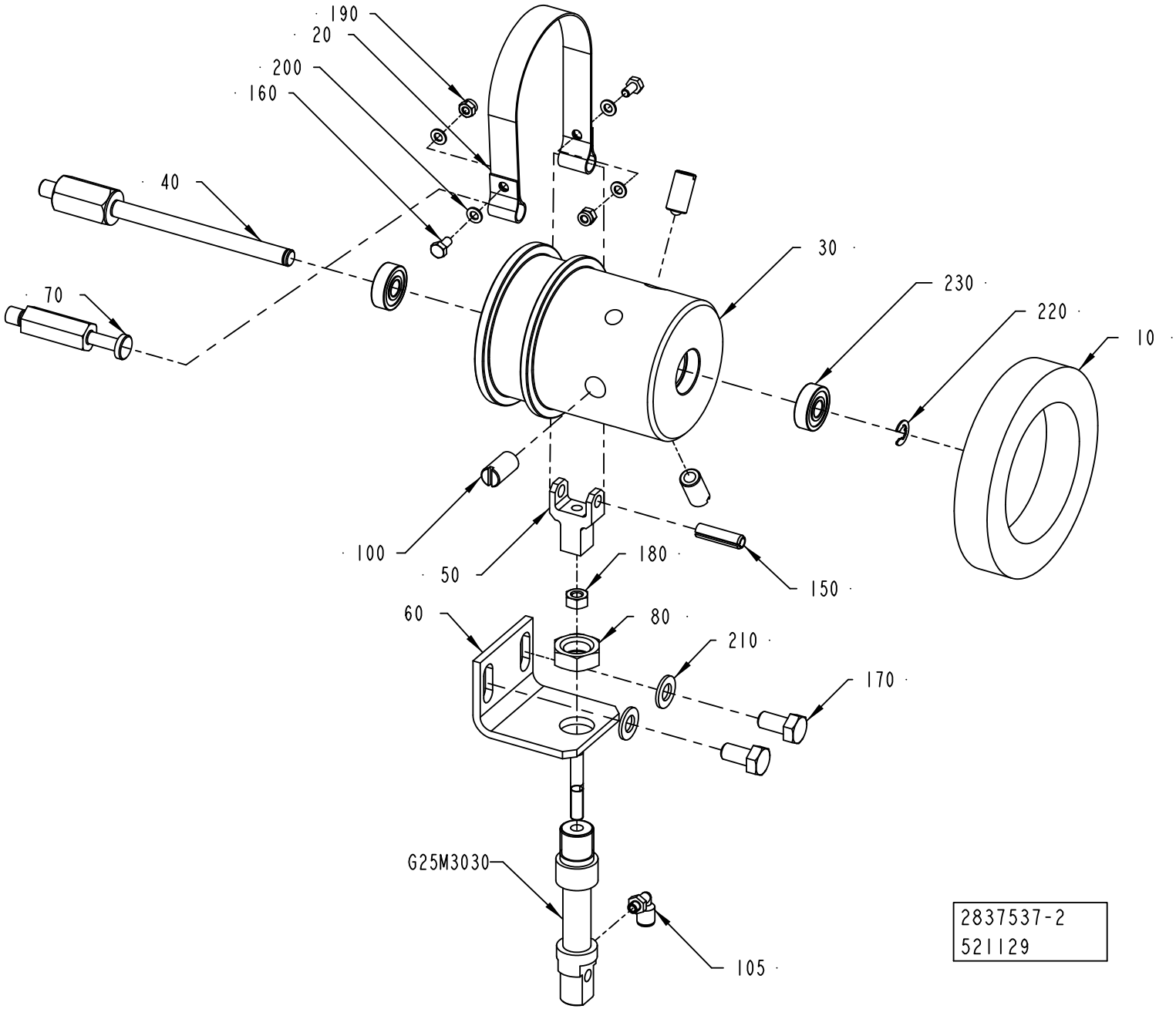

ECM: 523102 - 20120401
Group number: 2837537-0200
Assembly Drawing: 2837537-2_1_AA

Pos	Part No	UN	Qty	Description	Page No
-					
010	2553315-0100		1	BOBBIN HOLDER	**1-69**
020	1498303-0000		1	BELT	
030	1498360-0000		1	HUB	
040	2506563-0000		1	SHAFT	
050	2506564-0000		1	GUIDE FORK	
060	2506565-0000		1	BRACKET	
070	2511316-0000		1	PIN	
080	2511317-0000		1	NUT	
100	90287-0106		3	SCREW SPRINGLOAD. SLOTTED HEAD M10X21	
105	90458-2954		1	ELBOW PIPE JOINT, EXT.THREAD, D=4MM M5	
150	311112-0341		1	SPRING PIN, ISO 8752 6X24 A2	
160	312105-0287		2	SCREW, M6S ISO 4017 M4X8 A4 70	
170	312105-0449		2	SCREW, M6S ISO 4017 M8X16 A4 80	
180	312605-0316		1	HEXAGON NUT, M6M M6 A280	
190	312812-0312		2	HEXAGON NUT, NY-LOCK M4 A4 80	
200	315105-0136		4	WASHER PLAIN, 4,3X8X0,8 A4 BRB	
210	315105-0165		2	FWAS080G0-0S, WASHER PLAIN	
220	315755-0108		1	RETAINING RING SHAFT DIN 6799 6 SS	
230	90603-2408		2	BALL BEARING 8/22X7	
G25M3030	90604-0596		1	SINGLE ACTING, MINI-ISO, CYL 12-10	

Pos	Part No	UN	Qty	Description	Page No

BOBBIN HOLDER

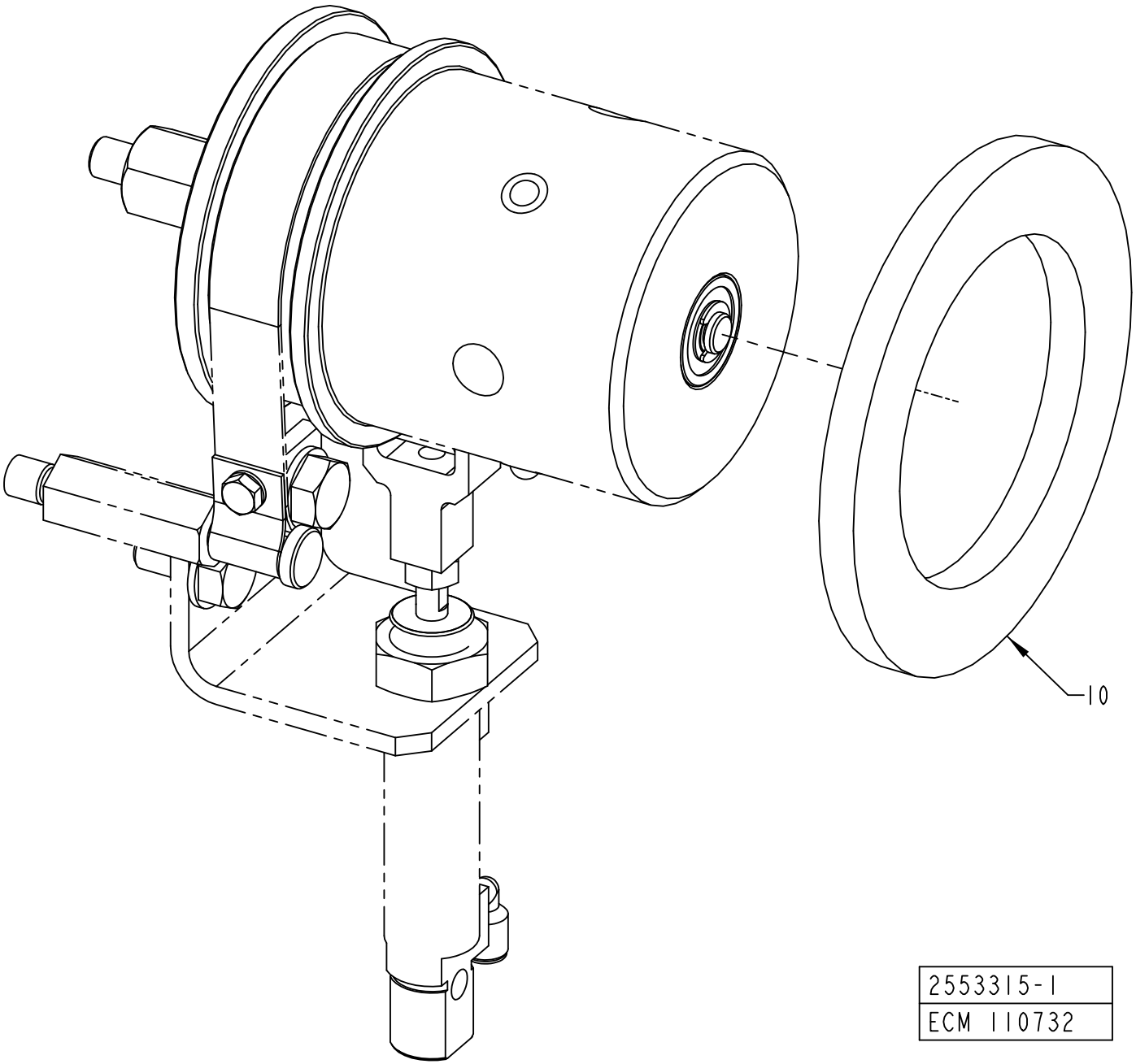

ECM: 409479 - 20090915
Group number: 2553315-0100
Assembly Drawing: 2553315-1_1_AA

Pos	Part No	UN	Qty	Description	Page No
HOLE72, HOLE48, HOLE73					
010	1347952-0003		1	SPACER	

Pos	Part No	UN	Qty	Description	Page No

STRIP MAGAZINE

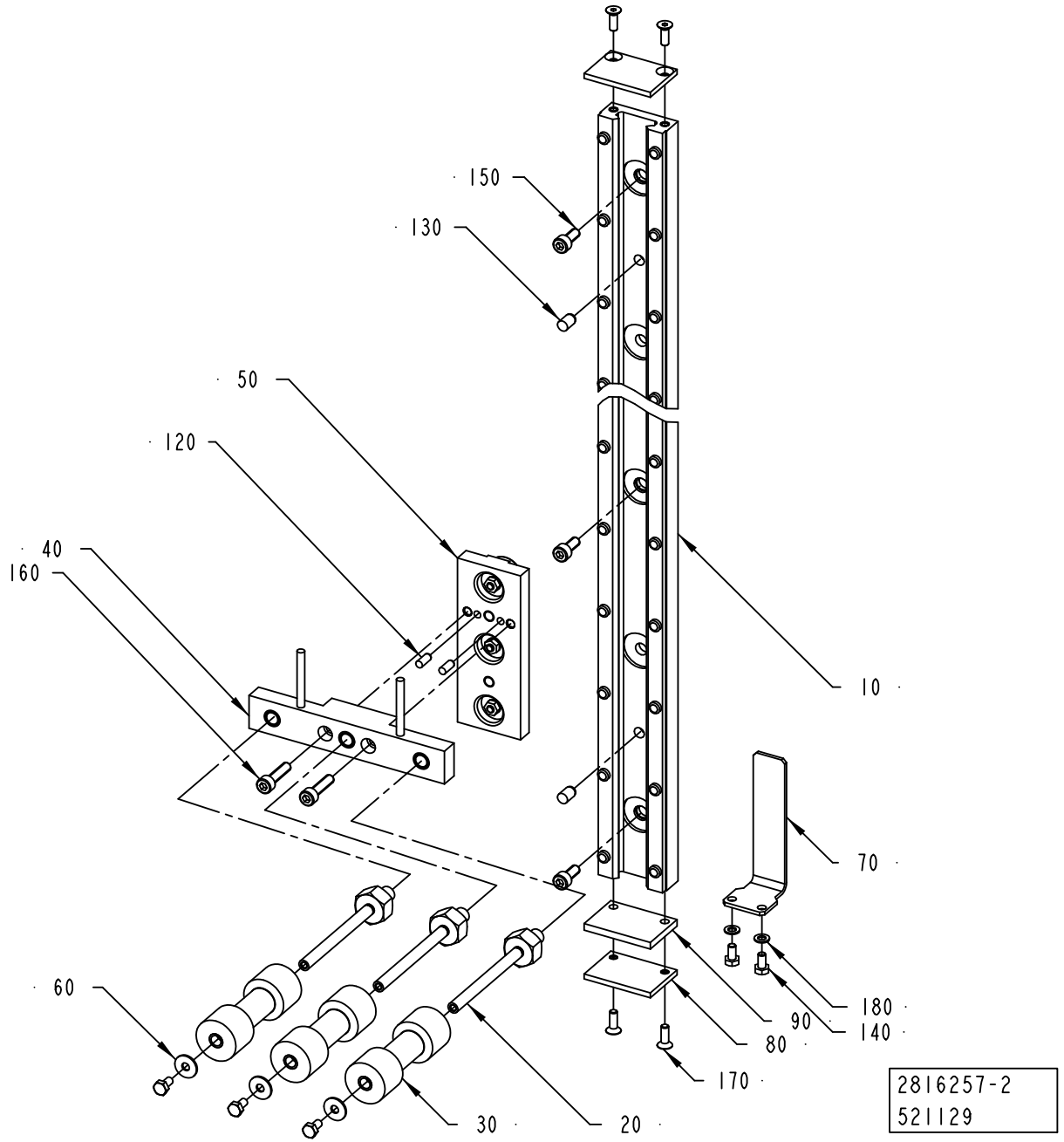

ECM: 525122 - 20120401
Group number: 2816257-0200
Assembly Drawing: 2816257-2_1_AA

Pos	Part No	UN	Qty	Description	Page No
-					
010	2816251-0000		1	GUIDE	
020	2511271-0001		3	SHAFT	
030	2564043-0003		3	ROLLER	
040	2816256-0000		1	BRACKET	
050	3204302-0000		1	CARRIAGE	
010	*90604-3367*		*1*	*CARRIAGE, UTILITRAK UTCCA1-SS-SPL-FOODLU*	
020	*312910-0114*		*2*	*THREADED INSERT, FREE RUNNING M5X1,5D*	
060	2033-0005		3	WASHER	
070	2816255-0000		1	PHOTOCELL BRACKET	
080	2808544-0000		2	STOPPER	
090	2808545-0000		1	DAMPER	
120	311103-0267		2	PARALLEL PIN ISO 2338 4M6X10 A1	
130	311103-0348		2	PARALLEL PIN ISO 2338 6M6X10 A1	
140	312105-0287		5	SCREW, M6S ISO 4017 M4X8 A4 70	
150	312115-0327		4	SCREW ISO4762 M5X12 A4 80	
160	312115-0331		2	SCREW ISO4762 M5X20 A4 80	
170	312155-0291		4	SCREW DIN 7991 MF6S M4X12 A4 70	
180	315105-0136		2	WASHER PLAIN, 4,3X8X0,8 A4 BRB	

Pos	Part No	UN	Qty	Description	Page No

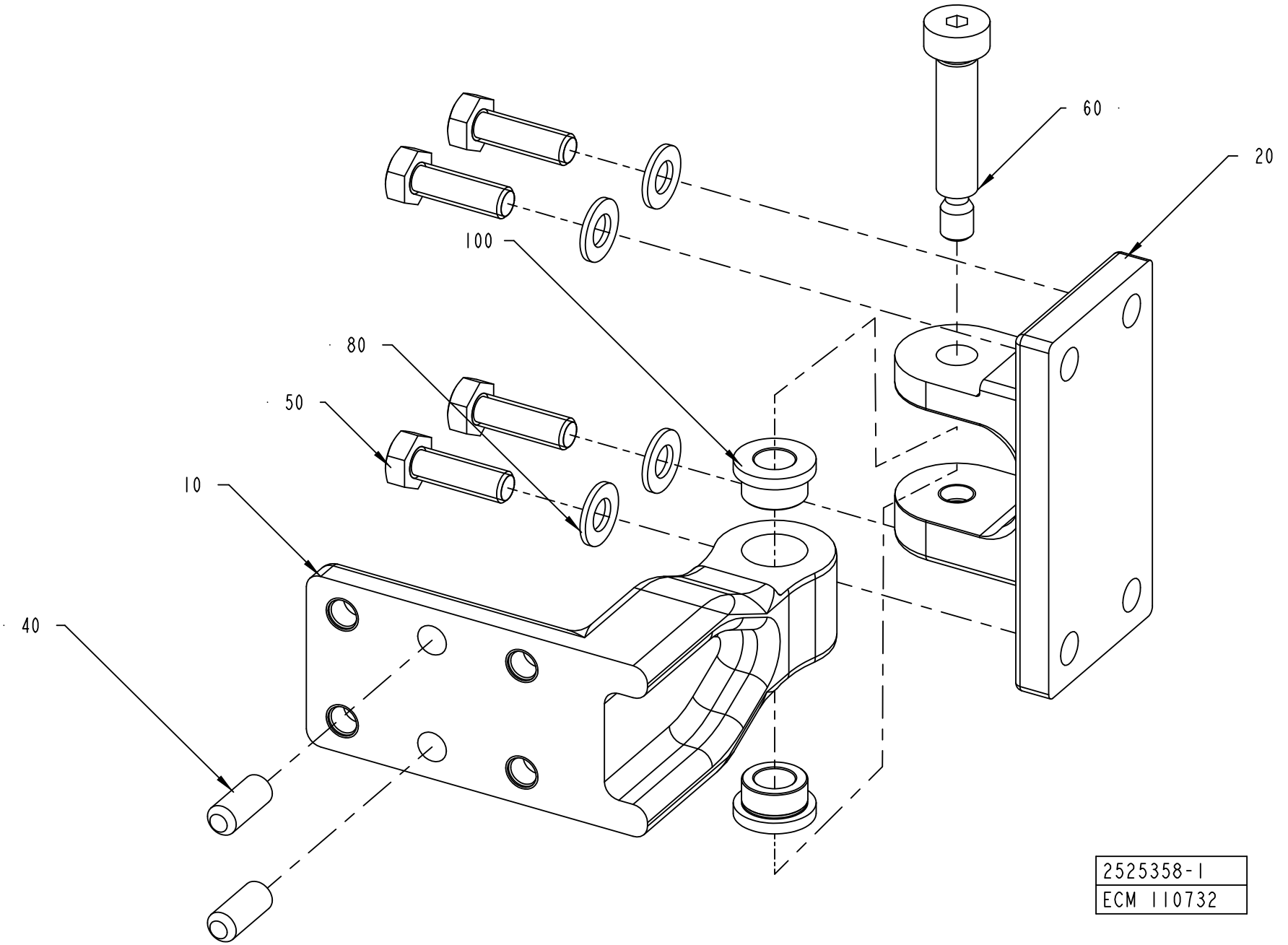
60
20
100
80
50
10
40
2525358-1
ECM 110732

ECM: 185814 - 20041005
Group number: 2525358-0100
Assembly Drawing: 2525358-1_1_AA

Pos	Part No	UN	Qty	Description	Page No
-					
010	2525350-0000		1	BRACKET	
020	2525351-0000		1	HINGE	
040	311103-0401		2	PARALLEL PIN ISO 2338 8M6X20 A1	
050	312105-0453		4	SCREW, M6S ISO 4017 M8X25 A4 80	
060	312180-0499		1	SHOULDER SCREW, ISO7379 10X40/M8 12.9	
080	315105-0165		4	FWAS080G0-0S, WASHER PLAIN	
100	321101-0163		2	FLANGE BUSHING, 10/16X10-20X3 MM	

Pos	Part No	UN	Qty	Description	Page No

SPLICING TABLE

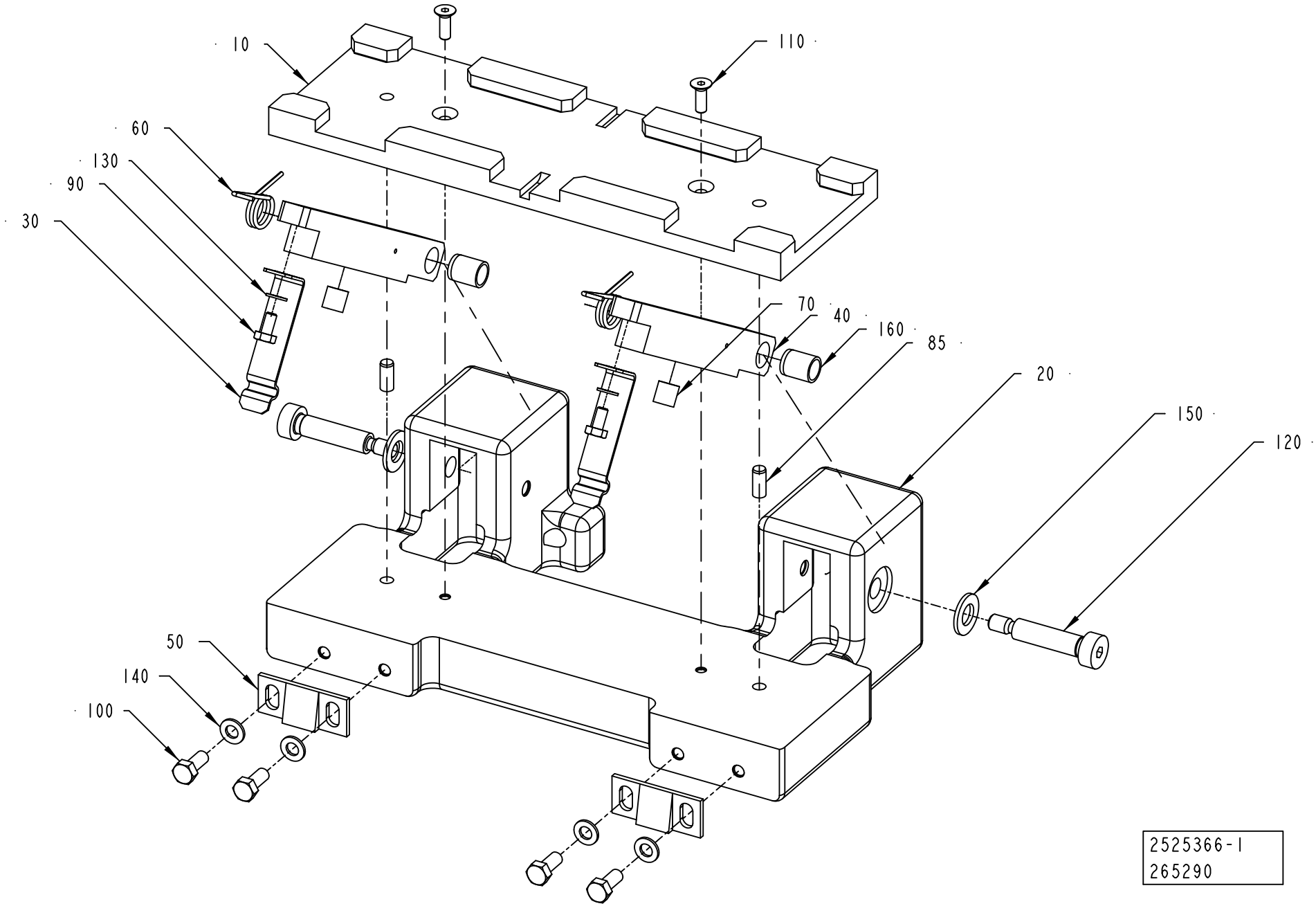

ECM: 409488 - 20090915
Group number: 2525366-0100
Assembly Drawing: 2525366-1_1_AB

Pos	Part No	UN	Qty	Description	Page No
-					
010	2533683-0100		1	SPLICING TABLE	**1-77**
020	2525349-0000		1	BRACKET	
030	1519463-0000		2	LOCKING CLAMP	
040	2525360-0000		2	LOCKING FINGER	
050	532022-0000		2	LOCK BAR	
060	544427-0000		2	TURN SPRING	
070	2525368-0000		2	PUSHER	
085	311103-0306		2	PARALLEL PIN ISO 2338 5M6X12 A1	
090	312105-0287		2	SCREW, M6S ISO 4017 M4X8 A4 70	
100	312105-0327		4	"SCREW, M6S ISO 4017 M5X12 A4 80"	
110	312155-0291		2	SCREW DIN 7991 MF6S M4X12 A4 70	
120	312180-0455		2	SHOULDER SCREW, ISO7379 8X30/M6 12.9	
130	315105-0136		2	WASHER PLAIN, 4,3X8X0,8 A4 BRB	
140	315105-0146		4	WASHER PLAIN, 5,3X10X1 A4 BRB	
150	315105-0165		2	FWAS080G0-0S, WASHER PLAIN	
160	321141-0104		2	BEARING BUSHING, 8X10X12 MM	

Pos	Part No	UN	Qty	Description	Page No

SPLICING TABLE

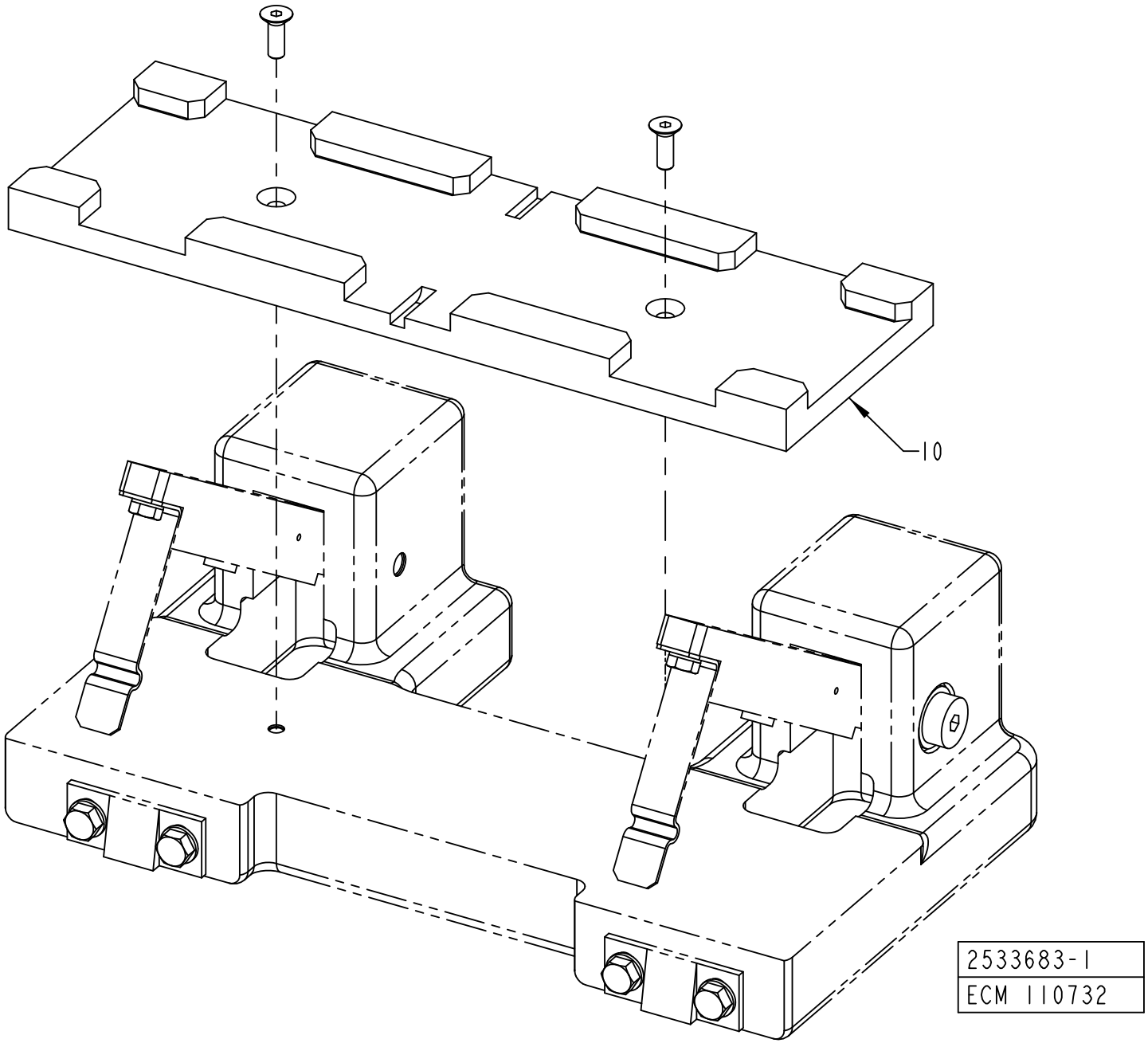

ECM: 409480 - 20090915
Group number: 2533683-0100
Assembly Drawing: 2533683-1_1_AA

Pos	Part No	UN	Qty	Description	Page No
HOLE72, HOLE48, HOLE73					
010	1499296-0002		1	GUIDE	

Pos	Part No	UN	Qty	Description	Page No

OUTER PATCH MAGAZINE

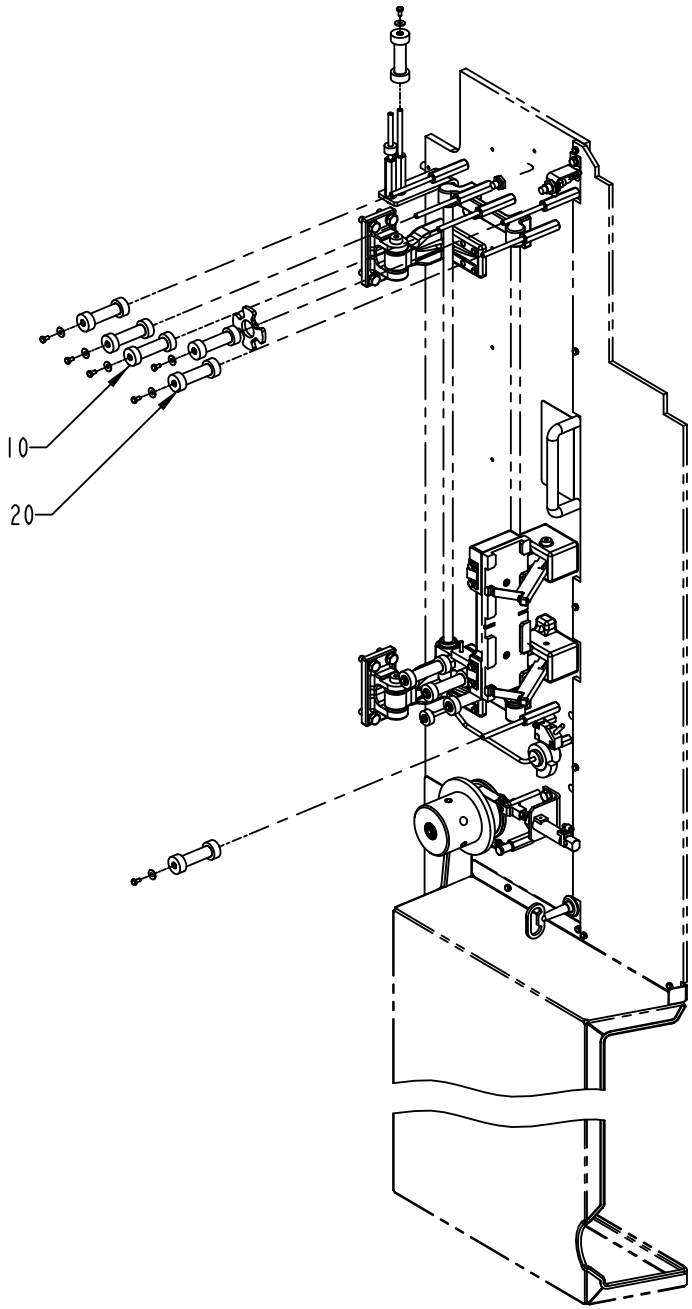

2564053-1
ECM 123507

ECM: 409481 - 20090915
Group number: 2564053-0100
Assembly Drawing: 2564053-1_1_AB

Pos	Part No	UN	Qty	Description	Page No
HOLE72, HOLE48, HOLE73					
010	2564043-0003		2	ROLLER	
020	2564044-0004		5	ROLLER	

Pos	Part No	UN	Qty	Description	Page No

OUTER PATCH MAGAZINE

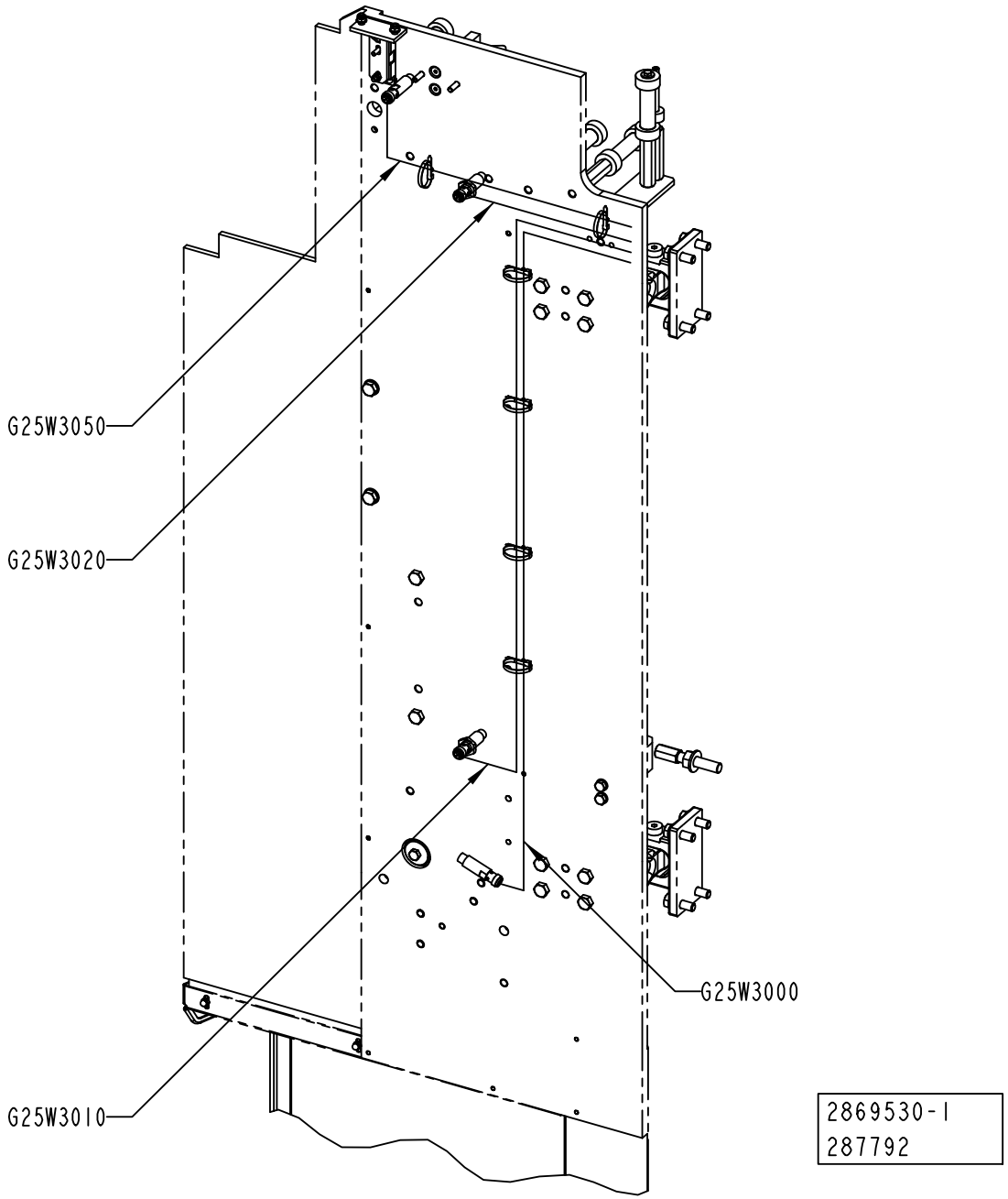

ECM: 288278 - 20061201
Group number: 2869530-0100
Assembly Drawing: 2869530-1_1_AA

Pos	Part No	UN	Qty	Description	Page No
-					
G25W3000	351310-0050		1	ACTUATOR/SENSOR CABLE PRKWT 4-07/5M	
G25W3010	351310-0050		1	ACTUATOR/SENSOR CABLE PRKWT 4-07/5M	
G25W3020	351310-0020		1	ACTUATOR/SENSOR CABLE PRKWT 4-07/2M	
G25W3050	351411-0050		1	ACTU/SENS. CABLE PRST 4-PRKT 4-07/5,0	

Pos	Part No	UN	Qty	Description	Page No

This page is intentionally left blank.

ECM: 605642 - 20131001
Group number: 2693161-0100
Assembly Drawing:

Pos	Part No	UN	Qty	Description	Page No
-					
010	3299172-0100		1	ELECTRIC MATERIALS	**1-85**
020	90166-0081	M	8	TUBE 6 MM PA BLUE	
030	90166-0109	M	9	TUBE 4 MM PA TRANSP.	

Pos	Part No	UN	Qty	Description	Page No

Machine Type | Group Description | Used-In | Group Number | Page No

This page is intentionally left blank.

ECM: 605643 - 20131001
Group number: 3299172-0100
Assembly Drawing:

Pos	Part No	UN	Qty	Description	Page No
-					
055	90459-3772		10	END SLEEVE H 0.25/12	
070	352113-0101		40	CABLE TIE,BLACK 92X	
080	352113-0102		30	CABLE TIE, BLACK 188X4,8 MM	
105	353300-0004	MM	500	HEATSHRINK TUBING	
250	359000-0200		2	WIRE MARKING, YELLOW, PA02/3"0"	
260	359000-0201		4	WIRE MARKING, YELLOW, PA02/3"1"	
270	359000-0202		2	WIRE MARKING, YELLOW, PA02/3"2"	
290	359000-0204		2	WIRE MARKING, YELLOW, PA02/3"4"	
300	359000-0205		1	WIRE MARKING, YELLOW, PA02/3"5"	
310	359000-0206		1	WIRE MARKING, YELLOW, PA02/3"6"	
320	359000-0207		1	WIRE MARKING, YELLOW, PA02/3"7"	
330	359000-0208		1	WIRE MARKING, YELLOW, PA02/3"8"	
380	359009-0100		22	CABLE MARKING, YELLOW, PK2/4"0"	
390	359009-0101		2	CABLE MARKING, YELLOW, PK 2/4"1"	
395	359009-0102		12	CABLE MARKING, YELLOW, PK 2/4"2"	
397	359009-0103		10	CABLE MARKING, YELLOW, PK 2/4"3"	
400	359009-0104		2	CABLE MARKING, YELLOW, PK 2/4"4"	
405	359009-0105		12	CABLE MARKING, YELLOW, PK 2/4"5"	
415	359009-0206		10	CABLE MARKING, YELLOW, PK 2/4" G"	
420	359009-0222		10	CABLE MARKING, YELLOW, PK 2/4" W"	

Pos	Part No	UN	Qty	Description	Page No

Machine Type | Group Description | Used-In | Group Number | Page No

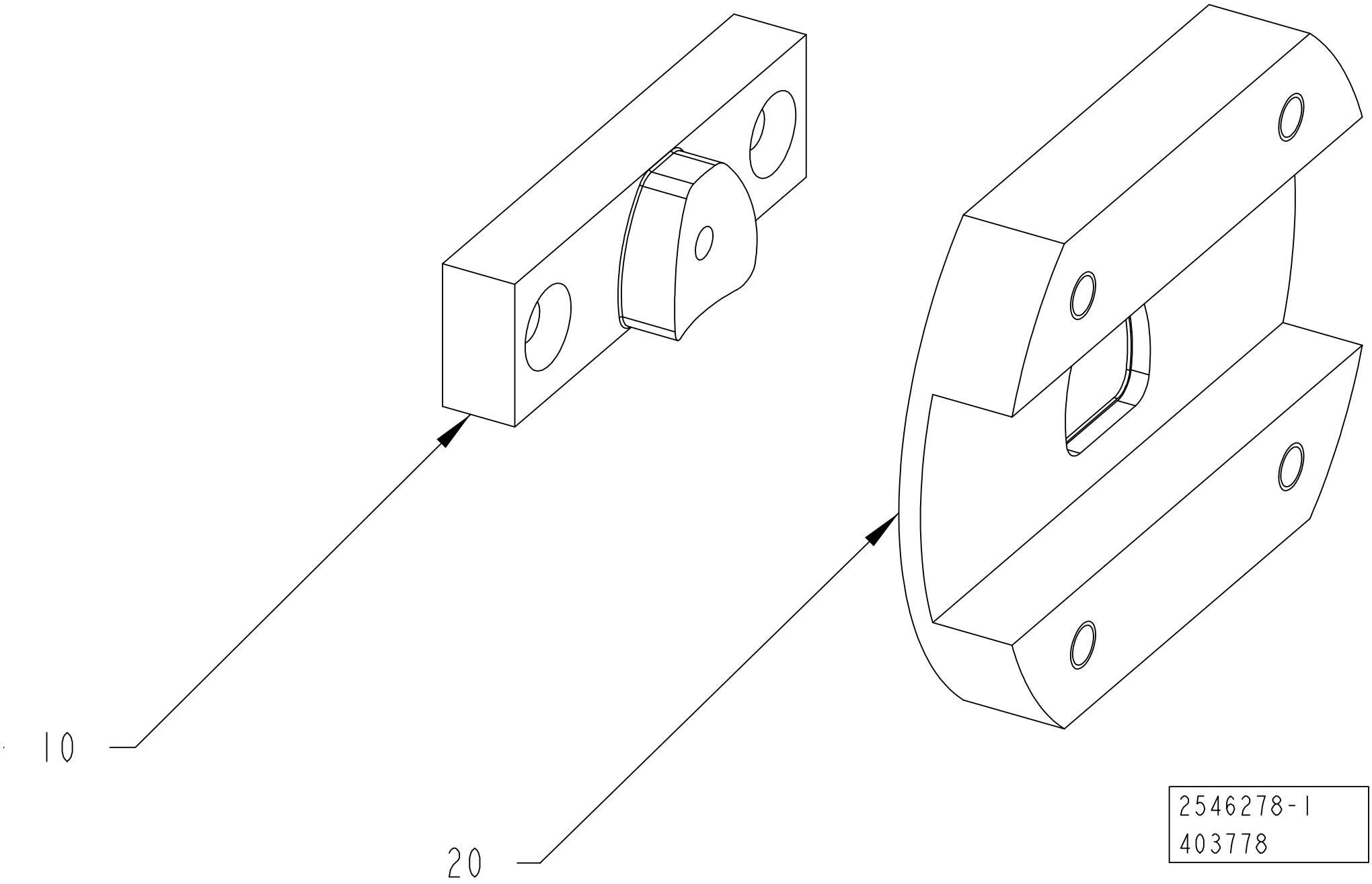
10
20
2546278-1
403778

ECM: 462540 - 20101002
Group number: 2546278-0100
Assembly Drawing: 2546278-1_1_AC

Pos	Part No	UN	Qty	Description	Page No
HOLE48					
010	2525290-0000		1	PUNCH	
020	2525289-0000		1	DIE	
HOLE72					
010	2511644-0000		1	PUNCH	
020	2511639-0000		1	DIE	
HOLE73					
010	3019893-0000		1	PUNCH	
020	3019892-0000		1	DIE	
HOLE92					
010	2956876-0000		1	PUNCH	
020	2956875-0000		1	DIE	
HOLE95					
010	2657828-0000		1	PUNCH	
020	2657829-0000		1	DIE	

Pos	Part No	UN	Qty	Description	Page No

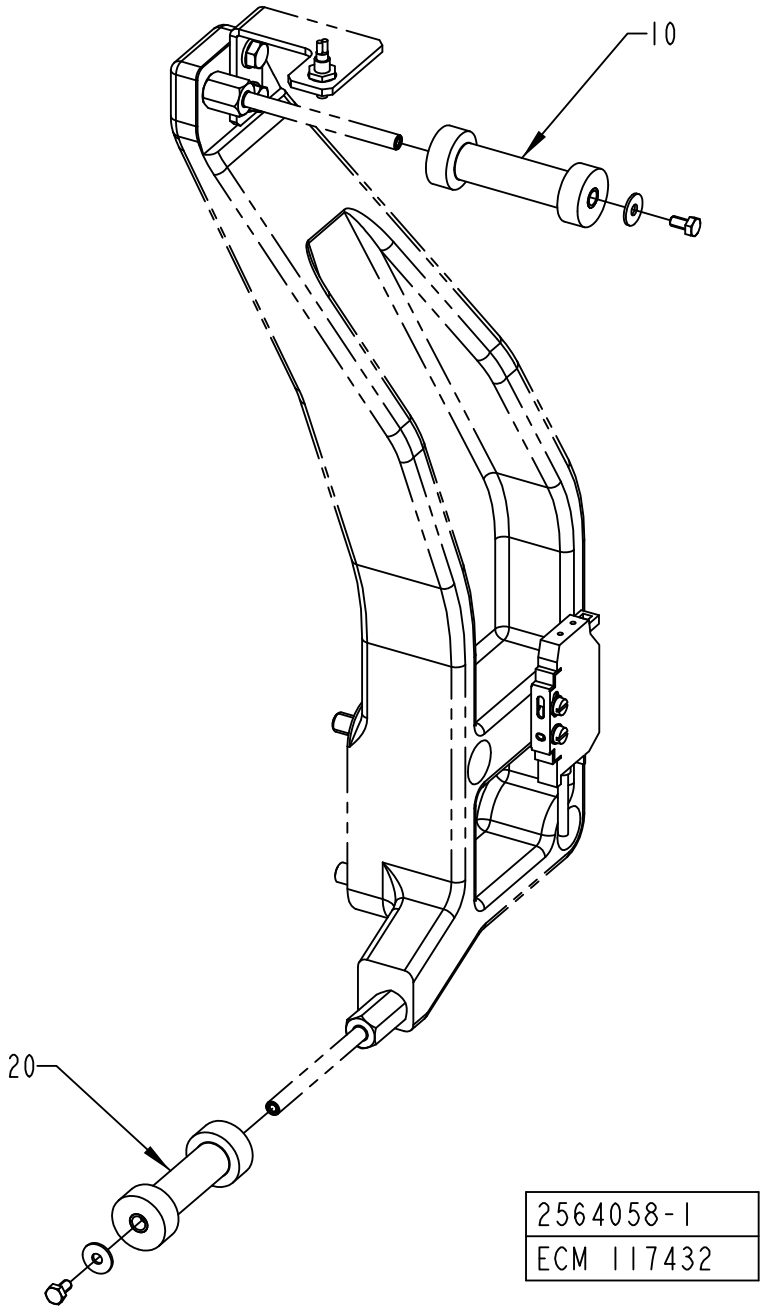
10
20
2564058-1
ECM 117432

ECM: 409593 - 20090915
Group number: 2564058-0100
Assembly Drawing: 2564058-1_1_AA

Pos	Part No	UN	Qty	Description	Page No
HOLE48, HOLE73					
010	2564043-0003		1	ROLLER	
020	2564044-0004		1	ROLLER	
HOLE72, HOLE92					
010	2564043-0002		1	ROLLER	
020	2564044-0002		1	ROLLER	
HOLE95					
010	2564043-0005		1	ROLLER	
020	2564044-0006		1	ROLLER	

Pos	Part No	UN	Qty	Description	Page No

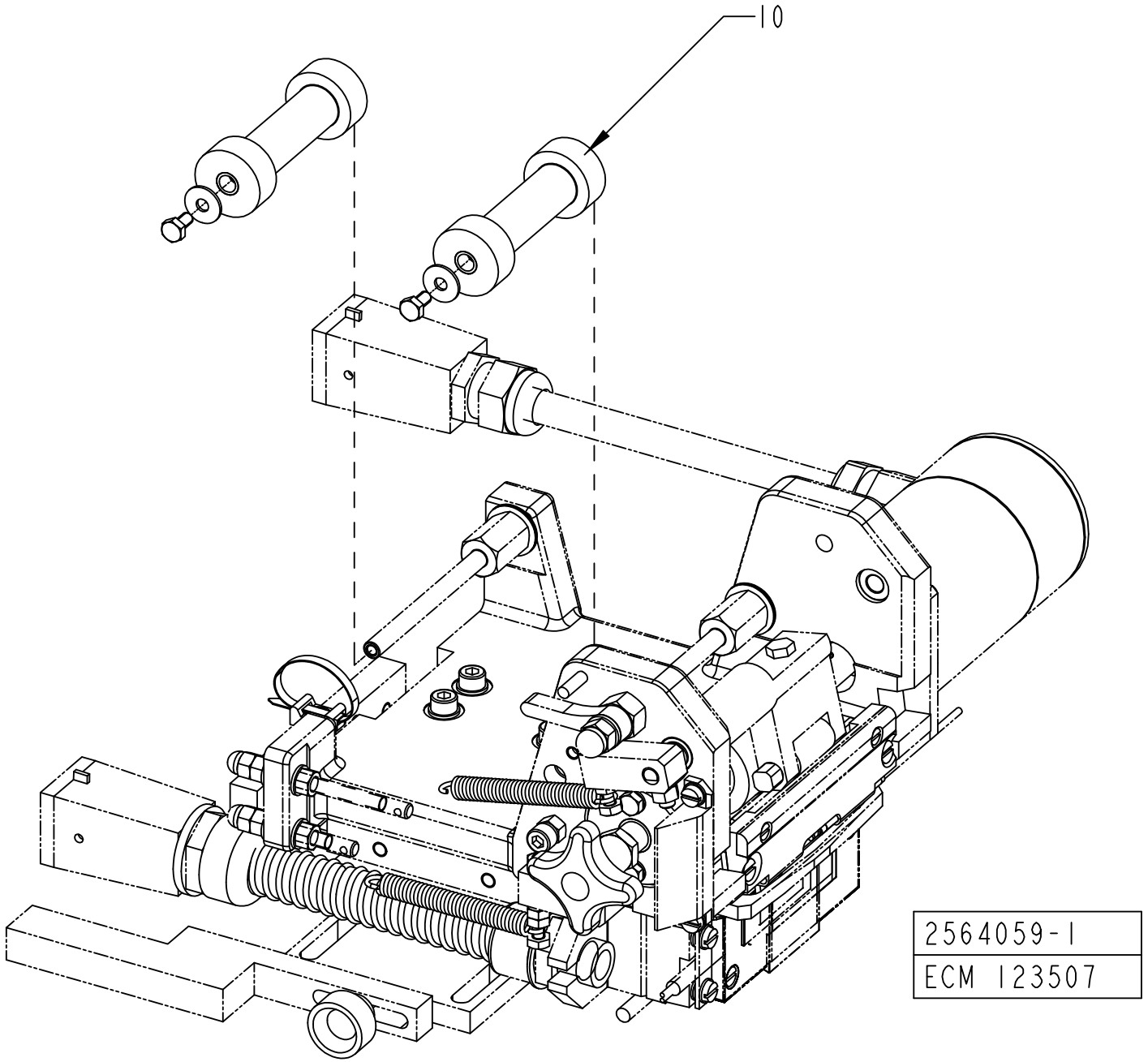
10
2564059-1
ECM 123507

ECM: 608629 - 20130514
Group number: 2564059-0100
Assembly Drawing: 2564059-1_1_AB

Pos	Part No	UN	Qty	Description	Page No
TBA 0250B HOLE95, TBA 0375S HOLE95, TBA 0330S HOLE95, TBA 0200B HOLE95					
010	2564044-0011		2	ROLLER	
TBA 0200S HOLE92, TBA 0200M HOLE92, TBA 0125S HOLE92, TBA 0250S HOLE92, TBA 0160S HOLE92					
010	2564044-0006		2	ROLLER	
TPA 0250SQ HOLE72, TPA 0330SQ HOLE48, TPA 0200SQ HOLE72, TPA 0125SQ HOLE73					
010	2564044-0001		2	ROLLER	

Pos	Part No	UN	Qty	Description	Page No

TAB FEEDER

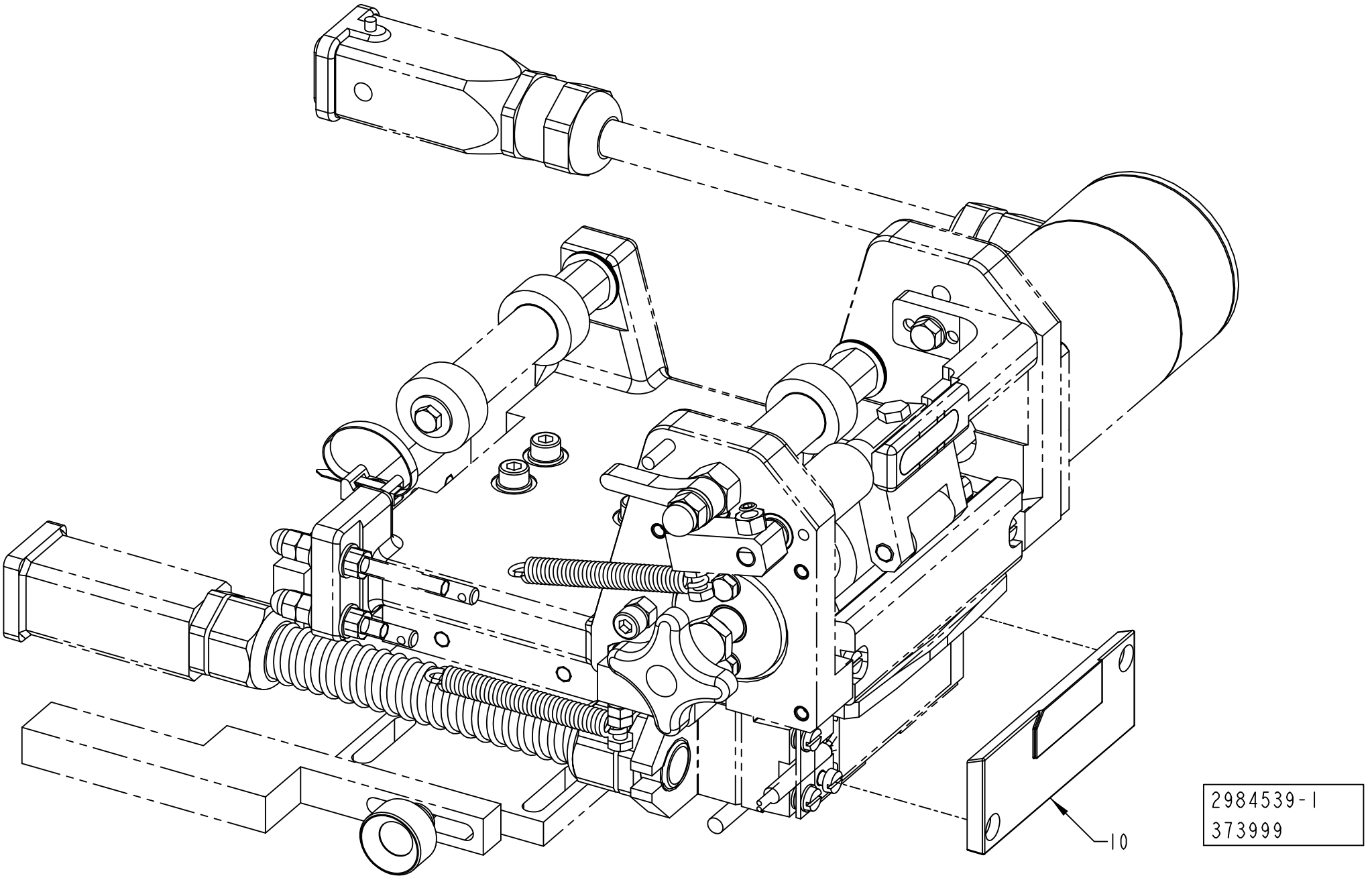

ECM: 608630 - 20130514
Group number: 2984539-0100
Assembly Drawing: 2984539-1_1_AA

Pos	Part No	UN	Qty	Description	Page No
TBA 0125S HOLE92					
010	3086911-0000		1	SEALING PLATE	
TBA 0200S HOLE92, TBA 0200M HOLE92, TBA 0250S HOLE92, TBA 0160S HOLE92					
010	2927708-0000		1	SEALING PLATE	
TBA 0250B HOLE95, TBA 0375S HOLE95, TBA 0330S HOLE95, TBA 0200B HOLE95					
010	2526551-0000		1	PLATE	
TPA 0125SQ HOLE73					
010	2995020-0000		1	SEALING PLATE	
TPA 0250SQ HOLE72, TPA 0200SQ HOLE72					
010	2511640-0000		1	SEALING PLATE	
TPA 0330SQ HOLE48					
010	2511642-0000		1	SEALING PLATE	

Pos	Part No	UN	Qty	Description	Page No

TAB C'JAW

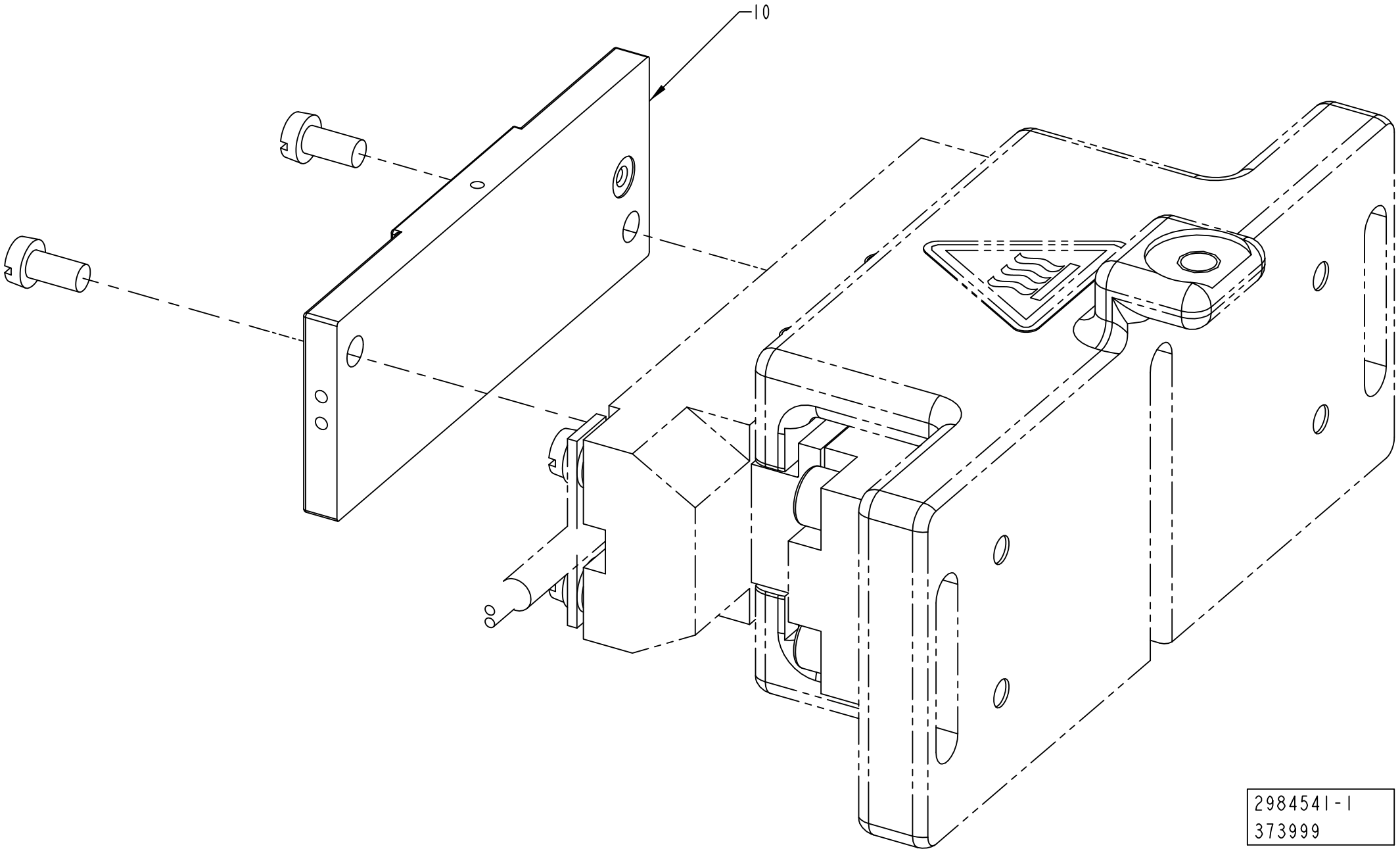

ECM: 608631 - 20130514
Group number: 2984541-0100
Assembly Drawing: 2984541-1_1_AA

Pos	Part No	UN	Qty	Description	Page No
TBA 0200S HOLE92, TBA 0200M HOLE92, TBA 0125S HOLE92, TBA 0250S HOLE92, TBA 0160S HOLE92					
010	2927709-0000		1	SEALING PLATE	
010	*311102-0185*		*1*	*PARALLEL PIN ISO 2338 2M6X6 ST*	
TBA 0250B HOLE95, TBA 0375S HOLE95, TBA 0330S HOLE95, TBA 0200B HOLE95					
010	2563974-0000		1	SEALING PLATE	
TPA 0125SQ HOLE73					
010	3019927-0000		1	SEALING PLATE	
TPA 0250SQ HOLE72, TPA 0200SQ HOLE72					
010	2525292-0000		1	SEALING PLATE	
TPA 0330SQ HOLE48					
010	2511651-0000		1	SEALING PLATE	

Pos	Part No	UN	Qty	Description	Page No

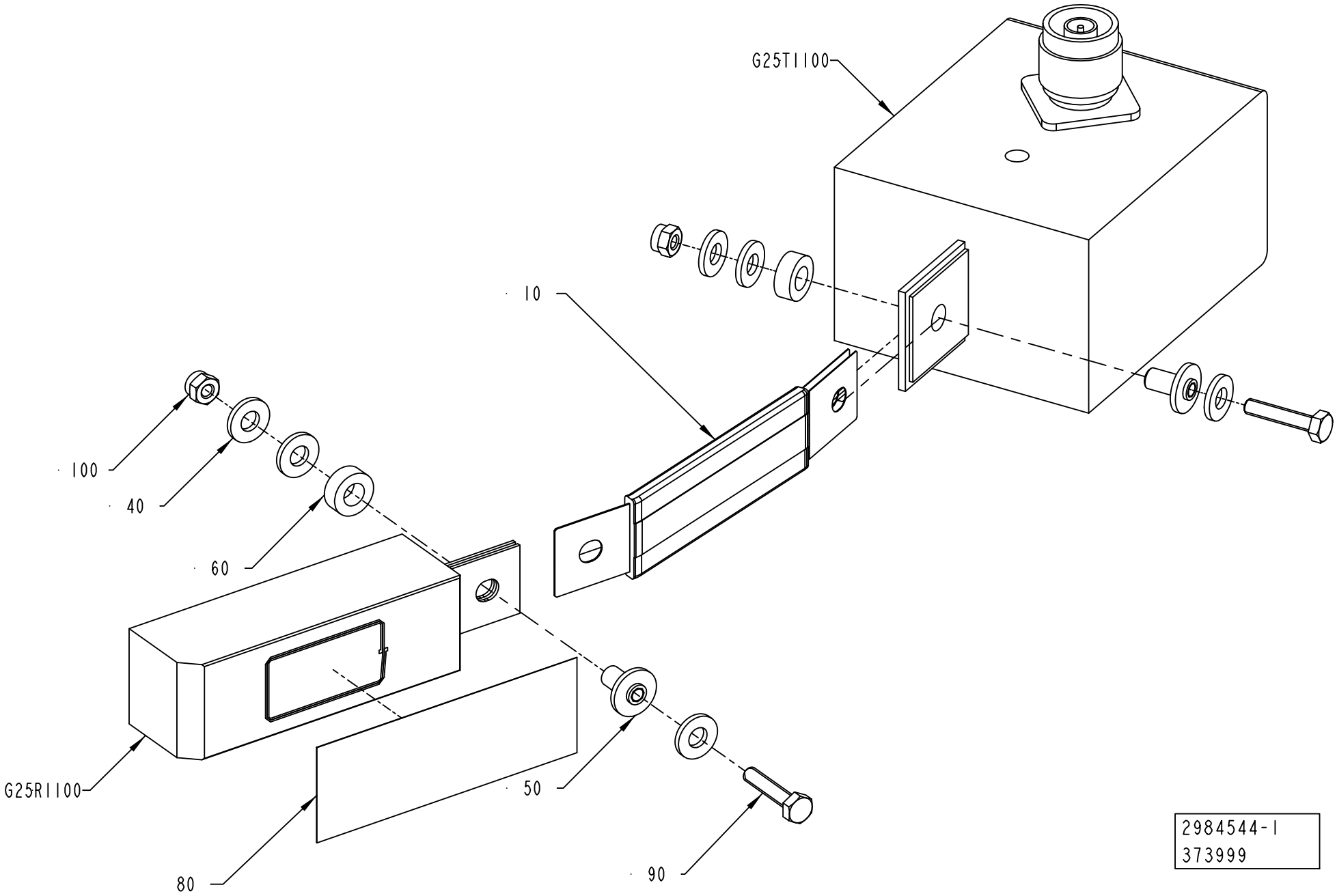

2984544-1
373999

ECM: 507995 - 20111001
Group number: 2984544-0100
Assembly Drawing: 2984544-1_1_AA

Pos	Part No	UN	Qty	Description	Page No
HOLE48					
G25R1100	1520196-0000		1	INDUCTOR	
G25T1100	67379-0216		1	TRANSFORMER	
HOLE72					
G25R1100	1566708-0000		1	INDUCTOR	
G25T1100	67379-0224		1	TRANSFORMER	
HOLE73					
G25R1100	3003484-0000		1	INDUCTOR	
G25T1100	67379-0224		1	TRANSFORMER	
HOLE92					
G25R1100	2971544-0000		1	INDUCTOR	
G25T1100	67379-0224		1	TRANSFORMER	
HOLE95					
G25R1100	1533360-0000		1	INDUCTOR	
G25T1100	67379-0216		1	TRANSFORMER	
Common Parts					
010	1140889-0000		1	BUSBAR	
040	28509-0000		6	WASHER	
050	32544-0000		2	INSULATION NUT	
060	32644-0000		2	WASHER	
080	90459-2130	MM	130	TAPE, ADHESIVE SI TAPE MON3154535033CL	
090	312105-0295		2	SCREW, M6S ISO 4017 M4X20 A4 70	
100	312812-0312		2	HEXAGON NUT, NY-LOCK M4 A4 80	

Pos	Part No	UN	Qty	Description	Page No

PATCH FEEDER

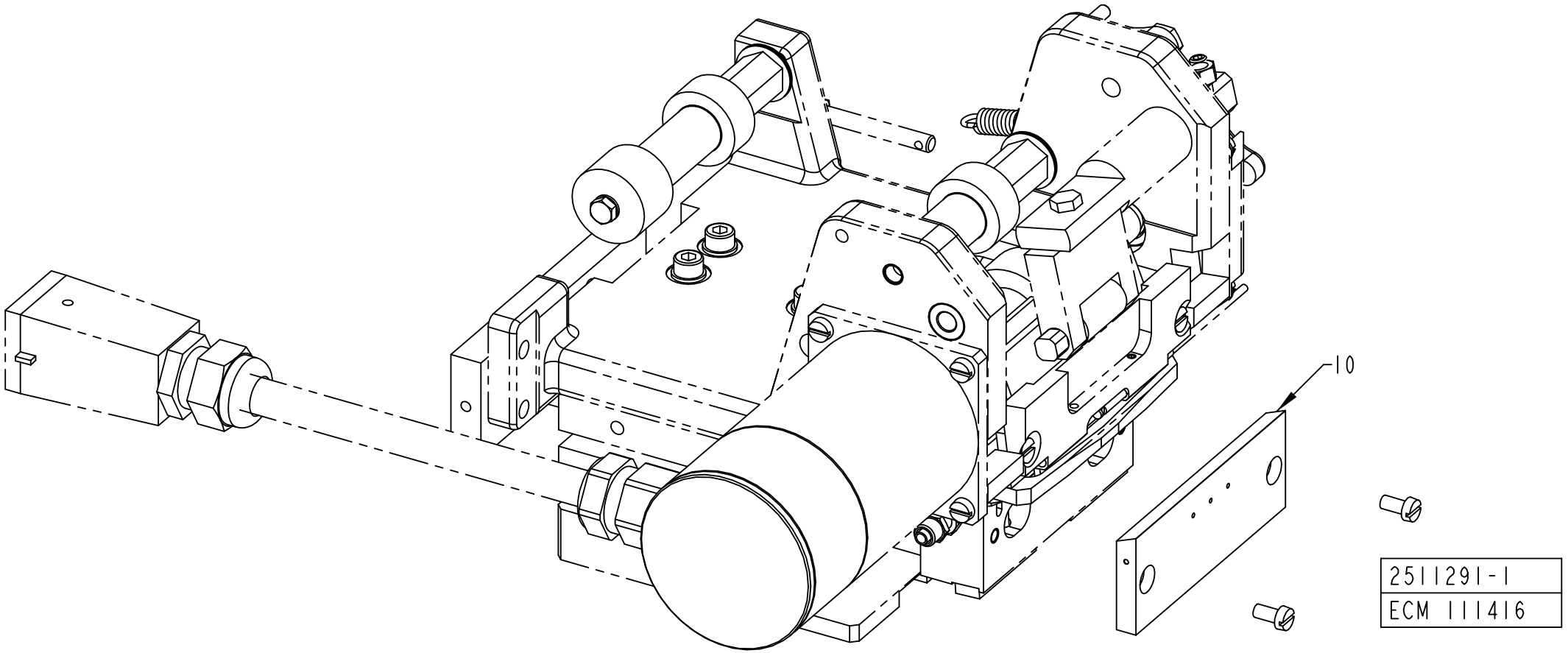

ECM: 409791 - 20090915
Group number: 2511291-0100
Assembly Drawing: 2511291-1_1_AA

Pos	Part No	UN	Qty	Description	Page No
HOLE95, HOLE92, HOLE73					
010	2533715-0000		1	SEALING PLATE	
HOLE72, HOLE48					
010	2546293-0000		1	SEALING PLATE	

Pos	Part No	UN	Qty	Description	Page No

PATCH FEEDER

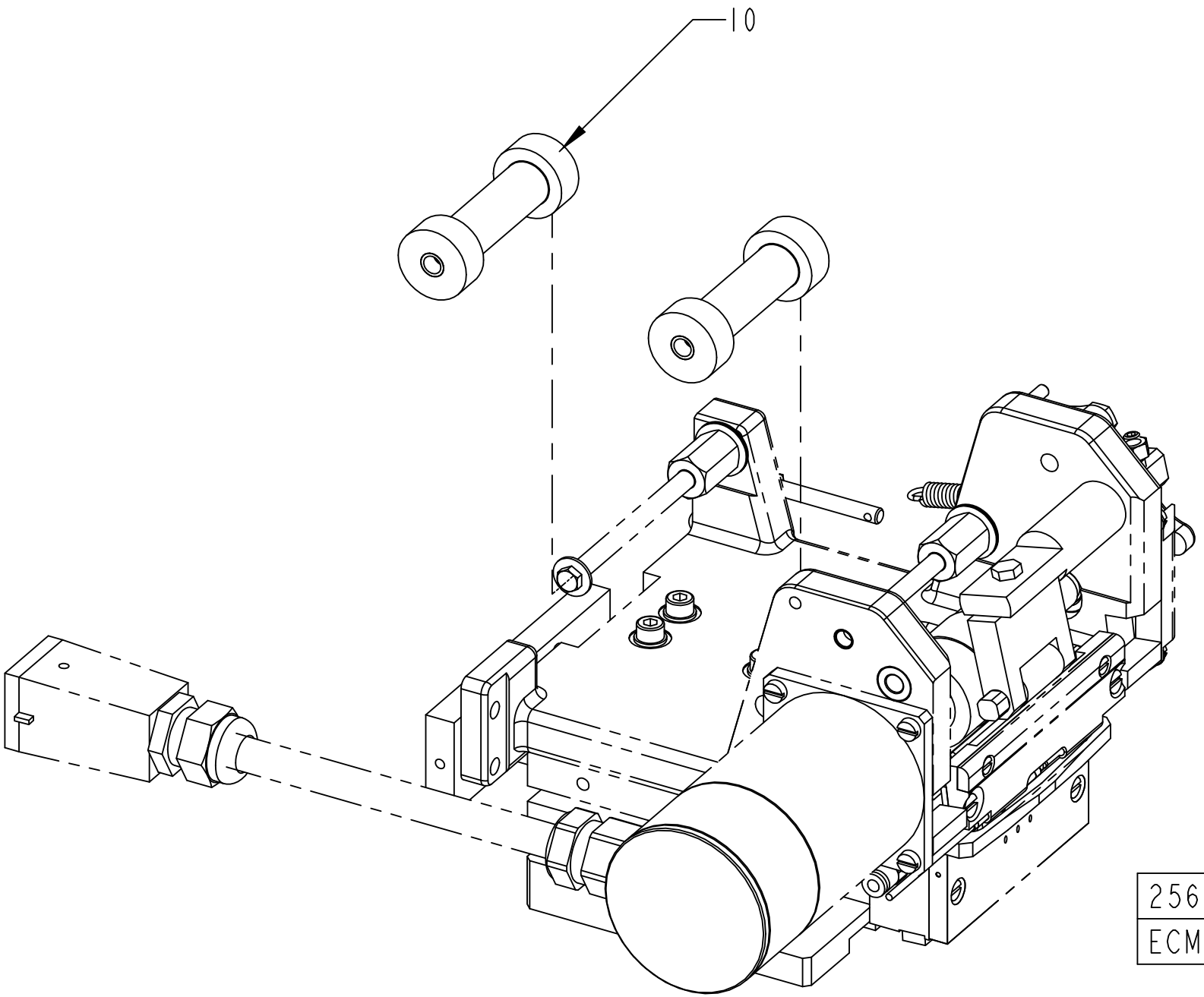

ECM: 409790 - 20090915
Group number: 2564060-0100
Assembly Drawing: 2564060-1_1_AA

Pos	Part No	UN	Qty	Description	Page No
HOLE48, HOLE73					
010	2564044-0004		2	ROLLER	
HOLE72, HOLE92					
010	2564044-0002		2	ROLLER	
HOLE95					
010	2564044-0006		2	ROLLER	

Pos	Part No	UN	Qty	Description	Page No

BAR CODE READER

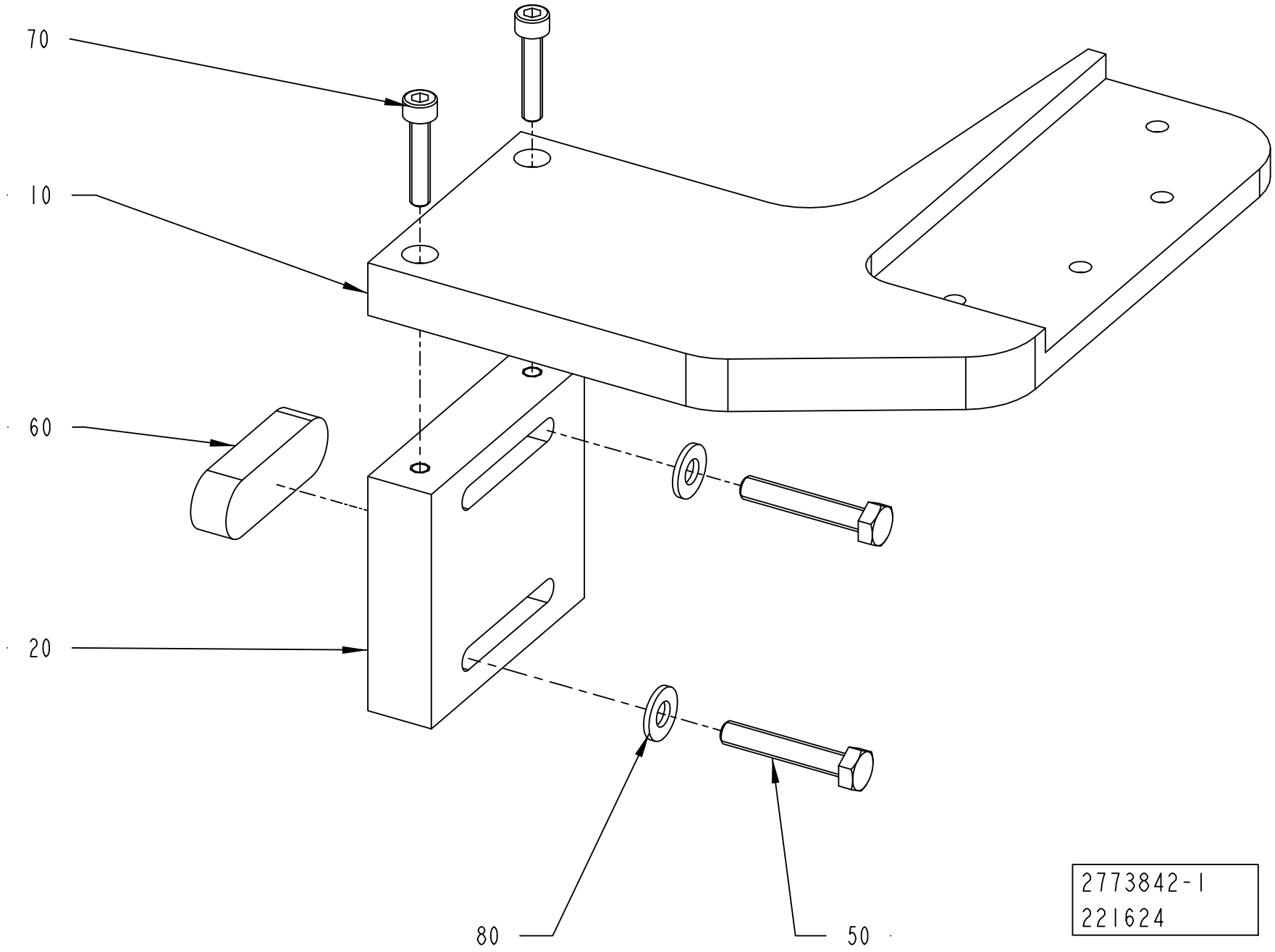

Pos	Part No	UN	Qty	Description	Page No
TPA 0330SQ HOLE48, TBA 0250B HOLE95, TBA 0375S HOLE95, TBA 0330S HOLE95, TBA 0200B HOLE95, TBA 0200S HOLE92, TBA 0200M HOLE92, TBA 0125S HOLE92, TBA 0250S HOLE92, TBA 0160S HOLE92 (See drawing on page: 1-104)					
010	1548376-0000		1	BRACKET	
080	315125-0153		2	WASHER HIGH, TBRSB 6,4X22X4 A4	
TPA 0250SQ HOLE72, TPA 0200SQ HOLE72, TPA 0125SQ HOLE73 (See drawing on page: 1-102)					
010	2735131-0000		1	BRACKET	
020	2735132-0000		1	SUPPORT	
070	312115-0333		2	SCREW ISO4762 M5X25 A4 80	
080	315105-0156		2	WASHER PLAIN, 6,7X14X1,5 A4 BRB	
Common Parts					
050	312109-0376		2	SCREW, M6S ISO 4017 M6X35 A4 80	
060	315701-0396		1	PARALLEL KEY W. ROUND ENDS, 16X10X50 MM	

Pos	Part No	UN	Qty	Description	Page No

BAR CODE READER

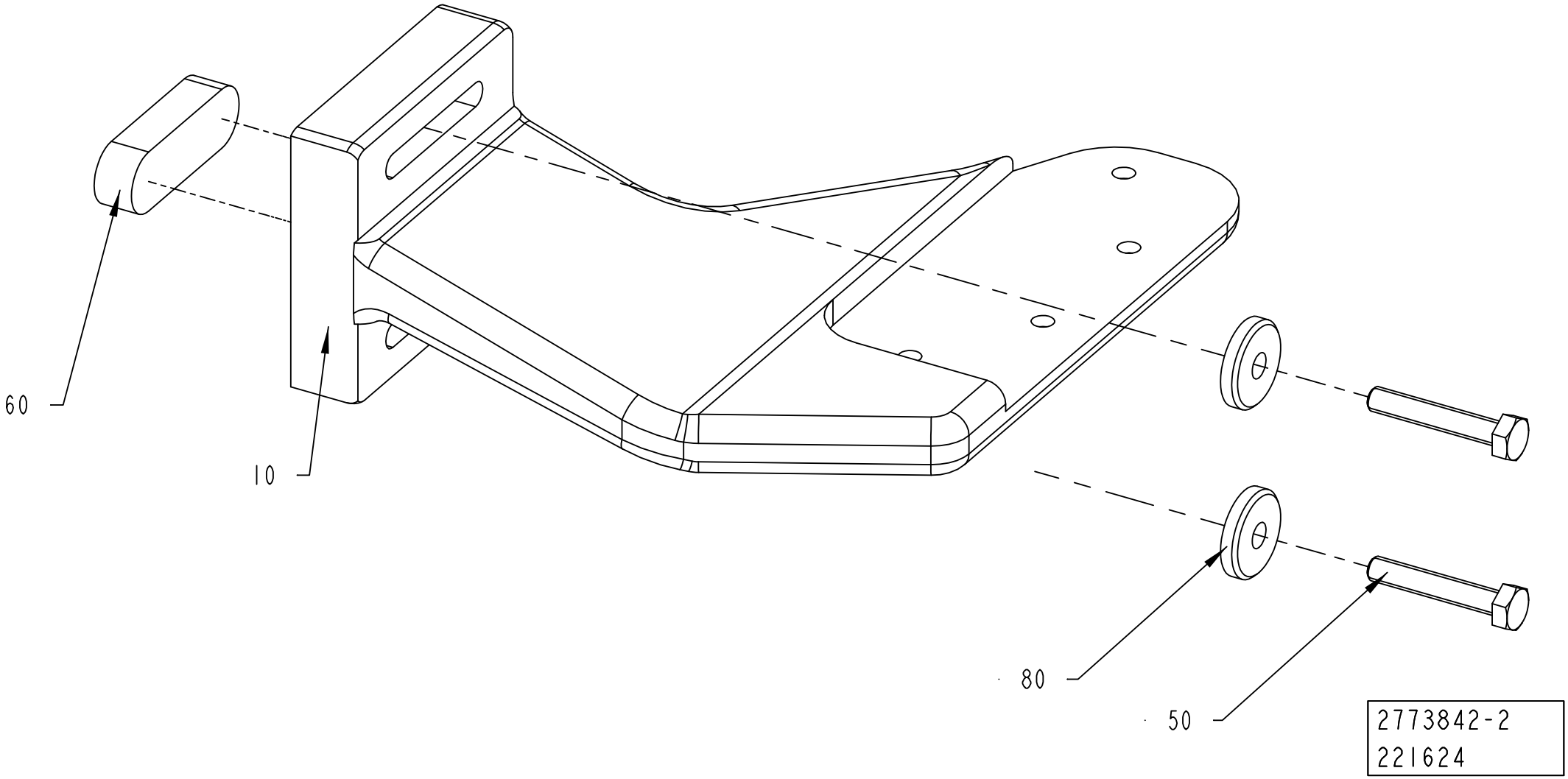

Pos	Part No	UN	Qty	Description	Page No
TPA 0330SQ HOLE48, TBA 0250B HOLE95, TBA 0375S HOLE95, TBA 0330S HOLE95, TBA 0200B HOLE95, TBA 0200S HOLE92, TBA 0200M HOLE92, TBA 0125S HOLE92, TBA 0250S HOLE92, TBA 0160S HOLE92 (See drawing on page: 1-104)					
010	1548376-0000		1	BRACKET	
080	315125-0153		2	WASHER HIGH, TBRSB 6,4X22X4 A4	
TPA 0250SQ HOLE72, TPA 0200SQ HOLE72, TPA 0125SQ HOLE73 (See drawing on page: 1-102)					
010	2735131-0000		1	BRACKET	
020	2735132-0000		1	SUPPORT	
070	312115-0333		2	SCREW ISO4762 M5X25 A4 80	
080	315105-0156		2	WASHER PLAIN, 6,7X14X1,5 A4 BRB	
Common Parts					
050	312109-0376		2	SCREW, M6S ISO 4017 M6X35 A4 80	
060	315701-0396		1	PARALLEL KEY W. ROUND ENDS, 16X10X50 MM	

Pos	Part No	UN	Qty	Description	Page No

SPLICING TABLE

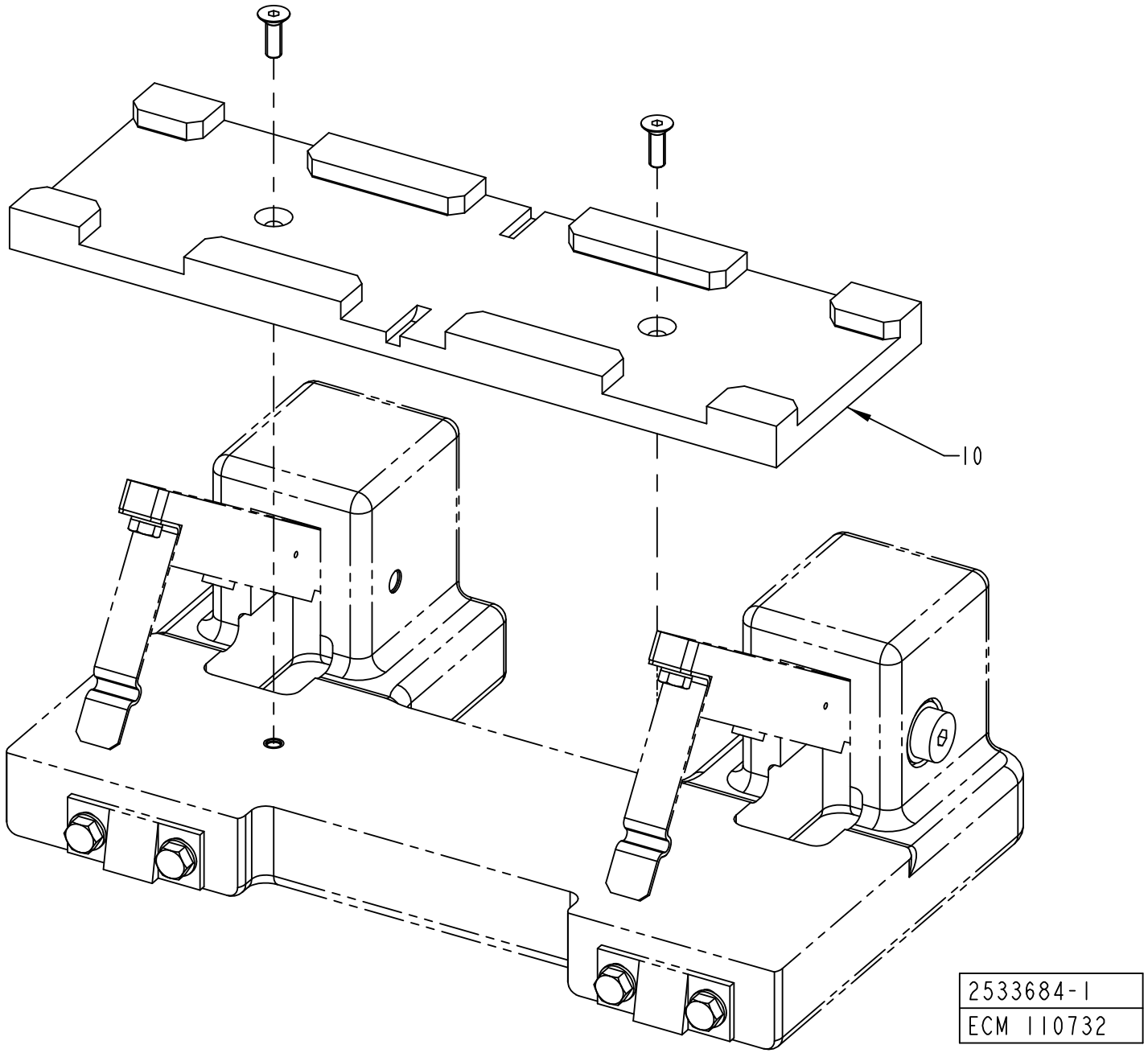

ECM: 409472 - 20090915
Group number: 2533684-0100
Assembly Drawing: 2533684-1_1_AA

Pos	Part No	UN	Qty	Description	Page No
HOLE48, HOLE73					
010	1499296-0002		1	GUIDE	
HOLE72, HOLE92					
010	1499296-0001		1	GUIDE	
HOLE95					
010	1499296-0004		1	GUIDE	

Pos	Part No	UN	Qty	Description	Page No

BOBBIN HOLDER

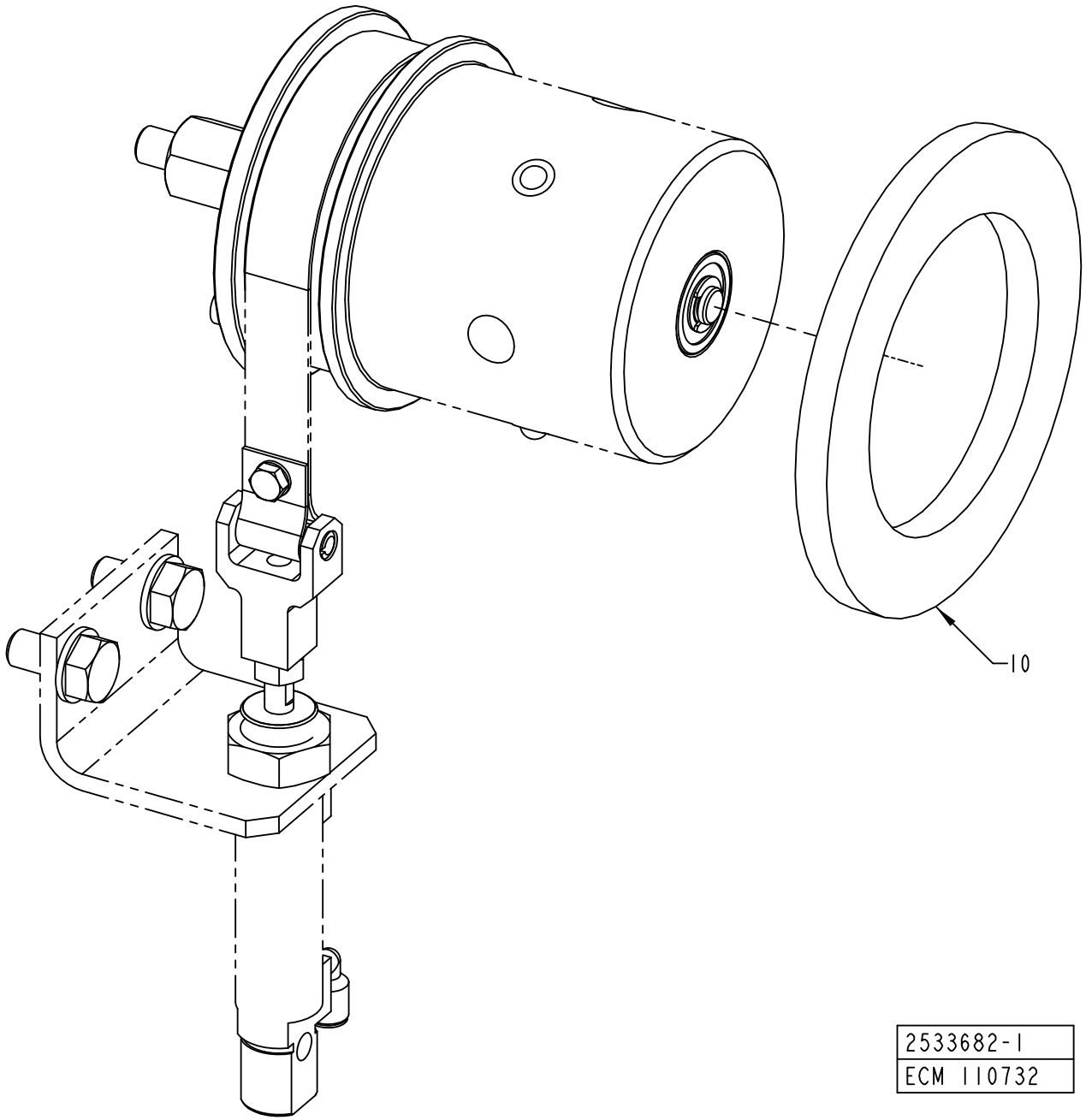

2533682-1
ECM 110732

ECM: 409471 - 20090915
Group number: 2533682-0100
Assembly Drawing: 2533682-1_1_AA

Pos	Part No	UN	Qty	Description	Page No
HOLE48, HOLE73					
010	1347952-0003		1	SPACER	
HOLE72, HOLE92					
010	1347952-0002		1	SPACER	
HOLE95					
010	1347952-0006		1	SPACER	

Pos	Part No	UN	Qty	Description	Page No

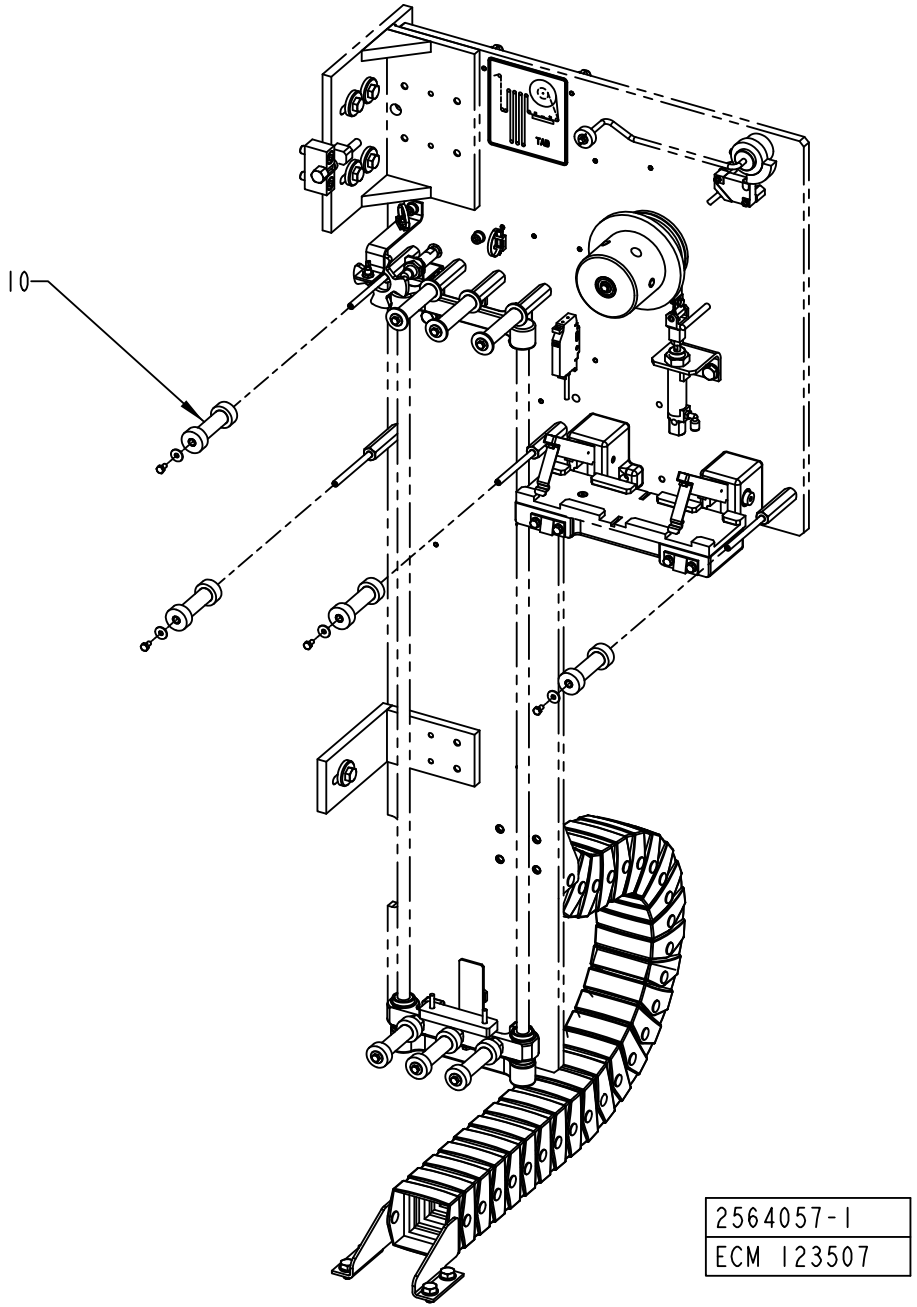
10
2564057-1
ECM 123507

ECM: 608625 - 20130514
Group number: 2564057-0100
Assembly Drawing: 2564057-1_1_AB

Pos	Part No	UN	Qty	Description	Page No
TBA 0250B HOLE95, TBA 0375S HOLE95, TBA 0330S HOLE95, TBA 0200B HOLE95					
010	2564044-0011		4	ROLLER	
TBA 0200S HOLE92, TBA 0200M HOLE92, TBA 0125S HOLE92, TBA 0250S HOLE92, TBA 0160S HOLE92					
010	2564044-0006		4	ROLLER	
TPA 0250SQ HOLE72, TPA 0330SQ HOLE48, TPA 0200SQ HOLE72, TPA 0125SQ HOLE73					
010	2564044-0001		4	ROLLER	

Pos	Part No	UN	Qty	Description	Page No

BOBBIN HOLDER

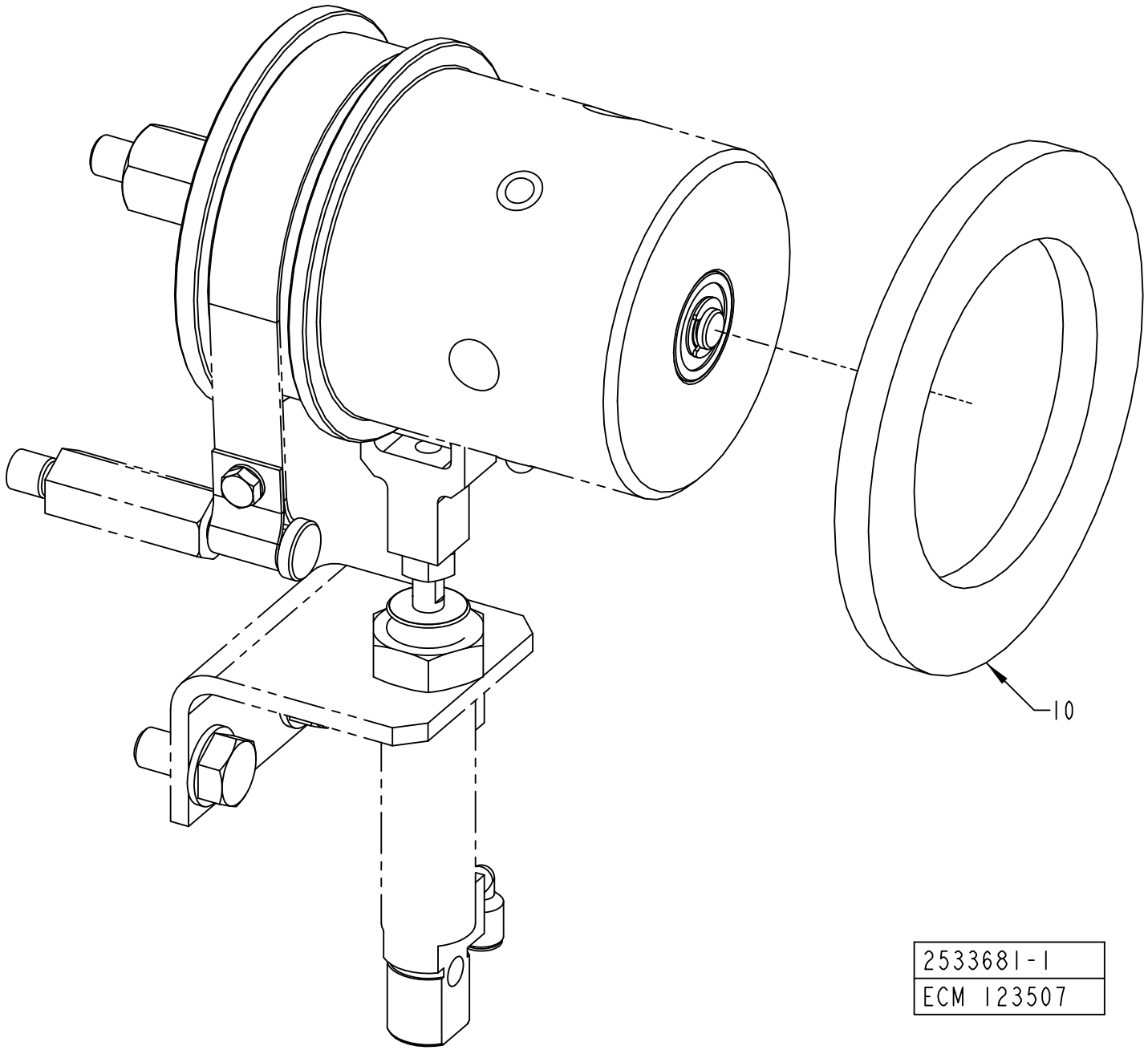

2533681-1
ECM 123507

ECM: 608627 - 20130514
Group number: 2533681-0100
Assembly Drawing: 2533681-1_1_AB

Pos	Part No	UN	Qty	Description	Page No
TBA 0250B HOLE95, TBA 0375S HOLE95, TBA 0330S HOLE95, TBA 0200B HOLE95					
010	1347952-0010		1	SPACER	
TBA 0200S HOLE92, TBA 0200M HOLE92, TBA 0125S HOLE92, TBA 0250S HOLE92, TBA 0160S HOLE92					
010	1347952-0006		1	SPACER	
TPA 0250SQ HOLE72, TPA 0330SQ HOLE48, TPA 0200SQ HOLE72, TPA 0125SQ HOLE73					
010	1347952-0016		1	SPACER	

Pos	Part No	UN	Qty	Description	Page No

SPLICING TABLE

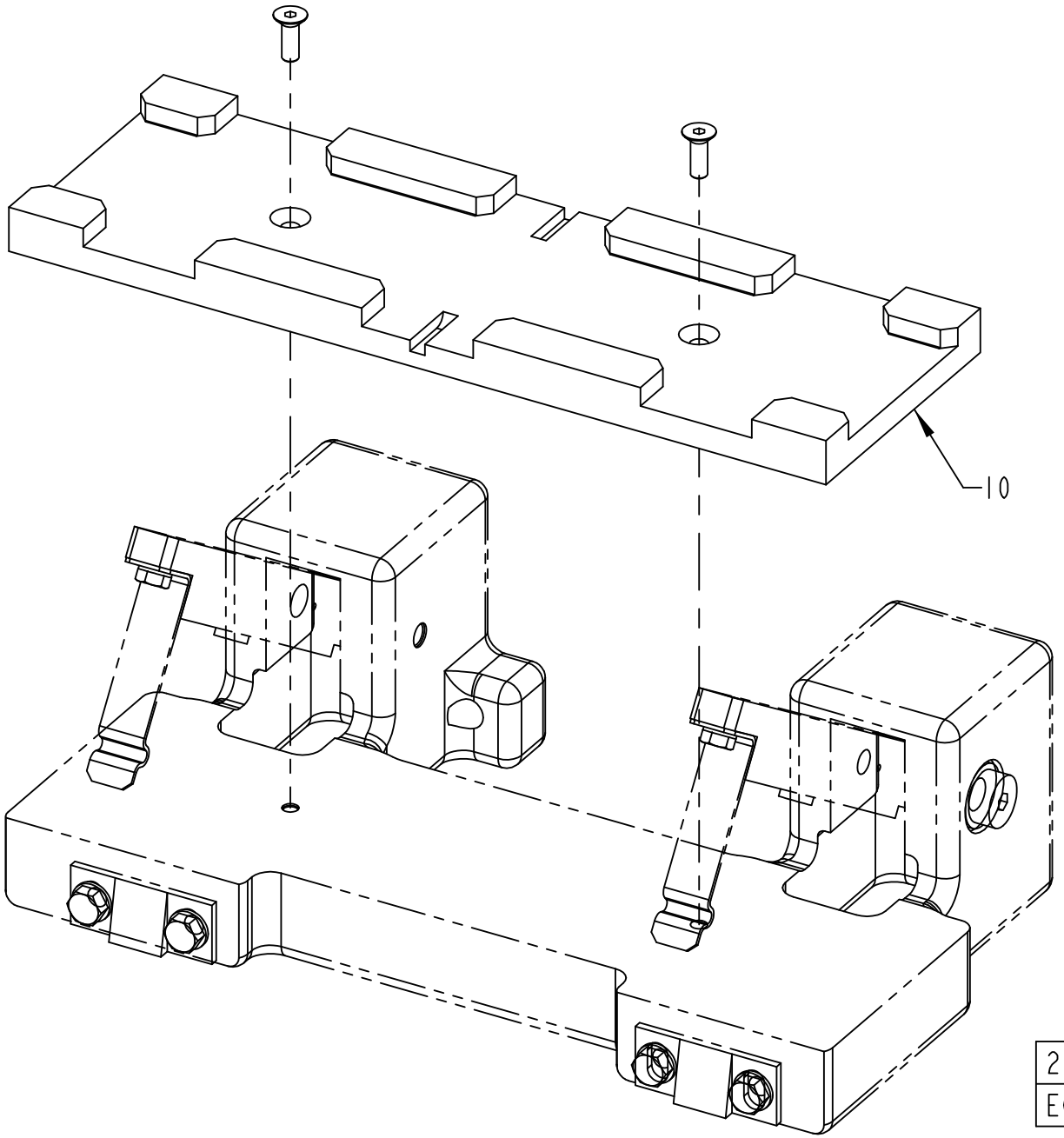

2533685-1
ECM 123507

ECM: 608626 - 20130514
Group number: 2533685-0100
Assembly Drawing: 2533685-1_1_AB

Pos	Part No	UN	Qty	Description	Page No
TBA 0250B HOLE95, TBA 0375S HOLE95, TBA 0330S HOLE95, TBA 0200B HOLE95					
010	1499296-0007		1	GUIDE	
TBA 0200S HOLE92, TBA 0200M HOLE92, TBA 0125S HOLE92, TBA 0250S HOLE92, TBA 0160S HOLE92					
010	1499296-0004		1	GUIDE	
TPA 0250SQ HOLE72, TPA 0330SQ HOLE48, TPA 0200SQ HOLE72, TPA 0125SQ HOLE73					
010	1499296-0013		1	GUIDE	

Pos	Part No	UN	Qty	Description	Page No

STRIP MAGAZINE

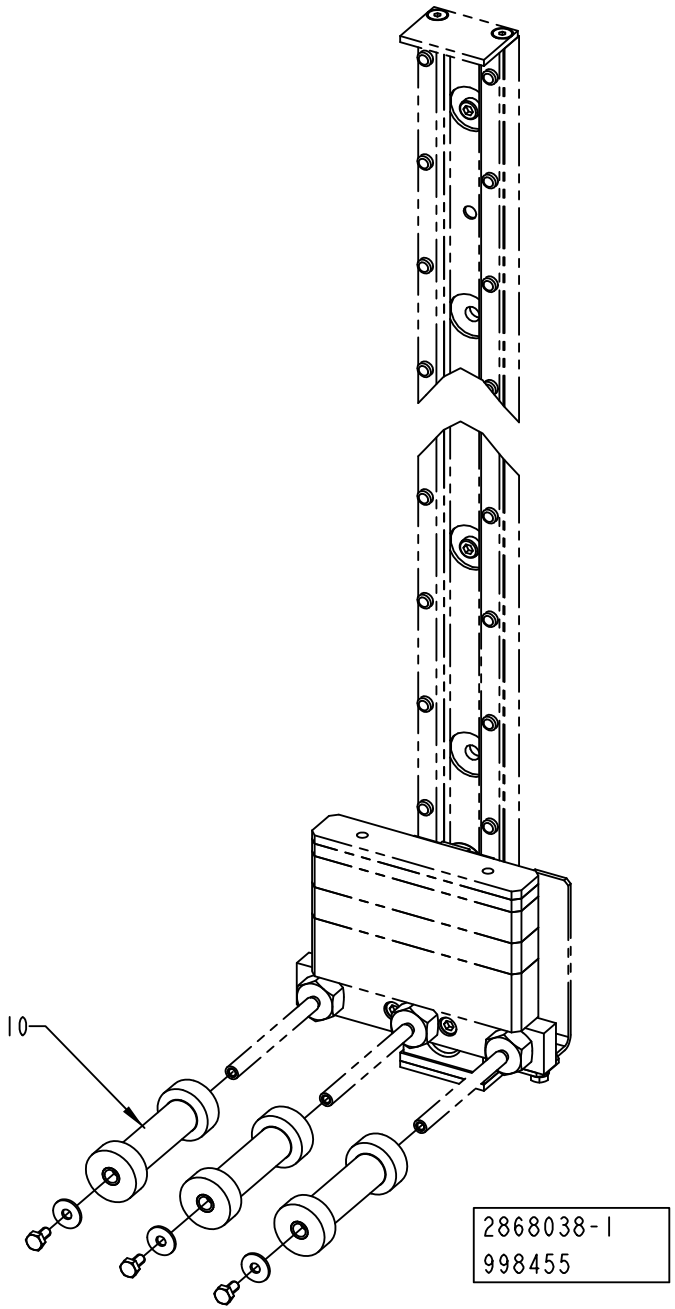

ECM: 998455 - 20130514
Group number: 2868038-0100
Assembly Drawing: 2868038-1_1_AA

Pos	Part No	UN	Qty	Description	Page No
TBA 0250B HOLE95, TBA 0375S HOLE95, TBA 0330S HOLE95, TBA 0200B HOLE95					
010	2564043-0008		3	ROLLER	
TBA 0200S HOLE92, TBA 0200M HOLE92, TBA 0125S HOLE92, TBA 0250S HOLE92, TBA 0160S HOLE92					
010	2564043-0005		3	ROLLER	
TPA 0250SQ HOLE72, TPA 0330SQ HOLE48, TPA 0200SQ HOLE72, TPA 0125SQ HOLE73					
010	2564043-0001		3	ROLLER	

Pos	Part No	UN	Qty	Description	Page No

PATCH MAGAZINE

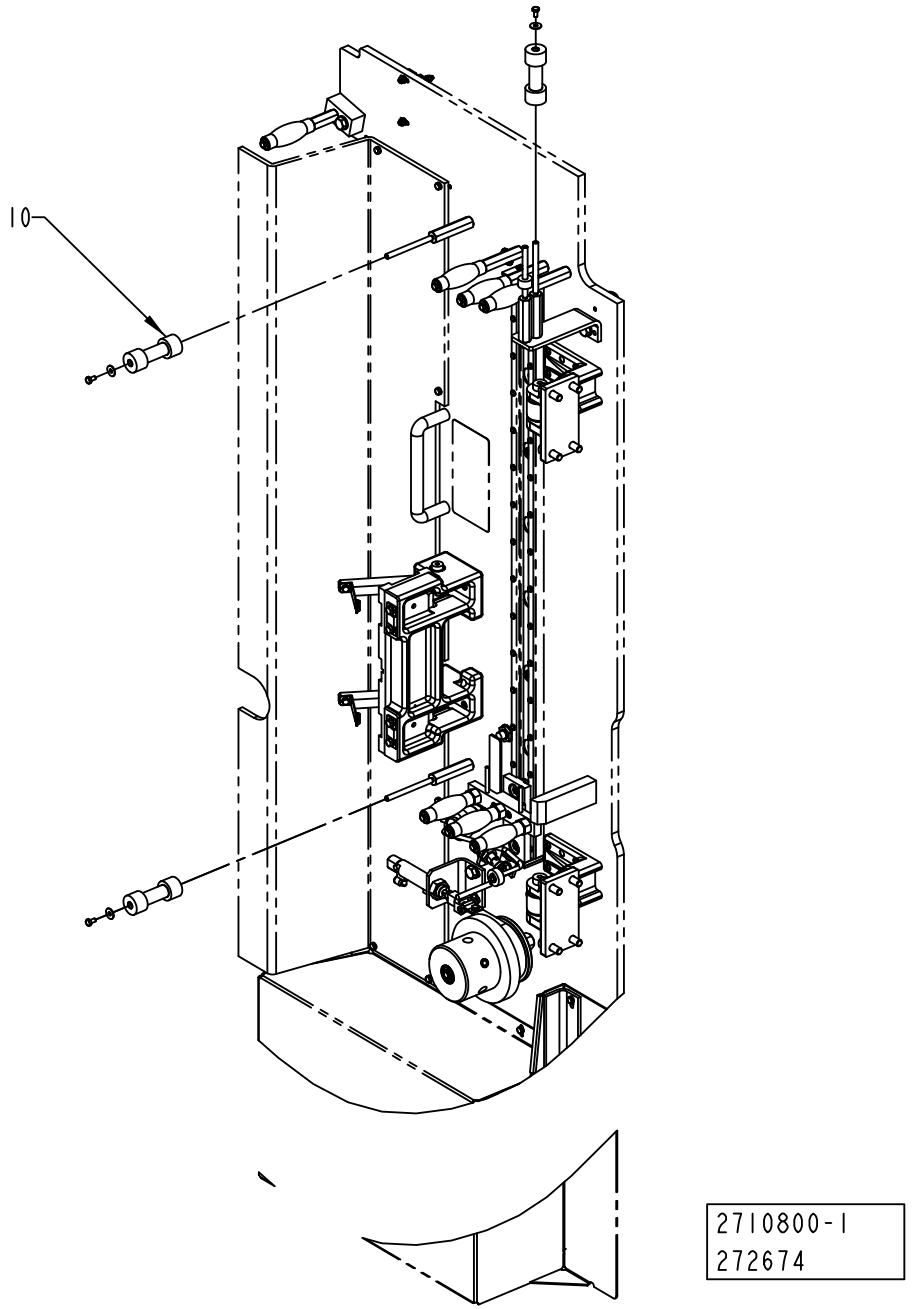

ECM: 409478 - 20090915
Group number: 2710800-0100
Assembly Drawing: 2710800-1_1_AA

Pos	Part No	UN	Qty	Description	Page No
HOLE48, HOLE73					
010	2564044-0004		3	ROLLER	
HOLE72, HOLE92					
010	2564044-0002		3	ROLLER	
HOLE95					
010	2564044-0006		3	ROLLER	

Pos	Part No	UN	Qty	Description	Page No

This page is intentionally left blank.

ECM: 467340 - 20110101
Group number: 2564076-0100
Assembly Drawing:

Pos	Part No	UN	Qty	Description	Page No
HOLE95, HOLE92					
100	90602-9590		1	ADH. TAPE LABELS AL/PE,BS FOIL 100 35X16	
HOLE72, HOLE48, HOLE73					
120	90602-9592		1	ADH. TAPE LABELS AL/PE,BS FOIL 100 24X24	
Common Parts					
130	90602-9550		1	ADH. TAPE LABELS AL/PET,BS SPLICE 90N 30	
200	90600-2609		1	SCOTCH-BRITE WHITE 690	

Pos	Part No	UN	Qty	Description	Page No

This page is intentionally left blank.

ECM: 608624 - 20130514
Group number: 2984535-0100
Assembly Drawing:

Pos	Part No	UN	Qty	Description	Page No
TBA 0125S HOLE92					
010	3081261-0000		1	OPENING SPECIFICATION	
TBA 0160S HOLE92					
010	3122368-0000		1	OPENING SPECIFICATION	
TBA 0200B HOLE95					
010	2696580-0000		1	OPENING SPECIFICATION	
TBA 0200M HOLE92					
010	2984658-0000		1	OPENING SPECIFICATION	
TBA 0200S HOLE92					
010	2927573-0000		1	OPENING SPECIFICATION	
TBA 0250B HOLE95					
010	2697205-0000		1	OPENING SPECIFICATION	
TBA 0250S HOLE92					
010	3118982-0000		1	OPENING SPECIFICATION	
TBA 0330S HOLE95					
010	2695493-0000		1	OPENING SPECIFICATION	
TBA 0375S HOLE95					
010	3210791-0000		1	OPENING SPECIFICATION	
TPA 0125SQ HOLE73					
010	2992259-0000		1	OPENING SPECIFICATION	
TPA 0200SQ HOLE72					
010	2526546-0000		1	OPENING SPECIFICATION	
TPA 0250SQ HOLE72					
010	2511638-0000		1	OPENING SPECIFICATION	
TPA 0330SQ HOLE48					
010	2514030-0000		1	OPENING SPECIFICATION	

Pos	Part No	UN	Qty	Description	Page No

Machine Type | Group Description | Used-In | Group Number | Page No

GUIDE ROLLER

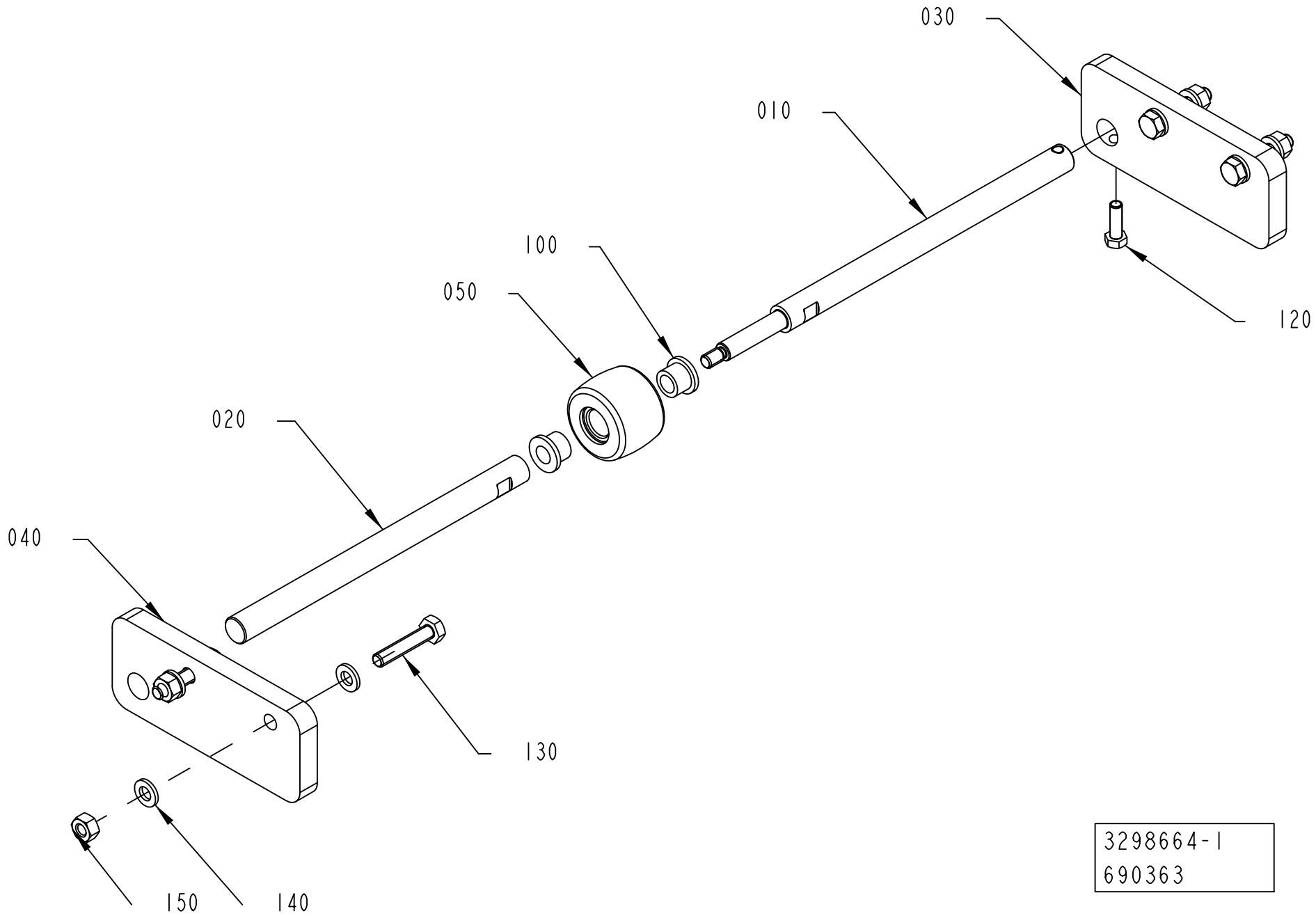

3298664-1
690363

ECM: 691611 - 20141001
Group number: 3298664-0100
Assembly Drawing: 3298664-1_1_AB

Pos	Part No	UN	Qty	Description	Page No
TB 0200S, TB 0200M					
030	3300356-0000		1	PLATE	
040	3300895-0000		1	PLATE	
TBA 0375S					
030	3366898-0000		1	PLATE	
040	3366897-0000		1	PLATE	
Common Parts					
010	3300092-0000		1	SHAFT	
020	3300153-0000		1	SHAFT	
050	3300349-0000		1	ROLLER	
100	90240-0172		2	FLANGE BUSHING, 8X12X10 MM	
120	312105-0329		1	SCREW, M6S ISO 4017 M5X16 A4 80	
130	312109-0374		4	SCREW, M6S ISO 4017 M6X30 A4 80	
140	315106-0153		8	WASHER PLAIN, M6 ISO7089-6-200 HV A4	
150	312605-0316		4	HEXAGON NUT, M6M M6 A280	

Pos	Part No	UN	Qty	Description	Page No

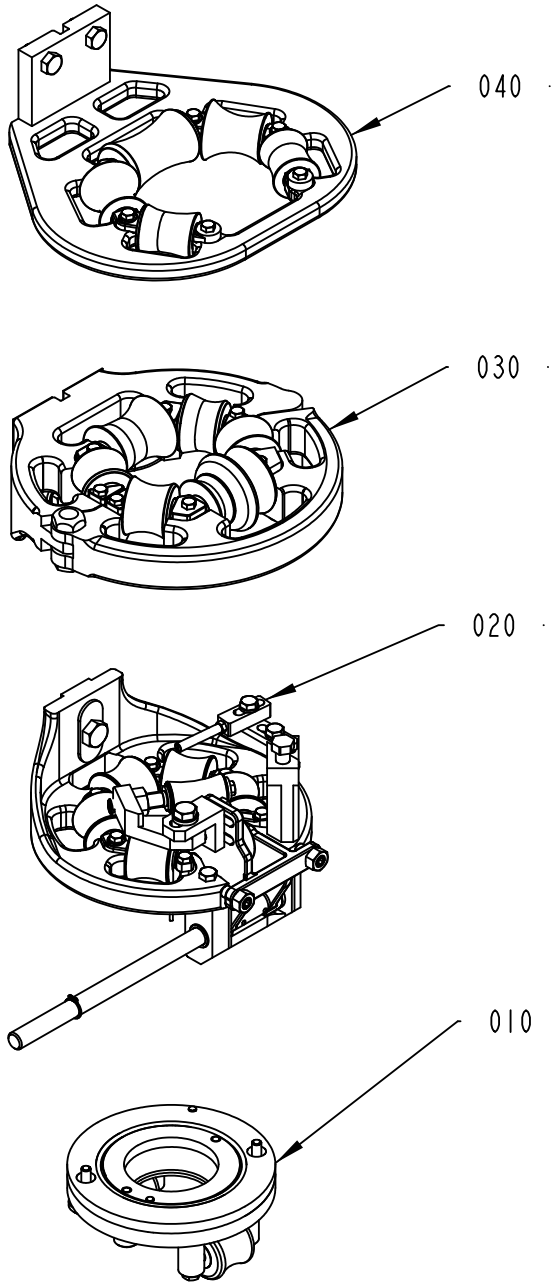
040
030
020
010
050
060
2808305-3
622292

ECM: 626338 - 20131025
Group number: 2808305-0200
Assembly Drawing: 2808305-3_1_AB

Pos	Part No	UN	Qty	Description	Page No
-					
010	2808315-0200		1	SEAL RING	**1-129, 1-131, 1-133**
020	2808290-0150		1	LOWER FORMING RING	**1-135, 1-137**
030	2808285-0150		1	UPPER FORMING RING	**1-139, 1-141, 1-143, 1-145, 1-147, 1-149**
040	2890090-0100		1	LOWER SUPPORT ROLLERS	**1-151**
050	2808295-0100		1	EDGE ROLLER	**1-153, 1-155, 1-157**
060	2871540-0100		1	AIR NOZZLE	**1-159**
070	2890357-0100		1	ROLLER	**1-161, 1-163**

Pos	Part No	UN	Qty	Description	Page No

SEAL RING

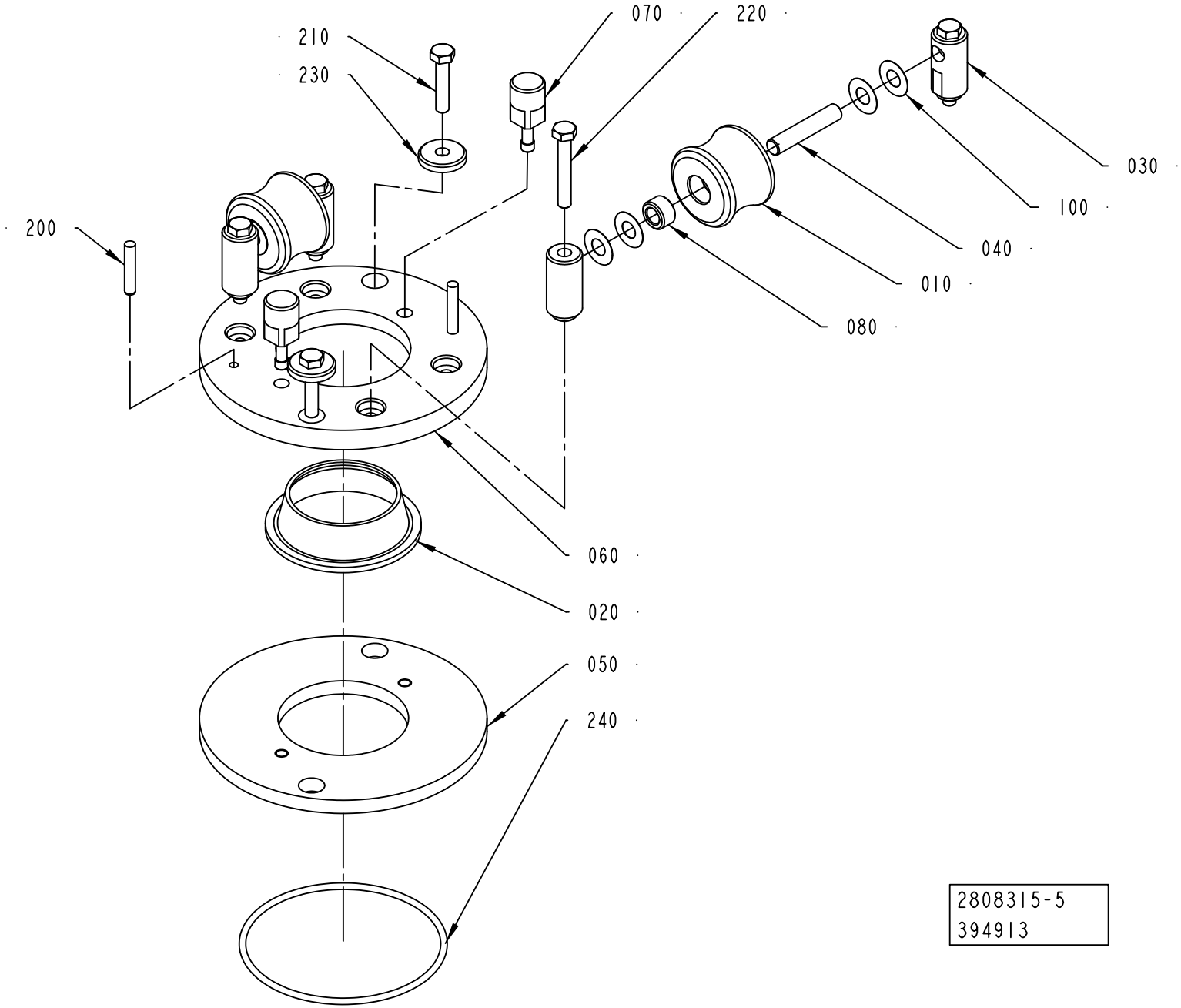
210
230
070
220
030
100
040
010
080
200
060
020
050
240
2808315-5
394913

ECM: 658142 - 20140101
Group number: 2808315-0200
Assembly Drawing: 2808315-5_1_AA

This list covers pages from 1-128 to 1-133

Pos	Part No	UN	Qty	Description	Page No
TBA 0080S (See drawing on page: 1-132)					
010	2945443-0000		2	ROLLER	
020	3021605-0000		1	SEAL RING	
030	490902-0000		4	AXLE SUPPORT	
040	263655-0018		2	SHAFT	
050	2795385-0000		1	RING	
060	2795386-0000		1	RING	
070	571540-0000		2	PIN	
080	751230-0000		4	PLAIN BEARING	
200	311103-0313		2	PARALLEL PIN ISO 2338 5M6X28 A1	
210	312115-0370		2	SCREW ISO4762 M6X20 A4 80	
240	344210-0309		1	O-RING 89,5X3,0 MM FDA, 3-A	
250	312105-0368		2	"SCREW, M6S ISO 4017 M6X16 A4 80"	
TBA 0100B, TBA 0125S (See drawing on page: 1-128)					
010	2970443-0000		2	ROLLER	
020	3023659-0000		1	SEAL RING	
030	490902-0000		4	AXLE SUPPORT	
040	490903-0000		2	SHAFT	
050	571537-0000		1	RING	
060	571538-0000		1	RING	
070	571540-0000		2	PIN	
080	751230-0000		4	PLAIN BEARING	
200	311103-0313		2	PARALLEL PIN ISO 2338 5M6X28 A1	
210	312105-0374		2	SCREW, M6S ISO 4014 M6X30 A4 80	
240	344210-0309		1	O-RING 89,5X3,0 MM FDA, 3-A	
TBA 0160S, TBA 0200S, TB 0200S, TPA 0250SQ, TPA 0200SQ, TBA 0180S (See drawing on page: 1-128)					
010	2966629-0000		2	ROLLER	
020	3023522-0000		1	SEAL RING	
030	490902-0000		4	AXLE SUPPORT	
040	490903-0000		2	SHAFT	
050	571537-0000		1	RING	
060	571539-0000		1	RING	
070	571540-0000		2	PIN	
080	751230-0000		4	PLAIN BEARING	
200	311103-0313		2	PARALLEL PIN ISO 2338 5M6X28 A1	
210	312105-0374		2	SCREW, M6S ISO 4014 M6X30 A4 80	
240	344210-0309		1	O-RING 89,5X3,0 MM FDA, 3-A	
TBA 0200B, TBA 0200SQ, TBA 0250B, TBA 0330S (See drawing on page: 1-130)					
010	456796-0000		2	ROLLER	
020	3023523-0000		1	SEAL RING	
030	456797-0000		4	AXLE SUPPORT	
040	263655-0006		2	SHAFT	
050	456794-0000		1	RING	
070	752519-0002		2	PIN	
200	311103-0310		2	PARALLEL PIN ISO 2338 5M6X20 A1	
210	312105-0372		2	SCREW, M6S ISO 4017 M6X25 A4 80	
TBA 0200M, TBA 0250S, TB 0200M, TBA 0200E, TBA 0250E (See drawing on page: 1-128)					
010	2966627-0000		2	ROLLER	
020	3023524-0000		1	SEAL RING	
030	490902-0000		4	AXLE SUPPORT	
040	490903-0000		2	SHAFT	
050	574334-0000		1	RING	
060	574335-0000		1	RING	
070	571540-0000		2	PIN	
080	751230-0000		4	PLAIN BEARING	
200	311103-0313		2	PARALLEL PIN ISO 2338 5M6X28 A1	
210	312105-0374		2	SCREW, M6S ISO 4014 M6X30 A4 80	
240	344210-0309		1	O-RING 89,5X3,0 MM FDA, 3-A	
TBA 0375S (See drawing on page: 1-130)					
010	3058449-0000		2	ROLLER	
020	3058448-0000		1	SEAL RING	
030	456797-0000		4	AXLE SUPPORT	
040	263655-0006		2	SHAFT	
050	456794-0000		1	RING	
070	752519-0002		2	PIN	
200	311103-0310		2	PARALLEL PIN ISO 2338 5M6X20 A1	
210	312105-0372		2	SCREW, M6S ISO 4017 M6X25 A4 80	
TPA 0125SQ (See drawing on page: 1-132)					
010	2795387-0000		2	ROLLER	
020	3021604-0000		1	SEAL RING	
030	490902-0000		4	AXLE SUPPORT	
040	263655-0018		2	SHAFT	
050	2795385-0000		1	RING	
060	2795386-0000		1	RING	
070	571540-0000		2	PIN	
080	751230-0000		4	PLAIN BEARING	
200	311103-0313		2	PARALLEL PIN ISO 2338 5M6X28 A1	
210	312115-0370		2	SCREW ISO4762 M6X20 A4 80	
240	344210-0309		1	O-RING 89,5X3,0 MM FDA, 3-A	
250	312105-0368		2	"SCREW, M6S ISO 4017 M6X16 A4 80"	
TPA 0330SQ (See drawing on page: 1-130)					
010	929284-0000		2	ROLLER	
020	3021606-0000		1	SEAL RING	
030	456797-0000		4	AXLE SUPPORT	

Machine Type | Group Description | Used-In | Group Number | Page No

SEAL RING

Drawing file: 2808315-6_1_AA.hpgl

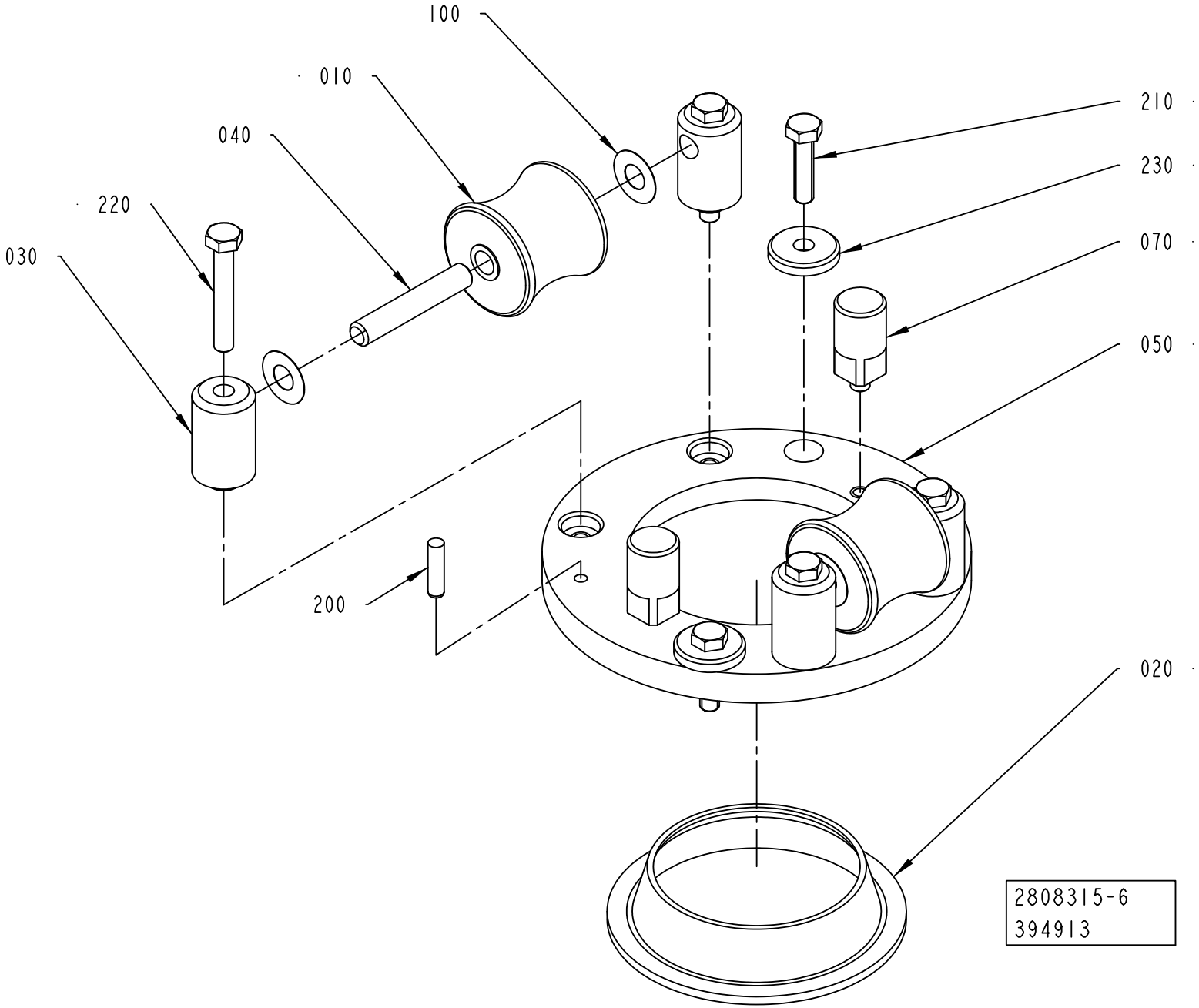

Pos	Part No	UN	Qty	Description	Page No
TPA 0330SQ (Cont'd) (See drawing on page: 1-130)					
040	263655-0006		2	SHAFT	
050	456794-0000		1	RING	
070	752519-0002		2	PIN	
200	311103-0310		2	PARALLEL PIN ISO 2338 5M6X20 A1	
210	312105-0372		2	SCREW, M6S ISO 4017 M6X25 A4 80	
Common Parts					
100	2033-0007		8	WASHER	
220	312105-0378		4	SCREW, M6S ISO 4014 M6X40 A4 80	
230	315125-0153		2	WASHER HIGH, TBRSB 6,4X22X4 A4	

Pos	Part No	UN	Qty	Description	Page No

SEAL RING

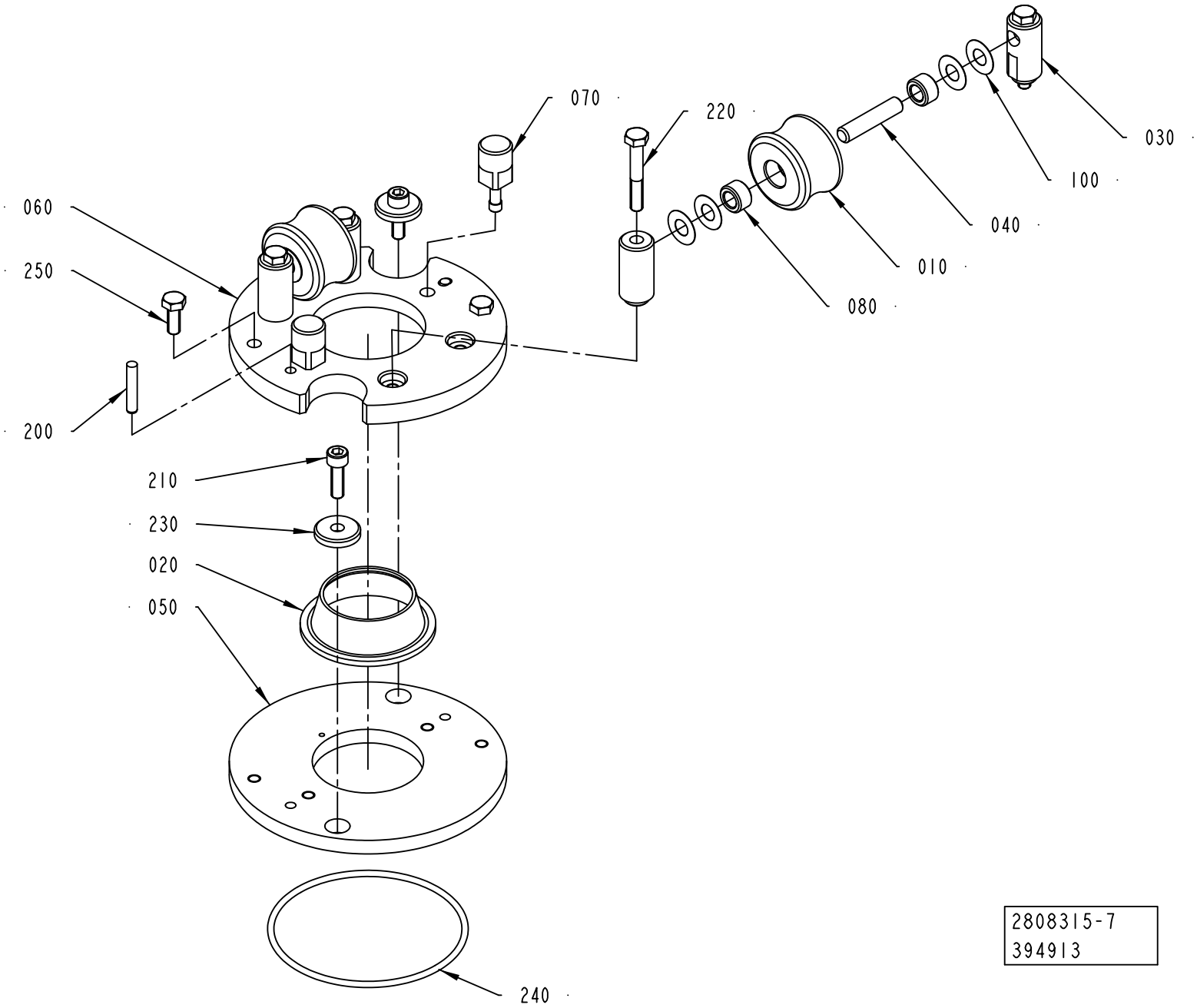
070
220
030
100
060
040
250
010
080
200
210
230
020
050
240
2808315-7
394913

ECM: 658142 - 20140101
Group number: 2808315-0200
Assembly Drawing: 2808315-7_1_AA

This list covers pages from 1-128 to 1-133

Pos	Part No	UN	Qty	Description	Page No
SEE PREVIOUS LISTS PAGES: 1-129, 1-131.					

Pos	Part No	UN	Qty	Description	Page No

LOWER FORMING RING

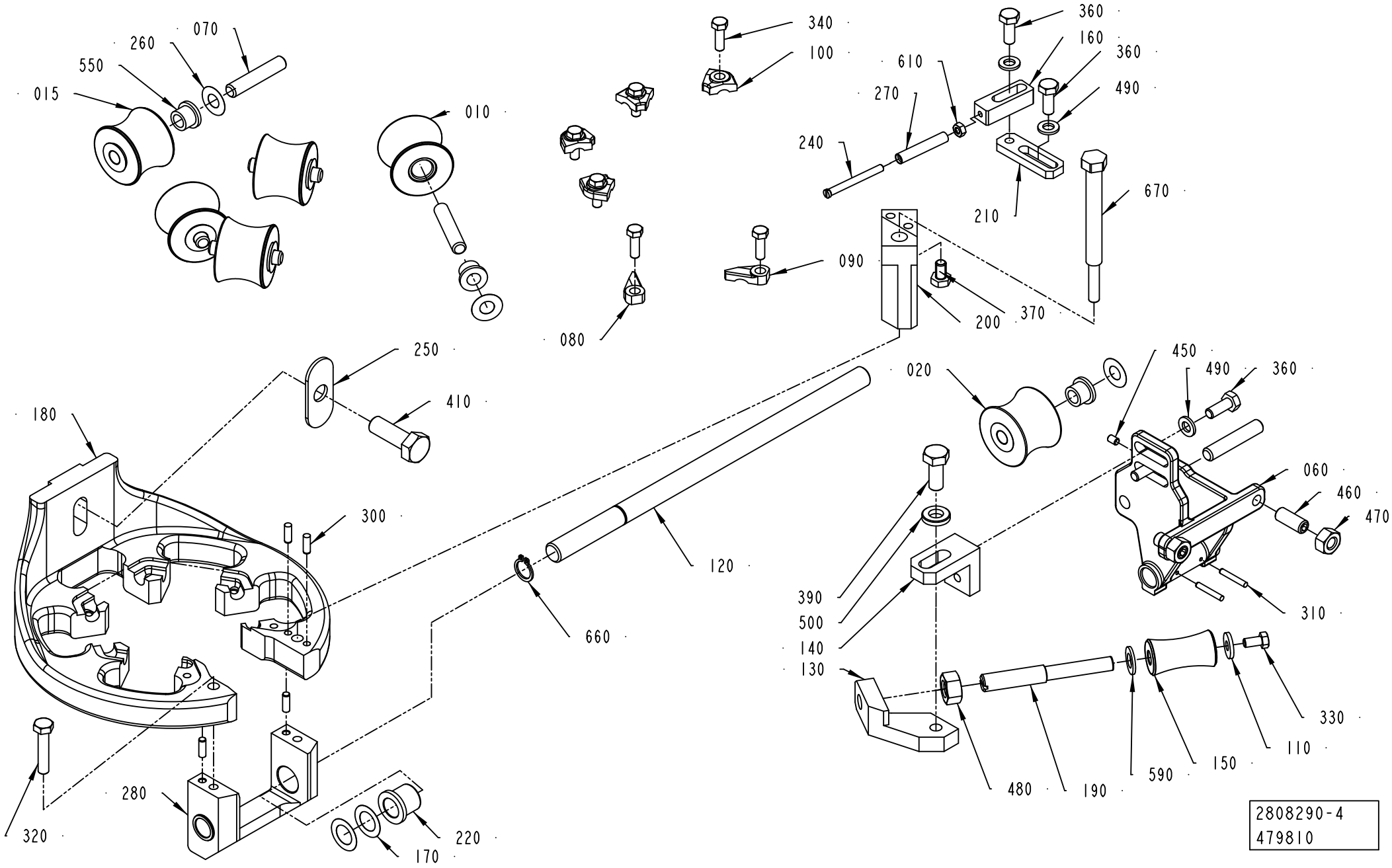

ECM: 668973 - 20140403
Group number: 2808290-0150
Assembly Drawing: 2808290-4_1_AB

This list covers pages from 1-134 to 1-137

Pos	Part No	UN	Qty	Description	Page No
TBA 0080S (See drawing on page: 1-136)					
010	2922709-0001		4	ROLLER	
015	2945446-0001		1	ROLLER	
020	2945445-0000		1	COUNTER ROLLER	
060	2890093-0000		1	FORK	
070	752186-0013		6	SHAFT	
090	2528119-0001		1	LOCK PLATE	
100	2528123-0001		4	LOCK PLATE	
180	3127434-0000		1	LOWER FORMING RING	
200	3142889-0000		1	BRACKET	
670	3142890-0000		1	BRACKET	
TBA 0100B, TBA 0125S (See drawing on page: 1-136)					
010	752153-0000		4	FORMING ROLLER	
015	2969725-0001		1	ROLLER (STANDARD SIZE)	
020	2969939-0000		1	COUNTER ROLLER	
060	2808311-0000		1	FORK	
070	2522213-0009		6	SHAFT	
090	2528119-0001		1	LOCK PLATE	
100	2528123-0001		4	LOCK PLATE	
180	3100994-0000		1	LOWER FORMING RING	
200	3142889-0000		1	BRACKET	
670	3142890-0000		1	BRACKET	
TBA 0160S, TBA 0200S, TB 0200S, TBA 0180S (See drawing on page: 1-134)					
010	752138-0000		4	FORMING ROLLER	
015	2966599-0001		1	ROLLER	
020	2966598-0000		1	COUNTER ROLLER	
060	2808311-0000		1	FORK	
070	2522213-0009		6	SHAFT	
090	2528119-0001		1	LOCK PLATE	
100	2528123-0001		4	LOCK PLATE	
180	3100994-0000		1	LOWER FORMING RING	
200	3142887-0000		1	BRACKET	
670	3142888-0000		1	BRACKET	
TBA 0200B, TBA 0200SQ, TBA 0250B, TBA 0330S (See drawing on page: 1-134)					
010	751502-0000		4	ROLLER	
015	2966602-0001		1	ROLLER	
020	2966601-0000		1	COUNTER ROLLER	
060	2808370-0000		1	FORK	
070	752186-0005		6	SHAFT	
090	2528119-0001		1	LOCK PLATE	
100	2528123-0004		4	LOCK PLATE	
180	3089599-0000		1	LOWER FORMING RING	
200	3142887-0000		1	BRACKET	
670	3142888-0000		1	BRACKET	
TBA 0200E, TBA 0250E (See drawing on page: 1-134)					
010	3089567-0001		4	ROLLER	
015	3089568-0001		1	ROLLER	
020	3089569-0000		1	ROLLER	
060	2808312-0000		1	FORK	
070	2522213-0009		6	SHAFT	
090	2528119-0001		1	LOCK PLATE	
100	2528123-0001		4	LOCK PLATE	
180	3089606-0000		1	LOWER FORMING RING	
200	3142887-0000		1	BRACKET	
670	3142888-0000		1	BRACKET	
TBA 0200M, TBA 0250S, TB 0200M (See drawing on page: 1-134)					
010	3006310-0000		4	ROLLER	
015	3006309-0001		1	ROLLER	
020	2808308-0000		1	COUNTER ROLLER	
060	2808312-0000		1	FORK	
070	2522213-0009		6	SHAFT	
090	2528119-0001		1	LOCK PLATE	
100	2528123-0001		4	LOCK PLATE	
180	3089606-0000		1	LOWER FORMING RING	
200	3142887-0000		1	BRACKET	
670	3142888-0000		1	BRACKET	
TBA 0375S (See drawing on page: 1-134)					
010	3058446-0001		4	ROLLER	
015	3058447-0001		1	ROLLER	
020	3058444-0000		1	COUNTER ROLLER	
060	3058452-0000		1	FORK	
070	752186-0005		6	SHAFT	
090	3151766-0000		1	LOCK PLATE	
100	2528123-0002		4	LOCK PLATE	
180	3127435-0000		1	LOWER FORMING RING	
200	3142887-0000		1	BRACKET	
670	3142890-0000		1	BRACKET	
TPA 0125SQ (See drawing on page: 1-136)					
010	2890091-0001		4	ROLLER	
015	2966605-0001		1	ROLLER	
020	2966604-0000		1	COUNTER ROLLER	
060	2890093-0000		1	FORK	
070	752186-0013		6	SHAFT	
090	2528119-0001		1	LOCK PLATE	

Machine Type | Group Description | Used-In | Group Number | Page No

LOWER FORMING RING

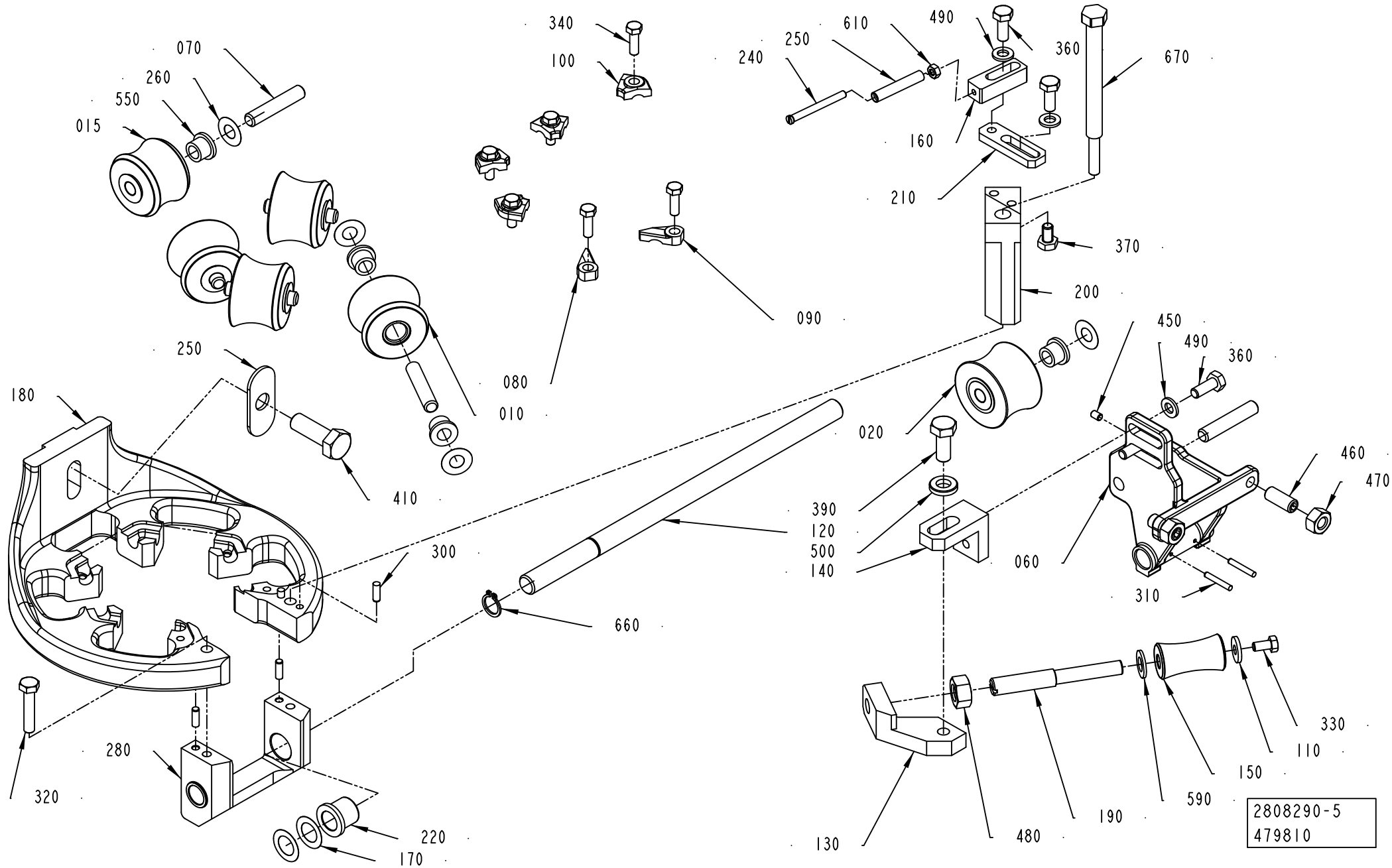

ECM: 668973 - 20140403
Group number: 2808290-0150
Assembly Drawing: 2808290-5_1_AB

This list covers pages from 1-134 to 1-137

Pos	Part No	UN	Qty	Description	Page No
TPA 0125SQ (Cont'd) (See drawing on page: 1-136)					
100	2528123-0001		4	LOCK PLATE	
180	3127434-0000		1	LOWER FORMING RING	
200	3142889-0000		1	BRACKET	
670	3142890-0000		1	BRACKET	
TPA 0250SQ, TPA 0200SQ (See drawing on page: 1-136)					
010	2922767-0001		4	ROLLER	
015	3340553-0000		1	ROLLER	
020	2945466-0000		1	COUNTER ROLLER	
060	2808311-0000		1	FORK	
070	2522213-0009		6	SHAFT	
090	2528119-0001		1	LOCK PLATE	
100	2528123-0001		4	LOCK PLATE	
180	3100994-0000		1	LOWER FORMING RING	
200	3142889-0000		1	BRACKET	
670	3142890-0000		1	BRACKET	
TPA 0330SQ (See drawing on page: 1-136)					
010	929279-0000		4	ROLLER	
015	2986698-0001		1	ROLLER	
020	2986699-0000		1	COUNTER ROLLER	
060	2808370-0000		1	FORK	
070	752186-0005		6	SHAFT	
090	2528119-0001		1	LOCK PLATE	
100	2528123-0004		4	LOCK PLATE	
180	3089599-0000		1	LOWER FORMING RING	
200	3142889-0000		1	BRACKET	
670	3142890-0000		1	BRACKET	
Common Parts					
080	2528118-0001		1	LOCK PLATE	
110	27815-0000		1	WASHER	
120	3127549-0000		1	SHAFT	
130	257042-0000		1	BRACKET	
140	257043-0000		1	ANGLE BRACKET	
150	2890043-0000		1	ROLLER	
160	3120863-0000		1	PIN	
170	752038-0000		4	SHIM	
190	2808318-0000		1	SHAFT2781168-0000	
210	3120862-0000		1	BRACKET	
220	2808434-0000		2	BUSHING	
240	2906064-0000		1	SHAFT	
250	3089589-0000		1	WASHER	
260	2033-0011		24	WASHER	
270	2906065-0000		1	ROLLER	
280	3100995-0000		1	SUPPORT	
300	311103-0268		4	PARALLEL PIN ISO 2338 4M6X12 A1	
310	311103-0238		2	PARALLEL PIN ISO 2338 3M6X20 A1	
320	312105-0374		1	SCREW, M6S ISO 4014 M6X30 A4 80	
330	312105-0325		1	SCREW, M6S ISO 4017 M5X10 A4 80	
340	312105-0329		6	SCREW, M6S ISO 4017 M5X16 A4 80	
360	312105-0368		4	"SCREW, M6S ISO 4017 M6X16 A4 80"	
370	312105-0364		1	"SCREW, M6S ISO 4017 M6X10 A4 80"	
390	312105-0451		1	SCREW, M6S ISO 4017 M8X20 A4 80	
410	312105-0495		1	SCREW, M6S ISO 4017 M10X30 A4 80	
450	312318-0285		1	SET SCREW, CUP END ISO4029 M4X6 A4	
460	312318-0451		2	SET SCREW, CUP END ISO4029 M8X20 A4	
470	312605-0318		2	HEXAGON NUT, M6M M8 A280	
480	312605-0320		1	HEXAGON NUT, M6M M10 A280	
490	315105-0153		4	WASHER PLAIN, 6,4X12X1,5 A4 BRB	
500	315115-0165		1	WASHER PLAIN, TBRB 8,4/16 H=3	
550	90240-0172		12	FLANGE BUSHING, 8X12X10 MM	
590	315105-0165		1	FWAS080G0-0S, WASHER PLAIN	
610	312605-0312		1	HEXAGON NUT, M6M M4 A280	
660	315751-0109		1	RETAINING RING FOR SHAFT DIN 471 12 SS	

Machine Type	Group Description	Used-In	Group Number	Page No

UPPER FORMING RING

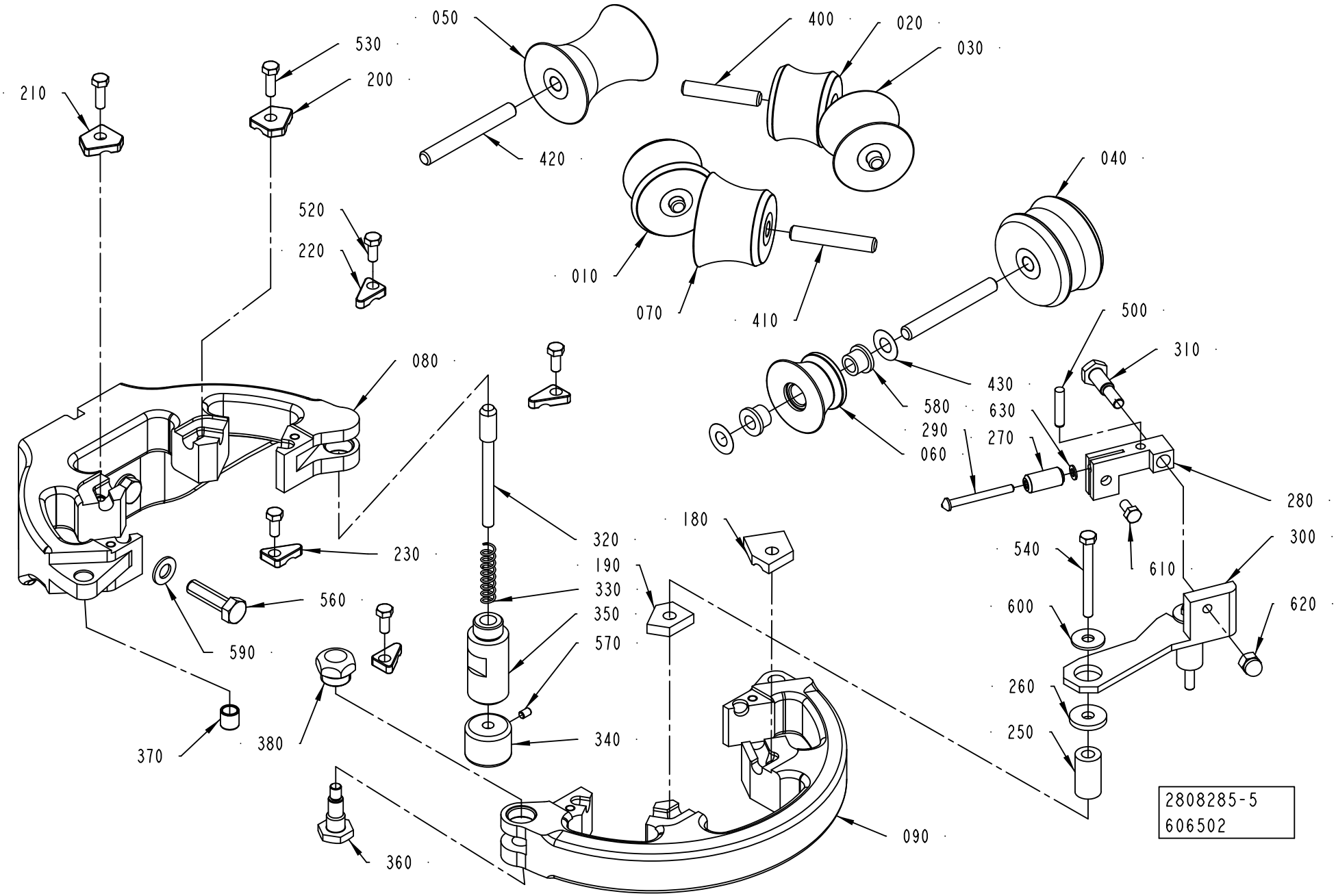

ECM: 651569 - 20140402
Group number: 2808285-0150
Assembly Drawing: 2808285-5_1_AB

This list covers pages from 1-138 to 1-149

Pos	Part No	UN	Qty	Description	Page No
TBA 0080S (See drawing on page: 1-144)					
010	2945450-0000		1	ROLLER	
020	2945451-0000		1	ROLLER	
030	2945453-0000		1	ROLLER	
040	2945447-0000		1	ROLLER	
050	2945449-0000		1	ROLLER	
060	2945448-0000		1	ROLLER	
070	2945452-0000		1	ROLLER	
080	3127436-0000		1	UPPER FORMING RING	
090	3127439-0000		1	UPPER FORMING RING	
200	2528123-0009		3	LOCK PLATE	
220	2528119-0001		2	LOCK PLATE	
230	2528118-0001		2	LOCK PLATE	
240	2890110-0000		1	SHAFT	
400	752186-0002		4	SHAFT	
410	752186-0005		1	SHAFT	
440	752156-0000		2	FLANGE BUSHING	
450	2890114-0000		1	LOCK PLATE	
530	312105-0329		4	SCREW, M6S ISO 4017 M5X16 A4 80	
580	90240-0172		12	FLANGE BUSHING, 8X12X10 MM	
590	315105-0165		2	FWAS080G0-0S, WASHER PLAIN	
TBA 0100B, TBA 0125S (See drawing on page: 1-146)					
010	2966613-0000		1	ROLLER	
020	2966614-0000		1	ROLLER	
030	752150-0000		1	FORMING ROLLER	
040	3274246-0000		1	ROLLER	
050	2966612-0000		1	ROLLER	
060	3274247-0000		1	ROLLER	
070	752149-0000		1	FORMING ROLLER	
080	3089600-0000		1	UPPER FORMING RING	
090	3089601-0000		1	UPPER FORMING RING	
180	456872-0000		1	LOCK PLATE	
200	1279090-0000		2	LOCKING PLATE	
210	1279086-0000		1	LOCKING PLATE	
220	1279093-0000		2	LOCKING PLATE	
230	1279094-0000		2	LOCKING PLATE	
240	752185-0000		1	SHAFT	
390	3297869-0000		2	SHIM	
400	752186-0003		4	SHAFT	
420	752186-0006		1	SHAFT	
440	752156-0000		2	FLANGE BUSHING	
530	312105-0329		4	SCREW, M6S ISO 4017 M5X16 A4 80	
580	90240-0172		12	FLANGE BUSHING, 8X12X10 MM	
590	315115-0165		2	WASHER PLAIN, TBRB 8,4/16 H=3	
TBA 0160S, TBA 0200S (See drawing on page: 1-146)					
010	752132-0000		1	FORMING ROLLER	
020	752133-0000		1	FORMING ROLLER	
030	752135-0000		1	FORMING ROLLER	
040	3274244-0000		1	ROLLER	
050	752131-0000		1	FORMING ROLLER	
060	3274245-0000		1	ROLLER	
070	752134-0000		1	FORMING ROLLER	
080	3127429-0000		1	UPPER FORMING RING	
090	3089601-0000		1	UPPER FORMING RING	
180	456872-0000		1	LOCK PLATE	
200	1279090-0000		2	LOCKING PLATE	
210	1279086-0000		1	LOCKING PLATE	
220	1279093-0000		2	LOCKING PLATE	
230	1279094-0000		2	LOCKING PLATE	
240	752185-0000		1	SHAFT	
390	3297869-0000		2	SHIM	
400	752186-0003		4	SHAFT	
420	752186-0006		1	SHAFT	
440	752156-0000		2	FLANGE BUSHING	
530	312105-0329		4	SCREW, M6S ISO 4017 M5X16 A4 80	
580	90240-0172		12	FLANGE BUSHING, 8X12X10 MM	
590	315115-0165		2	WASHER PLAIN, TBRB 8,4/16 H=3	
TBA 0180S (See drawing on page: 1-148)					
010	752132-0000		1	FORMING ROLLER	
020	752133-0000		1	FORMING ROLLER	
030	752135-0000		1	FORMING ROLLER	
040	3274244-0000		1	ROLLER	
050	752131-0000		1	FORMING ROLLER	
060	3274245-0000		1	ROLLER	
070	752134-0000		1	FORMING ROLLER	
080	3127429-0000		1	UPPER FORMING RING	
090	3089601-0000		1	UPPER FORMING RING	
180	456872-0000		1	LOCK PLATE	
200	1279090-0000		2	LOCKING PLATE	
210	1279086-0000		1	LOCKING PLATE	
220	1279093-0000		2	LOCKING PLATE	
230	1279094-0000		2	LOCKING PLATE	
240	752185-0000		1	SHAFT	
390	3337204-0000		2	SHIM	

Machine Type | Group Description | Used-In | Group Number | Page No

UPPER FORMING RING

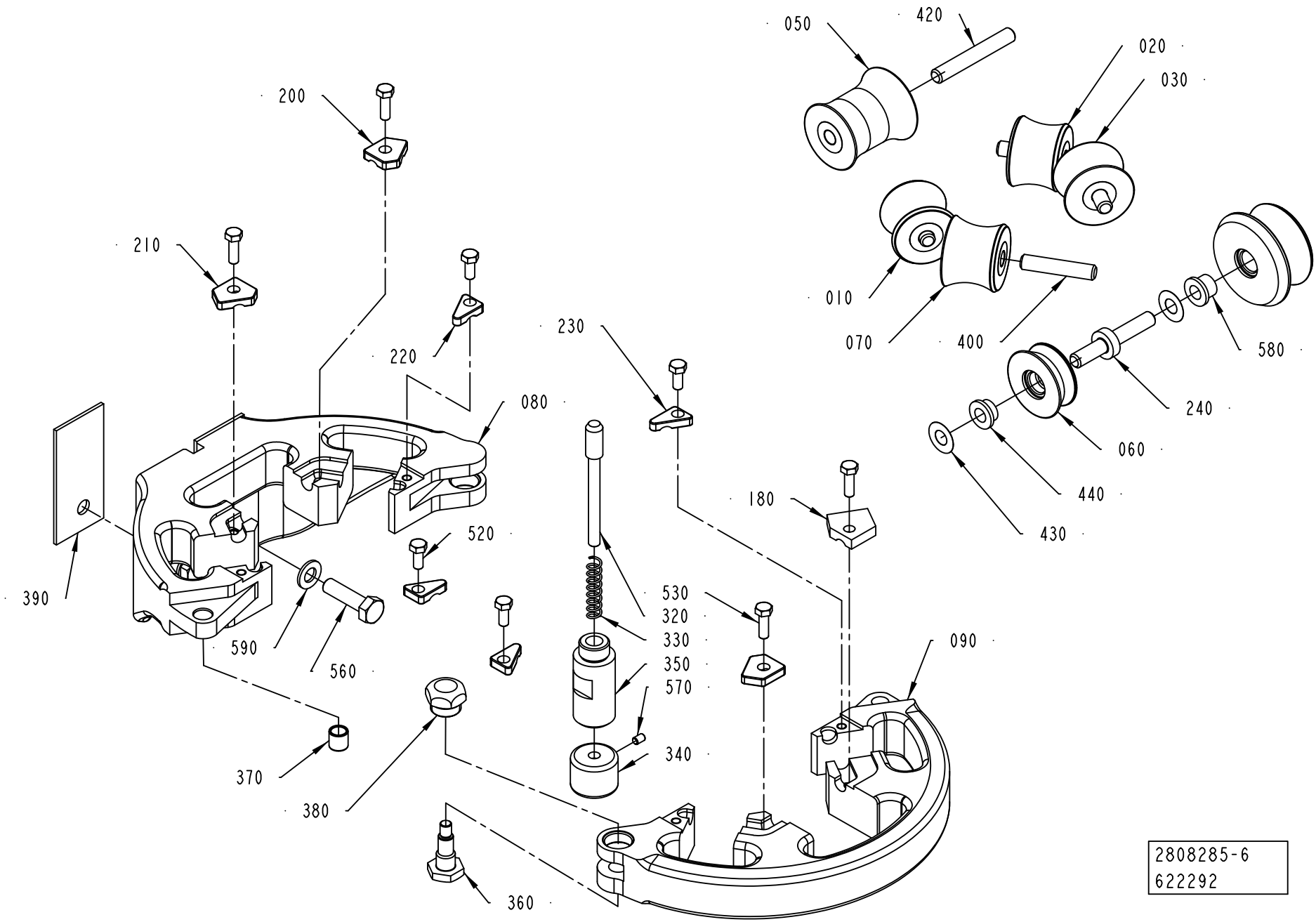

2808285-6
622292

Pos	Part No	UN	Qty	Description	Page No
TBA 0180S (Cont'd) (See drawing on page: 1-148)					
400	752186-0003		4	SHAFT	
420	752186-0006		1	SHAFT	
440	752156-0000		2	FLANGE BUSHING	
530	312105-0329		4	SCREW, M6S ISO 4017 M5X16 A4 80	
580	90240-0172		12	FLANGE BUSHING, 8X12X10 MM	
590	315105-0165		2	FWAS080G0-0S, WASHER PLAIN	
TBA 0200B, TBA 0200SQ, TBA 0250B, TBA 0330S (See drawing on page: 1-138)					
010	751499-0000		1	ROLL	
020	751497-0000		1	ROLL	
030	751496-0000		1	ROLL	
040	3274239-0000		1	ROLLER	
050	751498-0000		1	ROLL	
060	3274240-0000		1	ROLLER	
070	751500-0000		1	ROLL	
080	3089602-0000		1	UPPER FORMING RING	
090	3089603-0000		1	UPPER FORMING RING	
180	456199-0000		1	LOCK PLATE	
190	456198-0000		1	LOCK PLATE	
200	1279090-0000		1	LOCKING PLATE	
210	1279086-0000		1	LOCKING PLATE	
220	1279093-0000		2	LOCKING PLATE	
230	1279094-0000		2	LOCKING PLATE	
250	456181-0000		2	SPACER	
260	257175-0000		2	WASHER	
270	2890044-0000		1	ROLLER	
280	451148-0000		1	BRACKET	
290	451149-0000		1	SHAFT	
300	2808293-0000		1	BRACKET	
310	2808294-0000		1	SCREW	
400	752186-0004		2	SHAFT	
410	752186-0005		2	SHAFT	
420	752186-0014		2	SHAFT	
500	311103-1312		1	PARALLEL PIN ISO 2338 5M6X24 A1	
530	312105-0329		2	SCREW, M6S ISO 4017 M5X16 A4 80	
540	312105-0341		2	SCREW, M6S ISO 4014 M5X50 A4 80	
580	90240-0172		14	FLANGE BUSHING, 8X12X10 MM	
590	315105-0165		2	FWAS080G0-0S, WASHER PLAIN	
600	90005-0060		2	WASHER PLAIN, RBS 6,4/M6)/18,H=1,5	
610	312105-0325		1	SCREW, M6S ISO 4017 M5X10 A4 80	
620	312705-0316		1	HEX. DOMED CAP MHM-6 M6 A280	
630	315105-0136		1	WASHER PLAIN, 4,3X8X0,8 A4 BRB	

Pos	Part No	UN	Qty	Description	Page No
TBA 0200M, TBA 0250S, TBA 0200E, TBA 0250E (See drawing on page: 1-142)					
010	574397-0000		1	ROLL	
020	2986736-0000		1	ROLL	
030	574400-0000		1	ROLL	
040	3319351-0000		1	ROLLER	
050	2986735-0000		1	ROLL	
060	3319352-0000		1	ROLLER	
070	574403-0000		1	ROLL	
080	3089604-0000		1	UPPER FORMING RING	
090	3089605-0000		1	UPPER FORMING RING	
180	574393-0000		1	LOCK PLATE	
190	574394-0000		1	LOCK PLATE	
200	1279090-0000		1	LOCKING PLATE	
210	1279086-0000		1	LOCKING PLATE	
220	1279093-0000		2	LOCKING PLATE	
230	1279094-0000		2	LOCKING PLATE	
240	574395-0000		1	SHAFT	
250	456181-0000		2	SPACER	
260	257175-0000		2	WASHER	
270	2890044-0000		1	ROLLER	
280	451148-0000		1	BRACKET	
290	451149-0000		1	SHAFT	
300	2808299-0000		1	BRACKET	
310	2808294-0000		1	SCREW	
400	752186-0004		4	SHAFT	
420	752186-0006		1	SHAFT	
440	752156-0000		2	FLANGE BUSHING	
500	311103-1312		1	PARALLEL PIN ISO 2338 5M6X24 A1	
530	312105-0329		2	SCREW, M6S ISO 4017 M5X16 A4 80	
540	312105-0341		2	SCREW, M6S ISO 4014 M5X50 A4 80	
580	90240-0172		12	FLANGE BUSHING, 8X12X10 MM	
590	315105-0165		2	FWAS080G0-0S, WASHER PLAIN	
600	90005-0060		2	WASHER PLAIN, RBS 6,4/M6)/18,H=1,5	
610	312105-0325		1	SCREW, M6S ISO 4017 M5X10 A4 80	
620	312705-0316		1	HEX. DOMED CAP MHM-6 M6 A280	
630	315105-0136		1	WASHER PLAIN, 4,3X8X0,8 A4 BRB	
TBA 0375S (See drawing on page: 1-138)					
010	3058472-0000		1	ROLLER	
020	3058470-0000		1	ROLLER	
030	3058469-0000		1	ROLLER	
040	3274241-0000		1	ROLLER	
050	3058471-0000		1	ROLLER	

UPPER FORMING RING

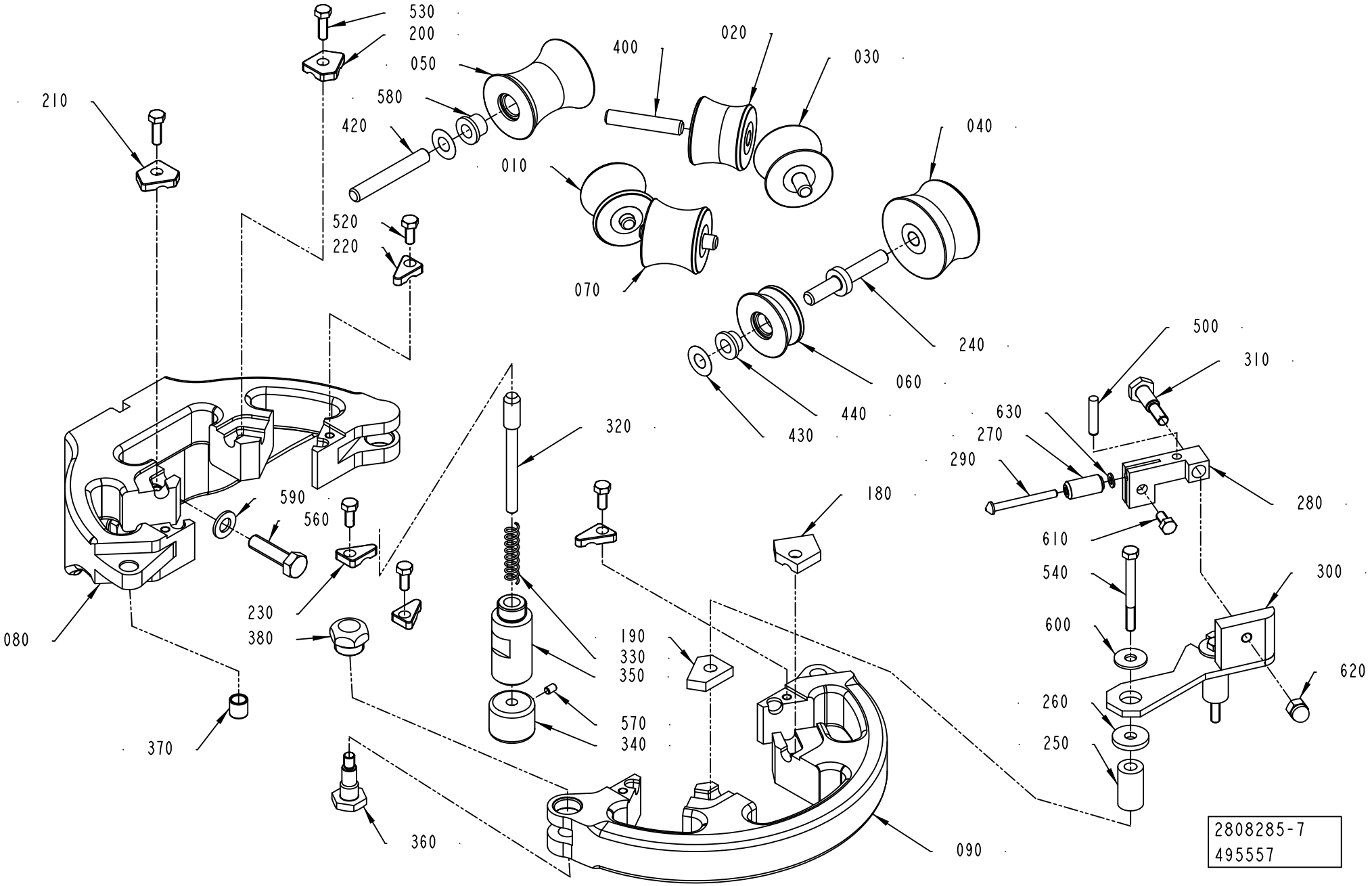

Pos	Part No	UN	Qty	Description	Page No
TBA 0375S (Cont'd) (See drawing on page: 1-138)					
060	3274242-0000		1	ROLLER	
070	3058473-0000		1	ROLLER	
080	3127437-0000		1	UPPER FORMING RING	
090	3127440-0000		1	UPPER FORMING RING	
180	3058476-0000		1	LOCK PLATE	
190	3058468-0000		1	LOCK PLATE	
200	1279090-0000		1	LOCKING PLATE	
210	1279086-0000		1	LOCKING PLATE	
220	1279093-0000		2	LOCKING PLATE	
230	1279094-0000		2	LOCKING PLATE	
250	456181-0000		2	SPACER	
260	257175-0000		2	WASHER	
270	2890044-0000		1	ROLLER	
280	451148-0000		1	BRACKET	
290	451149-0000		1	SHAFT	
300	3058480-0000		1	BRACKET	
310	2808294-0000		1	SCREW	
400	752186-0021		2	SHAFT	
410	752186-0019		2	SHAFT	
420	752186-0014		2	SHAFT	
500	311103-1312		1	PARALLEL PIN ISO 2338 5M6X24 A1	
530	312105-0329		2	SCREW, M6S ISO 4017 M5X16 A4 80	
540	312105-0341		2	SCREW, M6S ISO 4014 M5X50 A4 80	
580	90240-0172		14	FLANGE BUSHING, 8X12X10 MM	
590	315105-0165		2	FWAS080G0-0S, WASHER PLAIN	
600	90005-0060		2	WASHER PLAIN, RBS 6,4/M6)/18,H=1,5	
610	312105-0325		1	SCREW, M6S ISO 4017 M5X10 A4 80	
TPA 0125SQ (See drawing on page: 1-144)					
010	2890105-0000		1	ROLLER	
020	2890106-0000		1	ROLLER	
030	2890108-0000		1	ROLLER	
040	2890102-0000		1	ROLLER	
050	2890104-0000		1	ROLLER	
060	2890103-0000		1	ROLLER	
070	2890107-0000		1	ROLLER	
080	3127436-0000		1	UPPER FORMING RING	
090	3127439-0000		1	UPPER FORMING RING	
200	2528123-0009		3	LOCK PLATE	
220	2528119-0001		2	LOCK PLATE	
230	2528118-0001		2	LOCK PLATE	
240	2890110-0000		1	SHAFT	
400	752186-0002		4	SHAFT	
410	752186-0005		1	SHAFT	
440	752156-0000		2	FLANGE BUSHING	
450	2890114-0000		1	LOCK PLATE	
530	312105-0329		4	SCREW, M6S ISO 4017 M5X16 A4 80	
580	90240-0172		12	FLANGE BUSHING, 8X12X10 MM	
590	315105-0165		2	FWAS080G0-0S, WASHER PLAIN	
TPA 0250SQ, TPA 0200SQ (See drawing on page: 1-140)					
010	3297481-0000		1	ROLLER	
020	3297482-0000		1	ROLLER	
030	752135-0000		1	FORMING ROLLER	
040	3274244-0000		1	ROLLER	
050	3297480-0000		1	ROLLER	
060	3274245-0000		1	ROLLER	
070	752134-0000		1	FORMING ROLLER	
080	3127429-0000		1	UPPER FORMING RING	
090	3089601-0000		1	UPPER FORMING RING	
180	456872-0000		1	LOCK PLATE	
200	1279090-0000		2	LOCKING PLATE	
210	1279086-0000		1	LOCKING PLATE	
220	1279093-0000		2	LOCKING PLATE	
230	1279094-0000		2	LOCKING PLATE	
240	752185-0000		1	SHAFT	
390	3337204-0000		2	SHIM	
400	752186-0003		4	SHAFT	
420	752186-0006		1	SHAFT	
440	752156-0000		2	FLANGE BUSHING	
530	312105-0329		4	SCREW, M6S ISO 4017 M5X16 A4 80	
580	90240-0172		12	FLANGE BUSHING, 8X12X10 MM	
590	315105-0165		2	FWAS080G0-0S, WASHER PLAIN	
TPA 0330SQ (See drawing on page: 1-142)					
010	3037924-0000		1	ROLLER	
020	3037926-0000		1	ROLLER	
030	3078547-0000		1	ROLLER	
040	3058432-0000		1	ROLLER	
050	3037925-0000		1	ROLLER	
060	3058433-0000		1	ROLLER	
070	3058434-0000		1	ROLLER	
080	3127438-0000		1	UPPER FORMING RING	
090	3127441-0000		1	UPPER FORMING RING	
180	574338-0000		1	LOCK PLATE	
190	574338-0000		1	LOCK PLATE	

UPPER FORMING RING

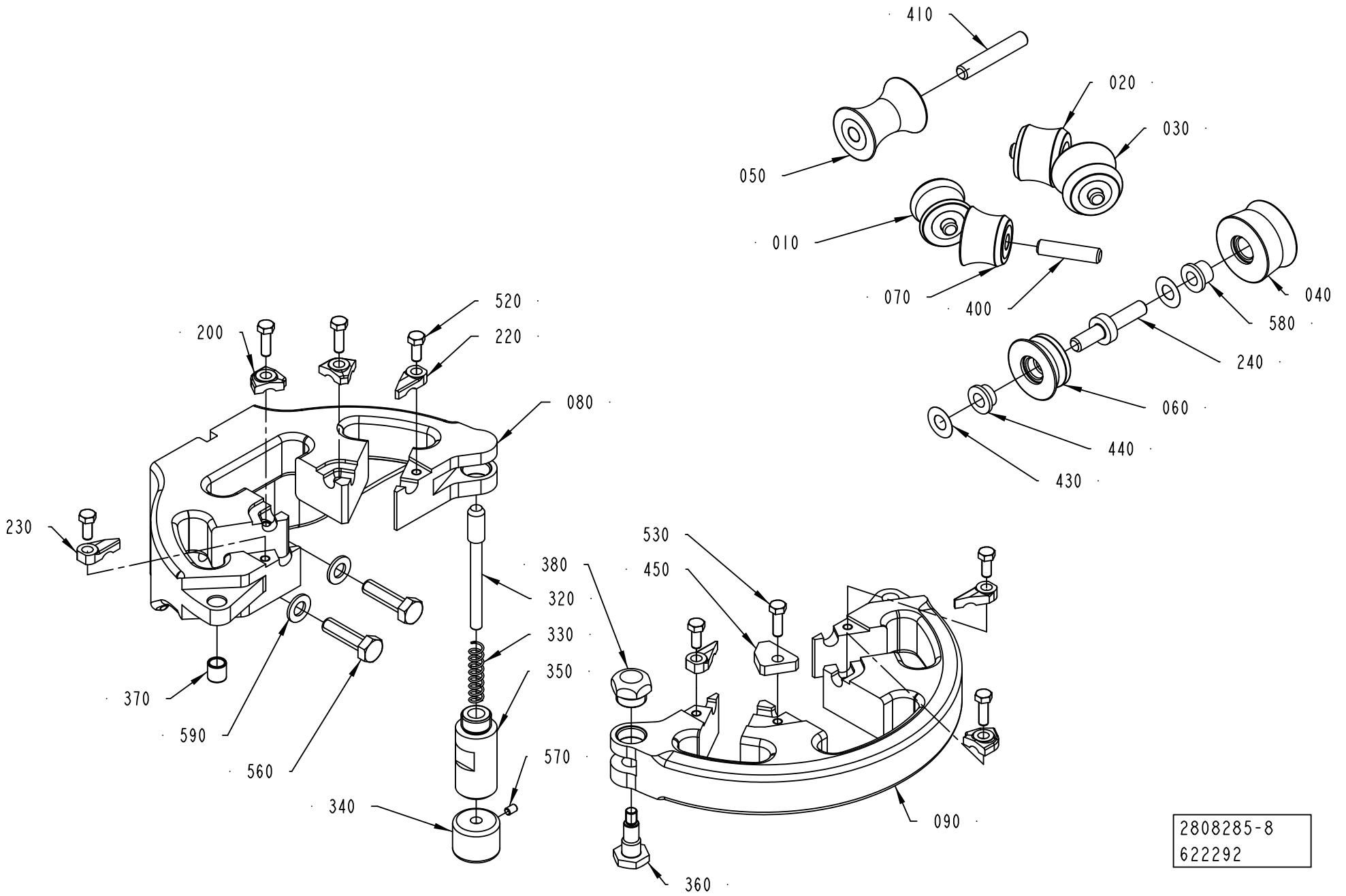

2808285-8
622292

Pos	Part No	UN	Qty	Description	Page No
TPA 0330SQ (Cont'd) (See drawing on page: 1-142)					
200	2528123-0008		1	LOCK PLATE	
210	2528123-0008		1	LOCK PLATE	
220	2528119-0001		2	LOCK PLATE	
230	2528118-0001		2	LOCK PLATE	
240	574395-0000		1	SHAFT	
250	456181-0000		2	SPACER	
260	257175-0000		2	WASHER	
270	2890044-0000		1	ROLLER	
280	451148-0000		1	BRACKET	
290	451149-0000		1	SHAFT	
300	3058435-0000		1	BRACKET	
310	2808294-0000		1	SCREW	
400	752186-0021		4	SHAFT	
420	2522213-0006		1	SHAFT	
440	752156-0000		2	FLANGE BUSHING	
500	311103-1312		1	PARALLEL PIN ISO 2338 5M6X24 A1	
530	312105-0329		2	SCREW, M6S ISO 4017 M5X16 A4 80	
540	312105-0341		2	SCREW, M6S ISO 4014 M5X50 A4 80	
580	90240-0172		12	FLANGE BUSHING, 8X12X10 MM	
590	315105-0165		2	FWAS080G0-0S, WASHER PLAIN	
600	90005-0060		2	WASHER PLAIN, RBS 6,4/M6)/18,H=1,5	
610	312105-0325		1	SCREW, M6S ISO 4017 M5X10 A4 80	
620	312705-0316		1	HEX. DOMED CAP MHM-6 M6 A280	
630	315105-0136		1	WASHER PLAIN, 4,3X8X0,8 A4 BRB	
Common Parts					
320	35918-0000		1	SHAFT	
330	35919-0000		1	COMPRESSION SPRING	
340	36325-0000		1	KNOB	
350	2808289-0000		1	SHAFT	
360	2808291-0000		1	SCREW	
370	2808292-0000		1	BUSHING	
380	2808298-0000		1	PLUG	
430	2033-0011		14	WASHER	
520	312105-0327		4	"SCREW, M6S ISO 4017 M5X12 A4 80"	
560	312105-0455		2	SCREW, M6S ISO 4017 M8X30 A4 80	
570	312318-0285		1	SET SCREW, CUP END ISO4029 M4X6 A4	

Pos	Part No	UN	Qty	Description	Page No

UPPER FORMING RING

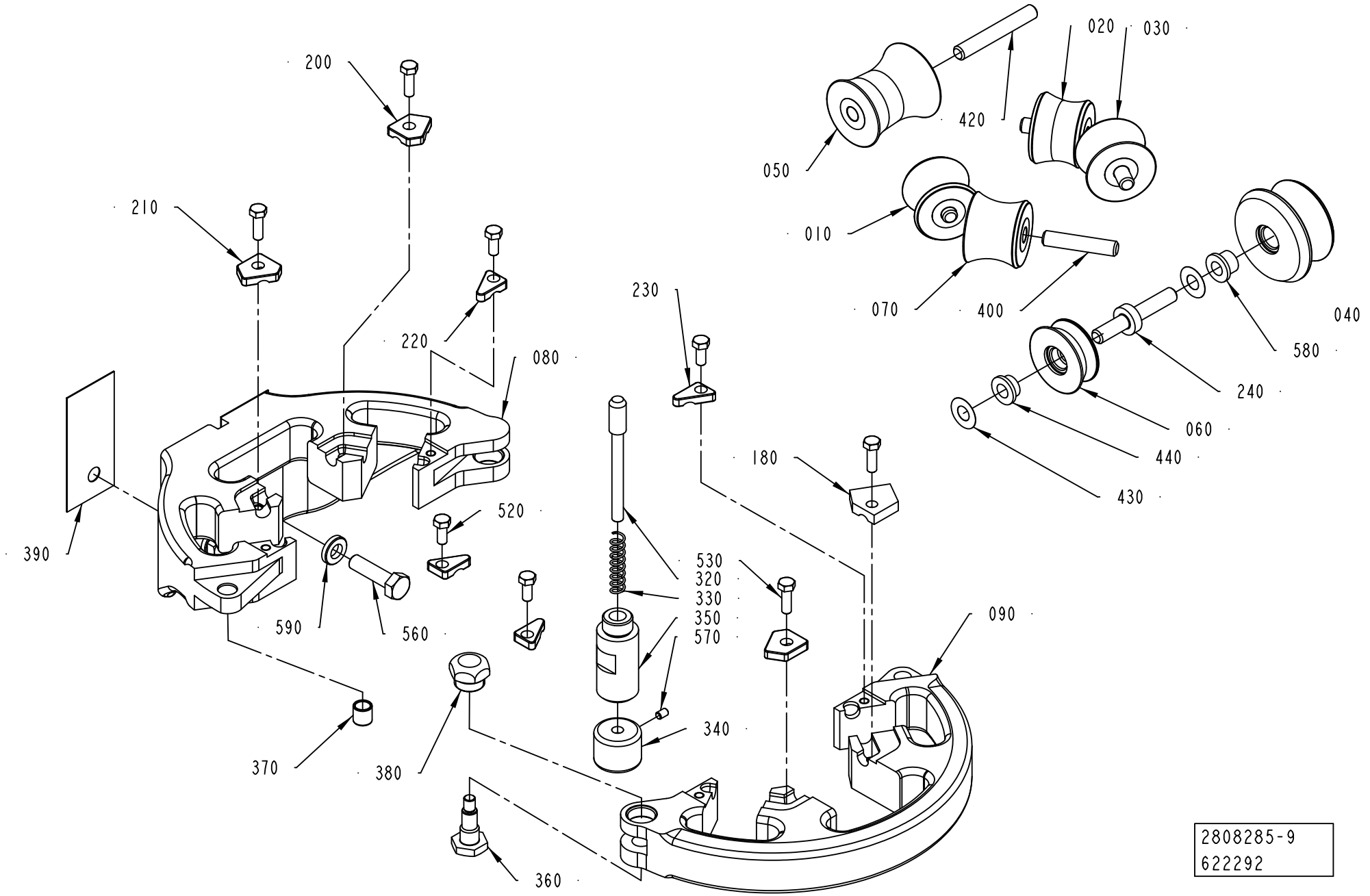

2808285-9
622292

Pos	Part No	UN	Qty	Description	Page No
SEE PREVIOUS LISTS PAGES: 1-139, 1-141, 1-143, 1-145.					

Pos	Part No	UN	Qty	Description	Page No

UPPER FORMING RING

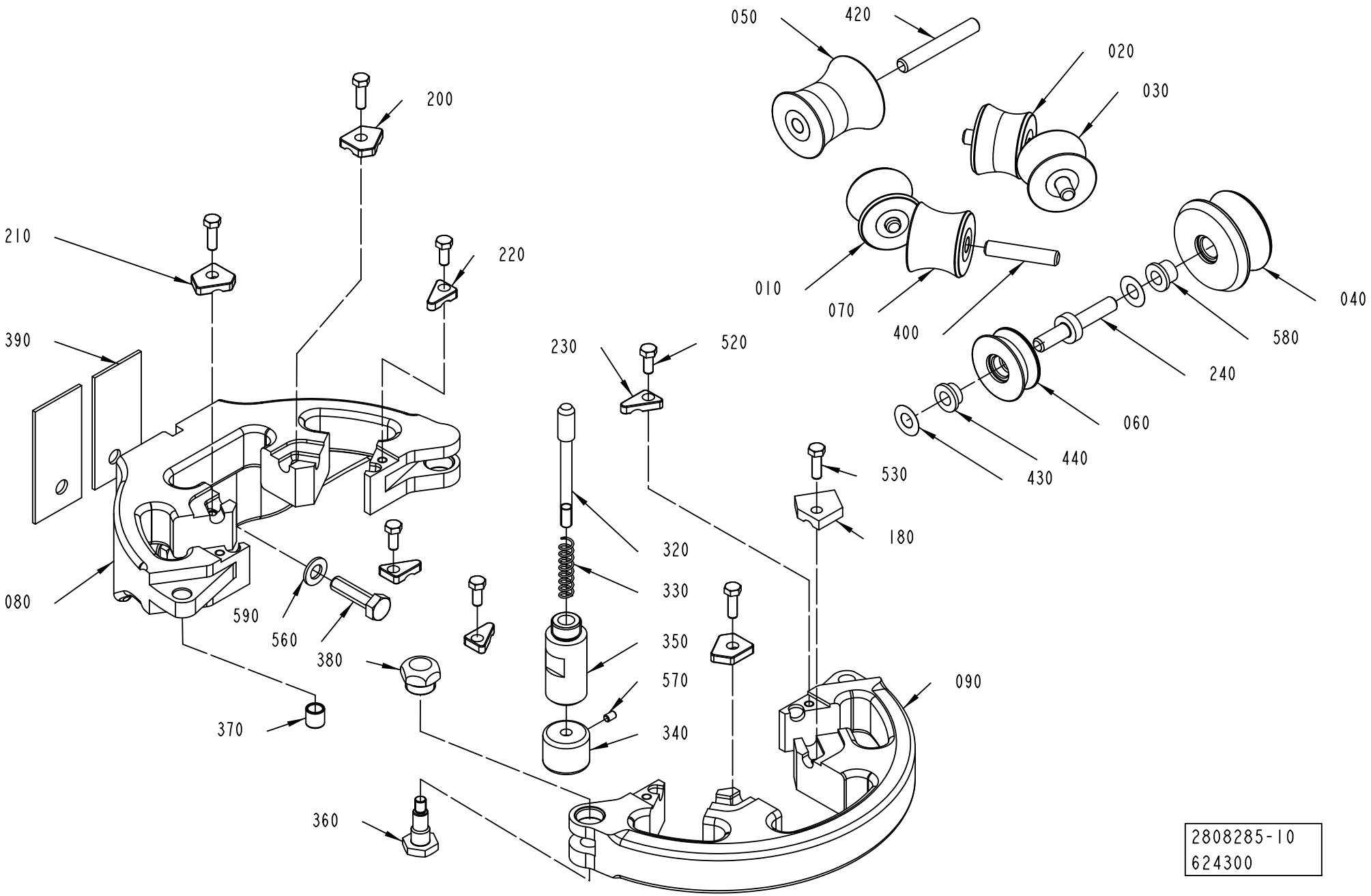

2808285-10
624300

ECM: 651569 - 20140402
Group number: 2808285-0150
Assembly Drawing: 2808285-10_1_AB

This list covers pages from 1-138 to 1-149

Pos	Part No	UN	Qty	Description	Page No
SEE PREVIOUS LISTS PAGES: 1-139, 1-141, 1-143, 1-145.					

Pos	Part No	UN	Qty	Description	Page No

LOWER SUPPORT ROLLERS

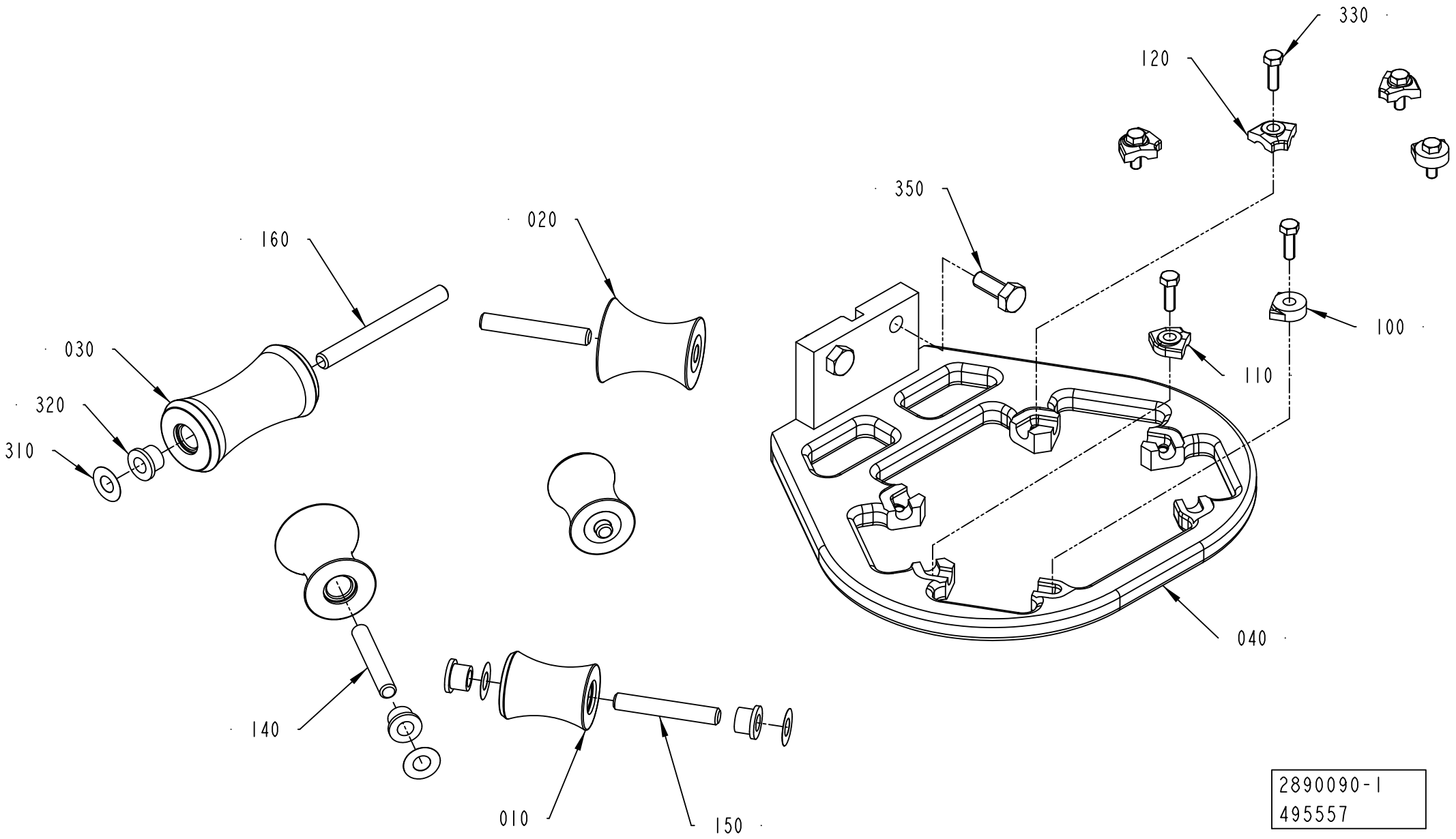

2890090-1
495557

ECM: 581974 - 20130402
Group number: 2890090-0100
Assembly Drawing: 2890090-1_1_AC

Pos	Part No	UN	Qty	Description	Page No
TBA 0080S					
010	2906119-0000		2	ROLLER	
020	2906120-0000		2	ROLLER	
030	2906121-0000		1	ROLLER	
040	2986716-0000		1	LOWER SUPPORT ROLLERS	
100	2532895-0002		2	LOCK PLATE	
110	2528123-0001		4	LOCK PLATE	
140	752186-0004		2	SHAFT	
150	752186-0020		2	SHAFT	
160	752186-0022		1	SHAFT	
TBA 0100B, TBA 0125S					
010	2976256-0000		2	ROLLER	
020	2906120-0000		2	ROLLER	
030	2906121-0000		1	ROLLER	
040	2906118-0000		1	LOWER SUPPORT ROLLERS	
100	2532895-0011		2	LOCK PLATE	
110	2528123-0001		4	LOCK PLATE	
140	752186-0004		2	SHAFT	
150	752186-0020		2	SHAFT	
160	752186-0022		1	SHAFT	
TBA 0160S, TBA 0200S, TPA 0250SQ, TPA 0200SQ, TBA 0180S					
010	2986772-0000		2	ROLLER	
020	2986773-0000		2	ROLLER	
030	2986774-0000		1	ROLLER	
040	2986776-0000		1	SUPPORT RING	
100	2532895-0002		2	LOCK PLATE	
110	2528123-0001		2	LOCK PLATE	
120	2528123-0003		2	LOCK PLATE	
140	2522213-0004		2	SHAFT	
150	752186-0021		2	SHAFT	
160	2522213-0012		1	SHAFT	
TBA 0200B, TBA 0200SQ, TBA 0250B, TBA 0330S, TPA 0330SQ					
010	2930304-0000		2	ROLLER	
020	2906104-0000		2	ROLLER	
030	2906105-0000		1	ROLLER	
040	2913350-0000		1	SUPPORT RING	
100	2532895-0002		2	LOCK PLATE	
110	2528123-0001		2	LOCK PLATE	
120	2528123-0003		2	LOCK PLATE	
140	2522213-0015		2	SHAFT	
150	752186-0019		2	SHAFT	
160	2522213-0003		1	SHAFT	

Pos	Part No	UN	Qty	Description	Page No
TBA 0200M, TBA 0250S, TBA 0200E, TBA 0250E					
010	2906103-0000		2	ROLLER	
020	2906104-0000		2	ROLLER	
030	2986739-0000		1	ROLLER	
040	2986740-0000		1	LOWER SUPPORT ROLLERS	
100	2532895-0002		2	LOCK PLATE	
110	2528123-0001		2	LOCK PLATE	
120	2528123-0003		2	LOCK PLATE	
140	2522213-0015		2	SHAFT	
150	752186-0019		2	SHAFT	
160	2522213-0018		1	SHAFT	
TBA 0375S					
010	3058481-0000		2	ROLLER	
020	3058479-0000		2	ROLLER	
030	3058478-0000		1	ROLLER	
040	3058477-0000		1	SUPPORT RING	
100	2532895-0002		2	LOCK PLATE	
110	2528123-0001		2	LOCK PLATE	
120	2528123-0003		2	LOCK PLATE	
140	2522213-0015		2	SHAFT	
150	752186-0006		2	SHAFT	
160	2522213-0020		1	SHAFT	
TPA 0125SQ					
010	2906119-0000		2	ROLLER	
020	2906120-0000		2	ROLLER	
030	2906121-0000		1	ROLLER	
040	2945457-0000		1	LOWER SUPPORT ROLLERS	
100	2532895-0002		2	LOCK PLATE	
110	2528123-0001		4	LOCK PLATE	
140	752186-0004		2	SHAFT	
150	752186-0020		2	SHAFT	
160	752186-0022		1	SHAFT	
Common Parts					
310	2033-0011		10	WASHER	
320	90240-0172		10	FLANGE BUSHING, 8X12X10 MM	
330	312105-0329		6	SCREW, M6S ISO 4017 M5X16 A4 80	
350	312105-0451		2	SCREW, M6S ISO 4017 M8X20 A4 80	

Machine Type | Group Description | Used-In | Group Number | Page No

EDGE ROLLER

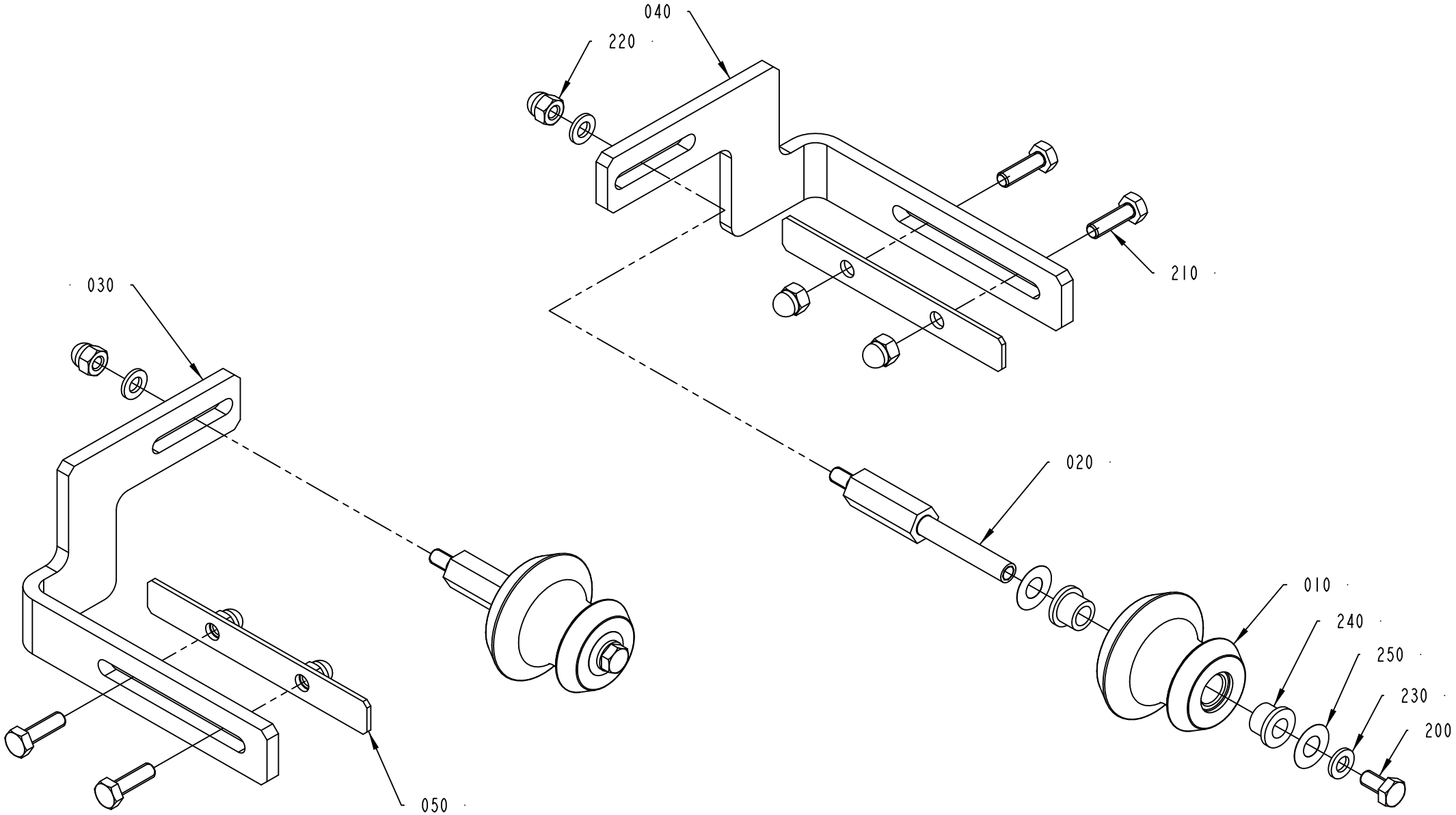

Pos	Part No	UN	Qty	Description	Page No
TBA 0100B, TBA 0125S (See drawing on page: 1-156)					
010	2640354-0000		2	ROLLER	
020	2890119-0000		2	SHAFT	
030	2808319-0000		1	BRACKET	
040	2863999-0000		1	BRACKET	
260	2033-0008		8	WASHER	
TBA 0160S, TBA 0200M, TBA 0200B, TBA 0200SQ, TBA 0200S, TBA 0250S, TBA 0250B, TBA 0330S, TPA 0330SQ, TPA 0250SQ, TPA 0200SQ, TBA 0200E, TBA 0250E, TBA 0180S (See drawing on page: 1-154)					
010	2640354-0000		2	ROLLER	
020	2863998-0000		2	SHAFT	
030	2945431-0000		1	BRACKET	
040	2945432-0000		1	BRACKET	
TBA 0375S (See drawing on page: 1-154)					
010	2640354-0000		2	ROLLER	
020	2863998-0000		2	SHAFT	
030	3099357-0000		1	BRACKET	
040	3100273-0000		1	BRACKET	
TPA 0125SQ, TBA 0080S (See drawing on page: 1-152)					
010	2890115-0000		2	ROLLER	
020	2890119-0000		2	SHAFT	
030	2808319-0000		1	BRACKET	
040	2863999-0000		1	BRACKET	
Common Parts					
050	2528114-0000		2	COVER PLATE	
200	312105-0366		2	SCREW, M6S ISO 4017 M6X12 A4 80	
210	312105-0370		4	SCREW, M6S ISO 4017 M6X20 A4 80	
220	312705-0316		6	HEX. DOMED CAP MHM-6 M6 A280	
230	315105-0153		4	WASHER PLAIN, 6,4X12X1,5 A4 BRB	
240	90240-0172		4	FLANGE BUSHING, 8X12X10 MM	
250	2033-0011		4	WASHER	

Pos	Part No	UN	Qty	Description	Page No

EDGE ROLLER

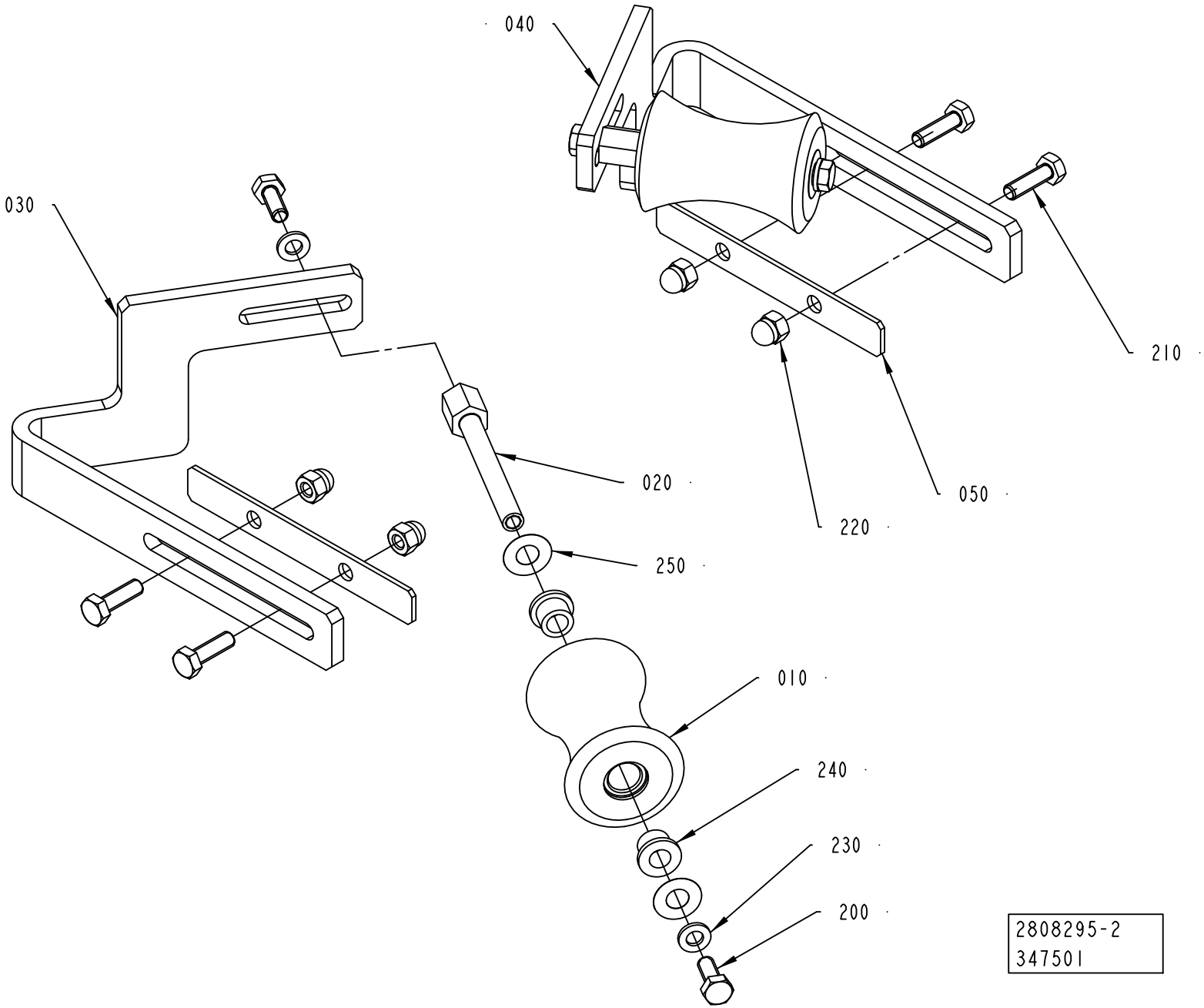

Pos	Part No	UN	Qty	Description	Page No
TBA 0100B, TBA 0125S (See drawing on page: 1-156)					
010	2640354-0000		2	ROLLER	
020	2890119-0000		2	SHAFT	
030	2808319-0000		1	BRACKET	
040	2863999-0000		1	BRACKET	
260	2033-0008		8	WASHER	
TBA 0160S, TBA 0200M, TBA 0200B, TBA 0200SQ, TBA 0200S, TBA 0250S, TBA 0250B, TBA 0330S, TPA 0330SQ, TPA 0250SQ, TPA 0200SQ, TBA 0200E, TBA 0250E, TBA 0180S (See drawing on page: 1-154)					
010	2640354-0000		2	ROLLER	
020	2863998-0000		2	SHAFT	
030	2945431-0000		1	BRACKET	
040	2945432-0000		1	BRACKET	
TBA 0375S (See drawing on page: 1-154)					
010	2640354-0000		2	ROLLER	
020	2863998-0000		2	SHAFT	
030	3099357-0000		1	BRACKET	
040	3100273-0000		1	BRACKET	
TPA 0125SQ, TBA 0080S (See drawing on page: 1-152)					
010	2890115-0000		2	ROLLER	
020	2890119-0000		2	SHAFT	
030	2808319-0000		1	BRACKET	
040	2863999-0000		1	BRACKET	
Common Parts					
050	2528114-0000		2	COVER PLATE	
200	312105-0366		2	SCREW, M6S ISO 4017 M6X12 A4 80	
210	312105-0370		4	SCREW, M6S ISO 4017 M6X20 A4 80	
220	312705-0316		6	HEX. DOMED CAP MHM-6 M6 A280	
230	315105-0153		4	WASHER PLAIN, 6,4X12X1,5 A4 BRB	
240	90240-0172		4	FLANGE BUSHING, 8X12X10 MM	
250	2033-0011		4	WASHER	

Pos	Part No	UN	Qty	Description	Page No

EDGE ROLLER

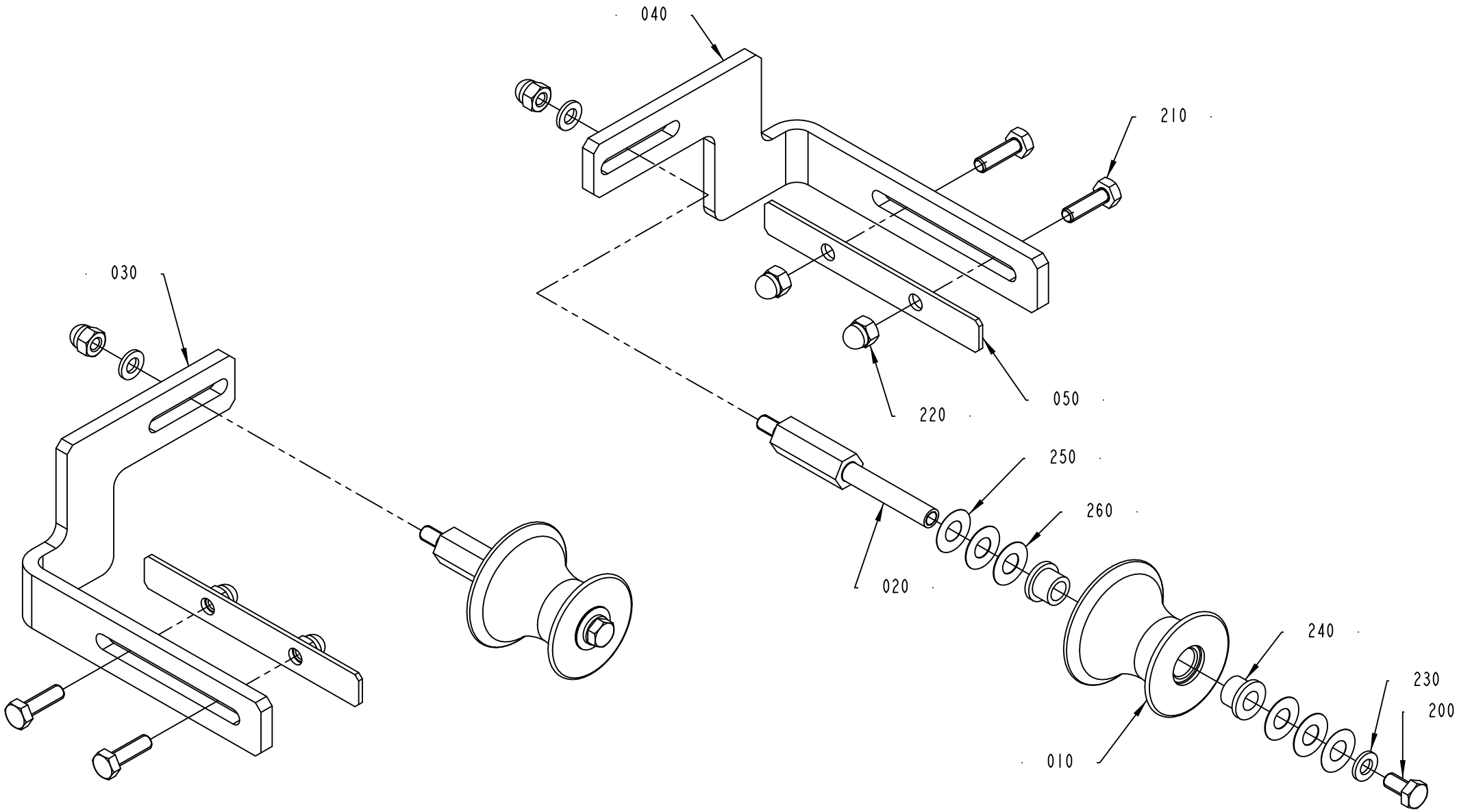
040
210
030
220
050
250
260
020
240
230
200
010
2808295-3
356242

Pos	Part No	UN	Qty	Description	Page No
TBA 0100B, TBA 0125S (See drawing on page: 1-156)					
010	2640354-0000		2	ROLLER	
020	2890119-0000		2	SHAFT	
030	2808319-0000		1	BRACKET	
040	2863999-0000		1	BRACKET	
260	2033-0008		8	WASHER	
TBA 0160S, TBA 0200M, TBA 0200B, TBA 0200SQ, TBA 0200S, TBA 0250S, TBA 0250B, TBA 0330S, TPA 0330SQ, TPA 0250SQ, TPA 0200SQ, TBA 0200E, TBA 0250E, TBA 0180S (See drawing on page: 1-154)					
010	2640354-0000		2	ROLLER	
020	2863998-0000		2	SHAFT	
030	2945431-0000		1	BRACKET	
040	2945432-0000		1	BRACKET	
TBA 0375S (See drawing on page: 1-154)					
010	2640354-0000		2	ROLLER	
020	2863998-0000		2	SHAFT	
030	3099357-0000		1	BRACKET	
040	3100273-0000		1	BRACKET	
TPA 0125SQ, TBA 0080S (See drawing on page: 1-152)					
010	2890115-0000		2	ROLLER	
020	2890119-0000		2	SHAFT	
030	2808319-0000		1	BRACKET	
040	2863999-0000		1	BRACKET	
Common Parts					
050	2528114-0000		2	COVER PLATE	
200	312105-0366		2	SCREW, M6S ISO 4017 M6X12 A4 80	
210	312105-0370		4	SCREW, M6S ISO 4017 M6X20 A4 80	
220	312705-0316		6	HEX. DOMED CAP MHM-6 M6 A280	
230	315105-0153		4	WASHER PLAIN, 6,4X12X1,5 A4 BRB	
240	90240-0172		4	FLANGE BUSHING, 8X12X10 MM	
250	2033-0011		4	WASHER	

Pos	Part No	UN	Qty	Description	Page No

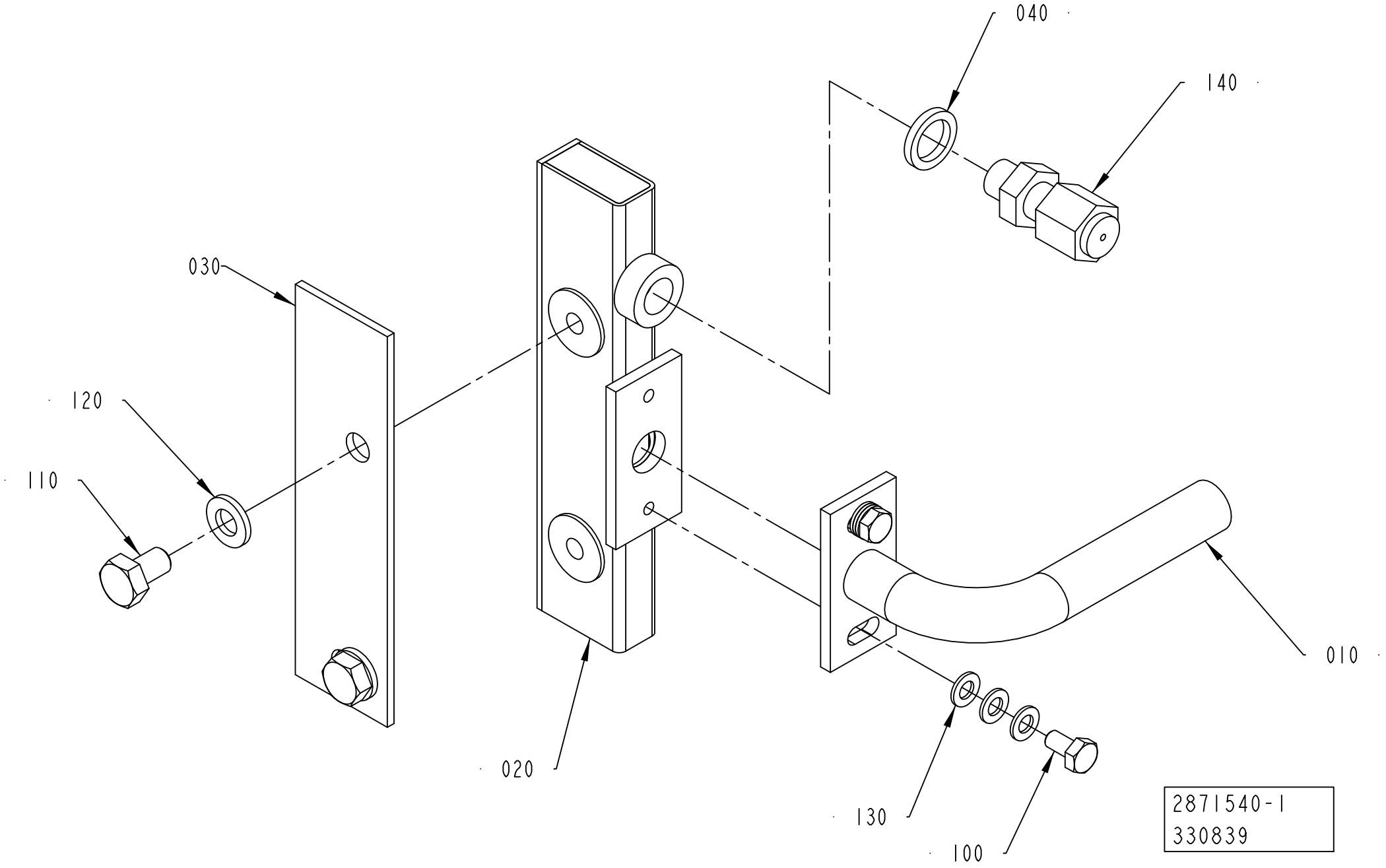
040
140
030
120
110
020
010
130
100
2871540-1
330839

ECM: 658144 - 20140101
Group number: 2871540-0100
Assembly Drawing: 2871540-1_1_AA

Pos	Part No	UN	Qty	Description	Page No
TBA 0100B, TBA 0125S					
010	2808379-0000		1	BRACKET	
020	2986710-0000		1	AIR NOZZLE	
030	2986711-0000		1	HEAT GUARD	
TBA 0160S, TBA 0200M, TBA 0200S, TBA 0250S, TB 0200S, TB 0200M, TPA 0250SQ, TPA 0200SQ, TBA 0200E, TBA 0250E, TBA 0180S					
010	2808378-0000		1	BRACKET	
020	2902962-0000		1	AIR NOZZLE	
030	2903070-0000		1	HEAT GUARD	
TBA 0200B, TBA 0200SQ, TBA 0250B, TBA 0330S, TPA 0330SQ					
010	2808366-0000		1	BRACKET	
020	2902962-0000		1	AIR NOZZLE	
030	2903070-0000		1	HEAT GUARD	
TBA 0375S					
010	3058450-0000		1	BRACKET	
020	2902962-0000		1	AIR NOZZLE	
030	2903070-0000		1	HEAT GUARD	
TPA 0125SQ, TBA 0080S					
010	2808365-0000		1	BRACKET	
020	2986710-0000		1	AIR NOZZLE	
030	2986711-0000		1	HEAT GUARD	
Common Parts					
040	273429-0000		1	WASHER	
100	312105-0287		2	SCREW, M6S ISO 4017 M4X8 A4 70	
110	312105-0364		2	"SCREW, M6S ISO 4017 M6X10 A4 80"	
120	315105-0153		2	WASHER PLAIN, 6,4X12X1,5 A4 BRB	
130	315105-0136		6	WASHER PLAIN, 4,3X8X0,8 A4 BRB	
140	90326-0304		1	COMPRESSION FITTING, 5101015-005	

Pos	Part No	UN	Qty	Description	Page No

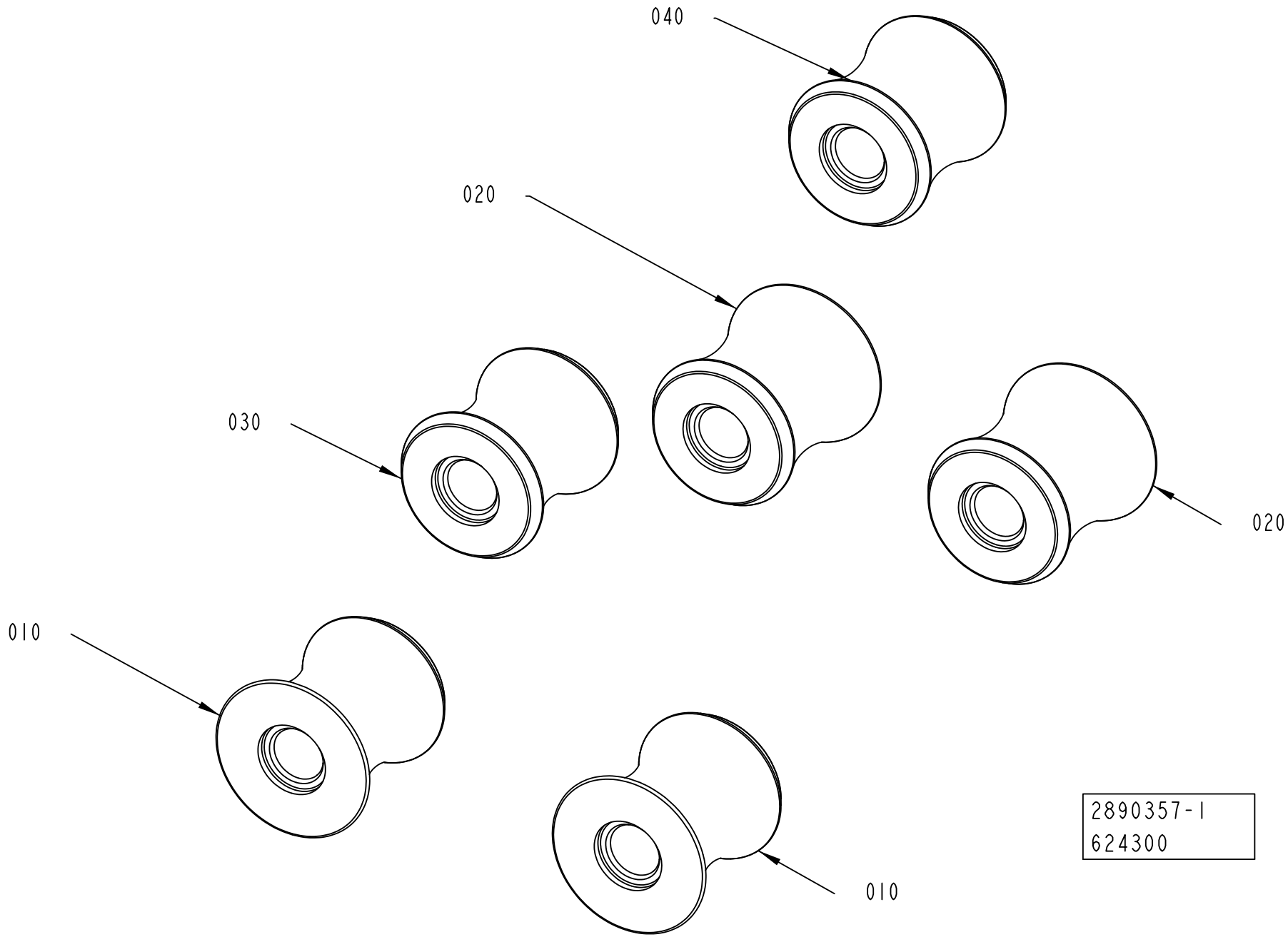
040
020
030
020
010
010
2890357-1
624300

Pos	Part No	UN	Qty	Description	Page No
TBA 0080S (See drawing on page: 1-160)					
010	2922709-0003		2	TRIMMING ROLLER PLUS	
020	2922709-0002		2	TRIMMING ROLLER MINUS	
030	2945446-0003		1	TRIMMING ROLLER PLUS	
040	2945446-0002		1	TRIMMING ROLLER MINUS	
TBA 0100B, TBA 0125S (See drawing on page: 1-160)					
010	752466-0000		2	TRIMMING ROLLER PLUS	
020	752467-0000		2	TRIMMING ROLLER MINUS	
030	2969725-0003		1	TRIMMING ROLLER PLUS	
040	2969725-0002		1	TRIMMING ROLLER MINUS	
TBA 0160S, TBA 0200S, TB 0200S, TBA 0180S (See drawing on page: 1-160)					
010	752464-0000		2	TRIMMING ROLLER PLUS	
020	752465-0000		2	TRIMMING ROLLER MINUS	
030	2966599-0003		1	TRIMMING ROLLER PLUS	
040	2966599-0002		1	TRIMMING ROLLER MINUS	
TBA 0200B, TBA 0200SQ, TBA 0250B, TBA 0330S (See drawing on page: 1-160)					
010	752462-0000		2	TRIMMING ROLLER PLUS	
020	752463-0000		2	TRIMMING ROLLER MINUS	
030	2966602-0003		1	TRIMMING ROLLER PLUS	
040	2966602-0002		1	TRIMMING ROLLER MINUS	
TBA 0200E, TBA 0250E (See drawing on page: 1-160)					
010	3089567-0003		2	ROLLER	
020	3089567-0002		2	ROLLER	
030	3089568-0003		1	ROLLER	
040	3089568-0002		1	ROLLER	
TBA 0200M, TBA 0250S, TB 0200M (See drawing on page: 1-160)					
010	574446-0000		2	TRIMMING ROLLER PLUS	
020	574447-0000		2	TRIMMING ROLLER MINUS	
030	3006309-0003		1	TRIMMING ROLLER PLUS	
040	3006309-0002		1	TRIMMING ROLLER MINUS	
TBA 0375S (See drawing on page: 1-160)					
010	3058446-0003		2	ROLLER	
020	3058446-0002		2	ROLLER	
030	3058447-0003		1	ROLLER	
040	3058447-0002		1	ROLLER	
TPA 0125SQ (See drawing on page: 1-160)					
010	2890091-0003		2	TRIMMING ROLLER PLUS	
020	2890091-0002		2	TRIMMING ROLLER MINUS	
030	2966605-0003		1	TRIMMING ROLLER PLUS	
040	2966605-0002		1	TRIMMING ROLLER MINUS	
TPA 0250SQ, TPA 0200SQ (See drawing on page: 1-162)					
010	2922767-0003		2	TRIMMING ROLLER PLUS	
020	2922767-0002		2	TRIMMING ROLLER MINUS	
TPA 0330SQ (See drawing on page: 1-160)					
010	929282-0000		2	TRIMMING ROLLER PLUS	
020	929283-0000		2	TRIMMING ROLLER MINUS	
030	2986698-0003		1	TRIMMING ROLLER PLUS	
040	2986698-0002		1	TRIMMING ROLLER MINUS	

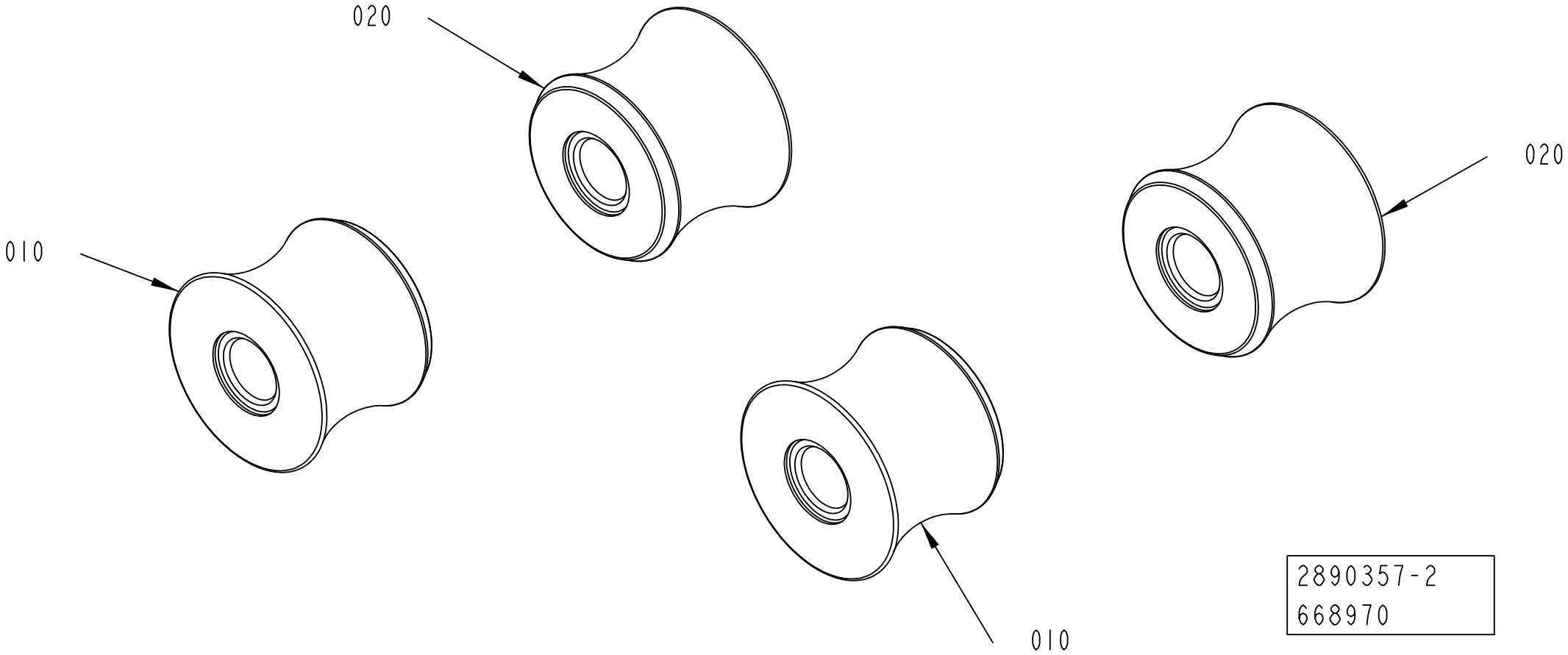
020
010
020
010
2890357-2
668970

Pos	Part No	UN	Qty	Description	Page No
TBA 0080S (See drawing on page: 1-160)					
010	2922709-0003		2	TRIMMING ROLLER PLUS	
020	2922709-0002		2	TRIMMING ROLLER MINUS	
030	2945446-0003		1	TRIMMING ROLLER PLUS	
040	2945446-0002		1	TRIMMING ROLLER MINUS	
TBA 0100B, TBA 0125S (See drawing on page: 1-160)					
010	752466-0000		2	TRIMMING ROLLER PLUS	
020	752467-0000		2	TRIMMING ROLLER MINUS	
030	2969725-0003		1	TRIMMING ROLLER PLUS	
040	2969725-0002		1	TRIMMING ROLLER MINUS	
TBA 0160S, TBA 0200S, TB 0200S, TBA 0180S (See drawing on page: 1-160)					
010	752464-0000		2	TRIMMING ROLLER PLUS	
020	752465-0000		2	TRIMMING ROLLER MINUS	
030	2966599-0003		1	TRIMMING ROLLER PLUS	
040	2966599-0002		1	TRIMMING ROLLER MINUS	
TBA 0200B, TBA 0200SQ, TBA 0250B, TBA 0330S (See drawing on page: 1-160)					
010	752462-0000		2	TRIMMING ROLLER PLUS	
020	752463-0000		2	TRIMMING ROLLER MINUS	
030	2966602-0003		1	TRIMMING ROLLER PLUS	
040	2966602-0002		1	TRIMMING ROLLER MINUS	
TBA 0200E, TBA 0250E (See drawing on page: 1-160)					
010	3089567-0003		2	ROLLER	
020	3089567-0002		2	ROLLER	
030	3089568-0003		1	ROLLER	
040	3089568-0002		1	ROLLER	
TBA 0200M, TBA 0250S, TB 0200M (See drawing on page: 1-160)					
010	574446-0000		2	TRIMMING ROLLER PLUS	
020	574447-0000		2	TRIMMING ROLLER MINUS	
030	3006309-0003		1	TRIMMING ROLLER PLUS	
040	3006309-0002		1	TRIMMING ROLLER MINUS	
TBA 0375S (See drawing on page: 1-160)					
010	3058446-0003		2	ROLLER	
020	3058446-0002		2	ROLLER	
030	3058447-0003		1	ROLLER	
040	3058447-0002		1	ROLLER	
TPA 0125SQ (See drawing on page: 1-160)					
010	2890091-0003		2	TRIMMING ROLLER PLUS	
020	2890091-0002		2	TRIMMING ROLLER MINUS	
030	2966605-0003		1	TRIMMING ROLLER PLUS	
040	2966605-0002		1	TRIMMING ROLLER MINUS	
TPA 0250SQ, TPA 0200SQ (See drawing on page: 1-162)					
010	2922767-0003		2	TRIMMING ROLLER PLUS	
020	2922767-0002		2	TRIMMING ROLLER MINUS	
TPA 0330SQ (See drawing on page: 1-160)					
010	929282-0000		2	TRIMMING ROLLER PLUS	
020	929283-0000		2	TRIMMING ROLLER MINUS	
030	2986698-0003		1	TRIMMING ROLLER PLUS	
040	2986698-0002		1	TRIMMING ROLLER MINUS	

This page is intentionally left blank.

ECM: 514186 - 20111002
Group number: 3190294-0100
Assembly Drawing:

Pos	Part No	UN	Qty	Description	Page No
TBA 0375S					
010	2529547-0100		1	PAPER GUIDE	**1-167**
020	2832313-0000		2	SHAFT	
Common Parts					
030	2974074-0100		1	SPACER	**1-169**

Pos	Part No	UN	Qty	Description	Page No

PAPER GUIDE

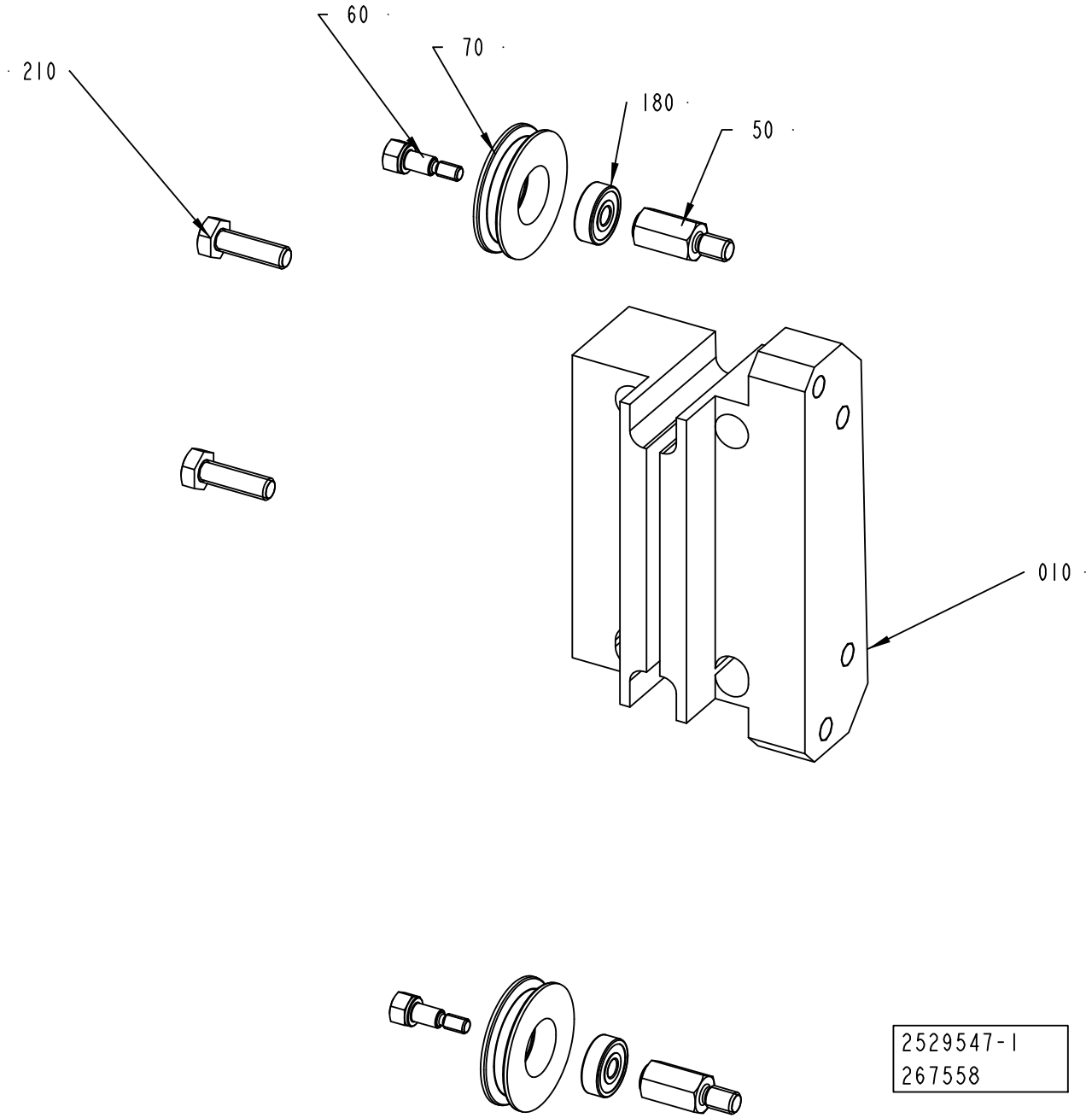

ECM: 405759 - 20100610
Group number: 2529547-0100
Assembly Drawing: 2529547-1_1_AC

Pos	Part No	UN	Qty	Description	Page No
A3/COMPACTFLEX					
010	2831678-0000		1	SUPPORT	
Common Parts					
050	1558251-0000		2	SHAFT	
060	1558252-0000		2	SCREW	
070	1558253-0000		2	ROLLER	
180	90458-2950		2	BALL BEARING 5/16X5	
210	312105-0370		2	SCREW, M6S ISO 4017 M6X20 A4 80	

Pos	Part No	UN	Qty	Description	Page No

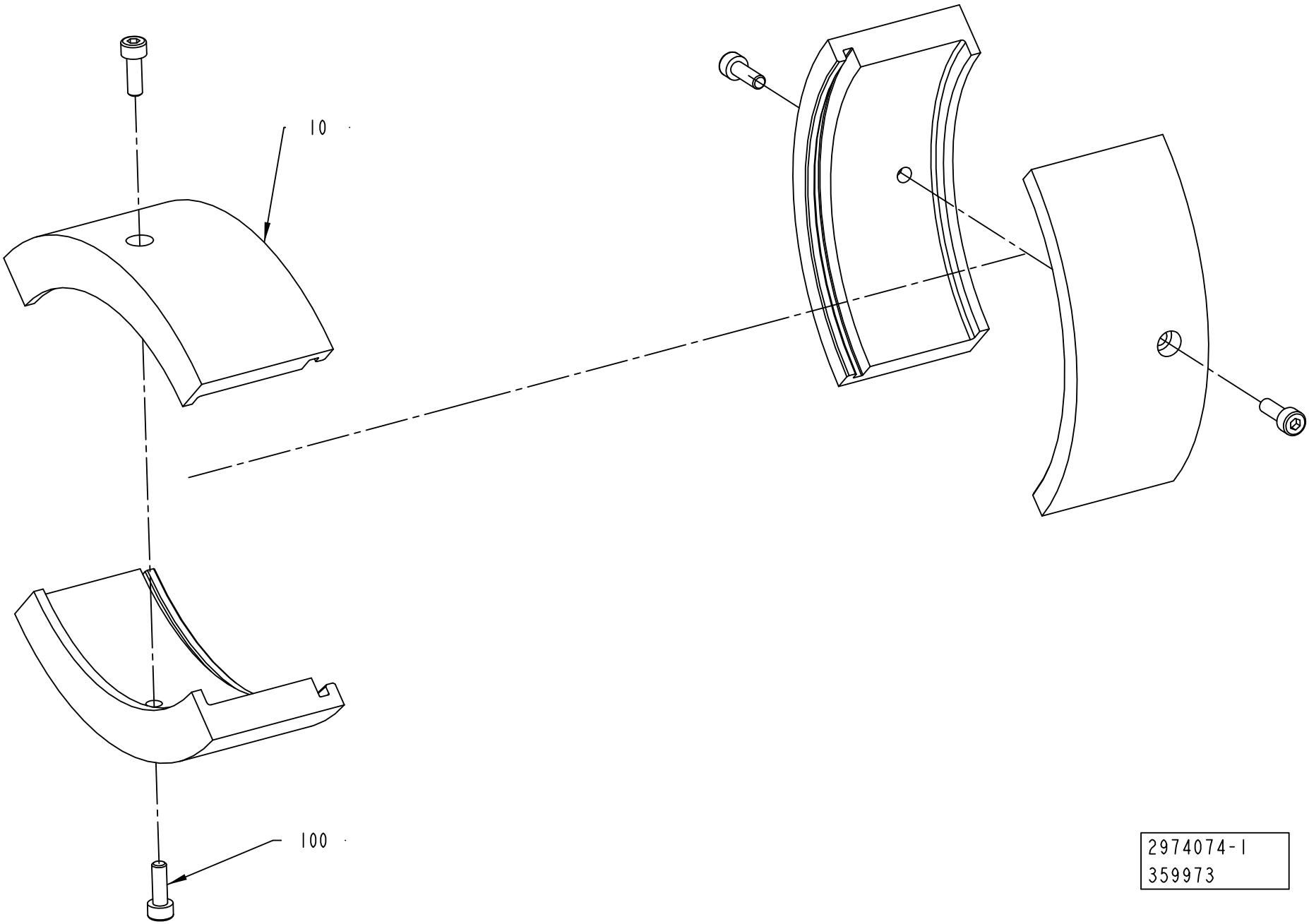

2974074-1
359973

ECM: 657756 - 20140102
Group number: 2974074-0100
Assembly Drawing: 2974074-1_1_AA

Pos	Part No	UN	Qty	Description	Page No
TBA 0080S					
010	2850474-0001		4	BRACKET	
TBA 0100B, TBA 0125S					
010	2850474-0002		4	BRACKET	
TBA 0160S, TBA 0200S, TB 0200S, TPA 0250SQ, TPA 0200SQ, TBA 0180S					
010	2850474-0003		4	BRACKET	
TBA 0200B, TBA 0200SQ, TBA 0250B, TBA 0330S					
010	2850474-0005		4	BRACKET	
TBA 0200M, TBA 0250S, TBA 0200E, TBA 0250E					
010	2850474-0004		4	BRACKET	
TBA 0375S					
010	2850474-0006		4	BRACKET	
TPA 0125SQ					
010	2523766-0012		4	BRACKET	
TPA 0330SQ					
010	2523766-0001		4	BRACKET	
Common Parts					
100	312115-0291		4	SCREW ISO4762 M4X12 A4 80	

Pos	Part No	UN	Qty	Description	Page No

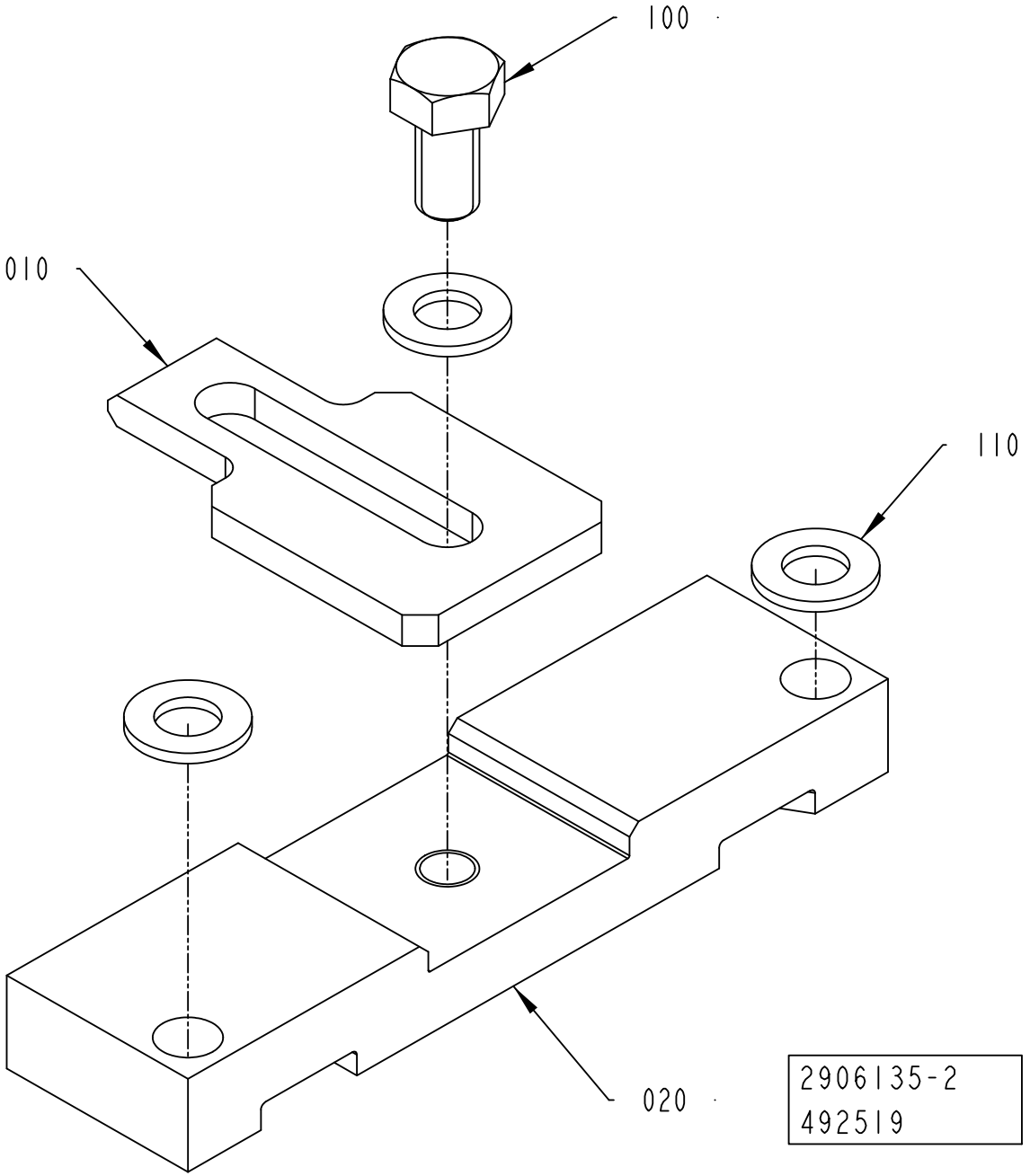
100
010
110
020
2906135-2
492519

ECM: 675723 - 20140102
Group number: 2906135-0200
Assembly Drawing: 2906135-2_1_AA

Pos	Part No	UN	Qty	Description	Page No
TBA 0100B, TBA 0125S, TBA 0160S, TBA 0200S, TB 0200S, TPA 0250SQ, TPA 0200SQ, TBA 0180S					
020	3151763-0000		1	PLATE	
TBA 0200B, TBA 0200SQ, TBA 0250B, TBA 0330S, TBA 0375S, TPA 0330SQ					
020	3151764-0000		1	PLATE	
TBA 0200M, TBA 0250S, TB 0200M, TBA 0200E, TBA 0250E					
020	3151765-0000		1	PLATE	
TPA 0125SQ, TBA 0080S					
020	3151762-0000		1	PLATE	
Common Parts					
010	2736719-0000		1	PLATE	
100	312105-0325		1	SCREW, M6S ISO 4017 M5X10 A4 80	
110	315105-0146		3	WASHER PLAIN, 5,3X10X1 A4 BRB	

Pos	Part No	UN	Qty	Description	Page No

This page is intentionally left blank.

ECM: 686157 - 20141001
Group number: 2889626-0100
Assembly Drawing:

This list covers pages from 1-172 to 1-175

Pos	Part No	UN	Qty	Description	Page No
TBA 0375S					
FF20	3037955-0000		2	PUSHER	
JS40	3096231-0000		1	KNIFE	
JS30	3067274-0000		8	SHIM	
JS20	3089348-0000		2	INDUCTOR	
JS10	1110083-0005		12	DOLLY	
SU20	295376-0000		1	SHAFT	
SU10	2909367-0000		1	PRESSURE ROLLER	
TPA 0125SQ					
FF20	2921574-0000		2	PUSHER	
JS40	1282645-0000		1	KNIFE	
JS30	2908756-0000		20	VOLUME SHIM	
JS20	2975930-0000		2	INDUCTOR	
JS10	1110083-0003		12	DOLLY	
SU20	3158158-0000		1	SHAFT	
SU10	2932253-0000		1	PRESSURE ROLLER (PACK 10)	
TPA 0200SQ					
FF20	3037955-0000		2	PUSHER	
JS40	1282646-0000		1	KNIFE	
JS30	3019316-0000		8	SHIM	
JS20	1110534-0000		2	INDUCTOR	
JS10	1110083-0003		12	DOLLY	
SU20	3158158-0000		1	SHAFT	
SU10	2932253-0000		1	PRESSURE ROLLER (PACK 10)	
TPA 0250SQ					
FF20	3037955-0000		2	PUSHER	
JS40	1282646-0000		1	KNIFE	
JS30	3019317-0000		8	SHIM	
JS20	1110534-0000		2	INDUCTOR	
JS10	1110083-0003		12	DOLLY	
SU20	3158158-0000		1	SHAFT	
SU10	2932253-0000		1	PRESSURE ROLLER (PACK 10)	
TPA 0330SQ					
FF20	2921574-0000		2	PUSHER	
JS40	1282646-0000		1	KNIFE	
JS30	3003863-0000		16	VOLUME SHIM	
JS20	1110556-0000		2	INDUCTOR	
JS10	1110083-0003		12	DOLLY	
SU20	295376-0000		1	SHAFT	
SU10	2909367-0000		1	PRESSURE ROLLER	
TBA 0080S					
FF20	2921574-0000		2	PUSHER	
JS40	1282645-0000		1	KNIFE	
JS30	2950902-0000		8	VOLUME SHIM	
JS20	1566981-0000		2	INDUCTOR	
JS10	1566761-0000		12	DOLLY	
SU20	3158158-0000		1	SHAFT	
SU10	2932253-0000		1	PRESSURE ROLLER (PACK 10)	
TBA 0100B					
FF20	2921574-0000		2	PUSHER	
JS40	1282645-0000		1	KNIFE	
JS30	979754-0000		8	VOLUME SHIM 100	
JS20	2917498-0000		2	INDUCTOR	
JS10	2949862-0004		12	DOLLY	
SU20	3158158-0000		1	SHAFT	
SU10	2932253-0000		1	PRESSURE ROLLER (PACK 10)	
TBA 0125S					
FF20	2921574-0000		2	PUSHER	
JS40	1282645-0000		1	KNIFE	
JS30	272987-0000		8	VOLUME SHIM	
JS20	2917498-0000		2	INDUCTOR	
JS10	2949862-0004		12	DOLLY	
SU20	3158158-0000		1	SHAFT	
SU10	2932253-0000		1	PRESSURE ROLLER (PACK 10)	
TBA 0160S, TBA 0180S					
FF20	2921574-0000		2	PUSHER	
JS40	1282647-0000		1	KNIFE	
JS30	3022276-0000		8	VOLUME SHIM	
JS20	1110532-0000		2	INDUCTOR	
JS10	1110083-0003		12	DOLLY	
SU20	3158158-0000		1	SHAFT	
SU10	2932253-0000		1	PRESSURE ROLLER (PACK 10)	
TBA 0200B					
FF20	2894700-0000		2	PUSHER	
JS40	1282646-0000		1	KNIFE	
JS30	272986-0003		8	VOLUME SHIM	
JS20	1110534-0000		2	INDUCTOR	
JS10	1110083-0003		12	DOLLY	
SU20	295376-0000		1	SHAFT	
SU10	2909368-0000		1	PRESSURE ROLLER (PACK 10)	
TBA 0200E					
FF20	3037955-0000		2	PUSHER	
JS40	1282647-0000		1	KNIFE	
JS30	3067286-0000		8	VOLUME SHIM	

Machine Type | Group Description | Used-In | Group Number | Page No

This page is intentionally left blank.

Pos	Part No	UN	Qty	Description	Page No
TBA 0200E (Cont'd)					
JS30	3111045-0000		8	VOLUME SHIM	
JS20	3089354-0000		2	INDUCTOR	
JS10	1110083-0003		12	DOLLY	
SU20	3158158-0000		1	SHAFT	
SU10	2932253-0000		1	PRESSURE ROLLER (PACK 10)	
TBA 0200M					
FF20	2921574-0000		2	PUSHER	
JS40	1282647-0000		1	KNIFE	
JS30	979861-0000		8	VOLUME SHIM	
JS20	1110535-0000		2	INDUCTOR	
JS10	1110083-0003		12	DOLLY	
SU20	3158158-0000		1	SHAFT	
SU10	2932253-0000		1	PRESSURE ROLLER (PACK 10)	
TBA 0200S					
FF20	2921574-0000		2	PUSHER	
JS40	1282647-0000		1	KNIFE	
JS30	2947788-0000		8	VOLUME SHIM	
JS20	1110532-0000		2	INDUCTOR	
JS10	1110083-0003		12	DOLLY	
SU20	3158158-0000		1	SHAFT	
SU10	2932253-0000		1	PRESSURE ROLLER (PACK 10)	
TBA 0200SQ					
FF20	3037955-0000		2	PUSHER	
JS40	1282646-0000		1	KNIFE	
JS30	1519222-0000		8	VOLUME SHIM	
JS20	3044527-0000		2	INDUCTOR	
JS10	1110083-0003		12	DOLLY	
SU20	295376-0000		1	SHAFT	
SU10	2909368-0000		1	PRESSURE ROLLER (PACK 10)	
TBA 0250B					
FF20	2894700-0000		2	PUSHER	
JS40	1282646-0000		1	KNIFE	
JS30	272986-0001		8	VOLUME SHIM	
JS20	1110534-0000		2	INDUCTOR	
JS10	1110083-0003		12	DOLLY	
SU20	295376-0000		1	SHAFT	
SU10	2909368-0000		1	PRESSURE ROLLER (PACK 10)	
TBA 0250E					
FF20	3037955-0000		2	PUSHER	
JS40	1282647-0000		1	KNIFE	
JS30	3059050-0000		8	VOLUME SHIM	
JS20	3089354-0000		2	INDUCTOR	
JS10	1110083-0003		12	DOLLY	
TBA 0250S					
FF20	2921574-0000		2	PUSHER	
JS40	1282647-0000		1	KNIFE	
JS30	3002257-0000		8	VOLUME SHIM	
JS20	1110535-0000		2	INDUCTOR	
JS10	1110083-0003		12	DOLLY	
SU20	3158158-0000		1	SHAFT	
SU10	2932253-0000		1	PRESSURE ROLLER (PACK 10)	
TBA 0330S					
FF20	2894700-0000		2	PUSHER	
JS40	1282646-0000		1	KNIFE	
JS30	272986-0006		8	VOLUME SHIM 330S	
JS20	1110534-0000		2	INDUCTOR	
JS10	1110083-0003		12	DOLLY	
SU20	295376-0000		1	SHAFT	
SU10	2909368-0000		1	PRESSURE ROLLER (PACK 10)	

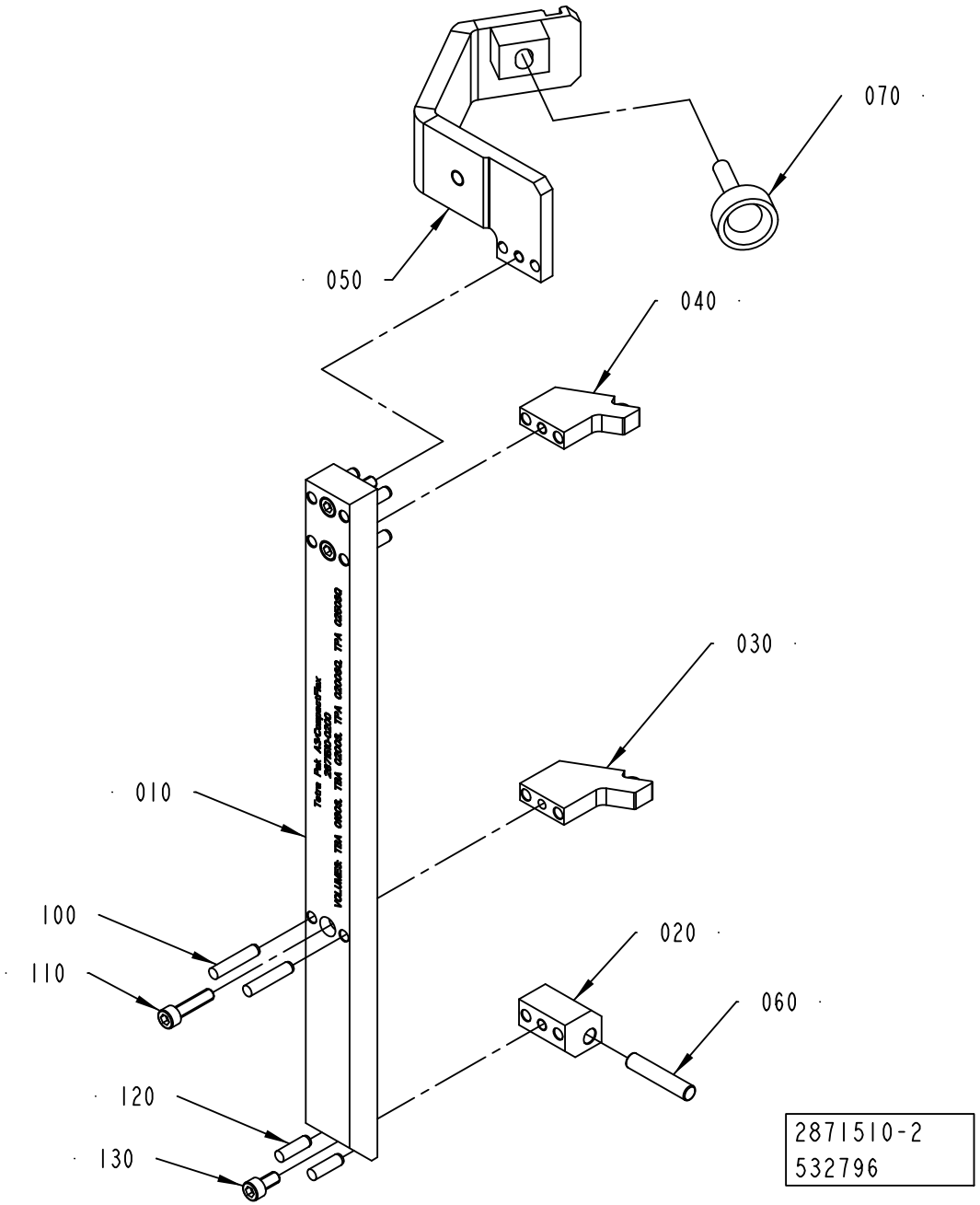
070
050
040
030
010
100
110
020
060
120
130
2871510-2
532796

ECM: 675722 - 20140401
Group number: 2871510-0200
Assembly Drawing: 2871510-2_1_AB

Pos	Part No	UN	Qty	Description	Page No
TBA 0080S					
010	3151752-0000		1	RULER	
020	3151760-0000		1	BRACKET	
030	3151758-0000		1	STOPPER	
040	3151759-0000		1	STOPPER	
050	3212442-0000		1	BRACKET	
060	263655-0003		1	SHAFT	
100	311103-0314		6	PARALLEL PIN ISO 2338 5M6X30 A1	
120	311103-0310		2	PARALLEL PIN ISO 2338 5M6X20 A1	
TBA 0100B, TBA 0125S					
010	3151748-0000		1	RULER	
020	2871511-0000		1	BRACKET	
030	2871513-0000		1	STOPPER	
040	2871517-0000		1	STOPPER	
050	3212441-0000		1	BRACKET	
060	2873-0000		1	SHAFT	
100	311103-0357		6	PARALLEL PIN ISO 2338 6M6X30 A1	
120	311103-0353		2	PARALLEL PIN ISO 2338 6M6X20 A1	
TBA 0160S, TBA 0200S, TB 0200S, TPA 0250SQ, TPA 0200SQ, TBA 0180S					
010	3151749-0000		1	RULER	
020	2871511-0000		1	BRACKET	
030	2871514-0000		1	STOPPER	
040	2871518-0000		1	STOPPER	
050	3212438-0000		1	BRACKET	
060	2873-0000		1	SHAFT	
100	311103-0357		6	PARALLEL PIN ISO 2338 6M6X30 A1	
120	311103-0353		2	PARALLEL PIN ISO 2338 6M6X20 A1	
TBA 0200B, TBA 0200SQ, TBA 0250B, TBA 0330S					
010	3151751-0000		1	RULER	
020	2871512-0000		1	BRACKET	
030	2871515-0000		1	STOPPER	
040	2871519-0000		1	STOPPER	
050	3212439-0000		1	BRACKET	
060	263655-0006		1	SHAFT	
100	311103-0357		6	PARALLEL PIN ISO 2338 6M6X30 A1	
120	311103-0353		2	PARALLEL PIN ISO 2338 6M6X20 A1	
TBA 0200M, TBA 0250S, TB 0200M, TBA 0200E, TBA 0250E					
010	3151750-0000		1	RULER	
020	2871511-0000		1	BRACKET	
030	2871516-0000		1	STOPPER	
040	2871520-0000		1	STOPPER	
050	3212440-0000		1	BRACKET	
060	2873-0000		1	SHAFT	
100	311103-0357		6	PARALLEL PIN ISO 2338 6M6X30 A1	
120	311103-0353		2	PARALLEL PIN ISO 2338 6M6X20 A1	
TBA 0375S					
010	3151755-0000		1	RULER	
020	3089572-0000		1	BRACKET	
030	3058483-0000		1	STOPPER	
040	3058484-0000		1	STOPPER	
050	3212439-0000		1	BRACKET	
060	263655-0006		1	SHAFT	
100	311103-0357		6	PARALLEL PIN ISO 2338 6M6X30 A1	
120	311103-0353		2	PARALLEL PIN ISO 2338 6M6X20 A1	
TPA 0125SQ					
010	3151753-0000		1	RULER	
020	3151760-0000		1	BRACKET	
030	3151756-0000		1	STOPPER	
040	3151757-0000		1	STOPPER	
050	3212442-0000		1	BRACKET	
060	263655-0003		1	SHAFT	
100	311103-0314		6	PARALLEL PIN ISO 2338 5M6X30 A1	
120	311103-0310		2	PARALLEL PIN ISO 2338 5M6X20 A1	
TPA 0330SQ					
010	3151754-0000		1	RULER	
020	2871512-0000		1	BRACKET	
030	3058438-0000		1	STOPPER	
040	3058439-0000		1	STOPPER	
050	3212439-0000		1	BRACKET	
060	263655-0006		1	SHAFT	
100	311103-0357		6	PARALLEL PIN ISO 2338 6M6X30 A1	
120	311103-0353		2	PARALLEL PIN ISO 2338 6M6X20 A1	
Common Parts					
070	90051-0059		1	KNOB, EXTERNAL THREAD. NO. 8308-1550	
110	312115-0372		3	SCREW ISO4762 M6X25 A4 80	
130	312115-0366		1	SCREW ISO4762 M6X12 A4 80	

Machine Type | Group Description | Used-In | Group Number | Page No

SETTING TOOL

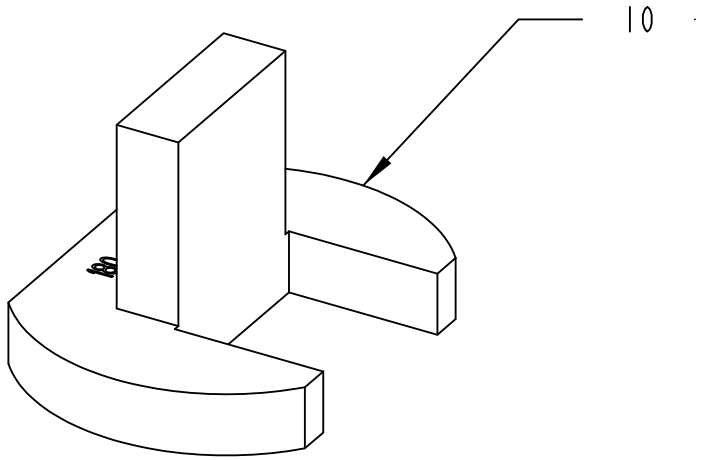

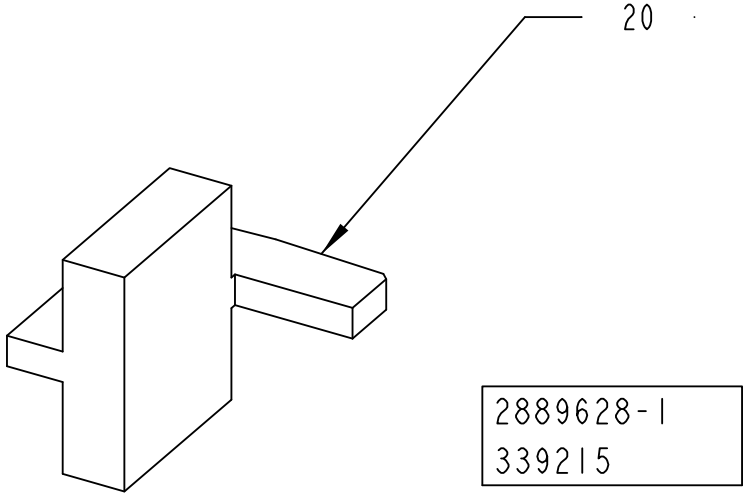

Pos	Part No	UN	Qty	Description	Page No
TBA 0080S (See drawing on page: 1-178)					
010	2960530-0000		1	TEMPLATE	
020	2960531-0000		1	TEMPLATE	
TBA 0100B, TBA 0125S (See drawing on page: 1-178)					
010	75937-0000		1	TEMPLATE	
020	75943-0000		1	TEMPLATE	
TBA 0160S, TBA 0200S, TB 0200S (See drawing on page: 1-178)					
010	76176-0000		1	TEMPLATE	
020	75944-0000		1	TEMPLATE	
TBA 0180S (See drawing on page: 1-178)					
010	76176-0000		1	TEMPLATE	
020	3272071-0000		1	TOOL	
TBA 0200B, TBA 0250B, TBA 0330S (See drawing on page: 1-178)					
010	75936-0000		1	TEMPLATE	
020	75939-0000		1	TEMPLATE	
TBA 0200E, TBA 0250E (See drawing on page: 1-180)					
010	3180559-0000		1	TEMPLATE	
020	3122501-0000		1	TOOL	
025	3137764-0000		1	TOOL	
TBA 0200M, TBA 0250S (See drawing on page: 1-178)					
010	574454-0000		1	TEMPLATE	
020	574455-0000		1	TEMPLATE	
TBA 0200SQ (See drawing on page: 1-178)					
010	75936-0000		1	TEMPLATE	
020	1538757-0000		1	TOOL	
TBA 0375S (See drawing on page: 1-178)					
010	3072777-0000		1	TEMPLATE	
020	3073526-0000		1	TEMPLATE	
TPA 0125SQ (See drawing on page: 1-178)					
010	2909729-0000		1	TEMPLATE	
020	2909730-0000		1	TEMPLATE	
TPA 0250SQ, TPA 0200SQ (See drawing on page: 1-178)					
010	76176-0000		1	TEMPLATE	
020	1539893-0000		1	TEMPLATE	
TPA 0330SQ (See drawing on page: 1-178)					
010	929328-0000		1	TEMPLATE	
020	1539892-0000		1	TEMPLATE	

Pos	Part No	UN	Qty	Description	Page No

SETTING TOOL

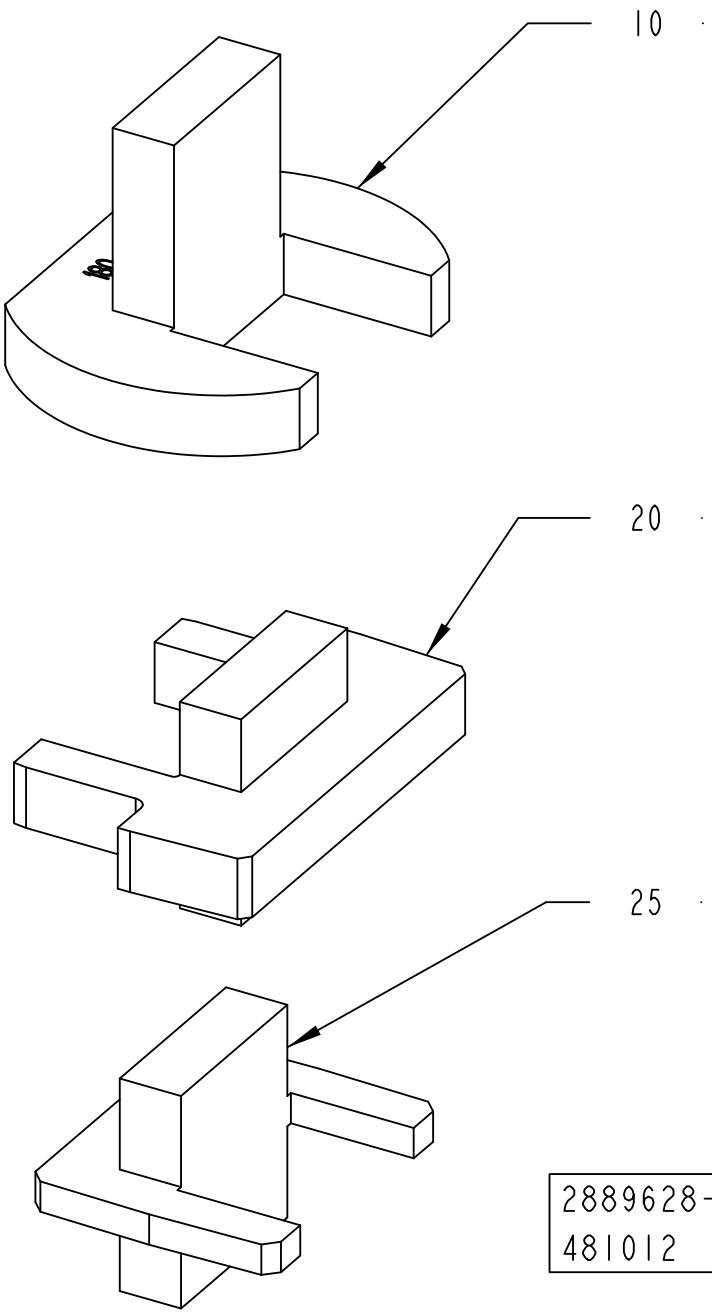

Pos	Part No	UN	Qty	Description	Page No
TBA 0080S (See drawing on page: 1-178)					
010	2960530-0000		1	TEMPLATE	
020	2960531-0000		1	TEMPLATE	
TBA 0100B, TBA 0125S (See drawing on page: 1-178)					
010	75937-0000		1	TEMPLATE	
020	75943-0000		1	TEMPLATE	
TBA 0160S, TBA 0200S, TB 0200S (See drawing on page: 1-178)					
010	76176-0000		1	TEMPLATE	
020	75944-0000		1	TEMPLATE	
TBA 0180S (See drawing on page: 1-178)					
010	76176-0000		1	TEMPLATE	
020	3272071-0000		1	TOOL	
TBA 0200B, TBA 0250B, TBA 0330S (See drawing on page: 1-178)					
010	75936-0000		1	TEMPLATE	
020	75939-0000		1	TEMPLATE	
TBA 0200E, TBA 0250E (See drawing on page: 1-180)					
010	3180559-0000		1	TEMPLATE	
020	3122501-0000		1	TOOL	
025	3137764-0000		1	TOOL	
TBA 0200M, TBA 0250S (See drawing on page: 1-178)					
010	574454-0000		1	TEMPLATE	
020	574455-0000		1	TEMPLATE	
TBA 0200SQ (See drawing on page: 1-178)					
010	75936-0000		1	TEMPLATE	
020	1538757-0000		1	TOOL	
TBA 0375S (See drawing on page: 1-178)					
010	3072777-0000		1	TEMPLATE	
020	3073526-0000		1	TEMPLATE	
TPA 0125SQ (See drawing on page: 1-178)					
010	2909729-0000		1	TEMPLATE	
020	2909730-0000		1	TEMPLATE	
TPA 0250SQ, TPA 0200SQ (See drawing on page: 1-178)					
010	76176-0000		1	TEMPLATE	
020	1539893-0000		1	TEMPLATE	
TPA 0330SQ (See drawing on page: 1-178)					
010	929328-0000		1	TEMPLATE	
020	1539892-0000		1	TEMPLATE	

Pos	Part No	UN	Qty	Description	Page No

CLEANING CUP

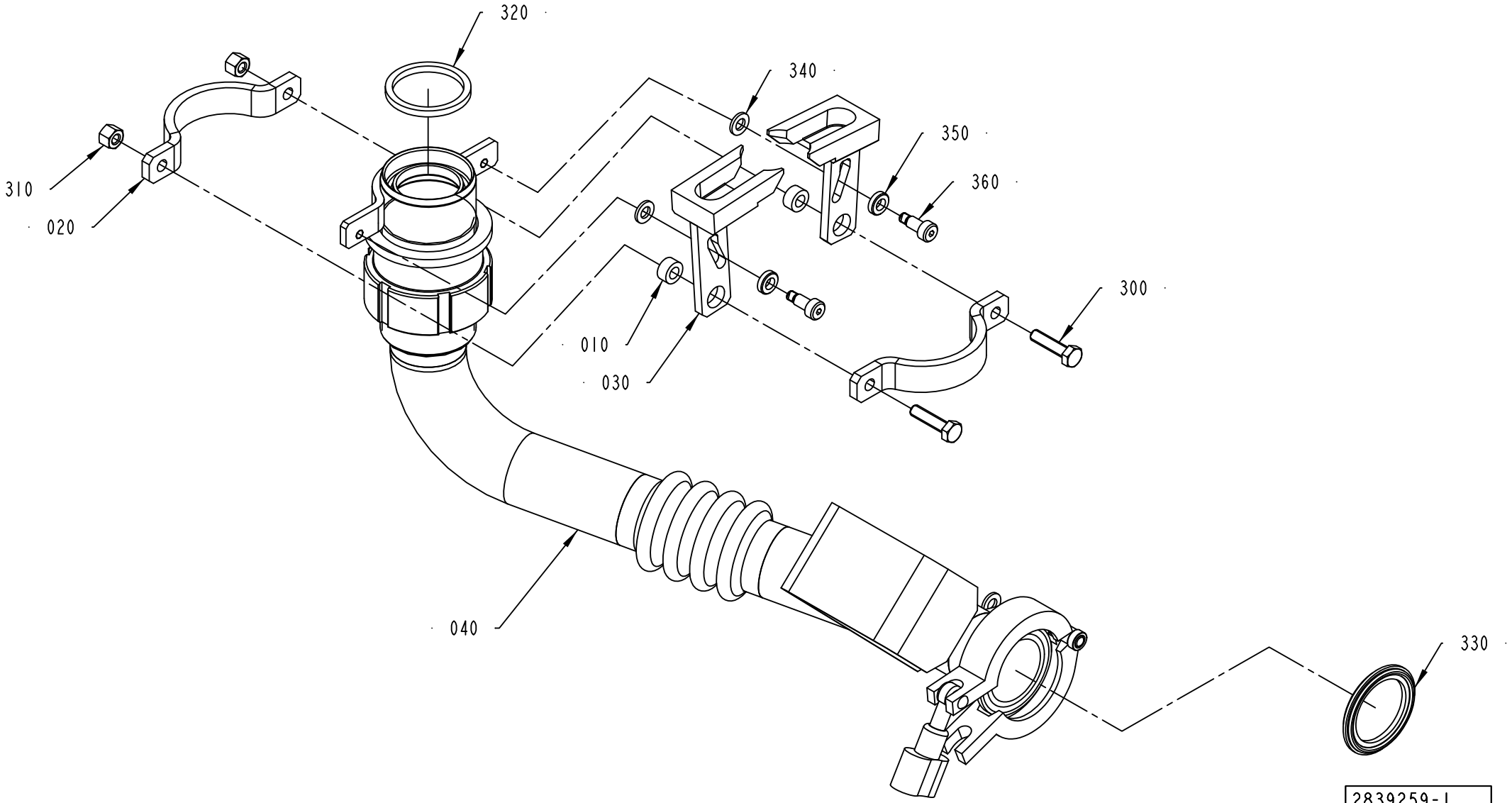

ECM: 679059 - 20141001
Group number: 2839259-0100
Assembly Drawing: 2839259-1_1_AC

Pos	Part No	UN	Qty	Description	Page No
TBA 0100B, TBA 0125S, TPA 0125SQ, TBA 0080S					
030	2795376-0000		2	CATCH	
040	2890111-0000		1	CLEANING PIPE	
320	12242-0006		1	GASKET	
TBA 0160S, TBA 0200S, TPA 0250SQ, TPA 0200SQ, TBA 0180S					
030	979728-0000		2	CATCH	
040	2890880-0000		1	CLEANING PIPE	
320	12242-0007		1	GASKET	
TBA 0200B, TBA 0200SQ, TBA 0250B, TBA 0330S, TBA 0375S, TPA 0330SQ					
030	579637-0000		2	CATCH	
040	2922724-0000		1	CLEANING PIPE	
320	12242-0005		1	GASKET 61X51X5,5	
TBA 0200M, TBA 0250S, TBA 0200E, TBA 0250E					
030	579771-0000		2	CATCH	
040	2966651-0000		1	CLEANING PIPE	
320	12242-0003		1	GASKET 48X38X5,5	
Common Parts					
010	553586-0000		2	SPACER	
020	752499-0000		2	RING	
300	312105-0372		2	SCREW, M6S ISO 4017 M6X25 A4 80	
310	312811-0316		2	NUT HEX.LOCK HELI COIL MID GRIP M6 SS	
330	342850-0304		1	GASKET 35,4X49,1X5,2 1"1/2 FDA, 3-A	
340	315105-0153		2	WASHER PLAIN, 6,4X12X1,5 A4 BRB	
350	315115-0153		2	WASHER PLAIN, TBRB 6,4/12 H=3	
360	90459-1906		2	SHOULDER SCREW, 6X10/M5 SS	

Pos	Part No	UN	Qty	Description	Page No

FILLING PIPE

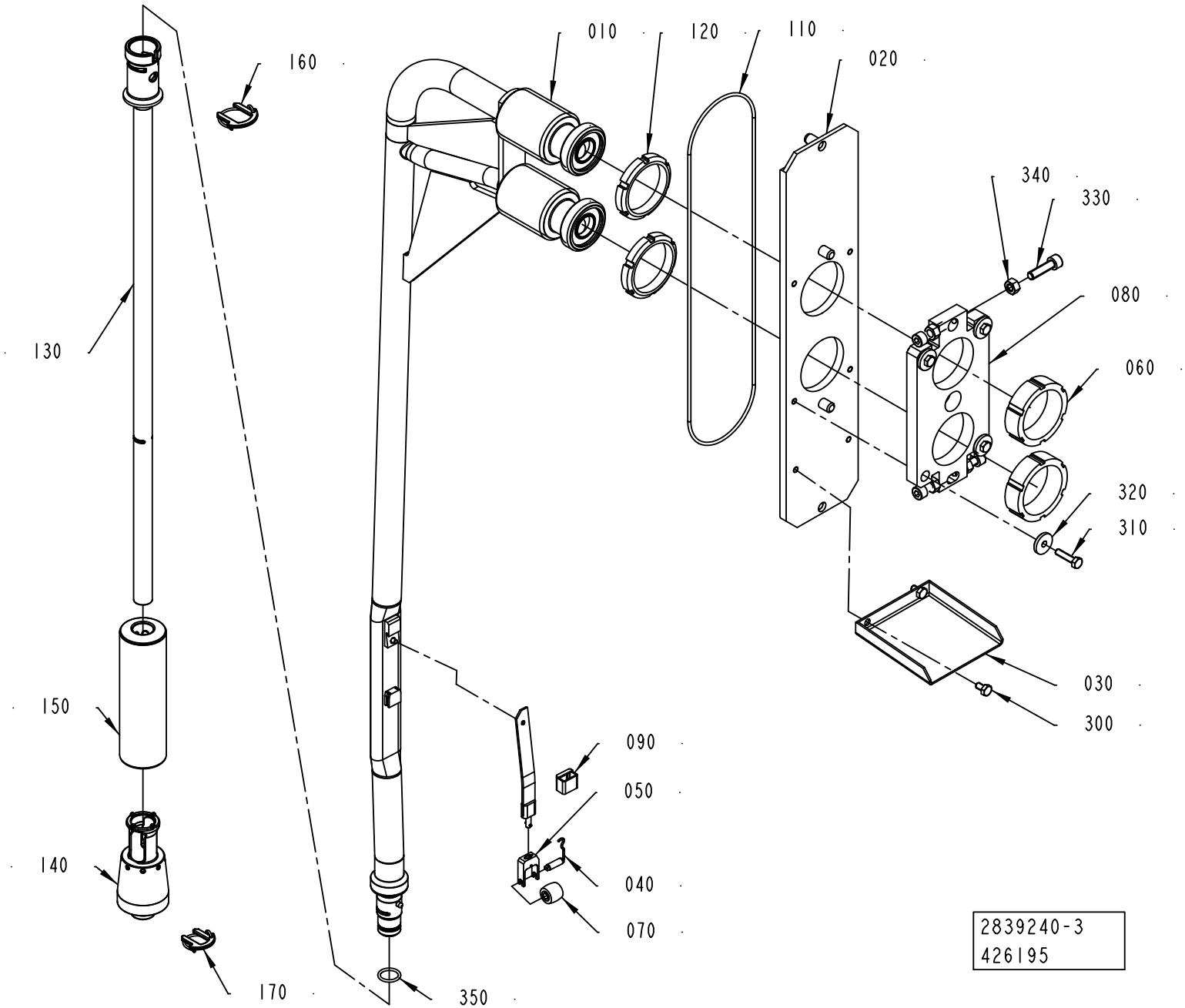

ECM: 651914 - 20140401
Group number: 2839240-0200
Assembly Drawing: 2839240-3_1_AA

This list covers pages from 1-184 to 1-187

Pos	Part No	UN	Qty	Description	Page No
TBA 0080S (See drawing on page: 1-184)					
010	2966648-0000		1	UPPER FILLING TUBE	
040	2529416-0000		1	SHAFT	
050	255978-0000		1	FORK	
070	2932253-0000		1	PRESSURE ROLLER (PACK 10)	
090	295377-0002		1	HOOD	
100	2906117-0000		1	SPRING	
130	2986705-0000		1	LOWER FILLING TUBE	
140	2986706-0000		1	PRESSURE FLANGE	
150	2945423-0000		1	FLOAT	
160	3115221-0000		1	FORK	
170	2966649-0000		1	FORK	
TBA 0100B, TBA 0125S (See drawing on page: 1-184)					
010	2966648-0000		1	UPPER FILLING TUBE	
040	2529416-0000		1	SHAFT	
050	255978-0000		1	FORK	
070	2932253-0000		1	PRESSURE ROLLER (PACK 10)	
090	295377-0004		1	HOOD	
100	2906117-0000		1	SPRING	
130	2966640-0000		1	LOWER FILLING TUBE	
140	2966641-0000		1	PRESSURE FLANGE	
150	3158205-0000		1	FLOAT	
160	3271429-0000		1	FORK	
170	3271430-0000		1	FORK	
TBA 0160S, TBA 0200S, TBA 0180S (See drawing on page: 1-184)					
010	2966639-0000		1	UPPER FILLING TUBE	
040	2529416-0000		1	SHAFT	
050	255978-0000		1	FORK	
070	2932253-0000		1	PRESSURE ROLLER (PACK 10)	
090	295377-0001		1	HOOD	
100	2906117-0000		1	SPRING	
130	2966644-0000		1	LOWER FILLING TUBE	
140	3277801-0000		1	PRESSURE FLANGE	
150	3158205-0000		1	FLOAT	
160	3271429-0000		1	FORK	
170	3271430-0000		1	FORK	
TBA 0200B, TBA 0250B, TBA 0330S (See drawing on page: 1-186)					
010	2966672-0000		1	UPPER FILLING TUBE	
040	2529417-0000		1	SHAFT	
050	568583-0000		1	FORK	
070	2909368-0000		1	PRESSURE ROLLER (PACK 10)	
090	295377-0002		1	HOOD	
100	2906116-0000		1	SPRING	
130	2966645-0000		1	LOWER FILLING TUBE	
140	2966646-0000		1	PRESSURE FLANGE	
150	3159703-0000		1	FLOAT	
160	3271429-0000		2	FORK	
TBA 0200E, TBA 0250E (See drawing on page: 1-184)					
010	2966647-0000		1	UPPER FILLING TUBE	
040	2529416-0000		1	SHAFT	
050	255978-0000		1	FORK	
070	2932253-0000		1	PRESSURE ROLLER (PACK 10)	
090	295377-0001		1	HOOD	
100	2906117-0000		1	SPRING	
130	2966653-0000		1	LOWER FILLING TUBE	
140	3089565-0000		1	PRESSURE FLANGE	
150	3158205-0000		1	FLOAT	
160	3271429-0000		1	FORK	
170	3271430-0000		1	FORK	
TBA 0200M, TBA 0250S (See drawing on page: 1-184)					
010	2966647-0000		1	UPPER FILLING TUBE	
040	2529416-0000		1	SHAFT	
050	255978-0000		1	FORK	
070	2932253-0000		1	PRESSURE ROLLER (PACK 10)	
090	295377-0001		1	HOOD	
100	2906117-0000		1	SPRING	
130	2966653-0000		1	LOWER FILLING TUBE	
140	3271433-0000		1	PRESSURE FLANGE	
150	3158205-0000		1	FLOAT	
160	3271429-0000		1	FORK	
170	3271430-0000		1	FORK	
TBA 0200SQ (See drawing on page: 1-186)					
010	2966672-0000		1	UPPER FILLING TUBE	
040	2529417-0000		1	SHAFT	
050	568583-0000		1	FORK	
070	2909368-0000		1	PRESSURE ROLLER (PACK 10)	
090	295377-0002		1	HOOD	
100	2906116-0000		1	SPRING	
130	2966654-0000		1	LOWER FILLING TUBE	
140	3022594-0000		1	PRESSURE FLANGE	
150	3159703-0000		1	FLOAT	
160	3271429-0000		2	FORK	
TBA 0375S (See drawing on page: 1-186)					
010	2966672-0000		1	UPPER FILLING TUBE	

Machine Type | Group Description | Used-In | Group Number | Page No

FILLING PIPE

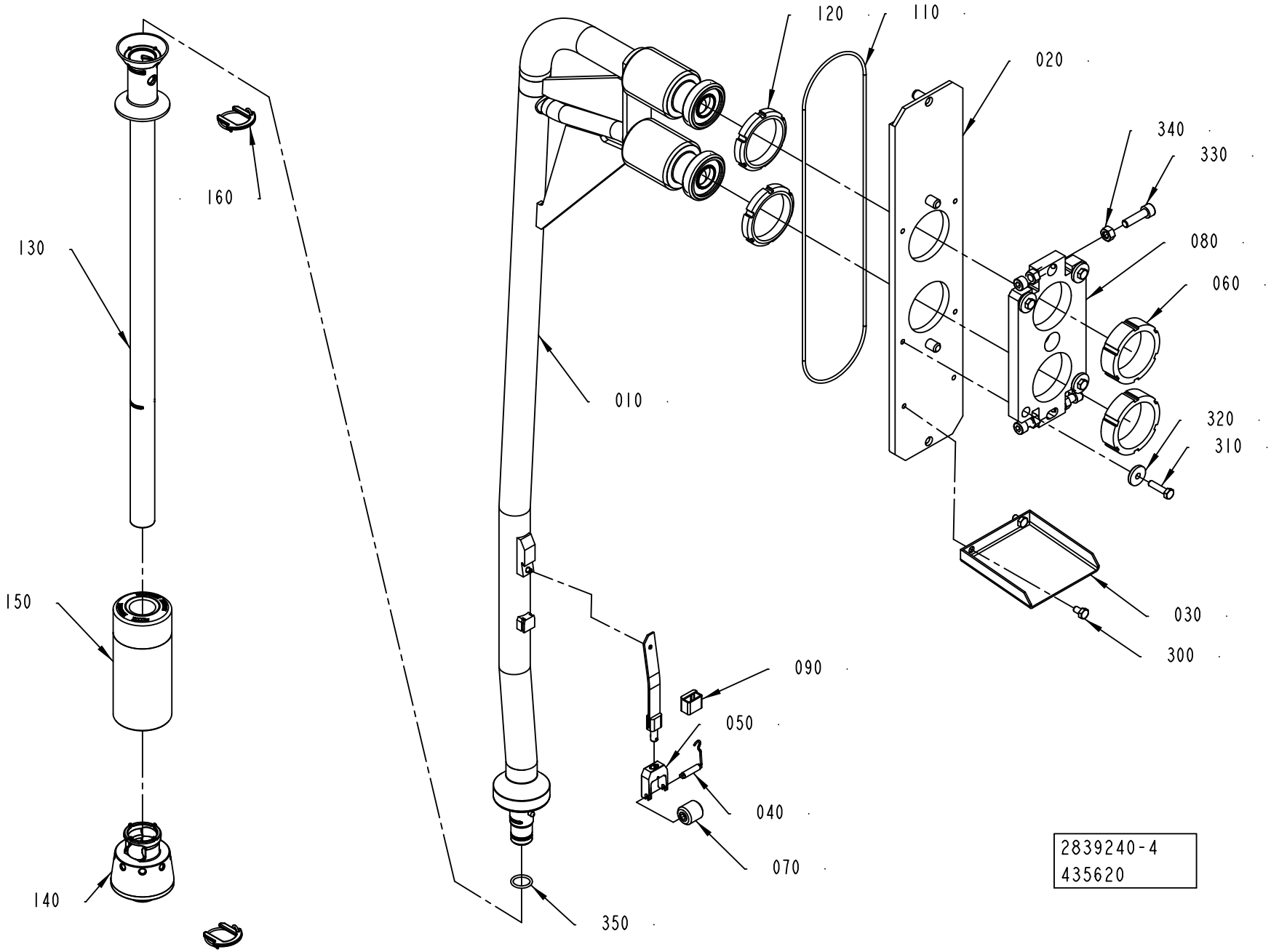

Pos	Part No	UN	Qty	Description	Page No
TBA 0375S (Cont'd) (See drawing on page: 1-186)					
040	2529417-0000		1	SHAFT	
050	568583-0000		1	FORK	
070	2909367-0000		1	PRESSURE ROLLER	
090	295377-0005		1	HOOD	
100	2906116-0000		1	SPRING	
130	2966645-0000		1	LOWER FILLING TUBE	
140	3058457-0000		1	PRESSURE FLANGE	
150	3159703-0000		1	FLOAT	
160	3271429-0000		2	FORK	
TPA 0125SQ (See drawing on page: 1-184)					
010	2966648-0000		1	UPPER FILLING TUBE	
040	2529416-0000		1	SHAFT	
050	255978-0000		1	FORK	
070	2932253-0000		1	PRESSURE ROLLER (PACK 10)	
090	295377-0004		1	HOOD	
100	2906117-0000		1	SPRING	
130	2966656-0000		1	LOWER FILLING TUBE	
140	2966660-0000		1	PRESSURE FLANGE	
150	2945423-0000		1	FLOAT	
160	3115221-0000		1	FORK	
170	2966649-0000		1	FORK	
TPA 0250SQ, TPA 0200SQ (See drawing on page: 1-184)					
010	2966639-0000		1	UPPER FILLING TUBE	
040	2529416-0000		1	SHAFT	
050	255978-0000		1	FORK	
070	2932253-0000		1	PRESSURE ROLLER (PACK 10)	
090	295377-0001		1	HOOD	
100	2906117-0000		1	SPRING	
130	2966644-0000		1	LOWER FILLING TUBE	
140	3089566-0000		1	PRESSURE FLANGE	
150	3158205-0000		1	FLOAT	
160	3271429-0000		1	FORK	
170	3271430-0000		1	FORK	
TPA 0330SQ (See drawing on page: 1-186)					
010	2966672-0000		1	UPPER FILLING TUBE	
040	2529417-0000		1	SHAFT	
050	568583-0000		1	FORK	
070	2909367-0000		1	PRESSURE ROLLER	
090	295377-0002		1	HOOD	
100	2906116-0000		1	SPRING	
130	2986702-0000		1	LOWER FILLING TUBE	
140	3089571-0000		1	PRESSURE FLANGE	
150	3106891-0000		1	FLOAT	
160	3271429-0000		2	FORK	
Common Parts					
020	1523222-0000		1	PLATE	
030	295984-0000		1	DRIP GUARD	
060	1523223-0000		2	NUT	
080	1523225-0000		1	FASTENING PLATE	
110	90600-3388		1	O-RING 284X3 MM	
120	1523224-0000		2	NUT	
300	312105-0364		2	"SCREW, M6S ISO 4017 M6X10 A4 80"	
310	312105-0372		4	SCREW, M6S ISO 4017 M6X25 A4 80	
320	315125-0153		4	WASHER HIGH, TBRSB 6,4X22X4 A4	
330	312115-0455		4	SCREW ISO4762 M8X30 A4 80	
340	312605-0318		4	HEXAGON NUT, M6M M8 A280	
350	344210-0214		1	O-RING 17,3X2,4 MM FDA, 3-A	

AIR NOZZLE

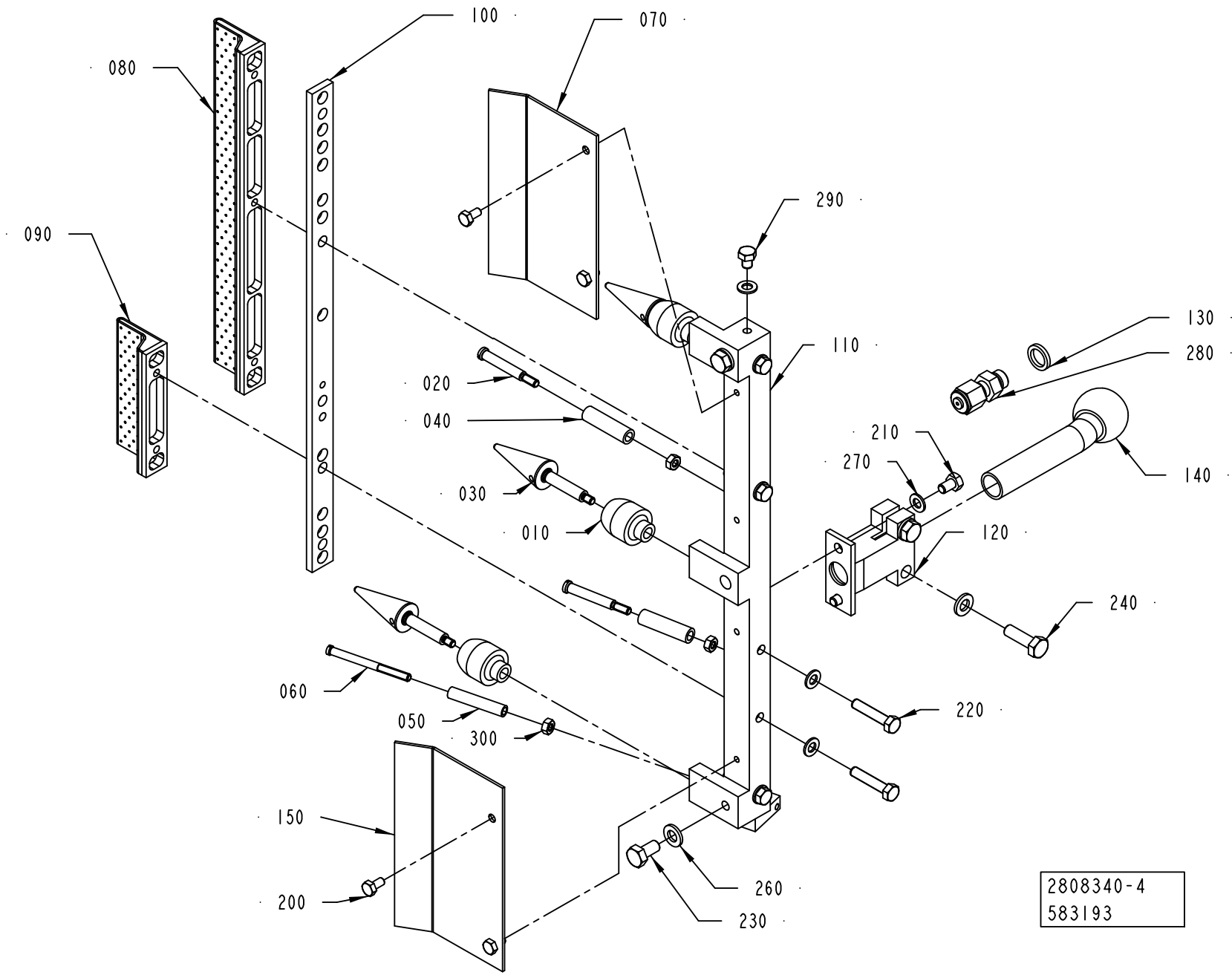
100
070
080
290
090
130
280
110
020
040
210
270
140
030
010
120
240
060
220
050
300
150
200
260
230
2808340-4
583193

ECM: 689155 - 20140403
Group number: 2808340-0300
Assembly Drawing: 2808340-4_1_AA

Pos	Part No	UN	Qty	Description	Page No
TBA 0100B, TBA 0125S, TBA 0160S, TBA 0200M, TBA 0200S, TBA 0250S, TB 0200S, TB 0200M, TPA 0250SQ, TPA 0200SQ, TPA 0125SQ, TBA 0080S, TBA 0200E, TBA 0250E, TBA 0180S					
020	3037861-0000		2	SHAFT	
040	3274289-0000		2	ROLLER	
100	2906099-0000		1	DISTRIBUTOR WING	
120	2808402-0000		1	CLAMP	
140	2808403-0000		1	ELBOW PIPE	
300	312605-0312		3	HEXAGON NUT, M6M M4 A280	
TBA 0200B, TBA 0200SQ, TBA 0250B, TBA 0330S, TPA 0330SQ					
020	3037861-0000		1	SHAFT	
040	3274289-0000		1	ROLLER	
100	2906099-0000		1	DISTRIBUTOR WING	
120	2808402-0000		1	CLAMP	
140	2808403-0000		1	ELBOW PIPE	
300	312605-0312		2	HEXAGON NUT, M6M M4 A280	
TBA 0375S					
020	3037861-0000		1	SHAFT	
040	3274289-0000		1	ROLLER	
100	568581-0000		1	DISTRIBUTOR WING	
120	3058488-0000		1	CLAMP	
140	3058489-0000		1	ELBOW PIPE	
300	312605-0312		2	HEXAGON NUT, M6M M4 A280	
Common Parts					
010	3290908-0000		3	ROLLER	
030	3198088-0000		3	SHAFT	
050	3274288-0000		1	ROLLER	
060	2890118-0000		1	SHAFT	
070	3197996-0000		1	PLATE	
080	568577-0000		1	AIR NOZZLE	
090	568578-0000		1	AIR NOZZLE	
110	752218-0000		1	ATTACHMENT	
130	273429-0000		1	WASHER	
150	3198091-0000		1	PLATE	
200	312105-0287		4	SCREW, M6S ISO 4017 M4X8 A4 70	
210	312105-0323		2	"FSCR05080-10, SCREW, M6S"	
220	312105-0333		5	SCREW, M6S ISO 4017 M5X25 A4 80	
230	312105-0366		2	SCREW, M6S ISO 4017 M6X12 A4 80	
240	312105-0370		2	SCREW, M6S ISO 4017 M6X20 A4 80	
260	315105-0153		4	WASHER PLAIN, 6,4X12X1,5 A4 BRB	
270	315105-0146		8	WASHER PLAIN, 5,3X10X1 A4 BRB	
280	90326-0304		1	COMPRESSION FITTING, 5101015-005	
290	90287-0199		1	SCREW, M6S ISO 4017 M5X6 A4 80	

Pos	Part No	UN	Qty	Description	Page No

Machine Type	Group Description	Used-In	Group Number	Page No

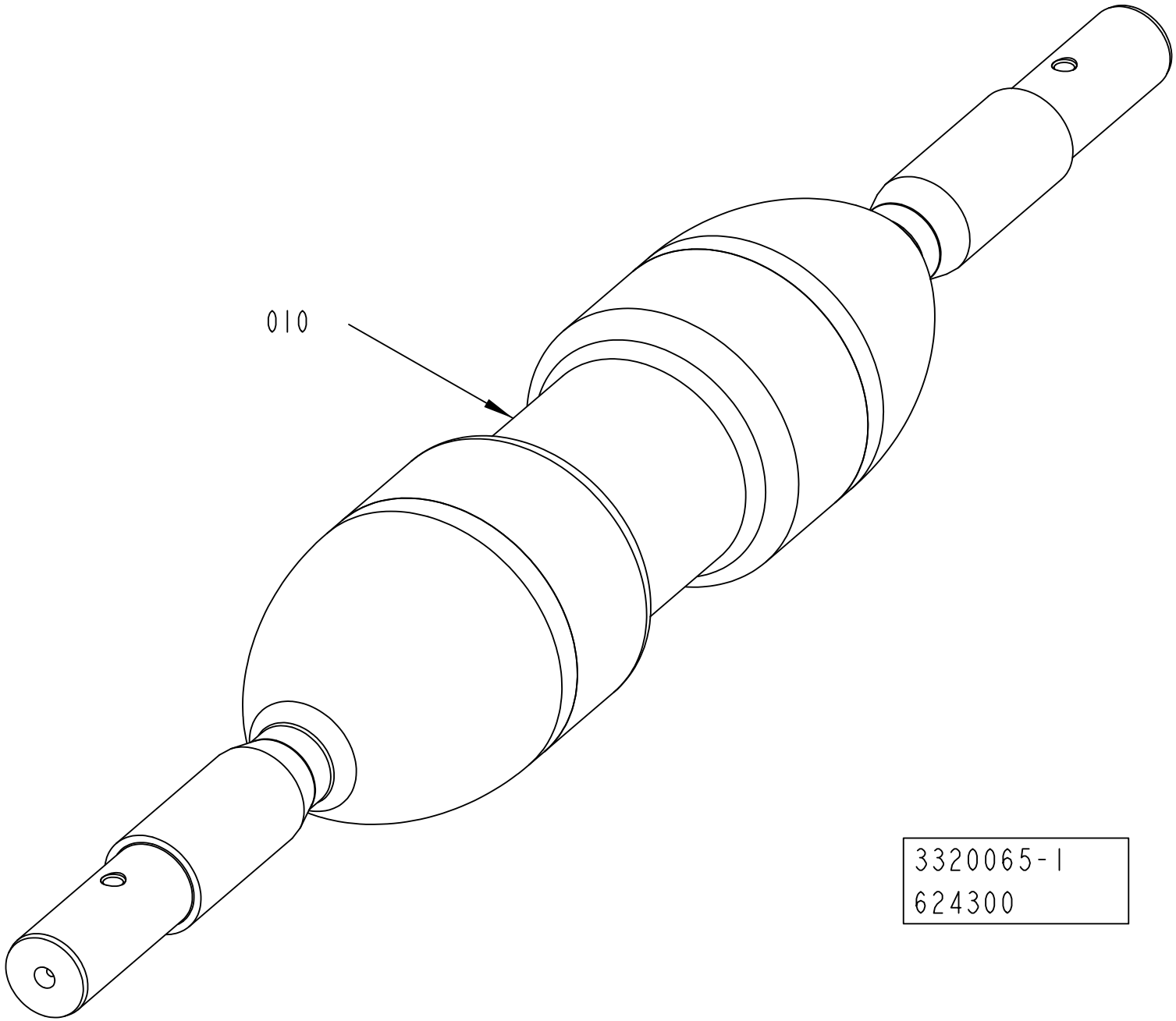
010
3320065-1
624300

ECM: 675462 - 20141001
Group number: 3320065-0100
Assembly Drawing: 3320065-1_1_AA

Pos	Part No	UN	Qty	Description	Page No
TBA 0100B, TBA 0125S					
010	3312242-0000		1	ROLLER	
TBA 0160S, TBA 0200S, TB 0200S, TPA 0250SQ, TPA 0200SQ, TBA 0180S					
010	3326247-0000		1	ROLLER	
TBA 0200B, TBA 0200SQ, TBA 0250B, TBA 0330S					
010	3312239-0000		1	ROLLER	
TBA 0200M, TBA 0250S, TB 0200M, TBA 0200E, TBA 0250E					
010	3326255-0000		1	ROLLER	
TBA 0375S					
010	3366896-0000		1	ROLLER	
TPA 0125SQ, TBA 0080S					
010	3312241-0000		1	ROLLER	
TPA 0330SQ					
010	3312243-0000		1	ROLLER	

Pos	Part No	UN	Qty	Description	Page No

This page is intentionally left blank.

ECM: 639230 - 20140401
Group number: 3320066-0100
Assembly Drawing:

Pos	Part No	UN	Qty	Description	Page No
TBA 0100B, TBA 0125S, TPA 0125SQ, TBA 0080S					
010	3312405-0000		1	SETTING TOOL	
TBA 0160S, TBA 0200S, TPA 0330SQ, TPA 0250SQ, TPA 0200SQ, TBA 0180S					
010	3309642-0000		1	SETTING TOOL	
TBA 0200B, TBA 0200SQ, TBA 0250B, TBA 0330S, TBA 0375S					
010	3312404-0000		1	SETTING TOOL	
TBA 0200M, TBA 0250S, TBA 0200E, TBA 0250E					
010	3326366-0000		1	SETTING TOOL	

Pos	Part No	UN	Qty	Description	Page No

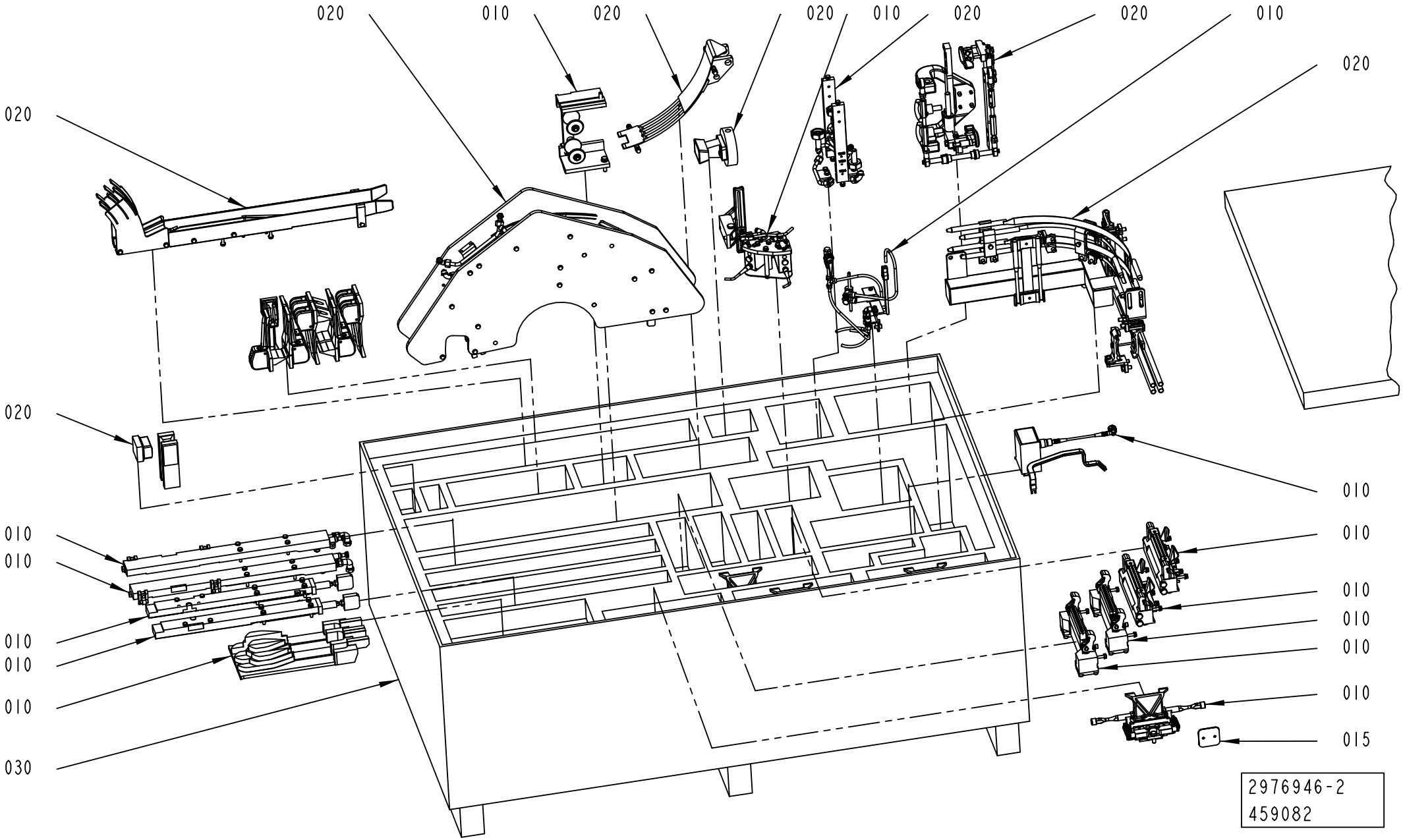
020
010
020
020
010
020
020
010
020
020
020
010
010
010
010
010
010
010
010
010
010
010
010
030
015
2976946-2
459082

ECM: 461251 - 20101001
Group number: 2976946-0200
Assembly Drawing: 2976946-2_1_AB

Pos	Part No	UN	Qty	Description	Page No
START FM HI					
015	3104917-0100		1	VOLUME BULGE	**1-197, 1-199**
Common Parts					
010	2824756-0200		1	FORMING UNIT	**1-201, 1-203**
020	2819319-0200		1	FORMING UNIT	**1-323**
030	2988052-0000		1	BOX 2 NOQC	

Pos	Part No	UN	Qty	Description	Page No

VOLUME BULGE

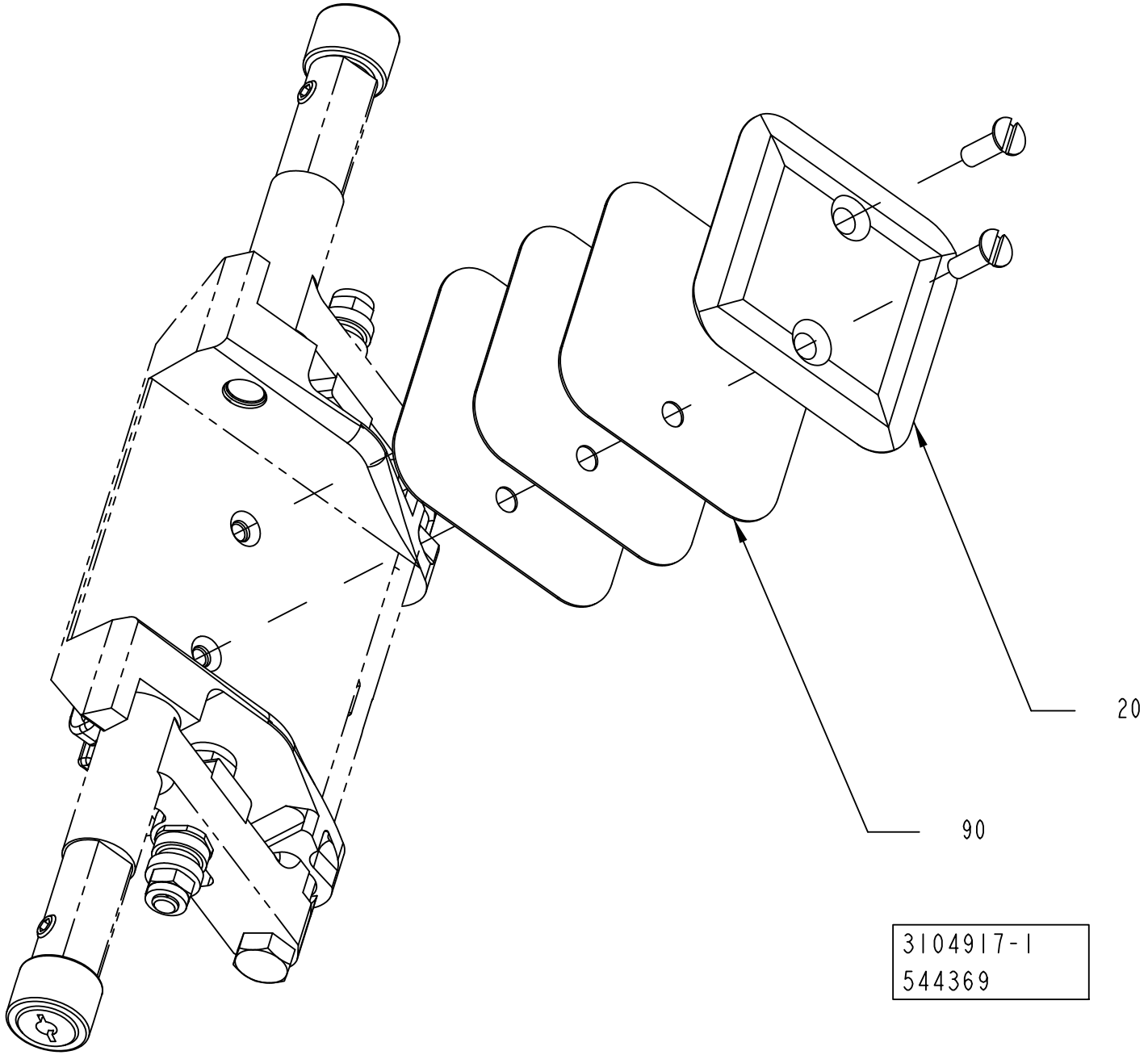

ECM: 658978 - 20140402
Group number: 3104917-0100
Assembly Drawing: 3104917-1_1_AB

This list covers pages from 1-196 to 1-199

Pos	Part No	UN	Qty	Description	Page No
TBA 0080S (See drawing on page: 1-196)					
020	3115484-0000		4	VOLUME BULGE	
090	3115485-0000		8	VOLUME SHIM	
TBA 0100B, TBA 0180S (See drawing on page: 1-196)					
020	3122818-0000		4	VOLUME BULGE	
090	3122819-0000		8	VOLUME SHIM	
TBA 0125S (See drawing on page: 1-196)					
020	3106859-0000		4	VOLUME BULGE	
090	3106860-0000		12	SHIM	
TBA 0200B (See drawing on page: 1-196)					
020	3047317-0000		4	VOLUME BULGE	
090	3047358-0000		12	VOLUME SHIM	
TBA 0200E (See drawing on page: 1-196)					
020	3222718-0000		2	VOLUME BULGE	
090	3222719-0000		6	VOLUME SHIM	
TBA 0200M, TBA 0250S (See drawing on page: 1-196)					
020	3104458-0000		8	VOLUME BULGE	
090	3104459-0000		24	SHIM	
TBA 0200S (See drawing on page: 1-196)					
020	3174445-0000		4	VOLUME BULGE	
090	3174446-0000		12	VOLUME SHIM	
TBA 0200SQ (See drawing on page: 1-196)					
020	3214721-0000		4	VOLUME BULGE	
090	3214722-0000		6	VOLUME SHIM	
TBA 0250E (See drawing on page: 1-198)					
020	3048011-0000		2	VOLUME BULGE	
025	3106685-0000		2	VOLUME BULGE	
090	3206238-0000		6	VOLUME SHIM	

Pos	Part No	UN	Qty	Description	Page No

Machine Type | Group Description | Used-In | Group Number | Page No

VOLUME BULGE

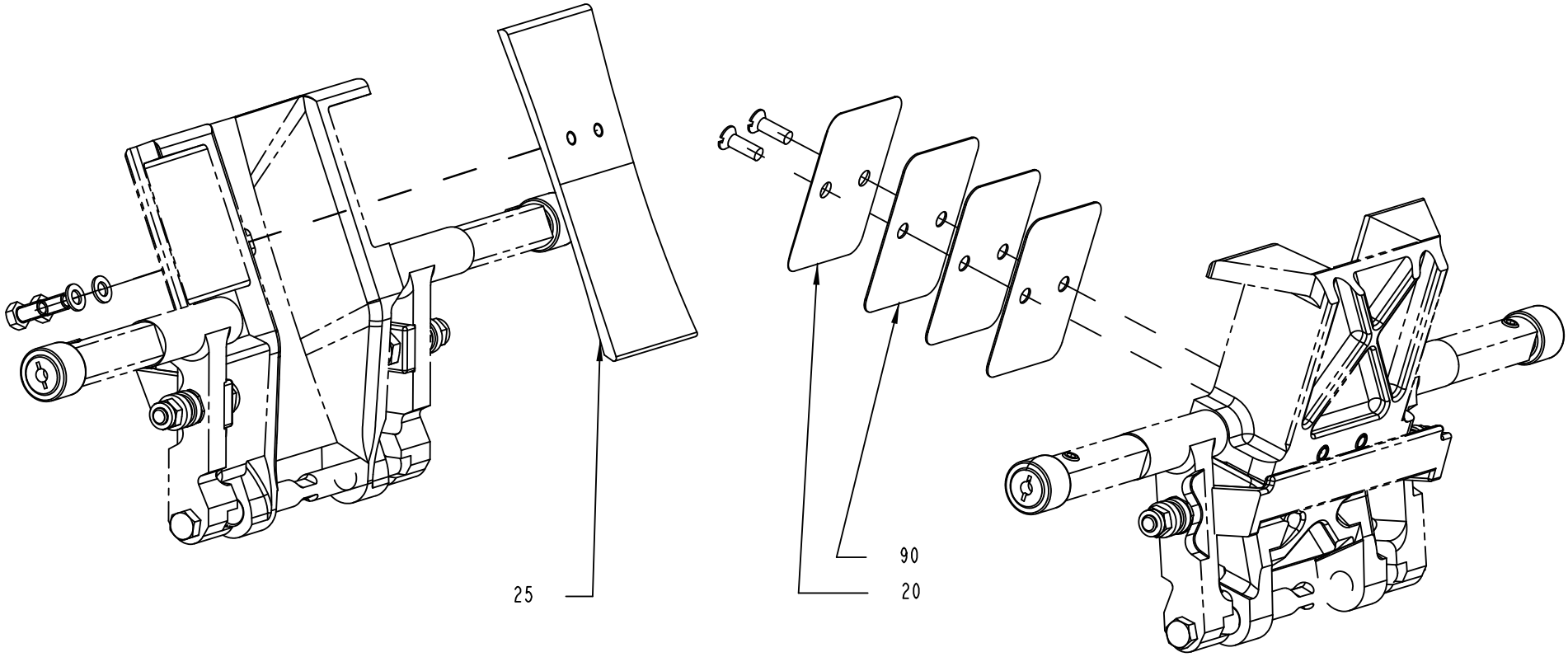

VOLUME FLAP PRESSURE SIDE
SPC POS : 110 115

VOLUME FLAP CUTTING SIDE
SPC POS. : 100 105

3104917-2
544369

Pos	Part No	UN	Qty	Description	Page No
TBA 0080S (See drawing on page: 1-196)					
020	3115484-0000		4	VOLUME BULGE	
090	3115485-0000		8	VOLUME SHIM	
TBA 0100B, TBA 0180S (See drawing on page: 1-196)					
020	3122818-0000		4	VOLUME BULGE	
090	3122819-0000		8	VOLUME SHIM	
TBA 0125S (See drawing on page: 1-196)					
020	3106859-0000		4	VOLUME BULGE	
090	3106860-0000		12	SHIM	
TBA 0200B (See drawing on page: 1-196)					
020	3047317-0000		4	VOLUME BULGE	
090	3047358-0000		12	VOLUME SHIM	
TBA 0200E (See drawing on page: 1-196)					
020	3222718-0000		2	VOLUME BULGE	
090	3222719-0000		6	VOLUME SHIM	
TBA 0200M, TBA 0250S (See drawing on page: 1-196)					
020	3104458-0000		8	VOLUME BULGE	
090	3104459-0000		24	SHIM	
TBA 0200S (See drawing on page: 1-196)					
020	3174445-0000		4	VOLUME BULGE	
090	3174446-0000		12	VOLUME SHIM	
TBA 0200SQ (See drawing on page: 1-196)					
020	3214721-0000		4	VOLUME BULGE	
090	3214722-0000		6	VOLUME SHIM	
TBA 0250E (See drawing on page: 1-198)					
020	3048011-0000		2	VOLUME BULGE	
025	3106685-0000		2	VOLUME BULGE	
090	3206238-0000		6	VOLUME SHIM	

Pos	Part No	UN	Qty	Description	Page No

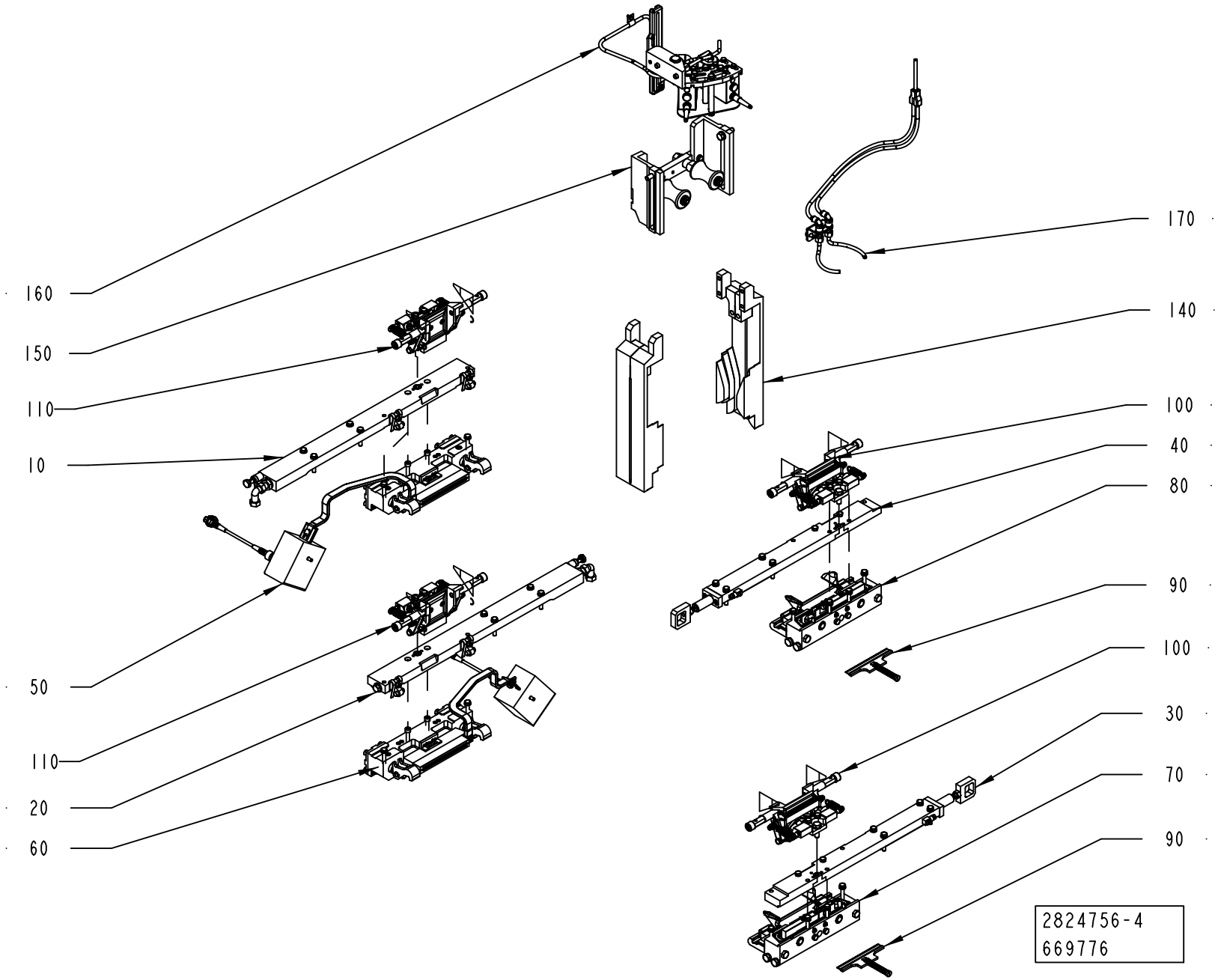
160
150
110
10
50
110
20
60
170
140
100
40
80
90
100
30
70
90
2824756-4
669776

ECM: 680111 - 20141001
Group number: 2824756-0200
Assembly Drawing: 2824756-4_1_AB

This list covers pages from 1-200 to 1-203

Pos	Part No	UN	Qty	Description	Page No
TBA 0200SQ HI (See drawing on page: 1-202)					
100	2869019-0200		1	VOLUME FLAP	**1-205**
105	2966465-0200		1	VOLUME FLAP	**1-225**
110	2907729-0200		1	VOLUME FLAP	**1-229**
115	2966467-0200		1	VOLUME FLAP	**1-241**
TBA 0200SQ NOHI (See drawing on page: 1-202)					
100	2869019-0200		1	VOLUME FLAP	**1-205**
105	2966465-0200		1	VOLUME FLAP	**1-225**
110	2907729-0200		1	VOLUME FLAP	**1-229**
115	2966467-0200		1	VOLUME FLAP	**1-241**
TBA 0250B (See drawing on page: 1-200)					
100	2869019-0200		2	VOLUME FLAP	**1-205**
110	2869019-0200		2	VOLUME FLAP	**1-205**
TBA 0250E HI (See drawing on page: 1-202)					
100	2869019-0200		1	VOLUME FLAP	**1-205**
105	2966465-0200		1	VOLUME FLAP	**1-225**
110	2907729-0200		1	VOLUME FLAP	**1-229**
115	2966467-0200		1	VOLUME FLAP	**1-241**
TBA 0250E NOHI (See drawing on page: 1-202)					
100	2869019-0200		1	VOLUME FLAP	**1-205**
105	2966465-0200		1	VOLUME FLAP	**1-225**
110	2907729-0200		1	VOLUME FLAP	**1-229**
115	2966467-0200		1	VOLUME FLAP	**1-241**
TBA 0250S HI					
100	2869019-0200		2	VOLUME FLAP	**1-205**
110	2869019-0200		2	VOLUME FLAP	**1-205**
TBA 0250S NOHI (See drawing on page: 1-200)					
100	2869019-0200		2	VOLUME FLAP	**1-205**
110	2869019-0200		2	VOLUME FLAP	**1-205**
TBA 0330S (See drawing on page: 1-200)					
100	2869019-0200		2	VOLUME FLAP	**1-205**
110	2869019-0200		2	VOLUME FLAP	**1-205**
TBA 0375S (See drawing on page: 1-202)					
100	2869019-0200		1	VOLUME FLAP	**1-205**
105	2966465-0200		1	VOLUME FLAP	**1-225**
110	2907729-0200		1	VOLUME FLAP	**1-229**
115	2966467-0200		1	VOLUME FLAP	**1-241**
TPA 0125SQ (See drawing on page: 1-200)					
100	2869019-0200		2	VOLUME FLAP	**1-205**
110	2907729-0200		2	VOLUME FLAP	**1-229**
TPA 0200SQ (See drawing on page: 1-202)					
100	2869019-0200		1	VOLUME FLAP	**1-205**
105	2966465-0200		1	VOLUME FLAP	**1-225**
110	2907729-0200		1	VOLUME FLAP	**1-229**
115	2966467-0200		1	VOLUME FLAP	**1-241**
TPA 0250SQ (See drawing on page: 1-202)					
100	2869019-0200		1	VOLUME FLAP	**1-205**
105	2966465-0200		1	VOLUME FLAP	**1-225**
110	2907729-0200		1	VOLUME FLAP	**1-229**
115	2966467-0200		1	VOLUME FLAP	**1-241**
TPA 0330SQ (See drawing on page: 1-202)					
100	2869019-0200		1	VOLUME FLAP	**1-205**
105	2966465-0200		1	VOLUME FLAP	**1-225**
110	2907729-0200		1	VOLUME FLAP	**1-229**
115	2966467-0200		1	VOLUME FLAP	**1-241**
TBA 0080S HI					
100	2869019-0200		2	VOLUME FLAP	**1-205**
110	2869019-0200		2	VOLUME FLAP	**1-205**
TBA 0080S NOHI (See drawing on page: 1-200)					
100	2869019-0200		2	VOLUME FLAP	**1-205**
110	2869019-0200		2	VOLUME FLAP	**1-205**
TBA 0100B HI (See drawing on page: 1-200)					
100	2869019-0200		2	VOLUME FLAP	**1-205**
110	2869019-0200		2	VOLUME FLAP	**1-205**
TBA 0100B NOHI (See drawing on page: 1-200)					
100	2869019-0200		2	VOLUME FLAP	**1-205**
110	2869019-0200		2	VOLUME FLAP	**1-205**
TBA 0125S HI					
100	2869019-0200		2	VOLUME FLAP	**1-205**
110	2869019-0200		2	VOLUME FLAP	**1-205**
TBA 0125S NOHI (See drawing on page: 1-200)					
100	2869019-0200		2	VOLUME FLAP	**1-205**
110	2869019-0200		2	VOLUME FLAP	**1-205**
TBA 0160S (See drawing on page: 1-202)					
100	2869019-0200		1	VOLUME FLAP	**1-205**
105	2966465-0200		1	VOLUME FLAP	**1-225**
110	2907729-0200		1	VOLUME FLAP	**1-229**
115	2966467-0200		1	VOLUME FLAP	**1-241**
TBA 0180S					
100	2869019-0200		1	VOLUME FLAP	**1-205**
105	2966465-0200		1	VOLUME FLAP	**1-225**
110	2907729-0200		1	VOLUME FLAP	**1-229**
115	2966467-0200		1	VOLUME FLAP	**1-241**
TBA 0200B HI					

Machine Type | Group Description | Used-In | Group Number | Page No

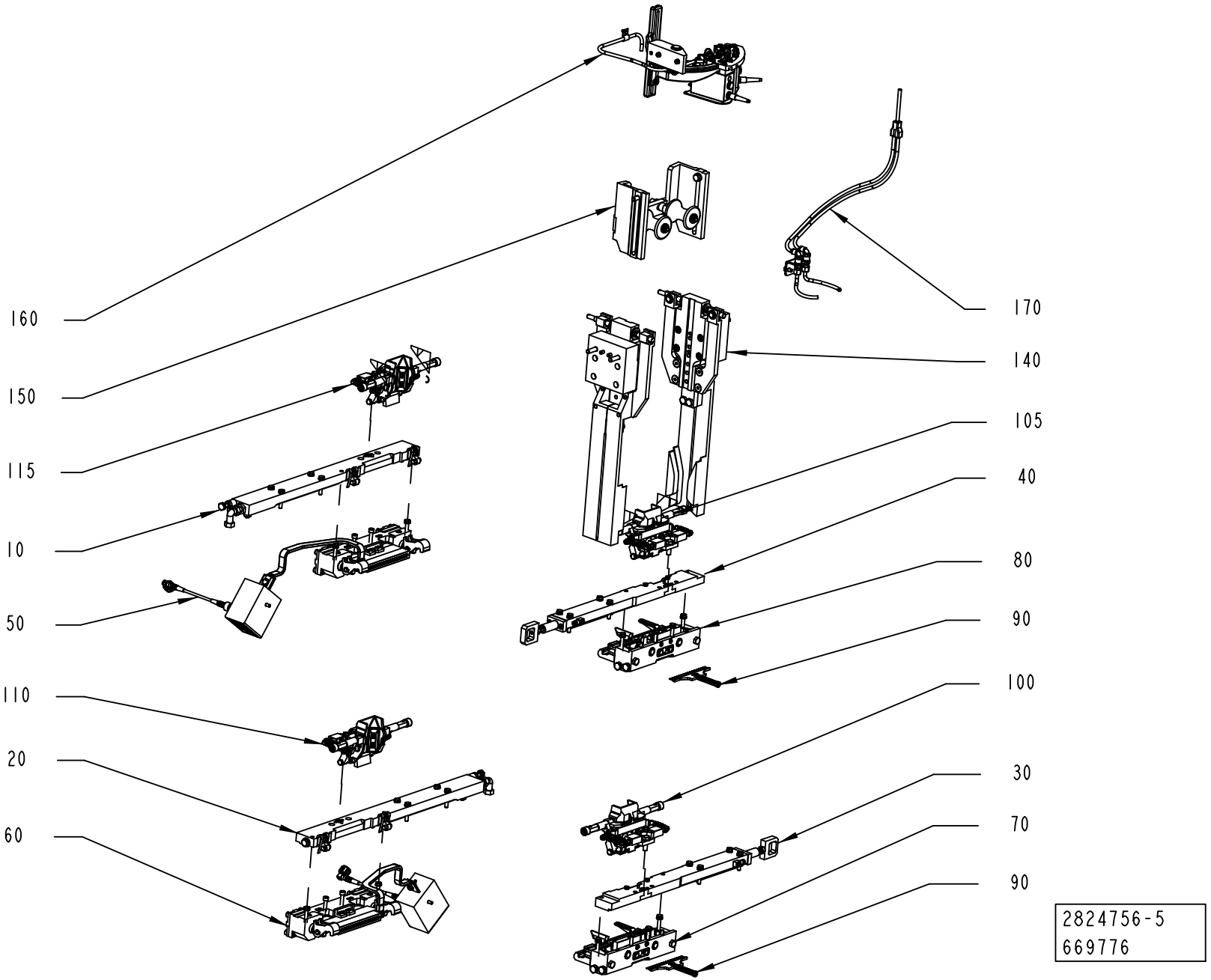
160
150
115
10
50
110
20
60
170
140
105
40
80
90
100
30
70
90
2824756-5
669776

Pos	Part No	UN	Qty	Description	Page No
TBA 0200B HI (Cont'd) (See drawing on page: 1-202)					
100	2869019-0200		2	VOLUME FLAP	**1-205**
110	2869019-0200		2	VOLUME FLAP	**1-205**
TBA 0200B NOHI (See drawing on page: 1-200)					
100	2869019-0200		2	VOLUME FLAP	**1-205**
110	2869019-0200		2	VOLUME FLAP	**1-205**
TBA 0200E HI (See drawing on page: 1-202)					
100	2869019-0200		1	VOLUME FLAP	**1-205**
105	2966465-0200		1	VOLUME FLAP	**1-225**
110	2907729-0200		1	VOLUME FLAP	**1-229**
115	2966467-0200		1	VOLUME FLAP	**1-241**
TBA 0200E NOHI (See drawing on page: 1-202)					
100	2869019-0200		1	VOLUME FLAP	**1-205**
105	2966465-0200		1	VOLUME FLAP	**1-225**
110	2907729-0200		1	VOLUME FLAP	**1-229**
115	2966467-0200		1	VOLUME FLAP	**1-241**
TBA 0200M HI					
100	2869019-0200		2	VOLUME FLAP	**1-205**
110	2869019-0200		2	VOLUME FLAP	**1-205**
TBA 0200M NOHI (See drawing on page: 1-200)					
100	2869019-0200		2	VOLUME FLAP	**1-205**
110	2869019-0200		2	VOLUME FLAP	**1-205**
TBA 0200S HI (See drawing on page: 1-202)					
100	2869019-0200		1	VOLUME FLAP	**1-205**
105	2966465-0200		1	VOLUME FLAP	**1-225**
110	2907729-0200		1	VOLUME FLAP	**1-229**
115	2966467-0200		1	VOLUME FLAP	**1-241**
TBA 0200S NOHI (See drawing on page: 1-202)					
100	2869019-0200		1	VOLUME FLAP	**1-205**
105	2966465-0200		1	VOLUME FLAP	**1-225**
110	2907729-0200		1	VOLUME FLAP	**1-229**
115	2966467-0200		1	VOLUME FLAP	**1-241**
Common Parts					
010	2869011-0200		1	CARRIER PRESSURE	**1-245, 1-247**
020	2869012-0200		1	CARRIER PRESSURE	**1-249, 1-251**
030	2869013-0100		1	CARRIER CUTTING	**1-253, 1-255, 1-257**
040	2869014-0100		1	CARRIER CUTTING	**1-259, 1-261, 1-263**
050	2869015-0100		1	PRESSURE JAW	**1-265, 1-267, 1-269, 1-271**
060	2869016-0100		1	PRESSURE JAW	**1-275, 1-277, 1-279, 1-281**
070	2869017-0100		1	CUTTING JAW	**1-285, 1-287, 1-289, 1-291**
080	2869018-0100		1	CUTTING JAW	**1-293, 1-295, 1-297, 1-299**
090	256208-0400		2	KNIFE HOLDER	**1-301, 1-303, 1-305**
140	3166845-0100		1	VOLUME CURVE PIECE	**1-307, 1-309**
150	2901092-0200		1	SUPPORT ROLLER	**1-311, 1-313**
160	2862751-0200		1	PHOTOCELL UNIT	**1-315, 1-317**
170	2961522-0200		1	TUBE FLUSHING	**1-319**

Machine Type | Group Description | Used-In | Group Number | Page No

VOLUME FLAP

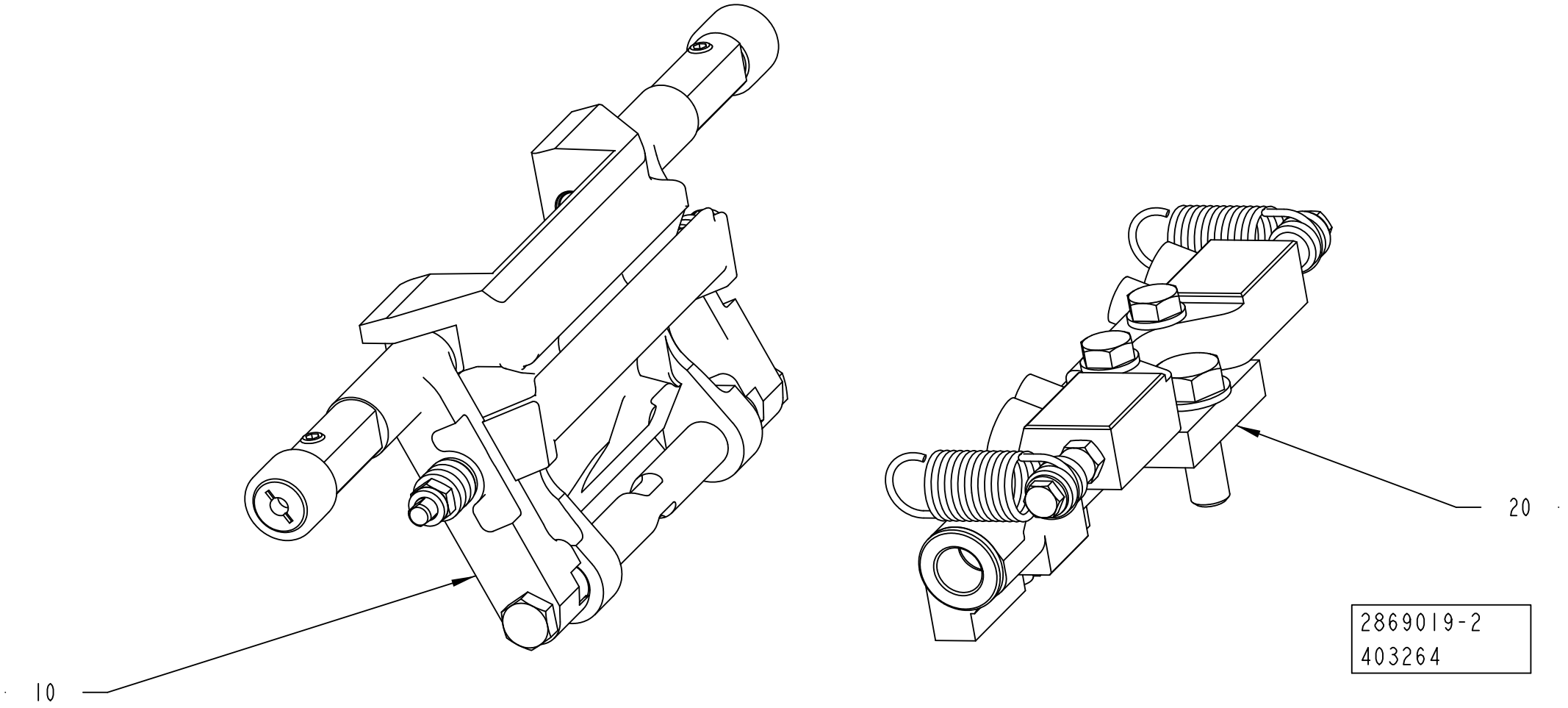

ECM: 633587 - 20140101
Group number: 2869019-0200
Assembly Drawing: 2869019-2_1_AA

Pos	Part No	UN	Qty	Description	Page No
-					
010	2869207-0200		1	VOLUME FLAP	**1-207, 1-209, 1-211, 1-213, 1-215, 1-217**
020	2869206-0200		1	SHOCK ABSORBER	**1-219, 1-221, 1-223**

Pos	Part No	UN	Qty	Description	Page No

VOLUME FLAP

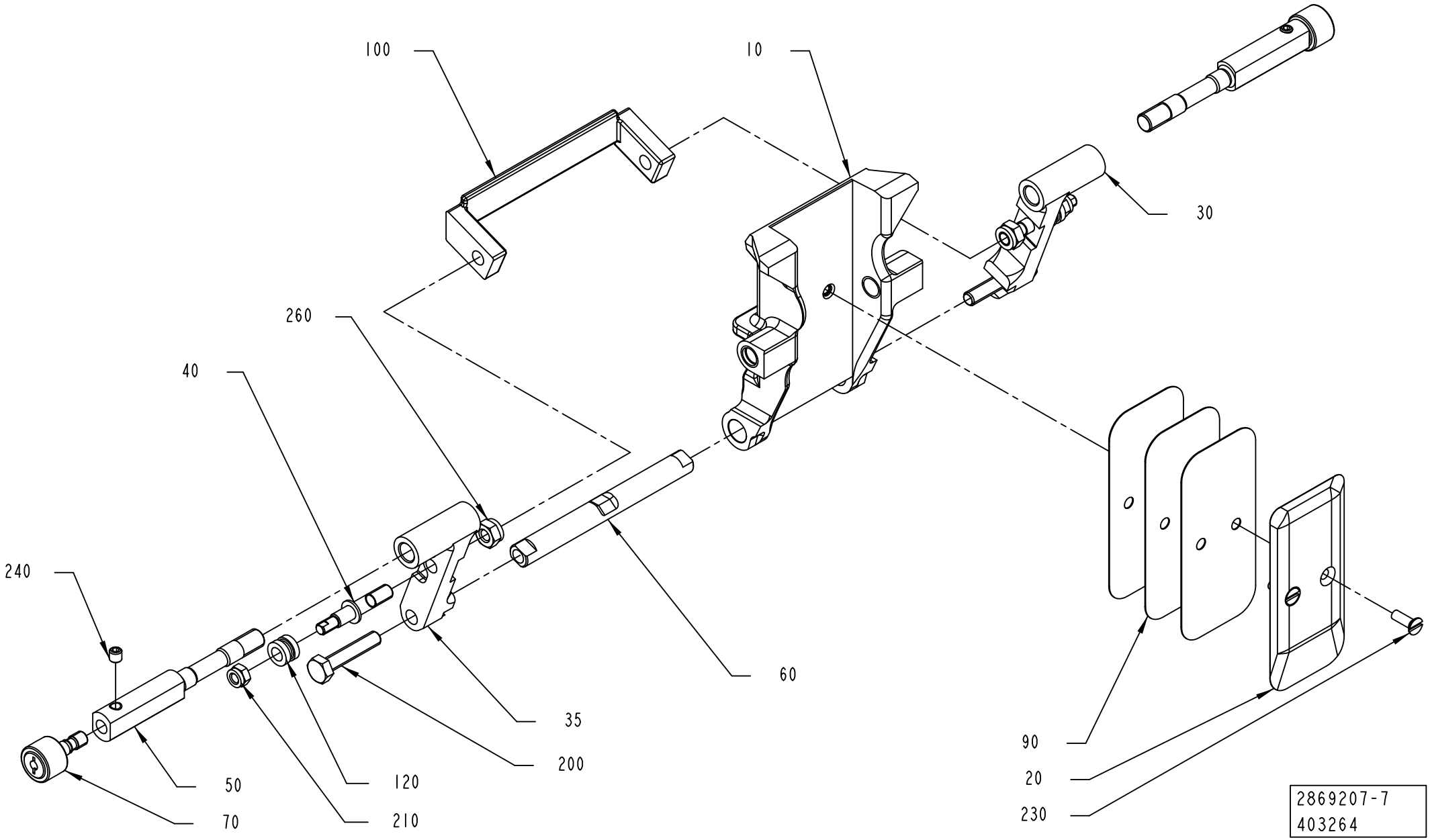
100
10
30
260
40
240
60
35
200
50
120
70
210
90
20
230
2869207-7
403264

ECM: 680105 - 20141001
Group number: 2869207-0200
Assembly Drawing: 2869207-7_1_AA

This list covers pages from 1-206 to 1-217

Pos	Part No	UN	Qty	Description	Page No
TPA 0330SQ (See drawing on page: 1-212)					
010	3002889-0000		1	VOLUME FLAP	
020	3003862-0000		2	VOLUME BULGE	
030	3002894-0000		1	CARRIER	
035	3002891-0000		1	CARRIER	
040	3022273-0000		2	SCREW	
050	3002893-0000		2	SHAFT	
060	3003860-0000		1	SHAFT	
090	3003863-0000		6	VOLUME SHIM	
100	3007781-0000		1	STOP	
120	2905199-0000		2	HOLDER	
200	312109-0335		2	SCREW, M6S ISO 4017 M5X30 A4 80	
210	312812-0314		2	HEXAGON NUT, NY-LOCK M5 A4 80	
230	312105-0327		2	"SCREW, M6S ISO 4017 M5X12 A4 80"	
400	315105-0146		2	WASHER PLAIN, 5,3X10X1 A4 BRB	
TBA 0200S NOHI (See drawing on page: 1-206)					
010	2954994-0000		1	VOLUME FLAP	
020	2947787-0000		1	VOLUME BULGE	
030	3022271-0000		1	CARRIER	
035	3022272-0000		1	CARRIER	
040	3022273-0000		2	SCREW	
050	2914728-0000		2	SHAFT	
060	2916179-0000		1	SHAFT	
090	2947788-0000		3	VOLUME SHIM	
100	3022275-0000		1	STOP	
120	2905199-0000		2	HOLDER	
200	312109-0374		2	SCREW, M6S ISO 4017 M6X30 A4 80	
210	312812-0314		2	HEXAGON NUT, NY-LOCK M5 A4 80	
230	312145-0287		2	SCREW ISO 2009 MFS M4X8 A4	
TBA 0200SQ HI (See drawing on page: 1-206)					
010	2976916-0000		1	VOLUME FLAP	
020	3214721-0000		1	VOLUME BULGE	
030	3042529-0000		1	CARRIER	
035	3042530-0000		1	CARRIER	
040	3022273-0000		2	SCREW	
050	2976920-0000		2	SHAFT	
060	2916179-0000		1	SHAFT	
090	3214722-0000		3	VOLUME SHIM	
100	3042522-0000		1	STOP	
120	2905199-0000		2	HOLDER	
200	312109-0374		2	SCREW, M6S ISO 4017 M6X30 A4 80	
210	312812-0314		2	HEXAGON NUT, NY-LOCK M5 A4 80	
230	312145-0291		2	SCREW ISO 2009 MFS M4X12 A4	
TBA 0200SQ NOHI (See drawing on page: 1-206)					
010	2976916-0000		1	VOLUME FLAP	
020	1548941-0000		1	VOLUME BULGE	
030	3042529-0000		1	CARRIER	
035	3042530-0000		1	CARRIER	
040	3022273-0000		2	SCREW	
050	2976920-0000		2	SHAFT	
060	2916179-0000		1	SHAFT	
090	1519222-0000		1	VOLUME SHIM	
100	3042522-0000		1	STOP	
120	2905199-0000		2	HOLDER	
200	312109-0374		2	SCREW, M6S ISO 4017 M6X30 A4 80	
210	312812-0314		2	HEXAGON NUT, NY-LOCK M5 A4 80	
230	312145-0291		2	SCREW ISO 2009 MFS M4X12 A4	
TBA 0250B (See drawing on page: 1-206)					
010	2958511-0000		1	VOLUME FLAP	
020	456005-0001		1	VOLUME BULGE	
030	2992940-0000		1	CARRIER	
035	2993250-0000		1	CARRIER	
040	3022273-0000		2	SCREW	
050	2914728-0000		2	SHAFT	
060	2916179-0000		1	SHAFT	
090	272986-0001		3	VOLUME SHIM	
100	2992941-0000		1	STOP	
120	2905199-0000		2	HOLDER	
200	312109-0374		2	SCREW, M6S ISO 4017 M6X30 A4 80	
210	312812-0314		2	HEXAGON NUT, NY-LOCK M5 A4 80	
230	312145-0291		2	SCREW ISO 2009 MFS M4X12 A4	
TBA 0250E HI (See drawing on page: 1-206)					
010	3134286-0000		1	VOLUME FLAP	
020	3048011-0000		1	VOLUME BULGE	
030	3097407-0000		1	CARRIER	
035	3097408-0000		1	CARRIER	
040	3022273-0000		2	SCREW	
050	2976923-0000		2	SHAFT	
060	3003860-0000		1	SHAFT	
090	3206238-0000		3	VOLUME SHIM	
100	3097582-0000		1	STOP	
120	2905199-0000		2	HOLDER	
200	312109-0335		2	SCREW, M6S ISO 4017 M5X30 A4 80	
210	312812-0314		2	HEXAGON NUT, NY-LOCK M5 A4 80	

Machine Type | Group Description | Used-In | Group Number | Page No

VOLUME FLAP

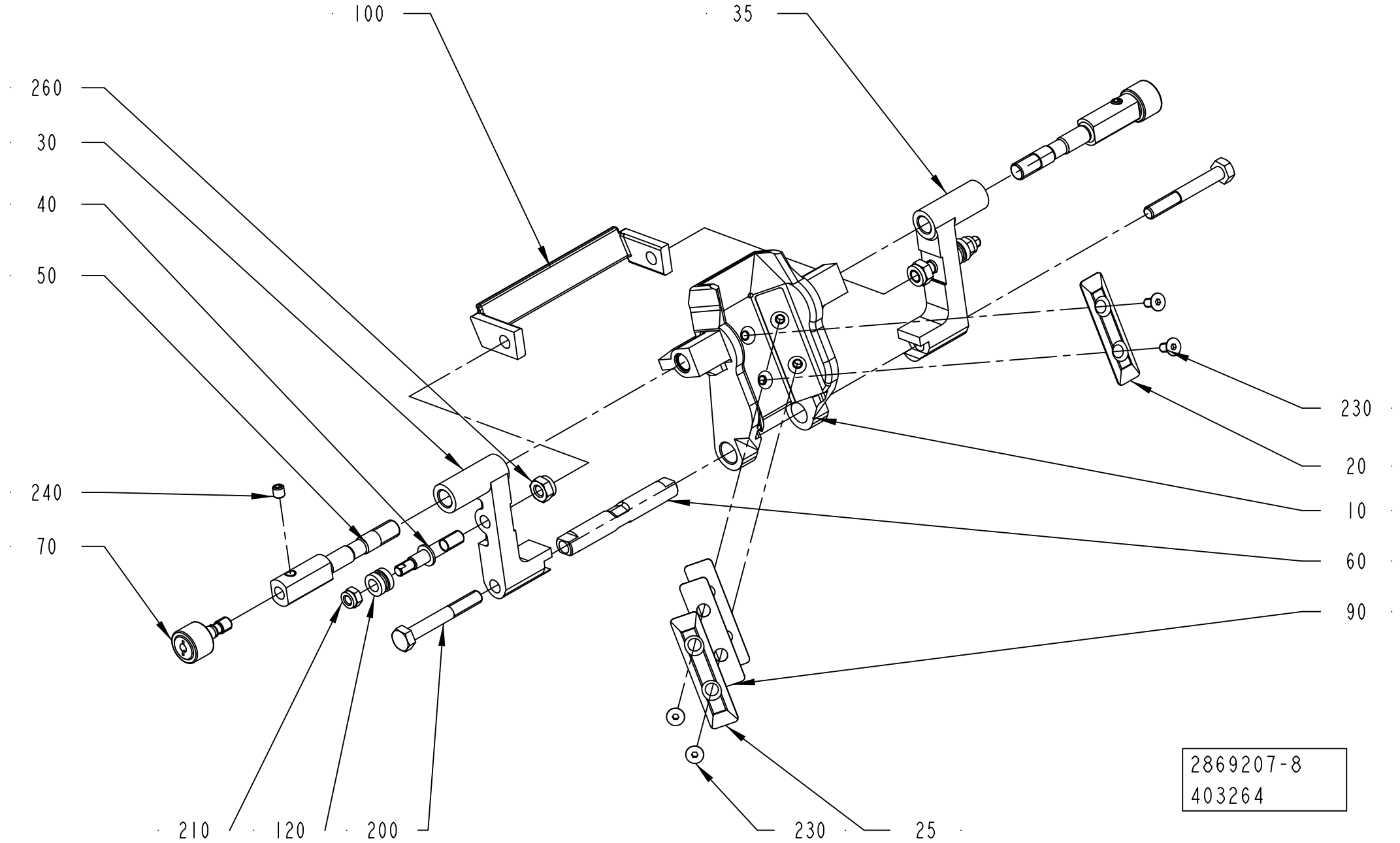
100
35
260
30
40
50
240
70
230
20
10
60
90
210
120
200
230
25
2869207-8
403264

Pos	Part No	UN	Qty	Description	Page No
TBA 0250E HI (Cont'd) (See drawing on page: 1-206)					
230	312145-0291		2	SCREW ISO 2009 MFS M4X12 A4	
TBA 0250E NOHI (See drawing on page: 1-206)					
010	3134286-0000		1	VOLUME FLAP	
020	3059048-0000		1	VOLUME BULGE	
030	3097407-0000		1	CARRIER	
035	3097408-0000		1	CARRIER	
040	3022273-0000		2	SCREW	
050	2976923-0000		2	SHAFT	
060	3003860-0000		1	SHAFT	
090	3059050-0000		6	VOLUME SHIM	
100	3097582-0000		1	STOP	
120	2905199-0000		2	HOLDER	
200	312109-0335		2	SCREW, M6S ISO 4017 M5X30 A4 80	
210	312812-0314		2	HEXAGON NUT, NY-LOCK M5 A4 80	
230	312145-0291		2	SCREW ISO 2009 MFS M4X12 A4	
TBA 0250S HI (See drawing on page: 1-206)					
010	2947186-0000		1	VOLUME FLAP	
020	3104458-0000		1	VOLUME BULGE	
030	2992940-0000		1	CARRIER	
035	2993250-0000		1	CARRIER	
040	3022273-0000		2	SCREW	
050	2914728-0000		2	SHAFT	
060	2916179-0000		1	SHAFT	
090	3104459-0000		3	SHIM	
100	2992941-0000		1	STOP	
120	2905199-0000		2	HOLDER	
200	312109-0374		2	SCREW, M6S ISO 4017 M6X30 A4 80	
210	312812-0314		2	HEXAGON NUT, NY-LOCK M5 A4 80	
230	312145-0287		2	SCREW ISO 2009 MFS M4X8 A4	
TBA 0250S NOHI (See drawing on page: 1-206)					
010	2947186-0000		1	VOLUME FLAP	
020	3002255-0000		1	VOLUME BULGE	
030	2992940-0000		1	CARRIER	
035	2993250-0000		1	CARRIER	
040	3022273-0000		2	SCREW	
050	2914728-0000		2	SHAFT	
060	2916179-0000		1	SHAFT	
090	3002257-0000		3	VOLUME SHIM	
100	2992941-0000		1	STOP	
120	2905199-0000		2	HOLDER	
200	312109-0374		2	SCREW, M6S ISO 4017 M6X30 A4 80	
210	312812-0314		2	HEXAGON NUT, NY-LOCK M5 A4 80	
230	312145-0287		2	SCREW ISO 2009 MFS M4X8 A4	
TBA 0330S (See drawing on page: 1-206)					
010	2958512-0000		1	VOLUME FLAP	
020	979931-0000		1	VOLUME BULGE	
030	2992940-0000		1	CARRIER	
035	2993250-0000		1	CARRIER	
040	3022273-0000		2	SCREW	
050	2914729-0000		2	SHAFT	
060	2916179-0000		1	SHAFT	
090	272986-0006		3	VOLUME SHIM 330S	
100	2992941-0000		1	STOP	
120	2905199-0000		2	HOLDER	
200	312109-0374		2	SCREW, M6S ISO 4017 M6X30 A4 80	
210	312812-0314		2	HEXAGON NUT, NY-LOCK M5 A4 80	
230	312145-0291		2	SCREW ISO 2009 MFS M4X12 A4	
TBA 0375S (See drawing on page: 1-206)					
010	3067248-0000		1	VOLUME FLAP	
020	3067249-0000		1	VOLUME BULGE	
030	3067250-0000		1	CARRIER	
035	3067251-0000		1	CARRIER	
040	3022273-0000		2	SCREW	
050	3067273-0000		2	SHAFT	
060	2916179-0000		1	SHAFT	
090	3067274-0000		3	SHIM	
100	3042522-0000		1	STOP	
120	2905199-0000		2	HOLDER	
200	312109-0374		2	SCREW, M6S ISO 4017 M6X30 A4 80	
210	312812-0314		2	HEXAGON NUT, NY-LOCK M5 A4 80	
230	312145-0287		2	SCREW ISO 2009 MFS M4X8 A4	
TPA 0125SQ (See drawing on page: 1-208)					
010	2907726-0000		1	VOLUME FLAP	
020	2971940-0000		1	VOLUME BULGE	
025	2979711-0000		2	VOLUME BULGE	
030	2906024-0000		1	CARRIER	
035	2906023-0000		1	CARRIER	
040	3022273-0000		2	SCREW	
050	2921571-0000		2	SHAFT	
060	2906025-0000		1	SHAFT	
090	2908756-0000		4	VOLUME SHIM	
100	2992941-0000		1	STOP	
120	2905199-0000		2	HOLDER	

VOLUME FLAP

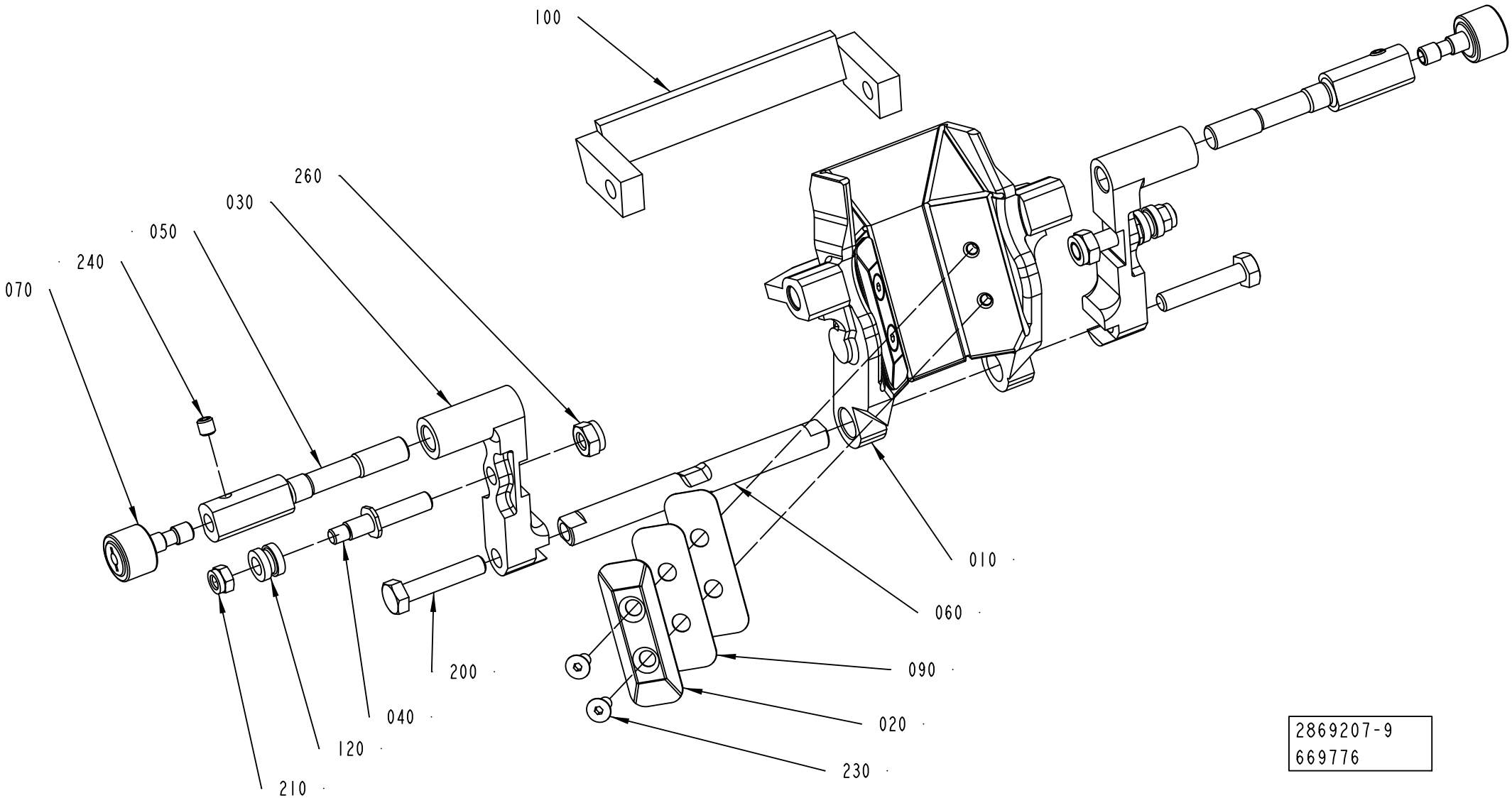
100
260
030
050
240
070
010
060
090
020
230
200
040
120
210
2869207-9
669776

Pos	Part No	UN	Qty	Description	Page No
TPA 0125SQ (Cont'd) (See drawing on page: 1-208)					
200	312105-0379		2	SCREW, M6S ISO 4014 M6X45 A4 80	
210	312812-0314		2	HEXAGON NUT, NY-LOCK M5 A4 80	
230	312155-0287		6	SCREW DIN 7991 MF6S M4X8 A4 70	
TPA 0200SQ (See drawing on page: 1-210)					
010	2964389-0000		1	VOLUME FLAP	
020	3327331-0000		2	VOLUME BULGE	
030	3042528-0000		2	CARRIER	
040	3022273-0000		2	SCREW	
050	2964541-0000		2	SHAFT	
060	2916179-0000		1	SHAFT	
090	3327332-0000		4	VOLUME SHIM	
100	3042521-0000		1	STOP	
120	2905199-0000		2	HOLDER	
200	312109-0374		2	SCREW, M6S ISO 4017 M6X30 A4 80	
210	312812-0314		2	HEXAGON NUT, NY-LOCK M5 A4 80	
230	312155-0287		4	SCREW DIN 7991 MF6S M4X8 A4 70	
TPA 0250SQ (See drawing on page: 1-210)					
010	2964390-0000		1	VOLUME FLAP	
020	1350959-0000		2	VOLUME BULGE P48 250	
030	3042528-0000		2	CARRIER	
040	3022273-0000		2	SCREW	
050	2964542-0000		2	SHAFT	
060	2916179-0000		1	SHAFT	
090	3019317-0000		4	SHIM	
100	3042521-0000		1	STOP	
120	2905199-0000		2	HOLDER	
200	312109-0374		2	SCREW, M6S ISO 4017 M6X30 A4 80	
210	312812-0314		2	HEXAGON NUT, NY-LOCK M5 A4 80	
230	312155-0287		4	SCREW DIN 7991 MF6S M4X8 A4 70	
TBA 0080S HI (See drawing on page: 1-206)					
010	2950901-0000		1	VOLUME FLAP	
020	3115484-0000		1	VOLUME BULGE	
030	3042525-0000		1	CARRIER	
035	3042525-0000		1	CARRIER	
040	3042518-0000		2	SUPPORT	
050	2914727-0000		2	AXLE	
060	2916887-0000		1	SHAFT	
090	3115485-0000		3	VOLUME SHIM	
100	3042523-0000		1	STOP	
120	3024046-0000		2	HOLDER	
200	312105-0374		2	SCREW, M6S ISO 4014 M6X30 A4 80	
210	3042504-0000		2	NUT	
230	312145-0287		2	SCREW ISO 2009 MFS M4X8 A4	
TBA 0080S NOHI (See drawing on page: 1-206)					
010	2950901-0000		1	VOLUME FLAP	
020	3000073-0000		1	VOLUME BULGE	
030	3042525-0000		1	CARRIER	
035	3042525-0000		1	CARRIER	
040	3042518-0000		2	SUPPORT	
050	2914727-0000		2	AXLE	
060	2916887-0000		1	SHAFT	
090	2950902-0000		3	VOLUME SHIM	
100	3042523-0000		1	STOP	
120	3024046-0000		2	HOLDER	
200	312105-0374		2	SCREW, M6S ISO 4014 M6X30 A4 80	
210	3042504-0000		2	NUT	
230	312145-0287		2	SCREW ISO 2009 MFS M4X8 A4	
TBA 0100B HI (See drawing on page: 1-206)					
010	2919303-0000		1	VOLUME FLAP	
020	3122818-0000		1	VOLUME BULGE	
030	3042525-0000		1	CARRIER	
035	3042525-0000		1	CARRIER	
040	3042518-0000		2	SUPPORT	
050	2914727-0000		2	AXLE	
060	2916887-0000		1	SHAFT	
090	3122819-0000		3	VOLUME SHIM	
100	3042519-0000		1	STOP	
120	3024046-0000		2	HOLDER	
200	312105-0374		2	SCREW, M6S ISO 4014 M6X30 A4 80	
210	3042504-0000		2	NUT	
230	312145-0291		2	SCREW ISO 2009 MFS M4X12 A4	
TBA 0100B NOHI (See drawing on page: 1-206)					
010	2919303-0000		1	VOLUME FLAP	
020	979755-0000		1	VOLUME BULGE 100	
030	3042525-0000		1	CARRIER	
035	3042525-0000		1	CARRIER	
040	3042518-0000		2	SUPPORT	
050	2914727-0000		2	AXLE	
060	2916887-0000		1	SHAFT	
090	979754-0000		3	VOLUME SHIM 100	
100	3042519-0000		1	STOP	
120	3024046-0000		2	HOLDER	
200	312105-0374		2	SCREW, M6S ISO 4014 M6X30 A4 80	

Machine Type | Group Description | Used-In | Group Number | Page No

VOLUME FLAP

Drawing file: 2869207-10_1_AB.hpgl

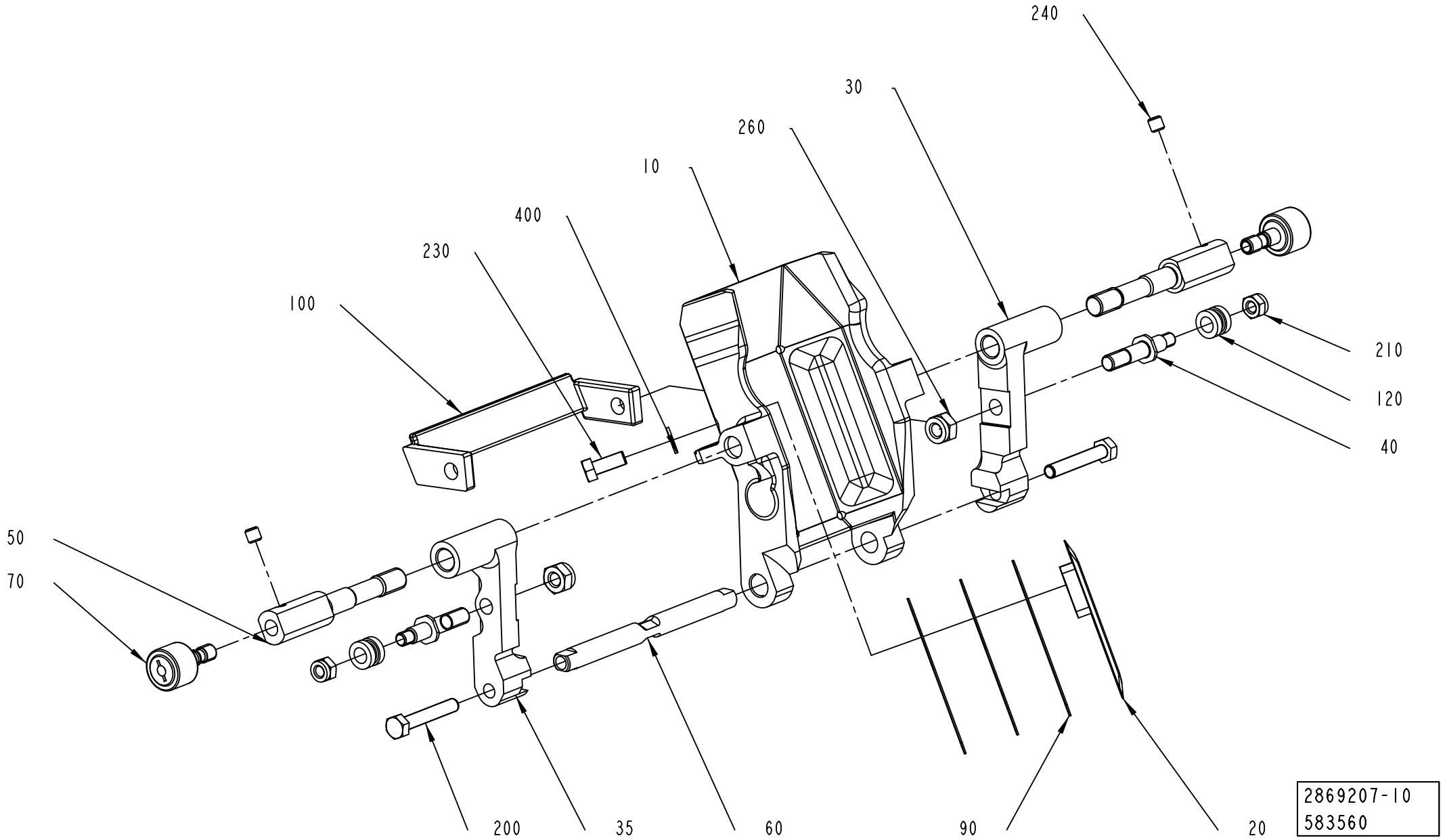

ECM: 680105 - 20141001
Group number: 2869207-0200
Assembly Drawing: 2869207-10_1_AB

This list covers pages from 1-206 to 1-217

Pos	Part No	UN	Qty	Description	Page No
TBA 0100B NOHI (Cont'd) (See drawing on page: 1-206)					
210	3042504-0000		2	NUT	
230	312145-0291		2	SCREW ISO 2009 MFS M4X12 A4	
TBA 0125S HI (See drawing on page: 1-206)					
010	2919304-0000		1	VOLUME FLAP	
020	3106859-0000		1	VOLUME BULGE	
030	3042526-0000		1	CARRIER	
035	3042527-0000		1	CARRIER	
040	3042518-0000		2	SUPPORT	
050	2914728-0000		2	SHAFT	
060	2916887-0000		1	SHAFT	
090	3106860-0000		3	SHIM	
100	3042519-0000		1	STOP	
120	3024046-0000		2	HOLDER	
200	312105-0374		2	SCREW, M6S ISO 4014 M6X30 A4 80	
210	3042504-0000		2	NUT	
230	312145-0291		2	SCREW ISO 2009 MFS M4X12 A4	
TBA 0125S NOHI (See drawing on page: 1-206)					
010	2919304-0000		1	VOLUME FLAP	
020	491868-0000		1	VOLUME BULGE	
030	3042526-0000		1	CARRIER	
035	3042527-0000		1	CARRIER	
040	3042518-0000		2	SUPPORT	
050	2914728-0000		2	SHAFT	
060	2916887-0000		1	SHAFT	
090	272987-0000		3	VOLUME SHIM	
100	3042519-0000		1	STOP	
120	3024046-0000		2	HOLDER	
200	312105-0374		2	SCREW, M6S ISO 4014 M6X30 A4 80	
210	3042504-0000		2	NUT	
230	312145-0291		2	SCREW ISO 2009 MFS M4X12 A4	
TBA 0160S (See drawing on page: 1-206)					
010	3024345-0000		1	VOLUME FLAP	
020	3022278-0000		1	VOLUME BULGE	
030	3022271-0000		1	CARRIER	
035	3022272-0000		1	CARRIER	
040	3022273-0000		2	SCREW	
050	2914727-0000		2	AXLE	
060	2916179-0000		1	SHAFT	
090	3022276-0000		3	VOLUME SHIM	
100	3022275-0000		1	STOP	
120	2905199-0000		2	HOLDER	
200	312109-0374		2	SCREW, M6S ISO 4017 M6X30 A4 80	
210	312812-0314		2	HEXAGON NUT, NY-LOCK M5 A4 80	
230	312145-0287		2	SCREW ISO 2009 MFS M4X8 A4	
TBA 0180S HI (See drawing on page: 1-206)					
010	3241936-0000		1	VOLUME FLAP	
020	3122818-0000		1	VOLUME BULGE	
030	3022271-0000		1	CARRIER	
035	3022272-0000		1	CARRIER	
040	3022273-0000		2	SCREW	
050	2914727-0000		2	AXLE	
060	2916179-0000		1	SHAFT	
090	3122819-0000		3	VOLUME SHIM	
100	3022275-0000		1	STOP	
120	2905199-0000		2	HOLDER	
200	312109-0374		2	SCREW, M6S ISO 4017 M6X30 A4 80	
210	312812-0314		2	HEXAGON NUT, NY-LOCK M5 A4 80	
230	312145-0287		2	SCREW ISO 2009 MFS M4X8 A4	
TBA 0180S NOHI (See drawing on page: 1-206)					
010	3241936-0000		1	VOLUME FLAP	
020	3022278-0000		1	VOLUME BULGE	
030	3022271-0000		1	CARRIER	
035	3022272-0000		1	CARRIER	
040	3022273-0000		2	SCREW	
050	2914727-0000		2	AXLE	
060	2916179-0000		1	SHAFT	
090	3022276-0000		3	VOLUME SHIM	
100	3022275-0000		1	STOP	
120	2905199-0000		2	HOLDER	
200	312109-0374		2	SCREW, M6S ISO 4017 M6X30 A4 80	
210	312812-0314		2	HEXAGON NUT, NY-LOCK M5 A4 80	
230	312145-0287		2	SCREW ISO 2009 MFS M4X8 A4	
TBA 0200B HI (See drawing on page: 1-206)					
010	2910371-0000		1	VOLUME FLAP	
020	3047317-0000		1	VOLUME BULGE	
030	2992940-0000		1	CARRIER	
035	2993250-0000		1	CARRIER	
040	3022273-0000		2	SCREW	
050	2914727-0000		2	AXLE	
060	2916179-0000		1	SHAFT	
090	3047358-0000		3	VOLUME SHIM	
100	2992941-0000		1	STOP	
120	2905199-0000		2	HOLDER	

Machine Type | Group Description | Used-In | Group Number | Page No

See previous drawings pages: 1-206, 1-208, 1-210, 1-212.

Pos	Part No	UN	Qty	Description	Page No
TBA 0200B HI (Cont'd) (See drawing on page: 1-206)					
200	312109-0374		2	SCREW, M6S ISO 4017 M6X30 A4 80	
210	312812-0314		2	HEXAGON NUT, NY-LOCK M5 A4 80	
230	312145-0291		2	SCREW ISO 2009 MFS M4X12 A4	
TBA 0200B NOHI (See drawing on page: 1-206)					
010	2910371-0000		1	VOLUME FLAP	
020	456005-0003		1	VOLUME BULGE	
030	2992940-0000		1	CARRIER	
035	2993250-0000		1	CARRIER	
040	3022273-0000		2	SCREW	
050	2914727-0000		2	AXLE	
060	2916179-0000		1	SHAFT	
090	272986-0003		3	VOLUME SHIM	
100	2992941-0000		1	STOP	
120	2905199-0000		2	HOLDER	
200	312109-0374		2	SCREW, M6S ISO 4017 M6X30 A4 80	
210	312812-0314		2	HEXAGON NUT, NY-LOCK M5 A4 80	
230	312145-0291		2	SCREW ISO 2009 MFS M4X12 A4	
TBA 0200E HI (See drawing on page: 1-206)					
010	3123577-0000		1	VOLUME FLAP	
020	3222718-0000		1	VOLUME BULGE	
030	3097407-0000		1	CARRIER	
035	3097408-0000		1	CARRIER	
040	3022273-0000		2	SCREW	
050	2976920-0000		2	SHAFT	
060	3003860-0000		1	SHAFT	
090	3222719-0000		2	VOLUME SHIM	
100	3097582-0000		1	STOP	
120	2905199-0000		2	HOLDER	
200	312109-0335		2	SCREW, M6S ISO 4017 M5X30 A4 80	
210	312812-0314		2	HEXAGON NUT, NY-LOCK M5 A4 80	
230	312145-0291		2	SCREW ISO 2009 MFS M4X12 A4	
TBA 0200E NOHI (See drawing on page: 1-206)					
010	3123577-0000		1	VOLUME FLAP	
020	3110105-0000		1	VOLUME BULGE	
030	3097407-0000		1	CARRIER	
035	3097408-0000		1	CARRIER	
040	3022273-0000		2	SCREW	
050	2976920-0000		2	SHAFT	
060	3003860-0000		1	SHAFT	
090	3111045-0000		3	VOLUME SHIM	
100	3097582-0000		1	STOP	
120	2905199-0000		2	HOLDER	
200	312109-0335		2	SCREW, M6S ISO 4017 M5X30 A4 80	
210	312812-0314		2	HEXAGON NUT, NY-LOCK M5 A4 80	
230	312145-0291		2	SCREW ISO 2009 MFS M4X12 A4	
TBA 0200M HI (See drawing on page: 1-206)					
010	2947187-0000		1	VOLUME FLAP	
020	3104458-0000		1	VOLUME BULGE	
030	2992940-0000		1	CARRIER	
035	2993250-0000		1	CARRIER	
040	3022273-0000		2	SCREW	
050	2914727-0000		2	AXLE	
060	2916179-0000		1	SHAFT	
090	3104459-0000		3	SHIM	
100	2992941-0000		1	STOP	
120	2905199-0000		2	HOLDER	
200	312109-0374		2	SCREW, M6S ISO 4017 M6X30 A4 80	
210	312812-0314		2	HEXAGON NUT, NY-LOCK M5 A4 80	
230	312145-0287		2	SCREW ISO 2009 MFS M4X8 A4	
TBA 0200M NOHI (See drawing on page: 1-206)					
010	2947187-0000		1	VOLUME FLAP	
020	979860-0000		1	VOLUME BULGE	
030	2992940-0000		1	CARRIER	
035	2993250-0000		1	CARRIER	
040	3022273-0000		2	SCREW	
050	2914727-0000		2	AXLE	
060	2916179-0000		1	SHAFT	
090	979861-0000		3	VOLUME SHIM	
100	2992941-0000		1	STOP	
120	2905199-0000		2	HOLDER	
200	312109-0374		2	SCREW, M6S ISO 4017 M6X30 A4 80	
210	312812-0314		2	HEXAGON NUT, NY-LOCK M5 A4 80	
230	312145-0287		2	SCREW ISO 2009 MFS M4X8 A4	
TBA 0200S HI (See drawing on page: 1-206)					
010	2954994-0000		1	VOLUME FLAP	
020	3174445-0000		1	VOLUME BULGE	
030	3022271-0000		1	CARRIER	
035	3022272-0000		1	CARRIER	
040	3022273-0000		2	SCREW	
050	2914728-0000		2	SHAFT	
060	2916179-0000		1	SHAFT	
090	3174446-0000		3	VOLUME SHIM	
100	3022275-0000		1	STOP	

See previous drawings pages: 1-206, 1-208, 1-210, 1-212.

ECM: 680105 - 20141001
Group number: 2869207-0200
Assembly Drawing: 2869207-10_1_AB

This list covers pages from 1-206 to 1-217

Pos	Part No	UN	Qty	Description	Page No
TBA 0200S HI (Cont'd) (See drawing on page: 1-206)					
120	2905199-0000		2	HOLDER	
200	312109-0374		2	SCREW, M6S ISO 4017 M6X30 A4 80	
210	312812-0314		2	HEXAGON NUT, NY-LOCK M5 A4 80	
230	312145-0287		2	SCREW ISO 2009 MFS M4X8 A4	
Common Parts					
070	2914730-0000		2	ROLLER	
240	312318-0320		2	SET SCREW, CUP END ISO4029 M5X5 A4	
260	312812-0316		2	HEXAGON NUT, NY-LOCK M6 A4 80	

Pos	Part No	UN	Qty	Description	Page No

SHOCK ABSORBER

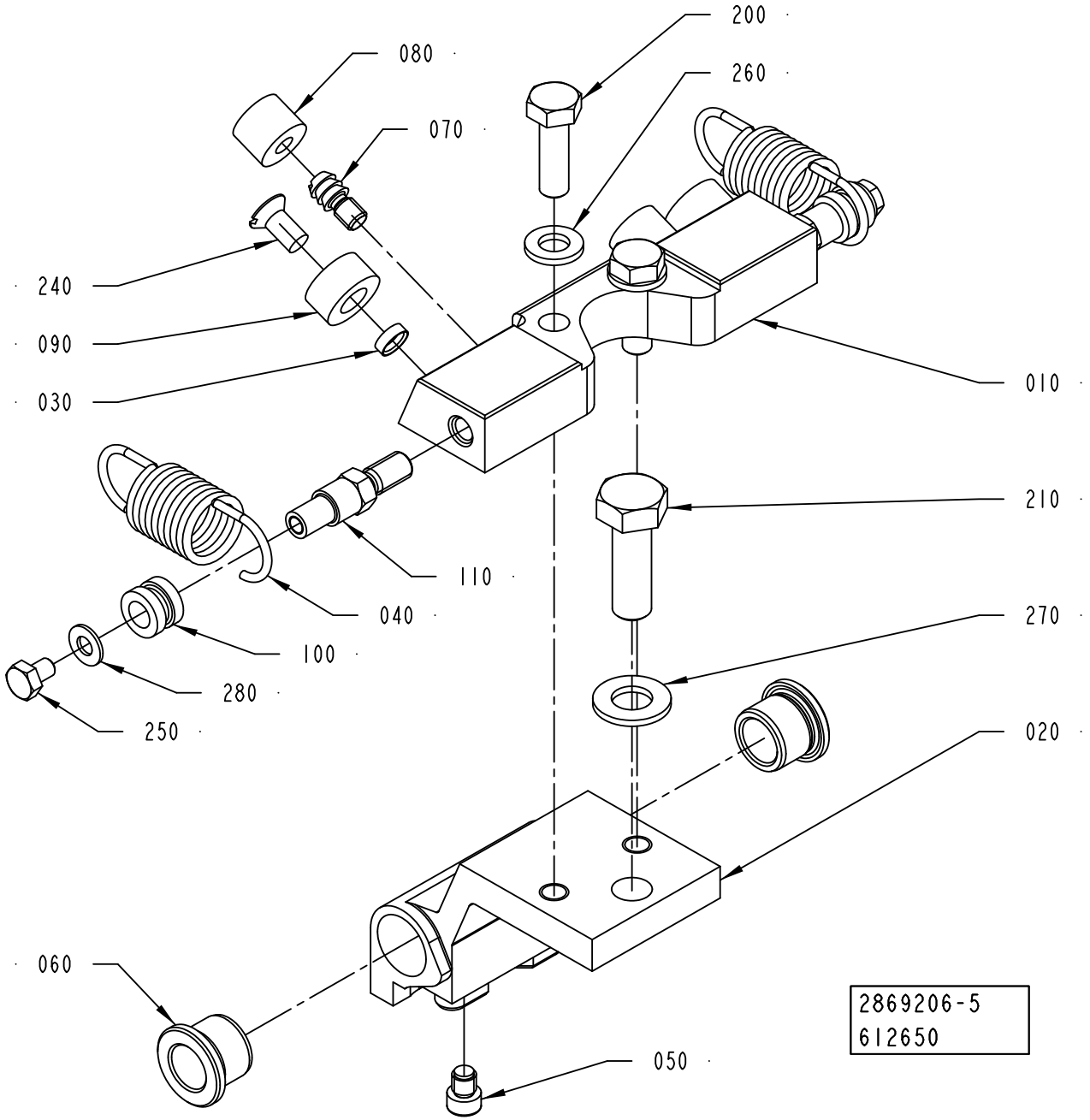

ECM: 615899 - 20131001
Group number: 2869206-0200
Assembly Drawing: 2869206-5_1_AB

This list covers pages from 1-218 to 1-223

Pos	Part No	UN	Qty	Description	Page No
TBA 0080S (See drawing on page: 1-220)					
010	3042505-0000		1	SUPPORT	
020	2950900-0000		1	HOLDER	
040	2950910-0000		2	TENSION SPRING	
050	2933520-0000		1	SCREW	
060	2532544-0000		2	BUSHING	
090	3291156-0001		2	STOP	
100	3024046-0000		2	HOLDER	
120	3042504-0000		2	NUT	
200	312105-0327		2	"SCREW, M6S ISO 4017 M5X12 A4 80"	
330	90287-0199		1	SCREW, M6S ISO 4017 M5X6 A4 80	
TBA 0100B, TBA 0125S (See drawing on page: 1-220)					
010	3042505-0000		1	SUPPORT	
020	2916883-0000		1	HOLDER	
040	2950910-0000		2	TENSION SPRING	
050	2933520-0000		1	SCREW	
060	2532544-0000		2	BUSHING	
090	3291156-0002		2	STOP	
100	3024046-0000		2	HOLDER	
120	3042504-0000		2	NUT	
200	312105-0327		2	"SCREW, M6S ISO 4017 M5X12 A4 80"	
330	90287-0199		1	SCREW, M6S ISO 4017 M5X6 A4 80	
TBA 0160S, TBA 0200S, TBA 0180S (See drawing on page: 1-218)					
010	3018882-0000		1	SUPPORT	
020	3022267-0004		1	HOLDER	
040	3040850-0000		2	TENSION SPRING	
050	3022268-0000		1	SCREW	
060	2532544-0000		2	BUSHING	
070	3290330-0000		2	PIN	
080	3290331-0000		2	DAMPER	
090	3291156-0002		2	STOP	
100	2905199-0000		2	HOLDER	
110	3022269-0000		2	SCREW	
200	312105-0370		2	SCREW, M6S ISO 4017 M6X20 A4 80	
250	312105-0285		2	SCREW, M6S ISO 4017 M4X6 A4 70	
260	315105-0153		2	WASHER PLAIN, 6,4X12X1,5 A4 BRB	
280	315106-0136		2	WASHER PLAIN, M4 ISO7089-4-200 HV A4	
TBA 0200B, TBA 0250B (See drawing on page: 1-218)					
010	3018882-0000		1	SUPPORT	
020	2870080-0000		1	HOLDER	
040	3040850-0000		2	TENSION SPRING	
050	3003494-0000		1	SCREW	
060	2532544-0000		2	BUSHING	
070	3290330-0000		2	PIN	
080	3290331-0000		2	DAMPER	
090	3291156-0002		2	STOP	
100	2905199-0000		2	HOLDER	
110	3022269-0000		2	SCREW	
200	312105-0370		2	SCREW, M6S ISO 4017 M6X20 A4 80	
250	312105-0285		2	SCREW, M6S ISO 4017 M4X6 A4 70	
260	315105-0153		2	WASHER PLAIN, 6,4X12X1,5 A4 BRB	
280	315106-0136		2	WASHER PLAIN, M4 ISO7089-4-200 HV A4	
TBA 0200E, TBA 0250E (See drawing on page: 1-218)					
010	3018882-0000		1	SUPPORT	
020	3097405-0004		1	HOLDER	
040	3040850-0000		2	TENSION SPRING	
050	2966463-0000		1	SCREW	
060	3097403-0000		2	BUSHING	
070	3290330-0000		2	PIN	
080	3290331-0000		2	DAMPER	
090	3291156-0003		2	STOP	
100	2905199-0000		2	HOLDER	
110	3022269-0000		2	SCREW	
200	312105-0370		2	SCREW, M6S ISO 4017 M6X20 A4 80	
250	312105-0285		2	SCREW, M6S ISO 4017 M4X6 A4 70	
260	315105-0153		2	WASHER PLAIN, 6,4X12X1,5 A4 BRB	
280	315106-0136		2	WASHER PLAIN, M4 ISO7089-4-200 HV A4	
TBA 0200M, TBA 0250S (See drawing on page: 1-218)					
010	3018882-0000		1	SUPPORT	
020	2947185-0000		1	HOLDER	
040	3040850-0000		2	TENSION SPRING	
050	3003494-0000		1	SCREW	
060	2532544-0000		2	BUSHING	
070	3290330-0000		2	PIN	
080	3290331-0000		2	DAMPER	
090	3291156-0002		2	STOP	
100	2905199-0000		2	HOLDER	
110	3022269-0000		2	SCREW	
200	312105-0370		2	SCREW, M6S ISO 4017 M6X20 A4 80	
250	312105-0285		2	SCREW, M6S ISO 4017 M4X6 A4 70	
260	315105-0153		2	WASHER PLAIN, 6,4X12X1,5 A4 BRB	
280	315106-0136		2	WASHER PLAIN, M4 ISO7089-4-200 HV A4	
TBA 0200SQ (See drawing on page: 1-218)					
010	3018882-0000		1	SUPPORT	

SHOCK ABSORBER

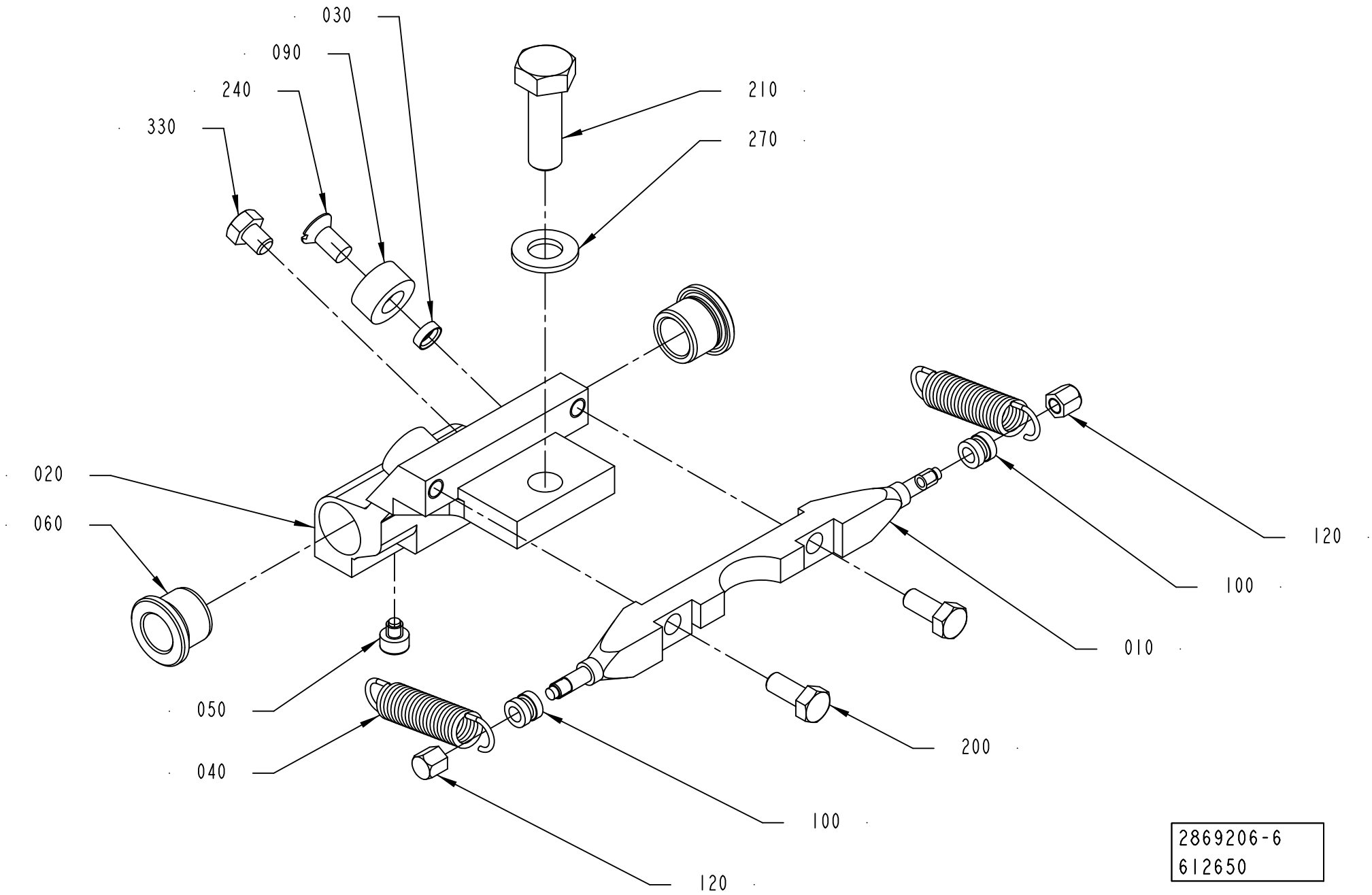

Pos	Part No	UN	Qty	Description	Page No
TBA 0200SQ (Cont'd) (See drawing on page: 1-218)					
020	2976830-0004		1	HOLDER	
040	3040850-0000		2	TENSION SPRING	
050	2966463-0000		1	SCREW	
060	2532544-0000		2	BUSHING	
070	3290330-0000		2	PIN	
080	3290331-0000		2	DAMPER	
090	3291156-0002		2	STOP	
100	2905199-0000		2	HOLDER	
110	3022269-0000		2	SCREW	
200	312105-0370		2	SCREW, M6S ISO 4017 M6X20 A4 80	
250	312105-0285		2	SCREW, M6S ISO 4017 M4X6 A4 70	
260	315105-0153		2	WASHER PLAIN, 6,4X12X1,5 A4 BRB	
280	315106-0136		2	WASHER PLAIN, M4 ISO7089-4-200 HV A4	
TBA 0330S (See drawing on page: 1-218)					
010	3018882-0000		1	SUPPORT	
020	2870080-0000		1	HOLDER	
040	3040850-0000		2	TENSION SPRING	
050	3003494-0000		1	SCREW	
060	2532544-0000		2	BUSHING	
070	3290330-0000		2	PIN	
080	3290331-0000		2	DAMPER	
090	3291156-0002		2	STOP	
100	2905199-0000		2	HOLDER	
110	3022269-0000		2	SCREW	
200	312105-0370		2	SCREW, M6S ISO 4017 M6X20 A4 80	
250	312105-0285		2	SCREW, M6S ISO 4017 M4X6 A4 70	
260	315105-0153		2	WASHER PLAIN, 6,4X12X1,5 A4 BRB	
280	315106-0136		2	WASHER PLAIN, M4 ISO7089-4-200 HV A4	
TBA 0375S (See drawing on page: 1-218)					
010	3018882-0000		1	SUPPORT	
020	3067247-0004		1	HOLDER	
040	3040850-0000		2	TENSION SPRING	
050	2966463-0000		1	SCREW	
060	2532544-0000		2	BUSHING	
070	3290330-0000		2	PIN	
080	3290331-0000		2	DAMPER	
090	3291156-0002		2	STOP	
100	2905199-0000		2	HOLDER	
110	3022269-0000		2	SCREW	
200	312105-0370		2	SCREW, M6S ISO 4017 M6X20 A4 80	
250	312105-0285		2	SCREW, M6S ISO 4017 M4X6 A4 70	
260	315105-0153		2	WASHER PLAIN, 6,4X12X1,5 A4 BRB	
280	315106-0136		2	WASHER PLAIN, M4 ISO7089-4-200 HV A4	
TPA 0125SQ (See drawing on page: 1-218)					
010	3018882-0000		1	SUPPORT	
020	2906170-0000		1	HOLDER	
040	3040850-0000		2	TENSION SPRING	
050	2991044-0000		1	STOP SCREW	
060	2532544-0000		2	BUSHING	
070	3290330-0000		2	PIN	
080	3290331-0000		2	DAMPER	
090	3291156-0002		2	STOP	
100	2905199-0000		2	HOLDER	
110	3022269-0000		2	SCREW	
200	312105-0370		2	SCREW, M6S ISO 4017 M6X20 A4 80	
250	312105-0285		2	SCREW, M6S ISO 4017 M4X6 A4 70	
260	315105-0153		2	WASHER PLAIN, 6,4X12X1,5 A4 BRB	
280	315106-0136		2	WASHER PLAIN, M4 ISO7089-4-200 HV A4	
TPA 0200SQ (See drawing on page: 1-218)					
010	3018882-0000		1	SUPPORT	
020	2959957-0004		1	HOLDER	
040	3040850-0000		2	TENSION SPRING	
050	2966463-0000		1	SCREW	
060	2532544-0000		2	BUSHING	
070	3290330-0000		2	PIN	
080	3290331-0000		2	DAMPER	
090	3291156-0002		2	STOP	
100	2905199-0000		2	HOLDER	
110	3022269-0000		2	SCREW	
200	312105-0370		2	SCREW, M6S ISO 4017 M6X20 A4 80	
250	312105-0285		2	SCREW, M6S ISO 4017 M4X6 A4 70	
260	315105-0153		2	WASHER PLAIN, 6,4X12X1,5 A4 BRB	
280	315106-0136		2	WASHER PLAIN, M4 ISO7089-4-200 HV A4	
TPA 0250SQ (See drawing on page: 1-218)					
010	3018882-0000		1	SUPPORT	
020	2965109-0004		1	HOLDER	
040	3040850-0000		2	TENSION SPRING	
050	2966463-0000		1	SCREW	
060	2532544-0000		2	BUSHING	
070	3290330-0000		2	PIN	
080	3290331-0000		2	DAMPER	
090	3291156-0002		2	STOP	
100	2905199-0000		2	HOLDER	

Machine Type | Group Description | Used-In | Group Number | Page No

See previous drawings pages: 1-218, 1-220.

Pos	Part No	UN	Qty	Description	Page No
TPA 0250SQ (Cont'd) (See drawing on page: 1-218)					
110	3022269-0000		2	SCREW	
200	312105-0370		2	SCREW, M6S ISO 4017 M6X20 A4 80	
250	312105-0285		2	SCREW, M6S ISO 4017 M4X6 A4 70	
260	315105-0153		2	WASHER PLAIN, 6,4X12X1,5 A4 BRB	
280	315106-0136		2	WASHER PLAIN, M4 ISO7089-4-200 HV A4	
TPA 0330SQ (See drawing on page: 1-218)					
010	3018882-0000		1	SUPPORT	
020	3002890-0004		1	HOLDER	
040	3040850-0000		2	TENSION SPRING	
050	3003861-0000		1	SCREW	
060	2810394-0000		2	BUSHING	
070	3290330-0000		2	PIN	
080	3290331-0000		2	DAMPER	
090	3291156-0002		2	STOP	
100	2905199-0000		2	HOLDER	
110	3022269-0000		2	SCREW	
200	312105-0370		2	SCREW, M6S ISO 4017 M6X20 A4 80	
250	312105-0285		2	SCREW, M6S ISO 4017 M4X6 A4 70	
260	315105-0153		2	WASHER PLAIN, 6,4X12X1,5 A4 BRB	
280	315106-0136		2	WASHER PLAIN, M4 ISO7089-4-200 HV A4	
Common Parts					
030	3291155-0000		2	SPACER	
210	312105-0453		1	SCREW, M6S ISO 4017 M8X25 A4 80	
240	312145-0325		2	SCREW ISO 2009 MFS M5X10 A4	
270	315105-0165		1	FWAS080G0-0S, WASHER PLAIN	

Pos	Part No	UN	Qty	Description	Page No

VOLUME FLAP

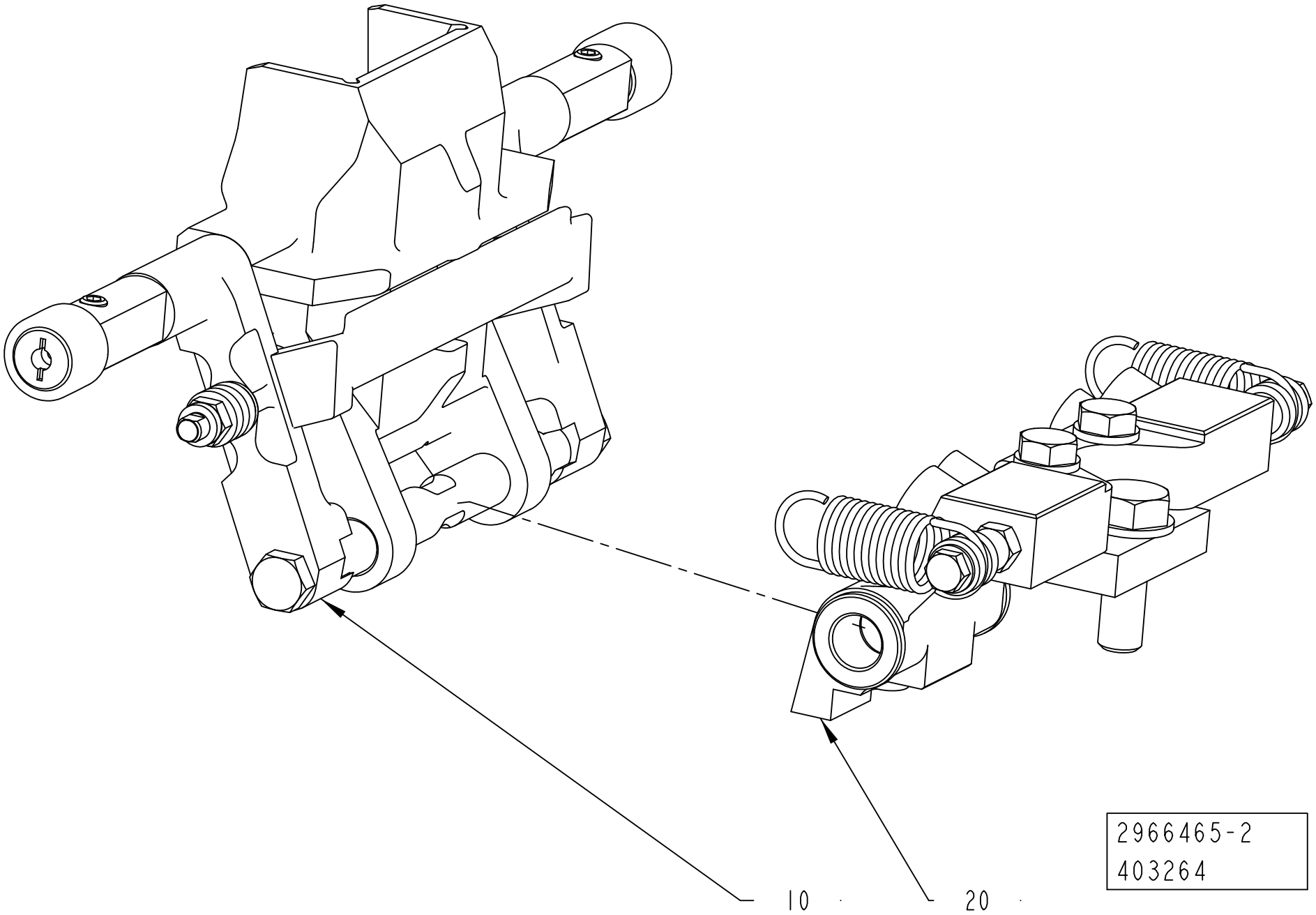

ECM: 633588 - 20140101
Group number: 2966465-0200
Assembly Drawing: 2966465-2_1_AA

Pos	Part No	UN	Qty	Description	Page No
-					
010	2869207-0200		1	VOLUME FLAP	**1-207, 1-209, 1-211, 1-213, 1-215, 1-217**
020	2966466-0200		1	SHOCK ABSORBER	**1-227**

Pos	Part No	UN	Qty	Description	Page No

Machine Type | Group Description | Used-In | Group Number | Page No

SHOCK ABSORBER

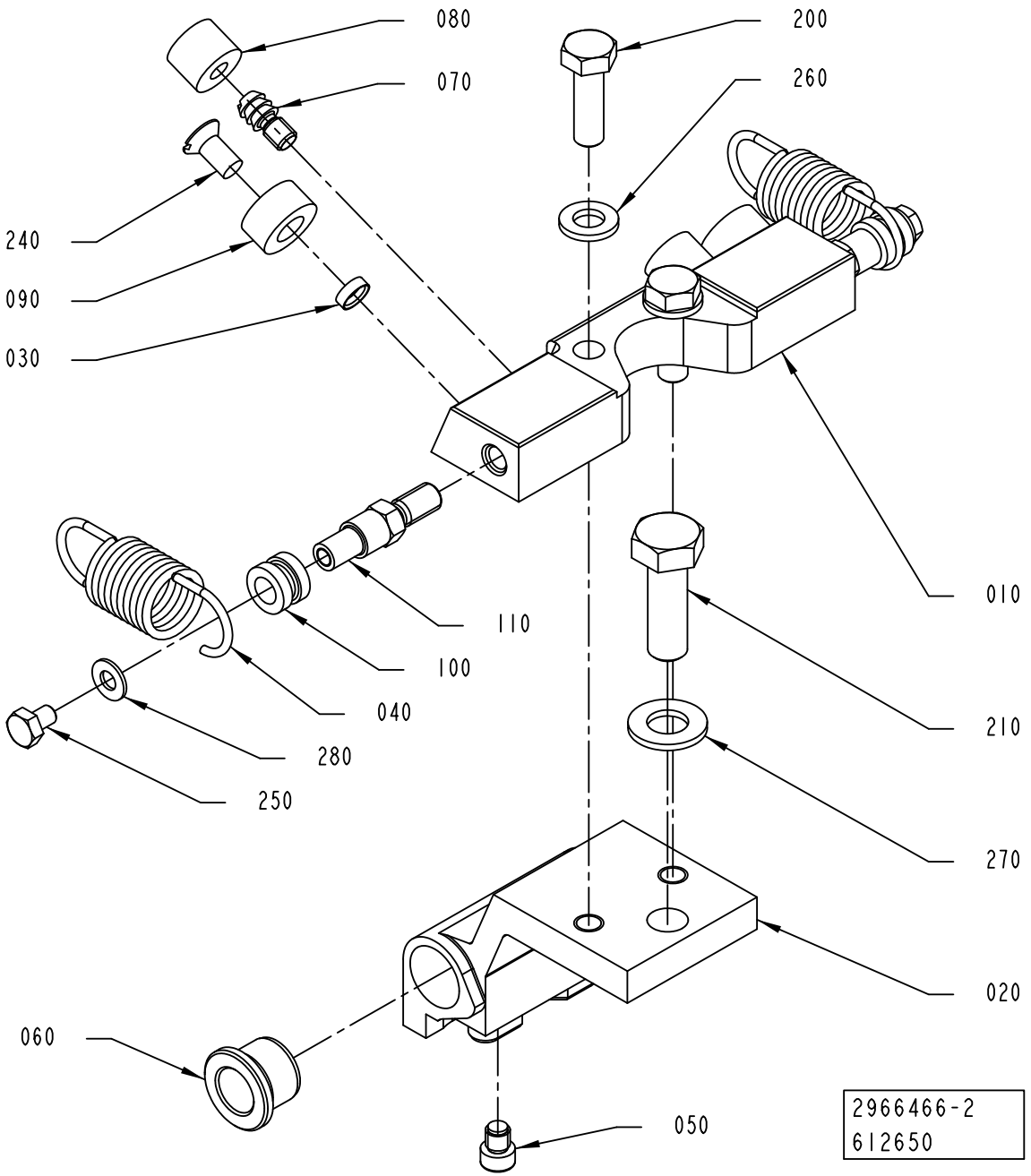

ECM: 615898 - 20131001
Group number: 2966466-0200
Assembly Drawing: 2966466-2_1_AB

Pos	Part No	UN	Qty	Description	Page No
TBA 0160S, TBA 0200S, TBA 0180S					
020	3022267-0002		1	HOLDER	
050	3022268-0000		1	SCREW	
060	2532544-0000		2	BUSHING	
090	3291156-0002		2	STOP	
TBA 0200E, TBA 0250E					
020	3097405-0002		1	HOLDER	
050	2966463-0000		1	SCREW	
060	3097403-0000		2	BUSHING	
090	3291156-0003		2	STOP	
TBA 0200SQ					
020	2976830-0002		1	HOLDER	
050	2966463-0000		1	SCREW	
060	2532544-0000		2	BUSHING	
090	3291156-0002		2	STOP	
TBA 0375S					
020	3067247-0002		1	HOLDER	
050	2966463-0000		1	SCREW	
060	2532544-0000		2	BUSHING	
090	3291156-0002		2	STOP	
TPA 0200SQ					
020	2959957-0002		1	HOLDER	
050	2966463-0000		1	SCREW	
060	2532544-0000		2	BUSHING	
090	3291156-0002		2	STOP	
TPA 0250SQ					
020	2965109-0002		1	HOLDER	
050	2966463-0000		1	SCREW	
060	2532544-0000		2	BUSHING	
090	3291156-0002		2	STOP	
TPA 0330SQ					
020	3002890-0002		1	HOLDER	
050	3003861-0000		1	SCREW	
060	2810394-0000		2	BUSHING	
090	3291156-0002		2	STOP	
Common Parts					
010	3018882-0000		1	SUPPORT	
030	3291155-0000		2	SPACER	
040	3040850-0000		2	TENSION SPRING	
070	3290330-0000		2	PIN	
080	3290331-0000		2	DAMPER	
100	2905199-0000		2	HOLDER	
110	3022269-0000		2	SCREW	
200	312105-0370		2	SCREW, M6S ISO 4017 M6X20 A4 80	
210	312105-0453		1	SCREW, M6S ISO 4017 M8X25 A4 80	
240	312145-0325		2	SCREW ISO 2009 MFS M5X10 A4	
250	312105-0285		2	SCREW, M6S ISO 4017 M4X6 A4 70	
260	315105-0153		2	WASHER PLAIN, 6,4X12X1,5 A4 BRB	
270	315105-0165		1	FWAS080G0-0S, WASHER PLAIN	
280	315106-0136		2	WASHER PLAIN, M4 ISO7089-4-200 HV A4	

Machine Type | Group Description | Used-In | Group Number | Page No

VOLUME FLAP

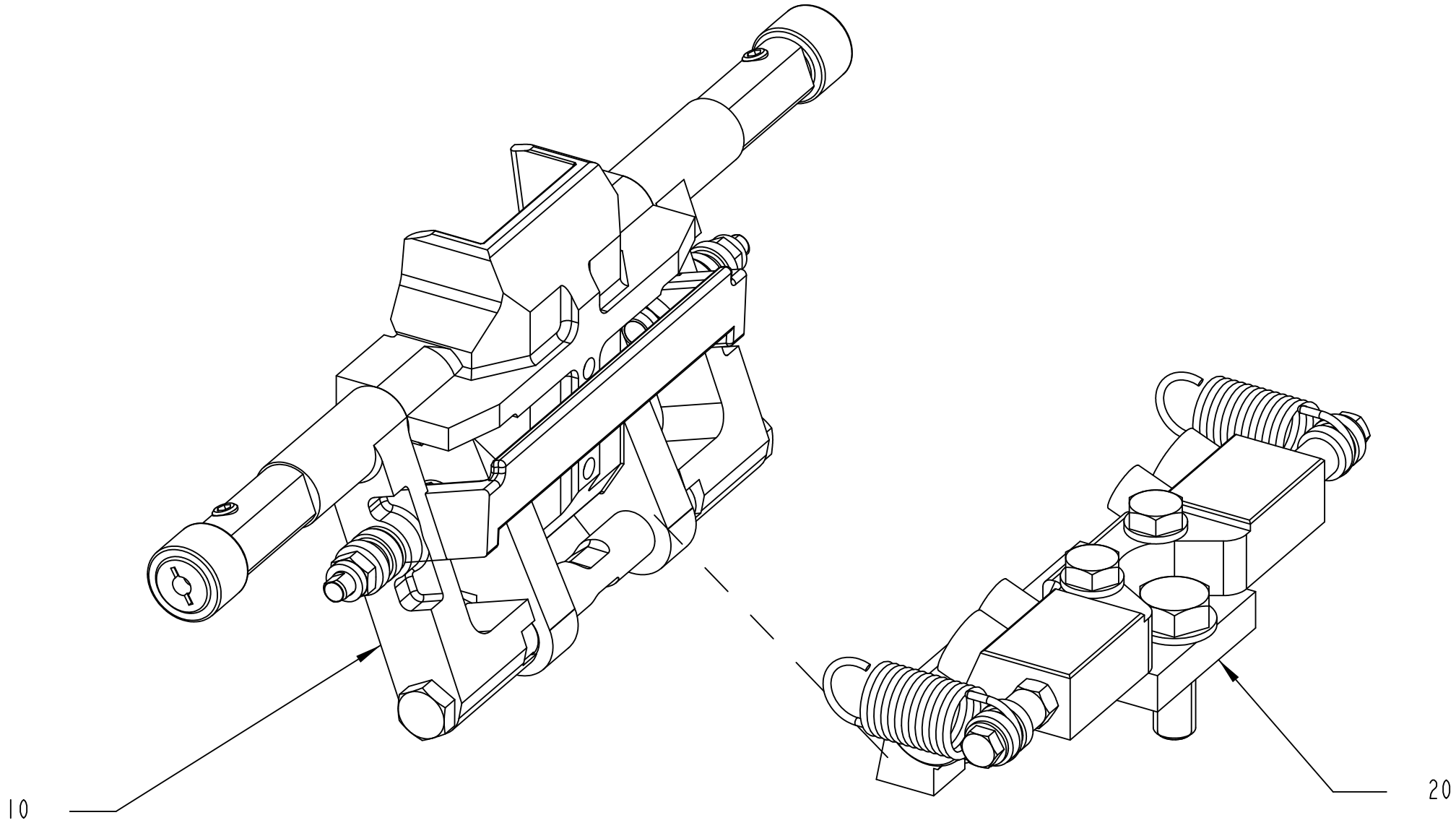

2907729-2
403264

ECM: 633589 - 20140101
Group number: 2907729-0200
Assembly Drawing: 2907729-2_1_AA

Pos	Part No	UN	Qty	Description	Page No
TPA 0330SQ					
010	2907728-0200		1	VOLUME FLAP	**1-231, 1-233, 1-235, 1-237**
020	2966464-0200		1	SHOCK ABSORBER	**1-239**
TBA 0160S					
010	2869207-0200		1	VOLUME FLAP	**1-207, 1-209, 1-211, 1-213, 1-215, 1-217**
020	2966464-0200		1	SHOCK ABSORBER	**1-239**
TBA 0180S					
010	2869207-0200		1	VOLUME FLAP	**1-207, 1-209, 1-211, 1-213, 1-215, 1-217**
020	2966464-0200		1	SHOCK ABSORBER	**1-239**
TBA 0200E					
010	2907728-0200		1	VOLUME FLAP	**1-231, 1-233, 1-235, 1-237**
020	2966464-0200		1	SHOCK ABSORBER	**1-239**
TBA 0200S HI					
010	2869207-0200		1	VOLUME FLAP	**1-207, 1-209, 1-211, 1-213, 1-215, 1-217**
020	2966464-0200		1	SHOCK ABSORBER	**1-239**
TBA 0200S NOHI					
010	2869207-0200		1	VOLUME FLAP	**1-207, 1-209, 1-211, 1-213, 1-215, 1-217**
020	2966464-0200		1	SHOCK ABSORBER	**1-239**
TBA 0200SQ HI					
010	2869207-0200		1	VOLUME FLAP	**1-207, 1-209, 1-211, 1-213, 1-215, 1-217**
020	2966464-0200		1	SHOCK ABSORBER	**1-239**
TBA 0200SQ NOHI					
010	2869207-0200		1	VOLUME FLAP	**1-207, 1-209, 1-211, 1-213, 1-215, 1-217**
020	2966464-0200		1	SHOCK ABSORBER	**1-239**
TBA 0250E HI					
010	2907728-0200		1	VOLUME FLAP	**1-231, 1-233, 1-235, 1-237**
020	2966464-0200		1	SHOCK ABSORBER	**1-239**
TBA 0250E NOHI					
010	2907728-0200		1	VOLUME FLAP	**1-231, 1-233, 1-235, 1-237**
020	2966464-0200		1	SHOCK ABSORBER	**1-239**
TBA 0375S					
010	2869207-0200		1	VOLUME FLAP	**1-207, 1-209, 1-211, 1-213, 1-215, 1-217**
020	2966464-0200		1	SHOCK ABSORBER	**1-239**
TPA 0125SQ					
010	2907728-0200		1	VOLUME FLAP	**1-231, 1-233, 1-235, 1-237**
020	2869206-0200		1	SHOCK ABSORBER	**1-219, 1-221, 1-223**
TPA 0200SQ					
010	2907728-0200		1	VOLUME FLAP	**1-231, 1-233, 1-235, 1-237**
020	2966464-0200		1	SHOCK ABSORBER	**1-239**
TPA 0250SQ					
010	2907728-0200		1	VOLUME FLAP	**1-231, 1-233, 1-235, 1-237**
020	2966464-0200		1	SHOCK ABSORBER	**1-239**

Pos	Part No	UN	Qty	Description	Page No

Machine Type	Group Description	Used-In	Group Number	Page No

VOLUME FLAP

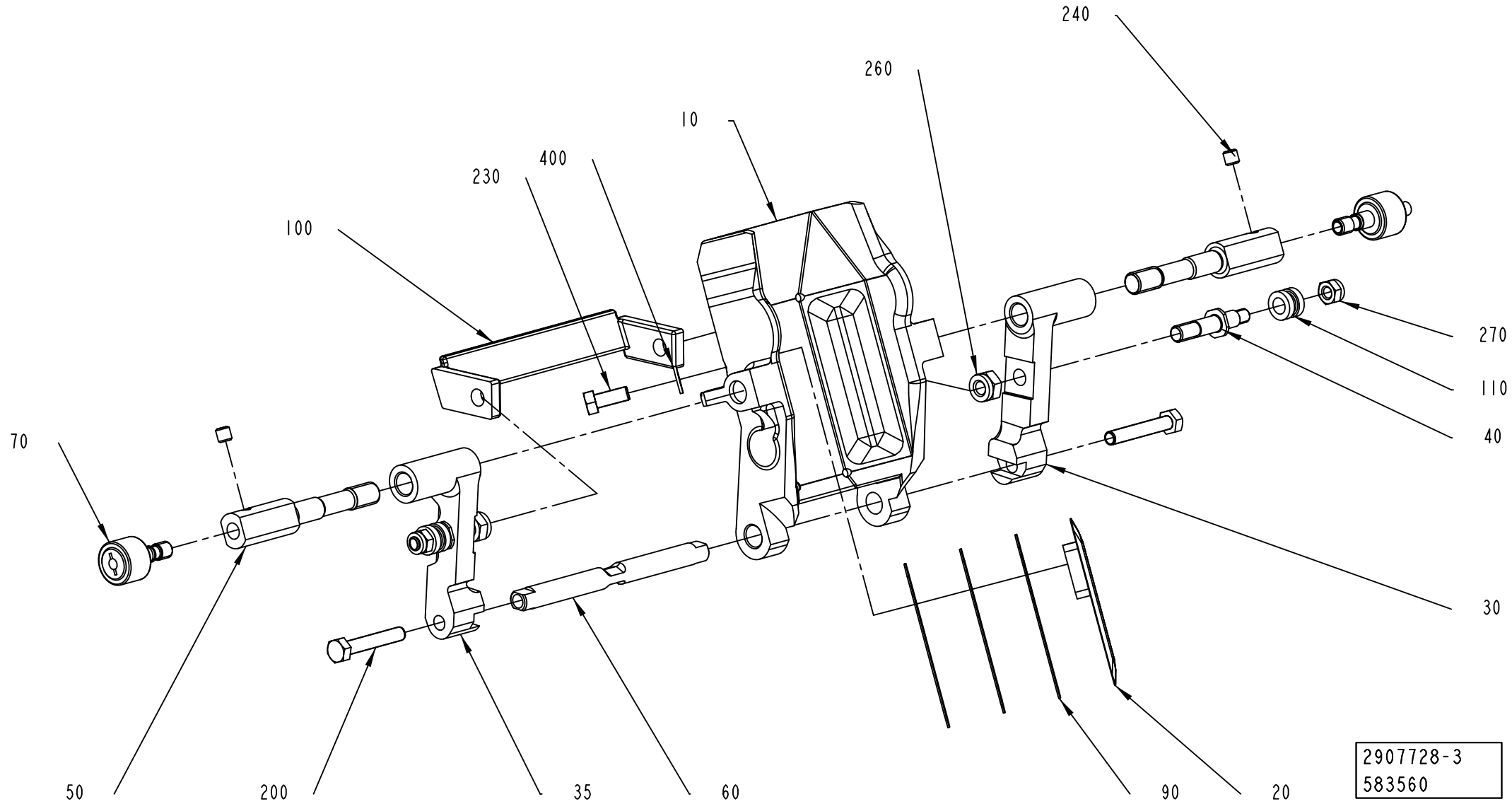
240
260
10
400
230
100
270
110
40
70
30
50
200
35
60
90
20
2907728-3
583560

ECM: 646186 - 20140401
Group number: 2907728-0200
Assembly Drawing: 2907728-3_1_AB

This list covers pages from 1-230 to 1-237

Pos	Part No	UN	Qty	Description	Page No
TBA 0200E (See drawing on page: 1-236)					
010	3122374-0000		1	VOLUME FLAP	
025	3123029-0000		1	VOLUME BULGE	
030	3097409-0000		1	CARRIER	
035	3097580-0000		1	CARRIER	
050	2976920-0000		2	SHAFT	
060	3003860-0000		1	SHAFT	
100	3097581-0000		1	STOP	
200	312109-0335		2	SCREW, M6S ISO 4017 M5X30 A4 80	
230	312105-0287		2	SCREW, M6S ISO 4017 M4X8 A4 70	
400	315105-0136		2	WASHER PLAIN, 4,3X8X0,8 A4 BRB	
TBA 0250E HI (See drawing on page: 1-236)					
010	3134285-0000		1	VOLUME FLAP	
025	3106685-0000		1	VOLUME BULGE	
030	3097409-0000		1	CARRIER	
035	3097580-0000		1	CARRIER	
050	2976923-0000		2	SHAFT	
060	3003860-0000		1	SHAFT	
100	3097581-0000		1	STOP	
200	312109-0335		2	SCREW, M6S ISO 4017 M5X30 A4 80	
230	312105-0287		2	SCREW, M6S ISO 4017 M4X8 A4 70	
400	315105-0136		2	WASHER PLAIN, 4,3X8X0,8 A4 BRB	
TBA 0250E NOHI (See drawing on page: 1-236)					
010	3134285-0000		1	VOLUME FLAP	
025	3190796-0000		1	VOLUME BULGE	
030	3097409-0000		1	CARRIER	
035	3097580-0000		1	CARRIER	
050	2976923-0000		2	SHAFT	
060	3003860-0000		1	SHAFT	
100	3097581-0000		1	STOP	
200	312109-0335		2	SCREW, M6S ISO 4017 M5X30 A4 80	
230	312105-0287		2	SCREW, M6S ISO 4017 M4X8 A4 70	
400	315105-0136		2	WASHER PLAIN, 4,3X8X0,8 A4 BRB	
TPA 0125SQ (See drawing on page: 1-232)					
010	2907727-0000		1	VOLUME FLAP	
020	2971940-0000		1	VOLUME BULGE	
025	2979711-0000		2	VOLUME BULGE	
030	2906024-0000		1	CARRIER	
035	2906023-0000		1	CARRIER	
050	2921571-0000		2	SHAFT	
060	2906025-0000		1	SHAFT	
090	2908756-0000		4	VOLUME SHIM	
100	2992941-0000		1	STOP	
200	312105-0379		2	SCREW, M6S ISO 4014 M6X45 A4 80	
230	312155-0287		6	SCREW DIN 7991 MF6S M4X8 A4 70	
TPA 0200SQ (See drawing on page: 1-234)					
010	2950908-0000		1	VOLUME FLAP	
020	3327331-0000		2	VOLUME BULGE	
030	3042528-0000		2	CARRIER	
050	2964541-0000		2	SHAFT	
060	2916179-0000		1	SHAFT	
090	3327332-0000		4	VOLUME SHIM	
100	3042521-0000		1	STOP	
200	312109-0374		2	SCREW, M6S ISO 4017 M6X30 A4 80	
230	312155-0287		4	SCREW DIN 7991 MF6S M4X8 A4 70	
TPA 0250SQ (See drawing on page: 1-234)					
010	2964391-0000		1	VOLUME FLAP	
020	1350959-0000		2	VOLUME BULGE P48 250	
030	3042528-0000		2	CARRIER	
050	2964542-0000		2	SHAFT	
060	2916179-0000		1	SHAFT	
090	3019317-0000		4	SHIM	
100	3042521-0000		1	STOP	
200	312109-0374		2	SCREW, M6S ISO 4017 M6X30 A4 80	
230	312155-0287		4	SCREW DIN 7991 MF6S M4X8 A4 70	
TPA 0330SQ (See drawing on page: 1-230)					
010	3003477-0000		1	VOLUME FLAP	
020	3003862-0000		2	VOLUME BULGE	
030	3002894-0000		1	CARRIER	
035	3002891-0000		1	CARRIER	
050	3002893-0000		2	SHAFT	
060	3003860-0000		1	SHAFT	
090	3003863-0000		6	VOLUME SHIM	
100	3007781-0000		1	STOP	
200	312109-0335		2	SCREW, M6S ISO 4017 M5X30 A4 80	
230	312105-0327		2	"SCREW, M6S ISO 4017 M5X12 A4 80"	
400	315105-0146		2	WASHER PLAIN, 5,3X10X1 A4 BRB	
Common Parts					
040	3022273-0000		2	SCREW	
070	2914730-0000		2	ROLLER	
110	2905199-0000		2	HOLDER	
240	312318-0320		2	SET SCREW, CUP END ISO4029 M5X5 A4	
260	312812-0316		2	HEXAGON NUT, NY-LOCK M6 A4 80	
270	312812-0314		2	HEXAGON NUT, NY-LOCK M5 A4 80	

Machine Type | Group Description | Used-In | Group Number | Page No

VOLUME FLAP

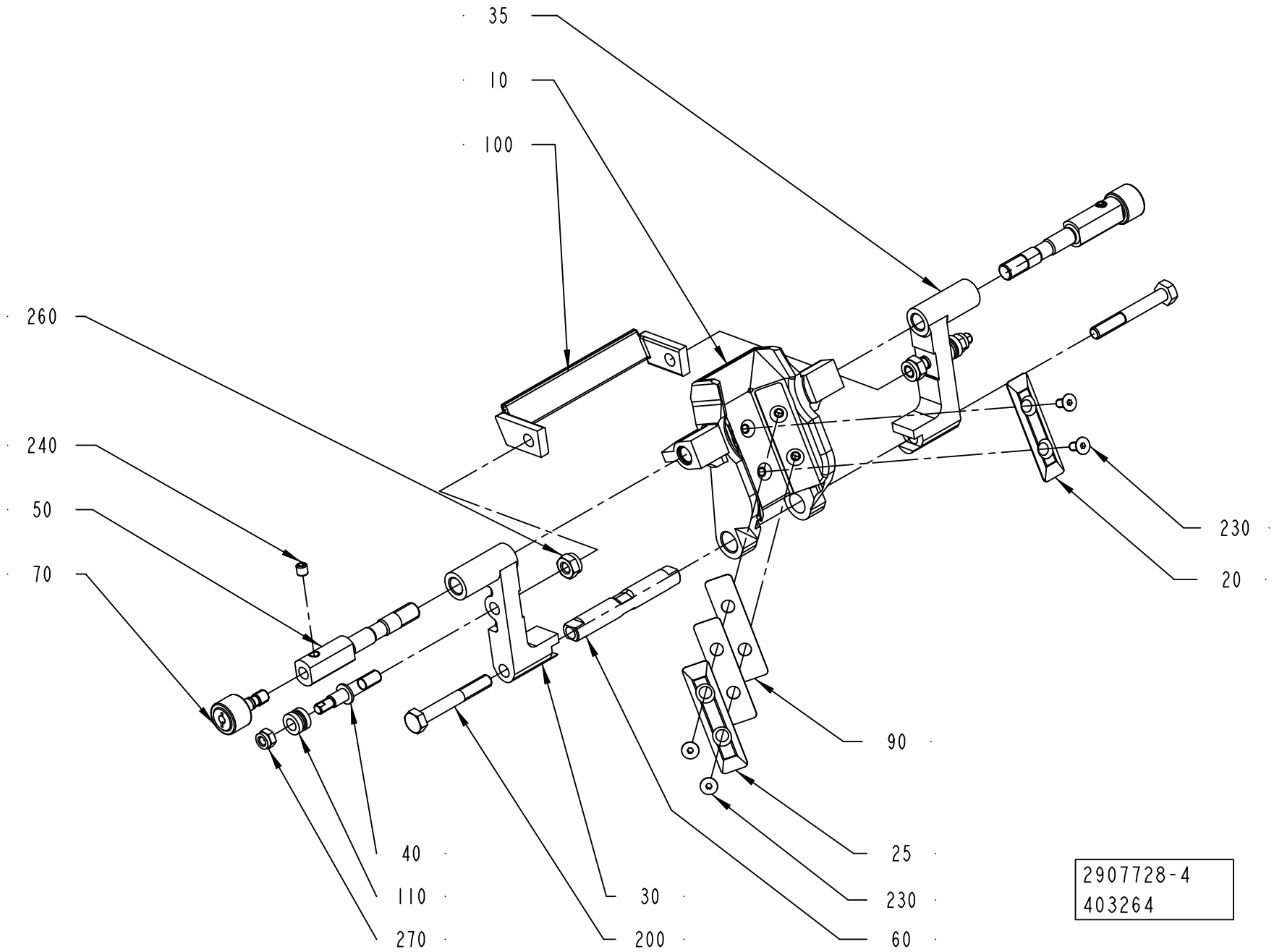
35
10
100
260
240
50
70
230
20
90
25
230
60
40
110
270
30
200
2907728-4
403264

ECM: 646186 - 20140401
Group number: 2907728-0200
Assembly Drawing: 2907728-4_1_AA

This list covers pages from 1-230 to 1-237

Pos	Part No	UN	Qty	Description	Page No
TBA 0200E (See drawing on page: 1-236)					
010	3122374-0000		1	VOLUME FLAP	
025	3123029-0000		1	VOLUME BULGE	
030	3097409-0000		1	CARRIER	
035	3097580-0000		1	CARRIER	
050	2976920-0000		2	SHAFT	
060	3003860-0000		1	SHAFT	
100	3097581-0000		1	STOP	
200	312109-0335		2	SCREW, M6S ISO 4017 M5X30 A4 80	
230	312105-0287		2	SCREW, M6S ISO 4017 M4X8 A4 70	
400	315105-0136		2	WASHER PLAIN, 4,3X8X0,8 A4 BRB	
TBA 0250E HI (See drawing on page: 1-236)					
010	3134285-0000		1	VOLUME FLAP	
025	3106685-0000		1	VOLUME BULGE	
030	3097409-0000		1	CARRIER	
035	3097580-0000		1	CARRIER	
050	2976923-0000		2	SHAFT	
060	3003860-0000		1	SHAFT	
100	3097581-0000		1	STOP	
200	312109-0335		2	SCREW, M6S ISO 4017 M5X30 A4 80	
230	312105-0287		2	SCREW, M6S ISO 4017 M4X8 A4 70	
400	315105-0136		2	WASHER PLAIN, 4,3X8X0,8 A4 BRB	
TBA 0250E NOHI (See drawing on page: 1-236)					
010	3134285-0000		1	VOLUME FLAP	
025	3190796-0000		1	VOLUME BULGE	
030	3097409-0000		1	CARRIER	
035	3097580-0000		1	CARRIER	
050	2976923-0000		2	SHAFT	
060	3003860-0000		1	SHAFT	
100	3097581-0000		1	STOP	
200	312109-0335		2	SCREW, M6S ISO 4017 M5X30 A4 80	
230	312105-0287		2	SCREW, M6S ISO 4017 M4X8 A4 70	
400	315105-0136		2	WASHER PLAIN, 4,3X8X0,8 A4 BRB	
TPA 0125SQ (See drawing on page: 1-232)					
010	2907727-0000		1	VOLUME FLAP	
020	2971940-0000		1	VOLUME BULGE	
025	2979711-0000		2	VOLUME BULGE	
030	2906024-0000		1	CARRIER	
035	2906023-0000		1	CARRIER	
050	2921571-0000		2	SHAFT	
060	2906025-0000		1	SHAFT	
090	2908756-0000		4	VOLUME SHIM	
100	2992941-0000		1	STOP	
200	312105-0379		2	SCREW, M6S ISO 4014 M6X45 A4 80	
230	312155-0287		6	SCREW DIN 7991 MF6S M4X8 A4 70	
TPA 0200SQ (See drawing on page: 1-234)					
010	2950908-0000		1	VOLUME FLAP	
020	3327331-0000		2	VOLUME BULGE	
030	3042528-0000		2	CARRIER	
050	2964541-0000		2	SHAFT	
060	2916179-0000		1	SHAFT	
090	3327332-0000		4	VOLUME SHIM	
100	3042521-0000		1	STOP	
200	312109-0374		2	SCREW, M6S ISO 4017 M6X30 A4 80	
230	312155-0287		4	SCREW DIN 7991 MF6S M4X8 A4 70	
TPA 0250SQ (See drawing on page: 1-234)					
010	2964391-0000		1	VOLUME FLAP	
020	1350959-0000		2	VOLUME BULGE P48 250	
030	3042528-0000		2	CARRIER	
050	2964542-0000		2	SHAFT	
060	2916179-0000		1	SHAFT	
090	3019317-0000		4	SHIM	
100	3042521-0000		1	STOP	
200	312109-0374		2	SCREW, M6S ISO 4017 M6X30 A4 80	
230	312155-0287		4	SCREW DIN 7991 MF6S M4X8 A4 70	
TPA 0330SQ (See drawing on page: 1-230)					
010	3003477-0000		1	VOLUME FLAP	
020	3003862-0000		2	VOLUME BULGE	
030	3002894-0000		1	CARRIER	
035	3002891-0000		1	CARRIER	
050	3002893-0000		2	SHAFT	
060	3003860-0000		1	SHAFT	
090	3003863-0000		6	VOLUME SHIM	
100	3007781-0000		1	STOP	
200	312109-0335		2	SCREW, M6S ISO 4017 M5X30 A4 80	
230	312105-0327		2	"SCREW, M6S ISO 4017 M5X12 A4 80"	
400	315105-0146		2	WASHER PLAIN, 5,3X10X1 A4 BRB	
Common Parts					
040	3022273-0000		2	SCREW	
070	2914730-0000		2	ROLLER	
110	2905199-0000		2	HOLDER	
240	312318-0320		2	SET SCREW, CUP END ISO4029 M5X5 A4	
260	312812-0316		2	HEXAGON NUT, NY-LOCK M6 A4 80	
270	312812-0314		2	HEXAGON NUT, NY-LOCK M5 A4 80	

Machine Type | Group Description | Used-In | Group Number | Page No

VOLUME FLAP

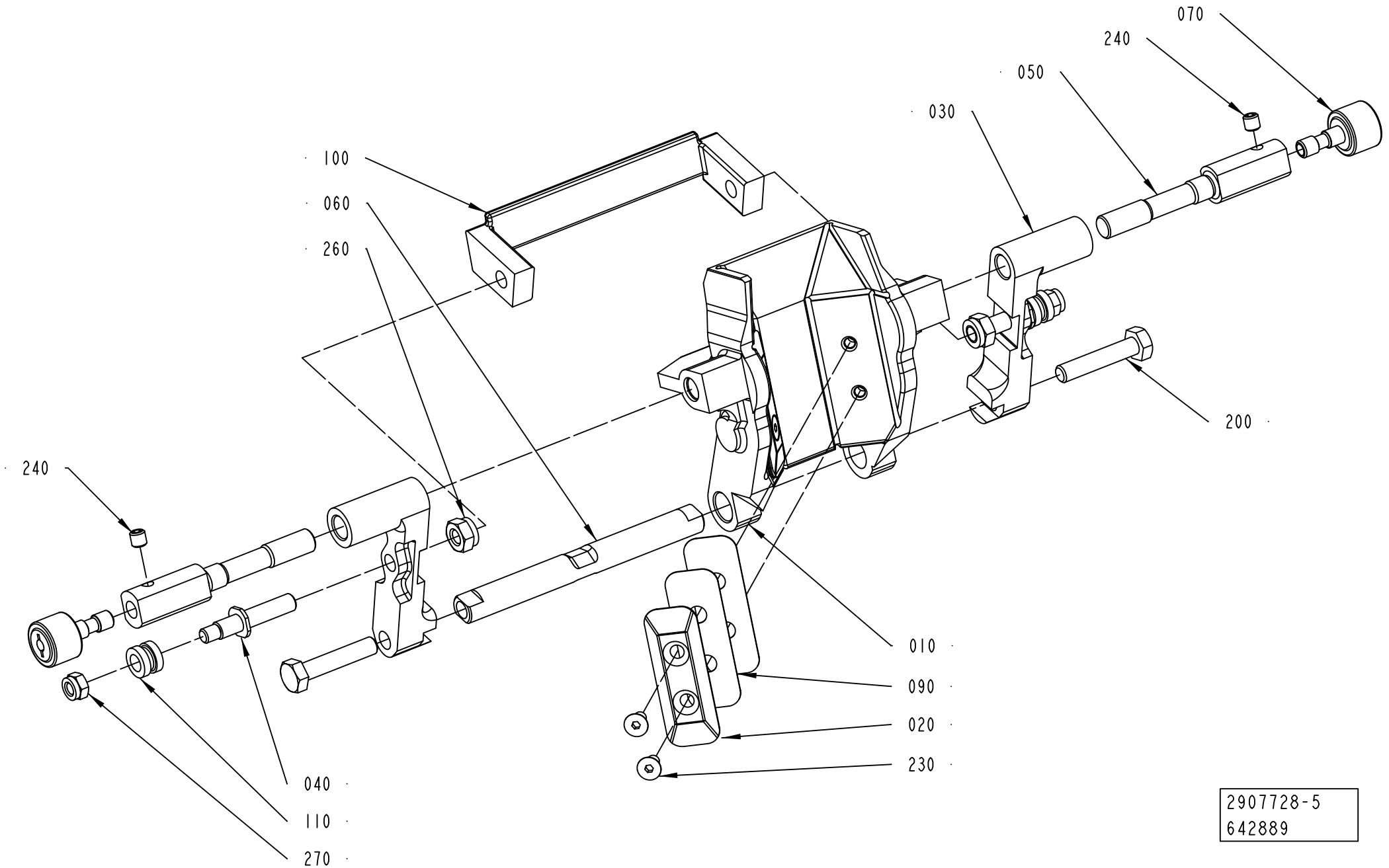
070
240
050
030
100
060
260
200
240
010
090
020
230
040
110
270
2907728-5
642889

ECM: 646186 - 20140401
Group number: 2907728-0200
Assembly Drawing: 2907728-5_1_AB

This list covers pages from 1-230 to 1-237

Pos	Part No	UN	Qty	Description	Page No
TBA 0200E (See drawing on page: 1-236)					
010	3122374-0000		1	VOLUME FLAP	
025	3123029-0000		1	VOLUME BULGE	
030	3097409-0000		1	CARRIER	
035	3097580-0000		1	CARRIER	
050	2976920-0000		2	SHAFT	
060	3003860-0000		1	SHAFT	
100	3097581-0000		1	STOP	
200	312109-0335		2	SCREW, M6S ISO 4017 M5X30 A4 80	
230	312105-0287		2	SCREW, M6S ISO 4017 M4X8 A4 70	
400	315105-0136		2	WASHER PLAIN, 4,3X8X0,8 A4 BRB	
TBA 0250E HI (See drawing on page: 1-236)					
010	3134285-0000		1	VOLUME FLAP	
025	3106685-0000		1	VOLUME BULGE	
030	3097409-0000		1	CARRIER	
035	3097580-0000		1	CARRIER	
050	2976923-0000		2	SHAFT	
060	3003860-0000		1	SHAFT	
100	3097581-0000		1	STOP	
200	312109-0335		2	SCREW, M6S ISO 4017 M5X30 A4 80	
230	312105-0287		2	SCREW, M6S ISO 4017 M4X8 A4 70	
400	315105-0136		2	WASHER PLAIN, 4,3X8X0,8 A4 BRB	
TBA 0250E NOHI (See drawing on page: 1-236)					
010	3134285-0000		1	VOLUME FLAP	
025	3190796-0000		1	VOLUME BULGE	
030	3097409-0000		1	CARRIER	
035	3097580-0000		1	CARRIER	
050	2976923-0000		2	SHAFT	
060	3003860-0000		1	SHAFT	
100	3097581-0000		1	STOP	
200	312109-0335		2	SCREW, M6S ISO 4017 M5X30 A4 80	
230	312105-0287		2	SCREW, M6S ISO 4017 M4X8 A4 70	
400	315105-0136		2	WASHER PLAIN, 4,3X8X0,8 A4 BRB	
TPA 0125SQ (See drawing on page: 1-232)					
010	2907727-0000		1	VOLUME FLAP	
020	2971940-0000		1	VOLUME BULGE	
025	2979711-0000		2	VOLUME BULGE	
030	2906024-0000		1	CARRIER	
035	2906023-0000		1	CARRIER	
050	2921571-0000		2	SHAFT	
060	2906025-0000		1	SHAFT	
090	2908756-0000		4	VOLUME SHIM	
100	2992941-0000		1	STOP	
200	312105-0379		2	SCREW, M6S ISO 4014 M6X45 A4 80	
230	312155-0287		6	SCREW DIN 7991 MF6S M4X8 A4 70	
TPA 0200SQ (See drawing on page: 1-234)					
010	2950908-0000		1	VOLUME FLAP	
020	3327331-0000		2	VOLUME BULGE	
030	3042528-0000		2	CARRIER	
050	2964541-0000		2	SHAFT	
060	2916179-0000		1	SHAFT	
090	3327332-0000		4	VOLUME SHIM	
100	3042521-0000		1	STOP	
200	312109-0374		2	SCREW, M6S ISO 4017 M6X30 A4 80	
230	312155-0287		4	SCREW DIN 7991 MF6S M4X8 A4 70	
TPA 0250SQ (See drawing on page: 1-234)					
010	2964391-0000		1	VOLUME FLAP	
020	1350959-0000		2	VOLUME BULGE P48 250	
030	3042528-0000		2	CARRIER	
050	2964542-0000		2	SHAFT	
060	2916179-0000		1	SHAFT	
090	3019317-0000		4	SHIM	
100	3042521-0000		1	STOP	
200	312109-0374		2	SCREW, M6S ISO 4017 M6X30 A4 80	
230	312155-0287		4	SCREW DIN 7991 MF6S M4X8 A4 70	
TPA 0330SQ (See drawing on page: 1-230)					
010	3003477-0000		1	VOLUME FLAP	
020	3003862-0000		2	VOLUME BULGE	
030	3002894-0000		1	CARRIER	
035	3002891-0000		1	CARRIER	
050	3002893-0000		2	SHAFT	
060	3003860-0000		1	SHAFT	
090	3003863-0000		6	VOLUME SHIM	
100	3007781-0000		1	STOP	
200	312109-0335		2	SCREW, M6S ISO 4017 M5X30 A4 80	
230	312105-0327		2	"SCREW, M6S ISO 4017 M5X12 A4 80"	
400	315105-0146		2	WASHER PLAIN, 5,3X10X1 A4 BRB	
Common Parts					
040	3022273-0000		2	SCREW	
070	2914730-0000		2	ROLLER	
110	2905199-0000		2	HOLDER	
240	312318-0320		2	SET SCREW, CUP END ISO4029 M5X5 A4	
260	312812-0316		2	HEXAGON NUT, NY-LOCK M6 A4 80	
270	312812-0314		2	HEXAGON NUT, NY-LOCK M5 A4 80	

Machine Type | Group Description | Used-In | Group Number | Page No

VOLUME FLAP

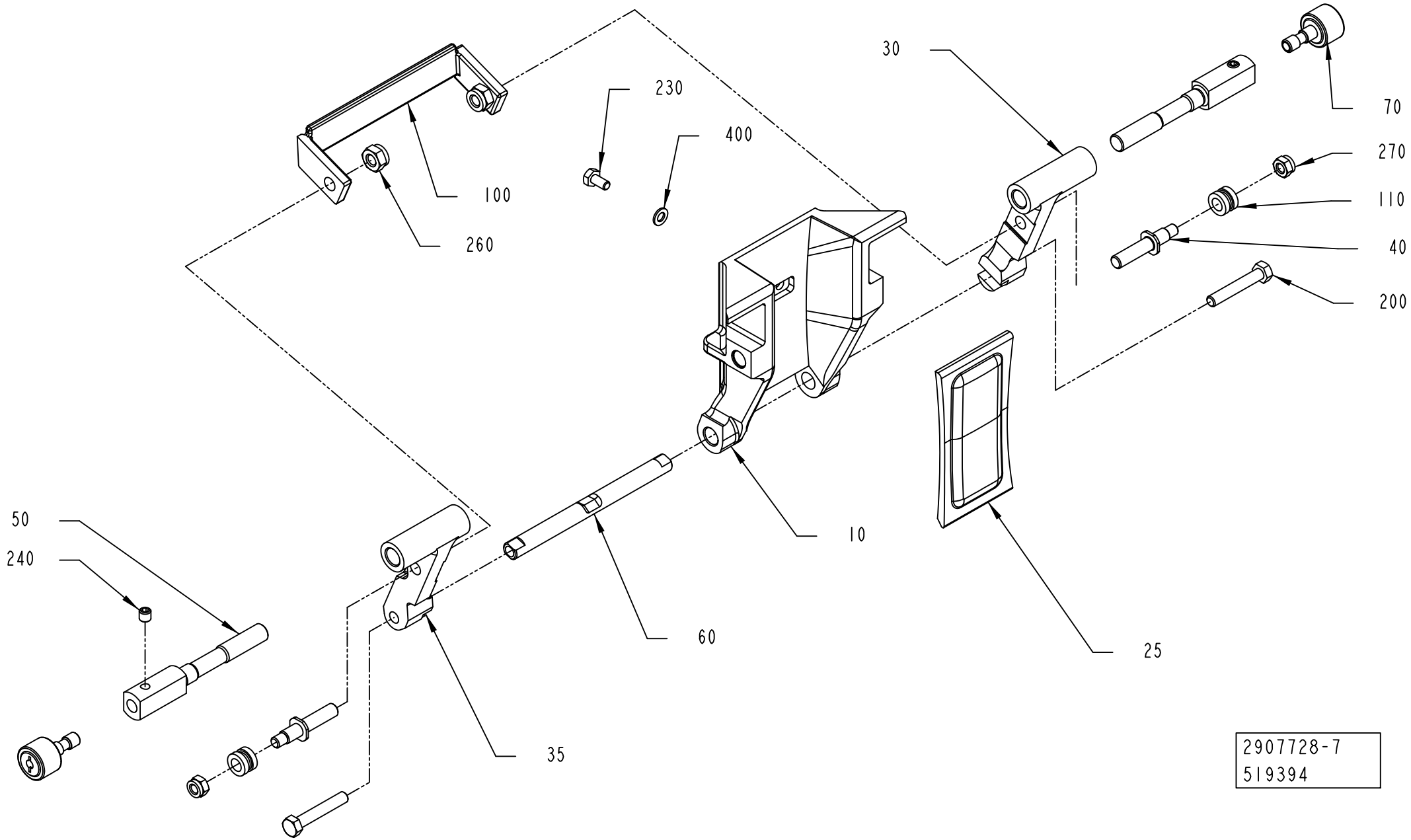
30
70
230
400
270
110
100
260
40
200
10
50
240
60
25
35
2907728-7
519394

ECM: 646186 - 20140401
Group number: 2907728-0200
Assembly Drawing: 2907728-7_1_AB

This list covers pages from 1-230 to 1-237

Pos	Part No	UN	Qty	Description	Page No
TBA 0200E (See drawing on page: 1-236)					
010	3122374-0000		1	VOLUME FLAP	
025	3123029-0000		1	VOLUME BULGE	
030	3097409-0000		1	CARRIER	
035	3097580-0000		1	CARRIER	
050	2976920-0000		2	SHAFT	
060	3003860-0000		1	SHAFT	
100	3097581-0000		1	STOP	
200	312109-0335		2	SCREW, M6S ISO 4017 M5X30 A4 80	
230	312105-0287		2	SCREW, M6S ISO 4017 M4X8 A4 70	
400	315105-0136		2	WASHER PLAIN, 4,3X8X0,8 A4 BRB	
TBA 0250E HI (See drawing on page: 1-236)					
010	3134285-0000		1	VOLUME FLAP	
025	3106685-0000		1	VOLUME BULGE	
030	3097409-0000		1	CARRIER	
035	3097580-0000		1	CARRIER	
050	2976923-0000		2	SHAFT	
060	3003860-0000		1	SHAFT	
100	3097581-0000		1	STOP	
200	312109-0335		2	SCREW, M6S ISO 4017 M5X30 A4 80	
230	312105-0287		2	SCREW, M6S ISO 4017 M4X8 A4 70	
400	315105-0136		2	WASHER PLAIN, 4,3X8X0,8 A4 BRB	
TBA 0250E NOHI (See drawing on page: 1-236)					
010	3134285-0000		1	VOLUME FLAP	
025	3190796-0000		1	VOLUME BULGE	
030	3097409-0000		1	CARRIER	
035	3097580-0000		1	CARRIER	
050	2976923-0000		2	SHAFT	
060	3003860-0000		1	SHAFT	
100	3097581-0000		1	STOP	
200	312109-0335		2	SCREW, M6S ISO 4017 M5X30 A4 80	
230	312105-0287		2	SCREW, M6S ISO 4017 M4X8 A4 70	
400	315105-0136		2	WASHER PLAIN, 4,3X8X0,8 A4 BRB	
TPA 0125SQ (See drawing on page: 1-232)					
010	2907727-0000		1	VOLUME FLAP	
020	2971940-0000		1	VOLUME BULGE	
025	2979711-0000		2	VOLUME BULGE	
030	2906024-0000		1	CARRIER	
035	2906023-0000		1	CARRIER	
050	2921571-0000		2	SHAFT	
060	2906025-0000		1	SHAFT	
090	2908756-0000		4	VOLUME SHIM	
100	2992941-0000		1	STOP	
200	312105-0379		2	SCREW, M6S ISO 4014 M6X45 A4 80	
230	312155-0287		6	SCREW DIN 7991 MF6S M4X8 A4 70	
TPA 0200SQ (See drawing on page: 1-234)					
010	2950908-0000		1	VOLUME FLAP	
020	3327331-0000		2	VOLUME BULGE	
030	3042528-0000		2	CARRIER	
050	2964541-0000		2	SHAFT	
060	2916179-0000		1	SHAFT	
090	3327332-0000		4	VOLUME SHIM	
100	3042521-0000		1	STOP	
200	312109-0374		2	SCREW, M6S ISO 4017 M6X30 A4 80	
230	312155-0287		4	SCREW DIN 7991 MF6S M4X8 A4 70	
TPA 0250SQ (See drawing on page: 1-234)					
010	2964391-0000		1	VOLUME FLAP	
020	1350959-0000		2	VOLUME BULGE P48 250	
030	3042528-0000		2	CARRIER	
050	2964542-0000		2	SHAFT	
060	2916179-0000		1	SHAFT	
090	3019317-0000		4	SHIM	
100	3042521-0000		1	STOP	
200	312109-0374		2	SCREW, M6S ISO 4017 M6X30 A4 80	
230	312155-0287		4	SCREW DIN 7991 MF6S M4X8 A4 70	
TPA 0330SQ (See drawing on page: 1-230)					
010	3003477-0000		1	VOLUME FLAP	
020	3003862-0000		2	VOLUME BULGE	
030	3002894-0000		1	CARRIER	
035	3002891-0000		1	CARRIER	
050	3002893-0000		2	SHAFT	
060	3003860-0000		1	SHAFT	
090	3003863-0000		6	VOLUME SHIM	
100	3007781-0000		1	STOP	
200	312109-0335		2	SCREW, M6S ISO 4017 M5X30 A4 80	
230	312105-0327		2	"SCREW, M6S ISO 4017 M5X12 A4 80"	
400	315105-0146		2	WASHER PLAIN, 5,3X10X1 A4 BRB	
Common Parts					
040	3022273-0000		2	SCREW	
070	2914730-0000		2	ROLLER	
110	2905199-0000		2	HOLDER	
240	312318-0320		2	SET SCREW, CUP END ISO4029 M5X5 A4	
260	312812-0316		2	HEXAGON NUT, NY-LOCK M6 A4 80	
270	312812-0314		2	HEXAGON NUT, NY-LOCK M5 A4 80	

Machine Type | Group Description | Used-In | Group Number | Page No

SHOCK ABSORBER

Drawing file: 2966464-2_1_AB.hpgl

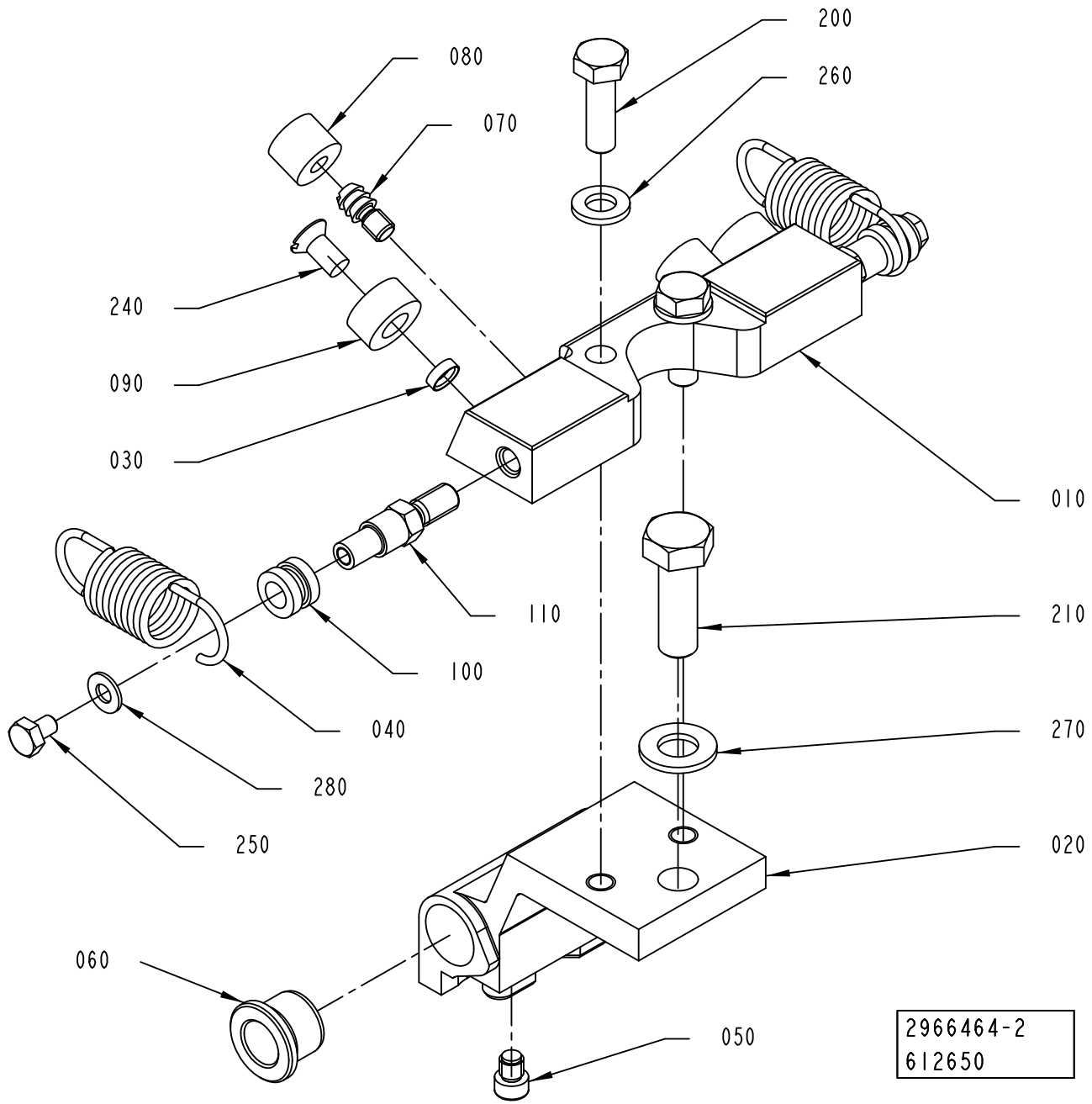

ECM: 615901 - 20131001
Group number: 2966464-0200
Assembly Drawing: 2966464-2_1_AB

Pos	Part No	UN	Qty	Description	Page No
TBA 0160S, TBA 0200S, TBA 0180S					
020	3022267-0001		1	HOLDER	
050	3022268-0000		1	SCREW	
060	2532544-0000		2	BUSHING	
090	3291156-0002		2	STOP	
TBA 0200E, TBA 0250E					
020	3097404-0001		1	HOLDER	
050	2933520-0000		1	SCREW	
060	3097403-0000		2	BUSHING	
090	3291156-0004		2	STOP	
TBA 0200SQ					
020	2976830-0001		1	HOLDER	
060	2532544-0000		2	BUSHING	
090	3291156-0002		2	STOP	
TBA 0375S					
020	3067247-0001		1	HOLDER	
050	2966463-0000		1	SCREW	
060	2532544-0000		2	BUSHING	
090	3291156-0002		2	STOP	
TPA 0200SQ					
020	2959957-0001		1	HOLDER	
050	2966463-0000		1	SCREW	
060	2532544-0000		2	BUSHING	
090	3291156-0002		2	STOP	
TPA 0250SQ					
020	2965109-0001		1	HOLDER	
050	2966463-0000		1	SCREW	
060	2532544-0000		2	BUSHING	
090	3291156-0002		2	STOP	
TPA 0330SQ					
020	3002890-0001		1	HOLDER	
050	3003861-0000		1	SCREW	
060	2810394-0000		2	BUSHING	
090	3291156-0002		2	STOP	
Common Parts					
010	3018882-0000		1	SUPPORT	
030	3291155-0000		2	SPACER	
040	3040850-0000		2	TENSION SPRING	
070	3290330-0000		2	PIN	
080	3290331-0000		2	DAMPER	
100	2905199-0000		2	HOLDER	
110	3022269-0000		2	SCREW	
200	312105-0370		2	SCREW, M6S ISO 4017 M6X20 A4 80	
210	312105-0453		1	SCREW, M6S ISO 4017 M8X25 A4 80	
240	312145-0325		2	SCREW ISO 2009 MFS M5X10 A4	
250	312105-0285		2	SCREW, M6S ISO 4017 M4X6 A4 70	
260	315105-0153		2	WASHER PLAIN, 6,4X12X1,5 A4 BRB	
270	315105-0165		1	FWAS080G0-0S, WASHER PLAIN	
280	315106-0136		2	WASHER PLAIN, M4 ISO7089-4-200 HV A4	

Machine Type | Group Description | Used-In | Group Number | Page No

VOLUME FLAP

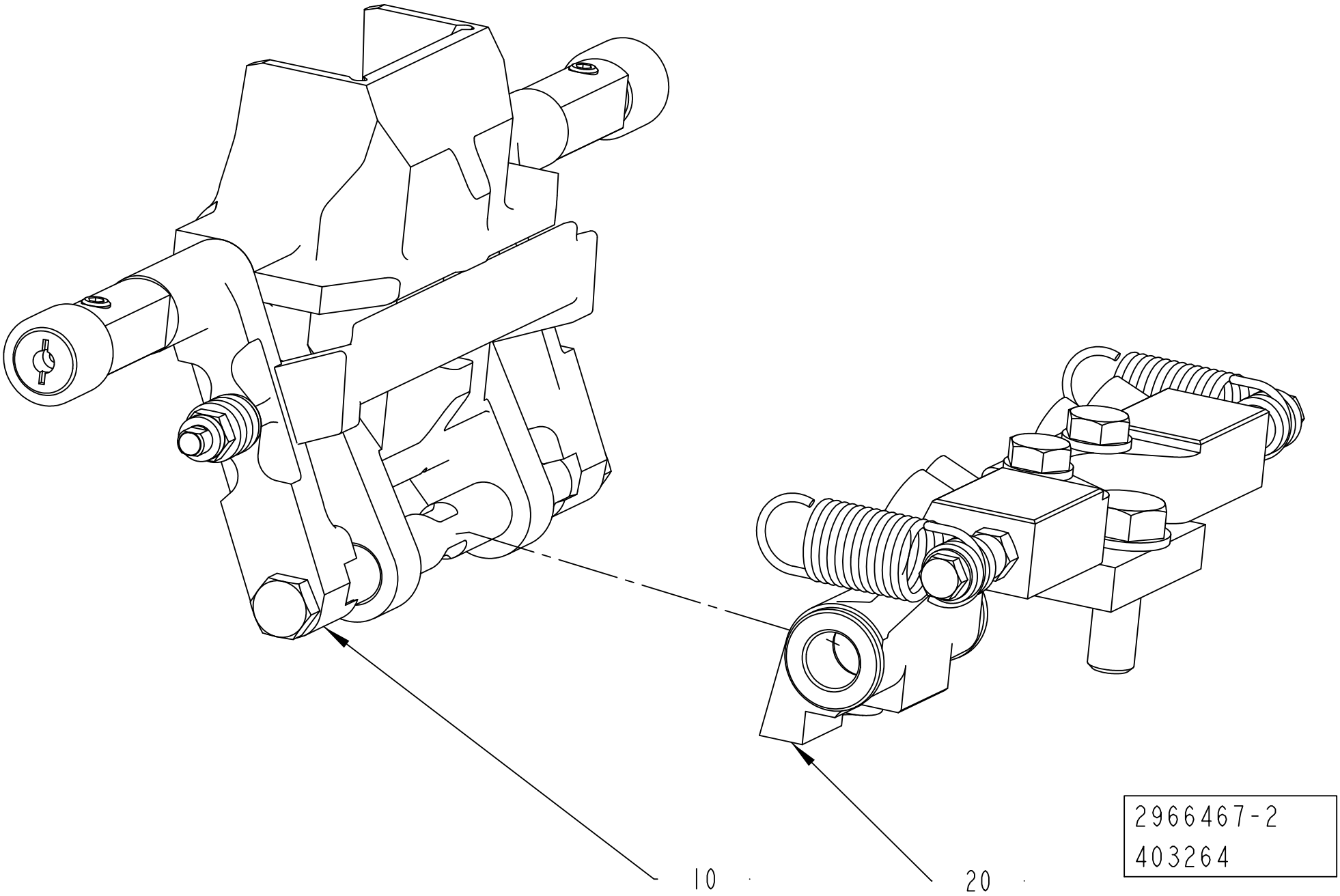

ECM: 633590 - 20140101
Group number: 2966467-0200
Assembly Drawing: 2966467-2_1_AA

Pos	Part No	UN	Qty	Description	Page No
TBA 0160S					
10	2869207-0200		1	VOLUME FLAP	**1-207, 1-209, 1-211, 1-213, 1-215, 1-217**
TBA 0180S					
10	2869207-0200		1	VOLUME FLAP	**1-207, 1-209, 1-211, 1-213, 1-215, 1-217**
TBA 0200E					
10	2907728-0200		1	VOLUME FLAP	**1-231, 1-233, 1-235, 1-237**
TBA 0200S HI					
10	2869207-0200		1	VOLUME FLAP	**1-207, 1-209, 1-211, 1-213, 1-215, 1-217**
TBA 0200S NOHI					
10	2869207-0200		1	VOLUME FLAP	**1-207, 1-209, 1-211, 1-213, 1-215, 1-217**
TBA 0200SQ HI					
10	2869207-0200		1	VOLUME FLAP	**1-207, 1-209, 1-211, 1-213, 1-215, 1-217**
TBA 0200SQ NOHI					
10	2869207-0200		1	VOLUME FLAP	**1-207, 1-209, 1-211, 1-213, 1-215, 1-217**
TBA 0250E HI					
10	2907728-0200		1	VOLUME FLAP	**1-231, 1-233, 1-235, 1-237**
TBA 0250E NOHI					
10	2907728-0200		1	VOLUME FLAP	**1-231, 1-233, 1-235, 1-237**
TBA 0375S					
10	2869207-0200		1	VOLUME FLAP	**1-207, 1-209, 1-211, 1-213, 1-215, 1-217**
TPA 0200SQ					
10	2907728-0200		1	VOLUME FLAP	**1-231, 1-233, 1-235, 1-237**
TPA 0250SQ					
10	2907728-0200		1	VOLUME FLAP	**1-231, 1-233, 1-235, 1-237**
TPA 0330SQ					
10	2907728-0200		1	VOLUME FLAP	**1-231, 1-233, 1-235, 1-237**
Common Parts					
20	2966468-0200		1	SHOCK ABSORBER	**1-243**

Pos	Part No	UN	Qty	Description	Page No

Machine Type	Group Description	Used-In	Group Number	Page No

SHOCK ABSORBER

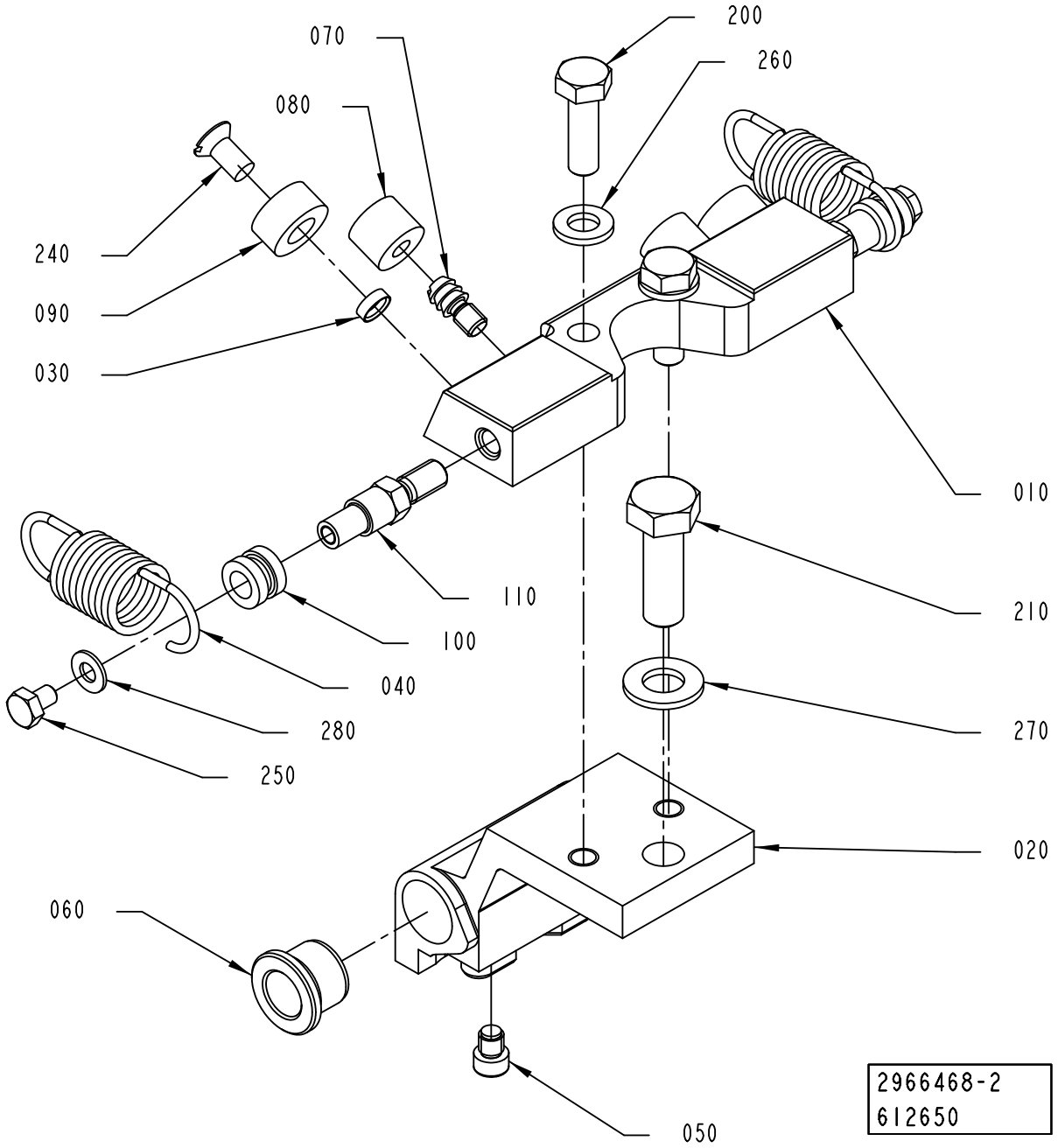

ECM: 615900 - 20131001
Group number: 2966468-0200
Assembly Drawing: 2966468-2_1_AB

Pos	Part No	UN	Qty	Description	Page No
TBA 0160S, TBA 0200S, TBA 0180S					
020	3022267-0003		1	HOLDER	
050	3022268-0000		1	SCREW	
060	2532544-0000		2	BUSHING	
090	3291156-0002		2	STOP	
TBA 0200E, TBA 0250E					
020	3097404-0003		1	HOLDER	
050	2933520-0000		1	SCREW	
060	3097403-0000		2	BUSHING	
090	3291156-0004		2	STOP	
TBA 0200SQ					
020	2976830-0003		1	HOLDER	
050	2966463-0000		1	SCREW	
060	2532544-0000		2	BUSHING	
090	3291156-0002		2	STOP	
TBA 0375S					
020	3067247-0003		1	HOLDER	
050	2966463-0000		1	SCREW	
060	2532544-0000		2	BUSHING	
090	3291156-0002		2	STOP	
TPA 0200SQ					
020	2959957-0003		1	HOLDER	
050	2966463-0000		1	SCREW	
060	2532544-0000		2	BUSHING	
090	3291156-0002		2	STOP	
TPA 0250SQ					
020	2965109-0003		1	HOLDER	
050	2966463-0000		1	SCREW	
060	2532544-0000		2	BUSHING	
090	3291156-0002		2	STOP	
TPA 0330SQ					
020	3002890-0003		1	HOLDER	
050	3003861-0000		1	SCREW	
060	2810394-0000		2	BUSHING	
090	3291156-0002		2	STOP	
Common Parts					
010	3018882-0000		1	SUPPORT	
030	3291155-0000		2	SPACER	
040	3040850-0000		2	TENSION SPRING	
070	3290330-0000		2	PIN	
080	3290331-0000		2	DAMPER	
100	2905199-0000		2	HOLDER	
110	3022269-0000		2	SCREW	
200	312105-0370		2	SCREW, M6S ISO 4017 M6X20 A4 80	
210	312105-0453		1	SCREW, M6S ISO 4017 M8X25 A4 80	
240	312145-0325		2	SCREW ISO 2009 MFS M5X10 A4	
250	312105-0285		2	SCREW, M6S ISO 4017 M4X6 A4 70	
260	315105-0153		2	WASHER PLAIN, 6,4X12X1,5 A4 BRB	
270	315105-0165		1	FWAS080G0-0S, WASHER PLAIN	
280	315106-0136		2	WASHER PLAIN, M4 ISO7089-4-200 HV A4	

Machine Type | Group Description | Used-In | Group Number | Page No

CARRIER PRESSURE

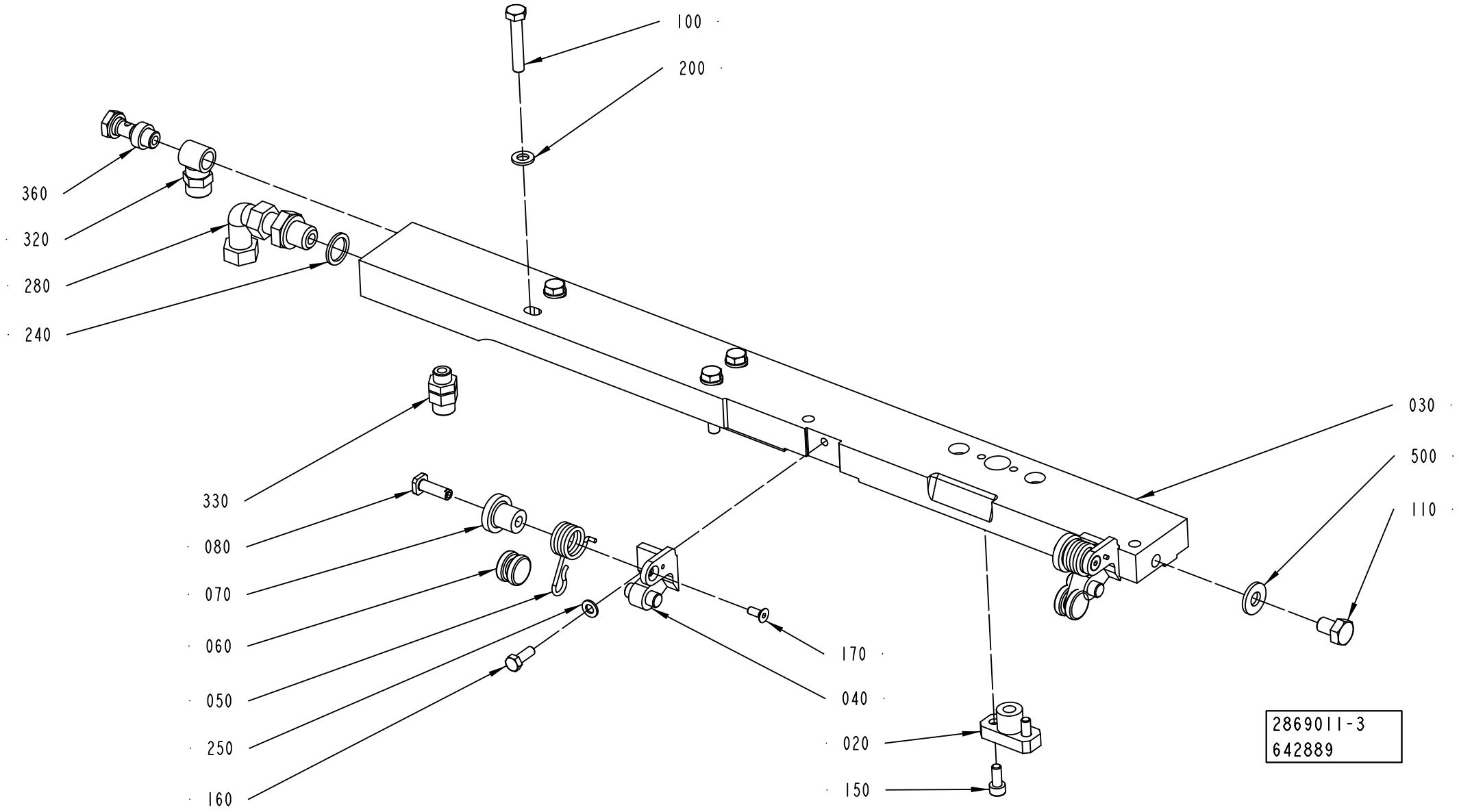

ECM: 648198 - 20140401
Group number: 2869011-0200
Assembly Drawing: 2869011-3_1_AD

This list covers pages from 1-244 to 1-247

Pos	Part No	UN	Qty	Description	Page No
TBA 0100B, TBA 0125S, TBA 0080S (See drawing on page: 1-244)					
020	2916871-0000		1	BLOCK	
030	3253314-0000		1	CARRIER	
150	312115-0325		2	SCREW ISO4762 M5X10 A4 80	
TBA 0160S, TBA 0200M, TBA 0200B, TBA 0200S, TBA 0250S, TBA 0250B, TBA 0330S, TPA 0125SQ, TBA 0180S (See drawing on page: 1-244)					
020	2869196-0000		1	BLOCK	
030	3253312-0000		1	CARRIER	
150	312115-0327		2	SCREW ISO4762 M5X12 A4 80	
TBA 0200SQ, TBA 0375S, TPA 0330SQ, TPA 0250SQ, TPA 0200SQ, TBA 0200E, TBA 0250E (See drawing on page: 1-246)					
020	2869196-0000		1	BLOCK	
030	3253316-0000		1	CARRIER	
150	312115-0327		2	SCREW ISO4762 M5X12 A4 80	
180	311103-0267		1	PARALLEL PIN ISO 2338 4M6X10 A1	
Common Parts					
040	3261205-0000		2	SUPPORT	
050	3268185-0000		2	SPRING	
060	2530296-0000		2	ROLLER	
070	3261206-0000		2	ROLLER	
080	3135273-0000		2	SHAFT	
100	312105-0376		4	SCREW, M6S ISO 4014 M6X35 A4 80	
110	312105-0447		1	SCREW M6S ISO 4017 M8X12 A480	
160	312105-0328		2	SCREW M6S ISO 4017 M5X14 A4 80	
170	312155-0289		2	SCREW DIN 7991 MF6S M4X10 A4 70	
200	315105-0153		4	WASHER PLAIN, 6,4X12X1,5 A4 BRB	
240	315237-0110		1	WASHER,PL.RND.AL.13,5/18,H=1,5	
250	315105-0146		2	WASHER PLAIN, 5,3X10X1 A4 BRB	
280	342738-0208		1	ADJUSTABLE ELBOW CONNECTION 8-G1/4	
320	342980-0121		1	HOSE FITTING, BANJO RING L PO G1/8 8/6	
330	342921-0121		1	STRAIGHT COUPLING, EXT.THREAD 8/6-G1/8	
360	342980-0303		1	BANJO-HOLLOW BOLT COUPL,EXT.THR.01-G1/8	
500	90005-0052		1	WASHER,PL.RND.CU.8/18 H=2	

Pos	Part No	UN	Qty	Description	Page No

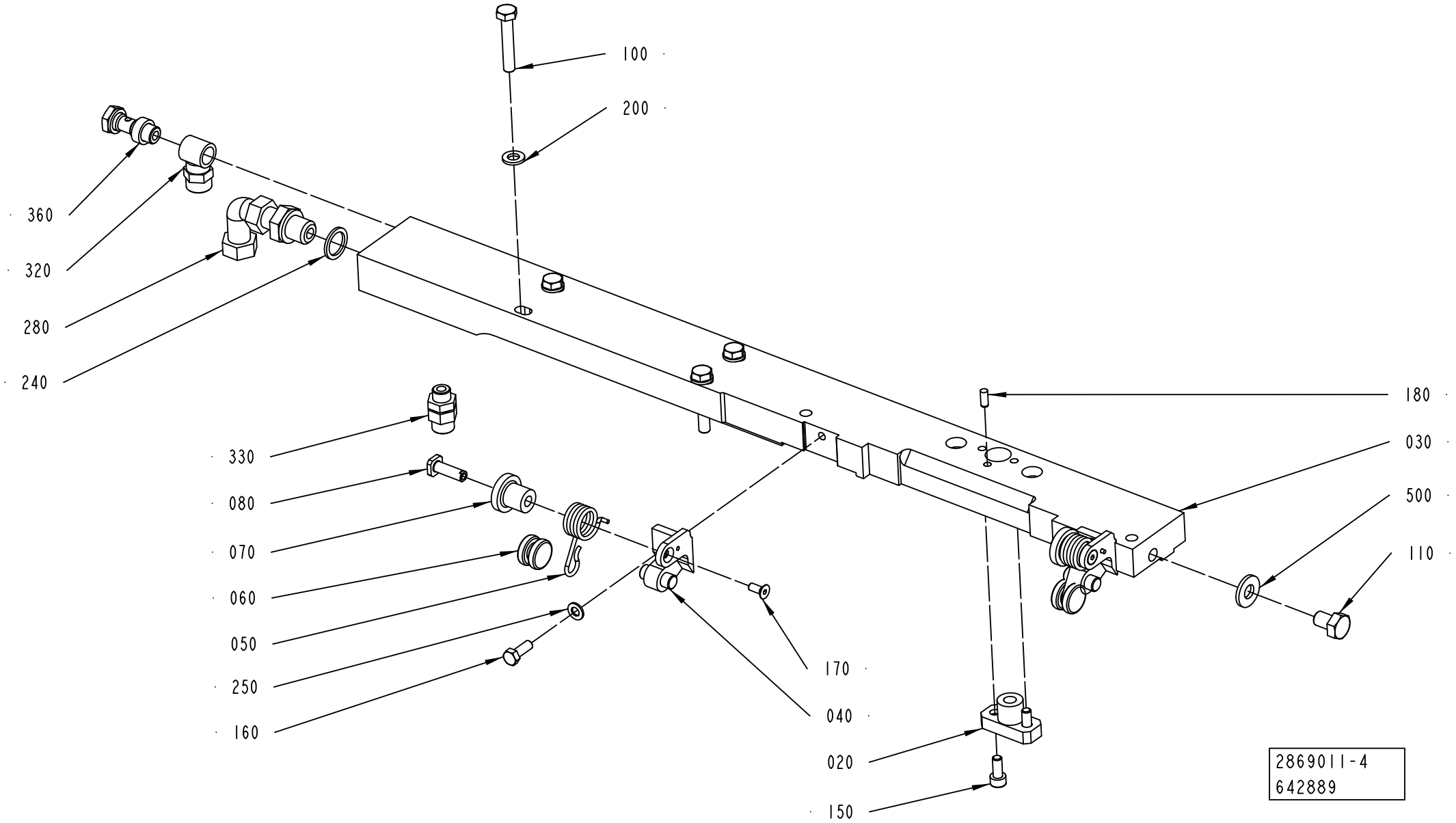
100
200
360
320
280
240
180
030
500
110
330
080
070
060
050
250
160
170
040
020
150
2869011-4
642889

Pos	Part No	UN	Qty	Description	Page No
TBA 0100B, TBA 0125S, TBA 0080S (See drawing on page: 1-244)					
020	2916871-0000		1	BLOCK	
030	3253314-0000		1	CARRIER	
150	312115-0325		2	SCREW ISO4762 M5X10 A4 80	
TBA 0160S, TBA 0200M, TBA 0200B, TBA 0200S, TBA 0250S, TBA 0250B, TBA 0330S, TPA 0125SQ, TBA 0180S (See drawing on page: 1-244)					
020	2869196-0000		1	BLOCK	
030	3253312-0000		1	CARRIER	
150	312115-0327		2	SCREW ISO4762 M5X12 A4 80	
TBA 0200SQ, TBA 0375S, TPA 0330SQ, TPA 0250SQ, TPA 0200SQ, TBA 0200E, TBA 0250E (See drawing on page: 1-246)					
020	2869196-0000		1	BLOCK	
030	3253316-0000		1	CARRIER	
150	312115-0327		2	SCREW ISO4762 M5X12 A4 80	
180	311103-0267		1	PARALLEL PIN ISO 2338 4M6X10 A1	
Common Parts					
040	3261205-0000		2	SUPPORT	
050	3268185-0000		2	SPRING	
060	2530296-0000		2	ROLLER	
070	3261206-0000		2	ROLLER	
080	3135273-0000		2	SHAFT	
100	312105-0376		4	SCREW, M6S ISO 4014 M6X35 A4 80	
110	312105-0447		1	SCREW M6S ISO 4017 M8X12 A480	
160	312105-0328		2	SCREW M6S ISO 4017 M5X14 A4 80	
170	312155-0289		2	SCREW DIN 7991 MF6S M4X10 A4 70	
200	315105-0153		4	WASHER PLAIN, 6,4X12X1,5 A4 BRB	
240	315237-0110		1	WASHER,PL.RND.AL.13,5/18,H=1,5	
250	315105-0146		2	WASHER PLAIN, 5,3X10X1 A4 BRB	
280	342738-0208		1	ADJUSTABLE ELBOW CONNECTION 8-G1/4	
320	342980-0121		1	HOSE FITTING, BANJO RING L PO G1/8 8/6	
330	342921-0121		1	STRAIGHT COUPLING, EXT.THREAD 8/6-G1/8	
360	342980-0303		1	BANJO-HOLLOW BOLT COUPL,EXT.THR.01-G1/8	
500	90005-0052		1	WASHER,PL.RND.CU.8/18 H=2	

Pos	Part No	UN	Qty	Description	Page No

CARRIER PRESSURE

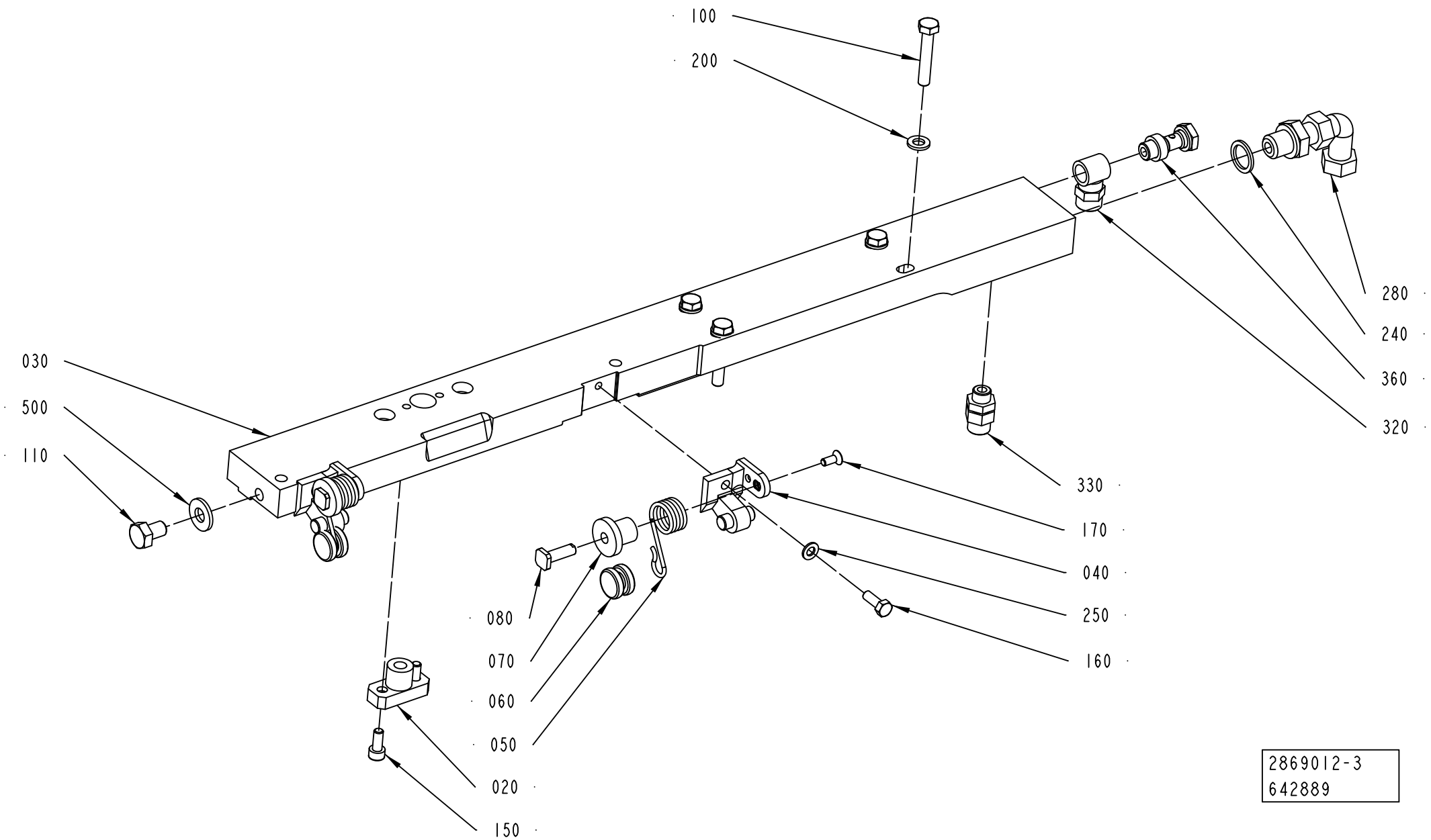

Pos	Part No	UN	Qty	Description	Page No
TBA 0100B, TBA 0125S, TBA 0080S (See drawing on page: 1-248)					
020	2916871-0000		1	BLOCK	
030	3253315-0000		1	CARRIER	
150	312115-0325		2	SCREW ISO4762 M5X10 A4 80	
TBA 0160S, TBA 0200M, TBA 0200B, TBA 0200S, TBA 0250S, TBA 0250B, TBA 0330S, TPA 0125SQ, TBA 0180S (See drawing on page: 1-248)					
020	2869196-0000		1	BLOCK	
030	3253313-0000		1	CARRIER	
150	312115-0327		2	SCREW ISO4762 M5X12 A4 80	
TBA 0200SQ, TBA 0375S, TPA 0330SQ, TPA 0250SQ, TPA 0200SQ, TBA 0200E, TBA 0250E (See drawing on page: 1-250)					
020	2869196-0000		1	BLOCK	
030	3253317-0000		1	CARRIER	
150	312115-0327		2	SCREW ISO4762 M5X12 A4 80	
180	311103-0267		1	PARALLEL PIN ISO 2338 4M6X10 A1	
Common Parts					
040	3261205-0000		2	SUPPORT	
050	3268185-0000		2	SPRING	
060	2530296-0000		2	ROLLER	
070	3261206-0000		2	ROLLER	
080	3135273-0000		2	SHAFT	
100	312105-0376		4	SCREW, M6S ISO 4014 M6X35 A4 80	
110	312105-0447		1	SCREW M6S ISO 4017 M8X12 A480	
160	312105-0328		2	SCREW M6S ISO 4017 M5X14 A4 80	
170	312155-0289		2	SCREW DIN 7991 MF6S M4X10 A4 70	
200	315105-0153		4	WASHER PLAIN, 6,4X12X1,5 A4 BRB	
240	315237-0110		1	WASHER,PL.RND.AL.13,5/18,H=1,5	
250	315105-0146		2	WASHER PLAIN, 5,3X10X1 A4 BRB	
280	342738-0208		1	ADJUSTABLE ELBOW CONNECTION 8-G1/4	
320	342980-0121		1	HOSE FITTING, BANJO RING L PO G1/8 8/6	
330	342921-0121		1	STRAIGHT COUPLING, EXT.THREAD 8/6-G1/8	
360	342980-0303		1	BANJO-HOLLOW BOLT COUPL,EXT.THR.01-G1/8	
500	90005-0052		1	WASHER,PL.RND.CU.8/18 H=2	

Pos	Part No	UN	Qty	Description	Page No

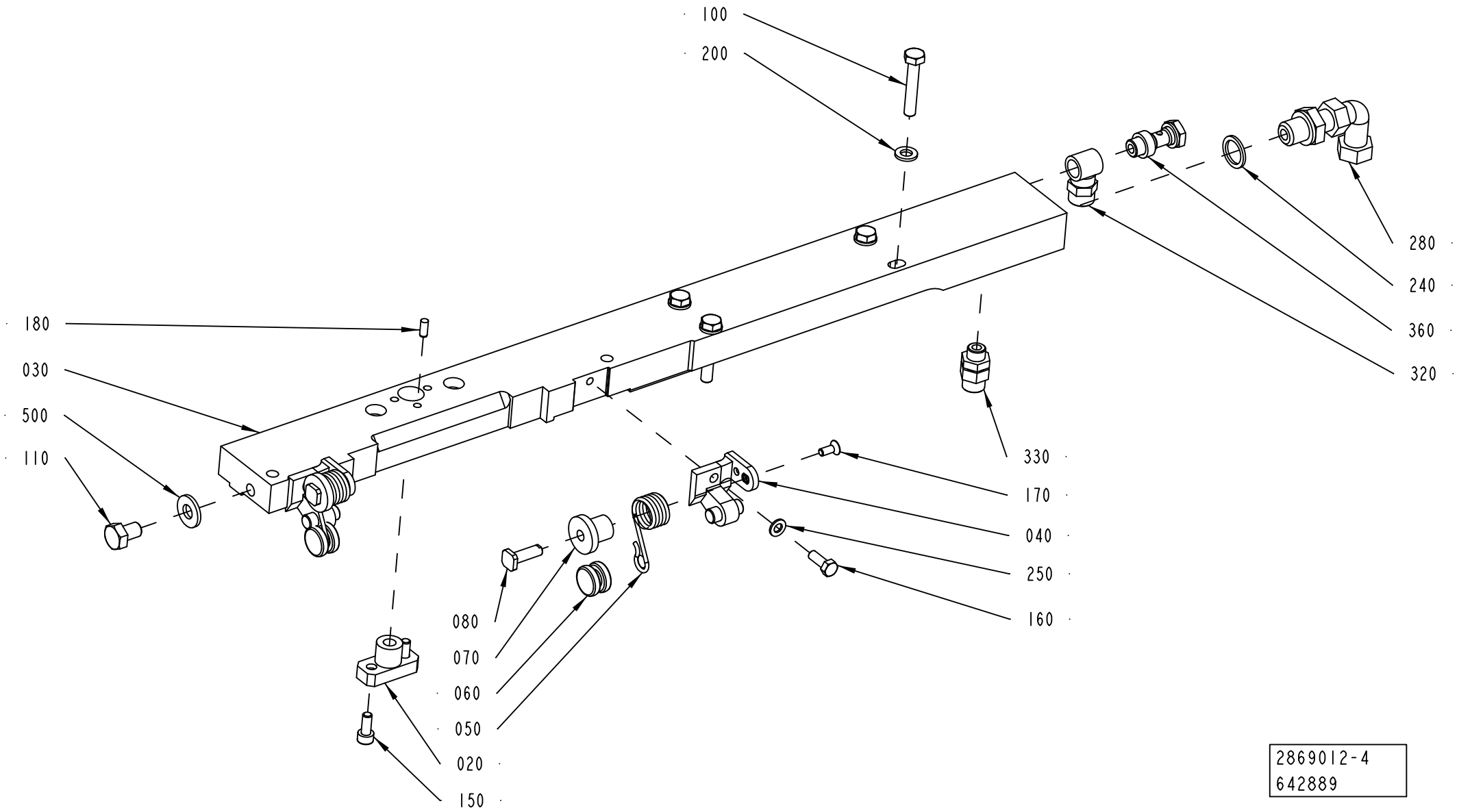
100
200
280
240
360
320
180
030
500
110
330
170
040
250
160
080
070
060
050
020
150
2869012-4
642889

Pos	Part No	UN	Qty	Description	Page No
TBA 0100B, TBA 0125S, TBA 0080S (See drawing on page: 1-248)					
020	2916871-0000		1	BLOCK	
030	3253315-0000		1	CARRIER	
150	312115-0325		2	SCREW ISO4762 M5X10 A4 80	
TBA 0160S, TBA 0200M, TBA 0200B, TBA 0200S, TBA 0250S, TBA 0250B, TBA 0330S, TPA 0125SQ, TBA 0180S (See drawing on page: 1-248)					
020	2869196-0000		1	BLOCK	
030	3253313-0000		1	CARRIER	
150	312115-0327		2	SCREW ISO4762 M5X12 A4 80	
TBA 0200SQ, TBA 0375S, TPA 0330SQ, TPA 0250SQ, TPA 0200SQ, TBA 0200E, TBA 0250E (See drawing on page: 1-250)					
020	2869196-0000		1	BLOCK	
030	3253317-0000		1	CARRIER	
150	312115-0327		2	SCREW ISO4762 M5X12 A4 80	
180	311103-0267		1	PARALLEL PIN ISO 2338 4M6X10 A1	
Common Parts					
040	3261205-0000		2	SUPPORT	
050	3268185-0000		2	SPRING	
060	2530296-0000		2	ROLLER	
070	3261206-0000		2	ROLLER	
080	3135273-0000		2	SHAFT	
100	312105-0376		4	SCREW, M6S ISO 4014 M6X35 A4 80	
110	312105-0447		1	SCREW M6S ISO 4017 M8X12 A480	
160	312105-0328		2	SCREW M6S ISO 4017 M5X14 A4 80	
170	312155-0289		2	SCREW DIN 7991 MF6S M4X10 A4 70	
200	315105-0153		4	WASHER PLAIN, 6,4X12X1,5 A4 BRB	
240	315237-0110		1	WASHER,PL.RND.AL.13,5/18,H=1,5	
250	315105-0146		2	WASHER PLAIN, 5,3X10X1 A4 BRB	
280	342738-0208		1	ADJUSTABLE ELBOW CONNECTION 8-G1/4	
320	342980-0121		1	HOSE FITTING, BANJO RING L PO G1/8 8/6	
330	342921-0121		1	STRAIGHT COUPLING, EXT.THREAD 8/6-G1/8	
360	342980-0303		1	BANJO-HOLLOW BOLT COUPL,EXT.THR.01-G1/8	
500	90005-0052		1	WASHER,PL.RND.CU.8/18 H=2	

Pos	Part No	UN	Qty	Description	Page No

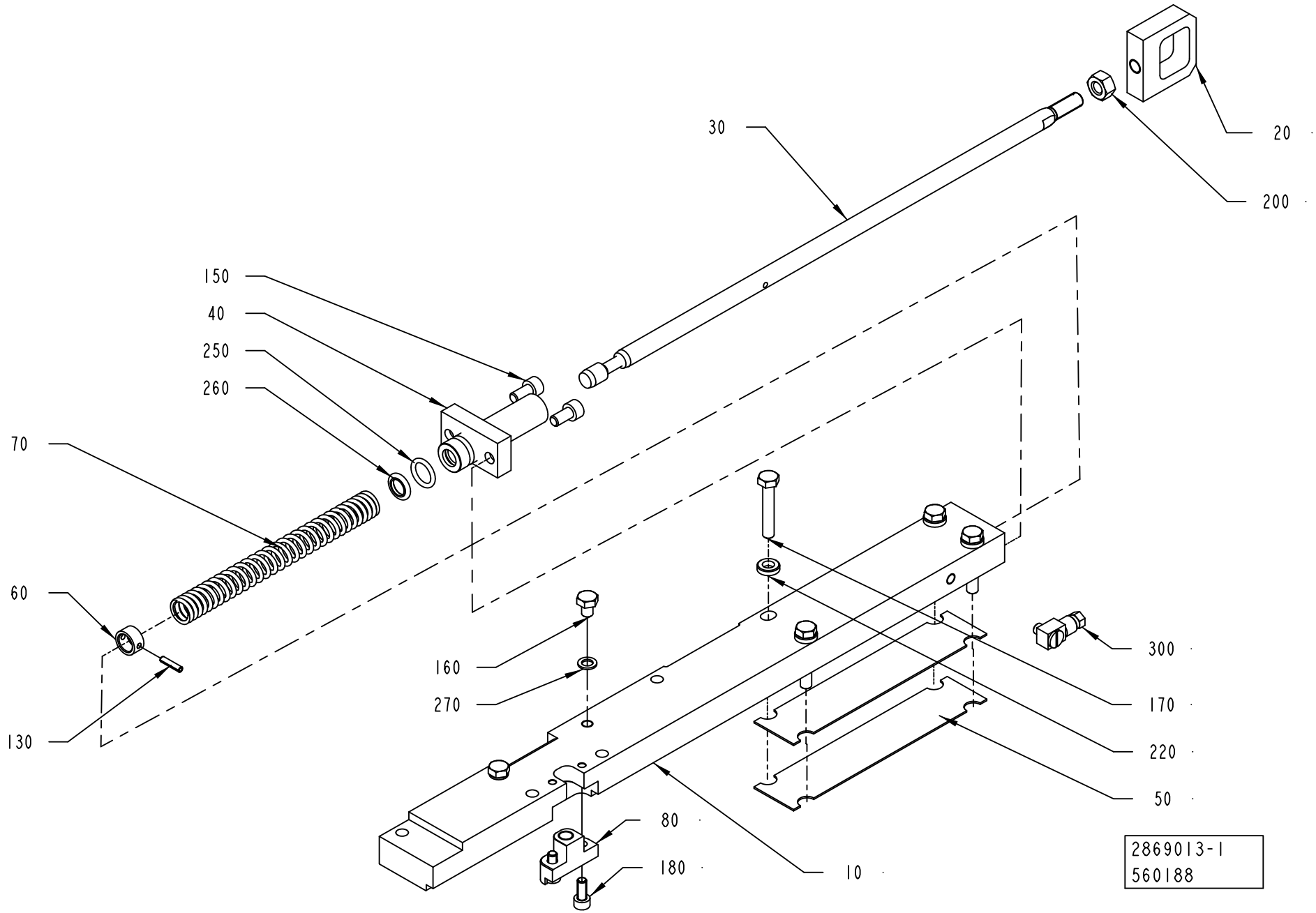
30
20
200
150
40
250
260
70
60
130
160
270
300
170
220
50
80
180
10
2869013-1
560188

ECM: 680110 - 20141001
Group number: 2869013-0100
Assembly Drawing: 2869013-1_1_AB

This list covers pages from 1-252 to 1-257

Pos	Part No	UN	Qty	Description	Page No
TB 0200S (See drawing on page: 1-256)					
010	3253318-0000		1	CARRIER	
030	2818125-0000		1	OPERATING ROD	
080	2869199-0000		1	BLOCK	
090	3276681-0000		4	SHIM	
120	311103-0267		1	PARALLEL PIN ISO 2338 4M6X10 A1	
160	312105-0362		2	SCREW, M6S ISO 4017 M6X8 A4 80	
180	312115-0327		2	SCREW ISO4762 M5X12 A4 80	
270	315237-0106		2	WASHER,PL.RND.AL.6/10,H=1	
TBA 0100B, TBA 0125S, TBA 0080S (See drawing on page: 1-252)					
010	3253320-0000		1	CARRIER	
030	2818125-0000		1	OPERATING ROD	
080	2916875-0000		1	BLOCK	
160	312105-0362		2	SCREW, M6S ISO 4017 M6X8 A4 80	
180	312115-0323		2	SCREW ISO4762 M5X8 A4 80	
270	315237-0106		2	WASHER,PL.RND.AL.6/10,H=1	
TBA 0160S, TBA 0200M, TBA 0200B, TBA 0200S, TBA 0250S, TBA 0250B, TBA 0330S, TBA 0180S (See drawing on page: 1-252)					
010	3253318-0000		1	CARRIER	
030	2818125-0000		1	OPERATING ROD	
080	2869199-0000		1	BLOCK	
160	312105-0362		2	SCREW, M6S ISO 4017 M6X8 A4 80	
180	312115-0327		2	SCREW ISO4762 M5X12 A4 80	
270	315237-0106		2	WASHER,PL.RND.AL.6/10,H=1	
TBA 0200E, TBA 0250E (See drawing on page: 1-254)					
010	3253324-0000		1	CARRIER	
030	3199906-0000		1	OPERATING ROD	
080	2869199-0000		1	BLOCK	
120	311103-0267		1	PARALLEL PIN ISO 2338 4M6X10 A1	
160	312105-0362		2	SCREW, M6S ISO 4017 M6X8 A4 80	
180	312115-0327		2	SCREW ISO4762 M5X12 A4 80	
270	315237-0106		2	WASHER,PL.RND.AL.6/10,H=1	
TBA 0200SQ, TBA 0375S, TPA 0330SQ, TPA 0250SQ, TPA 0200SQ (See drawing on page: 1-254)					
010	3253322-0000		1	CARRIER	
030	2818125-0000		1	OPERATING ROD	
080	2964567-0000		1	BLOCK	
120	311103-0267		1	PARALLEL PIN ISO 2338 4M6X10 A1	
160	312105-0323		2	"FSCR05080-10, SCREW, M6S"	
180	312115-0327		2	SCREW ISO4762 M5X12 A4 80	
270	315237-0108		2	WASHER,PL.RND.AL.5,2/8,H=0,5	
TPA 0125SQ (See drawing on page: 1-252)					
010	3253318-0000		1	CARRIER	
030	2906017-0000		1	OPERATING ROD	
080	2869199-0000		1	BLOCK	
160	312105-0362		2	SCREW, M6S ISO 4017 M6X8 A4 80	
180	312115-0327		2	SCREW ISO4762 M5X12 A4 80	
270	315237-0106		2	WASHER,PL.RND.AL.6/10,H=1	
Common Parts					
020	256626-0000		1	EAR	
040	2818126-0000		1	BEARING PLATE	
050	257362-0000		2	LACE	
060	255801-0000		1	RETAINING RING	
070	255742-0000		1	COMPRESSION SPRING	
130	311111-0207		1	SPRING PIN ISO 8752 3X14-ST	
150	312115-0366		2	SCREW ISO4762 M6X12 A4 80	
170	312105-0376		4	SCREW, M6S ISO 4014 M6X35 A4 80	
200	312605-0318		1	HEXAGON NUT, M6M M8 A280	
220	315115-0153		4	WASHER PLAIN, TBRB 6,4/12 H=3	
250	315202-0265		1	O-RING 12,3X2,4 MM	
260	90091-0091		1	ROD SEAL 10X14X1,7 MM	
300	90134-0058		1	CONNECTION	

Machine Type | Group Description | Used-In | Group Number | Page No

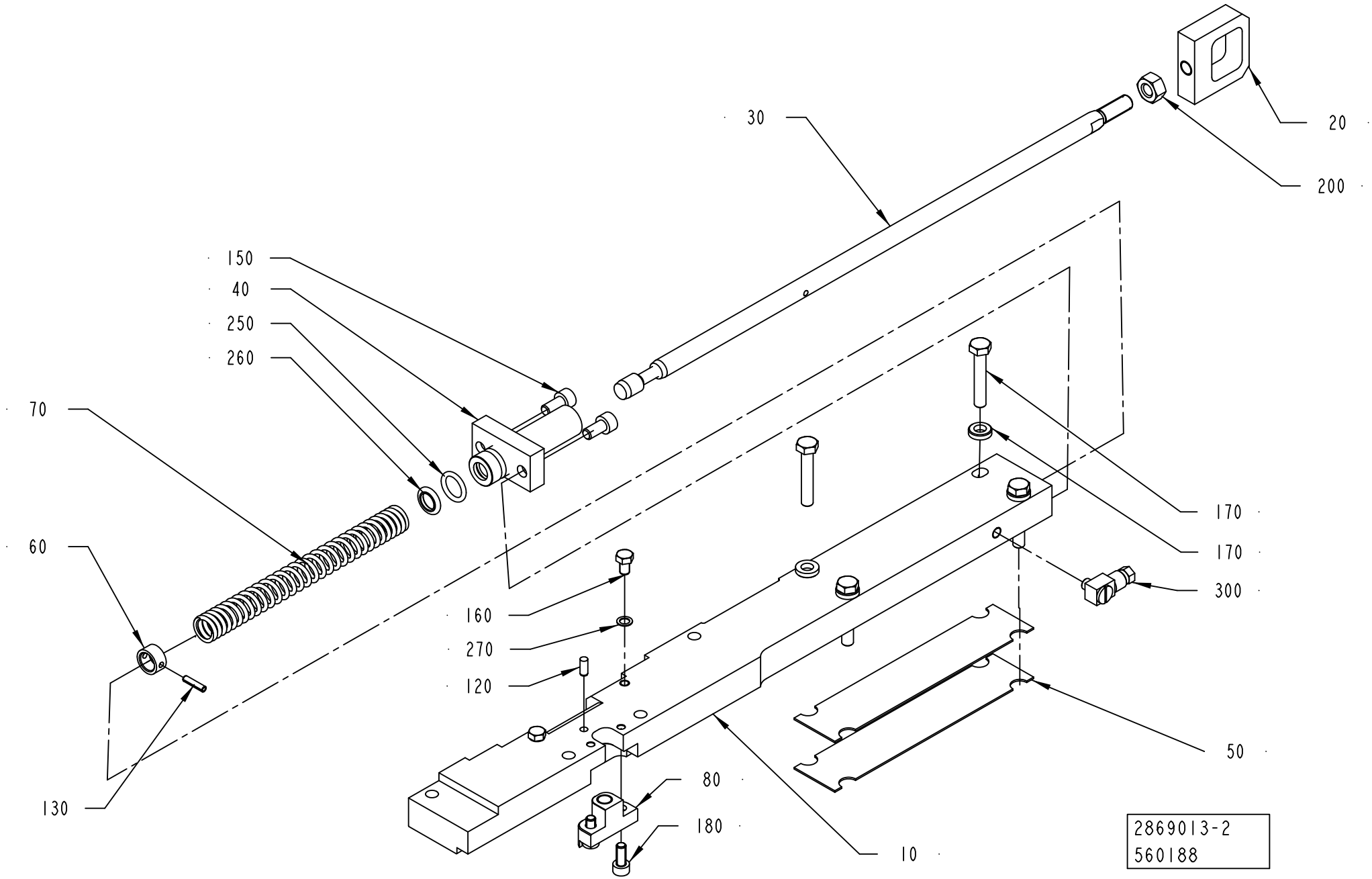
30
20
200
150
40
250
260
70
60
130
160
270
120
80
180
10
170
170
300
50
2869013-2
560188

ECM: 680110 - 20141001
Group number: 2869013-0100
Assembly Drawing: 2869013-2_1_AB

This list covers pages from 1-252 to 1-257

Pos	Part No	UN	Qty	Description	Page No
TB 0200S (See drawing on page: 1-256)					
010	3253318-0000		1	CARRIER	
030	2818125-0000		1	OPERATING ROD	
080	2869199-0000		1	BLOCK	
090	3276681-0000		4	SHIM	
120	311103-0267		1	PARALLEL PIN ISO 2338 4M6X10 A1	
160	312105-0362		2	SCREW, M6S ISO 4017 M6X8 A4 80	
180	312115-0327		2	SCREW ISO4762 M5X12 A4 80	
270	315237-0106		2	WASHER,PL.RND.AL.6/10,H=1	
TBA 0100B, TBA 0125S, TBA 0080S (See drawing on page: 1-252)					
010	3253320-0000		1	CARRIER	
030	2818125-0000		1	OPERATING ROD	
080	2916875-0000		1	BLOCK	
160	312105-0362		2	SCREW, M6S ISO 4017 M6X8 A4 80	
180	312115-0323		2	SCREW ISO4762 M5X8 A4 80	
270	315237-0106		2	WASHER,PL.RND.AL.6/10,H=1	
TBA 0160S, TBA 0200M, TBA 0200B, TBA 0200S, TBA 0250S, TBA 0250B, TBA 0330S, TBA 0180S (See drawing on page: 1-252)					
010	3253318-0000		1	CARRIER	
030	2818125-0000		1	OPERATING ROD	
080	2869199-0000		1	BLOCK	
160	312105-0362		2	SCREW, M6S ISO 4017 M6X8 A4 80	
180	312115-0327		2	SCREW ISO4762 M5X12 A4 80	
270	315237-0106		2	WASHER,PL.RND.AL.6/10,H=1	
TBA 0200E, TBA 0250E (See drawing on page: 1-254)					
010	3253324-0000		1	CARRIER	
030	3199906-0000		1	OPERATING ROD	
080	2869199-0000		1	BLOCK	
120	311103-0267		1	PARALLEL PIN ISO 2338 4M6X10 A1	
160	312105-0362		2	SCREW, M6S ISO 4017 M6X8 A4 80	
180	312115-0327		2	SCREW ISO4762 M5X12 A4 80	
270	315237-0106		2	WASHER,PL.RND.AL.6/10,H=1	
TBA 0200SQ, TBA 0375S, TPA 0330SQ, TPA 0250SQ, TPA 0200SQ (See drawing on page: 1-254)					
010	3253322-0000		1	CARRIER	
030	2818125-0000		1	OPERATING ROD	
080	2964567-0000		1	BLOCK	
120	311103-0267		1	PARALLEL PIN ISO 2338 4M6X10 A1	
160	312105-0323		2	"FSCR05080-10, SCREW, M6S"	
180	312115-0327		2	SCREW ISO4762 M5X12 A4 80	
270	315237-0108		2	WASHER,PL.RND.AL.5,2/8,H=0,5	
TPA 0125SQ (See drawing on page: 1-252)					
010	3253318-0000		1	CARRIER	
030	2906017-0000		1	OPERATING ROD	
080	2869199-0000		1	BLOCK	
160	312105-0362		2	SCREW, M6S ISO 4017 M6X8 A4 80	
180	312115-0327		2	SCREW ISO4762 M5X12 A4 80	
270	315237-0106		2	WASHER,PL.RND.AL.6/10,H=1	
Common Parts					
020	256626-0000		1	EAR	
040	2818126-0000		1	BEARING PLATE	
050	257362-0000		2	LACE	
060	255801-0000		1	RETAINING RING	
070	255742-0000		1	COMPRESSION SPRING	
130	311111-0207		1	SPRING PIN ISO 8752 3X14-ST	
150	312115-0366		2	SCREW ISO4762 M6X12 A4 80	
170	312105-0376		4	SCREW, M6S ISO 4014 M6X35 A4 80	
200	312605-0318		1	HEXAGON NUT, M6M M8 A280	
220	315115-0153		4	WASHER PLAIN, TBRB 6,4/12 H=3	
250	315202-0265		1	O-RING 12,3X2,4 MM	
260	90091-0091		1	ROD SEAL 10X14X1,7 MM	
300	90134-0058		1	CONNECTION	

Machine Type | Group Description | Used-In | Group Number | Page No

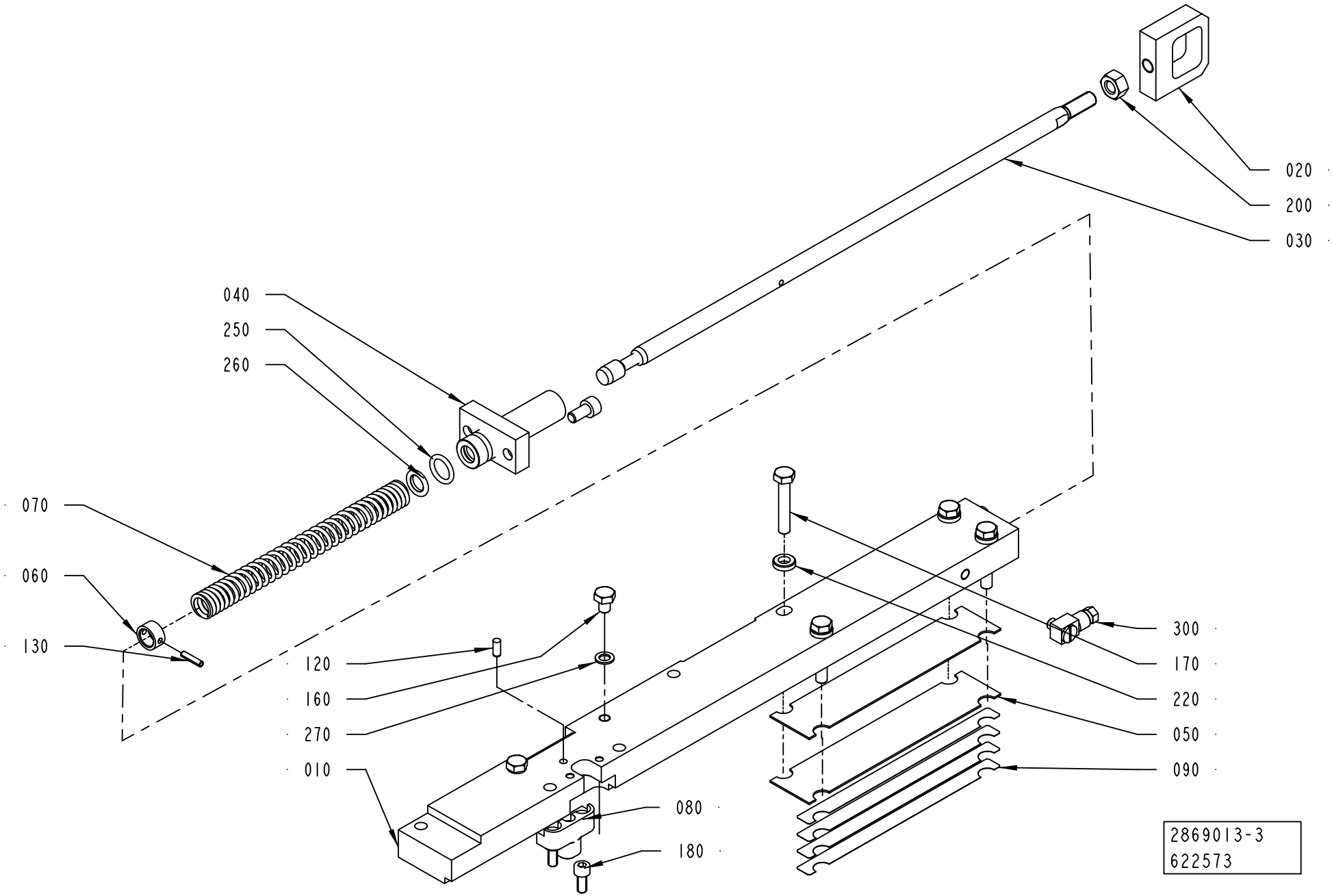
020
200
030
040
250
260
070
060
130
120
160
270
010
080
180
300
170
220
050
090
2869013-3
622573

ECM: 680110 - 20141001
Group number: 2869013-0100
Assembly Drawing: 2869013-3_1_AA

This list covers pages from 1-252 to 1-257

Pos	Part No	UN	Qty	Description	Page No
TB 0200S (See drawing on page: 1-256)					
010	3253318-0000		1	CARRIER	
030	2818125-0000		1	OPERATING ROD	
080	2869199-0000		1	BLOCK	
090	3276681-0000		4	SHIM	
120	311103-0267		1	PARALLEL PIN ISO 2338 4M6X10 A1	
160	312105-0362		2	SCREW, M6S ISO 4017 M6X8 A4 80	
180	312115-0327		2	SCREW ISO4762 M5X12 A4 80	
270	315237-0106		2	WASHER,PL.RND.AL.6/10,H=1	
TBA 0100B, TBA 0125S, TBA 0080S (See drawing on page: 1-252)					
010	3253320-0000		1	CARRIER	
030	2818125-0000		1	OPERATING ROD	
080	2916875-0000		1	BLOCK	
160	312105-0362		2	SCREW, M6S ISO 4017 M6X8 A4 80	
180	312115-0323		2	SCREW ISO4762 M5X8 A4 80	
270	315237-0106		2	WASHER,PL.RND.AL.6/10,H=1	
TBA 0160S, TBA 0200M, TBA 0200B, TBA 0200S, TBA 0250S, TBA 0250B, TBA 0330S, TBA 0180S (See drawing on page: 1-252)					
010	3253318-0000		1	CARRIER	
030	2818125-0000		1	OPERATING ROD	
080	2869199-0000		1	BLOCK	
160	312105-0362		2	SCREW, M6S ISO 4017 M6X8 A4 80	
180	312115-0327		2	SCREW ISO4762 M5X12 A4 80	
270	315237-0106		2	WASHER,PL.RND.AL.6/10,H=1	
TBA 0200E, TBA 0250E (See drawing on page: 1-254)					
010	3253324-0000		1	CARRIER	
030	3199906-0000		1	OPERATING ROD	
080	2869199-0000		1	BLOCK	
120	311103-0267		1	PARALLEL PIN ISO 2338 4M6X10 A1	
160	312105-0362		2	SCREW, M6S ISO 4017 M6X8 A4 80	
180	312115-0327		2	SCREW ISO4762 M5X12 A4 80	
270	315237-0106		2	WASHER,PL.RND.AL.6/10,H=1	
TBA 0200SQ, TBA 0375S, TPA 0330SQ, TPA 0250SQ, TPA 0200SQ (See drawing on page: 1-254)					
010	3253322-0000		1	CARRIER	
030	2818125-0000		1	OPERATING ROD	
080	2964567-0000		1	BLOCK	
120	311103-0267		1	PARALLEL PIN ISO 2338 4M6X10 A1	
160	312105-0323		2	"FSCR05080-10, SCREW, M6S"	
180	312115-0327		2	SCREW ISO4762 M5X12 A4 80	
270	315237-0108		2	WASHER,PL.RND.AL.5,2/8,H=0,5	
TPA 0125SQ (See drawing on page: 1-252)					
010	3253318-0000		1	CARRIER	
030	2906017-0000		1	OPERATING ROD	
080	2869199-0000		1	BLOCK	
160	312105-0362		2	SCREW, M6S ISO 4017 M6X8 A4 80	
180	312115-0327		2	SCREW ISO4762 M5X12 A4 80	
270	315237-0106		2	WASHER,PL.RND.AL.6/10,H=1	
Common Parts					
020	256626-0000		1	EAR	
040	2818126-0000		1	BEARING PLATE	
050	257362-0000		2	LACE	
060	255801-0000		1	RETAINING RING	
070	255742-0000		1	COMPRESSION SPRING	
130	311111-0207		1	SPRING PIN ISO 8752 3X14-ST	
150	312115-0366		2	SCREW ISO4762 M6X12 A4 80	
170	312105-0376		4	SCREW, M6S ISO 4014 M6X35 A4 80	
200	312605-0318		1	HEXAGON NUT, M6M M8 A280	
220	315115-0153		4	WASHER PLAIN, TBRB 6,4/12 H=3	
250	315202-0265		1	O-RING 12,3X2,4 MM	
260	90091-0091		1	ROD SEAL 10X14X1,7 MM	
300	90134-0058		1	CONNECTION	

Machine Type | Group Description | Used-In | Group Number | Page No

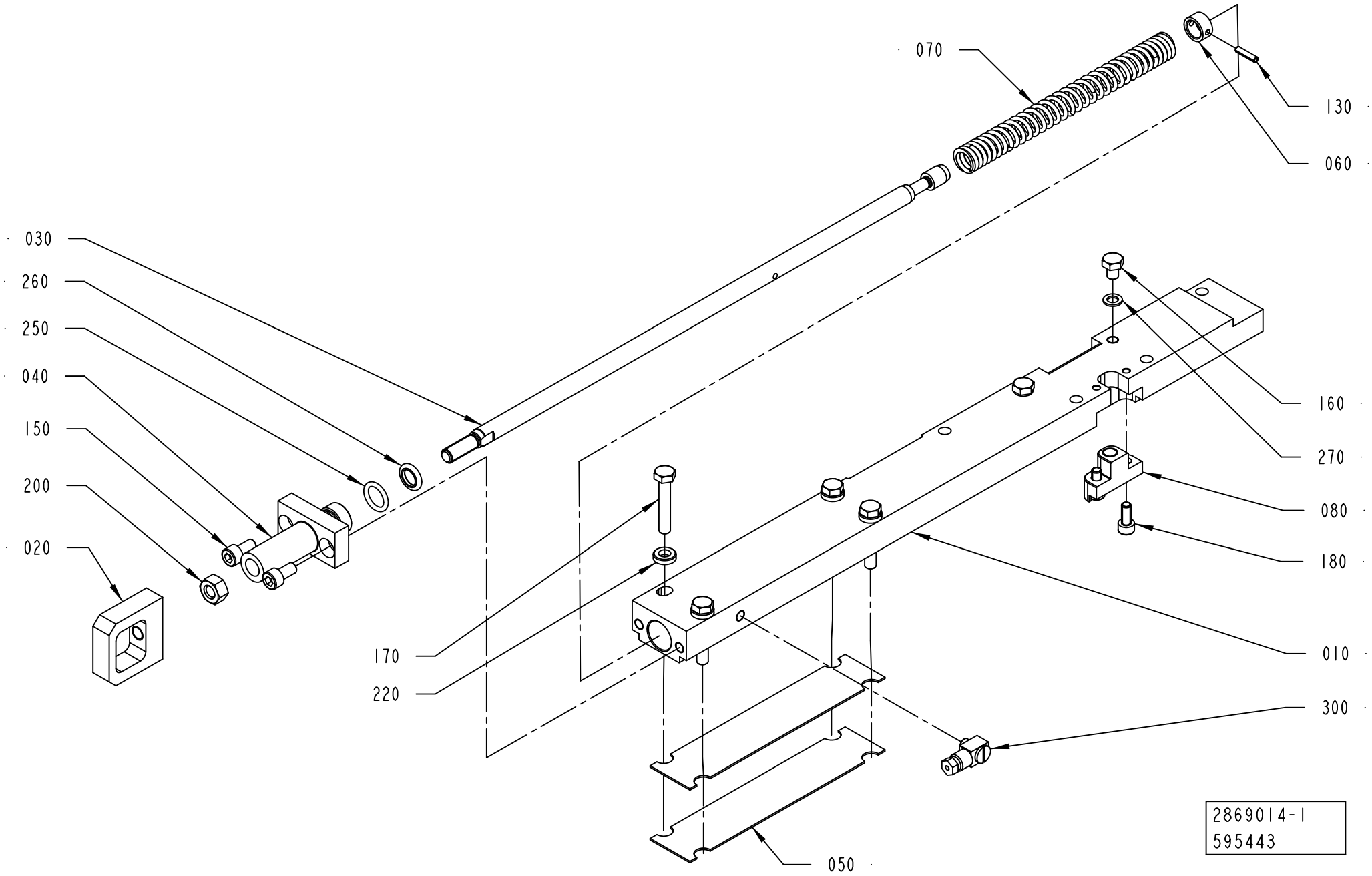
070
130
060
030
260
250
040
150
200
020
160
270
080
180
010
170
220
300
050
2869014-1
595443

ECM: 680109 - 20141001
Group number: 2869014-0100
Assembly Drawing: 2869014-1_1_AC

This list covers pages from 1-258 to 1-263

Pos	Part No	UN	Qty	Description	Page No
TB 0200S (See drawing on page: 1-262)					
010	3253319-0000		1	CARRIER	
030	2818125-0000		1	OPERATING ROD	
080	2869199-0000		1	BLOCK	
090	3276681-0000		4	SHIM	
120	311103-0267		1	PARALLEL PIN ISO 2338 4M6X10 A1	
160	312105-0362		2	SCREW, M6S ISO 4017 M6X8 A4 80	
180	312115-0327		2	SCREW ISO4762 M5X12 A4 80	
270	315237-0106		2	WASHER,PL.RND.AL.6/10,H=1	
TBA 0100B, TBA 0125S, TBA 0080S (See drawing on page: 1-258)					
010	3253321-0000		1	CARRIER	
030	2818125-0000		1	OPERATING ROD	
080	2916875-0000		1	BLOCK	
160	312105-0362		2	SCREW, M6S ISO 4017 M6X8 A4 80	
180	312115-0323		2	SCREW ISO4762 M5X8 A4 80	
270	315237-0106		2	WASHER,PL.RND.AL.6/10,H=1	
TBA 0160S, TBA 0200M, TBA 0200B, TBA 0200S, TBA 0250S, TBA 0250B, TBA 0330S, TBA 0180S (See drawing on page: 1-258)					
010	3253319-0000		1	CARRIER	
030	2818125-0000		1	OPERATING ROD	
080	2869199-0000		1	BLOCK	
160	312105-0362		2	SCREW, M6S ISO 4017 M6X8 A4 80	
180	312115-0327		2	SCREW ISO4762 M5X12 A4 80	
270	315237-0106		2	WASHER,PL.RND.AL.6/10,H=1	
TBA 0200E, TBA 0250E (See drawing on page: 1-260)					
010	3253325-0000		1	CARRIER	
030	3199906-0000		1	OPERATING ROD	
080	2869199-0000		1	BLOCK	
120	311103-0267		1	PARALLEL PIN ISO 2338 4M6X10 A1	
160	312105-0362		2	SCREW, M6S ISO 4017 M6X8 A4 80	
180	312115-0327		2	SCREW ISO4762 M5X12 A4 80	
270	315237-0106		2	WASHER,PL.RND.AL.6/10,H=1	
TBA 0200SQ, TBA 0375S, TPA 0330SQ, TPA 0250SQ, TPA 0200SQ (See drawing on page: 1-260)					
010	3253323-0000		1	CARRIER	
030	2818125-0000		1	OPERATING ROD	
080	2964567-0000		1	BLOCK	
120	311103-0267		1	PARALLEL PIN ISO 2338 4M6X10 A1	
160	312105-0323		2	"FSCR05080-10, SCREW, M6S"	
180	312115-0327		2	SCREW ISO4762 M5X12 A4 80	
270	315237-0108		2	WASHER,PL.RND.AL.5,2/8,H=0,5	
TPA 0125SQ (See drawing on page: 1-258)					
010	3253319-0000		1	CARRIER	
030	2906017-0000		1	OPERATING ROD	
080	2869199-0000		1	BLOCK	
160	312105-0362		2	SCREW, M6S ISO 4017 M6X8 A4 80	
180	312115-0327		2	SCREW ISO4762 M5X12 A4 80	
270	315237-0106		2	WASHER,PL.RND.AL.6/10,H=1	
Common Parts					
020	256626-0000		1	EAR	
040	2818126-0000		1	BEARING PLATE	
050	257362-0000		2	LACE	
060	255801-0000		1	RETAINING RING	
070	255742-0000		1	COMPRESSION SPRING	
130	311111-0207		1	SPRING PIN ISO 8752 3X14-ST	
150	312115-0366		2	SCREW ISO4762 M6X12 A4 80	
170	312105-0376		4	SCREW, M6S ISO 4014 M6X35 A4 80	
200	312605-0318		1	HEXAGON NUT, M6M M8 A280	
220	315115-0153		4	WASHER PLAIN, TBRB 6,4/12 H=3	
250	315202-0265		1	O-RING 12,3X2,4 MM	
260	90091-0091		1	ROD SEAL 10X14X1,7 MM	
300	90134-0058		1	CONNECTION	

Machine Type | Group Description | Used-In | Group Number | Page No

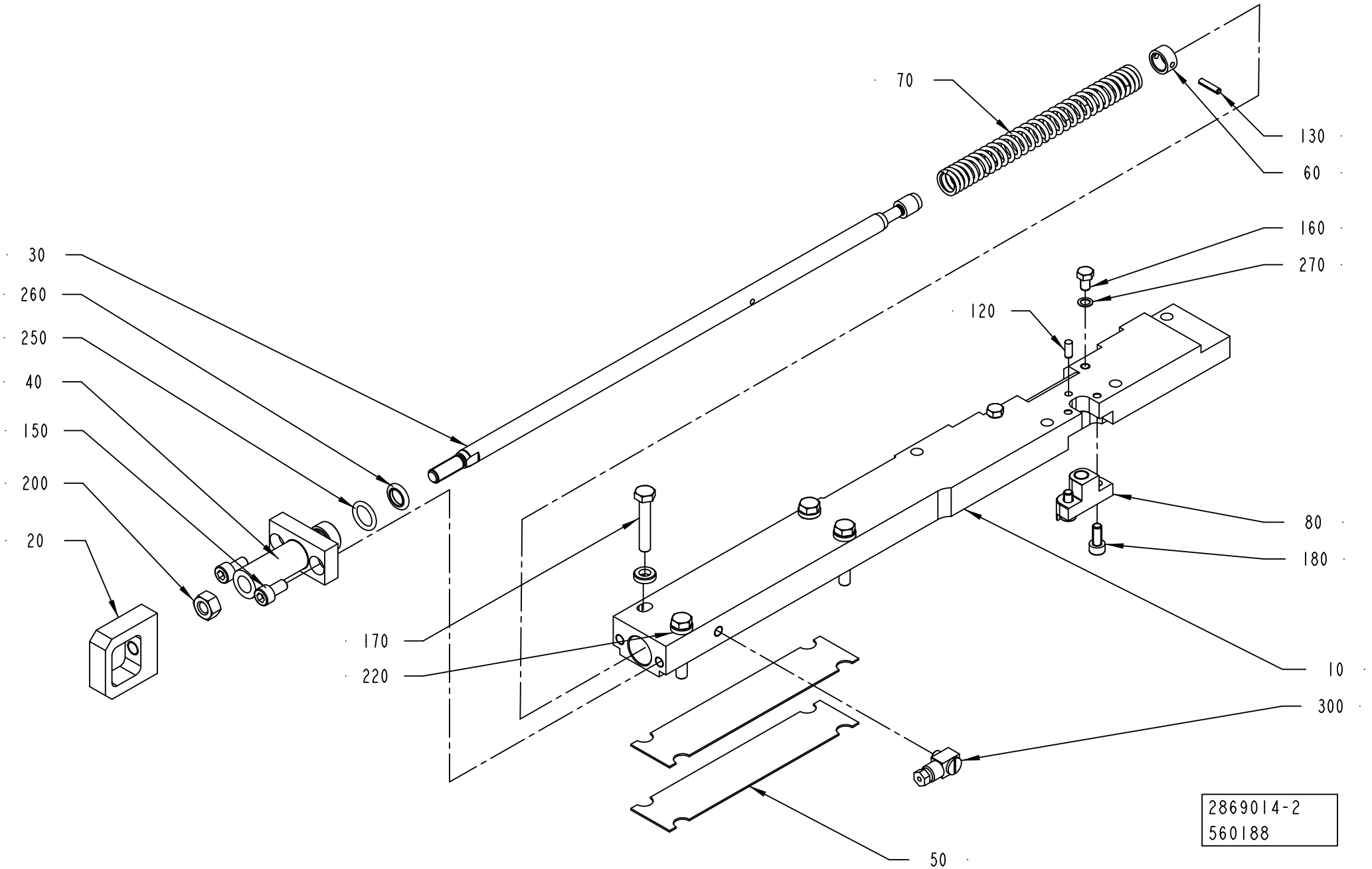
70
130
60
160
270
120
30
260
250
40
150
200
20
80
180
170
220
10
300
50
2869014-2
560188

ECM: 680109 - 20141001
Group number: 2869014-0100
Assembly Drawing: 2869014-2_1_AB

This list covers pages from 1-258 to 1-263

Pos	Part No	UN	Qty	Description	Page No
TB 0200S (See drawing on page: 1-262)					
010	3253319-0000		1	CARRIER	
030	2818125-0000		1	OPERATING ROD	
080	2869199-0000		1	BLOCK	
090	3276681-0000		4	SHIM	
120	311103-0267		1	PARALLEL PIN ISO 2338 4M6X10 A1	
160	312105-0362		2	SCREW, M6S ISO 4017 M6X8 A4 80	
180	312115-0327		2	SCREW ISO4762 M5X12 A4 80	
270	315237-0106		2	WASHER,PL.RND.AL.6/10,H=1	
TBA 0100B, TBA 0125S, TBA 0080S (See drawing on page: 1-258)					
010	3253321-0000		1	CARRIER	
030	2818125-0000		1	OPERATING ROD	
080	2916875-0000		1	BLOCK	
160	312105-0362		2	SCREW, M6S ISO 4017 M6X8 A4 80	
180	312115-0323		2	SCREW ISO4762 M5X8 A4 80	
270	315237-0106		2	WASHER,PL.RND.AL.6/10,H=1	
TBA 0160S, TBA 0200M, TBA 0200B, TBA 0200S, TBA 0250S, TBA 0250B, TBA 0330S, TBA 0180S (See drawing on page: 1-258)					
010	3253319-0000		1	CARRIER	
030	2818125-0000		1	OPERATING ROD	
080	2869199-0000		1	BLOCK	
160	312105-0362		2	SCREW, M6S ISO 4017 M6X8 A4 80	
180	312115-0327		2	SCREW ISO4762 M5X12 A4 80	
270	315237-0106		2	WASHER,PL.RND.AL.6/10,H=1	
TBA 0200E, TBA 0250E (See drawing on page: 1-260)					
010	3253325-0000		1	CARRIER	
030	3199906-0000		1	OPERATING ROD	
080	2869199-0000		1	BLOCK	
120	311103-0267		1	PARALLEL PIN ISO 2338 4M6X10 A1	
160	312105-0362		2	SCREW, M6S ISO 4017 M6X8 A4 80	
180	312115-0327		2	SCREW ISO4762 M5X12 A4 80	
270	315237-0106		2	WASHER,PL.RND.AL.6/10,H=1	
TBA 0200SQ, TBA 0375S, TPA 0330SQ, TPA 0250SQ, TPA 0200SQ (See drawing on page: 1-260)					
010	3253323-0000		1	CARRIER	
030	2818125-0000		1	OPERATING ROD	
080	2964567-0000		1	BLOCK	
120	311103-0267		1	PARALLEL PIN ISO 2338 4M6X10 A1	
160	312105-0323		2	"FSCR05080-10, SCREW, M6S"	
180	312115-0327		2	SCREW ISO4762 M5X12 A4 80	
270	315237-0108		2	WASHER,PL.RND.AL.5,2/8,H=0,5	
TPA 0125SQ (See drawing on page: 1-258)					
010	3253319-0000		1	CARRIER	
030	2906017-0000		1	OPERATING ROD	
080	2869199-0000		1	BLOCK	
160	312105-0362		2	SCREW, M6S ISO 4017 M6X8 A4 80	
180	312115-0327		2	SCREW ISO4762 M5X12 A4 80	
270	315237-0106		2	WASHER,PL.RND.AL.6/10,H=1	
Common Parts					
020	256626-0000		1	EAR	
040	2818126-0000		1	BEARING PLATE	
050	257362-0000		2	LACE	
060	255801-0000		1	RETAINING RING	
070	255742-0000		1	COMPRESSION SPRING	
130	311111-0207		1	SPRING PIN ISO 8752 3X14-ST	
150	312115-0366		2	SCREW ISO4762 M6X12 A4 80	
170	312105-0376		4	SCREW, M6S ISO 4014 M6X35 A4 80	
200	312605-0318		1	HEXAGON NUT, M6M M8 A280	
220	315115-0153		4	WASHER PLAIN, TBRB 6,4/12 H=3	
250	315202-0265		1	O-RING 12,3X2,4 MM	
260	90091-0091		1	ROD SEAL 10X14X1,7 MM	
300	90134-0058		1	CONNECTION	

Machine Type | Group Description | Used-In | Group Number | Page No

CARRIER CUTTING

Drawing file: 2869014-3_1_AA.hpgl

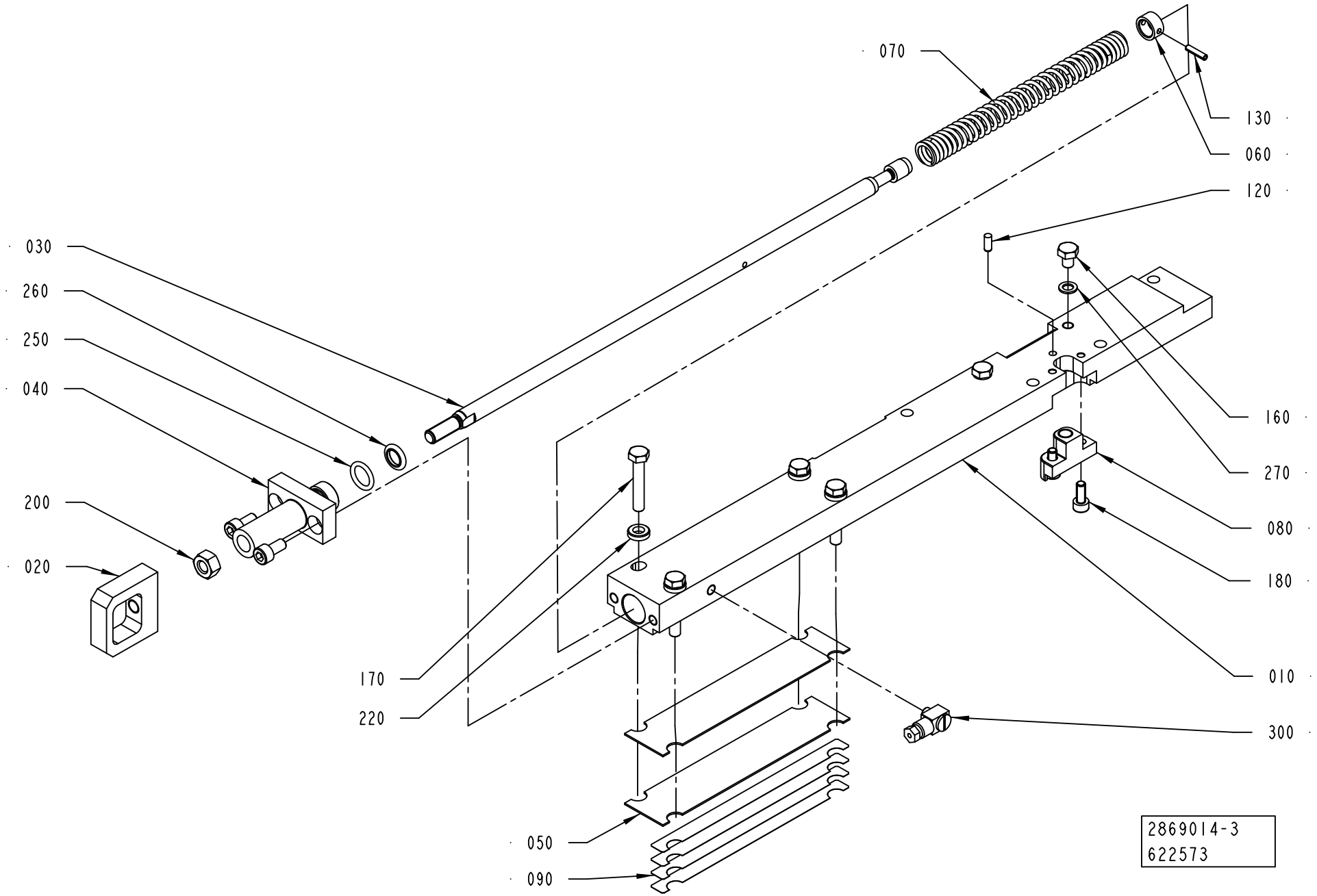

ECM: 680109 - 20141001
Group number: 2869014-0100
Assembly Drawing: 2869014-3_1_AA

This list covers pages from 1-258 to 1-263

Pos	Part No	UN	Qty	Description	Page No
TB 0200S (See drawing on page: 1-262)					
010	3253319-0000		1	CARRIER	
030	2818125-0000		1	OPERATING ROD	
080	2869199-0000		1	BLOCK	
090	3276681-0000		4	SHIM	
120	311103-0267		1	PARALLEL PIN ISO 2338 4M6X10 A1	
160	312105-0362		2	SCREW, M6S ISO 4017 M6X8 A4 80	
180	312115-0327		2	SCREW ISO4762 M5X12 A4 80	
270	315237-0106		2	WASHER,PL.RND.AL.6/10,H=1	
TBA 0100B, TBA 0125S, TBA 0080S (See drawing on page: 1-258)					
010	3253321-0000		1	CARRIER	
030	2818125-0000		1	OPERATING ROD	
080	2916875-0000		1	BLOCK	
160	312105-0362		2	SCREW, M6S ISO 4017 M6X8 A4 80	
180	312115-0323		2	SCREW ISO4762 M5X8 A4 80	
270	315237-0106		2	WASHER,PL.RND.AL.6/10,H=1	
TBA 0160S, TBA 0200M, TBA 0200B, TBA 0200S, TBA 0250S, TBA 0250B, TBA 0330S, TBA 0180S (See drawing on page: 1-258)					
010	3253319-0000		1	CARRIER	
030	2818125-0000		1	OPERATING ROD	
080	2869199-0000		1	BLOCK	
160	312105-0362		2	SCREW, M6S ISO 4017 M6X8 A4 80	
180	312115-0327		2	SCREW ISO4762 M5X12 A4 80	
270	315237-0106		2	WASHER,PL.RND.AL.6/10,H=1	
TBA 0200E, TBA 0250E (See drawing on page: 1-260)					
010	3253325-0000		1	CARRIER	
030	3199906-0000		1	OPERATING ROD	
080	2869199-0000		1	BLOCK	
120	311103-0267		1	PARALLEL PIN ISO 2338 4M6X10 A1	
160	312105-0362		2	SCREW, M6S ISO 4017 M6X8 A4 80	
180	312115-0327		2	SCREW ISO4762 M5X12 A4 80	
270	315237-0106		2	WASHER,PL.RND.AL.6/10,H=1	
TBA 0200SQ, TBA 0375S, TPA 0330SQ, TPA 0250SQ, TPA 0200SQ (See drawing on page: 1-260)					
010	3253323-0000		1	CARRIER	
030	2818125-0000		1	OPERATING ROD	
080	2964567-0000		1	BLOCK	
120	311103-0267		1	PARALLEL PIN ISO 2338 4M6X10 A1	
160	312105-0323		2	"FSCR05080-10, SCREW, M6S"	
180	312115-0327		2	SCREW ISO4762 M5X12 A4 80	
270	315237-0108		2	WASHER,PL.RND.AL.5,2/8,H=0,5	
TPA 0125SQ (See drawing on page: 1-258)					
010	3253319-0000		1	CARRIER	
030	2906017-0000		1	OPERATING ROD	
080	2869199-0000		1	BLOCK	
160	312105-0362		2	SCREW, M6S ISO 4017 M6X8 A4 80	
180	312115-0327		2	SCREW ISO4762 M5X12 A4 80	
270	315237-0106		2	WASHER,PL.RND.AL.6/10,H=1	
Common Parts					
020	256626-0000		1	EAR	
040	2818126-0000		1	BEARING PLATE	
050	257362-0000		2	LACE	
060	255801-0000		1	RETAINING RING	
070	255742-0000		1	COMPRESSION SPRING	
130	311111-0207		1	SPRING PIN ISO 8752 3X14-ST	
150	312115-0366		2	SCREW ISO4762 M6X12 A4 80	
170	312105-0376		4	SCREW, M6S ISO 4014 M6X35 A4 80	
200	312605-0318		1	HEXAGON NUT, M6M M8 A280	
220	315115-0153		4	WASHER PLAIN, TBRB 6,4/12 H=3	
250	315202-0265		1	O-RING 12,3X2,4 MM	
260	90091-0091		1	ROD SEAL 10X14X1,7 MM	
300	90134-0058		1	CONNECTION	

Machine Type | Group Description | Used-In | Group Number | Page No

PRESSURE JAW

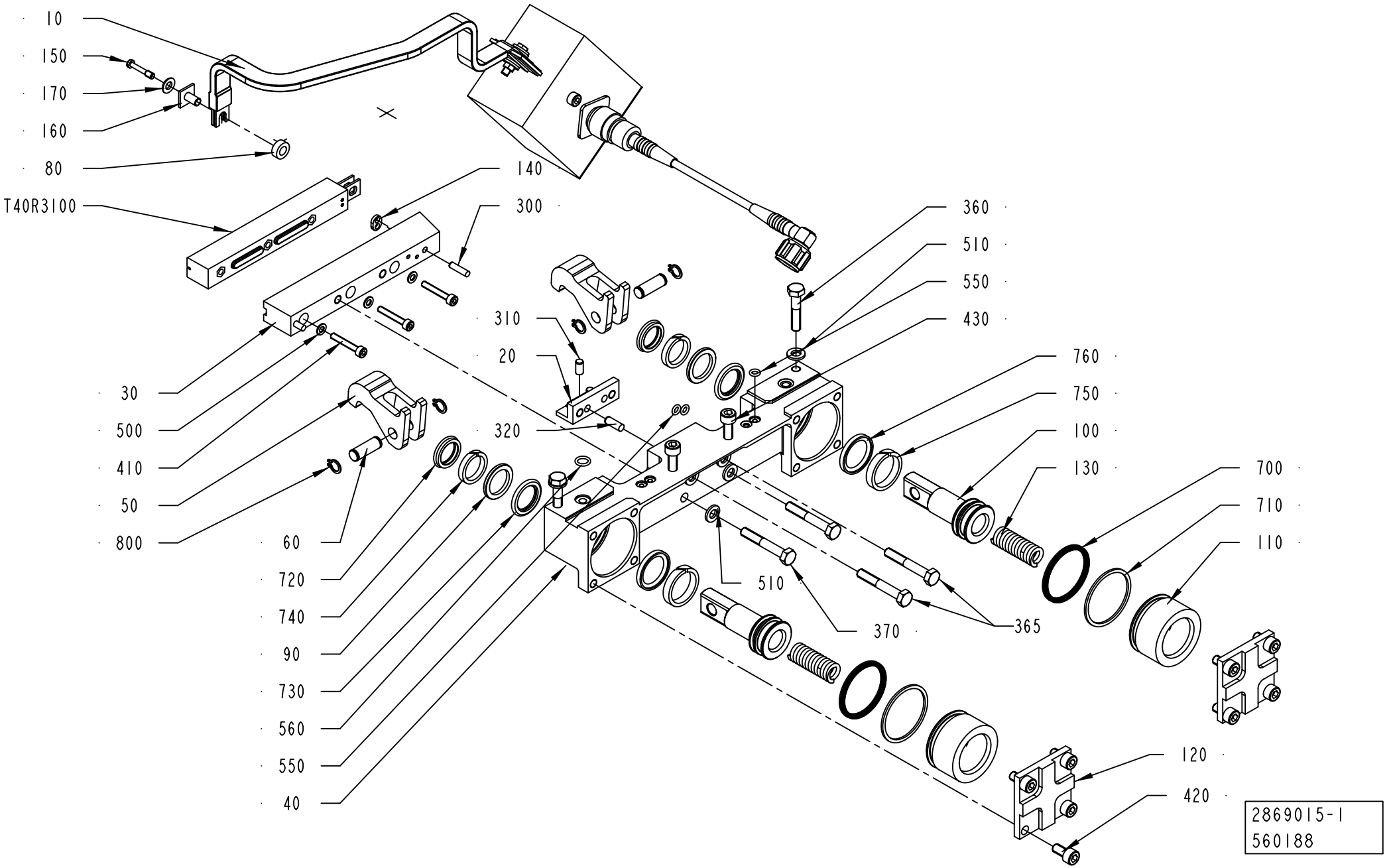

Pos	Part No	UN	Qty	Description	Page No
TBA 0080S (See drawing on page: 1-264)					
020	2916880-0000		1	SUPPORT	
030	2950886-0000		1	RAIL	
040	2835328-0000		1	BEARING HOUSING	
100	2934403-0000		2	PISTON	
110	2934402-0000		2	SLEEVE	
140	491681-0000		1	GASKET	
310	311103-0305		2	PARALLEL PIN ISO 2338 5M6X10 A1	
410	312115-0297		3	SCREW ISO4762 M4X25 A4 80	
430	312105-0372		2	SCREW, M6S ISO 4017 M6X25 A4 80	
500	315105-0136		3	WASHER PLAIN, 4,3X8X0,8 A4 BRB	
750	90091-0394		2	WEAR RING 20X25X5,6 MM	
760	90091-0393		2	PISTON SEAL GLYD RING T 17,5X25X3,2 MM	
T40R3200	1566981-0000		1	INDUCTOR	
TBA 0100B, TBA 0125S (See drawing on page: 1-264)					
020	2916880-0000		1	SUPPORT	
030	2915798-0000		1	RAIL	
040	2835328-0000		1	BEARING HOUSING	
100	2934403-0000		2	PISTON	
110	2934402-0000		2	SLEEVE	
140	315202-0102		2	O-RING 4,1X1,6 MM	
310	311103-0305		2	PARALLEL PIN ISO 2338 5M6X10 A1	
410	312115-0232		3	SCREW ISO4762 M3X25 A4 80	
430	312105-0372		2	SCREW, M6S ISO 4017 M6X25 A4 80	
500	315106-0124		3	WASHER PLAIN, M3 ISO7089-3-200 HV A4	
750	90091-0394		2	WEAR RING 20X25X5,6 MM	
760	90091-0393		2	PISTON SEAL GLYD RING T 17,5X25X3,2 MM	
T40R3100	2917498-0000		1	INDUCTOR	
TBA 0160S, TBA 0200S, TBA 0180S (See drawing on page: 1-264)					
020	3022266-0000		1	SUPPORT	
030	2835329-0000		1	RAIL	
040	2835328-0000		1	BEARING HOUSING	
100	929372-0000		2	PISTON	
110	929371-0000		2	SLEEVE	
140	491681-0000		1	GASKET	
365	312105-0378		2	SCREW, M6S ISO 4014 M6X40 A4 80	
410	312115-0297		3	SCREW ISO4762 M4X25 A4 80	
430	312115-0372		2	SCREW ISO4762 M6X25 A4 80	
500	315105-0136		3	WASHER PLAIN, 4,3X8X0,8 A4 BRB	
750	90091-0391		2	SEAL SLYDRING	
760	90091-0398		2	PISTON SEAL GLIDE RING T 20,5X28X3,2 MM	
T40R3100	1110532-0000		1	INDUCTOR	
TBA 0200B, TBA 0250B, TBA 0330S (See drawing on page: 1-264)					
020	2869202-0000		1	SUPPORT	
030	2835329-0000		1	RAIL	
040	2835328-0000		1	BEARING HOUSING	
100	929372-0000		2	PISTON	
110	929371-0000		2	SLEEVE	
140	491681-0000		1	GASKET	
310	311103-0305		2	PARALLEL PIN ISO 2338 5M6X10 A1	
410	312115-0297		3	SCREW ISO4762 M4X25 A4 80	
430	312115-0372		2	SCREW ISO4762 M6X25 A4 80	
500	315105-0136		3	WASHER PLAIN, 4,3X8X0,8 A4 BRB	
750	90091-0391		2	SEAL SLYDRING	
760	90091-0398		2	PISTON SEAL GLIDE RING T 20,5X28X3,2 MM	
T40R3100	1110534-0000		1	INDUCTOR	
TBA 0200E, TBA 0250E (See drawing on page: 1-270)					
020	3012782-0000		1	SUPPORT	
030	3092451-0000		1	RAIL	
040	3002880-0000		1	BEARING HOUSING	
100	929372-0000		2	PISTON	
110	929371-0000		2	SLEEVE	
140	491681-0000		1	GASKET	
180	3106750-0000		1	VOLUME BULGE	
190	3200712-0000		1	WEDGE	
195	3106754-0000		1	COVER	
310	311103-0305		2	PARALLEL PIN ISO 2338 5M6X10 A1	
365	312105-0376		2	SCREW, M6S ISO 4014 M6X35 A4 80	
430	312115-0372		2	SCREW ISO4762 M6X25 A4 80	
570	312155-0220		4	SCREW DIN 7991 MF6S M3X6 A4 70	
580	312115-0293		2	SCREW ISO4762 M4X16 A4 80	
750	90091-0391		2	SEAL SLYDRING	
760	90091-0398		2	PISTON SEAL GLIDE RING T 20,5X28X3,2 MM	
T40R3100	3089354-0000		1	INDUCTOR	
TBA 0200M, TBA 0250S (See drawing on page: 1-264)					
020	2869202-0000		1	SUPPORT	
030	2947183-0000		1	RAIL	
040	2835328-0000		1	BEARING HOUSING	
100	929372-0000		2	PISTON	
110	929371-0000		2	SLEEVE	
140	491681-0000		1	GASKET	
310	311103-0305		2	PARALLEL PIN ISO 2338 5M6X10 A1	
410	312115-0297		3	SCREW ISO4762 M4X25 A4 80	
430	312115-0372		2	SCREW ISO4762 M6X25 A4 80	

PRESSURE JAW

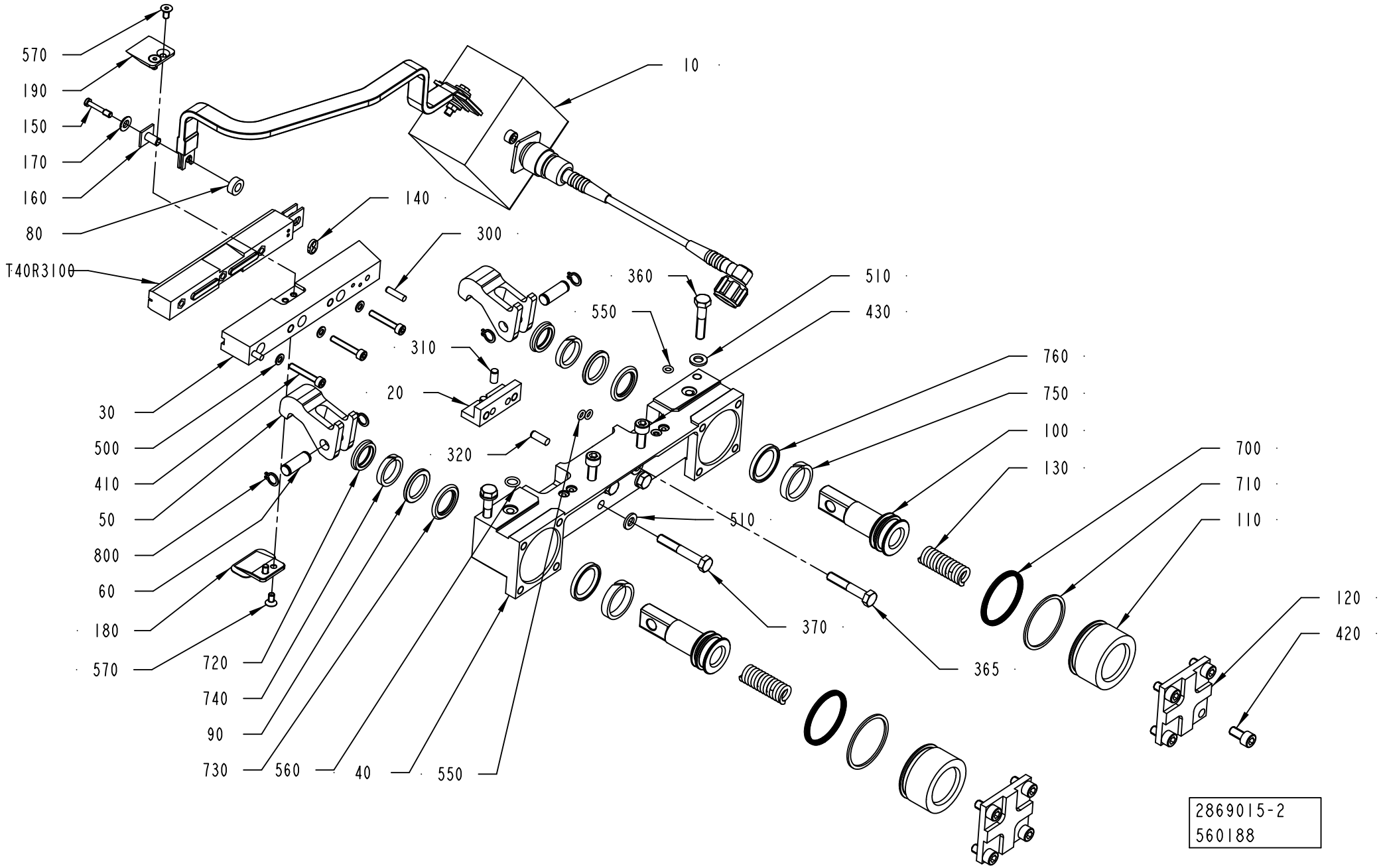

Pos	Part No	UN	Qty	Description	Page No
TBA 0200M, TBA 0250S (Cont'd) (See drawing on page: 1-264)					
500	315105-0136		3	WASHER PLAIN, 4,3X8X0,8 A4 BRB	
750	90091-0391		2	SEAL SLYDRING	
760	90091-0398		2	PISTON SEAL GLIDE RING T 20,5X28X3,2 MM	
T40R3100	1110535-0000		1	INDUCTOR	
TBA 0200SQ (See drawing on page: 1-266)					
020	2964566-0000		1	SUPPORT	
030	2976821-0000		1	RAIL	
040	3002880-0000		1	BEARING HOUSING	
100	929372-0000		2	PISTON	
110	929371-0000		2	SLEEVE	
140	491681-0000		1	GASKET	
180	3006049-0000		1	VOLUME BULGE	
190	1539593-0000		1	COVER	
310	311103-0305		2	PARALLEL PIN ISO 2338 5M6X10 A1	
365	312105-0376		2	SCREW, M6S ISO 4014 M6X35 A4 80	
410	312115-0297		3	SCREW ISO4762 M4X25 A4 80	
430	312115-0372		2	SCREW ISO4762 M6X25 A4 80	
500	315105-0136		3	WASHER PLAIN, 4,3X8X0,8 A4 BRB	
570	312155-0287		4	SCREW DIN 7991 MF6S M4X8 A4 70	
750	90091-0391		2	SEAL SLYDRING	
760	90091-0398		2	PISTON SEAL GLIDE RING T 20,5X28X3,2 MM	
T40R3200	3044527-0000		1	INDUCTOR	
TBA 0375S (See drawing on page: 1-268)					
020	3067238-0000		1	SUPPORT	
030	2835329-0000		1	RAIL	
040	3002880-0000		1	BEARING HOUSING	
100	929372-0000		2	PISTON	
110	929371-0000		2	SLEEVE	
140	491681-0000		1	GASKET	
365	312105-0376		2	SCREW, M6S ISO 4014 M6X35 A4 80	
430	312115-0372		2	SCREW ISO4762 M6X25 A4 80	
750	90091-0391		2	SEAL SLYDRING	
760	90091-0398		2	PISTON SEAL GLIDE RING T 20,5X28X3,2 MM	
T40R3100	3089348-0000		1	INDUCTOR	
TPA 0125SQ (See drawing on page: 1-264)					
020	2869202-0000		1	SUPPORT	
030	2835329-0000		1	RAIL	
040	2835328-0000		1	BEARING HOUSING	
100	2934403-0000		2	PISTON	
110	2934402-0000		2	SLEEVE	
140	491681-0000		1	GASKET	
310	311103-0305		2	PARALLEL PIN ISO 2338 5M6X10 A1	
410	312115-0297		3	SCREW ISO4762 M4X25 A4 80	
430	312115-0372		2	SCREW ISO4762 M6X25 A4 80	
500	315105-0136		3	WASHER PLAIN, 4,3X8X0,8 A4 BRB	
750	90091-0394		2	WEAR RING 20X25X5,6 MM	
760	90091-0393		2	PISTON SEAL GLYD RING T 17,5X25X3,2 MM	
T40R3100	2975930-0000		1	INDUCTOR	
TPA 0250SQ, TPA 0200SQ (See drawing on page: 1-264)					
020	2964566-0000		1	SUPPORT	
030	2835329-0000		1	RAIL	
040	3002880-0000		1	BEARING HOUSING	
100	929372-0000		2	PISTON	
110	929371-0000		2	SLEEVE	
140	491681-0000		1	GASKET	
310	311103-0305		2	PARALLEL PIN ISO 2338 5M6X10 A1	
365	312105-0376		2	SCREW, M6S ISO 4014 M6X35 A4 80	
410	312115-0297		3	SCREW ISO4762 M4X25 A4 80	
430	312115-0372		2	SCREW ISO4762 M6X25 A4 80	
500	315105-0136		3	WASHER PLAIN, 4,3X8X0,8 A4 BRB	
750	90091-0391		2	SEAL SLYDRING	
760	90091-0398		2	PISTON SEAL GLIDE RING T 20,5X28X3,2 MM	
T40R3100	1110534-0000		1	INDUCTOR	
TPA 0330SQ (See drawing on page: 1-264)					
020	2964566-0000		1	SUPPORT	
030	3130390-0000		1	RAIL	
040	3002880-0000		1	BEARING HOUSING	
100	929372-0000		2	PISTON	
110	929371-0000		2	SLEEVE	
140	491681-0000		1	GASKET	
310	311103-0305		2	PARALLEL PIN ISO 2338 5M6X10 A1	
365	312105-0376		2	SCREW, M6S ISO 4014 M6X35 A4 80	
410	312115-0297		3	SCREW ISO4762 M4X25 A4 80	
430	312115-0372		2	SCREW ISO4762 M6X25 A4 80	
500	315105-0136		3	WASHER PLAIN, 4,3X8X0,8 A4 BRB	
570	312155-0287		4	SCREW DIN 7991 MF6S M4X8 A4 70	
750	90091-0391		2	SEAL SLYDRING	
760	90091-0398		2	PISTON SEAL GLIDE RING T 20,5X28X3,2 MM	
T40R3100	1110556-0000		1	INDUCTOR	
Common Parts					
010	2837086-0100		1	TRANSFORMER	**1-273**
050	2835327-0000		2	CATCH	
060	2835326-0000		2	SHAFT	

Machine Type | Group Description | Used-In | Group Number | Page No

PRESSURE JAW

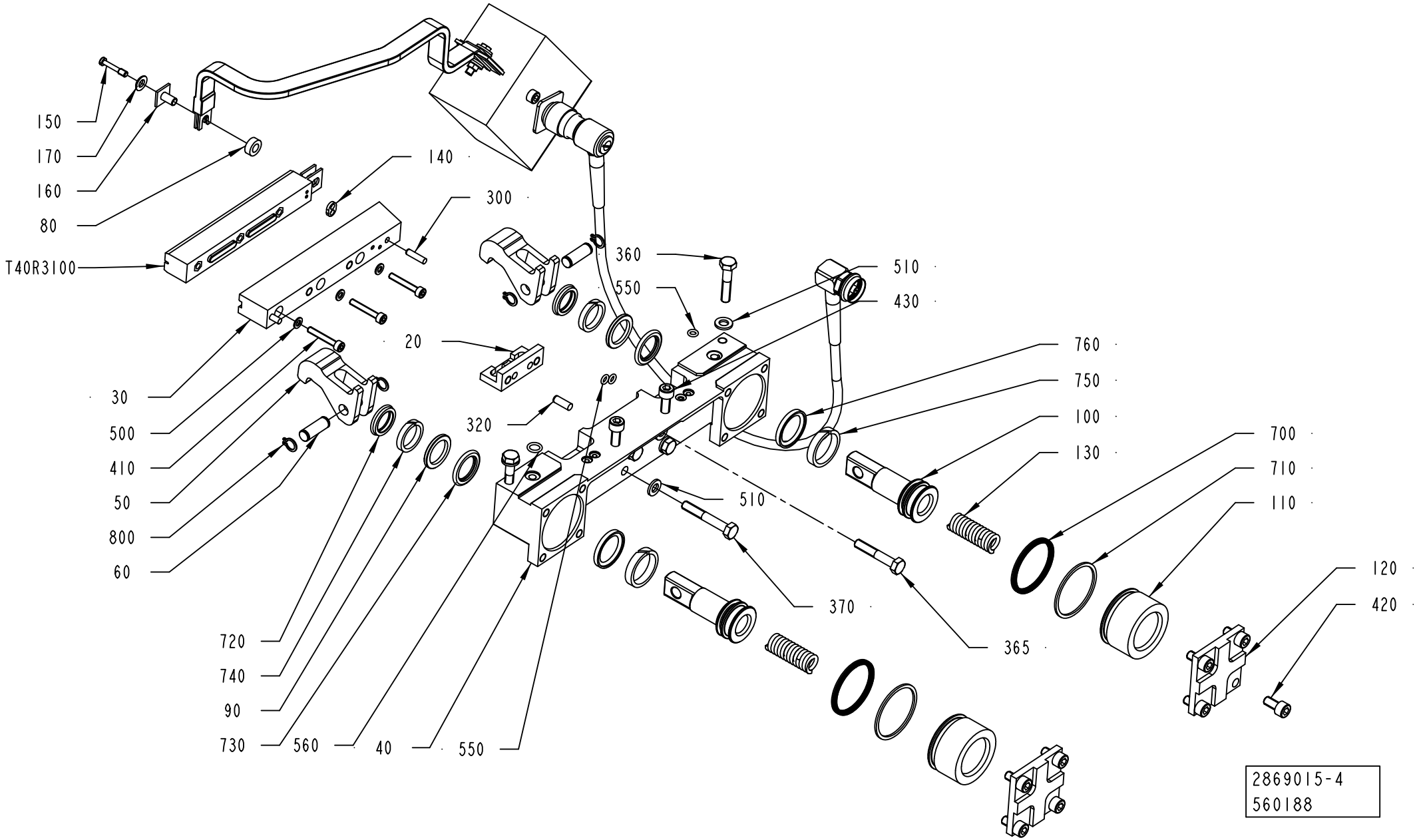

Pos	Part No	UN	Qty	Description	Page No
Common Parts (Cont'd)					
080	32644-0000		1	WASHER	
090	1038240-0000		2	SPACER	
120	3192942-0000		2	LID	
130	590369-0000		2	COMPRESSION SPRING	
150	271848-0000		1	SCREW	
160	271846-0000		1	INSULATION NUT	
170	256882-0000		1	WASHER	
300	311103-0270		2	PARALLEL PIN ISO 2338 4M6X16 A1	
320	311103-0307		2	PARALLEL PIN ISO 2338 5M6X14 A1	
360	312105-0374		2	SCREW, M6S ISO 4014 M6X30 A4 80	
370	312105-0378		2	SCREW, M6S ISO 4014 M6X40 A4 80	
420	312115-0366		8	SCREW ISO4762 M6X12 A4 80	
510	315105-0153		6	WASHER PLAIN, 6,4X12X1,5 A4 BRB	
550	315202-0102		4	O-RING 4,1X1,6 MM	
560	315202-0105		2	O-RING 7,1X1,6 MM	
700	90091-0359		2	X-SEAL 36,17X2,62 MM	
710	90091-0360		2	BACK-UP RING 37,5X1,4 MM	
720	90091-0362		2	SCRAPER, EXCLUDER 18X22,8X3,7 MM	
730	90091-0364		2	ROD SEAL, STEPSEAL 18X25,3X3,2 MM	
740	90091-0366		2	WEAR RING 18X23X3,9 MM	
800	90141-0015		4	RETAINING RING FOR SHAFT DIN 471 8 SS	

Pos	Part No	UN	Qty	Description	Page No

PRESSURE JAW

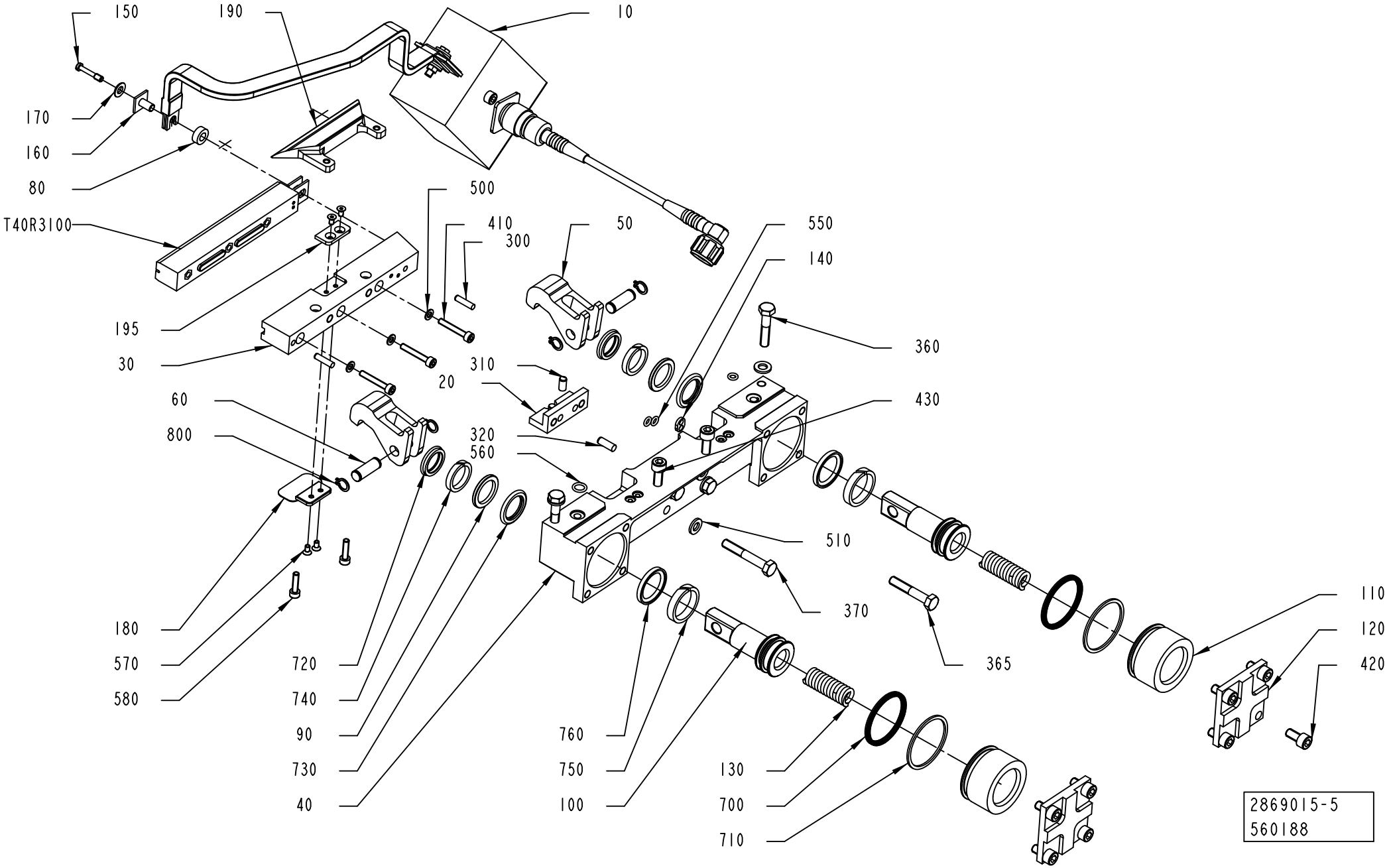

ECM: 577499 - 20130402
Group number: 2869015-0100
Assembly Drawing: 2869015-5_1_AC

This list covers pages from 1-264 to 1-271

Pos	Part No	UN	Qty	Description	Page No

SEE PREVIOUS LISTS PAGES: 1-265, 1-267, 1-269.

Pos	Part No	UN	Qty	Description	Page No

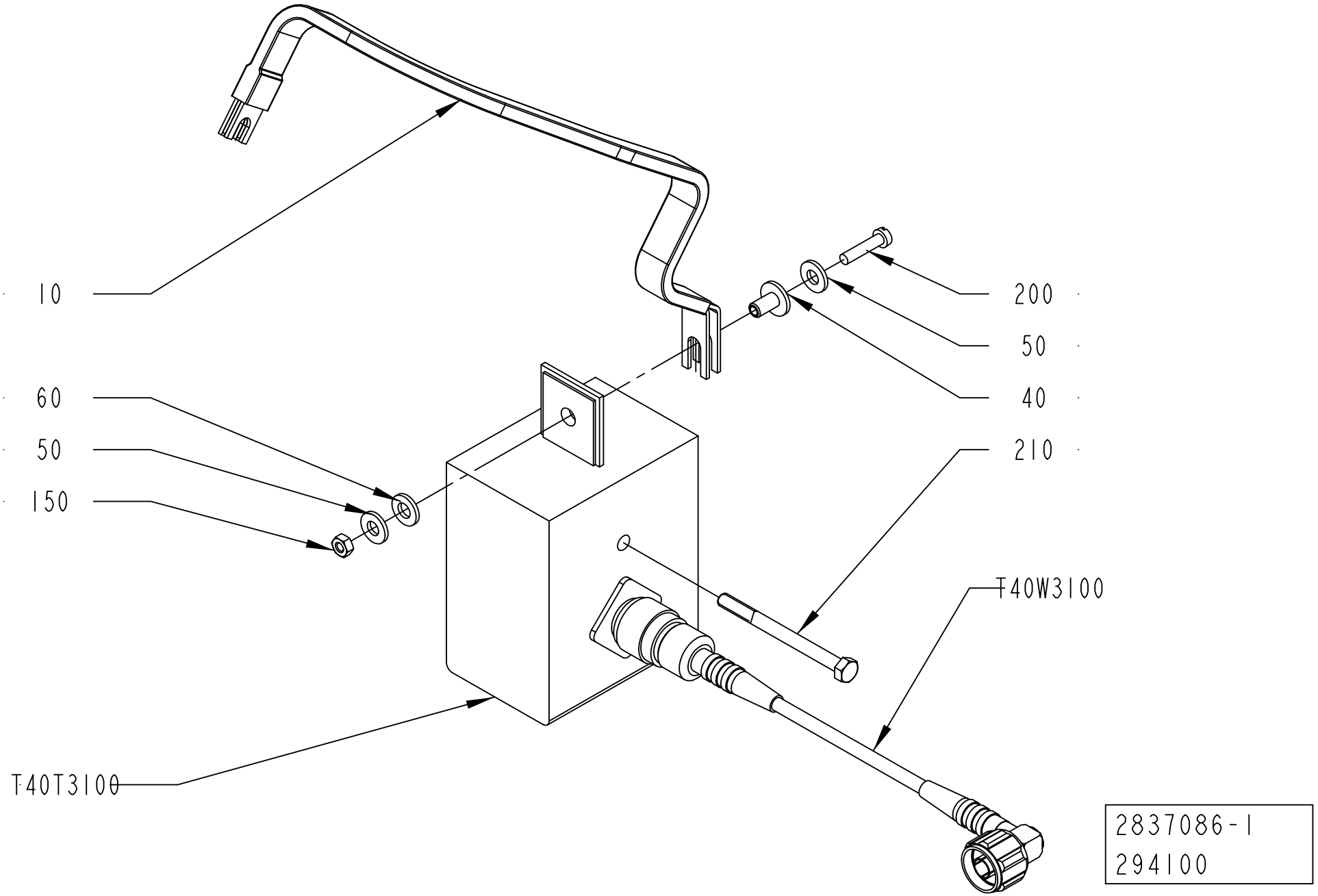
10
60
50
150
200
50
40
210
T40W3100
T40T3100
2837086-1
294100

ECM: 575261 - 20130402
Group number: 2837086-0100
Assembly Drawing: 2837086-1_1_AA

Pos	Part No	UN	Qty	Description	Page No
TBA 0080S					
010	2916878-0000		1	BUSBAR	
T40T3200	67379-0262		1	TRANSFORMER	
TBA 0100B, TBA 0125S					
010	2837076-0000		1	BUSBAR	
T40T3200	67379-0107		1	TRANSFORMER	
TBA 0160S, TBA 0200S, TBA 0180S					
010	2837076-0000		1	BUSBAR	
T40T3200	67379-0204		1	TRANSFORMER	
TBA 0200B, TBA 0250B, TBA 0330S					
010	2837076-0000		1	BUSBAR	
T40T3200	67379-0264		1	TRANSFORMER	
TBA 0200E, TBA 0250E					
010	2837076-0000		1	BUSBAR	
T40T3200	2837503-0109		1	TRANSFORMER	
TBA 0200M, TBA 0250S					
010	2837076-0000		1	BUSBAR	
T40T3200	2837503-0105		1	TRANSFORMER	
TBA 0200SQ					
010	2837076-0000		1	BUSBAR	
T40T3200	67379-0269		1	TRANSFORMER	
TBA 0375S, TPA 0330SQ					
010	2837076-0000		1	BUSBAR	
T40T3200	67379-0115		1	TRANSFORMER	
TPA 0125SQ					
010	2837076-0000		1	BUSBAR	
T40T3200	67379-0248		1	TRANSFORMER	
TPA 0250SQ, TPA 0200SQ					
010	2837076-0000		1	BUSBAR	
T40T3200	67379-0254		1	TRANSFORMER	
Common Parts					
040	32544-0000		1	INSULATION NUT	
050	28509-0000		2	WASHER	
060	32079-0000		1	WASHER	
150	312602-0312		1	HEXAGON NUT, EN 24032 M6M M4 NIPLBR	
200	312105-0295		1	SCREW, M6S ISO 4017 M4X20 A4 70	
210	90458-0058		1	SCREW M5X60 A280	
T40W3100	2562736-0002		1	COAXIAL CABLE	

Pos	Part No	UN	Qty	Description	Page No

Machine Type	Group Description	Used-In	Group Number	Page No

PRESSURE JAW

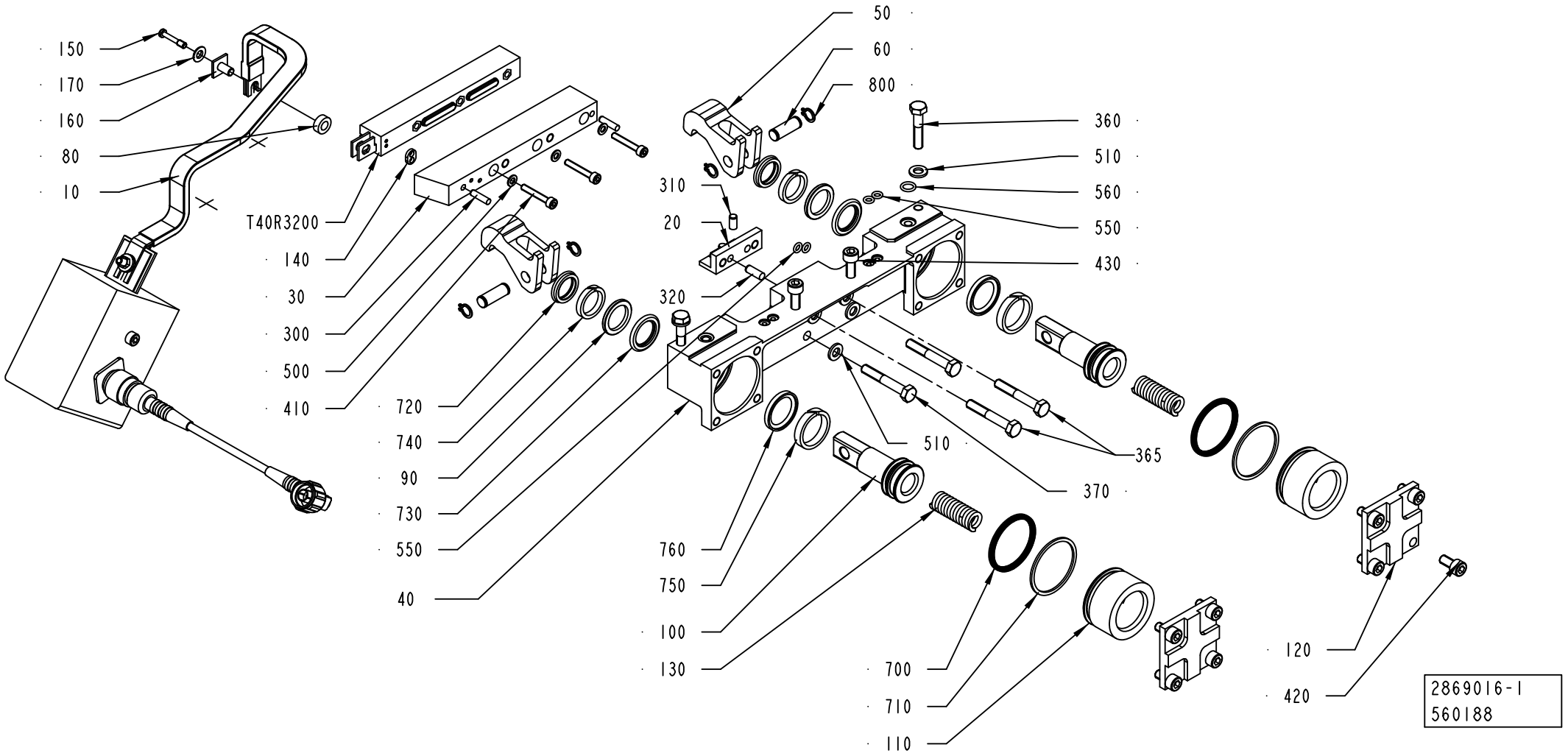

ECM: 579434 - 20130402
Group number: 2869016-0100
Assembly Drawing: 2869016-1_1_AF

This list covers pages from 1-274 to 1-281

Pos	Part No	UN	Qty	Description	Page No
TBA 0080S (See drawing on page: 1-274)					
020	2916880-0000		1	SUPPORT	
030	2950887-0000		1	RAIL	
040	2835328-0000		1	BEARING HOUSING	
100	2934403-0000		2	PISTON	
110	2934402-0000		2	SLEEVE	
140	491681-0000		1	GASKET	
310	311103-0305		2	PARALLEL PIN ISO 2338 5M6X10 A1	
365	312105-0378		2	SCREW, M6S ISO 4014 M6X40 A4 80	
410	312115-0297		3	SCREW ISO4762 M4X25 A4 80	
430	312105-0372		2	SCREW, M6S ISO 4017 M6X25 A4 80	
500	315105-0136		3	WASHER PLAIN, 4,3X8X0,8 A4 BRB	
750	90091-0394		2	WEAR RING 20X25X5,6 MM	
760	90091-0393		2	PISTON SEAL GLYD RING T 17,5X25X3,2 MM	
T40R3200	1566981-0000		1	INDUCTOR	
TBA 0100B, TBA 0125S (See drawing on page: 1-274)					
020	2916880-0000		1	SUPPORT	
030	2944475-0000		1	RAIL	
040	2835328-0000		1	BEARING HOUSING	
100	2934403-0000		2	PISTON	
110	2934402-0000		2	SLEEVE	
140	315202-0102		2	O-RING 4,1X1,6 MM	
310	311103-0305		2	PARALLEL PIN ISO 2338 5M6X10 A1	
365	312105-0378		2	SCREW, M6S ISO 4014 M6X40 A4 80	
410	312115-0232		3	SCREW ISO4762 M3X25 A4 80	
430	312105-0372		2	SCREW, M6S ISO 4017 M6X25 A4 80	
500	315106-0124		3	WASHER PLAIN, M3 ISO7089-3-200 HV A4	
750	90091-0394		2	WEAR RING 20X25X5,6 MM	
760	90091-0393		2	PISTON SEAL GLYD RING T 17,5X25X3,2 MM	
T40R3200	2917498-0000		1	INDUCTOR	
TBA 0160S, TBA 0200S, TBA 0180S (See drawing on page: 1-274)					
020	3022266-0000		1	SUPPORT	
030	2835329-0000		1	RAIL	
040	2835328-0000		1	BEARING HOUSING	
100	929372-0000		2	PISTON	
110	929371-0000		2	SLEEVE	
140	491681-0000		1	GASKET	
365	312105-0378		2	SCREW, M6S ISO 4014 M6X40 A4 80	
410	312115-0297		3	SCREW ISO4762 M4X25 A4 80	
430	312115-0372		2	SCREW ISO4762 M6X25 A4 80	
500	315105-0136		3	WASHER PLAIN, 4,3X8X0,8 A4 BRB	
750	90091-0391		2	SEAL SLYDRING	
760	90091-0398		2	PISTON SEAL GLIDE RING T 20,5X28X3,2 MM	
T40R3200	1110532-0000		1	INDUCTOR	
TBA 0200B, TBA 0250B, TBA 0330S (See drawing on page: 1-274)					
020	2869202-0000		1	SUPPORT	
030	2835329-0000		1	RAIL	
040	2835328-0000		1	BEARING HOUSING	
100	929372-0000		2	PISTON	
110	929371-0000		2	SLEEVE	
140	491681-0000		1	GASKET	
310	311103-0305		2	PARALLEL PIN ISO 2338 5M6X10 A1	
365	312105-0378		2	SCREW, M6S ISO 4014 M6X40 A4 80	
410	312115-0297		3	SCREW ISO4762 M4X25 A4 80	
430	312115-0372		2	SCREW ISO4762 M6X25 A4 80	
500	315105-0136		3	WASHER PLAIN, 4,3X8X0,8 A4 BRB	
750	90091-0391		2	SEAL SLYDRING	
760	90091-0398		2	PISTON SEAL GLIDE RING T 20,5X28X3,2 MM	
T40R3200	1110534-0000		1	INDUCTOR	
TBA 0200E, TBA 0250E (See drawing on page: 1-280)					
020	3012782-0000		1	SUPPORT	
030	3092451-0000		1	RAIL	
040	3002880-0000		1	BEARING HOUSING	
100	929372-0000		2	PISTON	
110	929371-0000		2	SLEEVE	
140	491681-0000		1	GASKET	
180	3106750-0000		1	VOLUME BULGE	
190	3200712-0000		1	WEDGE	
195	3106754-0000		1	COVER	
310	311103-0305		2	PARALLEL PIN ISO 2338 5M6X10 A1	
365	312105-0376		2	SCREW, M6S ISO 4014 M6X35 A4 80	
430	312115-0372		2	SCREW ISO4762 M6X25 A4 80	
435	312105-0374		2	SCREW, M6S ISO 4014 M6X30 A4 80	
570	312155-0220		4	SCREW DIN 7991 MF6S M3X6 A4 70	
580	312115-0293		2	SCREW ISO4762 M4X16 A4 80	
750	90091-0391		2	SEAL SLYDRING	
760	90091-0398		2	PISTON SEAL GLIDE RING T 20,5X28X3,2 MM	
T40R3200	3089354-0000		1	INDUCTOR	
TBA 0200M, TBA 0250S (See drawing on page: 1-274)					
020	2869202-0000		1	SUPPORT	
030	2947183-0000		1	RAIL	
040	2835328-0000		1	BEARING HOUSING	
100	929372-0000		2	PISTON	
110	929371-0000		2	SLEEVE	

Machine Type | Group Description | Used-In | Group Number | Page No

PRESSURE JAW

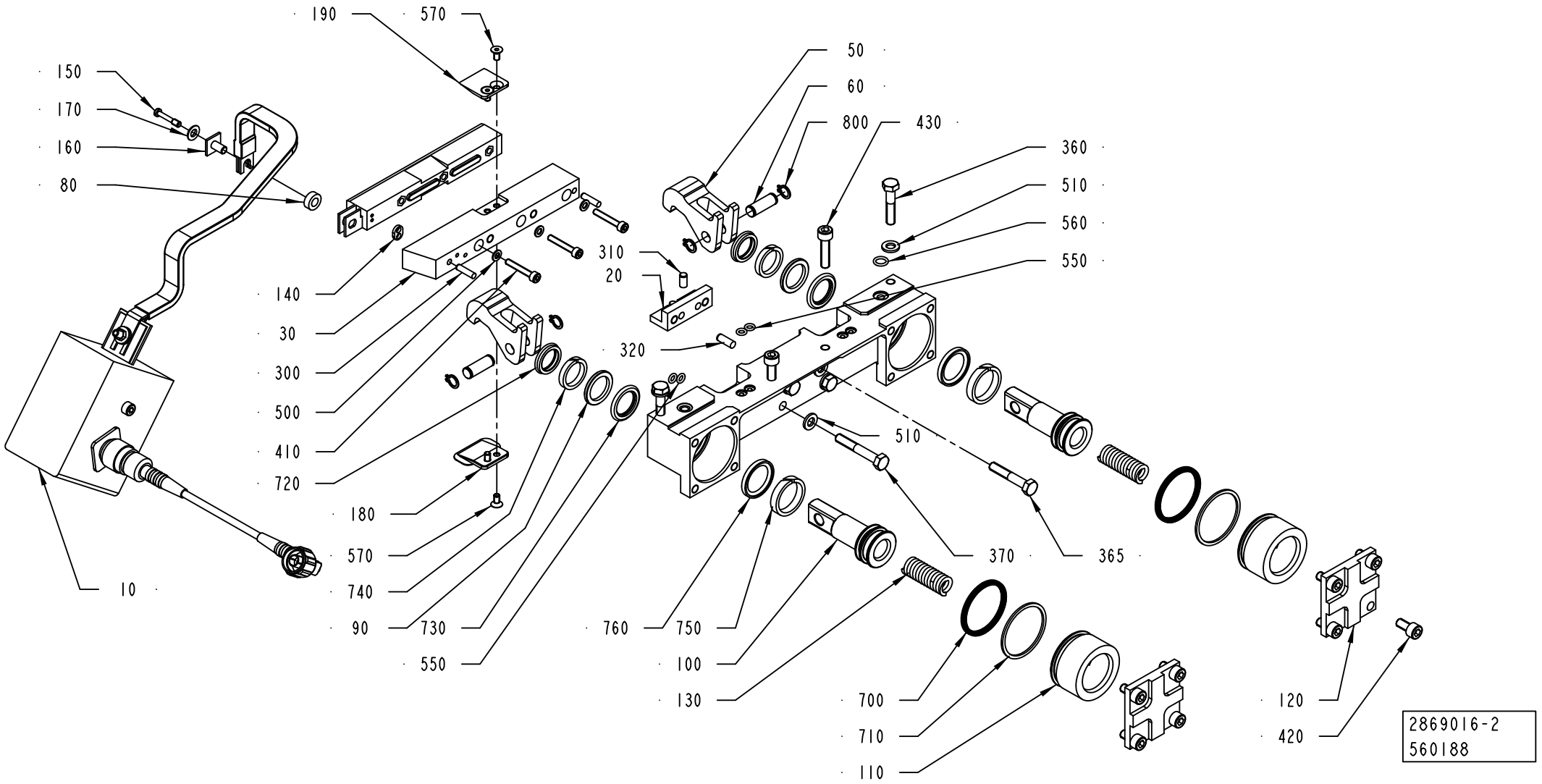

Pos	Part No	UN	Qty	Description	Page No
TBA 0200M, TBA 0250S (Cont'd) (See drawing on page: 1-274)					
140	491681-0000		1	GASKET	
310	311103-0305		2	PARALLEL PIN ISO 2338 5M6X10 A1	
365	312105-0378		2	SCREW, M6S ISO 4014 M6X40 A4 80	
410	312115-0297		3	SCREW ISO4762 M4X25 A4 80	
430	312115-0372		2	SCREW ISO4762 M6X25 A4 80	
500	315105-0136		3	WASHER PLAIN, 4,3X8X0,8 A4 BRB	
750	90091-0391		2	SEAL SLYDRING	
760	90091-0398		2	PISTON SEAL GLIDE RING T 20,5X28X3,2 MM	
T40R3200	1110535-0000		1	INDUCTOR	
TBA 0200SQ (See drawing on page: 1-276)					
020	2964566-0000		1	SUPPORT	
030	2976821-0000		1	RAIL	
040	3002880-0000		1	BEARING HOUSING	
100	929372-0000		2	PISTON	
110	929371-0000		2	SLEEVE	
140	491681-0000		1	GASKET	
180	3006049-0000		1	VOLUME BULGE	
190	1539593-0000		1	COVER	
310	311103-0305		2	PARALLEL PIN ISO 2338 5M6X10 A1	
365	312105-0376		2	SCREW, M6S ISO 4014 M6X35 A4 80	
410	312115-0297		3	SCREW ISO4762 M4X25 A4 80	
430	312115-0372		2	SCREW ISO4762 M6X25 A4 80	
500	315105-0136		3	WASHER PLAIN, 4,3X8X0,8 A4 BRB	
570	312155-0287		4	SCREW DIN 7991 MF6S M4X8 A4 70	
750	90091-0391		2	SEAL SLYDRING	
760	90091-0398		2	PISTON SEAL GLIDE RING T 20,5X28X3,2 MM	
T40R3200	3044527-0000		1	INDUCTOR	
TBA 0375S (See drawing on page: 1-278)					
020	3067238-0000		1	SUPPORT	
030	2835329-0000		1	RAIL	
040	3002880-0000		1	BEARING HOUSING	
100	929372-0000		2	PISTON	
110	929371-0000		2	SLEEVE	
365	312105-0376		2	SCREW, M6S ISO 4014 M6X35 A4 80	
430	312115-0372		2	SCREW ISO4762 M6X25 A4 80	
750	90091-0391		2	SEAL SLYDRING	
760	90091-0398		2	PISTON SEAL GLIDE RING T 20,5X28X3,2 MM	
T40R3200	3089348-0000		1	INDUCTOR	
TPA 0125SQ (See drawing on page: 1-274)					
020	2869202-0000		1	SUPPORT	
030	2835329-0000		1	RAIL	
040	2835328-0000		1	BEARING HOUSING	
100	2934403-0000		2	PISTON	
110	2934402-0000		2	SLEEVE	
140	491681-0000		1	GASKET	
310	311103-0305		2	PARALLEL PIN ISO 2338 5M6X10 A1	
365	312105-0378		2	SCREW, M6S ISO 4014 M6X40 A4 80	
410	312115-0297		3	SCREW ISO4762 M4X25 A4 80	
430	312115-0372		2	SCREW ISO4762 M6X25 A4 80	
500	315105-0136		3	WASHER PLAIN, 4,3X8X0,8 A4 BRB	
750	90091-0394		2	WEAR RING 20X25X5,6 MM	
760	90091-0393		2	PISTON SEAL GLYD RING T 17,5X25X3,2 MM	
T40R3200	2975930-0000		1	INDUCTOR	
TPA 0250SQ, TPA 0200SQ (See drawing on page: 1-274)					
020	2964566-0000		1	SUPPORT	
030	2835329-0000		1	RAIL	
040	3002880-0000		1	BEARING HOUSING	
100	929372-0000		2	PISTON	
110	929371-0000		2	SLEEVE	
140	491681-0000		1	GASKET	
310	311103-0305		2	PARALLEL PIN ISO 2338 5M6X10 A1	
365	312105-0376		2	SCREW, M6S ISO 4014 M6X35 A4 80	
410	312115-0297		3	SCREW ISO4762 M4X25 A4 80	
430	312115-0372		2	SCREW ISO4762 M6X25 A4 80	
500	315105-0136		3	WASHER PLAIN, 4,3X8X0,8 A4 BRB	
750	90091-0391		2	SEAL SLYDRING	
760	90091-0398		2	PISTON SEAL GLIDE RING T 20,5X28X3,2 MM	
T40R3200	1110534-0000		1	INDUCTOR	
TPA 0330SQ (See drawing on page: 1-274)					
020	2964566-0000		1	SUPPORT	
030	3130390-0000		1	RAIL	
040	3002880-0000		1	BEARING HOUSING	
100	929372-0000		2	PISTON	
110	929371-0000		2	SLEEVE	
140	491681-0000		1	GASKET	
310	311103-0305		2	PARALLEL PIN ISO 2338 5M6X10 A1	
365	312105-0376		2	SCREW, M6S ISO 4014 M6X35 A4 80	
410	312115-0297		3	SCREW ISO4762 M4X25 A4 80	
430	312115-0372		2	SCREW ISO4762 M6X25 A4 80	
500	315105-0136		3	WASHER PLAIN, 4,3X8X0,8 A4 BRB	
570	312155-0287		4	SCREW DIN 7991 MF6S M4X8 A4 70	
750	90091-0391		2	SEAL SLYDRING	
760	90091-0398		2	PISTON SEAL GLIDE RING T 20,5X28X3,2 MM	

PRESSURE JAW

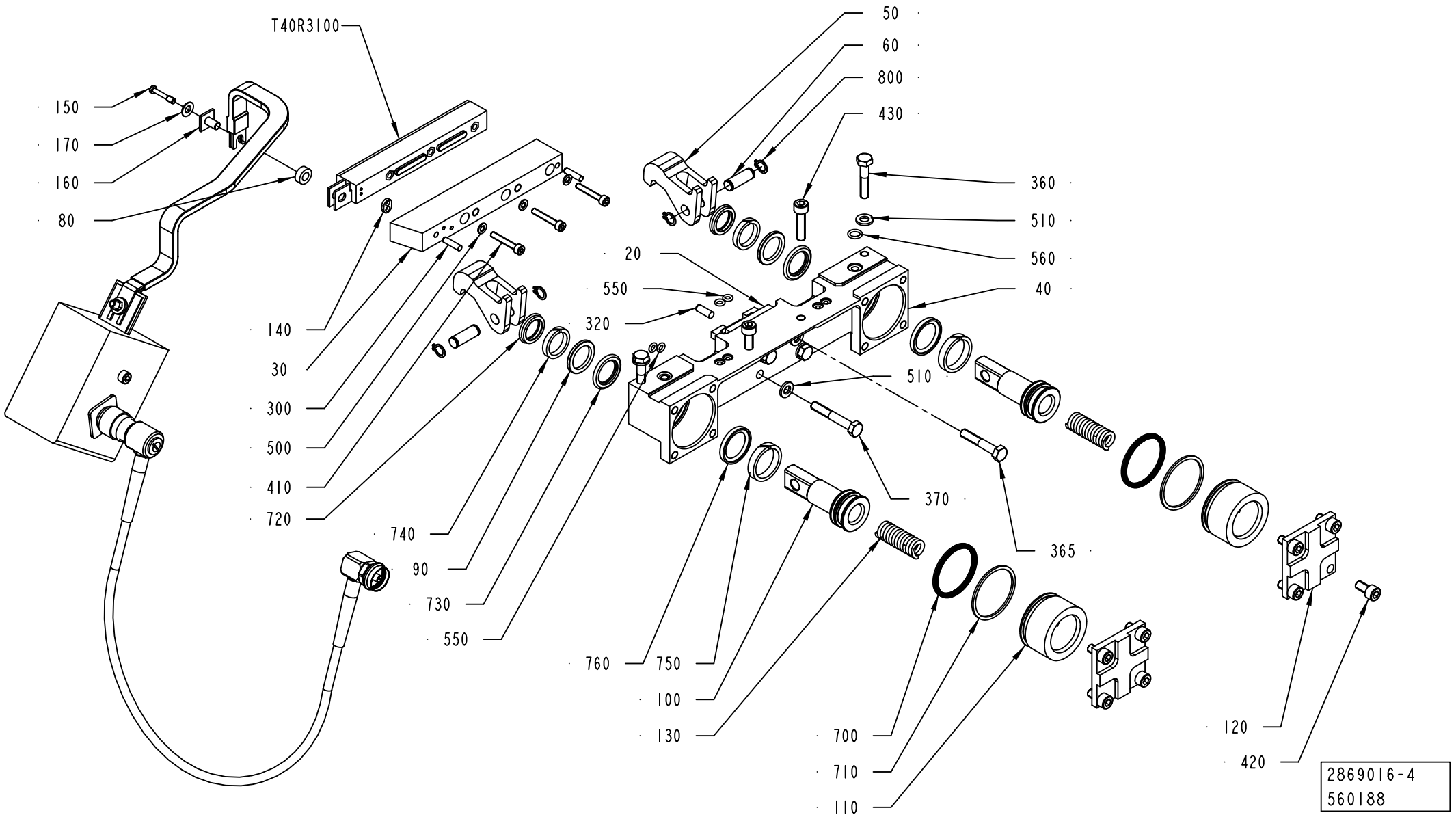

Pos	Part No	UN	Qty	Description	Page No
TPA 0330SQ (Cont'd) (See drawing on page: 1-274)					
T40R3200	1110556-0000		1	INDUCTOR	
Common Parts					
010	2837085-0100		1	TRANSFORMER	**1-283**
050	2835327-0000		2	CATCH	
060	2835326-0000		2	SHAFT	
080	32644-0000		1	WASHER	
090	1038240-0000		2	SPACER	
120	3192942-0000		2	LID	
130	590369-0000		2	COMPRESSION SPRING	
150	271848-0000		1	SCREW	
160	271846-0000		1	INSULATION NUT	
170	256882-0000		1	WASHER	
300	311103-0270		2	PARALLEL PIN ISO 2338 4M6X16 A1	
320	311103-0307		2	PARALLEL PIN ISO 2338 5M6X14 A1	
360	312105-0374		2	SCREW, M6S ISO 4014 M6X30 A4 80	
370	312105-0378		2	SCREW, M6S ISO 4014 M6X40 A4 80	
420	312115-0366		8	SCREW ISO4762 M6X12 A4 80	
510	315105-0153		6	WASHER PLAIN, 6,4X12X1,5 A4 BRB	
550	315202-0102		4	O-RING 4,1X1,6 MM	
560	315202-0105		2	O-RING 7,1X1,6 MM	
700	90091-0359		2	X-SEAL 36,17X2,62 MM	
710	90091-0360		2	BACK-UP RING 37,5X1,4 MM	
720	90091-0362		2	SCRAPER, EXCLUDER 18X22,8X3,7 MM	
730	90091-0364		2	ROD SEAL, STEPSEAL 18X25,3X3,2 MM	
740	90091-0366		2	WEAR RING 18X23X3,9 MM	
800	90141-0015		4	RETAINING RING FOR SHAFT DIN 471 8 SS	

Pos	Part No	UN	Qty	Description	Page No

PRESSURE JAW

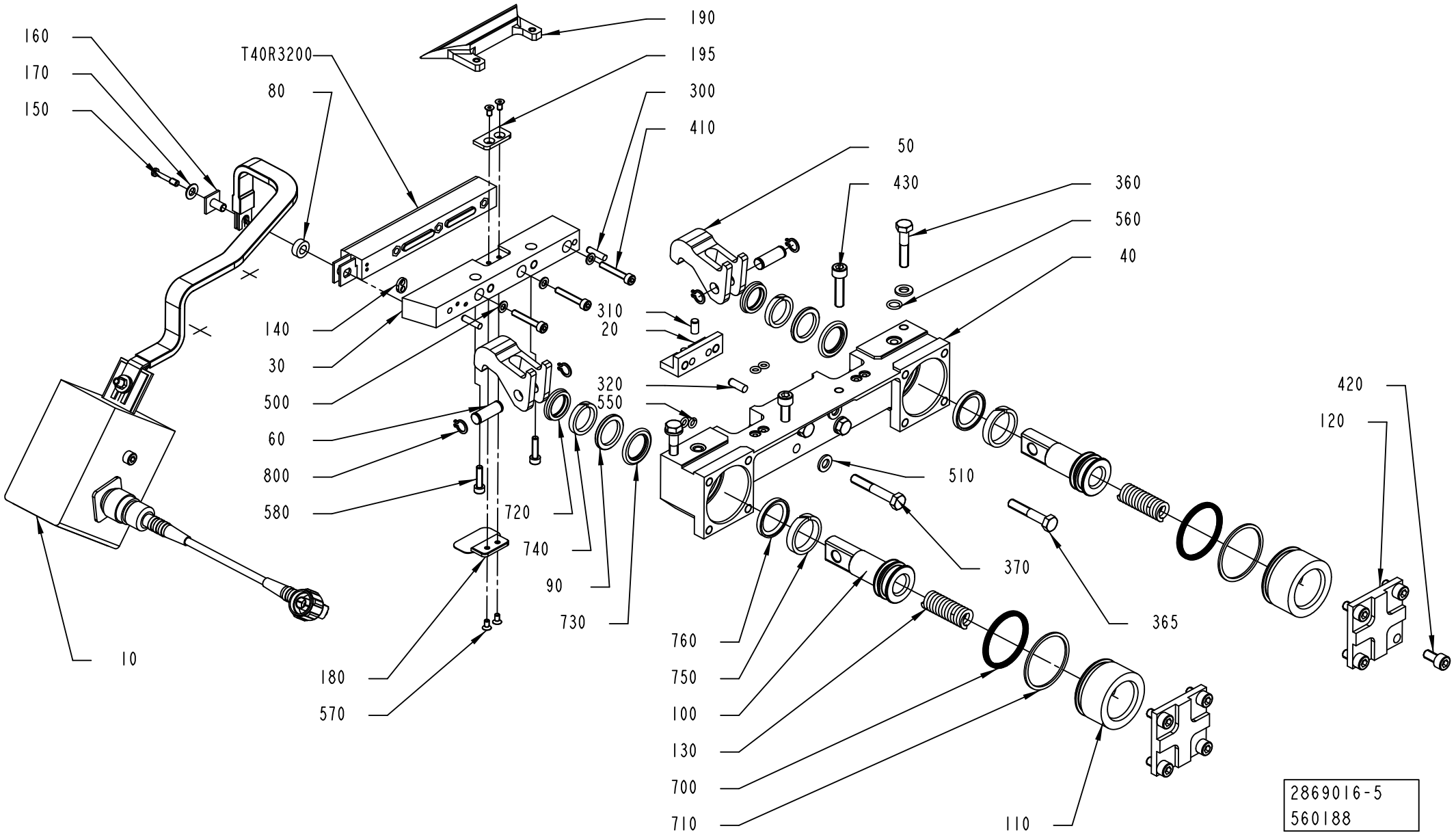

ECM: 579434 - 20130402
Group number: 2869016-0100
Assembly Drawing: 2869016-5_1_AC

This list covers pages from 1-274 to 1-281

Pos	Part No	UN	Qty	Description	Page No
SEE PREVIOUS LISTS PAGES: 1-275, 1-277, 1-279.					

Pos	Part No	UN	Qty	Description	Page No

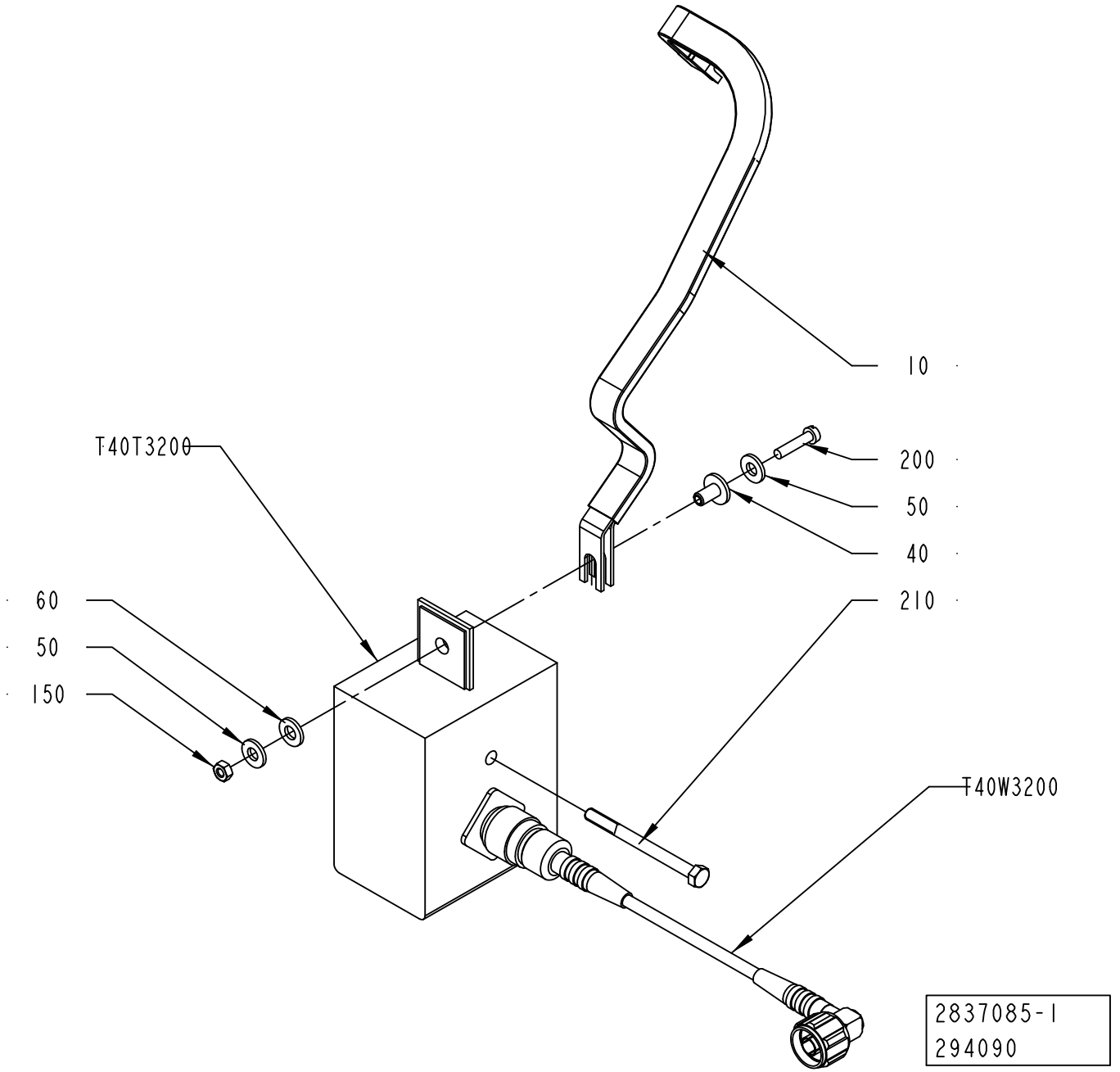
10
T40T3200
200
50
40
60
50
150
210
T40W3200
2837085-1
294090

ECM: 574349 - 20130402
Group number: 2837085-0100
Assembly Drawing: 2837085-1_1_AA

Pos	Part No	UN	Qty	Description	Page No
TBA 0080S					
010	2916877-0000		1	BUSBAR	
T40T3200	67379-0262		1	TRANSFORMER	
TBA 0100B, TBA 0125S					
010	2837077-0000		1	BUSBAR	
T40T3200	67379-0107		1	TRANSFORMER	
TBA 0160S, TBA 0200S, TBA 0180S					
010	2837077-0000		1	BUSBAR	
T40T3200	67379-0204		1	TRANSFORMER	
TBA 0200B, TBA 0250B, TBA 0330S					
010	2837077-0000		1	BUSBAR	
T40T3200	67379-0264		1	TRANSFORMER	
TBA 0200E, TBA 0250E					
010	2837077-0000		1	BUSBAR	
T40T3200	2837503-0109		1	TRANSFORMER	
TBA 0200M, TBA 0250S					
010	2837077-0000		1	BUSBAR	
T40T3200	2837503-0105		1	TRANSFORMER	
TBA 0200SQ					
010	2837077-0000		1	BUSBAR	
T40T3200	67379-0269		1	TRANSFORMER	
TBA 0375S, TPA 0330SQ					
010	2837077-0000		1	BUSBAR	
T40T3200	67379-0115		1	TRANSFORMER	
TPA 0125SQ					
010	2837077-0000		1	BUSBAR	
T40T3200	67379-0248		1	TRANSFORMER	
TPA 0250SQ, TPA 0200SQ					
010	2837077-0000		1	BUSBAR	
T40T3200	67379-0254		1	TRANSFORMER	
Common Parts					
040	32544-0000		1	INSULATION NUT	
050	28509-0000		2	WASHER	
060	32079-0000		1	WASHER	
150	312602-0312		1	HEXAGON NUT, EN 24032 M6M M4 NIPLBR	
200	312105-0295		1	SCREW, M6S ISO 4017 M4X20 A4 70	
210	90458-0058		1	SCREW M5X60 A280	
T40W3200	2562736-0002		1	COAXIAL CABLE	

Pos	Part No	UN	Qty	Description	Page No

CUTTING JAW

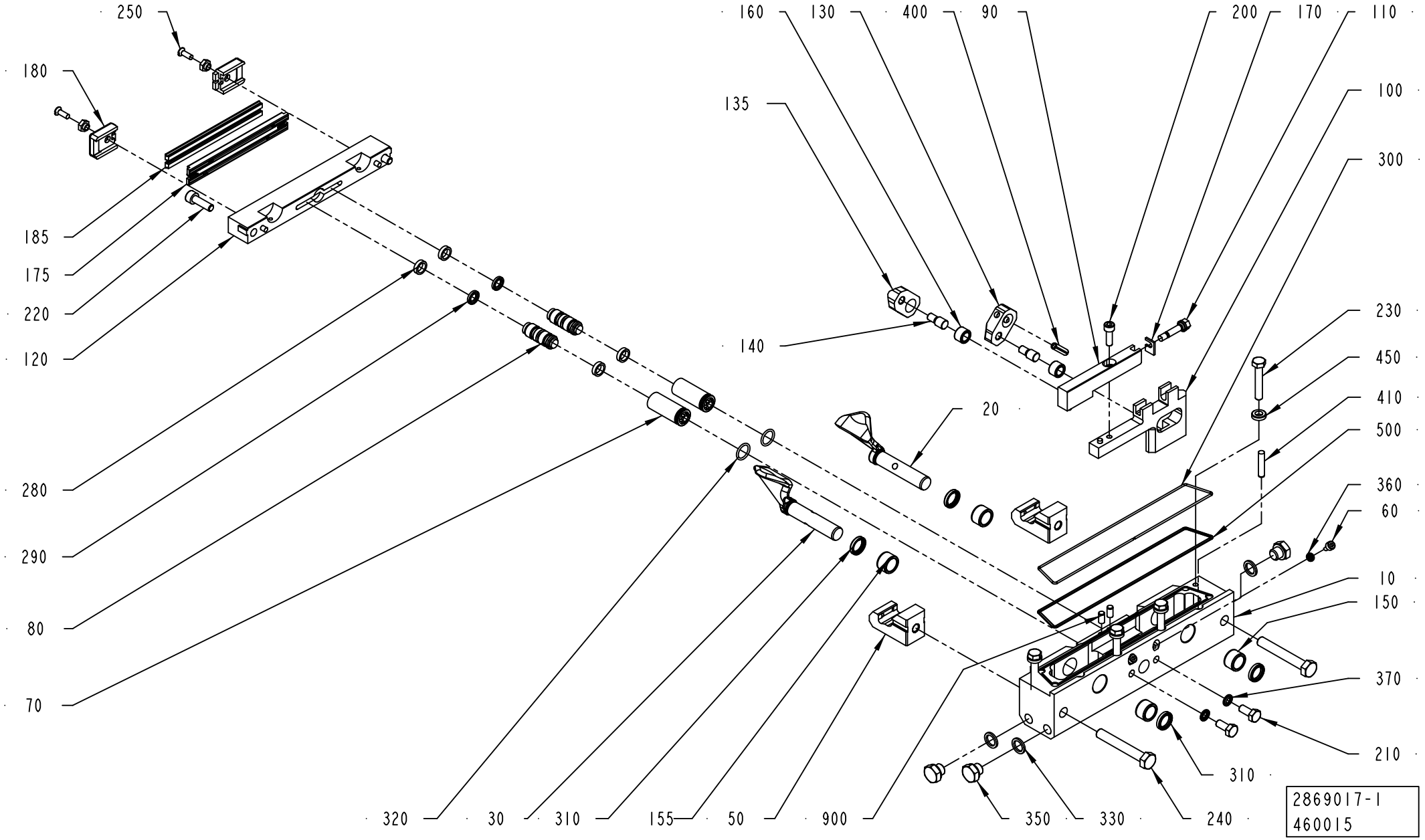
250
180
185
175
220
120
280
290
80
70
320
30
310
155
50
900
160
130
400
90
200
170
110
135
100
300
140
230
450
20
410
500
360
60
10
150
370
210
310
350
330
240
2869017-1
460015

ECM: 591822 - 20130402
Group number: 2869017-0100
Assembly Drawing: 2869017-1_1_AF

This list covers pages from 1-284 to 1-291

Pos	Part No	UN	Qty	Description	Page No
TBA 0080S (See drawing on page: 1-284)					
010	2950888-0000		1	BEARING HOUSING	
020	3147236-0000		1	FOLDING FLAP	
030	3147237-0000		1	FOLDING FLAP	
090	2950890-0000		1	CARRIER RULER	
100	2950889-0000		1	CARRIER RULER	
110	2950891-0000		1	ADJUSTING SCREW	
120	2950892-0000		1	CUTTING JAW	
130	2950893-0000		1	CARRIER	
135	2950894-0000		1	CARRIER	
150	33408-0000		2	BEARING	
155	33408-0000		2	BEARING	
175	2683961-0000		2	CUTTING RAIL	
180	272427-0000		2	BRACKET	
185	1566761-0000		2	DOLLY	
220	312115-0374		2	SCREW ISO4762 M6X30 A4 80	
230	312105-0376		4	SCREW, M6S ISO 4014 M6X35 A4 80	
250	312145-0289		2	SCREW ISO 2009 MFS M4X10 A4	
450	315115-0153		4	WASHER PLAIN, TBRB 6,4/12 H=3	
900	311103-0305		2	PARALLEL PIN ISO 2338 5M6X10 A1	
TBA 0100B, TBA 0125S (See drawing on page: 1-284)					
010	2916881-0000		1	BEARING HOUSING	
020	2597663-0000		1	FOLDING FLAP	
030	2532539-0000		1	FOLDING FLAP	
090	752015-0000		1	RULERPART R	
100	752014-0000		1	RULERPART R	
120	2927588-0000		1	CUTTING JAW	
130	2527724-0000		1	CARRIER	
135	2665718-0000		1	CARRIER	
150	33408-0000		2	BEARING	
155	33408-0000		2	BEARING	
175	2975162-0000		2	CUTTING RAIL	
180	2927589-0000		2	BRACKET	
185	2949862-0004		2	DOLLY	
220	312115-0374		2	SCREW ISO4762 M6X30 A4 80	
230	312105-0376		4	SCREW, M6S ISO 4014 M6X35 A4 80	
250	312145-0289		2	SCREW ISO 2009 MFS M4X10 A4	
450	315115-0153		4	WASHER PLAIN, TBRB 6,4/12 H=3	
900	311103-0305		2	PARALLEL PIN ISO 2338 5M6X10 A1	
TBA 0160S, TBA 0200S, TBA 0180S (See drawing on page: 1-284)					
010	2970615-0000		1	BEARING HOUSING	
020	2532542-0000		1	FOLDING FLAP	
030	2532543-0000		1	FOLDING FLAP	
090	752009-0000		1	RULERPART R	
100	752010-0000		1	RULERPART R	
110	751579-0000		1	ADJUSTING SCREW	
120	3113803-0000		1	CUTTING JAW	
130	272419-0000		1	CARRIER	
135	272419-0000		1	CARRIER	
150	33408-0000		2	BEARING	
155	33408-0000		2	BEARING	
175	2890692-0000		2	CUTTING RAIL	
180	1348053-0000		2	BRACKET	
185	1110083-0003		2	DOLLY	
220	312115-0370		2	SCREW ISO4762 M6X20 A4 80	
230	312105-0376		4	SCREW, M6S ISO 4014 M6X35 A4 80	
250	312145-0291		2	SCREW ISO 2009 MFS M4X12 A4	
450	315115-0153		4	WASHER PLAIN, TBRB 6,4/12 H=3	
TBA 0200B, TBA 0250B, TBA 0330S (See drawing on page: 1-284)					
010	2869201-0000		1	BEARING HOUSING	
020	3080559-0000		1	FOLDING FLAP	
030	3080560-0000		1	FOLDING FLAP	
090	751577-0000		1	RULERPART R	
100	751575-0000		1	RULERPART R	
110	751579-0000		1	ADJUSTING SCREW	
120	3113802-0000		1	CUTTING JAW	
130	272419-0000		1	CARRIER	
135	272419-0000		1	CARRIER	
150	33408-0000		2	BEARING	
155	33408-0000		2	BEARING	
175	2890692-0000		2	CUTTING RAIL	
180	1348053-0000		2	BRACKET	
185	1110083-0003		2	DOLLY	
220	312115-0370		2	SCREW ISO4762 M6X20 A4 80	
230	312105-0376		4	SCREW, M6S ISO 4014 M6X35 A4 80	
250	312145-0291		2	SCREW ISO 2009 MFS M4X12 A4	
450	315115-0153		4	WASHER PLAIN, TBRB 6,4/12 H=3	
900	311103-0305		2	PARALLEL PIN ISO 2338 5M6X10 A1	
TBA 0200E, TBA 0250E (See drawing on page: 1-290)					
010	2947184-0000		1	BEARING HOUSING	
020	3099249-0000		1	FLAP	
025	3013509-0000		1	SHAFT	
030	3099250-0000		1	FLAP	
035	3013512-0000		1	SHAFT	

Machine Type | Group Description | Used-In | Group Number | Page No

CUTTING JAW

Drawing file: 2869017-3_1_AB.hpgl

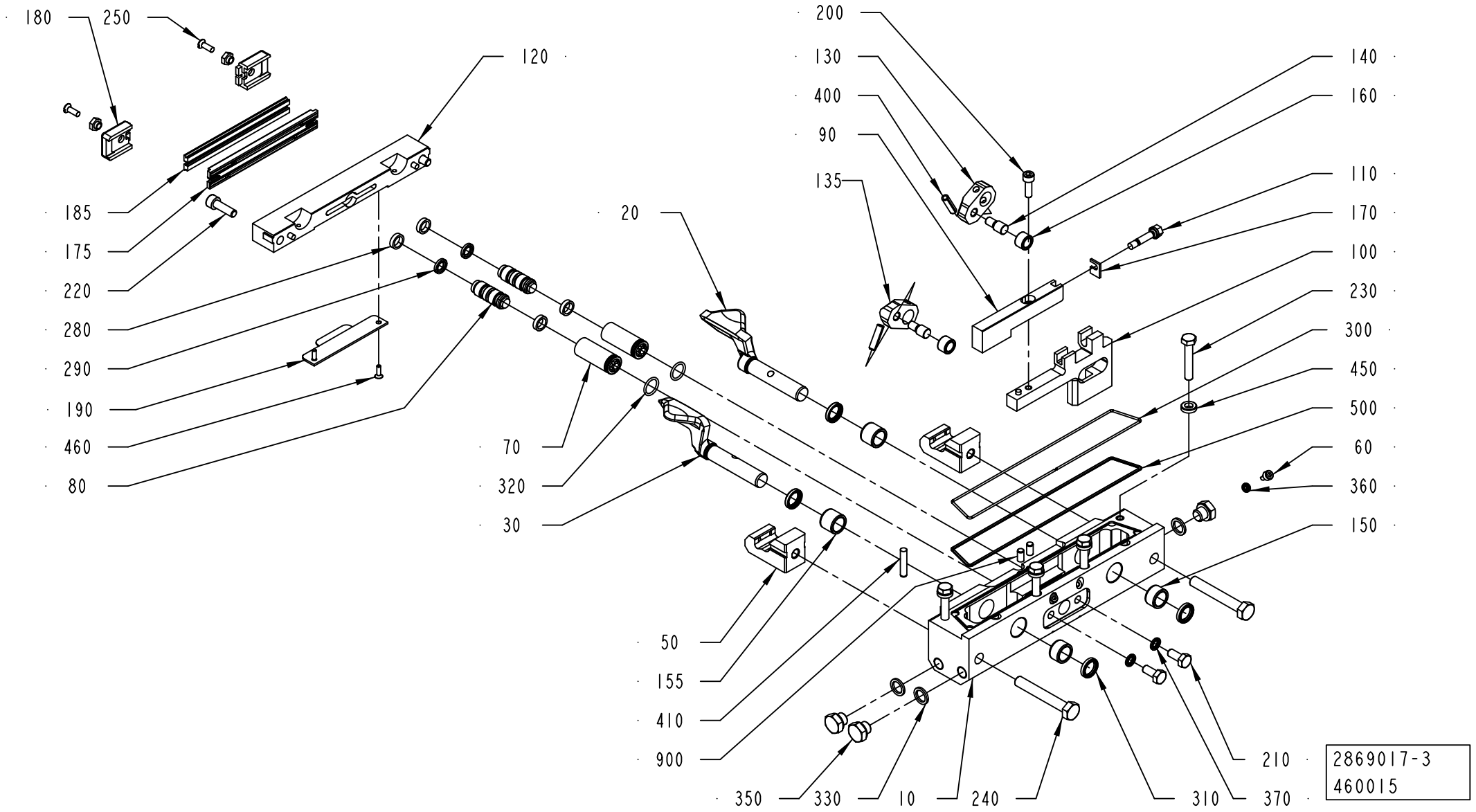

Pos	Part No	UN	Qty	Description	Page No
TBA 0200E, TBA 0250E (Cont'd) (See drawing on page: 1-290)					
090	574370-0000		1	CARRIER RULER RIGHT	
100	574369-0000		1	CARRIER RULER RIGHT	
110	751579-0000		1	ADJUSTING SCREW	
120	3033995-0000		1	CUTTING JAW	
130	272419-0000		1	CARRIER	
135	272419-0000		1	CARRIER	
150	33408-0000		2	BEARING	
155	33408-0000		2	BEARING	
175	3033996-0000		2	CUTTING RAIL	
180	1348053-0000		2	BRACKET	
185	1110083-0003		2	DOLLY	
190	3035454-0000		1	VOLUME BULGE	
220	312115-0370		2	SCREW ISO4762 M6X20 A4 80	
230	312105-0376		4	SCREW, M6S ISO 4014 M6X35 A4 80	
250	312145-0291		2	SCREW ISO 2009 MFS M4X12 A4	
255	312115-0327		2	SCREW ISO4762 M5X12 A4 80	
450	315115-0153		4	WASHER PLAIN, TBRB 6,4/12 H=3	
460	312145-0220		2	SCREW ISO 2009 MFS M3X6 A4	
900	311103-0305		2	PARALLEL PIN ISO 2338 5M6X10 A1	
TBA 0200M, TBA 0250S (See drawing on page: 1-284)					
010	2947184-0000		1	BEARING HOUSING	
020	3266673-0000		1	FOLDING FLAP	
030	2532543-0000		1	FOLDING FLAP	
090	574370-0000		1	CARRIER RULER RIGHT	
100	574369-0000		1	CARRIER RULER RIGHT	
110	751579-0000		1	ADJUSTING SCREW	
120	3113804-0000		1	CUTTING JAW	
130	272419-0000		1	CARRIER	
135	272419-0000		1	CARRIER	
150	33408-0000		2	BEARING	
155	33408-0000		2	BEARING	
175	2890692-0000		2	CUTTING RAIL	
180	1348053-0000		2	BRACKET	
185	1110083-0003		2	DOLLY	
220	312115-0370		2	SCREW ISO4762 M6X20 A4 80	
230	312105-0376		4	SCREW, M6S ISO 4014 M6X35 A4 80	
250	312145-0291		2	SCREW ISO 2009 MFS M4X12 A4	
450	315115-0153		4	WASHER PLAIN, TBRB 6,4/12 H=3	
900	311103-0305		2	PARALLEL PIN ISO 2338 5M6X10 A1	
TBA 0200SQ (See drawing on page: 1-286)					
010	2976822-0000		1	BEARING HOUSING	
020	2976826-0000		1	FOLDING FLAP	
030	2976827-0000		1	FOLDING FLAP	
090	2976825-0000		1	CARRIER RULER	
100	2976824-0000		1	CARRIER RULER	
110	751579-0000		1	ADJUSTING SCREW	
120	3113805-0000		1	CUTTING JAW	
130	2976823-0000		1	CARRIER	
135	2976823-0000		1	CARRIER	
150	929316-0001		2	BEARING	
155	929316-0002		2	BEARING	
175	2890692-0000		2	CUTTING RAIL	
180	1348053-0000		2	BRACKET	
185	1110083-0003		2	DOLLY	
190	3006048-0000		1	VOLUME BULGE	
220	312115-0370		2	SCREW ISO4762 M6X20 A4 80	
230	312105-0376		4	SCREW, M6S ISO 4014 M6X35 A4 80	
250	312145-0291		2	SCREW ISO 2009 MFS M4X12 A4	
450	315115-0153		4	WASHER PLAIN, TBRB 6,4/12 H=3	
460	312145-0220		2	SCREW ISO 2009 MFS M3X6 A4	
900	311103-0305		2	PARALLEL PIN ISO 2338 5M6X10 A1	
TBA 0375S (See drawing on page: 1-288)					
010	3067239-0000		1	BEARING HOUSING	
020	3105452-0000		1	FOLDING FLAP	
030	3067241-0000		1	FOLDING FLAP	
090	3067242-0000		1	CARRIER RULER	
100	3067243-0000		1	CARRIER RULER	
110	751579-0000		1	ADJUSTING SCREW	
120	3067244-0000		1	CUTTING JAW	
130	2976823-0000		1	CARRIER	
135	2976823-0000		1	CARRIER	
150	929316-0001		2	BEARING	
155	929316-0002		2	BEARING	
175	3096232-0000		2	CUTTING RAIL	
180	3096233-0000		2	BRACKET	
185	1110083-0005		2	DOLLY	
220	312115-0370		2	SCREW ISO4762 M6X20 A4 80	
230	312105-0376		4	SCREW, M6S ISO 4014 M6X35 A4 80	
250	312145-0291		2	SCREW ISO 2009 MFS M4X12 A4	
450	315115-0153		4	WASHER PLAIN, TBRB 6,4/12 H=3	
TPA 0125SQ (See drawing on page: 1-284)					
010	2906021-0000		1	BEARING HOUSING	
020	2906019-0000		1	FOLDING FLAP	

Machine Type | Group Description | Used-In | Group Number | Page No

CUTTING JAW

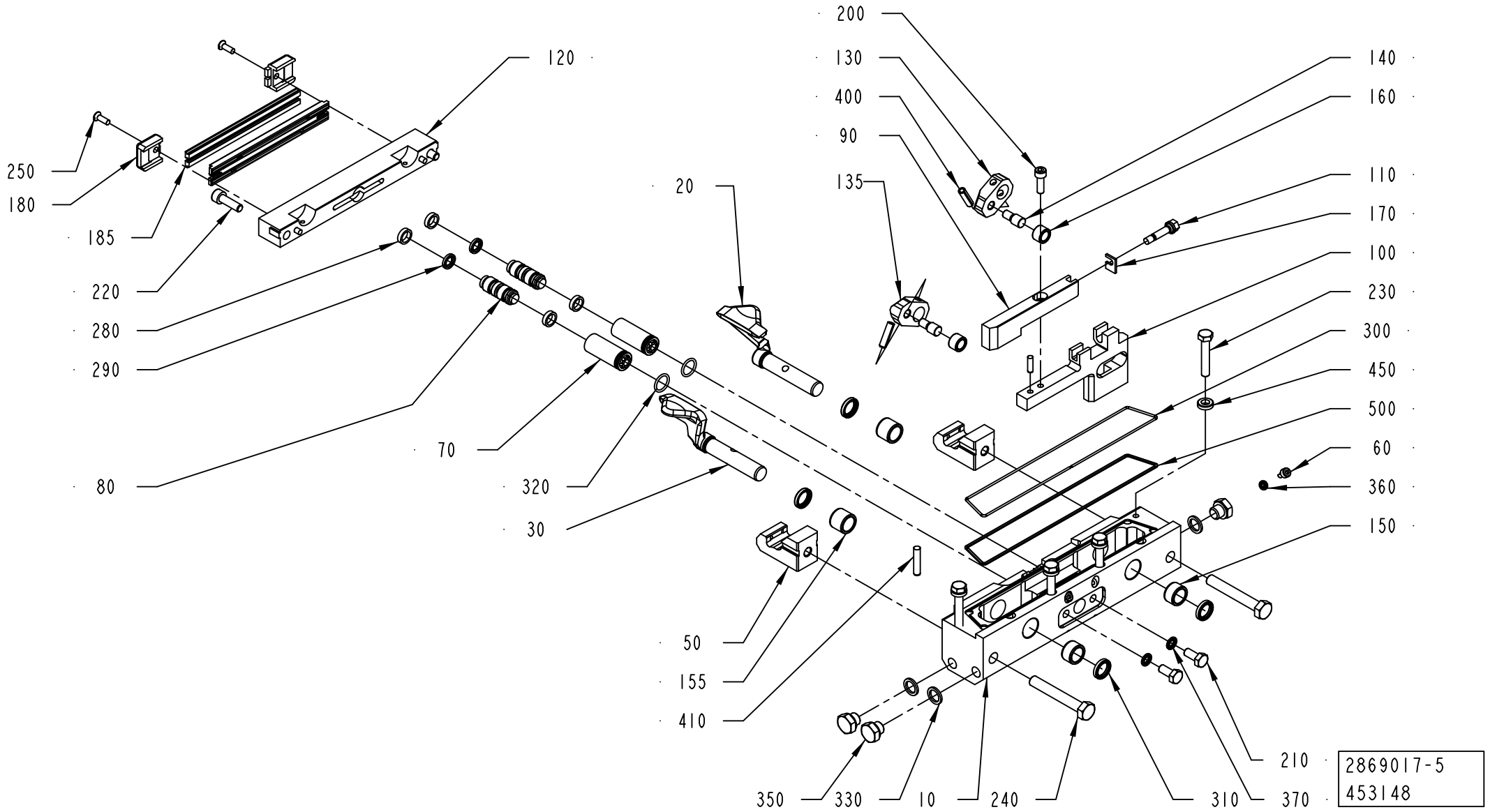
200
130
400
90
135
140
160
110
170
100
230
300
450
500
60
360
150
120
250
180
185
220
280
290
80
20
70
320
30
50
155
410
350
330
10
240
310
370
210
2869017-5
453148

Pos	Part No	UN	Qty	Description	Page No
TPA 0125SQ (Cont'd) (See drawing on page: 1-284)					
030	2906020-0000		1	FOLDING FLAP	
090	2845903-0000		1	CARRIER RULER	
100	2906018-0000		1	CARRIER RULER	
110	751579-0000		1	ADJUSTING SCREW	
120	2907732-0000		1	CUTTING JAW	
130	2846012-0000		1	CARRIER	
135	2846012-0000		1	CARRIER	
150	33408-0000		2	BEARING	
155	33408-0000		2	BEARING	
175	2890692-0000		2	CUTTING RAIL	
180	1348053-0000		2	BRACKET	
185	1110083-0003		2	DOLLY	
220	312115-0370		2	SCREW ISO4762 M6X20 A4 80	
230	312105-0374		4	SCREW, M6S ISO 4014 M6X30 A4 80	
250	312145-0291		2	SCREW ISO 2009 MFS M4X12 A4	
450	315105-0153		4	WASHER PLAIN, 6,4X12X1,5 A4 BRB	
900	311103-0305		2	PARALLEL PIN ISO 2338 5M6X10 A1	
TPA 0250SQ, TPA 0200SQ (See drawing on page: 1-284)					
010	2962055-0000		1	BEARING HOUSING	
020	1350985-0000		1	FOLDING FLAP RIGHT	
030	1350986-0000		1	FOLDING FLAP LEFT	
090	1350996-0000		1	CARRIER RULER RIGHT	
100	2978920-0000		1	CARRIER RULER	
110	751579-0000		1	ADJUSTING SCREW	
120	2965110-0000		1	CUTTING JAW	
130	272419-0000		1	CARRIER	
135	272419-0000		1	CARRIER	
150	929316-0001		2	BEARING	
155	929316-0002		2	BEARING	
175	2890692-0000		2	CUTTING RAIL	
180	1348053-0000		2	BRACKET	
185	1110083-0003		2	DOLLY	
220	312115-0370		2	SCREW ISO4762 M6X20 A4 80	
230	312105-0376		4	SCREW, M6S ISO 4014 M6X35 A4 80	
250	312145-0291		2	SCREW ISO 2009 MFS M4X12 A4	
450	315115-0153		4	WASHER PLAIN, TBRB 6,4/12 H=3	
900	311103-0305		2	PARALLEL PIN ISO 2338 5M6X10 A1	
TPA 0330SQ (See drawing on page: 1-284)					
010	3002881-0000		1	BEARING HOUSING	
020	3002884-0000		1	FOLDING FLAP	
030	3002883-0000		1	FOLDING FLAP	
090	3002886-0000		1	CARRIER RULER	
100	3002885-0000		1	CARRIER RULER	
110	751579-0000		1	ADJUSTING SCREW	
120	3002882-0000		1	CUTTING JAW	
130	2976823-0000		1	CARRIER	
135	2976823-0000		1	CARRIER	
150	929316-0001		2	BEARING	
155	929316-0002		2	BEARING	
175	2890692-0000		2	CUTTING RAIL	
180	1348053-0000		2	BRACKET	
185	1110083-0003		2	DOLLY	
220	312115-0370		2	SCREW ISO4762 M6X20 A4 80	
230	312105-0376		4	SCREW, M6S ISO 4014 M6X35 A4 80	
250	312145-0291		2	SCREW ISO 2009 MFS M4X12 A4	
450	315115-0153		4	WASHER PLAIN, TBRB 6,4/12 H=3	
900	311103-0305		2	PARALLEL PIN ISO 2338 5M6X10 A1	
Common Parts					
050	2888463-0000		2	CATCH	
060	752476-0000		2	SCREW	
070	752288-0000		2	SLEEVE	
080	752115-0000		2	PLUNGER	
140	256607-0000		2	AXLE PIN	
160	22463-0000		2	ROLL	
170	751580-0000		1	SHIM	
200	312115-0329		1	SCREW ISO4762 M5X16 A4 80	
210	312105-0367		2	SCREW, M6S ISO 4017 M6X14 A4 80	
240	312105-0462		2	SCREW, M6S ISO 4014 M8X55 A4 8002	
280	90091-0169		4	WEAR RING 12X15X3,2 MM	
290	90091-0216		2	PISTON SEAL GLYD RING 7,1X12X2,2 MM	
300	90242-0093	MM	500	O-RING MATERIAL 1,5 MM	
310	90459-5936		4	BEARING SEAL 12X16X3 MM	
320	315202-0110		2	O-RING 12,1X1,6 MM	
330	315237-0109		3	WASHER,PL.RND.AL.10/14,H=1,5	
350	90330-0066		3	PLUG, G1/8EXT, G1/8	
360	315211-0101		2	BONDED SEAL SS/NBR90 M4	
370	315211-0103		2	BONDED SEAL SS/NBR90 M6	
400	311111-0308		2	SPRING PIN ISO 8752 5X20-ST	
410	311103-0312		1	PARALLEL PIN ISO 2338 5M6X25 A1	
500	90153-0015		1	ADHESIVE LOCTITE IS 496/CYANOLOT 303	

Machine Type	Group Description	Used-In	Group Number	Page No

CUTTING JAW

Drawing file: 2869017-7_1_AA.hpgl

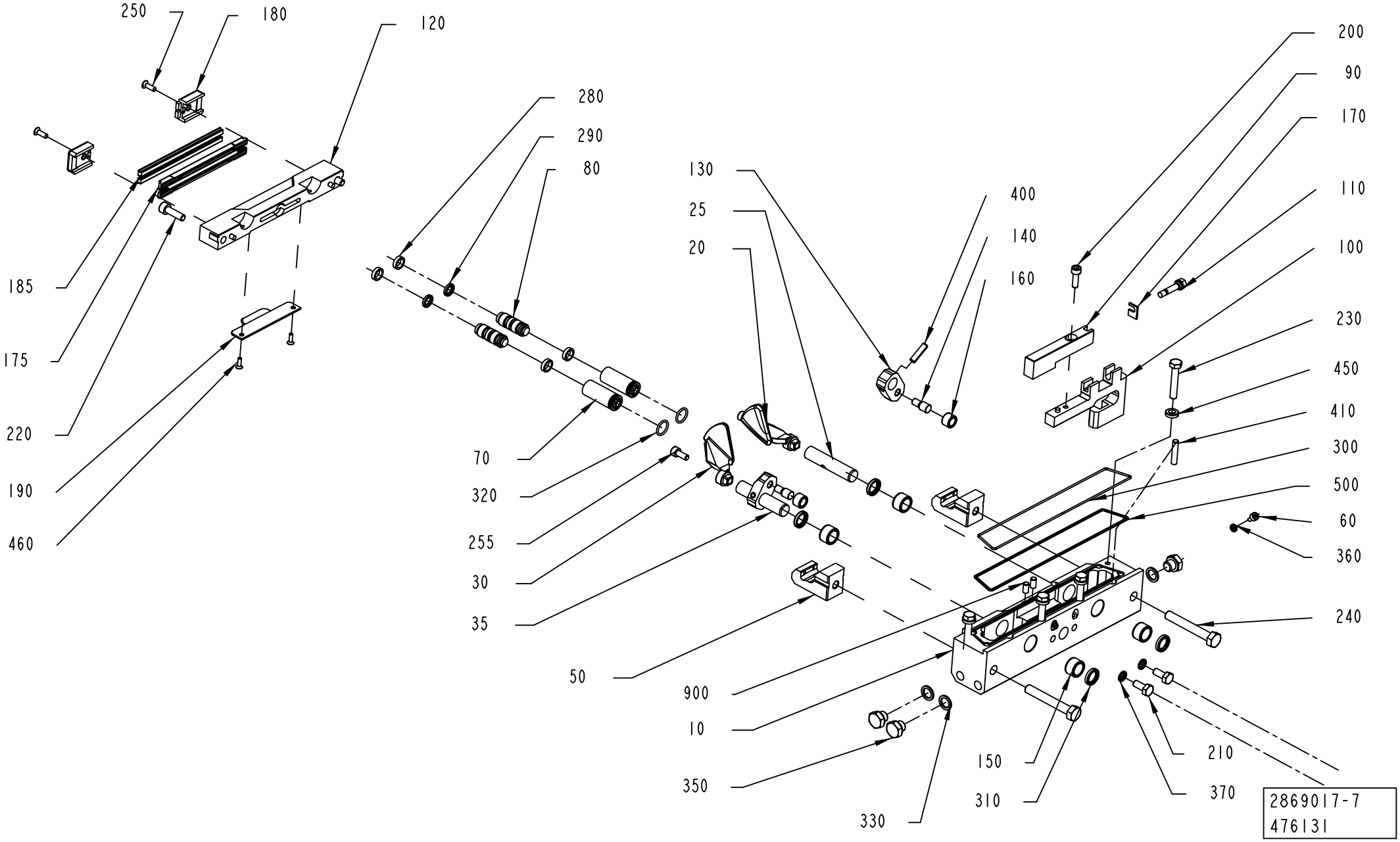

ECM: 591822 - 20130402
Group number: 2869017-0100
Assembly Drawing: 2869017-7_1_AA

This list covers pages from 1-284 to 1-291

Pos	Part No	UN	Qty	Description	Page No

SEE PREVIOUS LISTS PAGES: 1-285, 1-287, 1-289.

Pos	Part No	UN	Qty	Description	Page No

CUTTING JAW

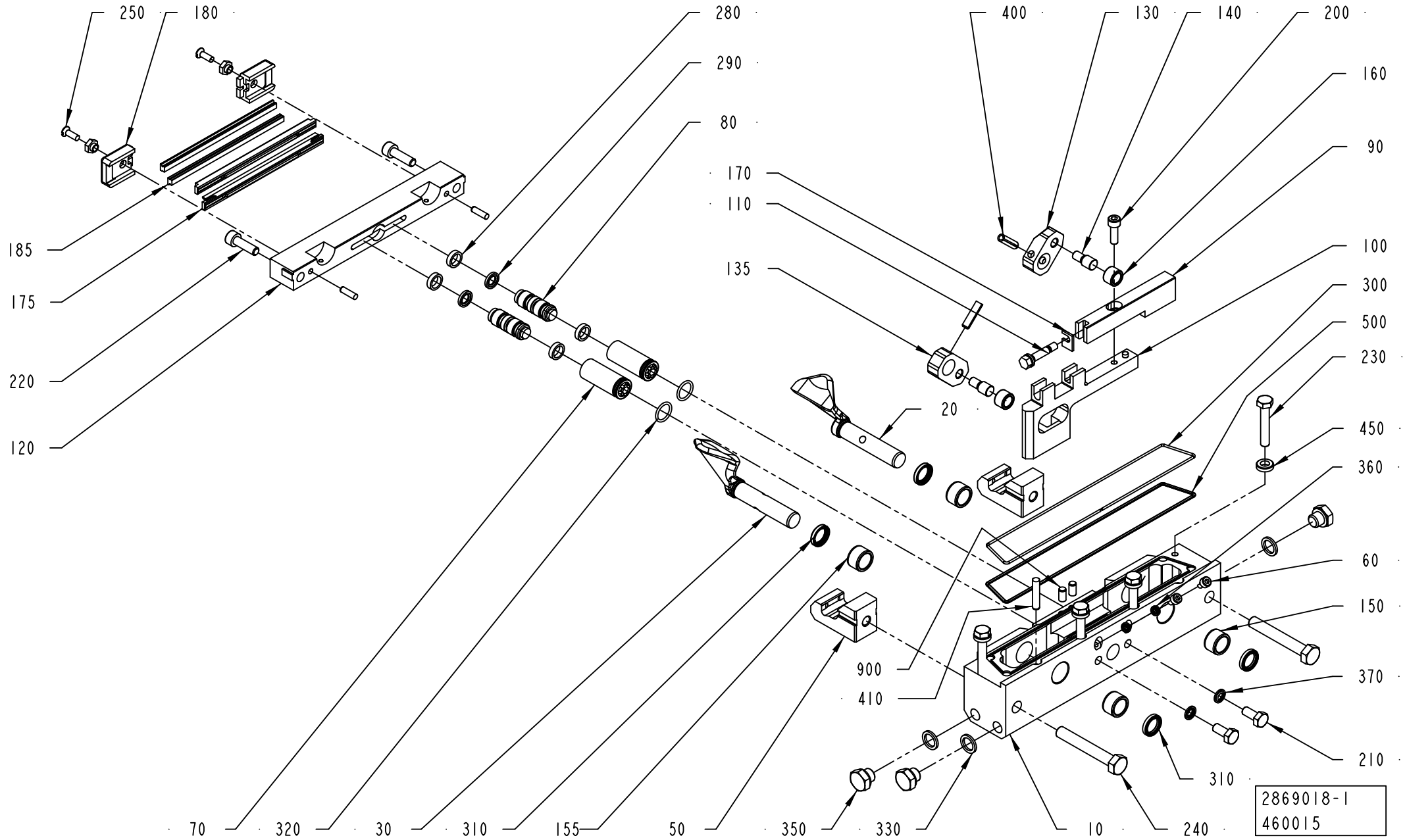
250
180
280
290
80
170
110
135
400
130
140
200
160
90
100
300
500
230
450
360
60
150
370
210
185
175
220
120
20
900
410
70
320
30
310
155
50
350
330
10
240
310
2869018-1
460015

Pos	Part No	UN	Qty	Description	Page No
TBA 0080S (See drawing on page: 1-292)					
010	2950888-0000		1	BEARING HOUSING	
020	3147236-0000		1	FOLDING FLAP	
030	3147237-0000		1	FOLDING FLAP	
090	2950896-0000		1	CARRIER RULER	
100	2950895-0000		1	CARRIER RULER	
110	2950891-0000		1	ADJUSTING SCREW	
120	2950892-0000		1	CUTTING JAW	
130	2950893-0000		1	CARRIER	
135	2950894-0000		1	CARRIER	
150	33408-0000		2	BEARING	
155	33408-0000		2	BEARING	
175	2683961-0000		2	CUTTING RAIL	
180	272427-0000		2	BRACKET	
185	1566761-0000		2	DOLLY	
220	312105-0374		2	SCREW, M6S ISO 4014 M6X30 A4 80	
230	312105-0376		4	SCREW, M6S ISO 4014 M6X35 A4 80	
250	312145-0289		2	SCREW ISO 2009 MFS M4X10 A4	
450	315115-0153		4	WASHER PLAIN, TBRB 6,4/12 H=3	
900	311103-0305		2	PARALLEL PIN ISO 2338 5M6X10 A1	
TBA 0100B, TBA 0125S (See drawing on page: 1-292)					
010	2916881-0000		1	BEARING HOUSING	
020	2597663-0000		1	FOLDING FLAP	
030	2532539-0000		1	FOLDING FLAP	
090	752017-0000		1	RULERPART L	
100	752016-0000		1	RULERPART L	
110	751579-0000		1	ADJUSTING SCREW	
120	2927588-0000		1	CUTTING JAW	
130	2527724-0000		1	CARRIER	
135	2665718-0000		1	CARRIER	
150	33408-0000		2	BEARING	
155	33408-0000		2	BEARING	
175	2975162-0000		2	CUTTING RAIL	
180	2927589-0000		2	BRACKET	
185	2949862-0004		2	DOLLY	
220	312105-0374		2	SCREW, M6S ISO 4014 M6X30 A4 80	
230	312105-0376		4	SCREW, M6S ISO 4014 M6X35 A4 80	
250	312145-0289		2	SCREW ISO 2009 MFS M4X10 A4	
450	315115-0153		4	WASHER PLAIN, TBRB 6,4/12 H=3	
900	311103-0305		2	PARALLEL PIN ISO 2338 5M6X10 A1	
TBA 0160S, TBA 0200S, TBA 0180S (See drawing on page: 1-292)					
010	2970615-0000		1	BEARING HOUSING	
020	2532542-0000		1	FOLDING FLAP	
030	2532543-0000		1	FOLDING FLAP	
090	752011-0000		1	RULERPART L	
100	752012-0000		1	RULERPART L	
110	751579-0000		1	ADJUSTING SCREW	
120	3113803-0000		1	CUTTING JAW	
130	272419-0000		1	CARRIER	
135	272419-0000		1	CARRIER	
150	33408-0000		2	BEARING	
155	33408-0000		2	BEARING	
175	2890692-0000		2	CUTTING RAIL	
180	1348053-0000		2	BRACKET	
185	1110083-0003		2	DOLLY	
220	312115-0370		2	SCREW ISO4762 M6X20 A4 80	
230	312105-0376		4	SCREW, M6S ISO 4014 M6X35 A4 80	
250	312145-0291		2	SCREW ISO 2009 MFS M4X12 A4	
450	315115-0153		4	WASHER PLAIN, TBRB 6,4/12 H=3	
TBA 0200B, TBA 0250B, TBA 0330S (See drawing on page: 1-292)					
010	2869201-0000		1	BEARING HOUSING	
020	3080559-0000		1	FOLDING FLAP	
030	3080560-0000		1	FOLDING FLAP	
090	751578-0000		1	RULERPART L	
100	751576-0000		1	RULERPART L	
110	751579-0000		1	ADJUSTING SCREW	
120	3113802-0000		1	CUTTING JAW	
130	272419-0000		1	CARRIER	
135	272419-0000		1	CARRIER	
150	33408-0000		2	BEARING	
155	33408-0000		2	BEARING	
175	2890692-0000		2	CUTTING RAIL	
180	1348053-0000		2	BRACKET	
185	1110083-0003		2	DOLLY	
220	312115-0370		2	SCREW ISO4762 M6X20 A4 80	
230	312105-0376		4	SCREW, M6S ISO 4014 M6X35 A4 80	
250	312145-0291		2	SCREW ISO 2009 MFS M4X12 A4	
450	315115-0153		4	WASHER PLAIN, TBRB 6,4/12 H=3	
900	311103-0305		2	PARALLEL PIN ISO 2338 5M6X10 A1	
TBA 0200E, TBA 0250E (See drawing on page: 1-298)					
010	2947184-0000		1	BEARING HOUSING	
020	3099249-0000		1	FLAP	
025	3013509-0000		1	SHAFT	
030	3099250-0000		1	FLAP	

CUTTING JAW

Drawing file: 2869018-3_1_AB.hpgl

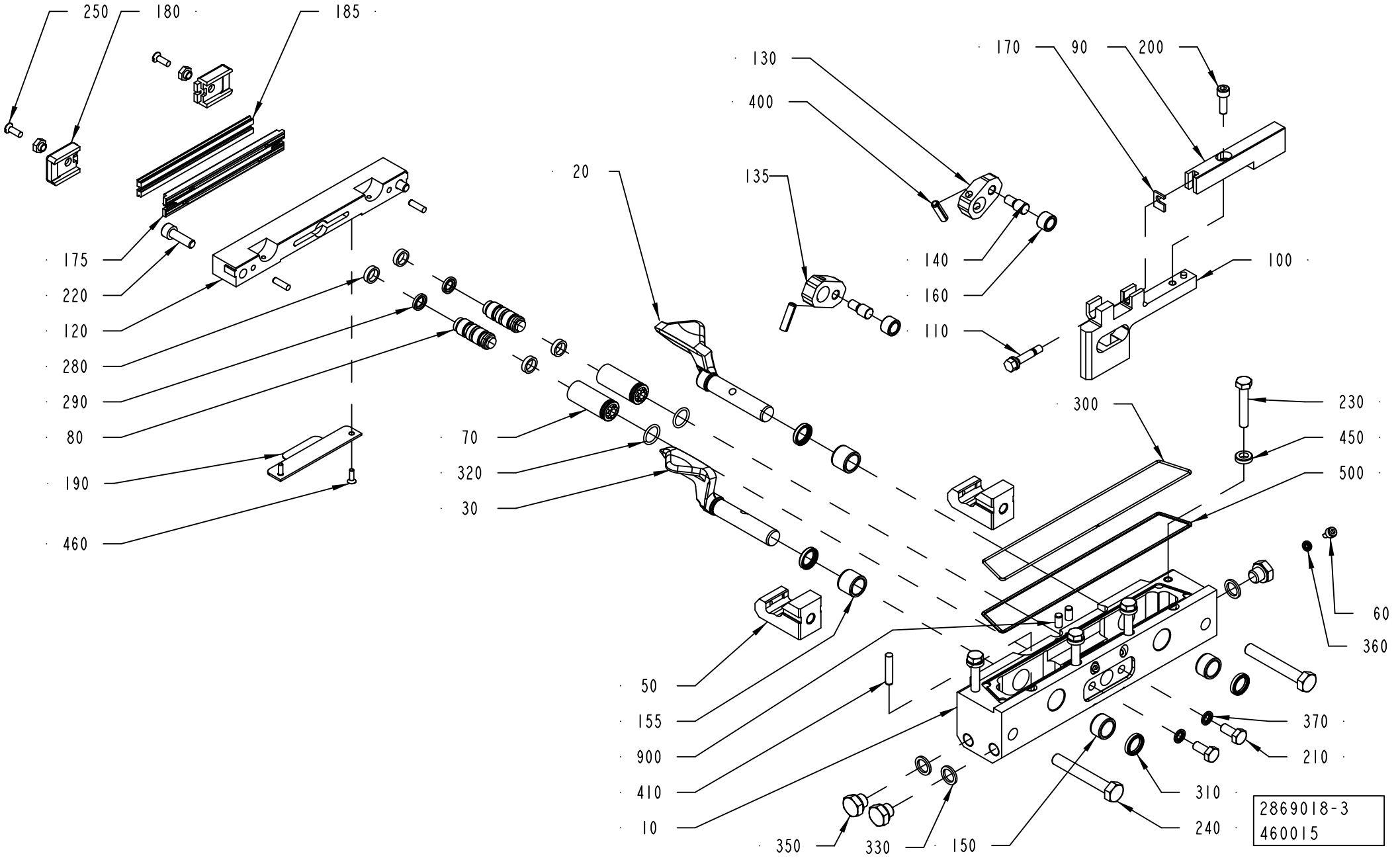

ECM: 591823 - 20130402
Group number: 2869018-0100
Assembly Drawing: 2869018-3_1_AB

This list covers pages from 1-292 to 1-299

Pos	Part No	UN	Qty	Description	Page No
TBA 0200E, TBA 0250E (Cont'd) (See drawing on page: 1-298)					
035	3013512-0000		1	SHAFT	
090	574372-0000		1	CARRIER RULER LEFT	
100	574371-0000		1	CARRIER RULER LEFT	
110	751579-0000		1	ADJUSTING SCREW	
120	3033995-0000		1	CUTTING JAW	
130	272419-0000		1	CARRIER	
135	272419-0000		1	CARRIER	
150	33408-0000		2	BEARING	
155	33408-0000		2	BEARING	
175	3033996-0000		2	CUTTING RAIL	
180	1348053-0000		2	BRACKET	
185	1110083-0003		2	DOLLY	
190	3035454-0000		1	VOLUME BULGE	
220	312115-0370		2	SCREW ISO4762 M6X20 A4 80	
230	312105-0376		4	SCREW, M6S ISO 4014 M6X35 A4 80	
250	312145-0291		2	SCREW ISO 2009 MFS M4X12 A4	
255	312115-0327		2	SCREW ISO4762 M5X12 A4 80	
450	315115-0153		4	WASHER PLAIN, TBRB 6,4/12 H=3	
460	312145-0220		2	SCREW ISO 2009 MFS M3X6 A4	
900	311103-0305		2	PARALLEL PIN ISO 2338 5M6X10 A1	
TBA 0200M, TBA 0250S (See drawing on page: 1-292)					
010	2947184-0000		1	BEARING HOUSING	
020	3266673-0000		1	FOLDING FLAP	
030	2532543-0000		1	FOLDING FLAP	
090	574372-0000		1	CARRIER RULER LEFT	
100	574371-0000		1	CARRIER RULER LEFT	
110	751579-0000		1	ADJUSTING SCREW	
120	3113804-0000		1	CUTTING JAW	
130	272419-0000		1	CARRIER	
135	272419-0000		1	CARRIER	
150	33408-0000		2	BEARING	
155	33408-0000		2	BEARING	
175	2890692-0000		2	CUTTING RAIL	
180	1348053-0000		2	BRACKET	
185	1110083-0003		2	DOLLY	
220	312115-0370		2	SCREW ISO4762 M6X20 A4 80	
230	312105-0376		4	SCREW, M6S ISO 4014 M6X35 A4 80	
250	312145-0291		2	SCREW ISO 2009 MFS M4X12 A4	
450	315115-0153		4	WASHER PLAIN, TBRB 6,4/12 H=3	
900	311103-0305		2	PARALLEL PIN ISO 2338 5M6X10 A1	
TBA 0200SQ (See drawing on page: 1-294)					
010	2976822-0000		1	BEARING HOUSING	
020	2976826-0000		1	FOLDING FLAP	
030	2976827-0000		1	FOLDING FLAP	
090	2976828-0000		1	CARRIER RULER	
100	2976829-0000		1	CARRIER RULER	
110	751579-0000		1	ADJUSTING SCREW	
120	3113805-0000		1	CUTTING JAW	
130	2976823-0000		1	CARRIER	
135	2976823-0000		1	CARRIER	
150	929316-0001		2	BEARING	
155	929316-0002		2	BEARING	
175	2890692-0000		2	CUTTING RAIL	
180	1348053-0000		2	BRACKET	
185	1110083-0003		2	DOLLY	
190	3006048-0000		1	VOLUME BULGE	
220	312115-0370		2	SCREW ISO4762 M6X20 A4 80	
230	312105-0376		4	SCREW, M6S ISO 4014 M6X35 A4 80	
250	312145-0291		2	SCREW ISO 2009 MFS M4X12 A4	
450	315115-0153		4	WASHER PLAIN, TBRB 6,4/12 H=3	
460	312145-0220		2	SCREW ISO 2009 MFS M3X6 A4	
900	311103-0305		2	PARALLEL PIN ISO 2338 5M6X10 A1	
TBA 0375S (See drawing on page: 1-296)					
010	3067239-0000		1	BEARING HOUSING	
020	3105452-0000		1	FOLDING FLAP	
030	3067241-0000		1	FOLDING FLAP	
090	3067245-0000		1	CARRIER RULER	
100	3067246-0000		1	CARRIER RULER	
110	751579-0000		1	ADJUSTING SCREW	
120	3067244-0000		1	CUTTING JAW	
130	2976823-0000		1	CARRIER	
135	2976823-0000		1	CARRIER	
150	929316-0001		2	BEARING	
155	929316-0002		2	BEARING	
175	3096232-0000		2	CUTTING RAIL	
180	3096233-0000		2	BRACKET	
185	1110083-0005		2	DOLLY	
220	312115-0370		2	SCREW ISO4762 M6X20 A4 80	
230	312105-0376		4	SCREW, M6S ISO 4014 M6X35 A4 80	
250	312145-0291		2	SCREW ISO 2009 MFS M4X12 A4	
450	315115-0153		4	WASHER PLAIN, TBRB 6,4/12 H=3	
TPA 0125SQ (See drawing on page: 1-292)					
010	2906021-0000		1	BEARING HOUSING	

Machine Type | Group Description | Used-In | Group Number | Page No

CUTTING JAW

Drawing file: 2869018-5_1_AA.hpgl

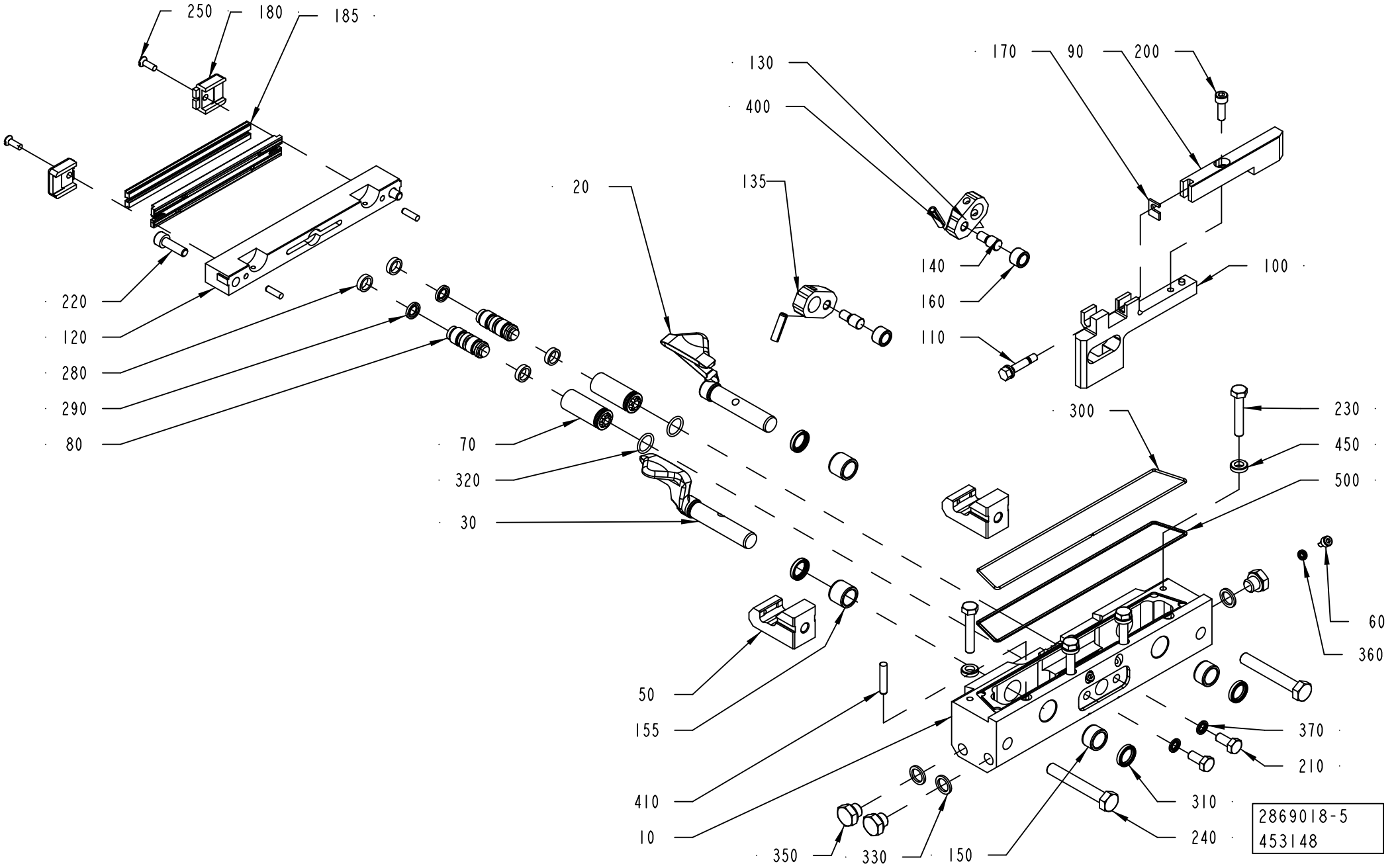

ECM: 591823 - 20130402
Group number: 2869018-0100
Assembly Drawing: 2869018-5_1_AA

This list covers pages from 1-292 to 1-299

Pos	Part No	UN	Qty	Description	Page No
TPA 0125SQ (Cont'd) (See drawing on page: 1-292)					
020	2906019-0000		1	FOLDING FLAP	
030	2906020-0000		1	FOLDING FLAP	
090	2845909-0000		1	CARRIER RULER	
100	2906022-0000		1	CARRIER RULER	
110	751579-0000		1	ADJUSTING SCREW	
120	2907732-0000		1	CUTTING JAW	
130	2846012-0000		1	CARRIER	
135	2846012-0000		1	CARRIER	
150	33408-0000		2	BEARING	
155	33408-0000		2	BEARING	
175	2890692-0000		2	CUTTING RAIL	
180	1348053-0000		2	BRACKET	
185	1110083-0003		2	DOLLY	
220	312115-0370		2	SCREW ISO4762 M6X20 A4 80	
230	312105-0374		4	SCREW, M6S ISO 4014 M6X30 A4 80	
250	312145-0291		2	SCREW ISO 2009 MFS M4X12 A4	
450	315105-0153		4	WASHER PLAIN, 6,4X12X1,5 A4 BRB	
900	311103-0305		2	PARALLEL PIN ISO 2338 5M6X10 A1	
TPA 0250SQ, TPA 0200SQ (See drawing on page: 1-292)					
010	2962055-0000		1	BEARING HOUSING	
020	1350985-0000		1	FOLDING FLAP RIGHT	
030	1350986-0000		1	FOLDING FLAP LEFT	
090	1350998-0000		1	CARRIER RULER LEFT	
100	2978921-0000		1	CARRIER RULER	
110	751579-0000		1	ADJUSTING SCREW	
120	2965110-0000		1	CUTTING JAW	
130	272419-0000		1	CARRIER	
135	272419-0000		1	CARRIER	
150	929316-0001		2	BEARING	
155	929316-0002		2	BEARING	
175	2890692-0000		2	CUTTING RAIL	
180	1348053-0000		2	BRACKET	
185	1110083-0003		2	DOLLY	
220	312115-0370		2	SCREW ISO4762 M6X20 A4 80	
230	312105-0376		4	SCREW, M6S ISO 4014 M6X35 A4 80	
250	312145-0291		2	SCREW ISO 2009 MFS M4X12 A4	
450	315115-0153		4	WASHER PLAIN, TBRB 6,4/12 H=3	
900	311103-0305		2	PARALLEL PIN ISO 2338 5M6X10 A1	
TPA 0330SQ (See drawing on page: 1-292)					
010	3002881-0000		1	BEARING HOUSING	
020	3002884-0000		1	FOLDING FLAP	
030	3002883-0000		1	FOLDING FLAP	
090	3002887-0000		1	CARRIER RULER	
100	3002888-0000		1	CARRIER RULER	
110	751579-0000		1	ADJUSTING SCREW	
120	3002882-0000		1	CUTTING JAW	
130	2976823-0000		1	CARRIER	
135	2976823-0000		1	CARRIER	
150	929316-0001		2	BEARING	
155	929316-0002		2	BEARING	
175	2890692-0000		2	CUTTING RAIL	
180	1348053-0000		2	BRACKET	
185	1110083-0003		2	DOLLY	
220	312115-0370		2	SCREW ISO4762 M6X20 A4 80	
230	312105-0376		4	SCREW, M6S ISO 4014 M6X35 A4 80	
250	312145-0291		2	SCREW ISO 2009 MFS M4X12 A4	
450	315115-0153		4	WASHER PLAIN, TBRB 6,4/12 H=3	
900	311103-0305		2	PARALLEL PIN ISO 2338 5M6X10 A1	
Common Parts					
050	2888463-0000		2	CATCH	
060	752476-0000		2	SCREW	
070	752288-0000		2	SLEEVE	
080	752115-0000		2	PLUNGER	
140	256607-0000		2	AXLE PIN	
160	22463-0000		2	ROLL	
170	751580-0000		1	SHIM	
200	312115-0329		1	SCREW ISO4762 M5X16 A4 80	
210	312105-0367		2	SCREW, M6S ISO 4017 M6X14 A4 80	
240	312105-0462		2	SCREW, M6S ISO 4014 M8X55 A4 8002	
280	90091-0169		4	WEAR RING 12X15X3,2 MM	
290	90091-0216		2	PISTON SEAL GLYD RING 7,1X12X2,2 MM	
300	90242-0093	MM	500	O-RING MATERIAL 1,5 MM	
310	90459-5936		4	BEARING SEAL 12X16X3 MM	
320	315202-0110		2	O-RING 12,1X1,6 MM	
330	315237-0109		3	WASHER,PL.RND.AL.10/14,H=1,5	
350	90330-0066		3	PLUG, G1/8EXT, G1/8	
360	315211-0101		2	BONDED SEAL SS/NBR90 M4	
370	315211-0103		2	BONDED SEAL SS/NBR90 M6	
400	311111-0308		2	SPRING PIN ISO 8752 5X20-ST	
410	311103-0312		1	PARALLEL PIN ISO 2338 5M6X25 A1	
500	90153-0015		1	ADHESIVE LOCTITE IS 496/CYANOLOT 303	

Machine Type | Group Description | Used-In | Group Number | Page No

CUTTING JAW

Drawing file: 2869018-7_1_AA.hpgl

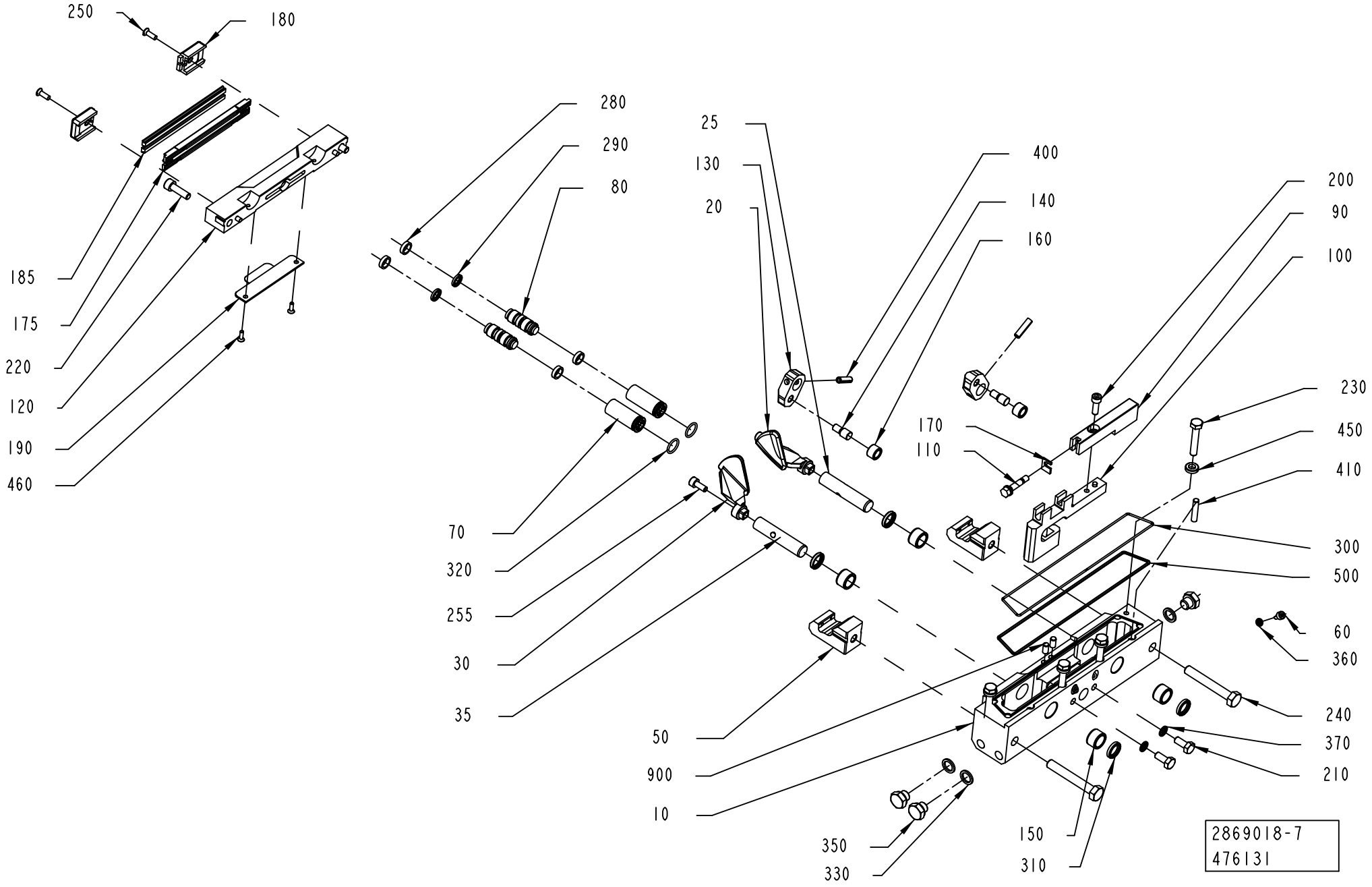

ECM: 591823 - 20130402
Group number: 2869018-0100
Assembly Drawing: 2869018-7_1_AA

This list covers pages from 1-292 to 1-299

Pos	Part No	UN	Qty	Description	Page No
SEE PREVIOUS LISTS PAGES: 1-293, 1-295, 1-297.					

Pos	Part No	UN	Qty	Description	Page No

KNIFE HOLDER

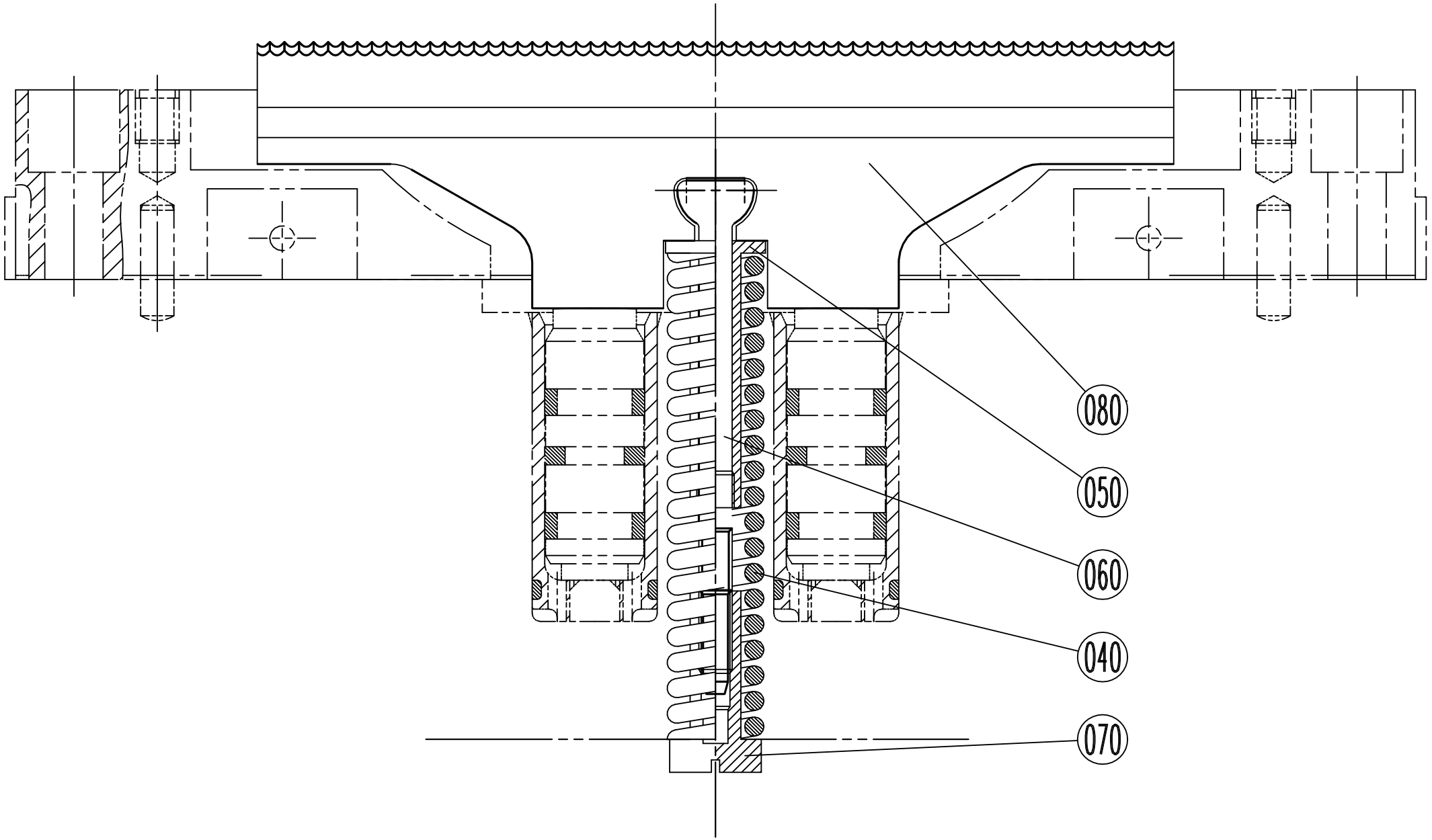

Pos	Part No	UN	Qty	Description	Page No
TBA 0100B IH, TBA 0125S IH, TPA 0125SQ, TBA 0080S (See drawing on page: 1-302)					
040	1538109-0000		1	COMPRESSION SPRING	
080	1282645-0000		1	KNIFE	
TBA 0160S IH, TBA 0200M IH, TBA 0200S IH, TBA 0250S IH, TB 0200S, TBA 0200E, TBA 0250E, TBA 0180S (See drawing on page: 1-304)					
040	1538109-0000		1	COMPRESSION SPRING	
080	1282647-0000		1	KNIFE	
TBA 0200B IH, TBA 0180B IH, TBA 0200SQ IH, TBA 0250B IH, TBA 0330S IH, TPA 0250SQ IH, TPA 0330SQ IH, TPA 0200SQ IH, TBA 0250SQ IH (See drawing on page: 1-300)					
040	1538109-0000		1	COMPRESSION SPRING	
080	1282646-0000		1	KNIFE	
TBA 0375S (See drawing on page: 1-300)					
040	1538109-0000		1	COMPRESSION SPRING	
080	3096231-0000		1	KNIFE	
Common Parts					
050	272753-0000		1	STEERING	
060	456009-0000		1	LINK	
070	272755-0000		1	NUT	

Pos	Part No	UN	Qty	Description	Page No

KNIFE HOLDER

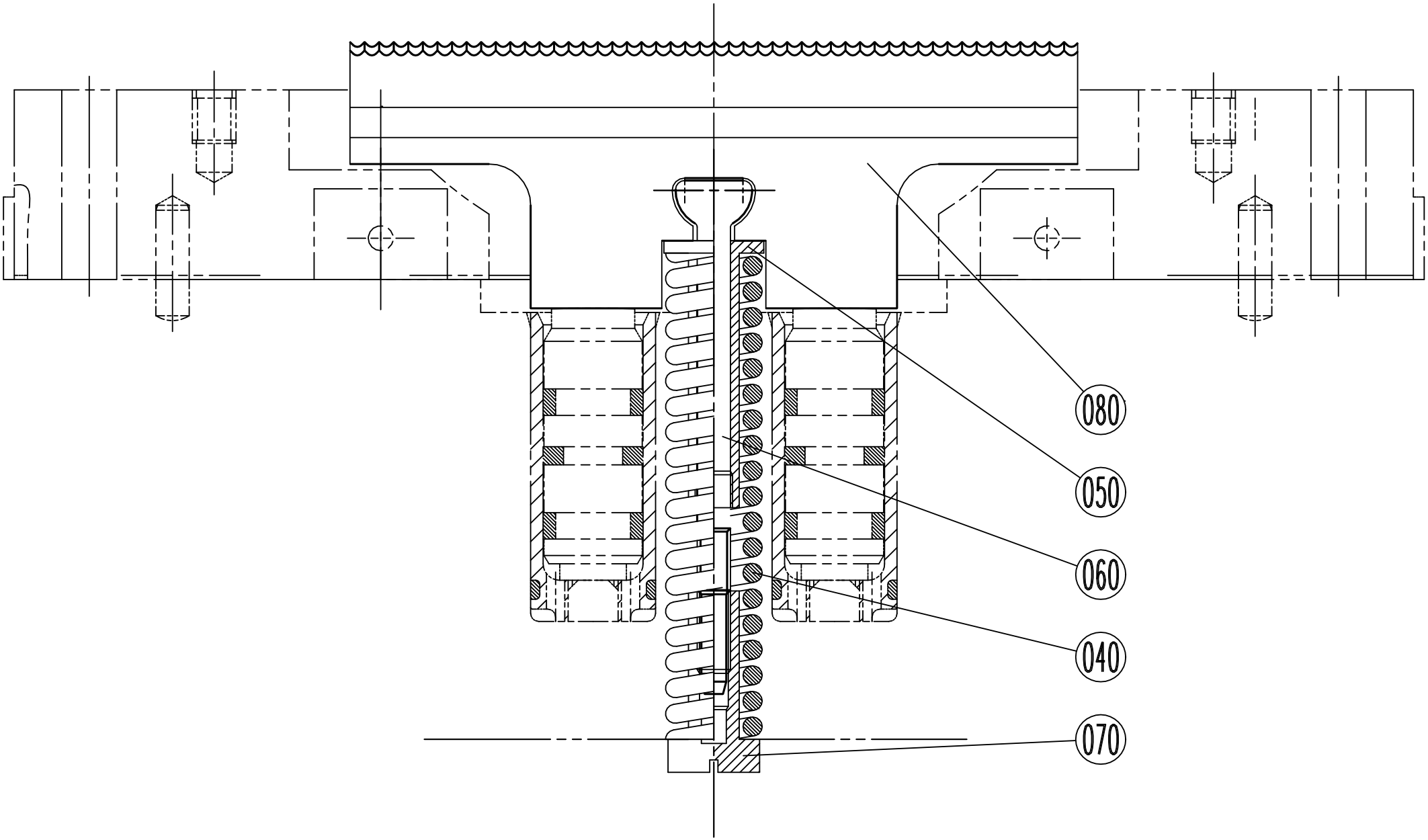

Pos	Part No	UN	Qty	Description	Page No
TBA 0100B IH, TBA 0125S IH, TPA 0125SQ, TBA 0080S (See drawing on page: 1-302)					
040	1538109-0000		1	COMPRESSION SPRING	
080	1282645-0000		1	KNIFE	
TBA 0160S IH, TBA 0200M IH, TBA 0200S IH, TBA 0250S IH, TB 0200S, TBA 0200E, TBA 0250E, TBA 0180S (See drawing on page: 1-304)					
040	1538109-0000		1	COMPRESSION SPRING	
080	1282647-0000		1	KNIFE	
TBA 0200B IH, TBA 0180B IH, TBA 0200SQ IH, TBA 0250B IH, TBA 0330S IH, TPA 0250SQ IH, TPA 0330SQ IH, TPA 0200SQ IH, TBA 0250SQ IH (See drawing on page: 1-300)					
040	1538109-0000		1	COMPRESSION SPRING	
080	1282646-0000		1	KNIFE	
TBA 0375S (See drawing on page: 1-300)					
040	1538109-0000		1	COMPRESSION SPRING	
080	3096231-0000		1	KNIFE	
Common Parts					
050	272753-0000		1	STEERING	
060	456009-0000		1	LINK	
070	272755-0000		1	NUT	

Pos	Part No	UN	Qty	Description	Page No

KNIFE HOLDER

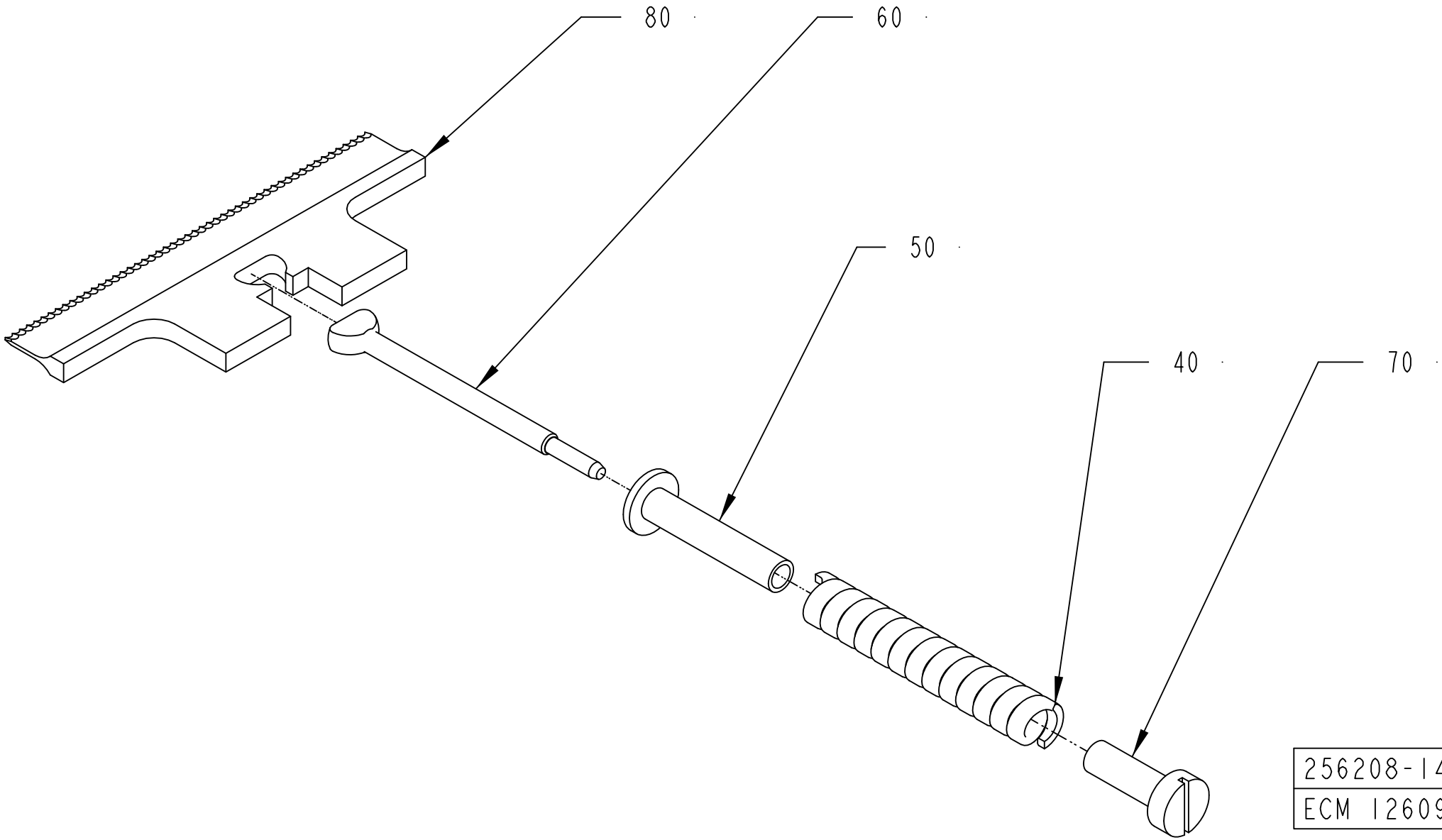

256208-14
ECM 126095

Pos	Part No	UN	Qty	Description	Page No
TBA 0100B IH, TBA 0125S IH, TPA 0125SQ, TBA 0080S (See drawing on page: 1-302)					
040	1538109-0000		1	COMPRESSION SPRING	
080	1282645-0000		1	KNIFE	
TBA 0160S IH, TBA 0200M IH, TBA 0200S IH, TBA 0250S IH, TB 0200S, TBA 0200E, TBA 0250E, TBA 0180S (See drawing on page: 1-304)					
040	1538109-0000		1	COMPRESSION SPRING	
080	1282647-0000		1	KNIFE	
TBA 0200B IH, TBA 0180B IH, TBA 0200SQ IH, TBA 0250B IH, TBA 0330S IH, TPA 0250SQ IH, TPA 0330SQ IH, TPA 0200SQ IH, TBA 0250SQ IH (See drawing on page: 1-300)					
040	1538109-0000		1	COMPRESSION SPRING	
080	1282646-0000		1	KNIFE	
TBA 0375S (See drawing on page: 1-300)					
040	1538109-0000		1	COMPRESSION SPRING	
080	3096231-0000		1	KNIFE	
Common Parts					
050	272753-0000		1	STEERING	
060	456009-0000		1	LINK	
070	272755-0000		1	NUT	

Pos	Part No	UN	Qty	Description	Page No

VOLUME CURVE PIECE

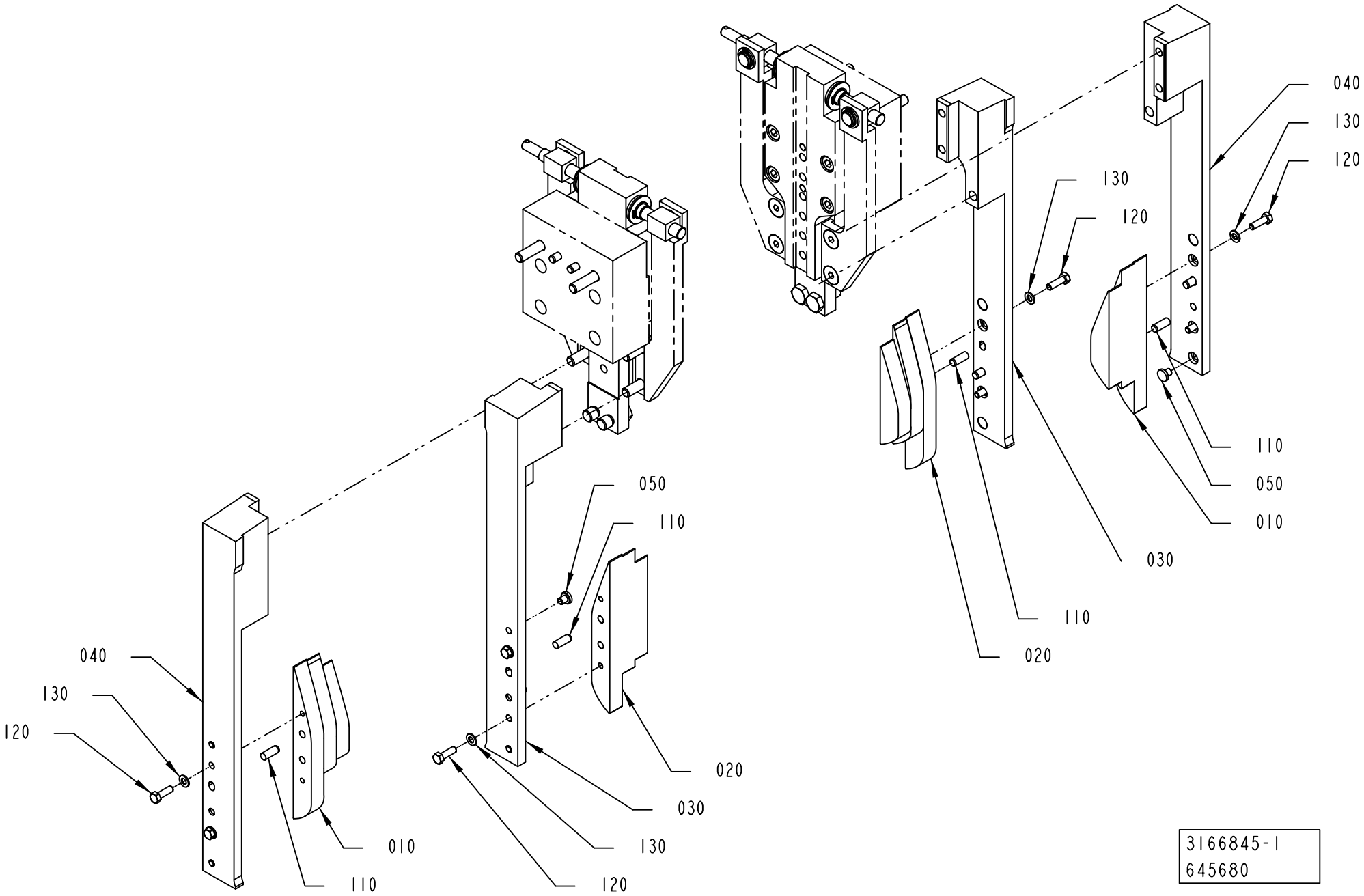

3166845-1
645680

ECM: 664272 - 20140701
Group number: 3166845-0100
Assembly Drawing: 3166845-1_1_AB

This list covers pages from 1-306 to 1-309

Pos	Part No	UN	Qty	Description	Page No
TB 0200S (See drawing on page: 1-306)					
010	3290937-0000		2	VOLUME CAM	
020	3290938-0000		2	VOLUME CAM	
TBA 0080S (See drawing on page: 1-306)					
010	3224229-0000		2	VOLUME CAM	
020	3224230-0000		2	VOLUME CAM	
TBA 0100B, TBA 0125S (See drawing on page: 1-306)					
010	3224228-0000		2	VOLUME CAM	
020	3224227-0000		2	VOLUME CAM	
TBA 0160S, TBA 0200S (See drawing on page: 1-306)					
010	3223683-0000		2	VOLUME CAM	
020	3223684-0000		2	VOLUME CAM	
TBA 0180S (See drawing on page: 1-306)					
010	3285684-0000		2	VOLUME CAM	
020	3285683-0000		2	VOLUME CAM	
TBA 0200B, TBA 0250B, TBA 0330S (See drawing on page: 1-306)					
010	3166841-0000		2	VOLUME CAM	
020	3166839-0000		2	VOLUME CAM	
TBA 0200E, TBA 0250E (See drawing on page: 1-308)					
010	3223682-0000		1	VOLUME CAM	
015	3223681-0000		1	VOLUME CAM	
020	3223680-0000		1	VOLUME CAM	
025	3223679-0000		1	VOLUME CAM	
TBA 0200M, TBA 0250S (See drawing on page: 1-306)					
010	3223675-0000		2	VOLUME CAM	
020	3223676-0000		2	VOLUME CAM	
TBA 0200SQ (See drawing on page: 1-306)					
010	3224234-0000		2	VOLUME CAM	
020	3224233-0000		2	VOLUME CAM	
TBA 0375S (See drawing on page: 1-306)					
010	3166844-0000		2	VOLUME CAM	
020	3166843-0000		2	VOLUME CAM	
TPA 0125SQ (See drawing on page: 1-306)					
010	3224235-0000		2	VOLUME CAM	
020	3224236-0000		2	VOLUME CAM	
TPA 0250SQ, TPA 0200SQ (See drawing on page: 1-306)					
010	3167532-0000		2	VOLUME CAM	
020	3167531-0000		2	VOLUME CAM	
TPA 0330SQ (See drawing on page: 1-306)					
010	3223677-0000		2	VOLUME CAM	
020	3223678-0000		2	VOLUME CAM	
Common Parts					
030	3171342-0000		2	PLATE	
040	3171341-0000		2	PLATE	
050	3231269-0000		8	PLUG	
110	311103-0351		8	PARALLEL PIN ISO 2338 6M6X16 A1	
120	312105-0329		8	SCREW, M6S ISO 4017 M5X16 A4 80	
130	315105-0146		8	WASHER PLAIN, 5,3X10X1 A4 BRB	

Machine Type | Group Description | Used-In | Group Number | Page No

VOLUME CURVE PIECE

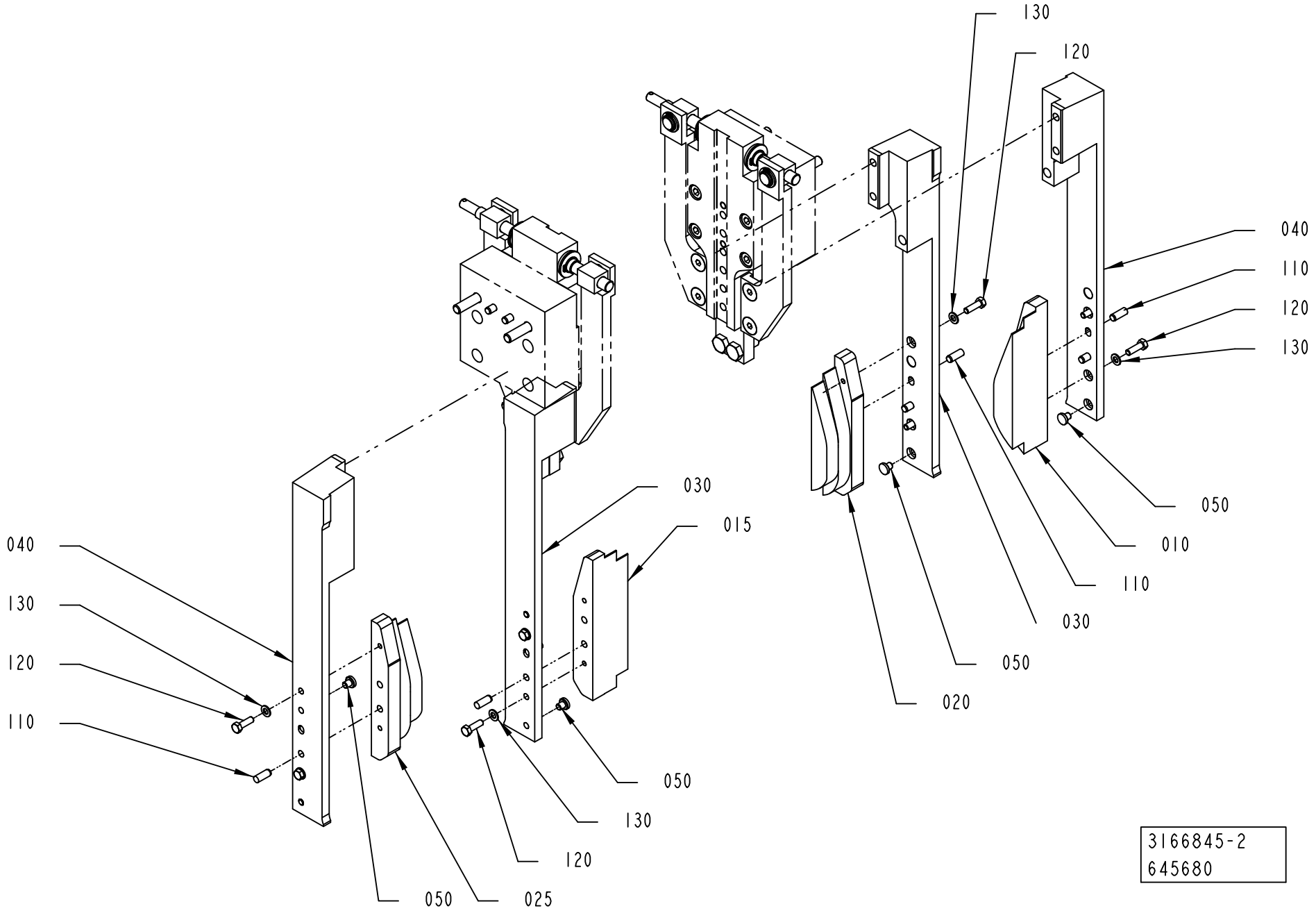

3166845-2
645680

ECM: 664272 - 20140701
Group number: 3166845-0100
Assembly Drawing: 3166845-2_1_AB

This list covers pages from 1-306 to 1-309

Pos	Part No	UN	Qty	Description	Page No
TB 0200S (See drawing on page: 1-306)					
010	3290937-0000		2	VOLUME CAM	
020	3290938-0000		2	VOLUME CAM	
TBA 0080S (See drawing on page: 1-306)					
010	3224229-0000		2	VOLUME CAM	
020	3224230-0000		2	VOLUME CAM	
TBA 0100B, TBA 0125S (See drawing on page: 1-306)					
010	3224228-0000		2	VOLUME CAM	
020	3224227-0000		2	VOLUME CAM	
TBA 0160S, TBA 0200S (See drawing on page: 1-306)					
010	3223683-0000		2	VOLUME CAM	
020	3223684-0000		2	VOLUME CAM	
TBA 0180S (See drawing on page: 1-306)					
010	3285684-0000		2	VOLUME CAM	
020	3285683-0000		2	VOLUME CAM	
TBA 0200B, TBA 0250B, TBA 0330S (See drawing on page: 1-306)					
010	3166841-0000		2	VOLUME CAM	
020	3166839-0000		2	VOLUME CAM	
TBA 0200E, TBA 0250E (See drawing on page: 1-308)					
010	3223682-0000		1	VOLUME CAM	
015	3223681-0000		1	VOLUME CAM	
020	3223680-0000		1	VOLUME CAM	
025	3223679-0000		1	VOLUME CAM	
TBA 0200M, TBA 0250S (See drawing on page: 1-306)					
010	3223675-0000		2	VOLUME CAM	
020	3223676-0000		2	VOLUME CAM	
TBA 0200SQ (See drawing on page: 1-306)					
010	3224234-0000		2	VOLUME CAM	
020	3224233-0000		2	VOLUME CAM	
TBA 0375S (See drawing on page: 1-306)					
010	3166844-0000		2	VOLUME CAM	
020	3166843-0000		2	VOLUME CAM	
TPA 0125SQ (See drawing on page: 1-306)					
010	3224235-0000		2	VOLUME CAM	
020	3224236-0000		2	VOLUME CAM	
TPA 0250SQ, TPA 0200SQ (See drawing on page: 1-306)					
010	3167532-0000		2	VOLUME CAM	
020	3167531-0000		2	VOLUME CAM	
TPA 0330SQ (See drawing on page: 1-306)					
010	3223677-0000		2	VOLUME CAM	
020	3223678-0000		2	VOLUME CAM	
Common Parts					
030	3171342-0000		2	PLATE	
040	3171341-0000		2	PLATE	
050	3231269-0000		8	PLUG	
110	311103-0351		8	PARALLEL PIN ISO 2338 6M6X16 A1	
120	312105-0329		8	SCREW, M6S ISO 4017 M5X16 A4 80	
130	315105-0146		8	WASHER PLAIN, 5,3X10X1 A4 BRB	

Machine Type | Group Description | Used-In | Group Number | Page No

SUPPORT ROLLER

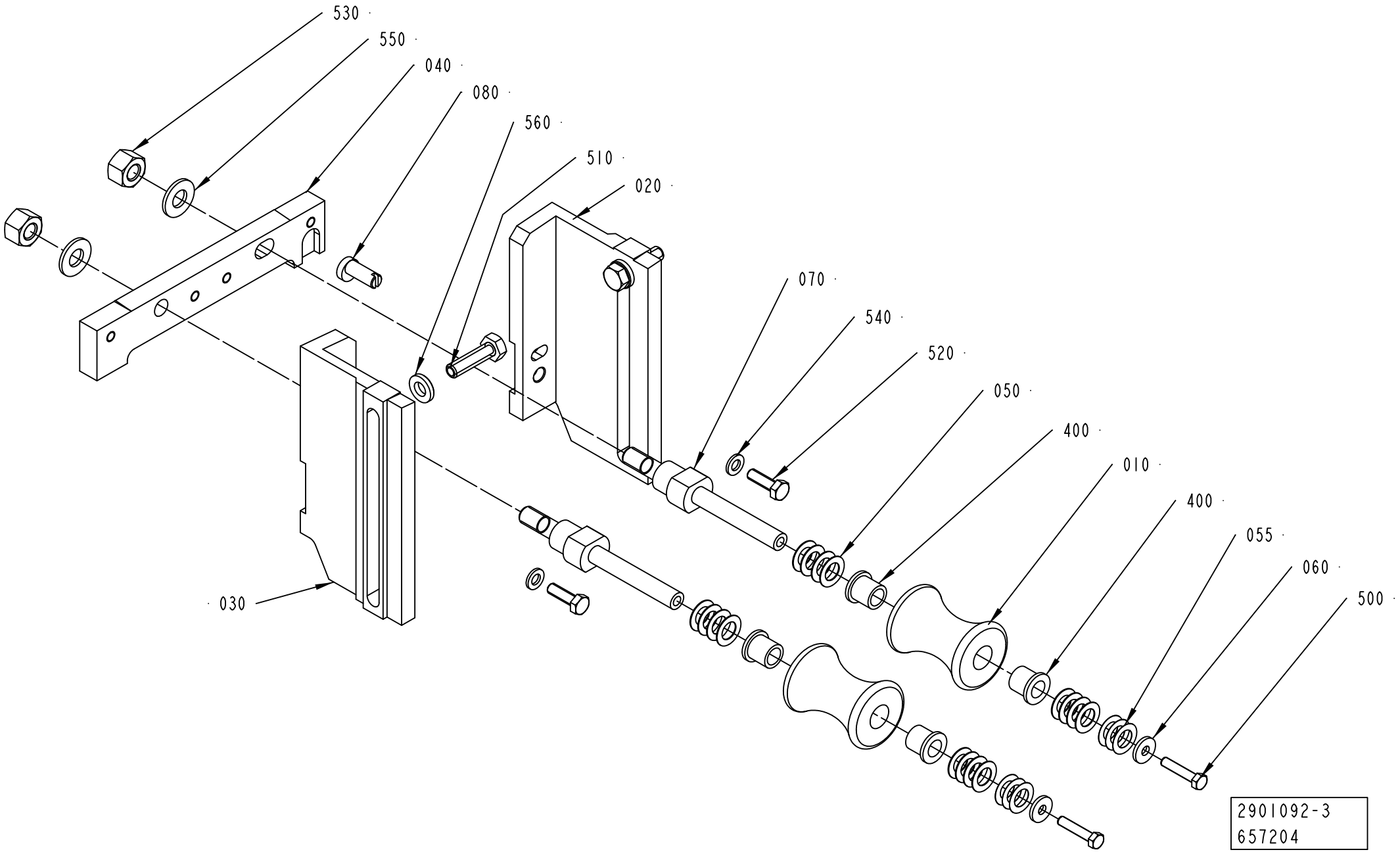

ECM: 665972 - 20140701
Group number: 2901092-0200
Assembly Drawing: 2901092-3_1_AA

This list covers pages from 1-310 to 1-313

Pos	Part No	UN	Qty	Description	Page No
TBA 0080S (See drawing on page: 1-310)					
010	2950897-0000		2	ROLLER	
040	3248661-0003		1	BRACKET	
050	2033-0009		16	WASHER	
055	2033-0014		6	WASHER	
070	2939843-0000		2	PIN	
TBA 0100B, TBA 0125S (See drawing on page: 1-310)					
010	2964307-0000		2	ROLLER	
040	3248661-0003		1	BRACKET	
050	2033-0009		16	WASHER	
055	2033-0014		6	WASHER	
070	2939843-0000		2	PIN	
TBA 0160S, TBA 0200S, TB 0200S, TBA 0180S (See drawing on page: 1-310)					
010	2947531-0000		2	ROLLER	
040	3248661-0004		1	BRACKET	
050	2033-0009		16	WASHER	
055	2033-0014		6	WASHER	
070	2939843-0000		2	PIN	
TBA 0200B, TBA 0200SQ, TBA 0250B, TBA 0330S (See drawing on page: 1-310)					
010	2959274-0000		2	ROLLER	
040	3248661-0002		1	BRACKET	
050	2033-0009		16	WASHER	
055	2033-0014		6	WASHER	
070	2939843-0000		2	PIN	
TBA 0200E, TBA 0250E (See drawing on page: 1-312)					
010	574385-0000		2	ROLLER TBA250SL	
040	3248661-0001		1	BRACKET	
050	2033-0009		8	WASHER	
055	2033-0014		4	WASHER	
070	3047987-0000		2	PIN	
TBA 0200M, TBA 0250S (See drawing on page: 1-310)					
010	574385-0000		2	ROLLER TBA250SL	
040	3248661-0001		1	BRACKET	
050	2033-0009		16	WASHER	
055	2033-0014		6	WASHER	
070	2939843-0000		2	PIN	
TBA 0375S (See drawing on page: 1-310)					
010	3092802-0000		2	ROLLER	
040	3248661-0002		1	BRACKET	
050	2033-0009		16	WASHER	
055	2033-0014		6	WASHER	
070	2939843-0000		2	PIN	

Pos	Part No	UN	Qty	Description	Page No
TPA 0125SQ (See drawing on page: 1-310)					
010	2950996-0000		2	ROLLER	
040	3248661-0003		1	BRACKET	
050	2033-0009		16	WASHER	
055	2033-0014		6	WASHER	
070	2939843-0000		2	PIN	
TPA 0250SQ, TPA 0200SQ (See drawing on page: 1-310)					
010	978760-0000		2	ROLLER TBA200SL	
040	3248661-0004		1	BRACKET	
050	2033-0009		16	WASHER	
055	2033-0014		6	WASHER	
070	2939843-0000		2	PIN	
TPA 0330SQ (See drawing on page: 1-310)					
010	929355-0000		2	ROLLER TPA 330	
040	3248661-0002		1	BRACKET	
050	2033-0009		16	WASHER	
055	2033-0014		6	WASHER	
070	2939843-0000		2	PIN	
Common Parts					
020	3248657-0000		1	HOLDER	
030	3248658-0000		1	HOLDER	
060	27815-0000		2	WASHER	
080	1511404-0000		1	ECCENTRIC SHAFT	
400	90240-0180		4	FLANGE BUSHING 10X14X15MM	
500	312105-0333		2	SCREW, M6S ISO 4017 M5X25 A4 80	
510	312105-0455		2	SCREW, M6S ISO 4017 M8X30 A4 80	
520	312105-0370		2	SCREW, M6S ISO 4017 M6X20 A4 80	
530	312811-0320		2	NUT HEX.LOCK HELI COIL MID GRIP M10 SS	
540	315105-0153		2	WASHER PLAIN, 6,4X12X1,5 A4 BRB	
550	315105-0173		2	WASHER PLAIN, 10,5X22X2 A4 BRB	
560	315115-0165		2	WASHER PLAIN, TBRB 8,4/16 H=3	

Machine Type | Group Description | Used-In | Group Number | Page No

SUPPORT ROLLER

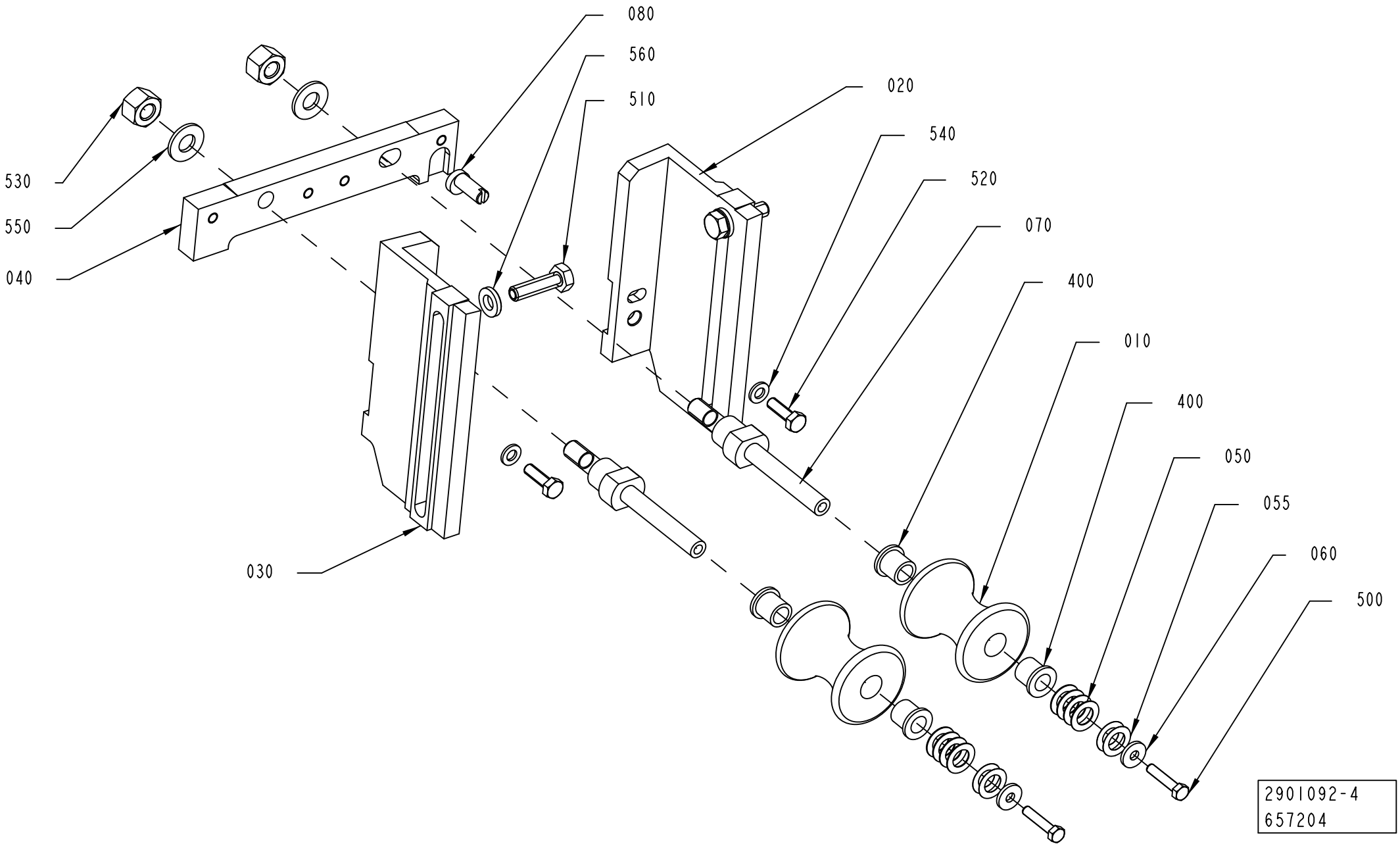

ECM: 665972 - 20140701
Group number: 2901092-0200
Assembly Drawing: 2901092-4_1_AA

This list covers pages from 1-310 to 1-313

Pos	Part No	UN	Qty	Description	Page No
TBA 0080S (See drawing on page: 1-310)					
010	2950897-0000		2	ROLLER	
040	3248661-0003		1	BRACKET	
050	2033-0009		16	WASHER	
055	2033-0014		6	WASHER	
070	2939843-0000		2	PIN	
TBA 0100B, TBA 0125S (See drawing on page: 1-310)					
010	2964307-0000		2	ROLLER	
040	3248661-0003		1	BRACKET	
050	2033-0009		16	WASHER	
055	2033-0014		6	WASHER	
070	2939843-0000		2	PIN	
TBA 0160S, TBA 0200S, TB 0200S, TBA 0180S (See drawing on page: 1-310)					
010	2947531-0000		2	ROLLER	
040	3248661-0004		1	BRACKET	
050	2033-0009		16	WASHER	
055	2033-0014		6	WASHER	
070	2939843-0000		2	PIN	
TBA 0200B, TBA 0200SQ, TBA 0250B, TBA 0330S (See drawing on page: 1-310)					
010	2959274-0000		2	ROLLER	
040	3248661-0002		1	BRACKET	
050	2033-0009		16	WASHER	
055	2033-0014		6	WASHER	
070	2939843-0000		2	PIN	
TBA 0200E, TBA 0250E (See drawing on page: 1-312)					
010	574385-0000		2	ROLLER TBA250SL	
040	3248661-0001		1	BRACKET	
050	2033-0009		8	WASHER	
055	2033-0014		4	WASHER	
070	3047987-0000		2	PIN	
TBA 0200M, TBA 0250S (See drawing on page: 1-310)					
010	574385-0000		2	ROLLER TBA250SL	
040	3248661-0001		1	BRACKET	
050	2033-0009		16	WASHER	
055	2033-0014		6	WASHER	
070	2939843-0000		2	PIN	
TBA 0375S (See drawing on page: 1-310)					
010	3092802-0000		2	ROLLER	
040	3248661-0002		1	BRACKET	
050	2033-0009		16	WASHER	
055	2033-0014		6	WASHER	
070	2939843-0000		2	PIN	
TPA 0125SQ (See drawing on page: 1-310)					
010	2950996-0000		2	ROLLER	
040	3248661-0003		1	BRACKET	
050	2033-0009		16	WASHER	
055	2033-0014		6	WASHER	
070	2939843-0000		2	PIN	
TPA 0250SQ, TPA 0200SQ (See drawing on page: 1-310)					
010	978760-0000		2	ROLLER TBA200SL	
040	3248661-0004		1	BRACKET	
050	2033-0009		16	WASHER	
055	2033-0014		6	WASHER	
070	2939843-0000		2	PIN	
TPA 0330SQ (See drawing on page: 1-310)					
010	929355-0000		2	ROLLER TPA 330	
040	3248661-0002		1	BRACKET	
050	2033-0009		16	WASHER	
055	2033-0014		6	WASHER	
070	2939843-0000		2	PIN	
Common Parts					
020	3248657-0000		1	HOLDER	
030	3248658-0000		1	HOLDER	
060	27815-0000		2	WASHER	
080	1511404-0000		1	ECCENTRIC SHAFT	
400	90240-0180		4	FLANGE BUSHING 10X14X15MM	
500	312105-0333		2	SCREW, M6S ISO 4017 M5X25 A4 80	
510	312105-0455		2	SCREW, M6S ISO 4017 M8X30 A4 80	
520	312105-0370		2	SCREW, M6S ISO 4017 M6X20 A4 80	
530	312811-0320		2	NUT HEX.LOCK HELI COIL MID GRIP M10 SS	
540	315105-0153		2	WASHER PLAIN, 6,4X12X1,5 A4 BRB	
550	315105-0173		2	WASHER PLAIN, 10,5X22X2 A4 BRB	
560	315115-0165		2	WASHER PLAIN, TBRB 8,4/16 H=3	

Machine Type | Group Description | Used-In | Group Number | Page No

PHOTOCELL UNIT

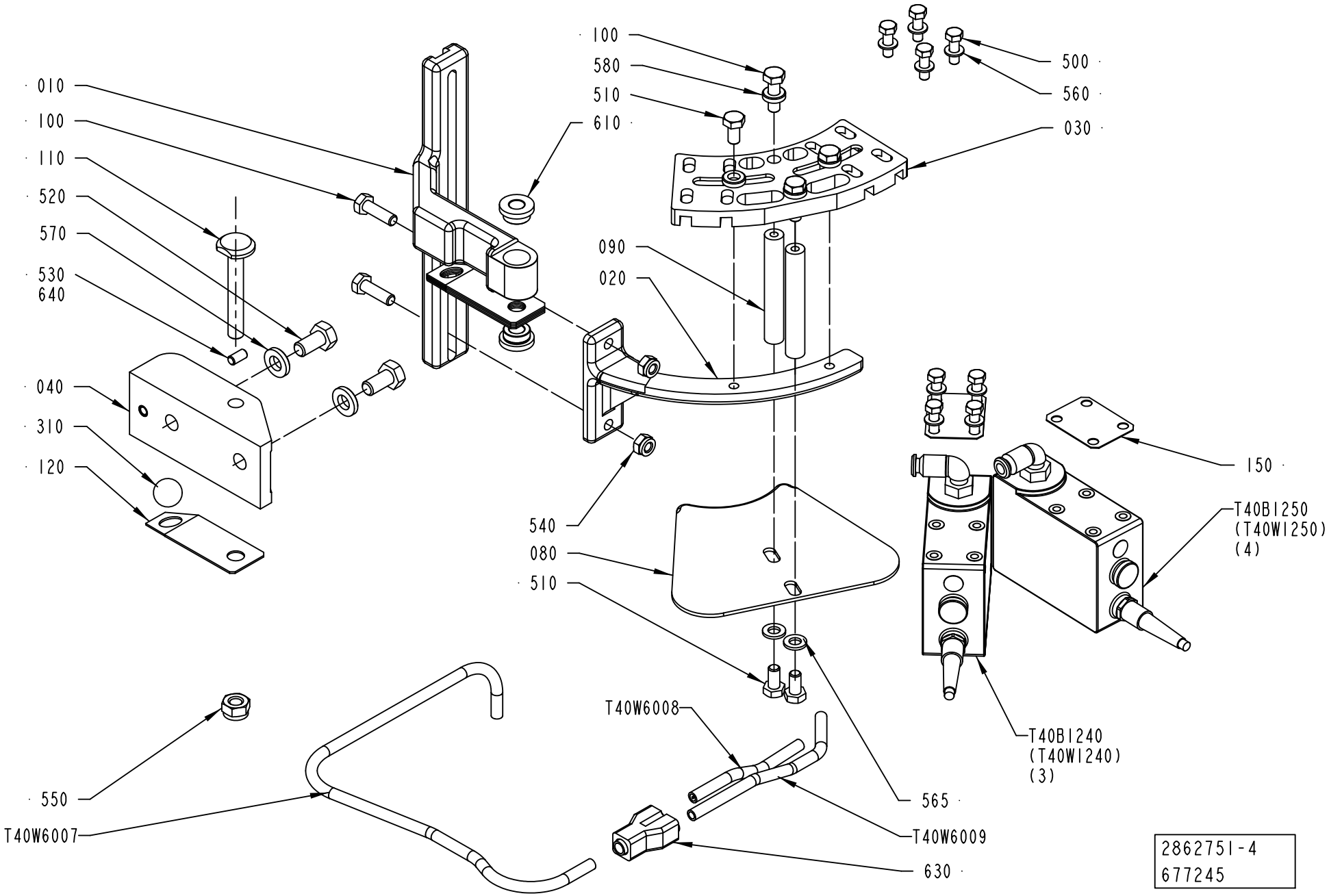

ECM: 678499 - 20141001
Group number: 2862751-0200
Assembly Drawing: 2862751-4_1_AC

This list covers pages from 1-314 to 1-317

Pos	Part No	UN	Qty	Description	Page No
TB 0200S (See drawing on page: 1-316)					
020	751476-0000		1	CANTILEVER	
030	3294787-0000		1	PLATE	
060	752554-0000		4	SPACER	
080	1260487-0000		1	PLATE	
090	1260491-0000		2	NUT	
170	312109-0335		8	SCREW, M6S ISO 4017 M5X30 A4 80	
T40B1240	3142230-0000		1	CONTRAST SCANNER	
	90459-6387		*1*	*CONNECTOR 5-POL M12, RSCS 5/9*	
	353250-0025		*1*	*GLAND LOCK NUT, M25X1,5*	
	3149940-0000		*1*	*INSERT*	
	90459-1501		*1*	*CABLE SEALING, 12023/I, ELFA. 44-625-79*	
	90458-2956		*1*	*ELBOW PIPE JOINT, EXT.THREAD, D=6MM-G1/8*	
	90458-0601		*1*	*CONTRAST SCANNER, KT15W-P2110S01*	
	90604-4604		*1*	*PUSH-IN L-FITTING QSL-G1/8-6*	
	90458-0407		*1*	*CABLE GLAND, VK 22553Y*	
T40B1250	3142230-0000		1	CONTRAST SCANNER	
	90459-6387		*1*	*CONNECTOR 5-POL M12, RSCS 5/9*	
	353250-0025		*1*	*GLAND LOCK NUT, M25X1,5*	
	3149940-0000		*1*	*INSERT*	
	90459-1501		*1*	*CABLE SEALING, 12023/I, ELFA. 44-625-79*	
	90458-2956		*1*	*ELBOW PIPE JOINT, EXT.THREAD, D=6MM-G1/8*	
	90458-0601		*1*	*CONTRAST SCANNER, KT15W-P2110S01*	
	90604-4604		*1*	*PUSH-IN L-FITTING QSL-G1/8-6*	
	90458-0407		*1*	*CABLE GLAND, VK 22553Y*	
TBA 0100B, TBA 0125S, TBA 0160S, TBA 0200M, TBA 0200S, TBA 0250S, TBA 0375S, TPA 0330SQ, TPA 0250SQ, TPA 0200SQ, TBA 0200E, TBA 0250E, TBA 0180S (See drawing on page: 1-316)					
020	751476-0000		1	CANTILEVER	
030	3294787-0000		1	PLATE	
060	752554-0000		4	SPACER	
080	1260487-0000		1	PLATE	
090	1260491-0000		2	NUT	
170	312109-0335		8	SCREW, M6S ISO 4017 M5X30 A4 80	
500	312105-0329		2	SCREW, M6S ISO 4017 M5X16 A4 80	
T40B1240	90458-0601		1	CONTRAST SCANNER, KT15W-P2110S01	
	90604-4604		*1*	*PUSH-IN L-FITTING QSL-G1/8-6*	
T40B1250	90458-0601		1	CONTRAST SCANNER, KT15W-P2110S01	
	90604-4604		*1*	*PUSH-IN L-FITTING QSL-G1/8-6*	
TBA 0200B, TBA 0200SQ, TBA 0250B, TBA 0330S (See drawing on page: 1-314)					
020	751457-0000		1	CANTILEVER	
030	3248664-0000		1	PLATE	
080	1260486-0000		1	PLATE	
090	1260490-0000		2	NUT	
500	312105-0329		8	SCREW, M6S ISO 4017 M5X16 A4 80	
T40B1240	90458-0601		1	CONTRAST SCANNER, KT15W-P2110S01	
	90604-4604		*1*	*PUSH-IN L-FITTING QSL-G1/8-6*	
T40B1250	90458-0601		1	CONTRAST SCANNER, KT15W-P2110S01	
	90604-4604		*1*	*PUSH-IN L-FITTING QSL-G1/8-6*	
TPA 0125SQ, TBA 0080S (See drawing on page: 1-316)					
020	2844252-0000		1	CANTILEVER	
030	3343943-0000		1	PLATE	
060	752554-0000		4	SPACER	
080	1260487-0000		1	PLATE	
090	1260491-0000		2	NUT	
170	312109-0335		8	SCREW, M6S ISO 4017 M5X30 A4 80	
500	312105-0329		2	SCREW, M6S ISO 4017 M5X16 A4 80	
T40B1240	90458-0601		1	CONTRAST SCANNER, KT15W-P2110S01	
	90604-4604		*1*	*PUSH-IN L-FITTING QSL-G1/8-6*	
T40B1250	90458-0601		1	CONTRAST SCANNER, KT15W-P2110S01	
	90604-4604		*1*	*PUSH-IN L-FITTING QSL-G1/8-6*	
Common Parts					
010	2815756-0000		1	HOLDER	
040	3343306-0000		1	BRACKET	
100	312105-0370		4	SCREW, M6S ISO 4017 M6X20 A4 80	
110	457367-0000		1	SHAFT	
120	457368-0000		5	SPRING	
150	3338611-0000		2	SHIM	
310	90601-1727		1	STEEL BALL 15MM, RB-15 INOX316	
510	312105-0366		4	SCREW, M6S ISO 4017 M6X12 A4 80	
520	312105-0449		2	SCREW, M6S ISO 4017 M8X16 A4 80	
530	312318-0325		1	SET SCREW, CUP END ISO4029 M5X10 A4	
540	312812-0316		2	HEXAGON NUT, NY-LOCK M6 A4 80	
550	312812-0318		1	HEXAGON NUT, NY-LOCK M8 A4 80	
560	315105-0146		8	WASHER PLAIN, 5,3X10X1 A4 BRB	
565	315105-0153		2	WASHER PLAIN, 6,4X12X1,5 A4 BRB	
570	315115-0165		2	WASHER PLAIN, TBRB 8,4/16 H=3	
580	315115-0153		4	WASHER PLAIN, TBRB 6,4/12 H=3	
610	321101-0143		2	FLANGE BUSHING, 8/14X8-18X3 MM	
630	90055-0100		1	Y-CONNECTION, 6-6	
640	344431-0000		1	THREADLOCKER LOCTITE 243, ONLY IN BOM	
	344431-0050		*1*	*THREADLOCKER LOCTITE 243, 50ML*	
	344431-0010		*1*	*THREADLOCKER LOCTITE 243, 10ML*	
T40W6007	90166-0132	MM	500	TUBE 6 MM PA TRANSP.	
T40W6008	90166-0132	MM	100	TUBE 6 MM PA TRANSP.	

Machine Type | Group Description | Used-In | Group Number | Page No

PHOTOCELL UNIT

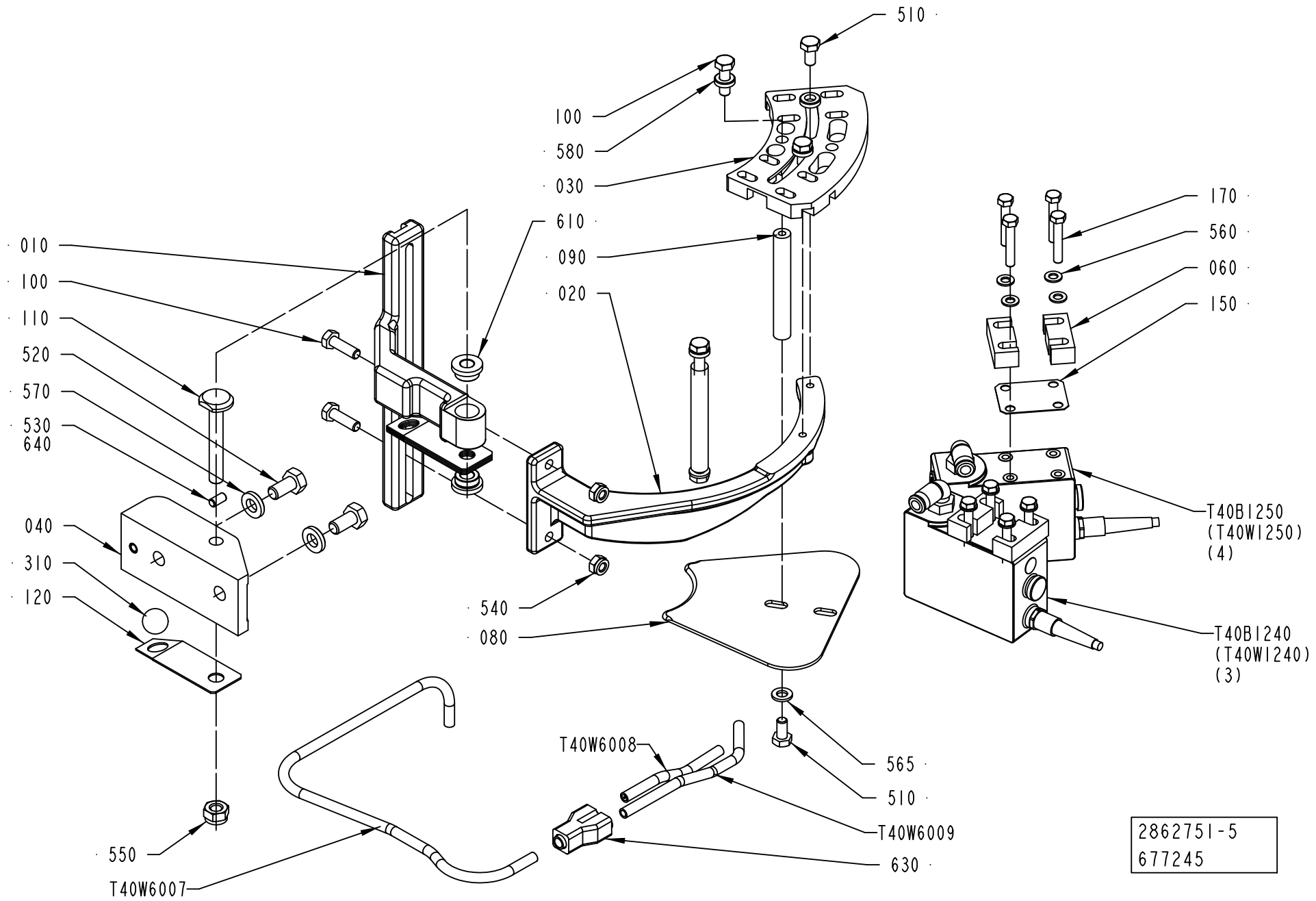

Pos	Part No	UN	Qty	Description	Page No
Common Parts (Cont'd)					
T40W6009	90166-0132	MM	150	TUBE 6 MM PA TRANSP.	

Pos	Part No	UN	Qty	Description	Page No

TUBE FLUSHING

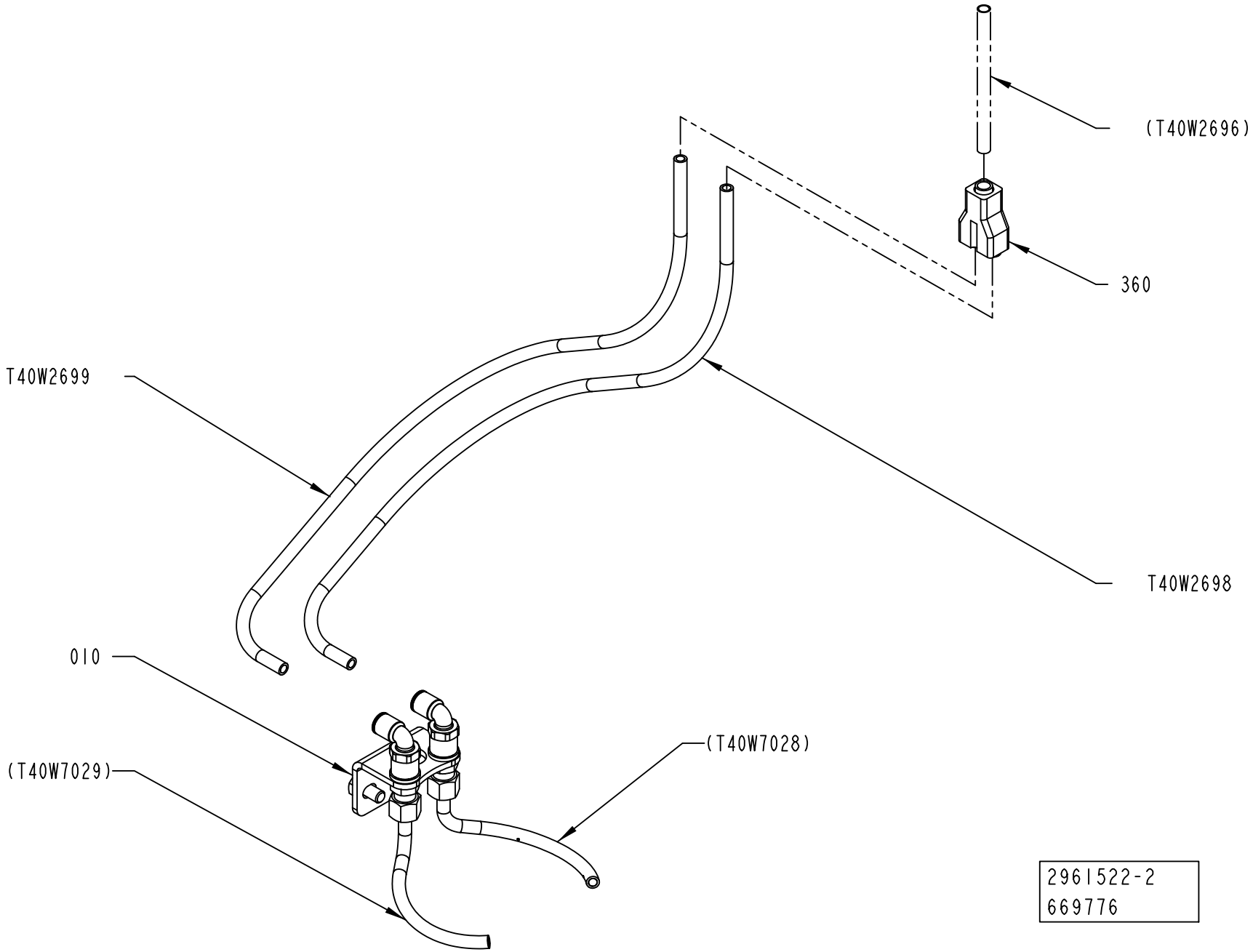

ECM: 680647 - 20141001
Group number: 2961522-0200
Assembly Drawing: 2961522-2_1_AB

Pos	Part No	UN	Qty	Description	Page No
-					
010	2961521-0300		1	NOZZLE	**1-321**
360	90055-0100		1	Y-CONNECTION, 6-6	
T40W2698	90166-0132	MM	220	TUBE 6 MM PA TRANSP.	
T40W2699	90166-0132	MM	220	TUBE 6 MM PA TRANSP.	

Pos	Part No	UN	Qty	Description	Page No

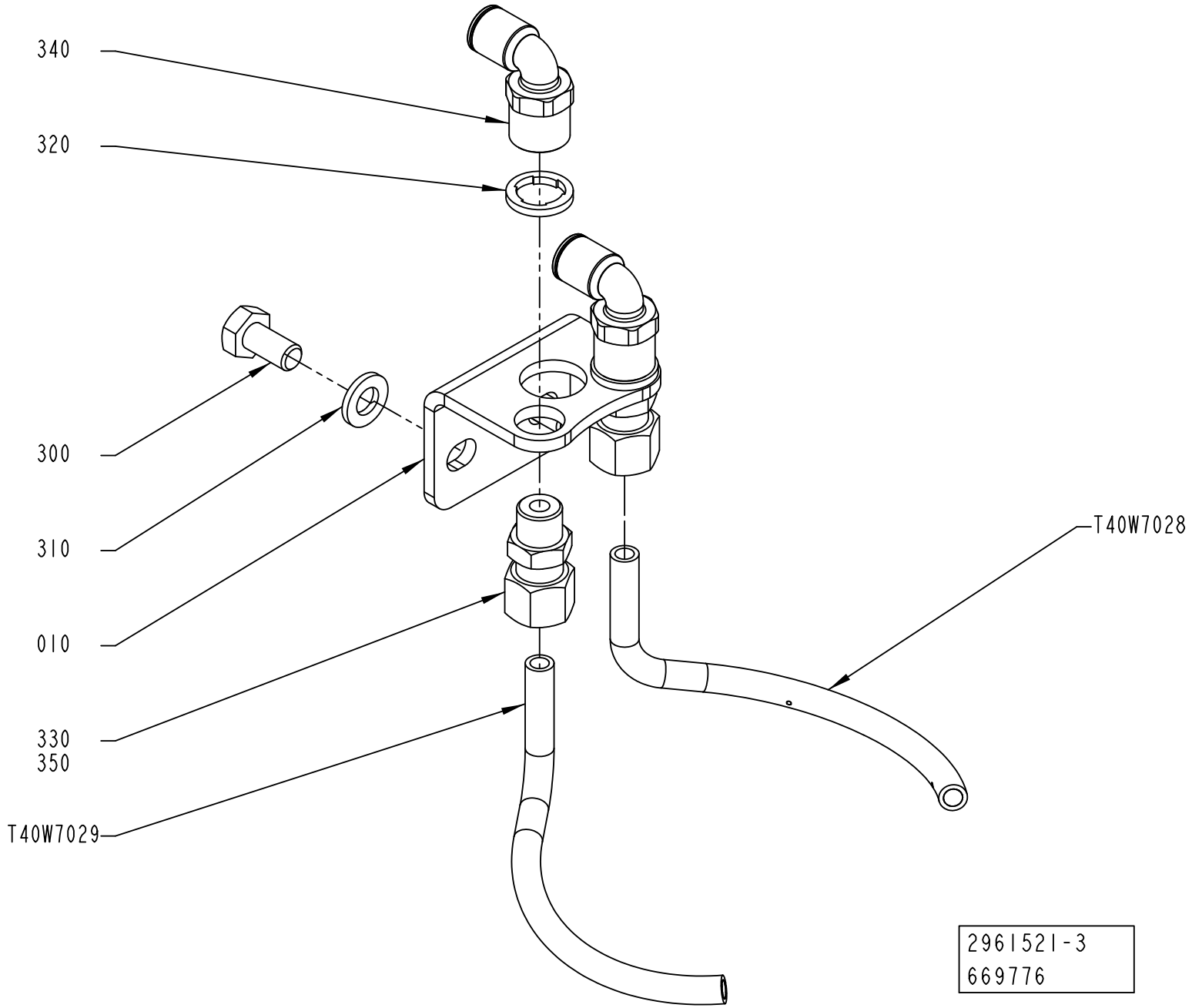
340
320
300
310
010
330
350
T40W7029
T40W7028
2961521-3
669776

ECM: 680648 - 20141001
Group number: 2961521-0300
Assembly Drawing: 2961521-3_1_AA

Pos	Part No	UN	Qty	Description	Page No
-					
010	3259625-0000		1	BRACKET	
300	312105-0366		2	SCREW, M6S ISO 4017 M6X12 A4 80	
310	315105-0153		2	WASHER PLAIN, 6,4X12X1,5 A4 BRB	
320	315239-0109		2	NYLON WASHER G1/8, 1/8RRP	
330	90458-2039		2	CONN. STR., 6-R1/8, EXT. THREAD	
340	90458-2040		2	ELBOW PIPE JOINT, INT. THREAD, G1/8" D=6	
350	344431-0050		1	THREADLOCKER LOCTITE 243, 50ML	
T40W7028	2961519-0000		1	PIPE	
T40W7029	2961518-0000		1	PIPE	

Pos	Part No	UN	Qty	Description	Page No

FORMING UNIT

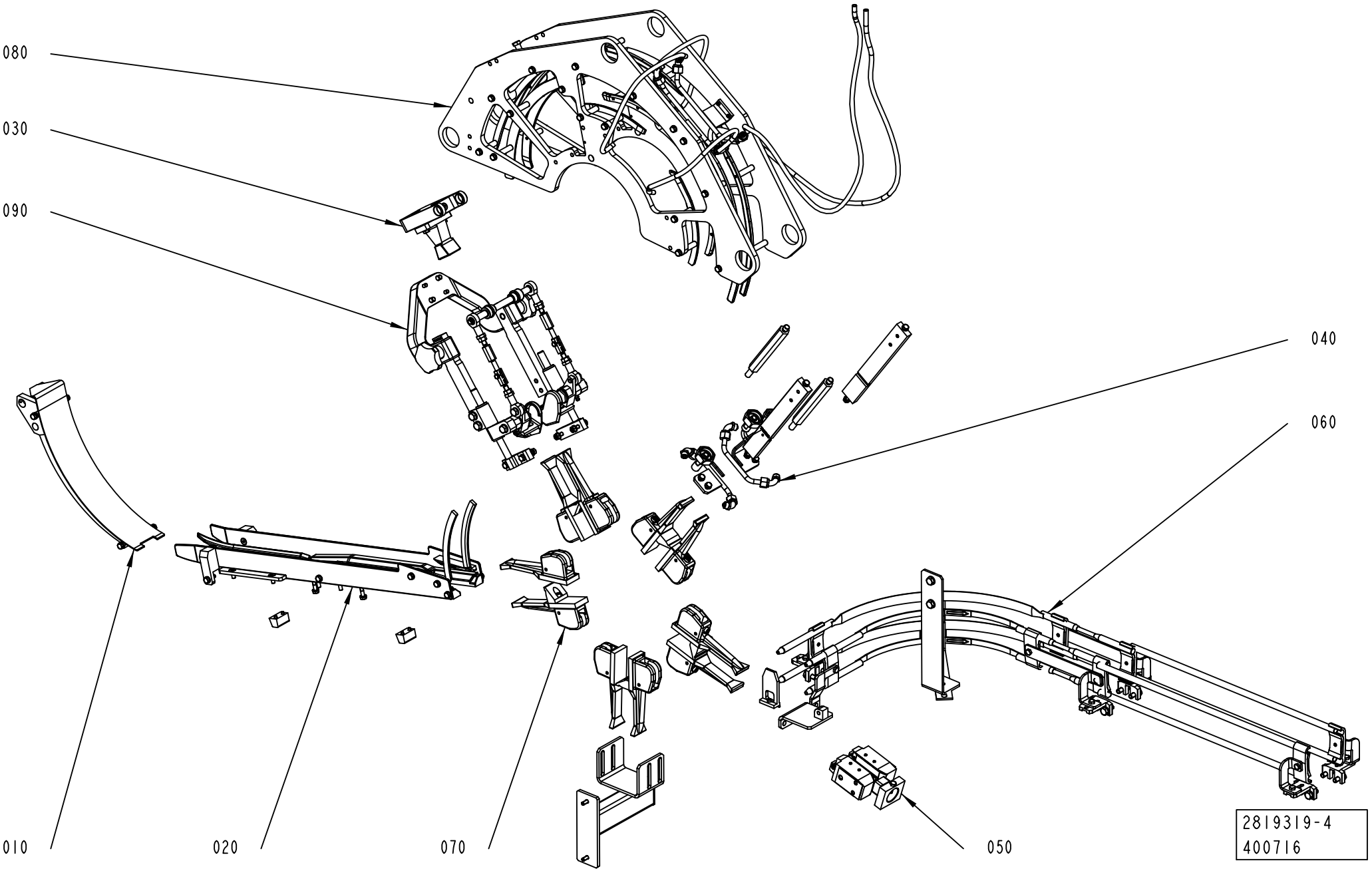

ECM: 651326 - 20140102
Group number: 2819319-0200
Assembly Drawing: 2819319-4_1_AA

Pos	Part No	UN	Qty	Description	Page No
TPA 0125SQ					
090	2852382-0100		1	FIN FOLDER	**1-325, 1-327**
TPA 0200SQ					
090	2852382-0100		1	FIN FOLDER	**1-325, 1-327**
TPA 0250SQ					
090	2852382-0100		1	FIN FOLDER	**1-325, 1-327**
TPA 0330SQ					
090	2852382-0100		1	FIN FOLDER	**1-325, 1-327**
TBA 0200E					
090	2852382-0100		1	FIN FOLDER	**1-325, 1-327**
TBA 0200SQ					
090	2852382-0100		1	FIN FOLDER	**1-325, 1-327**
TBA 0250E					
090	2852382-0100		1	FIN FOLDER	**1-325, 1-327**
Common Parts					
010	2871929-0100		1	DROP CHUTE VARIANT	**1-329, 1-331, 1-333**
020	2819312-0200		1	INFEED CONVEYOR VARIANT	**1-335, 1-337, 1-339, 1-341, 1-343**
030	2819313-0100		1	PULL-DOWN DEVICE	**1-347, 1-349**
040	2819314-0100		1	FLAP HEATER	**1-351**
050	2819315-0100		1	PRESSURE DEVICE	**1-355**
060	2819316-0200		1	OUTFEEDER	**1-365, 1-367, 1-369**
070	2819317-0200		1	WHEEL	**1-389, 1-391, 1-393**
080	2819318-0200		1	FOLDING BAR	**1-397, 1-399, 1-401**

Pos	Part No	UN	Qty	Description	Page No

FIN FOLDER

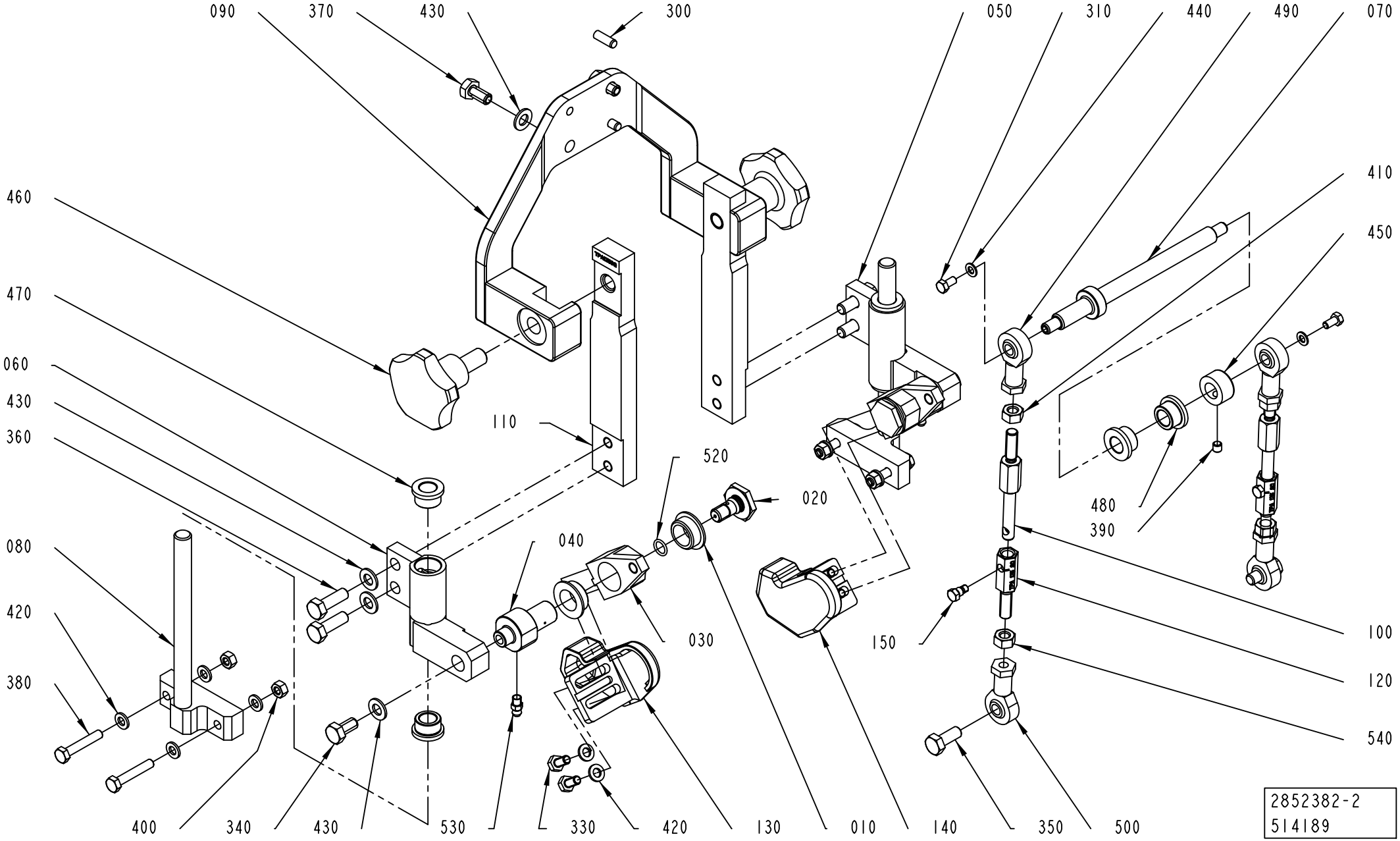
090
370
430
300
050
310
440
490
070
460
470
060
430
360
110
520
020
410
450
480
390
080
420
380
040
030
150
100
120
540
400
340
430
530
330
420
130
010
140
350
500
2852382-2
514189

ECM: 648870 - 20140401
Group number: 2852382-0100
Assembly Drawing: 2852382-2_1_AD

This list covers pages from 1-324 to 1-327

Pos	Part No	UN	Qty	Description	Page No
TBA 0200E (See drawing on page: 1-326)					
030	3017847-0000		2	LEVER	
040	3017851-0000		2	AXLE PIN	
070	3017848-0000		1	SHAFT	
100	2983847-0000		2	SPACER	
110	3052009-0000		2	PLATE	
120	3052010-0000		2	SHAFT	
130	3052011-0000		1	FOLDING DEVICE	
140	3052012-0000		1	FOLDING DEVICE	
160	3017852-0000		2	SPACER	
350	312105-0460		2	SCREW, M6S ISO 4014 M8X45 A4 80	
380	312105-0374		4	SCREW, M6S ISO 4014 M6X30 A4 80	
420	315105-0153		8	WASHER PLAIN, 6,4X12X1,5 A4 BRB	
TBA 0200SQ (See drawing on page: 1-324)					
030	1350440-0000		2	LEVER	
040	2647105-0000		2	AXLE PIN	
070	2852384-0000		1	SHAFT	
100	2852392-0000		2	SPACER	
110	2962133-0000		2	PLATE	
120	2852391-0000		2	SHAFT	
130	3027694-0000		1	FOLDING DEVICE	
140	3027695-0000		1	FOLDING DEVICE	
350	312105-0451		2	SCREW, M6S ISO 4017 M8X20 A4 80	
380	312109-0376		4	SCREW, M6S ISO 4017 M6X35 A4 80	
400	312605-0316		4	HEXAGON NUT, M6M M6 A280	
420	315105-0153		12	WASHER PLAIN, 6,4X12X1,5 A4 BRB	
TBA 0250E (See drawing on page: 1-326)					
030	3017847-0000		2	LEVER	
040	3017851-0000		2	AXLE PIN	
070	3017848-0000		1	SHAFT	
100	2983847-0000		2	SPACER	
110	3052009-0000		2	PLATE	
120	3052010-0000		2	SHAFT	
130	3052011-0000		1	FOLDING DEVICE	
140	3052012-0000		1	FOLDING DEVICE	
160	3017852-0000		2	SPACER	
350	312105-0460		2	SCREW, M6S ISO 4014 M8X45 A4 80	
380	312105-0374		4	SCREW, M6S ISO 4014 M6X30 A4 80	
420	315105-0153		8	WASHER PLAIN, 6,4X12X1,5 A4 BRB	
TPA 0125SQ (See drawing on page: 1-324)					
030	1350440-0000		2	LEVER	
040	2647105-0000		2	AXLE PIN	
070	2852384-0000		1	SHAFT	
100	2852392-0000		2	SPACER	
110	2871959-0000		2	PLATE	
120	2871960-0000		2	SPACER	
130	2894725-0000		1	FOLDING DEVICE	
140	2894726-0000		1	FOLDING DEVICE	
350	312105-0451		2	SCREW, M6S ISO 4017 M8X20 A4 80	
380	312109-0376		4	SCREW, M6S ISO 4017 M6X35 A4 80	
400	312605-0316		4	HEXAGON NUT, M6M M6 A280	
420	315105-0153		12	WASHER PLAIN, 6,4X12X1,5 A4 BRB	
TPA 0200SQ (See drawing on page: 1-326)					
030	3017847-0000		2	LEVER	
040	3017851-0000		2	AXLE PIN	
070	3017848-0000		1	SHAFT	
100	2983847-0000		2	SPACER	
110	2976965-0000		2	PLATE	
120	2983848-0000		2	SHAFT	
130	3017845-0000		1	FOLDING DEVICE	
140	3017846-0000		1	FOLDING DEVICE	
160	3017852-0000		2	SPACER	
350	312105-0460		2	SCREW, M6S ISO 4014 M8X45 A4 80	
380	312105-0374		4	SCREW, M6S ISO 4014 M6X30 A4 80	
420	315105-0153		8	WASHER PLAIN, 6,4X12X1,5 A4 BRB	
TPA 0330SQ, TPA 0250SQ (See drawing on page: 1-326)					
030	3017847-0000		2	LEVER	
040	3017851-0000		2	AXLE PIN	
070	3017848-0000		1	SHAFT	
100	2983847-0000		2	SPACER	
110	2976965-0000		2	PLATE	
120	2983848-0000		2	SHAFT	
130	3017845-0000		1	FOLDING DEVICE	
140	3017846-0000		1	FOLDING DEVICE	
160	3017852-0000		2	SPACER	
350	312105-0460		2	SCREW, M6S ISO 4014 M8X45 A4 80	
380	312105-0374		4	SCREW, M6S ISO 4014 M6X30 A4 80	
420	315105-0153		8	WASHER PLAIN, 6,4X12X1,5 A4 BRB	
Common Parts					
010	1282708-0000		4	BUSHING	
020	1347496-0000		2	SCREW	
050	2668245-0000		1	SLIDER	
060	2668246-0000		1	SLIDER	
080	2852385-0000		2	SUPPORT	

FIN FOLDER

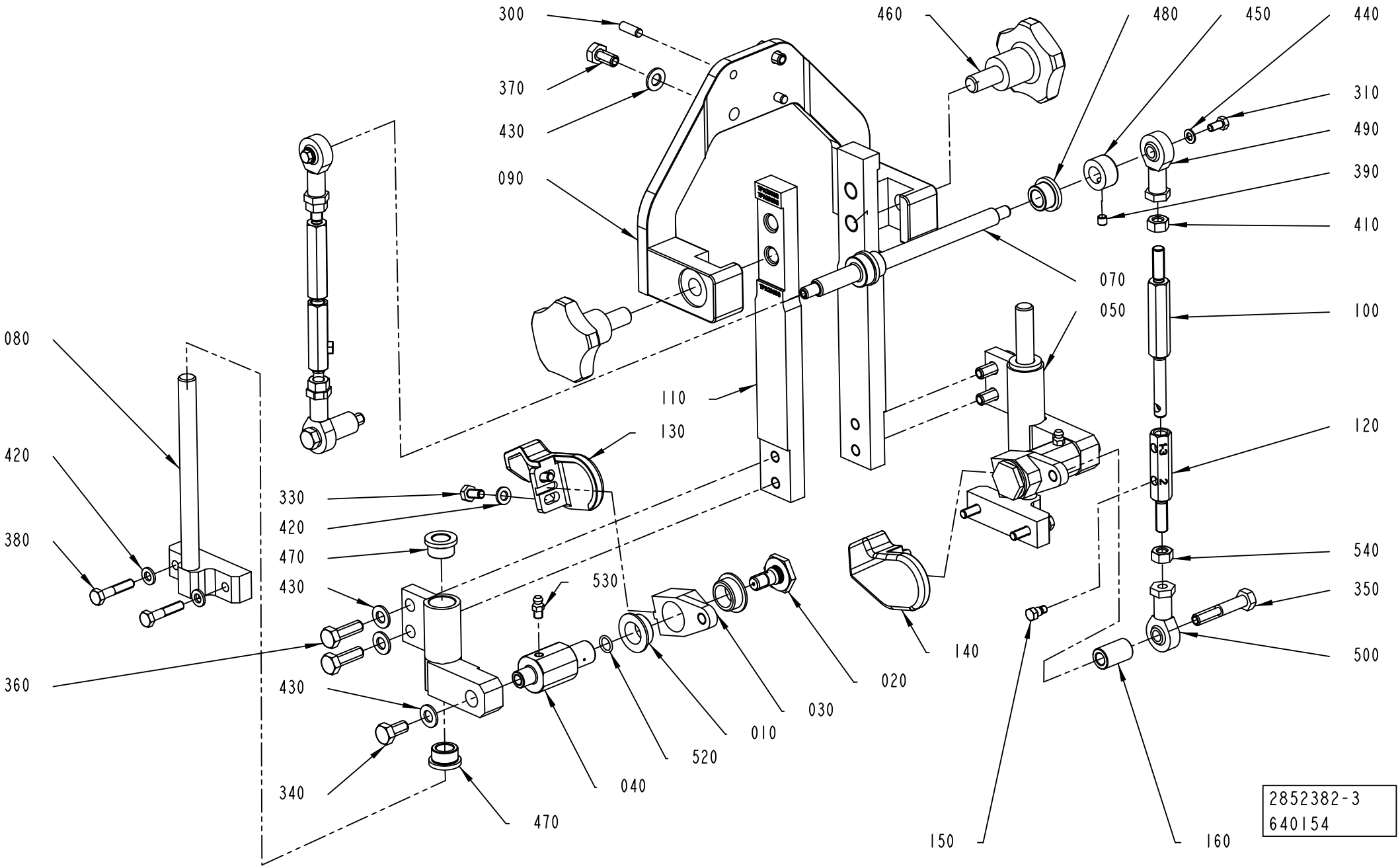
300
370
430
090
460
480
450
440
310
490
390
410
070
050
100
120
080
420
380
360
110
130
330
420
470
430
430
340
530
040
520
010
030
020
140
540
350
500
150
160
2852382-3
640154

Pos	Part No	UN	Qty	Description	Page No
Common Parts (Cont'd)					
090	3163272-0000		1	SUPPORT	
150	3017850-0000		2	SCREW	
300	311103-0352		2	PARALLEL PIN ISO 2338 6M6X18 A1	
310	312105-0325		2	SCREW, M6S ISO 4017 M5X10 A4 80	
330	312105-0366		4	SCREW, M6S ISO 4017 M6X12 A4 80	
340	312105-0449		2	SCREW, M6S ISO 4017 M8X16 A4 80	
360	312105-0453		4	SCREW, M6S ISO 4017 M8X25 A4 80	
370	312105-0449		2	SCREW, M6S ISO 4017 M8X16 A4 80	
390	312318-0360		1	SET SCREW, CUP END ISO4029 M6X6 A4	
410	312605-0318		2	HEXAGON NUT, M6M M8 A280	
430	315105-0165		8	FWAS080G0-0S, WASHER PLAIN	
440	315106-0146		2	"WASHER PLAIN, M5 ISO7089-5-200 HV A4"	
450	315741-0108		1	RETAINING RING, DIN 705 A2 12	
460	318856-0115		2	KNOB, EXTERNAL THREAD. NO. 8306-0278	
470	321101-0173		4	FLANGE BUSHING, 12X18X12 MM	
480	344270-0159		2	FLANGE BUSHING, 12/18X12-24X3 MM	
490	90115-0139		2	ROD END, ID=8 MM, M8X1,25	
500	90115-0180		2	ROD END, ID=8 MM, M8X1,25 LH	
520	315202-0107		2	O-RING 9,1X1,6 MM	
530	90286-0013		2	GREASE NIPPLE STRAIGHT, H1 M6X1 2346	
540	312902-0318		2	NUT HEX. LEFT THREAD, M8 A280	

Pos	Part No	UN	Qty	Description	Page No

DROP CHUTE VARIANT

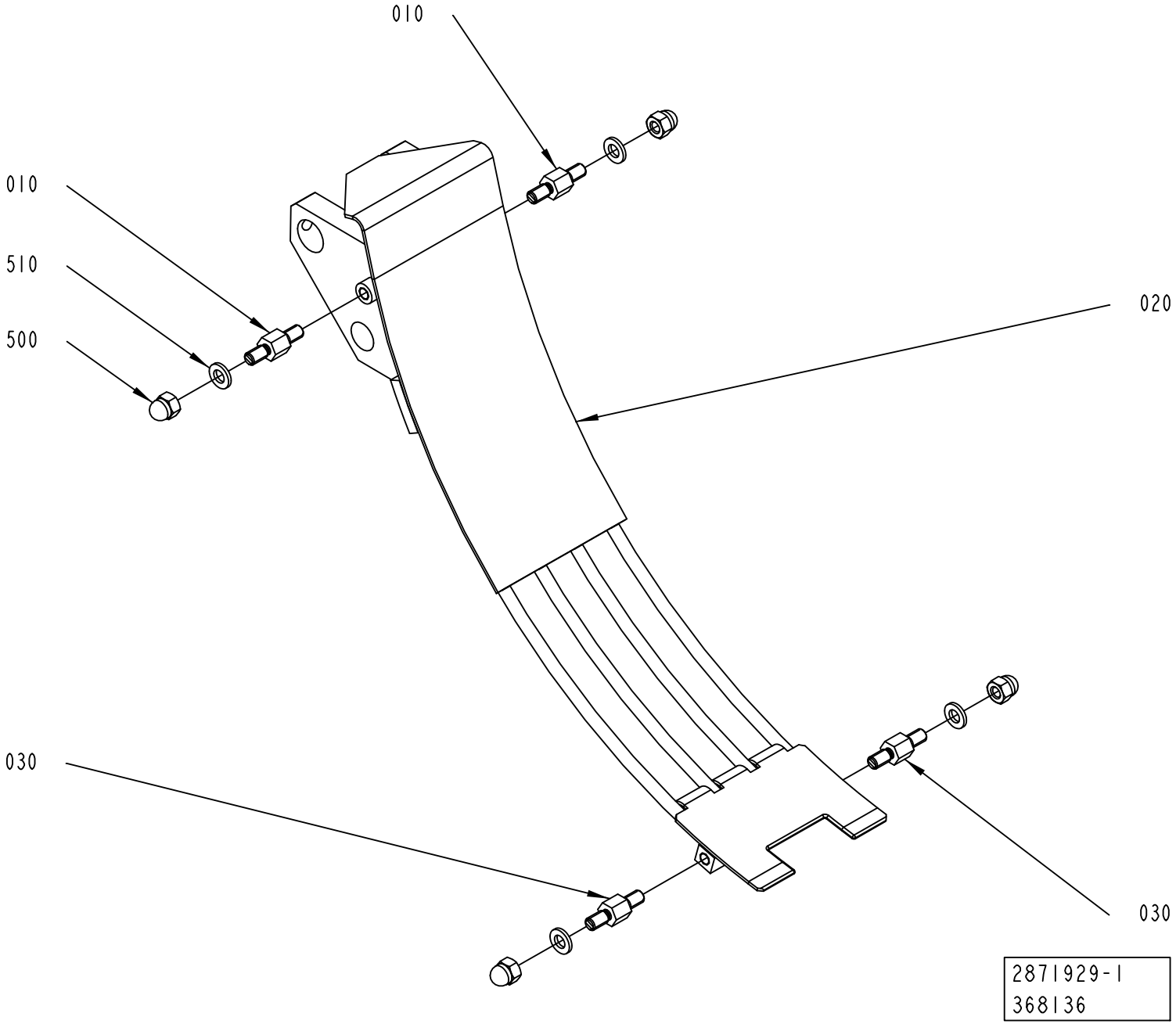

ECM: 648871 - 20140401
Group number: 2871929-0100
Assembly Drawing: 2871929-1_1_AB

This list covers pages from 1-328 to 1-333

Pos	Part No	UN	Qty	Description	Page No
TBA 0080S (See drawing on page: 1-332)					
010	2871955-0005		2	SPACER	
020	2852409-0000		1	CRADLE	
500	312705-0316		2	HEX. DOMED CAP MHM-6 M6 A280	
520	312105-0366		2	SCREW, M6S ISO 4017 M6X12 A4 80	
TBA 0100B, TBA 0125S (See drawing on page: 1-328)					
010	2871955-0003		2	SPACER	
020	2852409-0000		1	CRADLE	
030	2871955-0006		2	SPACER	
500	312705-0316		4	HEX. DOMED CAP MHM-6 M6 A280	
TBA 0160S, TBA 0200S, TB 0200S, TBA 0180S (See drawing on page: 1-328)					
010	2871955-0001		2	SPACER	
020	2852409-0000		1	CRADLE	
030	2871955-0008		2	SPACER	
500	312705-0316		4	HEX. DOMED CAP MHM-6 M6 A280	
TBA 0200B, TBA 0200SQ, TBA 0250B, TBA 0330S (See drawing on page: 1-328)					
010	2871955-0002		2	SPACER	
020	2852409-0000		1	CRADLE	
030	2871955-0007		2	SPACER	
500	312705-0316		4	HEX. DOMED CAP MHM-6 M6 A280	
TBA 0200M, TBA 0250S, TBA 0200E, TBA 0250E (See drawing on page: 1-328)					
010	2871955-0004		2	SPACER	
020	2852409-0000		1	CRADLE	
030	2871955-0004		2	SPACER	
500	312705-0316		4	HEX. DOMED CAP MHM-6 M6 A280	
TBA 0375S (See drawing on page: 1-328)					
010	2871955-0010		2	SPACER	
020	2852409-0000		1	CRADLE	
030	2871955-0002		2	SPACER	
500	312705-0316		4	HEX. DOMED CAP MHM-6 M6 A280	
TPA 0125SQ (See drawing on page: 1-330)					
020	2894673-0000		1	CHUTE	
500	312105-0366		4	SCREW, M6S ISO 4017 M6X12 A4 80	
TPA 0250SQ, TPA 0200SQ (See drawing on page: 1-328)					
010	2871955-0001		2	SPACER	
020	2852409-0000		1	CRADLE	
030	2871955-0001		2	SPACER	
500	312705-0316		4	HEX. DOMED CAP MHM-6 M6 A280	
TPA 0330SQ (See drawing on page: 1-328)					
010	2871955-0002		2	SPACER	
020	2852409-0000		1	CRADLE	
030	2871955-0009		2	SPACER	
500	312705-0316		4	HEX. DOMED CAP MHM-6 M6 A280	
Common Parts					
510	315106-0153		4	WASHER PLAIN, M6 ISO7089-6-200 HV A4	

DROP CHUTE VARIANT

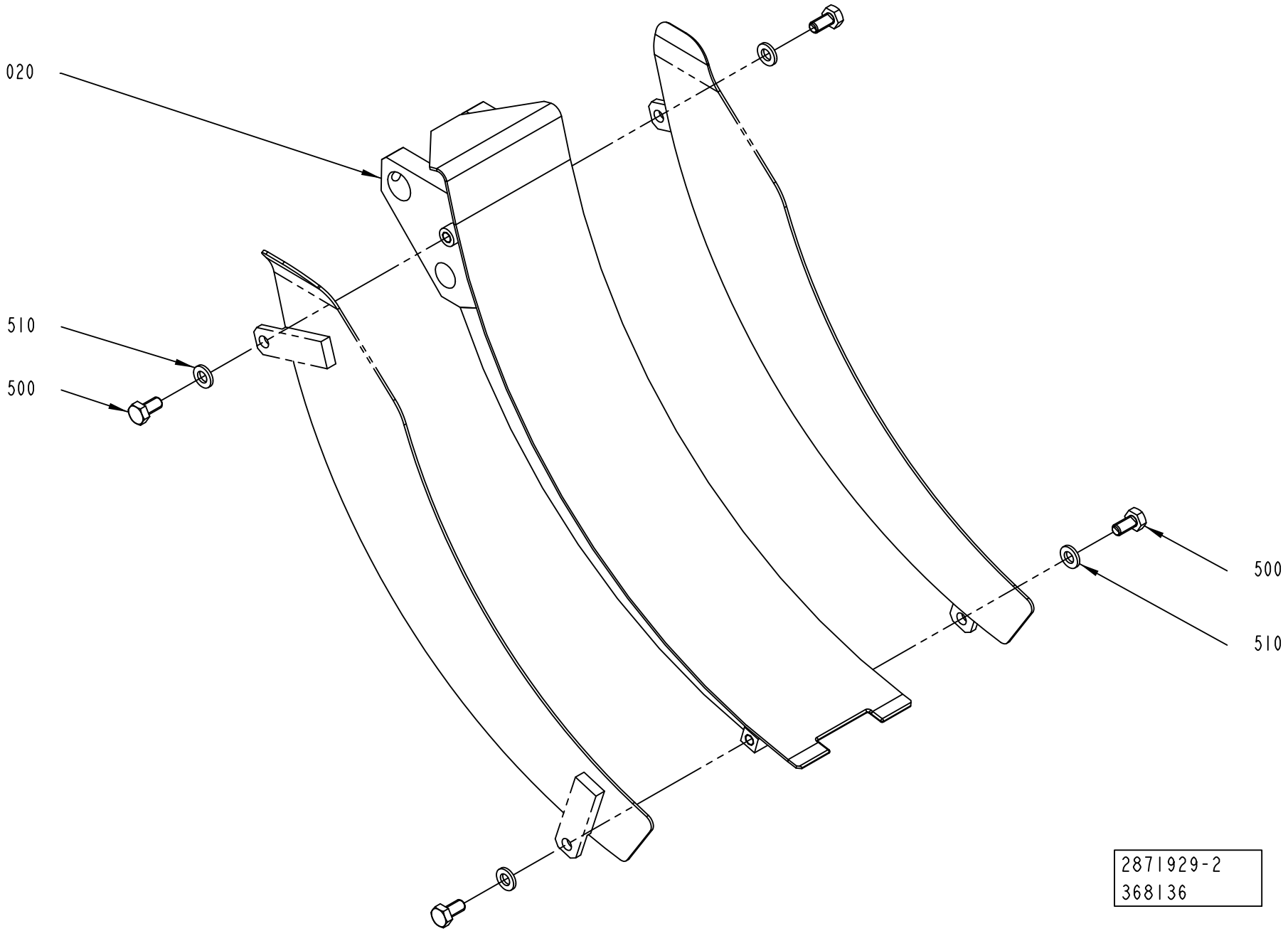

ECM: 648871 - 20140401
Group number: 2871929-0100
Assembly Drawing: 2871929-2_1_AA

This list covers pages from 1-328 to 1-333

Pos	Part No	UN	Qty	Description	Page No
TBA 0080S (See drawing on page: 1-332)					
010	2871955-0005		2	SPACER	
020	2852409-0000		1	CRADLE	
500	312705-0316		2	HEX. DOMED CAP MHM-6 M6 A280	
520	312105-0366		2	SCREW, M6S ISO 4017 M6X12 A4 80	
TBA 0100B, TBA 0125S (See drawing on page: 1-328)					
010	2871955-0003		2	SPACER	
020	2852409-0000		1	CRADLE	
030	2871955-0006		2	SPACER	
500	312705-0316		4	HEX. DOMED CAP MHM-6 M6 A280	
TBA 0160S, TBA 0200S, TB 0200S, TBA 0180S (See drawing on page: 1-328)					
010	2871955-0001		2	SPACER	
020	2852409-0000		1	CRADLE	
030	2871955-0008		2	SPACER	
500	312705-0316		4	HEX. DOMED CAP MHM-6 M6 A280	
TBA 0200B, TBA 0200SQ, TBA 0250B, TBA 0330S (See drawing on page: 1-328)					
010	2871955-0002		2	SPACER	
020	2852409-0000		1	CRADLE	
030	2871955-0007		2	SPACER	
500	312705-0316		4	HEX. DOMED CAP MHM-6 M6 A280	
TBA 0200M, TBA 0250S, TBA 0200E, TBA 0250E (See drawing on page: 1-328)					
010	2871955-0004		2	SPACER	
020	2852409-0000		1	CRADLE	
030	2871955-0004		2	SPACER	
500	312705-0316		4	HEX. DOMED CAP MHM-6 M6 A280	
TBA 0375S (See drawing on page: 1-328)					
010	2871955-0010		2	SPACER	
020	2852409-0000		1	CRADLE	
030	2871955-0002		2	SPACER	
500	312705-0316		4	HEX. DOMED CAP MHM-6 M6 A280	
TPA 0125SQ (See drawing on page: 1-330)					
020	2894673-0000		1	CHUTE	
500	312105-0366		4	SCREW, M6S ISO 4017 M6X12 A4 80	
TPA 0250SQ, TPA 0200SQ (See drawing on page: 1-328)					
010	2871955-0001		2	SPACER	
020	2852409-0000		1	CRADLE	
030	2871955-0001		2	SPACER	
500	312705-0316		4	HEX. DOMED CAP MHM-6 M6 A280	
TPA 0330SQ (See drawing on page: 1-328)					
010	2871955-0002		2	SPACER	
020	2852409-0000		1	CRADLE	
030	2871955-0009		2	SPACER	
500	312705-0316		4	HEX. DOMED CAP MHM-6 M6 A280	
Common Parts					
510	315106-0153		4	WASHER PLAIN, M6 ISO7089-6-200 HV A4	

DROP CHUTE VARIANT

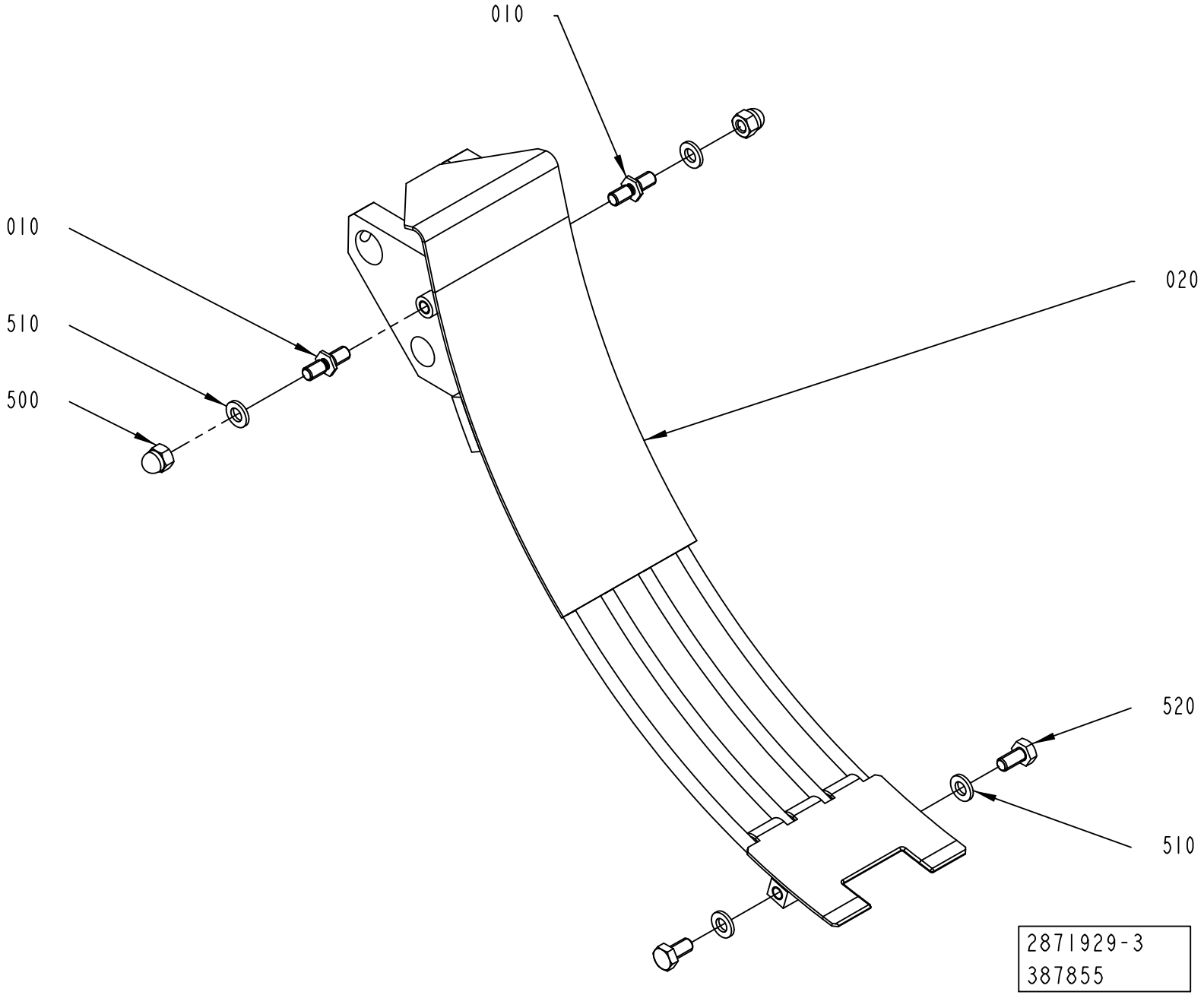

ECM: 648871 - 20140401
Group number: 2871929-0100
Assembly Drawing: 2871929-3_1_AA

This list covers pages from 1-328 to 1-333

Pos	Part No	UN	Qty	Description	Page No
TBA 0080S (See drawing on page: 1-332)					
010	2871955-0005		2	SPACER	
020	2852409-0000		1	CRADLE	
500	312705-0316		2	HEX. DOMED CAP MHM-6 M6 A280	
520	312105-0366		2	SCREW, M6S ISO 4017 M6X12 A4 80	
TBA 0100B, TBA 0125S (See drawing on page: 1-328)					
010	2871955-0003		2	SPACER	
020	2852409-0000		1	CRADLE	
030	2871955-0006		2	SPACER	
500	312705-0316		4	HEX. DOMED CAP MHM-6 M6 A280	
TBA 0160S, TBA 0200S, TB 0200S, TBA 0180S (See drawing on page: 1-328)					
010	2871955-0001		2	SPACER	
020	2852409-0000		1	CRADLE	
030	2871955-0008		2	SPACER	
500	312705-0316		4	HEX. DOMED CAP MHM-6 M6 A280	
TBA 0200B, TBA 0200SQ, TBA 0250B, TBA 0330S (See drawing on page: 1-328)					
010	2871955-0002		2	SPACER	
020	2852409-0000		1	CRADLE	
030	2871955-0007		2	SPACER	
500	312705-0316		4	HEX. DOMED CAP MHM-6 M6 A280	
TBA 0200M, TBA 0250S, TBA 0200E, TBA 0250E (See drawing on page: 1-328)					
010	2871955-0004		2	SPACER	
020	2852409-0000		1	CRADLE	
030	2871955-0004		2	SPACER	
500	312705-0316		4	HEX. DOMED CAP MHM-6 M6 A280	
TBA 0375S (See drawing on page: 1-328)					
010	2871955-0010		2	SPACER	
020	2852409-0000		1	CRADLE	
030	2871955-0002		2	SPACER	
500	312705-0316		4	HEX. DOMED CAP MHM-6 M6 A280	
TPA 0125SQ (See drawing on page: 1-330)					
020	2894673-0000		1	CHUTE	
500	312105-0366		4	SCREW, M6S ISO 4017 M6X12 A4 80	
TPA 0250SQ, TPA 0200SQ (See drawing on page: 1-328)					
010	2871955-0001		2	SPACER	
020	2852409-0000		1	CRADLE	
030	2871955-0001		2	SPACER	
500	312705-0316		4	HEX. DOMED CAP MHM-6 M6 A280	
TPA 0330SQ (See drawing on page: 1-328)					
010	2871955-0002		2	SPACER	
020	2852409-0000		1	CRADLE	
030	2871955-0009		2	SPACER	
500	312705-0316		4	HEX. DOMED CAP MHM-6 M6 A280	
Common Parts					
510	315106-0153		4	WASHER PLAIN, M6 ISO7089-6-200 HV A4	

INFEED CONVEYOR VARIANT

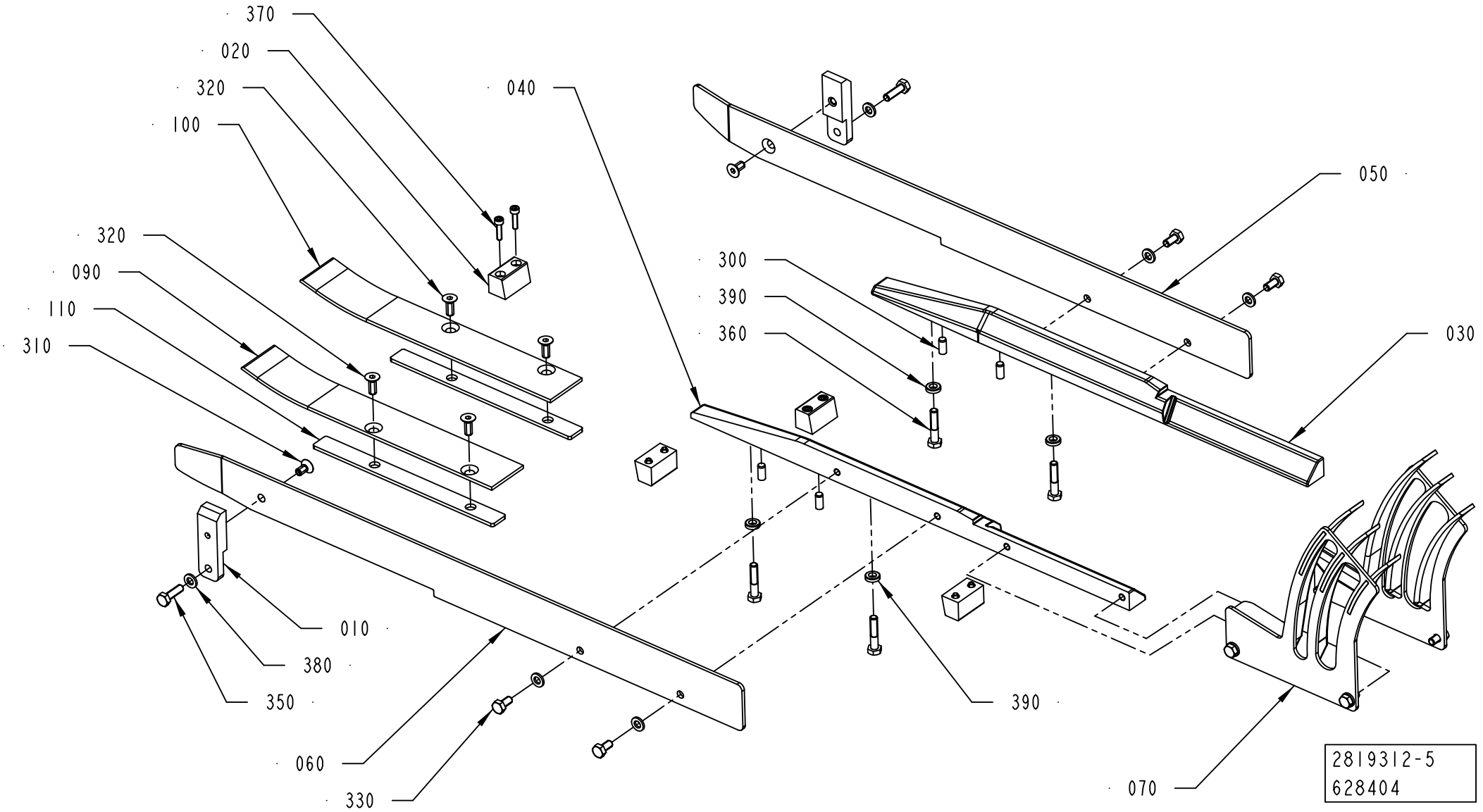

ECM: 663125 - 20140701
Group number: 2819312-0200
Assembly Drawing: 2819312-5_1_AD

This list covers pages from 1-334 to 1-343

Pos	Part No	UN	Qty	Description	Page No
TB 0200S (See drawing on page: 1-334)					
010	3020016-0000		2	SUPPORT	
020	2921574-0000		4	PUSHER	
030	3292963-0000		1	GUIDE	
040	3292964-0000		1	GUIDE	
050	3015758-0000		1	WALL	
060	3015759-0000		1	WALL	
090	2852413-0000		1	CHUTE	
100	2852414-0000		1	CHUTE	
110	2985491-0000		2	SHIM	
320	312155-0368		4	SCREW DIN 7991 MF6S M6X16 A4 70	
370	312115-0293		8	SCREW ISO4762 M4X16 A4 80	
TBA 0080S (See drawing on page: 1-342)					
010	2894664-0000		2	SUPPORT	
020	2921574-0000		4	PUSHER	
030	3020453-0000		1	GUIDE	
040	3020454-0000		1	GUIDE	
050	3002054-0000		1	WALL	
060	3002053-0000		1	WALL	
080	3249286-0000		2	SHAFT	
090	2949928-0000		1	GUIDE	
100	2949929-0000		1	GUIDE	
120	2540612-0000		1	PLATE	
130	2767621-0000		1	SPRING	
140	3027099-0000		1	SUPPORT	
150	3249287-0000		1	PLATE	
320	312155-0366		4	SCREW DIN 7991 MF6S M6X12 A4 70	
330	312105-0364		4	"SCREW, M6S ISO 4017 M6X10 A4 80"	
340	312318-0362		2	SET SCREW, CUP END ISO4029 M6X8 A4	
370	312115-0293		8	SCREW ISO4762 M4X16 A4 80	
400	312105-0366		2	SCREW, M6S ISO 4017 M6X12 A4 80	
410	312155-0364		3	SCREW DIN 7991 MF6S M6X10 A4 70	
420	315105-0153		4	WASHER PLAIN, 6,4X12X1,5 A4 BRB	
430	312705-0316		2	HEX. DOMED CAP MHM-6 M6 A280	
TBA 0100B, TBA 0125S (See drawing on page: 1-334)					
010	2894683-0000		2	SUPPORT	
020	2921574-0000		4	PUSHER	
030	2977492-0000		1	GUIDE	
040	2977491-0000		1	GUIDE	
050	2977496-0000		1	WALL	
060	2977495-0000		1	WALL	
090	2852413-0000		1	CHUTE	
100	2852414-0000		1	CHUTE	
110	2985491-0000		2	SHIM	
320	312155-0368		4	SCREW DIN 7991 MF6S M6X16 A4 70	
330	312105-0364		4	"SCREW, M6S ISO 4017 M6X10 A4 80"	
370	312115-0293		8	SCREW ISO4762 M4X16 A4 80	
TBA 0160S, TBA 0200S (See drawing on page: 1-334)					
010	3020016-0000		2	SUPPORT	
020	2921574-0000		4	PUSHER	
030	2871944-0000		1	GUIDE	
040	2871943-0000		1	GUIDE	
050	3015758-0000		1	WALL	
060	3015759-0000		1	WALL	
090	2852413-0000		1	CHUTE	
100	2852414-0000		1	CHUTE	
110	2985491-0000		2	SHIM	
320	312155-0368		4	SCREW DIN 7991 MF6S M6X16 A4 70	
330	312105-0366		4	SCREW, M6S ISO 4017 M6X12 A4 80	
370	312115-0293		8	SCREW ISO4762 M4X16 A4 80	
TBA 0180S (See drawing on page: 1-334)					
010	3020016-0000		2	SUPPORT	
020	2921574-0000		4	PUSHER	
030	2871944-0000		1	GUIDE	
040	2871943-0000		1	GUIDE	
050	3015758-0000		1	WALL	
060	3015759-0000		1	WALL	
090	2852413-0000		1	CHUTE	
100	2852414-0000		1	CHUTE	
110	2985491-0000		2	SHIM	
320	312155-0368		4	SCREW DIN 7991 MF6S M6X16 A4 70	
330	312105-0366		4	SCREW, M6S ISO 4017 M6X12 A4 80	
370	312115-0293		8	SCREW ISO4762 M4X16 A4 80	
TBA 0200B, TBA 0250B, TBA 0330S (See drawing on page: 1-334)					
010	2852372-0000		2	SUPPORT	
020	2894700-0000		4	PUSHER	
030	2894714-0000		1	GUIDE	
040	2894713-0000		1	GUIDE	
050	2894716-0000		1	WALL	
060	2894715-0000		1	WALL	
090	2852413-0000		1	CHUTE	
100	2852414-0000		1	CHUTE	
110	2985491-0000		2	SHIM	
320	312155-0368		4	SCREW DIN 7991 MF6S M6X16 A4 70	

Machine Type | Group Description | Used-In | Group Number | Page No

INFEED CONVEYOR VARIANT

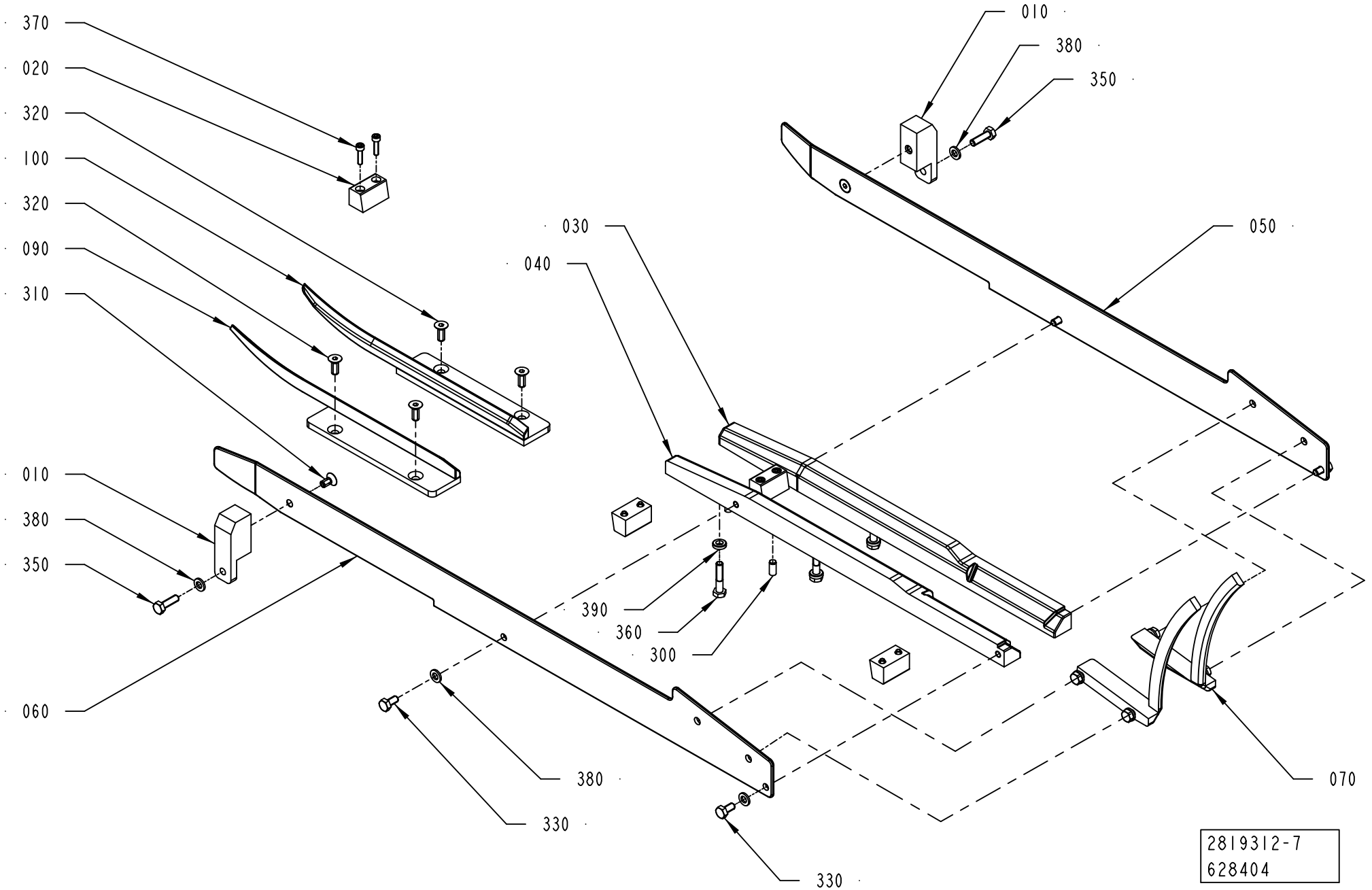

Pos	Part No	UN	Qty	Description	Page No
TBA 0200B, TBA 0250B, TBA 0330S (Cont'd) (See drawing on page: 1-334)					
330	312105-0366		4	SCREW, M6S ISO 4017 M6X12 A4 80	
370	312115-0293		8	SCREW ISO4762 M4X16 A4 80	
TBA 0200E, TBA 0250E (See drawing on page: 1-334)					
010	2912412-0000		2	SUPPORT	
020	3037955-0000		4	PUSHER	
030	3074722-0000		1	GUIDE	
040	3074723-0000		1	GUIDE	
050	2918693-0000		1	WALL	
060	2918694-0000		1	WALL	
090	3074720-0000		1	GUIDE	
100	3074721-0000		1	GUIDE	
320	312155-0368		4	SCREW DIN 7991 MF6S M6X16 A4 70	
330	312105-0366		4	SCREW, M6S ISO 4017 M6X12 A4 80	
370	312115-0295		8	SCREW ISO4762 M4X20 A4 80	
TBA 0200M, TBA 0250S (See drawing on page: 1-334)					
010	2912412-0000		2	SUPPORT	
020	2921574-0000		4	PUSHER	
030	2912413-0000		1	GUIDE	
040	2912414-0000		1	GUIDE	
050	2918693-0000		1	WALL	
060	2918694-0000		1	WALL	
090	2852413-0000		1	CHUTE	
100	2852414-0000		1	CHUTE	
110	2985491-0000		2	SHIM	
320	312155-0368		4	SCREW DIN 7991 MF6S M6X16 A4 70	
330	312105-0366		4	SCREW, M6S ISO 4017 M6X12 A4 80	
370	312115-0293		8	SCREW ISO4762 M4X16 A4 80	
TBA 0200SQ (See drawing on page: 1-334)					
010	2852372-0000		2	SUPPORT	
020	3037955-0000		4	PUSHER	
030	2962114-0000		1	GUIDE	
040	2962115-0000		1	GUIDE	
050	2894716-0000		1	WALL	
060	2894715-0000		1	WALL	
090	2852413-0000		1	CHUTE	
100	2852414-0000		1	CHUTE	
110	2985491-0000		2	SHIM	
320	312155-0368		4	SCREW DIN 7991 MF6S M6X16 A4 70	
330	312105-0364		4	"SCREW, M6S ISO 4017 M6X10 A4 80"	
370	312115-0295		8	SCREW ISO4762 M4X20 A4 80	
TBA 0375S (See drawing on page: 1-338)					
010	3067349-0000		2	SUPPORT	
020	3037955-0000		4	PUSHER	
030	3067351-0000		1	GUIDE	
040	3067350-0000		1	GUIDE	
050	3067355-0000		1	WALL	
060	3067354-0000		1	WALL	
090	2852413-0000		1	CHUTE	
100	2852414-0000		1	CHUTE	
110	2985491-0000		2	SHIM	
320	312155-0368		4	SCREW DIN 7991 MF6S M6X16 A4 70	
330	312105-0366		4	SCREW, M6S ISO 4017 M6X12 A4 80	
370	312115-0295		8	SCREW ISO4762 M4X20 A4 80	
TPA 0125SQ (See drawing on page: 1-336)					
010	2894664-0000		2	SUPPORT	
020	2894700-0000		4	PUSHER	
030	2871972-0000		1	GUIDE	
040	2871971-0000		1	GUIDE	
050	2894663-0000		1	WALL	
060	2871973-0000		1	WALL	
090	2894674-0000		1	GUIDE	
100	2894675-0000		1	GUIDE	
320	312155-0368		4	SCREW DIN 7991 MF6S M6X16 A4 70	
330	312105-0366		4	SCREW, M6S ISO 4017 M6X12 A4 80	
370	312115-0293		8	SCREW ISO4762 M4X16 A4 80	
TPA 0250SQ, TPA 0200SQ (See drawing on page: 1-340)					
010	2871945-0000		2	SUPPORT	
020	3037955-0000		4	PUSHER	
030	2976949-0000		1	GUIDE	
040	2976950-0000		1	GUIDE	
050	3024501-0000		1	WALL	
060	3024500-0000		1	WALL	
090	3024498-0000		1	GUIDE	
100	3024499-0000		1	GUIDE	
320	312155-0366		4	SCREW DIN 7991 MF6S M6X12 A4 70	
330	312105-0366		4	SCREW, M6S ISO 4017 M6X12 A4 80	
370	312115-0295		8	SCREW ISO4762 M4X20 A4 80	
TPA 0330SQ (See drawing on page: 1-336)					
010	2852372-0000		2	SUPPORT	
020	3037955-0000		4	PUSHER	
030	2987097-0000		1	GUIDE	
040	2987098-0000		1	GUIDE	
050	3055889-0000		1	WALL	

INFEED CONVEYOR VARIANT

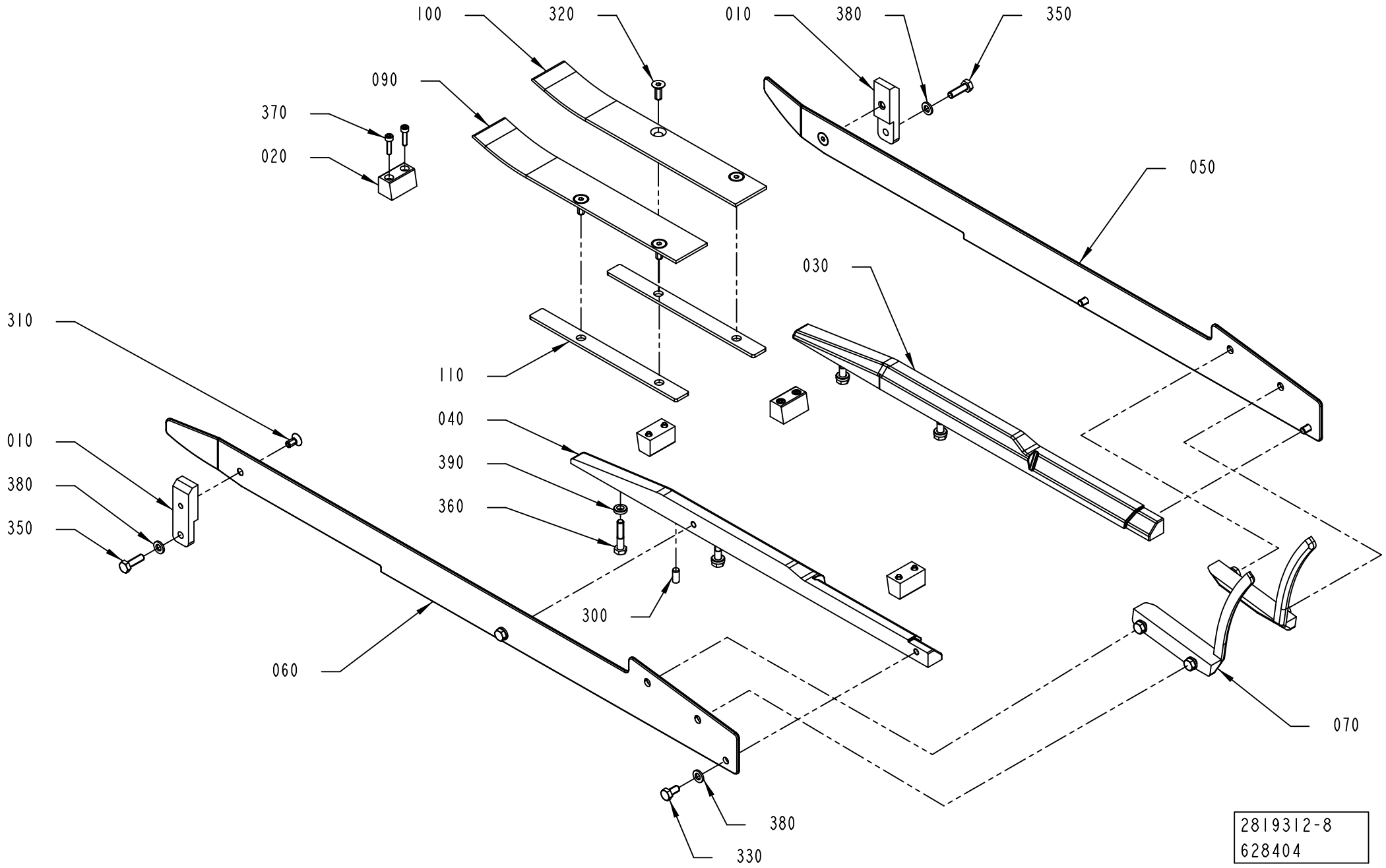

Pos	Part No	UN	Qty	Description	Page No
TPA 0330SQ (Cont'd) (See drawing on page: 1-336)					
060	3055888-0000		1	WALL	
090	2993462-0000		1	GUIDE	
100	2993463-0000		1	GUIDE	
320	312155-0368		4	SCREW DIN 7991 MF6S M6X16 A4 70	
330	312105-0366		4	SCREW, M6S ISO 4017 M6X12 A4 80	
370	312115-0295		8	SCREW ISO4762 M4X20 A4 80	
Common Parts					
070	3306156-0100		1	GUIDE	**1-345**
300	311103-0350		4	PARALLEL PIN ISO 2338 6M6X14 A1	
310	312155-0366		2	SCREW DIN 7991 MF6S M6X12 A4 70	
350	312105-0370		2	SCREW, M6S ISO 4017 M6X20 A4 80	
360	312105-0374		4	SCREW, M6S ISO 4014 M6X30 A4 80	
380	315106-0153		6	WASHER PLAIN, M6 ISO7089-6-200 HV A4	
390	315115-0153		4	WASHER PLAIN, TBRB 6,4/12 H=3	

Pos	Part No	UN	Qty	Description	Page No

INFEED CONVEYOR VARIANT

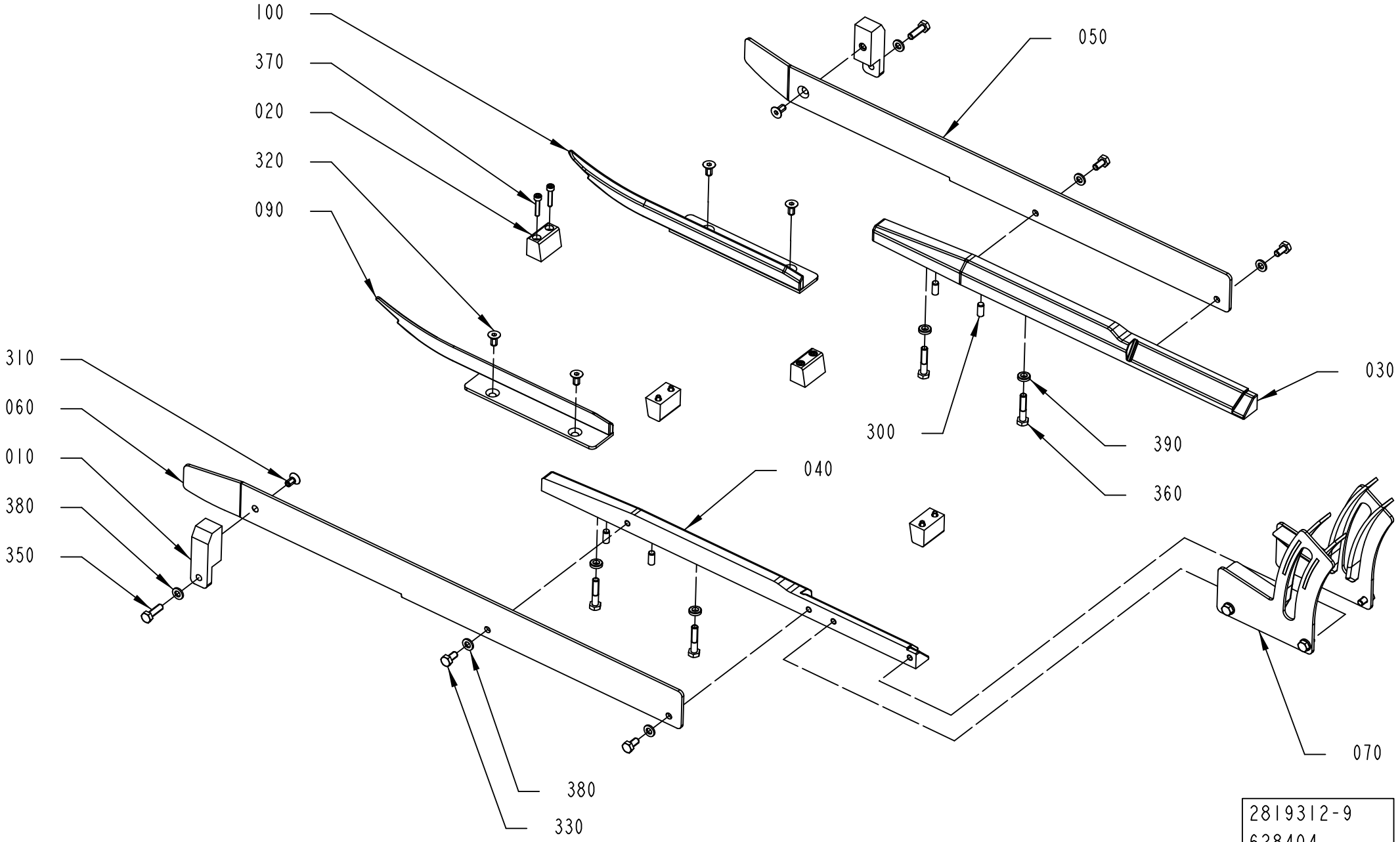

Pos	Part No	UN	Qty	Description	Page No
SEE PREVIOUS LISTS PAGES: 1-335, 1-337, 1-339.					

Pos	Part No	UN	Qty	Description	Page No

INFEED CONVEYOR VARIANT

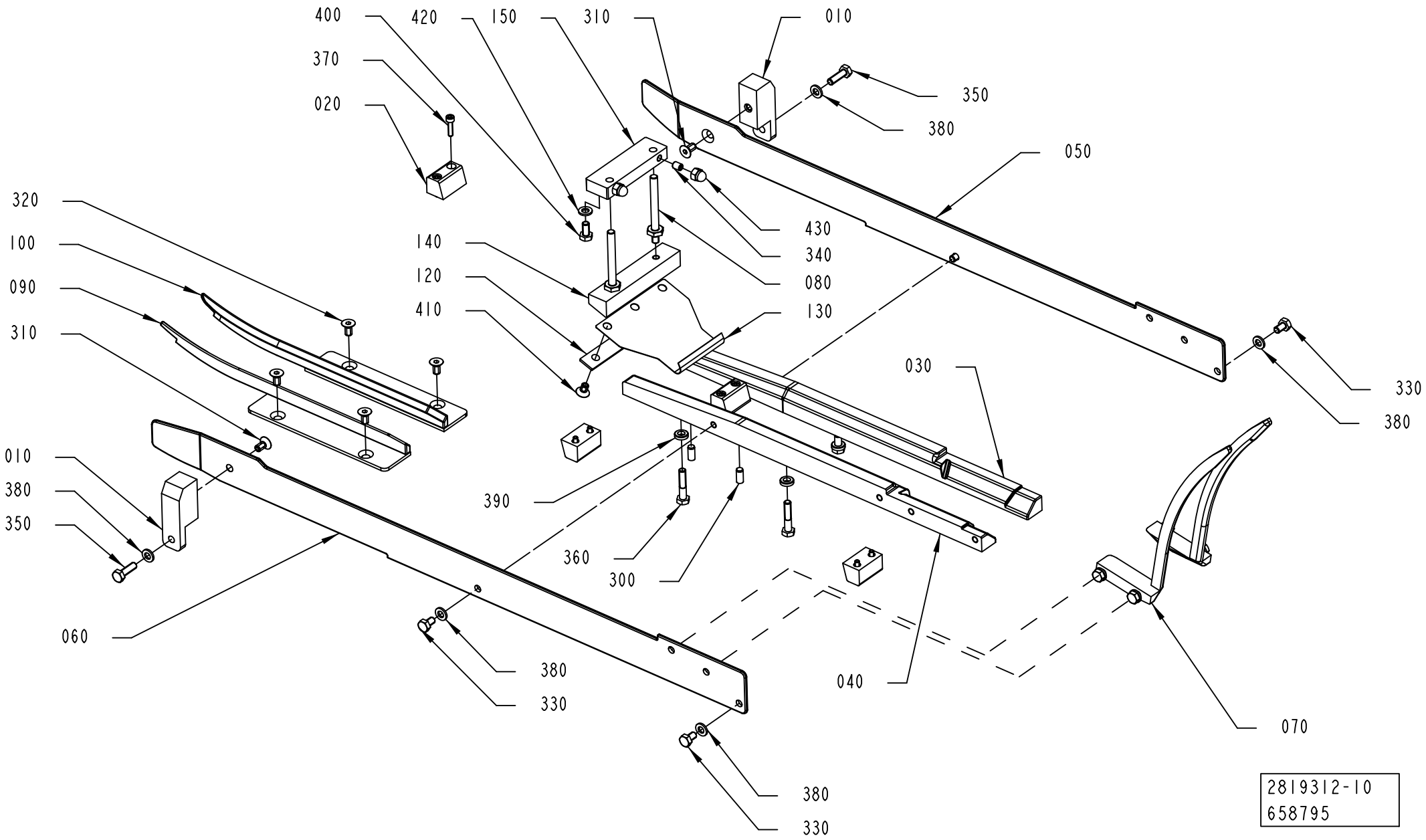

Pos	Part No	UN	Qty	Description	Page No

SEE PREVIOUS LISTS PAGES: 1-335, 1-337, 1-339.

Pos	Part No	UN	Qty	Description	Page No

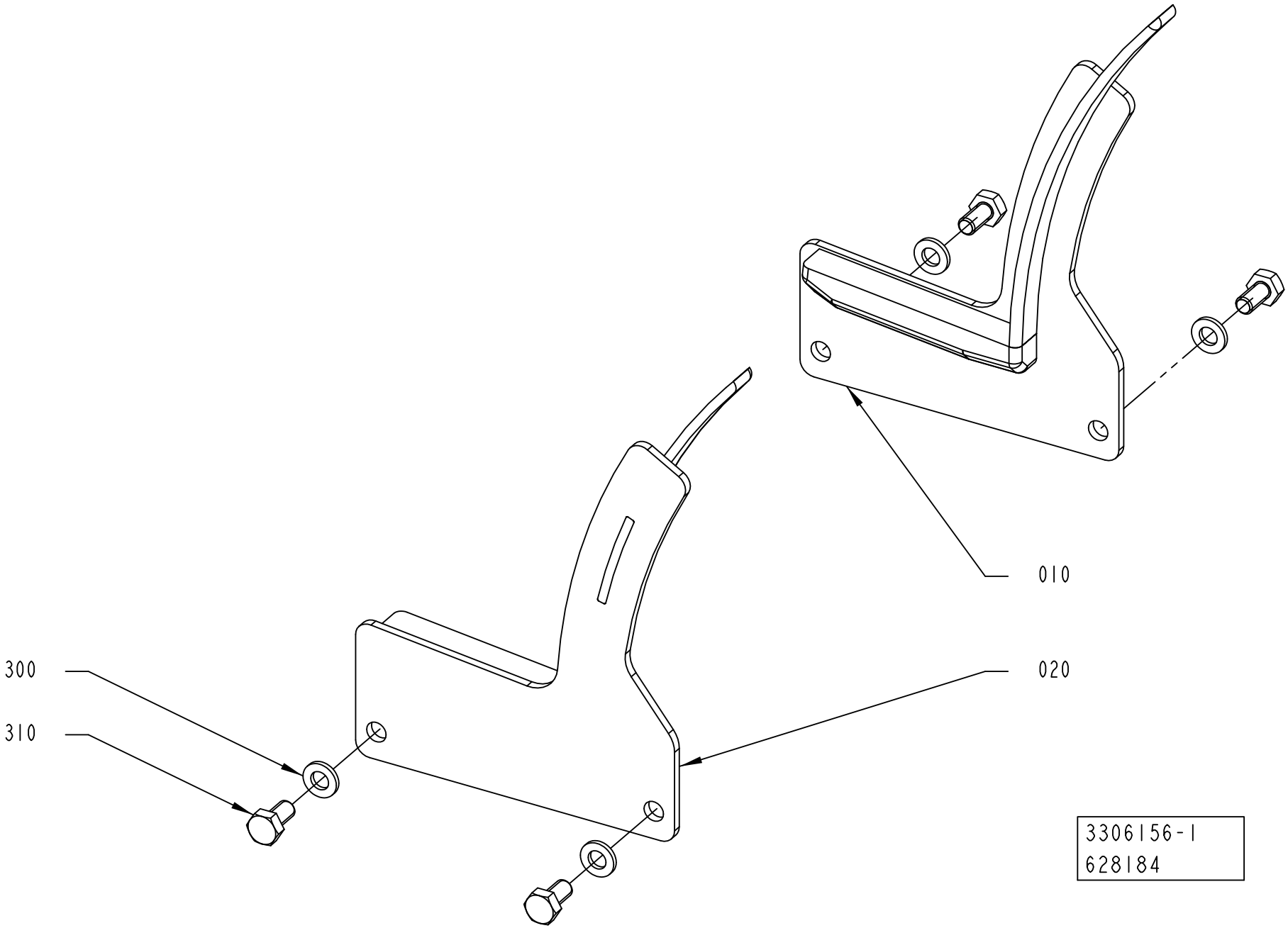
010
020
300
310
3306156-1
628184

ECM: 669619 - 20140402
Group number: 3306156-0100
Assembly Drawing: 3306156-1_1_AA

Pos	Part No	UN	Qty	Description	Page No
TB 0200S					
010	3015760-0000		1	GUIDE	
020	3015761-0000		1	GUIDE	
310	312105-0366		4	SCREW, M6S ISO 4017 M6X12 A4 80	
TBA 0080S					
010	3002052-0000		1	GUIDE	
020	3002051-0000		1	GUIDE	
310	312105-0364		4	"SCREW, M6S ISO 4017 M6X10 A4 80"	
TBA 0100B, TBA 0125S					
010	3092001-0000		1	GUIDE	
020	2894684-0000		1	GUIDE	
310	312105-0364		4	"SCREW, M6S ISO 4017 M6X10 A4 80"	
TBA 0160S, TBA 0200S					
010	3089305-0000		1	GUIDE	
020	3015761-0000		1	GUIDE	
310	312105-0366		4	SCREW, M6S ISO 4017 M6X12 A4 80	
TBA 0180S					
010	3245514-0000		1	GUIDE	
020	3245513-0000		1	GUIDE	
310	312105-0366		4	SCREW, M6S ISO 4017 M6X12 A4 80	
TBA 0200B, TBA 0250B, TBA 0330S					
010	3018830-0000		1	GUIDE	
020	2894718-0000		1	GUIDE	
310	312105-0366		4	SCREW, M6S ISO 4017 M6X12 A4 80	
TBA 0200E, TBA 0250E					
010	3051989-0000		1	GUIDE	
020	3051988-0000		1	GUIDE	
310	312105-0366		4	SCREW, M6S ISO 4017 M6X12 A4 80	
TBA 0200M, TBA 0250S					
010	3092002-0000		1	GUIDE	
020	2918697-0000		1	GUIDE	
310	312105-0366		4	SCREW, M6S ISO 4017 M6X12 A4 80	
TBA 0200SQ					
010	2962117-0000		1	GUIDE	
020	2962127-0000		1	GUIDE	
310	312105-0364		4	"SCREW, M6S ISO 4017 M6X10 A4 80"	
TBA 0375S					
010	3067353-0000		1	GUIDE	
020	3067352-0000		1	GUIDE	
310	312105-0364		4	"SCREW, M6S ISO 4017 M6X10 A4 80"	
TPA 0125SQ					
010	2894666-0000		1	GUIDE	
020	2894665-0000		1	GUIDE	
310	312105-0362		4	SCREW, M6S ISO 4017 M6X8 A4 80	
TPA 0250SQ, TPA 0200SQ					
010	3045543-0000		1	GUIDE	
020	3045542-0000		1	GUIDE	
310	312105-0366		4	SCREW, M6S ISO 4017 M6X12 A4 80	
TPA 0330SQ					
010	2987096-0000		1	GUIDE	
020	2987095-0000		1	GUIDE	
310	312105-0366		4	SCREW, M6S ISO 4017 M6X12 A4 80	
Common Parts					
300	315106-0153		4	WASHER PLAIN, M6 ISO7089-6-200 HV A4	

Machine Type | Group Description | Used-In | Group Number | Page No

PULL-DOWN DEVICE

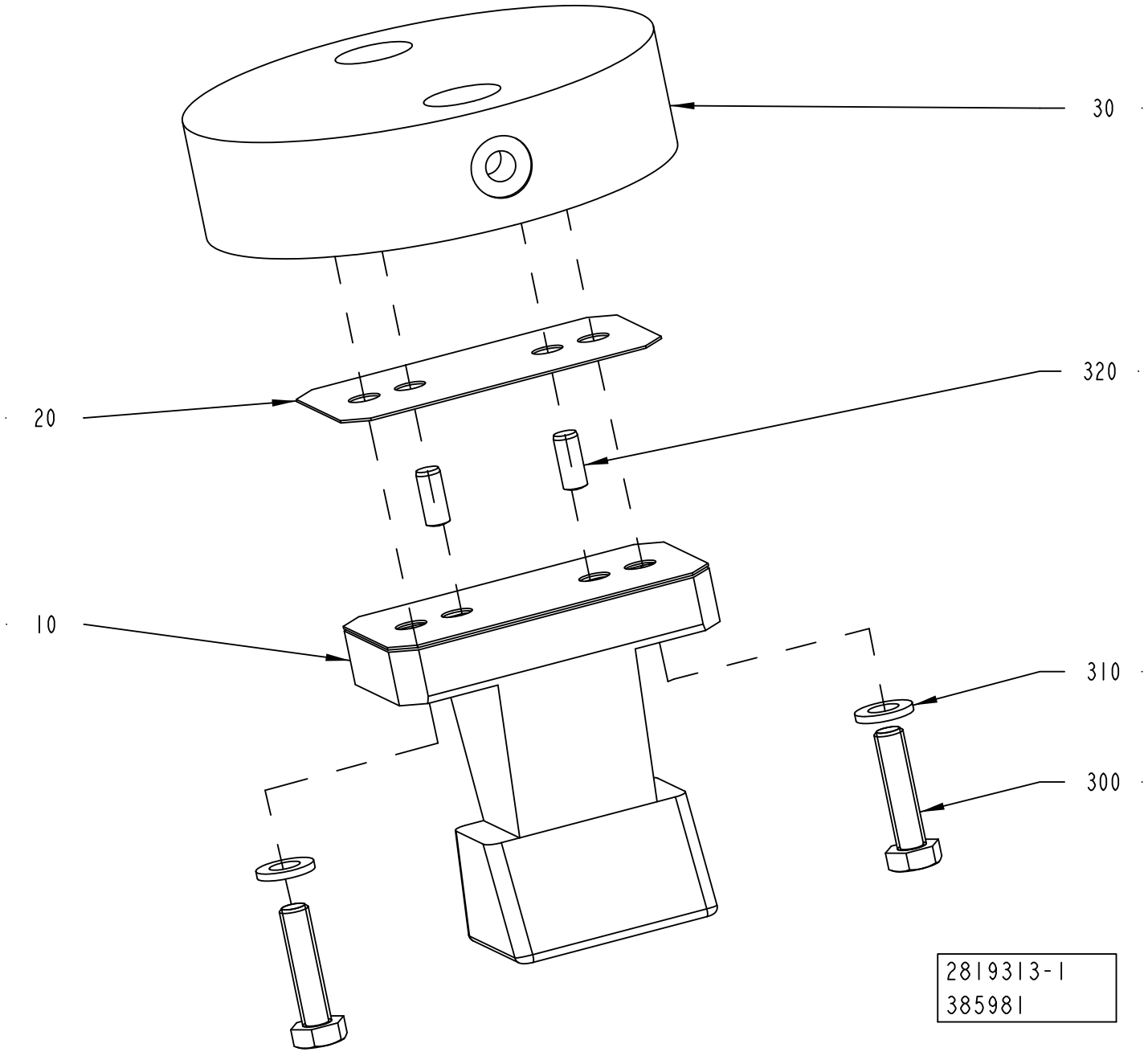

ECM: 651333 - 20140102
Group number: 2819313-0100
Assembly Drawing: 2819313-1_1_AB

This list covers pages from 1-346 to 1-349

Pos	Part No	UN	Qty	Description	Page No
TBA 0080S (See drawing on page: 1-346)					
010	2949914-0000		1	BLOCK	
030	2806005-0000		1	PLATE	
300	312105-0372		2	SCREW, M6S ISO 4017 M6X25 A4 80	
TBA 0100B, TBA 0125S (See drawing on page: 1-346)					
010	2894686-0000		1	BLOCK	
030	2806005-0000		1	PLATE	
300	312105-0372		2	SCREW, M6S ISO 4017 M6X25 A4 80	
TBA 0160S, TBA 0200S, TB 0200S, TBA 0180S (See drawing on page: 1-346)					
010	2806002-0000		1	BLOCK	
030	2806005-0000		1	PLATE	
300	312105-0372		2	SCREW, M6S ISO 4017 M6X25 A4 80	
TBA 0200B, TBA 0250B, TBA 0330S, TBA 0375S (See drawing on page: 1-346)					
010	2852321-0000		1	BLOCK	
030	2806005-0000		1	PLATE	
300	312105-0372		2	SCREW, M6S ISO 4017 M6X25 A4 80	
TBA 0200E, TBA 0250E (See drawing on page: 1-348)					
010	3051990-0000		1	BLOCK	
030	2852386-0000		1	PLATE	
300	312105-0370		2	SCREW, M6S ISO 4017 M6X20 A4 80	
TBA 0200M, TBA 0250S (See drawing on page: 1-346)					
010	2912419-0000		1	BLOCK	
030	2806005-0000		1	PLATE	
300	312105-0372		2	SCREW, M6S ISO 4017 M6X25 A4 80	
TBA 0200SQ (See drawing on page: 1-348)					
010	2962119-0000		1	BLOCK	
030	2852386-0000		1	PLATE	
300	312105-0370		2	SCREW, M6S ISO 4017 M6X20 A4 80	
TPA 0125SQ (See drawing on page: 1-348)					
010	2871963-0000		1	BLOCK	
030	2852386-0000		1	PLATE	
300	312105-0370		2	SCREW, M6S ISO 4017 M6X20 A4 80	
TPA 0250SQ, TPA 0200SQ (See drawing on page: 1-348)					
010	2976960-0000		1	BLOCK	
030	2852386-0000		1	PLATE	
300	312105-0370		2	SCREW, M6S ISO 4017 M6X20 A4 80	
TPA 0330SQ (See drawing on page: 1-348)					
010	2987100-0000		1	BLOCK	
030	2852386-0000		1	PLATE	
300	312105-0370		2	SCREW, M6S ISO 4017 M6X20 A4 80	
Common Parts					
020	2806012-0000		3	SHIM	
310	315105-0153		2	WASHER PLAIN, 6,4X12X1,5 A4 BRB	
320	311103-0306		2	PARALLEL PIN ISO 2338 5M6X12 A1	

Machine Type | Group Description | Used-In | Group Number | Page No

PULL-DOWN DEVICE

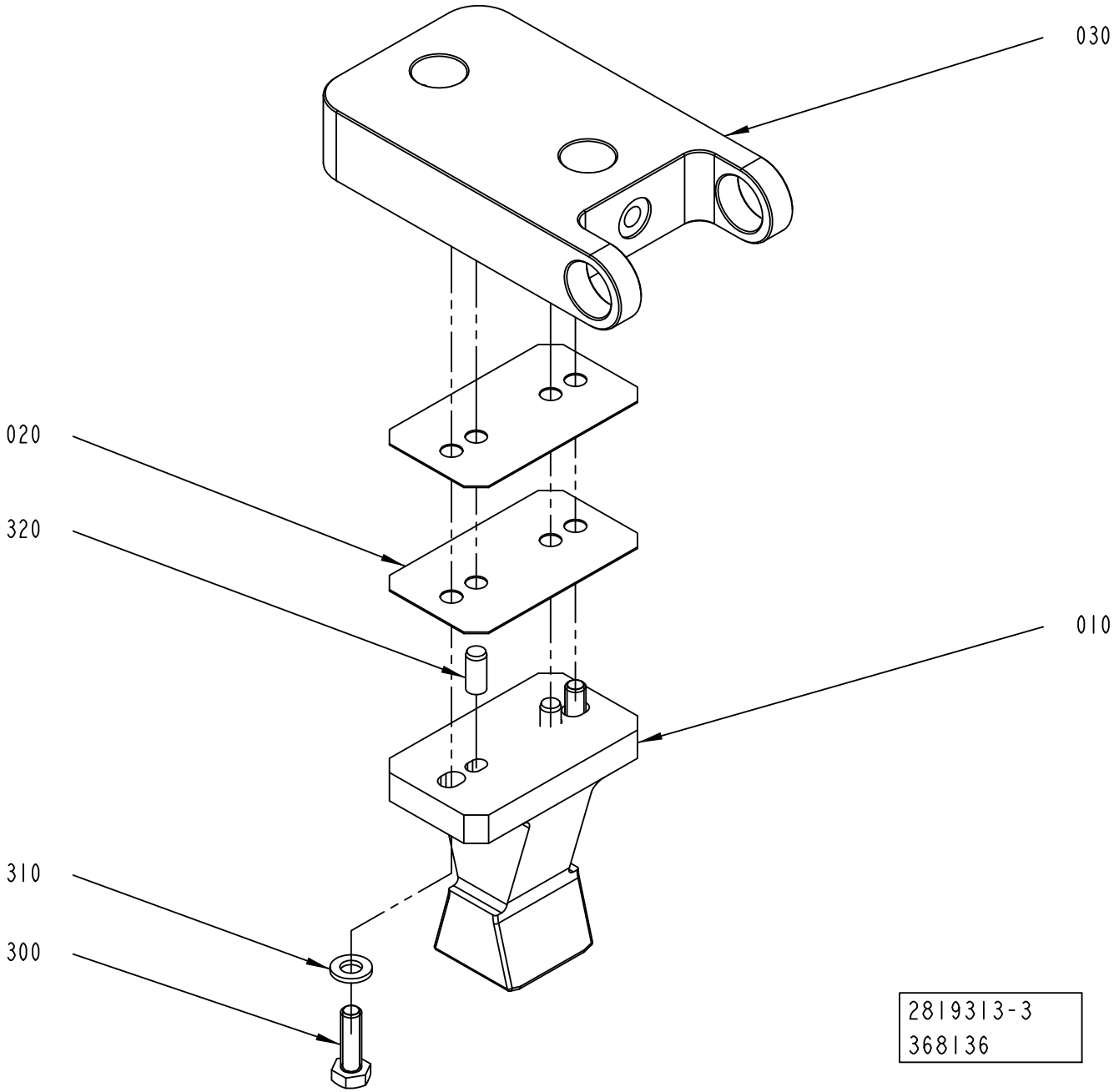

ECM: 651333 - 20140102
Group number: 2819313-0100
Assembly Drawing: 2819313-3_1_AA

This list covers pages from 1-346 to 1-349

Pos	Part No	UN	Qty	Description	Page No
TBA 0080S (See drawing on page: 1-346)					
010	2949914-0000		1	BLOCK	
030	2806005-0000		1	PLATE	
300	312105-0372		2	SCREW, M6S ISO 4017 M6X25 A4 80	
TBA 0100B, TBA 0125S (See drawing on page: 1-346)					
010	2894686-0000		1	BLOCK	
030	2806005-0000		1	PLATE	
300	312105-0372		2	SCREW, M6S ISO 4017 M6X25 A4 80	
TBA 0160S, TBA 0200S, TB 0200S, TBA 0180S (See drawing on page: 1-346)					
010	2806002-0000		1	BLOCK	
030	2806005-0000		1	PLATE	
300	312105-0372		2	SCREW, M6S ISO 4017 M6X25 A4 80	
TBA 0200B, TBA 0250B, TBA 0330S, TBA 0375S (See drawing on page: 1-346)					
010	2852321-0000		1	BLOCK	
030	2806005-0000		1	PLATE	
300	312105-0372		2	SCREW, M6S ISO 4017 M6X25 A4 80	
TBA 0200E, TBA 0250E (See drawing on page: 1-348)					
010	3051990-0000		1	BLOCK	
030	2852386-0000		1	PLATE	
300	312105-0370		2	SCREW, M6S ISO 4017 M6X20 A4 80	
TBA 0200M, TBA 0250S (See drawing on page: 1-346)					
010	2912419-0000		1	BLOCK	
030	2806005-0000		1	PLATE	
300	312105-0372		2	SCREW, M6S ISO 4017 M6X25 A4 80	
TBA 0200SQ (See drawing on page: 1-348)					
010	2962119-0000		1	BLOCK	
030	2852386-0000		1	PLATE	
300	312105-0370		2	SCREW, M6S ISO 4017 M6X20 A4 80	
TPA 0125SQ (See drawing on page: 1-348)					
010	2871963-0000		1	BLOCK	
030	2852386-0000		1	PLATE	
300	312105-0370		2	SCREW, M6S ISO 4017 M6X20 A4 80	
TPA 0250SQ, TPA 0200SQ (See drawing on page: 1-348)					
010	2976960-0000		1	BLOCK	
030	2852386-0000		1	PLATE	
300	312105-0370		2	SCREW, M6S ISO 4017 M6X20 A4 80	
TPA 0330SQ (See drawing on page: 1-348)					
010	2987100-0000		1	BLOCK	
030	2852386-0000		1	PLATE	
300	312105-0370		2	SCREW, M6S ISO 4017 M6X20 A4 80	
Common Parts					
020	2806012-0000		3	SHIM	
310	315105-0153		2	WASHER PLAIN, 6,4X12X1,5 A4 BRB	
320	311103-0306		2	PARALLEL PIN ISO 2338 5M6X12 A1	

Machine Type | Group Description | Used-In | Group Number | Page No

FLAP HEATER

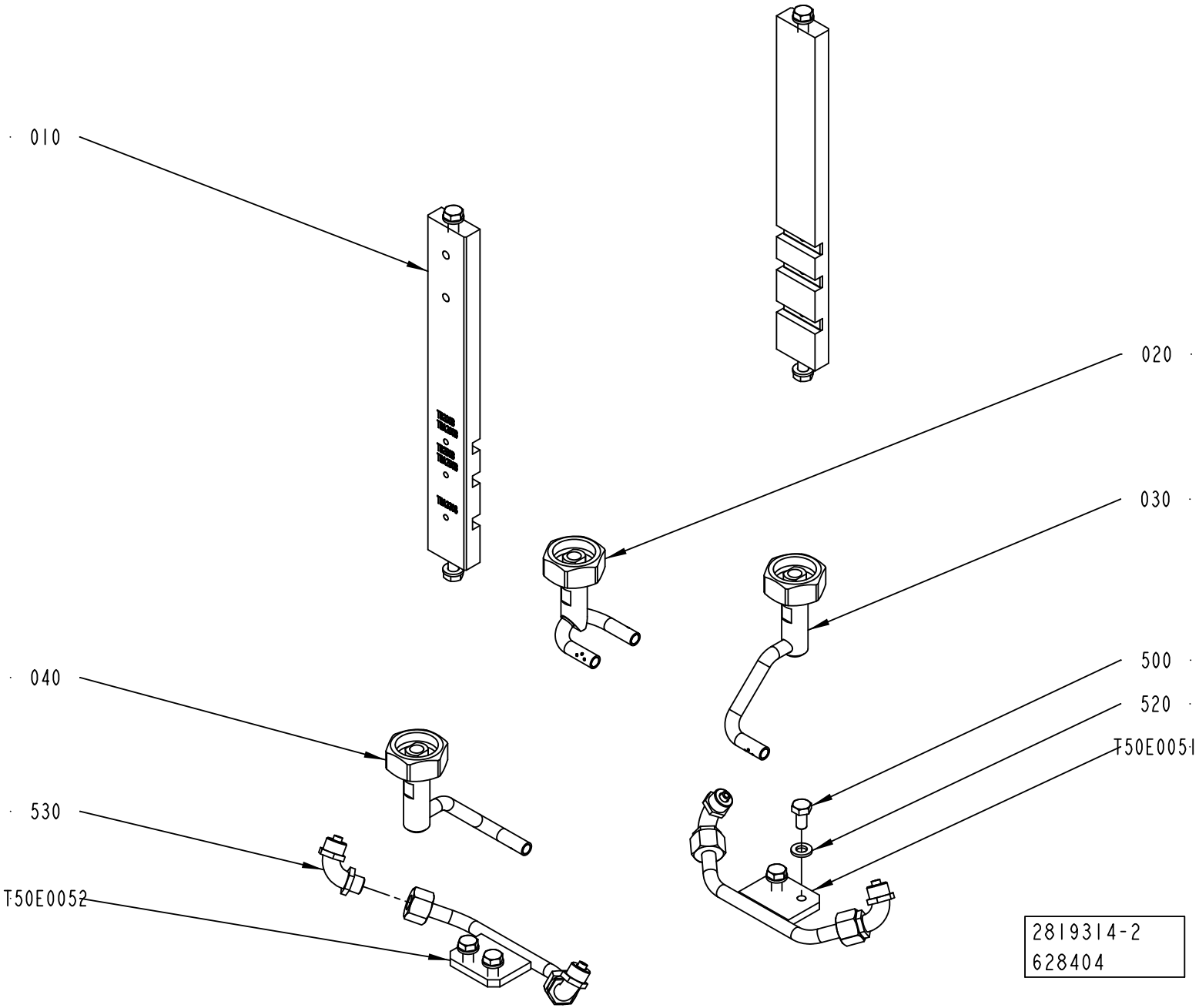
010
020
030
040
500
520
530
T50E0051
T50E0052
2819314-2
628404

ECM: 632289 - 20140401
Group number: 2819314-0100
Assembly Drawing: 2819314-2_1_AE

Pos	Part No	UN	Qty	Description	Page No
TBA 0080S					
020	2949921-0000		1	NOZZLE	
030	2949922-0000		1	NOZZLE	
040	2949920-0000		1	NOZZLE	
T50E0051	2852331-0003		1	PIPE	
T50E0052	2852331-0003		1	PIPE	
TBA 0100B, TBA 0125S					
020	2983395-0000		1	NOZZLE	
030	2990873-0000		1	NOZZLE	
040	2986078-0000		1	NOZZLE	
T50E0051	2852331-0001		1	PIPE	
T50E0052	2852331-0001		1	PIPE	
TBA 0160S, TBA 0200S, TB 0200S					
020	2976932-0000		1	NOZZLE	
030	2894688-0000		1	NOZZLE	
040	2894689-0000		1	NOZZLE	
T50E0051	2852331-0001		1	PIPE	
T50E0052	2852331-0001		1	PIPE	
TBA 0180S					
020	2976932-0000		1	NOZZLE	
030	2894688-0000		1	NOZZLE	
040	2894689-0000		1	NOZZLE	
T50E0051	2852331-0001		1	PIPE	
T50E0052	2852331-0001		1	PIPE	
TBA 0200B, TBA 0250B, TBA 0330S					
020	2852324-0000		1	NOZZLE	
030	3120546-0000		1	NOZZLE	
040	3120547-0000		1	NOZZLE	
T50E0051	2852331-0002		1	PIPE	
T50E0052	2852331-0002		1	PIPE	
TBA 0200E					
020	3051991-0000		1	NOZZLE	
030	3051992-0000		1	NOZZLE	
040	3051993-0000		1	NOZZLE	
T50E0051	3051996-0000		1	PIPE	
T50E0052	3051995-0000		1	PIPE	
TBA 0200M, TBA 0250S					
020	2912437-0000		1	NOZZLE	
030	2912438-0000		1	NOZZLE	
040	2912440-0000		1	NOZZLE	
T50E0051	2852331-0004		1	PIPE	
T50E0052	2852331-0004		1	PIPE	
TBA 0200SQ					
020	2962130-0000		1	NOZZLE	
030	2912438-0000		1	NOZZLE	
040	2912440-0000		1	NOZZLE	
T50E0051	2852331-0004		1	PIPE	
T50E0052	2852331-0004		1	PIPE	
TBA 0250E					
020	3051991-0000		1	NOZZLE	
030	3051992-0000		1	NOZZLE	
040	3051993-0000		1	NOZZLE	
T50E0051	3051996-0000		1	PIPE	
T50E0052	3051995-0000		1	PIPE	
TBA 0375S					
020	3067358-0000		1	NOZZLE	
030	2852325-0000		1	NOZZLE	
040	2852326-0000		1	NOZZLE	
T50E0051	2852331-0005		1	PIPE	
T50E0052	2852331-0005		1	PIPE	
TPA 0125SQ					
020	2871969-0000		1	NOZZLE	
030	2871968-0000		1	NOZZLE	
040	2871967-0000		1	NOZZLE	
T50E0051	2852331-0003		1	PIPE	
T50E0052	2852331-0003		1	PIPE	
TPA 0250SQ, TPA 0200SQ					
020	2984839-0000		1	NOZZLE	
030	3092257-0000		1	NOZZLE	
040	3092258-0000		1	NOZZLE	
T50E0051	2852331-0001		1	PIPE	
T50E0052	2852331-0001		1	PIPE	
TPA 0330SQ					
020	2962130-0000		1	NOZZLE	
030	2912438-0000		1	NOZZLE	
040	2912440-0000		1	NOZZLE	
T50E0051	2852331-0004		1	PIPE	
T50E0052	2852331-0004		1	PIPE	
Common Parts					
010	3306154-0100		1	PLATE	**1-353**
500	312105-0366		4	SCREW, M6S ISO 4017 M6X12 A4 80	
520	315106-0153		4	WASHER PLAIN, M6 ISO7089-6-200 HV A4	
530	342931-0121		4	ELBOW 90 COUPL., EXT. THREAD 8/6-G1/8"	

Machine Type	Group Description	Used-In	Group Number	Page No

PLATE

Drawing file: 3306154-1_1_AA.hpgl

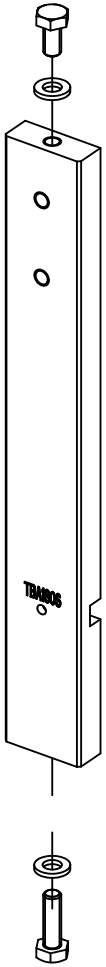

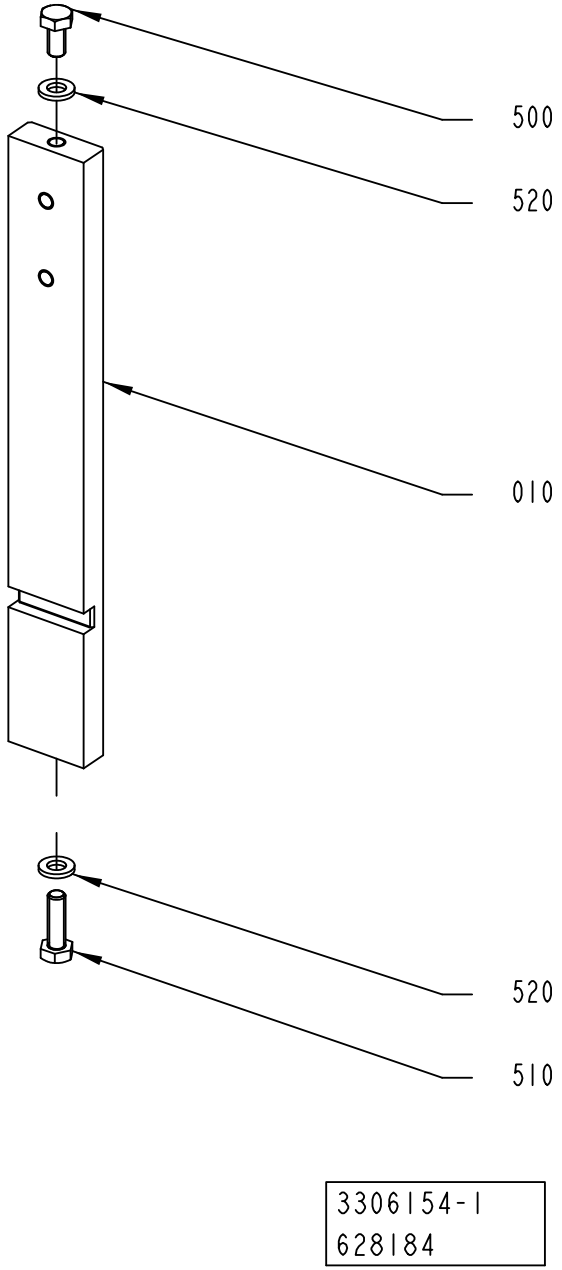

3306154-1
628184

ECM: 651329 - 20140401
Group number: 3306154-0100
Assembly Drawing: 3306154-1_1_AA

Pos	Part No	UN	Qty	Description	Page No
TBA 0080S					
010	2949915-0000		2	PLATE	
TBA 0100B, TBA 0125S					
010	2894690-0000		2	PLATE	
TBA 0160S, TBA 0200S, TB 0200S					
010	2894719-0000		2	PLATE	
TBA 0180S					
010	3245515-0000		2	PLATE	
TBA 0200B, TBA 0250B, TBA 0330S					
010	3120545-0000		2	PLATE	
TBA 0200E, TBA 0250E					
010	3051994-0000		2	PLATE	
TBA 0200M, TBA 0250S					
010	2912441-0000		2	PLATE	
TBA 0200SQ					
010	2971768-0000		2	PLATE	
TBA 0375S					
010	3067357-0000		2	PLATE	
TPA 0125SQ					
010	2871970-0000		2	PLATE	
TPA 0250SQ, TPA 0200SQ					
010	2976963-0000		2	PLATE	
TPA 0330SQ					
010	2987099-0000		2	PLATE	
Common Parts					
500	312105-0366		2	SCREW, M6S ISO 4017 M6X12 A4 80	
510	312105-0370		2	SCREW, M6S ISO 4017 M6X20 A4 80	
520	315106-0153		4	WASHER PLAIN, M6 ISO7089-6-200 HV A4	

Pos	Part No	UN	Qty	Description	Page No

PRESSURE DEVICE

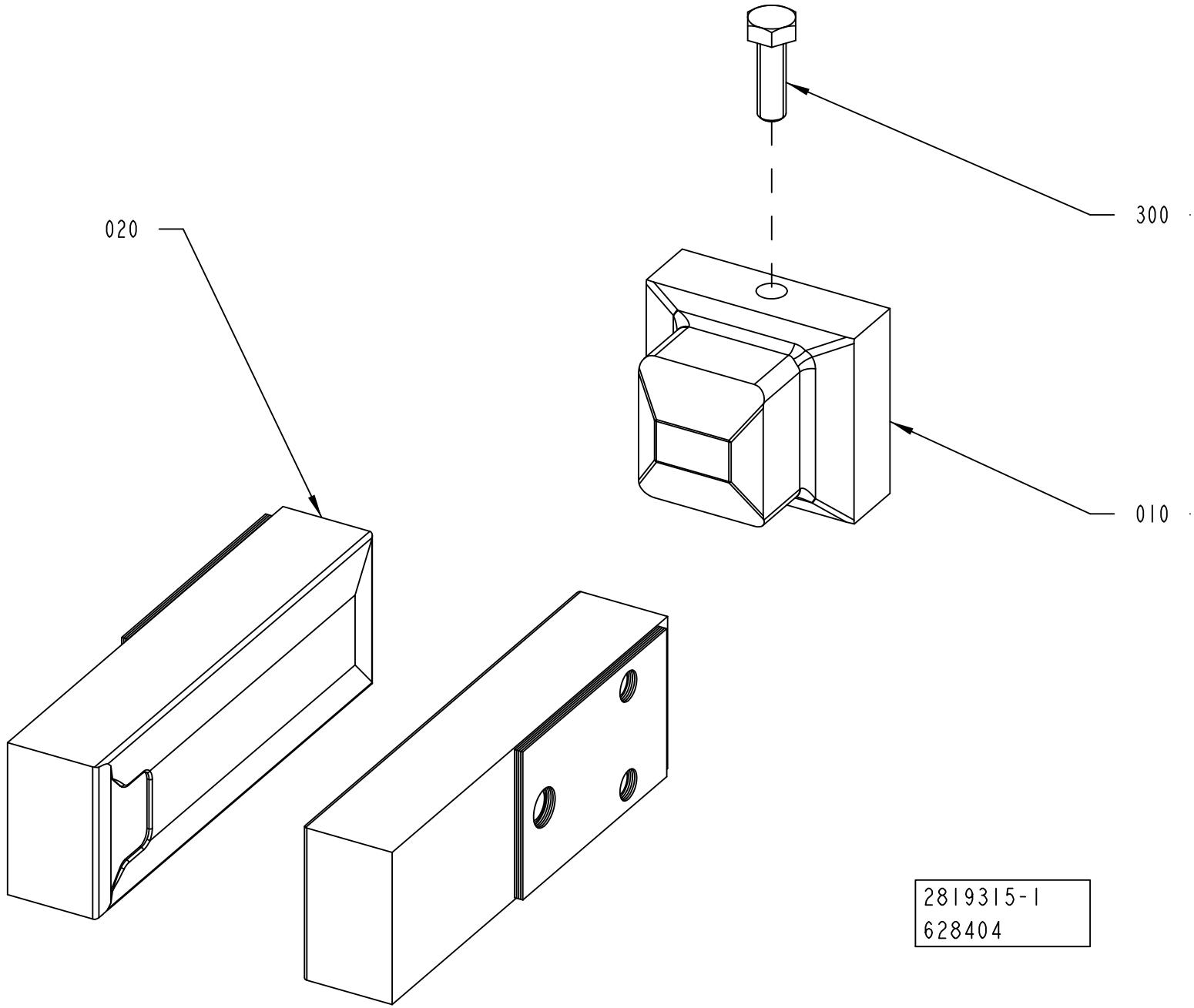

ECM: 632292 - 20140401
Group number: 2819315-0100
Assembly Drawing: 2819315-1_1_AB

Pos	Part No	UN	Qty	Description	Page No
TBA 0330S					
010	2852322-0000		1	BLOCK	
TBA 0375S					
010	3067359-0000		1	BLOCK	
TPA 0125SQ					
010	2871965-0000		1	BLOCK	
TPA 0200SQ					
010	3031464-0000		1	BLOCK	
TPA 0250SQ					
010	3031464-0000		1	BLOCK	
TPA 0330SQ					
010	2987105-0000		1	BLOCK	
TB 0200S					
010	2806015-0000		1	BLOCK	
TBA 0080S					
010	2949925-0000		1	BLOCK	
TBA 0100B					
010	2894691-0000		1	BLOCK	
TBA 0125S					
010	2894691-0000		1	BLOCK	
TBA 0160S					
010	2806015-0000		1	BLOCK	
TBA 0180S					
010	2806015-0000		1	BLOCK	
TBA 0200B					
010	2852322-0000		1	BLOCK	
TBA 0200E					
010	3051997-0000		1	BLOCK	
TBA 0200M					
010	2912423-0000		1	BLOCK	
TBA 0200S					
010	2806015-0000		1	BLOCK	
TBA 0200SQ					
010	2962125-0000		1	BLOCK	
TBA 0250B					
010	2852322-0000		1	BLOCK	
TBA 0250E					
010	3051997-0000		1	BLOCK	
TBA 0250S					
010	2912423-0000		1	BLOCK	
Common Parts					
020	3306155-0100		1	PUSHER	**1-357, 1-359, 1-361, 1-363**
300	312105-0370		1	SCREW, M6S ISO 4017 M6X20 A4 80	

Machine Type | Group Description | Used-In | Group Number | Page No

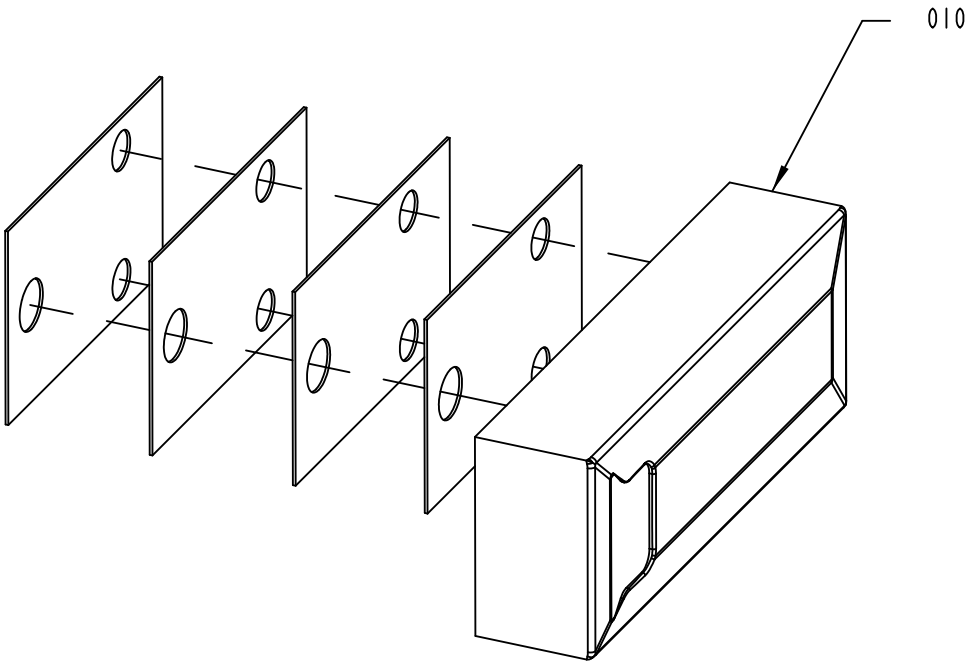
010

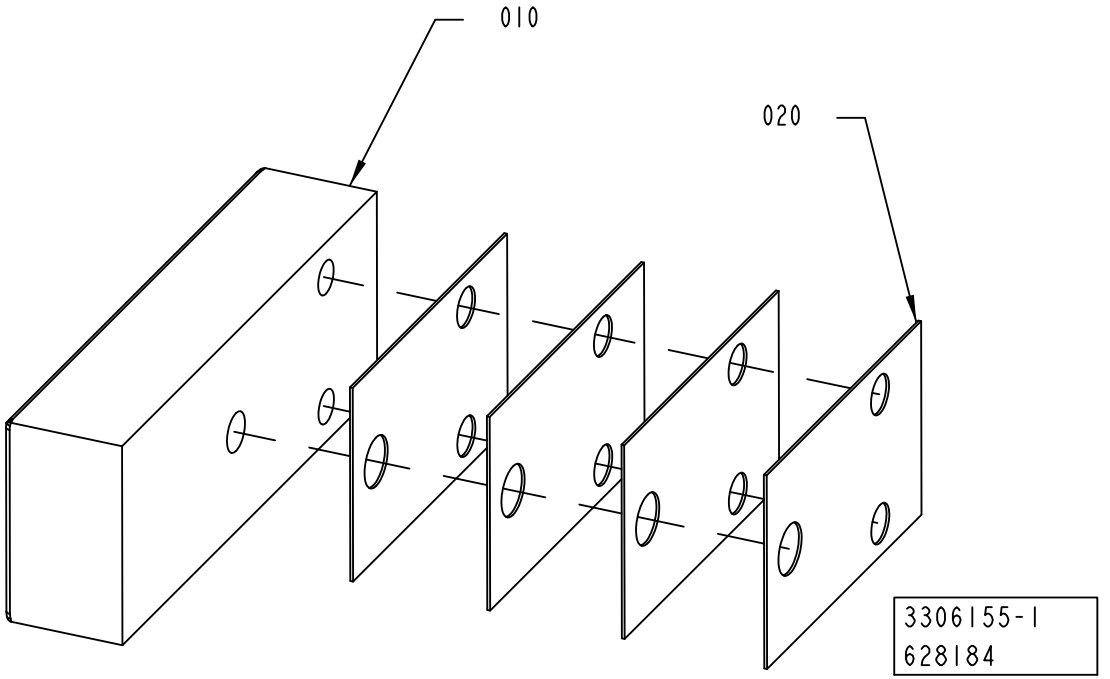
010
020
3306155-1
628184

ECM: 652028 - 20140401
Group number: 3306155-0100
Assembly Drawing: 3306155-1_1_AA

This list covers pages from 1-356 to 1-363

Pos	Part No	UN	Qty	Description	Page No
TBA 0330S (See drawing on page: 1-356)					
010	2852323-0000		2	PUSHER	
TBA 0375S (See drawing on page: 1-356)					
010	3067360-0000		2	PUSHER	
TPA 0125SQ (See drawing on page: 1-362)					
010	2871964-0000		1	PUSHER	
015	2871966-0000		1	BLOCK	
030	2894729-0000		1	VOLUME BULGE	
060	2894730-0000		1	VOLUME BULGE	
070	2941944-0000		4	VOLUME BULGE	
500	315106-0136		2	WASHER PLAIN, M4 ISO7089-4-200 HV A4	
520	312605-0312		2	HEXAGON NUT, M6M M4 A280	
530	312155-0289		8	SCREW DIN 7991 MF6S M4X10 A4 70	
TPA 0200SQ (See drawing on page: 1-360)					
010	3110111-0000		1	PUSHER	
015	3110110-0000		1	PUSHER	
030	3092452-0000		2	NAIL	
040	3097776-0000		6	SHIM	
500	315106-0136		2	WASHER PLAIN, M4 ISO7089-4-200 HV A4	
510	312115-0295		2	SCREW ISO4762 M4X20 A4 80	
TPA 0250SQ (See drawing on page: 1-360)					
010	3110108-0000		1	PUSHER	
015	3110109-0000		1	PUSHER	
030	3092452-0000		2	NAIL	
040	3097776-0000		6	SHIM	
500	315106-0136		2	WASHER PLAIN, M4 ISO7089-4-200 HV A4	
510	312115-0295		2	SCREW ISO4762 M4X20 A4 80	
TPA 0330SQ (See drawing on page: 1-360)					
010	2987110-0000		1	PUSHER	
015	2987109-0000		1	PUSHER	
030	3066842-0000		2	VOLUME BULGE	
040	3160954-0000		8	SHIM	
500	315106-0136		2	WASHER PLAIN, M4 ISO7089-4-200 HV A4	
510	312115-0293		2	SCREW ISO4762 M4X16 A4 80	
TB 0200S (See drawing on page: 1-358)					
010	3292969-0000		1	PUSHER	
015	3292970-0000		1	PUSHER	
TBA 0080S (See drawing on page: 1-356)					
010	2949926-0000		2	PUSHER	
TBA 0100B (See drawing on page: 1-356)					
010	2894692-0000		2	PUSHER	
TBA 0125S (See drawing on page: 1-356)					
010	2894693-0000		2	PUSHER	
TBA 0160S (See drawing on page: 1-356)					
010	3015762-0000		2	PUSHER	
TBA 0180S (See drawing on page: 1-356)					
010	3245517-0000		2	PUSHER	
TBA 0200B (See drawing on page: 1-356)					
010	2852329-0000		2	PUSHER	
TBA 0200E (See drawing on page: 1-358)					
010	3074724-0000		1	PUSHER	
015	3074725-0000		1	PUSHER	
TBA 0200M (See drawing on page: 1-356)					
010	2912427-0000		2	PUSHER	
TBA 0200S (See drawing on page: 1-356)					
010	2871940-0000		2	PUSHER	
TBA 0200SQ (See drawing on page: 1-356)					
010	2962126-0000		2	PUSHER	
TBA 0250B (See drawing on page: 1-356)					
010	2852330-0000		2	PUSHER	
TBA 0250E (See drawing on page: 1-358)					
010	3106241-0000		1	PUSHER	
015	3106242-0000		1	PUSHER	
TBA 0250S (See drawing on page: 1-356)					
010	2912424-0000		2	PUSHER	
Common Parts					
020	2852410-0000		8	SHIM	

Machine Type | Group Description | Used-In | Group Number | Page No

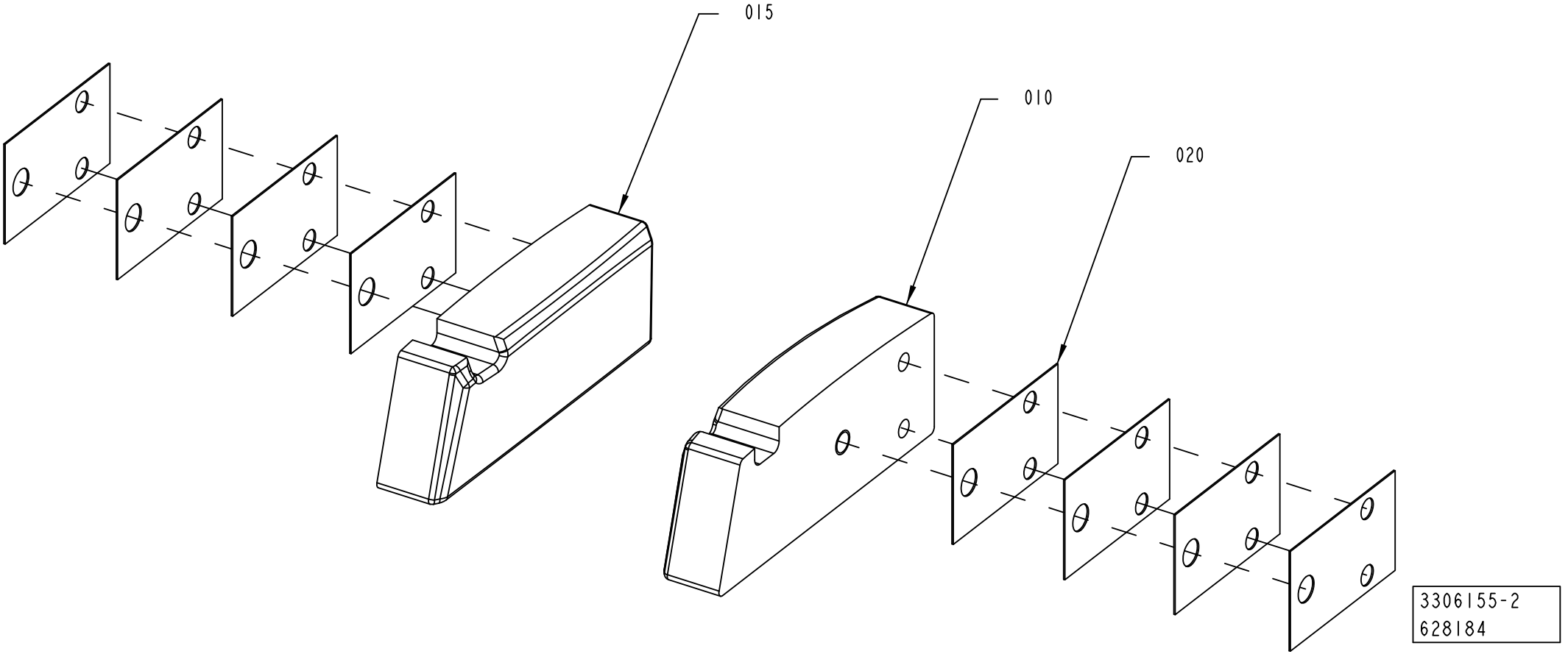
015
010
020
3306155-2
628184

ECM: 652028 - 20140401
Group number: 3306155-0100
Assembly Drawing: 3306155-2_1_AA

This list covers pages from 1-356 to 1-363

Pos	Part No	UN	Qty	Description	Page No
TBA 0330S (See drawing on page: 1-356)					
010	2852323-0000		2	PUSHER	
TBA 0375S (See drawing on page: 1-356)					
010	3067360-0000		2	PUSHER	
TPA 0125SQ (See drawing on page: 1-362)					
010	2871964-0000		1	PUSHER	
015	2871966-0000		1	BLOCK	
030	2894729-0000		1	VOLUME BULGE	
060	2894730-0000		1	VOLUME BULGE	
070	2941944-0000		4	VOLUME BULGE	
500	315106-0136		2	WASHER PLAIN, M4 ISO7089-4-200 HV A4	
520	312605-0312		2	HEXAGON NUT, M6M M4 A280	
530	312155-0289		8	SCREW DIN 7991 MF6S M4X10 A4 70	
TPA 0200SQ (See drawing on page: 1-360)					
010	3110111-0000		1	PUSHER	
015	3110110-0000		1	PUSHER	
030	3092452-0000		2	NAIL	
040	3097776-0000		6	SHIM	
500	315106-0136		2	WASHER PLAIN, M4 ISO7089-4-200 HV A4	
510	312115-0295		2	SCREW ISO4762 M4X20 A4 80	
TPA 0250SQ (See drawing on page: 1-360)					
010	3110108-0000		1	PUSHER	
015	3110109-0000		1	PUSHER	
030	3092452-0000		2	NAIL	
040	3097776-0000		6	SHIM	
500	315106-0136		2	WASHER PLAIN, M4 ISO7089-4-200 HV A4	
510	312115-0295		2	SCREW ISO4762 M4X20 A4 80	
TPA 0330SQ (See drawing on page: 1-360)					
010	2987110-0000		1	PUSHER	
015	2987109-0000		1	PUSHER	
030	3066842-0000		2	VOLUME BULGE	
040	3160954-0000		8	SHIM	
500	315106-0136		2	WASHER PLAIN, M4 ISO7089-4-200 HV A4	
510	312115-0293		2	SCREW ISO4762 M4X16 A4 80	
TB 0200S (See drawing on page: 1-358)					
010	3292969-0000		1	PUSHER	
015	3292970-0000		1	PUSHER	
TBA 0080S (See drawing on page: 1-356)					
010	2949926-0000		2	PUSHER	
TBA 0100B (See drawing on page: 1-356)					
010	2894692-0000		2	PUSHER	
TBA 0125S (See drawing on page: 1-356)					
010	2894693-0000		2	PUSHER	
TBA 0160S (See drawing on page: 1-356)					
010	3015762-0000		2	PUSHER	
TBA 0180S (See drawing on page: 1-356)					
010	3245517-0000		2	PUSHER	
TBA 0200B (See drawing on page: 1-356)					
010	2852329-0000		2	PUSHER	
TBA 0200E (See drawing on page: 1-358)					
010	3074724-0000		1	PUSHER	
015	3074725-0000		1	PUSHER	
TBA 0200M (See drawing on page: 1-356)					
010	2912427-0000		2	PUSHER	
TBA 0200S (See drawing on page: 1-356)					
010	2871940-0000		2	PUSHER	
TBA 0200SQ (See drawing on page: 1-356)					
010	2962126-0000		2	PUSHER	
TBA 0250B (See drawing on page: 1-356)					
010	2852330-0000		2	PUSHER	
TBA 0250E (See drawing on page: 1-358)					
010	3106241-0000		1	PUSHER	
015	3106242-0000		1	PUSHER	
TBA 0250S (See drawing on page: 1-356)					
010	2912424-0000		2	PUSHER	
Common Parts					
020	2852410-0000		8	SHIM	

Machine Type | Group Description | Used-In | Group Number | Page No

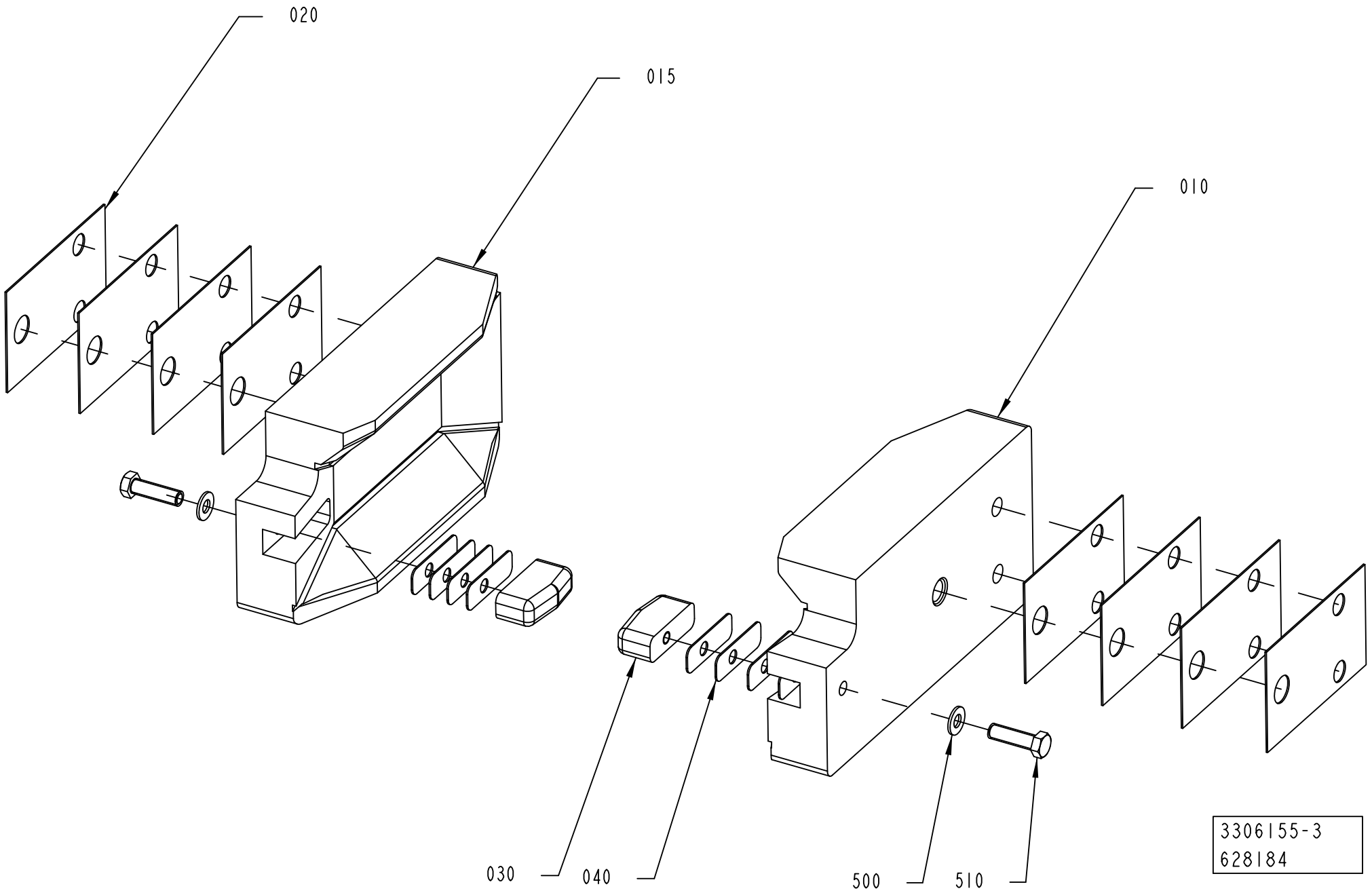
020
015
010
030
040
500
510
3306155-3
628184

ECM: 652028 - 20140401
Group number: 3306155-0100
Assembly Drawing: 3306155-3_1_AA

This list covers pages from 1-356 to 1-363

Pos	Part No	UN	Qty	Description	Page No
TBA 0330S (See drawing on page: 1-356)					
010	2852323-0000		2	PUSHER	
TBA 0375S (See drawing on page: 1-356)					
010	3067360-0000		2	PUSHER	
TPA 0125SQ (See drawing on page: 1-362)					
010	2871964-0000		1	PUSHER	
015	2871966-0000		1	BLOCK	
030	2894729-0000		1	VOLUME BULGE	
060	2894730-0000		1	VOLUME BULGE	
070	2941944-0000		4	VOLUME BULGE	
500	315106-0136		2	WASHER PLAIN, M4 ISO7089-4-200 HV A4	
520	312605-0312		2	HEXAGON NUT, M6M M4 A280	
530	312155-0289		8	SCREW DIN 7991 MF6S M4X10 A4 70	
TPA 0200SQ (See drawing on page: 1-360)					
010	3110111-0000		1	PUSHER	
015	3110110-0000		1	PUSHER	
030	3092452-0000		2	NAIL	
040	3097776-0000		6	SHIM	
500	315106-0136		2	WASHER PLAIN, M4 ISO7089-4-200 HV A4	
510	312115-0295		2	SCREW ISO4762 M4X20 A4 80	
TPA 0250SQ (See drawing on page: 1-360)					
010	3110108-0000		1	PUSHER	
015	3110109-0000		1	PUSHER	
030	3092452-0000		2	NAIL	
040	3097776-0000		6	SHIM	
500	315106-0136		2	WASHER PLAIN, M4 ISO7089-4-200 HV A4	
510	312115-0295		2	SCREW ISO4762 M4X20 A4 80	
TPA 0330SQ (See drawing on page: 1-360)					
010	2987110-0000		1	PUSHER	
015	2987109-0000		1	PUSHER	
030	3066842-0000		2	VOLUME BULGE	
040	3160954-0000		8	SHIM	
500	315106-0136		2	WASHER PLAIN, M4 ISO7089-4-200 HV A4	
510	312115-0293		2	SCREW ISO4762 M4X16 A4 80	
TB 0200S (See drawing on page: 1-358)					
010	3292969-0000		1	PUSHER	
015	3292970-0000		1	PUSHER	
TBA 0080S (See drawing on page: 1-356)					
010	2949926-0000		2	PUSHER	
TBA 0100B (See drawing on page: 1-356)					
010	2894692-0000		2	PUSHER	
TBA 0125S (See drawing on page: 1-356)					
010	2894693-0000		2	PUSHER	
TBA 0160S (See drawing on page: 1-356)					
010	3015762-0000		2	PUSHER	
TBA 0180S (See drawing on page: 1-356)					
010	3245517-0000		2	PUSHER	
TBA 0200B (See drawing on page: 1-356)					
010	2852329-0000		2	PUSHER	
TBA 0200E (See drawing on page: 1-358)					
010	3074724-0000		1	PUSHER	
015	3074725-0000		1	PUSHER	
TBA 0200M (See drawing on page: 1-356)					
010	2912427-0000		2	PUSHER	
TBA 0200S (See drawing on page: 1-356)					
010	2871940-0000		2	PUSHER	
TBA 0200SQ (See drawing on page: 1-356)					
010	2962126-0000		2	PUSHER	
TBA 0250B (See drawing on page: 1-356)					
010	2852330-0000		2	PUSHER	
TBA 0250E (See drawing on page: 1-358)					
010	3106241-0000		1	PUSHER	
015	3106242-0000		1	PUSHER	
TBA 0250S (See drawing on page: 1-356)					
010	2912424-0000		2	PUSHER	
Common Parts					
020	2852410-0000		8	SHIM	

Machine Type | Group Description | Used-In | Group Number | Page No

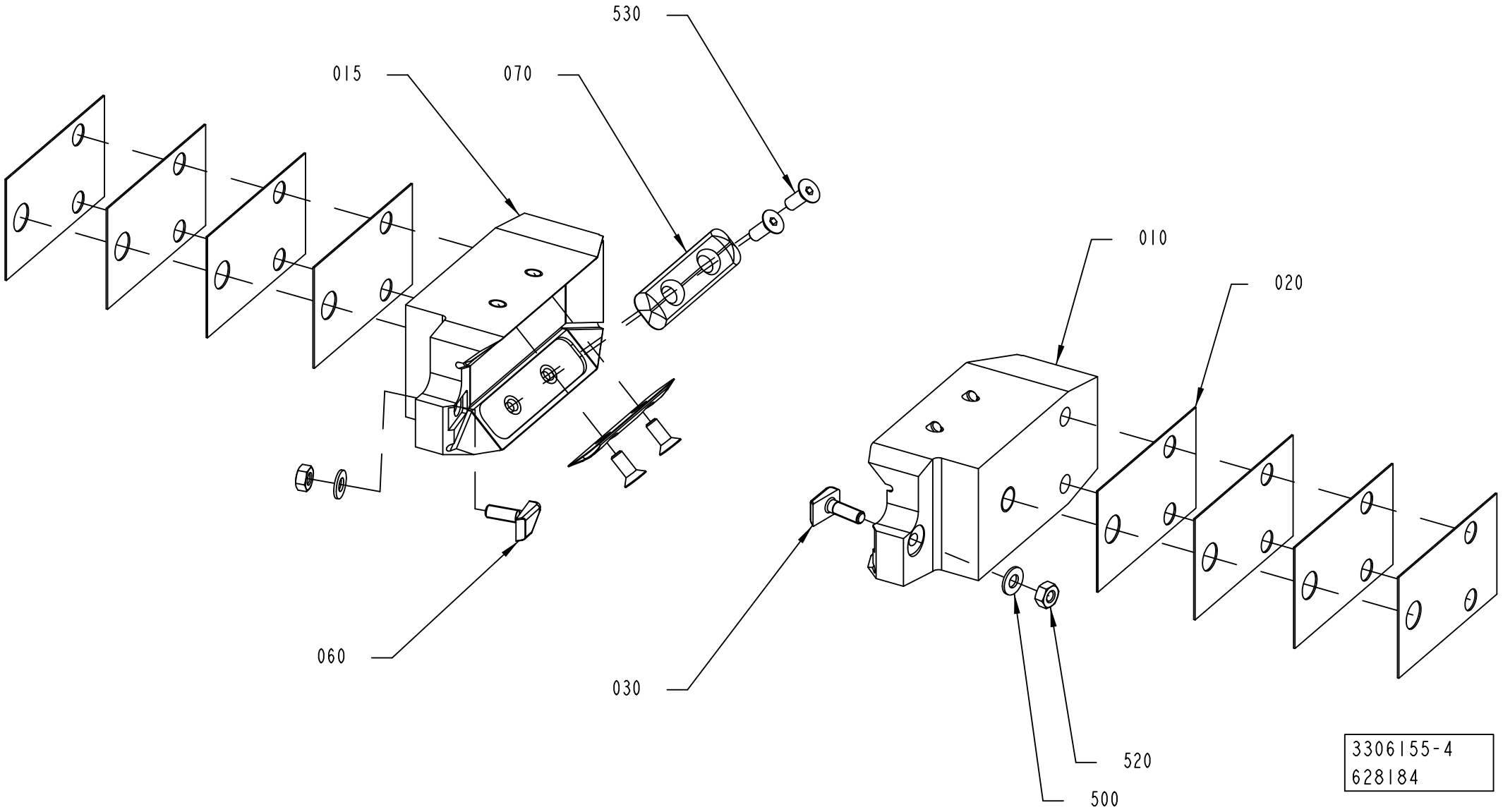
530
015
070
010
020
060
030
520
500
3306155-4
628184

ECM: 652028 - 20140401
Group number: 3306155-0100
Assembly Drawing: 3306155-4_1_AA

This list covers pages from 1-356 to 1-363

Pos	Part No	UN	Qty	Description	Page No
TBA 0330S (See drawing on page: 1-356)					
010	2852323-0000		2	PUSHER	
TBA 0375S (See drawing on page: 1-356)					
010	3067360-0000		2	PUSHER	
TPA 0125SQ (See drawing on page: 1-362)					
010	2871964-0000		1	PUSHER	
015	2871966-0000		1	BLOCK	
030	2894729-0000		1	VOLUME BULGE	
060	2894730-0000		1	VOLUME BULGE	
070	2941944-0000		4	VOLUME BULGE	
500	315106-0136		2	WASHER PLAIN, M4 ISO7089-4-200 HV A4	
520	312605-0312		2	HEXAGON NUT, M6M M4 A280	
530	312155-0289		8	SCREW DIN 7991 MF6S M4X10 A4 70	
TPA 0200SQ (See drawing on page: 1-360)					
010	3110111-0000		1	PUSHER	
015	3110110-0000		1	PUSHER	
030	3092452-0000		2	NAIL	
040	3097776-0000		6	SHIM	
500	315106-0136		2	WASHER PLAIN, M4 ISO7089-4-200 HV A4	
510	312115-0295		2	SCREW ISO4762 M4X20 A4 80	
TPA 0250SQ (See drawing on page: 1-360)					
010	3110108-0000		1	PUSHER	
015	3110109-0000		1	PUSHER	
030	3092452-0000		2	NAIL	
040	3097776-0000		6	SHIM	
500	315106-0136		2	WASHER PLAIN, M4 ISO7089-4-200 HV A4	
510	312115-0295		2	SCREW ISO4762 M4X20 A4 80	
TPA 0330SQ (See drawing on page: 1-360)					
010	2987110-0000		1	PUSHER	
015	2987109-0000		1	PUSHER	
030	3066842-0000		2	VOLUME BULGE	
040	3160954-0000		8	SHIM	
500	315106-0136		2	WASHER PLAIN, M4 ISO7089-4-200 HV A4	
510	312115-0293		2	SCREW ISO4762 M4X16 A4 80	
TB 0200S (See drawing on page: 1-358)					
010	3292969-0000		1	PUSHER	
015	3292970-0000		1	PUSHER	
TBA 0080S (See drawing on page: 1-356)					
010	2949926-0000		2	PUSHER	
TBA 0100B (See drawing on page: 1-356)					
010	2894692-0000		2	PUSHER	
TBA 0125S (See drawing on page: 1-356)					
010	2894693-0000		2	PUSHER	
TBA 0160S (See drawing on page: 1-356)					
010	3015762-0000		2	PUSHER	
TBA 0180S (See drawing on page: 1-356)					
010	3245517-0000		2	PUSHER	
TBA 0200B (See drawing on page: 1-356)					
010	2852329-0000		2	PUSHER	
TBA 0200E (See drawing on page: 1-358)					
010	3074724-0000		1	PUSHER	
015	3074725-0000		1	PUSHER	
TBA 0200M (See drawing on page: 1-356)					
010	2912427-0000		2	PUSHER	
TBA 0200S (See drawing on page: 1-356)					
010	2871940-0000		2	PUSHER	
TBA 0200SQ (See drawing on page: 1-356)					
010	2962126-0000		2	PUSHER	
TBA 0250B (See drawing on page: 1-356)					
010	2852330-0000		2	PUSHER	
TBA 0250E (See drawing on page: 1-358)					
010	3106241-0000		1	PUSHER	
015	3106242-0000		1	PUSHER	
TBA 0250S (See drawing on page: 1-356)					
010	2912424-0000		2	PUSHER	
Common Parts					
020	2852410-0000		8	SHIM	

Machine Type | Group Description | Used-In | Group Number | Page No

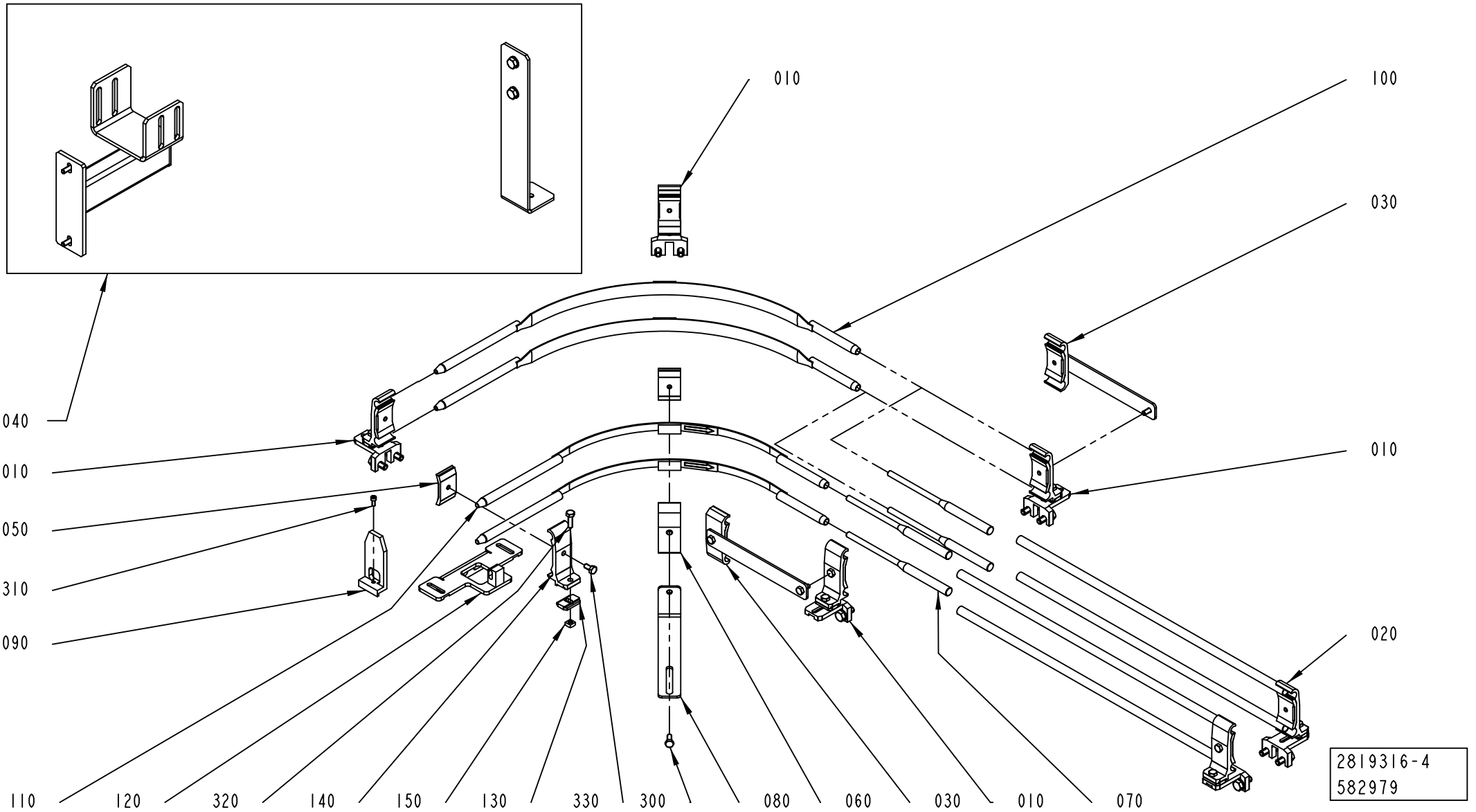
010
100
030
040
010
050
310
090
010
020
110
120
320
140
150
130
330
300
080
060
030
010
070
2819316-4
582979

ECM: 681020 - 20141001
Group number: 2819316-0200
Assembly Drawing: 2819316-4_1_AB

This list covers pages from 1-364 to 1-369

Pos	Part No	UN	Qty	Description	Page No
TBA 0100B, TBA 0125S, TBA 0080S (See drawing on page: 1-364)					
010	3358052-0100		4	RAIL HOLDER	**1-371, 1-373**
020	2561274-0102		1	RAILING	**1-375**
040	3039513-0100		1	SUPPORT	**1-379**
090	2894694-0000		1	PUSHER	
TBA 0160S, TBA 0200M, TBA 0200B, TBA 0200S, TBA 0250S, TBA 0250B, TBA 0330S, TBA 0375S, TB 0200S, TBA 0180S (See drawing on page: 1-364)					
010	3358052-0100		4	RAIL HOLDER	**1-371, 1-373**
020	2561274-0102		1	RAILING	**1-375**
040	3039513-0100		1	SUPPORT	**1-379**
090	2871956-0000		1	PUSHER	
TBA 0200E, TBA 0250E (See drawing on page: 1-364)					
010	3358052-0100		4	RAIL HOLDER	**1-371, 1-373**
020	2561274-0102		1	RAILING	**1-375**
040	3039513-0100		1	SUPPORT	**1-379**
090	3244946-0000		1	PUSHER	
TBA 0200SQ (See drawing on page: 1-368)					
010	3358052-0100		4	RAIL HOLDER	**1-371, 1-373**
020	2561274-0102		1	RAILING	**1-375**
040	3039514-0100		1	SUPPORT	**1-381**
090	2966591-0000		1	PUSHER	
TPA 0125SQ (See drawing on page: 1-366)					
010	2999197-0100		4	RAIL HOLDER	**1-383**
020	2999199-0100		1	RAILING	**1-385**
040	3039513-0100		1	SUPPORT	**1-379**
090	2894737-0000		1	PUSHER	
TPA 0250SQ, TPA 0200SQ (See drawing on page: 1-364)					
010	3358052-0100		4	RAIL HOLDER	**1-371, 1-373**
020	2561274-0102		1	RAILING	**1-375**
040	3039513-0100		1	SUPPORT	**1-379**
090	2871956-0000		1	PUSHER	
TPA 0330SQ (See drawing on page: 1-368)					
010	3358052-0100		4	RAIL HOLDER	**1-371, 1-373**
020	2561274-0102		1	RAILING	**1-375**
040	3039514-0100		1	SUPPORT	**1-381**
090	2871956-0000		1	PUSHER	
Common Parts					
030	2561602-0100		2	RAIL HOLDER KIT	**1-387**
050	1366727-0000		2	CLAMP	
060	1366750-0000		1	HOLDER	
070	1550664-0000		4	DOWEL	
080	1550666-0000		1	HOLDER	
100	3044462-0000		2	ARCH	
110	3044463-0000		2	ARCH	
120	3252760-0000		1	BRACKET	
130	2699436-0000		1	SPACER	
140	2699437-0000		1	RAIL HOLDER	
150	1359565-0000		1	NUT	
300	312105-0368		1	"SCREW, M6S ISO 4017 M6X16 A4 80"	
310	312115-0289		1	SCREW ISO4762 M4X10 A4 80	
320	312105-0370		1	SCREW, M6S ISO 4017 M6X20 A4 80	
330	312105-0366		1	SCREW, M6S ISO 4017 M6X12 A4 80	

Machine Type | Group Description | Used-In | Group Number | Page No

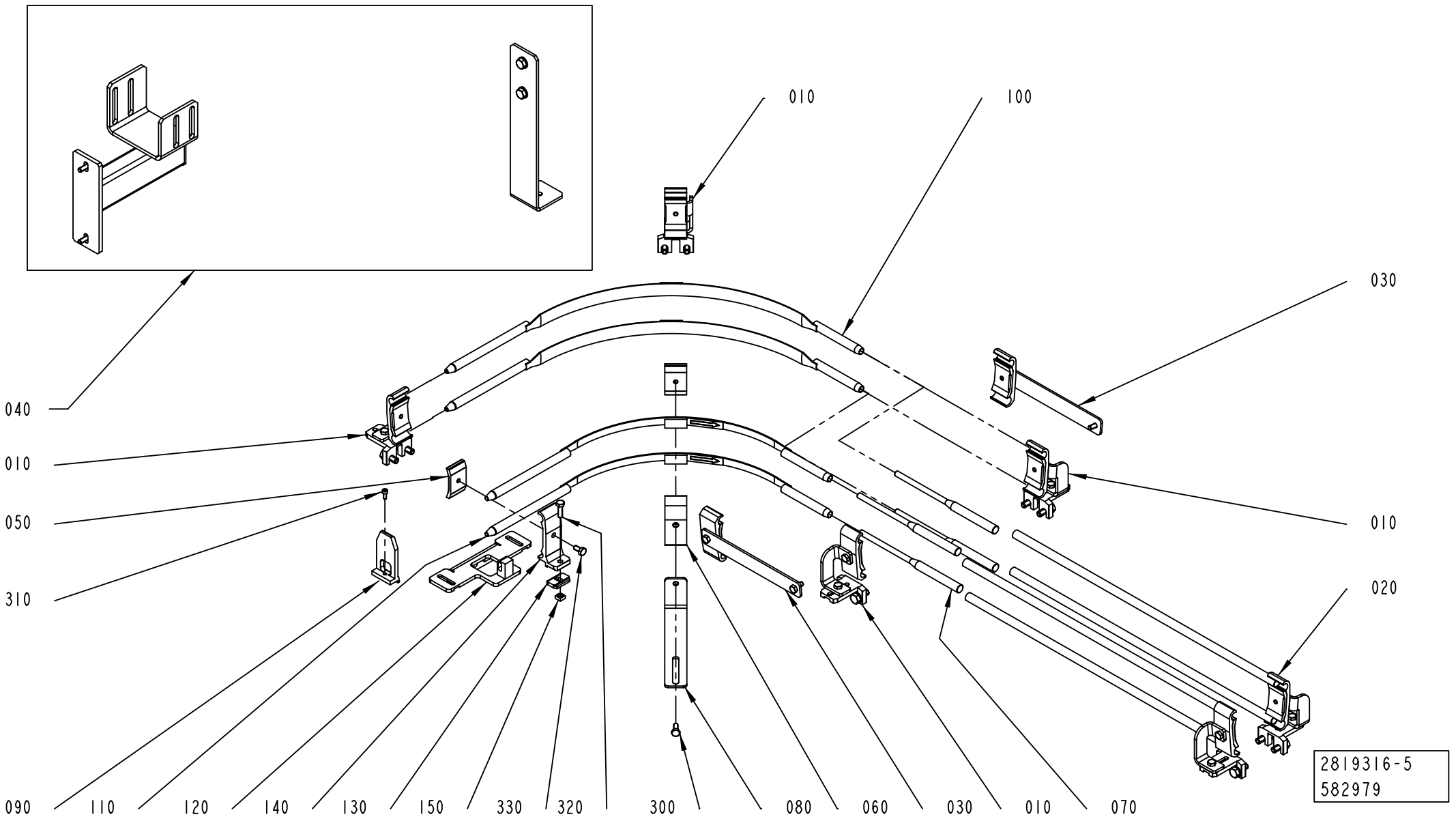
010
100
030
040
010
050
310
010
020
090
110
120
140
130
150
330
320
300
080
060
030
010
070
2819316-5
582979

ECM: 681020 - 20141001
Group number: 2819316-0200
Assembly Drawing: 2819316-5_1_AB

This list covers pages from 1-364 to 1-369

Pos	Part No	UN	Qty	Description	Page No
TBA 0100B, TBA 0125S, TBA 0080S (See drawing on page: 1-364)					
010	3358052-0100		4	RAIL HOLDER	**1-371, 1-373**
020	2561274-0102		1	RAILING	**1-375**
040	3039513-0100		1	SUPPORT	**1-379**
090	2894694-0000		1	PUSHER	
TBA 0160S, TBA 0200M, TBA 0200B, TBA 0200S, TBA 0250S, TBA 0250B, TBA 0330S, TBA 0375S, TB 0200S, TBA 0180S (See drawing on page: 1-364)					
010	3358052-0100		4	RAIL HOLDER	**1-371, 1-373**
020	2561274-0102		1	RAILING	**1-375**
040	3039513-0100		1	SUPPORT	**1-379**
090	2871956-0000		1	PUSHER	
TBA 0200E, TBA 0250E (See drawing on page: 1-364)					
010	3358052-0100		4	RAIL HOLDER	**1-371, 1-373**
020	2561274-0102		1	RAILING	**1-375**
040	3039513-0100		1	SUPPORT	**1-379**
090	3244946-0000		1	PUSHER	
TBA 0200SQ (See drawing on page: 1-368)					
010	3358052-0100		4	RAIL HOLDER	**1-371, 1-373**
020	2561274-0102		1	RAILING	**1-375**
040	3039514-0100		1	SUPPORT	**1-381**
090	2966591-0000		1	PUSHER	
TPA 0125SQ (See drawing on page: 1-366)					
010	2999197-0100		4	RAIL HOLDER	**1-383**
020	2999199-0100		1	RAILING	**1-385**
040	3039513-0100		1	SUPPORT	**1-379**
090	2894737-0000		1	PUSHER	
TPA 0250SQ, TPA 0200SQ (See drawing on page: 1-364)					
010	3358052-0100		4	RAIL HOLDER	**1-371, 1-373**
020	2561274-0102		1	RAILING	**1-375**
040	3039513-0100		1	SUPPORT	**1-379**
090	2871956-0000		1	PUSHER	
TPA 0330SQ (See drawing on page: 1-368)					
010	3358052-0100		4	RAIL HOLDER	**1-371, 1-373**
020	2561274-0102		1	RAILING	**1-375**
040	3039514-0100		1	SUPPORT	**1-381**
090	2871956-0000		1	PUSHER	
Common Parts					
030	2561602-0100		2	RAIL HOLDER KIT	**1-387**
050	1366727-0000		2	CLAMP	
060	1366750-0000		1	HOLDER	
070	1550664-0000		4	DOWEL	
080	1550666-0000		1	HOLDER	
100	3044462-0000		2	ARCH	
110	3044463-0000		2	ARCH	
120	3252760-0000		1	BRACKET	
130	2699436-0000		1	SPACER	
140	2699437-0000		1	RAIL HOLDER	
150	1359565-0000		1	NUT	
300	312105-0368		1	"SCREW, M6S ISO 4017 M6X16 A4 80"	
310	312115-0289		1	SCREW ISO4762 M4X10 A4 80	
320	312105-0370		1	SCREW, M6S ISO 4017 M6X20 A4 80	
330	312105-0366		1	SCREW, M6S ISO 4017 M6X12 A4 80	

Machine Type | Group Description | Used-In | Group Number | Page No

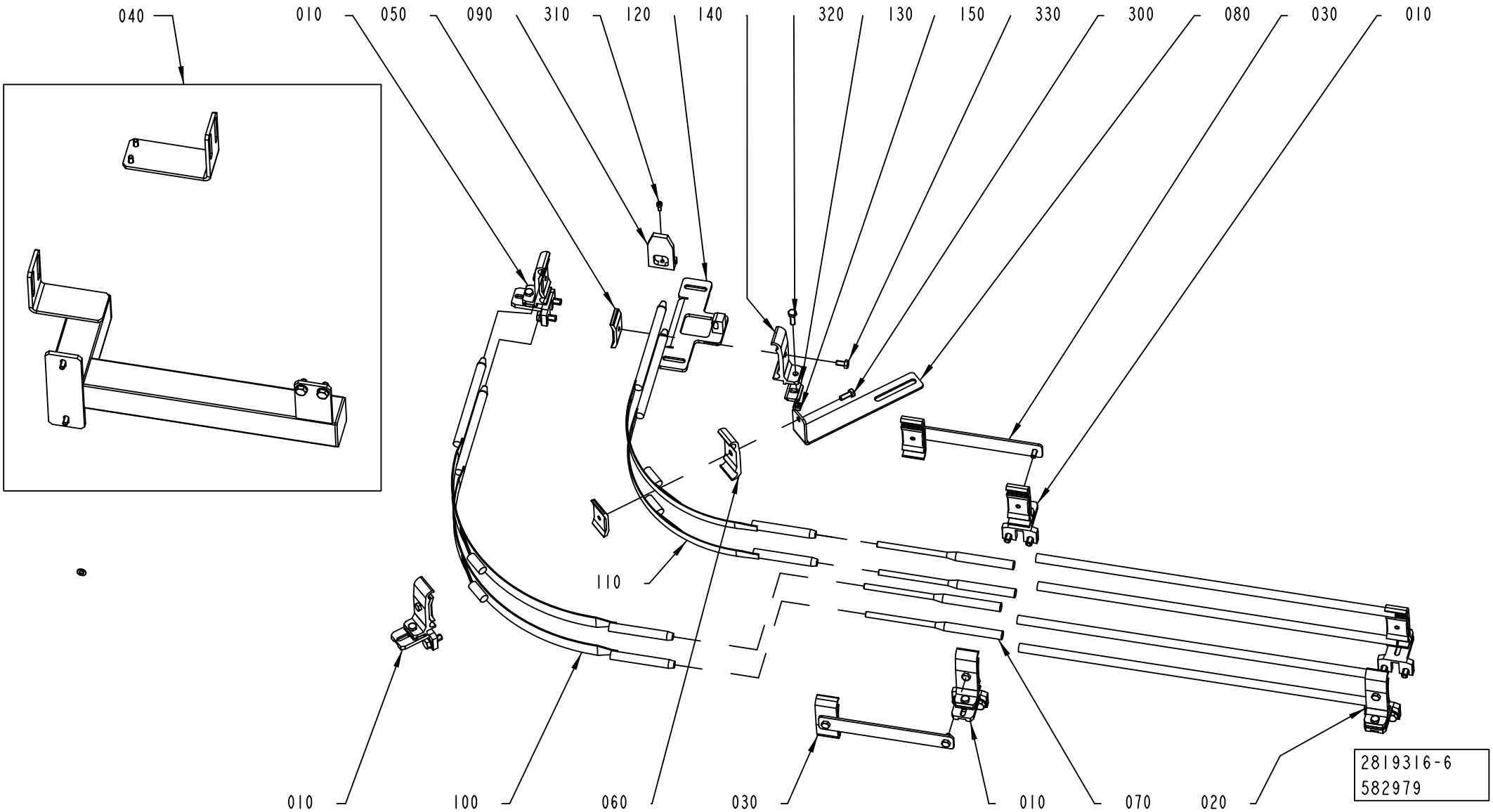
040
010
050
090
310
120
140
320
130
150
330
300
080
030
010
110
010
100
060
030
010
070
020
2819316-6
582979

ECM: 681020 - 20141001
Group number: 2819316-0200
Assembly Drawing: 2819316-6_1_AB

This list covers pages from 1-364 to 1-369

Pos	Part No	UN	Qty	Description	Page No
TBA 0100B, TBA 0125S, TBA 0080S (See drawing on page: 1-364)					
010	3358052-0100		4	RAIL HOLDER	**1-371, 1-373**
020	2561274-0102		1	RAILING	**1-375**
040	3039513-0100		1	SUPPORT	**1-379**
090	2894694-0000		1	PUSHER	
TBA 0160S, TBA 0200M, TBA 0200B, TBA 0200S, TBA 0250S, TBA 0250B, TBA 0330S, TBA 0375S, TB 0200S, TBA 0180S (See drawing on page: 1-364)					
010	3358052-0100		4	RAIL HOLDER	**1-371, 1-373**
020	2561274-0102		1	RAILING	**1-375**
040	3039513-0100		1	SUPPORT	**1-379**
090	2871956-0000		1	PUSHER	
TBA 0200E, TBA 0250E (See drawing on page: 1-364)					
010	3358052-0100		4	RAIL HOLDER	**1-371, 1-373**
020	2561274-0102		1	RAILING	**1-375**
040	3039513-0100		1	SUPPORT	**1-379**
090	3244946-0000		1	PUSHER	
TBA 0200SQ (See drawing on page: 1-368)					
010	3358052-0100		4	RAIL HOLDER	**1-371, 1-373**
020	2561274-0102		1	RAILING	**1-375**
040	3039514-0100		1	SUPPORT	**1-381**
090	2966591-0000		1	PUSHER	
TPA 0125SQ (See drawing on page: 1-366)					
010	2999197-0100		4	RAIL HOLDER	**1-383**
020	2999199-0100		1	RAILING	**1-385**
040	3039513-0100		1	SUPPORT	**1-379**
090	2894737-0000		1	PUSHER	
TPA 0250SQ, TPA 0200SQ (See drawing on page: 1-364)					
010	3358052-0100		4	RAIL HOLDER	**1-371, 1-373**
020	2561274-0102		1	RAILING	**1-375**
040	3039513-0100		1	SUPPORT	**1-379**
090	2871956-0000		1	PUSHER	
TPA 0330SQ (See drawing on page: 1-368)					
010	3358052-0100		4	RAIL HOLDER	**1-371, 1-373**
020	2561274-0102		1	RAILING	**1-375**
040	3039514-0100		1	SUPPORT	**1-381**
090	2871956-0000		1	PUSHER	
Common Parts					
030	2561602-0100		2	RAIL HOLDER KIT	**1-387**
050	1366727-0000		2	CLAMP	
060	1366750-0000		1	HOLDER	
070	1550664-0000		4	DOWEL	
080	1550666-0000		1	HOLDER	
100	3044462-0000		2	ARCH	
110	3044463-0000		2	ARCH	
120	3252760-0000		1	BRACKET	
130	2699436-0000		1	SPACER	
140	2699437-0000		1	RAIL HOLDER	
150	1359565-0000		1	NUT	
300	312105-0368		1	"SCREW, M6S ISO 4017 M6X16 A4 80"	
310	312115-0289		1	SCREW ISO4762 M4X10 A4 80	
320	312105-0370		1	SCREW, M6S ISO 4017 M6X20 A4 80	
330	312105-0366		1	SCREW, M6S ISO 4017 M6X12 A4 80	

Machine Type | Group Description | Used-In | Group Number | Page No

RAIL HOLDER

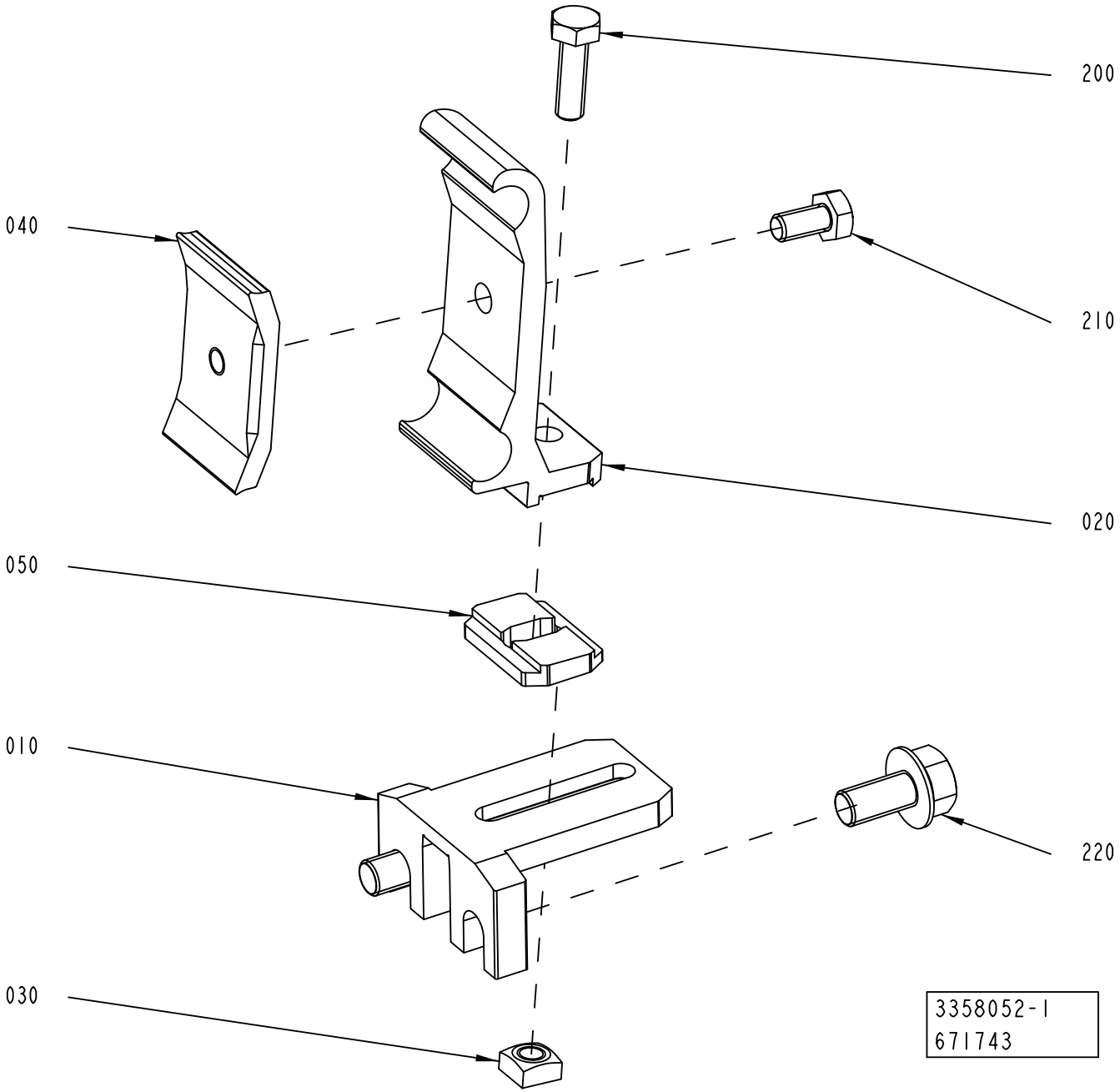

ECM: 681019 - 20141001
Group number: 3358052-0100
Assembly Drawing: 3358052-1_1_AA

This list covers pages from 1-370 to 1-373

Pos	Part No	UN	Qty	Description	Page No
-					
010	1550772-0000		1	HOLDER	
020	2699437-0000		1	RAIL HOLDER	
030	1359565-0000		1	NUT	
040	1366727-0000		1	CLAMP	
050	2699436-0000		1	SPACER	
200	312105-0370		1	SCREW, M6S ISO 4017 M6X20 A4 80	
210	312105-0366		1	SCREW, M6S ISO 4017 M6X12 A4 80	
220	312108-0449		2	SCREW EN 1665 TYPE F M8X16 A270	

Pos	Part No	UN	Qty	Description	Page No

RAIL HOLDER

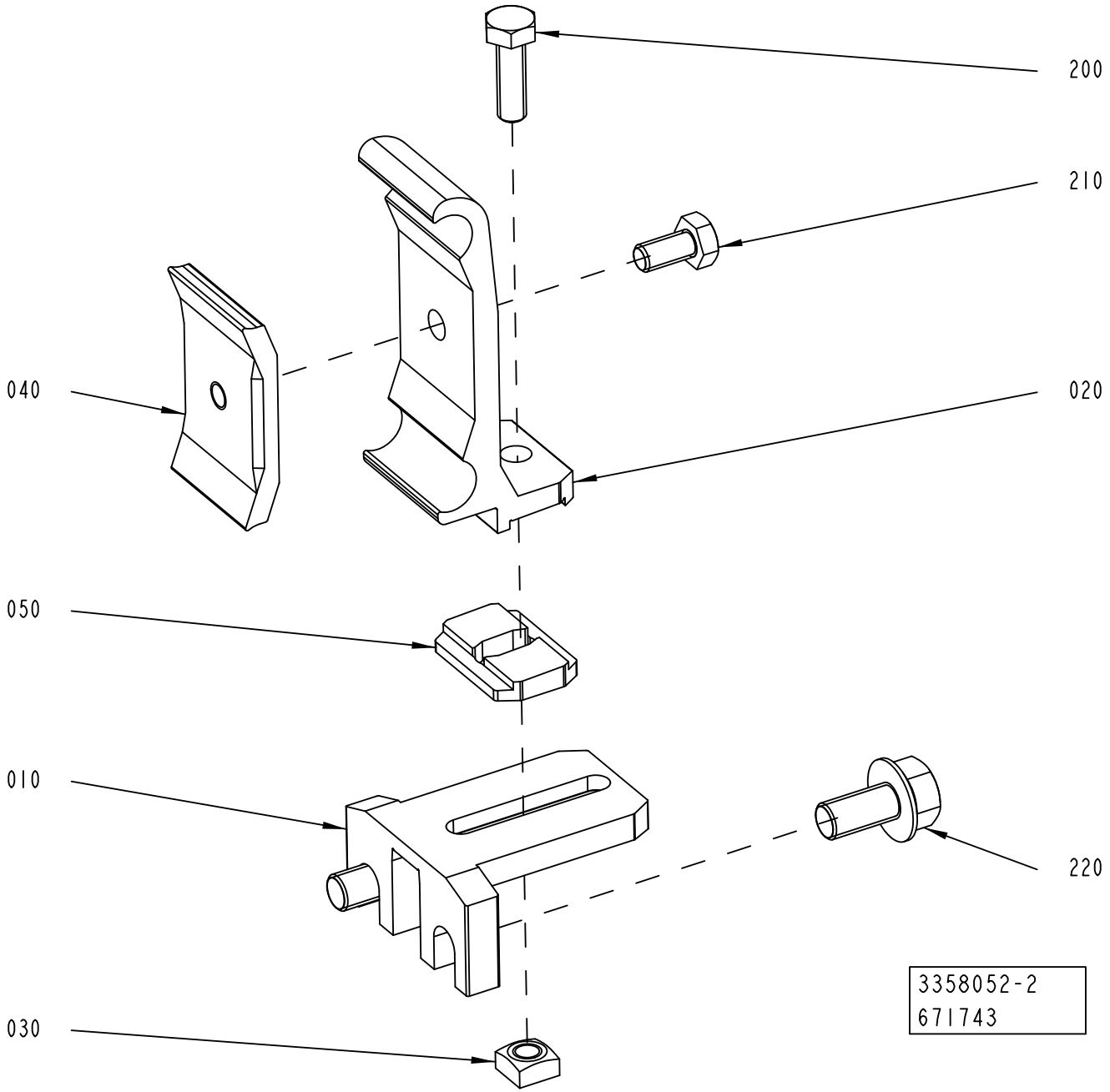

ECM: 681019 - 20141001
Group number: 3358052-0100
Assembly Drawing: 3358052-2_1_AA

This list covers pages from 1-370 to 1-373

Pos	Part No	UN	Qty	Description	Page No
-					
010	1550772-0000		1	HOLDER	
020	2699437-0000		1	RAIL HOLDER	
030	1359565-0000		1	NUT	
040	1366727-0000		1	CLAMP	
050	2699436-0000		1	SPACER	
200	312105-0370		1	SCREW, M6S ISO 4017 M6X20 A4 80	
210	312105-0366		1	SCREW, M6S ISO 4017 M6X12 A4 80	
220	312108-0449		2	SCREW EN 1665 TYPE F M8X16 A270	

Pos	Part No	UN	Qty	Description	Page No

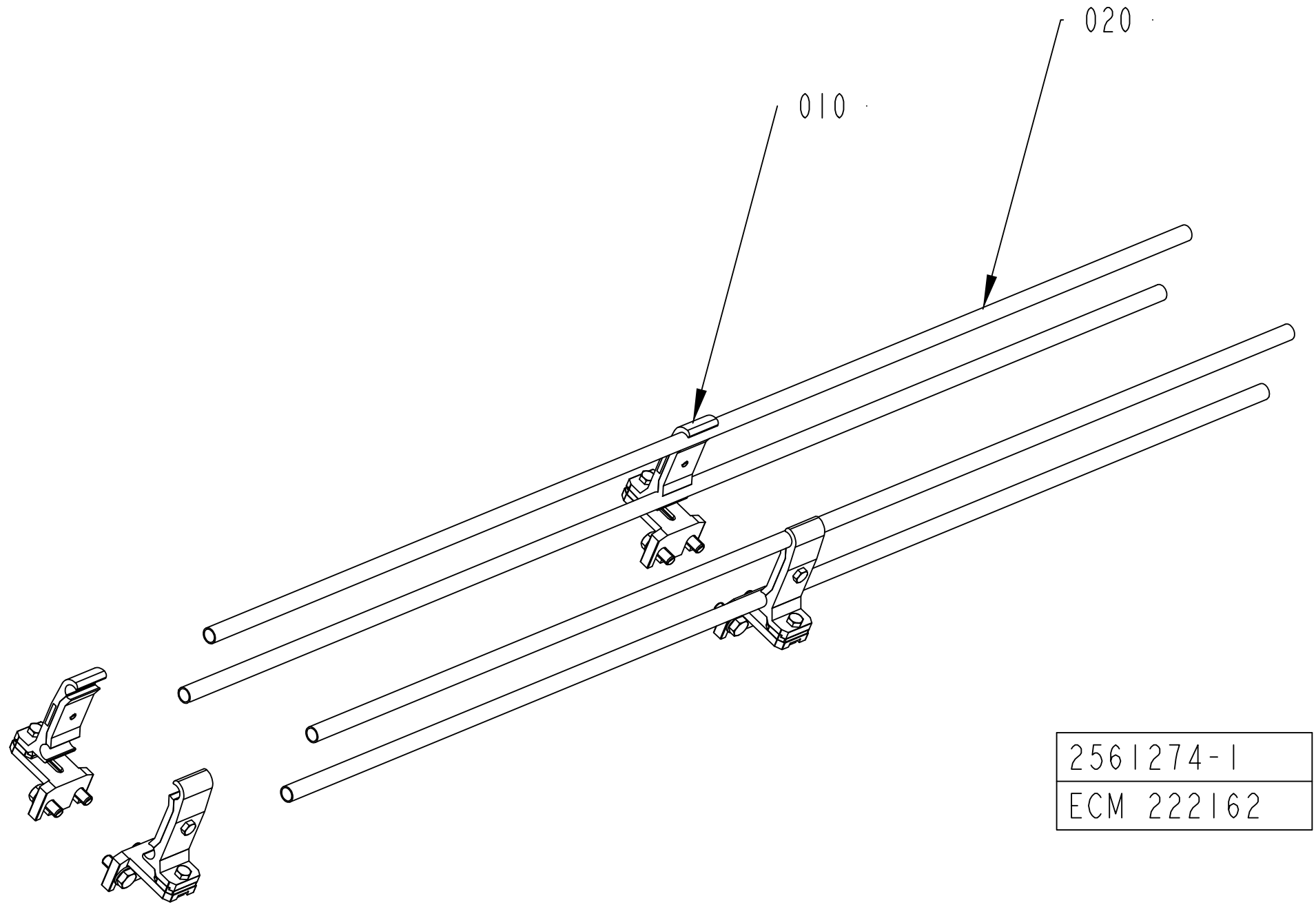
020
010
2561274-1
ECM 222162

ECM: 222162 -
Group number: 2561274-0102
Assembly Drawing: 2561274-1_1_AB

Pos	Part No	UN	Qty	Description	Page No
L 0250					
010	1550743-0200		2	RAIL HOLDER	**1-377**
L 0500					
010	1550743-0200		2	RAIL HOLDER	**1-377**
020	476221-0002		4	PIPE	

Pos	Part No	UN	Qty	Description	Page No

RAIL HOLDER

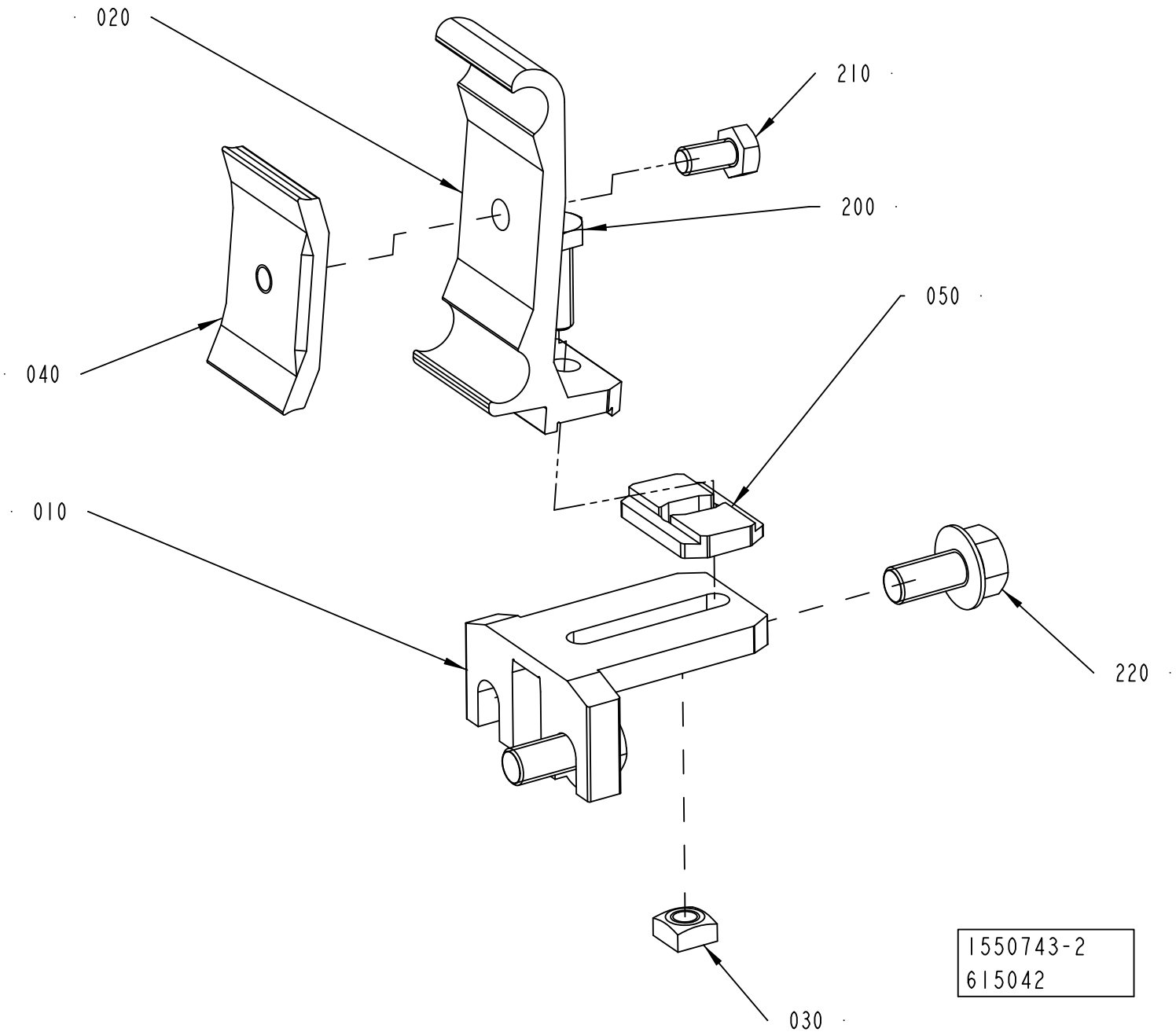

ECM: 626475 - 20140301
Group number: 1550743-0200
Assembly Drawing: 1550743-2_1_AB

Pos	Part No	UN	Qty	Description	Page No
-					
010	1550772-0000		1	HOLDER	
020	2699437-0000		1	RAIL HOLDER	
030	1359565-0000		1	NUT	
040	1366727-0000		1	CLAMP	
050	2699436-0000		1	SPACER	
200	312105-0370		1	SCREW, M6S ISO 4017 M6X20 A4 80	
210	312105-0366		1	SCREW, M6S ISO 4017 M6X12 A4 80	
220	312108-0449		2	SCREW EN 1665 TYPE F M8X16 A270	

Pos	Part No	UN	Qty	Description	Page No

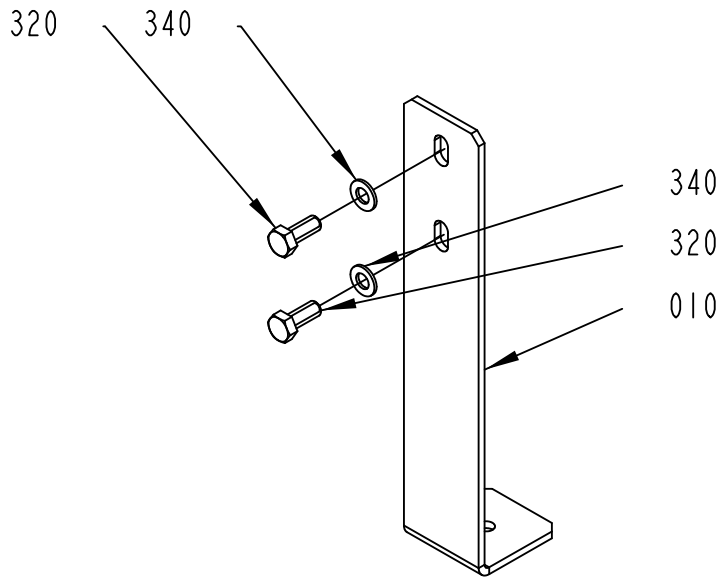

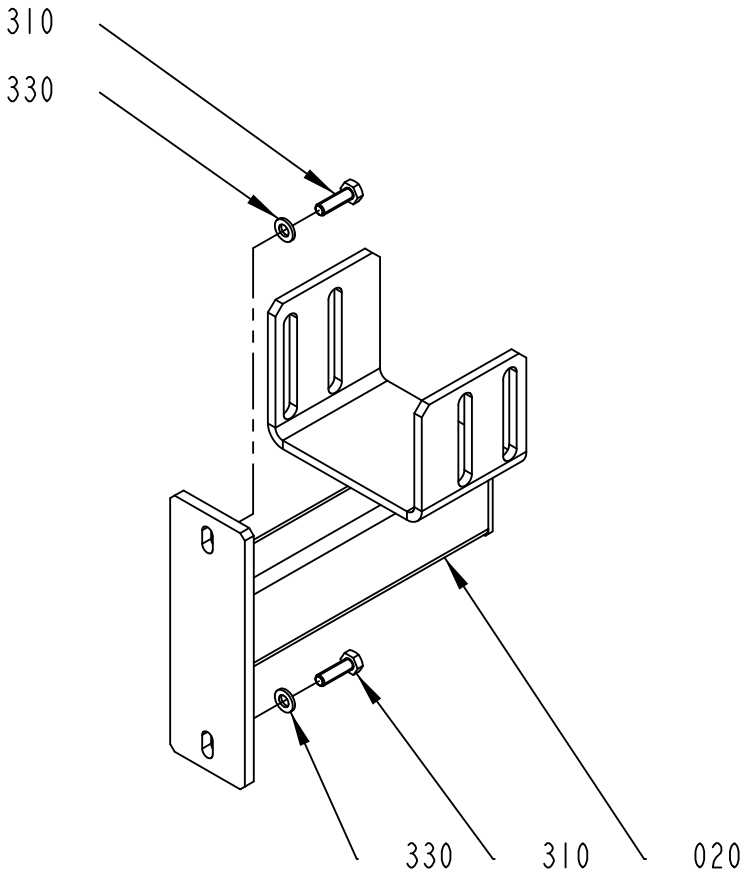

3039513-1
582979

ECM: 584081 - 20130401
Group number: 3039513-0100
Assembly Drawing: 3039513-1_1_AB

Pos	Part No	UN	Qty	Description	Page No
-					
010	2819302-0000		1	SUPPORT	
020	2852874-0000		1	SUPPORT	
300	312105-0368		1	"SCREW, M6S ISO 4017 M6X16 A4 80"	
310	312105-0370		2	SCREW, M6S ISO 4017 M6X20 A4 80	
320	312105-0451		2	SCREW, M6S ISO 4017 M8X20 A4 80	
330	315105-0153		2	WASHER PLAIN, 6,4X12X1,5 A4 BRB	
340	315105-0165		2	FWAS080G0-0S, WASHER PLAIN	

Pos	Part No	UN	Qty	Description	Page No

SUPPORT

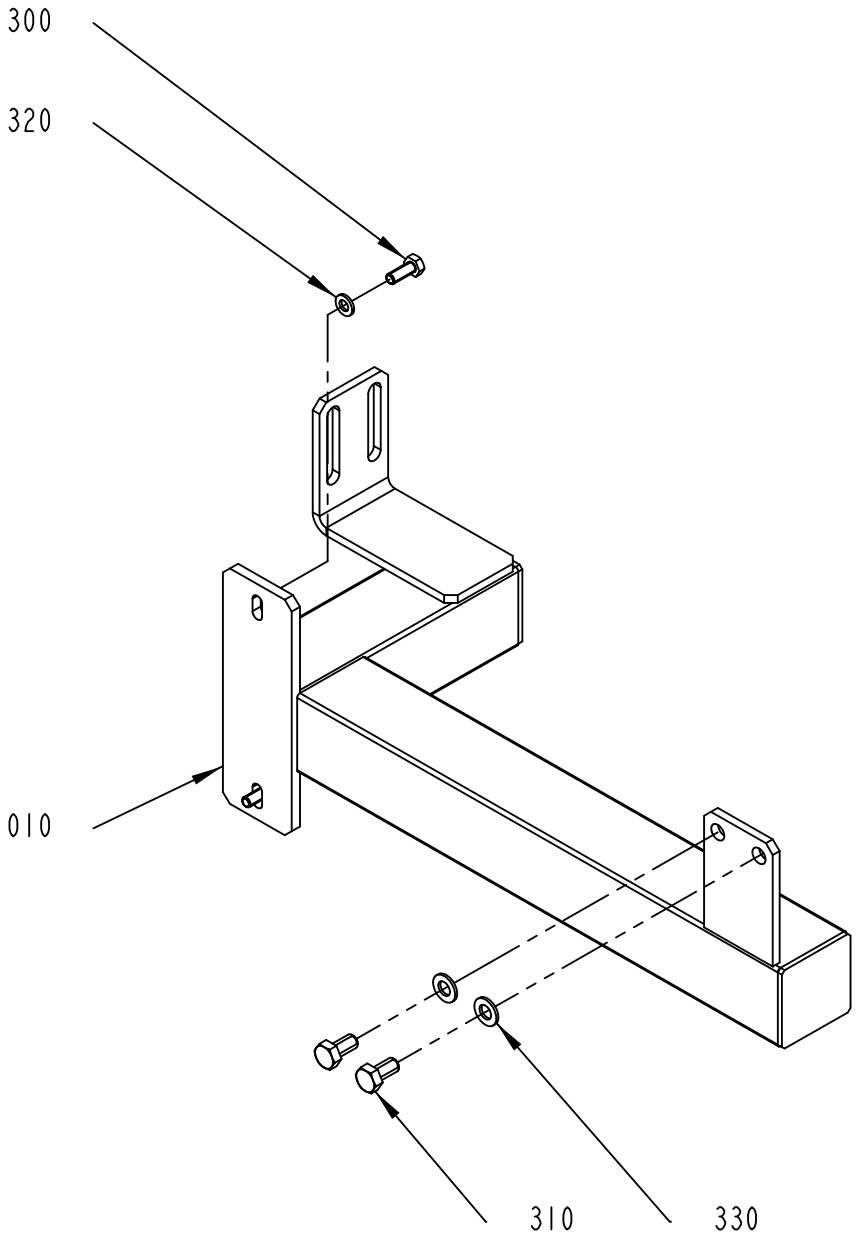

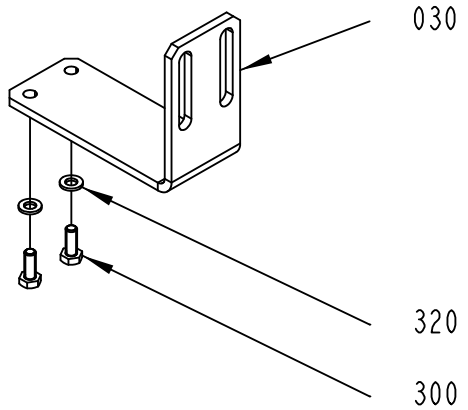

3039514-1
582979

ECM: 584082 - 20130401
Group number: 3039514-0100
Assembly Drawing: 3039514-1_1_AC

Pos	Part No	UN	Qty	Description	Page No
-					
010	2966592-0000		1	SUPPORT	
030	2966594-0000		1	BRACKET	
300	312105-0368		4	"SCREW, M6S ISO 4017 M6X16 A4 80"	
310	312105-0449		2	SCREW, M6S ISO 4017 M8X16 A4 80	
320	315105-0153		4	WASHER PLAIN, 6,4X12X1,5 A4 BRB	
330	315105-0165		2	FWAS080G0-0S, WASHER PLAIN	

Pos	Part No	UN	Qty	Description	Page No

RAIL HOLDER

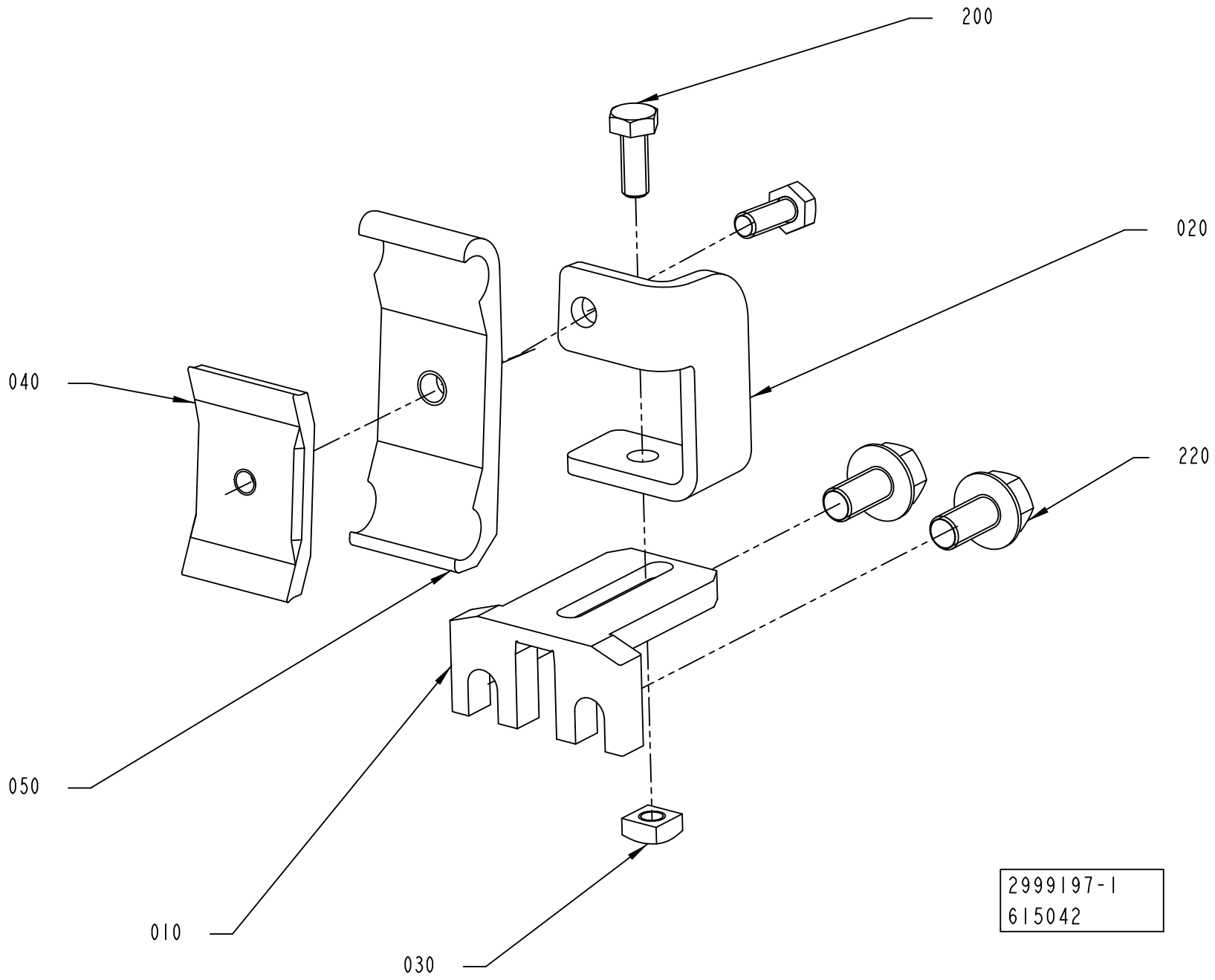

ECM: 626474 - 20140301
Group number: 2999197-0100
Assembly Drawing: 2999197-1_1_AB

Pos	Part No	UN	Qty	Description	Page No
-					
010	1550772-0000		1	HOLDER	
020	2998006-0000		1	RAIL HOLDER	
030	1359565-0000		1	NUT	
040	1366727-0000		1	CLAMP	
050	1366750-0000		1	HOLDER	
200	312105-0368		2	"SCREW, M6S ISO 4017 M6X16 A4 80"	
220	312108-0449		2	SCREW EN 1665 TYPE F M8X16 A270	

Pos	Part No	UN	Qty	Description	Page No

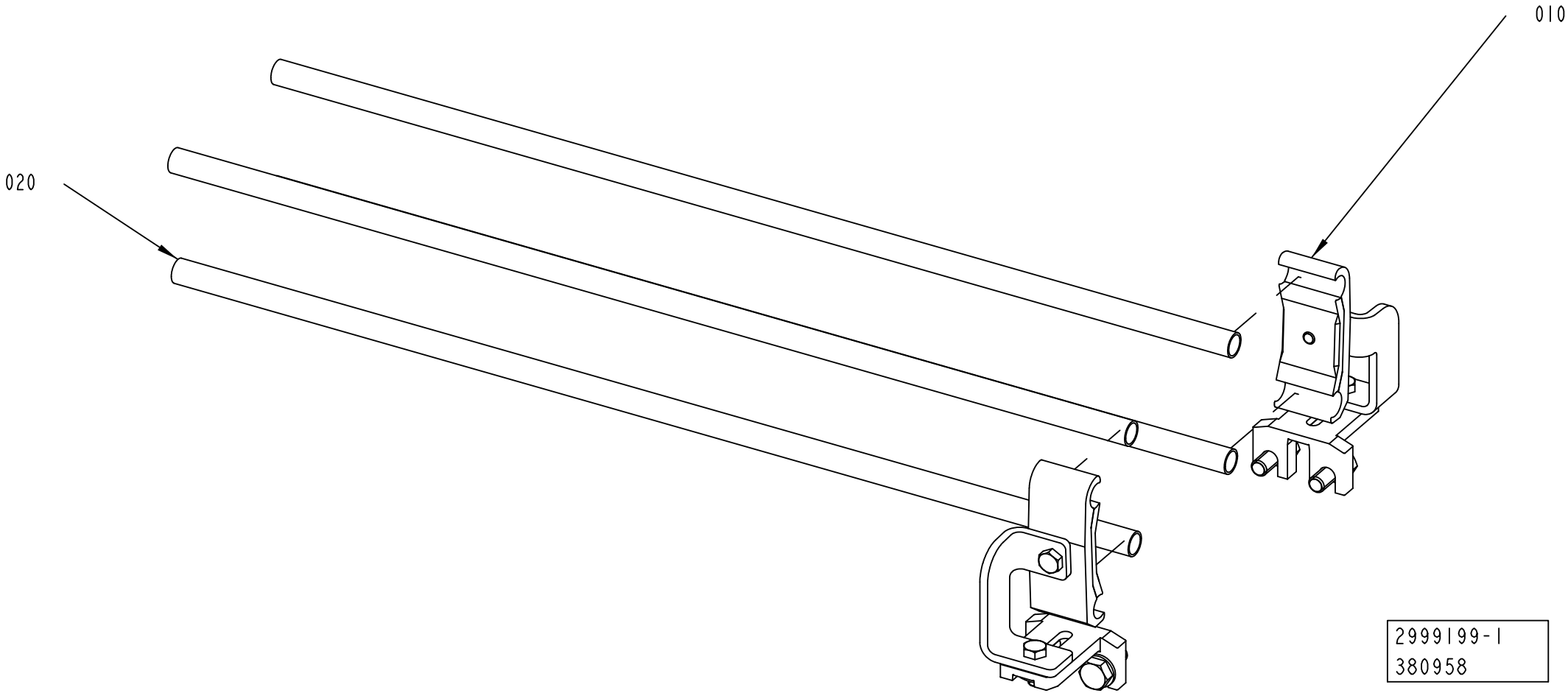
010
020
2999199-1
380958

ECM: 389050 - 20090602
Group number: 2999199-0100
Assembly Drawing: 2999199-1_1_AA

Pos	Part No	UN	Qty	Description	Page No
-					
010	2999197-0100		2	RAIL HOLDER	**1-383**
020	476221-0002		4	PIPE	

Pos	Part No	UN	Qty	Description	Page No

Machine Type | Group Description | Used-In | Group Number | Page No

RAIL HOLDER KIT

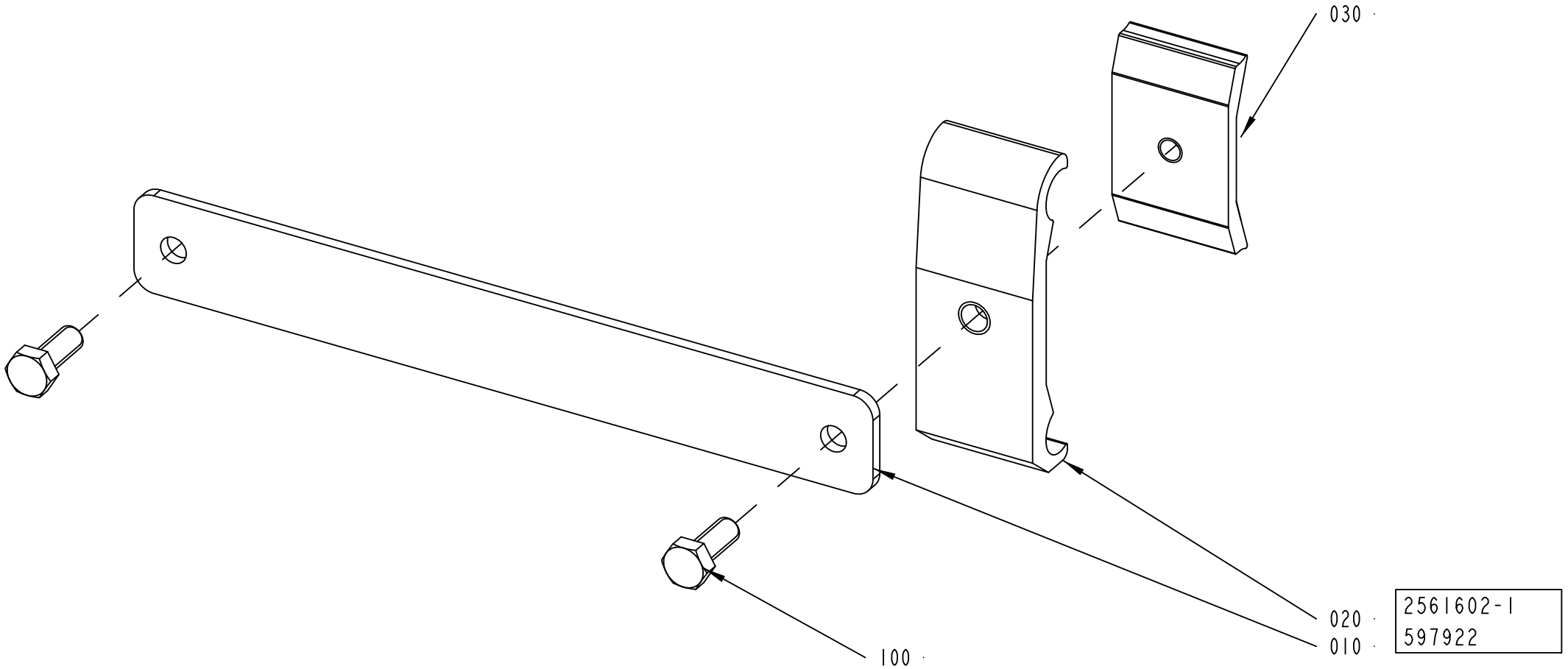

ECM: 599495 - 20130418
Group number: 2561602-0100
Assembly Drawing: 2561602-1_1_AD

Pos	Part No	UN	Qty	Description	Page No
-					
010	2561596-0000		1	RAIL HOLDER KIT	
020	1366750-0000		1	HOLDER	
030	1366727-0000		1	CLAMP	
100	312105-0368		2	"SCREW, M6S ISO 4017 M6X16 A4 80"	

Pos	Part No	UN	Qty	Description	Page No

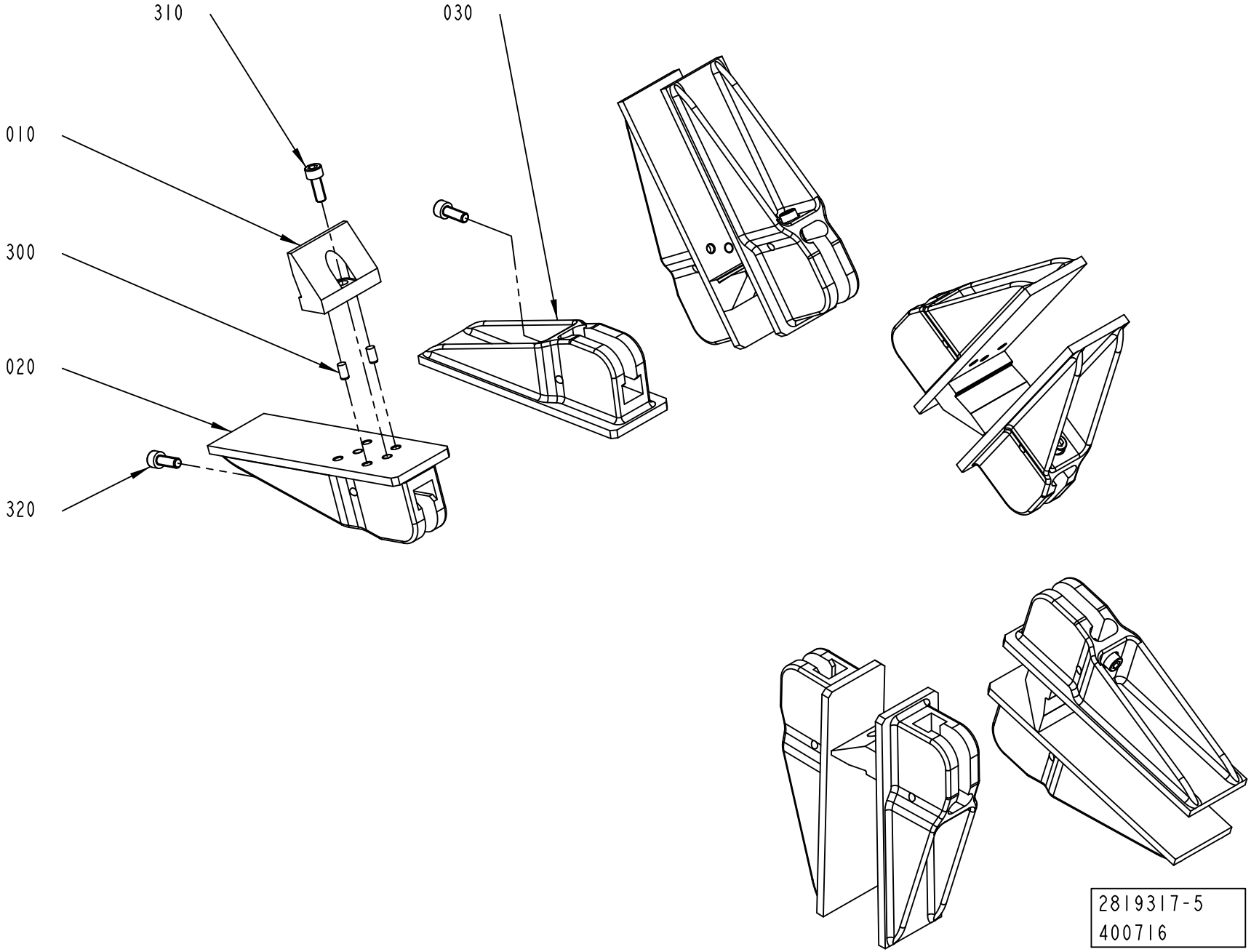
310
030
010
300
020
320
2819317-5
400716

ECM: 632293 - 20140401
Group number: 2819317-0200
Assembly Drawing: 2819317-5_1_AA

This list covers pages from 1-388 to 1-393

Pos	Part No	UN	Qty	Description	Page No
TBA 0375S (See drawing on page: 1-390)					
010	3067363-0000		5	BOTTOM	
020	3067362-0000		5	FLAP	
030	3067361-0000		5	FLAP	
300	311103-0305		10	PARALLEL PIN ISO 2338 5M6X10 A1	
310	312115-0329		10	SCREW ISO4762 M5X16 A4 80	
TPA 0125SQ (See drawing on page: 1-388)					
010	2871962-0000		5	BOTTOM	
020	2871961-0000		5	FLAP	
030	2894753-0000		5	FLAP	
300	311103-0305		10	PARALLEL PIN ISO 2338 5M6X10 A1	
310	312115-0368		5	SCREW ISO4762 M6X16 A4 80	
TPA 0200SQ (See drawing on page: 1-392)					
020	3043672-0100		5	FLAP	**1-395**
030	2976961-0000		5	FLAP	
TPA 0250SQ (See drawing on page: 1-392)					
020	3043672-0100		5	FLAP	**1-395**
030	2976964-0000		5	FLAP	
TPA 0330SQ (See drawing on page: 1-388)					
010	2987102-0000		5	BOTTOM	
020	2987101-0000		5	FLAP	
030	3076767-0000		5	FLAP	
300	311103-0305		10	PARALLEL PIN ISO 2338 5M6X10 A1	
310	312115-0368		5	SCREW ISO4762 M6X16 A4 80	
TBA 0080S (See drawing on page: 1-390)					
010	2949924-0000		5	BOTTOM	
020	2949923-0000		5	FLAP	
030	3019291-0000		5	FLAP	
300	311103-0305		10	PARALLEL PIN ISO 2338 5M6X10 A1	
310	312115-0329		5	SCREW ISO4762 M5X16 A4 80	
TBA 0100B (See drawing on page: 1-388)					
010	2894678-0000		5	BOTTOM	
020	2894677-0000		5	FLAP	
030	2978922-0000		5	FLAP	
300	311103-0305		10	PARALLEL PIN ISO 2338 5M6X10 A1	
310	312115-0329		5	SCREW ISO4762 M5X16 A4 80	
TBA 0125S (See drawing on page: 1-388)					
010	2894678-0000		5	BOTTOM	
020	2894677-0000		5	FLAP	
030	2978922-0000		5	FLAP	
300	311103-0305		10	PARALLEL PIN ISO 2338 5M6X10 A1	
310	312115-0329		5	SCREW ISO4762 M5X16 A4 80	
TBA 0160S (See drawing on page: 1-388)					
010	3016922-0000		5	BOTTOM	
020	3016921-0000		5	FLAP	
030	2894752-0000		5	FLAP	
300	311103-0305		10	PARALLEL PIN ISO 2338 5M6X10 A1	
310	312115-0368		5	SCREW ISO4762 M6X16 A4 80	
TBA 0180S (See drawing on page: 1-392)					
020	3043672-0100		5	FLAP	**1-395**
030	2894752-0000		5	FLAP	
TBA 0200B (See drawing on page: 1-390)					
010	2852320-0000		5	BOTTOM	
020	3150927-0000		5	FLAP	
030	3150928-0000		5	FLAP	
300	311103-0305		10	PARALLEL PIN ISO 2338 5M6X10 A1	
310	312115-0329		10	SCREW ISO4762 M5X16 A4 80	
TBA 0200E (See drawing on page: 1-392)					
020	3043672-0100		5	FLAP	**1-395**
030	3052000-0000		5	FLAP	
TBA 0200M (See drawing on page: 1-388)					
010	2912425-0000		5	BOTTOM	
020	2912426-0000		5	FLAP	
030	2980067-0000		5	FLAP	
300	311103-0305		10	PARALLEL PIN ISO 2338 5M6X10 A1	
310	312115-0329		5	SCREW ISO4762 M5X16 A4 80	
TBA 0200S, TB 0200S (See drawing on page: 1-388)					
010	3016922-0000		5	BOTTOM	
020	3016921-0000		5	FLAP	
030	2894752-0000		5	FLAP	
300	311103-0305		10	PARALLEL PIN ISO 2338 5M6X10 A1	
310	312115-0368		5	SCREW ISO4762 M6X16 A4 80	
TBA 0200SQ (See drawing on page: 1-388)					
010	2962129-0000		5	BOTTOM	
020	2962128-0000		5	FLAP	
030	2966596-0000		5	FLAP	
300	311103-0305		10	PARALLEL PIN ISO 2338 5M6X10 A1	
310	312115-0331		5	SCREW ISO4762 M5X20 A4 80	
TBA 0250B (See drawing on page: 1-390)					
010	2852320-0000		5	BOTTOM	
020	3150927-0000		5	FLAP	
030	3150928-0000		5	FLAP	
300	311103-0305		10	PARALLEL PIN ISO 2338 5M6X10 A1	
310	312115-0329		10	SCREW ISO4762 M5X16 A4 80	

Machine Type | Group Description | Used-In | Group Number | Page No

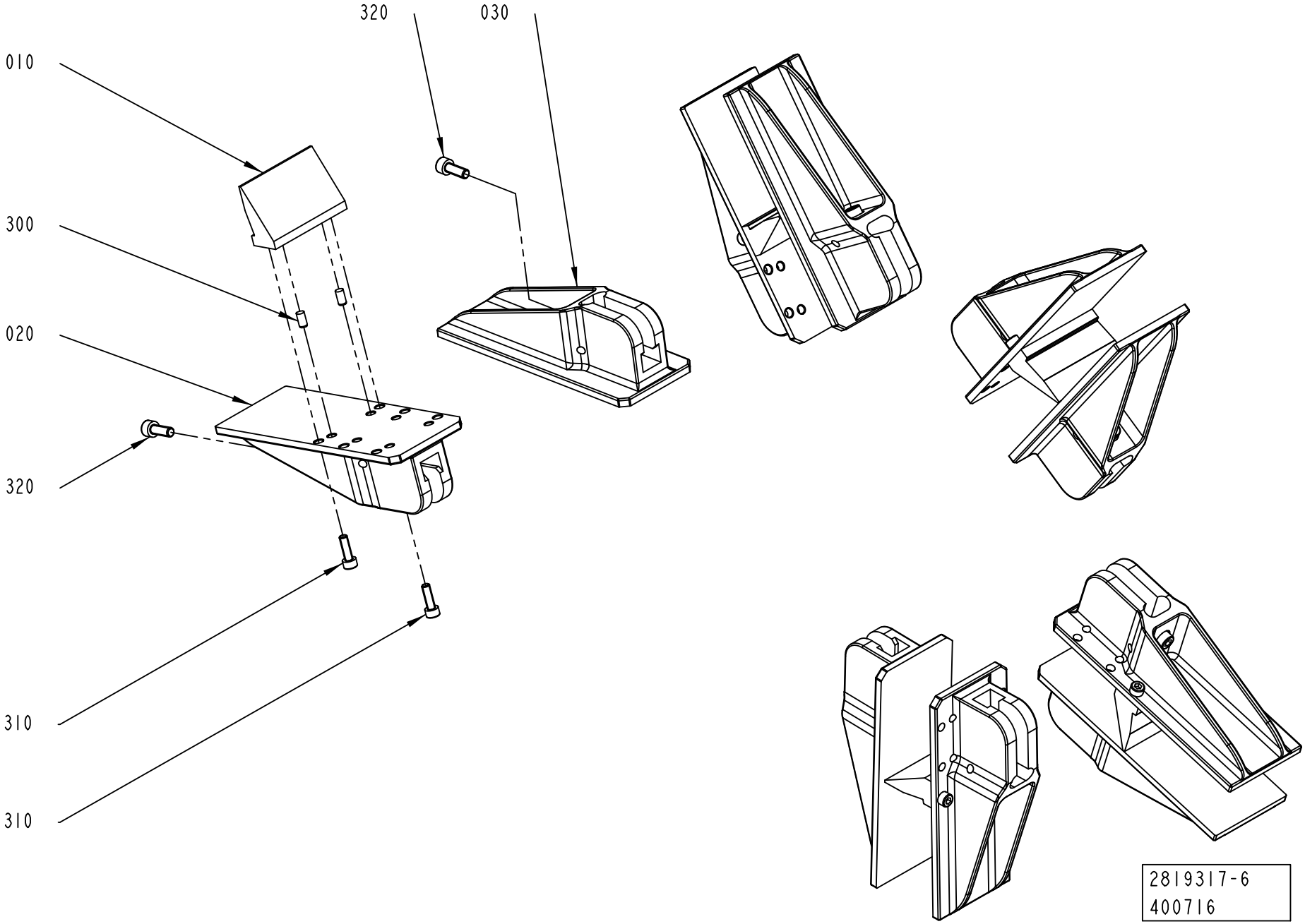
320
030
010
300
020
320
310
310
2819317-6
400716

Pos	Part No	UN	Qty	Description	Page No
TBA 0250E (Cont'd) (See drawing on page: 1-392)					
020	3043672-0100		5	FLAP	**1-395**
030	3052000-0000		5	FLAP	
TBA 0250S (See drawing on page: 1-388)					
010	2912425-0000		5	BOTTOM	
020	2912426-0000		5	FLAP	
030	2980067-0000		5	FLAP	
300	311103-0305		10	PARALLEL PIN ISO 2338 5M6X10 A1	
310	312115-0329		5	SCREW ISO4762 M5X16 A4 80	
TBA 0330S (See drawing on page: 1-390)					
010	2852320-0000		5	BOTTOM	
020	3150927-0000		5	FLAP	
030	3150928-0000		5	FLAP	
300	311103-0305		10	PARALLEL PIN ISO 2338 5M6X10 A1	
310	312115-0329		10	SCREW ISO4762 M5X16 A4 80	
Common Parts					
320	312115-0368		10	SCREW ISO4762 M6X16 A4 80	

Pos	Part No	UN	Qty	Description	Page No

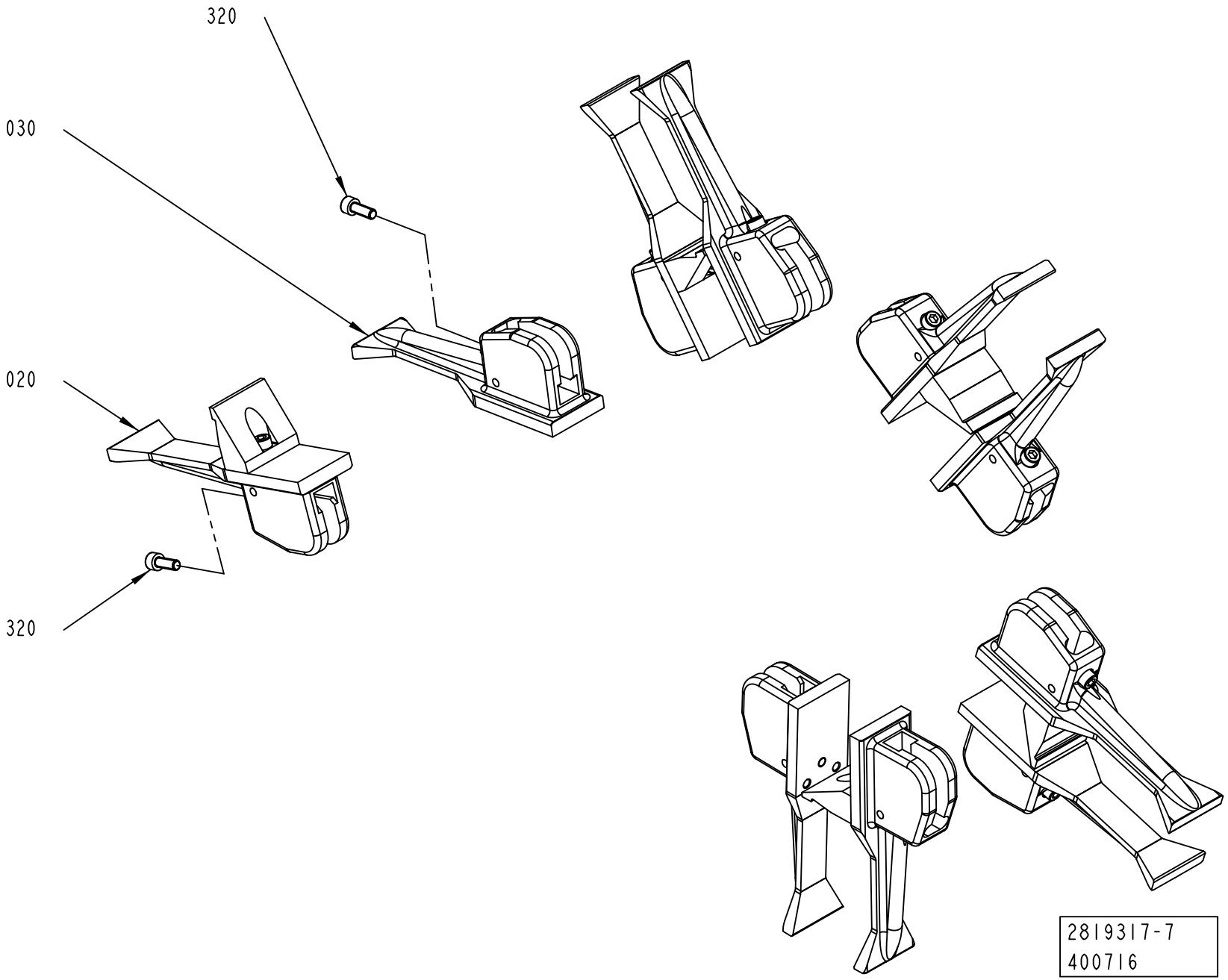
320
030
020
320
2819317-7
400716

Pos	Part No	UN	Qty	Description	Page No
SEE PREVIOUS LISTS PAGES: 1-389, 1-391.					

Pos	Part No	UN	Qty	Description	Page No

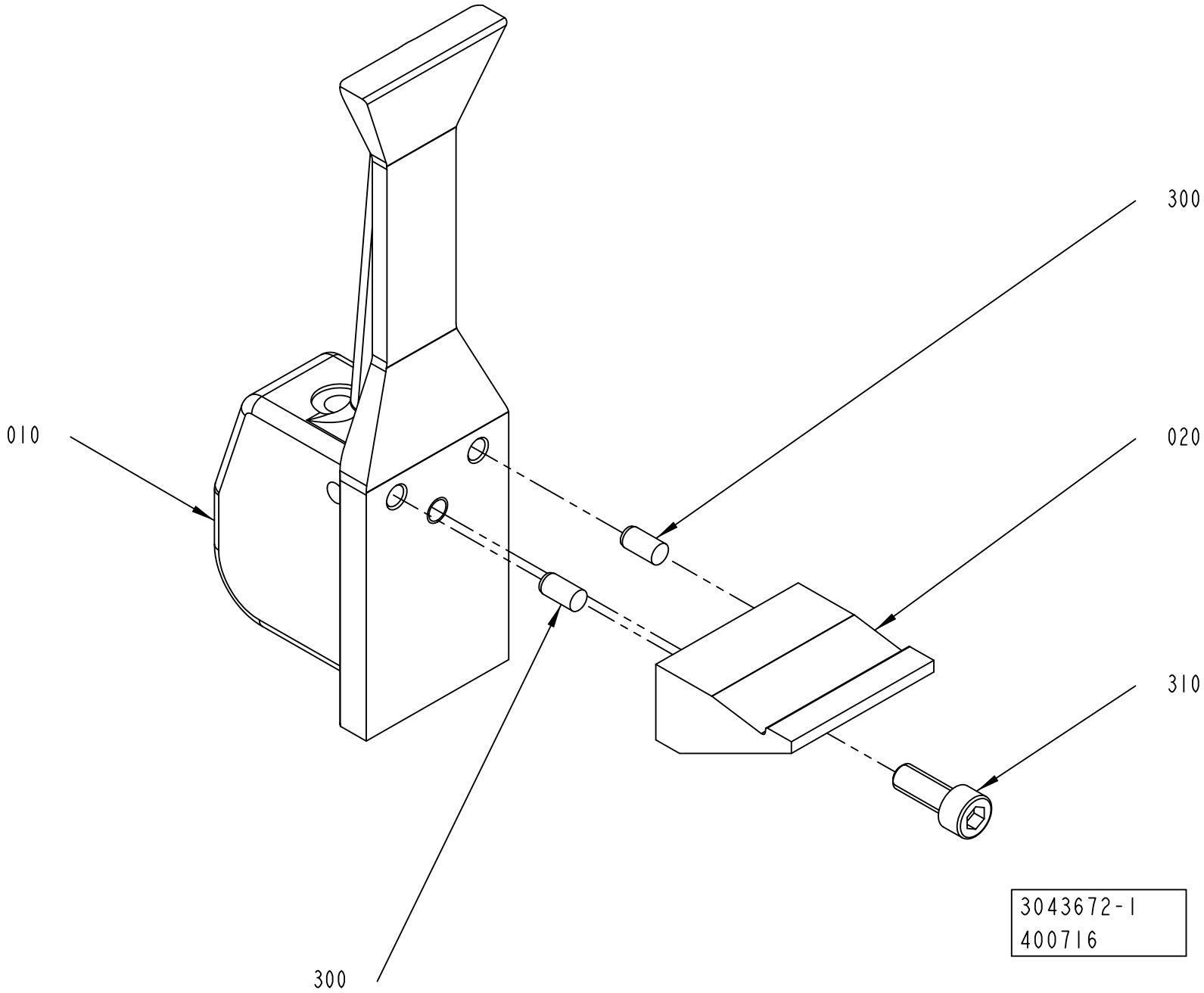
300
010
020
310
300
3043672-1
400716

ECM: 628462 - 20131002
Group number: 3043672-0100
Assembly Drawing: 3043672-1_1_AA

Pos	Part No	UN	Qty	Description	Page No
TBA 0180S					
010	3245516-0000		1	FLAP	
020	3016922-0000		1	BOTTOM	
TBA 0200E					
010	3074726-0000		1	FLAP	
020	3052002-0000		1	BOTTOM	
TBA 0250E					
010	3159344-0000		1	FLAP	
020	3052002-0000		1	BOTTOM	
TPA 0200SQ					
010	2976961-0000		1	FLAP	
020	2976962-0000		1	BOTTOM	
TPA 0250SQ					
010	2976964-0000		1	FLAP	
020	2976962-0000		1	BOTTOM	
Common Parts					
300	311103-0305		2	PARALLEL PIN ISO 2338 5M6X10 A1	
310	312115-0368		1	SCREW ISO4762 M6X16 A4 80	

Pos	Part No	UN	Qty	Description	Page No

FOLDING BAR

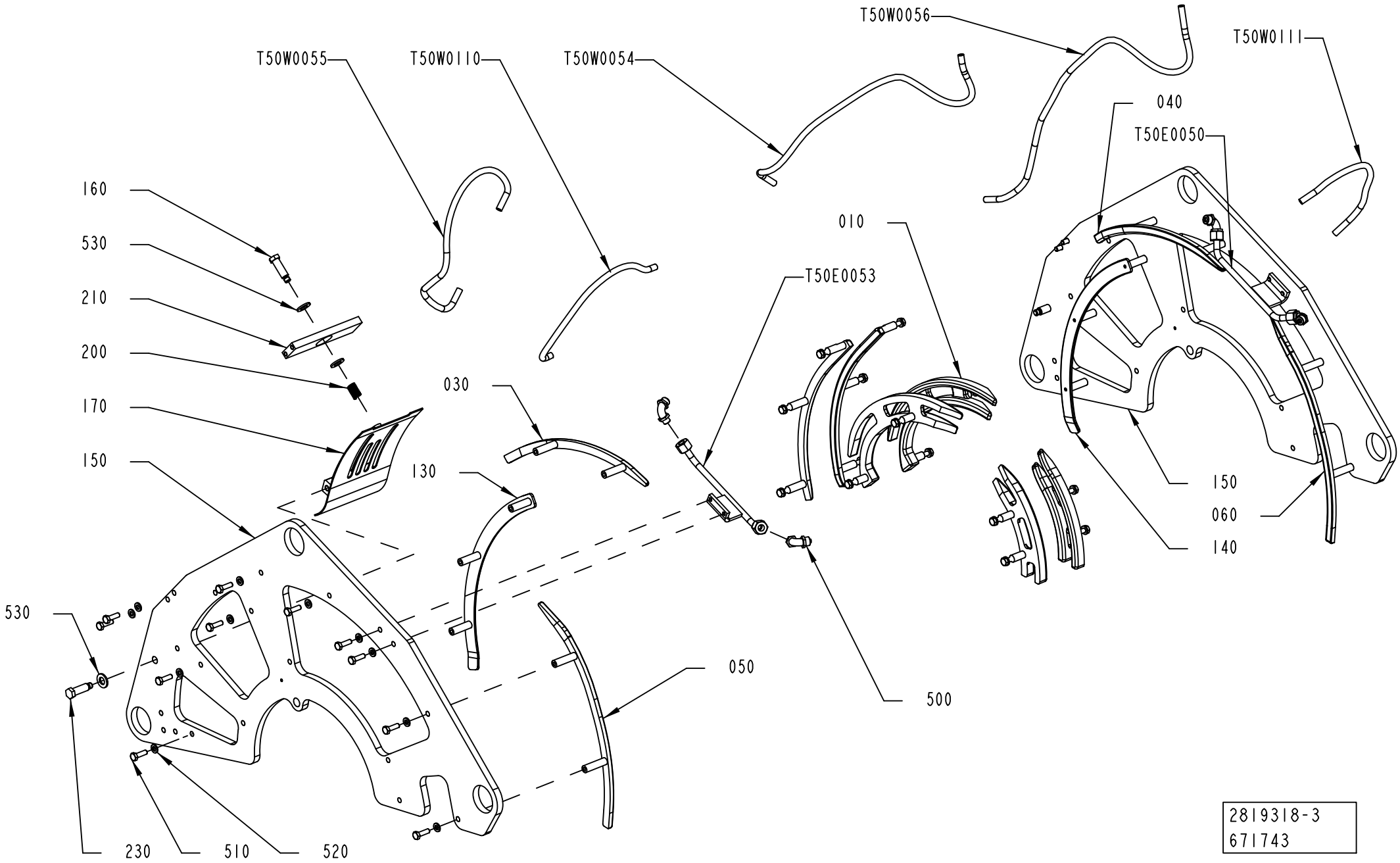
T50W0056
T50W0111
T50W0055
T50W0110
T50W0054
040
T50E0050
160
530
210
200
170
150
030
130
010
T50E0053
150
060
140
530
050
500
230
510
520
2819318-3
671743

ECM: 684756 - 20141001
Group number: 2819318-0200
Assembly Drawing: 2819318-3_1_AE

This list covers pages from 1-396 to 1-401

Pos	Part No	UN	Qty	Description	Page No
TB 0200S (See drawing on page: 1-396)					
030	3139545-0001		1	FOLDING BAR	
040	3139546-0001		1	FOLDING BAR	
050	3139547-0001		1	FOLDING BAR	
060	3139548-0001		1	FOLDING BAR	
130	2871934-0001		1	WALL	
140	2871938-0001		1	WALL	
150	2894724-0000		2	PLATE	
160	3296058-0000		1	STOP SCREW	
170	3296061-0000		1	PLATE	
T50E0050	2871927-0001		1	FOLDING BAR	
T50E0053	2871928-0001		1	FOLDING BAR	
TBA 0080S (See drawing on page: 1-396)					
030	3014070-0000		1	FOLDING BAR	
040	3014069-0000		1	FOLDING BAR	
050	2871933-0003		1	FOLDING BAR	
060	2871937-0003		1	FOLDING BAR	
130	3014068-0000		1	WALL	
140	3014067-0000		1	WALL	
150	2894699-0000		2	PLATE	
160	3296058-0000		1	STOP SCREW	
170	3296062-0000		1	PLATE	
T50E0050	2871927-0005		1	FOLDING BAR	
T50E0053	2871928-0005		1	FOLDING BAR	
TBA 0100B, TBA 0125S (See drawing on page: 1-396)					
030	2871932-0001		1	FOLDING BAR	
040	2871936-0001		1	FOLDING BAR	
050	2871933-0001		1	FOLDING BAR	
060	2871937-0001		1	FOLDING BAR	
130	2871934-0001		1	WALL	
140	2871938-0001		1	WALL	
150	2894699-0000		2	PLATE	
160	3296058-0000		1	STOP SCREW	
170	3296061-0000		1	PLATE	
T50E0050	2871927-0001		1	FOLDING BAR	
T50E0053	2871928-0001		1	FOLDING BAR	
TBA 0160S, TBA 0200S (See drawing on page: 1-396)					
030	3139545-0001		1	FOLDING BAR	
040	3139546-0001		1	FOLDING BAR	
050	3139547-0001		1	FOLDING BAR	
060	3139548-0001		1	FOLDING BAR	
130	2871934-0001		1	WALL	
140	2871938-0001		1	WALL	
150	2894724-0000		2	PLATE	
160	3296058-0000		1	STOP SCREW	
170	3296061-0000		1	PLATE	
T50E0050	2871927-0001		1	FOLDING BAR	
T50E0053	2871928-0001		1	FOLDING BAR	
TBA 0180S (See drawing on page: 1-396)					
030	3139545-0001		1	FOLDING BAR	
040	3139546-0001		1	FOLDING BAR	
050	3139547-0001		1	FOLDING BAR	
060	3139548-0001		1	FOLDING BAR	
130	2871934-0001		1	WALL	
140	2871938-0001		1	WALL	
150	2894724-0000		2	PLATE	
160	3296058-0000		1	STOP SCREW	
170	3296061-0000		1	PLATE	
T50E0050	2871927-0001		1	FOLDING BAR	
T50E0053	2871928-0001		1	FOLDING BAR	
TBA 0200B, TBA 0250B, TBA 0330S (See drawing on page: 1-396)					
030	3139545-0002		1	FOLDING BAR	
040	3139546-0002		1	FOLDING BAR	
050	3139547-0002		1	FOLDING BAR	
060	3139548-0002		1	FOLDING BAR	
130	2871934-0002		1	WALL	
140	2871938-0002		1	WALL	
150	2852333-0000		2	PLATE	
160	3296058-0000		1	STOP SCREW	
170	3296061-0000		1	PLATE	
T50E0050	2871927-0002		1	FOLDING BAR	
T50E0053	2871928-0002		1	FOLDING BAR	
TBA 0200E, TBA 0250E (See drawing on page: 1-398)					
030	2871932-0005		1	FOLDING BAR	
040	2871936-0005		1	FOLDING BAR	
050	2871933-0008		1	FOLDING BAR	
060	2871937-0008		1	FOLDING BAR	
130	3052003-0000		1	WALL	
140	3052004-0000		1	WALL	
150	3017849-0000		2	PLATE	
160	3296060-0000		1	STOP SCREW	
170	3296061-0000		1	PLATE	
T50E0050	2871927-0007		1	FOLDING BAR	
T50E0053	2871928-0007		1	FOLDING BAR	

Machine Type | Group Description | Used-In | Group Number | Page No

FOLDING BAR

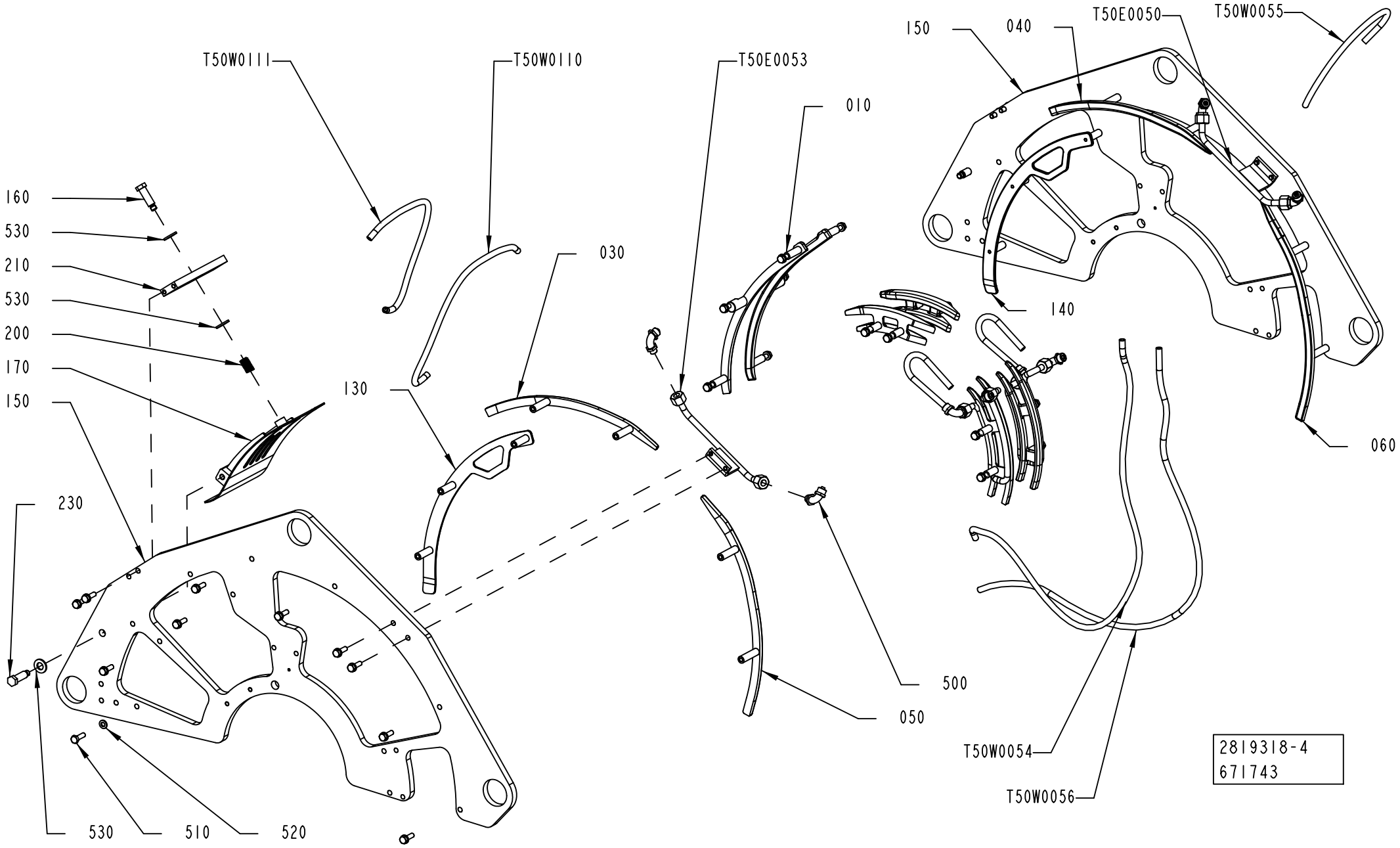
T50W0111
T50W0110
T50E0053
010
030
130
160
530
210
530
200
170
150
230
530
510
520
150
040
T50E0050
T50W0055
140
060
500
050
T50W0054
T50W0056
2819318-4
671743

Pos	Part No	UN	Qty	Description	Page No
TBA 0200M, TBA 0250S (Cont'd) (See drawing on page: 1-396)					
030	3139545-0004		1	FOLDING BAR	
040	3139546-0004		1	FOLDING BAR	
050	3139547-0004		1	FOLDING BAR	
060	3139548-0004		1	FOLDING BAR	
130	2871934-0004		1	WALL	
140	2871938-0004		1	WALL	
150	2912442-0000		2	PLATE	
160	3296058-0000		1	STOP SCREW	
170	3296061-0000		1	PLATE	
T50E0050	2871927-0004		1	FOLDING BAR	
T50E0053	2871928-0004		1	FOLDING BAR	
TBA 0200SQ (See drawing on page: 1-398)					
030	2871932-0004		1	FOLDING BAR	
040	2871936-0004		1	FOLDING BAR	
050	2871933-0007		1	FOLDING BAR	
060	2871937-0007		1	FOLDING BAR	
130	3037931-0000		1	WALL	
140	3037932-0000		1	WALL	
150	2894672-0000		2	PLATE	
160	3296058-0000		1	STOP SCREW	
170	3296061-0000		1	PLATE	
T50E0050	2871927-0001		1	FOLDING BAR	
T50E0053	2871928-0001		1	FOLDING BAR	
TBA 0375S (See drawing on page: 1-396)					
030	2871932-0002		1	FOLDING BAR	
040	2871936-0002		1	FOLDING BAR	
050	2871933-0002		1	FOLDING BAR	
060	2871937-0002		1	FOLDING BAR	
130	2871934-0002		1	WALL	
140	2871938-0002		1	WALL	
150	2852333-0000		2	PLATE	
160	3296058-0000		1	STOP SCREW	
170	3296061-0000		1	PLATE	
T50E0050	2871927-0002		1	FOLDING BAR	
T50E0053	2871928-0002		1	FOLDING BAR	
TPA 0125SQ (See drawing on page: 1-398)					
030	2871932-0003		1	FOLDING BAR	
040	2871936-0003		1	FOLDING BAR	
050	2871933-0003		1	FOLDING BAR	
060	2871937-0003		1	FOLDING BAR	
130	2871934-0005		1	WALL	
140	2871938-0005		1	WALL	
150	2894672-0000		2	PLATE	
160	3296059-0000		1	STOP SCREW	
170	3296061-0000		1	PLATE	
T50E0050	2871927-0003		1	FOLDING BAR	
T50E0053	2871928-0003		1	FOLDING BAR	
TPA 0250SQ, TPA 0200SQ (See drawing on page: 1-398)					
030	2871932-0005		1	FOLDING BAR	
040	2871936-0005		1	FOLDING BAR	
050	2871933-0005		1	FOLDING BAR	
060	2871937-0005		1	FOLDING BAR	
130	3031785-0000		1	WALL	
140	3031786-0000		1	WALL	
150	3017849-0000		2	PLATE	
160	3296058-0000		1	STOP SCREW	
170	3296061-0000		1	PLATE	
T50E0050	2871927-0006		1	FOLDING BAR	
T50E0053	2871928-0006		1	FOLDING BAR	
TPA 0330SQ (See drawing on page: 1-398)					
030	3139545-0004		1	FOLDING BAR	
040	3139546-0004		1	FOLDING BAR	
050	3139547-0001		1	FOLDING BAR	
060	3139548-0001		1	FOLDING BAR	
130	3055892-0000		1	FOLDING BAR	
140	3055893-0000		1	FOLDING BAR	
150	3017849-0000		2	PLATE	
160	3296058-0000		1	STOP SCREW	
170	3296061-0000		1	PLATE	
T50E0050	2871927-0001		1	FOLDING BAR	
T50E0053	2871928-0001		1	FOLDING BAR	
Common Parts					
010	3306157-0100		1	FOLDING BAR	**1-403, 1-405, 1-407**
200	1317633-0000		1	SPRING	
210	3264387-0000		1	SUPPORT	
230	3296058-0000		2	STOP SCREW	
500	342931-0121		4	ELBOW 90 COUPL., EXT. THREAD 8/6-G1/8"	
510	312105-0370		22	SCREW, M6S ISO 4017 M6X20 A4 80	
520	315106-0153		22	WASHER PLAIN, M6 ISO7089-6-200 HV A4	
530	315106-0173		4	"WASHER PLAIN, M10 ISO7089-10-200 HV A4"	
T50W0054	315400-0006	MM	2500	TUBE PUN-H-8X1,25-SW	
T50W0055	315400-0006	MM	500	TUBE PUN-H-8X1,25-SW	
T50W0056	315400-0006	MM	2500	TUBE PUN-H-8X1,25-SW	

Machine Type | Group Description | Used-In | Group Number | Page No

See previous drawings pages: 1-396, 1-398.

Pos	Part No	UN	Qty	Description	Page No
Common Parts (Cont'd)					
T50W0110	315400-0006	MM	500	TUBE PUN-H-8X1,25-SW	
T50W0111	315400-0006	MM	500	TUBE PUN-H-8X1,25-SW	

Pos	Part No	UN	Qty	Description	Page No

FOLDING BAR

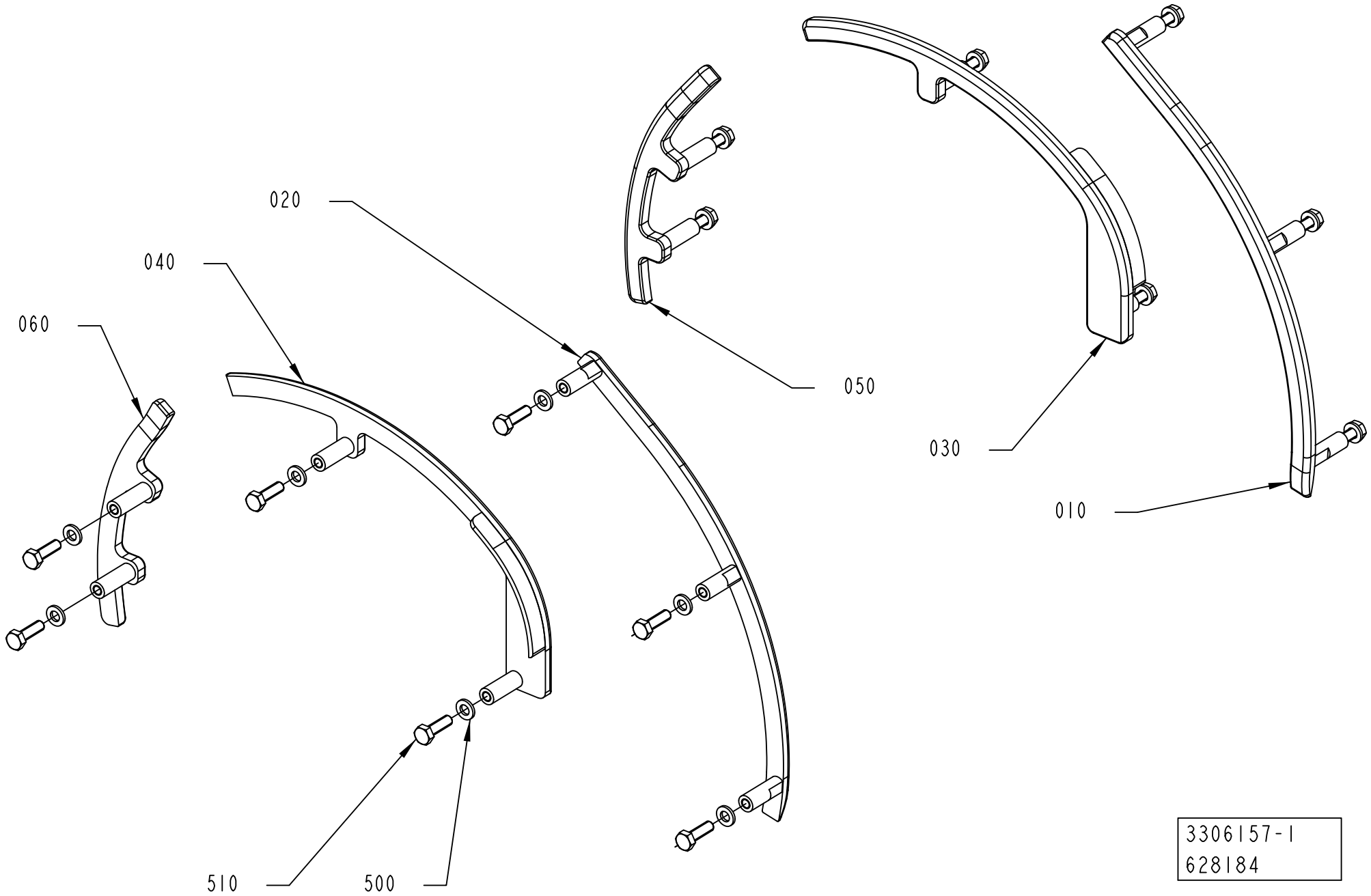

3306157-1
628184

ECM: 684755 - 20141001
Group number: 3306157-0100
Assembly Drawing: 3306157-1_1_AA

This list covers pages from 1-402 to 1-407

Pos	Part No	UN	Qty	Description	Page No
TB 0200S (See drawing on page: 1-402)					
010	3019782-0000		1	FOLDING BAR	
020	3019783-0000		1	FOLDING BAR	
030	3292966-0000		1	CREASE BAR	
040	3292965-0000		1	CREASE BAR	
050	3292967-0000		1	CREASE BAR	
060	3292968-0000		1	CREASE BAR	
500	315106-0153		14	WASHER PLAIN, M6 ISO7089-6-200 HV A4	
510	312105-0370		14	SCREW, M6S ISO 4017 M6X20 A4 80	
TBA 0080S (See drawing on page: 1-402)					
010	3010701-0000		1	FOLDING BAR	
020	3010702-0000		1	FOLDING BAR	
030	2949916-0000		1	FOLDING BAR	
040	2949918-0000		1	FOLDING BAR	
050	2949917-0000		1	FOLDING BAR	
060	2949919-0000		1	FOLDING BAR	
500	315106-0153		14	WASHER PLAIN, M6 ISO7089-6-200 HV A4	
510	312105-0370		14	SCREW, M6S ISO 4017 M6X20 A4 80	
TBA 0100B, TBA 0125S (See drawing on page: 1-402)					
010	2973927-0000		1	FOLDING BAR	
020	2973928-0000		1	FOLDING BAR	
030	2894695-0000		1	FOLDING BAR	
040	2894697-0000		1	FOLDING BAR	
050	2894696-0000		1	FOLDING BAR	
060	2894698-0000		1	FOLDING BAR	
500	315106-0153		14	WASHER PLAIN, M6 ISO7089-6-200 HV A4	
510	312105-0370		14	SCREW, M6S ISO 4017 M6X20 A4 80	
TBA 0160S, TBA 0200S (See drawing on page: 1-402)					
010	3019782-0000		1	FOLDING BAR	
020	3019783-0000		1	FOLDING BAR	
030	3015764-0000		1	FOLDING BAR	
040	3015763-0000		1	FOLDING BAR	
050	3015765-0000		1	FOLDING BAR	
060	3015766-0000		1	FOLDING BAR	
500	315106-0153		14	WASHER PLAIN, M6 ISO7089-6-200 HV A4	
510	312105-0370		14	SCREW, M6S ISO 4017 M6X20 A4 80	
TBA 0180S (See drawing on page: 1-402)					
010	3277977-0000		1	FOLDING BAR	
020	3277978-0000		1	FOLDING BAR	
030	3245518-0000		1	FOLDING BAR	
040	3245519-0000		1	FOLDING BAR	
050	3245520-0000		1	FOLDING BAR	
060	3245521-0000		1	FOLDING BAR	
500	315106-0153		14	WASHER PLAIN, M6 ISO7089-6-200 HV A4	
510	312105-0370		14	SCREW, M6S ISO 4017 M6X20 A4 80	
TBA 0200B, TBA 0250B, TBA 0330S (See drawing on page: 1-406)					
010	2871931-0002		1	FOLDING BAR	
020	2871935-0002		1	FOLDING BAR	
030	2852327-0000		1	FOLDING BAR	
040	2871925-0000		1	FOLDING BAR	
050	2852328-0000		1	FOLDING BAR	
060	2871926-0000		1	FOLDING BAR	
500	315106-0153		18	WASHER PLAIN, M6 ISO7089-6-200 HV A4	
510	312105-0370		18	SCREW, M6S ISO 4017 M6X20 A4 80	
TBA 0200E, TBA 0250E (See drawing on page: 1-404)					
010	3052013-0000		1	FOLDING BAR	
020	3052014-0000		1	FOLDING BAR	
030	3052005-0000		1	FOLDING BAR	
040	3052006-0000		1	FOLDING BAR	
500	315106-0153		14	WASHER PLAIN, M6 ISO7089-6-200 HV A4	
510	312105-0370		14	SCREW, M6S ISO 4017 M6X20 A4 80	
520	342931-0121		4	ELBOW 90 COUPL., EXT. THREAD 8/6-G1/8"	
T50E0054	3165601-0000		1	FOLDING BAR	
T50E0055	3165602-0000		1	FOLDING BAR	
T50W0108	315400-0006	MM	500	TUBE PUN-H-8X1,25-SW	
T50W0109	315400-0006	MM	500	TUBE PUN-H-8X1,25-SW	
TBA 0200M, TBA 0250S (See drawing on page: 1-402)					
010	2871931-0004		1	FOLDING BAR	
020	2871935-0004		1	FOLDING BAR	
030	2919057-0000		1	FOLDING BAR	
040	2919059-0000		1	FOLDING BAR	
050	2919058-0000		1	FOLDING BAR	
060	2919060-0000		1	FOLDING BAR	
500	315106-0153		14	WASHER PLAIN, M6 ISO7089-6-200 HV A4	
510	312105-0370		14	SCREW, M6S ISO 4017 M6X20 A4 80	
TBA 0200SQ (See drawing on page: 1-404)					
010	3037929-0000		1	FOLDING BAR	
020	3037930-0000		1	FOLDING BAR	
030	2966587-0000		1	FOLDING BAR	
040	2966588-0000		1	FOLDING BAR	
500	315106-0153		14	WASHER PLAIN, M6 ISO7089-6-200 HV A4	
510	312105-0370		14	SCREW, M6S ISO 4017 M6X20 A4 80	
520	342931-0121		4	ELBOW 90 COUPL., EXT. THREAD 8/6-G1/8"	
T50E0054	3356853-0000		1	FOLDING BAR	

Machine Type | Group Description | Used-In | Group Number | Page No

FOLDING BAR

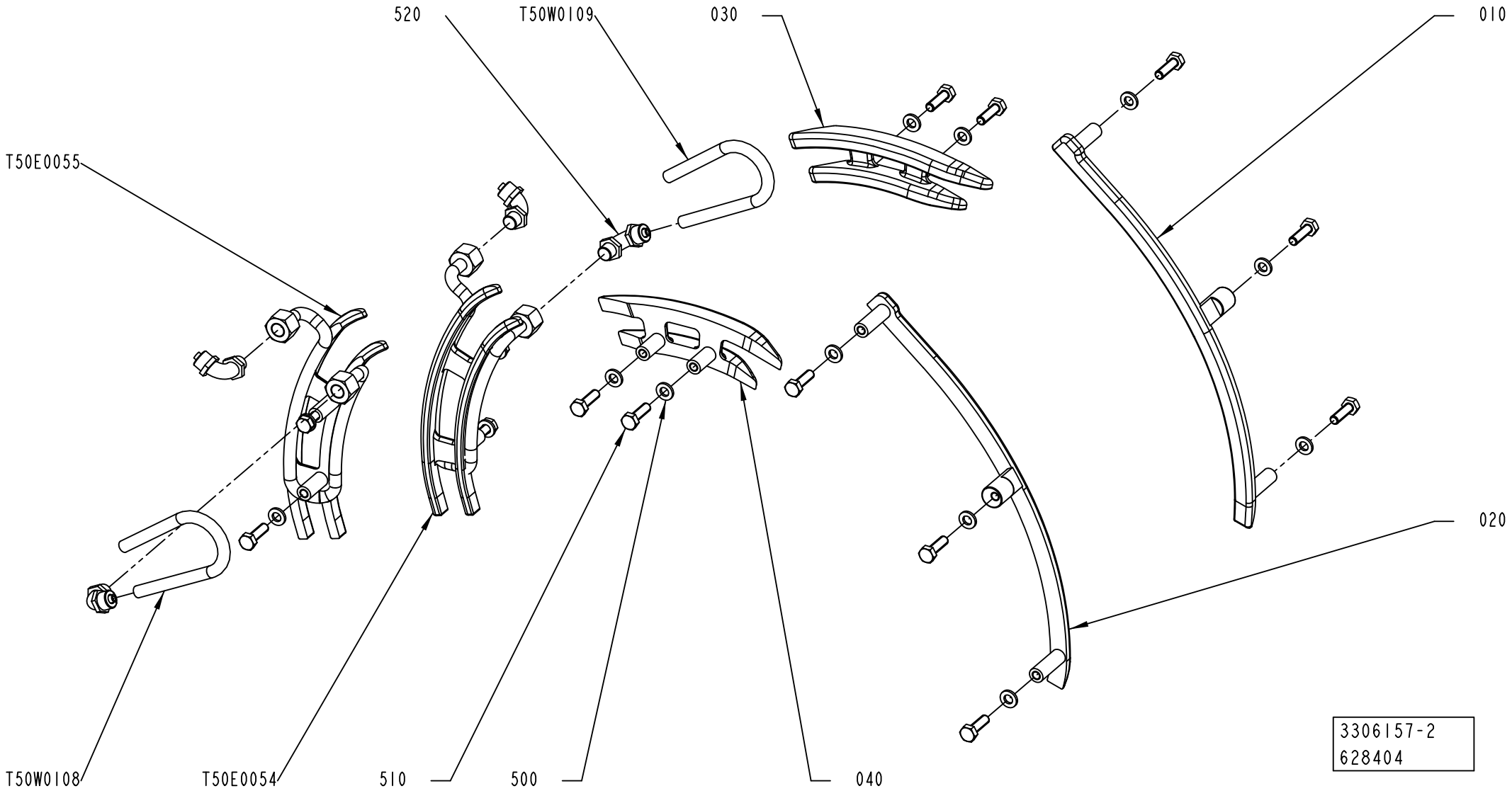
520
T50W0109
030
010
T50E0055
020
T50W0108
T50E0054
510
500
040
3306157-2
628404

Pos	Part No	UN	Qty	Description	Page No
TBA 0200SQ (Cont'd) (See drawing on page: 1-404)					
T50E0055	3356854-0000		1	FOLDING BAR	
T50W0108	315400-0006	MM	500	TUBE PUN-H-8X1,25-SW	
T50W0109	315400-0006	MM	500	TUBE PUN-H-8X1,25-SW	
TBA 0375S (See drawing on page: 1-402)					
010	2871931-0002		1	FOLDING BAR	
020	2871935-0002		1	FOLDING BAR	
030	3067364-0000		1	FOLDING BAR	
040	3067365-0000		1	FOLDING BAR	
050	3067367-0000		1	FOLDING BAR	
060	3067366-0000		1	FOLDING BAR	
500	315106-0153		14	WASHER PLAIN, M6 ISO7089-6-200 HV A4	
510	312105-0370		14	SCREW, M6S ISO 4017 M6X20 A4 80	
TPA 0125SQ (See drawing on page: 1-404)					
010	2894755-0000		1	FOLDING BAR	
020	2894756-0000		1	FOLDING BAR	
030	2894727-0000		1	FOLDING BAR	
040	2894728-0000		1	FOLDING BAR	
500	315106-0153		14	WASHER PLAIN, M6 ISO7089-6-200 HV A4	
510	312105-0370		14	SCREW, M6S ISO 4017 M6X20 A4 80	
520	342931-0121		4	ELBOW 90 COUPL., EXT. THREAD 8/6-G1/8"	
T50E0054	3356855-0000		1	FOLDING BAR	
T50E0055	3356856-0000		1	FOLDING BAR	
T50W0108	315400-0006	MM	500	TUBE PUN-H-8X1,25-SW	
T50W0109	315400-0006	MM	500	TUBE PUN-H-8X1,25-SW	
TPA 0250SQ, TPA 0200SQ (See drawing on page: 1-404)					
010	2973927-0000		1	FOLDING BAR	
020	2973928-0000		1	FOLDING BAR	
030	2976953-0000		1	FOLDING BAR	
040	2976954-0000		1	FOLDING BAR	
500	315106-0153		14	WASHER PLAIN, M6 ISO7089-6-200 HV A4	
510	312105-0370		14	SCREW, M6S ISO 4017 M6X20 A4 80	
520	342931-0121		4	ELBOW 90 COUPL., EXT. THREAD 8/6-G1/8"	
T50E0054	3070289-0000		1	FOLDING BAR	
T50E0055	3070290-0000		1	FOLDING BAR	
T50W0108	315400-0006	MM	500	TUBE PUN-H-8X1,25-SW	
T50W0109	315400-0006	MM	500	TUBE PUN-H-8X1,25-SW	
TPA 0330SQ (See drawing on page: 1-404)					
010	3055890-0000		1	FOLDING BAR	
020	3055891-0000		1	FOLDING BAR	
030	2987092-0000		1	FOLDING BAR	
040	2987091-0000		1	FOLDING BAR	
500	315106-0153		14	WASHER PLAIN, M6 ISO7089-6-200 HV A4	
510	312105-0370		14	SCREW, M6S ISO 4017 M6X20 A4 80	
520	342931-0121		4	ELBOW 90 COUPL., EXT. THREAD 8/6-G1/8"	
T50E0054	3356857-0000		1	FOLDING BAR	
T50E0055	3356858-0000		1	FOLDING BAR	
T50W0108	315400-0006	MM	500	TUBE PUN-H-8X1,25-SW	
T50W0109	315400-0006	MM	500	TUBE PUN-H-8X1,25-SW	

FOLDING BAR

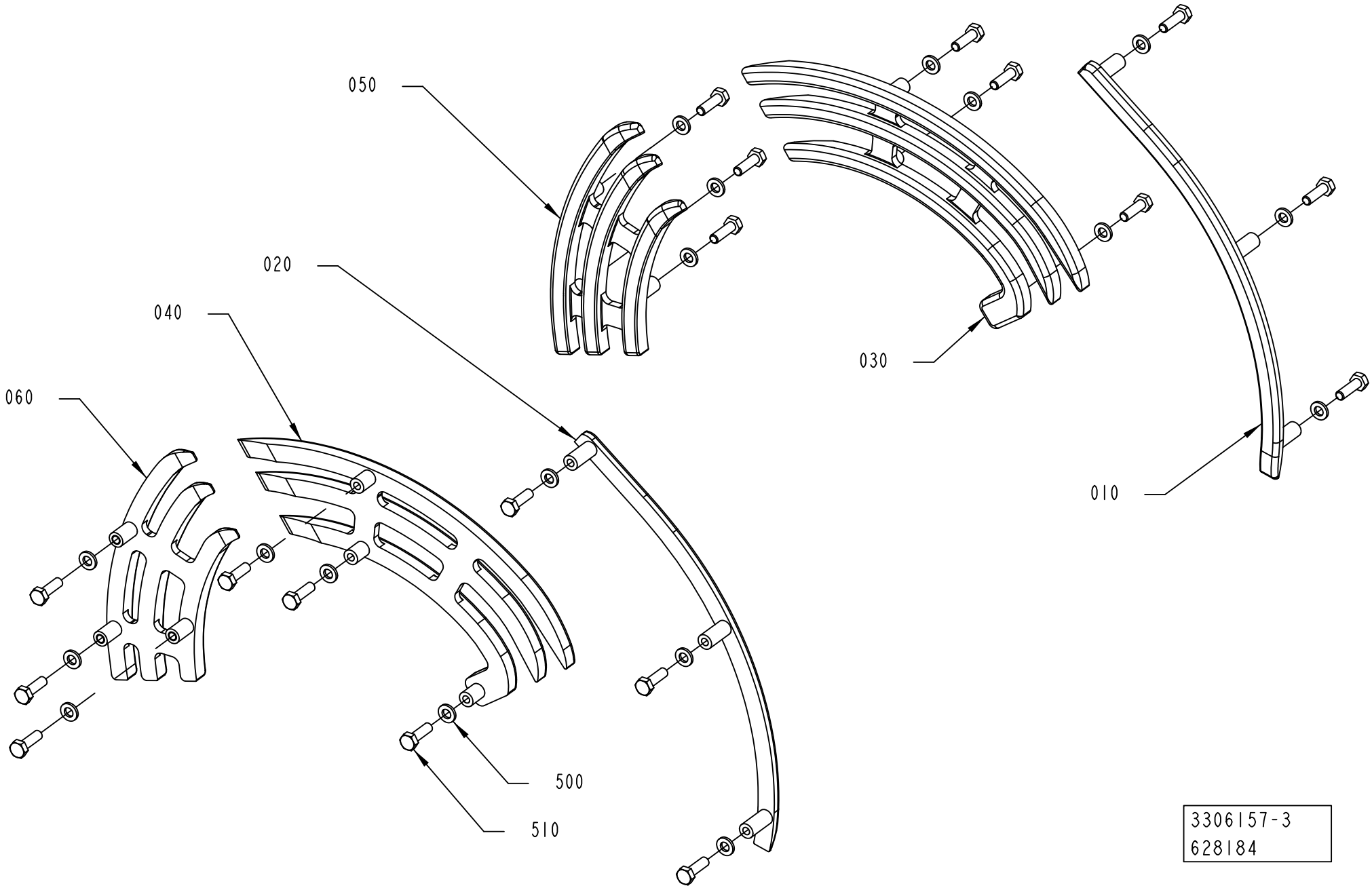

3306157-3
628184

Pos	Part No	UN	Qty	Description	Page No
SEE PREVIOUS LISTS PAGES: 1-403, 1-405.					

Pos	Part No	UN	Qty	Description	Page No

VOLUME CONVERSION KIT QC

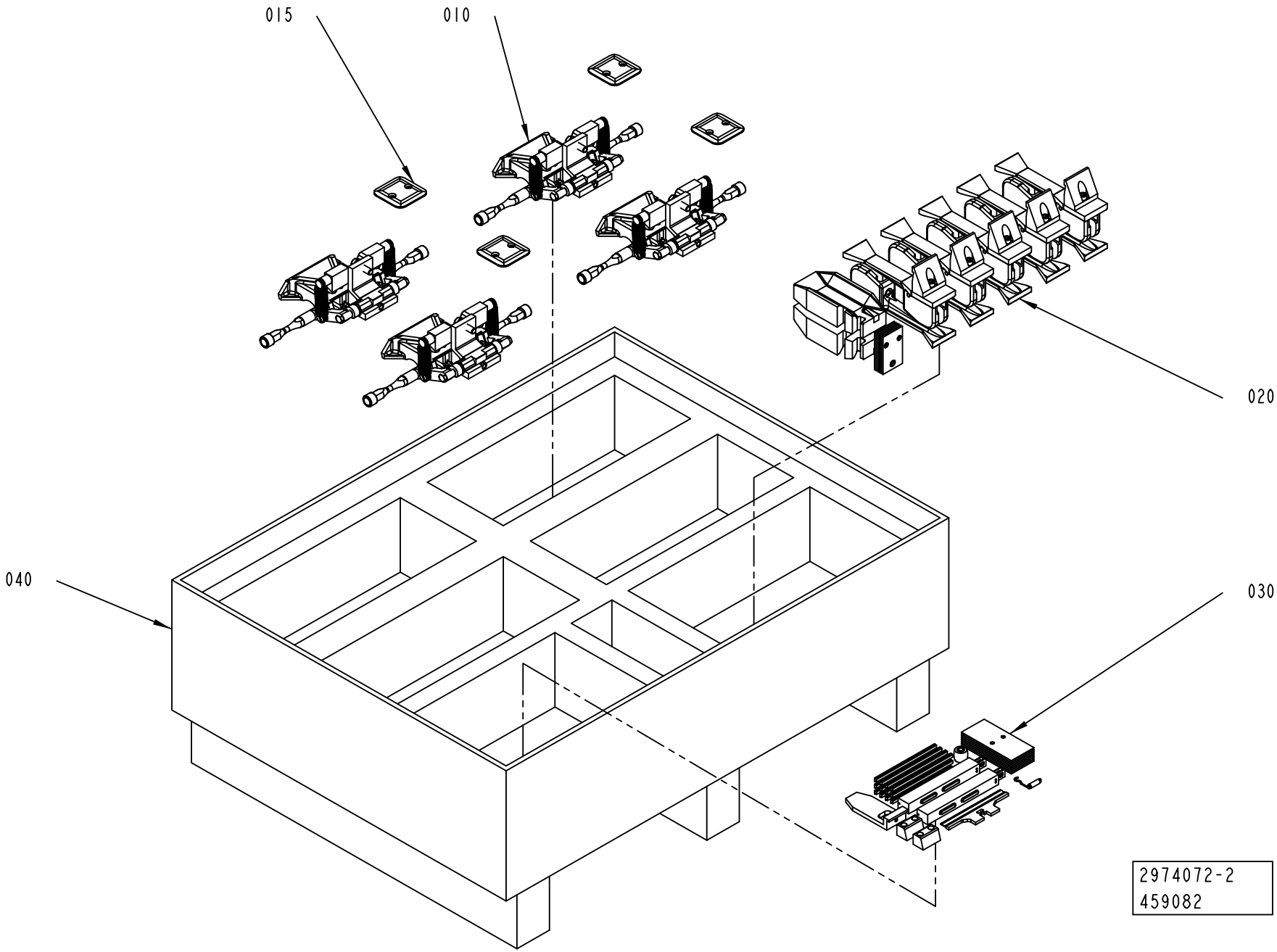

ECM: 461252 - 20101001
Group number: 2974072-0200
Assembly Drawing: 2974072-2_1_AB

Pos	Part No	UN	Qty	Description	Page No
START FM HI					
015	3104917-0100		1	VOLUME BULGE	**1-197, 1-199**
Common Parts					
010	3117319-0100		1	JAW SYSTEM	**1-411**
020	2974073-0100		1	FINAL FOLDER	**1-413**
030	2889626-0100		1	START-UP KIT	**1-173, 1-175**
040	2988050-0000		1	BOX QC	

Pos	Part No	UN	Qty	Description	Page No

This page is intentionally left blank.

ECM: 637144 - 20131023
Group number: 3117319-0100
Assembly Drawing:

Pos	Part No	UN	Qty	Description	Page No
TBA 0100B, TBA 0125S, TBA 0200M, TBA 0200B, TBA 0250S, TBA 0250B, TBA 0330S, TBA 0080S					
010	2869019-0200		4	VOLUME FLAP	**1-205**
TBA 0160S, TBA 0200SQ, TBA 0200S, TPA 0330SQ, TPA 0250SQ, TPA 0200SQ, TBA 0200E, TBA 0250E, TBA 0180S					
010	2869019-0200		1	VOLUME FLAP	**1-205**
020	2907729-0200		1	VOLUME FLAP	**1-229**
030	2966465-0200		1	VOLUME FLAP	**1-225**
040	2966467-0200		1	VOLUME FLAP	**1-241**
TPA 0125SQ					
010	2869019-0200		2	VOLUME FLAP	**1-205**
020	2907729-0200		2	VOLUME FLAP	**1-229**

Pos	Part No	UN	Qty	Description	Page No

This page is intentionally left blank.

ECM: 631696 - 20131002
Group number: 2974073-0100
Assembly Drawing:

Pos	Part No	UN	Qty	Description	Page No
TBA 0100B					
010	2894692-0000		2	PUSHER	
TBA 0125S					
010	2894693-0000		2	PUSHER	
TBA 0160S					
010	3015762-0000		2	PUSHER	
TBA 0180S					
010	3245517-0000		2	PUSHER	
040	3043672-0100		5	FLAP	**1-395**
TBA 0200B					
010	2852329-0000		2	PUSHER	
TBA 0200E					
010	3074724-0000		1	PUSHER	
020	3074725-0000		1	PUSHER	
040	3043672-0100		5	FLAP	**1-395**
TBA 0200M					
010	2912427-0000		2	PUSHER	
TBA 0200S					
010	2871940-0000		2	PUSHER	
TBA 0200SQ					
010	2962126-0000		2	PUSHER	
TBA 0250B					
010	2852330-0000		2	PUSHER	
TBA 0250E					
010	3106241-0000		1	PUSHER	
020	3106242-0000		1	PUSHER	
040	3043672-0100		5	FLAP	**1-395**
TBA 0250S					
010	2912424-0000		2	PUSHER	
TBA 0330S					
010	2852323-0000		2	PUSHER	
TPA 0200SQ					
010	3110111-0000		1	PUSHER	
020	3110110-0000		1	PUSHER	
030	2976961-0000		5	FLAP	
040	3043672-0100		5	FLAP	**1-395**
050	3092452-0000		2	NAIL	
070	3097776-0000		6	SHIM	
300	312115-0295		2	SCREW ISO4762 M4X20 A4 80	
310	315106-0136		2	WASHER PLAIN, M4 ISO7089-4-200 HV A4	
TPA 0250SQ					
010	3110108-0000		1	PUSHER	
020	3110109-0000		1	PUSHER	
030	2976964-0000		5	FLAP	
040	3043672-0100		5	FLAP	**1-395**
050	3092452-0000		2	NAIL	
070	3097776-0000		6	SHIM	
300	312115-0295		2	SCREW ISO4762 M4X20 A4 80	
310	315106-0136		2	WASHER PLAIN, M4 ISO7089-4-200 HV A4	
Common Parts					
060	2852410-0000		6	SHIM	

Machine Type	Group Description	Used-In	Group Number	Page No

NO QUICKCHANGE INTERMEDIATE

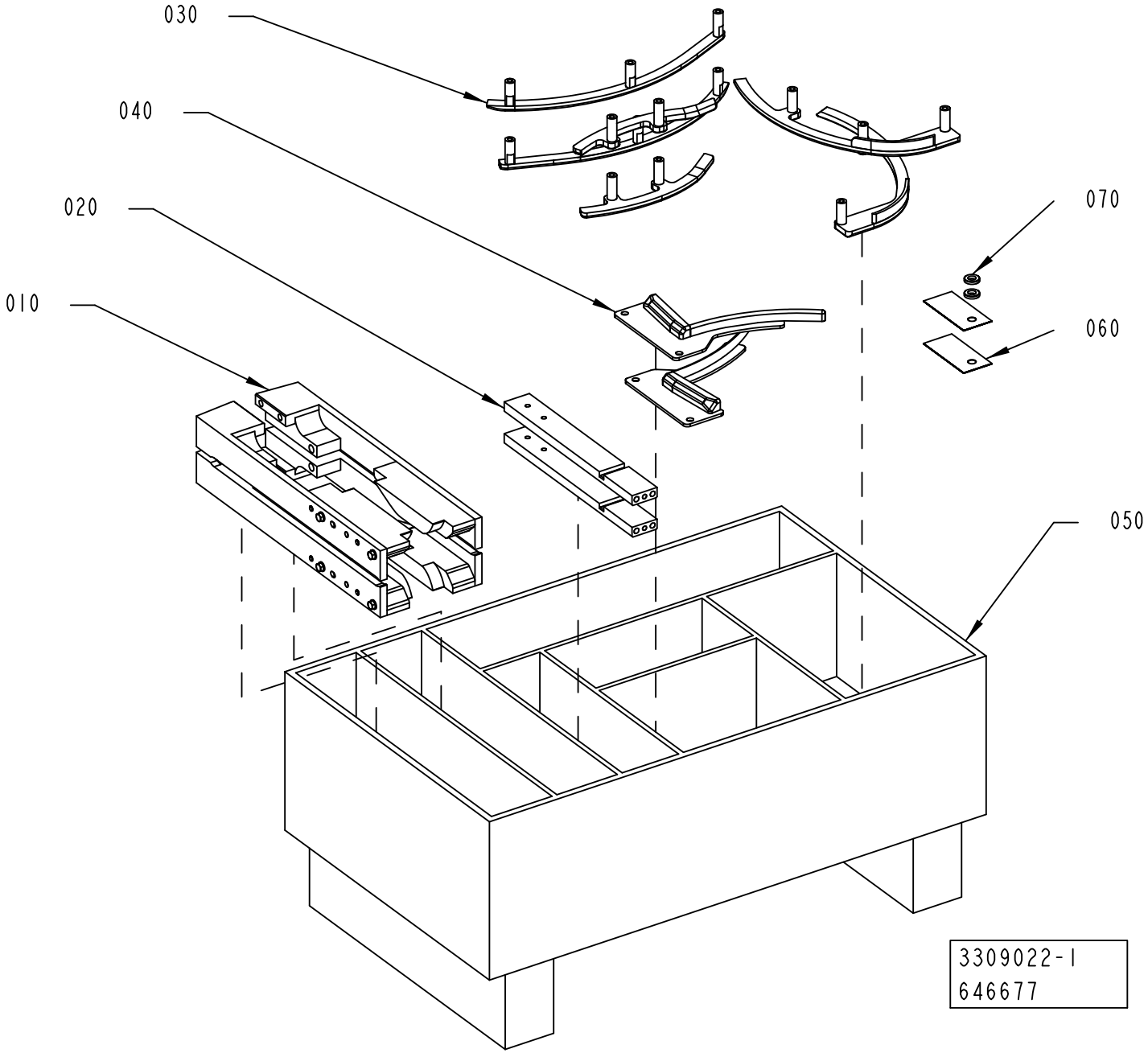

ECM: 646677 - 20140401
Group number: 3309022-0100
Assembly Drawing: 3309022-1_1_AB

Pos	Part No	UN	Qty	Description	Page No
TBA 0160S, TBA 0200S					
060	3297869-0000		2	SHIM	
070	315115-0165		2	WASHER PLAIN, TBRB 8,4/16 H=3	
TBA 0180S					
060	3337204-0000		2	SHIM	
070	315105-0165		2	FWAS080G0-0S, WASHER PLAIN	
Common Parts					
010	3166845-0100		1	VOLUME CURVE PIECE	**1-307, 1-309**
020	3306154-0100		1	PLATE	**1-353**
030	3306157-0100		1	FOLDING BAR	**1-403, 1-405, 1-407**
040	3306156-0100		1	GUIDE	**1-345**
050	3309258-0000		1	BOX	

Pos	Part No	UN	Qty	Description	Page No

Machine Type | Group Description | Used-In | Group Number | Page No

Tetra Pak®

SPC
Spare Parts Catalogue

Part No	Description	Page No
List - 641515-0200		1-3
2033-0005	WASHER	1-37, 1-57, 1-59, 1-61, 1-63, 1-71
2033-0007	WASHER	1-129, 1-131
2033-0008	WASHER	1-37, 1-153, 1-155, 1-157
2033-0009	WASHER	1-311, 1-313
2033-0011	WASHER	1-135, 1-137, 1-139, 1-141, 1-143, 1-145, 1-151, 1-153, 1-155, 1-157
2033-0014	WASHER	1-311, 1-313
2873-0000	SHAFT	1-177
12242-0003	GASKET 48X38X5,5	1-183
12242-0005	GASKET 61X51X5,5	1-183
12242-0006	GASKET	1-183
12242-0007	GASKET	1-183
22463-0000	ROLL	1-285, 1-287, 1-289, 1-293, 1-295, 1-297
27815-0000	WASHER	1-135, 1-137, 1-311, 1-313
28509-0000	WASHER	1-97, 1-273, 1-283
32079-0000	WASHER	1-273, 1-283
32544-0000	INSULATION NUT	1-97, 1-273, 1-283
32644-0000	WASHER	1-97, 1-265, 1-267, 1-269, 1-275, 1-277, 1-279
33408-0000	BEARING	1-285, 1-287, 1-289, 1-293, 1-295, 1-297
35918-0000	SHAFT	1-139, 1-141, 1-143, 1-145
35919-0000	COMPRESSION SPRING	1-139, 1-141, 1-143, 1-145
36325-0000	KNOB	1-139, 1-141, 1-143, 1-145
67379-0107	TRANSFORMER	1-273, 1-283
67379-0115	TRANSFORMER	1-273, 1-283
67379-0204	TRANSFORMER	1-273, 1-283
67379-0216	TRANSFORMER	1-97
67379-0224	TRANSFORMER	1-97
67379-0248	TRANSFORMER	1-273, 1-283
67379-0254	TRANSFORMER	1-273, 1-283
67379-0262	TRANSFORMER	1-273, 1-283
67379-0264	TRANSFORMER	1-273, 1-283
67379-0269	TRANSFORMER	1-273, 1-283
75936-0000	TEMPLATE	1-179, 1-181
75937-0000	TEMPLATE	1-179, 1-181
75939-0000	TEMPLATE	1-179, 1-181
75943-0000	TEMPLATE	1-179, 1-181
75944-0000	TEMPLATE	1-179, 1-181
76176-0000	TEMPLATE	1-179, 1-181
90005-0052	WASHER,PL.RND.CU.8/18 H=2	1-245, 1-247, 1-249, 1-251
90005-0060	WASHER PLAIN, RBS 6,4/M6)/18,H=1,5	1-57, 1-139, 1-141, 1-143, 1-145
90017-0022	HANDLE, NO. EL-037311	1-59, 1-61, 1-63
90051-0007	STELLAR KNOB, INT. THREAD, NO. 40	1-37
90051-0059	KNOB, EXTERNAL THREAD. NO. 8308-1550	1-177
90055-0100	Y-CONNECTION, 6-6	1-315, 1-317, 1-319
90091-0091	ROD SEAL 10X14X1,7 MM	1-253, 1-255, 1-257, 1-259, 1-261, 1-263
90091-0169	WEAR RING 12X15X3,2 MM	1-285, 1-287, 1-289, 1-293, 1-295, 1-297
90091-0216	PISTON SEAL GLYD RING 7,1X12X2,2 MM	1-285, 1-287, 1-289, 1-293, 1-295, 1-297
90091-0359	X-SEAL 36,17X2,62 MM	1-265, 1-267, 1-269, 1-275, 1-277, 1-279
90091-0360	BACK-UP RING 37,5X1,4 MM	1-265, 1-267, 1-269, 1-275, 1-277, 1-279
90091-0362	SCRAPER, EXCLUDER 18X22,8X3,7 MM	1-265, 1-267, 1-269, 1-275, 1-277, 1-279
90091-0364	ROD SEAL, STEPSEAL 18X25,3X3,2 MM	1-265, 1-267, 1-269, 1-275, 1-277, 1-279
90091-0366	WEAR RING 18X23X3,9 MM	1-265, 1-267, 1-269, 1-275, 1-277, 1-279
90091-0391	SEAL SLYDRING	1-265, 1-267, 1-269, 1-275, 1-277, 1-279
90091-0393	PISTON SEAL GLYD RING T 17,5X25X3,2 MM	1-265, 1-267, 1-269, 1-275, 1-277, 1-279
90091-0394	WEAR RING 20X25X5,6 MM	1-265, 1-267, 1-269, 1-275, 1-277, 1-279
90091-0398	PISTON SEAL GLIDE RING T 20,5X28X3,2 MM	1-265, 1-267, 1-269, 1-275, 1-277, 1-279
90115-0139	ROD END, ID=8 MM, M8X1,25	1-325, 1-327
90115-0180	ROD END, ID=8 MM, M8X1,25 LH	1-325, 1-327
90134-0058	CONNECTION	1-253, 1-255, 1-257, 1-259, 1-261, 1-263
90141-0015	RETAINING RING FOR SHAFT DIN 471 8 SS	1-265, 1-267, 1-269, 1-275, 1-277, 1-279
90143-0060	EDGE STRIP 9,5X6,3MM BLACK PVC	1-59, 1-61, 1-63
90152-0059	HOSE, SPIRAL CONDUIT, 18X12, UL 1211	1-35
90153-0015	ADHESIVE LOCTITE IS 496/CYANOLOT 303	1-285, 1-287, 1-289, 1-293, 1-295, 1-297
90166-0081	TUBE 6 MM PA BLUE	1-83
90166-0109	TUBE 4 MM PA TRANSP.	1-83
90166-0132	TUBE 6 MM PA TRANSP.	1-315, 1-317, 1-319
90194-0143	WARNING SIGN ISO, HOT SURFACE	1-35
90232-0325	FIBRE, E32-DC200	1-57
90240-0172	FLANGE BUSHING, 8X12X10 MM	1-125, 1-135, 1-137, 1-139, 1-141, 1-143, 1-145, 1-151, 1-153, 1-155, 1-157
90240-0180	FLANGE BUSHING 10X14X15MM	1-311, 1-313
90242-0093	O-RING MATERIAL 1,5 MM	1-285, 1-287, 1-289, 1-293, 1-295, 1-297
90286-0013	GREASE NIPPLE STRAIGHT, H1 M6X1 2346	1-325, 1-327
90287-0106	SCREW SPRINGLOAD. SLOTTED HEAD M10X21	1-67
90287-0199	SCREW, M6S ISO 4017 M5X6 A4 80	1-189, 1-219, 1-221, 1-223
90287-0330	SCREW, M6S ISO 4017 M10X70 A4 80	1-59, 1-61, 1-63
90298-0033	WATLUBE HEAT LIQUID	1-33
90326-0304	COMPRESSION FITTING, 5101015-005	1-159, 1-189
90330-0066	PLUG, G1/8EXT, G1/8	1-285, 1-287, 1-289, 1-293, 1-295, 1-297
90411-0018	INSULATOR, ALU-SILICATE HM 15643	1-35
90450-0380	SINGLE ACTING, PANCAKE EV-20/75-5	1-27
90458-0058	SCREW M5X60 A280	1-273, 1-283
90458-0307	CABLE GLAND, M20X1,5, 5311 1020	1-37
90458-0427	GLAND FITTING, VK 21652YUL11	1-35

Part No	Description	Page No
90458-0428	GLAND FITTING, VK 22052YUL11	1-35
90458-0523	STEP MOTOR, SM 56.2.18J3 Z(202)	1-37
90458-0601	CONTRAST SCANNER, KT15W-P2110S01	1-315, 1-317
90458-2039	CONN. STR., 6-R1/8, EXT. THREAD	1-321
90458-2040	ELBOW PIPE JOINT, INT. THREAD, G1/8" D=6	1-321
90458-2164	ELBOW PIPE JOINT, EXT.THREAD,D=6MM M5	1-35
90458-2950	BALL BEARING 5/16X5	1-167
90458-2954	ELBOW PIPE JOINT, EXT.THREAD, D=4MM M5	1-27, 1-67
90459-1906	SHOULDER SCREW, 6X10/M5 SS	1-183
90459-2130	TAPE, ADHESIVE SI TAPE MON3154535033CL	1-97
90459-3670	HOOD, HAN3A, 19 20 003 1440	1-35
90459-3772	END SLEEVE H 0.25/12	1-85
90459-5936	BEARING SEAL 12X16X3 MM	1-285, 1-287, 1-289, 1-293, 1-295, 1-297
90459-5939	LOCKING LEVER, 142365 MRX.80 P-M12X80	1-55
90459-6821	MALE INSERT HAN 4A, 0920 0042 611	1-35, 1-37
90459-7222	HOOD, TOP ENTRY, 3A, 19 20 003 0420	1-37
90459-7361	FIBRE OPTIC UNIT, WLL170-2P460	1-57
90459-7458	WARNING SIGN ANSI (H), HOT SURFACE	1-47, 1-53
90600-0386	ADHESIVE LOCTITE HYSOL 9455 , 250 GR	1-21, 1-55
90600-2602	THERMOFOIL HEATER, HM15643	1-35
90600-2603	SPRING WASHER, CURVED 6,83X10,74X0,17 MM	1-39
90600-2604	TENSION SPRING, EO300-055-2500-S	1-39, 1-41
90600-2609	SCOTCH-BRITE WHITE 690	1-121
90600-3388	O-RING 284X3 MM	1-185, 1-187
90600-5982	ADJ. MECH. STOP M12X1, FOR CYL. 2711	1-35
90600-7887	"INDUCTIVE SENSOR, IFT 200"	1-59, 1-61, 1-63
90601-1727	STEEL BALL 15MM, RB-15 INOX316	1-315, 1-317
90602-9550	ADH. TAPE LABELS AL/PET,BS SPLICE 90N 30	1-121
90602-9590	ADH. TAPE LABELS AL/PE,BS FOIL 100 35X16	1-121
90602-9592	ADH. TAPE LABELS AL/PE,BS FOIL 100 24X24	1-121
90603-2408	BALL BEARING 8/22X7	1-67
90603-4573	FREE-WHEEL COUPLING, 8X12 MM	1-39
90603-5291	CYLINDER WITH INT. GUIDING BORE 25	1-35
90604-0596	SINGLE ACTING, MINI-ISO, CYL 12-10	1-67
234844-0000	WHEEL	1-65
255742-0000	COMPRESSION SPRING	1-253, 1-255, 1-257, 1-259, 1-261, 1-263
255801-0000	RETAINING RING	1-253, 1-255, 1-257, 1-259, 1-261, 1-263
255978-0000	FORK	1-185, 1-187
256208-0400	KNIFE HOLDER	1-201, 1-203
256607-0000	AXLE PIN	1-285, 1-287, 1-289, 1-293, 1-295, 1-297
256626-0000	EAR	1-253, 1-255, 1-257, 1-259, 1-261, 1-263
256882-0000	WASHER	1-265, 1-267, 1-269, 1-275, 1-277, 1-279
257042-0000	BRACKET	1-135, 1-137
257043-0000	ANGLE BRACKET	1-135, 1-137
257175-0000	WASHER	1-139, 1-141, 1-143, 1-145
257362-0000	LACE	1-253, 1-255, 1-257, 1-259, 1-261, 1-263
263655-0003	SHAFT	1-177
263655-0006	SHAFT	1-129, 1-131, 1-177
263655-0018	SHAFT	1-129, 1-131
271846-0000	INSULATION NUT	1-265, 1-267, 1-269, 1-275, 1-277, 1-279
271848-0000	SCREW	1-265, 1-267, 1-269, 1-275, 1-277, 1-279
272419-0000	CARRIER	1-285, 1-287, 1-289, 1-293, 1-295, 1-297
272427-0000	BRACKET	1-285, 1-287, 1-289, 1-293, 1-295, 1-297
272753-0000	STEERING	1-301, 1-303, 1-305
272755-0000	NUT	1-301, 1-303, 1-305
272986-0001	VOLUME SHIM	1-173, 1-175, 1-207, 1-209, 1-211, 1-213, 1-215, 1-217
272986-0003	VOLUME SHIM	1-173, 1-175, 1-207, 1-209, 1-211, 1-213, 1-215, 1-217
272986-0006	VOLUME SHIM 330S	1-173, 1-175, 1-207, 1-209, 1-211, 1-213, 1-215, 1-217
272987-0000	VOLUME SHIM	1-173, 1-175, 1-207, 1-209, 1-211, 1-213, 1-215, 1-217
273429-0000	WASHER	1-159, 1-189
295376-0000	SHAFT	1-173, 1-175
295377-0001	HOOD	1-185, 1-187
295377-0002	HOOD	1-185, 1-187
295377-0004	HOOD	1-185, 1-187
295377-0005	HOOD	1-185, 1-187
295984-0000	DRIP GUARD	1-185, 1-187
311101-0270	PARALLEL PIN ISO 2338 4H6X16 ST	1-33, 1-37
311101-0272	PARALLEL PIN ISO 2338 4H6X20 ST	1-37
311103-0233	PARALLEL PIN ISO 2338 3M6X10 A1	1-41, 1-57
311103-0238	PARALLEL PIN ISO 2338 3M6X20 A1	1-135, 1-137
311103-0267	PARALLEL PIN ISO 2338 4M6X10 A1	1-27, 1-71, 1-245, 1-247, 1-249, 1-251, 1-253, 1-255, 1-257, 1-259, 1-261, 1-263
311103-0268	PARALLEL PIN ISO 2338 4M6X12 A1	1-135, 1-137
311103-0270	PARALLEL PIN ISO 2338 4M6X16 A1	1-35, 1-265, 1-267, 1-269, 1-275, 1-277, 1-279
311103-0305	PARALLEL PIN ISO 2338 5M6X10 A1	1-265, 1-267, 1-269, 1-275, 1-277, 1-279, 1-285, 1-287, 1-289, 1-293, 1-295, 1-297, 1-389, 1-391, 1-395
311103-0306	PARALLEL PIN ISO 2338 5M6X12 A1	1-59, 1-61, 1-63, 1-75, 1-347, 1-349
311103-0307	PARALLEL PIN ISO 2338 5M6X14 A1	1-265, 1-267, 1-269, 1-275, 1-277, 1-279
311103-0310	PARALLEL PIN ISO 2338 5M6X20 A1	1-129, 1-131, 1-177
311103-0312	PARALLEL PIN ISO 2338 5M6X25 A1	1-285, 1-287, 1-289, 1-293, 1-295, 1-297
311103-0313	PARALLEL PIN ISO 2338 5M6X28 A1	1-129, 1-131
311103-0314	PARALLEL PIN ISO 2338 5M6X30 A1	1-45, 1-177
311103-0348	PARALLEL PIN ISO 2338 6M6X10 A1	1-71
311103-0350	PARALLEL PIN ISO 2338 6M6X14 A1	1-335, 1-337, 1-339

Machine Type Group Description Page No

Part No	Description	Page No
311103-0351 ..	PARALLEL PIN ISO 2338 6M6X16 A1	1-307, 1-309
311103-0352 ..	PARALLEL PIN ISO 2338 6M6X18 A1	1-325, 1-327
311103-0353 ..	PARALLEL PIN ISO 2338 6M6X20 A1	1-177
311103-0357 ..	PARALLEL PIN ISO 2338 6M6X30 A1	1-177
311103-0369 ..	PARALLEL PIN ISO 2338 6M6X60 A1	1-59, 1-61, 1-63
311103-0401 ..	PARALLEL PIN ISO 2338 8M6X20 A1	1-59, 1-61, 1-63, 1-73
311103-1312 ..	PARALLEL PIN ISO 2338 5M6X24 A1	1-139, 1-141, 1-143, 1-145
311111-0207 ..	SPRING PIN ISO 8752 3X14-ST	1-253, 1-255, 1-257, 1-259, 1-261, 1-263
311111-0308 ..	SPRING PIN ISO 8752 5X20-ST	1-285, 1-287, 1-289, 1-293, 1-295, 1-297
311112-0341 ..	SPRING PIN, ISO 8752 6X24 A2	1-67
311411-0138 ..	SPLIT PIN SP1,6X12RFR	1-65
312105-0285 ..	SCREW, M6S ISO 4017 M4X6 A4 70	1-219, 1-221, 1-223, 1-227, 1-239, 1-243
312105-0287 ..	SCREW, M6S ISO 4017 M4X8 A4 70	1-37, 1-57, 1-59, 1-61, 1-63, 1-67, 1-71, 1-75, 1-159, 1-189 1-231, 1-233, 1-235, 1-237
312105-0289 ..	SCREW, M6S ISO 4017 M4X10 A4 70	1-57
312105-0291 ..	SCREW, M6S ISO 4017 M4X12 A4 70	1-59, 1-61, 1-63
312105-0293 ..	SCREW, M6S ISO 4017 M4X16 A4 70	1-39, 1-45, 1-59, 1-61, 1-63
312105-0295 ..	SCREW, M6S ISO 4017 M4X20 A4 70	1-97, 1-273, 1-283
312105-0299 ..	SCREW, M6S ISO 4017 M4X30 A4 70	1-41
312105-0323 ..	"FSCR05080-10, SCREW, M6S"	1-189, 1-253, 1-255, 1-257, 1-259, 1-261, 1-263
312105-0325 ..	SCREW, M6S ISO 4017 M5X10 A4 80	1-135, 1-137, 1-139, 1-141, 1-143, 1-145, 1-171, 1-325, 1-327
312105-0327 ..	"SCREW, M6S ISO 4017 M5X12 A4 80"	1-57, 1-75, 1-139, 1-141, 1-143, 1-145, 1-207, 1-209 1-211, 1-213, 1-215, 1-217, 1-219, 1-221, 1-223, 1-231, 1-233, 1-235, 1-237
312105-0328 ..	SCREW M6S ISO 4017 M5X14 A4 80	1-245, 1-247, 1-249, 1-251
312105-0329 ..	SCREW, M6S ISO 4017 M5X16 A4 80	1-125, 1-135, 1-137, 1-139, 1-141, 1-143, 1-145, 1-151 1-307, 1-309, 1-315, 1-317
312105-0331 ..	SCREW, M6S ISO 4017 M5X20 A4 80	1-33, 1-59, 1-61, 1-63
312105-0333 ..	SCREW, M6S ISO 4017 M5X25 A4 80	1-189, 1-311, 1-313
312105-0335 ..	SCREW, M6S ISO 4014 M5X30 A4 80	1-35
312105-0341 ..	SCREW, M6S ISO 4014 M5X50 A4 80	1-139, 1-141, 1-143, 1-145
312105-0362 ..	SCREW, M6S ISO 4017 M6X8 A4 80	1-253, 1-255, 1-257, 1-259, 1-261, 1-263, 1-345
312105-0364 ..	"SCREW, M6S ISO 4017 M6X10 A4 80"	1-59, 1-61, 1-63, 1-135, 1-137, 1-159, 1-185, 1-187 1-335, 1-337, 1-339, 1-345
312105-0366 ..	SCREW, M6S ISO 4017 M6X12 A4 80	1-15, 1-17, 1-19, 1-45, 1-59, 1-61, 1-63, 1-153, 1-155 1-157, 1-189, 1-315, 1-317, 1-321, 1-325, 1-327, 1-329, 1-331, 1-333, 1-335, 1-337, 1-339, 1-345 1-351, 1-353, 1-365, 1-367, 1-369, 1-371, 1-373, 1-377
312105-0367 ..	SCREW, M6S ISO 4017 M6X14 A4 80	1-285, 1-287, 1-289, 1-293, 1-295, 1-297
312105-0368 ..	"SCREW, M6S ISO 4017 M6X16 A4 80"	1-129, 1-131, 1-135, 1-137, 1-365, 1-367, 1-369, 1-379 1-381, 1-383, 1-387
312105-0370 ..	SCREW, M6S ISO 4017 M6X20 A4 80	1-57, 1-59, 1-61, 1-63, 1-153, 1-155, 1-157, 1-167, 1-189 1-219, 1-221, 1-223, 1-227, 1-239, 1-243, 1-311, 1-313, 1-315, 1-317, 1-335, 1-337, 1-339, 1-347 1-349, 1-353, 1-355, 1-365, 1-367, 1-369, 1-371, 1-373, 1-377, 1-379, 1-397, 1-399, 1-401, 1-403
312105-0372 ..	SCREW, M6S ISO 4017 M6X25 A4 80	1-45, 1-129, 1-131, 1-183, 1-185, 1-187, 1-265, 1-267 1-269, 1-275, 1-277, 1-279, 1-347, 1-349
312105-0374 ..	SCREW, M6S ISO 4014 M6X30 A4 80	1-25, 1-129, 1-131, 1-135, 1-137, 1-207, 1-209, 1-211 1-213, 1-215, 1-217, 1-265, 1-267, 1-269, 1-275, 1-277, 1-279, 1-285, 1-287, 1-289, 1-293, 1-295 1-297, 1-325, 1-327, 1-335, 1-337, 1-339
312105-0376 ..	SCREW, M6S ISO 4014 M6X35 A4 80	1-245, 1-247, 1-249, 1-251, 1-253, 1-255, 1-257, 1-259 1-261, 1-263, 1-265, 1-267, 1-269, 1-275, 1-277, 1-279, 1-285, 1-287, 1-289, 1-293, 1-295, 1-297
312105-0378 ..	SCREW, M6S ISO 4014 M6X40 A4 80	1-129, 1-131, 1-265, 1-267, 1-269, 1-275, 1-277, 1-279
312105-0379 ..	SCREW, M6S ISO 4014 M6X45 A4 80	1-57, 1-207, 1-209, 1-211, 1-213, 1-215, 1-217, 1-231 1-233, 1-235, 1-237
312105-0381 ..	SCREW, M6S ISO 4014 M6X55 A4 80	1-25
312105-0447 ..	SCREW M6S ISO 4017 M8X12 A480	1-245, 1-247, 1-249, 1-251
312105-0449 ..	SCREW, M6S ISO 4017 M8X16 A4 80	1-59, 1-61, 1-63, 1-67, 1-315, 1-317, 1-325, 1-327, 1-381
312105-0451 ..	SCREW, M6S ISO 4017 M8X20 A4 80	1-59, 1-61, 1-63, 1-135, 1-137, 1-151, 1-325, 1-327, 1-379
312105-0453 ..	SCREW, M6S ISO 4017 M8X25 A4 80	1-59, 1-61, 1-63, 1-73, 1-219, 1-221, 1-223, 1-227, 1-239 1-243, 1-325, 1-327
312105-0455 ..	SCREW, M6S ISO 4017 M8X30 A4 80	1-139, 1-141, 1-143, 1-145, 1-311, 1-313
312105-0460 ..	SCREW, M6S ISO 4014 M8X45 A4 80	1-325, 1-327
312105-0462 ..	SCREW, M6S ISO 4014 M8X55 A4 8002	1-285, 1-287, 1-289, 1-293, 1-295, 1-297
312105-0495 ..	SCREW, M6S ISO 4017 M10X30 A4 80	1-135, 1-137
312108-0449 ..	SCREW EN 1665 TYPE F M8X16 A270	1-371, 1-373, 1-377, 1-383
312109-0335 ..	SCREW, M6S ISO 4017 M5X30 A4 80	1-207, 1-209, 1-211, 1-213, 1-215, 1-217, 1-231, 1-233 1-235, 1-237, 1-315, 1-317
312109-0374 ..	SCREW, M6S ISO 4017 M6X30 A4 80	1-125, 1-207, 1-209, 1-211, 1-213, 1-215, 1-217, 1-231 1-233, 1-235, 1-237
312109-0376 ..	SCREW, M6S ISO 4017 M6X35 A4 80	1-33, 1-103, 1-105, 1-325, 1-327
312109-0378 ..	SCREW, M6S ISO 4017 M6X40 A4 80	1-25, 1-45
312109-0380 ..	SCREW, M6S ISO 4017 M6X50 A4 80	1-25
312109-0459 ..	SCREW, M6S ISO 4017 M8X40 A4 80	1-25, 1-55
312115-0232 ..	SCREW ISO4762 M3X25 A4 80	1-265, 1-267, 1-269, 1-275, 1-277, 1-279
312115-0289 ..	SCREW ISO4762 M4X10 A4 80	1-365, 1-367, 1-369
312115-0291 ..	SCREW ISO4762 M4X12 A4 80	1-169
312115-0293 ..	SCREW ISO4762 M4X16 A4 80	1-41, 1-265, 1-267, 1-269, 1-275, 1-277, 1-279, 1-335, 1-337 1-339, 1-357, 1-359, 1-361, 1-363
312115-0295 ..	SCREW ISO4762 M4X20 A4 80	1-335, 1-337, 1-339, 1-357, 1-359, 1-361, 1-363, 1-413
312115-0297 ..	SCREW ISO4762 M4X25 A4 80	1-265, 1-267, 1-269, 1-275, 1-277, 1-279
312115-0323 ..	SCREW ISO4762 M5X8 A4 80	1-253, 1-255, 1-257, 1-259, 1-261, 1-263
312115-0325 ..	SCREW ISO4762 M5X10 A4 80	1-245, 1-247, 1-249, 1-251
312115-0327 ..	SCREW ISO4762 M5X12 A4 80	1-71, 1-245, 1-247, 1-249, 1-251, 1-253, 1-255, 1-257, 1-259 1-261, 1-263, 1-285, 1-287, 1-289, 1-293, 1-295, 1-297
312115-0329 ..	SCREW ISO4762 M5X16 A4 80	1-37, 1-285, 1-287, 1-289, 1-293, 1-295, 1-297, 1-389, 1-391

Part No	Description	Page No
312115-0331 ..	SCREW ISO4762 M5X20 A4 80	1-25, 1-27, 1-33, 1-71, 1-389, 1-391
312115-0333 ..	SCREW ISO4762 M5X25 A4 80	1-35, 1-103, 1-105
312115-0339 ..	SCREW ISO4762 M5X40 A4 80	1-33
312115-0366 ..	SCREW ISO4762 M6X12 A4 80	1-177, 1-253, 1-255, 1-257, 1-259, 1-261, 1-263, 1-265, 1-267 1-269, 1-275, 1-277, 1-279
312115-0368 ..	SCREW ISO4762 M6X16 A4 80	1-389, 1-391, 1-395
312115-0370 ..	SCREW ISO4762 M6X20 A4 80	1-129, 1-131, 1-285, 1-287, 1-289, 1-293, 1-295, 1-297
312115-0372 ..	SCREW ISO4762 M6X25 A4 80	1-177, 1-265, 1-267, 1-269, 1-275, 1-277, 1-279
312115-0374 ..	SCREW ISO4762 M6X30 A4 80	1-285, 1-287, 1-289
312115-0455 ..	SCREW ISO4762 M8X30 A4 80	1-185, 1-187
312125-0222 ..	SLOTTED HEAD SCREW, ISO1207 M3X8 A4	1-57
312125-0285 ..	SLOTTED HEAD SCREW, ISO1207 M4X6 A4	1-35, 1-57
312125-0287 ..	SLOTTED HEAD SCREW, ISO1207 M4X8 A4	1-27, 1-33, 1-35, 1-45, 1-59, 1-61, 1-63
312125-0289 ..	SCREW	1-37
312145-0220 ..	SCREW ISO 2009 MFS M3X6 A4	1-285, 1-287, 1-289, 1-293, 1-295, 1-297
312145-0287 ..	SCREW ISO 2009 MFS M4X8 A4	1-207, 1-209, 1-211, 1-213, 1-215, 1-217
312145-0289 ..	SCREW ISO 2009 MFS M4X10 A4	1-285, 1-287, 1-289, 1-293, 1-295, 1-297
312145-0291 ..	SCREW ISO 2009 MFS M4X12 A4	1-207, 1-209, 1-211, 1-213, 1-215, 1-217, 1-285, 1-287 1-289, 1-293, 1-295, 1-297
312145-0301 ..	SCREW ISO 2009 MFS M4X35 A4	1-35
312145-0325 ..	SCREW ISO 2009 MFS M5X10 A4	1-219, 1-221, 1-223, 1-227, 1-239, 1-243
312155-0220 ..	SCREW DIN 7991 MF6S M3X6 A4 70	1-265, 1-267, 1-269, 1-275, 1-277, 1-279
312155-0287 ..	SCREW DIN 7991 MF6S M4X8 A4 70	1-207, 1-209, 1-211, 1-213, 1-215, 1-217, 1-231, 1-233 1-235, 1-237, 1-265, 1-267, 1-269, 1-275, 1-277, 1-279
312155-0289 ..	SCREW DIN 7991 MF6S M4X10 A4 70	1-245, 1-247, 1-249, 1-251, 1-357, 1-359, 1-361, 1-363
312155-0291 ..	SCREW DIN 7991 MF6S M4X12 A4 70	1-71, 1-75
312155-0293 ..	SCREW DIN 7991 MF6S M4X16 A4 70	1-35
312155-0327 ..	SCREW DIN 7991 MF6S M5X12 A4 70	1-45
312155-0331 ..	SCREW DIN 7991 MF6S M5X20 A4 70	1-59, 1-61, 1-63
312155-0364 ..	SCREW DIN 7991 MF6S M6X10 A4 70	1-335, 1-337, 1-339
312155-0366 ..	SCREW DIN 7991 MF6S M6X12 A4 70	1-335, 1-337, 1-339
312155-0368 ..	SCREW DIN 7991 MF6S M6X16 A4 70	1-335, 1-337, 1-339
312180-0455 ..	SHOULDER SCREW, ISO7379 8X30/M6 12.9	1-75
312180-0499 ..	SHOULDER SCREW, ISO7379 10X40/M8 12.9	1-73
312318-0220 ..	SET SCREW, CUP END ISO4029 M3X6 A4	1-59, 1-61, 1-63
312318-0283 ..	SET SCREW, CUP END ISO4029 M4X4 A4	1-37
312318-0285 ..	SET SCREW, CUP END ISO4029 M4X6 A4	1-41, 1-135, 1-137, 1-139, 1-141, 1-143, 1-145
312318-0320 ..	SET SCREW, CUP END ISO4029 M5X5 A4	1-207, 1-209, 1-211, 1-213, 1-215, 1-217, 1-231 1-233, 1-235, 1-237
312318-0325 ..	SET SCREW, CUP END ISO4029 M5X10 A4	1-315, 1-317
312318-0327 ..	SET SCREW, CUP END ISO4029 M5X12 A4	1-39, 1-41, 1-65
312318-0360 ..	SET SCREW, CUP END ISO4029 M6X6 A4	1-325, 1-327
312318-0362 ..	SET SCREW, CUP END ISO4029 M6X8 A4	1-335, 1-337, 1-339
312318-0370 ..	SET SCREW, CUP END ISO4029 M6X20 A4	1-25
312318-0451 ..	SET SCREW, CUP END ISO4029 M8X20 A4	1-135, 1-137
312602-0312 ..	HEXAGON NUT, EN 24032 M6M M4 NIPLBR	1-273, 1-283
312605-0312 ..	HEXAGON NUT, M6M M4 A280	1-39, 1-41, 1-135, 1-137, 1-189, 1-357, 1-359, 1-361, 1-363
312605-0314 ..	HEXAGON NUT, M6M M5 A280	1-37, 1-39, 1-41
312605-0316 ..	HEXAGON NUT, M6M M6 A280	1-25, 1-33, 1-67, 1-125, 1-325, 1-327
312605-0318 ..	HEXAGON NUT, M6M M8 A280	1-135, 1-137, 1-185, 1-187, 1-253, 1-255, 1-257, 1-259, 1-261 1-263, 1-325, 1-327
312605-0320 ..	HEXAGON NUT, M6M M10 A280	1-59, 1-61, 1-63, 1-135, 1-137
312621-0318 ..	ROD END,NUT M8	1-37
312625-0316 ..	HEXAGON THIN NUT, EN 24035 ML6M M6 A4	1-25
312705-0312 ..	NUT HEX. DOMED CAP MHM-6 M4 A280	1-59, 1-61, 1-63
312705-0314 ..	NUT HEX. DOMED CAP MHM-6 M5 A280	1-37
312705-0316 ..	HEX. DOMED CAP MHM-6 M6 A280	1-37, 1-139, 1-141, 1-143, 1-145, 1-153, 1-155, 1-157 1-329, 1-331, 1-333, 1-335, 1-337, 1-339
312811-0316 ..	NUT HEX.LOCK HELI COIL MID GRIP M6 SS	1-183
312811-0320 ..	NUT HEX.LOCK HELI COIL MID GRIP M10 SS	1-311, 1-313
312812-0312 ..	HEXAGON NUT, NY-LOCK M4 A4 80	1-67, 1-97
312812-0314 ..	HEXAGON NUT, NY-LOCK M5 A4 80	1-207, 1-209, 1-211, 1-213, 1-215, 1-217, 1-231, 1-233 1-235, 1-237
312812-0316 ..	HEXAGON NUT, NY-LOCK M6 A4 80	1-207, 1-209, 1-211, 1-213, 1-215, 1-217, 1-231, 1-233 1-235, 1-237, 1-315, 1-317
312812-0318 ..	HEXAGON NUT, NY-LOCK M8 A4 80	1-315, 1-317
312902-0318 ..	NUT HEX. LEFT THREAD, M8 A280	1-325, 1-327
315105-0136 ..	WASHER PLAIN, 4,3X8X0,8 A4 BRB	1-35, 1-37, 1-45, 1-57, 1-59, 1-61, 1-63, 1-67, 1-71, 1-75 1-139, 1-141, 1-143, 1-145, 1-159, 1-231, 1-233, 1-235, 1-237, 1-265, 1-267, 1-269, 1-275, 1-277 1-279
315105-0146 ..	WASHER PLAIN, 5,3X10X1 A4 BRB	1-33, 1-35, 1-37, 1-57, 1-59, 1-61, 1-63, 1-65, 1-75, 1-171 1-189, 1-207, 1-209, 1-211, 1-213, 1-215, 1-217, 1-231, 1-233, 1-235, 1-237, 1-245, 1-247, 1-249 1-251, 1-307, 1-309, 1-315, 1-317
315105-0153 ..	WASHER PLAIN, 6,4X12X1,5 A4 BRB	1-15, 1-17, 1-19, 1-25, 1-33, 1-37, 1-45, 1-59, 1-61, 1-63 1-135, 1-137, 1-153, 1-155, 1-157, 1-159, 1-183, 1-189, 1-219, 1-221, 1-223, 1-227, 1-239, 1-243 1-245, 1-247, 1-249, 1-251, 1-265, 1-267, 1-269, 1-275, 1-277, 1-279, 1-285, 1-287, 1-289, 1-293 1-295, 1-297, 1-311, 1-313, 1-315, 1-317, 1-321, 1-325, 1-327, 1-335, 1-337, 1-339, 1-347, 1-349 1-379, 1-381
315105-0156 ..	WASHER PLAIN, 6,7X14X1,5 A4 BRB	1-103, 1-105
315105-0165 ..	FWAS080G0-0S, WASHER PLAIN	1-55, 1-59, 1-61, 1-63, 1-67, 1-73, 1-75, 1-135, 1-137, 1-139 1-141, 1-143, 1-145, 1-219, 1-221, 1-223, 1-227, 1-239, 1-243, 1-325, 1-327, 1-379, 1-381, 1-415
315105-0173 ..	WASHER PLAIN, 10,5X22X2 A4 BRB	1-59, 1-61, 1-63, 1-311, 1-313
315105-0178 ..	WASHER PLAIN, 13X24X2,5 A4 BRB	1-55
315106-0124 ..	WASHER PLAIN, M3 ISO7089-3-200 HV A4	1-265, 1-267, 1-269, 1-275, 1-277, 1-279

Part No	Description	Page No
315106-0136 ..	WASHER PLAIN, M4 ISO7089-4-200 HV A4	1-219, 1-221, 1-223, 1-227, 1-239, 1-243, 1-357, 1-359, 1-361, 1-363, 1-413
315106-0146 ..	"WASHER PLAIN, M5 ISO7089-5-200 HV A4"	1-325, 1-327
315106-0153 ..	WASHER PLAIN, M6 ISO7089-6-200 HV A4	1-125, 1-329, 1-331, 1-333, 1-335, 1-337, 1-339, 1-345, 1-351, 1-353, 1-397, 1-399, 1-401, 1-403, 1-405
315106-0173 ..	"WASHER PLAIN, M10 ISO7089-10-200 HV A4"	1-397, 1-399, 1-401
315115-0153 ..	WASHER PLAIN, TBRB 6,4/12 H=3	1-25, 1-183, 1-253, 1-255, 1-257, 1-259, 1-261, 1-263, 1-285, 1-287, 1-289, 1-293, 1-295, 1-297, 1-315, 1-317, 1-335, 1-337, 1-339
315115-0165 ..	WASHER PLAIN, TBRB 8,4/16 H=3	1-135, 1-137, 1-139, 1-141, 1-143, 1-145, 1-311, 1-313, 1-315, 1-317, 1-415
315125-0153 ..	WASHER HIGH, TBRSB 6,4X22X4 A4	1-25, 1-45, 1-103, 1-105, 1-129, 1-131, 1-185, 1-187
315125-0165 ..	WASHER HIGH, TBRSB 8,4X26X5 A4	1-25
315202-0102 ..	O-RING 4,1X1,6 MM	1-265, 1-267, 1-269, 1-275, 1-277, 1-279
315202-0105 ..	O-RING 7,1X1,6 MM	1-265, 1-267, 1-269, 1-275, 1-277, 1-279
315202-0107 ..	O-RING 9,1X1,6 MM	1-325, 1-327
315202-0110 ..	O-RING 12,1X1,6 MM	1-285, 1-287, 1-289, 1-293, 1-295, 1-297
315202-0265 ..	O-RING 12,3X2,4 MM	1-253, 1-255, 1-257, 1-259, 1-261, 1-263
315211-0101 ..	BONDED SEAL SS/NBR90 M4	1-285, 1-287, 1-289, 1-293, 1-295, 1-297
315211-0103 ..	BONDED SEAL SS/NBR90 M6	1-285, 1-287, 1-289, 1-293, 1-295, 1-297
315237-0106 ..	WASHER,PL.RND.AL.6/10,H=1	1-253, 1-255, 1-257, 1-259, 1-261, 1-263
315237-0108 ..	WASHER,PL.RND.AL.5,2/8,H=0,5	1-253, 1-255, 1-257, 1-259, 1-261, 1-263
315237-0109 ..	WASHER,PL.RND.AL.10/14,H=1,5	1-285, 1-287, 1-289, 1-293, 1-295, 1-297
315237-0110 ..	WASHER,PL.RND.AL.13,5/18,H=1,5	1-245, 1-247, 1-249, 1-251
315239-0109 ..	NYLON WASHER G1/8, 1/8RRP	1-321
315400-0006 ..	TUBE PUN-H-8X1,25-SW	1-397, 1-399, 1-401, 1-403, 1-405
315701-0239 ..	PARALLEL KEY W. ROUND ENDS, 6X6X40 MM	1-57
315701-0396 ..	PARALLEL KEY W. ROUND ENDS, 16X10X50 MM	1-103, 1-105
315701-0401 ..	PARALLEL KEY W. ROUND ENDS, 16X10X80 MM	1-55
315705-0232 ..	PARALLEL KEY W. ROUND ENDS, 6X6X20 MM	1-31
315741-0108 ..	RETAINING RING, DIN 705 A2 12	1-325, 1-327
315751-0109 ..	RETAINING RING FOR SHAFT DIN 471 12 SS	1-135, 1-137
315755-0106 ..	RETAINING RING SHAFT DIN 6799 4 SS	1-39
315755-0107 ..	RETAINING RING SHAFT DIN 6799 5 SS	1-41
315755-0108 ..	RETAINING RING SHAFT DIN 6799 6 SS	1-67
318856-0115 ..	KNOB, EXTERNAL THREAD. NO. 8306-0278	1-325, 1-327
321101-0143 ..	FLANGE BUSHING, 8/14X8-18X3 MM	1-315, 1-317
321101-0163 ..	FLANGE BUSHING, 10/16X10-20X3 MM	1-73
321101-0173 ..	FLANGE BUSHING, 12X18X12 MM	1-325, 1-327
321105-0127 ..	BUSHING W/O FLANGE, 6/12X12 MM	1-37
321141-0040 ..	BEARING BUSHING, 4X5,5X6 MM	1-41
321141-0060 ..	BEARING BUSHING, 6X8X6 MM	1-37, 1-39
321141-0104 ..	BEARING BUSHING, 8X10X12 MM	1-75
321141-0140 ..	BEARING BUSHING, 10X12X10 MM	1-37
342738-0208 ..	ADJUSTABLE ELBOW CONNECTION 8-G1/4	1-245, 1-247, 1-249, 1-251
342850-0304 ..	GASKET 35,4X49,1X5,2 1"1/2 FDA, 3-A	1-183
342921-0121 ..	STRAIGHT COUPLING, EXT.THREAD 8/6-G1/8	1-245, 1-247, 1-249, 1-251
342931-0121 ..	ELBOW 90 COUPL., EXT. THREAD 8/6-G1/8"	1-351, 1-397, 1-399, 1-401, 1-403, 1-405
342980-0121 ..	HOSE FITTING, BANJO RING L PO G1/8 8/6	1-245, 1-247, 1-249, 1-251
342980-0303 ..	BANJO-HOLLOW BOLT COUPL,EXT.THR.01-G1/8	1-245, 1-247, 1-249, 1-251
344202-0003 ..	CABLE GLAND; MS-SC-M, 7-12,5MM, M20X1,5	1-37
344210-0214 ..	O-RING 17,3X2,4 MM FDA, 3-A	1-185, 1-187
344210-0309 ..	O-RING 89,5X3,0 MM FDA, 3-A	1-129, 1-131
344270-0159 ..	FLANGE BUSHING, 12/18X12-24X3 MM	1-325, 1-327
344301-0160 ..	THERMOCOUPLE, 5110160-001	1-35
344431-0000 ..	THREADLOCKER LOCTITE 243, ONLY IN BOM	1-315, 1-317
344431-0050 ..	THREADLOCKER LOCTITE 243, 50ML	1-321
351310-0020 ..	ACTUATOR/SENSOR CABLE PRKWT 4-07/2M	1-81
351310-0050 ..	ACTUATOR/SENSOR CABLE PRKWT 4-07/5M	1-81
351409-0020 ..	ACTU/SENS. CABLE PRST 4-PRKMV 4-07/2,0M	1-55
351411-0050 ..	ACTU/SENS. CABLE PRST 4-PRKT 4-07/5,0	1-81
352113-0101 ..	CABLE TIE,BLACK 92X	1-35, 1-45, 1-59, 1-61, 1-63, 1-85
352113-0102 ..	CABLE TIE, BLACK 188X4,8 MM	1-85
352113-0104 ..	CABLE TIE, BLACK 300X4,8 MM	1-57
352113-0205 ..	ANCHOR PLATES FOR STRIPS, TM2S8-C100	1-35, 1-45, 1-57, 1-59, 1-61, 1-63
353300-0004 ..	HEATSHRINK TUBING	1-85
359000-0200 ..	WIRE MARKING, YELLOW, PA02/3"0"	1-85
359000-0201 ..	WIRE MARKING, YELLOW, PA02/3"1"	1-85
359000-0202 ..	WIRE MARKING, YELLOW, PA02/3"2"	1-85
359000-0204 ..	WIRE MARKING, YELLOW, PA02/3"4"	1-85
359000-0205 ..	WIRE MARKING, YELLOW, PA02/3"5"	1-85
359000-0206 ..	WIRE MARKING, YELLOW, PA02/3"6"	1-85
359000-0207 ..	WIRE MARKING, YELLOW, PA02/3"7"	1-85
359000-0208 ..	WIRE MARKING, YELLOW, PA02/3"8"	1-85
359009-0100 ..	CABLE MARKING, YELLOW, PK2/4"0"	1-85
359009-0101 ..	CABLE MARKING, YELLOW, PK 2/4"1"	1-85
359009-0102 ..	CABLE MARKING, YELLOW, PK 2/4"2"	1-85
359009-0103 ..	CABLE MARKING, YELLOW, PK 2/4"3"	1-85
359009-0104 ..	CABLE MARKING, YELLOW, PK 2/4"4"	1-85
359009-0105 ..	CABLE MARKING, YELLOW, PK 2/4"5"	1-85
359009-0206 ..	CABLE MARKING, YELLOW, PK 2/4" G"	1-85
359009-0222 ..	CABLE MARKING, YELLOW, PK 2/4" W"	1-85
359705-0005 ..	WARNING SIGN ISO, MOVING PART	1-49, 1-51
359705-0007 ..	WARNING SIGN ISO, HOT SURFACE	1-47, 1-53
359725-0108 ..	WARNING SIGN ANSI (H), MOVING PART	1-49, 1-51

Part No	Description	Page No
451148-0000 ..	BRACKET	1-139, 1-141, 1-143, 1-145
451149-0000 ..	SHAFT	1-139, 1-141, 1-143, 1-145
456005-0001 ..	VOLUME BULGE	1-207, 1-209, 1-211, 1-213, 1-215, 1-217
456005-0003 ..	VOLUME BULGE	1-207, 1-209, 1-211, 1-213, 1-215, 1-217
456009-0000 ..	LINK	1-301, 1-303, 1-305
456181-0000 ..	SPACER	1-139, 1-141, 1-143, 1-145
456198-0000 ..	LOCK PLATE	1-139, 1-141, 1-143, 1-145
456199-0000 ..	LOCK PLATE	1-139, 1-141, 1-143, 1-145
456794-0000 ..	RING	1-129, 1-131
456796-0000 ..	ROLLER	1-129, 1-131
456797-0000 ..	AXLE SUPPORT	1-129, 1-131
456872-0000 ..	LOCK PLATE	1-139, 1-141, 1-143, 1-145
457367-0000 ..	SHAFT	1-315, 1-317
457368-0000 ..	SPRING	1-315, 1-317
476221-0002 ..	PIPE	1-375, 1-385
490902-0000 ..	AXLE SUPPORT	1-129, 1-131
490903-0000 ..	SHAFT	1-129, 1-131
491681-0000 ..	GASKET	1-265, 1-267, 1-269, 1-275, 1-277, 1-279
491868-0000 ..	VOLUME BULGE	1-207, 1-209, 1-211, 1-213, 1-215, 1-217
532022-0000 ..	LOCK BAR	1-75
533972-0000 ..	INDICATOR CURVE	1-65
544427-0000 ..	TURN SPRING	1-75
553586-0000 ..	SPACER	1-183
568577-0000 ..	AIR NOZZLE	1-189
568578-0000 ..	AIR NOZZLE	1-189
568581-0000 ..	DISTRIBUTOR WING	1-189
568583-0000 ..	FORK	1-185, 1-187
571537-0000 ..	RING	1-129, 1-131
571538-0000 ..	RING	1-129, 1-131
571539-0000 ..	RING	1-129, 1-131
571540-0000 ..	PIN	1-129, 1-131
574334-0000 ..	RING	1-129, 1-131
574335-0000 ..	RING	1-129, 1-131
574338-0000 ..	LOCK PLATE	1-139, 1-141, 1-143, 1-145
574369-0000 ..	CARRIER RULER RIGHT	1-285, 1-287, 1-289
574370-0000 ..	CARRIER RULER RIGHT	1-285, 1-287, 1-289
574371-0000 ..	CARRIER RULER LEFT	1-293, 1-295, 1-297
574372-0000 ..	CARRIER RULER LEFT	1-293, 1-295, 1-297
574385-0000 ..	ROLLER TBA250SL	1-311, 1-313
574393-0000 ..	LOCK PLATE	1-139, 1-141, 1-143, 1-145
574394-0000 ..	LOCK PLATE	1-139, 1-141, 1-143, 1-145
574395-0000 ..	SHAFT	1-139, 1-141, 1-143, 1-145
574397-0000 ..	ROLL	1-139, 1-141, 1-143, 1-145
574400-0000 ..	ROLL	1-139, 1-141, 1-143, 1-145
574403-0000 ..	ROLL	1-139, 1-141, 1-143, 1-145
574446-0000 ..	TRIMMING ROLLER PLUS	1-161, 1-163
574447-0000 ..	TRIMMING ROLLER MINUS	1-161, 1-163
574454-0000 ..	TEMPLATE	1-179, 1-181
574455-0000 ..	TEMPLATE	1-179, 1-181
579637-0000 ..	CATCH	1-183
579771-0000 ..	CATCH	1-183
590369-0000 ..	COMPRESSION SPRING	1-265, 1-267, 1-269, 1-275, 1-277, 1-279
751230-0000 ..	PLAIN BEARING	1-129, 1-131
751457-0000 ..	CANTILEVER	1-315, 1-317
751476-0000 ..	CANTILEVER	1-315, 1-317
751496-0000 ..	ROLL	1-139, 1-141, 1-143, 1-145
751497-0000 ..	ROLL	1-139, 1-141, 1-143, 1-145
751498-0000 ..	ROLL	1-139, 1-141, 1-143, 1-145
751499-0000 ..	ROLL	1-139, 1-141, 1-143, 1-145
751500-0000 ..	ROLL	1-139, 1-141, 1-143, 1-145
751502-0000 ..	ROLLER	1-135, 1-137
751575-0000 ..	RULERPART R	1-285, 1-287, 1-289
751576-0000 ..	RULERPART L	1-293, 1-295, 1-297
751577-0000 ..	RULERPART R	1-285, 1-287, 1-289
751578-0000 ..	RULERPART L	1-293, 1-295, 1-297
751579-0000 ..	ADJUSTING SCREW	1-285, 1-287, 1-289, 1-293, 1-295, 1-297
751580-0000 ..	SHIM	1-285, 1-287, 1-289, 1-293, 1-295, 1-297
752009-0000 ..	RULERPART R	1-285, 1-287, 1-289
752010-0000 ..	RULERPART R	1-285, 1-287, 1-289
752011-0000 ..	RULERPART L	1-293, 1-295, 1-297
752012-0000 ..	RULERPART L	1-293, 1-295, 1-297
752014-0000 ..	RULERPART R	1-285, 1-287, 1-289
752015-0000 ..	RULERPART R	1-285, 1-287, 1-289
752016-0000 ..	RULERPART L	1-293, 1-295, 1-297
752017-0000 ..	RULERPART L	1-293, 1-295, 1-297
752038-0000 ..	SHIM	1-135, 1-137
752115-0000 ..	PLUNGER	1-285, 1-287, 1-289, 1-293, 1-295, 1-297
752131-0000 ..	FORMING ROLLER	1-139, 1-141, 1-143, 1-145
752132-0000 ..	FORMING ROLLER	1-139, 1-141, 1-143, 1-145
752133-0000 ..	FORMING ROLLER	1-139, 1-141, 1-143, 1-145
752134-0000 ..	FORMING ROLLER	1-139, 1-141, 1-143, 1-145
752135-0000 ..	FORMING ROLLER	1-139, 1-141, 1-143, 1-145
752138-0000 ..	FORMING ROLLER	1-135, 1-137
752149-0000 ..	FORMING ROLLER	1-139, 1-141, 1-143, 1-145

Part No	Description	Page No
752150-0000 ..	FORMING ROLLER	1-139, 1-141, 1-143, 1-145
752153-0000 ..	FORMING ROLLER	1-135, 1-137
752156-0000 ..	FLANGE BUSHING	1-139, 1-141, 1-143, 1-145
752185-0000 ..	SHAFT	1-139, 1-141, 1-143, 1-145
752186-0002 ..	SHAFT	1-139, 1-141, 1-143, 1-145
752186-0003 ..	SHAFT	1-139, 1-141, 1-143, 1-145
752186-0004 ..	SHAFT	1-139, 1-141, 1-143, 1-145, 1-151
752186-0005 ..	SHAFT	1-135, 1-137, 1-139, 1-141, 1-143, 1-145
752186-0006 ..	SHAFT	1-139, 1-141, 1-143, 1-145, 1-151
752186-0013 ..	SHAFT	1-135, 1-137
752186-0014 ..	SHAFT	1-139, 1-141, 1-143, 1-145
752186-0019 ..	SHAFT	1-139, 1-141, 1-143, 1-145, 1-151
752186-0020 ..	SHAFT	1-151
752186-0021 ..	SHAFT	1-139, 1-141, 1-143, 1-145, 1-151
752186-0022 ..	SHAFT	1-151
752218-0000 ..	ATTACHMENT	1-189
752288-0000 ..	SLEEVE	1-285, 1-287, 1-289, 1-293, 1-295, 1-297
752462-0000 ..	TRIMMING ROLLER PLUS	1-161, 1-163
752463-0000 ..	TRIMMING ROLLER MINUS	1-161, 1-163
752464-0000 ..	TRIMMING ROLLER PLUS	1-161, 1-163
752465-0000 ..	TRIMMING ROLLER MINUS	1-161, 1-163
752466-0000 ..	TRIMMING ROLLER PLUS	1-161, 1-163
752467-0000 ..	TRIMMING ROLLER MINUS	1-161, 1-163
752476-0000 ..	SCREW	1-285, 1-287, 1-289, 1-293, 1-295, 1-297
752499-0000 ..	RING	1-183
752519-0002 ..	PIN	1-129, 1-131
752554-0000 ..	SPACER	1-315, 1-317
905413-0000 ..	SHAFT	1-39
905415-0000 ..	SHAFT	1-39
929279-0000 ..	ROLLER	1-135, 1-137
929282-0000 ..	TRIMMING ROLLER PLUS	1-161, 1-163
929283-0000 ..	TRIMMING ROLLER MINUS	1-161, 1-163
929284-0000 ..	ROLLER	1-129, 1-131
929316-0001 ..	BEARING	1-285, 1-287, 1-289, 1-293, 1-295, 1-297
929316-0002 ..	BEARING	1-285, 1-287, 1-289, 1-293, 1-295, 1-297
929328-0000 ..	TEMPLATE	1-179, 1-181
929355-0000 ..	ROLLER TPA 330	1-311, 1-313
929371-0000 ..	SLEEVE	1-265, 1-267, 1-269, 1-275, 1-277, 1-279
929372-0000 ..	PISTON	1-265, 1-267, 1-269, 1-275, 1-277, 1-279
978760-0000 ..	ROLLER TBA200SL	1-311, 1-313
979728-0000 ..	CATCH	1-183
979754-0000 ..	VOLUME SHIM 100	1-173, 1-175, 1-207, 1-209, 1-211, 1-213, 1-215, 1-217
979755-0000 ..	VOLUME BULGE 100	1-207, 1-209, 1-211, 1-213, 1-215, 1-217
979860-0000 ..	VOLUME BULGE	1-207, 1-209, 1-211, 1-213, 1-215, 1-217
979861-0000 ..	VOLUME SHIM	1-173, 1-175, 1-207, 1-209, 1-211, 1-213, 1-215, 1-217
979931-0000 ..	VOLUME BULGE	1-207, 1-209, 1-211, 1-213, 1-215, 1-217
1038240-0000 .	SPACER	1-265, 1-267, 1-269, 1-275, 1-277, 1-279
1110083-0003 .	DOLLY	1-173, 1-175, 1-285, 1-287, 1-289, 1-293, 1-295, 1-297
1110083-0005 .	DOLLY	1-173, 1-175, 1-285, 1-287, 1-289, 1-293, 1-295, 1-297
1110532-0000 .	INDUCTOR	1-173, 1-175, 1-265, 1-267, 1-269, 1-275, 1-277, 1-279
1110534-0000 .	INDUCTOR	1-173, 1-175, 1-265, 1-267, 1-269, 1-275, 1-277, 1-279
1110535-0000 .	INDUCTOR	1-173, 1-175, 1-265, 1-267, 1-269, 1-275, 1-277, 1-279
1110556-0000 .	INDUCTOR	1-173, 1-175, 1-265, 1-267, 1-269, 1-275, 1-277, 1-279
1140548-0000 .	FLANGED BEARING BUSHING	1-37
1140889-0000 .	BUSBAR	1-97
1260486-0000 .	PLATE	1-315, 1-317
1260487-0000 .	PLATE	1-315, 1-317
1260490-0000 .	NUT	1-315, 1-317
1260491-0000 .	NUT	1-315, 1-317
1279086-0000 .	LOCKING PLATE	1-139, 1-141, 1-143, 1-145
1279090-0000 .	LOCKING PLATE	1-139, 1-141, 1-143, 1-145
1279093-0000 .	LOCKING PLATE	1-139, 1-141, 1-143, 1-145
1279094-0000 .	LOCKING PLATE	1-139, 1-141, 1-143, 1-145
1282645-0000 .	KNIFE	1-173, 1-175, 1-301, 1-303, 1-305
1282646-0000 .	KNIFE	1-173, 1-175, 1-301, 1-303, 1-305
1282647-0000 .	KNIFE	1-173, 1-175, 1-301, 1-303, 1-305
1282708-0000 .	BUSHING	1-325, 1-327
1317633-0000 .	SPRING	1-397, 1-399, 1-401
1347496-0000 .	SCREW	1-325, 1-327
1347952-0002 .	SPACER	1-109
1347952-0003 .	SPACER	1-69, 1-109
1347952-0006 .	SPACER	1-109, 1-113
1347952-0010 .	SPACER	1-113
1347952-0016 .	SPACER	1-113
1348053-0000 .	BRACKET	1-285, 1-287, 1-289, 1-293, 1-295, 1-297
1349916-0000 .	CLAMP	1-35
1350440-0000 .	LEVER	1-325, 1-327
1350785-0001 .	SHIM	1-41
1350785-0002 .	SHIM	1-41
1350785-0003 .	SHIM	1-41
1350785-0004 .	SHIM	1-41
1350959-0000 .	VOLUME BULGE P48 250	1-207, 1-209, 1-211, 1-213, 1-215, 1-217, 1-231, 1-233, 1-235, 1-237
1350985-0000 .	FOLDING FLAP RIGHT	1-285, 1-287, 1-289, 1-293, 1-295, 1-297
1350986-0000 .	FOLDING FLAP LEFT	1-285, 1-287, 1-289, 1-293, 1-295, 1-297

Part No	Description	Page No
1350996-0000	.CARRIER RULER RIGHT	1-285, 1-287, 1-289
1350998-0000	.CARRIER RULER LEFT	1-293, 1-295, 1-297
1359565-0000	.NUT	1-365, 1-367, 1-369, 1-371, 1-373, 1-377, 1-383
1366727-0000	.CLAMP	1-365, 1-367, 1-369, 1-371, 1-373, 1-377, 1-383, 1-387
1366750-0000	.HOLDER	1-365, 1-367, 1-369, 1-383, 1-387
1478479-0000	.HOLDER	1-35
1487264-0000	.PLATE	1-35
1498113-0000	.BRACKET	1-31
1498115-0000	.BLOCK	1-27
1498303-0000	.BELT	1-67
1498347-0000	.WASHER	1-59, 1-61, 1-63
1498360-0000	.HUB	1-67
1498496-0000	.GUIDE	1-27
1498704-0000	.LEVER	1-37
1499251-0002	.AXLE PIN	1-59, 1-61, 1-63
1499252-0000	.ARM	1-65
1499253-0000	.BUSHING	1-59, 1-61, 1-63
1499255-0100	.DETECTOR	1-59, 1-61, 1-63
1499296-0001	.GUIDE	1-107
1499296-0002	.GUIDE	1-77, 1-107
1499296-0004	.GUIDE	1-107, 1-115
1499296-0007	.GUIDE	1-115
1499296-0013	.GUIDE	1-115
1511404-0000	.ECCENTRIC SHAFT	1-311, 1-313
1519222-0000	.VOLUME SHIM	1-173, 1-175, 1-207, 1-209, 1-211, 1-213, 1-215, 1-217
1519364-0000	.INSULATING RAIL	1-35
1519365-0000	.PIVOT PLATE	1-41
1519379-0000	.FLAT KNIFE	1-35
1519463-0000	.LOCKING CLAMP	1-75
1519543-0000	.HOLDER	1-39, 1-41
1519544-0000	.SHAFT	1-37
1519996-0000	.SHAFT	1-37
1520196-0000	.INDUCTOR	1-97
1523159-0000	.PIVOT PLATE	1-41
1523160-0000	.PIN	1-41
1523168-0000	.SHAFT	1-39
1523169-0000	.BRACKET	1-39
1523222-0000	.PLATE	1-185, 1-187
1523223-0000	.NUT	1-185, 1-187
1523224-0000	.NUT	1-185, 1-187
1523225-0000	.FASTENING PLATE	1-185, 1-187
1523262-0000	.FLAG	1-59, 1-61, 1-63
1523263-0001	.BRACKET	1-59, 1-61, 1-63
1533360-0000	.INDUCTOR	1-97
1538109-0000	.COMPRESSION SPRING	1-301, 1-303, 1-305
1538231-0000	.SHAFT	1-37
1538757-0000	.TOOL	1-179, 1-181
1539125-0000	.BRACKET	1-59, 1-61, 1-63
1539593-0000	.COVER	1-265, 1-267, 1-269, 1-275, 1-277, 1-279
1539892-0000	.TEMPLATE	1-179, 1-181
1539893-0000	.TEMPLATE	1-179, 1-181
1548368-0000	.PLATE	1-15, 1-17, 1-19, 1-33
1548376-0000	.BRACKET	1-103, 1-105
1548377-0000	.PAPER GUIDE	1-15, 1-17, 1-19
1548941-0000	.VOLUME BULGE	1-207, 1-209, 1-211, 1-213, 1-215, 1-217
1550664-0000	.DOWEL	1-365, 1-367, 1-369
1550666-0000	.HOLDER	1-365, 1-367, 1-369
1550743-0200	.RAIL HOLDER	1-375
1550772-0000	.HOLDER	1-371, 1-373, 1-377, 1-383
1558230-0200	.COUNTER ROLLER	1-37
1558231-0100	.KNIFE	1-37
1558251-0000	.SHAFT	1-167
1558252-0000	.SCREW	1-167
1558253-0000	.ROLLER	1-167
1566708-0000	.INDUCTOR	1-97
1566761-0000	.DOLLY	1-173, 1-175, 1-285, 1-287, 1-289, 1-293, 1-295, 1-297
1566981-0000	.INDUCTOR	1-173, 1-175, 1-265, 1-267, 1-269, 1-275, 1-277, 1-279
2500097-0000	.KNIFE SUPPORT	1-41
2504616-0000	.SEALING PLATE	1-23
2506563-0000	.SHAFT	1-67
2506564-0000	.GUIDE FORK	1-67
2506565-0000	.BRACKET	1-67
2511271-0001	.SHAFT	1-71
2511291-0100	.PATCH FEEDER	1-15, 1-17, 1-19
2511313-0000	.BRACKET	1-33
2511314-0000	.BRACKET	1-45
2511316-0000	.PIN	1-67
2511317-0000	.NUT	1-67
2511638-0000	.OPENING SPECIFICATION	1-123
2511639-0000	.DIE	1-87
2511640-0000	.SEALING PLATE	1-93
2511642-0000	.SEALING PLATE	1-93
2511643-0000	.SEALING PLATE	1-23
2511644-0000	.PUNCH	1-87

Machine Type Group Description Page No

Part No	Description	Page No
2511651-0000	.SEALING PLATE	1-95
2512836-0000	.STOP SCREW	1-35
2514030-0000	.OPENING SPECIFICATION	1-123
2522213-0003	.SHAFT	1-151
2522213-0004	.SHAFT	1-151
2522213-0006	.SHAFT	1-139, 1-141, 1-143, 1-145
2522213-0009	.SHAFT	1-135, 1-137
2522213-0012	.SHAFT	1-151
2522213-0015	.SHAFT	1-151
2522213-0018	.SHAFT	1-151
2522213-0020	.SHAFT	1-151
2523766-0001	.BRACKET	1-169
2523766-0012	.BRACKET	1-169
2525289-0000	.DIE	1-87
2525290-0000	.PUNCH	1-87
2525292-0000	.SEALING PLATE	1-95
2525349-0000	.BRACKET	1-75
2525350-0000	.BRACKET	1-73
2525351-0000	.HINGE	1-73
2525358-0100	.HINGE	1-59, 1-61, 1-63
2525360-0000	.LOCKING FINGER	1-75
2525366-0100	.SPLICING TABLE	1-59, 1-61, 1-63
2525368-0000	.PUSHER	1-75
2525373-0000	.WHEEL	1-59, 1-61, 1-63
2525377-0000	.NUT	1-35
2525378-0000	.PAPER GUIDE	1-15, 1-17, 1-19
2525382-0000	.BRACKET	1-55
2526546-0000	.OPENING SPECIFICATION	1-123
2526551-0000	.PLATE	1-93
2526700-0000	.SPRING	1-35
2527724-0000	.CARRIER	1-285, 1-287, 1-289, 1-293, 1-295, 1-297
2528114-0000	.COVER PLATE	1-153, 1-155, 1-157
2528118-0001	.LOCK PLATE	1-135, 1-137, 1-139, 1-141, 1-143, 1-145
2528119-0001	.LOCK PLATE	1-135, 1-137, 1-139, 1-141, 1-143, 1-145
2528123-0001	.LOCK PLATE	1-135, 1-137, 1-151
2528123-0002	.LOCK PLATE	1-135, 1-137
2528123-0003	.LOCK PLATE	1-151
2528123-0004	.LOCK PLATE	1-135, 1-137
2528123-0008	.LOCK PLATE	1-139, 1-141, 1-143, 1-145
2528123-0009	.LOCK PLATE	1-139, 1-141, 1-143, 1-145
2529416-0000	.SHAFT	1-185, 1-187
2529417-0000	.SHAFT	1-185, 1-187
2529547-0100	.PAPER GUIDE	1-165
2530296-0000	.ROLLER	1-245, 1-247, 1-249, 1-251
2532539-0000	.FOLDING FLAP	1-285, 1-287, 1-289, 1-293, 1-295, 1-297
2532542-0000	.FOLDING FLAP	1-285, 1-287, 1-289, 1-293, 1-295, 1-297
2532543-0000	.FOLDING FLAP	1-285, 1-287, 1-289, 1-293, 1-295, 1-297
2532544-0000	.BUSHING	1-219, 1-221, 1-223, 1-227, 1-239, 1-243
2532895-0002	.LOCK PLATE	1-151
2532895-0011	.LOCK PLATE	1-151
2533680-0000	.SHIM	1-33
2533681-0100	.BOBBIN HOLDER	1-15, 1-17, 1-19
2533682-0100	.BOBBIN HOLDER	1-15, 1-17, 1-19
2533683-0100	.SPLICING TABLE	1-75
2533684-0100	.SPLICING TABLE	1-15, 1-17, 1-19
2533685-0100	.SPLICING TABLE	1-15, 1-17, 1-19
2533715-0000	.SEALING PLATE	1-99
2540612-0000	.PLATE	1-335, 1-337, 1-339
2546278-0100	.PUNCH UNIT	1-15, 1-17, 1-19
2546293-0000	.SEALING PLATE	1-99
2546294-0100	.OUTER PATCH C'JAW	1-27
2546296-0100	.OUTER PATCH C'JAW	1-25
2546297-0100	.OUTER PATCH FEEDER	1-15, 1-17, 1-19, 1-33
2546303-0000	.SEALING PLATE	1-29
2553315-0100	.BOBBIN HOLDER	1-67
2553327-0000	.PLATE	1-15, 1-17, 1-19
2553338-0000	.PROTECTION	1-59, 1-61, 1-63
2561274-0102	.RAILING	1-365, 1-367, 1-369
2561596-0000	.RAIL HOLDER KIT	1-387
2561602-0100	.RAIL HOLDER KIT	1-365, 1-367, 1-369
2562736-0002	.COAXIAL CABLE	1-273, 1-283
2563974-0000	.SEALING PLATE	1-95
2564043-0001	.ROLLER	1-117
2564043-0002	.ROLLER	1-89
2564043-0003	.ROLLER	1-71, 1-79, 1-89
2564043-0005	.ROLLER	1-89, 1-117
2564043-0008	.ROLLER	1-117
2564044-0001	.ROLLER	1-91, 1-111
2564044-0002	.ROLLER	1-89, 1-101, 1-119
2564044-0004	.ROLLER	1-43, 1-79, 1-89, 1-101, 1-119
2564044-0006	.ROLLER	1-89, 1-91, 1-101, 1-111, 1-119
2564044-0011	.ROLLER	1-91, 1-111
2564053-0100	.OUTER PATCH MAGAZINE	1-59, 1-61, 1-63
2564057-0100	.TAB MAGAZINE	1-15, 1-17, 1-19

Part No	Description	Page No
2564058-0100	.TURNING DEVICE	1-15, 1-17, 1-19
2564059-0100	.TAB FEEDER	1-15, 1-17, 1-19
2564060-0100	.PATCH FEEDER	1-15, 1-17, 1-19
2564061-0100	.OUTER PATCH FEEDER	1-33
2564064-0000	.SHAFT	1-37
2564066-0000	.SHAFT	1-41
2564073-0000	.LABEL	1-59, 1-61, 1-63
2564076-0100	.START-UP KIT	1-13
2587325-0000	.SHAFT	1-37
2597663-0000	.FOLDING FLAP	1-285, 1-287, 1-289, 1-293, 1-295, 1-297
2639394-0000	.GUIDE FORK	1-59, 1-61, 1-63
2640354-0000	.ROLLER	1-153, 1-155, 1-157
2647105-0000	.AXLE PIN	1-325, 1-327
2657828-0000	.PUNCH	1-87
2657829-0000	.DIE	1-87
2660825-0000	.BRACKET	1-45
2665718-0000	.CARRIER	1-285, 1-287, 1-289, 1-293, 1-295, 1-297
2668245-0000	.SLIDER	1-325, 1-327
2668246-0000	.SLIDER	1-325, 1-327
2683961-0000	.CUTTING RAIL	1-285, 1-287, 1-289, 1-293, 1-295, 1-297
2693161-0100	.INSTALLATION MATERIAL	1-15, 1-17, 1-19
2695493-0000	.OPENING SPECIFICATION	1-123
2696580-0000	.OPENING SPECIFICATION	1-123
2697205-0000	.OPENING SPECIFICATION	1-123
2699436-0000	.SPACER	1-365, 1-367, 1-369, 1-371, 1-373, 1-377
2699437-0000	.RAIL HOLDER	1-365, 1-367, 1-369, 1-371, 1-373, 1-377
2709603-0000	.BOX	1-15, 1-17, 1-19
2710788-0000	.PANEL DOOR	1-59, 1-61, 1-63
2710800-0100	.PATCH MAGAZINE	1-15, 1-17, 1-19
2710802-0000	.SPACER	1-33
2715294-0000	.TEMPLATE	1-21, 1-55
2735131-0000	.BRACKET	1-103, 1-105
2735132-0000	.SUPPORT	1-103, 1-105
2736719-0000	.PLATE	1-171
2737447-0000	.HOLDER	1-35
2746416-0000	.BRACKET	1-37
2758237-0000	.SPACER	1-59, 1-61, 1-63
2767621-0000	.SPRING	1-335, 1-337, 1-339
2773842-0100	.BAR CODE READER	1-15, 1-17, 1-19
2790193-0000	.PLATE	1-47, 1-49, 1-53
2795376-0000	.CATCH	1-183
2795385-0000	.RING	1-129, 1-131
2795386-0000	.RING	1-129, 1-131
2795387-0000	.ROLLER	1-129, 1-131
2800317-0000	.BRACKET	1-59, 1-61, 1-63
2806002-0000	.BLOCK	1-347, 1-349
2806005-0000	.PLATE	1-347, 1-349
2806012-0000	.SHIM	1-347, 1-349
2806015-0000	.BLOCK	1-355
2808285-0150	.UPPER FORMING RING	1-127
2808289-0000	.SHAFT	1-139, 1-141, 1-143, 1-145
2808290-0150	.LOWER FORMING RING	1-127
2808291-0000	.SCREW	1-139, 1-141, 1-143, 1-145
2808292-0000	.BUSHING	1-139, 1-141, 1-143, 1-145
2808293-0000	.BRACKET	1-139, 1-141, 1-143, 1-145
2808294-0000	.SCREW	1-139, 1-141, 1-143, 1-145
2808295-0100	.EDGE ROLLER	1-127
2808298-0000	.PLUG	1-139, 1-141, 1-143, 1-145
2808299-0000	.BRACKET	1-139, 1-141, 1-143, 1-145
2808305-0200	.FORMING SECTION	1-7, 1-9
2808308-0000	.COUNTER ROLLER	1-135, 1-137
2808311-0000	.FORK	1-135, 1-137
2808312-0000	.FORK	1-135, 1-137
2808315-0200	.SEAL RING	1-127
2808318-0000	.SHAFT2781168-0000	1-135, 1-137
2808319-0000	.BRACKET	1-153, 1-155, 1-157
2808340-0300	.AIR NOZZLE	1-7, 1-9
2808365-0000	.BRACKET	1-159
2808366-0000	.BRACKET	1-159
2808370-0000	.FORK	1-135, 1-137
2808378-0000	.BRACKET	1-159
2808379-0000	.BRACKET	1-159
2808402-0000	.CLAMP	1-189
2808403-0000	.ELBOW PIPE	1-189
2808434-0000	.BUSHING	1-135, 1-137
2808544-0000	.STOPPER	1-71
2808545-0000	.DAMPER	1-71
2810394-0000	.BUSHING	1-219, 1-221, 1-223, 1-227, 1-239, 1-243
2815756-0000	.HOLDER	1-315, 1-317
2816251-0000	.GUIDE	1-71
2816255-0000	.PHOTOCELL BRACKET	1-71
2816256-0000	.BRACKET	1-71
2816257-0200	.STRIP MAGAZINE	1-59, 1-61, 1-63
2818125-0000	.OPERATING ROD	1-253, 1-255, 1-257, 1-259, 1-261, 1-263

Machine Type Group Description Page No

Part No	Description	Page No
2818126-0000	.BEARING PLATE	1-253, 1-255, 1-257, 1-259, 1-261, 1-263
2819302-0000	.SUPPORT	1-379
2819312-0200	.INFEED CONVEYOR VARIANT	1-323
2819313-0100	.PULL-DOWN DEVICE	1-323
2819314-0100	.FLAP HEATER	1-323
2819315-0100	.PRESSURE DEVICE	1-323
2819316-0200	.OUTFEEDER	1-323
2819317-0200	.WHEEL	1-323
2819318-0200	.FOLDING BAR	1-323
2819319-0200	.FORMING UNIT	1-195
2824756-0200	.FORMING UNIT	1-195
2831678-0000	.SUPPORT	1-167
2832313-0000	.SHAFT	1-165
2835326-0000	.SHAFT	1-265, 1-267, 1-269, 1-275, 1-277, 1-279
2835327-0000	.CATCH	1-265, 1-267, 1-269, 1-275, 1-277, 1-279
2835328-0000	.BEARING HOUSING	1-265, 1-267, 1-269, 1-275, 1-277, 1-279
2835329-0000	.RAIL	1-265, 1-267, 1-269, 1-275, 1-277, 1-279
2837076-0000	.BUSBAR	1-273
2837077-0000	.BUSBAR	1-283
2837085-0100	.TRANSFORMER	1-275, 1-277, 1-279
2837086-0100	.TRANSFORMER	1-265, 1-267, 1-269
2837503-0105	.TRANSFORMER	1-273, 1-283
2837503-0109	.TRANSFORMER	1-273, 1-283
2837523-0000	.SPRING	1-21, 1-55
2837527-0000	.SPRING BRACKET	1-21
2837535-0100	.SEALING UNIT	1-25
2837537-0200	.BOBBIN HOLDER	1-59, 1-61, 1-63
2837538-0200	.SEALING UNIT	1-33
2839240-0200	.FILLING PIPE	1-7, 1-9
2839259-0100	.CLEANING CUP	1-7, 1-9
2844252-0000	.CANTILEVER	1-315, 1-317
2845903-0000	.CARRIER RULER	1-285, 1-287, 1-289
2845909-0000	.CARRIER RULER	1-293, 1-295, 1-297
2846012-0000	.CARRIER	1-285, 1-287, 1-289, 1-293, 1-295, 1-297
2850474-0001	.BRACKET	1-169
2850474-0002	.BRACKET	1-169
2850474-0003	.BRACKET	1-169
2850474-0004	.BRACKET	1-169
2850474-0005	.BRACKET	1-169
2850474-0006	.BRACKET	1-169
2852320-0000	.BOTTOM	1-389, 1-391
2852321-0000	.BLOCK	1-347, 1-349
2852322-0000	.BLOCK	1-355
2852323-0000	.PUSHER	1-357, 1-359, 1-361, 1-363, 1-413
2852324-0000	.NOZZLE	1-351
2852325-0000	.NOZZLE	1-351
2852326-0000	.NOZZLE	1-351
2852327-0000	.FOLDING BAR	1-403, 1-405
2852328-0000	.FOLDING BAR	1-403, 1-405
2852329-0000	.PUSHER	1-357, 1-359, 1-361, 1-363, 1-413
2852330-0000	.PUSHER	1-357, 1-359, 1-361, 1-363, 1-413
2852331-0001	.PIPE	1-351
2852331-0002	.PIPE	1-351
2852331-0003	.PIPE	1-351
2852331-0004	.PIPE	1-351
2852331-0005	.PIPE	1-351
2852333-0000	.PLATE	1-397, 1-399, 1-401
2852372-0000	.SUPPORT	1-335, 1-337, 1-339
2852382-0100	.FIN FOLDER	1-323
2852384-0000	.SHAFT	1-325, 1-327
2852385-0000	.SUPPORT	1-325, 1-327
2852386-0000	.PLATE	1-347, 1-349
2852391-0000	.SHAFT	1-325, 1-327
2852392-0000	.SPACER	1-325, 1-327
2852409-0000	.CRADLE	1-329, 1-331, 1-333
2852410-0000	.SHIM	1-357, 1-359, 1-361, 1-363, 1-413
2852413-0000	.CHUTE	1-335, 1-337, 1-339
2852414-0000	.CHUTE	1-335, 1-337, 1-339
2852874-0000	.SUPPORT	1-379
2862751-0200	.PHOTOCELL UNIT	1-201, 1-203
2863998-0000	.SHAFT	1-153, 1-155, 1-157
2863999-0000	.BRACKET	1-153, 1-155, 1-157
2868038-0100	.STRIP MAGAZINE	1-15, 1-17, 1-19
2869011-0200	.CARRIER PRESSURE	1-201, 1-203
2869012-0200	.CARRIER PRESSURE	1-201, 1-203
2869013-0100	.CARRIER CUTTING	1-201, 1-203
2869014-0100	.CARRIER CUTTING	1-201, 1-203
2869015-0100	.PRESSURE JAW	1-201, 1-203
2869016-0100	.PRESSURE JAW	1-201, 1-203
2869017-0100	.CUTTING JAW	1-201, 1-203
2869018-0100	.CUTTING JAW	1-201, 1-203
2869019-0200	.VOLUME FLAP	1-201, 1-203, 1-411
2869196-0000	.BLOCK	1-245, 1-247, 1-249, 1-251
2869199-0000	.BLOCK	1-253, 1-255, 1-257, 1-259, 1-261, 1-263

Part No	Description	Page No
2869201-0000	.BEARING HOUSING	1-285, 1-287, 1-289, 1-293, 1-295, 1-297
2869202-0000	.SUPPORT	1-265, 1-267, 1-269, 1-275, 1-277, 1-279
2869206-0200	.SHOCK ABSORBER	1-205, 1-229
2869207-0200	.VOLUME FLAP	1-205, 1-225, 1-229, 1-241
2869530-0100	.OUTER PATCH MAGAZINE	1-15, 1-17, 1-19
2870080-0000	.HOLDER	1-219, 1-221, 1-223
2871510-0200	.LS TEMPLATE	1-7, 1-9
2871511-0000	.BRACKET	1-177
2871512-0000	.BRACKET	1-177
2871513-0000	.STOPPER	1-177
2871514-0000	.STOPPER	1-177
2871515-0000	.STOPPER	1-177
2871516-0000	.STOPPER	1-177
2871517-0000	.STOPPER	1-177
2871518-0000	.STOPPER	1-177
2871519-0000	.STOPPER	1-177
2871520-0000	.STOPPER	1-177
2871540-0100	.AIR NOZZLE	1-127
2871925-0000	.FOLDING BAR	1-403, 1-405
2871926-0000	.FOLDING BAR	1-403, 1-405
2871927-0001	.FOLDING BAR	1-397, 1-399, 1-401
2871927-0002	.FOLDING BAR	1-397, 1-399, 1-401
2871927-0003	.FOLDING BAR	1-397, 1-399, 1-401
2871927-0004	.FOLDING BAR	1-397, 1-399, 1-401
2871927-0005	.FOLDING BAR	1-397, 1-399, 1-401
2871927-0006	.FOLDING BAR	1-397, 1-399, 1-401
2871927-0007	.FOLDING BAR	1-397, 1-399, 1-401
2871928-0001	.FOLDING BAR	1-397, 1-399, 1-401
2871928-0002	.FOLDING BAR	1-397, 1-399, 1-401
2871928-0003	.FOLDING BAR	1-397, 1-399, 1-401
2871928-0004	.FOLDING BAR	1-397, 1-399, 1-401
2871928-0005	.FOLDING BAR	1-397, 1-399, 1-401
2871928-0006	.FOLDING BAR	1-397, 1-399, 1-401
2871928-0007	.FOLDING BAR	1-397, 1-399, 1-401
2871929-0100	.DROP CHUTE VARIANT	1-323
2871931-0002	.FOLDING BAR	1-403, 1-405
2871931-0004	.FOLDING BAR	1-403, 1-405
2871932-0001	.FOLDING BAR	1-397, 1-399, 1-401
2871932-0002	.FOLDING BAR	1-397, 1-399, 1-401
2871932-0003	.FOLDING BAR	1-397, 1-399, 1-401
2871932-0004	.FOLDING BAR	1-397, 1-399, 1-401
2871932-0005	.FOLDING BAR	1-397, 1-399, 1-401
2871933-0001	.FOLDING BAR	1-397, 1-399, 1-401
2871933-0002	.FOLDING BAR	1-397, 1-399, 1-401
2871933-0003	.FOLDING BAR	1-397, 1-399, 1-401
2871933-0005	.FOLDING BAR	1-397, 1-399, 1-401
2871933-0007	.FOLDING BAR	1-397, 1-399, 1-401
2871933-0008	.FOLDING BAR	1-397, 1-399, 1-401
2871934-0001	.WALL	1-397, 1-399, 1-401
2871934-0002	.WALL	1-397, 1-399, 1-401
2871934-0004	.WALL	1-397, 1-399, 1-401
2871934-0005	.WALL	1-397, 1-399, 1-401
2871935-0002	.FOLDING BAR	1-403, 1-405
2871935-0004	.FOLDING BAR	1-403, 1-405
2871936-0001	.FOLDING BAR	1-397, 1-399, 1-401
2871936-0002	.FOLDING BAR	1-397, 1-399, 1-401
2871936-0003	.FOLDING BAR	1-397, 1-399, 1-401
2871936-0004	.FOLDING BAR	1-397, 1-399, 1-401
2871936-0005	.FOLDING BAR	1-397, 1-399, 1-401
2871937-0001	.FOLDING BAR	1-397, 1-399, 1-401
2871937-0002	.FOLDING BAR	1-397, 1-399, 1-401
2871937-0003	.FOLDING BAR	1-397, 1-399, 1-401
2871937-0005	.FOLDING BAR	1-397, 1-399, 1-401
2871937-0007	.FOLDING BAR	1-397, 1-399, 1-401
2871937-0008	.FOLDING BAR	1-397, 1-399, 1-401
2871938-0001	.WALL	1-397, 1-399, 1-401
2871938-0002	.WALL	1-397, 1-399, 1-401
2871938-0004	.WALL	1-397, 1-399, 1-401
2871938-0005	.WALL	1-397, 1-399, 1-401
2871940-0000	.PUSHER	1-357, 1-359, 1-361, 1-363, 1-413
2871943-0000	.GUIDE	1-335, 1-337, 1-339
2871944-0000	.GUIDE	1-335, 1-337, 1-339
2871945-0000	.SUPPORT	1-335, 1-337, 1-339
2871955-0001	.SPACER	1-329, 1-331, 1-333
2871955-0002	.SPACER	1-329, 1-331, 1-333
2871955-0003	.SPACER	1-329, 1-331, 1-333
2871955-0004	.SPACER	1-329, 1-331, 1-333
2871955-0005	.SPACER	1-329, 1-331, 1-333
2871955-0006	.SPACER	1-329, 1-331, 1-333
2871955-0007	.SPACER	1-329, 1-331, 1-333
2871955-0008	.SPACER	1-329, 1-331, 1-333
2871955-0009	.SPACER	1-329, 1-331, 1-333
2871955-0010	.SPACER	1-329, 1-331, 1-333
2871956-0000	.PUSHER	1-365, 1-367, 1-369

Part No	Description	Page No
2871959-0000	.PLATE	1-325, 1-327
2871960-0000	.SPACER	1-325, 1-327
2871961-0000	.FLAP	1-389, 1-391
2871962-0000	.BOTTOM	1-389, 1-391
2871963-0000	.BLOCK	1-347, 1-349
2871964-0000	.PUSHER	1-357, 1-359, 1-361, 1-363
2871965-0000	.BLOCK	1-355
2871966-0000	.BLOCK	1-357, 1-359, 1-361, 1-363
2871967-0000	.NOZZLE	1-351
2871968-0000	.NOZZLE	1-351
2871969-0000	.NOZZLE	1-351
2871970-0000	.PLATE	1-353
2871971-0000	.GUIDE	1-335, 1-337, 1-339
2871972-0000	.GUIDE	1-335, 1-337, 1-339
2871973-0000	.WALL	1-335, 1-337, 1-339
2887701-0000	.ROLLER	1-37
2887775-0000	.STRIP GUIDE	1-37
2887897-0000	.GUIDE	1-37
2888463-0000	.CATCH	1-285, 1-287, 1-289, 1-293, 1-295, 1-297
2889626-0100	.START-UP KIT	1-7, 1-9, 1-409
2889628-0100	.SETTING TOOL	1-7, 1-9
2890043-0000	.ROLLER	1-135, 1-137
2890044-0000	.ROLLER	1-139, 1-141, 1-143, 1-145
2890090-0100	.LOWER SUPPORT ROLLERS	1-127
2890091-0001	.ROLLER	1-135, 1-137
2890091-0002	.TRIMMING ROLLER MINUS	1-161, 1-163
2890091-0003	.TRIMMING ROLLER PLUS	1-161, 1-163
2890093-0000	.FORK	1-135, 1-137
2890102-0000	.ROLLER	1-139, 1-141, 1-143, 1-145
2890103-0000	.ROLLER	1-139, 1-141, 1-143, 1-145
2890104-0000	.ROLLER	1-139, 1-141, 1-143, 1-145
2890105-0000	.ROLLER	1-139, 1-141, 1-143, 1-145
2890106-0000	.ROLLER	1-139, 1-141, 1-143, 1-145
2890107-0000	.ROLLER	1-139, 1-141, 1-143, 1-145
2890108-0000	.ROLLER	1-139, 1-141, 1-143, 1-145
2890110-0000	.SHAFT	1-139, 1-141, 1-143, 1-145
2890111-0000	.CLEANING PIPE	1-183
2890114-0000	.LOCK PLATE	1-139, 1-141, 1-143, 1-145
2890115-0000	.ROLLER	1-153, 1-155, 1-157
2890118-0000	.SHAFT	1-189
2890119-0000	.SHAFT	1-153, 1-155, 1-157
2890357-0100	.ROLLER	1-7, 1-9, 1-127
2890692-0000	.CUTTING RAIL	1-285, 1-287, 1-289, 1-293, 1-295, 1-297
2890880-0000	.CLEANING PIPE	1-183
2894663-0000	.WALL	1-335, 1-337, 1-339
2894664-0000	.SUPPORT	1-335, 1-337, 1-339
2894665-0000	.GUIDE	1-345
2894666-0000	.GUIDE	1-345
2894672-0000	.PLATE	1-397, 1-399, 1-401
2894673-0000	.CHUTE	1-329, 1-331, 1-333
2894674-0000	.GUIDE	1-335, 1-337, 1-339
2894675-0000	.GUIDE	1-335, 1-337, 1-339
2894677-0000	.FLAP	1-389, 1-391
2894678-0000	.BOTTOM	1-389, 1-391
2894683-0000	.SUPPORT	1-335, 1-337, 1-339
2894684-0000	.GUIDE	1-345
2894686-0000	.BLOCK	1-347, 1-349
2894688-0000	.NOZZLE	1-351
2894689-0000	.NOZZLE	1-351
2894690-0000	.PLATE	1-353
2894691-0000	.BLOCK	1-355
2894692-0000	.PUSHER	1-357, 1-359, 1-361, 1-363, 1-413
2894693-0000	.PUSHER	1-357, 1-359, 1-361, 1-363, 1-413
2894694-0000	.PUSHER	1-365, 1-367, 1-369
2894695-0000	.FOLDING BAR	1-403, 1-405
2894696-0000	.FOLDING BAR	1-403, 1-405
2894697-0000	.FOLDING BAR	1-403, 1-405
2894698-0000	.FOLDING BAR	1-403, 1-405
2894699-0000	.PLATE	1-397, 1-399, 1-401
2894700-0000	.PUSHER	1-173, 1-175, 1-335, 1-337, 1-339
2894713-0000	.GUIDE	1-335, 1-337, 1-339
2894714-0000	.GUIDE	1-335, 1-337, 1-339
2894715-0000	.WALL	1-335, 1-337, 1-339
2894716-0000	.WALL	1-335, 1-337, 1-339
2894718-0000	.GUIDE	1-345
2894719-0000	.PLATE	1-353
2894724-0000	.PLATE	1-397, 1-399, 1-401
2894725-0000	.FOLDING DEVICE	1-325, 1-327
2894726-0000	.FOLDING DEVICE	1-325, 1-327
2894727-0000	.FOLDING BAR	1-403, 1-405
2894728-0000	.FOLDING BAR	1-403, 1-405
2894729-0000	.VOLUME BULGE	1-357, 1-359, 1-361, 1-363
2894730-0000	.VOLUME BULGE	1-357, 1-359, 1-361, 1-363
2894737-0000	.PUSHER	1-365, 1-367, 1-369

Part No	Description	Page No
2894752-0000	.FLAP	1-389, 1-391
2894753-0000	.FLAP	1-389, 1-391
2894755-0000	.FOLDING BAR	1-403, 1-405
2894756-0000	.FOLDING BAR	1-403, 1-405
2901092-0200	.SUPPORT ROLLER	1-201, 1-203
2902962-0000	.AIR NOZZLE	1-159
2903070-0000	.HEAT GUARD	1-159
2905199-0000	.HOLDER	1-207, 1-209, 1-211, 1-213, 1-215, 1-217, 1-219, 1-221, 1-223, 1-227, 1-231, 1-233, 1-235, 1-237, 1-239, 1-243
2906017-0000	.OPERATING ROD	1-253, 1-255, 1-257, 1-259, 1-261, 1-263
2906018-0000	.CARRIER RULER	1-285, 1-287, 1-289
2906019-0000	.FOLDING FLAP	1-285, 1-287, 1-289, 1-293, 1-295, 1-297
2906020-0000	.FOLDING FLAP	1-285, 1-287, 1-289, 1-293, 1-295, 1-297
2906021-0000	.BEARING HOUSING	1-285, 1-287, 1-289, 1-293, 1-295, 1-297
2906022-0000	.CARRIER RULER	1-293, 1-295, 1-297
2906023-0000	.CARRIER	1-207, 1-209, 1-211, 1-213, 1-215, 1-217, 1-231, 1-233, 1-235, 1-237
2906024-0000	.CARRIER	1-207, 1-209, 1-211, 1-213, 1-215, 1-217, 1-231, 1-233, 1-235, 1-237
2906025-0000	.SHAFT	1-207, 1-209, 1-211, 1-213, 1-215, 1-217, 1-231, 1-233, 1-235, 1-237
2906064-0000	.SHAFT	1-135, 1-137
2906065-0000	.ROLLER	1-135, 1-137
2906099-0000	.DISTRIBUTOR WING	1-189
2906103-0000	.ROLLER	1-151
2906104-0000	.ROLLER	1-151
2906105-0000	.ROLLER	1-151
2906116-0000	.SPRING	1-185, 1-187
2906117-0000	.SPRING	1-185, 1-187
2906118-0000	.LOWER SUPPORT ROLLERS	1-151
2906119-0000	.ROLLER	1-151
2906120-0000	.ROLLER	1-151
2906121-0000	.ROLLER	1-151
2906135-0200	.TEMPLATE	1-7, 1-9
2906170-0000	.HOLDER	1-219, 1-221, 1-223
2907726-0000	.VOLUME FLAP	1-207, 1-209, 1-211, 1-213, 1-215, 1-217
2907727-0000	.VOLUME FLAP	1-231, 1-233, 1-235, 1-237
2907728-0200	.VOLUME FLAP	1-229, 1-241
2907729-0200	.VOLUME FLAP	1-201, 1-203, 1-411
2907732-0000	.CUTTING JAW	1-285, 1-287, 1-289, 1-293, 1-295, 1-297
2908756-0000	.VOLUME SHIM	1-173, 1-175, 1-207, 1-209, 1-211, 1-213, 1-215, 1-217, 1-231, 1-233, 1-235, 1-237
2909367-0000	.PRESSURE ROLLER	1-173, 1-175, 1-185, 1-187
2909368-0000	.PRESSURE ROLLER (PACK 10)	1-173, 1-175, 1-185, 1-187
2909729-0000	.TEMPLATE	1-179, 1-181
2909730-0000	.TEMPLATE	1-179, 1-181
2910371-0000	.VOLUME FLAP	1-207, 1-209, 1-211, 1-213, 1-215, 1-217
2912412-0000	.SUPPORT	1-335, 1-337, 1-339
2912413-0000	.GUIDE	1-335, 1-337, 1-339
2912414-0000	.GUIDE	1-335, 1-337, 1-339
2912419-0000	.BLOCK	1-347, 1-349
2912423-0000	.BLOCK	1-355
2912424-0000	.PUSHER	1-357, 1-359, 1-361, 1-363, 1-413
2912425-0000	.BOTTOM	1-389, 1-391
2912426-0000	.FLAP	1-389, 1-391
2912427-0000	.PUSHER	1-357, 1-359, 1-361, 1-363, 1-413
2912437-0000	.NOZZLE	1-351
2912438-0000	.NOZZLE	1-351
2912440-0000	.NOZZLE	1-351
2912441-0000	.PLATE	1-353
2912442-0000	.PLATE	1-397, 1-399, 1-401
2913350-0000	.SUPPORT RING	1-151
2914727-0000	.AXLE	1-207, 1-209, 1-211, 1-213, 1-215, 1-217
2914728-0000	.SHAFT	1-207, 1-209, 1-211, 1-213, 1-215, 1-217
2914729-0000	.SHAFT	1-207, 1-209, 1-211, 1-213, 1-215, 1-217
2914730-0000	.ROLLER	1-207, 1-209, 1-211, 1-213, 1-215, 1-217, 1-231, 1-233, 1-235, 1-237
2915798-0000	.RAIL	1-265, 1-267, 1-269
2916179-0000	.SHAFT	1-207, 1-209, 1-211, 1-213, 1-215, 1-217, 1-231, 1-233, 1-235, 1-237
2916871-0000	.BLOCK	1-245, 1-247, 1-249, 1-251
2916875-0000	.BLOCK	1-253, 1-255, 1-257, 1-259, 1-261, 1-263
2916877-0000	.BUSBAR	1-283
2916878-0000	.BUSBAR	1-273
2916880-0000	.SUPPORT	1-265, 1-267, 1-269, 1-275, 1-277, 1-279
2916881-0000	.BEARING HOUSING	1-285, 1-287, 1-289, 1-293, 1-295, 1-297
2916883-0000	.HOLDER	1-219, 1-221, 1-223
2916887-0000	.SHAFT	1-207, 1-209, 1-211, 1-213, 1-215, 1-217
2917498-0000	.INDUCTOR	1-173, 1-175, 1-265, 1-267, 1-269, 1-275, 1-277, 1-279
2918693-0000	.WALL	1-335, 1-337, 1-339
2918694-0000	.WALL	1-335, 1-337, 1-339
2918697-0000	.GUIDE	1-345
2919057-0000	.FOLDING BAR	1-403, 1-405
2919058-0000	.FOLDING BAR	1-403, 1-405
2919059-0000	.FOLDING BAR	1-403, 1-405
2919060-0000	.FOLDING BAR	1-403, 1-405
2919303-0000	.VOLUME FLAP	1-207, 1-209, 1-211, 1-213, 1-215, 1-217
2919304-0000	.VOLUME FLAP	1-207, 1-209, 1-211, 1-213, 1-215, 1-217
2921028-0000	.FASTENING BRACKET	1-21, 1-25
2921029-0000	.FASTENING BRACKET	1-21, 1-25

Part No	Description	Page No
2921571-0000	.SHAFT	1-207, 1-209, 1-211, 1-213, 1-215, 1-217, 1-231, 1-233, 1-235, 1-237
2921574-0000	.PUSHER	1-173, 1-175, 1-335, 1-337, 1-339
2922709-0001	.ROLLER	1-135, 1-137
2922709-0002	.TRIMMING ROLLER MINUS	1-161, 1-163
2922709-0003	.TRIMMING ROLLER PLUS	1-161, 1-163
2922724-0000	.CLEANING PIPE	1-183
2922767-0001	.ROLLER	1-135, 1-137
2922767-0002	.TRIMMING ROLLER MINUS	1-161, 1-163
2922767-0003	.TRIMMING ROLLER PLUS	1-161, 1-163
2927573-0000	.OPENING SPECIFICATION	1-123
2927588-0000	.CUTTING JAW	1-285, 1-287, 1-289, 1-293, 1-295, 1-297
2927589-0000	.BRACKET	1-285, 1-287, 1-289, 1-293, 1-295, 1-297
2927708-0000	.SEALING PLATE	1-93
2927709-0000	.SEALING PLATE	1-95
2930304-0000	.ROLLER	1-151
2931715-0000	.SPRING BRACKET	1-15, 1-17, 1-19
2932253-0000	.PRESSURE ROLLER (PACK 10)	1-173, 1-175, 1-185, 1-187
2933520-0000	.SCREW	1-219, 1-221, 1-223, 1-239, 1-243
2934402-0000	.SLEEVE	1-265, 1-267, 1-269, 1-275, 1-277, 1-279
2934403-0000	.PISTON	1-265, 1-267, 1-269, 1-275, 1-277, 1-279
2939843-0000	.PIN	1-311, 1-313
2941944-0000	.VOLUME BULGE	1-357, 1-359, 1-361, 1-363
2944475-0000	.RAIL	1-275, 1-277, 1-279
2945423-0000	.FLOAT	1-185, 1-187
2945430-0200	.PRESSURE FLANGE	1-7, 1-9
2945431-0000	.BRACKET	1-153, 1-155, 1-157
2945432-0000	.BRACKET	1-153, 1-155, 1-157
2945443-0000	.ROLLER	1-129, 1-131
2945445-0000	.COUNTER ROLLER	1-135, 1-137
2945446-0001	.ROLLER	1-135, 1-137
2945446-0002	.TRIMMING ROLLER MINUS	1-161, 1-163
2945446-0003	.TRIMMING ROLLER PLUS	1-161, 1-163
2945447-0000	.ROLLER	1-139, 1-141, 1-143, 1-145
2945448-0000	.ROLLER	1-139, 1-141, 1-143, 1-145
2945449-0000	.ROLLER	1-139, 1-141, 1-143, 1-145
2945450-0000	.ROLLER	1-139, 1-141, 1-143, 1-145
2945451-0000	.ROLLER	1-139, 1-141, 1-143, 1-145
2945452-0000	.ROLLER	1-139, 1-141, 1-143, 1-145
2945453-0000	.ROLLER	1-139, 1-141, 1-143, 1-145
2945457-0000	.LOWER SUPPORT ROLLERS	1-151
2945466-0000	.COUNTER ROLLER	1-135, 1-137
2947183-0000	.RAIL	1-265, 1-267, 1-269, 1-275, 1-277, 1-279
2947184-0000	.BEARING HOUSING	1-285, 1-287, 1-289, 1-293, 1-295, 1-297
2947185-0000	.HOLDER	1-219, 1-221, 1-223
2947186-0000	.VOLUME FLAP	1-207, 1-209, 1-211, 1-213, 1-215, 1-217
2947187-0000	.VOLUME FLAP	1-207, 1-209, 1-211, 1-213, 1-215, 1-217
2947531-0000	.ROLLER	1-311, 1-313
2947655-0000	.LABEL	1-59, 1-61, 1-63
2947787-0000	.VOLUME BULGE	1-207, 1-209, 1-211, 1-213, 1-215, 1-217
2947788-0000	.VOLUME SHIM	1-173, 1-175, 1-207, 1-209, 1-211, 1-213, 1-215, 1-217
2949862-0004	.DOLLY	1-173, 1-175, 1-285, 1-287, 1-289, 1-293, 1-295, 1-297
2949914-0000	.BLOCK	1-347, 1-349
2949915-0000	.PLATE	1-353
2949916-0000	.FOLDING BAR	1-403, 1-405
2949917-0000	.FOLDING BAR	1-403, 1-405
2949918-0000	.FOLDING BAR	1-403, 1-405
2949919-0000	.FOLDING BAR	1-403, 1-405
2949920-0000	.NOZZLE	1-351
2949921-0000	.NOZZLE	1-351
2949922-0000	.NOZZLE	1-351
2949923-0000	.FLAP	1-389, 1-391
2949924-0000	.BOTTOM	1-389, 1-391
2949925-0000	.BLOCK	1-355
2949926-0000	.PUSHER	1-357, 1-359, 1-361, 1-363
2949928-0000	.GUIDE	1-335, 1-337, 1-339
2949929-0000	.GUIDE	1-335, 1-337, 1-339
2950886-0000	.RAIL	1-265, 1-267, 1-269
2950887-0000	.RAIL	1-275, 1-277, 1-279
2950888-0000	.BEARING HOUSING	1-285, 1-287, 1-289, 1-293, 1-295, 1-297
2950889-0000	.CARRIER RULER	1-285, 1-287, 1-289
2950890-0000	.CARRIER RULER	1-285, 1-287, 1-289
2950891-0000	.ADJUSTING SCREW	1-285, 1-287, 1-289, 1-293, 1-295, 1-297
2950892-0000	.CUTTING JAW	1-285, 1-287, 1-289, 1-293, 1-295, 1-297
2950893-0000	.CARRIER	1-285, 1-287, 1-289, 1-293, 1-295, 1-297
2950894-0000	.CARRIER	1-285, 1-287, 1-289, 1-293, 1-295, 1-297
2950895-0000	.CARRIER RULER	1-293, 1-295, 1-297
2950896-0000	.CARRIER RULER	1-293, 1-295, 1-297
2950897-0000	.ROLLER	1-311, 1-313
2950900-0000	.HOLDER	1-219, 1-221, 1-223
2950901-0000	.VOLUME FLAP	1-207, 1-209, 1-211, 1-213, 1-215, 1-217
2950902-0000	.VOLUME SHIM	1-173, 1-175, 1-207, 1-209, 1-211, 1-213, 1-215, 1-217
2950908-0000	.VOLUME FLAP	1-231, 1-233, 1-235, 1-237
2950910-0000	.TENSION SPRING	1-219, 1-221, 1-223
2950996-0000	.ROLLER	1-311, 1-313

Part No	Description	Page No
2951583-0300	.OUTER PATCH MAGAZINE	1-15, 1-17, 1-19
2951584-0000	.PROTECTION	1-59, 1-61, 1-63
2954994-0000	.VOLUME FLAP	1-207, 1-209, 1-211, 1-213, 1-215, 1-217
2956875-0000	.DIE	1-87
2956876-0000	.PUNCH	1-87
2958511-0000	.VOLUME FLAP	1-207, 1-209, 1-211, 1-213, 1-215, 1-217
2958512-0000	.VOLUME FLAP	1-207, 1-209, 1-211, 1-213, 1-215, 1-217
2959274-0000	.ROLLER	1-311, 1-313
2959957-0001	.HOLDER	1-239
2959957-0002	.HOLDER	1-227
2959957-0003	.HOLDER	1-243
2959957-0004	.HOLDER	1-219, 1-221, 1-223
2960530-0000	.TEMPLATE	1-179, 1-181
2960531-0000	.TEMPLATE	1-179, 1-181
2961518-0000	.PIPE	1-321
2961519-0000	.PIPE	1-321
2961521-0300	.NOZZLE	1-319
2961522-0200	.TUBE FLUSHING	1-201, 1-203
2962055-0000	.BEARING HOUSING	1-285, 1-287, 1-289, 1-293, 1-295, 1-297
2962114-0000	.GUIDE	1-335, 1-337, 1-339
2962115-0000	.GUIDE	1-335, 1-337, 1-339
2962117-0000	.GUIDE	1-345
2962119-0000	.BLOCK	1-347, 1-349
2962125-0000	.BLOCK	1-355
2962126-0000	.PUSHER	1-357, 1-359, 1-361, 1-363, 1-413
2962127-0000	.GUIDE	1-345
2962128-0000	.FLAP	1-389, 1-391
2962129-0000	.BOTTOM	1-389, 1-391
2962130-0000	.NOZZLE	1-351
2962133-0000	.PLATE	1-325, 1-327
2963819-0300	.OUTER PATCH APPLICATOR	1-15, 1-17, 1-19
2963820-0200	.MOUNTING BRACKET	1-25
2964307-0000	.ROLLER	1-311, 1-313
2964389-0000	.VOLUME FLAP	1-207, 1-209, 1-211, 1-213, 1-215, 1-217
2964390-0000	.VOLUME FLAP	1-207, 1-209, 1-211, 1-213, 1-215, 1-217
2964391-0000	.VOLUME FLAP	1-231, 1-233, 1-235, 1-237
2964541-0000	.SHAFT	1-207, 1-209, 1-211, 1-213, 1-215, 1-217, 1-231, 1-233, 1-235, 1-237
2964542-0000	.SHAFT	1-207, 1-209, 1-211, 1-213, 1-215, 1-217, 1-231, 1-233, 1-235, 1-237
2964566-0000	.SUPPORT	1-265, 1-267, 1-269, 1-275, 1-277, 1-279
2964567-0000	.BLOCK	1-253, 1-255, 1-257, 1-259, 1-261, 1-263
2965109-0001	.HOLDER	1-239
2965109-0002	.HOLDER	1-227
2965109-0003	.HOLDER	1-243
2965109-0004	.HOLDER	1-219, 1-221, 1-223
2965110-0000	.CUTTING JAW	1-285, 1-287, 1-289, 1-293, 1-295, 1-297
2966463-0000	.SCREW	1-219, 1-221, 1-223, 1-227, 1-239, 1-243
2966464-0200	.SHOCK ABSORBER	1-229
2966465-0200	.VOLUME FLAP	1-201, 1-203, 1-411
2966466-0200	.SHOCK ABSORBER	1-225
2966467-0200	.VOLUME FLAP	1-201, 1-203, 1-411
2966468-0200	.SHOCK ABSORBER	1-241
2966587-0000	.FOLDING BAR	1-403, 1-405
2966588-0000	.FOLDING BAR	1-403, 1-405
2966591-0000	.PUSHER	1-365, 1-367, 1-369
2966592-0000	.SUPPORT	1-381
2966594-0000	.BRACKET	1-381
2966596-0000	.FLAP	1-389, 1-391
2966598-0000	.COUNTER ROLLER	1-135, 1-137
2966599-0001	.ROLLER	1-135, 1-137
2966599-0002	.TRIMMING ROLLER MINUS	1-161, 1-163
2966599-0003	.TRIMMING ROLLER PLUS	1-161, 1-163
2966601-0000	.COUNTER ROLLER	1-135, 1-137
2966602-0001	.ROLLER	1-135, 1-137
2966602-0002	.TRIMMING ROLLER MINUS	1-161, 1-163
2966602-0003	.TRIMMING ROLLER PLUS	1-161, 1-163
2966604-0000	.COUNTER ROLLER	1-135, 1-137
2966605-0001	.ROLLER	1-135, 1-137
2966605-0002	.TRIMMING ROLLER MINUS	1-161, 1-163
2966605-0003	.TRIMMING ROLLER PLUS	1-161, 1-163
2966612-0000	.ROLLER	1-139, 1-141, 1-143, 1-145
2966613-0000	.ROLLER	1-139, 1-141, 1-143, 1-145
2966614-0000	.ROLLER	1-139, 1-141, 1-143, 1-145
2966627-0000	.ROLLER	1-129, 1-131
2966629-0000	.ROLLER	1-129, 1-131
2966639-0000	.UPPER FILLING TUBE	1-185, 1-187
2966640-0000	.LOWER FILLING TUBE	1-185, 1-187
2966641-0000	.PRESSURE FLANGE	1-185, 1-187
2966644-0000	.LOWER FILLING TUBE	1-185, 1-187
2966645-0000	.LOWER FILLING TUBE	1-185, 1-187
2966646-0000	.PRESSURE FLANGE	1-185, 1-187
2966647-0000	.UPPER FILLING TUBE	1-185, 1-187
2966648-0000	.UPPER FILLING TUBE	1-185, 1-187
2966649-0000	.FORK	1-185, 1-187
2966651-0000	.CLEANING PIPE	1-183

Part No	Description	Page No
2966653-0000	.LOWER FILLING TUBE	1-185, 1-187
2966654-0000	.LOWER FILLING TUBE	1-185, 1-187
2966656-0000	.LOWER FILLING TUBE	1-185, 1-187
2966660-0000	.PRESSURE FLANGE	1-185, 1-187
2966672-0000	.UPPER FILLING TUBE	1-185, 1-187
2966681-0000	.PRESSURE FLANGE	1-11
2966682-0000	.PRESSURE FLANGE	1-11
2966683-0000	.PRESSURE FLANGE	1-11
2966688-0000	.PRESSURE FLANGE	1-11
2966689-0000	.PRESSURE FLANGE	1-11
2966691-0000	.PRESSURE FLANGE	1-11
2969725-0001	.ROLLER (STANDARD SIZE)	1-135, 1-137
2969725-0002	.TRIMMING ROLLER MINUS	1-161, 1-163
2969725-0003	.TRIMMING ROLLER PLUS	1-161, 1-163
2969939-0000	.COUNTER ROLLER	1-135, 1-137
2970443-0000	.ROLLER	1-129, 1-131
2970615-0000	.BEARING HOUSING	1-285, 1-287, 1-289, 1-293, 1-295, 1-297
2971544-0000	.INDUCTOR	1-97
2971768-0000	.PLATE	1-353
2971940-0000	.VOLUME BULGE	1-207, 1-209, 1-211, 1-213, 1-215, 1-217, 1-231, 1-233, 1-235, 1-237
2973927-0000	.FOLDING BAR	1-403, 1-405
2973928-0000	.FOLDING BAR	1-403, 1-405
2974071-0200	.VOLUME CONVERSION KIT NOQC	1-3
2974072-0200	.VOLUME CONVERSION KIT QC	1-3
2974073-0100	.FINAL FOLDER	1-409
2974074-0100	.SPACER	1-165
2975162-0000	.CUTTING RAIL	1-285, 1-287, 1-289, 1-293, 1-295, 1-297
2975930-0000	.INDUCTOR	1-173, 1-175, 1-265, 1-267, 1-269, 1-275, 1-277, 1-279
2976256-0000	.ROLLER	1-151
2976821-0000	.RAIL	1-265, 1-267, 1-269, 1-275, 1-277, 1-279
2976822-0000	.BEARING HOUSING	1-285, 1-287, 1-289, 1-293, 1-295, 1-297
2976823-0000	.CARRIER	1-285, 1-287, 1-289, 1-293, 1-295, 1-297
2976824-0000	.CARRIER RULER	1-285, 1-287, 1-289
2976825-0000	.CARRIER RULER	1-285, 1-287, 1-289
2976826-0000	.FOLDING FLAP	1-285, 1-287, 1-289, 1-293, 1-295, 1-297
2976827-0000	.FOLDING FLAP	1-285, 1-287, 1-289, 1-293, 1-295, 1-297
2976828-0000	.CARRIER RULER	1-293, 1-295, 1-297
2976829-0000	.CARRIER RULER	1-293, 1-295, 1-297
2976830-0001	.HOLDER	1-239
2976830-0002	.HOLDER	1-227
2976830-0003	.HOLDER	1-243
2976830-0004	.HOLDER	1-219, 1-221, 1-223
2976916-0000	.VOLUME FLAP	1-207, 1-209, 1-211, 1-213, 1-215, 1-217
2976920-0000	.SHAFT	1-207, 1-209, 1-211, 1-213, 1-215, 1-217, 1-231, 1-233, 1-235, 1-237
2976923-0000	.SHAFT	1-207, 1-209, 1-211, 1-213, 1-215, 1-217, 1-231, 1-233, 1-235, 1-237
2976932-0000	.NOZZLE	1-351
2976945-0200	.BOX 1 NOQC	1-5
2976946-0200	.BOX 2 NOQC	1-5
2976949-0000	.GUIDE	1-335, 1-337, 1-339
2976950-0000	.GUIDE	1-335, 1-337, 1-339
2976953-0000	.FOLDING BAR	1-403, 1-405
2976954-0000	.FOLDING BAR	1-403, 1-405
2976960-0000	.BLOCK	1-347, 1-349
2976961-0000	.FLAP	1-389, 1-391, 1-395, 1-413
2976962-0000	.BOTTOM	1-395
2976963-0000	.PLATE	1-353
2976964-0000	.FLAP	1-389, 1-391, 1-395, 1-413
2976965-0000	.PLATE	1-325, 1-327
2977491-0000	.GUIDE	1-335, 1-337, 1-339
2977492-0000	.GUIDE	1-335, 1-337, 1-339
2977495-0000	.WALL	1-335, 1-337, 1-339
2977496-0000	.WALL	1-335, 1-337, 1-339
2978920-0000	.CARRIER RULER	1-285, 1-287, 1-289
2978921-0000	.CARRIER RULER	1-293, 1-295, 1-297
2978922-0000	.FLAP	1-389, 1-391
2979711-0000	.VOLUME BULGE	1-207, 1-209, 1-211, 1-213, 1-215, 1-217, 1-231, 1-233, 1-235, 1-237
2980067-0000	.FLAP	1-389, 1-391
2983395-0000	.NOZZLE	1-351
2983847-0000	.SPACER	1-325, 1-327
2983848-0000	.SHAFT	1-325, 1-327
2984535-0100	.OPENING SPECIFICATION	1-13
2984539-0100	.TAB FEEDER	1-15, 1-17, 1-19
2984541-0100	.TAB C'JAW	1-15, 1-17, 1-19
2984544-0100	.PATCH C'JAW	1-15, 1-17, 1-19
2984658-0000	.OPENING SPECIFICATION	1-123
2984839-0000	.NOZZLE	1-351
2985491-0000	.SHIM	1-335, 1-337, 1-339
2986078-0000	.NOZZLE	1-351
2986698-0001	.ROLLER	1-135, 1-137
2986698-0002	.TRIMMING ROLLER MINUS	1-161, 1-163
2986698-0003	.TRIMMING ROLLER PLUS	1-161, 1-163
2986699-0000	.COUNTER ROLLER	1-135, 1-137
2986702-0000	.LOWER FILLING TUBE	1-185, 1-187
2986705-0000	.LOWER FILLING TUBE	1-185, 1-187

Part No	Description	Page No
2986706-0000	.PRESSURE FLANGE	1-185, 1-187
2986710-0000	.AIR NOZZLE	1-159
2986711-0000	.HEAT GUARD	1-159
2986716-0000	.LOWER SUPPORT ROLLERS	1-151
2986735-0000	.ROLL	1-139, 1-141, 1-143, 1-145
2986736-0000	.ROLL	1-139, 1-141, 1-143, 1-145
2986739-0000	.ROLLER	1-151
2986740-0000	.LOWER SUPPORT ROLLERS	1-151
2986772-0000	.ROLLER	1-151
2986773-0000	.ROLLER	1-151
2986774-0000	.ROLLER	1-151
2986776-0000	.SUPPORT RING	1-151
2987091-0000	.FOLDING BAR	1-403, 1-405
2987092-0000	.FOLDING BAR	1-403, 1-405
2987095-0000	.GUIDE	1-345
2987096-0000	.GUIDE	1-345
2987097-0000	.GUIDE	1-335, 1-337, 1-339
2987098-0000	.GUIDE	1-335, 1-337, 1-339
2987099-0000	.PLATE	1-353
2987100-0000	.BLOCK	1-347, 1-349
2987101-0000	.FLAP	1-389, 1-391
2987102-0000	.BOTTOM	1-389, 1-391
2987105-0000	.BLOCK	1-355
2987109-0000	.PUSHER	1-357, 1-359, 1-361, 1-363
2987110-0000	.PUSHER	1-357, 1-359, 1-361, 1-363
2988050-0000	.BOX QC	1-409
2988051-0000	.BOX 1 NOQC	1-7, 1-9
2988052-0000	.BOX 2 NOQC	1-195
2990873-0000	.NOZZLE	1-351
2991044-0000	.STOP SCREW	1-219, 1-221, 1-223
2992259-0000	.OPENING SPECIFICATION	1-123
2992940-0000	.CARRIER	1-207, 1-209, 1-211, 1-213, 1-215, 1-217
2992941-0000	.STOP	1-207, 1-209, 1-211, 1-213, 1-215, 1-217, 1-231, 1-233, 1-235, 1-237
2993250-0000	.CARRIER	1-207, 1-209, 1-211, 1-213, 1-215, 1-217
2993462-0000	.GUIDE	1-335, 1-337, 1-339
2993463-0000	.GUIDE	1-335, 1-337, 1-339
2995020-0000	.SEALING PLATE	1-93
2998006-0000	.RAIL HOLDER	1-383
2999197-0100	.RAIL HOLDER	1-365, 1-367, 1-369, 1-385
2999199-0100	.RAILING	1-365, 1-367, 1-369
3000073-0000	.VOLUME BULGE	1-207, 1-209, 1-211, 1-213, 1-215, 1-217
3002051-0000	.GUIDE	1-345
3002052-0000	.GUIDE	1-345
3002053-0000	.WALL	1-335, 1-337, 1-339
3002054-0000	.WALL	1-335, 1-337, 1-339
3002255-0000	.VOLUME BULGE	1-207, 1-209, 1-211, 1-213, 1-215, 1-217
3002257-0000	.VOLUME SHIM	1-173, 1-175, 1-207, 1-209, 1-211, 1-213, 1-215, 1-217
3002880-0000	.BEARING HOUSING	1-265, 1-267, 1-269, 1-275, 1-277, 1-279
3002881-0000	.BEARING HOUSING	1-285, 1-287, 1-289, 1-293, 1-295, 1-297
3002882-0000	.CUTTING JAW	1-285, 1-287, 1-289, 1-293, 1-295, 1-297
3002883-0000	.FOLDING FLAP	1-285, 1-287, 1-289, 1-293, 1-295, 1-297
3002884-0000	.FOLDING FLAP	1-285, 1-287, 1-289, 1-293, 1-295, 1-297
3002885-0000	.CARRIER RULER	1-285, 1-287, 1-289
3002886-0000	.CARRIER RULER	1-285, 1-287, 1-289
3002887-0000	.CARRIER RULER	1-293, 1-295, 1-297
3002888-0000	.CARRIER RULER	1-293, 1-295, 1-297
3002889-0000	.VOLUME FLAP	1-207, 1-209, 1-211, 1-213, 1-215, 1-217
3002890-0001	.HOLDER	1-239
3002890-0002	.HOLDER	1-227
3002890-0003	.HOLDER	1-243
3002890-0004	.HOLDER	1-219, 1-221, 1-223
3002891-0000	.CARRIER	1-207, 1-209, 1-211, 1-213, 1-215, 1-217, 1-231, 1-233, 1-235, 1-237
3002893-0000	.SHAFT	1-207, 1-209, 1-211, 1-213, 1-215, 1-217, 1-231, 1-233, 1-235, 1-237
3002894-0000	.CARRIER	1-207, 1-209, 1-211, 1-213, 1-215, 1-217, 1-231, 1-233, 1-235, 1-237
3003477-0000	.VOLUME FLAP	1-231, 1-233, 1-235, 1-237
3003484-0000	.INDUCTOR	1-97
3003494-0000	.SCREW	1-219, 1-221, 1-223
3003860-0000	.SHAFT	1-207, 1-209, 1-211, 1-213, 1-215, 1-217, 1-231, 1-233, 1-235, 1-237
3003861-0000	.SCREW	1-219, 1-221, 1-223, 1-227, 1-239, 1-243
3003862-0000	.VOLUME BULGE	1-207, 1-209, 1-211, 1-213, 1-215, 1-217, 1-231, 1-233, 1-235, 1-237
3003863-0000	.VOLUME SHIM	1-173, 1-175, 1-207, 1-209, 1-211, 1-213, 1-215, 1-217, 1-231, 1-233, 1-235, 1-237
3006048-0000	.VOLUME BULGE	1-285, 1-287, 1-289, 1-293, 1-295, 1-297
3006049-0000	.VOLUME BULGE	1-265, 1-267, 1-269, 1-275, 1-277, 1-279
3006309-0001	.ROLLER	1-135, 1-137
3006309-0002	.TRIMMING ROLLER MINUS	1-161, 1-163
3006309-0003	.TRIMMING ROLLER PLUS	1-161, 1-163
3006310-0000	.ROLLER	1-135, 1-137
3007781-0000	.STOP	1-207, 1-209, 1-211, 1-213, 1-215, 1-217, 1-231, 1-233, 1-235, 1-237
3010701-0000	.FOLDING BAR	1-403, 1-405
3010702-0000	.FOLDING BAR	1-403, 1-405
3012782-0000	.SUPPORT	1-265, 1-267, 1-269, 1-275, 1-277, 1-279
3013509-0000	.SHAFT	1-285, 1-287, 1-289, 1-293, 1-295, 1-297
3013512-0000	.SHAFT	1-285, 1-287, 1-289, 1-293, 1-295, 1-297
3014067-0000	.WALL	1-397, 1-399, 1-401

Part No	Description	Page No
3014068-0000	.WALL	1-397, 1-399, 1-401
3014069-0000	.FOLDING BAR	1-397, 1-399, 1-401
3014070-0000	.FOLDING BAR	1-397, 1-399, 1-401
3015758-0000	.WALL	1-335, 1-337, 1-339
3015759-0000	.WALL	1-335, 1-337, 1-339
3015760-0000	.GUIDE	1-345
3015761-0000	.GUIDE	1-345
3015762-0000	.PUSHER	1-357, 1-359, 1-361, 1-363, 1-413
3015763-0000	.FOLDING BAR	1-403, 1-405
3015764-0000	.FOLDING BAR	1-403, 1-405
3015765-0000	.FOLDING BAR	1-403, 1-405
3015766-0000	.FOLDING BAR	1-403, 1-405
3016921-0000	.FLAP	1-389, 1-391
3016922-0000	.BOTTOM	1-389, 1-391, 1-395
3017845-0000	.FOLDING DEVICE	1-325, 1-327
3017846-0000	.FOLDING DEVICE	1-325, 1-327
3017847-0000	.LEVER	1-325, 1-327
3017848-0000	.SHAFT	1-325, 1-327
3017849-0000	.PLATE	1-397, 1-399, 1-401
3017850-0000	.SCREW	1-325, 1-327
3017851-0000	.AXLE PIN	1-325, 1-327
3017852-0000	.SPACER	1-325, 1-327
3017891-0000	.SPRING BRACKET	1-21, 1-55
3018830-0000	.GUIDE	1-345
3018882-0000	.SUPPORT	1-219, 1-221, 1-223, 1-227, 1-239, 1-243
3019291-0000	.FLAP	1-389, 1-391
3019316-0000	.SHIM	1-173, 1-175
3019317-0000	.SHIM	1-173, 1-175, 1-207, 1-209, 1-211, 1-213, 1-215, 1-217, 1-231, 1-233, 1-235, 1-237
3019782-0000	.FOLDING BAR	1-403, 1-405
3019783-0000	.FOLDING BAR	1-403, 1-405
3019892-0000	.DIE	1-87
3019893-0000	.PUNCH	1-87
3019927-0000	.SEALING PLATE	1-95
3020016-0000	.SUPPORT	1-335, 1-337, 1-339
3020453-0000	.GUIDE	1-335, 1-337, 1-339
3020454-0000	.GUIDE	1-335, 1-337, 1-339
3021604-0000	.SEAL RING	1-129, 1-131
3021605-0000	.SEAL RING	1-129, 1-131
3021606-0000	.SEAL RING	1-129, 1-131
3022266-0000	.SUPPORT	1-265, 1-267, 1-269, 1-275, 1-277, 1-279
3022267-0001	.HOLDER	1-239
3022267-0002	.HOLDER	1-227
3022267-0003	.HOLDER	1-243
3022267-0004	.HOLDER	1-219, 1-221, 1-223
3022268-0000	.SCREW	1-219, 1-221, 1-223, 1-227, 1-239, 1-243
3022269-0000	.SCREW	1-219, 1-221, 1-223, 1-227, 1-239, 1-243
3022271-0000	.CARRIER	1-207, 1-209, 1-211, 1-213, 1-215, 1-217
3022272-0000	.CARRIER	1-207, 1-209, 1-211, 1-213, 1-215, 1-217
3022273-0000	.SCREW	1-207, 1-209, 1-211, 1-213, 1-215, 1-217, 1-231, 1-233, 1-235, 1-237
3022275-0000	.STOP	1-207, 1-209, 1-211, 1-213, 1-215, 1-217
3022276-0000	.VOLUME SHIM	1-173, 1-175, 1-207, 1-209, 1-211, 1-213, 1-215, 1-217
3022278-0000	.VOLUME BULGE	1-207, 1-209, 1-211, 1-213, 1-215, 1-217
3022594-0000	.PRESSURE FLANGE	1-185, 1-187
3022744-0000	.SEALING PLATE	1-23
3023522-0000	.SEAL RING	1-129, 1-131
3023523-0000	.SEAL RING	1-129, 1-131
3023524-0000	.SEAL RING	1-129, 1-131
3023659-0000	.SEAL RING	1-129, 1-131
3024046-0000	.HOLDER	1-207, 1-209, 1-211, 1-213, 1-215, 1-217, 1-219, 1-221, 1-223
3024345-0000	.VOLUME FLAP	1-207, 1-209, 1-211, 1-213, 1-215, 1-217
3024498-0000	.GUIDE	1-335, 1-337, 1-339
3024499-0000	.GUIDE	1-335, 1-337, 1-339
3024500-0000	.WALL	1-335, 1-337, 1-339
3024501-0000	.WALL	1-335, 1-337, 1-339
3027099-0000	.SUPPORT	1-335, 1-337, 1-339
3027694-0000	.FOLDING DEVICE	1-325, 1-327
3027695-0000	.FOLDING DEVICE	1-325, 1-327
3031464-0000	.BLOCK	1-355
3031785-0000	.WALL	1-397, 1-399, 1-401
3031786-0000	.WALL	1-397, 1-399, 1-401
3033995-0000	.CUTTING JAW	1-285, 1-287, 1-289, 1-293, 1-295, 1-297
3033996-0000	.CUTTING RAIL	1-285, 1-287, 1-289, 1-293, 1-295, 1-297
3035454-0000	.VOLUME BULGE	1-285, 1-287, 1-289, 1-293, 1-295, 1-297
3035991-0000	.BRACKET	1-51
3037861-0000	.SHAFT	1-189
3037924-0000	.ROLLER	1-139, 1-141, 1-143, 1-145
3037925-0000	.ROLLER	1-139, 1-141, 1-143, 1-145
3037926-0000	.ROLLER	1-139, 1-141, 1-143, 1-145
3037929-0000	.FOLDING BAR	1-403, 1-405
3037930-0000	.FOLDING BAR	1-403, 1-405
3037931-0000	.WALL	1-397, 1-399, 1-401
3037932-0000	.WALL	1-397, 1-399, 1-401
3037955-0000	.PUSHER	1-173, 1-175, 1-335, 1-337, 1-339
3038087-0000	.KEY	1-45

Part No	Description	Page No
3039513-0100	.SUPPORT	1-365, 1-367, 1-369
3039514-0100	.SUPPORT	1-365, 1-367, 1-369
3040850-0000	.TENSION SPRING	1-219, 1-221, 1-223, 1-227, 1-239, 1-243
3042196-0200	.OUTER PATCH FEEDER	1-25
3042197-0200	.OUTER PATCH FEEDER	1-33
3042504-0000	.NUT	1-207, 1-209, 1-211, 1-213, 1-215, 1-217, 1-219, 1-221, 1-223
3042505-0000	.SUPPORT	1-219, 1-221, 1-223
3042518-0000	.SUPPORT	1-207, 1-209, 1-211, 1-213, 1-215, 1-217
3042519-0000	.STOP	1-207, 1-209, 1-211, 1-213, 1-215, 1-217
3042521-0000	.STOP	1-207, 1-209, 1-211, 1-213, 1-215, 1-217, 1-231, 1-233, 1-235, 1-237
3042522-0000	.STOP	1-207, 1-209, 1-211, 1-213, 1-215, 1-217
3042523-0000	.STOP	1-207, 1-209, 1-211, 1-213, 1-215, 1-217
3042525-0000	.CARRIER	1-207, 1-209, 1-211, 1-213, 1-215, 1-217
3042526-0000	.CARRIER	1-207, 1-209, 1-211, 1-213, 1-215, 1-217
3042527-0000	.CARRIER	1-207, 1-209, 1-211, 1-213, 1-215, 1-217
3042528-0000	.CARRIER	1-207, 1-209, 1-211, 1-213, 1-215, 1-217, 1-231, 1-233, 1-235, 1-237
3042529-0000	.CARRIER	1-207, 1-209, 1-211, 1-213, 1-215, 1-217
3042530-0000	.CARRIER	1-207, 1-209, 1-211, 1-213, 1-215, 1-217
3043672-0100	.FLAP	1-389, 1-391, 1-413
3044462-0000	.ARCH	1-365, 1-367, 1-369
3044463-0000	.ARCH	1-365, 1-367, 1-369
3044527-0000	.INDUCTOR	1-173, 1-175, 1-265, 1-267, 1-269, 1-275, 1-277, 1-279
3045542-0000	.GUIDE	1-345
3045543-0000	.GUIDE	1-345
3047317-0000	.VOLUME BULGE	1-197, 1-199, 1-207, 1-209, 1-211, 1-213, 1-215, 1-217
3047358-0000	.VOLUME SHIM	1-197, 1-199, 1-207, 1-209, 1-211, 1-213, 1-215, 1-217
3047987-0000	.PIN	1-311, 1-313
3048011-0000	.VOLUME BULGE	1-197, 1-199, 1-207, 1-209, 1-211, 1-213, 1-215, 1-217
3051988-0000	.GUIDE	1-345
3051989-0000	.GUIDE	1-345
3051990-0000	.BLOCK	1-347, 1-349
3051991-0000	.NOZZLE	1-351
3051992-0000	.NOZZLE	1-351
3051993-0000	.NOZZLE	1-351
3051994-0000	.PLATE	1-353
3051995-0000	.PIPE	1-351
3051996-0000	.PIPE	1-351
3051997-0000	.BLOCK	1-355
3052000-0000	.FLAP	1-389, 1-391
3052002-0000	.BOTTOM	1-395
3052003-0000	.WALL	1-397, 1-399, 1-401
3052004-0000	.WALL	1-397, 1-399, 1-401
3052005-0000	.FOLDING BAR	1-403, 1-405
3052006-0000	.FOLDING BAR	1-403, 1-405
3052009-0000	.PLATE	1-325, 1-327
3052010-0000	.SHAFT	1-325, 1-327
3052011-0000	.FOLDING DEVICE	1-325, 1-327
3052012-0000	.FOLDING DEVICE	1-325, 1-327
3052013-0000	.FOLDING BAR	1-403, 1-405
3052014-0000	.FOLDING BAR	1-403, 1-405
3055888-0000	.WALL	1-335, 1-337, 1-339
3055889-0000	.WALL	1-335, 1-337, 1-339
3055890-0000	.FOLDING BAR	1-403, 1-405
3055891-0000	.FOLDING BAR	1-403, 1-405
3055892-0000	.FOLDING BAR	1-397, 1-399, 1-401
3055893-0000	.FOLDING BAR	1-397, 1-399, 1-401
3058432-0000	.ROLLER	1-139, 1-141, 1-143, 1-145
3058433-0000	.ROLLER	1-139, 1-141, 1-143, 1-145
3058434-0000	.ROLLER	1-139, 1-141, 1-143, 1-145
3058435-0000	.BRACKET	1-139, 1-141, 1-143, 1-145
3058438-0000	.STOPPER	1-177
3058439-0000	.STOPPER	1-177
3058444-0000	.COUNTER ROLLER	1-135, 1-137
3058446-0001	.ROLLER	1-135, 1-137
3058446-0002	.ROLLER	1-161, 1-163
3058446-0003	.ROLLER	1-161, 1-163
3058447-0001	.ROLLER	1-135, 1-137
3058447-0002	.ROLLER	1-161, 1-163
3058447-0003	.ROLLER	1-161, 1-163
3058448-0000	.SEAL RING	1-129, 1-131
3058449-0000	.ROLLER	1-129, 1-131
3058450-0000	.BRACKET	1-159
3058452-0000	.FORK	1-135, 1-137
3058457-0000	.PRESSURE FLANGE	1-185, 1-187
3058468-0000	.LOCK PLATE	1-139, 1-141, 1-143, 1-145
3058469-0000	.ROLLER	1-139, 1-141, 1-143, 1-145
3058470-0000	.ROLLER	1-139, 1-141, 1-143, 1-145
3058471-0000	.ROLLER	1-139, 1-141, 1-143, 1-145
3058472-0000	.ROLLER	1-139, 1-141, 1-143, 1-145
3058473-0000	.ROLLER	1-139, 1-141, 1-143, 1-145
3058476-0000	.LOCK PLATE	1-139, 1-141, 1-143, 1-145
3058477-0000	.SUPPORT RING	1-151
3058478-0000	.ROLLER	1-151
3058479-0000	.ROLLER	1-151

Part No	Description	Page No
3058480-0000	.BRACKET	1-139, 1-141, 1-143, 1-145
3058481-0000	.ROLLER	1-151
3058483-0000	.STOPPER	1-177
3058484-0000	.STOPPER	1-177
3058488-0000	.CLAMP	1-189
3058489-0000	.ELBOW PIPE	1-189
3058527-0000	.PRESSURE FLANGE	1-11
3058528-0000	.PRESSURE FLANGE	1-11
3058529-0000	.PRESSURE FLANGE	1-11
3059048-0000	.VOLUME BULGE	1-207, 1-209, 1-211, 1-213, 1-215, 1-217
3059050-0000	.VOLUME SHIM	1-173, 1-175, 1-207, 1-209, 1-211, 1-213, 1-215, 1-217
3066842-0000	.VOLUME BULGE	1-357, 1-359, 1-361, 1-363
3067238-0000	.SUPPORT	1-265, 1-267, 1-269, 1-275, 1-277, 1-279
3067239-0000	.BEARING HOUSING	1-285, 1-287, 1-289, 1-293, 1-295, 1-297
3067241-0000	.FOLDING FLAP	1-285, 1-287, 1-289, 1-293, 1-295, 1-297
3067242-0000	.CARRIER RULER	1-285, 1-287, 1-289
3067243-0000	.CARRIER RULER	1-285, 1-287, 1-289
3067244-0000	.CUTTING JAW	1-285, 1-287, 1-289, 1-293, 1-295, 1-297
3067245-0000	.CARRIER RULER	1-293, 1-295, 1-297
3067246-0000	.CARRIER RULER	1-293, 1-295, 1-297
3067247-0001	.HOLDER	1-239
3067247-0002	.HOLDER	1-227
3067247-0003	.HOLDER	1-243
3067247-0004	.HOLDER	1-219, 1-221, 1-223
3067248-0000	.VOLUME FLAP	1-207, 1-209, 1-211, 1-213, 1-215, 1-217
3067249-0000	.VOLUME BULGE	1-207, 1-209, 1-211, 1-213, 1-215, 1-217
3067250-0000	.CARRIER	1-207, 1-209, 1-211, 1-213, 1-215, 1-217
3067251-0000	.CARRIER	1-207, 1-209, 1-211, 1-213, 1-215, 1-217
3067273-0000	.SHAFT	1-207, 1-209, 1-211, 1-213, 1-215, 1-217
3067274-0000	.SHIM	1-173, 1-175, 1-207, 1-209, 1-211, 1-213, 1-215, 1-217
3067286-0000	.VOLUME SHIM	1-173, 1-175
3067349-0000	.SUPPORT	1-335, 1-337, 1-339
3067350-0000	.GUIDE	1-335, 1-337, 1-339
3067351-0000	.GUIDE	1-335, 1-337, 1-339
3067352-0000	.GUIDE	1-345
3067353-0000	.GUIDE	1-345
3067354-0000	.WALL	1-335, 1-337, 1-339
3067355-0000	.WALL	1-335, 1-337, 1-339
3067357-0000	.PLATE	1-353
3067358-0000	.NOZZLE	1-351
3067359-0000	.BLOCK	1-355
3067360-0000	.PUSHER	1-357, 1-359, 1-361, 1-363
3067361-0000	.FLAP	1-389, 1-391
3067362-0000	.FLAP	1-389, 1-391
3067363-0000	.BOTTOM	1-389, 1-391
3067364-0000	.FOLDING BAR	1-403, 1-405
3067365-0000	.FOLDING BAR	1-403, 1-405
3067366-0000	.FOLDING BAR	1-403, 1-405
3067367-0000	.FOLDING BAR	1-403, 1-405
3070289-0000	.FOLDING BAR	1-403, 1-405
3070290-0000	.FOLDING BAR	1-403, 1-405
3072777-0000	.TEMPLATE	1-179, 1-181
3073526-0000	.TEMPLATE	1-179, 1-181
3074720-0000	.GUIDE	1-335, 1-337, 1-339
3074721-0000	.GUIDE	1-335, 1-337, 1-339
3074722-0000	.GUIDE	1-335, 1-337, 1-339
3074723-0000	.GUIDE	1-335, 1-337, 1-339
3074724-0000	.PUSHER	1-357, 1-359, 1-361, 1-363, 1-413
3074725-0000	.PUSHER	1-357, 1-359, 1-361, 1-363, 1-413
3074726-0000	.FLAP	1-395
3076767-0000	.FLAP	1-389, 1-391
3076856-0000	.PRESSURE FLANGE	1-11
3076857-0000	.PRESSURE FLANGE	1-11
3076858-0000	.PRESSURE FLANGE	1-11
3076859-0000	.PRESSURE FLANGE	1-11
3076860-0000	.PRESSURE FLANGE	1-11
3076861-0000	.PRESSURE FLANGE	1-11
3078547-0000	.ROLLER	1-139, 1-141, 1-143, 1-145
3080559-0000	.FOLDING FLAP	1-285, 1-287, 1-289, 1-293, 1-295, 1-297
3080560-0000	.FOLDING FLAP	1-285, 1-287, 1-289, 1-293, 1-295, 1-297
3081261-0000	.OPENING SPECIFICATION	1-123
3086911-0000	.SEALING PLATE	1-93
3089305-0000	.GUIDE	1-345
3089348-0000	.INDUCTOR	1-173, 1-175, 1-265, 1-267, 1-269, 1-275, 1-277, 1-279
3089354-0000	.INDUCTOR	1-173, 1-175, 1-265, 1-267, 1-269, 1-275, 1-277, 1-279
3089565-0000	.PRESSURE FLANGE	1-185, 1-187
3089566-0000	.PRESSURE FLANGE	1-185, 1-187
3089567-0001	.ROLLER	1-135, 1-137
3089567-0002	.ROLLER	1-161, 1-163
3089567-0003	.ROLLER	1-161, 1-163
3089568-0001	.ROLLER	1-135, 1-137
3089568-0002	.ROLLER	1-161, 1-163
3089568-0003	.ROLLER	1-161, 1-163
3089569-0000	.ROLLER	1-135, 1-137

Part No	Description	Page No
3089571-0000	.PRESSURE FLANGE	1-185, 1-187
3089572-0000	.BRACKET	1-177
3089589-0000	.WASHER	1-135, 1-137
3089594-0000	.PRESSURE FLANGE	1-11
3089595-0000	.PRESSURE FLANGE	1-11
3089596-0000	.PRESSURE FLANGE	1-11
3089599-0000	.LOWER FORMING RING	1-135, 1-137
3089600-0000	.UPPER FORMING RING	1-139, 1-141, 1-143, 1-145
3089601-0000	.UPPER FORMING RING	1-139, 1-141, 1-143, 1-145
3089602-0000	.UPPER FORMING RING	1-139, 1-141, 1-143, 1-145
3089603-0000	.UPPER FORMING RING	1-139, 1-141, 1-143, 1-145
3089604-0000	.UPPER FORMING RING	1-139, 1-141, 1-143, 1-145
3089605-0000	.UPPER FORMING RING	1-139, 1-141, 1-143, 1-145
3089606-0000	.LOWER FORMING RING	1-135, 1-137
3092001-0000	.GUIDE	1-345
3092002-0000	.GUIDE	1-345
3092257-0000	.NOZZLE	1-351
3092258-0000	.NOZZLE	1-351
3092451-0000	.RAIL	1-265, 1-267, 1-269, 1-275, 1-277, 1-279
3092452-0000	.NAIL	1-357, 1-359, 1-361, 1-363, 1-413
3092802-0000	.ROLLER	1-311, 1-313
3096231-0000	.KNIFE	1-173, 1-175, 1-301, 1-303, 1-305
3096232-0000	.CUTTING RAIL	1-285, 1-287, 1-289, 1-293, 1-295, 1-297
3096233-0000	.BRACKET	1-285, 1-287, 1-289, 1-293, 1-295, 1-297
3097403-0000	.BUSHING	1-219, 1-221, 1-223, 1-227, 1-239, 1-243
3097404-0001	.HOLDER	1-239
3097404-0003	.HOLDER	1-243
3097405-0002	.HOLDER	1-227
3097405-0004	.HOLDER	1-219, 1-221, 1-223
3097407-0000	.CARRIER	1-207, 1-209, 1-211, 1-213, 1-215, 1-217
3097408-0000	.CARRIER	1-207, 1-209, 1-211, 1-213, 1-215, 1-217
3097409-0000	.CARRIER	1-231, 1-233, 1-235, 1-237
3097580-0000	.CARRIER	1-231, 1-233, 1-235, 1-237
3097581-0000	.STOP	1-231, 1-233, 1-235, 1-237
3097582-0000	.STOP	1-207, 1-209, 1-211, 1-213, 1-215, 1-217
3097776-0000	.SHIM	1-357, 1-359, 1-361, 1-363, 1-413
3099249-0000	.FLAP	1-285, 1-287, 1-289, 1-293, 1-295, 1-297
3099250-0000	.FLAP	1-285, 1-287, 1-289, 1-293, 1-295, 1-297
3099357-0000	.BRACKET	1-153, 1-155, 1-157
3100273-0000	.BRACKET	1-153, 1-155, 1-157
3100463-0000	.SUPPORT	1-57
3100465-0000	.SUPPORT	1-57
3100466-0000	.AXLE PIN	1-57
3100469-0000	.BRACKET	1-57
3100471-0000	.ROLLER	1-57
3100478-0000	.GUIDE FORK	1-57
3100494-0200	.TURNING DEVICE	1-55
3100994-0000	.LOWER FORMING RING	1-135, 1-137
3100995-0000	.SUPPORT	1-135, 1-137
3104458-0000	.VOLUME BULGE	1-197, 1-199, 1-207, 1-209, 1-211, 1-213, 1-215, 1-217
3104459-0000	.SHIM	1-197, 1-199, 1-207, 1-209, 1-211, 1-213, 1-215, 1-217
3104917-0100	.VOLUME BULGE	1-195, 1-409
3105452-0000	.FOLDING FLAP	1-285, 1-287, 1-289, 1-293, 1-295, 1-297
3106241-0000	.PUSHER	1-357, 1-359, 1-361, 1-363, 1-413
3106242-0000	.PUSHER	1-357, 1-359, 1-361, 1-363, 1-413
3106685-0000	.VOLUME BULGE	1-197, 1-199, 1-231, 1-233, 1-235, 1-237
3106750-0000	.VOLUME BULGE	1-265, 1-267, 1-269, 1-275, 1-277, 1-279
3106754-0000	.COVER	1-265, 1-267, 1-269, 1-275, 1-277, 1-279
3106811-0100	.PT COMPACTFLEX HOLES	1-7, 1-9
3106812-0102	.REBUILDING MANUAL	1-13
3106813-0100	.MECHANICAL REBUILDING	1-13
3106859-0000	.VOLUME BULGE	1-197, 1-199, 1-207, 1-209, 1-211, 1-213, 1-215, 1-217
3106860-0000	.SHIM	1-197, 1-199, 1-207, 1-209, 1-211, 1-213, 1-215, 1-217
3106864-0100	.PANEL	1-15, 1-17, 1-19
3106891-0000	.FLOAT	1-185, 1-187
3106969-0100	.PANEL	1-15, 1-17, 1-19
3108956-0000	.SHIM	1-55
3110105-0000	.VOLUME BULGE	1-207, 1-209, 1-211, 1-213, 1-215, 1-217
3110108-0000	.PUSHER	1-357, 1-359, 1-361, 1-363, 1-413
3110109-0000	.PUSHER	1-357, 1-359, 1-361, 1-363, 1-413
3110110-0000	.PUSHER	1-357, 1-359, 1-361, 1-363, 1-413
3110111-0000	.PUSHER	1-357, 1-359, 1-361, 1-363, 1-413
3111045-0000	.VOLUME SHIM	1-173, 1-175, 1-207, 1-209, 1-211, 1-213, 1-215, 1-217
3112804-0000	.SHIM	1-57
3113802-0000	.CUTTING JAW	1-285, 1-287, 1-289, 1-293, 1-295, 1-297
3113803-0000	.CUTTING JAW	1-285, 1-287, 1-289, 1-293, 1-295, 1-297
3113804-0000	.CUTTING JAW	1-285, 1-287, 1-289, 1-293, 1-295, 1-297
3113805-0000	.CUTTING JAW	1-285, 1-287, 1-289, 1-293, 1-295, 1-297
3115221-0000	.FORK	1-185, 1-187
3115484-0000	.VOLUME BULGE	1-197, 1-199, 1-207, 1-209, 1-211, 1-213, 1-215, 1-217
3115485-0000	.VOLUME SHIM	1-197, 1-199, 1-207, 1-209, 1-211, 1-213, 1-215, 1-217
3117319-0100	.JAW SYSTEM	1-409
3118982-0000	.OPENING SPECIFICATION	1-123
3120545-0000	.PLATE	1-353

Part No	Description	Page No
3120546-0000	.NOZZLE	1-351
3120547-0000	.NOZZLE	1-351
3120862-0000	.BRACKET	1-135, 1-137
3120863-0000	.PIN	1-135, 1-137
3122368-0000	.OPENING SPECIFICATION	1-123
3122374-0000	.VOLUME FLAP	1-231, 1-233, 1-235, 1-237
3122501-0000	.TOOL	1-179, 1-181
3122818-0000	.VOLUME BULGE	1-197, 1-199, 1-207, 1-209, 1-211, 1-213, 1-215, 1-217
3122819-0000	.VOLUME SHIM	1-197, 1-199, 1-207, 1-209, 1-211, 1-213, 1-215, 1-217
3123029-0000	.VOLUME BULGE	1-231, 1-233, 1-235, 1-237
3123577-0000	.VOLUME FLAP	1-207, 1-209, 1-211, 1-213, 1-215, 1-217
3127429-0000	.UPPER FORMING RING	1-139, 1-141, 1-143, 1-145
3127434-0000	.LOWER FORMING RING	1-135, 1-137
3127435-0000	.LOWER FORMING RING	1-135, 1-137
3127436-0000	.UPPER FORMING RING	1-139, 1-141, 1-143, 1-145
3127437-0000	.UPPER FORMING RING	1-139, 1-141, 1-143, 1-145
3127438-0000	.UPPER FORMING RING	1-139, 1-141, 1-143, 1-145
3127439-0000	.UPPER FORMING RING	1-139, 1-141, 1-143, 1-145
3127440-0000	.UPPER FORMING RING	1-139, 1-141, 1-143, 1-145
3127441-0000	.UPPER FORMING RING	1-139, 1-141, 1-143, 1-145
3127549-0000	.SHAFT	1-135, 1-137
3130390-0000	.RAIL	1-265, 1-267, 1-269, 1-275, 1-277, 1-279
3134285-0000	.VOLUME FLAP	1-231, 1-233, 1-235, 1-237
3134286-0000	.VOLUME FLAP	1-207, 1-209, 1-211, 1-213, 1-215, 1-217
3134331-0000	.BRACKET	1-51
3135273-0000	.SHAFT	1-245, 1-247, 1-249, 1-251
3137764-0000	.TOOL	1-179, 1-181
3139285-0100	.LABEL	1-45
3139351-0000	.PLATE	1-47, 1-49, 1-53
3139352-0100	.LABEL	1-45
3139392-0100	.LABEL	1-45
3139545-0001	.FOLDING BAR	1-397, 1-399, 1-401
3139545-0002	.FOLDING BAR	1-397, 1-399, 1-401
3139545-0004	.FOLDING BAR	1-397, 1-399, 1-401
3139546-0001	.FOLDING BAR	1-397, 1-399, 1-401
3139546-0002	.FOLDING BAR	1-397, 1-399, 1-401
3139546-0004	.FOLDING BAR	1-397, 1-399, 1-401
3139547-0001	.FOLDING BAR	1-397, 1-399, 1-401
3139547-0002	.FOLDING BAR	1-397, 1-399, 1-401
3139547-0004	.FOLDING BAR	1-397, 1-399, 1-401
3139548-0001	.FOLDING BAR	1-397, 1-399, 1-401
3139548-0002	.FOLDING BAR	1-397, 1-399, 1-401
3139548-0004	.FOLDING BAR	1-397, 1-399, 1-401
3142230-0000	.CONTRAST SCANNER	1-315, 1-317
3142887-0000	.BRACKET	1-135, 1-137
3142888-0000	.BRACKET	1-135, 1-137
3142889-0000	.BRACKET	1-135, 1-137
3142890-0000	.BRACKET	1-135, 1-137
3144283-0100	.LABEL	1-45
3147236-0000	.FOLDING FLAP	1-285, 1-287, 1-289, 1-293, 1-295, 1-297
3147237-0000	.FOLDING FLAP	1-285, 1-287, 1-289, 1-293, 1-295, 1-297
3150927-0000	.FLAP	1-389, 1-391
3150928-0000	.FLAP	1-389, 1-391
3151748-0000	.RULER	1-177
3151749-0000	.RULER	1-177
3151750-0000	.RULER	1-177
3151751-0000	.RULER	1-177
3151752-0000	.RULER	1-177
3151753-0000	.RULER	1-177
3151754-0000	.RULER	1-177
3151755-0000	.RULER	1-177
3151756-0000	.STOPPER	1-177
3151757-0000	.STOPPER	1-177
3151758-0000	.STOPPER	1-177
3151759-0000	.STOPPER	1-177
3151760-0000	.BRACKET	1-177
3151762-0000	.PLATE	1-171
3151763-0000	.PLATE	1-171
3151764-0000	.PLATE	1-171
3151765-0000	.PLATE	1-171
3151766-0000	.LOCK PLATE	1-135, 1-137
3158158-0000	.SHAFT	1-173, 1-175
3158205-0000	.FLOAT	1-185, 1-187
3159344-0000	.FLAP	1-395
3159703-0000	.FLOAT	1-185, 1-187
3160954-0000	.SHIM	1-357, 1-359, 1-361, 1-363
3163272-0000	.SUPPORT	1-325, 1-327
3165601-0000	.FOLDING BAR	1-403, 1-405
3165602-0000	.FOLDING BAR	1-403, 1-405
3166839-0000	.VOLUME CAM	1-307, 1-309
3166841-0000	.VOLUME CAM	1-307, 1-309
3166843-0000	.VOLUME CAM	1-307, 1-309
3166844-0000	.VOLUME CAM	1-307, 1-309
3166845-0100	.VOLUME CURVE PIECE	1-201, 1-203, 1-415

Part No	Description	Page No
3167531-0000	.VOLUME CAM	1-307, 1-309
3167532-0000	.VOLUME CAM	1-307, 1-309
3171341-0000	.PLATE	1-307, 1-309
3171342-0000	.PLATE	1-307, 1-309
3174445-0000	.VOLUME BULGE	1-197, 1-199, 1-207, 1-209, 1-211, 1-213, 1-215, 1-217
3174446-0000	.VOLUME SHIM	1-197, 1-199, 1-207, 1-209, 1-211, 1-213, 1-215, 1-217
3180559-0000	.TEMPLATE	1-179, 1-181
3190294-0100	.ASU MODIFICATION	1-7, 1-9
3190796-0000	.VOLUME BULGE	1-231, 1-233, 1-235, 1-237
3192942-0000	.LID	1-265, 1-267, 1-269, 1-275, 1-277, 1-279
3197996-0000	.PLATE	1-189
3198088-0000	.SHAFT	1-189
3198091-0000	.PLATE	1-189
3199906-0000	.OPERATING ROD	1-253, 1-255, 1-257, 1-259, 1-261, 1-263
3200712-0000	.WEDGE	1-265, 1-267, 1-269, 1-275, 1-277, 1-279
3204302-0000	.CARRIAGE	1-71
3206238-0000	.VOLUME SHIM	1-197, 1-199, 1-207, 1-209, 1-211, 1-213, 1-215, 1-217
3210791-0000	.OPENING SPECIFICATION	1-123
3212438-0000	.BRACKET	1-177
3212439-0000	.BRACKET	1-177
3212440-0000	.BRACKET	1-177
3212441-0000	.BRACKET	1-177
3212442-0000	.BRACKET	1-177
3214721-0000	.VOLUME BULGE	1-197, 1-199, 1-207, 1-209, 1-211, 1-213, 1-215, 1-217
3214722-0000	.VOLUME SHIM	1-197, 1-199, 1-207, 1-209, 1-211, 1-213, 1-215, 1-217
3220006-0101	.UPDATE PAGES	1-13
3222718-0000	.VOLUME BULGE	1-197, 1-199, 1-207, 1-209, 1-211, 1-213, 1-215, 1-217
3222719-0000	.VOLUME SHIM	1-197, 1-199, 1-207, 1-209, 1-211, 1-213, 1-215, 1-217
3223675-0000	.VOLUME CAM	1-307, 1-309
3223676-0000	.VOLUME CAM	1-307, 1-309
3223677-0000	.VOLUME CAM	1-307, 1-309
3223678-0000	.VOLUME CAM	1-307, 1-309
3223679-0000	.VOLUME CAM	1-307, 1-309
3223680-0000	.VOLUME CAM	1-307, 1-309
3223681-0000	.VOLUME CAM	1-307, 1-309
3223682-0000	.VOLUME CAM	1-307, 1-309
3223683-0000	.VOLUME CAM	1-307, 1-309
3223684-0000	.VOLUME CAM	1-307, 1-309
3224227-0000	.VOLUME CAM	1-307, 1-309
3224228-0000	.VOLUME CAM	1-307, 1-309
3224229-0000	.VOLUME CAM	1-307, 1-309
3224230-0000	.VOLUME CAM	1-307, 1-309
3224233-0000	.VOLUME CAM	1-307, 1-309
3224234-0000	.VOLUME CAM	1-307, 1-309
3224235-0000	.VOLUME CAM	1-307, 1-309
3224236-0000	.VOLUME CAM	1-307, 1-309
3231269-0000	.PLUG	1-307, 1-309
3241936-0000	.VOLUME FLAP	1-207, 1-209, 1-211, 1-213, 1-215, 1-217
3244946-0000	.PUSHER	1-365, 1-367, 1-369
3245513-0000	.GUIDE	1-345
3245514-0000	.GUIDE	1-345
3245515-0000	.PLATE	1-353
3245516-0000	.FLAP	1-395
3245517-0000	.PUSHER	1-357, 1-359, 1-361, 1-363, 1-413
3245518-0000	.FOLDING BAR	1-403, 1-405
3245519-0000	.FOLDING BAR	1-403, 1-405
3245520-0000	.FOLDING BAR	1-403, 1-405
3245521-0000	.FOLDING BAR	1-403, 1-405
3248657-0000	.HOLDER	1-311, 1-313
3248658-0000	.HOLDER	1-311, 1-313
3248661-0001	.BRACKET	1-311, 1-313
3248661-0002	.BRACKET	1-311, 1-313
3248661-0003	.BRACKET	1-311, 1-313
3248661-0004	.BRACKET	1-311, 1-313
3248664-0000	.PLATE	1-315, 1-317
3249286-0000	.SHAFT	1-335, 1-337, 1-339
3249287-0000	.PLATE	1-335, 1-337, 1-339
3252760-0000	.BRACKET	1-365, 1-367, 1-369
3253312-0000	.CARRIER	1-245, 1-247
3253313-0000	.CARRIER	1-249, 1-251
3253314-0000	.CARRIER	1-245, 1-247
3253315-0000	.CARRIER	1-249, 1-251
3253316-0000	.CARRIER	1-245, 1-247
3253317-0000	.CARRIER	1-249, 1-251
3253318-0000	.CARRIER	1-253, 1-255, 1-257
3253319-0000	.CARRIER	1-259, 1-261, 1-263
3253320-0000	.CARRIER	1-253, 1-255, 1-257
3253321-0000	.CARRIER	1-259, 1-261, 1-263
3253322-0000	.CARRIER	1-253, 1-255, 1-257
3253323-0000	.CARRIER	1-259, 1-261, 1-263
3253324-0000	.CARRIER	1-253, 1-255, 1-257
3253325-0000	.CARRIER	1-259, 1-261, 1-263
3259625-0000	.BRACKET	1-321
3261205-0000	.SUPPORT	1-245, 1-247, 1-249, 1-251

Part No	Description	Page No
3261206-0000	.ROLLER	1-245, 1-247, 1-249, 1-251
3264387-0000	.SUPPORT	1-397, 1-399, 1-401
3266673-0000	.FOLDING FLAP	1-285, 1-287, 1-289, 1-293, 1-295, 1-297
3268185-0000	.SPRING	1-245, 1-247, 1-249, 1-251
3271429-0000	.FORK	1-185, 1-187
3271430-0000	.FORK	1-185, 1-187
3271433-0000	.PRESSURE FLANGE	1-185, 1-187
3272071-0000	.TOOL	1-179, 1-181
3274239-0000	.ROLLER	1-139, 1-141, 1-143, 1-145
3274240-0000	.ROLLER	1-139, 1-141, 1-143, 1-145
3274241-0000	.ROLLER	1-139, 1-141, 1-143, 1-145
3274242-0000	.ROLLER	1-139, 1-141, 1-143, 1-145
3274244-0000	.ROLLER	1-139, 1-141, 1-143, 1-145
3274245-0000	.ROLLER	1-139, 1-141, 1-143, 1-145
3274246-0000	.ROLLER	1-139, 1-141, 1-143, 1-145
3274247-0000	.ROLLER	1-139, 1-141, 1-143, 1-145
3274288-0000	.ROLLER	1-189
3274289-0000	.ROLLER	1-189
3276681-0000	.SHIM	1-253, 1-255, 1-257, 1-259, 1-261, 1-263
3277801-0000	.PRESSURE FLANGE	1-185, 1-187
3277977-0000	.FOLDING BAR	1-403, 1-405
3277978-0000	.FOLDING BAR	1-403, 1-405
3285683-0000	.VOLUME CAM	1-307, 1-309
3285684-0000	.VOLUME CAM	1-307, 1-309
3290330-0000	.PIN	1-219, 1-221, 1-223, 1-227, 1-239, 1-243
3290331-0000	.DAMPER	1-219, 1-221, 1-223, 1-227, 1-239, 1-243
3290908-0000	.ROLLER	1-189
3290937-0000	.VOLUME CAM	1-307, 1-309
3290938-0000	.VOLUME CAM	1-307, 1-309
3291155-0000	.SPACER	1-219, 1-221, 1-223, 1-227, 1-239, 1-243
3291156-0001	.STOP	1-219, 1-221, 1-223
3291156-0002	.STOP	1-219, 1-221, 1-223, 1-227, 1-239, 1-243
3291156-0003	.STOP	1-219, 1-221, 1-223, 1-227
3291156-0004	.STOP	1-239, 1-243
3292963-0000	.GUIDE	1-335, 1-337, 1-339
3292964-0000	.GUIDE	1-335, 1-337, 1-339
3292965-0000	.CREASE BAR	1-403, 1-405
3292966-0000	.CREASE BAR	1-403, 1-405
3292967-0000	.CREASE BAR	1-403, 1-405
3292968-0000	.CREASE BAR	1-403, 1-405
3292969-0000	.PUSHER	1-357, 1-359, 1-361, 1-363
3292970-0000	.PUSHER	1-357, 1-359, 1-361, 1-363
3294787-0000	.PLATE	1-315, 1-317
3296058-0000	.STOP SCREW	1-397, 1-399, 1-401
3296059-0000	.STOP SCREW	1-397, 1-399, 1-401
3296060-0000	.STOP SCREW	1-397, 1-399, 1-401
3296061-0000	.PLATE	1-397, 1-399, 1-401
3296062-0000	.PLATE	1-397, 1-399, 1-401
3297480-0000	.ROLLER	1-139, 1-141, 1-143, 1-145
3297481-0000	.ROLLER	1-139, 1-141, 1-143, 1-145
3297482-0000	.ROLLER	1-139, 1-141, 1-143, 1-145
3297869-0000	.SHIM	1-139, 1-141, 1-143, 1-145, 1-415
3298664-0100	.GUIDE ROLLER	1-7, 1-9
3299172-0100	.ELECTRIC MATERIALS	1-83
3300092-0000	.SHAFT	1-125
3300153-0000	.SHAFT	1-125
3300349-0000	.ROLLER	1-125
3300356-0000	.PLATE	1-125
3300895-0000	.PLATE	1-125
3306154-0100	.PLATE	1-351, 1-415
3306155-0100	.PUSHER	1-355
3306156-0100	.GUIDE	1-335, 1-337, 1-339, 1-415
3306157-0100	.FOLDING BAR	1-397, 1-399, 1-401, 1-415
3309022-0100	.NO QUICKCHANGE INTERMEDIATE	1-3
3309258-0000	.BOX	1-415
3309642-0000	.SETTING TOOL	1-193
3312239-0000	.ROLLER	1-191
3312241-0000	.ROLLER	1-191
3312242-0000	.ROLLER	1-191
3312243-0000	.ROLLER	1-191
3312404-0000	.SETTING TOOL	1-193
3312405-0000	.SETTING TOOL	1-193
3319351-0000	.ROLLER	1-139, 1-141, 1-143, 1-145
3319352-0000	.ROLLER	1-139, 1-141, 1-143, 1-145
3320065-0100	.ROLLER	1-7, 1-9
3320066-0100	.SETTING TOOL	1-7, 1-9
3326247-0000	.ROLLER	1-191
3326255-0000	.ROLLER	1-191
3326366-0000	.SETTING TOOL	1-193
3327331-0000	.VOLUME BULGE	1-207, 1-209, 1-211, 1-213, 1-215, 1-217, 1-231, 1-233, 1-235, 1-237
3327332-0000	.VOLUME SHIM	1-207, 1-209, 1-211, 1-213, 1-215, 1-217, 1-231, 1-233, 1-235, 1-237
3337204-0000	.SHIM	1-139, 1-141, 1-143, 1-145, 1-415
3338611-0000	.SHIM	1-315, 1-317
3340553-0000	.ROLLER	1-135, 1-137

Part No	Description	Page No	Part No	Description	Page No

Tetra Pak®

SPC
Spare Parts Catalogue

Pos	Part No	Description	Page No
B			
G25B3000	90600-7887	"INDUCTIVE SENSOR, IFT 200"	1-59, 1-61, 1-63
G25B3010	90600-7887	"INDUCTIVE SENSOR, IFT 200"	1-59, 1-61, 1-63
G25B3020	90600-7887	"INDUCTIVE SENSOR, IFT 200"	1-59, 1-61, 1-63
G25B3040	90459-7361	FIBRE OPTIC UNIT, WLL170-2P460	1-57
G25B3050	90600-7887	"INDUCTIVE SENSOR, IFT 200"	1-59, 1-61, 1-63
G25B3120	344301-0160	THERMOCOUPLE, 5110160-001	1-35
T40B1240	90458-0601	CONTRAST SCANNER, KT15W-P2110S01	1-315, 1-317
T40B1240	3142230-0000	CONTRAST SCANNER	1-315, 1-317
T40B1250	90458-0601	CONTRAST SCANNER, KT15W-P2110S01	1-315, 1-317
T40B1250	3142230-0000	CONTRAST SCANNER	1-315, 1-317
E			
T50E0050	2871927-0001	FOLDING BAR	1-397, 1-399, 1-401
T50E0050	2871927-0002	FOLDING BAR	1-397, 1-399, 1-401
T50E0050	2871927-0003	FOLDING BAR	1-397, 1-399, 1-401
T50E0050	2871927-0004	FOLDING BAR	1-397, 1-399, 1-401
T50E0050	2871927-0005	FOLDING BAR	1-397, 1-399, 1-401
T50E0050	2871927-0006	FOLDING BAR	1-397, 1-399, 1-401
T50E0050	2871927-0007	FOLDING BAR	1-397, 1-399, 1-401
T50E0051	2852331-0001	PIPE	1-351
T50E0051	2852331-0002	PIPE	1-351
T50E0051	2852331-0003	PIPE	1-351
T50E0051	2852331-0004	PIPE	1-351
T50E0051	2852331-0005	PIPE	1-351
T50E0051	3051996-0000	PIPE	1-351
T50E0052	2852331-0001	PIPE	1-351
T50E0052	2852331-0002	PIPE	1-351
T50E0052	2852331-0003	PIPE	1-351
T50E0052	2852331-0004	PIPE	1-351
T50E0052	2852331-0005	PIPE	1-351
T50E0052	3051995-0000	PIPE	1-351
T50E0053	2871928-0001	FOLDING BAR	1-397, 1-399, 1-401
T50E0053	2871928-0002	FOLDING BAR	1-397, 1-399, 1-401
T50E0053	2871928-0003	FOLDING BAR	1-397, 1-399, 1-401
T50E0053	2871928-0004	FOLDING BAR	1-397, 1-399, 1-401
T50E0053	2871928-0005	FOLDING BAR	1-397, 1-399, 1-401
T50E0053	2871928-0006	FOLDING BAR	1-397, 1-399, 1-401
T50E0053	2871928-0007	FOLDING BAR	1-397, 1-399, 1-401
T50E0054	3070289-0000	FOLDING BAR	1-403, 1-405
T50E0054	3165601-0000	FOLDING BAR	1-403, 1-405
T50E0054	3356853-0000	FOLDING BAR	1-403, 1-405
T50E0054	3356855-0000	FOLDING BAR	1-403, 1-405
T50E0054	3356857-0000	FOLDING BAR	1-403, 1-405
T50E0055	3070290-0000	FOLDING BAR	1-403, 1-405
T50E0055	3165602-0000	FOLDING BAR	1-403, 1-405
T50E0055	3356854-0000	FOLDING BAR	1-403, 1-405
T50E0055	3356856-0000	FOLDING BAR	1-403, 1-405
T50E0055	3356858-0000	FOLDING BAR	1-403, 1-405
F			
FF20	2894700-0000	PUSHER	1-173, 1-175
FF20	2921574-0000	PUSHER	1-173, 1-175
FF20	3037955-0000	PUSHER	1-173, 1-175
J			
JS10	1110083-0003	DOLLY	1-173, 1-175
JS10	1110083-0005	DOLLY	1-173, 1-175
JS10	1566761-0000	DOLLY	1-173, 1-175
JS10	2949862-0004	DOLLY	1-173, 1-175
JS20	1110532-0000	INDUCTOR	1-173, 1-175
JS20	1110534-0000	INDUCTOR	1-173, 1-175
JS20	1110535-0000	INDUCTOR	1-173, 1-175
JS20	1110556-0000	INDUCTOR	1-173, 1-175
JS20	1566981-0000	INDUCTOR	1-173, 1-175
JS20	2917498-0000	INDUCTOR	1-173, 1-175
JS20	2975930-0000	INDUCTOR	1-173, 1-175
JS20	3044527-0000	INDUCTOR	1-173, 1-175
JS20	3089348-0000	INDUCTOR	1-173, 1-175
JS20	3089354-0000	INDUCTOR	1-173, 1-175
JS30	272986-0001	VOLUME SHIM	1-173, 1-175
JS30	272986-0003	VOLUME SHIM	1-173, 1-175
JS30	272986-0006	VOLUME SHIM 330S	1-173, 1-175
JS30	272987-0000	VOLUME SHIM	1-173, 1-175
JS30	979754-0000	VOLUME SHIM 100	1-173, 1-175
JS30	979861-0000	VOLUME SHIM	1-173, 1-175
JS30	1519222-0000	VOLUME SHIM	1-173, 1-175
JS30	2908756-0000	VOLUME SHIM	1-173, 1-175
JS30	2947788-0000	VOLUME SHIM	1-173, 1-175
JS30	2950902-0000	VOLUME SHIM	1-173, 1-175
JS30	3002257-0000	VOLUME SHIM	1-173, 1-175
JS30	3003863-0000	VOLUME SHIM	1-173, 1-175
JS30	3019316-0000	SHIM	1-173, 1-175
JS30	3019317-0000	SHIM	1-173, 1-175
JS30	3022276-0000	VOLUME SHIM	1-173, 1-175
JS30	3059050-0000	VOLUME SHIM	1-173, 1-175

Pos	Part No	Description	Page No
J			
JS30	3067274-0000	SHIM	1-173, 1-175
JS30	3067286-0000	VOLUME SHIM	1-173, 1-175
JS30	3111045-0000	VOLUME SHIM	1-173, 1-175
JS40	1282645-0000	KNIFE	1-173, 1-175
JS40	1282646-0000	KNIFE	1-173, 1-175
JS40	1282647-0000	KNIFE	1-173, 1-175
JS40	3096231-0000	KNIFE	1-173, 1-175
M			
G25M0020	90603-5291	CYLINDER WITH INT. GUIDING BORE 25	1-35
G25M3030	90604-0596	SINGLE ACTING, MINI-ISO, CYL 12-10	1-67
G25M3300	90458-0523	STEP MOTOR, SM 56.2.18J3 Z(202)	1-37
G25M5001	90450-0380	SINGLE ACTING, PANCAKE EV-20/75-5	1-27
R			
G25R1100	1520196-0000	INDUCTOR	1-97
G25R1100	1533360-0000	INDUCTOR	1-97
G25R1100	1566708-0000	INDUCTOR	1-97
G25R1100	2971544-0000	INDUCTOR	1-97
G25R1100	3003484-0000	INDUCTOR	1-97
G25R3110	90600-2602	THERMOFOIL HEATER, HM15643	1-35
T40R3100	1110532-0000	INDUCTOR	1-265, 1-267, 1-269
T40R3100	1110534-0000	INDUCTOR	1-265, 1-267, 1-269
T40R3100	1110535-0000	INDUCTOR	1-265, 1-267, 1-269
T40R3100	1110556-0000	INDUCTOR	1-265, 1-267, 1-269
T40R3100	2917498-0000	INDUCTOR	1-265, 1-267, 1-269
T40R3100	2975930-0000	INDUCTOR	1-265, 1-267, 1-269
T40R3100	3089348-0000	INDUCTOR	1-265, 1-267, 1-269
T40R3100	3089354-0000	INDUCTOR	1-265, 1-267, 1-269
T40R3200	1110532-0000	INDUCTOR	1-275, 1-277, 1-279
T40R3200	1110534-0000	INDUCTOR	1-275, 1-277, 1-279
T40R3200	1110535-0000	INDUCTOR	1-275, 1-277, 1-279
T40R3200	1110556-0000	INDUCTOR	1-275, 1-277, 1-279
T40R3200	1566981-0000	INDUCTOR	1-265, 1-267, 1-269, 1-275, 1-277, 1-279
T40R3200	2917498-0000	INDUCTOR	1-275, 1-277, 1-279
T40R3200	2975930-0000	INDUCTOR	1-275, 1-277, 1-279
T40R3200	3044527-0000	INDUCTOR	1-265, 1-267, 1-269, 1-275, 1-277, 1-279
T40R3200	3089348-0000	INDUCTOR	1-275, 1-277, 1-279
T40R3200	3089354-0000	INDUCTOR	1-275, 1-277, 1-279
S			
SU10	2909367-0000	PRESSURE ROLLER	1-173, 1-175
SU10	2909368-0000	PRESSURE ROLLER (PACK 10)	1-173, 1-175
SU10	2932253-0000	PRESSURE ROLLER (PACK 10)	1-173, 1-175
SU20	295376-0000	SHAFT	1-173, 1-175
SU20	3158158-0000	SHAFT	1-173, 1-175
T			
G25T1100	67379-0216	TRANSFORMER	1-97
G25T1100	67379-0224	TRANSFORMER	1-97
T40T3200	67379-0107	TRANSFORMER	1-273, 1-283
T40T3200	67379-0115	TRANSFORMER	1-273, 1-283
T40T3200	67379-0204	TRANSFORMER	1-273, 1-283
T40T3200	67379-0248	TRANSFORMER	1-273, 1-283
T40T3200	67379-0254	TRANSFORMER	1-273, 1-283
T40T3200	67379-0262	TRANSFORMER	1-273, 1-283
T40T3200	67379-0264	TRANSFORMER	1-273, 1-283
T40T3200	67379-0269	TRANSFORMER	1-273, 1-283
T40T3200	2837503-0105	TRANSFORMER	1-273, 1-283
T40T3200	2837503-0109	TRANSFORMER	1-273, 1-283
W			
G25W3000	351310-0050	ACTUATOR/SENSOR CABLE PRKWT 4-07/5M	1-81
G25W3010	351310-0050	ACTUATOR/SENSOR CABLE PRKWT 4-07/5M	1-81
G25W3020	351310-0020	ACTUATOR/SENSOR CABLE PRKWT 4-07/2M	1-81
G25W3040	351409-0020	ACTU/SENS. CABLE PRST 4-PRKMV 4-07/2,0M	1-55
G25W3041	90232-0325	FIBRE, E32-DC200	1-57
G25W3050	351411-0050	ACTU/SENS. CABLE PRST 4-PRKT 4-07/5,0	1-81
T40W2698	90166-0132	TUBE 6 MM PA TRANSP.	1-319
T40W2699	90166-0132	TUBE 6 MM PA TRANSP.	1-319
T40W3100	2562736-0002	COAXIAL CABLE	1-273
T40W3200	2562736-0002	COAXIAL CABLE	1-283
T40W6007	90166-0132	TUBE 6 MM PA TRANSP.	1-315, 1-317
T40W6008	90166-0132	TUBE 6 MM PA TRANSP.	1-315, 1-317
T40W6009	90166-0132	TUBE 6 MM PA TRANSP.	1-315, 1-317
T40W7028	2961519-0000	PIPE	1-321
T40W7029	2961518-0000	PIPE	1-321
T50W0054	315400-0006	TUBE PUN-H-8X1,25-SW	1-397, 1-399, 1-401
T50W0055	315400-0006	TUBE PUN-H-8X1,25-SW	1-397, 1-399, 1-401
T50W0056	315400-0006	TUBE PUN-H-8X1,25-SW	1-397, 1-399, 1-401
T50W0108	315400-0006	TUBE PUN-H-8X1,25-SW	1-403, 1-405
T50W0109	315400-0006	TUBE PUN-H-8X1,25-SW	1-403, 1-405
T50W0110	315400-0006	TUBE PUN-H-8X1,25-SW	1-397, 1-399, 1-401
T50W0111	315400-0006	TUBE PUN-H-8X1,25-SW	1-397, 1-399, 1-401
X			
G25X3110	90459-6821	MALE INSERT HAN 4A, 0920 0042 611	1-35
G25X3300	90459-6821	MALE INSERT HAN 4A, 0920 0042 611	1-37

Tetra Pak®

Label for 80 mm binder **Note!** *This page is generated* **automatically.**

VCK A3/CompactFlex
641515-0200 Issue 2014-09
Doc No. SPC-3046796-0119

VCK A3/CompactFlex
641515-0200 Issue 2014-09
Doc No. SPC-3046796-0119

VCK A3/CompactFlex
641515-0200 Issue 2014-09
Doc No. SPC-3046796-0119

VCK A3/CompactFlex 1(3)
641515-0200 Issue 2014-09
Doc No. SPC-3046796-0119

VCK A3/CompactFlex 1(2)
641515-0200 Issue 2014-09
Doc No. SPC-3046796-0119

VCK A3/CompactFlex 2(3)
641515-0200 Issue 2014-09
Doc No. SPC-3046796-0119

VCK A3/CompactFlex 2(2)
641515-0200 Issue 2014-09
Doc No. SPC-3046796-0119

VCK A3/CompactFlex 3(3)
641515-0200 Issue 2014-09
Doc No. SPC-3046796-0119

Label for 55 mm binder **Note!** *This page is generated* **automatically.**

VCK A3/CompactFlex
641515-0200 Issue 2014-09
Doc No. SPC-3046796-0119

VCK A3/CompactFlex 1(2)
641515-0200 Issue 2014-09
Doc No. SPC-3046796-0119

VCK A3/CompactFlex
641515-0200 Issue 2014-09
Doc No. SPC-3046796-0119

VCK A3/CompactFlex 2(2)
641515-0200 Issue 2014-09
Doc No. SPC-3046796-0119

VCK A3/CompactFlex
641515-0200 Issue 2014-09
Doc No. SPC-3046796-0119

VCK A3/CompactFlex 1(3)
641515-0200 Issue 2014-09
Doc No. SPC-3046796-0119

VCK A3/CompactFlex
641515-0200 Issue 2014-09
Doc No. SPC-3046796-0119

VCK A3/CompactFlex 2(3)
641515-0200 Issue 2014-09
Doc No. SPC-3046796-0119

VCK A3/CompactFlex
641515-0200 Issue 2014-09
Doc No. SPC-3046796-0119

VCK A3/CompactFlex 3(3)
641515-0200 Issue 2014-09
Doc No. SPC-3046796-0119

VCK A3/CompactFlex
641515-0200 Issue 2014-09
Doc No. SPC-3046796-0119

VCK A3/CompactFlex 3(3)
641515-0200 Issue 2014-09
Doc No. SPC-3046796-0119

Label for 40 mm binder **Note!** *This page is generated* **automatically.**

VCK A3/CompactFlex
641515-0200 Issue 2014-09
Doc No. SPC-3046796-0119

VCK A3/CompactFlex 1(2)
641515-0200 Issue 2014-09
Doc No. SPC-3046796-0119

VCK A3/CompactFlex
641515-0200 Issue 2014-09
Doc No. SPC-3046796-0119

VCK A3/CompactFlex 2(2)
641515-0200 Issue 2014-09
Doc No. SPC-3046796-0119

VCK A3/CompactFlex
641515-0200 Issue 2014-09
Doc No. SPC-3046796-0119

VCK A3/CompactFlex 1(2)
641515-0200 Issue 2014-09
Doc No. SPC-3046796-0119

VCK A3/CompactFlex
641515-0200 Issue 2014-09
Doc No. SPC-3046796-0119

VCK A3/CompactFlex 2(2)
641515-0200 Issue 2014-09
Doc No. SPC-3046796-0119

VCK A3/CompactFlex
641515-0200 Issue 2014-09
Doc No. SPC-3046796-0119

VCK A3/CompactFlex 1(3)
641515-0200 Issue 2014-09
Doc No. SPC-3046796-0119

VCK A3/CompactFlex
641515-0200 Issue 2014-09
Doc No. SPC-3046796-0119

VCK A3/CompactFlex 2(3)
641515-0200 Issue 2014-09
Doc No. SPC-3046796-0119

VCK A3/CompactFlex
641515-0200 Issue 2014-09
Doc No. SPC-3046796-0119

VCK A3/CompactFlex 3(3)
641515-0200 Issue 2014-09
Doc No. SPC-3046796-0119

VCK A3/CompactFlex
641515-0200 Issue 2014-09
Doc No. SPC-3046796-0119

VCK A3/CompactFlex 3(3)
641515-0200 Issue 2014-09
Doc No. SPC-3046796-0119