SPC

Spare Parts Catalogue

VCK A3/CompactFlex

641515-0200

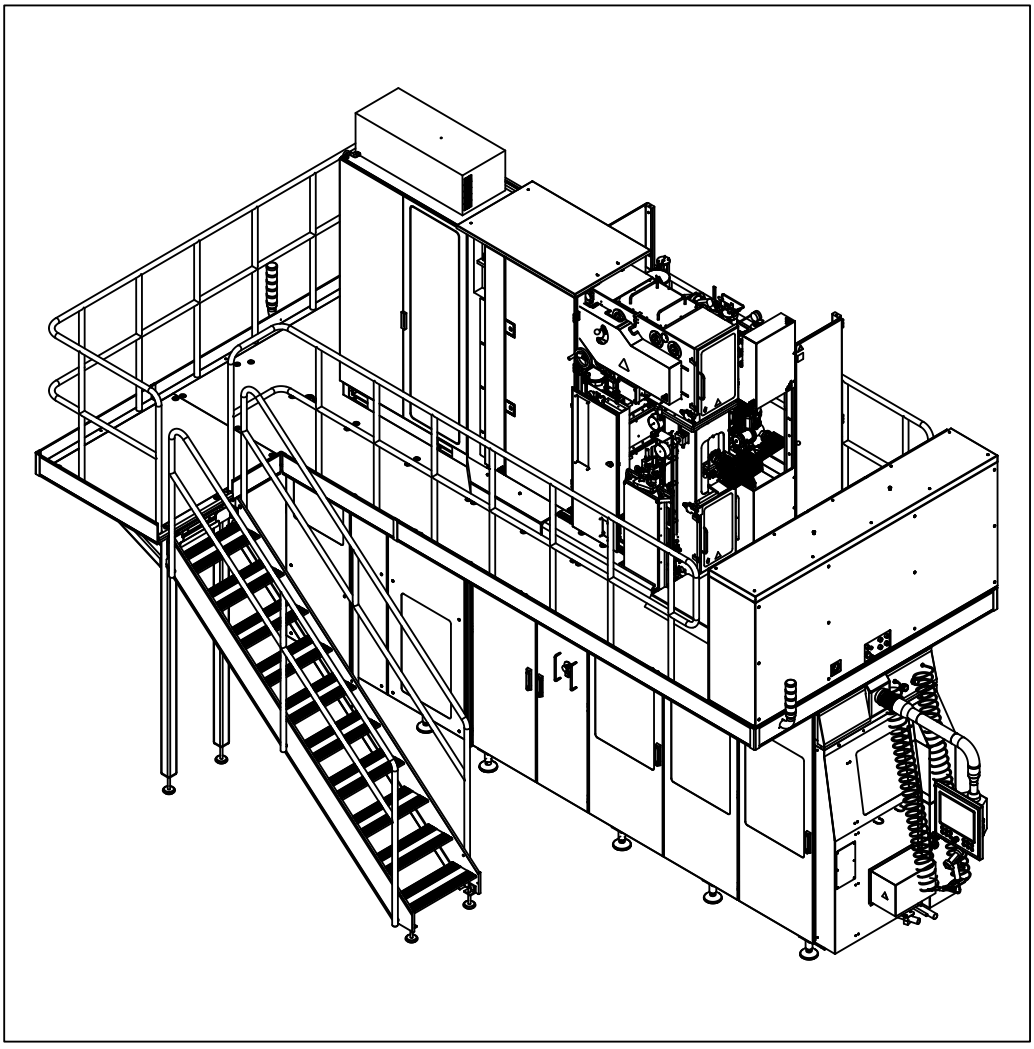

Tetra Pak

Doc. No: SPC-3046796-0107

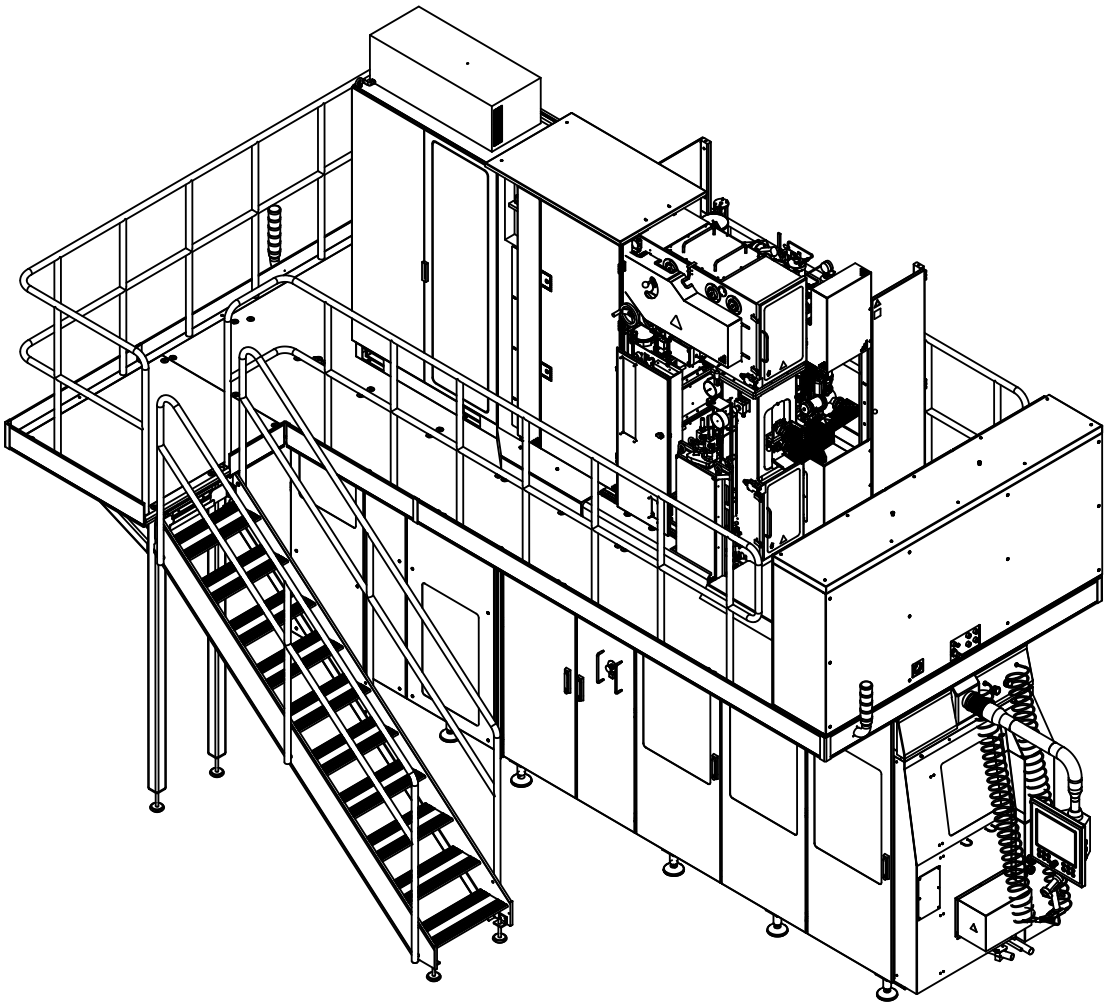

The position numbers in the illustration correspond with the chapter numbers listed on the next page.

Copyright © 2012 Tetra Pak Group

All rights reserved. No part of this document may be reproduced or copied in any form or by any means without written permission from Tetra Pak Packaging Solutions .

Tetra Pak and all Tetra Pak products are trademarks belonging to the Tetra Pak Group.

The content of this manual is in accordance with the design and construction of the machine or equipment at the time of publishing. Tetra Pak reserves the right to introduce design modifications without prior notice.

This document was produced by:

Tetra Pak Packaging Solutions
Via Delfini 1
41123 Modena
ITALY

Additional copies can be ordered from Tetra Pak. When ordering additional copies, always provide the document number.

Doc. No. SPC-3046796-0107

Issue 2012-02

This document is valid for:

Series No/Machine No Sign.

i Introduction

1 Volume Conversion Kit .

ii Part Number Index

iii Ref. Des. Parts Index

SPC

Spare Parts Catalogue

VCK A3/CompactFlex
641515-0200

Machine or equipment configurations that this catalogue is valid for are described on the next page.

Doc. No: SPC-3046796-0107

Issue 2012-02

Tetra Pak

Tetra Pak Packaging Solutions

Valid for:

Name	Drawing Specification and Development Step	Additional Information
VCK A3/CompactFlex	641515-0200	Valid from T-order: 22365/00110

Update Log for Doc. No. SPC-3046796-0107

This table shows all changes made to this catalogue, including installed rebuilding kits, added or removed pages.

Date	Installed Kit	Added Pages (Doc. No.)	Removed Pages	Signature

Date	Installed Kit	Added Pages (Doc. No.)	Removed Pages	Signature

i Introduction

en About the Introduction Chapter
This chapter contains basic information about this catalogue and related Tetra Pak equipment.

cs Seznámení s úvodní kapitolou
Tato kapitola obsahuje základní informace o tomto katalogu a o příslušném zařízení Tetra Pak.

da Om indledningen
Kapitlet indeholder grundlæggende oplysninger om dette katalog og tilhørende Tetra Pak-udstyr.

de Zur Einleitung
Dieses Kapitel enthält grundlegende Informationen zu diesem Handbuch und der entsprechenden Tetra Pak Ausrüstung.

el Σχετικά με το Κεφάλαιο 'Εισαγωγή'
Αυτό το κεφάλαιο περιέχει βασικές πληροφορίες για τον παρόντα κατάλογο και τον σχετικό εξοπλισμό της Tetra Pak.

es Sobre el Capítulo de Introducción
Este capítulo contiene información básica sobre este manual y el equipo Tetra Pak relacionado.

et Sissejuhatava peatüki kohta
Sellest peatükist leiate põhiinfo kataloogi ja Tetra Pak seadmete kohta.

fi Tietoja Johdanto-luvusta
Tässä luvussa on perustietoja tästä luettelosta ja Tetra Pak -laitteesta.

fr Concernant le chapitre d'Introduction
Le présent chapitre contient les renseignements de base concernant ce manuel et l'équipement Tetra Pak concerné.

hu A Bevezetés fejezetről
Ezen fejezet alapvető információt tartalmaz jelen kézikönyvről és a kapcsolódó Tetra Pak berendezésről.

it Informazioni sulla sezione Introduzione
Questa sezione contiene informazioni generali sul presente catalogo e la relativa macchina Tetra Pak.

lt Apie pristatymo skyrių
Šiame skyriuje yra pagrindinė informacija apie šį katalogą ir su juo susijusią Tetra Pak įrangą.

lv Par Ievada nodaļu
Šī nodaļa satur galveno informāciju par katalogu un par Tetra Pak iekārtām, uz kurām tas attiecas.

mt Dwar il-Kapitlu ta' l-Introduzzjoni
Dan il-kapitlu fih informazzjoni bażika dwar dan il-katalgu u tagħmir relatat ta' Tetra Pak.

nl Omtrent het hoofdstuk Inleiding
Dit hoofdstuk bevat basisinformatie betreffende dit handboek en daarmee verband houdende apparatuur van Tetra Pak.

no Om kapitlet Introduksjon
Dette kapitlet inneholder grunnleggende informasjon om denne katalogen og relatert Tetra Pak-ustyr.

pl Informacje na temat Rozdziału Wprowadzającego
Rozdział ten zawiera podstawowe informacje na temat niniejszego katalogu i związanego z nim wyposażenia Tetra Pak.

pt Sobre o capítulo Introdução
Este capítulo contém informações básicas sobre este catálogo e ao equipamento Tetra Pak relacionado.

sk O úvodnej kapitole
Táto kapitola obsahuje základné informácie o tomto katalógu a príslušnom zariadení Tetra Pak.

sl Informacija o uvodnem poglavju
Poglavje vsebuje osnovne informacije o tem katalogu in opremi Tetra Pak.

sv Om inledningskapitlet
Det här kapitlet innehåller grundläggande information om katalogen och Tetra Pak-utrustningen.

Introduction

Illustrations . . . . . i - 5
English Text . . . . . i - 7

Úvod

Obrázky . . . . . i - 5
Český text . . . . . i - 11

Indledning

Illustrationer . . . . . i - 5
Dansk tekst . . . . . i - 15

Einleitung

Abbildungen . . . . . i - 5
Deutscher Text . . . . . i - 19

Εισαγωγή

Εικόνες . . . . . i - 5
Ελληνικό Κείμενο . . . . . i - 23

Introducción

Ilustraciones . . . . . i - 5
Texto español . . . . . i - 27

Sissejuhatus

Illustratsioonid . . . . . i - 5
Eestikeelne tekst . . . . . i - 31

Johdanto

Kuvat . . . . . i - 5
Suomenkielinen teksti . . . . . i - 35

Introduction

Figures . . . . . i - 5
Texte français . . . . . i - 39

Bevezetés

Ábrák . . . . . i - 5
Magyar szöveg . . . . . i - 43

Introduzione

Figure . . . . . i - 5
Testo in italiano . . . . . i - 47

Įvadas

Iliustracijos . . . . . i - 5
Lietuviškas tekstas . . . . . i - 51

Ievads

Ilustrācijas . . . . . i - 5
Latviešu teksts . . . . . i - 55

Introduzzjoni

Stampi . . . . . i - 5
Test bil-Malti . . . . . i - 59

Inleiding

Illustraties . . . . . i - 5
Nederlands tekst . . . . . i - 63

Introduksjon

Illustrasjoner . . . . . i - 5
Norsk tekst . . . . . i - 67

Wprowadzenie

Ilustracje . . . . . i - 5
Tekst po polsku . . . . . i - 71

Introdução

Ilustrações . . . . . i - 5
Texto em portugese . . . . . i - 75

Úvod

Zobrazenie . . . . . i - 5
Slovenský text . . . . . i - 79

Uvod

Risbe . . . . . i - 5
Slovensko besedilo . . . . . i - 83

Inledning

Bilder . . . . . i - 5
Svensk text . . . . . i - 87

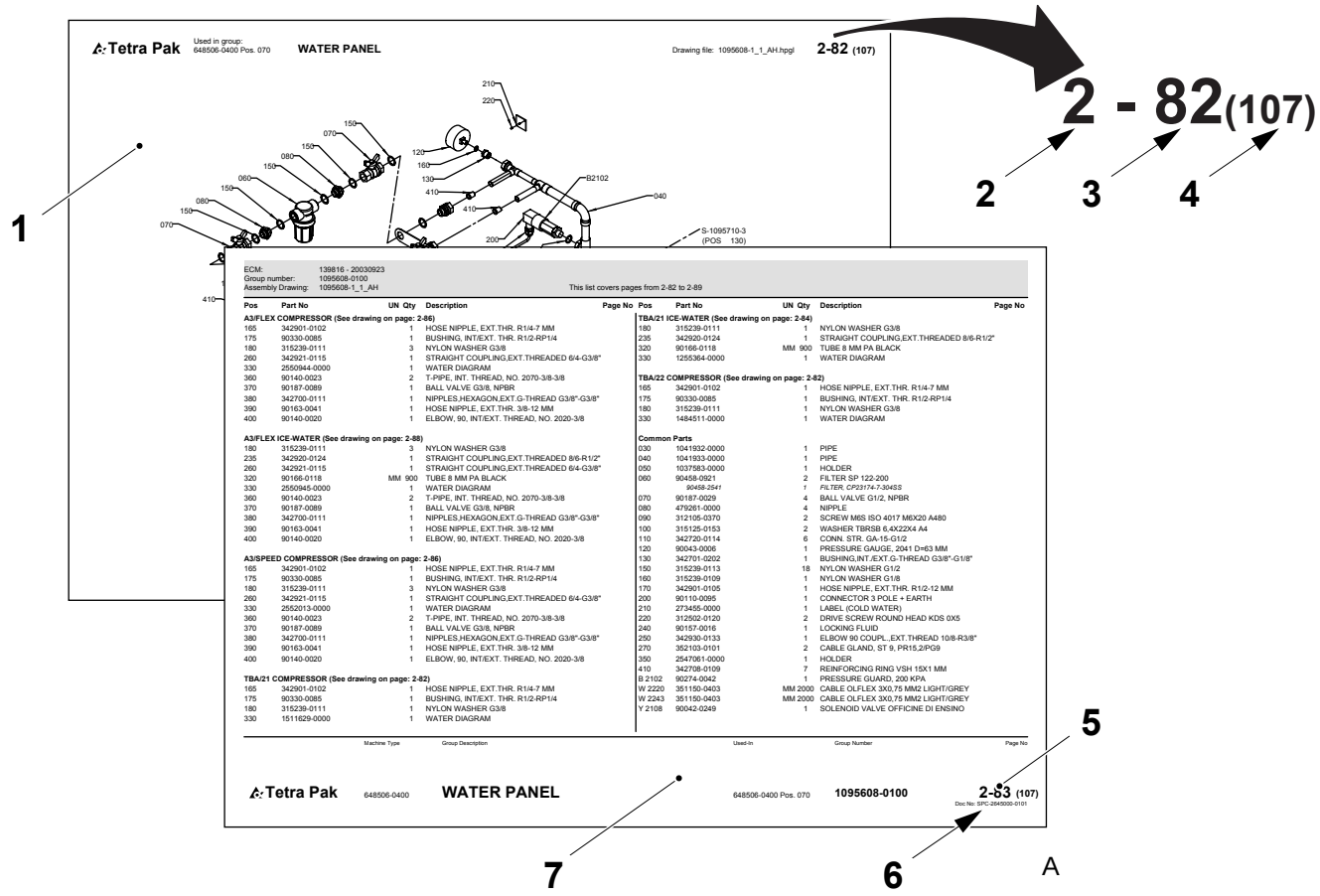
Tetra Pak
Used in group: 648506-0400 Pos. 070
WATER PANEL
Drawing file: 1095608-1_1_AH.hpgl
2-82 (107)
2 - 82(107)
1
2
3
4
5
6
7
A
ECM: 139816 - 20030923
Group number: 1095608-0100
Assembly Drawing: 1095608-1_1_AH
This list covers pages from 2-82 to 2-89
Tetra Pak 648506-0400 WATER PANEL 648506-0400 Pos. 070 1095608-0100 2-83 (107)

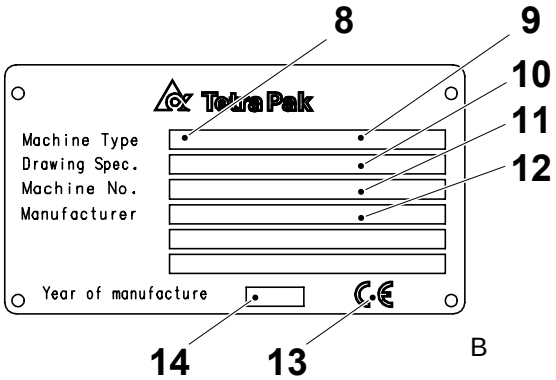
8
9
10
11
12
Tetra Pak
Machine Type
Drawing Spec.
Machine No.
Manufacturer
Year of manufacture
14
13
B

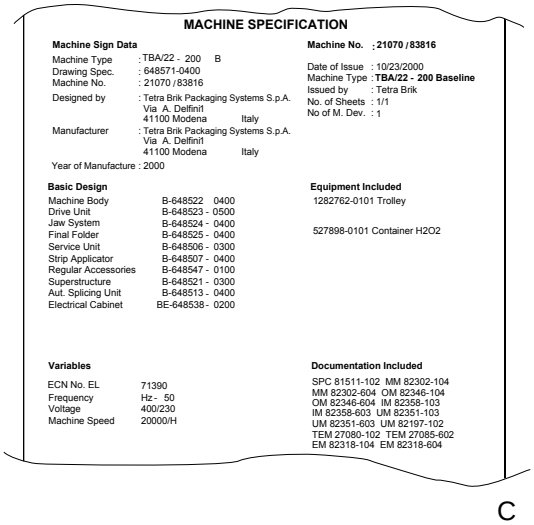
MACHINE SPECIFICATION
Machine Sign Data
Machine Type : TBA/22 - 200 B
Drawing Spec. : 648571-0400
Machine No. : 21070 / 83816
Designed by : Tetra Brik Packaging Systems S.p.A. Via A. Delfini 41100 Modena Italy
Manufacturer : Tetra Brik Packaging Systems S.p.A. Via A. Delfini 41100 Modena Italy
Year of Manufacture : 2000
Machine No. : 21070 / 83816
Date of Issue : 10/23/2000
Machine Type : TBA/22 - 200 Baseline
Issued by : Tetra Brik
No. of Sheets : 1/1
No of M. Dev. : 1
Basic Design
Machine Body B-648522 0400
Drive Unit B-648523 - 0500
Jaw System B-648524 - 0400
Final Folder B-648525 - 0400
Service Unit B-648506 - 0300
Strip Applicator B-648507 - 0400
Regular Accessories B-648547 - 0100
Superstructure B-648521 - 0300
Aut. Splicing Unit B-648513 - 0400
Electrical Cabinet BE-648538 - 0200
Equipment Included
1282762-0101 Trolley
527898-0101 Container H2O2
Variables
ECN No. EL 71390
Frequency Hz - 50
Voltage 400/230
Machine Speed 20000/H
Documentation Included
SPC 81511-102 MM 82302-104
MM 82302-604 OM 82346-104
OM 82346-604 IM 82358-103
IM 82358-603 UM 82351-103
UM 82351-603 UM 82197-102
TEM 27080-102 TEM 27085-602
EM 82318-104 EM 82318-604
C

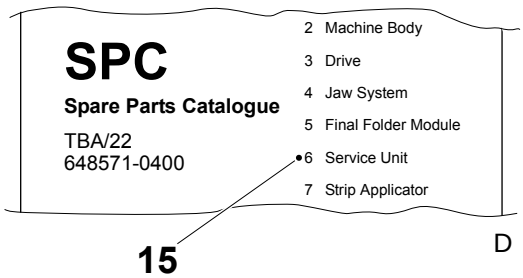
SPC
Spare Parts Catalogue
TBA/22
648571-0400
2 Machine Body
3 Drive
4 Jaw System
5 Final Folder Module
6 Service Unit
7 Strip Applicator
15
D

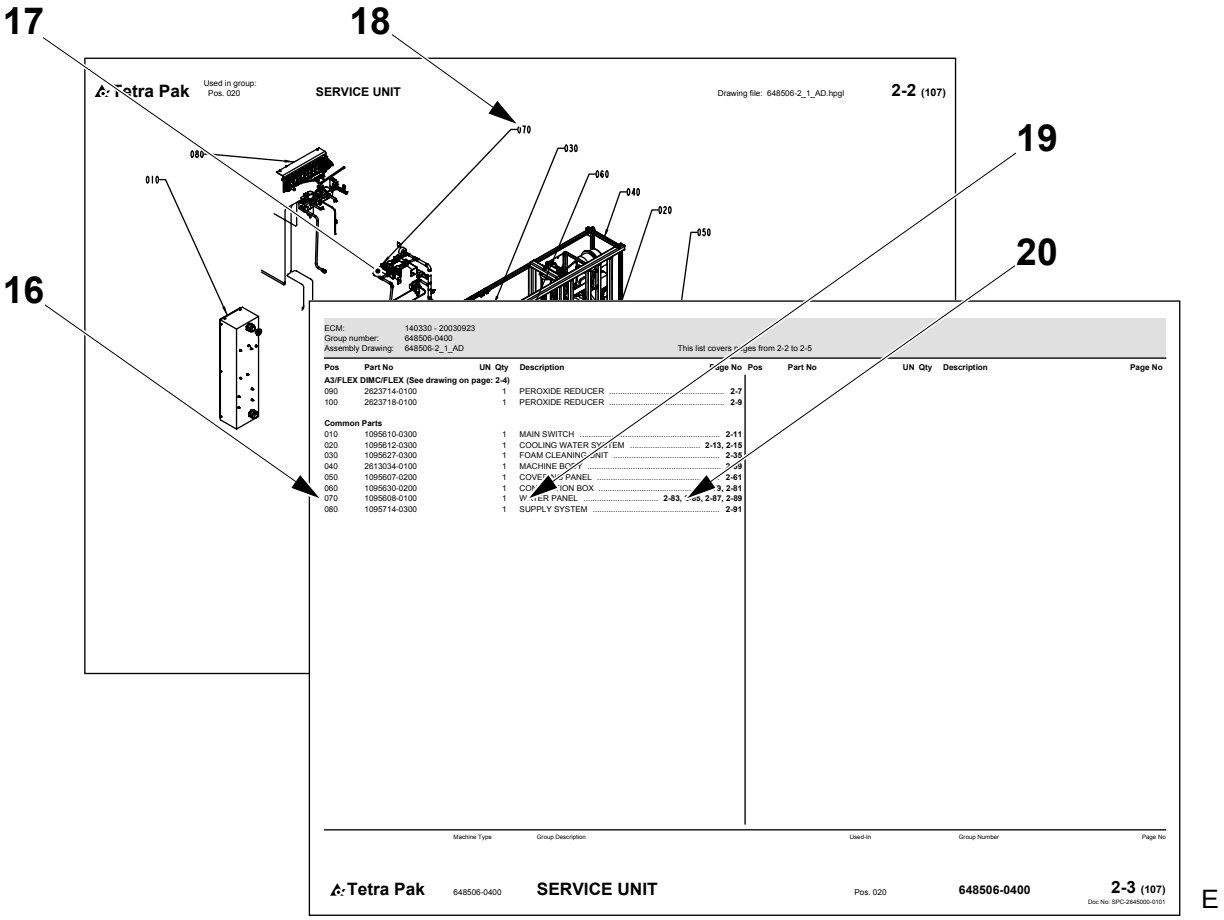
17
18
19
20
16
Tetra Pak
SERVICE UNIT
Drawing file: 648506-2_1_AD.hpgl
2-2 (107)
070
030
080
060
010
040
020
050
ECM: 140330 - 20030923
Group number: 648506-0400
Assembly Drawing: 648506-2_1_AD
This list covers pages from 2-2 to 2-5
Pos Part No UN Qty Description Page No
A3/FLEX DIMC/FLEX (See drawing on page: 2-4)
090 2623714-0100 1 PEROXIDE REDUCER 2-7
100 2623718-0100 1 PEROXIDE REDUCER 2-9
Common Parts
010 1095610-0300 1 MAIN SWITCH 2-11
020 1095612-0300 1 COOLING WATER SYSTEM 2-13, 2-15
030 1095627-0300 1 FOAM CLEANING UNIT 2-35
040 2613034-0100 1 MACHINE BODY
050 1095607-0200 1 COVERING PANEL 2-61
060 1095630-0200 1 CONTROL BOX 2-3, 2-81
070 1095608-0100 1 WATER PANEL 2-83, 2-87, 2-89
080 1095714-0300 1 SUPPLY SYSTEM 2-91
Machine Type
Group Description
Used-In
Group Number
Page No
Tetra Pak
648506-0400
SERVICE UNIT
Pos. 020
648506-0400
2-3 (107)
Doc No: SPC-2645000-0101

E

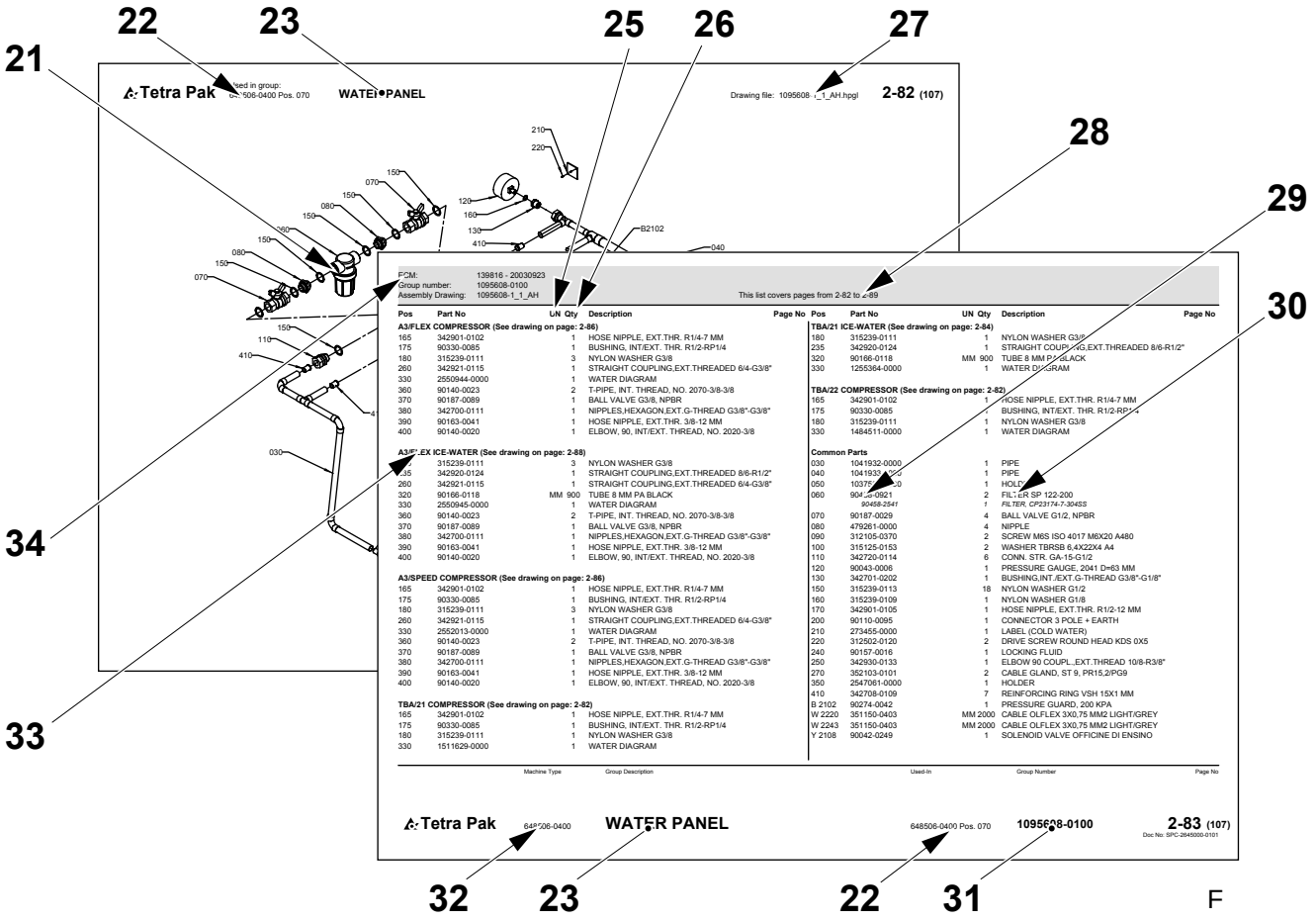
22
23
25
26
27
21
28
29
30
34
33
Tetra Pak
WATER PANEL
Drawing file: 1095608-1_1_AH.hpgl
2-82 (107)
210
220
150
070
080
120
160
130
410
B2102
040
030
110
ECM: 139816 - 20030923
Group number: 1095608-0100
Assembly Drawing: 1095608-1_1_AH
This list covers pages from 2-82 to 2-89
Pos Part No UN Qty Description Page No
A3/FLEX COMPRESSOR (See drawing on page: 2-86)
165 342901-0102 1 HOSE NIPPLE, EXT.THR. R1/4-7 MM
175 90330-0085 1 BUSHING, INT/EXT. THR. R1/2-RP1/4
180 315239-0111 3 NYLON WASHER G3/8
260 342921-0115 1 STRAIGHT COUPLING,EXT.THREADED 6/4-G3/8"
330 2550944-0000 1 WATER DIAGRAM
360 90140-0023 2 T-PIPE, INT. THREAD, NO. 2070-3/8-3/8
370 90187-0089 1 BALL VALVE G3/8, NPBR
380 342700-0111 1 NIPPLES,HEXAGON,EXT.G-THREAD G3/8"-G3/8"
390 90163-0041 1 HOSE NIPPLE, EXT.THR. 3/8-12 MM
400 90140-0020 1 ELBOW, 90, INT/EXT. THREAD, NO. 2020-3/8
A3/FLEX ICE-WATER (See drawing on page: 2-88)
155 315239-0111 3 NYLON WASHER G3/8
165 342920-0124 1 STRAIGHT COUPLING,EXT.THREADED 8/6-R1/2"
260 342921-0115 1 STRAIGHT COUPLING,EXT.THREADED 6/4-G3/8"
320 90166-0118 MM 900 TUBE 8 MM PA BLACK
330 2550945-0000 1 WATER DIAGRAM
360 90140-0023 2 T-PIPE, INT. THREAD, NO. 2070-3/8-3/8
370 90187-0089 1 BALL VALVE G3/8, NPBR
380 342700-0111 1 NIPPLES,HEXAGON,EXT.G-THREAD G3/8"-G3/8"
390 90163-0041 1 HOSE NIPPLE, EXT.THR. 3/8-12 MM
400 90140-0020 1 ELBOW, 90, INT/EXT. THREAD, NO. 2020-3/8
A3/SPEED COMPRESSOR (See drawing on page: 2-86)
165 342901-0102 1 HOSE NIPPLE, EXT.THR. R1/4-7 MM
175 90330-0085 1 BUSHING, INT/EXT. THR. R1/2-RP1/4
180 315239-0111 3 NYLON WASHER G3/8
260 342921-0115 1 STRAIGHT COUPLING,EXT.THREADED 6/4-G3/8"
330 2552013-0000 1 WATER DIAGRAM
360 90140-0023 2 T-PIPE, INT. THREAD, NO. 2070-3/8-3/8
370 90187-0089 1 BALL VALVE G3/8, NPBR
380 342700-0111 1 NIPPLES,HEXAGON,EXT.G-THREAD G3/8"-G3/8"
390 90163-0041 1 HOSE NIPPLE, EXT.THR. 3/8-12 MM
400 90140-0020 1 ELBOW, 90, INT/EXT. THREAD, NO. 2020-3/8
TBA/21 COMPRESSOR (See drawing on page: 2-82)
165 342901-0102 1 HOSE NIPPLE, EXT.THR. R1/4-7 MM
175 90330-0085 1 BUSHING, INT/EXT. THR. R1/2-RP1/4
180 315239-0111 1 NYLON WASHER G3/8
330 1511629-0000 1 WATER DIAGRAM
TBA/21 ICE-WATER (See drawing on page: 2-84)
180 315239-0111 1 NYLON WASHER G3/8
235 342920-0124 1 STRAIGHT COUPLING,EXT.THREADED 8/6-R1/2"
320 90166-0118 MM 900 TUBE 8 MM PA BLACK
330 1255364-0000 1 WATER DIAGRAM
TBA/22 COMPRESSOR (See drawing on page: 2-82)
165 342901-0102 1 HOSE NIPPLE, EXT.THR. R1/4-7 MM
175 90330-0085 1 BUSHING, INT/EXT. THR. R1/2-RP1/4
180 315239-0111 1 NYLON WASHER G3/8
330 1484511-0000 1 WATER DIAGRAM
Common Parts
030 1041932-0000 1 PIPE
040 1041933-0000 1 PIPE
050 1037[illegible] 1 HOLDER
060 9045[illegible]-0921 2 FILTER SP 122-200
90458-2541 1 FILTER, CP23174-7-30455
070 90187-0029 4 BALL VALVE G1/2, NPBR
080 479261-0000 4 NIPPLE
090 312105-0370 2 SCREW M6S ISO 4017 M6X20 A480
100 315125-0153 2 WASHER TBRSB 6,4X22X4 A4
110 342720-0114 6 CONN. STR. GA-15-G1/2
120 90043-0006 1 PRESSURE GAUGE, 2041 D=63 MM
130 342701-0202 1 BUSHING,INT./EXT.G-THREAD G3/8"-G1/8"
150 315239-0113 18 NYLON WASHER G1/2
160 315239-0109 1 NYLON WASHER G1/8
170 342901-0105 1 HOSE NIPPLE, EXT.THR. R1/2-12 MM
200 90110-0095 1 CONNECTOR 3 POLE + EARTH
210 273455-0000 1 LABEL (COLD WATER)
220 312502-0120 2 DRIVE SCREW ROUND HEAD KDS 0X5
240 90157-0016 1 LOCKING FLUID
250 342930-0133 1 ELBOW 90 COUPL.,EXT.THREAD 10/8-R3/8"
270 352103-0101 2 CABLE GLAND, ST 9, PR15,2/PG9
350 2547061-0000 1 HOLDER
410 342708-0109 7 REINFORCING RING VSH 15X1 MM
B 2102 90274-0042 1 PRESSURE GUARD, 200 KPA
W 2220 351150-0403 MM 2000 CABLE OLFLEX 3X0,75 MM2 LIGHT/GREY
W 2243 351150-0403 MM 2000 CABLE OLFLEX 3X0,75 MM2 LIGHT/GREY
Y 2108 90042-0249 1 SOLENOID VALVE OFFICINE DI ENSINO
Machine Type
Group Description
Used-In
Group Number
Page No
Tetra Pak
648506-0400
WATER PANEL
648506-0400 Pos. 070
1095608-0100
2-83 (107)
Doc No: SPC-2648000-0101
32
23
22
31

F

Introduction

Manual Information

Tetra Pak recommends reading all delivered manuals carefully. Make sure that the delivered manuals are available to personnel who operate or maintain the equipment.

It is important to keep this catalogue for the lifetime of the equipment and to pass the catalogue on to any subsequent holder or user.

Tetra Pak will not be held responsible for any damage to the equipment caused by not following the instructions given in the manuals that accompany this equipment.

Delivered Manuals

The manuals delivered with this equipment may include

- Conversion Manual (CM)
  This manual provides technicians with information on converting the equipment between different production modes.
- Electrical Manual (EM)
  This manual provides technicians with information about the equipment's electrical system.
- Installation Manual (IM)
  This manual provides technicians with information required to safely install the equipment.
- Maintenance Manual (MM)
  This manual provides technicians with information on maintaining the equipment.
- Operation Manual (OM)
  This manual provides the operator with information on handling and operating the equipment before, during, and after production.
- Spare Parts Catalogue (SPC)
  This manual provides the information necessary to order spare parts from Tetra Pak.
- Technical Manual (TeM)
  - provides technicians with information required to safely install the equipment
  - provides technicians with information on maintaining the equipment
  - provides technicians with information about the equipment's electrical system
  - provides the information necessary to order spare parts from Tetra Pak

Page Layout

Refer to the illustration (A) on page i-5: The main pages in a Spare Parts Catalogue consist of an illustration page (1) and a corresponding list page (7). The page number (5) is shown in the header of an illustration page and in the footer of a list page. The document number (6) is shown in the footer of a list page.

Page Numbering

Refer to the illustration (A) on page i-5: A page number (5) has three parts:

- chapter number (2)
- consecutive page number within the chapter (3)
- total number of pages in the chapter (4)

Machine Introduction

Manufacturer

For the manufacturer's name and address, see the second page of this catalogue.

Service

To order spare parts for this machine, or to report problems associated with operating this machine, contact the nearest Tetra Pak office.

Contact the Liaison with other inquiries, comments, or suggestions for improvement regarding the equipment and its documentation.

Identification

CE Classification

This equipment complies with the basic health and safety regulations of the European Economic Area (EEA).

Machine Plate

The illustration (B) on page i-5 shows an example of a machine plate. An illustration of the valid machine plate and its location on the equipment is shown in the Introduction chapter of the manuals delivered with this equipment. The machine plate contains the data listed below, needed when contacting Tetra Pak concerning this specific equipment.

- Machine type (8)
- Volume (9)
- Drawing specifications (10)
- Machine serial number (11)
- Manufacturer (12)
- CE mark (13)
- Year of manufacture (14)

The illustration (C) on page i-5 shows an example of a machine specification. Make sure that the equipment data listed in the front pages of this manual corresponds to the machine plate data and the machine specification.

How to Use This Spare Parts Catalogue

Locate a Spare Part Number

a) Refer to the illustration (D) on page i-5: Go to the chapter number (15) indicated beside the main group that contains the part you want to locate.

Items b) and c) refer to the illustration (E) on page i-6.

b) On the main group illustration, look for the machine subgroup (17) that contains the part or subgroup you are looking for. Note the position number (18) and go to the list page that follows the illustration.

c) Look for the position number (16) or the subgroup name (19). Go to the corresponding page number (20) listed in the right-hand column.

Items d) and e) refer to the illustration (F) on page i-6.

d) Locate the part (21) that you are looking for on the subgroup illustration and note the part's position number.

e) The part number (29) and part description (30) are listed beside the position number on the list page.

Information Listed in a Spare Parts Catalogue

The list below refers to the illustration (F) on page i-6. A Spare Parts Catalogue contains the following information about groups, subgroups, and spare parts for the equipment:

- Group structure reference (22). Indicates the next higher group in the equipment list structure.
- Group name (23)
- Unit of measure (25)
- Quantity (26)
- Assembly drawing number (27)
- List page range (28). Included if there are multiple pages in the group illustration or list.
- Part or subgroup number (29)
- Subgroup name or part description (30)
- Group number (31)
- Equipment number (32)
- Group information heading (33). Indicates if the section below the heading is for a specific machine variant or if it is a list of common parts. If a list has more than one variant and each variant has its own assembly drawing, a page reference to the variant's assembly drawing is shown.
- Internal information (34)

Úvod

Informace o příručce

Společnost Tetra Pak doporučuje, abyste se důkladně seznámili se všemi dodanými příručkami. Dodané příručky musí být k dispozici pracovníkům, kteří provádějí obsluhu nebo údržbu zařízení.

Tento katalog je třeba uchovávat po celou dobu životnosti zařízení a předat jej každému dalšímu vlastníkovi nebo uživateli.

Společnost Tetra Pak nezodpovídá za škody na zařízení způsobené nedodržováním pokynů uvedených v příručkách dodaných se zařízením.

Dodané příručky

Mezi příručky dodané se zařízením patří:

- Příručka pro konverzi (CM)
  Tato příručka obsahuje informace pro techniky o konverzi zařízení mezi jednotlivými výrobními režimy.
- Příručka pro elektroinstalaci (EM)
  Tato příručka obsahuje informace pro techniky o elektroinstalaci zařízení.
- Příručka pro instalaci (IM)
  Tato příručka obsahuje informace pro techniky týkající se bezpečné instalace zařízení.
- Příručka pro obsluhu (MM)
  Tato příručka obsahuje informace pro techniky o údržbě zařízení.
- Provozní příručka (OM)
  Tato příručka obsahuje informace pro obsluhu o manipulaci a provozu zařízení před, během a po výrobě.
- Katalog náhradních dílů (SPC)
  Tato příručka obsahuje informace nezbytné pro objednávání náhradních dílů od společnosti Tetra Pak.
- Technická příručka (TeM)
  - obsahuje informace pro techniky týkající se bezpečné instalace zařízení
  - obsahuje informace pro techniky o údržbě zařízení
  - obsahuje informace pro techniky o elektroinstalaci zařízení
  - obsahuje informace nezbytné pro objednávání náhradních dílů od společnosti Tetra Pak

Vzhled stránky

Viz obrázek (A) na stránce i-5: hlavní stránky v katalogu náhradních dílů se skládají ze stránky s obrázkem (1) a z odpovídající katalogové stránky (7). Číslo stránky (5) je uvedeno v záhlaví stránky s obrázkem a v zapatí katalogové stránky. Číslo dokumentu (6) je uvedeno v záhlaví katalogové stránky.

Číslování stránek

Viz obrázek (A) na stránce i-5: číslo stránky (5) se skládá ze tří částí:

- číslo kapitoly (2)
- číslo další stránky (3) v rámci kapitoly
- celkový počet stránek (4) v kapitole

Seznámení se zařízením

Výrobce

Název a adresa výrobce jsou uvedeny na druhé stránce tohoto katalogu.

Servis

Chcete-li objednat náhradní díly pro toto zařízení nebo chcete-li ohlásit potíže spojené s provozem zařízení, obrat'te se na nejbližší pobočku společnosti Tetra Pak.

S ostatními stížnostmi, připomínkami nebo zlepšovacími návrhy v souvislosti se zařízením a dokumentací se obrat'te na zastoupení společnosti.

Označení

Klasifikace CE

Toto zařízení vyhovuje základním zdravotním a bezpečnostním směrnicím EEA (European Economic Area).

Typový štítek

Na obrázku (B) na stránce i-5 je uveden příklad typového štítku zařízení. Příslušné typové štítky a jejich umístění na zařízení jsou uvedeny v kapitole Úvod v příručkách dodaných se zařízením. Typový štítek obsahuje níže uvedené údaje, které je třeba uvést při kontaktování společnosti Tetra Pak ohledně tohoto zařízení.

- typ zařízení (8)
- množství (9)
- označení schémat (10)
- sériové číslo zařízení (11)
- výrobce (12)
- symbol CE (13)
- rok výroby (14)

Na obrázku (C) na stránce i-5 je uveden příklad specifikace zařízení. Údaje o zařízení uvedené na předních stránkách této příručky musí souhlasit s údaji na typovém štítku a se specifikacemi zařízení.

Jak používat tento katalog náhradních dílů

Vyhledání čísla náhradního dílů

a) Viz obrázek (D) na stránce i-5: přejdete na číslo kapitoly (15) uvedené vedle hlavní skupiny, která obsahuje hledaný díl.

Položky b) a c) odkazují na obrázek (E) na stránce i-6.

b) Na obrázku hlavní skupiny vyhledejte podskupinu zařízení (17) která obsahuje hledaný díl nebo podskupinu. Zapamatujte si číslo umístění (18) a přejděte na katalogovou stránku, která následuje obrázek.

c) Vyhledejte číslo umístění (16) nebo název podskupiny (19). Přejděte na příslušné číslo stránky (20) uvedené v pravém sloupci.

Položky d) a e) odkazují na obrázek (F) na stránce i-6.

d) Na obrázku podskupiny vyhledejte požadovaný díl (21) a poznamenejte si číslo jeho umístění.

e) Na katalogové stránce je vedle čísla umístění uvedeno číslo dílu (29) a popis (30).

Informace uvedené v katalogu náhradních dílů

Následující seznam odkazuje na obrázek (F) na stránce i-6. Katalog náhradních dílů obsahuje následující informace o skupinách, podskupinách a náhradních dílech pro toto zařízení:

- Označení struktury skupiny (22). Označuje další vyšší skupinu ve struktuře katalogu zařízení.
- Název skupiny (23)
- Měrné jednotky (25)
- Množství (26)
- Číslo schématu součásti (27)
- Rozsah katalogových stránek (28). Je uvedeno, pokud obrázek skupiny nebo katalog obsahují více stránek.
- Číslo dílu nebo podskupiny (29)
- Název podskupiny nebo popis dílu (30)
- Číslo skupiny (31)
- Číslo zařízení (32)
- Nadpis informací o skupině (33). Označuje, zda se oddíl pod nadpisem vztahuje na konkrétní variantu zařízení nebo představuje katalog běžných dílů. Pokud některý katalog obsahuje více, než jednu variantu, a pokud má každá varianta vlastní schéma součásti, zobrazí se odkaz na stránku se schématem součásti dané varianty.
- Vnitřní informace (34)

Indledning

Information om manualen

Tetra Pak anbefaler, at alle leverede manualer læses omhyggeligt. Sørg for, at de leverede manualer er tilgængelige for medarbejdere, der betjener eller vedligeholder udstyret.

Det er vigtigt at opbevare dette katalog hele udstyrets levetid og give kataloget videre til eventuelt kommende ejere eller brugere.

Tetra Pak kan ikke holdes ansvarlig for eventuel beskadigelse af udstyr, der opstår, fordi instruktionerne i manualerne til dette udstyr ikke følges.

Leverede manualer

De manualer, der leveres sammen med dette udstyr, kan omfatte:

- Konverteringsmanual (CM)
  Denne manual forsyner teknikere med informationer om konvertering af udstyret mellem forskellige produktionstilstande.
- Elektrisk manual (EM)
  Denne manual forsyner teknikere med informationer om udstyrets elektriske system.
- Installationsmanual (IM)
  Denne manual forsyner teknikere med informationer, der er nødvendige for en sikker installation af udstyret.
- Vedligeholdelsesmanual (MM)
  Denne manual forsyner teknikere med informationer om vedligeholdelse af udstyret.
- Betjeningsmanual (OM)
  Denne manual forsyner operatøren med informationer om håndtering og betjening af udstyret før, under og efter produktion.
- Reservedelskatalog (SPC)
  Denne manual indeholder de informationer, der er nødvendige for at kunne bestille reservedele fra Tetra Pak.
- Teknisk manual (TeM)
  - forsyner teknikere med informationer, der er nødvendige for en sikker installation af udstyret.
  - forsyner teknikere med informationer om vedligeholdelse af udstyret.
  - forsyner teknikere med informationer om udstyrets elektriske system.
  - indeholder de informationer, der er nødvendige for at kunne bestille reservedele fra Tetra Pak.

Sidelayout

Se illustrationen (A) på side i-5: Hovedsiderne i et reservedelskatalog består af en illustrationsside (1) og en tilsvarende listeside (7). Sidenummeret (5) vises i sidehovedet på en illlustrationsside og i sidefoden på en listeside. Dokumentnummeret (6) vises i sidefoden på en listeside.

Sidenummerering

Se illustrationen (A) på side i-5: Et sidenummer (5) har tre dele:

- kapitelnummer (2)
- fortløbende sidenummer i kapitlet (3)
- samlet sideantal i kapitlet (4)

Præsentation af maskinen

Producent

Producentens navn og adresse findes på side to i dette katalog.

Service

Kontakt nærmeste Tetra Pak-kontor for at bestille reservedele eller rapportere problemer i forbindelse med betjening af denne maskine.

Kontakt kontaktpersonen med andre forespørgsler, kommentarer eller forslag til forbedringer af udstyret og dets dokumentation.

Identifikation

CE-klassificering

Dette udstyr overholder de grundlæggende sundheds- og sikkerhedsbestemmelser for Det Europæiske Økonomiske Samarbejdsområde (EØS).

Maskinskilt

Illustrationen (B) på side i-5 viser et eksempel på et maskinskilt. En illustration af et gyldigt maskinskilt og dets placering på udstyret er vist i indledningskapitlet i de manualer, der leveres med dette udstyr. Maskinskiltet indeholder nedennævnte data. Disse er nødvendige ved kontakt med Tetra Pak vedrørende dette specifikke udstyr.

- Maskintype (8)
- Volumen (9)
- Tegningsspecifikationer (10)
- Maskinens serienummer (11)
- Producent (12)
- CE-mærke (13)
- Produktionsår (14)

Illustrationen (C) på side i-5 viser et eksempel på en maskinspecifikation. Kontroller, at de udstyrsdata, der er anført på de første sider i denne manual, svarer til maskinskiltsdataene og maskinspecifikationen.

Sådan bruges dette reservedelskatalog

Find et reservedelsnummer

a) Se illustrationen (D) på side i-5: Gå til kapitelnummeret (15), der er angivet ved siden af hovedgruppen, der indeholder den del, der ønskes fundet.

Punkterne b) og c) refererer til illustrationen (E) på side i-6.

b) I hovedgruppeillustrationen skal man se efter maskinundergruppen (17), som indeholder den del eller undergruppe, der søges. Bemærk placeringsnummeret (18), og gå til listesiden, som følger illustrationen.

c) Se efter placeringsnummeret (16) eller undergruppens navn (19). Gå til det tilsvarende sidenummer (20) angivet i den højre kolonne.

Punkterne d) og e) refererer til illustrationen (F) på side i-6.

d) Find den del (21), du søger i undergruppeillustrationen, og notér delens placeringsnummer.

e) Reservedelsnummeret (29) og -beskrivelsen (30) er angivet ved siden af placeringsnummeret på listesiden.

Informationer der er angivet i et reservedelskatalog

Listen nedenfor refererer til illustrationen (F) på side i-6. Et reservedelskatalog indeholder følgende informationer om grupper, undergrupper og reservedele til udstyret:

- Gruppestrukturreference (22). Angiver næste overordnede gruppe i udstyrslistestrukturen.
- Gruppenavn (23)
- Måleenhed (25)
- Antal (26)
- Samletegningsnummer (27)
- Listens sideområde (28). Er angivet, hvis gruppeillustrationen eller -listen inkluderer mange sider.
- Del- eller undergruppenummer (29)
- Undergruppens navn eller delsbeskrivelse (30)
- Gruppenummer (31)
- Udstyrsnummer (32)
- Overskrift for gruppeinformation (33). Angiver om afsnittet under overskriften er for en specifik maskinvariant, eller om det er en liste over fælles dele. Hvis en liste har mere end én variant, og hver variant har sin egen samletegning, vises en sidereference til variantens samletegning.
- Intern information (34)

Einleitung

Handbuch-Informationen

Tetra Pak empfiehlt, alle gelieferten Handbücher sorgfältig zu lesen. Es muss sichergestellt werden, dass die gelieferten Handbücher dem Bediener- oder Wartungspersonal der Ausrüstung verfügbar sind.

Es ist wichtig, dieses Handbuch während der Lebensdauer der Ausrüstung vorzuhalten und es an nachfolgende Halter oder Benutzer weiterzugeben.

Tetra Pak ist nicht verantwortlich für Schäden an der Ausrüstung, die durch die Nichtbefolgung der Anweisungen dieses Handbuchs verursacht werden.

Gelieferte Handbücher

Die mit dieser Ausrüstung gelieferten Handbücher umfassen

- Umbauhandbuch (CM)
  Dieses Handbuch liefert den Technikern Informationen über den Umbau der Ausrüstung zwischen den verschiedenen Produktionsweisen.
- Elektrohandbuch (EM)
  Dieses Handbuch liefert den Technikern Informationen zum Elektrosystem der Ausrüstung.
- Installationshandbuch (IM)
  Dieses Handbuch liefert den Technikern Informationen für die sichere Installation der Ausrüstung.
- Wartungshandbuch (MM)
  Dieses Handbuch liefert den Technikern Informationen über die Wartung der Ausrüstung.
- Betriebshandbuch (OM)
  Dieses Handbuch liefert dem Bediener Informationen über die Handhabung und den Betrieb der Ausrüstung vor, während und nach der Produktion.
- Ersatzteilkatalog (SPC)
  Dieses Handbuch liefert Informationen, wie sie für die Bestellung von Ersatzteilen bei Tetra Pak erforderlich sind.
- Technisches Handbuch (TeM)
  - liefert den Technikern Informationen für die sichere Installation der Ausrüstung
  - liefert den Technikern Informationen über die Wartung der Ausrüstung
  - liefert den Technikern Informationen über das Elektrosystem der Ausrüstung
  - liefert die erforderlichen Informationen für die Bestellung von Ersatzteilen bei Tetra Pak.

Seitenlayout

Bezugnahme Abbildung (A) auf Seite i-5: Die Hauptseiten in einem Ersatzteilkatalog bestehen aus einer Abbildungsseite (1) und einer entsprechenden Listenseite (7). Die Seitennummer (5) ist im Kopf einer Abbilldungsseite und im Fuß einer Listenseite aufgeführt. Die Dokumentennummer (6) ist ist im Fuß einer Listenseite angegeben.

Seitennummerierung

Bezugnahme Abbildung (A) auf Seite i-5: Eine Seitennummer (5) besteht aus drei Teilen:

- Kapitelnummer (2)
- Fortlaufende Seitennummer innerhalb des Kapitels (3)
- Gesamtanzahl der Seiten im Kapitel (4)

Einführung in die Maschine

Hersteller

Für Name und Anschrift des Herstellers, siehe die zweite Seite dieses Kataloges.

Service

Um Ersatzteile für diese Maschine zu bestellen oder um über Probleme beim Betrieb dieser Maschine zu berichten, ist das nächstgelegene Büro von Tetra Pak anzusprechen.

Mit anderen Anfragen. Kommentaren oder Vorschlägen zur Ausrüstung und der Dokumentation ist die Verbindungsstelle anzusprechen.

Identifizierung

CE-Klassifizierung

Diese Ausrüstung entspricht den grundlegenden Gesundheits- und Sicherheitsvorschriften des Europäischen Wirtschaftsraumes (EEA).

Maschinenschild

Die Abbildung (B) auf Seite i-5 zeigt das Beispiel eines Maschinenschildes. Die Abbildung eines gültigen Maschinenschildes und die Lage desselben auf der Ausrüstung befindet sich im Einleitungskapitel der mit der Ausrüstung gelieferten Handbücher. Das Maschinenschild enthält die nachstehend aufgeführten Daten, wie sie erforderlich sind, wenn Tetra Pak wegen dieser spezifischen Ausrüstung anzusprechen ist.

- Maschinentyp (8)
- Volumen (9)
- Zeichnungs-Spezifikationen (10)
- Serien-Nummer der Maschine (11)
- Hersteller (12)
- CE-Markierung (13)
- Baujahr (14)

Die Abbildung (C) auf Seite i-5 zeigt das Beispiel einer Maschinenspezifikation. Es muss sichergestellt sein, dass die in den Frontseiten dieses Handbuchs aufgeführten Ausrüstungsdaten mit den Daten des Maschinenschildes und der Maschinenspezifikation übereinstimmen.

Verwendung dieses Ersatzteilkatalogs

Anordnung einer Ersatzteilnummer

a) Bezugnahme auf Abbildung (D) auf Seite i-5: Weiter zur Kapitelnummer (15), die neben der Hauptgruppe angegeben ist, die das entsprechende Teil enthält.

Die Pos. b) und c) beziehen sich auf die Abbildung (E) auf Seite i-6.

b) Auf der Hauptgruppenabbildung die Maschinen-Untergruppe (17) suchen, die das gesuchte Teil oder die gesuchte Untergruppe enthält. Die Positionsnummer (18) notieren und weiter zur Listenseite gehen, die der Abbildung folgt.

c) Die Positionsnummer (16) oder den Namen der Untergruppe (19) suchen. Dann zur entsprechenden Seitennummer (20) in der rechten Spalte gehen.

Pos. d) und e) beziehen sich auf die Abbildung (F) auf Seite i-6.

d) Suchen Sie Teil (21) auf der Untergruppen-Abbildung und notieren Sie die Positionsnummer des Teils.

e) Die Teilnummer (29) und die Teilebeschreibung (30) finden Sie neben der Positionsnummer auf der Listenseite.

In einem Ersatzteilkatalog enthaltene Information

Die nachstehende Liste bezieht sich auf die Abbildung (F) auf Seite i-6. Ein Ersatzteilkatalog enthält folgende Informationen über Gruppen, Untergruppen und Ersatzteile für die Ausrüstung:

- Gruppenstrukturreferenz (22). Sie gibt die nächst höhere Gruppe in der Ausrüstungslistenstruktur an
- Gruppenname (23)
- Maßeinheit (25)
- Menge (26)
- Nummer der Zusammenbauzeichnung (27)
- Listenseite, Bereich (28). Eingeschlossen, wenn Mehrfachseiten in der Gruppenabbildung oder Liste enthalten sind
- Teile- oder Untergruppennummer (29)
- Untergruppenname oder Teilebeschreibung (30)
- Gruppennummer (31)
- Ausrüstungsnummer (32)
- Gruppeninformationsüberschrift (33). Gibt an, ob der Abschnitt unter der Überschrift sich auf eine spezifische Maschinenvariante bezieht oder eine Liste der allgemeinen Teile ist. Wenn eine Liste sich auf mehr als eine Variante bezieht und jede Variante eine eigene Zusammenbauzeichnung hat, wird eine Seitenreferenz zur Zusammenbauzeichnung der Variante vorgestellt.
- Interne Information (34)

Εισαγωγή

Πληροφορίες για το Εγχειρίδιο

Η Tetra Pak σας συνιστά να διαβάζετε προσεκτικά όλα τα χορηγούμενα εγχειρίδια. Βεβαιωθείτε ότι είναι διαθέσιμα όλα τα χορηγούμενα εγχειρίδια για το προσωπικό που χειρίζεται ή συντηρεί τον εξοπλισμό.

Είναι σημαντικό να διατηρείτε αυτό τον κατάλογο καθ' όλη τη διάρκεια ζωής του εξοπλισμού καθώς και να παραδίδετε τον κατάλογο στον τυχόν επόμενο ιδιοκτήτη ή χρήστη του εξοπλισμού.

Η Tetra Pak δεν πρόκειται να αναλάβει καμία ευθύνη για οποιαδήποτε ζημιά που προκαλείται στον εξοπλισμό λόγω της παράβλεψης των οδηγιών που δίνονται στα εγχειρίδια που συνοδεύουν αυτό τον εξοπλισμό.

Χορηγούμενα Εγχειρίδια

Τα εγχειρίδια που χορηγούνται μ' αυτόν τον εξοπλισμό, μπορεί να περιλαμβάνουν

- Εγχειρίδιο Μετατροπής (CM)
  Αυτό το εγχειρίδιο χορηγεί στους τεχνικούς πληροφορίες για τη μετατροπή του εξοπλισμού στους διαφορετικούς τρόπους παραγωγής.
- Εγχειρίδιο Ηλεκτρικού (EM)
  Αυτό το εγχειρίδιο χορηγεί στους τεχνικούς πληροφορίες για το ηλεκτρικό σύστημα του εξοπλισμού.
- Εγχειρίδιο Εγκατάστασης (IM)
  Αυτό το εγχειρίδιο χορηγεί στους τεχνικούς τις απαιτούμενες πληροφορίες για την ασφαλή εγκατάσταση του εξοπλισμού.
- Εγχειρίδιο Συντήρησης (MM)
  Αυτό το εγχειρίδιο χορηγεί στους τεχνικούς πληροφορίες για τη συντήρηση του εξοπλισμού.
- Εγχειρίδιο Χρήσης (OM)
  Αυτό το εγχειρίδιο χορηγεί στο χειριστή πληροφορίες για τη διακίνηση και το χειρισμό του εξοπλισμού πριν, κατά τη διάρκεια και μετά την παραγωγή.
- Κατάλογος Ανταλλακτικών (SPC)
  Αυτό το εγχειρίδιο χορηγεί τις απαραίτητες πληροφορίες για την παραγγελία ανταλλακτικών από την Tetra Pak.
- Τεχνικό Εγχειρίδιο (TeM)
  - χορηγεί στους τεχνικούς τις απαιτούμενες πληροφορίες για την ασφαλή εγκατάσταση του εξοπλισμού
  - χορηγεί στους τεχνικούς πληροφορίες για τη συντήρηση του εξοπλισμού
  - χορηγεί στους τεχνικούς πληροφορίες για το ηλεκτρικό σύστημα του εξοπλισμού
  - χορηγεί τις απαραίτητες πληροφορίες για την παραγγελία ανταλλακτικών από την Tetra Pak

Σχεδίαση Σελίδας

Ανατρέξτε στην εικόνα (A) της σελίδας i-5: Οι κύριες σελίδες ενός Καταλόγου Ανταλλακτικών αποτελούνται από μία εικονογραφημένη σελίδα (1) και από μία αντίστοιχη σελίδα καταλόγου (7). Ο αριθμός σελίδας (5) φαίνεται στην κεφαλίδα μιας εικονογραφημένης σελίδας και στο υποσέλιδο μιας σελίδας καταλόγου. Ο αριθμός εγγράφου (6) φαίνεται στο υποσέλιδο μιας σελίδας λίστας.

Αρίθμηση Σελίδων

Ανατρέξτε στην εικόνα (A) της σελίδας i-5: Ένας αριθμός σελίδας (5) αποτελείται από τρία μέρη:

- αριθμός κεφαλαίου (2)
- αύξων αριθμός σελίδας του κεφαλαίου (3)
- συνολικός αριθμός σελίδων του κεφαλαίου (4)

Εισαγωγή στη Μηχανή

Κατασκευαστής

Για την επωνυμία και τη διεύθυνση του κατασκευαστή, βλέπετε στη δεύτερη σελίδα αυτού του καταλόγου.

Σέρβις

Για να παραγγείλετε ανταλλακτικά για τη συγκεκριμένη μηχανή, ή για να αναφέρετε προβλήματα που σχετίζονται με το χειρισμό αυτής της μηχανής, επικοινωνήστε με το πλησιέστερο γραφείο της Tetra Pak.

Εάν έχετε άλλου είδους ερωτήσεις, σχόλια ή προτάσεις βελτίωσης όσον αφορά τον εξοπλισμό και την έγγραφη τεκμηρίωσή του, επικοινωνήστε με το Τμήμα Σχέσεων.

Αναγνώριση

Κατάταξη ΕΚ

Αυτός ο εξοπλισμός συμμορφώνεται με τους βασικούς κανονισμούς υγείας και ασφάλειας του Ευρωπαϊκού Οικονομικού Χώρου (ΕΟΧ).

Πινακίδα Μηχανής

Η εικόνα (B) της σελίδας i-5 δείχνει ένα παράδειγμα μιας πινακίδας μηχανής. Μια εικόνα της ενδεδειγμένης μορφής και θέσης της πινακίδας μηχανής στον εξοπλισμό, υποδεικνύεται στο κεφάλαιο 'Εισαγωγή' των εγχειριδίων που χορηγούνται μ' αυτόν τον εξοπλισμό. Η πινακίδα μηχανής περιέχει τα στοιχεία που παρατίθενται παρακάτω, τα οποία χρειάζονται όταν επικοινωνείτε με την Tetra Pak για όσον αφορά αυτό το συγκεκριμένο εξοπλισμό.

- Τύπος μηχανής (8)
- Όγκος (9)
- Προδιαγραφές σχεδίου (10)
- Αριθμός σειράς μηχανής (11)
- Κατασκευαστής (12)
- Σήμα ΕΚ (13)
- Έτος κατασκευής (14)

Η εικόνα (C) της σελίδας i-5 δείχνει ένα παράδειγμα τεχνικών χαρακτηριστικών μηχανής. Βεβαιωθείτε ότι τα στοιχεία εξοπλισμού που παρατίθενται στις πρώτες σελίδες αυτού του εγχειριδίου αντιστοιχούν με τα στοιχεία της πινακίδας μηχανής και τα τεχνικά χαρακτηριστικά μηχανής.

Πώς Χρησιμοποιείται Αυτός ο Κατάλογος Ανταλλακτικών

Εντοπισμός ενός Αριθμού Ανταλλακτικού

a) Ανατρέξτε στην εικόνα (D) της σελίδας i-5: Πηγαίνετε στον αριθμό κεφαλαίου (15) που υποδεικνύεται δίπλα από το κύριο συγκρότημα το οποίο περιλαμβάνει το εξάρτημα που θέλετε να εντοπίσετε.

Τα βήματα b) και c) αναφέρονται στην εικόνα (E) της σελίδας i-6.

b) Στην εικόνα της κύριου συγκροτήματος, αναζητήστε το υποσυγκρότημα μηχανής (17) που περιλαμβάνει το εξάρτημα ή το υποσυγκρότημα που αναζητάτε. Σημειώστε τον αριθμό θέσης (18) και πηγαίνετε στη σελίδα καταλόγου που ακολουθεί την εικόνα.

c) Αναζητήστε τον αριθμό θέσης (16) ή το όνομα υποσυγκροτήματος (19). Πηγαίνετε στον αντίστοιχο αριθμό σελίδας (20) που αναγράφεται στη δεξιά στήλη.

Τα βήματα d) και e) αναφέρονται στην εικόνα (F) της σελίδας i-6.

d) Εντοπίστε το εξάρτημα (21) που αναζητάτε στην εικόνα υποσυγκροτήματος και σημειώστε τον αριθμό θέσης του εξαρτήματος.

e) Ο αριθμός του εξαρτήματος (29) και η περιγραφή του εξαρτήματος (30) παρατίθενται δίπλα στον αριθμό θέσης στη σελίδα καταλόγου.

Πληροφορίες που Περιέχονται σε έναν Κατάλογο Ανταλλακτικών

Ο παρακάτω κατάλογος αναφέρεται στην εικόνα (F) της σελίδας i-6. Ένας Κατάλογος Ανταλλακτικών περιέχει τις ακόλουθες πληροφορίες σχετικά με συγκροτήματα, υποσυγκροτήματα και ανταλλακτικά του εξοπλισμού:

- Αναφορά συγκροτήματος κατασκευής (22). Υποδεικνύει το επόμενο μεγαλύτερο συγκρότημα στον πίνακα εξοπλισμού κατασκευής.
- Όνομα συγκροτήματος (23)
- Μονάδα μέτρησης (25)
- Ποσότητα (26)
- Αριθμός σχεδίου συναρμολόγησης (27)
- Σειρά σελίδων καταλόγου (28). Περιλαμβάνεται εάν υπάρχουν πολλαπλές σελίδες στην εικόνα ή στον κατάλογο συγκροτήματος.
- Αριθμός εξαρτήματος ή υποσυγκροτήματος (29)
- Όνομα υποσυγκροτήματος ή περιγραφή εξαρτήματος (30)
- Αριθμός συγκροτήματος (31)
- Αριθμός εξοπλισμού (32)
- Επικεφαλίδα πληροφοριών συγκροτήματος (33). Υποδεικνύει εάν η ενότητα κάτω από την επικεφαλίδα αφορά μια ειδική παραλλαγή μηχανής ή είναι ένας κατάλογος κοινών εξαρτημάτων. Εάν ένας κατάλογος περιέχει περισσότερες από μία παραλλαγές και κάθε παραλλαγή έχει το δικό της σχέδιο συναρμολόγησης, υποδεικνύεται μια παραπομπή στη σελίδα σχεδίου συναρμολόγησης της παραλλαγής.
- Εσωτερικές πληροφορίες (34)

Introducción

Información del manual

Tetra Pak recomienda que se lean cuidadosamente todos los manuales entregados. Comprobar que todos los manuales entregados estén disponibles para el personal que efectúe la operación o el mantenimiento del equipo.

Es importante conservar este manual durante la vida útil del equipo, así como facilitárselo a cualquier propietario o usuario posterior.

Tetra Pak no se responsabilizará de daños en la máquina o equipo debidos a la inobservancia de las instrucciones dadas en los manuales que acompañan este equipo.

Manuales entregados

Los manuales entregados con este equipo pueden incluir

- Manual de conversión (CM)
  Este manual proporciona a los técnicos información sobre cómo convertir el equipo entre diferentes modos de producción.
- Manual eléctrico (EM)
  Este manual proporciona a los técnicos información acerca del sistema eléctrico del sistema.
- Manual de instalación (IM)
  Este manual proporciona a los técnicos la información necesaria para la instalación segura del equipo.
- Manual de mantenimiento (MM)
  Este manual proporciona a los técnicos la información acerca del mantenimiento del equipo.
- Manual de servicio (OM)
  Este manual proporciona al operador información acerca de la manipulación y operación de la máquina antes, durante y después de la producción.
- Catálogo de piezas de recambio (SPC)
  Este manual proporciona la información necesaria para pedir piezas de recambio a Tetra Pak.
- Manual técnico (TeM)
  - proporciona a los técnicos la información necesaria para la instalación segura del equipo
  - proporciona a los técnicos la información acerca del mantenimiento del equipo
  - proporciona a los técnicos información acerca del sistema eléctrico del sistema
  - proporciona la información necesaria para pedir piezas de recambio a Tetra Pak

Organización de las páginas

Remitirse a la ilustración (A) en la página i-5: Las páginas principales en un Catálogo de piezas de recambio se componen de una página de ilustración (1) y una página de lista correspondiente (7). El número de la página (5) se muestra en el encabezado de una página de ilustración y en el pie de página de una página de lista. El número del documento (6) se muestra en el pie de página de una página de lista.

Numeración de las páginas

Remitirse a la ilustración (A) en la página i-5: Un número de página (5) se compone de tres partes:

- Número de capítulo (2)
- número de página consecutivo (2) dentro del capítulo (3)
- número total de páginas del capítulo (4)

Introducción a la máquina

Fabricante

Para el nombre y la dirección del fabricante, ver la segunda página de este catálogo.

Servicio

Para pedir piezas de recambio para esta máquina o informar problemas asociados con la operación de esta máquina, contactar con la oficina de Tetra Pak más cercana.

Ponerse en contacto con el responsable correspondiente para otras preguntas, comentarios o sugerencias sobre mejoras de la máquina o equipo y su documentación.

Identificación

Clasificación de la CE

Este equipo cumple los requisitos esenciales relativos a la salud y la seguridad del Área Económica Europea (EEA).

Placa de la máquina

La ilustración (B) en la página i-5 muestra un ejemplo de placa de máquina. En la Introducción del capítulo de los manuales entregados con este equipo se muestra una ilustración de la placa de máquina válida y su ubicación en el equipo La placa de máquina contiene los datos listados a continuación requeridos al contactar con Tetra Pak en relaciôn a este equipo específico.

- Tipo de máquina (8)
- Volumen (9)
- Especificaciones de plano (10)
- Número de serie de la máquina (11)
- Fabricante (12)
- Marca de la CE (13)
- Año de fabricación (14)

La ilustración (C) en la página i-5 muestra un ejemplo de especificación máquina. Asegúrese que los datos de equipo listados en las páginas de cubierta de este manual corresponden a los datos de la placa de máquina y la especificación máquinav.

Cómo utilizar este Catálogo de piezas de recambio

Localizar un número de pieza de recambio

a) Remitirse a la ilustración (D) en la página i-5: Ir al número de capítulo (15) indicado detrás el grupo principal que contiene la parte que usted desea localizar.

Los items b) y c) se refieren a la ilustracióni (E) en la página i-6.

b) En la ilustración del grupo principal, buscar el subgrupo máquina (17) que contiene la pieza o subgrupo que usted busca. Anote el número de posición (18) y vaya a la página de lista que sigue la ilustración.

c) Busque el número de posición (16) o el nombre del subgrupo (19). Vaya al número de página correspondiente (20) listado en la columna de la derecha.

Los items d) y e) se refieren a la ilustración (F) en la página i-6.

d) Localizar la pieza (21) que busca en la ilustración del subgrupo y anotar el número de posición de la pieza.

e) El número de pieza (29) y la descripción de pieza (30) están listadas detrás del número de posición en la página de lista.

Información listada en un Catálogo de piezas de recambio

La lista a continuación remite a la ilustración (F) en la página i-6.
Un Catálogo de piezas de recambio contiene la siguiente información sobre grupos, subgrupos y piezas de recambio para el equipo:

- Referencia de estructura de grupo (22). Indica el siguiente grupo más alto en la estructura de lista del equipo.
- Nombre del grupo (23)
- Unidad de medida (25)
- Cantidad (26)
- Número de plano de conjunto (27)
- Gama de página lista (28). Incluida si hay páginas múltiples en la ilustración o lista de grupo.
- Número de pieza o subgrupo (29)
- Nombre, subgrupo o descripción de pieza (30)
- Número de grupo (31)
- Número de equipo (32)
- Encabezado de información grupo (33). Indica si la sección debajo del encabezado es para una variante máquina específica o si es una lista de piezas comunes. Si la lista tiene más de una variante y cada variante tiene su propio plano de conjunto, se muestra una referencia página para el plano de conjunto de la variante.
- Información interna (34)

Sissejuhatus

Kasutusjuhendi teave

Tetra Pak soovitab lugeda hoolega kõiki kaasasolevaid juhendeid. Veenduge, et juhendid on seadmega töötavatele ja neid hooldavatele töötajatele kättesaadavad.

Oluline on hoida kataloog alles kogu seadme eluea jooksul ja anda kataloog kaasa ka järgmisele omanikule või kasutajale.

Tetra Pak ei vastuta seadme kahjustuste eest, mille põhjuseks on seadmega kaasasolevas juhendis toodud juhiste mittejärgimine.

Kaasasolevad juhendid

Seadmega kaasasolevad juhendid võivad sisaldada järgmist:

- Konverteerimisjuhend (ÜJ)
  Juhend annab tehnikutele teavet seadme konverteerimise kohta eri tootmisrežiimide korral.
- Elektrijuhend (EJ)
  Juhend annab tehnikutele teavet seadme elektrisüsteemi kohta.
- Paigaldusjuhend (PJ)
  Juhend annab tehnikutele teavet seadme ohutu paigaldamise kohta.
- Hooldusjuhend (HJ)
  Juhend annab tehnikutele teavet seadme hoolduse kohta.
- Kasutusjuhend (KJ)
  Juhend annab operaatorile teavet seadme käitlemise ja töö kohta enne tootmist, selle ajal ja pärast seda.
- Varuosade kataloog (VOK)
  Juhend annab Tetra Pakilt varuosade tellimiseks vajalikku teavet.
- Tehniline juhend (TJ)
  - annab tehnikutele seadme ohutuks paigaldamiseks vajalikku teavet
  - annab tehnikutele teavet seadme hoolduse kohta
  - annab tehnikutele teavet seadme elektrisüsteemi kohta
  - annab Tetra Pakilt varuosade tellimiseks vajalikku teavet

Küljend

Vt illustratsiooni (A) lk i-5: Varuosade kataloogi põhilehtedeks on illustratsioonilehed (1) ja vastavad loetelulehed (7). Leheküljе number (5) on toodud illustratsioonilehe päises ja loetelulehe jaluses. Dokumendi number (6) on toodud loetelulehe jaluses.

Leheküljenummerdus

Vt illustratsiooni (A) lk i-5: Leheküljе number (5) koosneb kolmest osast:

- peatüki number (2)
- lehekülgede järjestikused numbrid peatüki sees (3)
- lehekülgede koguarv peatükis (4)

Sissejuhatus masina kohta

Tootja

Tootja nimi ja aadress on toodud kataloogi teisel lehel.

Teenindus

Varuosade tellimiseks masinale või selle tööga seotud probleemidest teatamiseks võtke ühendust lähima Tetra Pak kontoriga.

Kui teil on muid küsimusi, märkusi või soovitusi seadmete ja dokumentatsiooni täiustamise kohta, võtke ühendust Tetra Paki kontaktisikuga.

Identifitseerimine

CE-klassifikatsioon

Seade vastab Euroopa Majanduspiirkonna (EMP) põhilistele tervisekaitse ja ohutuse alastele määrustele.

Masina andmeplaat

Illustratsioon (B) leheküljel i-5 kujutab masina andmeplaati.
Masina andmeplaadi pilt ja selle asukoht seadmel on toodud seadmega kaasasolevate juhendite sissejuhatavas peatükis. Masina andmeplaadil on allpool nimetatud andmed, mida vajate antud konkreetse seadmega seoses Tetra Paki poole pöördudes.

- Masina tüüp (8)
- Maht (9)
- Joonisspetsifikatsioonid (10)
- Masina seerianumber (11)
- Tootja (12)
- CE-tähis (13)
- Tootmisaasta (14)

Illustratsioon (C) leheküljel i-5 kujutab masina spetsifikatsiooni. Veenduge, et käesoleva juhendi esimestel lehekülgedel toodud andmed seadme kohta vastavad masina andmesildil olevatele andmetele ja masina spetsifikatsioonile.

Kuidas varuosade kataloogi kasutada

Leidke varuosa number

a) Vt illustratsiooni (D) lk i-5: Leidke peatükk, mille number (15) on toodud selle põhirühma juures, mis sisaldab teie poolt otsitavat varuosa.

Punktid b) ja c) käivad illustratsiooni (E) kohta lk i-6.

b) Põhirühma illustratsioonil leidke masina alarühm (17), mis sisaldab osa või alarühma, mida otsite. Leidke positsiooni number (18) ja avage siis illustratsioonile järgnev loeteluleht.

c) Leidke positsiooni number (16) või alarühma nimetus (19). Leidke vastav leheküljenumber (20) parempoolsest veerust.

Punktid d) ja e) käivad illustratsiooni (F) kohta lk i-6.

d) Leidke otsitav osa (21) alarühma illustratsioonilt ja siis osa positsiooninumber.

e) Osa number (29) ja osa kirjeldus (30) on toodud positsiooninumbri kõrval loetelulehel.

Varuosade kataloogis toodud teave

Allpool toodud loetelu käib illustratsiooni (F) kohta lk i-6. Varuosade kataloogis on järgmine teave seadme rühmade, alarühmade ja varuosade kohta:

- Rühmastruktuuri viide (22). Esitab järgmise kõrgema rühma seadmete loetelu struktuuris.
- Rühma nimetus (23)
- Mõõtühik (25)
- Kogus (26)
- Koostejoonise number (27)
- Loetelu lehekülgede vahemik (28). Märgitud, kui rühma illustratsioonid või loetelu on mitmel lehel.
- Osa või alarühma number (29)
- Alarühma nimetus või osa kirjeldus (30)
- Rühma number (31)
- Seadme number (32)
- Rühma teabe rubriik (33). Näitab, kas rubriigi all toodud jaotis on konkreetse masinavariandi kohta või on tegemist tavaliste varuosade loeteluga. Kui loetelus on üle ühe variandi ja iga variandi jaoks on oma koostejoonis, esitatakse viide selle variandi koostejoonise leheküljele.
- Siseteave (34)

Johdanto

Tietoja käsikirjasta

Tetra Pak suosittelee kaikkien toimitettavien oppaiden lukemista huolellisesti. Varmista, että toimitetut oppaat ovat laitetta käyttävän tai huoltavan henkilökunnan saatavilla.

Tämä luettelo on säilytettävä laitteen käyttöiän ajan ja toimitettava edelleen mahdolliselle seuraavalle omistajalle tai käyttäjälle.

Tetra Pak ei vastaa laitevaurioista, jotka aiheutuvat laitteen mukana tulevissa oppaissa annettujen ohjeiden noudattamatta jättämisestä.

Toimitettavat ohjeet

Tämän laitteen mukana toimitettaviin ohjeisiin kuuluvat:

- Muutoskirja (CM)
  Tässä oppaassa on teknikoille tarkoitettuja ohjeita laitteiston muuttamisesta eti tuotantotiloihin.
- Sähkökirja (EM)
  Tässä oppaassa on teknikoille tarkoitettuja tietoja laitteen sähköjärjestelmästä.
- Asennuskäsikirja (IM)
  Tässä oppaassa on teknikoille tarkoitettuja tietoja, jotka tarvitaan laitteen turvallista asentamista varten.
- Huoltokäsikirja (MM)
  Tässä oppaassa on teknikoille tarkoitettuja tietoja tämän laitteen huoltamisesta.
- Käyttäjän käsikirja (OM)
  Tässä oppaassa on käyttäjälle tarkoitettuja tietoja laitteiston käsittelystä ja käyttämisestä ennen tuotantoa, tuotannon aikana ja sen jälkeen.
- Varaosakuvasto (SPC)
  Tässä oppaassa on tietoja, joita tarvitaan varaosien tilaamiseen Tetra Pakilta.
- Tekninen käsikirja (TeM)
  - sisältää teknikoille tarkoitettuja tietoja, joita tarvitaan laitteen turvallista asentamista varten
  - sisältää teknikoille tarkoitettuja tietoja laitteen huoltamisesta
  - sisältää teknikoille tarkoitettuja tietoja laitteen sähköjärjestelmästä
  - sisältää tietoja, joita tarvitaan varaosien tilaamiseen Tetra Pakilta.

Sivujen asettelu

Katso kuva (A) sivulla i-5: Varaosaluettelon pääsivut koostuvat kuvasivusta (1) ja sitä vastaavasta luettelosivusta (7). Sivunumero (5) näytetään kuvasivun ylätunnisteessa ja luettelosivun alatunnisteessa. Asiakirjan numero (6) näytetään luettelosivun alatunnisteessa.

Sivunumerointi

Katso kuva (A) sivulla i-5: Sivunumerossa (5) on kolme osaa:

- luvun numero (2)
- perättäinen sivunumero (3) luvun sisällä
- luvun kokonaissivumäärä (4).

Koneen esittely

Valmistaja

Valmistajan nimi ja osoite on ilmoitettu tämän luettelon toisella sivulla.

Huolto

Jos haluat tilata tähän koneeseen varaosia tai jos tämän koneen käytössä ilmenee ongelmia, jotka haluat raportoida, ota yhteyttä lähimpään Tetra Pakin toimistoon.

Jos sinulla on muuta kysyttävää, huomautettavaa tai ehdotuksia laitteistoa ja sen asiakirjoja koskevista parannuksista, ota yhteys yhteyshenkilöön.

Tunnistetiedot

CE-luokitus

Tämä laite vastaa Euroopan talousalueen (EEA) perustason terveys- ja turvallisuusvaatimuksia.

Koneen tyyppikilpi

Kuvassa (B) sivulla i-5 on esimerkki koneen tyyppikilvestä. Voimassa olevan tyyppikilven kuva ja sen sijainti koneessa käy ilmi laitteiston mukana tulleiden ohjeiden Johdanto-luvusta. Tyyppikilvessä on tarvitsemasi Tetra Pakin voimassa olevat yhteystiedot, kun on kyseessä tämä nimenomainen laite.

- Konetyyppi (8)
- Tilavuus (9)
- Piirustuserittelyt (10)
- Koneen sarjanumero (11)
- Valmistaja (12)
- CE-merkki (13)
- Valmistusvuosi (14)

Kuvassa (C) sivulla i-5 on esimerkki koneen erittelystä. Varmista, että tämän ohjeen etusivuilla ilmoitetut laitetiedot vastaavat tyyppikilven ja kone-erittelyn tietoja.

Tämän varaosaluettelon käyttäminen

Etsi varaosan numero

a) Katso kuva (D) sivulla i-5: Siirry lukuun (15), joka on ilmoitettu etsittävän osan pääryhmän vieressä.

Kohdat b) ja c) viittaavat kuvaan (E) sivulla i-6.

b) Etsi pääryhmän kuvasta koneen alaryhmä (17), joka sisältää etsimäsi osan tai alaryhmän. Merkitse muistiin paikkanumero (18) ja siirry luettelosivulle, joka seuraa kuvaa.

c) Etsi paikkanumero (16) tai alaryhmän nimi (19). Siirry vastaavalle sivunumerolle (20), joka on ilmoitettu oikeassa sarakkeessa.

Kohdat d) ja e) viittaavat kuvaan (F) sivulla i-6.

d) Hae etsittävä osa (21) alaryhmän kuvasta ja merkitse osan paikkanumero muistiin.

e) Osanumero (29) ja osan kuvaus (30) on annettu paikkanumeron vieressä luettelosivulla.

Varaosaluettelossa olevat tiedot

Alla oleva luettelo viittaa kuvaan (F) sivulla i-6. Varaosaluettelo sisältää seuraavat tiedot ryhmistä, alaryhmistä ja laitteen varaosista:

- Ryhmärakenneviite (22). Osoittaa seuraavaksi ylemmän ryhmän laiteluettelorakenteessa.
- Ryhmän nimi (23)
- Mittayksikkö (25)
- Määrä (26)
- Kokoonpanopiirustuksen numero (27)
- Luettelosivun väli (28). Tämä on mukana, jos ryhmäkuvassa tai luettelossa on useita sivuja.
- Osan tai alaryhmän numero (29)
- Alaryhmän nimi tai osan kuvaus (30)
- Ryhmän numero (31)
- Laitteen numero (32)
- Ryhmätietojen otsikko (33). Osoittaa, koskeeko alla oleva osio tiettyä koneversiota vai onko kyseessä yleisten osien luettelo. Jos luettelolla on useampi kuin yksi versio ja kullakin versiolla on oma kokoonpanopiirustuksensa, näytetään version kokoonpanopiirustuksen sivuviittaus.
- Sisäiset tiedot (34)

Introduction

Information sur le manuel

Tetra Pak recommande de lire attentivement tous les manuels fournis. S'assurer que les manuels fournis soient accessibles au personnel qui s'occupe du fonctionnement ou de la maintenance de l'équipement.

Il est important de conserver ce manuel pendant toute la durée d'utilisation de la machine et de le transmettre à tout détenteur ou utilisateur ultérieur.

Tetra Pak ne sera pas tenu responsable d'un dommage causé à la machine ou à l'équipement par le fait de ne pas avoir respecté les instructions figurant dans le présent manuel.

Manuels fournis

Les manuels fournis avec cette machine comprennent

- Le Manuel de Conversion (CM)
  Ce manuel fournit aux techniciens les informations nécessaires pour convertir la machine en vue des différents modes de production.
- Manuel Electrique (EM)
  Ce manuel fournit aux techniciens les informations sur le système électrique de la machine.
- Manuel de Mise en Place (IM)
  Ce manuel fournit aux techniciens les informations nécessaires pour l'installation de la machine en toute sécurité.
- Manuel de Maintenance (MM)
  Ce manuel fournit aux techniciens les informations pour la maintenance.
- Manuel d'Opérateur (OM)
  Ce manuel fournit aux opérateurs les informations nécessaires pour la manutention et le fonctionnement de la machine avant, pendant et après la production.
- Catalogue de Pièces de Rechange (SPC)
  Ce manuel fournit l'information nécessaire à la commande de pièces de rechange auprès de Tetra Pak
- Manuel Technique (TeM)
  - fournit aux techniciens les informations nécessaires pour l'installation de la machine en toute sécurité
  - fournit aux techniciens les informations pour la maintenance
  - fournit aux techniciens les informations sur le système électrique de la machine
  - fournit l' information nécessaire à la commande de pièces de rechange auprès de Tetra Pak

Présentation d'une page

Se référer à la figure (A) à la page i-5: Les pages principales du Catalogue des Pièces de Rechange sont composées d'une page de figure (1) et d'une page de liste correspondante (7). Le numéro de page (5) est indiqué dans le titre de la page de figure et dans le bas de page d'une page de liste.
Le numéro de document (6) est indiqué dans le bas de page de la page de liste.

Numérotation de page

Se référer (A) à la page i-5: Un numéro de page (5) possède trois parties:

- Numéro de chapitre (2)
- numéro de page consécutif (2) à l'intérieur du chapitre (3)
- nombre total de pages dans le chapitre (4)

Présentation de la machine

Fabricant

Pour le nom et l'adresse du fabricant, voir la deuxième page de ce catalogue.

Assistance technique

Pour commander les pièces de rechange de cette machine ou pour rapporter les problèmes associés au fonctionnement de celle-ci, prendre contact avec le bureau Tetra Pak le plus proche.

Prendre contact avec le responsable de liaison pour les renseignements, commentaires ou suggestions concernant la machine ou l'équipement et sa documentation.

Identification

Certification CE

Cet équipement est conforme aux réglementations essentielles d'hygiène et de sécurité de la Communauté Economique Européenne (CEE).

Plaque signalétique de machine

La figure (B) à la page i-5 montre un exemple d'une plaque signalétique de machine.
Une représentation de la plaque de machine valable et son emplacement sur l'équipement est indiquée au Chapitre Introduction des manuels fournis avec l'équipement. La plaque de machine contient les caractéristiques figurant dans la liste ci-dessous, nécessaires pour prendre contact avec Tetra Pak au sujet de cet équipement spécifique.

- Type de machine (8)
- Volume (9)
- Spécifications du plan (10)
- Numéro de série de la machine (11)
- Fabricant (12)
- Marquage CE (13)
- Année de fabrication (14)

La figure (C) à la page i-5 montre un exemple d'une spécification de machine. S'assurer que les caractéristiques de l'équipement figurant dans la liste des pages de garde de ce manuel correspondent aux caractéristiques de la plaque signalétique de la machine et à ses spécifications.

Comment utiliser ce Catalogue de Pièces de Rechange

Localiser un numéro de pièce de rechange

a) Se référer à la figure (D) à la page i-5: Aller au numéro de chapitre (15) indiqué à côté du groupe principal qui contient la pièce que vous souhaitez localiser.

Les articles b) et c) se réfèrent à la figure (E) à la page i-6.

b) Sur la figure du groupe principal, chercher la sous-groupe de machine (17) qui contient la pièce ou le sous-groupe que vous recherchez. Noter le numéro de repère (18) et aller à la page de liste qui suit la figure.

c) Rechercher le numéro de repère (16) ou le nom de sous-groupe (19). Aller au numéro de page correspondant (20) figurant dans la liste de la colonne de droite.

Les articles d) et e) se réfèrent à la figure (F) à la page i-6.

d) Localiser la pièce (21) que vous recherchez sur la figure de sous-groupe et noter le numéro de repère de la pièce.

e) Le numéro de pièce (29) et la description de la pièce (30) figurent dans la liste à côté du numéro de repère sur la page de liste.

Informations figurant dans la liste dans un Catalogue de Pièces de Rechange

La liste ci-dessous se réfère à la figure (F) à la page i-6. Un Catalogue de Pièces de Rechange contient les renseignements suivants relatifs aux groupes, sous-groupes et pièces de rechange de l'équipement:

- Référence de structure de groupe (22). Indique le groupe supérieur suivant dans la structure de liste d'équipement.
- Nom du groupe (23).
- Unité de mesure (25).
- Quantité (26).
- Numéro de plan de montage (27).
- Gamme de la page de liste (28). Incluse s'il y a des pages multiples dans la figure de groupe ou dans la liste.
- Numéro de pièce ou de sous-groupe (29).
- Nom de sous-groupe ou description de la pièce (30).
- Numéro de groupe (31).
- Numéro de l'équipement (32).
- Titre des informations de groupe (33). Indique si la section sous le titre est pour une variante de machine spécifique ou s'il y a une liste de pièces communes. Si une liste comporte plus d'une variante et que chaque variante possède son propre plan de montage, une référence de page au plan de montage de la variante est alors indiqué.
- Renseignements internes (34).

Bevezetés

Kézikönyv információ

A Tetra Pak az összes rendelkezésre bocsátott kézikönyv figyelmes elolvasását ajánlja. Győződjön meg arról, hogy a rendelkezésre bocsátott kézikönyveket hozzáférhetővé tették a berendezést kezelő és karbantartó személyzet számára.

Föltétlenül őrizzék meg ezen kézikönyvet a berendezés teljes élethossza alatt, és adják át a következő tulajdonosnak vagy felhasználónak.

A Tetra Pak nem vonható felelősségre a berendezést ért olyan károkért, amelyek a kézikönyvben meghatározott utasítások be nem tartásából erednek.

Rendelkezésre bocsátott kézikönyvek

A géppel vagy berendezéssel együtt a következő dokumentumokat szállítjuk

- Karbantartási kézikönyv (CM)
  Ezen kézikönyv a technikusok számára szolgáltat adatokat a berendezés átkapcsolásáról egyik üzemmódból a másikba.
- Elektromos kézikönyv (EM)
  Ezen kézikönyv a villamosmérnökök és szervizelő technikusok számára szolgáltat adatokat a berendezés elektromos hálózatáról.
- Beszerelési kézikönyv (IM)
  Ezen kézikönyv a berendezés biztonságos beszerelésével kapcsolatos adatokat szolgáltat a technikusoknak.
- Karbantartási kézikönyv (MM)
  Ezen kézikönyv a technikusok számára szolgáltat adatokat a berendezés karbantartásáról.
- Kezelési kézikönyv (OM)
  Ezen kézikönyv a berendezés kezelésével és vezérlésével kapcsolatos adatokat szolgáltat a kezelőknek termelés előtt, közben és után.
- Cserealkatrész katalógus (SPC)
  Ezen kézikönyv a cserealkatrészek Tetra Pak cégtől való megrendeléséhez szükséges adatokat tartalmaz.
- Műszaki kézikönyv (TeM)
  - a berendezés biztonságos beszerelésével kapcsolatos adatokat szolgáltat a technikusoknak
  - a technikusok számára szolgáltat adatokat a berendezés karbantartásáról
  - a villamosmérnökök és szervizelő technikusok számára szolgáltat adatokat a berendezés elektromos hálózatáról
  - a cserealkatrészek Tetra Pak cégtől való megrendeléséhez szükséges adatokat tartalmaz

Lap elrendezése

Tekintse meg a i-5 oldalon levő ábrát (A): A Cserealkatrészek katalógusának főoldalai egy rajzoldalból (1) és egy hozzá tartozó listaoldalból (7) állnak. Az oldalszám (5) a rajzoldal fejlécében és a listaoldal láblécében jelenik meg. A dokumentumszám (6) a listaoldal láblécében jelenik meg.

Oldalszámozás

Tekintse meg a i-5 oldalon levő ábrát (A): Az oldalszám (5) három részből áll:

- fejezetszám (2)
- folytonos oldalszám (3) a fejezeten belül
- fejezet oldalszáma (4)

A gép bemutatása

Gyártó

A gyártó neve és címe ezen katalógus, második oldalán található.

Szervizelés

Ezen gép valamely cserealkatrészének megrendelése vagy a gép működésével kapcsolatos üzemzavarok bejelentése végett, forduljon a legközelebbi Tetra Pak képviselethez.

Bármilyen más, a berendezés, illetve dokumentációjának feljavítására irányuló kérdéseivel, megjegyzéseivel vagy javaslataival forduljon kapcsolattartóhoz.

Azonosítás

CE besorolás

Ezen berendezés megfelel az Európai Gazdasági Régió (EEA) alapvető egészségügyi és biztonsági előírásainak.

A gép adattáblája

A i-5 oldalon található ábra (B) a gép adattáblájának egyik példája. A megfelelő gép-adattábla ábrája és helye a berendezésen a berendezéssel szállított kézikönyvek Bevezetés fejezetében található. A gép adattáblája az alább felsorolt adatokat tartalmazza, amelyek ezen berendezésre vonatkoznak, és a Tetra Pak céggel való kapcsolat felvételekor szükségesek.

- Géptípus (8)
- Térfogat (9)
- Tervrajz (10)
- A gép sorozatszáma (11)
- Gyártó (12)
- CE jelzés (13)
- Gyártás éve (14)

A i-5 oldalon található ábra (C) példa a gép műszaki leírására. Győződjön meg arról, hogy ezen kézikönyv előlapjain közölt berendezésadatok megegyeznek a gép adattábláján és a gép műszaki leírásában megjelenő információval.

A Cserealkatrészek katalógus használata

Keresse meg a cserealkatrész számát

a) Tekintse meg a i-5 oldalon levő ábrát (D): Lapozzon a keresett alkatrészt tartalmazó főcsoport mellett feltüntetett számú (15) fejezetre.

A b) és c) elemek a i-6 oldalon levő ábrára vonatkoznak.

b) A főcsoport-ábrán keresse meg azt az alcsoportot (17), amelyik a keresett alkatrészt vagy alcsoportot tartalmazza. Jegyezze le a helyszámot (18), majd lapozzon az ábrát követő listaoldalra.

c) Keresse meg a lejegyzett helyszámot (16) vagy a keresett alcsoport nevét (19). Lapozzon a jobb oldali oszlopban feltüntetett számú (20) oldalra.

A d) és e) elemek a i-6 oldalon levő ábrára (F) vonatkoznak.

d) Az alcsoport ábrán keresse meg a keresett alkatrészt (21), és jegyezze le az alkatrész helyszámát.

e) Az alkatrészek száma (29) és leírása (30) a listaoldalon, a helyszám mellett láthatóak.

A Cserelkatrész katalógusban közölt adatok

Az alábbi lista a i-6 oldalon található ábrára (F) vonatkozik. A Cserealkatrészek katalógus a következő, csoportokra, alcsoportokra és cserealkatrészekre vonatkozó, adatokat tartalmazza:

- Csoportstruktúra hivatkozás (22). A berendezés listás struktúrájában közvetlenül az aktuális csoport fölött álló csoportot jelöli.
- Csoportnév (23)
- Mértékegység (25)
- Menniség (26)
- Szerelvény tervrajza (27)
- Lista oldaltartománya (28). Abban az esetben jelenik meg, ha a csoport ábrája vagy listája többoldalas.
- Alkatrész vagy alcsoport száma (29)
- Alcsoport neve vagy alkatrész leírása (30)
- Csoportszám (31)
- Berendezésszám (32)
- Csoportinformáció fejléc (33). Azt mutatja, hogy a fejléc után következő rész egy bizonyos gépváltozatra vonatkozik vagy az általános cserealkatrészek listája. Ha a listának több változata van, és mindegyikhez más szerelvény-tervrajz tartozik, az illető szerelvény-tervrajz oldalhivatkozása is megjelenik.
- Belső információ (34)

Introduzione

Informazioni sul manuale

Tetra Pak consiglia di leggere con attenzione tutti i manuali forniti in dotazione. Assicurarsi che tutti i manuali in dotazione siano disponibili per il personale addetto al funzionamento e alla manutenzione della macchina.

È importante conservare il presente catalogo per tutta la durata della macchina e consegnarlo al successivo proprietario o utilizzatore.

Tetra Pak non sarà da ritenersi responsabile per eventuali danni alla macchina causati dal mancato rispetto delle istruzioni fornite nei manuali che accompagnano le macchine.

Manuali in dotazione

I manuali consegnati con la presente macchina possono comprendere:

- Manuale di Conversione (CM)
  Questo manuale fornisce ai tecnici le informazioni necessarie per la conversione della macchina da una modalità di produzione a un'altra.
- Manuale Elettrico (EM)
  Questo manuale fornisce ai tecnici informazioni sull'impianto elettrico della macchina.
- Manuale di Installazione (IM)
  Questo manuale fornisce ai tecnici le informazioni necessarie per installare in sicurezza la macchina.
- Manuale di Manutenzione (MM)
  Questo manuale fornisce ai tecnici le informazioni necessarie per la manutenzione della macchina.
- Manuale Operativo (OM)
  Questo manuale fornisce all'operatore le informazioni sull'utilizzo e il funzionamento della macchina prima, durante e dopo la produzione.
- Catalogo Pezzi di Ricambio (SPC)
  Questo manuale fornisce le informazioni necessarie per ordinare a Tetra Pak i pezzi di ricambio.
- Manuale Tecnico (TeM)
  - fornisce ai tecnici le informazioni necessarie per installare in sicurezza la macchina
  - fornisce ai tecnici le informazioni necessarie per la manutenzione della macchina
  - fornisce ai tecnici informazioni sull'impianto elettrico della macchina
  - fornisce le informazioni necessarie per ordinare a Tetra Pak i pezzi di ricambio.

Schema della pagina

Consultare la figura (A) a pagina i-5. Le pagine principali del Catalogo Pezzi di Ricambio consistono in una pagina con la figura (1) e una pagina elenco corrispondente (7). Il numero di pagina (5) è indicato nell'intestazione delle pagine con le figure e nel piè di pagina delle pagine elenco. Il codice del documento (6) è indicato nel piè di pagina delle pagine elenco.

Numerazione delle pagine

Consultare la figura (A) a pagina i-5. Il numero di pagina (5) è suddiviso in tre parti:

- numero della sezione (2)
- numero progressivo di pagina all'interno della sezione (3)
- numero totale di pagine della sezione (4)

Introduzione alla macchina

Fabbricante

Il nome e l'indirizzo del fabbricante sono riportati sulla seconda pagina del presente catalogo.

Assistenza

Per ordinare i pezzi di ricambio per questa macchina oppure per riferire problemi associati con il funzionamento della macchina, contattare il più vicino ufficio Tetra Pak.

Per tutte le altre richieste, commenti o suggerimenti per eventuali miglioramenti da apportare alla macchina e alla relativa documentazione, contattare il responsabile di collegamento.

Identificazione

Marchio CE

La macchina è conforme alle principali norme sanitarie e di sicurezza dell'Area Economica Europea (EEA).

Targhetta della macchina

La figura (B) a pagina i-5 illustra un esempio di targhetta della macchina. La sezione Introduzione di tutti i manuali consegnati con la presente macchina contiene invece la figura della targhetta della macchina valida e l'illustrazione della sua posizione sulla macchina. La targhetta riporta i dati elencati sotto che sono necessari per contattare Tetra Pak in relazione a questa macchina specifica.

- Tipo di macchina (8)
- Volume (9)
- Specifiche disegno (10)
- Numero di matricola della macchina (11)
- Fabbricante (12)
- Marchio CE (13)
- Anno di fabbricazione (14)

La figura (C) a pagina i-5 mostra un esempio delle specifiche di una macchina. Verificare che i dati relativi alla macchina elencati nelle pagine iniziali del manuale corrispondano ai dati riportati sulla targhetta della macchina e nelle specifiche della macchina.

Come usare questo Catalogo Pezzi di Ricambio

Individuare il numero del pezzo di ricambio

f) Vedere la figura (D) a pagina i-5. Andare al numero della sezione (15) indicato accanto al gruppo principale che contiene il pezzo che si desidera individuare.

I punti b) e c) fanno riferimento alla figura (E) a pagina i-6.

g) Nella figura del gruppo principale, identificare il sottogruppo della macchina (17) che contiene il pezzo o il sottogruppo cercato. Annotare il numero di posizione (18) e andare alla pagina elenco che segue la figura.

h) Identificare il numero di posizione (16) o il nome del sottogruppo (19). Andare al numero di pagina corrispondente (20) indicato nella colonna di destra.

I punti d) e e) fanno riferimento alla figura (F) a pagina i-6.

i) Individuare il pezzo (21) cercato sulla figura del sottogruppo e annotare il numero di posizione del pezzo.

j) Il numero del pezzo (29) e la descrizione del pezzo (30) sono indicati accanto al numero di posizione sulla pagina elenco.

Informazioni contenute nel Catalogo Pezzi di Ricambio

L'elenco seguente fa riferimento alla figura (F) a pagina i-6. Il Catalogo Pezzi di Ricambio contiene le seguenti informazioni sui gruppi, i sottogruppi e i pezzi di ricambio della macchina:

- Riferimento struttura gruppo (22). Indica il gruppo superiore più prossimo nella struttura elenco della macchina.
- Nome gruppo (23)
- Unità di misura (25)
- Quantità (26)
- Numero disegno di assemblaggio (27)
- Pagine dell'elenco (28). Questa informazione è presente se la figura o l'elenco relativi al gruppo occupano più di una pagina del manuale.
- Numero pezzo o sottogruppo (29)
- Nome sottogruppo o descrizione pezzo (30)
- Numero gruppo (31)
- Numero macchina (32)
- Titolo informazioni gruppo (33). Indica se la sezione che segue il titolo si riferisce a una variante di macchina specifica oppure se si tratta di un elenco di parti comuni. Se un elenco contiene più di una variante ed esiste un disegno di assemblaggio specifico per ogni variante, viene fornito il riferimento alla pagina in cui è riportato il disegno di assemblaggio relativo alla variante.
- Informazioni interne (34)

Įvadas

Žinyno informacija

Tetra Pak rekomenduoja atidžiai perskaityti visus pateikiamus žinynus. Užtikrinkite, kad pateikti žinynai būtų prieinami darbuotojams, kurie naudoja ar aptarnauja įrangą.

Svarbu išsaugoti šį katalogą visą įrangos naudojimo laiką ir perduoti jį vėlesniems savininkams ar naudotojams.

Tetra Pak neprisiima atsakomybės už bet kokius pažeidimus įrangai, kuriuos sukels nurodymų, pateikiamų žinynuose kartu su įranga, nesilaikymas.

Pateikiami žinynai

Žinynuose, pateikiamuose su šia įranga, gali būti:

- Konversijos žinynas (KŽ)
  Šiame žinyne technikams pateikiama informacija apie įrangos perjungimą skirtingais gamybiniais režimais.
- Elektros žinynas (EŽ)
  Šiame žinyne technikams pateikiama informacija apie įrangos elektros sistemą.
- Montavimo žinynas (MŽ)
  Šiame žinyne technikams pateikiama informacija, reikalinga saugiam įrangos sumontavimui.
- Aptarnavimo žinynas (AŽ)
  Šiame žinyne technikams pateikiama informacija apie įrangos aptarnavimą.
- Naudotojo žinynas (NŽ)
  Šiame žinyne operatoriui pateikiama informacija apie įrangos priežiūrą ir naudojimą prieš gamybos procesą, jo metu ir po jo.
- Atsarginių detalių katalogas (ADK)
  Šiame žinyne pateikiama informacija, reikalinga norint užsakyti atsargines detales iš Tetra Pak.
- Techninis žinynas (TeŽ)
  - pateikia technikams informaciją, reikalingą saugiam įrangos sumontavimui
  - pateikia technikams informaciją, reikalingą įrangos aptarnavimui
  - pateikiama technikams informacija apie įrangos elektros sistemą
  - pateikiama informacija, kaip užsakyti atsargines detales iš Tetra Pak

Puslapio išdėstymas

Remkitės iliustracija (A) puslapyje i-5: Pagrindiniai atsarginių detalių katalogo puslapiai yra sudaryti iš iliustracijos puslapio (1) ir jį atitinkančio sąrašo puslapio (7). Puslapio numeris (5) parodytas iliustracijos puslapio viršutinėje paraštėje ir sąrašo puslapio apatinėje paraštėje. Dokumento numeris (6) yra parodytas apatinėje sąrašo puslapio paraštėje.

Puslapių numeravimas

Vadovaukitės iliustracija (A) puslapyje i-5: A puslapio numeris (5) turi tris dalis:

- skyriaus numerį (2)
- puslapio eilės numerį skyriuje (3)
- bendrą puslapių skaičių skyriuje (4)

Mašinos pristatymas

Gamintojas

Gamintojo pavadinimą ir adresą galite rasti šio katalogo antrajame puslapyje.

Aptarnavimas

Norėdami užsakyti atsargines detales šiai mašinai arba pranešti apie nesklandumus, susijusius su šios mašinos naudojimu, susisiekite su artimiausiu Tetra Pak biuru.

Susisiekite su Liaison dėl kitų komentarų, klausimų ar pasiūlymų, kaip patobulinti įrangą ar jos dokumentaciją.

Identifikacija

CE Klasifikacija

Ši įranga atitinka Europos ekonominės erdvės (EEE) pirminius sveikatos ir saugumo normatyvus.

Mašinos plokštelė

Iliustracijoje (B) puslapyje i-5 parodytas mašinos plokštelės pavyzdys. Mašinos specifikacijos plokštelės iliustracija ir jos vieta prie įrangos parodyta įžanginiame žinynų, pateikiamų su šia įranga, skyriuje. Mašinos plokštelėje yra žemiau išvardinti duomenys, reikalingi kreipiantis į Tetra Pak su šia konkrečia įranga susijusiais klausimais:

- mašinos tipas (8)
- tomas (9)
- brėžinių specifikacijos (10)
- mašinos serijos numeris (11)
- gamintojas (12)
- CE ženklas (13)
- pagaminimo metai (14)

Iliustracija (C) puslapyje i-5 vaizduoja mašinos specifikacijos pavyzdį. Įsitikinkite, kad įrangos duomenys, išdėstyti šio žinyno pirmuosiuose puslapiuose, atitinka duomenis mašinos plokštelėje ir mašinos specifikaciją.

Kaip naudotis šiuo atsarginių detalių katalogu?

Atsarginės detalės numerio nustatymas

a) Remkitės iliustracija (D) puslapyje i-5: eikite į skyrių Nr. (15), nurodytą šalia pagrindinės grupės, kurioje yra jūsų ieškoma detalė.

Elementai b) ir c) nurodo iliustraciją (E) puslapyje i-6.

b) Pagrindinės grupės iliustracijoje suraskite mašinos pogrupį (17), kuriame yra jūsų ieškoma detalė. Įsidėmėkite pozicijos numerį ir pereikite į sąrašo puslapį, kuris atitinka iliustraciją.

c) Ieškokite pozicijos numerio (16) arba pogrupio pavadinimo (19). Pereikite į atitinkamo numerio puslapį (20), kuris nurodytas dešiniajame stulpelyje.

Elementai d) ir e) nurodo iliustraciją (F) puslapyje i-6.

d) Raskite ieškomą detalę (21) pogrupio iliustracijoje ir įsidėmėkite detalės pozicijos numerį.

e) Detalės numeris (29) ir detalės aprašymas (30) pateikiami šalia pozicijos numerio sąrašo puslapyje.

Informacija, pateikiama atsarginių detalių kataloge

Žemiau pateikiamas sąrašas nurodo iliustraciją (F) puslapyje i-6. Atsarginių detalių kataloge yra tokia informacija apie grupes, pogrupius ir atsargines detales įrangai:

- Grupės struktūros nuorodos (22). Nurodo tolimesnę aukštesnę grupę įrangos sąrašo struktūroje.
- Grupės pavadinimas (23)
- Mato vienetas (25)
- Kiekis (26)
- Surinkimo brėžinio numeris (27)
- Sąrašo puslapio diapazonas (28). Įtrauktas, jei egzistuoja daug puslapių grupės iliustracijoje arba sąraše.
- Detalės arba pogrupio numeris (29)
- Pogrupio pavadinimas ar detalės aprašymas (30)
- Grupės numeris (31)
- Įrangos numeris (32)
- Grupės informacinė antraštė (33). Nurodo, ar žemiau antraštės esantis skyrius yra skirtas specifiniam mašinos variantui, ar tai yra įprastinių detalių sąrašas. Jei sąrašas turi daugiau nei vieną variantą ir kiekvienas variantas iliustruojamas surinkimo brėžiniu, pateikiama nuoroda į surinkimo brėžinio puslapį.
- Vidinė informacija (34)

Ievads

Informācija par rokasgrāmatu

Tetra Pak iesaka rūpīgi izlasīt visas piegādātās rokasgrāmatas. Piegādātajām rokasgrāmatām ir jābūt pieejamām personālam, kas apkalpo iekārtas vai veic to apkopi.

Nepieciešams saglabāt šo katalogu visu laiku, kamēr iekārtas tiek izmantotas, un nodot katalogu nākamajam īpašniekam vai lietotājam.

Tetra Pak neatbild par iekārtas bojājumiem, kuri rodas līdz ar iekārtu piegādāto instrukciju neievērošanas rezultātā.

Piegādātās rokasgrāmatas

Līdz ar iekārtu var tikt piegādātas šādas rokasgrāmatas

- Pārslēgšanas rokasgrāmata (CM)
  Šī rokasgrāmata sniedz tehniķiem informāciju par iekārtas pārslēgšanu dažādos atšķirīgos ražošanas režīmos.
- Elektriskās instalācijas rokasgrāmata (EM)
  Šī rokasgrāmata sniedz tehniķiem informāciju par iekārtas elektriskās instalācijas sistēmu.
- Uzstādīšanas rokasgrāmata (IM)
  Šī rokasgrāmata sniedz tehniķiem informāciju, kas nepieciešama drošai iekārtas uzstādīšanai.
- Apkopes rokasgrāmata (MM)
  Šī rokasgrāmata sniedz tehniķiem informāciju par iekārtas apkopi.
- Ekspluatācijas rokasgrāmata (OM)
  Šī rokasgrāmata sniedz apkalpojošajam personālam informāciju par iekārtas apkalpošanu un ekspluatēšanu pirms darba sākuma, darba laikā un pēc darba beigām.
- Rezerves daļu katalogs (SPC)
  Šī rokasgrāmata sniedz informāciju, kas nepieciešama, lai pasūtītu rezerves daļas no Tetra Pak.
- Tehniskā rokasgrāmata (TeM)
  - sniedz tehniķiem informāciju, kas nepieciešama drošai iekārtas uzstādīšanai
  - sniedz tehniķiem informāciju par iekārtas apkopi
  - sniedz tehniķiem informāciju par iekārtas elektrisko instalāciju
  - sniedz informāciju, kas nepieciešama, lai pasūtītu rezerves daļas no Tetra Pak

Lappuses izkārtojums

Skatīt ilustrāciju (A) i-5 lappusē: Galvenās lappuses Rezerves daļu katalogā sastāv no ilustrāciju lapas (1) un atbilstīgās saraksta lapas (7). Lappuses numurs (5) ir norādīts ilustrācijas lapas galvenē un saraksta lapas kājenē. Dokumenta numurs (6) ir norādīts saraksta lapas kājenē.

Lappušu numerācija

Skatīt ilustrāciju (A) lappusē i-5: Lappuses numurs (5) sastāv no trim daļām:

- nodaļas numura (2)
- secīga lappuses numura nodaļas ietvaros (3)
- kopējā lappušu skaita nodaļā (4)

Iepazīstināšana ar iekārtu

Ražotājs

Ražotāja nosaukumu un adresi skatīt šī kataloga otrajā lappusē.

Serviss

Ja nepieciešams pasūtīt rezerves daļas šai mašīnai vai ziņot par problēmām, kas saistītas ar mašīnas ekspluatāciju, tad, lūdzu, sazinieties ar tuvāko Tetra Pak pārstāvniecību.

Ja Jums ir citi jautājumi, piezīmes vai ieteikumi par iekārtas un tās dokumentācijas uzlabošanu, tad lūdzam sazināties ar Sakaru biroju.

Identifikācija

CE klasifikācija

Šī iekārta atbilst galvenajām Eiropas Ekonomiskās Zonas (EEA) regulām, kuras attiecas uz veselību un drošību.

Mašīnas tipa plāksnīte

Ilustrācijā (B) i-5lappusē redzams mašīnas tipa plāksnītes paraugs. Aktuālās mašīnas tipa plāksnīte un tās atrašanās vieta uz iekārtas ir parādīta līdz ar šo iekārtu piegādāto rokasgrāmatu Ievada nodaļā. Mašīnas tipa plāksnīte satur tālāk uzskaitīto informāciju, kura ir nepieciešama, sazinoties ar Tetra Pak par šo iekārtu.

- Mašīnas tips (8)
- Daudzums (9)
- Rasējuma specifikācijas (10)
- Mašīnas sērijas numurs (11)
- Ražotājs (12)
- CE apzīmējums (13)
- Izgatavošanas gads (14)

Ilustrācijā (C) i-5lappusē ir parādīts mašīnas specifikācijas paraugs. Pārliecinieties, ka šīs rokasgrāmatas titullapās minētā informācija par iekārtu atbilst tai, kas norādīta uz mašīnas tipa plāksnītes un mašīnas specifikācijā.

Rezerves daļu kataloga lietošana

Vajadzīgās rezerves daļas numura atrašana

a) Skatiet ilustrāciju (D) i-5lappusē: atrodiet nodaļas numuru (15), kas norādīts līdzās galvenajai grupai, kurā ietilpst Jūsu meklētā rezerves daļa.

Pozīcijas b) un c) skatiet ilustrāciju (E) i-6lappusē.

b) Galvenās grupas ilustrācijā atrodiet mašīnas apakšgrupu (17), kurā ietilpst Jūsu meklētā detaļa vai apakšgrupa. Atzīmējiet pozīcijas numuru (18) un pievērsieties saraksta lappusei, kura seko šai ilustrācijai.

c) Sameklējiet atbilstīgo pozīcijas numuru (16) vai apakšgrupas nosaukumu (19). Pievērsieties atbilstīgajam lappuses numuram (20), kas norādīts ailē pa labi.

Pozīcijas d) un e) skatiet ilustrāciju (E) i-6lappusē.

d) Atrodiet vajadzīgo rezerves daļu (21) apakšgrupas ilustrācijā un atzīmējiet šīs detaļas pozīcijas numuru.

e) Šīs daļas numurs (29) un apraksts (30) atrodas saraksta lapā līdzās pozīcijas numuram.

Rezerves daļu katalogā sniegtā informācija

Šis saraksts attiecas uz ilustrāciju (F) i-6lappusē. Rezerves daļu katalogs satur šādu informāciju par grupām, apakšgrupām un iekārtas rezerves daļām:

- Norādes par grupu struktūru (22). Norāde uz tuvāko augstāko grupu iekārtas saraksta struktūrā.
- Grupas nosaukums (23)
- Mērvienība (25)
- Skaits (26)
- Montāžas rasējuma numurs (27)
- Saraksta lappuses zona (28). Tiek izmantota tad, ja grupas ilustrācija vai saraksts ir uz vairākām lappusēm.
- Daļas vai apakšgrupas numurs (29)
- Apakšgrupas nosaukums vai daļas apraksts (30)
- Grupas numurs (31)
- Iekārtas numurs (32)
- Grupas informācijas iedaļas apzīmējums (33). Norāda, vai iedaļa zem šī apzīmējuma attiecas uz noteiktu mašīnas variantu, vai arī tas ir kopējo rezerves daļu saraksts. Ja sarakstam ir vairāk par vienu variantu un katram variantam ir savs montāžas rasējums, tad tiek dota atsauce uz lappusi, kur atrodams katra varianta montāžas rasējums.
- Iekšējā informācija (34)

Introduzzjoni

Informazzjoni tal-Manwal

Tetra Pak tirrakkomanda li jinqraw bl-attenzjoni l-manwali kkunsinnati kollha. Aċċerta ruħek li l-manwali kkunsinnati kollha huma disponibbli għall-personàl li jħaddem jew li jagħmel manutezjoni fuq it-tagħmir.

Huwa importanti li żżomm dan il-katalgu sakemm idum jaħdem it-tagħmir, u li tgħaddi l-katalgu lil xi sid jew lil xi persuna oħra li tuża dan it-tagħmir fil-futur.

Tetra Pak ma tistax tinżamm responsabbli ta' xi ħsara lit-tagħmir ikkawżata minn nuqqas ta' osservanza ta' l-istruzzjonijiet li jingħataw f'dan il-manwal.

Manwali Kkunsinnati

Il-manwali kkunsinnati ma' dan it-tagħmir jinkludu

- Manwal tal-Konverżjoni (CM)
  Dan il-manwal jipprovdi informazzjoni lit-tekniċi dwar il-konverżjoni tat-tagħmir bejn modi differenti tal-produzzjoni.
- Manwal Elettriku (EM)
  Dan il-manwal jipprovdi informazzjoni lit-tekniċi dwar is-sistema ta' l-elettriku tat-tagħmir.
- Manwal ta' l-Installazzjoni (IM)
  Dan il-manwal jipprovdi lit-tekniċi b'informazzjoni meħtieġa biex jinstallaw it-tagħmir mingħajr periklu.
- Manwal tal-Manutenzjoni (MM)
  Dan il-manwal jipprovdi lit-tekniċi b'informazzjoni fuq kif jagħmlu manutenzjoni fuq it-tagħmir.
- Manwal ta' l-Operazzjoni (OM)
  Dan il-manwal jipprovdi informazzjoni lill-operatur fuq kif jimmaniġġja u jħaddem it-tagħmir, qabel, waqt, u wara l-produzzjoni.
- Katalgu tal-Partijiet Għat-Tibdil (SPC)
  Dan il-manwal jipprovdi l-informazzjoni neċessarja biex jiġu ordnati partijiet għat-tibdil mingħand Tetra Pak.
- Manwal Tekniku (TeM)
  - jipprovdi lit-tekniċi b'informazzjoni meħtieġa biex jinstallaw it-tagħmir mingħajr periklu
  - jipprovdi lit-tekniċi b'informazzjoni fuq kif jagħmlu manutenzjoni fuq it-tagħmir
  - jipprovdi informazzjoni lit-tekniċi dwar is-sistema ta' l-elettriku tat-tagħmir.
  - jipprovdi l-informazzjoni neċessarja biex jiġu ordnati partijiet għat-tibdil mingħand Tetra Pak

Taqsim tal-Paġna

Irreferi għal stampa (A) f'paġna i-5: Il-paġni ewlenin fil-Katalgu tal-Partijiet Għat-Tibdil jikkonsistu f'paġna bl-istampi (1) u paġna b'lista li tikkorrispondi (7). In-numru tal-paġna (5) jintwera fil-header ta' paġna bl-istampi u fil-footer ta' paġna b'lista. In-numru tad-dokument (6) jintwera fil-footer ta' paġna b'lista.

Numru tal-paġna

Irreferi għal stampa (A) f'paġna i-5: In-numru tal-paġna (5) fih tliet partijiet:

- numru tal-kapitlu (2)
- in-numru konsekuttiv tal-paġna fil-kapitlu (3)
- in-numru totali ta' paġni fil-kapitlu (4)

Introduzzjoni tal-Magna

Manifattur

Għall-isem u l-indirizz tal-manifattur, ara t-tieni paġna ta' dan il-katalgu.

Servizz

Biex tordna partijiet għat-tibdil għal din il-magna, jew biex tirrapporta problemi assoċjati mat-thaddim ta' din il-magna, ikkuntattja l-eqreb uffiċċju ta' Tetra Pak.

Ikkuntattja lill-persuna responsabbli mill-komunikazzjoni jekk ikollok xi mistoqsijiet, kummenti, jew suġġerimenti ohrajn biex ittejjeb it-tagħmir u d-dokumentazzjoni tiegħu.

Identifikazzjoni

Klassifikazzjoni CE

Dan it-tagħmir huwa konformi mar-regolamenti bażiċi tas-saħħa u s-sigurtà tal- European Economic Area (EEA).

Pjanċa tal-Magna

L-istampa (B) fuq paġna i-5 turi eżempju ta' pjanċa tal-magna.
Stampa tal-pjanċa valida tal-magna u l-lok tagħha fuq it-tagħmir hi murija fil-kapitlu ta' l-Introduzzjoni tal-manwali kkunsinnati ma' dan it-tagħmir.
Il-pjanċa tat-tagħmir fiha l-informazzjoni elenkata hawn taħt, meħtieġa meta tikkuntattja lil Tetra Pak dwar dan it-tagħmir partikulari.

- Tip ta' magna (8)
- Volum (9)
- Speċifikazzjonijiet tad-Disinn (10)
- Numru tas-serje tal-magna (11)
- Manifattur (12)
- Marka CE (13)
- Sena tal-manifattura (14)

L-istampa (Ċ) fuq paġna i-5 turi eżempju ta' speċifikazzjoni tal-magna.
Aċċerta ruħek li l-informazzjoni tat-tagħmir elenkata fuq il-paġni ta' quddiem ta' dan il-manwal tikkorrispondi għall-informazzjoni tal-pjanċa tal-magna u l-ispeċifikazzjoni tal-magna.

Kif Tuża Dan il-Katalgu tal-Partijiet Għat-Tibdil

Sib Numru ta' Parti Għat-Tibdil

a) Irreferi għal stampa (D) f'paġna i-5: Mur fin-numru tal-kapitlu (15) indikat ħdejn il-grupp prinċipali li fih il-parti li trid issib.

Oġġetti b) u c) irreferi għal stampa (E) f'paġna i-6.

b) Fl-istampa tal-grupp prinċipali, fittex għas-sottogrupp tal-magna (17) li fih il-parti jew sottogrupp li tkun qed tfittex. Innota n-numru tal-pożizzjoni (18) u mur fil-paġna bil-lista li ssegwi l-istampa.

c) Fittex in-numru tal-pożizzjoni (16) jew l-isem tas-sottogrupp (19). Mur fin-numru tal-paġna li jikkorrispondi (20) elenkat fil-kolonna tan-naħa tal-lemin.

Oġġetti d) u e) irreferi għal stampa (F) f'paġna i-6.

d) Sib il-parti (21) li qed tfittex fl-istampa tas-sottogrupp u nnota n-numru tal-pożizzjoni tal-parti.

e) In-numru tal-parti (29) u d-deskrizzjoni tal-parti (30) huma elenkati ħdejn n-numru tal-pożizzjoni fuq il-paġna bil-lista.

Informazzjoni Elenkata fil-Katalgu tal-Partijiet Għat-Tibdil

Il-lista t'hawn taħt tirreferi għal stampa (F) fuq paġna i-6. Il-Katalgu tal-Partijiet Għat-Tibdil fih din l-informazzjoni li ġejja dwar gruppi, sottogruppi, u partijiet għat-tibdil għat-tagħmir:

- Referenza ta' l-istruttura tal-grupp (22). Tindika l-ogħla grupp li jmiss fl-istruttura tal-lista tat-tagħmir.
- Isem tal-grupp (23)
- Unit tal-kejl (25)
- Kwantità (26)
- Numru tad-disinn ta' l-immuntar (27)
- Medda tal-paġni tal-lista (28). Inkluži jekk hemm paġni multipli fil-lista jew fl-istampa tal-grupp.
- Numru tal-parti jew sottogrupp (29)
- Deskrizzjoni ta' l-isem tas-sottogrupp jew parti (30)
- Numru tal-grupp (31)
- Numru tat-tagħmir (32)
- Heading ta' l-informazzjoni tal-grupp (33). Tindika jekk is-sezzjoni ta' taħt il-heading hix għal xi varjant speċifiku tal-magna jew jekk hix lista ta' partijiet komuni. Jekk lista jkun fiha aktar minn varjant wieħed u jekk kull varjant ikollu d-disinn ta' l-immuntar tiegħu, tintwera referenza ta' paġna għad-disinn ta' l-immuntar tal-varjant.
- Informazzjoni interna (34)

Inleiding

Informatie betreffende dit handboek

Tetra Pak raadt aan alle geleverde documentatie zorgvuldig te lezen. Ga na of de geleverde documentatie ter beschikking is van het personeel dat de machine moet bedienen of servicewerkzaamheden moet uitvoeren.

Het is belangrijk deze catalogus voor de duur van de machine te bewaren en de catalogus door te geven aan elke volgende eigenaar of gebruiker.

Tetra Pak aanvaardt geen verantwoordelijkheid voor om het even welke soort beschadiging aan de machine als gevolg van het niet opvolgen van de in dit handboek gegeven instructies.

Bijgeleverde handboeken

De met deze apparatuur geleverde handboeken omvatten

- Conversiehandboek (CM)
  Dit handboek geeft technici informatie over het ombouwen van de apparatuur tussen verschillende productiemodi.
- Handboek Elektriciteit (EM)
  Dit handboek geeft elektriciens en servicetechnici informatie betreffende het elektrisch systeem van de apparatuur.
- Installatiehandboek (IM)
  Dit handboek geeft installatiepersoneel informatie om op veilige wijze de apparatuur te installeren.
- Onderhoudshandboek (MM)
  Dit handboek geeft technici informatie over het onderhoud van de apparatuur.
- Bedieningshandboek (OM)
  Dit handboek geeft de operator informatie betreffende het omgaan met en bedienen van de apparatuur, voor, tijdens en na productie.
- Catalogus reservedelen (SPC).
  Dit handboek geeft de nodige informatie om reserveonderdelen bij Tetra Pak te bestellen.
- Technisch Handboek (TeM)
  - Dit handboek geeft technici informatie, nodig om op veilige wijze de apparatuur te installeren
  - Dit handboek geeft technici informatie over het onderhoud van de apparatuur
  - Dit handboek geeft technici informatie betreffende het elektrisch systeem van de apparatuur
  - geeft de nodige informatie, nodig om reserveonderdelen bij Tetra Pak te bestellen

Pagina lay-out

Refereer naar de illustratie (A) op bladzijde i-5: De belangrijkste bladzijden van een Catalogus Reserveonderdelen bestaan uit een bladzijde met een illustratie (1) en een corresponderende bladzijde met een lijst (7).
Het bladzijdenummer (5) is te vinden in de kop van een illustratiebladzijde en in de voetnoot van de lijstbladzijde. Het documentnummer (6) is te vinden in de voetnoot van een lijstbladzijde.

Bladzijdenummering

Refereer naar de illustratie (A) op bladzijde i-5: een bladzijdenummer (5) bestaat uit drie delen:

- hoofdstuknummer (2)
- opeenvolgende bladzijdenummer in het hoofdstuk (3)
- totaal aantal bladzijden in het hoofdstuk (4)

Introductie van de machine

Fabrikant

Voor naam en adres van de fabrikant, zie de tweede bladzijde van deze catalogus.

Service

Voor het bestellen van reserveonderdelen of om bedieningsproblemen van deze machine te melden, contacteer de dichtst bijzijnde vestiging van Tetra Pak.

Neem contact op met de contactpersoon voor andere informatie, opmerkingen of suggesties ter verbetering van de machine en de bijbehorende documentatie.

Identificatie

CE-classificatie

Deze apparatuur voldoet aan de basiseisen voor gezondheid en veiligheid voor het Europese Economische Gebied (EEA).

Machineplaatje

De illustratie (B) op bladzijde i-5 toont een voorbeeld van een machineplaatje.
Een illustratie van het wettige machineplaatje en de plaatsing ervan wordt getoond in het hoofdstuk Introductie van de handboeken, meegeleverd met deze apparatuur. Het machineplaatje bevat onderstaande gegevens die nodig zijn wanneer Tetra Pak moet worden gecontacteerd betreffende deze apparatuur.

- Machinetype (8)
- Volume (9)
- Tekeningspecificaties (10)
- Serienummer machine (11)
- Fabrikant (12)
- CE-markering (13)
- Fabricagejaar (14)

De illustratie (C) op bladzijde i-5 toont een voorbeeld van een machineplaatje. Controleer of de gegevens betreffende de apparatuur in de voorste bladzijden van dit handboek overeenkomen met de gegevens op het machineplaatje en de machinespecificaties.

Hoe dient deze catalogus reserveonderdelen te worden gebruikt

Lokaliseren van een nummer van een reserveonderdeel

a) Refereer naar de illustratie (D) op bladzijde i-5: ga naar het hoofdstuknummer (15), naast de hoofdgroep die het gewenste deel bevat.

Items b) en c) refereer naar de illustratie (E) op bladzijde i-6.

b) Op de illustratie van de hoofdgroep, zoek de machinesub-groep (17) op die het deel van de gewenste sub-groep bevat. Noteer het positienummer (18) en ga naar de lijstbladzijde die op de illustratie volgt.

c) Op de illustratie van de hoofdgroep, zoek de machinesub-groep (17) op die het deel van de gewenste sub-groep bevat. Noteer het positienummer (18) en ga naar de lijstbladzijde die op de illustratie volgt.

Items d) en e) refereren naar de illustratie (F) op bladzijde i-6.

d) Lokaliseer het gewenste onderdeel (21) in de illustratie van de sub-groep en noteer het positienummer van het onderdeel.

e) Het onderdeelnummer (29) en de beschrijving ervan (30) worden naast het positienummer op de lijstbladzijde weergegeven.

Informatie die in een Catalogus reserveonderdelen wordt gegeven

Onderstaande lijst verwijst naar de illustratie (F) op bladzijde i-6.
Een Catalogus reserveonderdelen bevat de volgende informatie betreffende groepen, sub-groepen en reserveonderdelen voor de apparatuur:

- Referentie groepsstructuur (22). Geeft de volgende hoogste groep in de structuur van de apparatuur aan.
- Groepsnaam(23)
- Meeteenheid (25)
- Hoeveelheid (26)
- Tekeningnummer montage (27)
- Lijst met bladzijdenreeks (28). Inclusief indien er meerdere bladzijden in de groepsillustratie of lijst voorkomen.
- Onderdeel of sub-groepsnummer (29)
- Naam sub-groep of beschrijving onderdeel (30)
- Groepsnummer (31)
- Apparatuurnummer (32)
- Titel groepsinformatie (33). Geeft aan of het deel onder de titel voor een specifieke machine is, voor een variant of een lijst is met algemene onderdelen. Indien een lijst meer dan één variant bevat en elke variant heeft zijn eigen montagetekening, wordt een bladzijdenreferentie naar de montagetekening van de variant gegeven.
- Interne informatie (34)

Introduksjon

Informasjon om håndboken

Tetra Pak anbefaler at du leser nøye gjennom alle leverte håndbøker. Sørg for at håndbøkene er tilgjengelige for alle som betjener eller vedlikeholder utstyret.

Det er viktig at du tar vare på denne katalogen under hele levetiden til utstyret og at du gir den videre til eventuelle nye eiere eller brukere.

Tetra Pak vil ikke være ansvarlig for skader på utstyret som oppstår fordi brukeren ikke følger instruksjonene i håndbøkene som følger med utstyret.

Leverte håndbøker

Håndbøkene som leveres med dette utstyret, kan inkludere

- Konverteringsmanual (CM)
  Denne håndboken gir teknikere informasjon om hvordan de konverterer utstyret mellom ulike produksjonsmodi.
- Electrisk manual (EM)
  Denne håndboken gir teknikere informasjon om utstyrets elektriske system.
- Installasjonsmanual (IM)
  Denne håndboken gir teknikere informasjon som kreves for å kunne installere utstyret på en sikker måte.
- Vedlikeholdsmanual (MM)
  Denne håndboken gir teknikere informasjon om vedlikehold av utstyret.
- Driftsmanual (OM)
  Denne håndboken gir operatøren informasjon om hvordan han håndterer og bruker utstyret før, under og etter produksjon.
- Reservedelskatalog (SPC)
  Denne håndboken inneholder informasjon som du trenger for å bestille reservedeler fra Tetra Pak.
- Teknisk manual (TeM)
  - gir teknikere informasjon om sikker installasjon av utstyret
  - gir teknikere informasjon om vedlikehold av utstyret
  - gir teknikere informasjon om utstyrets elektriske system
  - inneholder informasjon som du trenger for å bestille reservedeler fra Tetra Pak

Sideoppsett

Se illustrasjonen (A) på side i-5: Hovedsidene i reservedelskatalogen består av en illustrasjonsside (1) og en korresponderende listeside (7). Sidenummeret (5) vises i toppteksten på illustrasjonssiden og i bunnteksten listesiden. Dokumentnummeret (6) vises i bunnteksten på listesiden.

Sidenummerering

Se illustrasjonen (A) på side i-5: Et sidenummer (5) består av tre deler:

- kapittelnummer (2)
- etterfølgende sidenummer i kapitlet (3)
- det totale antall sider i kapitlet (4)

Introduksjon av maskinen

Produsent

Hvis du ønsker produsentens navn og adresse, kan du se side to i denne katalogen.

Service

Når du skal bestille reservedeler til denne maskinen eller rapportere problemer forbundet med driften av denne maskinen, må du kontakte ditt nærmeste Tetra Pak-kontor.

Når det gjelder andre forespørsler, kommentarer eller forslag til forbedringer av utstyret og dets dokumentasjon, kan du ta kontakt med din kontaktperson.

Identifisering

CE-klassifisering

Dette utstyret er i overensstemmelse med de grunnleggende helse- og sikkerhetsforskriftene i Det europeiske økonomiske samarbeidsområdet (EØS).

Maskinplate

Illustrasjonen (B) på side i-5 viser et eksempel på en maskinplate. En illustrasjon av en gyldig maskinplate og hvor denne er plassert på utstyret, er vist i introduksjonskapitlet i håndbøkene som følger med dette utstyret. Maskinplaten inneholder nedenstående data, som du trenger når du skal kontakte Tetra Pak angående dette bestemte utstyret.

- Maskintype (8)
- Volum (9)
- Tegningsspesifikasjoner (10)
- Maskin-serienummer (11)
- Produsent (12)
- CE-merke (13)
- Produksjonsår (14)

Illustrasjonen (C) på side i-5 viser et eksempel på en maskinspesifikasjon. Sørg for at utstyrsdataene som står oppført foran i denne håndboken samsvarer med dataene på maskinplaten og maskinspesifikasjonen.

Hvordan bruke denne reservedelskatalogen

Finn et reservedelsnummer

a) Se illustrasjonen (D) på side i-5: Gå til kapittelnummeret (15) som er angitt ved siden av hovedgruppen som inneholder delen du vil finne.

Punkt b) og c) viser til illustrasjonen (E) på side i-6.

b) På hovedgruppeillustrasjonen ser du etter maskinundergruppen (17) som inneholder delen eller undergruppen du ser etter. Merk deg posisjonsnummeret (18), og gå til listesiden som kommer etter illustrasjonen.

c) Se etter posisjonsnummeret (16) eller undergruppenavnet (19). Gå til det korresponderende sidenummeret (20) som står oppført i høyre kolonne.

Punkt d) og e) viser til illustrasjonen (F) på side i-6.

d) Finn delen (21) du ser etter på undergruppeillustrasjonen, og merk deg delens posisjonsnummer.

e) Delenummeret (29) og delebeskrivelsen (30) finner du ved siden av posisjonsnummeret på listesiden.

Informasjon i en reservedelskatalog

Listen nedenfor viser til illustrasjonen (F) på side i-6. En reservedelskatalog inneholder følgende informasjon om grupper, undergrupper og reservedeler for utstyret:

- Gruppeinndelingsreferanse (22). Angir den neste gruppen opp i inndelingen av utstyrslisten.
- Gruppenavn (23)
- Målenhet (25)
- Antall (26)
- Tegningsnummer (27)
- Listesideområde (28). Inkludert hvis det er flere sider i gruppeillustrasjonen eller listen.
- Dele- eller undergruppenummer (29)
- Undergruppenavn eller delebeskrivelse (30)
- Gruppenummer (31)
- Utstyrsnummer (32)
- Gruppeinformasjonsoverskrift (33). Angir om avsnittet under overskriften er for en bestemt maskinvariant eller om det er en liste over vanlige deler. Hvis en liste har flere varianter og hver variant har sin egen sammenstillingstegning, vises det en sidereferanse til variantens sammenstillingstegning.
- Intern informasjon (34)

Wprowadzenie

Informacje o Instrukcji

Tetra Pak zaleca dokładne zapoznanie się ze wszystkimi dostarczonymi instrukcjami obsługi. Upewnij się, że dostarczone instrukcje obsługi są dostępne dla personelu obsługującego lub konserwującego wyposażenie.

Ważne jest, aby niniejszy katalog zachować na cały okres eksploatacji urządzenia i przekazać go każdemu kolejnemu użytkownikowi/ właścicielowi.

Tetra Pak nie ponosi odpowiedzialności za żadne uszkodzenia urządzenia spowodowane nieprzestrzeganiem zaleceń zawartych instrukcjach dołączonych do tego urządzenia.

Dostarczone Instrukcje

Instrukcje dostarczone z tym urządzeniem zawierają

- Instrukcję Konwersji (CM)
  Instrukcja ta dostarcza technikom informacje o sposobie konwersji urządzenia pomiędzy różnymi trybami produkcji.
- Instrukcję Elektryki (EM)
  Instrukcja ta dostarcza technikom informacje o układzie elektrycznym urządzenia.
- Instrukcję Instalacyjną (IM)
  Instrukcja ta dostarcza technikom informacje niezbędne do bezpiecznego zainstalowania urządzenia.
- Instrukcję Konserwacji (MM)
  Instrukcja ta dostarcza technikom informacje o sposobie konserwacji urządzenia.
- Instrukcję Operacyjną (OM)
  Instrukcja ta dostarcza operatorowi informacje o sposobie manipulacji i obsługi urządzenia przed, podczas i po produkcji.
- Katalog Części Zamiennych (SPC)
  Instrukcja ta dostarcza informacje niezbędne do zamawiania części zamiennych z firmy Tetra Pak.
- Instrukcję Techniczną (TeM)
  - dostarcza technikom informacje niezbędne do bezpiecznego zainstalowania urządzenia
  - dostarcza technikom informacje o konserwacji urządzenia
  - dostarcza technikom informacje o układzie elektrycznym urządzenia
  - dostarcza informacje niezbędne do zamawiania części zamiennych z firmy Tetra Pak

Układ Strony

Patrz ilustracja (A) na stronie i-5: Kartki główne Katalogu Części Zamiennych składają się z ze strony z ilustracją (1) oraz odpowiadającej jej strony z listą (7). W nagłówku strony z ilustracją oraz w stopce strony z listą pokazany jest numer strony (5). Numer dokumentu (6)umieszczony jest w stopce strony z listą.

Numeracja stron

Patrz ilustracja (A) na stronie i-5:Numer strony (5) zawiera trzy części:

- numer rozdziału (2)
- kolejny numer strony (3) w ramach rozdziału
- łączna ilość stron (4) w rozdziale

Wprowadzenie do Maszyny

Producent

Nazwę i adres producenta można znaleźć na drugiej stronie niniejszego katalogu.

Serwis

Aby zamówić części zapasowe do tej maszyny lub zgłosić problemy związane z jej pracą należy skontaktować się z najbliższym biurem Tetra Pak.

Prosimy o nawiązanie kontaktu w przypadku jakichkolwiek zapytań, komentarzy, lub sugestii zmierzających do usprawnienia wyposażenia oraz dokumentacji z nimi związanych.

Identyfikacja

Klasyfikacja CE

Urządzenie spełnia wymagania podstawowych przepisów BHP Europejskiego Obszaru Ekonomicznego (EEA).

Płyta znamionowa maszyny

Ilustracja (B) przedstawiona na stronie i-5 pokazuje przykład płyty znamionowej maszyny.
Ilustracja prawidłowej płyty znamionowej oraz jej położenie na urządzeniu pokazana jest w rozdziale Wprowadzenie zawartym w instrukcjach dostarczonych z tym urządzeniem. Płyta znamionowa maszyny zawiera niżej przedstawione dane, potrzebne podczas kontaktowania się z firmą Tetra Pak w sprawach dotyczących tego konkretnego urządzenia.

- Typ maszyny (8)
- Objętość (9)
- Specyfikacje rysunkowe (10)
- Numer seryjny urządzenia (11)
- Producent (12)
- Oznaczenie symbolemCE (13)
- Rok produkcji (14)

Ilustracja (C) zawarta na stronie i-5 pokazuje przykład specyfikacji maszyny. Należy sprawdzić, czy dane wyposażenia przedstawione na pierwszej stronie tej instrukcji odpowiadają danym zawartym na płycie znamionowej maszyny oraz specyfikacji maszyny.

Jak Korzystać z niniejszego Katalogu Części Zamiennych

Należy znaleźć Numer części zamiennej

a) Patrz ilustracja (D) zawarta na stronie i-5: Przejdź do numeru rozdziału (15) pokazanego obok głównej grupy zawierającej część, którą chcesz odszukać.

Pozycje b) i c) odnoszą się do ilustracji (E) zawartej na stronie i-6.

b) Na ilustracji grupy głównej odszukaj podgrupę maszyny (17), która zawiera odpowiednią część lub podgrupę, której szukasz. Zanotuj numer pozycji (18) i przejdź na stronę z listą, umieszczoną za ilustracją.

c) Odszukaj numer pozycji (16) lub nazwę podgrupy (19). Przejdź do odpowiedniego numeru strony (20) pokazanego w kolumnie umieszczonej po prawej stronie.

Pozycje d) i e) odnoszą się do ilustracji (F) zawartej na stronie i-6.

d) Znajdź na ilustracji podgrupy część (21), której szukasz i zanotuj numer pozycji części.

e) Numer części (29) oraz opis części (30) są umieszczone na stronie z listą obok numeru pozycji.

Informacje zawarte w Katalogu Części Zamiennych

Poniższa lista odnosi się do ilustracji (F) zawartej na stronie i-6. Katalog Części Zamiennych zawiera następujące informacje o grupach, podgrupach oraz częściach zamiennych dla urządzenia:

- Struktura referencji grup (22). Wskazuje następną wyższą grupę zawartą w strukturze listy wyposażenia.
- Nazwa grupy (23)
- Jednostka miary(25)
- Ilość (26)
- Numer rysunku montażowego (27)
- Zakres strony z listą (28). Zawarty w przypadku występowania wielu stron dla ilustracji lub listy grupy.
- Numer części lub podgrupy (29)
- Nazwa podgrupy lub opis części (30)
- Numer grupy (31)
- Numer urządzenia (32)
- Nagłówek informacyjny grupy (33). Wskazuje, czy sekcja umieszczona pod nagłówkiem dotyczy określonego wariantu maszyny, czy też jest to lista wspólna dla wszystkich wariantów. Jeśli lista występuje w wielu wariantach i dla każdego z nich dostępny jest własny rysunek montażowy, pokazany jest numer strony odniesienia rysunku montażowego dla danego wariantu.
- Informacje wewnętrzne (34)

Introdução

Informação do Manual

A Tetra Pak recomenda ler cuidadosamente todos os manuais fornecidos. Verificar se os manuais fornecidos estão ao dispor do pessoal que trabalha com o equipamento ou que faz a manutenção do mesmo.

É importante guardar este catálogo durante o tempo útil de vida da máquina ou do equipamento e de entregar o catálogo a qualquer proprietário ou utilizador subsequente.

A Tetra Pak não toma a responsabilidade por quaisquer danos no equipamento causados devido ao facto de que as instruções dadas nos manuais que acompanham este equipamento não foram seguidas.

Manuais fornecidos

Os manuais fornecidos com este equipamento incluem

- Manual de Conversão (CM)
  Este manual fornece aos técnicos as informações sobre a conversão do equipamento entre os diferentes modos de produção.
- Manual Eléctrico (EM)
  Este manual fornece aos técnicos as informações sobre o sistema eléctrico do equipamento.
- Manual de Instalação (IM)
  Este manual fornece aos técnicos as informações necessárias para instalar seguramente o equipamento.
- Manual de Manutenção (MM)
  Este manual fornece aos técnicos as informações para a manutenção do equipamento.
- Manual de Operação (OM)
  Este manual fornece ao operador as informações que ele necessita para manejar e accionar o equipamento antes, durante e depois da produção.
- Catálogo de Peças Sobressalentes (SPC)
  Este manual fornece as informações necessárias para encomendar peças sobressalentes à Tetra Pak.
- Manual Técnico (TeM)
  - fornece aos técnicos as informações necessárias para instalar seguramente o equipamento
  - fornece aos técnicos as informações para a manutenção do equipamento
  - fornece aos técnicos as informações sobre o sistema eléctrico do equipamento
  - fornece as informações necessárias para encomendar peças sobressalentes à Tetra Pak

Disposição da página

Referência à ilustração (A) na página i-5: As páginas principais num Catálogo de Peças Sobressalentes consistem numa página ilustrada (1) e numa página com a lista correspondente (7). O número da página (5) é mostrado no cabeçalho de uma página ilustrada e no rodapé de uma página com lista. O número do documento (6) é mostrado no rodapé de uma página com lista.

Numeração da página

Referência à ilustração (A) na página i-5: Um número de página (5) tem três partes:

- Número do capítulo (2)
- número consecutivo da página dentro do capítulo (3)
- número total de páginas no capítulo (4)

Introdução da máquina

Fabricante

Para o nome e morada do fabricante, ver a segunda página deste catálogo.

Assistência técnica

Para encomendar peças sobressalentes para esta máquina, ou para relatar problemas associados com a operação desta máquina, contactar a companhia Tetra Pak mais próxima.

Contactar a Liaison se tiver quaisquer questões, comentários ou sugestões para o desenvolvimento relacionado com o equipamento e a sua documentação.

Identificação

Classificação CE

Este equipamento está de acordo com os regulamentos de segurança e saúde da Área Económica Europeia (EEA).

Placa da máquina

A ilustração (B) na página i-5 mostra um exemplo de uma placa da máquina. Uma ilustração da placa da máquina válida e a sua localização no equipamento é mostrada no capítulo Introdução dos manuais fornecidos com este equipamento. A placa da máquina contem os dados alistados em baixo, necessários quando se contactar a Tetra Pak relacionando-se a este equipamento em específico.

- Tipo da máquina (8)
- Volume (9)
- Especificações dos desenhos (10)
- Número de série da máquina (11)
- Fabricante (12)
- Marca CE (13)
- Ano de construção (14)

A ilustração (C) na página i-5 mostra um exemplo de uma especificação da máquina. Verificar se os dados do equipamento alistados nas páginas da frente deste manual correspondem aos dados na placa da máquina e à especificação da máquina.

Como usar este Catálogo de Peças Sobressalentes

Localizar um Número da peça sobressalente

f) Referência à ilustração (D) na página i-5: Para o número do capítulo (15) indicado ao lado do grupo principal que contem a peça que quer localizar.

Pos. b) e c) referem-se à ilustração (E) na página i-6.

g) Na ilustração do grupo principal, procurar o subgrupo da máquina (17) que contem a peça ou subgrupo que está à procura. Anotar o número da posição (18) e passar para a página da lista que segue a ilustração.

h) Procurar o número da posição (16) ou o nome do subgrupo (19). Passar para o número da página correspondente (20) alistado na coluna do lado direito.

Pos. d) e e) referem-se à ilustração (F) na página i-6.

i) Localizar a peça (21) que está à procura na ilustração do subgrupo e anotar o número da posição da peça.

j) O número da peça (29) e a descrição da peça (30) estão alistados ao lado do número da posição na página da lista.

Informações indicadas num Catálogo de Peças Sobressalentes

A lista em baixo refere-se à ilustração (F) na página i-6. Um Catálogo de Peças Sobressalentes contem as seguintes informações sobre grupos, subgrupos e peças sobressalentes para o equipamento:

- Referência da estrutura do grupo (22). Indica o grupo a seguir mais elevado na estrutura da lista do equipamento.
- Nome do grupo (23)
- Unidade de medição (25)
- Quantidade (26)
- Número do desenho de montagem (27)
- Gama da página de lista (28). Incluída se houver páginas múltiplas na ilustração do grupo ou lista.
- Número da peça ou do subgrupo (29)
- Nome do subgrupo ou descrição da peça (30)
- Número do grupo (31)
- Número do equipamento (32)
- Título da informação do grupo (33). Indica se a secção abaixo do título é para uma variante de máquina específica ou se é uma lista de peças comuns. Se uma lista tiver mais do que uma variante e cada variante tiver o seu próprio desenho de montagem, é mostrada uma referência para a página do desenho de montagem da variante.
- Informação interna (34)

Úvod

Informácie o príručke

Tetra Pak doporučuje čítat' pozorne všetky dodané príručky. Presvedčte sa, že dodané príručky sú k dispozícii personálu, ktorý vykonáva obsluhu alebo údržbu zariadenia.

Je dôležité ponechat' si tento katalóg počas životnosti zariadenia a odovzdat' katalóg inému majiteľovi alebo užívateľovi.

Tetra Pak nebude zodpovedat' za nijaké zničenie zariadenia spôsobené nedodržaním pokynov uvedených v príručke vzhľadom na toto zariadenie.

Dodané príručky

Príručky dodané s týmto zariadením majú obsahovat'

- Konverznú príručku (CM)
  Táto príručka poskytuje technikom informácie o konvertovaní zariadenia medzi rozličnými režimami výroby.
- Príručku elektriky (EM)
  Táto príručka poskytujetechnikom informácie o zariadeniach elektrickej inštalácie.
- Inštalačnú príručku (IM)
  Táto príručka poskytuje technikom informácie, požadované pre bezpečnú inštaláciu zariadenia.
- Údržbársku príručku (MM)
  Táto príručka poskytujetechnikom informáciu o údržbe zariadenia.
- Návod k použitiu (OM)
  Táto príručka poskytuje obsluhe informáciu o zaobchádzaní a obsluhe zariadenia pred, počas a po výrobe.
- Katalóg náhradných dielov (SPC)
  Táto príručka poskytuje informácie potrebné pre objednávku náhradných dielov Tetra Pak.
- Technická príručka (TeM)
  - poskytuje technikom informácie potrebné pre bezpečnú inštaláciu zariadenia
  - poskytuje technikom informácie o údržbe zariadenia
  - poskytujetechnikom informácie o zariadení elektrickej inštalácie
  - poskytuje informácie potrebné pre objednávku náhradných dielov z Tetra Pak

Formát stránky

Odvoláva sa na zobrazenie (A) na stranei-5: Hlavné stránky v katalógu náhradných dielov pozostávajú zo stránky zobrazenia (1) a stránky príslušného zoznamu (7). Stránka číslo (5) ukazuje v hlavičke stránky zobrazenie a v zápätí stránky zoznam. Číslo dokumentu (6) je zobrazené v zápätí stránky zoznamu.

Číslo stránky

Odvoláva sa na zobrazenie (A) na stranei-5: Číslo stránky (5) má tri časti:

- číslo kapitoly (2)
- nasledujúce číslo stránky v rámci kapitoly (3)
- celkový počet strán v kapitole (4)

Úvod o stroji

Výrobca

Pre názov a adresu výrobcu, viď druhá strana tohoto katalógu.

Servis

Pre objednávku náhradných dielov pre tento stroj, alebo pre hlásenie problémov spojených s obsluhou tohoto stroja, kontaktujte najbližšiu pobočku spoločnosti Tetra Pak.

Kontaktujte styčnú osobu s inými žiadost'ami, poznámkami, alebo zlepšovacími návrhmi týkajúcimi sa zariadenia a jeho dokumentácie.

Označenie

CE klasifikácia

Zariadenie spĺňa základné zdravotné a bezpečnostné predpisy Európskeho hospodárskeho priestoru (EEA).

Prístrojová doska

Zobrazenie (B) na strane i-5 ukazuje príklad prístrojovej dosky. Zobrazenie správnej prístrojovej dosky a jej umiestnenie na zariadení je uvedené v kapitole Úvod príručky dodanej s týmto zariadením. Prístrojová doska obsahuje dole zoznam údajov, potrebných ak kontaktujete spoločnost' Tetra Pak ohľadom tohoto špeciálneho zariadenia.

- Typ stroja (8)
- Kapacita (9)
- Výkres špecifikácie (10)
- Sériové číslo stroja (11)
- Výrobca (12)
- značka CE (13)
- Rok výroby (14)

Zobrazenie (C) na strane i-5 ukazuje príklad špecifikácie stroja. Presvedčte sa, či údaje zariadenia uvedené na prednej strane tejto príručky zodpovedajú údajom prístrojovej dosky a špecifikácii stroja.

Ako používat' tento katalóg náhradných dielov

Vyhľadajte číslo náhradného dielu

a) Odvoláva sa na zobrazenie (D) na strane i-5: Choďte na kapitolu číslo (15) označenú pri halvnej skupine, ktorá obsahuje diel, ktorý chcete vyhľadat'.

Položky b) a c) sa odvolávajú na zobrazenie (E) na strane i-6

b) Na zobrazení hlavnej skupiny, hľadajte pre stroj podskupinu (17) ktorá obsahuje diel alebo podskupinu, ktoré hľadáte. Zaznamenajte pozíciu číslo (18) a choďte na stránku zoznamu, ktorá sleduje zobrazenie.

c) Hľadajte číslo položky (16) alebo názov podskupiny (19). Choďte na zodpovedajúcu stránku číslo (20)uvedenú v stĺpci po pravej ruke.

Položky d) a e) sa odvolávajú na zobrazenie (F) na stranei-6

d) Vyhľadajte diel (21), ktorý hľadáte podľa zobrazenia podskupiny a poznámky čísla položky dielu.

e) Číslo dielu (29) a popis dielu (30) sú uvedené pri čísle položky na zozname stránok.

Informácie uvedené v katalógu náhradných dielov

Zoznam dole sa odvoláva na zobrazenie (F) na strane i-6 Katalóg náhradných dielov obsahuje informácie o skupinách, podskupinách a náhradných dieloch pre zariadenie:

- Odkaz na usporiadanie skupiny (22) Označuje nasledujúcu vyššiu skupinu v štruktúre zoznamu zariadenia.
- Názov skupiny (23)
- Jednotka merania(25)
- Množstvo (26)
- Číslo výkresu montáže (27)
- Zoznam rozsahu stránok (28). Zahrnutý, ak sú to mnohonásobné stránky v zobrazení skupiny alebo zoznam.
- Diel alebo číslo podskupiny (29)
- Názov podskupiny alebo popis dielu (30)
- Číslo skupiny (31)
- Číslo zariadenia (32)
- Základné informácie o skupine (33). Označuje, ak sekcia pod hlavičkou je pre špeciálnu variantu stroja alebo ak je to zoznam všeobecných dielov. Ak zoznam má viac ako jednu variantu a každá varianta má svoj vlastný montážny výkres, tak je zobrazená strana, ktorá odkazuje na varianty montážneho výkresu.
- Interné informácie (34)

Uvod

Informacija o priročnikih

Podjetje Tetra Pak priporoča, da natančno preberete vse priložene priročnike. Osebje, ki upravlja in vzdržuje opremo, mora imeti dostop do priloženih priročnikov.

Katalog hranite v celotnem času uporabe opreme. V primeru, ko opremo pridobi drug uporabnik, mu obenem izročite tudi katalog.

Podjetje Tetra Pak ne prevzema odgovornosti za poškodbe na opremi, ki nastanejo zaradi neupoštevanja navodil iz priročnikov, ki so priloženi opremi.

Priloženi priročniki

Priročniki, ki so priloženi opremi, vključujejo

- Priročnik za zamenjavo (CM)
  V tem priročniku so podatki, ki tehnikom omogočajo izvesti zamenjavo opreme med različnimi načini proizvodnje.
- Električni priročnik (EM)
  Priročnik vsebuje informacije za tehnike o električnem sistemu opreme.
- Priročnik za namestitev (IM)
  Priročnik vsebuje ustrezne tehnične informacije za varno namestitev opreme.
- Priročnik za vzdrževanje (MM)
  Priročnik vsebuje informacije za tehnike o vzdrževanju opreme.
- Priročnik za obratovanje (OM)
  Priročnik je namenjen informiranju za pravilno rokovanje in upravljanje s strojem pred, med in po proizvodnem postopku.
- Katalog rezervnih delov (SPC)
  Priročnik vsebuje potrebne informacije za naročanje rezervnih delov v podjetju Tetra Pak.
- Tehnični priročnik (TeM) vsebuje:
  - ustrezne tehnične informacije za tehnike za varno namestitev opreme
  - informacije za tehnike o vzdrževanju opreme
  - informacije za tehnike o električnem sistemu opreme
  - potrebne informacije za naročanje rezervnih delov v podjetju Tetra Pak

Zgradba strani

Oglejte si risbo (A) na strani i-5: Glavne strani v Katalogu rezervnih delov sestavljata stran z risbo (1) ter ustrezna stran s seznamom (7). Številka strani (5) je v glavi na strani z risbo ter v nogi na strani s seznamom. Številka dokumenta (6) je v nogi na strani s seznamom.

Številčenje strani

Oglejte si risbo (A) na strani i-5: Številko strani (5) sestavljajo trije deli:

- številka poglavja (2)
- zaporedna številka strani v poglavju (3)
- skupno število strani poglavja (4)

Predstavitev stroja

Proizvajalec

Ime in naslov proizvajalca poiščite na drugi strani tega kataloga.

Servis

Za naročanje rezervnih delov za stroj ter za sporočanje motenj pri delovanju stroja se obrnite na najbližjo servisno službo podjetja Tetra Pak.

V primeru drugih zahtev, komentarjev, predlogov za izboljšavo opreme ali dokumentacije se obrnite na odgovorno osebo.

Identifikacijska oznaka

CE klasifikacija

Oprema je izdelana v skladu z osnovnimi zdravstvenimi in varnostnimi predpisi Evropskega gospodarskega prostora (EGP).

Ploščica s podatki

Risba (B) na strani i-5 prikazuje primer ploščice s podatki.
Risba veljavne ploščice s podatki ter mesto njene namestitve na opremi je v uvodnem poglavju posameznih priročnikov, ki so priloženi opremi.
Na ploščici s podatki so zapisani spodaj našteti podatki, ki jih potrebujete pri posvetovanju s podjetjem Tetra Pak.

- Tip stroja (8)
- Prostornina (9)
- Specifikacija risbe (10)
- Serijska številka stroja (11)
- Proizvajalec (12)
- CE oznaka (13)
- Leto izdelave (14)

Risba (C) na strani i-5 prikazuje primer specifikacije strojne opreme. Prepričajte se, da podatki o opremi, ki so zapisani na prvih straneh priročnika, ustrezajo podatkom na ploščici s podatki in specifikaciji strojne opreme.

Uporaba Kataloga rezervnih delov

Določitev številke rezervnega dela

a) Oglejte si risbo (D) na strani i-5: Zatem si oglejte poglavje številka (15), ki je označeno poleg glavne skupine, ki vsebuje želeni del.

Točki b) in c) se nanašata na risbo (E) na strani i-6.

b) Na risbi glavne skupine poiščite podskupino stroja (17), ki vključuje del ali podskupino, ki ga (jo) iščete. Zapomnite si pozicijsko številko (18) in pojdite na stran s seznamom, ki sledi risbi.

c) Poiščite pozicijsko številko (16) ali ime podskupine (19). Pojdite na ustrezno številko strani (20), ki je označena v desnem stolpcu.

Točki d) in e) se nanašata na risbo (F) na strani i-6.

d) Na risbi podskupine poiščite sestavni del (21) in si zapišite njegovo pozicijsko številko.

e) Številka sestavnega dela (29) in opis sestavnega dela (30) se nahajata poleg pozicijske številke na strani s seznamom.

Informacije v Katalogu rezervnih delov

Spodnji seznam se nanaša na risbo (F) na strani i-6. V Katalogu rezervnih delov so naslednje informacije o skupinah, podskupinah in rezervnih delih za opremo:

- Referenca strukture skupine (22). Označuje naslednjo višjo skupino v strukturi seznama opreme.
- Ime skupine (23)
- Merska enota (25)
- Količina (26)
- Številka sestavne risbe (27)
- Število strani seznama (28). Vključeno, kadar risba ali seznam skupine vsebuje več strani.
- Številka dela ali podskupine (29)
- Ime podskupine ali opis dela (30)
- Številka skupine (31)
- Številka opreme (32)
- Naslov skupine informacij (33). Označuje, če se odsek pod naslovom nanaša na specifično izvedbo stroja, ali je seznam skupnih delov. Če ima seznam več izvedb ter ima vsaka izvedba svojo sestavno risbo, je prikazana referenčna stran sestavne risbe za to izvedbo.
- Interna informacija (34)

Inledning

Information om manualerna

Tetra Pak rekommenderar att alla manualer läses noggrant. Se till att manualerna är tillgängliga för personalen som använder eller underhåller utrustningen.

Det är viktigt att denna katalog behålls under utrustningens livslängd, och att den överlämnas till varje efterföljande innehavare eller användare av utrustningen.

Tetra Pak tar inte ansvar för någon skada på utrustningen som orsakats av att instruktionerna i medföljande manualer inte har följts.

Medföljande manualer

Följande manualer kan levereras tillsammans med utrustningen:

- Konverteringsmanual (CM)
  Manualen innehåller information för tekniker om hur utrustningen ska konverteras mellan olika produktionslägen.
- Elektrisk manual (EM)
  Manualen innehåller information för tekniker om utrustningens elektriska system.
- Installationsmanual (IM)
  Manualen innehåller information för tekniker om hur utrustningen installeras på ett säkert sätt.
- Underhållsmanual (MM)
  Manualen innehåller information för tekniker om hur utrustningen ska underhållas.
- Driftsmanual (OM)
  Manualen innehåller information för operatören om hur utrustningen ska hanteras före, under och efter produktion.
- Reservdelskatalog (SPC)
  Manualen innehåller information som behövs för beställning av reservdelar från Tetra Pak.
- Teknisk manual (TeM)
  - innehåller information för tekniker om hur utrustningen installeras på ett säkert sätt.
  - innehåller information för tekniker om hur utrustningen ska underhållas.
  - innehåller information för tekniker om utrustningens elektriska system.
  - innehåller information som behövs för beställning av reservdelar från Tetra Pak.

Sidlayout

Se bilden (A) på sidan i-5: Huvudsidorna i reservdelskatalogen består av en bildsida (1) och en motsvarande listsida (7). Sidnumret (5) visas i sidhuvudet på bildsidan och i sidfoten på listsidan. Dokumentnumret (6) visas i sidfoten på listsidan.

Sidnumrering

Se bilden (A) på sidan i-5: Ett sidnummer (5) består av tre delar:

- kapitelnummer (2)
- löpande sidnummer inom kapitlet (3)
- totalt sidantal i kapitlet (4)

Introduktion till maskinen

Tillverkare

Tillverkarens namn och adress finns på sidan 2 i katalogen.

Service

För att beställa reservdelar till denna maskin eller för att rapportera problem som uppstått i samband med driften kontaktar du närmaste Tetra Pak-kontor.

Har du andra frågor, kommentarer eller förslag som gäller förbättring av maskinen eller utrustningen och dokumentationen vänder du dig till din kontaktperson på Tetra Pak.

Identifiering

CE-klassificering

Denna utrustning överensstämmer med de grundläggande hälso- och säkerhetsbestämmelserna inom den europeiska ekonomiska unionen (EEA).

Maskinskylt

Bilden (B) på sidan i-5 visar ett exempel på en maskinskylt. En bild på giltig maskinskylt och dess placering på utrustningen visas i inledningskapitlet som medföljer utrustningen. Skylten innehåller de uppgifter som listas nedan och som behövs vid kontakt med Tetra Pak angående utrustningen.

- Maskintyp (8)
- Volym (9)
- Ritningsspecifikationer (10)
- Maskinnummer (11)
- Tillverkare (12)
- CE-märkning (13)
- Tillverkningsår (14)

Bilden (C) på sidan i-5 visar ett exempel på en maskinspecifikation. Kontrollera att informationen om utrustningen som listas på manualens framsida motsvarar informationen på maskinskylten och i maskinspecifikationen.

Använda reservdelskatalogen

Hitta ett reservdelsnummer

a) Se bilden (D) på sidan i-5: Gå till kapitelnumret (15) som står vid sidan om huvudgruppen som innehåller den del du vill leta reda på.

Punkt b) och c) hänvisar till bilden (E) på sidan i-6.

b) På huvudgruppsbilden letar du efter den maskinundergrupp (17) som innehåller delen eller undergruppen du letar efter. Notera positionsnumret (18) och gå till listsidan som följer efter bilden.

c) Leta efter positionsnumret (16) eller undergruppsnamnet (19). Gå till motsvarande sidnummer (20) som listas i den högra kolumnen.

Punkt d) och e) hänvisar till bilden (F) på sidan i-6.

d) Leta reda på delen (21) i undergruppsbilden och notera delens positionsnummer.

e) Reservdelsnumret (29) och reservdelsbeskrivningen (30) står bredvid positionsnumret på listsidan.

Information i reservdelskatalogen

Listan nedan hänvisar till bilden (F) på sidan i-6. Reservdelskatalogen innehåller följande information om grupper, undergrupper och reservdelar för utrustningen:

- Gruppstrukturreferens (22). Anger nästa högre grupp i utrustningslistans struktur.
- Gruppnamn (23)
- Måttenhet (25)
- Kvantitet (26)
- Monteringsritningsnummer (27)
- Listsidesintervall (28). Står med om det finns flera sidor i gruppbilden eller listan.
- Reservdels- eller undergruppsnummer (29)
- Undergruppsnamn eller reservdelsbeskrivning (30)
- Gruppnummer (31)
- Utrustningsnummer (32)
- Gruppinformationsrubrik (33). Anger om avsnittet under rubriken gäller en viss maskinvariant eller om det är en lista över allmänna delar. Om en lista har fler än en variant och varje variant har sin egen monteringsritning, visas en sidhänvisning till variantens monteringsritning.
- Intern information (34)

SPC
Spare Parts Catalogue

This page is intentionally left blank.

ECM: 460860 - 20100610
Group number: 641515-0200
Assembly Drawing:

Pos	Part No	UN	Qty	Description	Page No
	List Remark				
	List - 641515-0200				
	Remark : Machine variant "VCK QC" collects ONLY following combinations:				
	VCK TBA 0125S for Fill.Mach. TBA 0100B				
	VCK TBA 0100B for Fill.Mach. TBA 0125S				
	VCK TPA 0200SQ for Fill.Mach. TPA 0250SQ				
	VCK TPA 0250SQ for Fill.Mach. TPA 0200SQ				
	VCK TBA 0200M for Fill.Mach. TBA 0250S				
	VCK TBA 0250S for Fill.Mach. TBA 0200M				
	VCK TBA 0200B for Fill.Mach. TBA 0250B				
	VCK TBA 0250B for Fill.Mach. TBA 0200B				
	VCK TBA 0200B for Fill.Mach. TBA 0330S				
	VCK TBA 0330S for Fill.Mach. TBA 0200B				
	VCK TBA 0250B for Fill.Mach. TBA 0330S				
	VCK TBA 0330S for Fill.Mach. TBA 0250B				
	VCK TBA 0200SQ for Fill.Mach. TBA 0250SQ				
	VCK TBA 0250SQ for Fill.Mach. TBA 0200SQ				
	VCK TBA 0284B for Fill.Mach. TBA 0300S				
	VCK TBA 0300S for Fill.Mach. TBA 0284B				
	VCK TBA 0160S for Fill.Mach. TBA 0200S				
	VCK TBA 0200S for Fill.Mach. TBA 0160S				
	All other are considered as VCK NOQC				
VCK NOQC					
010	2974071-0200		1	VOLUME CONVERSION KIT NOQC	**1-5**
VCK QC					
010	2974072-0200		1	VOLUME CONVERSION KIT QC	**1-375**

Pos	Part No	UN	Qty	Description	Page No

This page is intentionally left blank.

ECM: 408044 - 20090730
Group number: 2974071-0200
Assembly Drawing:

Pos	Part No	UN	Qty	Description	Page No
-					
010	2976945-0200		1	BOX 1 NOQC	**1-7**
020	2976946-0200		1	BOX 2 NOQC	**1-185**

Pos	Part No	UN	Qty	Description	Page No

Machine Type | Group Description | Used-In | Group Number | Page No

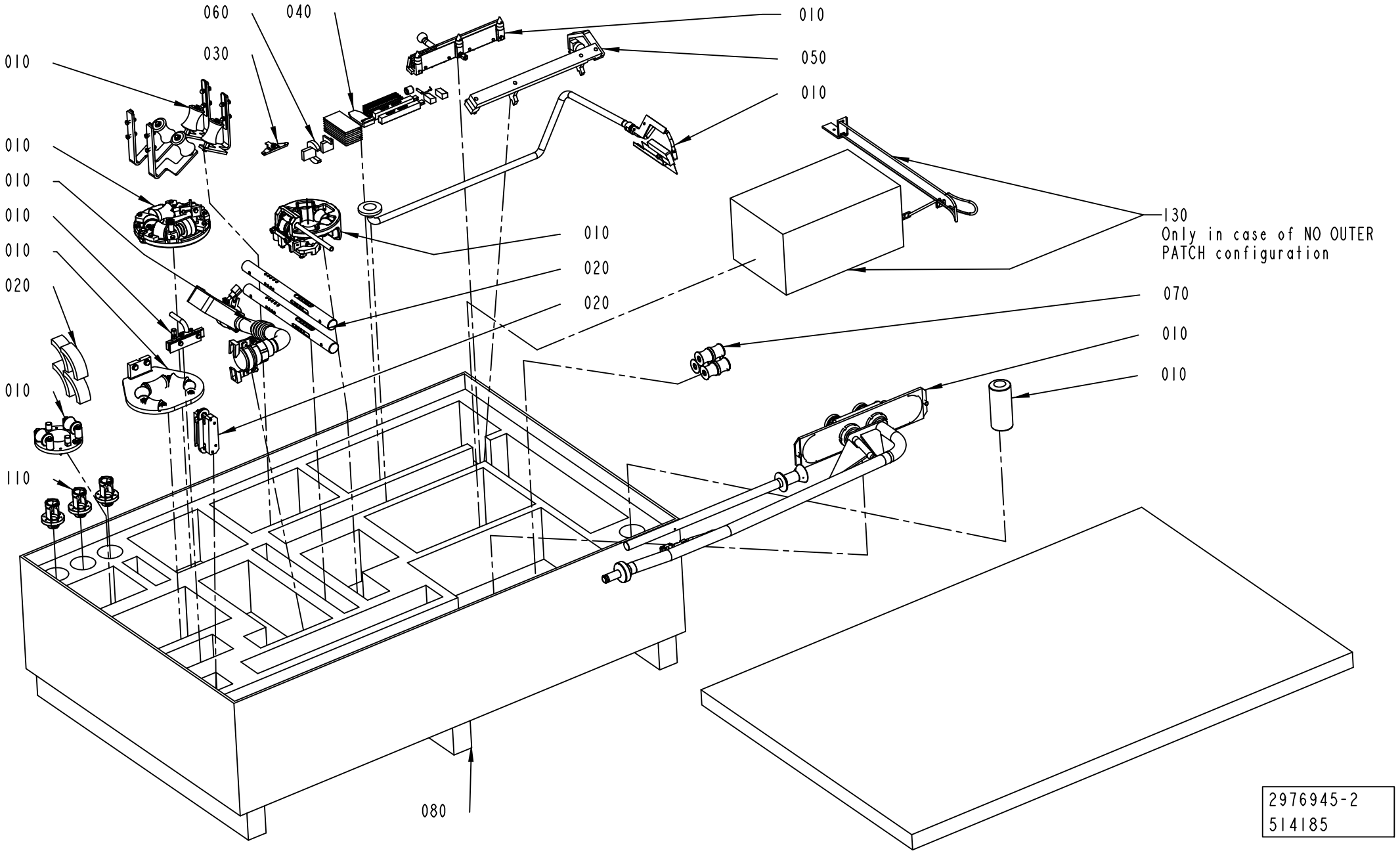
060
040
030
010
010
010
010
010
010
010
010
020
010
110
080
010
050
010
010
020
020
130
Only in case of NO OUTER
PATCH configuration
070
010
010
2976945-2
514185

ECM: 514185 - 20111002
Group number: 2976945-0200
Assembly Drawing: 2976945-2_1_AE

Pos	Part No	UN	Qty	Description	Page No
ST FM HVA NOPT					
110	2945430-0200		1	PRESSURE FLANGE	**1-9**
ST FM HVA PT/CF					
110	2945430-0200		1	PRESSURE FLANGE	**1-9**
130	3106811-0100		1	PT COMPACTFLEX HOLES	**1-11**
ST FM NOHVA PT/CF					
130	3106811-0100		1	PT COMPACTFLEX HOLES	**1-11**
Common Parts					
010	2890050-0200		1	FORMING UNIT	**1-123**
020	3190294-0100		1	ASU MODIFICATION	**1-163**
030	2906135-0100		1	TEMPLATE	**1-169**
040	2889626-0100		1	START-UP KIT	**1-171, 1-173, 1-175**
050	2871510-0100		1	LS TEMPLATE	**1-177**
060	2889628-0100		1	SETTING TOOL	**1-179, 1-181**
070	2890357-0100		1	ROLLER	**1-183**
080	2988051-0000		1	BOX 1 NOQC	

Pos	Part No	UN	Qty	Description	Page No

This page is intentionally left blank.

ECM: 460161 - 20100610
Group number: 2945430-0200
Assembly Drawing:

Pos	Part No	UN	Qty	Description	Page No
TBA 0100B, TBA 0125S					
010	2966688-0000		1	PRESSURE FLANGE	
020	2966689-0000		1	PRESSURE FLANGE	
030	2966691-0000		1	PRESSURE FLANGE	
TBA 0160S, TBA 0200S, TPA 0250SQ, TPA 0200SQ					
010	3076856-0000		1	PRESSURE FLANGE	
020	3076858-0000		1	PRESSURE FLANGE	
030	3076859-0000		1	PRESSURE FLANGE	
TBA 0200B, TBA 0200SQ, TBA 0250B, TBA 0330S, TBA 0250SQ					
010	2966681-0000		1	PRESSURE FLANGE	
020	2966682-0000		1	PRESSURE FLANGE	
030	2966683-0000		1	PRESSURE FLANGE	
TBA 0200M, TBA 0250S					
010	3076857-0000		1	PRESSURE FLANGE	
020	3076860-0000		1	PRESSURE FLANGE	
030	3076861-0000		1	PRESSURE FLANGE	
TBA 0284B, TBA 0300S					
010	3058531-0000		1	PRESSURE FLANGE	
020	3089560-0000		1	PRESSURE FLANGE	
030	3089561-0000		1	PRESSURE FLANGE	
TBA 0375S					
010	3089594-0000		1	PRESSURE FLANGE	
020	3089595-0000		1	PRESSURE FLANGE	
030	3089596-0000		1	PRESSURE FLANGE	
TPA 0330SQ					
010	3058527-0000		1	PRESSURE FLANGE	
020	3058528-0000		1	PRESSURE FLANGE	
030	3058529-0000		1	PRESSURE FLANGE	

Pos	Part No	UN	Qty	Description	Page No

Machine Type	Group Description	Used-In	Group Number	Page No

This page is intentionally left blank.

ECM: 452704 - 20100611
Group number: 3106811-0100
Assembly Drawing:

Pos	Part No	UN	Qty	Description	Page No
PT/CF					
000	3106812-0101		1	REBUILDING MANUAL	
010	3106813-0100		1	MECHANICAL REBUILDING	**1-13, 1-15, 1-17**
020	2564076-0100		1	START-UP KIT	**1-119**
030	2984535-0100		1	OPENING SPECIFICATION	**1-121**

Pos	Part No	UN	Qty	Description	Page No

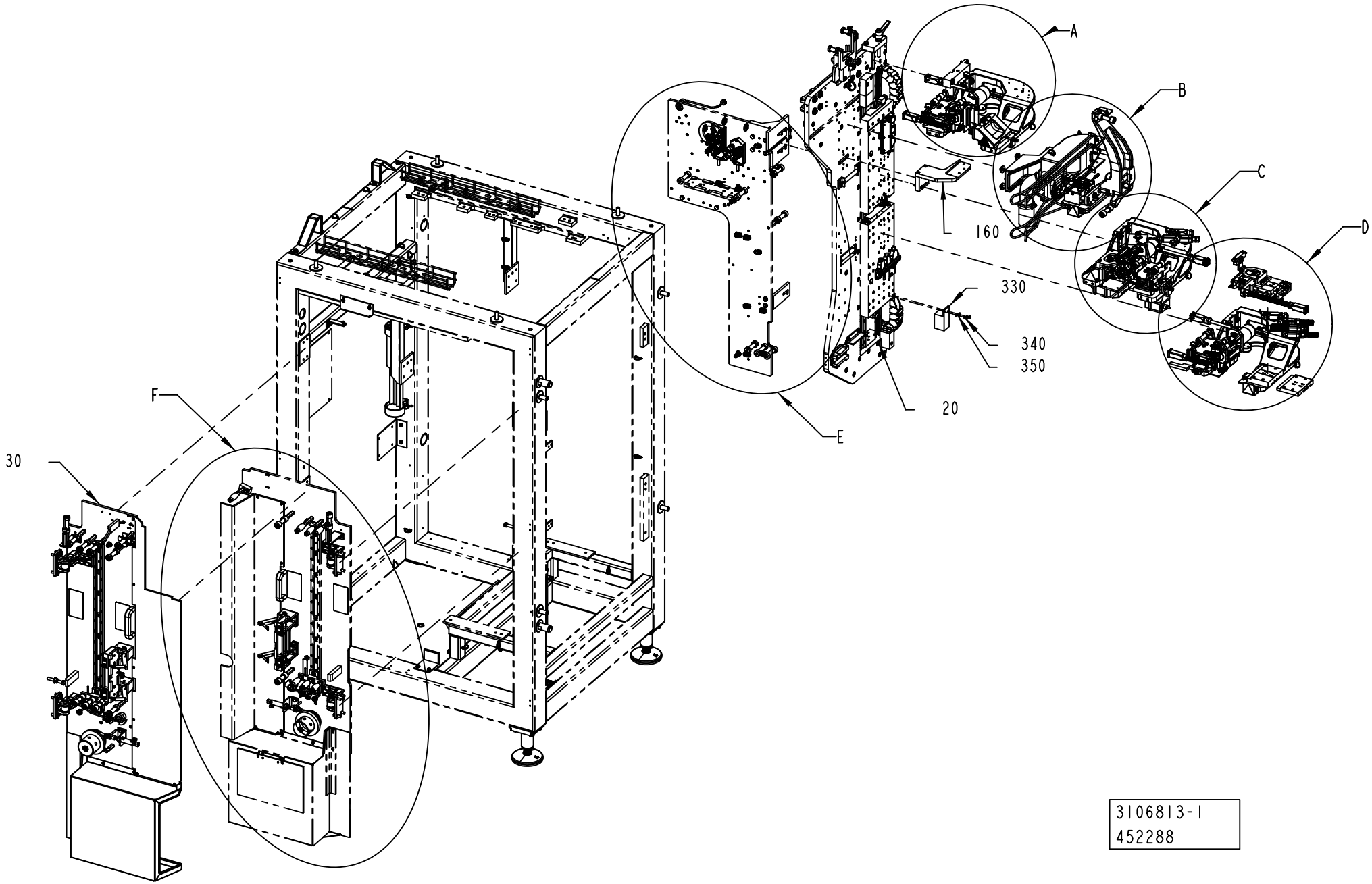
A
B
C
D
E
F
30
160
330
340
350
20
3106813-1
452288

ECM: 452334 - 20100611
Group number: 3106813-0100
Assembly Drawing: 3106813-1_1_AA

This list covers pages from 1-12 to 1-17

Pos	Part No	UN	Qty	Description	Page No
NO OUTER PATCH					
025	3106969-0100		1	PANEL	**1-19**
070	2546297-0100		1	OUTER PATCH FEEDER	**1-21**
120	2553327-0000		1	PLATE	
310	1548377-0000		1	PAPER GUIDE	
320	2525378-0000		1	PAPER GUIDE	
OUTER PATCH					
010	2963819-0200		1	OUTER PATCH APPLICATOR	**1-23**
020	3106864-0100		1	PANEL	**1-53**
030	2951583-0200		1	OUTER PATCH MAGAZINE	**1-57, 1-59, 1-61**
035	2869530-0100		1	OUTER PATCH MAGAZINE	**1-79**
110	1548368-0000		1	PLATE	
270	2693161-0100		1	INSTALLATION MATERIAL	**1-81**
300	2709603-0000		1	BOX	
320	2525378-0000		1	PAPER GUIDE	
330	2931715-0000		1	SPRING BRACKET	
340	312105-0366		2	SCREW, M6S ISO 4017 M6X12 A4 80	
350	315105-0153		2	WASHER PLAIN, 6,4X12X1,5 A4 BRB	
Common Parts					
040	2546278-0100		1	PUNCH UNIT	**1-85**
050	2564058-0100		1	TURNING DEVICE	**1-87**
080	2564059-0100		1	TAB FEEDER	**1-89**
090	2984539-0100		1	TAB FEEDER	**1-91**
100	2984541-0100		1	TAB C'JAW	**1-93**
130	2984544-0100		1	PATCH C'JAW	**1-95**
140	2511291-0100		1	PATCH FEEDER	**1-97**
150	2564060-0100		1	PATCH FEEDER	**1-99**
160	2773842-0100		1	BAR CODE READER	**1-101, 1-103**
200	2533684-0100		1	SPLICING TABLE	**1-105**
220	2533682-0100		1	BOBBIN HOLDER	**1-107**
230	2564057-0100		1	TAB MAGAZINE	**1-109**
240	2533681-0100		1	BOBBIN HOLDER	**1-111**
250	2533685-0100		1	SPLICING TABLE	**1-113**
260	2868038-0100		1	STRIP MAGAZINE	**1-115**
290	2710800-0100		1	PATCH MAGAZINE	**1-117**

Pos	Part No	UN	Qty	Description	Page No

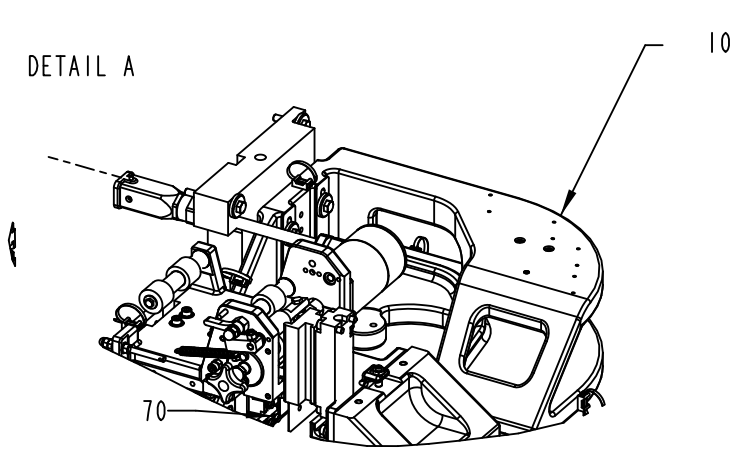
DETAIL A
10
70

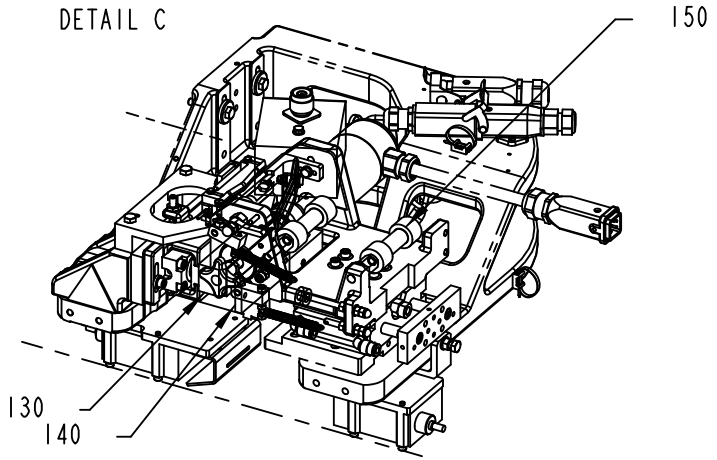
DETAIL C
150
130
140

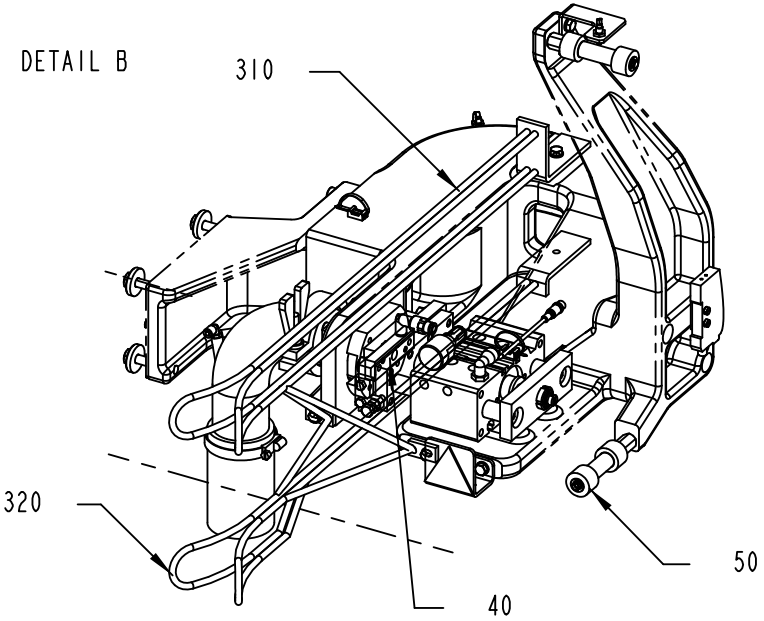
DETAIL B
310
320
40
50

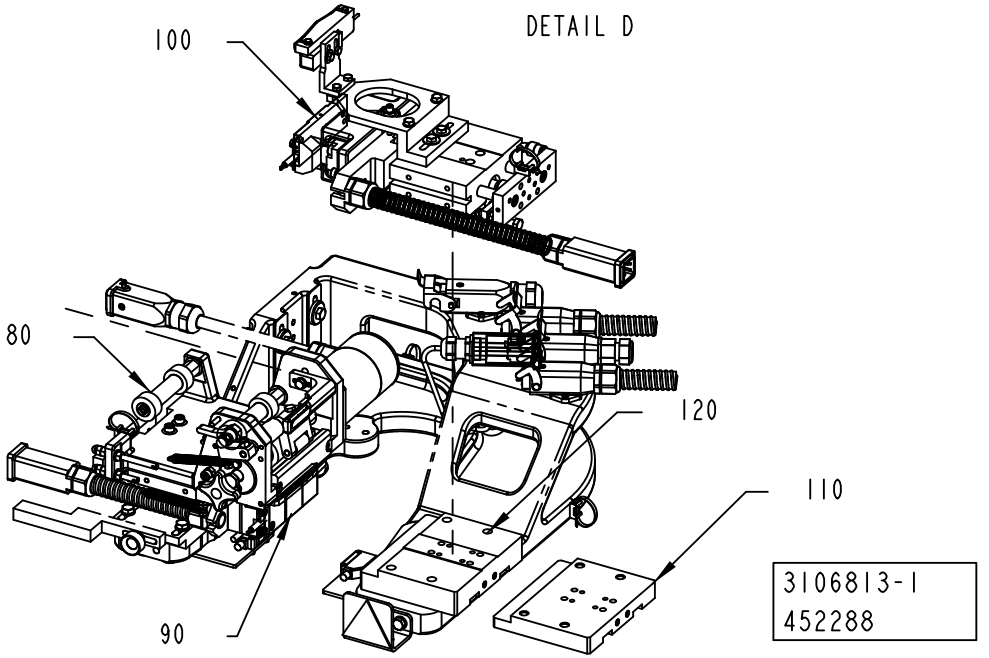
DETAIL D
100
80
120
110
90
3106813-1
452288

ECM: 452334 - 20100611
Group number: 3106813-0100
Assembly Drawing: 3106813-1_2_AA

This list covers pages from 1-12 to 1-17

Pos	Part No	UN	Qty	Description	Page No
NO OUTER PATCH					
025	3106969-0100		1	PANEL	**1-19**
070	2546297-0100		1	OUTER PATCH FEEDER	**1-21**
120	2553327-0000		1	PLATE	
310	1548377-0000		1	PAPER GUIDE	
320	2525378-0000		1	PAPER GUIDE	
OUTER PATCH					
010	2963819-0200		1	OUTER PATCH APPLICATOR	**1-23**
020	3106864-0100		1	PANEL	**1-53**
030	2951583-0200		1	OUTER PATCH MAGAZINE	**1-57, 1-59, 1-61**
035	2869530-0100		1	OUTER PATCH MAGAZINE	**1-79**
110	1548368-0000		1	PLATE	
270	2693161-0100		1	INSTALLATION MATERIAL	**1-81**
300	2709603-0000		1	BOX	
320	2525378-0000		1	PAPER GUIDE	
330	2931715-0000		1	SPRING BRACKET	
340	312105-0366		2	SCREW, M6S ISO 4017 M6X12 A4 80	
350	315105-0153		2	WASHER PLAIN, 6,4X12X1,5 A4 BRB	
Common Parts					
040	2546278-0100		1	PUNCH UNIT	**1-85**
050	2564058-0100		1	TURNING DEVICE	**1-87**
080	2564059-0100		1	TAB FEEDER	**1-89**
090	2984539-0100		1	TAB FEEDER	**1-91**
100	2984541-0100		1	TAB C'JAW	**1-93**
130	2984544-0100		1	PATCH C'JAW	**1-95**
140	2511291-0100		1	PATCH FEEDER	**1-97**
150	2564060-0100		1	PATCH FEEDER	**1-99**
160	2773842-0100		1	BAR CODE READER	**1-101, 1-103**
200	2533684-0100		1	SPLICING TABLE	**1-105**
220	2533682-0100		1	BOBBIN HOLDER	**1-107**
230	2564057-0100		1	TAB MAGAZINE	**1-109**
240	2533681-0100		1	BOBBIN HOLDER	**1-111**
250	2533685-0100		1	SPLICING TABLE	**1-113**
260	2868038-0100		1	STRIP MAGAZINE	**1-115**
290	2710800-0100		1	PATCH MAGAZINE	**1-117**

Pos	Part No	UN	Qty	Description	Page No

DETAIL F

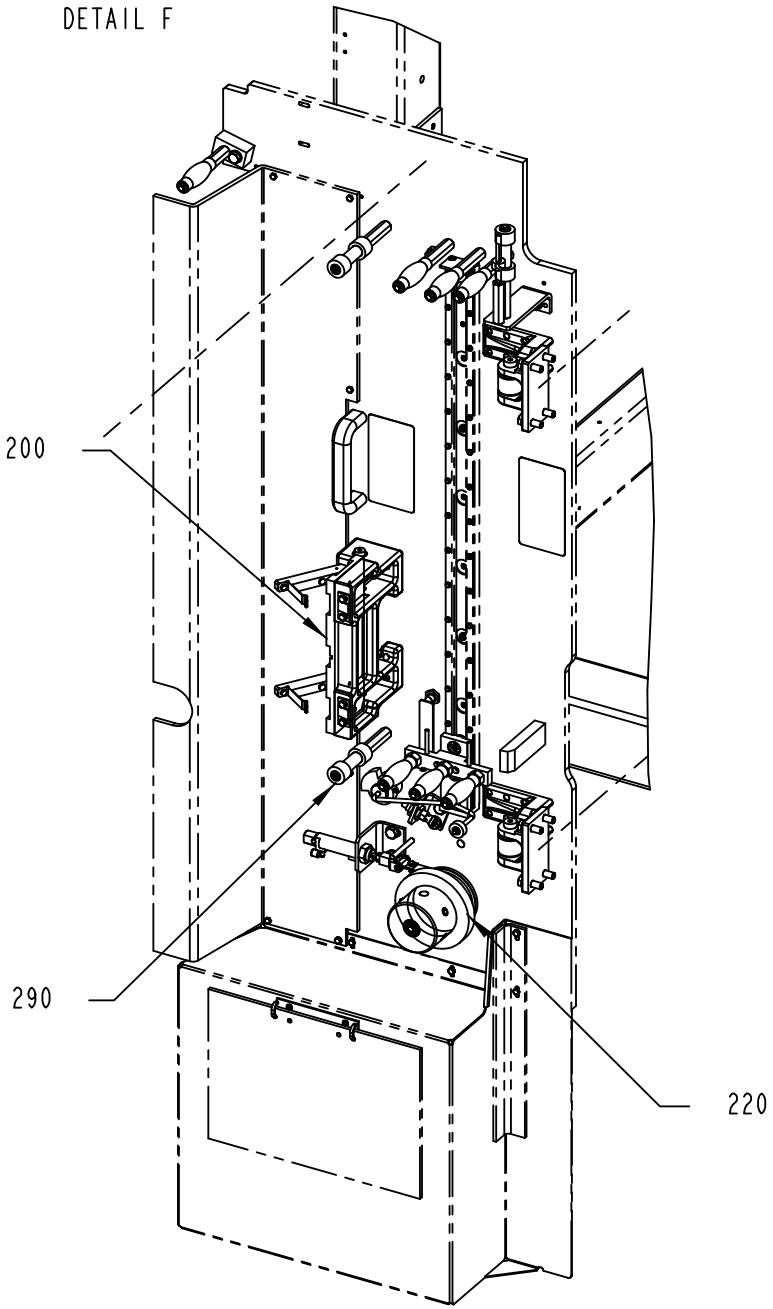

DETAIL E

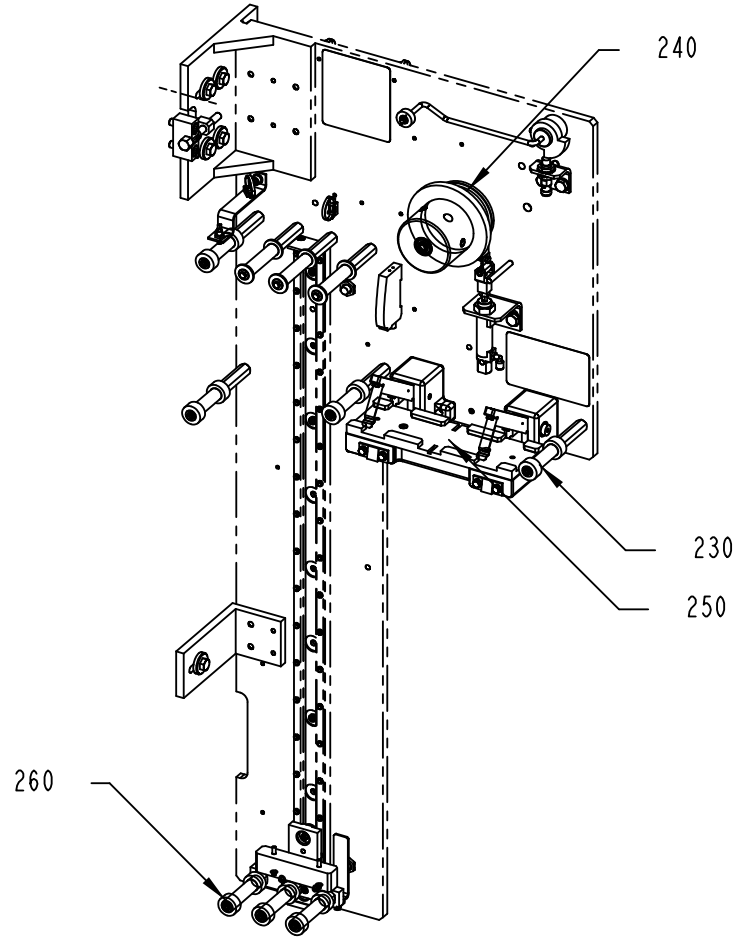

3106813-1
452288

ECM: 452334 - 20100611
Group number: 3106813-0100
Assembly Drawing: 3106813-1_3_AA

This list covers pages from 1-12 to 1-17

Pos	Part No	UN	Qty	Description	Page No
NO OUTER PATCH					
025	3106969-0100		1	PANEL	**1-19**
070	2546297-0100		1	OUTER PATCH FEEDER	**1-21**
120	2553327-0000		1	PLATE	
310	1548377-0000		1	PAPER GUIDE	
320	2525378-0000		1	PAPER GUIDE	
OUTER PATCH					
010	2963819-0200		1	OUTER PATCH APPLICATOR	**1-23**
020	3106864-0100		1	PANEL	**1-53**
030	2951583-0200		1	OUTER PATCH MAGAZINE	**1-57, 1-59, 1-61**
035	2869530-0100		1	OUTER PATCH MAGAZINE	**1-79**
110	1548368-0000		1	PLATE	
270	2693161-0100		1	INSTALLATION MATERIAL	**1-81**
300	2709603-0000		1	BOX	
320	2525378-0000		1	PAPER GUIDE	
330	2931715-0000		1	SPRING BRACKET	
340	312105-0366		2	SCREW, M6S ISO 4017 M6X12 A4 80	
350	315105-0153		2	WASHER PLAIN, 6,4X12X1,5 A4 BRB	
Common Parts					
040	2546278-0100		1	PUNCH UNIT	**1-85**
050	2564058-0100		1	TURNING DEVICE	**1-87**
080	2564059-0100		1	TAB FEEDER	**1-89**
090	2984539-0100		1	TAB FEEDER	**1-91**
100	2984541-0100		1	TAB C'JAW	**1-93**
130	2984544-0100		1	PATCH C'JAW	**1-95**
140	2511291-0100		1	PATCH FEEDER	**1-97**
150	2564060-0100		1	PATCH FEEDER	**1-99**
160	2773842-0100		1	BAR CODE READER	**1-101, 1-103**
200	2533684-0100		1	SPLICING TABLE	**1-105**
220	2533682-0100		1	BOBBIN HOLDER	**1-107**
230	2564057-0100		1	TAB MAGAZINE	**1-109**
240	2533681-0100		1	BOBBIN HOLDER	**1-111**
250	2533685-0100		1	SPLICING TABLE	**1-113**
260	2868038-0100		1	STRIP MAGAZINE	**1-115**
290	2710800-0100		1	PATCH MAGAZINE	**1-117**

Pos	Part No	UN	Qty	Description	Page No

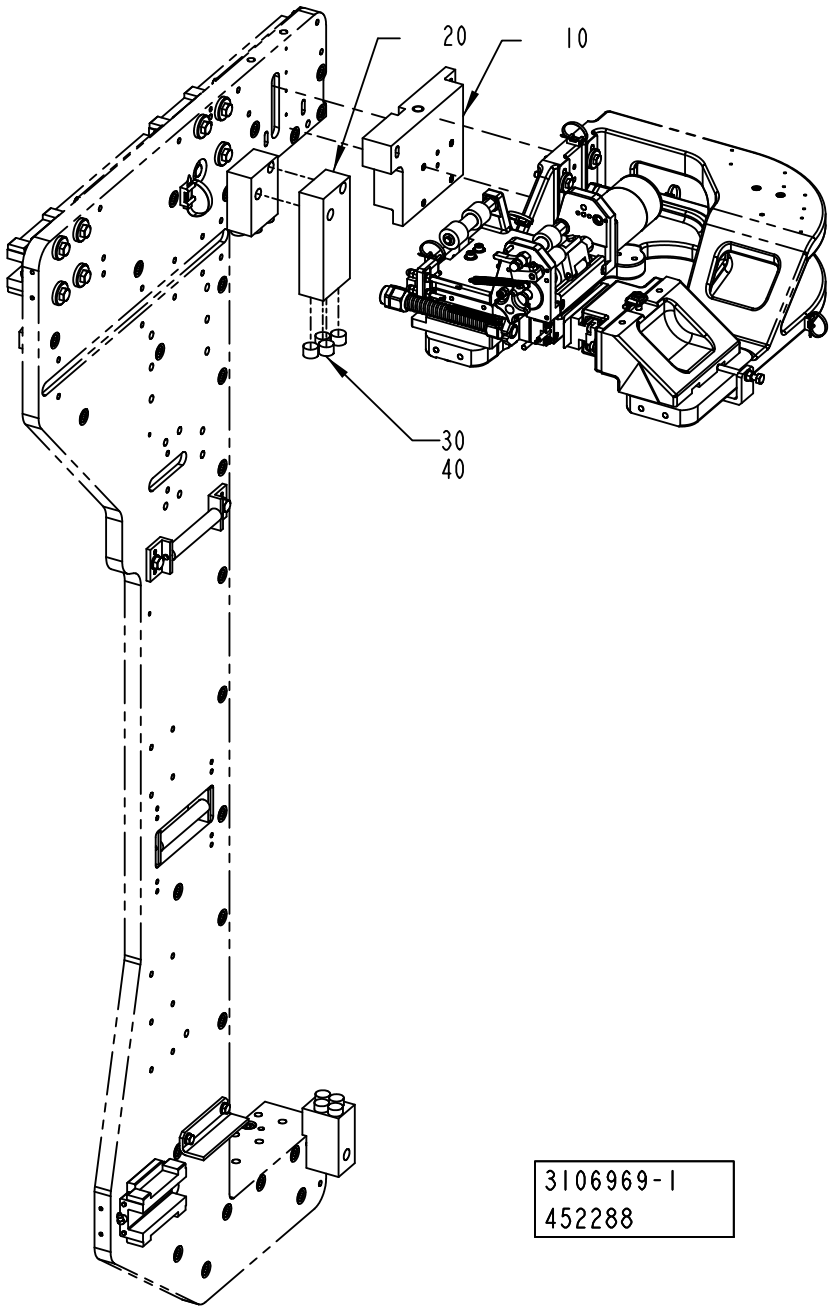
20
10
30
40
3106969-1
452288

ECM: 462862 - 20101002
Group number: 3106969-0100
Assembly Drawing: 3106969-1_1_AA

Pos	Part No	UN	Qty	Description	Page No
HOLE48					
010	2921028-0000		1	FASTENING BRACKET	
020	2837527-0000		1	SPRING BRACKET	
HOLE72					
010	2921028-0000		1	FASTENING BRACKET	
020	2837527-0000		1	SPRING BRACKET	
035	2715294-0000		1	TEMPLATE	
HOLE73					
010	2921029-0000		1	FASTENING BRACKET	
020	3017891-0000		1	SPRING BRACKET	
HOLE90, HOLE95, HOLE92					
020	2837527-0000		1	SPRING BRACKET	
Common Parts					
030	2837523-0000		4	SPRING	
040	90600-0386	L	1	LOCTITE HYSOL 9455 ADHESIVE, 250 GR	

Pos	Part No	UN	Qty	Description	Page No

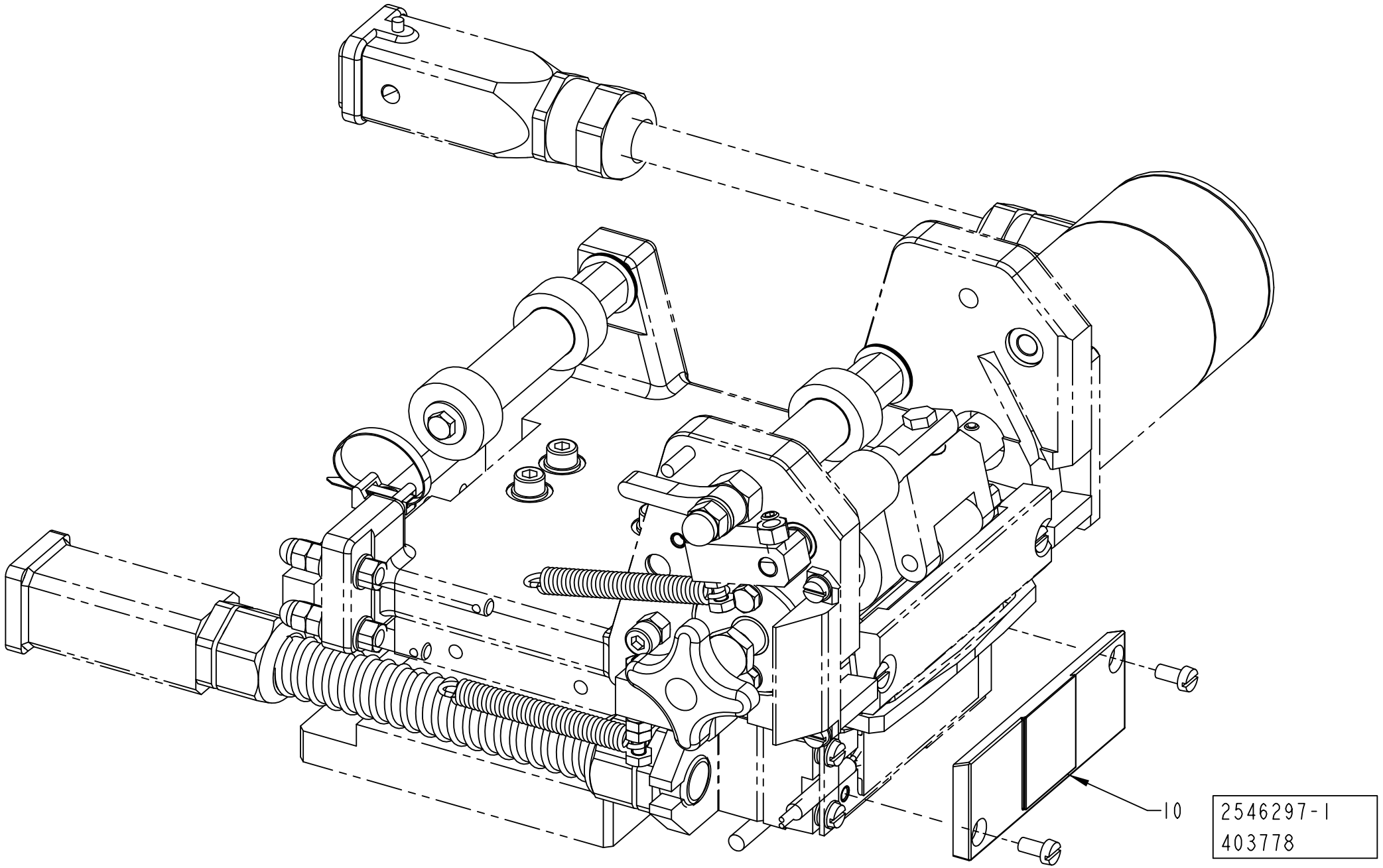
10
2546297-1
403778

ECM: 409850 - 20090915
Group number: 2546297-0100
Assembly Drawing: 2546297-1_1_AC

Pos	Part No	UN	Qty	Description	Page No
HOLE48					
010	2511643-0000		1	SEALING PLATE	
HOLE72					
010	2504616-0000		1	SEALING PLATE	
HOLE73					
010	3022744-0000		1	SEALING PLATE	

Pos	Part No	UN	Qty	Description	Page No

OUTER PATCH APPLICATOR

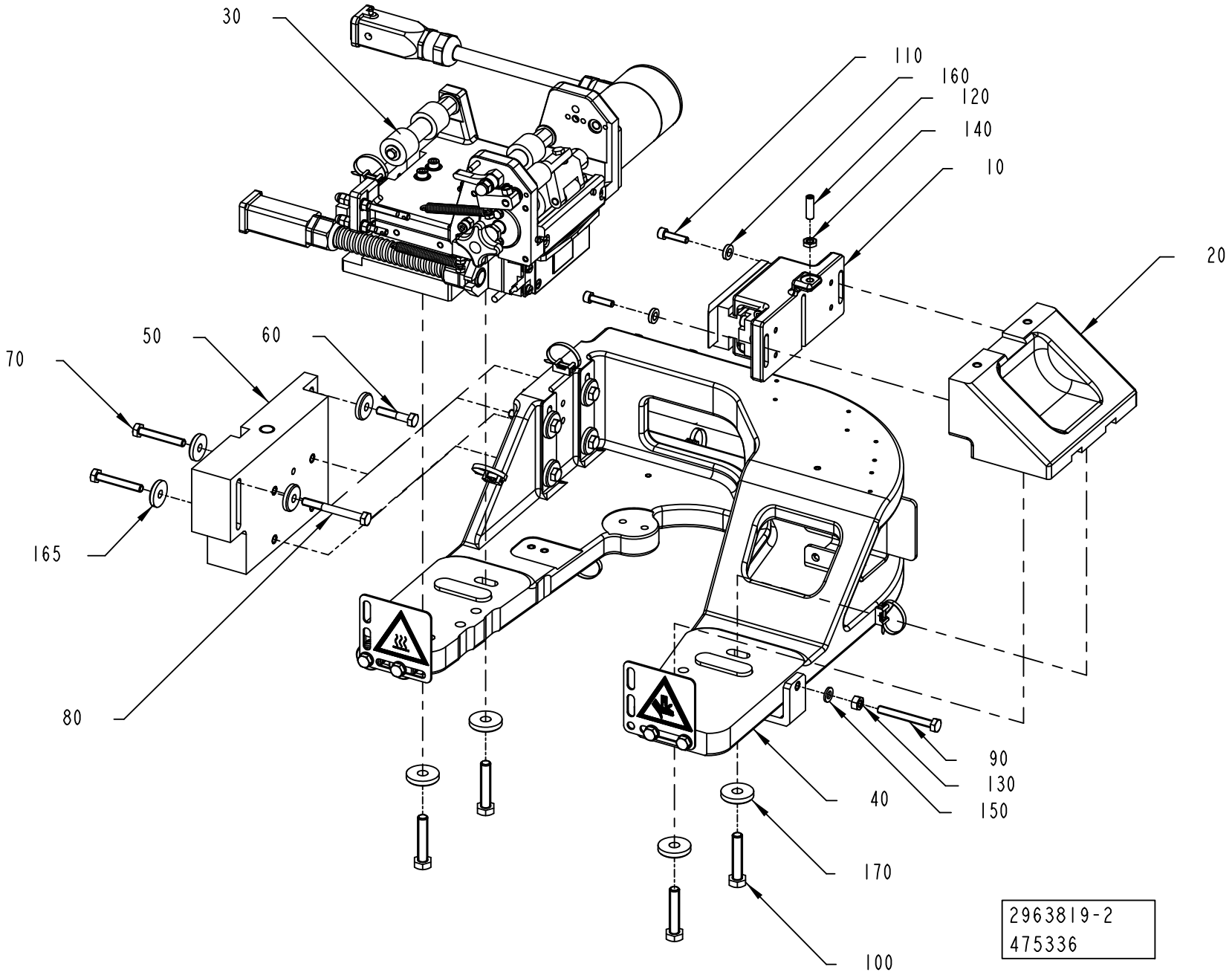

ECM: 475489 - 20110401
Group number: 2963819-0200
Assembly Drawing: 2963819-2_1_AB

Pos	Part No	UN	Qty	Description	Page No
HOLE72, HOLE48					
050	2921028-0000		1	FASTENING BRACKET	
HOLE73					
050	2921029-0000		1	FASTENING BRACKET	
Common Parts					
010	2837535-0100		1	SEALING UNIT	**1-25**
020	2546296-0100		1	OUTER PATCH C'JAW	**1-29**
030	3042196-0100		1	OUTER PATCH FEEDER	**1-31**
040	2963820-0200		1	MOUNTING BRACKET	**1-43**
060	312105-0374		1	SCREW, M6S ISO 4014 M6X30 A4 80	
070	312109-0378		2	SCREW, M6S ISO 4017 M6X40 A4 80	
080	312105-0381		1	SCREW, M6S ISO 4014 M6X55 A4 80	
090	312109-0380		1	SCREW, M6S ISO 4017 M6X50 A4 80	
100	312109-0459		4	SCREW, M6S ISO 4017 M8X40 A4 80	
110	312115-0331		2	SCREW ISO4762 M5X20 A4 80	
120	312318-0370		1	SET SCREW, CUP END ISO4029 M6X20 A4	
130	312605-0316		1	HEXAGON NUT, M6M M6 A280	
140	312625-0316		1	HEXAGON THIN NUT, EN 24035 ML6M M6 A4	
150	315105-0153		1	WASHER PLAIN, 6,4X12X1,5 A4 BRB	
160	315115-0153		2	WASHER PLAIN, TBRB 6,4/12 H=3	
165	315125-0153		4	WASHER HIGH, TBRSB 6,4X22X4 A4	
170	315125-0165		4	WASHER HIGH, TBRSB 8,4X26X5 A4	

Pos	Part No	UN	Qty	Description	Page No

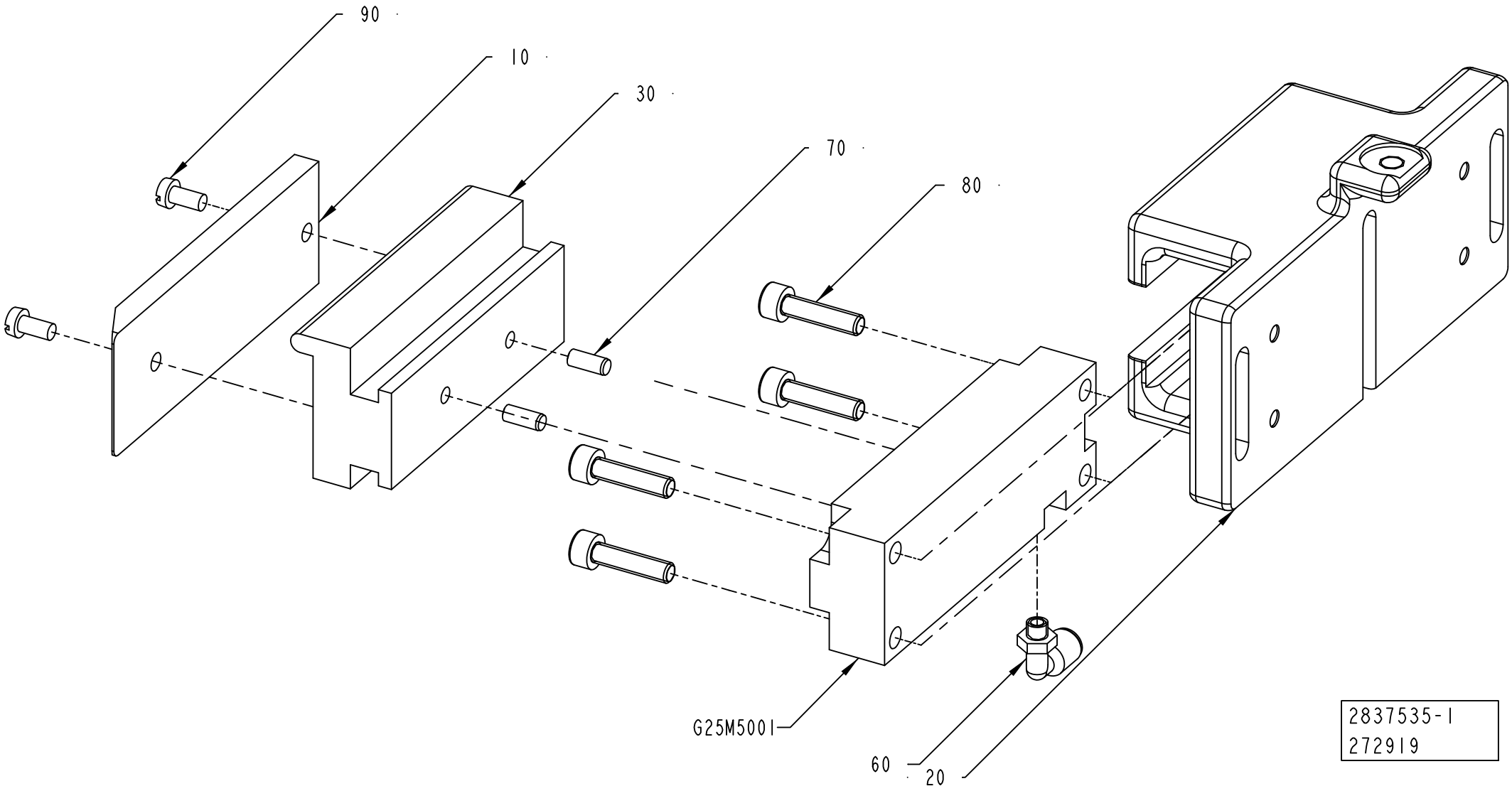
90
10
30
70
80
G25M5001
60
20
2837535-1
272919

ECM: 274091 - 20061101
Group number: 2837535-0100
Assembly Drawing: 2837535-1_1_AA

Pos	Part No	UN	Qty	Description	Page No
-					
010	2546294-0100		1	OUTER PATCH C'JAW	**1-27**
020	1498496-0000		1	GUIDE	
030	1498115-0000		1	BLOCK	
060	90458-2954		1	ELBOW PIPE JOINT, EXT.THREAD, D=4MM M5	
070	311103-0267		2	PARALLEL PIN ISO 2338 4M6X10 A1	
080	312115-0331		4	SCREW ISO4762 M5X20 A4 80	
090	312125-0287		2	SLOTTED HEAD SCREW, ISO1207 M4X8 A4	
G25M5001	90450-0380		1	SINGLE ACTING, PANCAKE EV-20/75-5	

Pos	Part No	UN	Qty	Description	Page No

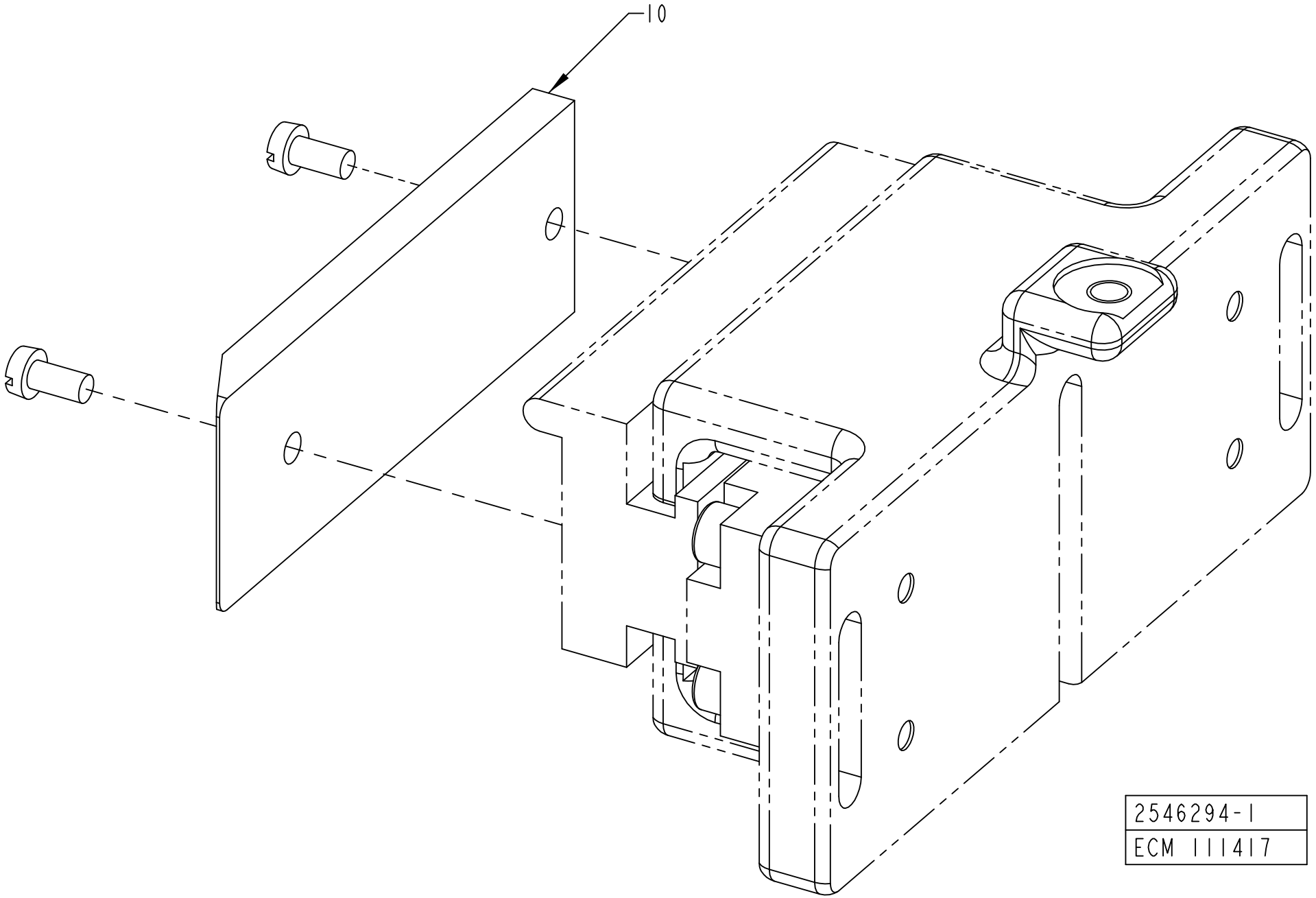
10
2546294-1
ECM 111417

ECM: 409845 - 20090915
Group number: 2546294-0100
Assembly Drawing: 2546294-1_1_AA

Pos	Part No	UN	Qty	Description	Page No	Pos	Part No	UN	Qty	Description	Page No
HOLE72, HOLE48, HOLE73											
010	2546303-0000		1	SEALING PLATE							

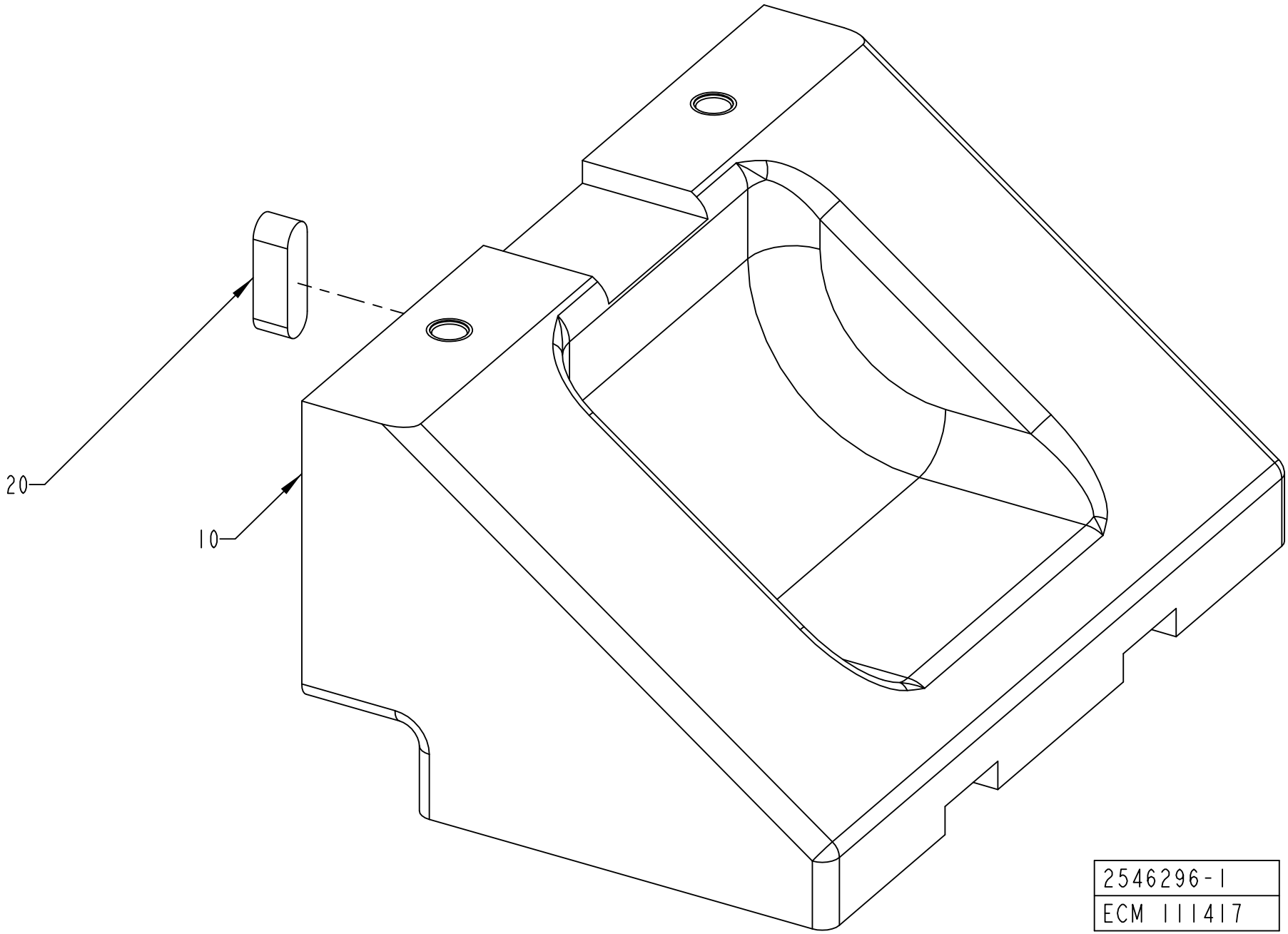
20
10
2546296-1
ECM 111417

ECM: 185957 - 20041005
Group number: 2546296-0100
Assembly Drawing: 2546296-1_1_AA

Pos	Part No	UN	Qty	Description	Page No
-					
010	1498113-0000		1	BRACKET	
020	315705-0232		1	PARALLEL KEY W. ROUND ENDS, 6X6X20 MM	

Pos	Part No	UN	Qty	Description	Page No

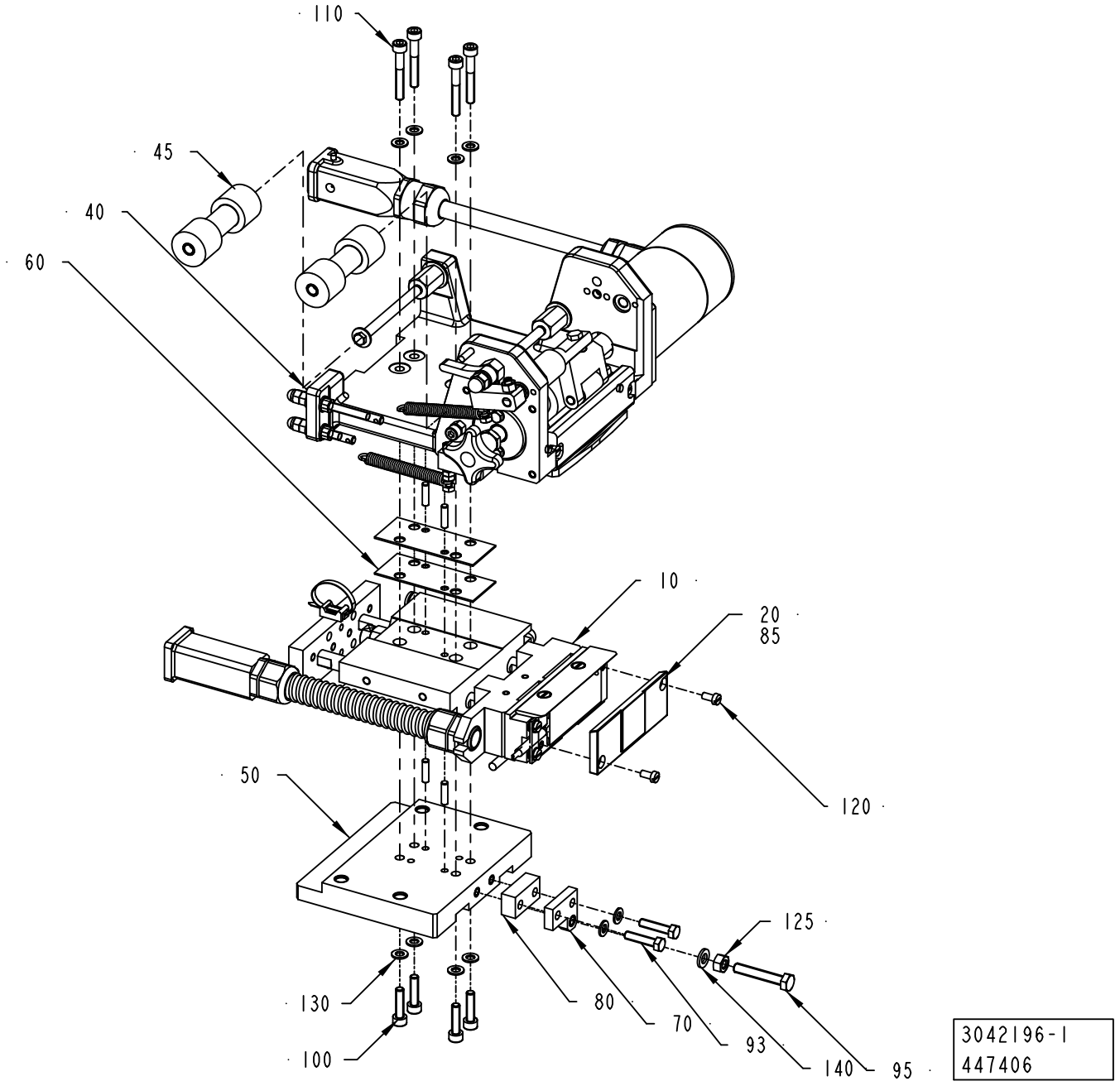
110
45
40
60
10
20
85
120
50
125
130
80
70
93
100
140
95
3042196-1
447406

ECM: 448323 - 20101001
Group number: 3042196-0100
Assembly Drawing: 3042196-1_1_AB

Pos	Part No	UN	Qty	Description	Page No
-					
010	2837538-0100		1	SEALING UNIT	**1-33**
020	2546297-0100		1	OUTER PATCH FEEDER	**1-21**
040	3042197-0100		1	OUTER PATCH FEEDER	**1-35**
045	2564061-0100		1	OUTER PATCH FEEDER	**1-41**
050	1548368-0000		1	PLATE	
060	2533680-0000		2	SHIM	
070	2511313-0000		1	BRACKET	
080	2710802-0000		1	SPACER	
085	90298-0033		1	WATLUBE HEAT LIQUID	
090	311101-0270		2	PARALLEL PIN ISO 2338 4H6X16 ST	
093	312105-0331		2	SCREW, M6S ISO 4017 M5X20 A4 80	
095	312109-0376		1	SCREW, M6S ISO 4017 M6X35 A4 80	
100	312115-0331		4	SCREW ISO4762 M5X20 A4 80	
110	312115-0337		4	SCREW ISO4762 M5X35 A4 80	
120	312125-0287		2	SLOTTED HEAD SCREW, ISO1207 M4X8 A4	
125	312605-0316		1	HEXAGON NUT, M6M M6 A280	
130	315105-0146		10	WASHER PLAIN, 5,3X10X1 A4 BRB	
140	315105-0153		1	WASHER PLAIN, 6,4X12X1,5 A4 BRB	

Pos	Part No	UN	Qty	Description	Page No

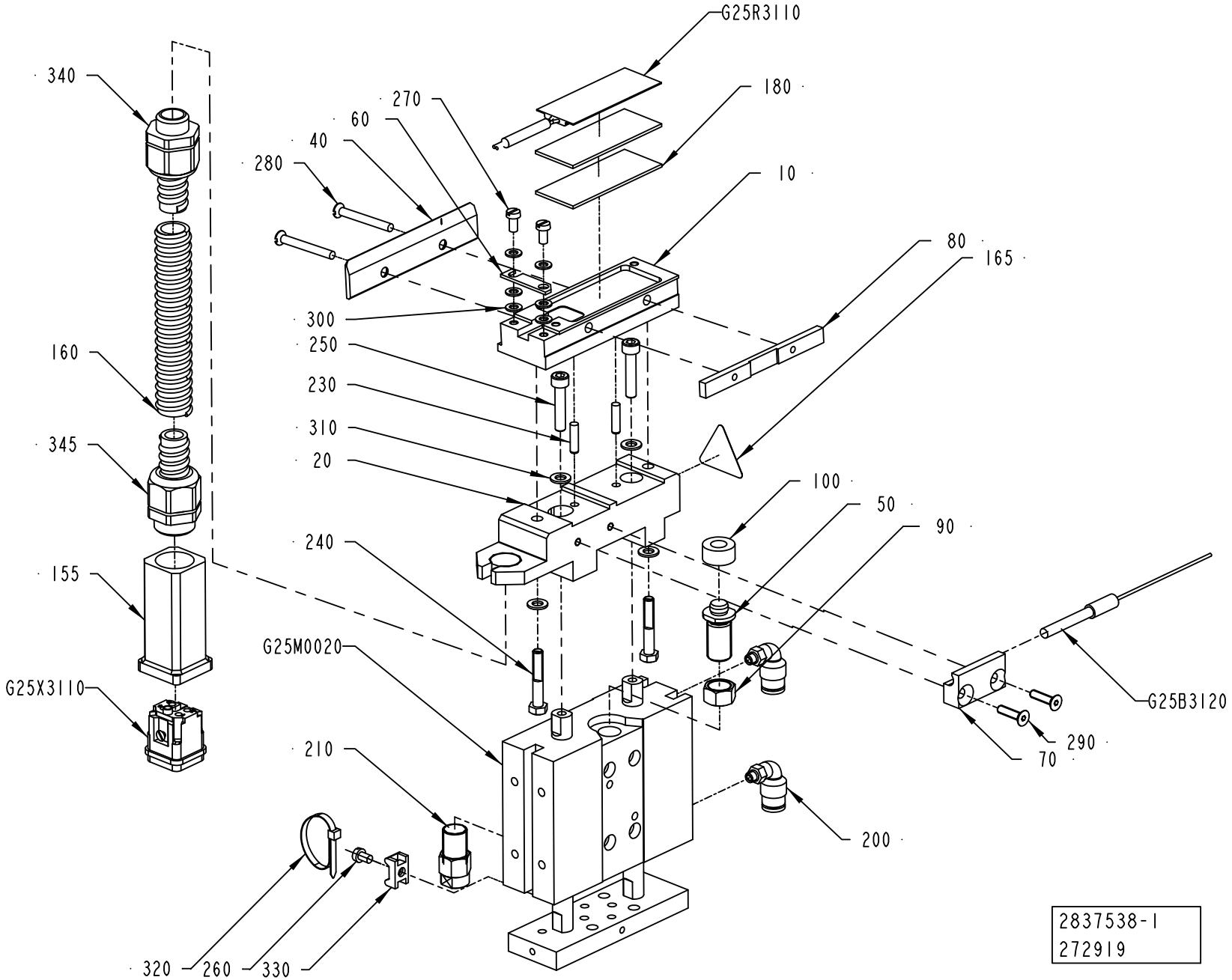
G25R3110
340
270
180
60
40
280
10
80
165
300
160
250
230
310
345
20
100
50
90
240
155
G25M0020
G25X3110
G25B3120
290
70
210
200
320
260
330
2837538-1
272919

ECM: 500572 - 20111001
Group number: 2837538-0100
Assembly Drawing: 2837538-1_1_AA

Pos	Part No	UN	Qty	Description	Page No
-					
010	1519364-0000		1	INSULATING RAIL	
020	2737447-0000		1	HOLDER	
040	1519379-0000		1	FLAT KNIFE	
050	2512836-0000		1	STOP SCREW	
060	1349916-0000		1	CLAMP	
070	1478479-0000		1	HOLDER	
080	1487264-0000		1	PLATE	
090	2525377-0000		1	NUT	
100	2526700-0000		1	SPRING	
155	90459-3670		1	HOOD, HAN3A, 19 20 003 1440	
160	90152-0059	M	1	HOSE, SPIRAL CONDUIT, 18X12, UL 1211	
165	90194-0143		1	WARNING SIGN ISO, HOT SURFACE	
180	90411-0018		2	INSULATOR, ALU-SILICATE HM 15643	
200	90458-2164		2	ELBOW PIPE JOINT, EXT.THREAD,D=6MM M5	
210	90600-5982		1	ADJ. MECH. STOP M12X1, FOR CYL. 2711	
230	311103-0270		2	PARALLEL PIN ISO 2338 4M6X16 A1	
240	312105-0335		2	SCREW, M6S ISO 4014 M5X30 A4 80	
250	312115-0333		2	SCREW ISO4762 M5X25 A4 80	
260	312125-0285		1	SLOTTED HEAD SCREW, ISO1207 M4X6 A4	
270	312125-0287		2	SLOTTED HEAD SCREW, ISO1207 M4X8 A4	
280	312145-0301		2	SCREW ISO 2009 MFS M4X35 A4	
290	312155-0293		2	SCREW DIN 7991 MF6S M4X16 A4 70	
300	315105-0136		6	WASHER PLAIN, 4,3X9X0,8 A4 BRB	
310	315105-0146		4	WASHER PLAIN, 5,3X10X1 A4 BRB	
320	352113-0101		1	CABLE TIE, BLACK 92X2,5 MM	
330	352113-0205		1	ANCHOR PLATES FOR STRIPS, TM2S8-C100	
340	90458-0427		1	GLAND FITTING, VK 21652YUL11	
345	90458-0428		1	GLAND FITTING, VK 22052YUL11	
G25B3120	90326-0060		1	THERMOCOUPLE, 5110060-000 CR-AL	
G25M0020	90600-1844		1	CYLINDER WITH INT. GUIDING BORE 25	
G25R3110	90600-2602		1	THERMOFOIL HEATER, HM15643	
G25X3110	90459-6821		1	MALE INSERT HAN 4A, 0920 0042 611	

Pos	Part No	UN	Qty	Description	Page No

OUTER PATCH FEEDER

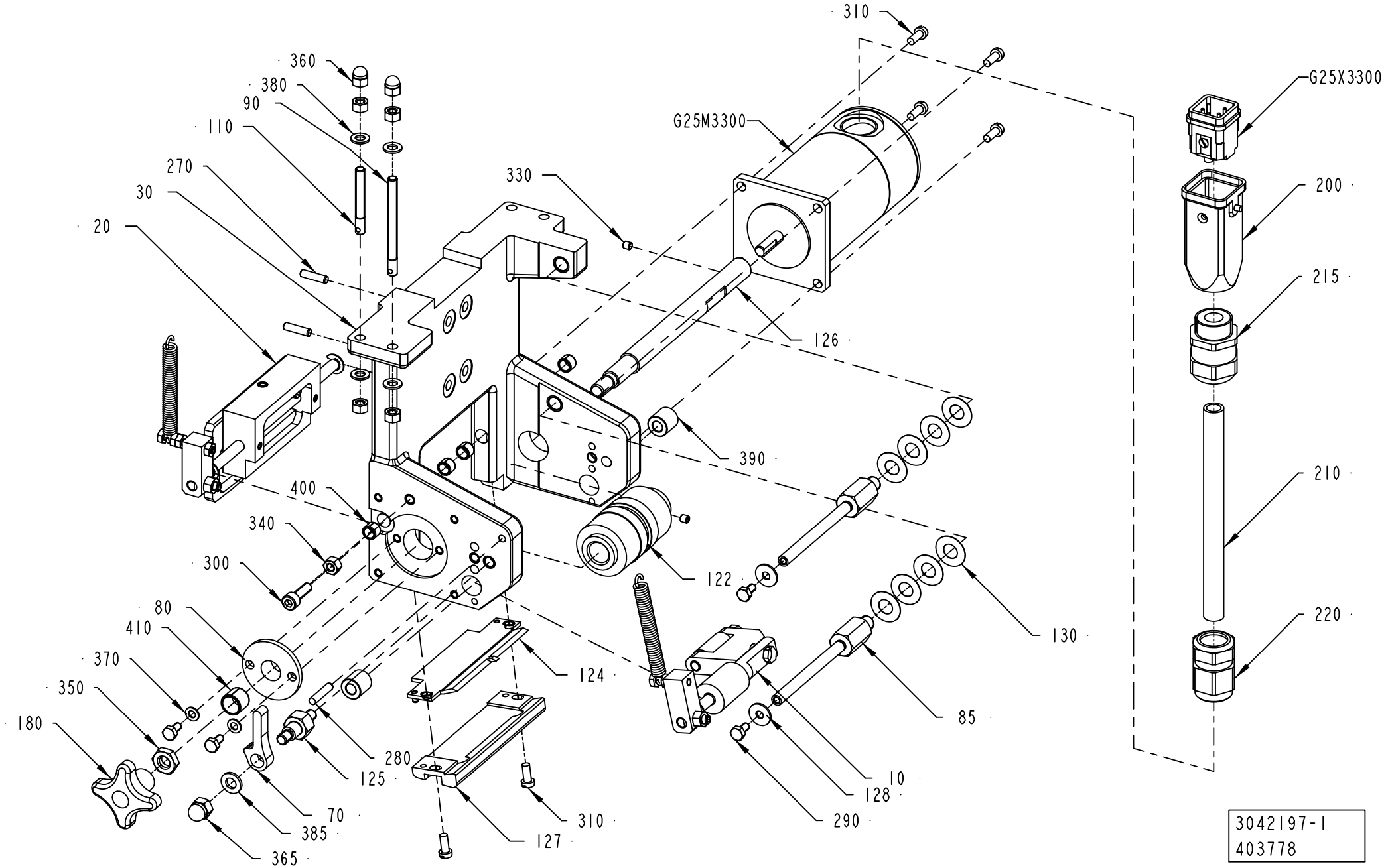

ECM: 451046 - 20101001
Group number: 3042197-0100
Assembly Drawing: 3042197-1_1_AA

Pos	Part No	UN	Qty	Description	Page No
-					
010	1558230-0100		1	COUNTER ROLLER	**1-37**
020	1558231-0100		1	KNIFE	**1-39**
030	2746416-0000		1	BRACKET	
070	1498704-0000		1	LEVER	
080	1140548-0000		1	FLANGED BEARING BUSHING	
085	1519544-0000		2	SHAFT	
090	1519996-0000		1	SHAFT	
110	1538231-0000		1	SHAFT	
122	2887701-0000		1	ROLLER	
124	2887897-0000		1	GUIDE	
125	2587325-0000		1	SHAFT	
126	2564064-0000		1	SHAFT	
127	2887775-0000		1	STRIP GUIDE	
128	2033-0005		2	WASHER	
130	2033-0008		8	WASHER	
180	90051-0007		1	STELLAR KNOB, INT. THREAD, NO. 40	
200	90459-7222		1	HOOD, TOP ENTRY, 3A, 19 20 003 0420	
210	351422-0004	M	0.5	CABLE Ã–LFLEX 150CY QUATTRO 5X0,75	
215	90458-0307		1	CABLE GLAND, M20X1,5, 5311 1020	
220	90458-0438		1	GLAND, EXTENDED WITH INSERT, M20X1,5	
270	311101-0270		2	PARALLEL PIN ISO 2338 4H6X16 ST	
280	311101-0272		1	PARALLEL PIN ISO 2338 4H6X20 ST	
290	312105-0287		4	SCREW, M6S ISO 4017 M4X8 A4 70	
300	312115-0329		1	SCREW ISO4762 M5X16 A4 80	
310	312125-0289		6	SCREW ISO 1207 M4X10 A4	
330	312318-0283		2	SET SCREW, CUP END ISO4029 M4X4 A4	
340	312605-0314		5	HEXAGON NUT, M6M M5 A280	
350	312621-0318		1	ROD END,NUT M8	
360	312705-0314		2	NUT HEX. DOMED CAP MHM-6 M5 A280	
365	312705-0316		1	HEX. DOMED CAP MHM-6 M6 A280	
370	315105-0136		2	WASHER PLAIN, 4,3X9X0,8 A4 BRB	
380	315105-0146		4	WASHER PLAIN, 5,3X10X1 A4 BRB	
385	315105-0153		1	WASHER PLAIN, 6,4X12X1,5 A4 BRB	
390	321105-0127		2	BUSHING W/O FLANGE, 6/12X12 MM	
400	321141-0060		4	BEARING BUSHING, 6X8X6 MM	
410	321141-0140		1	BEARING BUSHING, 10X12X10 MM	
G25M3300	90458-0523		1	STEP MOTOR, SM 56.2.18J3 Z(202)	
G25X3300	90459-6821		1	MALE INSERT HAN 4A, 0920 0042 611	

Pos	Part No	UN	Qty	Description	Page No

Machine Type | Group Description | Used-In | Group Number | Page No

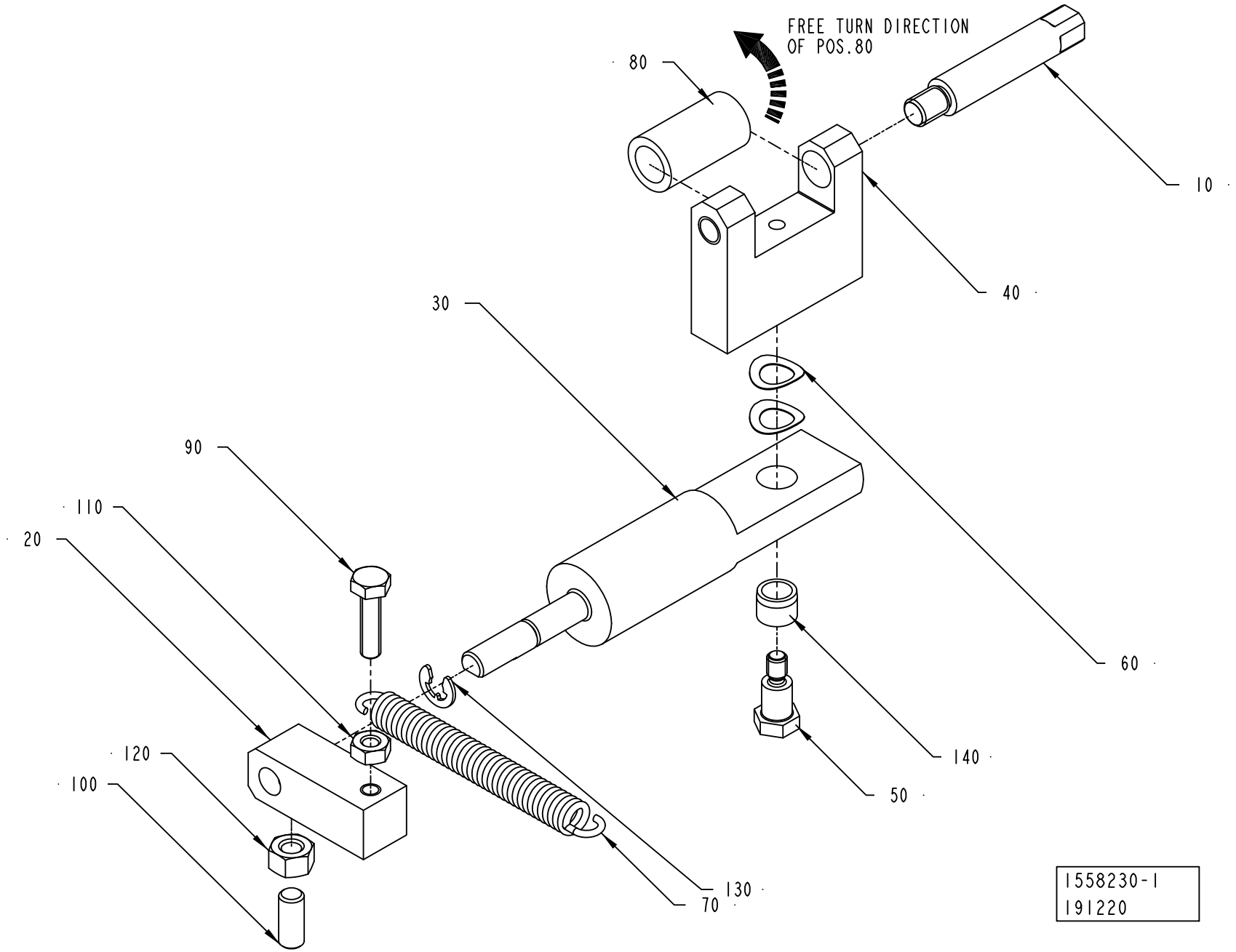
FREE TURN DIRECTION
OF POS.80
80
10
40
30
90
110
20
60
140
50
120
100
130
70
1558230-1
191220

ECM: 337482 - 20080402
Group number: 1558230-0100
Assembly Drawing: 1558230-1_1_AC

Pos	Part No	UN	Qty	Description	Page No
-					
010	905413-0000		1	SHAFT	
020	1519543-0000		1	HOLDER	
030	1523168-0000		1	SHAFT	
040	1523169-0000		1	BRACKET	
050	905415-0000		1	SHAFT	
060	90600-2603		2	SPRING WASHER, CURVED 6,83X10,74X0,17 MM	
070	90600-2604		1	TENSION SPRING, EO300-055-2500-S	
080	90348-0031		1	FREE-WHEEL COUPLING, 8X12 MM	
090	312105-0293		1	SCREW, M6S ISO 4017 M4X16 A4 70	
100	312318-0327		1	SET SCREW, CUP END ISO4029 M5X12 A4	
110	312605-0312		1	HEXAGON NUT, M6M M4 A280	
120	312605-0314		1	HEXAGON NUT, M6M M5 A280	
130	315755-0106		1	RETAINING RING SHAFT DIN 6799 4 SS	
140	321141-0060		1	BEARING BUSHING, 6X8X6 MM	

Pos	Part No	UN	Qty	Description	Page No

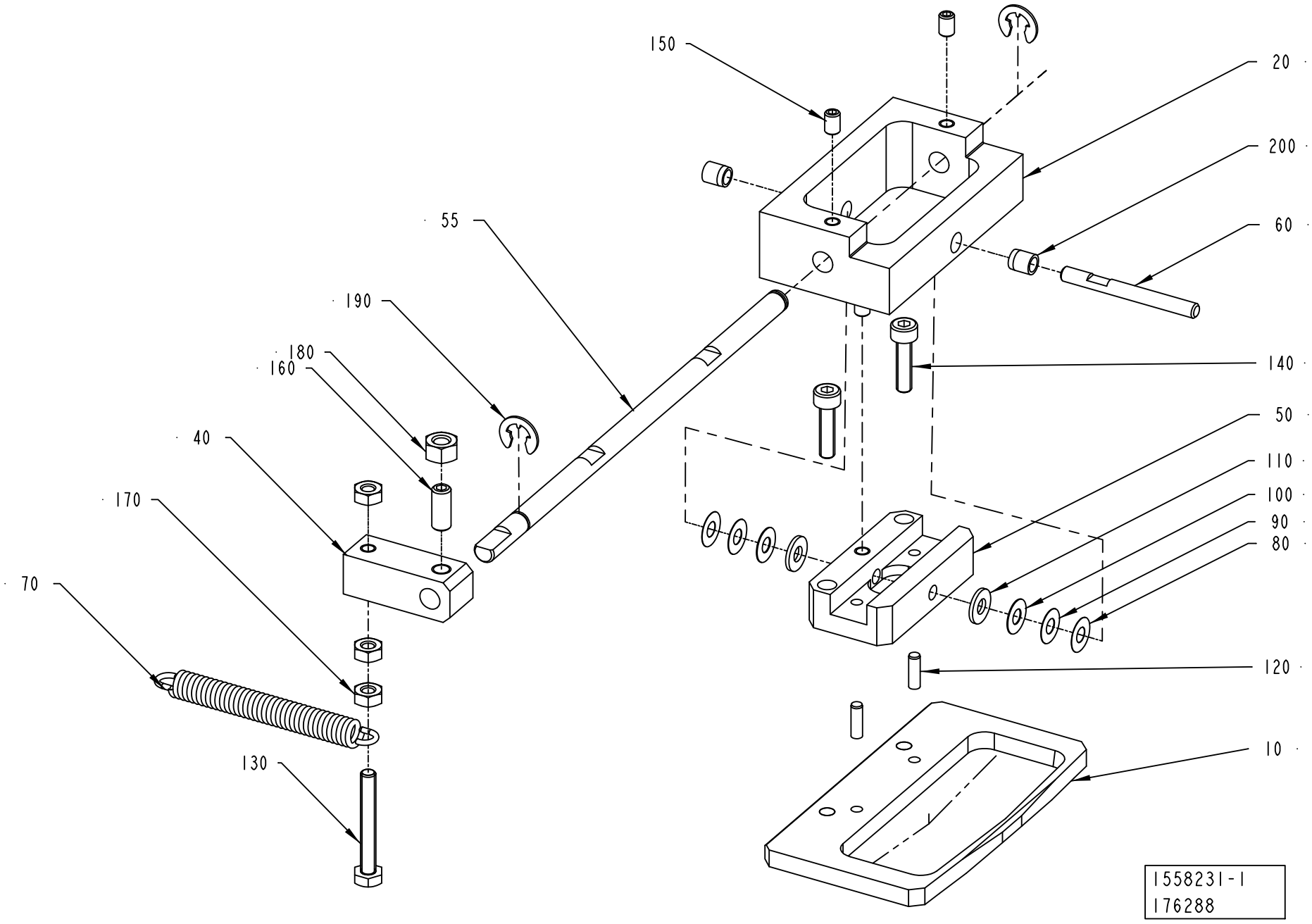
150
20
200
60
55
190
180
160
140
40
50
110
170
100
90
80
70
120
130
10
1558231-1
176288

ECM: 335703 - 20080401
Group number: 1558231-0100
Assembly Drawing: 1558231-1_1_AC

Pos	Part No	UN	Qty	Description	Page No
-					
010	2500097-0000		1	KNIFE SUPPORT	
020	1519365-0000		1	PIVOT PLATE	
040	1519543-0000		1	HOLDER	
050	1523159-0000		1	PIVOT PLATE	
055	2564066-0000		1	SHAFT	
060	1523160-0000		1	PIN	
070	90600-2604		1	TENSION SPRING, EO300-055-2500-S	
080	1350785-0001		1	SHIM	
090	1350785-0002		1	SHIM	
100	1350785-0003		1	SHIM	
110	1350785-0004		1	SHIM	
120	311103-0233		2	PARALLEL PIN ISO 2338 3M6X10 A1	
130	312105-0299		1	SCREW, M6S ISO 4017 M4X30 A4 70	
140	312115-0293		2	SCREW ISO4762 M4X16 A4 80	
150	312318-0285		3	SET SCREW, CUP END ISO4029 M4X6 A4	
160	312318-0327		1	SET SCREW, CUP END ISO4029 M5X12 A4	
170	312605-0312		3	HEXAGON NUT, M6M M4 A280	
180	312605-0314		1	HEXAGON NUT, M6M M5 A280	
190	315755-0107		2	RETAINING RING SHAFT DIN 6799 5 SS	
200	321141-0040		2	BEARING BUSHING, 4X5,5X6 MM	

Pos	Part No	UN	Qty	Description	Page No

OUTER PATCH FEEDER

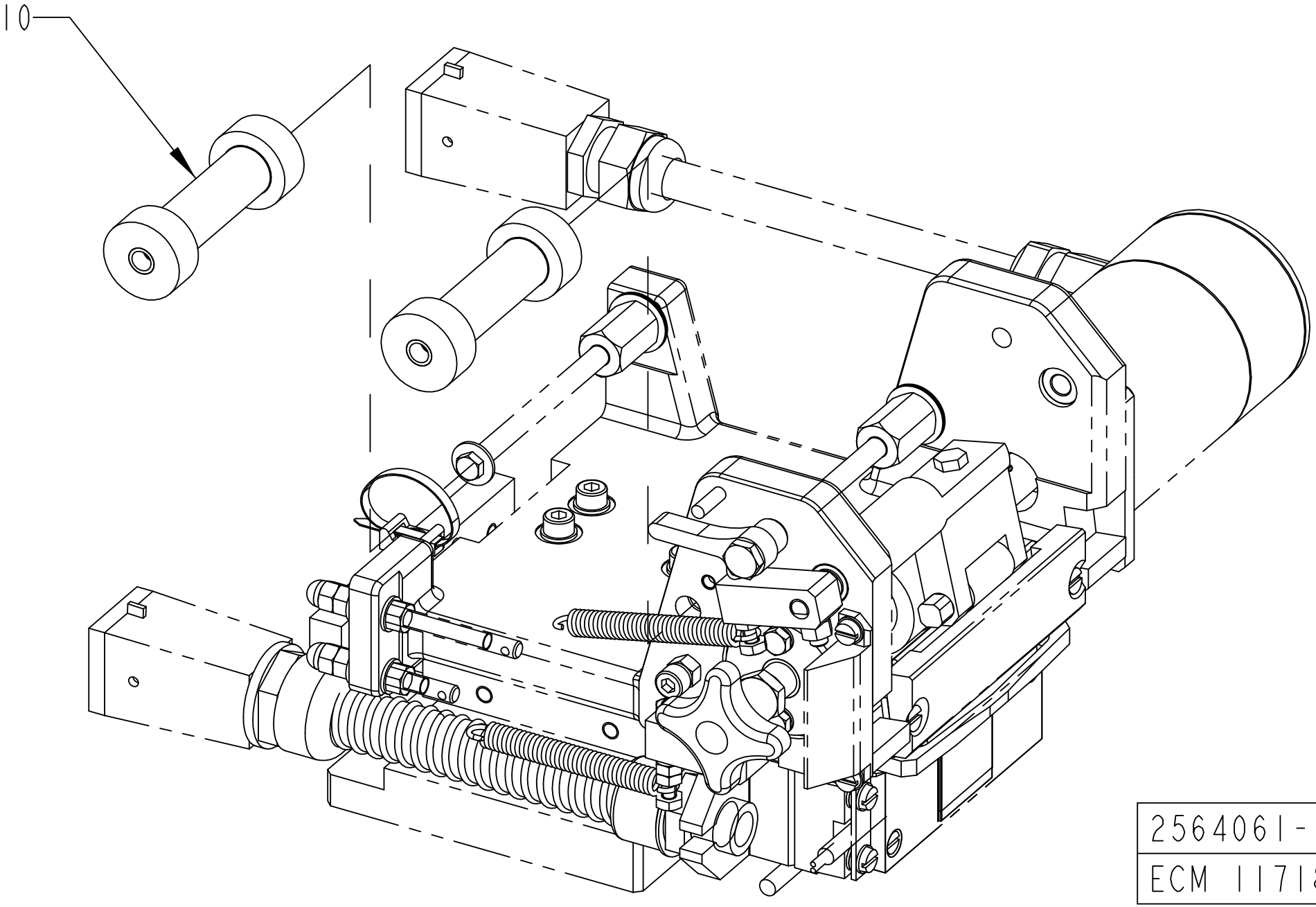

2564061-1
ECM 117180

ECM: 409846 - 20090915
Group number: 2564061-0100
Assembly Drawing: 2564061-1_1_AA

Pos	Part No	UN	Qty	Description	Page No
HOLE72, HOLE48, HOLE73					
010	2564044-0004		2	ROLLER	

Pos	Part No	UN	Qty	Description	Page No

MOUNTING BRACKET

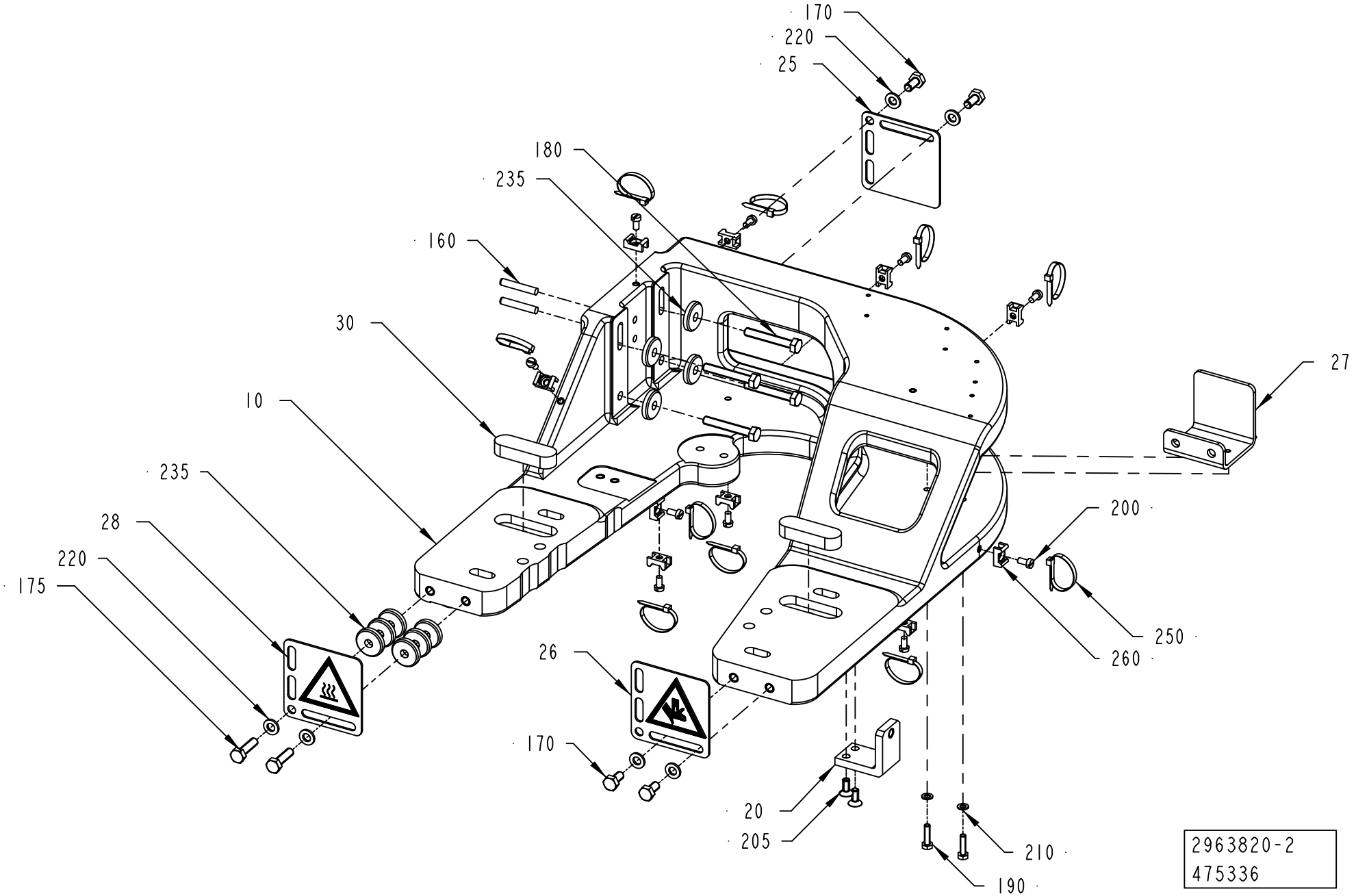

ECM: 475484 - 20110401
Group number: 2963820-0200
Assembly Drawing: 2963820-2_1_AC

Pos	Part No	UN	Qty	Description	Page No
-					
010	2660825-0000		1	BRACKET	
020	2511314-0000		1	BRACKET	
025	3139352-0100		1	LABEL	**1-45**
026	3139392-0100		1	LABEL	**1-47**
027	3139285-0100		1	LABEL	**1-49**
028	3144283-0100		1	LABEL	**1-51**
030	3038087-0000		2	KEY	
160	311103-0314		2	PARALLEL PIN ISO 2338 5M6X30 A1	
170	312105-0366		4	SCREW, M6S ISO 4017 M6X12 A4 80	
175	312105-0372		2	SCREW, M6S ISO 4017 M6X25 A4 80	
180	312109-0378		4	SCREW, M6S ISO 4017 M6X40 A4 80	
190	312105-0293		2	SCREW, M6S ISO 4017 M4X16 A4 70	
200	312125-0287		11	SLOTTED HEAD SCREW, ISO1207 M4X8 A4	
205	312155-0327		2	SCREW DIN 7991 MF6S M5X12 A4 70	
210	315105-0136		2	WASHER PLAIN, 4,3X9X0,8 A4 BRB	
220	315105-0153		6	WASHER PLAIN, 6,4X12X1,5 A4 BRB	
235	315125-0153		10	WASHER HIGH, TBRSB 6,4X22X4 A4	
250	352113-0101		11	CABLE TIE, BLACK 92X2,5 MM	
260	352113-0205		11	ANCHOR PLATES FOR STRIPS, TM2S8-C100	

Pos	Part No	UN	Qty	Description	Page No

ISO VERSION

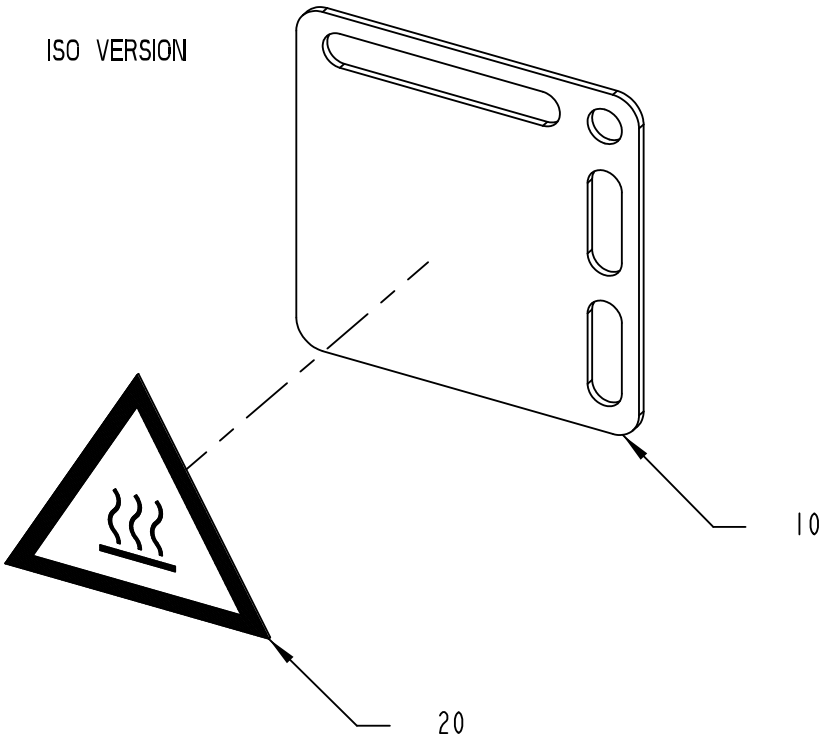

ANSI VERSION

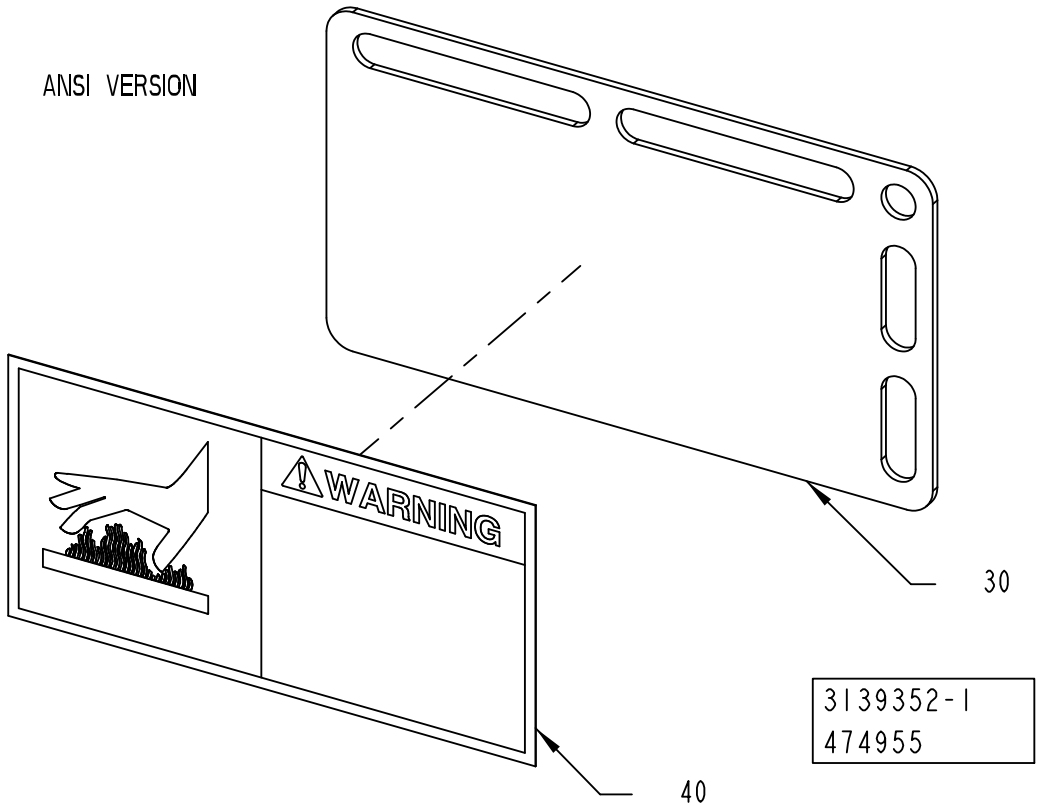

3139352-1
474955

ECM: 477381 - 20110401
Group number: 3139352-0100
Assembly Drawing: 3139352-1_1_AA

Pos	Part No	UN	Qty	Description	Page No
ANSI					
030	2790193-0000		1	PLATE	
040	90459-7458		1	WARNING SIGN ANSI (H), HOT SURFACE	
ISO					
010	3139351-0000		1	PLATE	
020	359705-0007		1	WARNING SIGN ISO, HOT SURFACE	

Pos	Part No	UN	Qty	Description	Page No

ISO VERSION

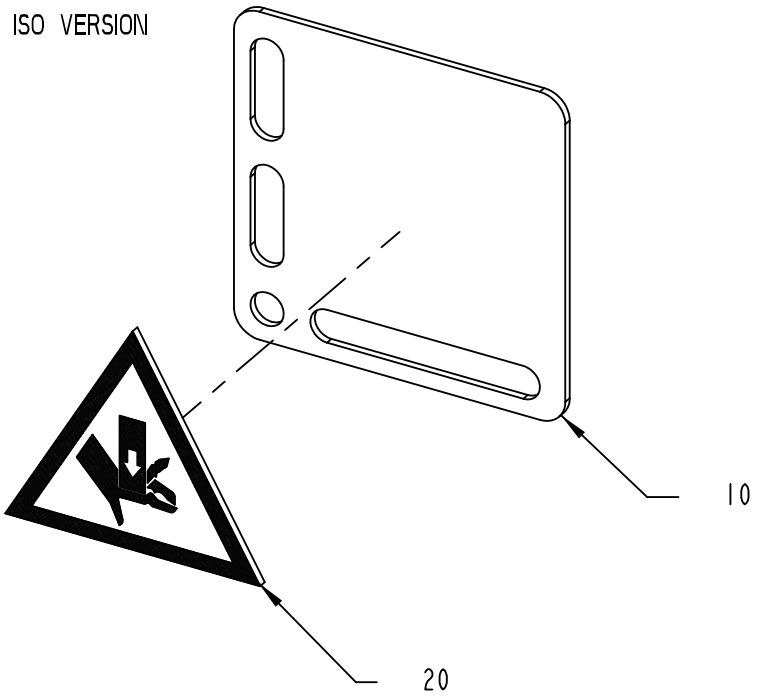

ANSI VERSION

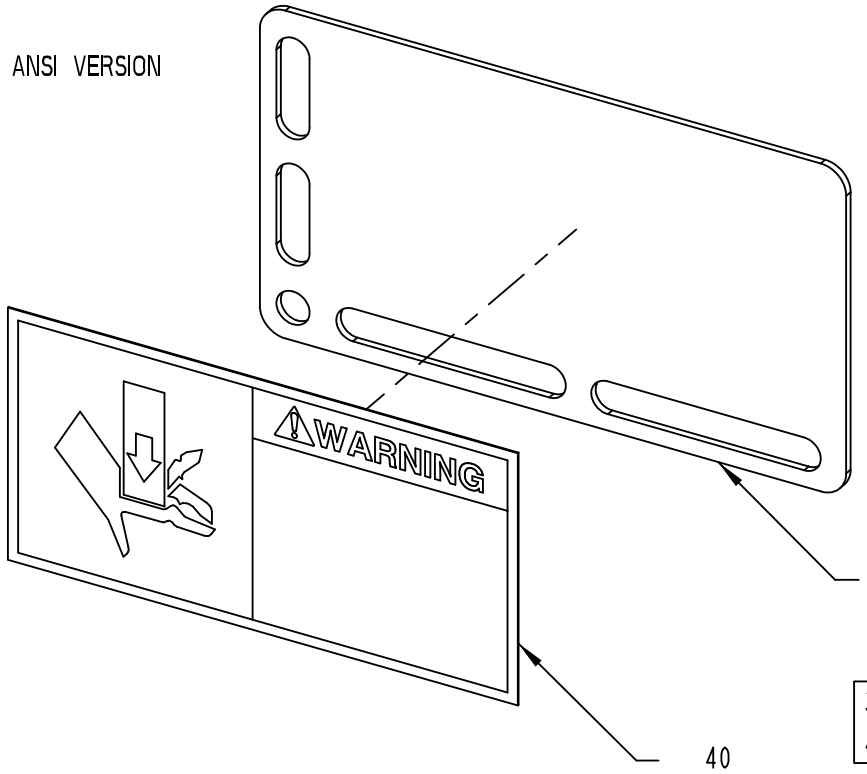

3139392-1
474955

ECM: 477583 - 20110401
Group number: 3139392-0100
Assembly Drawing: 3139392-1_1_AA

Pos	Part No	UN	Qty	Description	Page No
ANSI					
030	2790193-0000		1	PLATE	
040	359725-0108		1	WARNING SIGN ANSI (H), MOVING PART	
ISO					
010	3139351-0000		1	PLATE	
020	359705-0005		1	WARNING SIGN ISO, MOVING PART	

Pos	Part No	UN	Qty	Description	Page No

ISO VERSION

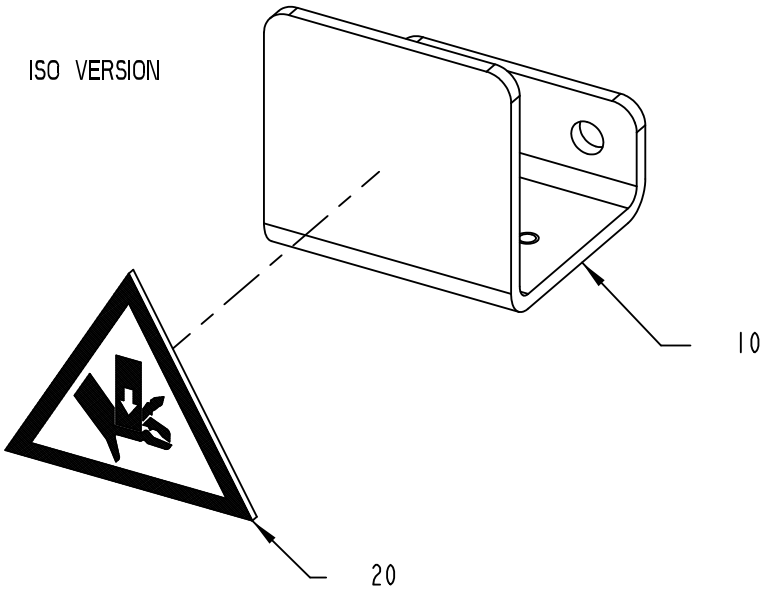

ANSI VERSION

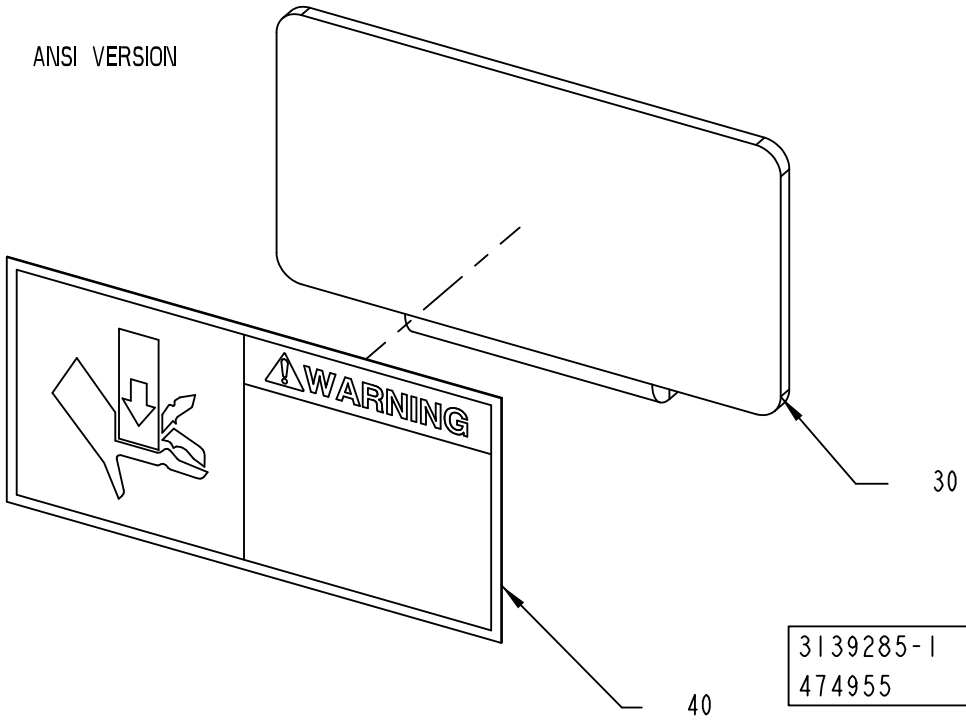

3139285-1
474955

ECM: 477331 - 20110401
Group number: 3139285-0100
Assembly Drawing: 3139285-1_1_AA

Pos	Part No	UN	Qty	Description	Page No
ANSI					
030	3134331-0000		1	BRACKET	
040	359725-0108		1	WARNING SIGN ANSI (H), MOVING PART	
ISO					
010	3035991-0000		1	BRACKET	
020	359705-0005		1	WARNING SIGN ISO, MOVING PART	

Pos	Part No	UN	Qty	Description	Page No

ISO VERSION

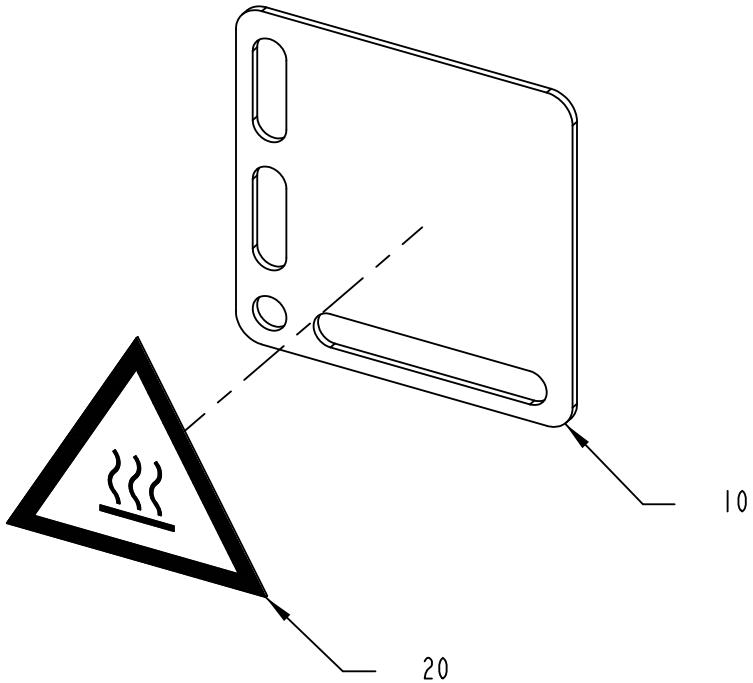

ANSI VERSION

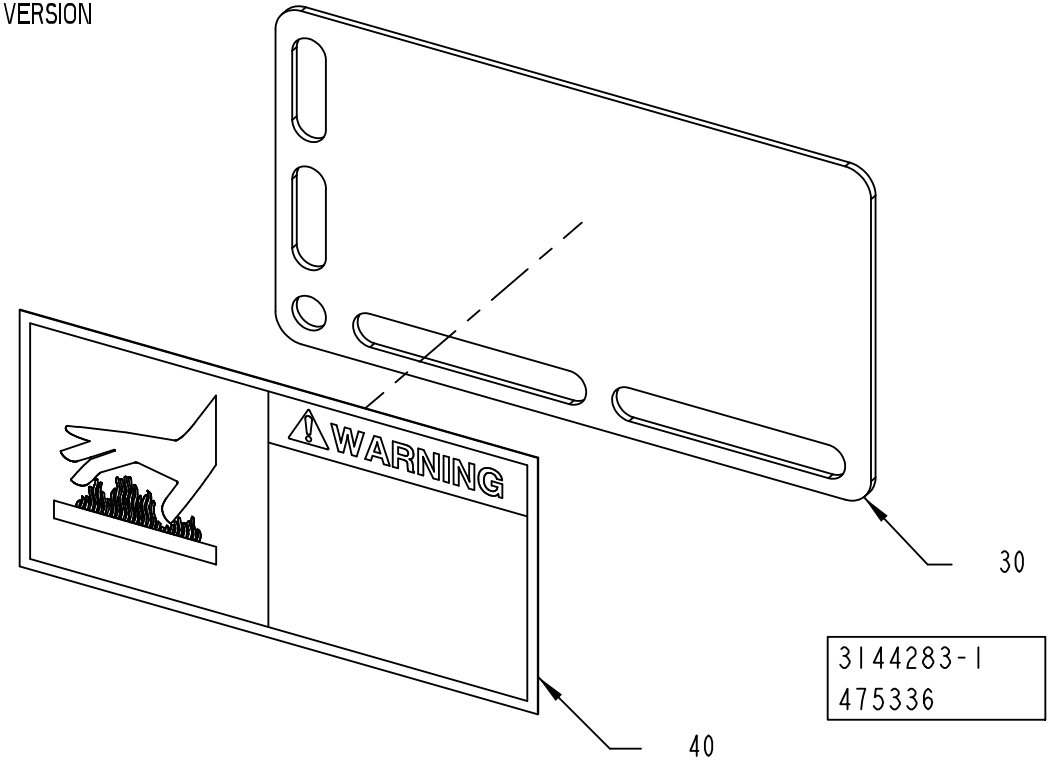

3144283-1
475336

ECM: 480873 - 20110401
Group number: 3144283-0100
Assembly Drawing: 3144283-1_1_AA

Pos	Part No	UN	Qty	Description	Page No
ANSI					
030	2790193-0000		1	PLATE	
040	90459-7458		1	WARNING SIGN ANSI (H), HOT SURFACE	
ISO					
010	3139351-0000		1	PLATE	
020	359705-0007		1	WARNING SIGN ISO, HOT SURFACE	

Pos	Part No	UN	Qty	Description	Page No

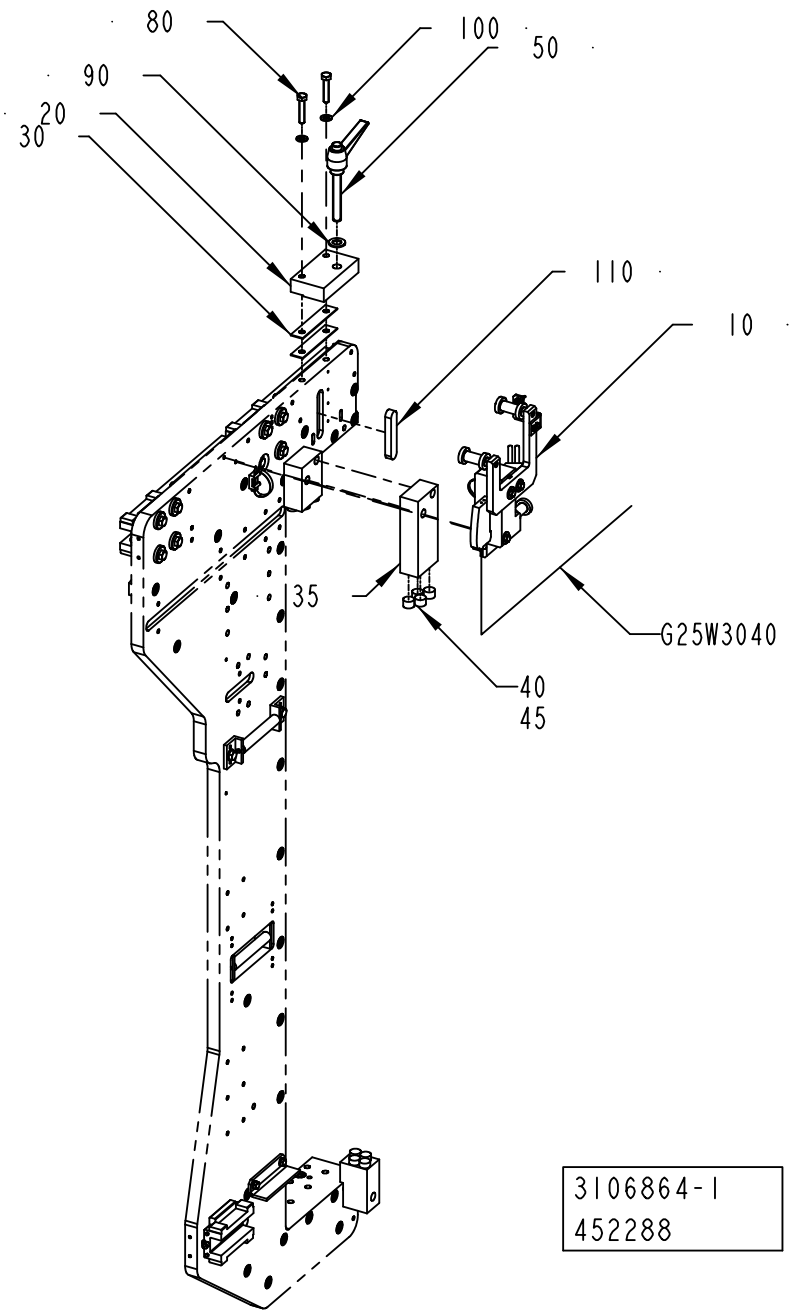
80
100
50
90
20
30
110
10
35
G25W3040
40
45
3106864-1
452288

ECM: 452322 - 20100611
Group number: 3106864-0100
Assembly Drawing: 3106864-1_1_AA

Pos	Part No	UN	Qty	Description	Page No
HOLE72					
043	2715294-0000		1	TEMPLATE	
HOLE73					
035	3017891-0000		1	SPRING BRACKET	
040	2837523-0000		4	SPRING	
045	90600-0386	L	1	LOCTITE HYSOL 9455 ADHESIVE, 250 GR	
Common Parts					
010	3100494-0100		1	TURNING DEVICE	**1-55**
020	2525382-0000		1	BRACKET	
030	3108956-0000		2	SHIM	
050	90459-5939		1	LOCKING LEVER, 142365 MRX.80 P-M12X80	
080	312109-0459		2	SCREW, M6S ISO 4017 M8X40 A4 80	
090	315105-0178		1	WASHER PLAIN, 13X24X2,5 A4 BRB	
100	315105-0165		2	WASHER PLAIN, 8,4X16X1,6 A4 BRB	
110	315701-0401		1	PARALLEL KEY W. ROUND ENDS, 16X10X80 MM	
G25W3040	351409-0020		1	ACTU/SENS. CABLE PRST 4-PRKMV 4-07/2,0M	

Pos	Part No	UN	Qty	Description	Page No

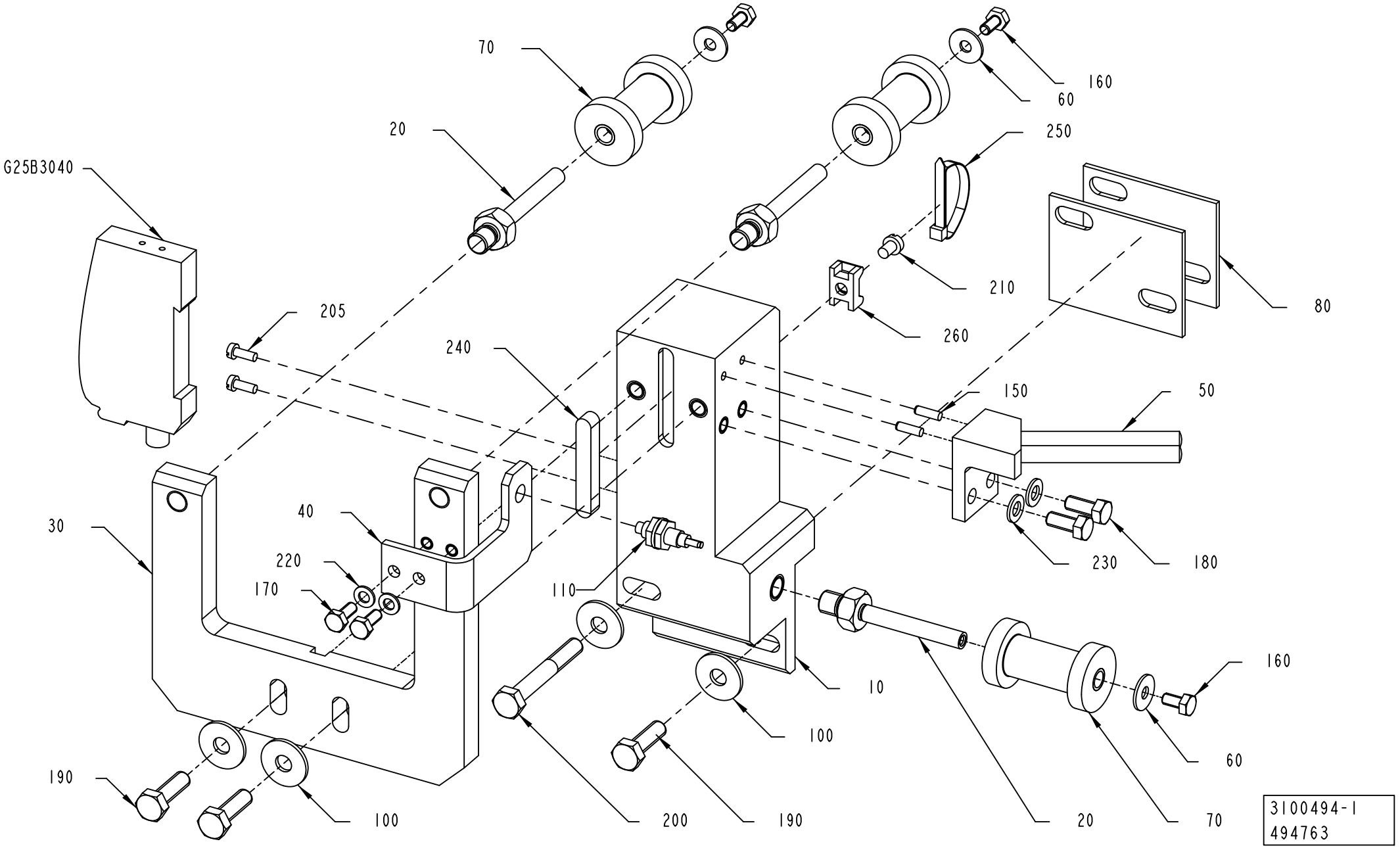
70
20
G25B3040
205
240
30
40
220
170
190
100
200
190
110
10
100
20
70
60
160
250
210
260
80
150
50
230
180
160
60
3100494-1
494763

ECM: 500252 - 20111001
Group number: 3100494-0100
Assembly Drawing: 3100494-1_1_AB

Pos	Part No	UN	Qty	Description	Page No
-					
010	3100463-0000		1	SUPPORT	
020	3100466-0000		3	AXLE PIN	
030	3100465-0000		1	SUPPORT	
040	3100469-0000		1	BRACKET	
050	3100478-0000		1	GUIDE FORK	
010	*311103-0371*		*2*	*PARALLEL PIN ISO 2338 6M6X65 A1*	
060	2033-0005		3	WASHER	
070	3100471-0000		3	ROLLER	
010	*321138-0060*		*2*	*BUSHING, IGLIDUR J 6X8X6*	
080	3112804-0000		2	SHIM	
100	90005-0060		4	WASHER PLAIN, RBS 6,4/M6)/18,H=1,5	
110	90232-0325		1	FIBRE, E32-DC200	
150	311103-0233		2	PARALLEL PIN ISO 2338 3M6X10 A1	
160	312105-0287		3	SCREW, M6S ISO 4017 M4X8 A4 70	
170	312105-0289		2	SCREW, M6S ISO 4017 M4X10 A4 70	
180	312105-0327		2	SCREW, M6S ISO 4017 M5X12 A4 80	
190	312105-0370		3	SCREW, M6S ISO 4017 M6X20 A4 80	
200	312105-0379		1	SCREW, M6S ISO 4014 M6X45 A4 80	
205	312125-0222		2	SLOTTED HEAD SCREW, ISO1207 M3X8 A4	
210	312125-0285		1	SLOTTED HEAD SCREW, ISO1207 M4X6 A4	
220	315105-0136		2	WASHER PLAIN, 4,3X9X0,8 A4 BRB	
230	315105-0146		2	WASHER PLAIN, 5,3X10X1 A4 BRB	
240	315701-0239		1	PARALLEL KEY W. ROUND ENDS, 6X6X40 MM	
250	352113-0104		1	CABLE TIE, BLACK 300X4,8 MM	
260	352113-0205		1	ANCHOR PLATES FOR STRIPS, TM2S8-C100	
G25B3040	90459-7361		1	FIBRE OPTIC UNIT, WLL170-2P460	

Pos	Part No	UN	Qty	Description	Page No

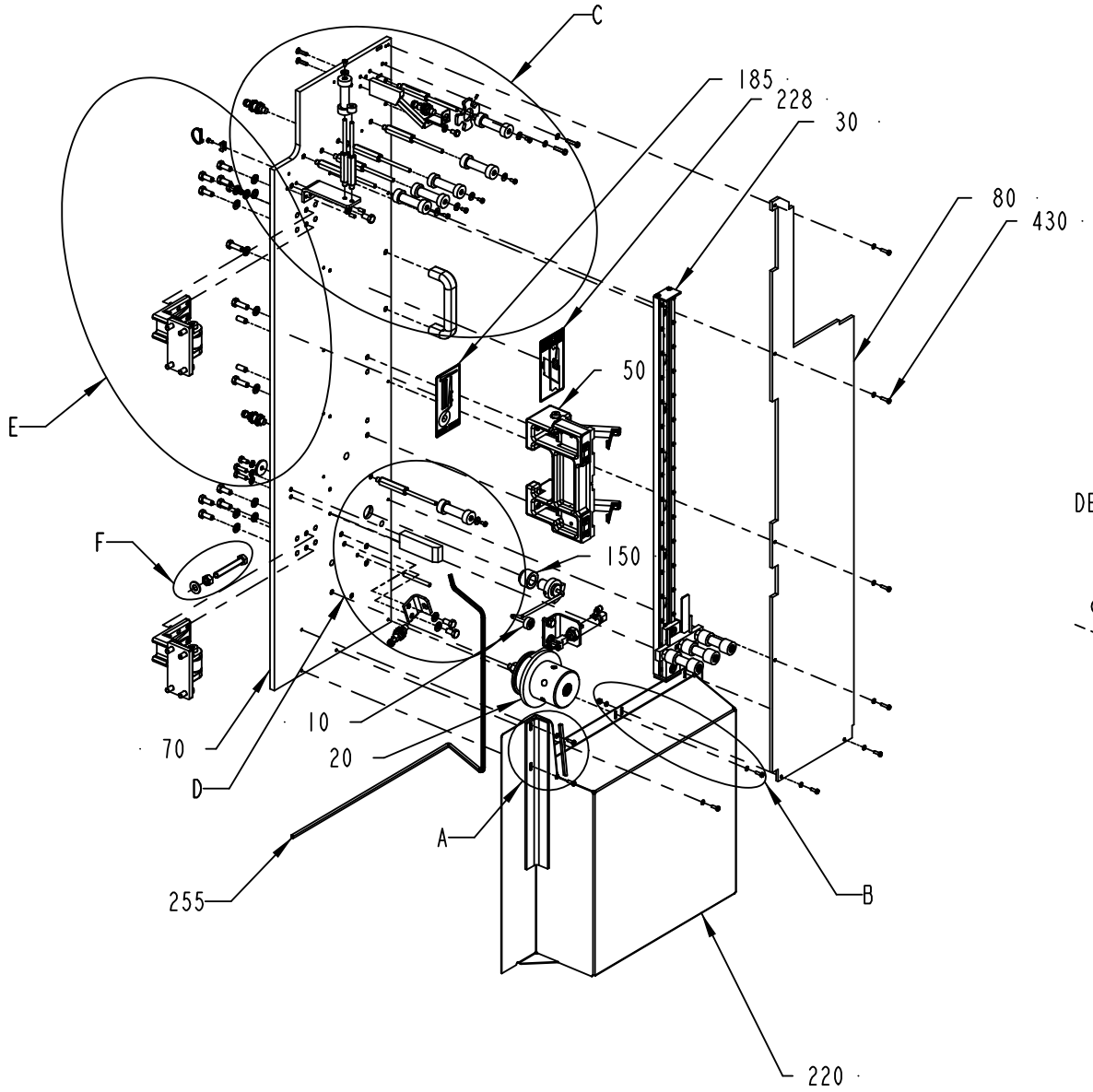

DETAIL A

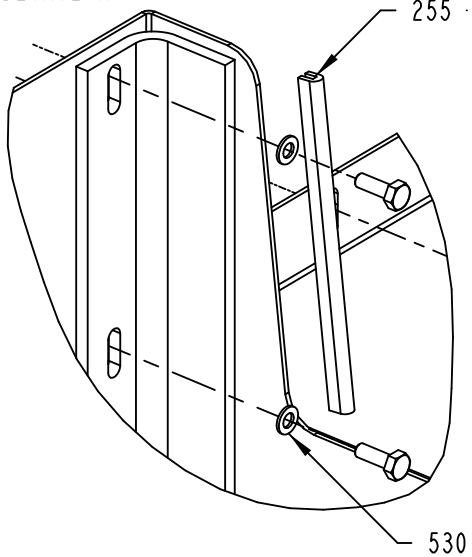

DETAIL B

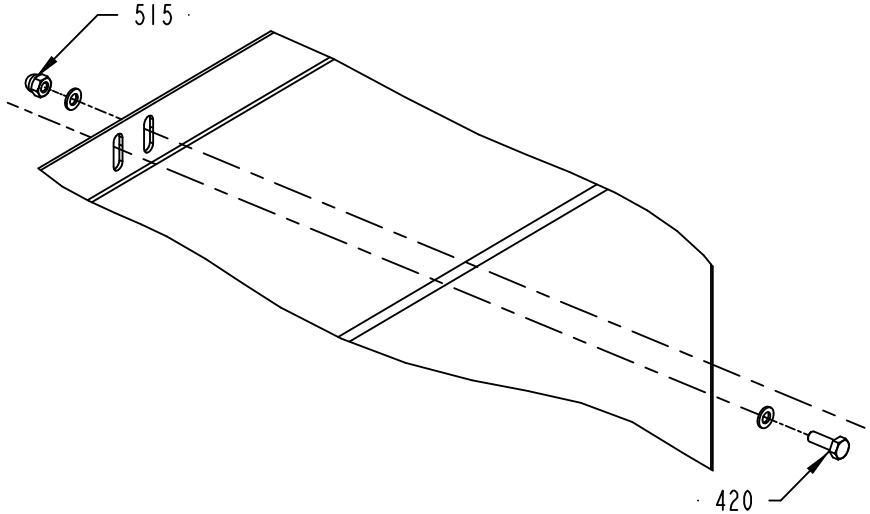

2951583-2
412407

ECM: 415409 - 20091002
Group number: 2951583-0200
Assembly Drawing: 2951583-2_1_AA

This list covers pages from 1-56 to 1-61

Pos	Part No	UN	Qty	Description	Page No
-					
010	1499255-0100		1	DETECTOR	**1-63**
020	2837537-0100		1	BOBBIN HOLDER	**1-65**
030	2816257-0100		1	STRIP MAGAZINE	**1-69**
040	2525358-0100		2	HINGE	**1-71**
050	2525366-0100		1	SPLICING TABLE	**1-73**
060	2564053-0100		1	OUTER PATCH MAGAZINE	**1-77**
070	2710788-0000		1	PANEL DOOR	
080	2553338-0000		1	PROTECTION	
120	1499251-0002		8	AXLE PIN	
130	1539125-0000		1	BRACKET	
134	2800317-0000		1	BRACKET	
135	2033-0005		7	WASHER	
140	1498347-0000		1	WASHER	
150	1499253-0000		1	BUSHING	
160	1523262-0000		1	FLAG	
170	1523263-0001		1	BRACKET	
180	2525373-0000		1	WHEEL	
185	2564073-0000		1	LABEL	
220	2951584-0000		1	PROTECTION	
225	2758237-0000		1	SPACER	
226	2947655-0000		1	LABEL	
227	90287-0330		1	SCREW, M6S ISO 4017 M10X70 A4 80	
230	90017-0022		1	HANDLE, NO. EL-037311	
255	90143-0060	M	1.2	EDGE STRIP 9,5X6,3MM BLACK PVC	
325	2639394-0000		1	GUIDE FORK	
380	311103-0306		2	PARALLEL PIN ISO 2338 5M6X12 A1	
390	311103-0369		1	PARALLEL PIN ISO 2338 6M6X60 A1	
400	311103-0401		2	PARALLEL PIN ISO 2338 8M6X20 A1	
410	312105-0287		7	SCREW, M6S ISO 4017 M4X8 A4 70	
420	312105-0291		6	SCREW, M6S ISO 4017 M4X12 A4 70	
430	312105-0293		4	SCREW, M6S ISO 4017 M4X16 A4 70	
435	312155-0331		2	SCREW DIN 7991 MF6S M5X20 A4 70	
440	312105-0364		1	SCREW, M6S ISO 4017 M6X10 A4 80	
450	312105-0366		1	SCREW, M6S ISO 4017 M6X12 A4 80	
457	312105-0370		2	SCREW, M6S ISO 4017 M6X20 A4 80	
460	312105-0449		3	SCREW, M6S ISO 4017 M8X16 A4 80	
465	312105-0451		8	SCREW, M6S ISO 4017 M8X20 A4 80	
470	312105-0453		4	SCREW, M6S ISO 4017 M8X25 A4 80	
478	312105-0331		2	SCREW, M6S ISO 4017 M5X20 A4 80	
490	312125-0287		7	SLOTTED HEAD SCREW, ISO1207 M4X8 A4	
500	312318-0220		2	SET SCREW, CUP END ISO4029 M3X6 A4	
511	312605-0320		1	HEXAGON NUT, M6M M10 A280	
515	312705-0312		2	NUT HEX. DOMED CAP MHM-6 M4 A280	
530	315105-0136		12	WASHER PLAIN, 4,3X9X0,8 A4 BRB	
535	315105-0146		2	WASHER PLAIN, 5,3X10X1 A4 BRB	
540	315105-0153		4	WASHER PLAIN, 6,4X12X1,5 A4 BRB	
550	315105-0165		15	WASHER PLAIN, 8,4X16X1,6 A4 BRB	
555	315105-0173		1	WASHER PLAIN, 10,5X22X2 A4 BRB	
560	352113-0101		7	CABLE TIE, BLACK 92X2,5 MM	
570	352113-0205		7	ANCHOR PLATES FOR STRIPS, TM2S8-C100	
G25B3000	90459-4177		1	INDUCTIVE SENSOR, E2A-M12KN08-M1-B1	
G25B3010	90459-4177		1	INDUCTIVE SENSOR, E2A-M12KN08-M1-B1	
G25B3020	90459-4177		1	INDUCTIVE SENSOR, E2A-M12KN08-M1-B1	
G25B3050	90459-4177		1	INDUCTIVE SENSOR, E2A-M12KN08-M1-B1	

Machine Type | Group Description | Used-In | Group Number | Page No

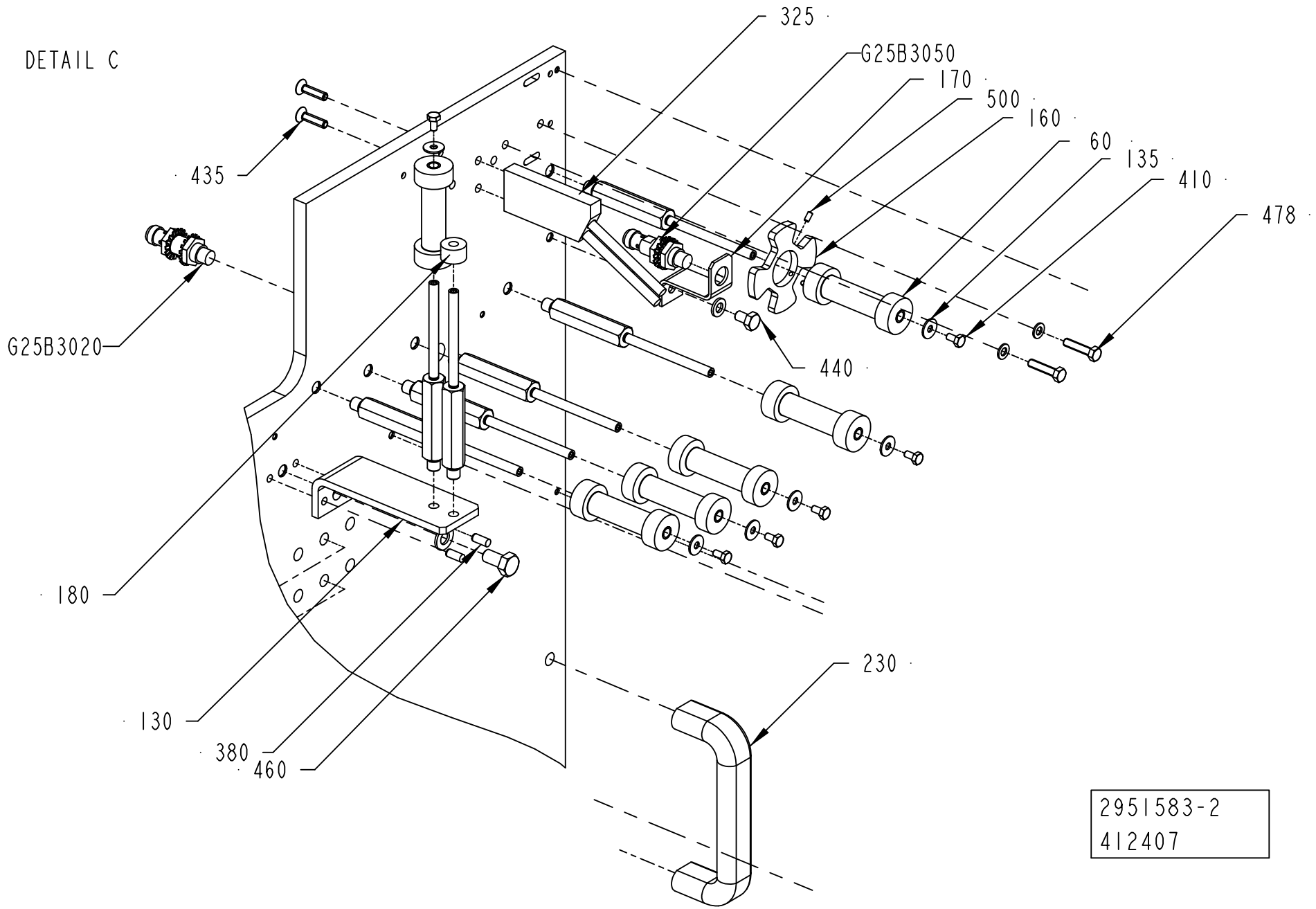
DETAIL C
325
G25B3050
170
500
160
60
135
410
478
435
G25B3020
440
180
130
380
460
230
2951583-2
412407

ECM: 415409 - 20091002
Group number: 2951583-0200
Assembly Drawing: 2951583-2_2_AA

This list covers pages from 1-56 to 1-61

Pos	Part No	UN	Qty	Description	Page No
-					
010	1499255-0100		1	DETECTOR	**1-63**
020	2837537-0100		1	BOBBIN HOLDER	**1-65**
030	2816257-0100		1	STRIP MAGAZINE	**1-69**
040	2525358-0100		2	HINGE	**1-71**
050	2525366-0100		1	SPLICING TABLE	**1-73**
060	2564053-0100		1	OUTER PATCH MAGAZINE	**1-77**
070	2710788-0000		1	PANEL DOOR	
080	2553338-0000		1	PROTECTION	
120	1499251-0002		8	AXLE PIN	
130	1539125-0000		1	BRACKET	
134	2800317-0000		1	BRACKET	
135	2033-0005		7	WASHER	
140	1498347-0000		1	WASHER	
150	1499253-0000		1	BUSHING	
160	1523262-0000		1	FLAG	
170	1523263-0001		1	BRACKET	
180	2525373-0000		1	WHEEL	
185	2564073-0000		1	LABEL	
220	2951584-0000		1	PROTECTION	
225	2758237-0000		1	SPACER	
226	2947655-0000		1	LABEL	
227	90287-0330		1	SCREW, M6S ISO 4017 M10X70 A4 80	
230	90017-0022		1	HANDLE, NO. EL-037311	
255	90143-0060	M	1.2	EDGE STRIP 9,5X6,3MM BLACK PVC	
325	2639394-0000		1	GUIDE FORK	
380	311103-0306		2	PARALLEL PIN ISO 2338 5M6X12 A1	
390	311103-0369		1	PARALLEL PIN ISO 2338 6M6X60 A1	
400	311103-0401		2	PARALLEL PIN ISO 2338 8M6X20 A1	
410	312105-0287		7	SCREW, M6S ISO 4017 M4X8 A4 70	
420	312105-0291		6	SCREW, M6S ISO 4017 M4X12 A4 70	
430	312105-0293		4	SCREW, M6S ISO 4017 M4X16 A4 70	
435	312155-0331		2	SCREW DIN 7991 MF6S M5X20 A4 70	
440	312105-0364		1	SCREW, M6S ISO 4017 M6X10 A4 80	
450	312105-0366		1	SCREW, M6S ISO 4017 M6X12 A4 80	
457	312105-0370		2	SCREW, M6S ISO 4017 M6X20 A4 80	
460	312105-0449		3	SCREW, M6S ISO 4017 M8X16 A4 80	
465	312105-0451		8	SCREW, M6S ISO 4017 M8X20 A4 80	
470	312105-0453		4	SCREW, M6S ISO 4017 M8X25 A4 80	
478	312105-0331		2	SCREW, M6S ISO 4017 M5X20 A4 80	
490	312125-0287		7	SLOTTED HEAD SCREW, ISO1207 M4X8 A4	
500	312318-0220		2	SET SCREW, CUP END ISO4029 M3X6 A4	
511	312605-0320		1	HEXAGON NUT, M6M M10 A280	
515	312705-0312		2	NUT HEX. DOMED CAP MHM-6 M4 A280	
530	315105-0136		12	WASHER PLAIN, 4,3X9X0,8 A4 BRB	
535	315105-0146		2	WASHER PLAIN, 5,3X10X1 A4 BRB	
540	315105-0153		4	WASHER PLAIN, 6,4X12X1,5 A4 BRB	
550	315105-0165		15	WASHER PLAIN, 8,4X16X1,6 A4 BRB	
555	315105-0173		1	WASHER PLAIN, 10,5X22X2 A4 BRB	
560	352113-0101		7	CABLE TIE, BLACK 92X2,5 MM	
570	352113-0205		7	ANCHOR PLATES FOR STRIPS, TM2S8-C100	
G25B3000	90459-4177		1	INDUCTIVE SENSOR, E2A-M12KN08-M1-B1	
G25B3010	90459-4177		1	INDUCTIVE SENSOR, E2A-M12KN08-M1-B1	
G25B3020	90459-4177		1	INDUCTIVE SENSOR, E2A-M12KN08-M1-B1	
G25B3050	90459-4177		1	INDUCTIVE SENSOR, E2A-M12KN08-M1-B1	

Machine Type | Group Description | Used-In | Group Number | Page No

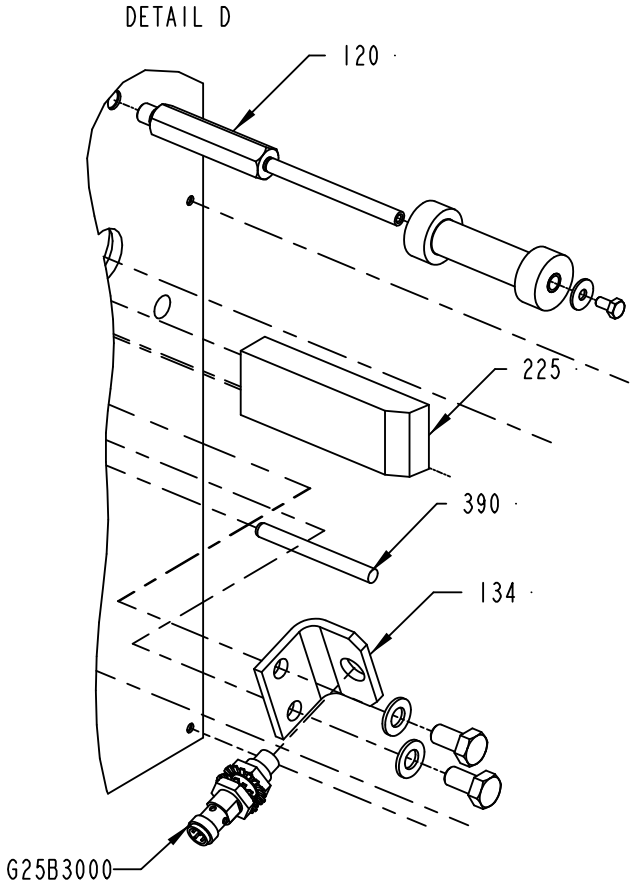
DETAIL D
120
225
390
134
G25B3000

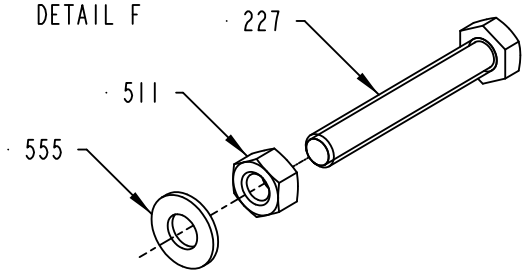
DETAIL F
227
511
555

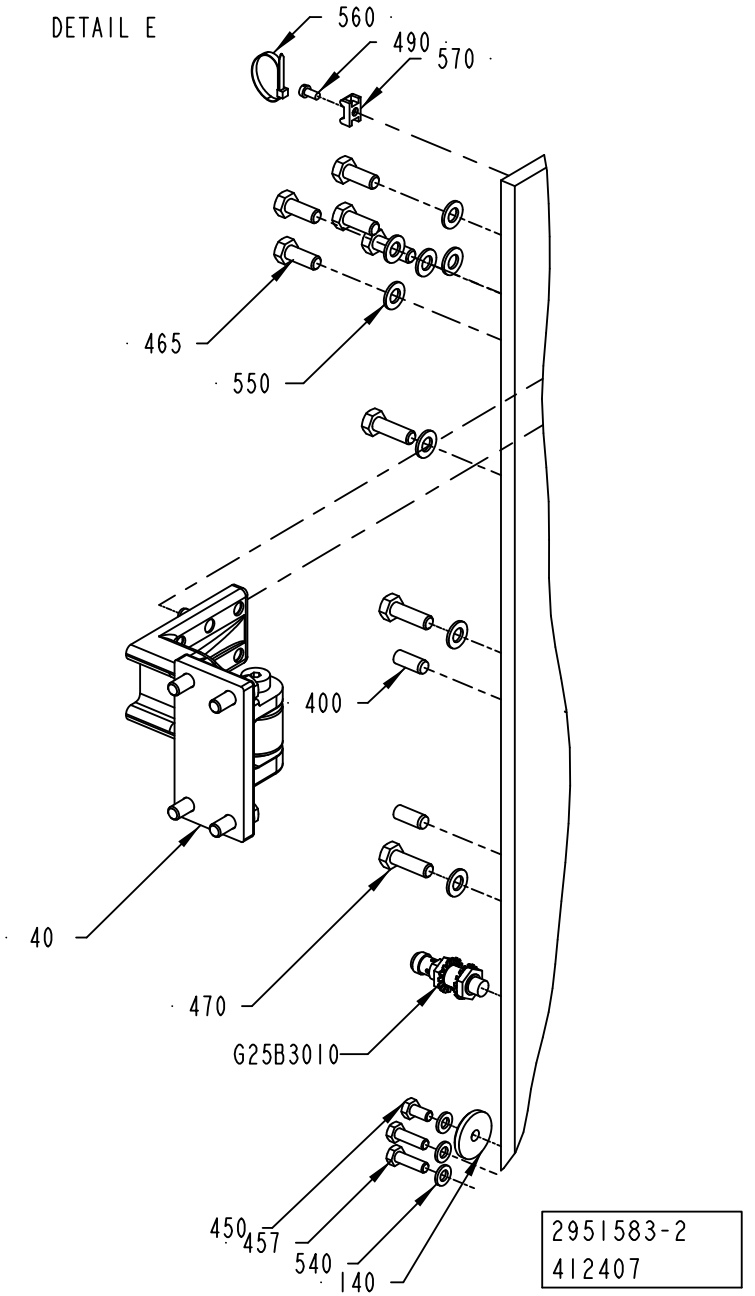
DETAIL E
560
490
570
465
550
400
40
470
G25B3010
450
457
540
140
2951583-2
412407

ECM: 415409 - 20091002
Group number: 2951583-0200
Assembly Drawing: 2951583-2_3_AA

This list covers pages from 1-56 to 1-61

Pos	Part No	UN	Qty	Description	Page No
-					
010	1499255-0100		1	DETECTOR	**1-63**
020	2837537-0100		1	BOBBIN HOLDER	**1-65**
030	2816257-0100		1	STRIP MAGAZINE	**1-69**
040	2525358-0100		2	HINGE	**1-71**
050	2525366-0100		1	SPLICING TABLE	**1-73**
060	2564053-0100		1	OUTER PATCH MAGAZINE	**1-77**
070	2710788-0000		1	PANEL DOOR	
080	2553338-0000		1	PROTECTION	
120	1499251-0002		8	AXLE PIN	
130	1539125-0000		1	BRACKET	
134	2800317-0000		1	BRACKET	
135	2033-0005		7	WASHER	
140	1498347-0000		1	WASHER	
150	1499253-0000		1	BUSHING	
160	1523262-0000		1	FLAG	
170	1523263-0001		1	BRACKET	
180	2525373-0000		1	WHEEL	
185	2564073-0000		1	LABEL	
220	2951584-0000		1	PROTECTION	
225	2758237-0000		1	SPACER	
226	2947655-0000		1	LABEL	
227	90287-0330		1	SCREW, M6S ISO 4017 M10X70 A4 80	
230	90017-0022		1	HANDLE, NO. EL-037311	
255	90143-0060	M	1.2	EDGE STRIP 9,5X6,3MM BLACK PVC	
325	2639394-0000		1	GUIDE FORK	
380	311103-0306		2	PARALLEL PIN ISO 2338 5M6X12 A1	
390	311103-0369		1	PARALLEL PIN ISO 2338 6M6X60 A1	
400	311103-0401		2	PARALLEL PIN ISO 2338 8M6X20 A1	
410	312105-0287		7	SCREW, M6S ISO 4017 M4X8 A4 70	
420	312105-0291		6	SCREW, M6S ISO 4017 M4X12 A4 70	
430	312105-0293		4	SCREW, M6S ISO 4017 M4X16 A4 70	
435	312155-0331		2	SCREW DIN 7991 MF6S M5X20 A4 70	
440	312105-0364		1	SCREW, M6S ISO 4017 M6X10 A4 80	
450	312105-0366		1	SCREW, M6S ISO 4017 M6X12 A4 80	
457	312105-0370		2	SCREW, M6S ISO 4017 M6X20 A4 80	
460	312105-0449		3	SCREW, M6S ISO 4017 M8X16 A4 80	
465	312105-0451		8	SCREW, M6S ISO 4017 M8X20 A4 80	
470	312105-0453		4	SCREW, M6S ISO 4017 M8X25 A4 80	
478	312105-0331		2	SCREW, M6S ISO 4017 M5X20 A4 80	
490	312125-0287		7	SLOTTED HEAD SCREW, ISO1207 M4X8 A4	
500	312318-0220		2	SET SCREW, CUP END ISO4029 M3X6 A4	
511	312605-0320		1	HEXAGON NUT, M6M M10 A280	
515	312705-0312		2	NUT HEX. DOMED CAP MHM-6 M4 A280	
530	315105-0136		12	WASHER PLAIN, 4,3X9X0,8 A4 BRB	
535	315105-0146		2	WASHER PLAIN, 5,3X10X1 A4 BRB	
540	315105-0153		4	WASHER PLAIN, 6,4X12X1,5 A4 BRB	
550	315105-0165		15	WASHER PLAIN, 8,4X16X1,6 A4 BRB	
555	315105-0173		1	WASHER PLAIN, 10,5X22X2 A4 BRB	
560	352113-0101		7	CABLE TIE, BLACK 92X2,5 MM	
570	352113-0205		7	ANCHOR PLATES FOR STRIPS, TM2S8-C100	
G25B3000	90459-4177		1	INDUCTIVE SENSOR, E2A-M12KN08-M1-B1	
G25B3010	90459-4177		1	INDUCTIVE SENSOR, E2A-M12KN08-M1-B1	
G25B3020	90459-4177		1	INDUCTIVE SENSOR, E2A-M12KN08-M1-B1	
G25B3050	90459-4177		1	INDUCTIVE SENSOR, E2A-M12KN08-M1-B1	

Machine Type | Group Description | Used-In | Group Number | Page No

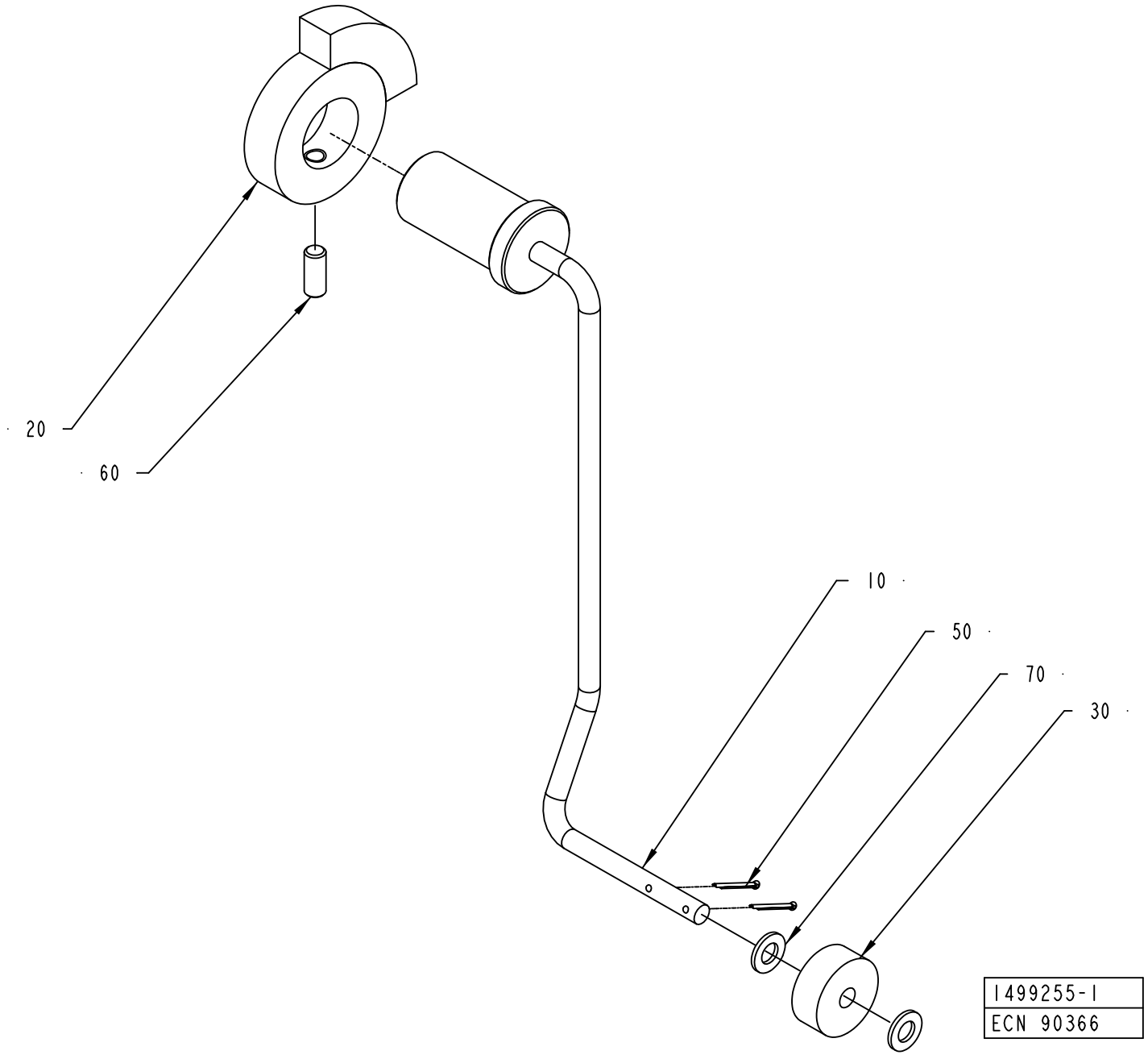
20
60
10
50
70
30
1499255-1
ECN 90366

ECM: 211632 - 20060117
Group number: 1499255-0100
Assembly Drawing: 1499255-1_1_AA

Pos	Part No	UN	Qty	Description	Page No
-					
010	1499252-0000		1	ARM	
020	533972-0000		1	INDICATOR CURVE	
030	234844-0000		1	WHEEL	
050	311411-0138		2	SPLIT PIN SP1,6X12RFR	
060	312318-0327		1	SET SCREW, CUP END ISO4029 M5X12 A4	
070	315105-0146		2	WASHER PLAIN, 5,3X10X1 A4 BRB	

Pos	Part No	UN	Qty	Description	Page No

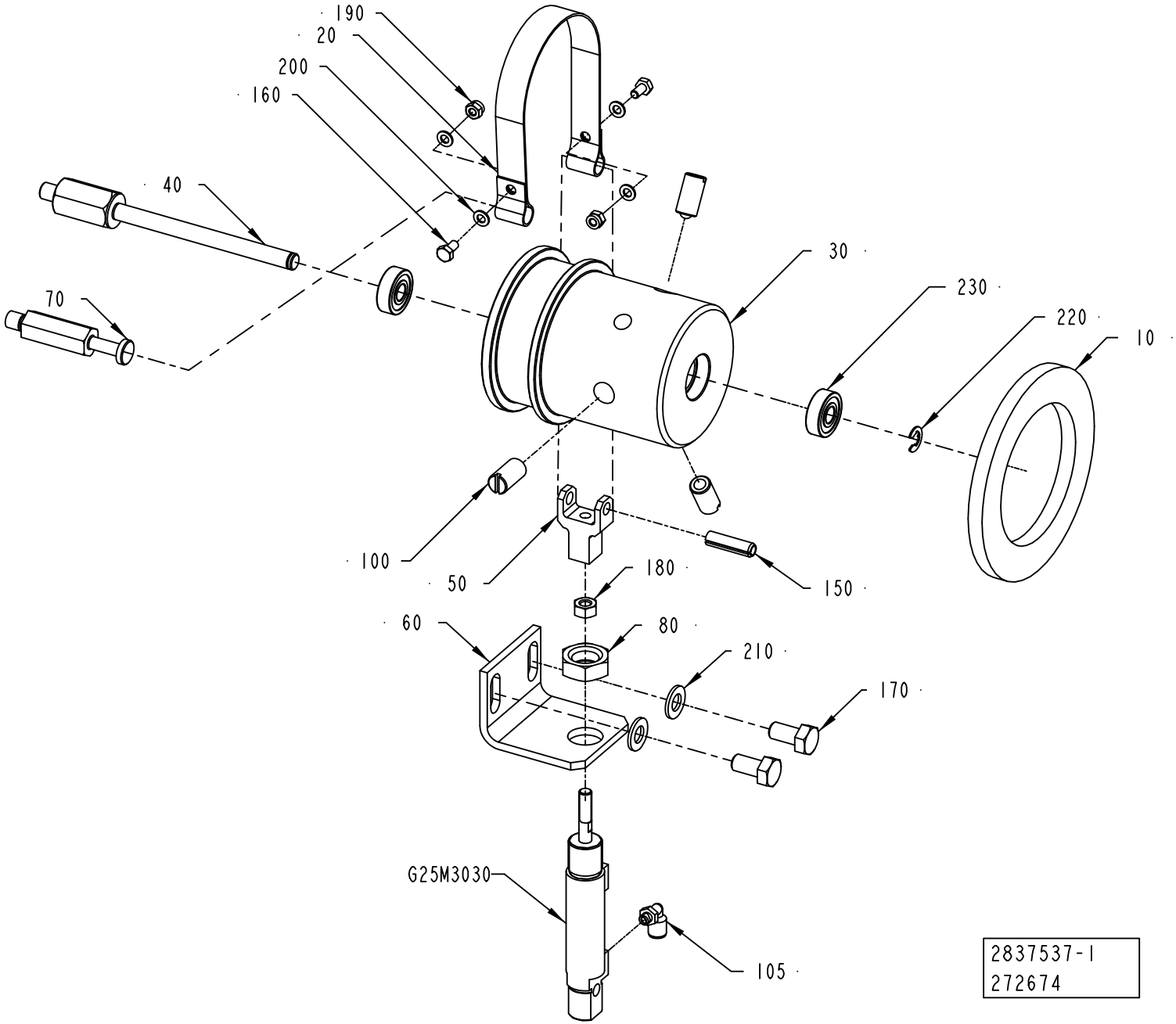
190
20
200
160
40
70
30
230
220
10
100
50
180
150
60
80
210
170
G25M3030
105
2837537-1
272674

ECM: 343619 - 20080215
Group number: 2837537-0100
Assembly Drawing: 2837537-1_1_AA

Pos	Part No	UN	Qty	Description	Page No
-					
010	2553315-0100		1	BOBBIN HOLDER	**1-67**
020	1498303-0000		1	BELT	
030	1498360-0000		1	HUB	
040	2506563-0000		1	SHAFT	
050	2506564-0000		1	GUIDE FORK	
060	2506565-0000		1	BRACKET	
070	2511316-0000		1	PIN	
080	2511317-0000		1	NUT	
100	90287-0106		3	SCREW SPRINGLOAD. SLOTTED HEAD M10X21	
105	90458-2954		1	ELBOW PIPE JOINT, EXT.THREAD, D=4MM M5	
150	311112-0341		1	SPRING PIN, ISO 8752 6X24 A2	
160	312105-0287		2	SCREW, M6S ISO 4017 M4X8 A4 70	
170	312105-0449		2	SCREW, M6S ISO 4017 M8X16 A4 80	
180	312605-0316		1	HEXAGON NUT, M6M M6 A280	
190	312812-0312		2	HEXAGON NUT, NY-LOCK M4 A4 80	
200	315105-0136		4	WASHER PLAIN, 4,3X9X0,8 A4 BRB	
210	315105-0165		2	WASHER PLAIN, 8,4X16X1,6 A4 BRB	
220	315755-0108		1	RETAINING RING SHAFT DIN 6799 6 SS	
230	321302-0298		2	BALL BEARING 8/22X7	
G25M3030	90459-0844		1	SINGLE ACTING, MINI-ISO, CYL 12-10	

Pos	Part No	UN	Qty	Description	Page No

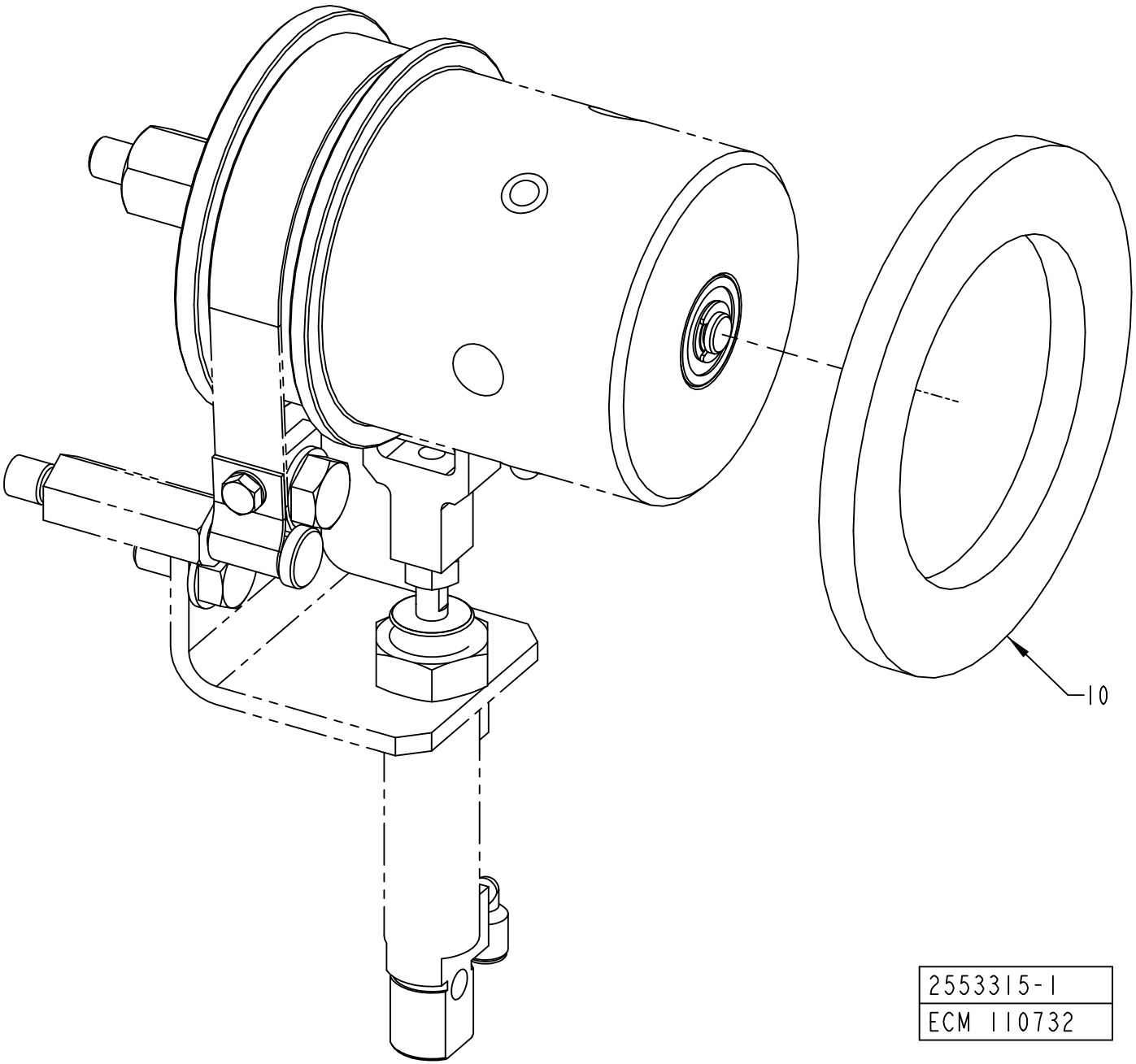
10
2553315-1
ECM 110732

ECM: 409479 - 20090915
Group number: 2553315-0100
Assembly Drawing: 2553315-1_1_AA

Pos	Part No	UN	Qty	Description	Page No
HOLE48, HOLE73, HOLE72					
010	1347952-0003		1	SPACER	

Pos	Part No	UN	Qty	Description	Page No

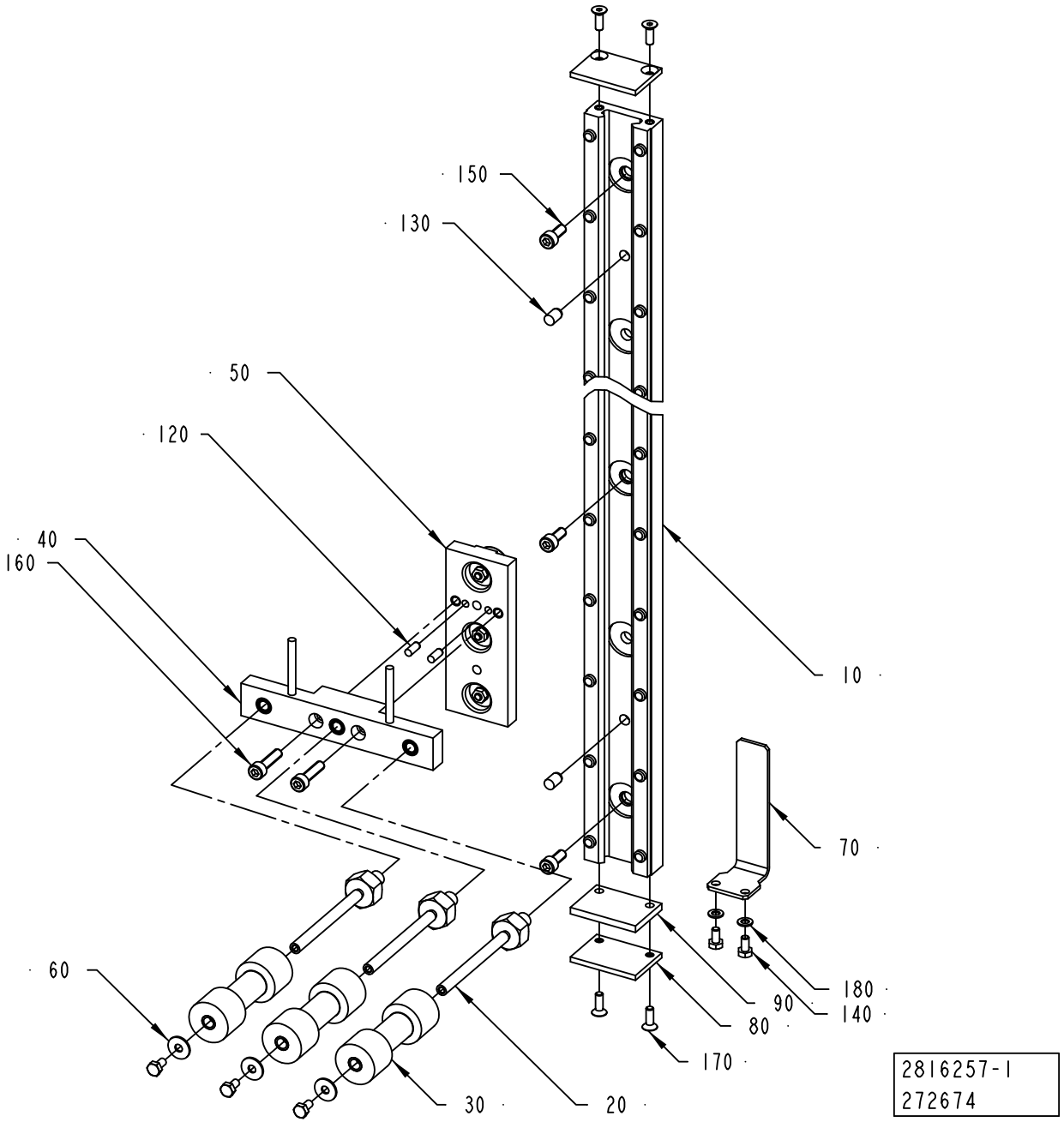
150
130
50
120
40
160
10
70
60
180
90
140
80
170
30
20
2816257-1
272674

ECM: 273242 - 20061101
Group number: 2816257-0100
Assembly Drawing: 2816257-1_1_AA

Pos	Part No	UN	Qty	Description	Page No
-					
010	2816251-0000		1	GUIDE	
020	2511271-0001		3	SHAFT	
030	2564043-0003		3	ROLLER	
040	2816256-0000		1	BRACKET	
050	2808769-0000		1	SLIDER	
060	2033-0005		3	WASHER	
070	2816255-0000		1	PHOTOCELL BRACKET	
080	2808544-0000		2	STOPPER	
090	2808545-0000		1	DAMPER	
120	311103-0267		2	PARALLEL PIN ISO 2338 4M6X10 A1	
130	311103-0348		2	PARALLEL PIN ISO 2338 6M6X10 A1	
140	312105-0287		5	SCREW, M6S ISO 4017 M4X8 A4 70	
150	312115-0327		4	SCREW ISO4762 M5X12 A4 80	
160	312115-0331		2	SCREW ISO4762 M5X20 A4 80	
170	312155-0291		4	SCREW DIN 7991 MF6S M4X12 A4 70	
180	315105-0136		2	WASHER PLAIN, 4,3X9X0,8 A4 BRB	

Pos	Part No	UN	Qty	Description	Page No

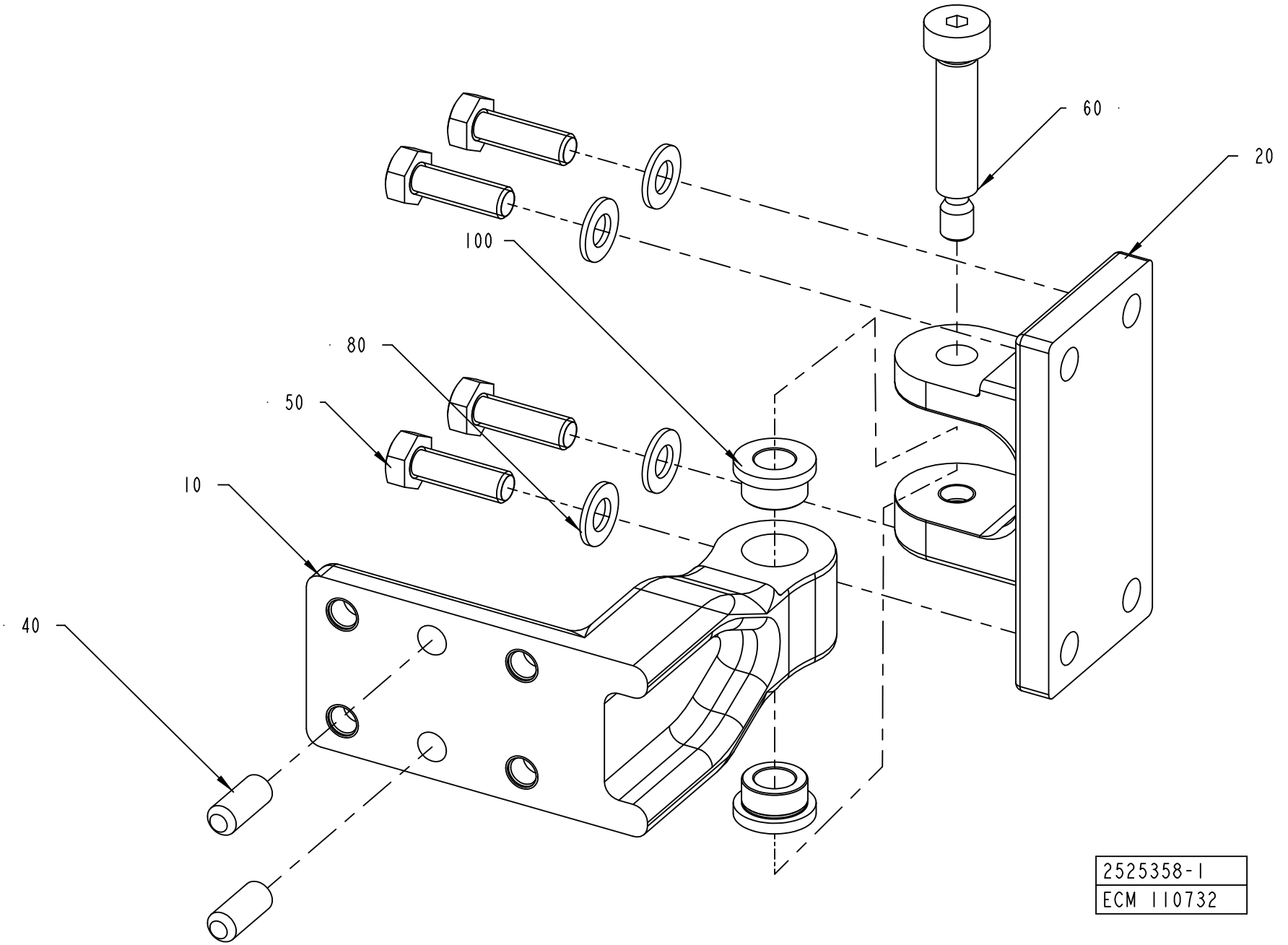
60
20
100
80
50
10
40
2525358-1
ECM 110732

ECM: 185814 - 20041005
Group number: 2525358-0100
Assembly Drawing: 2525358-1_1_AA

Pos	Part No	UN	Qty	Description	Page No
-					
010	2525350-0000		1	BRACKET	
020	2525351-0000		1	HINGE	
040	311103-0401		2	PARALLEL PIN ISO 2338 8M6X20 A1	
050	312105-0453		4	SCREW, M6S ISO 4017 M8X25 A4 80	
060	312180-0499		1	SHOULDER SCREW, ISO7379 10X40/M8 12.9	
080	315105-0165		4	WASHER PLAIN, 8,4X16X1,6 A4 BRB	
100	321101-0163		2	FLANGE BUSHING, 10/16X10-20X3 MM	

Pos	Part No	UN	Qty	Description	Page No

SPLICING TABLE

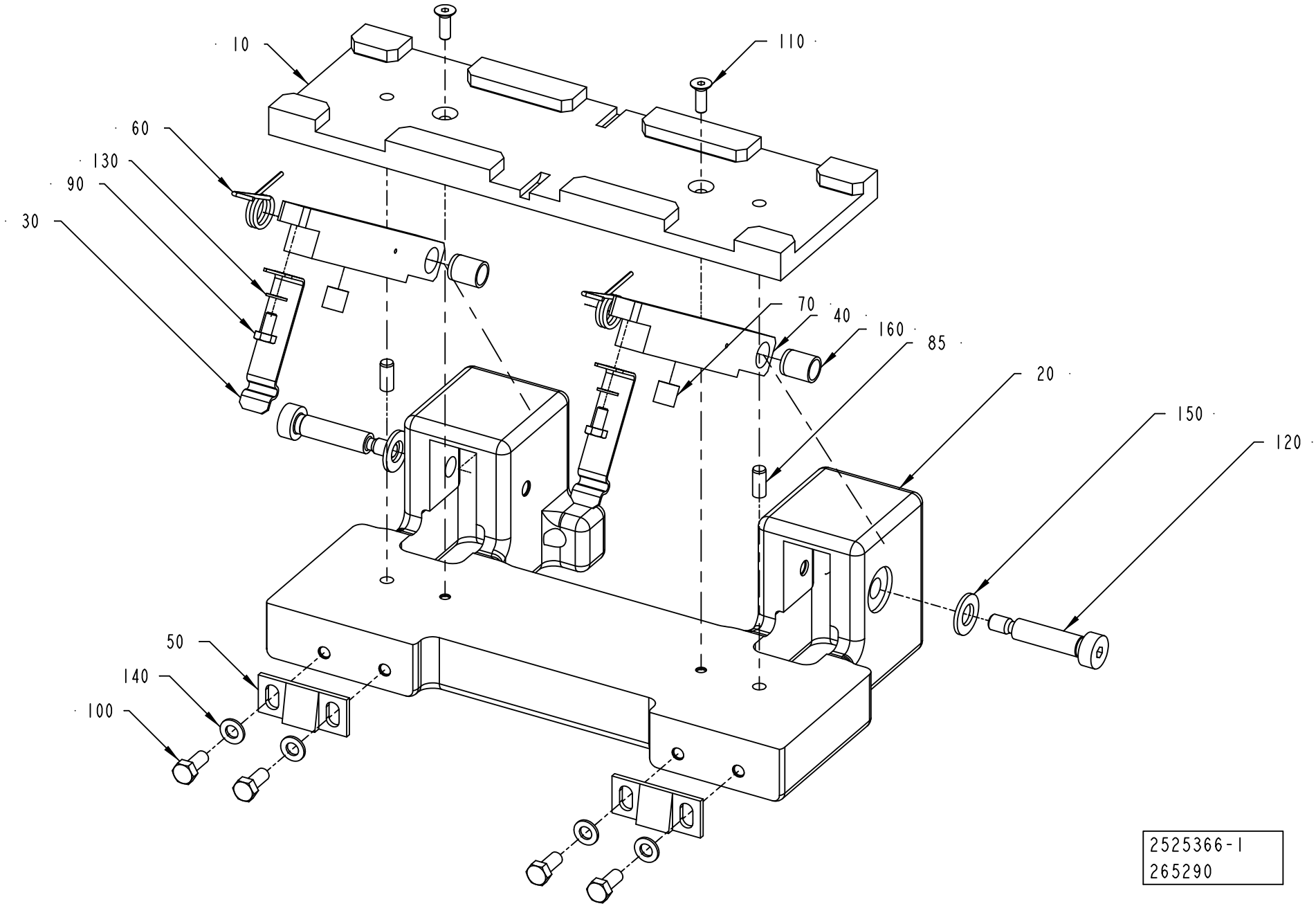

ECM: 409488 - 20090915
Group number: 2525366-0100
Assembly Drawing: 2525366-1_1_AB

Pos	Part No	UN	Qty	Description	Page No
-					
010	2533683-0100		1	SPLICING TABLE	**1-75**
020	2525349-0000		1	BRACKET	
030	1519463-0000		2	LOCKING CLAMP	
040	2525360-0000		2	LOCKING FINGER	
050	532022-0000		2	LOCK BAR	
060	544427-0000		2	TURN SPRING	
070	2525368-0000		2	PUSHER	
085	311103-0306		2	PARALLEL PIN ISO 2338 5M6X12 A1	
090	312105-0287		2	SCREW, M6S ISO 4017 M4X8 A4 70	
100	312105-0327		4	SCREW, M6S ISO 4017 M5X12 A4 80	
110	312155-0291		2	SCREW DIN 7991 MF6S M4X12 A4 70	
120	312180-0455		2	SHOULDER SCREW, ISO7379 8X30/M6 12.9	
130	315105-0136		2	WASHER PLAIN, 4,3X9X0,8 A4 BRB	
140	315105-0146		4	WASHER PLAIN, 5,3X10X1 A4 BRB	
150	315105-0165		2	WASHER PLAIN, 8,4X16X1,6 A4 BRB	
160	321141-0104		2	BEARING BUSHING, 8X10X12 MM	

Pos	Part No	UN	Qty	Description	Page No

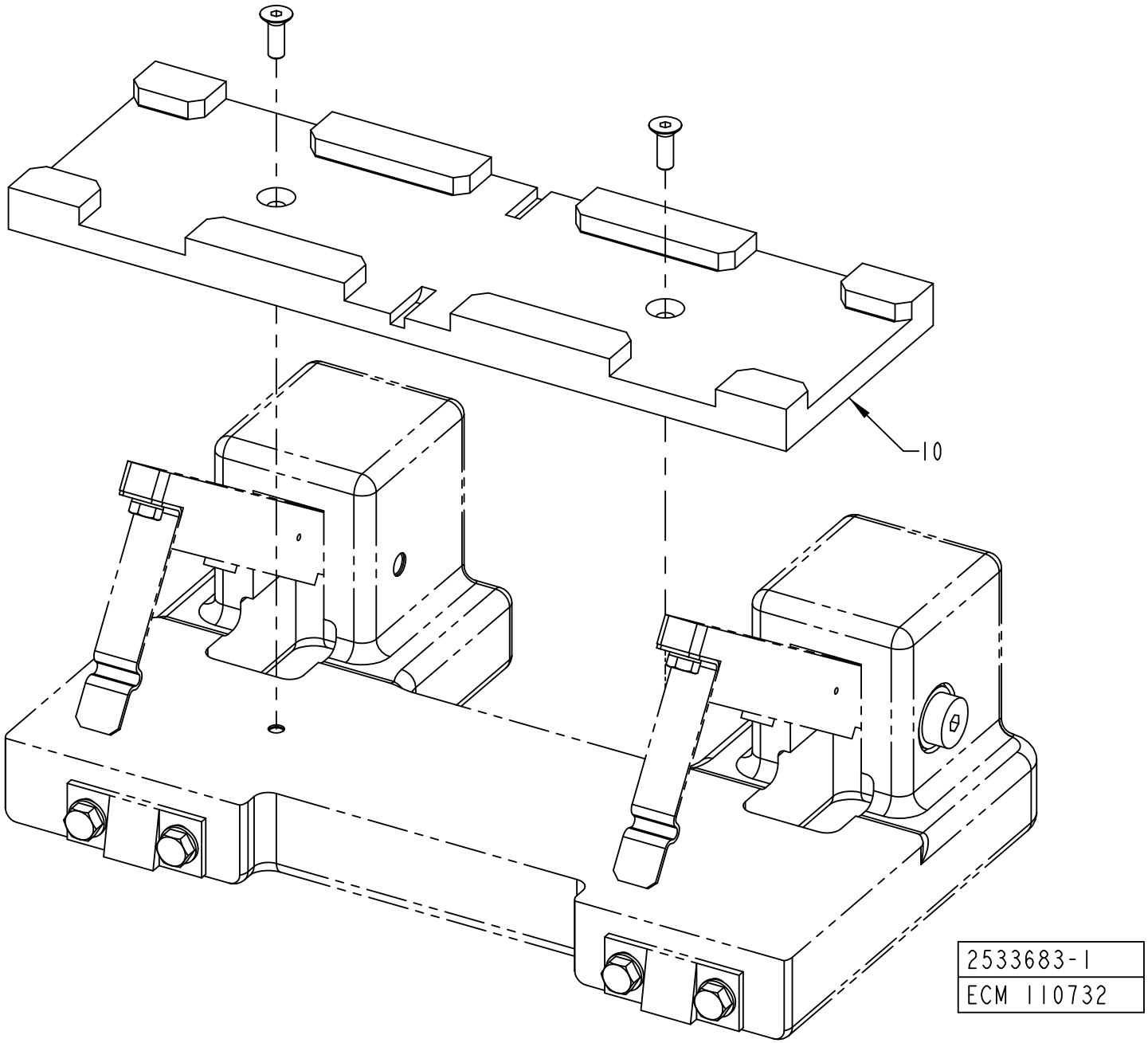
10
2533683-1
ECM 110732

ECM: 409480 - 20090915
Group number: 2533683-0100
Assembly Drawing: 2533683-1_1_AA

Pos	Part No	UN	Qty	Description	Page No
HOLE72, HOLE48, HOLE73					
010	1499296-0002		1	GUIDE	

Pos	Part No	UN	Qty	Description	Page No

OUTER PATCH MAGAZINE

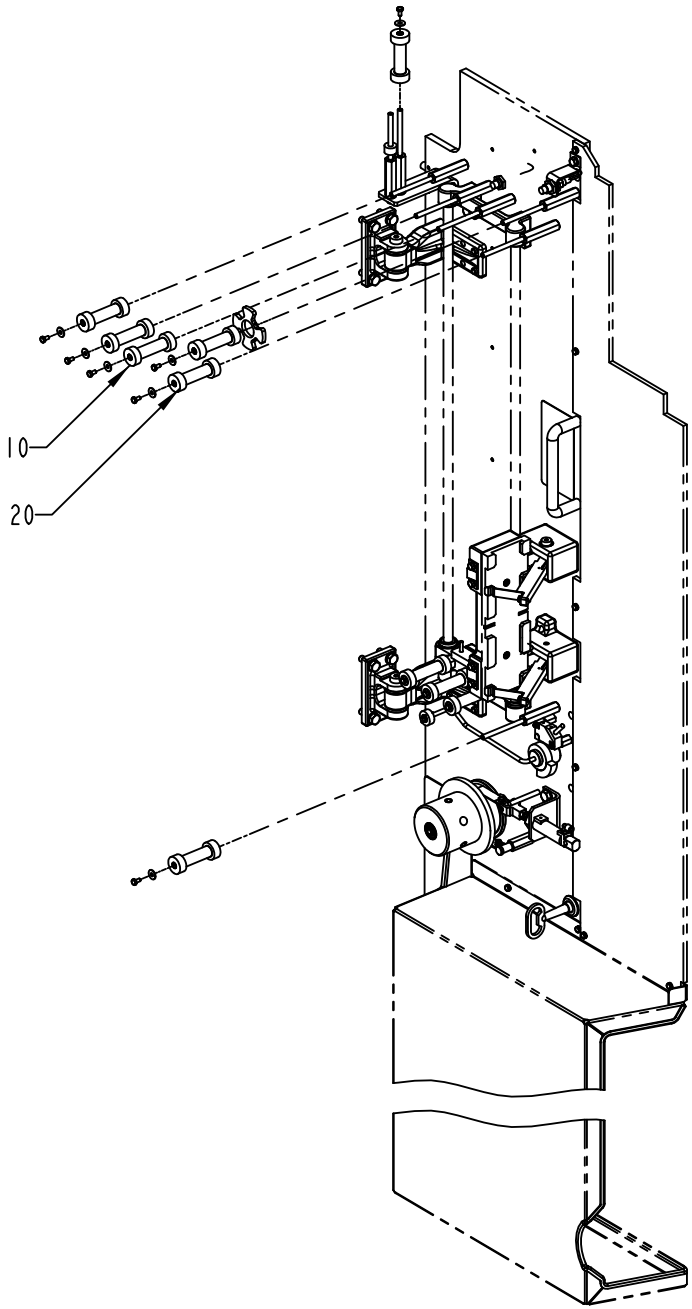

2564053-1
ECM 123507

ECM: 409481 - 20090915
Group number: 2564053-0100
Assembly Drawing: 2564053-1_1_AB

Pos	Part No	UN	Qty	Description	Page No
HOLE72, HOLE48, HOLE73					
010	2564043-0003		2	ROLLER	
020	2564044-0004		5	ROLLER	

Pos	Part No	UN	Qty	Description	Page No

OUTER PATCH MAGAZINE

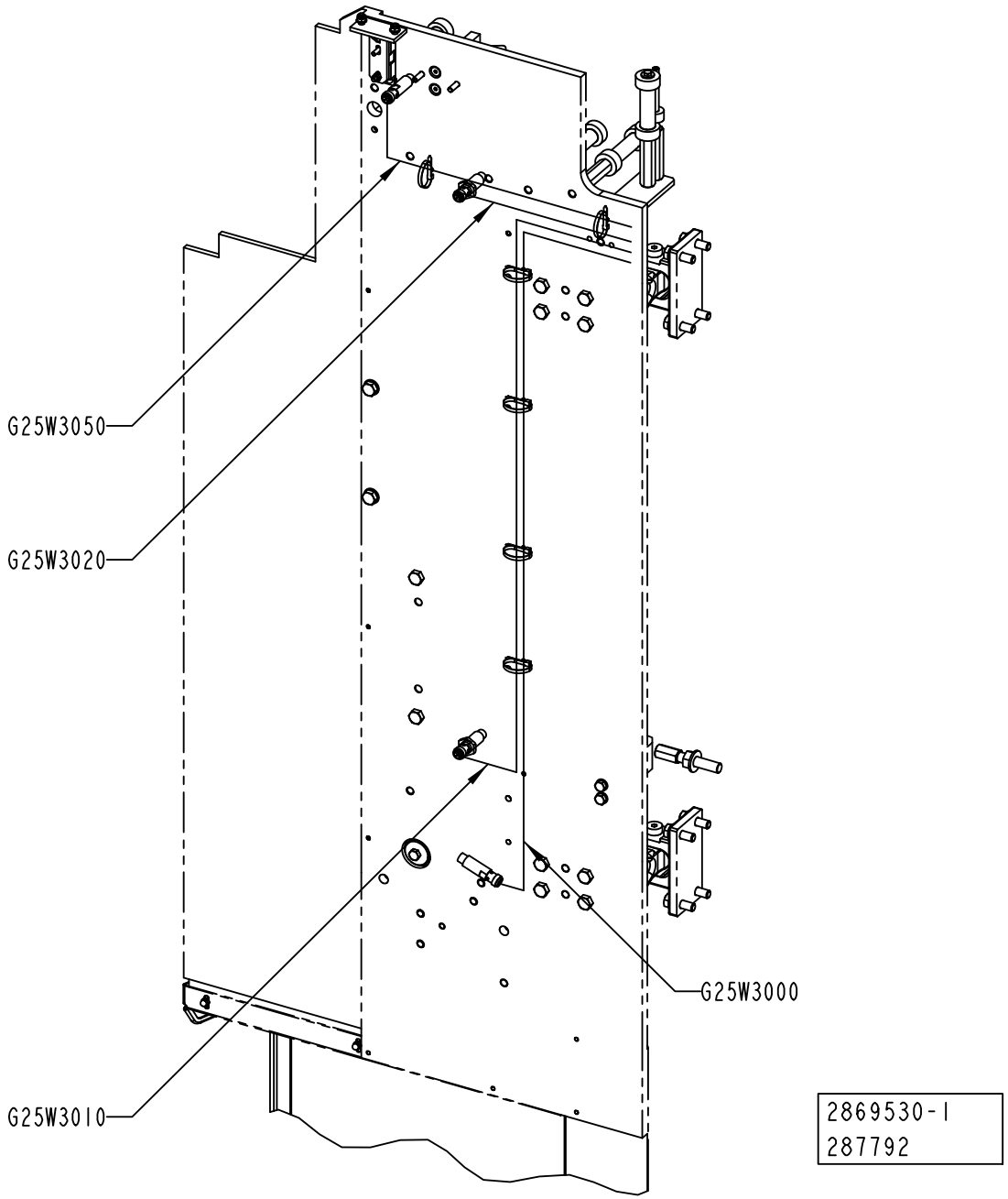

ECM: 288278 - 20061201
Group number: 2869530-0100
Assembly Drawing: 2869530-1_1_AA

Pos	Part No	UN	Qty	Description	Page No
-					
G25W3000	351310-0050		1	ACTUATOR/SENSOR CABLE PRKWT 4-07/5M	
G25W3010	351310-0050		1	ACTUATOR/SENSOR CABLE PRKWT 4-07/5M	
G25W3020	351310-0020		1	ACTUATOR/SENSOR CABLE PRKWT 4-07/2M	
G25W3050	351411-0050		1	ACTU/SENS. CABLE PRST 4-PRKT 4-07/5,0	

Pos	Part No	UN	Qty	Description	Page No

This page is intentionally left blank.

ECM: 134803 - 20040531
Group number: 2693161-0100
Assembly Drawing:

Pos	Part No	UN	Qty	Description	Page No
-					
010	2545239-0100		1	ELECTRIC MATERIALS	**1-83**
020	90166-0081	M	8	TUBE 6 MM PA BLUE	
030	90166-0109	M	9	TUBE 4 MM PA TRANSP.	

Pos	Part No	UN	Qty	Description	Page No

Machine Type | Group Description | Used-In | Group Number | Page No

This page is intentionally left blank.

ECM: 298298 - 20070216
Group number: 2545239-0100
Assembly Drawing:

Pos	Part No	UN	Qty	Description	Page No
-					
055	90459-3772		10	END SLEEVE H 0.25/12	
070	352113-0101		40	CABLE TIE, BLACK 92X2,5 MM	
080	352113-0102		30	CABLE TIE, BLACK 188X4,8 MM	
105	353300-0004	MM	500	HEATSHRINK TUBING	
250	359000-0200		2	WIRE MARKING, YELLOW, PA02/3"0"	
260	359000-0201		4	WIRE MARKING, YELLOW, PA02/3"1"	
270	359000-0202		2	WIRE MARKING, YELLOW, PA02/3"2"	
290	359000-0204		2	WIRE MARKING, YELLOW, PA02/3"4"	
300	359000-0205		1	WIRE MARKING, YELLOW, PA02/3"5"	
310	359000-0206		1	WIRE MARKING, YELLOW, PA02/3"6"	
320	359000-0207		1	WIRE MARKING, YELLOW, PA02/3"7"	
330	359000-0208		1	WIRE MARKING, YELLOW, PA02/3"8"	
380	359009-0100		22	CABLE MARKING, YELLOW, PK2/4"0"	
390	359009-0101		2	CABLE MARKING, YELLOW, PK 2/4"1"	
395	359009-0102		12	CABLE MARKING, YELLOW, PK 2/4"2"	
397	359009-0103		10	CABLE MARKING, YELLOW, PK 2/4"3"	
400	359009-0104		2	CABLE MARKING, YELLOW, PK 2/4"4"	
405	359009-0105		12	CABLE MARKING, YELLOW, PK 2/4"5"	
415	359009-0206		10	CABLE MARKING, YELLOW, PK 2/4" G"	
420	359009-0222		10	CABLE MARKING, YELLOW, PK 2/4" W"	

Pos	Part No	UN	Qty	Description	Page No

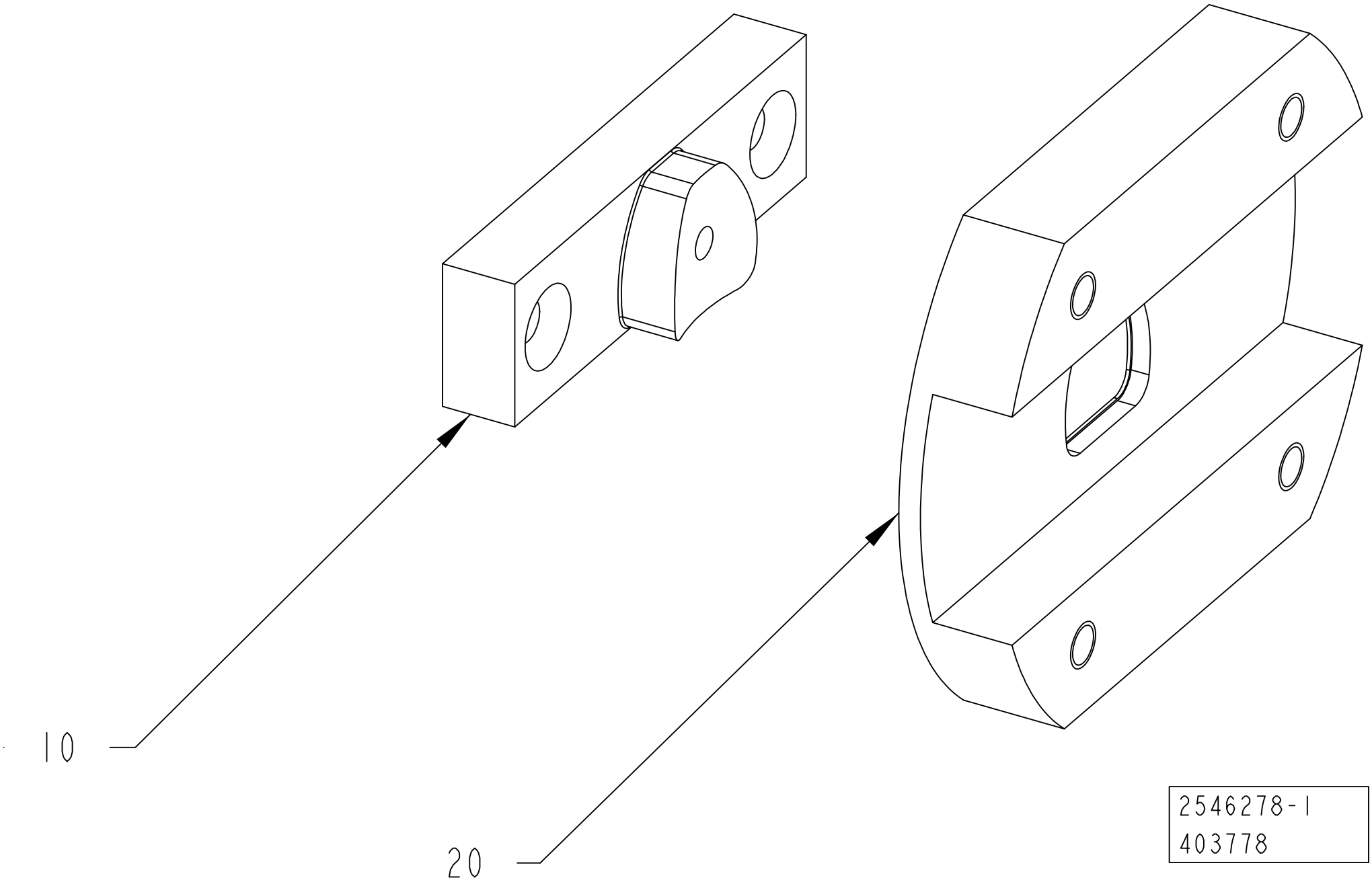
10
20
2546278-1
403778

ECM: 462540 - 20101002
Group number: 2546278-0100
Assembly Drawing: 2546278-1_1_AC

Pos	Part No	UN	Qty	Description	Page No
HOLE48					
010	2525290-0000		1	PUNCH	
020	2525289-0000		1	DIE	
HOLE55					
010	1145416-0000		1	PUNCH HOLE 55	
020	1145417-0000		1	DIE HOLE 55	
HOLE72					
010	2511644-0000		1	PUNCH	
020	2511639-0000		1	DIE	
HOLE73					
010	3019893-0000		1	PUNCH	
020	3019892-0000		1	DIE	
HOLE91					
010	2604554-0000		1	PUNCH	
020	2604555-0000		1	DIE	
HOLE92					
010	2956876-0000		1	PUNCH	
020	2956875-0000		1	DIE	
HOLE95					
010	2657828-0000		1	PUNCH	
020	2657829-0000		1	DIE	
TBA 0375S HOLE90					
010	2655469-0000		1	PUNCH	
020	2655470-0000		1	DIE HOLE 90	
TBA 1000S HOLE90, TBA 1500S HOLE90					
010	2603683-0000		1	PUNCH	
020	2603682-0000		1	DIE	

Pos	Part No	UN	Qty	Description	Page No

Machine Type | Group Description | Used-In | Group Number | Page No

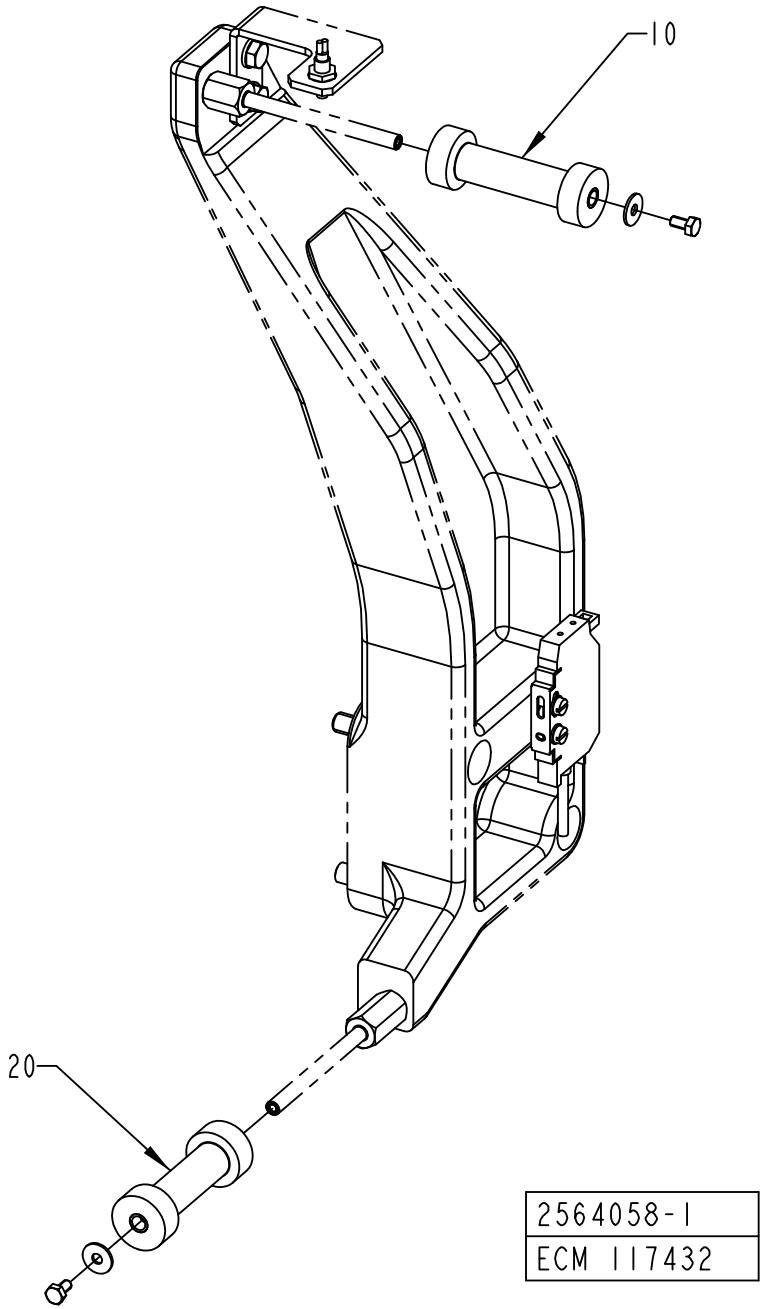
10
20
2564058-1
ECM 117432

ECM: 409593 - 20090915
Group number: 2564058-0100
Assembly Drawing: 2564058-1_1_AA

Pos	Part No	UN	Qty	Description	Page No
HOLE48, HOLE55, HOLE73					
010	2564043-0003		1	ROLLER	
020	2564044-0004		1	ROLLER	
HOLE72, HOLE92					
010	2564043-0002		1	ROLLER	
020	2564044-0002		1	ROLLER	
HOLE90					
010	2564043-0004		1	ROLLER	
020	2564044-0005		1	ROLLER	
HOLE95, HOLE91					
010	2564043-0005		1	ROLLER	
020	2564044-0006		1	ROLLER	

Pos	Part No	UN	Qty	Description	Page No

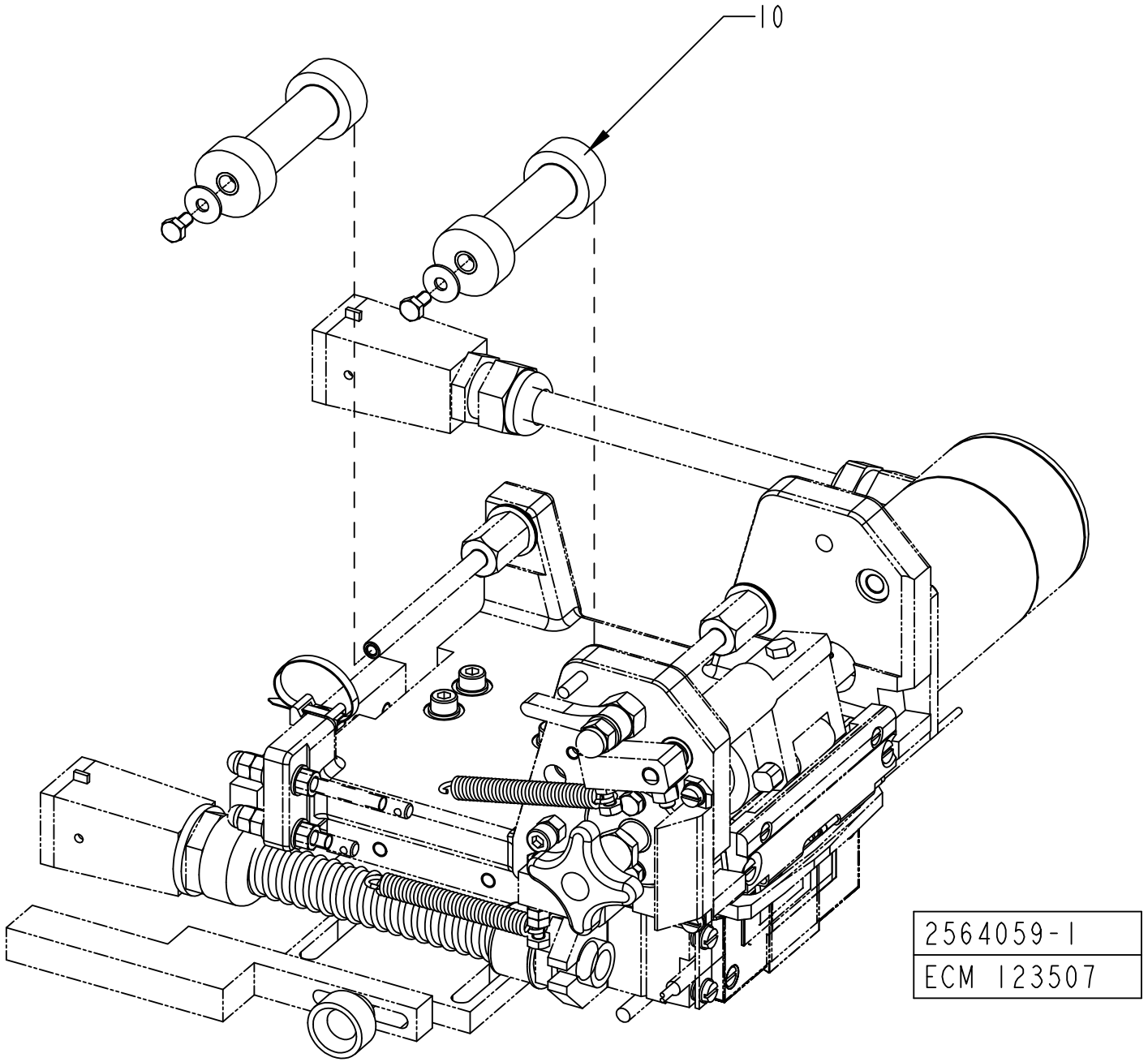
10
2564059-1
ECM 123507

ECM: 462574 - 20101002
Group number: 2564059-0100
Assembly Drawing: 2564059-1_1_AB

Pos	Part No	UN	Qty	Description	Page No
TBA 0250B HOLE95, TBA 0330S HOLE95, TBA 0500S HOLE95, TBA 0200B HOLE95, TBA 0375S HOLE90					
010	2564044-0011		2	ROLLER	
TBA 0500S HOLE55, TBA 0200S HOLE92, TBA 0200M HOLE92, TBA 0125S HOLE92					
010	2564044-0006		2	ROLLER	
TBA 1000B HOLE95, TBA 1000S HOLE95, TBA 1000SQ HOLE95, TBA 1500S HOLE95, TBA 1890S HOLE91, TBA 1890S HOLE95, TBA 2000S HOLE91, TBA 2000S HOLE95, TBA 1400B HOLE95					
010	2564044-0012		2	ROLLER	
TBA 1000S HOLE90, TBA 1500S HOLE90					
010	2564044-0008		2	ROLLER	
TPA 0250SQ HOLE72, TPA 0330SQ HOLE48, TPA 0200SQ HOLE72, TPA 0125SQ HOLE73					
010	2564044-0001		2	ROLLER	

Pos	Part No	UN	Qty	Description	Page No

TAB FEEDER

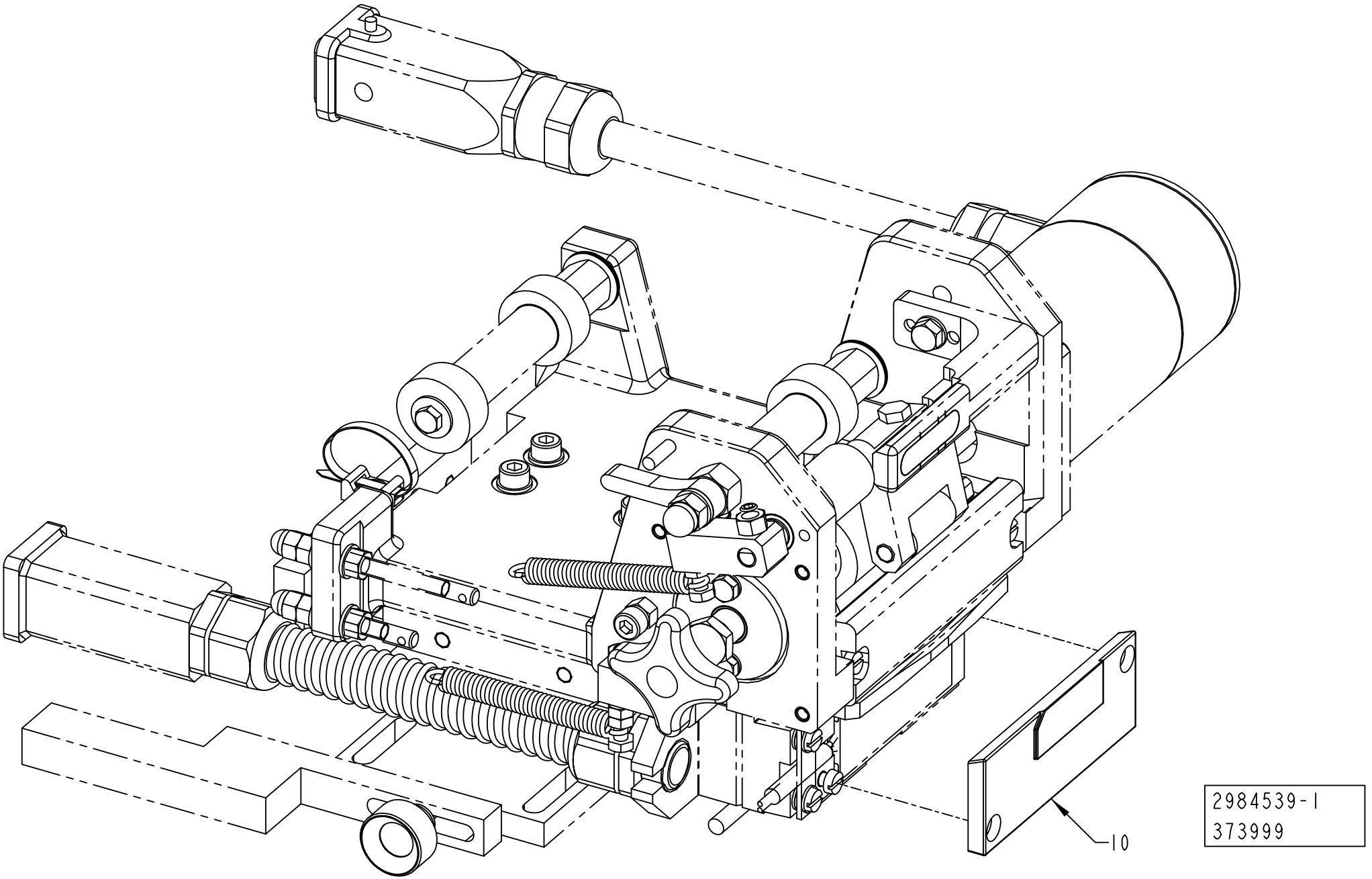

ECM: 462573 - 20101002
Group number: 2984539-0100
Assembly Drawing: 2984539-1_1_AA

Pos	Part No	UN	Qty	Description	Page No
TBA 0125S HOLE92					
010	3086911-0000		1	SEALING PLATE	
TBA 0200S HOLE92					
010	2927708-0000		1	SEALING PLATE	
TBA 0250B HOLE95, TBA 0330S HOLE95, TBA 0200B HOLE95, TBA 0375S HOLE90					
010	2526551-0000		1	PLATE	
TPA 0125SQ HOLE73					
010	2995020-0000		1	SEALING PLATE	
TPA 0250SQ HOLE72, TPA 0200SQ HOLE72					
010	2511640-0000		1	SEALING PLATE	
TPA 0330SQ HOLE48					
010	2511642-0000		1	SEALING PLATE	

Pos	Part No	UN	Qty	Description	Page No

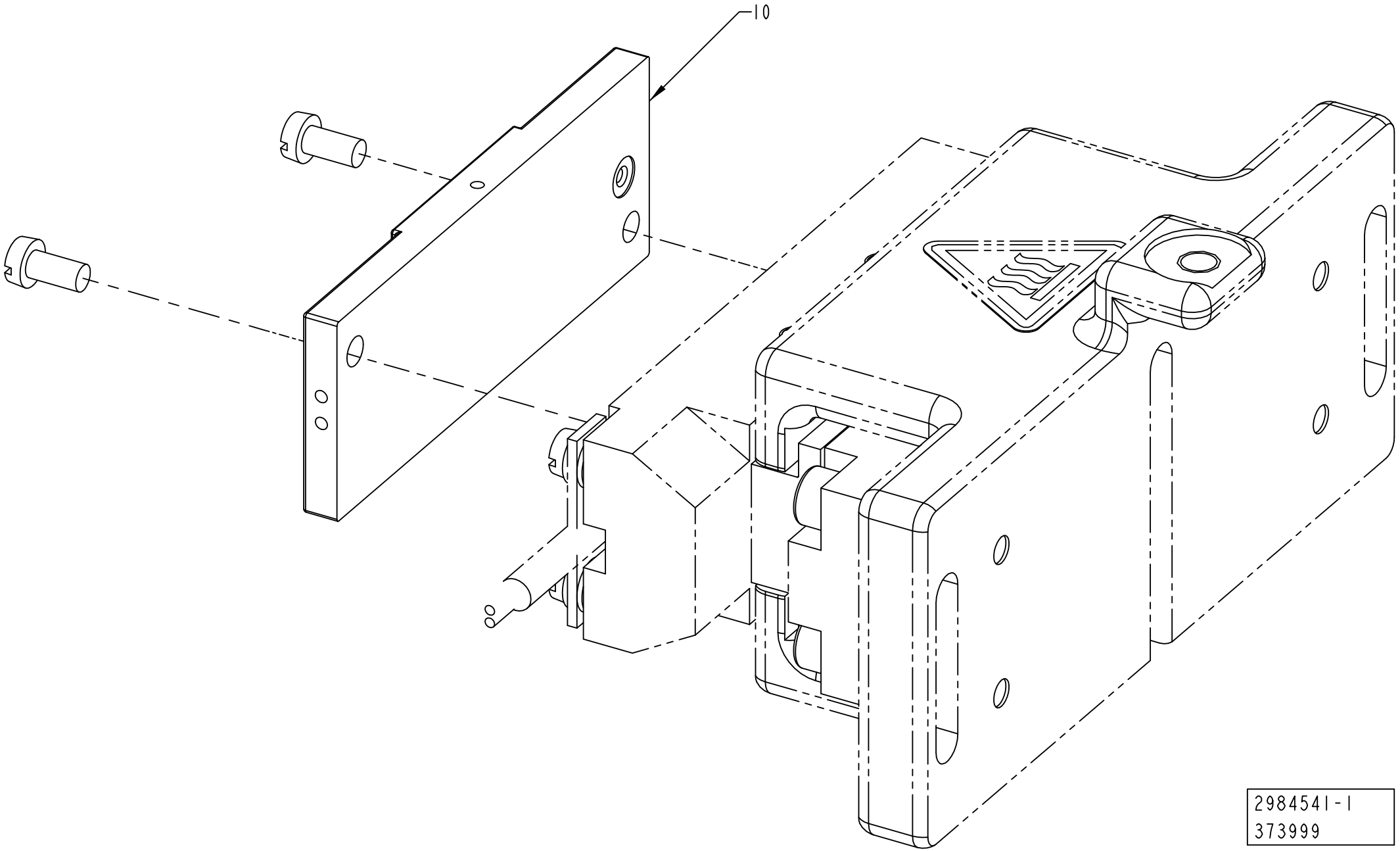
10
2984541-1
373999

ECM: 462572 - 20101002
Group number: 2984541-0100
Assembly Drawing: 2984541-1_1_AA

Pos	Part No	UN	Qty	Description	Page No
TBA 0125S HOLE92, TBA 0200S HOLE92					
010	2927709-0000		1	SEALING PLATE	
010	*311102-0185*		*1*	*PARALLEL PIN ISO 2338 2M6X6 ST*	
TBA 0250B HOLE95, TBA 0330S HOLE95, TBA 0200B HOLE95					
010	2563974-0000		1	SEALING PLATE	
TBA 0375S HOLE90					
010	3119316-0000		1	SEALING PLATE	
TPA 0125SQ HOLE73					
010	3019927-0000		1	SEALING PLATE	
TPA 0250SQ HOLE72, TPA 0200SQ HOLE72					
010	2525292-0000		1	SEALING PLATE	
TPA 0330SQ HOLE48					
010	2511651-0000		1	SEALING PLATE	

Pos	Part No	UN	Qty	Description	Page No

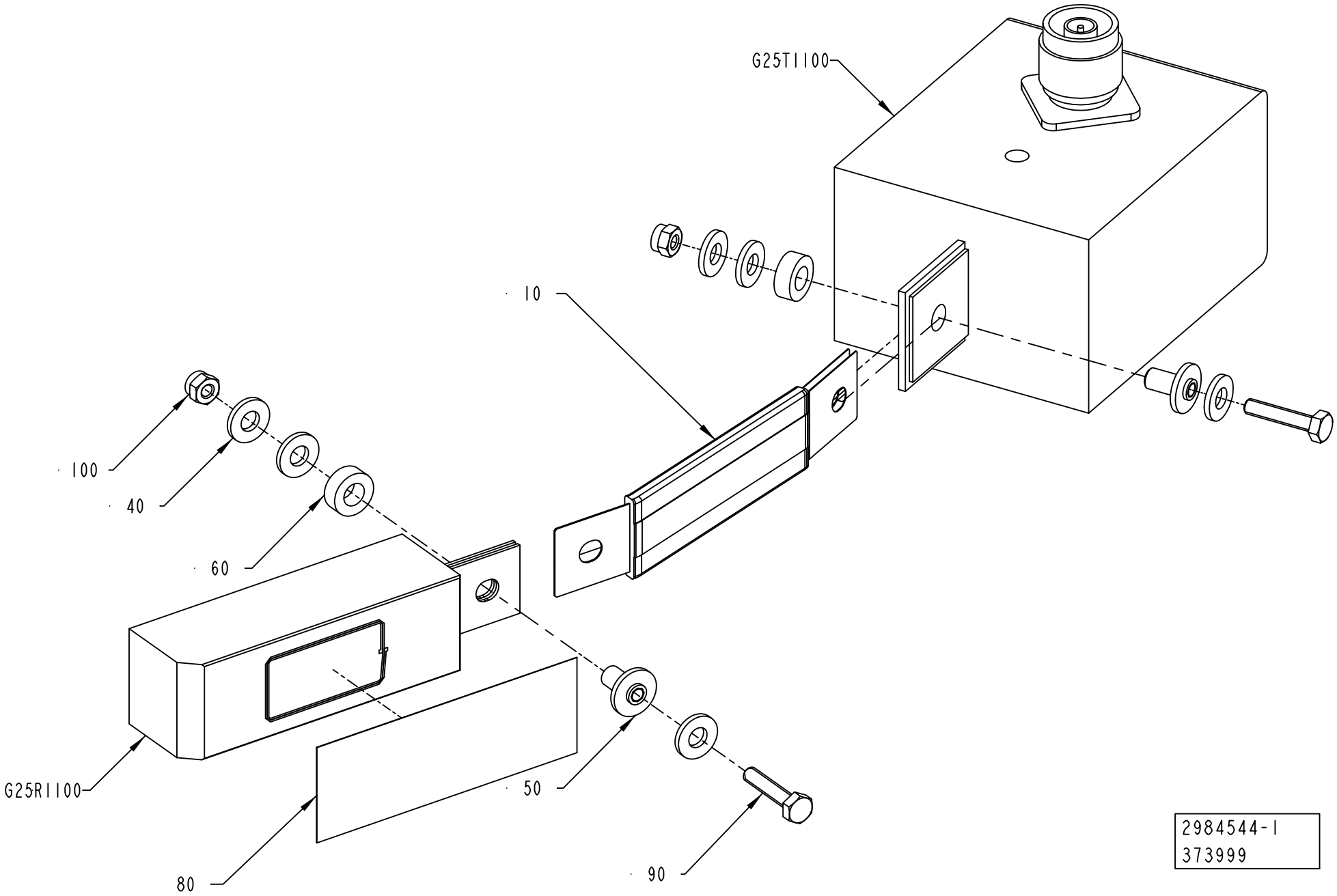

2984544-1
373999

ECM: 507995 - 20111001
Group number: 2984544-0100
Assembly Drawing: 2984544-1_1_AA

Pos	Part No	UN	Qty	Description	Page No
HOLE48					
G25R1100	1520196-0000		1	INDUCTOR	
G25T1100	67379-0216		1	TRANSFORMER	
HOLE72					
G25R1100	1566708-0000		1	INDUCTOR	
G25T1100	67379-0224		1	TRANSFORMER	
HOLE73					
G25R1100	3003484-0000		1	INDUCTOR	
G25T1100	67379-0224		1	TRANSFORMER	
HOLE90					
G25R1100	1533364-0000		1	INDUCTOR	
G25T1100	67379-0224		1	TRANSFORMER	
HOLE92					
G25R1100	2971544-0000		1	INDUCTOR	
G25T1100	67379-0224		1	TRANSFORMER	
HOLE95					
G25R1100	1533360-0000		1	INDUCTOR	
G25T1100	67379-0216		1	TRANSFORMER	
Common Parts					
010	1140889-0000		1	BUSBAR	
040	28509-0000		6	WASHER	
050	32544-0000		2	INSULATION NUT	
060	32644-0000		2	WASHER	
080	90459-2130	MM	130	TAPE, ADHESIVE SI TAPE MON3154535033CL	
090	312105-0295		2	SCREW, M6S ISO 4017 M4X20 A4 70	
100	312812-0312		2	HEXAGON NUT, NY-LOCK M4 A4 80	

Pos	Part No	UN	Qty	Description	Page No

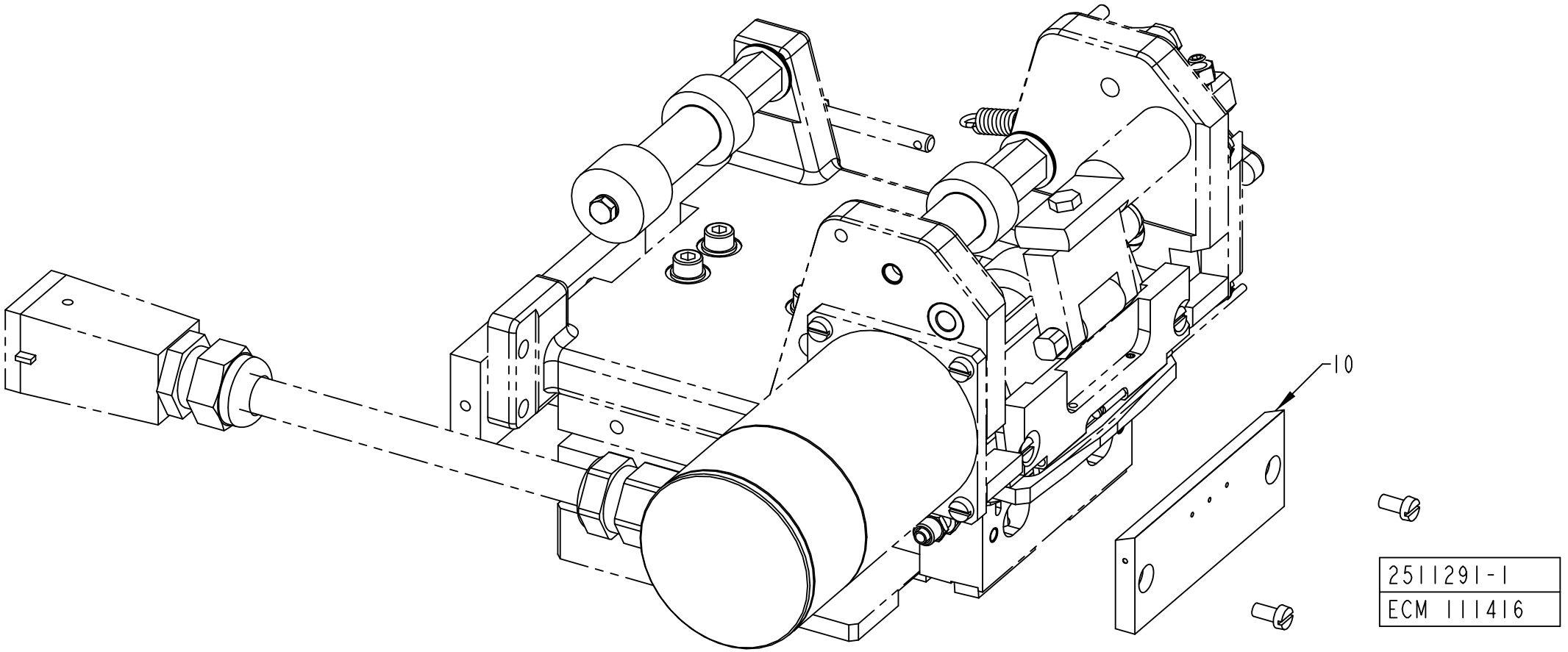
10
2511291-1
ECM 111416

ECM: 409791 - 20090915
Group number: 2511291-0100
Assembly Drawing: 2511291-1_1_AA

Pos	Part No	UN	Qty	Description	Page No
HOLE55, HOLE90, HOLE95, HOLE91, HOLE92, HOLE73					
010	2533715-0000		1	SEALING PLATE	
HOLE72, HOLE48					
010	2546293-0000		1	SEALING PLATE	

Pos	Part No	UN	Qty	Description	Page No

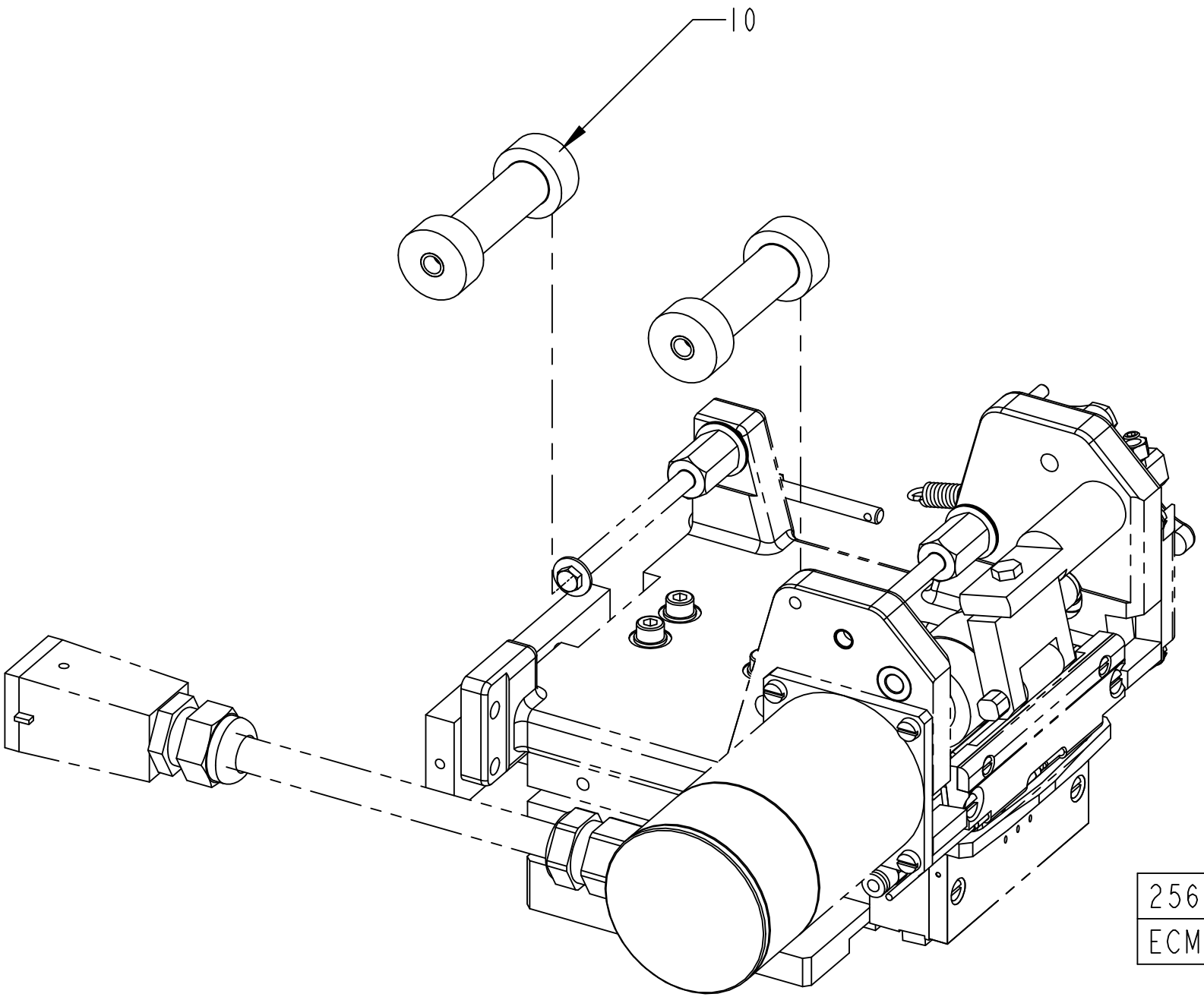
10
2564060-1
ECM 117180

ECM: 409790 - 20090915
Group number: 2564060-0100
Assembly Drawing: 2564060-1_1_AA

Pos	Part No	UN	Qty	Description	Page No
HOLE48, HOLE55, HOLE73					
010	2564044-0004		2	ROLLER	
HOLE72, HOLE92					
010	2564044-0002		2	ROLLER	
HOLE90					
010	2564044-0005		2	ROLLER	
HOLE95, HOLE91					
010	2564044-0006		2	ROLLER	

Pos	Part No	UN	Qty	Description	Page No

BAR CODE READER

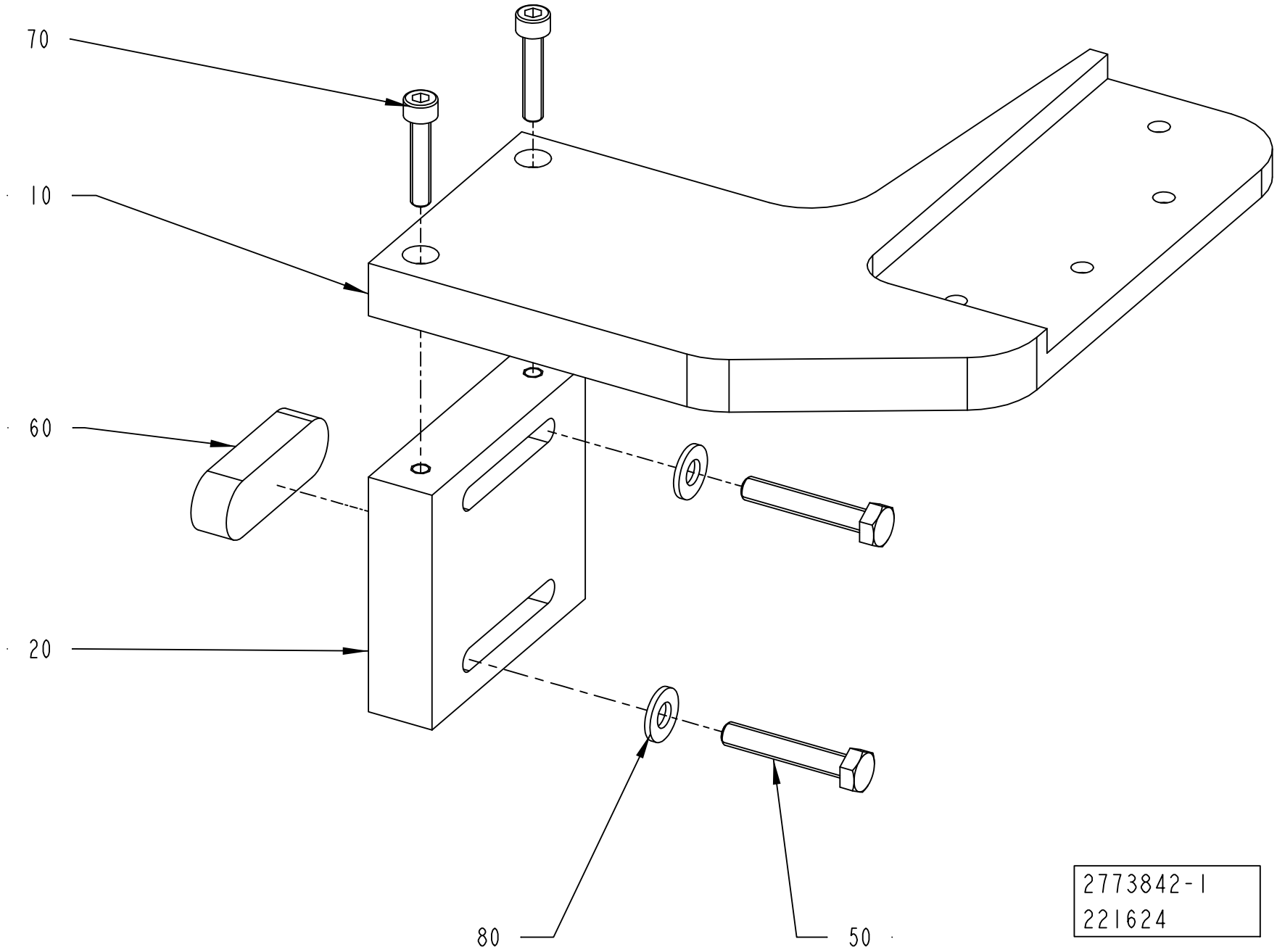

Pos	Part No	UN	Qty	Description	Page No
TBA 0500S HOLE55, TPA 0330SQ HOLE48, TBA 1000S HOLE90, TBA 1500S HOLE90, TBA 1000B HOLE95, TBA 1000S HOLE95, TBA 1000SQ HOLE95, TBA 1500S HOLE95, TBA 1890S HOLE91, TBA 1890S HOLE95, TBA 2000S HOLE91, TBA 2000S HOLE95, TBA 0250B HOLE95, TBA 0330S HOLE95, TBA 0500S HOLE95, TBA 0200B HOLE95, TBA 0200S HOLE92, TBA 0200M HOLE92, TBA 1400B HOLE95, TBA 0125S HOLE92, TBA 0375S HOLE90 (See drawing on page: 1-102)					
010	1548376-0000		1	BRACKET	
080	315125-0153		2	WASHER HIGH, TBRSB 6,4X22X4 A4	
TPA 0250SQ HOLE72, TPA 0200SQ HOLE72, TPA 0125SQ HOLE73 (See drawing on page: 1-100)					
010	2735131-0000		1	BRACKET	
020	2735132-0000		1	SUPPORT	
070	312115-0333		2	SCREW ISO4762 M5X25 A4 80	
080	315105-0156		2	WASHER PLAIN, 6,7X14X1,5 A4 BRB	
Common Parts					
050	312109-0376		2	SCREW, M6S ISO 4017 M6X35 A4 80	
060	315701-0396		1	PARALLEL KEY W. ROUND ENDS, 16X10X50 MM	

Pos	Part No	UN	Qty	Description	Page No

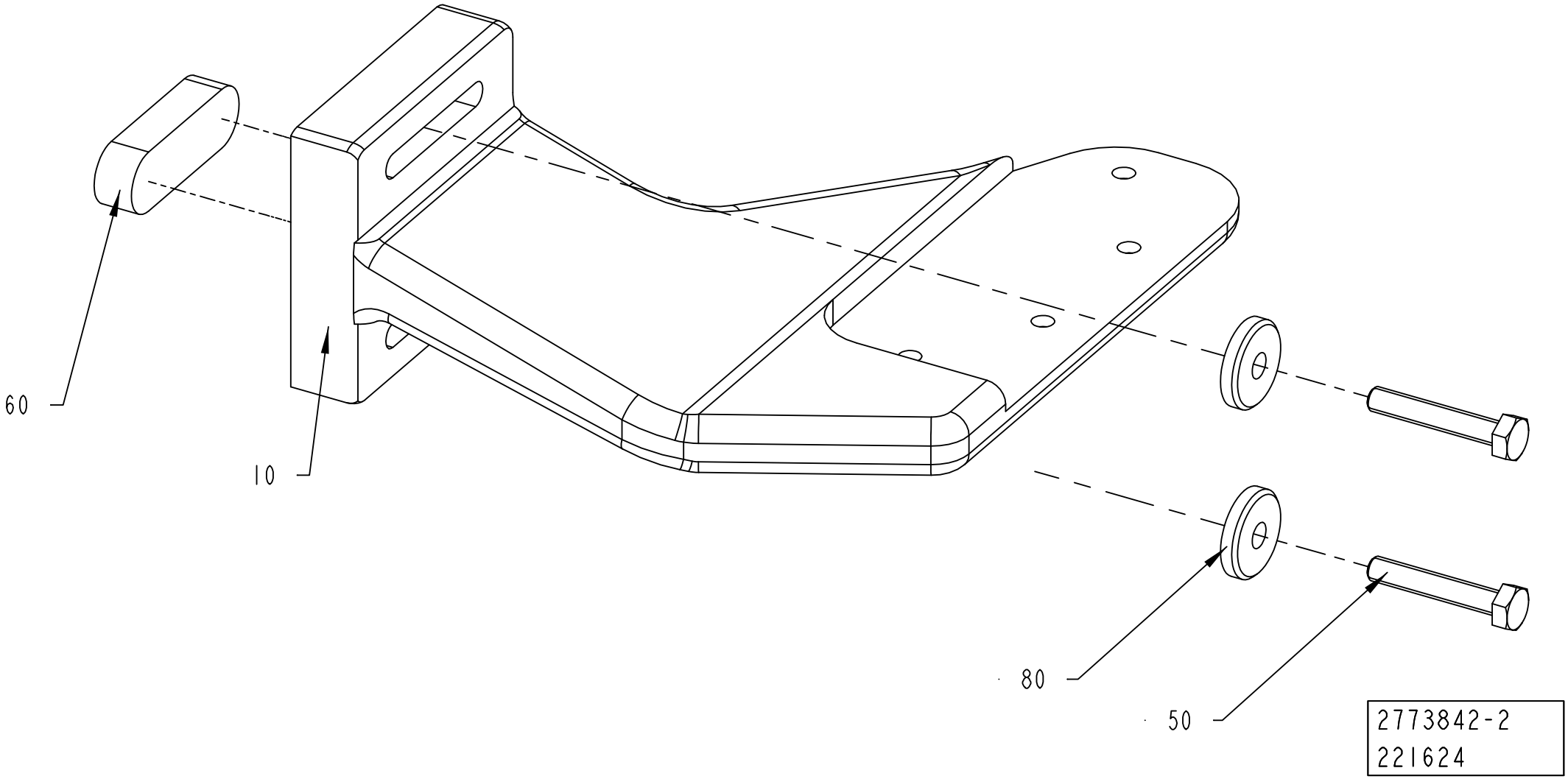
60
10
80
50
2773842-2
221624

Pos	Part No	UN	Qty	Description	Page No
TBA 0500S HOLE55, TPA 0330SQ HOLE48, TBA 1000S HOLE90, TBA 1500S HOLE90, TBA 1000B HOLE95, TBA 1000S HOLE95, TBA 1000SQ HOLE95, TBA 1500S HOLE95, TBA 1890S HOLE91, TBA 1890S HOLE95, TBA 2000S HOLE91, TBA 2000S HOLE95, TBA 0250B HOLE95, TBA 0330S HOLE95, TBA 0500S HOLE95, TBA 0200B HOLE95, TBA 0200S HOLE92, TBA 0200M HOLE92, TBA 1400B HOLE95, TBA 0125S HOLE92, TBA 0375S HOLE90 (See drawing on page: 1-102)					
010	1548376-0000		1	BRACKET	
080	315125-0153		2	WASHER HIGH, TBRSB 6,4X22X4 A4	
TPA 0250SQ HOLE72, TPA 0200SQ HOLE72, TPA 0125SQ HOLE73 (See drawing on page: 1-100)					
010	2735131-0000		1	BRACKET	
020	2735132-0000		1	SUPPORT	
070	312115-0333		2	SCREW ISO4762 M5X25 A4 80	
080	315105-0156		2	WASHER PLAIN, 6,7X14X1,5 A4 BRB	
Common Parts					
050	312109-0376		2	SCREW, M6S ISO 4017 M6X35 A4 80	
060	315701-0396		1	PARALLEL KEY W. ROUND ENDS, 16X10X50 MM	

Pos	Part No	UN	Qty	Description	Page No

SPLICING TABLE

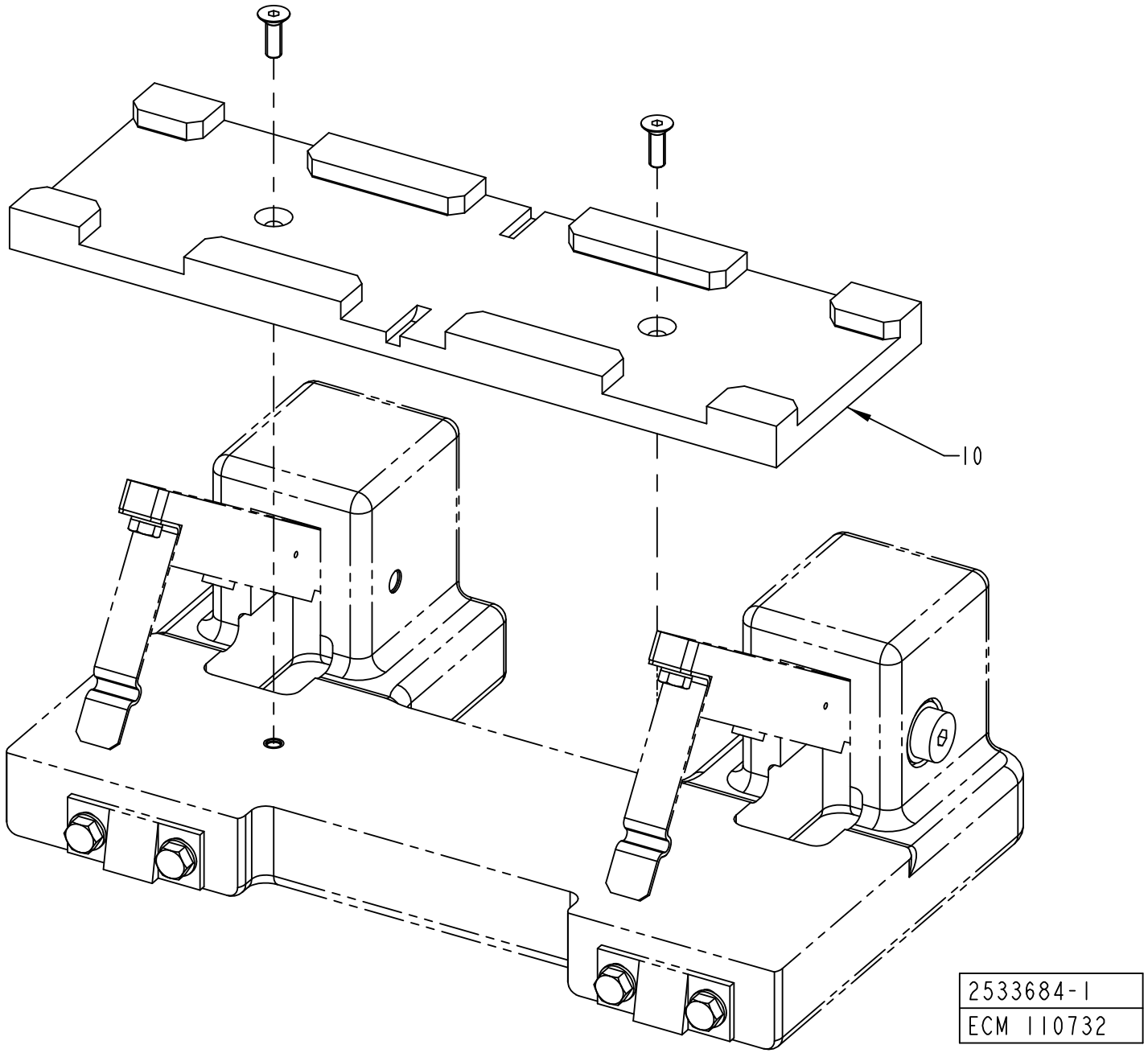

ECM: 409472 - 20090915
Group number: 2533684-0100
Assembly Drawing: 2533684-1_1_AA

Pos	Part No	UN	Qty	Description	Page No
HOLE48, HOLE55, HOLE73					
010	1499296-0002		1	GUIDE	
HOLE72, HOLE92					
010	1499296-0001		1	GUIDE	
HOLE90					
010	1499296-0003		1	GUIDE	
HOLE95, HOLE91					
010	1499296-0004		1	GUIDE	

Pos	Part No	UN	Qty	Description	Page No

Machine Type | Group Description | Used-In | Group Number | Page No

BOBBIN HOLDER

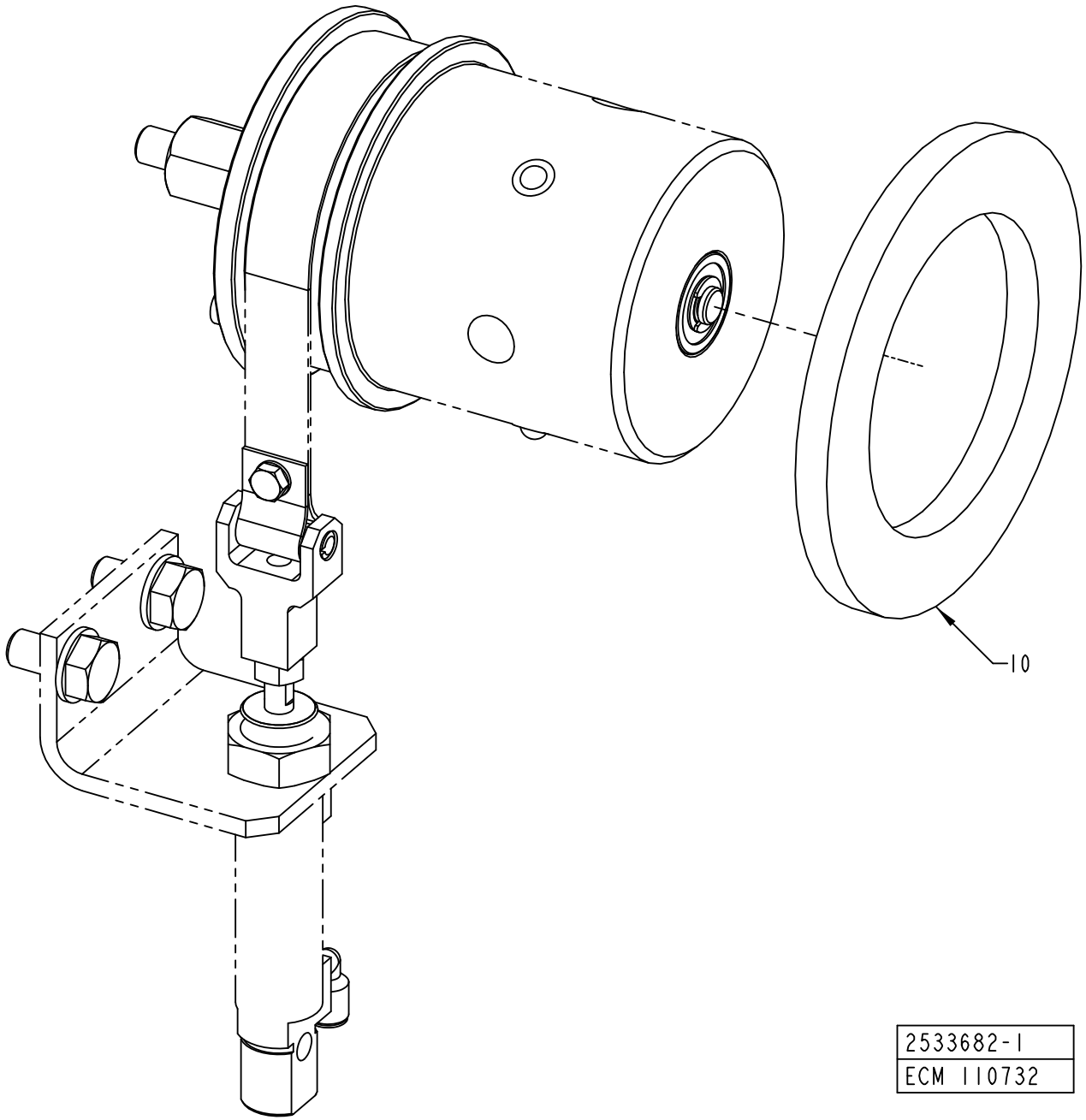

2533682-1
ECM 110732

ECM: 409471 - 20090915
Group number: 2533682-0100
Assembly Drawing: 2533682-1_1_AA

Pos	Part No	UN	Qty	Description	Page No
HOLE48, HOLE55, HOLE73					
010	1347952-0003		1	SPACER	
HOLE72, HOLE92					
010	1347952-0002		1	SPACER	
HOLE90					
010	1347952-0004		1	SPACER	
HOLE95, HOLE91					
010	1347952-0006		1	SPACER	

Pos	Part No	UN	Qty	Description	Page No

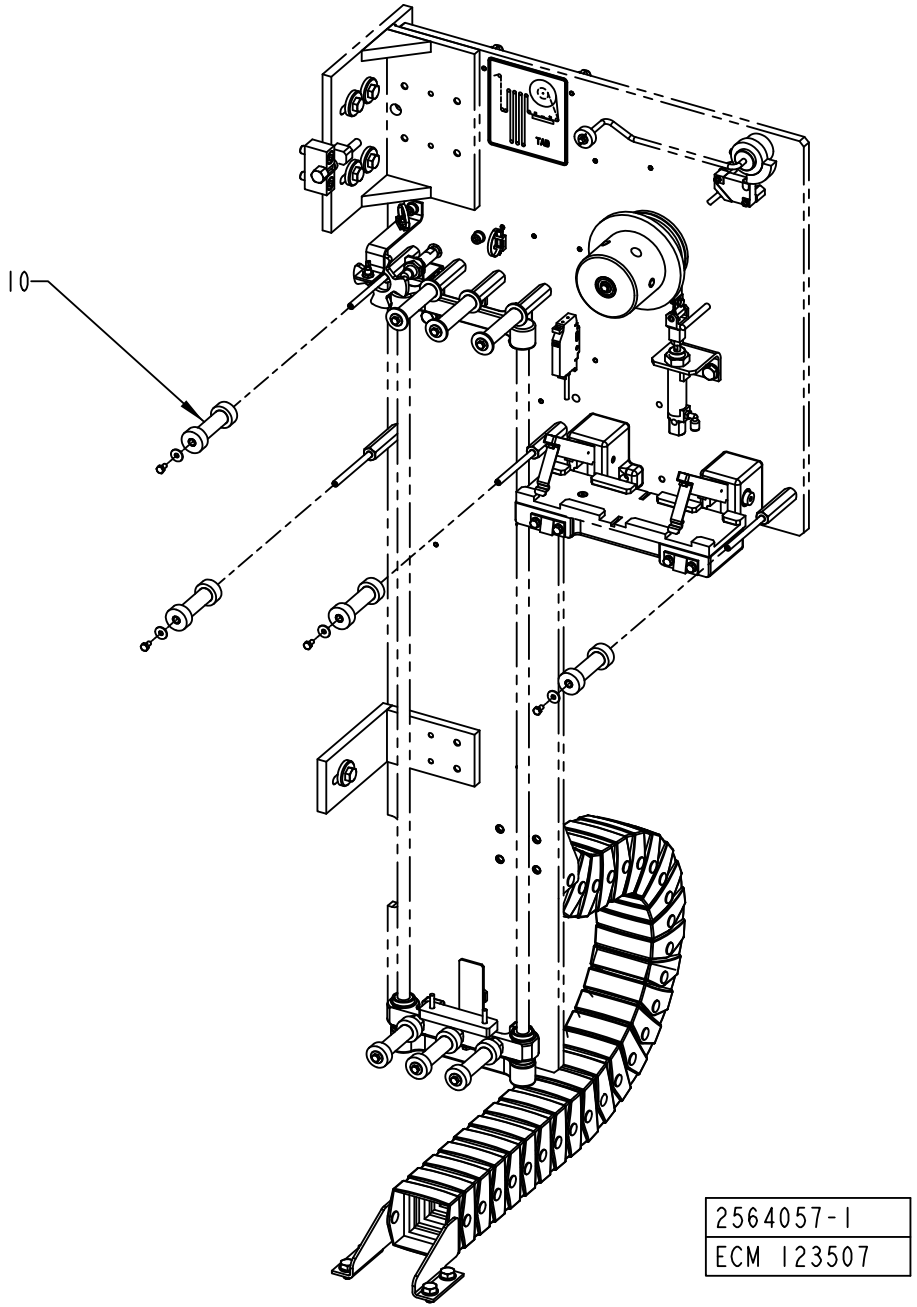
10
2564057-1
ECM 123507

ECM: 462578 - 20101002
Group number: 2564057-0100
Assembly Drawing: 2564057-1_1_AB

Pos	Part No	UN	Qty	Description	Page No
TBA 0250B HOLE95, TBA 0330S HOLE95, TBA 0500S HOLE95, TBA 0200B HOLE95, TBA 0375S HOLE90					
010	2564044-0011		4	ROLLER	
TBA 0500S HOLE55, TBA 0200S HOLE92, TBA 0200M HOLE92, TBA 0125S HOLE92					
010	2564044-0006		4	ROLLER	
TBA 1000B HOLE95, TBA 1000S HOLE95, TBA 1000SQ HOLE95, TBA 1500S HOLE95, TBA 1890S HOLE91, TBA 1890S HOLE95, TBA 2000S HOLE91, TBA 2000S HOLE95, TBA 1400B HOLE95					
010	2564044-0012		4	ROLLER	
TBA 1000S HOLE90, TBA 1500S HOLE90					
010	2564044-0008		4	ROLLER	
TPA 0250SQ HOLE72, TPA 0330SQ HOLE48, TPA 0200SQ HOLE72, TPA 0125SQ HOLE73					
010	2564044-0001		4	ROLLER	

Pos	Part No	UN	Qty	Description	Page No

BOBBIN HOLDER

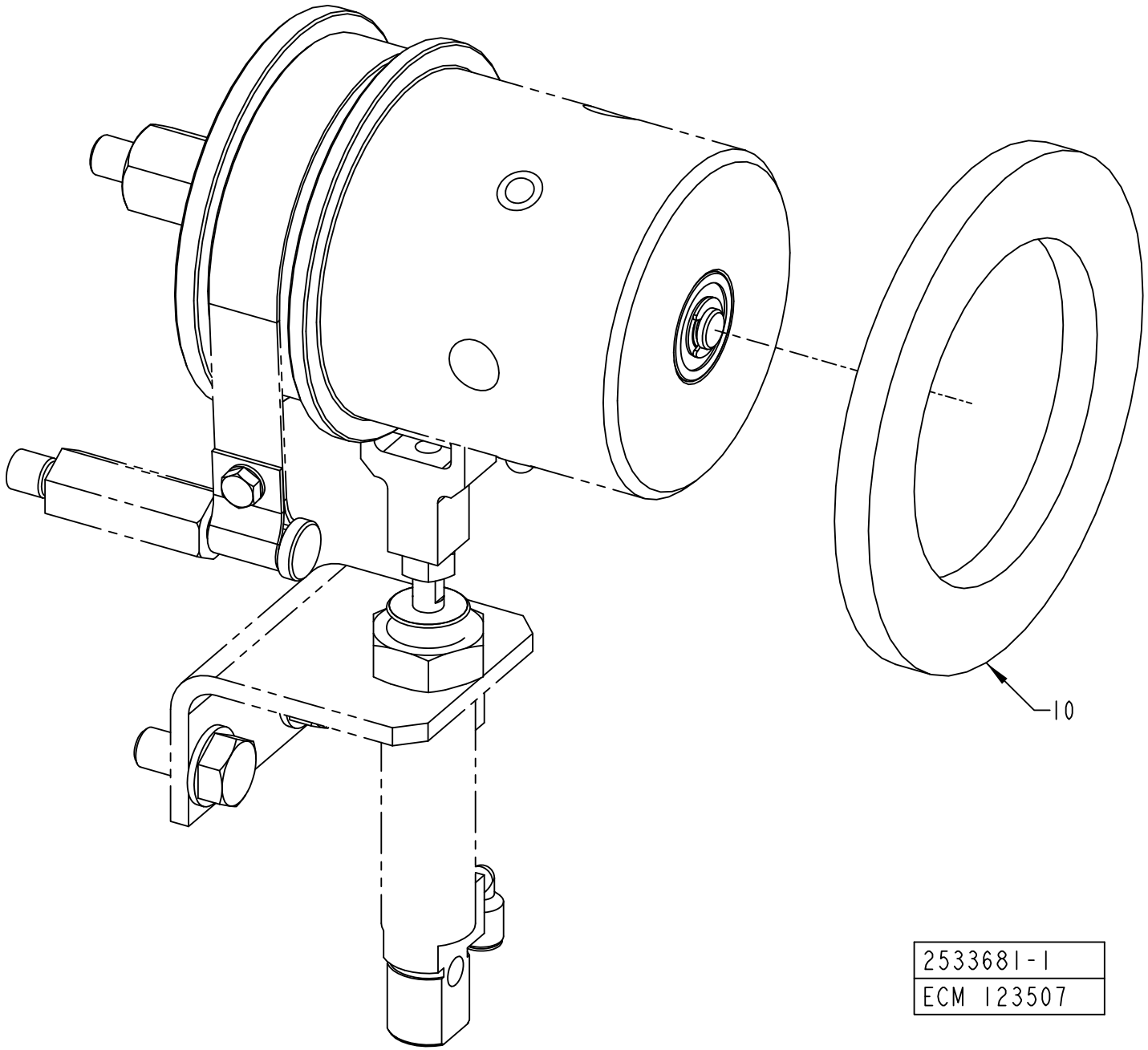

2533681-1
ECM 123507

ECM: 462576 - 20101002
Group number: 2533681-0100
Assembly Drawing: 2533681-1_1_AB

Pos	Part No	UN	Qty	Description	Page No
TBA 0250B HOLE95, TBA 0330S HOLE95, TBA 0500S HOLE95, TBA 0200B HOLE95, TBA 0375S HOLE90					
010	1347952-0010		1	SPACER	
TBA 0500S HOLE55, TBA 0200S HOLE92, TBA 0200M HOLE92, TBA 0125S HOLE92					
010	1347952-0006		1	SPACER	
TBA 1000B HOLE95, TBA 1000S HOLE95, TBA 1000SQ HOLE95, TBA 1500S HOLE95, TBA 1890S HOLE91, TBA 1890S HOLE95, TBA 2000S HOLE91, TBA 2000S HOLE95, TBA 1400B HOLE95					
010	1347952-0011		1	SPACER	
TBA 1000S HOLE90, TBA 1500S HOLE90					
010	1347952-0008		1	SPACER	
TPA 0250SQ HOLE72, TPA 0330SQ HOLE48, TPA 0200SQ HOLE72, TPA 0125SQ HOLE73					
010	1347952-0016		1	SPACER	

Pos	Part No	UN	Qty	Description	Page No

SPLICING TABLE

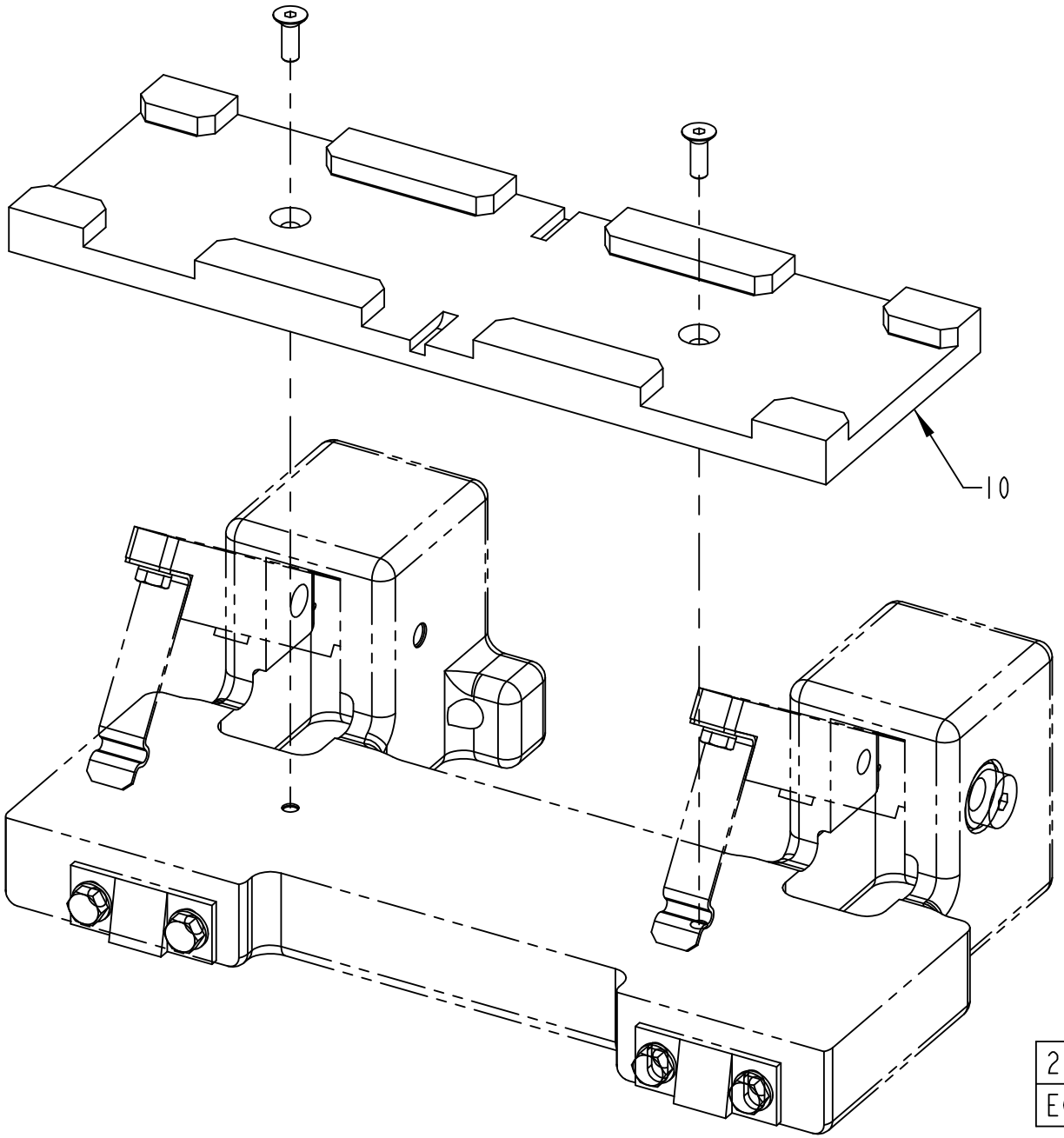

ECM: 462577 - 20101002
Group number: 2533685-0100
Assembly Drawing: 2533685-1_1_AB

Pos	Part No	UN	Qty	Description	Page No
TBA 0250B HOLE95, TBA 0330S HOLE95, TBA 0500S HOLE95, TBA 0200B HOLE95, TBA 0375S HOLE90					
010	1499296-0007		1	GUIDE	
TBA 0500S HOLE55, TBA 0200S HOLE92, TBA 0200M HOLE92, TBA 0125S HOLE92					
010	1499296-0004		1	GUIDE	
TBA 1000B HOLE95, TBA 1000S HOLE95, TBA 1000SQ HOLE95, TBA 1500S HOLE95, TBA 1890S HOLE91, TBA 1890S HOLE95, TBA 2000S HOLE91, TBA 2000S HOLE95, TBA 1400B HOLE95					
010	1499296-0008		1	GUIDE	
TBA 1000S HOLE90, TBA 1500S HOLE90					
010	1499296-0015		1	GUIDE	
TPA 0250SQ HOLE72, TPA 0330SQ HOLE48, TPA 0200SQ HOLE72, TPA 0125SQ HOLE73					
010	1499296-0013		1	GUIDE	

Pos	Part No	UN	Qty	Description	Page No

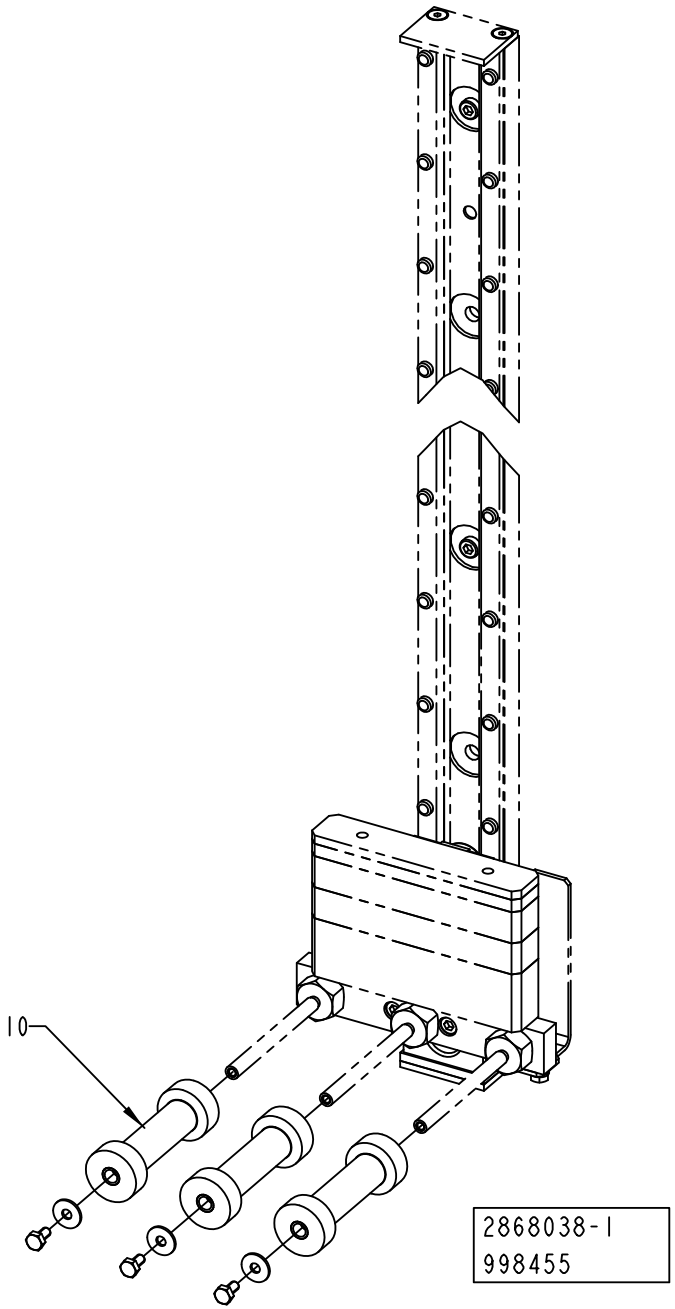
10
2868038-1
998455

ECM: 998455 - 20101002
Group number: 2868038-0100
Assembly Drawing: 2868038-1_1_AA

Pos	Part No	UN	Qty	Description	Page No
TBA 0250B HOLE95, TBA 0330S HOLE95, TBA 0500S HOLE95, TBA 0200B HOLE95, TBA 0375S HOLE90					
010	2564043-0008		3	ROLLER	
TBA 0500S HOLE55, TBA 0200S HOLE92, TBA 0200M HOLE92, TBA 0125S HOLE92					
010	2564043-0005		3	ROLLER	
TBA 1000B HOLE95, TBA 1000S HOLE95, TBA 1000SQ HOLE95, TBA 1500S HOLE95, TBA 1890S HOLE91, TBA 1890S HOLE95, TBA 2000S HOLE91, TBA 2000S HOLE95, TBA 1400B HOLE95					
010	2564043-0009		3	ROLLER	
TBA 1000S HOLE90, TBA 1500S HOLE90					
010	2564043-0006		3	ROLLER	
TPA 0250SQ HOLE72, TPA 0330SQ HOLE48, TPA 0200SQ HOLE72, TPA 0125SQ HOLE73					
010	2564043-0001		3	ROLLER	

Pos	Part No	UN	Qty	Description	Page No

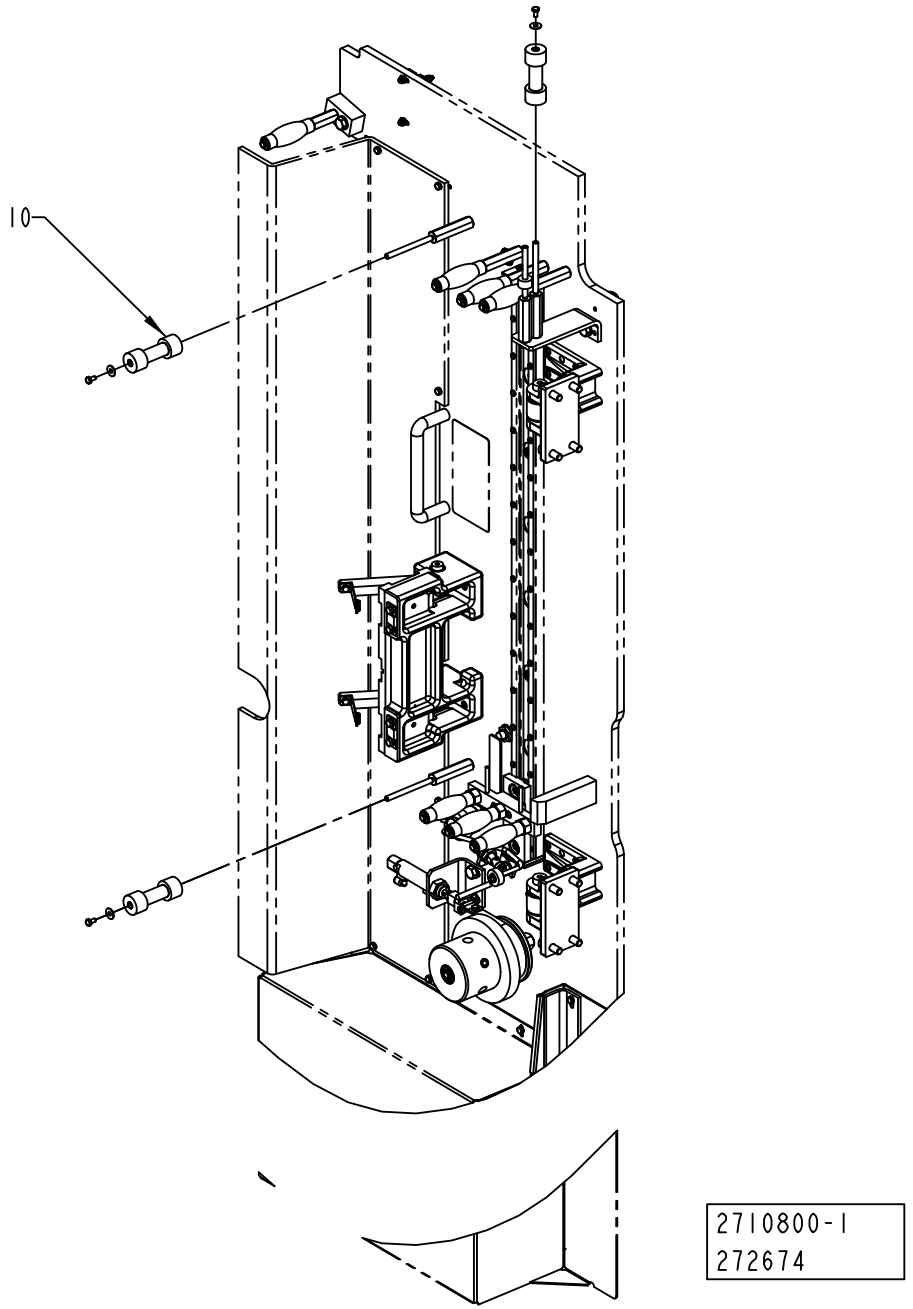
10
2710800-1
272674

ECM: 409478 - 20090915
Group number: 2710800-0100
Assembly Drawing: 2710800-1_1_AA

Pos	Part No	UN	Qty	Description	Page No
HOLE48, HOLE55, HOLE73					
010	2564044-0004		3	ROLLER	
HOLE72, HOLE92					
010	2564044-0002		3	ROLLER	
HOLE90					
010	2564044-0005		3	ROLLER	
HOLE95, HOLE91					
010	2564044-0006		3	ROLLER	

Pos	Part No	UN	Qty	Description	Page No

This page is intentionally left blank.

ECM: 467340 - 20110101
Group number: 2564076-0100
Assembly Drawing:

Pos	Part No	UN	Qty	Description	Page No
HOLE55, HOLE90, HOLE95, HOLE91, HOLE92					
100	90602-9590		1	ADH. TAPE LABELS AL/PE,BS FOIL 100 35X16	
HOLE72, HOLE48, HOLE73					
120	90602-9592		1	ADH. TAPE LABELS AL/PE,BS FOIL 100 24X24	
Common Parts					
130	90602-9550		1	ADH. TAPE LABELS AL/PET,BS SPLICE 90N 30	
200	90600-2609		1	SCOTCH-BRITE WHITE 690	

Pos	Part No	UN	Qty	Description	Page No

This page is intentionally left blank.

ECM: 448109 - 20101002
Group number: 2984535-0100
Assembly Drawing:

Pos	Part No	UN	Qty	Description	Page No
TBA 0125S HOLE92					
010	3081261-0000		1	OPENING SPECIFICATION	
TBA 0200B HOLE95					
010	2696580-0000		1	OPENING SPECIFICATION	
TBA 0200S HOLE92					
010	2927573-0000		1	OPENING SPECIFICATION	
TBA 0250B HOLE95					
010	2697205-0000		1	OPENING SPECIFICATION	
TBA 0330S HOLE95					
010	2695493-0000		1	OPENING SPECIFICATION	
TBA 0375S HOLE90					
010	3059451-0000		1	OPENING SPECIFICATION	
TPA 0125SQ HOLE73					
010	2992259-0000		1	OPENING SPECIFICATION	
TPA 0200SQ HOLE72					
010	2526546-0000		1	OPENING SPECIFICATION	
TPA 0250SQ HOLE72					
010	2511638-0000		1	OPENING SPECIFICATION	
TPA 0330SQ HOLE48					
010	2514030-0000		1	OPENING SPECIFICATION	

Pos	Part No	UN	Qty	Description	Page No

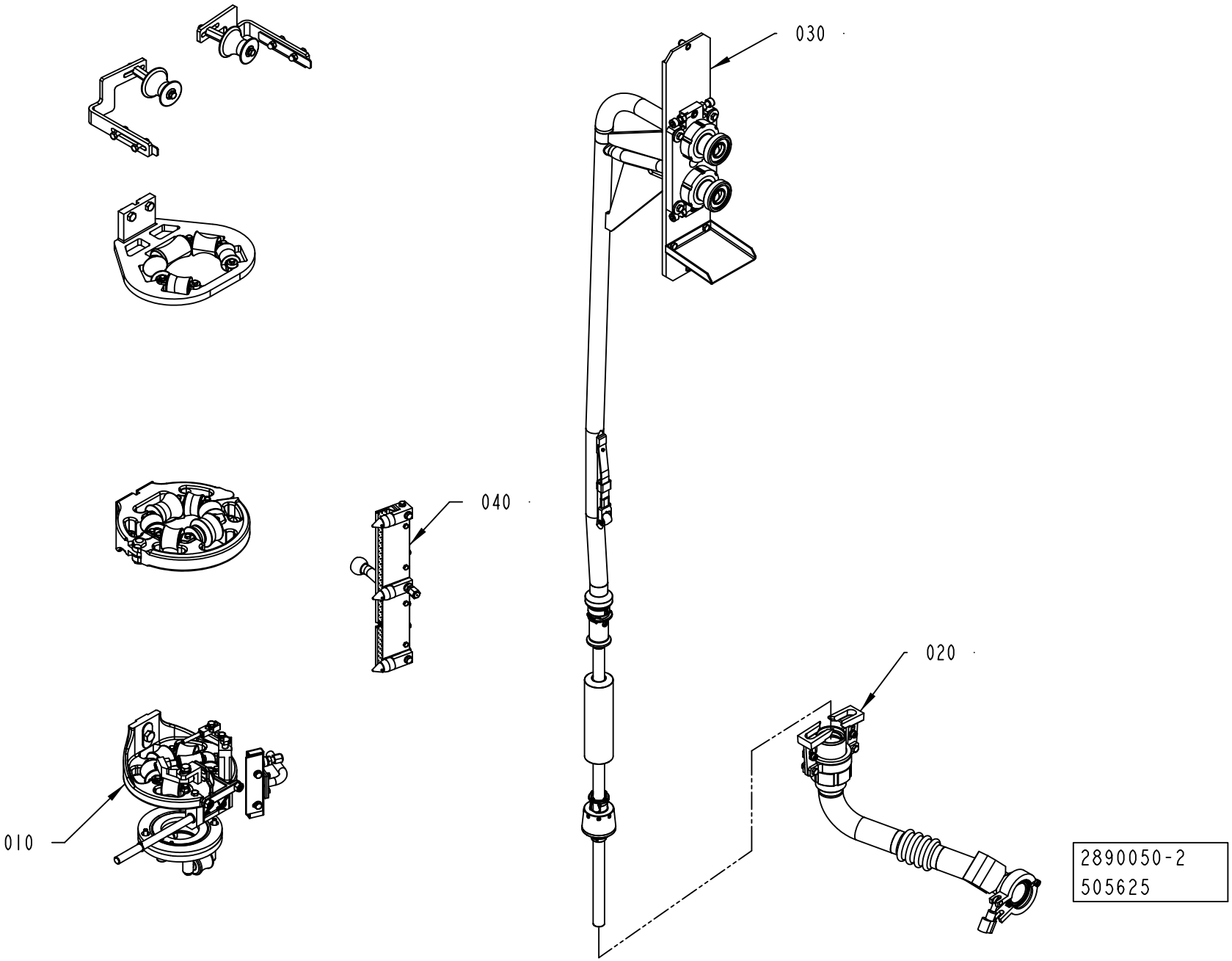
030
040
020
010
2890050-2
505625

ECM: 507210 - 20111001
Group number: 2890050-0200
Assembly Drawing: 2890050-2_1_AA

Pos	Part No	UN	Qty	Description	Page No
-					
010	2808305-0200		1	FORMING SECTION	**1-125**
020	2839259-0100		1	CLEANING CUP	**1-155**
030	2839240-0200		1	FILLING PIPE	**1-157, 1-159**
040	2808340-0200		1	AIR NOZZLE	**1-161**

Pos	Part No	UN	Qty	Description	Page No

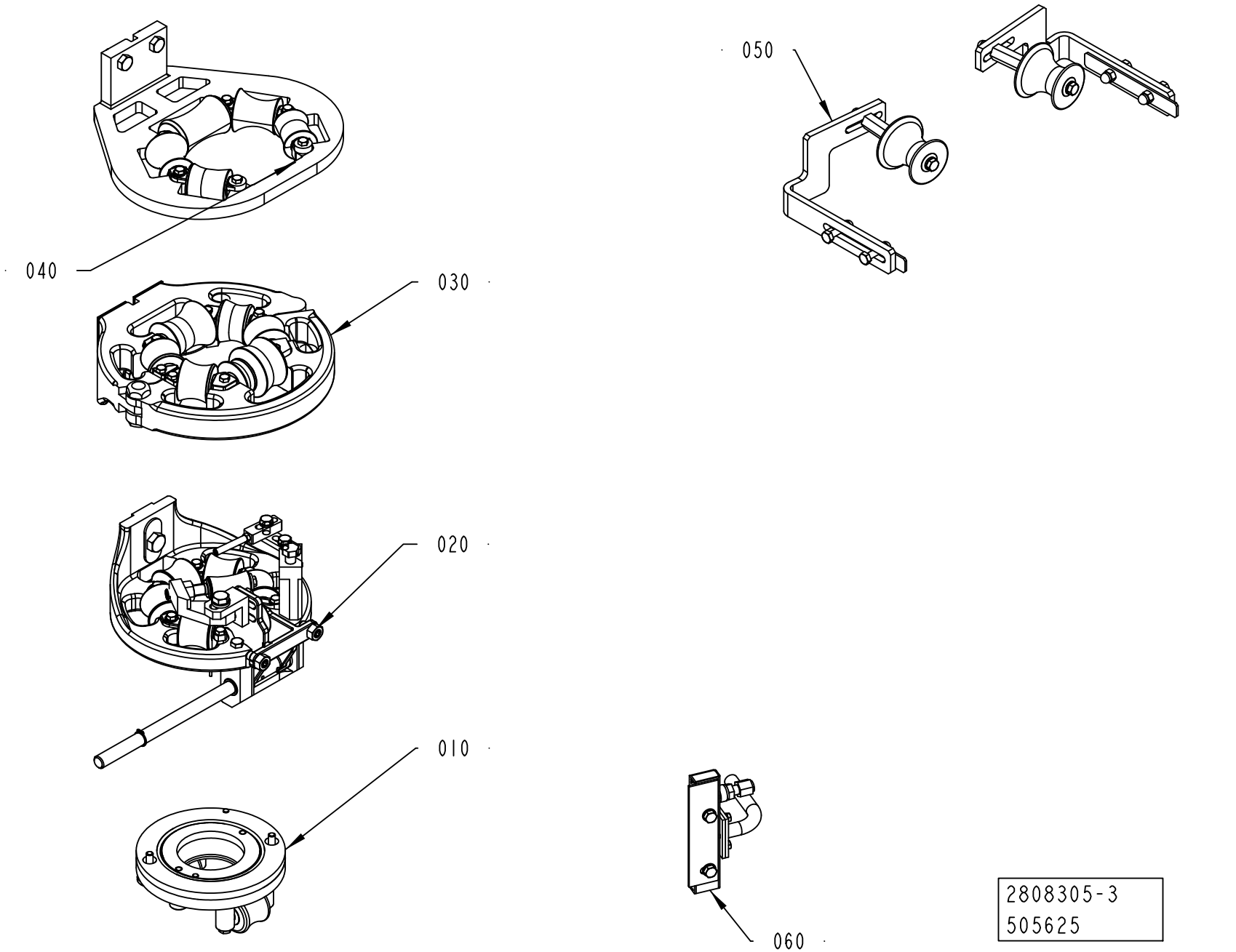

2808305-3
505625

ECM: 507207 - 20111001
Group number: 2808305-0200
Assembly Drawing: 2808305-3_1_AA

Pos	Part No	UN	Qty	Description	Page No
-					
010	2808315-0200		1	SEAL RING	**1-127, 1-129, 1-131**
020	2808290-0150		1	LOWER FORMING RING	**1-133, 1-135**
030	2808285-0150		1	UPPER FORMING RING	**1-137, 1-139, 1-141, 1-143**
040	2890090-0100		1	LOWER SUPPORT ROLLERS	**1-145**
050	2808295-0100		1	EDGE ROLLER	**1-147, 1-149, 1-151**
060	2871540-0100		1	AIR NOZZLE	**1-153**

Pos	Part No	UN	Qty	Description	Page No

SEAL RING

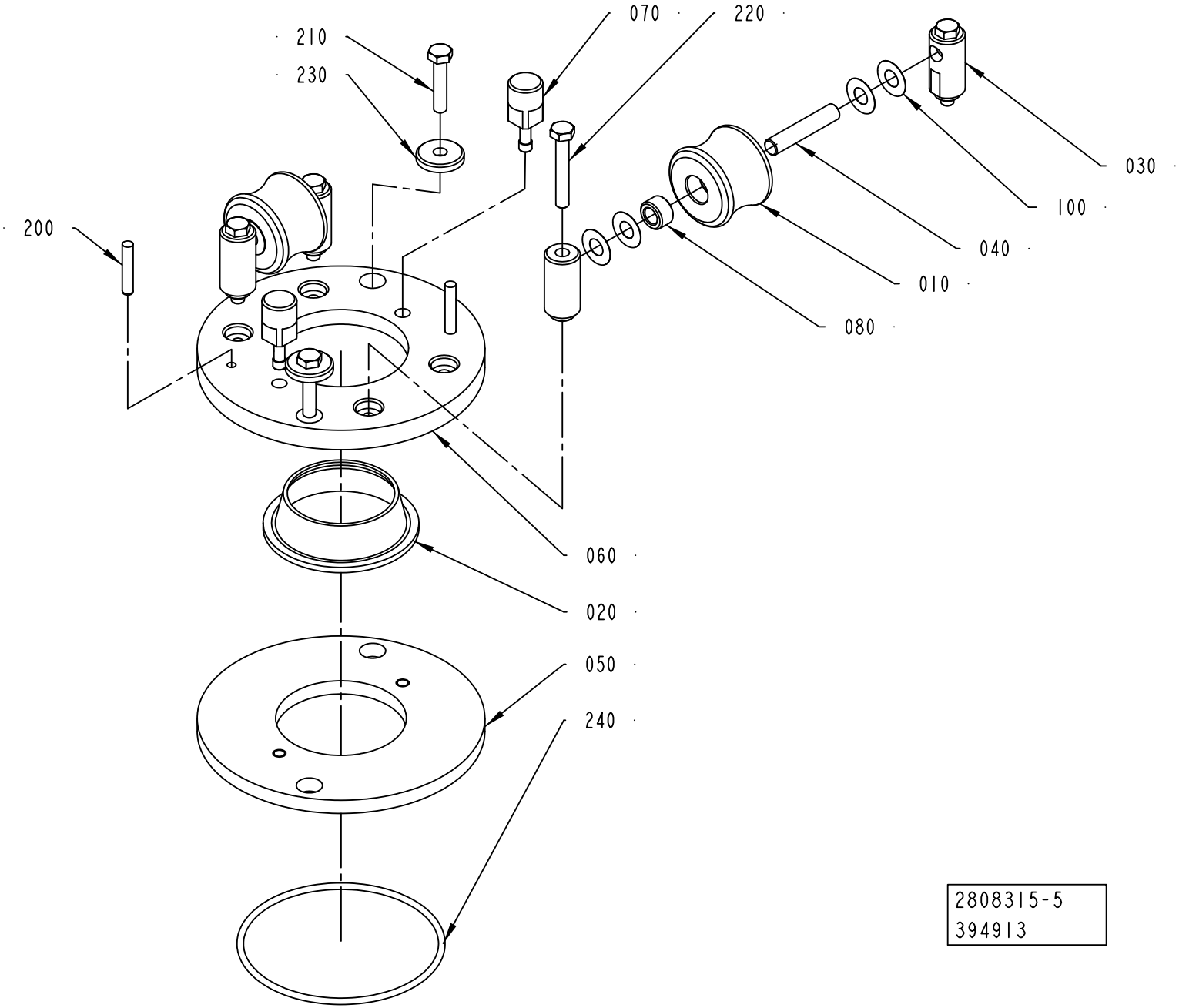
210
230
070
220
030
100
040
010
080
200
060
020
050
240
2808315-5
394913

ECM: 479257 - 20101003
Group number: 2808315-0200
Assembly Drawing: 2808315-5_1_AA

This list covers pages from 1-126 to 1-131

Pos	Part No	UN	Qty	Description	Page No
TBA 0080S (See drawing on page: 1-130)					
010	2945443-0000		2	ROLLER	
020	3021605-0000		1	SEAL RING	
030	490902-0000		4	AXLE SUPPORT	
040	263655-0018		2	SHAFT	
050	2795385-0000		1	RING	
060	2795386-0000		1	RING	
070	571540-0000		2	PIN	
080	751230-0000		4	PLAIN BEARING	
200	311103-0313		2	PARALLEL PIN ISO 2338 5M6X28 A1	
210	312115-0370		2	SCREW ISO4762 M6X20 A4 80	
240	315204-0309		1	O-RING 89,5X3 MM	
250	312105-0368		2	SCREW, M6S ISO 4017 M6X16 A4 80	
TBA 0100B, TBA 0125S (See drawing on page: 1-126)					
010	2970443-0000		2	ROLLER	
020	3023659-0000		1	SEAL RING	
030	490902-0000		4	AXLE SUPPORT	
040	490903-0000		2	SHAFT	
050	571537-0000		1	RING	
060	571538-0000		1	RING	
070	571540-0000		2	PIN	
080	751230-0000		4	PLAIN BEARING	
200	311103-0313		2	PARALLEL PIN ISO 2338 5M6X28 A1	
210	312105-0374		2	SCREW, M6S ISO 4014 M6X30 A4 80	
240	315204-0309		1	O-RING 89,5X3 MM	
TBA 0160S, TBA 0200S, TPA 0250SQ, TPA 0200SQ (See drawing on page: 1-126)					
010	2966629-0000		2	ROLLER	
020	3023522-0000		1	SEAL RING	
030	490902-0000		4	AXLE SUPPORT	
040	490903-0000		2	SHAFT	
050	571537-0000		1	RING	
060	571539-0000		1	RING	
070	571540-0000		2	PIN	
080	751230-0000		4	PLAIN BEARING	
200	311103-0313		2	PARALLEL PIN ISO 2338 5M6X28 A1	
210	312105-0374		2	SCREW, M6S ISO 4014 M6X30 A4 80	
240	315204-0309		1	O-RING 89,5X3 MM	
TBA 0200B, TBA 0200SQ, TBA 0284B, TBA 0250B, TBA 0300S, TBA 0330S, TBA 0250SQ (See drawing on page: 1-128)					
010	456796-0000		2	ROLLER	
020	3023523-0000		1	SEAL RING	
030	456797-0000		4	AXLE SUPPORT	
040	263655-0006		2	SHAFT	
050	456794-0000		1	RING	
070	752519-0002		2	PIN	
200	311103-0310		2	PARALLEL PIN ISO 2338 5M6X20 A1	
210	312105-0372		2	SCREW, M6S ISO 4017 M6X25 A4 80	
TBA 0200M, TBA 0250S, TBA 0200E (See drawing on page: 1-126)					
010	2966627-0000		2	ROLLER	
020	3023524-0000		1	SEAL RING	
030	490902-0000		4	AXLE SUPPORT	
040	490903-0000		2	SHAFT	
050	574334-0000		1	RING	
060	574335-0000		1	RING	
070	571540-0000		2	PIN	
080	751230-0000		4	PLAIN BEARING	
200	311103-0313		2	PARALLEL PIN ISO 2338 5M6X28 A1	
210	312105-0374		2	SCREW, M6S ISO 4014 M6X30 A4 80	
240	315204-0309		1	O-RING 89,5X3 MM	
TBA 0375S (See drawing on page: 1-128)					
010	3058449-0000		2	ROLLER	
020	3058448-0000		1	SEAL RING	
030	456797-0000		4	AXLE SUPPORT	
040	263655-0006		2	SHAFT	
050	456794-0000		1	RING	
070	752519-0002		2	PIN	
200	311103-0310		2	PARALLEL PIN ISO 2338 5M6X20 A1	
210	312105-0372		2	SCREW, M6S ISO 4017 M6X25 A4 80	
TPA 0125SQ (See drawing on page: 1-130)					
010	2795387-0000		2	ROLLER	
020	3021604-0000		1	SEAL RING	
030	490902-0000		4	AXLE SUPPORT	
040	263655-0018		2	SHAFT	
050	2795385-0000		1	RING	
060	2795386-0000		1	RING	
070	571540-0000		2	PIN	
080	751230-0000		4	PLAIN BEARING	
200	311103-0313		2	PARALLEL PIN ISO 2338 5M6X28 A1	
210	312115-0370		2	SCREW ISO4762 M6X20 A4 80	
240	315204-0309		1	O-RING 89,5X3 MM	
250	312105-0368		2	SCREW, M6S ISO 4017 M6X16 A4 80	
TPA 0330SQ (See drawing on page: 1-128)					
010	929284-0000		2	ROLLER	
020	3021606-0000		1	SEAL RING	

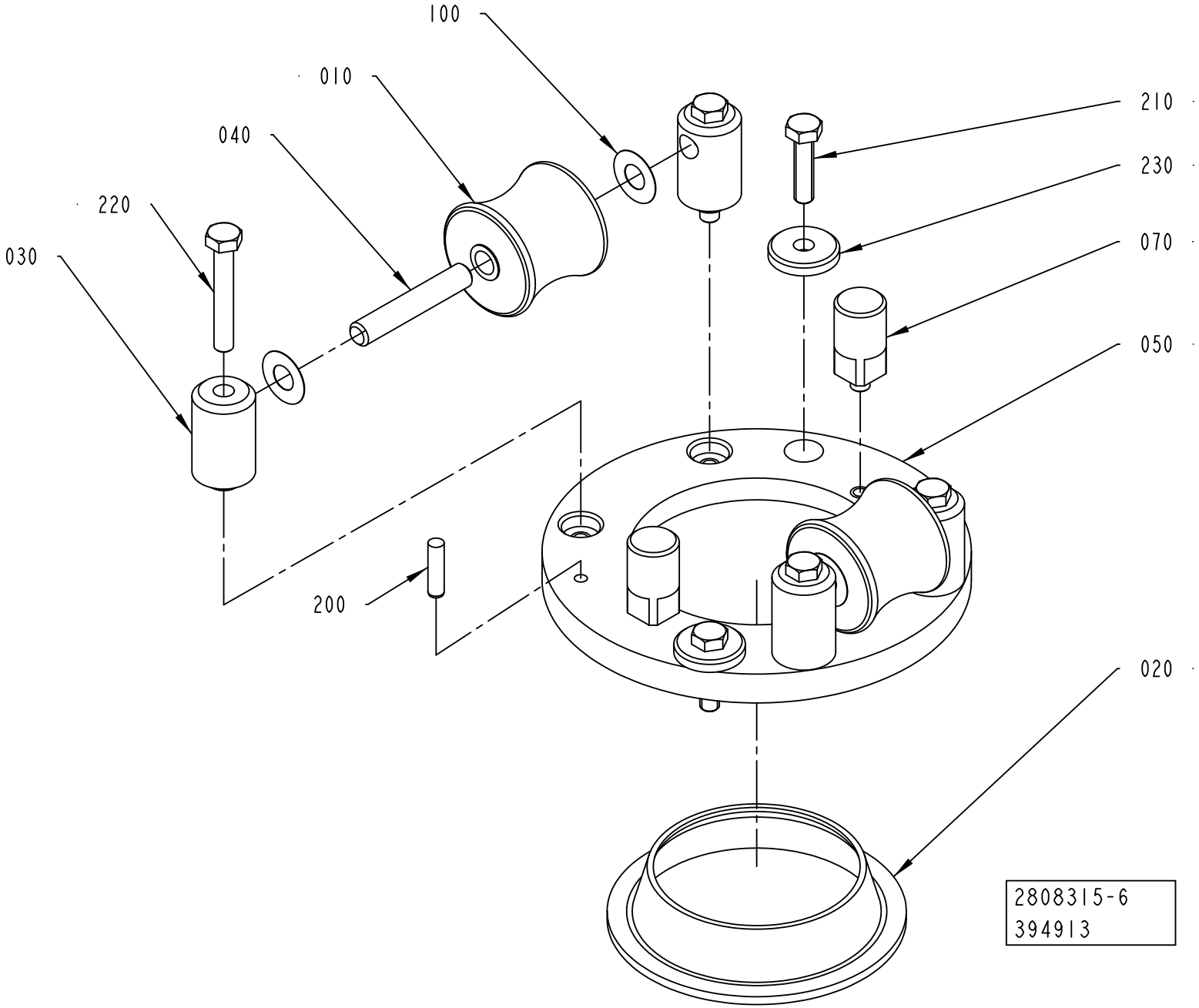
100
010
040
220
030
210
230
070
050
200
020
2808315-6
394913

Pos	Part No	UN	Qty	Description	Page No
TPA 0330SQ (Cont'd) (See drawing on page: 1-128)					
030	456797-0000		4	AXLE SUPPORT	
040	263655-0006		2	SHAFT	
050	456794-0000		1	RING	
070	752519-0002		2	PIN	
200	311103-0310		2	PARALLEL PIN ISO 2338 5M6X20 A1	
210	312105-0372		2	SCREW, M6S ISO 4017 M6X25 A4 80	
Common Parts					
100	2033-0007		8	WASHER	
220	312105-0378		4	SCREW, M6S ISO 4014 M6X40 A4 80	
230	315125-0153		2	WASHER HIGH, TBRSB 6,4X22X4 A4	

Pos	Part No	UN	Qty	Description	Page No

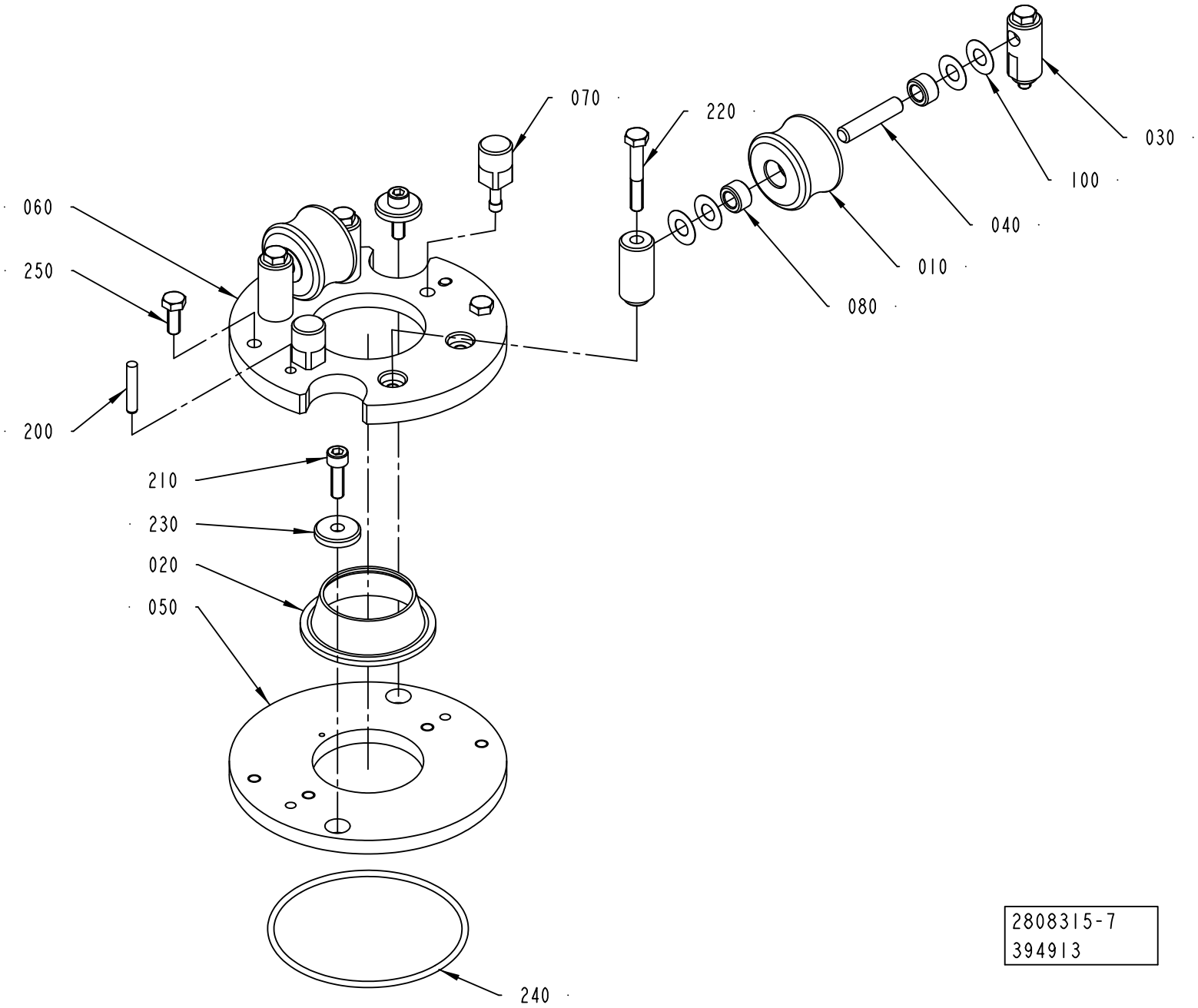
070
220
030
100
040
060
250
010
080
200
210
230
020
050
240
2808315-7
394913

ECM: 479257 - 20101003
Group number: 2808315-0200
Assembly Drawing: 2808315-7_1_AA

This list covers pages from 1-126 to 1-131

Pos	Part No	UN	Qty	Description	Page No
SEE PREVIOUS LISTS PAGES: 1-127, 1-129.					

Pos	Part No	UN	Qty	Description	Page No

LOWER FORMING RING

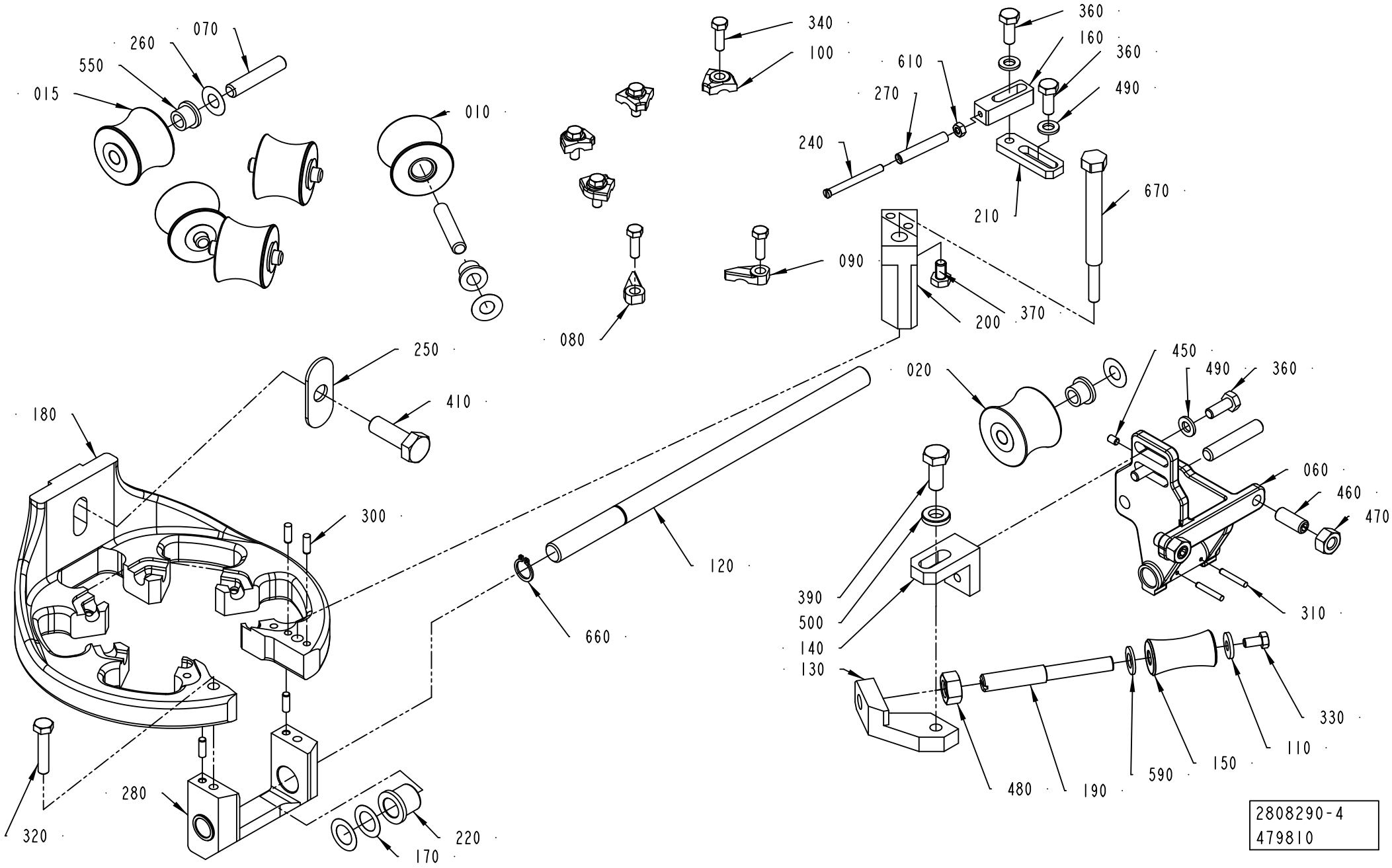

ECM: 480125 - 20111001
Group number: 2808290-0150
Assembly Drawing: 2808290-4_1_AB

This list covers pages from 1-132 to 1-135

Pos	Part No	UN	Qty	Description	Page No
TBA 0080S (See drawing on page: 1-134)					
010	2922709-0001		4	ROLLER	
015	2945446-0001		1	ROLLER	
020	2945445-0000		1	COUNTER ROLLER	
060	2890093-0000		1	FORK	
070	752186-0013		6	SHAFT	
090	2528119-0001		1	LOCK PLATE	
100	2528123-0001		4	LOCK PLATE	
180	3127434-0000		1	LOWER FORMING RING	
200	3142889-0000		1	BRACKET	
670	3142890-0000		1	BRACKET	
TBA 0100B, TBA 0125S (See drawing on page: 1-134)					
010	752153-0000		4	FORMING ROLLER	
015	2969725-0001		1	ROLLER (STANDARD SIZE)	
020	2969939-0000		1	COUNTER ROLLER	
060	2808311-0000		1	FORK	
070	2522213-0009		6	SHAFT	
090	2528119-0001		1	LOCK PLATE	
100	2528123-0001		4	LOCK PLATE	
180	3100994-0000		1	LOWER FORMING RING	
200	3142889-0000		1	BRACKET	
670	3142890-0000		1	BRACKET	
TBA 0160S, TBA 0200S (See drawing on page: 1-132)					
010	752138-0000		4	FORMING ROLLER	
015	2966599-0001		1	ROLLER	
020	2966598-0000		1	COUNTER ROLLER	
060	2808311-0000		1	FORK	
070	2522213-0009		6	SHAFT	
090	2528119-0001		1	LOCK PLATE	
100	2528123-0001		4	LOCK PLATE	
180	3100994-0000		1	LOWER FORMING RING	
200	3142887-0000		1	BRACKET	
670	3142888-0000		1	BRACKET	
TBA 0200B, TBA 0200SQ, TBA 0250B, TBA 0330S, TBA 0250SQ (See drawing on page: 1-132)					
010	751502-0000		4	ROLLER	
015	2966602-0001		1	ROLLER	
020	2966601-0000		1	COUNTER ROLLER	
060	2808370-0000		1	FORK	
070	752186-0005		6	SHAFT	
090	2528119-0001		1	LOCK PLATE	
100	2528123-0004		4	LOCK PLATE	
180	3089599-0000		1	LOWER FORMING RING	
200	3142887-0000		1	BRACKET	
670	3142888-0000		1	BRACKET	
TBA 0200E (See drawing on page: 1-132)					
010	3089567-0001		4	ROLLER	
015	3089568-0001		1	ROLLER	
020	3089569-0000		1	ROLLER	
060	2808312-0000		1	FORK	
070	2522213-0009		6	SHAFT	
090	2528119-0001		1	LOCK PLATE	
100	2528123-0001		4	LOCK PLATE	
180	3089606-0000		1	LOWER FORMING RING	
200	3142887-0000		1	BRACKET	
670	3142888-0000		1	BRACKET	
TBA 0200M, TBA 0250S (See drawing on page: 1-132)					
010	3006310-0000		4	ROLLER	
015	3006309-0001		1	ROLLER	
020	2808308-0000		1	COUNTER ROLLER	
060	2808312-0000		1	FORK	
070	2522213-0009		6	SHAFT	
090	2528119-0001		1	LOCK PLATE	
100	2528123-0001		4	LOCK PLATE	
180	3089606-0000		1	LOWER FORMING RING	
200	3142887-0000		1	BRACKET	
670	3142888-0000		1	BRACKET	
TBA 0284B, TBA 0300S (See drawing on page: 1-132)					
010	2922717-0001		4	ROLLER	
015	2945469-0001		1	ROLLER	
020	2808307-0000		1	COUNTER ROLLER	
060	2808370-0000		1	FORK	
070	752186-0005		6	SHAFT	
090	2528119-0001		1	LOCK PLATE	
100	2528123-0004		4	LOCK PLATE	
180	3089599-0000		1	LOWER FORMING RING	
200	3142887-0000		1	BRACKET	
670	3142888-0000		1	BRACKET	
TBA 0375S (See drawing on page: 1-132)					
010	3058446-0001		4	ROLLER	
015	3058447-0001		1	ROLLER	
020	3058444-0000		1	COUNTER ROLLER	
060	3058452-0000		1	FORK	
070	752186-0005		6	SHAFT	
090	3151766-0000		1	LOCK PLATE	

Machine Type | Group Description | Used-In | Group Number | Page No

LOWER FORMING RING

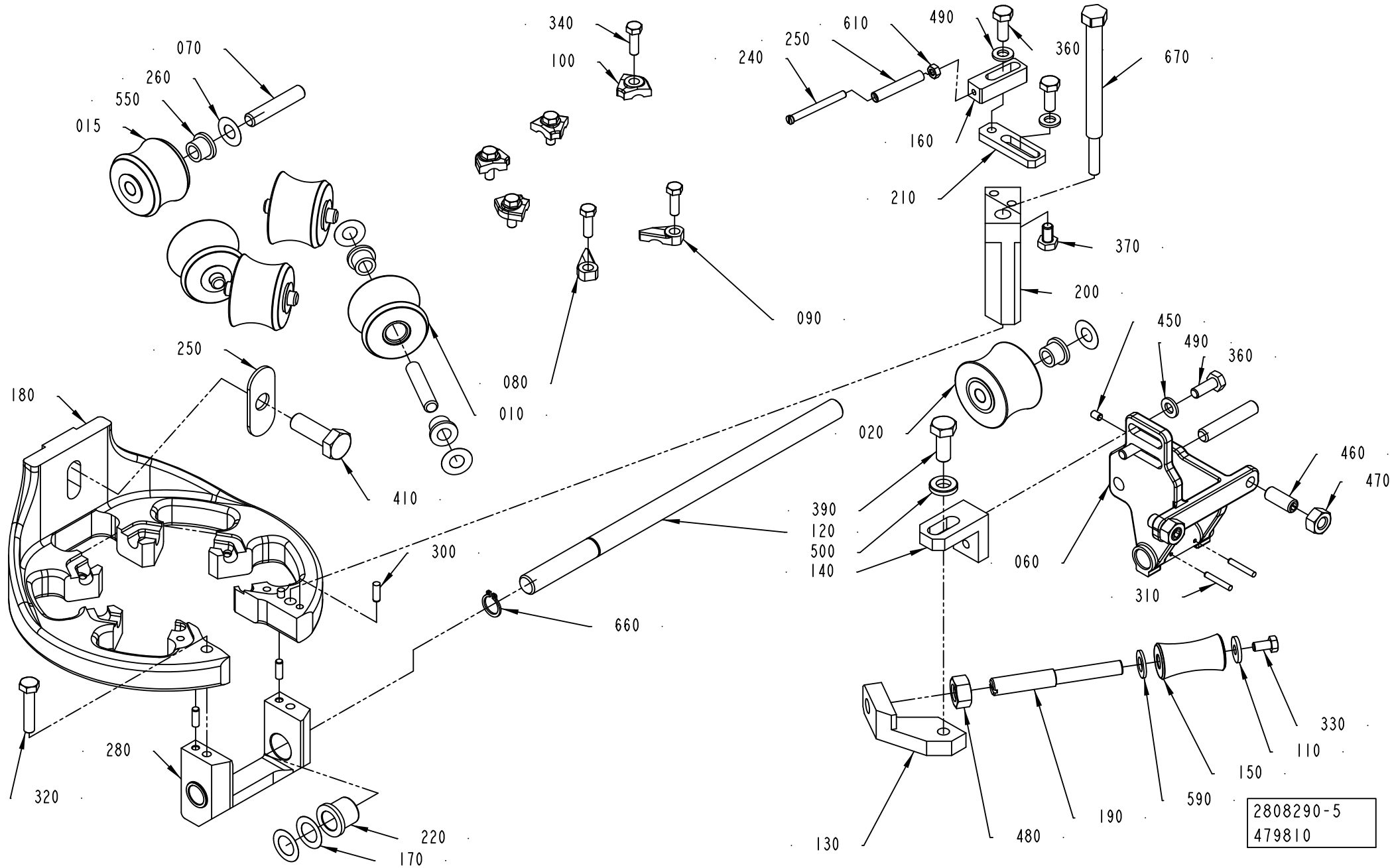

ECM: 480125 - 20111001
Group number: 2808290-0150
Assembly Drawing: 2808290-5_1_AB

This list covers pages from 1-132 to 1-135

Pos	Part No	UN	Qty	Description	Page No
TBA 0375S (Cont'd) (See drawing on page: 1-132)					
100	2528123-0002		4	LOCK PLATE	
180	3127435-0000		1	LOWER FORMING RING	
200	3142887-0000		1	BRACKET	
670	3142890-0000		1	BRACKET	
TPA 0125SQ (See drawing on page: 1-134)					
010	2890091-0001		4	ROLLER	
015	2966605-0001		1	ROLLER	
020	2966604-0000		1	COUNTER ROLLER	
060	2890093-0000		1	FORK	
070	752186-0013		6	SHAFT	
090	2528119-0001		1	LOCK PLATE	
100	2528123-0001		4	LOCK PLATE	
180	3127434-0000		1	LOWER FORMING RING	
200	3142889-0000		1	BRACKET	
670	3142890-0000		1	BRACKET	
TPA 0250SQ, TPA 0200SQ (See drawing on page: 1-134)					
010	2922767-0001		4	ROLLER	
015	2945467-0001		1	ROLLER	
020	2945466-0000		1	COUNTER ROLLER	
060	2808311-0000		1	FORK	
070	2522213-0009		6	SHAFT	
090	2528119-0001		1	LOCK PLATE	
100	2528123-0001		4	LOCK PLATE	
180	3100994-0000		1	LOWER FORMING RING	
200	3142889-0000		1	BRACKET	
670	3142890-0000		1	BRACKET	
TPA 0330SQ (See drawing on page: 1-134)					
010	929279-0000		4	ROLLER	
015	2986698-0001		1	ROLLER	
020	2986699-0000		1	COUNTER ROLLER	
060	2808370-0000		1	FORK	
070	752186-0005		6	SHAFT	
090	2528119-0001		1	LOCK PLATE	
100	2528123-0004		4	LOCK PLATE	
180	3089599-0000		1	LOWER FORMING RING	
200	3142889-0000		1	BRACKET	
670	3142890-0000		1	BRACKET	
Common Parts					
080	2528118-0001		1	LOCK PLATE	
110	27815-0000		1	WASHER	
120	3127549-0000		1	SHAFT	
130	257042-0000		1	BRACKET	
140	257043-0000		1	ANGLE BRACKET	
150	2890043-0000		1	ROLLER	
160	3120863-0000		1	PIN	
170	752038-0000		4	SHIM	
190	2808318-0000		1	SHAFT2781168-0000	
210	3120862-0000		1	BRACKET	
220	2808434-0000		2	BUSHING	
240	2906064-0000		1	SHAFT	
250	3089589-0000		1	WASHER	
260	2033-0011		24	WASHER	
270	2906065-0000		1	ROLLER	
280	3100995-0000		1	SUPPORT	
300	311103-0268		4	PARALLEL PIN ISO 2338 4M6X12 A1	
310	311103-0238		2	PARALLEL PIN ISO 2338 3M6X20 A1	
320	312105-0374		1	SCREW, M6S ISO 4014 M6X30 A4 80	
330	312105-0325		1	SCREW, M6S ISO 4017 M5X10 A4 80	
340	312105-0329		6	SCREW, M6S ISO 4017 M5X16 A4 80	
360	312105-0368		4	SCREW, M6S ISO 4017 M6X16 A4 80	
370	312105-0364		1	SCREW, M6S ISO 4017 M6X10 A4 80	
390	312105-0451		1	SCREW, M6S ISO 4017 M8X20 A4 80	
410	312105-0495		1	SCREW, M6S ISO 4017 M10X30 A4 80	
450	312318-0285		1	SET SCREW, CUP END ISO4029 M4X6 A4	
460	312318-0451		2	SET SCREW, CUP END ISO4029 M8X20 A4	
470	312605-0318		2	HEXAGON NUT, M6M M8 A280	
480	312605-0320		1	HEXAGON NUT, M6M M10 A280	
490	315105-0153		4	WASHER PLAIN, 6,4X12X1,5 A4 BRB	
500	315115-0165		1	WASHER PLAIN, TBRB 8,4/16 H=3	
550	90240-0172		12	FLANGE BUSHING, 8X12X10 MM	
590	315105-0165		1	WASHER PLAIN, 8,4X16X1,6 A4 BRB	
610	312605-0312		1	HEXAGON NUT, M6M M4 A280	
660	315751-0109		1	RETAINING RING FOR SHAFT DIN 471 12 SS	

Machine Type | Group Description | Used-In | Group Number | Page No

UPPER FORMING RING

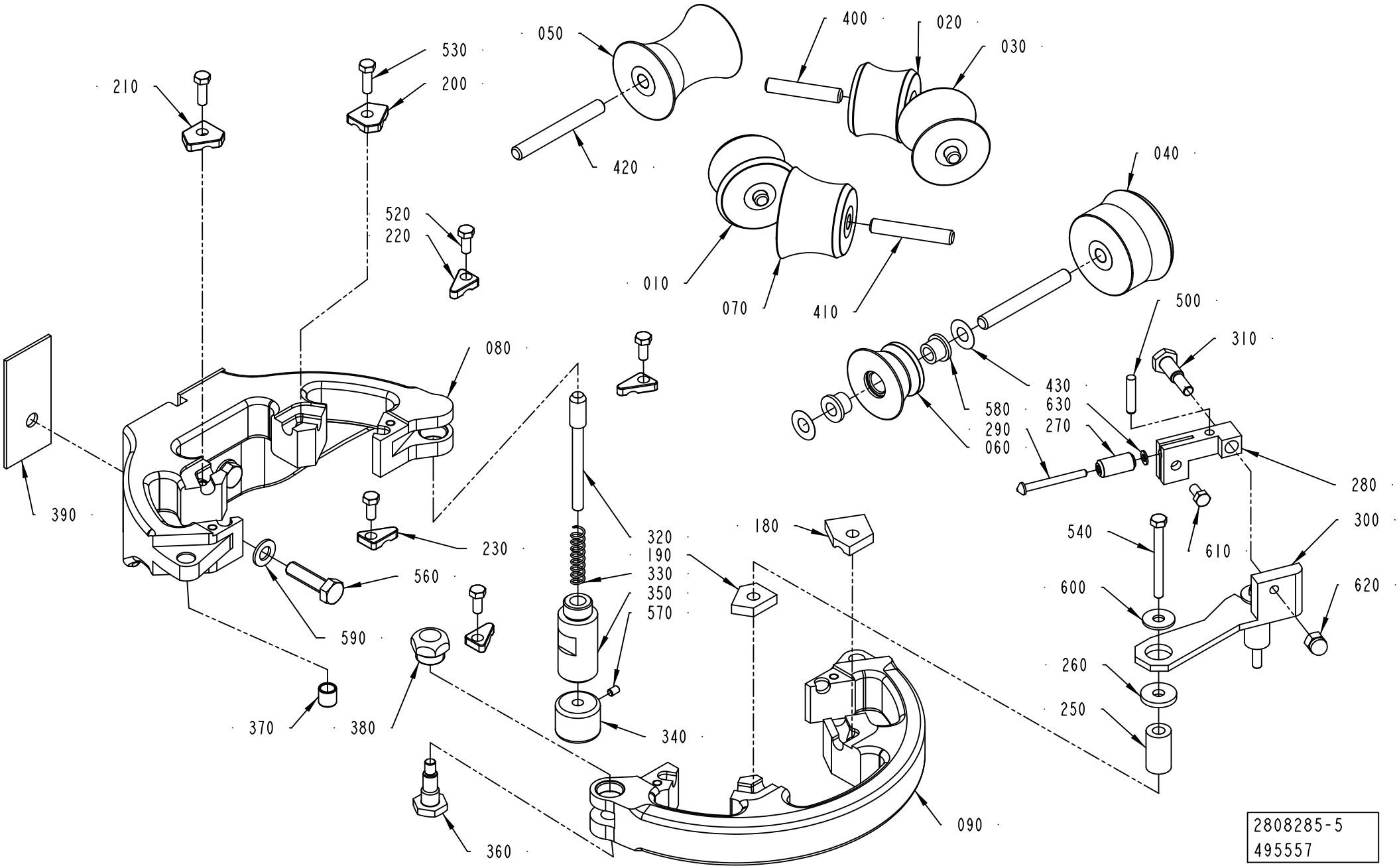

ECM: 495557 - 20110101
Group number: 2808285-0150
Assembly Drawing: 2808285-5_1_AA

This list covers pages from 1-136 to 1-143

Pos	Part No	UN	Qty	Description	Page No
TBA 0080S (See drawing on page: 1-142)					
010	2945450-0000		1	ROLLER	
020	2945451-0000		1	ROLLER	
030	2945453-0000		1	ROLLER	
040	2945447-0000		1	ROLLER	
050	2945449-0000		1	ROLLER	
060	2945448-0000		1	ROLLER	
070	2945452-0000		1	ROLLER	
080	3127436-0000		1	UPPER FORMING RING	
090	3127439-0000		1	UPPER FORMING RING	
200	2528123-0009		3	LOCK PLATE	
220	2528119-0001		2	LOCK PLATE	
230	2528118-0001		2	LOCK PLATE	
240	2890110-0000		1	SHAFT	
390	3127442-0000		6	SHIM	
400	752186-0002		4	SHAFT	
410	752186-0005		1	SHAFT	
440	752156-0000		2	FLANGE BUSHING	
450	2890114-0000		1	LOCK PLATE	
530	312105-0329		4	SCREW, M6S ISO 4017 M5X16 A4 80	
580	90240-0172		12	FLANGE BUSHING, 8X12X10 MM	
TBA 0100B, TBA 0125S (See drawing on page: 1-138)					
010	2966613-0000		1	ROLLER	
020	2966614-0000		1	ROLLER	
030	752150-0000		1	FORMING ROLLER	
040	2966615-0000		1	ROLLER	
050	2966612-0000		1	ROLLER	
060	2871536-0000		1	ROLLER	
070	752149-0000		1	FORMING ROLLER	
080	3089600-0000		1	UPPER FORMING RING	
090	3089601-0000		1	UPPER FORMING RING	
180	456872-0000		1	LOCK PLATE	
200	1279090-0000		2	LOCKING PLATE	
210	1279086-0000		1	LOCKING PLATE	
220	1279093-0000		2	LOCKING PLATE	
230	1279094-0000		2	LOCKING PLATE	
240	752185-0000		1	SHAFT	
390	3089607-0000		2	SHIM	
400	752186-0003		4	SHAFT	
420	752186-0006		1	SHAFT	
440	752156-0000		2	FLANGE BUSHING	
530	312105-0329		4	SCREW, M6S ISO 4017 M5X16 A4 80	
580	90240-0172		12	FLANGE BUSHING, 8X12X10 MM	
TBA 0160S, TBA 0200S, TPA 0250SQ, TPA 0200SQ (See drawing on page: 1-138)					
010	752132-0000		1	FORMING ROLLER	
020	752133-0000		1	FORMING ROLLER	
030	752135-0000		1	FORMING ROLLER	
040	2871532-0000		1	ROLLER	
050	752131-0000		1	FORMING ROLLER	
060	2846108-0000		1	FORMING ROLLER	
070	752134-0000		1	FORMING ROLLER	
080	3127429-0000		1	UPPER FORMING RING	
090	3089601-0000		1	UPPER FORMING RING	
180	456872-0000		1	LOCK PLATE	
200	1279090-0000		2	LOCKING PLATE	
210	1279086-0000		1	LOCKING PLATE	
220	1279093-0000		2	LOCKING PLATE	
230	1279094-0000		2	LOCKING PLATE	
240	752185-0000		1	SHAFT	
390	3089607-0000		2	SHIM	
400	752186-0003		4	SHAFT	
420	752186-0006		1	SHAFT	
440	752156-0000		2	FLANGE BUSHING	
530	312105-0329		4	SCREW, M6S ISO 4017 M5X16 A4 80	
580	90240-0172		12	FLANGE BUSHING, 8X12X10 MM	
TBA 0200B, TBA 0200SQ, TBA 0284B, TBA 0250B, TBA 0300S, TBA 0330S, TBA 0250SQ (See drawing on page: 1-136)					
010	751499-0000		1	ROLL	
020	751497-0000		1	ROLL	
030	751496-0000		1	ROLL	
040	2912637-0000		1	ROLLER	
050	751498-0000		1	ROLL	
060	3005112-0000		1	ROLLER	
070	751500-0000		1	ROLL	
080	3089602-0000		1	UPPER FORMING RING	
090	3089603-0000		1	UPPER FORMING RING	
180	456199-0000		1	LOCK PLATE	
190	456198-0000		1	LOCK PLATE	
200	1279090-0000		1	LOCKING PLATE	
210	1279086-0000		1	LOCKING PLATE	
220	1279093-0000		2	LOCKING PLATE	
230	1279094-0000		2	LOCKING PLATE	
250	456181-0000		2	SPACER	
260	257175-0000		2	WASHER	

Machine Type | Group Description | Used-In | Group Number | Page No

UPPER FORMING RING

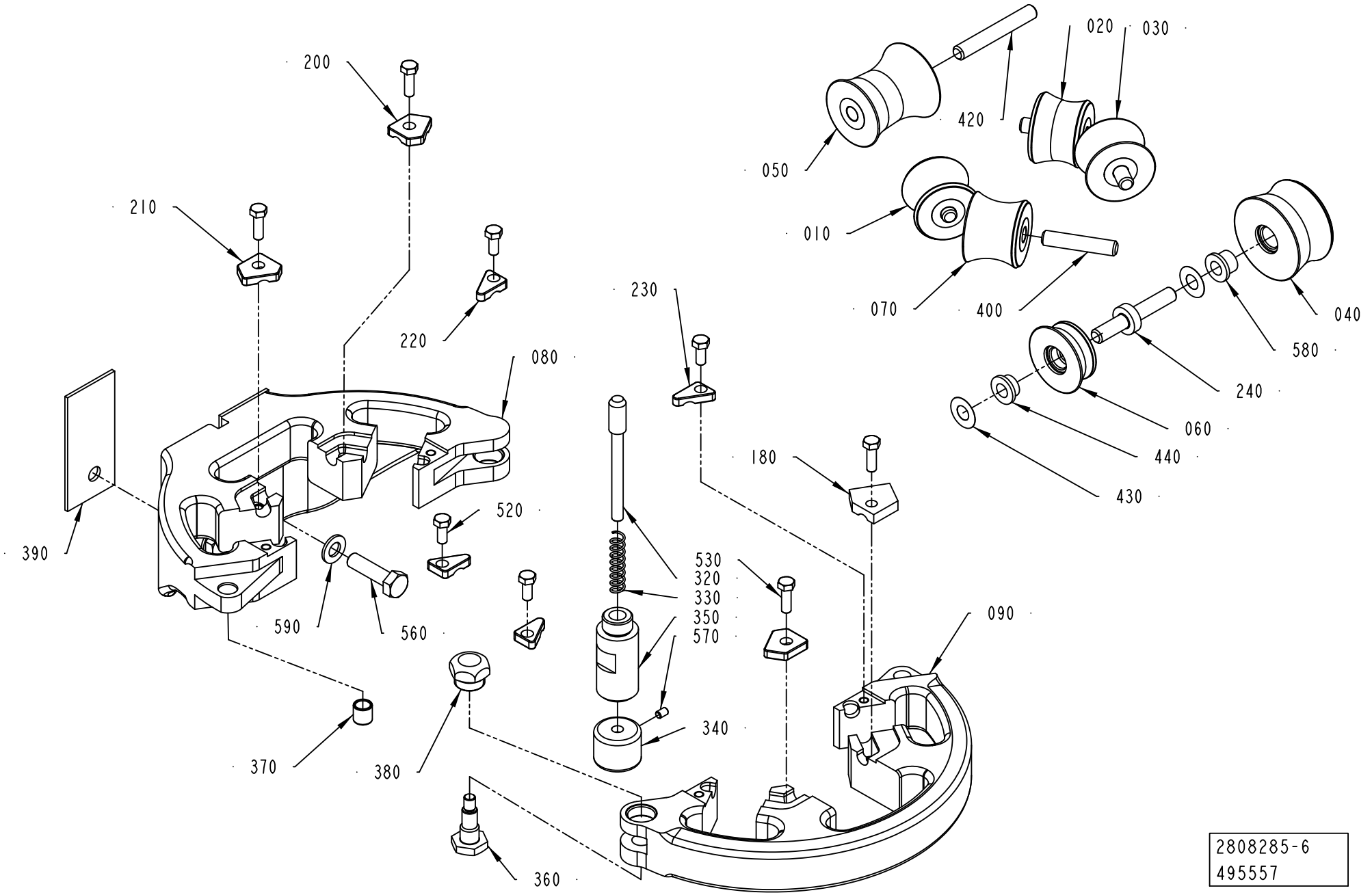

2808285-6
495557

Pos	Part No	UN	Qty	Description	Page No
TBA 0200B, TBA 0200SQ, TBA 0284B, TBA 0250B, TBA 0300S, TBA 0330S, TBA 0250SQ (Cont'd) (See drawing on page: 1-136)					
270	2890044-0000		1	ROLLER	
280	451148-0000		1	BRACKET	
290	451149-0000		1	SHAFT	
300	2808293-0000		1	BRACKET	
310	2808294-0000		1	SCREW	
390	3089608-0000		2	SHIM	
400	752186-0004		2	SHAFT	
410	752186-0005		2	SHAFT	
420	752186-0014		2	SHAFT	
500	311103-1312		1	PARALLEL PIN ISO 2338 5M6X24 A1	
530	312105-0329		2	SCREW, M6S ISO 4017 M5X16 A4 80	
540	312105-0341		2	SCREW, M6S ISO 4014 M5X50 A4 80	
580	90240-0172		14	FLANGE BUSHING, 8X12X10 MM	
600	90005-0060		2	WASHER PLAIN, RBS 6,4/M6)/18,H=1,5	
610	312105-0325		1	SCREW, M6S ISO 4017 M5X10 A4 80	
620	312705-0316		1	HEX. DOMED CAP MHM-6 M6 A280	
630	315105-0136		1	WASHER PLAIN, 4,3X9X0,8 A4 BRB	
TBA 0200M, TBA 0250S, TBA 0200E (See drawing on page: 1-140)					
010	574397-0000		1	ROLL	
020	2986736-0000		1	ROLL	
030	574400-0000		1	ROLL	
040	2871530-0000		1	ROLLER	
050	2986735-0000		1	ROLL	
060	2871534-0000		1	ROLLER	
070	574403-0000		1	ROLL	
080	3089604-0000		1	UPPER FORMING RING	
090	3089605-0000		1	UPPER FORMING RING	
180	574393-0000		1	LOCK PLATE	
190	574394-0000		1	LOCK PLATE	
200	1279090-0000		1	LOCKING PLATE	
210	1279086-0000		1	LOCKING PLATE	
220	1279093-0000		2	LOCKING PLATE	
230	1279094-0000		2	LOCKING PLATE	
240	574395-0000		1	SHAFT	
250	456181-0000		2	SPACER	
260	257175-0000		2	WASHER	
270	2890044-0000		1	ROLLER	
280	451148-0000		1	BRACKET	
290	451149-0000		1	SHAFT	
300	2808299-0000		1	BRACKET	
310	2808294-0000		1	SCREW	
390	3089607-0000		2	SHIM	
400	752186-0004		4	SHAFT	
420	752186-0006		1	SHAFT	
440	752156-0000		2	FLANGE BUSHING	
500	311103-1312		1	PARALLEL PIN ISO 2338 5M6X24 A1	
530	312105-0329		2	SCREW, M6S ISO 4017 M5X16 A4 80	
540	312105-0341		2	SCREW, M6S ISO 4014 M5X50 A4 80	
580	90240-0172		12	FLANGE BUSHING, 8X12X10 MM	
600	90005-0060		2	WASHER PLAIN, RBS 6,4/M6)/18,H=1,5	
610	312105-0325		1	SCREW, M6S ISO 4017 M5X10 A4 80	
620	312705-0316		1	HEX. DOMED CAP MHM-6 M6 A280	
630	315105-0136		1	WASHER PLAIN, 4,3X9X0,8 A4 BRB	
TBA 0375S (See drawing on page: 1-136)					
010	3058472-0000		1	ROLLER	
020	3058470-0000		1	ROLLER	
030	3058469-0000		1	ROLLER	
040	3058474-0000		1	ROLLER	
050	3058471-0000		1	ROLLER	
060	3058475-0000		1	ROLLER	
070	3058473-0000		1	ROLLER	
080	3127437-0000		1	UPPER FORMING RING	
090	3127440-0000		1	UPPER FORMING RING	
180	3058476-0000		1	LOCK PLATE	
190	3058468-0000		1	LOCK PLATE	
200	1279090-0000		1	LOCKING PLATE	
210	1279086-0000		1	LOCKING PLATE	
220	1279093-0000		2	LOCKING PLATE	
230	1279094-0000		2	LOCKING PLATE	
250	456181-0000		2	SPACER	
260	257175-0000		2	WASHER	
270	2890044-0000		1	ROLLER	
280	451148-0000		1	BRACKET	
290	451149-0000		1	SHAFT	
300	3058480-0000		1	BRACKET	
310	2808294-0000		1	SCREW	
390	3089608-0000		2	SHIM	
400	752186-0021		2	SHAFT	
410	752186-0019		2	SHAFT	
420	752186-0014		2	SHAFT	
500	311103-1312		1	PARALLEL PIN ISO 2338 5M6X24 A1	
530	312105-0329		2	SCREW, M6S ISO 4017 M5X16 A4 80	

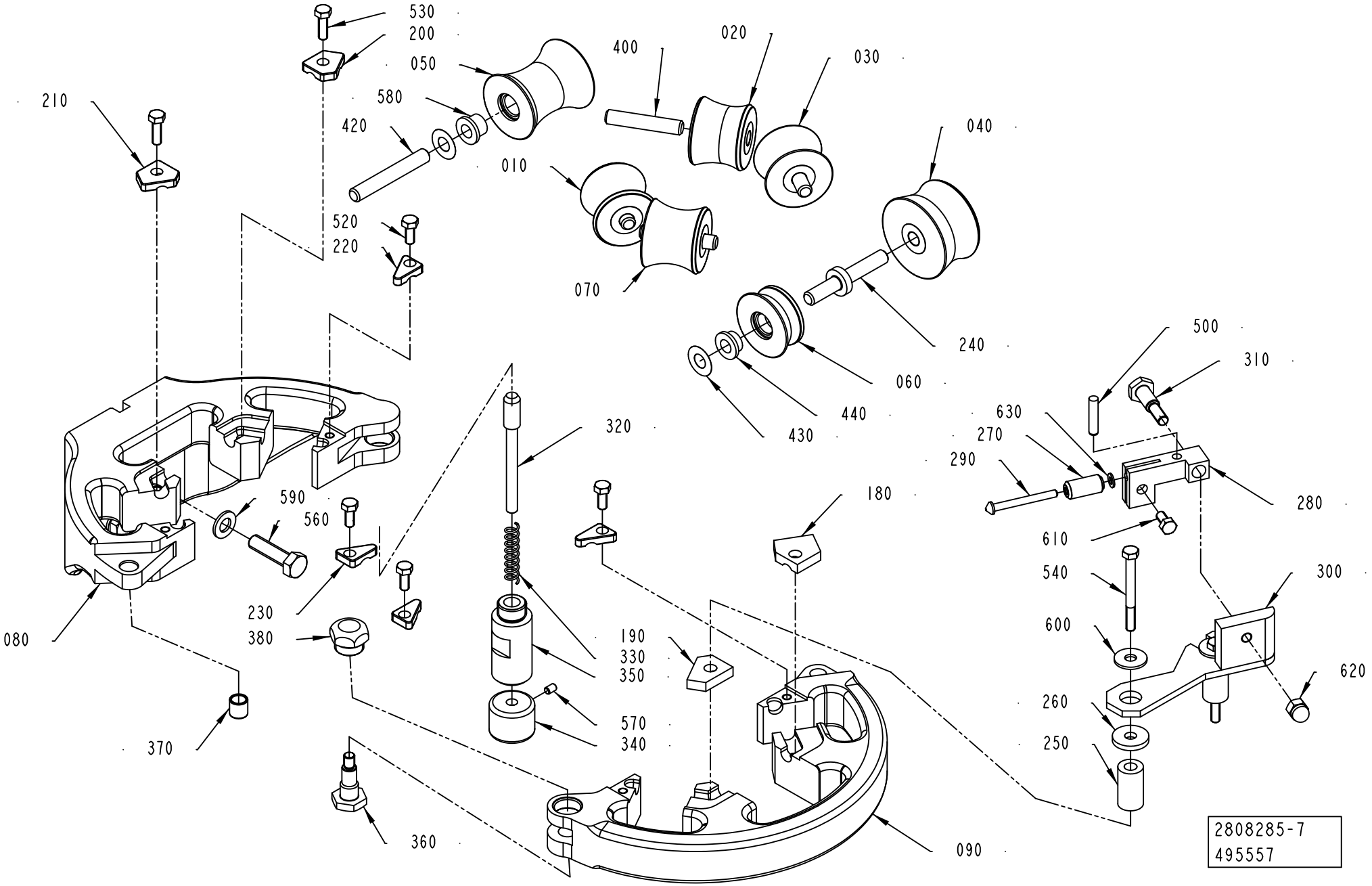
530
200
050
580
420
210
400
020
030
040
010
070
520
220
240
060
440
430
500
310
630
270
290
280
610
540
300
600
620
260
250
320
180
190
330
350
570
340
590
560
230
380
080
370
360
090
2808285-7
495557

ECM: 495557 - 20110101
Group number: 2808285-0150
Assembly Drawing: 2808285-7_1_AA

This list covers pages from 1-136 to 1-143

Pos	Part No	UN	Qty	Description	Page No
TBA 0375S (Cont'd) (See drawing on page: 1-136)					
540	312105-0341		2	SCREW, M6S ISO 4014 M5X50 A4 80	
580	90240-0172		14	FLANGE BUSHING, 8X12X10 MM	
600	90005-0060		2	WASHER PLAIN, RBS 6,4/M6)/18,H=1,5	
610	312105-0325		1	SCREW, M6S ISO 4017 M5X10 A4 80	
TPA 0125SQ (See drawing on page: 1-142)					
010	2890105-0000		1	ROLLER	
020	2890106-0000		1	ROLLER	
030	2890108-0000		1	ROLLER	
040	2890102-0000		1	ROLLER	
050	2890104-0000		1	ROLLER	
060	2890103-0000		1	ROLLER	
070	2890107-0000		1	ROLLER	
080	3127436-0000		1	UPPER FORMING RING	
090	3127439-0000		1	UPPER FORMING RING	
200	2528123-0009		3	LOCK PLATE	
220	2528119-0001		2	LOCK PLATE	
230	2528118-0001		2	LOCK PLATE	
240	2890110-0000		1	SHAFT	
390	3127442-0000		6	SHIM	
400	752186-0002		4	SHAFT	
410	752186-0005		1	SHAFT	
440	752156-0000		2	FLANGE BUSHING	
450	2890114-0000		1	LOCK PLATE	
530	312105-0329		4	SCREW, M6S ISO 4017 M5X16 A4 80	
580	90240-0172		12	FLANGE BUSHING, 8X12X10 MM	
TPA 0330SQ (See drawing on page: 1-140)					
010	3037924-0000		1	ROLLER	
020	3037926-0000		1	ROLLER	
030	3078547-0000		1	ROLLER	
040	3058432-0000		1	ROLLER	
050	3037925-0000		1	ROLLER	
060	3058433-0000		1	ROLLER	
070	3058434-0000		1	ROLLER	
080	3127438-0000		1	UPPER FORMING RING	
090	3127441-0000		1	UPPER FORMING RING	
180	574338-0000		1	LOCK PLATE	
190	574338-0000		1	LOCK PLATE	
200	2528123-0008		1	LOCK PLATE	
210	2528123-0008		1	LOCK PLATE	
220	2528119-0001		2	LOCK PLATE	
230	2528118-0001		2	LOCK PLATE	
240	574395-0000		1	SHAFT	
250	456181-0000		2	SPACER	
260	257175-0000		2	WASHER	
270	2890044-0000		1	ROLLER	
280	451148-0000		1	BRACKET	
290	451149-0000		1	SHAFT	
300	3058435-0000		1	BRACKET	
310	2808294-0000		1	SCREW	
390	3089608-0000		2	SHIM	
400	752186-0021		4	SHAFT	
420	2522213-0006		1	SHAFT	
440	752156-0000		2	FLANGE BUSHING	
500	311103-1312		1	PARALLEL PIN ISO 2338 5M6X24 A1	
530	312105-0329		2	SCREW, M6S ISO 4017 M5X16 A4 80	
540	312105-0341		2	SCREW, M6S ISO 4014 M5X50 A4 80	
580	90240-0172		12	FLANGE BUSHING, 8X12X10 MM	
600	90005-0060		2	WASHER PLAIN, RBS 6,4/M6)/18,H=1,5	
610	312105-0325		1	SCREW, M6S ISO 4017 M5X10 A4 80	
620	312705-0316		1	HEX. DOMED CAP MHM-6 M6 A280	
630	315105-0136		1	WASHER PLAIN, 4,3X9X0,8 A4 BRB	
Common Parts					
320	35918-0000		1	SHAFT	
330	35919-0000		1	COMPRESSION SPRING	
340	36325-0000		1	KNOB	
350	2808289-0000		1	SHAFT	
360	2808291-0000		1	SCREW	
370	2808292-0000		1	BUSHING	
380	2808298-0000		1	PLUG	
430	2033-0011		14	WASHER	
520	312105-0327		4	SCREW, M6S ISO 4017 M5X12 A4 80	
560	312105-0455		2	SCREW, M6S ISO 4017 M8X30 A4 80	
570	312318-0285		1	SET SCREW, CUP END ISO4029 M4X6 A4	
590	315105-0165		2	WASHER PLAIN, 8,4X16X1,6 A4 BRB	

UPPER FORMING RING

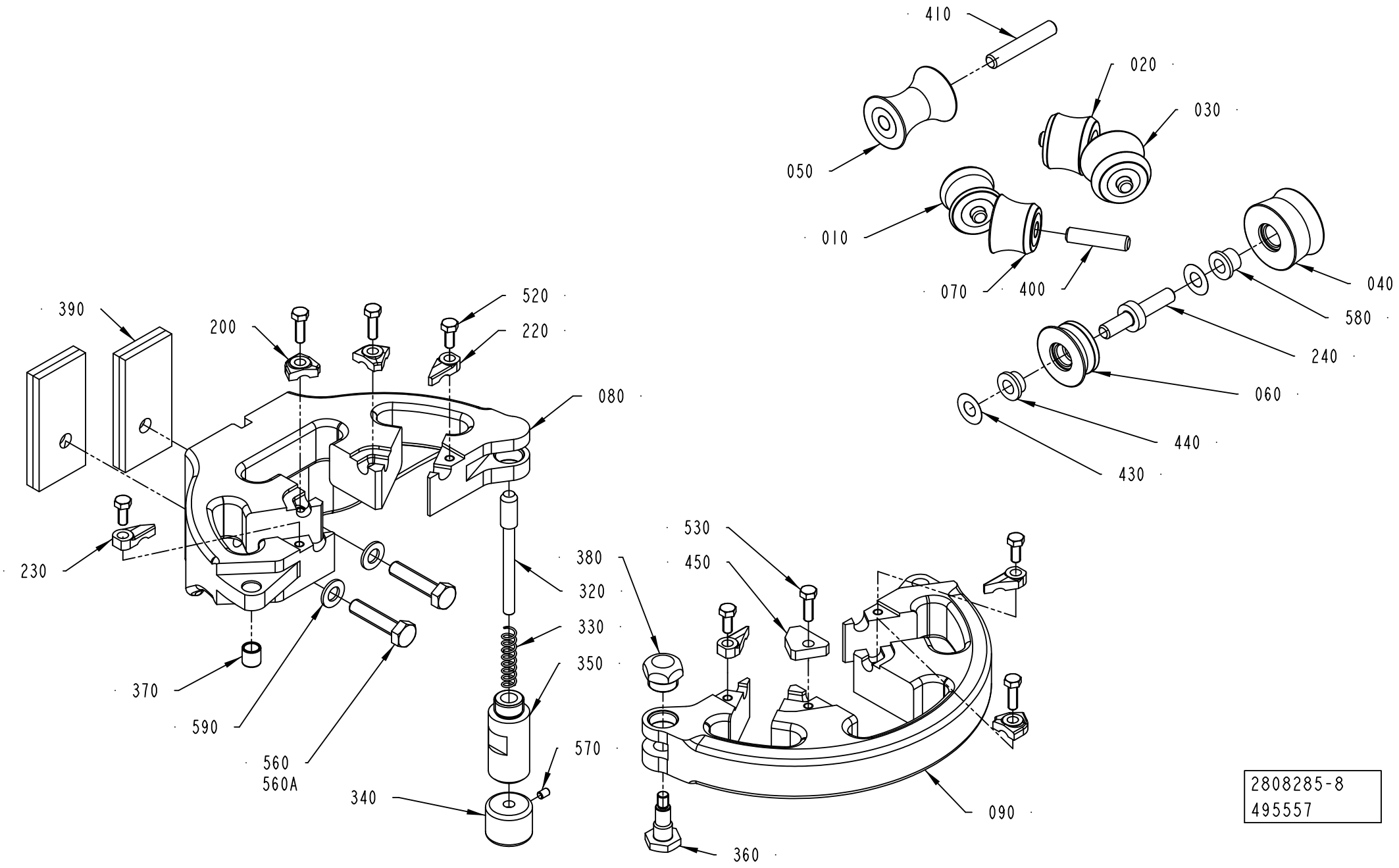

2808285-8
495557

ECM: 495557 - 20110101
Group number: 2808285-0150
Assembly Drawing: 2808285-8_1_AA

This list covers pages from 1-136 to 1-143

Pos	Part No	UN	Qty	Description	Page No
SEE PREVIOUS LISTS PAGES: 1-137, 1-139, 1-141.					

Pos	Part No	UN	Qty	Description	Page No

LOWER SUPPORT ROLLERS

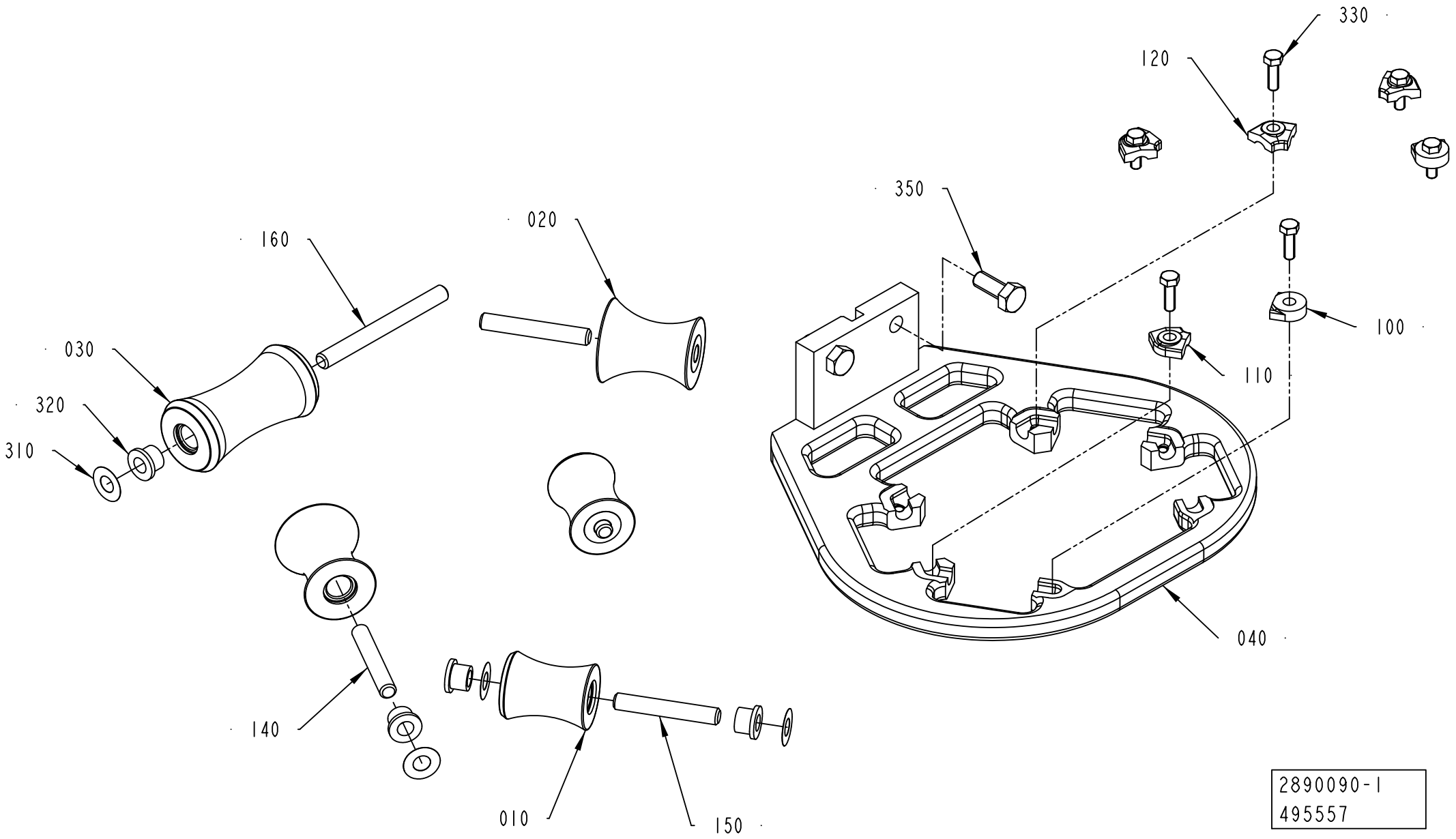

2890090-1
495557

ECM: 495557 - 20110101
Group number: 2890090-0100
Assembly Drawing: 2890090-1_1_AC

Pos	Part No	UN	Qty	Description	Page No
TBA 0080S					
010	2906119-0000		2	ROLLER	
020	2906120-0000		2	ROLLER	
030	2906121-0000		1	ROLLER	
040	2986716-0000		1	LOWER SUPPORT ROLLERS	
100	2532895-0002		2	LOCK PLATE	
110	2528123-0001		4	LOCK PLATE	
140	752186-0004		2	SHAFT	
150	752186-0020		2	SHAFT	
160	752186-0022		1	SHAFT	
TBA 0100B, TBA 0125S					
010	2976256-0000		2	ROLLER	
020	2906120-0000		2	ROLLER	
030	2906121-0000		1	ROLLER	
040	2906118-0000		1	LOWER SUPPORT ROLLERS	
100	2532895-0011		2	LOCK PLATE	
110	2528123-0001		4	LOCK PLATE	
140	752186-0004		2	SHAFT	
150	752186-0020		2	SHAFT	
160	752186-0022		1	SHAFT	
TBA 0160S, TBA 0200S, TPA 0250SQ, TPA 0200SQ					
010	2986772-0000		2	ROLLER	
020	2986773-0000		2	ROLLER	
030	2986774-0000		1	ROLLER	
040	2986776-0000		1	SUPPORT RING	
100	2532895-0002		2	LOCK PLATE	
110	2528123-0001		2	LOCK PLATE	
120	2528123-0003		2	LOCK PLATE	
140	2522213-0004		2	SHAFT	
150	752186-0021		2	SHAFT	
160	2522213-0012		1	SHAFT	
TBA 0200B, TBA 0200SQ, TBA 0284B, TBA 0250B, TBA 0300S, TBA 0330S, TPA 0330SQ, TBA 0250SQ					
010	2930304-0000		2	ROLLER	
020	2906104-0000		2	ROLLER	
030	2906105-0000		1	ROLLER	
040	2913350-0000		1	SUPPORT RING	
100	2532895-0002		2	LOCK PLATE	
110	2528123-0001		2	LOCK PLATE	
120	2528123-0003		2	LOCK PLATE	
140	2522213-0015		2	SHAFT	
150	752186-0019		2	SHAFT	
160	2522213-0003		1	SHAFT	
TBA 0200M, TBA 0250S, TBA 0200E					
010	2906103-0000		2	ROLLER	
020	2906104-0000		2	ROLLER	
030	2986739-0000		1	ROLLER	
040	2986740-0000		1	LOWER SUPPORT ROLLERS	
100	2532895-0002		2	LOCK PLATE	
110	2528123-0001		2	LOCK PLATE	
120	2528123-0003		2	LOCK PLATE	
140	2522213-0015		2	SHAFT	
150	752186-0019		2	SHAFT	
160	2522213-0018		1	SHAFT	
TBA 0375S					
010	3058481-0000		2	ROLLER	
020	3058479-0000		2	ROLLER	
030	3058478-0000		1	ROLLER	
040	3058477-0000		1	SUPPORT RING	
100	2532895-0002		2	LOCK PLATE	
110	2528123-0001		2	LOCK PLATE	
120	2528123-0003		2	LOCK PLATE	
140	2522213-0015		2	SHAFT	
150	752186-0006		2	SHAFT	
160	2522213-0020		1	SHAFT	
TPA 0125SQ					
010	2906119-0000		2	ROLLER	
020	2906120-0000		2	ROLLER	
030	2906121-0000		1	ROLLER	
040	2945457-0000		1	LOWER SUPPORT ROLLERS	
100	2532895-0002		2	LOCK PLATE	
110	2528123-0001		4	LOCK PLATE	
140	752186-0004		2	SHAFT	
150	752186-0020		2	SHAFT	
160	752186-0022		1	SHAFT	
Common Parts					
310	2033-0011		10	WASHER	
320	90240-0172		10	FLANGE BUSHING, 8X12X10 MM	
330	312105-0329		6	SCREW, M6S ISO 4017 M5X16 A4 80	
350	312105-0451		2	SCREW, M6S ISO 4017 M8X20 A4 80	

Machine Type	Group Description	Used-In	Group Number	Page No

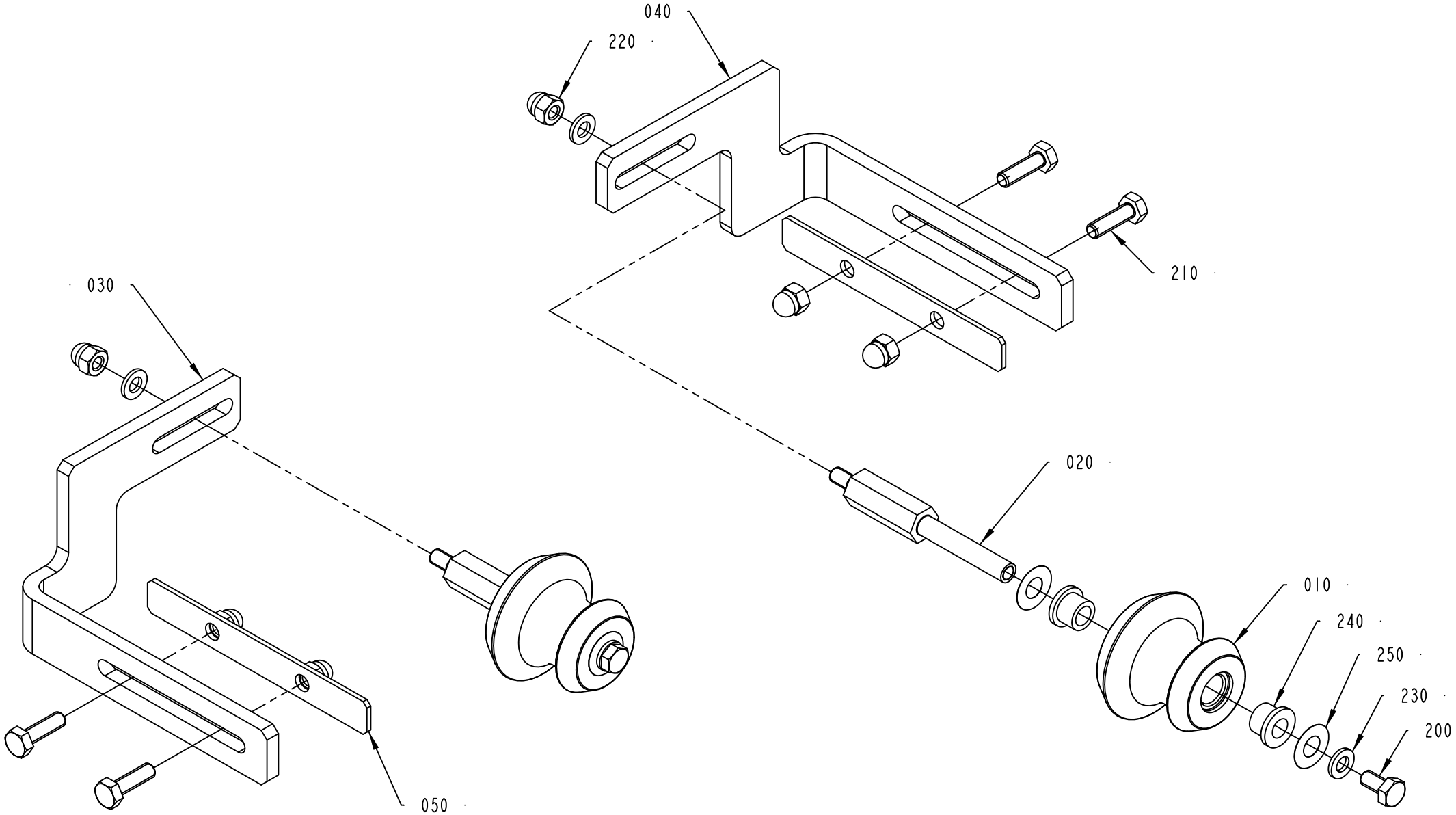
040
220
210
030
020
010
240
250
230
200
050
2808295-1
368835

Pos	Part No	UN	Qty	Description	Page No
TBA 0100B, TBA 0125S (See drawing on page: 1-150)					
010	2640354-0000		2	ROLLER	
020	2890119-0000		2	SHAFT	
030	2808319-0000		1	BRACKET	
040	2863999-0000		1	BRACKET	
260	2033-0008		8	WASHER	
TBA 0160S, TBA 0200M, TBA 0200B, TBA 0200SQ, TBA 0200S, TBA 0250S, TBA 0284B, TBA 0250B, TBA 0300S, TBA 0330S, TPA 0330SQ, TPA 0250SQ, TPA 0200SQ, TBA 0250SQ (See drawing on page: 1-148)					
010	2640354-0000		2	ROLLER	
020	2863998-0000		2	SHAFT	
030	2945431-0000		1	BRACKET	
040	2945432-0000		1	BRACKET	
TBA 0375S (See drawing on page: 1-148)					
010	2640354-0000		2	ROLLER	
020	2863998-0000		2	SHAFT	
030	3099357-0000		1	BRACKET	
040	3100273-0000		1	BRACKET	
TPA 0125SQ, TBA 0080S (See drawing on page: 1-146)					
010	2890115-0000		2	ROLLER	
020	2890119-0000		2	SHAFT	
030	2808319-0000		1	BRACKET	
040	2863999-0000		1	BRACKET	
Common Parts					
050	2528114-0000		2	COVER PLATE	
200	312105-0366		2	SCREW, M6S ISO 4017 M6X12 A4 80	
210	312105-0370		4	SCREW, M6S ISO 4017 M6X20 A4 80	
220	312705-0316		6	HEX. DOMED CAP MHM-6 M6 A280	
230	315105-0153		4	WASHER PLAIN, 6,4X12X1,5 A4 BRB	
240	90240-0172		4	FLANGE BUSHING, 8X12X10 MM	
250	2033-0011		4	WASHER	

Pos	Part No	UN	Qty	Description	Page No

EDGE ROLLER

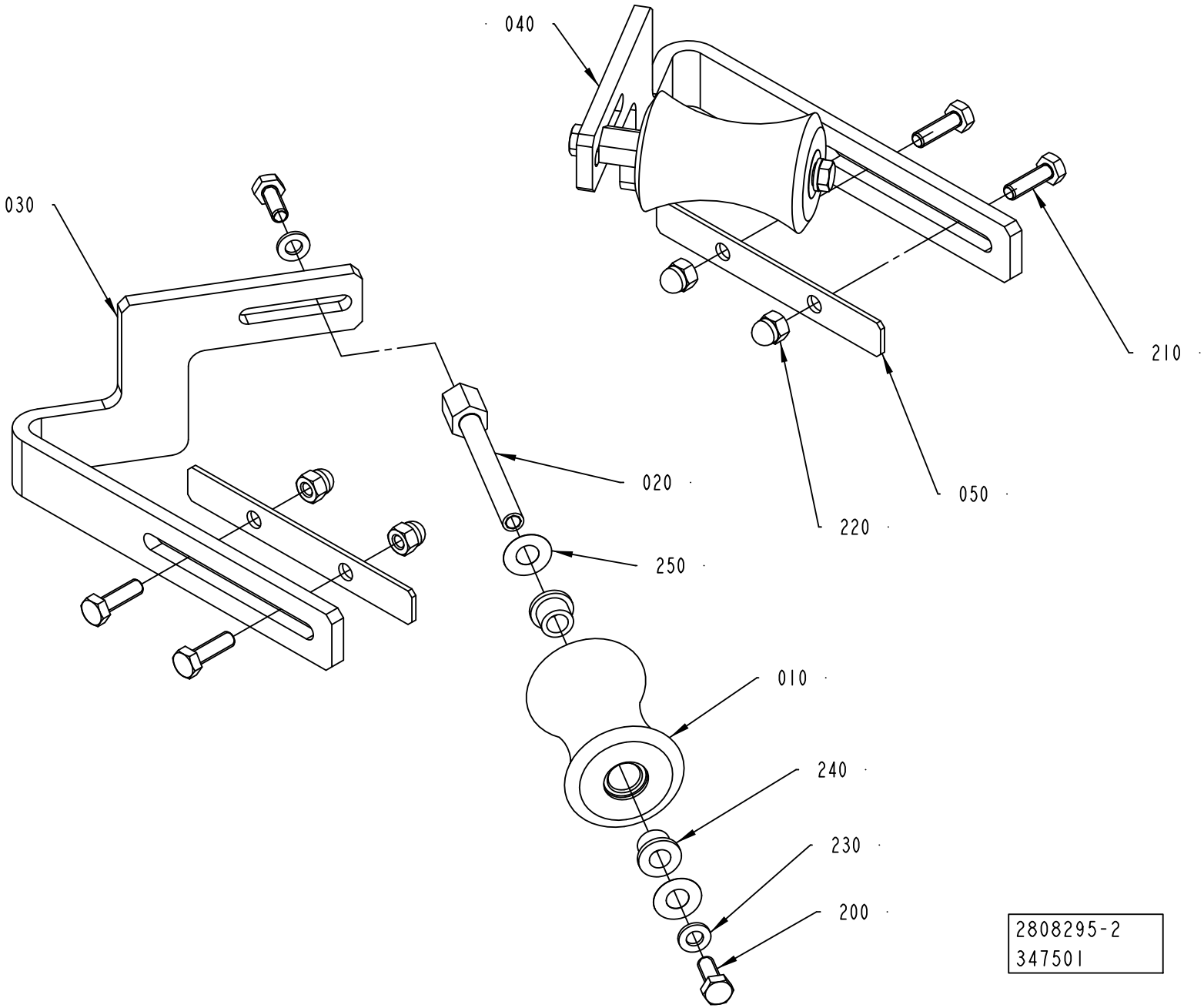

ECM: 459913 - 20100610
Group number: 2808295-0100
Assembly Drawing: 2808295-2_1_AB

This list covers pages from 1-146 to 1-151

Pos	Part No	UN	Qty	Description	Page No
TBA 0100B, TBA 0125S (See drawing on page: 1-150)					
010	2640354-0000		2	ROLLER	
020	2890119-0000		2	SHAFT	
030	2808319-0000		1	BRACKET	
040	2863999-0000		1	BRACKET	
260	2033-0008		8	WASHER	
TBA 0160S, TBA 0200M, TBA 0200B, TBA 0200SQ, TBA 0200S, TBA 0250S, TBA 0284B, TBA 0250B, TBA 0300S, TBA 0330S, TPA 0330SQ, TPA 0250SQ, TPA 0200SQ, TBA 0250SQ (See drawing on page: 1-148)					
010	2640354-0000		2	ROLLER	
020	2863998-0000		2	SHAFT	
030	2945431-0000		1	BRACKET	
040	2945432-0000		1	BRACKET	
TBA 0375S (See drawing on page: 1-148)					
010	2640354-0000		2	ROLLER	
020	2863998-0000		2	SHAFT	
030	3099357-0000		1	BRACKET	
040	3100273-0000		1	BRACKET	
TPA 0125SQ, TBA 0080S (See drawing on page: 1-146)					
010	2890115-0000		2	ROLLER	
020	2890119-0000		2	SHAFT	
030	2808319-0000		1	BRACKET	
040	2863999-0000		1	BRACKET	
Common Parts					
050	2528114-0000		2	COVER PLATE	
200	312105-0366		2	SCREW, M6S ISO 4017 M6X12 A4 80	
210	312105-0370		4	SCREW, M6S ISO 4017 M6X20 A4 80	
220	312705-0316		6	HEX. DOMED CAP MHM-6 M6 A280	
230	315105-0153		4	WASHER PLAIN, 6,4X12X1,5 A4 BRB	
240	90240-0172		4	FLANGE BUSHING, 8X12X10 MM	
250	2033-0011		4	WASHER	

Pos	Part No	UN	Qty	Description	Page No

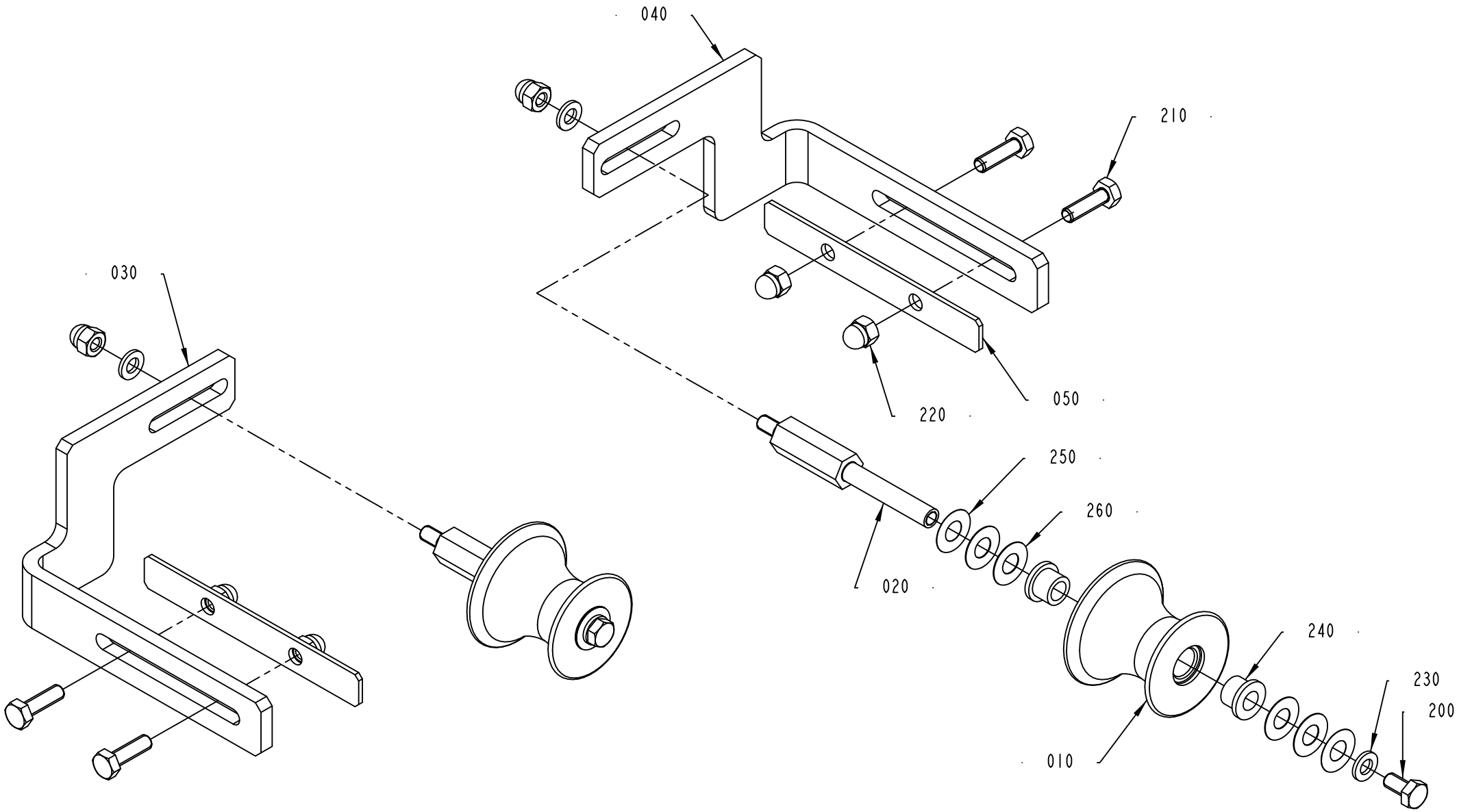
040
210
030
220
050
250
260
020
240
230
200
010
2808295-3
356242

ECM: 459913 - 20100610
Group number: 2808295-0100
Assembly Drawing: 2808295-3_1_AA

This list covers pages from 1-146 to 1-151

Pos	Part No	UN	Qty	Description	Page No
TBA 0100B, TBA 0125S (See drawing on page: 1-150)					
010	2640354-0000		2	ROLLER	
020	2890119-0000		2	SHAFT	
030	2808319-0000		1	BRACKET	
040	2863999-0000		1	BRACKET	
260	2033-0008		8	WASHER	
TBA 0160S, TBA 0200M, TBA 0200B, TBA 0200SQ, TBA 0200S, TBA 0250S, TBA 0284B, TBA 0250B, TBA 0300S, TBA 0330S, TPA 0330SQ, TPA 0250SQ, TPA 0200SQ, TBA 0250SQ (See drawing on page: 1-148)					
010	2640354-0000		2	ROLLER	
020	2863998-0000		2	SHAFT	
030	2945431-0000		1	BRACKET	
040	2945432-0000		1	BRACKET	
TBA 0375S (See drawing on page: 1-148)					
010	2640354-0000		2	ROLLER	
020	2863998-0000		2	SHAFT	
030	3099357-0000		1	BRACKET	
040	3100273-0000		1	BRACKET	
TPA 0125SQ, TBA 0080S (See drawing on page: 1-146)					
010	2890115-0000		2	ROLLER	
020	2890119-0000		2	SHAFT	
030	2808319-0000		1	BRACKET	
040	2863999-0000		1	BRACKET	
Common Parts					
050	2528114-0000		2	COVER PLATE	
200	312105-0366		2	SCREW, M6S ISO 4017 M6X12 A4 80	
210	312105-0370		4	SCREW, M6S ISO 4017 M6X20 A4 80	
220	312705-0316		6	HEX. DOMED CAP MHM-6 M6 A280	
230	315105-0153		4	WASHER PLAIN, 6,4X12X1,5 A4 BRB	
240	90240-0172		4	FLANGE BUSHING, 8X12X10 MM	
250	2033-0011		4	WASHER	

Pos	Part No	UN	Qty	Description	Page No

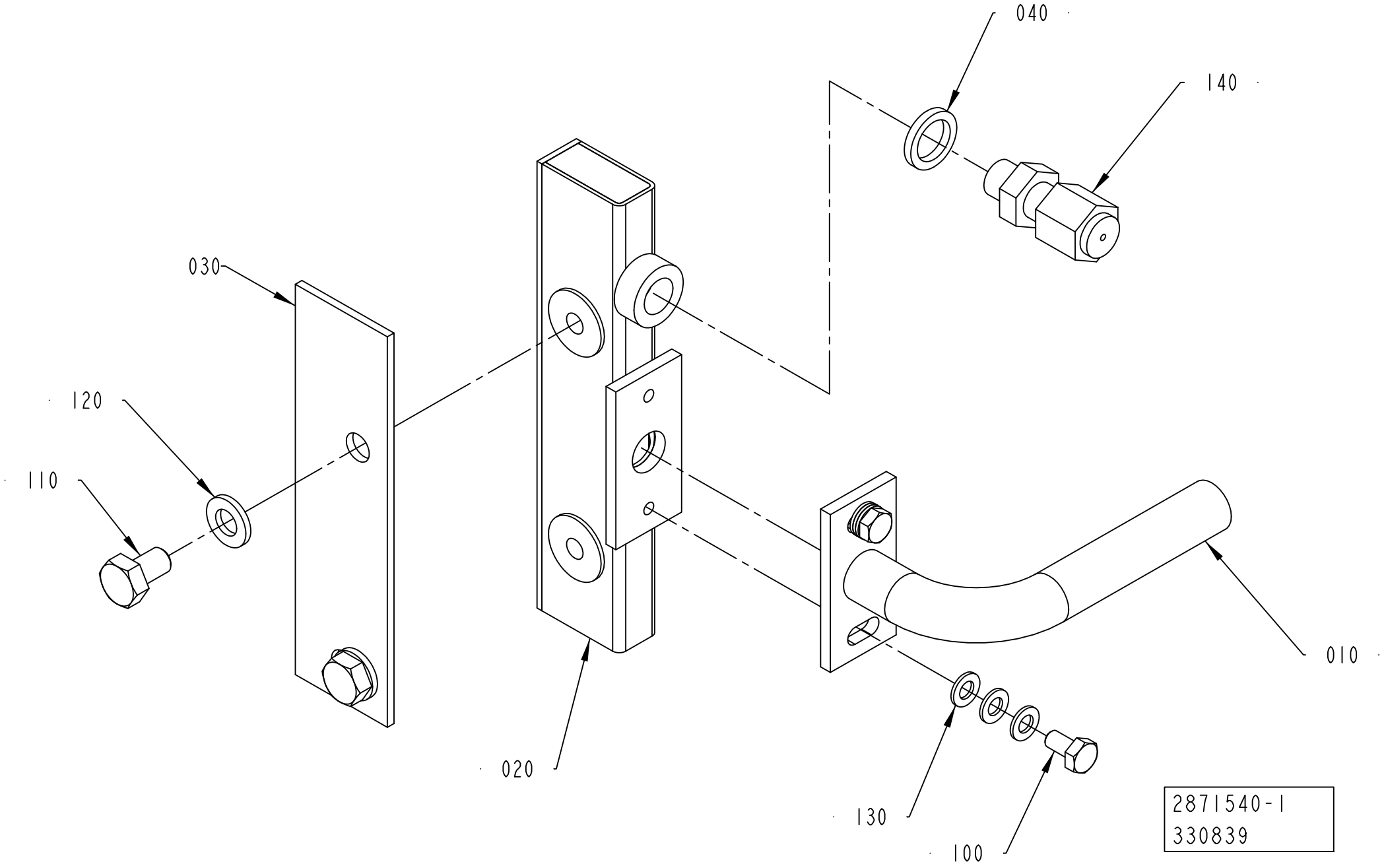
040
140
030
120
110
020
010
130
100
2871540-1
330839

ECM: 459916 - 20100610
Group number: 2871540-0100
Assembly Drawing: 2871540-1_1_AA

Pos	Part No	UN	Qty	Description	Page No
TBA 0100B, TBA 0125S					
010	2808379-0000		1	BRACKET	
020	2986710-0000		1	AIR NOZZLE	
030	2986711-0000		1	HEAT GUARD	
TBA 0160S, TBA 0200M, TBA 0200S, TBA 0250S, TPA 0250SQ, TPA 0200SQ					
010	2808378-0000		1	BRACKET	
020	2902962-0000		1	AIR NOZZLE	
030	2903070-0000		1	HEAT GUARD	
TBA 0200B, TBA 0200SQ, TBA 0284B, TBA 0250B, TBA 0300S, TBA 0330S, TPA 0330SQ, TBA 0250SQ					
010	2808366-0000		1	BRACKET	
020	2902962-0000		1	AIR NOZZLE	
030	2903070-0000		1	HEAT GUARD	
TBA 0375S					
010	3058450-0000		1	BRACKET	
020	2902962-0000		1	AIR NOZZLE	
030	2903070-0000		1	HEAT GUARD	
TPA 0125SQ, TBA 0080S					
010	2808365-0000		1	BRACKET	
020	2986710-0000		1	AIR NOZZLE	
030	2986711-0000		1	HEAT GUARD	
Common Parts					
040	273429-0000		1	WASHER	
100	312105-0287		2	SCREW, M6S ISO 4017 M4X8 A4 70	
110	312105-0364		2	SCREW, M6S ISO 4017 M6X10 A4 80	
120	315105-0153		2	WASHER PLAIN, 6,4X12X1,5 A4 BRB	
130	315105-0136		6	WASHER PLAIN, 4,3X9X0,8 A4 BRB	
140	90326-0304		1	COMPRESSION GLAND, 5101 015-005	

Pos	Part No	UN	Qty	Description	Page No

CLEANING CUP

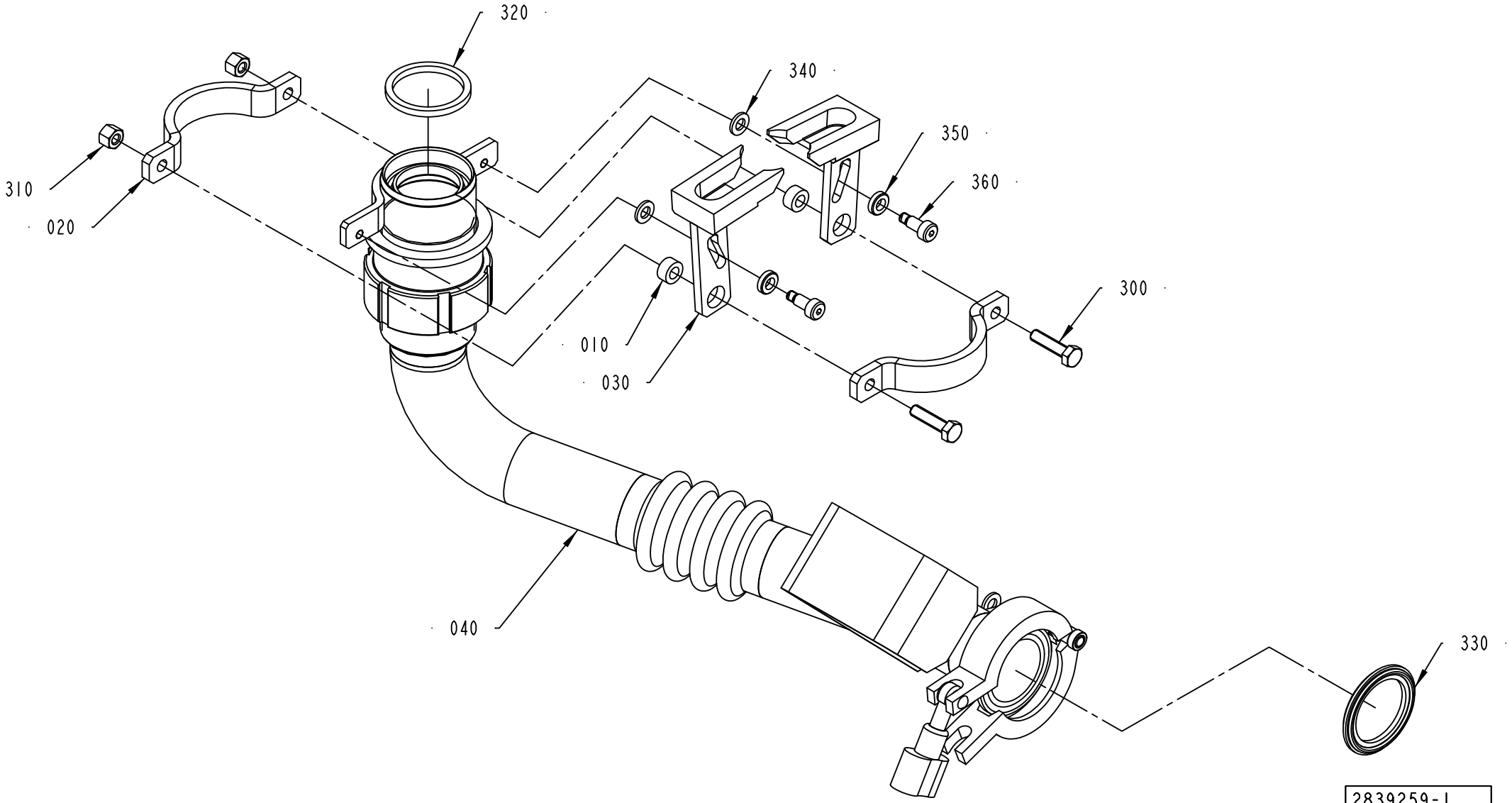

ECM: 479258 - 20101003
Group number: 2839259-0100
Assembly Drawing: 2839259-1_1_AC

Pos	Part No	UN	Qty	Description	Page No
TBA 0100B, TBA 0125S, TPA 0125SQ, TBA 0080S					
030	2795376-0000		2	CATCH	
040	2890111-0000		1	CLEANING PIPE	
320	12242-0006		1	GASKET	
TBA 0160S, TBA 0200S, TPA 0250SQ, TPA 0200SQ					
030	979728-0000		2	CATCH	
040	2890880-0000		1	CLEANING PIPE	
320	12242-0007		1	GASKET	
TBA 0200B, TBA 0200SQ, TBA 0284B, TBA 0250B, TBA 0300S, TBA 0330S, TBA 0375S, TPA 0330SQ, TBA 0250SQ					
030	579637-0000		2	CATCH	
040	2922724-0000		1	CLEANING PIPE	
320	12242-0005		1	GASKET 61X51X5,5	
TBA 0200M, TBA 0250S, TBA 0200E					
030	579771-0000		2	CATCH	
040	2966651-0000		1	CLEANING PIPE	
320	12242-0003		1	GASKET 48X38X5,5	
Common Parts					
010	553586-0000		2	SPACER	
020	752499-0000		2	RING	
300	312105-0372		2	SCREW, M6S ISO 4017 M6X25 A4 80	
310	312811-0316		2	NUT HEX.LOCK HELI COIL MID GRIP M6 SS	
330	342850-0304		1	GASKET 35,4X49,1X5,2 1"1/2 FDA, 3-A	
340	315105-0153		2	WASHER PLAIN, 6,4X12X1,5 A4 BRB	
350	315115-0153		2	WASHER PLAIN, TBRB 6,4/12 H=3	
360	90287-0229		2	SCREW, HEX.SOCK.HEAD SHOULD. M5X6	

Pos	Part No	UN	Qty	Description	Page No

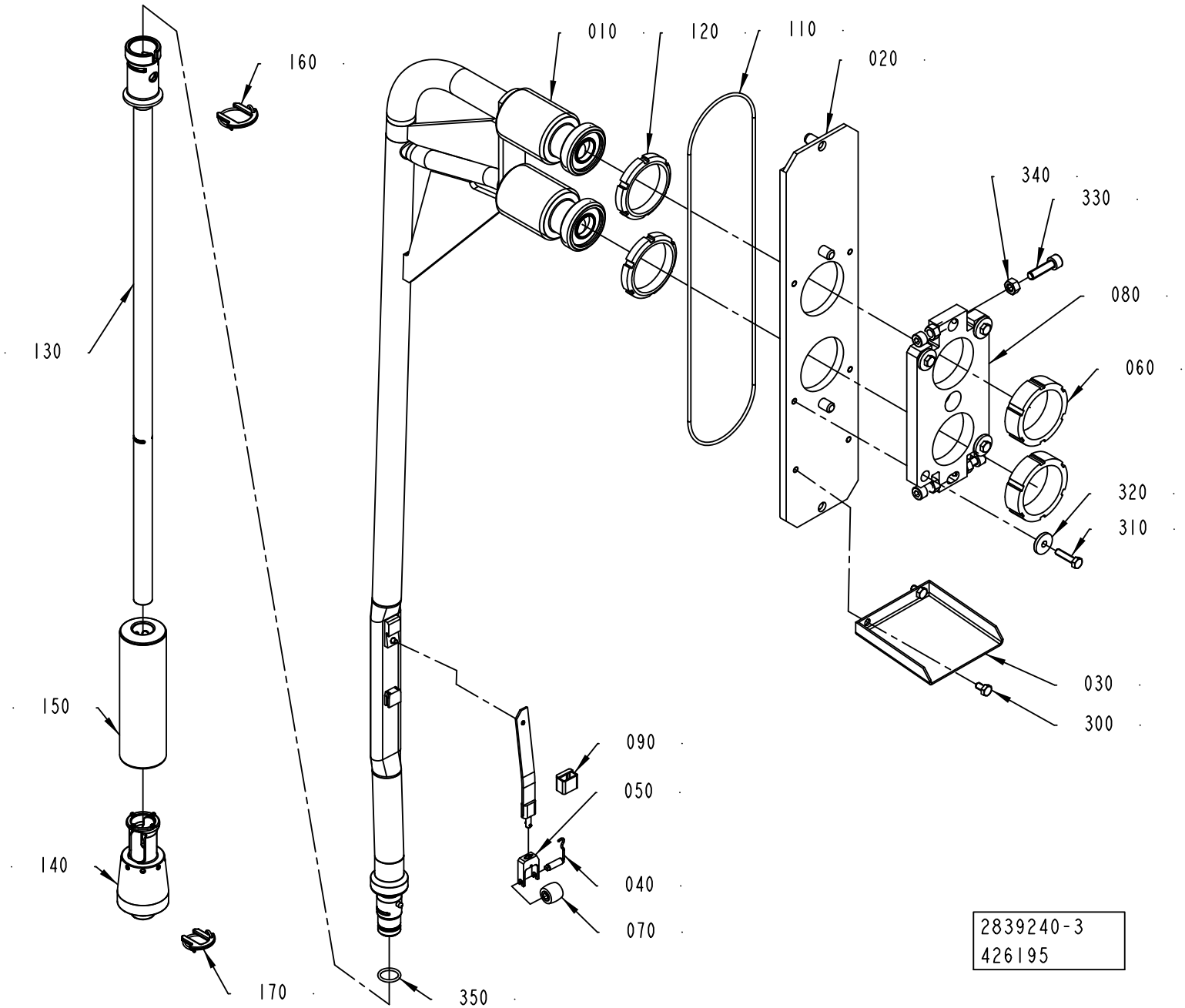
010
120
110
020
160
340
330
080
130
060
320
310
030
300
150
090
050
140
040
070
170
350
2839240-3
426195

Pos	Part No	UN	Qty	Description	Page No
TBA 0080S (See drawing on page: 1-156)					
010	2966648-0000		1	UPPER FILLING TUBE	
040	255977-0000		1	SHAFT	
050	255978-0000		1	FORK	
070	2932253-0000		1	PRESSURE ROLLER (PACK 10)	
090	295377-0002		1	HOOD	
100	2906117-0000		1	SPRING	
130	2986705-0000		1	LOWER FILLING TUBE	
140	2986706-0000		1	PRESSURE FLANGE	
150	2945423-0000		1	FLOAT	
160	3115221-0000		1	FORK	
170	2966649-0000		1	FORK	
TBA 0100B, TBA 0125S (See drawing on page: 1-156)					
010	2966648-0000		1	UPPER FILLING TUBE	
040	255977-0000		1	SHAFT	
050	255978-0000		1	FORK	
070	2932253-0000		1	PRESSURE ROLLER (PACK 10)	
090	295377-0004		1	HOOD	
100	2906117-0000		1	SPRING	
130	2966640-0000		1	LOWER FILLING TUBE	
140	2966641-0000		1	PRESSURE FLANGE	
150	2999019-0000		1	FLOAT	
	90602-0330		*1*	*SAFETY CUTTER, RUCK-ZUCK 55337*	
160	2796072-0001		1	LOCKING FORK	
170	2796072-0002		1	FLANGE	
TBA 0160S, TBA 0200S (See drawing on page: 1-156)					
010	2966639-0000		1	UPPER FILLING TUBE	
040	255977-0000		1	SHAFT	
050	255978-0000		1	FORK	
070	2932253-0000		1	PRESSURE ROLLER (PACK 10)	
090	295377-0001		1	HOOD	
100	2906117-0000		1	SPRING	
130	2966644-0000		1	LOWER FILLING TUBE	
140	2914808-0002		1	PRESSURE FLANGE	
150	2999019-0000		1	FLOAT	
	90602-0330		*1*	*SAFETY CUTTER, RUCK-ZUCK 55337*	
160	2796072-0001		1	LOCKING FORK	
170	2796072-0002		1	FLANGE	
TBA 0200B, TBA 0250B, TBA 0330S (See drawing on page: 1-158)					
010	2966672-0000		1	UPPER FILLING TUBE	
040	295376-0000		1	SHAFT	
050	568583-0000		1	FORK	
070	2909368-0000		1	PRESSURE ROLLER (PACK 10)	
090	295377-0002		1	HOOD	
100	2906116-0000		1	SPRING	
130	2966645-0000		1	LOWER FILLING TUBE	
140	2966646-0000		1	PRESSURE FLANGE	
150	2610042-0000		1	FLOAT	
	90602-0330		*1*	*SAFETY CUTTER, RUCK-ZUCK 55337*	
160	2796072-0001		2	LOCKING FORK	
TBA 0200E (See drawing on page: 1-156)					
010	2966647-0000		1	UPPER FILLING TUBE	
040	255977-0000		1	SHAFT	
050	255978-0000		1	FORK	
070	2932253-0000		1	PRESSURE ROLLER (PACK 10)	
090	295377-0001		1	HOOD	
100	2906117-0000		1	SPRING	
130	2966653-0000		1	LOWER FILLING TUBE	
140	3089565-0000		1	PRESSURE FLANGE	
150	2999019-0000		1	FLOAT	
	90602-0330		*1*	*SAFETY CUTTER, RUCK-ZUCK 55337*	
160	2796072-0001		1	LOCKING FORK	
170	2796072-0002		1	FLANGE	
TBA 0200M, TBA 0250S (See drawing on page: 1-156)					
010	2966647-0000		1	UPPER FILLING TUBE	
040	255977-0000		1	SHAFT	
050	255978-0000		1	FORK	
070	2932253-0000		1	PRESSURE ROLLER (PACK 10)	
090	295377-0001		1	HOOD	
100	2906117-0000		1	SPRING	
130	2966653-0000		1	LOWER FILLING TUBE	
140	2914808-0003		1	PRESSURE FLANGE	
150	2999019-0000		1	FLOAT	
	90602-0330		*1*	*SAFETY CUTTER, RUCK-ZUCK 55337*	
160	2796072-0001		1	LOCKING FORK	
170	2796072-0002		1	FLANGE	
TBA 0200SQ, TBA 0250SQ (See drawing on page: 1-158)					
010	2966672-0000		1	UPPER FILLING TUBE	
040	295376-0000		1	SHAFT	
050	568583-0000		1	FORK	
070	2909368-0000		1	PRESSURE ROLLER (PACK 10)	
090	295377-0002		1	HOOD	
100	2906116-0000		1	SPRING	
130	2966654-0000		1	LOWER FILLING TUBE	

Machine Type | Group Description | Used-In | Group Number | Page No

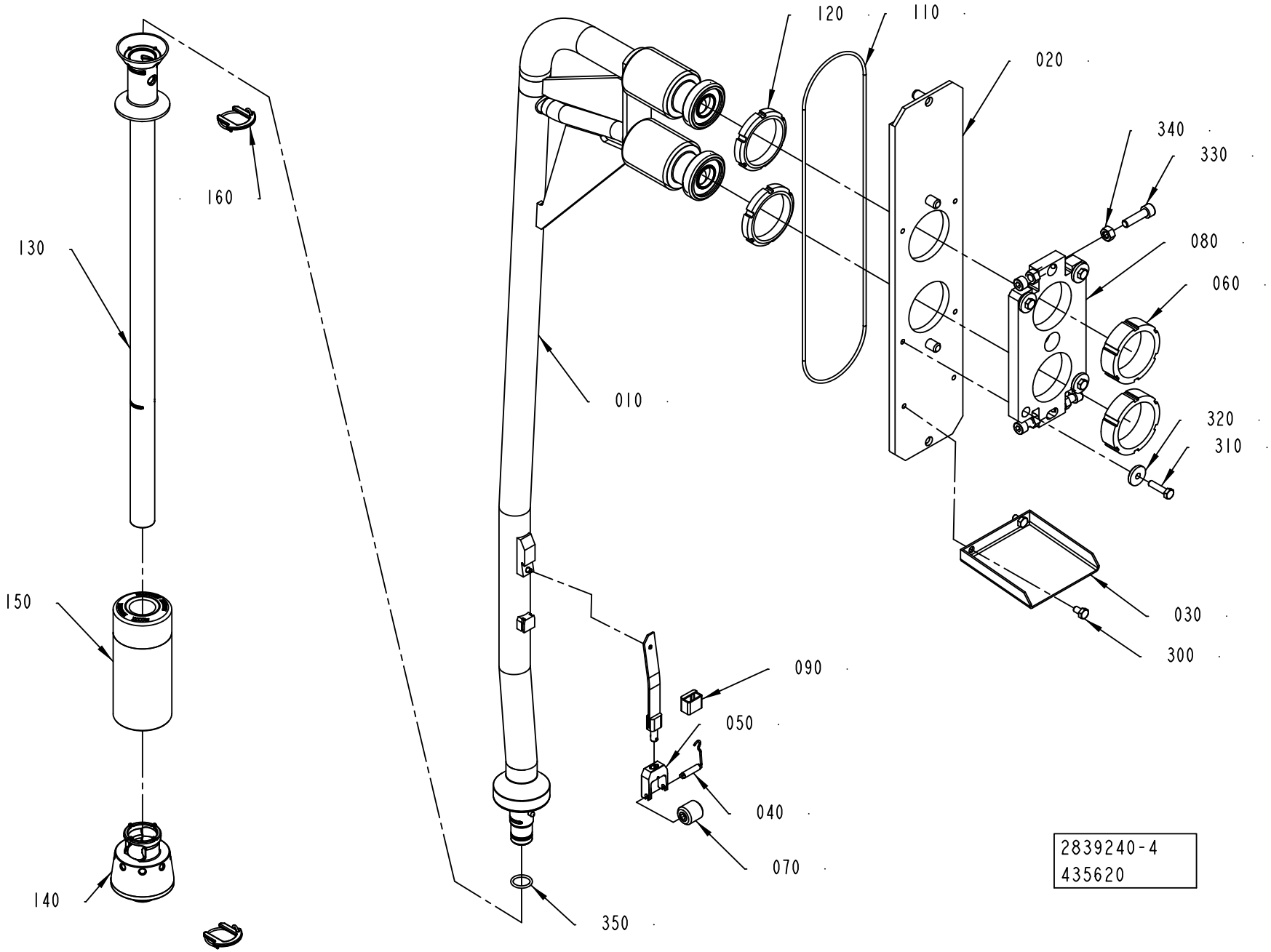
120
110
020
340
330
080
060
320
310
030
300
160
130
150
140
010
090
050
040
070
350
2839240-4
435620

ECM: 486057 - 20110401
Group number: 2839240-0200
Assembly Drawing: 2839240-4_1_AB

This list covers pages from 1-156 to 1-159

Pos	Part No	UN	Qty	Description	Page No
TBA 0200SQ, TBA 0250SQ (Cont'd) (See drawing on page: 1-158)					
140	3022594-0000		1	PRESSURE FLANGE	
150	2610042-0000		1	FLOAT	
	90602-0330		*1*	*SAFETY CUTTER, RUCK-ZUCK 55337*	
160	2796072-0001		2	LOCKING FORK	
TBA 0284B, TBA 0300S (See drawing on page: 1-158)					
010	2966672-0000		1	UPPER FILLING TUBE	
040	295376-0000		1	SHAFT	
050	568583-0000		1	FORK	
070	2909368-0000		1	PRESSURE ROLLER (PACK 10)	
090	295377-0002		1	HOOD	
100	2906116-0000		1	SPRING	
130	2986733-0000		1	LOWER FILLING TUBE	
140	3067587-0000		1	PRESSURE FLANGE	
150	2610042-0000		1	FLOAT	
	90602-0330		*1*	*SAFETY CUTTER, RUCK-ZUCK 55337*	
160	2796072-0001		2	LOCKING FORK	
TBA 0375S (See drawing on page: 1-158)					
010	2966672-0000		1	UPPER FILLING TUBE	
040	295376-0000		1	SHAFT	
050	568583-0000		1	FORK	
070	2909367-0000		1	PRESSURE ROLLER (PACK 10)	
090	295377-0005		1	HOOD	
100	2906116-0000		1	SPRING	
130	2966645-0000		1	LOWER FILLING TUBE	
140	3058457-0000		1	PRESSURE FLANGE	
150	2610042-0000		1	FLOAT	
	90602-0330		*1*	*SAFETY CUTTER, RUCK-ZUCK 55337*	
160	2796072-0001		2	LOCKING FORK	
TPA 0125SQ (See drawing on page: 1-156)					
010	2966648-0000		1	UPPER FILLING TUBE	
040	255977-0000		1	SHAFT	
050	255978-0000		1	FORK	
070	2932253-0000		1	PRESSURE ROLLER (PACK 10)	
090	295377-0004		1	HOOD	
100	2906117-0000		1	SPRING	
130	2966656-0000		1	LOWER FILLING TUBE	
140	2966660-0000		1	PRESSURE FLANGE	
150	2945423-0000		1	FLOAT	
160	3115221-0000		1	FORK	
170	2966649-0000		1	FORK	
TPA 0250SQ, TPA 0200SQ (See drawing on page: 1-156)					
010	2966639-0000		1	UPPER FILLING TUBE	
040	255977-0000		1	SHAFT	
050	255978-0000		1	FORK	
070	2932253-0000		1	PRESSURE ROLLER (PACK 10)	
090	295377-0001		1	HOOD	
100	2906117-0000		1	SPRING	
130	2966644-0000		1	LOWER FILLING TUBE	
140	3089566-0000		1	PRESSURE FLANGE	
150	2999019-0000		1	FLOAT	
	90602-0330		*1*	*SAFETY CUTTER, RUCK-ZUCK 55337*	
160	2796072-0001		1	LOCKING FORK	
170	2796072-0002		1	FLANGE	
TPA 0330SQ (See drawing on page: 1-158)					
010	2966672-0000		1	UPPER FILLING TUBE	
040	295376-0000		1	SHAFT	
050	568583-0000		1	FORK	
070	2909367-0000		1	PRESSURE ROLLER (PACK 10)	
090	295377-0002		1	HOOD	
100	2906116-0000		1	SPRING	
130	2986702-0000		1	LOWER FILLING TUBE	
140	3089571-0000		1	PRESSURE FLANGE	
150	3106891-0000		1	FLOAT	
160	2796072-0001		2	LOCKING FORK	
Common Parts					
020	1523222-0000		1	PLATE	
030	295984-0000		1	DRIP GUARD	
060	1523223-0000		2	NUT	
080	1523225-0000		1	FASTENING PLATE	
110	90600-3388		1	O-RING 284X3 MM	
120	1523224-0000		2	NUT	
300	312105-0364		2	SCREW, M6S ISO 4017 M6X10 A4 80	
310	312105-0372		4	SCREW, M6S ISO 4017 M6X25 A4 80	
320	315125-0153		4	WASHER HIGH, TBRSB 6,4X22X4 A4	
330	312115-0455		4	SCREW ISO4762 M8X30 A4 80	
340	312605-0318		4	HEXAGON NUT, M6M M8 A280	
350	90600-2508		1	O-RING 17,3X2,4 MM FDA, 3-A	

Machine Type | Group Description | Used-In | Group Number | Page No

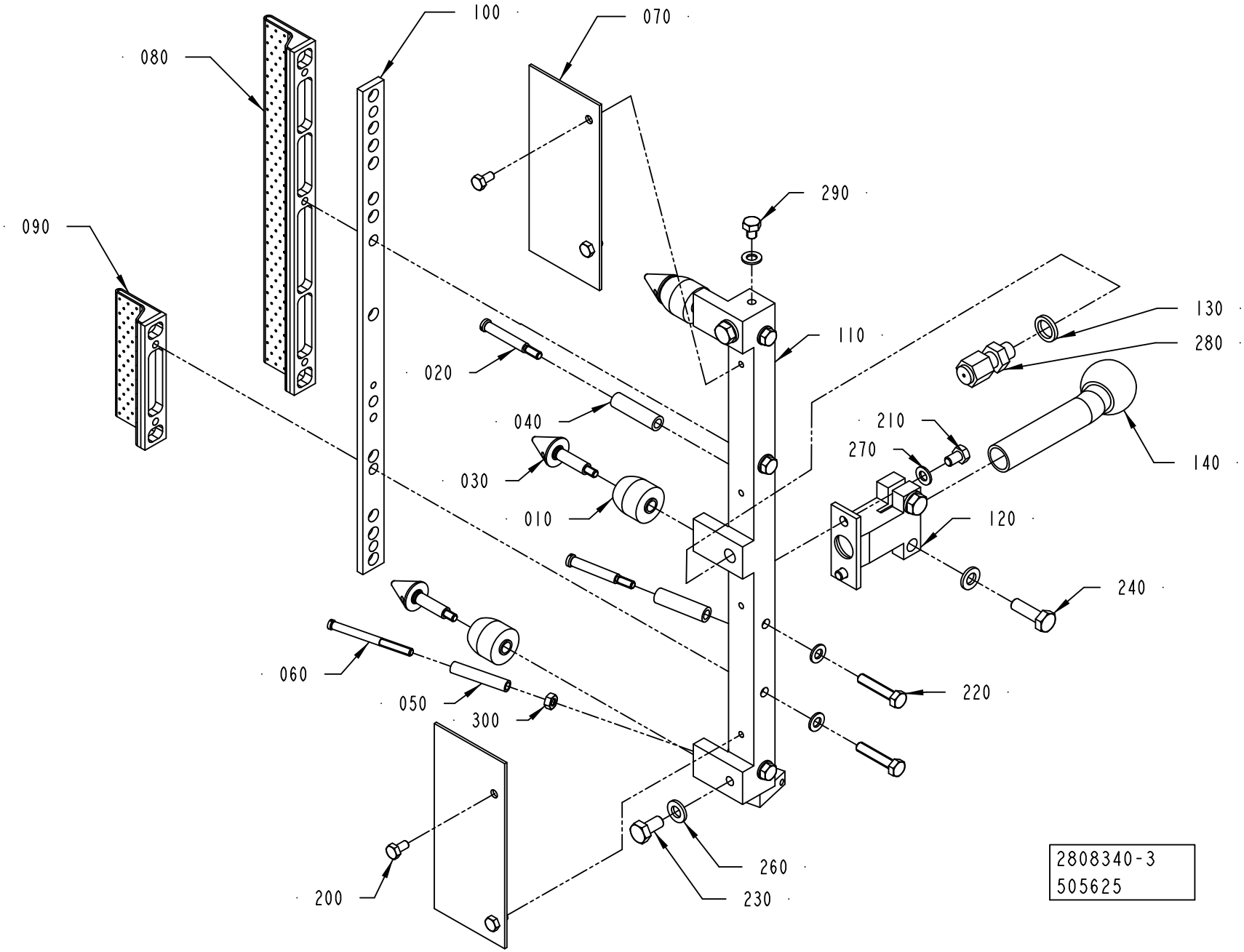
100
070
080
290
090
130
280
110
020
040
210
270
140
030
010
120
240
060
220
050
300
260
200
230
2808340-3
505625

ECM: 507209 - 20111001
Group number: 2808340-0200
Assembly Drawing: 2808340-3_1_AA

Pos	Part No	UN	Qty	Description	Page No
TBA 0100B, TBA 0125S, TBA 0160S, TBA 0200M, TBA 0200S, TBA 0250S, TPA 0250SQ, TPA 0200SQ, TPA 0125SQ, TBA 0080S, TBA 0200E					
020	3037861-0000		2	SHAFT	
040	3037862-0000		2	ROLLER	
100	2906099-0000		1	DISTRIBUTOR WING	
120	2808402-0000		1	CLAMP	
140	2808403-0000		1	ELBOW PIPE	
TBA 0200B, TBA 0200SQ, TBA 0284B, TBA 0250B, TBA 0300S, TBA 0330S, TPA 0330SQ, TBA 0250SQ					
020	3037861-0000		1	SHAFT	
040	3037862-0000		1	ROLLER	
100	2906099-0000		1	DISTRIBUTOR WING	
120	2808402-0000		1	CLAMP	
140	2808403-0000		1	ELBOW PIPE	
TBA 0375S					
020	3037861-0000		1	SHAFT	
040	3037862-0000		1	ROLLER	
100	568581-0000		1	DISTRIBUTOR WING	
120	3058488-0000		1	CLAMP	
140	3058489-0000		1	ELBOW PIPE	
Common Parts					
010	3009960-0000		3	ROLL	
030	272095-0000		3	SHAFT	
050	2890117-0000		1	ROLLER	
060	2890118-0000		1	SHAFT	
070	469466-0000		2	PLATE	
080	568577-0000		1	AIR NOZZLE	
090	568578-0000		1	AIR NOZZLE	
110	752218-0000		1	ATTACHMENT	
130	273429-0000		1	WASHER	
200	312105-0287		4	SCREW, M6S ISO 4017 M4X8 A4 70	
210	312105-0323		2	SCREW, M6S ISO 4017 M5X8 A4 80	
220	312105-0333		5	SCREW, M6S ISO 4017 M5X25 A4 80	
230	312105-0366		2	SCREW, M6S ISO 4017 M6X12 A4 80	
240	312105-0370		2	SCREW, M6S ISO 4017 M6X20 A4 80	
260	315105-0153		4	WASHER PLAIN, 6,4X12X1,5 A4 BRB	
270	315105-0146		8	WASHER PLAIN, 5,3X10X1 A4 BRB	
280	90326-0304		1	COMPRESSION GLAND, 5101 015-005	
290	90287-0199		1	SCREW, M6S ISO 4017 M5X6 A4 80	
300	312605-0312		1	HEXAGON NUT, M6M M4 A280	

Pos	Part No	UN	Qty	Description	Page No

Machine Type	Group Description	Used-In	Group Number	Page No

This page is intentionally left blank.

ECM: 514186 - 20111002
Group number: 3190294-0100
Assembly Drawing:

Pos	Part No	UN	Qty	Description	Page No
TBA 0375S					
010	2529547-0100		1	PAPER GUIDE	**1-165**
020	2832313-0000		2	SHAFT	
Common Parts					
030	2974074-0100		1	SPACER	**1-167**

Pos	Part No	UN	Qty	Description	Page No

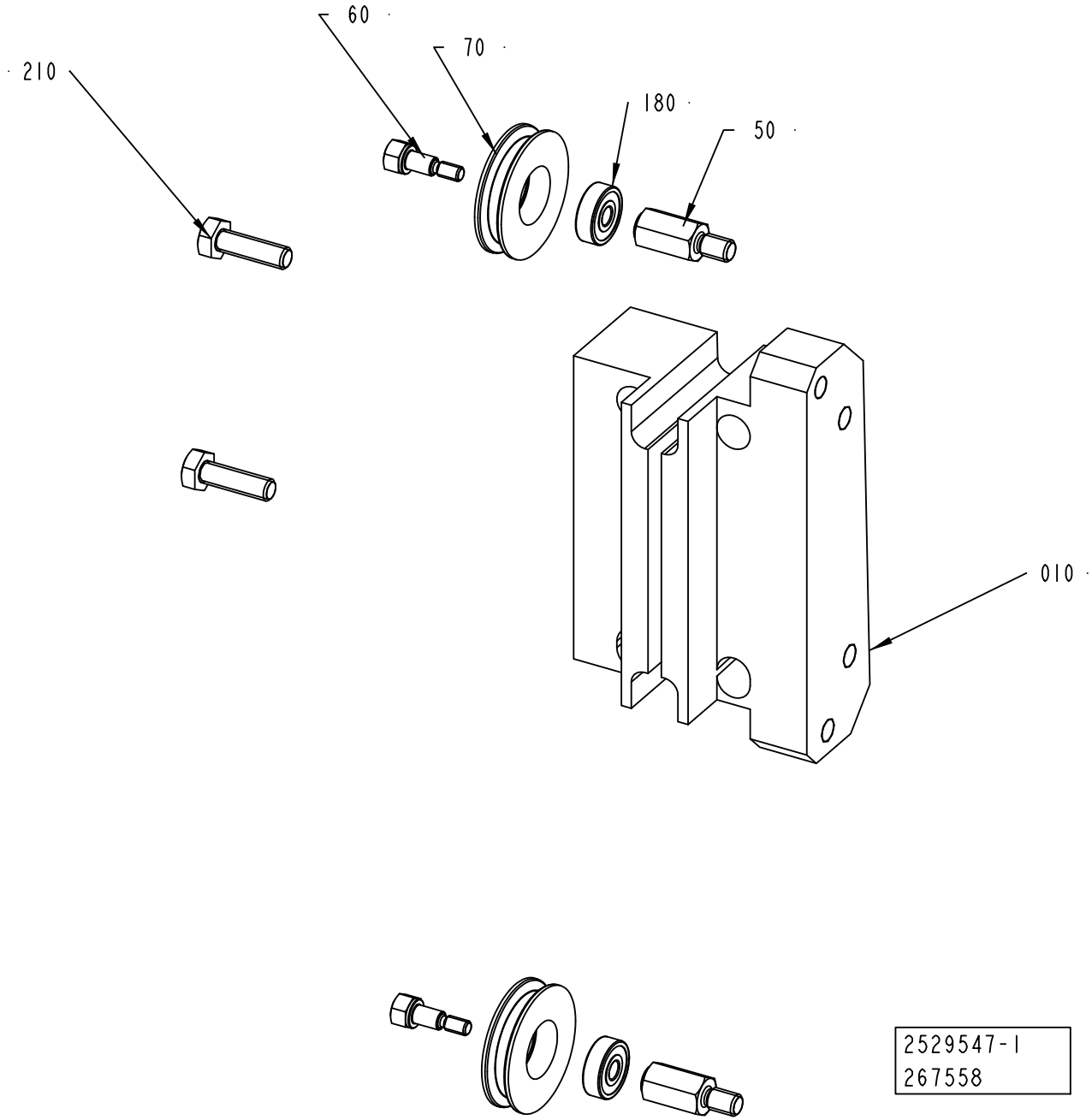
60
70
180
50
210
010
2529547-1
267558

ECM: 405759 - 20100610
Group number: 2529547-0100
Assembly Drawing: 2529547-1_1_AC

Pos	Part No	UN	Qty	Description	Page No
A3/COMPACTFLEX					
010	2831678-0000		1	SUPPORT	
Common Parts					
050	1558251-0000		2	SHAFT	
060	1558252-0000		2	SCREW	
070	1558253-0000		2	ROLLER	
180	90458-2950		2	BALL BEARING 5/16X5	
210	312105-0370		2	SCREW, M6S ISO 4017 M6X20 A4 80	

Pos	Part No	UN	Qty	Description	Page No

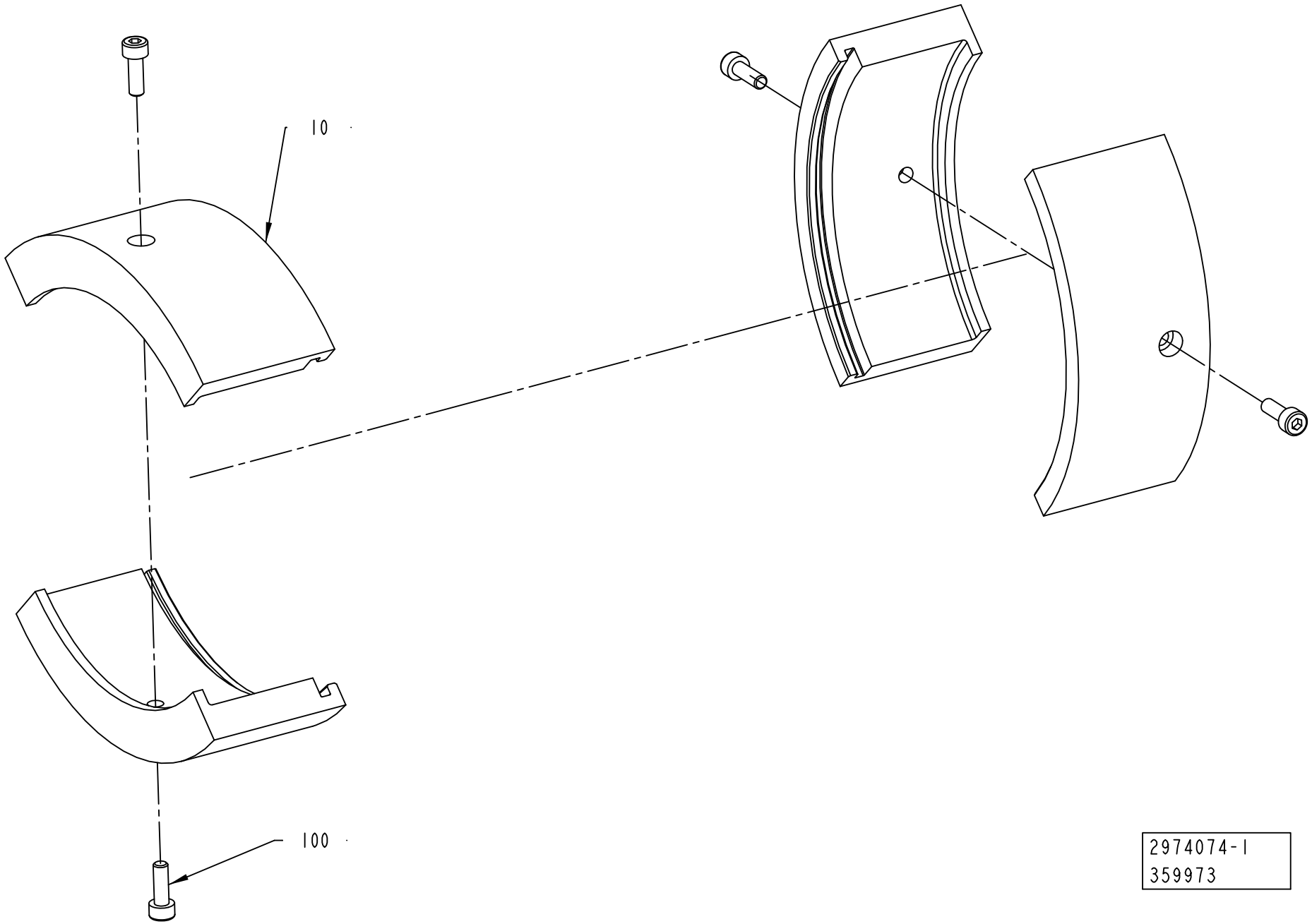

2974074-1
359973

ECM: 478876 - 20101003
Group number: 2974074-0100
Assembly Drawing: 2974074-1_1_AA

Pos	Part No	UN	Qty	Description	Page No
TBA 0080S					
010	2850474-0001		4	BRACKET	
TBA 0100B, TBA 0125S					
010	2850474-0002		4	BRACKET	
TBA 0160S, TBA 0200S, TPA 0250SQ, TPA 0200SQ					
010	2850474-0003		4	BRACKET	
TBA 0200B, TBA 0200SQ, TBA 0284B, TBA 0250B, TBA 0300S, TBA 0330S, TBA 0250SQ					
010	2850474-0005		4	BRACKET	
TBA 0200M, TBA 0250S, TBA 0200E					
010	2850474-0004		4	BRACKET	
TBA 0375S					
010	2850474-0006		4	BRACKET	
TPA 0125SQ					
010	2523766-0012		4	BRACKET	
TPA 0330SQ					
010	2523766-0001		4	BRACKET	
Common Parts					
100	312115-0291		4	SCREW ISO4762 M4X12 A4 80	

Pos	Part No	UN	Qty	Description	Page No

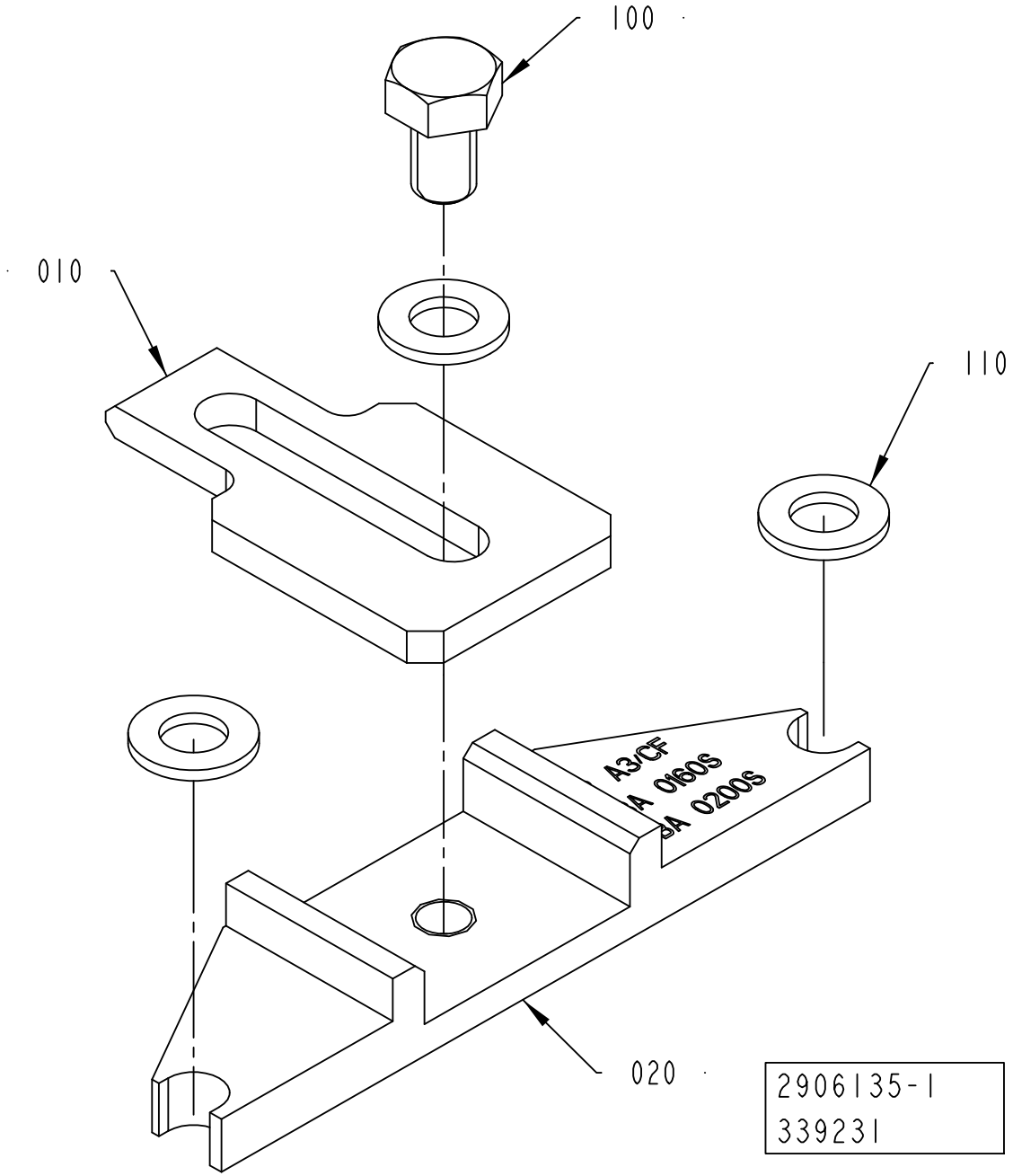
100
010
110
020
A3/CF
A 0160S
SA 0200S
2906135-1
339231

ECM: 479635 - 20101003
Group number: 2906135-0100
Assembly Drawing: 2906135-1_1_AA

Pos	Part No	UN	Qty	Description	Page No
TBA 0100B, TBA 0125S, TBA 0160S, TBA 0200S, TPA 0250SQ, TPA 0200SQ					
020	2945458-0000		1	PLATE	
TBA 0200B, TBA 0200SQ, TBA 0284B, TBA 0250B, TBA 0300S, TBA 0330S, TPA 0330SQ, TBA 0250SQ					
020	2945459-0000		1	PLATE	
TBA 0200M, TBA 0250S, TBA 0200E					
020	2966652-0000		1	PLATE	
TBA 0375S					
020	2945459-0000		1	PLATE	
TPA 0125SQ, TBA 0080S					
020	2945456-0000		1	PLATE	
Common Parts					
010	2736719-0000		1	PLATE	
100	312105-0325		1	SCREW, M6S ISO 4017 M5X10 A4 80	
110	315105-0146		3	WASHER PLAIN, 5,3X10X1 A4 BRB	

Pos	Part No	UN	Qty	Description	Page No

This page is intentionally left blank.

ECM: 478588 - 20101003
Group number: 2889626-0100
Assembly Drawing:

This list covers pages from 1-170 to 1-175

Pos	Part No	UN	Qty	Description	Page No
TPA 0125SQ					
FF10	2894737-0000		1	PUSHER	
FF20	2921574-0000		2	PUSHER	
JS10	1110083-0003		12	DOLLY	
JS20	2975930-0000		2	INDUCTOR	
JS30	2908756-0000		20	VOLUME SHIM	
JS40	1282645-0000		1	KNIFE	
SU10	2932253-0000		1	PRESSURE ROLLER (PACK 10)	
SU20	255977-0000		1	SHAFT	
TPA 0200SQ					
FF10	2871956-0000		1	PUSHER	
FF20	3037955-0000		2	PUSHER	
JS10	1110083-0003		12	DOLLY	
JS20	1110534-0000		2	INDUCTOR	
JS30	3019316-0000		8	SHIM	
JS40	1282646-0000		1	KNIFE	
SU10	2932253-0000		1	PRESSURE ROLLER (PACK 10)	
SU20	255977-0000		1	SHAFT	
TPA 0250SQ					
FF10	2871956-0000		1	PUSHER	
FF20	3037955-0000		2	PUSHER	
JS10	1110083-0003		12	DOLLY	
JS20	1110534-0000		2	INDUCTOR	
JS30	3019317-0000		8	SHIM	
JS40	1282646-0000		1	KNIFE	
SU10	2932253-0000		1	PRESSURE ROLLER (PACK 10)	
SU20	255977-0000		1	SHAFT	
TPA 0330SQ					
FF10	2871956-0000		1	PUSHER	
FF20	2921574-0000		2	PUSHER	
JS10	1110083-0003		12	DOLLY	
JS20	1110556-0000		2	INDUCTOR	
JS30	3003863-0000		16	VOLUME SHIM	
JS40	1282646-0000		1	KNIFE	
SU10	2909367-0000		1	PRESSURE ROLLER (PACK 10)	
SU20	295376-0000		1	SHAFT	
TBA 0080S					
FF10	2894694-0000		1	PUSHER	
FF20	2921574-0000		2	PUSHER	
JS10	1566761-0000		12	DOLLY	
JS20	1566981-0000		2	INDUCTOR	
JS30	2950902-0000		8	VOLUME SHIM	
JS40	1282645-0000		1	KNIFE	
SU10	2932253-0000		1	PRESSURE ROLLER (PACK 10)	
SU20	255977-0000		1	SHAFT	
TBA 0100B					
FF10	2894694-0000		1	PUSHER	
FF20	2921574-0000		2	PUSHER	
JS10	2949862-0004		12	DOLLY	
JS20	2917498-0000		2	INDUCTOR	
JS30	979754-0000		8	VOLUME SHIM 100	
JS40	1282645-0000		1	KNIFE	
SU10	2932253-0000		1	PRESSURE ROLLER (PACK 10)	
SU20	255977-0000		1	SHAFT	
TBA 0125S					
FF10	2894694-0000		1	PUSHER	
FF20	2921574-0000		2	PUSHER	
JS10	2949862-0004		12	DOLLY	
JS20	2917498-0000		2	INDUCTOR	
JS30	272987-0000		8	VOLUME SHIM	
JS40	1282645-0000		1	KNIFE	
SU10	2932253-0000		1	PRESSURE ROLLER (PACK 10)	
SU20	255977-0000		1	SHAFT	
TBA 0160S					
FF10	2871956-0000		1	PUSHER	
FF20	2921574-0000		2	PUSHER	
JS10	1110083-0003		12	DOLLY	
JS20	1110532-0000		2	INDUCTOR	
JS30	3022276-0000		8	VOLUME SHIM	
JS40	1282647-0000		1	KNIFE	
SU10	2932253-0000		1	PRESSURE ROLLER (PACK 10)	
SU20	255977-0000		1	SHAFT	
TBA 0200B					
FF10	2871956-0000		1	PUSHER	
FF20	2894700-0000		2	PUSHER	
JS10	1110083-0003		12	DOLLY	
JS20	1110534-0000		2	INDUCTOR	
JS30	272986-0003		8	VOLUME SHIM	
JS40	1282646-0000		1	KNIFE	
SU10	2909368-0000		1	PRESSURE ROLLER (PACK 10)	
SU20	295376-0000		1	SHAFT	
TBA 0200E					
FF10	2871956-0000		1	PUSHER	
FF20	3037955-0000		2	PUSHER	

Machine Type | Group Description | Used-In | Group Number | Page No

This page is intentionally left blank.

ECM: 478588 - 20101003
Group number: 2889626-0100
Assembly Drawing:

This list covers pages from 1-170 to 1-175

Pos	Part No	UN	Qty	Description	Page No
TBA 0200E (Cont'd)					
JS10	1110083-0003		12	DOLLY	
JS20	3089354-0000		2	INDUCTOR	
JS30	3067286-0000		8	VOLUME SHIM	
JS30	3111045-0000		8	VOLUME SHIM	
JS40	1282647-0000		1	KNIFE	
SU10	2932253-0000		1	PRESSURE ROLLER (PACK 10)	
SU20	255977-0000		1	SHAFT	
TBA 0200M					
FF10	2871956-0000		1	PUSHER	
FF20	2921574-0000		2	PUSHER	
JS10	1110083-0003		12	DOLLY	
JS20	1110535-0000		2	INDUCTOR	
JS30	979861-0000		8	VOLUME SHIM	
JS40	1282647-0000		1	KNIFE	
SU10	2932253-0000		1	PRESSURE ROLLER (PACK 10)	
SU20	255977-0000		1	SHAFT	
TBA 0200S					
FF10	2871956-0000		1	PUSHER	
FF20	2921574-0000		2	PUSHER	
JS10	1110083-0003		12	DOLLY	
JS20	1110532-0000		2	INDUCTOR	
JS30	272991-0000		8	VOLUME SHIM	
JS40	1282647-0000		1	KNIFE	
SU10	2932253-0000		1	PRESSURE ROLLER (PACK 10)	
SU20	255977-0000		1	SHAFT	
TBA 0200SQ					
FF10	2966591-0000		1	PUSHER	
FF20	3037955-0000		2	PUSHER	
JS10	1110083-0003		12	DOLLY	
JS20	3044527-0000		2	INDUCTOR	
JS30	1519222-0000		8	VOLUME SHIM	
JS40	1282646-0000		1	KNIFE	
SU10	2909368-0000		1	PRESSURE ROLLER (PACK 10)	
SU20	295376-0000		1	SHAFT	
TBA 0250B					
FF10	2871956-0000		1	PUSHER	
FF20	2894700-0000		2	PUSHER	
JS10	1110083-0003		12	DOLLY	
JS20	1110534-0000		2	INDUCTOR	
JS30	272986-0001		8	VOLUME SHIM	
JS40	1282646-0000		1	KNIFE	
SU10	2909368-0000		1	PRESSURE ROLLER (PACK 10)	
SU20	295376-0000		1	SHAFT	
TBA 0250S					
FF10	2871956-0000		1	PUSHER	
FF20	2921574-0000		2	PUSHER	
JS10	1110083-0003		12	DOLLY	
JS20	1110535-0000		2	INDUCTOR	
JS30	3002257-0000		8	VOLUME SHIM	
JS40	1282647-0000		1	KNIFE	
SU10	2932253-0000		1	PRESSURE ROLLER (PACK 10)	
SU20	255977-0000		1	SHAFT	
TBA 0250SQ					
FF10	2966591-0000		1	PUSHER	
FF20	3037955-0000		2	PUSHER	
JS10	1110083-0003		12	DOLLY	
JS20	3044527-0000		2	INDUCTOR	
JS30	2977544-0000		8	SHIM	
JS40	1282646-0000		1	KNIFE	
SU10	2909368-0000		1	PRESSURE ROLLER (PACK 10)	
SU20	295376-0000		1	SHAFT	
TBA 0284B					
FF10	2871956-0000		1	PUSHER	
FF20	2894700-0000		2	PUSHER	
JS10	1110083-0003		12	DOLLY	
JS20	1110534-0000		2	INDUCTOR	
JS30	3010756-0000		8	VOLUME SHIM	
JS40	1282646-0000		1	KNIFE	
SU10	2909368-0000		1	PRESSURE ROLLER (PACK 10)	
SU20	295376-0000		1	SHAFT	
TBA 0300S					
FF10	2871956-0000		1	PUSHER	
FF20	2894700-0000		2	PUSHER	
JS10	1110083-0003		12	DOLLY	
JS20	1110534-0000		2	INDUCTOR	
JS30	3047358-0000		8	VOLUME SHIM	
JS40	1282646-0000		1	KNIFE	
SU10	2909368-0000		1	PRESSURE ROLLER (PACK 10)	
SU20	295376-0000		1	SHAFT	
TBA 0330S					
FF10	2871956-0000		1	PUSHER	
FF20	2894700-0000		2	PUSHER	
JS10	1110083-0003		12	DOLLY	

Machine Type | Group Description | Used-In | Group Number | Page No

This page is intentionally left blank.

Pos	Part No	UN	Qty	Description	Page No
TBA 0330S (Cont'd)					
JS20	1110534-0000		2	INDUCTOR	
JS30	272986-0006		8	VOLUME SHIM 330S	
JS40	1282646-0000		1	KNIFE	
SU10	2909368-0000		1	PRESSURE ROLLER (PACK 10)	
SU20	295376-0000		1	SHAFT	
TBA 0375S					
FF10	2871956-0000		1	PUSHER	
FF20	3037955-0000		2	PUSHER	
JS10	1110083-0005		12	DOLLY	
JS20	3089348-0000		2	INDUCTOR	
JS30	3067274-0000		8	SHIM	
JS40	3096231-0000		1	KNIFE	
SU10	2909367-0000		1	PRESSURE ROLLER (PACK 10)	
SU20	295376-0000		1	SHAFT	

Pos	Part No	UN	Qty	Description	Page No

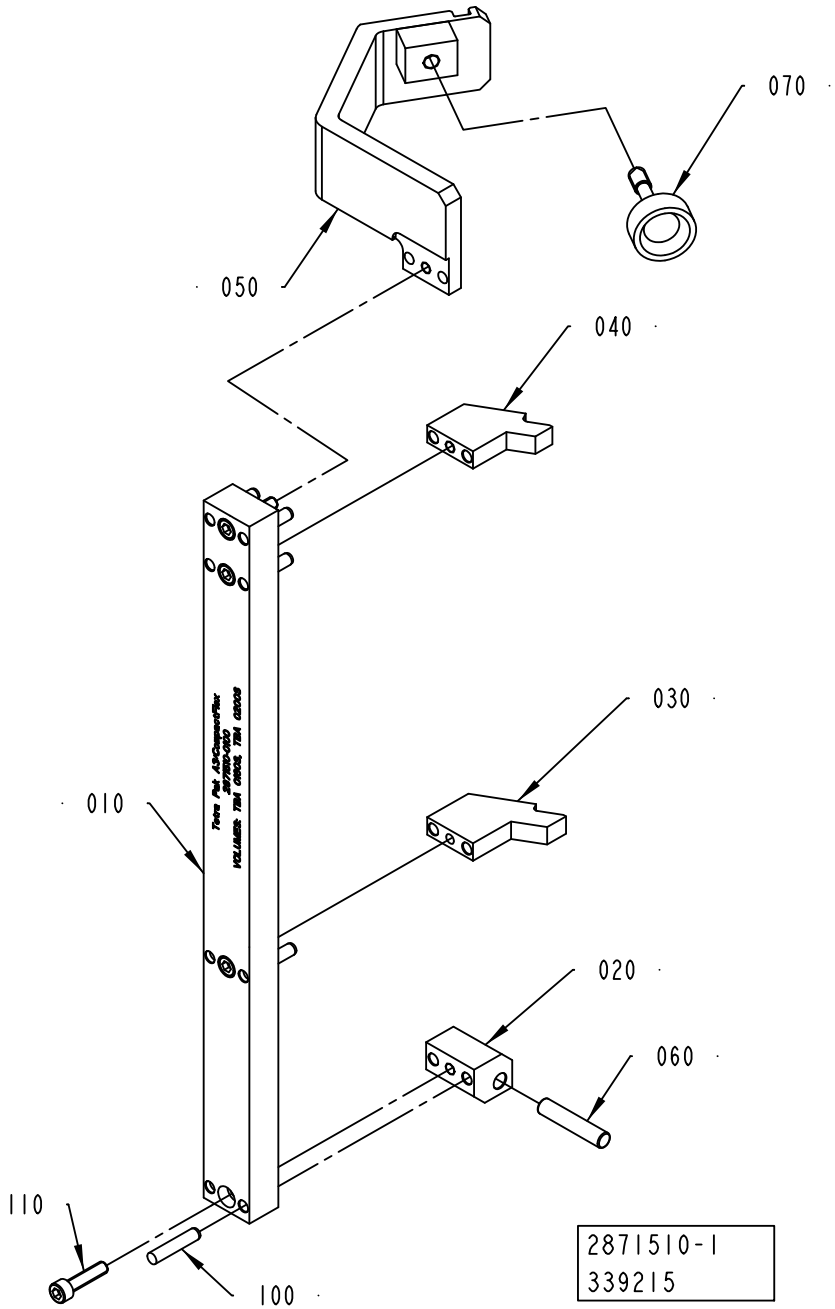
070
050
040
030
010
020
060
110
100
2871510-1
339215

ECM: 482677 - 20110401
Group number: 2871510-0100
Assembly Drawing: 2871510-1_1_AA

Pos	Part No	UN	Qty	Description	Page No
TBA 0080S					
010	2945429-0000		1	RULER	
020	2945463-0000		1	BRACKET	
030	3013549-0000		1	STOPPER	
040	3013550-0000		1	STOPPER	
050	2871527-0000		1	BRACKET	
060	263655-0003		1	SHAFT	
TBA 0100B, TBA 0125S					
010	2871523-0000		1	RULER	
020	2871511-0000		1	BRACKET	
030	2871513-0000		1	STOPPER	
040	2871517-0000		1	STOPPER	
050	2945419-0000		1	BRACKET	
060	2873-0000		1	SHAFT	
TBA 0160S, TBA 0200S, TPA 0250SQ, TPA 0200SQ					
010	2871524-0000		1	RULER	
020	2871511-0000		1	BRACKET	
030	2871514-0000		1	STOPPER	
040	2871518-0000		1	STOPPER	
050	2871521-0000		1	BRACKET	
060	2873-0000		1	SHAFT	
TBA 0200B, TBA 0200SQ, TBA 0284B, TBA 0250B, TBA 0300S, TBA 0330S, TBA 0250SQ					
010	2871537-0000		1	RULER	
020	2871512-0000		1	BRACKET	
030	2871515-0000		1	STOPPER	
040	2871519-0000		1	STOPPER	
050	2871522-0000		1	BRACKET	
060	263655-0006		1	SHAFT	
TBA 0200M, TBA 0250S, TBA 0200E					
010	2871526-0000		1	RULER	
020	2871511-0000		1	BRACKET	
030	2871516-0000		1	STOPPER	
040	2871520-0000		1	STOPPER	
050	2871528-0000		1	BRACKET	
060	2873-0000		1	SHAFT	
TBA 0375S					
010	3058482-0000		1	RULER	
020	3089572-0000		1	BRACKET	
030	3058483-0000		1	STOPPER	
040	3058484-0000		1	STOPPER	
050	2871522-0000		1	BRACKET	
060	263655-0006		1	SHAFT	

Pos	Part No	UN	Qty	Description	Page No
TPA 0125SQ					
010	2986723-0000		1	RULER	
020	2945463-0000		1	BRACKET	
030	2945461-0000		1	STOPPER	
040	2945462-0000		1	STOPPER	
050	2871527-0000		1	BRACKET	
060	263655-0003		1	SHAFT	
TPA 0330SQ					
010	3058437-0000		1	RULER	
020	2871512-0000		1	BRACKET	
030	3058438-0000		1	STOPPER	
040	3058439-0000		1	STOPPER	
050	2871522-0000		1	BRACKET	
060	263655-0006		1	SHAFT	
Common Parts					
070	2890071-0000		1	KNOB	
100	311103-0357		8	PARALLEL PIN ISO 2338 6M6X30 A1	
110	312115-0372		4	SCREW ISO4762 M6X25 A4 80	

Machine Type | Group Description | Used-In | Group Number | Page No

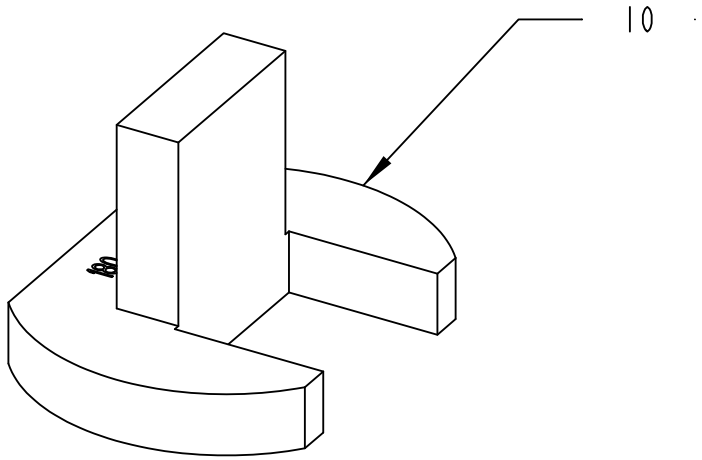

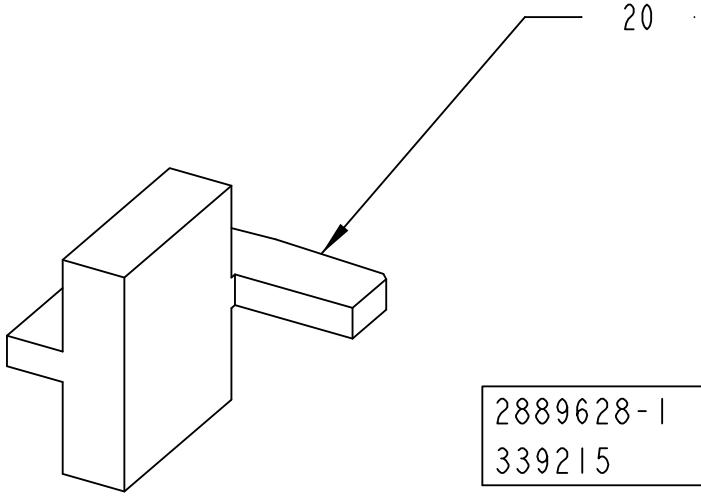

2889628-1
339215

ECM: 521070 - 20111003
Group number: 2889628-0100
Assembly Drawing: 2889628-1_1_AA

This list covers pages from 1-178 to 1-181

Pos	Part No	UN	Qty	Description	Page No
TBA 0080S (See drawing on page: 1-178)					
010	2960530-0000		1	TEMPLATE	
020	2960531-0000		1	TEMPLATE	
TBA 0100B, TBA 0125S (See drawing on page: 1-178)					
010	75937-0000		1	TEMPLATE	
020	75943-0000		1	TEMPLATE	
TBA 0160S, TBA 0200S (See drawing on page: 1-178)					
010	76176-0000		1	TEMPLATE	
020	75944-0000		1	TEMPLATE	
TBA 0200B, TBA 0284B, TBA 0250B, TBA 0300S, TBA 0330S (See drawing on page: 1-178)					
010	75936-0000		1	TEMPLATE	
020	75939-0000		1	TEMPLATE	
TBA 0200E (See drawing on page: 1-180)					
010	3180559-0000		1	TOOL	
020	3122501-0000		1	TOOL	
025	3137764-0000		1	TOOL	
TBA 0200M, TBA 0250S (See drawing on page: 1-178)					
010	574454-0000		1	TEMPLATE	
020	574455-0000		1	TEMPLATE	
TBA 0200SQ, TBA 0250SQ (See drawing on page: 1-178)					
010	75936-0000		1	TEMPLATE	
020	1538757-0000		1	TOOL	
TBA 0375S (See drawing on page: 1-178)					
010	3072777-0000		1	TEMPLATE	
020	3073526-0000		1	TEMPLATE	
TPA 0125SQ (See drawing on page: 1-178)					
010	2909729-0000		1	TEMPLATE	
020	2909730-0000		1	TEMPLATE	
TPA 0250SQ, TPA 0200SQ (See drawing on page: 1-178)					
010	76176-0000		1	TEMPLATE	
020	1539893-0000		1	TEMPLATE	
TPA 0330SQ (See drawing on page: 1-178)					
010	929328-0000		1	TEMPLATE	
020	1539892-0000		1	TEMPLATE	

Pos	Part No	UN	Qty	Description	Page No

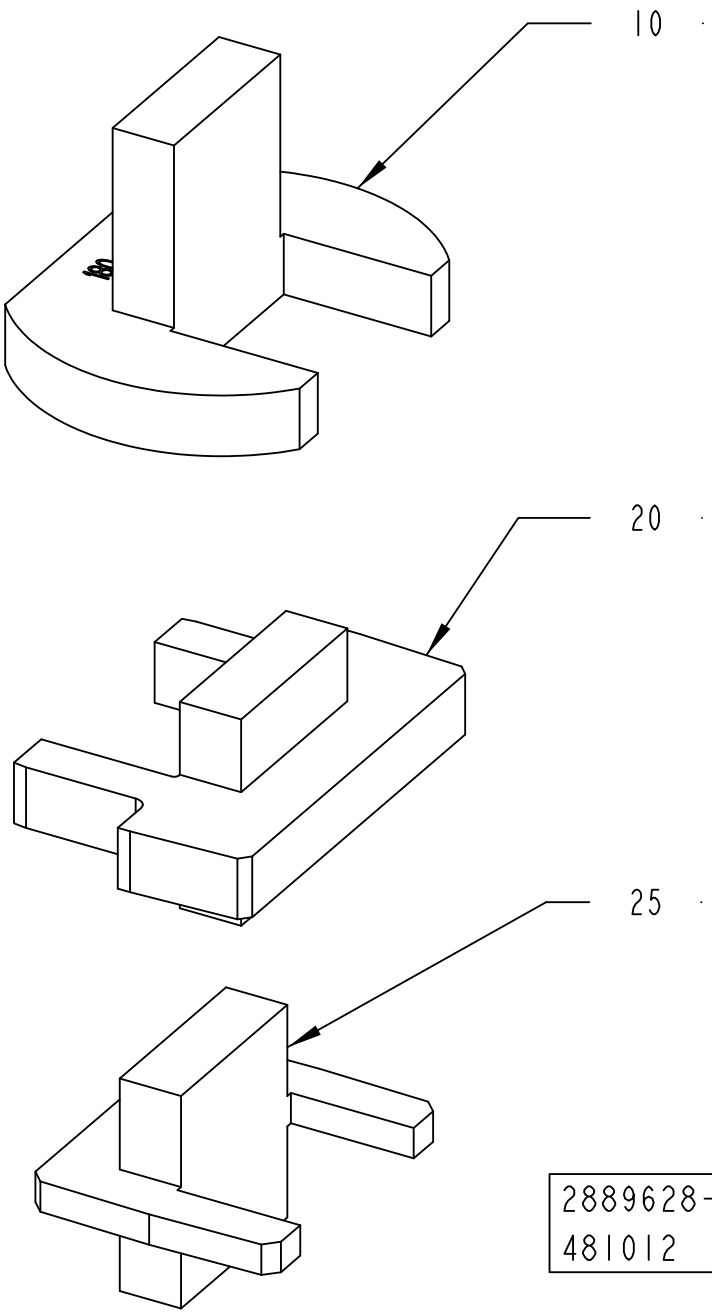
10
20
25
2889628-2
481012

ECM: 521070 - 20111003
Group number: 2889628-0100
Assembly Drawing: 2889628-2_1_AB

This list covers pages from 1-178 to 1-181

Pos	Part No	UN	Qty	Description	Page No
TBA 0080S (See drawing on page: 1-178)					
010	2960530-0000		1	TEMPLATE	
020	2960531-0000		1	TEMPLATE	
TBA 0100B, TBA 0125S (See drawing on page: 1-178)					
010	75937-0000		1	TEMPLATE	
020	75943-0000		1	TEMPLATE	
TBA 0160S, TBA 0200S (See drawing on page: 1-178)					
010	76176-0000		1	TEMPLATE	
020	75944-0000		1	TEMPLATE	
TBA 0200B, TBA 0284B, TBA 0250B, TBA 0300S, TBA 0330S (See drawing on page: 1-178)					
010	75936-0000		1	TEMPLATE	
020	75939-0000		1	TEMPLATE	
TBA 0200E (See drawing on page: 1-180)					
010	3180559-0000		1	TOOL	
020	3122501-0000		1	TOOL	
025	3137764-0000		1	TOOL	
TBA 0200M, TBA 0250S (See drawing on page: 1-178)					
010	574454-0000		1	TEMPLATE	
020	574455-0000		1	TEMPLATE	
TBA 0200SQ, TBA 0250SQ (See drawing on page: 1-178)					
010	75936-0000		1	TEMPLATE	
020	1538757-0000		1	TOOL	
TBA 0375S (See drawing on page: 1-178)					
010	3072777-0000		1	TEMPLATE	
020	3073526-0000		1	TEMPLATE	
TPA 0125SQ (See drawing on page: 1-178)					
010	2909729-0000		1	TEMPLATE	
020	2909730-0000		1	TEMPLATE	
TPA 0250SQ, TPA 0200SQ (See drawing on page: 1-178)					
010	76176-0000		1	TEMPLATE	
020	1539893-0000		1	TEMPLATE	
TPA 0330SQ (See drawing on page: 1-178)					
010	929328-0000		1	TEMPLATE	
020	1539892-0000		1	TEMPLATE	

Pos	Part No	UN	Qty	Description	Page No

This page is intentionally left blank.

ECM: 479631 - 20101003
Group number: 2890357-0100
Assembly Drawing:

Pos	Part No	UN	Qty	Description	Page No
TBA 0080S					
010	2922709-0003		2	TRIMMING ROLLER PLUS	
020	2922709-0002		2	TRIMMING ROLLER MINUS	
030	2945446-0003		1	TRIMMING ROLLER PLUS	
040	2945446-0002		1	TRIMMING ROLLER MINUS	
TBA 0100B, TBA 0125S					
010	752466-0000		2	TRIMMING ROLLER PLUS	
020	752467-0000		2	TRIMMING ROLLER MINUS	
030	2969725-0003		1	TRIMMING ROLLER PLUS	
040	2969725-0002		1	TRIMMING ROLLER MINUS	
TBA 0160S, TBA 0200S					
010	752464-0000		2	TRIMMING ROLLER PLUS	
020	752465-0000		2	TRIMMING ROLLER MINUS	
030	2966599-0003		1	TRIMMING ROLLER PLUS	
040	2966599-0002		1	TRIMMING ROLLER MINUS	
TBA 0200B, TBA 0200SQ, TBA 0250B, TBA 0330S, TBA 0250SQ					
010	752462-0000		2	TRIMMING ROLLER PLUS	
020	752463-0000		2	TRIMMING ROLLER MINUS	
030	2966602-0003		1	TRIMMING ROLLER PLUS	
040	2966602-0002		1	TRIMMING ROLLER MINUS	
TBA 0200E					
010	3089567-0003		2	ROLLER	
020	3089567-0002		2	ROLLER	
030	3089568-0003		1	ROLLER	
040	3089568-0002		1	ROLLER	
TBA 0200M, TBA 0250S					
010	574446-0000		2	TRIMMING ROLLER PLUS	
020	574447-0000		2	TRIMMING ROLLER MINUS	
030	3006309-0003		1	TRIMMING ROLLER PLUS	
040	3006309-0002		1	TRIMMING ROLLER MINUS	
TBA 0284B, TBA 0300S					
010	2922717-0003		2	TRIMMING ROLLER PLUS	
020	2922717-0002		2	TRIMMING ROLLER MINUS	
030	2945469-0003		1	TRIMMING ROLLER PLUS	
040	2945469-0002		1	TRIMMING ROLLER MINUS	
TBA 0375S					
010	3058446-0003		2	ROLLER	
020	3058446-0002		2	ROLLER	
030	3058447-0003		1	ROLLER	
040	3058447-0002		1	ROLLER	
TPA 0125SQ					
010	2890091-0003		2	TRIMMING ROLLER PLUS	
020	2890091-0002		2	TRIMMING ROLLER MINUS	
030	2966605-0003		1	TRIMMING ROLLER PLUS	
040	2966605-0002		1	TRIMMING ROLLER MINUS	
TPA 0250SQ, TPA 0200SQ					
010	2922767-0003		2	TRIMMING ROLLER PLUS	
020	2922767-0002		2	TRIMMING ROLLER MINUS	
030	2945467-0003		1	TRIMMING ROLLER PLUS	
040	2945467-0002		1	TRIMMING ROLLER MINUS	
TPA 0330SQ					
010	929282-0000		2	TRIMMING ROLLER PLUS	
020	929283-0000		2	TRIMMING ROLLER MINUS	
030	2986698-0003		1	TRIMMING ROLLER PLUS	
040	2986698-0002		1	TRIMMING ROLLER MINUS	

Machine Type | Group Description | Used-In | Group Number | Page No

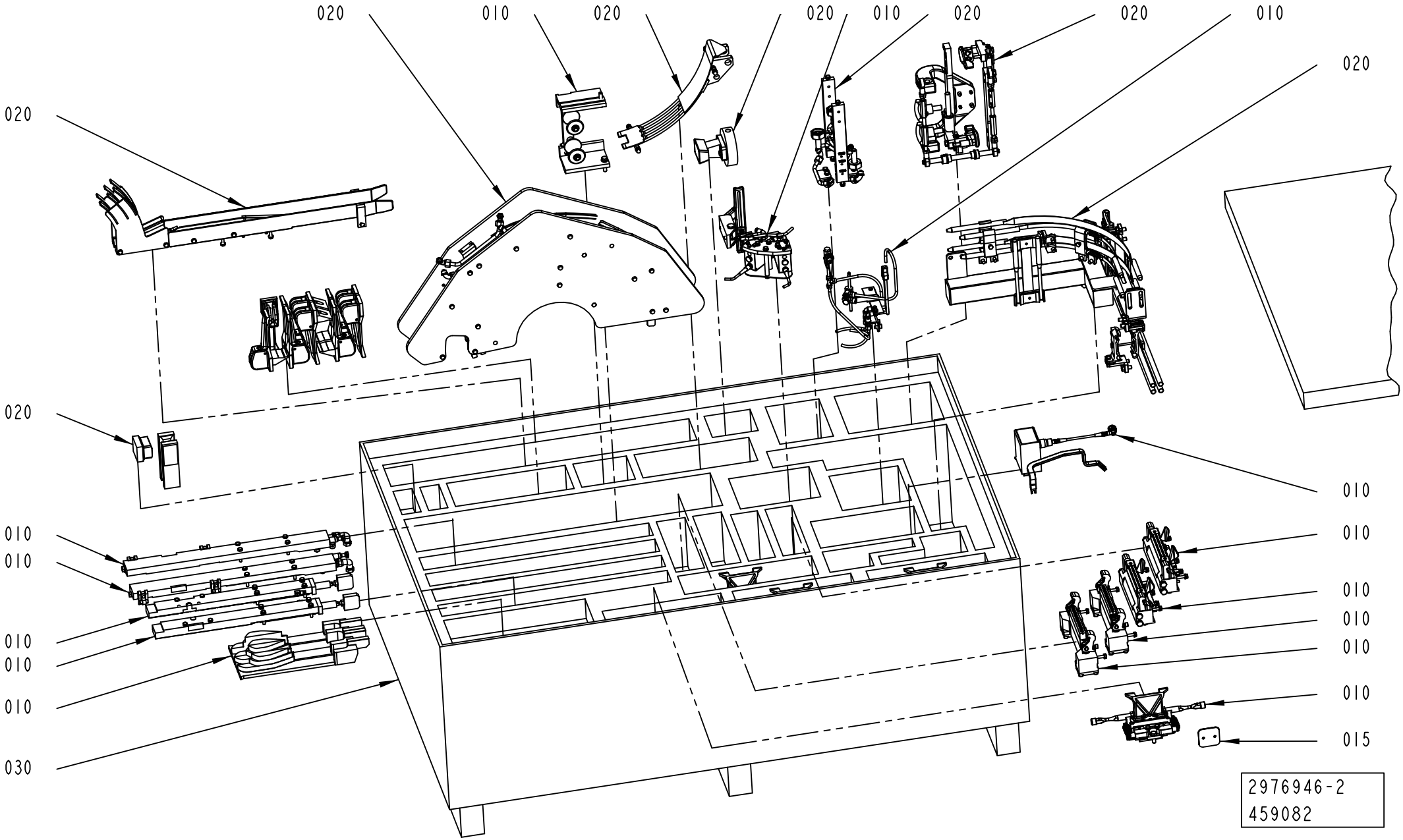
020
010
020
020
010
020
020
010
020
020
020
010
010
010
010
010
010
010
010
010
010
010
010
030
015
2976946-2
459082

ECM: 461251 - 20101001
Group number: 2976946-0200
Assembly Drawing: 2976946-2_1_AB

Pos	Part No	UN	Qty	Description	Page No
START FM HI					
015	3104917-0100		1	VOLUME BULGE	**1-187**
Common Parts					
010	2824756-0200		1	FORMING UNIT	**1-189, 1-191**
020	2819319-0200		1	FORMING UNIT	**1-303**
030	2988052-0000		1	BOX 2 NOQC	

Pos	Part No	UN	Qty	Description	Page No

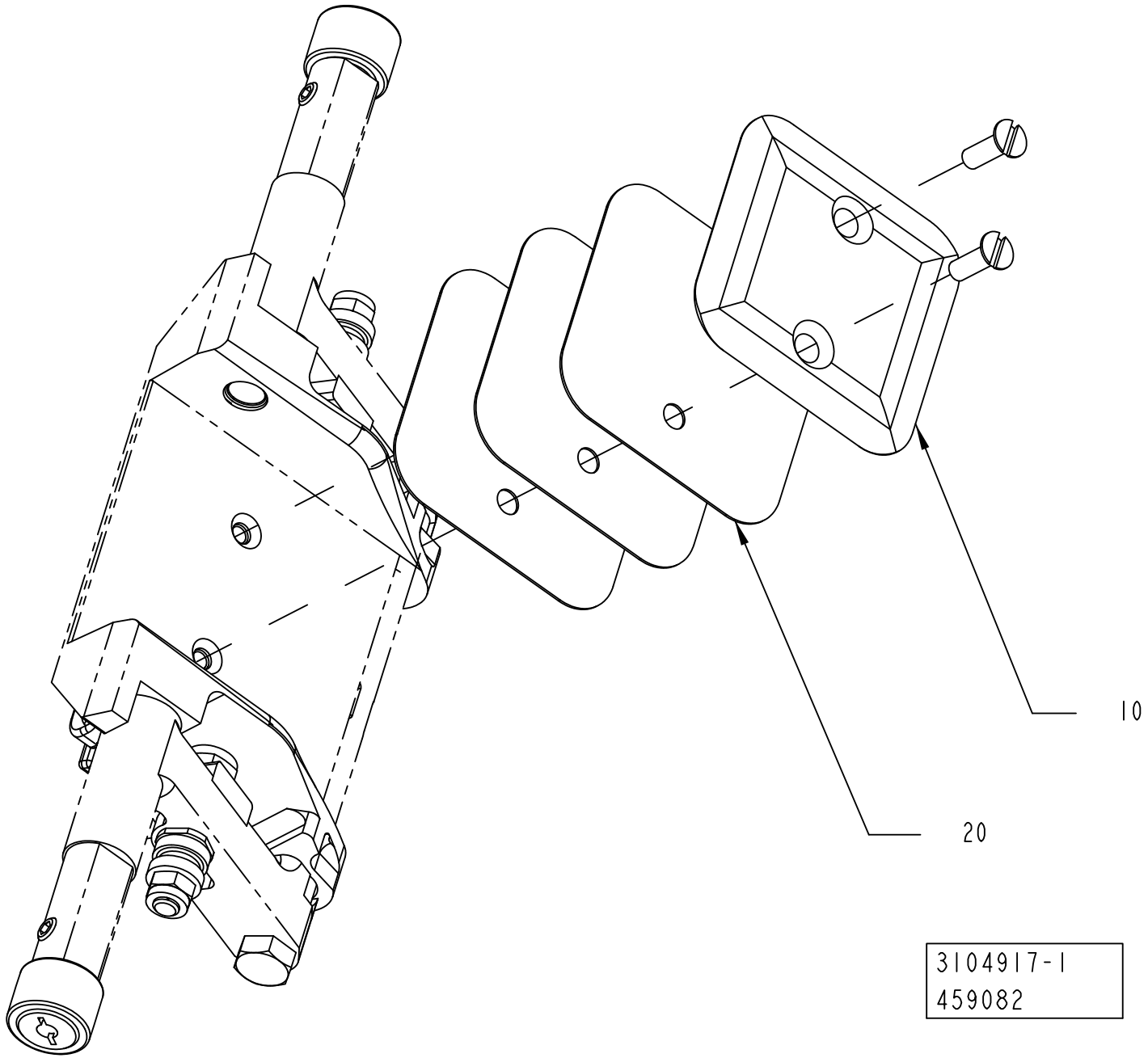
10
20
3104917-1
459082

ECM: 507833 - 20111001
Group number: 3104917-0100
Assembly Drawing: 3104917-1_1_AA

Pos	Part No	UN	Qty	Description	Page No
TBA 0080S					
020	3115484-0000		4	VOLUME BULGE	
090	3115485-0000		8	VOLUME SHIM	
TBA 0100B					
020	3122818-0000		4	VOLUME BULGE	
090	3122819-0000		8	VOLUME SHIM	
TBA 0125S					
020	3106859-0000		4	VOLUME BULGE	
090	3106860-0000		12	SHIM	
TBA 0200B					
020	3047317-0000		4	VOLUME BULGE	
090	3047358-0000		12	VOLUME SHIM	
TBA 0200M, TBA 0250S					
020	3104458-0000		8	VOLUME BULGE	
090	3104459-0000		24	SHIM	
TBA 0200S					
020	3174445-0000		4	VOLUME BULGE	
090	3174446-0000		12	VOLUME SHIM	

Pos	Part No	UN	Qty	Description	Page No

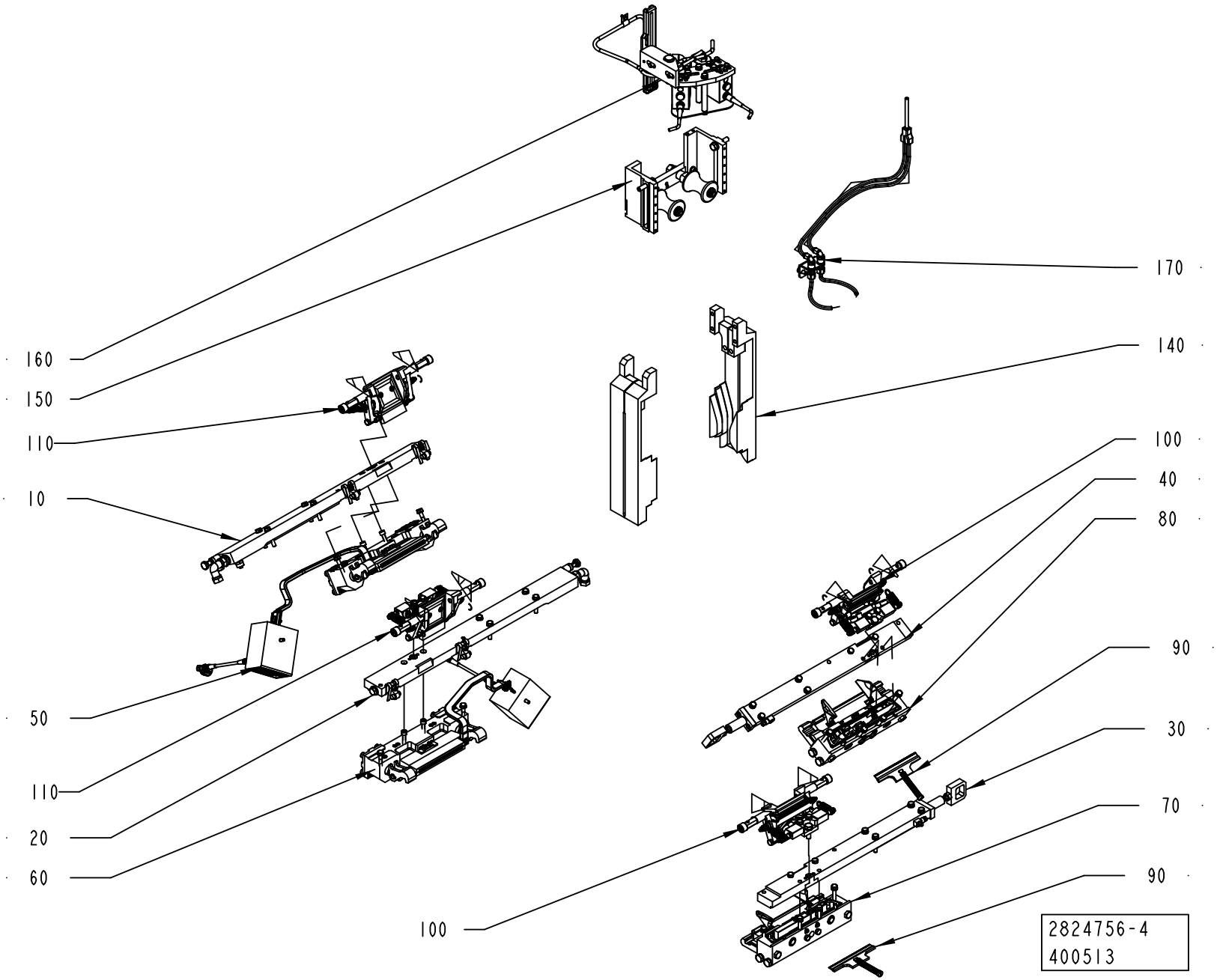
160
150
110
10
50
110
20
60
100
170
140
100
40
80
90
30
70
90
2824756-4
400513

ECM: 509348 - 20111001
Group number: 2824756-0200
Assembly Drawing: 2824756-4_1_AA

This list covers pages from 1-188 to 1-191

Pos	Part No	UN	Qty	Description	Page No
TBA 0250S HI					
100	2869019-0200		2	VOLUME FLAP	**1-193**
110	2869019-0200		2	VOLUME FLAP	**1-193**
TBA 0250S NOHI (See drawing on page: 1-188)					
100	2869019-0200		2	VOLUME FLAP	**1-193**
110	2869019-0200		2	VOLUME FLAP	**1-193**
TBA 0250SQ (See drawing on page: 1-190)					
100	2869019-0200		1	VOLUME FLAP	**1-193**
105	2966465-0200		1	VOLUME FLAP	**1-211**
110	2907729-0200		1	VOLUME FLAP	**1-215**
115	2966467-0200		1	VOLUME FLAP	**1-227**
TBA 0284B (See drawing on page: 1-190)					
100	2869019-0200		1	VOLUME FLAP	**1-193**
105	2966465-0200		1	VOLUME FLAP	**1-211**
110	2907729-0200		1	VOLUME FLAP	**1-215**
115	2966467-0200		1	VOLUME FLAP	**1-227**
TBA 0300S (See drawing on page: 1-190)					
100	2869019-0200		1	VOLUME FLAP	**1-193**
105	2966465-0200		1	VOLUME FLAP	**1-211**
110	2907729-0200		1	VOLUME FLAP	**1-215**
115	2966467-0200		1	VOLUME FLAP	**1-227**
TBA 0330S (See drawing on page: 1-188)					
100	2869019-0200		2	VOLUME FLAP	**1-193**
110	2869019-0200		2	VOLUME FLAP	**1-193**
TBA 0375S (See drawing on page: 1-190)					
100	2869019-0200		1	VOLUME FLAP	**1-193**
105	2966465-0200		1	VOLUME FLAP	**1-211**
110	2907729-0200		1	VOLUME FLAP	**1-215**
115	2966467-0200		1	VOLUME FLAP	**1-227**
TPA 0125SQ (See drawing on page: 1-188)					
100	2869019-0200		2	VOLUME FLAP	**1-193**
110	2907729-0200		2	VOLUME FLAP	**1-215**
TPA 0200SQ (See drawing on page: 1-190)					
100	2869019-0200		1	VOLUME FLAP	**1-193**
105	2966465-0200		1	VOLUME FLAP	**1-211**
110	2907729-0200		1	VOLUME FLAP	**1-215**
115	2966467-0200		1	VOLUME FLAP	**1-227**
TPA 0250SQ (See drawing on page: 1-190)					
100	2869019-0200		1	VOLUME FLAP	**1-193**
105	2966465-0200		1	VOLUME FLAP	**1-211**
110	2907729-0200		1	VOLUME FLAP	**1-215**
115	2966467-0200		1	VOLUME FLAP	**1-227**
TPA 0330SQ (See drawing on page: 1-190)					
100	2869019-0200		1	VOLUME FLAP	**1-193**
105	2966465-0200		1	VOLUME FLAP	**1-211**
110	2907729-0200		1	VOLUME FLAP	**1-215**
115	2966467-0200		1	VOLUME FLAP	**1-227**
TBA 0080S HI					
100	2869019-0200		2	VOLUME FLAP	**1-193**
110	2869019-0200		2	VOLUME FLAP	**1-193**
TBA 0080S NOHI (See drawing on page: 1-188)					
100	2869019-0200		2	VOLUME FLAP	**1-193**
110	2869019-0200		2	VOLUME FLAP	**1-193**
TBA 0100B HI (See drawing on page: 1-188)					
100	2869019-0200		2	VOLUME FLAP	**1-193**
110	2869019-0200		2	VOLUME FLAP	**1-193**
TBA 0100B NOHI (See drawing on page: 1-188)					
100	2869019-0200		2	VOLUME FLAP	**1-193**
110	2869019-0200		2	VOLUME FLAP	**1-193**
TBA 0125S HI					
100	2869019-0200		2	VOLUME FLAP	**1-193**
110	2869019-0200		2	VOLUME FLAP	**1-193**
TBA 0125S NOHI (See drawing on page: 1-188)					
100	2869019-0200		2	VOLUME FLAP	**1-193**
110	2869019-0200		2	VOLUME FLAP	**1-193**
TBA 0160S (See drawing on page: 1-190)					
100	2869019-0200		1	VOLUME FLAP	**1-193**
105	2966465-0200		1	VOLUME FLAP	**1-211**
110	2907729-0200		1	VOLUME FLAP	**1-215**
115	2966467-0200		1	VOLUME FLAP	**1-227**
TBA 0200B HI					
100	2869019-0200		2	VOLUME FLAP	**1-193**
110	2869019-0200		2	VOLUME FLAP	**1-193**
TBA 0200B NOHI (See drawing on page: 1-188)					
100	2869019-0200		2	VOLUME FLAP	**1-193**
110	2869019-0200		2	VOLUME FLAP	**1-193**
TBA 0200E (See drawing on page: 1-190)					
100	2869019-0200		1	VOLUME FLAP	**1-193**
105	2966465-0200		1	VOLUME FLAP	**1-211**
110	2907729-0200		1	VOLUME FLAP	**1-215**
115	2966467-0200		1	VOLUME FLAP	**1-227**
TBA 0200M HI					
100	2869019-0200		2	VOLUME FLAP	**1-193**
110	2869019-0200		2	VOLUME FLAP	**1-193**

Machine Type | Group Description | Used-In | Group Number | Page No

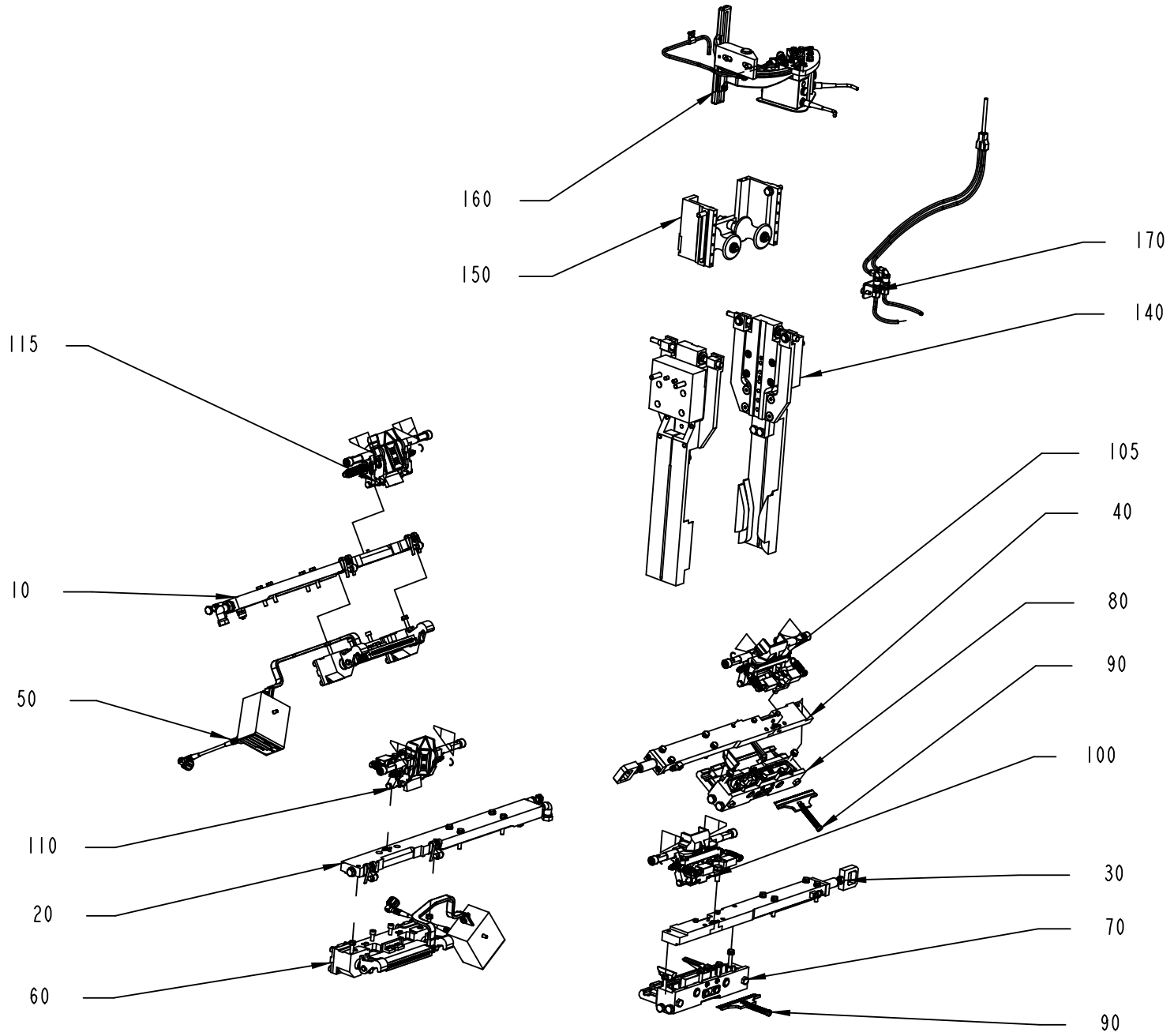
160
150
170
140
115
105
40
10
80
90
50
100
110
30
20
70
60
90
2824756-5
400513

Pos	Part No	UN	Qty	Description	Page No
TBA 0200M NOHI (Cont'd) (See drawing on page: 1-188)					
100	2869019-0200		2	VOLUME FLAP	**1-193**
110	2869019-0200		2	VOLUME FLAP	**1-193**
TBA 0200S HI (See drawing on page: 1-190)					
100	2869019-0200		1	VOLUME FLAP	**1-193**
105	2966465-0200		1	VOLUME FLAP	**1-211**
110	2907729-0200		1	VOLUME FLAP	**1-215**
115	2966467-0200		1	VOLUME FLAP	**1-227**
TBA 0200S NOHI (See drawing on page: 1-190)					
100	2869019-0200		1	VOLUME FLAP	**1-193**
105	2966465-0200		1	VOLUME FLAP	**1-211**
110	2907729-0200		1	VOLUME FLAP	**1-215**
115	2966467-0200		1	VOLUME FLAP	**1-227**
TBA 0200SQ (See drawing on page: 1-190)					
100	2869019-0200		1	VOLUME FLAP	**1-193**
105	2966465-0200		1	VOLUME FLAP	**1-211**
110	2907729-0200		1	VOLUME FLAP	**1-215**
115	2966467-0200		1	VOLUME FLAP	**1-227**
TBA 0250B (See drawing on page: 1-188)					
100	2869019-0200		2	VOLUME FLAP	**1-193**
110	2869019-0200		2	VOLUME FLAP	**1-193**
Common Parts					
010	2869011-0100		1	CARRIER PRESSURE	**1-231, 1-233**
020	2869012-0100		1	CARRIER PRESSURE	**1-235, 1-237**
030	2869013-0100		1	CARRIER CUTTING	**1-239, 1-241**
040	2869014-0100		1	CARRIER CUTTING	**1-243, 1-245**
050	2869015-0100		1	PRESSURE JAW	**1-247, 1-249, 1-251, 1-253**
060	2869016-0100		1	PRESSURE JAW	**1-257, 1-259, 1-261, 1-263**
070	2869017-0100		1	CUTTING JAW	**1-267, 1-269, 1-271, 1-273**
080	2869018-0100		1	CUTTING JAW	**1-275, 1-277, 1-279, 1-281**
090	256208-0400		2	KNIFE HOLDER	**1-283, 1-285, 1-287**
140	2835504-0200		1	VOLUME CURVE PIECE	**1-289, 1-291**
150	2901092-0100		1	SUPPORT ROLLER	**1-293**
160	2862751-0100		1	PHOTOCELL UNIT	**1-295, 1-297**
170	2961522-0100		1	TUBE FLUSHING	**1-299**

Pos	Part No	UN	Qty	Description	Page No

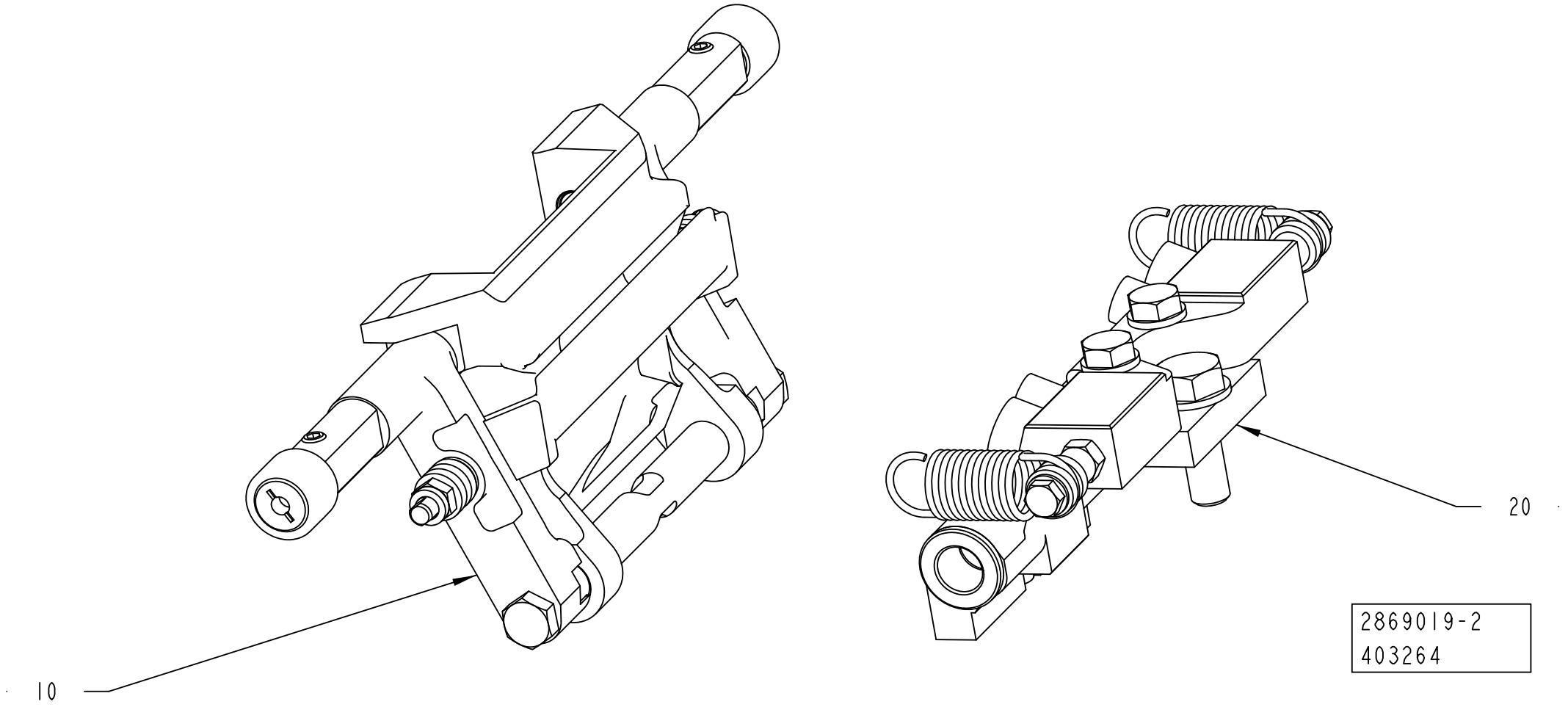
10
20
2869019-2
403264

ECM: 509349 - 20111001
Group number: 2869019-0200
Assembly Drawing: 2869019-2_1_AA

Pos	Part No	UN	Qty	Description	Page No
-					
010	2869207-0200		1	VOLUME FLAP	**1-195, 1-197, 1-199, 1-201, 1-203**
020	2869206-0200		1	SHOCK ABSORBER	**1-205, 1-207, 1-209**

Pos	Part No	UN	Qty	Description	Page No

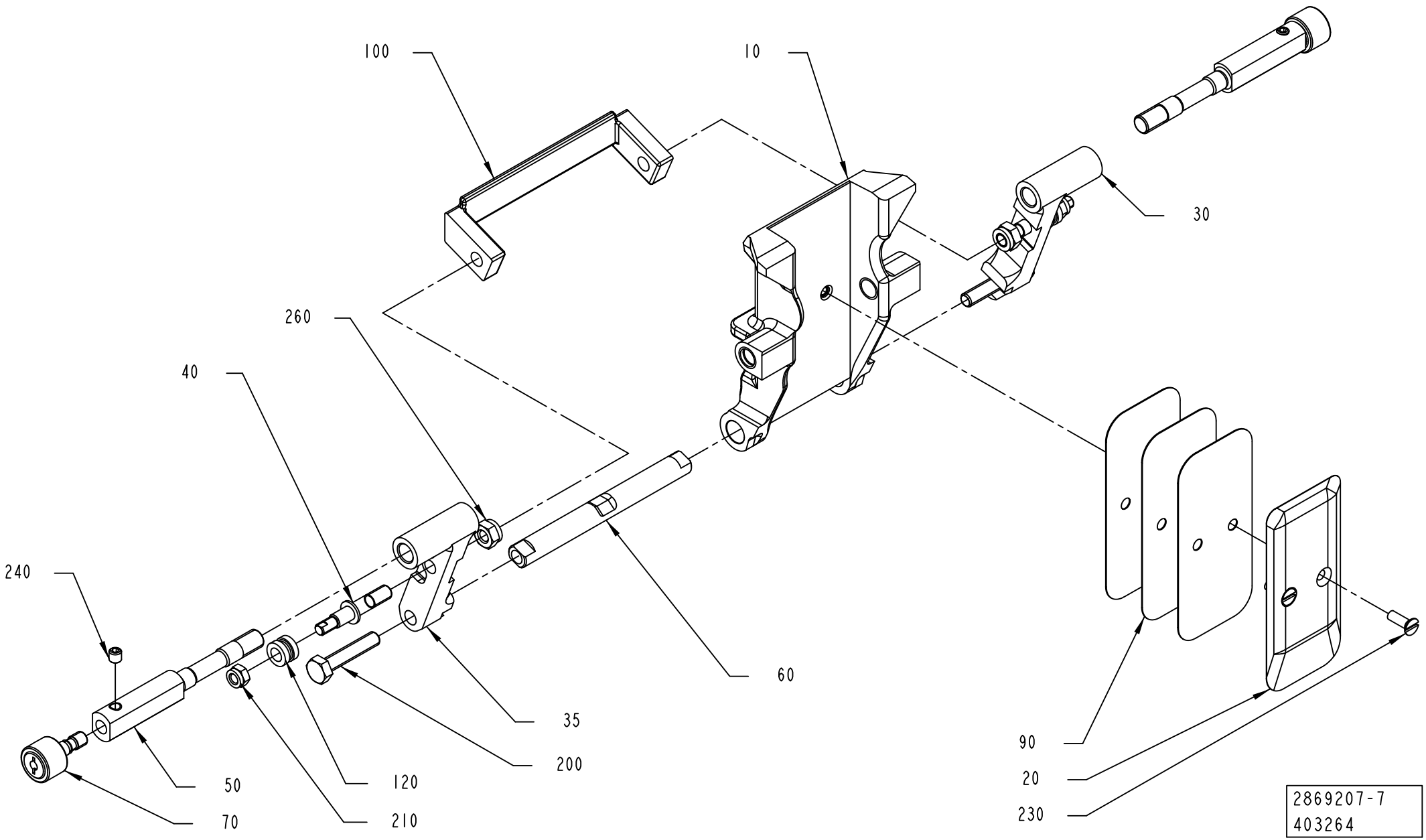
100
10
30
260
40
240
60
35
200
50
120
70
210
90
20
230
2869207-7
403264

ECM: 509350 - 20111001
Group number: 2869207-0200
Assembly Drawing: 2869207-7_1_AA

This list covers pages from 1-194 to 1-203

Pos	Part No	UN	Qty	Description	Page No
TBA 0250S HI (See drawing on page: 1-194)					
010	2947186-0000		1	VOLUME FLAP	
020	3104458-0000		1	VOLUME BULGE	
030	2992940-0000		1	CARRIER	
035	2993250-0000		1	CARRIER	
040	3022273-0000		2	SCREW	
050	2914728-0000		2	SHAFT	
060	2916179-0000		1	SHAFT	
090	3104459-0000		3	SHIM	
100	2992941-0000		1	STOP	
120	2905199-0000		2	HOLDER	
200	312109-0374		2	SCREW, M6S ISO 4017 M6X30 A4 80	
210	312812-0314		2	HEXAGON NUT, NY-LOCK M5 A4 80	
230	312145-0287		2	SCREW ISO 2009 MFS M4X8 A4	
TBA 0250S NOHI (See drawing on page: 1-194)					
010	2947186-0000		1	VOLUME FLAP	
020	3002255-0000		1	VOLUME BULGE	
030	2992940-0000		1	CARRIER	
035	2993250-0000		1	CARRIER	
040	3022273-0000		2	SCREW	
050	2914728-0000		2	SHAFT	
060	2916179-0000		1	SHAFT	
090	3002257-0000		3	VOLUME SHIM	
100	2992941-0000		1	STOP	
120	2905199-0000		2	HOLDER	
200	312109-0374		2	SCREW, M6S ISO 4017 M6X30 A4 80	
210	312812-0314		2	HEXAGON NUT, NY-LOCK M5 A4 80	
230	312145-0287		2	SCREW ISO 2009 MFS M4X8 A4	
TBA 0250SQ (See drawing on page: 1-194)					
010	2976921-0000		1	VOLUME FLAP	
020	2977545-0000		1	VOLUME BULGE	
030	3042529-0000		1	CARRIER	
035	3042530-0000		1	CARRIER	
040	3022273-0000		2	SCREW	
050	2976923-0000		2	SHAFT	
060	2916179-0000		1	SHAFT	
090	2977544-0000		3	SHIM	
100	3042522-0000		1	STOP	
120	2905199-0000		2	HOLDER	
200	312109-0374		2	SCREW, M6S ISO 4017 M6X30 A4 80	
210	312812-0314		2	HEXAGON NUT, NY-LOCK M5 A4 80	
230	312145-0291		2	SCREW ISO 2009 MFS M4X12 A4	
TBA 0284B (See drawing on page: 1-194)					
010	3010751-0000		1	VOLUME FLAP	
020	3010755-0000		1	VOLUME BULGE	
030	3010753-0000		1	CARRIER	
035	3010752-0000		1	CARRIER	
040	3022273-0000		2	SCREW	
050	3002893-0000		2	SHAFT	
060	2916179-0000		1	SHAFT	
090	3010756-0000		3	VOLUME SHIM	
100	3010754-0000		1	STOP	
120	2905199-0000		2	HOLDER	
200	312109-0335		2	SCREW, M6S ISO 4017 M5X30 A4 80	
210	312812-0314		2	HEXAGON NUT, NY-LOCK M5 A4 80	
230	312145-0287		2	SCREW ISO 2009 MFS M4X8 A4	
TBA 0300S (See drawing on page: 1-194)					
010	3010751-0000		1	VOLUME FLAP	
020	3047317-0000		1	VOLUME BULGE	
030	3010753-0000		1	CARRIER	
035	3010752-0000		1	CARRIER	
040	3022273-0000		2	SCREW	
050	3002893-0000		2	SHAFT	
060	2916179-0000		1	SHAFT	
090	3047358-0000		3	VOLUME SHIM	
100	3010754-0000		1	STOP	
120	2905199-0000		2	HOLDER	
200	312109-0335		2	SCREW, M6S ISO 4017 M5X30 A4 80	
210	312812-0314		2	HEXAGON NUT, NY-LOCK M5 A4 80	
230	312145-0287		2	SCREW ISO 2009 MFS M4X8 A4	
TBA 0330S (See drawing on page: 1-194)					
010	2958512-0000		1	VOLUME FLAP	
020	979931-0000		1	VOLUME BULGE	
030	2992940-0000		1	CARRIER	
035	2993250-0000		1	CARRIER	
040	3022273-0000		2	SCREW	
050	2914729-0000		2	SHAFT	
060	2916179-0000		1	SHAFT	
090	272986-0006		3	VOLUME SHIM 330S	
100	2992941-0000		1	STOP	
120	2905199-0000		2	HOLDER	
200	312109-0374		2	SCREW, M6S ISO 4017 M6X30 A4 80	
210	312812-0314		2	HEXAGON NUT, NY-LOCK M5 A4 80	
230	312145-0291		2	SCREW ISO 2009 MFS M4X12 A4	

Machine Type | Group Description | Used-In | Group Number | Page No

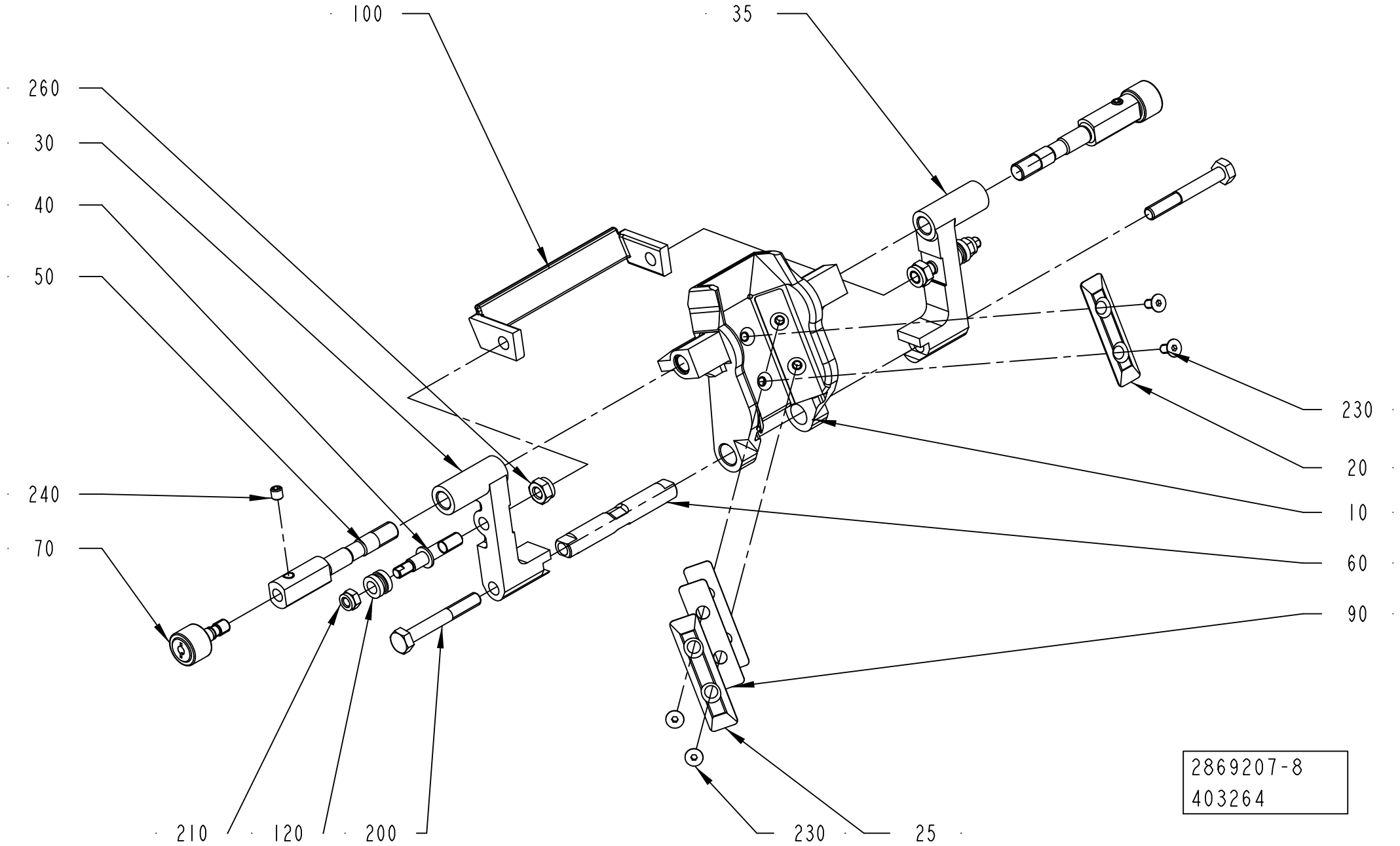
100
35
260
30
40
50
240
70
230
20
10
60
90
210
120
200
230
25
2869207-8
403264

ECM: 509350 - 20111001
Group number: 2869207-0200
Assembly Drawing: 2869207-8_1_AA

This list covers pages from 1-194 to 1-203

Pos	Part No	UN	Qty	Description	Page No
TBA 0375S (Cont'd) (See drawing on page: 1-194)					
010	3067248-0000		1	VOLUME FLAP	
025	3067249-0000		1	VOLUME BULGE	
030	3067250-0000		1	CARRIER	
035	3067251-0000		1	CARRIER	
040	3022273-0000		2	SCREW	
050	3067273-0000		2	SHAFT	
060	2916179-0000		1	SHAFT	
090	3067274-0000		3	SHIM	
100	3042522-0000		1	STOP	
120	2905199-0000		2	HOLDER	
200	312109-0374		2	SCREW, M6S ISO 4017 M6X30 A4 80	
210	312812-0314		2	HEXAGON NUT, NY-LOCK M5 A4 80	
230	312145-0287		2	SCREW ISO 2009 MFS M4X8 A4	
TPA 0125SQ (See drawing on page: 1-196)					
010	2907726-0000		1	VOLUME FLAP	
020	2971940-0000		1	VOLUME BULGE	
025	2979711-0000		2	VOLUME BULGE	
030	2906024-0000		1	CARRIER	
035	2906023-0000		1	CARRIER	
040	3022273-0000		2	SCREW	
050	2921571-0000		2	SHAFT	
060	2906025-0000		1	SHAFT	
090	2908756-0000		4	VOLUME SHIM	
100	2992941-0000		1	STOP	
120	2905199-0000		2	HOLDER	
200	312105-0379		2	SCREW, M6S ISO 4014 M6X45 A4 80	
210	312812-0314		2	HEXAGON NUT, NY-LOCK M5 A4 80	
230	312155-0287		4	SCREW DIN 7991 MF6S M4X8 A4 70	
TPA 0200SQ (See drawing on page: 1-198)					
010	2964389-0000		1	VOLUME FLAP	
020	1538782-0000		2	VOLUME BULGE P48 200	
030	3042528-0000		2	CARRIER	
040	3022273-0000		2	SCREW	
050	2964541-0000		2	SHAFT	
060	2916179-0000		1	SHAFT	
090	3019316-0000		4	SHIM	
100	3042521-0000		1	STOP	
120	2905199-0000		2	HOLDER	
200	312109-0374		2	SCREW, M6S ISO 4017 M6X30 A4 80	
210	312812-0314		2	HEXAGON NUT, NY-LOCK M5 A4 80	
230	312155-0287		4	SCREW DIN 7991 MF6S M4X8 A4 70	
TPA 0250SQ (See drawing on page: 1-198)					
010	2964390-0000		1	VOLUME FLAP	
020	1350959-0000		2	VOLUME BULGE P48 250	
030	3042528-0000		2	CARRIER	
040	3022273-0000		2	SCREW	
050	2964542-0000		2	SHAFT	
060	2916179-0000		1	SHAFT	
090	3019317-0000		4	SHIM	
100	3042521-0000		1	STOP	
120	2905199-0000		2	HOLDER	
200	312109-0374		2	SCREW, M6S ISO 4017 M6X30 A4 80	
210	312812-0314		2	HEXAGON NUT, NY-LOCK M5 A4 80	
230	312155-0287		4	SCREW DIN 7991 MF6S M4X8 A4 70	
TPA 0330SQ (See drawing on page: 1-200)					
010	3002889-0000		1	VOLUME FLAP	
020	3003862-0000		2	VOLUME BULGE	
030	3002894-0000		1	CARRIER	
035	3002891-0000		1	CARRIER	
040	3022273-0000		2	SCREW	
050	3002893-0000		2	SHAFT	
060	3003860-0000		1	SHAFT	
090	3003863-0000		6	VOLUME SHIM	
100	3007781-0000		1	STOP	
120	2905199-0000		2	HOLDER	
200	312109-0335		2	SCREW, M6S ISO 4017 M5X30 A4 80	
210	312812-0314		2	HEXAGON NUT, NY-LOCK M5 A4 80	
230	312105-0328		2	SCREW M6S ISO 4017 M5X14 A4 80	
400	315105-0146		2	WASHER PLAIN, 5,3X10X1 A4 BRB	
TBA 0080S HI (See drawing on page: 1-194)					
010	2950901-0000		1	VOLUME FLAP	
020	3115484-0000		1	VOLUME BULGE	
030	3042525-0000		1	CARRIER	
035	3042525-0000		1	CARRIER	
040	3042518-0000		2	SUPPORT	
050	2914727-0000		2	AXLE	
060	2916887-0000		1	SHAFT	
090	3115485-0000		3	VOLUME SHIM	
100	3042523-0000		1	STOP	
120	3024046-0000		2	HOLDER	
200	312105-0374		2	SCREW, M6S ISO 4014 M6X30 A4 80	
210	3042504-0000		2	NUT	
230	312145-0287		2	SCREW ISO 2009 MFS M4X8 A4	

Machine Type | Group Description | Used-In | Group Number | Page No

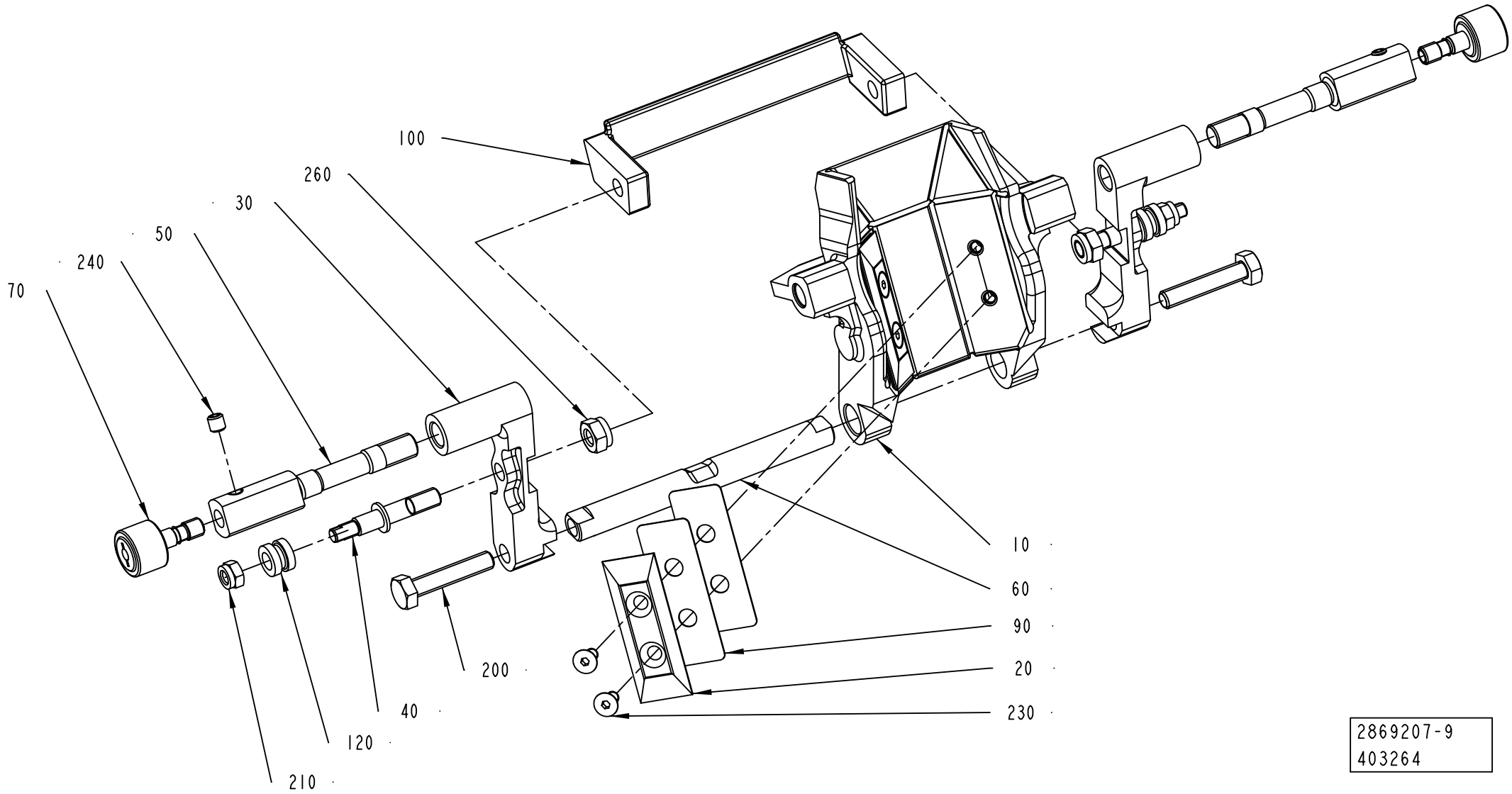

2869207-9
403264

ECM: 509350 - 20111001
Group number: 2869207-0200
Assembly Drawing: 2869207-9_1_AA

This list covers pages from 1-194 to 1-203

Pos	Part No	UN	Qty	Description	Page No
TBA 0080S NOHI (Cont'd) (See drawing on page: 1-194)					
010	2950901-0000		1	VOLUME FLAP	
020	3000073-0000		1	VOLUME BULGE	
030	3042525-0000		1	CARRIER	
035	3042525-0000		1	CARRIER	
040	3042518-0000		2	SUPPORT	
050	2914727-0000		2	AXLE	
060	2916887-0000		1	SHAFT	
090	2950902-0000		3	VOLUME SHIM	
100	3042523-0000		1	STOP	
120	3024046-0000		2	HOLDER	
200	312105-0374		2	SCREW, M6S ISO 4014 M6X30 A4 80	
210	3042504-0000		2	NUT	
230	312145-0287		2	SCREW ISO 2009 MFS M4X8 A4	
TBA 0100B HI (See drawing on page: 1-194)					
010	2919303-0000		1	VOLUME FLAP	
025	3122818-0000		1	VOLUME BULGE	
030	3042525-0000		1	CARRIER	
035	3042525-0000		1	CARRIER	
040	3042518-0000		2	SUPPORT	
050	2914727-0000		2	AXLE	
060	2916887-0000		1	SHAFT	
090	3122819-0000		3	VOLUME SHIM	
100	3042519-0000		1	STOP	
120	3024046-0000		2	HOLDER	
200	312105-0374		2	SCREW, M6S ISO 4014 M6X30 A4 80	
210	3042504-0000		2	NUT	
230	312145-0291		2	SCREW ISO 2009 MFS M4X12 A4	
TBA 0100B NOHI (See drawing on page: 1-194)					
010	2919303-0000		1	VOLUME FLAP	
020	979755-0000		1	VOLUME BULGE 100	
030	3042525-0000		1	CARRIER	
035	3042525-0000		1	CARRIER	
040	3042518-0000		2	SUPPORT	
050	2914727-0000		2	AXLE	
060	2916887-0000		1	SHAFT	
090	979754-0000		3	VOLUME SHIM 100	
100	3042519-0000		1	STOP	
120	3024046-0000		2	HOLDER	
200	312105-0374		2	SCREW, M6S ISO 4014 M6X30 A4 80	
210	3042504-0000		2	NUT	
230	312145-0291		2	SCREW ISO 2009 MFS M4X12 A4	
TBA 0125S HI (See drawing on page: 1-194)					
010	2919304-0000		1	VOLUME FLAP	
020	3106859-0000		1	VOLUME BULGE	
030	3042526-0000		1	CARRIER	
035	3042527-0000		1	CARRIER	
040	3042518-0000		2	SUPPORT	
050	2914728-0000		2	SHAFT	
060	2916887-0000		1	SHAFT	
090	3106860-0000		3	SHIM	
100	3042519-0000		1	STOP	
120	3024046-0000		2	HOLDER	
200	312105-0374		2	SCREW, M6S ISO 4014 M6X30 A4 80	
210	3042504-0000		2	NUT	
230	312145-0291		2	SCREW ISO 2009 MFS M4X12 A4	
TBA 0125S NOHI (See drawing on page: 1-194)					
010	2919304-0000		1	VOLUME FLAP	
020	491868-0000		1	VOLUME BULGE	
030	3042526-0000		1	CARRIER	
035	3042527-0000		1	CARRIER	
040	3042518-0000		2	SUPPORT	
050	2914728-0000		2	SHAFT	
060	2916887-0000		1	SHAFT	
090	272987-0000		3	VOLUME SHIM	
100	3042519-0000		1	STOP	
120	3024046-0000		2	HOLDER	
200	312105-0374		2	SCREW, M6S ISO 4014 M6X30 A4 80	
210	3042504-0000		2	NUT	
230	312145-0291		2	SCREW ISO 2009 MFS M4X12 A4	
TBA 0160S (See drawing on page: 1-194)					
010	3024345-0000		1	VOLUME FLAP	
020	3022278-0000		1	VOLUME BULGE	
030	3022271-0000		1	CARRIER	
035	3022272-0000		1	CARRIER	
040	3022273-0000		2	SCREW	
050	2914727-0000		2	AXLE	
060	2916179-0000		1	SHAFT	
090	3022276-0000		3	VOLUME SHIM	
100	3022275-0000		1	STOP	
120	2905199-0000		2	HOLDER	
200	312109-0374		2	SCREW, M6S ISO 4017 M6X30 A4 80	
210	312812-0314		2	HEXAGON NUT, NY-LOCK M5 A4 80	
230	312145-0287		2	SCREW ISO 2009 MFS M4X8 A4	

Machine Type | Group Description | Used-In | Group Number | Page No

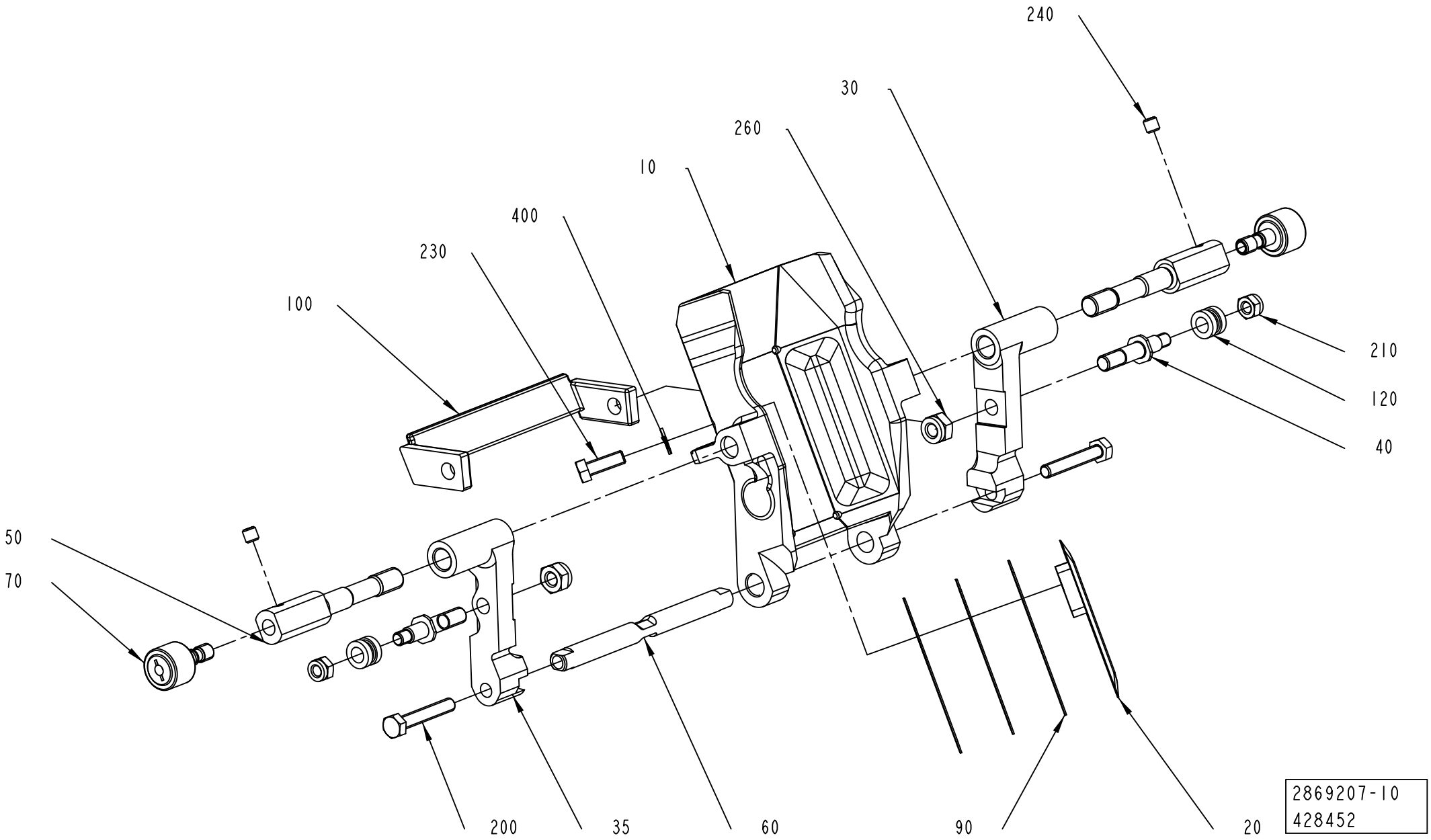
240
30
260
10
400
230
100
210
120
40
50
70
200
35
60
90
20
2869207-10
428452

ECM: 509350 - 20111001
Group number: 2869207-0200
Assembly Drawing: 2869207-10_1_AA

This list covers pages from 1-194 to 1-203

Pos	Part No	UN	Qty	Description	Page No
TBA 0200B HI (Cont'd) (See drawing on page: 1-194)					
010	2910371-0000		1	VOLUME FLAP	
020	3047317-0000		1	VOLUME BULGE	
030	2992940-0000		1	CARRIER	
035	2993250-0000		1	CARRIER	
040	3022273-0000		2	SCREW	
050	2914727-0000		2	AXLE	
060	2916179-0000		1	SHAFT	
090	3047358-0000		3	VOLUME SHIM	
100	2992941-0000		1	STOP	
120	2905199-0000		2	HOLDER	
200	312109-0374		2	SCREW, M6S ISO 4017 M6X30 A4 80	
210	312812-0314		2	HEXAGON NUT, NY-LOCK M5 A4 80	
230	312145-0291		2	SCREW ISO 2009 MFS M4X12 A4	
TBA 0200B NOHI (See drawing on page: 1-194)					
010	2910371-0000		1	VOLUME FLAP	
020	456005-0003		1	VOLUME BULGE	
030	2992940-0000		1	CARRIER	
035	2993250-0000		1	CARRIER	
040	3022273-0000		2	SCREW	
050	2914727-0000		2	AXLE	
060	2916179-0000		1	SHAFT	
090	272986-0003		3	VOLUME SHIM	
100	2992941-0000		1	STOP	
120	2905199-0000		2	HOLDER	
200	312109-0374		2	SCREW, M6S ISO 4017 M6X30 A4 80	
210	312812-0314		2	HEXAGON NUT, NY-LOCK M5 A4 80	
230	312145-0291		2	SCREW ISO 2009 MFS M4X12 A4	
TBA 0200E (See drawing on page: 1-194)					
010	3123577-0000		1	VOLUME FLAP	
020	3110105-0000		1	VOLUME BULGE	
030	3097407-0000		1	CARRIER	
035	3097408-0000		1	CARRIER	
040	3022273-0000		2	SCREW	
050	2976920-0000		2	SHAFT	
060	3003860-0000		1	SHAFT	
090	3111045-0000		3	VOLUME SHIM	
100	3097582-0000		1	STOP	
120	2905199-0000		2	HOLDER	
200	312109-0335		2	SCREW, M6S ISO 4017 M5X30 A4 80	
210	312812-0314		2	HEXAGON NUT, NY-LOCK M5 A4 80	
230	312145-0291		2	SCREW ISO 2009 MFS M4X12 A4	

Pos	Part No	UN	Qty	Description	Page No
TBA 0200M HI (See drawing on page: 1-194)					
010	2947187-0000		1	VOLUME FLAP	
020	3104458-0000		1	VOLUME BULGE	
030	2992940-0000		1	CARRIER	
035	2993250-0000		1	CARRIER	
040	3022273-0000		2	SCREW	
050	2914727-0000		2	AXLE	
060	2916179-0000		1	SHAFT	
090	3104459-0000		3	SHIM	
100	2992941-0000		1	STOP	
120	2905199-0000		2	HOLDER	
200	312109-0374		2	SCREW, M6S ISO 4017 M6X30 A4 80	
210	312812-0314		2	HEXAGON NUT, NY-LOCK M5 A4 80	
230	312145-0287		2	SCREW ISO 2009 MFS M4X8 A4	
TBA 0200M NOHI (See drawing on page: 1-194)					
010	2947187-0000		1	VOLUME FLAP	
020	979860-0000		1	VOLUME BULGE	
030	2992940-0000		1	CARRIER	
035	2993250-0000		1	CARRIER	
040	3022273-0000		2	SCREW	
050	2914727-0000		2	AXLE	
060	2916179-0000		1	SHAFT	
090	979861-0000		3	VOLUME SHIM	
100	2992941-0000		1	STOP	
120	2905199-0000		2	HOLDER	
200	312109-0374		2	SCREW, M6S ISO 4017 M6X30 A4 80	
210	312812-0314		2	HEXAGON NUT, NY-LOCK M5 A4 80	
230	312145-0287		2	SCREW ISO 2009 MFS M4X8 A4	
TBA 0200S HI (See drawing on page: 1-194)					
010	2954994-0000		1	VOLUME FLAP	
020	3174445-0000		1	VOLUME BULGE	
030	3022271-0000		2	CARRIER	
035	3022272-0000		2	CARRIER	
040	3022273-0000		2	SCREW	
050	2914728-0000		2	SHAFT	
060	2916179-0000		1	SHAFT	
090	3174446-0000		3	VOLUME SHIM	
100	3022275-0000		1	STOP	
120	2905199-0000		2	HOLDER	
200	312109-0374		2	SCREW, M6S ISO 4017 M6X30 A4 80	
210	312812-0314		2	HEXAGON NUT, NY-LOCK M5 A4 80	
230	312145-0287		2	SCREW ISO 2009 MFS M4X8 A4	

Machine Type | Group Description | Used-In | Group Number | Page No

See previous drawings pages: 1-194, 1-196, 1-198, 1-200.

ECM: 509350 - 20111001
Group number: 2869207-0200
Assembly Drawing: 2869207-10_1_AA

This list covers pages from 1-194 to 1-203

Pos	Part No	UN	Qty	Description	Page No
TBA 0200S NOHI (Cont'd) (See drawing on page: 1-194)					
010	2954994-0000		1	VOLUME FLAP	
020	2947787-0000		2	VOLUME BULGE	
030	3022271-0000		2	CARRIER	
035	3022272-0000		2	CARRIER	
040	3022273-0000		2	SCREW	
050	2914728-0000		2	SHAFT	
060	2916179-0000		1	SHAFT	
090	2947788-0000		3	VOLUME SHIM	
100	3022275-0000		1	STOP	
120	2905199-0000		2	HOLDER	
200	312109-0374		2	SCREW, M6S ISO 4017 M6X30 A4 80	
210	312812-0314		2	HEXAGON NUT, NY-LOCK M5 A4 80	
230	312145-0287		2	SCREW ISO 2009 MFS M4X8 A4	
TBA 0200SQ (See drawing on page: 1-194)					
010	2976916-0000		1	VOLUME FLAP	
020	1548941-0000		1	VOLUME BULGE	
030	3042529-0000		1	CARRIER	
035	3042530-0000		1	CARRIER	
040	3022273-0000		2	SCREW	
050	2976920-0000		2	SHAFT	
060	2916179-0000		1	SHAFT	
090	1519222-0000		3	VOLUME SHIM	
100	3042522-0000		1	STOP	
120	2905199-0000		2	HOLDER	
200	312109-0374		2	SCREW, M6S ISO 4017 M6X30 A4 80	
210	312812-0314		2	HEXAGON NUT, NY-LOCK M5 A4 80	
230	312145-0291		2	SCREW ISO 2009 MFS M4X12 A4	
TBA 0250B (See drawing on page: 1-194)					
010	2958511-0000		1	VOLUME FLAP	
020	456005-0001		1	VOLUME BULGE	
030	2992940-0000		1	CARRIER	
035	2993250-0000		1	CARRIER	
040	3022273-0000		2	SCREW	
050	2914728-0000		2	SHAFT	
060	2916179-0000		1	SHAFT	
090	272986-0001		3	VOLUME SHIM	
100	2992941-0000		1	STOP	
120	2905199-0000		2	HOLDER	
200	312109-0374		2	SCREW, M6S ISO 4017 M6X30 A4 80	
210	312812-0314		2	HEXAGON NUT, NY-LOCK M5 A4 80	
230	312145-0291		2	SCREW ISO 2009 MFS M4X12 A4	

Pos	Part No	UN	Qty	Description	Page No
Common Parts					
070	2914730-0000		2	ROLLER	
240	312318-0320		2	SET SCREW, CUP END ISO4029 M5X5 A4	
260	312812-0316		2	HEXAGON NUT, NY-LOCK M6 A4 80	

Machine Type	Group Description	Used-In	Group Number	Page No

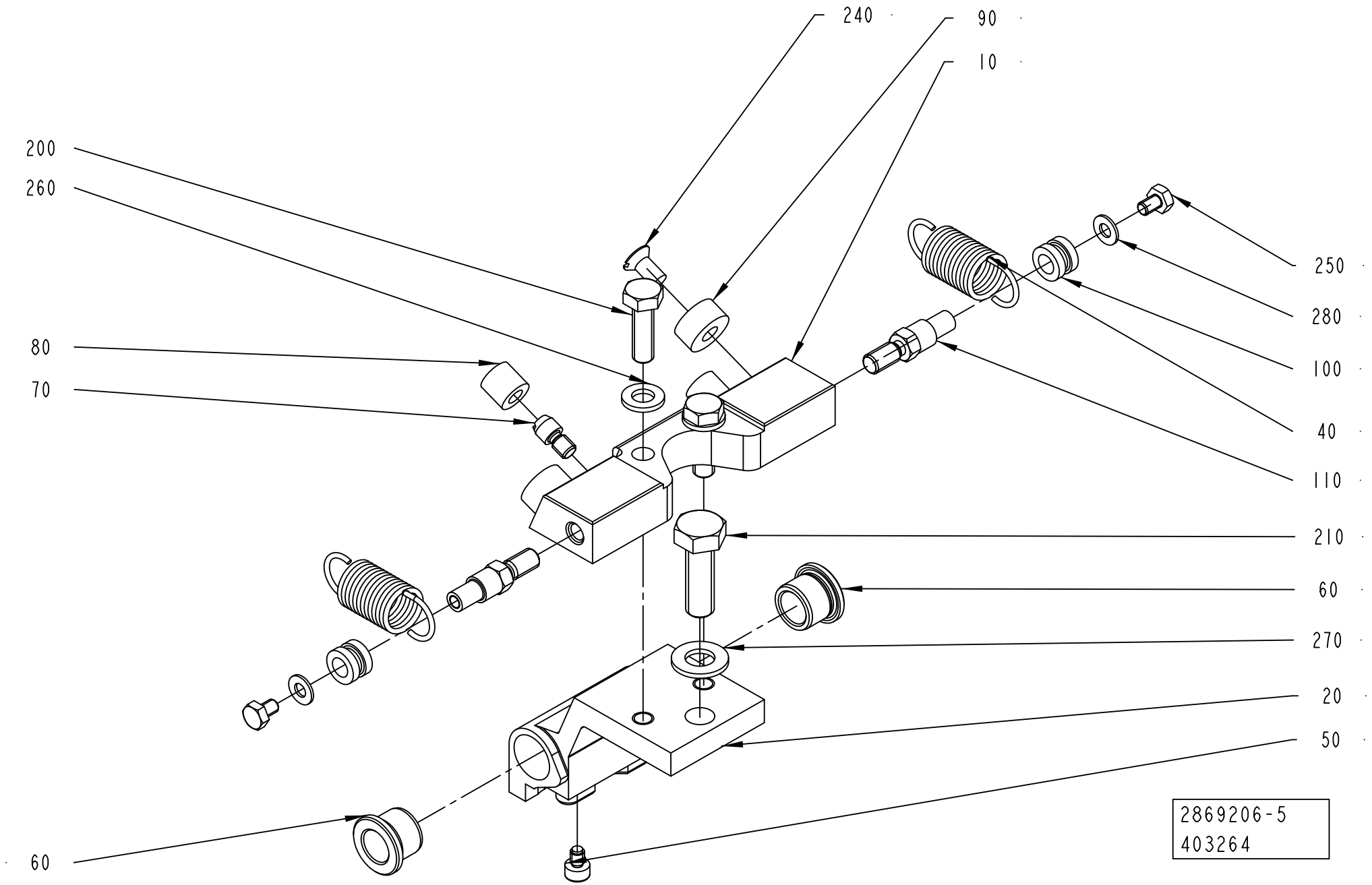
240
90
10
200
260
80
70
250
280
100
40
110
210
60
270
20
50
60
2869206-5
403264

ECM: 478003 - 20101003
Group number: 2869206-0200
Assembly Drawing: 2869206-5_1_AA

This list covers pages from 1-204 to 1-209

Pos	Part No	UN	Qty	Description	Page No
TBA 0080S (See drawing on page: 1-206)					
010	3042505-0000		1	SUPPORT	
020	2950900-0000		1	HOLDER	
040	2950910-0000		2	TENSION SPRING	
050	2933520-0000		1	SCREW	
060	2532544-0000		2	BUSHING	
090	2993461-0000		2	STOP	
100	3024046-0000		2	HOLDER	
120	3042504-0000		2	NUT	
200	312105-0327		2	SCREW, M6S ISO 4017 M5X12 A4 80	
330	90287-0199		1	SCREW, M6S ISO 4017 M5X6 A4 80	
TBA 0100B, TBA 0125S (See drawing on page: 1-206)					
010	3042505-0000		1	SUPPORT	
020	2916883-0000		1	HOLDER	
040	2950910-0000		2	TENSION SPRING	
050	2933520-0000		1	SCREW	
060	2532544-0000		2	BUSHING	
090	2869195-0000		2	STOP	
100	3024046-0000		2	HOLDER	
120	3042504-0000		2	NUT	
200	312105-0327		2	SCREW, M6S ISO 4017 M5X12 A4 80	
330	90287-0199		1	SCREW, M6S ISO 4017 M5X6 A4 80	
TBA 0160S, TBA 0200S (See drawing on page: 1-204)					
010	3018882-0000		1	SUPPORT	
020	3022267-0004		1	HOLDER	
040	2959868-0000		2	TENSION SPRING	
050	3022268-0000		1	SCREW	
060	2532544-0000		2	BUSHING	
070	2869193-0000		2	PIN	
080	2869194-0000		2	DAMPER	
090	2869195-0000		2	STOP	
100	2905199-0000		2	HOLDER	
110	3022269-0000		2	SCREW	
200	312105-0370		2	SCREW, M6S ISO 4017 M6X20 A4 80	
250	312105-0285		2	SCREW, M6S ISO 4017 M4X6 A4 70	
260	315105-0153		2	WASHER PLAIN, 6,4X12X1,5 A4 BRB	
280	315106-0136		2	WASHER PLAIN, M4 ISO7089-4-200 HV A4	
TBA 0200B, TBA 0250B (See drawing on page: 1-204)					
010	3018882-0000		1	SUPPORT	
020	2870080-0000		1	HOLDER	
040	2959868-0000		2	TENSION SPRING	
050	3003494-0000		1	SCREW	
060	2532544-0000		2	BUSHING	
070	2869193-0000		2	PIN	
080	2869194-0000		2	DAMPER	
090	2869195-0000		2	STOP	
100	2905199-0000		2	HOLDER	
110	3022269-0000		2	SCREW	
200	312105-0370		2	SCREW, M6S ISO 4017 M6X20 A4 80	
250	312105-0285		2	SCREW, M6S ISO 4017 M4X6 A4 70	
260	315105-0153		2	WASHER PLAIN, 6,4X12X1,5 A4 BRB	
280	315106-0136		2	WASHER PLAIN, M4 ISO7089-4-200 HV A4	
TBA 0200E (See drawing on page: 1-204)					
010	3018882-0000		1	SUPPORT	
020	3097405-0004		1	HOLDER	
040	2959868-0000		2	TENSION SPRING	
050	2966463-0000		1	SCREW	
060	3097403-0000		2	BUSHING	
070	2869193-0000		2	PIN	
080	2869194-0000		2	DAMPER	
090	3022743-0000		2	STOP	
100	2905199-0000		2	HOLDER	
110	3022269-0000		2	SCREW	
200	312105-0370		2	SCREW, M6S ISO 4017 M6X20 A4 80	
250	312105-0285		2	SCREW, M6S ISO 4017 M4X6 A4 70	
260	315105-0153		2	WASHER PLAIN, 6,4X12X1,5 A4 BRB	
280	315106-0136		2	WASHER PLAIN, M4 ISO7089-4-200 HV A4	
TBA 0200M, TBA 0250S (See drawing on page: 1-204)					
010	3018882-0000		1	SUPPORT	
020	2947185-0000		1	HOLDER	
040	2959868-0000		2	TENSION SPRING	
050	3003494-0000		1	SCREW	
060	2532544-0000		2	BUSHING	
070	2869193-0000		2	PIN	
080	2869194-0000		2	DAMPER	
090	2869195-0000		2	STOP	
100	2905199-0000		2	HOLDER	
110	3022269-0000		2	SCREW	
200	312105-0370		2	SCREW, M6S ISO 4017 M6X20 A4 80	
250	312105-0285		2	SCREW, M6S ISO 4017 M4X6 A4 70	
260	315105-0153		2	WASHER PLAIN, 6,4X12X1,5 A4 BRB	
280	315106-0136		2	WASHER PLAIN, M4 ISO7089-4-200 HV A4	
TBA 0200SQ, TBA 0250SQ (See drawing on page: 1-204)					
010	3018882-0000		1	SUPPORT	

Machine Type | Group Description | Used-In | Group Number | Page No

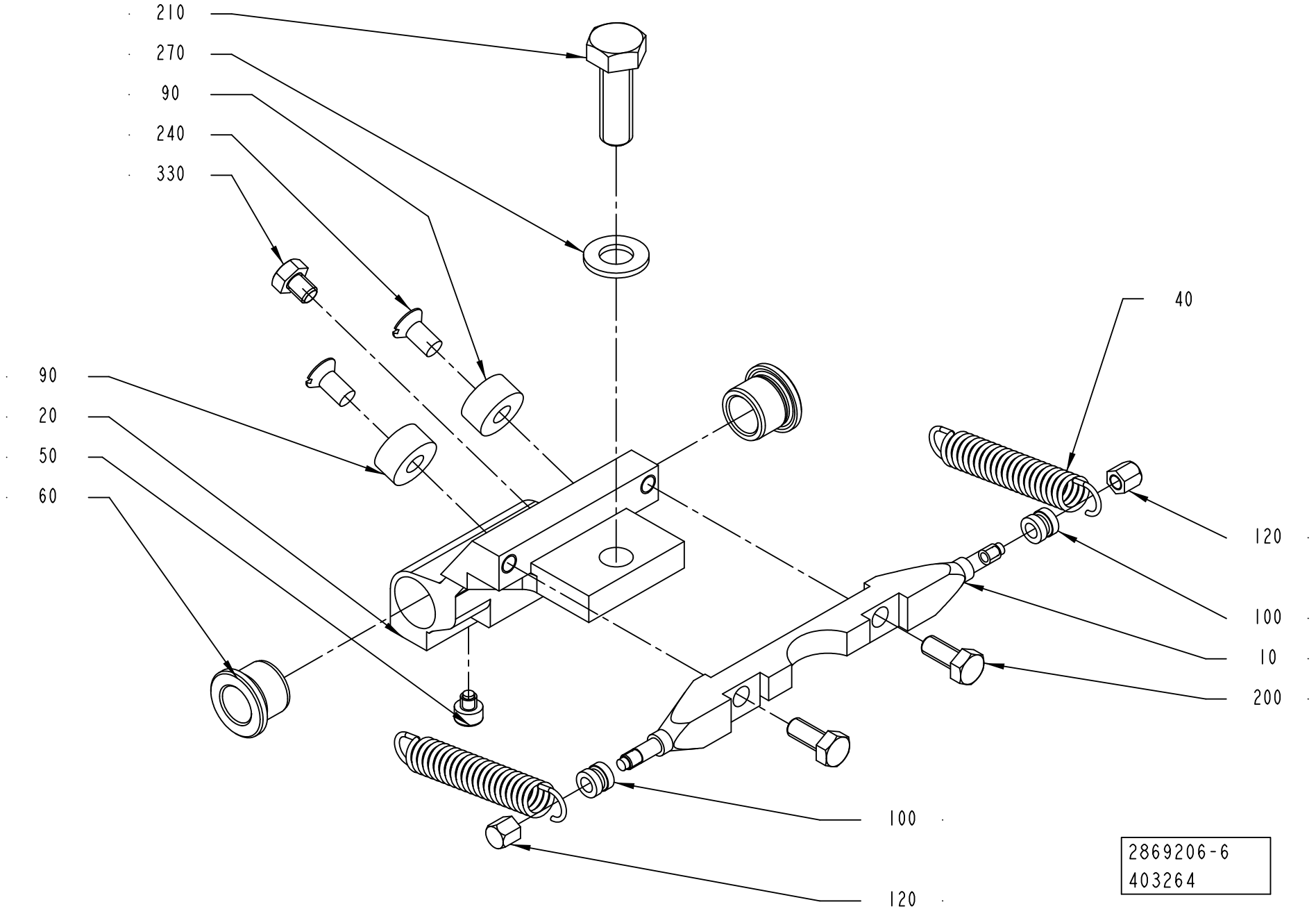
210
270
90
240
330
90
20
50
60
40
120
100
10
200
100
120
2869206-6
403264

ECM: 478003 - 20101003
Group number: 2869206-0200
Assembly Drawing: 2869206-6_1_AA

This list covers pages from 1-204 to 1-209

Pos	Part No	UN	Qty	Description	Page No
TBA 0200SQ, TBA 0250SQ (Cont'd) (See drawing on page: 1-204)					
020	2976830-0004		1	HOLDER	
040	2959868-0000		2	TENSION SPRING	
050	2966463-0000		1	SCREW	
060	2532544-0000		2	BUSHING	
070	2869193-0000		2	PIN	
080	2869194-0000		2	DAMPER	
090	2869195-0000		2	STOP	
100	2905199-0000		2	HOLDER	
110	3022269-0000		2	SCREW	
200	312105-0370		2	SCREW, M6S ISO 4017 M6X20 A4 80	
250	312105-0285		2	SCREW, M6S ISO 4017 M4X6 A4 70	
260	315105-0153		2	WASHER PLAIN, 6,4X12X1,5 A4 BRB	
280	315106-0136		2	WASHER PLAIN, M4 ISO7089-4-200 HV A4	
TBA 0284B, TBA 0300S (See drawing on page: 1-204)					
010	3018882-0000		1	SUPPORT	
020	3010750-0004		1	HOLDER	
040	3040850-0000		2	TENSION SPRING	
050	3013566-0000		1	SCREW	
060	2532544-0000		2	BUSHING	
070	2869193-0000		2	PIN	
080	2869194-0000		2	DAMPER	
090	2869195-0000		2	STOP	
100	2905199-0000		2	HOLDER	
110	3022269-0000		2	SCREW	
200	312105-0370		2	SCREW, M6S ISO 4017 M6X20 A4 80	
250	312105-0285		2	SCREW, M6S ISO 4017 M4X6 A4 70	
260	315105-0153		2	WASHER PLAIN, 6,4X12X1,5 A4 BRB	
280	315106-0136		2	WASHER PLAIN, M4 ISO7089-4-200 HV A4	
TBA 0330S (See drawing on page: 1-204)					
010	3018882-0000		1	SUPPORT	
020	2870080-0000		1	HOLDER	
040	3040850-0000		2	TENSION SPRING	
050	3003494-0000		1	SCREW	
060	2532544-0000		2	BUSHING	
070	2869193-0000		2	PIN	
080	2869194-0000		2	DAMPER	
090	2869195-0000		2	STOP	
100	2905199-0000		2	HOLDER	
110	3022269-0000		2	SCREW	
200	312105-0370		2	SCREW, M6S ISO 4017 M6X20 A4 80	
250	312105-0285		2	SCREW, M6S ISO 4017 M4X6 A4 70	
260	315105-0153		2	WASHER PLAIN, 6,4X12X1,5 A4 BRB	
280	315106-0136		2	WASHER PLAIN, M4 ISO7089-4-200 HV A4	
TBA 0375S (See drawing on page: 1-204)					
010	3018882-0000		1	SUPPORT	
020	3067247-0004		1	HOLDER	
040	3040850-0000		2	TENSION SPRING	
050	2966463-0000		1	SCREW	
060	2532544-0000		2	BUSHING	
070	2869193-0000		2	PIN	
080	2869194-0000		2	DAMPER	
090	2869195-0000		2	STOP	
100	2905199-0000		2	HOLDER	
110	3022269-0000		2	SCREW	
200	312105-0370		2	SCREW, M6S ISO 4017 M6X20 A4 80	
250	312105-0285		2	SCREW, M6S ISO 4017 M4X6 A4 70	
260	315105-0153		2	WASHER PLAIN, 6,4X12X1,5 A4 BRB	
280	315106-0136		2	WASHER PLAIN, M4 ISO7089-4-200 HV A4	
TPA 0125SQ (See drawing on page: 1-204)					
010	3018882-0000		1	SUPPORT	
020	2906170-0000		1	HOLDER	
040	2959868-0000		2	TENSION SPRING	
050	2991044-0000		1	STOP SCREW	
060	2532544-0000		2	BUSHING	
070	2869193-0000		2	PIN	
080	2869194-0000		2	DAMPER	
090	2869195-0000		2	STOP	
100	2905199-0000		2	HOLDER	
110	3022269-0000		2	SCREW	
200	312105-0370		2	SCREW, M6S ISO 4017 M6X20 A4 80	
250	312105-0285		2	SCREW, M6S ISO 4017 M4X6 A4 70	
260	315105-0153		2	WASHER PLAIN, 6,4X12X1,5 A4 BRB	
280	315106-0136		2	WASHER PLAIN, M4 ISO7089-4-200 HV A4	
TPA 0200SQ (See drawing on page: 1-204)					
010	3018882-0000		1	SUPPORT	
020	2959957-0004		1	HOLDER	
040	2959868-0000		2	TENSION SPRING	
050	2966463-0000		1	SCREW	
060	2532544-0000		2	BUSHING	
070	2869193-0000		2	PIN	
080	2869194-0000		2	DAMPER	
090	2869195-0000		2	STOP	
100	2905199-0000		2	HOLDER	

Machine Type | Group Description | Used-In | Group Number | Page No

See previous drawings pages: 1-204, 1-206.

Pos	Part No	UN	Qty	Description	Page No
TPA 0200SQ (Cont'd) (See drawing on page: 1-204)					
110	3022269-0000		2	SCREW	
200	312105-0370		2	SCREW, M6S ISO 4017 M6X20 A4 80	
250	312105-0285		2	SCREW, M6S ISO 4017 M4X6 A4 70	
260	315105-0153		2	WASHER PLAIN, 6,4X12X1,5 A4 BRB	
280	315106-0136		2	WASHER PLAIN, M4 ISO7089-4-200 HV A4	
TPA 0250SQ (See drawing on page: 1-204)					
010	3018882-0000		1	SUPPORT	
020	2965109-0004		1	HOLDER	
040	2959868-0000		2	TENSION SPRING	
050	2966463-0000		1	SCREW	
060	2532544-0000		2	BUSHING	
070	2869193-0000		2	PIN	
080	2869194-0000		2	DAMPER	
090	2869195-0000		2	STOP	
100	2905199-0000		2	HOLDER	
110	3022269-0000		2	SCREW	
200	312105-0370		2	SCREW, M6S ISO 4017 M6X20 A4 80	
250	312105-0285		2	SCREW, M6S ISO 4017 M4X6 A4 70	
260	315105-0153		2	WASHER PLAIN, 6,4X12X1,5 A4 BRB	
280	315106-0136		2	WASHER PLAIN, M4 ISO7089-4-200 HV A4	
TPA 0330SQ (See drawing on page: 1-204)					
010	3018882-0000		1	SUPPORT	
020	3002890-0004		1	HOLDER	
040	3040850-0000		2	TENSION SPRING	
050	3003861-0000		1	SCREW	
060	2810394-0000		2	BUSHING	
070	2869193-0000		2	PIN	
080	2869194-0000		2	DAMPER	
090	2869195-0000		2	STOP	
100	2905199-0000		2	HOLDER	
110	3022269-0000		2	SCREW	
200	312105-0370		2	SCREW, M6S ISO 4017 M6X20 A4 80	
250	312105-0285		2	SCREW, M6S ISO 4017 M4X6 A4 70	
260	315105-0153		2	WASHER PLAIN, 6,4X12X1,5 A4 BRB	
280	315106-0136		2	WASHER PLAIN, M4 ISO7089-4-200 HV A4	
Common Parts					
210	312105-0453		1	SCREW, M6S ISO 4017 M8X25 A4 80	
240	312145-0325		2	SCREW ISO 2009 MFS M5X10 A4	
270	315105-0165		1	WASHER PLAIN, 8,4X16X1,6 A4 BRB	

Pos	Part No	UN	Qty	Description	Page No

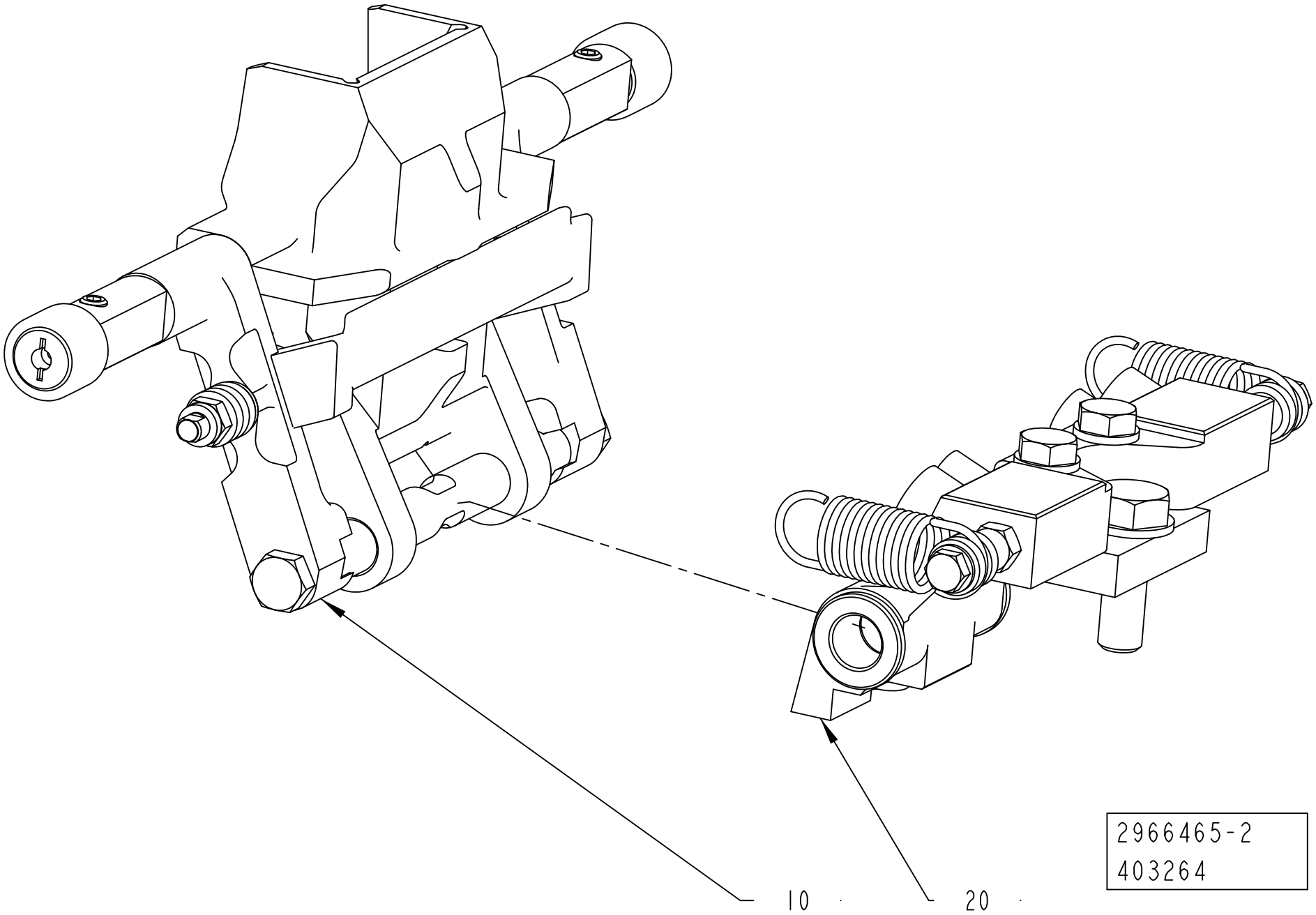
2966465-2
403264
10
20

ECM: 509352 - 20111001
Group number: 2966465-0200
Assembly Drawing: 2966465-2_1_AA

Pos	Part No	UN	Qty	Description	Page No
-					
010	2869207-0200		1	VOLUME FLAP	**1-195, 1-197, 1-199, 1-201, 1-203**
020	2966466-0200		1	SHOCK ABSORBER	**1-213**

Pos	Part No	UN	Qty	Description	Page No

SHOCK ABSORBER

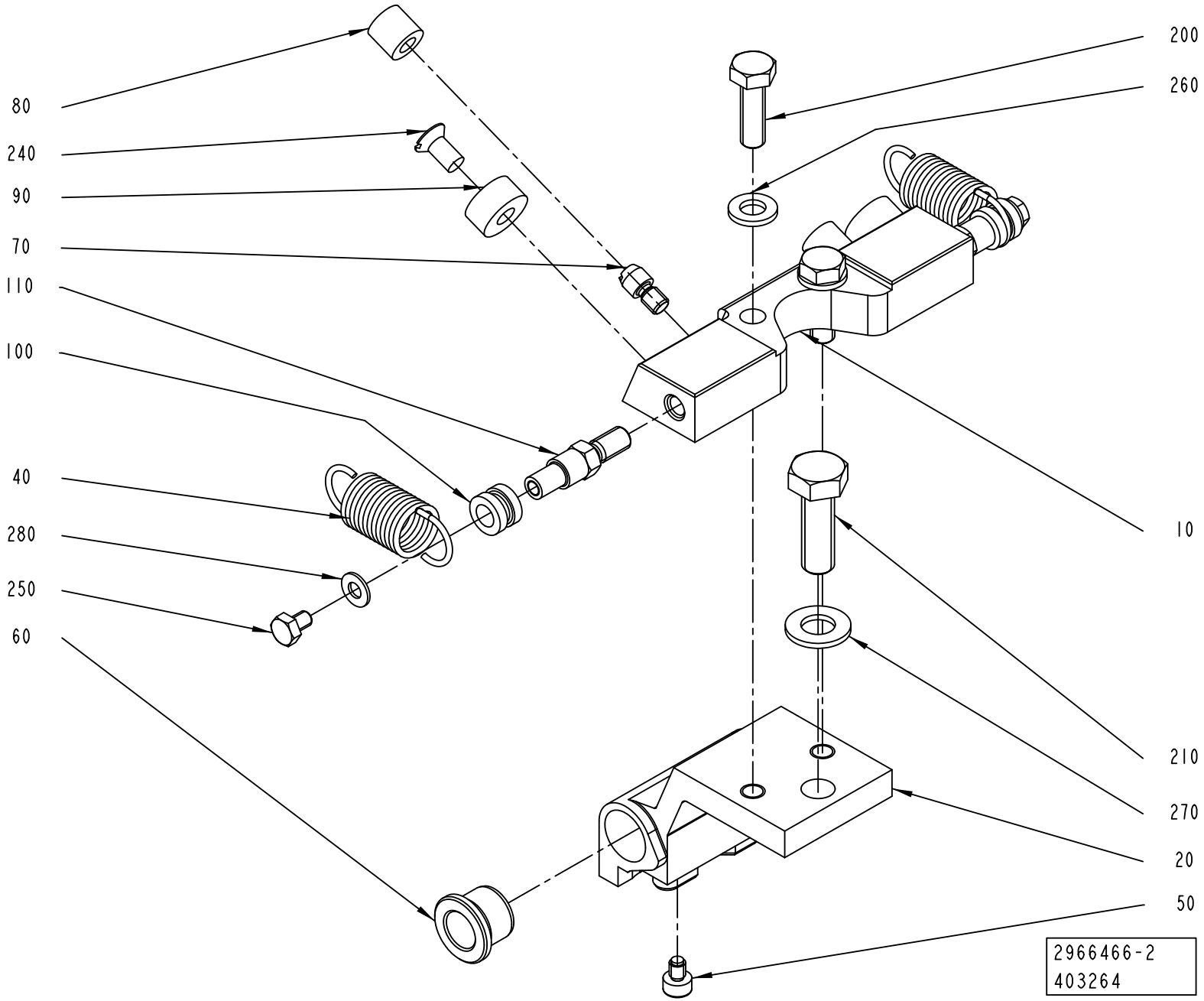

ECM: 478005 - 20101003
Group number: 2966466-0200
Assembly Drawing: 2966466-2_1_AA

Pos	Part No	UN	Qty	Description	Page No
TBA 0160S, TBA 0200S					
020	3022267-0002		1	HOLDER	
040	2959868-0000		2	TENSION SPRING	
050	3022268-0000		1	SCREW	
060	2532544-0000		2	BUSHING	
TBA 0200E					
020	3097405-0002		1	HOLDER	
040	2959868-0000		2	TENSION SPRING	
050	2966463-0000		1	SCREW	
060	3097403-0000		2	BUSHING	
090	3022743-0000		2	STOP	
TBA 0200SQ, TBA 0250SQ					
020	2976830-0002		1	HOLDER	
040	2959868-0000		2	TENSION SPRING	
050	2966463-0000		1	SCREW	
060	2532544-0000		2	BUSHING	
TBA 0284B, TBA 0300S					
020	3010750-0002		1	HOLDER	
040	3040850-0000		2	TENSION SPRING	
050	3013566-0000		1	SCREW	
060	2532544-0000		2	BUSHING	
TBA 0375S					
020	3067247-0002		1	HOLDER	
040	3040850-0000		2	TENSION SPRING	
050	2966463-0000		1	SCREW	
060	2532544-0000		2	BUSHING	
TPA 0200SQ					
020	2959957-0002		1	HOLDER	
040	2959868-0000		2	TENSION SPRING	
050	2966463-0000		1	SCREW	
060	2532544-0000		2	BUSHING	
TPA 0250SQ					
020	2965109-0002		1	HOLDER	
040	2959868-0000		2	TENSION SPRING	
050	2966463-0000		1	SCREW	
060	2532544-0000		2	BUSHING	
TPA 0330SQ					
020	3002890-0002		1	HOLDER	
040	3040850-0000		2	TENSION SPRING	
050	3003861-0000		1	SCREW	
060	2810394-0000		2	BUSHING	
Common Parts					
010	3018882-0000		1	SUPPORT	
070	2869193-0000		2	PIN	
080	2869194-0000		2	DAMPER	
090	2869195-0000		2	STOP	
100	2905199-0000		2	HOLDER	
110	3022269-0000		2	SCREW	
200	312105-0370		2	SCREW, M6S ISO 4017 M6X20 A4 80	
210	312105-0453		1	SCREW, M6S ISO 4017 M8X25 A4 80	
240	312145-0325		2	SCREW ISO 2009 MFS M5X10 A4	
250	312105-0285		2	SCREW, M6S ISO 4017 M4X6 A4 70	
260	315105-0153		2	WASHER PLAIN, 6,4X12X1,5 A4 BRB	
270	315105-0165		1	WASHER PLAIN, 8,4X16X1,6 A4 BRB	
280	315106-0136		2	WASHER PLAIN, M4 ISO7089-4-200 HV A4	

Machine Type | Group Description | Used-In | Group Number | Page No

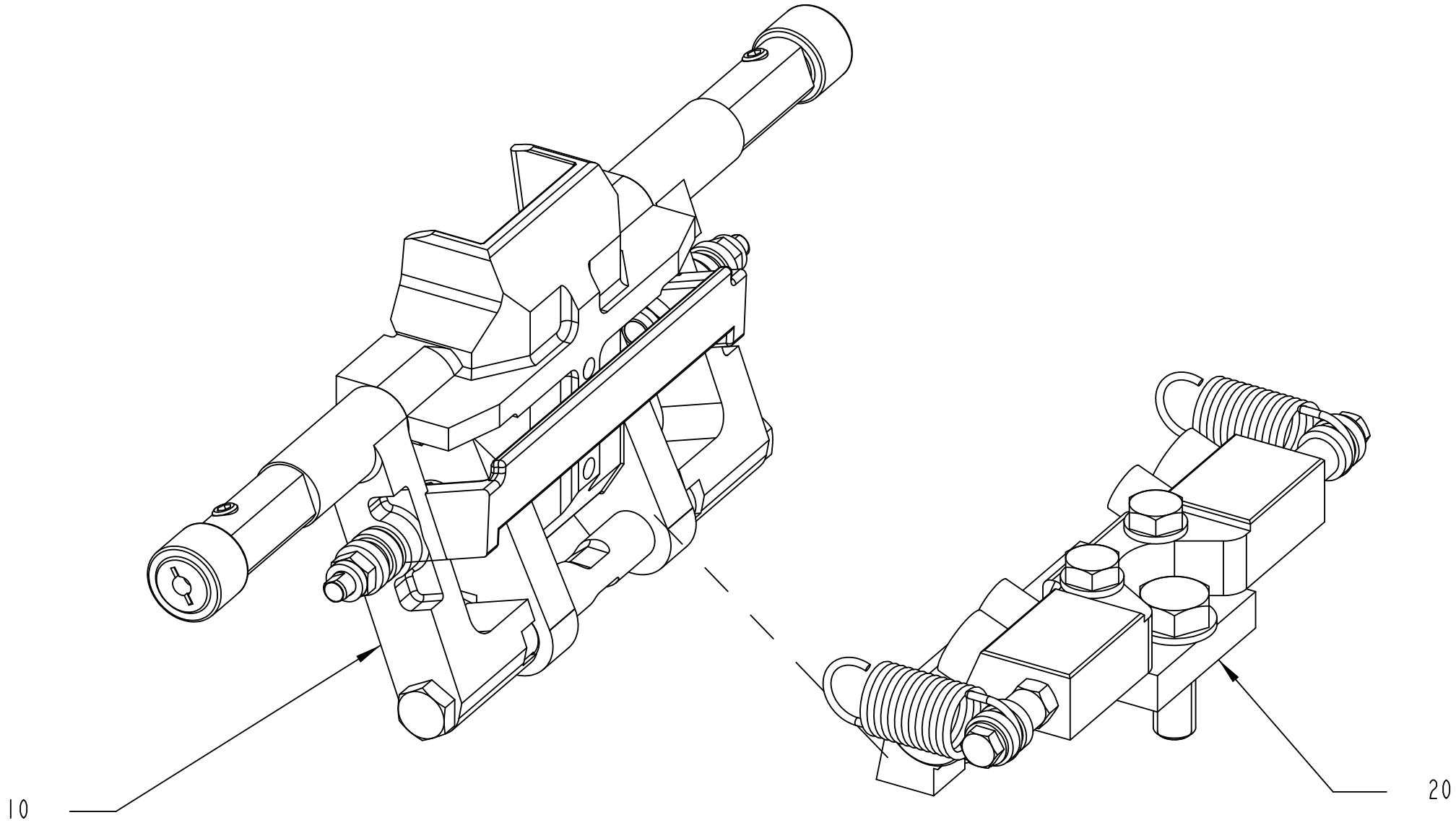

2907729-2
403264

ECM: 509351 - 20111001
Group number: 2907729-0200
Assembly Drawing: 2907729-2_1_AA

Pos	Part No	UN	Qty	Description	Page No
TBA 0160S					
010	2869207-0200		1	VOLUME FLAP	**1-195, 1-197, 1-199, 1-201, 1-203**
020	2966464-0200		1	SHOCK ABSORBER	**1-217**
TBA 0200E					
010	2907728-0200		1	VOLUME FLAP	**1-219, 1-221, 1-223, 1-225**
020	2966464-0200		1	SHOCK ABSORBER	**1-217**
TBA 0200S HI					
010	2869207-0200		1	VOLUME FLAP	**1-195, 1-197, 1-199, 1-201, 1-203**
020	2966464-0200		1	SHOCK ABSORBER	**1-217**
TBA 0200S NOHI					
010	2869207-0200		1	VOLUME FLAP	**1-195, 1-197, 1-199, 1-201, 1-203**
020	2966464-0200		1	SHOCK ABSORBER	**1-217**
TBA 0200SQ					
010	2869207-0200		1	VOLUME FLAP	**1-195, 1-197, 1-199, 1-201, 1-203**
020	2966464-0200		1	SHOCK ABSORBER	**1-217**
TBA 0250SQ					
010	2869207-0200		1	VOLUME FLAP	**1-195, 1-197, 1-199, 1-201, 1-203**
020	2966464-0200		1	SHOCK ABSORBER	**1-217**
TBA 0284B					
010	2869207-0200		1	VOLUME FLAP	**1-195, 1-197, 1-199, 1-201, 1-203**
020	2966464-0200		1	SHOCK ABSORBER	**1-217**
TBA 0300S					
010	2869207-0200		1	VOLUME FLAP	**1-195, 1-197, 1-199, 1-201, 1-203**
020	2966464-0200		1	SHOCK ABSORBER	**1-217**
TBA 0375S					
010	2869207-0200		1	VOLUME FLAP	**1-195, 1-197, 1-199, 1-201, 1-203**
020	2966464-0200		1	SHOCK ABSORBER	**1-217**
TPA 0125SQ					
010	2907728-0200		1	VOLUME FLAP	**1-219, 1-221, 1-223, 1-225**
020	2869206-0200		1	SHOCK ABSORBER	**1-205, 1-207, 1-209**
TPA 0200SQ					
010	2907728-0200		1	VOLUME FLAP	**1-219, 1-221, 1-223, 1-225**
020	2966464-0200		1	SHOCK ABSORBER	**1-217**
TPA 0250SQ					
010	2907728-0200		1	VOLUME FLAP	**1-219, 1-221, 1-223, 1-225**
020	2966464-0200		1	SHOCK ABSORBER	**1-217**
TPA 0330SQ					
010	2907728-0200		1	VOLUME FLAP	**1-219, 1-221, 1-223, 1-225**
020	2966464-0200		1	SHOCK ABSORBER	**1-217**

Pos	Part No	UN	Qty	Description	Page No

SHOCK ABSORBER

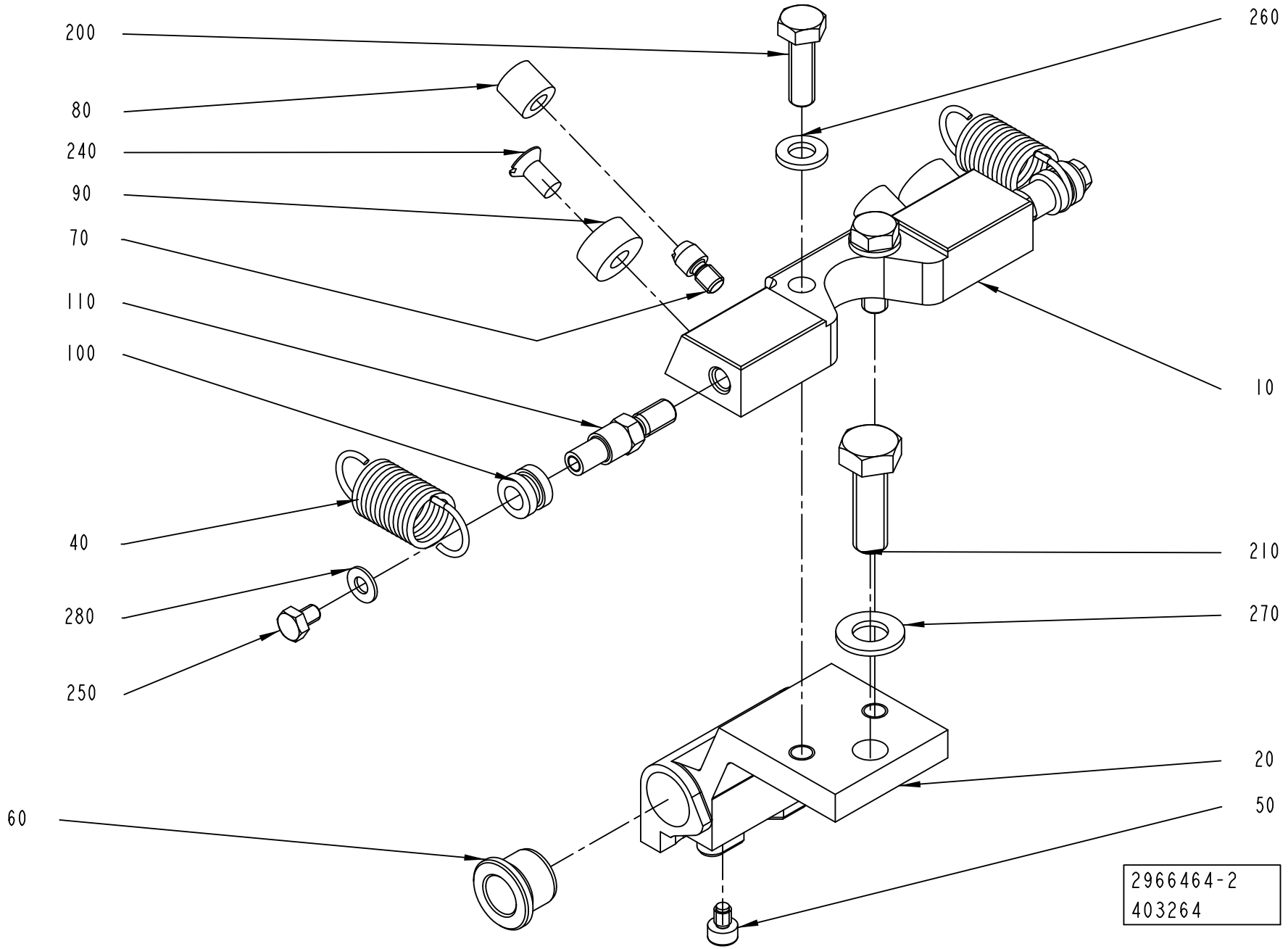

ECM: 478552 - 20101003
Group number: 2966464-0200
Assembly Drawing: 2966464-2_1_AA

Pos	Part No	UN	Qty	Description	Page No
TBA 0160S, TBA 0200S					
020	3022267-0001		1	HOLDER	
040	2959868-0000		2	TENSION SPRING	
050	3022268-0000		1	SCREW	
060	2532544-0000		2	BUSHING	
TBA 0200E					
020	3097404-0001		1	HOLDER	
040	2959868-0000		2	TENSION SPRING	
050	2933520-0000		1	SCREW	
060	3097403-0000		2	BUSHING	
090	3133957-0000		2	STOP	
TBA 0200SQ, TBA 0250SQ					
020	2976830-0001		1	HOLDER	
040	2959868-0000		2	TENSION SPRING	
060	2532544-0000		2	BUSHING	
TBA 0284B, TBA 0300S					
020	3010750-0001		1	HOLDER	
040	3040850-0000		2	TENSION SPRING	
050	3013566-0000		1	SCREW	
060	2532544-0000		2	BUSHING	
TBA 0375S					
020	3067247-0001		1	HOLDER	
040	3040850-0000		2	TENSION SPRING	
050	2966463-0000		1	SCREW	
060	2532544-0000		2	BUSHING	
TPA 0200SQ					
020	2959957-0001		1	HOLDER	
040	2959868-0000		2	TENSION SPRING	
050	2966463-0000		1	SCREW	
060	2532544-0000		2	BUSHING	
TPA 0250SQ					
020	2965109-0001		1	HOLDER	
040	2959868-0000		2	TENSION SPRING	
050	2966463-0000		1	SCREW	
060	2532544-0000		2	BUSHING	
TPA 0330SQ					
020	3002890-0001		1	HOLDER	
040	3040850-0000		2	TENSION SPRING	
050	3003861-0000		1	SCREW	
060	2810394-0000		2	BUSHING	
Common Parts					
010	3018882-0000		1	SUPPORT	
070	2869193-0000		2	PIN	
080	2869194-0000		2	DAMPER	
090	2869195-0000		2	STOP	
100	2905199-0000		2	HOLDER	
110	3022269-0000		2	SCREW	
200	312105-0370		2	SCREW, M6S ISO 4017 M6X20 A4 80	
210	312105-0453		1	SCREW, M6S ISO 4017 M8X25 A4 80	
240	312145-0325		2	SCREW ISO 2009 MFS M5X10 A4	
250	312105-0285		2	SCREW, M6S ISO 4017 M4X6 A4 70	
260	315105-0153		2	WASHER PLAIN, 6,4X12X1,5 A4 BRB	
270	315105-0165		1	WASHER PLAIN, 8,4X16X1,6 A4 BRB	
280	315106-0136		2	WASHER PLAIN, M4 ISO7089-4-200 HV A4	

Machine Type | Group Description | Used-In | Group Number | Page No

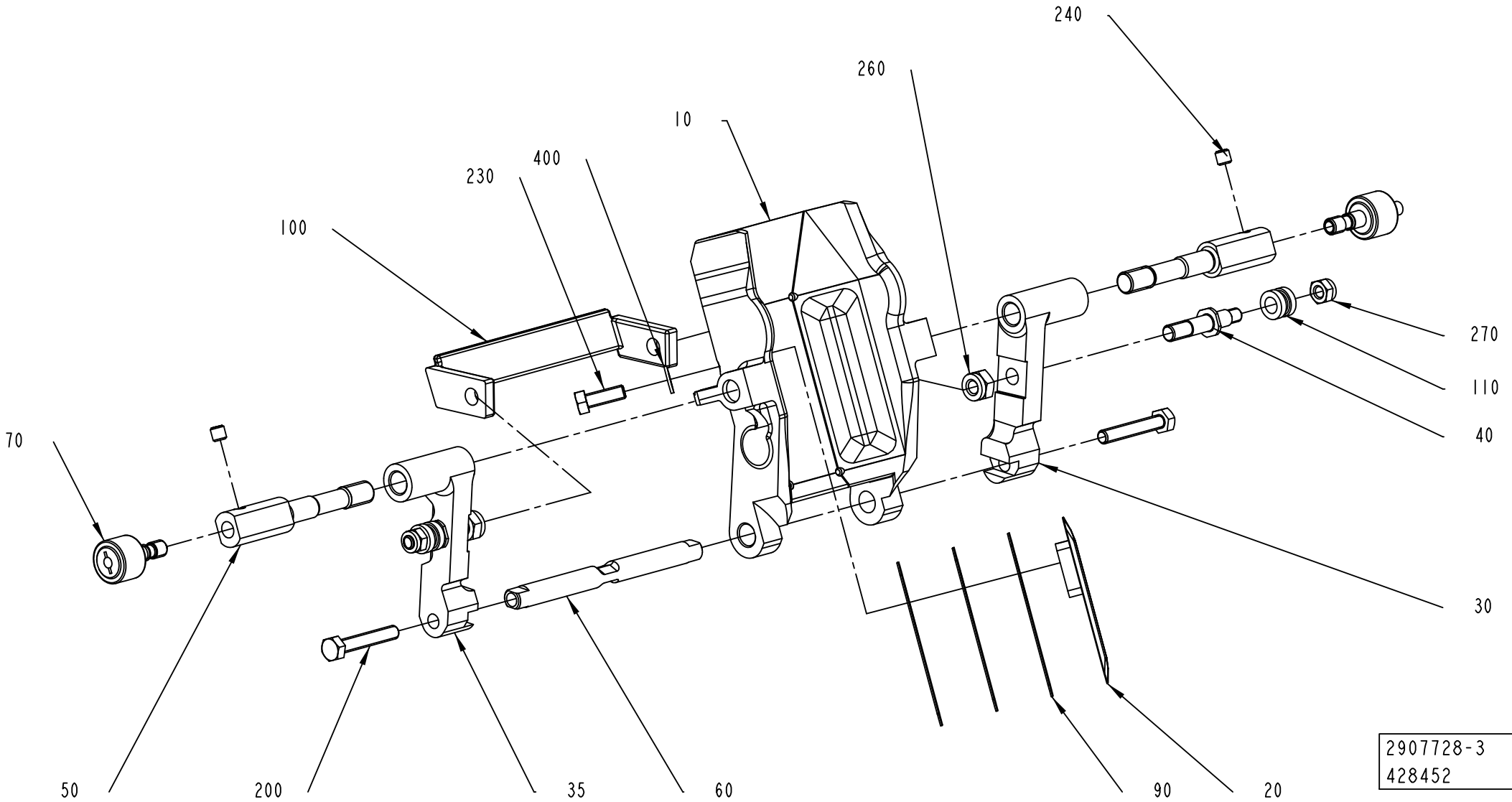
240
260
10
400
230
100
270
110
40
70
30
50
200
35
60
90
20
2907728-3
428452

ECM: 521068 - 20111003
Group number: 2907728-0200
Assembly Drawing: 2907728-3_1_AA

This list covers pages from 1-218 to 1-225

Pos	Part No	UN	Qty	Description	Page No
TBA 0200E (See drawing on page: 1-224)					
010	3122374-0000		1	VOLUME FLAP	
025	3123029-0000		1	VOLUME BULGE	
030	3097409-0000		1	CARRIER	
035	3097580-0000		1	CARRIER	
050	2976920-0000		2	SHAFT	
060	3003860-0000		1	SHAFT	
100	3097581-0000		1	STOP	
200	312109-0335		2	SCREW, M6S ISO 4017 M5X30 A4 80	
230	312105-0287		4	SCREW, M6S ISO 4017 M4X8 A4 70	
400	315105-0136		4	WASHER PLAIN, 4,3X9X0,8 A4 BRB	
TPA 0125SQ (See drawing on page: 1-220)					
010	2907727-0000		1	VOLUME FLAP	
020	2971940-0000		1	VOLUME BULGE	
025	2979711-0000		2	VOLUME BULGE	
030	2906024-0000		1	CARRIER	
035	2906023-0000		1	CARRIER	
050	2921571-0000		2	SHAFT	
060	2906025-0000		1	SHAFT	
090	2908756-0000		4	VOLUME SHIM	
100	2992941-0000		1	STOP	
200	312105-0379		2	SCREW, M6S ISO 4014 M6X45 A4 80	
230	312155-0287		6	SCREW DIN 7991 MF6S M4X8 A4 70	
TPA 0200SQ (See drawing on page: 1-222)					
010	2950908-0000		1	VOLUME FLAP	
020	1538782-0000		2	VOLUME BULGE P48 200	
030	3042528-0000		2	CARRIER	
050	2964541-0000		2	SHAFT	
060	2916179-0000		1	SHAFT	
100	3042521-0000		1	STOP	
200	312109-0374		2	SCREW, M6S ISO 4017 M6X30 A4 80	
230	312155-0287		4	SCREW DIN 7991 MF6S M4X8 A4 70	
TPA 0250SQ (See drawing on page: 1-222)					
010	2964391-0000		1	VOLUME FLAP	
020	1350959-0000		2	VOLUME BULGE P48 250	
030	3042528-0000		2	CARRIER	
050	2964542-0000		2	SHAFT	
060	2916179-0000		1	SHAFT	
100	3042521-0000		1	STOP	
200	312109-0374		2	SCREW, M6S ISO 4017 M6X30 A4 80	
230	312155-0287		4	SCREW DIN 7991 MF6S M4X8 A4 70	
TPA 0330SQ (See drawing on page: 1-218)					
010	3003477-0000		1	VOLUME FLAP	
020	3003862-0000		2	VOLUME BULGE	
030	3002894-0000		1	CARRIER	
035	3002891-0000		1	CARRIER	
050	3002893-0000		1	SHAFT	
060	3003860-0000		1	SHAFT	
090	3003863-0000		6	VOLUME SHIM	
100	3007781-0000		1	STOP	
200	312109-0335		2	SCREW, M6S ISO 4017 M5X30 A4 80	
230	312105-0328		2	SCREW M6S ISO 4017 M5X14 A4 80	
400	315105-0146		2	WASHER PLAIN, 5,3X10X1 A4 BRB	
Common Parts					
040	3022273-0000		2	SCREW	
070	2914730-0000		2	ROLLER	
110	2905199-0000		2	HOLDER	
240	312318-0320		2	SET SCREW, CUP END ISO4029 M5X5 A4	
260	312812-0316		2	HEXAGON NUT, NY-LOCK M6 A4 80	
270	312812-0314		2	HEXAGON NUT, NY-LOCK M5 A4 80	

Machine Type | Group Description | Used-In | Group Number | Page No

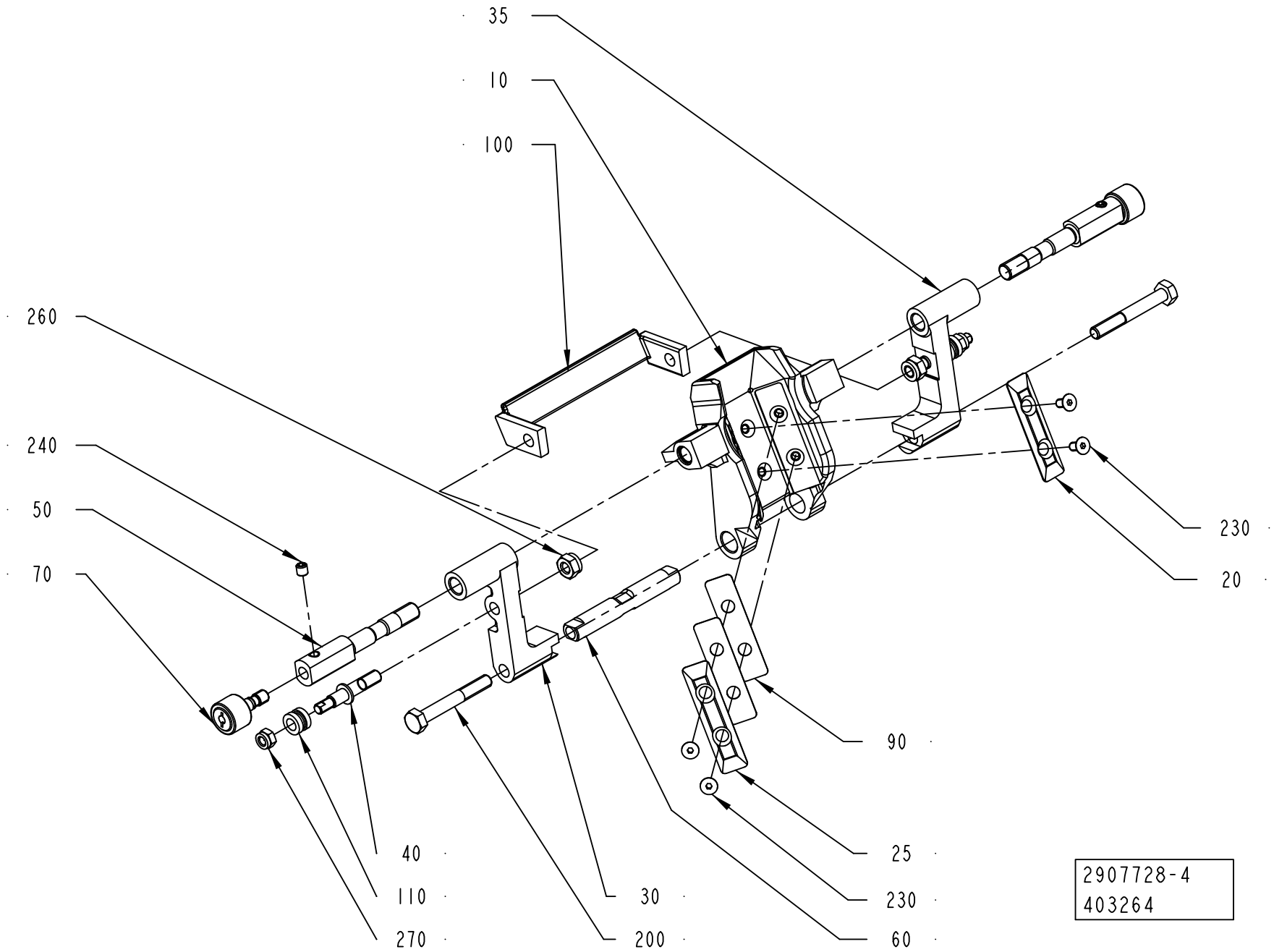
35
10
100
260
240
50
70
230
20
90
25
230
60
40
110
270
30
200
2907728-4
403264

ECM: 521068 - 20111003
Group number: 2907728-0200
Assembly Drawing: 2907728-4_1_AA

This list covers pages from 1-218 to 1-225

Pos	Part No	UN	Qty	Description	Page No
TBA 0200E (See drawing on page: 1-224)					
010	3122374-0000		1	VOLUME FLAP	
025	3123029-0000		1	VOLUME BULGE	
030	3097409-0000		1	CARRIER	
035	3097580-0000		1	CARRIER	
050	2976920-0000		2	SHAFT	
060	3003860-0000		1	SHAFT	
100	3097581-0000		1	STOP	
200	312109-0335		2	SCREW, M6S ISO 4017 M5X30 A4 80	
230	312105-0287		4	SCREW, M6S ISO 4017 M4X8 A4 70	
400	315105-0136		4	WASHER PLAIN, 4,3X9X0,8 A4 BRB	
TPA 0125SQ (See drawing on page: 1-220)					
010	2907727-0000		1	VOLUME FLAP	
020	2971940-0000		1	VOLUME BULGE	
025	2979711-0000		2	VOLUME BULGE	
030	2906024-0000		1	CARRIER	
035	2906023-0000		1	CARRIER	
050	2921571-0000		2	SHAFT	
060	2906025-0000		1	SHAFT	
090	2908756-0000		4	VOLUME SHIM	
100	2992941-0000		1	STOP	
200	312105-0379		2	SCREW, M6S ISO 4014 M6X45 A4 80	
230	312155-0287		6	SCREW DIN 7991 MF6S M4X8 A4 70	
TPA 0200SQ (See drawing on page: 1-222)					
010	2950908-0000		1	VOLUME FLAP	
020	1538782-0000		2	VOLUME BULGE P48 200	
030	3042528-0000		2	CARRIER	
050	2964541-0000		2	SHAFT	
060	2916179-0000		1	SHAFT	
100	3042521-0000		1	STOP	
200	312109-0374		2	SCREW, M6S ISO 4017 M6X30 A4 80	
230	312155-0287		4	SCREW DIN 7991 MF6S M4X8 A4 70	
TPA 0250SQ (See drawing on page: 1-222)					
010	2964391-0000		1	VOLUME FLAP	
020	1350959-0000		2	VOLUME BULGE P48 250	
030	3042528-0000		2	CARRIER	
050	2964542-0000		2	SHAFT	
060	2916179-0000		1	SHAFT	
100	3042521-0000		1	STOP	
200	312109-0374		2	SCREW, M6S ISO 4017 M6X30 A4 80	
230	312155-0287		4	SCREW DIN 7991 MF6S M4X8 A4 70	
TPA 0330SQ (See drawing on page: 1-218)					
010	3003477-0000		1	VOLUME FLAP	
020	3003862-0000		2	VOLUME BULGE	
030	3002894-0000		1	CARRIER	
035	3002891-0000		1	CARRIER	
050	3002893-0000		1	SHAFT	
060	3003860-0000		1	SHAFT	
090	3003863-0000		6	VOLUME SHIM	
100	3007781-0000		1	STOP	
200	312109-0335		2	SCREW, M6S ISO 4017 M5X30 A4 80	
230	312105-0328		2	SCREW M6S ISO 4017 M5X14 A4 80	
400	315105-0146		2	WASHER PLAIN, 5,3X10X1 A4 BRB	
Common Parts					
040	3022273-0000		2	SCREW	
070	2914730-0000		2	ROLLER	
110	2905199-0000		2	HOLDER	
240	312318-0320		2	SET SCREW, CUP END ISO4029 M5X5 A4	
260	312812-0316		2	HEXAGON NUT, NY-LOCK M6 A4 80	
270	312812-0314		2	HEXAGON NUT, NY-LOCK M5 A4 80	

Machine Type | Group Description | Used-In | Group Number | Page No

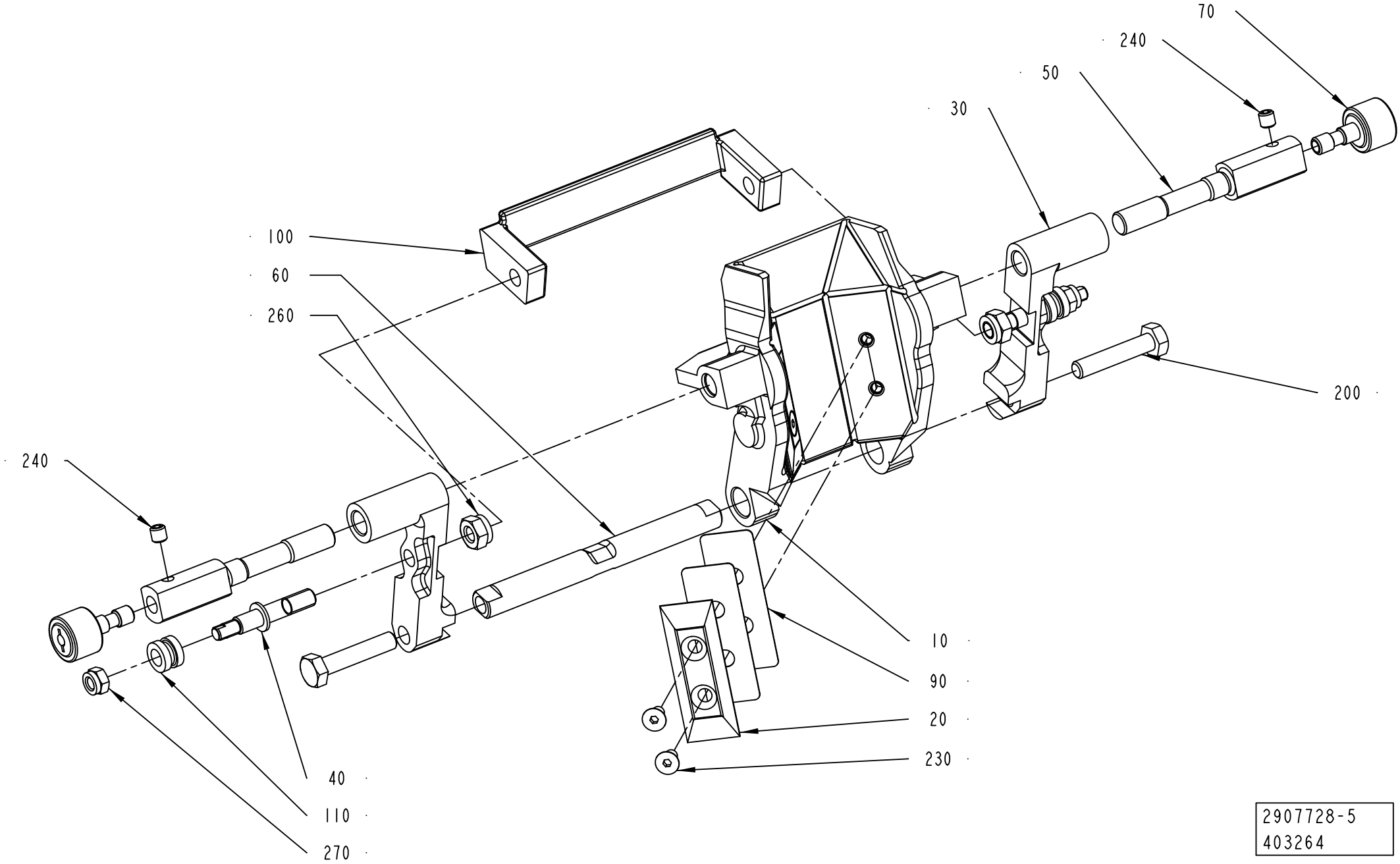

2907728-5
403264

ECM: 521068 - 20111003
Group number: 2907728-0200
Assembly Drawing: 2907728-5_1_AA

This list covers pages from 1-218 to 1-225

Pos	Part No	UN	Qty	Description	Page No
TBA 0200E (See drawing on page: 1-224)					
010	3122374-0000		1	VOLUME FLAP	
025	3123029-0000		1	VOLUME BULGE	
030	3097409-0000		1	CARRIER	
035	3097580-0000		1	CARRIER	
050	2976920-0000		2	SHAFT	
060	3003860-0000		1	SHAFT	
100	3097581-0000		1	STOP	
200	312109-0335		2	SCREW, M6S ISO 4017 M5X30 A4 80	
230	312105-0287		4	SCREW, M6S ISO 4017 M4X8 A4 70	
400	315105-0136		4	WASHER PLAIN, 4,3X9X0,8 A4 BRB	
TPA 0125SQ (See drawing on page: 1-220)					
010	2907727-0000		1	VOLUME FLAP	
020	2971940-0000		1	VOLUME BULGE	
025	2979711-0000		2	VOLUME BULGE	
030	2906024-0000		1	CARRIER	
035	2906023-0000		1	CARRIER	
050	2921571-0000		2	SHAFT	
060	2906025-0000		1	SHAFT	
090	2908756-0000		4	VOLUME SHIM	
100	2992941-0000		1	STOP	
200	312105-0379		2	SCREW, M6S ISO 4014 M6X45 A4 80	
230	312155-0287		6	SCREW DIN 7991 MF6S M4X8 A4 70	
TPA 0200SQ (See drawing on page: 1-222)					
010	2950908-0000		1	VOLUME FLAP	
020	1538782-0000		2	VOLUME BULGE P48 200	
030	3042528-0000		2	CARRIER	
050	2964541-0000		2	SHAFT	
060	2916179-0000		1	SHAFT	
100	3042521-0000		1	STOP	
200	312109-0374		2	SCREW, M6S ISO 4017 M6X30 A4 80	
230	312155-0287		4	SCREW DIN 7991 MF6S M4X8 A4 70	
TPA 0250SQ (See drawing on page: 1-222)					
010	2964391-0000		1	VOLUME FLAP	
020	1350959-0000		2	VOLUME BULGE P48 250	
030	3042528-0000		2	CARRIER	
050	2964542-0000		2	SHAFT	
060	2916179-0000		1	SHAFT	
100	3042521-0000		1	STOP	
200	312109-0374		2	SCREW, M6S ISO 4017 M6X30 A4 80	
230	312155-0287		4	SCREW DIN 7991 MF6S M4X8 A4 70	
TPA 0330SQ (See drawing on page: 1-218)					
010	3003477-0000		1	VOLUME FLAP	
020	3003862-0000		2	VOLUME BULGE	
030	3002894-0000		1	CARRIER	
035	3002891-0000		1	CARRIER	
050	3002893-0000		1	SHAFT	
060	3003860-0000		1	SHAFT	
090	3003863-0000		6	VOLUME SHIM	
100	3007781-0000		1	STOP	
200	312109-0335		2	SCREW, M6S ISO 4017 M5X30 A4 80	
230	312105-0328		2	SCREW M6S ISO 4017 M5X14 A4 80	
400	315105-0146		2	WASHER PLAIN, 5,3X10X1 A4 BRB	
Common Parts					
040	3022273-0000		2	SCREW	
070	2914730-0000		2	ROLLER	
110	2905199-0000		2	HOLDER	
240	312318-0320		2	SET SCREW, CUP END ISO4029 M5X5 A4	
260	312812-0316		2	HEXAGON NUT, NY-LOCK M6 A4 80	
270	312812-0314		2	HEXAGON NUT, NY-LOCK M5 A4 80	

Machine Type | Group Description | Used-In | Group Number | Page No

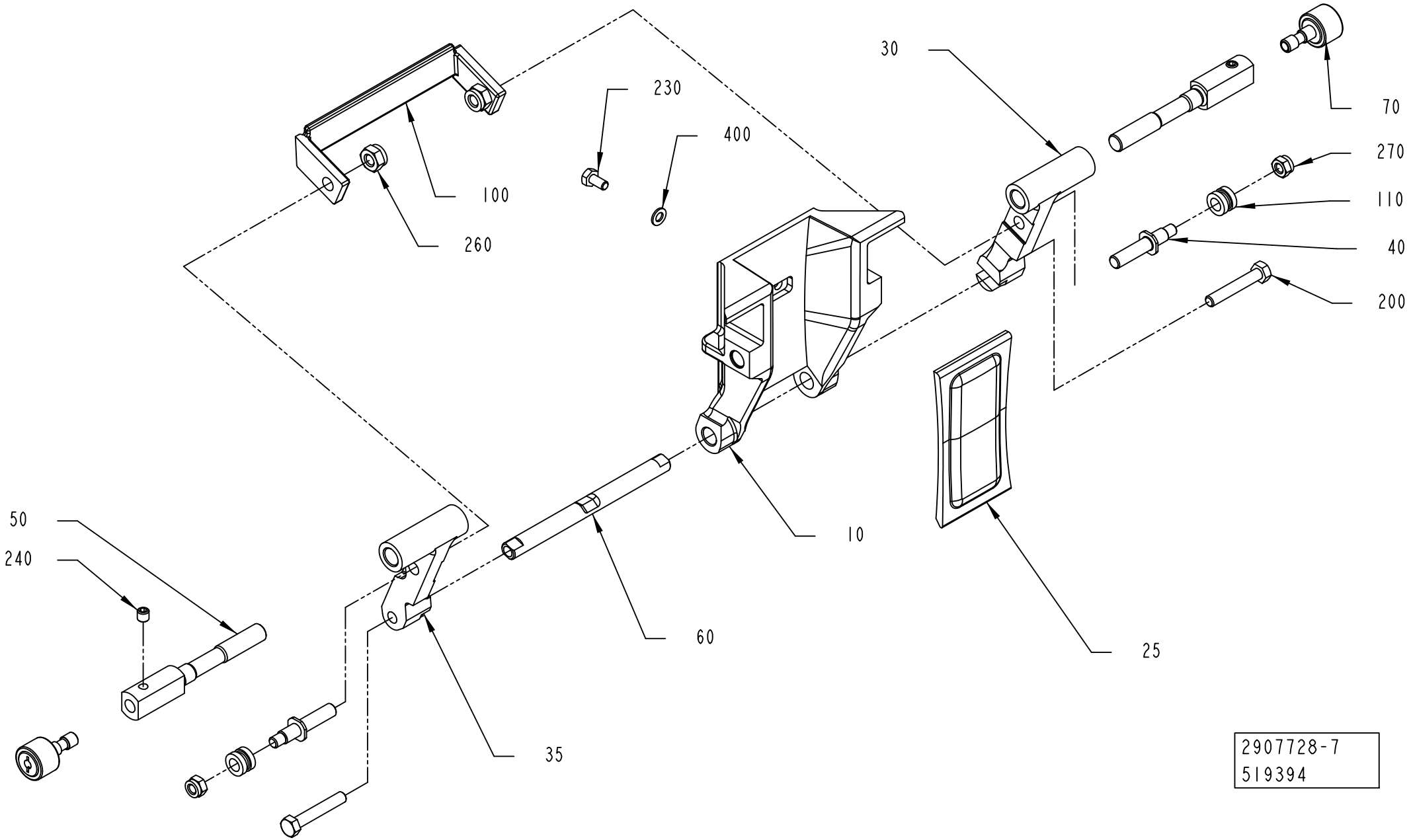
30
70
230
400
270
110
100
260
40
200
10
50
240
60
25
35
2907728-7
519394

ECM: 521068 - 20111003
Group number: 2907728-0200
Assembly Drawing: 2907728-7_1_AB

This list covers pages from 1-218 to 1-225

Pos	Part No	UN	Qty	Description	Page No
TBA 0200E (See drawing on page: 1-224)					
010	3122374-0000		1	VOLUME FLAP	
025	3123029-0000		1	VOLUME BULGE	
030	3097409-0000		1	CARRIER	
035	3097580-0000		1	CARRIER	
050	2976920-0000		2	SHAFT	
060	3003860-0000		1	SHAFT	
100	3097581-0000		1	STOP	
200	312109-0335		2	SCREW, M6S ISO 4017 M5X30 A4 80	
230	312105-0287		4	SCREW, M6S ISO 4017 M4X8 A4 70	
400	315105-0136		4	WASHER PLAIN, 4,3X9X0,8 A4 BRB	
TPA 0125SQ (See drawing on page: 1-220)					
010	2907727-0000		1	VOLUME FLAP	
020	2971940-0000		1	VOLUME BULGE	
025	2979711-0000		2	VOLUME BULGE	
030	2906024-0000		1	CARRIER	
035	2906023-0000		1	CARRIER	
050	2921571-0000		2	SHAFT	
060	2906025-0000		1	SHAFT	
090	2908756-0000		4	VOLUME SHIM	
100	2992941-0000		1	STOP	
200	312105-0379		2	SCREW, M6S ISO 4014 M6X45 A4 80	
230	312155-0287		6	SCREW DIN 7991 MF6S M4X8 A4 70	
TPA 0200SQ (See drawing on page: 1-222)					
010	2950908-0000		1	VOLUME FLAP	
020	1538782-0000		2	VOLUME BULGE P48 200	
030	3042528-0000		2	CARRIER	
050	2964541-0000		2	SHAFT	
060	2916179-0000		1	SHAFT	
100	3042521-0000		1	STOP	
200	312109-0374		2	SCREW, M6S ISO 4017 M6X30 A4 80	
230	312155-0287		4	SCREW DIN 7991 MF6S M4X8 A4 70	
TPA 0250SQ (See drawing on page: 1-222)					
010	2964391-0000		1	VOLUME FLAP	
020	1350959-0000		2	VOLUME BULGE P48 250	
030	3042528-0000		2	CARRIER	
050	2964542-0000		2	SHAFT	
060	2916179-0000		1	SHAFT	
100	3042521-0000		1	STOP	
200	312109-0374		2	SCREW, M6S ISO 4017 M6X30 A4 80	
230	312155-0287		4	SCREW DIN 7991 MF6S M4X8 A4 70	
TPA 0330SQ (See drawing on page: 1-218)					
010	3003477-0000		1	VOLUME FLAP	
020	3003862-0000		2	VOLUME BULGE	
030	3002894-0000		1	CARRIER	
035	3002891-0000		1	CARRIER	
050	3002893-0000		1	SHAFT	
060	3003860-0000		1	SHAFT	
090	3003863-0000		6	VOLUME SHIM	
100	3007781-0000		1	STOP	
200	312109-0335		2	SCREW, M6S ISO 4017 M5X30 A4 80	
230	312105-0328		2	SCREW M6S ISO 4017 M5X14 A4 80	
400	315105-0146		2	WASHER PLAIN, 5,3X10X1 A4 BRB	
Common Parts					
040	3022273-0000		2	SCREW	
070	2914730-0000		2	ROLLER	
110	2905199-0000		2	HOLDER	
240	312318-0320		2	SET SCREW, CUP END ISO4029 M5X5 A4	
260	312812-0316		2	HEXAGON NUT, NY-LOCK M6 A4 80	
270	312812-0314		2	HEXAGON NUT, NY-LOCK M5 A4 80	

Machine Type | Group Description | Used-In | Group Number | Page No

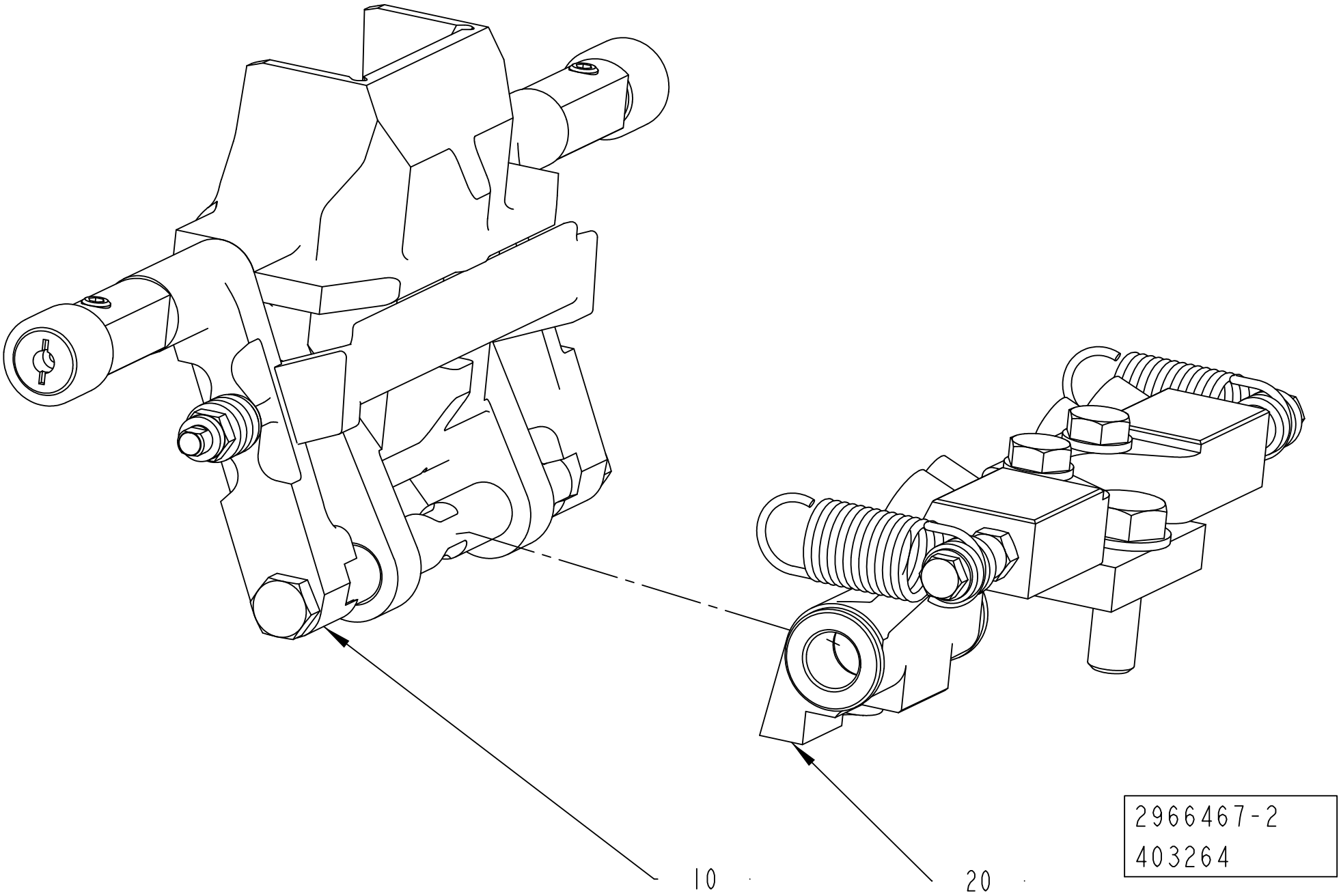
10
20
2966467-2
403264

ECM: 509353 - 20111001
Group number: 2966467-0200
Assembly Drawing: 2966467-2_1_AA

Pos	Part No	UN	Qty	Description	Page No
TBA 0160S					
10	2869207-0200		1	VOLUME FLAP	**1-195, 1-197, 1-199, 1-201, 1-203**
TBA 0200E					
10	2907728-0200		1	VOLUME FLAP	**1-219, 1-221, 1-223, 1-225**
TBA 0200S HI					
10	2869207-0200		1	VOLUME FLAP	**1-195, 1-197, 1-199, 1-201, 1-203**
TBA 0200S NOHI					
10	2869207-0200		1	VOLUME FLAP	**1-195, 1-197, 1-199, 1-201, 1-203**
TBA 0200SQ					
10	2869207-0200		1	VOLUME FLAP	**1-195, 1-197, 1-199, 1-201, 1-203**
TBA 0250SQ					
10	2869207-0200		1	VOLUME FLAP	**1-195, 1-197, 1-199, 1-201, 1-203**
TBA 0284B					
10	2869207-0200		1	VOLUME FLAP	**1-195, 1-197, 1-199, 1-201, 1-203**
TBA 0300S					
10	2869207-0200		1	VOLUME FLAP	**1-195, 1-197, 1-199, 1-201, 1-203**
TBA 0375S					
10	2869207-0200		1	VOLUME FLAP	**1-195, 1-197, 1-199, 1-201, 1-203**
TPA 0200SQ					
10	2907728-0200		1	VOLUME FLAP	**1-219, 1-221, 1-223, 1-225**
TPA 0250SQ					
10	2907728-0200		1	VOLUME FLAP	**1-219, 1-221, 1-223, 1-225**
TPA 0330SQ					
10	2907728-0200		1	VOLUME FLAP	**1-219, 1-221, 1-223, 1-225**
Common Parts					
20	2966468-0200		1	SHOCK ABSORBER	**1-229**

Pos	Part No	UN	Qty	Description	Page No

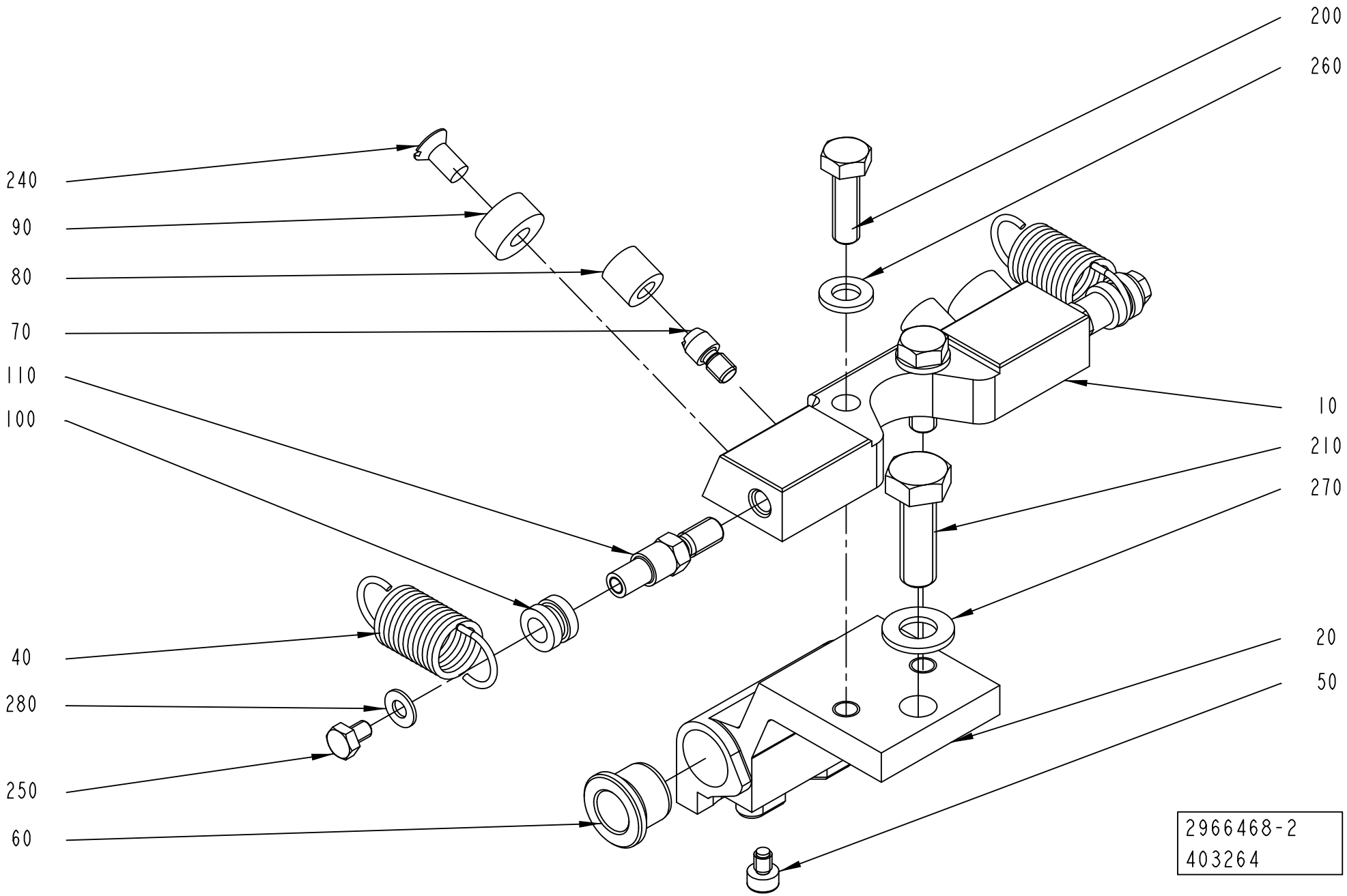
200
260
240
90
80
70
110
100
10
210
270
40
280
250
60
20
50
2966468-2
403264

ECM: 478553 - 20101003
Group number: 2966468-0200
Assembly Drawing: 2966468-2_1_AA

Pos	Part No	UN	Qty	Description	Page No
TBA 0160S, TBA 0200S					
020	3022267-0003		1	HOLDER	
040	2959868-0000		2	TENSION SPRING	
050	3022268-0000		1	SCREW	
060	2532544-0000		2	BUSHING	
090	2869195-0000		2	STOP	
TBA 0200E					
020	3097404-0003		1	HOLDER	
040	2959868-0000		2	TENSION SPRING	
050	2933520-0000		1	SCREW	
060	3097403-0000		2	BUSHING	
090	3133957-0000		2	STOP	
TBA 0200SQ, TBA 0250SQ					
020	2976830-0003		1	HOLDER	
040	2959868-0000		2	TENSION SPRING	
050	2966463-0000		1	SCREW	
060	2532544-0000		2	BUSHING	
090	2869195-0000		2	STOP	
TBA 0284B, TBA 0300S					
020	3010750-0003		1	HOLDER	
040	3040850-0000		2	TENSION SPRING	
050	3013566-0000		1	SCREW	
060	2532544-0000		2	BUSHING	
090	2869195-0000		2	STOP	
TBA 0375S					
020	3067247-0003		1	HOLDER	
040	3040850-0000		2	TENSION SPRING	
050	2966463-0000		1	SCREW	
060	2532544-0000		2	BUSHING	
090	2869195-0000		2	STOP	
TPA 0200SQ					
020	2959957-0003		1	HOLDER	
040	2959868-0000		2	TENSION SPRING	
050	2966463-0000		1	SCREW	
060	2532544-0000		2	BUSHING	
090	2869195-0000		2	STOP	
TPA 0250SQ					
020	2965109-0003		1	HOLDER	
040	2959868-0000		2	TENSION SPRING	
050	2966463-0000		1	SCREW	
060	2532544-0000		2	BUSHING	
090	2869195-0000		2	STOP	
TPA 0330SQ					
020	3002890-0003		1	HOLDER	
040	3040850-0000		2	TENSION SPRING	
050	3003861-0000		1	SCREW	
060	2810394-0000		2	BUSHING	
090	2869195-0000		2	STOP	
Common Parts					
010	3018882-0000		1	SUPPORT	
070	2869193-0000		2	PIN	
080	2869194-0000		2	DAMPER	
100	2905199-0000		2	HOLDER	
110	3022269-0000		2	SCREW	
200	312105-0370		2	SCREW, M6S ISO 4017 M6X20 A4 80	
210	312105-0453		1	SCREW, M6S ISO 4017 M8X25 A4 80	
240	312145-0325		2	SCREW ISO 2009 MFS M5X10 A4	
250	312105-0285		2	SCREW, M6S ISO 4017 M4X6 A4 70	
260	315105-0153		2	WASHER PLAIN, 6,4X12X1,5 A4 BRB	
270	315105-0165		1	WASHER PLAIN, 8,4X16X1,6 A4 BRB	
280	315106-0136		2	WASHER PLAIN, M4 ISO7089-4-200 HV A4	

Machine Type | Group Description | Used-In | Group Number | Page No

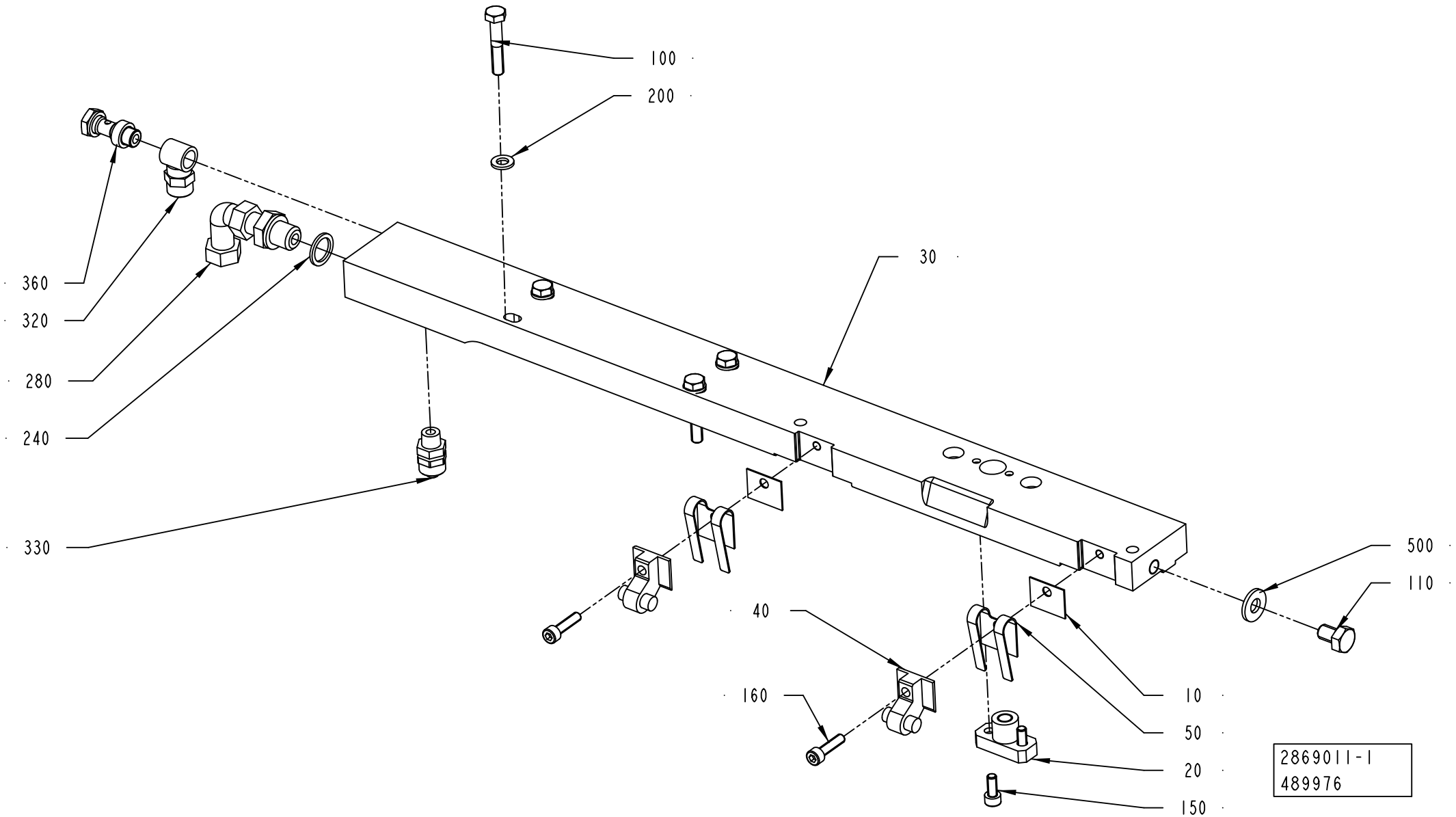
100
200
30
360
320
280
240
330
500
110
40
160
10
50
20
150
2869011-1
489976

Pos	Part No	UN	Qty	Description	Page No
TBA 0100B, TBA 0125S, TBA 0080S (See drawing on page: 1-230)					
020	2916871-0000		1	BLOCK	
030	2916870-0000		1	CARRIER	
150	312115-0325		2	SCREW ISO4762 M5X10 A4 80	
TBA 0160S, TBA 0200M, TBA 0200B, TBA 0200S, TBA 0250S, TBA 0284B, TBA 0250B, TBA 0300S, TBA 0330S, TPA 0125SQ (See drawing on page: 1-230)					
020	2869196-0000		1	BLOCK	
030	2869205-0000		1	CARRIER	
150	312115-0327		2	SCREW ISO4762 M5X12 A4 80	
TBA 0200SQ, TBA 0375S, TPA 0330SQ, TPA 0250SQ, TPA 0200SQ, TBA 0250SQ, TBA 0200E (See drawing on page: 1-232)					
020	2869196-0000		1	BLOCK	
030	2962051-0000		1	CARRIER	
150	312115-0327		2	SCREW ISO4762 M5X12 A4 80	
180	311103-0267		1	PARALLEL PIN ISO 2338 4M6X10 A1	
Common Parts					
010	2837094-0000		2	SHIM	
040	3167562-0000		2	SUPPORT	
050	929391-0000		2	SPRING	
100	312105-0376		4	SCREW, M6S ISO 4014 M6X35 A4 80	
110	312105-0447		1	SCREW, M6S ISO 4017 M8X12 A4 80	
160	312115-0331		2	SCREW ISO4762 M5X20 A4 80	
200	315105-0153		4	WASHER PLAIN, 6,4X12X1,5 A4 BRB	
240	315237-0110		1	WASHER,PL.RND.AL.13,5/18,H=1,5	
280	342738-0208		1	ADJUSTABLE ELBOW CONNECTION 8-G1/4	
320	342980-0121		1	HOSE FITTING, BANJO RING L PO G1/8 8/6	
330	342920-0121		1	STRAIGHT COUPLING, EXT.THREAD 8/6-R1/8	
360	342980-0303		1	BANJO-HOLLOW BOLT COUPL,EXT.THR.01-G1/8	
500	90005-0052		1	WASHER,PL.RND.CU.8/18 H=2	

Pos	Part No	UN	Qty	Description	Page No

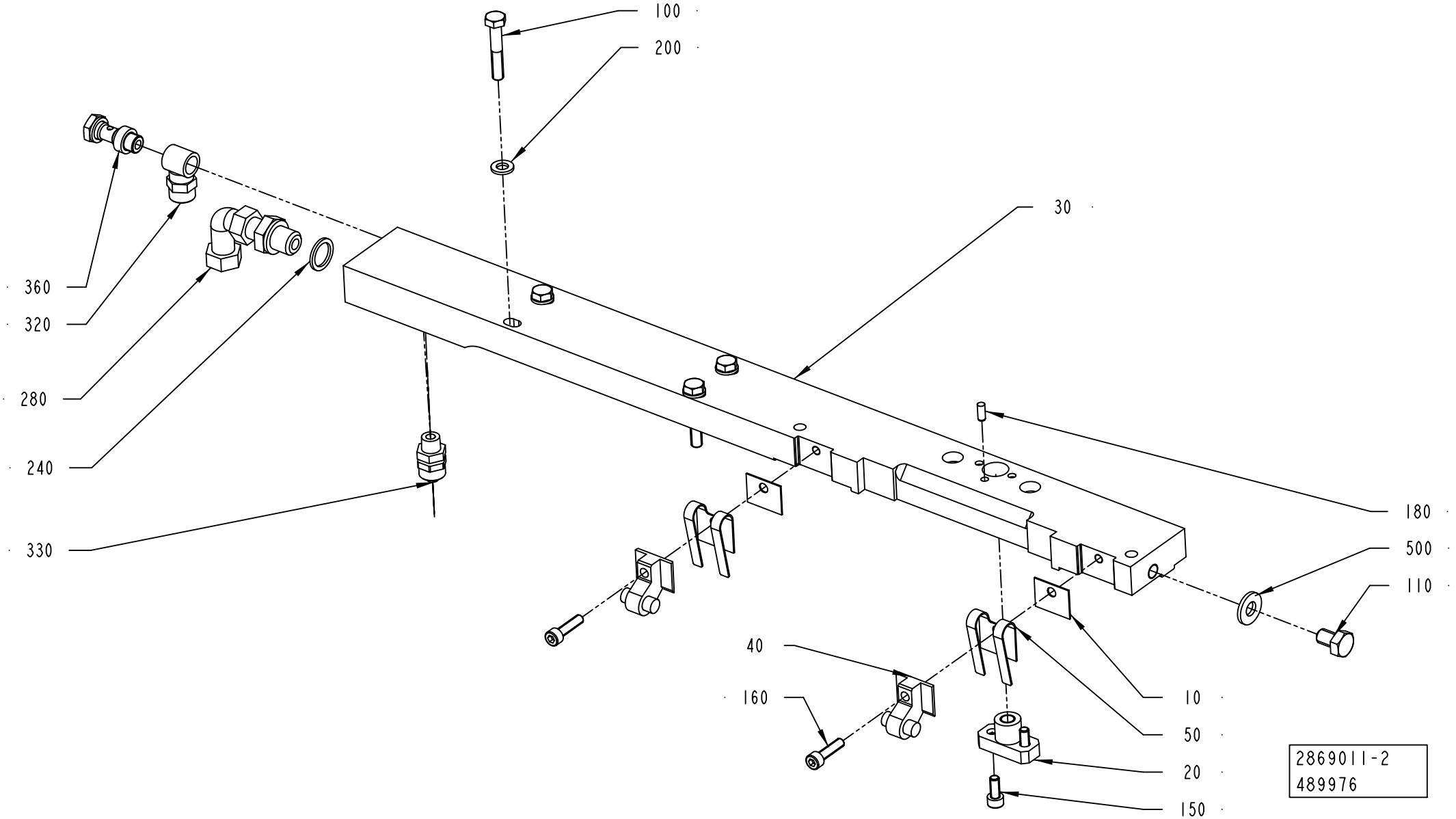
100
200
30
360
320
280
240
330
180
500
110
40
160
10
50
20
150
2869011-2
489976

ECM: 498656 - 20110701
Group number: 2869011-0100
Assembly Drawing: 2869011-2_1_AB

This list covers pages from 1-230 to 1-233

Pos	Part No	UN	Qty	Description	Page No
TBA 0100B, TBA 0125S, TBA 0080S (See drawing on page: 1-230)					
020	2916871-0000		1	BLOCK	
030	2916870-0000		1	CARRIER	
150	312115-0325		2	SCREW ISO4762 M5X10 A4 80	
TBA 0160S, TBA 0200M, TBA 0200B, TBA 0200S, TBA 0250S, TBA 0284B, TBA 0250B, TBA 0300S, TBA 0330S, TPA 0125SQ (See drawing on page: 1-230)					
020	2869196-0000		1	BLOCK	
030	2869205-0000		1	CARRIER	
150	312115-0327		2	SCREW ISO4762 M5X12 A4 80	
TBA 0200SQ, TBA 0375S, TPA 0330SQ, TPA 0250SQ, TPA 0200SQ, TBA 0250SQ, TBA 0200E (See drawing on page: 1-232)					
020	2869196-0000		1	BLOCK	
030	2962051-0000		1	CARRIER	
150	312115-0327		2	SCREW ISO4762 M5X12 A4 80	
180	311103-0267		1	PARALLEL PIN ISO 2338 4M6X10 A1	
Common Parts					
010	2837094-0000		2	SHIM	
040	3167562-0000		2	SUPPORT	
050	929391-0000		2	SPRING	
100	312105-0376		4	SCREW, M6S ISO 4014 M6X35 A4 80	
110	312105-0447		1	SCREW, M6S ISO 4017 M8X12 A4 80	
160	312115-0331		2	SCREW ISO4762 M5X20 A4 80	
200	315105-0153		4	WASHER PLAIN, 6,4X12X1,5 A4 BRB	
240	315237-0110		1	WASHER,PL.RND.AL.13,5/18,H=1,5	
280	342738-0208		1	ADJUSTABLE ELBOW CONNECTION 8-G1/4	
320	342980-0121		1	HOSE FITTING, BANJO RING L PO G1/8 8/6	
330	342920-0121		1	STRAIGHT COUPLING, EXT.THREAD 8/6-R1/8	
360	342980-0303		1	BANJO-HOLLOW BOLT COUPL,EXT.THR.01-G1/8	
500	90005-0052		1	WASHER,PL.RND.CU.8/18 H=2	

Pos	Part No	UN	Qty	Description	Page No

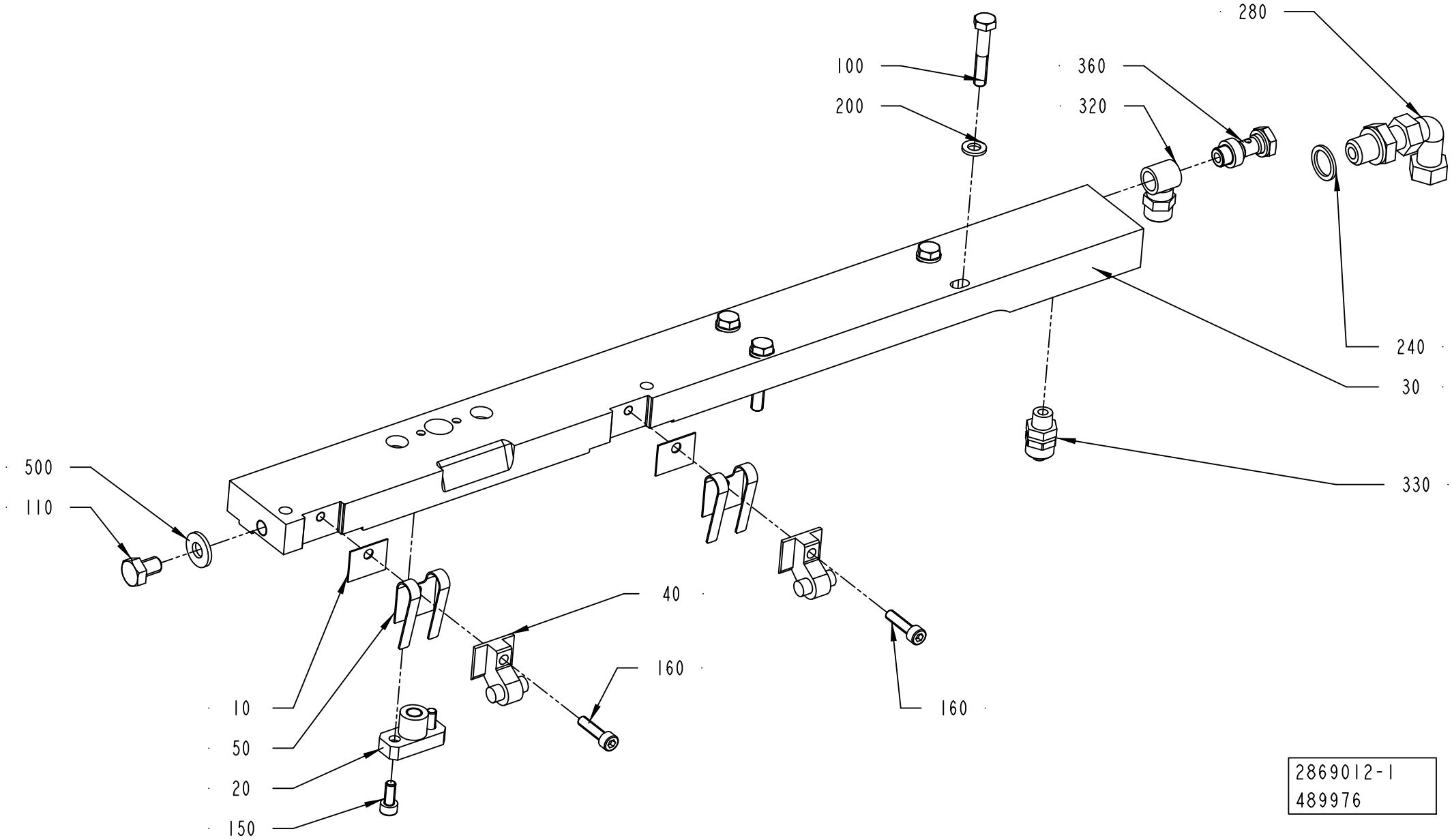
280
100
360
200
320
240
30
500
330
110
40
160
10
160
50
20
150
2869012-1
489976

Pos	Part No	UN	Qty	Description	Page No
TBA 0100B, TBA 0125S, TBA 0080S (See drawing on page: 1-234)					
020	2916871-0000		1	BLOCK	
030	2916872-0000		1	CARRIER	
150	312115-0325		2	SCREW ISO4762 M5X10 A4 80	
TBA 0160S, TBA 0200M, TBA 0200B, TBA 0200S, TBA 0250S, TBA 0284B, TBA 0250B, TBA 0300S, TBA 0330S, TPA 0125SQ (See drawing on page: 1-234)					
020	2869196-0000		1	BLOCK	
030	2869204-0000		1	CARRIER	
150	312115-0327		2	SCREW ISO4762 M5X12 A4 80	
TBA 0200SQ, TBA 0375S, TPA 0330SQ, TPA 0250SQ, TPA 0200SQ, TBA 0250SQ, TBA 0200E (See drawing on page: 1-236)					
020	2869196-0000		1	BLOCK	
030	2962050-0000		1	CARRIER	
150	312115-0327		2	SCREW ISO4762 M5X12 A4 80	
180	311103-0267		1	PARALLEL PIN ISO 2338 4M6X10 A1	
Common Parts					
010	2837094-0000		2	SHIM	
040	3167562-0000		2	SUPPORT	
050	929391-0000		2	SPRING	
100	312105-0376		4	SCREW, M6S ISO 4014 M6X35 A4 80	
110	312105-0447		1	SCREW, M6S ISO 4017 M8X12 A4 80	
160	312115-0331		2	SCREW ISO4762 M5X20 A4 80	
200	315105-0153		4	WASHER PLAIN, 6,4X12X1,5 A4 BRB	
240	315237-0110		1	WASHER,PL.RND.AL.13,5/18,H=1,5	
280	342738-0208		1	ADJUSTABLE ELBOW CONNECTION 8-G1/4	
320	342980-0121		1	HOSE FITTING, BANJO RING L PO G1/8 8/6	
330	342920-0121		1	STRAIGHT COUPLING, EXT.THREAD 8/6-R1/8	
360	342980-0303		1	BANJO-HOLLOW BOLT COUPL,EXT.THR.01-G1/8	
500	90005-0052		1	WASHER,PL.RND.CU.8/18 H=2	

Pos	Part No	UN	Qty	Description	Page No

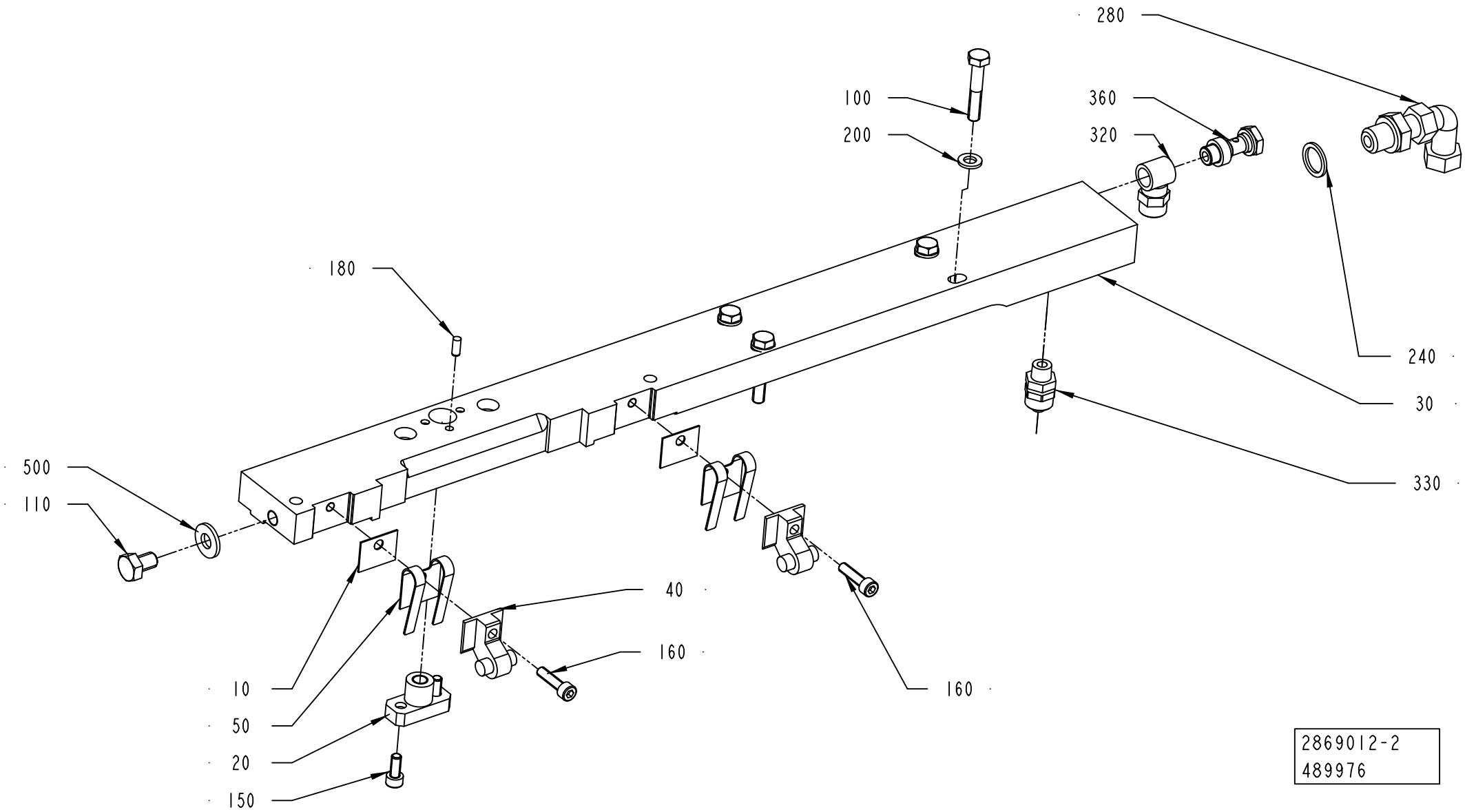
280
100
200
360
320
180
240
30
500
110
330
40
160
10
50
20
150
160
2869012-2
489976

Pos	Part No	UN	Qty	Description	Page No
TBA 0100B, TBA 0125S, TBA 0080S (See drawing on page: 1-234)					
020	2916871-0000		1	BLOCK	
030	2916872-0000		1	CARRIER	
150	312115-0325		2	SCREW ISO4762 M5X10 A4 80	
TBA 0160S, TBA 0200M, TBA 0200B, TBA 0200S, TBA 0250S, TBA 0284B, TBA 0250B, TBA 0300S, TBA 0330S, TPA 0125SQ (See drawing on page: 1-234)					
020	2869196-0000		1	BLOCK	
030	2869204-0000		1	CARRIER	
150	312115-0327		2	SCREW ISO4762 M5X12 A4 80	
TBA 0200SQ, TBA 0375S, TPA 0330SQ, TPA 0250SQ, TPA 0200SQ, TBA 0250SQ, TBA 0200E (See drawing on page: 1-236)					
020	2869196-0000		1	BLOCK	
030	2962050-0000		1	CARRIER	
150	312115-0327		2	SCREW ISO4762 M5X12 A4 80	
180	311103-0267		1	PARALLEL PIN ISO 2338 4M6X10 A1	
Common Parts					
010	2837094-0000		2	SHIM	
040	3167562-0000		2	SUPPORT	
050	929391-0000		2	SPRING	
100	312105-0376		4	SCREW, M6S ISO 4014 M6X35 A4 80	
110	312105-0447		1	SCREW, M6S ISO 4017 M8X12 A4 80	
160	312115-0331		2	SCREW ISO4762 M5X20 A4 80	
200	315105-0153		4	WASHER PLAIN, 6,4X12X1,5 A4 BRB	
240	315237-0110		1	WASHER,PL.RND.AL.13,5/18,H=1,5	
280	342738-0208		1	ADJUSTABLE ELBOW CONNECTION 8-G1/4	
320	342980-0121		1	HOSE FITTING, BANJO RING L PO G1/8 8/6	
330	342920-0121		1	STRAIGHT COUPLING, EXT.THREAD 8/6-R1/8	
360	342980-0303		1	BANJO-HOLLOW BOLT COUPL,EXT.THR.01-G1/8	
500	90005-0052		1	WASHER,PL.RND.CU.8/18 H=2	

Pos	Part No	UN	Qty	Description	Page No

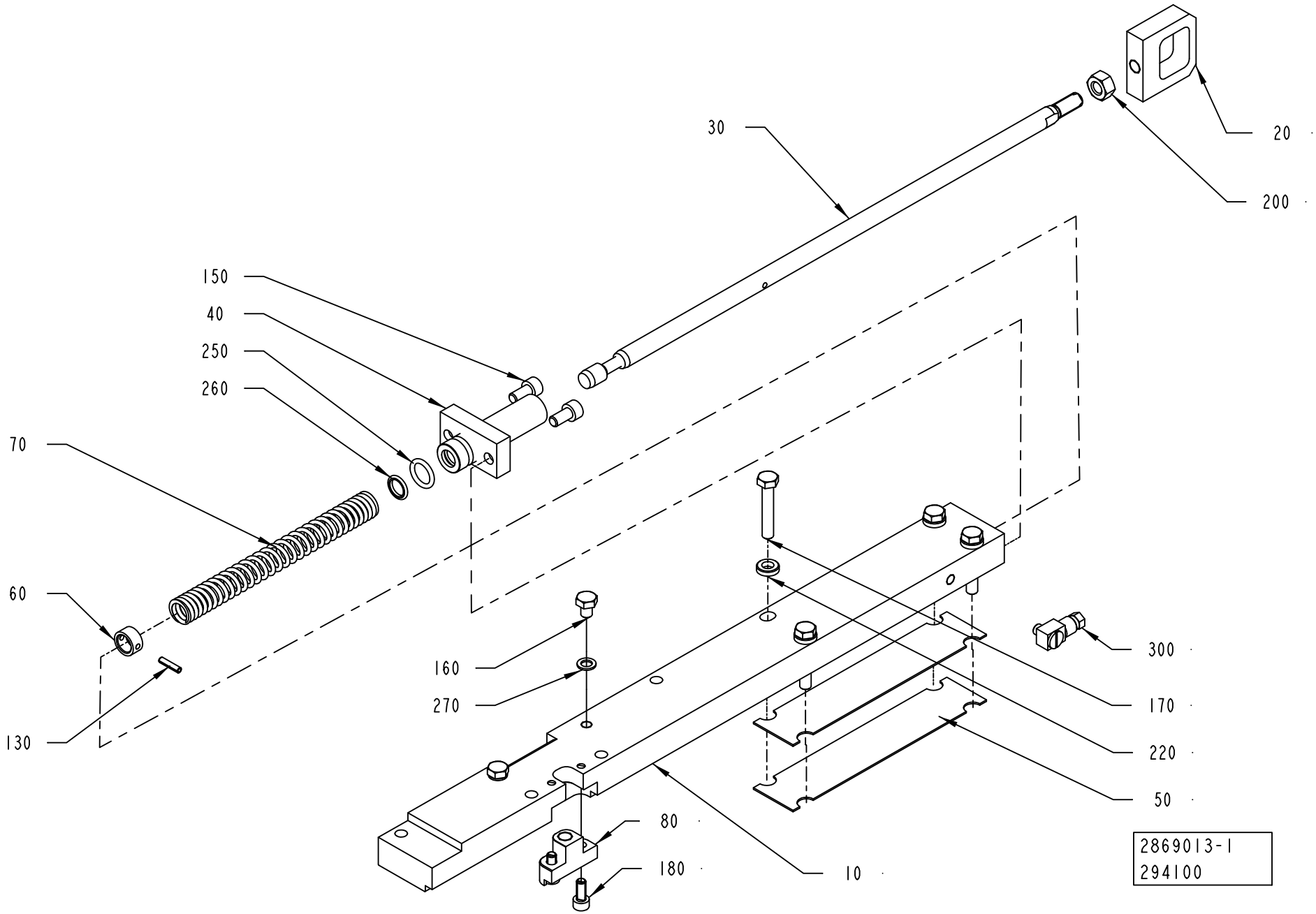
30
20
200
150
40
250
260
70
60
130
160
270
300
170
220
50
80
180
10
2869013-1
294100

ECM: 496380 - 20110701
Group number: 2869013-0100
Assembly Drawing: 2869013-1_1_AA

This list covers pages from 1-238 to 1-241

Pos	Part No	UN	Qty	Description	Page No
TBA 0100B, TBA 0125S, TBA 0080S (See drawing on page: 1-238)					
010	2916873-0000		1	CARRIER	
030	2818125-0000		1	OPERATING ROD	
080	2916875-0000		1	BLOCK	
160	312105-0362		2	SCREW, M6S ISO 4017 M6X8 A4 80	
180	312115-0325		2	SCREW ISO4762 M5X10 A4 80	
270	315237-0106		2	WASHER,PL.RND.AL.6/10,H=1	
TBA 0160S, TBA 0200M, TBA 0200B, TBA 0200S, TBA 0250S, TBA 0284B, TBA 0250B, TBA 0300S, TBA 0330S (See drawing on page: 1-238)					
010	2869200-0000		1	CARRIER	
030	2818125-0000		1	OPERATING ROD	
080	2869199-0000		1	BLOCK	
160	312105-0362		2	SCREW, M6S ISO 4017 M6X8 A4 80	
180	312115-0327		2	SCREW ISO4762 M5X12 A4 80	
270	315237-0106		2	WASHER,PL.RND.AL.6/10,H=1	
TBA 0200E (See drawing on page: 1-240)					
010	3013513-0000		1	CARRIER	
030	2818125-0000		1	OPERATING ROD	
080	2869199-0000		1	BLOCK	
120	311103-0267		1	PARALLEL PIN ISO 2338 4M6X10 A1	
160	312105-0362		2	SCREW, M6S ISO 4017 M6X8 A4 80	
180	312115-0327		2	SCREW ISO4762 M5X12 A4 80	
270	315237-0106		2	WASHER,PL.RND.AL.6/10,H=1	
TBA 0200SQ, TBA 0375S, TPA 0330SQ, TPA 0250SQ, TPA 0200SQ, TBA 0250SQ (See drawing on page: 1-240)					
010	2962052-0000		1	CARRIER	
030	2818125-0000		1	OPERATING ROD	
080	2964567-0000		1	BLOCK	
120	311103-0267		1	PARALLEL PIN ISO 2338 4M6X10 A1	
160	312105-0323		2	SCREW, M6S ISO 4017 M5X8 A4 80	
180	312115-0327		2	SCREW ISO4762 M5X12 A4 80	
270	315237-0108		2	WASHER,PL.RND.AL.5,2/8,H=0,5	
TPA 0125SQ (See drawing on page: 1-238)					
010	2869200-0000		1	CARRIER	
030	2906017-0000		1	OPERATING ROD	
080	2869199-0000		1	BLOCK	
160	312105-0362		2	SCREW, M6S ISO 4017 M6X8 A4 80	
180	312115-0327		2	SCREW ISO4762 M5X12 A4 80	
270	315237-0106		2	WASHER,PL.RND.AL.6/10,H=1	
Common Parts					
020	256626-0000		1	EAR	
040	2818126-0000		1	BEARING PLATE	
050	257362-0000		2	LACE	
060	255801-0000		1	RETAINING RING	
070	255742-0000		1	COMPRESSION SPRING	
130	311111-0207		1	SPRING PIN ISO 8752 3X14-ST	
150	312115-0366		2	SCREW ISO4762 M6X12 A4 80	
170	312105-0376		4	SCREW, M6S ISO 4014 M6X35 A4 80	
200	312605-0318		1	HEXAGON NUT, M6M M8 A280	
220	315115-0153		4	WASHER PLAIN, TBRB 6,4/12 H=3	
250	315202-0265		1	O-RING 12,3X2,4 MM	
260	90091-0091		1	ROD SEAL 10X14X1,7 MM	
300	90134-0058		1	CONNECTION	

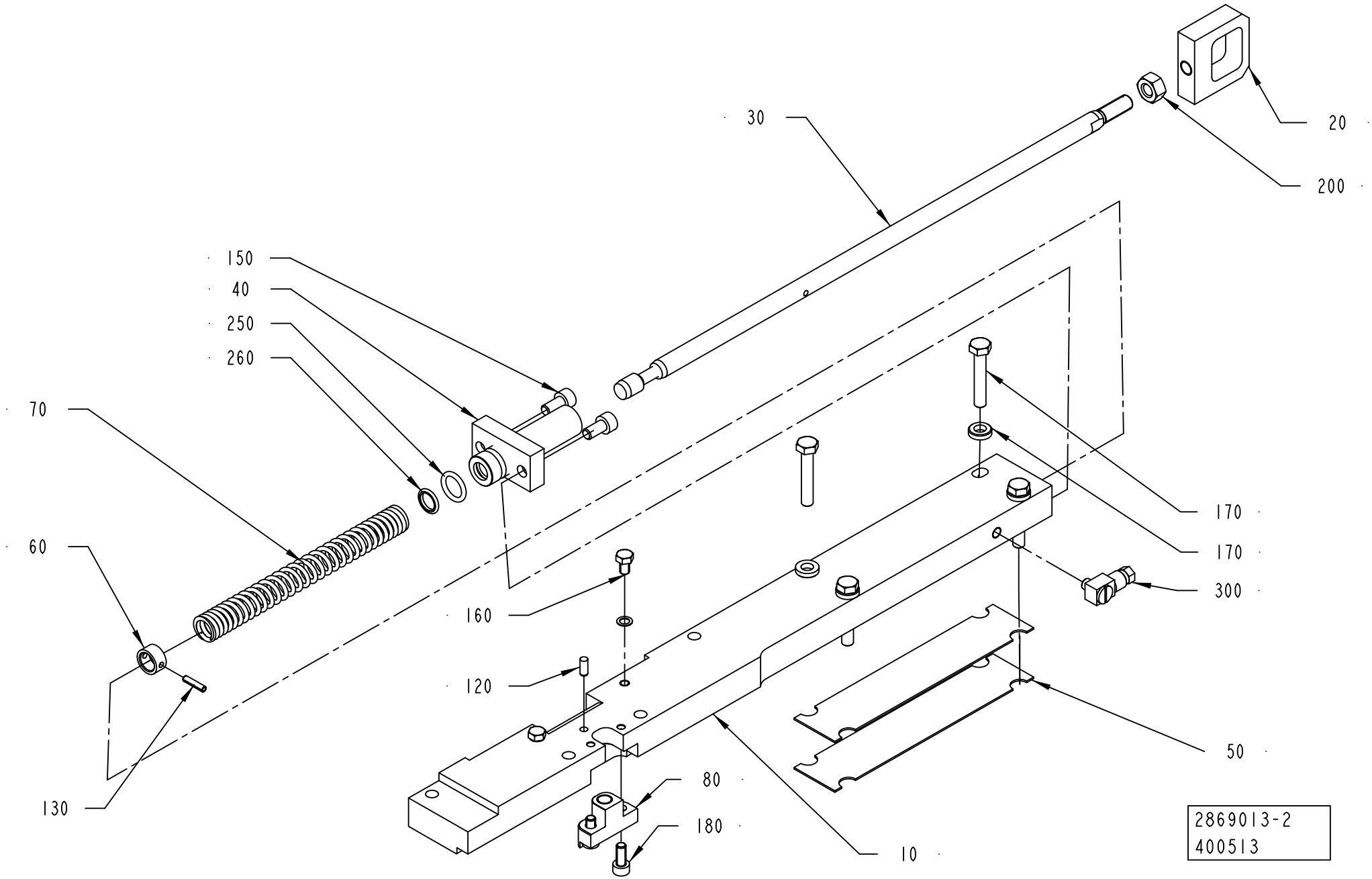
30
20
200
150
40
250
260
70
60
130
160
120
80
180
10
170
170
300
50
2869013-2
400513

ECM: 496380 - 20110701
Group number: 2869013-0100
Assembly Drawing: 2869013-2_1_AA

This list covers pages from 1-238 to 1-241

Pos	Part No	UN	Qty	Description	Page No
TBA 0100B, TBA 0125S, TBA 0080S (See drawing on page: 1-238)					
010	2916873-0000		1	CARRIER	
030	2818125-0000		1	OPERATING ROD	
080	2916875-0000		1	BLOCK	
160	312105-0362		2	SCREW, M6S ISO 4017 M6X8 A4 80	
180	312115-0325		2	SCREW ISO4762 M5X10 A4 80	
270	315237-0106		2	WASHER,PL.RND.AL.6/10,H=1	
TBA 0160S, TBA 0200M, TBA 0200B, TBA 0200S, TBA 0250S, TBA 0284B, TBA 0250B, TBA 0300S, TBA 0330S (See drawing on page: 1-238)					
010	2869200-0000		1	CARRIER	
030	2818125-0000		1	OPERATING ROD	
080	2869199-0000		1	BLOCK	
160	312105-0362		2	SCREW, M6S ISO 4017 M6X8 A4 80	
180	312115-0327		2	SCREW ISO4762 M5X12 A4 80	
270	315237-0106		2	WASHER,PL.RND.AL.6/10,H=1	
TBA 0200E (See drawing on page: 1-240)					
010	3013513-0000		1	CARRIER	
030	2818125-0000		1	OPERATING ROD	
080	2869199-0000		1	BLOCK	
120	311103-0267		1	PARALLEL PIN ISO 2338 4M6X10 A1	
160	312105-0362		2	SCREW, M6S ISO 4017 M6X8 A4 80	
180	312115-0327		2	SCREW ISO4762 M5X12 A4 80	
270	315237-0106		2	WASHER,PL.RND.AL.6/10,H=1	
TBA 0200SQ, TBA 0375S, TPA 0330SQ, TPA 0250SQ, TPA 0200SQ, TBA 0250SQ (See drawing on page: 1-240)					
010	2962052-0000		1	CARRIER	
030	2818125-0000		1	OPERATING ROD	
080	2964567-0000		1	BLOCK	
120	311103-0267		1	PARALLEL PIN ISO 2338 4M6X10 A1	
160	312105-0323		2	SCREW, M6S ISO 4017 M5X8 A4 80	
180	312115-0327		2	SCREW ISO4762 M5X12 A4 80	
270	315237-0108		2	WASHER,PL.RND.AL.5,2/8,H=0,5	
TPA 0125SQ (See drawing on page: 1-238)					
010	2869200-0000		1	CARRIER	
030	2906017-0000		1	OPERATING ROD	
080	2869199-0000		1	BLOCK	
160	312105-0362		2	SCREW, M6S ISO 4017 M6X8 A4 80	
180	312115-0327		2	SCREW ISO4762 M5X12 A4 80	
270	315237-0106		2	WASHER,PL.RND.AL.6/10,H=1	
Common Parts					
020	256626-0000		1	EAR	
040	2818126-0000		1	BEARING PLATE	
050	257362-0000		2	LACE	
060	255801-0000		1	RETAINING RING	
070	255742-0000		1	COMPRESSION SPRING	
130	311111-0207		1	SPRING PIN ISO 8752 3X14-ST	
150	312115-0366		2	SCREW ISO4762 M6X12 A4 80	
170	312105-0376		4	SCREW, M6S ISO 4014 M6X35 A4 80	
200	312605-0318		1	HEXAGON NUT, M6M M8 A280	
220	315115-0153		4	WASHER PLAIN, TBRB 6,4/12 H=3	
250	315202-0265		1	O-RING 12,3X2,4 MM	
260	90091-0091		1	ROD SEAL 10X14X1,7 MM	
300	90134-0058		1	CONNECTION	

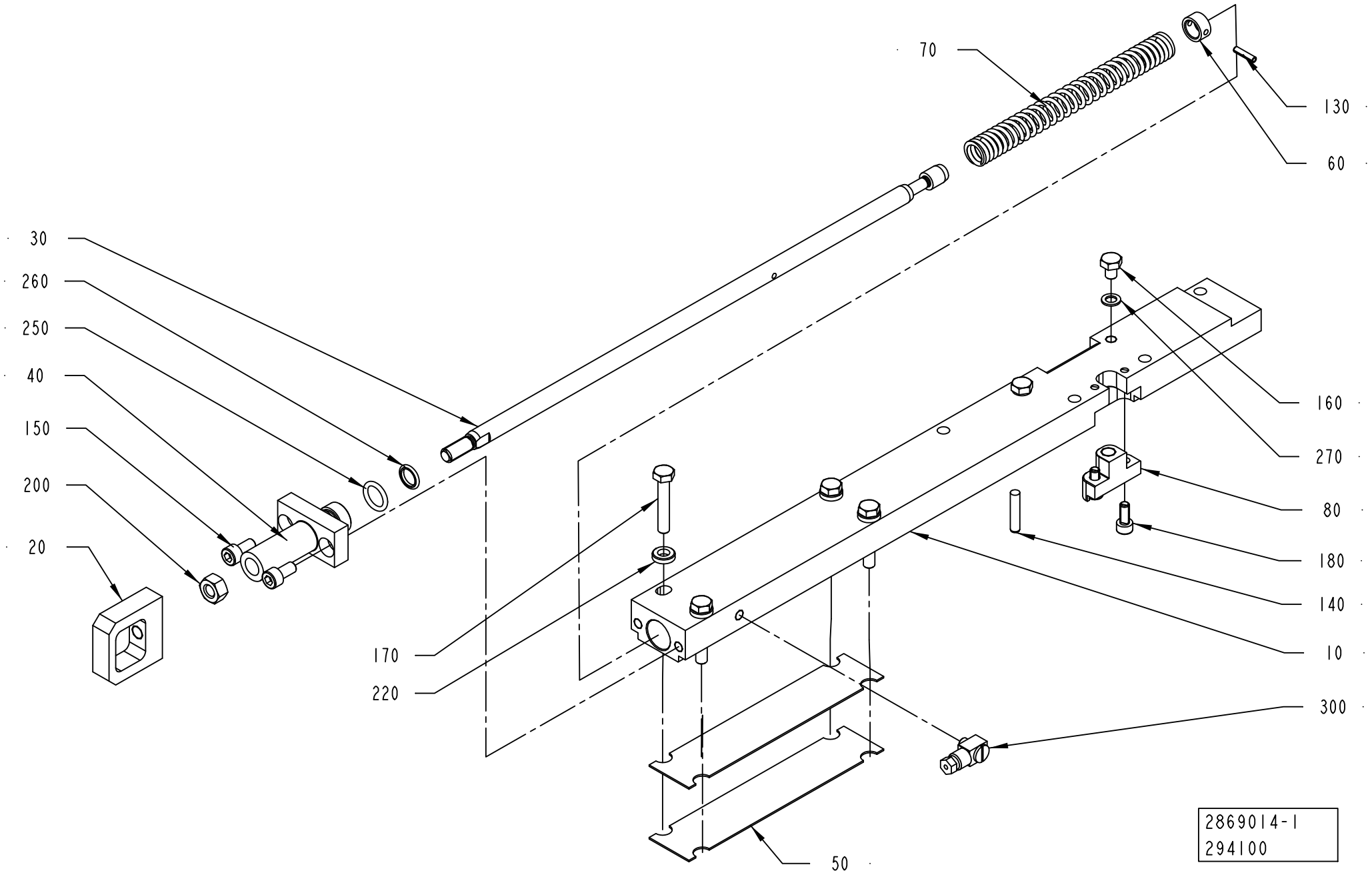
70
130
60
30
260
250
40
150
200
20
160
270
80
180
140
10
170
220
300
50
2869014-1
294100

ECM: 496381 - 20110701
Group number: 2869014-0100
Assembly Drawing: 2869014-1_1_AA

This list covers pages from 1-242 to 1-245

Pos	Part No	UN	Qty	Description	Page No
TBA 0100B, TBA 0125S, TBA 0080S (See drawing on page: 1-242)					
010	2916876-0000		1	CARRIER	
030	2818125-0000		1	OPERATING ROD	
080	2916875-0000		1	BLOCK	
160	312105-0362		2	SCREW, M6S ISO 4017 M6X8 A4 80	
180	312115-0325		2	SCREW ISO4762 M5X10 A4 80	
270	315237-0106		2	WASHER,PL.RND.AL.6/10,H=1	
TBA 0160S, TBA 0200M, TBA 0200B, TBA 0200S, TBA 0250S, TBA 0284B, TBA 0250B, TBA 0300S, TBA 0330S (See drawing on page: 1-242)					
010	2869203-0000		1	CARRIER	
030	2818125-0000		1	OPERATING ROD	
080	2869199-0000		1	BLOCK	
160	312105-0362		2	SCREW, M6S ISO 4017 M6X8 A4 80	
180	312115-0327		2	SCREW ISO4762 M5X12 A4 80	
270	315237-0106		2	WASHER,PL.RND.AL.6/10,H=1	
TBA 0200E (See drawing on page: 1-244)					
010	3013514-0000		1	CARRIER	
030	2818125-0000		1	OPERATING ROD	
080	2869199-0000		1	BLOCK	
120	311103-0267		1	PARALLEL PIN ISO 2338 4M6X10 A1	
160	312105-0362		2	SCREW, M6S ISO 4017 M6X8 A4 80	
180	312115-0327		2	SCREW ISO4762 M5X12 A4 80	
270	315237-0106		2	WASHER,PL.RND.AL.6/10,H=1	
TBA 0200SQ, TBA 0375S, TPA 0330SQ, TPA 0250SQ, TPA 0200SQ, TBA 0250SQ (See drawing on page: 1-244)					
010	2962053-0000		1	CARRIER	
030	2818125-0000		1	OPERATING ROD	
080	2964567-0000		1	BLOCK	
120	311103-0267		1	PARALLEL PIN ISO 2338 4M6X10 A1	
160	312105-0323		2	SCREW, M6S ISO 4017 M5X8 A4 80	
180	312115-0327		2	SCREW ISO4762 M5X12 A4 80	
270	315237-0108		2	WASHER,PL.RND.AL.5,2/8,H=0,5	
TPA 0125SQ (See drawing on page: 1-242)					
010	2869203-0000		1	CARRIER	
030	2906017-0000		1	OPERATING ROD	
080	2869199-0000		1	BLOCK	
160	312105-0362		2	SCREW, M6S ISO 4017 M6X8 A4 80	
180	312115-0327		2	SCREW ISO4762 M5X12 A4 80	
270	315237-0106		2	WASHER,PL.RND.AL.6/10,H=1	
Common Parts					
020	256626-0000		1	EAR	
040	2818126-0000		1	BEARING PLATE	
050	257362-0000		2	LACE	
060	255801-0000		1	RETAINING RING	
070	255742-0000		1	COMPRESSION SPRING	
130	311111-0207		1	SPRING PIN ISO 8752 3X14-ST	
150	312115-0366		2	SCREW ISO4762 M6X12 A4 80	
170	312105-0376		4	SCREW, M6S ISO 4014 M6X35 A4 80	
200	312605-0318		1	HEXAGON NUT, M6M M8 A280	
220	315115-0153		4	WASHER PLAIN, TBRB 6,4/12 H=3	
250	315202-0265		1	O-RING 12,3X2,4 MM	
260	90091-0091		1	ROD SEAL 10X14X1,7 MM	
300	90134-0058		1	CONNECTION	

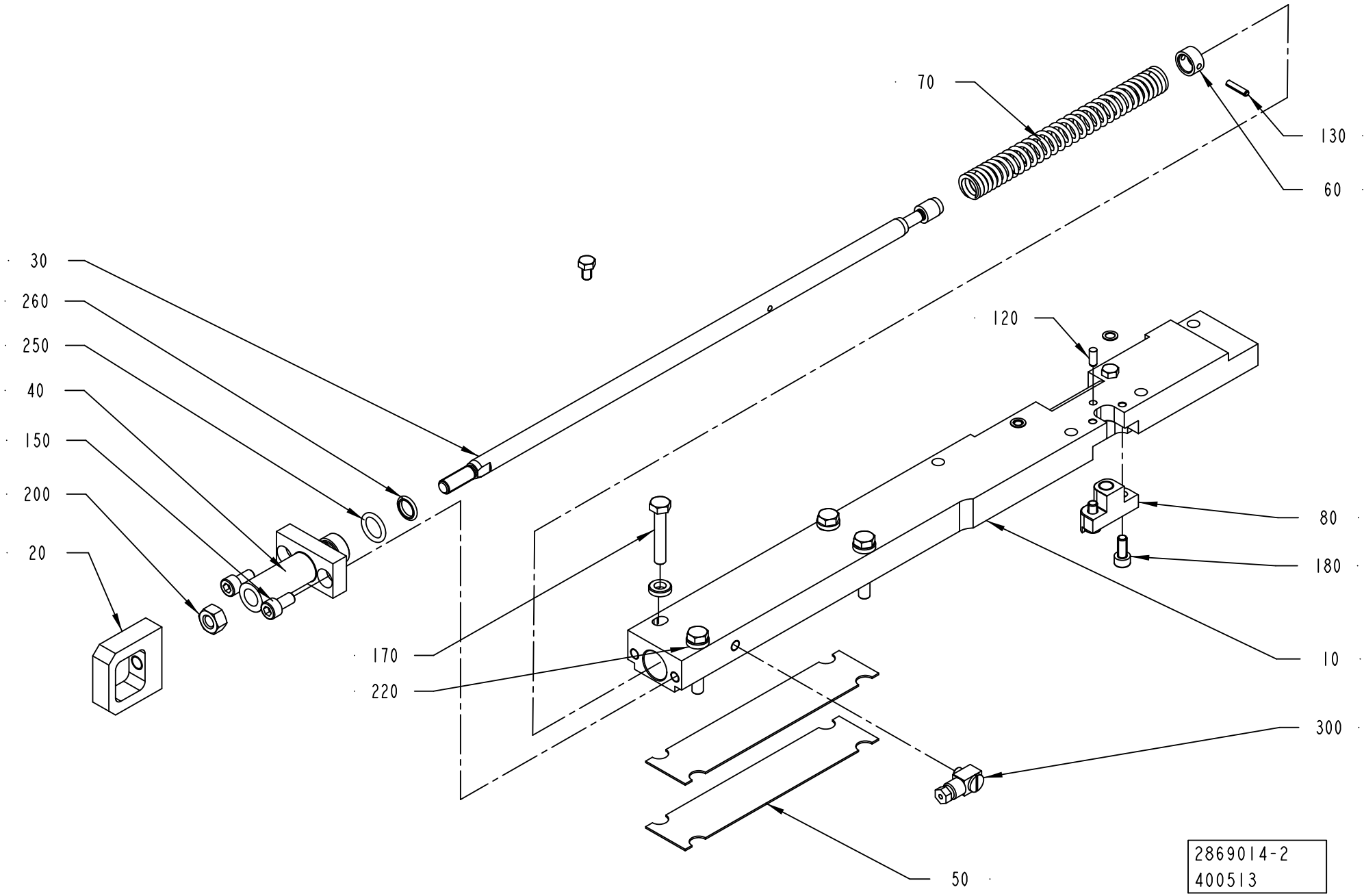
70
130
60
30
260
250
40
150
200
20
120
80
180
10
170
220
300
50
2869014-2
400513

ECM: 496381 - 20110701
Group number: 2869014-0100
Assembly Drawing: 2869014-2_1_AA

This list covers pages from 1-242 to 1-245

Pos	Part No	UN	Qty	Description	Page No
TBA 0100B, TBA 0125S, TBA 0080S (See drawing on page: 1-242)					
010	2916876-0000		1	CARRIER	
030	2818125-0000		1	OPERATING ROD	
080	2916875-0000		1	BLOCK	
160	312105-0362		2	SCREW, M6S ISO 4017 M6X8 A4 80	
180	312115-0325		2	SCREW ISO4762 M5X10 A4 80	
270	315237-0106		2	WASHER,PL.RND.AL.6/10,H=1	
TBA 0160S, TBA 0200M, TBA 0200B, TBA 0200S, TBA 0250S, TBA 0284B, TBA 0250B, TBA 0300S, TBA 0330S (See drawing on page: 1-242)					
010	2869203-0000		1	CARRIER	
030	2818125-0000		1	OPERATING ROD	
080	2869199-0000		1	BLOCK	
160	312105-0362		2	SCREW, M6S ISO 4017 M6X8 A4 80	
180	312115-0327		2	SCREW ISO4762 M5X12 A4 80	
270	315237-0106		2	WASHER,PL.RND.AL.6/10,H=1	
TBA 0200E (See drawing on page: 1-244)					
010	3013514-0000		1	CARRIER	
030	2818125-0000		1	OPERATING ROD	
080	2869199-0000		1	BLOCK	
120	311103-0267		1	PARALLEL PIN ISO 2338 4M6X10 A1	
160	312105-0362		2	SCREW, M6S ISO 4017 M6X8 A4 80	
180	312115-0327		2	SCREW ISO4762 M5X12 A4 80	
270	315237-0106		2	WASHER,PL.RND.AL.6/10,H=1	
TBA 0200SQ, TBA 0375S, TPA 0330SQ, TPA 0250SQ, TPA 0200SQ, TBA 0250SQ (See drawing on page: 1-244)					
010	2962053-0000		1	CARRIER	
030	2818125-0000		1	OPERATING ROD	
080	2964567-0000		1	BLOCK	
120	311103-0267		1	PARALLEL PIN ISO 2338 4M6X10 A1	
160	312105-0323		2	SCREW, M6S ISO 4017 M5X8 A4 80	
180	312115-0327		2	SCREW ISO4762 M5X12 A4 80	
270	315237-0108		2	WASHER,PL.RND.AL.5,2/8,H=0,5	
TPA 0125SQ (See drawing on page: 1-242)					
010	2869203-0000		1	CARRIER	
030	2906017-0000		1	OPERATING ROD	
080	2869199-0000		1	BLOCK	
160	312105-0362		2	SCREW, M6S ISO 4017 M6X8 A4 80	
180	312115-0327		2	SCREW ISO4762 M5X12 A4 80	
270	315237-0106		2	WASHER,PL.RND.AL.6/10,H=1	
Common Parts					
020	256626-0000		1	EAR	
040	2818126-0000		1	BEARING PLATE	
050	257362-0000		2	LACE	
060	255801-0000		1	RETAINING RING	
070	255742-0000		1	COMPRESSION SPRING	
130	311111-0207		1	SPRING PIN ISO 8752 3X14-ST	
150	312115-0366		2	SCREW ISO4762 M6X12 A4 80	
170	312105-0376		4	SCREW, M6S ISO 4014 M6X35 A4 80	
200	312605-0318		1	HEXAGON NUT, M6M M8 A280	
220	315115-0153		4	WASHER PLAIN, TBRB 6,4/12 H=3	
250	315202-0265		1	O-RING 12,3X2,4 MM	
260	90091-0091		1	ROD SEAL 10X14X1,7 MM	
300	90134-0058		1	CONNECTION	

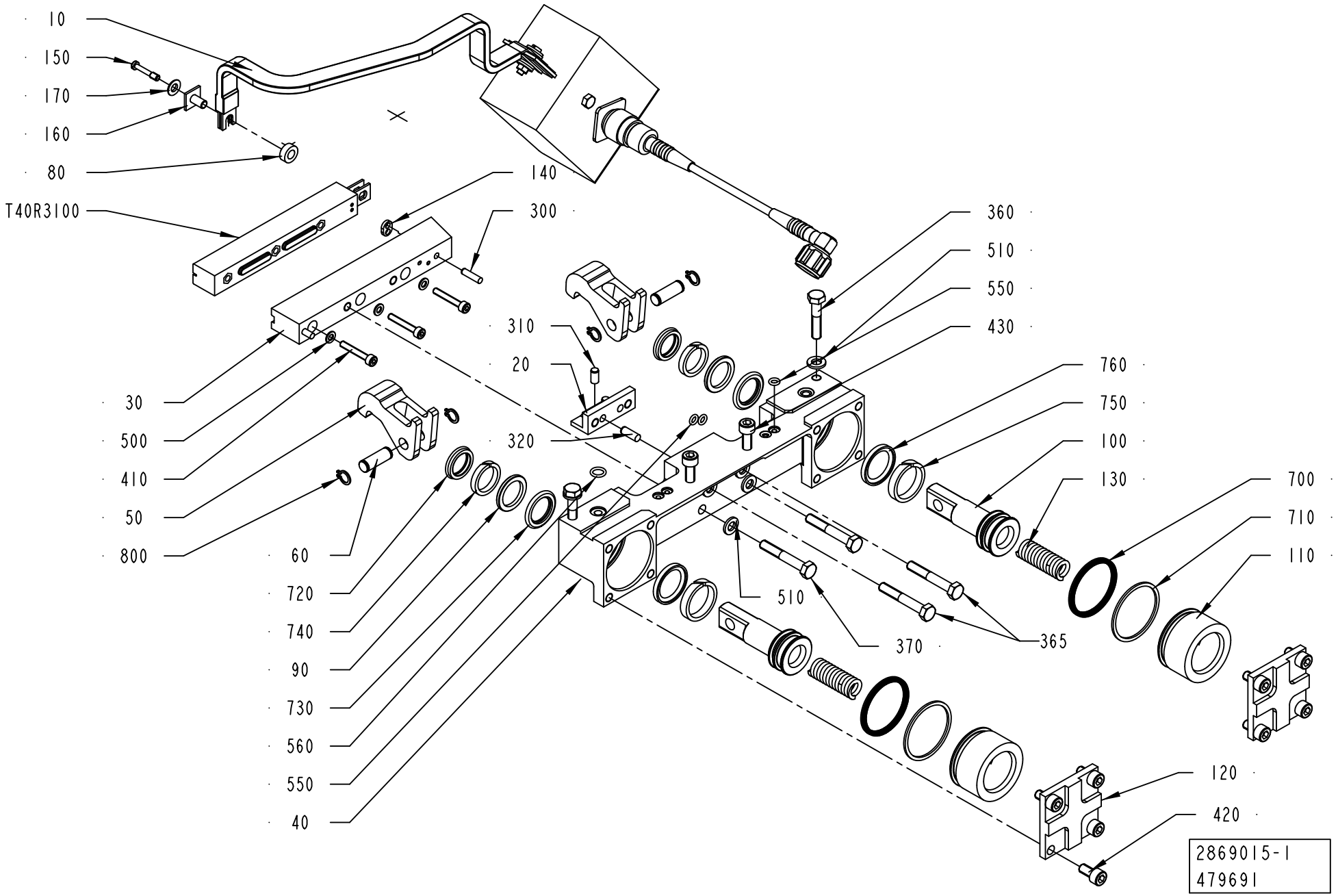
10
150
170
160
80
T40R3100
140
300
360
510
550
430
310
20
760
750
100
130
700
710
110
30
500
410
50
800
320
60
720
740
90
730
560
550
40
510
370
365
120
420
2869015-1
479691

ECM: 485144 - 20110401
Group number: 2869015-0100
Assembly Drawing: 2869015-1_1_AE

This list covers pages from 1-246 to 1-253

Pos	Part No	UN	Qty	Description	Page No
TBA 0080S (See drawing on page: 1-246)					
020	2916880-0000		1	SUPPORT	
030	2950886-0000		1	RAIL	
040	2835328-0000		1	BEARING HOUSING	
100	2934403-0000		2	PISTON	
110	2934402-0000		2	SLEEVE	
140	491681-0000		1	GASKET	
310	311103-0305		2	PARALLEL PIN ISO 2338 5M6X10 A1	
410	312115-0297		3	SCREW ISO4762 M4X25 A4 80	
430	312105-0372		2	SCREW, M6S ISO 4017 M6X25 A4 80	
500	315105-0136		3	WASHER PLAIN, 4,3X9X0,8 A4 BRB	
750	90091-0394		2	WEAR RING 20X25X5,6 MM	
760	90091-0393		2	PISTON SEAL GLYD RING T 17,5X25X3,2 MM	
T40R3200	1566981-0000		1	INDUCTOR	
TBA 0100B, TBA 0125S (See drawing on page: 1-246)					
020	2916880-0000		1	SUPPORT	
030	2915798-0000		1	RAIL	
040	2835328-0000		1	BEARING HOUSING	
100	2934403-0000		2	PISTON	
110	2934402-0000		2	SLEEVE	
140	315202-0102		2	O-RING 4,1X1,6 MM	
310	311103-0305		2	PARALLEL PIN ISO 2338 5M6X10 A1	
410	312115-0232		3	SCREW ISO4762 M3X25 A4 80	
430	312105-0372		2	SCREW, M6S ISO 4017 M6X25 A4 80	
500	315106-0124		3	WASHER PLAIN, M3 ISO7089-3-200 HV A4	
750	90091-0394		2	WEAR RING 20X25X5,6 MM	
760	90091-0393		2	PISTON SEAL GLYD RING T 17,5X25X3,2 MM	
T40R3100	2917498-0000		1	INDUCTOR	
TBA 0160S, TBA 0200S (See drawing on page: 1-246)					
020	3022266-0000		1	SUPPORT	
030	2835329-0000		1	RAIL	
040	2835328-0000		1	BEARING HOUSING	
100	929372-0000		2	PISTON	
110	929371-0000		2	SLEEVE	
140	491681-0000		1	GASKET	
365	312105-0378		2	SCREW, M6S ISO 4014 M6X40 A4 80	
410	312115-0297		3	SCREW ISO4762 M4X25 A4 80	
430	312115-0372		2	SCREW ISO4762 M6X25 A4 80	
500	315105-0136		3	WASHER PLAIN, 4,3X9X0,8 A4 BRB	
750	90091-0391		2	SEAL SLYDRING	
760	90091-0398		2	PISTON SEAL GLIDE RING T 20,5X28X3,2 MM	
T40R3100	1110532-0000		1	INDUCTOR	
TBA 0200B, TBA 0250B, TBA 0330S (See drawing on page: 1-246)					
020	2869202-0000		1	SUPPORT	
030	2835329-0000		1	RAIL	
040	2835328-0000		1	BEARING HOUSING	
100	929372-0000		2	PISTON	
110	929371-0000		2	SLEEVE	
140	491681-0000		1	GASKET	
310	311103-0305		2	PARALLEL PIN ISO 2338 5M6X10 A1	
410	312115-0297		3	SCREW ISO4762 M4X25 A4 80	
430	312115-0372		2	SCREW ISO4762 M6X25 A4 80	
500	315105-0136		3	WASHER PLAIN, 4,3X9X0,8 A4 BRB	
750	90091-0391		2	SEAL SLYDRING	
760	90091-0398		2	PISTON SEAL GLIDE RING T 20,5X28X3,2 MM	
T40R3100	1110534-0000		1	INDUCTOR	
TBA 0200E (See drawing on page: 1-252)					
020	3012782-0000		1	SUPPORT	
030	3092451-0000		1	RAIL	
040	3002880-0000		1	BEARING HOUSING	
100	929372-0000		2	PISTON	
110	929371-0000		2	SLEEVE	
140	491681-0000		1	GASKET	
180	3106750-0000		1	VOLUME BULGE	
190	3092653-0000		1	WEDGE	
195	3106754-0000		1	COVER	
310	311103-0305		2	PARALLEL PIN ISO 2338 5M6X10 A1	
365	312105-0376		2	SCREW, M6S ISO 4014 M6X35 A4 80	
430	312115-0372		2	SCREW ISO4762 M6X25 A4 80	
570	312155-0220		4	SCREW DIN 7991 MF6S M3X6 A4 70	
580	312115-0293		2	SCREW ISO4762 M4X16 A4 80	
750	90091-0391		2	SEAL SLYDRING	
760	90091-0398		2	PISTON SEAL GLIDE RING T 20,5X28X3,2 MM	
T40R3100	3089354-0000		1	INDUCTOR	
TBA 0200M, TBA 0250S (See drawing on page: 1-246)					
020	2869202-0000		1	SUPPORT	
030	2947183-0000		1	RAIL	
040	2835328-0000		1	BEARING HOUSING	
100	929372-0000		2	PISTON	
110	929371-0000		2	SLEEVE	
140	491681-0000		1	GASKET	
310	311103-0305		2	PARALLEL PIN ISO 2338 5M6X10 A1	
410	312115-0297		3	SCREW ISO4762 M4X25 A4 80	
430	312115-0372		2	SCREW ISO4762 M6X25 A4 80	

Machine Type | Group Description | Used-In | Group Number | Page No

PRESSURE JAW

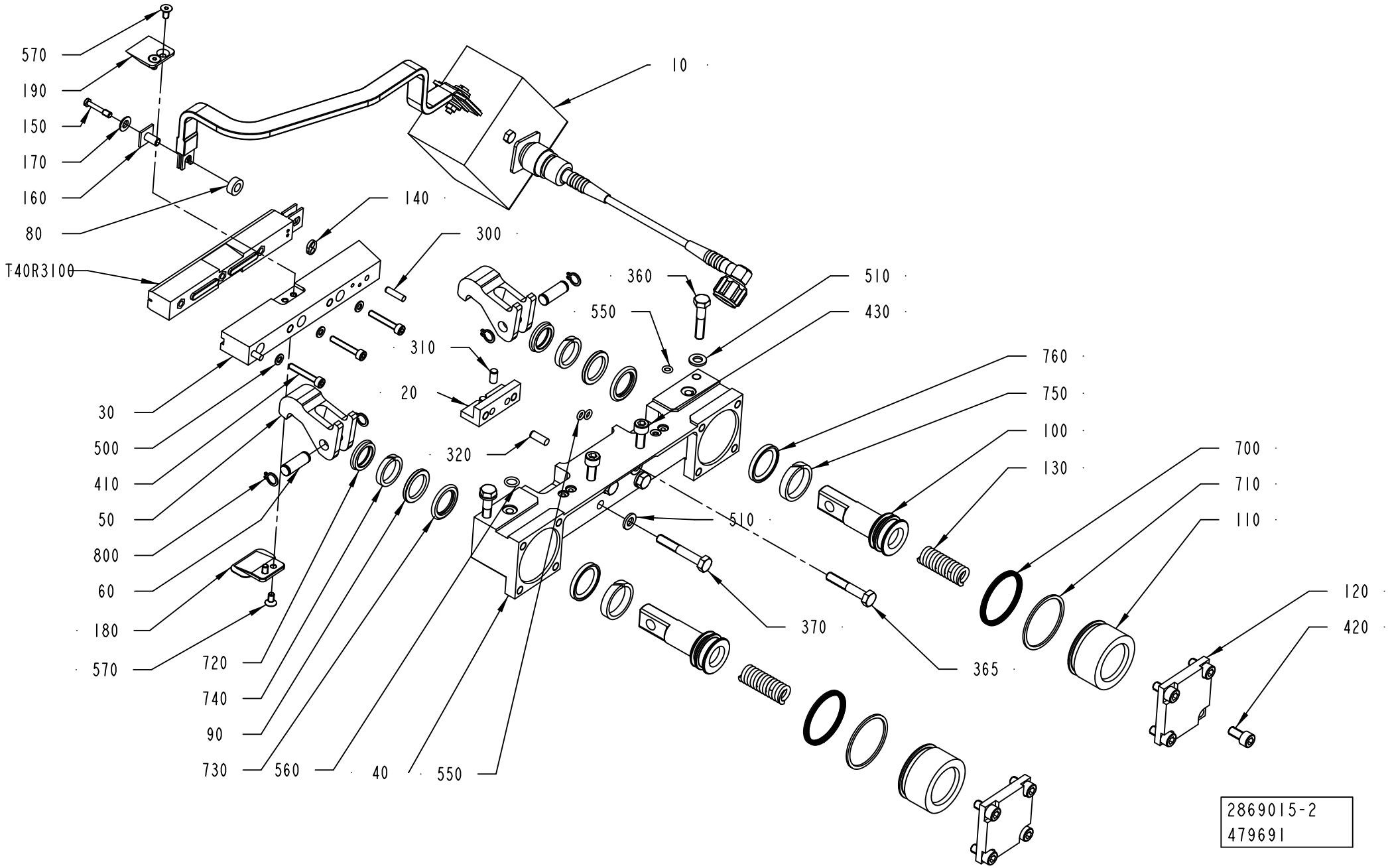

Pos	Part No	UN	Qty	Description	Page No
TBA 0200M, TBA 0250S (Cont'd) (See drawing on page: 1-246)					
500	315105-0136		3	WASHER PLAIN, 4,3X9X0,8 A4 BRB	
750	90091-0391		2	SEAL SLYDRING	
760	90091-0398		2	PISTON SEAL GLIDE RING T 20,5X28X3,2 MM	
T40R3100	1110535-0000		1	INDUCTOR	
TBA 0200SQ, TBA 0250SQ (See drawing on page: 1-248)					
020	2964566-0000		1	SUPPORT	
030	2976821-0000		1	RAIL	
040	3002880-0000		1	BEARING HOUSING	
100	929372-0000		2	PISTON	
110	929371-0000		2	SLEEVE	
140	491681-0000		1	GASKET	
180	3006049-0000		1	VOLUME BULGE	
190	1539593-0000		1	COVER	
310	311103-0305		2	PARALLEL PIN ISO 2338 5M6X10 A1	
365	312105-0376		2	SCREW, M6S ISO 4014 M6X35 A4 80	
410	312115-0297		3	SCREW ISO4762 M4X25 A4 80	
430	312115-0372		2	SCREW ISO4762 M6X25 A4 80	
500	315105-0136		3	WASHER PLAIN, 4,3X9X0,8 A4 BRB	
570	312155-0287		4	SCREW DIN 7991 MF6S M4X8 A4 70	
750	90091-0391		2	SEAL SLYDRING	
760	90091-0398		2	PISTON SEAL GLIDE RING T 20,5X28X3,2 MM	
T40R3200	3044527-0000		1	INDUCTOR	
TBA 0284B, TBA 0300S (See drawing on page: 1-246)					
020	2964566-0000		1	SUPPORT	
030	2947183-0000		1	RAIL	
040	2835328-0000		1	BEARING HOUSING	
100	929372-0000		2	PISTON	
110	929371-0000		2	SLEEVE	
140	491681-0000		1	GASKET	
310	311103-0305		2	PARALLEL PIN ISO 2338 5M6X10 A1	
365	312105-0378		2	SCREW, M6S ISO 4014 M6X40 A4 80	
410	312115-0297		3	SCREW ISO4762 M4X25 A4 80	
430	312115-0372		2	SCREW ISO4762 M6X25 A4 80	
500	315105-0136		3	WASHER PLAIN, 4,3X9X0,8 A4 BRB	
570	312155-0287		4	SCREW DIN 7991 MF6S M4X8 A4 70	
750	90091-0391		2	SEAL SLYDRING	
760	90091-0398		2	PISTON SEAL GLIDE RING T 20,5X28X3,2 MM	
T40R3100	1110534-0000		1	INDUCTOR	
TBA 0375S (See drawing on page: 1-250)					
020	3067238-0000		1	SUPPORT	
030	2835329-0000		1	RAIL	
040	3002880-0000		1	BEARING HOUSING	
100	929372-0000		2	PISTON	
110	929371-0000		2	SLEEVE	
140	491681-0000		1	GASKET	
365	312105-0376		2	SCREW, M6S ISO 4014 M6X35 A4 80	
430	312115-0372		2	SCREW ISO4762 M6X25 A4 80	
750	90091-0391		2	SEAL SLYDRING	
760	90091-0398		2	PISTON SEAL GLIDE RING T 20,5X28X3,2 MM	
T40R3100	3089348-0000		1	INDUCTOR	
TPA 0125SQ (See drawing on page: 1-246)					
020	2869202-0000		1	SUPPORT	
030	2835329-0000		1	RAIL	
040	2835328-0000		1	BEARING HOUSING	
100	2934403-0000		2	PISTON	
110	2934402-0000		2	SLEEVE	
140	491681-0000		1	GASKET	
310	311103-0305		2	PARALLEL PIN ISO 2338 5M6X10 A1	
410	312115-0297		3	SCREW ISO4762 M4X25 A4 80	
430	312115-0372		2	SCREW ISO4762 M6X25 A4 80	
500	315105-0136		3	WASHER PLAIN, 4,3X9X0,8 A4 BRB	
750	90091-0394		2	WEAR RING 20X25X5,6 MM	
760	90091-0393		2	PISTON SEAL GLYD RING T 17,5X25X3,2 MM	
T40R3100	2975930-0000		1	INDUCTOR	
TPA 0250SQ, TPA 0200SQ (See drawing on page: 1-246)					
020	2964566-0000		1	SUPPORT	
030	2835329-0000		1	RAIL	
040	3002880-0000		1	BEARING HOUSING	
100	929372-0000		2	PISTON	
110	929371-0000		2	SLEEVE	
140	491681-0000		1	GASKET	
310	311103-0305		2	PARALLEL PIN ISO 2338 5M6X10 A1	
365	312105-0376		2	SCREW, M6S ISO 4014 M6X35 A4 80	
410	312115-0297		3	SCREW ISO4762 M4X25 A4 80	
430	312115-0372		2	SCREW ISO4762 M6X25 A4 80	
500	315105-0136		3	WASHER PLAIN, 4,3X9X0,8 A4 BRB	
750	90091-0391		2	SEAL SLYDRING	
760	90091-0398		2	PISTON SEAL GLIDE RING T 20,5X28X3,2 MM	
T40R3100	1110534-0000		1	INDUCTOR	
TPA 0330SQ (See drawing on page: 1-246)					
020	2964566-0000		1	SUPPORT	
030	3130390-0000		1	RAIL	
040	3002880-0000		1	BEARING HOUSING	

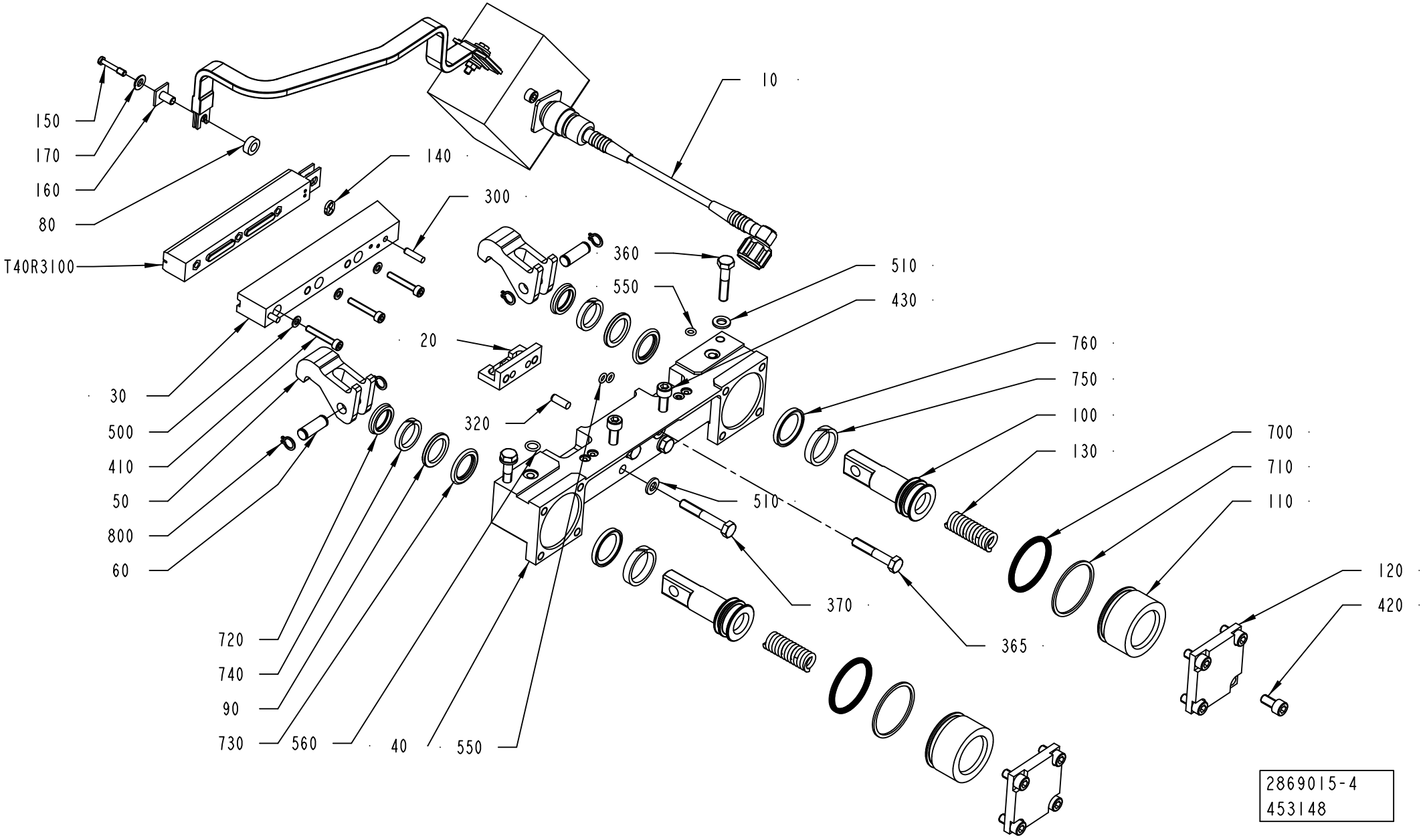
10
150
170
160
80
140
300
T40R3100
360
550
510
430
20
760
750
100
130
30
500
410
50
800
60
320
510
700
710
110
120
420
370
365
720
740
90
730
560
40
550
2869015-4
453148

Pos	Part No	UN	Qty	Description	Page No
TPA 0330SQ (Cont'd) (See drawing on page: 1-246)					
100	929372-0000		2	PISTON	
110	929371-0000		2	SLEEVE	
140	491681-0000		1	GASKET	
310	311103-0305		2	PARALLEL PIN ISO 2338 5M6X10 A1	
365	312105-0376		2	SCREW, M6S ISO 4014 M6X35 A4 80	
410	312115-0297		3	SCREW ISO4762 M4X25 A4 80	
430	312115-0372		2	SCREW ISO4762 M6X25 A4 80	
500	315105-0136		3	WASHER PLAIN, 4,3X9X0,8 A4 BRB	
570	312155-0287		4	SCREW DIN 7991 MF6S M4X8 A4 70	
750	90091-0391		2	SEAL SLYDRING	
760	90091-0398		2	PISTON SEAL GLIDE RING T 20,5X28X3,2 MM	
T40R3100	1110556-0000		1	INDUCTOR	
Common Parts					
010	2837086-0100		1	TRANSFORMER	**1-255**
050	2835327-0000		2	CATCH	
060	2835326-0000		2	SHAFT	
080	32644-0000		1	WASHER	
090	1038240-0000		2	SPACER	
120	2979699-0000		2	LID	
130	590369-0000		2	COMPRESSION SPRING	
150	271848-0000		1	SCREW	
160	271846-0000		1	INSULATION NUT	
170	256882-0000		1	WASHER	
300	311103-0270		2	PARALLEL PIN ISO 2338 4M6X16 A1	
320	311103-0307		2	PARALLEL PIN ISO 2338 5M6X14 A1	
360	312105-0374		2	SCREW, M6S ISO 4014 M6X30 A4 80	
370	312105-0378		2	SCREW, M6S ISO 4014 M6X40 A4 80	
420	312115-0366		8	SCREW ISO4762 M6X12 A4 80	
510	315105-0153		6	WASHER PLAIN, 6,4X12X1,5 A4 BRB	
550	315202-0102		4	O-RING 4,1X1,6 MM	
560	315202-0105		2	O-RING 7,1X1,6 MM	
700	90091-0359		2	X-SEAL 36,17X2,62 MM	
710	90091-0360		2	BACK-UP RING 37,5X1,4 MM	
720	90091-0362		2	SCRAPER, EXCLUDER 18X22,8X3,7 MM	
730	90091-0364		2	ROD SEAL, STEPSEAL 18X25,3X3,2 MM	
740	90091-0366		2	WEAR RING 18X23X3,9 MM	
800	90141-0015		4	RETAINING RING FOR SHAFT DIN 471 8 SS	

Pos	Part No	UN	Qty	Description	Page No

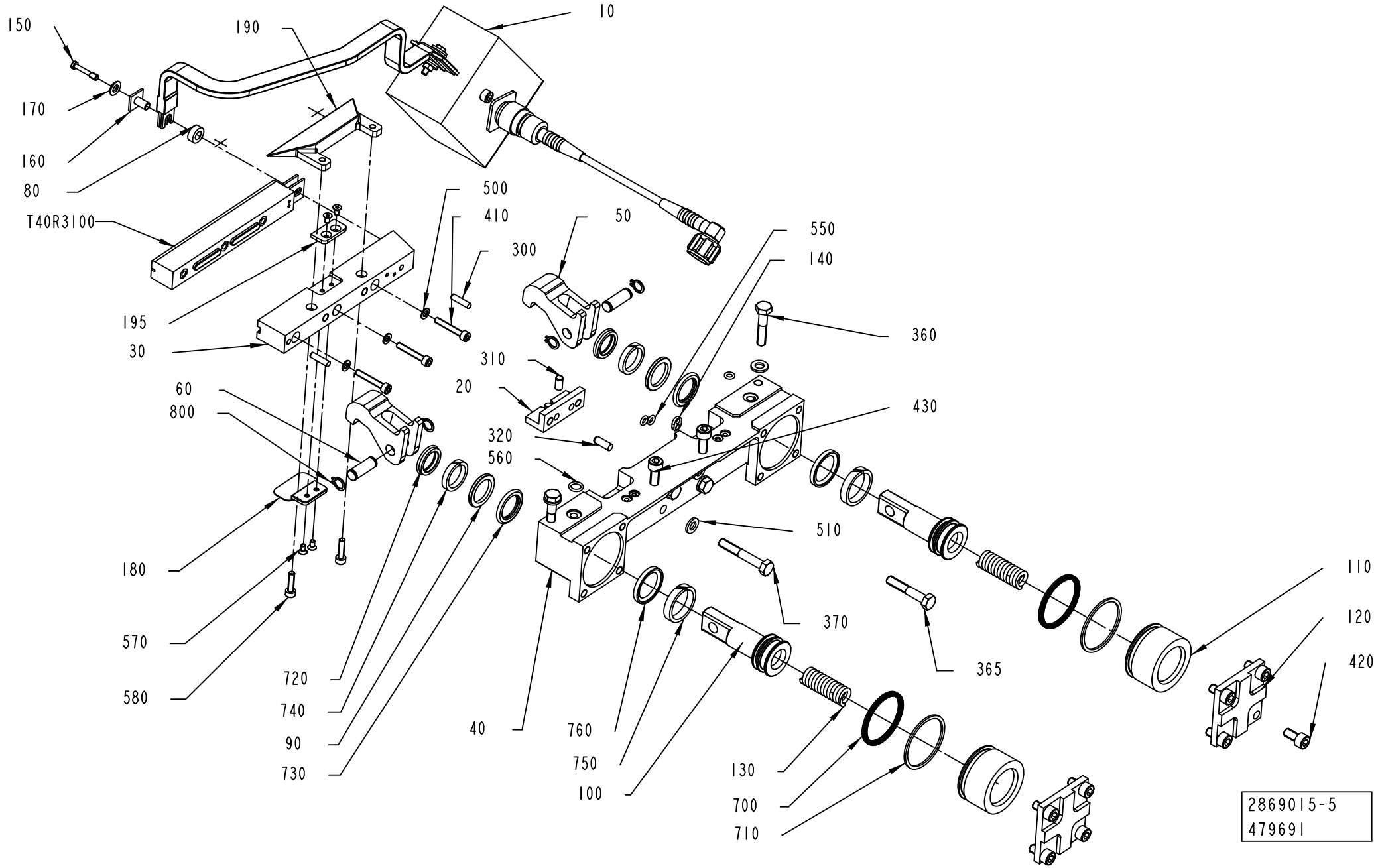
150
190
10
170
160
80
T40R3100
500
410
50
300
550
140
360
195
30
310
20
60
800
430
320
560
510
180
570
580
720
740
90
730
40
760
750
100
130
700
710
370
365
110
120
420
2869015-5
479691

ECM: 485144 - 20110401
Group number: 2869015-0100
Assembly Drawing: 2869015-5_1_AB

This list covers pages from 1-246 to 1-253

Pos	Part No	UN	Qty	Description	Page No
SEE PREVIOUS LISTS PAGES: 1-247, 1-249, 1-251.					

Pos	Part No	UN	Qty	Description	Page No

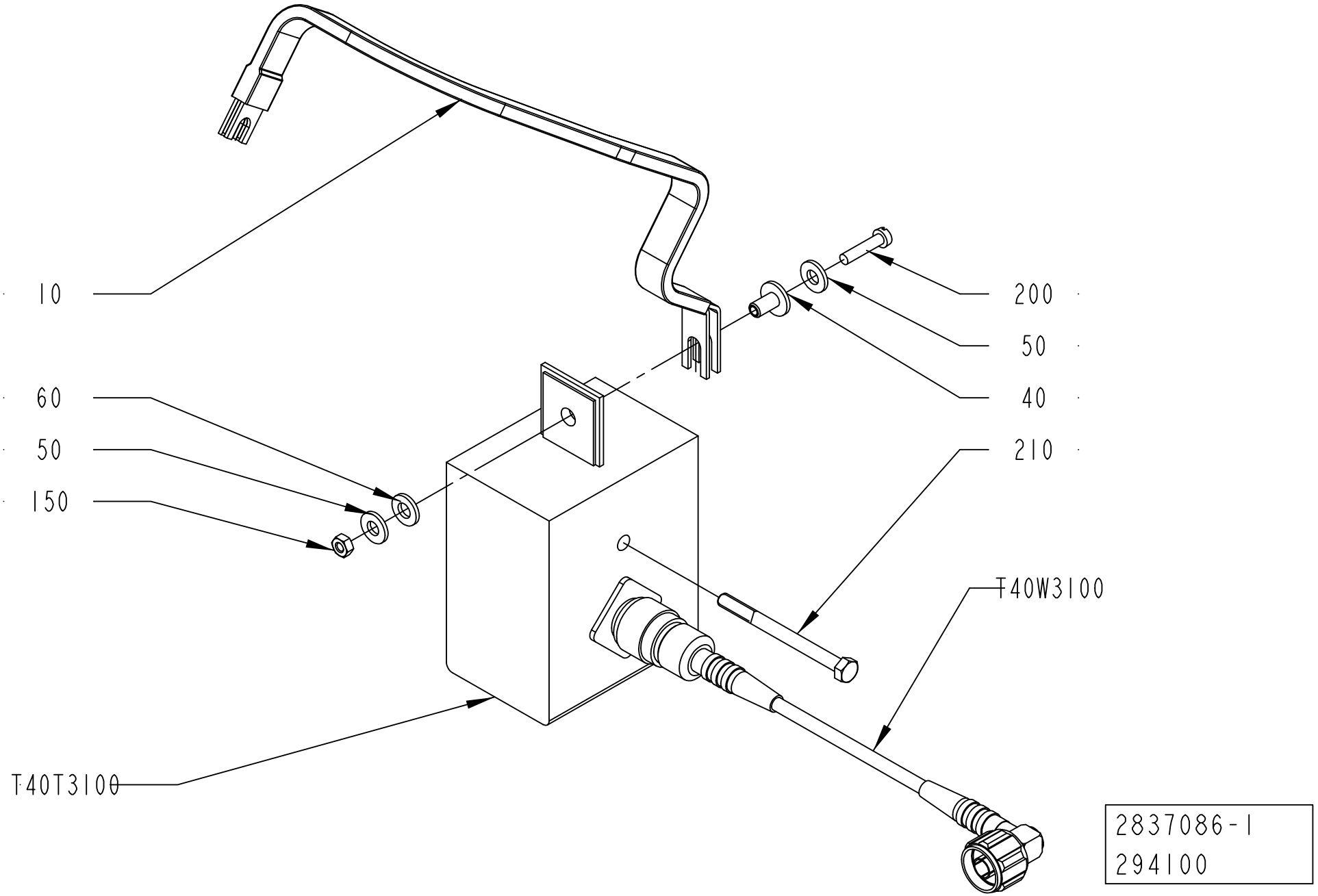
10
60
50
150
200
50
40
210
T40W3100
T40T3100
2837086-1
294100

ECM: 510088 - 20111001
Group number: 2837086-0100
Assembly Drawing: 2837086-1_1_AA

Pos	Part No	UN	Qty	Description	Page No
TBA 0080S					
010	2916878-0000		1	BUSBAR	
T40T3200	67379-0262		1	TRANSFORMER	
TBA 0100B, TBA 0125S					
010	2837076-0000		1	BUSBAR	
T40T3200	67379-0107		1	TRANSFORMER	
TBA 0160S, TBA 0200S					
010	2837076-0000		1	BUSBAR	
T40T3200	67379-0204		1	TRANSFORMER	
TBA 0200B, TBA 0284B, TBA 0250B, TBA 0300S, TBA 0330S					
010	2837076-0000		1	BUSBAR	
T40T3200	67379-0264		1	TRANSFORMER	
TBA 0200E					
010	2837076-0000		1	BUSBAR	
T40T3200	67379-0206		1	TRANSFORMER	
TBA 0200M, TBA 0250S					
010	2837076-0000		1	BUSBAR	
T40T3200	2837503-0105		1	TRANSFORMER	
TBA 0200SQ, TBA 0250SQ					
010	2837076-0000		1	BUSBAR	
T40T3200	67379-0269		1	TRANSFORMER	
TBA 0375S, TPA 0330SQ					
010	2837076-0000		1	BUSBAR	
T40T3200	67379-0115		1	TRANSFORMER	
TPA 0125SQ					
010	2837076-0000		1	BUSBAR	
T40T3200	67379-0248		1	TRANSFORMER	
TPA 0250SQ, TPA 0200SQ					
010	2837076-0000		1	BUSBAR	
T40T3200	67379-0254		1	TRANSFORMER	
Common Parts					
040	32544-0000		1	INSULATION NUT	
050	28509-0000		2	WASHER	
060	32079-0000		1	WASHER	
150	312602-0312		1	HEXAGON NUT, EN 24032 M6M M4 NIPLBR	
200	312105-0295		1	SCREW, M6S ISO 4017 M4X20 A4 70	
210	90458-0058		1	SCREW M5X60 A280	
T40W3100	2562736-0002		1	COAXIAL CABLE	

Pos	Part No	UN	Qty	Description	Page No

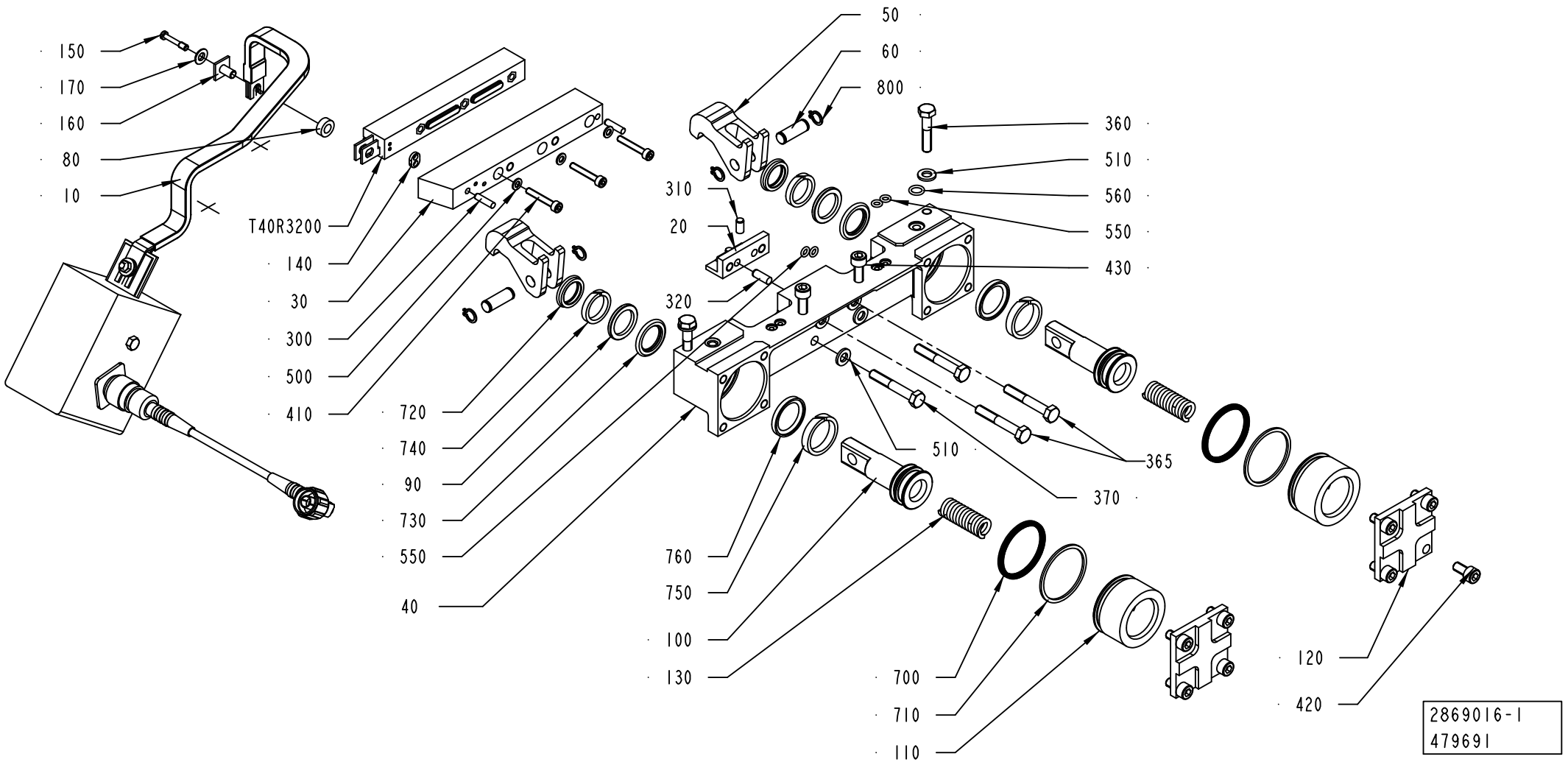
150
170
160
80
10
T40R3200
140
30
300
500
410
720
740
90
730
550
40
760
750
100
130
700
710
110
50
60
800
310
20
320
360
510
560
550
430
510
365
370
120
420
2869016-1
479691

ECM: 485145 - 20110401
Group number: 2869016-0100
Assembly Drawing: 2869016-1_1_AE

This list covers pages from 1-256 to 1-263

Pos	Part No	UN	Qty	Description	Page No
TBA 0080S (See drawing on page: 1-256)					
020	2916880-0000		1	SUPPORT	
030	2950887-0000		1	RAIL	
040	2835328-0000		1	BEARING HOUSING	
100	2934403-0000		2	PISTON	
110	2934402-0000		2	SLEEVE	
140	491681-0000		1	GASKET	
310	311103-0305		2	PARALLEL PIN ISO 2338 5M6X10 A1	
365	312105-0378		2	SCREW, M6S ISO 4014 M6X40 A4 80	
410	312115-0297		3	SCREW ISO4762 M4X25 A4 80	
430	312105-0372		2	SCREW, M6S ISO 4017 M6X25 A4 80	
500	315105-0136		3	WASHER PLAIN, 4,3X9X0,8 A4 BRB	
750	90091-0394		2	WEAR RING 20X25X5,6 MM	
760	90091-0393		2	PISTON SEAL GLYD RING T 17,5X25X3,2 MM	
T40R3200	1566981-0000		1	INDUCTOR	
TBA 0100B, TBA 0125S (See drawing on page: 1-256)					
020	2916880-0000		1	SUPPORT	
030	2944475-0000		1	RAIL	
040	2835328-0000		1	BEARING HOUSING	
100	2934403-0000		2	PISTON	
110	2934402-0000		2	SLEEVE	
140	315202-0102		2	O-RING 4,1X1,6 MM	
310	311103-0305		2	PARALLEL PIN ISO 2338 5M6X10 A1	
365	312105-0378		2	SCREW, M6S ISO 4014 M6X40 A4 80	
410	312115-0232		3	SCREW ISO4762 M3X25 A4 80	
430	312105-0372		2	SCREW, M6S ISO 4017 M6X25 A4 80	
500	315106-0124		3	WASHER PLAIN, M3 ISO7089-3-200 HV A4	
750	90091-0394		2	WEAR RING 20X25X5,6 MM	
760	90091-0393		2	PISTON SEAL GLYD RING T 17,5X25X3,2 MM	
T40R3200	2917498-0000		1	INDUCTOR	
TBA 0160S, TBA 0200S (See drawing on page: 1-256)					
020	3022266-0000		1	SUPPORT	
030	2835329-0000		1	RAIL	
040	2835328-0000		1	BEARING HOUSING	
100	929372-0000		2	PISTON	
110	929371-0000		2	SLEEVE	
140	491681-0000		1	GASKET	
365	312105-0378		2	SCREW, M6S ISO 4014 M6X40 A4 80	
410	312115-0297		3	SCREW ISO4762 M4X25 A4 80	
430	312115-0372		2	SCREW ISO4762 M6X25 A4 80	
500	315105-0136		3	WASHER PLAIN, 4,3X9X0,8 A4 BRB	
750	90091-0391		2	SEAL SLYDRING	
760	90091-0398		2	PISTON SEAL GLIDE RING T 20,5X28X3,2 MM	
T40R3200	1110532-0000		1	INDUCTOR	
TBA 0200B, TBA 0250B, TBA 0330S (See drawing on page: 1-256)					
020	2869202-0000		1	SUPPORT	
030	2835329-0000		1	RAIL	
040	2835328-0000		1	BEARING HOUSING	
100	929372-0000		2	PISTON	
110	929371-0000		2	SLEEVE	
140	491681-0000		1	GASKET	
310	311103-0305		2	PARALLEL PIN ISO 2338 5M6X10 A1	
365	312105-0378		2	SCREW, M6S ISO 4014 M6X40 A4 80	
410	312115-0297		3	SCREW ISO4762 M4X25 A4 80	
430	312115-0372		2	SCREW ISO4762 M6X25 A4 80	
500	315105-0136		3	WASHER PLAIN, 4,3X9X0,8 A4 BRB	
750	90091-0391		2	SEAL SLYDRING	
760	90091-0398		2	PISTON SEAL GLIDE RING T 20,5X28X3,2 MM	
T40R3200	1110534-0000		1	INDUCTOR	
TBA 0200E (See drawing on page: 1-262)					
020	3012782-0000		1	SUPPORT	
030	3092451-0000		1	RAIL	
040	3002880-0000		1	BEARING HOUSING	
100	929372-0000		2	PISTON	
110	929371-0000		2	SLEEVE	
140	491681-0000		1	GASKET	
180	3106750-0000		1	VOLUME BULGE	
190	3092653-0000		1	WEDGE	
195	3106754-0000		1	COVER	
310	311103-0305		2	PARALLEL PIN ISO 2338 5M6X10 A1	
365	312105-0376		2	SCREW, M6S ISO 4014 M6X35 A4 80	
430	312115-0372		2	SCREW ISO4762 M6X25 A4 80	
435	312105-0374		2	SCREW, M6S ISO 4014 M6X30 A4 80	
570	312155-0220		4	SCREW DIN 7991 MF6S M3X6 A4 70	
580	312115-0293		2	SCREW ISO4762 M4X16 A4 80	
750	90091-0391		2	SEAL SLYDRING	
760	90091-0398		2	PISTON SEAL GLIDE RING T 20,5X28X3,2 MM	
T40R3200	3089354-0000		1	INDUCTOR	
TBA 0200M, TBA 0250S (See drawing on page: 1-256)					
020	2869202-0000		1	SUPPORT	
030	2947183-0000		1	RAIL	
040	2835328-0000		1	BEARING HOUSING	
100	929372-0000		2	PISTON	
110	929371-0000		2	SLEEVE	

Machine Type | Group Description | Used-In | Group Number | Page No

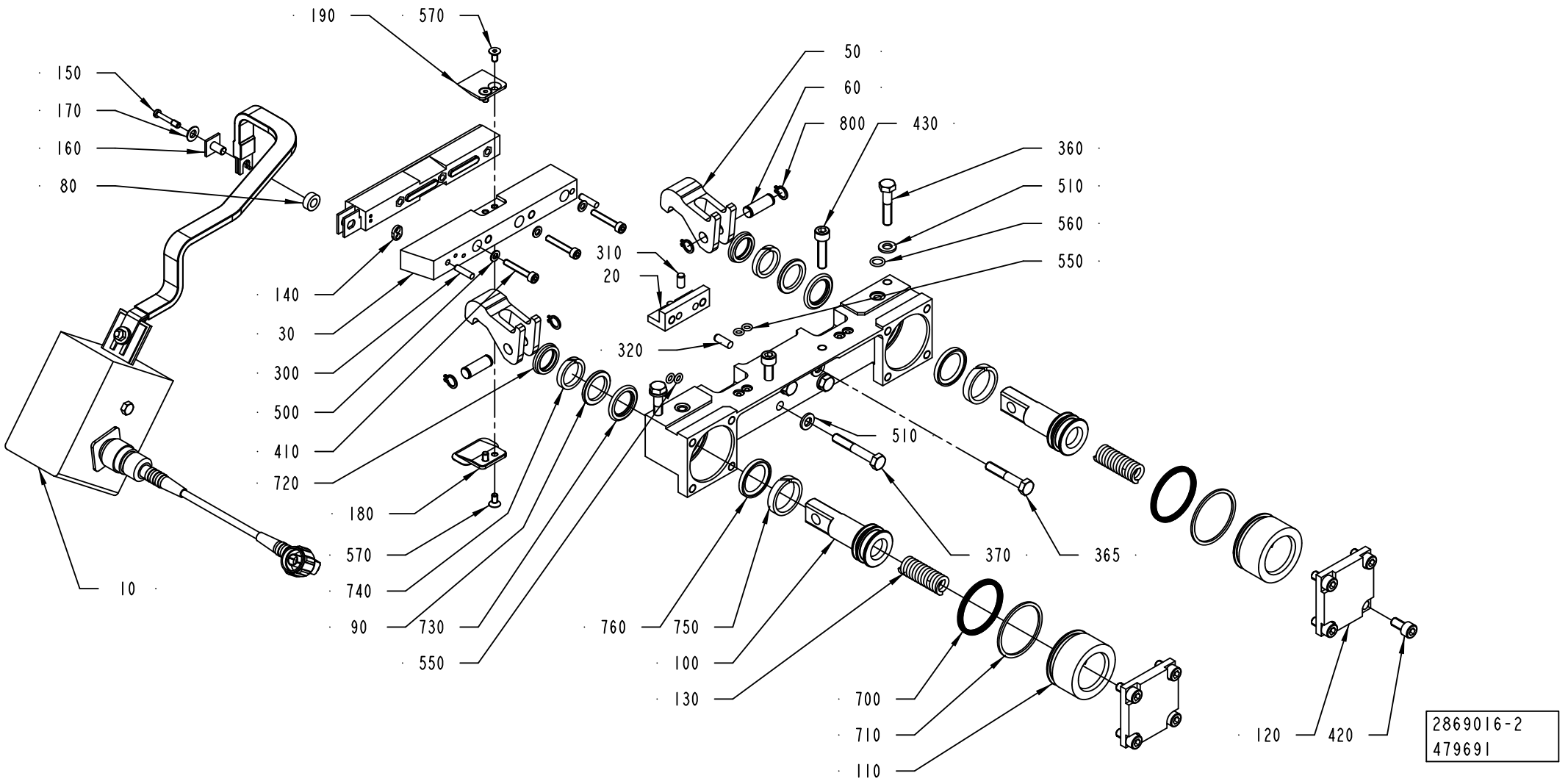
190
570
150
170
160
80
50
60
800
430
360
510
560
550
310
20
140
30
300
500
410
720
320
180
570
740
90
730
550
760
750
100
130
700
710
110
510
370
365
10
120
420
2869016-2
479691

Pos	Part No	UN	Qty	Description	Page No
TBA 0200M, TBA 0250S (Cont'd) (See drawing on page: 1-256)					
140	491681-0000		1	GASKET	
310	311103-0305		2	PARALLEL PIN ISO 2338 5M6X10 A1	
365	312105-0378		2	SCREW, M6S ISO 4014 M6X40 A4 80	
410	312115-0297		3	SCREW ISO4762 M4X25 A4 80	
430	312115-0372		2	SCREW ISO4762 M6X25 A4 80	
500	315105-0136		3	WASHER PLAIN, 4,3X9X0,8 A4 BRB	
750	90091-0391		2	SEAL SLYDRING	
760	90091-0398		2	PISTON SEAL GLIDE RING T 20,5X28X3,2 MM	
T40R3200	1110535-0000		1	INDUCTOR	
TBA 0200SQ, TBA 0250SQ (See drawing on page: 1-258)					
020	2964566-0000		1	SUPPORT	
030	2976821-0000		1	RAIL	
040	3002880-0000		1	BEARING HOUSING	
100	929372-0000		2	PISTON	
110	929371-0000		2	SLEEVE	
140	491681-0000		1	GASKET	
180	3006049-0000		1	VOLUME BULGE	
190	1539593-0000		1	COVER	
310	311103-0305		2	PARALLEL PIN ISO 2338 5M6X10 A1	
365	312105-0376		2	SCREW, M6S ISO 4014 M6X35 A4 80	
410	312115-0297		3	SCREW ISO4762 M4X25 A4 80	
430	312115-0372		2	SCREW ISO4762 M6X25 A4 80	
500	315105-0136		3	WASHER PLAIN, 4,3X9X0,8 A4 BRB	
570	312155-0287		4	SCREW DIN 7991 MF6S M4X8 A4 70	
750	90091-0391		2	SEAL SLYDRING	
760	90091-0398		2	PISTON SEAL GLIDE RING T 20,5X28X3,2 MM	
T40R3200	3044527-0000		1	INDUCTOR	
TBA 0284B, TBA 0300S (See drawing on page: 1-256)					
020	2964566-0000		1	SUPPORT	
030	2947183-0000		1	RAIL	
040	2835328-0000		1	BEARING HOUSING	
100	929372-0000		2	PISTON	
110	929371-0000		2	SLEEVE	
140	491681-0000		1	GASKET	
310	311103-0305		2	PARALLEL PIN ISO 2338 5M6X10 A1	
365	312105-0378		2	SCREW, M6S ISO 4014 M6X40 A4 80	
410	312115-0297		3	SCREW ISO4762 M4X25 A4 80	
430	312115-0372		2	SCREW ISO4762 M6X25 A4 80	
500	315105-0136		3	WASHER PLAIN, 4,3X9X0,8 A4 BRB	
570	312155-0287		4	SCREW DIN 7991 MF6S M4X8 A4 70	
750	90091-0391		2	SEAL SLYDRING	
760	90091-0398		2	PISTON SEAL GLIDE RING T 20,5X28X3,2 MM	
T40R3200	1110534-0000		1	INDUCTOR	
TBA 0375S (See drawing on page: 1-260)					
020	3067238-0000		1	SUPPORT	
030	2835329-0000		1	RAIL	
040	3002880-0000		1	BEARING HOUSING	
100	929372-0000		2	PISTON	
110	929371-0000		2	SLEEVE	
365	312105-0376		2	SCREW, M6S ISO 4014 M6X35 A4 80	
430	312115-0372		2	SCREW ISO4762 M6X25 A4 80	
750	90091-0391		2	SEAL SLYDRING	
760	90091-0398		2	PISTON SEAL GLIDE RING T 20,5X28X3,2 MM	
T40R3200	3089348-0000		1	INDUCTOR	
TPA 0125SQ (See drawing on page: 1-256)					
020	2869202-0000		1	SUPPORT	
030	2835329-0000		1	RAIL	
040	2835328-0000		1	BEARING HOUSING	
100	2934403-0000		2	PISTON	
110	2934402-0000		2	SLEEVE	
140	491681-0000		1	GASKET	
310	311103-0305		2	PARALLEL PIN ISO 2338 5M6X10 A1	
365	312105-0378		2	SCREW, M6S ISO 4014 M6X40 A4 80	
410	312115-0297		3	SCREW ISO4762 M4X25 A4 80	
430	312115-0372		2	SCREW ISO4762 M6X25 A4 80	
500	315105-0136		3	WASHER PLAIN, 4,3X9X0,8 A4 BRB	
750	90091-0394		2	WEAR RING 20X25X5,6 MM	
760	90091-0393		2	PISTON SEAL GLYD RING T 17,5X25X3,2 MM	
T40R3200	2975930-0000		1	INDUCTOR	
TPA 0250SQ, TPA 0200SQ (See drawing on page: 1-256)					
020	2964566-0000		1	SUPPORT	
030	2835329-0000		1	RAIL	
040	3002880-0000		1	BEARING HOUSING	
100	929372-0000		2	PISTON	
110	929371-0000		2	SLEEVE	
140	491681-0000		1	GASKET	
310	311103-0305		2	PARALLEL PIN ISO 2338 5M6X10 A1	
365	312105-0376		2	SCREW, M6S ISO 4014 M6X35 A4 80	
410	312115-0297		3	SCREW ISO4762 M4X25 A4 80	
430	312115-0372		2	SCREW ISO4762 M6X25 A4 80	
500	315105-0136		3	WASHER PLAIN, 4,3X9X0,8 A4 BRB	
750	90091-0391		2	SEAL SLYDRING	
760	90091-0398		2	PISTON SEAL GLIDE RING T 20,5X28X3,2 MM	

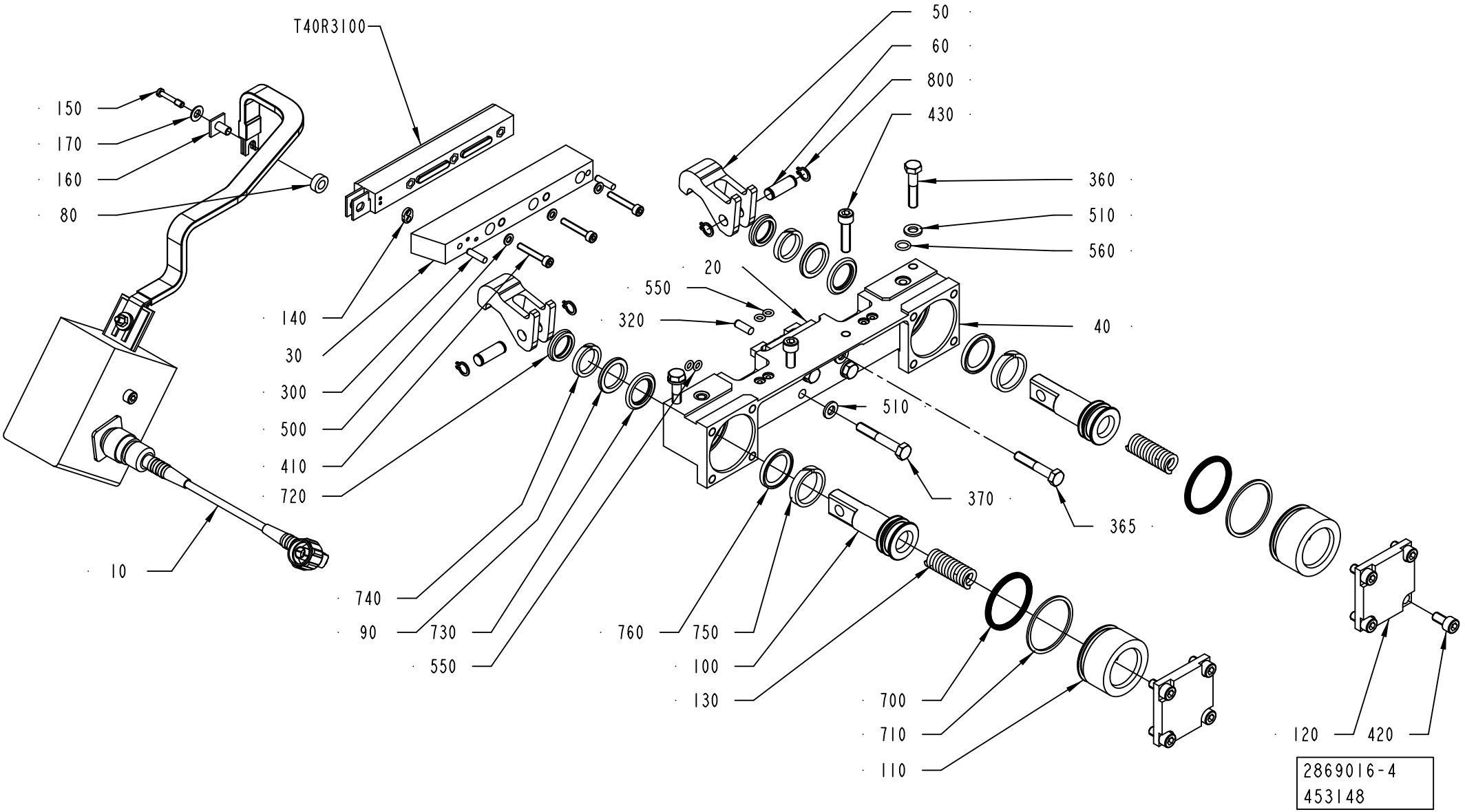
T40R3100
50
60
800
430
150
170
160
80
360
510
560
20
550
320
40
140
30
300
500
410
720
510
370
365
10
740
90
730
550
760
750
100
130
700
710
110
120
420
2869016-4
453148

Pos	Part No	UN	Qty	Description	Page No
TPA 0250SQ, TPA 0200SQ (Cont'd) (See drawing on page: 1-256)					
T40R3200	1110534-0000		1	INDUCTOR	
TPA 0330SQ (See drawing on page: 1-256)					
020	2964566-0000		1	SUPPORT	
030	3130390-0000		1	RAIL	
040	3002880-0000		1	BEARING HOUSING	
100	929372-0000		2	PISTON	
110	929371-0000		2	SLEEVE	
140	491681-0000		1	GASKET	
310	311103-0305		2	PARALLEL PIN ISO 2338 5M6X10 A1	
365	312105-0376		2	SCREW, M6S ISO 4014 M6X35 A4 80	
410	312115-0297		3	SCREW ISO4762 M4X25 A4 80	
430	312115-0372		2	SCREW ISO4762 M6X25 A4 80	
500	315105-0136		3	WASHER PLAIN, 4,3X9X0,8 A4 BRB	
570	312155-0287		4	SCREW DIN 7991 MF6S M4X8 A4 70	
750	90091-0391		2	SEAL SLYDRING	
760	90091-0398		2	PISTON SEAL GLIDE RING T 20,5X28X3,2 MM	
T40R3200	1110556-0000		1	INDUCTOR	
Common Parts					
010	2837085-0100		1	TRANSFORMER	**1-265**
050	2835327-0000		2	CATCH	
060	2835326-0000		2	SHAFT	
080	32644-0000		1	WASHER	
090	1038240-0000		2	SPACER	
120	2979699-0000		2	LID	
130	590369-0000		2	COMPRESSION SPRING	
150	271848-0000		1	SCREW	
160	271846-0000		1	INSULATION NUT	
170	256882-0000		1	WASHER	
300	311103-0270		2	PARALLEL PIN ISO 2338 4M6X16 A1	
320	311103-0307		2	PARALLEL PIN ISO 2338 5M6X14 A1	
360	312105-0374		2	SCREW, M6S ISO 4014 M6X30 A4 80	
370	312105-0378		2	SCREW, M6S ISO 4014 M6X40 A4 80	
420	312115-0366		8	SCREW ISO4762 M6X12 A4 80	
510	315105-0153		6	WASHER PLAIN, 6,4X12X1,5 A4 BRB	
550	315202-0102		4	O-RING 4,1X1,6 MM	
560	315202-0105		2	O-RING 7,1X1,6 MM	
700	90091-0359		2	X-SEAL 36,17X2,62 MM	
710	90091-0360		2	BACK-UP RING 37,5X1,4 MM	
720	90091-0362		2	SCRAPER, EXCLUDER 18X22,8X3,7 MM	
730	90091-0364		2	ROD SEAL, STEPSEAL 18X25,3X3,2 MM	
740	90091-0366		2	WEAR RING 18X23X3,9 MM	
800	90141-0015		4	RETAINING RING FOR SHAFT DIN 471 8 SS	

Machine Type | Group Description | Used-In | Group Number | Page No

PRESSURE JAW

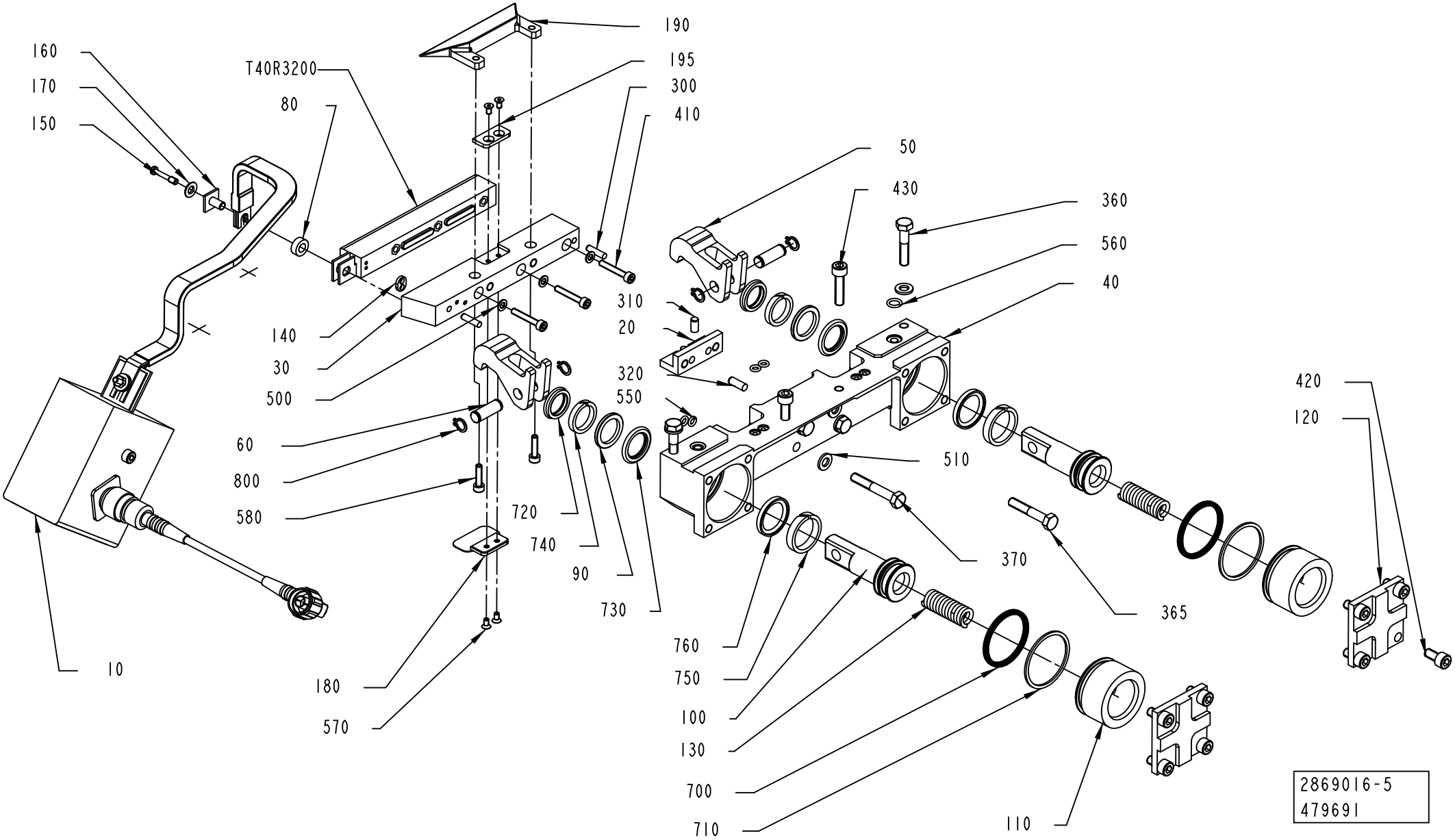

ECM: 485145 - 20110401
Group number: 2869016-0100
Assembly Drawing: 2869016-5_1_AB

This list covers pages from 1-256 to 1-263

Pos	Part No	UN	Qty	Description	Page No
SEE PREVIOUS LISTS PAGES: 1-257, 1-259, 1-261.					

Pos	Part No	UN	Qty	Description	Page No

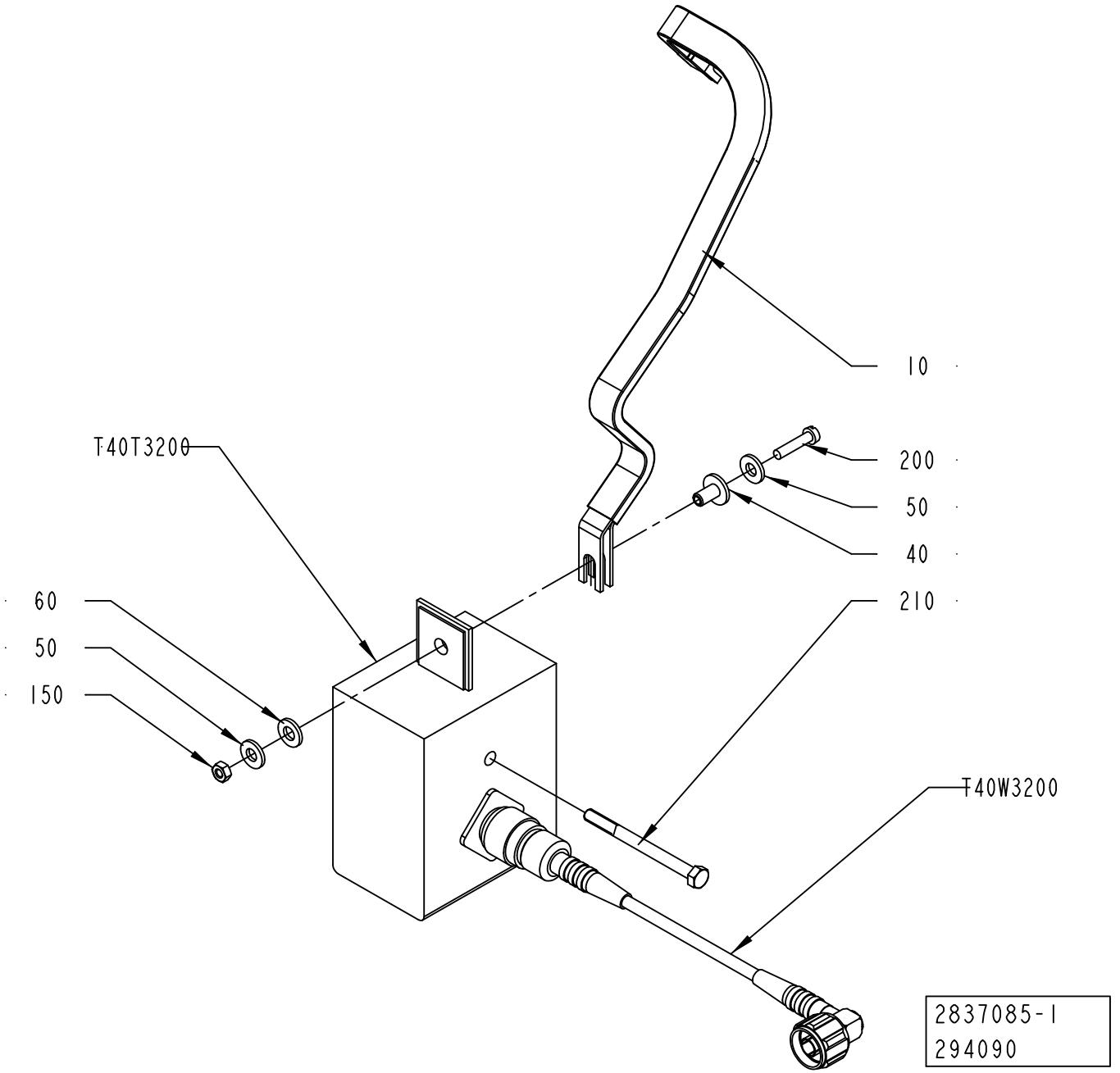
10
T40T3200
200
50
40
60
50
150
210
T40W3200
2837085-1
294090

ECM: 510089 - 20111001
Group number: 2837085-0100
Assembly Drawing: 2837085-1_1_AA

Pos	Part No	UN	Qty	Description	Page No
TBA 0080S					
010	2916877-0000		1	BUSBAR	
T40T3200	67379-0262		1	TRANSFORMER	
TBA 0100B, TBA 0125S					
010	2837077-0000		1	BUSBAR	
T40T3200	67379-0107		1	TRANSFORMER	
TBA 0160S, TBA 0200S					
010	2837077-0000		1	BUSBAR	
T40T3200	67379-0204		1	TRANSFORMER	
TBA 0200B, TBA 0284B, TBA 0250B, TBA 0300S, TBA 0330S					
010	2837077-0000		1	BUSBAR	
T40T3200	67379-0264		1	TRANSFORMER	
TBA 0200E					
010	2837077-0000		1	BUSBAR	
T40T3200	67379-0206		1	TRANSFORMER	
TBA 0200M, TBA 0250S					
010	2837077-0000		1	BUSBAR	
T40T3200	2837503-0105		1	TRANSFORMER	
TBA 0200SQ, TBA 0250SQ					
010	2837077-0000		1	BUSBAR	
T40T3200	67379-0269		1	TRANSFORMER	
TBA 0375S, TPA 0330SQ					
010	2837077-0000		1	BUSBAR	
T40T3200	67379-0115		1	TRANSFORMER	
TPA 0125SQ					
010	2837077-0000		1	BUSBAR	
T40T3200	67379-0248		1	TRANSFORMER	
TPA 0250SQ, TPA 0200SQ					
010	2837077-0000		1	BUSBAR	
T40T3200	67379-0254		1	TRANSFORMER	
Common Parts					
040	32544-0000		1	INSULATION NUT	
050	28509-0000		2	WASHER	
060	32079-0000		1	WASHER	
150	312602-0312		1	HEXAGON NUT, EN 24032 M6M M4 NIPLBR	
200	312105-0295		1	SCREW, M6S ISO 4017 M4X20 A4 70	
210	90458-0058		1	SCREW M5X60 A280	
T40W3200	2562736-0002		1	COAXIAL CABLE	

Pos	Part No	UN	Qty	Description	Page No

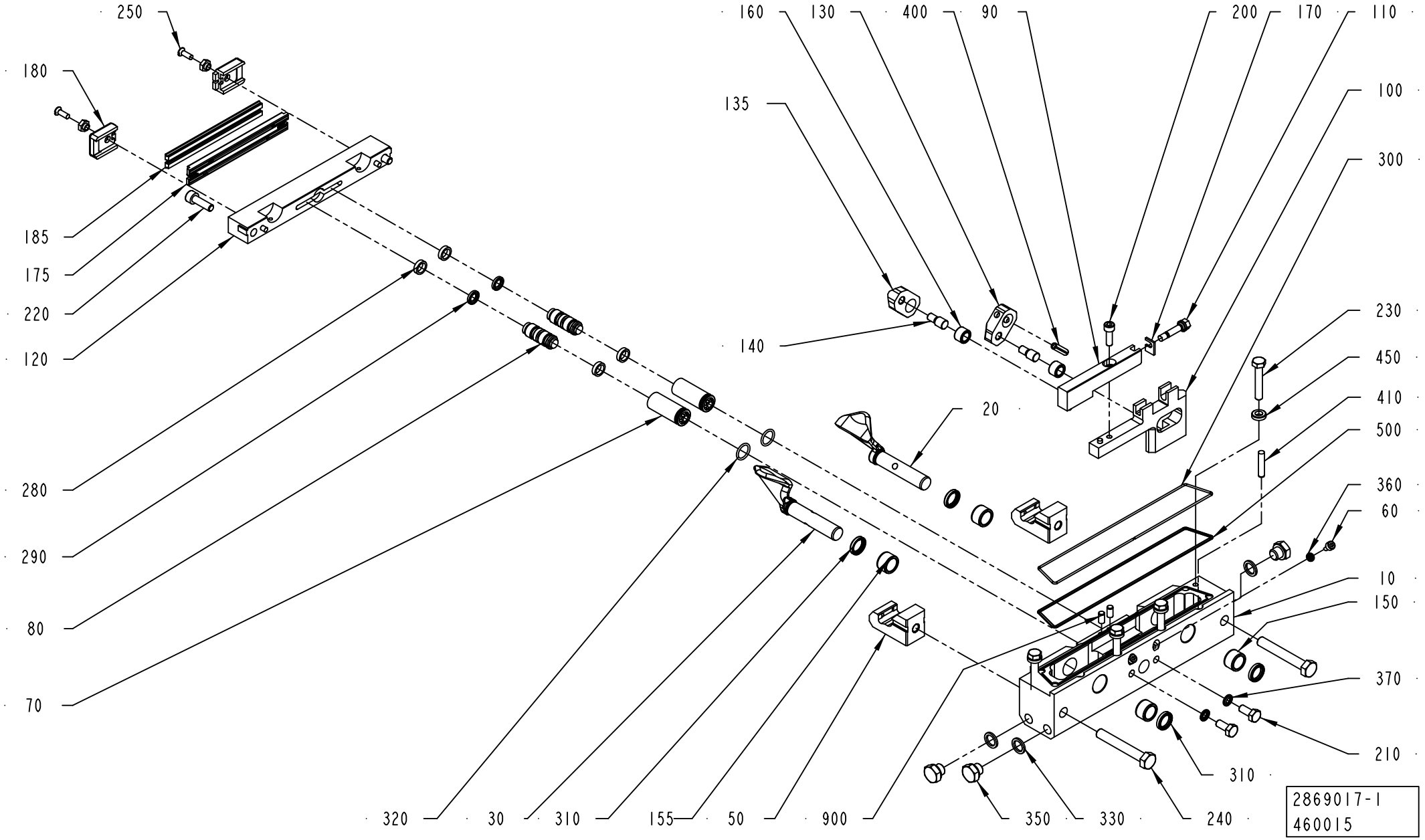
250
180
185
175
220
120
280
290
80
70
320
30
310
155
50
900
160
130
400
90
200
170
110
135
100
300
140
230
450
20
410
500
360
60
10
150
370
210
310
350
330
240
2869017-1
460015

ECM: 496743 - 20110701
Group number: 2869017-0100
Assembly Drawing: 2869017-1_1_AF

This list covers pages from 1-266 to 1-273

Pos	Part No	UN	Qty	Description	Page No
TBA 0080S (See drawing on page: 1-266)					
010	2950888-0000		1	BEARING HOUSING	
020	3147236-0000		1	FOLDING FLAP	
030	3147237-0000		1	FOLDING FLAP	
090	2950890-0000		1	CARRIER RULER	
100	2950889-0000		1	CARRIER RULER	
110	2950891-0000		1	ADJUSTING SCREW	
120	2950892-0000		1	CUTTING JAW	
130	2950893-0000		1	CARRIER	
135	2950894-0000		1	CARRIER	
150	33408-0000		2	BEARING	
155	33408-0000		2	BEARING	
175	2683961-0000		2	CUTTING RAIL	
180	272427-0000		2	BRACKET	
185	1566761-0000		2	DOLLY	
220	312115-0374		2	SCREW ISO4762 M6X30 A4 80	
230	312105-0376		4	SCREW, M6S ISO 4014 M6X35 A4 80	
250	312145-0289		2	SCREW ISO 2009 MFS M4X10 A4	
450	315115-0153		4	WASHER PLAIN, TBRB 6,4/12 H=3	
900	311103-0305		2	PARALLEL PIN ISO 2338 5M6X10 A1	
TBA 0100B, TBA 0125S (See drawing on page: 1-266)					
010	2916881-0000		1	BEARING HOUSING	
020	2597663-0000		1	FOLDING FLAP	
030	2532539-0000		1	FOLDING FLAP	
090	752015-0000		1	RULERPART R	
100	752014-0000		1	RULERPART R	
120	2927588-0000		1	CUTTING JAW	
130	2527724-0000		1	CARRIER	
135	2665718-0000		1	CARRIER	
150	33408-0000		2	BEARING	
155	33408-0000		2	BEARING	
175	2975162-0000		2	CUTTING RAIL	
180	2927589-0000		2	BRACKET	
185	2949862-0004		2	DOLLY	
220	312115-0374		2	SCREW ISO4762 M6X30 A4 80	
230	312105-0376		4	SCREW, M6S ISO 4014 M6X35 A4 80	
250	312145-0289		2	SCREW ISO 2009 MFS M4X10 A4	
450	315115-0153		4	WASHER PLAIN, TBRB 6,4/12 H=3	
900	311103-0305		2	PARALLEL PIN ISO 2338 5M6X10 A1	
TBA 0160S, TBA 0200S (See drawing on page: 1-266)					
010	2970615-0000		1	BEARING HOUSING	
020	2532542-0000		1	FOLDING FLAP	
030	2532543-0000		1	FOLDING FLAP	
090	752009-0000		1	RULERPART R	
100	752010-0000		1	RULERPART R	
110	751579-0000		1	ADJUSTING SCREW	
120	3113803-0000		1	CUTTING JAW	
130	272419-0000		1	CARRIER	
135	272419-0000		1	CARRIER	
150	33408-0000		2	BEARING	
155	33408-0000		2	BEARING	
175	2890692-0000		2	CUTTING RAIL	
180	1348053-0000		2	BRACKET	
185	1110083-0003		2	DOLLY	
220	312115-0370		2	SCREW ISO4762 M6X20 A4 80	
230	312105-0376		4	SCREW, M6S ISO 4014 M6X35 A4 80	
250	312145-0291		2	SCREW ISO 2009 MFS M4X12 A4	
450	315115-0153		4	WASHER PLAIN, TBRB 6,4/12 H=3	
TBA 0200B, TBA 0250B, TBA 0330S (See drawing on page: 1-266)					
010	2869201-0000		1	BEARING HOUSING	
020	3080559-0000		1	FOLDING FLAP	
030	3080560-0000		1	FOLDING FLAP	
090	751577-0000		1	RULERPART R	
100	751575-0000		1	RULERPART R	
110	751579-0000		1	ADJUSTING SCREW	
120	3113802-0000		1	CUTTING JAW	
130	272419-0000		1	CARRIER	
135	272419-0000		1	CARRIER	
150	33408-0000		2	BEARING	
155	33408-0000		2	BEARING	
175	2890692-0000		2	CUTTING RAIL	
180	1348053-0000		2	BRACKET	
185	1110083-0003		2	DOLLY	
220	312115-0370		2	SCREW ISO4762 M6X20 A4 80	
230	312105-0376		4	SCREW, M6S ISO 4014 M6X35 A4 80	
250	312145-0291		2	SCREW ISO 2009 MFS M4X12 A4	
450	315115-0153		4	WASHER PLAIN, TBRB 6,4/12 H=3	
900	311103-0305		2	PARALLEL PIN ISO 2338 5M6X10 A1	
TBA 0200E (See drawing on page: 1-272)					
010	2947184-0000		1	BEARING HOUSING	
020	3099249-0000		1	FLAP	
025	3013509-0000		1	SHAFT	
030	3099250-0000		1	FLAP	
035	3013512-0000		1	SHAFT	

Machine Type | Group Description | Used-In | Group Number | Page No

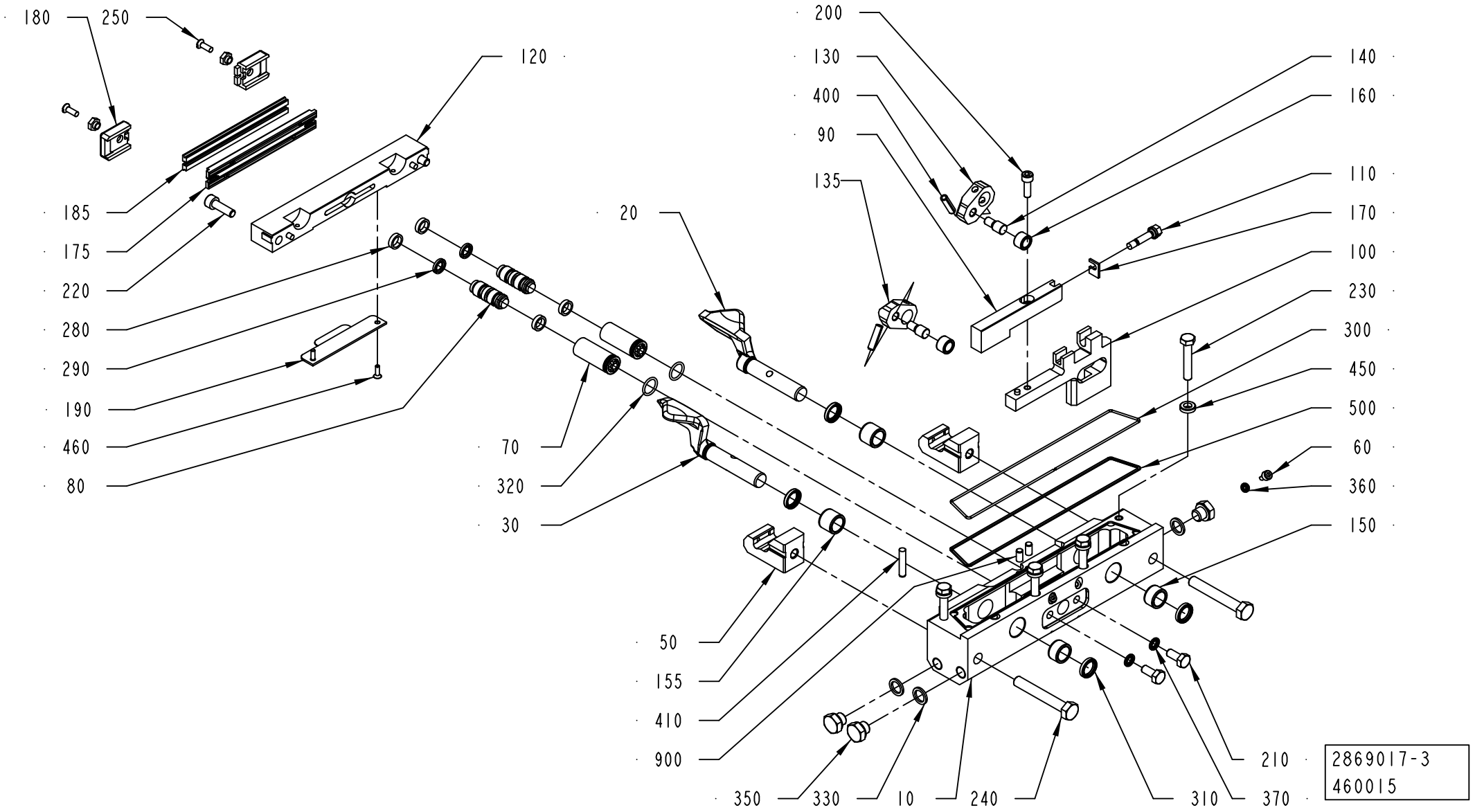
180
250
120
200
130
400
90
135
140
160
110
170
100
230
300
450
500
60
360
150
185
175
220
280
290
190
460
80
20
70
320
30
50
155
410
900
350
330
10
240
310
370
210
2869017-3
460015

ECM: 496743 - 20110701
Group number: 2869017-0100
Assembly Drawing: 2869017-3_1_AB

This list covers pages from 1-266 to 1-273

Pos	Part No	UN	Qty	Description	Page No
TBA 0200E (Cont'd) (See drawing on page: 1-272)					
090	574370-0000		1	CARRIER RULER RIGHT	
100	574369-0000		1	CARRIER RULER RIGHT	
110	751579-0000		1	ADJUSTING SCREW	
120	3033995-0000		1	CUTTING JAW	
130	272419-0000		1	CARRIER	
135	272419-0000		1	CARRIER	
150	33408-0000		2	BEARING	
155	33408-0000		2	BEARING	
175	3033996-0000		2	CUTTING RAIL	
180	1348053-0000		2	BRACKET	
185	1110083-0003		2	DOLLY	
190	3035454-0000		1	VOLUME BULGE	
220	312115-0370		2	SCREW ISO4762 M6X20 A4 80	
230	312105-0376		4	SCREW, M6S ISO 4014 M6X35 A4 80	
250	312145-0291		2	SCREW ISO 2009 MFS M4X12 A4	
255	312115-0327		2	SCREW ISO4762 M5X12 A4 80	
450	315115-0153		4	WASHER PLAIN, TBRB 6,4/12 H=3	
460	312145-0220		2	SCREW ISO 2009 MFS M3X6 A4	
900	311103-0305		2	PARALLEL PIN ISO 2338 5M6X10 A1	
TBA 0200M, TBA 0250S (See drawing on page: 1-266)					
010	2947184-0000		1	BEARING HOUSING	
020	2532542-0000		1	FOLDING FLAP	
030	2532543-0000		1	FOLDING FLAP	
090	574370-0000		1	CARRIER RULER RIGHT	
100	574369-0000		1	CARRIER RULER RIGHT	
110	751579-0000		1	ADJUSTING SCREW	
120	3113804-0000		1	CUTTING JAW	
130	272419-0000		1	CARRIER	
135	272419-0000		1	CARRIER	
150	33408-0000		2	BEARING	
155	33408-0000		2	BEARING	
175	2890692-0000		2	CUTTING RAIL	
180	1348053-0000		2	BRACKET	
185	1110083-0003		2	DOLLY	
220	312115-0370		2	SCREW ISO4762 M6X20 A4 80	
230	312105-0376		4	SCREW, M6S ISO 4014 M6X35 A4 80	
250	312145-0291		2	SCREW ISO 2009 MFS M4X12 A4	
450	315115-0153		4	WASHER PLAIN, TBRB 6,4/12 H=3	
900	311103-0305		2	PARALLEL PIN ISO 2338 5M6X10 A1	
TBA 0200SQ, TBA 0250SQ (See drawing on page: 1-268)					
010	2976822-0000		1	BEARING HOUSING	
020	2976826-0000		1	FOLDING FLAP	
030	2976827-0000		1	FOLDING FLAP	
090	2976825-0000		1	CARRIER RULER	
100	2976824-0000		1	CARRIER RULER	
110	751579-0000		1	ADJUSTING SCREW	
120	3113805-0000		1	CUTTING JAW	
130	2976823-0000		1	CARRIER	
135	2976823-0000		1	CARRIER	
150	929316-0001		2	BEARING	
155	929316-0002		2	BEARING	
175	2890692-0000		2	CUTTING RAIL	
180	1348053-0000		2	BRACKET	
185	1110083-0003		2	DOLLY	
190	3006048-0000		1	VOLUME BULGE	
220	312115-0370		2	SCREW ISO4762 M6X20 A4 80	
230	312105-0376		4	SCREW, M6S ISO 4014 M6X35 A4 80	
250	312145-0291		2	SCREW ISO 2009 MFS M4X12 A4	
450	315115-0153		4	WASHER PLAIN, TBRB 6,4/12 H=3	
460	312145-0220		2	SCREW ISO 2009 MFS M3X6 A4	
900	311103-0305		2	PARALLEL PIN ISO 2338 5M6X10 A1	
TBA 0284B, TBA 0300S (See drawing on page: 1-266)					
010	3010757-0000		1	BEARING HOUSING	
020	3010758-0000		1	FOLDING FLAP	
030	3010759-0000		1	FOLDING FLAP	
090	3010761-0000		1	CARRIER RULER	
100	3010760-0000		1	CARRIER RULER	
110	751579-0000		1	ADJUSTING SCREW	
120	3113802-0000		1	CUTTING JAW	
130	272419-0000		1	CARRIER	
135	272419-0000		1	CARRIER	
150	33408-0000		2	BEARING	
175	2890692-0000		2	CUTTING RAIL	
180	1348053-0000		2	BRACKET	
185	1110083-0003		2	DOLLY	
220	312115-0370		2	SCREW ISO4762 M6X20 A4 80	
230	312105-0376		4	SCREW, M6S ISO 4014 M6X35 A4 80	
250	312145-0291		2	SCREW ISO 2009 MFS M4X12 A4	
450	315115-0153		4	WASHER PLAIN, TBRB 6,4/12 H=3	
900	311103-0305		2	PARALLEL PIN ISO 2338 5M6X10 A1	
TBA 0375S (See drawing on page: 1-270)					
010	3067239-0000		1	BEARING HOUSING	
020	3105452-0000		1	FOLDING FLAP	

Machine Type | Group Description | Used-In | Group Number | Page No

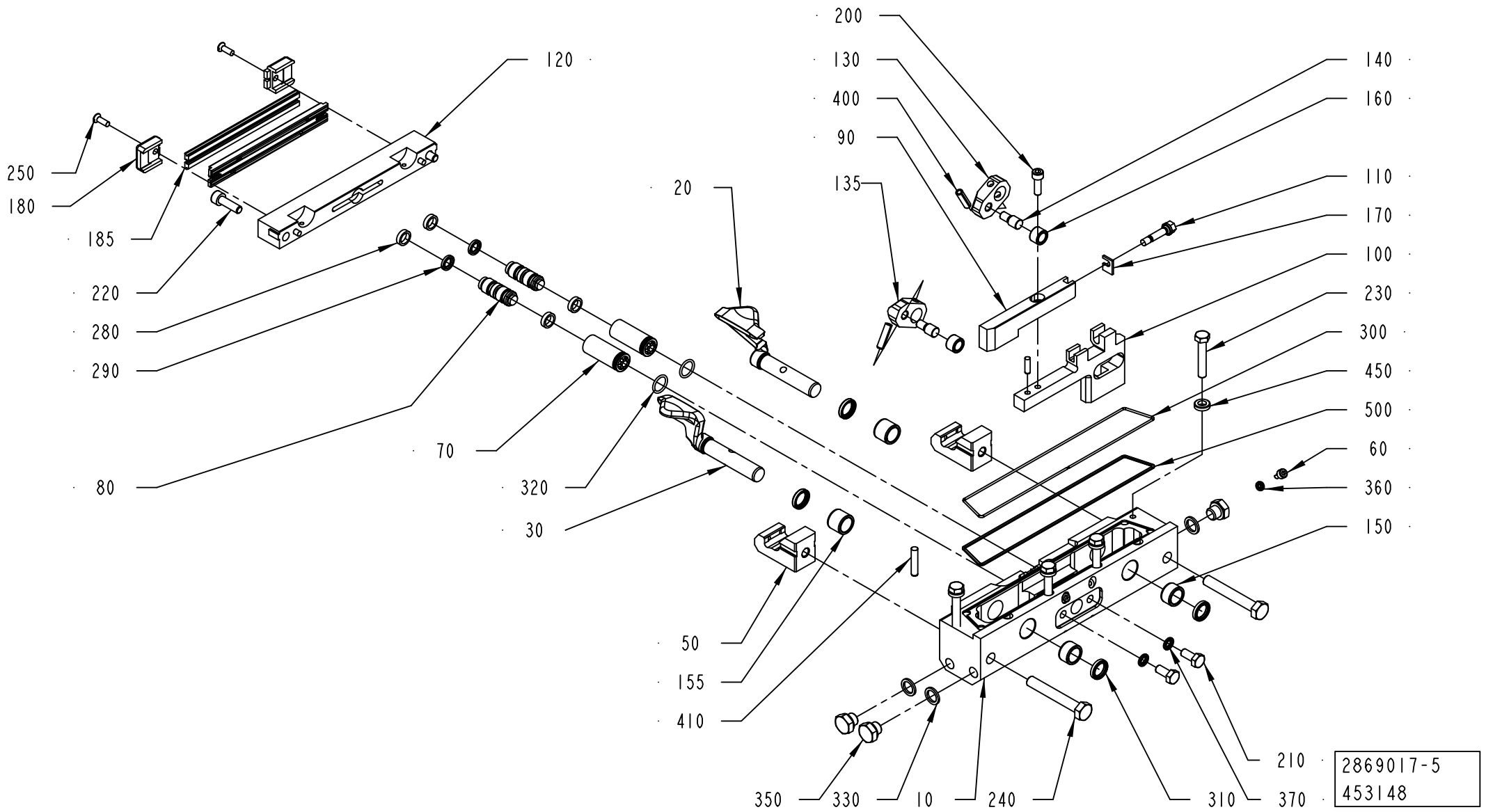
200
130
400
90
135
140
160
110
170
100
230
300
450
500
60
360
150
120
250
180
185
220
280
290
80
20
70
320
30
50
155
410
350
330
10
240
310
370
210
2869017-5
453148

ECM: 496743 - 20110701
Group number: 2869017-0100
Assembly Drawing: 2869017-5_1_AA

This list covers pages from 1-266 to 1-273

Pos	Part No	UN	Qty	Description	Page No
TBA 0375S (Cont'd) (See drawing on page: 1-270)					
030	3067241-0000		1	FOLDING FLAP	
090	3067242-0000		1	CARRIER RULER	
100	3067243-0000		1	CARRIER RULER	
110	751579-0000		1	ADJUSTING SCREW	
120	3067244-0000		1	CUTTING JAW	
130	2976823-0000		1	CARRIER	
135	2976823-0000		1	CARRIER	
150	929316-0001		2	BEARING	
155	929316-0002		2	BEARING	
175	3096232-0000		2	CUTTING RAIL	
180	3096233-0000		2	BRACKET	
185	1110083-0005		2	DOLLY	
220	312115-0370		2	SCREW ISO4762 M6X20 A4 80	
230	312105-0376		4	SCREW, M6S ISO 4014 M6X35 A4 80	
250	312145-0291		2	SCREW ISO 2009 MFS M4X12 A4	
450	315115-0153		4	WASHER PLAIN, TBRB 6,4/12 H=3	
TPA 0125SQ (See drawing on page: 1-266)					
010	2906021-0000		1	BEARING HOUSING	
020	2906019-0000		1	FOLDING FLAP	
030	2906020-0000		1	FOLDING FLAP	
090	2845903-0000		1	CARRIER RULER	
100	2906018-0000		1	CARRIER RULER	
110	751579-0000		1	ADJUSTING SCREW	
120	2907732-0000		1	CUTTING JAW	
130	2846012-0000		1	CARRIER	
135	2846012-0000		1	CARRIER	
150	33408-0000		2	BEARING	
155	33408-0000		2	BEARING	
175	2890692-0000		2	CUTTING RAIL	
180	1348053-0000		2	BRACKET	
185	1110083-0003		2	DOLLY	
220	312115-0370		2	SCREW ISO4762 M6X20 A4 80	
230	312105-0374		4	SCREW, M6S ISO 4014 M6X30 A4 80	
250	312145-0291		2	SCREW ISO 2009 MFS M4X12 A4	
450	315105-0153		4	WASHER PLAIN, 6,4X12X1,5 A4 BRB	
900	311103-0305		2	PARALLEL PIN ISO 2338 5M6X10 A1	
TPA 0250SQ, TPA 0200SQ (See drawing on page: 1-266)					
010	2962055-0000		1	BEARING HOUSING	
020	1350985-0000		1	FOLDING FLAP RIGHT	
030	1350986-0000		1	FOLDING FLAP LEFT	
090	1350996-0000		1	CARRIER RULER RIGHT	
100	2978920-0000		1	CARRIER RULER	
110	751579-0000		1	ADJUSTING SCREW	
120	2965110-0000		1	3UTTING JAW	
130	272419-0000		1	CARRIER	
135	272419-0000		1	CARRIER	
150	929316-0001		2	BEARING	
155	929316-0002		2	BEARING	
175	2890692-0000		2	CUTTING RAIL	
180	1348053-0000		2	BRACKET	
185	1110083-0003		2	DOLLY	
220	312115-0370		2	SCREW ISO4762 M6X20 A4 80	
230	312105-0376		4	SCREW, M6S ISO 4014 M6X35 A4 80	
250	312145-0291		2	SCREW ISO 2009 MFS M4X12 A4	
450	315115-0153		4	WASHER PLAIN, TBRB 6,4/12 H=3	
900	311103-0305		2	PARALLEL PIN ISO 2338 5M6X10 A1	
TPA 0330SQ (See drawing on page: 1-266)					
010	3002881-0000		1	BEARING HOUSING	
020	3002884-0000		1	FOLDING FLAP	
030	3002883-0000		1	FOLDING FLAP	
090	3002886-0000		1	CARRIER RULER	
100	3002885-0000		1	CARRIER RULER	
110	751579-0000		1	ADJUSTING SCREW	
120	3002882-0000		1	CUTTING JAW	
130	2976823-0000		1	CARRIER	
135	2976823-0000		1	CARRIER	
150	929316-0001		2	BEARING	
155	929316-0002		2	BEARING	
175	2890692-0000		2	CUTTING RAIL	
180	1348053-0000		2	BRACKET	
185	1110083-0003		2	DOLLY	
220	312115-0370		2	SCREW ISO4762 M6X20 A4 80	
230	312105-0376		4	SCREW, M6S ISO 4014 M6X35 A4 80	
250	312145-0291		2	SCREW ISO 2009 MFS M4X12 A4	
450	315115-0153		4	WASHER PLAIN, TBRB 6,4/12 H=3	
900	311103-0305		2	PARALLEL PIN ISO 2338 5M6X10 A1	
Common Parts					
050	2888463-0000		2	CATCH	
060	752476-0000		2	SCREW	
070	752288-0000		2	SLEEVE	
080	752115-0000		2	PLUNGER	
140	256607-0000		2	AXLE PIN	
160	22463-0000		2	ROLL	

Machine Type | Group Description | Used-In | Group Number | Page No

CUTTING JAW

Drawing file: 2869017-7_1_AA.hpgl

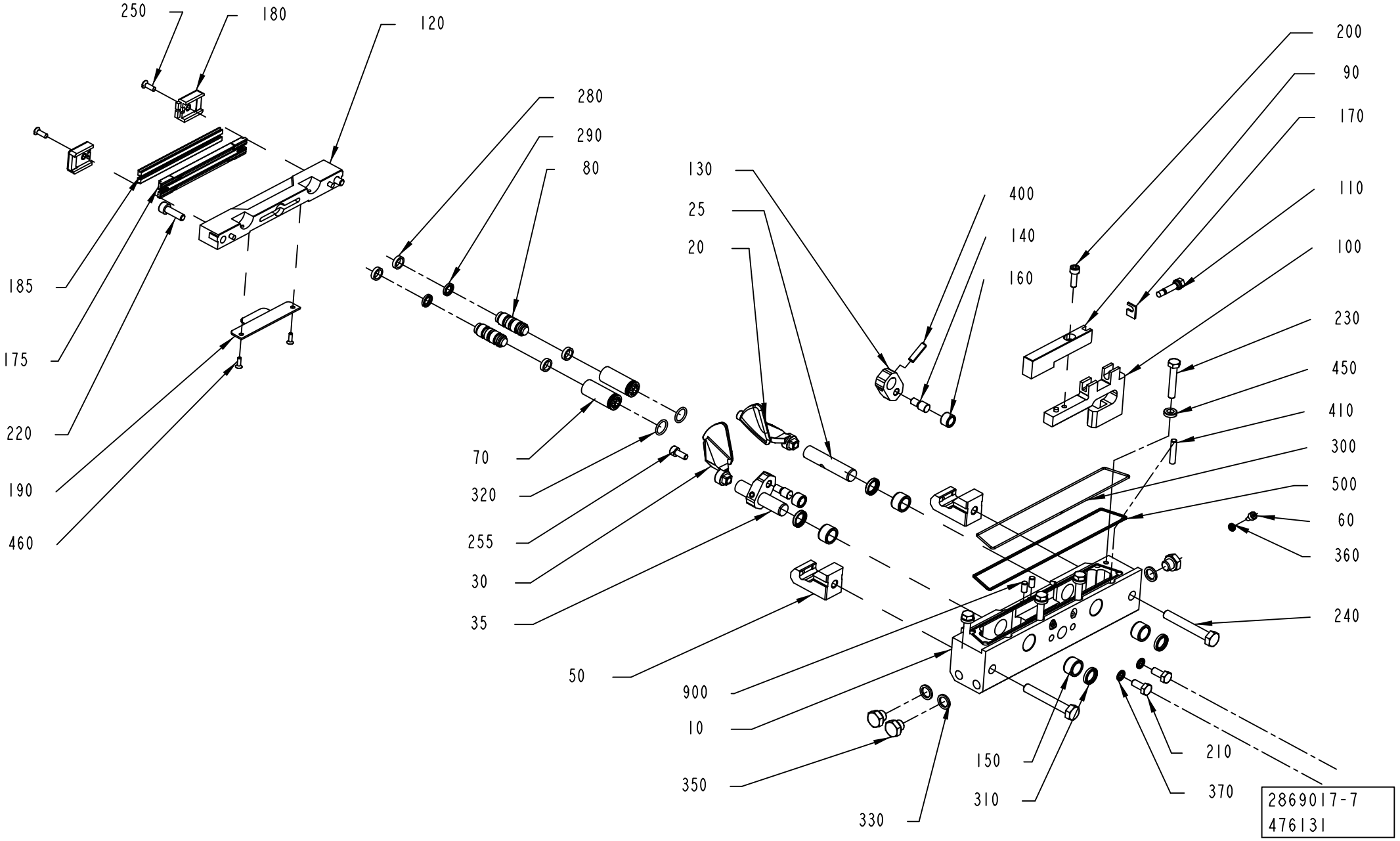

ECM: 496743 - 20110701
Group number: 2869017-0100
Assembly Drawing: 2869017-7_1_AA

This list covers pages from 1-266 to 1-273

Pos	Part No	UN	Qty	Description	Page No
Common Parts (Cont'd)					
170	751580-0000		1	SHIM	
200	312115-0329		1	SCREW ISO4762 M5X16 A4 80	
210	312105-0367		2	SCREW, M6S ISO 4017 M6X14 A4 80	
240	312105-0462		2	SCREW, M6S ISO 4014 M8X55 A4 80	
280	90091-0169		4	WEAR RING 12X15X3,2 MM	
290	90091-0216		2	PISTON SEAL GLYD RING 7,1X12X2,2 MM	
300	90242-0093	MM	500	O-RING MATERIAL 1,5 MM	
310	90459-5936		4	BEARING SEAL 12X16X3 MM	
320	315202-0110		2	O-RING 12,1X1,6 MM	
330	315237-0109		3	WASHER,PL.RND.AL.10/14,H=1,5	
350	90330-0066		3	PLUG, G1/8EXT, G1/8	
360	315211-0101		2	BONDED SEAL SS/NBR90 M4	
370	315211-0103		2	BONDED SEAL SS/NBR90 M6	
400	311111-0308		2	SPRING PIN ISO 8752 5X20-ST	
410	311103-0312		1	PARALLEL PIN ISO 2338 5M6X25 A1	
500	90153-0015		1	ADHESIVE,LOCTITE IS 496/CYANOLOT 303	

Pos	Part No	UN	Qty	Description	Page No

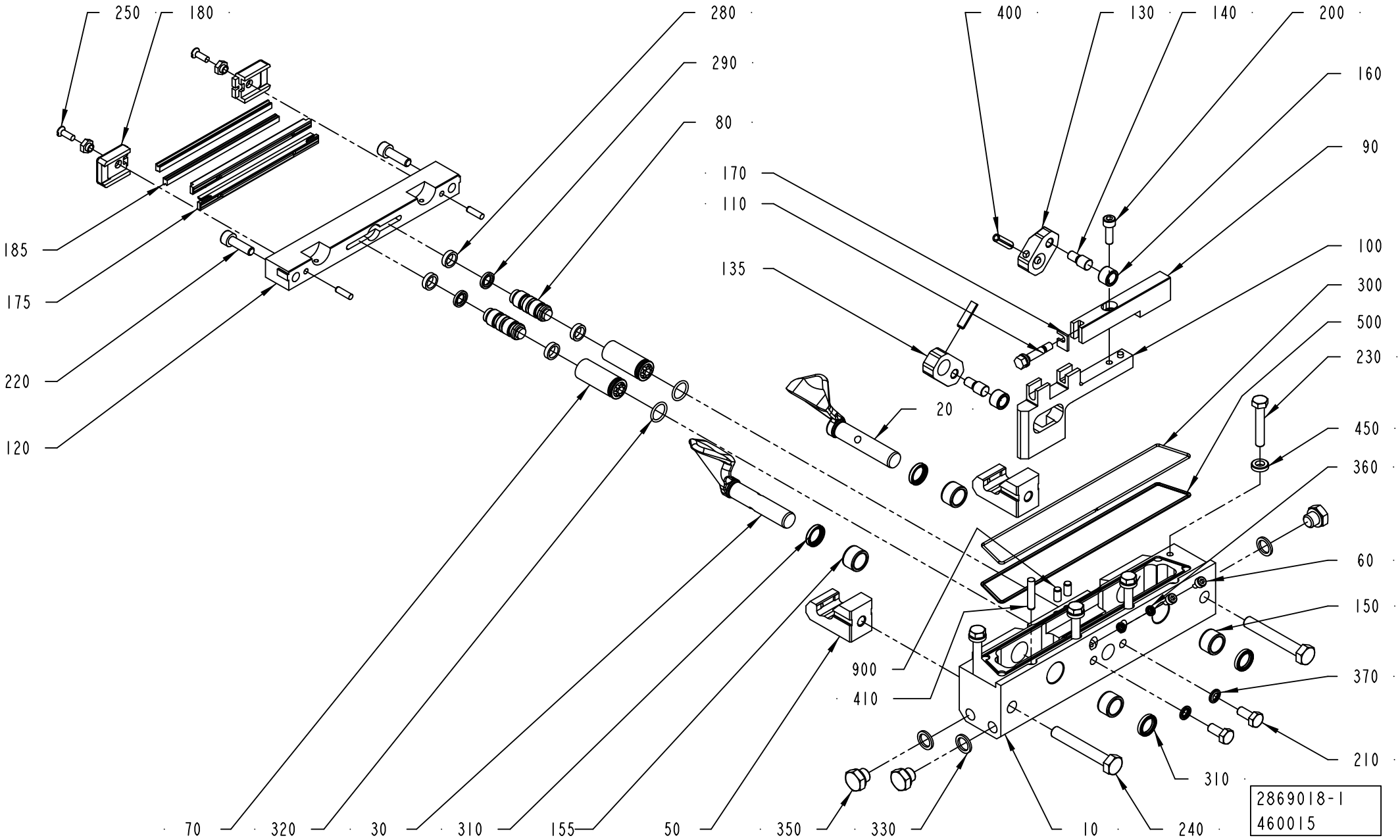
250
180
280
290
80
170
110
135
400
130
140
200
160
90
100
300
500
230
450
360
60
150
370
210
185
175
220
120
20
900
410
70
320
30
310
155
50
350
330
10
240
310
2869018-1
460015

ECM: 496742 - 20110701
Group number: 2869018-0100
Assembly Drawing: 2869018-1_1_AF

This list covers pages from 1-274 to 1-281

Pos	Part No	UN	Qty	Description	Page No
TBA 0080S (See drawing on page: 1-274)					
010	2950888-0000		1	BEARING HOUSING	
020	3147236-0000		1	FOLDING FLAP	
030	3147237-0000		1	FOLDING FLAP	
090	2950896-0000		1	CARRIER RULER	
100	2950895-0000		1	CARRIER RULER	
110	2950891-0000		1	ADJUSTING SCREW	
120	2950892-0000		1	CUTTING JAW	
130	2950893-0000		1	CARRIER	
135	2950894-0000		1	CARRIER	
150	33408-0000		2	BEARING	
155	33408-0000		2	BEARING	
175	2683961-0000		2	CUTTING RAIL	
180	272427-0000		2	BRACKET	
185	1566761-0000		2	DOLLY	
220	312105-0374		2	SCREW, M6S ISO 4014 M6X30 A4 80	
230	312105-0376		4	SCREW, M6S ISO 4014 M6X35 A4 80	
250	312145-0289		2	SCREW ISO 2009 MFS M4X10 A4	
450	315115-0153		4	WASHER PLAIN, TBRB 6,4/12 H=3	
900	311103-0305		2	PARALLEL PIN ISO 2338 5M6X10 A1	
TBA 0100B, TBA 0125S (See drawing on page: 1-274)					
010	2916881-0000		1	BEARING HOUSING	
020	2597663-0000		1	FOLDING FLAP	
030	2532539-0000		1	FOLDING FLAP	
090	752017-0000		1	RULERPART L	
100	752016-0000		1	RULERPART L	
110	751579-0000		1	ADJUSTING SCREW	
120	2927588-0000		1	CUTTING JAW	
130	2527724-0000		1	CARRIER	
135	2665718-0000		1	CARRIER	
150	33408-0000		2	BEARING	
155	33408-0000		2	BEARING	
175	2975162-0000		2	CUTTING RAIL	
180	2927589-0000		2	BRACKET	
185	2949862-0004		2	DOLLY	
220	312105-0374		2	SCREW, M6S ISO 4014 M6X30 A4 80	
230	312105-0376		4	SCREW, M6S ISO 4014 M6X35 A4 80	
250	312145-0289		2	SCREW ISO 2009 MFS M4X10 A4	
450	315115-0153		4	WASHER PLAIN, TBRB 6,4/12 H=3	
900	311103-0305		2	PARALLEL PIN ISO 2338 5M6X10 A1	
TBA 0160S, TBA 0200S (See drawing on page: 1-274)					
010	2970615-0000		1	BEARING HOUSING	
020	2532542-0000		1	FOLDING FLAP	
030	2532543-0000		1	FOLDING FLAP	
090	752011-0000		1	RULERPART L	
100	752012-0000		1	RULERPART L	
110	751579-0000		1	ADJUSTING SCREW	
120	3113803-0000		1	CUTTING JAW	
130	272419-0000		1	CARRIER	
135	272419-0000		1	CARRIER	
150	33408-0000		2	BEARING	
155	33408-0000		2	BEARING	
175	2890692-0000		2	CUTTING RAIL	
180	1348053-0000		2	BRACKET	
185	1110083-0003		2	DOLLY	
220	312115-0370		2	SCREW ISO4762 M6X20 A4 80	
230	312105-0376		4	SCREW, M6S ISO 4014 M6X35 A4 80	
250	312145-0291		2	SCREW ISO 2009 MFS M4X12 A4	
450	315115-0153		4	WASHER PLAIN, TBRB 6,4/12 H=3	
TBA 0200B, TBA 0250B, TBA 0330S (See drawing on page: 1-274)					
010	2869201-0000		1	BEARING HOUSING	
020	3080559-0000		1	FOLDING FLAP	
030	3080560-0000		1	FOLDING FLAP	
090	751578-0000		1	RULERPART L	
100	751576-0000		1	RULERPART L	
110	751579-0000		1	ADJUSTING SCREW	
120	3113802-0000		1	CUTTING JAW	
130	272419-0000		1	CARRIER	
135	272419-0000		1	CARRIER	
150	33408-0000		2	BEARING	
155	33408-0000		2	BEARING	
175	2890692-0000		2	CUTTING RAIL	
180	1348053-0000		2	BRACKET	
185	1110083-0003		2	DOLLY	
220	312115-0370		2	SCREW ISO4762 M6X20 A4 80	
230	312105-0376		4	SCREW, M6S ISO 4014 M6X35 A4 80	
250	312145-0291		2	SCREW ISO 2009 MFS M4X12 A4	
450	315115-0153		4	WASHER PLAIN, TBRB 6,4/12 H=3	
900	311103-0305		2	PARALLEL PIN ISO 2338 5M6X10 A1	
TBA 0200E (See drawing on page: 1-280)					
010	2947184-0000		1	BEARING HOUSING	
020	3099249-0000		1	FLAP	
025	3013509-0000		1	SHAFT	
030	3099250-0000		1	FLAP	

Machine Type | Group Description | Used-In | Group Number | Page No

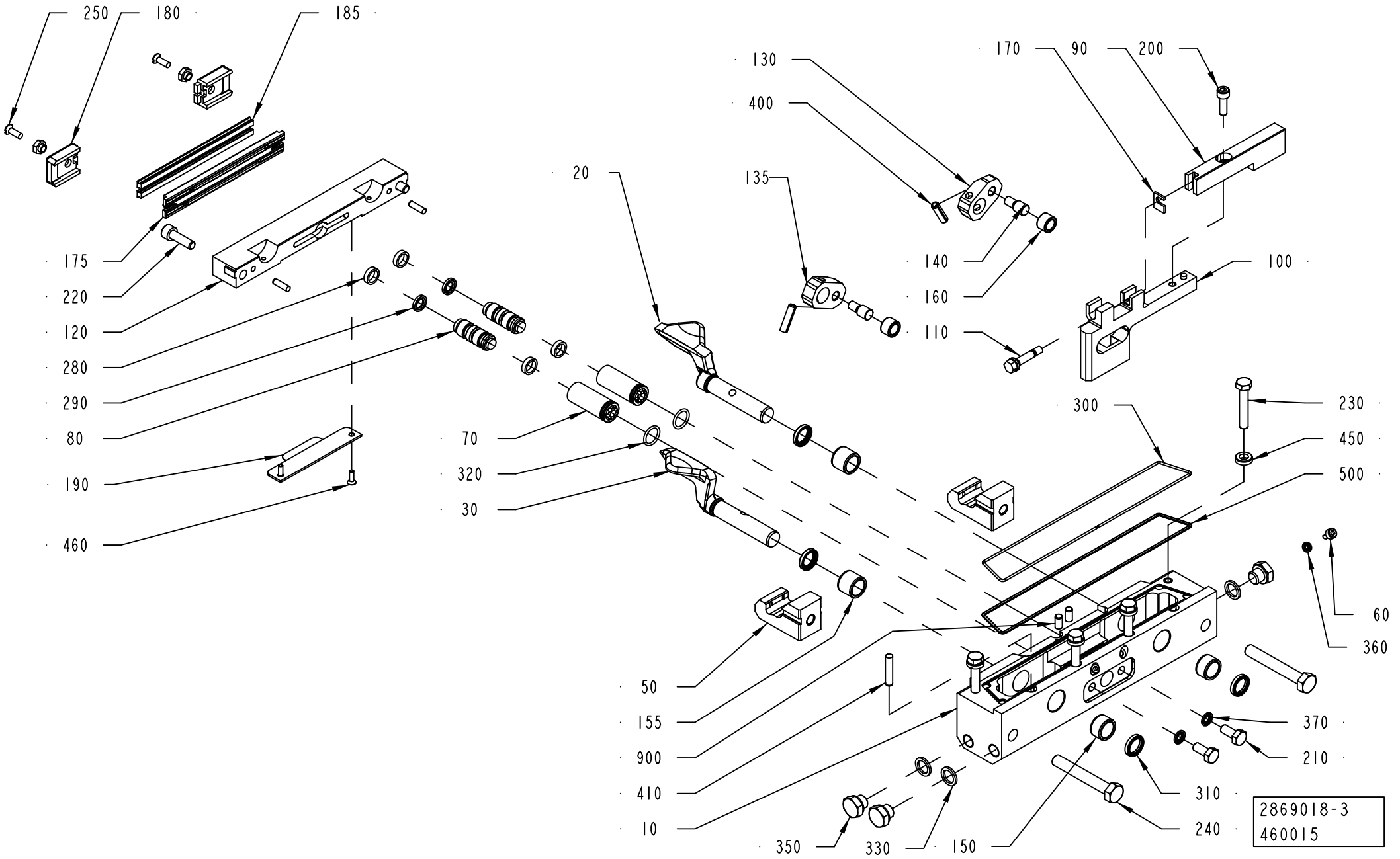
250
180
185
175
220
120
280
290
80
190
460
20
130
400
135
140
160
110
170
90
200
100
300
230
450
500
70
320
30
50
155
900
410
10
60
360
370
210
310
240
350
330
150
2869018-3
460015

ECM: 496742 - 20110701
Group number: 2869018-0100
Assembly Drawing: 2869018-3_1_AB

This list covers pages from 1-274 to 1-281

Pos	Part No	UN	Qty	Description	Page No
TBA 0200E (Cont'd) (See drawing on page: 1-280)					
035	3013512-0000		1	SHAFT	
090	574372-0000		1	CARRIER RULER LEFT	
100	574371-0000		1	CARRIER RULER LEFT	
110	751579-0000		1	ADJUSTING SCREW	
120	3033995-0000		1	CUTTING JAW	
130	272419-0000		1	CARRIER	
135	272419-0000		1	CARRIER	
150	33408-0000		2	BEARING	
155	33408-0000		2	BEARING	
175	3033996-0000		2	CUTTING RAIL	
180	1348053-0000		2	BRACKET	
185	1110083-0003		2	DOLLY	
190	3035454-0000		1	VOLUME BULGE	
220	312115-0370		2	SCREW ISO4762 M6X20 A4 80	
230	312105-0376		4	SCREW, M6S ISO 4014 M6X35 A4 80	
250	312145-0291		2	SCREW ISO 2009 MFS M4X12 A4	
255	312115-0327		2	SCREW ISO4762 M5X12 A4 80	
450	315115-0153		4	WASHER PLAIN, TBRB 6,4/12 H=3	
460	312145-0220		2	SCREW ISO 2009 MFS M3X6 A4	
900	311103-0305		2	PARALLEL PIN ISO 2338 5M6X10 A1	
TBA 0200M, TBA 0250S (See drawing on page: 1-274)					
010	2947184-0000		1	BEARING HOUSING	
020	2532542-0000		1	FOLDING FLAP	
030	2532543-0000		1	FOLDING FLAP	
090	574372-0000		1	CARRIER RULER LEFT	
100	574371-0000		1	CARRIER RULER LEFT	
110	751579-0000		1	ADJUSTING SCREW	
120	3113804-0000		1	CUTTING JAW	
130	272419-0000		1	CARRIER	
135	272419-0000		1	CARRIER	
150	33408-0000		2	BEARING	
155	33408-0000		2	BEARING	
175	2890692-0000		2	CUTTING RAIL	
180	1348053-0000		2	BRACKET	
185	1110083-0003		2	DOLLY	
220	312115-0370		2	SCREW ISO4762 M6X20 A4 80	
230	312105-0376		4	SCREW, M6S ISO 4014 M6X35 A4 80	
250	312145-0291		2	SCREW ISO 2009 MFS M4X12 A4	
450	315115-0153		4	WASHER PLAIN, TBRB 6,4/12 H=3	
900	311103-0305		2	PARALLEL PIN ISO 2338 5M6X10 A1	
TBA 0200SQ, TBA 0250SQ (See drawing on page: 1-276)					
010	2976822-0000		1	BEARING HOUSING	
020	2976826-0000		1	FOLDING FLAP	
030	2976827-0000		1	FOLDING FLAP	
090	2976828-0000		1	CARRIER RULER	
100	2976829-0000		1	CARRIER RULER	
110	751579-0000		1	ADJUSTING SCREW	
120	3113805-0000		1	CUTTING JAW	
130	2976823-0000		1	CARRIER	
135	2976823-0000		1	CARRIER	
150	929316-0001		2	BEARING	
155	929316-0002		2	BEARING	
175	2890692-0000		2	CUTTING RAIL	
180	1348053-0000		2	BRACKET	
185	1110083-0003		2	DOLLY	
190	3006048-0000		1	VOLUME BULGE	
220	312115-0370		2	SCREW ISO4762 M6X20 A4 80	
230	312105-0376		4	SCREW, M6S ISO 4014 M6X35 A4 80	
250	312145-0291		2	SCREW ISO 2009 MFS M4X12 A4	
450	315115-0153		4	WASHER PLAIN, TBRB 6,4/12 H=3	
460	312145-0220		2	SCREW ISO 2009 MFS M3X6 A4	
900	311103-0305		2	PARALLEL PIN ISO 2338 5M6X10 A1	
TBA 0284B, TBA 0300S (See drawing on page: 1-274)					
010	3010757-0000		1	BEARING HOUSING	
020	3010758-0000		1	FOLDING FLAP	
030	3010759-0000		1	FOLDING FLAP	
090	3010762-0000		1	CARRIER RULER	
100	3010763-0000		1	CARRIER RULER	
110	751579-0000		1	ADJUSTING SCREW	
120	3113802-0000		1	CUTTING JAW	
130	272419-0000		1	CARRIER	
135	272419-0000		1	CARRIER	
150	33408-0000		2	BEARING	
155	33408-0000		2	BEARING	
175	2890692-0000		2	CUTTING RAIL	
180	1348053-0000		2	BRACKET	
185	1110083-0003		2	DOLLY	
220	312115-0370		2	SCREW ISO4762 M6X20 A4 80	
230	312105-0376		4	SCREW, M6S ISO 4014 M6X35 A4 80	
250	312145-0291		2	SCREW ISO 2009 MFS M4X12 A4	
450	315115-0153		4	WASHER PLAIN, TBRB 6,4/12 H=3	
900	311103-0305		2	PARALLEL PIN ISO 2338 5M6X10 A1	
TBA 0375S (See drawing on page: 1-278)					

Machine Type | Group Description | Used-In | Group Number | Page No

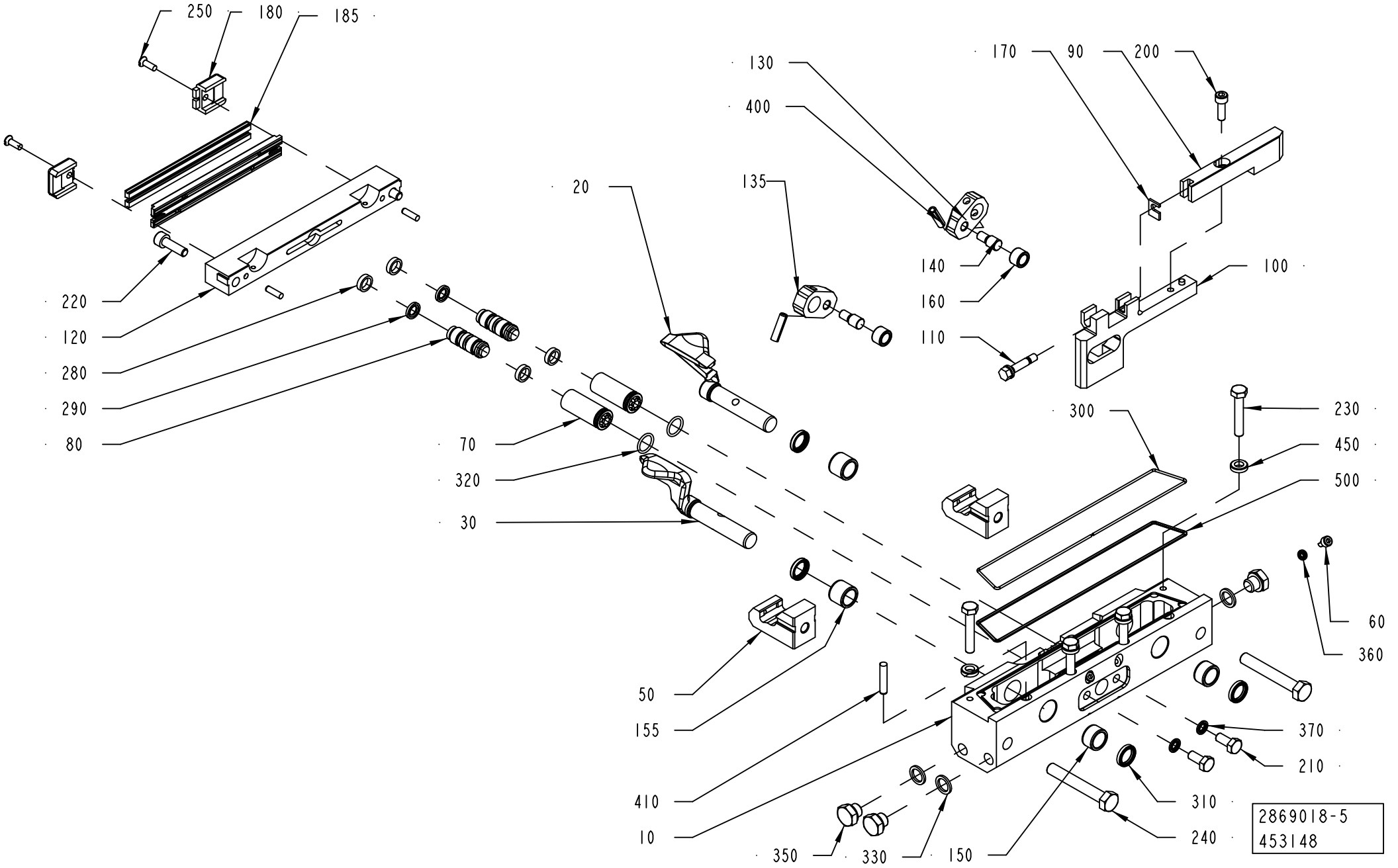
250
180
185
130
400
135
20
170
90
200
140
160
110
100
220
120
280
290
80
70
320
30
300
230
450
500
60
360
50
155
410
10
350
330
150
370
210
310
240
2869018-5
453148

ECM: 496742 - 20110701
Group number: 2869018-0100
Assembly Drawing: 2869018-5_1_AA

This list covers pages from 1-274 to 1-281

Pos	Part No	UN	Qty	Description	Page No
TBA 0375S (Cont'd) (See drawing on page: 1-278)					
010	3067239-0000		1	BEARING HOUSING	
020	3105452-0000		1	FOLDING FLAP	
030	3067241-0000		1	FOLDING FLAP	
090	3067245-0000		1	CARRIER RULER	
100	3067246-0000		1	CARRIER RULER	
110	751579-0000		1	ADJUSTING SCREW	
120	3067244-0000		1	CUTTING JAW	
130	2976823-0000		1	CARRIER	
135	2976823-0000		1	CARRIER	
150	929316-0001		2	BEARING	
155	929316-0002		2	BEARING	
175	3096232-0000		2	CUTTING RAIL	
180	3096233-0000		2	BRACKET	
185	1110083-0005		2	DOLLY	
220	312115-0370		2	SCREW ISO4762 M6X20 A4 80	
230	312105-0376		4	SCREW, M6S ISO 4014 M6X35 A4 80	
250	312145-0291		2	SCREW ISO 2009 MFS M4X12 A4	
450	315115-0153		4	WASHER PLAIN, TBRB 6,4/12 H=3	
TPA 0125SQ (See drawing on page: 1-274)					
010	2906021-0000		1	BEARING HOUSING	
020	2906019-0000		1	FOLDING FLAP	
030	2906020-0000		1	FOLDING FLAP	
090	2845909-0000		1	CARRIER RULER	
100	2906022-0000		1	CARRIER RULER	
110	751579-0000		1	ADJUSTING SCREW	
120	2907732-0000		1	CUTTING JAW	
130	2846012-0000		1	CARRIER	
135	2846012-0000		1	CARRIER	
150	33408-0000		2	BEARING	
155	33408-0000		2	BEARING	
175	2890692-0000		2	CUTTING RAIL	
180	1348053-0000		2	BRACKET	
185	1110083-0003		2	DOLLY	
220	312115-0370		2	SCREW ISO4762 M6X20 A4 80	
230	312105-0374		4	SCREW, M6S ISO 4014 M6X30 A4 80	
250	312145-0291		2	SCREW ISO 2009 MFS M4X12 A4	
450	315105-0153		4	WASHER PLAIN, 6,4X12X1,5 A4 BRB	
900	311103-0305		2	PARALLEL PIN ISO 2338 5M6X10 A1	
TPA 0250SQ, TPA 0200SQ (See drawing on page: 1-274)					
010	2962055-0000		1	BEARING HOUSING	
020	1350985-0000		1	FOLDING FLAP RIGHT	
030	1350986-0000		1	FOLDING FLAP LEFT	
090	1350998-0000		1	CARRIER RULER LEFT	
100	2978921-0000		1	CARRIER RULER	
110	751579-0000		1	ADJUSTING SCREW	
120	2965110-0000		1	3UTTING JAW	
130	272419-0000		1	CARRIER	
135	272419-0000		1	CARRIER	
150	929316-0001		2	BEARING	
155	929316-0002		2	BEARING	
175	2890692-0000		2	CUTTING RAIL	
180	1348053-0000		2	BRACKET	
185	1110083-0003		2	DOLLY	
220	312115-0370		2	SCREW ISO4762 M6X20 A4 80	
230	312105-0376		4	SCREW, M6S ISO 4014 M6X35 A4 80	
250	312145-0291		2	SCREW ISO 2009 MFS M4X12 A4	
450	315115-0153		4	WASHER PLAIN, TBRB 6,4/12 H=3	
900	311103-0305		2	PARALLEL PIN ISO 2338 5M6X10 A1	
TPA 0330SQ (See drawing on page: 1-274)					
010	3002881-0000		1	BEARING HOUSING	
020	3002884-0000		1	FOLDING FLAP	
030	3002883-0000		1	FOLDING FLAP	
090	3002887-0000		1	CARRIER RULER	
100	3002888-0000		1	CARRIER RULER	
110	751579-0000		1	ADJUSTING SCREW	
120	3002882-0000		1	CUTTING JAW	
130	2976823-0000		1	CARRIER	
135	2976823-0000		1	CARRIER	
150	929316-0001		2	BEARING	
155	929316-0002		2	BEARING	
175	2890692-0000		2	CUTTING RAIL	
180	1348053-0000		2	BRACKET	
185	1110083-0003		2	DOLLY	
220	312115-0370		2	SCREW ISO4762 M6X20 A4 80	
230	312105-0376		4	SCREW, M6S ISO 4014 M6X35 A4 80	
250	312145-0291		2	SCREW ISO 2009 MFS M4X12 A4	
450	315115-0153		4	WASHER PLAIN, TBRB 6,4/12 H=3	
900	311103-0305		2	PARALLEL PIN ISO 2338 5M6X10 A1	
Common Parts					
050	2888463-0000		2	CATCH	
060	752476-0000		2	SCREW	
070	752288-0000		2	SLEEVE	
080	752115-0000		2	PLUNGER	

Machine Type | Group Description | Used-In | Group Number | Page No

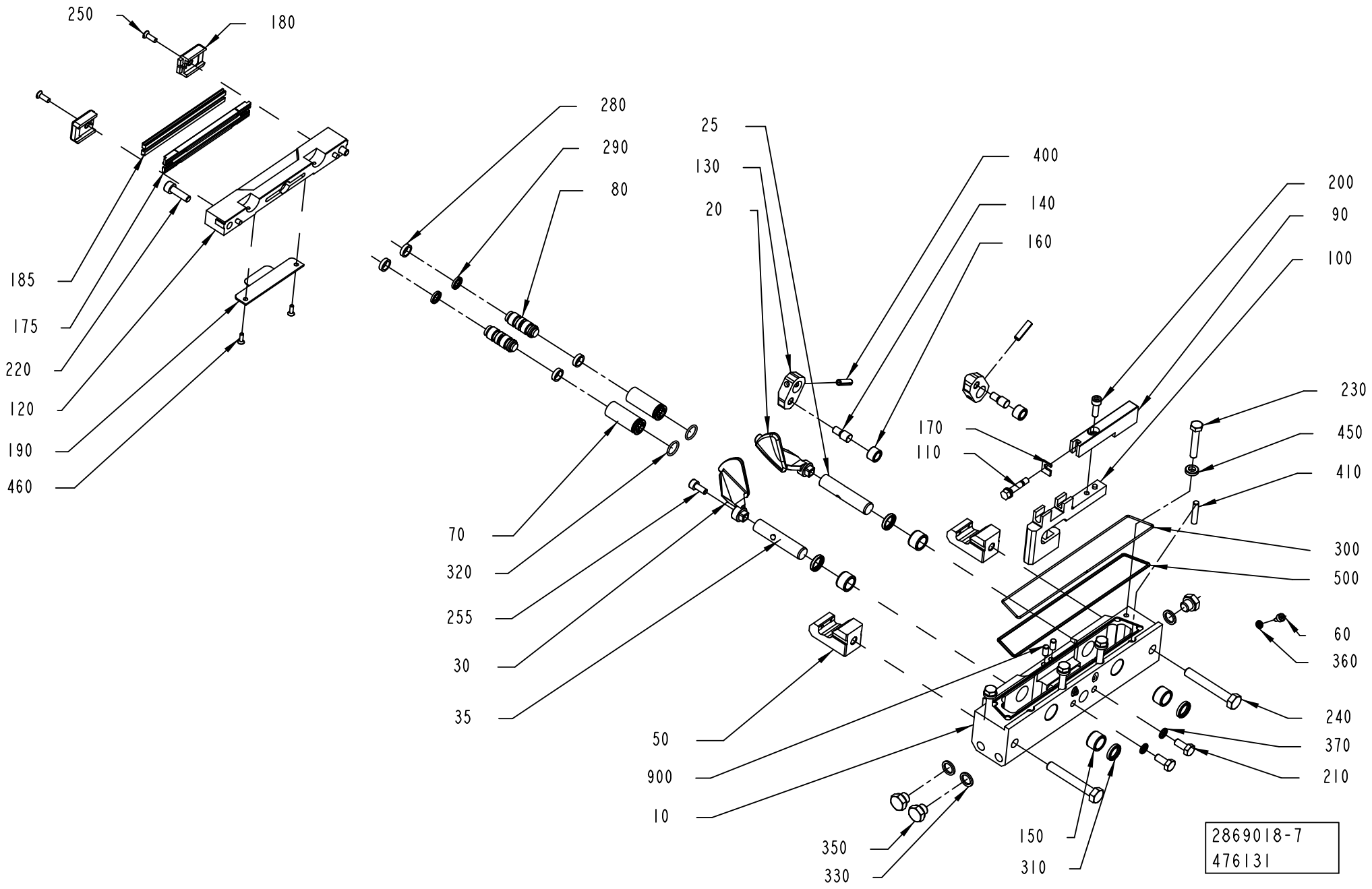
250
180
185
175
220
120
190
460
280
290
80
25
130
20
400
140
160
200
90
100
230
450
410
170
110
70
320
255
30
35
50
900
10
300
500
60
360
240
370
210
350
330
150
310
2869018-7
476131

ECM: 496742 - 20110701
Group number: 2869018-0100
Assembly Drawing: 2869018-7_1_AA

This list covers pages from 1-274 to 1-281

Pos	Part No	UN	Qty	Description	Page No
Common Parts (Cont'd)					
140	256607-0000		2	AXLE PIN	
160	22463-0000		2	ROLL	
170	751580-0000		1	SHIM	
200	312115-0329		1	SCREW ISO4762 M5X16 A4 80	
210	312105-0367		2	SCREW, M6S ISO 4017 M6X14 A4 80	
240	312105-0462		2	SCREW, M6S ISO 4014 M8X55 A4 80	
280	90091-0169		4	WEAR RING 12X15X3,2 MM	
290	90091-0216		2	PISTON SEAL GLYD RING 7,1X12X2,2 MM	
300	90242-0093	MM	500	O-RING MATERIAL 1,5 MM	
310	90459-5936		4	BEARING SEAL 12X16X3 MM	
320	315202-0110		2	O-RING 12,1X1,6 MM	
330	315237-0109		3	WASHER,PL.RND.AL.10/14,H=1,5	
350	90330-0066		3	PLUG, G1/8EXT, G1/8	
360	315211-0101		2	BONDED SEAL SS/NBR90 M4	
370	315211-0103		2	BONDED SEAL SS/NBR90 M6	
400	311111-0308		2	SPRING PIN ISO 8752 5X20-ST	
410	311103-0312		1	PARALLEL PIN ISO 2338 5M6X25 A1	
500	90153-0015		1	ADHESIVE,LOCTITE IS 496/CYANOLOT 303	

Pos	Part No	UN	Qty	Description	Page No

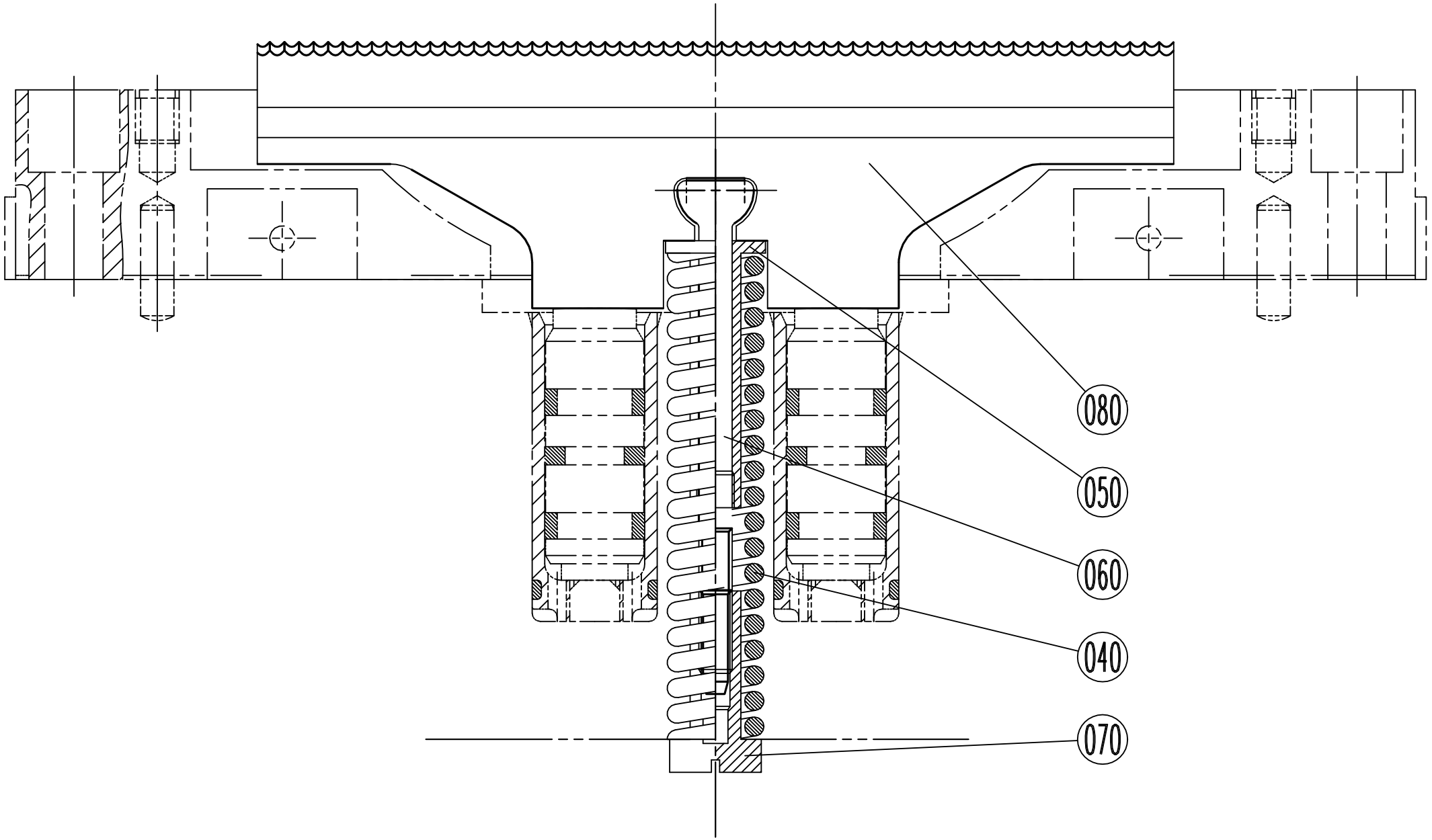
080
050
060
040
070

Pos	Part No	UN	Qty	Description	Page No
TBA 0100B IH, TBA 0125S IH, TPA 0125SQ, TBA 0080S (See drawing on page: 1-284)					
040	1538109-0000		1	COMPRESSION SPRING	
080	1282645-0000		1	KNIFE	
TBA 0160S IH, TBA 0200M IH, TBA 0200S IH, TBA 0250S IH, TBA 0200E (See drawing on page: 1-286)					
040	1538109-0000		1	COMPRESSION SPRING	
080	1282647-0000		1	KNIFE	
TBA 0200B IH, TBA 0200SQ IH, TBA 0250B IH, TBA 0300S IH, TBA 0284B IH, TBA 0330S IH, TPA 0250SQ IH, TPA 0330SQ IH, TPA 0200SQ IH, TBA 0250SQ IH (See drawing on page: 1-282)					
040	1538109-0000		1	COMPRESSION SPRING	
080	1282646-0000		1	KNIFE	
TBA 0375S (See drawing on page: 1-282)					
040	1538109-0000		1	COMPRESSION SPRING	
080	3096231-0000		1	KNIFE	
Common Parts					
050	272753-0000		1	STEERING	
060	456009-0000		1	LINK	
070	272755-0000		1	NUT	

Pos	Part No	UN	Qty	Description	Page No

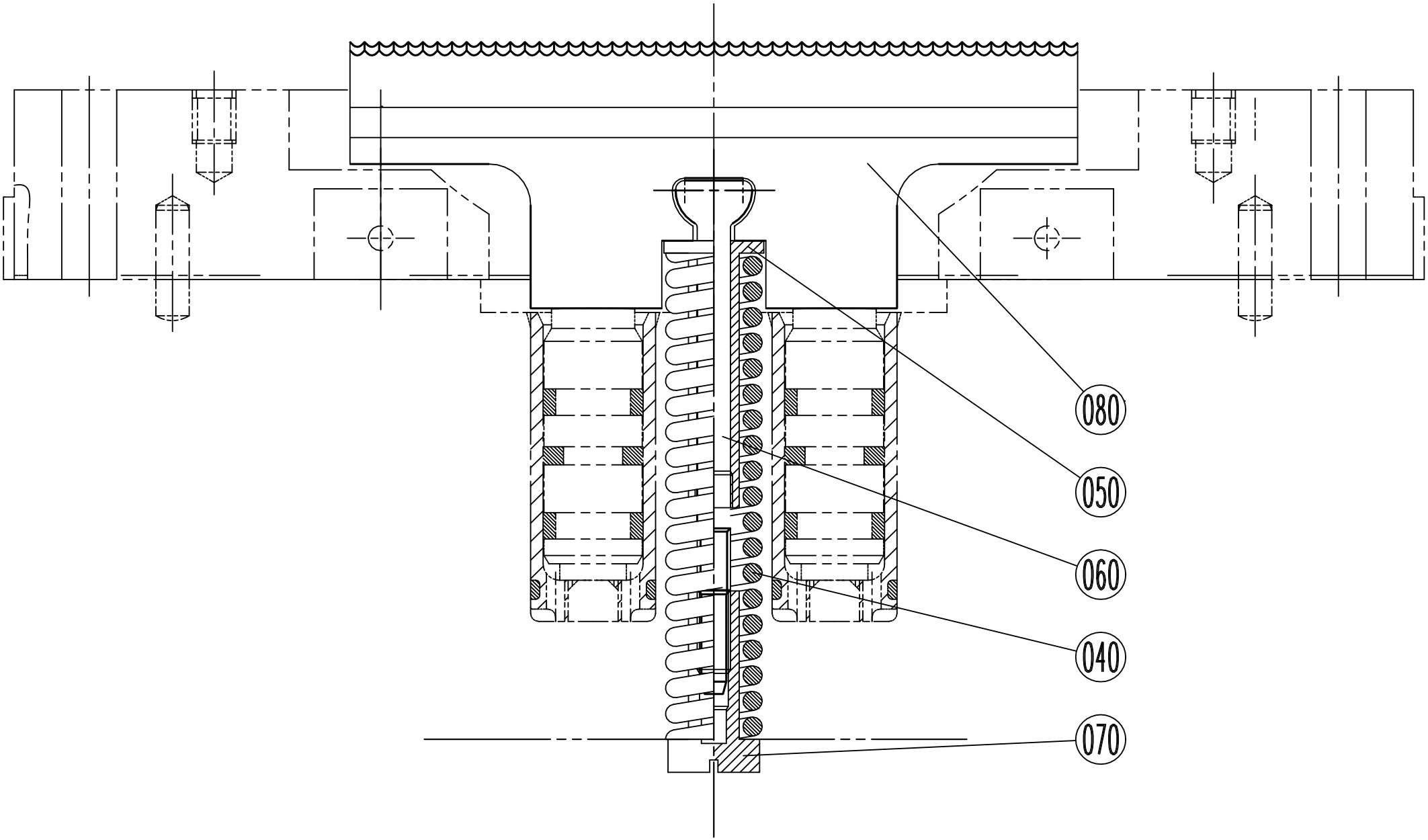
080
050
060
040
070

Pos	Part No	UN	Qty	Description	Page No
TBA 0100B IH, TBA 0125S IH, TPA 0125SQ, TBA 0080S (See drawing on page: 1-284)					
040	1538109-0000		1	COMPRESSION SPRING	
080	1282645-0000		1	KNIFE	
TBA 0160S IH, TBA 0200M IH, TBA 0200S IH, TBA 0250S IH, TBA 0200E (See drawing on page: 1-286)					
040	1538109-0000		1	COMPRESSION SPRING	
080	1282647-0000		1	KNIFE	
TBA 0200B IH, TBA 0200SQ IH, TBA 0250B IH, TBA 0300S IH, TBA 0284B IH, TBA 0330S IH, TPA 0250SQ IH, TPA 0330SQ IH, TPA 0200SQ IH, TBA 0250SQ IH (See drawing on page: 1-282)					
040	1538109-0000		1	COMPRESSION SPRING	
080	1282646-0000		1	KNIFE	
TBA 0375S (See drawing on page: 1-282)					
040	1538109-0000		1	COMPRESSION SPRING	
080	3096231-0000		1	KNIFE	
Common Parts					
050	272753-0000		1	STEERING	
060	456009-0000		1	LINK	
070	272755-0000		1	NUT	

Pos	Part No	UN	Qty	Description	Page No

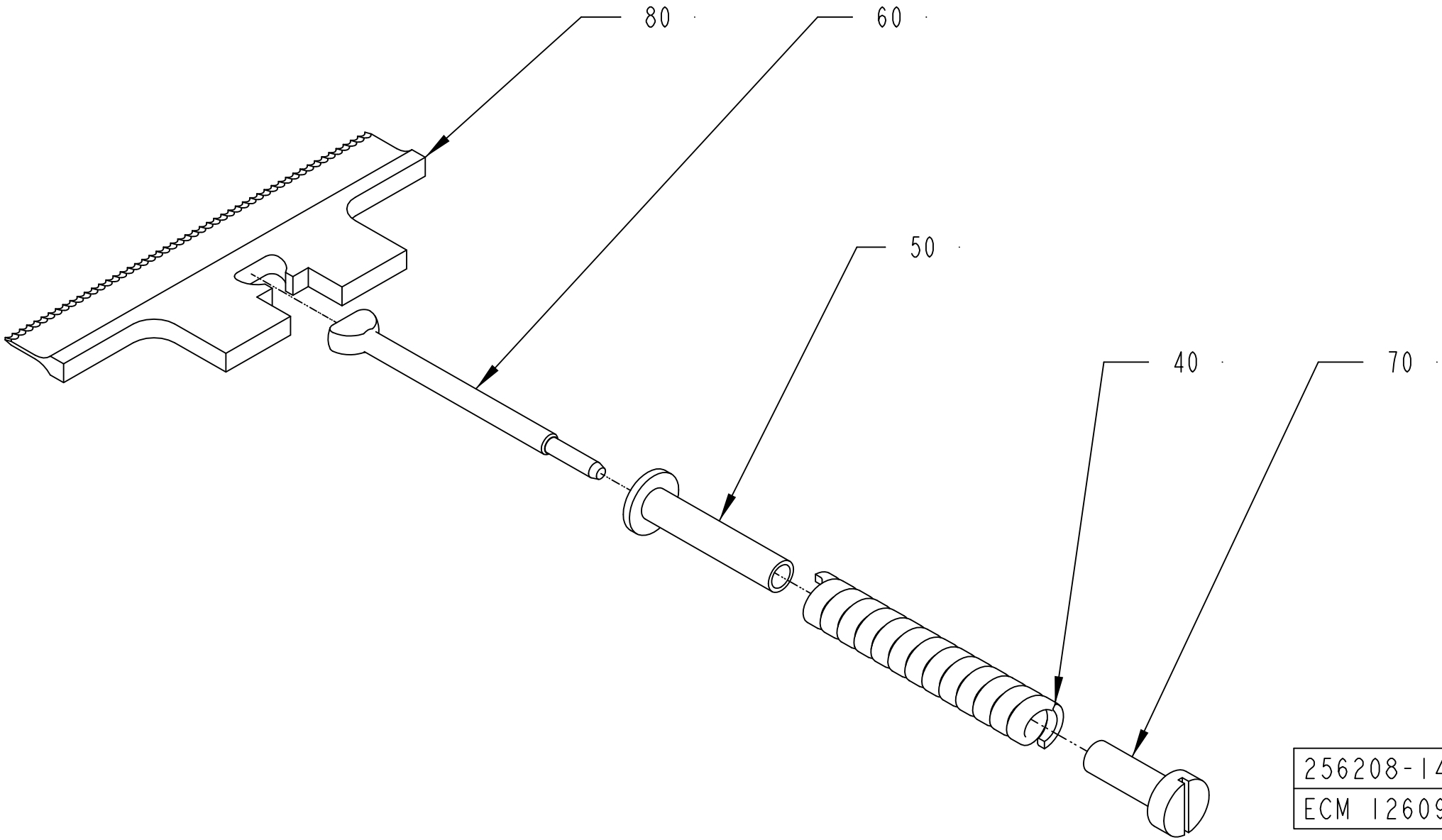
80
60
50
40
70
256208-14
ECM 126095

Pos	Part No	UN	Qty	Description	Page No
TBA 0100B IH, TBA 0125S IH, TPA 0125SQ, TBA 0080S (See drawing on page: 1-284)					
040	1538109-0000		1	COMPRESSION SPRING	
080	1282645-0000		1	KNIFE	
TBA 0160S IH, TBA 0200M IH, TBA 0200S IH, TBA 0250S IH, TBA 0200E (See drawing on page: 1-286)					
040	1538109-0000		1	COMPRESSION SPRING	
080	1282647-0000		1	KNIFE	
TBA 0200B IH, TBA 0200SQ IH, TBA 0250B IH, TBA 0300S IH, TBA 0284B IH, TBA 0330S IH, TPA 0250SQ IH, TPA 0330SQ IH, TPA 0200SQ IH, TBA 0250SQ IH (See drawing on page: 1-282)					
040	1538109-0000		1	COMPRESSION SPRING	
080	1282646-0000		1	KNIFE	
TBA 0375S (See drawing on page: 1-282)					
040	1538109-0000		1	COMPRESSION SPRING	
080	3096231-0000		1	KNIFE	
Common Parts					
050	272753-0000		1	STEERING	
060	456009-0000		1	LINK	
070	272755-0000		1	NUT	

Pos	Part No	UN	Qty	Description	Page No

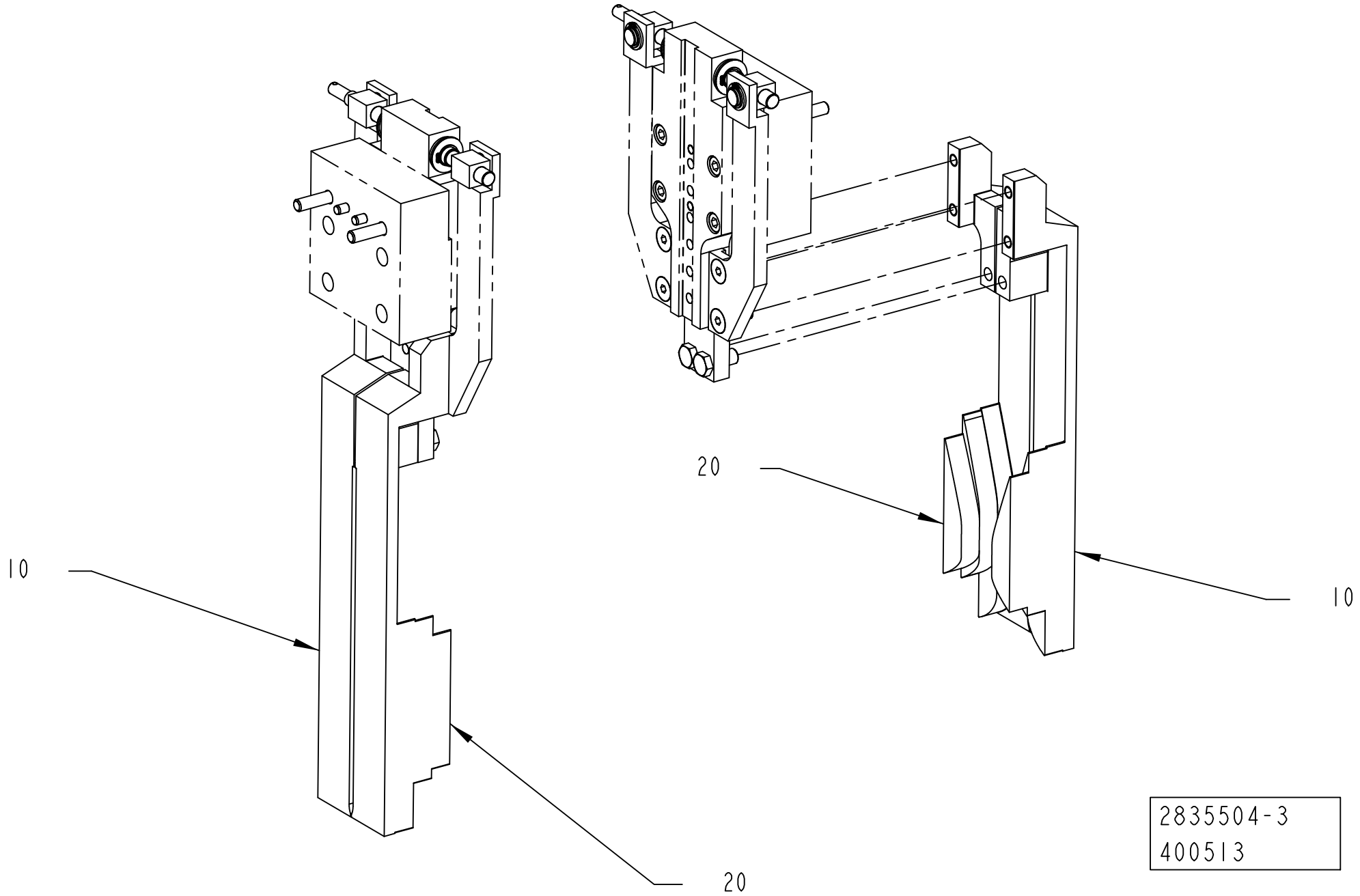
10
20
20
10
2835504-3
400513

Pos	Part No	UN	Qty	Description	Page No
TBA 0080S (See drawing on page: 1-288)					
010	2950899-0000		2	VOLUME CAM	
020	2950898-0000		2	VOLUME CAM	
TBA 0100B, TBA 0125S (See drawing on page: 1-288)					
010	2919188-0000		2	VOLUME CAM	
020	2919189-0000		2	VOLUME CAM	
TBA 0160S, TBA 0200S (See drawing on page: 1-288)					
010	3033710-0000		2	VOLUME CAM	
020	3033711-0000		2	VOLUME CAM	
TBA 0200B, TBA 0250B, TBA 0330S (See drawing on page: 1-288)					
010	2914861-0000		2	VOLUME CAM	
020	2914860-0000		2	VOLUME CAM	
TBA 0200E (See drawing on page: 1-290)					
010	3100667-0000		1	VOLUME CAM	
015	3100668-0000		1	VOLUME CAM	
020	3100669-0000		1	VOLUME CAM	
025	3100670-0000		1	VOLUME CAM	
TBA 0200M, TBA 0250S (See drawing on page: 1-288)					
010	2985871-0000		2	VOLUME CAM	
020	2985870-0000		2	VOLUME CAM	
TBA 0200SQ, TBA 0250SQ (See drawing on page: 1-288)					
010	2977885-0000		2	VOLUME CAM	
020	2977884-0000		2	VOLUME CAM	
TBA 0284B, TBA 0300S (See drawing on page: 1-288)					
010	3014099-0000		2	VOLUME CAM	
020	3014100-0000		2	VOLUME CAM	
TBA 0375S (See drawing on page: 1-288)					
010	3067290-0000		2	VOLUME CAM	
020	3067289-0000		2	VOLUME CAM	
TPA 0125SQ (See drawing on page: 1-288)					
010	2911790-0000		2	VOLUME CAM	
020	2911791-0000		2	VOLUME CAM	
TPA 0250SQ, TPA 0200SQ (See drawing on page: 1-288)					
010	2986989-0000		2	VOLUME CAM	
020	2986990-0000		2	VOLUME CAM	
TPA 0330SQ (See drawing on page: 1-288)					
010	3007870-0000		2	VOLUME CAM	
020	3007871-0000		2	VOLUME CAM	

Pos	Part No	UN	Qty	Description	Page No

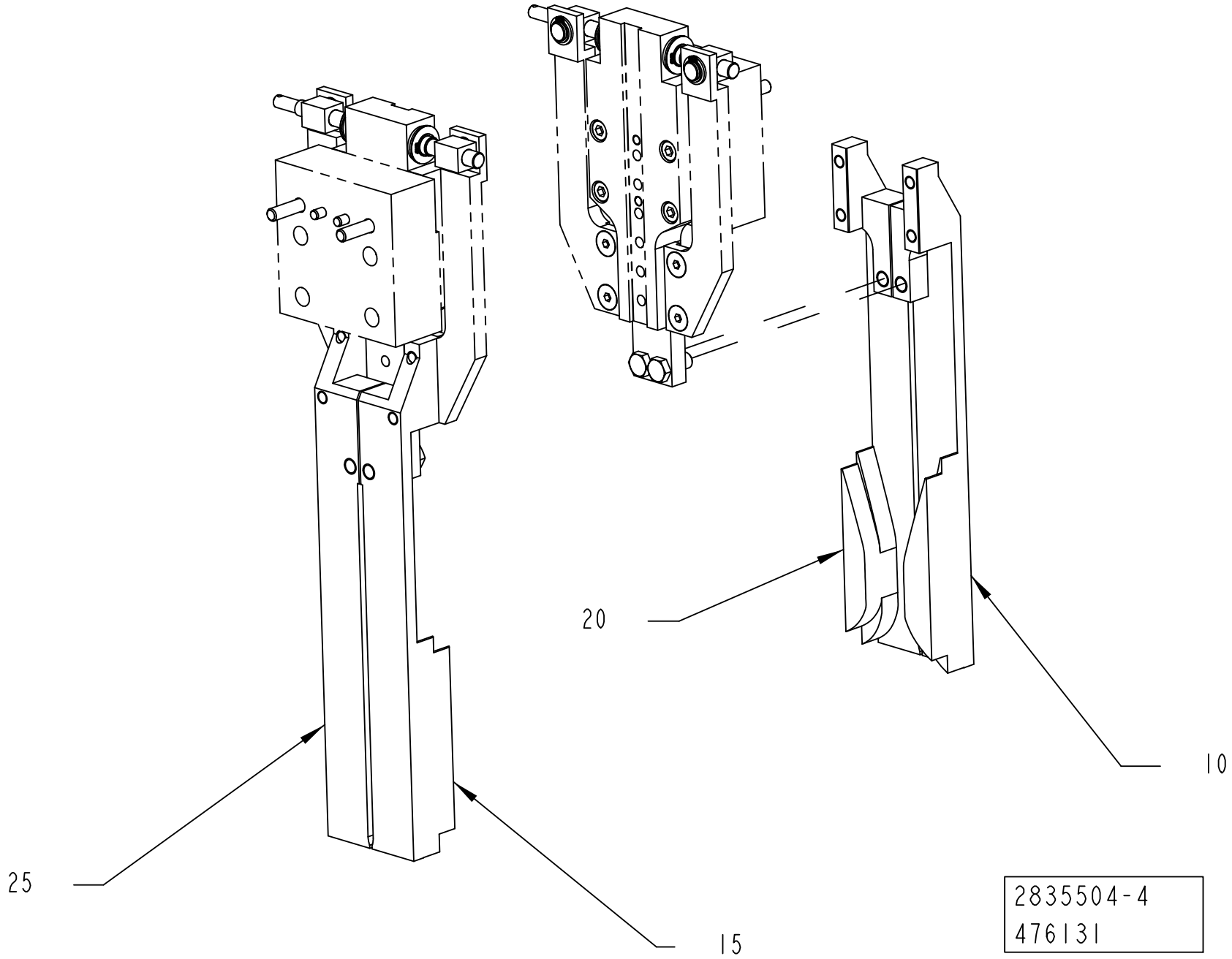
25
15
20
10
2835504-4
476131

Pos	Part No	UN	Qty	Description	Page No
TBA 0080S (See drawing on page: 1-288)					
010	2950899-0000		2	VOLUME CAM	
020	2950898-0000		2	VOLUME CAM	
TBA 0100B, TBA 0125S (See drawing on page: 1-288)					
010	2919188-0000		2	VOLUME CAM	
020	2919189-0000		2	VOLUME CAM	
TBA 0160S, TBA 0200S (See drawing on page: 1-288)					
010	3033710-0000		2	VOLUME CAM	
020	3033711-0000		2	VOLUME CAM	
TBA 0200B, TBA 0250B, TBA 0330S (See drawing on page: 1-288)					
010	2914861-0000		2	VOLUME CAM	
020	2914860-0000		2	VOLUME CAM	
TBA 0200E (See drawing on page: 1-290)					
010	3100667-0000		1	VOLUME CAM	
015	3100668-0000		1	VOLUME CAM	
020	3100669-0000		1	VOLUME CAM	
025	3100670-0000		1	VOLUME CAM	
TBA 0200M, TBA 0250S (See drawing on page: 1-288)					
010	2985871-0000		2	VOLUME CAM	
020	2985870-0000		2	VOLUME CAM	
TBA 0200SQ, TBA 0250SQ (See drawing on page: 1-288)					
010	2977885-0000		2	VOLUME CAM	
020	2977884-0000		2	VOLUME CAM	
TBA 0284B, TBA 0300S (See drawing on page: 1-288)					
010	3014099-0000		2	VOLUME CAM	
020	3014100-0000		2	VOLUME CAM	
TBA 0375S (See drawing on page: 1-288)					
010	3067290-0000		2	VOLUME CAM	
020	3067289-0000		2	VOLUME CAM	
TPA 0125SQ (See drawing on page: 1-288)					
010	2911790-0000		2	VOLUME CAM	
020	2911791-0000		2	VOLUME CAM	
TPA 0250SQ, TPA 0200SQ (See drawing on page: 1-288)					
010	2986989-0000		2	VOLUME CAM	
020	2986990-0000		2	VOLUME CAM	
TPA 0330SQ (See drawing on page: 1-288)					
010	3007870-0000		2	VOLUME CAM	
020	3007871-0000		2	VOLUME CAM	

Pos	Part No	UN	Qty	Description	Page No

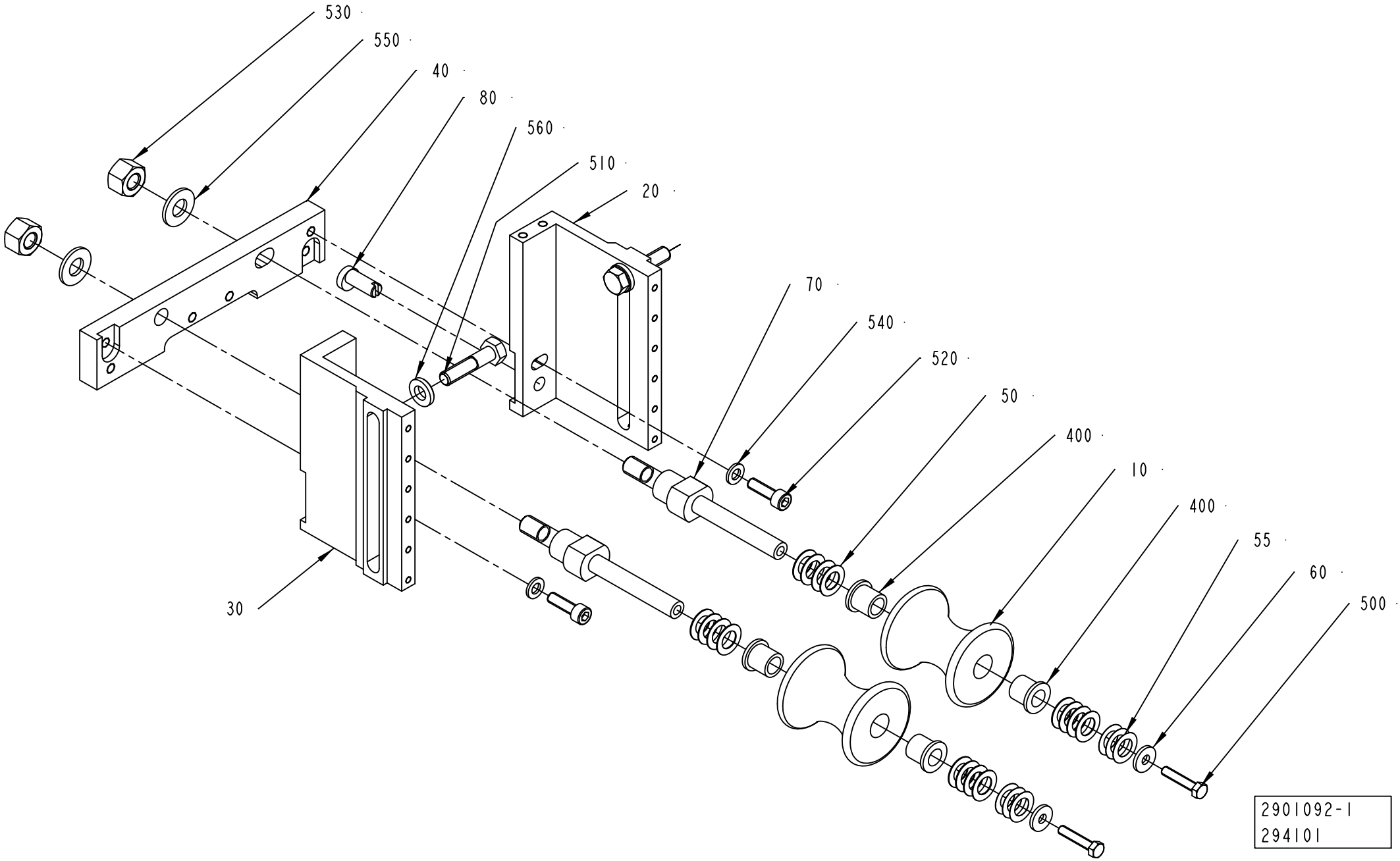
530
550
40
80
560
510
20
70
540
520
50
400
10
400
55
60
500
30
2901092-1
294101

ECM: 484762 - 20110401
Group number: 2901092-0100
Assembly Drawing: 2901092-1_1_AA

Pos	Part No	UN	Qty	Description	Page No
TBA 0080S					
010	2950897-0000		2	ROLLER	
040	2961520-0003		1	BRACKET	
050	2033-0009		16	WASHER	
055	2033-0014		6	WASHER	
070	2939843-0000		2	PIN	
TBA 0100B, TBA 0125S					
010	2964307-0000		2	ROLLER	
040	2961520-0003		1	BRACKET	
050	2033-0009		16	WASHER	
055	2033-0014		6	WASHER	
070	2939843-0000		2	PIN	
TBA 0160S, TBA 0200S					
010	2947531-0000		2	ROLLER	
040	2961520-0004		1	BRACKET	
050	2033-0009		16	WASHER	
055	2033-0014		6	WASHER	
070	2939843-0000		2	PIN	
TBA 0200B, TBA 0200SQ, TBA 0284B, TBA 0250B, TBA 0300S, TBA 0330S, TBA 0250SQ					
010	2959274-0000		2	ROLLER	
040	2961520-0002		1	BRACKET	
050	2033-0009		16	WASHER	
055	2033-0014		6	WASHER	
070	2939843-0000		2	PIN	
TBA 0200E					
010	574385-0000		2	ROLLER TBA250SL	
040	2961520-0001		1	BRACKET	
050	2033-0009		8	WASHER	
055	2033-0014		4	WASHER	
070	3047987-0000		2	PIN	
TBA 0200M, TBA 0250S					
010	574385-0000		2	ROLLER TBA250SL	
040	2961520-0001		1	BRACKET	
050	2033-0009		16	WASHER	
055	2033-0014		6	WASHER	
070	2939843-0000		2	PIN	
TBA 0375S					
010	3092802-0000		2	ROLLER	
040	2961520-0002		1	BRACKET	
050	2033-0009		16	WASHER	
055	2033-0014		6	WASHER	
070	2939843-0000		2	PIN	

Pos	Part No	UN	Qty	Description	Page No
TPA 0125SQ					
010	2950996-0000		2	ROLLER	
040	2961520-0003		1	BRACKET	
050	2033-0009		16	WASHER	
055	2033-0014		6	WASHER	
070	2939843-0000		2	PIN	
TPA 0250SQ, TPA 0200SQ					
010	978760-0000		2	ROLLER TBA200SL	
040	2961520-0004		1	BRACKET	
050	2033-0009		16	WASHER	
055	2033-0014		6	WASHER	
070	2939843-0000		2	PIN	
TPA 0330SQ					
010	929355-0000		2	ROLLER TPA 330	
040	2961520-0002		1	BRACKET	
050	2033-0009		16	WASHER	
055	2033-0014		6	WASHER	
070	2939843-0000		2	PIN	
Common Parts					
020	1511406-0000		1	BRACKET	
030	1511407-0000		1	BRACKET	
060	27815-0000		2	WASHER	
080	1511404-0000		1	ECCENTRIC SHAFT	
400	90240-0180		4	FLANGE BUSHING 10X14X15MM	
500	312105-0333		2	SCREW, M6S ISO 4017 M5X25 A4 80	
510	312105-0457		2	SCREW, M6S ISO 4014 M8X35 A4 80	
520	312115-0370		2	SCREW ISO4762 M6X20 A4 80	
530	312811-0320		2	NUT HEX.LOCK HELI COIL MID GRIP M10 SS	
540	315105-0153		2	WASHER PLAIN, 6,4X12X1,5 A4 BRB	
550	315105-0173		2	WASHER PLAIN, 10,5X22X2 A4 BRB	
560	315115-0165		2	WASHER PLAIN, TBRB 8,4/16 H=3	

Machine Type | Group Description | Used-In | Group Number | Page No

PHOTOCELL UNIT

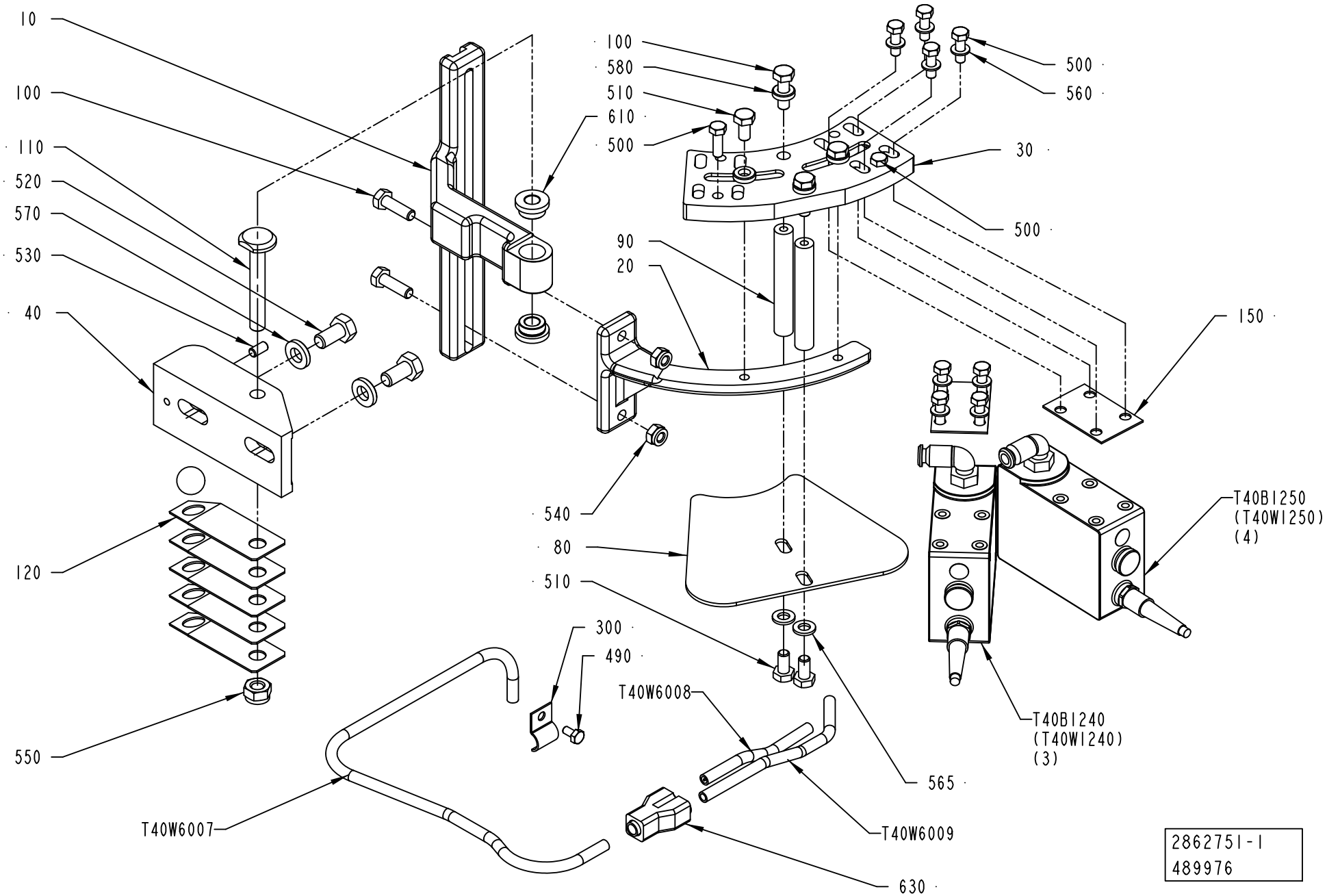

ECM: 496378 - 20110701
Group number: 2862751-0100
Assembly Drawing: 2862751-1_1_AC

This list covers pages from 1-294 to 1-297

Pos	Part No	UN	Qty	Description	Page No
TBA 0100B, TBA 0125S, TBA 0160S, TBA 0200M, TBA 0200S, TBA 0250S, TBA 0375S, TPA 0330SQ, TPA 0250SQ, TPA 0200SQ, TBA 0200E (See drawing on page: 1-296)					
020	751476-0000		1	CANTILEVER	
030	491880-0000		1	FASTENING PLATE	
060	752554-0000		4	SPACER	
080	1260487-0000		1	PLATE	
090	1260491-0000		2	NUT	
170	312109-0335		8	SCREW, M6S ISO 4017 M5X30 A4 80	
500	312105-0329		2	SCREW, M6S ISO 4017 M5X16 A4 80	
TBA 0200B, TBA 0200SQ, TBA 0284B, TBA 0250B, TBA 0300S, TBA 0330S, TBA 0250SQ (See drawing on page: 1-294)					
020	751457-0000		1	CANTILEVER	
030	978735-0000		1	FASTENING PLATE	
080	1260486-0000		1	PLATE	
090	1260490-0000		2	NUT	
150	536374-0000		2	WASHER	
500	312105-0329		10	SCREW, M6S ISO 4017 M5X16 A4 80	
TPA 0125SQ, TBA 0080S (See drawing on page: 1-296)					
020	2844252-0000		1	CANTILEVER	
030	2844253-0000		1	FASTENING PLATE	
060	752554-0000		4	SPACER	
080	1260487-0000		1	PLATE	
090	1260491-0000		2	NUT	
170	312109-0335		8	SCREW, M6S ISO 4017 M5X30 A4 80	
500	312105-0329		2	SCREW, M6S ISO 4017 M5X16 A4 80	
Common Parts					
010	2815756-0000		1	HOLDER	
040	490876-0000		1	BRACKET	
100	312105-0370		4	SCREW, M6S ISO 4017 M6X20 A4 80	
110	457367-0000		1	SHAFT	
120	457368-0000		5	SPRING	
300	90074-0001		1	CABLE CLIPS, D=10 MM	
310	90601-1727		1	STEEL BALL 15MM, RB-15 INOX316	
320	90166-0132	MM	750	TUBE 6 MM PA,TRANSP.	
490	312105-0287		1	SCREW, M6S ISO 4017 M4X8 A4 70	
510	312105-0366		4	SCREW, M6S ISO 4017 M6X12 A4 80	
520	312105-0449		2	SCREW, M6S ISO 4017 M8X16 A4 80	
530	312318-0325		1	SET SCREW, CUP END ISO4029 M5X10 A4	
540	312812-0316		2	HEXAGON NUT, NY-LOCK M6 A4 80	
550	312812-0318		1	HEXAGON NUT, NY-LOCK M8 A4 80	
560	315105-0146		8	WASHER PLAIN, 5,3X10X1 A4 BRB	
565	315105-0153		2	WASHER PLAIN, 6,4X12X1,5 A4 BRB	
570	315115-0165		2	WASHER PLAIN, TBRB 8,4/16 H=3	
580	315115-0153		4	WASHER PLAIN, TBRB 6,4/12 H=3	
610	321101-0143		2	FLANGE BUSHING, 8/14X8-18X3 MM	
630	90055-0100		1	Y-CONNECTION, 6-6	
T40B1240	90458-0601		1	CONTRAST SCANNER, KT15W-P2110S01	
	342732-0102		*1*	*ELBOW PIPE JOINT, EXT.THREAD, D=6MM-G1/8*	
T40B1250	90458-0601		1	CONTRAST SCANNER, KT15W-P2110S01	
	342732-0102		*1*	*ELBOW PIPE JOINT, EXT.THREAD, D=6MM-G1/8*	

Machine Type | Group Description | Used-In | Group Number | Page No

PHOTOCELL UNIT

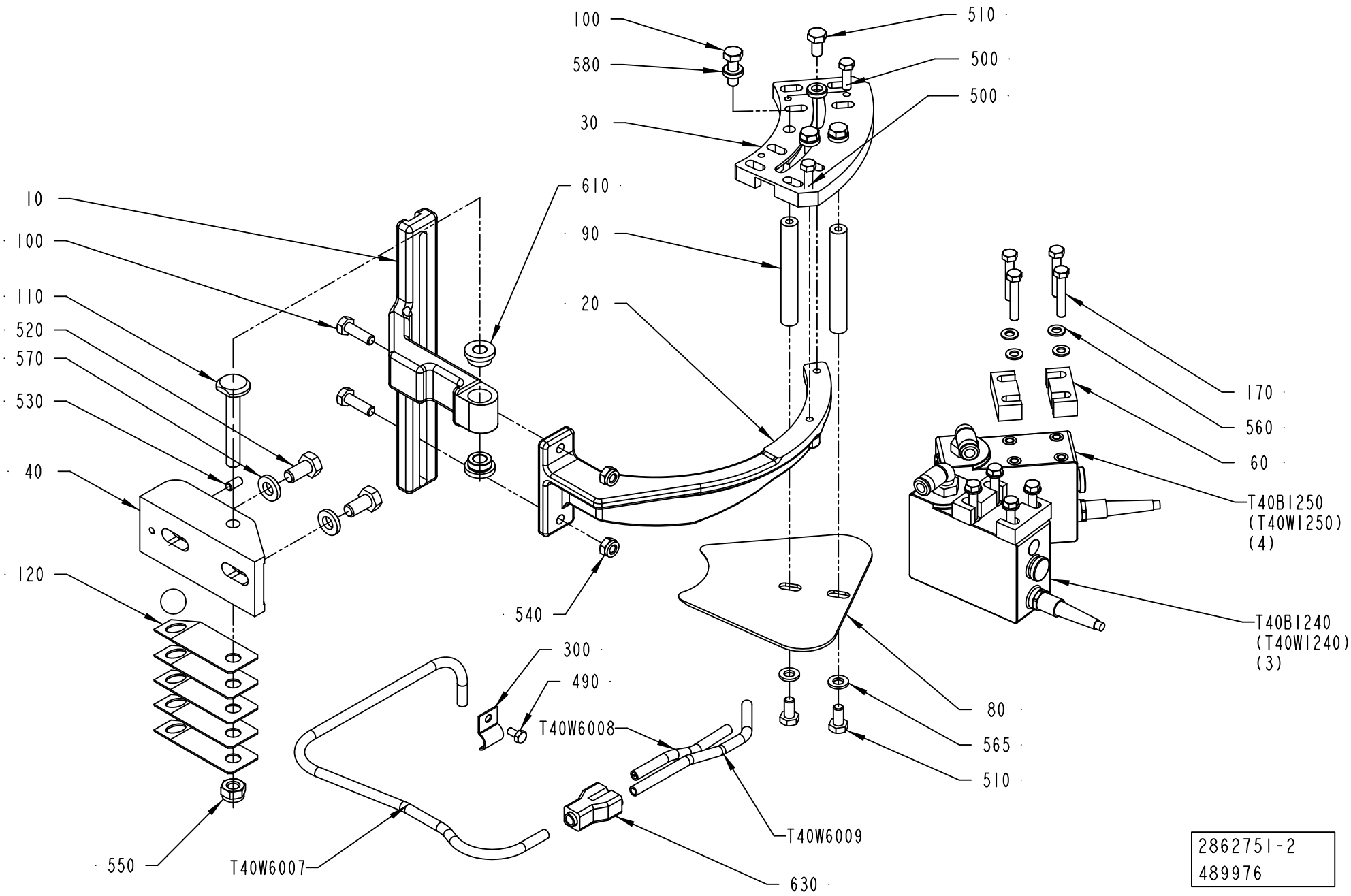

2862751-2
489976

ECM: 496378 - 20110701
Group number: 2862751-0100
Assembly Drawing: 2862751-2_1_AC

This list covers pages from 1-294 to 1-297

Pos	Part No	UN	Qty	Description	Page No
TBA 0100B, TBA 0125S, TBA 0160S, TBA 0200M, TBA 0200S, TBA 0250S, TBA 0375S, TPA 0330SQ, TPA 0250SQ, TPA 0200SQ, TBA 0200E (See drawing on page: 1-296)					
020	751476-0000		1	CANTILEVER	
030	491880-0000		1	FASTENING PLATE	
060	752554-0000		4	SPACER	
080	1260487-0000		1	PLATE	
090	1260491-0000		2	NUT	
170	312109-0335		8	SCREW, M6S ISO 4017 M5X30 A4 80	
500	312105-0329		2	SCREW, M6S ISO 4017 M5X16 A4 80	
TBA 0200B, TBA 0200SQ, TBA 0284B, TBA 0250B, TBA 0300S, TBA 0330S, TBA 0250SQ (See drawing on page: 1-294)					
020	751457-0000		1	CANTILEVER	
030	978735-0000		1	FASTENING PLATE	
080	1260486-0000		1	PLATE	
090	1260490-0000		2	NUT	
150	536374-0000		2	WASHER	
500	312105-0329		10	SCREW, M6S ISO 4017 M5X16 A4 80	
TPA 0125SQ, TBA 0080S (See drawing on page: 1-296)					
020	2844252-0000		1	CANTILEVER	
030	2844253-0000		1	FASTENING PLATE	
060	752554-0000		4	SPACER	
080	1260487-0000		1	PLATE	
090	1260491-0000		2	NUT	
170	312109-0335		8	SCREW, M6S ISO 4017 M5X30 A4 80	
500	312105-0329		2	SCREW, M6S ISO 4017 M5X16 A4 80	
Common Parts					
010	2815756-0000		1	HOLDER	
040	490876-0000		1	BRACKET	
100	312105-0370		4	SCREW, M6S ISO 4017 M6X20 A4 80	
110	457367-0000		1	SHAFT	
120	457368-0000		5	SPRING	
300	90074-0001		1	CABLE CLIPS, D=10 MM	
310	90601-1727		1	STEEL BALL 15MM, RB-15 INOX316	
320	90166-0132	MM	750	TUBE 6 MM PA,TRANSP.	
490	312105-0287		1	SCREW, M6S ISO 4017 M4X8 A4 70	
510	312105-0366		4	SCREW, M6S ISO 4017 M6X12 A4 80	
520	312105-0449		2	SCREW, M6S ISO 4017 M8X16 A4 80	
530	312318-0325		1	SET SCREW, CUP END ISO4029 M5X10 A4	
540	312812-0316		2	HEXAGON NUT, NY-LOCK M6 A4 80	
550	312812-0318		1	HEXAGON NUT, NY-LOCK M8 A4 80	
560	315105-0146		8	WASHER PLAIN, 5,3X10X1 A4 BRB	
565	315105-0153		2	WASHER PLAIN, 6,4X12X1,5 A4 BRB	
570	315115-0165		2	WASHER PLAIN, TBRB 8,4/16 H=3	
580	315115-0153		4	WASHER PLAIN, TBRB 6,4/12 H=3	
610	321101-0143		2	FLANGE BUSHING, 8/14X8-18X3 MM	
630	90055-0100		1	Y-CONNECTION, 6-6	
T40B1240	90458-0601		1	CONTRAST SCANNER, KT15W-P2110S01	
	342732-0102		*1*	*ELBOW PIPE JOINT, EXT.THREAD, D=6MM-G1/8*	
T40B1250	90458-0601		1	CONTRAST SCANNER, KT15W-P2110S01	
	342732-0102		*1*	*ELBOW PIPE JOINT, EXT.THREAD, D=6MM-G1/8*	

Machine Type | Group Description | Used-In | Group Number | Page No

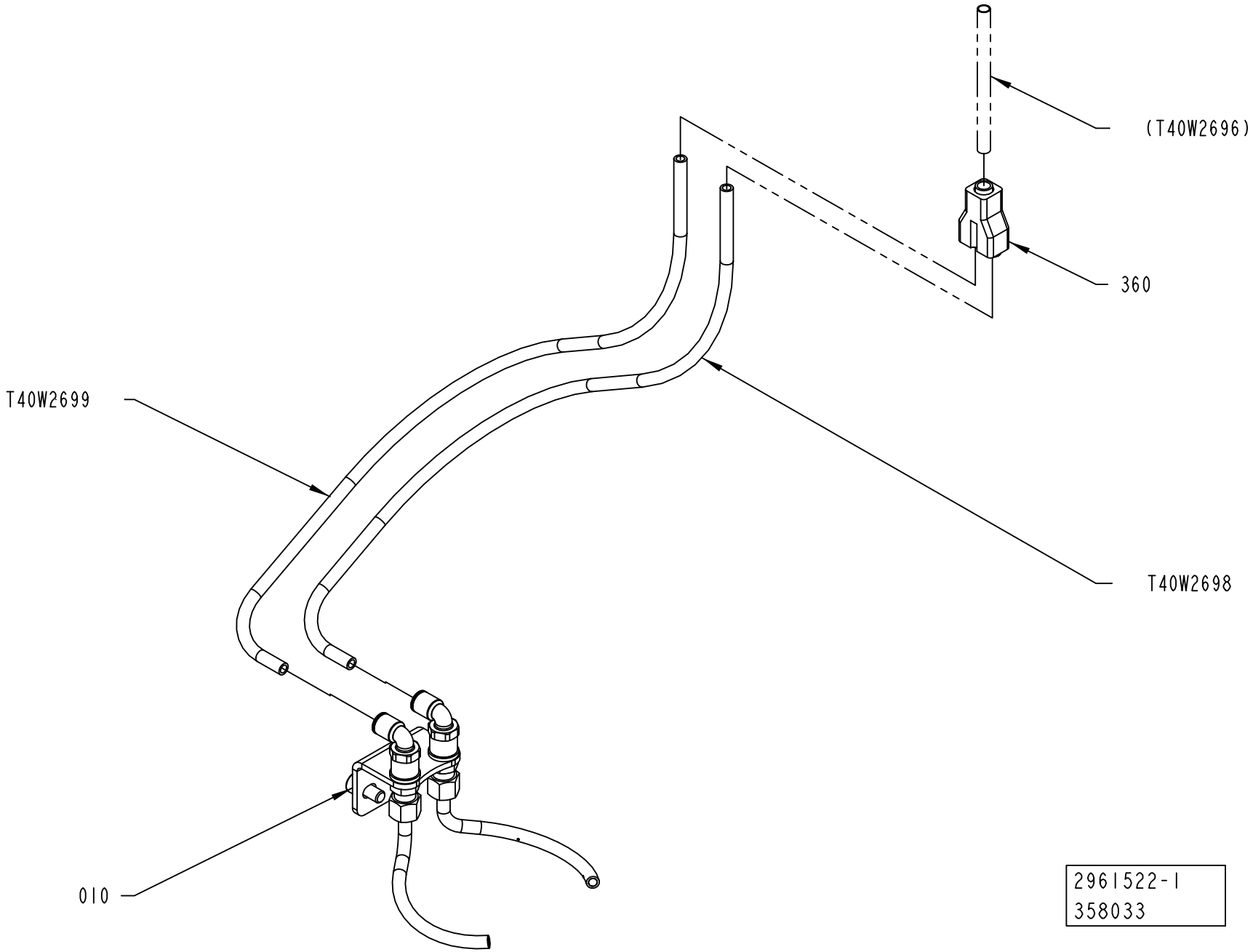
(T40W2696)
360
T40W2699
T40W2698
010
2961522-1
358033

ECM: 484764 - 20110401
Group number: 2961522-0100
Assembly Drawing: 2961522-1_1_AA

Pos	Part No	UN	Qty	Description	Page No
-					
010	2961521-0100		1	NOZZLE	**1-301**
360	90055-0100		1	Y-CONNECTION, 6-6	
T40W2698	90166-0132	MM	220	TUBE 6 MM PA,TRANSP.	
T40W2699	90166-0132	MM	200	TUBE 6 MM PA,TRANSP.	

Pos	Part No	UN	Qty	Description	Page No

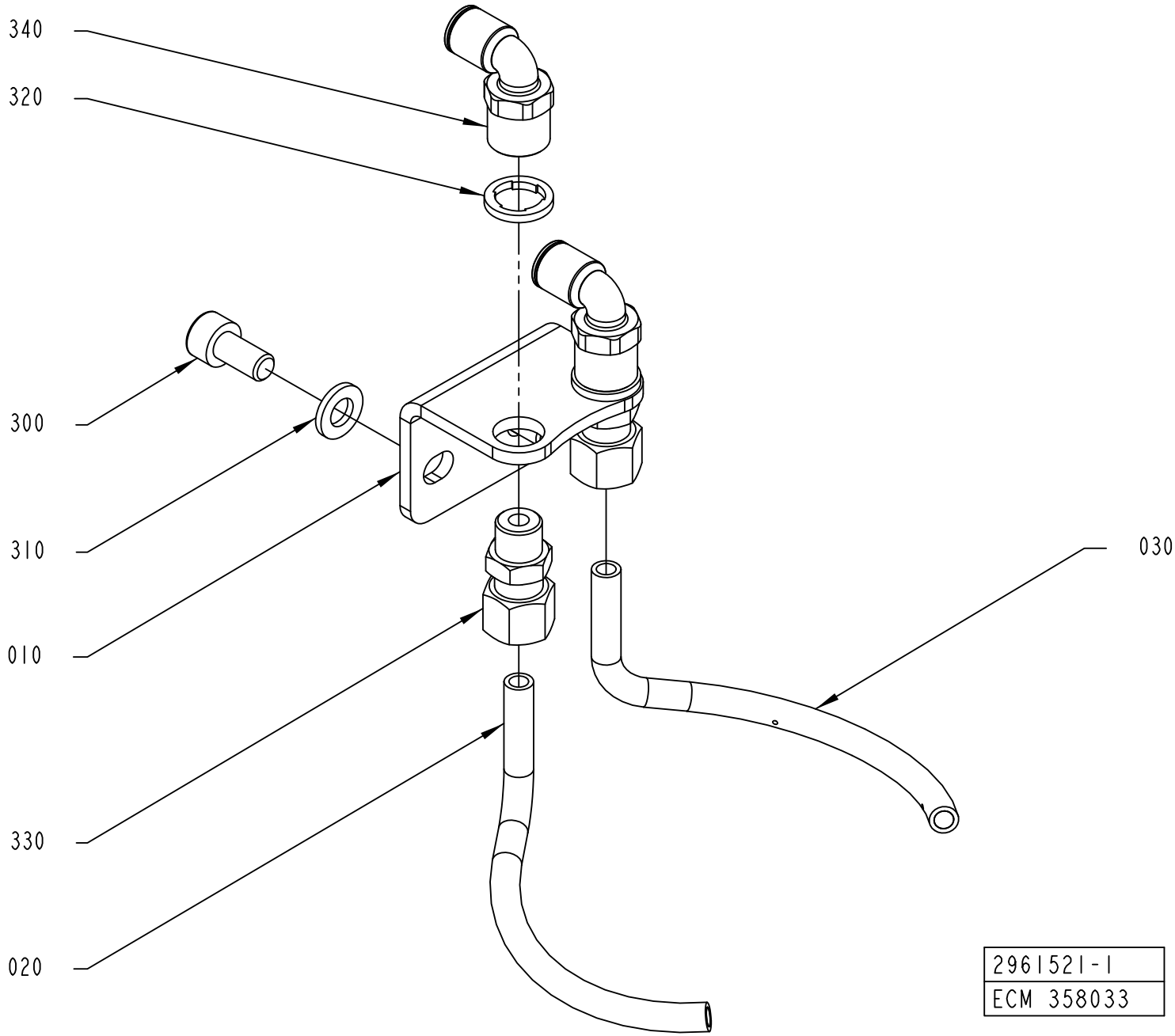
340
320
300
310
010
330
020
030
2961521-1
ECM 358033

ECM: 457152 - 20100614
Group number: 2961521-0100
Assembly Drawing: 2961521-1_1_AA

Pos	Part No	UN	Qty	Description	Page No
-					
010	2961517-0000		1	BRACKET	
020	2961518-0000		1	PIPE	
030	2961519-0000		1	PIPE	
300	312115-0366		2	SCREW ISO4762 M6X12 A4 80	
310	315105-0153		2	WASHER PLAIN, 6,4X12X1,5 A4 BRB	
320	315239-0109		2	NYLON WASHER G1/8, 1/8RRP	
330	90458-2039		2	CONN. STR., 6-R1/8, EXT. THREAD	
340	90458-2040		2	ELBOW PIPE JOINT, INT. THREAD, G1/8" D=6	
350	90602-4847		1	THREAD LOCKING, LOCTITE 243 50 ML	

Pos	Part No	UN	Qty	Description	Page No

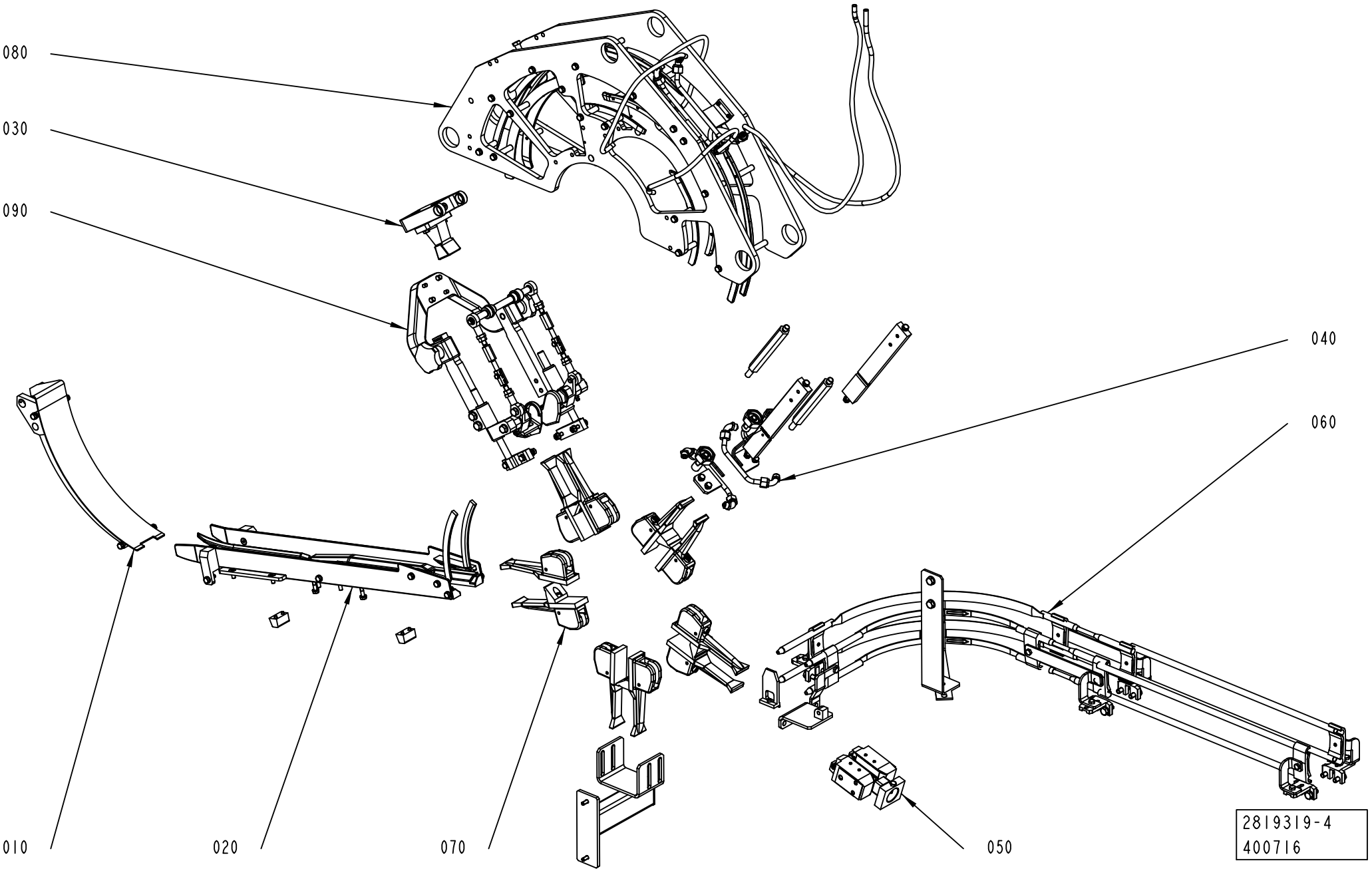
080
030
090
040
060
010
020
070
050
2819319-4
400716

ECM: 479586 - 20101003
Group number: 2819319-0200
Assembly Drawing: 2819319-4_1_AA

Pos	Part No	UN	Qty	Description	Page No
TPA 0200SQ					
090	2852382-0100		1	FIN FOLDER	**1-305, 1-307**
TPA 0250SQ					
090	2852382-0100		1	FIN FOLDER	**1-305, 1-307**
TPA 0330SQ					
090	2852382-0100		1	FIN FOLDER	**1-305, 1-307**
TBA 0200E					
090	2852382-0100		1	FIN FOLDER	**1-305, 1-307**
TBA 0200SQ					
090	2852382-0100		1	FIN FOLDER	**1-305, 1-307**
TBA 0250SQ					
090	2852382-0100		1	FIN FOLDER	**1-305, 1-307**
TPA 0125SQ					
090	2852382-0100		1	FIN FOLDER	**1-305, 1-307**
Common Parts					
010	2871929-0100		1	DROP CHUTE VARIANT	**1-309, 1-311, 1-313**
020	2819312-0200		1	INFEED CONVEYOR VARIANT	**1-315, 1-317, 1-319, 1-321**
030	2819313-0100		1	PULL-DOWN DEVICE	**1-323, 1-325**
040	2819314-0100		1	FLAP HEATER	**1-327, 1-329**
050	2819315-0100		1	PRESSURE DEVICE	**1-331, 1-333, 1-335, 1-337**
060	2819316-0200		1	OUTFEEDER	**1-339, 1-341, 1-343**
070	2819317-0200		1	WHEEL	**1-359, 1-361, 1-363**
080	2819318-0200		1	FOLDING BAR	**1-367, 1-369, 1-371, 1-373**

Pos	Part No	UN	Qty	Description	Page No

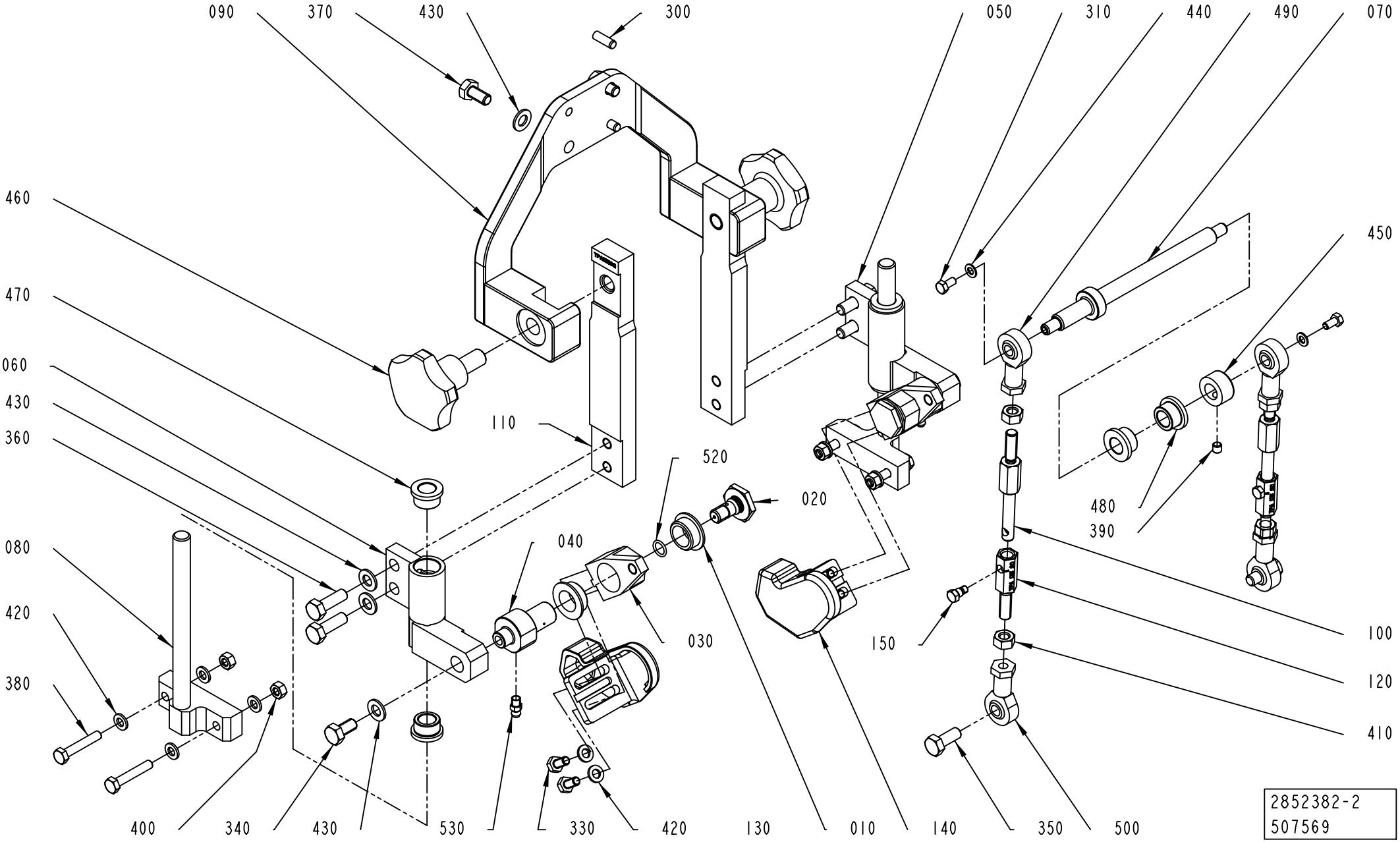
090
370
430
300
050
310
440
490
070
460
470
060
430
360
110
520
020
450
480
390
080
040
420
030
150
100
120
380
410
400
340
430
530
330
420
130
010
140
350
500
2852382-2
507569

ECM: 510876 - 20111001
Group number: 2852382-0100
Assembly Drawing: 2852382-2_1_AC

This list covers pages from 1-304 to 1-307

Pos	Part No	UN	Qty	Description	Page No
TBA 0200E (See drawing on page: 1-306)					
030	3017847-0000		2	LEVER	
040	3017851-0000		2	AXLE PIN	
070	3017848-0000		1	SHAFT	
100	2983847-0000		2	SPACER	
110	3052009-0000		2	PLATE	
120	3052010-0000		2	SHAFT	
130	3052011-0000		1	FOLDING DEVICE	
140	3052012-0000		1	FOLDING DEVICE	
160	3017852-0000		2	SPACER	
350	312105-0460		2	SCREW, M6S ISO 4014 M8X45 A4 80	
380	312105-0374		4	SCREW, M6S ISO 4014 M6X30 A4 80	
420	315105-0153		8	WASHER PLAIN, 6,4X12X1,5 A4 BRB	
TBA 0200SQ (See drawing on page: 1-304)					
030	1350440-0000		2	LEVER	
040	2647105-0000		2	AXLE PIN	
070	2852384-0000		1	SHAFT	
100	2852392-0000		2	SPACER	
110	2962133-0000		2	PLATE	
120	2852391-0000		2	SHAFT	
130	3027694-0000		1	FOLDING DEVICE	
140	3027695-0000		1	FOLDING DEVICE	
350	312105-0451		2	SCREW, M6S ISO 4017 M8X20 A4 80	
380	312109-0376		4	SCREW, M6S ISO 4017 M6X35 A4 80	
400	312605-0316		4	HEXAGON NUT, M6M M6 A280	
420	315105-0153		12	WASHER PLAIN, 6,4X12X1,5 A4 BRB	
TBA 0250SQ (See drawing on page: 1-304)					
030	1350440-0000		2	LEVER	
040	2647105-0000		2	AXLE PIN	
070	2852384-0000		1	SHAFT	
100	2852392-0000		2	SPACER	
110	2962133-0000		2	PLATE	
120	2852391-0000		2	SHAFT	
130	3027694-0000		1	FOLDING DEVICE	
140	3027695-0000		1	FOLDING DEVICE	
350	312105-0451		2	SCREW, M6S ISO 4017 M8X20 A4 80	
380	312109-0376		4	SCREW, M6S ISO 4017 M6X35 A4 80	
400	312605-0316		4	HEXAGON NUT, M6M M6 A280	
420	315105-0153		12	WASHER PLAIN, 6,4X12X1,5 A4 BRB	
TPA 0125SQ (See drawing on page: 1-304)					
030	1350440-0000		2	LEVER	
040	2647105-0000		2	AXLE PIN	
070	2852384-0000		1	SHAFT	
100	2852392-0000		2	SPACER	
110	2871959-0000		2	PLATE	
120	2871960-0000		2	SPACER	
130	2894725-0000		1	FOLDING DEVICE	
140	2894726-0000		1	FOLDING DEVICE	
350	312105-0451		2	SCREW, M6S ISO 4017 M8X20 A4 80	
380	312109-0376		4	SCREW, M6S ISO 4017 M6X35 A4 80	
400	312605-0316		4	HEXAGON NUT, M6M M6 A280	
420	315105-0153		12	WASHER PLAIN, 6,4X12X1,5 A4 BRB	
TPA 0200SQ (See drawing on page: 1-306)					
030	3017847-0000		2	LEVER	
040	3017851-0000		2	AXLE PIN	
070	3017848-0000		1	SHAFT	
100	2983847-0000		2	SPACER	
110	2976965-0000		2	PLATE	
120	2983848-0000		2	SHAFT	
130	3017845-0000		1	FOLDING DEVICE	
140	3017846-0000		1	FOLDING DEVICE	
160	3017852-0000		2	SPACER	
350	312105-0460		2	SCREW, M6S ISO 4014 M8X45 A4 80	
380	312105-0374		4	SCREW, M6S ISO 4014 M6X30 A4 80	
420	315105-0153		8	WASHER PLAIN, 6,4X12X1,5 A4 BRB	
TPA 0330SQ, TPA 0250SQ (See drawing on page: 1-306)					
030	3017847-0000		2	LEVER	
040	3017851-0000		2	AXLE PIN	
070	3017848-0000		1	SHAFT	
100	2983847-0000		2	SPACER	
110	2976965-0000		2	PLATE	
120	2983848-0000		2	SHAFT	
130	3017845-0000		1	FOLDING DEVICE	
140	3017846-0000		1	FOLDING DEVICE	
160	3017852-0000		2	SPACER	
350	312105-0460		2	SCREW, M6S ISO 4014 M8X45 A4 80	
380	312105-0374		4	SCREW, M6S ISO 4014 M6X30 A4 80	
420	315105-0153		8	WASHER PLAIN, 6,4X12X1,5 A4 BRB	
Common Parts					
010	1282708-0000		4	BUSHING	
020	1347496-0000		2	SCREW	
050	2668245-0000		1	SLIDER	
060	2668246-0000		1	SLIDER	
080	2852385-0000		2	SUPPORT	

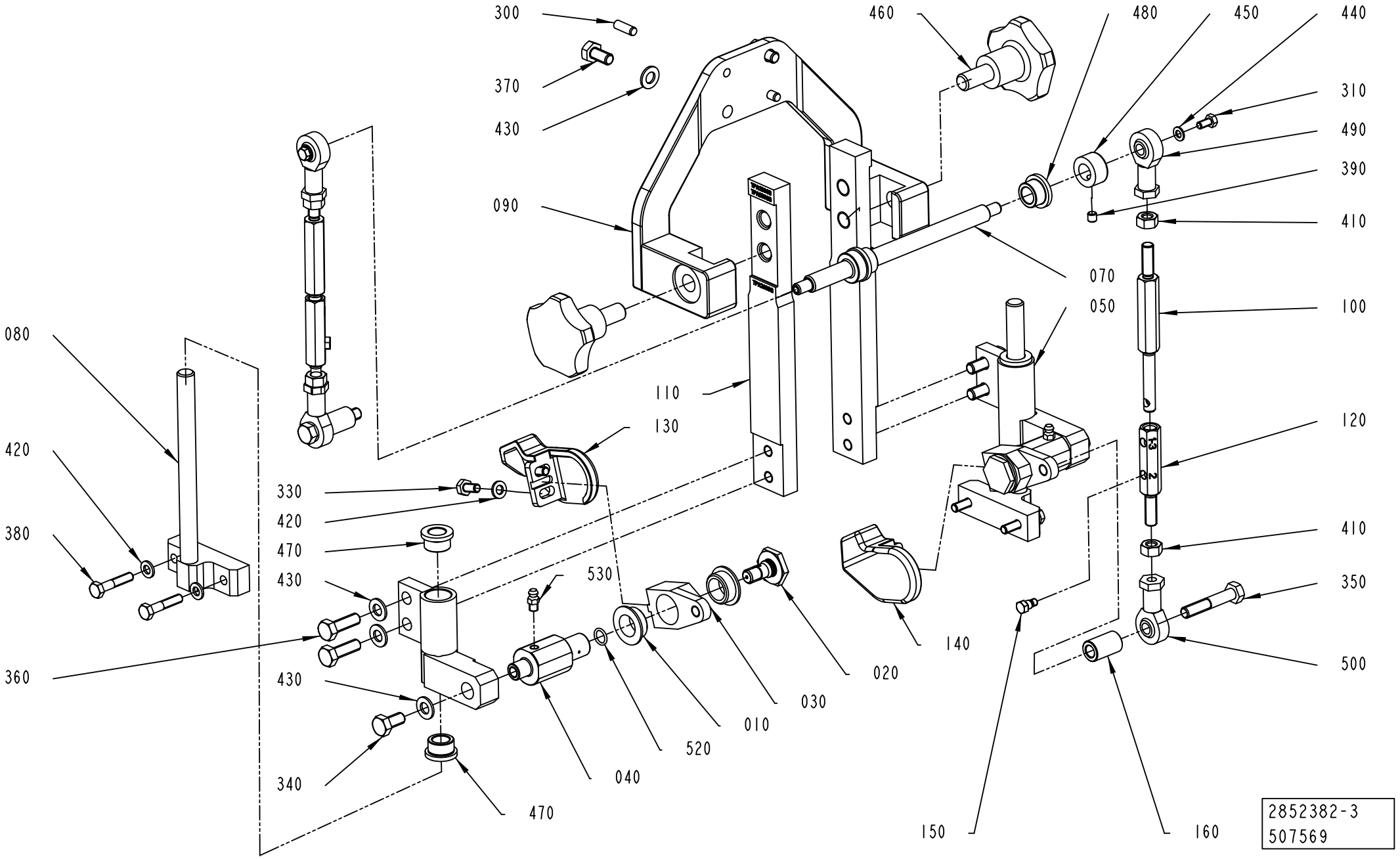
300
370
430
090
460
480
450
440
310
490
390
410
070
050
100
080
110
130
120
420
330
420
470
430
530
380
410
350
360
430
340
470
040
520
010
030
020
140
500
150
160
2852382-3
507569

Pos	Part No	UN	Qty	Description	Page No
Common Parts (Cont'd)					
090	3163272-0000		1	SUPPORT	
150	3017850-0000		2	SCREW	
300	311103-0352		2	PARALLEL PIN ISO 2338 6M6X18 A1	
310	312105-0325		2	SCREW, M6S ISO 4017 M5X10 A4 80	
330	312105-0366		4	SCREW, M6S ISO 4017 M6X12 A4 80	
340	312105-0449		2	SCREW, M6S ISO 4017 M8X16 A4 80	
360	312105-0453		4	SCREW, M6S ISO 4017 M8X25 A4 80	
370	312105-0449		2	SCREW, M6S ISO 4017 M8X16 A4 80	
390	312318-0360		1	SET SCREW, CUP END ISO4029 M6X6 A4	
410	312605-0318		4	HEXAGON NUT, M6M M8 A280	
430	315105-0165		8	WASHER PLAIN, 8,4X16X1,6 A4 BRB	
440	315106-0146		2	WASHER PLAIN, M5 ISO7089-5-200 HV A4	
450	315741-0108		1	RETAINING RING, DIN 705 A2 12	
460	318856-0115		2	KNOB, EXTERNAL THREAD. NO. 8306-0278	
470	321101-0173		4	FLANGE BUSHING, 12X18X12 MM	
480	321111-0159		2	FLANGE BUSHING, 12/18X12-24X3 MM	
490	90115-0139		2	ROD END, ID=8 MM, M8X1,25	
500	90115-0180		2	ROD END, ID=8 MM, M8X1,25 LH	
520	315202-0107		2	O-RING 9,1X1,6 MM	
530	90286-0013		2	GREASE NIPPLE STRAIGHT, H1 M6X1 2346	

Pos	Part No	UN	Qty	Description	Page No

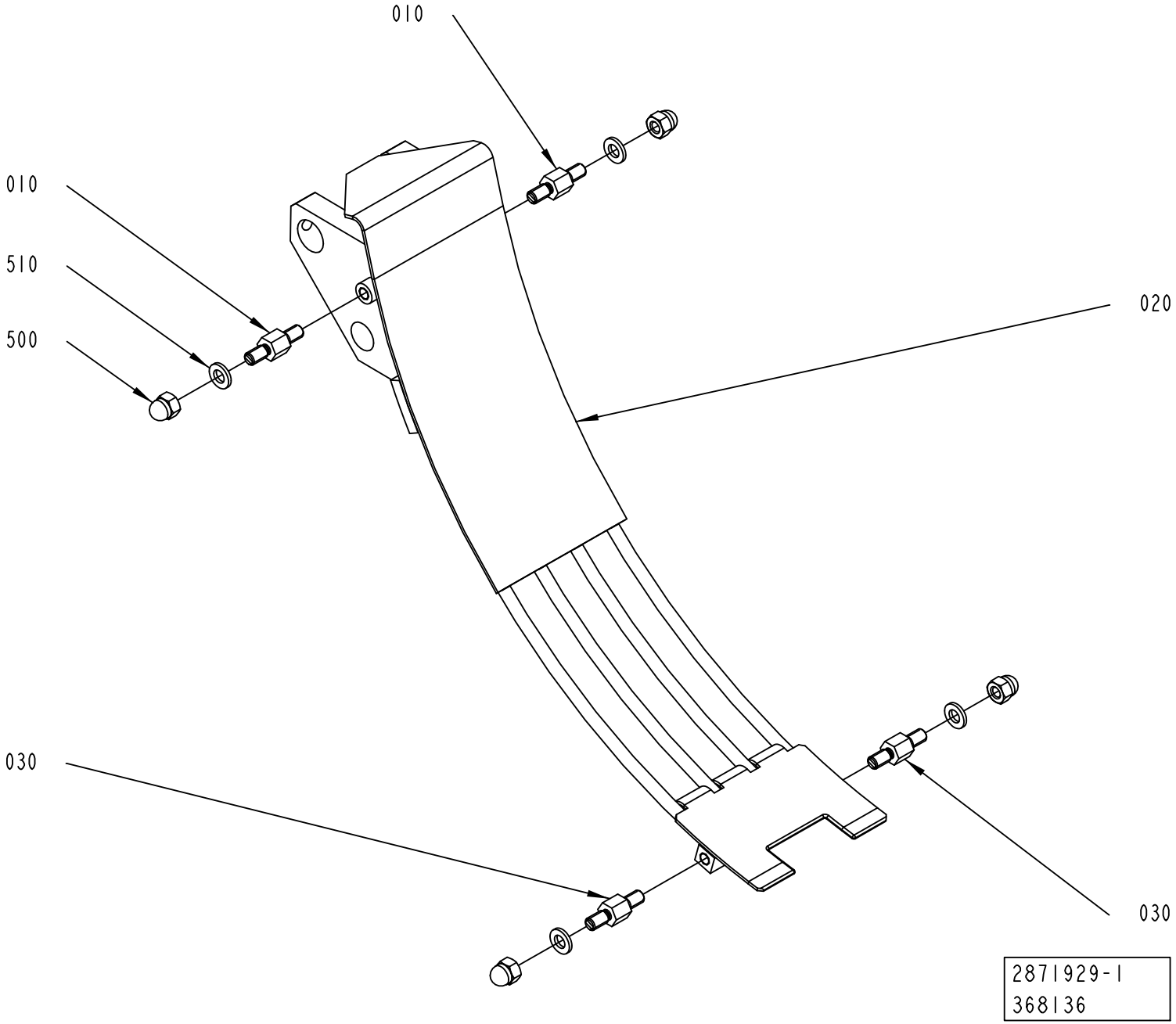
010
010
510
500
020
030
030
2871929-1
368136

ECM: 479588 - 20101003
Group number: 2871929-0100
Assembly Drawing: 2871929-1_1_AB

This list covers pages from 1-308 to 1-313

Pos	Part No	UN	Qty	Description	Page No
TBA 0080S (See drawing on page: 1-312)					
010	2871955-0005		2	SPACER	
020	2852409-0000		1	CRADLE	
500	312705-0316		2	HEX. DOMED CAP MHM-6 M6 A280	
520	312105-0366		2	SCREW, M6S ISO 4017 M6X12 A4 80	
TBA 0100B, TBA 0125S (See drawing on page: 1-308)					
010	2871955-0003		2	SPACER	
020	2852409-0000		1	CRADLE	
030	2871955-0006		2	SPACER	
500	312705-0316		4	HEX. DOMED CAP MHM-6 M6 A280	
TBA 0160S, TBA 0200S (See drawing on page: 1-308)					
010	2871955-0001		2	SPACER	
020	2852409-0000		1	CRADLE	
030	2871955-0008		2	SPACER	
500	312705-0316		4	HEX. DOMED CAP MHM-6 M6 A280	
TBA 0200B, TBA 0200SQ, TBA 0284B, TBA 0250B, TBA 0300S, TBA 0330S, TBA 0250SQ (See drawing on page: 1-308)					
010	2871955-0002		2	SPACER	
020	2852409-0000		1	CRADLE	
030	2871955-0007		2	SPACER	
500	312705-0316		4	HEX. DOMED CAP MHM-6 M6 A280	
TBA 0200M, TBA 0250S, TBA 0200E (See drawing on page: 1-308)					
010	2871955-0004		2	SPACER	
020	2852409-0000		1	CRADLE	
030	2871955-0004		2	SPACER	
500	312705-0316		4	HEX. DOMED CAP MHM-6 M6 A280	
TBA 0375S (See drawing on page: 1-308)					
010	2871955-0010		2	SPACER	
020	2852409-0000		1	CRADLE	
030	2871955-0002		2	SPACER	
500	312705-0316		4	HEX. DOMED CAP MHM-6 M6 A280	
TPA 0125SQ (See drawing on page: 1-310)					
020	2894673-0000		1	CHUTE	
500	312105-0366		4	SCREW, M6S ISO 4017 M6X12 A4 80	
TPA 0250SQ, TPA 0200SQ (See drawing on page: 1-308)					
010	2871955-0001		2	SPACER	
020	2852409-0000		1	CRADLE	
030	2871955-0001		2	SPACER	
500	312705-0316		4	HEX. DOMED CAP MHM-6 M6 A280	
TPA 0330SQ (See drawing on page: 1-308)					
010	2871955-0002		2	SPACER	
020	2852409-0000		1	CRADLE	
030	2871955-0009		2	SPACER	
500	312705-0316		4	HEX. DOMED CAP MHM-6 M6 A280	
Common Parts					
510	315106-0153		4	WASHER PLAIN, M6 ISO7089-6-200 HV A4	

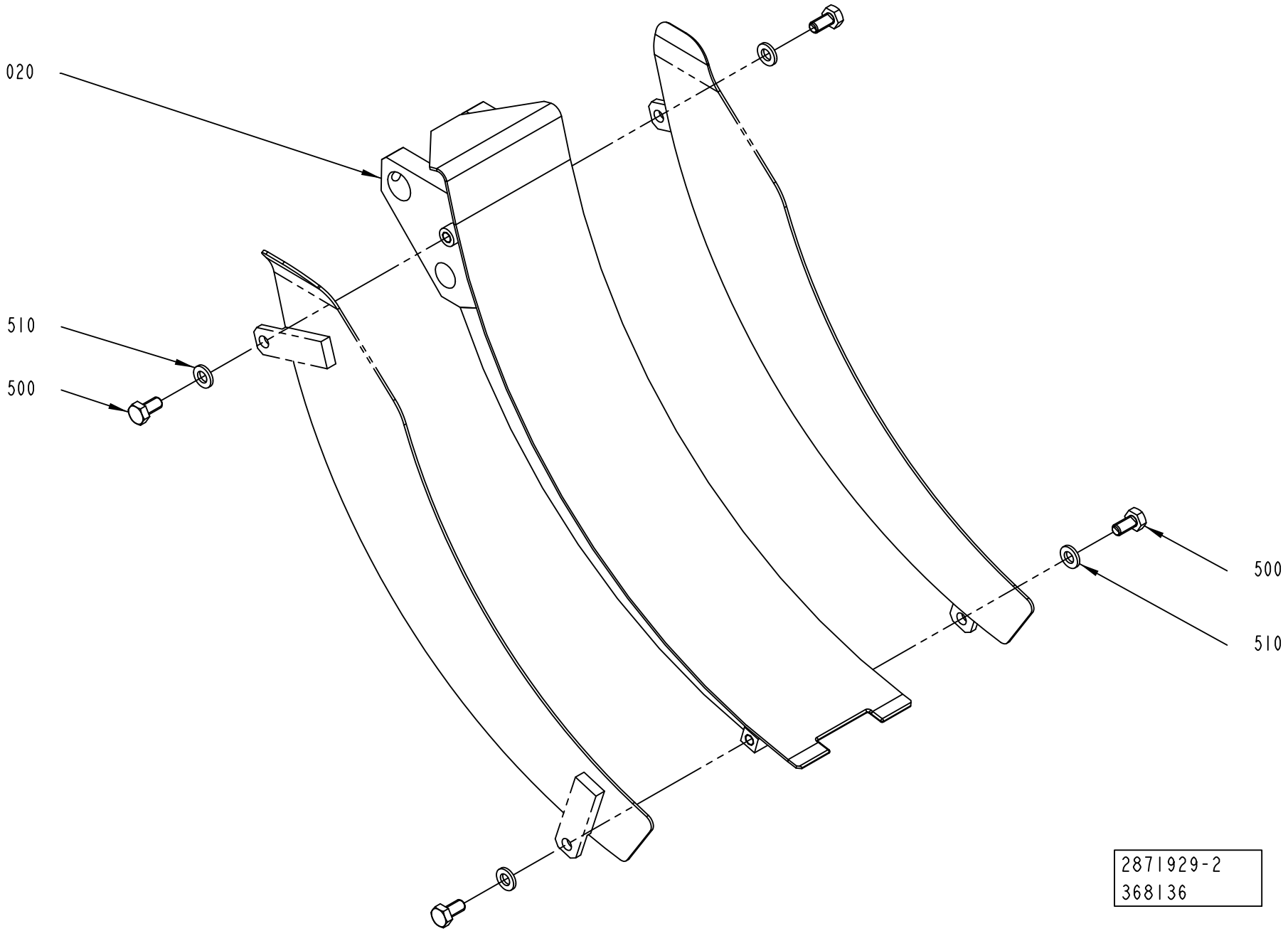
020
510
500
500
510
2871929-2
368136

ECM: 479588 - 20101003
Group number: 2871929-0100
Assembly Drawing: 2871929-2_1_AA

This list covers pages from 1-308 to 1-313

Pos	Part No	UN	Qty	Description	Page No
TBA 0080S (See drawing on page: 1-312)					
010	2871955-0005		2	SPACER	
020	2852409-0000		1	CRADLE	
500	312705-0316		2	HEX. DOMED CAP MHM-6 M6 A280	
520	312105-0366		2	SCREW, M6S ISO 4017 M6X12 A4 80	
TBA 0100B, TBA 0125S (See drawing on page: 1-308)					
010	2871955-0003		2	SPACER	
020	2852409-0000		1	CRADLE	
030	2871955-0006		2	SPACER	
500	312705-0316		4	HEX. DOMED CAP MHM-6 M6 A280	
TBA 0160S, TBA 0200S (See drawing on page: 1-308)					
010	2871955-0001		2	SPACER	
020	2852409-0000		1	CRADLE	
030	2871955-0008		2	SPACER	
500	312705-0316		4	HEX. DOMED CAP MHM-6 M6 A280	
TBA 0200B, TBA 0200SQ, TBA 0284B, TBA 0250B, TBA 0300S, TBA 0330S, TBA 0250SQ (See drawing on page: 1-308)					
010	2871955-0002		2	SPACER	
020	2852409-0000		1	CRADLE	
030	2871955-0007		2	SPACER	
500	312705-0316		4	HEX. DOMED CAP MHM-6 M6 A280	
TBA 0200M, TBA 0250S, TBA 0200E (See drawing on page: 1-308)					
010	2871955-0004		2	SPACER	
020	2852409-0000		1	CRADLE	
030	2871955-0004		2	SPACER	
500	312705-0316		4	HEX. DOMED CAP MHM-6 M6 A280	
TBA 0375S (See drawing on page: 1-308)					
010	2871955-0010		2	SPACER	
020	2852409-0000		1	CRADLE	
030	2871955-0002		2	SPACER	
500	312705-0316		4	HEX. DOMED CAP MHM-6 M6 A280	
TPA 0125SQ (See drawing on page: 1-310)					
020	2894673-0000		1	CHUTE	
500	312105-0366		4	SCREW, M6S ISO 4017 M6X12 A4 80	
TPA 0250SQ, TPA 0200SQ (See drawing on page: 1-308)					
010	2871955-0001		2	SPACER	
020	2852409-0000		1	CRADLE	
030	2871955-0001		2	SPACER	
500	312705-0316		4	HEX. DOMED CAP MHM-6 M6 A280	
TPA 0330SQ (See drawing on page: 1-308)					
010	2871955-0002		2	SPACER	
020	2852409-0000		1	CRADLE	
030	2871955-0009		2	SPACER	
500	312705-0316		4	HEX. DOMED CAP MHM-6 M6 A280	
Common Parts					
510	315106-0153		4	WASHER PLAIN, M6 ISO7089-6-200 HV A4	

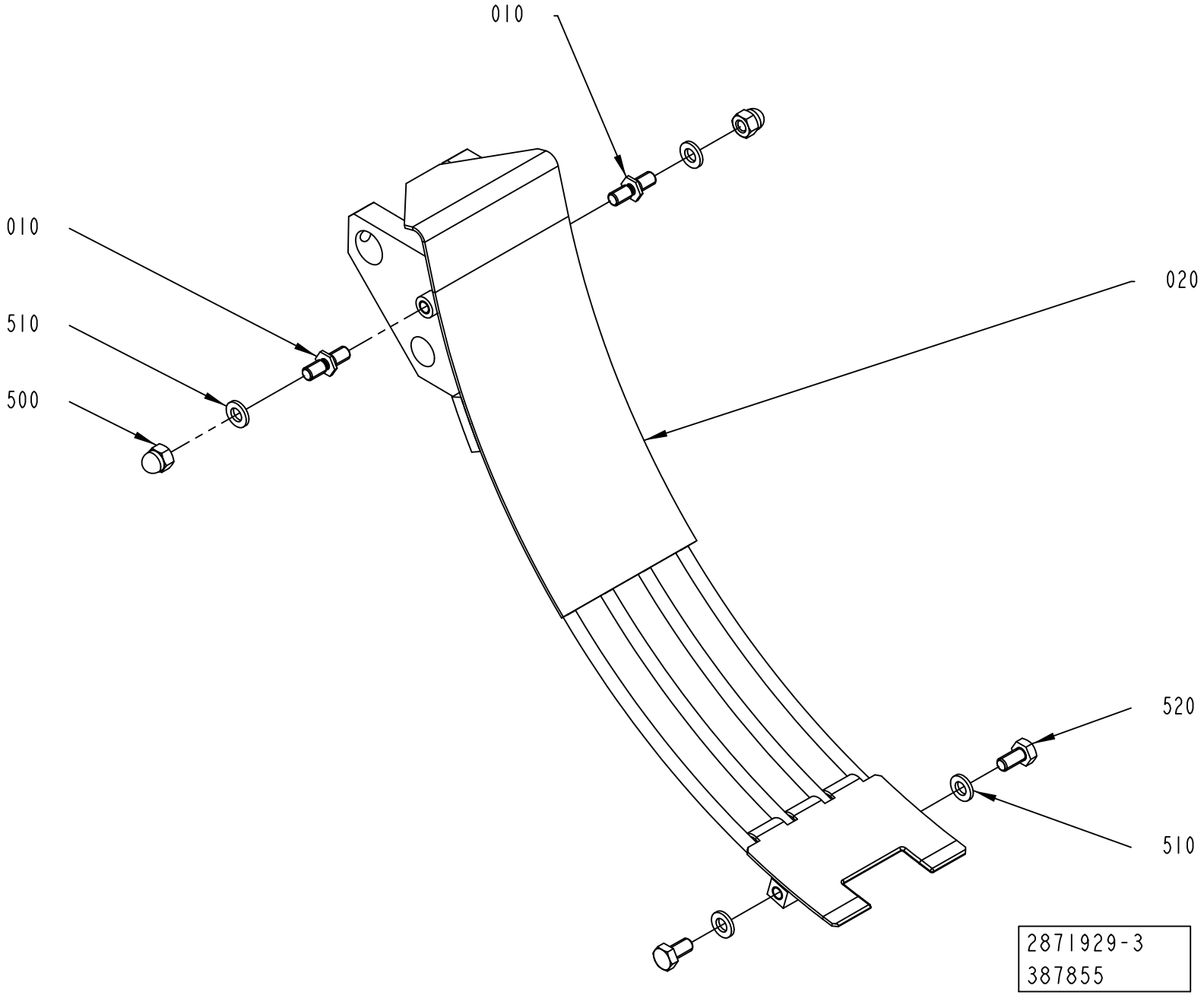
010
010
510
500
020
520
510
2871929-3
387855

ECM: 479588 - 20101003
Group number: 2871929-0100
Assembly Drawing: 2871929-3_1_AA

This list covers pages from 1-308 to 1-313

Pos	Part No	UN	Qty	Description	Page No
TBA 0080S (See drawing on page: 1-312)					
010	2871955-0005		2	SPACER	
020	2852409-0000		1	CRADLE	
500	312705-0316		2	HEX. DOMED CAP MHM-6 M6 A280	
520	312105-0366		2	SCREW, M6S ISO 4017 M6X12 A4 80	
TBA 0100B, TBA 0125S (See drawing on page: 1-308)					
010	2871955-0003		2	SPACER	
020	2852409-0000		1	CRADLE	
030	2871955-0006		2	SPACER	
500	312705-0316		4	HEX. DOMED CAP MHM-6 M6 A280	
TBA 0160S, TBA 0200S (See drawing on page: 1-308)					
010	2871955-0001		2	SPACER	
020	2852409-0000		1	CRADLE	
030	2871955-0008		2	SPACER	
500	312705-0316		4	HEX. DOMED CAP MHM-6 M6 A280	
TBA 0200B, TBA 0200SQ, TBA 0284B, TBA 0250B, TBA 0300S, TBA 0330S, TBA 0250SQ (See drawing on page: 1-308)					
010	2871955-0002		2	SPACER	
020	2852409-0000		1	CRADLE	
030	2871955-0007		2	SPACER	
500	312705-0316		4	HEX. DOMED CAP MHM-6 M6 A280	
TBA 0200M, TBA 0250S, TBA 0200E (See drawing on page: 1-308)					
010	2871955-0004		2	SPACER	
020	2852409-0000		1	CRADLE	
030	2871955-0004		2	SPACER	
500	312705-0316		4	HEX. DOMED CAP MHM-6 M6 A280	
TBA 0375S (See drawing on page: 1-308)					
010	2871955-0010		2	SPACER	
020	2852409-0000		1	CRADLE	
030	2871955-0002		2	SPACER	
500	312705-0316		4	HEX. DOMED CAP MHM-6 M6 A280	
TPA 0125SQ (See drawing on page: 1-310)					
020	2894673-0000		1	CHUTE	
500	312105-0366		4	SCREW, M6S ISO 4017 M6X12 A4 80	
TPA 0250SQ, TPA 0200SQ (See drawing on page: 1-308)					
010	2871955-0001		2	SPACER	
020	2852409-0000		1	CRADLE	
030	2871955-0001		2	SPACER	
500	312705-0316		4	HEX. DOMED CAP MHM-6 M6 A280	
TPA 0330SQ (See drawing on page: 1-308)					
010	2871955-0002		2	SPACER	
020	2852409-0000		1	CRADLE	
030	2871955-0009		2	SPACER	
500	312705-0316		4	HEX. DOMED CAP MHM-6 M6 A280	
Common Parts					
510	315106-0153		4	WASHER PLAIN, M6 ISO7089-6-200 HV A4	

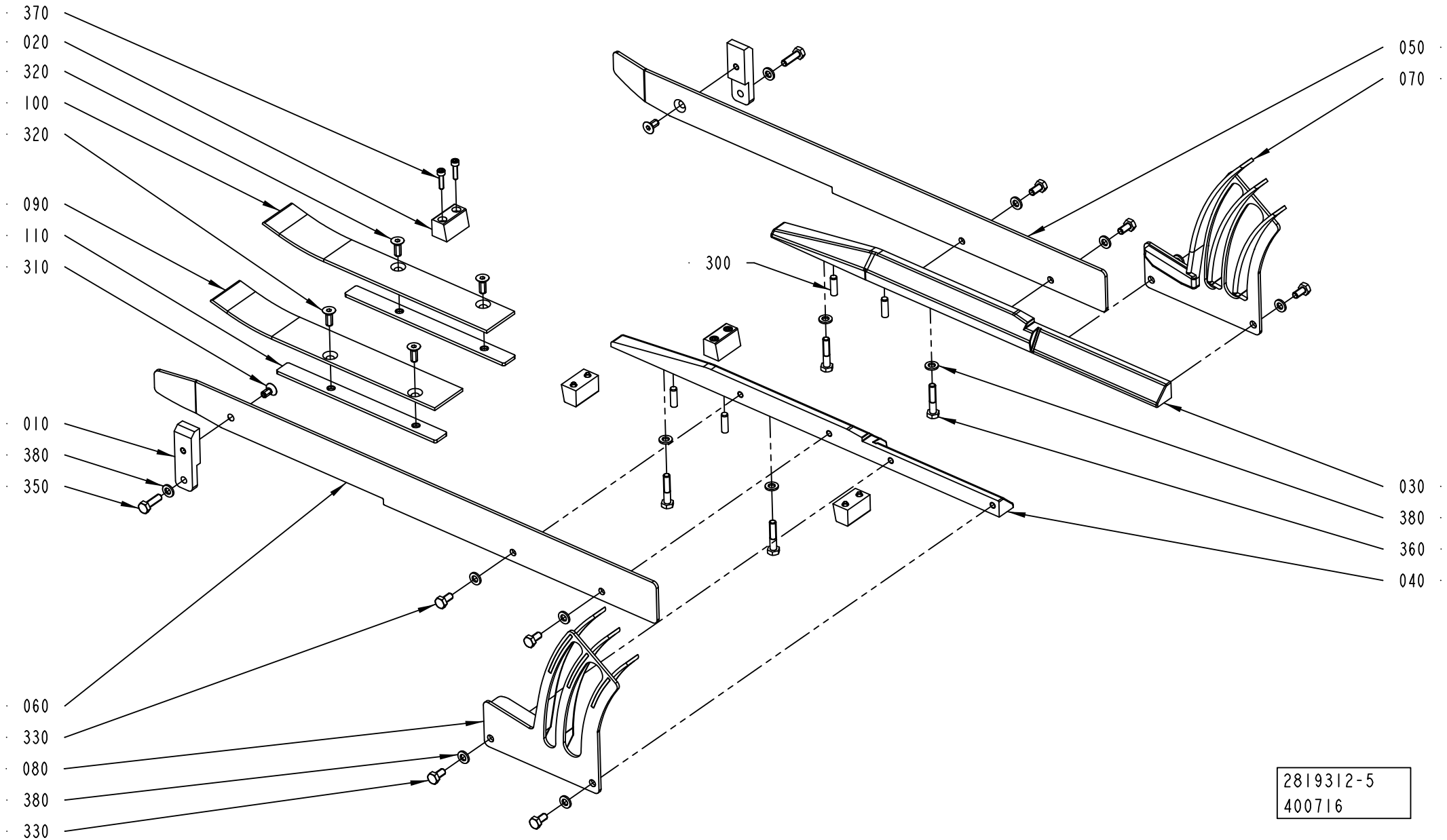
370
020
320
100
320
090
110
310
010
380
350
060
330
080
380
330
050
070
300
030
380
360
040
2819312-5
400716

ECM: 510874 - 20111001
Group number: 2819312-0200
Assembly Drawing: 2819312-5_1_AA

This list covers pages from 1-314 to 1-321

Pos	Part No	UN	Qty	Description	Page No
TBA 0080S (See drawing on page: 1-316)					
010	2894664-0000		2	SUPPORT	
020	2921574-0000		4	PUSHER	
030	3020453-0000		1	GUIDE	
040	3020454-0000		1	GUIDE	
050	3002054-0000		1	WALL	
060	3002053-0000		1	WALL	
070	3002052-0000		1	GUIDE	
080	3002051-0000		1	GUIDE	
090	2949928-0000		1	GUIDE	
100	2949929-0000		1	GUIDE	
320	312155-0366		4	SCREW DIN 7991 MF6S M6X12 A4 70	
330	312105-0364		8	SCREW, M6S ISO 4017 M6X10 A4 80	
370	312115-0293		8	SCREW ISO4762 M4X16 A4 80	
TBA 0100B, TBA 0125S (See drawing on page: 1-314)					
010	2894683-0000		2	SUPPORT	
020	2921574-0000		4	PUSHER	
030	2977492-0000		1	GUIDE	
040	2977491-0000		1	GUIDE	
050	2977496-0000		1	WALL	
060	2977495-0000		1	WALL	
070	3092001-0000		1	GUIDE	
080	2894684-0000		1	GUIDE	
090	2852413-0000		1	CHUTE	
100	2852414-0000		1	CHUTE	
110	2985491-0000		2	SHIM	
320	312155-0368		4	SCREW DIN 7991 MF6S M6X16 A4 70	
330	312105-0364		8	SCREW, M6S ISO 4017 M6X10 A4 80	
370	312115-0293		8	SCREW ISO4762 M4X16 A4 80	
TBA 0160S, TBA 0200S (See drawing on page: 1-314)					
010	3020016-0000		2	SUPPORT	
020	2921574-0000		4	PUSHER	
030	2871944-0000		1	GUIDE	
040	2871943-0000		1	GUIDE	
050	3015758-0000		1	WALL	
060	3015759-0000		1	WALL	
070	3089305-0000		1	GUIDE	
080	3015761-0000		1	GUIDE	
090	2852413-0000		1	CHUTE	
100	2852414-0000		1	CHUTE	
110	2985491-0000		2	SHIM	
320	312155-0368		4	SCREW DIN 7991 MF6S M6X16 A4 70	
330	312105-0366		8	SCREW, M6S ISO 4017 M6X12 A4 80	
370	312115-0293		8	SCREW ISO4762 M4X16 A4 80	
TBA 0200B, TBA 0250B, TBA 0330S (See drawing on page: 1-314)					
010	2852372-0000		2	SUPPORT	
020	2894700-0000		4	PUSHER	
030	2894714-0000		1	GUIDE	
040	2894713-0000		1	GUIDE	
050	2894716-0000		1	WALL	
060	2894715-0000		1	WALL	
070	3018830-0000		1	GUIDE	
080	2894718-0000		1	GUIDE	
090	2852413-0000		1	CHUTE	
100	2852414-0000		1	CHUTE	
110	2985491-0000		2	SHIM	
320	312155-0368		4	SCREW DIN 7991 MF6S M6X16 A4 70	
330	312105-0366		8	SCREW, M6S ISO 4017 M6X12 A4 80	
370	312115-0293		8	SCREW ISO4762 M4X16 A4 80	
TBA 0200E (See drawing on page: 1-314)					
010	2912412-0000		2	SUPPORT	
020	3037955-0000		4	PUSHER	
030	3074722-0000		1	GUIDE	
040	3074723-0000		1	GUIDE	
050	2918693-0000		1	WALL	
060	2918694-0000		1	WALL	
070	3051988-0000		1	GUIDE	
080	3051989-0000		1	GUIDE	
090	3074720-0000		1	GUIDE	
100	3074721-0000		1	GUIDE	
320	312155-0368		4	SCREW DIN 7991 MF6S M6X16 A4 70	
330	312105-0366		8	SCREW, M6S ISO 4017 M6X12 A4 80	
370	312115-0295		8	SCREW ISO4762 M4X20 A4 80	
TBA 0200M, TBA 0250S (See drawing on page: 1-314)					
010	2912412-0000		2	SUPPORT	
020	2921574-0000		4	PUSHER	
030	2912413-0000		1	GUIDE	
040	2912414-0000		1	GUIDE	
050	2918693-0000		1	WALL	
060	2918694-0000		1	WALL	
070	2918698-0000		1	GUIDE	
080	2918697-0000		1	GUIDE	
090	2852413-0000		1	CHUTE	
100	2852414-0000		1	CHUTE	

Machine Type | Group Description | Used-In | Group Number | Page No

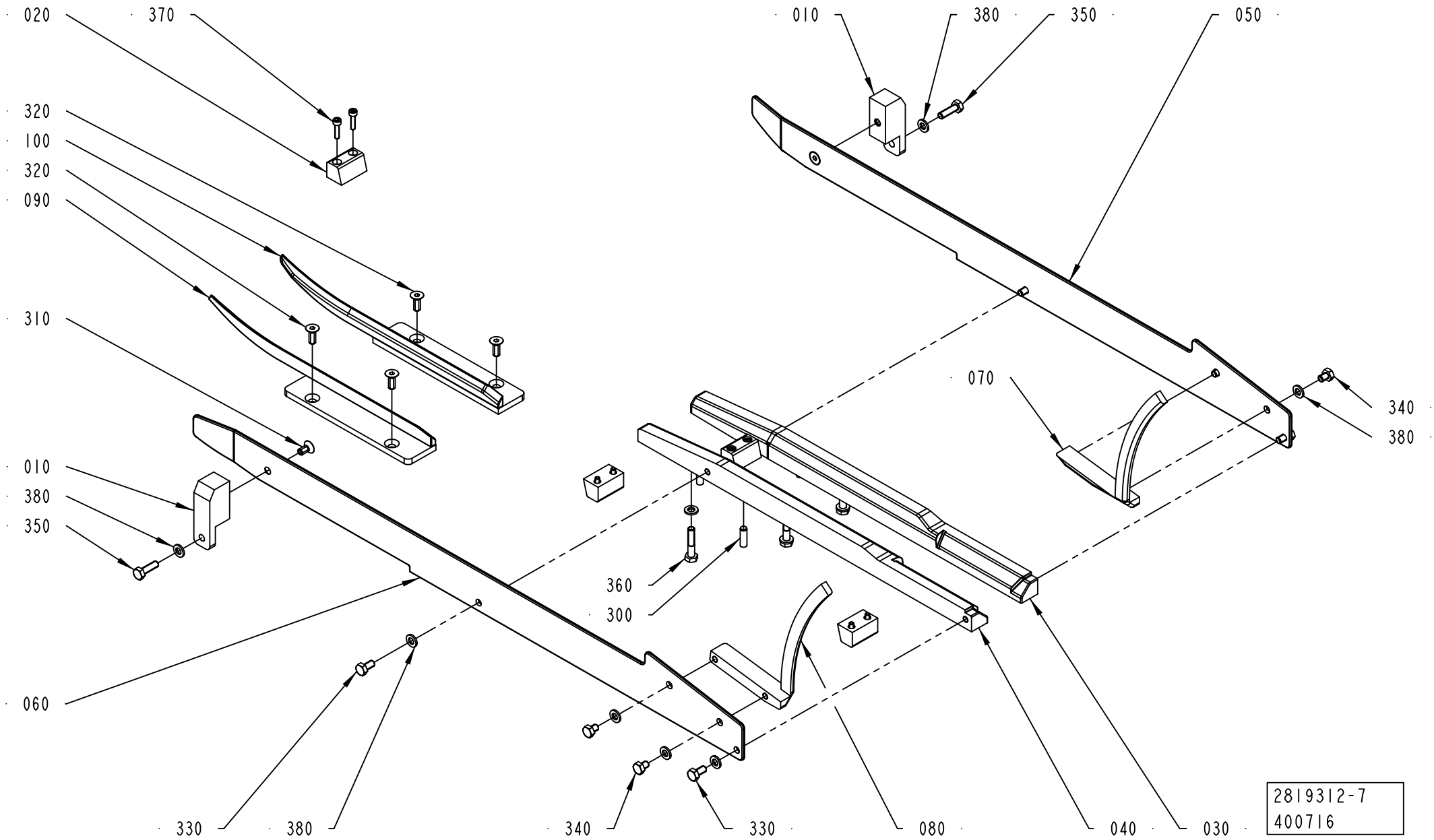
020
370
320
100
320
090
310
010
380
350
060
330
380
340
330
080
040
030
360
300
070
340
380
010
380
350
050
2819312-7
400716

Pos	Part No	UN	Qty	Description	Page No
TBA 0200M, TBA 0250S (Cont'd) (See drawing on page: 1-314)					
110	2985491-0000		2	SHIM	
320	312155-0368		4	SCREW DIN 7991 MF6S M6X16 A4 70	
330	312105-0366		8	SCREW, M6S ISO 4017 M6X12 A4 80	
370	312115-0293		8	SCREW ISO4762 M4X16 A4 80	
TBA 0200SQ, TBA 0250SQ (See drawing on page: 1-314)					
010	2852372-0000		2	SUPPORT	
020	3037955-0000		4	PUSHER	
030	2962114-0000		1	GUIDE	
040	2962115-0000		1	GUIDE	
050	2894716-0000		1	WALL	
060	2894715-0000		1	WALL	
070	2962117-0000		1	GUIDE	
080	2962127-0000		1	GUIDE	
090	2852413-0000		1	CHUTE	
100	2852414-0000		1	CHUTE	
110	2985491-0000		2	SHIM	
320	312155-0368		4	SCREW DIN 7991 MF6S M6X16 A4 70	
330	312105-0364		8	SCREW, M6S ISO 4017 M6X10 A4 80	
370	312115-0295		8	SCREW ISO4762 M4X20 A4 80	
TBA 0284B, TBA 0300S (See drawing on page: 1-318)					
010	2852372-0000		2	SUPPORT	
020	2894700-0000		4	PUSHER	
030	3060683-0000		1	GUIDE	
040	3060682-0000		1	GUIDE	
050	3002693-0000		1	WALL	
060	3002694-0000		1	WALL	
070	3067369-0000		1	GUIDE	
080	3067368-0000		1	GUIDE	
090	2852413-0000		1	CHUTE	
100	2852414-0000		1	CHUTE	
110	2985491-0000		2	SHIM	
320	312155-0368		4	SCREW DIN 7991 MF6S M6X16 A4 70	
330	312105-0366		8	SCREW, M6S ISO 4017 M6X12 A4 80	
340	312105-0362		4	SCREW, M6S ISO 4017 M6X8 A4 80	
370	312115-0293		8	SCREW ISO4762 M4X16 A4 80	
TBA 0375S (See drawing on page: 1-318)					
010	3067349-0000		2	SUPPORT	
020	3037955-0000		4	PUSHER	
030	3067351-0000		1	GUIDE	
040	3067350-0000		1	GUIDE	
050	3067355-0000		1	WALL	
060	3067354-0000		1	WALL	
070	3067353-0000		1	GUIDE	
080	3067352-0000		1	GUIDE	
090	2852413-0000		1	CHUTE	
100	2852414-0000		1	CHUTE	
110	2985491-0000		2	SHIM	
320	312155-0368		4	SCREW DIN 7991 MF6S M6X16 A4 70	
330	312105-0366		4	SCREW, M6S ISO 4017 M6X12 A4 80	
340	312105-0364		4	SCREW, M6S ISO 4017 M6X10 A4 80	
370	312115-0295		8	SCREW ISO4762 M4X20 A4 80	
TPA 0125SQ (See drawing on page: 1-316)					
010	2894664-0000		2	SUPPORT	
020	2894700-0000		4	PUSHER	
030	2871972-0000		1	GUIDE	
040	2871971-0000		1	GUIDE	
050	2894663-0000		1	WALL	
060	2871973-0000		1	WALL	
070	2894666-0000		1	GUIDE	
080	2894665-0000		1	GUIDE	
090	2894674-0000		1	GUIDE	
100	2894675-0000		1	GUIDE	
320	312155-0368		4	SCREW DIN 7991 MF6S M6X16 A4 70	
330	312105-0366		4	SCREW, M6S ISO 4017 M6X12 A4 80	
340	312105-0362		4	SCREW, M6S ISO 4017 M6X8 A4 80	
370	312115-0293		8	SCREW ISO4762 M4X16 A4 80	
TPA 0250SQ, TPA 0200SQ (See drawing on page: 1-320)					
010	2871945-0000		2	SUPPORT	
020	3037955-0000		4	PUSHER	
030	2976949-0000		1	GUIDE	
040	2976950-0000		1	GUIDE	
050	3024501-0000		1	WALL	
060	3024500-0000		1	WALL	
070	3045543-0000		1	GUIDE	
080	3045542-0000		1	GUIDE	
090	3024498-0000		1	GUIDE	
100	3024499-0000		1	GUIDE	
320	312155-0366		4	SCREW DIN 7991 MF6S M6X12 A4 70	
330	312105-0366		8	SCREW, M6S ISO 4017 M6X12 A4 80	
370	312115-0295		8	SCREW ISO4762 M4X20 A4 80	
TPA 0330SQ (See drawing on page: 1-316)					
010	2852372-0000		2	SUPPORT	
020	3037955-0000		4	PUSHER	

INFEED CONVEYOR VARIANT

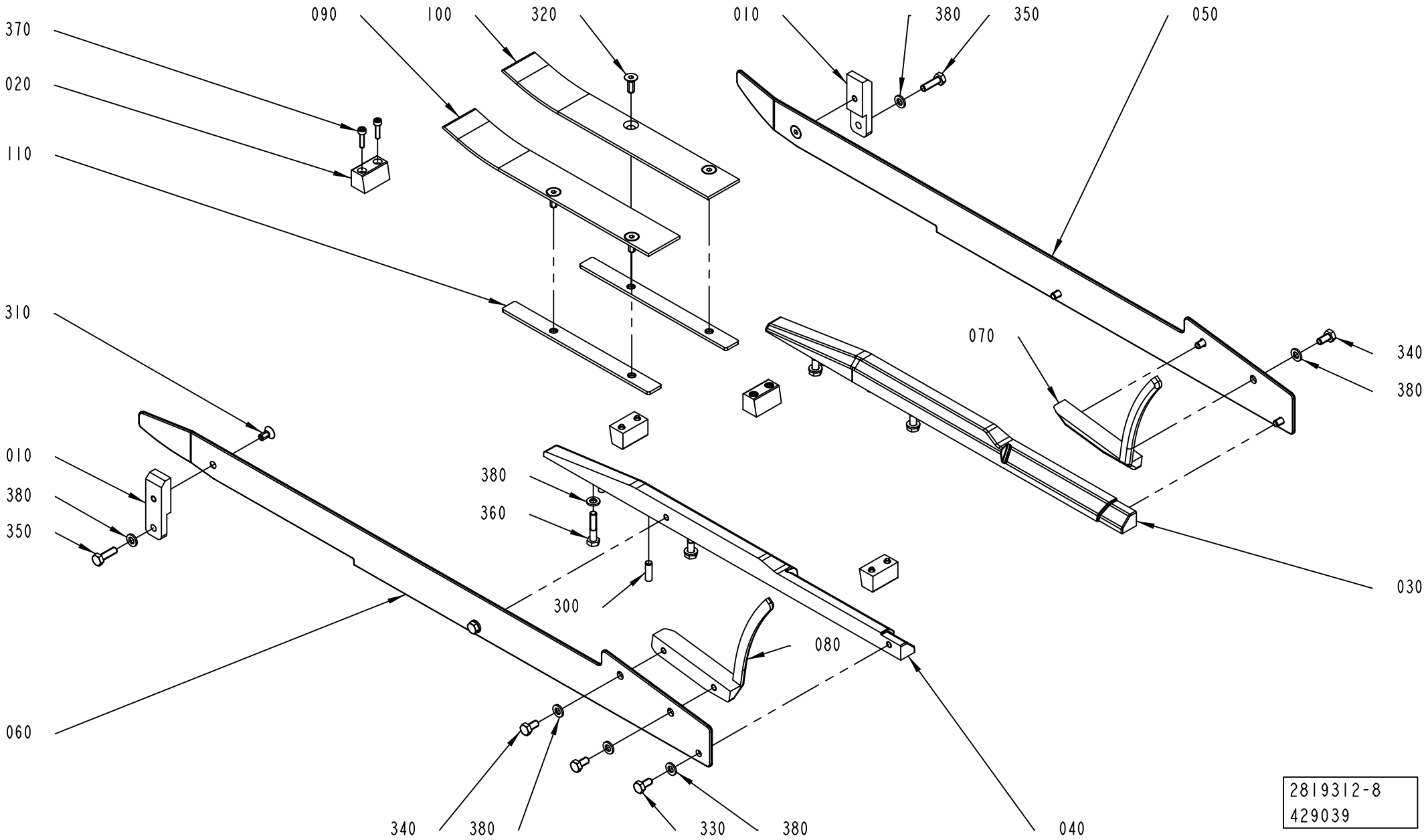

Pos	Part No	UN	Qty	Description	Page No
TPA 0330SQ (Cont'd) (See drawing on page: 1-316)					
030	2987097-0000		1	GUIDE	
040	2987098-0000		1	GUIDE	
050	3055889-0000		1	WALL	
060	3055888-0000		1	WALL	
070	2987095-0000		1	GUIDE	
080	2987096-0000		1	GUIDE	
090	2993462-0000		1	GUIDE	
100	2993463-0000		1	GUIDE	
320	312155-0368		4	SCREW DIN 7991 MF6S M6X16 A4 70	
330	312105-0366		8	SCREW, M6S ISO 4017 M6X12 A4 80	
370	312115-0295		8	SCREW ISO4762 M4X20 A4 80	
Common Parts					
300	311103-0353		4	PARALLEL PIN ISO 2338 6M6X20 A1	
310	312155-0366		2	SCREW DIN 7991 MF6S M6X12 A4 70	
350	312105-0370		2	SCREW, M6S ISO 4017 M6X20 A4 80	
360	312105-0374		4	SCREW, M6S ISO 4014 M6X30 A4 80	
380	315106-0153		14	WASHER PLAIN, M6 ISO7089-6-200 HV A4	

Pos	Part No	UN	Qty	Description	Page No

INFEED CONVEYOR VARIANT

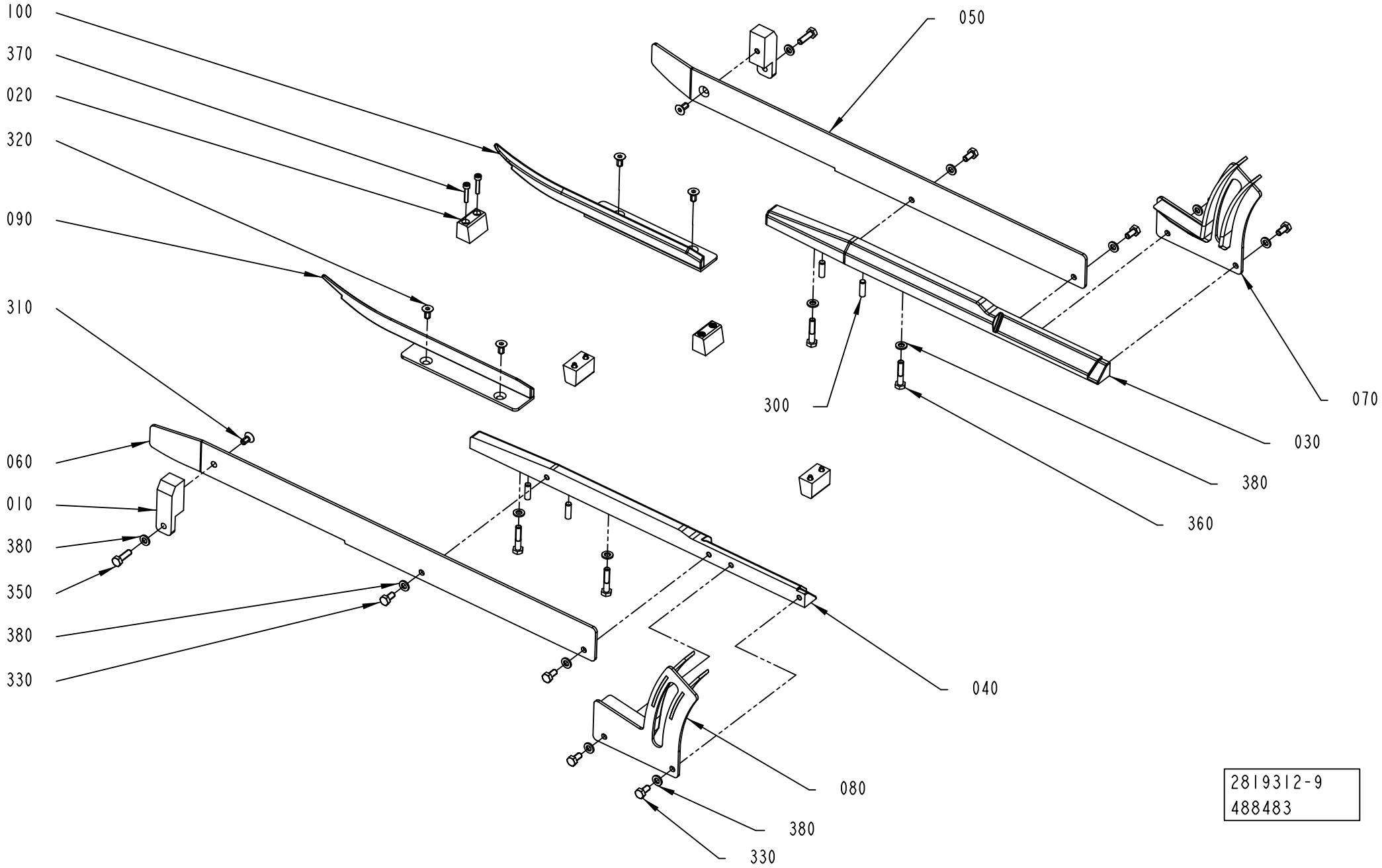

Pos	Part No	UN	Qty	Description	Page No
SEE PREVIOUS LISTS PAGES: 1-315, 1-317, 1-319.					

Pos	Part No	UN	Qty	Description	Page No

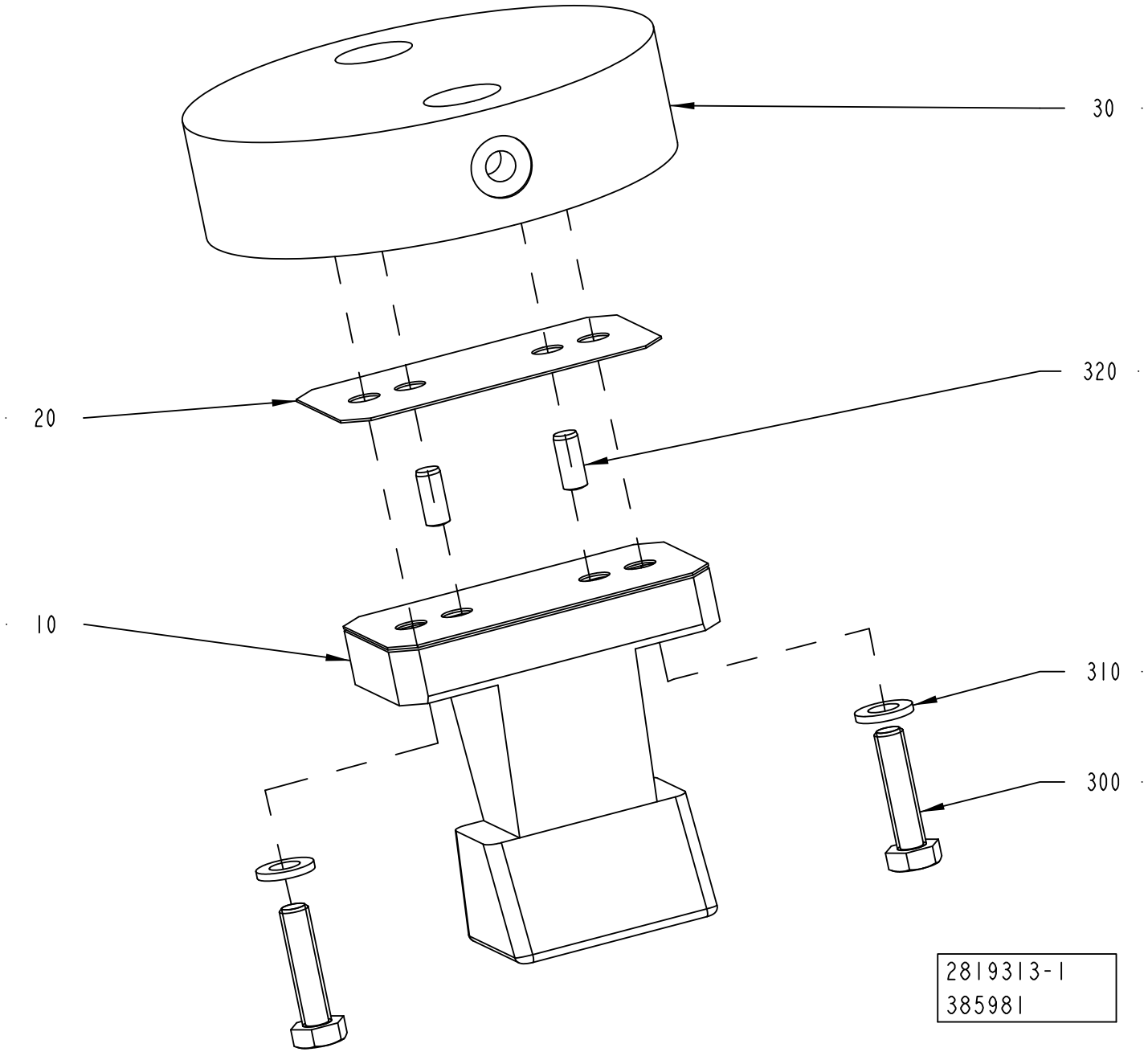
30
320
20
10
310
300
2819313-1
385981

ECM: 479580 - 20101003
Group number: 2819313-0100
Assembly Drawing: 2819313-1_1_AB

This list covers pages from 1-322 to 1-325

Pos	Part No	UN	Qty	Description	Page No
TBA 0080S (See drawing on page: 1-322)					
010	2949914-0000		1	BLOCK	
030	2806005-0000		1	PLATE	
300	312105-0372		2	SCREW, M6S ISO 4017 M6X25 A4 80	
TBA 0125S, TBA 0100B (See drawing on page: 1-322)					
010	2894686-0000		1	BLOCK	
030	2806005-0000		1	PLATE	
300	312105-0372		2	SCREW, M6S ISO 4017 M6X25 A4 80	
TBA 0160S, TBA 0200S (See drawing on page: 1-322)					
010	2806002-0000		1	BLOCK	
030	2806005-0000		1	PLATE	
300	312105-0372		2	SCREW, M6S ISO 4017 M6X25 A4 80	
TBA 0200B, TBA 0250B, TBA 0330S, TBA 0375S (See drawing on page: 1-322)					
010	2852321-0000		1	BLOCK	
030	2806005-0000		1	PLATE	
300	312105-0372		2	SCREW, M6S ISO 4017 M6X25 A4 80	
TBA 0200E (See drawing on page: 1-322)					
010	3051990-0000		1	BLOCK	
030	2852386-0000		1	PLATE	
300	312105-0370		2	SCREW, M6S ISO 4017 M6X20 A4 80	
TBA 0200M, TBA 0250S (See drawing on page: 1-322)					
010	2912419-0000		1	BLOCK	
030	2806005-0000		1	PLATE	
300	312105-0372		2	SCREW, M6S ISO 4017 M6X25 A4 80	
TBA 0200SQ, TBA 0250SQ (See drawing on page: 1-324)					
010	2962119-0000		1	BLOCK	
030	2852386-0000		1	PLATE	
300	312105-0370		2	SCREW, M6S ISO 4017 M6X20 A4 80	
TBA 0284B, TBA 0300S (See drawing on page: 1-322)					
010	3079740-0000		1	BLOCK	
030	2806005-0000		1	PLATE	
300	312105-0372		2	SCREW, M6S ISO 4017 M6X25 A4 80	
TPA 0125SQ (See drawing on page: 1-324)					
010	2871963-0000		1	BLOCK	
030	2852386-0000		1	PLATE	
300	312105-0370		2	SCREW, M6S ISO 4017 M6X20 A4 80	
TPA 0250SQ, TPA 0200SQ (See drawing on page: 1-324)					
010	2976960-0000		1	BLOCK	
030	2852386-0000		1	PLATE	
300	312105-0370		2	SCREW, M6S ISO 4017 M6X20 A4 80	
TPA 0330SQ (See drawing on page: 1-324)					
010	2987100-0000		1	BLOCK	
030	2852386-0000		1	PLATE	
300	312105-0370		2	SCREW, M6S ISO 4017 M6X20 A4 80	
Common Parts					
020	2806012-0000		3	SHIM	
310	315105-0153		2	WASHER PLAIN, 6,4X12X1,5 A4 BRB	
320	311103-0306		2	PARALLEL PIN ISO 2338 5M6X12 A1	

Machine Type	Group Description	Used-In	Group Number	Page No

PULL-DOWN DEVICE

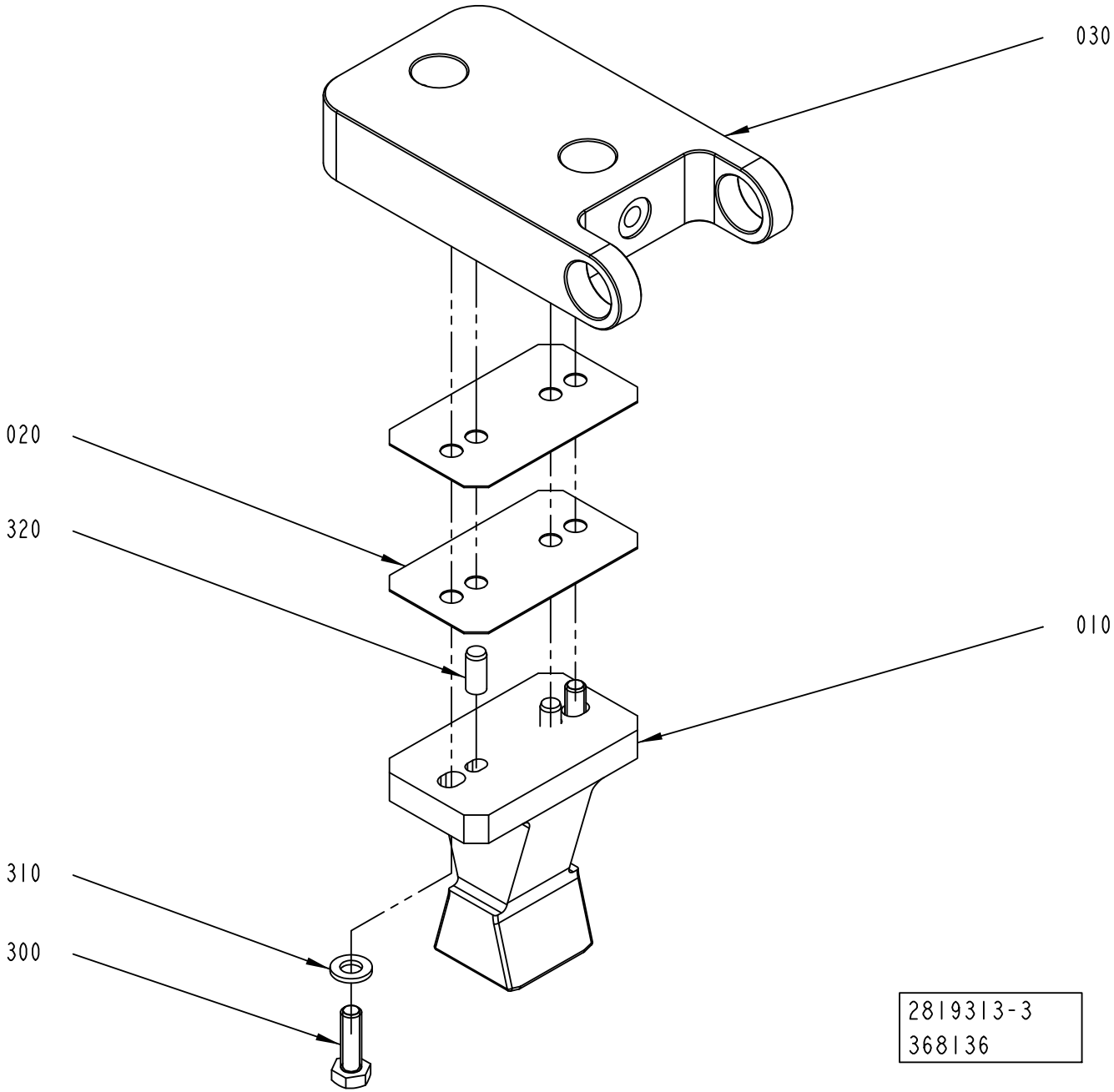

ECM: 479580 - 20101003
Group number: 2819313-0100
Assembly Drawing: 2819313-3_1_AA

This list covers pages from 1-322 to 1-325

Pos	Part No	UN	Qty	Description	Page No
TBA 0080S (See drawing on page: 1-322)					
010	2949914-0000		1	BLOCK	
030	2806005-0000		1	PLATE	
300	312105-0372		2	SCREW, M6S ISO 4017 M6X25 A4 80	
TBA 0125S, TBA 0100B (See drawing on page: 1-322)					
010	2894686-0000		1	BLOCK	
030	2806005-0000		1	PLATE	
300	312105-0372		2	SCREW, M6S ISO 4017 M6X25 A4 80	
TBA 0160S, TBA 0200S (See drawing on page: 1-322)					
010	2806002-0000		1	BLOCK	
030	2806005-0000		1	PLATE	
300	312105-0372		2	SCREW, M6S ISO 4017 M6X25 A4 80	
TBA 0200B, TBA 0250B, TBA 0330S, TBA 0375S (See drawing on page: 1-322)					
010	2852321-0000		1	BLOCK	
030	2806005-0000		1	PLATE	
300	312105-0372		2	SCREW, M6S ISO 4017 M6X25 A4 80	
TBA 0200E (See drawing on page: 1-322)					
010	3051990-0000		1	BLOCK	
030	2852386-0000		1	PLATE	
300	312105-0370		2	SCREW, M6S ISO 4017 M6X20 A4 80	
TBA 0200M, TBA 0250S (See drawing on page: 1-322)					
010	2912419-0000		1	BLOCK	
030	2806005-0000		1	PLATE	
300	312105-0372		2	SCREW, M6S ISO 4017 M6X25 A4 80	
TBA 0200SQ, TBA 0250SQ (See drawing on page: 1-324)					
010	2962119-0000		1	BLOCK	
030	2852386-0000		1	PLATE	
300	312105-0370		2	SCREW, M6S ISO 4017 M6X20 A4 80	
TBA 0284B, TBA 0300S (See drawing on page: 1-322)					
010	3079740-0000		1	BLOCK	
030	2806005-0000		1	PLATE	
300	312105-0372		2	SCREW, M6S ISO 4017 M6X25 A4 80	
TPA 0125SQ (See drawing on page: 1-324)					
010	2871963-0000		1	BLOCK	
030	2852386-0000		1	PLATE	
300	312105-0370		2	SCREW, M6S ISO 4017 M6X20 A4 80	
TPA 0250SQ, TPA 0200SQ (See drawing on page: 1-324)					
010	2976960-0000		1	BLOCK	
030	2852386-0000		1	PLATE	
300	312105-0370		2	SCREW, M6S ISO 4017 M6X20 A4 80	
TPA 0330SQ (See drawing on page: 1-324)					
010	2987100-0000		1	BLOCK	
030	2852386-0000		1	PLATE	
300	312105-0370		2	SCREW, M6S ISO 4017 M6X20 A4 80	
Common Parts					
020	2806012-0000		3	SHIM	
310	315105-0153		2	WASHER PLAIN, 6,4X12X1,5 A4 BRB	
320	311103-0306		2	PARALLEL PIN ISO 2338 5M6X12 A1	

Machine Type | Group Description | Used-In | Group Number | Page No

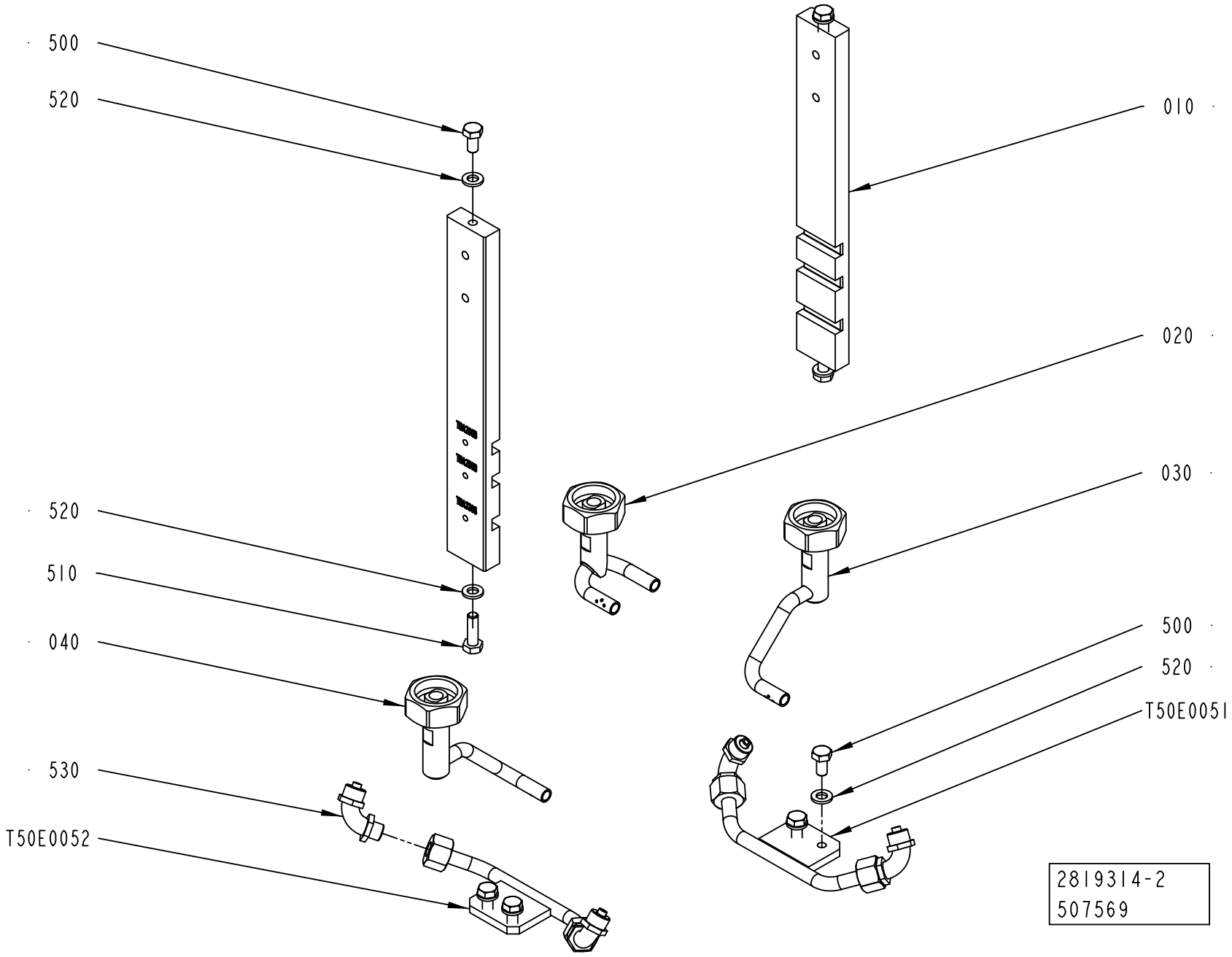
500
520
520
510
040
530
T50E0052
010
020
030
500
520
T50E0051
2819314-2
507569

ECM: 510875 - 20111001
Group number: 2819314-0100
Assembly Drawing: 2819314-2_1_AD

This list covers pages from 1-326 to 1-329

Pos	Part No	UN	Qty	Description	Page No
TBA 0080S					
010	2949915-0000		2	PLATE	
020	2949921-0000		1	NOZZLE	
030	2949922-0000		1	NOZZLE	
040	2949920-0000		1	NOZZLE	
T50E0051	2852331-0003		1	PIPE	
T50E0052	2852331-0003		1	PIPE	
TBA 0125S, TBA 0100B					
010	2894690-0000		2	PLATE	
020	2983395-0000		1	NOZZLE	
030	2990873-0000		1	NOZZLE	
040	2986078-0000		1	NOZZLE	
T50E0051	2852331-0001		1	PIPE	
T50E0052	2852331-0001		1	PIPE	
TBA 0160S, TBA 0200S					
010	2894719-0000		2	PLATE	
020	2976932-0000		1	NOZZLE	
030	2894688-0000		1	NOZZLE	
040	2894689-0000		1	NOZZLE	
T50E0051	2852331-0001		1	PIPE	
T50E0052	2852331-0001		1	PIPE	
TBA 0200B, TBA 0250B, TBA 0330S					
010	3120545-0000		2	PLATE	
020	2852324-0000		1	NOZZLE	
030	3120546-0000		1	NOZZLE	
040	3120547-0000		1	NOZZLE	
T50E0051	2852331-0002		1	PIPE	
T50E0052	2852331-0002		1	PIPE	
TBA 0200E					
010	3051994-0000		2	PLATE	
020	3051991-0000		1	NOZZLE	
030	3051992-0000		1	NOZZLE	
040	3051993-0000		1	NOZZLE	
T50E0051	3051996-0000		1	PIPE	
T50E0052	3051995-0000		1	PIPE	
TBA 0200M, TBA 0250S					
010	2912441-0000		2	PLATE	
020	2912437-0000		1	NOZZLE	
030	2912438-0000		1	NOZZLE	
040	2912440-0000		1	NOZZLE	
T50E0051	2852331-0004		1	PIPE	
T50E0052	2852331-0004		1	PIPE	
TBA 0200SQ, TBA 0250SQ					
010	2971768-0000		2	PLATE	
020	2962130-0000		1	NOZZLE	
030	2912438-0000		1	NOZZLE	
040	2912440-0000		1	NOZZLE	
T50E0051	2852331-0004		1	PIPE	
T50E0052	2852331-0004		1	PIPE	
TBA 0284B, TBA 0300S					
010	2998107-0000		2	PLATE	
020	2852324-0000		1	NOZZLE	
030	2852325-0000		1	NOZZLE	
040	2852326-0000		1	NOZZLE	
T50E0051	2852331-0002		1	PIPE	
T50E0052	2852331-0002		1	PIPE	
TBA 0375S					
010	3067357-0000		2	PLATE	
020	3067358-0000		1	NOZZLE	
030	2852325-0000		1	NOZZLE	
040	2852326-0000		1	NOZZLE	
T50E0051	2852331-0005		1	PIPE	
T50E0052	2852331-0005		1	PIPE	
TPA 0125SQ					
010	2871970-0000		2	PLATE	
020	2871969-0000		1	NOZZLE	
030	2871968-0000		1	NOZZLE	
040	2871967-0000		1	NOZZLE	
T50E0051	2852331-0003		1	PIPE	
T50E0052	2852331-0003		1	PIPE	
TPA 0250SQ, TPA 0200SQ					
010	2976963-0000		2	PLATE	
020	2984839-0000		1	NOZZLE	
030	3092257-0000		1	NOZZLE	
040	3092258-0000		1	NOZZLE	
T50E0051	2852331-0001		1	PIPE	
T50E0052	2852331-0001		1	PIPE	
TPA 0330SQ					
010	2987099-0000		2	PLATE	
020	2962130-0000		1	NOZZLE	
030	2912438-0000		1	NOZZLE	
040	2912440-0000		1	NOZZLE	
T50E0051	2852331-0004		1	PIPE	
T50E0052	2852331-0004		1	PIPE	

Machine Type | Group Description | Used-In | Group Number | Page No

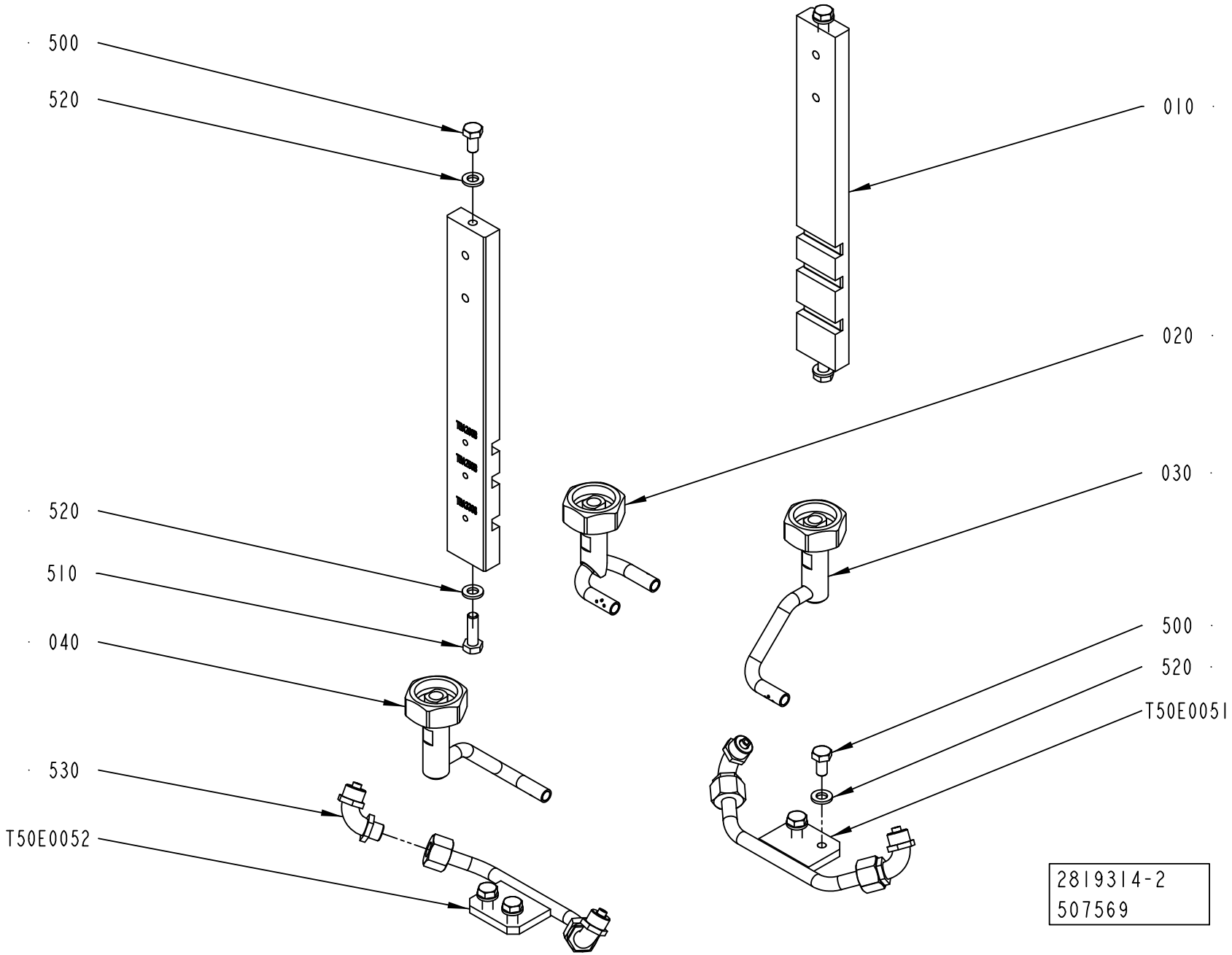
500
520
520
510
040
530
T50E0052
010
020
030
500
520
T50E0051
2819314-2
507569

Pos	Part No	UN	Qty	Description	Page No
Common Parts (Cont'd)					
500	312105-0366		6	SCREW, M6S ISO 4017 M6X12 A4 80	
510	312105-0370		2	SCREW, M6S ISO 4017 M6X20 A4 80	
520	315106-0153		8	WASHER PLAIN, M6 ISO7089-6-200 HV A4	
530	342931-0121		4	ELBOW 90 COUPL., EXT. THREAD 8/6-G1/8"	

Pos	Part No	UN	Qty	Description	Page No

PRESSURE DEVICE

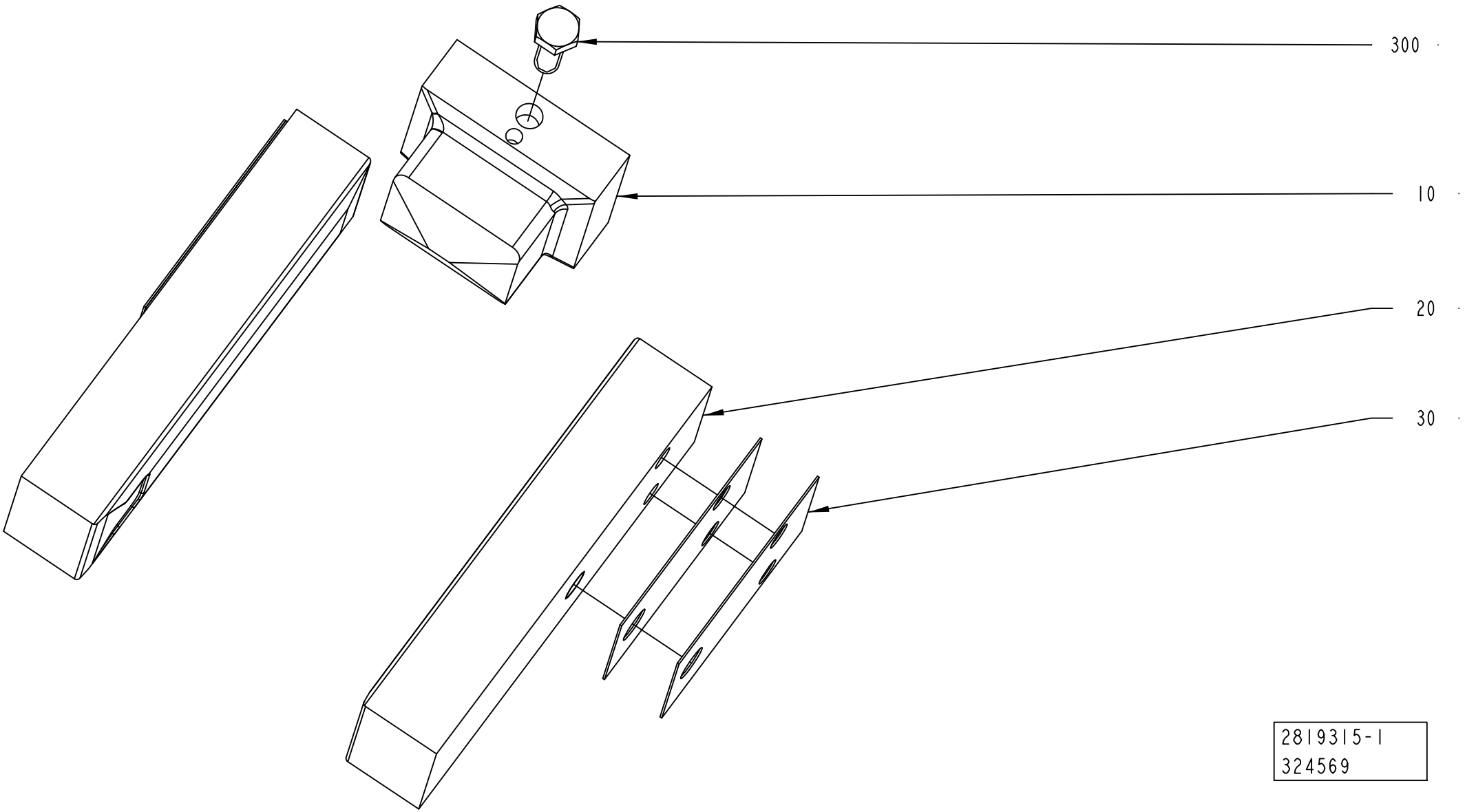

ECM: 509512 - 20111001
Group number: 2819315-0100
Assembly Drawing: 2819315-1_1_AA

This list covers pages from 1-330 to 1-337

Pos	Part No	UN	Qty	Description	Page No
TPA 0200SQ (See drawing on page: 1-334)					
010	3031464-0000		1	BLOCK	
020	3110111-0000		1	PUSHER	
025	3110110-0000		1	PUSHER	
050	3092452-0000		2	NAIL	
080	3097776-0000		6	SHIM	
330	315106-0136		2	WASHER PLAIN, M4 ISO7089-4-200 HV A4	
340	312115-0295		2	SCREW ISO4762 M4X20 A4 80	
TPA 0250SQ (See drawing on page: 1-334)					
010	3031464-0000		1	BLOCK	
020	3110108-0000		1	PUSHER	
025	3110109-0000		1	PUSHER	
050	3092452-0000		2	NAIL	
080	3097776-0000		6	SHIM	
330	315106-0136		2	WASHER PLAIN, M4 ISO7089-4-200 HV A4	
340	312115-0295		2	SCREW ISO4762 M4X20 A4 80	
TPA 0330SQ (See drawing on page: 1-334)					
010	2987105-0000		1	BLOCK	
020	2987110-0000		1	PUSHER	
025	2987109-0000		1	PUSHER	
050	3066842-0000		2	VOLUME BULGE	
080	3160954-0000		8	SHIM	
330	315106-0136		2	WASHER PLAIN, M4 ISO7089-4-200 HV A4	
340	312115-0293		2	SCREW ISO4762 M4X16 A4 80	
TBA 0080S (See drawing on page: 1-330)					
010	2949925-0000		1	BLOCK	
020	2949926-0000		2	PUSHER	
TBA 0100B (See drawing on page: 1-330)					
010	2894691-0000		1	BLOCK	
020	2894692-0000		2	PUSHER	
TBA 0125S (See drawing on page: 1-330)					
010	2894691-0000		1	BLOCK	
020	2894693-0000		2	PUSHER	
TBA 0160S (See drawing on page: 1-330)					
010	2806015-0000		1	BLOCK	
020	3015762-0000		2	PUSHER	
TBA 0200B (See drawing on page: 1-330)					
010	2852322-0000		1	BLOCK	
020	2852329-0000		2	PUSHER	
TBA 0200E (See drawing on page: 1-336)					
010	3051997-0000		1	BLOCK	
020	3074724-0000		1	PUSHER	
025	3074725-0000		1	PUSHER	
TBA 0200M (See drawing on page: 1-330)					
010	2912423-0000		1	BLOCK	
020	2912427-0000		2	PUSHER	
TBA 0200S (See drawing on page: 1-330)					
010	2806015-0000		1	BLOCK	
020	2871940-0000		2	PUSHER	
TBA 0200SQ (See drawing on page: 1-330)					
010	2962125-0000		1	BLOCK	
020	2962126-0000		2	PUSHER	
TBA 0250B (See drawing on page: 1-330)					
010	2852322-0000		1	BLOCK	
020	2852330-0000		2	PUSHER	
TBA 0250S (See drawing on page: 1-330)					
010	2912423-0000		1	BLOCK	
020	2912424-0000		2	PUSHER	
TBA 0250SQ (See drawing on page: 1-330)					
010	2962125-0000		1	BLOCK	
020	2966595-0000		2	PUSHER	
TBA 0284B, TBA 0300S (See drawing on page: 1-330)					
010	2852322-0000		1	BLOCK	
020	2998108-0000		2	PUSHER	
TBA 0330S (See drawing on page: 1-330)					
010	2852322-0000		1	BLOCK	
020	2852323-0000		2	PUSHER	
TBA 0375S (See drawing on page: 1-330)					
010	3067359-0000		1	BLOCK	
020	3067360-0000		2	PUSHER	
TPA 0125SQ (See drawing on page: 1-332)					
010	2871965-0000		1	BLOCK	
020	2871964-0000		1	PUSHER	
025	2871966-0000		1	BLOCK	
050	2894729-0000		1	VOLUME BULGE	
060	2894730-0000		1	VOLUME BULGE	
070	2941944-0000		4	VOLUME BULGE	
310	312155-0289		8	SCREW DIN 7991 MF6S M4X10 A4 70	
320	312605-0312		2	HEXAGON NUT, M6M M4 A280	
330	315106-0136		2	WASHER PLAIN, M4 ISO7089-4-200 HV A4	
Common Parts					
030	2852410-0000		8	SHIM	
300	312105-0370		1	SCREW, M6S ISO 4017 M6X20 A4 80	

Machine Type | Group Description | Used-In | Group Number | Page No

PRESSURE DEVICE

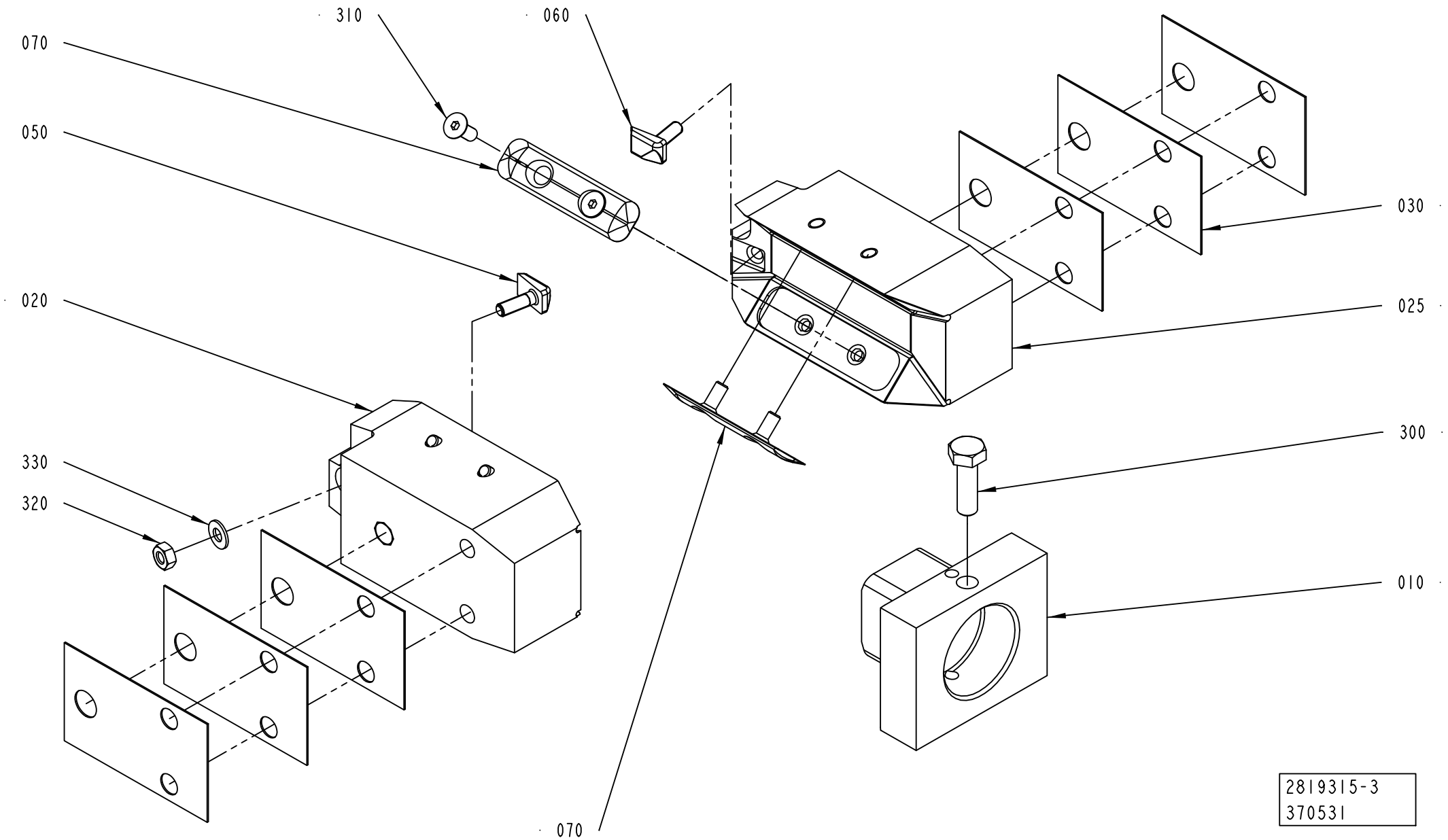

ECM: 509512 - 20111001
Group number: 2819315-0100
Assembly Drawing: 2819315-3_1_AA

This list covers pages from 1-330 to 1-337

Pos	Part No	UN	Qty	Description	Page No
TPA 0200SQ (See drawing on page: 1-334)					
010	3031464-0000		1	BLOCK	
020	3110111-0000		1	PUSHER	
025	3110110-0000		1	PUSHER	
050	3092452-0000		2	NAIL	
080	3097776-0000		6	SHIM	
330	315106-0136		2	WASHER PLAIN, M4 ISO7089-4-200 HV A4	
340	312115-0295		2	SCREW ISO4762 M4X20 A4 80	
TPA 0250SQ (See drawing on page: 1-334)					
010	3031464-0000		1	BLOCK	
020	3110108-0000		1	PUSHER	
025	3110109-0000		1	PUSHER	
050	3092452-0000		2	NAIL	
080	3097776-0000		6	SHIM	
330	315106-0136		2	WASHER PLAIN, M4 ISO7089-4-200 HV A4	
340	312115-0295		2	SCREW ISO4762 M4X20 A4 80	
TPA 0330SQ (See drawing on page: 1-334)					
010	2987105-0000		1	BLOCK	
020	2987110-0000		1	PUSHER	
025	2987109-0000		1	PUSHER	
050	3066842-0000		2	VOLUME BULGE	
080	3160954-0000		8	SHIM	
330	315106-0136		2	WASHER PLAIN, M4 ISO7089-4-200 HV A4	
340	312115-0293		2	SCREW ISO4762 M4X16 A4 80	
TBA 0080S (See drawing on page: 1-330)					
010	2949925-0000		1	BLOCK	
020	2949926-0000		2	PUSHER	
TBA 0100B (See drawing on page: 1-330)					
010	2894691-0000		1	BLOCK	
020	2894692-0000		2	PUSHER	
TBA 0125S (See drawing on page: 1-330)					
010	2894691-0000		1	BLOCK	
020	2894693-0000		2	PUSHER	
TBA 0160S (See drawing on page: 1-330)					
010	2806015-0000		1	BLOCK	
020	3015762-0000		2	PUSHER	
TBA 0200B (See drawing on page: 1-330)					
010	2852322-0000		1	BLOCK	
020	2852329-0000		2	PUSHER	
TBA 0200E (See drawing on page: 1-336)					
010	3051997-0000		1	BLOCK	
020	3074724-0000		1	PUSHER	
025	3074725-0000		1	PUSHER	
TBA 0200M (See drawing on page: 1-330)					
010	2912423-0000		1	BLOCK	
020	2912427-0000		2	PUSHER	
TBA 0200S (See drawing on page: 1-330)					
010	2806015-0000		1	BLOCK	
020	2871940-0000		2	PUSHER	
TBA 0200SQ (See drawing on page: 1-330)					
010	2962125-0000		1	BLOCK	
020	2962126-0000		2	PUSHER	
TBA 0250B (See drawing on page: 1-330)					
010	2852322-0000		1	BLOCK	
020	2852330-0000		2	PUSHER	
TBA 0250S (See drawing on page: 1-330)					
010	2912423-0000		1	BLOCK	
020	2912424-0000		2	PUSHER	
TBA 0250SQ (See drawing on page: 1-330)					
010	2962125-0000		1	BLOCK	
020	2966595-0000		2	PUSHER	
TBA 0284B, TBA 0300S (See drawing on page: 1-330)					
010	2852322-0000		1	BLOCK	
020	2998108-0000		2	PUSHER	
TBA 0330S (See drawing on page: 1-330)					
010	2852322-0000		1	BLOCK	
020	2852323-0000		2	PUSHER	
TBA 0375S (See drawing on page: 1-330)					
010	3067359-0000		1	BLOCK	
020	3067360-0000		2	PUSHER	
TPA 0125SQ (See drawing on page: 1-332)					
010	2871965-0000		1	BLOCK	
020	2871964-0000		1	PUSHER	
025	2871966-0000		1	BLOCK	
050	2894729-0000		1	VOLUME BULGE	
060	2894730-0000		1	VOLUME BULGE	
070	2941944-0000		4	VOLUME BULGE	
310	312155-0289		8	SCREW DIN 7991 MF6S M4X10 A4 70	
320	312605-0312		2	HEXAGON NUT, M6M M4 A280	
330	315106-0136		2	WASHER PLAIN, M4 ISO7089-4-200 HV A4	
Common Parts					
030	2852410-0000		8	SHIM	
300	312105-0370		1	SCREW, M6S ISO 4017 M6X20 A4 80	

Machine Type	Group Description	Used-In	Group Number	Page No

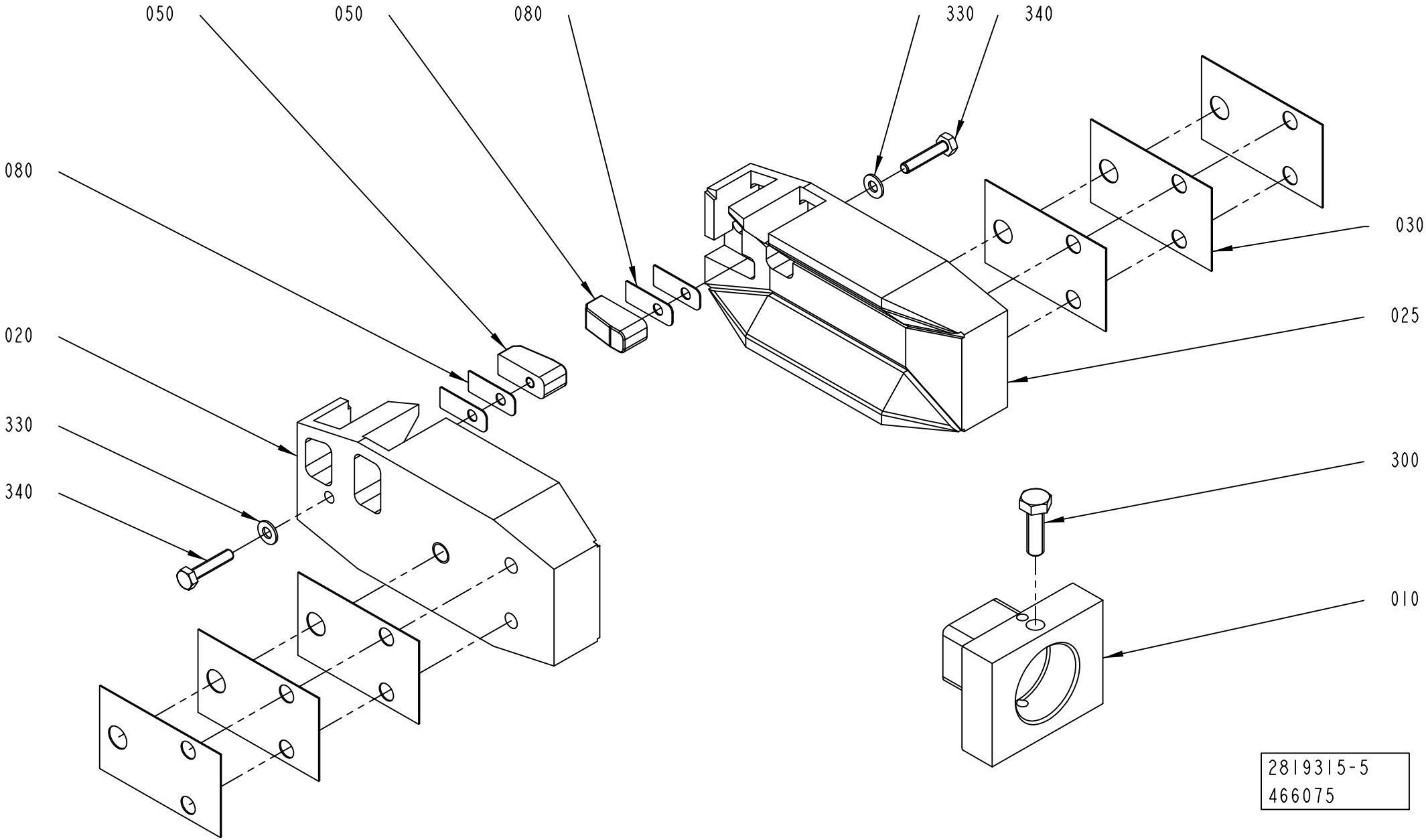
050
050
080
330
340
080
020
330
340
030
025
300
010
2819315-5
466075

ECM: 509512 - 20111001
Group number: 2819315-0100
Assembly Drawing: 2819315-5_1_AB

This list covers pages from 1-330 to 1-337

Pos	Part No	UN	Qty	Description	Page No
TPA 0200SQ (See drawing on page: 1-334)					
010	3031464-0000		1	BLOCK	
020	3110111-0000		1	PUSHER	
025	3110110-0000		1	PUSHER	
050	3092452-0000		2	NAIL	
080	3097776-0000		6	SHIM	
330	315106-0136		2	WASHER PLAIN, M4 ISO7089-4-200 HV A4	
340	312115-0295		2	SCREW ISO4762 M4X20 A4 80	
TPA 0250SQ (See drawing on page: 1-334)					
010	3031464-0000		1	BLOCK	
020	3110108-0000		1	PUSHER	
025	3110109-0000		1	PUSHER	
050	3092452-0000		2	NAIL	
080	3097776-0000		6	SHIM	
330	315106-0136		2	WASHER PLAIN, M4 ISO7089-4-200 HV A4	
340	312115-0295		2	SCREW ISO4762 M4X20 A4 80	
TPA 0330SQ (See drawing on page: 1-334)					
010	2987105-0000		1	BLOCK	
020	2987110-0000		1	PUSHER	
025	2987109-0000		1	PUSHER	
050	3066842-0000		2	VOLUME BULGE	
080	3160954-0000		8	SHIM	
330	315106-0136		2	WASHER PLAIN, M4 ISO7089-4-200 HV A4	
340	312115-0293		2	SCREW ISO4762 M4X16 A4 80	
TBA 0080S (See drawing on page: 1-330)					
010	2949925-0000		1	BLOCK	
020	2949926-0000		2	PUSHER	
TBA 0100B (See drawing on page: 1-330)					
010	2894691-0000		1	BLOCK	
020	2894692-0000		2	PUSHER	
TBA 0125S (See drawing on page: 1-330)					
010	2894691-0000		1	BLOCK	
020	2894693-0000		2	PUSHER	
TBA 0160S (See drawing on page: 1-330)					
010	2806015-0000		1	BLOCK	
020	3015762-0000		2	PUSHER	
TBA 0200B (See drawing on page: 1-330)					
010	2852322-0000		1	BLOCK	
020	2852329-0000		2	PUSHER	
TBA 0200E (See drawing on page: 1-336)					
010	3051997-0000		1	BLOCK	
020	3074724-0000		1	PUSHER	
025	3074725-0000		1	PUSHER	
TBA 0200M (See drawing on page: 1-330)					
010	2912423-0000		1	BLOCK	
020	2912427-0000		2	PUSHER	
TBA 0200S (See drawing on page: 1-330)					
010	2806015-0000		1	BLOCK	
020	2871940-0000		2	PUSHER	
TBA 0200SQ (See drawing on page: 1-330)					
010	2962125-0000		1	BLOCK	
020	2962126-0000		2	PUSHER	
TBA 0250B (See drawing on page: 1-330)					
010	2852322-0000		1	BLOCK	
020	2852330-0000		2	PUSHER	
TBA 0250S (See drawing on page: 1-330)					
010	2912423-0000		1	BLOCK	
020	2912424-0000		2	PUSHER	
TBA 0250SQ (See drawing on page: 1-330)					
010	2962125-0000		1	BLOCK	
020	2966595-0000		2	PUSHER	
TBA 0284B, TBA 0300S (See drawing on page: 1-330)					
010	2852322-0000		1	BLOCK	
020	2998108-0000		2	PUSHER	
TBA 0330S (See drawing on page: 1-330)					
010	2852322-0000		1	BLOCK	
020	2852323-0000		2	PUSHER	
TBA 0375S (See drawing on page: 1-330)					
010	3067359-0000		1	BLOCK	
020	3067360-0000		2	PUSHER	
TPA 0125SQ (See drawing on page: 1-332)					
010	2871965-0000		1	BLOCK	
020	2871964-0000		1	PUSHER	
025	2871966-0000		1	BLOCK	
050	2894729-0000		1	VOLUME BULGE	
060	2894730-0000		1	VOLUME BULGE	
070	2941944-0000		4	VOLUME BULGE	
310	312155-0289		8	SCREW DIN 7991 MF6S M4X10 A4 70	
320	312605-0312		2	HEXAGON NUT, M6M M4 A280	
330	315106-0136		2	WASHER PLAIN, M4 ISO7089-4-200 HV A4	
Common Parts					
030	2852410-0000		8	SHIM	
300	312105-0370		1	SCREW, M6S ISO 4017 M6X20 A4 80	

Machine Type | Group Description | Used-In | Group Number | Page No

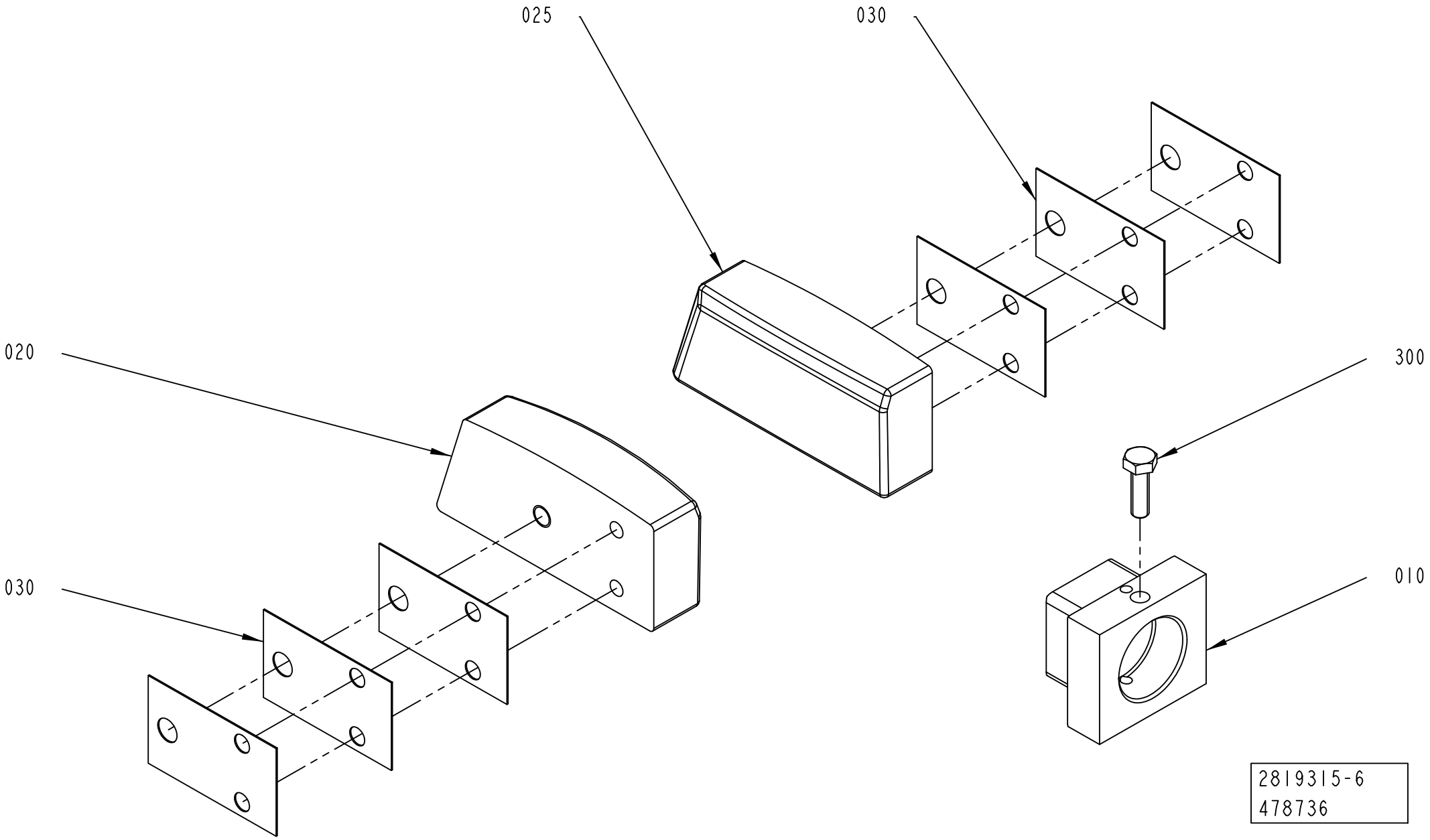
025
030
020
300
030
010
2819315-6
478736

ECM: 509512 - 20111001
Group number: 2819315-0100
Assembly Drawing: 2819315-6_1_AA

This list covers pages from 1-330 to 1-337

Pos	Part No	UN	Qty	Description	Page No
TPA 0200SQ (See drawing on page: 1-334)					
010	3031464-0000		1	BLOCK	
020	3110111-0000		1	PUSHER	
025	3110110-0000		1	PUSHER	
050	3092452-0000		2	NAIL	
080	3097776-0000		6	SHIM	
330	315106-0136		2	WASHER PLAIN, M4 ISO7089-4-200 HV A4	
340	312115-0295		2	SCREW ISO4762 M4X20 A4 80	
TPA 0250SQ (See drawing on page: 1-334)					
010	3031464-0000		1	BLOCK	
020	3110108-0000		1	PUSHER	
025	3110109-0000		1	PUSHER	
050	3092452-0000		2	NAIL	
080	3097776-0000		6	SHIM	
330	315106-0136		2	WASHER PLAIN, M4 ISO7089-4-200 HV A4	
340	312115-0295		2	SCREW ISO4762 M4X20 A4 80	
TPA 0330SQ (See drawing on page: 1-334)					
010	2987105-0000		1	BLOCK	
020	2987110-0000		1	PUSHER	
025	2987109-0000		1	PUSHER	
050	3066842-0000		2	VOLUME BULGE	
080	3160954-0000		8	SHIM	
330	315106-0136		2	WASHER PLAIN, M4 ISO7089-4-200 HV A4	
340	312115-0293		2	SCREW ISO4762 M4X16 A4 80	
TBA 0080S (See drawing on page: 1-330)					
010	2949925-0000		1	BLOCK	
020	2949926-0000		2	PUSHER	
TBA 0100B (See drawing on page: 1-330)					
010	2894691-0000		1	BLOCK	
020	2894692-0000		2	PUSHER	
TBA 0125S (See drawing on page: 1-330)					
010	2894691-0000		1	BLOCK	
020	2894693-0000		2	PUSHER	
TBA 0160S (See drawing on page: 1-330)					
010	2806015-0000		1	BLOCK	
020	3015762-0000		2	PUSHER	
TBA 0200B (See drawing on page: 1-330)					
010	2852322-0000		1	BLOCK	
020	2852329-0000		2	PUSHER	
TBA 0200E (See drawing on page: 1-336)					
010	3051997-0000		1	BLOCK	
020	3074724-0000		1	PUSHER	
025	3074725-0000		1	PUSHER	
TBA 0200M (See drawing on page: 1-330)					
010	2912423-0000		1	BLOCK	
020	2912427-0000		2	PUSHER	
TBA 0200S (See drawing on page: 1-330)					
010	2806015-0000		1	BLOCK	
020	2871940-0000		2	PUSHER	
TBA 0200SQ (See drawing on page: 1-330)					
010	2962125-0000		1	BLOCK	
020	2962126-0000		2	PUSHER	
TBA 0250B (See drawing on page: 1-330)					
010	2852322-0000		1	BLOCK	
020	2852330-0000		2	PUSHER	
TBA 0250S (See drawing on page: 1-330)					
010	2912423-0000		1	BLOCK	
020	2912424-0000		2	PUSHER	
TBA 0250SQ (See drawing on page: 1-330)					
010	2962125-0000		1	BLOCK	
020	2966595-0000		2	PUSHER	
TBA 0284B, TBA 0300S (See drawing on page: 1-330)					
010	2852322-0000		1	BLOCK	
020	2998108-0000		2	PUSHER	
TBA 0330S (See drawing on page: 1-330)					
010	2852322-0000		1	BLOCK	
020	2852323-0000		2	PUSHER	
TBA 0375S (See drawing on page: 1-330)					
010	3067359-0000		1	BLOCK	
020	3067360-0000		2	PUSHER	
TPA 0125SQ (See drawing on page: 1-332)					
010	2871965-0000		1	BLOCK	
020	2871964-0000		1	PUSHER	
025	2871966-0000		1	BLOCK	
050	2894729-0000		1	VOLUME BULGE	
060	2894730-0000		1	VOLUME BULGE	
070	2941944-0000		4	VOLUME BULGE	
310	312155-0289		8	SCREW DIN 7991 MF6S M4X10 A4 70	
320	312605-0312		2	HEXAGON NUT, M6M M4 A280	
330	315106-0136		2	WASHER PLAIN, M4 ISO7089-4-200 HV A4	
Common Parts					
030	2852410-0000		8	SHIM	
300	312105-0370		1	SCREW, M6S ISO 4017 M6X20 A4 80	

Machine Type	Group Description	Used-In	Group Number	Page No

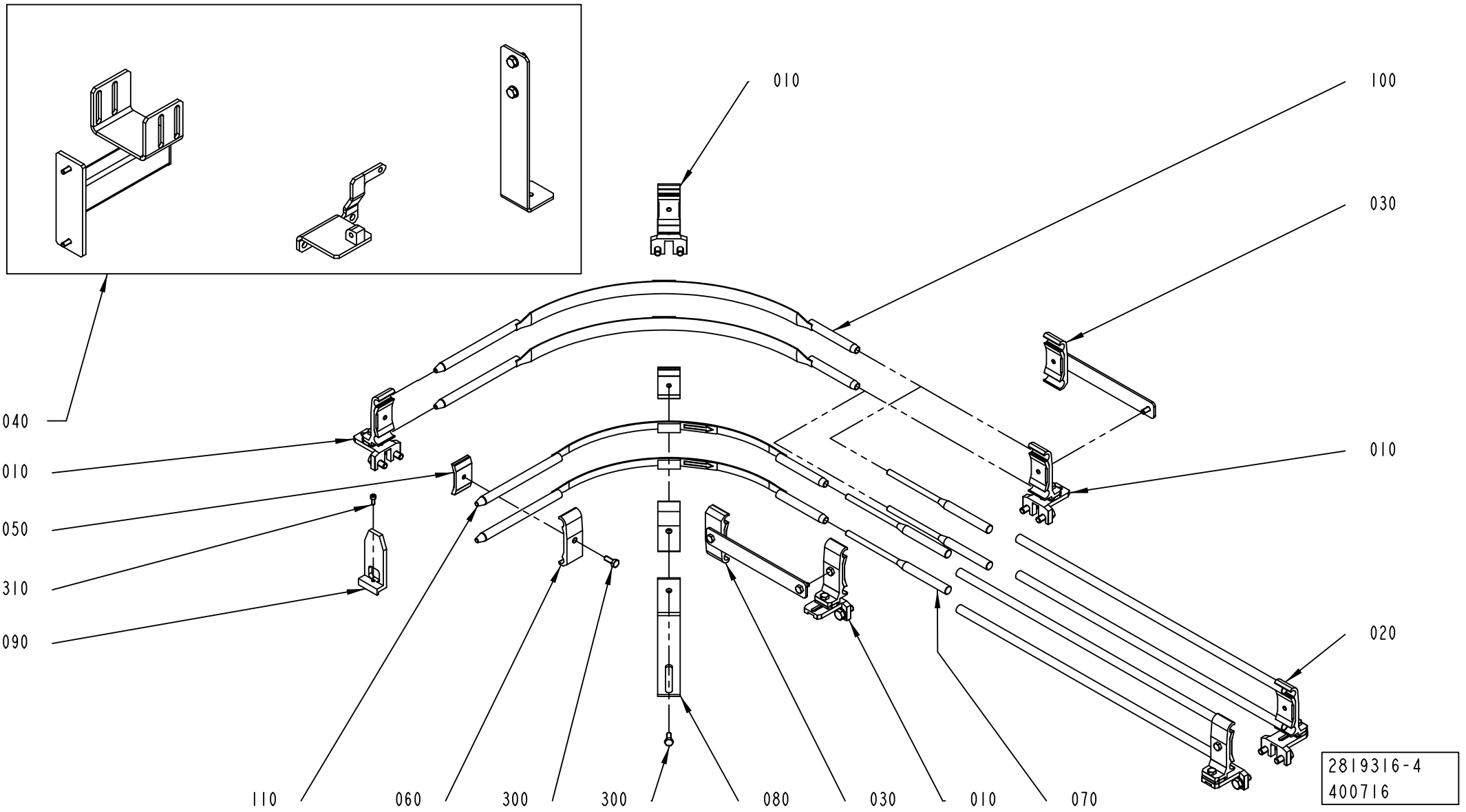
010
100
030
040
010
050
310
090
010
020
110
060
300
300
080
030
010
070
2819316-4
400716

ECM: 479583 - 20101003
Group number: 2819316-0200
Assembly Drawing: 2819316-4_1_AA

This list covers pages from 1-338 to 1-343

Pos	Part No	UN	Qty	Description	Page No
TBA 0100B, TBA 0125S, TBA 0080S (See drawing on page: 1-338)					
010	1550743-0200		4	RAIL HOLDER	**1-345**
020	2561274-0102		1	RAILING	**1-347**
040	3039513-0100		1	SUPPORT	**1-349**
090	2894694-0000		1	PUSHER	
TBA 0160S, TBA 0200M, TBA 0200B, TBA 0200S, TBA 0250S, TBA 0284B, TBA 0250B, TBA 0300S, TBA 0330S, TBA 0375S, TBA 0200E (See drawing on page: 1-338)					
010	1550743-0200		4	RAIL HOLDER	**1-345**
020	2561274-0102		1	RAILING	**1-347**
040	3039513-0100		1	SUPPORT	**1-349**
090	2871956-0000		1	PUSHER	
TBA 0200SQ, TBA 0250SQ (See drawing on page: 1-342)					
010	1550743-0200		4	RAIL HOLDER	**1-345**
020	2561274-0102		1	RAILING	**1-347**
040	3039514-0100		1	SUPPORT	**1-351**
090	2966591-0000		1	PUSHER	
TPA 0125SQ (See drawing on page: 1-340)					
010	2999197-0100		4	RAIL HOLDER	**1-353**
020	2999199-0100		1	RAILING	**1-355**
040	3039513-0100		1	SUPPORT	**1-349**
090	2894737-0000		1	PUSHER	
TPA 0250SQ, TPA 0200SQ (See drawing on page: 1-338)					
010	1550743-0200		4	RAIL HOLDER	**1-345**
020	2561274-0102		1	RAILING	**1-347**
040	3039513-0100		1	SUPPORT	**1-349**
090	2871956-0000		1	PUSHER	
TPA 0330SQ (See drawing on page: 1-342)					
010	1550743-0200		4	RAIL HOLDER	**1-345**
020	2561274-0102		1	RAILING	**1-347**
040	3039514-0100		1	SUPPORT	**1-351**
090	2871956-0000		1	PUSHER	
Common Parts					
030	2561602-0100		2	RAIL HOLDER KIT	**1-357**
050	1366727-0000		2	CLAMP	
060	1366750-0000		2	HOLDER	
070	1550664-0000		4	DOWEL	
080	1550666-0000		1	HOLDER	
100	3044462-0000		2	ARCH	
110	3044463-0000		2	ARCH	
300	312105-0368		2	SCREW, M6S ISO 4017 M6X16 A4 80	
310	312115-0289		1	SCREW ISO4762 M4X10 A4 80	

Pos	Part No	UN	Qty	Description	Page No

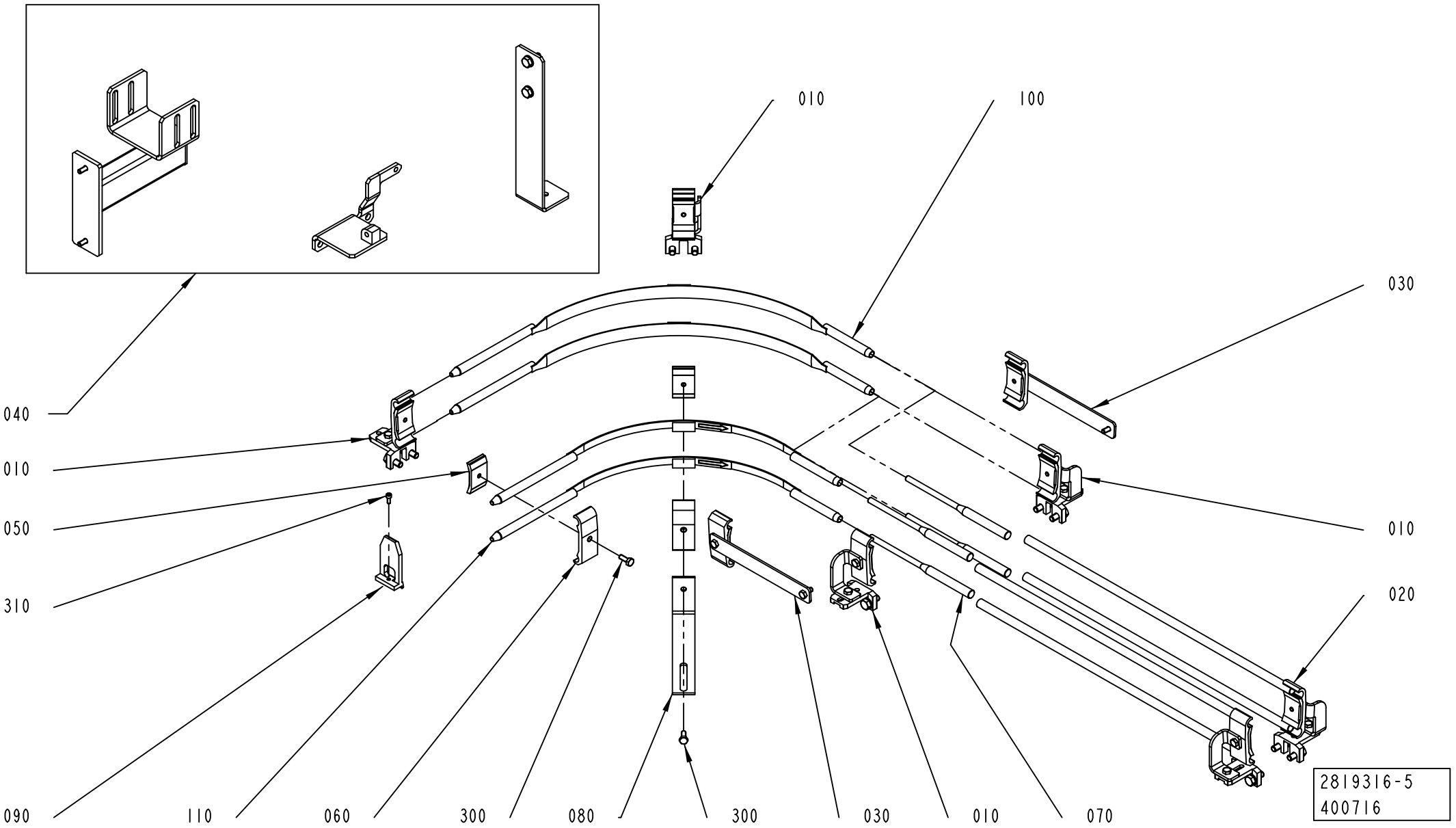
010
100
030
040
010
050
310
010
020
090
110
060
300
080
300
030
010
070
2819316-5
400716

ECM: 479583 - 20101003
Group number: 2819316-0200
Assembly Drawing: 2819316-5_1_AA

This list covers pages from 1-338 to 1-343

Pos	Part No	UN	Qty	Description	Page No
TBA 0100B, TBA 0125S, TBA 0080S (See drawing on page: 1-338)					
010	1550743-0200		4	RAIL HOLDER	**1-345**
020	2561274-0102		1	RAILING	**1-347**
040	3039513-0100		1	SUPPORT	**1-349**
090	2894694-0000		1	PUSHER	
TBA 0160S, TBA 0200M, TBA 0200B, TBA 0200S, TBA 0250S, TBA 0284B, TBA 0250B, TBA 0300S, TBA 0330S, TBA 0375S, TBA 0200E (See drawing on page: 1-338)					
010	1550743-0200		4	RAIL HOLDER	**1-345**
020	2561274-0102		1	RAILING	**1-347**
040	3039513-0100		1	SUPPORT	**1-349**
090	2871956-0000		1	PUSHER	
TBA 0200SQ, TBA 0250SQ (See drawing on page: 1-342)					
010	1550743-0200		4	RAIL HOLDER	**1-345**
020	2561274-0102		1	RAILING	**1-347**
040	3039514-0100		1	SUPPORT	**1-351**
090	2966591-0000		1	PUSHER	
TPA 0125SQ (See drawing on page: 1-340)					
010	2999197-0100		4	RAIL HOLDER	**1-353**
020	2999199-0100		1	RAILING	**1-355**
040	3039513-0100		1	SUPPORT	**1-349**
090	2894737-0000		1	PUSHER	
TPA 0250SQ, TPA 0200SQ (See drawing on page: 1-338)					
010	1550743-0200		4	RAIL HOLDER	**1-345**
020	2561274-0102		1	RAILING	**1-347**
040	3039513-0100		1	SUPPORT	**1-349**
090	2871956-0000		1	PUSHER	
TPA 0330SQ (See drawing on page: 1-342)					
010	1550743-0200		4	RAIL HOLDER	**1-345**
020	2561274-0102		1	RAILING	**1-347**
040	3039514-0100		1	SUPPORT	**1-351**
090	2871956-0000		1	PUSHER	
Common Parts					
030	2561602-0100		2	RAIL HOLDER KIT	**1-357**
050	1366727-0000		2	CLAMP	
060	1366750-0000		2	HOLDER	
070	1550664-0000		4	DOWEL	
080	1550666-0000		1	HOLDER	
100	3044462-0000		2	ARCH	
110	3044463-0000		2	ARCH	
300	312105-0368		2	SCREW, M6S ISO 4017 M6X16 A4 80	
310	312115-0289		1	SCREW ISO4762 M4X10 A4 80	

Pos	Part No	UN	Qty	Description	Page No

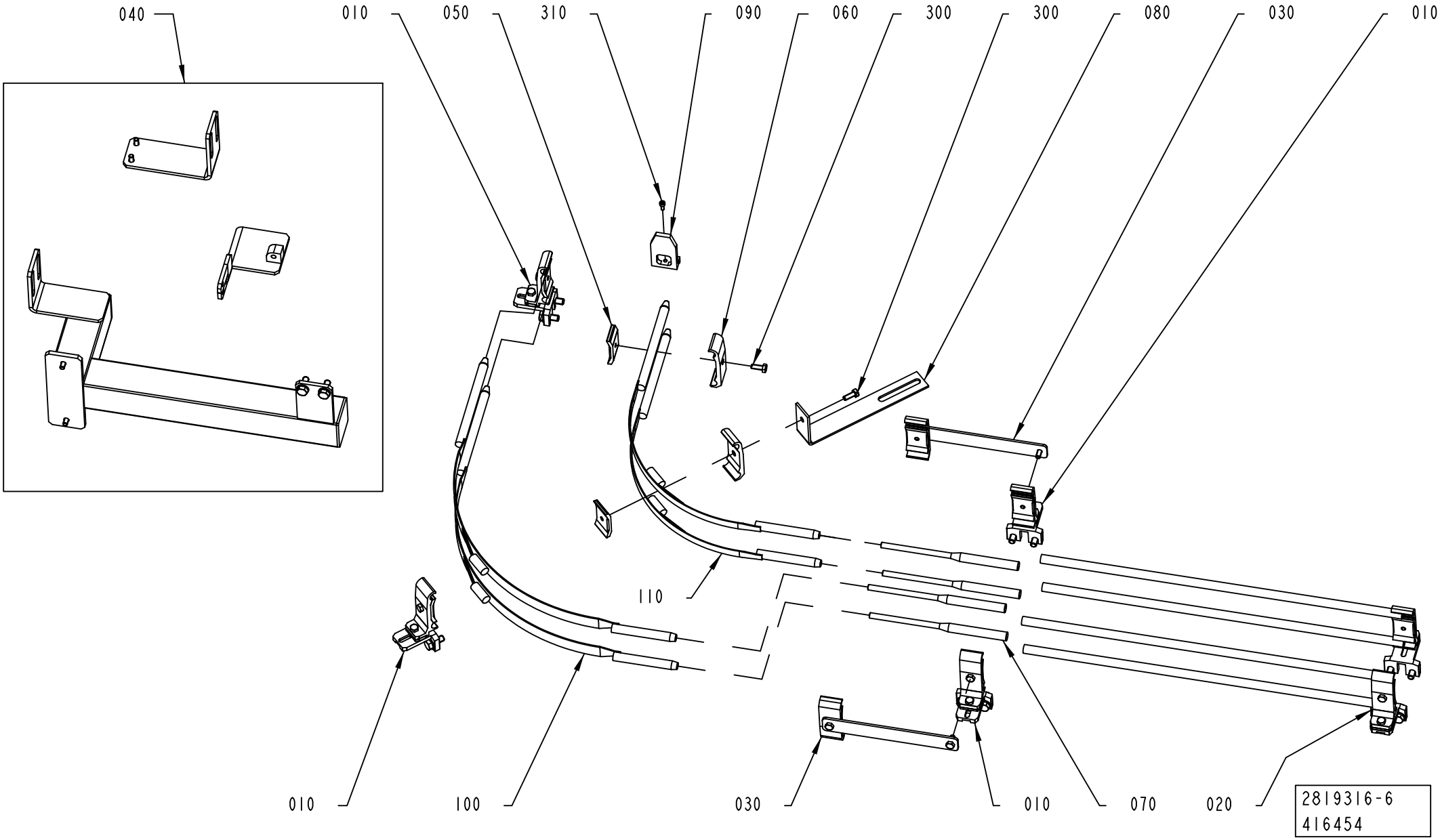
040
010
050
310
090
060
300
300
080
030
010
110
010
100
030
010
070
020
2819316-6
416454

ECM: 479583 - 20101003
Group number: 2819316-0200
Assembly Drawing: 2819316-6_1_AA

This list covers pages from 1-338 to 1-343

Pos	Part No	UN	Qty	Description	Page No
TBA 0100B, TBA 0125S, TBA 0080S (See drawing on page: 1-338)					
010	1550743-0200		4	RAIL HOLDER	**1-345**
020	2561274-0102		1	RAILING	**1-347**
040	3039513-0100		1	SUPPORT	**1-349**
090	2894694-0000		1	PUSHER	
TBA 0160S, TBA 0200M, TBA 0200B, TBA 0200S, TBA 0250S, TBA 0284B, TBA 0250B, TBA 0300S, TBA 0330S, TBA 0375S, TBA 0200E (See drawing on page: 1-338)					
010	1550743-0200		4	RAIL HOLDER	**1-345**
020	2561274-0102		1	RAILING	**1-347**
040	3039513-0100		1	SUPPORT	**1-349**
090	2871956-0000		1	PUSHER	
TBA 0200SQ, TBA 0250SQ (See drawing on page: 1-342)					
010	1550743-0200		4	RAIL HOLDER	**1-345**
020	2561274-0102		1	RAILING	**1-347**
040	3039514-0100		1	SUPPORT	**1-351**
090	2966591-0000		1	PUSHER	
TPA 0125SQ (See drawing on page: 1-340)					
010	2999197-0100		4	RAIL HOLDER	**1-353**
020	2999199-0100		1	RAILING	**1-355**
040	3039513-0100		1	SUPPORT	**1-349**
090	2894737-0000		1	PUSHER	
TPA 0250SQ, TPA 0200SQ (See drawing on page: 1-338)					
010	1550743-0200		4	RAIL HOLDER	**1-345**
020	2561274-0102		1	RAILING	**1-347**
040	3039513-0100		1	SUPPORT	**1-349**
090	2871956-0000		1	PUSHER	
TPA 0330SQ (See drawing on page: 1-342)					
010	1550743-0200		4	RAIL HOLDER	**1-345**
020	2561274-0102		1	RAILING	**1-347**
040	3039514-0100		1	SUPPORT	**1-351**
090	2871956-0000		1	PUSHER	
Common Parts					
030	2561602-0100		2	RAIL HOLDER KIT	**1-357**
050	1366727-0000		2	CLAMP	
060	1366750-0000		2	HOLDER	
070	1550664-0000		4	DOWEL	
080	1550666-0000		1	HOLDER	
100	3044462-0000		2	ARCH	
110	3044463-0000		2	ARCH	
300	312105-0368		2	SCREW, M6S ISO 4017 M6X16 A4 80	
310	312115-0289		1	SCREW ISO4762 M4X10 A4 80	

Pos	Part No	UN	Qty	Description	Page No

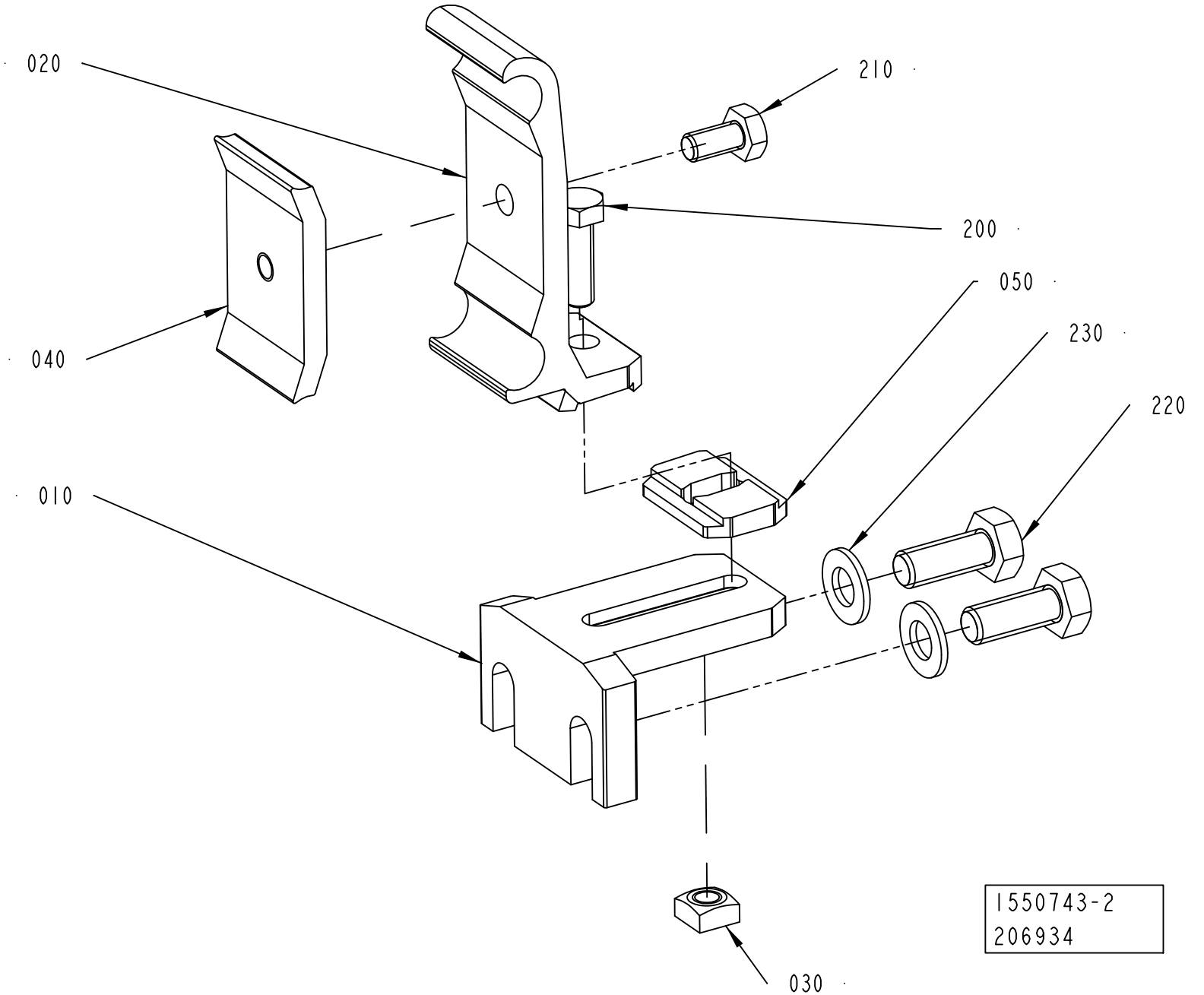
020
210
200
050
230
220
040
010
030
1550743-2
206934

ECM: 429045 - 20091201
Group number: 1550743-0200
Assembly Drawing: 1550743-2_1_AA

Pos	Part No	UN	Qty	Description	Page No
-					
010	1550772-0000		1	HOLDER	
020	2699437-0000		1	RAIL HOLDER	
030	1359565-0000		1	NUT	
040	1366727-0000		1	CLAMP	
050	2699436-0000		1	SPACER	
200	312105-0370		1	SCREW, M6S ISO 4017 M6X20 A4 80	
210	312105-0366		1	SCREW, M6S ISO 4017 M6X12 A4 80	
220	312105-0451		2	SCREW, M6S ISO 4017 M8X20 A4 80	
230	315105-0165		2	WASHER PLAIN, 8,4X16X1,6 A4 BRB	

Pos	Part No	UN	Qty	Description	Page No

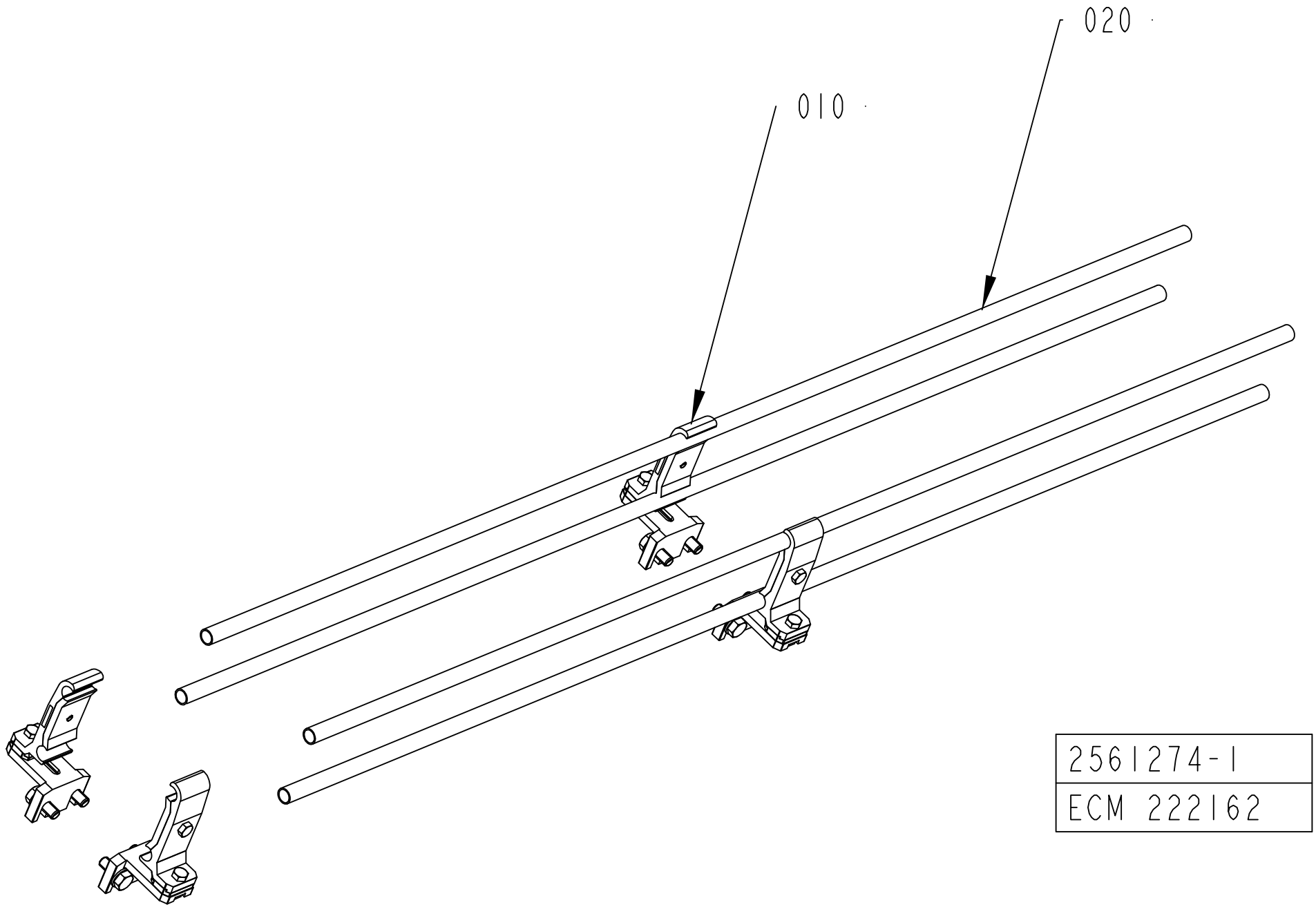
020
010
2561274-1
ECM 222162

ECM: 222162 -
Group number: 2561274-0102
Assembly Drawing: 2561274-1_1_AB

Pos	Part No	UN	Qty	Description	Page No
L 0250					
010	1550743-0200		2	RAIL HOLDER	**1-345**
L 0500					
010	1550743-0200		2	RAIL HOLDER	**1-345**
020	476221-0002		4	PIPE	

Pos	Part No	UN	Qty	Description	Page No

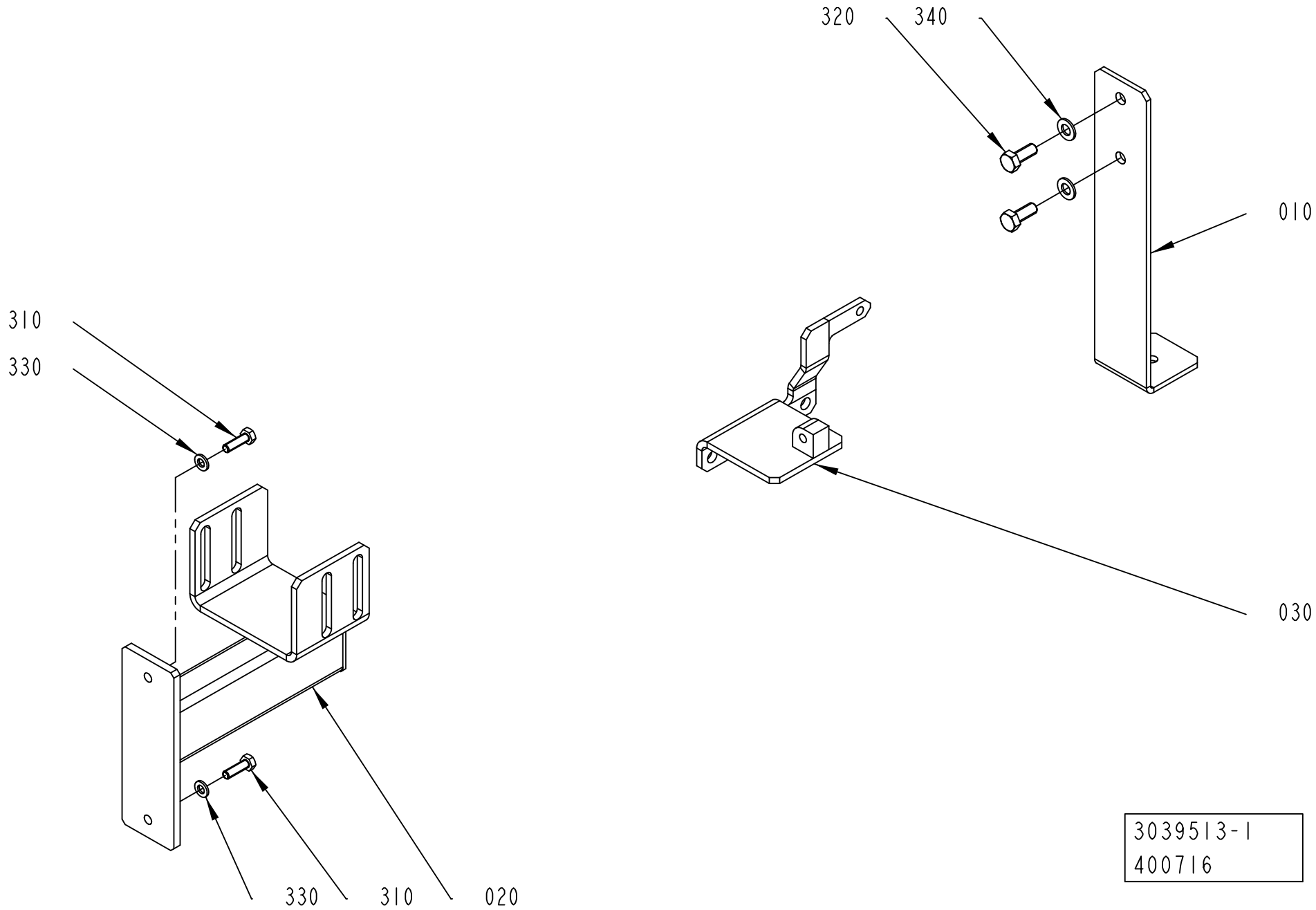
320
340
010
310
330
030
330
310
020
3039513-1
400716

ECM: 403673 - 20090710
Group number: 3039513-0100
Assembly Drawing: 3039513-1_1_AA

Pos	Part No	UN	Qty	Description	Page No
-					
010	2819302-0000		1	SUPPORT	
020	2852874-0000		1	SUPPORT	
030	2871949-0000		1	BRACKET	
300	312105-0368		1	SCREW, M6S ISO 4017 M6X16 A4 80	
310	312105-0370		2	SCREW, M6S ISO 4017 M6X20 A4 80	
320	312105-0451		2	SCREW, M6S ISO 4017 M8X20 A4 80	
330	315105-0153		2	WASHER PLAIN, 6,4X12X1,5 A4 BRB	
340	315105-0165		2	WASHER PLAIN, 8,4X16X1,6 A4 BRB	

Pos	Part No	UN	Qty	Description	Page No

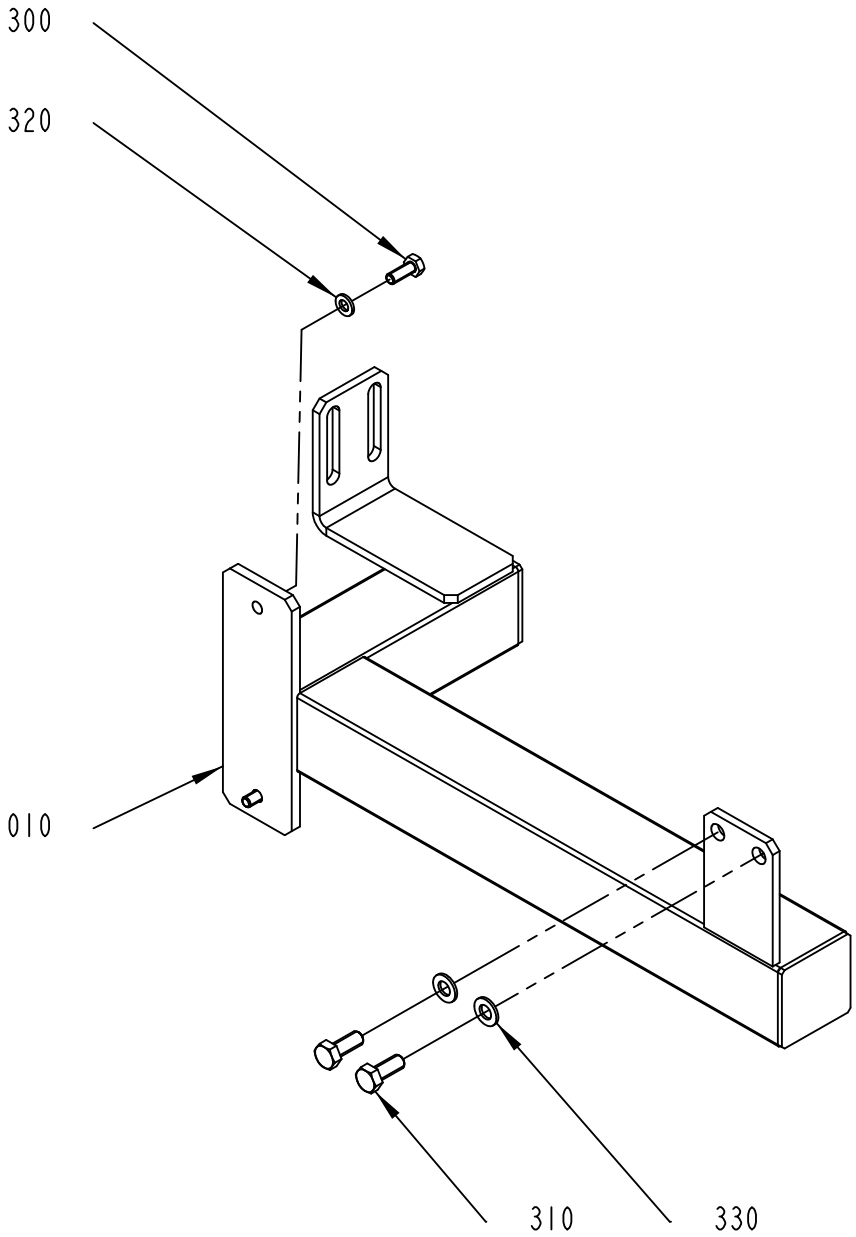

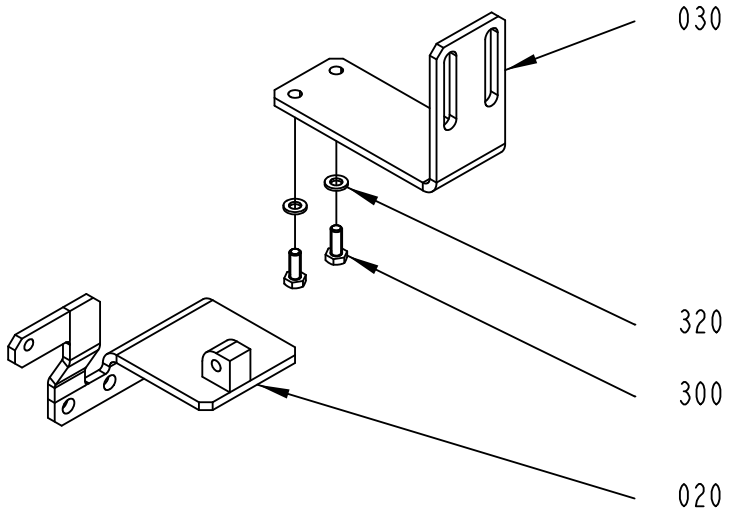

3039514-1
400716

ECM: 407859 - 20090710
Group number: 3039514-0100
Assembly Drawing: 3039514-1_1_AA

Pos	Part No	UN	Qty	Description	Page No
-					
010	2966592-0000		1	SUPPORT	
020	2966593-0000		1	BRACKET	
030	2966594-0000		1	BRACKET	
300	312105-0368		4	SCREW, M6S ISO 4017 M6X16 A4 80	
310	312105-0451		2	SCREW, M6S ISO 4017 M8X20 A4 80	
320	315105-0153		4	WASHER PLAIN, 6,4X12X1,5 A4 BRB	
330	315105-0165		2	WASHER PLAIN, 8,4X16X1,6 A4 BRB	

Pos	Part No	UN	Qty	Description	Page No

RAIL HOLDER

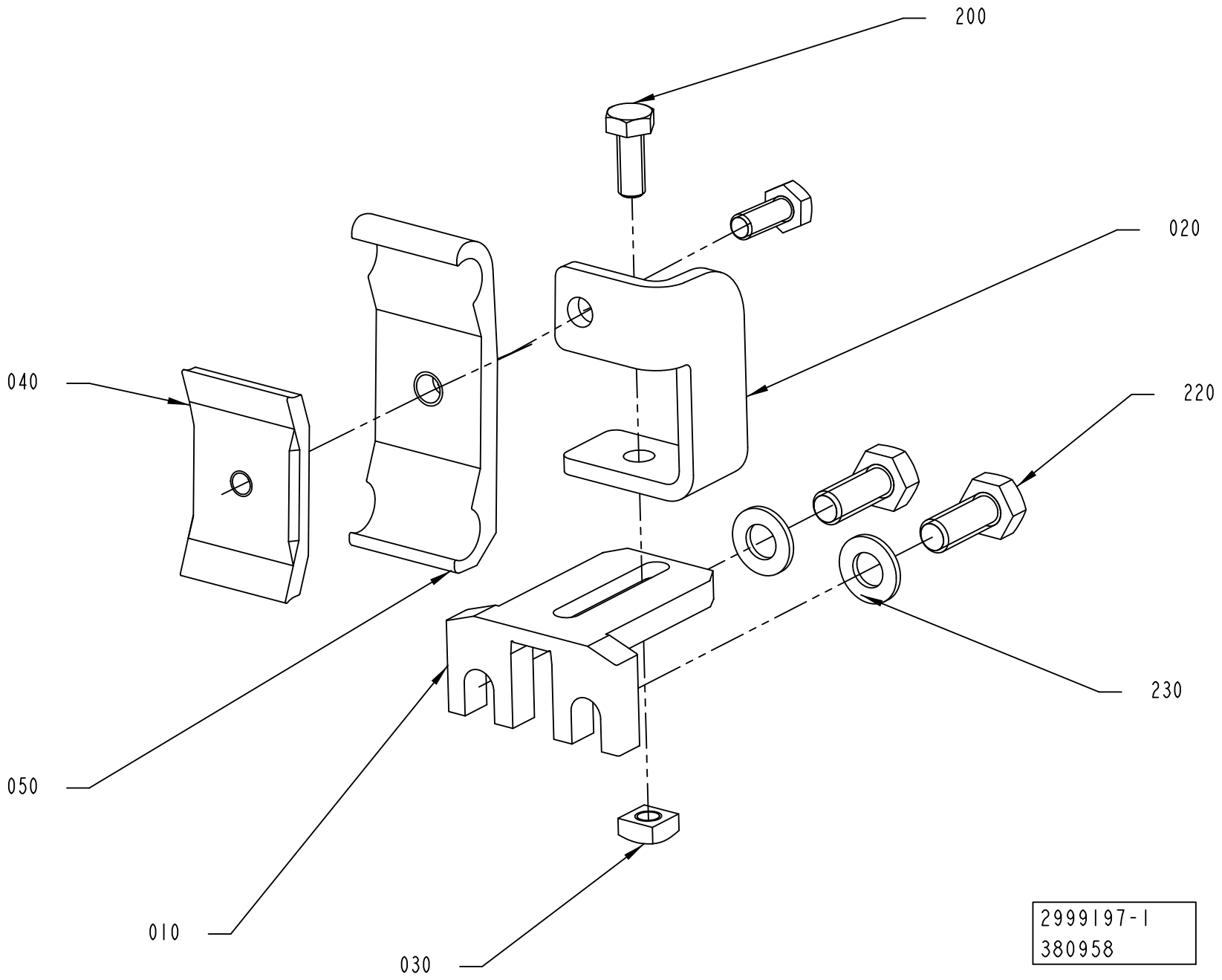

ECM: 436838 - 20100222
Group number: 2999197-0100
Assembly Drawing: 2999197-1_1_AA

Pos	Part No	UN	Qty	Description	Page No
-					
010	1550772-0000		1	HOLDER	
020	2998006-0000		1	RAIL HOLDER	
030	1359565-0000		1	NUT	
040	1366727-0000		1	CLAMP	
050	1366750-0000		1	HOLDER	
200	312105-0368		2	SCREW, M6S ISO 4017 M6X16 A4 80	
220	312105-0451		2	SCREW, M6S ISO 4017 M8X20 A4 80	
230	315105-0165		2	WASHER PLAIN, 8,4X16X1,6 A4 BRB	

Pos	Part No	UN	Qty	Description	Page No

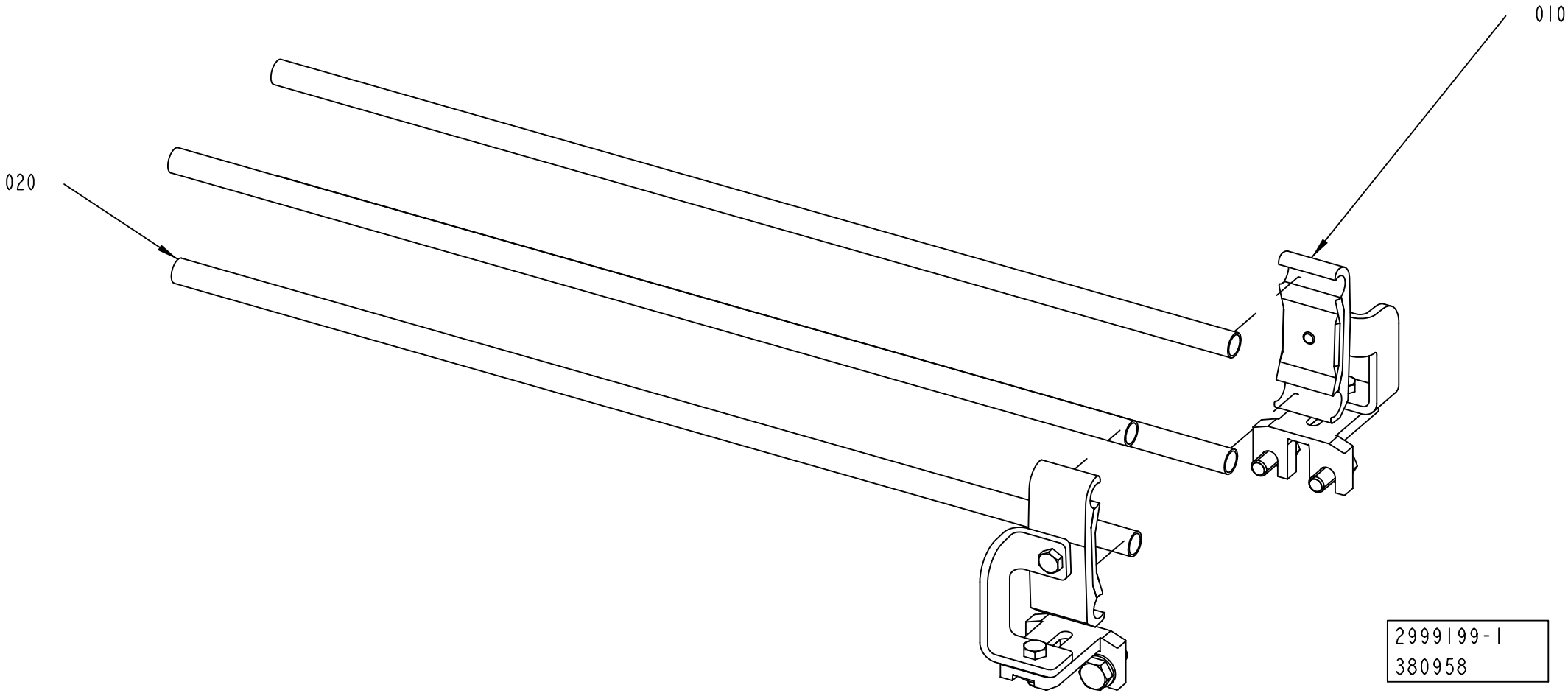
010
020
2999199-1
380958

ECM: 389050 - 20090602
Group number: 2999199-0100
Assembly Drawing: 2999199-1_1_AA

Pos	Part No	UN	Qty	Description	Page No
-					
010	2999197-0100		2	RAIL HOLDER	**1-353**
020	476221-0002		4	PIPE	

Pos	Part No	UN	Qty	Description	Page No

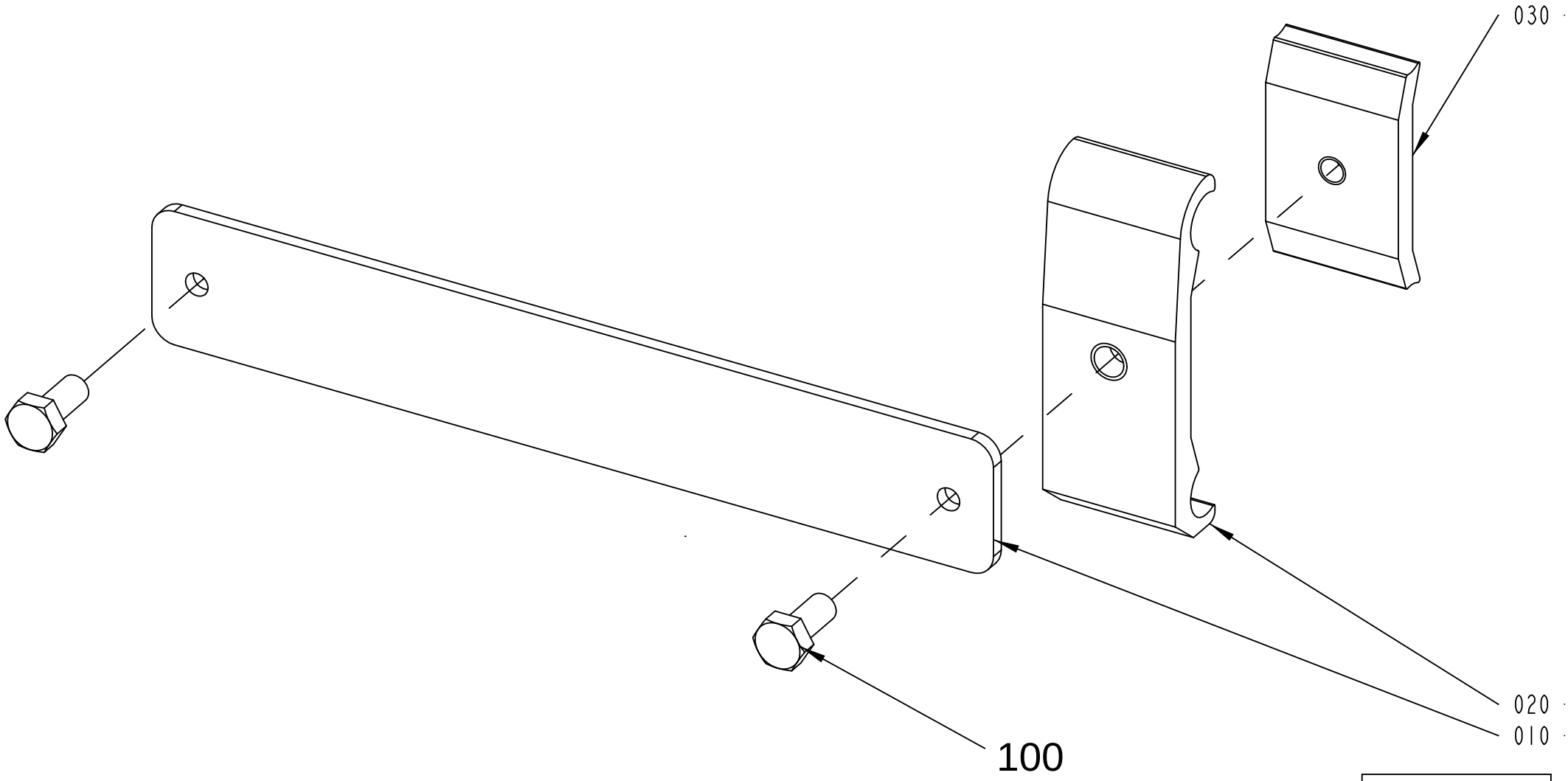

2561602-1
ECM 153837

ECM: 255321 - 20060302
Group number: 2561602-0100
Assembly Drawing: 2561602-1_1_AB

Pos	Part No	UN	Qty	Description	Page No
-					
010	2561596-0000		1	RAIL HOLDER KIT	
020	1366750-0000		1	HOLDER	
030	1366727-0000		1	CLAMP	
100	312105-0367		2	SCREW, M6S ISO 4017 M6X14 A4 80	

Pos	Part No	UN	Qty	Description	Page No

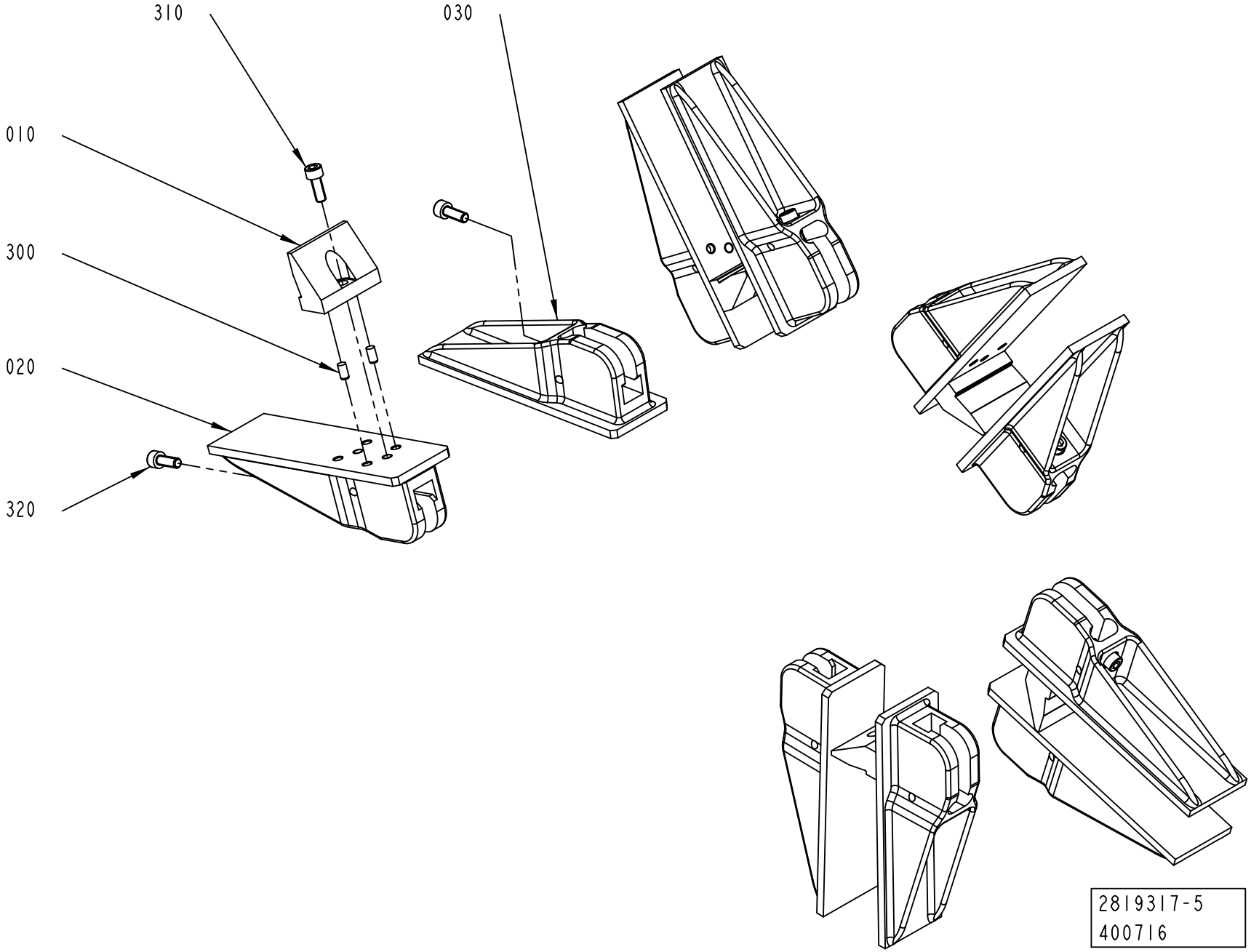
310
030
010
300
020
320
2819317-5
400716

Pos	Part No	UN	Qty	Description	Page No
TPA 0200SQ (See drawing on page: 1-362)					
020	3043672-0100		5	FLAP	**1-365**
030	2976961-0000		5	FLAP	
TPA 0250SQ (See drawing on page: 1-362)					
020	3043672-0100		5	FLAP	**1-365**
030	2976964-0000		5	FLAP	
TPA 0330SQ (See drawing on page: 1-358)					
010	2987102-0000		5	BOTTOM	
020	2987101-0000		5	FLAP	
030	3076767-0000		5	FLAP	
300	311103-0305		10	PARALLEL PIN ISO 2338 5M6X10 A1	
310	312115-0368		5	SCREW ISO4762 M6X16 A4 80	
TBA 0080S (See drawing on page: 1-360)					
010	2949924-0000		5	BOTTOM	
020	2949923-0000		5	FLAP	
030	3019291-0000		5	FLAP	
300	311103-0305		10	PARALLEL PIN ISO 2338 5M6X10 A1	
310	312115-0329		5	SCREW ISO4762 M5X16 A4 80	
TBA 0100B (See drawing on page: 1-358)					
010	2894678-0000		5	BOTTOM	
020	2894677-0000		5	FLAP	
030	2978922-0000		5	FLAP	
300	311103-0305		10	PARALLEL PIN ISO 2338 5M6X10 A1	
310	312115-0329		5	SCREW ISO4762 M5X16 A4 80	
TBA 0125S (See drawing on page: 1-358)					
010	2894678-0000		5	BOTTOM	
020	2894677-0000		5	FLAP	
030	2978922-0000		5	FLAP	
300	311103-0305		10	PARALLEL PIN ISO 2338 5M6X10 A1	
310	312115-0329		5	SCREW ISO4762 M5X16 A4 80	
TBA 0160S (See drawing on page: 1-358)					
010	3016922-0000		5	BOTTOM	
020	3016921-0000		5	FLAP	
030	2894752-0000		5	FLAP	
300	311103-0305		10	PARALLEL PIN ISO 2338 5M6X10 A1	
310	312115-0368		5	SCREW ISO4762 M6X16 A4 80	
TBA 0200B (See drawing on page: 1-360)					
010	2852320-0000		5	BOTTOM	
020	3150927-0000		5	FLAP	
030	3150928-0000		5	FLAP	
300	311103-0305		10	PARALLEL PIN ISO 2338 5M6X10 A1	
310	312115-0329		10	SCREW ISO4762 M5X16 A4 80	
TBA 0200E (See drawing on page: 1-358)					
010	3052002-0000		5	BOTTOM	
020	3074726-0000		5	FLAP	
030	3052000-0000		5	FLAP	
300	311103-0305		10	PARALLEL PIN ISO 2338 5M6X10 A1	
310	312115-0368		5	SCREW ISO4762 M6X16 A4 80	
TBA 0200M (See drawing on page: 1-358)					
010	2912425-0000		5	BOTTOM	
020	2912426-0000		5	FLAP	
030	2980067-0000		5	FLAP	
300	311103-0305		10	PARALLEL PIN ISO 2338 5M6X10 A1	
310	312115-0329		5	SCREW ISO4762 M5X16 A4 80	
TBA 0200S (See drawing on page: 1-358)					
010	3016922-0000		5	BOTTOM	
020	3016921-0000		5	FLAP	
030	2894752-0000		5	FLAP	
300	311103-0305		10	PARALLEL PIN ISO 2338 5M6X10 A1	
310	312115-0368		5	SCREW ISO4762 M6X16 A4 80	
TBA 0200SQ (See drawing on page: 1-358)					
010	2962129-0000		5	BOTTOM	
020	2962128-0000		5	FLAP	
030	2966596-0000		5	FLAP	
300	311103-0305		10	PARALLEL PIN ISO 2338 5M6X10 A1	
310	312115-0331		5	SCREW ISO4762 M5X20 A4 80	
TBA 0250B (See drawing on page: 1-360)					
010	2852320-0000		5	BOTTOM	
020	3150927-0000		5	FLAP	
030	3150928-0000		5	FLAP	
300	311103-0305		10	PARALLEL PIN ISO 2338 5M6X10 A1	
310	312115-0329		10	SCREW ISO4762 M5X16 A4 80	
TBA 0250S (See drawing on page: 1-358)					
010	2912425-0000		5	BOTTOM	
020	2912426-0000		5	FLAP	
030	2980067-0000		5	FLAP	
300	311103-0305		10	PARALLEL PIN ISO 2338 5M6X10 A1	
310	312115-0329		5	SCREW ISO4762 M5X16 A4 80	
TBA 0250SQ (See drawing on page: 1-358)					
010	2962129-0000		5	BOTTOM	
020	2962128-0000		5	FLAP	
030	2966596-0000		5	FLAP	
300	311103-0305		10	PARALLEL PIN ISO 2338 5M6X10 A1	
310	312115-0331		5	SCREW ISO4762 M5X20 A4 80	

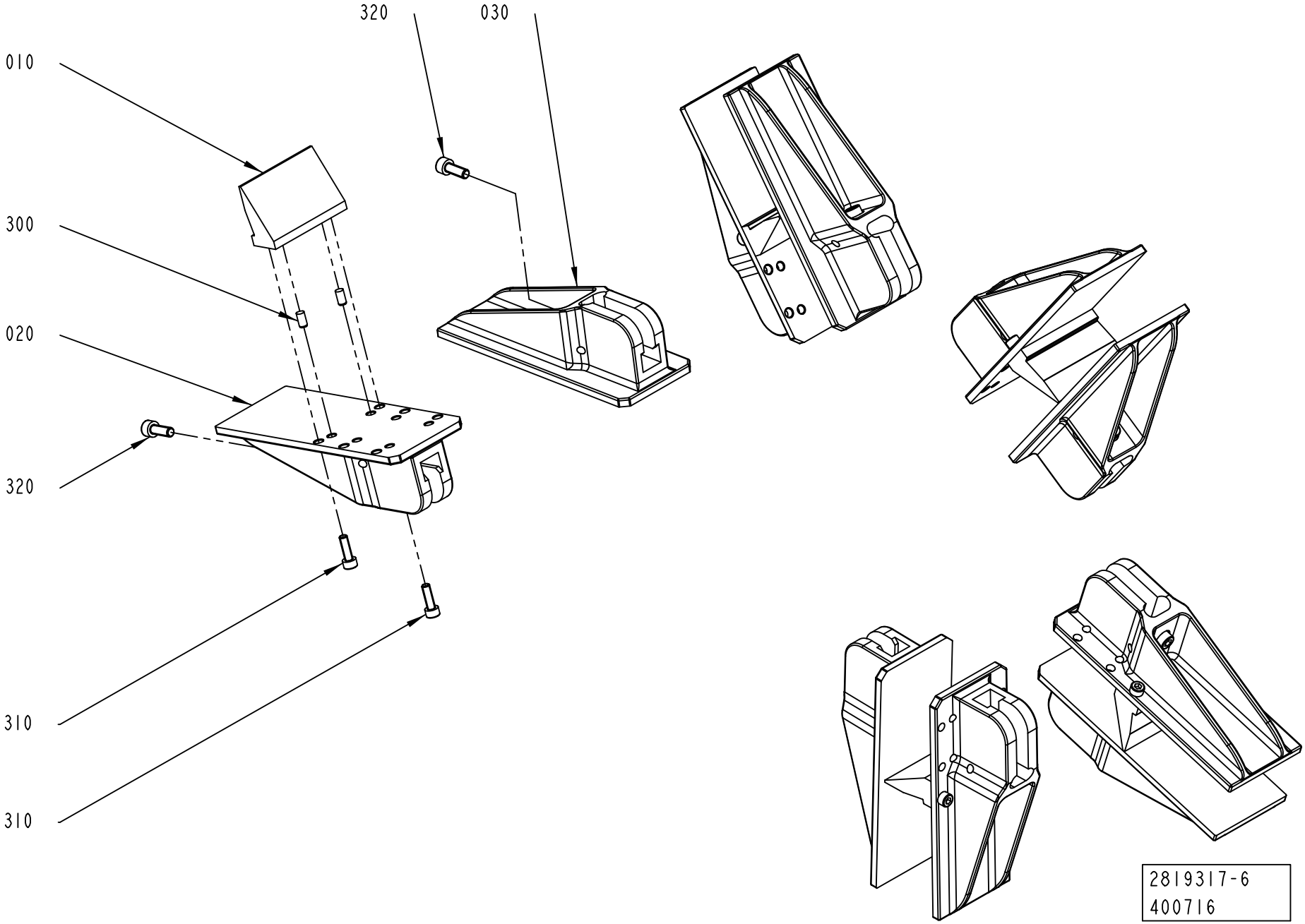
320
030
010
300
020
320
310
310
2819317-6
400716

Pos	Part No	UN	Qty	Description	Page No
TBA 0284B, TBA 0300S (Cont'd) (See drawing on page: 1-358)					
010	2852320-0000		5	BOTTOM	
020	3005197-0000		5	FLAP	
030	2894751-0000		5	FLAP	
300	311103-0305		10	PARALLEL PIN ISO 2338 5M6X10 A1	
310	312115-0329		10	SCREW ISO4762 M5X16 A4 80	
TBA 0330S (See drawing on page: 1-360)					
010	2852320-0000		5	BOTTOM	
020	3150927-0000		5	FLAP	
030	3150928-0000		5	FLAP	
300	311103-0305		10	PARALLEL PIN ISO 2338 5M6X10 A1	
310	312115-0329		10	SCREW ISO4762 M5X16 A4 80	
TBA 0375S (See drawing on page: 1-360)					
010	3067363-0000		5	BOTTOM	
020	3067362-0000		5	FLAP	
030	3067361-0000		5	FLAP	
300	311103-0305		10	PARALLEL PIN ISO 2338 5M6X10 A1	
310	312115-0329		10	SCREW ISO4762 M5X16 A4 80	
TPA 0125SQ (See drawing on page: 1-358)					
010	2871962-0000		5	BOTTOM	
020	2871961-0000		5	FLAP	
030	2894753-0000		5	FLAP	
300	311103-0305		10	PARALLEL PIN ISO 2338 5M6X10 A1	
310	312115-0368		5	SCREW ISO4762 M6X16 A4 80	
Common Parts					
320	312115-0368		10	SCREW ISO4762 M6X16 A4 80	

Pos	Part No	UN	Qty	Description	Page No

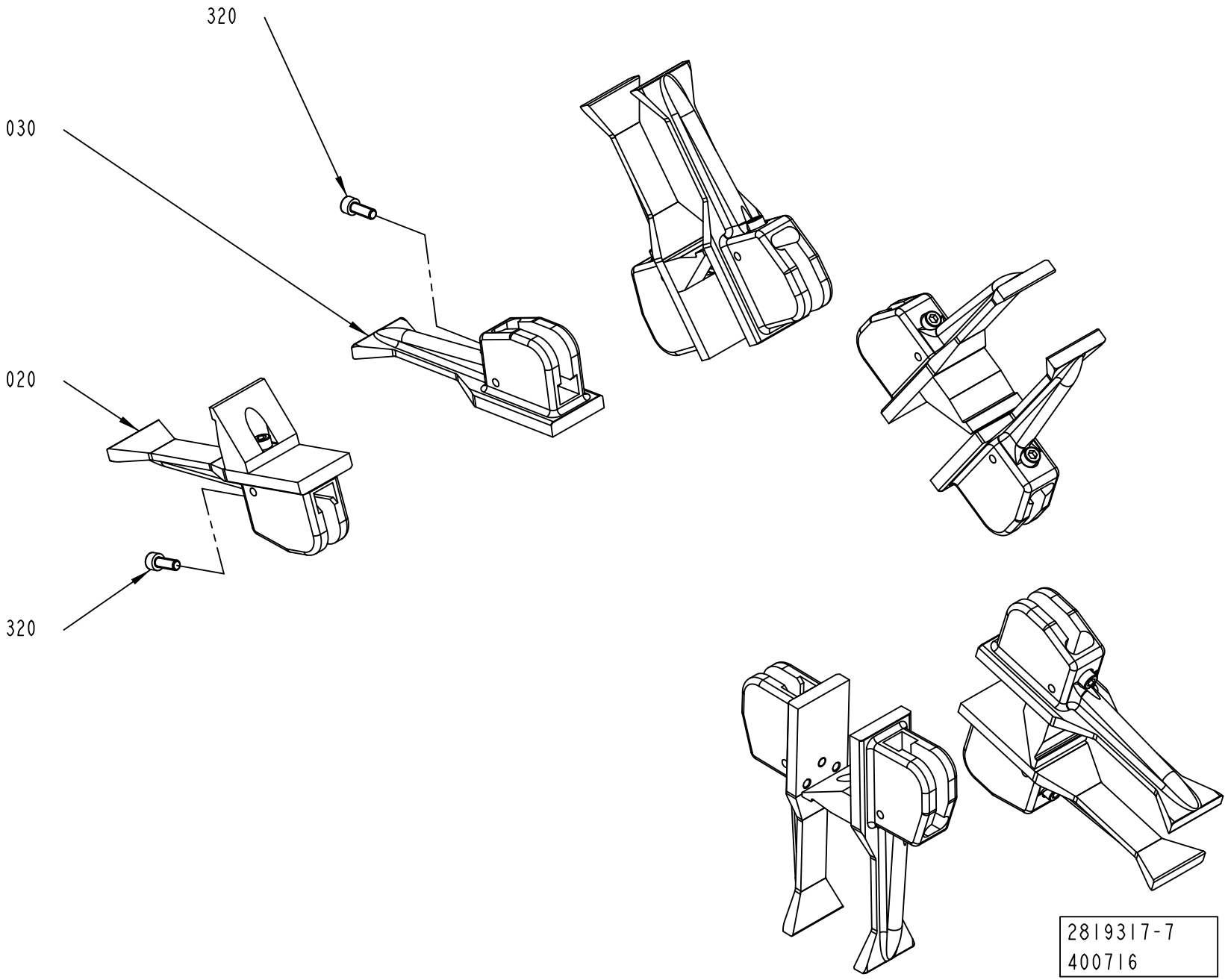
320
030
020
320
2819317-7
400716

Pos	Part No	UN	Qty	Description	Page No
SEE PREVIOUS LISTS PAGES: 1-359, 1-361.					

Pos	Part No	UN	Qty	Description	Page No

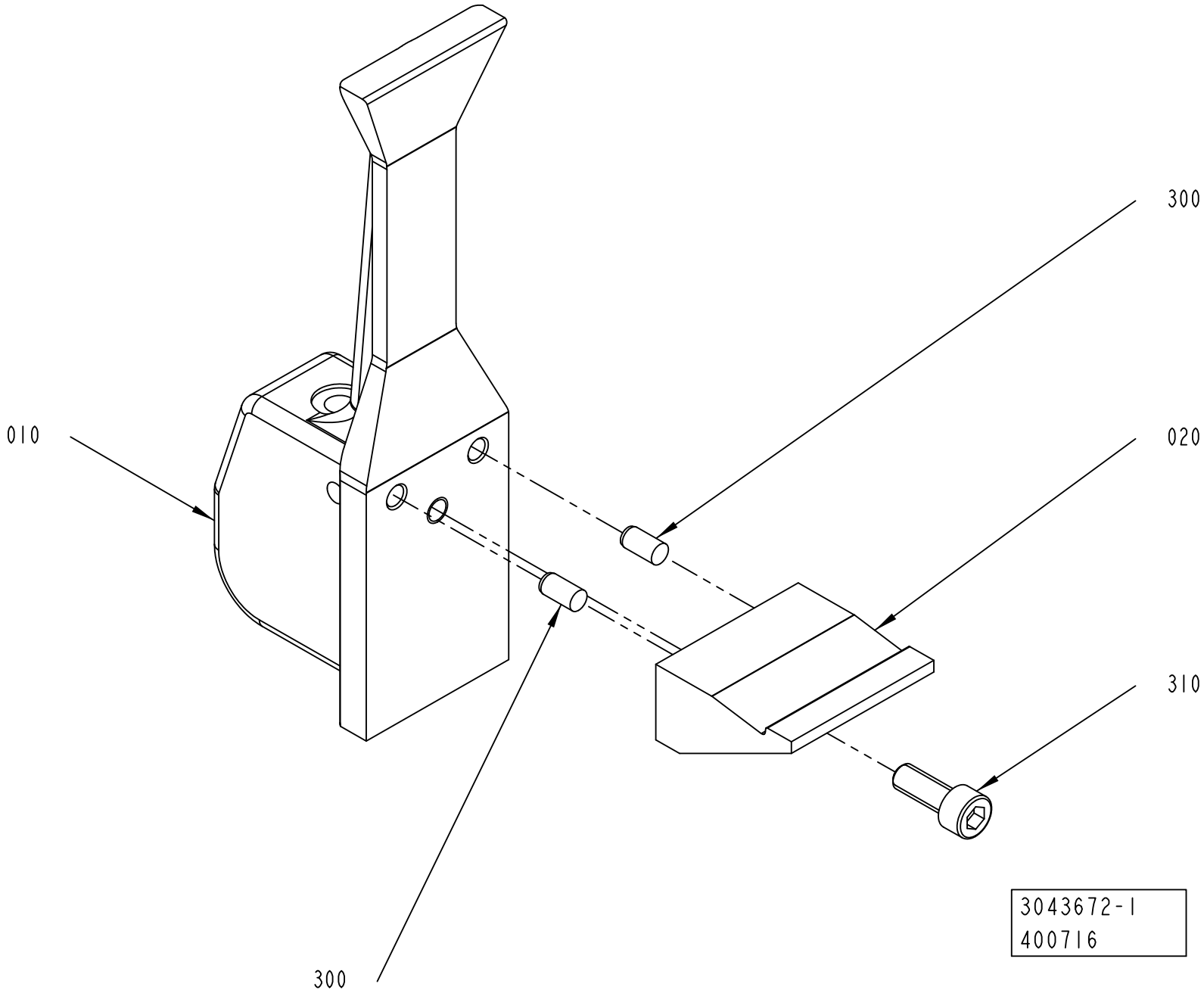
300
010
020
310
300
3043672-1
400716

ECM: 406444 - 20090710
Group number: 3043672-0100
Assembly Drawing: 3043672-1_1_AA

Pos	Part No	UN	Qty	Description	Page No
TPA 0200SQ					
010	2976961-0000		1	FLAP	
TPA 0250SQ					
010	2976964-0000		1	FLAP	
Common Parts					
020	2976962-0000		1	BOTTOM	
300	311103-0305		2	PARALLEL PIN ISO 2338 5M6X10 A1	
310	312115-0368		1	SCREW ISO4762 M6X16 A4 80	

Pos	Part No	UN	Qty	Description	Page No

FOLDING BAR

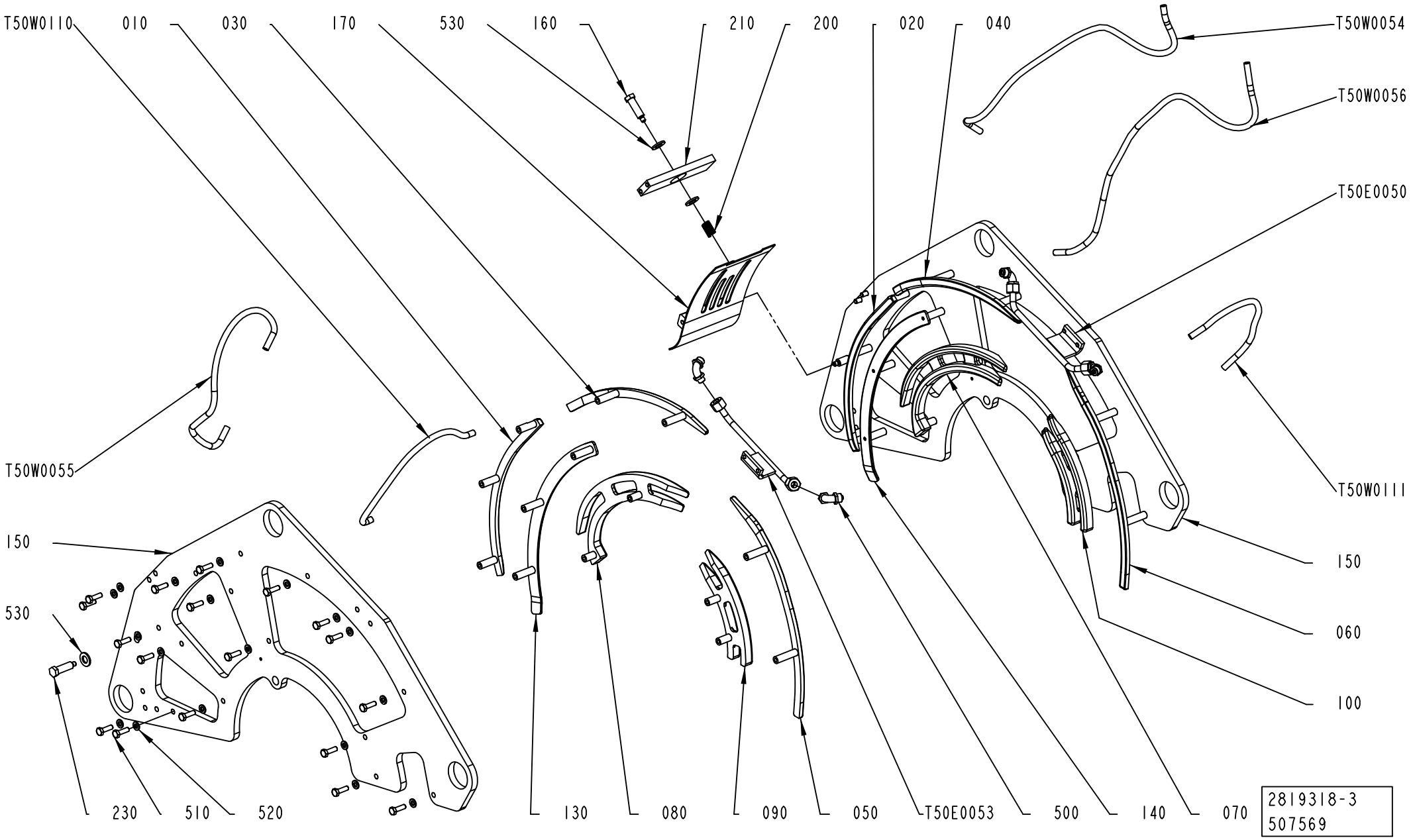
T50W0110
010
030
170
530
160
210
200
020
040
T50W0054
T50W0056
T50E0050
T50W0055
T50W0111
150
530
150
060
100
230
510
520
130
080
090
050
T50E0053
500
140
070
2819318-3
507569

ECM: 522613 - 20111014
Group number: 2819318-0200
Assembly Drawing: 2819318-3_1_AB

This list covers pages from 1-366 to 1-373

Pos	Part No	UN	Qty	Description	Page No
TBA 0080S (See drawing on page: 1-366)					
010	3010701-0000		1	FOLDING BAR	
020	3010702-0000		1	FOLDING BAR	
030	3014070-0000		1	FOLDING BAR	
040	3014069-0000		1	FOLDING BAR	
050	2871933-0003		1	FOLDING BAR	
060	2871937-0003		1	FOLDING BAR	
070	2949918-0000		1	FOLDING BAR	
080	2949916-0000		1	FOLDING BAR	
090	2949917-0000		1	FOLDING BAR	
100	2949919-0000		1	FOLDING BAR	
130	3014068-0000		1	WALL	
140	3014067-0000		1	WALL	
150	2894699-0000		2	PLATE	
160	1144976-0000		1	STOP SCREW	
170	3118145-0000		1	COVER	
500	342931-0121		4	ELBOW 90 COUPL., EXT. THREAD 8/6-G1/8"	
510	312105-0370		36	SCREW, M6S ISO 4017 M6X20 A4 80	
520	315106-0153		36	WASHER PLAIN, M6 ISO7089-6-200 HV A4	
T50E0050	2871927-0005		1	FOLDING BAR	
T50E0053	2871928-0005		1	FOLDING BAR	
TBA 0100B, TBA 0125S (See drawing on page: 1-366)					
010	2973927-0000		1	FOLDING BAR	
020	2973928-0000		1	FOLDING BAR	
030	2871932-0001		1	FOLDING BAR	
040	2871936-0001		1	FOLDING BAR	
050	2871933-0001		1	FOLDING BAR	
060	2871937-0001		1	FOLDING BAR	
070	2894697-0000		1	FOLDING BAR	
080	2894695-0000		1	FOLDING BAR	
090	2894696-0000		1	FOLDING BAR	
100	2894698-0000		1	FOLDING BAR	
130	2871934-0001		1	WALL	
140	2871938-0001		1	WALL	
150	2894699-0000		2	PLATE	
160	1144976-0000		1	STOP SCREW	
170	2819273-0000		1	COVER	
500	342931-0121		4	ELBOW 90 COUPL., EXT. THREAD 8/6-G1/8"	
510	312105-0370		36	SCREW, M6S ISO 4017 M6X20 A4 80	
520	315106-0153		36	WASHER PLAIN, M6 ISO7089-6-200 HV A4	
T50E0050	2871927-0001		1	FOLDING BAR	
T50E0053	2871928-0001		1	FOLDING BAR	
TBA 0160S, TBA 0200S (See drawing on page: 1-366)					
010	3019782-0000		1	FOLDING BAR	
020	3019783-0000		1	FOLDING BAR	
030	3139545-0001		1	FOLDING BAR	
040	3139546-0001		1	FOLDING BAR	
050	3139547-0001		1	FOLDING BAR	
060	3139548-0001		1	FOLDING BAR	
070	3015763-0000		1	FOLDING BAR	
080	3015764-0000		1	FOLDING BAR	
090	3015765-0000		1	FOLDING BAR	
100	3015766-0000		1	FOLDING BAR	
130	2871934-0001		1	WALL	
140	2871938-0001		1	WALL	
150	2894724-0000		2	PLATE	
160	1144976-0000		1	STOP SCREW	
170	2819273-0000		1	COVER	
500	342931-0121		4	ELBOW 90 COUPL., EXT. THREAD 8/6-G1/8"	
510	312105-0370		36	SCREW, M6S ISO 4017 M6X20 A4 80	
520	315106-0153		36	WASHER PLAIN, M6 ISO7089-6-200 HV A4	
T50E0050	2871927-0001		1	FOLDING BAR	
T50E0053	2871928-0001		1	FOLDING BAR	
TBA 0200B, TBA 0250B, TBA 0330S (See drawing on page: 1-366)					
010	2871931-0002		1	FOLDING BAR	
020	2871935-0002		1	FOLDING BAR	
030	3139545-0002		1	FOLDING BAR	
040	3139546-0002		1	FOLDING BAR	
050	3139547-0002		1	FOLDING BAR	
060	3139548-0002		1	FOLDING BAR	
070	2871925-0000		1	FOLDING BAR	
080	2852327-0000		1	FOLDING BAR	
090	2852328-0000		1	FOLDING BAR	
100	2871926-0000		1	FOLDING BAR	
130	2871934-0002		1	WALL	
140	2871938-0002		1	WALL	
150	2852333-0000		2	PLATE	
160	1144976-0000		1	STOP SCREW	
170	2819273-0000		1	COVER	
500	342931-0121		4	ELBOW 90 COUPL., EXT. THREAD 8/6-G1/8"	
510	312105-0370		40	SCREW, M6S ISO 4017 M6X20 A4 80	
520	315106-0153		40	WASHER PLAIN, M6 ISO7089-6-200 HV A4	
T50E0050	2871927-0002		1	FOLDING BAR	
T50E0053	2871928-0002		1	FOLDING BAR	

Machine Type | Group Description | Used-In | Group Number | Page No

FOLDING BAR

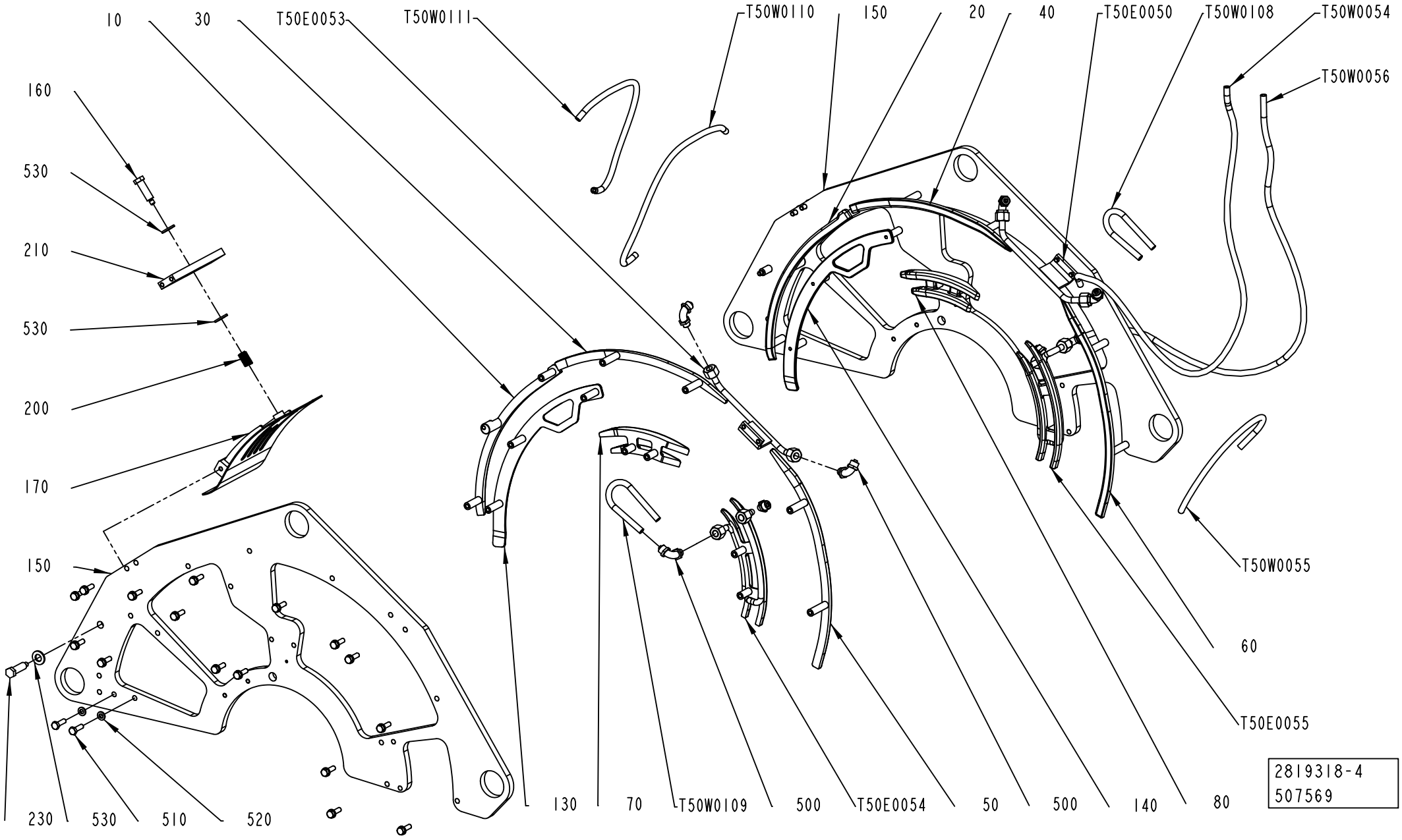
10
30
T50E0053
T50W0111
T50W0110
150
20
40
T50E0050
T50W0108
T50W0054
T50W0056
160
530
210
530
200
170
150
T50W0055
60
T50E0055
230
530
510
520
130
70
T50W0109
500
T50E0054
50
500
140
80
2819318-4
507569

ECM: 522613 - 20111014
Group number: 2819318-0200
Assembly Drawing: 2819318-4_1_AA

This list covers pages from 1-366 to 1-373

Pos	Part No	UN	Qty	Description	Page No
TBA 0200E (Cont'd) (See drawing on page: 1-368)					
010	3052013-0000		1	FOLDING BAR	
020	3052014-0000		1	FOLDING BAR	
030	2871932-0005		1	FOLDING BAR	
040	2871936-0005		1	FOLDING BAR	
050	2871933-0008		1	FOLDING BAR	
060	2871937-0008		1	FOLDING BAR	
070	3052006-0000		1	FOLDING BAR	
080	3052005-0000		1	FOLDING BAR	
130	3052003-0000		1	WALL	
140	3052004-0000		1	WALL	
150	3017849-0000		2	PLATE	
160	3130467-0000		1	STOP SCREW	
170	2819273-0000		1	COVER	
500	342931-0121		8	ELBOW 90 COUPL., EXT. THREAD 8/6-G1/8"	
510	312105-0370		36	SCREW, M6S ISO 4017 M6X20 A4 80	
520	315106-0153		36	WASHER PLAIN, M6 ISO7089-6-200 HV A4	
T50E0050	2871927-0007		1	FOLDING BAR	
T50E0053	2871928-0007		1	FOLDING BAR	
T50E0054	3165602-0000		1	FOLDING BAR	
T50E0055	3165601-0000		1	FOLDING BAR	
T50W0108	315400-0006	MM	500	TUBE PUN-H-8X1,25-SW	
T50W0109	315400-0006	MM	500	TUBE PUN-H-8X1,25-SW	
TBA 0200M, TBA 0250S (See drawing on page: 1-366)					
010	2871931-0004		1	FOLDING BAR	
020	2871935-0004		1	FOLDING BAR	
030	3139545-0004		1	FOLDING BAR	
040	3139546-0004		1	FOLDING BAR	
050	3139547-0004		1	FOLDING BAR	
060	3139548-0004		1	FOLDING BAR	
070	2919059-0000		1	FOLDING BAR	
080	2919057-0000		1	FOLDING BAR	
090	2919058-0000		1	FOLDING BAR	
100	2919060-0000		1	FOLDING BAR	
130	2871934-0004		1	WALL	
140	2871938-0004		1	WALL	
150	2912442-0000		2	PLATE	
160	1144976-0000		1	STOP SCREW	
170	2819273-0000		1	COVER	
500	342931-0121		4	ELBOW 90 COUPL., EXT. THREAD 8/6-G1/8"	
510	312105-0370		36	SCREW, M6S ISO 4017 M6X20 A4 80	
520	315106-0153		36	WASHER PLAIN, M6 ISO7089-6-200 HV A4	
T50E0050	2871927-0004		1	FOLDING BAR	
T50E0053	2871928-0004		1	FOLDING BAR	
TBA 0200SQ, TBA 0250SQ (See drawing on page: 1-366)					
010	3037929-0000		1	FOLDING BAR	
020	3037930-0000		1	FOLDING BAR	
030	2871932-0004		1	FOLDING BAR	
040	2871936-0004		1	FOLDING BAR	
050	2871933-0007		1	FOLDING BAR	
060	2871937-0007		1	FOLDING BAR	
070	2966588-0000		1	FOLDING BAR	
080	2966587-0000		1	FOLDING BAR	
090	2966589-0000		1	FOLDING BAR	
100	2966590-0000		1	FOLDING BAR	
130	3037931-0000		1	WALL	
140	3037932-0000		1	WALL	
150	2894672-0000		2	PLATE	
160	1144976-0000		1	STOP SCREW	
170	2819273-0000		1	COVER	
500	342931-0121		4	ELBOW 90 COUPL., EXT. THREAD 8/6-G1/8"	
510	312105-0370		36	SCREW, M6S ISO 4017 M6X20 A4 80	
520	315106-0153		36	WASHER PLAIN, M6 ISO7089-6-200 HV A4	
T50E0050	2871927-0001		1	FOLDING BAR	
T50E0053	2871928-0001		1	FOLDING BAR	
TBA 0284B, TBA 0300S (See drawing on page: 1-366)					
010	2871931-0005		1	FOLDING BAR	
020	2871935-0005		1	FOLDING BAR	
030	2871932-0002		1	FOLDING BAR	
040	2871936-0002		1	FOLDING BAR	
050	2871933-0002		1	FOLDING BAR	
060	2871937-0002		1	FOLDING BAR	
070	3005196-0000		1	FOLDING BAR	
080	2998104-0000		1	FOLDING BAR	
090	2998106-0000		1	FOLDING BAR	
100	2998105-0000		1	FOLDING BAR	
130	2871934-0002		1	WALL	
140	2871938-0002		1	WALL	
150	2894724-0000		2	PLATE	
160	1144976-0000		1	STOP SCREW	
170	2819273-0000		1	COVER	
500	342931-0121		4	ELBOW 90 COUPL., EXT. THREAD 8/6-G1/8"	
510	312105-0370		36	SCREW, M6S ISO 4017 M6X20 A4 80	
520	315106-0153		36	WASHER PLAIN, M6 ISO7089-6-200 HV A4	

Machine Type | Group Description | Used-In | Group Number | Page No

See previous drawings pages: 1-366, 1-368.

ECM: 522613 - 20111014
Group number: 2819318-0200
Assembly Drawing: 2819318-4_1_AA

This list covers pages from 1-366 to 1-373

Pos	Part No	UN	Qty	Description	Page No
TBA 0284B, TBA 0300S (Cont'd) (See drawing on page: 1-366)					
T50E0050	2871927-0002		1	FOLDING BAR	
T50E0053	2871928-0002		1	FOLDING BAR	
TBA 0375S (See drawing on page: 1-366)					
010	2871931-0002		1	FOLDING BAR	
020	2871935-0002		1	FOLDING BAR	
030	2871932-0002		1	FOLDING BAR	
040	2871936-0002		1	FOLDING BAR	
050	2871933-0002		1	FOLDING BAR	
060	2871937-0002		1	FOLDING BAR	
070	3067365-0000		1	FOLDING BAR	
080	3067364-0000		1	FOLDING BAR	
090	3067367-0000		1	FOLDING BAR	
100	3067366-0000		1	FOLDING BAR	
130	2871934-0002		1	WALL	
140	2871938-0002		1	WALL	
150	2852333-0000		2	PLATE	
160	1144976-0000		1	STOP SCREW	
170	2819273-0000		1	COVER	
500	342931-0121		4	ELBOW 90 COUPL., EXT. THREAD 8/6-G1/8"	
510	312105-0370		36	SCREW, M6S ISO 4017 M6X20 A4 80	
520	315106-0153		36	WASHER PLAIN, M6 ISO7089-6-200 HV A4	
T50E0050	2871927-0002		1	FOLDING BAR	
T50E0053	2871928-0002		1	FOLDING BAR	
TPA 0125SQ (See drawing on page: 1-366)					
010	2894755-0000		1	FOLDING BAR	
020	2894756-0000		1	FOLDING BAR	
030	2871932-0003		1	FOLDING BAR	
040	2871936-0003		1	FOLDING BAR	
050	2871933-0003		1	FOLDING BAR	
060	2871937-0003		1	FOLDING BAR	
070	2894728-0000		1	FOLDING BAR	
080	2894727-0000		1	FOLDING BAR	
090	2894667-0000		1	FOLDING BAR	
100	2894669-0000		1	FOLDING BAR	
130	2871934-0005		1	WALL	
140	2871938-0005		1	WALL	
150	2894672-0000		2	PLATE	
160	2994819-0000		1	STOP SCREW	
170	2819273-0000		1	COVER	
500	342931-0121		4	ELBOW 90 COUPL., EXT. THREAD 8/6-G1/8"	
510	312105-0370		36	SCREW, M6S ISO 4017 M6X20 A4 80	
520	315106-0153		36	WASHER PLAIN, M6 ISO7089-6-200 HV A4	
T50E0050	2871927-0003		1	FOLDING BAR	
T50E0053	2871928-0003		1	FOLDING BAR	
TPA 0250SQ, TPA 0200SQ (See drawing on page: 1-368)					
010	2973927-0000		1	FOLDING BAR	
020	2973928-0000		1	FOLDING BAR	
030	2871932-0005		1	FOLDING BAR	
040	2871936-0005		1	FOLDING BAR	
050	2871933-0005		1	FOLDING BAR	
060	2871937-0005		1	FOLDING BAR	
070	2976954-0000		1	FOLDING BAR	
080	2976953-0000		1	FOLDING BAR	
130	3031785-0000		1	WALL	
140	3031786-0000		1	WALL	
150	3017849-0000		2	PLATE	
160	1144976-0000		1	STOP SCREW	
170	2819273-0000		1	COVER	
500	342931-0121		8	ELBOW 90 COUPL., EXT. THREAD 8/6-G1/8"	
510	312105-0370		36	SCREW, M6S ISO 4017 M6X20 A4 80	
520	315106-0153		36	WASHER PLAIN, M6 ISO7089-6-200 HV A4	
T50E0050	2871927-0006		1	FOLDING BAR	
T50E0053	2871928-0006		1	FOLDING BAR	
T50E0054	3070289-0000		1	FOLDING BAR	
T50E0055	3070290-0000		1	FOLDING BAR	
T50W0108	315400-0006	MM	500	TUBE PUN-H-8X1,25-SW	
T50W0109	315400-0006	MM	500	TUBE PUN-H-8X1,25-SW	
TPA 0330SQ (See drawing on page: 1-366)					
010	3055890-0000		1	FOLDING BAR	
020	3055891-0000		1	FOLDING BAR	
030	2871932-0004		1	FOLDING BAR	
040	2871936-0004		1	FOLDING BAR	
050	2871933-0001		1	FOLDING BAR	
060	2871937-0001		1	FOLDING BAR	
070	2987091-0000		1	FOLDING BAR	
080	2987092-0000		1	FOLDING BAR	
090	2987093-0000		1	FOLDING BAR	
100	2987094-0000		1	FOLDING BAR	
130	3055892-0000		1	FOLDING BAR	
140	3055893-0000		1	FOLDING BAR	
150	3017849-0000		2	PLATE	
160	1144976-0000		1	STOP SCREW	
170	2819273-0000		1	COVER	

Machine Type | Group Description | Used-In | Group Number | Page No

See previous drawings pages: 1-366, 1-368.

ECM: 522613 - 20111014
Group number: 2819318-0200
Assembly Drawing: 2819318-4_1_AA

This list covers pages from 1-366 to 1-373

Pos	Part No	UN	Qty	Description	Page No
TPA 0330SQ (Cont'd) (See drawing on page: 1-366)					
500	342931-0121		4	ELBOW 90 COUPL., EXT. THREAD 8/6-G1/8"	
510	312105-0370		36	SCREW, M6S ISO 4017 M6X20 A4 80	
520	315106-0153		36	WASHER PLAIN, M6 ISO7089-6-200 HV A4	
T50E0050	2871927-0001		1	FOLDING BAR	
T50E0053	2871928-0001		1	FOLDING BAR	
Common Parts					
200	1317633-0000		1	SPRING	
210	2819305-0000		1	SUPPORT	
230	1144976-0000		2	STOP SCREW	
530	315106-0173		4	WASHER PLAIN, M10 ISO7089-10-200 HV A4	
T50W0054	315400-0006	MM	1100	TUBE PUN-H-8X1,25-SW	
T50W0055	315400-0006	MM	500	TUBE PUN-H-8X1,25-SW	
T50W0056	315400-0006	MM	900	TUBE PUN-H-8X1,25-SW	
T50W0110	315400-0006	MM	500	TUBE PUN-H-8X1,25-SW	
T50W0111	315400-0006	MM	500	TUBE PUN-H-8X1,25-SW	

Pos	Part No	UN	Qty	Description	Page No

VOLUME CONVERSION KIT QC

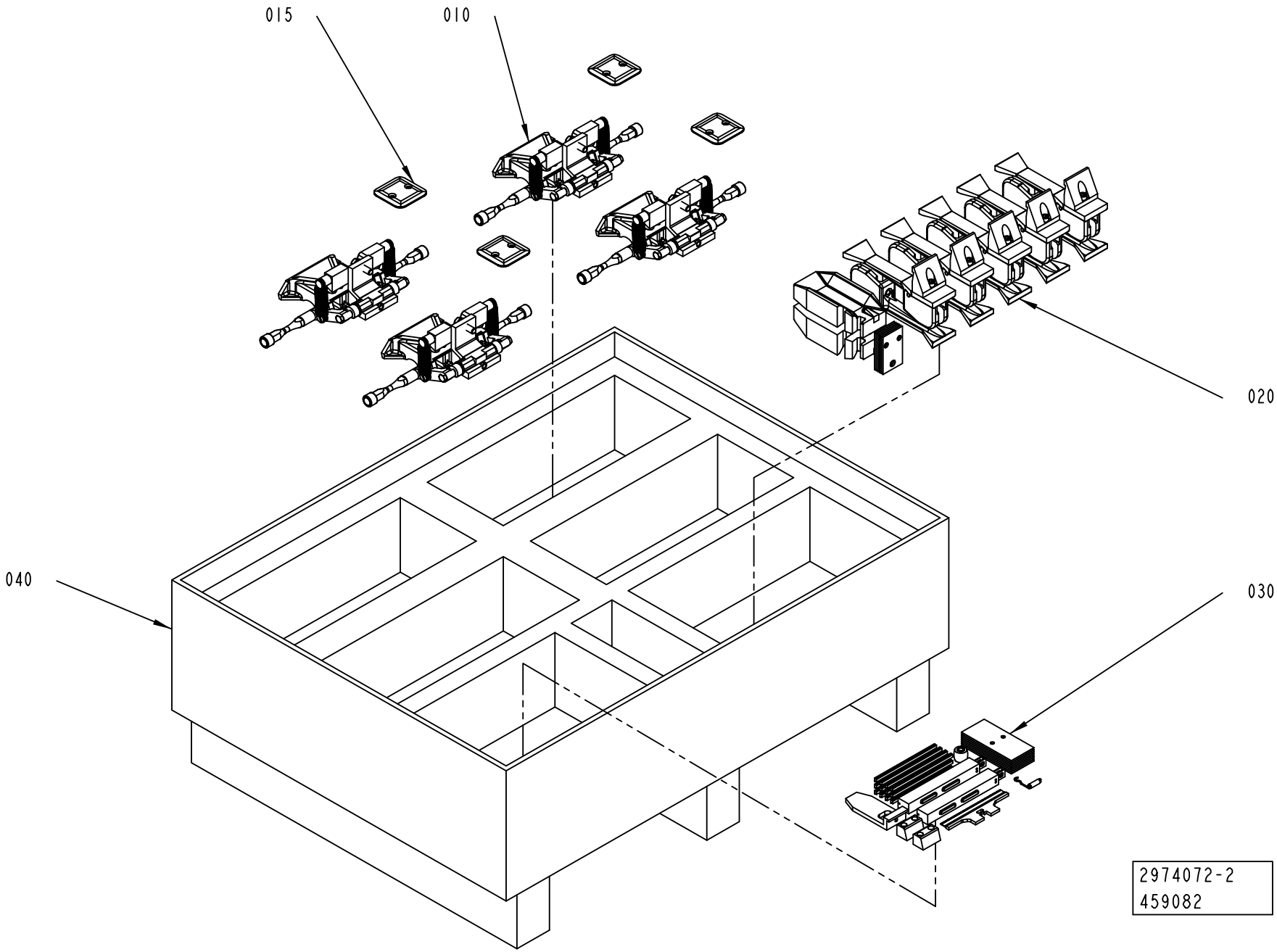

ECM: 461252 - 20101001
Group number: 2974072-0200
Assembly Drawing: 2974072-2_1_AB

Pos	Part No	UN	Qty	Description	Page No
START FM HI					
015	3104917-0100		1	VOLUME BULGE	**1-187**
Common Parts					
010	3117319-0100		1	JAW SYSTEM	**1-377**
020	2974073-0100		1	FINAL FOLDER	**1-379**
030	2889626-0100		1	START-UP KIT	**1-171, 1-173, 1-175**
040	2988050-0000		1	BOX QC	

Pos	Part No	UN	Qty	Description	Page No

This page is intentionally left blank.

ECM: 461238 - 20101001
Group number: 3117319-0100
Assembly Drawing:

Pos	Part No	UN	Qty	Description	Page No
TBA 0100B, TBA 0125S, TBA 0200M, TBA 0200B, TBA 0250S, TBA 0250B, TBA 0330S, TBA 0080S					
010	2869019-0200		4	VOLUME FLAP	**1-193**
TBA 0160S, TBA 0200SQ, TBA 0200S, TBA 0284B, TBA 0300S, TPA 0330SQ, TPA 0250SQ, TPA 0200SQ, TBA 0250SQ					
010	2966467-0200		1	VOLUME FLAP	**1-227**
010	2966465-0200		1	VOLUME FLAP	**1-211**
010	2907729-0200		1	VOLUME FLAP	**1-215**
010	2869019-0200		1	VOLUME FLAP	**1-193**
TPA 0125SQ					
010	2907729-0200		2	VOLUME FLAP	**1-215**
010	2869019-0200		2	VOLUME FLAP	**1-193**

Pos	Part No	UN	Qty	Description	Page No

This page is intentionally left blank.

ECM: 474367 - 20110101
Group number: 2974073-0100
Assembly Drawing:

Pos	Part No	UN	Qty	Description	Page No
TBA 0100B					
010	2894692-0000		2	PUSHER	
TBA 0125S					
010	2894693-0000		2	PUSHER	
TBA 0160S					
010	3015762-0000		2	PUSHER	
TBA 0200B					
010	2852329-0000		2	PUSHER	
TBA 0200M					
010	2912427-0000		2	PUSHER	
TBA 0200S					
010	2871940-0000		2	PUSHER	
TBA 0200SQ					
010	2962126-0000		2	PUSHER	
TBA 0250B					
010	2852330-0000		2	PUSHER	
TBA 0250S					
010	2912424-0000		2	PUSHER	
TBA 0250SQ					
010	2966595-0000		2	PUSHER	
TBA 0330S					
010	2852323-0000		2	PUSHER	
TPA 0200SQ					
010	3110111-0000		1	PUSHER	
020	3110110-0000		1	PUSHER	
030	2976961-0000		5	FLAP	
040	3043672-0100		5	FLAP	**1-365**
050	3092452-0000		2	NAIL	
070	3097776-0000		6	SHIM	
300	312115-0295		2	SCREW ISO4762 M4X20 A4 80	
310	315106-0136		2	WASHER PLAIN, M4 ISO7089-4-200 HV A4	
TPA 0250SQ					
010	3110108-0000		1	PUSHER	
020	3110109-0000		1	PUSHER	
030	2976964-0000		5	FLAP	
040	3043672-0100		5	FLAP	**1-365**
050	3092452-0000		2	NAIL	
070	3097776-0000		6	SHIM	
300	312115-0295		2	SCREW ISO4762 M4X20 A4 80	
310	315106-0136		2	WASHER PLAIN, M4 ISO7089-4-200 HV A4	
Common Parts					
060	2852410-0000		6	SHIM	

Pos	Part No	UN	Qty	Description	Page No

Machine Type | Group Description | Used-In | Group Number | Page No

Tetra Pak

SPC
Spare Parts Catalogue

Part No	Description	Page No
List - 641515-0200		1-3
2033-0005	WASHER	1-35, 1-55, 1-57, 1-59, 1-61, 1-69
2033-0007	WASHER	1-127, 1-129
2033-0008	WASHER	1-35, 1-147, 1-149, 1-151
2033-0009	WASHER	1-293
2033-0011	WASHER	1-133, 1-135, 1-137, 1-139, 1-141, 1-145, 1-147, 1-149, 1-151
2033-0014	WASHER	1-293
2873-0000	SHAFT	1-177
12242-0003	GASKET 48X38X5,5	1-155
12242-0005	GASKET 61X51X5,5	1-155
12242-0006	GASKET	1-155
12242-0007	GASKET	1-155
22463-0000	ROLL	1-267, 1-269, 1-271, 1-273, 1-275, 1-277, 1-279, 1-281
27815-0000	WASHER	1-133, 1-135, 1-293
28509-0000	WASHER	1-95, 1-255, 1-265
32079-0000	WASHER	1-255, 1-265
32544-0000	INSULATION NUT	1-95, 1-255, 1-265
32644-0000	WASHER	1-95, 1-247, 1-249, 1-251, 1-257, 1-259, 1-261
33408-0000	BEARING	1-267, 1-269, 1-271, 1-273, 1-275, 1-277, 1-279, 1-281
35918-0000	SHAFT	1-137, 1-139, 1-141
35919-0000	COMPRESSION SPRING	1-137, 1-139, 1-141
36325-0000	KNOB	1-137, 1-139, 1-141
67379-0107	TRANSFORMER	1-255, 1-265
67379-0115	TRANSFORMER	1-255, 1-265
67379-0204	TRANSFORMER	1-255, 1-265
67379-0206	TRANSFORMER	1-255, 1-265
67379-0216	TRANSFORMER	1-95
67379-0224	TRANSFORMER	1-95
67379-0248	TRANSFORMER	1-255, 1-265
67379-0254	TRANSFORMER	1-255, 1-265
67379-0262	TRANSFORMER	1-255, 1-265
67379-0264	TRANSFORMER	1-255, 1-265
67379-0269	TRANSFORMER	1-255, 1-265
75936-0000	TEMPLATE	1-179, 1-181
75937-0000	TEMPLATE	1-179, 1-181
75939-0000	TEMPLATE	1-179, 1-181
75943-0000	TEMPLATE	1-179, 1-181
75944-0000	TEMPLATE	1-179, 1-181
76176-0000	TEMPLATE	1-179, 1-181
90005-0052	WASHER,PL.RND.CU.8/18 H=2	1-231, 1-233, 1-235, 1-237
90005-0060	WASHER PLAIN, RBS 6,4/M6)/18,H=1,5	1-55, 1-137, 1-139, 1-141
90017-0022	HANDLE, NO. EL-037311	1-57, 1-59, 1-61
90051-0007	STELLAR KNOB, INT. THREAD, NO. 40	1-35
90055-0100	Y-CONNECTION, 6-6	1-295, 1-297, 1-299
90074-0001	CABLE CLIPS, D=10 MM	1-295, 1-297
90091-0091	ROD SEAL 10X14X1,7 MM	1-239, 1-241, 1-243, 1-245
90091-0169	WEAR RING 12X15X3,2 MM	1-267, 1-269, 1-271, 1-273, 1-275, 1-277, 1-279, 1-281
90091-0216	PISTON SEAL GLYD RING 7,1X12X2,2 MM	1-267, 1-269, 1-271, 1-273, 1-275, 1-277, 1-279, 1-281
90091-0359	X-SEAL 36,17X2,62 MM	1-247, 1-249, 1-251, 1-257, 1-259, 1-261
90091-0360	BACK-UP RING 37,5X1,4 MM	1-247, 1-249, 1-251, 1-257, 1-259, 1-261
90091-0362	SCRAPER, EXCLUDER 18X22,8X3,7 MM	1-247, 1-249, 1-251, 1-257, 1-259, 1-261
90091-0364	ROD SEAL, STEPSEAL 18X25,3X3,2 MM	1-247, 1-249, 1-251, 1-257, 1-259, 1-261
90091-0366	WEAR RING 18X23X3,9 MM	1-247, 1-249, 1-251, 1-257, 1-259, 1-261
90091-0391	SEAL SLYDRING	1-247, 1-249, 1-251, 1-257, 1-259, 1-261
90091-0393	PISTON SEAL GLYD RING T 17,5X25X3,2 MM	1-247, 1-249, 1-251, 1-257, 1-259, 1-261
90091-0394	WEAR RING 20X25X5,6 MM	1-247, 1-249, 1-251, 1-257, 1-259, 1-261
90091-0398	PISTON SEAL GLIDE RING T 20,5X28X3,2 MM	1-247, 1-249, 1-251, 1-257, 1-259, 1-261
90115-0139	ROD END, ID=8 MM, M8X1,25	1-305, 1-307
90115-0180	ROD END, ID=8 MM, M8X1,25 LH	1-305, 1-307
90134-0058	CONNECTION	1-239, 1-241, 1-243, 1-245
90141-0015	RETAINING RING FOR SHAFT DIN 471 8 SS	1-247, 1-249, 1-251, 1-257, 1-259, 1-261
90143-0060	EDGE STRIP 9,5X6,3MM BLACK PVC	1-57, 1-59, 1-61
90152-0059	HOSE, SPIRAL CONDUIT, 18X12, UL 1211	1-33
90153-0015	ADHESIVE,LOCTITE IS 496/CYANOLOT 302	1-267, 1-269, 1-271, 1-273, 1-275, 1-277, 1-279, 1-281
90166-0081	TUBE 6 MM PA BLUE	1-81
90166-0109	TUBE 4 MM PA TRANSP.	1-81
90166-0132	TUBE 6 MM PA,TRANSP.	1-295, 1-297, 1-299
90194-0143	WARNING SIGN ISO, HOT SURFACE	1-33
90232-0325	FIBRE, E32-DC200	1-55
90240-0172	FLANGE BUSHING, 8X12X10 MM	1-133, 1-135, 1-137, 1-139, 1-141, 1-145, 1-147, 1-149, 1-151
90240-0180	FLANGE BUSHING 10X14X15MM	1-293
90242-0093	O-RING MATERIAL 1,5 MM	1-267, 1-269, 1-271, 1-273, 1-275, 1-277, 1-279, 1-281
90286-0013	GREASE NIPPLE STRAIGHT, H1 M6X1 2346	1-305, 1-307
90287-0106	SCREW SPRINGLOAD. SLOTTED HEAD M10X21	1-65
90287-0199	SCREW, M6S ISO 4017 M5X6 A4 80	1-161, 1-205, 1-207, 1-209
90287-0229	SCREW, HEX.SOCK.HEAD SHOULD. M5X6	1-155
90287-0330	SCREW, M6S ISO 4017 M10X70 A4 80	1-57, 1-59, 1-61
90298-0033	WATLUBE HEAT LIQUID	1-31
90326-0060	THERMOCOUPLE, 5110060-000 CR-AL	1-33
90326-0304	COMPRESSION GLAND, 5101 015-005	1-153, 1-161
90330-0066	PLUG, G1/8EXT, G1/8	1-267, 1-269, 1-271, 1-273, 1-275, 1-277, 1-279, 1-281
90348-0031	FREE-WHEEL COUPLING, 8X12 MM	1-37
90411-0018	INSULATOR, ALU-SILICATE HM 15643	1-33
90450-0380	SINGLE ACTING, PANCAKE EV-20/75-5	1-25

Part No	Description	Page No
90458-0058	SCREW M5X60 A280	1-255, 1-265
90458-0307	CABLE GLAND, M20X1,5, 5311 1020	1-35
90458-0427	GLAND FITTING, VK 21652YUL11	1-33
90458-0428	GLAND FITTING, VK 22052YUL11	1-33
90458-0438	GLAND, EXTENDED WITH INSERT, M20X1,5	1-35
90458-0523	STEP MOTOR, SM 56.2.18J3 Z(202)	1-35
90458-0601	CONTRAST SCANNER, KT15W-P2110S01	1-295, 1-297
90458-2039	CONN. STR., 6-R1/8, EXT. THREAD	1-301
90458-2040	ELBOW PIPE JOINT, INT. THREAD, G1/8" D=6	1-301
90458-2164	ELBOW PIPE JOINT, EXT.THREAD,D=6MM M5	1-33
90458-2950	BALL BEARING 5/16X5	1-165
90458-2954	ELBOW PIPE JOINT, EXT.THREAD, D=4MM M5	1-25, 1-65
90459-0844	SINGLE ACTING, MINI-ISO, CYL 12-10	1-65
90459-2130	TAPE, ADHESIVE SI TAPE MON3154535033CL	1-95
90459-3670	HOOD, HAN3A, 19 20 003 1440	1-33
90459-3772	END SLEEVE H 0.25/12	1-83
90459-4177	INDUCTIVE SENSOR, E2A-M12KN08-M1-B1	1-57, 1-59, 1-61
90459-5936	BEARING SEAL 12X16X3 MM	1-267, 1-269, 1-271, 1-273, 1-275, 1-277, 1-279, 1-281
90459-5939	LOCKING LEVER, 142365 MRX.80 P-M12X80	1-53
90459-6821	MALE INSERT HAN 4A, 0920 0042 611	1-33, 1-35
90459-7222	HOOD, TOP ENTRY, 3A, 19 20 003 0420	1-35
90459-7361	FIBRE OPTIC UNIT, WLL170-2P460	1-55
90459-7458	WARNING SIGN ANSI (H), HOT SURFACE	1-45, 1-51
90600-0386	LOCTITE HYSOL 9455 ADHESIVE, 250 GR	1-19, 1-53
90600-1844	CYLINDER WITH INT. GUIDING BORE 25	1-33
90600-2508	O-RING 17,3X2,4 MM FDA, 3-A	1-157, 1-159
90600-2602	THERMOFOIL HEATER, HM15643	1-33
90600-2603	SPRING WASHER, CURVED 6,83X10,74X0,17 MM	1-37
90600-2604	TENSION SPRING, EO300-055-2500-S	1-37, 1-39
90600-2609	SCOTCH-BRITE WHITE 690	1-119
90600-3388	O-RING 284X3 MM	1-157, 1-159
90600-5982	ADJ. MECH. STOP M12X1, FOR CYL. 2711	1-33
90601-1727	STEEL BALL 15MM, RB-15 INOX316	1-295, 1-297
90602-4847	THREAD LOCKING, LOCTITE 243 50 ML	1-301
90602-9550	ADH. TAPE LABELS AL/PET,BS SPLICE 90N 30	1-119
90602-9590	ADH. TAPE LABELS AL/PE,BS FOIL 100 35X16	1-119
90602-9592	ADH. TAPE LABELS AL/PE,BS FOIL 100 24X24	1-119
234844-0000	WHEEL	1-63
255742-0000	COMPRESSION SPRING	1-239, 1-241, 1-243, 1-245
255801-0000	RETAINING RING	1-239, 1-241, 1-243, 1-245
255977-0000	SHAFT	1-157, 1-159, 1-171, 1-173, 1-175
255978-0000	FORK	1-157, 1-159
256208-0400	KNIFE HOLDER	1-189, 1-191
256607-0000	AXLE PIN	1-267, 1-269, 1-271, 1-273, 1-275, 1-277, 1-279, 1-281
256626-0000	EAR	1-239, 1-241, 1-243, 1-245
256882-0000	WASHER	1-247, 1-249, 1-251, 1-257, 1-259, 1-261
257042-0000	BRACKET	1-133, 1-135
257043-0000	ANGLE BRACKET	1-133, 1-135
257175-0000	WASHER	1-137, 1-139, 1-141
257362-0000	LACE	1-239, 1-241, 1-243, 1-245
263655-0003	SHAFT	1-177
263655-0006	SHAFT	1-127, 1-129, 1-177
263655-0018	SHAFT	1-127, 1-129
271846-0000	INSULATION NUT	1-247, 1-249, 1-251, 1-257, 1-259, 1-261
271848-0000	SCREW	1-247, 1-249, 1-251, 1-257, 1-259, 1-261
272095-0000	SHAFT	1-161
272419-0000	CARRIER	1-267, 1-269, 1-271, 1-273, 1-275, 1-277, 1-279, 1-281
272427-0000	BRACKET	1-267, 1-269, 1-271, 1-273, 1-275, 1-277, 1-279, 1-281
272753-0000	STEERING	1-283, 1-285, 1-287
272755-0000	NUT	1-283, 1-285, 1-287
272986-0001	VOLUME SHIM	1-171, 1-173, 1-175, 1-195, 1-197, 1-199, 1-201, 1-203
272986-0003	VOLUME SHIM	1-171, 1-173, 1-175, 1-195, 1-197, 1-199, 1-201, 1-203
272986-0006	VOLUME SHIM 330S	1-171, 1-173, 1-175, 1-195, 1-197, 1-199, 1-201, 1-203
272987-0000	VOLUME SHIM	1-171, 1-173, 1-175, 1-195, 1-197, 1-199, 1-201, 1-203
272991-0000	VOLUME SHIM	1-171, 1-173, 1-175
273429-0000	WASHER	1-153, 1-161
295376-0000	SHAFT	1-157, 1-159, 1-171, 1-173, 1-175
295377-0001	HOOD	1-157, 1-159
295377-0002	HOOD	1-157, 1-159
295377-0004	HOOD	1-157, 1-159
295377-0005	HOOD	1-157, 1-159
295984-0000	DRIP GUARD	1-157, 1-159
311101-0270	PARALLEL PIN ISO 2338 4H6X16 ST	1-31, 1-35
311101-0272	PARALLEL PIN ISO 2338 4H6X20 ST	1-35
311103-0233	PARALLEL PIN ISO 2338 3M6X10 A1	1-39, 1-55
311103-0238	PARALLEL PIN ISO 2338 3M6X20 A1	1-133, 1-135
311103-0267	PARALLEL PIN ISO 2338 4M6X10 A1	1-25, 1-69, 1-231, 1-233, 1-235, 1-237, 1-239, 1-241, 1-243, 1-245
311103-0268	PARALLEL PIN ISO 2338 4M6X12 A1	1-133, 1-135
311103-0270	PARALLEL PIN ISO 2338 4M6X16 A1	1-33, 1-247, 1-249, 1-251, 1-257, 1-259, 1-261
311103-0305	PARALLEL PIN ISO 2338 5M6X10 A1	1-247, 1-249, 1-251, 1-257, 1-259, 1-261, 1-267, 1-269, 1-271, 1-273, 1-275, 1-277, 1-279, 1-281, 1-359, 1-361, 1-365
311103-0306	PARALLEL PIN ISO 2338 5M6X12 A1	1-57, 1-59, 1-61, 1-73, 1-323, 1-325
311103-0307	PARALLEL PIN ISO 2338 5M6X14 A1	1-247, 1-249, 1-251, 1-257, 1-259, 1-261

Part No	Description	Page No
311103-0310 ..	PARALLEL PIN ISO 2338 5M6X20 A1	1-127, 1-129
311103-0312 ..	PARALLEL PIN ISO 2338 5M6X25 A1	1-267, 1-269, 1-271, 1-273, 1-275, 1-277, 1-279, 1-281
311103-0313 ..	PARALLEL PIN ISO 2338 5M6X28 A1	1-127, 1-129
311103-0314 ..	PARALLEL PIN ISO 2338 5M6X30 A1	1-43
311103-0348 ..	PARALLEL PIN ISO 2338 6M6X10 A1	1-69
311103-0352 ..	PARALLEL PIN ISO 2338 6M6X18 A1	1-305, 1-307
311103-0353 ..	PARALLEL PIN ISO 2338 6M6X20 A1	1-315, 1-317, 1-319
311103-0357 ..	PARALLEL PIN ISO 2338 6M6X30 A1	1-177
311103-0369 ..	PARALLEL PIN ISO 2338 6M6X60 A1	1-57, 1-59, 1-61
311103-0401 ..	PARALLEL PIN ISO 2338 8M6X20 A1	1-57, 1-59, 1-61, 1-71
311103-1312 ..	PARALLEL PIN ISO 2338 5M6X24 A1	1-137, 1-139, 1-141
311111-0207 ..	SPRING PIN ISO 8752 3X14-ST	1-239, 1-241, 1-243, 1-245
311111-0308 ..	SPRING PIN ISO 8752 5X20-ST	1-267, 1-269, 1-271, 1-273, 1-275, 1-277, 1-279, 1-281
311112-0341 ..	SPRING PIN, ISO 8752 6X24 A2	1-65
311411-0138 ..	SPLIT PIN SP1,6X12RFR	1-63
312105-0285 ..	SCREW, M6S ISO 4017 M4X6 A4 70	1-205, 1-207, 1-209, 1-213, 1-217, 1-229
312105-0287 ..	SCREW, M6S ISO 4017 M4X8 A4 70	1-35, 1-55, 1-57, 1-59, 1-61, 1-65, 1-69, 1-73, 1-153, 1-161, 1-219, 1-221, 1-223, 1-225, 1-295, 1-297
312105-0289 ..	SCREW, M6S ISO 4017 M4X10 A4 70	1-55
312105-0291 ..	SCREW, M6S ISO 4017 M4X12 A4 70	1-57, 1-59, 1-61
312105-0293 ..	SCREW, M6S ISO 4017 M4X16 A4 70	1-37, 1-43, 1-57, 1-59, 1-61
312105-0295 ..	SCREW, M6S ISO 4017 M4X20 A4 70	1-95, 1-255, 1-265
312105-0299 ..	SCREW, M6S ISO 4017 M4X30 A4 70	1-39
312105-0323 ..	SCREW, M6S ISO 4017 M5X8 A4 80	1-161, 1-239, 1-241, 1-243, 1-245
312105-0325 ..	SCREW, M6S ISO 4017 M5X10 A4 80	1-133, 1-135, 1-137, 1-139, 1-141, 1-169, 1-305, 1-307
312105-0327 ..	SCREW, M6S ISO 4017 M5X12 A4 80	1-55, 1-73, 1-137, 1-139, 1-141, 1-205, 1-207, 1-209
312105-0328 ..	SCREW M6S ISO 4017 M5X14 A4 80	1-195, 1-197, 1-199, 1-201, 1-203, 1-219, 1-221, 1-223, 1-225
312105-0329 ..	SCREW, M6S ISO 4017 M5X16 A4 80	1-133, 1-135, 1-137, 1-139, 1-141, 1-145, 1-295, 1-297
312105-0331 ..	SCREW, M6S ISO 4017 M5X20 A4 80	1-31, 1-57, 1-59, 1-61
312105-0333 ..	SCREW, M6S ISO 4017 M5X25 A4 80	1-161, 1-293
312105-0335 ..	SCREW, M6S ISO 4014 M5X30 A4 80	1-33
312105-0341 ..	SCREW, M6S ISO 4014 M5X50 A4 80	1-137, 1-139, 1-141
312105-0362 ..	SCREW, M6S ISO 4017 M6X8 A4 80	1-239, 1-241, 1-243, 1-245, 1-315, 1-317, 1-319
312105-0364 ..	SCREW, M6S ISO 4017 M6X10 A4 80	1-57, 1-59, 1-61, 1-133, 1-135, 1-153, 1-157, 1-159, 1-315, 1-317, 1-319
312105-0366 ..	SCREW, M6S ISO 4017 M6X12 A4 80	1-13, 1-15, 1-17, 1-43, 1-57, 1-59, 1-61, 1-147, 1-149, 1-151, 1-161, 1-295, 1-297, 1-305, 1-307, 1-309, 1-311, 1-313, 1-315, 1-317, 1-319, 1-327, 1-329, 1-345
312105-0367 ..	SCREW, M6S ISO 4017 M6X14 A4 80	1-267, 1-269, 1-271, 1-273, 1-275, 1-277, 1-279, 1-281, 1-357
312105-0368 ..	SCREW, M6S ISO 4017 M6X16 A4 80	1-127, 1-129, 1-133, 1-135, 1-339, 1-341, 1-343, 1-349, 1-351, 1-353
312105-0370 ..	SCREW, M6S ISO 4017 M6X20 A4 80	1-55, 1-57, 1-59, 1-61, 1-147, 1-149, 1-151, 1-161, 1-165, 1-205, 1-207, 1-209, 1-213, 1-217, 1-229, 1-295, 1-297, 1-315, 1-317, 1-319, 1-323, 1-325, 1-327, 1-329, 1-331, 1-333, 1-335, 1-337, 1-345, 1-349, 1-367, 1-369, 1-371, 1-373
312105-0372 ..	SCREW, M6S ISO 4017 M6X25 A4 80	1-43, 1-127, 1-129, 1-155, 1-157, 1-159, 1-247, 1-249, 1-251, 1-257, 1-259, 1-261, 1-323, 1-325
312105-0374 ..	SCREW, M6S ISO 4014 M6X30 A4 80	1-23, 1-127, 1-129, 1-133, 1-135, 1-195, 1-197, 1-199, 1-201, 1-203, 1-247, 1-249, 1-251, 1-257, 1-259, 1-261, 1-267, 1-269, 1-271, 1-273, 1-275, 1-277, 1-279, 1-281, 1-305, 1-307, 1-315, 1-317, 1-319
312105-0376 ..	SCREW, M6S ISO 4014 M6X35 A4 80	1-231, 1-233, 1-235, 1-237, 1-239, 1-241, 1-243, 1-245, 1-247, 1-249, 1-251, 1-257, 1-259, 1-261, 1-267, 1-269, 1-271, 1-273, 1-275, 1-277, 1-279, 1-281
312105-0378 ..	SCREW, M6S ISO 4014 M6X40 A4 80	1-127, 1-129, 1-247, 1-249, 1-251, 1-257, 1-259, 1-261
312105-0379 ..	SCREW, M6S ISO 4014 M6X45 A4 80	1-55, 1-195, 1-197, 1-199, 1-201, 1-203, 1-219, 1-221, 1-223, 1-225
312105-0381 ..	SCREW, M6S ISO 4014 M6X55 A4 80	1-23
312105-0447 ..	SCREW, M6S ISO 4017 M8X12 A4 80	1-231, 1-233, 1-235, 1-237
312105-0449 ..	SCREW, M6S ISO 4017 M8X16 A4 80	1-57, 1-59, 1-61, 1-65, 1-295, 1-297, 1-305, 1-307
312105-0451 ..	SCREW, M6S ISO 4017 M8X20 A4 80	1-57, 1-59, 1-61, 1-133, 1-135, 1-145, 1-305, 1-307, 1-345, 1-349, 1-351, 1-353
312105-0453 ..	SCREW, M6S ISO 4017 M8X25 A4 80	1-57, 1-59, 1-61, 1-71, 1-205, 1-207, 1-209, 1-213, 1-217, 1-229, 1-305, 1-307
312105-0455 ..	SCREW, M6S ISO 4017 M8X30 A4 80	1-137, 1-139, 1-141
312105-0457 ..	SCREW, M6S ISO 4014 M8X35 A4 80	1-293
312105-0460 ..	SCREW, M6S ISO 4014 M8X45 A4 80	1-305, 1-307
312105-0462 ..	SCREW, M6S ISO 4014 M8X55 A4 80	1-267, 1-269, 1-271, 1-273, 1-275, 1-277, 1-279, 1-281
312105-0495 ..	SCREW, M6S ISO 4017 M10X30 A4 80	1-133, 1-135
312109-0335 ..	SCREW, M6S ISO 4017 M5X30 A4 80	1-195, 1-197, 1-199, 1-201, 1-203, 1-219, 1-221, 1-223, 1-225, 1-295, 1-297
312109-0374 ..	SCREW, M6S ISO 4017 M6X30 A4 80	1-195, 1-197, 1-199, 1-201, 1-203, 1-219, 1-221, 1-223, 1-225
312109-0376 ..	SCREW, M6S ISO 4017 M6X35 A4 80	1-31, 1-101, 1-103, 1-305, 1-307
312109-0378 ..	SCREW, M6S ISO 4017 M6X40 A4 80	1-23, 1-43
312109-0380 ..	SCREW, M6S ISO 4017 M6X50 A4 80	1-23
312109-0459 ..	SCREW, M6S ISO 4017 M8X40 A4 80	1-23, 1-53
312115-0232 ..	SCREW ISO4762 M3X25 A4 80	1-247, 1-249, 1-251, 1-257, 1-259, 1-261
312115-0289 ..	SCREW ISO4762 M4X10 A4 80	1-339, 1-341, 1-343
312115-0291 ..	SCREW ISO4762 M4X12 A4 80	1-167
312115-0293 ..	SCREW ISO4762 M4X16 A4 80	1-39, 1-247, 1-249, 1-251, 1-257, 1-259, 1-261, 1-315, 1-317, 1-319, 1-331, 1-333, 1-335, 1-337
312115-0295 ..	SCREW ISO4762 M4X20 A4 80	1-315, 1-317, 1-319, 1-331, 1-333, 1-335, 1-337, 1-379
312115-0297 ..	SCREW ISO4762 M4X25 A4 80	1-247, 1-249, 1-251, 1-257, 1-259, 1-261
312115-0325 ..	SCREW ISO4762 M5X10 A4 80	1-231, 1-233, 1-235, 1-237, 1-239, 1-241, 1-243, 1-245
312115-0327 ..	SCREW ISO4762 M5X12 A4 80	1-69, 1-231, 1-233, 1-235, 1-237, 1-239, 1-241, 1-243, 1-245, 1-267, 1-269, 1-271, 1-273, 1-275, 1-277, 1-279, 1-281
312115-0329 ..	SCREW ISO4762 M5X16 A4 80	1-35, 1-267, 1-269, 1-271, 1-273, 1-275, 1-277, 1-279, 1-281

Part No	Description	Page No
		1-359, 1-361
312115-0331 ..	SCREW ISO4762 M5X20 A4 80	1-23, 1-25, 1-31, 1-69, 1-231, 1-233, 1-235, 1-237, 1-359, 1-361
312115-0333 ..	SCREW ISO4762 M5X25 A4 80	1-33, 1-101, 1-103
312115-0337 ..	SCREW ISO4762 M5X35 A4 80	1-31
312115-0366 ..	SCREW ISO4762 M6X12 A4 80	1-239, 1-241, 1-243, 1-245, 1-247, 1-249, 1-251, 1-257, 1-259, 1-261, 1-301
312115-0368 ..	SCREW ISO4762 M6X16 A4 80	1-359, 1-361, 1-365
312115-0370 ..	SCREW ISO4762 M6X20 A4 80	1-127, 1-129, 1-267, 1-269, 1-271, 1-273, 1-275, 1-277, 1-279, 1-281, 1-293
312115-0372 ..	SCREW ISO4762 M6X25 A4 80	1-177, 1-247, 1-249, 1-251, 1-257, 1-259, 1-261
312115-0374 ..	SCREW ISO4762 M6X30 A4 80	1-267, 1-269, 1-271, 1-273
312115-0455 ..	SCREW ISO4762 M8X30 A4 80	1-157, 1-159
312125-0222 ..	SLOTTED HEAD SCREW, ISO1207 M3X8 A4	1-55
312125-0285 ..	SLOTTED HEAD SCREW, ISO1207 M4X6 A4	1-33, 1-55
312125-0287 ..	SLOTTED HEAD SCREW, ISO1207 M4X8 A4	1-25, 1-31, 1-33, 1-43, 1-57, 1-59, 1-61
312125-0289 ..	SCREW ISO 1207 M4X10 A4	1-35
312145-0220 ..	SCREW ISO 2009 MFS M3X6 A4	1-267, 1-269, 1-271, 1-273, 1-275, 1-277, 1-279, 1-281
312145-0287 ..	SCREW ISO 2009 MFS M4X8 A4	1-195, 1-197, 1-199, 1-201, 1-203
312145-0289 ..	SCREW ISO 2009 MFS M4X10 A4	1-267, 1-269, 1-271, 1-273, 1-275, 1-277, 1-279, 1-281
312145-0291 ..	SCREW ISO 2009 MFS M4X12 A4	1-195, 1-197, 1-199, 1-201, 1-203, 1-267, 1-269, 1-271, 1-273, 1-275, 1-277, 1-279, 1-281
312145-0301 ..	SCREW ISO 2009 MFS M4X35 A4	1-33
312145-0325 ..	SCREW ISO 2009 MFS M5X10 A4	1-205, 1-207, 1-209, 1-213, 1-217, 1-229
312155-0220 ..	SCREW DIN 7991 MF6S M3X6 A4 70	1-247, 1-249, 1-251, 1-257, 1-259, 1-261
312155-0287 ..	SCREW DIN 7991 MF6S M4X8 A4 70	1-195, 1-197, 1-199, 1-201, 1-203, 1-219, 1-221, 1-223, 1-225, 1-247, 1-249, 1-251, 1-257, 1-259, 1-261
312155-0289 ..	SCREW DIN 7991 MF6S M4X10 A4 70	1-331, 1-333, 1-335, 1-337
312155-0291 ..	SCREW DIN 7991 MF6S M4X12 A4 70	1-69, 1-73
312155-0293 ..	SCREW DIN 7991 MF6S M4X16 A4 70	1-33
312155-0327 ..	SCREW DIN 7991 MF6S M5X12 A4 70	1-43
312155-0331 ..	SCREW DIN 7991 MF6S M5X20 A4 70	1-57, 1-59, 1-61
312155-0366 ..	SCREW DIN 7991 MF6S M6X12 A4 70	1-315, 1-317, 1-319
312155-0368 ..	SCREW DIN 7991 MF6S M6X16 A4 70	1-315, 1-317, 1-319
312180-0455 ..	SHOULDER SCREW, ISO7379 8X30/M6 12.9	1-73
312180-0499 ..	SHOULDER SCREW, ISO7379 10X40/M8 12.9	1-71
312318-0220 ..	SET SCREW, CUP END ISO4029 M3X6 A4	1-57, 1-59, 1-61
312318-0283 ..	SET SCREW, CUP END ISO4029 M4X4 A4	1-35
312318-0285 ..	SET SCREW, CUP END ISO4029 M4X6 A4	1-39, 1-133, 1-135, 1-137, 1-139, 1-141
312318-0320 ..	SET SCREW, CUP END ISO4029 M5X5 A4	1-195, 1-197, 1-199, 1-201, 1-203, 1-219, 1-221, 1-223, 1-225
312318-0325 ..	SET SCREW, CUP END ISO4029 M5X10 A4	1-295, 1-297
312318-0327 ..	SET SCREW, CUP END ISO4029 M5X12 A4	1-37, 1-39, 1-63
312318-0360 ..	SET SCREW, CUP END ISO4029 M6X6 A4	1-305, 1-307
312318-0370 ..	SET SCREW, CUP END ISO4029 M6X20 A4	1-23
312318-0451 ..	SET SCREW, CUP END ISO4029 M8X20 A4	1-133, 1-135
312602-0312 ..	HEXAGON NUT, EN 24032 M6M M4 NIPLBR	1-255, 1-265
312605-0312 ..	HEXAGON NUT, M6M M4 A280	1-37, 1-39, 1-133, 1-135, 1-161, 1-331, 1-333, 1-335, 1-337
312605-0314 ..	HEXAGON NUT, M6M M5 A280	1-35, 1-37, 1-39
312605-0316 ..	HEXAGON NUT, M6M M6 A280	1-23, 1-31, 1-65, 1-305, 1-307
312605-0318 ..	HEXAGON NUT, M6M M8 A280	1-133, 1-135, 1-157, 1-159, 1-239, 1-241, 1-243, 1-245, 1-305, 1-307
312605-0320 ..	HEXAGON NUT, M6M M10 A280	1-57, 1-59, 1-61, 1-133, 1-135
312621-0318 ..	ROD END,NUT M8	1-35
312625-0316 ..	HEXAGON THIN NUT, EN 24035 ML6M M6 A4	1-23
312705-0312 ..	NUT HEX. DOMED CAP MHM-6 M4 A280	1-57, 1-59, 1-61
312705-0314 ..	NUT HEX. DOMED CAP MHM-6 M5 A280	1-35
312705-0316 ..	HEX. DOMED CAP MHM-6 M6 A280	1-35, 1-137, 1-139, 1-141, 1-147, 1-149, 1-151, 1-309, 1-311, 1-313
312811-0316 ..	NUT HEX.LOCK HELI COIL MID GRIP M6 SS	1-155
312811-0320 ..	NUT HEX.LOCK HELI COIL MID GRIP M10 SS	1-293
312812-0312 ..	HEXAGON NUT, NY-LOCK M4 A4 80	1-65, 1-95
312812-0314 ..	HEXAGON NUT, NY-LOCK M5 A4 80	1-195, 1-197, 1-199, 1-201, 1-203, 1-219, 1-221, 1-223, 1-225
312812-0316 ..	HEXAGON NUT, NY-LOCK M6 A4 80	1-195, 1-197, 1-199, 1-201, 1-203, 1-219, 1-221, 1-223, 1-225, 1-295, 1-297
312812-0318 ..	HEXAGON NUT, NY-LOCK M8 A4 80	1-295, 1-297
315105-0136 ..	WASHER PLAIN, 4,3X9X0,8 A4 BRB	1-33, 1-35, 1-43, 1-55, 1-57, 1-59, 1-61, 1-65, 1-69, 1-73 1-137, 1-139, 1-141, 1-153, 1-219, 1-221, 1-223, 1-225, 1-247, 1-249, 1-251, 1-257, 1-259, 1-261
315105-0146 ..	WASHER PLAIN, 5,3X10X1 A4 BRB	1-31, 1-33, 1-35, 1-55, 1-57, 1-59, 1-61, 1-63, 1-73, 1-161 1-169, 1-195, 1-197, 1-199, 1-201, 1-203, 1-219, 1-221, 1-223, 1-225, 1-295, 1-297
315105-0153 ..	WASHER PLAIN, 6,4X12X1,5 A4 BRB	1-13, 1-15, 1-17, 1-23, 1-31, 1-35, 1-43, 1-57, 1-59, 1-61 1-133, 1-135, 1-147, 1-149, 1-151, 1-153, 1-155, 1-161, 1-205, 1-207, 1-209, 1-213, 1-217, 1-229 1-231, 1-233, 1-235, 1-237, 1-247, 1-249, 1-251, 1-257, 1-259, 1-261, 1-267, 1-269, 1-271, 1-273 1-275, 1-277, 1-279, 1-281, 1-293, 1-295, 1-297, 1-301, 1-305, 1-307, 1-323, 1-325, 1-349, 1-351
315105-0156 ..	WASHER PLAIN, 6,7X14X1,5 A4 BRB	1-101, 1-103
315105-0165 ..	WASHER PLAIN, 8,4X16X1,6 A4 BRB	1-53, 1-57, 1-59, 1-61, 1-65, 1-71, 1-73, 1-133, 1-135 1-137, 1-139, 1-141, 1-205, 1-207, 1-209, 1-213, 1-217, 1-229, 1-305, 1-307, 1-345, 1-349, 1-351, 1-353
315105-0173 ..	WASHER PLAIN, 10,5X22X2 A4 BRB	1-57, 1-59, 1-61, 1-293
315105-0178 ..	WASHER PLAIN, 13X24X2,5 A4 BRB	1-53
315106-0124 ..	WASHER PLAIN, M3 ISO7089-3-200 HV A4	1-247, 1-249, 1-251, 1-257, 1-259, 1-261
315106-0136 ..	WASHER PLAIN, M4 ISO7089-4-200 HV A4	1-205, 1-207, 1-209, 1-213, 1-217, 1-229, 1-331, 1-333, 1-335, 1-337, 1-379
315106-0146 ..	WASHER PLAIN, M5 ISO7089-5-200 HV A4	1-305, 1-307
315106-0153 ..	WASHER PLAIN, M6 ISO7089-6-200 HV A4	1-309, 1-311, 1-313, 1-315, 1-317, 1-319, 1-327, 1-329, 1-367, 1-369, 1-371, 1-373
315106-0173 ..	WASHER PLAIN, M10 ISO7089-10-200 HV A4	1-367, 1-369, 1-371, 1-373

Part No	Description	Page No
315115-0153 ..	WASHER PLAIN, TBRB 6,4/12 H=3	1-23, 1-155, 1-239, 1-241, 1-243, 1-245, 1-267, 1-269, 1-271, 1-273, 1-275, 1-277, 1-279, 1-281, 1-295, 1-297
315115-0165 ..	WASHER PLAIN, TBRB 8,4/16 H=3	1-133, 1-135, 1-293, 1-295, 1-297
315125-0153 ..	WASHER HIGH, TBRSB 6,4X22X4 A4	1-23, 1-43, 1-101, 1-103, 1-127, 1-129, 1-157, 1-159
315125-0165 ..	WASHER HIGH, TBRSB 8,4X26X5 A4	1-23
315202-0102 ..	O-RING 4,1X1,6 MM	1-247, 1-249, 1-251, 1-257, 1-259, 1-261
315202-0105 ..	O-RING 7,1X1,6 MM	1-247, 1-249, 1-251, 1-257, 1-259, 1-261
315202-0107 ..	O-RING 9,1X1,6 MM	1-305, 1-307
315202-0110 ..	O-RING 12,1X1,6 MM	1-267, 1-269, 1-271, 1-273, 1-275, 1-277, 1-279, 1-281
315202-0265 ..	O-RING 12,3X2,4 MM	1-239, 1-241, 1-243, 1-245
315204-0309 ..	O-RING 89,5X3 MM	1-127, 1-129
315211-0101 ..	BONDED SEAL SS/NBR90 M4	1-267, 1-269, 1-271, 1-273, 1-275, 1-277, 1-279, 1-281
315211-0103 ..	BONDED SEAL SS/NBR90 M6	1-267, 1-269, 1-271, 1-273, 1-275, 1-277, 1-279, 1-281
315237-0106 ..	WASHER,PL.RND.AL.6/10,H=1	1-239, 1-241, 1-243, 1-245
315237-0108 ..	WASHER,PL.RND.AL.5,2/8,H=0,5	1-239, 1-241, 1-243, 1-245
315237-0109 ..	WASHER,PL.RND.AL.10/14,H=1,5	1-267, 1-269, 1-271, 1-273, 1-275, 1-277, 1-279, 1-281
315237-0110 ..	WASHER,PL.RND.AL.13,5/18,H=1,5	1-231, 1-233, 1-235, 1-237
315239-0109 ..	NYLON WASHER G1/8, 1/8RRP	1-301
315400-0006 ..	TUBE PUN-H-8X1,25-SW	1-367, 1-369, 1-371, 1-373
315701-0239 ..	PARALLEL KEY W. ROUND ENDS, 6X6X40 MM	1-55
315701-0396 ..	PARALLEL KEY W. ROUND ENDS, 16X10X50 MM	1-101, 1-103
315701-0401 ..	PARALLEL KEY W. ROUND ENDS, 16X10X80 MM	1-53
315705-0232 ..	PARALLEL KEY W. ROUND ENDS, 6X6X20 MM	1-29
315741-0108 ..	RETAINING RING, DIN 705 A2 12	1-305, 1-307
315751-0109 ..	RETAINING RING FOR SHAFT DIN 471 12 SS	1-133, 1-135
315755-0106 ..	RETAINING RING SHAFT DIN 6799 4 SS	1-37
315755-0107 ..	RETAINING RING SHAFT DIN 6799 5 SS	1-39
315755-0108 ..	RETAINING RING SHAFT DIN 6799 6 SS	1-65
318856-0115 ..	KNOB, EXTERNAL THREAD. NO. 8306-0278	1-305, 1-307
321101-0143 ..	FLANGE BUSHING, 8/14X8-18X3 MM	1-295, 1-297
321101-0163 ..	FLANGE BUSHING, 10/16X10-20X3 MM	1-71
321101-0173 ..	FLANGE BUSHING, 12X18X12 MM	1-305, 1-307
321105-0127 ..	BUSHING W/O FLANGE, 6/12X12 MM	1-35
321111-0159 ..	FLANGE BUSHING, 12/18X12-24X3 MM	1-305, 1-307
321141-0040 ..	BEARING BUSHING, 4X5,5X6 MM	1-39
321141-0060 ..	BEARING BUSHING, 6X8X6 MM	1-35, 1-37
321141-0104 ..	BEARING BUSHING, 8X10X12 MM	1-73
321141-0140 ..	BEARING BUSHING, 10X12X10 MM	1-35
321302-0298 ..	BALL BEARING 8/22X7	1-65
342738-0208 ..	ADJUSTABLE ELBOW CONNECTION 8-G1/4	1-231, 1-233, 1-235, 1-237
342850-0304 ..	GASKET 35,4X49,1X5,2 1"1/2 FDA, 3-A	1-155
342920-0121 ..	STRAIGHT COUPLING, EXT.THREAD 8/6-R1/8	1-231, 1-233, 1-235, 1-237
342931-0121 ..	ELBOW 90 COUPL., EXT. THREAD 8/6-G1/8"	1-327, 1-329, 1-367, 1-369, 1-371, 1-373
342980-0121 ..	HOSE FITTING, BANJO RING L PO G1/8 8/6	1-231, 1-233, 1-235, 1-237
342980-0303 ..	BANJO-HOLLOW BOLT COUPL,EXT.THR.01-G1/8	1-231, 1-233, 1-235, 1-237
351310-0020 ..	ACTUATOR/SENSOR CABLE PRKWT 4-07/2M	1-79
351310-0050 ..	ACTUATOR/SENSOR CABLE PRKWT 4-07/5M	1-79
351409-0020 ..	ACTU/SENS. CABLE PRST 4-PRKMV 4-07/2,0M	1-53
351411-0050 ..	ACTU/SENS. CABLE PRST 4-PRKT 4-07/5,0	1-79
351422-0004 ..	CABLE Ã–LFLEX 150CY QUATTRO 5X0,75	1-35
352113-0101 ..	CABLE TIE, BLACK 92X2,5 MM	1-33, 1-43, 1-57, 1-59, 1-61, 1-83
352113-0102 ..	CABLE TIE, BLACK 188X4,8 MM	1-83
352113-0104 ..	CABLE TIE, BLACK 300X4,8 MM	1-55
352113-0205 ..	ANCHOR PLATES FOR STRIPS, TM2S8-C100	1-33, 1-43, 1-55, 1-57, 1-59, 1-61
353300-0004 ..	HEATSHRINK TUBING	1-83
359000-0200 ..	WIRE MARKING, YELLOW, PA02/3"0"	1-83
359000-0201 ..	WIRE MARKING, YELLOW, PA02/3"1"	1-83
359000-0202 ..	WIRE MARKING, YELLOW, PA02/3"2"	1-83
359000-0204 ..	WIRE MARKING, YELLOW, PA02/3"4"	1-83
359000-0205 ..	WIRE MARKING, YELLOW, PA02/3"5"	1-83
359000-0206 ..	WIRE MARKING, YELLOW, PA02/3"6"	1-83
359000-0207 ..	WIRE MARKING, YELLOW, PA02/3"7"	1-83
359000-0208 ..	WIRE MARKING, YELLOW, PA02/3"8"	1-83
359009-0100 ..	CABLE MARKING, YELLOW, PK2/4"0"	1-83
359009-0101 ..	CABLE MARKING, YELLOW, PK 2/4"1"	1-83
359009-0102 ..	CABLE MARKING, YELLOW, PK 2/4"2"	1-83
359009-0103 ..	CABLE MARKING, YELLOW, PK 2/4"3"	1-83
359009-0104 ..	CABLE MARKING, YELLOW, PK 2/4"4"	1-83
359009-0105 ..	CABLE MARKING, YELLOW, PK 2/4"5"	1-83
359009-0206 ..	CABLE MARKING, YELLOW, PK 2/4" G"	1-83
359009-0222 ..	CABLE MARKING, YELLOW, PK 2/4" W"	1-83
359705-0005 ..	WARNING SIGN ISO, MOVING PART	1-47, 1-49
359705-0007 ..	WARNING SIGN ISO, HOT SURFACE	1-45, 1-51
359725-0108 ..	WARNING SIGN ANSI (H), MOVING PART	1-47, 1-49
451148-0000 ..	BRACKET	1-137, 1-139, 1-141
451149-0000 ..	SHAFT	1-137, 1-139, 1-141
456005-0001 ..	VOLUME BULGE	1-195, 1-197, 1-199, 1-201, 1-203
456005-0003 ..	VOLUME BULGE	1-195, 1-197, 1-199, 1-201, 1-203
456009-0000 ..	LINK	1-283, 1-285, 1-287
456181-0000 ..	SPACER	1-137, 1-139, 1-141
456198-0000 ..	LOCK PLATE	1-137, 1-139, 1-141
456199-0000 ..	LOCK PLATE	1-137, 1-139, 1-141
456794-0000 ..	RING	1-127, 1-129
456796-0000 ..	ROLLER	1-127, 1-129

Part No	Description	Page No
456797-0000 ..	AXLE SUPPORT	1-127, 1-129
456872-0000 ..	LOCK PLATE	1-137, 1-139, 1-141
457367-0000 ..	SHAFT	1-295, 1-297
457368-0000 ..	SPRING	1-295, 1-297
469466-0000 ..	PLATE	1-161
476221-0002 ..	PIPE	1-347, 1-355
490876-0000 ..	BRACKET	1-295, 1-297
490902-0000 ..	AXLE SUPPORT	1-127, 1-129
490903-0000 ..	SHAFT	1-127, 1-129
491681-0000 ..	GASKET	1-247, 1-249, 1-251, 1-257, 1-259, 1-261
491868-0000 ..	VOLUME BULGE	1-195, 1-197, 1-199, 1-201, 1-203
491880-0000 ..	FASTENING PLATE	1-295, 1-297
532022-0000 ..	LOCK BAR	1-73
533972-0000 ..	INDICATOR CURVE	1-63
536374-0000 ..	WASHER	1-295, 1-297
544427-0000 ..	TURN SPRING	1-73
553586-0000 ..	SPACER	1-155
568577-0000 ..	AIR NOZZLE	1-161
568578-0000 ..	AIR NOZZLE	1-161
568581-0000 ..	DISTRIBUTOR WING	1-161
568583-0000 ..	FORK	1-157, 1-159
571537-0000 ..	RING	1-127, 1-129
571538-0000 ..	RING	1-127, 1-129
571539-0000 ..	RING	1-127, 1-129
571540-0000 ..	PIN	1-127, 1-129
574334-0000 ..	RING	1-127, 1-129
574335-0000 ..	RING	1-127, 1-129
574338-0000 ..	LOCK PLATE	1-137, 1-139, 1-141
574369-0000 ..	CARRIER RULER RIGHT	1-267, 1-269, 1-271, 1-273
574370-0000 ..	CARRIER RULER RIGHT	1-267, 1-269, 1-271, 1-273
574371-0000 ..	CARRIER RULER LEFT	1-275, 1-277, 1-279, 1-281
574372-0000 ..	CARRIER RULER LEFT	1-275, 1-277, 1-279, 1-281
574385-0000 ..	ROLLER TBA250SL	1-293
574393-0000 ..	LOCK PLATE	1-137, 1-139, 1-141
574394-0000 ..	LOCK PLATE	1-137, 1-139, 1-141
574395-0000 ..	SHAFT	1-137, 1-139, 1-141
574397-0000 ..	ROLL	1-137, 1-139, 1-141
574400-0000 ..	ROLL	1-137, 1-139, 1-141
574403-0000 ..	ROLL	1-137, 1-139, 1-141
574446-0000 ..	TRIMMING ROLLER PLUS	1-183
574447-0000 ..	TRIMMING ROLLER MINUS	1-183
574454-0000 ..	TEMPLATE	1-179, 1-181
574455-0000 ..	TEMPLATE	1-179, 1-181
579637-0000 ..	CATCH	1-155
579771-0000 ..	CATCH	1-155
590369-0000 ..	COMPRESSION SPRING	1-247, 1-249, 1-251, 1-257, 1-259, 1-261
751230-0000 ..	PLAIN BEARING	1-127, 1-129
751457-0000 ..	CANTILEVER	1-295, 1-297
751476-0000 ..	CANTILEVER	1-295, 1-297
751496-0000 ..	ROLL	1-137, 1-139, 1-141
751497-0000 ..	ROLL	1-137, 1-139, 1-141
751498-0000 ..	ROLL	1-137, 1-139, 1-141
751499-0000 ..	ROLL	1-137, 1-139, 1-141
751500-0000 ..	ROLL	1-137, 1-139, 1-141
751502-0000 ..	ROLLER	1-133, 1-135
751575-0000 ..	RULERPART R	1-267, 1-269, 1-271, 1-273
751576-0000 ..	RULERPART L	1-275, 1-277, 1-279, 1-281
751577-0000 ..	RULERPART R	1-267, 1-269, 1-271, 1-273
751578-0000 ..	RULERPART L	1-275, 1-277, 1-279, 1-281
751579-0000 ..	ADJUSTING SCREW	1-267, 1-269, 1-271, 1-273, 1-275, 1-277, 1-279, 1-281
751580-0000 ..	SHIM	1-267, 1-269, 1-271, 1-273, 1-275, 1-277, 1-279, 1-281
752009-0000 ..	RULERPART R	1-267, 1-269, 1-271, 1-273
752010-0000 ..	RULERPART R	1-267, 1-269, 1-271, 1-273
752011-0000 ..	RULERPART L	1-275, 1-277, 1-279, 1-281
752012-0000 ..	RULERPART L	1-275, 1-277, 1-279, 1-281
752014-0000 ..	RULERPART R	1-267, 1-269, 1-271, 1-273
752015-0000 ..	RULERPART R	1-267, 1-269, 1-271, 1-273
752016-0000 ..	RULERPART L	1-275, 1-277, 1-279, 1-281
752017-0000 ..	RULERPART L	1-275, 1-277, 1-279, 1-281
752038-0000 ..	SHIM	1-133, 1-135
752115-0000 ..	PLUNGER	1-267, 1-269, 1-271, 1-273, 1-275, 1-277, 1-279, 1-281
752131-0000 ..	FORMING ROLLER	1-137, 1-139, 1-141
752132-0000 ..	FORMING ROLLER	1-137, 1-139, 1-141
752133-0000 ..	FORMING ROLLER	1-137, 1-139, 1-141
752134-0000 ..	FORMING ROLLER	1-137, 1-139, 1-141
752135-0000 ..	FORMING ROLLER	1-137, 1-139, 1-141
752138-0000 ..	FORMING ROLLER	1-133, 1-135
752149-0000 ..	FORMING ROLLER	1-137, 1-139, 1-141
752150-0000 ..	FORMING ROLLER	1-137, 1-139, 1-141
752153-0000 ..	FORMING ROLLER	1-133, 1-135
752156-0000 ..	FLANGE BUSHING	1-137, 1-139, 1-141
752185-0000 ..	SHAFT	1-137, 1-139, 1-141
752186-0002 ..	SHAFT	1-137, 1-139, 1-141
752186-0003 ..	SHAFT	1-137, 1-139, 1-141

Part No	Description	Page No
752186-0004 ..	SHAFT	1-137, 1-139, 1-141, 1-145
752186-0005 ..	SHAFT	1-133, 1-135, 1-137, 1-139, 1-141
752186-0006 ..	SHAFT	1-137, 1-139, 1-141, 1-145
752186-0013 ..	SHAFT	1-133, 1-135
752186-0014 ..	SHAFT	1-137, 1-139, 1-141
752186-0019 ..	SHAFT	1-137, 1-139, 1-141, 1-145
752186-0020 ..	SHAFT	1-145
752186-0021 ..	SHAFT	1-137, 1-139, 1-141, 1-145
752186-0022 ..	SHAFT	1-145
752218-0000 ..	ATTACHMENT	1-161
752288-0000 ..	SLEEVE	1-267, 1-269, 1-271, 1-273, 1-275, 1-277, 1-279, 1-281
752462-0000 ..	TRIMMING ROLLER PLUS	1-183
752463-0000 ..	TRIMMING ROLLER MINUS	1-183
752464-0000 ..	TRIMMING ROLLER PLUS	1-183
752465-0000 ..	TRIMMING ROLLER MINUS	1-183
752466-0000 ..	TRIMMING ROLLER PLUS	1-183
752467-0000 ..	TRIMMING ROLLER MINUS	1-183
752476-0000 ..	SCREW	1-267, 1-269, 1-271, 1-273, 1-275, 1-277, 1-279, 1-281
752499-0000 ..	RING	1-155
752519-0002 ..	PIN	1-127, 1-129
752554-0000 ..	SPACER	1-295, 1-297
905413-0000 ..	SHAFT	1-37
905415-0000 ..	SHAFT	1-37
929279-0000 ..	ROLLER	1-133, 1-135
929282-0000 ..	TRIMMING ROLLER PLUS	1-183
929283-0000 ..	TRIMMING ROLLER MINUS	1-183
929284-0000 ..	ROLLER	1-127, 1-129
929316-0001 ..	BEARING	1-267, 1-269, 1-271, 1-273, 1-275, 1-277, 1-279, 1-281
929316-0002 ..	BEARING	1-267, 1-269, 1-271, 1-273, 1-275, 1-277, 1-279, 1-281
929328-0000 ..	TEMPLATE	1-179, 1-181
929355-0000 ..	ROLLER TPA 330	1-293
929371-0000 ..	SLEEVE	1-247, 1-249, 1-251, 1-257, 1-259, 1-261
929372-0000 ..	PISTON	1-247, 1-249, 1-251, 1-257, 1-259, 1-261
929391-0000 ..	SPRING	1-231, 1-233, 1-235, 1-237
978735-0000 ..	FASTENING PLATE	1-295, 1-297
978760-0000 ..	ROLLER TBA200SL	1-293
979728-0000 ..	CATCH	1-155
979754-0000 ..	VOLUME SHIM 100	1-171, 1-173, 1-175, 1-195, 1-197, 1-199, 1-201, 1-203
979755-0000 ..	VOLUME BULGE 100	1-195, 1-197, 1-199, 1-201, 1-203
979860-0000 ..	VOLUME BULGE	1-195, 1-197, 1-199, 1-201, 1-203
979861-0000 ..	VOLUME SHIM	1-171, 1-173, 1-175, 1-195, 1-197, 1-199, 1-201, 1-203
979931-0000 ..	VOLUME BULGE	1-195, 1-197, 1-199, 1-201, 1-203
1038240-0000 .	SPACER	1-247, 1-249, 1-251, 1-257, 1-259, 1-261
1110083-0003 .	DOLLY	1-171, 1-173, 1-175, 1-267, 1-269, 1-271, 1-273, 1-275, 1-277, 1-279, 1-281
1110083-0005 .	DOLLY	1-171, 1-173, 1-175, 1-267, 1-269, 1-271, 1-273, 1-275, 1-277, 1-279, 1-281
1110532-0000 .	INDUCTOR	1-171, 1-173, 1-175, 1-247, 1-249, 1-251, 1-257, 1-259, 1-261
1110534-0000 .	INDUCTOR	1-171, 1-173, 1-175, 1-247, 1-249, 1-251, 1-257, 1-259, 1-261
1110535-0000 .	INDUCTOR	1-171, 1-173, 1-175, 1-247, 1-249, 1-251, 1-257, 1-259, 1-261
1110556-0000 .	INDUCTOR	1-171, 1-173, 1-175, 1-247, 1-249, 1-251, 1-257, 1-259, 1-261
1140548-0000 .	FLANGED BEARING BUSHING	1-35
1140889-0000 .	BUSBAR	1-95
1144976-0000 .	STOP SCREW	1-367, 1-369, 1-371, 1-373
1145416-0000 .	PUNCH HOLE 55	1-85
1145417-0000 .	DIE HOLE 55	1-85
1260486-0000 .	PLATE	1-295, 1-297
1260487-0000 .	PLATE	1-295, 1-297
1260490-0000 .	NUT	1-295, 1-297
1260491-0000 .	NUT	1-295, 1-297
1279086-0000 .	LOCKING PLATE	1-137, 1-139, 1-141
1279090-0000 .	LOCKING PLATE	1-137, 1-139, 1-141
1279093-0000 .	LOCKING PLATE	1-137, 1-139, 1-141
1279094-0000 .	LOCKING PLATE	1-137, 1-139, 1-141
1282645-0000 .	KNIFE	1-171, 1-173, 1-175, 1-283, 1-285, 1-287
1282646-0000 .	KNIFE	1-171, 1-173, 1-175, 1-283, 1-285, 1-287
1282647-0000 .	KNIFE	1-171, 1-173, 1-175, 1-283, 1-285, 1-287
1282708-0000 .	BUSHING	1-305, 1-307
1317633-0000 .	SPRING	1-367, 1-369, 1-371, 1-373
1347496-0000 .	SCREW	1-305, 1-307
1347952-0002 .	SPACER	1-107
1347952-0003 .	SPACER	1-67, 1-107
1347952-0004 .	SPACER	1-107
1347952-0006 .	SPACER	1-107, 1-111
1347952-0008 .	SPACER	1-111
1347952-0010 .	SPACER	1-111
1347952-0011 .	SPACER	1-111
1347952-0016 .	SPACER	1-111
1348053-0000 .	BRACKET	1-267, 1-269, 1-271, 1-273, 1-275, 1-277, 1-279, 1-281
1349916-0000 .	CLAMP	1-33
1350440-0000 .	LEVER	1-305, 1-307
1350785-0001 .	SHIM	1-39
1350785-0002 .	SHIM	1-39
1350785-0003 .	SHIM	1-39
1350785-0004 .	SHIM	1-39
1350959-0000 .	VOLUME BULGE P48 250	1-195, 1-197, 1-199, 1-201, 1-203, 1-219, 1-221, 1-223, 1-225

Part No	Description	Page No
1350985-0000	.FOLDING FLAP RIGHT	1-267, 1-269, 1-271, 1-273, 1-275, 1-277, 1-279, 1-281
1350986-0000	.FOLDING FLAP LEFT	1-267, 1-269, 1-271, 1-273, 1-275, 1-277, 1-279, 1-281
1350996-0000	.CARRIER RULER RIGHT	1-267, 1-269, 1-271, 1-273
1350998-0000	.CARRIER RULER LEFT	1-275, 1-277, 1-279, 1-281
1359565-0000	.NUT	1-345, 1-353
1366727-0000	.CLAMP	1-339, 1-341, 1-343, 1-345, 1-353, 1-357
1366750-0000	.HOLDER	1-339, 1-341, 1-343, 1-353, 1-357
1478479-0000	.HOLDER	1-33
1487264-0000	.PLATE	1-33
1498113-0000	.BRACKET	1-29
1498115-0000	.BLOCK	1-25
1498303-0000	.BELT	1-65
1498347-0000	.WASHER	1-57, 1-59, 1-61
1498360-0000	.HUB	1-65
1498496-0000	.GUIDE	1-25
1498704-0000	.LEVER	1-35
1499251-0002	.AXLE PIN	1-57, 1-59, 1-61
1499252-0000	.ARM	1-63
1499253-0000	.BUSHING	1-57, 1-59, 1-61
1499255-0100	.DETECTOR	1-57, 1-59, 1-61
1499296-0001	.GUIDE	1-105
1499296-0002	.GUIDE	1-75, 1-105
1499296-0003	.GUIDE	1-105
1499296-0004	.GUIDE	1-105, 1-113
1499296-0007	.GUIDE	1-113
1499296-0008	.GUIDE	1-113
1499296-0013	.GUIDE	1-113
1499296-0015	.GUIDE	1-113
1511404-0000	.ECCENTRIC SHAFT	1-293
1511406-0000	.BRACKET	1-293
1511407-0000	.BRACKET	1-293
1519222-0000	.VOLUME SHIM	1-171, 1-173, 1-175, 1-195, 1-197, 1-199, 1-201, 1-203
1519364-0000	.INSULATING RAIL	1-33
1519365-0000	.PIVOT PLATE	1-39
1519379-0000	.FLAT KNIFE	1-33
1519463-0000	.LOCKING CLAMP	1-73
1519543-0000	.HOLDER	1-37, 1-39
1519544-0000	.SHAFT	1-35
1519996-0000	.SHAFT	1-35
1520196-0000	.INDUCTOR	1-95
1523159-0000	.PIVOT PLATE	1-39
1523160-0000	.PIN	1-39
1523168-0000	.SHAFT	1-37
1523169-0000	.BRACKET	1-37
1523222-0000	.PLATE	1-157, 1-159
1523223-0000	.NUT	1-157, 1-159
1523224-0000	.NUT	1-157, 1-159
1523225-0000	.FASTENING PLATE	1-157, 1-159
1523262-0000	.FLAG	1-57, 1-59, 1-61
1523263-0001	.BRACKET	1-57, 1-59, 1-61
1533360-0000	.INDUCTOR	1-95
1533364-0000	.INDUCTOR	1-95
1538109-0000	.COMPRESSION SPRING	1-283, 1-285, 1-287
1538231-0000	.SHAFT	1-35
1538757-0000	.TOOL	1-179, 1-181
1538782-0000	.VOLUME BULGE P48 200	1-195, 1-197, 1-199, 1-201, 1-203, 1-219, 1-221, 1-223, 1-225
1539125-0000	.BRACKET	1-57, 1-59, 1-61
1539593-0000	.COVER	1-247, 1-249, 1-251, 1-257, 1-259, 1-261
1539892-0000	.TEMPLATE	1-179, 1-181
1539893-0000	.TEMPLATE	1-179, 1-181
1548368-0000	.PLATE	1-13, 1-15, 1-17, 1-31
1548376-0000	.BRACKET	1-101, 1-103
1548377-0000	.PAPER GUIDE	1-13, 1-15, 1-17
1548941-0000	.VOLUME BULGE	1-195, 1-197, 1-199, 1-201, 1-203
1550664-0000	.DOWEL	1-339, 1-341, 1-343
1550666-0000	.HOLDER	1-339, 1-341, 1-343
1550743-0200	.RAIL HOLDER	1-339, 1-341, 1-343, 1-347
1550772-0000	.HOLDER	1-345, 1-353
1558230-0100	.COUNTER ROLLER	1-35
1558231-0100	.KNIFE	1-35
1558251-0000	.SHAFT	1-165
1558252-0000	.SCREW	1-165
1558253-0000	.ROLLER	1-165
1566708-0000	.INDUCTOR	1-95
1566761-0000	.DOLLY	1-171, 1-173, 1-175, 1-267, 1-269, 1-271, 1-273, 1-275, 1-277, 1-279, 1-281
1566981-0000	.INDUCTOR	1-171, 1-173, 1-175, 1-247, 1-249, 1-251, 1-257, 1-259, 1-261
2500097-0000	.KNIFE SUPPORT	1-39
2504616-0000	.SEALING PLATE	1-21
2506563-0000	.SHAFT	1-65
2506564-0000	.GUIDE FORK	1-65
2506565-0000	.BRACKET	1-65
2511271-0001	.SHAFT	1-69
2511291-0100	.PATCH FEEDER	1-13, 1-15, 1-17
2511313-0000	.BRACKET	1-31

Part No	Description	Page No
2511314-0000	.BRACKET	1-43
2511316-0000	.PIN	1-65
2511317-0000	.NUT	1-65
2511638-0000	.OPENING SPECIFICATION	1-121
2511639-0000	.DIE	1-85
2511640-0000	.SEALING PLATE	1-91
2511642-0000	.SEALING PLATE	1-91
2511643-0000	.SEALING PLATE	1-21
2511644-0000	.PUNCH	1-85
2511651-0000	.SEALING PLATE	1-93
2512836-0000	.STOP SCREW	1-33
2514030-0000	.OPENING SPECIFICATION	1-121
2522213-0003	.SHAFT	1-145
2522213-0004	.SHAFT	1-145
2522213-0006	.SHAFT	1-137, 1-139, 1-141
2522213-0009	.SHAFT	1-133, 1-135
2522213-0012	.SHAFT	1-145
2522213-0015	.SHAFT	1-145
2522213-0018	.SHAFT	1-145
2522213-0020	.SHAFT	1-145
2523766-0001	.BRACKET	1-167
2523766-0012	.BRACKET	1-167
2525289-0000	.DIE	1-85
2525290-0000	.PUNCH	1-85
2525292-0000	.SEALING PLATE	1-93
2525349-0000	.BRACKET	1-73
2525350-0000	.BRACKET	1-71
2525351-0000	.HINGE	1-71
2525358-0100	.HINGE	1-57, 1-59, 1-61
2525360-0000	.LOCKING FINGER	1-73
2525366-0100	.SPLICING TABLE	1-57, 1-59, 1-61
2525368-0000	.PUSHER	1-73
2525373-0000	.WHEEL	1-57, 1-59, 1-61
2525377-0000	.NUT	1-33
2525378-0000	.PAPER GUIDE	1-13, 1-15, 1-17
2525382-0000	.BRACKET	1-53
2526546-0000	.OPENING SPECIFICATION	1-121
2526551-0000	.PLATE	1-91
2526700-0000	.SPRING	1-33
2527724-0000	.CARRIER	1-267, 1-269, 1-271, 1-273, 1-275, 1-277, 1-279, 1-281
2528114-0000	.COVER PLATE	1-147, 1-149, 1-151
2528118-0001	.LOCK PLATE	1-133, 1-135, 1-137, 1-139, 1-141
2528119-0001	.LOCK PLATE	1-133, 1-135, 1-137, 1-139, 1-141
2528123-0001	.LOCK PLATE	1-133, 1-135, 1-145
2528123-0002	.LOCK PLATE	1-133, 1-135
2528123-0003	.LOCK PLATE	1-145
2528123-0004	.LOCK PLATE	1-133, 1-135
2528123-0008	.LOCK PLATE	1-137, 1-139, 1-141
2528123-0009	.LOCK PLATE	1-137, 1-139, 1-141
2529547-0100	.PAPER GUIDE	1-163
2532539-0000	.FOLDING FLAP	1-267, 1-269, 1-271, 1-273, 1-275, 1-277, 1-279, 1-281
2532542-0000	.FOLDING FLAP	1-267, 1-269, 1-271, 1-273, 1-275, 1-277, 1-279, 1-281
2532543-0000	.FOLDING FLAP	1-267, 1-269, 1-271, 1-273, 1-275, 1-277, 1-279, 1-281
2532544-0000	.BUSHING	1-205, 1-207, 1-209, 1-213, 1-217, 1-229
2532895-0002	.LOCK PLATE	1-145
2532895-0011	.LOCK PLATE	1-145
2533680-0000	.SHIM	1-31
2533681-0100	.BOBBIN HOLDER	1-13, 1-15, 1-17
2533682-0100	.BOBBIN HOLDER	1-13, 1-15, 1-17
2533683-0100	.SPLICING TABLE	1-73
2533684-0100	.SPLICING TABLE	1-13, 1-15, 1-17
2533685-0100	.SPLICING TABLE	1-13, 1-15, 1-17
2533715-0000	.SEALING PLATE	1-97
2545239-0100	.ELECTRIC MATERIALS	1-81
2546278-0100	.PUNCH UNIT	1-13, 1-15, 1-17
2546293-0000	.SEALING PLATE	1-97
2546294-0100	.OUTER PATCH C'JAW	1-25
2546296-0100	.OUTER PATCH C'JAW	1-23
2546297-0100	.OUTER PATCH FEEDER	1-13, 1-15, 1-17, 1-31
2546303-0000	.SEALING PLATE	1-27
2553315-0100	.BOBBIN HOLDER	1-65
2553327-0000	.PLATE	1-13, 1-15, 1-17
2553338-0000	.PROTECTION	1-57, 1-59, 1-61
2561274-0102	.RAILING	1-339, 1-341, 1-343
2561596-0000	.RAIL HOLDER KIT	1-357
2561602-0100	.RAIL HOLDER KIT	1-339, 1-341, 1-343
2562736-0002	.COAXIAL CABLE	1-255, 1-265
2563974-0000	.SEALING PLATE	1-93
2564043-0001	.ROLLER	1-115
2564043-0002	.ROLLER	1-87
2564043-0003	.ROLLER	1-69, 1-77, 1-87
2564043-0004	.ROLLER	1-87
2564043-0005	.ROLLER	1-87, 1-115
2564043-0006	.ROLLER	1-115

Part No	Description	Page No
2564043-0008	.ROLLER	1-115
2564043-0009	.ROLLER	1-115
2564044-0001	.ROLLER	1-89, 1-109
2564044-0002	.ROLLER	1-87, 1-99, 1-117
2564044-0004	.ROLLER	1-41, 1-77, 1-87, 1-99, 1-117
2564044-0005	.ROLLER	1-87, 1-99, 1-117
2564044-0006	.ROLLER	1-87, 1-89, 1-99, 1-109, 1-117
2564044-0008	.ROLLER	1-89, 1-109
2564044-0011	.ROLLER	1-89, 1-109
2564044-0012	.ROLLER	1-89, 1-109
2564053-0100	.OUTER PATCH MAGAZINE	1-57, 1-59, 1-61
2564057-0100	.TAB MAGAZINE	1-13, 1-15, 1-17
2564058-0100	.TURNING DEVICE	1-13, 1-15, 1-17
2564059-0100	.TAB FEEDER	1-13, 1-15, 1-17
2564060-0100	.PATCH FEEDER	1-13, 1-15, 1-17
2564061-0100	.OUTER PATCH FEEDER	1-31
2564064-0000	.SHAFT	1-35
2564066-0000	.SHAFT	1-39
2564073-0000	.LABEL	1-57, 1-59, 1-61
2564076-0100	.START-UP KIT	1-11
2587325-0000	.SHAFT	1-35
2597663-0000	.FOLDING FLAP	1-267, 1-269, 1-271, 1-273, 1-275, 1-277, 1-279, 1-281
2603682-0000	.DIE	1-85
2603683-0000	.PUNCH	1-85
2604554-0000	.PUNCH	1-85
2604555-0000	.DIE	1-85
2610042-0000	.FLOAT	1-157, 1-159
2639394-0000	.GUIDE FORK	1-57, 1-59, 1-61
2640354-0000	.ROLLER	1-147, 1-149, 1-151
2647105-0000	.AXLE PIN	1-305, 1-307
2655469-0000	.PUNCH	1-85
2655470-0000	.DIE HOLE 90	1-85
2657828-0000	.PUNCH	1-85
2657829-0000	.DIE	1-85
2660825-0000	.BRACKET	1-43
2665718-0000	.CARRIER	1-267, 1-269, 1-271, 1-273, 1-275, 1-277, 1-279, 1-281
2668245-0000	.SLIDER	1-305, 1-307
2668246-0000	.SLIDER	1-305, 1-307
2683961-0000	.CUTTING RAIL	1-267, 1-269, 1-271, 1-273, 1-275, 1-277, 1-279, 1-281
2693161-0100	.INSTALLATION MATERIAL	1-13, 1-15, 1-17
2695493-0000	.OPENING SPECIFICATION	1-121
2696580-0000	.OPENING SPECIFICATION	1-121
2697205-0000	.OPENING SPECIFICATION	1-121
2699436-0000	.SPACER	1-345
2699437-0000	.RAIL HOLDER	1-345
2709603-0000	.BOX	1-13, 1-15, 1-17
2710788-0000	.PANEL DOOR	1-57, 1-59, 1-61
2710800-0100	.PATCH MAGAZINE	1-13, 1-15, 1-17
2710802-0000	.SPACER	1-31
2715294-0000	.TEMPLATE	1-19, 1-53
2735131-0000	.BRACKET	1-101, 1-103
2735132-0000	.SUPPORT	1-101, 1-103
2736719-0000	.PLATE	1-169
2737447-0000	.HOLDER	1-33
2746416-0000	.BRACKET	1-35
2758237-0000	.SPACER	1-57, 1-59, 1-61
2773842-0100	.BAR CODE READER	1-13, 1-15, 1-17
2790193-0000	.PLATE	1-45, 1-47, 1-51
2795376-0000	.CATCH	1-155
2795385-0000	.RING	1-127, 1-129
2795386-0000	.RING	1-127, 1-129
2795387-0000	.ROLLER	1-127, 1-129
2796072-0001	.LOCKING FORK	1-157, 1-159
2796072-0002	.FLANGE	1-157, 1-159
2800317-0000	.BRACKET	1-57, 1-59, 1-61
2806002-0000	.BLOCK	1-323, 1-325
2806005-0000	.PLATE	1-323, 1-325
2806012-0000	.SHIM	1-323, 1-325
2806015-0000	.BLOCK	1-331, 1-333, 1-335, 1-337
2808285-0150	.UPPER FORMING RING	1-125
2808289-0000	.SHAFT	1-137, 1-139, 1-141
2808290-0150	.LOWER FORMING RING	1-125
2808291-0000	.SCREW	1-137, 1-139, 1-141
2808292-0000	.BUSHING	1-137, 1-139, 1-141
2808293-0000	.BRACKET	1-137, 1-139, 1-141
2808294-0000	.SCREW	1-137, 1-139, 1-141
2808295-0100	.EDGE ROLLER	1-125
2808298-0000	.PLUG	1-137, 1-139, 1-141
2808299-0000	.BRACKET	1-137, 1-139, 1-141
2808305-0200	.FORMING SECTION	1-123
2808307-0000	.COUNTER ROLLER	1-133, 1-135
2808308-0000	.COUNTER ROLLER	1-133, 1-135
2808311-0000	.FORK	1-133, 1-135
2808312-0000	.FORK	1-133, 1-135

Part No	Description	Page No
2808315-0200	.SEAL RING	1-125
2808318-0000	.SHAFT2781168-0000	1-133, 1-135
2808319-0000	.BRACKET	1-147, 1-149, 1-151
2808340-0200	.AIR NOZZLE	1-123
2808365-0000	.BRACKET	1-153
2808366-0000	.BRACKET	1-153
2808370-0000	.FORK	1-133, 1-135
2808378-0000	.BRACKET	1-153
2808379-0000	.BRACKET	1-153
2808402-0000	.CLAMP	1-161
2808403-0000	.ELBOW PIPE	1-161
2808434-0000	.BUSHING	1-133, 1-135
2808544-0000	.STOPPER	1-69
2808545-0000	.DAMPER	1-69
2808769-0000	.SLIDER	1-69
2810394-0000	.BUSHING	1-205, 1-207, 1-209, 1-213, 1-217, 1-229
2815756-0000	.HOLDER	1-295, 1-297
2816251-0000	.GUIDE	1-69
2816255-0000	.PHOTOCELL BRACKET	1-69
2816256-0000	.BRACKET	1-69
2816257-0100	.STRIP MAGAZINE	1-57, 1-59, 1-61
2818125-0000	.OPERATING ROD	1-239, 1-241, 1-243, 1-245
2818126-0000	.BEARING PLATE	1-239, 1-241, 1-243, 1-245
2819273-0000	.COVER	1-367, 1-369, 1-371, 1-373
2819302-0000	.SUPPORT	1-349
2819305-0000	.SUPPORT	1-367, 1-369, 1-371, 1-373
2819312-0200	.INFEED CONVEYOR VARIANT	1-303
2819313-0100	.PULL-DOWN DEVICE	1-303
2819314-0100	.FLAP HEATER	1-303
2819315-0100	.PRESSURE DEVICE	1-303
2819316-0200	.OUTFEEDER	1-303
2819317-0200	.WHEEL	1-303
2819318-0200	.FOLDING BAR	1-303
2819319-0200	.FORMING UNIT	1-185
2824756-0200	.FORMING UNIT	1-185
2831678-0000	.SUPPORT	1-165
2832313-0000	.SHAFT	1-163
2835326-0000	.SHAFT	1-247, 1-249, 1-251, 1-257, 1-259, 1-261
2835327-0000	.CATCH	1-247, 1-249, 1-251, 1-257, 1-259, 1-261
2835328-0000	.BEARING HOUSING	1-247, 1-249, 1-251, 1-257, 1-259, 1-261
2835329-0000	.RAIL	1-247, 1-249, 1-251, 1-257, 1-259, 1-261
2835504-0200	.VOLUME CURVE PIECE	1-189, 1-191
2837076-0000	.BUSBAR	1-255
2837077-0000	.BUSBAR	1-265
2837085-0100	.TRANSFORMER	1-257, 1-259, 1-261
2837086-0100	.TRANSFORMER	1-247, 1-249, 1-251
2837094-0000	.SHIM	1-231, 1-233, 1-235, 1-237
2837503-0105	.TRANSFORMER	1-255, 1-265
2837523-0000	.SPRING	1-19, 1-53
2837527-0000	.SPRING BRACKET	1-19
2837535-0100	.SEALING UNIT	1-23
2837537-0100	.BOBBIN HOLDER	1-57, 1-59, 1-61
2837538-0100	.SEALING UNIT	1-31
2839240-0200	.FILLING PIPE	1-123
2839259-0100	.CLEANING CUP	1-123
2844252-0000	.CANTILEVER	1-295, 1-297
2844253-0000	.FASTENING PLATE	1-295, 1-297
2845903-0000	.CARRIER RULER	1-267, 1-269, 1-271, 1-273
2845909-0000	.CARRIER RULER	1-275, 1-277, 1-279, 1-281
2846012-0000	.CARRIER	1-267, 1-269, 1-271, 1-273, 1-275, 1-277, 1-279, 1-281
2846108-0000	.FORMING ROLLER	1-137, 1-139, 1-141
2850474-0001	.BRACKET	1-167
2850474-0002	.BRACKET	1-167
2850474-0003	.BRACKET	1-167
2850474-0004	.BRACKET	1-167
2850474-0005	.BRACKET	1-167
2850474-0006	.BRACKET	1-167
2852320-0000	.BOTTOM	1-359, 1-361
2852321-0000	.BLOCK	1-323, 1-325
2852322-0000	.BLOCK	1-331, 1-333, 1-335, 1-337
2852323-0000	.PUSHER	1-331, 1-333, 1-335, 1-337, 1-379
2852324-0000	.NOZZLE	1-327, 1-329
2852325-0000	.NOZZLE	1-327, 1-329
2852326-0000	.NOZZLE	1-327, 1-329
2852327-0000	.FOLDING BAR	1-367, 1-369, 1-371, 1-373
2852328-0000	.FOLDING BAR	1-367, 1-369, 1-371, 1-373
2852329-0000	.PUSHER	1-331, 1-333, 1-335, 1-337, 1-379
2852330-0000	.PUSHER	1-331, 1-333, 1-335, 1-337, 1-379
2852331-0001	.PIPE	1-327, 1-329
2852331-0002	.PIPE	1-327, 1-329
2852331-0003	.PIPE	1-327, 1-329
2852331-0004	.PIPE	1-327, 1-329
2852331-0005	.PIPE	1-327, 1-329
2852333-0000	.PLATE	1-367, 1-369, 1-371, 1-373

Part No	Description	Page No
2852372-0000	.SUPPORT	1-315, 1-317, 1-319
2852382-0100	.FIN FOLDER	1-303
2852384-0000	.SHAFT	1-305, 1-307
2852385-0000	.SUPPORT	1-305, 1-307
2852386-0000	.PLATE	1-323, 1-325
2852391-0000	.SHAFT	1-305, 1-307
2852392-0000	.SPACER	1-305, 1-307
2852409-0000	.CRADLE	1-309, 1-311, 1-313
2852410-0000	.SHIM	1-331, 1-333, 1-335, 1-337, 1-379
2852413-0000	.CHUTE	1-315, 1-317, 1-319
2852414-0000	.CHUTE	1-315, 1-317, 1-319
2852874-0000	.SUPPORT	1-349
2862751-0100	.PHOTOCELL UNIT	1-189, 1-191
2863998-0000	.SHAFT	1-147, 1-149, 1-151
2863999-0000	.BRACKET	1-147, 1-149, 1-151
2868038-0100	.STRIP MAGAZINE	1-13, 1-15, 1-17
2869011-0100	.CARRIER PRESSURE	1-189, 1-191
2869012-0100	.CARRIER PRESSURE	1-189, 1-191
2869013-0100	.CARRIER CUTTING	1-189, 1-191
2869014-0100	.CARRIER CUTTING	1-189, 1-191
2869015-0100	.PRESSURE JAW	1-189, 1-191
2869016-0100	.PRESSURE JAW	1-189, 1-191
2869017-0100	.CUTTING JAW	1-189, 1-191
2869018-0100	.CUTTING JAW	1-189, 1-191
2869019-0200	.VOLUME FLAP	1-189, 1-191, 1-377
2869193-0000	.PIN	1-205, 1-207, 1-209, 1-213, 1-217, 1-229
2869194-0000	.DAMPER	1-205, 1-207, 1-209, 1-213, 1-217, 1-229
2869195-0000	.STOP	1-205, 1-207, 1-209, 1-213, 1-217, 1-229
2869196-0000	.BLOCK	1-231, 1-233, 1-235, 1-237
2869199-0000	.BLOCK	1-239, 1-241, 1-243, 1-245
2869200-0000	.CARRIER	1-239, 1-241
2869201-0000	.BEARING HOUSING	1-267, 1-269, 1-271, 1-273, 1-275, 1-277, 1-279, 1-281
2869202-0000	.SUPPORT	1-247, 1-249, 1-251, 1-257, 1-259, 1-261
2869203-0000	.CARRIER	1-243, 1-245
2869204-0000	.CARRIER	1-235, 1-237
2869205-0000	.CARRIER	1-231, 1-233
2869206-0200	.SHOCK ABSORBER	1-193, 1-215
2869207-0200	.VOLUME FLAP	1-193, 1-211, 1-215, 1-227
2869530-0100	.OUTER PATCH MAGAZINE	1-13, 1-15, 1-17
2870080-0000	.HOLDER	1-205, 1-207, 1-209
2871510-0100	.LS TEMPLATE	1-7
2871511-0000	.BRACKET	1-177
2871512-0000	.BRACKET	1-177
2871513-0000	.STOPPER	1-177
2871514-0000	.STOPPER	1-177
2871515-0000	.STOPPER	1-177
2871516-0000	.STOPPER	1-177
2871517-0000	.STOPPER	1-177
2871518-0000	.STOPPER	1-177
2871519-0000	.STOPPER	1-177
2871520-0000	.STOPPER	1-177
2871521-0000	.BRACKET	1-177
2871522-0000	.BRACKET	1-177
2871523-0000	.RULER	1-177
2871524-0000	.RULER	1-177
2871526-0000	.RULER	1-177
2871527-0000	.BRACKET	1-177
2871528-0000	.BRACKET	1-177
2871530-0000	.ROLLER	1-137, 1-139, 1-141
2871532-0000	.ROLLER	1-137, 1-139, 1-141
2871534-0000	.ROLLER	1-137, 1-139, 1-141
2871536-0000	.ROLLER	1-137, 1-139, 1-141
2871537-0000	.RULER	1-177
2871540-0100	.AIR NOZZLE	1-125
2871925-0000	.FOLDING BAR	1-367, 1-369, 1-371, 1-373
2871926-0000	.FOLDING BAR	1-367, 1-369, 1-371, 1-373
2871927-0001	.FOLDING BAR	1-367, 1-369, 1-371, 1-373
2871927-0002	.FOLDING BAR	1-367, 1-369, 1-371, 1-373
2871927-0003	.FOLDING BAR	1-367, 1-369, 1-371, 1-373
2871927-0004	.FOLDING BAR	1-367, 1-369, 1-371, 1-373
2871927-0005	.FOLDING BAR	1-367, 1-369, 1-371, 1-373
2871927-0006	.FOLDING BAR	1-367, 1-369, 1-371, 1-373
2871927-0007	.FOLDING BAR	1-367, 1-369, 1-371, 1-373
2871928-0001	.FOLDING BAR	1-367, 1-369, 1-371, 1-373
2871928-0002	.FOLDING BAR	1-367, 1-369, 1-371, 1-373
2871928-0003	.FOLDING BAR	1-367, 1-369, 1-371, 1-373
2871928-0004	.FOLDING BAR	1-367, 1-369, 1-371, 1-373
2871928-0005	.FOLDING BAR	1-367, 1-369, 1-371, 1-373
2871928-0006	.FOLDING BAR	1-367, 1-369, 1-371, 1-373
2871928-0007	.FOLDING BAR	1-367, 1-369, 1-371, 1-373
2871929-0100	.DROP CHUTE VARIANT	1-303
2871931-0002	.FOLDING BAR	1-367, 1-369, 1-371, 1-373
2871931-0004	.FOLDING BAR	1-367, 1-369, 1-371, 1-373
2871931-0005	.FOLDING BAR	1-367, 1-369, 1-371, 1-373

Machine Type Group Description Page No

Part No	Description	Page No
2871932-0001	.FOLDING BAR	1-367, 1-369, 1-371, 1-373
2871932-0002	.FOLDING BAR	1-367, 1-369, 1-371, 1-373
2871932-0003	.FOLDING BAR	1-367, 1-369, 1-371, 1-373
2871932-0004	.FOLDING BAR	1-367, 1-369, 1-371, 1-373
2871932-0005	.FOLDING BAR	1-367, 1-369, 1-371, 1-373
2871933-0001	.FOLDING BAR	1-367, 1-369, 1-371, 1-373
2871933-0002	.FOLDING BAR	1-367, 1-369, 1-371, 1-373
2871933-0003	.FOLDING BAR	1-367, 1-369, 1-371, 1-373
2871933-0005	.FOLDING BAR	1-367, 1-369, 1-371, 1-373
2871933-0007	.FOLDING BAR	1-367, 1-369, 1-371, 1-373
2871933-0008	.FOLDING BAR	1-367, 1-369, 1-371, 1-373
2871934-0001	.WALL	1-367, 1-369, 1-371, 1-373
2871934-0002	.WALL	1-367, 1-369, 1-371, 1-373
2871934-0004	.WALL	1-367, 1-369, 1-371, 1-373
2871934-0005	.WALL	1-367, 1-369, 1-371, 1-373
2871935-0002	.FOLDING BAR	1-367, 1-369, 1-371, 1-373
2871935-0004	.FOLDING BAR	1-367, 1-369, 1-371, 1-373
2871935-0005	.FOLDING BAR	1-367, 1-369, 1-371, 1-373
2871936-0001	.FOLDING BAR	1-367, 1-369, 1-371, 1-373
2871936-0002	.FOLDING BAR	1-367, 1-369, 1-371, 1-373
2871936-0003	.FOLDING BAR	1-367, 1-369, 1-371, 1-373
2871936-0004	.FOLDING BAR	1-367, 1-369, 1-371, 1-373
2871936-0005	.FOLDING BAR	1-367, 1-369, 1-371, 1-373
2871937-0001	.FOLDING BAR	1-367, 1-369, 1-371, 1-373
2871937-0002	.FOLDING BAR	1-367, 1-369, 1-371, 1-373
2871937-0003	.FOLDING BAR	1-367, 1-369, 1-371, 1-373
2871937-0005	.FOLDING BAR	1-367, 1-369, 1-371, 1-373
2871937-0007	.FOLDING BAR	1-367, 1-369, 1-371, 1-373
2871937-0008	.FOLDING BAR	1-367, 1-369, 1-371, 1-373
2871938-0001	.WALL	1-367, 1-369, 1-371, 1-373
2871938-0002	.WALL	1-367, 1-369, 1-371, 1-373
2871938-0004	.WALL	1-367, 1-369, 1-371, 1-373
2871938-0005	.WALL	1-367, 1-369, 1-371, 1-373
2871940-0000	.PUSHER	1-331, 1-333, 1-335, 1-337, 1-379
2871943-0000	.GUIDE	1-315, 1-317, 1-319
2871944-0000	.GUIDE	1-315, 1-317, 1-319
2871945-0000	.SUPPORT	1-315, 1-317, 1-319
2871949-0000	.BRACKET	1-349
2871955-0001	.SPACER	1-309, 1-311, 1-313
2871955-0002	.SPACER	1-309, 1-311, 1-313
2871955-0003	.SPACER	1-309, 1-311, 1-313
2871955-0004	.SPACER	1-309, 1-311, 1-313
2871955-0005	.SPACER	1-309, 1-311, 1-313
2871955-0006	.SPACER	1-309, 1-311, 1-313
2871955-0007	.SPACER	1-309, 1-311, 1-313
2871955-0008	.SPACER	1-309, 1-311, 1-313
2871955-0009	.SPACER	1-309, 1-311, 1-313
2871955-0010	.SPACER	1-309, 1-311, 1-313
2871956-0000	.PUSHER	1-171, 1-173, 1-175, 1-339, 1-341, 1-343
2871959-0000	.PLATE	1-305, 1-307
2871960-0000	.SPACER	1-305, 1-307
2871961-0000	.FLAP	1-359, 1-361
2871962-0000	.BOTTOM	1-359, 1-361
2871963-0000	.BLOCK	1-323, 1-325
2871964-0000	.PUSHER	1-331, 1-333, 1-335, 1-337
2871965-0000	.BLOCK	1-331, 1-333, 1-335, 1-337
2871966-0000	.BLOCK	1-331, 1-333, 1-335, 1-337
2871967-0000	.NOZZLE	1-327, 1-329
2871968-0000	.NOZZLE	1-327, 1-329
2871969-0000	.NOZZLE	1-327, 1-329
2871970-0000	.PLATE	1-327, 1-329
2871971-0000	.GUIDE	1-315, 1-317, 1-319
2871972-0000	.GUIDE	1-315, 1-317, 1-319
2871973-0000	.WALL	1-315, 1-317, 1-319
2887701-0000	.ROLLER	1-35
2887775-0000	.STRIP GUIDE	1-35
2887897-0000	.GUIDE	1-35
2888463-0000	.CATCH	1-267, 1-269, 1-271, 1-273, 1-275, 1-277, 1-279, 1-281
2889626-0100	.START-UP KIT	1-7, 1-375
2889628-0100	.SETTING TOOL	1-7
2890043-0000	.ROLLER	1-133, 1-135
2890044-0000	.ROLLER	1-137, 1-139, 1-141
2890050-0200	.FORMING UNIT	1-7
2890071-0000	.KNOB	1-177
2890090-0100	.LOWER SUPPORT ROLLERS	1-125
2890091-0001	.ROLLER	1-133, 1-135
2890091-0002	.TRIMMING ROLLER MINUS	1-183
2890091-0003	.TRIMMING ROLLER PLUS	1-183
2890093-0000	.FORK	1-133, 1-135
2890102-0000	.ROLLER	1-137, 1-139, 1-141
2890103-0000	.ROLLER	1-137, 1-139, 1-141
2890104-0000	.ROLLER	1-137, 1-139, 1-141
2890105-0000	.ROLLER	1-137, 1-139, 1-141
2890106-0000	.ROLLER	1-137, 1-139, 1-141

Part No	Description	Page No
2890107-0000	.ROLLER	1-137, 1-139, 1-141
2890108-0000	.ROLLER	1-137, 1-139, 1-141
2890110-0000	.SHAFT	1-137, 1-139, 1-141
2890111-0000	.CLEANING PIPE	1-155
2890114-0000	.LOCK PLATE	1-137, 1-139, 1-141
2890115-0000	.ROLLER	1-147, 1-149, 1-151
2890117-0000	.ROLLER	1-161
2890118-0000	.SHAFT	1-161
2890119-0000	.SHAFT	1-147, 1-149, 1-151
2890357-0100	.ROLLER	1-7
2890692-0000	.CUTTING RAIL	1-267, 1-269, 1-271, 1-273, 1-275, 1-277, 1-279, 1-281
2890880-0000	.CLEANING PIPE	1-155
2894663-0000	.WALL	1-315, 1-317, 1-319
2894664-0000	.SUPPORT	1-315, 1-317, 1-319
2894665-0000	.GUIDE	1-315, 1-317, 1-319
2894666-0000	.GUIDE	1-315, 1-317, 1-319
2894667-0000	.FOLDING BAR	1-367, 1-369, 1-371, 1-373
2894669-0000	.FOLDING BAR	1-367, 1-369, 1-371, 1-373
2894672-0000	.PLATE	1-367, 1-369, 1-371, 1-373
2894673-0000	.CHUTE	1-309, 1-311, 1-313
2894674-0000	.GUIDE	1-315, 1-317, 1-319
2894675-0000	.GUIDE	1-315, 1-317, 1-319
2894677-0000	.FLAP	1-359, 1-361
2894678-0000	.BOTTOM	1-359, 1-361
2894683-0000	.SUPPORT	1-315, 1-317, 1-319
2894684-0000	.GUIDE	1-315, 1-317, 1-319
2894686-0000	.BLOCK	1-323, 1-325
2894688-0000	.NOZZLE	1-327, 1-329
2894689-0000	.NOZZLE	1-327, 1-329
2894690-0000	.PLATE	1-327, 1-329
2894691-0000	.BLOCK	1-331, 1-333, 1-335, 1-337
2894692-0000	.PUSHER	1-331, 1-333, 1-335, 1-337, 1-379
2894693-0000	.PUSHER	1-331, 1-333, 1-335, 1-337, 1-379
2894694-0000	.PUSHER	1-171, 1-173, 1-175, 1-339, 1-341, 1-343
2894695-0000	.FOLDING BAR	1-367, 1-369, 1-371, 1-373
2894696-0000	.FOLDING BAR	1-367, 1-369, 1-371, 1-373
2894697-0000	.FOLDING BAR	1-367, 1-369, 1-371, 1-373
2894698-0000	.FOLDING BAR	1-367, 1-369, 1-371, 1-373
2894699-0000	.PLATE	1-367, 1-369, 1-371, 1-373
2894700-0000	.PUSHER	1-171, 1-173, 1-175, 1-315, 1-317, 1-319
2894713-0000	.GUIDE	1-315, 1-317, 1-319
2894714-0000	.GUIDE	1-315, 1-317, 1-319
2894715-0000	.WALL	1-315, 1-317, 1-319
2894716-0000	.WALL	1-315, 1-317, 1-319
2894718-0000	.GUIDE	1-315, 1-317, 1-319
2894719-0000	.PLATE	1-327, 1-329
2894724-0000	.PLATE	1-367, 1-369, 1-371, 1-373
2894725-0000	.FOLDING DEVICE	1-305, 1-307
2894726-0000	.FOLDING DEVICE	1-305, 1-307
2894727-0000	.FOLDING BAR	1-367, 1-369, 1-371, 1-373
2894728-0000	.FOLDING BAR	1-367, 1-369, 1-371, 1-373
2894729-0000	.VOLUME BULGE	1-331, 1-333, 1-335, 1-337
2894730-0000	.VOLUME BULGE	1-331, 1-333, 1-335, 1-337
2894737-0000	.PUSHER	1-171, 1-173, 1-175, 1-339, 1-341, 1-343
2894751-0000	.FLAP	1-359, 1-361
2894752-0000	.FLAP	1-359, 1-361
2894753-0000	.FLAP	1-359, 1-361
2894755-0000	.FOLDING BAR	1-367, 1-369, 1-371, 1-373
2894756-0000	.FOLDING BAR	1-367, 1-369, 1-371, 1-373
2901092-0100	.SUPPORT ROLLER	1-189, 1-191
2902962-0000	.AIR NOZZLE	1-153
2903070-0000	.HEAT GUARD	1-153
2905199-0000	.HOLDER	1-195, 1-197, 1-199, 1-201, 1-203, 1-205, 1-207, 1-209, 1-213, 1-217, 1-219, 1-221, 1-223, 1-225, 1-229
2906017-0000	.OPERATING ROD	1-239, 1-241, 1-243, 1-245
2906018-0000	.CARRIER RULER	1-267, 1-269, 1-271, 1-273
2906019-0000	.FOLDING FLAP	1-267, 1-269, 1-271, 1-273, 1-275, 1-277, 1-279, 1-281
2906020-0000	.FOLDING FLAP	1-267, 1-269, 1-271, 1-273, 1-275, 1-277, 1-279, 1-281
2906021-0000	.BEARING HOUSING	1-267, 1-269, 1-271, 1-273, 1-275, 1-277, 1-279, 1-281
2906022-0000	.CARRIER RULER	1-275, 1-277, 1-279, 1-281
2906023-0000	.CARRIER	1-195, 1-197, 1-199, 1-201, 1-203, 1-219, 1-221, 1-223, 1-225
2906024-0000	.CARRIER	1-195, 1-197, 1-199, 1-201, 1-203, 1-219, 1-221, 1-223, 1-225
2906025-0000	.SHAFT	1-195, 1-197, 1-199, 1-201, 1-203, 1-219, 1-221, 1-223, 1-225
2906064-0000	.SHAFT	1-133, 1-135
2906065-0000	.ROLLER	1-133, 1-135
2906099-0000	.DISTRIBUTOR WING	1-161
2906103-0000	.ROLLER	1-145
2906104-0000	.ROLLER	1-145
2906105-0000	.ROLLER	1-145
2906116-0000	.SPRING	1-157, 1-159
2906117-0000	.SPRING	1-157, 1-159
2906118-0000	.LOWER SUPPORT ROLLERS	1-145
2906119-0000	.ROLLER	1-145
2906120-0000	.ROLLER	1-145

Part No	Description	Page No
2906121-0000	.ROLLER	1-145
2906135-0100	.TEMPLATE	1-7
2906170-0000	.HOLDER	1-205, 1-207, 1-209
2907726-0000	.VOLUME FLAP	1-195, 1-197, 1-199, 1-201, 1-203
2907727-0000	.VOLUME FLAP	1-219, 1-221, 1-223, 1-225
2907728-0200	.VOLUME FLAP	1-215, 1-227
2907729-0200	.VOLUME FLAP	1-189, 1-191, 1-377
2907732-0000	.CUTTING JAW	1-267, 1-269, 1-271, 1-273, 1-275, 1-277, 1-279, 1-281
2908756-0000	.VOLUME SHIM	1-171, 1-173, 1-175, 1-195, 1-197, 1-199, 1-201, 1-203, 1-219, 1-221, 1-223, 1-225
2909367-0000	.PRESSURE ROLLER (PACK 10)	1-157, 1-159, 1-171, 1-173, 1-175
2909368-0000	.PRESSURE ROLLER (PACK 10)	1-157, 1-159, 1-171, 1-173, 1-175
2909729-0000	.TEMPLATE	1-179, 1-181
2909730-0000	.TEMPLATE	1-179, 1-181
2910371-0000	.VOLUME FLAP	1-195, 1-197, 1-199, 1-201, 1-203
2911790-0000	.VOLUME CAM	1-289, 1-291
2911791-0000	.VOLUME CAM	1-289, 1-291
2912412-0000	.SUPPORT	1-315, 1-317, 1-319
2912413-0000	.GUIDE	1-315, 1-317, 1-319
2912414-0000	.GUIDE	1-315, 1-317, 1-319
2912419-0000	.BLOCK	1-323, 1-325
2912423-0000	.BLOCK	1-331, 1-333, 1-335, 1-337
2912424-0000	.PUSHER	1-331, 1-333, 1-335, 1-337, 1-379
2912425-0000	.BOTTOM	1-359, 1-361
2912426-0000	.FLAP	1-359, 1-361
2912427-0000	.PUSHER	1-331, 1-333, 1-335, 1-337, 1-379
2912437-0000	.NOZZLE	1-327, 1-329
2912438-0000	.NOZZLE	1-327, 1-329
2912440-0000	.NOZZLE	1-327, 1-329
2912441-0000	.PLATE	1-327, 1-329
2912442-0000	.PLATE	1-367, 1-369, 1-371, 1-373
2912637-0000	.ROLLER	1-137, 1-139, 1-141
2913350-0000	.SUPPORT RING	1-145
2914727-0000	.AXLE	1-195, 1-197, 1-199, 1-201, 1-203
2914728-0000	.SHAFT	1-195, 1-197, 1-199, 1-201, 1-203
2914729-0000	.SHAFT	1-195, 1-197, 1-199, 1-201, 1-203
2914730-0000	.ROLLER	1-195, 1-197, 1-199, 1-201, 1-203, 1-219, 1-221, 1-223, 1-225
2914808-0002	.PRESSURE FLANGE	1-157, 1-159
2914808-0003	.PRESSURE FLANGE	1-157, 1-159
2914860-0000	.VOLUME CAM	1-289, 1-291
2914861-0000	.VOLUME CAM	1-289, 1-291
2915798-0000	.RAIL	1-247, 1-249, 1-251
2916179-0000	.SHAFT	1-195, 1-197, 1-199, 1-201, 1-203, 1-219, 1-221, 1-223, 1-225
2916870-0000	.CARRIER	1-231, 1-233
2916871-0000	.BLOCK	1-231, 1-233, 1-235, 1-237
2916872-0000	.CARRIER	1-235, 1-237
2916873-0000	.CARRIER	1-239, 1-241
2916875-0000	.BLOCK	1-239, 1-241, 1-243, 1-245
2916876-0000	.CARRIER	1-243, 1-245
2916877-0000	.BUSBAR	1-265
2916878-0000	.BUSBAR	1-255
2916880-0000	.SUPPORT	1-247, 1-249, 1-251, 1-257, 1-259, 1-261
2916881-0000	.BEARING HOUSING	1-267, 1-269, 1-271, 1-273, 1-275, 1-277, 1-279, 1-281
2916883-0000	.HOLDER	1-205, 1-207, 1-209
2916887-0000	.SHAFT	1-195, 1-197, 1-199, 1-201, 1-203
2917498-0000	.INDUCTOR	1-171, 1-173, 1-175, 1-247, 1-249, 1-251, 1-257, 1-259, 1-261
2918693-0000	.WALL	1-315, 1-317, 1-319
2918694-0000	.WALL	1-315, 1-317, 1-319
2918697-0000	.GUIDE	1-315, 1-317, 1-319
2918698-0000	.GUIDE	1-315, 1-317, 1-319
2919057-0000	.FOLDING BAR	1-367, 1-369, 1-371, 1-373
2919058-0000	.FOLDING BAR	1-367, 1-369, 1-371, 1-373
2919059-0000	.FOLDING BAR	1-367, 1-369, 1-371, 1-373
2919060-0000	.FOLDING BAR	1-367, 1-369, 1-371, 1-373
2919188-0000	.VOLUME CAM	1-289, 1-291
2919189-0000	.VOLUME CAM	1-289, 1-291
2919303-0000	.VOLUME FLAP	1-195, 1-197, 1-199, 1-201, 1-203
2919304-0000	.VOLUME FLAP	1-195, 1-197, 1-199, 1-201, 1-203
2921028-0000	.FASTENING BRACKET	1-19, 1-23
2921029-0000	.FASTENING BRACKET	1-19, 1-23
2921571-0000	.SHAFT	1-195, 1-197, 1-199, 1-201, 1-203, 1-219, 1-221, 1-223, 1-225
2921574-0000	.PUSHER	1-171, 1-173, 1-175, 1-315, 1-317, 1-319
2922709-0001	.ROLLER	1-133, 1-135
2922709-0002	.TRIMMING ROLLER MINUS	1-183
2922709-0003	.TRIMMING ROLLER PLUS	1-183
2922717-0001	.ROLLER	1-133, 1-135
2922717-0002	.TRIMMING ROLLER MINUS	1-183
2922717-0003	.TRIMMING ROLLER PLUS	1-183
2922724-0000	.CLEANING PIPE	1-155
2922767-0001	.ROLLER	1-133, 1-135
2922767-0002	.TRIMMING ROLLER MINUS	1-183
2922767-0003	.TRIMMING ROLLER PLUS	1-183
2927573-0000	.OPENING SPECIFICATION	1-121
2927588-0000	.CUTTING JAW	1-267, 1-269, 1-271, 1-273, 1-275, 1-277, 1-279, 1-281
2927589-0000	.BRACKET	1-267, 1-269, 1-271, 1-273, 1-275, 1-277, 1-279, 1-281

Part No	Description	Page No
2927708-0000	.SEALING PLATE	1-91
2927709-0000	.SEALING PLATE	1-93
2930304-0000	.ROLLER	1-145
2931715-0000	.SPRING BRACKET	1-13, 1-15, 1-17
2932253-0000	.PRESSURE ROLLER (PACK 10)	1-157, 1-159, 1-171, 1-173, 1-175
2933520-0000	.SCREW	1-205, 1-207, 1-209, 1-217, 1-229
2934402-0000	.SLEEVE	1-247, 1-249, 1-251, 1-257, 1-259, 1-261
2934403-0000	.PISTON	1-247, 1-249, 1-251, 1-257, 1-259, 1-261
2939843-0000	.PIN	1-293
2941944-0000	.VOLUME BULGE	1-331, 1-333, 1-335, 1-337
2944475-0000	.RAIL	1-257, 1-259, 1-261
2945419-0000	.BRACKET	1-177
2945423-0000	.FLOAT	1-157, 1-159
2945429-0000	.RULER	1-177
2945430-0200	.PRESSURE FLANGE	1-7
2945431-0000	.BRACKET	1-147, 1-149, 1-151
2945432-0000	.BRACKET	1-147, 1-149, 1-151
2945443-0000	.ROLLER	1-127, 1-129
2945445-0000	.COUNTER ROLLER	1-133, 1-135
2945446-0001	.ROLLER	1-133, 1-135
2945446-0002	.TRIMMING ROLLER MINUS	1-183
2945446-0003	.TRIMMING ROLLER PLUS	1-183
2945447-0000	.ROLLER	1-137, 1-139, 1-141
2945448-0000	.ROLLER	1-137, 1-139, 1-141
2945449-0000	.ROLLER	1-137, 1-139, 1-141
2945450-0000	.ROLLER	1-137, 1-139, 1-141
2945451-0000	.ROLLER	1-137, 1-139, 1-141
2945452-0000	.ROLLER	1-137, 1-139, 1-141
2945453-0000	.ROLLER	1-137, 1-139, 1-141
2945456-0000	.PLATE	1-169
2945457-0000	.LOWER SUPPORT ROLLERS	1-145
2945458-0000	.PLATE	1-169
2945459-0000	.PLATE	1-169
2945461-0000	.STOPPER	1-177
2945462-0000	.STOPPER	1-177
2945463-0000	.BRACKET	1-177
2945466-0000	.COUNTER ROLLER	1-133, 1-135
2945467-0001	.ROLLER	1-133, 1-135
2945467-0002	.TRIMMING ROLLER MINUS	1-183
2945467-0003	.TRIMMING ROLLER PLUS	1-183
2945469-0001	.ROLLER	1-133, 1-135
2945469-0002	.TRIMMING ROLLER MINUS	1-183
2945469-0003	.TRIMMING ROLLER PLUS	1-183
2947183-0000	.RAIL	1-247, 1-249, 1-251, 1-257, 1-259, 1-261
2947184-0000	.BEARING HOUSING	1-267, 1-269, 1-271, 1-273, 1-275, 1-277, 1-279, 1-281
2947185-0000	.HOLDER	1-205, 1-207, 1-209
2947186-0000	.VOLUME FLAP	1-195, 1-197, 1-199, 1-201, 1-203
2947187-0000	.VOLUME FLAP	1-195, 1-197, 1-199, 1-201, 1-203
2947531-0000	.ROLLER	1-293
2947655-0000	.LABEL	1-57, 1-59, 1-61
2947787-0000	.VOLUME BULGE	1-195, 1-197, 1-199, 1-201, 1-203
2947788-0000	.VOLUME SHIM	1-195, 1-197, 1-199, 1-201, 1-203
2949862-0004	.DOLLY	1-171, 1-173, 1-175, 1-267, 1-269, 1-271, 1-273, 1-275, 1-277, 1-279, 1-281
2949914-0000	.BLOCK	1-323, 1-325
2949915-0000	.PLATE	1-327, 1-329
2949916-0000	.FOLDING BAR	1-367, 1-369, 1-371, 1-373
2949917-0000	.FOLDING BAR	1-367, 1-369, 1-371, 1-373
2949918-0000	.FOLDING BAR	1-367, 1-369, 1-371, 1-373
2949919-0000	.FOLDING BAR	1-367, 1-369, 1-371, 1-373
2949920-0000	.NOZZLE	1-327, 1-329
2949921-0000	.NOZZLE	1-327, 1-329
2949922-0000	.NOZZLE	1-327, 1-329
2949923-0000	.FLAP	1-359, 1-361
2949924-0000	.BOTTOM	1-359, 1-361
2949925-0000	.BLOCK	1-331, 1-333, 1-335, 1-337
2949926-0000	.PUSHER	1-331, 1-333, 1-335, 1-337
2949928-0000	.GUIDE	1-315, 1-317, 1-319
2949929-0000	.GUIDE	1-315, 1-317, 1-319
2950886-0000	.RAIL	1-247, 1-249, 1-251
2950887-0000	.RAIL	1-257, 1-259, 1-261
2950888-0000	.BEARING HOUSING	1-267, 1-269, 1-271, 1-273, 1-275, 1-277, 1-279, 1-281
2950889-0000	.CARRIER RULER	1-267, 1-269, 1-271, 1-273
2950890-0000	.CARRIER RULER	1-267, 1-269, 1-271, 1-273
2950891-0000	.ADJUSTING SCREW	1-267, 1-269, 1-271, 1-273, 1-275, 1-277, 1-279, 1-281
2950892-0000	.CUTTING JAW	1-267, 1-269, 1-271, 1-273, 1-275, 1-277, 1-279, 1-281
2950893-0000	.CARRIER	1-267, 1-269, 1-271, 1-273, 1-275, 1-277, 1-279, 1-281
2950894-0000	.CARRIER	1-267, 1-269, 1-271, 1-273, 1-275, 1-277, 1-279, 1-281
2950895-0000	.CARRIER RULER	1-275, 1-277, 1-279, 1-281
2950896-0000	.CARRIER RULER	1-275, 1-277, 1-279, 1-281
2950897-0000	.ROLLER	1-293
2950898-0000	.VOLUME CAM	1-289, 1-291
2950899-0000	.VOLUME CAM	1-289, 1-291
2950900-0000	.HOLDER	1-205, 1-207, 1-209
2950901-0000	.VOLUME FLAP	1-195, 1-197, 1-199, 1-201, 1-203

Part No	Description	Page No
2950902-0000	.VOLUME SHIM	1-171, 1-173, 1-175, 1-195, 1-197, 1-199, 1-201, 1-203
2950908-0000	.VOLUME FLAP	1-219, 1-221, 1-223, 1-225
2950910-0000	.TENSION SPRING	1-205, 1-207, 1-209
2950996-0000	.ROLLER	1-293
2951583-0200	.OUTER PATCH MAGAZINE	1-13, 1-15, 1-17
2951584-0000	.PROTECTION	1-57, 1-59, 1-61
2954994-0000	.VOLUME FLAP	1-195, 1-197, 1-199, 1-201, 1-203
2956875-0000	.DIE	1-85
2956876-0000	.PUNCH	1-85
2958511-0000	.VOLUME FLAP	1-195, 1-197, 1-199, 1-201, 1-203
2958512-0000	.VOLUME FLAP	1-195, 1-197, 1-199, 1-201, 1-203
2959274-0000	.ROLLER	1-293
2959868-0000	.TENSION SPRING	1-205, 1-207, 1-209, 1-213, 1-217, 1-229
2959957-0001	.HOLDER	1-217
2959957-0002	.HOLDER	1-213
2959957-0003	.HOLDER	1-229
2959957-0004	.HOLDER	1-205, 1-207, 1-209
2960530-0000	.TEMPLATE	1-179, 1-181
2960531-0000	.TEMPLATE	1-179, 1-181
2961517-0000	.BRACKET	1-301
2961518-0000	.PIPE	1-301
2961519-0000	.PIPE	1-301
2961520-0001	.BRACKET	1-293
2961520-0002	.BRACKET	1-293
2961520-0003	.BRACKET	1-293
2961520-0004	.BRACKET	1-293
2961521-0100	.NOZZLE	1-299
2961522-0100	.TUBE FLUSHING	1-189, 1-191
2962050-0000	.CARRIER	1-235, 1-237
2962051-0000	.CARRIER	1-231, 1-233
2962052-0000	.CARRIER	1-239, 1-241
2962053-0000	.CARRIER	1-243, 1-245
2962055-0000	.BEARING HOUSING	1-267, 1-269, 1-271, 1-273, 1-275, 1-277, 1-279, 1-281
2962114-0000	.GUIDE	1-315, 1-317, 1-319
2962115-0000	.GUIDE	1-315, 1-317, 1-319
2962117-0000	.GUIDE	1-315, 1-317, 1-319
2962119-0000	.BLOCK	1-323, 1-325
2962125-0000	.BLOCK	1-331, 1-333, 1-335, 1-337
2962126-0000	.PUSHER	1-331, 1-333, 1-335, 1-337, 1-379
2962127-0000	.GUIDE	1-315, 1-317, 1-319
2962128-0000	.FLAP	1-359, 1-361
2962129-0000	.BOTTOM	1-359, 1-361
2962130-0000	.NOZZLE	1-327, 1-329
2962133-0000	.PLATE	1-305, 1-307
2963819-0200	.OUTER PATCH APPLICATOR	1-13, 1-15, 1-17
2963820-0200	.MOUNTING BRACKET	1-23
2964307-0000	.ROLLER	1-293
2964389-0000	.VOLUME FLAP	1-195, 1-197, 1-199, 1-201, 1-203
2964390-0000	.VOLUME FLAP	1-195, 1-197, 1-199, 1-201, 1-203
2964391-0000	.VOLUME FLAP	1-219, 1-221, 1-223, 1-225
2964541-0000	.SHAFT	1-195, 1-197, 1-199, 1-201, 1-203, 1-219, 1-221, 1-223, 1-225
2964542-0000	.SHAFT	1-195, 1-197, 1-199, 1-201, 1-203, 1-219, 1-221, 1-223, 1-225
2964566-0000	.SUPPORT	1-247, 1-249, 1-251, 1-257, 1-259, 1-261
2964567-0000	.BLOCK	1-239, 1-241, 1-243, 1-245
2965109-0001	.HOLDER	1-217
2965109-0002	.HOLDER	1-213
2965109-0003	.HOLDER	1-229
2965109-0004	.HOLDER	1-205, 1-207, 1-209
2965110-0000	.3UTTING JAW	1-267, 1-269, 1-271, 1-273, 1-275, 1-277, 1-279, 1-281
2966463-0000	.SCREW	1-205, 1-207, 1-209, 1-213, 1-217, 1-229
2966464-0200	.SHOCK ABSORBER	1-215
2966465-0200	.VOLUME FLAP	1-189, 1-191, 1-377
2966466-0200	.SHOCK ABSORBER	1-211
2966467-0200	.VOLUME FLAP	1-189, 1-191, 1-377
2966468-0200	.SHOCK ABSORBER	1-227
2966587-0000	.FOLDING BAR	1-367, 1-369, 1-371, 1-373
2966588-0000	.FOLDING BAR	1-367, 1-369, 1-371, 1-373
2966589-0000	.FOLDING BAR	1-367, 1-369, 1-371, 1-373
2966590-0000	.FOLDING BAR	1-367, 1-369, 1-371, 1-373
2966591-0000	.PUSHER	1-171, 1-173, 1-175, 1-339, 1-341, 1-343
2966592-0000	.SUPPORT	1-351
2966593-0000	.BRACKET	1-351
2966594-0000	.BRACKET	1-351
2966595-0000	.PUSHER	1-331, 1-333, 1-335, 1-337, 1-379
2966596-0000	.FLAP	1-359, 1-361
2966598-0000	.COUNTER ROLLER	1-133, 1-135
2966599-0001	.ROLLER	1-133, 1-135
2966599-0002	.TRIMMING ROLLER MINUS	1-183
2966599-0003	.TRIMMING ROLLER PLUS	1-183
2966601-0000	.COUNTER ROLLER	1-133, 1-135
2966602-0001	.ROLLER	1-133, 1-135
2966602-0002	.TRIMMING ROLLER MINUS	1-183
2966602-0003	.TRIMMING ROLLER PLUS	1-183
2966604-0000	.COUNTER ROLLER	1-133, 1-135

Part No	Description	Page No
2966605-0001	.ROLLER	1-133, 1-135
2966605-0002	.TRIMMING ROLLER MINUS	1-183
2966605-0003	.TRIMMING ROLLER PLUS	1-183
2966612-0000	.ROLLER	1-137, 1-139, 1-141
2966613-0000	.ROLLER	1-137, 1-139, 1-141
2966614-0000	.ROLLER	1-137, 1-139, 1-141
2966615-0000	.ROLLER	1-137, 1-139, 1-141
2966627-0000	.ROLLER	1-127, 1-129
2966629-0000	.ROLLER	1-127, 1-129
2966639-0000	.UPPER FILLING TUBE	1-157, 1-159
2966640-0000	.LOWER FILLING TUBE	1-157, 1-159
2966641-0000	.PRESSURE FLANGE	1-157, 1-159
2966644-0000	.LOWER FILLING TUBE	1-157, 1-159
2966645-0000	.LOWER FILLING TUBE	1-157, 1-159
2966646-0000	.PRESSURE FLANGE	1-157, 1-159
2966647-0000	.UPPER FILLING TUBE	1-157, 1-159
2966648-0000	.UPPER FILLING TUBE	1-157, 1-159
2966649-0000	.FORK	1-157, 1-159
2966651-0000	.CLEANING PIPE	1-155
2966652-0000	.PLATE	1-169
2966653-0000	.LOWER FILLING TUBE	1-157, 1-159
2966654-0000	.LOWER FILLING TUBE	1-157, 1-159
2966656-0000	.LOWER FILLING TUBE	1-157, 1-159
2966660-0000	.PRESSURE FLANGE	1-157, 1-159
2966672-0000	.UPPER FILLING TUBE	1-157, 1-159
2966681-0000	.PRESSURE FLANGE	1-9
2966682-0000	.PRESSURE FLANGE	1-9
2966683-0000	.PRESSURE FLANGE	1-9
2966688-0000	.PRESSURE FLANGE	1-9
2966689-0000	.PRESSURE FLANGE	1-9
2966691-0000	.PRESSURE FLANGE	1-9
2969725-0001	.ROLLER (STANDARD SIZE)	1-133, 1-135
2969725-0002	.TRIMMING ROLLER MINUS	1-183
2969725-0003	.TRIMMING ROLLER PLUS	1-183
2969939-0000	.COUNTER ROLLER	1-133, 1-135
2970443-0000	.ROLLER	1-127, 1-129
2970615-0000	.BEARING HOUSING	1-267, 1-269, 1-271, 1-273, 1-275, 1-277, 1-279, 1-281
2971544-0000	.INDUCTOR	1-95
2971768-0000	.PLATE	1-327, 1-329
2971940-0000	.VOLUME BULGE	1-195, 1-197, 1-199, 1-201, 1-203, 1-219, 1-221, 1-223, 1-225
2973927-0000	.FOLDING BAR	1-367, 1-369, 1-371, 1-373
2973928-0000	.FOLDING BAR	1-367, 1-369, 1-371, 1-373
2974071-0200	.VOLUME CONVERSION KIT NOQC	1-3
2974072-0200	.VOLUME CONVERSION KIT QC	1-3
2974073-0100	.FINAL FOLDER	1-375
2974074-0100	.SPACER	1-163
2975162-0000	.CUTTING RAIL	1-267, 1-269, 1-271, 1-273, 1-275, 1-277, 1-279, 1-281
2975930-0000	.INDUCTOR	1-171, 1-173, 1-175, 1-247, 1-249, 1-251, 1-257, 1-259, 1-261
2976256-0000	.ROLLER	1-145
2976821-0000	.RAIL	1-247, 1-249, 1-251, 1-257, 1-259, 1-261
2976822-0000	.BEARING HOUSING	1-267, 1-269, 1-271, 1-273, 1-275, 1-277, 1-279, 1-281
2976823-0000	.CARRIER	1-267, 1-269, 1-271, 1-273, 1-275, 1-277, 1-279, 1-281
2976824-0000	.CARRIER RULER	1-267, 1-269, 1-271, 1-273
2976825-0000	.CARRIER RULER	1-267, 1-269, 1-271, 1-273
2976826-0000	.FOLDING FLAP	1-267, 1-269, 1-271, 1-273, 1-275, 1-277, 1-279, 1-281
2976827-0000	.FOLDING FLAP	1-267, 1-269, 1-271, 1-273, 1-275, 1-277, 1-279, 1-281
2976828-0000	.CARRIER RULER	1-275, 1-277, 1-279, 1-281
2976829-0000	.CARRIER RULER	1-275, 1-277, 1-279, 1-281
2976830-0001	.HOLDER	1-217
2976830-0002	.HOLDER	1-213
2976830-0003	.HOLDER	1-229
2976830-0004	.HOLDER	1-205, 1-207, 1-209
2976916-0000	.VOLUME FLAP	1-195, 1-197, 1-199, 1-201, 1-203
2976920-0000	.SHAFT	1-195, 1-197, 1-199, 1-201, 1-203, 1-219, 1-221, 1-223, 1-225
2976921-0000	.VOLUME FLAP	1-195, 1-197, 1-199, 1-201, 1-203
2976923-0000	.SHAFT	1-195, 1-197, 1-199, 1-201, 1-203
2976932-0000	.NOZZLE	1-327, 1-329
2976945-0200	.BOX 1 NOQC	1-5
2976946-0200	.BOX 2 NOQC	1-5
2976949-0000	.GUIDE	1-315, 1-317, 1-319
2976950-0000	.GUIDE	1-315, 1-317, 1-319
2976953-0000	.FOLDING BAR	1-367, 1-369, 1-371, 1-373
2976954-0000	.FOLDING BAR	1-367, 1-369, 1-371, 1-373
2976960-0000	.BLOCK	1-323, 1-325
2976961-0000	.FLAP	1-359, 1-361, 1-365, 1-379
2976962-0000	.BOTTOM	1-365
2976963-0000	.PLATE	1-327, 1-329
2976964-0000	.FLAP	1-359, 1-361, 1-365, 1-379
2976965-0000	.PLATE	1-305, 1-307
2977491-0000	.GUIDE	1-315, 1-317, 1-319
2977492-0000	.GUIDE	1-315, 1-317, 1-319
2977495-0000	.WALL	1-315, 1-317, 1-319
2977496-0000	.WALL	1-315, 1-317, 1-319
2977544-0000	.SHIM	1-171, 1-173, 1-175, 1-195, 1-197, 1-199, 1-201, 1-203

Part No	Description	Page No
2977545-0000	.VOLUME BULGE	1-195, 1-197, 1-199, 1-201, 1-203
2977884-0000	.VOLUME CAM	1-289, 1-291
2977885-0000	.VOLUME CAM	1-289, 1-291
2978920-0000	.CARRIER RULER	1-267, 1-269, 1-271, 1-273
2978921-0000	.CARRIER RULER	1-275, 1-277, 1-279, 1-281
2978922-0000	.FLAP	1-359, 1-361
2979699-0000	.LID	1-247, 1-249, 1-251, 1-257, 1-259, 1-261
2979711-0000	.VOLUME BULGE	1-195, 1-197, 1-199, 1-201, 1-203, 1-219, 1-221, 1-223, 1-225
2980067-0000	.FLAP	1-359, 1-361
2983395-0000	.NOZZLE	1-327, 1-329
2983847-0000	.SPACER	1-305, 1-307
2983848-0000	.SHAFT	1-305, 1-307
2984535-0100	.OPENING SPECIFICATION	1-11
2984539-0100	.TAB FEEDER	1-13, 1-15, 1-17
2984541-0100	.TAB C'JAW	1-13, 1-15, 1-17
2984544-0100	.PATCH C'JAW	1-13, 1-15, 1-17
2984839-0000	.NOZZLE	1-327, 1-329
2985491-0000	.SHIM	1-315, 1-317, 1-319
2985870-0000	.VOLUME CAM	1-289, 1-291
2985871-0000	.VOLUME CAM	1-289, 1-291
2986078-0000	.NOZZLE	1-327, 1-329
2986698-0001	.ROLLER	1-133, 1-135
2986698-0002	.TRIMMING ROLLER MINUS	1-183
2986698-0003	.TRIMMING ROLLER PLUS	1-183
2986699-0000	.COUNTER ROLLER	1-133, 1-135
2986702-0000	.LOWER FILLING TUBE	1-157, 1-159
2986705-0000	.LOWER FILLING TUBE	1-157, 1-159
2986706-0000	.PRESSURE FLANGE	1-157, 1-159
2986710-0000	.AIR NOZZLE	1-153
2986711-0000	.HEAT GUARD	1-153
2986716-0000	.LOWER SUPPORT ROLLERS	1-145
2986723-0000	.RULER	1-177
2986733-0000	.LOWER FILLING TUBE	1-157, 1-159
2986735-0000	.ROLL	1-137, 1-139, 1-141
2986736-0000	.ROLL	1-137, 1-139, 1-141
2986739-0000	.ROLLER	1-145
2986740-0000	.LOWER SUPPORT ROLLERS	1-145
2986772-0000	.ROLLER	1-145
2986773-0000	.ROLLER	1-145
2986774-0000	.ROLLER	1-145
2986776-0000	.SUPPORT RING	1-145
2986989-0000	.VOLUME CAM	1-289, 1-291
2986990-0000	.VOLUME CAM	1-289, 1-291
2987091-0000	.FOLDING BAR	1-367, 1-369, 1-371, 1-373
2987092-0000	.FOLDING BAR	1-367, 1-369, 1-371, 1-373
2987093-0000	.FOLDING BAR	1-367, 1-369, 1-371, 1-373
2987094-0000	.FOLDING BAR	1-367, 1-369, 1-371, 1-373
2987095-0000	.GUIDE	1-315, 1-317, 1-319
2987096-0000	.GUIDE	1-315, 1-317, 1-319
2987097-0000	.GUIDE	1-315, 1-317, 1-319
2987098-0000	.GUIDE	1-315, 1-317, 1-319
2987099-0000	.PLATE	1-327, 1-329
2987100-0000	.BLOCK	1-323, 1-325
2987101-0000	.FLAP	1-359, 1-361
2987102-0000	.BOTTOM	1-359, 1-361
2987105-0000	.BLOCK	1-331, 1-333, 1-335, 1-337
2987109-0000	.PUSHER	1-331, 1-333, 1-335, 1-337
2987110-0000	.PUSHER	1-331, 1-333, 1-335, 1-337
2988050-0000	.BOX QC	1-375
2988051-0000	.BOX 1 NOQC	1-7
2988052-0000	.BOX 2 NOQC	1-185
2990873-0000	.NOZZLE	1-327, 1-329
2991044-0000	.STOP SCREW	1-205, 1-207, 1-209
2992259-0000	.OPENING SPECIFICATION	1-121
2992940-0000	.CARRIER	1-195, 1-197, 1-199, 1-201, 1-203
2992941-0000	.STOP	1-195, 1-197, 1-199, 1-201, 1-203, 1-219, 1-221, 1-223, 1-225
2993250-0000	.CARRIER	1-195, 1-197, 1-199, 1-201, 1-203
2993461-0000	.STOP	1-205, 1-207, 1-209
2993462-0000	.GUIDE	1-315, 1-317, 1-319
2993463-0000	.GUIDE	1-315, 1-317, 1-319
2994819-0000	.STOP SCREW	1-367, 1-369, 1-371, 1-373
2995020-0000	.SEALING PLATE	1-91
2998006-0000	.RAIL HOLDER	1-353
2998104-0000	.FOLDING BAR	1-367, 1-369, 1-371, 1-373
2998105-0000	.FOLDING BAR	1-367, 1-369, 1-371, 1-373
2998106-0000	.FOLDING BAR	1-367, 1-369, 1-371, 1-373
2998107-0000	.PLATE	1-327, 1-329
2998108-0000	.PUSHER	1-331, 1-333, 1-335, 1-337
2999019-0000	.FLOAT	1-157, 1-159
2999197-0100	.RAIL HOLDER	1-339, 1-341, 1-343, 1-355
2999199-0100	.RAILING	1-339, 1-341, 1-343
3000073-0000	.VOLUME BULGE	1-195, 1-197, 1-199, 1-201, 1-203
3002051-0000	.GUIDE	1-315, 1-317, 1-319
3002052-0000	.GUIDE	1-315, 1-317, 1-319

Part No	Description	Page No
3002053-0000	.WALL	1-315, 1-317, 1-319
3002054-0000	.WALL	1-315, 1-317, 1-319
3002255-0000	.VOLUME BULGE	1-195, 1-197, 1-199, 1-201, 1-203
3002257-0000	.VOLUME SHIM	1-171, 1-173, 1-175, 1-195, 1-197, 1-199, 1-201, 1-203
3002693-0000	.WALL	1-315, 1-317, 1-319
3002694-0000	.WALL	1-315, 1-317, 1-319
3002880-0000	.BEARING HOUSING	1-247, 1-249, 1-251, 1-257, 1-259, 1-261
3002881-0000	.BEARING HOUSING	1-267, 1-269, 1-271, 1-273, 1-275, 1-277, 1-279, 1-281
3002882-0000	.CUTTING JAW	1-267, 1-269, 1-271, 1-273, 1-275, 1-277, 1-279, 1-281
3002883-0000	.FOLDING FLAP	1-267, 1-269, 1-271, 1-273, 1-275, 1-277, 1-279, 1-281
3002884-0000	.FOLDING FLAP	1-267, 1-269, 1-271, 1-273, 1-275, 1-277, 1-279, 1-281
3002885-0000	.CARRIER RULER	1-267, 1-269, 1-271, 1-273
3002886-0000	.CARRIER RULER	1-267, 1-269, 1-271, 1-273
3002887-0000	.CARRIER RULER	1-275, 1-277, 1-279, 1-281
3002888-0000	.CARRIER RULER	1-275, 1-277, 1-279, 1-281
3002889-0000	.VOLUME FLAP	1-195, 1-197, 1-199, 1-201, 1-203
3002890-0001	.HOLDER	1-217
3002890-0002	.HOLDER	1-213
3002890-0003	.HOLDER	1-229
3002890-0004	.HOLDER	1-205, 1-207, 1-209
3002891-0000	.CARRIER	1-195, 1-197, 1-199, 1-201, 1-203, 1-219, 1-221, 1-223, 1-225
3002893-0000	.SHAFT	1-195, 1-197, 1-199, 1-201, 1-203, 1-219, 1-221, 1-223, 1-225
3002894-0000	.CARRIER	1-195, 1-197, 1-199, 1-201, 1-203, 1-219, 1-221, 1-223, 1-225
3003477-0000	.VOLUME FLAP	1-219, 1-221, 1-223, 1-225
3003484-0000	.INDUCTOR	1-95
3003494-0000	.SCREW	1-205, 1-207, 1-209
3003860-0000	.SHAFT	1-195, 1-197, 1-199, 1-201, 1-203, 1-219, 1-221, 1-223, 1-225
3003861-0000	.SCREW	1-205, 1-207, 1-209, 1-213, 1-217, 1-229
3003862-0000	.VOLUME BULGE	1-195, 1-197, 1-199, 1-201, 1-203, 1-219, 1-221, 1-223, 1-225
3003863-0000	.VOLUME SHIM	1-171, 1-173, 1-175, 1-195, 1-197, 1-199, 1-201, 1-203, 1-219, 1-221, 1-223, 1-225
3005112-0000	.ROLLER	1-137, 1-139, 1-141
3005196-0000	.FOLDING BAR	1-367, 1-369, 1-371, 1-373
3005197-0000	.FLAP	1-359, 1-361
3006048-0000	.VOLUME BULGE	1-267, 1-269, 1-271, 1-273, 1-275, 1-277, 1-279, 1-281
3006049-0000	.VOLUME BULGE	1-247, 1-249, 1-251, 1-257, 1-259, 1-261
3006309-0001	.ROLLER	1-133, 1-135
3006309-0002	.TRIMMING ROLLER MINUS	1-183
3006309-0003	.TRIMMING ROLLER PLUS	1-183
3006310-0000	.ROLLER	1-133, 1-135
3007781-0000	.STOP	1-195, 1-197, 1-199, 1-201, 1-203, 1-219, 1-221, 1-223, 1-225
3007870-0000	.VOLUME CAM	1-289, 1-291
3007871-0000	.VOLUME CAM	1-289, 1-291
3009960-0000	.ROLL	1-161
3010701-0000	.FOLDING BAR	1-367, 1-369, 1-371, 1-373
3010702-0000	.FOLDING BAR	1-367, 1-369, 1-371, 1-373
3010750-0001	.HOLDER	1-217
3010750-0002	.HOLDER	1-213
3010750-0003	.HOLDER	1-229
3010750-0004	.HOLDER	1-205, 1-207, 1-209
3010751-0000	.VOLUME FLAP	1-195, 1-197, 1-199, 1-201, 1-203
3010752-0000	.CARRIER	1-195, 1-197, 1-199, 1-201, 1-203
3010753-0000	.CARRIER	1-195, 1-197, 1-199, 1-201, 1-203
3010754-0000	.STOP	1-195, 1-197, 1-199, 1-201, 1-203
3010755-0000	.VOLUME BULGE	1-195, 1-197, 1-199, 1-201, 1-203
3010756-0000	.VOLUME SHIM	1-171, 1-173, 1-175, 1-195, 1-197, 1-199, 1-201, 1-203
3010757-0000	.BEARING HOUSING	1-267, 1-269, 1-271, 1-273, 1-275, 1-277, 1-279, 1-281
3010758-0000	.FOLDING FLAP	1-267, 1-269, 1-271, 1-273, 1-275, 1-277, 1-279, 1-281
3010759-0000	.FOLDING FLAP	1-267, 1-269, 1-271, 1-273, 1-275, 1-277, 1-279, 1-281
3010760-0000	.CARRIER RULER	1-267, 1-269, 1-271, 1-273
3010761-0000	.CARRIER RULER	1-267, 1-269, 1-271, 1-273
3010762-0000	.CARRIER RULER	1-275, 1-277, 1-279, 1-281
3010763-0000	.CARRIER RULER	1-275, 1-277, 1-279, 1-281
3012782-0000	.SUPPORT	1-247, 1-249, 1-251, 1-257, 1-259, 1-261
3013509-0000	.SHAFT	1-267, 1-269, 1-271, 1-273, 1-275, 1-277, 1-279, 1-281
3013512-0000	.SHAFT	1-267, 1-269, 1-271, 1-273, 1-275, 1-277, 1-279, 1-281
3013513-0000	.CARRIER	1-239, 1-241
3013514-0000	.CARRIER	1-243, 1-245
3013549-0000	.STOPPER	1-177
3013550-0000	.STOPPER	1-177
3013566-0000	.SCREW	1-205, 1-207, 1-209, 1-213, 1-217, 1-229
3014067-0000	.WALL	1-367, 1-369, 1-371, 1-373
3014068-0000	.WALL	1-367, 1-369, 1-371, 1-373
3014069-0000	.FOLDING BAR	1-367, 1-369, 1-371, 1-373
3014070-0000	.FOLDING BAR	1-367, 1-369, 1-371, 1-373
3014099-0000	.VOLUME CAM	1-289, 1-291
3014100-0000	.VOLUME CAM	1-289, 1-291
3015758-0000	.WALL	1-315, 1-317, 1-319
3015759-0000	.WALL	1-315, 1-317, 1-319
3015761-0000	.GUIDE	1-315, 1-317, 1-319
3015762-0000	.PUSHER	1-331, 1-333, 1-335, 1-337, 1-379
3015763-0000	.FOLDING BAR	1-367, 1-369, 1-371, 1-373
3015764-0000	.FOLDING BAR	1-367, 1-369, 1-371, 1-373
3015765-0000	.FOLDING BAR	1-367, 1-369, 1-371, 1-373
3015766-0000	.FOLDING BAR	1-367, 1-369, 1-371, 1-373

Part No	Description	Page No
3016921-0000	.FLAP	1-359, 1-361
3016922-0000	.BOTTOM	1-359, 1-361
3017845-0000	.FOLDING DEVICE	1-305, 1-307
3017846-0000	.FOLDING DEVICE	1-305, 1-307
3017847-0000	.LEVER	1-305, 1-307
3017848-0000	.SHAFT	1-305, 1-307
3017849-0000	.PLATE	1-367, 1-369, 1-371, 1-373
3017850-0000	.SCREW	1-305, 1-307
3017851-0000	.AXLE PIN	1-305, 1-307
3017852-0000	.SPACER	1-305, 1-307
3017891-0000	.SPRING BRACKET	1-19, 1-53
3018830-0000	.GUIDE	1-315, 1-317, 1-319
3018882-0000	.SUPPORT	1-205, 1-207, 1-209, 1-213, 1-217, 1-229
3019291-0000	.FLAP	1-359, 1-361
3019316-0000	.SHIM	1-171, 1-173, 1-175, 1-195, 1-197, 1-199, 1-201, 1-203
3019317-0000	.SHIM	1-171, 1-173, 1-175, 1-195, 1-197, 1-199, 1-201, 1-203
3019782-0000	.FOLDING BAR	1-367, 1-369, 1-371, 1-373
3019783-0000	.FOLDING BAR	1-367, 1-369, 1-371, 1-373
3019892-0000	.DIE	1-85
3019893-0000	.PUNCH	1-85
3019927-0000	.SEALING PLATE	1-93
3020016-0000	.SUPPORT	1-315, 1-317, 1-319
3020453-0000	.GUIDE	1-315, 1-317, 1-319
3020454-0000	.GUIDE	1-315, 1-317, 1-319
3021604-0000	.SEAL RING	1-127, 1-129
3021605-0000	.SEAL RING	1-127, 1-129
3021606-0000	.SEAL RING	1-127, 1-129
3022266-0000	.SUPPORT	1-247, 1-249, 1-251, 1-257, 1-259, 1-261
3022267-0001	.HOLDER	1-217
3022267-0002	.HOLDER	1-213
3022267-0003	.HOLDER	1-229
3022267-0004	.HOLDER	1-205, 1-207, 1-209
3022268-0000	.SCREW	1-205, 1-207, 1-209, 1-213, 1-217, 1-229
3022269-0000	.SCREW	1-205, 1-207, 1-209, 1-213, 1-217, 1-229
3022271-0000	.CARRIER	1-195, 1-197, 1-199, 1-201, 1-203
3022272-0000	.CARRIER	1-195, 1-197, 1-199, 1-201, 1-203
3022273-0000	.SCREW	1-195, 1-197, 1-199, 1-201, 1-203, 1-219, 1-221, 1-223, 1-225
3022275-0000	.STOP	1-195, 1-197, 1-199, 1-201, 1-203
3022276-0000	.VOLUME SHIM	1-171, 1-173, 1-175, 1-195, 1-197, 1-199, 1-201, 1-203
3022278-0000	.VOLUME BULGE	1-195, 1-197, 1-199, 1-201, 1-203
3022594-0000	.PRESSURE FLANGE	1-157, 1-159
3022743-0000	.STOP	1-205, 1-207, 1-209, 1-213
3022744-0000	.SEALING PLATE	1-21
3023522-0000	.SEAL RING	1-127, 1-129
3023523-0000	.SEAL RING	1-127, 1-129
3023524-0000	.SEAL RING	1-127, 1-129
3023659-0000	.SEAL RING	1-127, 1-129
3024046-0000	.HOLDER	1-195, 1-197, 1-199, 1-201, 1-203, 1-205, 1-207, 1-209
3024345-0000	.VOLUME FLAP	1-195, 1-197, 1-199, 1-201, 1-203
3024498-0000	.GUIDE	1-315, 1-317, 1-319
3024499-0000	.GUIDE	1-315, 1-317, 1-319
3024500-0000	.WALL	1-315, 1-317, 1-319
3024501-0000	.WALL	1-315, 1-317, 1-319
3027694-0000	.FOLDING DEVICE	1-305, 1-307
3027695-0000	.FOLDING DEVICE	1-305, 1-307
3031464-0000	.BLOCK	1-331, 1-333, 1-335, 1-337
3031785-0000	.WALL	1-367, 1-369, 1-371, 1-373
3031786-0000	.WALL	1-367, 1-369, 1-371, 1-373
3033710-0000	.VOLUME CAM	1-289, 1-291
3033711-0000	.VOLUME CAM	1-289, 1-291
3033995-0000	.CUTTING JAW	1-267, 1-269, 1-271, 1-273, 1-275, 1-277, 1-279, 1-281
3033996-0000	.CUTTING RAIL	1-267, 1-269, 1-271, 1-273, 1-275, 1-277, 1-279, 1-281
3035454-0000	.VOLUME BULGE	1-267, 1-269, 1-271, 1-273, 1-275, 1-277, 1-279, 1-281
3035991-0000	.BRACKET	1-49
3037861-0000	.SHAFT	1-161
3037862-0000	.ROLLER	1-161
3037924-0000	.ROLLER	1-137, 1-139, 1-141
3037925-0000	.ROLLER	1-137, 1-139, 1-141
3037926-0000	.ROLLER	1-137, 1-139, 1-141
3037929-0000	.FOLDING BAR	1-367, 1-369, 1-371, 1-373
3037930-0000	.FOLDING BAR	1-367, 1-369, 1-371, 1-373
3037931-0000	.WALL	1-367, 1-369, 1-371, 1-373
3037932-0000	.WALL	1-367, 1-369, 1-371, 1-373
3037955-0000	.PUSHER	1-171, 1-173, 1-175, 1-315, 1-317, 1-319
3038087-0000	.KEY	1-43
3039513-0100	.SUPPORT	1-339, 1-341, 1-343
3039514-0100	.SUPPORT	1-339, 1-341, 1-343
3040850-0000	.TENSION SPRING	1-205, 1-207, 1-209, 1-213, 1-217, 1-229
3042196-0100	.OUTER PATCH FEEDER	1-23
3042197-0100	.OUTER PATCH FEEDER	1-31
3042504-0000	.NUT	1-195, 1-197, 1-199, 1-201, 1-203, 1-205, 1-207, 1-209
3042505-0000	.SUPPORT	1-205, 1-207, 1-209
3042518-0000	.SUPPORT	1-195, 1-197, 1-199, 1-201, 1-203
3042519-0000	.STOP	1-195, 1-197, 1-199, 1-201, 1-203

Part No	Description	Page No
3042521-0000	.STOP	1-195, 1-197, 1-199, 1-201, 1-203, 1-219, 1-221, 1-223, 1-225
3042522-0000	.STOP	1-195, 1-197, 1-199, 1-201, 1-203
3042523-0000	.STOP	1-195, 1-197, 1-199, 1-201, 1-203
3042525-0000	.CARRIER	1-195, 1-197, 1-199, 1-201, 1-203
3042526-0000	.CARRIER	1-195, 1-197, 1-199, 1-201, 1-203
3042527-0000	.CARRIER	1-195, 1-197, 1-199, 1-201, 1-203
3042528-0000	.CARRIER	1-195, 1-197, 1-199, 1-201, 1-203, 1-219, 1-221, 1-223, 1-225
3042529-0000	.CARRIER	1-195, 1-197, 1-199, 1-201, 1-203
3042530-0000	.CARRIER	1-195, 1-197, 1-199, 1-201, 1-203
3043672-0100	.FLAP	1-359, 1-361, 1-379
3044462-0000	.ARCH	1-339, 1-341, 1-343
3044463-0000	.ARCH	1-339, 1-341, 1-343
3044527-0000	.INDUCTOR	1-171, 1-173, 1-175, 1-247, 1-249, 1-251, 1-257, 1-259, 1-261
3045542-0000	.GUIDE	1-315, 1-317, 1-319
3045543-0000	.GUIDE	1-315, 1-317, 1-319
3047317-0000	.VOLUME BULGE	1-187, 1-195, 1-197, 1-199, 1-201, 1-203
3047358-0000	.VOLUME SHIM	1-171, 1-173, 1-175, 1-187, 1-195, 1-197, 1-199, 1-201, 1-203
3047987-0000	.PIN	1-293
3051988-0000	.GUIDE	1-315, 1-317, 1-319
3051989-0000	.GUIDE	1-315, 1-317, 1-319
3051990-0000	.BLOCK	1-323, 1-325
3051991-0000	.NOZZLE	1-327, 1-329
3051992-0000	.NOZZLE	1-327, 1-329
3051993-0000	.NOZZLE	1-327, 1-329
3051994-0000	.PLATE	1-327, 1-329
3051995-0000	.PIPE	1-327, 1-329
3051996-0000	.PIPE	1-327, 1-329
3051997-0000	.BLOCK	1-331, 1-333, 1-335, 1-337
3052000-0000	.FLAP	1-359, 1-361
3052002-0000	.BOTTOM	1-359, 1-361
3052003-0000	.WALL	1-367, 1-369, 1-371, 1-373
3052004-0000	.WALL	1-367, 1-369, 1-371, 1-373
3052005-0000	.FOLDING BAR	1-367, 1-369, 1-371, 1-373
3052006-0000	.FOLDING BAR	1-367, 1-369, 1-371, 1-373
3052009-0000	.PLATE	1-305, 1-307
3052010-0000	.SHAFT	1-305, 1-307
3052011-0000	.FOLDING DEVICE	1-305, 1-307
3052012-0000	.FOLDING DEVICE	1-305, 1-307
3052013-0000	.FOLDING BAR	1-367, 1-369, 1-371, 1-373
3052014-0000	.FOLDING BAR	1-367, 1-369, 1-371, 1-373
3055888-0000	.WALL	1-315, 1-317, 1-319
3055889-0000	.WALL	1-315, 1-317, 1-319
3055890-0000	.FOLDING BAR	1-367, 1-369, 1-371, 1-373
3055891-0000	.FOLDING BAR	1-367, 1-369, 1-371, 1-373
3055892-0000	.FOLDING BAR	1-367, 1-369, 1-371, 1-373
3055893-0000	.FOLDING BAR	1-367, 1-369, 1-371, 1-373
3058432-0000	.ROLLER	1-137, 1-139, 1-141
3058433-0000	.ROLLER	1-137, 1-139, 1-141
3058434-0000	.ROLLER	1-137, 1-139, 1-141
3058435-0000	.BRACKET	1-137, 1-139, 1-141
3058437-0000	.RULER	1-177
3058438-0000	.STOPPER	1-177
3058439-0000	.STOPPER	1-177
3058444-0000	.COUNTER ROLLER	1-133, 1-135
3058446-0001	.ROLLER	1-133, 1-135
3058446-0002	.ROLLER	1-183
3058446-0003	.ROLLER	1-183
3058447-0001	.ROLLER	1-133, 1-135
3058447-0002	.ROLLER	1-183
3058447-0003	.ROLLER	1-183
3058448-0000	.SEAL RING	1-127, 1-129
3058449-0000	.ROLLER	1-127, 1-129
3058450-0000	.BRACKET	1-153
3058452-0000	.FORK	1-133, 1-135
3058457-0000	.PRESSURE FLANGE	1-157, 1-159
3058468-0000	.LOCK PLATE	1-137, 1-139, 1-141
3058469-0000	.ROLLER	1-137, 1-139, 1-141
3058470-0000	.ROLLER	1-137, 1-139, 1-141
3058471-0000	.ROLLER	1-137, 1-139, 1-141
3058472-0000	.ROLLER	1-137, 1-139, 1-141
3058473-0000	.ROLLER	1-137, 1-139, 1-141
3058474-0000	.ROLLER	1-137, 1-139, 1-141
3058475-0000	.ROLLER	1-137, 1-139, 1-141
3058476-0000	.LOCK PLATE	1-137, 1-139, 1-141
3058477-0000	.SUPPORT RING	1-145
3058478-0000	.ROLLER	1-145
3058479-0000	.ROLLER	1-145
3058480-0000	.BRACKET	1-137, 1-139, 1-141
3058481-0000	.ROLLER	1-145
3058482-0000	.RULER	1-177
3058483-0000	.STOPPER	1-177
3058484-0000	.STOPPER	1-177
3058488-0000	.CLAMP	1-161
3058489-0000	.ELBOW PIPE	1-161

Part No	Description	Page No
3058527-0000	.PRESSURE FLANGE	1-9
3058528-0000	.PRESSURE FLANGE	1-9
3058529-0000	.PRESSURE FLANGE	1-9
3058531-0000	.PRESSURE FLANGE	1-9
3059451-0000	.OPENING SPECIFICATION	1-121
3060682-0000	.GUIDE	1-315, 1-317, 1-319
3060683-0000	.GUIDE	1-315, 1-317, 1-319
3066842-0000	.VOLUME BULGE	1-331, 1-333, 1-335, 1-337
3067238-0000	.SUPPORT	1-247, 1-249, 1-251, 1-257, 1-259, 1-261
3067239-0000	.BEARING HOUSING	1-267, 1-269, 1-271, 1-273, 1-275, 1-277, 1-279, 1-281
3067241-0000	.FOLDING FLAP	1-267, 1-269, 1-271, 1-273, 1-275, 1-277, 1-279, 1-281
3067242-0000	.CARRIER RULER	1-267, 1-269, 1-271, 1-273
3067243-0000	.CARRIER RULER	1-267, 1-269, 1-271, 1-273
3067244-0000	.CUTTING JAW	1-267, 1-269, 1-271, 1-273, 1-275, 1-277, 1-279, 1-281
3067245-0000	.CARRIER RULER	1-275, 1-277, 1-279, 1-281
3067246-0000	.CARRIER RULER	1-275, 1-277, 1-279, 1-281
3067247-0001	.HOLDER	1-217
3067247-0002	.HOLDER	1-213
3067247-0003	.HOLDER	1-229
3067247-0004	.HOLDER	1-205, 1-207, 1-209
3067248-0000	.VOLUME FLAP	1-195, 1-197, 1-199, 1-201, 1-203
3067249-0000	.VOLUME BULGE	1-195, 1-197, 1-199, 1-201, 1-203
3067250-0000	.CARRIER	1-195, 1-197, 1-199, 1-201, 1-203
3067251-0000	.CARRIER	1-195, 1-197, 1-199, 1-201, 1-203
3067273-0000	.SHAFT	1-195, 1-197, 1-199, 1-201, 1-203
3067274-0000	.SHIM	1-171, 1-173, 1-175, 1-195, 1-197, 1-199, 1-201, 1-203
3067286-0000	.VOLUME SHIM	1-171, 1-173, 1-175
3067289-0000	.VOLUME CAM	1-289, 1-291
3067290-0000	.VOLUME CAM	1-289, 1-291
3067349-0000	.SUPPORT	1-315, 1-317, 1-319
3067350-0000	.GUIDE	1-315, 1-317, 1-319
3067351-0000	.GUIDE	1-315, 1-317, 1-319
3067352-0000	.GUIDE	1-315, 1-317, 1-319
3067353-0000	.GUIDE	1-315, 1-317, 1-319
3067354-0000	.WALL	1-315, 1-317, 1-319
3067355-0000	.WALL	1-315, 1-317, 1-319
3067357-0000	.PLATE	1-327, 1-329
3067358-0000	.NOZZLE	1-327, 1-329
3067359-0000	.BLOCK	1-331, 1-333, 1-335, 1-337
3067360-0000	.PUSHER	1-331, 1-333, 1-335, 1-337
3067361-0000	.FLAP	1-359, 1-361
3067362-0000	.FLAP	1-359, 1-361
3067363-0000	.BOTTOM	1-359, 1-361
3067364-0000	.FOLDING BAR	1-367, 1-369, 1-371, 1-373
3067365-0000	.FOLDING BAR	1-367, 1-369, 1-371, 1-373
3067366-0000	.FOLDING BAR	1-367, 1-369, 1-371, 1-373
3067367-0000	.FOLDING BAR	1-367, 1-369, 1-371, 1-373
3067368-0000	.GUIDE	1-315, 1-317, 1-319
3067369-0000	.GUIDE	1-315, 1-317, 1-319
3067587-0000	.PRESSURE FLANGE	1-157, 1-159
3070289-0000	.FOLDING BAR	1-367, 1-369, 1-371, 1-373
3070290-0000	.FOLDING BAR	1-367, 1-369, 1-371, 1-373
3072777-0000	.TEMPLATE	1-179, 1-181
3073526-0000	.TEMPLATE	1-179, 1-181
3074720-0000	.GUIDE	1-315, 1-317, 1-319
3074721-0000	.GUIDE	1-315, 1-317, 1-319
3074722-0000	.GUIDE	1-315, 1-317, 1-319
3074723-0000	.GUIDE	1-315, 1-317, 1-319
3074724-0000	.PUSHER	1-331, 1-333, 1-335, 1-337
3074725-0000	.PUSHER	1-331, 1-333, 1-335, 1-337
3074726-0000	.FLAP	1-359, 1-361
3076767-0000	.FLAP	1-359, 1-361
3076856-0000	.PRESSURE FLANGE	1-9
3076857-0000	.PRESSURE FLANGE	1-9
3076858-0000	.PRESSURE FLANGE	1-9
3076859-0000	.PRESSURE FLANGE	1-9
3076860-0000	.PRESSURE FLANGE	1-9
3076861-0000	.PRESSURE FLANGE	1-9
3078547-0000	.ROLLER	1-137, 1-139, 1-141
3079740-0000	.BLOCK	1-323, 1-325
3080559-0000	.FOLDING FLAP	1-267, 1-269, 1-271, 1-273, 1-275, 1-277, 1-279, 1-281
3080560-0000	.FOLDING FLAP	1-267, 1-269, 1-271, 1-273, 1-275, 1-277, 1-279, 1-281
3081261-0000	.OPENING SPECIFICATION	1-121
3086911-0000	.SEALING PLATE	1-91
3089305-0000	.GUIDE	1-315, 1-317, 1-319
3089348-0000	.INDUCTOR	1-171, 1-173, 1-175, 1-247, 1-249, 1-251, 1-257, 1-259, 1-261
3089354-0000	.INDUCTOR	1-171, 1-173, 1-175, 1-247, 1-249, 1-251, 1-257, 1-259, 1-261
3089560-0000	.PRESSURE FLANGE	1-9
3089561-0000	.PRESSURE FLANGE	1-9
3089565-0000	.PRESSURE FLANGE	1-157, 1-159
3089566-0000	.PRESSURE FLANGE	1-157, 1-159
3089567-0001	.ROLLER	1-133, 1-135
3089567-0002	.ROLLER	1-183
3089567-0003	.ROLLER	1-183

Part No	Description	Page No
3089568-0001	.ROLLER	1-133, 1-135
3089568-0002	.ROLLER	1-183
3089568-0003	.ROLLER	1-183
3089569-0000	.ROLLER	1-133, 1-135
3089571-0000	.PRESSURE FLANGE	1-157, 1-159
3089572-0000	.BRACKET	1-177
3089589-0000	.WASHER	1-133, 1-135
3089594-0000	.PRESSURE FLANGE	1-9
3089595-0000	.PRESSURE FLANGE	1-9
3089596-0000	.PRESSURE FLANGE	1-9
3089599-0000	.LOWER FORMING RING	1-133, 1-135
3089600-0000	.UPPER FORMING RING	1-137, 1-139, 1-141
3089601-0000	.UPPER FORMING RING	1-137, 1-139, 1-141
3089602-0000	.UPPER FORMING RING	1-137, 1-139, 1-141
3089603-0000	.UPPER FORMING RING	1-137, 1-139, 1-141
3089604-0000	.UPPER FORMING RING	1-137, 1-139, 1-141
3089605-0000	.UPPER FORMING RING	1-137, 1-139, 1-141
3089606-0000	.LOWER FORMING RING	1-133, 1-135
3089607-0000	.SHIM	1-137, 1-139, 1-141
3089608-0000	.SHIM	1-137, 1-139, 1-141
3092001-0000	.GUIDE	1-315, 1-317, 1-319
3092257-0000	.NOZZLE	1-327, 1-329
3092258-0000	.NOZZLE	1-327, 1-329
3092451-0000	.RAIL	1-247, 1-249, 1-251, 1-257, 1-259, 1-261
3092452-0000	.NAIL	1-331, 1-333, 1-335, 1-337, 1-379
3092653-0000	.WEDGE	1-247, 1-249, 1-251, 1-257, 1-259, 1-261
3092802-0000	.ROLLER	1-293
3096231-0000	.KNIFE	1-171, 1-173, 1-175, 1-283, 1-285, 1-287
3096232-0000	.CUTTING RAIL	1-267, 1-269, 1-271, 1-273, 1-275, 1-277, 1-279, 1-281
3096233-0000	.BRACKET	1-267, 1-269, 1-271, 1-273, 1-275, 1-277, 1-279, 1-281
3097403-0000	.BUSHING	1-205, 1-207, 1-209, 1-213, 1-217, 1-229
3097404-0001	.HOLDER	1-217
3097404-0003	.HOLDER	1-229
3097405-0002	.HOLDER	1-213
3097405-0004	.HOLDER	1-205, 1-207, 1-209
3097407-0000	.CARRIER	1-195, 1-197, 1-199, 1-201, 1-203
3097408-0000	.CARRIER	1-195, 1-197, 1-199, 1-201, 1-203
3097409-0000	.CARRIER	1-219, 1-221, 1-223, 1-225
3097580-0000	.CARRIER	1-219, 1-221, 1-223, 1-225
3097581-0000	.STOP	1-219, 1-221, 1-223, 1-225
3097582-0000	.STOP	1-195, 1-197, 1-199, 1-201, 1-203
3097776-0000	.SHIM	1-331, 1-333, 1-335, 1-337, 1-379
3099249-0000	.FLAP	1-267, 1-269, 1-271, 1-273, 1-275, 1-277, 1-279, 1-281
3099250-0000	.FLAP	1-267, 1-269, 1-271, 1-273, 1-275, 1-277, 1-279, 1-281
3099357-0000	.BRACKET	1-147, 1-149, 1-151
3100273-0000	.BRACKET	1-147, 1-149, 1-151
3100463-0000	.SUPPORT	1-55
3100465-0000	.SUPPORT	1-55
3100466-0000	.AXLE PIN	1-55
3100469-0000	.BRACKET	1-55
3100471-0000	.ROLLER	1-55
3100478-0000	.GUIDE FORK	1-55
3100494-0100	.TURNING DEVICE	1-53
3100667-0000	.VOLUME CAM	1-289, 1-291
3100668-0000	.VOLUME CAM	1-289, 1-291
3100669-0000	.VOLUME CAM	1-289, 1-291
3100670-0000	.VOLUME CAM	1-289, 1-291
3100994-0000	.LOWER FORMING RING	1-133, 1-135
3100995-0000	.SUPPORT	1-133, 1-135
3104458-0000	.VOLUME BULGE	1-187, 1-195, 1-197, 1-199, 1-201, 1-203
3104459-0000	.SHIM	1-187, 1-195, 1-197, 1-199, 1-201, 1-203
3104917-0100	.VOLUME BULGE	1-185, 1-375
3105452-0000	.FOLDING FLAP	1-267, 1-269, 1-271, 1-273, 1-275, 1-277, 1-279, 1-281
3106750-0000	.VOLUME BULGE	1-247, 1-249, 1-251, 1-257, 1-259, 1-261
3106754-0000	.COVER	1-247, 1-249, 1-251, 1-257, 1-259, 1-261
3106811-0100	.PT COMPACTFLEX HOLES	1-7
3106812-0101	.REBUILDING MANUAL	1-11
3106813-0100	.MECHANICAL REBUILDING	1-11
3106859-0000	.VOLUME BULGE	1-187, 1-195, 1-197, 1-199, 1-201, 1-203
3106860-0000	.SHIM	1-187, 1-195, 1-197, 1-199, 1-201, 1-203
3106864-0100	.PANEL	1-13, 1-15, 1-17
3106891-0000	.FLOAT	1-157, 1-159
3106969-0100	.PANEL	1-13, 1-15, 1-17
3108956-0000	.SHIM	1-53
3110105-0000	.VOLUME BULGE	1-195, 1-197, 1-199, 1-201, 1-203
3110108-0000	.PUSHER	1-331, 1-333, 1-335, 1-337, 1-379
3110109-0000	.PUSHER	1-331, 1-333, 1-335, 1-337, 1-379
3110110-0000	.PUSHER	1-331, 1-333, 1-335, 1-337, 1-379
3110111-0000	.PUSHER	1-331, 1-333, 1-335, 1-337, 1-379
3111045-0000	.VOLUME SHIM	1-171, 1-173, 1-175, 1-195, 1-197, 1-199, 1-201, 1-203
3112804-0000	.SHIM	1-55
3113802-0000	.CUTTING JAW	1-267, 1-269, 1-271, 1-273, 1-275, 1-277, 1-279, 1-281
3113803-0000	.CUTTING JAW	1-267, 1-269, 1-271, 1-273, 1-275, 1-277, 1-279, 1-281
3113804-0000	.CUTTING JAW	1-267, 1-269, 1-271, 1-273, 1-275, 1-277, 1-279, 1-281

Part No	Description	Page No
3113805-0000	.CUTTING JAW	1-267, 1-269, 1-271, 1-273, 1-275, 1-277, 1-279, 1-281
3115221-0000	.FORK	1-157, 1-159
3115484-0000	.VOLUME BULGE	1-187, 1-195, 1-197, 1-199, 1-201, 1-203
3115485-0000	.VOLUME SHIM	1-187, 1-195, 1-197, 1-199, 1-201, 1-203
3117319-0100	.JAW SYSTEM	1-375
3118145-0000	.COVER	1-367, 1-369, 1-371, 1-373
3119316-0000	.SEALING PLATE	1-93
3120545-0000	.PLATE	1-327, 1-329
3120546-0000	.NOZZLE	1-327, 1-329
3120547-0000	.NOZZLE	1-327, 1-329
3120862-0000	.BRACKET	1-133, 1-135
3120863-0000	.PIN	1-133, 1-135
3122374-0000	.VOLUME FLAP	1-219, 1-221, 1-223, 1-225
3122501-0000	.TOOL	1-179, 1-181
3122818-0000	.VOLUME BULGE	1-187, 1-195, 1-197, 1-199, 1-201, 1-203
3122819-0000	.VOLUME SHIM	1-187, 1-195, 1-197, 1-199, 1-201, 1-203
3123029-0000	.VOLUME BULGE	1-219, 1-221, 1-223, 1-225
3123577-0000	.VOLUME FLAP	1-195, 1-197, 1-199, 1-201, 1-203
3127429-0000	.UPPER FORMING RING	1-137, 1-139, 1-141
3127434-0000	.LOWER FORMING RING	1-133, 1-135
3127435-0000	.LOWER FORMING RING	1-133, 1-135
3127436-0000	.UPPER FORMING RING	1-137, 1-139, 1-141
3127437-0000	.UPPER FORMING RING	1-137, 1-139, 1-141
3127438-0000	.UPPER FORMING RING	1-137, 1-139, 1-141
3127439-0000	.UPPER FORMING RING	1-137, 1-139, 1-141
3127440-0000	.UPPER FORMING RING	1-137, 1-139, 1-141
3127441-0000	.UPPER FORMING RING	1-137, 1-139, 1-141
3127442-0000	.SHIM	1-137, 1-139, 1-141
3127549-0000	.SHAFT	1-133, 1-135
3130390-0000	.RAIL	1-247, 1-249, 1-251, 1-257, 1-259, 1-261
3130467-0000	.STOP SCREW	1-367, 1-369, 1-371, 1-373
3133957-0000	.STOP	1-217, 1-229
3134331-0000	.BRACKET	1-49
3137764-0000	.TOOL	1-179, 1-181
3139285-0100	.LABEL	1-43
3139351-0000	.PLATE	1-45, 1-47, 1-51
3139352-0100	.LABEL	1-43
3139392-0100	.LABEL	1-43
3139545-0001	.FOLDING BAR	1-367, 1-369, 1-371, 1-373
3139545-0002	.FOLDING BAR	1-367, 1-369, 1-371, 1-373
3139545-0004	.FOLDING BAR	1-367, 1-369, 1-371, 1-373
3139546-0001	.FOLDING BAR	1-367, 1-369, 1-371, 1-373
3139546-0002	.FOLDING BAR	1-367, 1-369, 1-371, 1-373
3139546-0004	.FOLDING BAR	1-367, 1-369, 1-371, 1-373
3139547-0001	.FOLDING BAR	1-367, 1-369, 1-371, 1-373
3139547-0002	.FOLDING BAR	1-367, 1-369, 1-371, 1-373
3139547-0004	.FOLDING BAR	1-367, 1-369, 1-371, 1-373
3139548-0001	.FOLDING BAR	1-367, 1-369, 1-371, 1-373
3139548-0002	.FOLDING BAR	1-367, 1-369, 1-371, 1-373
3139548-0004	.FOLDING BAR	1-367, 1-369, 1-371, 1-373
3142887-0000	.BRACKET	1-133, 1-135
3142888-0000	.BRACKET	1-133, 1-135
3142889-0000	.BRACKET	1-133, 1-135
3142890-0000	.BRACKET	1-133, 1-135
3144283-0100	.LABEL	1-43
3147236-0000	.FOLDING FLAP	1-267, 1-269, 1-271, 1-273, 1-275, 1-277, 1-279, 1-281
3147237-0000	.FOLDING FLAP	1-267, 1-269, 1-271, 1-273, 1-275, 1-277, 1-279, 1-281
3150927-0000	.FLAP	1-359, 1-361
3150928-0000	.FLAP	1-359, 1-361
3151766-0000	.LOCK PLATE	1-133, 1-135
3160954-0000	.SHIM	1-331, 1-333, 1-335, 1-337
3163272-0000	.SUPPORT	1-305, 1-307
3165601-0000	.FOLDING BAR	1-367, 1-369, 1-371, 1-373
3165602-0000	.FOLDING BAR	1-367, 1-369, 1-371, 1-373
3167562-0000	.SUPPORT	1-231, 1-233, 1-235, 1-237
3174445-0000	.VOLUME BULGE	1-187, 1-195, 1-197, 1-199, 1-201, 1-203
3174446-0000	.VOLUME SHIM	1-187, 1-195, 1-197, 1-199, 1-201, 1-203
3180559-0000	.TOOL	1-179, 1-181
3190294-0100	.ASU MODIFICATION	1-7

Part No	Description	Page No	Part No	Description	Page No

Machine Type	Group Description	Page No

Tetra Pak

SPC
Spare Parts Catalogue

Pos	Part No	Description	Page No
B			
G25B3000	90459-4177	INDUCTIVE SENSOR, E2A-M12KN08-M1-B1	1-57, 1-59, 1-61
G25B3010	90459-4177	INDUCTIVE SENSOR, E2A-M12KN08-M1-B1	1-57, 1-59, 1-61
G25B3020	90459-4177	INDUCTIVE SENSOR, E2A-M12KN08-M1-B1	1-57, 1-59, 1-61
G25B3040	90459-7361	FIBRE OPTIC UNIT, WLL170-2P460	1-55
G25B3050	90459-4177	INDUCTIVE SENSOR, E2A-M12KN08-M1-B1	1-57, 1-59, 1-61
G25B3120	90326-0060	THERMOCOUPLE, 5110060-000 CR-AL	1-33
T40B1240	90458-0601	CONTRAST SCANNER, KT15W-P2110S01	1-295, 1-297
T40B1250	90458-0601	CONTRAST SCANNER, KT15W-P2110S01	1-295, 1-297
E			
T50E0050	2871927-0001	FOLDING BAR	1-367, 1-369, 1-371, 1-373
T50E0050	2871927-0002	FOLDING BAR	1-367, 1-369, 1-371, 1-373
T50E0050	2871927-0003	FOLDING BAR	1-367, 1-369, 1-371, 1-373
T50E0050	2871927-0004	FOLDING BAR	1-367, 1-369, 1-371, 1-373
T50E0050	2871927-0005	FOLDING BAR	1-367, 1-369, 1-371, 1-373
T50E0050	2871927-0006	FOLDING BAR	1-367, 1-369, 1-371, 1-373
T50E0050	2871927-0007	FOLDING BAR	1-367, 1-369, 1-371, 1-373
T50E0051	2852331-0001	PIPE	1-327, 1-329
T50E0051	2852331-0002	PIPE	1-327, 1-329
T50E0051	2852331-0003	PIPE	1-327, 1-329
T50E0051	2852331-0004	PIPE	1-327, 1-329
T50E0051	2852331-0005	PIPE	1-327, 1-329
T50E0051	3051996-0000	PIPE	1-327, 1-329
T50E0052	2852331-0001	PIPE	1-327, 1-329
T50E0052	2852331-0002	PIPE	1-327, 1-329
T50E0052	2852331-0003	PIPE	1-327, 1-329
T50E0052	2852331-0004	PIPE	1-327, 1-329
T50E0052	2852331-0005	PIPE	1-327, 1-329
T50E0052	3051995-0000	PIPE	1-327, 1-329
T50E0053	2871928-0001	FOLDING BAR	1-367, 1-369, 1-371, 1-373
T50E0053	2871928-0002	FOLDING BAR	1-367, 1-369, 1-371, 1-373
T50E0053	2871928-0003	FOLDING BAR	1-367, 1-369, 1-371, 1-373
T50E0053	2871928-0004	FOLDING BAR	1-367, 1-369, 1-371, 1-373
T50E0053	2871928-0005	FOLDING BAR	1-367, 1-369, 1-371, 1-373
T50E0053	2871928-0006	FOLDING BAR	1-367, 1-369, 1-371, 1-373
T50E0053	2871928-0007	FOLDING BAR	1-367, 1-369, 1-371, 1-373
T50E0054	3070289-0000	FOLDING BAR	1-367, 1-369, 1-371, 1-373
T50E0054	3165602-0000	FOLDING BAR	1-367, 1-369, 1-371, 1-373
T50E0055	3070290-0000	FOLDING BAR	1-367, 1-369, 1-371, 1-373
T50E0055	3165601-0000	FOLDING BAR	1-367, 1-369, 1-371, 1-373
F			
FF10	2871956-0000	PUSHER	1-171, 1-173, 1-175
FF10	2894694-0000	PUSHER	1-171, 1-173, 1-175
FF10	2894737-0000	PUSHER	1-171, 1-173, 1-175
FF10	2966591-0000	PUSHER	1-171, 1-173, 1-175
FF20	2894700-0000	PUSHER	1-171, 1-173, 1-175
FF20	2921574-0000	PUSHER	1-171, 1-173, 1-175
FF20	3037955-0000	PUSHER	1-171, 1-173, 1-175
J			
JS10	1110083-0003	DOLLY	1-171, 1-173, 1-175
JS10	1110083-0005	DOLLY	1-171, 1-173, 1-175
JS10	1566761-0000	DOLLY	1-171, 1-173, 1-175
JS10	2949862-0004	DOLLY	1-171, 1-173, 1-175
JS20	1110532-0000	INDUCTOR	1-171, 1-173, 1-175
JS20	1110534-0000	INDUCTOR	1-171, 1-173, 1-175
JS20	1110535-0000	INDUCTOR	1-171, 1-173, 1-175
JS20	1110556-0000	INDUCTOR	1-171, 1-173, 1-175
JS20	1566981-0000	INDUCTOR	1-171, 1-173, 1-175
JS20	2917498-0000	INDUCTOR	1-171, 1-173, 1-175
JS20	2975930-0000	INDUCTOR	1-171, 1-173, 1-175
JS20	3044527-0000	INDUCTOR	1-171, 1-173, 1-175
JS20	3089348-0000	INDUCTOR	1-171, 1-173, 1-175
JS20	3089354-0000	INDUCTOR	1-171, 1-173, 1-175
JS30	272986-0001	VOLUME SHIM	1-171, 1-173, 1-175
JS30	272986-0003	VOLUME SHIM	1-171, 1-173, 1-175
JS30	272986-0006	VOLUME SHIM 330S	1-171, 1-173, 1-175
JS30	272987-0000	VOLUME SHIM	1-171, 1-173, 1-175
JS30	272991-0000	VOLUME SHIM	1-171, 1-173, 1-175
JS30	979754-0000	VOLUME SHIM 100	1-171, 1-173, 1-175
JS30	979861-0000	VOLUME SHIM	1-171, 1-173, 1-175
JS30	1519222-0000	VOLUME SHIM	1-171, 1-173, 1-175
JS30	2908756-0000	VOLUME SHIM	1-171, 1-173, 1-175
JS30	2950902-0000	VOLUME SHIM	1-171, 1-173, 1-175
JS30	2977544-0000	SHIM	1-171, 1-173, 1-175
JS30	3002257-0000	VOLUME SHIM	1-171, 1-173, 1-175
JS30	3003863-0000	VOLUME SHIM	1-171, 1-173, 1-175
JS30	3010756-0000	VOLUME SHIM	1-171, 1-173, 1-175
JS30	3019316-0000	SHIM	1-171, 1-173, 1-175
JS30	3019317-0000	SHIM	1-171, 1-173, 1-175
JS30	3022276-0000	VOLUME SHIM	1-171, 1-173, 1-175
JS30	3047358-0000	VOLUME SHIM	1-171, 1-173, 1-175
JS30	3067274-0000	SHIM	1-171, 1-173, 1-175
JS30	3067286-0000	VOLUME SHIM	1-171, 1-173, 1-175

Pos	Part No	Description	Page No
J			
JS30	3111045-0000	VOLUME SHIM	1-171, 1-173, 1-175
JS40	1282645-0000	KNIFE	1-171, 1-173, 1-175
JS40	1282646-0000	KNIFE	1-171, 1-173, 1-175
JS40	1282647-0000	KNIFE	1-171, 1-173, 1-175
JS40	3096231-0000	KNIFE	1-171, 1-173, 1-175
M			
G25M0020	90600-1844	CYLINDER WITH INT. GUIDING BORE 25	1-33
G25M3030	90459-0844	SINGLE ACTING, MINI-ISO, CYL 12-10	1-65
G25M3300	90458-0523	STEP MOTOR, SM 56.2.18J3 Z(202)	1-35
G25M5001	90450-0380	SINGLE ACTING, PANCAKE EV-20/75-5	1-25
R			
G25R1100	1520196-0000	INDUCTOR	1-95
G25R1100	1533360-0000	INDUCTOR	1-95
G25R1100	1533364-0000	INDUCTOR	1-95
G25R1100	1566708-0000	INDUCTOR	1-95
G25R1100	2971544-0000	INDUCTOR	1-95
G25R1100	3003484-0000	INDUCTOR	1-95
G25R3110	90600-2602	THERMOFOIL HEATER, HM15643	1-33
T40R3100	1110532-0000	INDUCTOR	1-247, 1-249, 1-251
T40R3100	1110534-0000	INDUCTOR	1-247, 1-249, 1-251
T40R3100	1110535-0000	INDUCTOR	1-247, 1-249, 1-251
T40R3100	1110556-0000	INDUCTOR	1-247, 1-249, 1-251
T40R3100	2917498-0000	INDUCTOR	1-247, 1-249, 1-251
T40R3100	2975930-0000	INDUCTOR	1-247, 1-249, 1-251
T40R3100	3089348-0000	INDUCTOR	1-247, 1-249, 1-251
T40R3100	3089354-0000	INDUCTOR	1-247, 1-249, 1-251
T40R3200	1110532-0000	INDUCTOR	1-257, 1-259, 1-261
T40R3200	1110534-0000	INDUCTOR	1-257, 1-259, 1-261
T40R3200	1110535-0000	INDUCTOR	1-257, 1-259, 1-261
T40R3200	1110556-0000	INDUCTOR	1-257, 1-259, 1-261
T40R3200	1566981-0000	INDUCTOR	1-247, 1-249, 1-251, 1-257, 1-259, 1-261
T40R3200	2917498-0000	INDUCTOR	1-257, 1-259, 1-261
T40R3200	2975930-0000	INDUCTOR	1-257, 1-259, 1-261
T40R3200	3044527-0000	INDUCTOR	1-247, 1-249, 1-251, 1-257, 1-259, 1-261
T40R3200	3089348-0000	INDUCTOR	1-257, 1-259, 1-261
T40R3200	3089354-0000	INDUCTOR	1-257, 1-259, 1-261
S			
SU10	2909367-0000	PRESSURE ROLLER (PACK 10)	1-171, 1-173, 1-175
SU10	2909368-0000	PRESSURE ROLLER (PACK 10)	1-171, 1-173, 1-175
SU10	2932253-0000	PRESSURE ROLLER (PACK 10)	1-171, 1-173, 1-175
SU20	255977-0000	SHAFT	1-171, 1-173, 1-175
SU20	295376-0000	SHAFT	1-171, 1-173, 1-175
T			
G25T1100	67379-0216	TRANSFORMER	1-95
G25T1100	67379-0224	TRANSFORMER	1-95
T40T3200	67379-0107	TRANSFORMER	1-255, 1-265
T40T3200	67379-0115	TRANSFORMER	1-255, 1-265
T40T3200	67379-0204	TRANSFORMER	1-255, 1-265
T40T3200	67379-0206	TRANSFORMER	1-255, 1-265
T40T3200	67379-0248	TRANSFORMER	1-255, 1-265
T40T3200	67379-0254	TRANSFORMER	1-255, 1-265
T40T3200	67379-0262	TRANSFORMER	1-255, 1-265
T40T3200	67379-0264	TRANSFORMER	1-255, 1-265
T40T3200	67379-0269	TRANSFORMER	1-255, 1-265
T40T3200	2837503-0105	TRANSFORMER	1-255, 1-265
W			
G25W3000	351310-0050	ACTUATOR/SENSOR CABLE PRKWT 4-07/5M	1-79
G25W3010	351310-0050	ACTUATOR/SENSOR CABLE PRKWT 4-07/5M	1-79
G25W3020	351310-0020	ACTUATOR/SENSOR CABLE PRKWT 4-07/2M	1-79
G25W3040	351409-0020	ACTU/SENS. CABLE PRST 4-PRKMV 4-07/2,0M	1-53
G25W3050	351411-0050	ACTU/SENS. CABLE PRST 4-PRKT 4-07/5,0	1-79
T40W2698	90166-0132	TUBE 6 MM PA,TRANSP.	1-299
T40W2699	90166-0132	TUBE 6 MM PA,TRANSP.	1-299
T40W3100	2562736-0002	COAXIAL CABLE	1-255
T40W3200	2562736-0002	COAXIAL CABLE	1-265
T50W0054	315400-0006	TUBE PUN-H-8X1,25-SW	1-367, 1-369, 1-371, 1-373
T50W0055	315400-0006	TUBE PUN-H-8X1,25-SW	1-367, 1-369, 1-371, 1-373
T50W0056	315400-0006	TUBE PUN-H-8X1,25-SW	1-367, 1-369, 1-371, 1-373
T50W0108	315400-0006	TUBE PUN-H-8X1,25-SW	1-367, 1-369, 1-371, 1-373
T50W0109	315400-0006	TUBE PUN-H-8X1,25-SW	1-367, 1-369, 1-371, 1-373
T50W0110	315400-0006	TUBE PUN-H-8X1,25-SW	1-367, 1-369, 1-371, 1-373
T50W0111	315400-0006	TUBE PUN-H-8X1,25-SW	1-367, 1-369, 1-371, 1-373
X			
G25X3110	90459-6821	MALE INSERT HAN 4A, 0920 0042 611	1-33
G25X3300	90459-6821	MALE INSERT HAN 4A, 0920 0042 611	1-35

Tetra Pak

SPC binder labels. 40 mm Full width *Note! This page is generated* **automatically.**
using the **variable definitions** *made in the* **front page** *file!!*

VCK A3/CompactFlex
641515-0200
Issue: 2012-02 Doc No: SPC-3046796-0107

VCK A3/CompactFlex
641515-0200
Issue: 2012-02 Doc No: SPC-3046796-0107

VCK A3/CompactFlex
641515-0200
Issue: 2012-02 Doc No: SPC-3046796-0107

VCK A3/CompactFlex
641515-0200
Issue: 2012-02 Doc No: SPC-3046796-0107

VCK A3/CompactFlex
641515-0200
Issue: 2012-02 Doc No: SPC-3046796-0107

VCK A3/CompactFlex
641515-0200
Issue: 2012-02 Doc No: SPC-3046796-0107

VCK A3/CompactFlex
641515-0200
Issue: 2012-02 Doc No: SPC-3046796-0107

VCK A3/CompactFlex
641515-0200
Issue: 2012-02 Doc No: SPC-3046796-0107

VCK A3/CompactFlex
641515-0200
Issue: 2012-02 Doc No: SPC-3046796-0107

VCK A3/CompactFlex
641515-0200
Issue: 2012-02 Doc No: SPC-3046796-0107

VCK A3/CompactFlex
641515-0200
Issue: 2012-02 Doc No: SPC-3046796-0107

SPC binder labels. 30 mm Half width using the **variable definitions** *made in the* **front page** *file!!*

Note! This page is generated **automatically.**

VCK A3/CompactFlex

641515-0200

Issue: 2012-02 Doc No: SPC-3046796-0107

VCK A3/CompactFlex

641515-0200

Issue: 2012-02 Doc No: SPC-3046796-0107