EM

Electrical Manual

Tetra Pak A3/CompactFlex

641550-0300

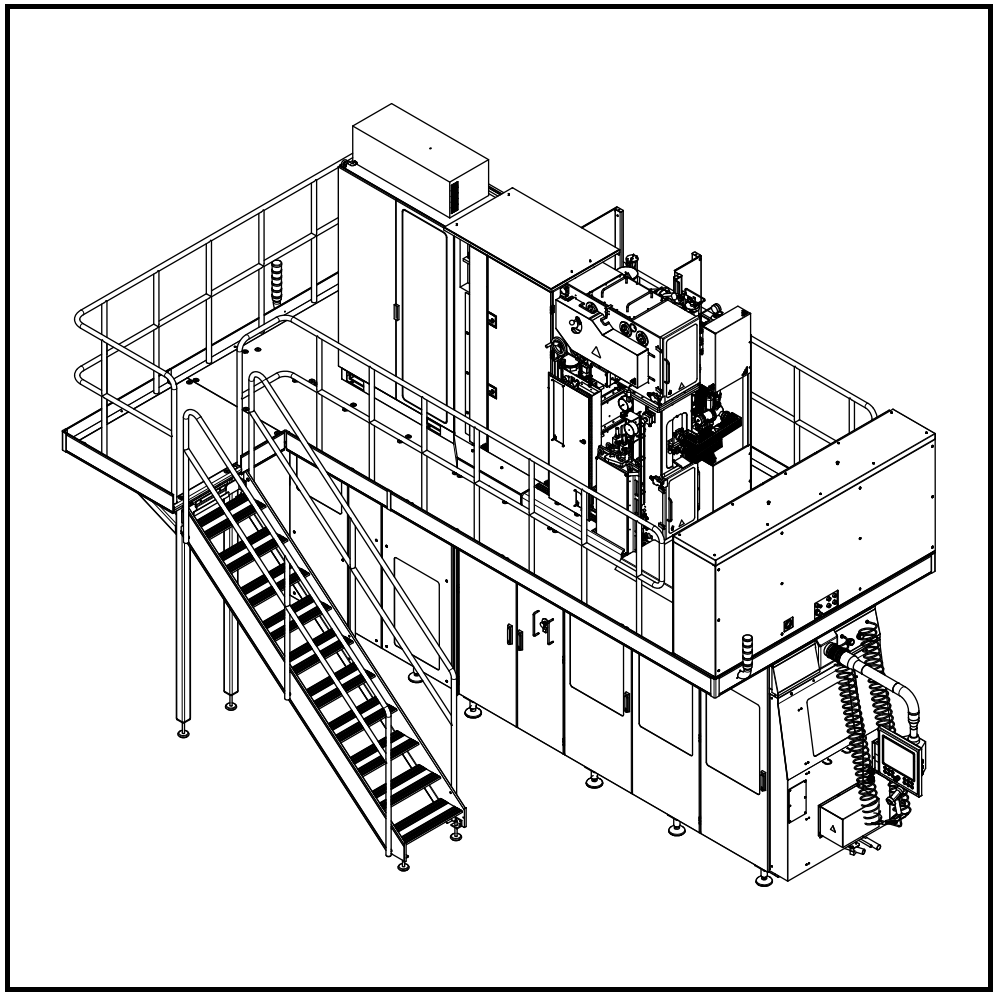

WARNING

Read and follow all safety precaution instructions throughout this manual and on safety signs attached to this equipment.

Failure to follow all safety precaution instructions could result in death or serious injury.

Tetra Pak®

Doc. No. EM-3212180-0111

Copyright © 2014 Tetra Pak International S.A.

All rights reserved. No part of this document may be reproduced or copied in any form or by any means without written permission from Tetra Pak Packaging Solutions.

, Tetra Pak, and all other trademarks displayed in this document are the property of the Tetra Pak International SA. Tetra Pak Packaging Solutions together with Tetra Pak International SA form part of ‘the Tetra Pak Group’. The content of this manual is in accordance with the design and construction of the machine or equipment at the time of publishing. The Tetra Pak Group reserves the right to introduce design modifications without prior notice.

The English language version of this document contains the original instructions. All other language versions are translations of the original instructions.

This document was produced and printed by:

Tetra Pak Packaging Solutions
Via Delfini 1
41123 Modena
Italy

Doc. No. EM-3212180-0111

Issue 2014-10

This manual is valid for:

Series No. / Machine No.
Year of Manufacture Sign.

EM
Electrical Manual

Tetra Pak
A3/CompactFlex
641550-0300

i Introduction
ii Safety Precautions
1 Electrical System Description
2 Document List
3 Position Summary
4 Circuit Diagrams
5 Line Summary
6 Cabinet Terminal Summary
7 Terminal Strip Overview
8 Cable Connection List
9 Mains Connections
10 Drawing Remarks
11 Engineering Change Description
12 Component Location
13 Dairy Signal Exchange
14 Other Information

Machine or equipment configurations that this manual is valid for are described on the next page.

Doc. No. EM-3212180-0111
Issue 2014-10

Tetra Pak®
Tetra Pak Packaging Solutions

Valid for:

Name	Drawing Specification and Development Step	Additional Information
Tetra Pak A3/CompactFlex	641550-0300	Valid from T-order: 21220/00388 EL. ECM No.: 687625

Update Log for Doc. No. EM-3212180-0111

This table shows all changes made to this manual, including installed rebuilding kits, added or removed pages. Page numbering on added pages begins with UP.

Date	Installed Kit	Added Pages (Doc. No.)	Removed Pages	Signature

Date	Installed Kit	Added Pages (Doc. No.)	Removed Pages	Signature

i Introduction

About the Introduction Chapter

This chapter contains basic information about this manual and the related Tetra Pak equipment.

About the Introduction Chapter i-2

Abbreviations and Terminology i-5

Manual Information i-6

Delivered Manuals i-6

CM i-6

EM i-6

IM i-6

MM i-6

OM i-6

RM i-6

SPC i-6

TeM i-7

UP i-7

Page Layout i-8

Page Numbering i-9

Typographical Conventions i-9

Symbols i-9

Machine Introduction i-10

Intended Use of the Equipment i-10

Manufacturer i-10

Declaration of Conformity i-10

Identification i-11

CE Classification i-11

3-A Compliance i-11

Machine Plate i-11

Food Grade Lubricated Machine Plate i-12

Delivered Design Label i-12

Orientation i-13

Hygiene.....i-14
Packaging Material..... i-14
Steam Barrier in the Product Valve..... i-14
How to Use This EM.....i-15
Reference Designation i-16
List of Function Codes i-17
Explanation of the American Wire Gauge (AWG) Table on the First Page of the Circuit Diagrams i-17
Example..... i-19
Optional Equipment..... i-20
How to Trace an Electrical Component i-20
Example 1: How to Trace a Line..... i-21
Supply Voltage and Line Connection Order i-21
How to Trace a Line i-22
Example 2: How to Trace a Contactor i-23
Example 3: How to Trace a Terminal in the Electrical Cabinet..... i-24
Example 4: How to Trace a Terminal Outside the Electrical Cabinet..... i-25
Example 5: How to Trace a Network..... i-26
Example 6: How to Find Electrical Components Using the SPC..... i-28
Assistance and Inquiries i-30

Abbreviations and Terminology

Abbreviation/Terminology	Meaning	Translation
AWG	American Wire Gauge	American Wire Gauge
CE	Communautés Européennes/European Communities	Communautés Européennes/European Communities
CSA	Canadian Standards Association	Canadian Standards Association
EEA	European Economic Area	European Economic Area
EM	Electrical Manual	Electrical Manual
EN	European Norm	European Norm
IM	Installation Manual	Installation Manual
ISO	International Standards Organization	International Standards Organization
MM	Maintenance Manual	Maintenance Manual
OM	Operation Manual	Operation Manual
SDS	Safety Data Sheet	Safety Data Sheet
SPC	Spare Parts Catalogue	Spare Parts Catalogue
TPMS	Tetra Pak Maintenance System	Tetra Pak Maintenance System
UL	Underwriters Laboratories	Underwriters Laboratories

Manual Information

The Tetra Pak Group recommends reading all delivered manuals carefully. Make sure that the delivered manuals are available to personnel who operate or maintain the equipment.

It is important to keep this manual for the lifetime of the equipment and to pass the manual on to any subsequent holder or user.

Any item that is named specifically in this manual is to be considered a designated item for the equipment. Designated items are verified by the Tetra Pak Group for use with the equipment.

The Tetra Pak Group will not be held responsible for any damage, loss, injury, or death caused by not following the instructions in the manuals that accompany this equipment, or by a failure to use designated items specified in the manuals that accompany this equipment.

Delivered Manuals

Manuals delivered with this equipment:

CM

The Conversion Manual provides technicians with information on converting the equipment between different production modes.

EM

The Electrical Manual provides technicians with information about the equipment's electrical system.

IM

The Installation Manual provides technicians with information required to safely install the equipment.

MM

The Maintenance Manual provides technicians with information on maintaining the equipment.

OM

The Operation Manual provides the operator with information on handling and operating the equipment before, during, and after production.

RM

The Rebuilding Manual provides technicians with information required to safely install a kit to an installed machine or equipment.

SPC

The Spare Parts Catalogue provides the information necessary to order spare parts from the Tetra Pak Group.

TeM

The Technical Manual provides technicians with information which can be:

- information required to safely install the equipment
- information required to maintaining the equipment
- information about the machine's/equipment's electrical system
- information necessary to order spare parts from the Tetra Pak Group
- other technical information

UP

The Update Pages provides new pages to update existing machine manuals.

Page Layout

Every main page in a manual contains a header and a footer. The page header contains the chapter name (1) and the section name (2). The page footer contains the page number (3), and the document number (4). See also the Page Numbering section.

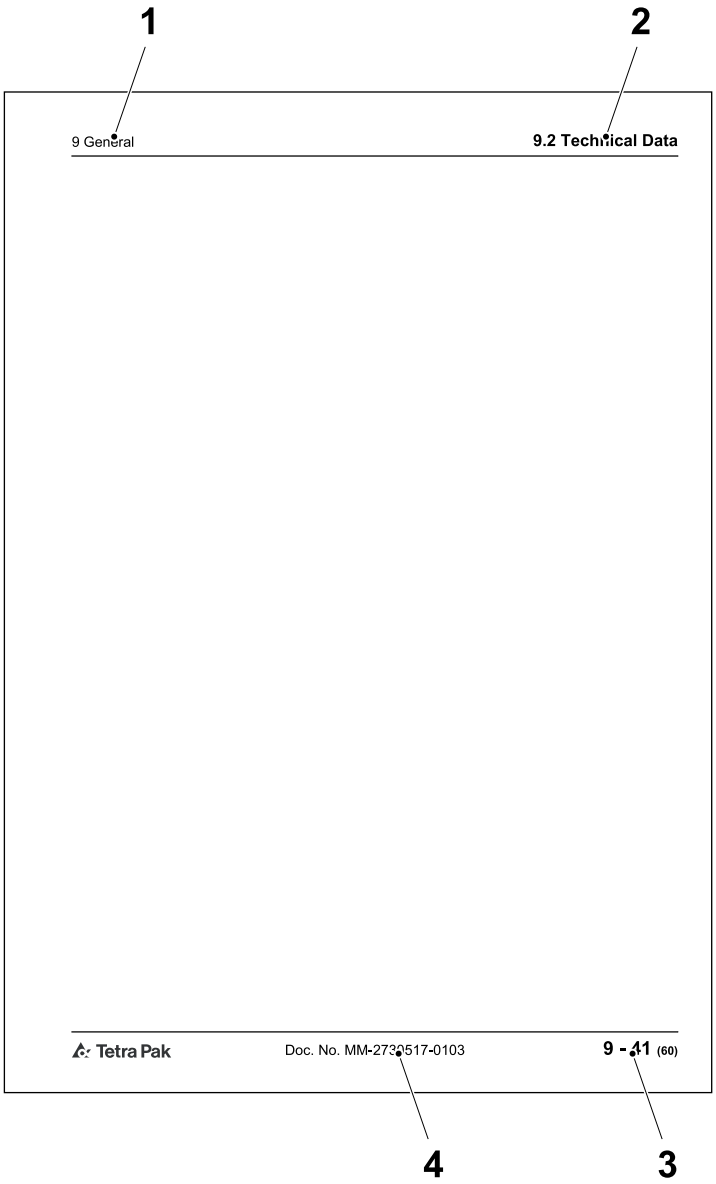

1 Chapter name
2 Section name
3 Page number
4 Document number

Page Numbering

A page number has three parts:

- chapter number (1)
- consecutive page number (2) within the chapter
- total number of pages (3) in the chapter

Note! The letters UP may replace the chapter number (1) if the manual includes update pages. The consecutive page number (2) and the total number of pages (3) of update pages do not follow the existing sequential page numbering of the chapter.

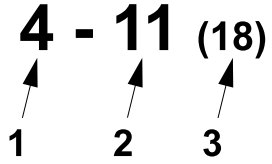

1 Chapter number
2 Consecutive page number
3 Total number of pages

Typographical Conventions

Controls on the operator panel, emergency stop devices, and program steps are printed in CAPITAL LETTERS.

Menu names, button names and other text displayed in software are printed in COURIER.

Cross-references are underlined.

Symbols

Symbols used in illustrations.

	A pointer arrow indicates the position of an object.
	A zoom arrow indicates that an object view is enlarged. The arrow points towards the enlarged view of the object.
	A rotation movement arrow indicates rotational movement of an object. The arrow points in the direction of rotation.
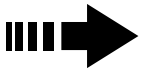	A straight movement arrow indicates movement of an object. The arrow points in the direction of movement.

Machine Introduction

Intended Use of the Equipment

The intended use of this Tetra Pak® equipment is to pack liquid food products.

All other use is strictly prohibited. The Tetra Pak Group will not be held responsible for injury or damage if the equipment is used for any other purpose than the intended use described above.

Manufacturer

This Tetra Pak® equipment has been manufactured by

Tetra Pak Packaging Solutions
Via Delfini 1
41123 Modena
Italy

Declaration of Conformity

A copy of the Declaration of Conformity can be found in the Installation Manual. The signed Declaration of Conformity is delivered separately with the equipment.

Identification

CE Classification

This equipment complies with the basic health and safety regulations of the European Economic Area (EEA).

3-A Compliance

This equipment complies with the 3-A Sanitary Standards for Formers, Fillers, and Sealers of Containers for Fluid Milk and Fluid Milk Products, Number 17-XX.

Machine Plate

The illustration below shows an example of the machine plate and its location on the equipment. The machine plate carries data needed when contacting Tetra Pak® concerning this specific equipment.

Make sure that the equipment data in the front pages of this manual corresponds to the machine plate data and the machine specification.

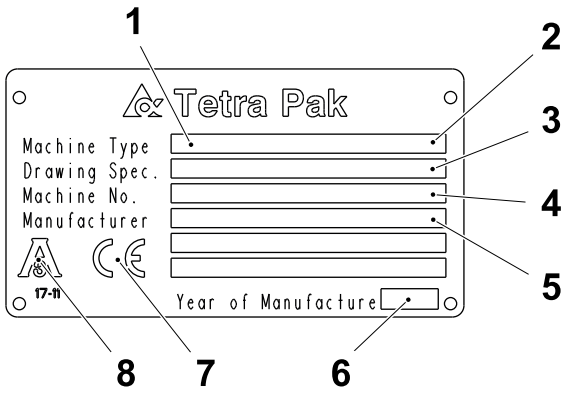

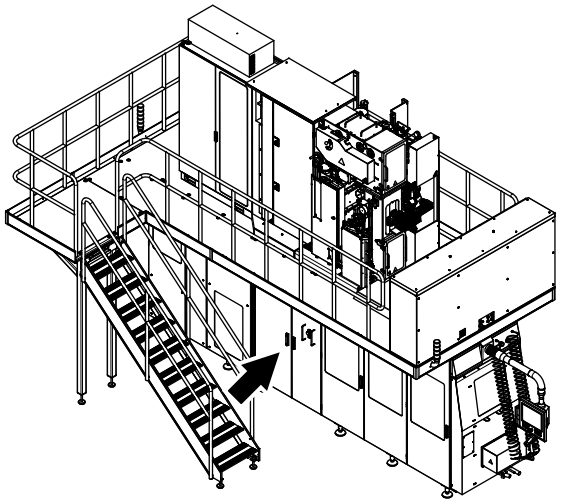

1 Machine type
2 Volume
3 Drawing specifications
4 Machine serial number
5 Manufacturer
6 Year of manufacture
7 CE mark
8 3-A mark (if applicable)

Food Grade Lubricated Machine Plate

The illustration below shows an example of the Food Grade Lubricated Machine plate and its location on the equipment. The Food Grade Lubricated Machine plate indicates that lubricants used in this equipment are of food grade quality.

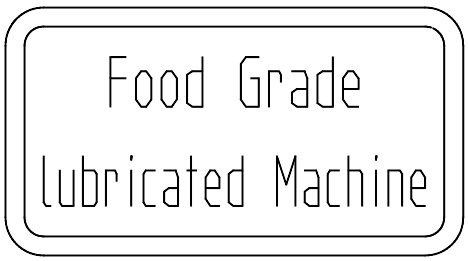

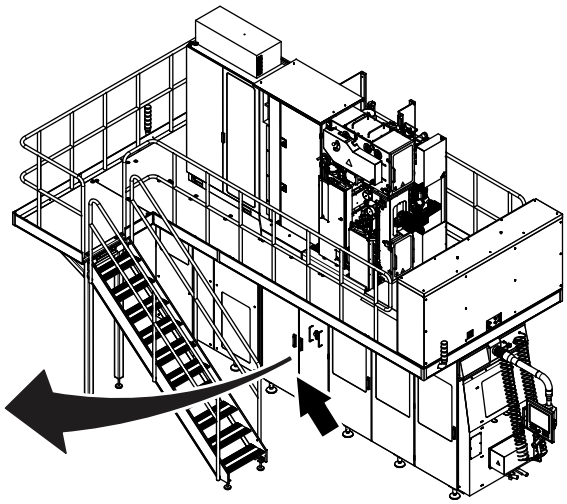

Delivered Design Label

The illustration below shows an example of the delivered design label and its location on the equipment. The delivered design label lists information tracking any rebuilding done to the electrical design, and any alterations done in the electrical cabinet and to related electrical components.

The delivered design label is filled in by the person performing the rebuilding or alteration.

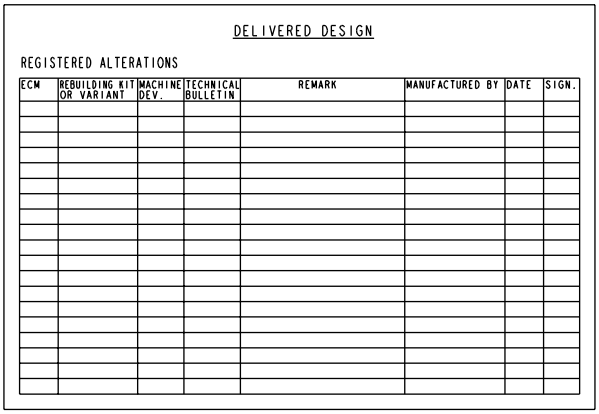

DELIVERED DESIGN

REGISTERED ALTERATIONS

ECM	REBUILDING KIT OR VARIANT	MACHINE DEV.	TECHNICAL BULLETIN	REMARK	MANUFACTURED BY	DATE	SIGN.

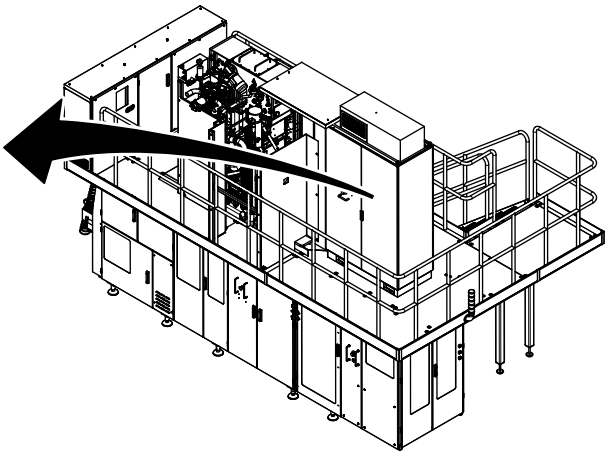

Orientation

The illustration below shows the orientation of the equipment. This orientation information will be used throughout this manual. The arrows indicate the flow of material.

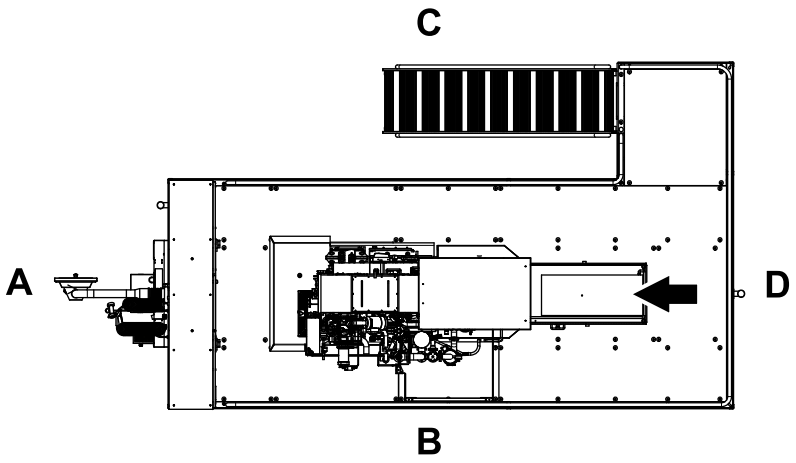

A Front
B Right-hand side
C Left-hand side
D Back

Hygiene

Packaging Material

Avoid microbiological contamination of the packaging material:

- Always protect your packaging material against contamination.
- Always keep the doors to the filling room (area) closed. To prevent contamination via air streams, never open a window when the machine is in production.
- Never clean the floors or the machine in the filling room (area) when the machine is in production.
- Compressed air used for cleaning purposes is to be used only for cleaning filters and should only be used outside of the filling room (area) or in the final folder compartment of the filling machine.
- Prepare the splicing of the packaging material as late as possible.
- Disinfect your hands before touching anything that may come into contact with the product. Use code H disinfectant. See the Technical Data chapter of the Maintenance Manual.
- Keep your hands clean.
- Always wear some type of hair protection (cap or hairnet) and clean clothes (preferably white).
- Do not wear a watch, ring, necklace, earrings, or any other exposed jewellery.

Steam Barrier in the Product Valve

The filling machine's product valve employs a steam barrier to separate the product supply line from the filling machine. The steam barrier allows the machine and the product supply line to be independently sterilised to commercial sterility conditions.

- Never disengage the steam barrier, and never interrupt the steam supply when the filling machine or the product supply line is being brought to the pre-sterilization phase, or when the machine is already in the production phase.
- If any maintenance activity requires disengagement of the steam barrier or the interruption of the steam supply to the machine, make sure that the product supply line is idle and empty of product.

How to Use This EM

Chapters in this EM.

Chapter	Name	Drawing No.
i	Introduction	
ii	Safety Precautions	
1	Electrical Systems Description	
2	Document List	xxxxxxx-0001
3	Position Summary	xxxxxxx-0002
4	Circuit Diagrams	xxxxxxx-0003
5	Line Summary	xxxxxxx-0004
6	Cabinet Terminal Summary	xxxxxxx-0005
7	Terminal Strip Overview	xxxxxxx-0006
8	Cable Connection List	xxxxxxx-0007
9	Mains Connection	xxxxxxx-0008
10	Mounting Drawings	xxxxxxx-0009
11	Drawing Remarks	
12	Other Information	
13	Program Documents	

The Document List chapter is a table of contents for the chapters 3 to 9, listing all drawings included.

In the Circuit Diagrams, the first pages are reserved for distribution terminals and the last pages can be used for pre-connected cables. Pre-connected cables are connected to spare terminals and are reserved for future use.

The diagrams in the Mains Connection chapter show how the machine should be connected to the local supply, the dimensions of the connection cable, and the connection of the matching transformer, when used.

The Drawing Remarks chapter lists the drawing remarks indicated with a number in the drawing.

The Program Documents chapter contains the PLC programs for this equipment.

(Cont'd)

(Cont'd)

The documents and drawings are identified by drawing number (1), version code (2), and page number (3). The page number is the consecutive numbering of the pages that belong to the main number and is used as a reference in the diagrams.

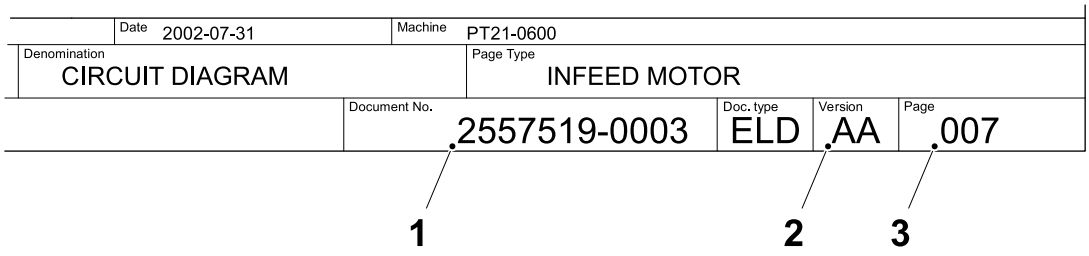

1 Drawing number
2 Version code
3 Page number

Reference Designation

Components are identified by the reference designation, defined by a function code (1), and a component code (2).

The object code for the group level (3) refers to the purpose or task of the group level that the component serves or supplies. See the section List of Function Codes

The object code for the component level (4) refers to the purpose or task of the current object. The letter is in accordance with international standards.

Examples: Code P for components that present information, such as an alarm lamp, a clock, or a volt meter. Code M for components that provide mechanical energy such as an actuator, or an electric motor.

The Tetra Pak Group has chosen to always use the function oriented structure for reference designation. The prefix indicating function oriented structure (=) is not shown in the reference designation.

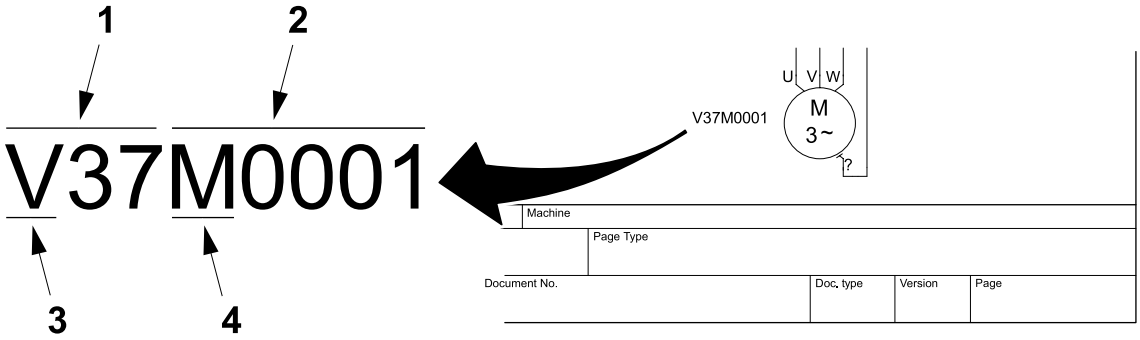

1 Function code
2 Component code
3 Object code, group level
4 Object code, component level

List of Function Codes

Function codes for this equipment.

Function Code	Identification
A01	General purpose and electrical cabinet
F01	Electrical cabinet safety circuit
F10	ASU safety circuit
F40	Jaw System safety circuit
F50	Final Folder safety circuit
F60	TPOP safety circuit
F70	Superstructure safety circuit
K80	Service Module
P60	TPOP
T10	ASU
T40	Jaw System
T50	Final Folder
U30	Chemical
U70	Superstructure

Explanation of the American Wire Gauge (AWG) Table on the First Page of the Circuit Diagrams

The cables and conductors used in Tetra Pak® equipment and documentation are, in most cases, given in measurements of metric area, such as 1.5 mm². Metric areas and AWG sizes are not fully interchangeable, and CSA/UL standards have a different current density for conductors than EN/ISO standards.

(Cont'd)

(Cont'd)

The AWG table on the first page of the circuit diagrams illustrates how metric areas correspond to AWG sizes, and how the current carrying capacity is recalculated based on the current density for the corresponding AWG conductor.

	1	2	3	4	5	6	7
	Current carrying capacity, A Ambient temperature 40ºC			Conductor size		Current density	
				mm^2	AWG	A / mm^2	
	B1	Based on CSA/UL density	CSA/UL	EN	CSA/UL	B1	CSA/UL
A			**2,64**	0,32	**22**		**8,25**
	N/A	4,13		0,50			
B			**4,4**	0,52	**20**		**8,48**
	8,6	5,61		0,75		11,47	
			6,16	0,82	**18**		**7,48**
C	10,3	7,48		1,00		10,30	
D			**8,8**	1,31	**16**		**6,72**
	13,5	10,08		1,50		9,00	
E			**13,2**	2,08	**14**		**6,35**
	18,3	15,87		2,50		7,32	
F			**17,6**	3,31	**12**		**5,32**
	24	21,27		4,00		6,00	
G			**26,4**	5,26	**10**		**5,02**
	31	30,11		6,00		5,17	
H			**44**	8,37	**8**		**5,26**
	44	52,59		10,00		4,40	
I			**57,2**	13,30	**6**		**4,30**
	59	68,81		16,00		3,69	
J			**74,8**	21,15	**4**		**3,54**
	77	88,42		25,00		3,08	
K			**88**	26,67	**3**		**3,30**
			101,2	33,62	**2**		**3,01**
	96	105,35		35,00		2,74	
L			**114,4**	42,41	**1**		**2,70**
	117	134,87		50,00		2,34	
M			**132**	53,49	**1/0**		**2,47**
			154	67,43	**2/0**		**2,28**
	149	159,87		70,00		2,13	
N			**176**	85,01	**3/0**		**2,07**
	180	196,68		95,00		1,89	
O			**202,4**	107,20	**4/0**		**1,89**
	208	226,57		120,00		1,73	

(Cont'd)

(Cont'd)

In the AWG table on the previous page, column 1 gives the current carrying capacity according to EN 60204-1:2006 Table 6, installation method B1. The values are given for 40 °C ambient temperature.

Column 2 gives the current carrying capacity, limited by the AWG current density in column 7 within the same row(s) letter.

Column 3 gives the CSA/UL current carrying capacity according to NFPA 79:2007 Table 12.5.1 (75 °C insulation). The values have been converted to 40 °C ambient temperature according to NFPA 79:2007 Table 12.5.5(a).

For conductors smaller than 10 mm^2, the current carrying capacity is limited by the AWG density in column 7, that is, values in column 2 with grey background colour are valid for the current carrying capacity.

For conductors equal to or larger than 10 mm^2, the current carrying capacity is limited by the calculated value from EN 60204-1:2006 Table 6 (column 6), that is, values in column 1 with grey background colour are valid for the current carrying capacity.

Example

In the row with the letter D

- 1.5 mm^2 conductor (column 4) has, according to EN 60204-1:2006 Table 6, a current carrying capacity of 13.5 A (column 1).
- 13.5 A in a 1.5 mm^2 conductor gives a current density of 9.00 A/mm2 (column 6).
- The corresponding AWG conductor, AWG 16 (column 5), has a current carrying capacity of 8.8 A (column 3), which gives a current density of 6.72 A/mm^2 (column 7)
- A 1.5 mm^2 conductor with a density of 6.72 A/mm^2 gives a current carrying capacity of 10.08 A (column 2).

Optional Equipment

An optional equipment designation indicates that the component belongs to specific optional equipment. The designation numbers for this equipment are explained in the Drawing Remarks chapter.

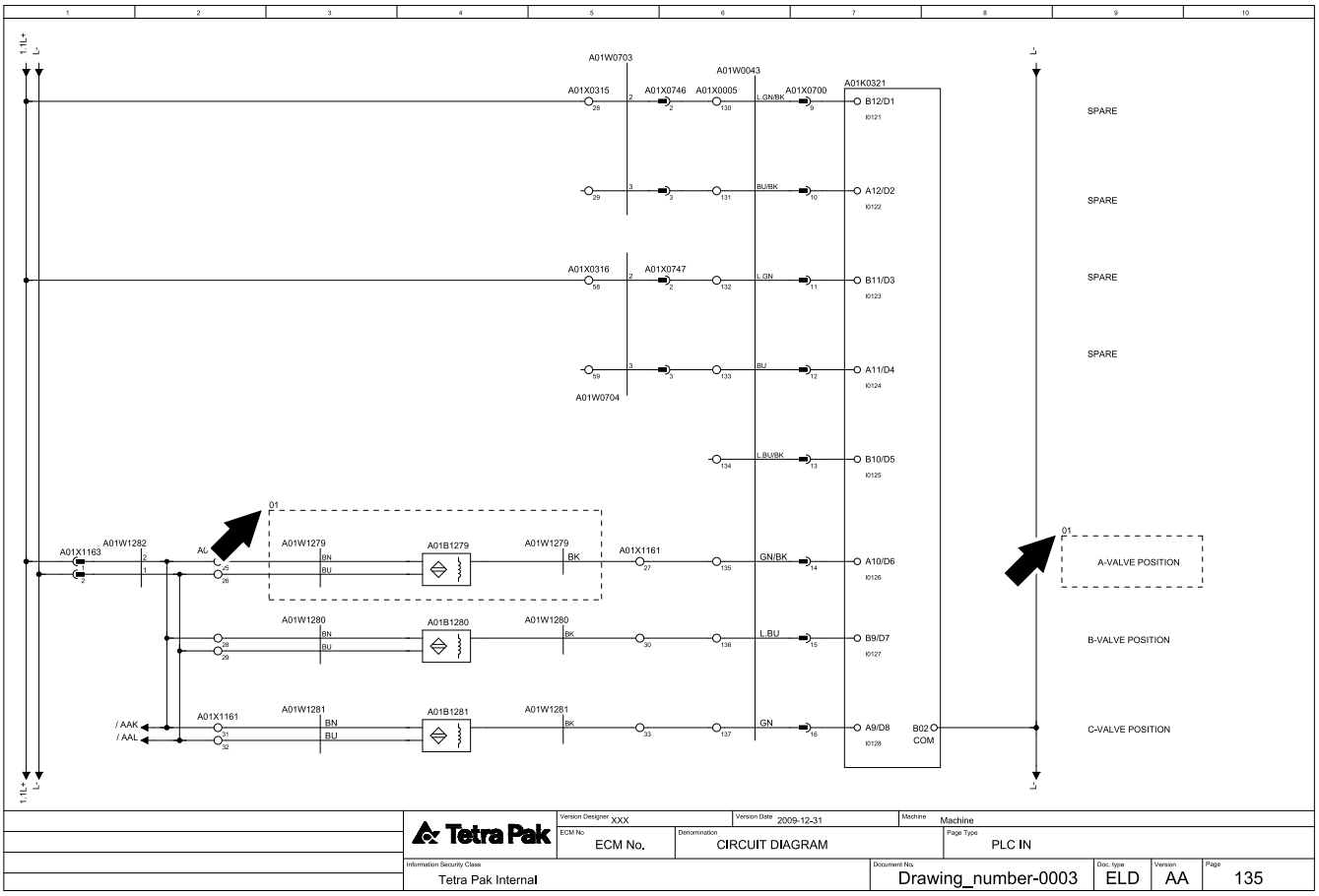

How to Trace an Electrical Component

Start tracing an electrical component by finding the correct list with page and column references to the Circuit Diagram.

Example 1: How to Trace a Line on page i-21 illustrates how to trace a Line. Use the Line Summary.

Example 2: How to Trace a Contactor on page i-23 illustrates how to trace a contactor. Find page references in the Position Summary. The procedure is identical when tracing sensors or other components. For cables, the page references are in the Cable Connection List. The number of spare cores is shown in the cable connection list.

Example 3: How to Trace a Terminal in the Electrical Cabinet on page i-24 and Example 4: How to Trace a Terminal Outside the Electrical Cabinet on page i-25 illustrate how to trace a terminal. Find page references for terminals *in* the electrical cabinet in the Cabinet Terminal Summary, and page references for terminals *outside* the electrical cabinet in the Terminal Strip Overview.

(Cont'd)

(Cont'd)

Example 5: How to Trace a Network on page i-26 illustrates how to trace a network (DeviceNet, Ethernet etc.). The last pages of the Circuit Diagrams are reserved for the network layout; these provide an overview of the network with cross references to locate the components in the circuit diagrams.

Example 6: How to Find Electrical Components Using the SPC on page i-28 illustrates how to locate a component in the Spare Parts Catalogue, SPC.

Example 1: How to Trace a Line

Supply Voltage and Line Connection Order

The supply voltage in the electrical cabinet has power voltage and control voltage designations.

- Power voltage: lines with designations ending with 01 to 09, for example, L03 and L803
- Control voltage: lines with designations ending with 10 to 99, for example, L12 and L812

The line connection order is shown in the Line Summary.

How to Trace a Line

The illustration below shows how to trace line connection L- from the component terminal A01X1163:2 to A01K0321:B02.

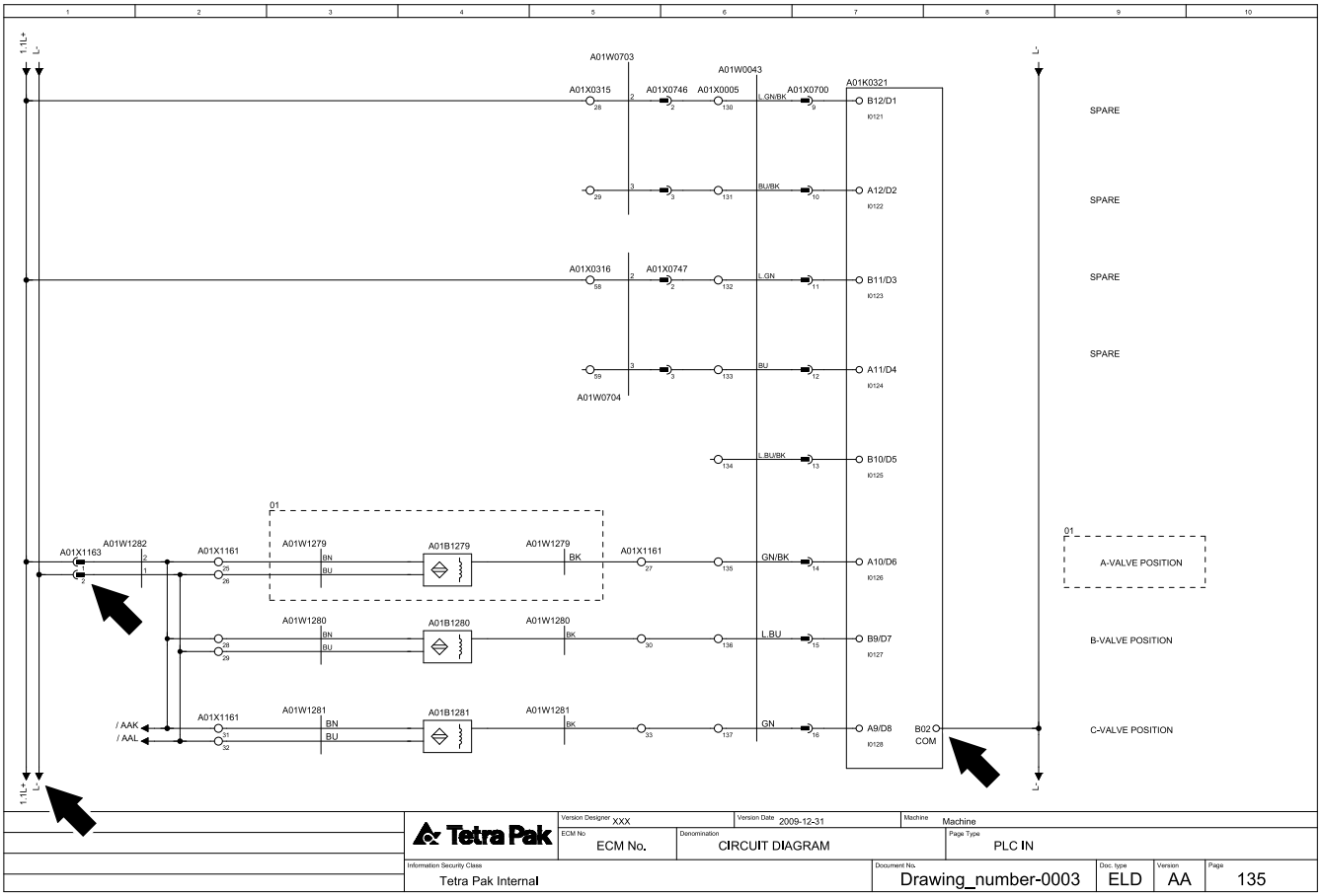

Line summary : Drawing_number-0003

Net	Page.Col.	Option	Area/Color	Net
L-				
A01X0010:1	001.2		0,75 BU	
A01X1163:2	135.1		0,75 BU	
A01K0321:B02	135.8			

Example 2: How to Trace a Contactor

The illustration below shows how to trace contactor G34K0110 to page 114, column 6 in the Circuit diagram.

Related contacts are traced with a cross reference to page 014, column 5.

Note! For master and slave components, such as coils and contacts, only the master is reported in the Position Summary. The slave shows the page and column references of the master.

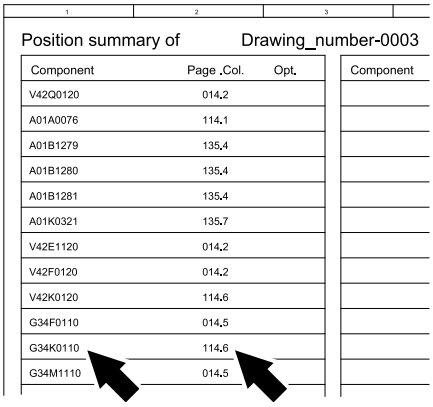

Position summary of Drawing_number-0003

Component	Page .Col.	Opt.	Component
V42Q0120	014,2		
A01A0076	114,1		
A01B1279	135,4		
A01B1280	135,4		
A01B1281	135,4		
A01K0321	135,7		
V42E1120	014,2		
V42F0120	014,2		
V42K0120	114,6		
G34F0110	014,5		
G34K0110	114,6		
G34M1110	014,5		

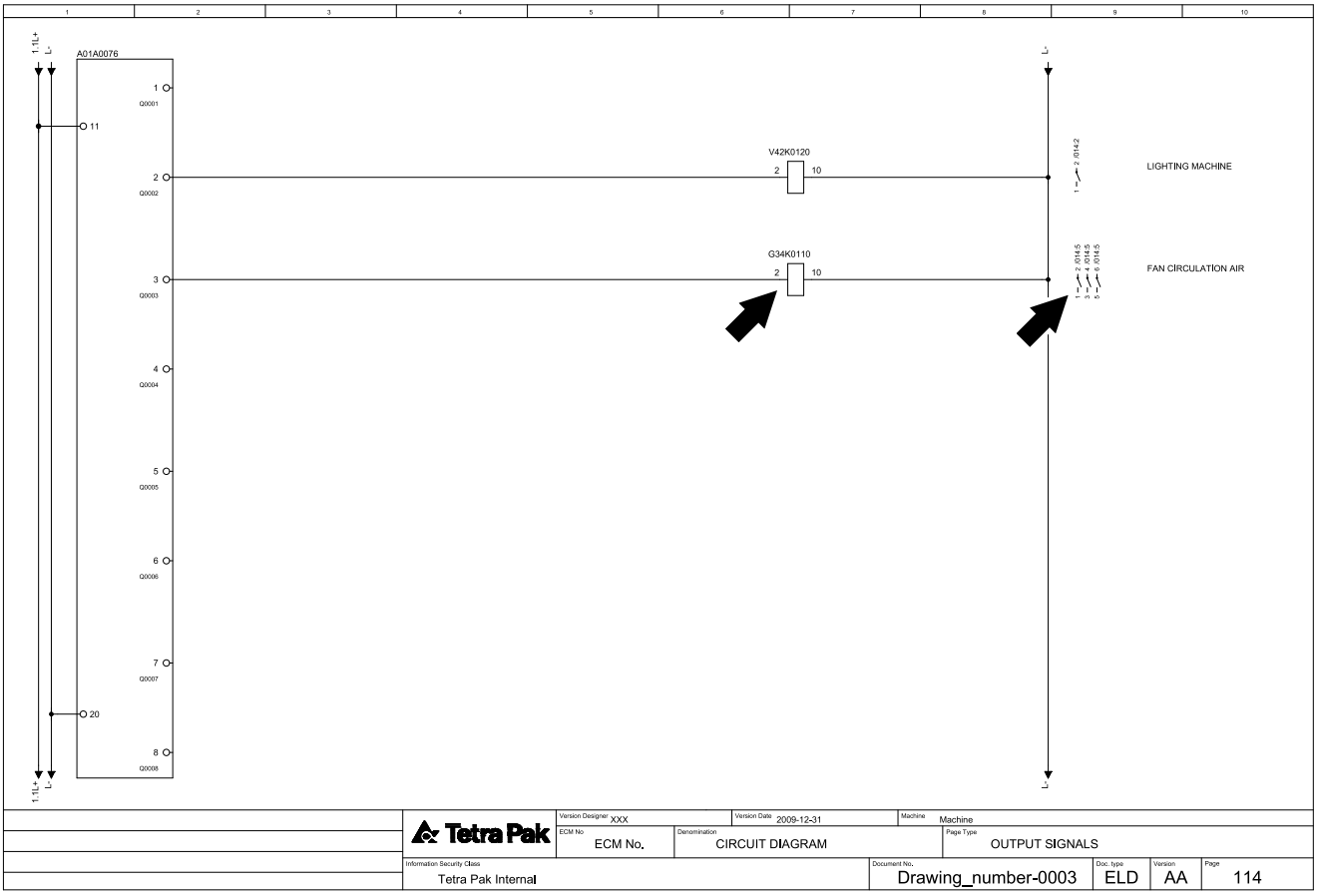

Example 3: How to Trace a Terminal in the Electrical Cabinet

The Cabinet Terminal Summary refers to the page and column where the relevant terminal is to be found.

The illustration below shows how to trace terminal A01X0005:130 to page 135, column 6 in the Circuit diagram.

Cabinet terminal summary of Drawing_number-0003

A01X0005	Page .Col.	Opt.
A01X0005:130	135.6	
A01X0005:131	135.6	
A01X0005:132	135.6	
A01X0005:133	135.6	
A01X0005:134	135.6	
A01X0005:135	135.6	
A01X0005:136	135.6	
A01X0005:137	135.6	

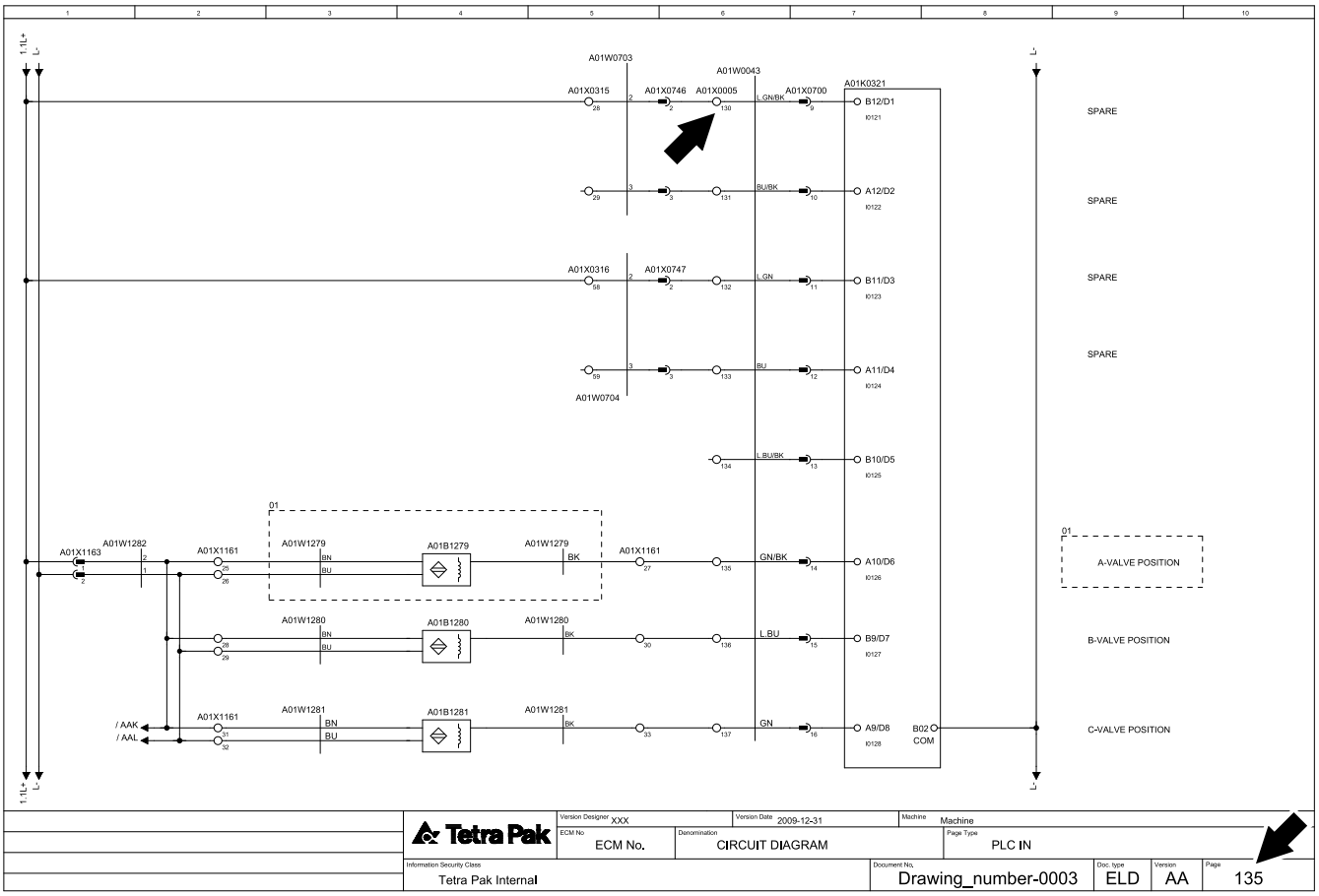

Example 4: How to Trace a Terminal Outside the Electrical Cabinet

The Terminal Strip Overview refer to the page and column where the relevant terminal is to be found.

The illustration below shows how to trace terminal A01X1161:26 to page 135, column 2 in the Circuit diagram. Note the connected component, A01B1279.

Terminal strip of Drawing_number-0003

A01X1161

From	Cable	Internal Jumper	Terminal	External Jumper	Cable	To	Page.Col.	Option	Function text
A01X1163:1	A01W1282-2		25		A01W1279-BN	A01B1279	135.2		A-VALVE POSITION
A01X1163:2	A01W1282-1		26		A01W1279-BU	A01B1279	135.2		A-VALVE POSITION
A01B1279	A01W1279-BK		27			A01X0005:135	135.5		
			28		A01W1280-BN	A01B1280	135.2		B-VALVE POSITION
			29		A01W1280-BU	A01B1280	135.2		B-VALVE POSITION
A01B1280	A01W1280-BK		30			A01X0005:136	135.5		
			31		A01W1281-BN	A01B1281	135.2		C-VALVE POSITION
			32		A01W1281-BU	A01B1281	135.2		C-VALVE POSITION
A01B1281	A01W1281-BK		33			A01X0005:137	135.5		

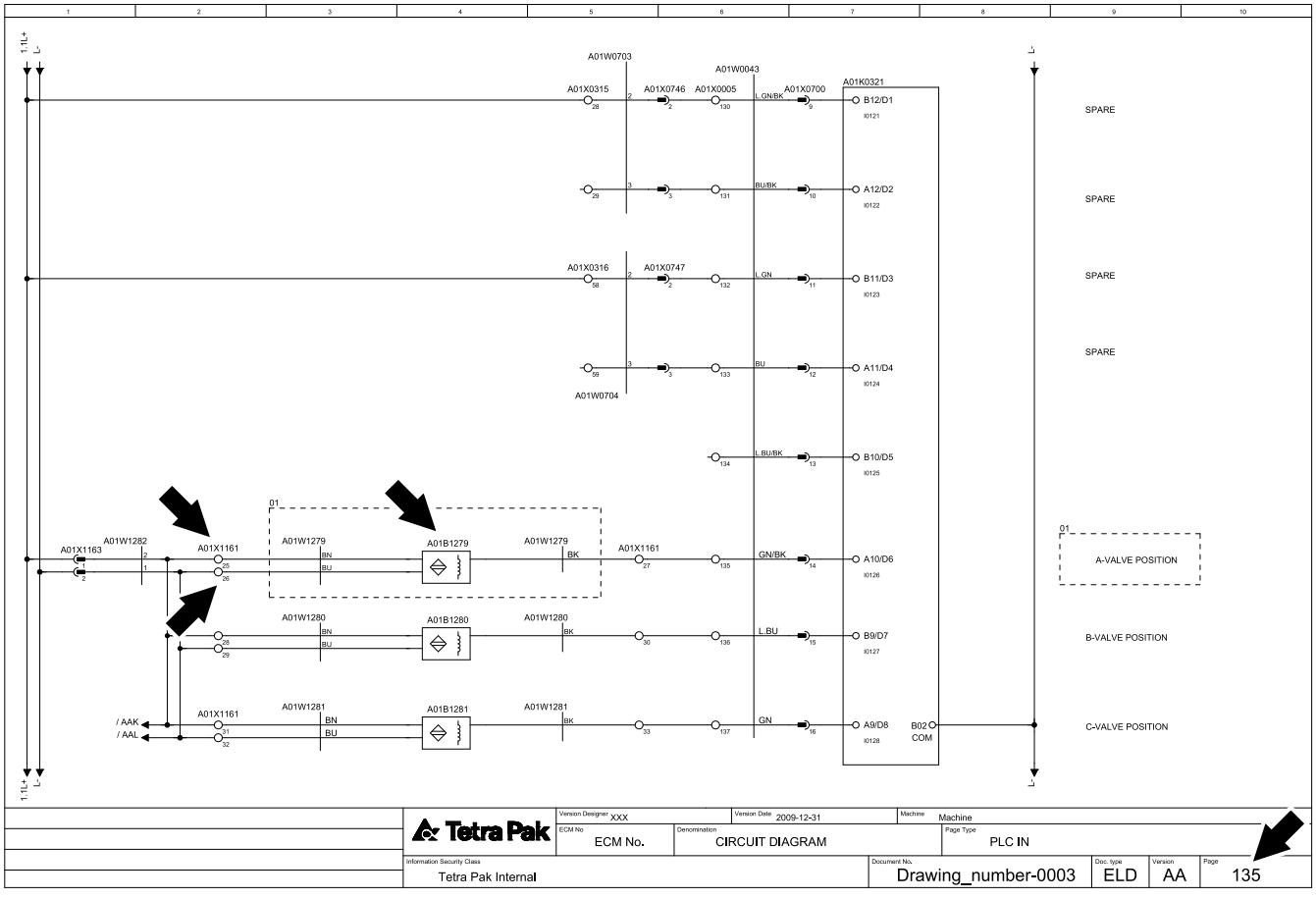

Example 5: How to Trace a Network

The illustration below shows how to find the terminal strip A01X9300 and the network cable A01W9300 in the network overview page(s).

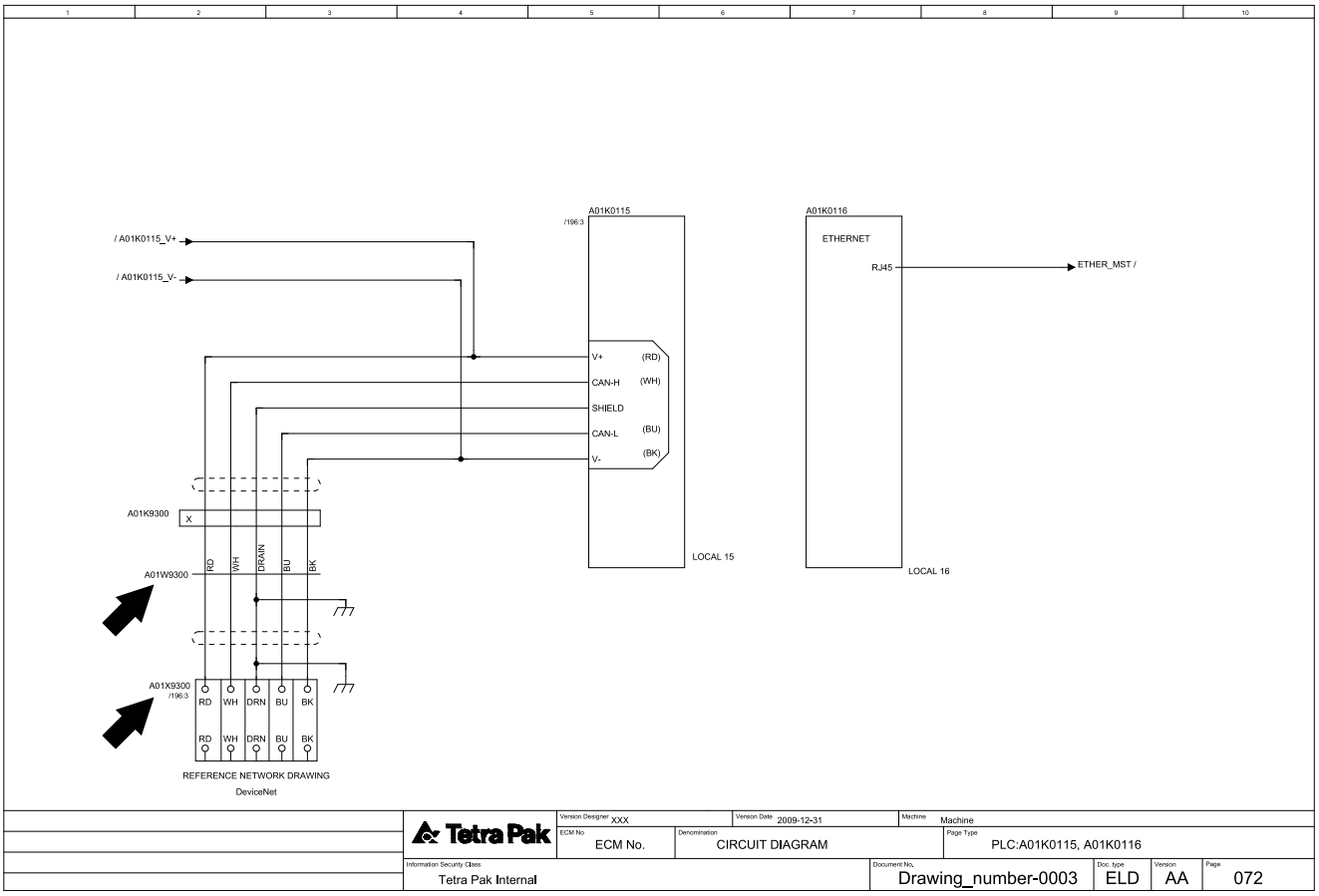

(Cont'd)

(Cont'd)

The figure reference, for example; "fig F" in the Network Overview page, refers to the Network Figure Drawing which provides a description of the component wiring. See the illustration.

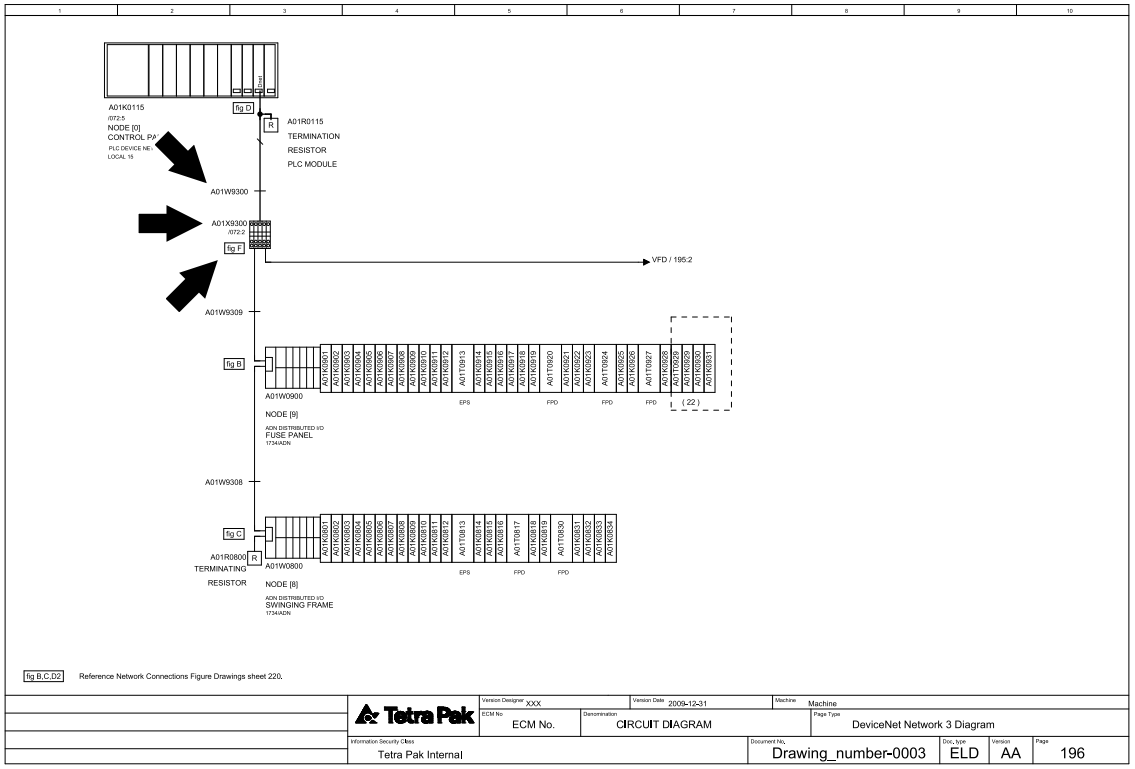

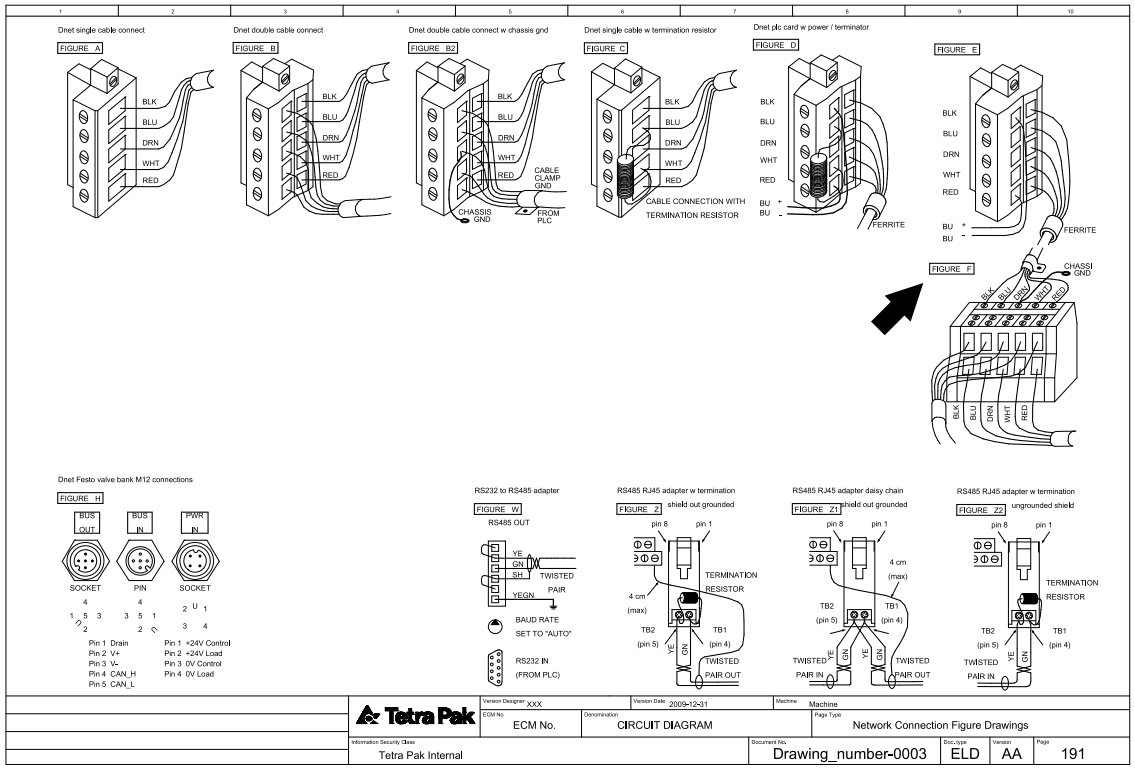

Example 6: How to Find Electrical Components Using the SPC

The Reference Designation Parts Index in the Spare Parts Catalogue, SPC, is used to locate electrical parts. For SPCs without a Reference Designation Parts Index, see the Component Location chapter in this manual.

(Cont'd)

(Cont'd)

The illustration below shows how to find component A04B0041 in the SPC. The Reference Designation Parts Index refers to page 2-5. In the drawing on page 2-4, the position number is the same as the reference designation for the component.

Tetra Pak Used in group: Pos. 020 CHAIN GUIDE Drawing file: 2690623-1_AA.jpg **2-4** (6)

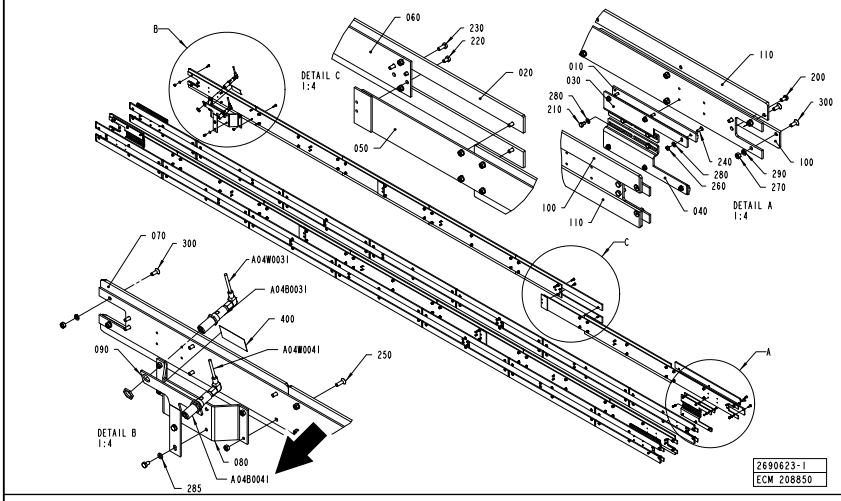

ECM: 209071 - 50001231
Group number: 2690623-0100
Assembly Drawing: 2690623-1_1_AA This list covers pages from 2-2 to 2-5

Pos	Part No	UN	Qty	Description	Page No
-					
010	2597877-0000		8	CHAIN GUIDE	
020	2653358-0000		40	CHAIN GUIDE	
030	2653365-0000		4	SUPPORT	
040	2653366-0000		4	SUPPORT	
050	2653367-0000		8	PLATE	
060	2653368-0000		4	PLATE	
070	2653369-0000		8	CHAIN GUIDE	
080	2690632-0000		1	HOLDER	
090	2690633-0000		1	HOLDER	
100	2730969-0000		4	CHAIN GUIDE	
110	2730970-0000		4	CHAIN GUIDE	
200	90458-0072		8	SCREW ISO 7380 S M6X12 A2	
210	312105-0287		16	SCREW M6S ISO4017 M4X8 A470	
220	312105-0364		18	SCREW M6S ISO 4017 M6X10 A480	
230	312105-0368		40	SCREW M6S ISO 4017 M6X16 A480	
240	312155-0291		24	SCREW DIN 7991 MF6S M4X12 A4 70	
250	312155-0370		4	SCREW DIN 7991 MF6S M6X20 A4 70	
260	312605-0312		24	HEXAGON NUT, M6M M4 A280	
270	312605-0316		168	HEXAGON NUT, M6M M6 A280	
280	315105-0146		40	WASHER BRB5,3X10RFR	
285	315105-0153		2	WASHER BRB6,4X12RFR	
290	315[illegible]-0156		164	LOCK WASHER FBB 6,5	
300	[illegible]8		164	SCREW DIN 7991 MF6S M6X16 A4 70	
400	[illegible]98		1	WARNING SIGN ISO, LASER RADIATION	
A04W0041	[illegible]-0050		1	ACTUATOR/SENSOR CABLE RKWTN 4-225/5M	
A04W0031	[illegible]-0050		1	ACTUATOR/SENSOR CABLE RKWTN 4-225/5M	
A04B0041	90459-5012		1	LASER SENSOR, YD24PA3	
C05C0041	2690632-0000		1	HOLDER	
C05C0031	2653367-0000		8	PLATE	
T04B0031	90459-5012		1	LASER SENSOR, YD24PA3	
T05C0041	2653369-0000		8	CHAIN GUIDE	
T05C0031	2653368-0000		4	PLATE	

Tetra Pak **iv-2** (4)
Doc No: SPC-654654-0101

Pos	Part No	Description	Page No
A			
F09A0332	[illegible]9	THERMOCOUPLE CABLE K/PVC/20AWG 2X0,5MM2	1-3, 1-5
T03A0321	[illegible]9	THERMOCOUPLE CABLE K/PVC/20AWG 2X0,5MM2	1-3, 1-5
T03A0322	[illegible]30	HEATING ELEMENT, 3000W, 220V	1-3, 1-5
B			
A04B0041	90459-5012	LASER SENSOR, YD24PA3	2-3, 2-5
C01B0001	351120-0145	CABLE SILFLEX SIHF 3X2,5 0046020	1-3, 1-5
C32B0001	90220-2259	THERMOCOUPLE CABLE K/PVC/20AWG 2X0,5MM2	1-3, 1-5
T04B0031	90459-5012	LASER SENSOR, YD24PA3	2-3, 2-5
C			
C05C0031	2653367-0000	PLATE	2-3, 2-5
C05C0041	2690632-0000	HOLDER	2-3, 2-5
T05C0031	2653368-0000	PLATE	2-3, 2-5

Page No

2-5 (6)
c No: SPC-654654-0101

Assistance and Inquiries

For assistance when operating this equipment, or other inquiries, comments, or suggestions, submit the questions or give feedback by using the QuTI-P tool. Type QuTI-P in the address field of your browser. If access to QuTI-P is not available, request access by contacting the Global Service Desk.

If access to the Tetra Pak® intranet is not available, contact the nearest Tetra Pak representative.

ii Safety Precautions

Description

Safety Precaution Instructions

WARNING

Read and understand this manual before using the machine.
Failure to follow safety precautions and instructions can result in death or serious injury.

Definition of Lockout Procedure

A lockout procedure is a procedure to put each necessary energy isolating device in its safe position to prevent the energisation of the equipment, such as when a maintenance procedure should be carried out.

A lockout is the use of a device, for example, a padlock, to make sure that an energy isolating device cannot be operated.

An energy isolating device is a mechanical device that physically prevents transmission or release of energy, such as an electrical supply disconnecting device.

Description ii-2

Safety Messages Description..... ii-7

Personnel Requirements ii-8

Skilled Person ii-8

Instructed Person ii-8

Safety Signs..... ii-9

Location of Safety Signs ii-11

Location of Safety Signs - ICU (OE) ii-20

ASU iLine XT Version (OE) ii-21

Protective Devices ii-22

Emergency Stop..... ii-22

Emergency Stop Push-Buttons ii-23

Safeguards..... ii-23

Safety Mat ii-26

Indicating Tower..... ii-27

Audible Alarm ii-28

Safe Manual Handling ii-29

Personal Protection ii-30

Noise ii-30

Entanglement..... ii-30

Hazardous Substances..... ii-31

Disposal of Chemical Substances..... ii-31

Hydrogen Peroxide (H_2O_2)..... ii-31

Emergency Procedures ii-31

Eyes ii-32

Skin..... ii-32

Inhalation ii-32

Ingestion..... ii-32

Personal Protective Equipment ii-32
Handling of Hydrogen Peroxide ii-33
Storage of Hydrogen Peroxide ii-34
Disposal of Hydrogen Peroxide ii-35
Caustic Soda/Sodium Hydroxide (NaOH) ii-35
Emergency Procedures ii-35
Inhalation ii-35
Ingestion ii-35
Skin Contact ii-35
Eye Contact ii-35
Accidental Release, Spillage or Splashing ii-35
Personal Protective Equipment ii-36
Handling and Storage of Caustic Soda/Sodium Hydroxide ii-36
Disposal of Caustic Soda/Sodium Hydroxide ii-36
Estinguishing Media ii-36
Specific Hazards ii-36
Protective Measures in Fire ii-37
Nitric Acid (HNO_3) ii-37
Emergency Procedures ii-37
Inhalation ii-37
Ingestion ii-37
Skin Contact ii-37
Eye Contact ii-37
Accidental Release, Spillage or Splashing ii-38
Personal Protective Equipment ii-38
Handling and Storage of Nitric Acid ii-38
Disposal of Nitric Acid ii-39
Fire ii-39
Explosion ii-39
Estinguishing Media ii-39
Special Information ii-39
Protective Measures In Fire ii-39

Magnetic Components ii-40

Supply Systems ii-41

Electrical Supply ii-41

Residual Voltage ii-42

Electrical Cabinet ii-42

Socket Outlet ii-43

Air Supply ii-44

Steam Supply ii-45

Water Supply ii-46

This page intentionally left blank

Safety Messages Description

A safety message is always accompanied by a safety alert symbol and a signal word.

The safety alert symbol is used to alert about potential personal injury hazards. To avoid hazards, obey all safety messages that follow this symbol.

The following safety alert symbols and signal words are used in this manual to inform the user of hazards.

DANGER	Danger indicates an imminently hazardous situation which, if not avoided, **will** result in **death or serious injury**.
WARNING	Warning indicates a potentially hazardous situation which, if not avoided, **could** result in **death or serious injury**.
CAUTION	Caution indicates a potentially hazardous situation which, if not avoided, **may** result in **minor or moderate injury.** It may also be used to alert against unsafe practices.
CAUTION	Caution without the safety alert symbol indicates a potentially hazardous situation which, if not avoided, **may** result in **property damage**.

Personnel Requirements

Note! Personnel includes all persons working on or near this equipment.

Only skilled or instructed persons are allowed to work with this equipment.

Skilled Person

A skilled person must have relevant education and experience to enable him or her to identify hazards, analyse risks, and avoid hazards which electricity, machinery, chemicals, other energies, and supply systems on this equipment can create.

Skilled persons must meet local regulations, such as certifications and qualifications for working with these energies and systems.

Instructed Person

An instructed person must be adequately advised or supervised by a skilled person. The skilled person enables the instructed person to identify hazards, analyse risks, and avoid hazards which electricity, machinery, chemicals, other energies, and supply systems on this equipment can create.

Safety Signs

WARNING

Damaged or missing safety signs.
Safety signs are used to indicate safety hazards. If the signs are missing or damaged, they can not fulfil this function. Replace all missing or damaged safety signs immediately.

Safety signs are attached to the equipment. The table below lists all the signs that are used, and illustrations show their locations on the equipment. Each position number refers to two standards of a safety sign in the table, but only one is used on the equipment.

- Make sure that each safety sign is legible and in its correct position after installation and maintenance.
- Replace all missing or damaged safety signs immediately.

Pos	ISO Standard	ANSI Standard
1	 **Moving part can crush and cut.** Do not operate with guard removed. Follow lockout procedure before maintenance.	
2	 **Hazardous voltage.** Will shock, burn, or cause death. Follow lockout procedure before maintenance.	
3	 **Chemical burn hazard.** Wear personal protective equipment.	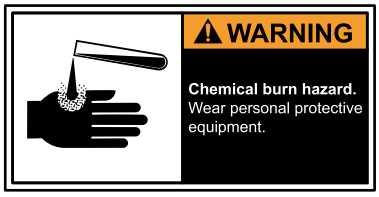

(Cont'd)

(Cont'd)

Pos	ISO Standard	ANSI Standard
4	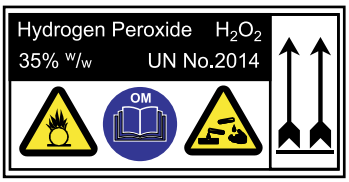	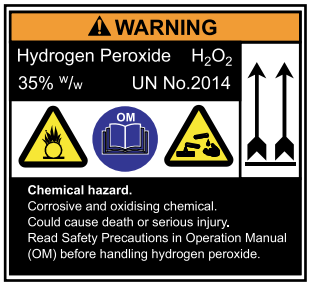
	Chemical hazard. Corrosive and oxidising chemical. Could cause death or serious injury. Read Safety Precautions in Operation Manual (OM) before handling hydrogen peroxide.	
5		
	Risk of eye injury. Wear eye protection.	
6		
	Hot surface. Do not touch. Follow lockout procedure before maintenance.	
7		
	Hazardous voltage. Can shock, burn, or cause death. Read Maintenance Manual (MM) before using this socket outlet.	
8		
	Hazardous rotating shafts and belts. Can crush and cut. Keep hands clear while the machine is operating.	

(Cont'd)

(Cont'd)

Pos	ISO Standard	ANSI Standard
9		
	Hot oil. Wear protective gloves.	

Location of Safety Signs

The illustration shows where the safety signs are located. The position numbers refer to the table in the Safety Signs section.

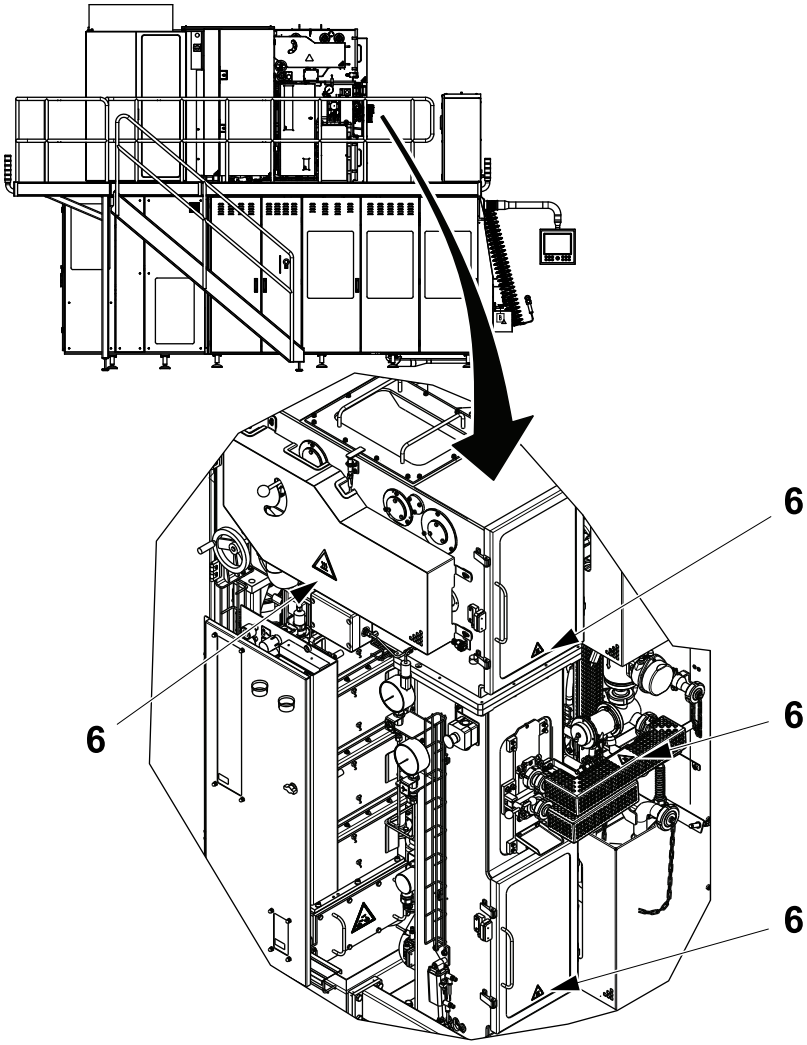

(Cont'd)

(Cont'd)

The illustration shows where the safety signs are located. The position numbers refer to the table in the Safety Signs section.

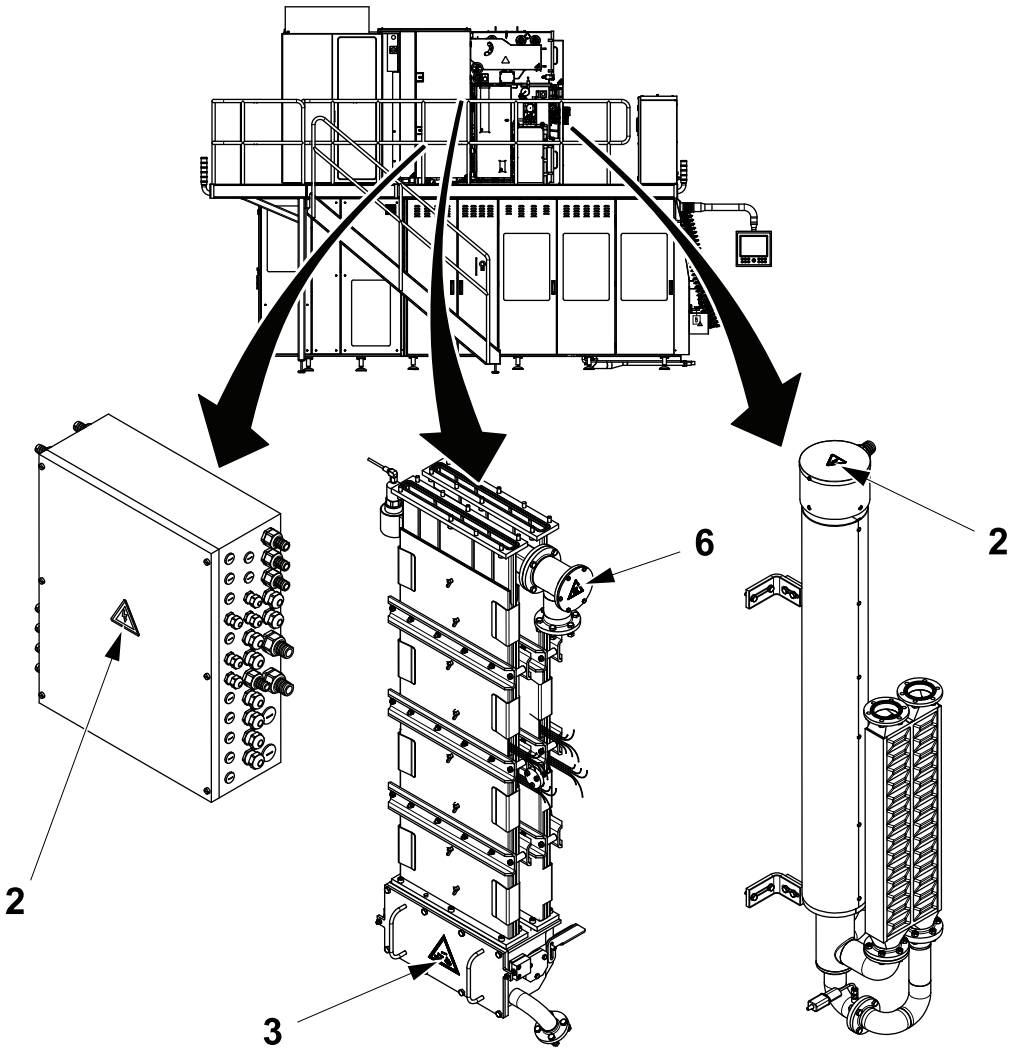

(Cont'd)

(Cont'd)

The illustration shows where the safety signs are located. The position numbers refer to the table in the Safety Signs section.

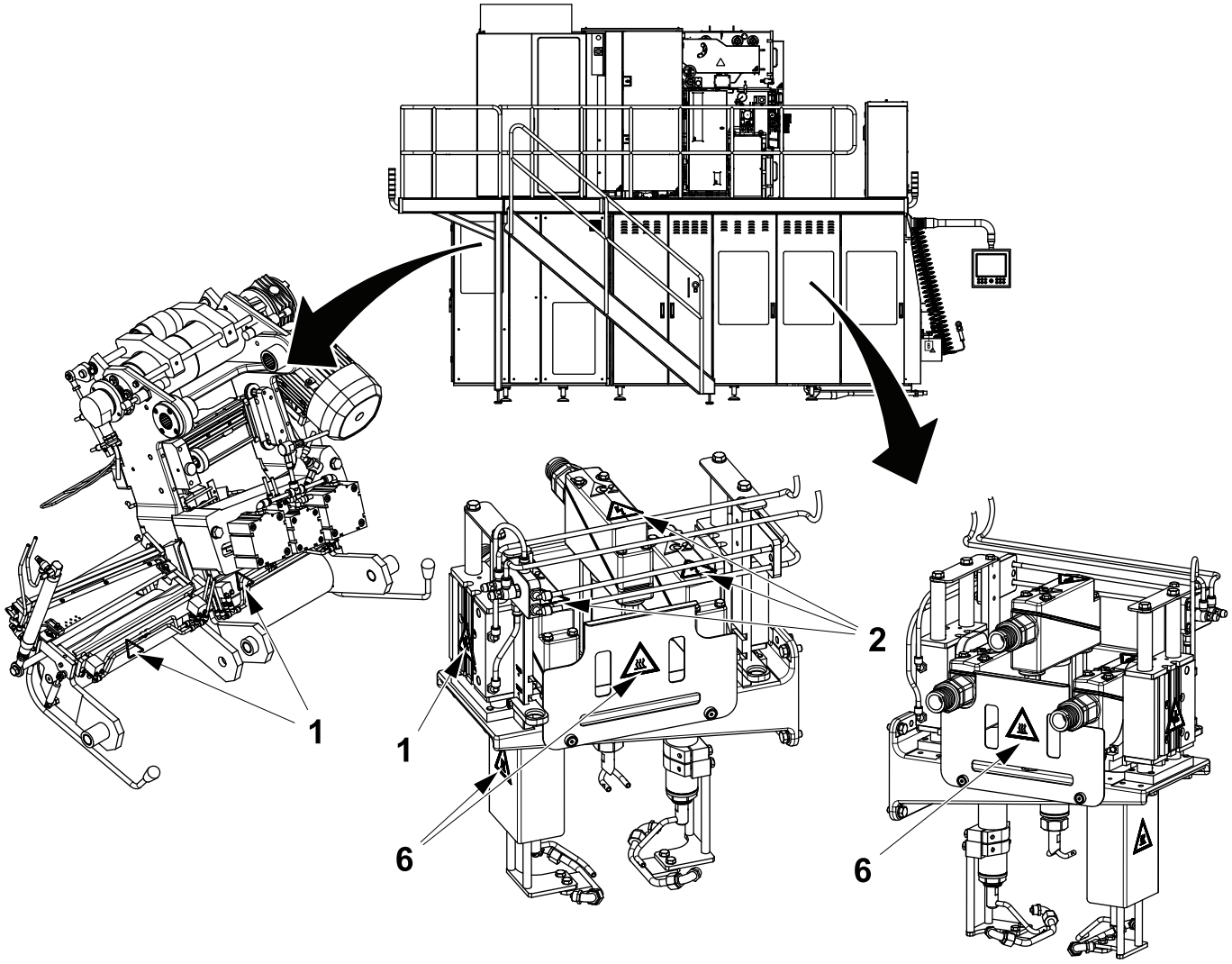

(Cont'd)

(Cont'd)

The illustration shows where the safety signs are located. The position numbers refer to the table in the Safety Signs section.

Note! The sign (6), on the outer plate of the hot air element SS, in the ASU is introduced for Tetra Pak A3/CompactFlex from T-order 21220/00290.

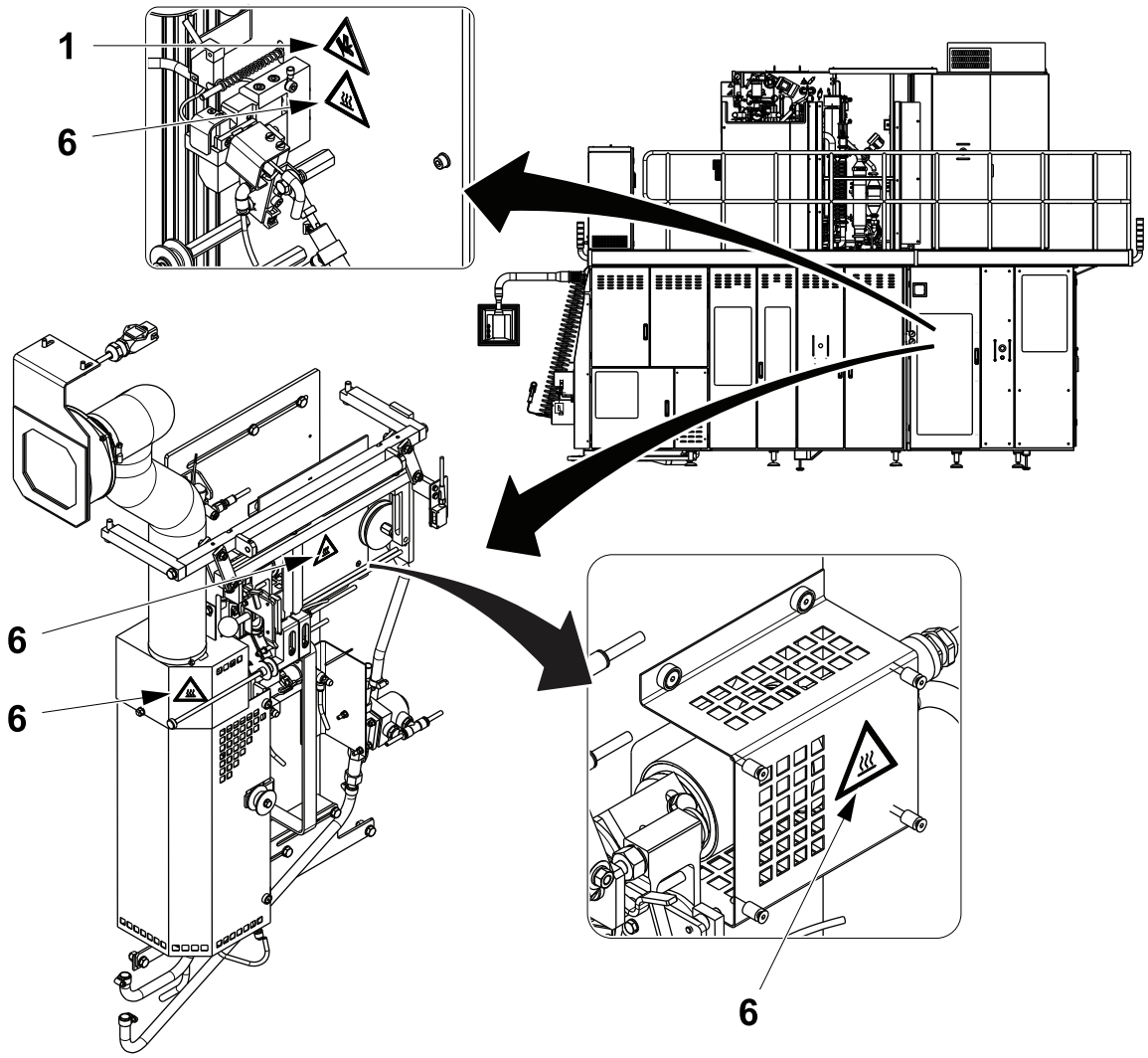

(Cont'd)

(Cont'd)

The illustration shows where the safety signs are located. The position numbers refer to the table in the Safety Signs section.

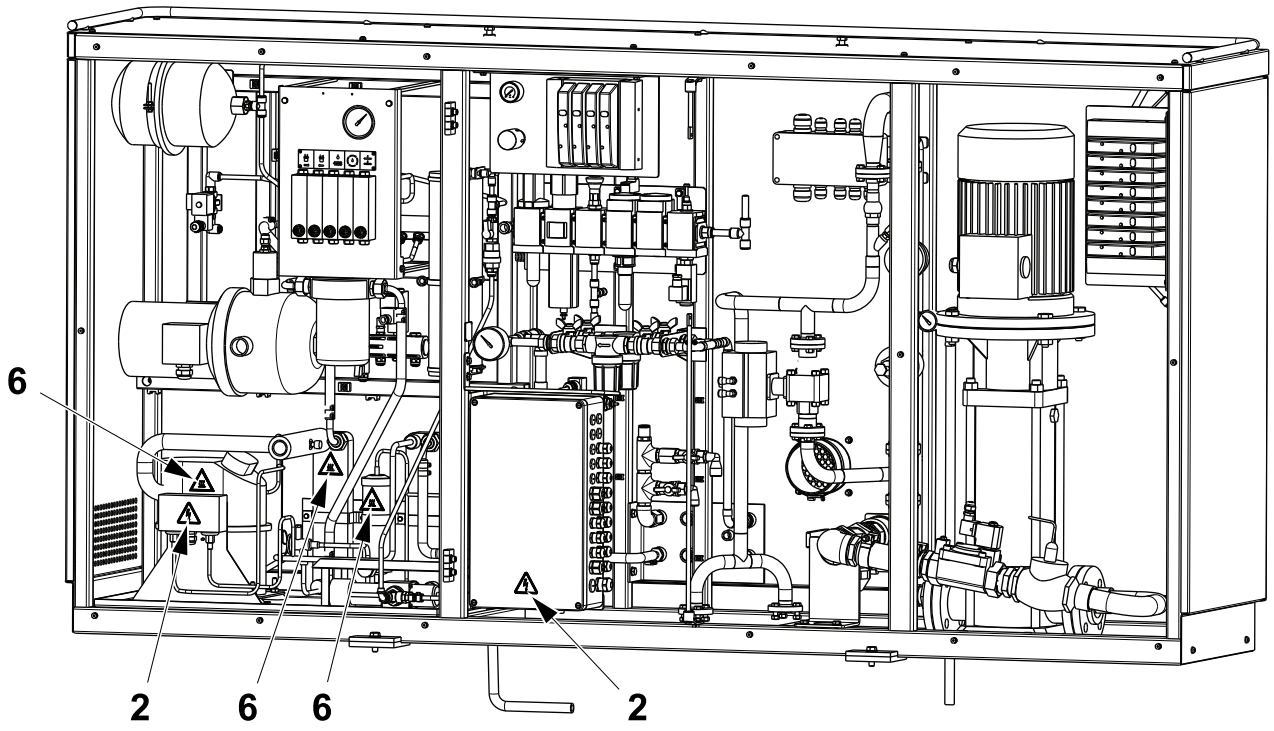

(Cont'd)

(Cont'd)

The illustration shows where the safety signs are located. The position numbers refer to the table in the Safety Signs section.

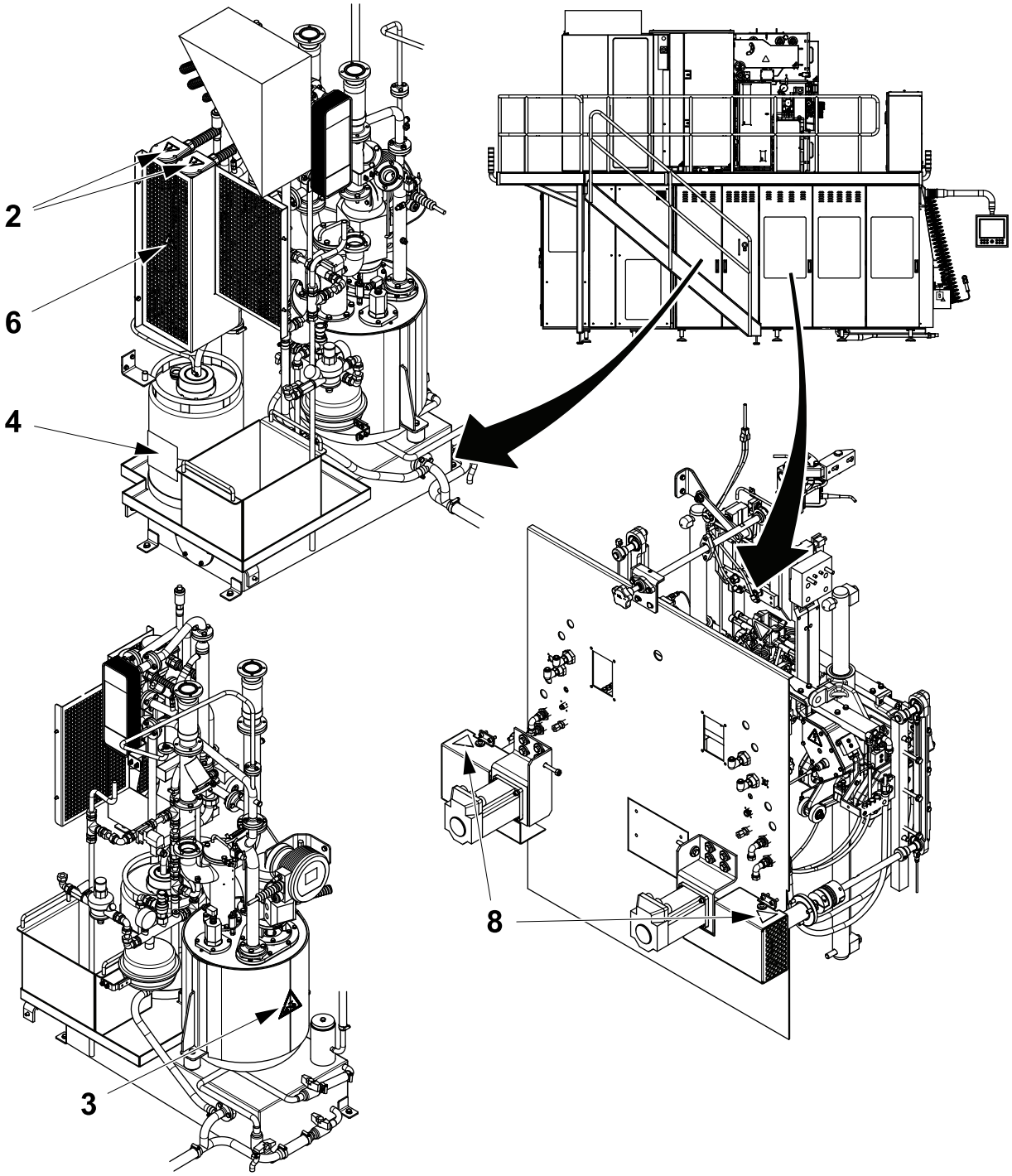

(Cont'd)

(Cont'd)

The illustration shows where the safety signs are located. The position numbers refer to the table in the Safety Signs section.

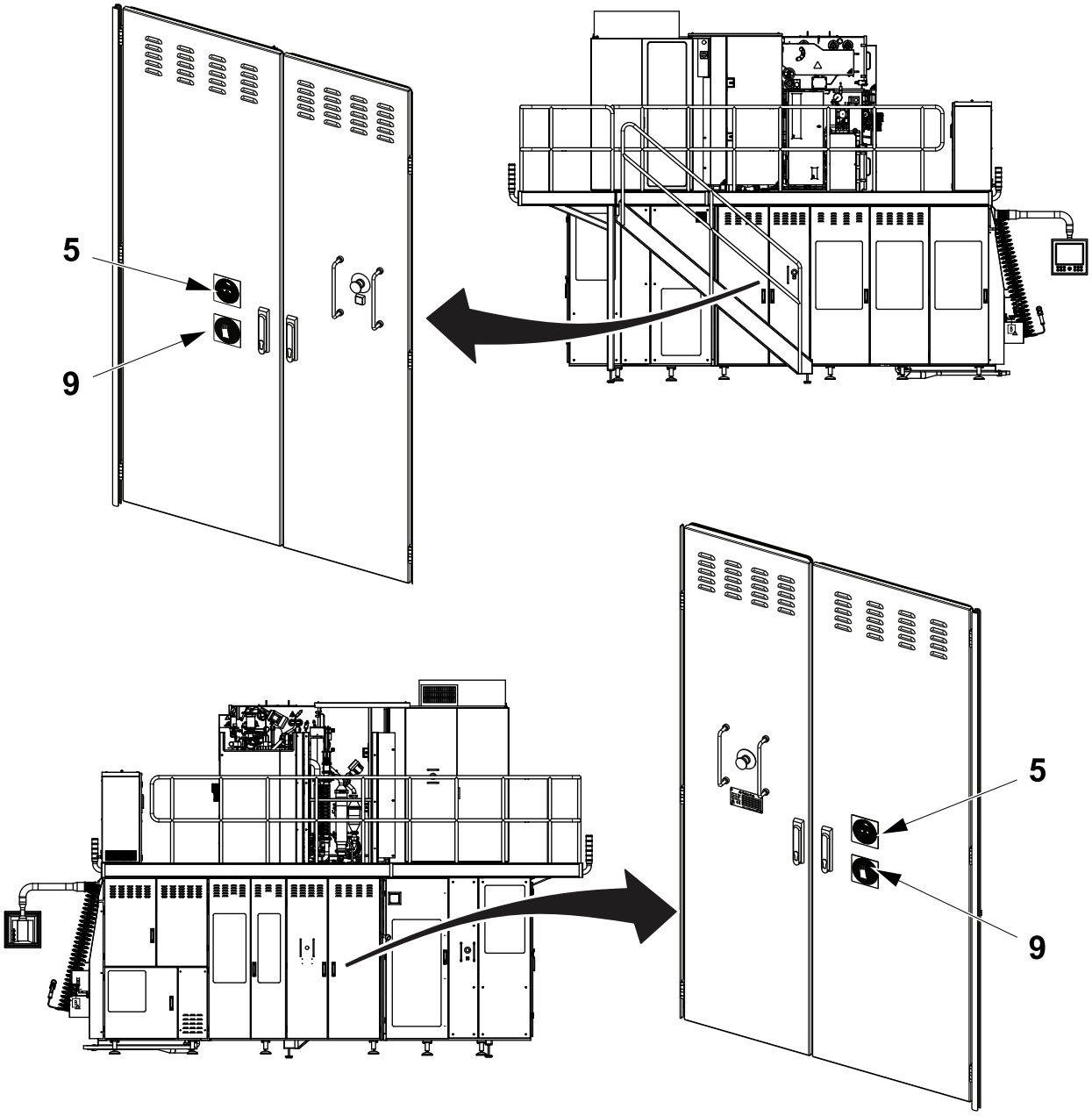

(Cont'd)

(Cont'd)

The illustration shows where the safety signs are located. The position numbers refer to the table in the Safety Signs section.

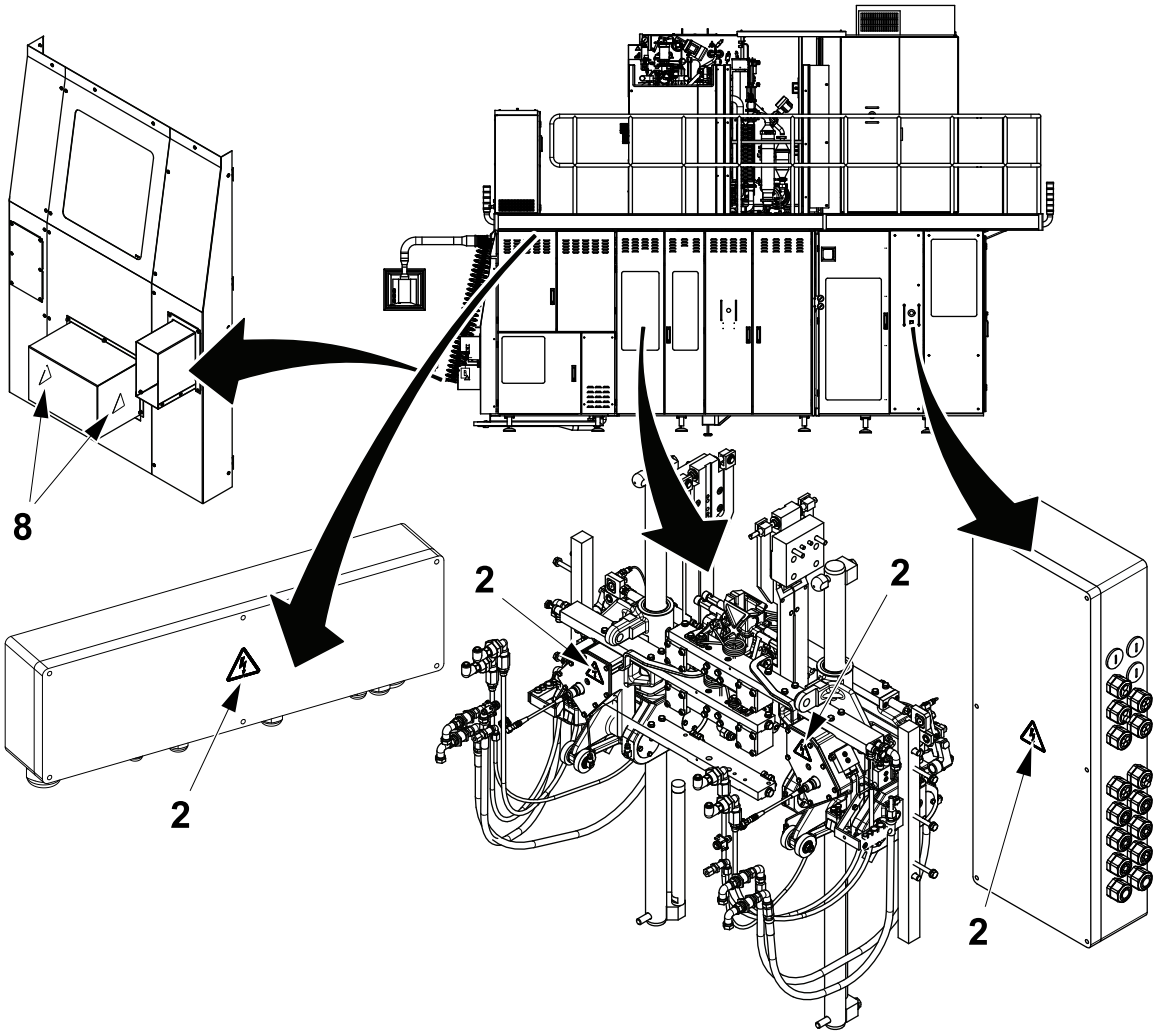

(Cont'd)

(Cont'd)

The illustration shows where the safety signs are located. The position numbers refer to the table in the Safety Signs section.

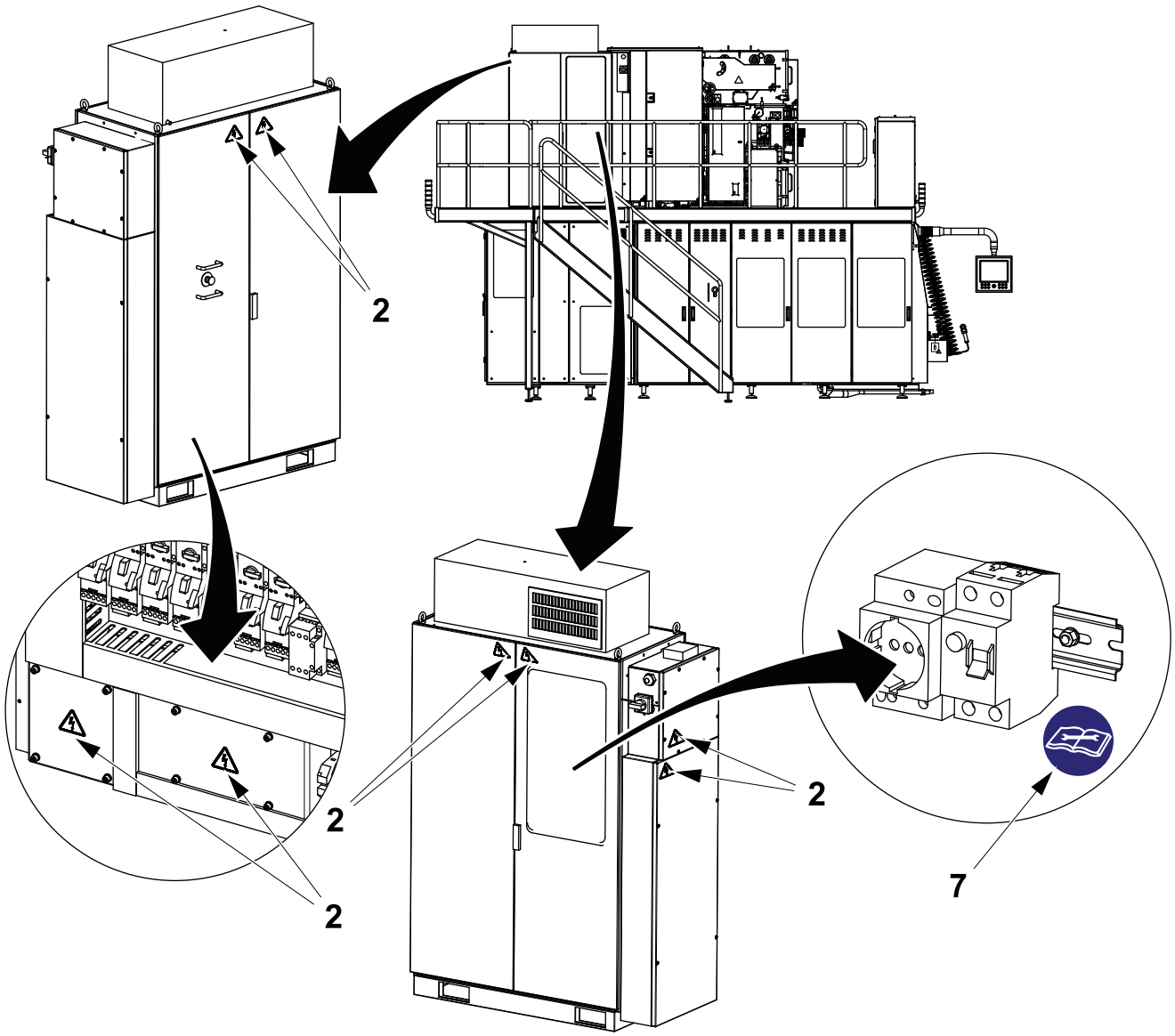

Location of Safety Signs - ICU (OE)

The illustration shows where the safety signs are located. The position numbers refer to the table in the Safety Signs section.

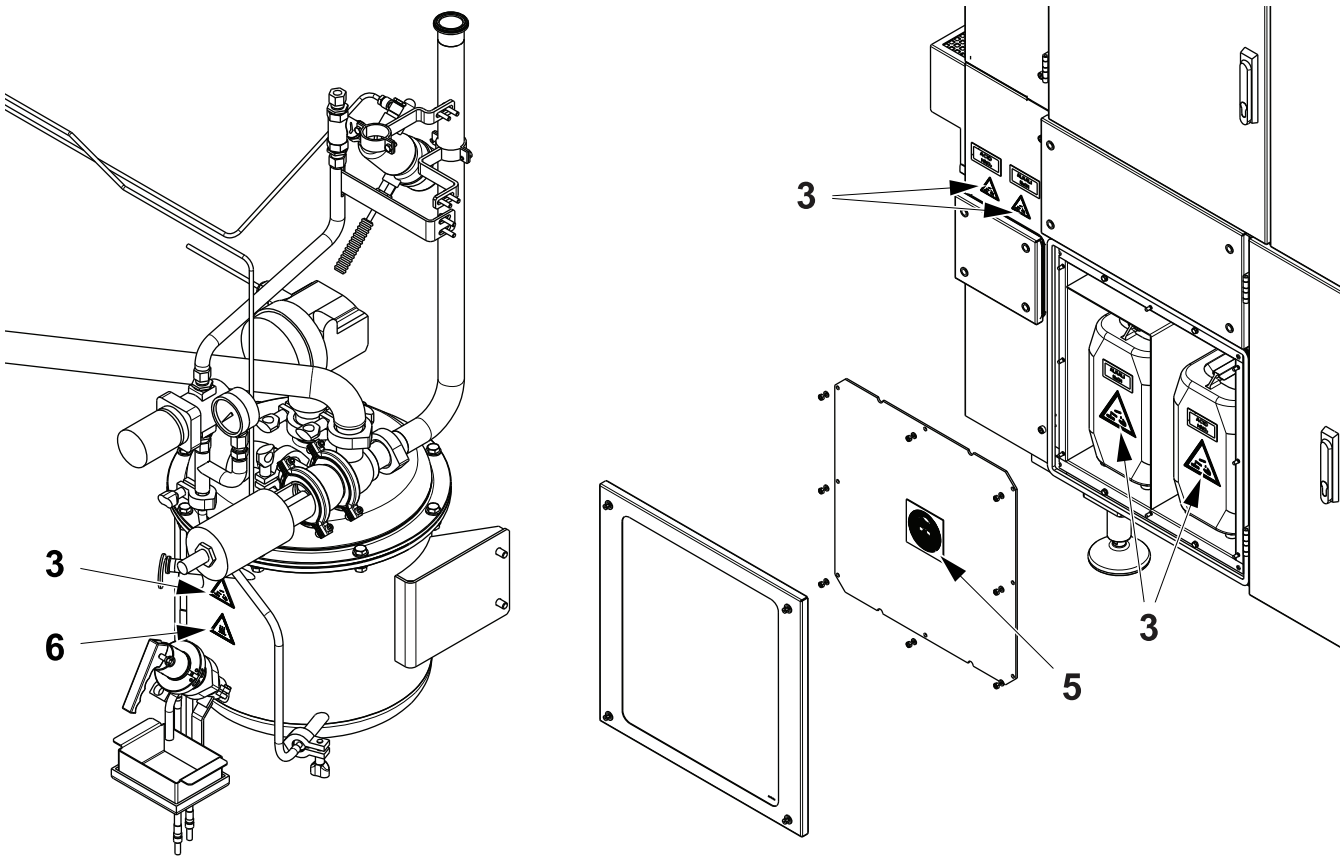

ASU iLine XT Version (OE)

The illustration shows where the safety signs are located. The position numbers refer to the table in the Safety Signs section.

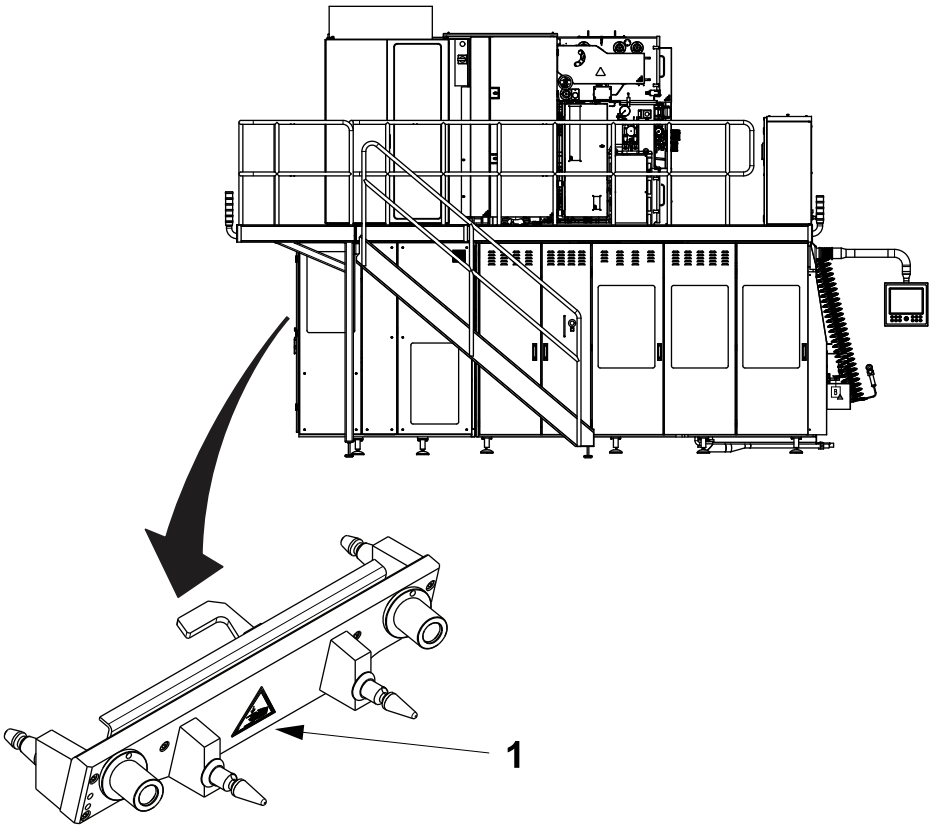

Protective Devices

There are different kinds of protective device designed to ensure safe use of the equipment. See the sections below.

WARNING

Hazardous zones.

Hazardous zones are safeguarded and provided with protective devices. Do not inch or run this equipment if any protective device is inoperative.

Change inoperative components of the safety system immediately.

For the locations of safeguards and/or other protective devices not mentioned in this section, see the Maintenance Manual.

Emergency Stop

DANGER

Hazardous voltage.

Will shock, burn, or cause death.

Hazardous voltage remains ON after activating an EMERGENCY STOP.

Emergency stop devices are used to stop this equipment immediately in a hazardous situation. Learn the positions of all emergency stop devices and how to use them.

Instructions for a normal production stop are included in the Stop chapter of the Operation Manual.

Emergency Stop Push-Buttons

Push one of the EMERGENCY STOP push-buttons to stop this equipment immediately.

The location of each EMERGENCY STOP push-button for the filling machine is shown by an arrow.

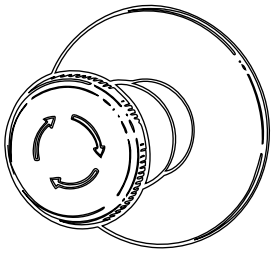

(behind door)

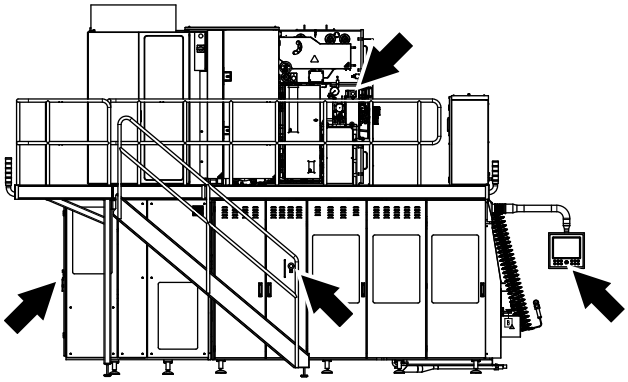

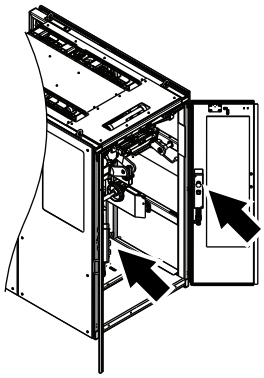

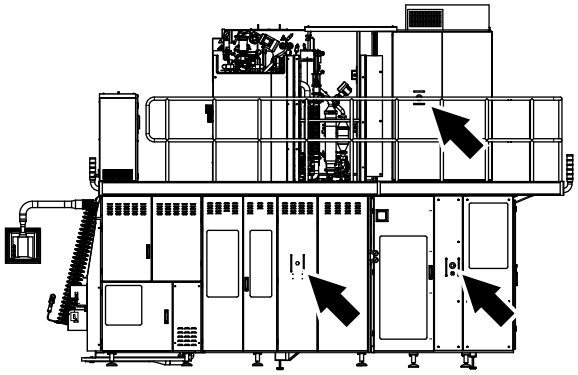

ASU iLine XT Version
(behind door)

Safeguards

WARNING

Moving machinery parts.

Never defeat or bypass the interlocking devices.

Movable guards, for example, doors and covers leading to hazardous zones, are fitted with interlocking devices where required. These devices are usually electric safety switches that are parts of the safety system and must never be defeated, bypassed, or otherwise made inoperative.

Where movable guards (doors) are equipped with means to be locked in a nonclosed position, any person with the intention to preside, for any reason, behind such a guard must lock the guard in the nonclosed position by use of a padlock.

(Cont'd)

(Cont'd)

Note! For work on the electrical equipment, the electrical power must also be disconnected.

CAUTION
Corners and edges.
Close the doors, guards, or parts of the equipment unless they must be open during work.

CAUTION
Burn hazard.
Parts of the equipment protected by guards may be hot after operation. Allow components to cool down or use personal protective equipment.

After installation and maintenance, and before this equipment is inched or run, check that all safeguards are in place and that they operate correctly.

CAUTION
Equipment damage.
The equipment can be damaged if it is not stopped in the correct way. Never stop this equipment by opening a movable guard, for example, a door or cover, equipped with an interlocking device.

(Cont'd)

(Cont'd)

The location of each interlocking device for filling machine is shown by an arrow.

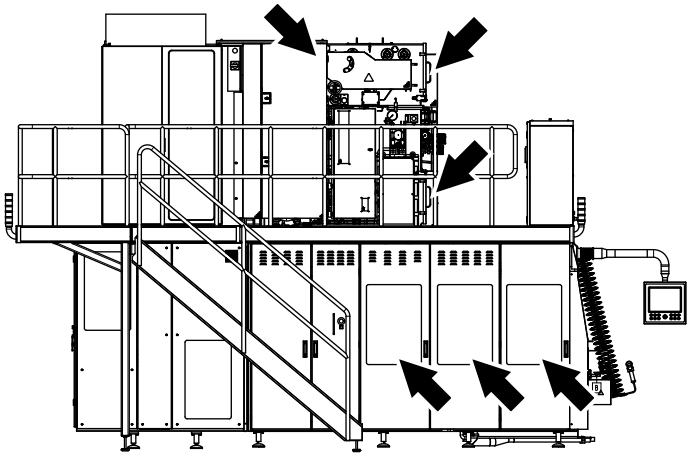

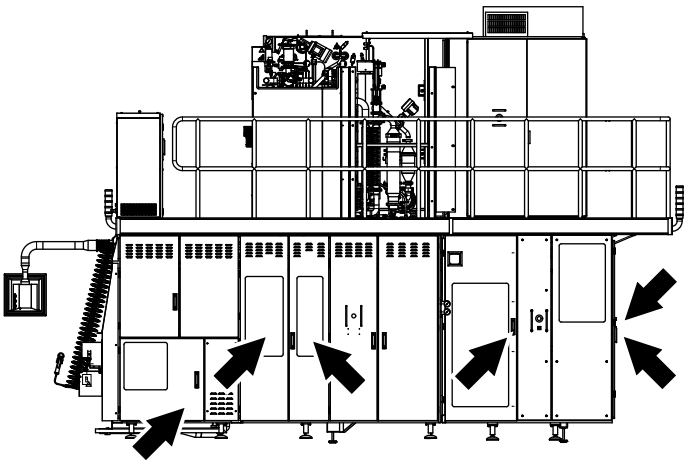

Safety Mat

Note! Valid only for ASU iLine XT Version (OE).

The safety mat is a safety device that disables the pneumatic system for the ASU automatic doors and the signal to the LGV (Laser Guide Vehicle) when activated.

The safety device is activated when a pressure is applied on the surface of the safety mat as for example a person standing on it.

The location of the safety mat is shown by the arrows.

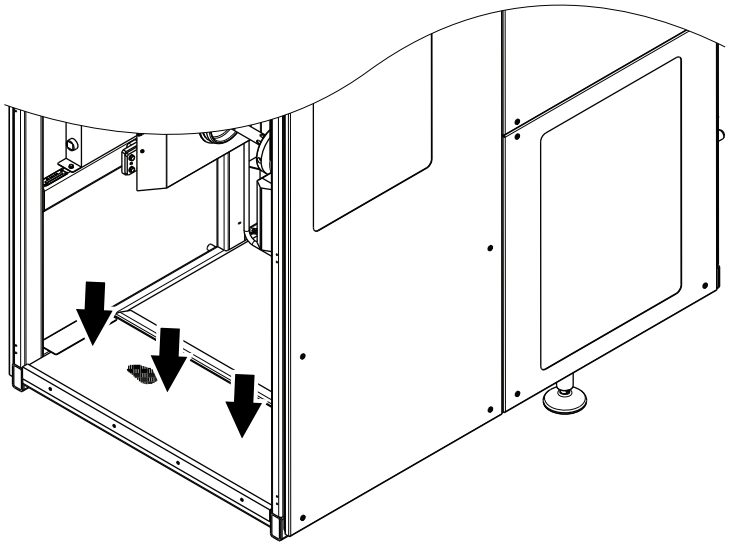

Indicating Tower

An indicating tower is a column of warning lights:

- A red light (1) indicates a hazardous condition. This is a situation that requires immediate action.
- A yellow light (2) indicates an abnormal or impending critical condition. This is a condition calling for action by the operator.
- A blue light (3) indicates that operator action is required.
- A green light (4) indicates a normal condition.

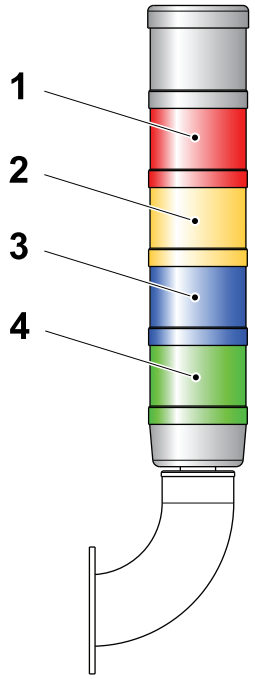

1 Red light
2 Yellow light
3 Blue light
4 Green light

Audible Alarm

The audible alarm (1) produces a warning signal every time this equipment is about to start. The warning signal sounds for approximately three seconds prior to starting to alert personnel.

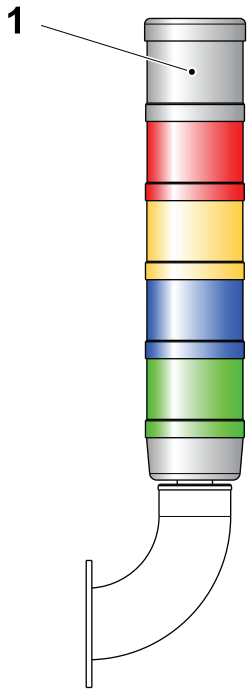

1 Audible alarm

Safe Manual Handling

Use mechanical lifting aids whenever possible. If mechanical lifting aids are not available, do not attempt to lift loads over 23 kg without the assistance of a colleague. Avoid lifting below knee height and above shoulder height. If it is necessary to lift from the floor, follow the instructions below to reduce the risk of back and disc injuries.

- Use safety shoes and be sure that the surface of the floor is not slippery.
- Get close to the load.
- Take a wide stance and find the best positions for your feet.
- Bend your hips and knees, and use your leg muscles.
- Keep the load close to your body.
- Do not twist your body while moving the load.
- Take small steps when turning.

In order to reduce the risk of injury to discs and back muscles, be careful to not bend or twist your back when lifting. Keep the load close to your body to reduce the strain on your back.

To reduce the ergonomic risks to each individual operator, job rotation is recommended, so that recovery and variety are provided.

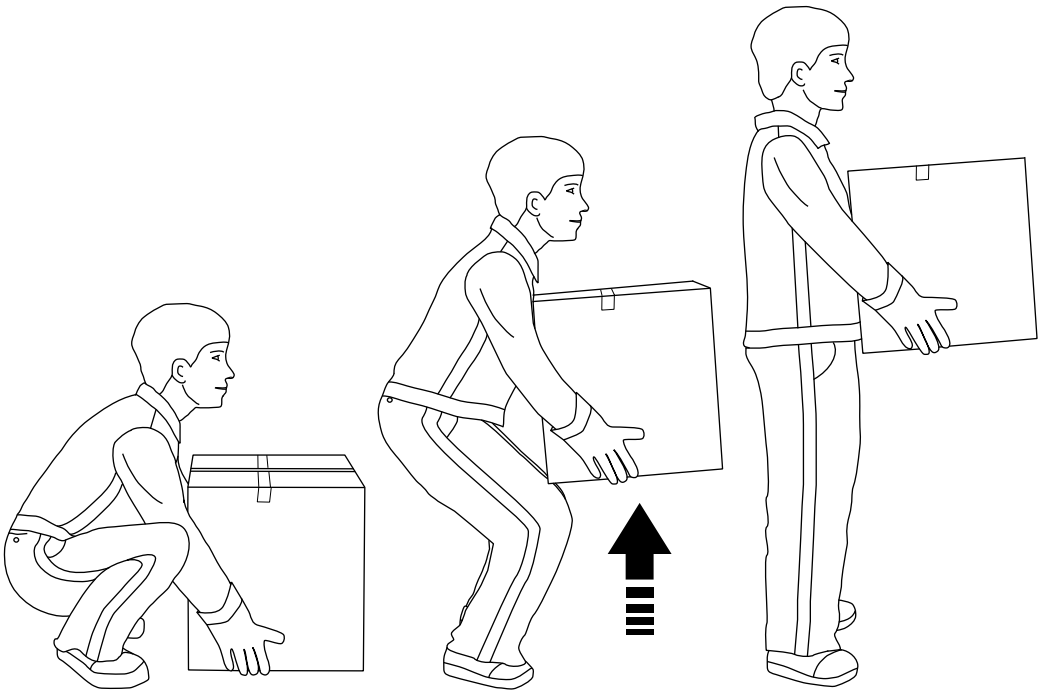

Personal Protection

This section applies to all personnel at all times when this equipment is in operation. For special personal protective equipment required when handling hazardous substances, see the Hazardous Substances section.

Noise

WARNING

Hazardous noise.
Can cause impaired hearing.
Wear hearing protection whenever this equipment is in operation.

CAUTION

Hazardous noise.
May cause impaired hearing.
Hearing protection is recommended whenever this equipment is in operation.

Entanglement

WARNING

Risk of entanglement.
Do not wear jewellery or loose clothing when working on or near this equipment.
Restrain long hair with, for example, clips or rubber bands.

Hazardous Substances

WARNING

Contact with chemicals can cause death, serious injury, or illness.
Always read and follow the instructions in the safety data sheet supplied by the manufacturer or local supplier, when handling chemicals.

Make sure that

- the safety data sheet is available
- preparations have been done to ensure that the stated safety measures in the safety data sheet can be followed
- the locations of the first aid equipment are learned in order to act immediately in case of an accident

Disposal of Chemical Substances

Always read and follow the disposal instructions in the safety data sheet supplied by the manufacturer or local supplier.

It is strongly recommended that used chemical containers are

- disposed of according to the instructions immediately after use
- not used as disposal containers for other chemicals in order to avoid uncontrolled chemical reactions within the container

Hydrogen Peroxide (H_2O_2)

WARNING

Corrosive chemical.
Wear personal protective equipment.

In both liquid and gas states, hydrogen peroxide may cause irritation or damage if it comes into contact with skin, mucous membranes, eyes, or clothes. Call for medical attention immediately if there is an accident.

Liquid hydrogen peroxide in concentrations of less than 1% is generally considered harmless to humans.

Consult the instructions on the label of the tank or container.

Emergency Procedures

If there is an accident involving hydrogen peroxide, rinse the affected area as soon as possible with large amounts of water.

Eyes

If splashes or vapour from hydrogen peroxide come in contact with the eyes

- wash the eyes thoroughly with lukewarm water for 15 minutes (keep eyelids wide apart)
- call for medical attention immediately

Skin

If hydrogen peroxide comes into contact with skin or clothes

- rinse immediately with plenty of water
- call for medical attention immediately if skin burns appear
- thoroughly wash the clothes before wearing them again

Inhalation

If irritation or pain is experienced due to having **inhaled** hydrogen peroxide vapour

- leave the affected area and get some fresh air
- call for medical attention if the symptoms get worse

Ingestion

If hydrogen peroxide is swallowed

- do not attempt to cause vomiting
- drink large amounts of lukewarm water to dilute the peroxide
- call for medical attention immediately

Personal Protective Equipment

The personal protective equipment for hydrogen peroxide is

- protective goggles (for instance, TP No. 90303-11), tight fitting
  If there is a risk of splashes, a visor is a suitable complement
- protective gloves made of neoprene (for instance, TP No. 90303-12), nitrile, or butyl rubber
- protective apron (for instance, TP No. 90303-13), or protective suit when handling larger amounts
- protective shoes or boots made of PVC, PE plastic, or rubber
- proper respiratory equipment, if ventilation is insufficient

Handling of Hydrogen Peroxide

WARNING

Sudden and violent chemical reaction.

Avoid any contamination of hydrogen peroxide.

Hydrogen peroxide can react very suddenly and violently in combination with many compounds, or if it is contaminated. Never pour surplus hydrogen peroxide back into the original container. There is a risk of a violent decomposition liberating oxygen and heat, with a big increase in volume due to the oxygen generated by the peroxide decomposition. This will cause a large overpressure if the contaminated hydrogen peroxide is in a closed container. If the integrity of the container fails, this could result in a dangerous hazard.

Ensure that equipment used for handling and diluting hydrogen peroxide is clean before it comes in contact with hydrogen peroxide. Pumps or other equipment used for handling hydrogen peroxide must be **used for this purpose only** and must be manufactured from appropriate materials, such as stainless steel 316 L, glass, polyethylene, or teflon. After use, make sure that all peroxide residue is rinsed away.

If hydrogen peroxide is spilled, dilute it with large amounts of water. Dispose of the diluted hydrogen peroxide according to local regulations.

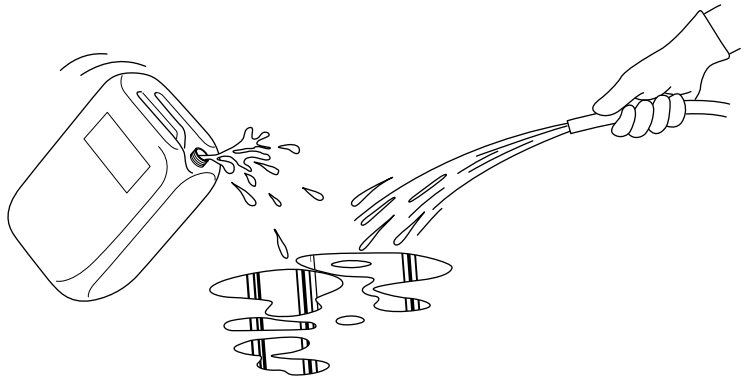

WARNING

Self-ignition.

Never wipe up hydrogen peroxide with materials such as rags or paper as these may self-ignite several hours after contact. If there is a fire, spray with large quantities of water.

Storage of Hydrogen Peroxide

WARNING

Containers may become overpressurised if they are not properly ventilated. If the integrity of a container fails, this could result in a dangerous hazard.
Keep the container upright and fitted with its proper ventilation cap. If there is a fire, cool all containers by spraying them with large quantities of water.

Hydrogen peroxide decomposes much faster with increasing temperature. There is a risk of a container becoming overpressurised at high temperatures, since the ventilation cap cannot release the gases produced quickly enough. If the integrity of the container fails, this could result in a dangerous hazard.

Hydrogen peroxide **must** be stored in the **original container** delivered by the supplier. Keep the container upright and fitted with its proper ventilation cap, which allows oxygen to escape. Otherwise there is a risk of overpressurisation of the container due to violent decomposition of the peroxide. If the integrity of the container fails, this could result in a dangerous hazard.

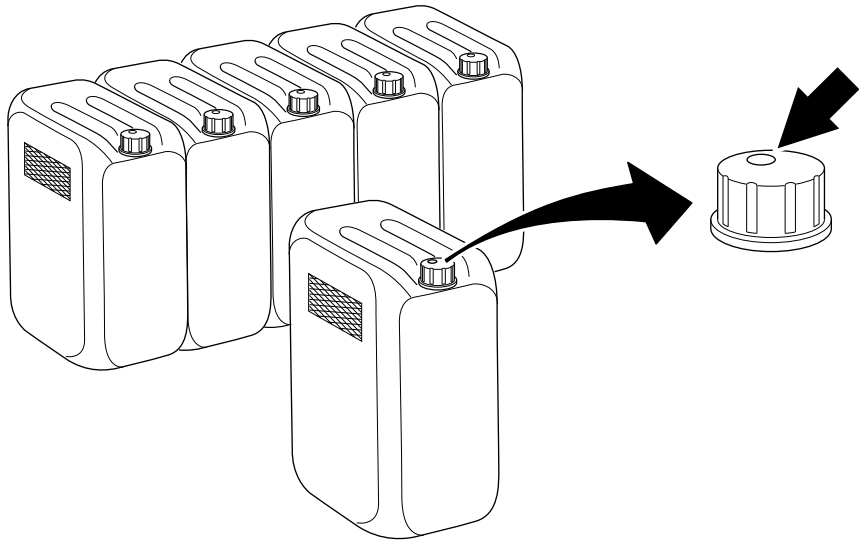

Make sure that the container is always properly closed.

Commercial food-grade hydrogen peroxide has been stabilized to inhibit the catalytic decomposition effects of metals and other impurities, but it can decompose into oxygen and water if it is exposed to heat or contaminated.

Make sure that the area used for storage of hydrogen peroxide is

- cool, clean, and well ventilated
- shielded from direct sunlight
- kept free from combustible materials

Disposal of Hydrogen Peroxide

Always read and follow the disposal instructions in the safety data sheet supplied by the manufacturer or local supplier.

Caustic Soda/Sodium Hydroxide (NaOH)

WARNING
Corrosive chemical.
Wear personal protective equipment.

Caustic soda/sodium hydroxide is highly corrosive in all forms and can cause serious burns on contact with skin and eyes.

Emergency Procedures

Inhalation

Remove victim immediately from source of exposure, provide rest, warmth and fresh air, get medical attention if any discomfort continues.

Ingestion

Do not induce vomiting, immediately rinse mouth and drink plenty of water (200 - 300 ml) and get medical attention immediately!

Skin Contact

Immediately remove contaminated clothing, rinse the skin with lots of water and get medical attention.

Eye Contact

May cause permanent damage if eye is not immediately irrigated. Make sure to remove any contact lenses from eyes before rinsing. Promptly wash eyes with plenty of water while lifting the eyelids, get immediately medical attention and continue to rinse.

Accidental Release, Spillage or Splashing

WARNING
Corrosive chemical.
Wear personal protective equipment.

In case of accidental release, spillage or splashing

- wash contaminated area with water. Alternatively, absorb in vermiculite, dry sand or earth, place into containers and wash the affected area
- in case of contact with eyes or skin wash with plenty of water
- remove any contaminated clothing immediately

Personal Protective Equipment

The personal protective equipment for caustic soda/sodium hydroxide is

- protective goggles (TP No. 90303-11)
- protective gloves made of neoprene (TP No. 90303-12)
- protective apron (TP No. 90303-13)
- protective shoes made of PVC, PE plastic, or rubber

Handling and Storage of Caustic Soda/Sodium Hydroxide

WARNING

Sudden and violent chemical reaction.
Avoid any contamination of caustic soda/sodium hydroxide. Never store or mix caustic soda together with hydrogen peroxide.

Ensure that

- containers are kept tightly closed
- containers are stored in a cool dry place away from direct sunlight or sources of heat
- designated storage and handling areas are adequately ventilated and that emergency shower and eye wash facilities are available nearby
- handle containers carefully during transport
- avoid spilling, skin and eye contact
- use dedicated equipment when sampling, pouring or decanting
- never store or mix caustic soda together with hydrogen peroxide

Disposal of Caustic Soda/Sodium Hydroxide

Dispose of waste and residues in accordance with local authority requirements. Used caustic soda should be sent to an approved facility for destruction. Never allow caustic soda to be disposed into the drain.

Estinguishing Media

CAUTION

Fire-Fighting Measures
Always apply the following measures.

The product is non-combustible, use fire extinguishing media appropriate for surrounding materials.

Specific Hazards

Corrosive liquid.

Protective Measures in Fire

Self-contained breathing apparatus and full-protective clothing must be worn in case of fire.

Note! Always refer to your supplier's Material Safety Data Sheet (MSDS) for caustic soda.

Nitric Acid (HNO_3)

WARNING
Corrosive chemical.
Wear personal protective equipment.

Nitric acid is extremely hazardous; it is corrosive, reactive, a strong oxidizer and a poison. Liquid and mist can cause serious burns on contact with skin and eyes; contact with other material may cause fire; liquid and mist cause severe burns to skin and eyes; inhalation may cause lung and tooth damage.

Emergency Procedures

Inhalation

Remove victim immediately from source of exposure, provide rest, warmth and fresh air. If not breathing, give artificial respiration; if breathing is difficult give oxigen. Get medical attention immediately.

Ingestion

Do not induce vomiting, immediately rinse mouth and drink plenty of water or milk if available. Never give anything by mouth to an unconscious person. Get medical attention immediately.

Skin Contact

Immediately remove contaminated clothing, rinse the skin with lots of water and get medical attention.

Eye Contact

May cause permanent damage if eye is not immediately irrigated. Make sure to remove any contact lenses from eyes before rinsing. Promptly wash eyes with plenty of water while lifting the eyelids, get immediately medical attention and continue to rinse. Get medical attention if any discomfort continues.

Accidental Release, Spillage or Splashing

WARNING
Corrosive chemical.
Wear personal protective equipment.

In case of accidental release, spillage or splashing

- ventilate area of leak or spill, isolate hazard area, keep unnecessary and unprotected personnel from entering, contain and recover liquid when possible, neutralise with alkaline material (soda ash, lime) then absorb with an inert material (e.g. ,vermiculite, dry sand or earth), place in a chemical waste container; do not use combustible materials, such as saw dust, rags, paper, wood
- in case of contact with eyes or skin wash with plenty of water
- remove any contaminated clothing immediately; see the Fire-fighting (fire) measures section on page ii-39

Personal Protective Equipment

The personal protective equipment for nitric acid is

- protective goggles (TP No. 90303-11)
- protective gloves made of neoprene (TP No. 90303-12)
- protective apron (TP No. 90303-13)
- protective shoes made of PVC, PE plastic, or rubber

Handling and Storage of Nitric Acid

WARNING
Sudden and violent chemical reaction.
Avoid any contamination of nitric acid.

Ensure that

- containers are kept tightly closed
- containers are stored in a cool dry place away from direct sunlight or sources of heat, water and incompatible materials and that emergency shower and eye wash facilities are available nearby
- designated storage and handling areas are adequately ventilated and have acid-resistant floors
- handle containers carefully during transport
- avoid spilling, skin and eye contact
- use dedicated equipment when sampling, pouring or decanting
- do not wash out container and use it for other purposes. Containers of this material may be hazardous when empty since they retain product residues (vapours, liquid)

Disposal of Nitric Acid

Dispose of waste and residue in accordance with local authority requirements. Used nitric acid should be sent to an approved facility for destruction. Never allow nitric acid to be disposed into the drain.

Fire

The product is non-combustible, but it is a strong oxidiser and its heat of reaction with reducing agents or combustibles may cause ignition. Can react with metals to release flammable hydrogen gas.

Explosion

Reacts explosively with combustible organic or readily oxidizable materials such as alcohols, turpentine, charcoal, organic refuse, metal powder, hydrogen sulphide, etc. Reacts with most metals to release hydrogen gas which can form explosive mixtures with air.

Estinguishing Media

CAUTION
Fire-Fighting Measures
Always apply the following measures.

The product is non-combustible, use fire extinguishing media appropriate for surrounding materials.

Special Information

Increases the flammability of combustible, organic and readily oxidizable materials.

Protective Measures In Fire

Self-contained breathing apparatus and full-protective clothing must be worn in case of fire.

Note! Always refer to your supplier's Material Safety Data Sheet (MSDS) for nitric acid.

Magnetic Components

WARNING

Strong magnetic field.

Can cause serious injuries to persons with pacemakers. Maintain at least 300 mm distance.

The magnet can attract tools and other metal objects causing pinch, cut, or impact. Keep metal objects away from the magnet.

The location of each magnet is shown by an arrow.

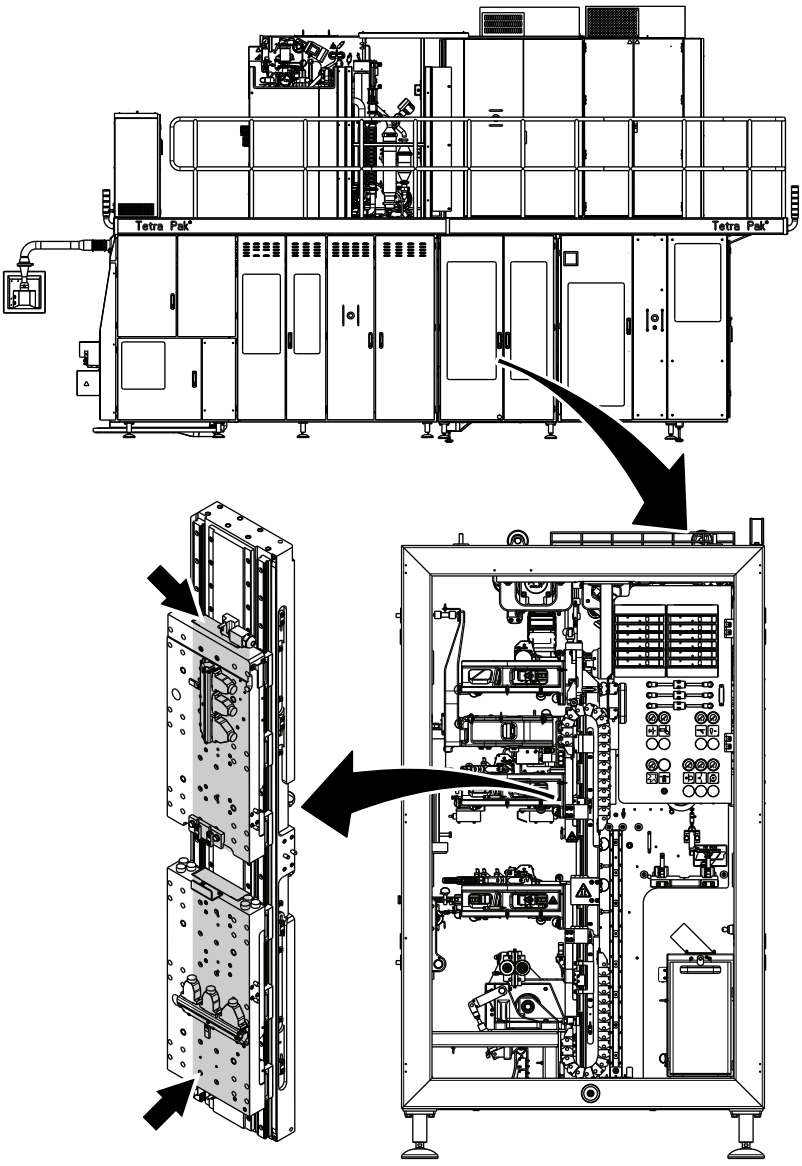

Supply Systems

Electrical Supply

DANGER

Hazardous voltage and moving machinery.
The electrical supply disconnecting device must be in position O (OFF) and secured with a lock before any work with the equipment that requires the electrical supply to be disconnected. See the Machine Status section of the MM Procedure Start Table.

Note! The key to the lock must be removed by the technician and retained in his/her possession until all work is completed.

DANGER

Hazardous voltage can be present with the electrical supply disconnecting device in position O (OFF).
Circuits identified by orange-coloured conductors are not disconnected by the main electrical supply disconnecting device. The location of the electrical supply disconnecting device of these circuits is described in the Maintenance Manual procedures that include work on these types of circuit.

Certain procedures may require that the electrical supply disconnecting device is in position I (ON). These exceptions are clearly stated in the manuals.

The illustrations show the electrical supply disconnecting device and its location.

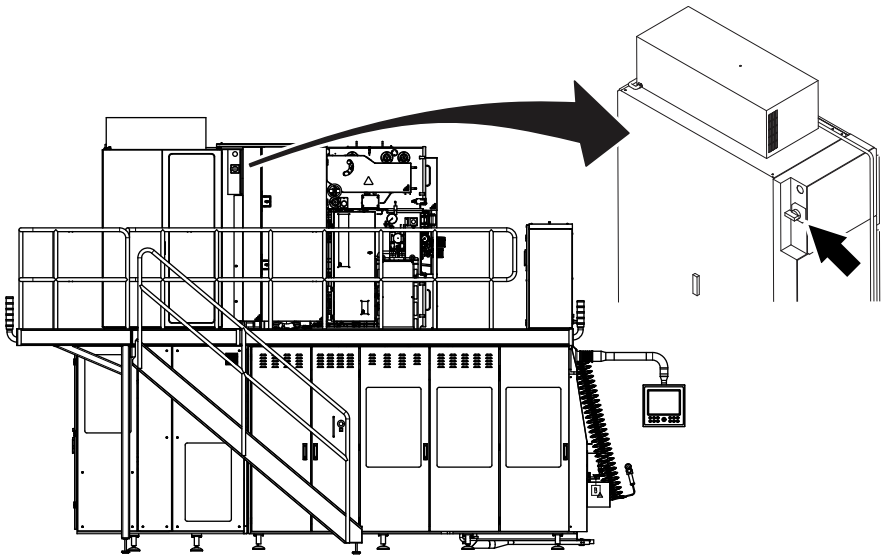

Residual Voltage

DANGER

Hazardous voltage.
Will shock, burn, or cause death.
After the electrical supply disconnecting device is turned to position O (OFF), residual voltage remains in the capacitor circuits. Wait five minutes before opening the enclosure containing these circuits. Ensure that no residual voltage remains on the capacitors before touching them.

Electrical Cabinet

DANGER

Hazardous voltage
Will shock, burn, or cause death.
Parts behind doors to electrical enclosures may be live. The electrical supply disconnecting device must be turned to position O (OFF) and secured with a lock before maintenance inside the electrical cabinet.

Note! The key to the lock must be removed by the technician and retained in his/her possession until all work is completed.

Make sure that the electrical cabinet doors are closed after working inside the electrical cabinet. Doors with locks must be locked.

The location of each electrical cabinet for filling machine is shown by an arrow.

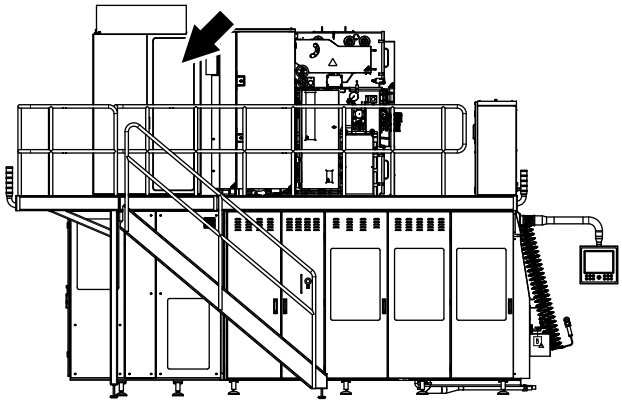

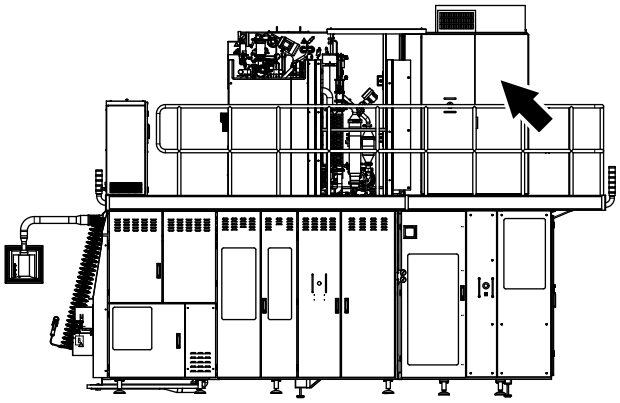

Socket Outlet

WARNING

Hazardous voltage.
Can shock, burn, or cause death.
Read the Maintenance Manual before using this socket outlet.

The socket outlet (1) is connected to a residual current device (2) to protect users against electrical shock if there is an earth fault in the connected equipment. The residual current device must be tested each time before the socket outlet is being used. See the MM for test procedure.

The illustrations show the socket outlet, the residual current device, and their locations.

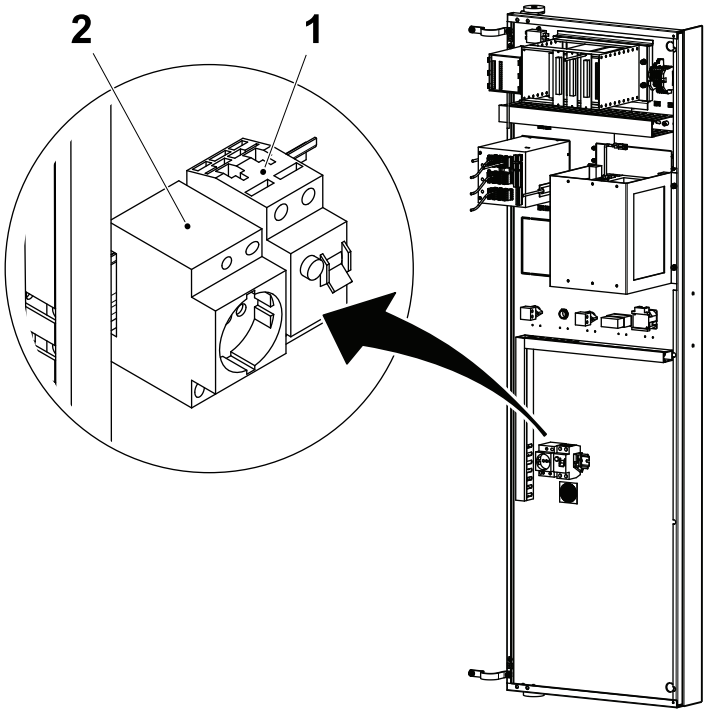

1 Socket outlet
2 Residual current device

Air Supply

WARNING

Compressed air and moving machinery.

Close the main air valve and lock it, and safely release compressed air from the air system before any work with the equipment that requires the air supply to be closed. See the Machine Status section of the Procedure Start Table.

Note! The key to the lock must be removed by the technician and retained in his/her possession until all work is completed.

Certain maintenance procedures may require the air supply systems to be on. These exceptions are clearly stated in the manuals.

The illustrations show the main air valve (1) and its location.

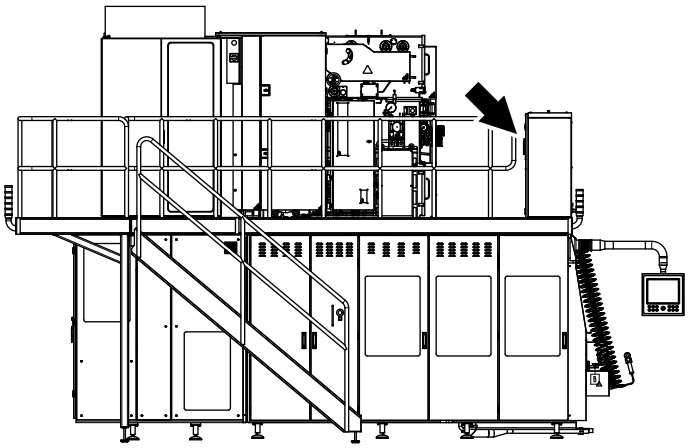

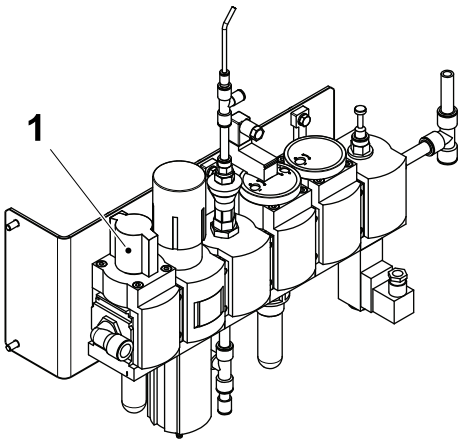

1 Main air valve

Steam Supply

WARNING

Hot steam can cause scalds.

Pressurised steam can be discharged unexpectedly.

Close the steam supply valve and lock it, and safely vent all steam pressure from the steam system before any work on parts with steam, such as pipes and valves, that requires the steam supply to be closed. See the Machine Status section of the Procedure Start Table.

Note! The key to the lock must be removed by the technician and retained in his/her possession until all work is completed.

Certain procedures may require the steam supply systems to be on. These exceptions are clearly stated in the manuals.

The illustrations show the steam supply valve (1), and its location.

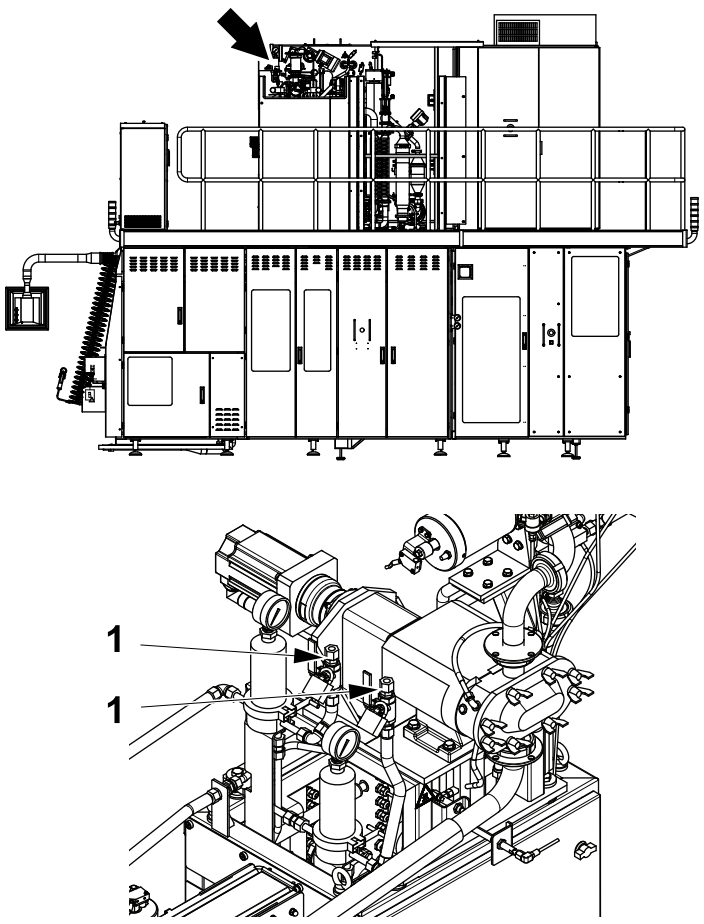

Machine equipped with HVA

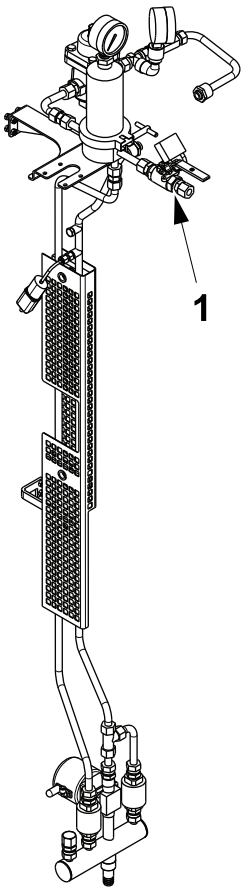

Machine not equipped with HVA

Water Supply

CAUTION

Water under pressure.

Close the water supply valves before any work with the equipment that requires the water supply to be closed. See the Machine Status section of the Procedure Start Table.

Certain maintenance procedures may require the water supply systems to be on. These exceptions are clearly stated in the manuals.

The illustration shows the water supply valve (1) and the water supply valve (2), and their location.

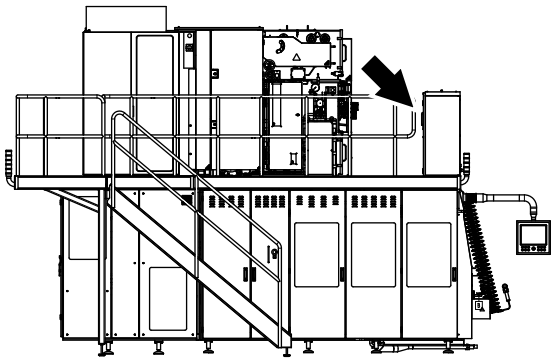

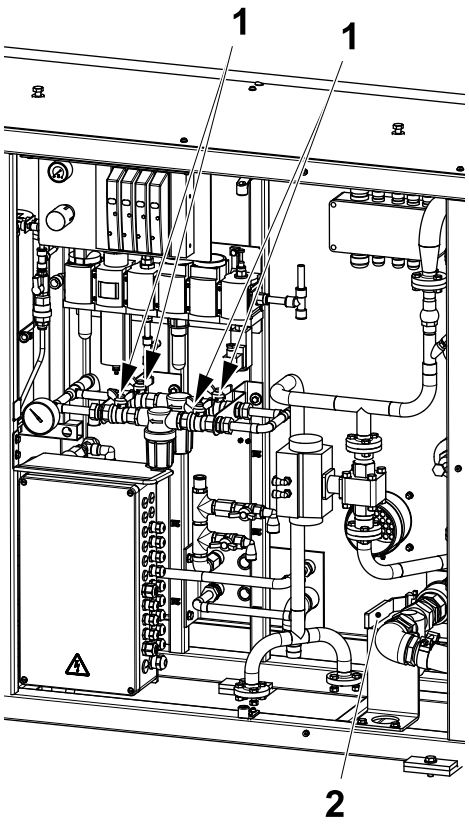

1 Valve, circulating cooling water
2 Valve, hot water external cleaning

1 Electrical System Description

Description

This chapter contains a description of the electrical system in the machine or equipment.

Description 1-2

1.1 Electrical System Description 1-5

1.1.1 Automatic Splicing Unit/Automatic Strip Splicing Unit 1-6

1.1.2 Paper Web Control 1-7

1.1.2.1 Pendulum Roller - Superstructure 1-7

1.1.2.2 Magazine - Automatic Splicing Unit 1-8

1.1.3 Longitudinal Sealing 1-9

1.1.4 Transversal Sealing 1-10

1.1.5 Filling System 1-11

1.1.6 Design Correction System 1-12

1.1.7 Jaw System / Final Folder 1-13

1.2 Safety System 1-14

1.2.1 Safety System Description 1-14

1.2.2 Diagnostics 1-15

1.2.2.1 User Error 1-15

1.2.2.2 Message and fault code list 1-15

This page intentionally left blank

1.1 Electrical System Description

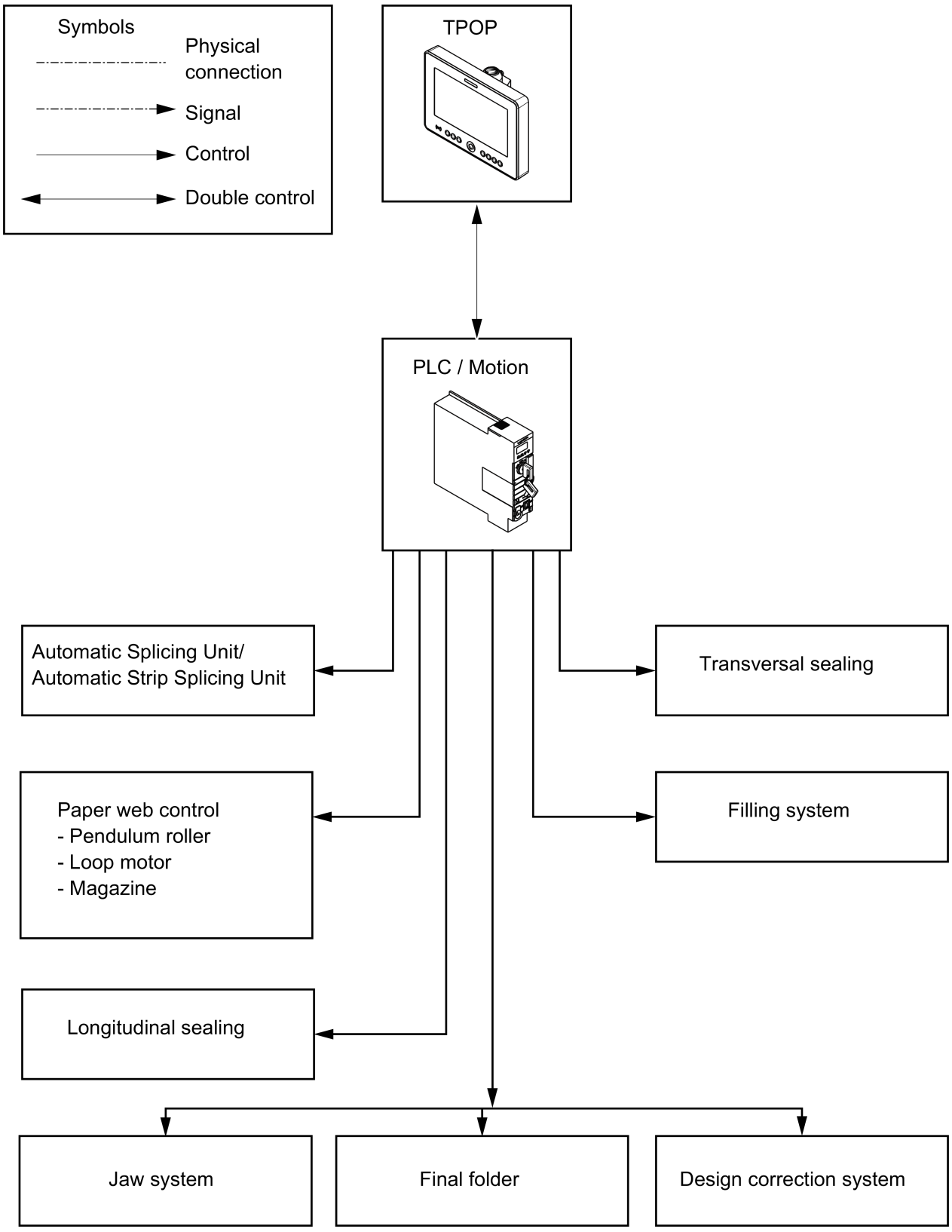

1.1.1 Automatic Splicing Unit/Automatic Strip Splicing Unit

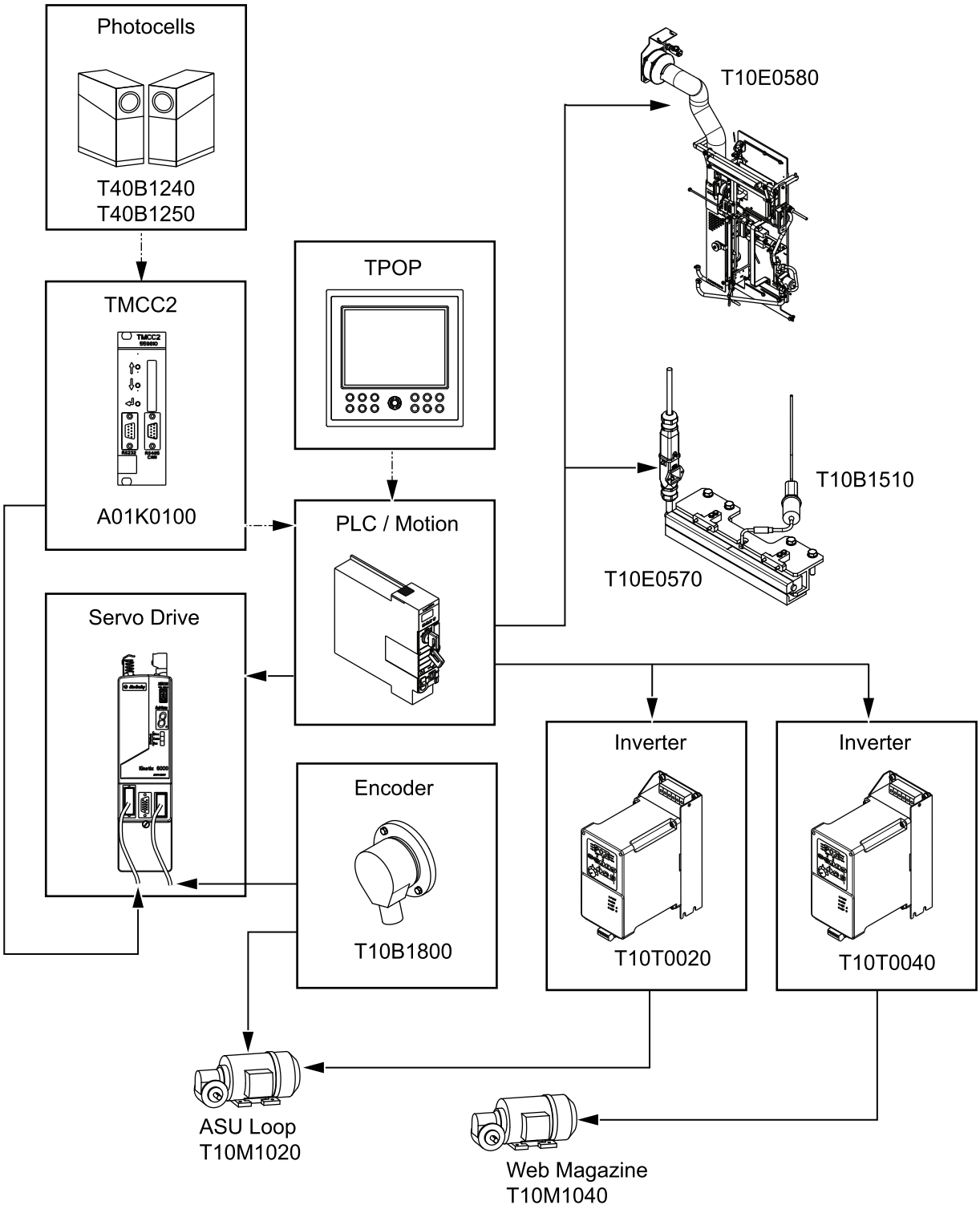

1.1.2 Paper Web Control

1.1.2.1 Pendulum Roller - Superstructure

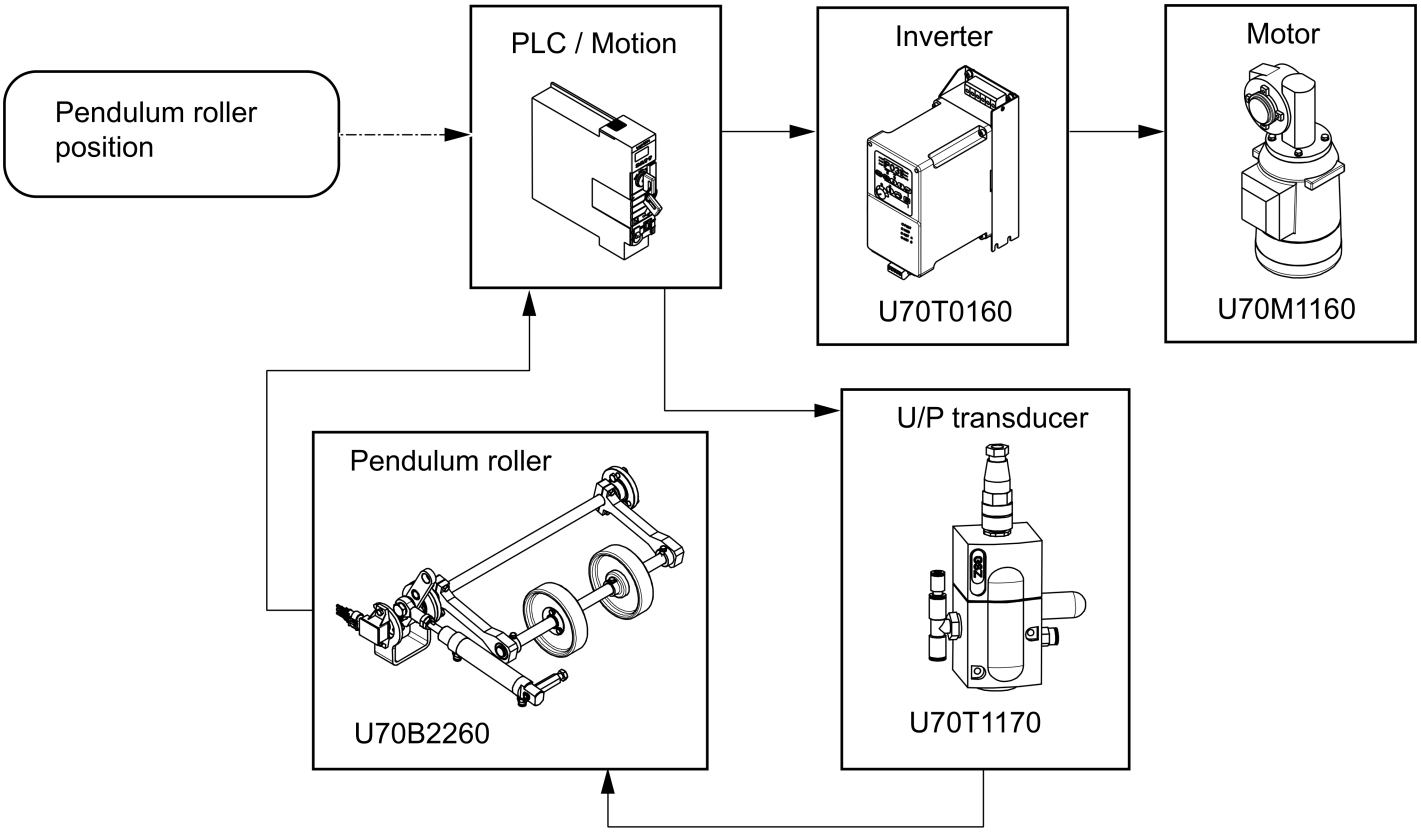

1.1.2.2 Magazine - Automatic Splicing Unit

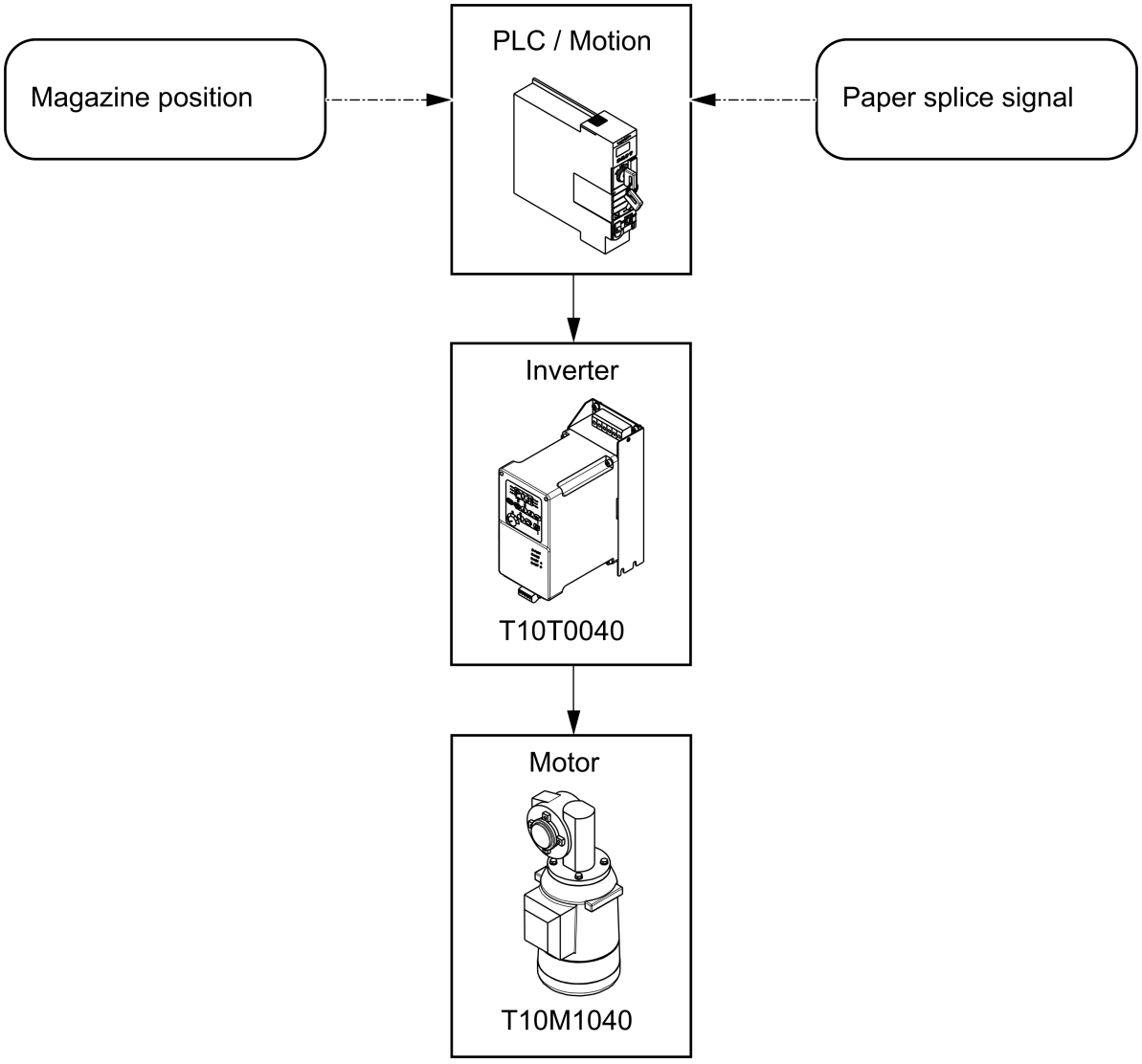

1.1.3 Longitudinal Sealing

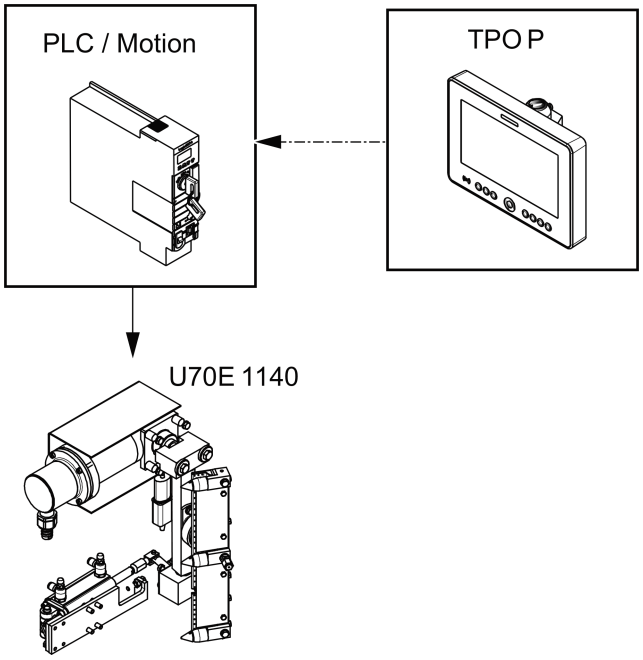

1.1.4 Transversal Sealing

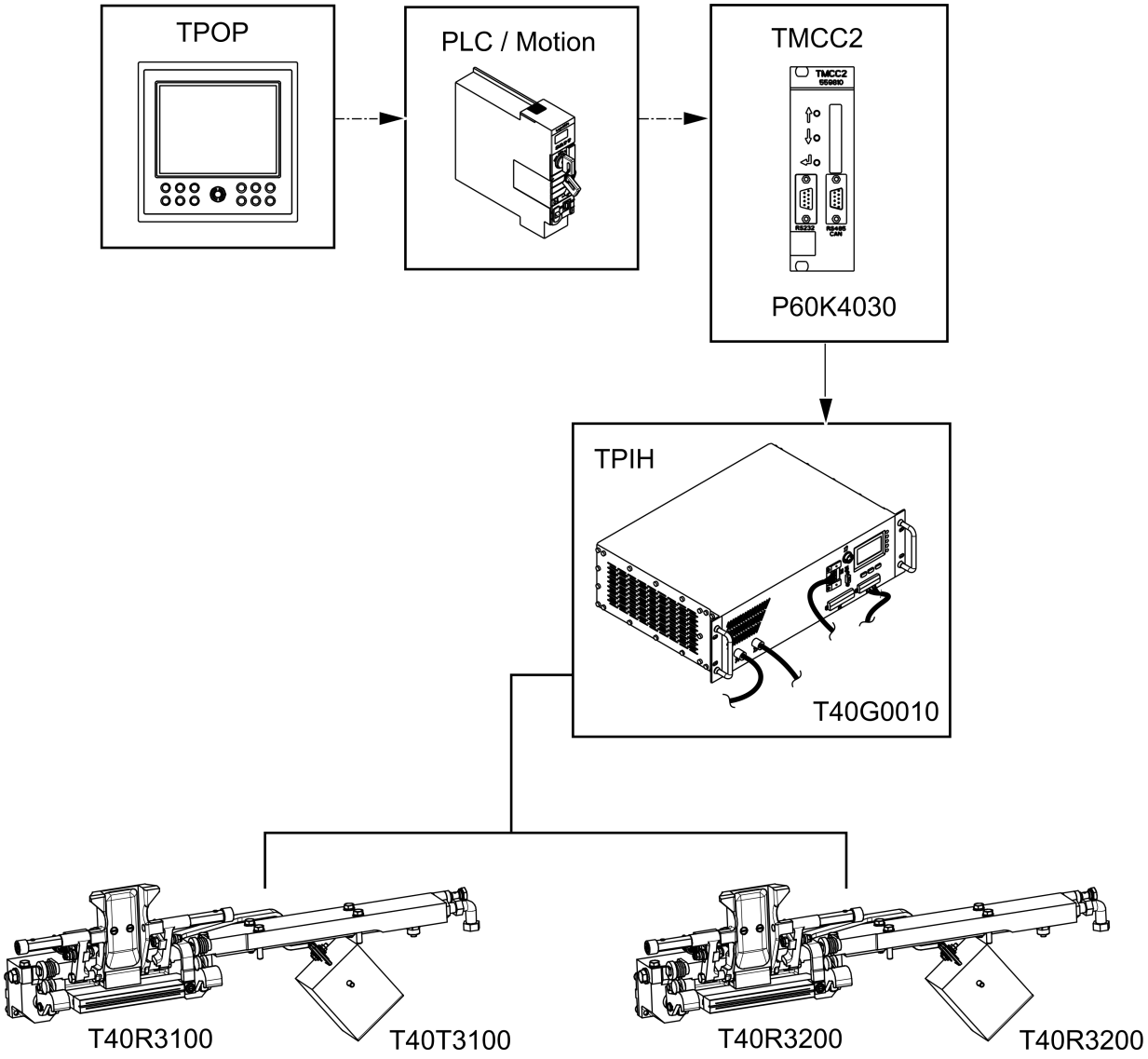

1.1.5 Filling System

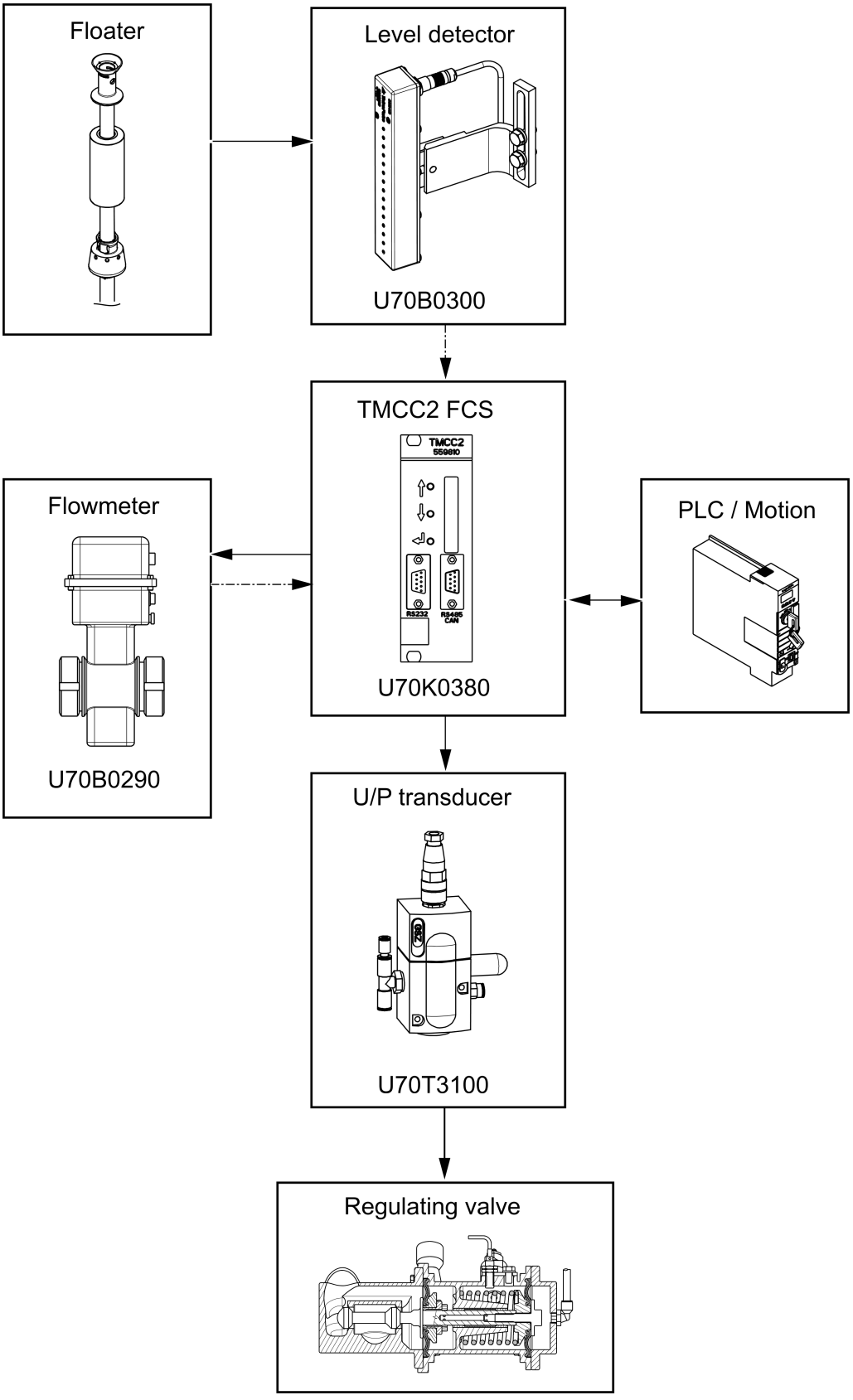

1.1.6 Design Correction System

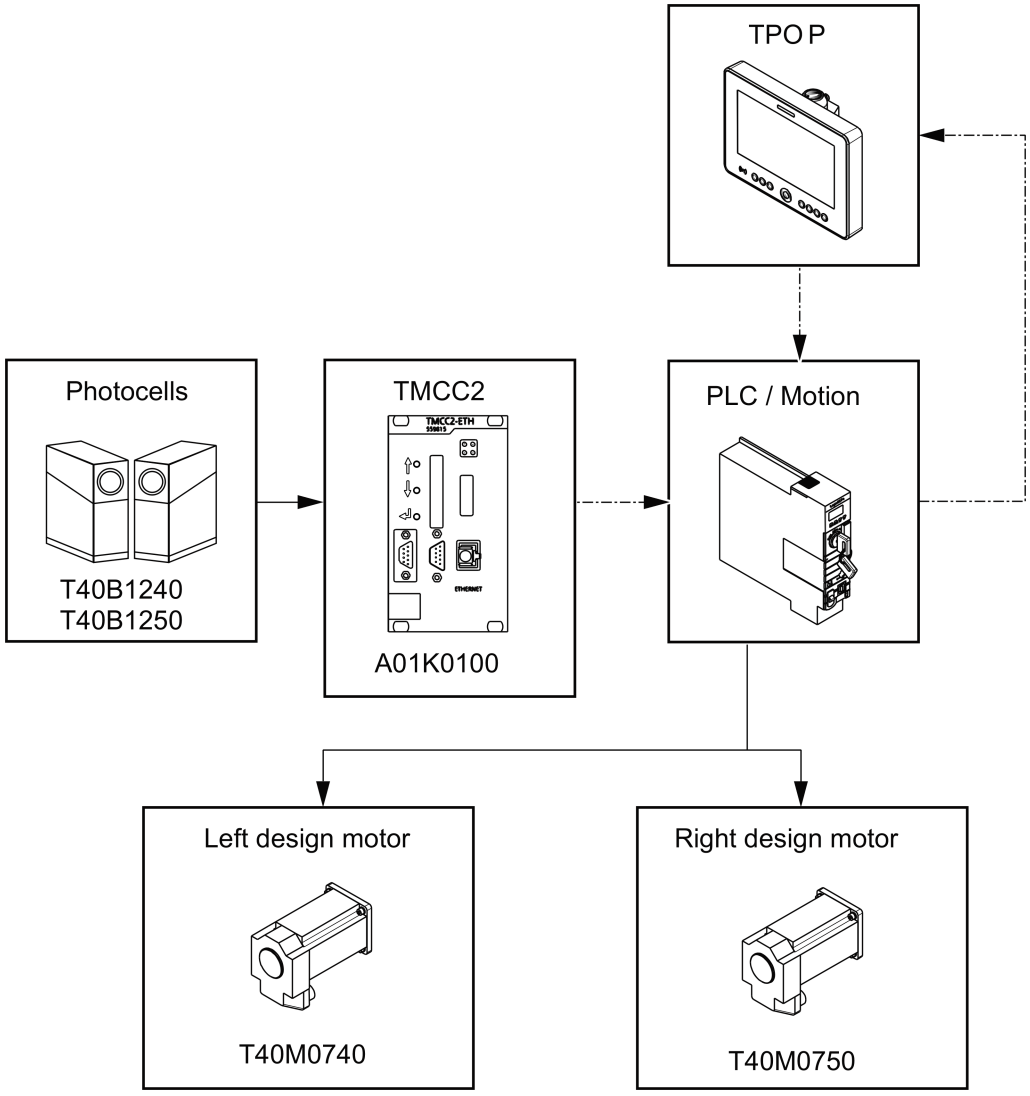

1.1.7 Jaw System / Final Folder

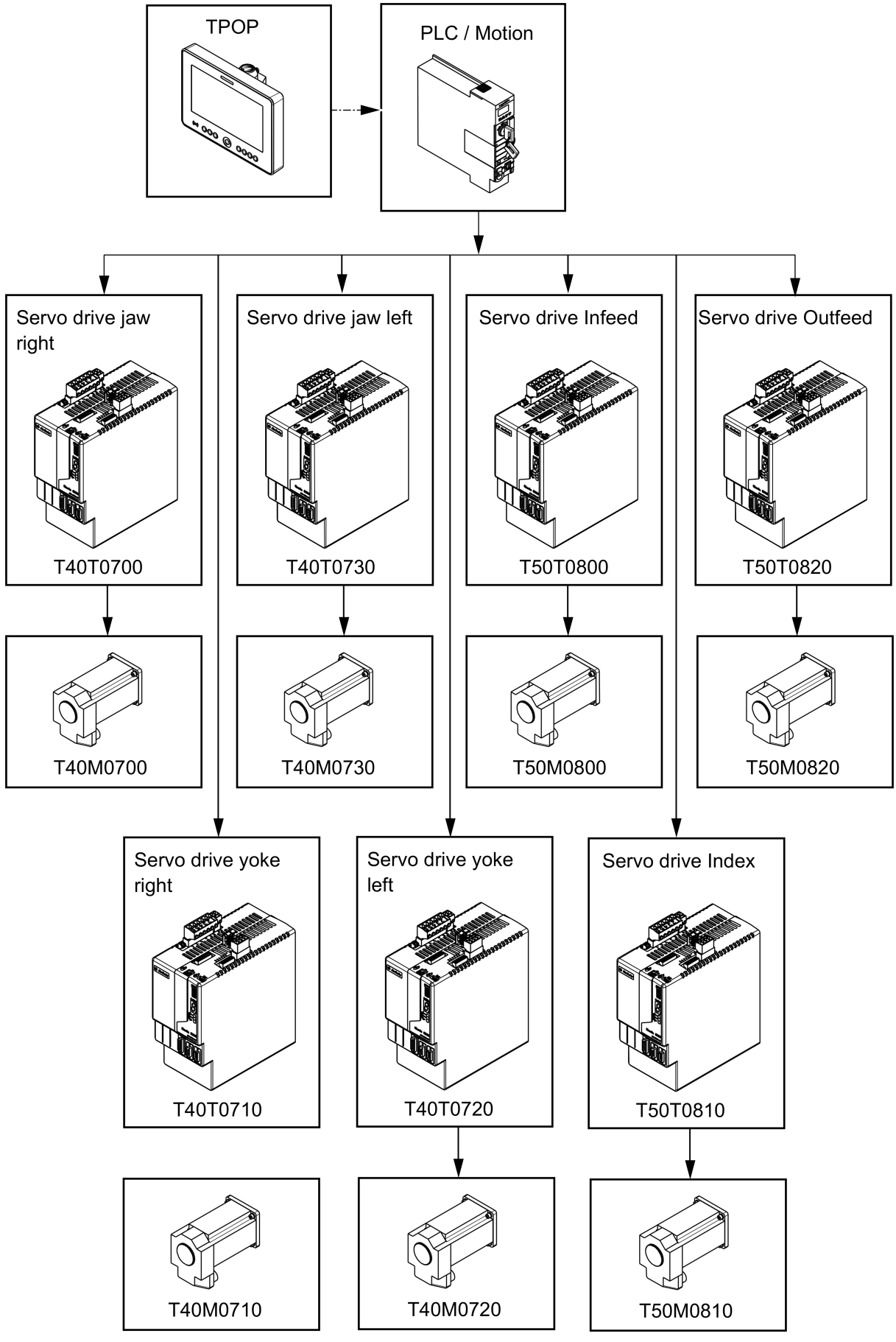

1.2 Safety System

1.2.1 Safety System Description

In case of a safety relay alarm in the TPOP, read the error code on the two safety plc and refer to tha diagnostic table.

Relay	Alarm
F01K5000	Safety PLC 1
F01K5001	Delay Safety Lines Emergency Stop
F01K5020	Delay Safety Lines Jaw & FFU
F01K5021	Brake Safety
T10F5032	ASU Safety

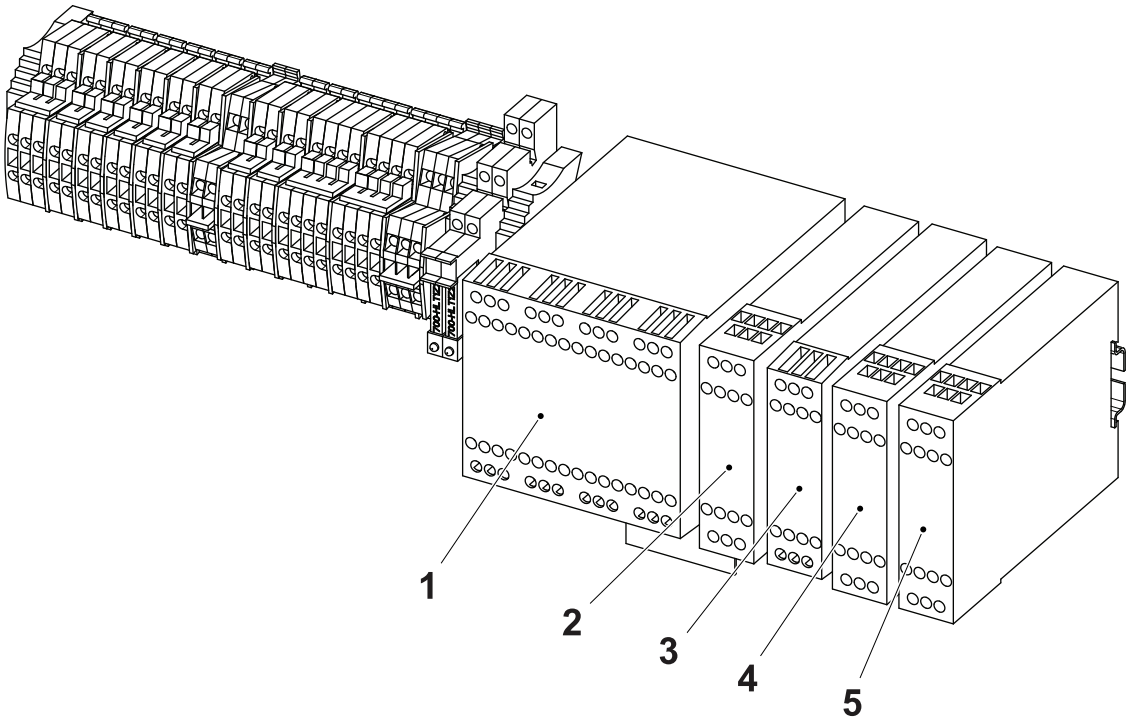

1 F01K5000: Safety PLC 1
2 F01K5001: Delay Safety Lines ES
3 F01K5020: Delay Safety Lines J & F
4 F01K5021: Brake Safety
5 T10F5032: ASU Safety

1.2.2 Diagnostics

1.2.2.1 User Error

Error Code	Fault and Possible Reason
UE00	One channel missing / one channel remaining - Emergency stop
UE01	Two channel - Emergency stop
UE11	Constant reset - Emergency stop
UE12	Constant reset - Jaw System and Final Folder
UE13	Constant reset - ASU rear
UE24	Remaining voltage though output is turned off - Jaw right brake
UE25	Remaining voltage though output is turned off - Yoke right brake
UE26	Remaining voltage though output is turned off - Yoke left brake
UE27	Remaining voltage though output is turned off - Jaw left brake
UE34	Missing feedback - Emergency stop
UE35	Missing feedback - Superstructure
UE36	Missing feedback - Jaw System (Servo rack 1)
UE37	Missing feedback Option - Final Folder (Servo rack 2)
UE40	Missing feedback - Jaw System and Final Folder
UE41	Missing feedback - ASU Air Pressure
UE42	Missing feedback - ASSU Internal
UE43	Missing feedback - Brakes
UE44	Missing feedback - Jaw right brake release
UE45	Missing feedback - Yoke right brake release
UE46	Missing feedback - Yoke left brake release
UE47	Missing feedback - Jaw left brake release

1.2.2.2 Message and fault code list

Status messages

No.	Description
–	Power up
Nn	Run mode (nn = station number)
Lo	Program load mode state. Flashing ‘Lo’, ready for self programming (program found in other unit)
HA	Program execution stopped from PC computer or not started after program download. Can be started either from PC or by power off-on.

(Cont’d)

(Cont'd)

User faults

No.	Fault and possible reason	Reset action
Er10	Dynamic output short circuited to foreign voltage.	Automatically reset
Er11	IQ_ for illuminated push button function. Missing diode	Automatically reset
Er12	Short circuit between two dynamic inputs	Automatically reset
Er13	Static output Q10..17 (Q20..27) short circuited to 0V or safety Q2,Q3 overloaded	Automatically reset, 'K' button
Er14	Static output Q10..17 (Q20..27) short circuited to 24V.	Automatically reset
Er15	Power supply below 18V	Autom. 3 min or 'K'
Er16	Power supply above 30V	Autom. 3 min or 'K'
Er17		
Er18	CAN-bus fault. (Short circuit, termination resistor, etc.)	Autom. 3 min or 'K'
Er19	Other unit with same station number on Can-bus	
Er20	PLC-program not loaded	Load of PLC-program
Er21	PLC-program CRC-error	Reload with valid PLC-program.
Er22	Identifier problem. External identifier can not be read.	Reboot
Er23	Unmatched ID. Identifier doesn't match declaration in program.	Exchange of identifiers or re-declaration of identifier in program.
Er24	Erroneous PLC-code. Invalid PLC-instructions.	Reload with valid code.
Er25	For versions as B16. Non existing output used in program.	
Er26	Baud rate conflict. Unit programmed for other baud rate than current bus baud rate. Note that Pluto must be rebooted after change of baudrate in the PLC program.	Reprogramming or reboot
Er27	Wrong checksum for unit member in common program.	Reprogramming or reboot
Er10	PLC program does not match the Pluto family. Families: [A/B/S 20, B16], [B/S 46-6], [Pluto AS-i]	Change to other type of Pluto or change the program.
Er29	Unsupported program version. The program contains instructions only supported by later customer specific operating systems.	Update of operating system
Er40	Error safety output Q0 ..5. /Q2,Q3 connected together or to other negative voltage. /Q2,Q3 has to high capacitive load.	'K' button
Er41	Error output Q2 or Q3. Overload or connected to foreign positive voltage.	'K' button
Er42	Error relay output. No answer from internal relay monitoring when output is off.	'K' button
Er43	Error relay output. (Self test of transistors)	* Reboot
Er44	Error relay output. Internal relay does not switch on.	'K' button
Er45	Analogue functions not calibrated.	System must be calibrated
Er49	Error calibration values, analogue functions	Recalibration

* Reboot can either be made from PC or Power OFF - Power ON.

(Cont'd)

(Cont'd)

CPU faults

No.	fault and possible reason	Reset action
Er50	Input data difference between processor A and B Processor A and B reads an input differently. The fault is often caused by a bad sensor. Corresponding input LED flashes.	* Reboot
Er51	Output data difference between processor A and B. Processor A and B sets a global variable different (Q0..Q3, GM0..11).(The problem can be caused by the PLC-program)	* Reboot
Er58	AS-I safety code table CRC error	* Reboot, Teach AS-I safety codes
Er59	Calibration analogue functions CRC fault	* Reboot
Er60	Twin self test monotoring	* Reboot
Er61	Timer IRQ monitoring	* Reboot
Er62	Internal serial communication	* Reboot
Er63	Boot-flash CRC	* Reboot
Er64	OS-flash CRC	* Reboot, Reload operating system (OS)
Er65	PLC-flash CRC	* Reboot, Reload PLC program
Er66	5 volt under/over voltage monitoring	* Reboot
Er67	CPU-test error	* Reboot
Er68	RAM-test error	* Reboot
Er69	Scan cycle time over run, PLC program to big	* Reboot
Er70	System, sum of system and stack monitoring	* Reboot
Er71	Pluto used for IDFIX writing. Normal operation ceased	* Reboot
Er72	System error. No communication AS-i processor	* Reboot
Er73	System error. CRC AS-i processor	* Reboot
Er80	Undefined self-test error	* Reboot

* Reboot can either be made from PC or Power OFF - Power ON.

(Cont'd)

(Cont'd)

AS-I

No.	fault and possible reason	Reset action
AE 01	AS-I power missing	
AE 02	No connection with AS-I master (By monitor mode)	
AE 03	Safety code missing by code teaching	
AE 04	Wrong code table	
AE 05	Global communication fault.	
AC [node no]	Channel fault in safety node	Switch off both channels
AB [node no]	AS-i slave with bad or wrong safety code.	Routine 'Single slave exchange' or teach safety codes (PC) or exchange defect slave.
AN [node no]	Slave profile does not match.	Read AS-i slaves
CC [node no]	Code Change. Pluto prepared for exchange of safety slave, one slave is missing.(Acknowledge by 'K' button)	
CC	Code Change. Pluto is prepared for connection of new safety slave.	
CF	Code Found. Code in new safety slave is available. (Acknowledge by 'K' button.	

2 Document List

Description

This chapter is a table of contents that includes the drawing specification for each electrical document valid for the equipment

2.1 Document List

This page intentionally left blank

This drawing must not without the consent of Tetra Pak be copied, transmitted or disclosed to any third party.

RELEASED

Documents list

Drawing No	Page	Denomination	Page type	Version
3223337-0001	001	DOCUMENTS LIST	DOCUMENTS LIST	AM
3223337-0001	002	DOCUMENTS LIST	DOCUMENTS LIST	AM
3223337-0001	003	DOCUMENTS LIST	DOCUMENTS LIST	AM
3223337-0001	004	DOCUMENTS LIST	DOCUMENTS LIST	AM
3223337-0001	005	DOCUMENTS LIST	DOCUMENTS LIST	AM
3223337-0001	006	DOCUMENTS LIST	DOCUMENTS LIST	AM
3223337-0001	007	DOCUMENTS LIST	DOCUMENTS LIST	AM
3223337-0001	008	DOCUMENTS LIST	DOCUMENTS LIST	AM
3223337-0001	009	DOCUMENTS LIST	DOCUMENTS LIST	AM
3223337-0002	001	POSITION SUMMARY	POSITION SUMMARY	AM
3223337-0002	002	POSITION SUMMARY	POSITION SUMMARY	AM
3223337-0002	003	POSITION SUMMARY	POSITION SUMMARY	AM
3223337-0002	004	POSITION SUMMARY	POSITION SUMMARY	AM
3223337-0002	005	POSITION SUMMARY	POSITION SUMMARY	AM
3223337-0002	006	POSITION SUMMARY	POSITION SUMMARY	AM
3223337-0002	007	POSITION SUMMARY	POSITION SUMMARY	AM
3223337-0003	001	CIRCUIT DIAGRAM	0V_24V TERMINAL	AM
3223337-0003	002	CIRCUIT DIAGRAM	0V_24V TERMINAL	AM
3223337-0003	003	CIRCUIT DIAGRAM	0V_24V TERMINAL	AM
3223337-0003	005	CIRCUIT DIAGRAM	MAINS SUPPLY	AM
3223337-0003	006	CIRCUIT DIAGRAM	LIGHT FIXTURES	AM
3223337-0003	007	CIRCUIT DIAGRAM	PEROXIDE TANK HEATERS	AM
3223337-0003	008	CIRCUIT DIAGRAM	HEATERS	AM
3223337-0003	009	CIRCUIT DIAGRAM	ELEMENTS	AM
3223337-0003	010	CIRCUIT DIAGRAM	ELEMENTS	AM
3223337-0003	011	CIRCUIT DIAGRAM	FLAP HEATING ELEMENTS	AM
3223337-0003	012	CIRCUIT DIAGRAM	ASU SEALING EQUIPMENT	AM
3223337-0003	014	CIRCUIT DIAGRAM	COOLING ELECTRICAL CABINET	AM
3223337-0003	015	CIRCUIT DIAGRAM	MOTORS	AM
3223337-0003	016	CIRCUIT DIAGRAM	MOTORS	AM
3223337-0003	017	CIRCUIT DIAGRAM	MOTORS	AM
3223337-0003	018	CIRCUIT DIAGRAM	STEERING DEVICE MOTOR	AM
3223337-0003	023	CIRCUIT DIAGRAM	TPIH GENERATOR TS	AM
3223337-0003	024	CIRCUIT DIAGRAM	ASU LOOP - ASU MAGAZINE	AM
3223337-0003	025	CIRCUIT DIAGRAM	EXTERNAL CONV.	AM
3223337-0003	026	CIRCUIT DIAGRAM	DRIVE ROLLER - CAP BLOWER	AM
3223337-0003	027	CIRCUIT DIAGRAM	AIR COMPRESSOR-ICU PUMP	AM
3223337-0003	028	CIRCUIT DIAGRAM	HTDROGEN PEROXIDE PUMP	AM
3223337-0003	030	CIRCUIT DIAGRAM	JAW RIGHT SERVO MOTOR	AM
3223337-0003	031	CIRCUIT DIAGRAM	YOKE RIGHT SERVO MOTOR	AM
3223337-0003	032	CIRCUIT DIAGRAM	YOKE LEFT SERVO MOTOR	AM
3223337-0003	033	CIRCUIT DIAGRAM	JAW LEFT SERVO MOTOR	AM
3223337-0003	034	CIRCUIT DIAGRAM	LEFT DESIGN SERVO MOTOR	AM
3223337-0003	035	CIRCUIT DIAGRAM	RIGHT DESIGN SERVO MOTOR	AM
3223337-0003	037	CIRCUIT DIAGRAM	HVA LOBE PUMP SERVO MOTOR	AM
3223337-0003	038	CIRCUIT DIAGRAM	INFEED FFU SERVO MOTOR	AM

Tetra Pak®

Version Designer RICO
ECM No 687624
Version Date 01/10/2014
Denomination DOCUMENTS LIST
Machine A3 CompactFlex 0300
Page Type DOCUMENTS LIST
Document No. 3223337-0001
Doc. type ELD
Version AM
Page 001
Information Security Class PUBLIC

This drawing must not without the consent of Tetra Pak be copied, transmitted or disclosed to any third party.

RELEASED

Documents list

Drawing No	Page	Denomination	Page type	Version
3223337-0003	039	CIRCUIT DIAGRAM	INDEX FFU SERVO MOTOR	AM
3223337-0003	040	CIRCUIT DIAGRAM	OUTFEED FFU SERVO MOTOR	AM
3223337-0003	045	CIRCUIT DIAGRAM	CONTROL VOLTAGE	AM
3223337-0003	046	CIRCUIT DIAGRAM	CONTROL VOLTAGE	AM
3223337-0003	047	CIRCUIT DIAGRAM	CONDUCTIVITY METER	AM
3223337-0003	048	CIRCUIT DIAGRAM	RECORDER	AM
3223337-0003	049	CIRCUIT DIAGRAM	RECORDER	AM
3223337-0003	051	CIRCUIT DIAGRAM	LEVEL RELAYS	AM
3223337-0003	052	CIRCUIT DIAGRAM	KNIVES AND CATCHERS	AM
3223337-0003	053	CIRCUIT DIAGRAM	DCS BAR CODE	AM
3223337-0003	054	CIRCUIT DIAGRAM	TMCC FILLING SYSTEM	AM
3223337-0003	055	CIRCUIT DIAGRAM	TMCC SEALING MONITORING	AM
3223337-0003	056	CIRCUIT DIAGRAM	BAR CODE SCANNER	AM
3223337-0003	057	CIRCUIT DIAGRAM	PC B&R COMMUNICATION	AM
3223337-0003	058	CIRCUIT DIAGRAM	SAFETY SYSTEM PLUTO B46	AM
3223337-0003	059	CIRCUIT DIAGRAM	ES SAFETY EXPANSION RELAY	AM
3223337-0003	060	CIRCUIT DIAGRAM	DELAYED DISCONNECTION MOTORS	AM
3223337-0003	061	CIRCUIT DIAGRAM	BRAKES DISCONNECTION	AM
3223337-0003	062	CIRCUIT DIAGRAM	BRAKES SAFETY EXPANSION RELAY	AM
3223337-0003	063	CIRCUIT DIAGRAM	ASU XT, SAFETY RELAY	AM
3223337-0003	064	CIRCUIT DIAGRAM	EMERGENCY STOP SAFETY	AM
3223337-0003	065	CIRCUIT DIAGRAM	JAW AND FFU DOORS GUARD SAFETY	AM
3223337-0003	066	CIRCUIT DIAGRAM	JAW AND FFU DOORS GUARD LOCKER	AM
3223337-0003	067	CIRCUIT DIAGRAM	ASU DOORS GUARD SAFETY	AM
3223337-0003	068	CIRCUIT DIAGRAM	ASEPTIC CHAMBER DOORS GUARD	AM
3223337-0003	069	CIRCUIT DIAGRAM	POWER SUPPLY DEVICENET	AM
3223337-0003	070	CIRCUIT DIAGRAM	DEVICE BOX 8 PORT	AM
3223337-0003	071	CIRCUIT DIAGRAM	ETHERNET SWITCH	AM
3223337-0003	072	CIRCUIT DIAGRAM	PRINTER	AM
3223337-0003	073	CIRCUIT DIAGRAM	PULL TAB	AM
3223337-0003	074	CIRCUIT DIAGRAM	POWER SUPPLY PLC	AM
3223337-0003	075	CIRCUIT DIAGRAM	PLC LOCAL DIGITAL INPUT	AM
3223337-0003	076	CIRCUIT DIAGRAM	PLC LOCAL DIGITAL INPUT	AM
3223337-0003	077	CIRCUIT DIAGRAM	PLC LOCAL DIGITAL INPUT	AM
3223337-0003	078	CIRCUIT DIAGRAM	PLC LOCAL DIGITAL INPUT	AM
3223337-0003	079	CIRCUIT DIAGRAM	PLC LOCAL DIGITAL INPUT	AM
3223337-0003	080	CIRCUIT DIAGRAM	PLC LOCAL DIGITAL INPUT	AM
3223337-0003	081	CIRCUIT DIAGRAM	PLC LOCAL DIGITAL INPUT	AM
3223337-0003	082	CIRCUIT DIAGRAM	PLC LOCAL DIGITAL INPUT	AM
3223337-0003	083	CIRCUIT DIAGRAM	PLC LOCAL DIGITAL OUTPUT	AM
3223337-0003	084	CIRCUIT DIAGRAM	PLC LOCAL DIGITAL OUTPUT	AM
3223337-0003	089	CIRCUIT DIAGRAM	DEVICENET ADAPTER, CABINET PWR	AM
3223337-0003	090	CIRCUIT DIAGRAM	PLC REMOTE D.I., CABINET PWR	AM
3223337-0003	091	CIRCUIT DIAGRAM	PLC REMOTE D.I., CABINET PWR	AM
3223337-0003	092	CIRCUIT DIAGRAM	PLC REMOTE D.O, CABINET PWR	AM
3223337-0003	093	CIRCUIT DIAGRAM	PLC REMOTE D.O, CABINET PWR	AM

Tetra Pak®

Version Designer RICO
ECM No 687624

Version Date 01/10/2014
Denomination DOCUMENTS LIST

Machine A3 CompactFlex 0300
Page Type DOCUMENTS LIST
Document No. 3223337-0001
Doc. type ELD
Version AM
Page 002

Information Security Class PUBLIC

This drawing must not without the consent of Tetra Pak be copied, transmitted or disclosed to any third party.

RELEASED

Documents list

Drawing No	Page	Denomination	Page type	Version
3223337-0003	094	CIRCUIT DIAGRAM	PLC REMOTE D.O, CABINET PWR	AM
3223337-0003	095	CIRCUIT DIAGRAM	PLC REMOTE D.O, CABINET PWR	AM
3223337-0003	096	CIRCUIT DIAGRAM	PLC REMOTE D.O, CABINET PWR	AM
3223337-0003	097	CIRCUIT DIAGRAM	PLC REMOTE D.O, CABINET PWR	AM
3223337-0003	098	CIRCUIT DIAGRAM	PLC REMOTE D.O, CABINET PWR	AM
3223337-0003	099	CIRCUIT DIAGRAM	PLC REMOTE D.O, CABINET PWR	AM
3223337-0003	100	CIRCUIT DIAGRAM	PLC REMOTE OW4, CABINET PWR	AM
3223337-0003	101	CIRCUIT DIAGRAM	PLC REMOTE EP24DC, CABINET PWR	AM
3223337-0003	102	CIRCUIT DIAGRAM	PLC REMOTE OW4, CABINET PWR	AM
3223337-0003	103	CIRCUIT DIAGRAM	PLC REMOTE OW4, CABINET PWR	AM
3223337-0003	104	CIRCUIT DIAGRAM	PLC REMOTE OW4, CABINET PWR	AM
3223337-0003	105	CIRCUIT DIAGRAM	PLC REMOTE OW4, CABINET PWR	AM
3223337-0003	106	CIRCUIT DIAGRAM	PLC REMOTE A.O.V., CABINET PWR	AM
3223337-0003	107	CIRCUIT DIAGRAM	PLC REMOTE D.O, CABINET PWR	AM
3223337-0003	108	CIRCUIT DIAGRAM	PLC REMOTE A.I.C., CABINET PWR	AM
3223337-0003	109	CIRCUIT DIAGRAM	PLC REMOTE A.O.V., CABINET PWR	AM
3223337-0003	110	CIRCUIT DIAGRAM	PLC REMOTE TH. , CABINET PWR	AM
3223337-0003	112	CIRCUIT DIAGRAM	TERMINAL STRIP COMMON, ASU (NEW)	AM
3223337-0003	113	CIRCUIT DIAGRAM	DEVICENET ADAPTER, ASU	AM
3223337-0003	114	CIRCUIT DIAGRAM	PLC REMOTE D.I, ASU	AM
3223337-0003	115	CIRCUIT DIAGRAM	PLC REMOTE D.I, ASU	AM
3223337-0003	116	CIRCUIT DIAGRAM	PLC REMOTE D.I, ASU	AM
3223337-0003	117	CIRCUIT DIAGRAM	PLC REMOTE D.I, ASU	AM
3223337-0003	118	CIRCUIT DIAGRAM	PLC REMOTE D.O, ASU	AM
3223337-0003	119	CIRCUIT DIAGRAM	PLC REMOTE D.O, ASU	AM
3223337-0003	120	CIRCUIT DIAGRAM	PLC REMOTE D.O, ASU	AM
3223337-0003	121	CIRCUIT DIAGRAM	PLC REMOTE D.O, ASU	AM
3223337-0003	122	CIRCUIT DIAGRAM	PLC REMOTE TH., ASU	AM
3223337-0003	123	CIRCUIT DIAGRAM	PLC REMOTE A.I.C., ASU	AM
3223337-0003	128	CIRCUIT DIAGRAM	PLC REMOTE DI, ASU	AM
3223337-0003	129	CIRCUIT DIAGRAM	PLC REMOTE DI, ASU	AM
3223337-0003	130	CIRCUIT DIAGRAM	PLC REMOTE RELAY OW4, ASU	AM
3223337-0003	131	CIRCUIT DIAGRAM	PLC REMOTE FPD, ASU	AM
3223337-0003	132	CIRCUIT DIAGRAM	PLC REMOTE DO, ASU	AM
3223337-0003	133	CIRCUIT DIAGRAM	PLC REMOTE DI, ASU	AM
3223337-0003	134	CIRCUIT DIAGRAM	DEVICENET ADAPTER,ASU XT	AM
3223337-0003	135	CIRCUIT DIAGRAM	PLC REMOTE D.I, PPI	AM
3223337-0003	136	CIRCUIT DIAGRAM	PLC REMOTE D.I, ASU XT	AM
3223337-0003	137	CIRCUIT DIAGRAM	PLC REMOTE D.I,ASU XT	AM
3223337-0003	138	CIRCUIT DIAGRAM	PLC REMOTE D.I, ASU XT	AM
3223337-0003	139	CIRCUIT DIAGRAM	PLC REMOTE D.O, ASU XT	AM
3223337-0003	140	CIRCUIT DIAGRAM	PLC REMOTE RELAY OW4, ASU XT	AM
3223337-0003	141	CIRCUIT DIAGRAM	TERMINAL STRIP COMMON, JAW (NEW)	AM
3223337-0003	142	CIRCUIT DIAGRAM	DEVICENET ADAPTER, JAW	AM
3223337-0003	143	CIRCUIT DIAGRAM	PLC REMOTE D.I, JAW	AM
3223337-0003	144	CIRCUIT DIAGRAM	PLC REMOTE D.I, JAW	AM

Tetra Pak®

Version Designer RICO
ECM No 687624
Denomination DOCUMENTS LIST
Version Date 01/10/2014
Machine A3 CompactFlex 0300
Page Type DOCUMENTS LIST
Document No. 3223337-0001
Doc. type ELD
Version AM
Page 003
Information Security Class PUBLIC

This drawing must not without the consent of Tetra Pak be copied, transmitted or disclosed to any third party.

RELEASED

Documents list

Drawing No	Page	Denomination	Page type	Version
3223337-0003	145	CIRCUIT DIAGRAM	PLC REMOTE D.O, JAW	AM
3223337-0003	146	CIRCUIT DIAGRAM	PLC REMOTE D.O, JAW	AM
3223337-0003	147	CIRCUIT DIAGRAM	PLC REMOTE D.O, JAW	AM
3223337-0003	148	CIRCUIT DIAGRAM	PLC REMOTE A.I C.,JAW	AM
3223337-0003	149	CIRCUIT DIAGRAM	PLC REMOTE A.I.V., JAW	AM
3223337-0003	150	CIRCUIT DIAGRAM	PLC REMOTE TH., JAW	AM
3223337-0003	151	CIRCUIT DIAGRAM	PLC REMOTE TH., JAW	AM
3223337-0003	152	CIRCUIT DIAGRAM	PLC REMOTE OW4, JAW	AM
3223337-0003	154	CIRCUIT DIAGRAM	TERMINAL STRIP COMMON, FFU (NEW)	AM
3223337-0003	155	CIRCUIT DIAGRAM	DEVICENET ADAPTER, FFU	AM
3223337-0003	156	CIRCUIT DIAGRAM	PLC REMOTE D.I, FFU	AM
3223337-0003	157	CIRCUIT DIAGRAM	PLC REMOTE D.I, FFU (DAIRY)	AM
3223337-0003	158	CIRCUIT DIAGRAM	PLC REMOTE D.I, FFU (DAIRY)	AM
3223337-0003	159	CIRCUIT DIAGRAM	PLC REMOTE D.O, FFU	AM
3223337-0003	160	CIRCUIT DIAGRAM	PLC REMOTE OW4, FFU (DAIRY)	AM
3223337-0003	161	CIRCUIT DIAGRAM	PLC REMOTE OW4, FFU (DAIRY)	AM
3223337-0003	162	CIRCUIT DIAGRAM	PLC REMOTE OW4, FFU (DAIRY)	AM
3223337-0003	163	CIRCUIT DIAGRAM	PLC REMOTE EP24DC, FFU	AM
3223337-0003	164	CIRCUIT DIAGRAM	PLC REMOTE TH, FFU	AM
3223337-0003	165	CIRCUIT DIAGRAM	PLC REMOTE TH, FFU	AM
3223337-0003	166	CIRCUIT DIAGRAM	PLC REMOTE D.I. FFU	AM
3223337-0003	167	CIRCUIT DIAGRAM	PLC REMOTE OW4 FFU	AM
3223337-0003	168	CIRCUIT DIAGRAM	PLC REMOTE OX2 FFU	AM
3223337-0003	170	CIRCUIT DIAGRAM	TERMINAL STRIP COMMON, SUPERSTR (NEW)	AM
3223337-0003	171	CIRCUIT DIAGRAM	DEVICENET ADAPTER, SUPERSTR.	AM
3223337-0003	172	CIRCUIT DIAGRAM	PLC REMOTE D.I, SUPERSTR.	AM
3223337-0003	173	CIRCUIT DIAGRAM	PLC REMOTE D.I, SUPERSTR.	AM
3223337-0003	174	CIRCUIT DIAGRAM	PLC REMOTE D.I, SUPERSTR.	AM
3223337-0003	175	CIRCUIT DIAGRAM	PLC REMOTE D.I, SUPERSTR.	AM
3223337-0003	176	CIRCUIT DIAGRAM	PLC REMOTE D.O, SUPERSTR.	AM
3223337-0003	177	CIRCUIT DIAGRAM	PLC REMOTE D.O, SUPERSTR.	AM
3223337-0003	178	CIRCUIT DIAGRAM	PLC REMOTE D.O, SUPERSTR.	AM
3223337-0003	179	CIRCUIT DIAGRAM	PLC REMOTE A.I.C, SUPERSTR.	AM
3223337-0003	180	CIRCUIT DIAGRAM	PLC REMOTE A.I.C. SUPERSTR.	AM
3223337-0003	181	CIRCUIT DIAGRAM	PLC REMOTE A.I.V., SUPERSTR.	AM
3223337-0003	182	CIRCUIT DIAGRAM	PLC REMOTE A.O.V., SUPERSTR.	AM
3223337-0003	183	CIRCUIT DIAGRAM	PLC REMOTE OX2, SUPERSTR.	AM
3223337-0003	184	CIRCUIT DIAGRAM	PLC REMOTE EP24DC, SUPERSTR.	AM
3223337-0003	185	CIRCUIT DIAGRAM	PLC REMOTE TH, SUPERSTR.	AM
3223337-0003	186	CIRCUIT DIAGRAM	PLC REMOTE TH., SUPERSTR.	AM
3223337-0003	187	CIRCUIT DIAGRAM	PLC REMOTE TH, SUPERSTR.	AM
3223337-0003	188	CIRCUIT DIAGRAM	PLC REMOTE TH, SUPERSTR.	AM
3223337-0003	189	CIRCUIT DIAGRAM	PLC REMOTE TH, SUPERSTR.	AM
3223337-0003	190	CIRCUIT DIAGRAM	PLC REMOTE OW4, SUPERSTR.	AM
3223337-0003	191	CIRCUIT DIAGRAM	PLC REMOTE EP24DC, SUPERSTR.	AM
3223337-0003	192	CIRCUIT DIAGRAM	PLC REMOTE TH, SUPERSTR.	AM

Tetra Pak®

Version Designer RICO
ECM No 687624
Version Date 01/10/2014
Denomination DOCUMENTS LIST
Machine A3 CompactFlex 0300
Page Type DOCUMENTS LIST
Document No. 3223337-0001
Doc. type ELD
Version AM
Page 004
Information Security Class PUBLIC

This drawing must not without the consent of Tetra Pak be copied, transmitted or disclosed to any third party.

RELEASED

Documents list

Drawing No	Page	Denomination	Page type	Version
3223337-0003	193	CIRCUIT DIAGRAM	PLC REMOTE TH, SUPERSTR.	AM
3223337-0003	194	CIRCUIT DIAGRAM	PLC REMOTE TH, SUPERSTR.	AM
3223337-0003	195	CIRCUIT DIAGRAM	PLC REMOTE PT00, SUPERSTR.	AM
3223337-0003	196	CIRCUIT DIAGRAM	PLC REMOTE DI, SUPERSTR.	AM
3223337-0003	197	CIRCUIT DIAGRAM	PLC REMOTE FPD, SUPERSTR.	AM
3223337-0003	198	CIRCUIT DIAGRAM	PLC REMOTE D.O, SUPERSTR.	AM
3223337-0003	205	CIRCUIT DIAGRAM	DEVICENET ADAPTER, H.I.	AM
3223337-0003	206	CIRCUIT DIAGRAM	PLC REMOTE D.I., H.I.	AM
3223337-0003	207	CIRCUIT DIAGRAM	PLC REMOTE D.I., H.I.	AM
3223337-0003	208	CIRCUIT DIAGRAM	PLC REMOTE D.O, H.I.	AM
3223337-0003	209	CIRCUIT DIAGRAM	PLC REMOTE A.I.C, H.I.	AM
3223337-0003	210	CIRCUIT DIAGRAM	PLC REMOTE A.I.V., H.I.	AM
3223337-0003	211	CIRCUIT DIAGRAM	PLC REMOTE A.O.V., H.I.	AM
3223337-0003	212	CIRCUIT DIAGRAM	PLC REMOTE TH., H.I.	AM
3223337-0003	213	CIRCUIT DIAGRAM	PLC REMOTE TH., H.I.	AM
3223337-0003	214	CIRCUIT DIAGRAM	PLC REMOTE D.I., H.I.	AM
3223337-0003	219	CIRCUIT DIAGRAM	TERMINAL STRIP COMMON (NEW)	AM
3223337-0003	220	CIRCUIT DIAGRAM	DEVICENET ADAPTER, SERVICE	AM
3223337-0003	221	CIRCUIT DIAGRAM	PLC REMOTE D.I, SERVICE	AM
3223337-0003	222	CIRCUIT DIAGRAM	PLC REMOTE D.I, SERVICE	AM
3223337-0003	223	CIRCUIT DIAGRAM	PLC REMOTE D.O, SERVICE	AM
3223337-0003	224	CIRCUIT DIAGRAM	PLC REMOTE D.O, SERVICE	AM
3223337-0003	225	CIRCUIT DIAGRAM	PLC REMOTE OW4, SERVICE	AM
3223337-0003	226	CIRCUIT DIAGRAM	PLC REMOTE TH, SERVICE	AM
3223337-0003	227	CIRCUIT DIAGRAM	PLC REMOTE D.O. SERVICE	AM
3223337-0003	228	CIRCUIT DIAGRAM	PLC REMOTE D.O. SERVICE	AM
3223337-0003	229	CIRCUIT DIAGRAM	PLC REMOTE A.I.C. SERVICE (DIMC)	AM
3223337-0003	233	CIRCUIT DIAGRAM	DEVICENET ADAPTER HVA	AM
3223337-0003	234	CIRCUIT DIAGRAM	PLC REMOTE D.I., HVA	AM
3223337-0003	235	CIRCUIT DIAGRAM	PLC REMOTE D.I., HVA	AM
3223337-0003	236	CIRCUIT DIAGRAM	PLC REMOTE D.O, HVA	AM
3223337-0003	237	CIRCUIT DIAGRAM	PLC REMOTE D.O, HVA	AM
3223337-0003	238	CIRCUIT DIAGRAM	PLC REMOTE TH., HVA	AM
3223337-0003	239	CIRCUIT DIAGRAM	PLC REMOTE TH., HVA	AM
3223337-0003	240	CIRCUIT DIAGRAM	PLC REMOTE A.O.V., HVA	AM
3223337-0003	241	CIRCUIT DIAGRAM	CABLE U70W0280	AM
3223337-0003	500	CIRCUIT DIAGRAM	NETWORK FIGURE DRAWING	AM
3223337-0003	501	CIRCUIT DIAGRAM	DEVICENET NETWORK	AM
3223337-0003	505	CIRCUIT DIAGRAM	ETHERNET NETWORK	AM
3223337-0004	001	LINE SUMMARY	LINE SUMMARY	AM
3223337-0004	002	LINE SUMMARY	LINE SUMMARY	AM
3223337-0004	003	LINE SUMMARY	LINE SUMMARY	AM
3223337-0004	004	LINE SUMMARY	LINE SUMMARY	AM
3223337-0004	005	LINE SUMMARY	LINE SUMMARY	AM
3223337-0004	006	LINE SUMMARY	LINE SUMMARY	AM
3223337-0004	007	LINE SUMMARY	LINE SUMMARY	AM

Tetra Pak®

Version Designer RICO
ECM No 687624
Denomination DOCUMENTS LIST
Version Date 01/10/2014
Machine A3 CompactFlex 0300
Page Type DOCUMENTS LIST
Document No. 3223337-0001
Doc. type ELD
Version AM
Page 005
Information Security Class PUBLIC

This drawing must not without the consent of Tetra Pak be copied, transmitted or disclosed to any third party.

RELEASED

Documents list

Drawing No	Page	Denomination	Page type	Version
3223337-0004	008	LINE SUMMARY	LINE SUMMARY	AM
3223337-0004	009	LINE SUMMARY	LINE SUMMARY	AM
3223337-0005	001	CABINET TERMINAL SUMMARY	CABINET TERMINAL SUMMARY	AM
3223337-0005	002	CABINET TERMINAL SUMMARY	CABINET TERMINAL SUMMARY	AM
3223337-0005	003	CABINET TERMINAL SUMMARY	CABINET TERMINAL SUMMARY	AM
3223337-0005	004	CABINET TERMINAL SUMMARY	CABINET TERMINAL SUMMARY	AM
3223337-0005	005	CABINET TERMINAL SUMMARY	CABINET TERMINAL SUMMARY	AM
3223337-0005	006	CABINET TERMINAL SUMMARY	CABINET TERMINAL SUMMARY	AM
3223337-0005	007	CABINET TERMINAL SUMMARY	CABINET TERMINAL SUMMARY	AM
3223337-0005	008	CABINET TERMINAL SUMMARY	CABINET TERMINAL SUMMARY	AM
3223337-0005	009	CABINET TERMINAL SUMMARY	CABINET TERMINAL SUMMARY	AM
3223337-0006	001	TERMINAL STRIP OVERVIEW	TERMINAL STRIP OVERVIEW	AM
3223337-0006	002	TERMINAL STRIP OVERVIEW	TERMINAL STRIP OVERVIEW	AM
3223337-0006	003	TERMINAL STRIP OVERVIEW	TERMINAL STRIP OVERVIEW	AM
3223337-0006	004	TERMINAL STRIP OVERVIEW	TERMINAL STRIP OVERVIEW	AM
3223337-0006	005	TERMINAL STRIP OVERVIEW	TERMINAL STRIP OVERVIEW	AM
3223337-0006	006	TERMINAL STRIP OVERVIEW	TERMINAL STRIP OVERVIEW	AM
3223337-0006	007	TERMINAL STRIP OVERVIEW	TERMINAL STRIP OVERVIEW	AM
3223337-0006	008	TERMINAL STRIP OVERVIEW	TERMINAL STRIP OVERVIEW	AM
3223337-0006	009	TERMINAL STRIP OVERVIEW	TERMINAL STRIP OVERVIEW	AM
3223337-0006	010	TERMINAL STRIP OVERVIEW	TERMINAL STRIP OVERVIEW	AM
3223337-0006	011	TERMINAL STRIP OVERVIEW	TERMINAL STRIP OVERVIEW	AM
3223337-0006	012	TERMINAL STRIP OVERVIEW	TERMINAL STRIP OVERVIEW	AM
3223337-0006	013	TERMINAL STRIP OVERVIEW	TERMINAL STRIP OVERVIEW	AM
3223337-0006	014	TERMINAL STRIP OVERVIEW	TERMINAL STRIP OVERVIEW	AM
3223337-0006	015	TERMINAL STRIP OVERVIEW	TERMINAL STRIP OVERVIEW	AM
3223337-0006	016	TERMINAL STRIP OVERVIEW	TERMINAL STRIP OVERVIEW	AM
3223337-0006	017	TERMINAL STRIP OVERVIEW	TERMINAL STRIP OVERVIEW	AM
3223337-0006	018	TERMINAL STRIP OVERVIEW	TERMINAL STRIP OVERVIEW	AM
3223337-0006	019	TERMINAL STRIP OVERVIEW	TERMINAL STRIP OVERVIEW	AM
3223337-0006	020	TERMINAL STRIP OVERVIEW	TERMINAL STRIP OVERVIEW	AM
3223337-0006	021	TERMINAL STRIP OVERVIEW	TERMINAL STRIP OVERVIEW	AM
3223337-0006	022	TERMINAL STRIP OVERVIEW	TERMINAL STRIP OVERVIEW	AM
3223337-0006	023	TERMINAL STRIP OVERVIEW	TERMINAL STRIP OVERVIEW	AM
3223337-0006	024	TERMINAL STRIP OVERVIEW	TERMINAL STRIP OVERVIEW	AM
3223337-0006	025	TERMINAL STRIP OVERVIEW	TERMINAL STRIP OVERVIEW	AM
3223337-0006	026	TERMINAL STRIP OVERVIEW	TERMINAL STRIP OVERVIEW	AM
3223337-0006	027	TERMINAL STRIP OVERVIEW	TERMINAL STRIP OVERVIEW	AM
3223337-0006	028	TERMINAL STRIP OVERVIEW	TERMINAL STRIP OVERVIEW	AM
3223337-0006	029	TERMINAL STRIP OVERVIEW	TERMINAL STRIP OVERVIEW	AM
3223337-0006	030	TERMINAL STRIP OVERVIEW	TERMINAL STRIP OVERVIEW	AM
3223337-0006	031	TERMINAL STRIP OVERVIEW	TERMINAL STRIP OVERVIEW	AM
3223337-0006	032	TERMINAL STRIP OVERVIEW	TERMINAL STRIP OVERVIEW	AM
3223337-0006	033	TERMINAL STRIP OVERVIEW	TERMINAL STRIP OVERVIEW	AM
3223337-0006	034	TERMINAL STRIP OVERVIEW	TERMINAL STRIP OVERVIEW	AM
3223337-0006	035	TERMINAL STRIP OVERVIEW	TERMINAL STRIP OVERVIEW	AM

Tetra Pak®

Version Designer RICO
ECM No 687624
Version Date 01/10/2014
Denomination DOCUMENTS LIST
Machine A3 CompactFlex 0300
Page Type DOCUMENTS LIST
Document No. 3223337-0001
Doc. type ELD
Version AM
Page 006
Information Security Class PUBLIC

This drawing must not without the consent of Tetra Pak be copied, transmitted or disclosed to any third party.

RELEASED

Documents list

Drawing No	Page	Denomination	Page type	Version
3223337-0006	036	TERMINAL STRIP OVERVIEW	TERMINAL STRIP OVERVIEW	AM
3223337-0006	037	TERMINAL STRIP OVERVIEW	TERMINAL STRIP OVERVIEW	AM
3223337-0006	038	TERMINAL STRIP OVERVIEW	TERMINAL STRIP OVERVIEW	AM
3223337-0006	039	TERMINAL STRIP OVERVIEW	TERMINAL STRIP OVERVIEW	AM
3223337-0006	040	TERMINAL STRIP OVERVIEW	TERMINAL STRIP OVERVIEW	AM
3223337-0006	041	TERMINAL STRIP OVERVIEW	TERMINAL STRIP OVERVIEW	AM
3223337-0006	042	TERMINAL STRIP OVERVIEW	TERMINAL STRIP OVERVIEW	AM
3223337-0006	043	TERMINAL STRIP OVERVIEW	TERMINAL STRIP OVERVIEW	AM
3223337-0006	044	TERMINAL STRIP OVERVIEW	TERMINAL STRIP OVERVIEW	AM
3223337-0006	045	TERMINAL STRIP OVERVIEW	TERMINAL STRIP OVERVIEW	AM
3223337-0006	046	TERMINAL STRIP OVERVIEW	TERMINAL STRIP OVERVIEW	AM
3223337-0006	047	TERMINAL STRIP OVERVIEW	TERMINAL STRIP OVERVIEW	AM
3223337-0006	048	TERMINAL STRIP OVERVIEW	TERMINAL STRIP OVERVIEW	AM
3223337-0006	049	TERMINAL STRIP OVERVIEW	TERMINAL STRIP OVERVIEW	AM
3223337-0006	050	TERMINAL STRIP OVERVIEW	TERMINAL STRIP OVERVIEW	AM
3223337-0006	051	TERMINAL STRIP OVERVIEW	TERMINAL STRIP OVERVIEW	AM
3223337-0006	052	TERMINAL STRIP OVERVIEW	TERMINAL STRIP OVERVIEW	AM
3223337-0006	053	TERMINAL STRIP OVERVIEW	TERMINAL STRIP OVERVIEW	AM
3223337-0006	054	TERMINAL STRIP OVERVIEW	TERMINAL STRIP OVERVIEW	AM
3223337-0006	055	TERMINAL STRIP OVERVIEW	TERMINAL STRIP OVERVIEW	AM
3223337-0006	056	TERMINAL STRIP OVERVIEW	TERMINAL STRIP OVERVIEW	AM
3223337-0006	057	TERMINAL STRIP OVERVIEW	TERMINAL STRIP OVERVIEW	AM
3223337-0006	058	TERMINAL STRIP OVERVIEW	TERMINAL STRIP OVERVIEW	AM
3223337-0006	059	TERMINAL STRIP OVERVIEW	TERMINAL STRIP OVERVIEW	AM
3223337-0006	060	TERMINAL STRIP OVERVIEW	TERMINAL STRIP OVERVIEW	AM
3223337-0006	061	TERMINAL STRIP OVERVIEW	TERMINAL STRIP OVERVIEW	AM
3223337-0006	062	TERMINAL STRIP OVERVIEW	TERMINAL STRIP OVERVIEW	AM
3223337-0006	063	TERMINAL STRIP OVERVIEW	TERMINAL STRIP OVERVIEW	AM
3223337-0006	064	TERMINAL STRIP OVERVIEW	TERMINAL STRIP OVERVIEW	AM
3223337-0006	065	TERMINAL STRIP OVERVIEW	TERMINAL STRIP OVERVIEW	AM
3223337-0006	066	TERMINAL STRIP OVERVIEW	TERMINAL STRIP OVERVIEW	AM
3223337-0006	067	TERMINAL STRIP OVERVIEW	TERMINAL STRIP OVERVIEW	AM
3223337-0006	068	TERMINAL STRIP OVERVIEW	TERMINAL STRIP OVERVIEW	AM
3223337-0006	069	TERMINAL STRIP OVERVIEW	TERMINAL STRIP OVERVIEW	AM
3223337-0006	070	TERMINAL STRIP OVERVIEW	TERMINAL STRIP OVERVIEW	AM
3223337-0006	071	TERMINAL STRIP OVERVIEW	TERMINAL STRIP OVERVIEW	AM
3223337-0006	072	TERMINAL STRIP OVERVIEW	TERMINAL STRIP OVERVIEW	AM
3223337-0006	073	TERMINAL STRIP OVERVIEW	TERMINAL STRIP OVERVIEW	AM
3223337-0006	074	TERMINAL STRIP OVERVIEW	TERMINAL STRIP OVERVIEW	AM
3223337-0006	075	TERMINAL STRIP OVERVIEW	TERMINAL STRIP OVERVIEW	AM
3223337-0006	076	TERMINAL STRIP OVERVIEW	TERMINAL STRIP OVERVIEW	AM
3223337-0006	077	TERMINAL STRIP OVERVIEW	TERMINAL STRIP OVERVIEW	AM
3223337-0006	078	TERMINAL STRIP OVERVIEW	TERMINAL STRIP OVERVIEW	AM
3223337-0006	079	TERMINAL STRIP OVERVIEW	TERMINAL STRIP OVERVIEW	AM
3223337-0006	080	TERMINAL STRIP OVERVIEW	TERMINAL STRIP OVERVIEW	AM
3223337-0006	081	TERMINAL STRIP OVERVIEW	TERMINAL STRIP OVERVIEW	AM

Tetra Pak®

Version Designer RICO
ECM No 687624

Denomination DOCUMENTS LIST

Version Date 01/10/2014

Machine A3 CompactFlex 0300

Page Type DOCUMENTS LIST

Document No. 3223337-0001

Doc. type ELD

Version AM

Page 007

Information Security Class PUBLIC

This drawing must not without the consent of Tetra Pak be copied, transmitted or disclosed to any third party.

RELEASED

Documents list

Drawing No	Page	Denomination	Page type	Version
3223337-0006	082	TERMINAL STRIP OVERVIEW	TERMINAL STRIP OVERVIEW	AM
3223337-0006	083	TERMINAL STRIP OVERVIEW	TERMINAL STRIP OVERVIEW	AM
3223337-0006	084	TERMINAL STRIP OVERVIEW	TERMINAL STRIP OVERVIEW	AM
3223337-0006	085	TERMINAL STRIP OVERVIEW	TERMINAL STRIP OVERVIEW	AM
3223337-0006	086	TERMINAL STRIP OVERVIEW	TERMINAL STRIP OVERVIEW	AM
3223337-0006	087	TERMINAL STRIP OVERVIEW	TERMINAL STRIP OVERVIEW	AM
3223337-0006	088	TERMINAL STRIP OVERVIEW	TERMINAL STRIP OVERVIEW	AM
3223337-0006	089	TERMINAL STRIP OVERVIEW	TERMINAL STRIP OVERVIEW	AM
3223337-0006	090	TERMINAL STRIP OVERVIEW	TERMINAL STRIP OVERVIEW	AM
3223337-0006	091	TERMINAL STRIP OVERVIEW	TERMINAL STRIP OVERVIEW	AM
3223337-0006	092	TERMINAL STRIP OVERVIEW	TERMINAL STRIP OVERVIEW	AM
3223337-0006	093	TERMINAL STRIP OVERVIEW	TERMINAL STRIP OVERVIEW	AM
3223337-0006	094	TERMINAL STRIP OVERVIEW	TERMINAL STRIP OVERVIEW	AM
3223337-0006	095	TERMINAL STRIP OVERVIEW	TERMINAL STRIP OVERVIEW	AM
3223337-0006	096	TERMINAL STRIP OVERVIEW	TERMINAL STRIP OVERVIEW	AM
3223337-0006	097	TERMINAL STRIP OVERVIEW	TERMINAL STRIP OVERVIEW	AM
3223337-0006	098	TERMINAL STRIP OVERVIEW	TERMINAL STRIP OVERVIEW	AM
3223337-0006	099	TERMINAL STRIP OVERVIEW	TERMINAL STRIP OVERVIEW	AM
3223337-0006	100	TERMINAL STRIP OVERVIEW	TERMINAL STRIP OVERVIEW	AM
3223337-0006	101	TERMINAL STRIP OVERVIEW	TERMINAL STRIP OVERVIEW	AM
3223337-0006	102	TERMINAL STRIP OVERVIEW	TERMINAL STRIP OVERVIEW	AM
3223337-0006	103	TERMINAL STRIP OVERVIEW	TERMINAL STRIP OVERVIEW	AM
3223337-0006	104	TERMINAL STRIP OVERVIEW	TERMINAL STRIP OVERVIEW	AM
3223337-0006	105	TERMINAL STRIP OVERVIEW	TERMINAL STRIP OVERVIEW	AM
3223337-0006	106	TERMINAL STRIP OVERVIEW	TERMINAL STRIP OVERVIEW	AM
3223337-0006	107	TERMINAL STRIP OVERVIEW	TERMINAL STRIP OVERVIEW	AM
3223337-0006	108	TERMINAL STRIP OVERVIEW	TERMINAL STRIP OVERVIEW	AM
3223337-0006	109	TERMINAL STRIP OVERVIEW	TERMINAL STRIP OVERVIEW	AM
3223337-0006	110	TERMINAL STRIP OVERVIEW	TERMINAL STRIP OVERVIEW	AM
3223337-0006	111	TERMINAL STRIP OVERVIEW	TERMINAL STRIP OVERVIEW	AM
3223337-0006	112	TERMINAL STRIP OVERVIEW	TERMINAL STRIP OVERVIEW	AM
3223337-0006	113	TERMINAL STRIP OVERVIEW	TERMINAL STRIP OVERVIEW	AM
3223337-0006	114	TERMINAL STRIP OVERVIEW	TERMINAL STRIP OVERVIEW	AM
3223337-0006	115	TERMINAL STRIP OVERVIEW	TERMINAL STRIP OVERVIEW	AM
3223337-0006	116	TERMINAL STRIP OVERVIEW	TERMINAL STRIP OVERVIEW	AM
3223337-0007	001	CABLE CONNECTION LIST	CABLE CONNECTION LIST	AM
3223337-0007	002	CABLE CONNECTION LIST	CABLE CONNECTION LIST	AM
3223337-0007	003	CABLE CONNECTION LIST	CABLE CONNECTION LIST	AM
3223337-0007	004	CABLE CONNECTION LIST	CABLE CONNECTION LIST	AM
3223337-0007	005	CABLE CONNECTION LIST	CABLE CONNECTION LIST	AM
3223337-0007	006	CABLE CONNECTION LIST	CABLE CONNECTION LIST	AM
3223337-0007	007	CABLE CONNECTION LIST	CABLE CONNECTION LIST	AM
3223337-0007	008	CABLE CONNECTION LIST	CABLE CONNECTION LIST	AM
3223337-0007	009	CABLE CONNECTION LIST	CABLE CONNECTION LIST	AM
3223337-0007	010	CABLE CONNECTION LIST	CABLE CONNECTION LIST	AM
3223337-0007	011	CABLE CONNECTION LIST	CABLE CONNECTION LIST	AM

Tetra Pak®

Version Designer RICO
ECM No 687624
Version Date 01/10/2014
Denomination DOCUMENTS LIST
Machine A3 CompactFlex 0300
Page Type DOCUMENTS LIST
Document No. 3223337-0001
Doc. type ELD
Version AM
Page 008
Information Security Class PUBLIC

This drawing must not without the consent of Tetra Pak be copied, transmitted or disclosed to any third party.

RELEASED

Documents list

Drawing No	Page	Denomination	Page type	Version
3223337-0007	012	CABLE CONNECTION LIST	CABLE CONNECTION LIST	AM
3223337-0007	013	CABLE CONNECTION LIST	CABLE CONNECTION LIST	AM
3223337-0007	014	CABLE CONNECTION LIST	CABLE CONNECTION LIST	AM
3223337-0007	015	CABLE CONNECTION LIST	CABLE CONNECTION LIST	AM
3223337-0007	016	CABLE CONNECTION LIST	CABLE CONNECTION LIST	AM
3223337-0007	017	CABLE CONNECTION LIST	CABLE CONNECTION LIST	AM
3223337-0007	018	CABLE CONNECTION LIST	CABLE CONNECTION LIST	AM
3223337-0007	019	CABLE CONNECTION LIST	CABLE CONNECTION LIST	AM
3223337-0007	020	CABLE CONNECTION LIST	CABLE CONNECTION LIST	AM
3223337-0007	021	CABLE CONNECTION LIST	CABLE CONNECTION LIST	AM
3223337-0007	022	CABLE CONNECTION LIST	CABLE CONNECTION LIST	AM
3223337-0007	023	CABLE CONNECTION LIST	CABLE CONNECTION LIST	AM
3223337-0007	024	CABLE CONNECTION LIST	CABLE CONNECTION LIST	AM
3223337-0007	025	CABLE CONNECTION LIST	CABLE CONNECTION LIST	AM
3223337-0007	026	CABLE CONNECTION LIST	CABLE CONNECTION LIST	AM
3223337-0007	027	CABLE CONNECTION LIST	CABLE CONNECTION LIST	AM
3223337-0007	028	CABLE CONNECTION LIST	CABLE CONNECTION LIST	AM
3223337-0007	029	CABLE CONNECTION LIST	CABLE CONNECTION LIST	AM
3223337-0007	030	CABLE CONNECTION LIST	CABLE CONNECTION LIST	AM
3223337-0007	031	CABLE CONNECTION LIST	CABLE CONNECTION LIST	AM
3223337-0007	032	CABLE CONNECTION LIST	CABLE CONNECTION LIST	AM
3223337-0007	033	CABLE CONNECTION LIST	CABLE CONNECTION LIST	AM
3223337-0007	034	CABLE CONNECTION LIST	CABLE CONNECTION LIST	AM
3223337-0007	035	CABLE CONNECTION LIST	CABLE CONNECTION LIST	AM
3223337-0007	036	CABLE CONNECTION LIST	CABLE CONNECTION LIST	AM
3223337-0007	037	CABLE CONNECTION LIST	CABLE CONNECTION LIST	AM
3223337-0007	038	CABLE CONNECTION LIST	CABLE CONNECTION LIST	AM
3223337-0007	039	CABLE CONNECTION LIST	CABLE CONNECTION LIST	AM
3223337-0007	040	CABLE CONNECTION LIST	CABLE CONNECTION LIST	AM
3223337-0007	041	CABLE CONNECTION LIST	CABLE CONNECTION LIST	AM
3223337-0007	042	CABLE CONNECTION LIST	CABLE CONNECTION LIST	AM
3223337-0007	043	CABLE CONNECTION LIST	CABLE CONNECTION LIST	AM
3223337-0007	044	CABLE CONNECTION LIST	CABLE CONNECTION LIST	AM
3223337-0007	045	CABLE CONNECTION LIST	CABLE CONNECTION LIST	AM
3223337-0007	046	CABLE CONNECTION LIST	CABLE CONNECTION LIST	AM
3223337-0007	047	CABLE CONNECTION LIST	CABLE CONNECTION LIST	AM
3223337-0007	048	CABLE CONNECTION LIST	CABLE CONNECTION LIST	AM
3223337-0008	001	MAINS CONNECTION	MAINS CONNECTION	AM
3223337-0008	002	MAINS CONNECTION	MAINS CONNECTION	AM
3223337-0098	001	DRAWING REMARKS	DRAWING REMARKS	AM
3223337-0099	001	ENGINEERING CHANGE DESCRIPTION	ENGINEERING CHANGE DESCRIPTION	AM

Tetra Pak®

Version Designer RICO
ECM No 687624

Version Date 01/10/2014
Denomination DOCUMENTS LIST

Machine A3 CompactFlex 0300
Page Type DOCUMENTS LIST

Document No. 3223337-0001

Doc. type ELD
Version AM
Page 009

Information Security Class PUBLIC

This page intentionally left blank

3 Position Summary

This page intentionally left blank

3.1 Description

This chapter is a list of all electrical components that are shown in the electrical drawings, with page references to the drawings where they are located.

3.2 Position Summary

This drawing must not without the consent of Tetra Pak be copied, transmitted or disclosed to any third party.

Position summary of 3223337-0003

Component	Page .Col.	Opt.
A01B3000	005.8	
A01B5860	090.2	
A01B5870	090.3	
A01B5880	090.4	
A01B5890	090.5	
A01B5900	006.8	UL/CSA
A01B5940	110.5	
A01C5000	058.1	
A01C5300	048.6	
A01C5320	047.5	
A01E5810	046.8	
A01E5820	046.9	
A01F0020	005.5	
A01F0110	045.3	
A01F0120	045.4	
A01F0130	045.4	
A01F0140	046.1	
A01F0150	046.2	
A01F0170	046.2	
A01F0180	046.3	
A01F3000	005.9	
A01F5400	045.2	
A01F5410	046.1	
A01F5500	030.2	
A01F5510	030.4	
A01F5520	038.2	
A01F5530	038.3	
A01F5730	045.8	

Component	Page .Col.	Opt.
A01F5740	045.8	
A01F5750	014.1	
A01F5780	017.5	
A01F5800	006.4	
A01F5820	006.1	
A01F5821	006.2	
A01F5900	006.8	UL/CSA
A01F5910	006.8	UL/CSA
A01K0010	005.6	
A01K0100	053.4	
A01K0120	005.6	
A01K0121	005.6	
A01K2000	074.4	
A01K2010	074.4	
A01K2020	074.4	
A01K2040	074.4	
A01K2060	075.7	
A01K2070	079.7	
A01K2080	083.1	
A01K2100	069.2	
A01K2120	074.4	
A01K4000	089.6	
A01K4010	090.7	
A01K4020	091.7	
A01K4030	092.1	
A01K4040	093.1	
A01K4050	094.1	
A01K4060	095.1	

Component	Page .Col.	Opt.
A01K4070	096.1	
A01K4080	097.1	
A01K4090	098.1	
A01K4100	099.1	
A01K4110	100.1	
A01K4120	101.7	
A01K4130	102.1	
A01K4140	103.1	
A01K4150	104.1	
A01K4160	105.1	
A01K4170	106.1	
A01K4180	107.1	
A01K4200	108.7	
A01K4300	109.1	
A01K4310	110.7	
A01K5320	047.5	
A01K5500	030.1	
A01K5510	030.4	
A01K5520	038.2	
A01K5530	038.3	
A01M5750	014.1	
A01M5780	017.5	
A01P5850	098.4	
A01P5860	098.4	
A01Q0010	005.2	
A01Q5500	095.5	
A01Q5520	095.5	
A01Q5750	014.1	

Component	Page .Col.	Opt.
A01Q5760	095.5	
A01Q5800	098.4	
A01R5000	058.1	
A01S5830	078.4	
A01T2000	074.4	
A01T5400	045.2	
A01T5410	046.1	
A01T5420	045.5	
A01T5430	045.6	
A01T5440	046.4	
A01T5450	046.7	UL/CSA
A01T6000	069.2	
A01V2080	074.3	
A01X0100	501.4	
A01X2040	069.4	
A01X2050	070.4	
A01X5820	006.1	
A01X5890	006.6	
A01X6030	505.2	
A01X6040	071.2	
F01K5000	058.1	
F01K5001	059.5	
F01K5020	060.5	
F01K5021	062.6	
F01S5870	064.1	
F01S5880	064.3	
K80B1010	221.4	
K80B1020	221.4	

This drawing must not without the consent of Tetra Pak be copied, transmitted or disclosed to any third party.

1 2 3 4 5 6 7 8 9 10

Position summary of 3223337-0003

Component	Page .Col.	Opt.
K80B1030	221.4	
K80B1040	221.4	
K80B1050	221.4	
K80B1060	221.4	
K80B1110	229.5	DIMC
K80B1140	226.5	
K80B1150	226.5	ACN
K80F0010	016.4	
K80F0020	016.6	
K80F0030	016.8	
K80F0110	045.8	
K80K1000	220.5	
K80K1010	221.7	
K80K1020	222.7	
K80K1030	223.1	
K80K1040	224.1	
K80K1050	225.1	
K80K1060	226.7	
K80K1070	227.1	
K80K1080	229.7	
K80K1600	223.4	ACN
K80K1610	223.4	ACN
K80K1620	223.4	ACN
K80K1630	223.4	ACN
K80K1730	223.4	
K80K1750	225.3	
K80K1760	225.3	
K80K1790	223.4	PEC

Component	Page .Col.	Opt.
K80K1800	224.6	
K80M0110	016.4	
K80M0120	016.6	
K80M0130	016.8	
K80Q0010	093.5	
K80Q0020	093.5	
K80Q0030	104.5	
P60A1000	057.6	
P60K0700	057.2	
P60K1000	057.7	
P60K1001	057.10	
P60Q0010	098.4	
T10B0300	123.5	SPM
T10B1180	115.5	
T10B1190	115.5	
T10B1200	117.4	
T10B1201	117.4	
T10B1210	117.4	
T10B1211	117.4	
T10B1220	115.5	
T10B1230	116.4	
T10B1240	116.4	
T10B1250	116.4	
T10B1260	116.4	
T10B1270	116.4	
T10B1290	116.4	
T10B1300	116.4	
T10B1310	060.3	

Component	Page .Col.	Opt.
T10B1330	117.4	
T10B1360	117.4	
T10B1510	121.5	
T10B1540	122.4	
T10B1550	122.4	
T10B1620	076.5	
T10B1800	030.5	
T10B1850	117.4	
T10B1860	117.4	
T10B1900	116.4	
T10B1930	056.5	
T10B1940	056.5	
T10B2000	115.5	
T10B2010	135.4	ASU XT
T10B2020	135.4	ASU XT
T10B2030	135.4	ASU XT
T10B2040	135.4	ASU XT
T10B2050	135.4	ASU XT
T10B2060	135.4	ASU XT
T10B2110	136.4	ASU XT
T10B2120	136.4	ASU XT
T10B2130	136.4	ASU XT
T10B2140	136.4	ASU XT
T10B2150	135.4	ASU XT
T10B2210	136.4	ASU XT
T10B2220	136.4	ASU XT
T10B2230	136.4	ASU XT
T10B2240	136.4	ASU XT

Component	Page .Col.	Opt.
T10B2250	135.4	ASU XT
T10B2310	137.4	ASU XT-AUT
T10B2320	137.4	ASU XT-AUT
T10B2330	137.4	ASU XT-AUT
T10B2340	137.4	ASU XT-AUT
T10B2350	137.4	ASU XT-AUT
T10B2360	137.4	ASU XT-AUT
T10B2370	137.4	ASU XT-AUT
T10B2380	137.4	ASU XT-AUT
T10B2400	138.4	ASU XT
T10B2410	138.4	ASU XT
T10B2420	138.4	ASU XT
T10B2430	138.4	ASU XT
T10B2520	063.8	
T10B2530	063.8	
T10E0070	012.2	
T10E0080	012.1	
T10E0100	006.5	
T10E0110	006.6	
T10E0570	012.5	
T10E0580	012.7	
T10E0590	012.9	
T10F0020	024.2	
T10F0040	024.7	
T10F0050	012.1	
T10F0060	016.9	
T10F0070	012.4	
T10F0080	012.7	

This drawing must not without the consent of Tetra Pak be copied, transmitted or disclosed to any third party.

Position summary of 3223337-0003

Component	Page .Col.	Opt.
T10F0090	012.9	
T10F0110	045.5	
T10F0120	017.1	
T10F1030	064.3	
T10F1080	115.4	
T10K0020	024.2	
T10K0021	024.2	
T10K0040	024.7	
T10K0041	024.7	
T10K1000	113.6	
T10K1001	128.7	
T10K1010	114.8	
T10K1020	115.7	
T10K1030	116.7	
T10K1040	117.7	
T10K1050	118.1	
T10K1060	119.1	
T10K1070	120.1	
T10K1080	121.7	
T10K1090	122.7	
T10K1091	123.7	SPM
T10K1092	129.7	
T10K1093	130.1	
T10K1100	131.8	
T10K1110	132.1	
T10K1120	133.1	
T10K1160	132.7	
T10K1165	119.7	

Component	Page .Col.	Opt.
T10K1170	119.7	
T10K1171	119.3	
T10K2100	134.4	ASU XT
T10K2110	135.7	ASU XT
T10K2120	136.7	ASU XT
T10K2130	137.7	ASU XT
T10K2140	138.7	ASU XT
T10K2150	139.1	ASU XT
T10K2160	140.1	ASU XT
T10K3500	139.7	ASU XT
T10M0060	016.9	
T10M0120	017.1	
T10M1020	024.4	
T10M1040	024.9	
T10P1130	120.5	
T10P1450	118.4	
T10P1490	118.5	ASR
T10P1520	118.5	ASR
T10Q0040	102.5	
T10Q0050	094.5	
T10Q0060	094.5	
T10Q0070	094.5	
T10Q0080	102.5	
T10Q0120	094.5	
T10Q0570	012.4	
T10Q0580	012.6	
T10Q0590	012.9	
T10R0010	501.8	

Component	Page .Col.	Opt.
T10R2100	501.9	
T10S1050	115.4	
T10S1090	114.3	
T10S1100	114.3	
T10S1110	114.3	
T10S1120	114.3	
T10S1130	114.3	
T10S1140	114.3	
T10S2440	115.4	ASU XT
T10S2450	115.5	ASU XT
T10T0020	024.2	
T10T0040	024.7	
T10T0050	012.1	
T40B1070	143.4	
T40B1080	144.5	
T40B1100	144.4	
T40B1110	144.4	
T40B1130	144.4	
T40B1150	144.4	
T40B1160	221.4	
T40B1170	221.4	
T40B1240	056.2	
T40B1250	056.2	
T40B1370	151.5	
T40B1390	148.4	
T40B9510	055.3	
T40B9520	055.3	
T40E0010	006.8	

Component	Page .Col.	Opt.
T40F0010	023.3	
T40F0040	015.7	
T40F0110	045.5	
T40F2700	046.3	
T40F2710	046.4	
T40F2720	046.4	
T40F2730	046.5	
T40F2740	046.5	
T40G0010	023.2	
T40K0700	030.8	
T40K0701	030.8	
T40K0710	031.8	
T40K0720	032.8	
T40K0730	033.8	
T40K0740	034.8	
T40K0750	035.8	
T40K1000	142.6	
T40K1010	143.7	
T40K1020	144.7	
T40K1030	145.1	
T40K1040	146.1	
T40K1050	147.1	
T40K1060	148.7	
T40K1070	149.7	
T40K1080	150.7	
T40K1090	151.7	
T40K1100	152.1	
T40K2690	145.4	

This drawing must not without the consent of Tetra Pak be copied, transmitted or disclosed to any third party.

Position summary of 3223337-0003

Component	Page .Col.	Opt.
T40K4030	055.6	
T40K9550	052.7	
T40K9570	052.7	
T40K9590	052.7	
T40M0040	015.7	
T40M0700	030.1	
T40M0710	031.2	
T40M0720	032.2	
T40M0730	033.2	
T40M0740	034.2	
T40M0750	035.2	
T40P2841	145.5	
T40Q0010	094.5	
T40Q0040	100.5	
T40Q0840	084.6	
T40Q9550	052.2	
T40Q9551	052.2	
T40Q9570	052.2	
T40Q9590	052.2	
T40R0240	023.8	
T40R3100	023.3	
T40R3200	023.3	
T40R4030	055.4	
T40R9550	052.2	
T40R9551	052.2	
T40R9570	052.2	
T40R9571	052.4	
T40R9590	052.2	

Component	Page .Col.	Opt.
T40R9591	052.4	
T40S2841	143.3	
T40T0700	030.8	
T40T0710	031.1	
T40T0720	032.1	
T40T0730	033.1	
T40T0740	034.2	
T40T0750	035.1	
T40T3100	023.3	
T40T3200	023.3	
T40X3860	065.7	
T40X3870	065.8	
T40X4030	055.5	
T50B1040	156.6	
T50B1050	156.5	
T50B1080	156.6	Q. SWITCH
T50B1090	156.5	Q. SWITCH
T50B1130	040.7	
T50B1220	164.5	
T50B1230	164.5	
T50B1240	165.5	
T50B1260	038.9	
T50B1290	038.8	
T50B1300	038.8	
T50B1310	039.8	
T50B2040	156.6	
T50B2050	156.5	
T50B2110	156.5	Q. SWITCH

Component	Page .Col.	Opt.
T50B2120	156.5	Q. SWITCH
T50B2130	156.5	Q. SWITCH
T50B2140	156.6	Q. SWITCH
T50B6110	060.4	
T50E0060	006.10	
T50E0510	011.2	
T50E0520	011.5	
T50E0540	011.8	
T50F0010	011.2	
T50F0020	011.5	
T50F0040	011.8	
T50F0070	025.7	
T50F0110	045.6	
T50F0140	015.8	
T50F0150	016.1	
T50K0070	025.7	
T50K0071	025.7	
T50K0600	038.8	
T50K0610	038.9	
T50K0800	038.8	
T50K0810	039.8	
T50K0811	039.7	
T50K0820	040.8	
T50K0821	040.7	
T50K0840	223.4	
T50K1000	155.6	
T50K1010	156.7	
T50K1020	157.7	

Component	Page .Col.	Opt.
T50K1030	158.7	
T50K1040	159.1	
T50K1050	160.1	
T50K1060	161.1	
T50K1070	162.1	
T50K1080	163.7	
T50K1090	164.7	
T50K1100	165.7	
T50K1110	166.7	
T50K1120	167.1	
T50K1130	168.1	
T50K6000	083.7	
T50K6120	159.5	DIMC
T50M0140	015.8	
T50M0800	038.3	
T50M0810	039.2	
T50M0820	040.2	
T50M1070	025.9	
T50P1120	159.5	
T50Q0010	094.5	
T50Q0070	104.5	
T50Q0140	104.5	
T50Q0150	103.5	
T50Q0510	011.1	
T50Q0520	011.5	
T50Q0540	011.8	
T50T0070	025.7	
T50T0800	038.2	

This drawing must not without the consent of Tetra Pak be copied, transmitted or disclosed to any third party.

Position summary of 3223337-0003

Component	Page .Col.	Opt.
T50T0810	039.1	
T50T0820	040.1	
T50X1000	163.5	
U30B1020	166.4	ICU
U30B1030	166.4	ICU
U30B1070	166.4	ICU
U30B1090	166.4	ICU
U30B1100	148.4	
U30B1180	149.5	
U30B1200	150.5	
U30B3730	143.3	
U30B3731	143.3	
U30F0110	028.2	
U30K0110	028.2	
U30K0111	028.2	
U30K1800	145.4	
U30M0010	028.4	
U30M1570	017.8	ICU
U30M1590	017.9	ICU
U30Q0010	100.5	
U30T0110	028.2	
U70B0290	054.3	
U70B0300	054.4	
U70B1010	173.4	
U70B1020	173.5	
U70B1040	174.6	
U70B1050	174.3	
U70B1060	173.5	

Component	Page .Col.	Opt.
U70B1070	196.5	
U70B1160	158.5	
U70B1210	189.5	
U70B1220	189.5	
U70B1230	188.5	
U70B1240	188.5	
U70B1250	150.5	
U70B1260	186.5	
U70B1270	186.5	
U70B1280	076.5	
U70B1290	181.6	
U70B1300	179.5	
U70B1330	174.5	
U70B1340	174.5	
U70B1350	174.5	
U70B1360	174.5	
U70B1370	174.5	
U70B1380	174.4	
U70B1390	175.4	
U70B1400	175.4	ICU
U70B1700	172.4	
U70B1990	180.4	DIMC
U70B2000	047.6	
U70B2020	175.5	
U70B2060	156.5	
U70B2100	173.5	
U70B2120	175.5	
U70B2190	175.5	

Component	Page .Col.	Opt.
U70B2200	175.5	
U70B2210	175.5	
U70B2211	175.5	
U70B2240	180.4	
U70B2260	181.4	
U70B2280	192.5	
U70B2290	193.5	
U70B2300	192.5	
U70B2310	079.4	
U70B2480	179.4	ICU
U70B2700	051.3	
U70B2730	172.4	
U70B3010	173.5	
U70B3020	173.5	
U70B3030	173.5	
U70B3090	173.5	
U70B3200	185.5	
U70B3210	187.5	
U70B3211	194.5	
U70B3230	187.5	
U70B3240	185.5	
U70B3250	193.5	
U70B3260	195.5	
U70B3270	194.5	
U70B3700	051.3	
U70B3780	196.5	
U70B3790	196.5	
U70B4010	206.4	H.I.

Component	Page .Col.	Opt.
U70B4020	206.5	H.I.
U70B4030	206.5	H.I.
U70B4040	206.5	H.I.
U70B4050	207.5	H.I.
U70B4060	051.3	H.I.
U70B4070	207.5	H.I.
U70B4080	207.5	H.I.
U70B4090	214.5	H.I.
U70B4290	209.3	H.I.
U70B4350	212.5	H.I.
U70B4360	212.5	H.I.
U70B4370	213.5	H.I.
U70B6050	239.5	HVA
U70B6500	234.5	HVA
U70B6510	234.5	HVA
U70B6520	234.5	HVA
U70B6530	234.5	HVA
U70B6540	234.5	HVA
U70B6550	234.5	HVA
U70B6560	234.5	HVA
U70B6565	238.5	HVA
U70B6566	238.5	HVA
U70B6570	234.5	HVA
U70B6580	235.5	HVA
U70B6590	235.5	HVA
U70B9510	047.6	
U70E0010	007.2	
U70E0020	007.6	

This drawing must not without the consent of Tetra Pak be copied, transmitted or disclosed to any third party.

Position summary of 3223337-0003

Component	Page .Col.	Opt.
U70E0030	008.2	
U70E0040	008.4	
U70E0050	008.7	
U70E0060	008.9	
U70E0080	009.4	
U70E0090	009.7	
U70E0370	010.2	H.I.
U70E1130	010.5	
U70E1140	010.8	
U70F0010	007.3	
U70F0020	007.7	
U70F0030	008.2	
U70F0040	008.4	
U70F0050	008.7	
U70F0060	008.9	
U70F0080	009.4	
U70F0090	009.8	
U70F0110	045.6	
U70F0120	045.7	
U70F0130	045.8	
U70F0160	026.2	
U70F0180	026.7	DIMC
U70F0190	027.2	
U70F0230	017.3	
U70F0320	027.7	
U70F0370	010.2	
U70F1130	010.5	
U70F1140	010.8	

Component	Page .Col.	Opt.
U70K0160	026.2	
U70K0161	026.2	
U70K0180	026.7	
U70K0181	026.7	DIMC
U70K0190	027.2	
U70K0191	027.2	
U70K0320	027.7	ICU
U70K0321	027.7	ICU
U70K0380	054.7	
U70K1000	171.6	
U70K1010	172.7	
U70K1020	173.7	
U70K1030	174.7	
U70K1040	175.7	
U70K1050	176.1	
U70K1060	177.1	
U70K1070	178.1	
U70K1080	179.7	
U70K1090	180.7	
U70K1100	181.7	
U70K1110	182.1	
U70K1120	183.1	
U70K1130	184.7	
U70K1140	185.7	
U70K1150	186.7	
U70K1160	187.7	
U70K1170	188.7	
U70K1180	189.7	

Component	Page .Col.	Opt.
U70K1190	190.1	
U70K1200	191.7	
U70K1210	192.7	
U70K1220	193.7	
U70K1230	194.7	
U70K1240	195.7	
U70K1250	196.7	
U70K1300	197.7	
U70K1310	198.1	
U70K1410	223.4	ICU
U70K1710	176.4	
U70K1720	145.4	
U70K1730	145.4	
U70K1740	198.7	
U70K1750	178.7	
U70K2700	051.6	
U70K2740	176.4	
U70K2750	176.4	
U70K2860	176.4	
U70K2870	176.4	
U70K3700	051.6	
U70K4061	051.6	H.I.
U70K4210	208.3	H.I.
U70K4220	208.3	H.I.
U70K4230	208.3	H.I.
U70K4240	208.3	H.I.
U70K6000	233.6	HVA
U70K6010	234.7	HVA

Component	Page .Col.	Opt.
U70K6015	235.7	HVA
U70K6020	236.1	HVA
U70K6030	237.1	HVA
U70K6040	238.7	HVA
U70K6050	239.7	HVA
U70K6060	240.1	HVA
U70K9000	205.4	H.I.
U70K9010	206.7	H.I.
U70K9020	207.7	H.I.
U70K9040	208.1	H.I.
U70K9060	209.7	H.I.
U70K9070	210.7	H.I.
U70K9080	211.1	H.I.
U70K9090	212.7	H.I.
U70K9100	213.7	H.I.
U70K9110	214.7	H.I.
U70M0230	017.3	
U70M0320	027.9	ICU
U70M1100	190.5	
U70M1160	026.4	
U70M1180	026.9	DIMC
U70M1190	027.4	
U70M6200	037.2	HVA
U70M9590	018.4	PTC
U70Q0010	093.5	
U70Q0020	093.5	
U70Q0030	093.5	
U70Q0040	098.4	

This drawing must not without the consent of Tetra Pak be copied, transmitted or disclosed to any third party.

1 2 3 4 5 6 7 8 9 10

Position summary of 3223337-0003

Component	Page .Col.	Opt.
U70Q0050	093.5	
U70Q0060	098.4	
U70Q0080	093.5	
U70Q0090	093.5	
U70Q0130	103.5	
U70Q0160	102.5	
U70Q0180	103.5	DIMC
U70Q0190	100.5	
U70Q0230	100.5	
U70Q0320	103.5	
U70Q0370	010.2	H.I.
U70Q0371	094.5	
U70Q0520	007.6	
U70Q0530	008.2	
U70Q0540	008.4	
U70Q0550	008.6	
U70Q0560	008.9	
U70Q0580	009.3	
U70Q0590	009.7	
U70Q1060	174.5	
U70Q1130	010.4	
U70Q1140	010.8	
U70R0380	054.9	
U70R0390	054.9	
U70R0400	241.2	
U70R0410	054.9	
U70R1290	181.4	
U70R1300	181.4	

Component	Page .Col.	Opt.
U70T0160	026.2	
U70T0180	026.7	DIMC
U70T0190	027.1	
U70T0320	027.7	ICU
U70T1170	182.5	
U70T3100	054.3	
U70T4330	211.6	H.I.
U70T6200	037.1	HVA
U70T6600	240.6	HVA
U70X0380	054.7	
U70X2540	068.4	
U70X6025	236.7	HVA
U70X6200	227.5	ICU
W51B1010	077.2	
W51B1011	077.2	
W51K1700	072.2	
W51P1700	072.5	
F40B1020	066.2	
F40B1040	066.4	
F40B2010	065.2	
F40B2011	065.2	
F40B2020	065.3	
F40B2021	065.3	
F40B2030	065.4	
F40B2031	065.5	
F40B2040	065.5	
F40B2041	065.6	
F40Q2800	058.5	

Component	Page .Col.	Opt.
F40Q2810	058.6	
F40Q2820	058.7	
F40Q2830	058.8	
F40S2830	064.4	
F40S2840	064.8	
F10B1340	061.5	
F10B1350	061.3	
F10B2500	063.1	ASU XT
F10B2610	067.2	
F10B2611	067.2	
F10B2620	067.4	
F10B2621	067.4	
F10B2630	067.8	
F10B2631	067.8	
F10F2460	064.8	ASU XT
F10K1740	061.9	
F10K5030	063.4	ASU XT
F10K5031	063.4	ASU XT
F10K5032	061.6	
F10S1010	064.4	
F10S1030	064.3	
F10S2460	064.8	ASU XT
F70B2510	068.2	
F70B2511	068.2	
F70B2520	068.3	
F70B2521	068.3	
F70B2530	068.4	
F70B2531	068.4	

Component	Page .Col.	Opt.
F70S2010	064.7	
F50B1530	066.6	
F50B2510	065.4	
F50B2511	065.4	
F50B2520	065.6	
F50B2521	065.7	
F50K1540	066.8	
F60S1110	064.8	
G25X1110	023.7	PT

This page intentionally left blank

4 Circuit Diagrams

Description

This chapter contains all component drawings, such as programmable logic controller (PLC) modules, terminals, and cables.

4.1 Circuit Diagrams

This page intentionally left blank

RELEASED

This drawing must not without the consent of Tetra Pak
be copied, transmitted or disclosed to any third party.

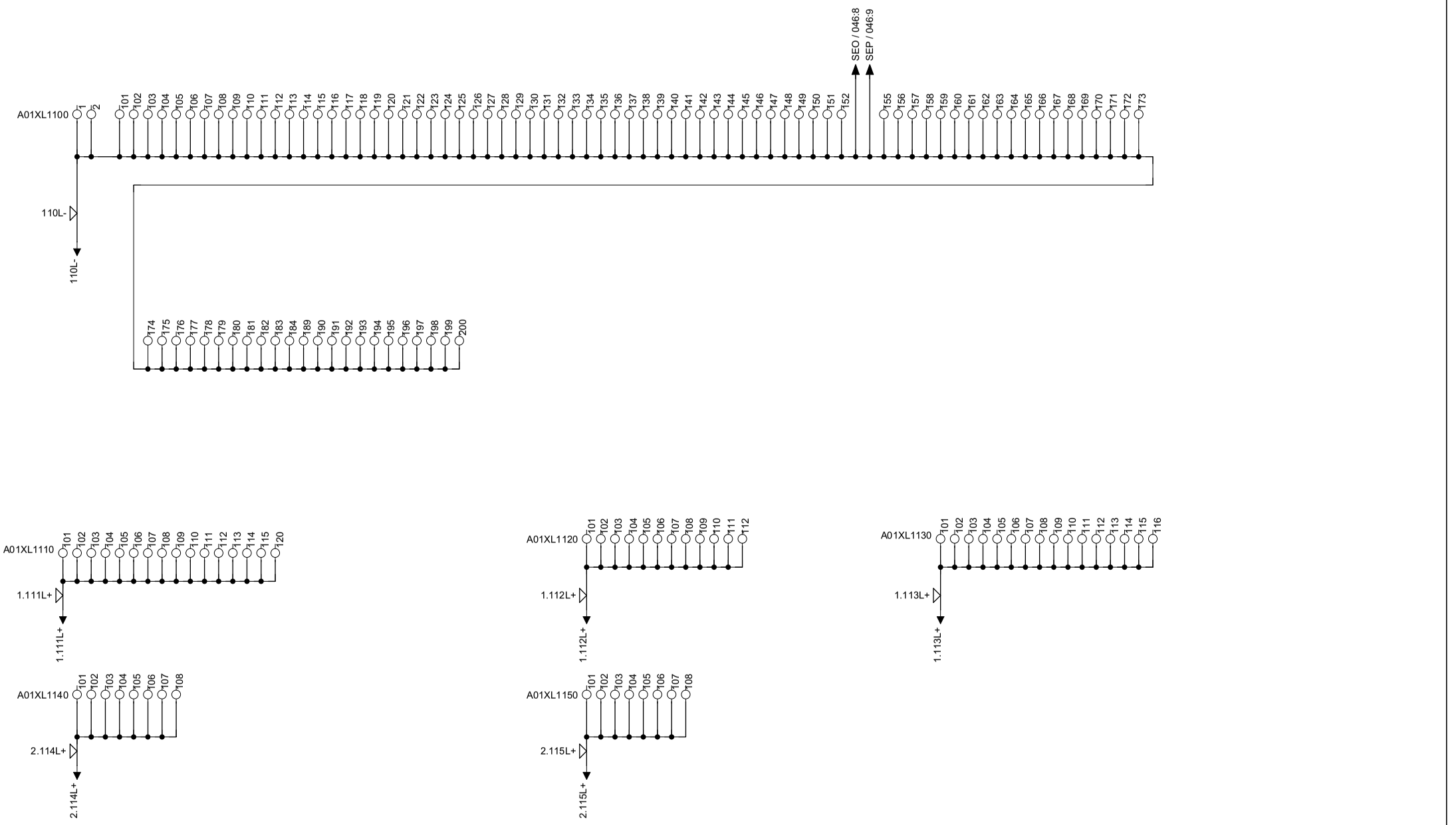

Tetra Pak®	Version Designer: RICO	Version Date: 01/10/2014	Machine: A3 CompactFlex 0300	
	ECM No: 687624	Denomination: CIRCUIT DIAGRAM	Page Type: 0V_24V TERMINAL	
Information Security Class: PUBLIC	Document No.: 3223337-0003	Doc. type: ELD	Version: AM	Page: 001

This drawing must not without the consent of Tetra Pak
be copied, transmitted or disclosed to any third party.

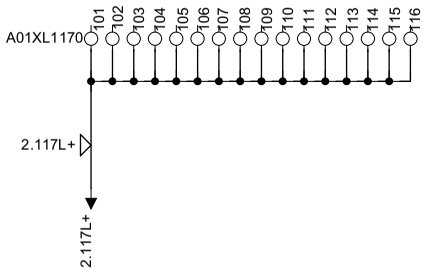

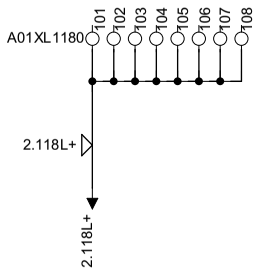

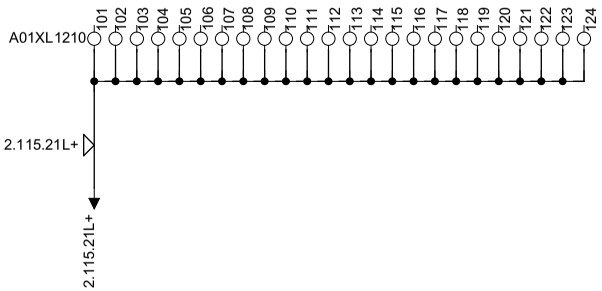

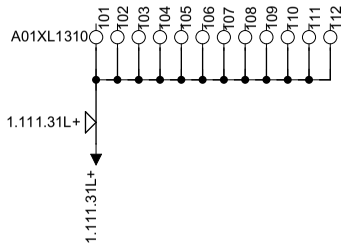

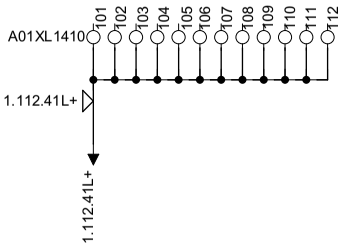

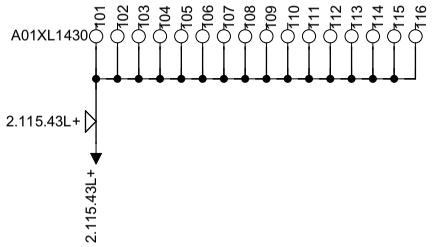

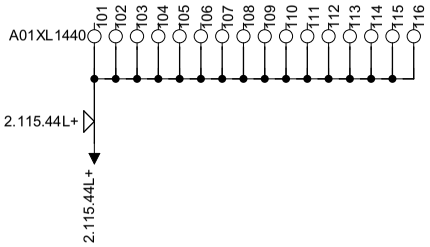

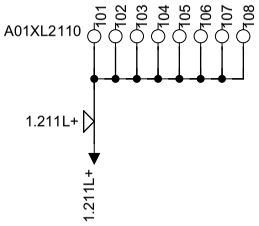

Tetra Pak®	Version Designer: RICO	Version Date: 01/10/2014	Machine: A3 CompactFlex 0300	
	ECM No: 687624	Denomination: CIRCUIT DIAGRAM	Page Type: 0V_24V TERMINAL	
	Information Security Class: PUBLIC	Document No.: 3223337-0003	Doc. type: ELD	Version: AM / Page: 002

This drawing must not without the consent of Tetra Pak
be copied, transmitted or disclosed to any third party.

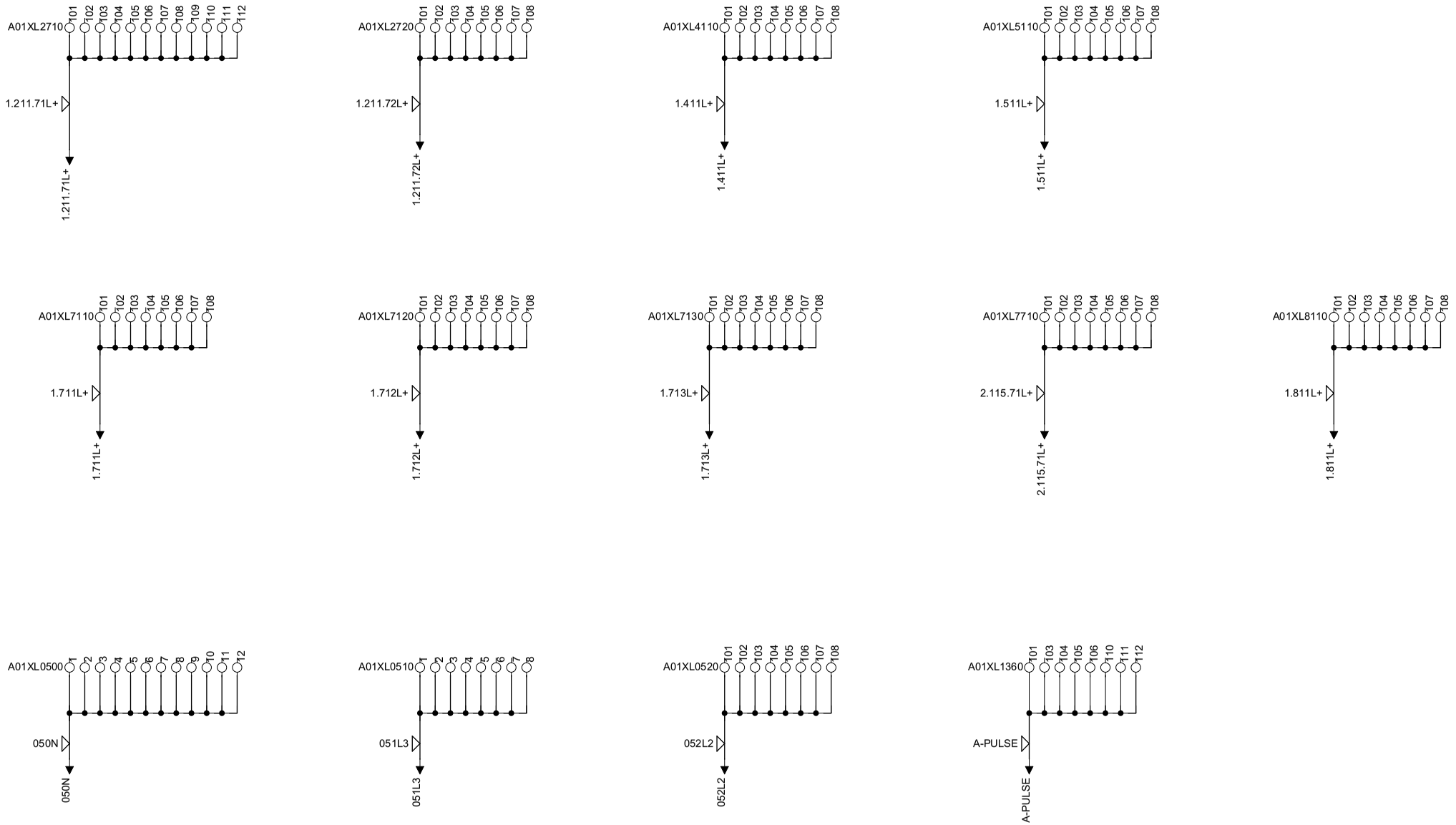

Tetra Pak®	Version Designer: RICO	Version Date: 01/10/2014	Machine: A3 CompactFlex 0300	
	ECM No: 687624	Denomination: CIRCUIT DIAGRAM	Page Type: 0V_24V TERMINAL	
	Information Security Class: PUBLIC	Document No.: 3223337-0003	Doc. type: ELD	Version: AM	Page: 003

RELEASED

This drawing must not without the consent of Tetra Pak
be copied, transmitted or disclosed to any third party.

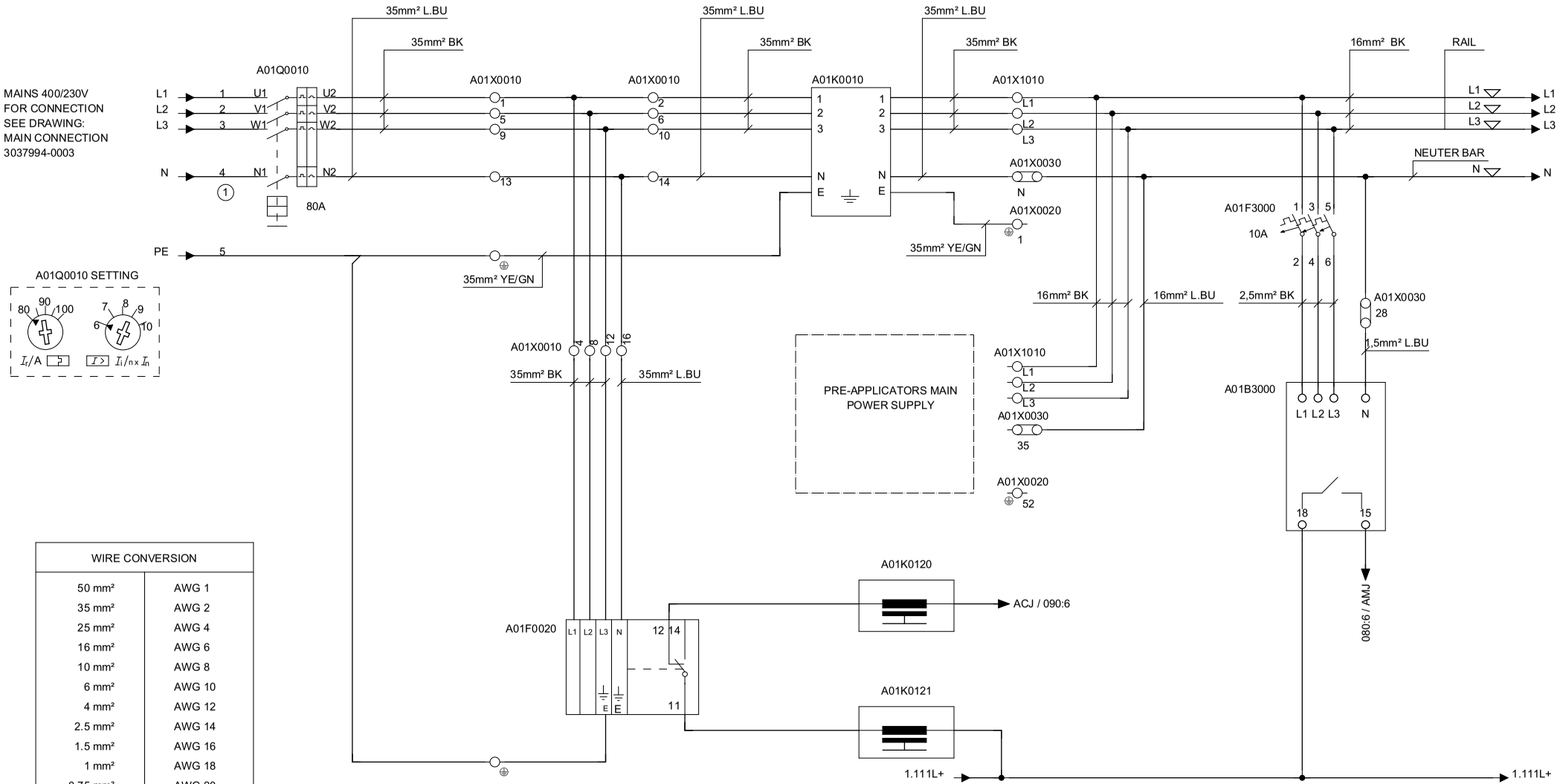

WIRE CONVERSION	
50 mm²	AWG 1
35 mm²	AWG 2
25 mm²	AWG 4
16 mm²	AWG 6
10 mm²	AWG 8
6 mm²	AWG 10
4 mm²	AWG 12
2.5 mm²	AWG 14
1.5 mm²	AWG 16
1 mm²	AWG 18
0.75 mm²	AWG 20
0.5 mm²	AWG 22

WHERE NOTHING ELSE IS SAID
OR LINE SUMMARY IS VALID: 0,75 mm² BU

FOR TYPE OF WIRING, INSTRUCTIONS ETC.
SEE SPECIFICATION FOR SUBSUPPLIERS TPUS 3502.22

Tetra Pak®	Version Designer: RICO	Version Date: 01/10/2014	Machine: A3 CompactFlex 0300	
	ECM No: 687624	Denomination: CIRCUIT DIAGRAM	Page Type: MAINS SUPPLY	
	Information Security Class: PUBLIC	Document No.: 3223337-0003	Doc. type: ELD	Version: AM	Page: 005

RELEASED

This drawing must not without the consent of Tetra Pak be copied, transmitted or disclosed to any third party.

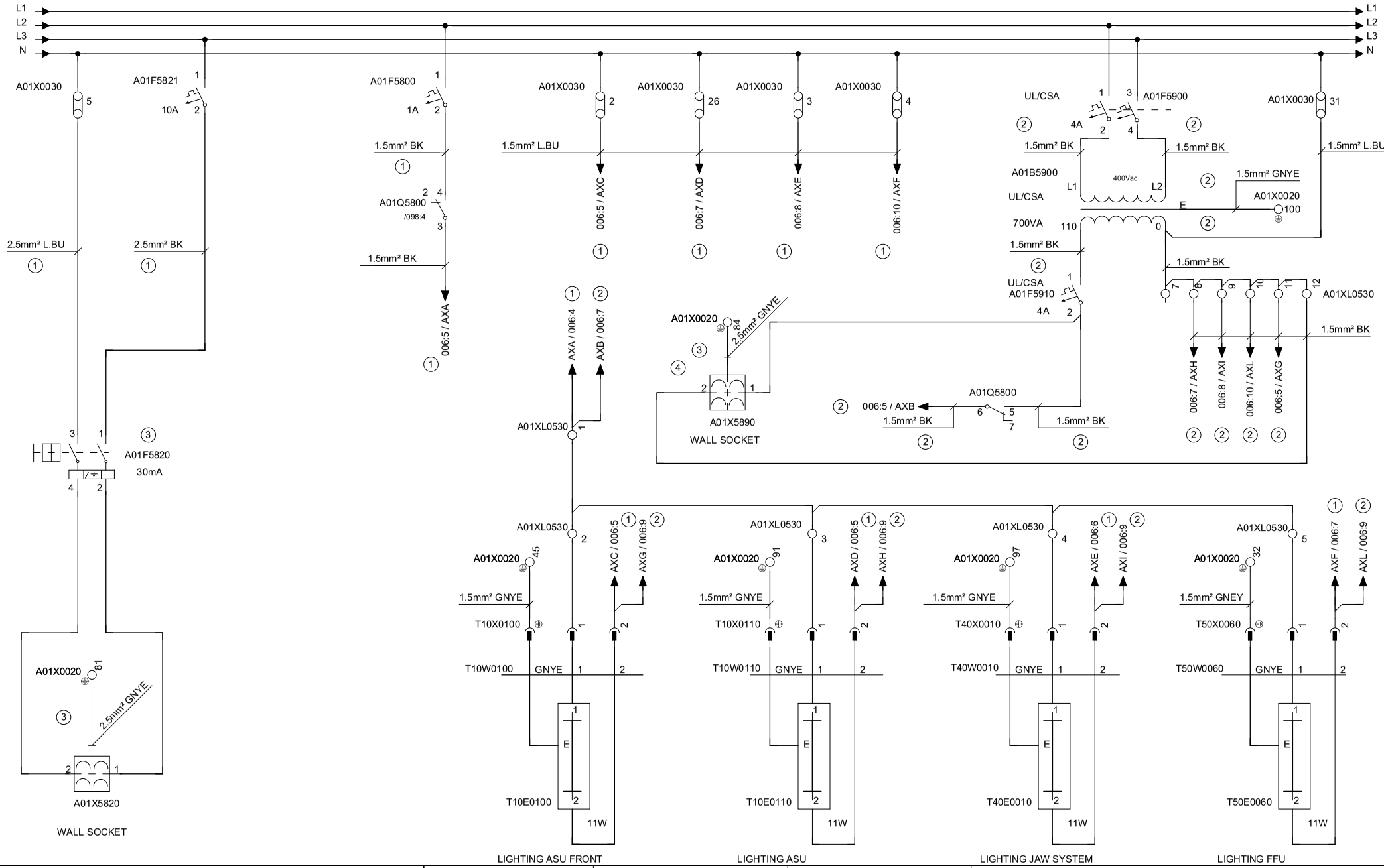

Tetra Pak®	Version Designer: RICO	Version Date: 01/10/2014	Machine: A3 CompactFlex 0300	
	ECM No: 687624	Denomination: CIRCUIT DIAGRAM	Page Type: LIGHT FIXTURES	
Information Security Class: PUBLIC	Document No.: 3223337-0003	Doc. type: ELD	Version: AM	Page: 006

RELEASED

This drawing must not without the consent of Tetra Pak be copied, transmitted or disclosed to any third party.

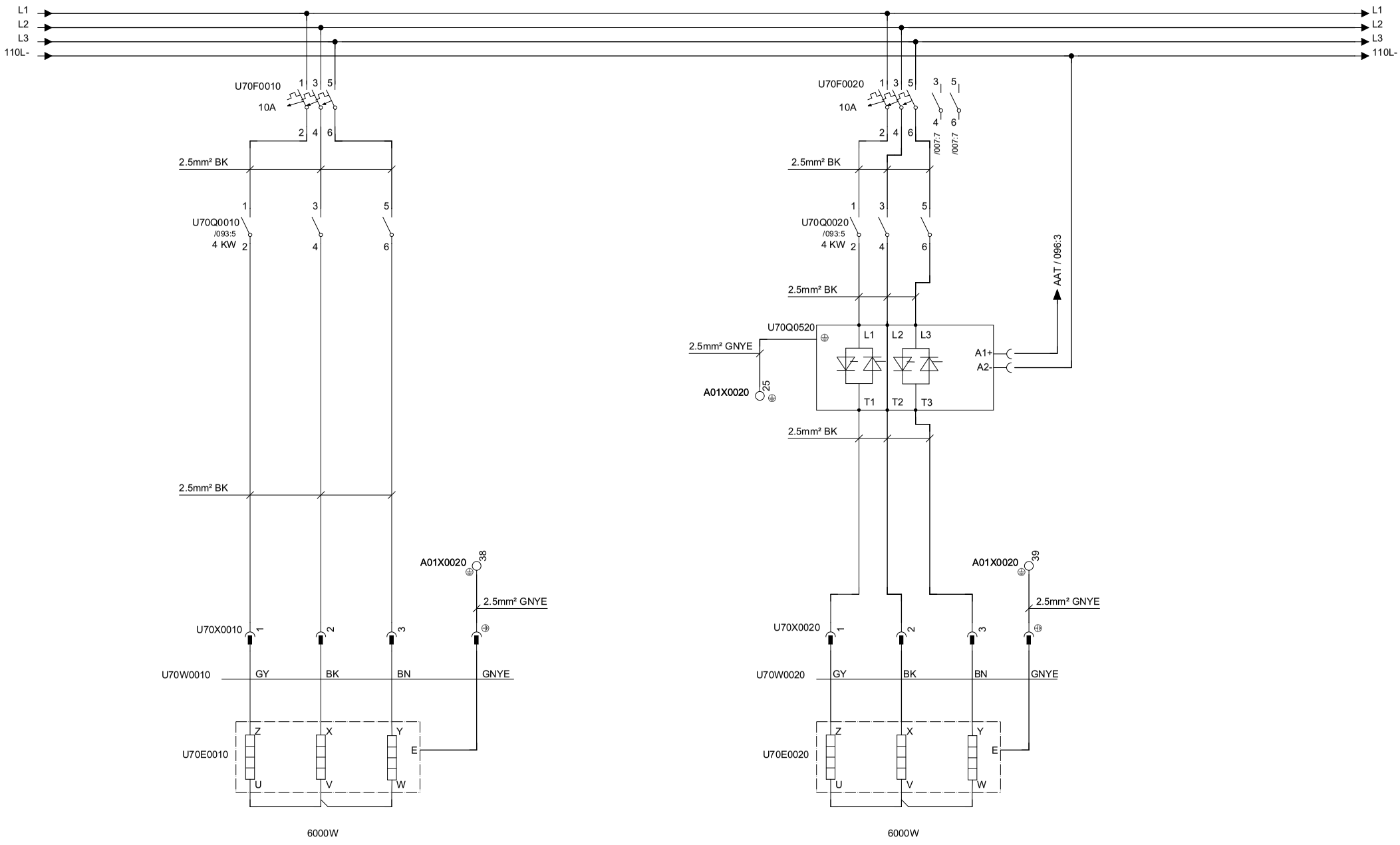

PEROXIDE TANK HEATERS 1

PEROXIDE TANK HEATERS 2

Tetra Pak®	Version Designer: RICO	Version Date: 01/10/2014	Machine: A3 CompactFlex 0300	
	ECM No: 687624	Denomination: CIRCUIT DIAGRAM	Page Type: PEROXIDE TANK HEATERS	
	Information Security Class: PUBLIC	Document No.: 3223337-0003	Doc. type: ELD	Version: AM / Page: 007

RELEASED

This drawing must not without the consent of Tetra Pak be copied, transmitted or disclosed to any third party.

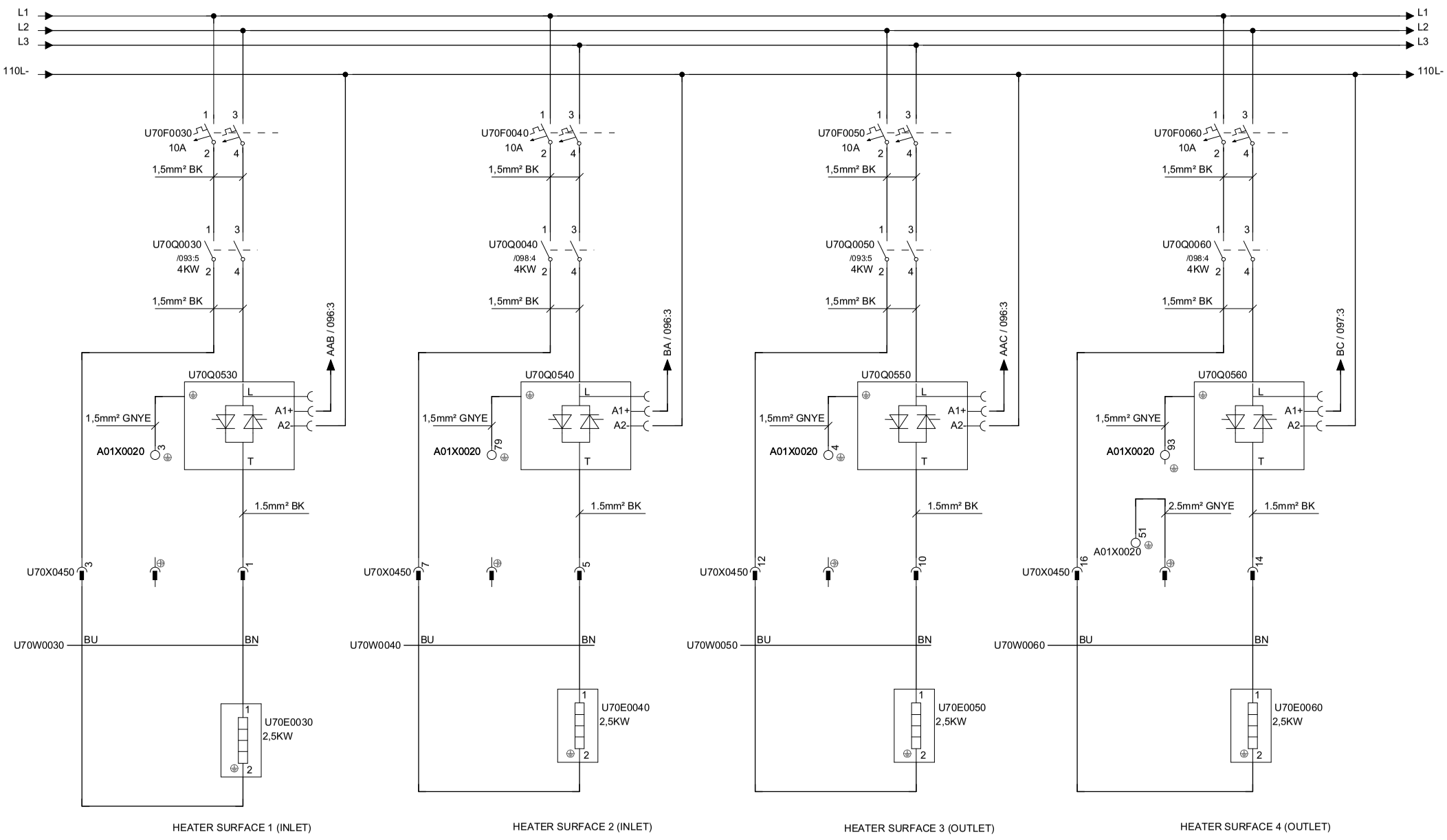

Tetra Pak®	Version Designer: RICO	Version Date: 01/10/2014	Machine: A3 CompactFlex 0300	
	ECM No: 687624	Denomination: CIRCUIT DIAGRAM	Page Type: HEATERS	
	Information Security Class: PUBLIC	Document No.: 3223337-0003	Doc. type: ELD	Version: AM / Page: 008

This drawing must not without the consent of Tetra Pak
be copied, transmitted or disclosed to any third party.

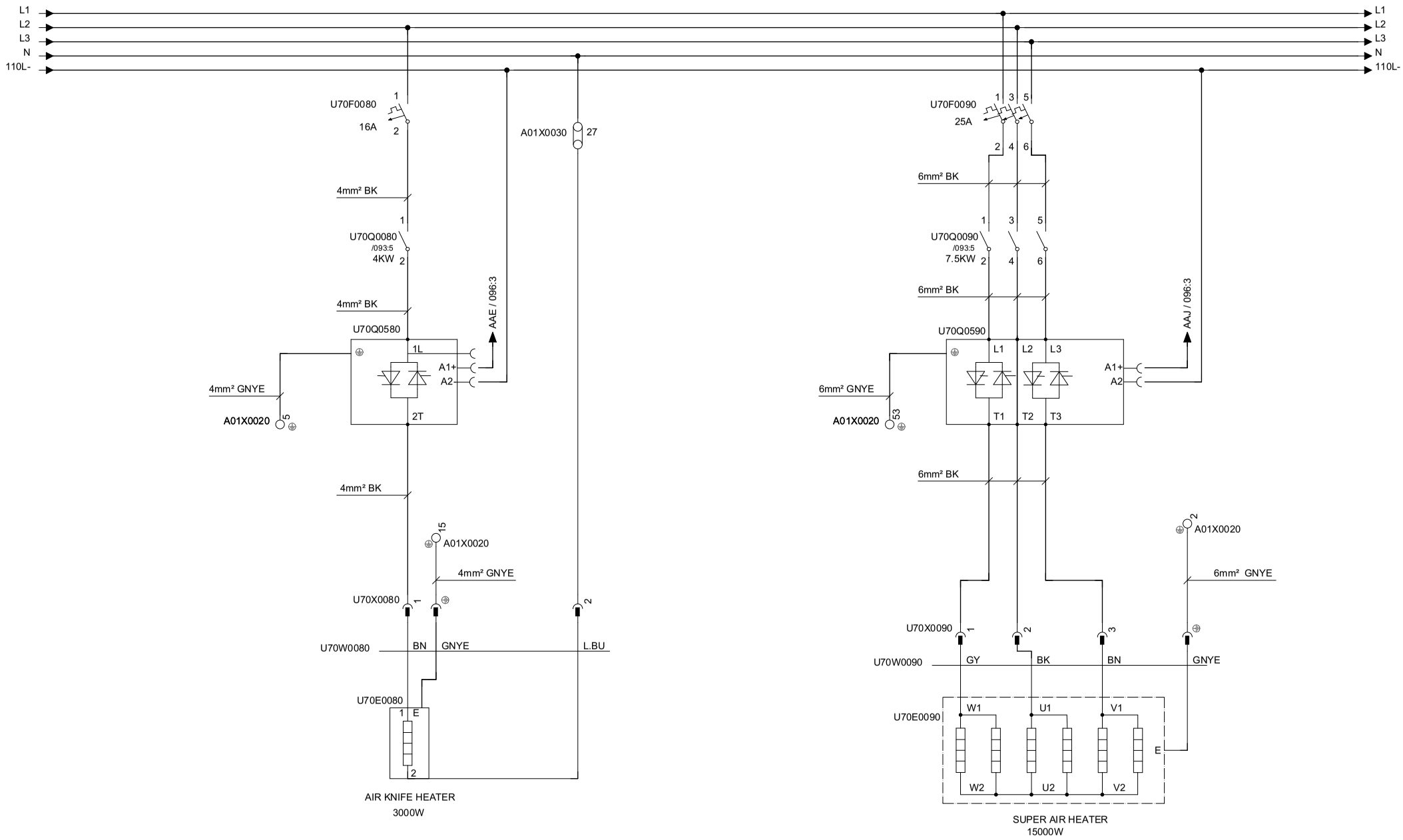

Tetra Pak®	Version Designer: RICO	Version Date: 01/10/2014	Machine: A3 CompactFlex 0300	
	ECM No: 687624	Denomination: CIRCUIT DIAGRAM	Page Type: ELEMENTS	
	Information Security Class: PUBLIC	Document No.: 3223337-0003	Doc. type: ELD	Version: AM / Page: 009

RELEASED

This drawing must not without the consent of Tetra Pak
be copied, transmitted or disclosed to any third party.

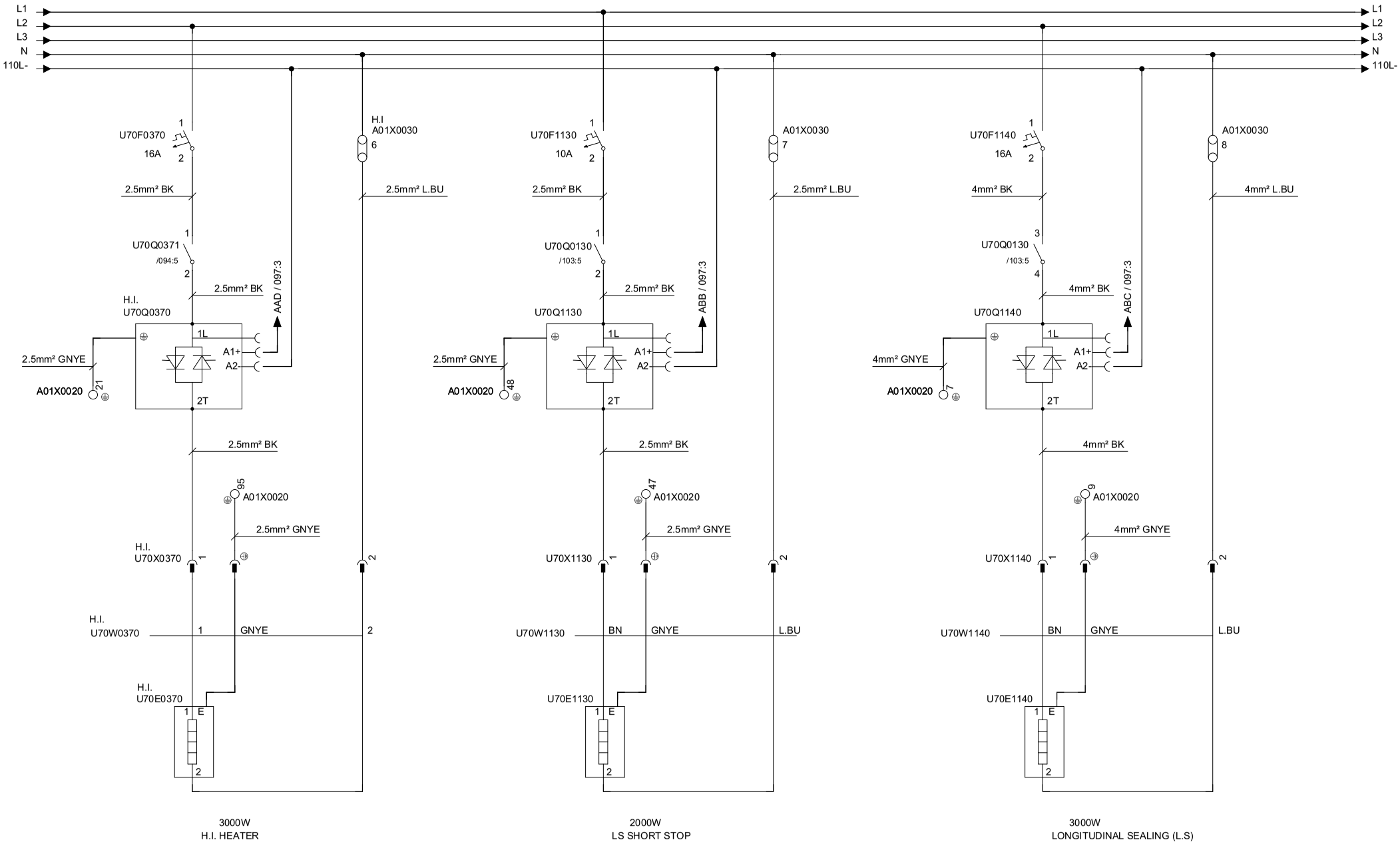

Tetra Pak®	Version Designer: RICO	Version Date: 01/10/2014	Machine: A3 CompactFlex 0300	
	ECM No: 687624	Denomination: CIRCUIT DIAGRAM	Page Type: ELEMENTS	
	Information Security Class: PUBLIC	Document No.: 3223337-0003	Doc. type: ELD	Version: AM / Page: 010

RELEASED

This drawing must not without the consent of Tetra Pak
be copied, transmitted or disclosed to any third party.

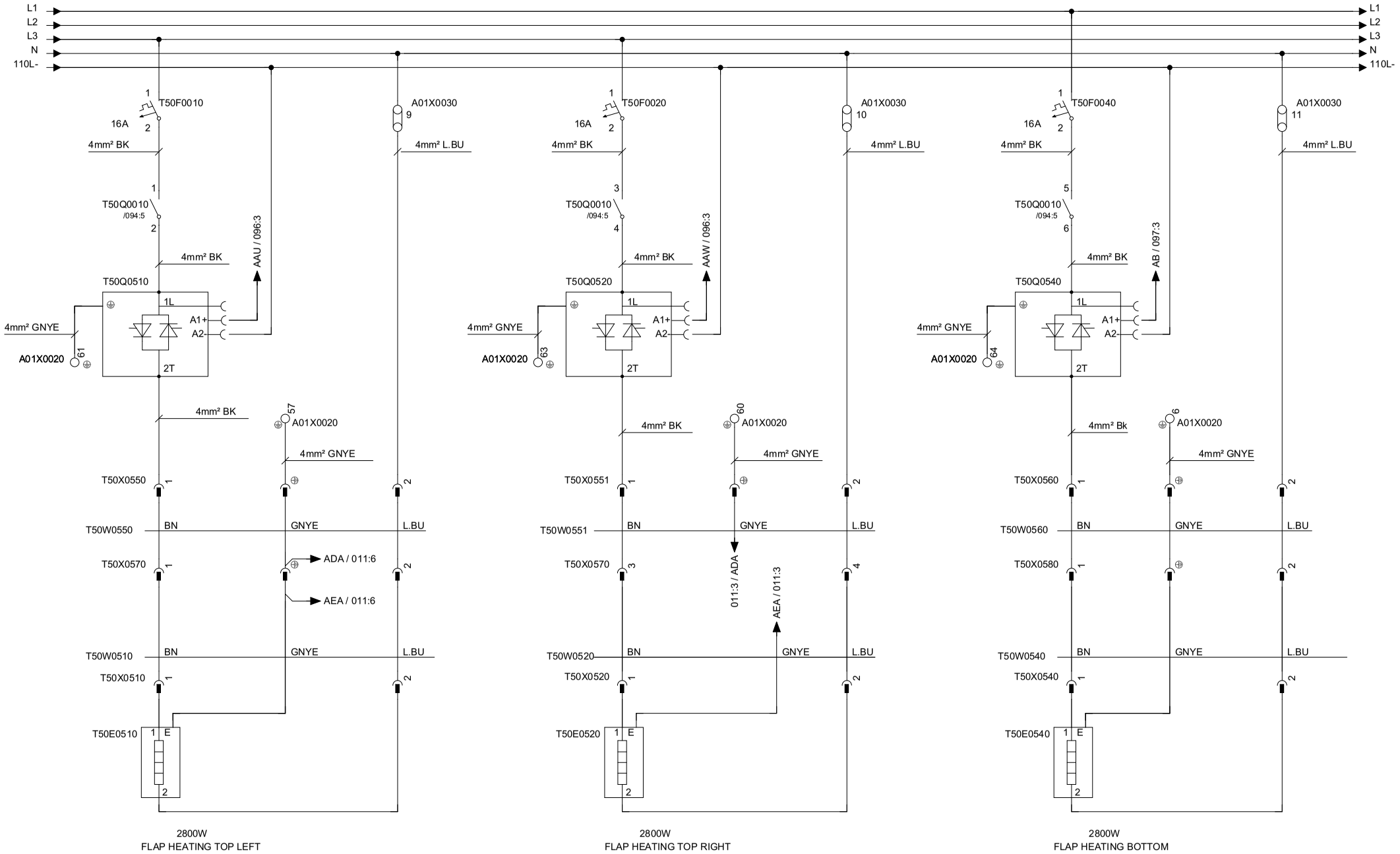

Tetra Pak®	Version Designer: RICO	Version Date: 01/10/2014	Machine: A3 CompactFlex 0300	
	ECM No: 687624	Denomination: CIRCUIT DIAGRAM	Page Type: FLAP HEATING ELEMENTS	
	Information Security Class: PUBLIC	Document No.: 3223337-0003	Doc. type: ELD	Version: AM / Page: 011

RELEASED

This drawing must not without the consent of Tetra Pak be copied, transmitted or disclosed to any third party.

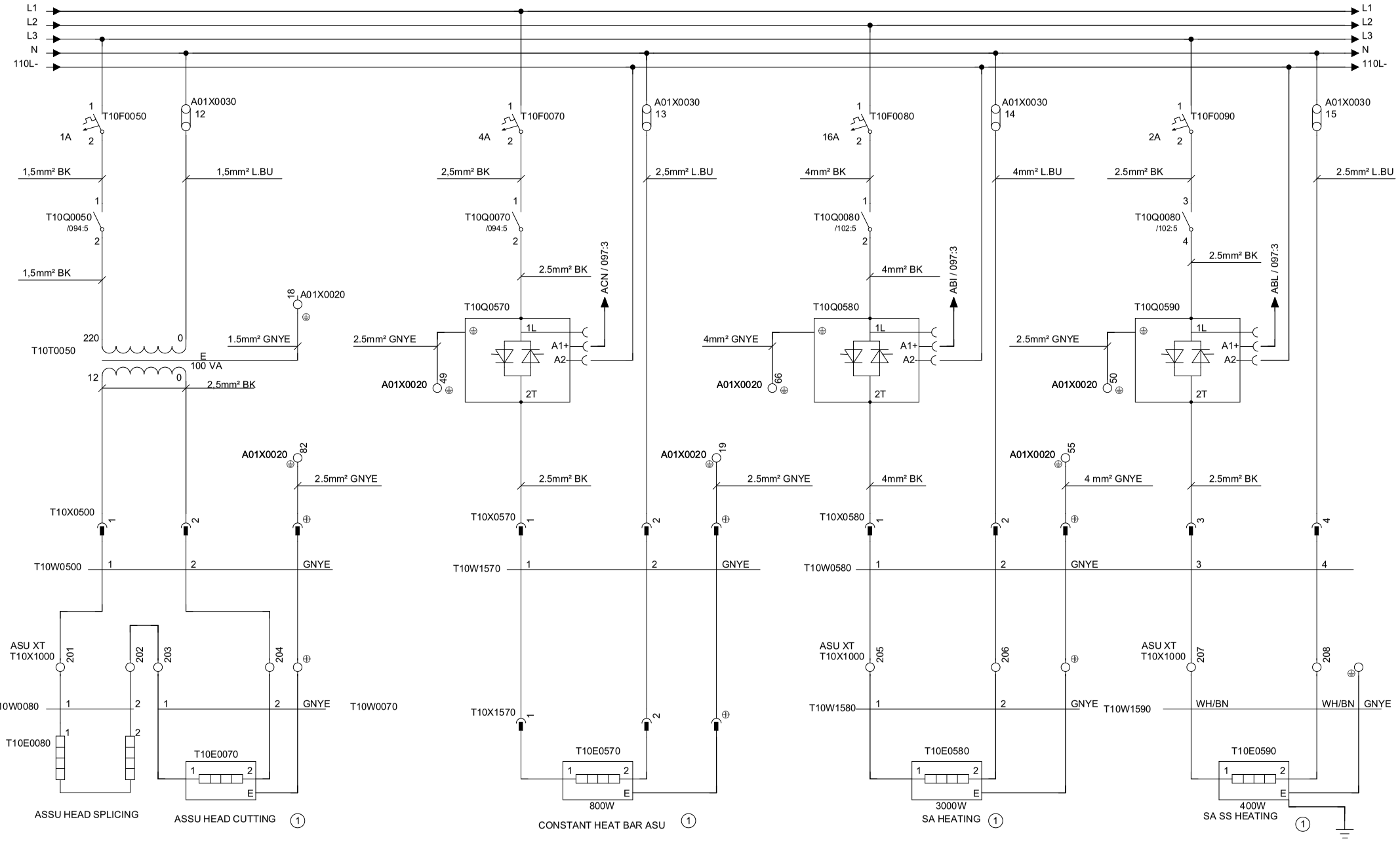

Tetra Pak®	Version Designer: RICO	Version Date: 01/10/2014	Machine: A3 CompactFlex 0300		
	ECM No: 687624	Denomination: CIRCUIT DIAGRAM	Page Type: ASU SEALING EQUIPMENT		
	Information Security Class: PUBLIC	Document No.: 3223337-0003	Doc. type: ELD	Version: AM	Page: 012

RELEASED

This drawing must not without the consent of Tetra Pak be copied, transmitted or disclosed to any third party.

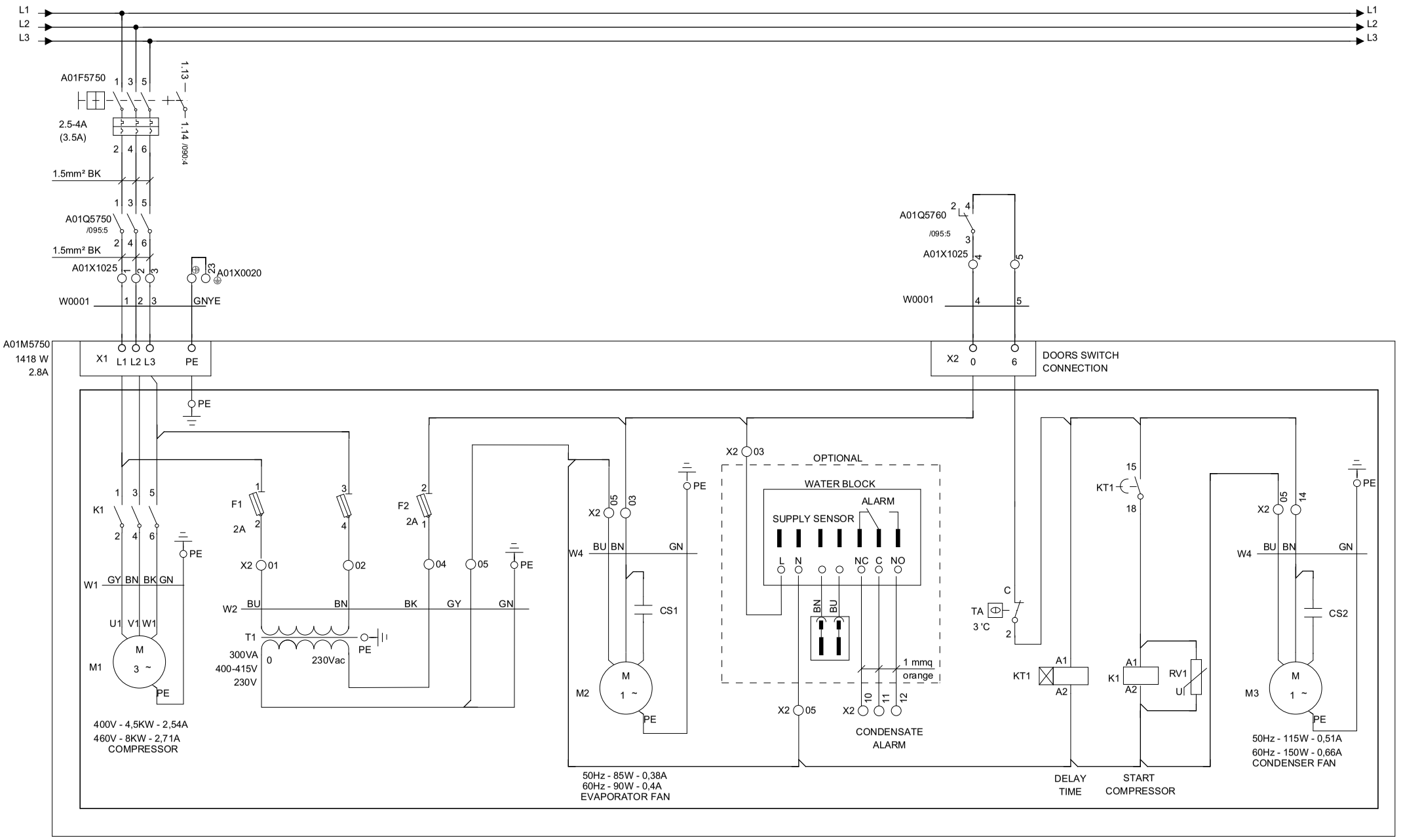

COOLING ELECTRICAL CABINET

Tetra Pak®	Version Designer: RICO	Version Date: 01/10/2014	Machine: A3 CompactFlex 0300	
	ECM No: 687624	Denomination: CIRCUIT DIAGRAM	Page Type: COOLING ELECTRICAL CABINET	
	Information Security Class: PUBLIC	Document No.: 3223337-0003	Doc. type: ELD	Version: AM	Page: 014

RELEASED

This drawing must not without the consent of Tetra Pak
be copied, transmitted or disclosed to any third party.

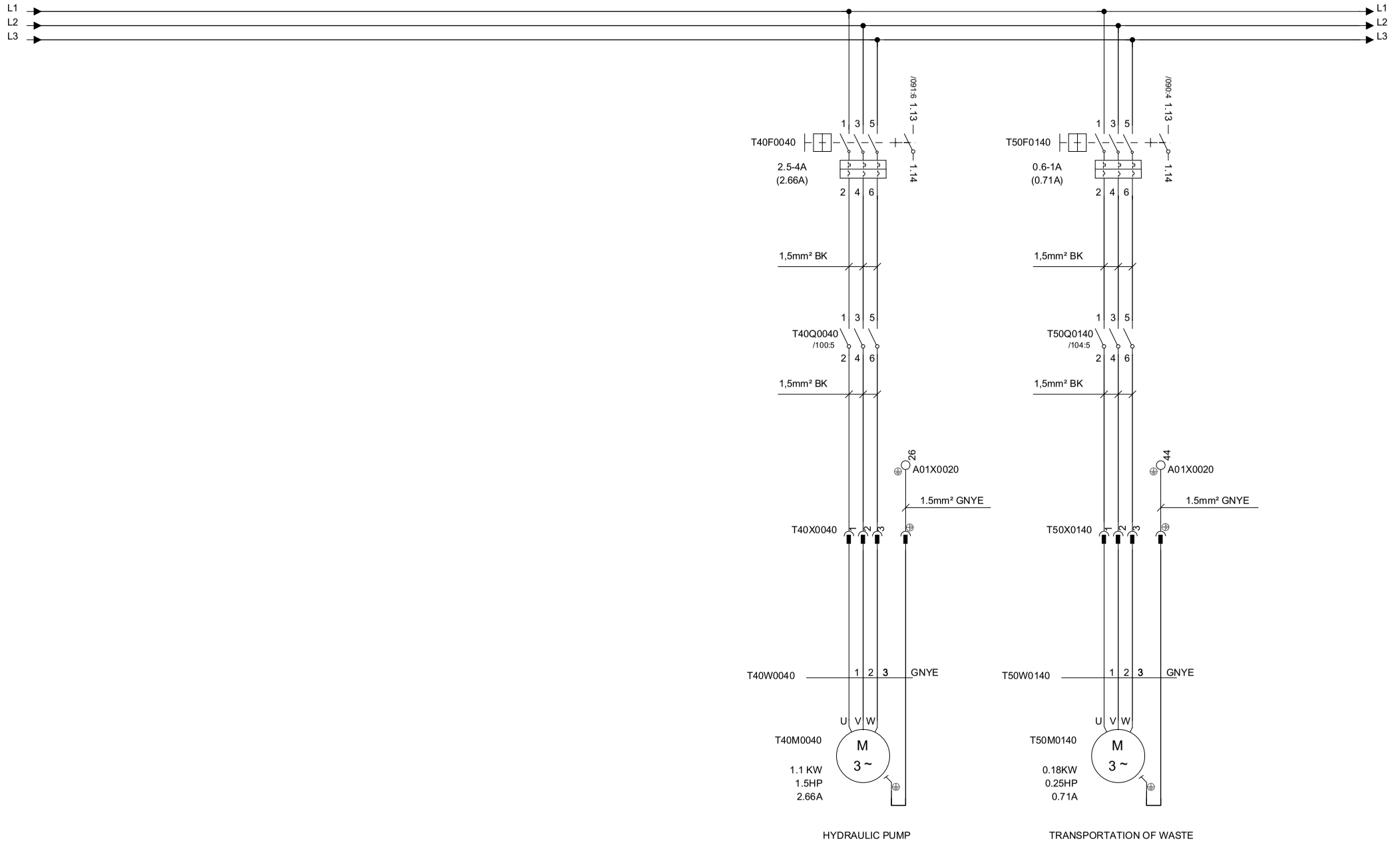

Tetra Pak®	Version Designer: RICO	Version Date: 01/10/2014	Machine: A3 CompactFlex 0300	
	ECM No: 687624	Denomination: CIRCUIT DIAGRAM	Page Type: MOTORS	
	Information Security Class: PUBLIC	Document No.: 3223337-0003	Doc. type: ELD	Version: AM / Page: 015

RELEASED

This drawing must not without the consent of Tetra Pak be copied, transmitted or disclosed to any third party.

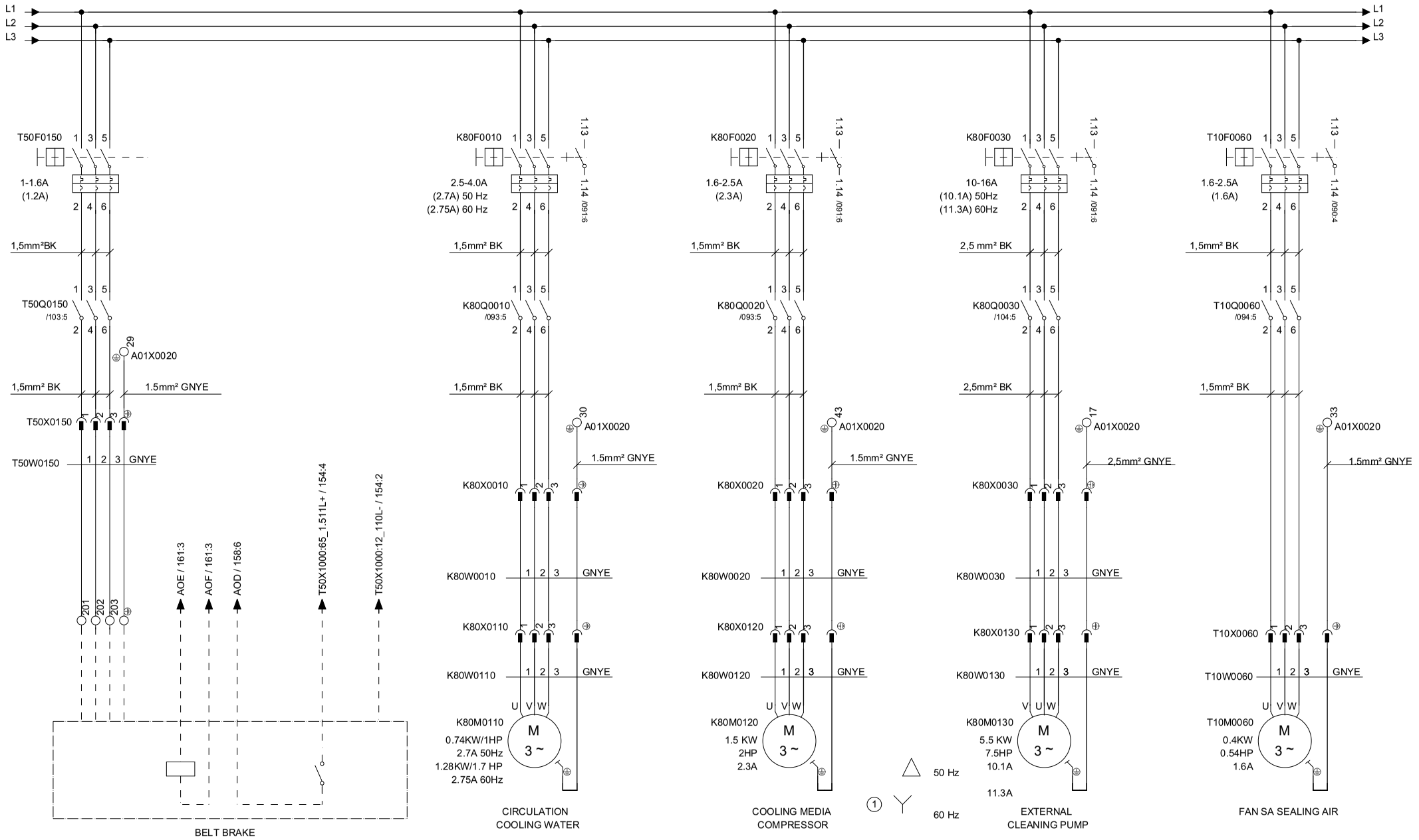

Tetra Pak®	Version Designer: RICO	Version Date: 01/10/2014	Machine: A3 CompactFlex 0300	
	ECM No: 687624	Denomination: CIRCUIT DIAGRAM	Page Type: MOTORS	
	Information Security Class: PUBLIC	Document No.: 3223337-0003	Doc. type: ELD	Version: AM	Page: 016

RELEASED

This drawing must not without the consent of Tetra Pak be copied, transmitted or disclosed to any third party.

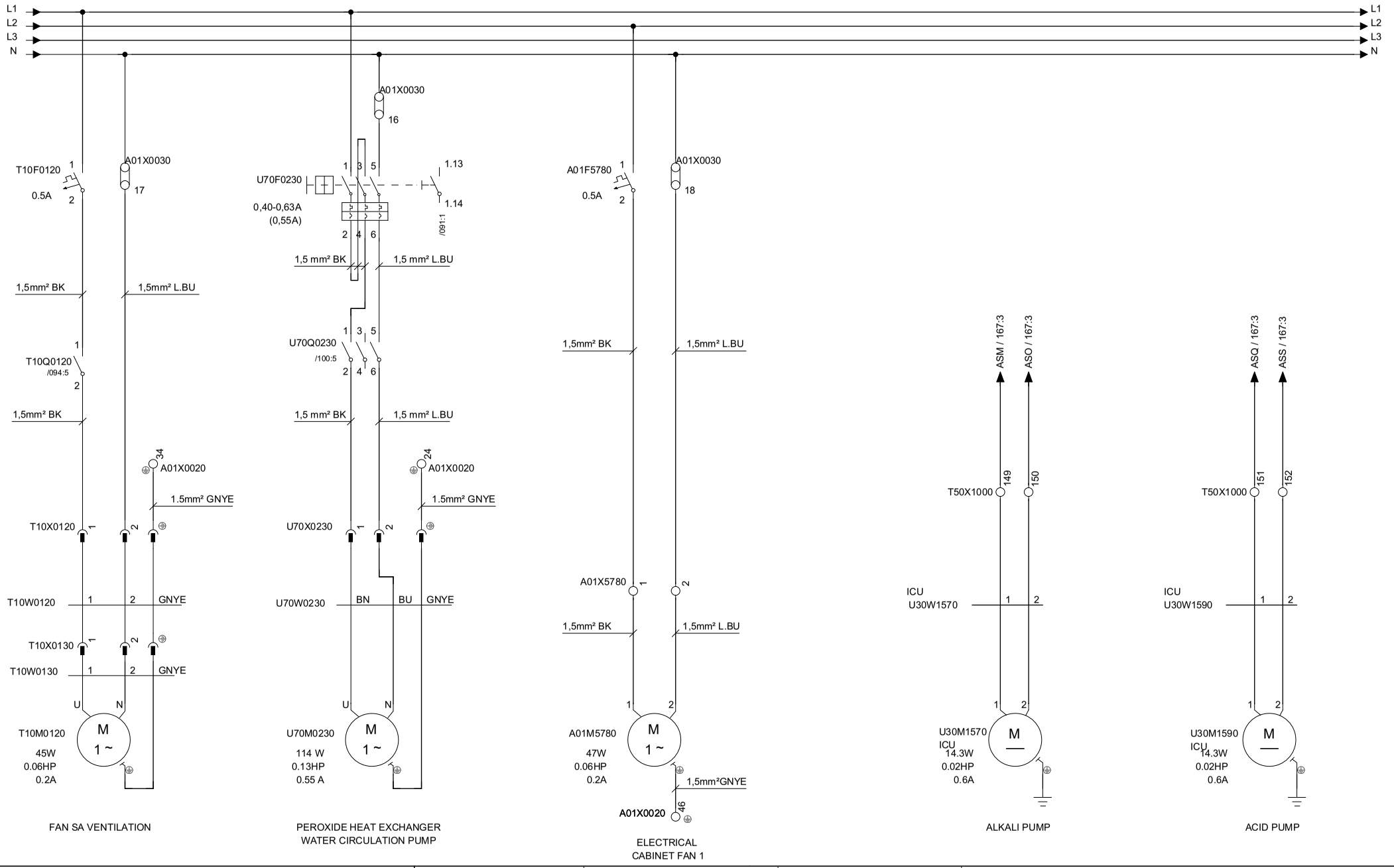

Tetra Pak®	Version Designer: RICO	Version Date: 01/10/2014	Machine: A3 CompactFlex 0300	
	ECM No: 687624	Denomination: CIRCUIT DIAGRAM	Page Type: MOTORS	
	Information Security Class: PUBLIC	Document No.: 3223337-0003	Doc. type: ELD	Version: AM / Page: 017

This drawing must not without the consent of Tetra Pak
be copied, transmitted or disclosed to any third party.

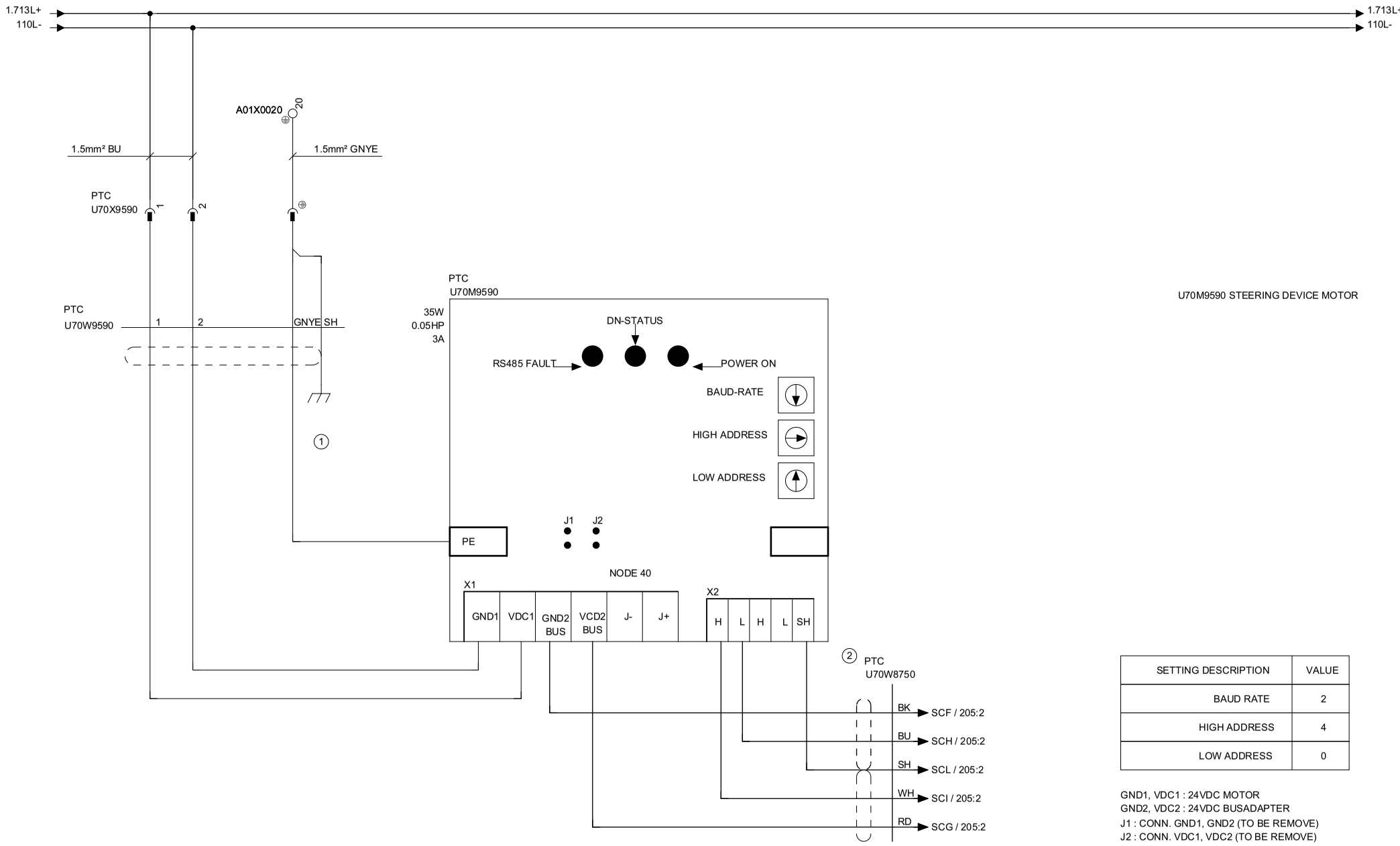

U70M9590 STEERING DEVICE MOTOR

SETTING DESCRIPTION	VALUE
BAUD RATE	2
HIGH ADDRESS	4
LOW ADDRESS	0

GND1, VDC1 : 24VDC MOTOR
GND2, VDC2 : 24VDC BUSADAPTER
J1 : CONN. GND1, GND2 (TO BE REMOVE)
J2 : CONN. VDC1, VDC2 (TO BE REMOVE)

Tetra Pak®	Version Designer: RICO	Version Date: 01/10/2014	Machine: A3 CompactFlex 0300	
	ECM No: 687624	Denomination: CIRCUIT DIAGRAM	Page Type: STEERING DEVICE MOTOR	
Information Security Class: PUBLIC	Document No.: 3223337-0003	Doc. type: ELD	Version: AM	Page: 018

RELEASED

This drawing must not without the consent of Tetra Pak be copied, transmitted or disclosed to any third party.

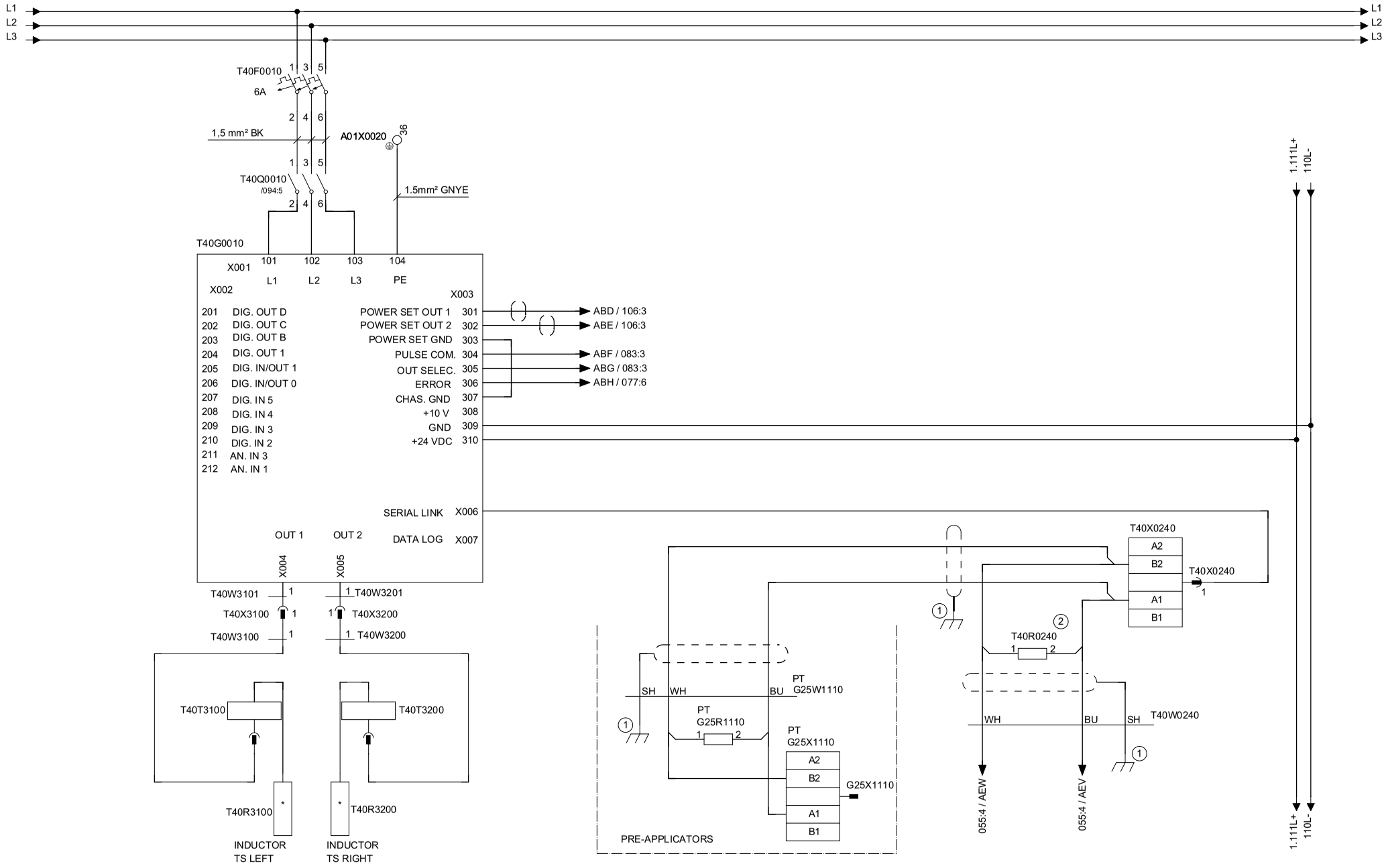

Tetra Pak®	Version Designer RICO	Version Date 01/10/2014	Machine A3 CompactFlex 0300		
	ECM No 687624	Denomination CIRCUIT DIAGRAM	Page Type TPIH GENERATOR TS		
	Information Security Class PUBLIC	Document No. 3223337-0003	Doc. type ELD	Version AM	Page 023

RELEASED

This drawing must not without the consent of Tetra Pak be copied, transmitted or disclosed to any third party.

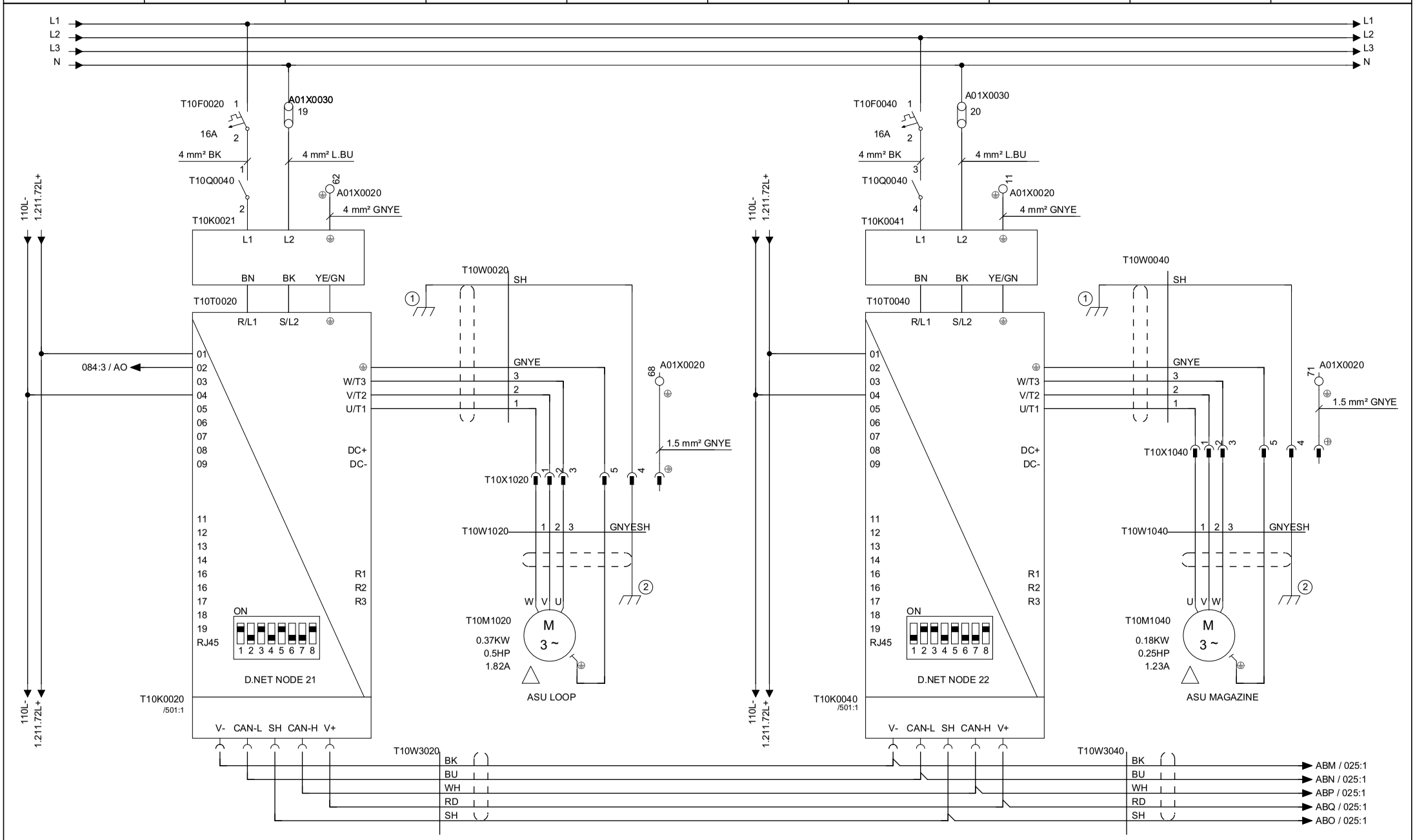

Tetra Pak®	Version Designer: RICO	Version Date: 01/10/2014	Machine: A3 CompactFlex 0300	
	ECM No: 687624	Denomination: CIRCUIT DIAGRAM	Page Type: ASU LOOP - ASU MAGAZINE	
	Information Security Class: PUBLIC	Document No.: 3223337-0003	Doc. type: ELD	Version: AM / Page: 024

RELEASED

This drawing must not without the consent of Tetra Pak
be copied, transmitted or disclosed to any third party.

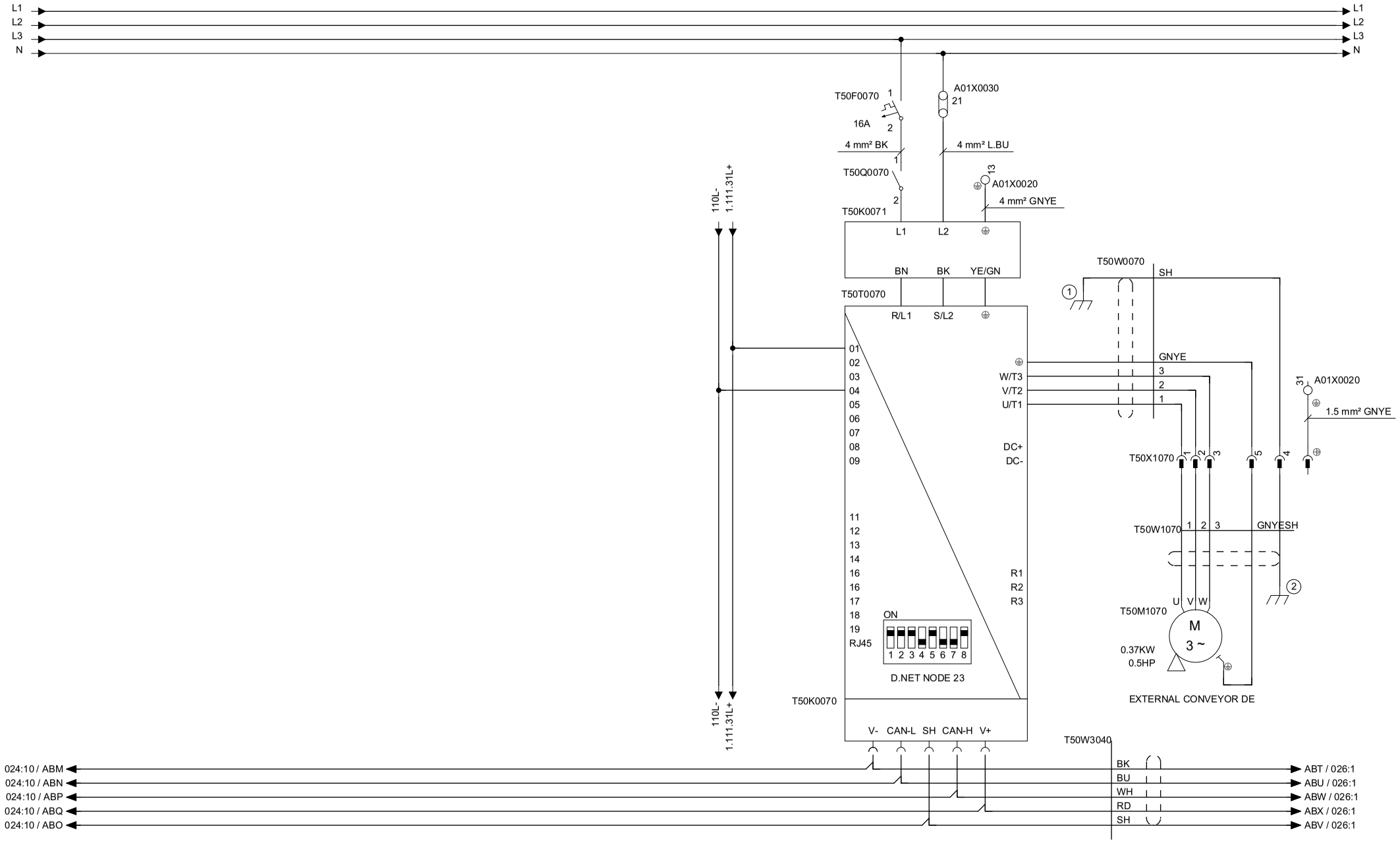

Tetra Pak®	Version Designer: RICO	Version Date: 01/10/2014	Machine: A3 CompactFlex 0300	
	ECM No: 687624	Denomination: CIRCUIT DIAGRAM	Page Type: EXTERNAL CONV.	
	Information Security Class: PUBLIC	Document No.: 3223337-0003	Doc. type: ELD	Version: AM / Page: 025

RELEASED

This drawing must not without the consent of Tetra Pak be copied, transmitted or disclosed to any third party.

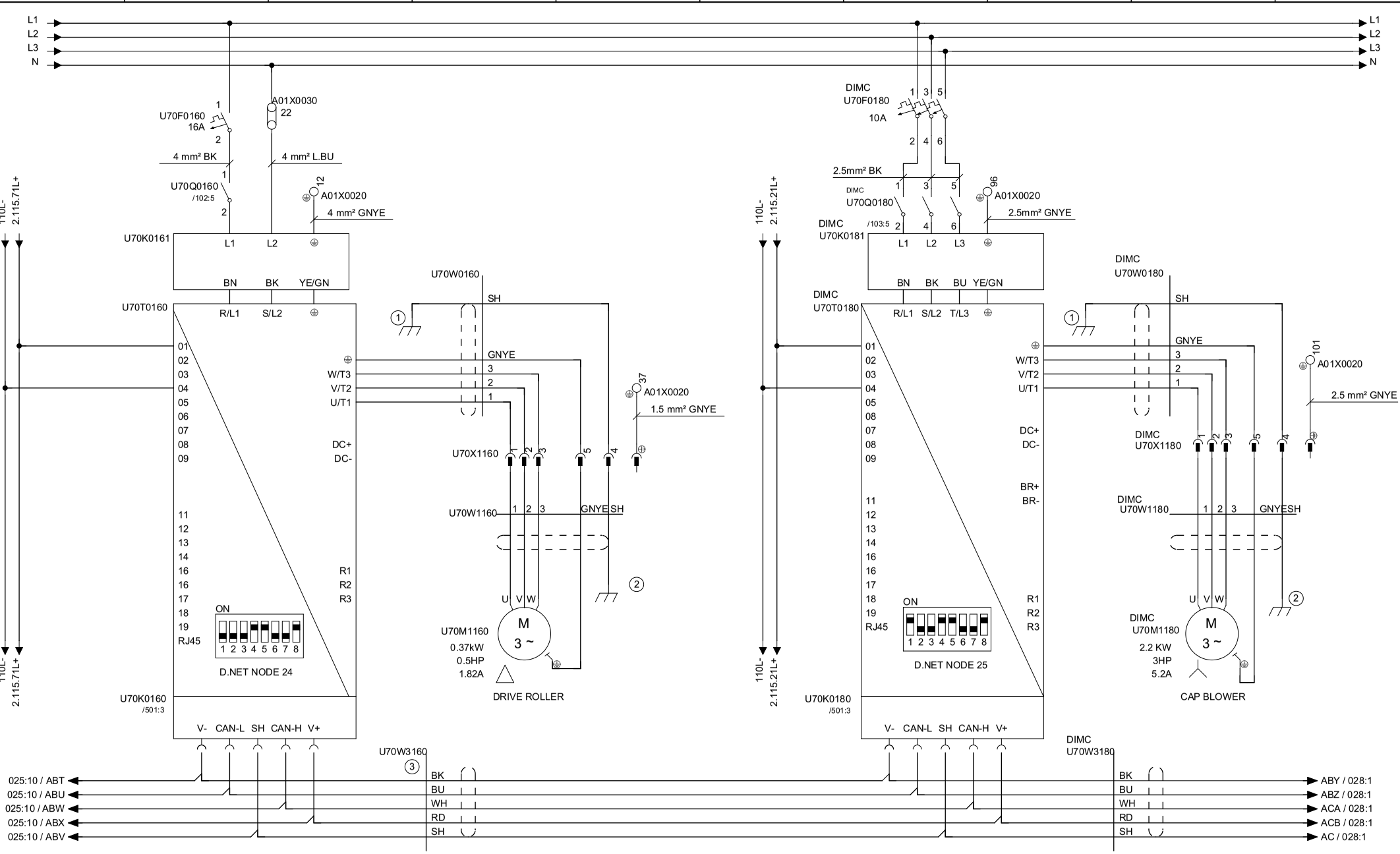

Tetra Pak®	Version Designer: RICO	Version Date: 01/10/2014	Machine: A3 CompactFlex 0300	
	ECM No: 687624	Denomination: CIRCUIT DIAGRAM	Page Type: DRIVE ROLLER - CAP BLOWER	
	Information Security Class: PUBLIC	Document No.: 3223337-0003	Doc. type: ELD	Version: AM / Page: 026

RELEASED

This drawing must not without the consent of Tetra Pak
be copied, transmitted or disclosed to any third party.

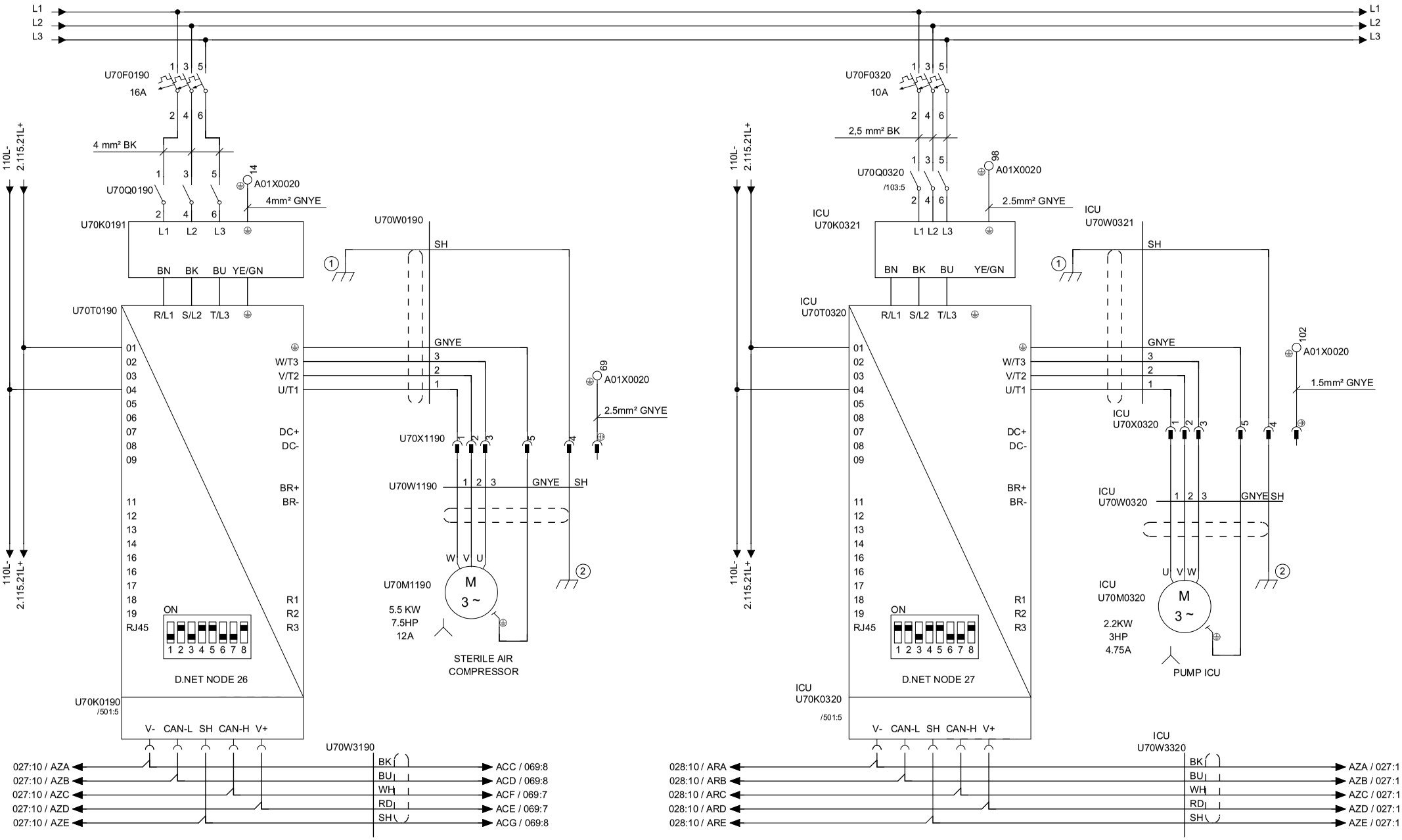

Tetra Pak®	Version Designer: RICO	Version Date: 01/10/2014	Machine: A3 CompactFlex 0300	
	ECM No: 687624	Denomination: CIRCUIT DIAGRAM	Page Type: AIR COMPRESSOR-ICU PUMP	
	Information Security Class: PUBLIC	Document No.: 3223337-0003	Doc. type: ELD	Version: AM / Page: 027

RELEASED

This drawing must not without the consent of Tetra Pak be copied, transmitted or disclosed to any third party.

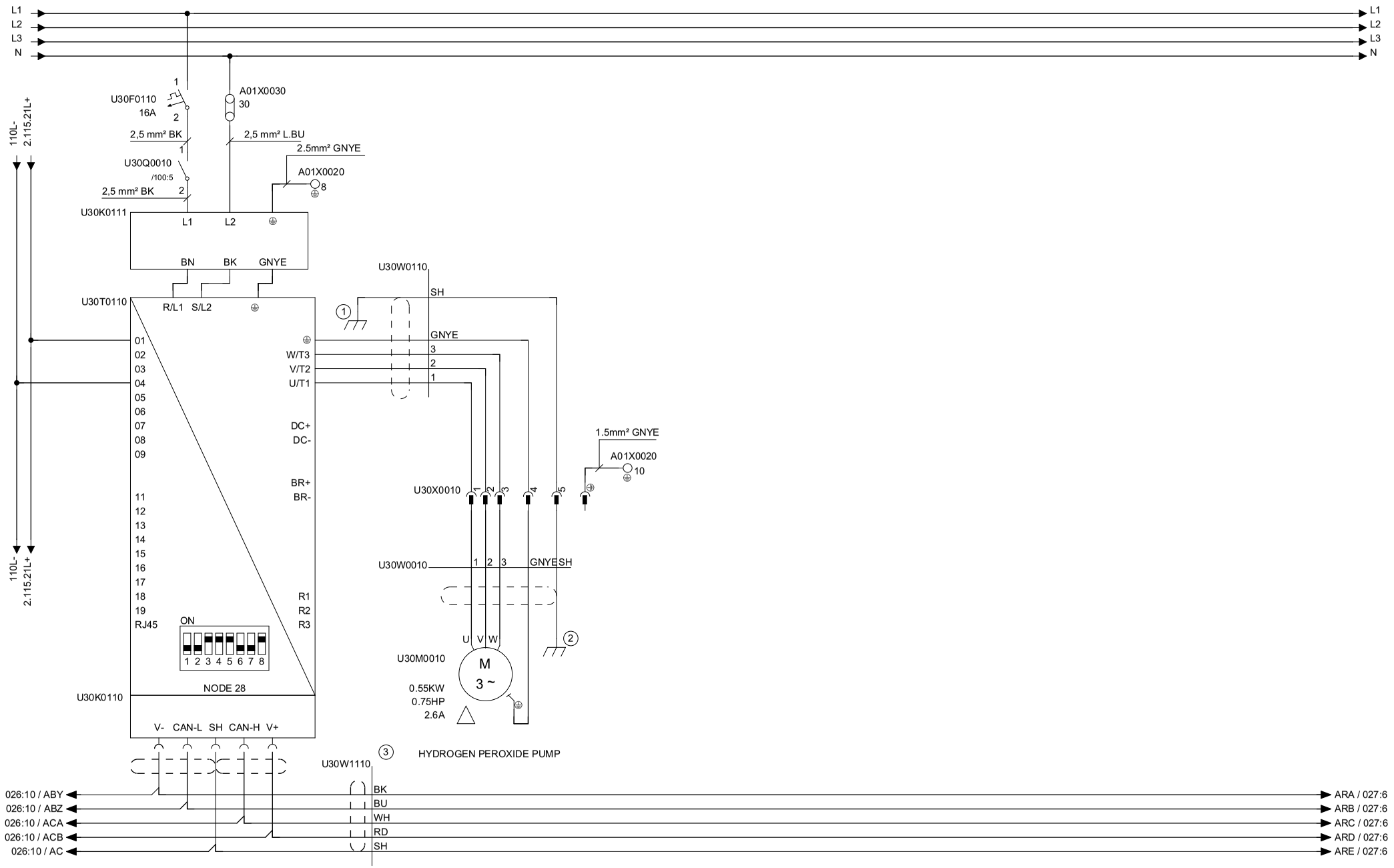

Tetra Pak®	Version Designer: RICO	Version Date: 01/10/2014	Machine: A3 CompactFlex 0300	
	ECM No: 687624	Denomination: CIRCUIT DIAGRAM	Page Type: HTDROGEN PEROXIDE PUMP	
	Information Security Class: PUBLIC	Document No.: 3223337-0003	Doc. type: ELD	Version: AM / Page: 028

RELEASED

This drawing must not without the consent of Tetra Pak
be copied, transmitted or disclosed to any third party.

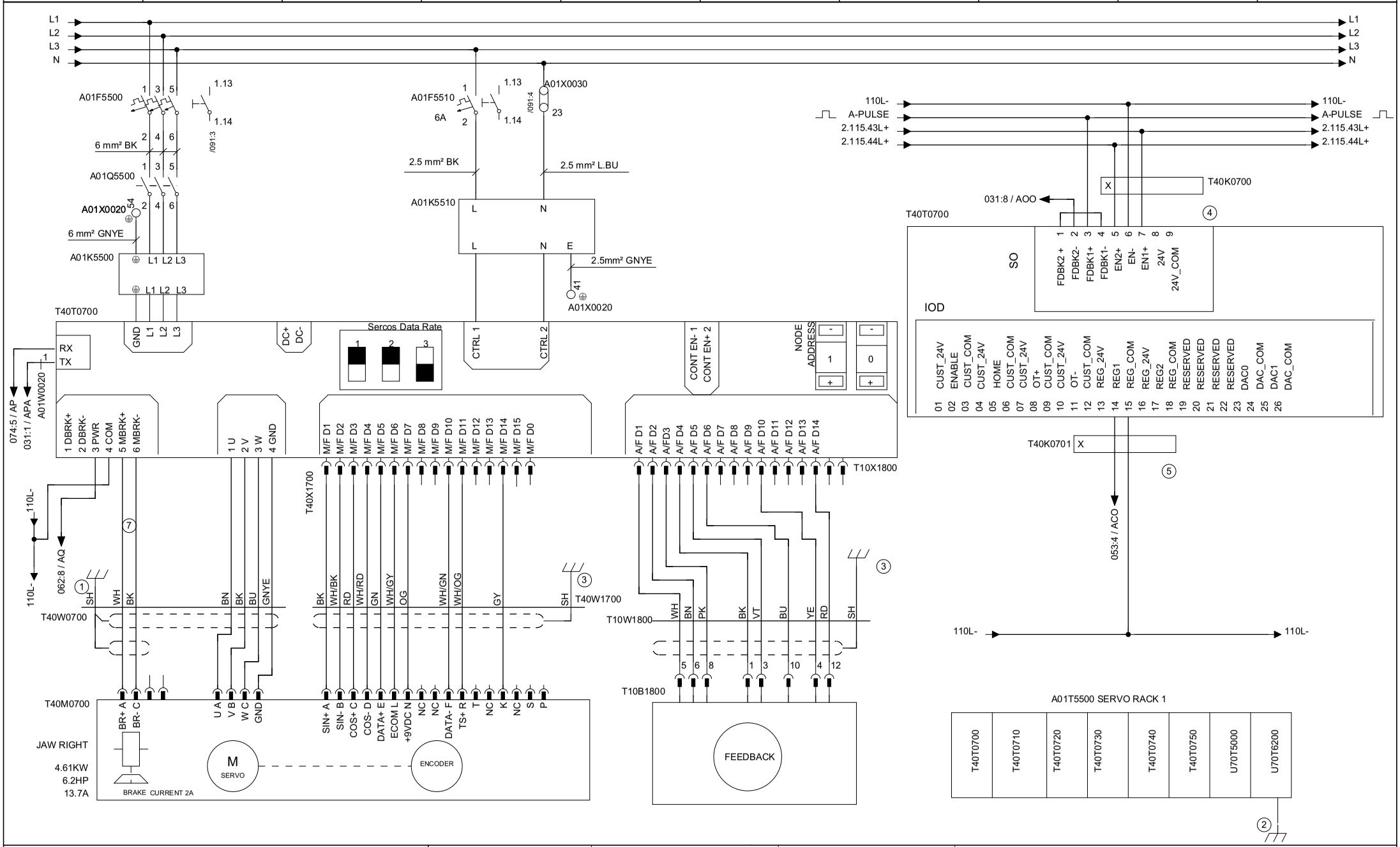

Tetra Pak®	Version Designer: RICO	Version Date: 01/10/2014	Machine: A3 CompactFlex 0300	
	ECM No: 687624	Denomination: CIRCUIT DIAGRAM	Page Type: JAW RIGHT SERVO MOTOR	
	Information Security Class: PUBLIC	Document No.: 3223337-0003	Doc. type: ELD	Version: AM	Page: 030

RELEASED

This drawing must not without the consent of Tetra Pak
be copied, transmitted or disclosed to any third party.

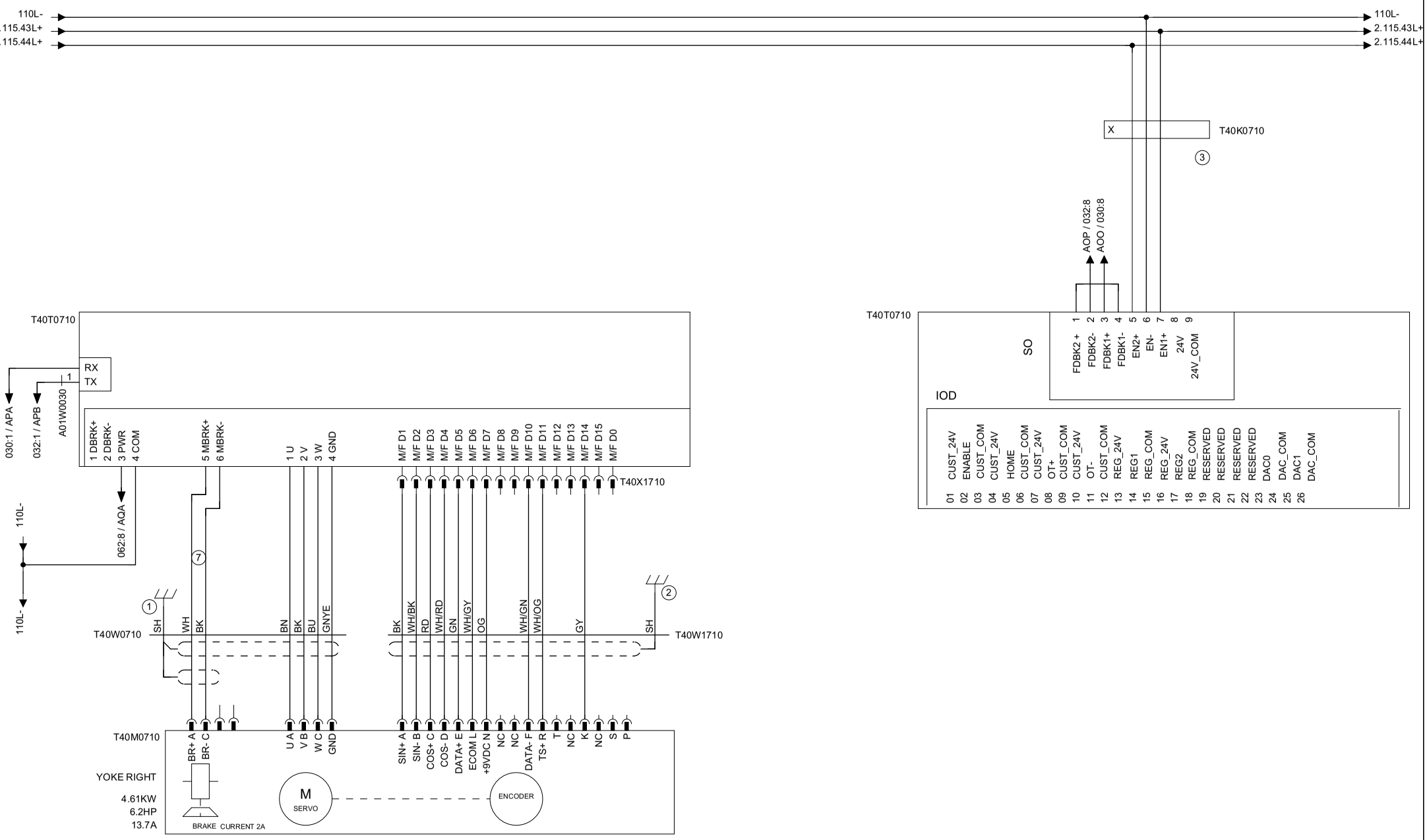

Tetra Pak®	Version Designer: RICO	Version Date: 01/10/2014	Machine: A3 CompactFlex 0300	
	ECM No: 687624	Denomination: CIRCUIT DIAGRAM	Page Type: YOKE RIGHT SERVO MOTOR	
	Information Security Class: PUBLIC	Document No.: 3223337-0003	Doc. type: ELD	Version: AM	Page: 031

RELEASED

This drawing must not without the consent of Tetra Pak
be copied, transmitted or disclosed to any third party.

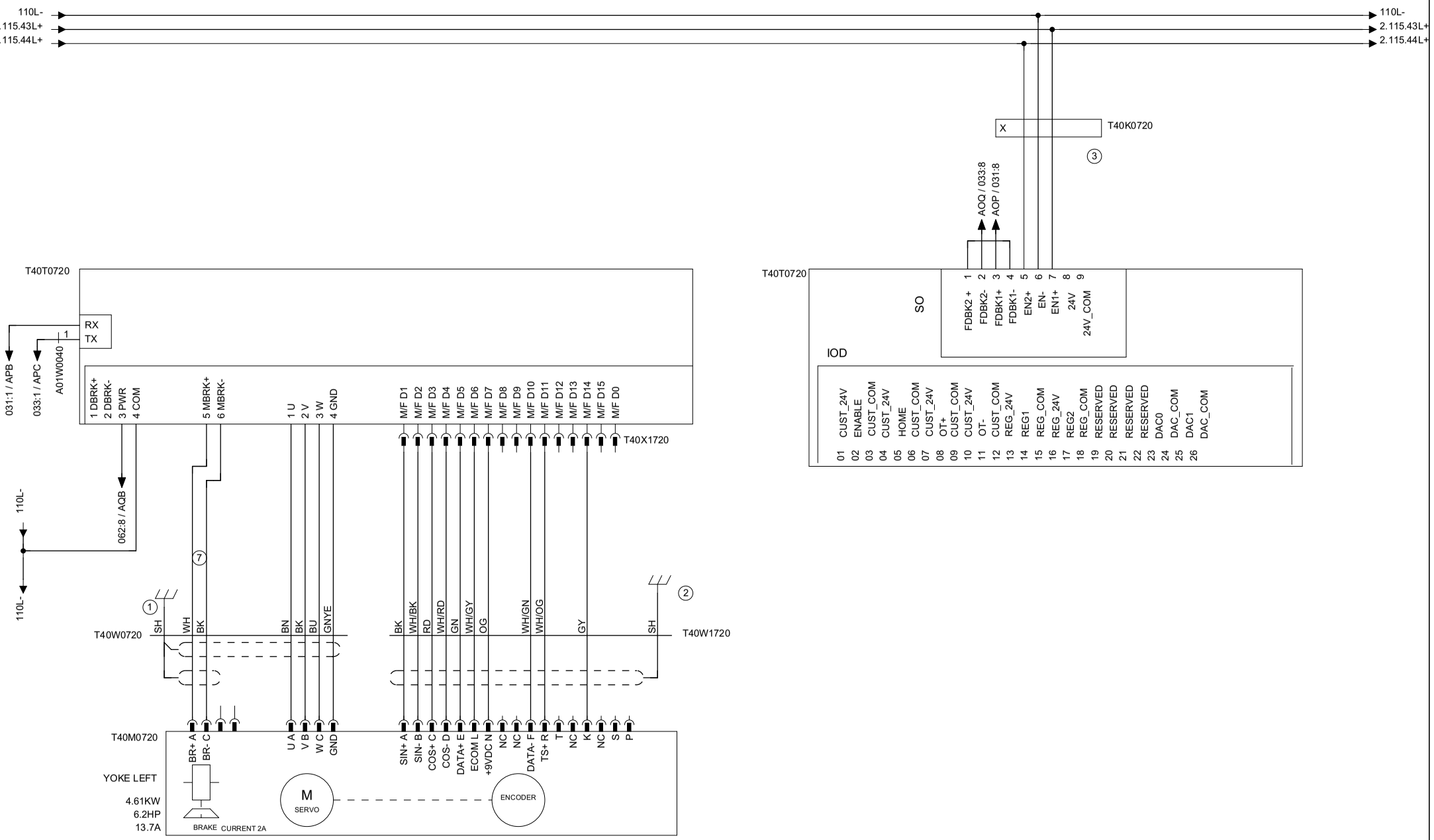

Tetra Pak®	Version Designer: RICO	Version Date: 01/10/2014	Machine: A3 CompactFlex 0300	
	ECM No: 687624	Denomination: CIRCUIT DIAGRAM	Page Type: YOKE LEFT SERVO MOTOR	
	Information Security Class: PUBLIC	Document No.: 3223337-0003	Doc. type: ELD	Version: AM / Page: 032

RELEASED

This drawing must not without the consent of Tetra Pak
be copied, transmitted or disclosed to any third party.

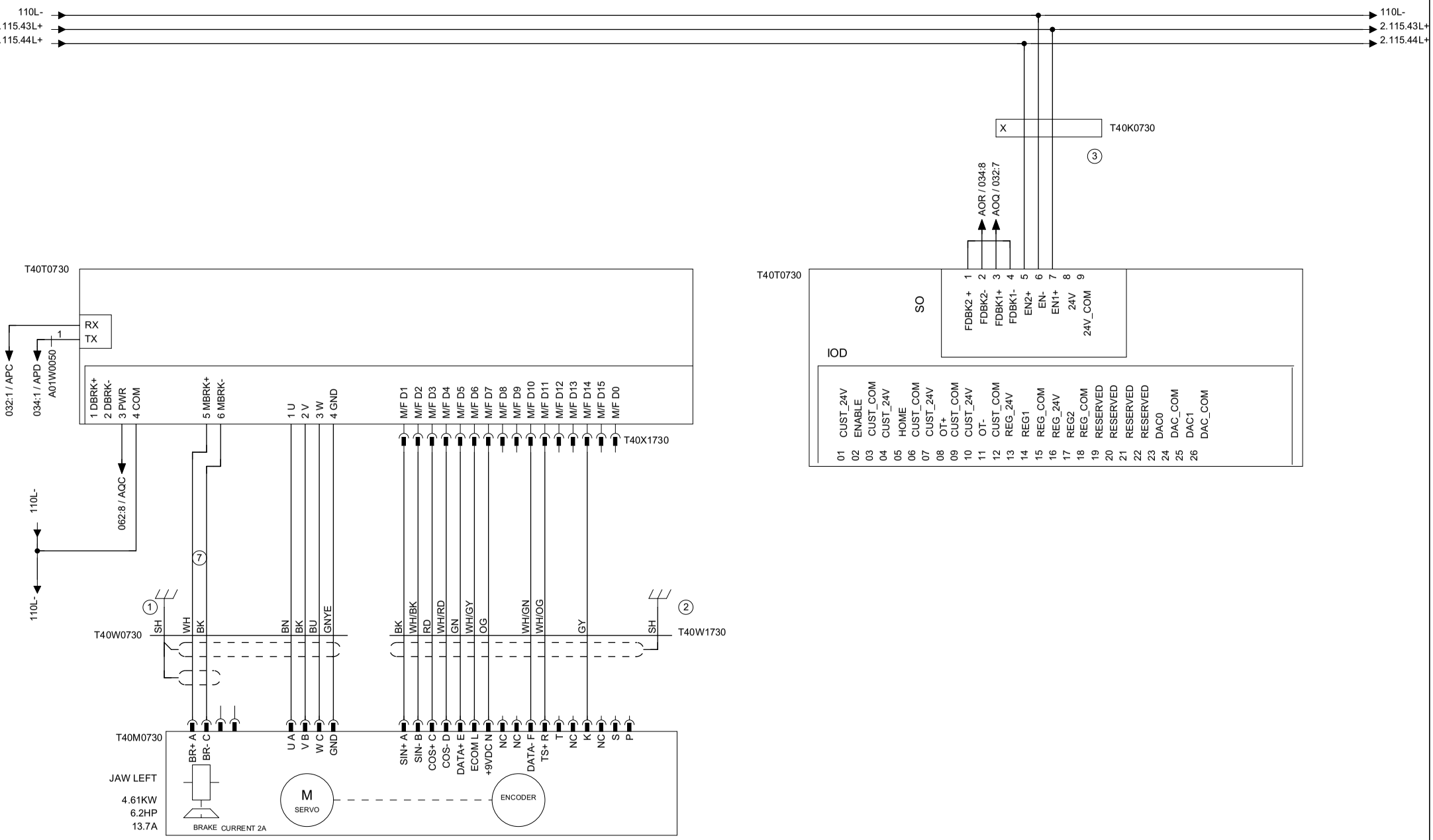

Tetra Pak®	Version Designer: RICO	Version Date: 01/10/2014	Machine: A3 CompactFlex 0300	
	ECM No: 687624	Denomination: CIRCUIT DIAGRAM	Page Type: JAW LEFT SERVO MOTOR	
	Information Security Class: PUBLIC	Document No.: 3223337-0003	Doc. type: ELD	Version: AM / Page: 033

RELEASED

This drawing must not without the consent of Tetra Pak be copied, transmitted or disclosed to any third party.

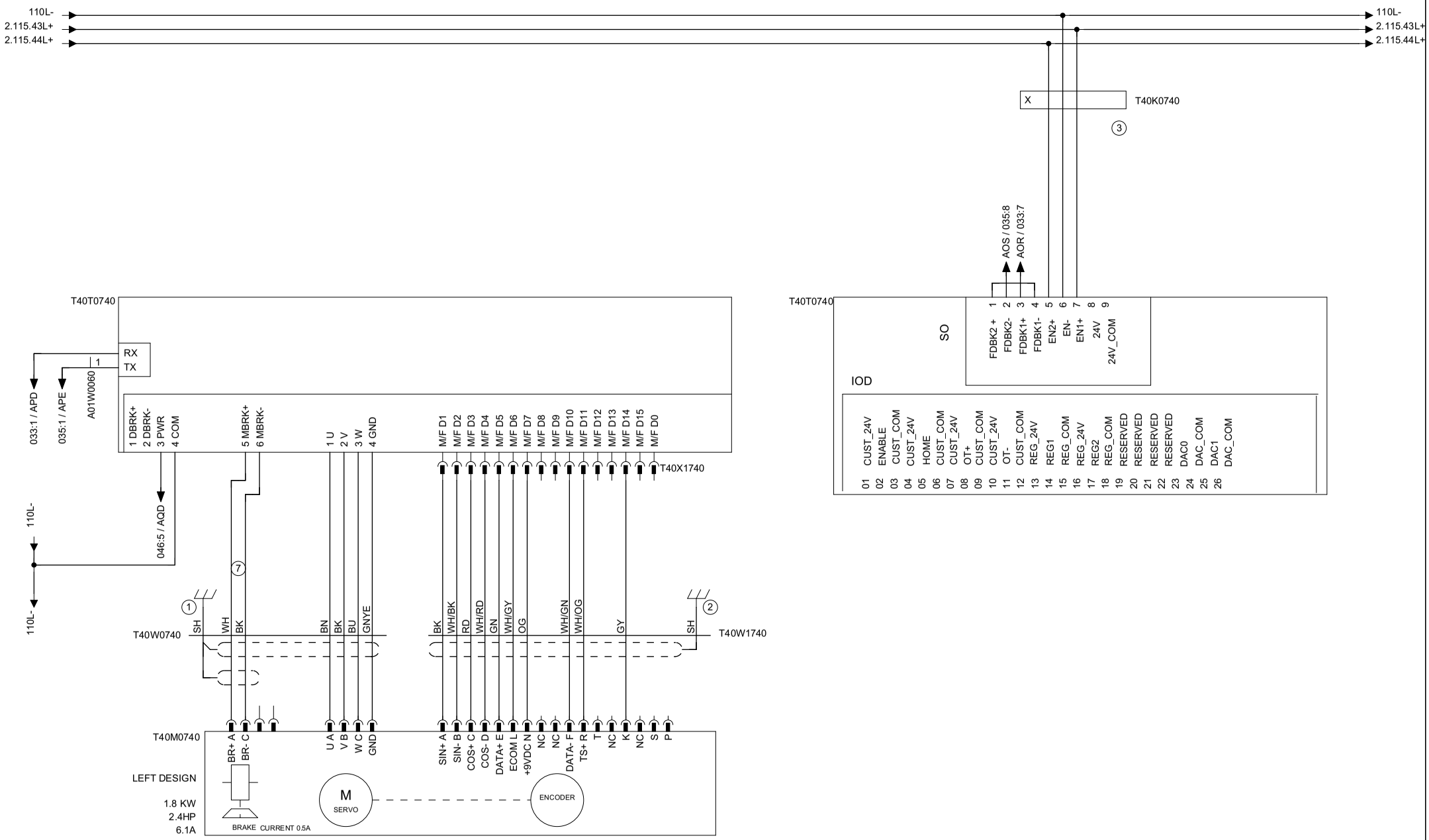

Tetra Pak®	Version Designer: RICO	Version Date: 01/10/2014	Machine: A3 CompactFlex 0300	
	ECM No: 687624	Denomination: CIRCUIT DIAGRAM	Page Type: LEFT DESIGN SERVO MOTOR	
	Information Security Class: PUBLIC	Document No.: 3223337-0003	Doc. type: ELD	Version: AM	Page: 034

RELEASED

This drawing must not without the consent of Tetra Pak
be copied, transmitted or disclosed to any third party.

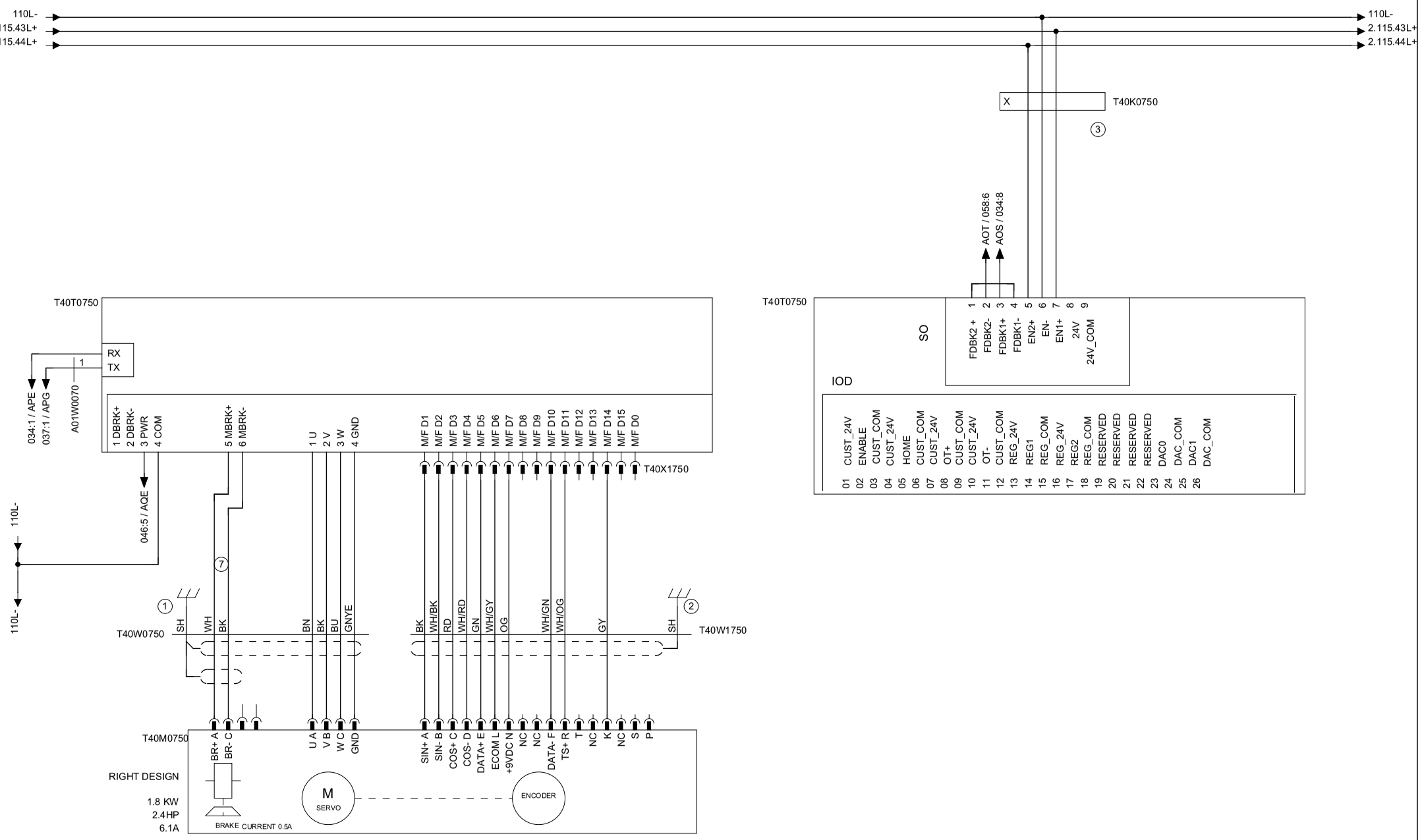

Tetra Pak®	Version Designer: RICO	Version Date: 01/10/2014	Machine: A3 CompactFlex 0300	
	ECM No: 687624	Denomination: CIRCUIT DIAGRAM	Page Type: RIGHT DESIGN SERVO MOTOR	
	Information Security Class: PUBLIC	Document No.: 3223337-0003	Doc. type: ELD	Version: AM / Page: 035

RELEASED

This drawing must not without the consent of Tetra Pak be copied, transmitted or disclosed to any third party.

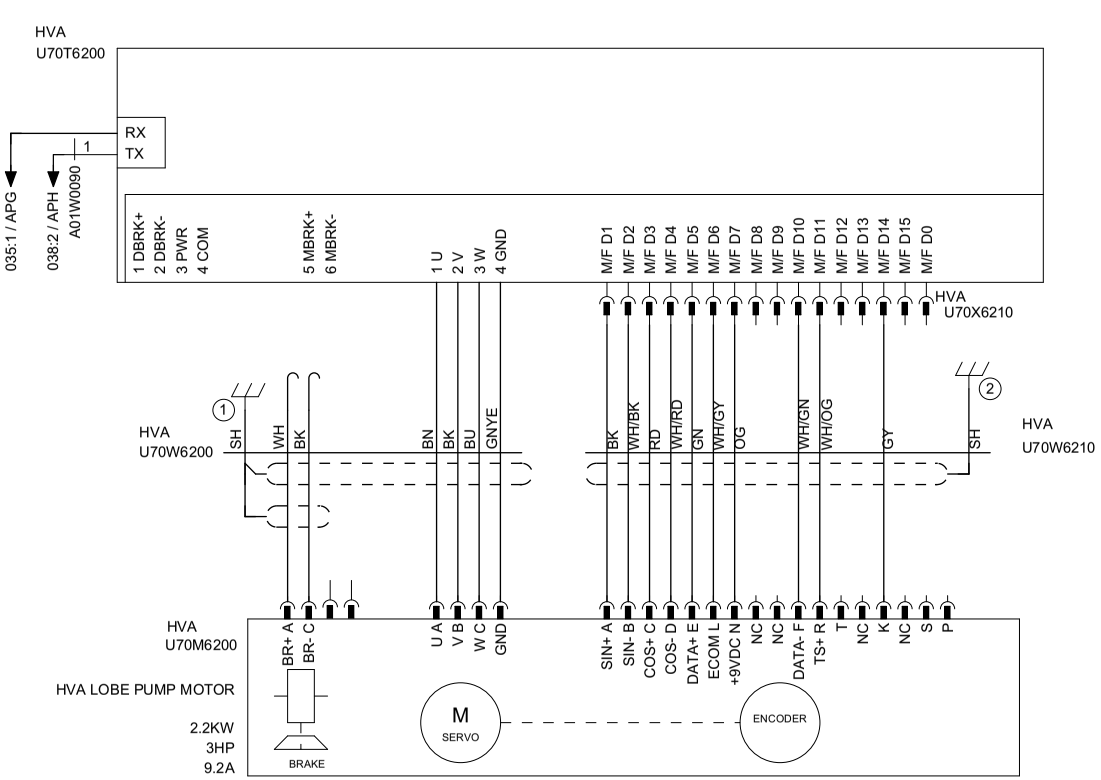

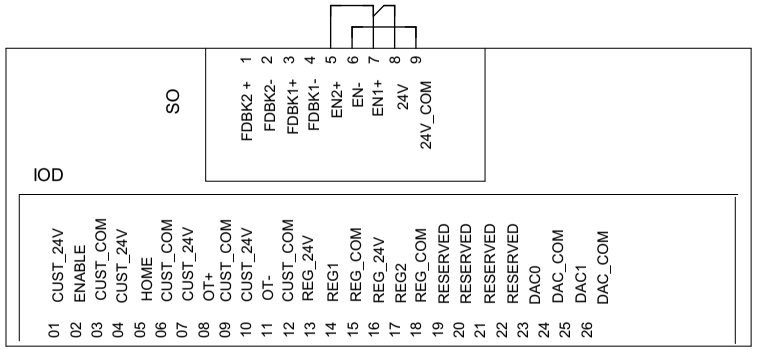

Tetra Pak®	Version Designer: RICO	Version Date: 01/10/2014	Machine: A3 CompactFlex 0300	
	ECM No: 687624	Denomination: CIRCUIT DIAGRAM	Page Type: HVA LOBE PUMP SERVO MOTOR	
	Information Security Class: PUBLIC	Document No.: 3223337-0003	Doc. type: ELD	Version: AM / Page: 037

RELEASED

This drawing must not without the consent of Tetra Pak be copied, transmitted or disclosed to any third party.

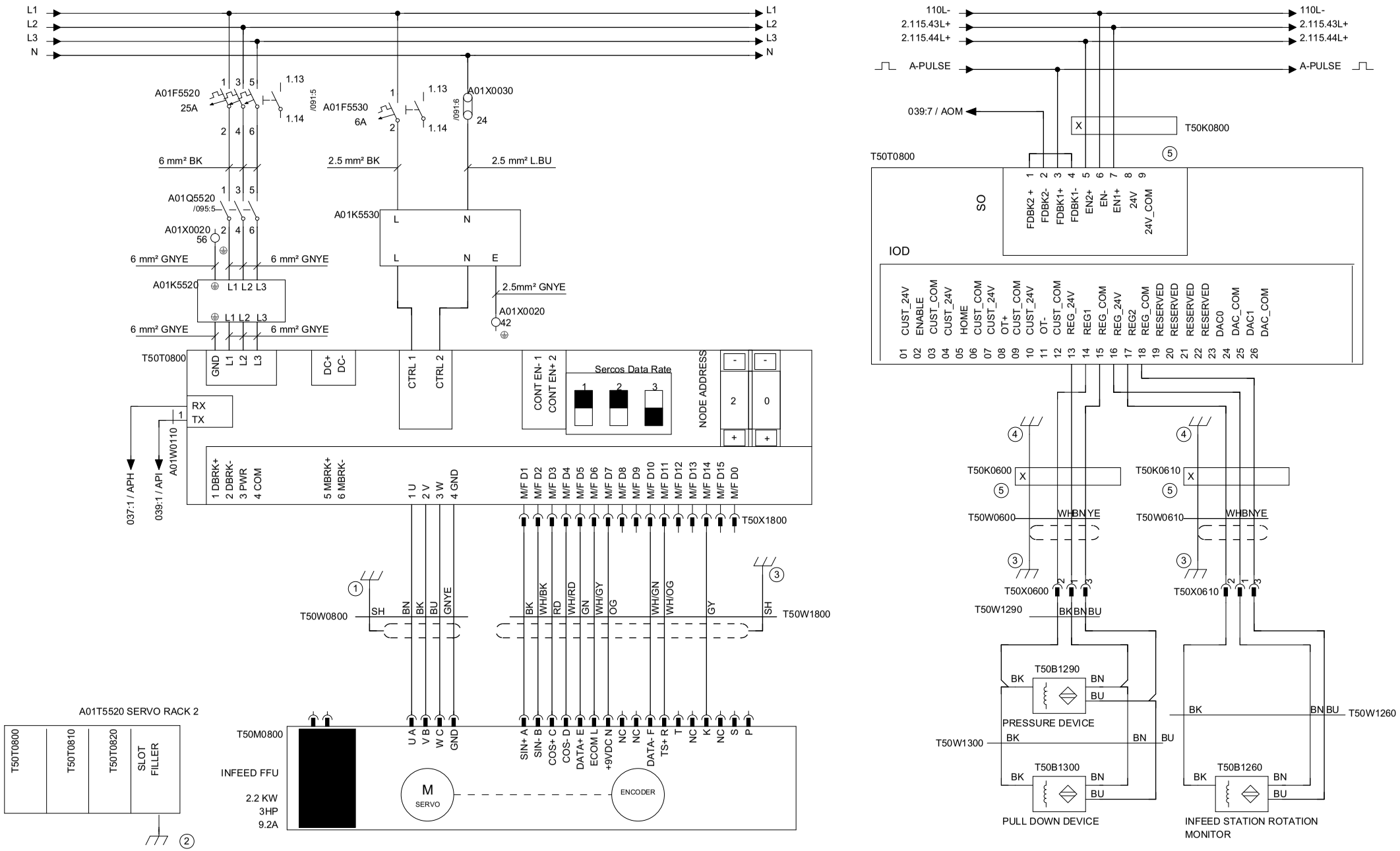

Tetra Pak®	Version Designer: RICO	Version Date: 01/10/2014	Machine: A3 CompactFlex 0300	
	ECM No: 687624	Denomination: CIRCUIT DIAGRAM	Page Type: INFEED FFU SERVO MOTOR	
	Information Security Class: PUBLIC	Document No.: 3223337-0003	Doc. type: ELD	Version: AM	Page: 038

RELEASED

This drawing must not without the consent of Tetra Pak
be copied, transmitted or disclosed to any third party.

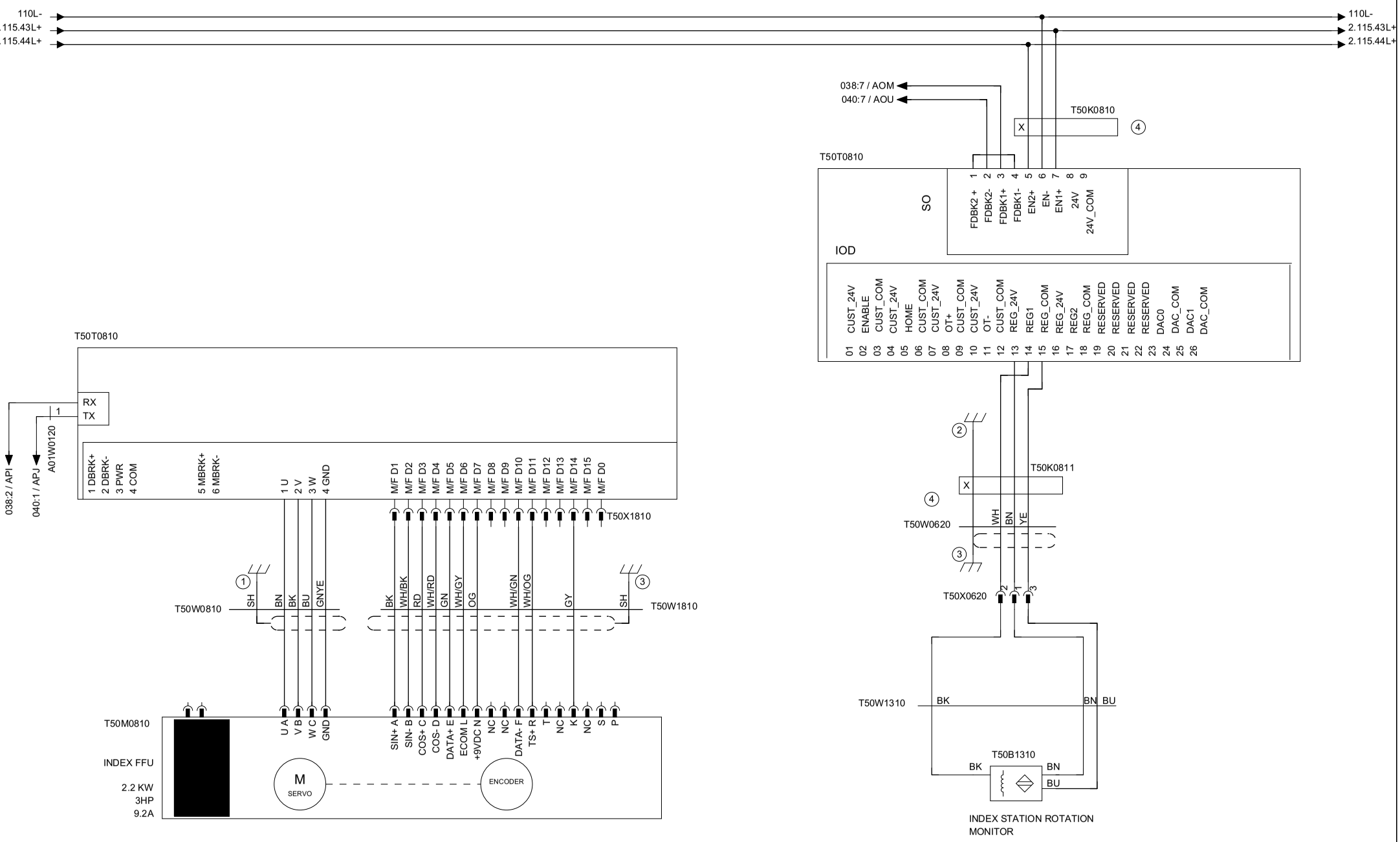

Tetra Pak®	Version Designer: RICO	Version Date: 01/10/2014	Machine: A3 CompactFlex 0300		
	ECM No: 687624	Denomination: CIRCUIT DIAGRAM	Page Type: INDEX FFU SERVO MOTOR		
	Information Security Class: PUBLIC	Document No.: 3223337-0003	Doc. type: ELD	Version: AM	Page: 039

RELEASED

This drawing must not without the consent of Tetra Pak be copied, transmitted or disclosed to any third party.

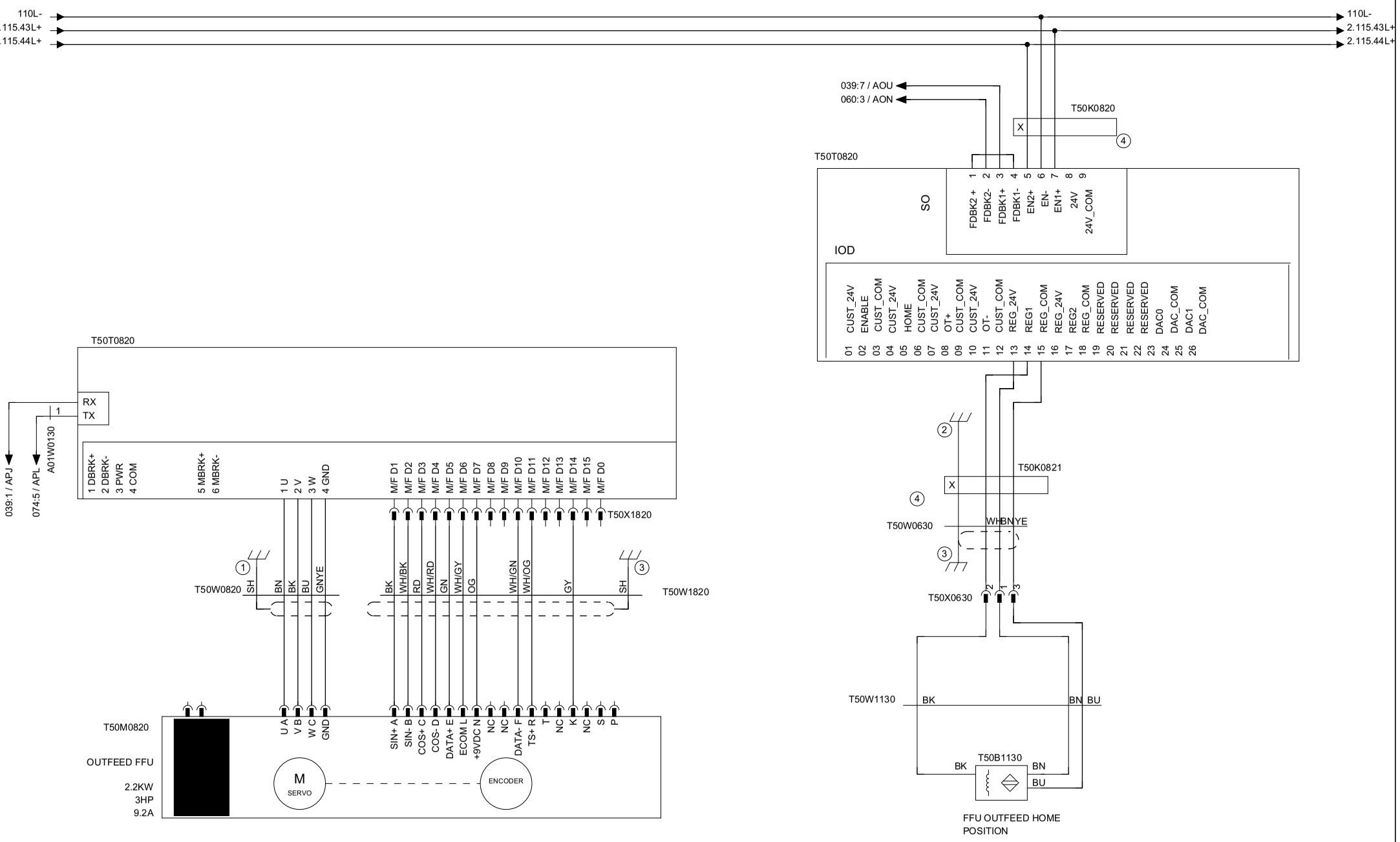

Tetra Pak®	Version Designer: RICO	Version Date: 01/10/2014	Machine: A3 CompactFlex 0300	
	ECM No: 687624	Denomination: CIRCUIT DIAGRAM	Page Type: OUTFEED FFU SERVO MOTOR	
	Information Security Class: PUBLIC	Document No.: 3223337-0003	Doc. type: ELD	Version: AM / Page: 040

RELEASED

This drawing must not without the consent of Tetra Pak be copied, transmitted or disclosed to any third party.

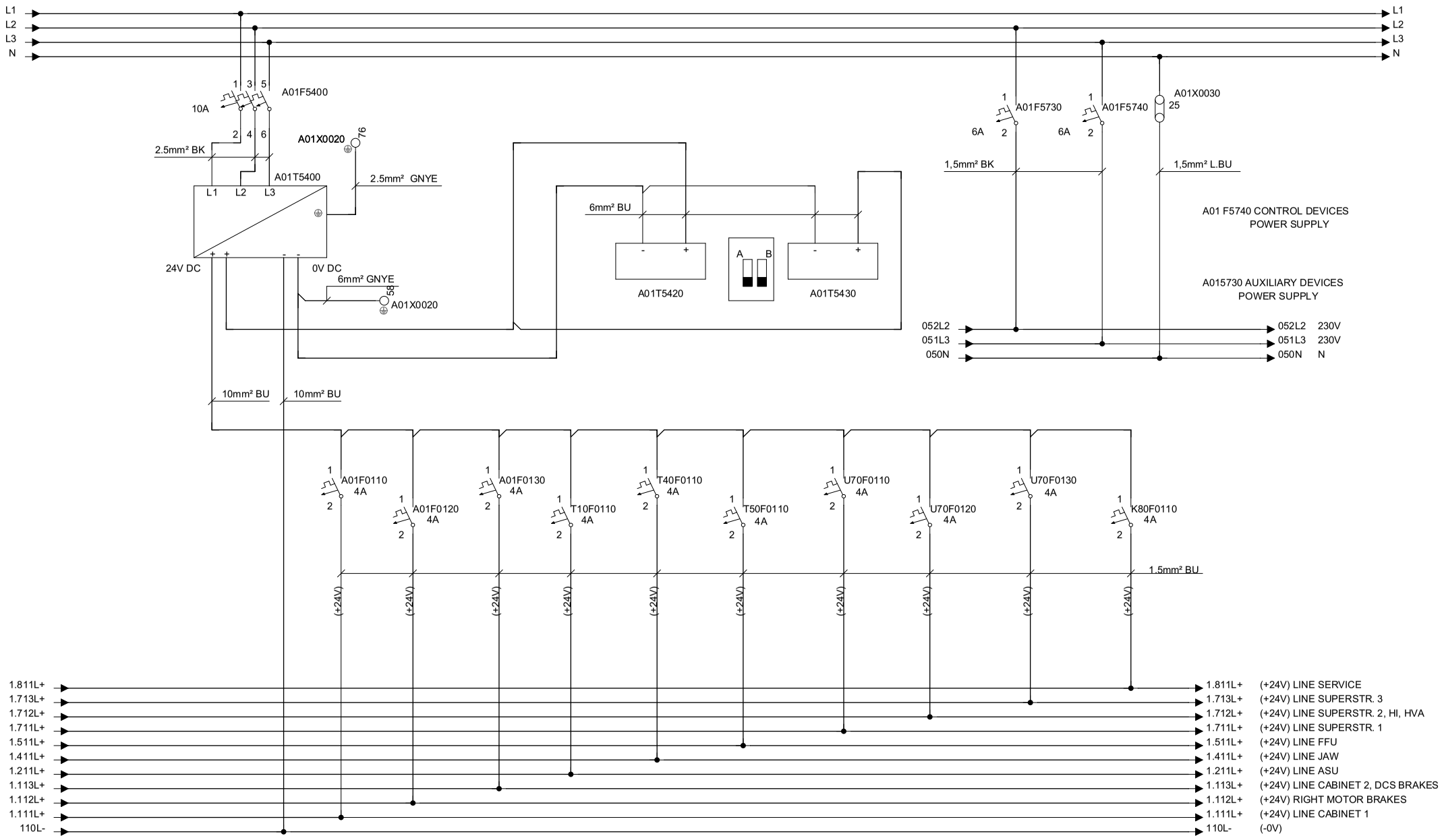

Tetra Pak®	Version Designer: RICO	Version Date: 01/10/2014	Machine: A3 CompactFlex 0300	
	ECM No: 687624	Denomination: CIRCUIT DIAGRAM	Page Type: CONTROL VOLTAGE	
	Information Security Class: PUBLIC	Document No.: 3223337-0003	Doc. type: ELD	Version: AM / Page: 045

RELEASED

This drawing must not without the consent of Tetra Pak be copied, transmitted or disclosed to any third party.

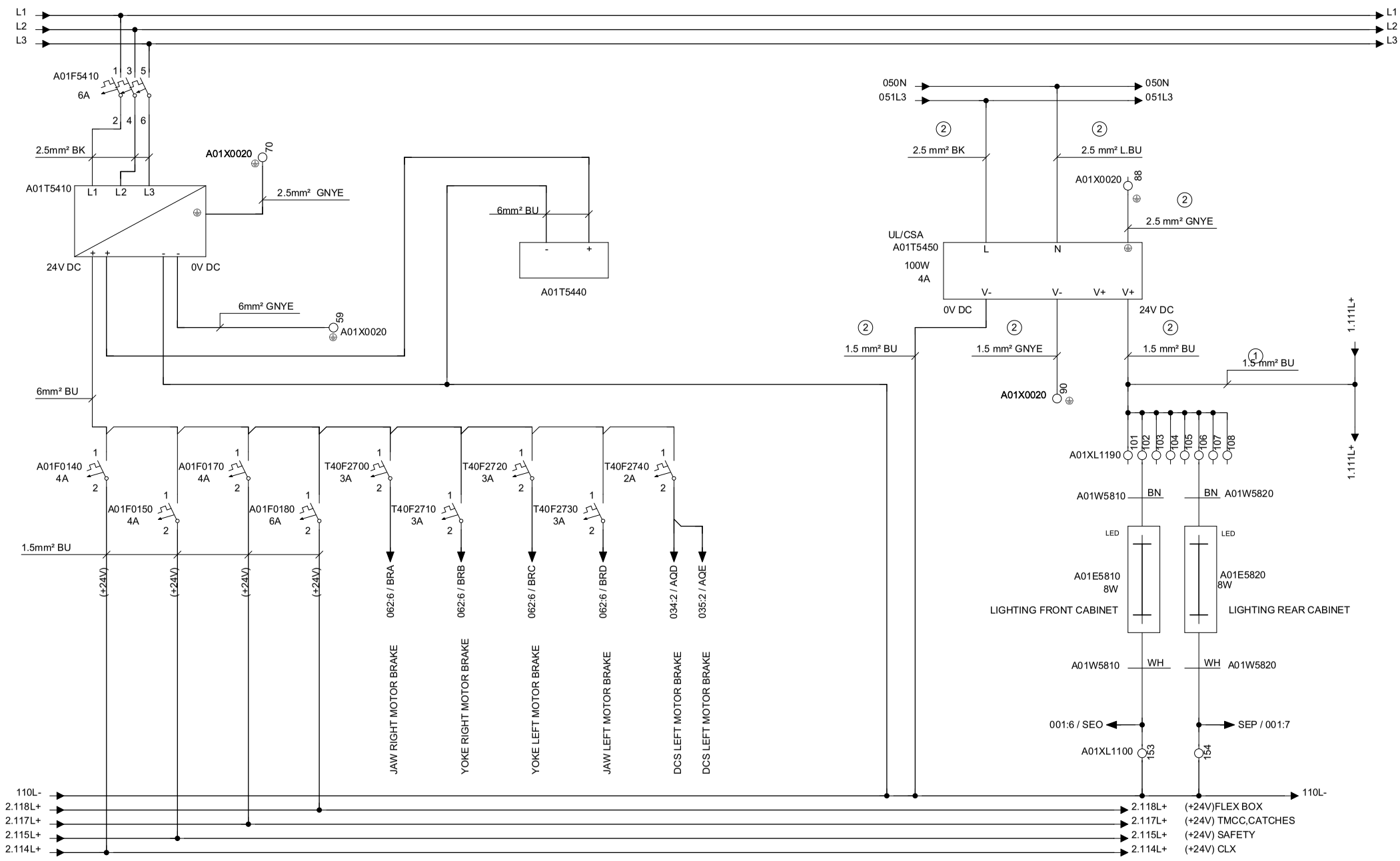

Tetra Pak®	Version Designer: RICO	Version Date: 01/10/2014	Machine: A3 CompactFlex 0300	
	ECM No: 687624	Denomination: CIRCUIT DIAGRAM	Page Type: CONTROL VOLTAGE	
	Information Security Class: PUBLIC	Document No.: 3223337-0003	Doc. type: ELD	Version: AM / Page: 046

RELEASED

This drawing must not without the consent of Tetra Pak
be copied, transmitted or disclosed to any third party.

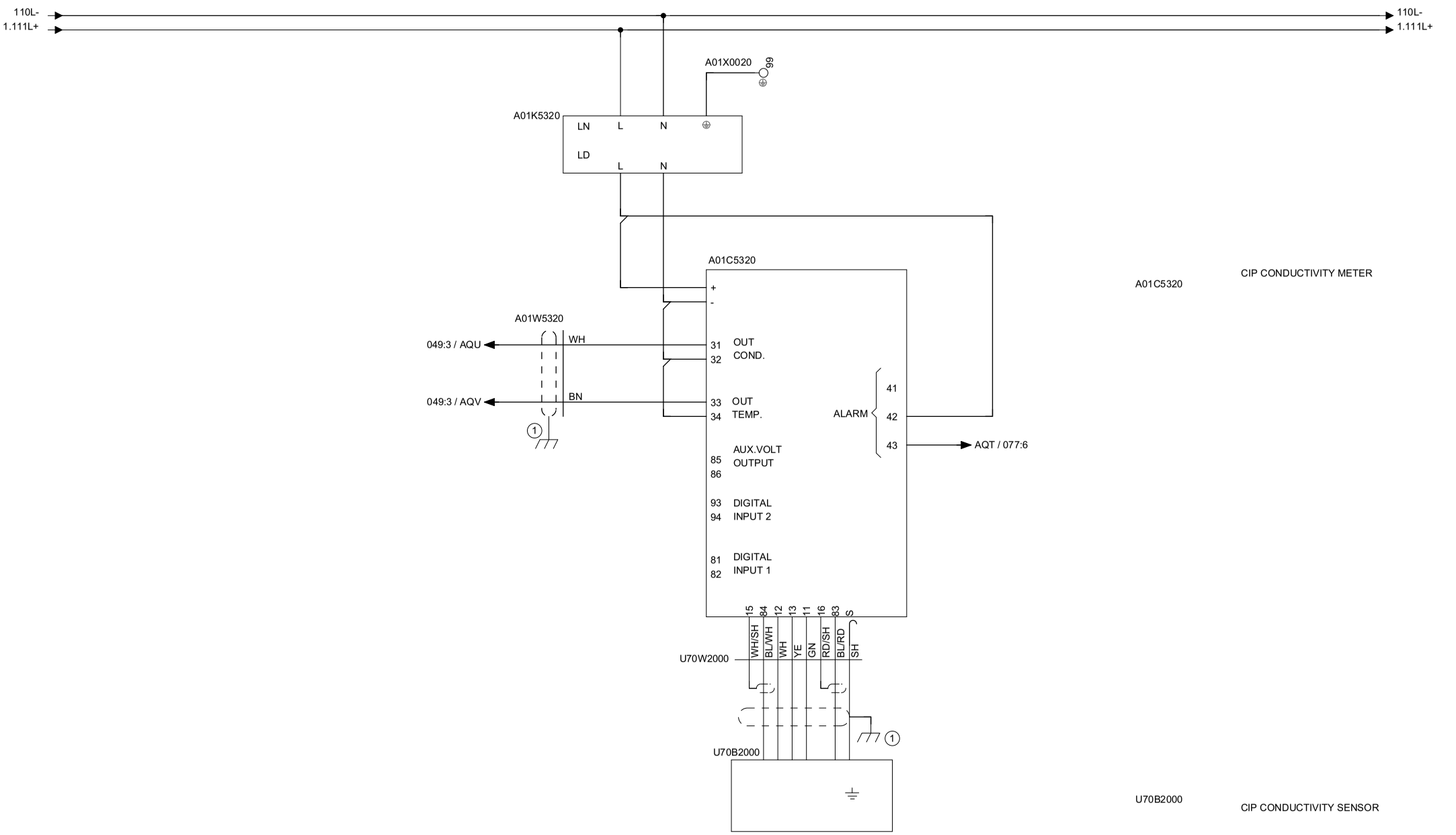

Tetra Pak®	Version Designer: RICO	Version Date: 01/10/2014	Machine: A3 CompactFlex 0300	
	ECM No: 687624	Denomination: CIRCUIT DIAGRAM	Page Type: CONDUCTIVITY METER	
	Information Security Class: PUBLIC	Document No.: 3223337-0003	Doc. type: ELD	Version: AM	Page: 047

RELEASED

This drawing must not without the consent of Tetra Pak be copied, transmitted or disclosed to any third party.

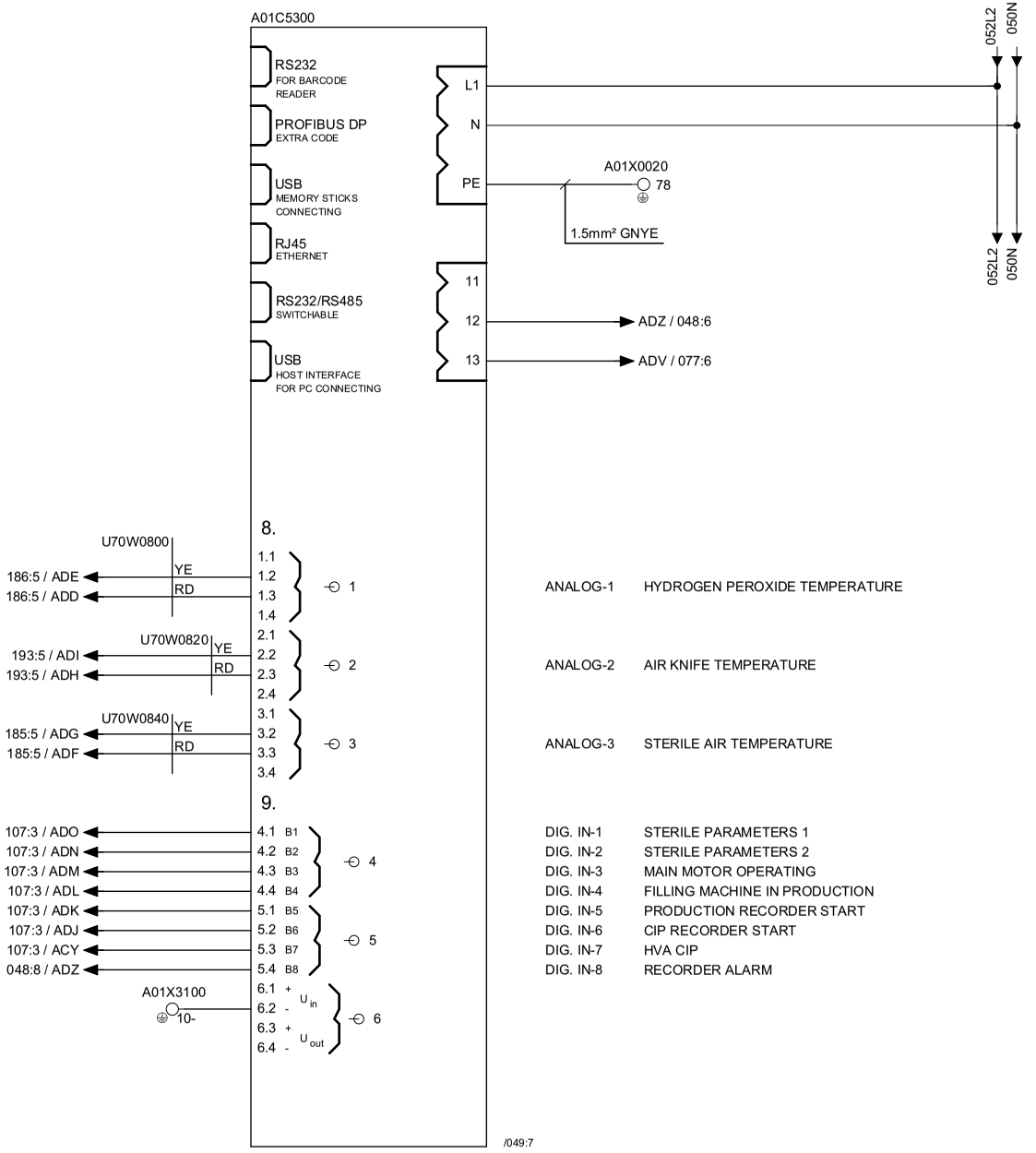

Tetra Pak®	Version Designer: RICO	Version Date: 01/10/2014	Machine: A3 CompactFlex 0300	
	ECM No: 687624	Denomination: CIRCUIT DIAGRAM	Page Type: RECORDER	
Information Security Class: PUBLIC	Document No.: 3223337-0003	Doc. type: ELD	Version: AM	Page: 048

This drawing must not without the consent of Tetra Pak
be copied, transmitted or disclosed to any third party.

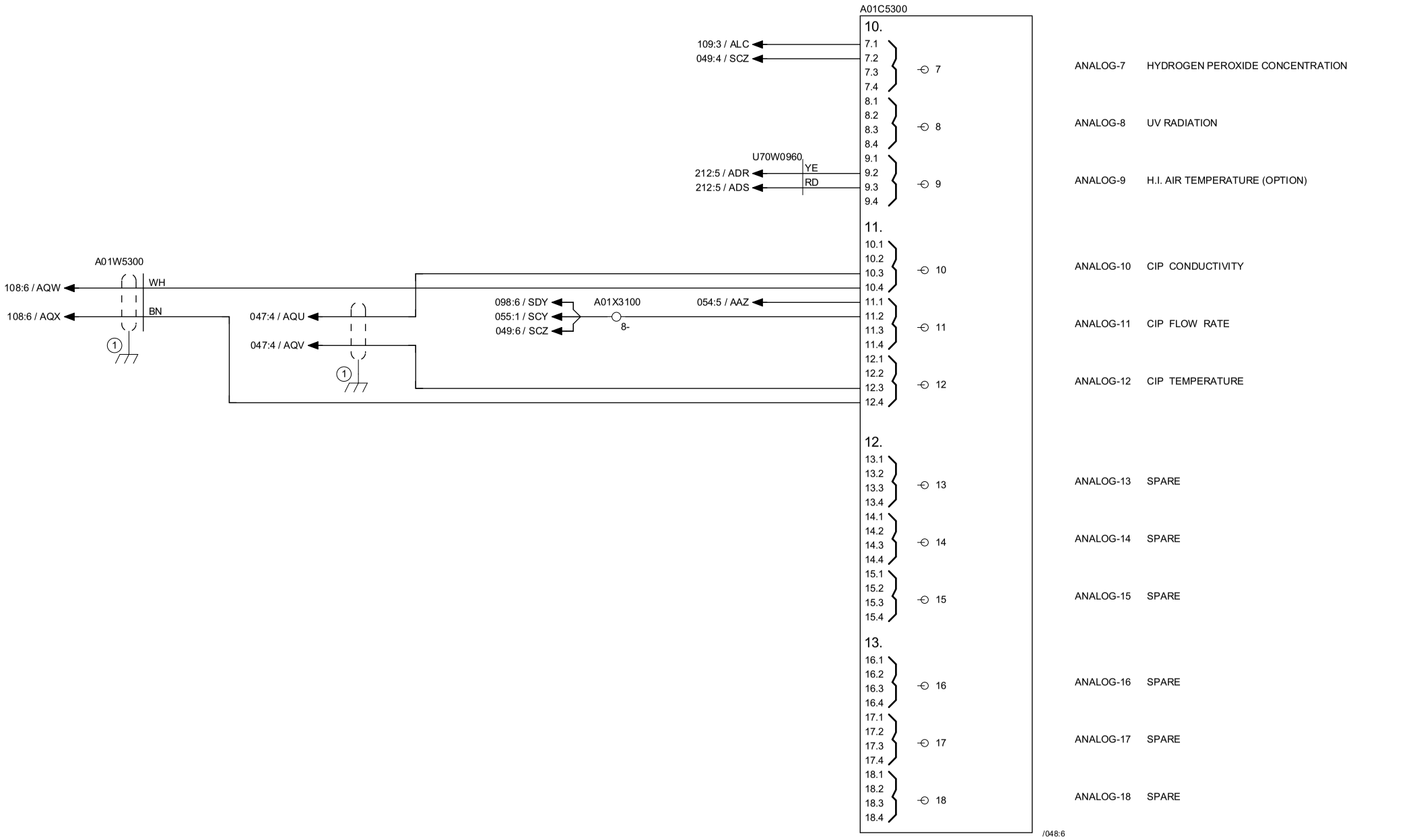

Tetra Pak®	Version Designer: RICO	Version Date: 01/10/2014	Machine: A3 CompactFlex 0300	
	ECM No: 687624	Denomination: CIRCUIT DIAGRAM	Page Type: RECORDER	
	Information Security Class: PUBLIC	Document No.: 3223337-0003	Doc. type: ELD	Version: AM	Page: 049

This drawing must not without the consent of Tetra Pak
be copied, transmitted or disclosed to any third party.

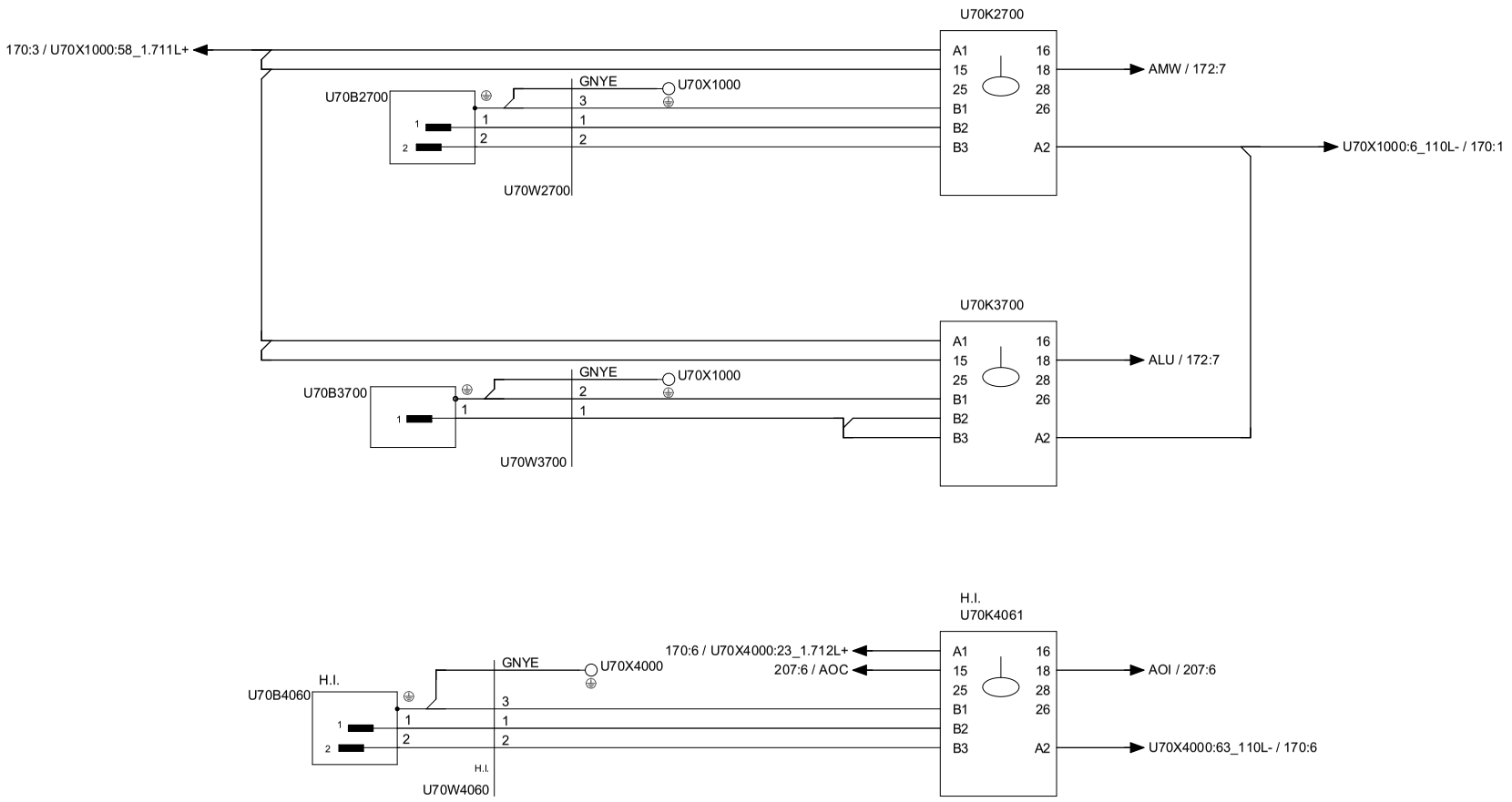

U70K2700 HYDROGEN PEROXIDE SPRAY TANK

U70B2700 FILLING SPRAY TANK
1 HIGH LEVEL
2 LOW LEVEL

U70K3700 MEMBRANE LEAKAGE

U70B3700 REGULATING VALVE LEAKAGE

U70K4061 H.I. LEVEL PEROXIDE SPRAY TANK

U70B4060 H.I. LEVEL SENSOR PEROXIDE SPRAY TANK
1 HIGH LEVEL
2 LOW LEVEL

Tetra Pak®	Version Designer: RICO	Version Date: 01/10/2014	Machine: A3 CompactFlex 0300	
	ECM No: 687624	Denomination: CIRCUIT DIAGRAM	Page Type: LEVEL RELAYS	
Information Security Class: PUBLIC	Document No.: 3223337-0003	Doc. type: ELD	Version: AM	Page: 051

RELEASED

This drawing must not without the consent of Tetra Pak be copied, transmitted or disclosed to any third party.

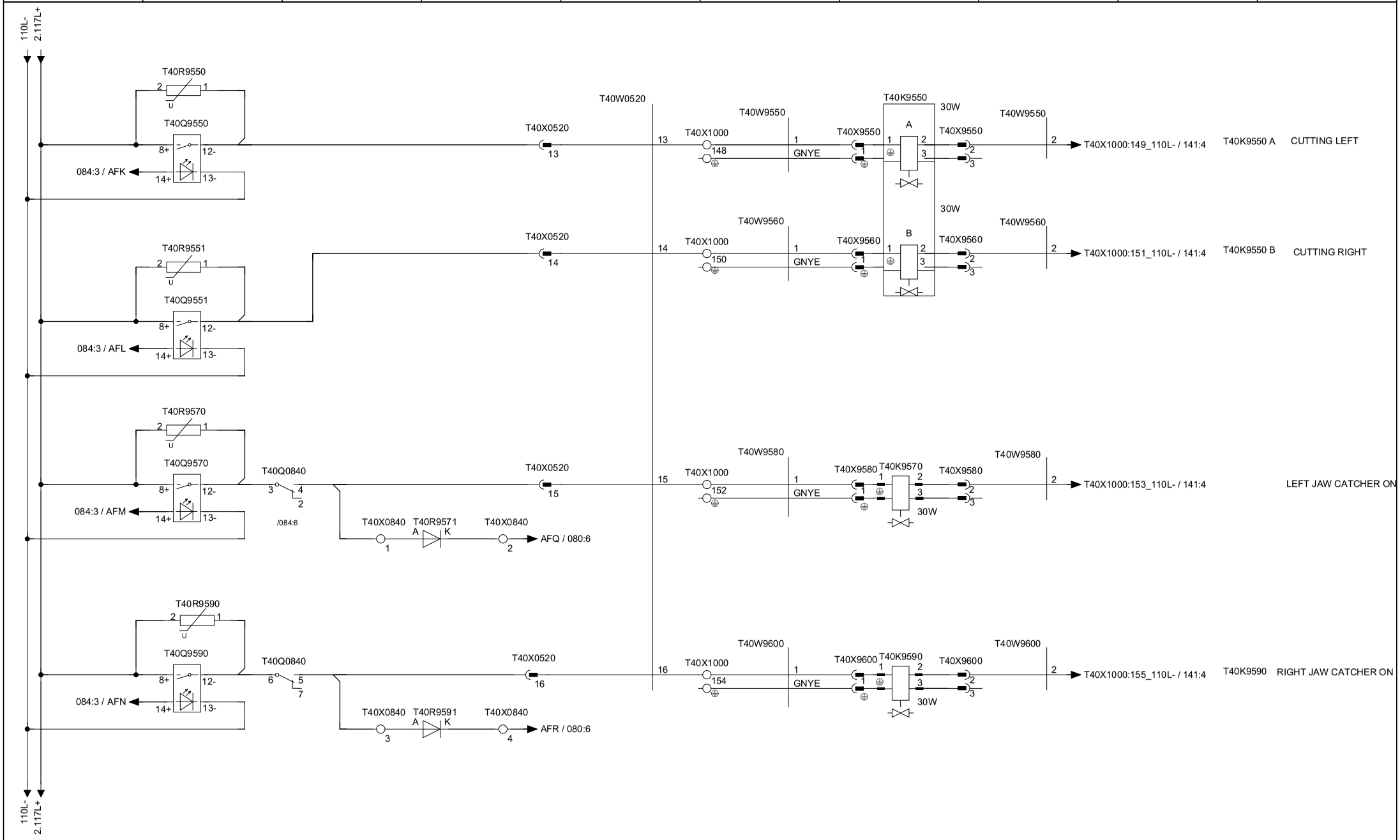

Tetra Pak®	Version Designer: RICO	Version Date: 01/10/2014	Machine: A3 CompactFlex 0300	
	ECM No: 687624	Denomination: CIRCUIT DIAGRAM	Page Type: KNIVES AND CATCHERS	
	Information Security Class: PUBLIC	Document No.: 3223337-0003	Doc. type: ELD	Version: AM / Page: 052

RELEASED

This drawing must not without the consent of Tetra Pak
be copied, transmitted or disclosed to any third party.

A01K0100 TMCC DESIGN CORRECTION

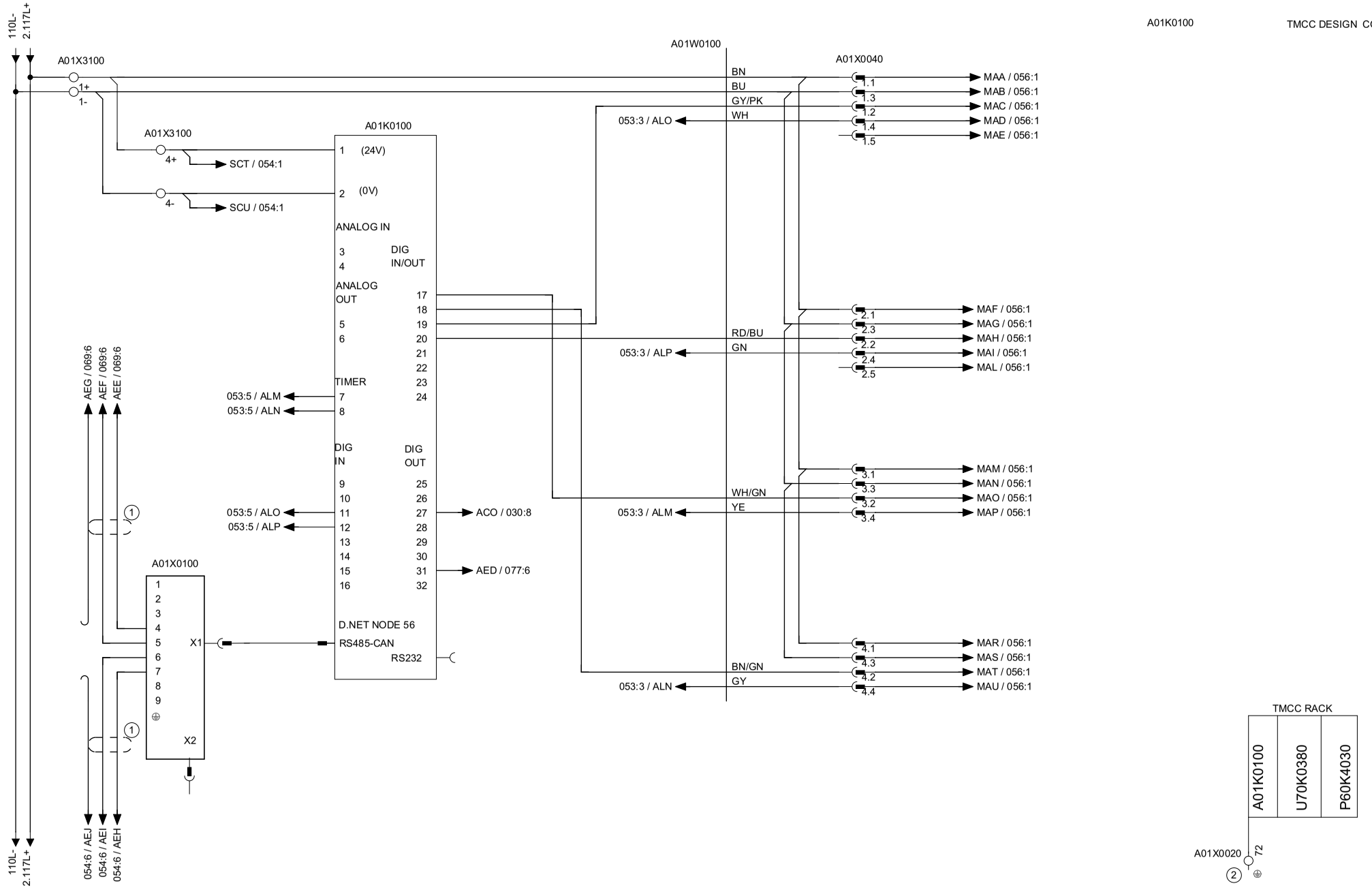

Tetra Pak®	Version Designer: RICO	Version Date: 01/10/2014	Machine: A3 CompactFlex 0300	
	ECM No: 687624	Denomination: CIRCUIT DIAGRAM	Page Type: DCS BAR CODE	
	Information Security Class: PUBLIC	Document No.: 3223337-0003	Doc. type: ELD	Version: AM	Page: 053

RELEASED

This drawing must not without the consent of Tetra Pak be copied, transmitted or disclosed to any third party.

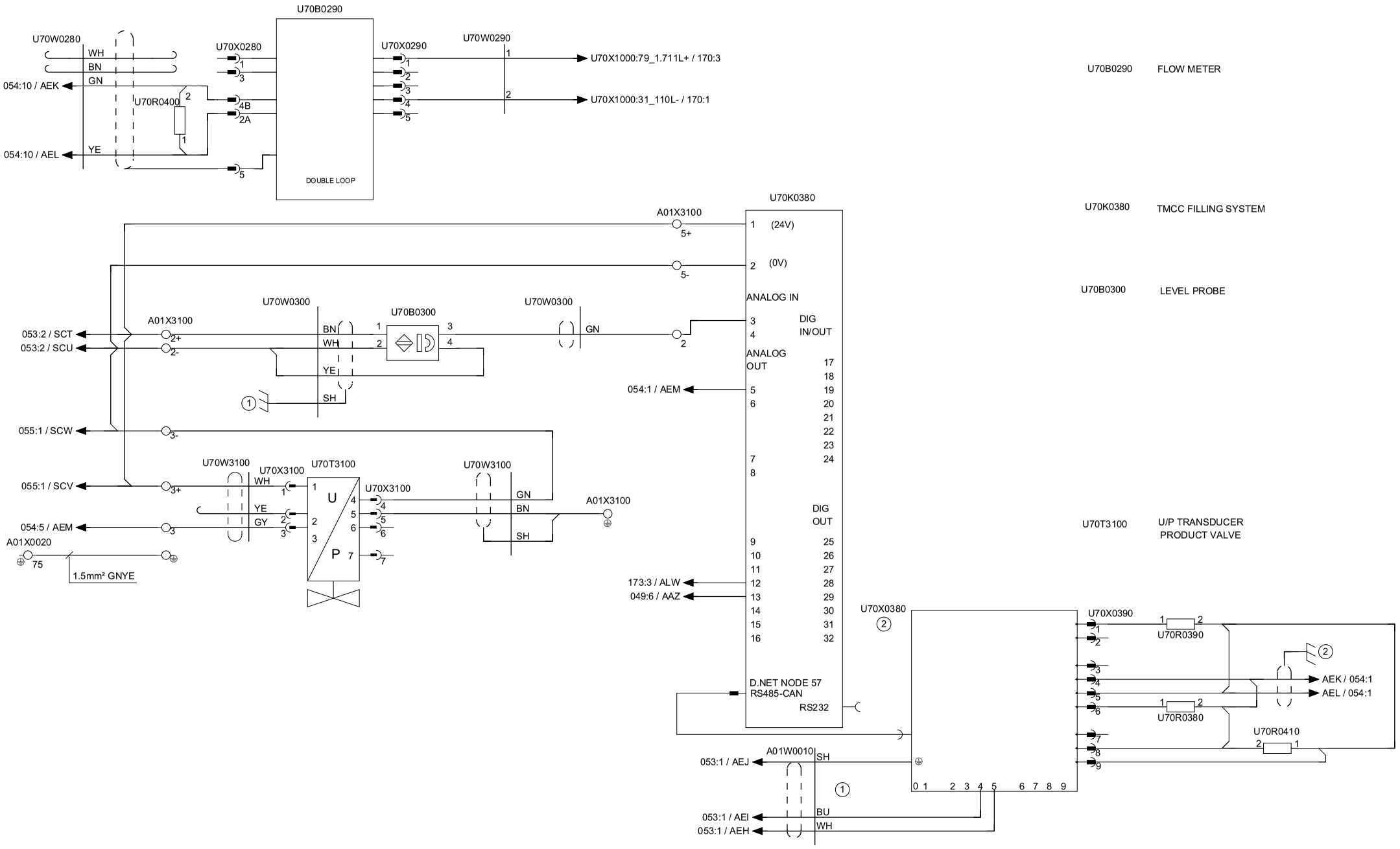

Tetra Pak®	Version Designer RICO	Version Date 01/10/2014	Machine A3 CompactFlex 0300			
	ECM No 687624	Denomination CIRCUIT DIAGRAM	Page Type TMCC FILLING SYSTEM			
	Information Security Class PUBLIC	Document No. 3223337-0003	Doc. type ELD	Version AM	Page 054	

This drawing must not without the consent of Tetra Pak
be copied, transmitted or disclosed to any third party.

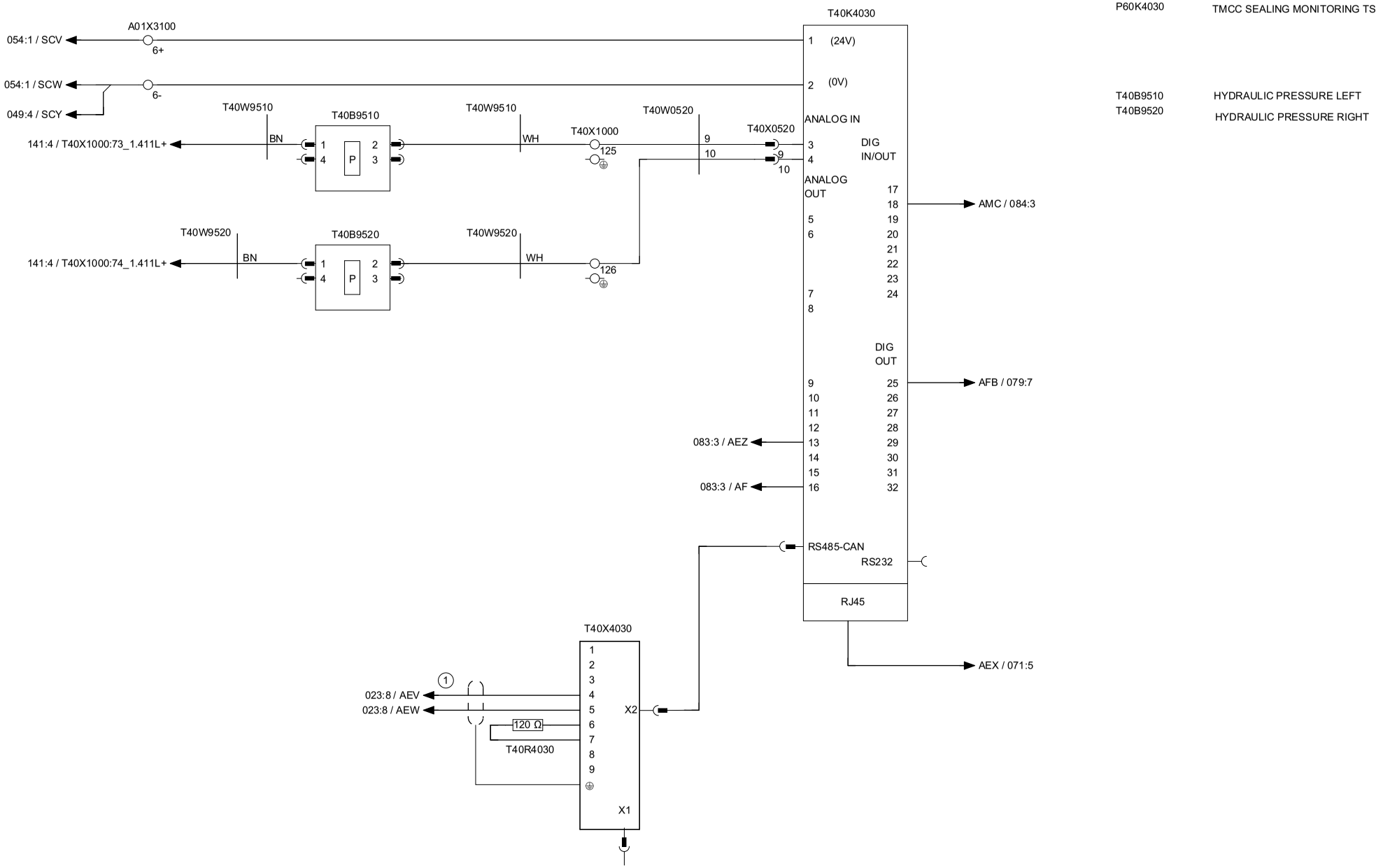

Tetra Pak®	Version Designer: RICO	Version Date: 01/10/2014	Machine: A3 CompactFlex 0300		
	ECM No: 687624	Denomination: CIRCUIT DIAGRAM	Page Type: TMCC SEALING MONITORING		
	Information Security Class: PUBLIC	Document No.: 3223337-0003	Doc. type: ELD	Version: AM	Page: 055

This drawing must not without the consent of Tetra Pak
be copied, transmitted or disclosed to any third party.

1	2	3	4	5	6	7	8	9	10

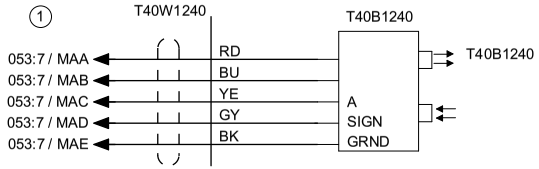

DESIGN CORRECTION
PHOTOCELL BAR CODE 3



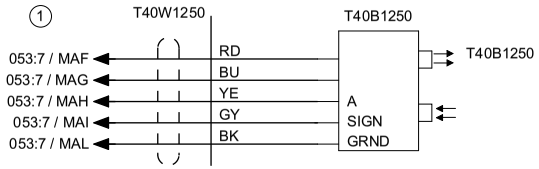

DESIGN CORRECTION
PHOTOCELL BAR CODE 4

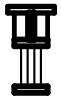

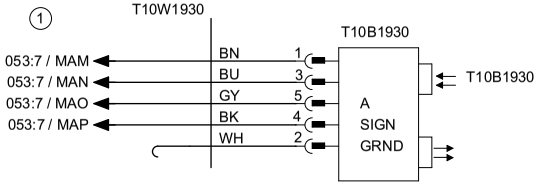

ASU BAR CODE 3

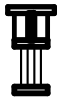

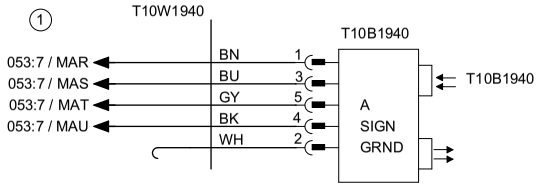

ASU BAR CODE 4



Tetra Pak®	Version Designer: RICO	Version Date: 01/10/2014	Machine: A3 CompactFlex 0300		
	ECM No: 687624	Denomination: CIRCUIT DIAGRAM	Page Type: BAR CODE SCANNER		
	Information Security Class: PUBLIC	Document No.: 3223337-0003	Doc. type: ELD	Version: AM	Page: 056

RELEASED

This drawing must not without the consent of Tetra Pak be copied, transmitted or disclosed to any third party.

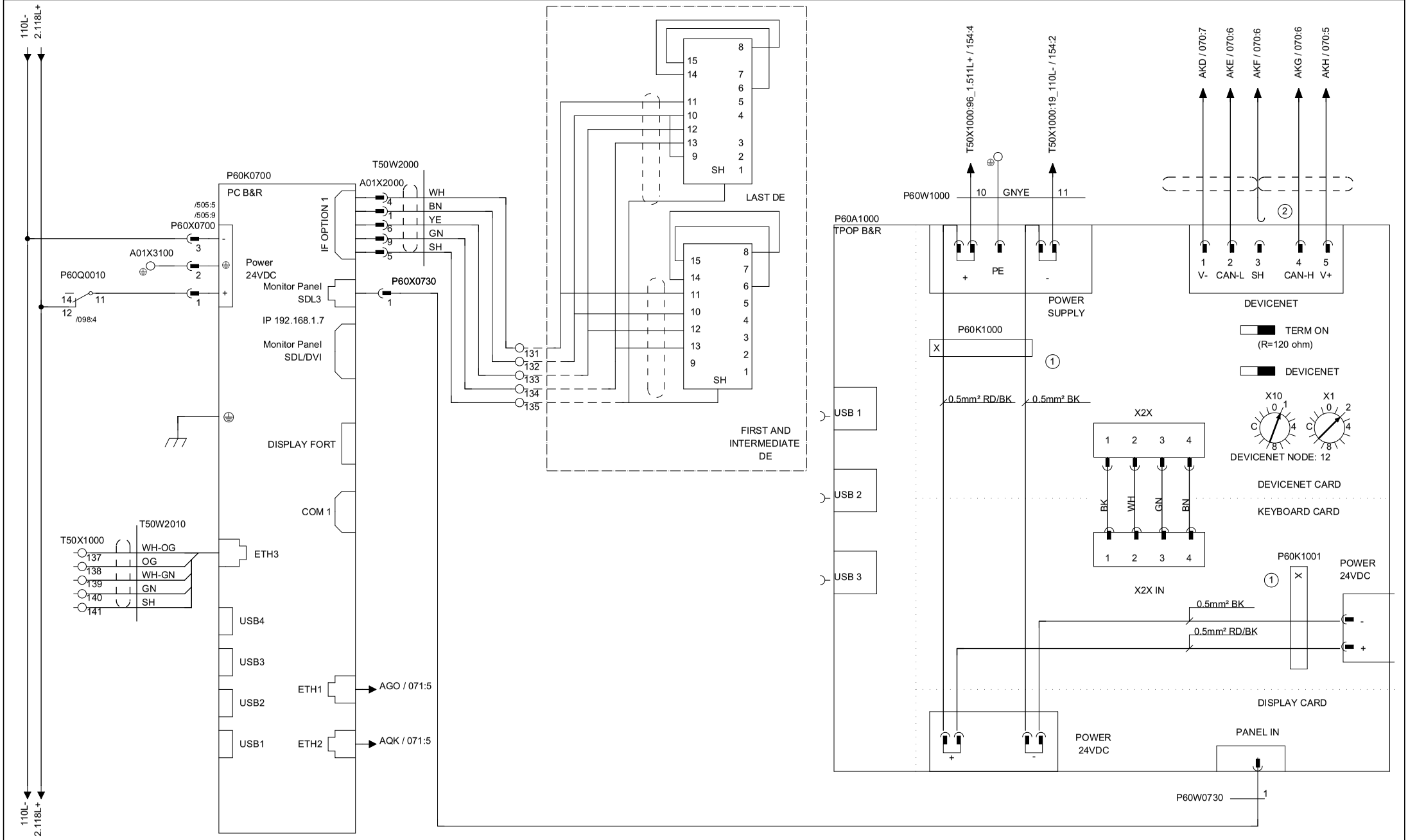

Tetra Pak®	Version Designer: RICO	Version Date: 01/10/2014	Machine: A3 CompactFlex 0300		
	ECM No: 687624	Denomination: CIRCUIT DIAGRAM	Page Type: PC B&R COMMUNICATION		
	Information Security Class: PUBLIC	Document No.: 3223337-0003	Doc. type: ELD	Version: AM	Page: 057

RELEASED

This drawing must not without the consent of Tetra Pak be copied, transmitted or disclosed to any third party.

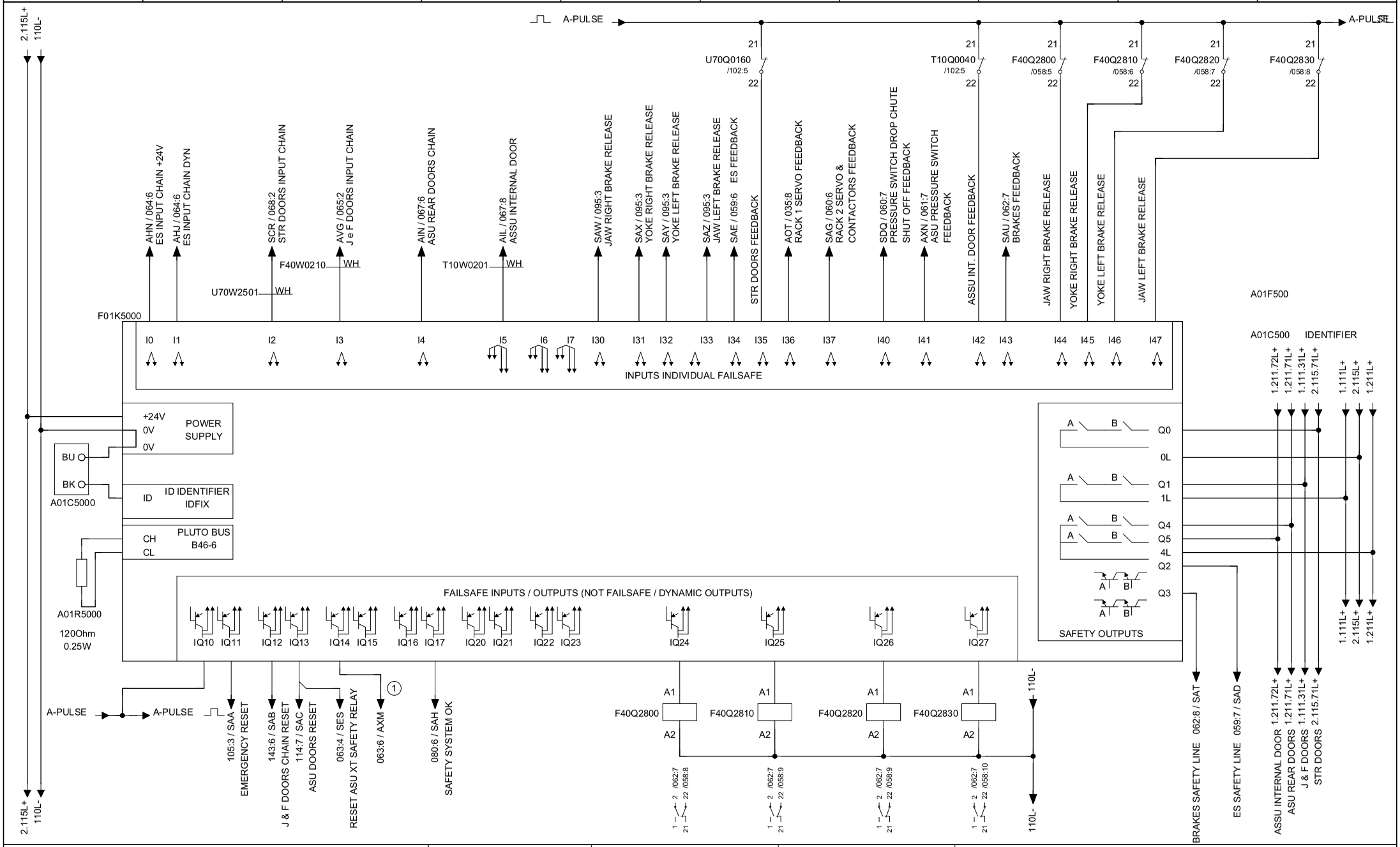

Tetra Pak®	Version Designer: RICO	Version Date: 01/10/2014	Machine: A3 CompactFlex 0300	
	ECM No: 687624	Denomination: CIRCUIT DIAGRAM	Page Type: SAFETY SYSTEM PLUTO B46	
	Information Security Class: PUBLIC	Document No.: 3223337-0003	Doc. type: ELD	Version: AM	Page: 058

RELEASED

This drawing must not without the consent of Tetra Pak be copied, transmitted or disclosed to any third party.

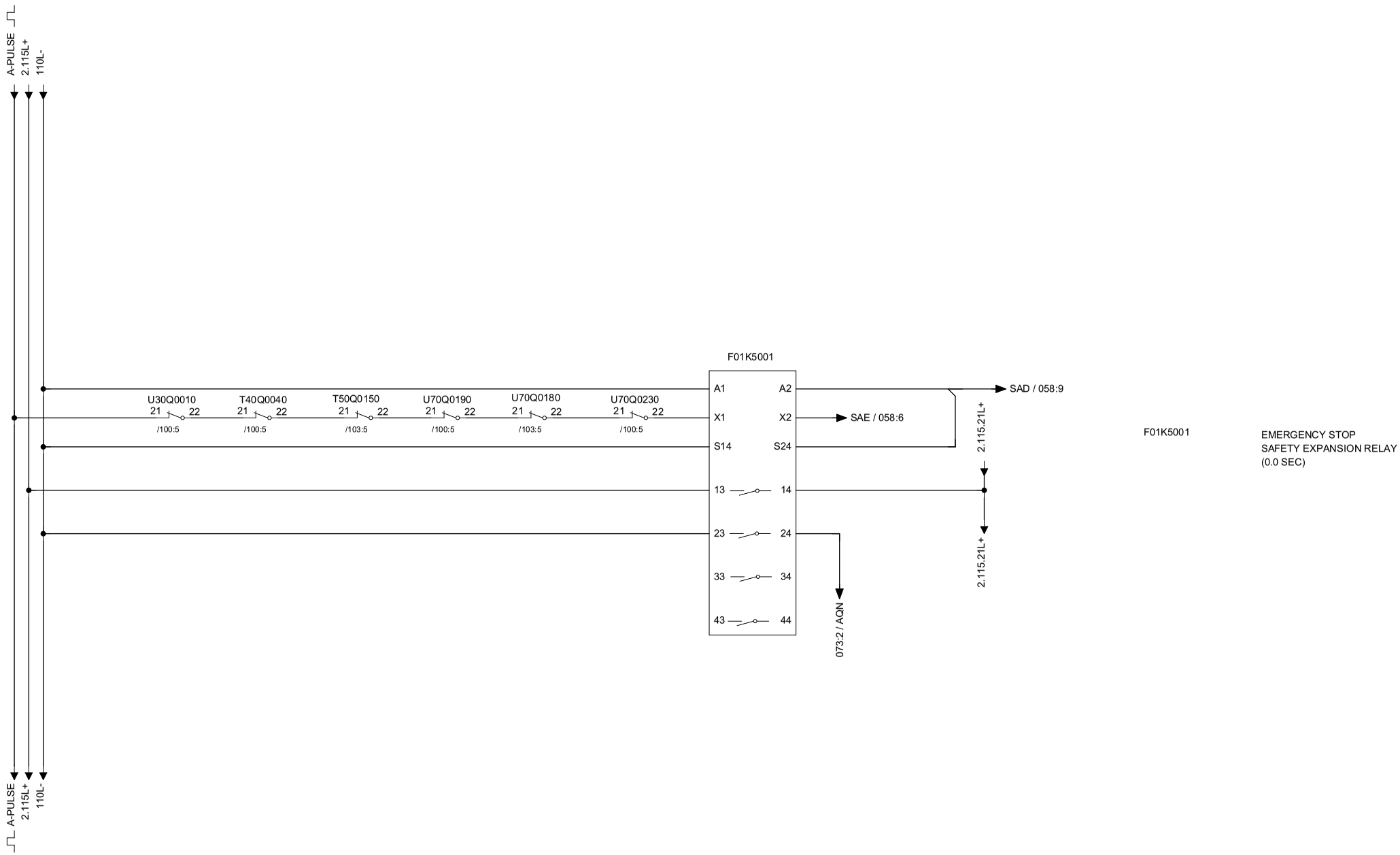

F01K5001

EMERGENCY STOP
SAFETY EXPANSION RELAY
(0.0 SEC)

Tetra Pak®	Version Designer: RICO	Version Date: 01/10/2014	Machine: A3 CompactFlex 0300	
	ECM No: 687624	Denomination: CIRCUIT DIAGRAM	Page Type: ES SAFETY EXPANSION RELAY	
	Information Security Class: PUBLIC	Document No.: 3223337-0003	Doc. type: ELD	Version: AM / Page: 059

RELEASED

This drawing must not without the consent of Tetra Pak be copied, transmitted or disclosed to any third party.

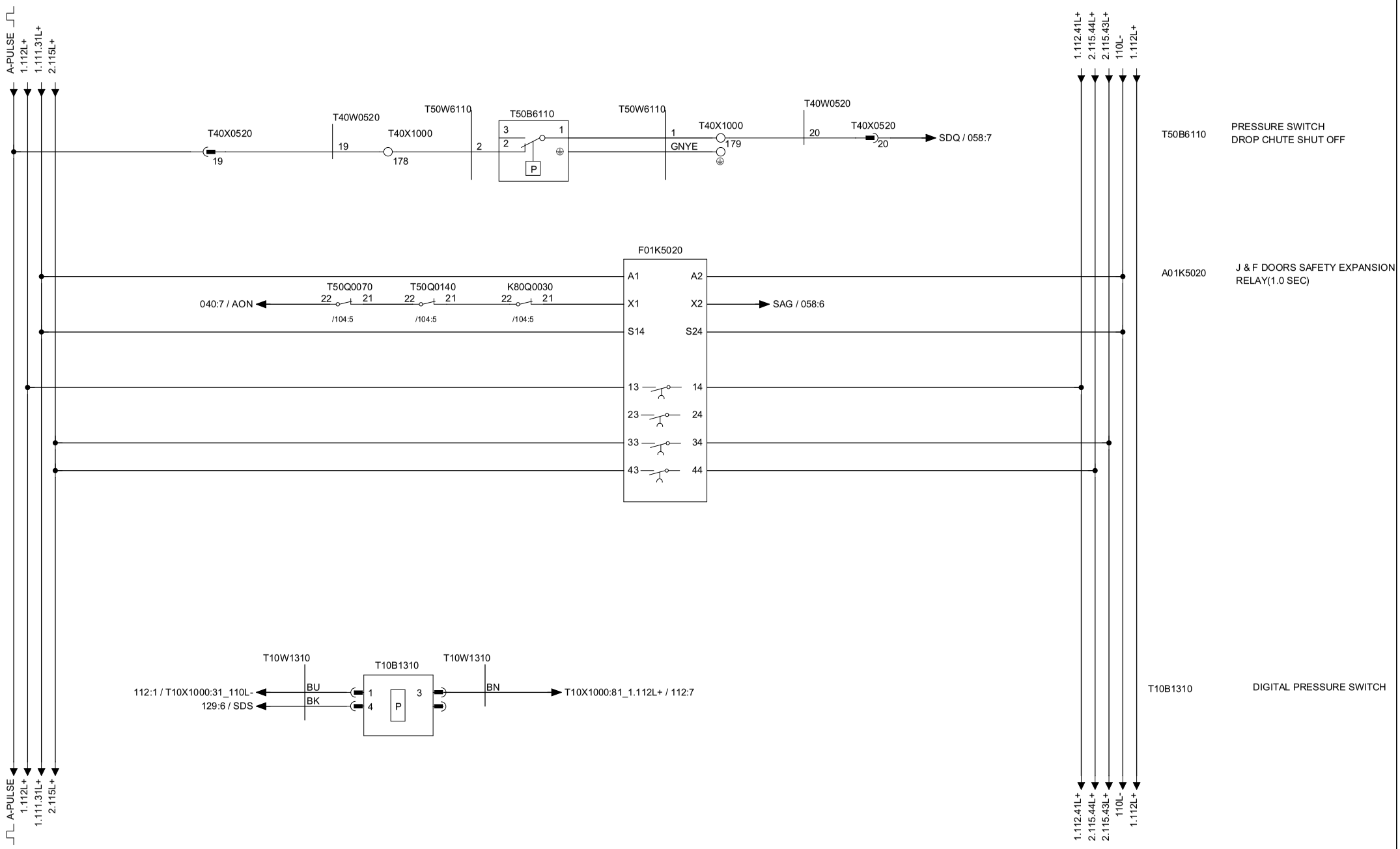

Tetra Pak®	Version Designer: RICO	Version Date: 01/10/2014	Machine: A3 CompactFlex 0300	
	ECM No: 687624	Denomination: CIRCUIT DIAGRAM	Page Type: DELAYED DISCONNECTION MOTORS	
	Information Security Class: PUBLIC	Document No.: 3223337-0003	Doc. type: ELD	Version: AM / Page: 060

RELEASED

This drawing must not without the consent of Tetra Pak
be copied, transmitted or disclosed to any third party.

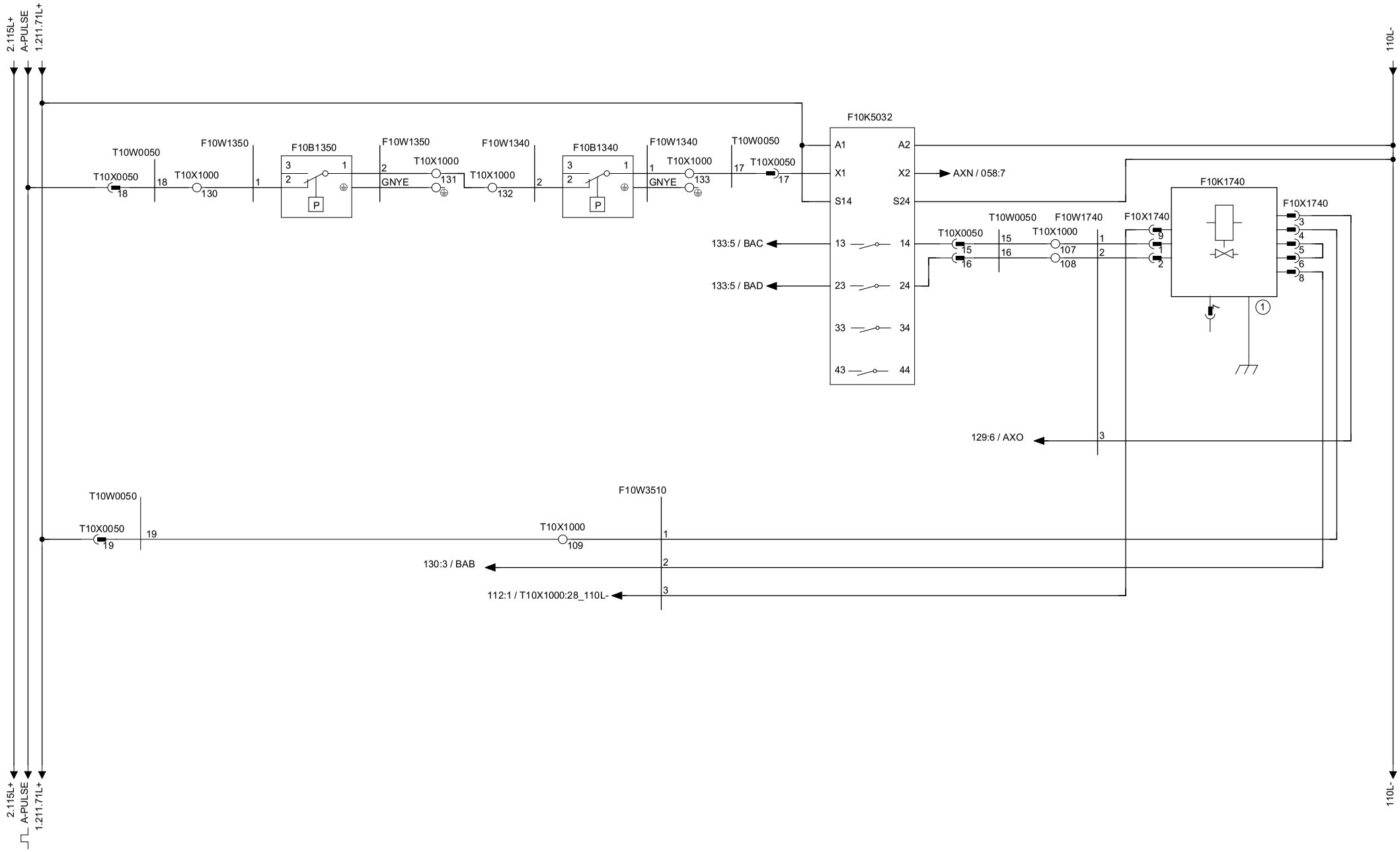

Tetra Pak®	Version Designer: RICO	Version Date: 01/10/2014	Machine: A3 CompactFlex 0300	
	ECM No: 687624	Denomination: CIRCUIT DIAGRAM	Page Type: BRAKES DISCONNECTION	
	Information Security Class: PUBLIC	Document No.: 3223337-0003	Doc. type: ELD	Version: AM	Page: 061

RELEASED

This drawing must not without the consent of Tetra Pak
be copied, transmitted or disclosed to any third party.

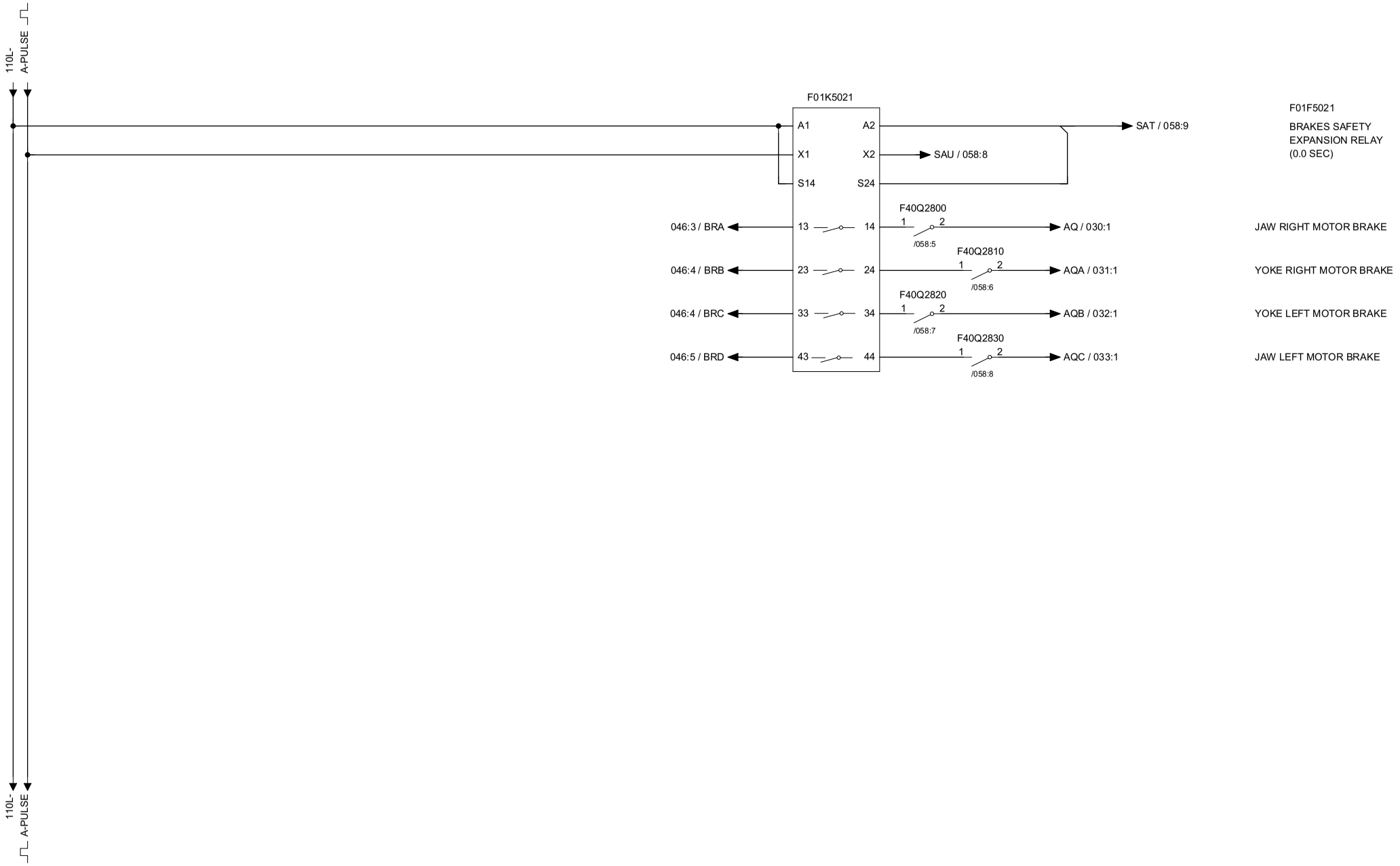

Tetra Pak®	Version Designer: RICO	Version Date: 01/10/2014	Machine: A3 CompactFlex 0300	
	ECM No: 687624	Denomination: CIRCUIT DIAGRAM	Page Type: BRAKES SAFETY EXPANSION RELAY	
	Information Security Class: PUBLIC	Document No.: 3223337-0003	Doc. type: ELD	Version: AM / Page: 062

RELEASED

This drawing must not without the consent of Tetra Pak
be copied, transmitted or disclosed to any third party.

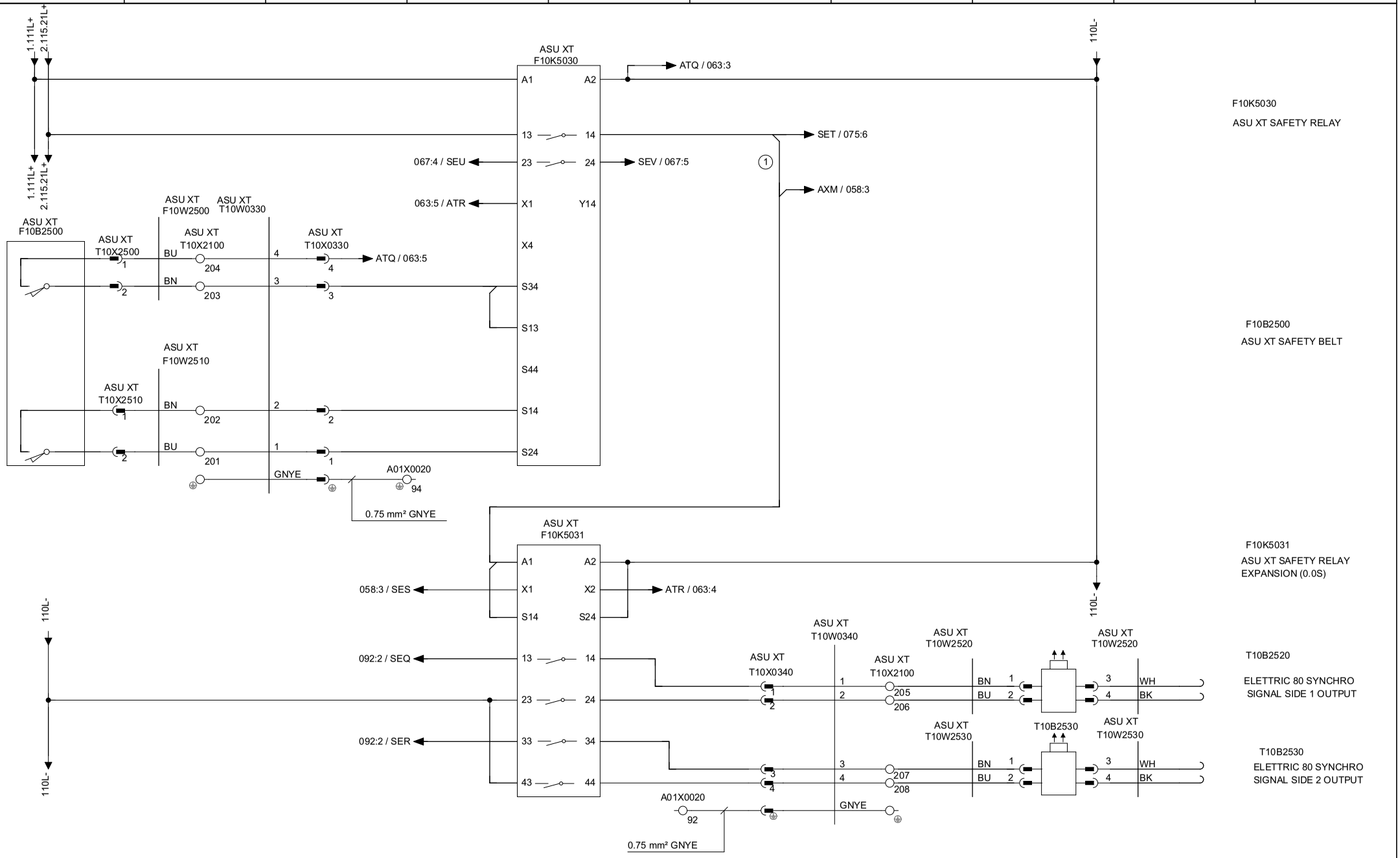

Tetra Pak®	Version Designer: RICO	Version Date: 01/10/2014	Machine: A3 CompactFlex 0300	
	ECM No: 687624	Denomination: CIRCUIT DIAGRAM	Page Type: ASU XT, SAFETY RELAY	
	Information Security Class: PUBLIC	Document No.: 3223337-0003	Doc. type: ELD	Version: AM / Page: 063

RELEASED

This drawing must not without the consent of Tetra Pak be copied, transmitted or disclosed to any third party.

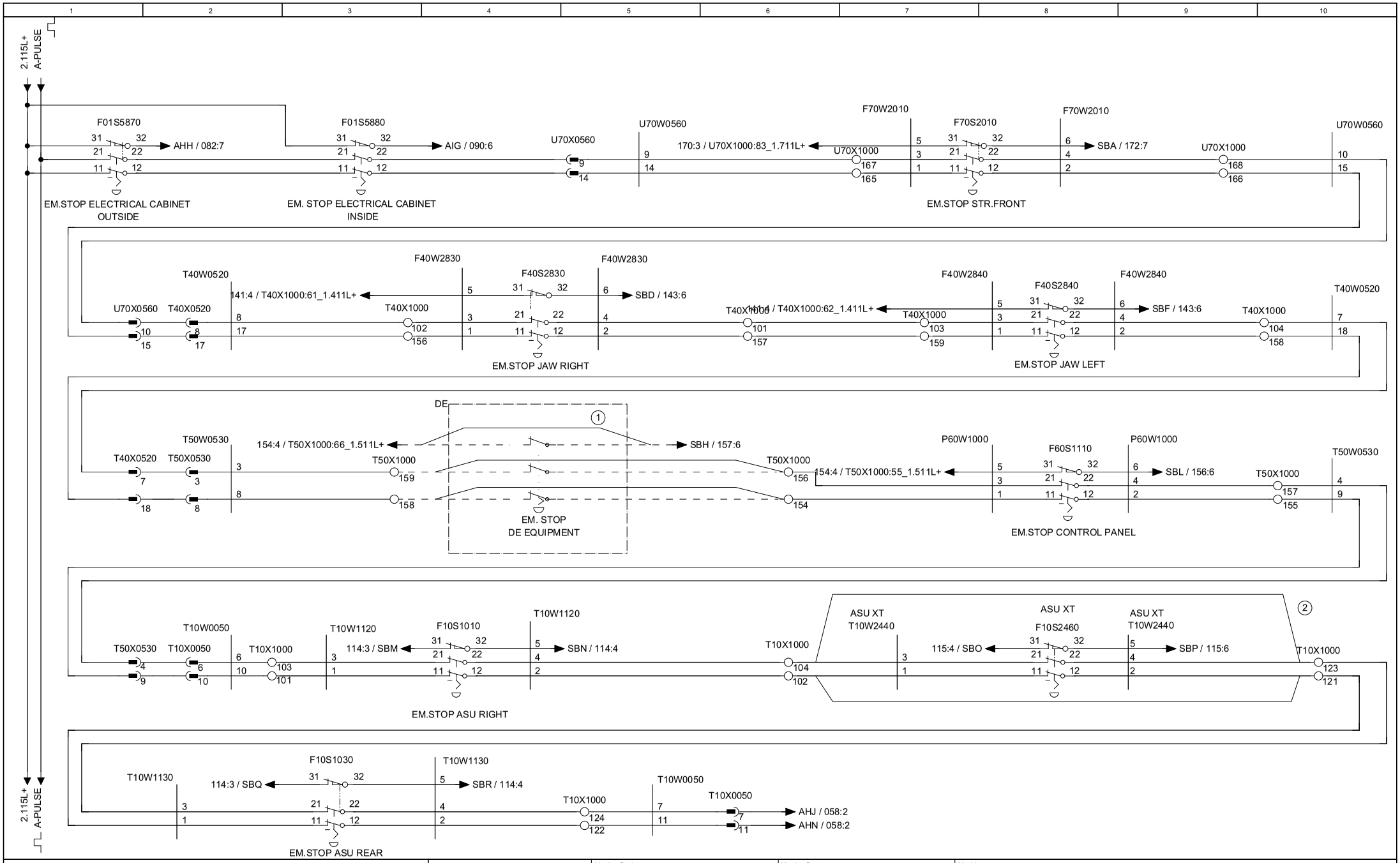

Tetra Pak®	Version Designer: RICO	Version Date: 01/10/2014	Machine: A3 CompactFlex 0300	
	ECM No: 687624	Denomination: CIRCUIT DIAGRAM	Page Type: EMERGENCY STOP SAFETY	
	Information Security Class: PUBLIC	Document No.: 3223337-0003	Doc. type: ELD	Version: AM	Page: 064

RELEASED

This drawing must not without the consent of Tetra Pak be copied, transmitted or disclosed to any third party.

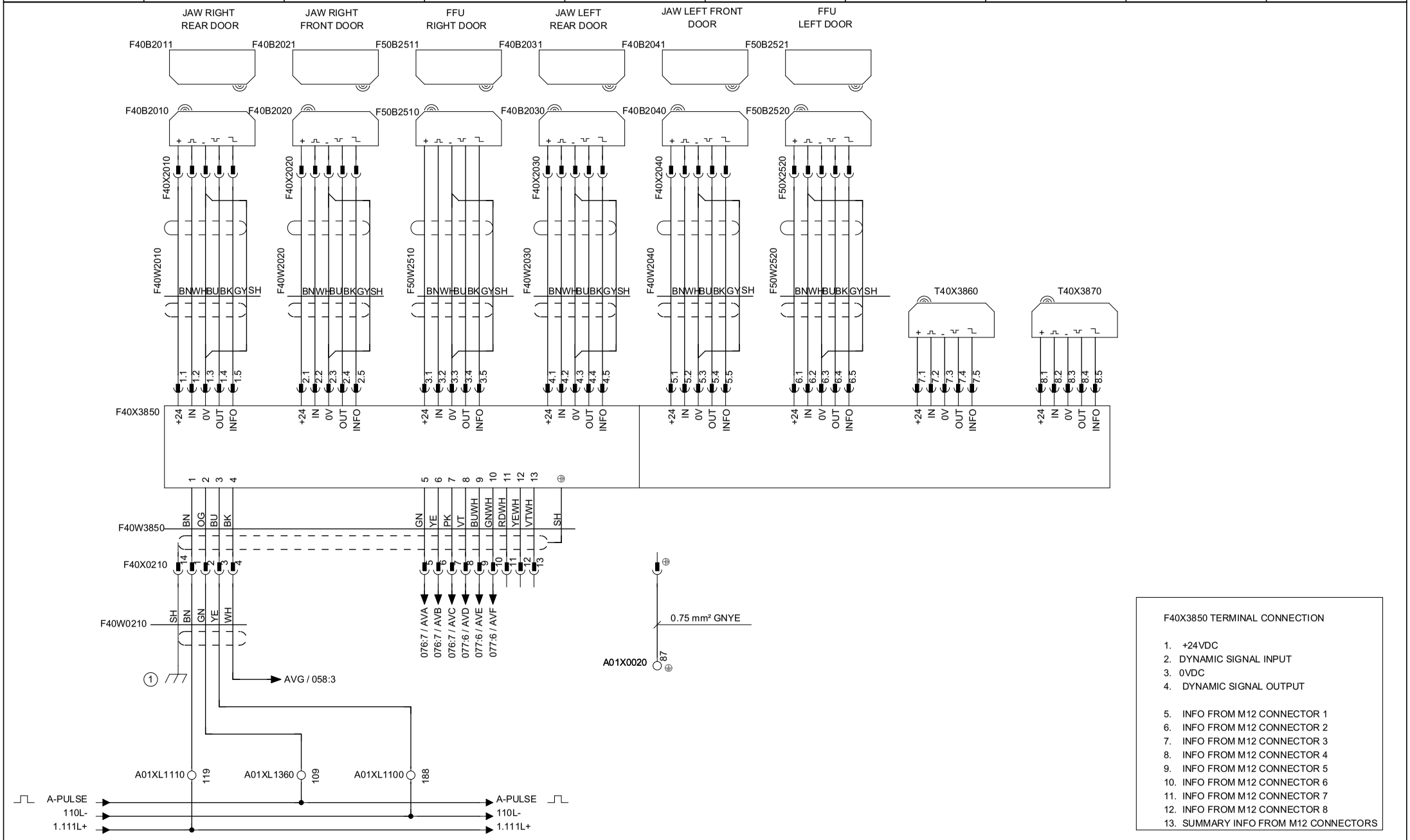

F40X3850 TERMINAL CONNECTION

1. +24VDC
2. DYNAMIC SIGNAL INPUT
3. 0VDC
4. DYNAMIC SIGNAL OUTPUT

5. INFO FROM M12 CONNECTOR 1
6. INFO FROM M12 CONNECTOR 2
7. INFO FROM M12 CONNECTOR 3
8. INFO FROM M12 CONNECTOR 4
9. INFO FROM M12 CONNECTOR 5
10. INFO FROM M12 CONNECTOR 6
11. INFO FROM M12 CONNECTOR 7
12. INFO FROM M12 CONNECTOR 8
13. SUMMARY INFO FROM M12 CONNECTORS

Tetra Pak®	Version Designer: RICO	Version Date: 01/10/2014	Machine: A3 CompactFlex 0300	
	ECM No: 687624	Denomination: CIRCUIT DIAGRAM	Page Type: JAW AND FFU DOORS GUARD SAFETY	
	Information Security Class: PUBLIC	Document No.: 3223337-0003	Doc. type: ELD	Version: AM	Page: 065

This drawing must not without the consent of Tetra Pak
be copied, transmitted or disclosed to any third party.

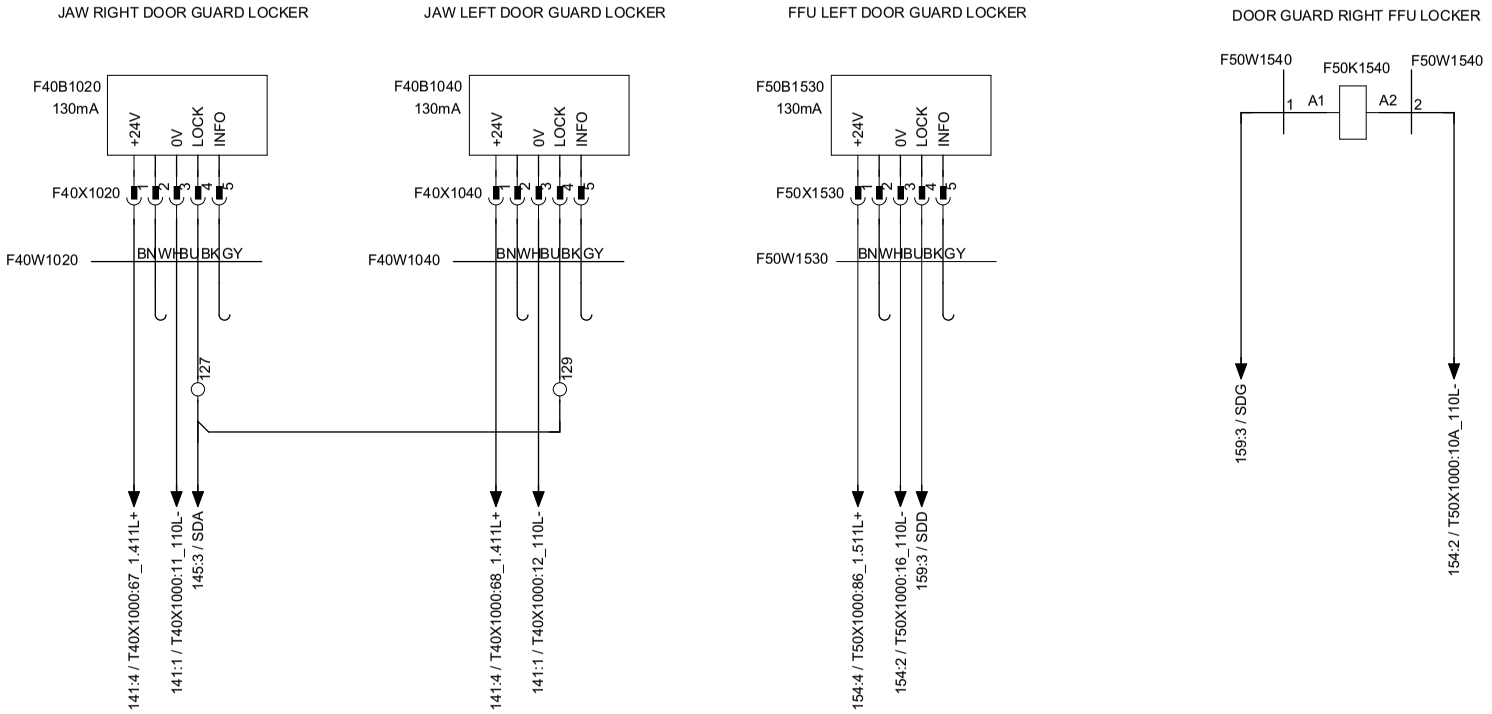

Tetra Pak®	Version Designer: RICO	Version Date: 01/10/2014	Machine: A3 CompactFlex 0300		
	ECM No: 687624	Denomination: CIRCUIT DIAGRAM	Page Type: JAW AND FFU DOORS GUARD LOCKER		
	Information Security Class: PUBLIC	Document No.: 3223337-0003	Doc. type: ELD	Version: AM	Page: 066

RELEASED

This drawing must not without the consent of Tetra Pak be copied, transmitted or disclosed to any third party.

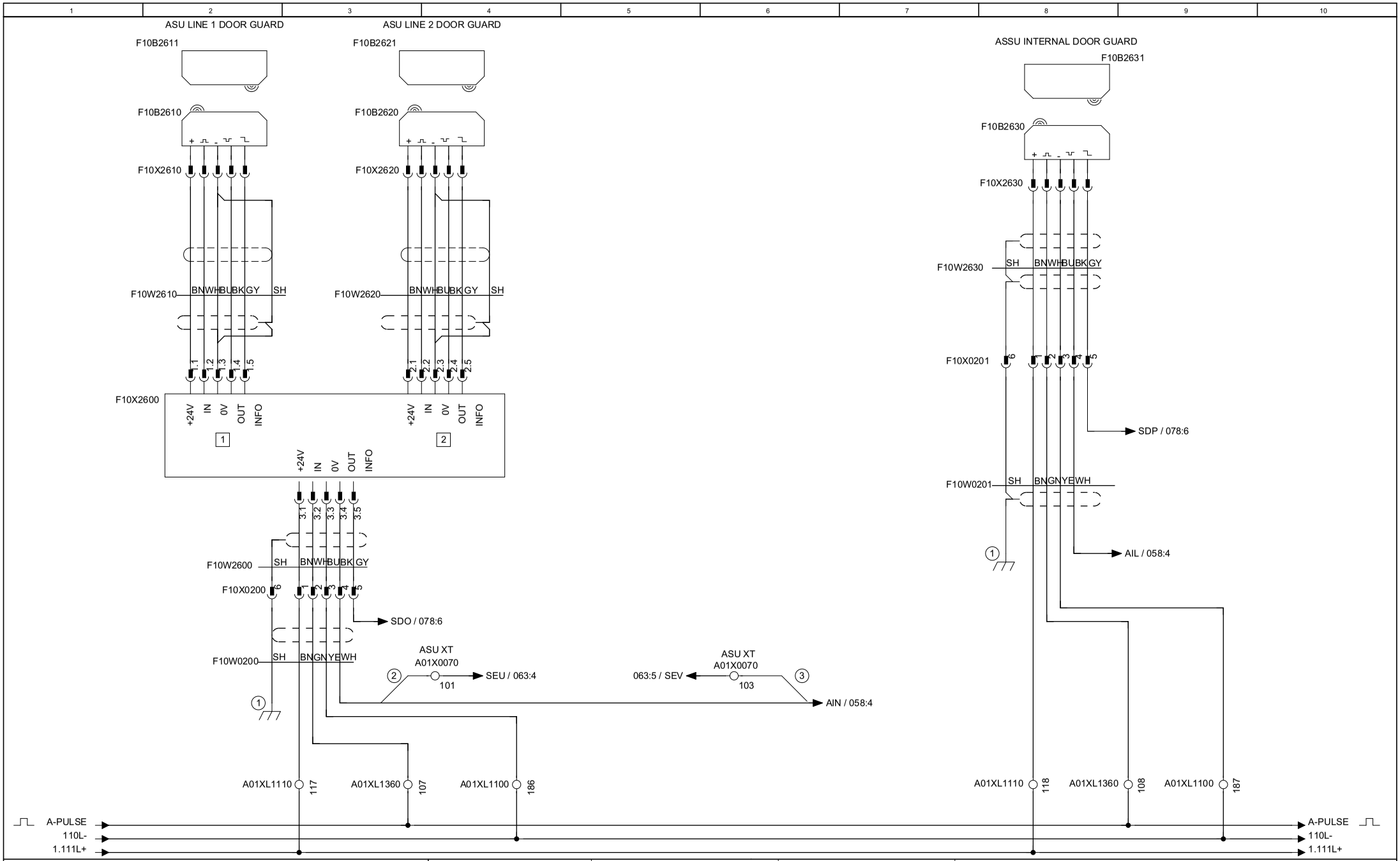

Tetra Pak®	Version Designer RICO	Version Date 01/10/2014	Machine A3 CompactFlex 0300			
	ECM No 687624	Denomination CIRCUIT DIAGRAM	Page Type ASU DOORS GUARD SAFETY			
	Information Security Class PUBLIC	Document No. 3223337-0003	Doc. type ELD	Version AM	Page 067	

This drawing must not without the consent of Tetra Pak
be copied, transmitted or disclosed to any third party.

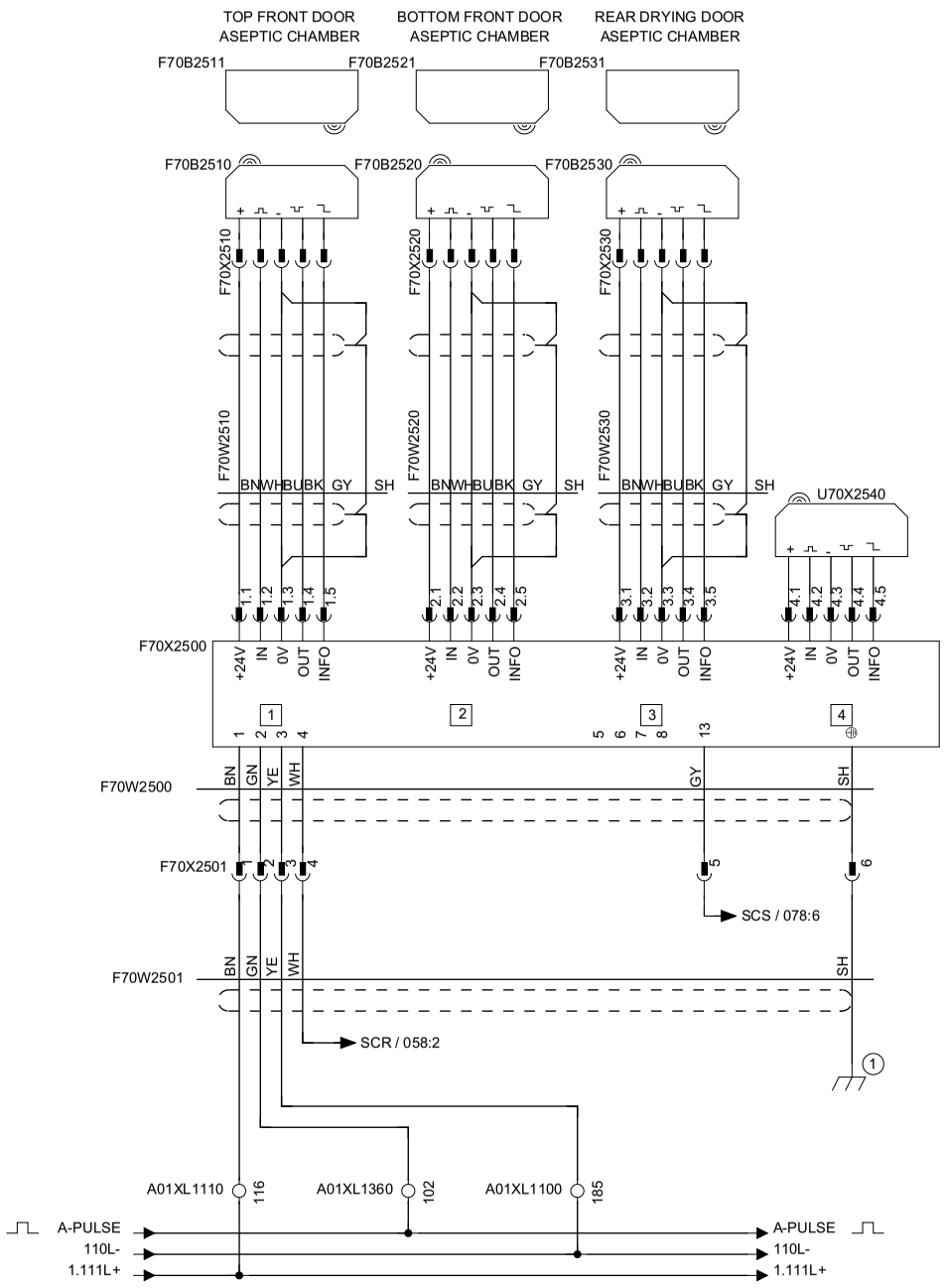

F70X2500 TERMINAL CONNECTION:

1. +24VDC
2. DYNAMIC SIGNAL INPUT
3. 0VDC
4. DYNAMIC SIGNAL OUTPUT
5. INFO FROM M12 CONNECTOR 1
6. INFO FROM M12 CONNECTOR 2
7. INFO FROM M12 CONNECTOR 3
8. INFO FROM M12 CONNECTOR 4
13. SUMMARY INFO FROM M12 CONNECTORS

Tetra Pak®	Version Designer: RICO	Version Date: 01/10/2014	Machine: A3 CompactFlex 0300	
	ECM No: 687624	Denomination: CIRCUIT DIAGRAM	Page Type: ASEPTIC CHAMBER DOORS GUARD	
	Information Security Class: PUBLIC	Document No.: 3223337-0003	Doc. type: ELD	Version: AM	Page: 068

RELEASED

This drawing must not without the consent of Tetra Pak
be copied, transmitted or disclosed to any third party.

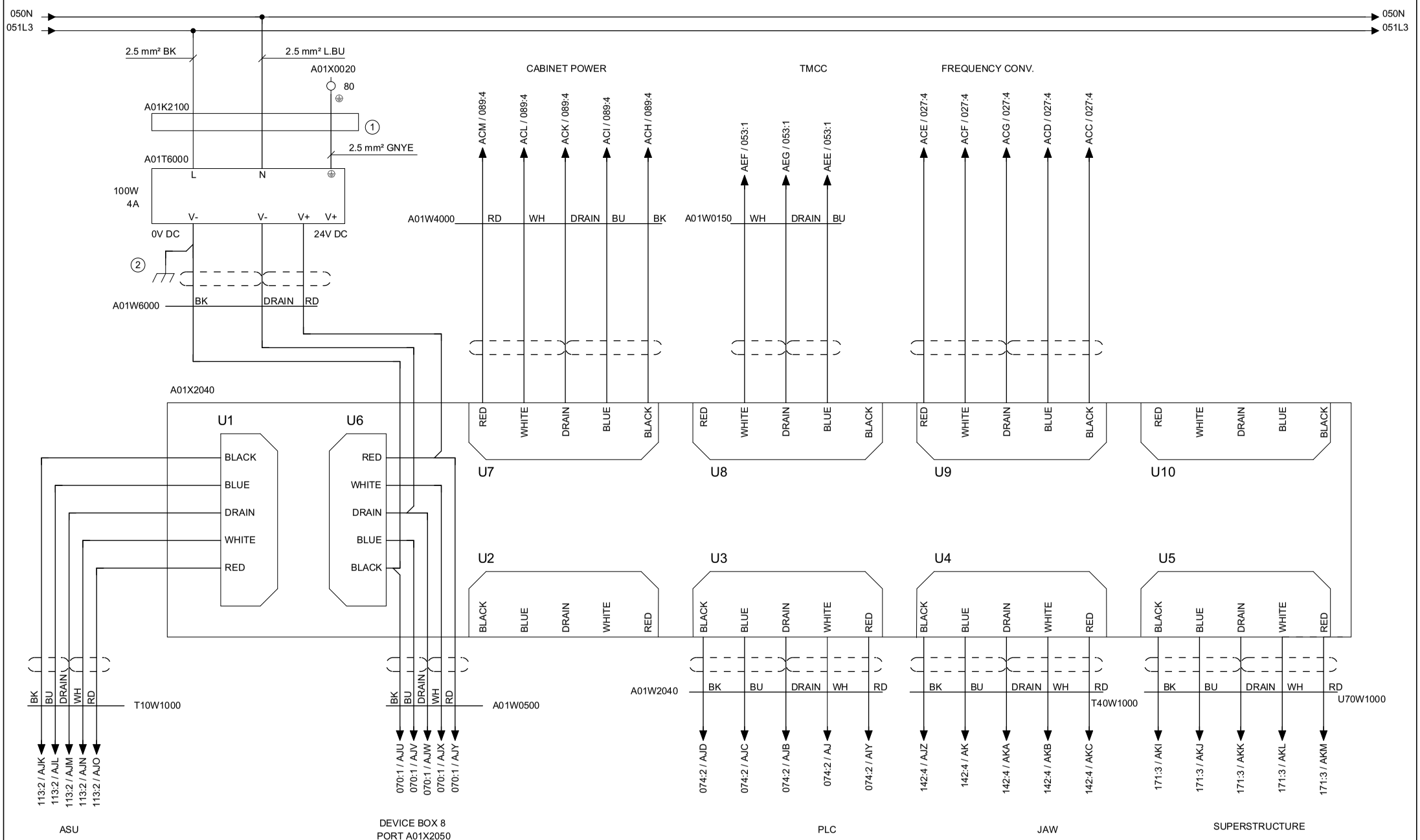

Tetra Pak®	Version Designer: RICO	Version Date: 01/10/2014	Machine: A3 CompactFlex 0300	
	ECM No: 687624	Denomination: CIRCUIT DIAGRAM	Page Type: POWER SUPPLY DEVICENET	
	Information Security Class: PUBLIC	Document No.: 3223337-0003	Doc. type: ELD	Version: AM	Page: 069

This drawing must not without the consent of Tetra Pak
be copied, transmitted or disclosed to any third party.

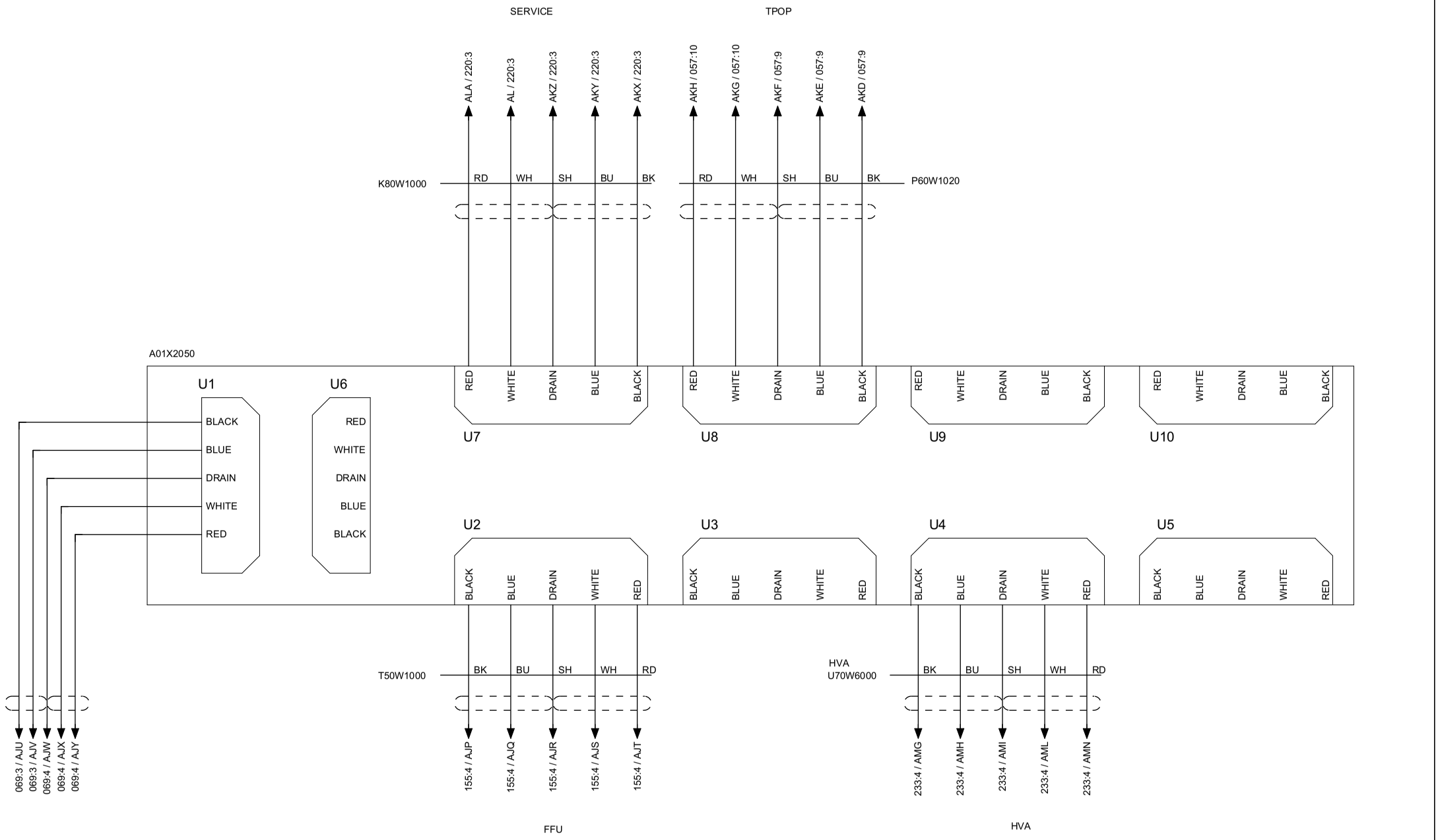

Tetra Pak®	Version Designer: RICO	Version Date: 01/10/2014	Machine: A3 CompactFlex 0300	
	ECM No: 687624	Denomination: CIRCUIT DIAGRAM	Page Type: DEVICE BOX 8 PORT	
	Information Security Class: PUBLIC	Document No.: 3223337-0003	Doc. type: ELD	Version: AM / Page: 070

This drawing must not without the consent of Tetra Pak be copied, transmitted or disclosed to any third party.

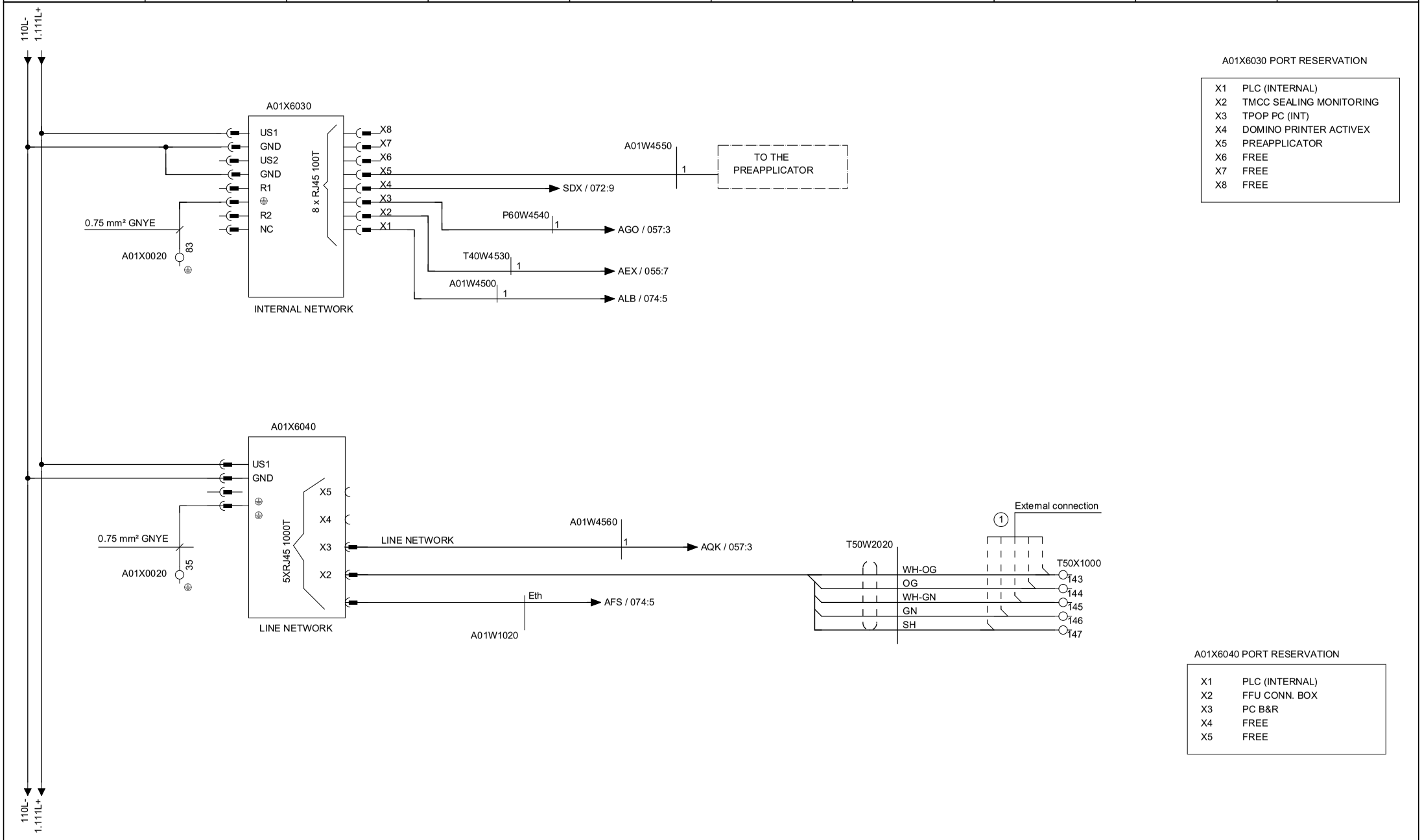

A01X6030 PORT RESERVATION

X1	PLC (INTERNAL)
X2	TMCC SEALING MONITORING
X3	TPOP PC (INT)
X4	DOMINO PRINTER ACTIVEX
X5	PREAPPLICATOR
X6	FREE
X7	FREE
X8	FREE

A01X6040 PORT RESERVATION

X1	PLC (INTERNAL)
X2	FFU CONN. BOX
X3	PC B&R
X4	FREE
X5	FREE

Tetra Pak®	Version Designer: RICO	Version Date: 01/10/2014	Machine: A3 CompactFlex 0300
ECM No: 687624	Denomination: CIRCUIT DIAGRAM	Page Type: ETHERNET SWITCH	
Information Security Class: PUBLIC	Document No.: 3223337-0003	Doc. type: ELD	Version: AM / Page: 071

RELEASED

This drawing must not without the consent of Tetra Pak
be copied, transmitted or disclosed to any third party.

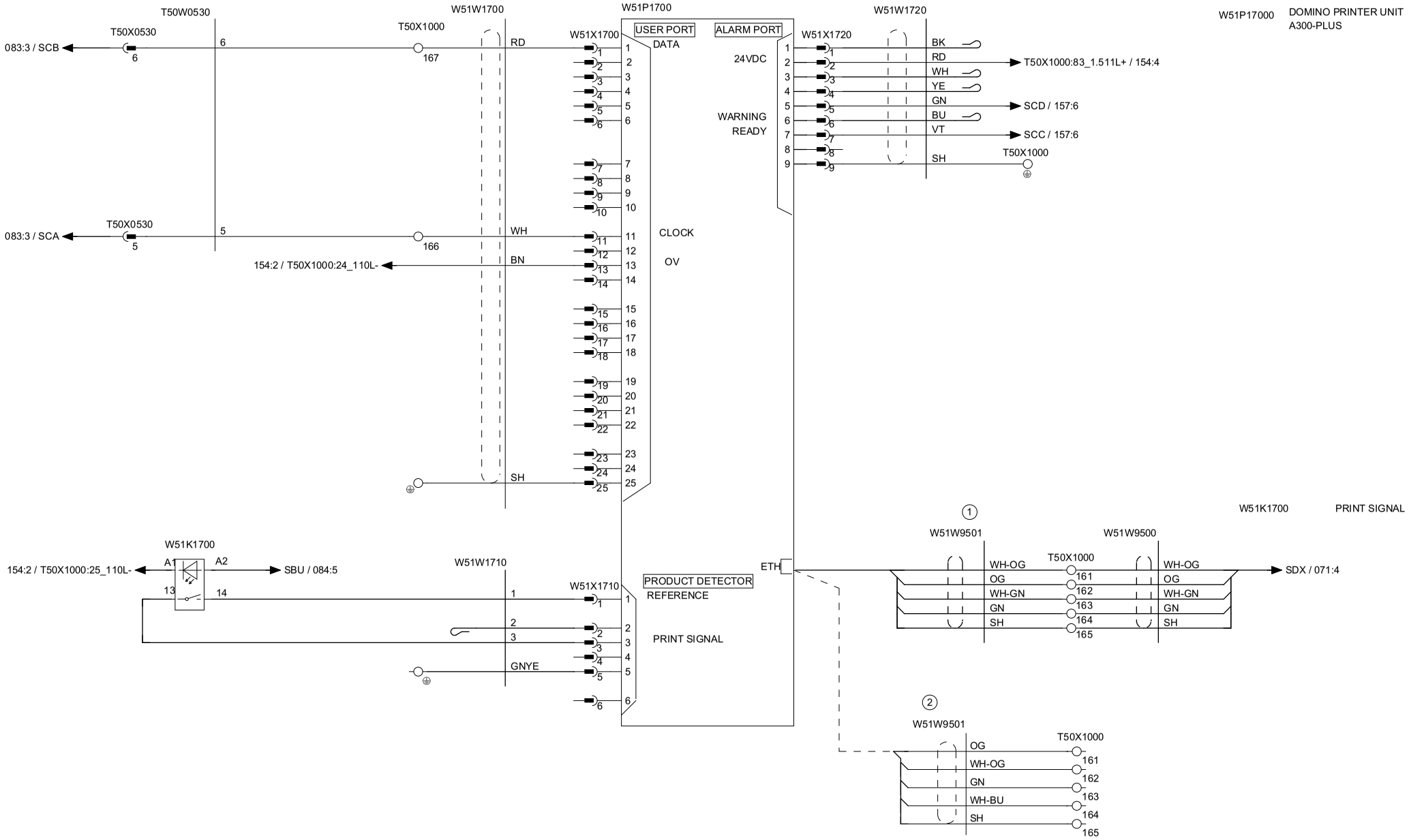

Tetra Pak®	Version Designer RICO	Version Date 01/10/2014	Machine A3 CompactFlex 0300				
	ECM No 687624	Denomination CIRCUIT DIAGRAM	Page Type PRINTER				
	Information Security Class PUBLIC	Document No. 3223337-0003	Doc. type ELD	Version AM	Page 072		

RELEASED

This drawing must not without the consent of Tetra Pak
be copied, transmitted or disclosed to any third party.



Tetra Pak®	Version Designer: RICO	Version Date: 01/10/2014	Machine: A3 CompactFlex 0300				
	ECM No: 687624	Denomination: CIRCUIT DIAGRAM	Page Type: PULL TAB				
	Information Security Class: PUBLIC	Document No.: 3223337-0003	Doc. type: ELD	Version: AM	Page: 073		

RELEASED

This drawing must not without the consent of Tetra Pak be copied, transmitted or disclosed to any third party.

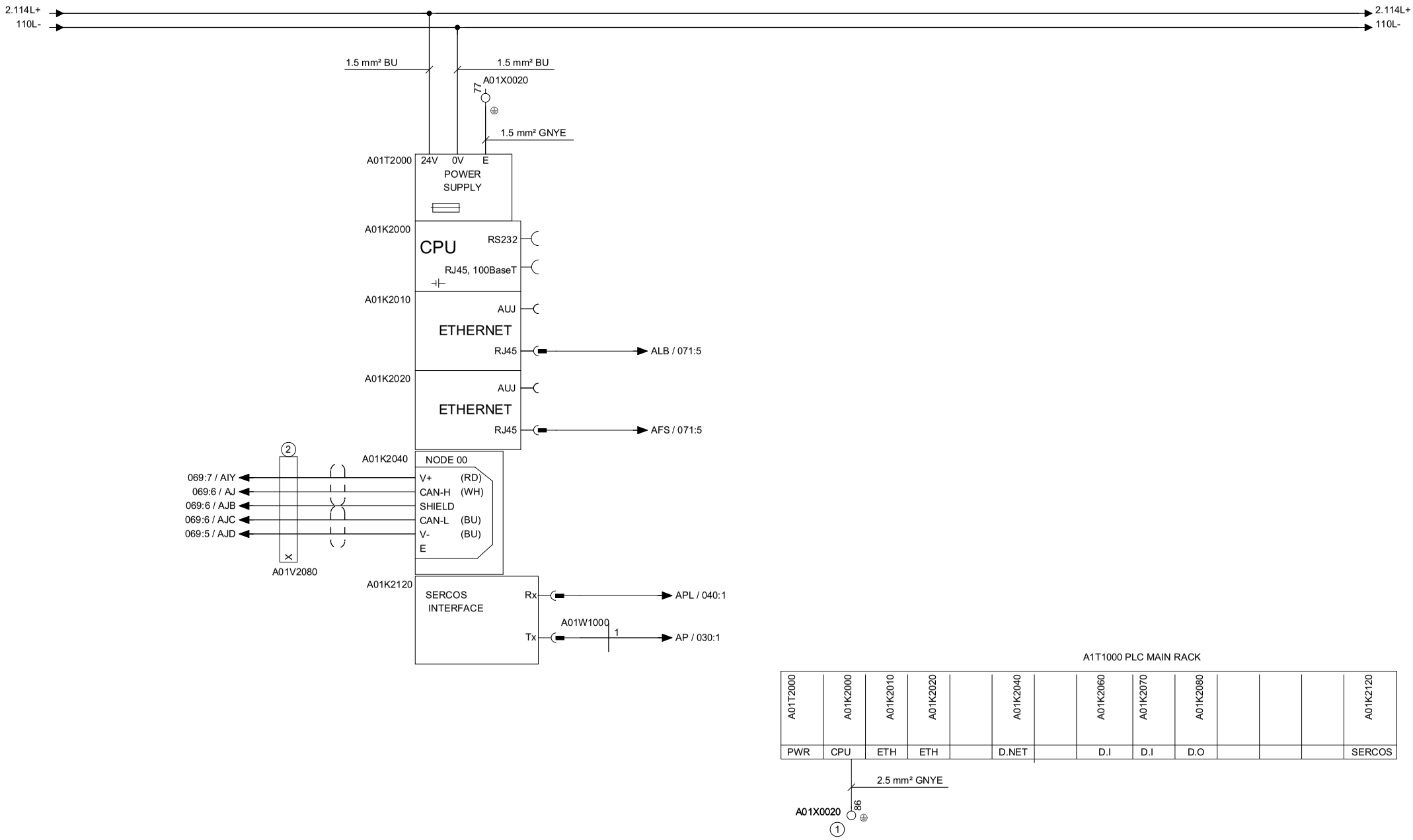

Tetra Pak®	Version Designer: RICO	Version Date: 01/10/2014	Machine: A3 CompactFlex 0300	
	ECM No: 687624	Denomination: CIRCUIT DIAGRAM	Page Type: POWER SUPPLY PLC	
	Information Security Class: PUBLIC	Document No.: 3223337-0003	Doc. type: ELD	Version: AM	Page: 074

RELEASED

This drawing must not without the consent of Tetra Pak
be copied, transmitted or disclosed to any third party.

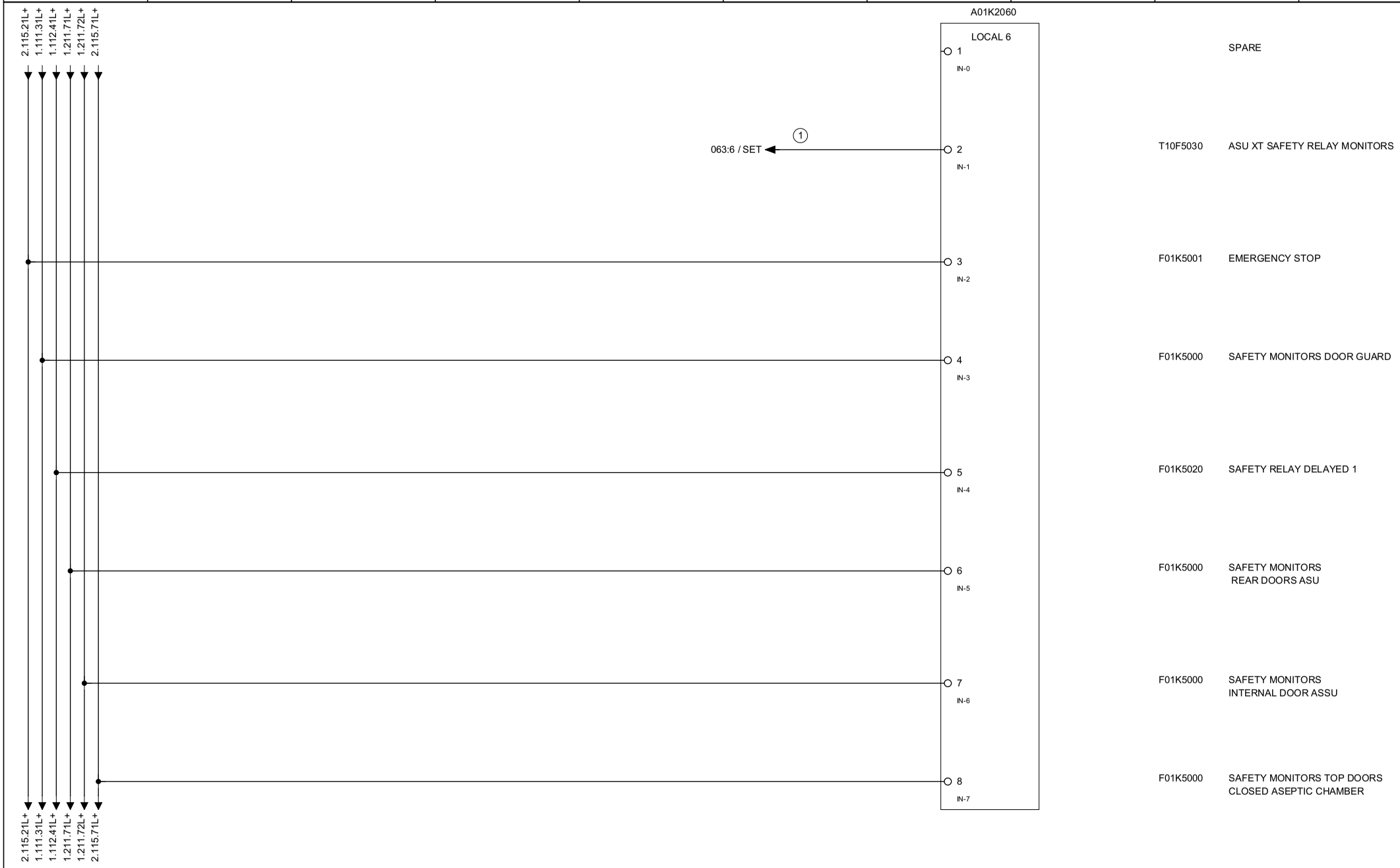

Tetra Pak®	Version Designer: RICO	Version Date: 01/10/2014	Machine: A3 CompactFlex 0300	
	ECM No: 687624	Denomination: CIRCUIT DIAGRAM	Page Type: PLC LOCAL DIGITAL INPUT	
	Information Security Class: PUBLIC	Document No.: 3223337-0003	Doc. type: ELD	Version: AM	Page: 075

RELEASED

This drawing must not without the consent of Tetra Pak be copied, transmitted or disclosed to any third party.

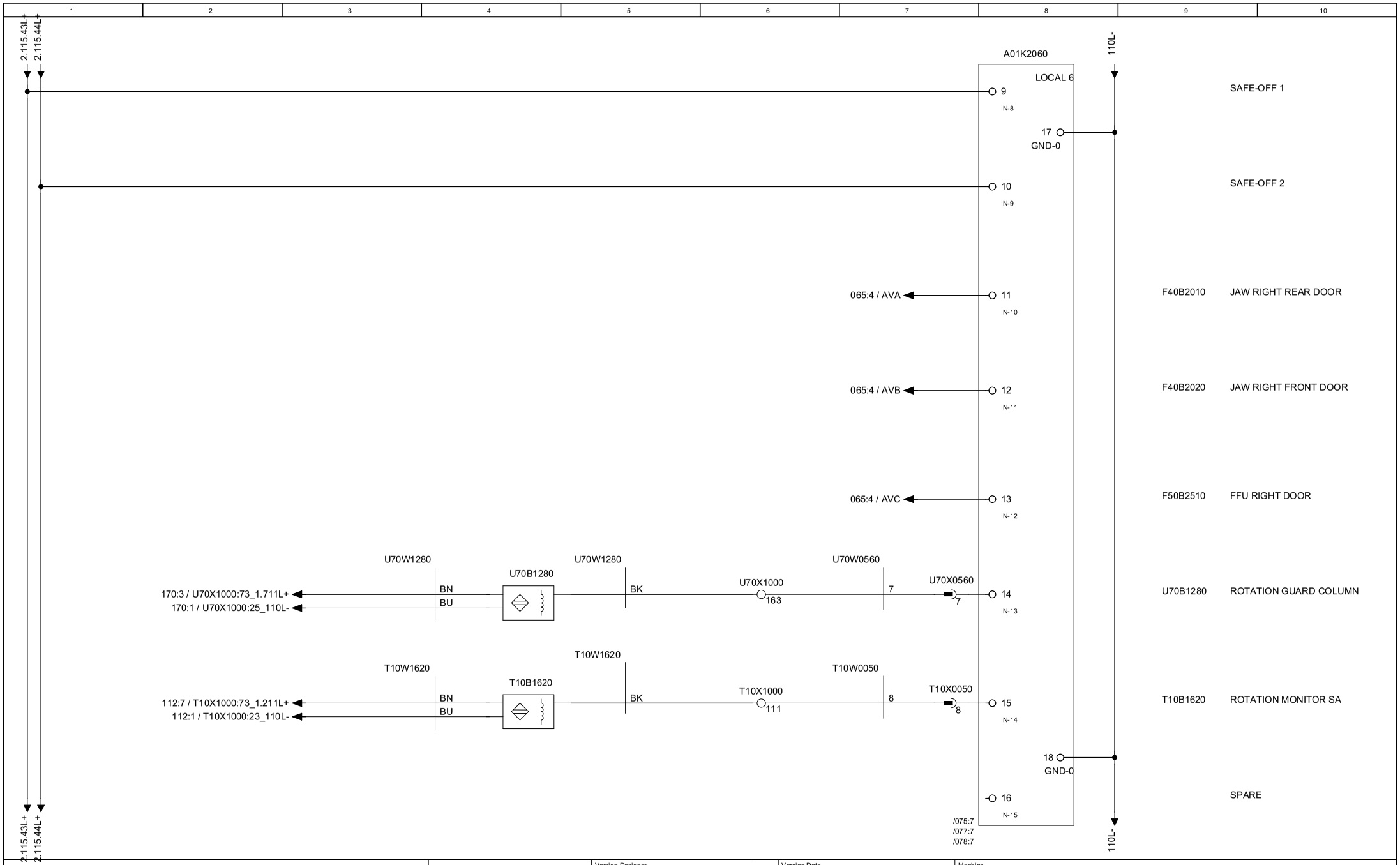

Tetra Pak®	Version Designer: RICO	Version Date: 01/10/2014	Machine: A3 CompactFlex 0300	
	ECM No: 687624	Denomination: CIRCUIT DIAGRAM	Page Type: PLC LOCAL DIGITAL INPUT	
	Information Security Class: PUBLIC	Document No.: 3223337-0003	Doc. type: ELD	Version: AM	Page: 076

This drawing must not without the consent of Tetra Pak be copied, transmitted or disclosed to any third party.

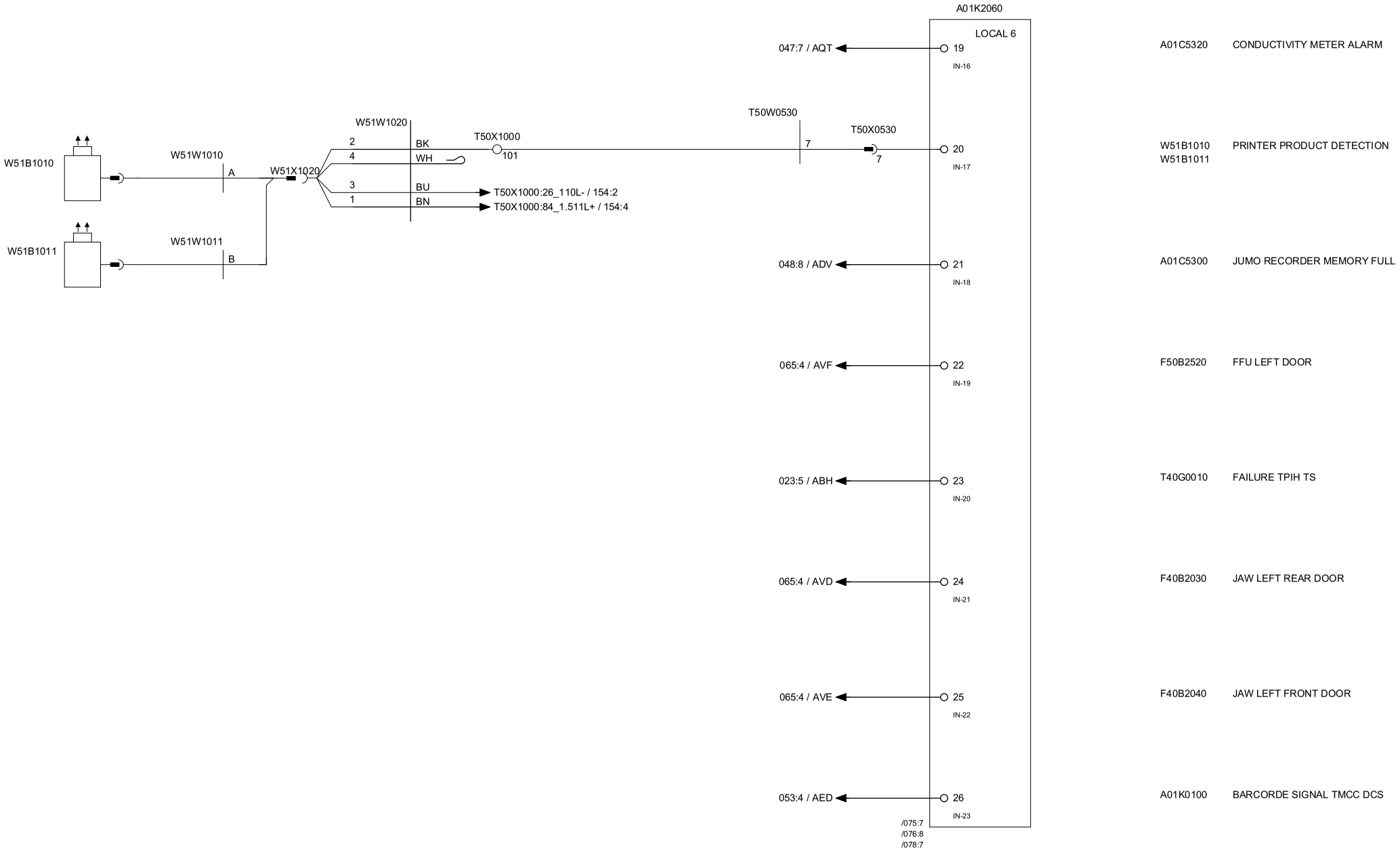

Tetra Pak®	Version Designer: RICO	Version Date: 01/10/2014	Machine: A3 CompactFlex 0300	
	ECM No: 687624	Denomination: CIRCUIT DIAGRAM	Page Type: PLC LOCAL DIGITAL INPUT	
	Information Security Class: PUBLIC	Document No.: 3223337-0003	Doc. type: ELD	Version: AM	Page: 077

RELEASED

This drawing must not without the consent of Tetra Pak
be copied, transmitted or disclosed to any third party.

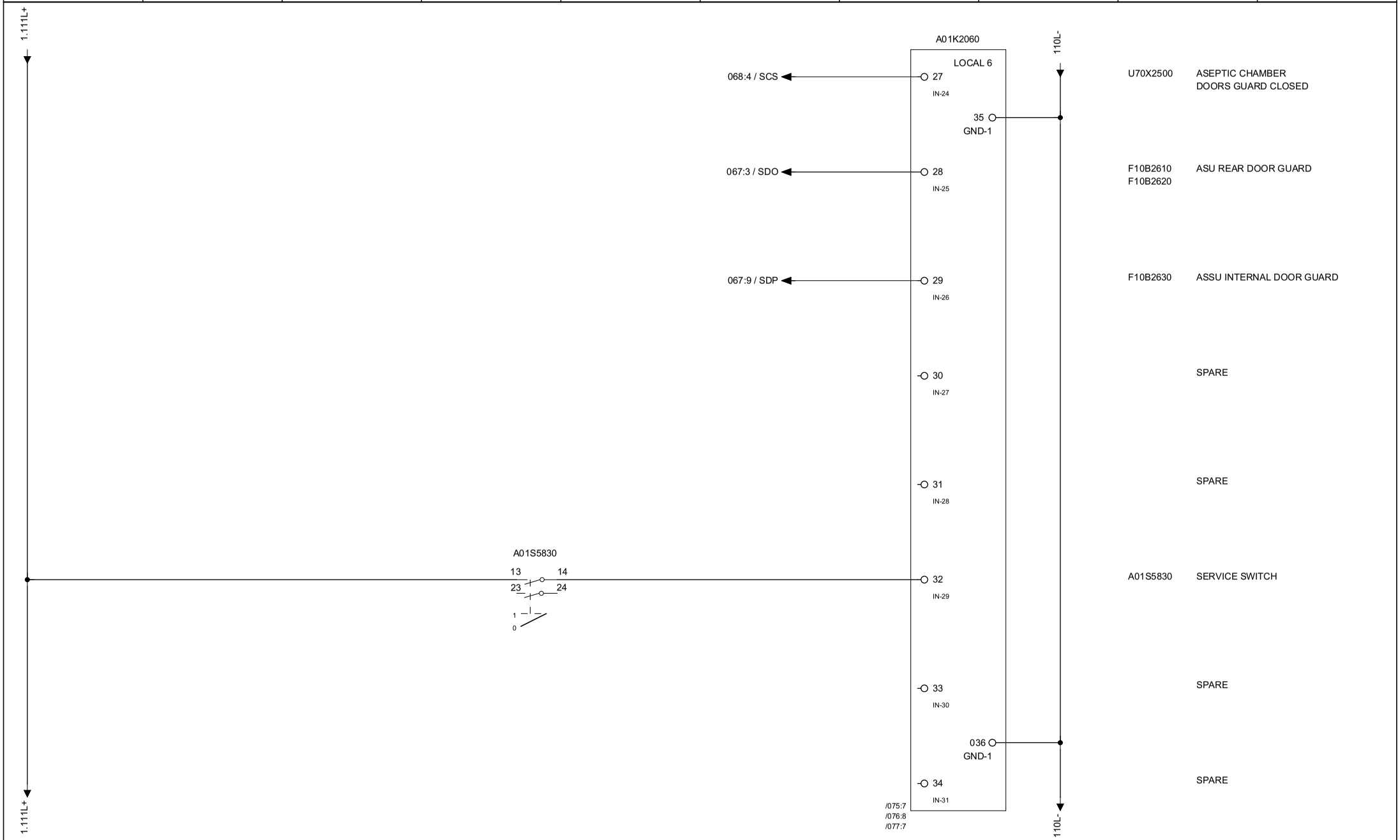

Tetra Pak®	Version Designer: RICO	Version Date: 01/10/2014	Machine: A3 CompactFlex 0300	
	ECM No: 687624	Denomination: CIRCUIT DIAGRAM	Page Type: PLC LOCAL DIGITAL INPUT	
	Information Security Class: PUBLIC	Document No.: 3223337-0003	Doc. type: ELD	Version: AM	Page: 078

This drawing must not without the consent of Tetra Pak
be copied, transmitted or disclosed to any third party.

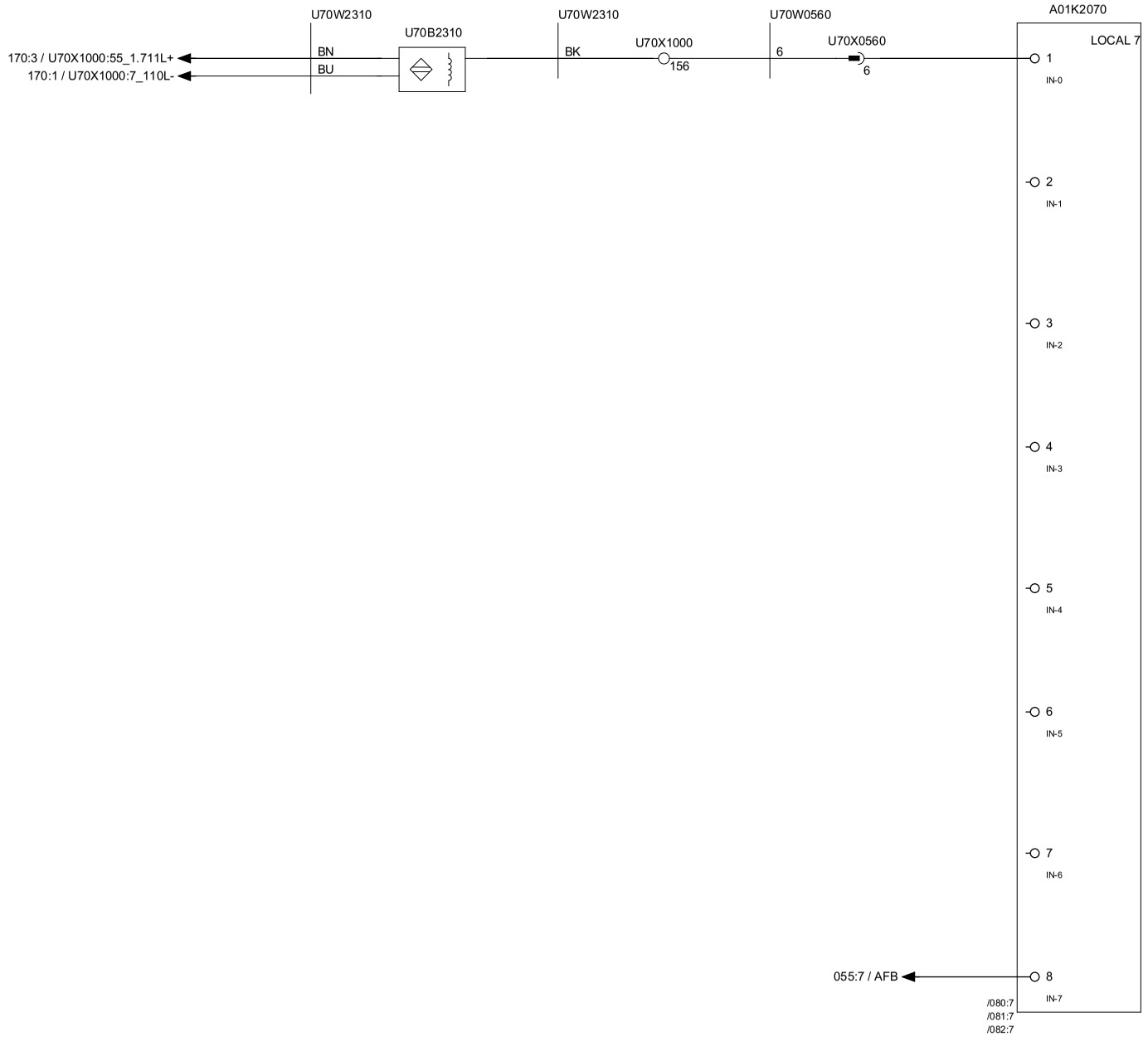

Tetra Pak®	Version Designer: RICO	Version Date: 01/10/2014	Machine: A3 CompactFlex 0300	
	ECM No: 687624	Denomination: CIRCUIT DIAGRAM	Page Type: PLC LOCAL DIGITAL INPUT	
	Information Security Class: PUBLIC	Document No.: 3223337-0003	Doc. type: ELD	Version: AM / Page: 079

RELEASED

This drawing must not without the consent of Tetra Pak be copied, transmitted or disclosed to any third party.

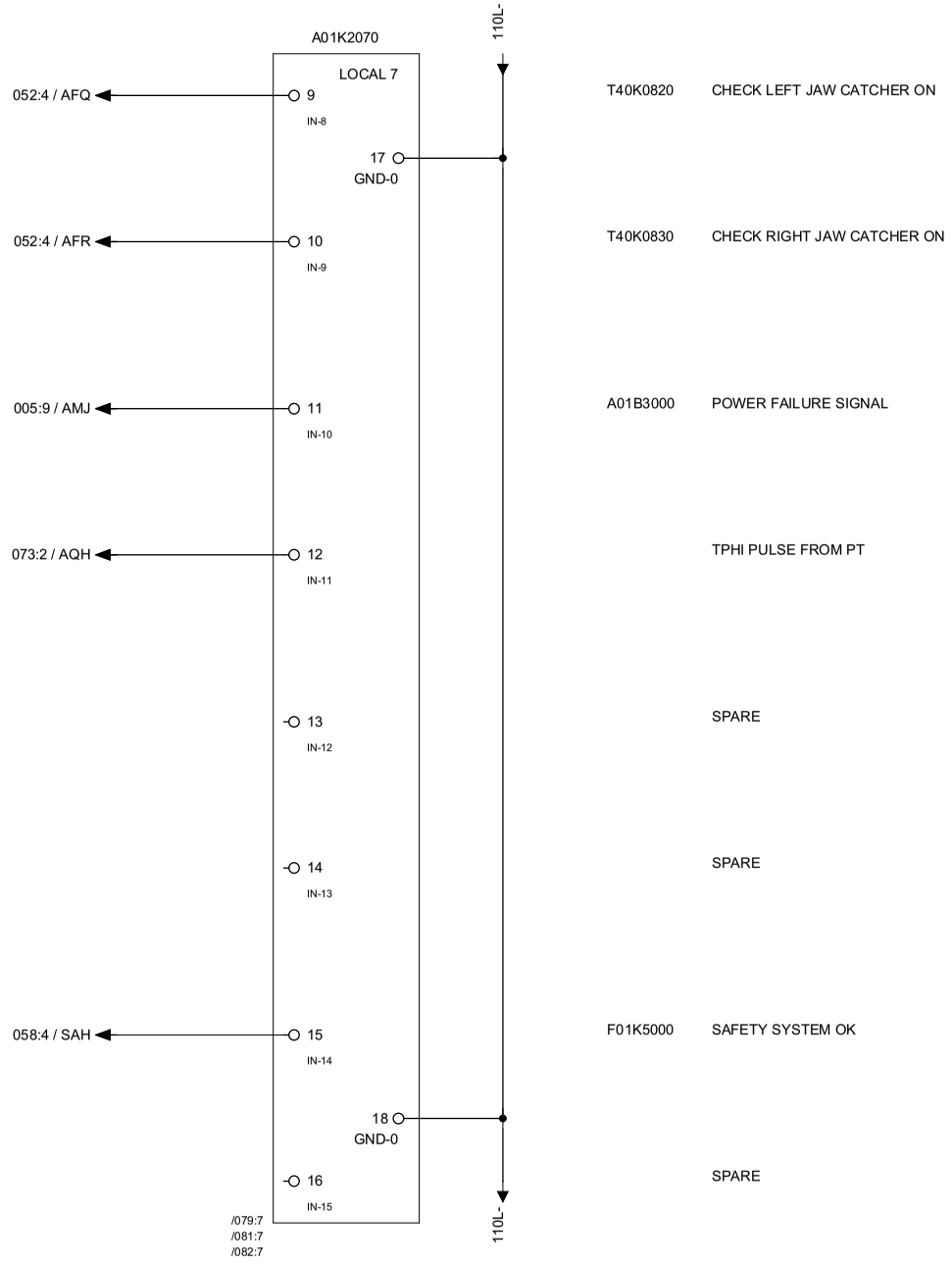

Tetra Pak®	Version Designer: RICO	Version Date: 01/10/2014	Machine: A3 CompactFlex 0300	
	ECM No: 687624	Denomination: CIRCUIT DIAGRAM	Page Type: PLC LOCAL DIGITAL INPUT	
	Information Security Class: PUBLIC	Document No.: 3223337-0003	Doc. type: ELD	Version: AM	Page: 080

RELEASED

This drawing must not without the consent of Tetra Pak
be copied, transmitted or disclosed to any third party.

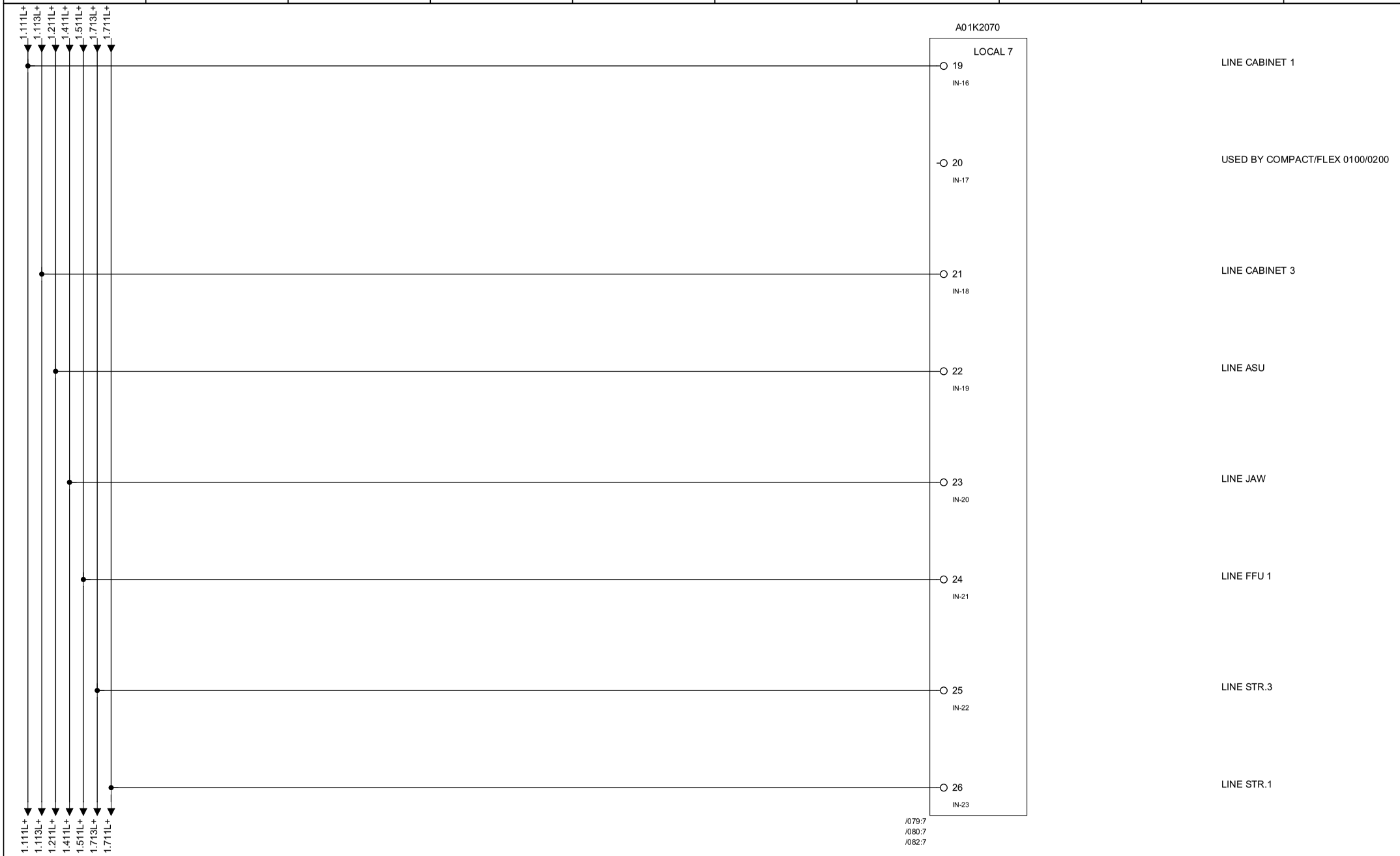

Tetra Pak®	Version Designer: RICO	Version Date: 01/10/2014	Machine: A3 CompactFlex 0300	
	ECM No: 687624	Denomination: CIRCUIT DIAGRAM	Page Type: PLC LOCAL DIGITAL INPUT	
	Information Security Class: PUBLIC	Document No.: 3223337-0003	Doc. type: ELD	Version: AM	Page: 081

RELEASED

This drawing must not without the consent of Tetra Pak
be copied, transmitted or disclosed to any third party.

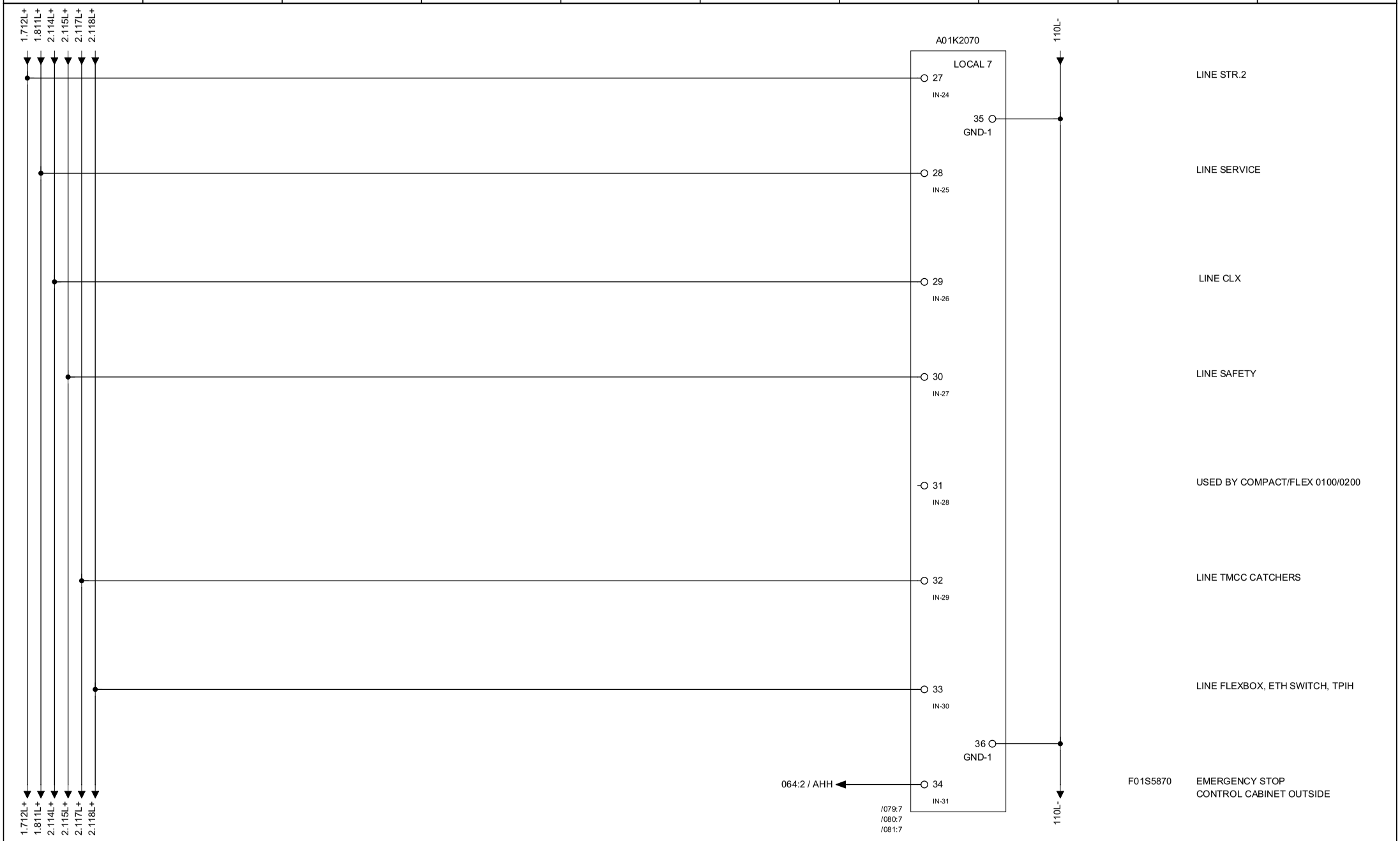

Tetra Pak®	Version Designer: RICO	Version Date: 01/10/2014	Machine: A3 CompactFlex 0300	
	ECM No: 687624	Denomination: CIRCUIT DIAGRAM	Page Type: PLC LOCAL DIGITAL INPUT	
	Information Security Class: PUBLIC	Document No.: 3223337-0003	Doc. type: ELD	Version: AM	Page: 082

This drawing must not without the consent of Tetra Pak be copied, transmitted or disclosed to any third party.

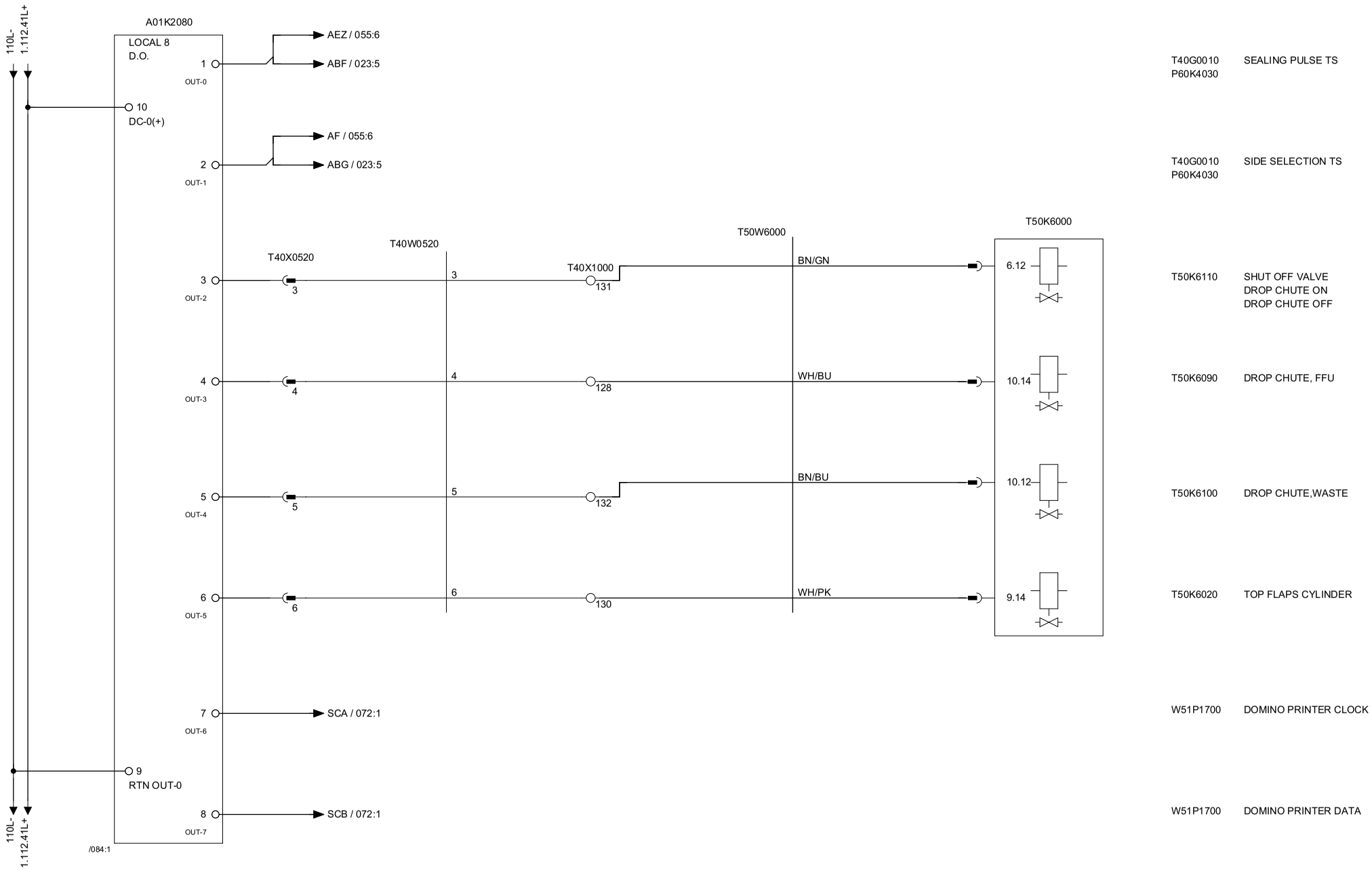

Tetra Pak®	Version Designer: RICO	Version Date: 01/10/2014	Machine: A3 CompactFlex 0300	
	ECM No: 687624	Denomination: CIRCUIT DIAGRAM	Page Type: PLC LOCAL DIGITAL OUTPUT	
Information Security Class: PUBLIC	Document No.: 3223337-0003	Doc. type: ELD	Version: AM	Page: 083

RELEASED

This drawing must not without the consent of Tetra Pak be copied, transmitted or disclosed to any third party.

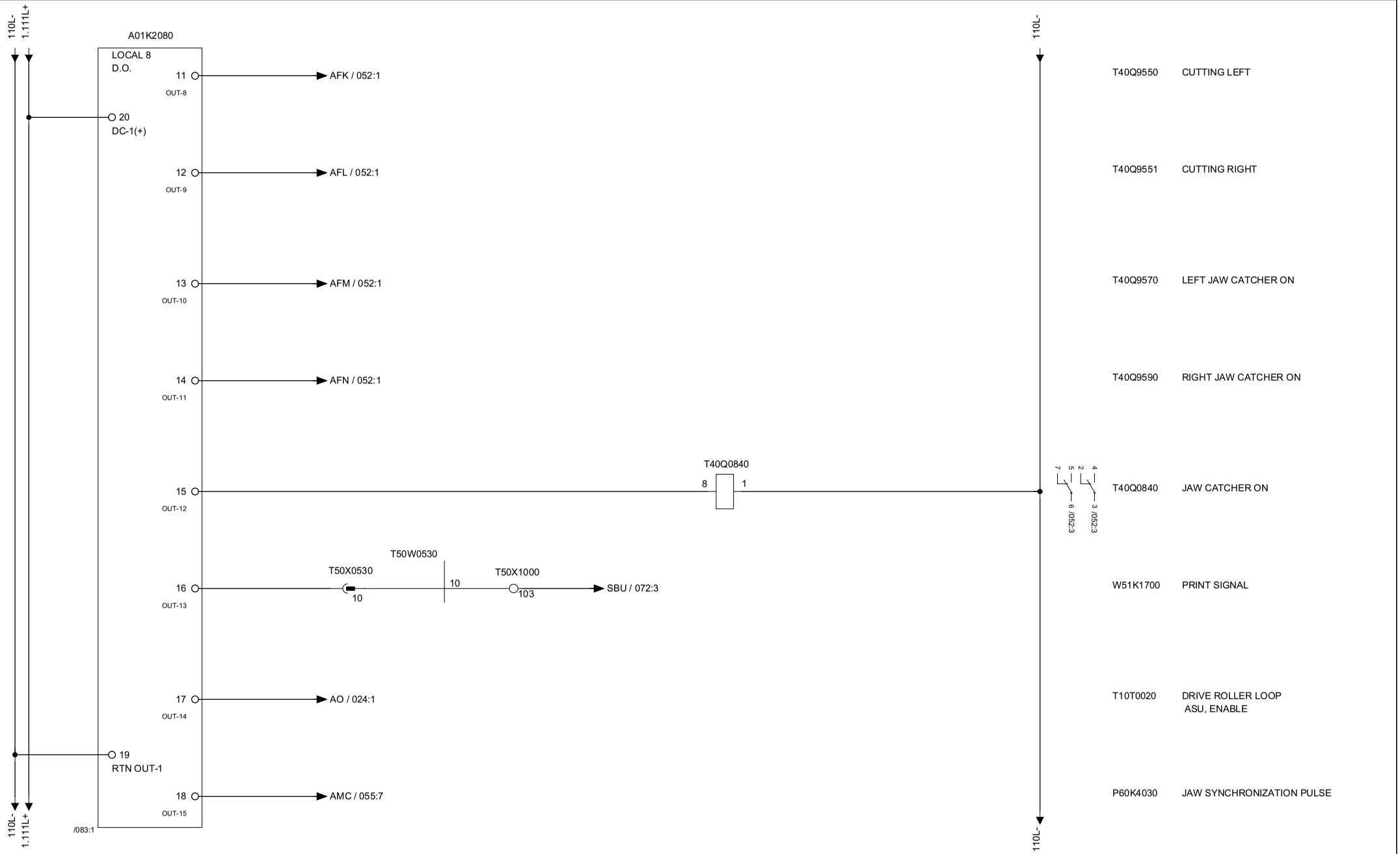

Tetra Pak®	Version Designer: RICO	Version Date: 01/10/2014	Machine: A3 CompactFlex 0300	
	ECM No: 687624	Denomination: CIRCUIT DIAGRAM	Page Type: PLC LOCAL DIGITAL OUTPUT	
Information Security Class: PUBLIC	Document No.: 3223337-0003	Doc. type: ELD	Version: AM	Page: 084

RELEASED

This drawing must not without the consent of Tetra Pak be copied, transmitted or disclosed to any third party.

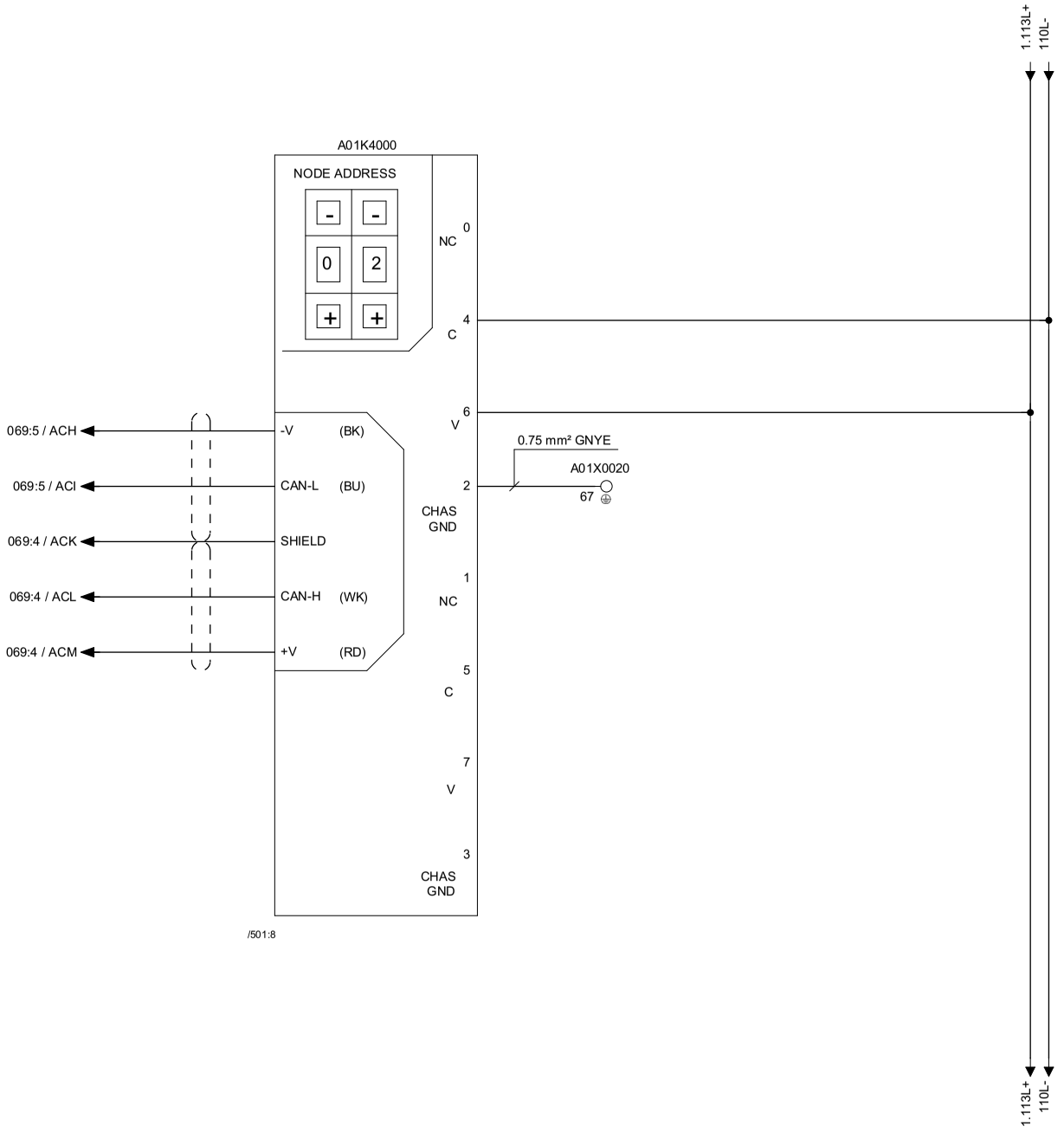

Tetra Pak®	Version Designer: RICO	Version Date: 01/10/2014	Machine: A3 CompactFlex 0300	
	ECM No: 687624	Denomination: CIRCUIT DIAGRAM	Page Type: DEVICENET ADAPTER, CABINET PWR	
	Information Security Class: PUBLIC	Document No.: 3223337-0003	Doc. type: ELD	Version: AM / Page: 089

RELEASED

This drawing must not without the consent of Tetra Pak be copied, transmitted or disclosed to any third party.

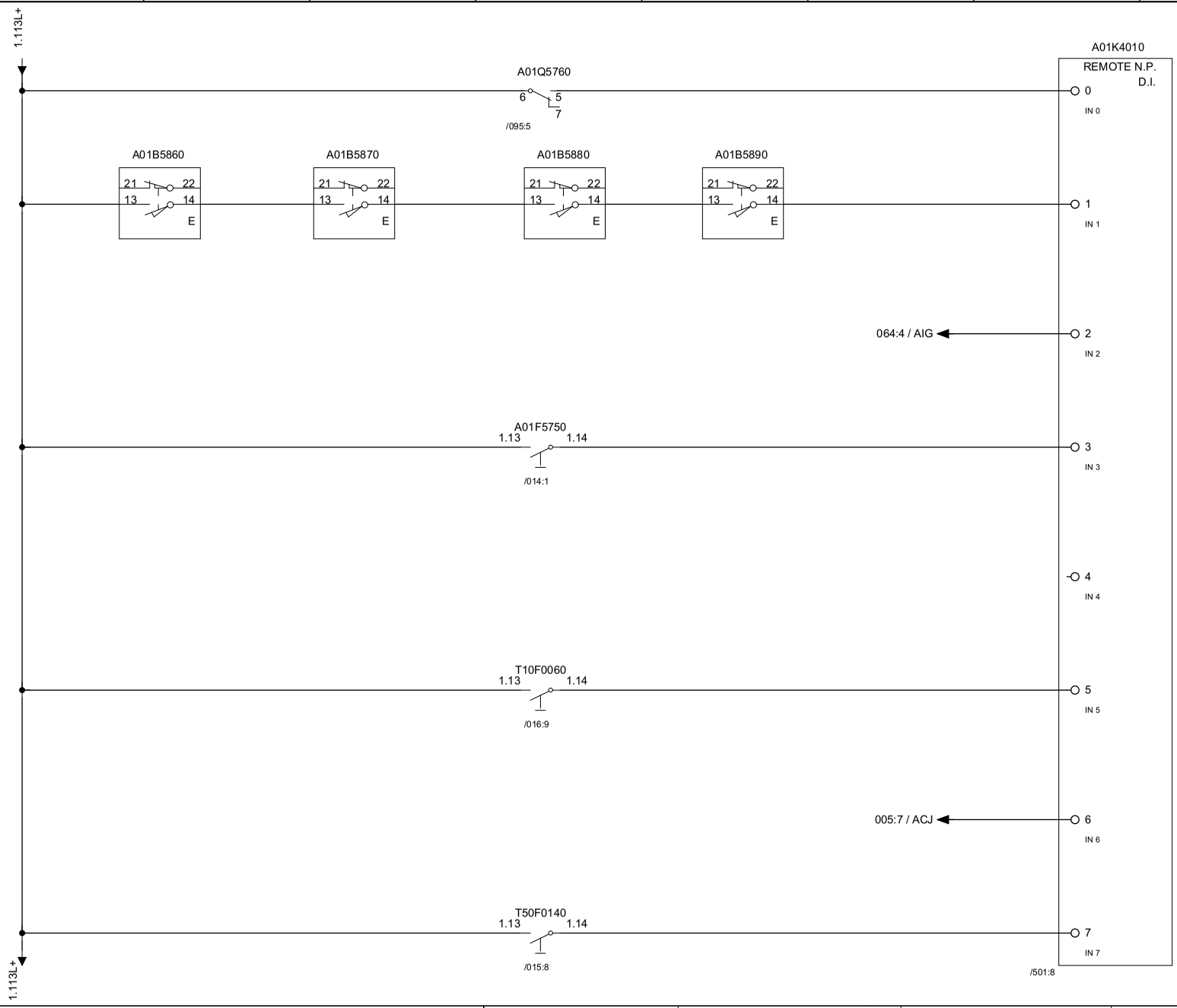

A01Q5760	EL. CABINET COOLER ON
A01B5860 A01B5870 A01B5880 A01B5890	ELECTRICAL CABINET DOORS CLOSED
F01S5880	EM. STOP CONTROL CABINET INSIDE
A01F5750	OVERLOAD COOLING ELECTRICAL CABINET
	SPARE
T10F0060	FAN SA SEALING AIR
A01V5720	MONITOR TRANSIENT MAIN FAILURE
T50F0140	OVERLOAD PROTECTION TRANSPORTATION OF WASTE

Tetra Pak®	Version Designer: RICO	Version Date: 01/10/2014	Machine: A3 CompactFlex 0300	
	ECM No: 687624	Denomination: CIRCUIT DIAGRAM	Page Type: PLC REMOTE D.I., CABINET PWR	
Information Security Class: PUBLIC	Document No.: 3223337-0003	Doc. type: ELD	Version: AM	Page: 090

RELEASED

This drawing must not without the consent of Tetra Pak be copied, transmitted or disclosed to any third party.

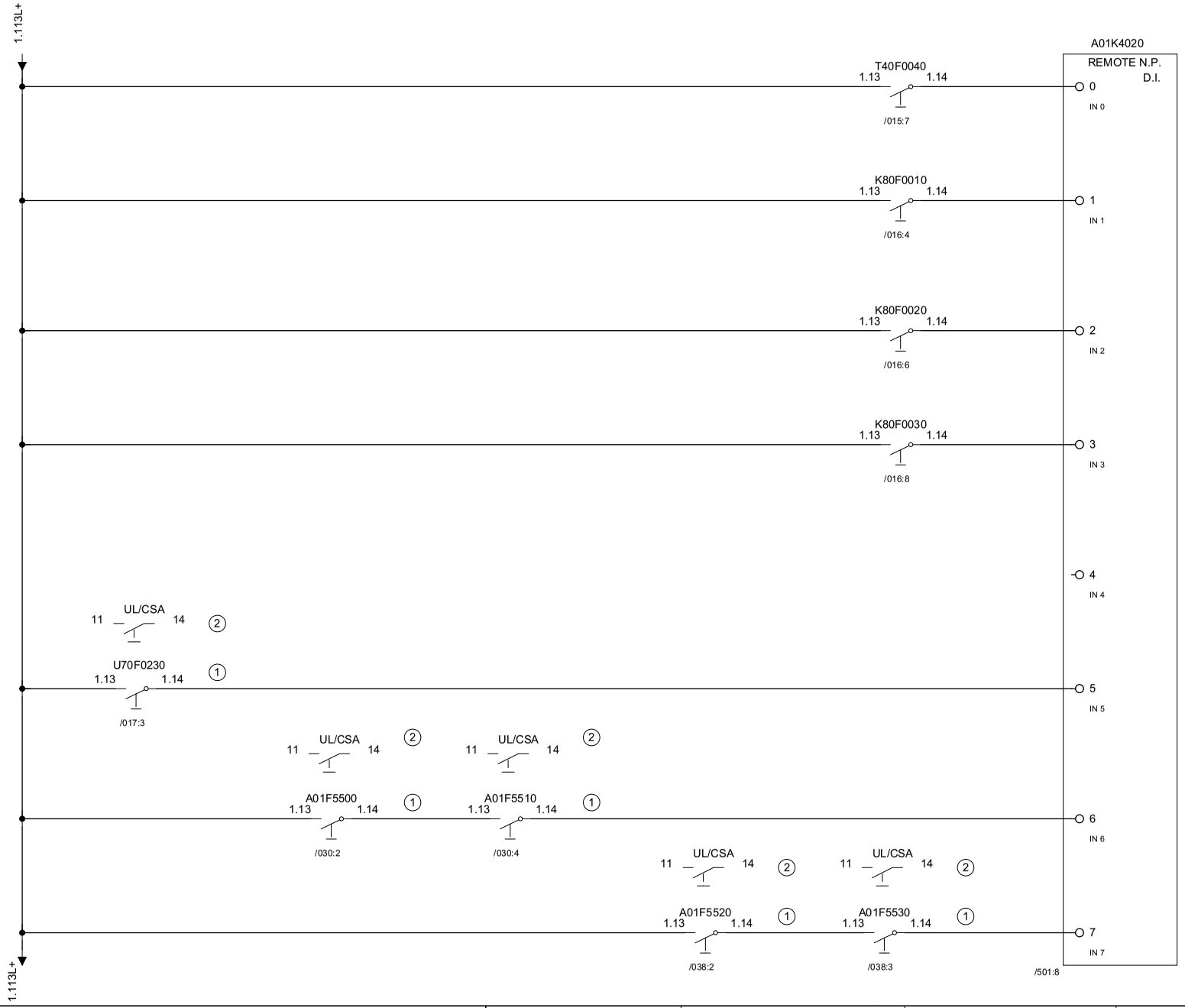

T40F0040	OVERLOAD PROTECTION HYDRAULIC PUMP
K80F0010	OVERLOAD PROTECTION CIRCULATION COOLING WATER
K80F0020	OVERLOAD PROTECTION CIRCULATION COOLING MEDIA
K80F0030	OVERLOAD PROTECTION EXTERNAL CLEANING PUMP
	USED IN COMPACT FLEX-0200
U70F0230	OVERLOAD PROTECTION PEROXIDE HEAT EXCHANGER WATER CIRCULATION PUMP
A01F5500 A01F5510	MONITOR POWER/CONTROL SERVO MOTORS RACK 1
A01F5520 A01F5530	MONITOR POWER/CONTROL SERVO MOTORS RACK 2

Version Designer: RICO	Version Date: 01/10/2014	Machine: A3 CompactFlex 0300	
ECM No: 687624	Denomination: CIRCUIT DIAGRAM	Page Type: PLC REMOTE D.I., CABINET PWR	
Information Security Class: PUBLIC	Document No.: 3223337-0003	Doc. type: ELD	Version: AM	Page: 091

This drawing must not without the consent of Tetra Pak
be copied, transmitted or disclosed to any third party.

1	2	3	4	5	6	7	8	9	10

A01K4030

REMOTE N.P.
D.O.

0 OUT-0			USED BY COMPACT/FLEX 0100/0200
1 OUT-1			USED BY COMPACT/FLEX 0100/0200
2 OUT-2			USED BY COMPACT/FLEX 0100/0200
3 OUT-3			USED BY COMPACT/FLEX 0100/0200
4 OUT-4			USED BY COMPACT/FLEX 0100/0200
5 OUT-5			USED BY COMPACT/FLEX 0100/0200
6 OUT-6	→ SEQ / 063:4	T10B2520	ASU XT ELETTRIC 80 SYNCHRO SIGNAL SIDE 1 OUTPUT
7 OUT-7	→ SER / 063:4	T10B2530	ASU XT ELETTRIC 80 SYNCHRO SIGNAL SIDE 2 OUTPUT

/501:8

Tetra Pak®	Version Designer: RICO	Version Date: 01/10/2014	Machine: A3 CompactFlex 0300	
	ECM No: 687624	Denomination: CIRCUIT DIAGRAM	Page Type: PLC REMOTE D.O, CABINET PWR	
	Information Security Class: PUBLIC	Document No.: 3223337-0003	Doc. type: ELD	Version: AM / Page: 092

RELEASED

This drawing must not without the consent of Tetra Pak be copied, transmitted or disclosed to any third party.

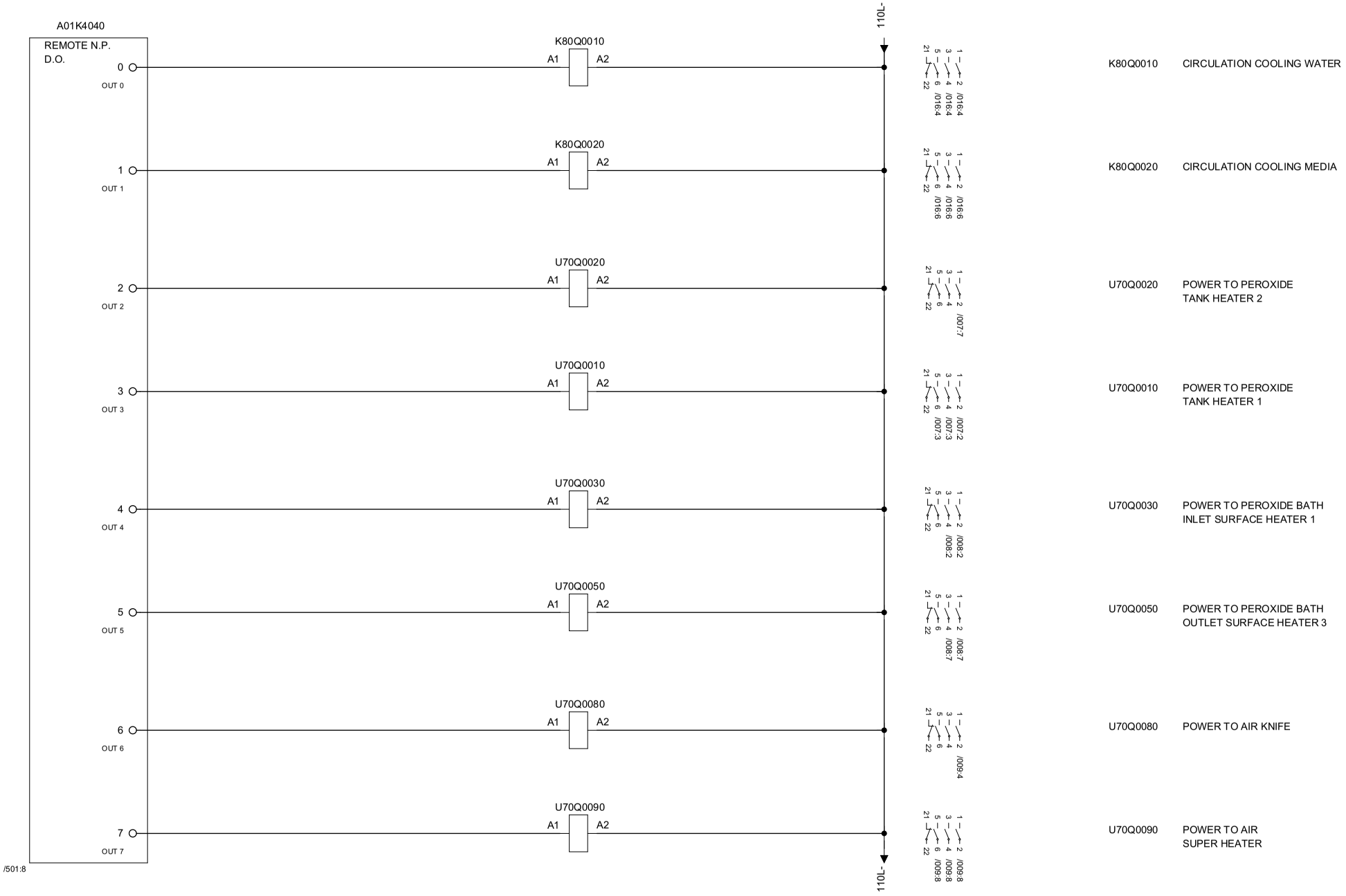

Tetra Pak®	Version Designer: RICO	Version Date: 01/10/2014	Machine: A3 CompactFlex 0300	
	ECM No: 687624	Denomination: CIRCUIT DIAGRAM	Page Type: PLC REMOTE D.O, CABINET PWR	
	Information Security Class: PUBLIC	Document No.: 3223337-0003	Doc. type: ELD	Version: AM	Page: 093

RELEASED

This drawing must not without the consent of Tetra Pak be copied, transmitted or disclosed to any third party.

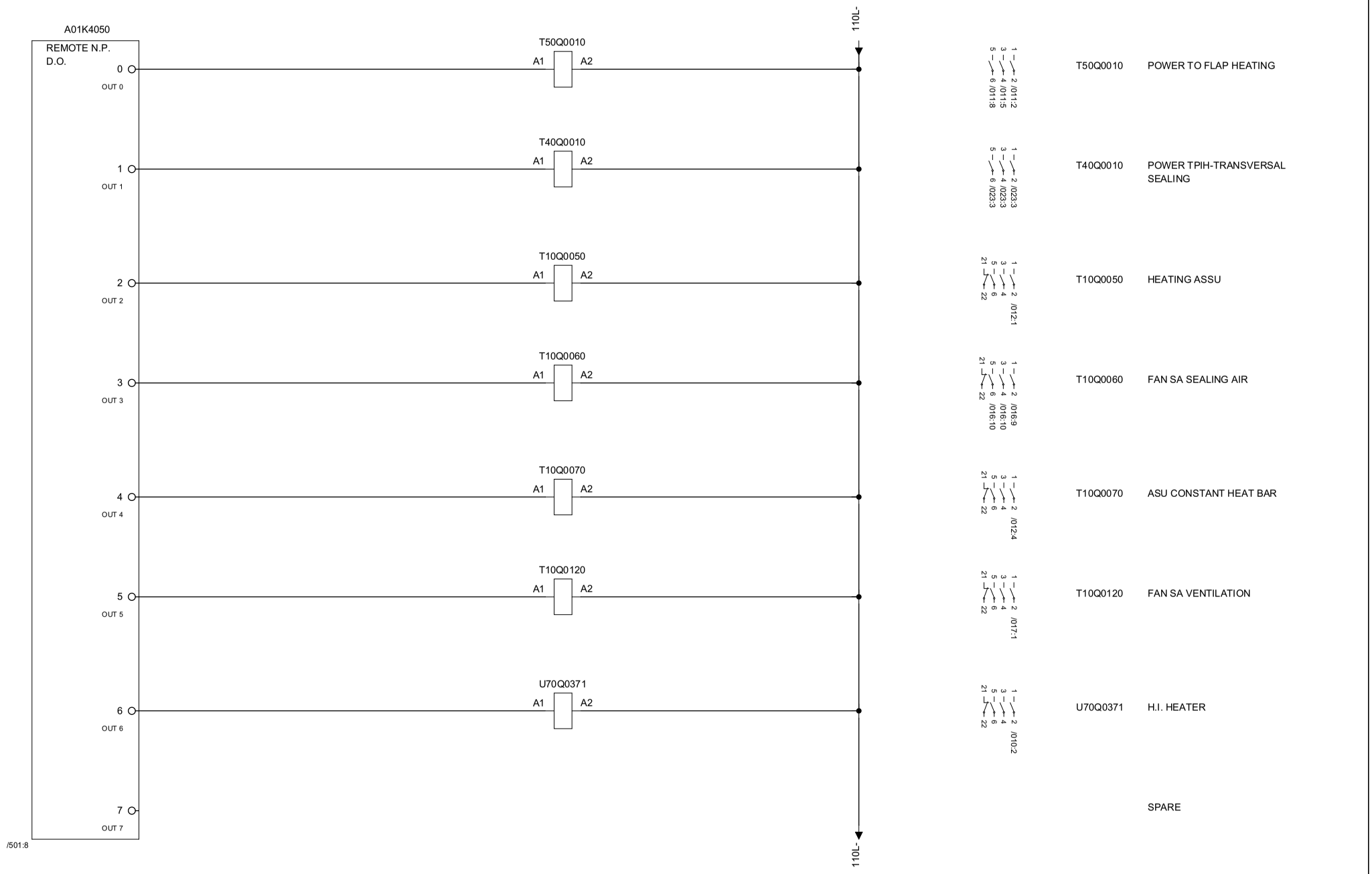

Tetra Pak®	Version Designer: RICO	Version Date: 01/10/2014	Machine: A3 CompactFlex 0300	
	ECM No: 687624	Denomination: CIRCUIT DIAGRAM	Page Type: PLC REMOTE D.O, CABINET PWR	
	Information Security Class: PUBLIC	Document No.: 3223337-0003	Doc. type: ELD	Version: AM / Page: 094

This drawing must not without the consent of Tetra Pak
be copied, transmitted or disclosed to any third party.

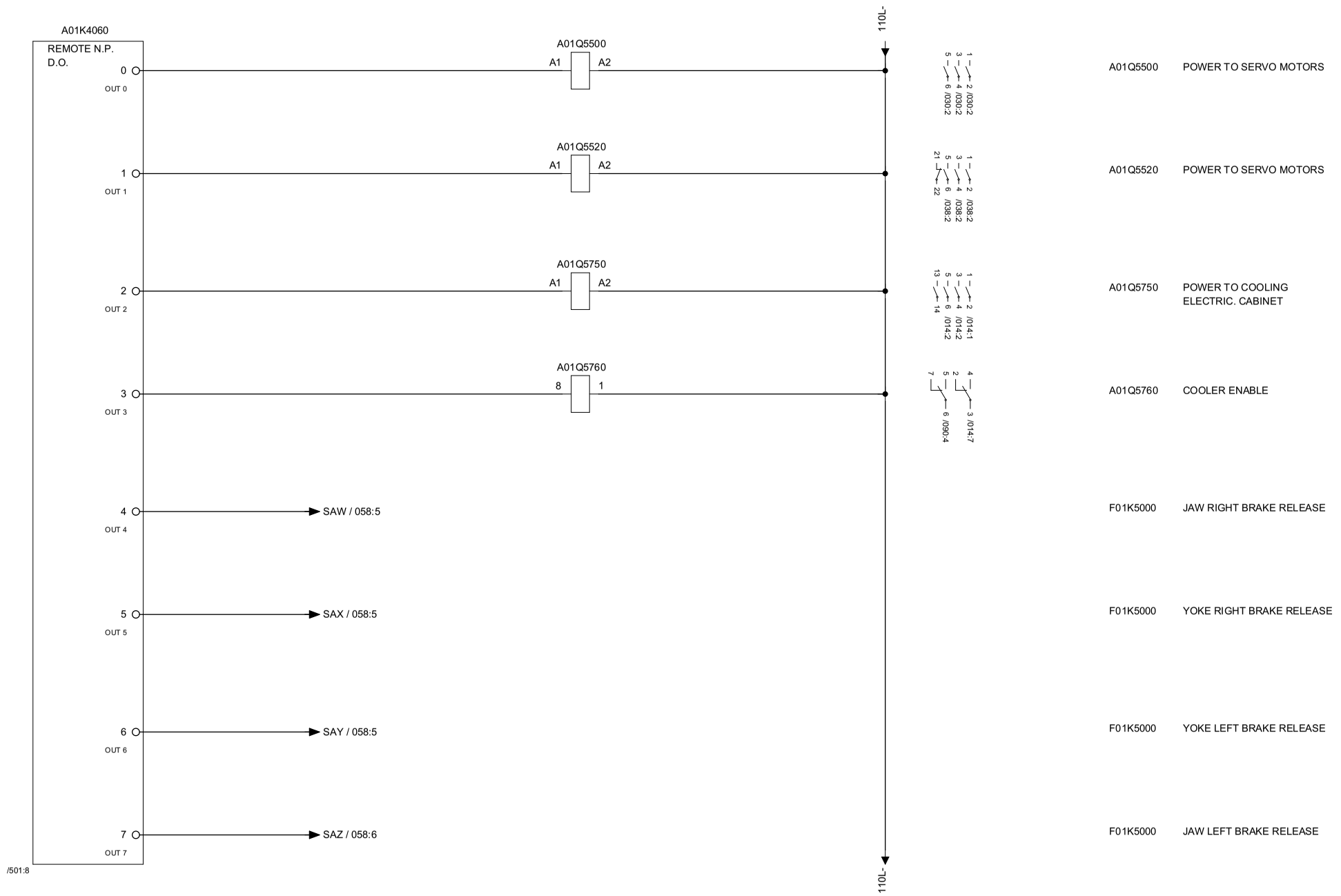

Tetra Pak®	Version Designer: RICO	Version Date: 01/10/2014	Machine: A3 CompactFlex 0300	
	ECM No: 687624	Denomination: CIRCUIT DIAGRAM	Page Type: PLC REMOTE D.O, CABINET PWR	
	Information Security Class: PUBLIC	Document No.: 3223337-0003	Doc. type: ELD	Version: AM / Page: 095

This drawing must not without the consent of Tetra Pak be copied, transmitted or disclosed to any third party.

1	2	3	4	5	6	7	8	9	10

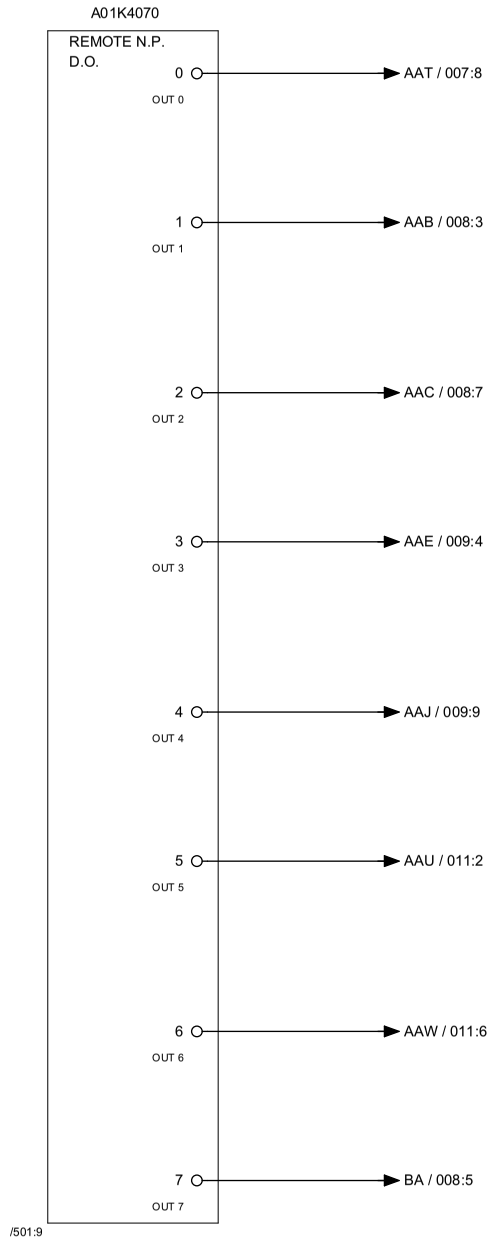

U70Q0520	COMMAND PEROXIDE TANK HEATER
U70Q0530	COMMAND PEROXIDE BATH SURFACE HEATER INLET 1
U70Q0550	COMMAND PEROXIDE BATH SURFACE HEATER OUTLET 3
U70Q0580	COMMAND AIR KNIFE
U70Q0590	COMMAND AIR SUPER HEATER
T50Q0510	COMMAND FLAP HEATING TOP LEFT
T50Q0520	COMMAND FLAP HEATING TOP RIGHT
U70Q0540	COMMAND PEROXIDE BATH SURFACE HEATER INLET 2.

Tetra Pak®

Version Designer: RICO	Version Date: 01/10/2014	Machine: A3 CompactFlex 0300	
ECM No: 687624	Denomination: CIRCUIT DIAGRAM	Page Type: PLC REMOTE D.O, CABINET PWR	
Information Security Class: PUBLIC	Document No.: 3223337-0003	Doc. type: ELD	Version: AM	Page: 096

RELEASED

This drawing must not without the consent of Tetra Pak be copied, transmitted or disclosed to any third party.

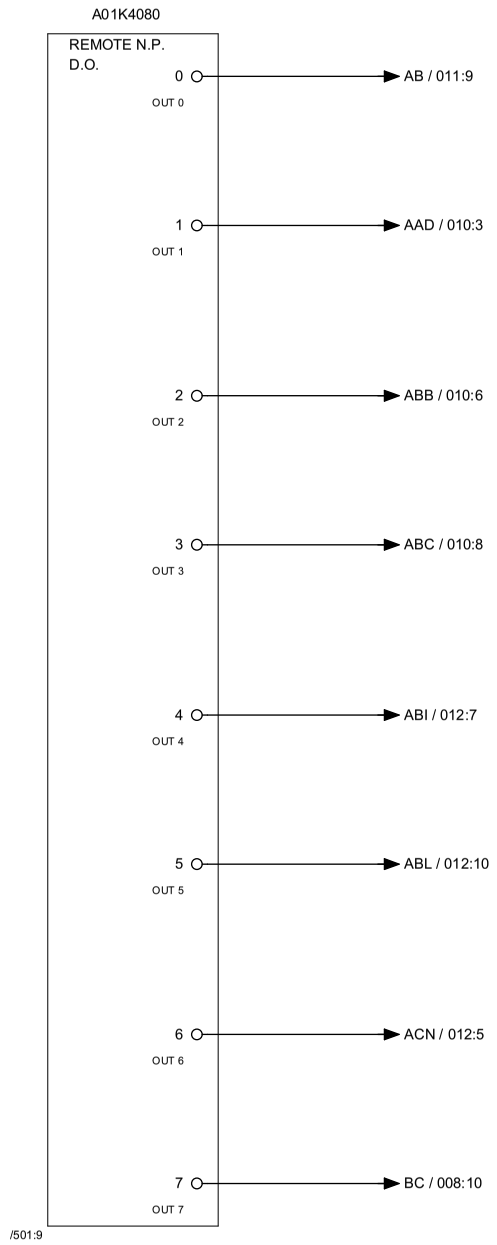

T50Q0540	COMMAND FLAP HEATING BOTTOM LEFT
U70Q0370	H.I. HEATER COMMAND
U70Q1130	LS SHORT STOP
U70Q1140	LS LONGITUDINAL SEALING
T10Q0580	SA HEATING
T10Q0590	SA SS HEATING
T10Q0570	ASU TPO-BAR
U70Q0560	COMMAND PEROXIDE BATH SURFACE HEATER OUTLET 4

Tetra Pak®	Version Designer: RICO	Version Date: 01/10/2014	Machine: A3 CompactFlex 0300	
	ECM No: 687624	Denomination: CIRCUIT DIAGRAM	Page Type: PLC REMOTE D.O, CABINET PWR	
Information Security Class: PUBLIC	Document No.: 3223337-0003	Doc. type: ELD	Version: AM	Page: 097

RELEASED

This drawing must not without the consent of Tetra Pak be copied, transmitted or disclosed to any third party.

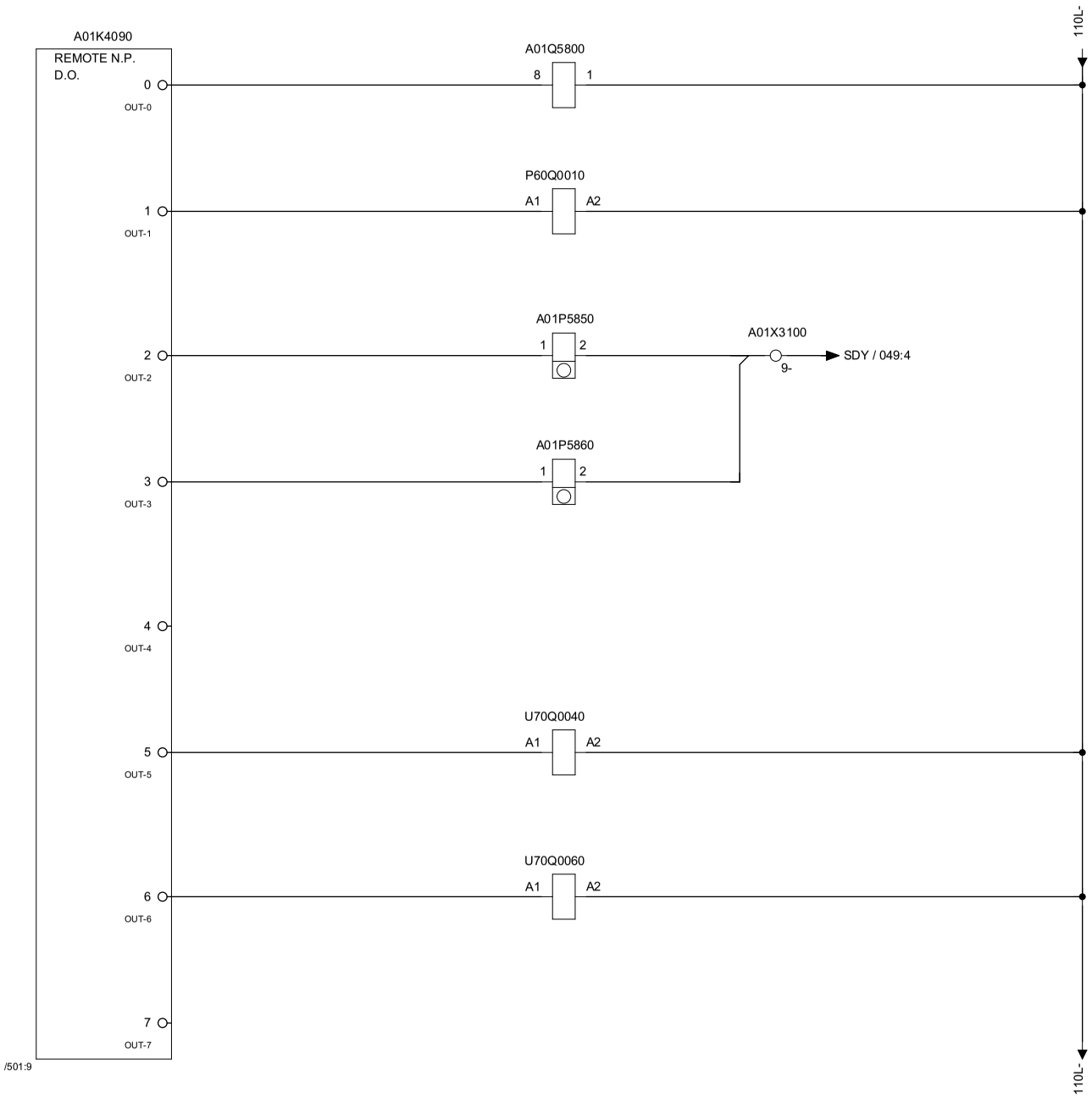

A01Q5800	LIGHTING MACHINE
P60Q0010	RESTART TPOP
A01P5850	HOUR METER
A01P5860	PACKAGE COUNTER AND TOTAL PACKAGE COUNTER
	RESERVED TO A3/COMPACTFLEX-0100
U70Q0040	POWER TO PEROXIDE BATH INLET SURFACE HEATER 2
U70Q0040	POWER TO PEROXIDE BATH OUTLET SURFACE HEATER 4
	SPARE

Tetra Pak®	Version Designer: RICO	Version Date: 01/10/2014	Machine: A3 CompactFlex 0300
ECM No: 687624	Denomination: CIRCUIT DIAGRAM	Page Type: PLC REMOTE D.O, CABINET PWR	
Information Security Class: PUBLIC	Document No.: 3223337-0003	Doc. type: ELD	Version: AM / Page: 098

RELEASED

This drawing must not without the consent of Tetra Pak be copied, transmitted or disclosed to any third party.

1	2	3	4	5	6	7	8	9	10

A01K4100

REMOTE N.P.
D.O.

0	OUT-0	SPARE
1	OUT-1	SPARE
2	OUT-2	SPARE
3	OUT-3	SPARE
4	OUT-4	SPARE
5	OUT-5	SPARE
6	OUT-6	SPARE
7	OUT-7	SPARE

/501:9

Tetra Pak®

Version Designer: RICO	Version Date: 01/10/2014	Machine: A3 CompactFlex 0300	
ECM No: 687624	Denomination: CIRCUIT DIAGRAM	Page Type: PLC REMOTE D.O, CABINET PWR	
Information Security Class: PUBLIC	Document No.: 3223337-0003	Doc. type: ELD	Version: AM	Page: 099

RELEASED

This drawing must not without the consent of Tetra Pak be copied, transmitted or disclosed to any third party.

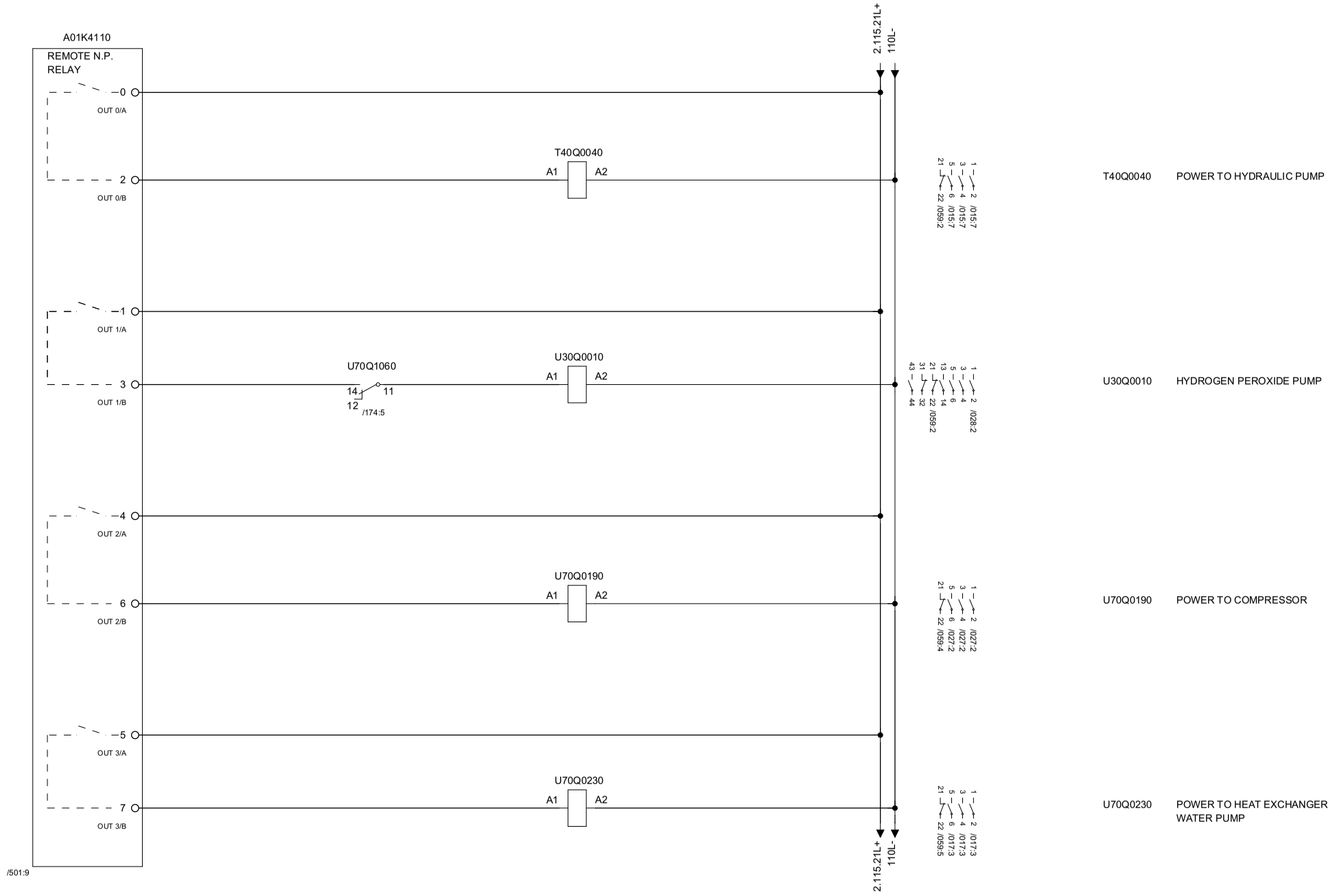

Tetra Pak®	Version Designer: RICO	Version Date: 01/10/2014	Machine: A3 CompactFlex 0300	
	ECM No: 687624	Denomination: CIRCUIT DIAGRAM	Page Type: PLC REMOTE OW4, CABINET PWR	
	Information Security Class: PUBLIC	Document No.: 3223337-0003	Doc. type: ELD	Version: AM / Page: 100

RELEASED

This drawing must not without the consent of Tetra Pak
be copied, transmitted or disclosed to any third party.

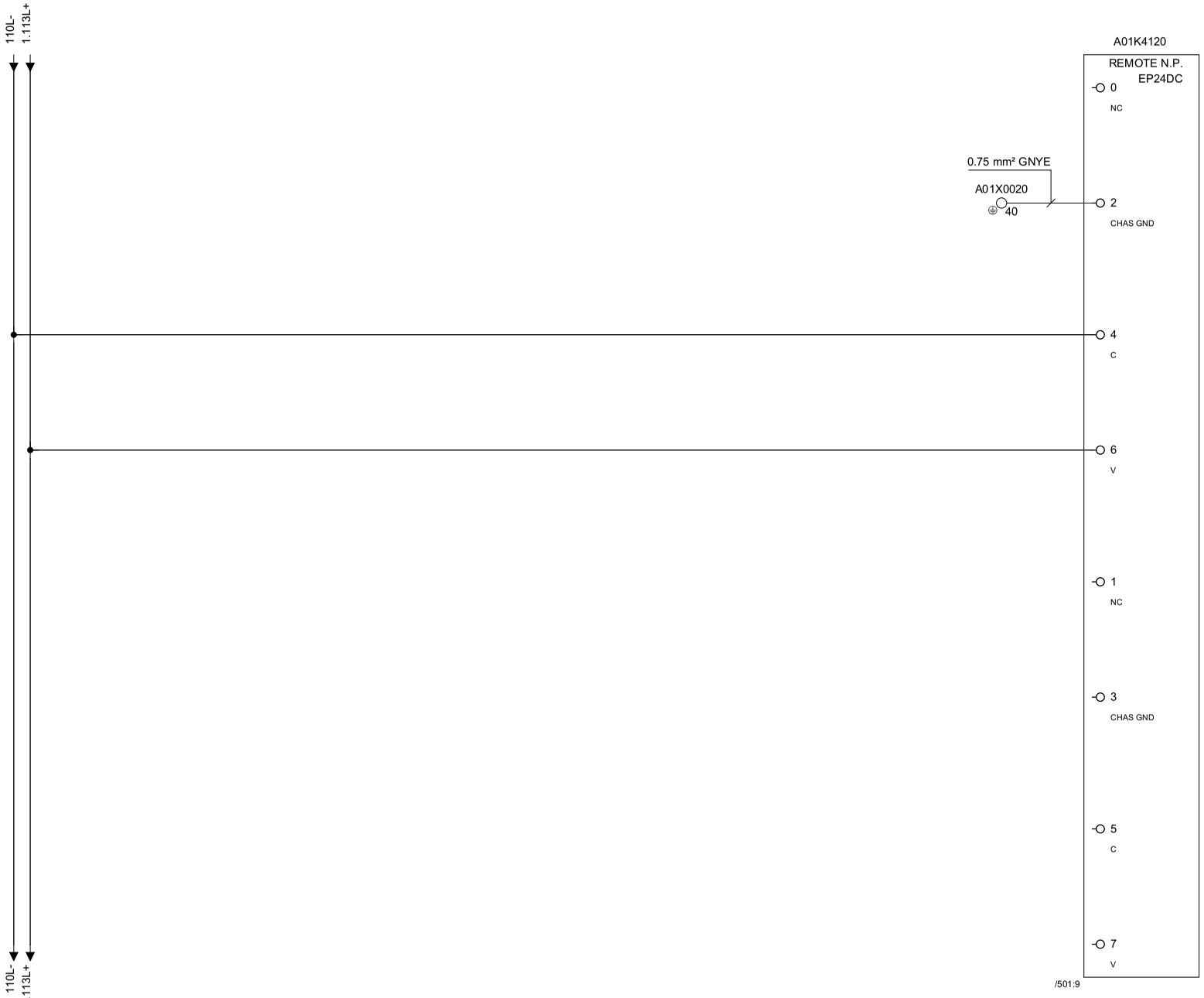

Tetra Pak®	Version Designer: RICO	Version Date: 01/10/2014	Machine: A3 CompactFlex 0300	
	ECM No: 687624	Denomination: CIRCUIT DIAGRAM	Page Type: PLC REMOTE EP24DC, CABINET PWR	
	Information Security Class: PUBLIC	Document No.: 3223337-0003	Doc. type: ELD	Version: AM / Page: 101

RELEASED

This drawing must not without the consent of Tetra Pak be copied, transmitted or disclosed to any third party.

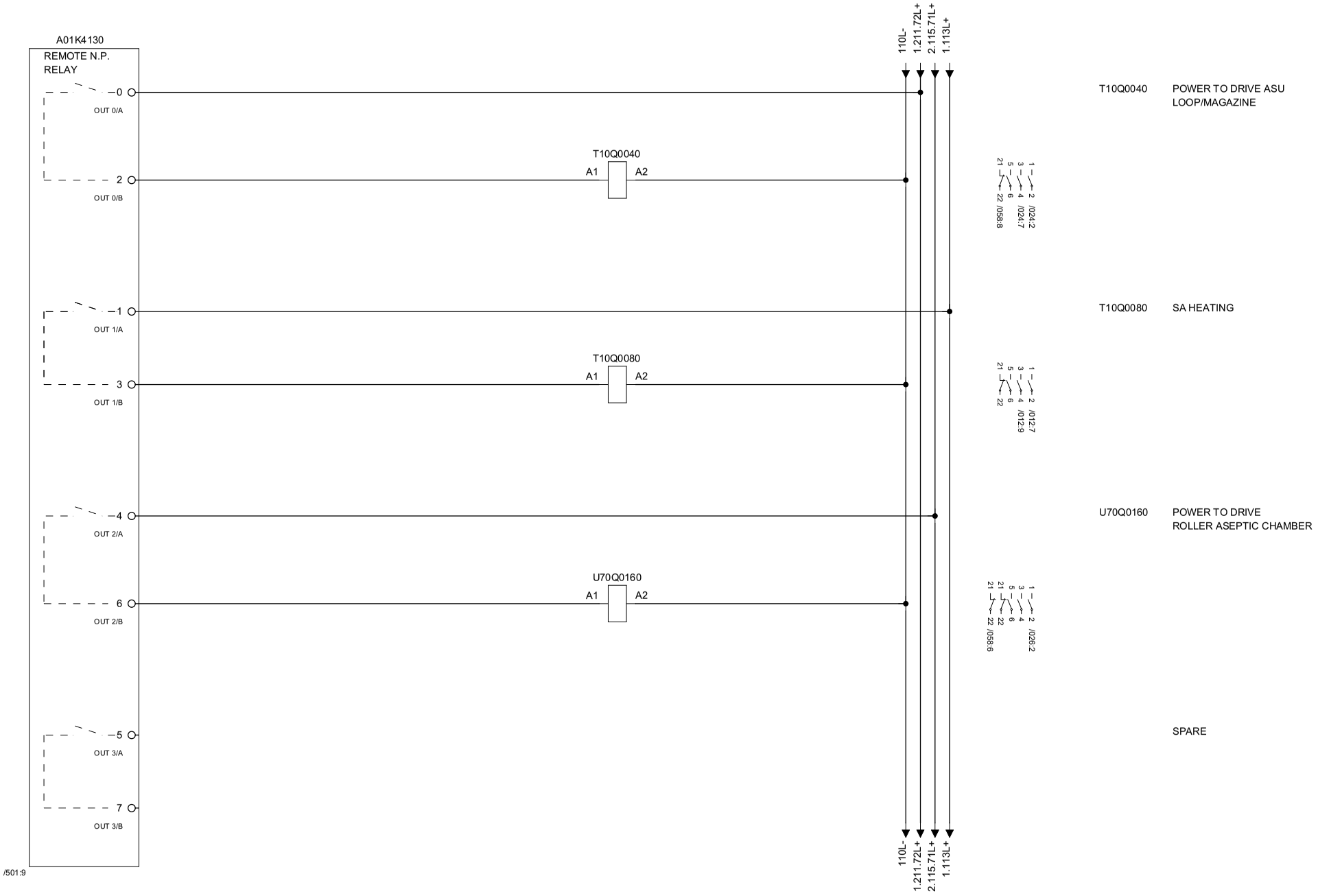

Tetra Pak®	Version Designer: RICO	Version Date: 01/10/2014	Machine: A3 CompactFlex 0300	
	ECM No: 687624	Denomination: CIRCUIT DIAGRAM	Page Type: PLC REMOTE OW4, CABINET PWR	
	Information Security Class: PUBLIC	Document No.: 3223337-0003	Doc. type: ELD	Version: AM	Page: 102

RELEASED

This drawing must not without the consent of Tetra Pak
be copied, transmitted or disclosed to any third party.

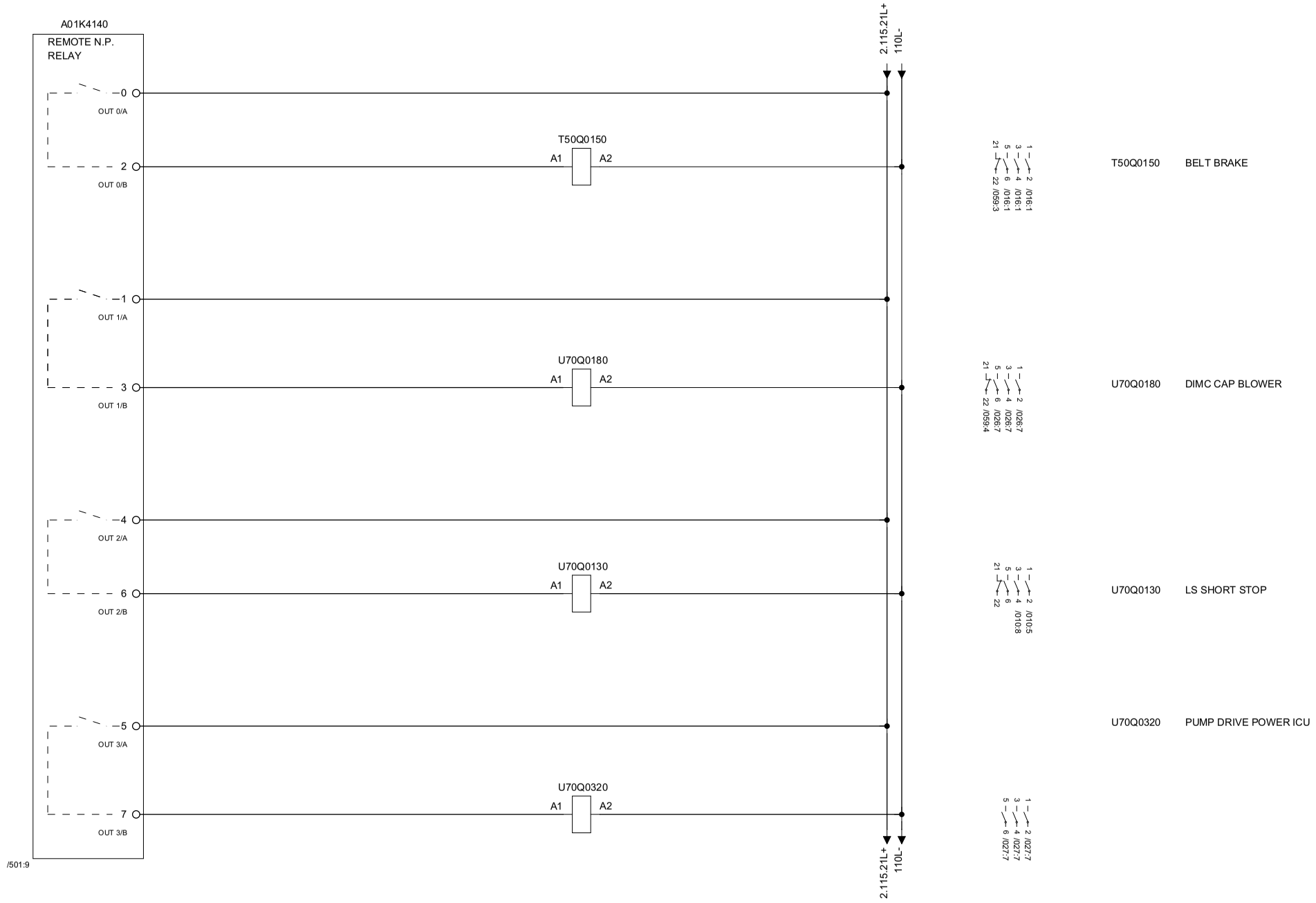

Tetra Pak®	Version Designer: RICO	Version Date: 01/10/2014	Machine: A3 CompactFlex 0300	
	ECM No: 687624	Denomination: CIRCUIT DIAGRAM	Page Type: PLC REMOTE OW4, CABINET PWR	
	Information Security Class: PUBLIC	Document No.: 3223337-0003	Doc. type: ELD	Version: AM / Page: 103

RELEASED

This drawing must not without the consent of Tetra Pak be copied, transmitted or disclosed to any third party.

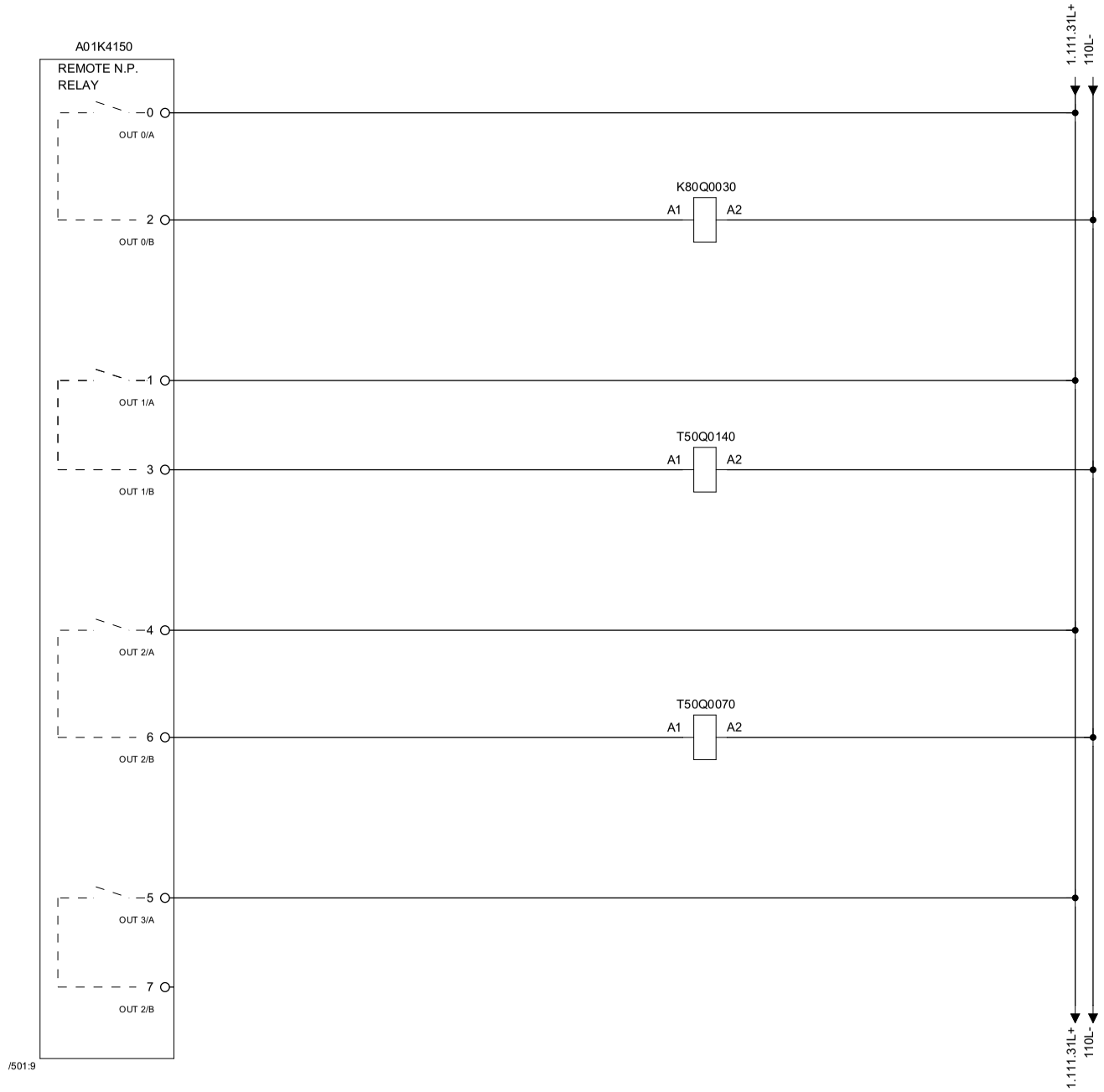

K80Q0030	CLEANING PUMP EXTERNAL CLEANING
T50Q0140	TRANSPORT OF WASTE
T50Q0070	EXTERNAL CONVEYOR
	SPARE

Tetra Pak®	Version Designer: RICO	Version Date: 01/10/2014	Machine: A3 CompactFlex 0300	
	ECM No: 687624	Denomination: CIRCUIT DIAGRAM	Page Type: PLC REMOTE OW4, CABINET PWR	
	Information Security Class: PUBLIC	Document No.: 3223337-0003	Doc. type: ELD	Version: AM / Page: 104

This drawing must not without the consent of Tetra Pak
be copied, transmitted or disclosed to any third party.

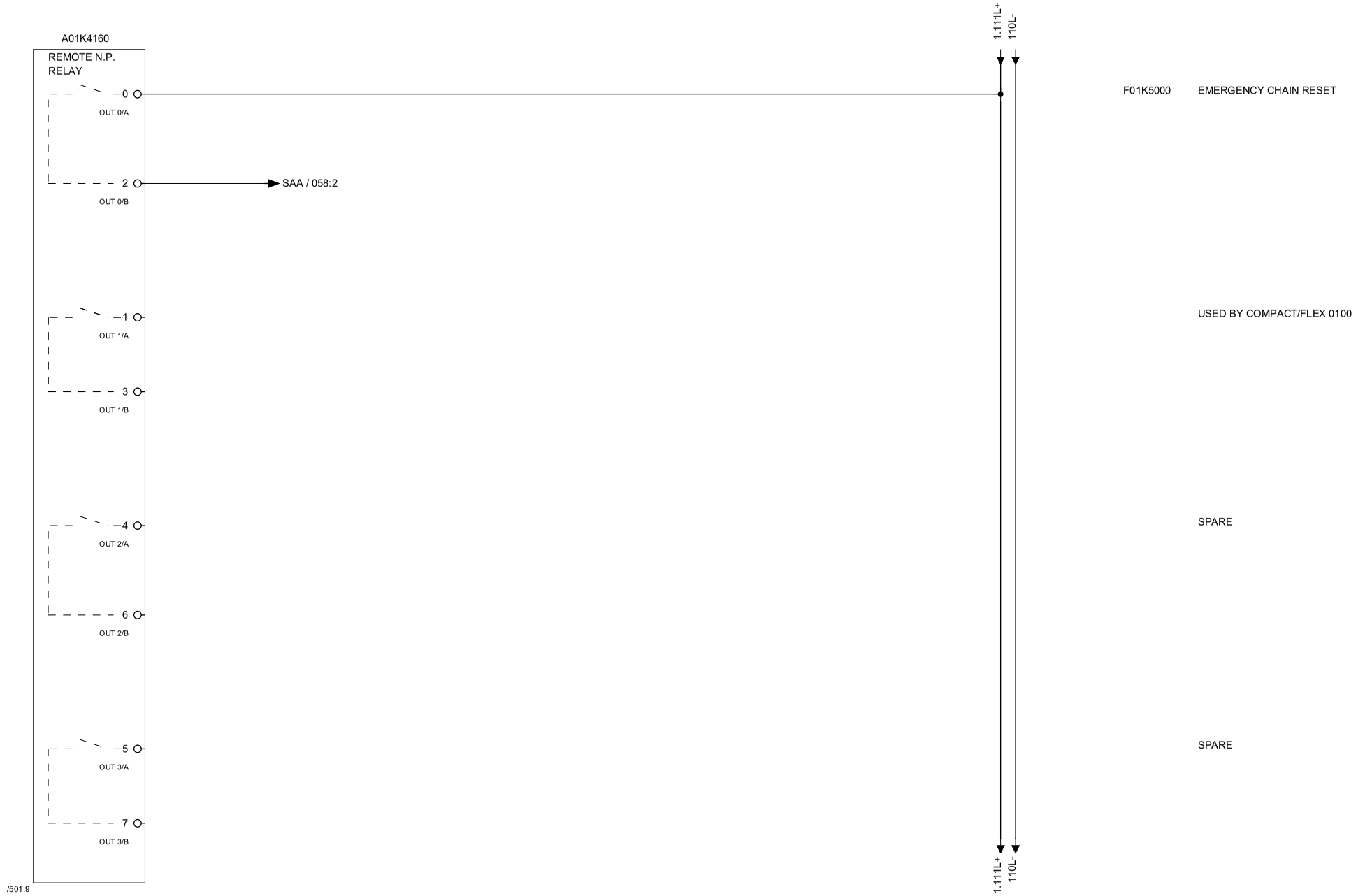

Tetra Pak®	Version Designer: RICO	Version Date: 01/10/2014	Machine: A3 CompactFlex 0300	
	ECM No: 687624	Denomination: CIRCUIT DIAGRAM	Page Type: PLC REMOTE OW4, CABINET PWR	
	Information Security Class: PUBLIC	Document No.: 3223337-0003	Doc. type: ELD	Version: AM / Page: 105

This drawing must not without the consent of Tetra Pak
be copied, transmitted or disclosed to any third party.

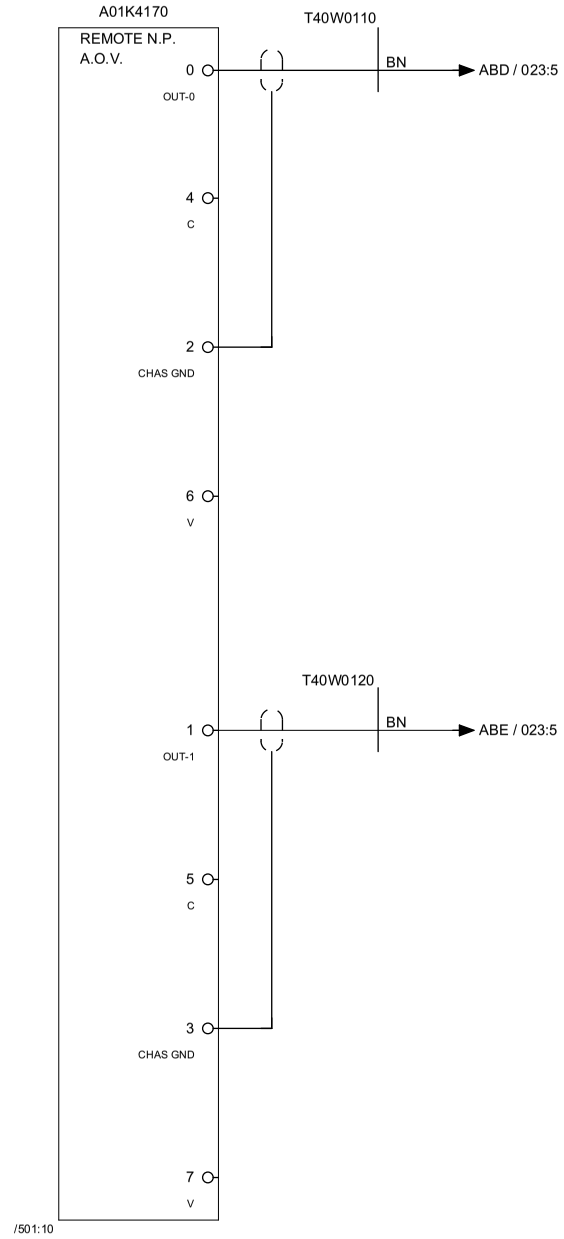

T40G0010 TPIH TS POWER LEFT SIDE

T40G0010 TPIH TS POWER RIGHT SIDE

Tetra Pak®	Version Designer: RICO	Version Date: 01/10/2014	Machine: A3 CompactFlex 0300	
	ECM No: 687624	Denomination: CIRCUIT DIAGRAM	Page Type: PLC REMOTE A.O.V., CABINET PWR	
Information Security Class: PUBLIC	Document No.: 3223337-0003	Doc. type: ELD	Version: AM	Page: 106

This drawing must not without the consent of Tetra Pak
be copied, transmitted or disclosed to any third party.

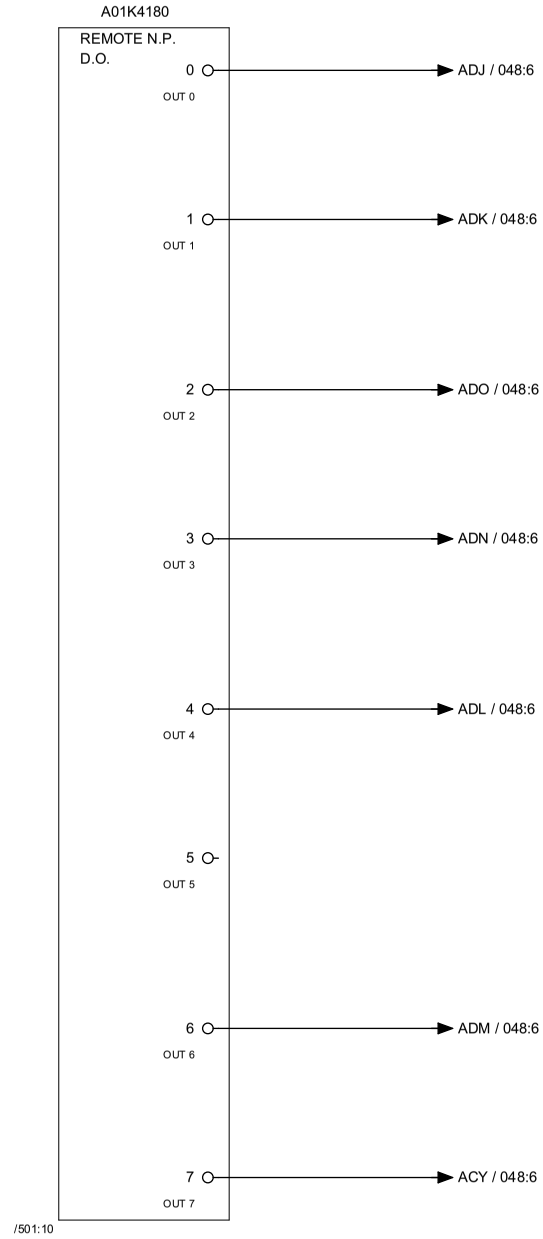

A01C5300	CIP RECORDER START
A01C5300	PRODUCTION RECORDER START
A01C5300	STERILE PARAMETERS 1
A01C5300	STERILE PARAMETERS 2
A01C5300	FILLING MACHINE IN PRODUCTION
	SPARE
A01C5300	MAIN MOTOR OPERATING
A01C5300	HVA CIP

Tetra Pak®	Version Designer: RICO	Version Date: 01/10/2014	Machine: A3 CompactFlex 0300
ECM No: 687624	Denomination: CIRCUIT DIAGRAM	Page Type: PLC REMOTE D.O, CABINET PWR	
Information Security Class: PUBLIC	Document No.: 3223337-0003	Doc. type: ELD	Version: AM / Page: 107

This drawing must not without the consent of Tetra Pak
be copied, transmitted or disclosed to any third party.

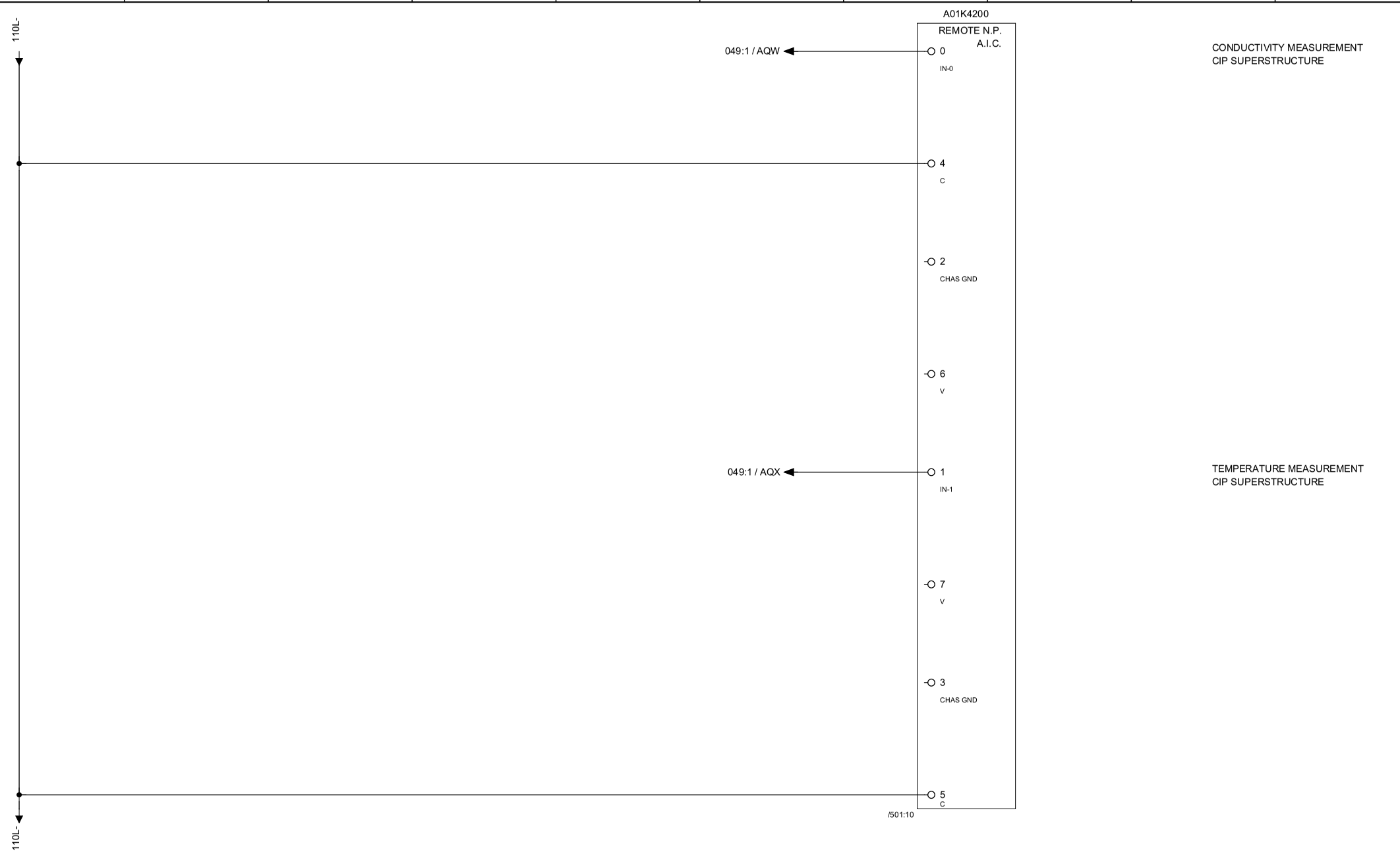

Tetra Pak®	Version Designer: RICO	Version Date: 01/10/2014	Machine: A3 CompactFlex 0300	
	ECM No: 687624	Denomination: CIRCUIT DIAGRAM	Page Type: PLC REMOTE A.I.C., CABINET PWR	
	Information Security Class: PUBLIC	Document No.: 3223337-0003	Doc. type: ELD	Version: AM	Page: 108

This drawing must not without the consent of Tetra Pak
be copied, transmitted or disclosed to any third party.

1	2	3	4	5	6	7	8	9	10

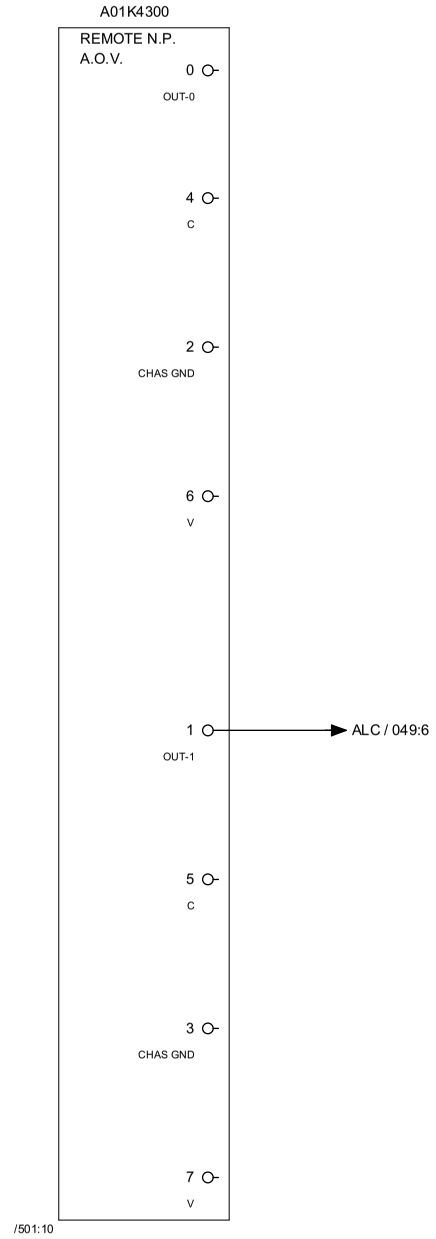

SPARE

A01C5310 H2O2 CONCENTRATION
FOR RECORDER

Tetra Pak®	Version Designer RICO	Version Date 01/10/2014	Machine A3 CompactFlex 0300		
	ECM No 687624	Denomination CIRCUIT DIAGRAM	Page Type PLC REMOTE A.O.V., CABINET PWR		
	Information Security Class PUBLIC	Document No. 3223337-0003	Doc. type ELD	Version AM	Page 109

This drawing must not without the consent of Tetra Pak
be copied, transmitted or disclosed to any third party.

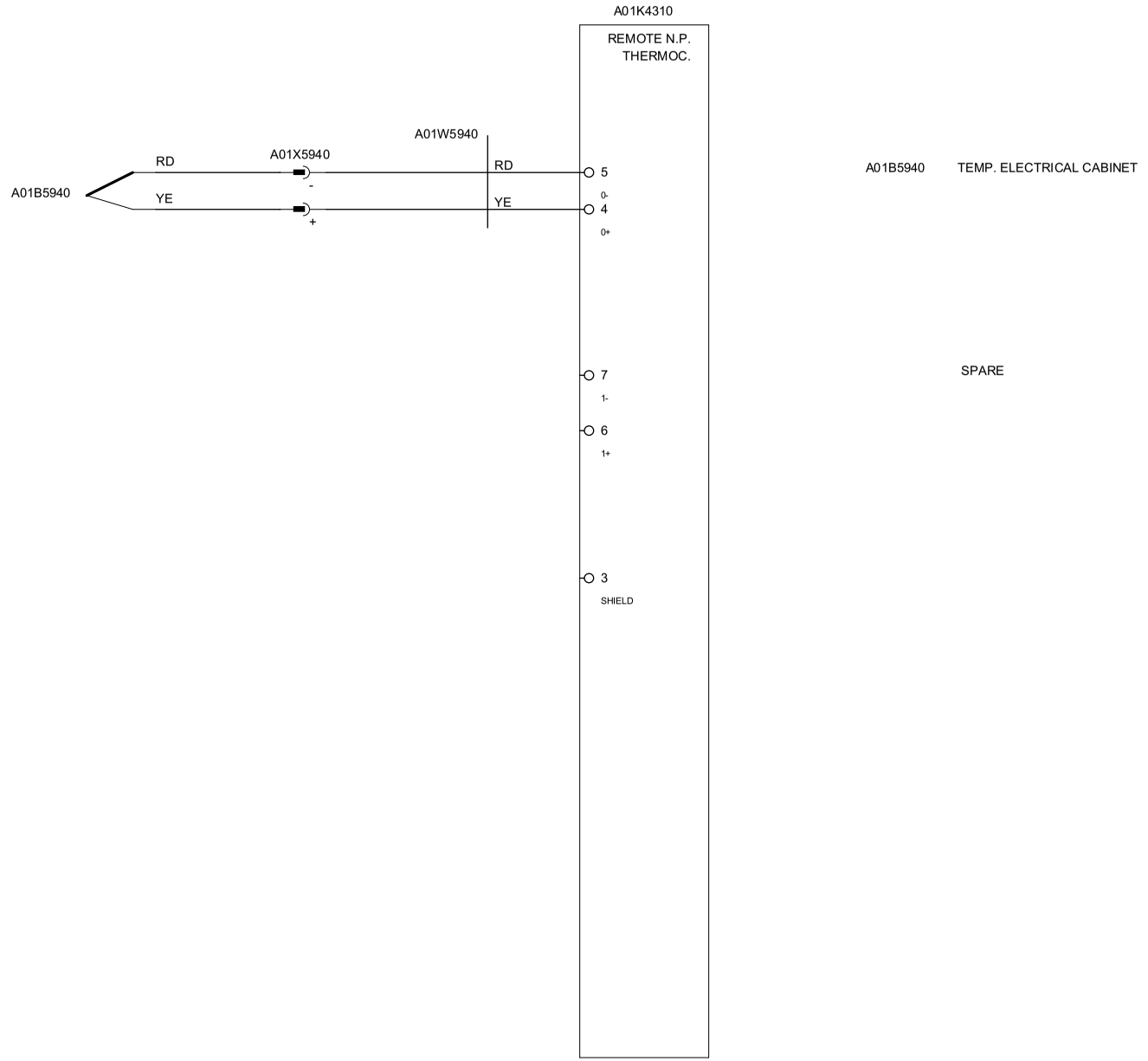

Tetra Pak®	Version Designer: RICO	Version Date: 01/10/2014	Machine: A3 CompactFlex 0300	
	ECM No: 687624	Denomination: CIRCUIT DIAGRAM	Page Type: PLC REMOTE TH. , CABINET PWR	
	Information Security Class: PUBLIC	Document No.: 3223337-0003	Doc. type: ELD	Version: AM / Page: 110

RELEASED

This drawing must not without the consent of Tetra Pak be copied, transmitted or disclosed to any third party.

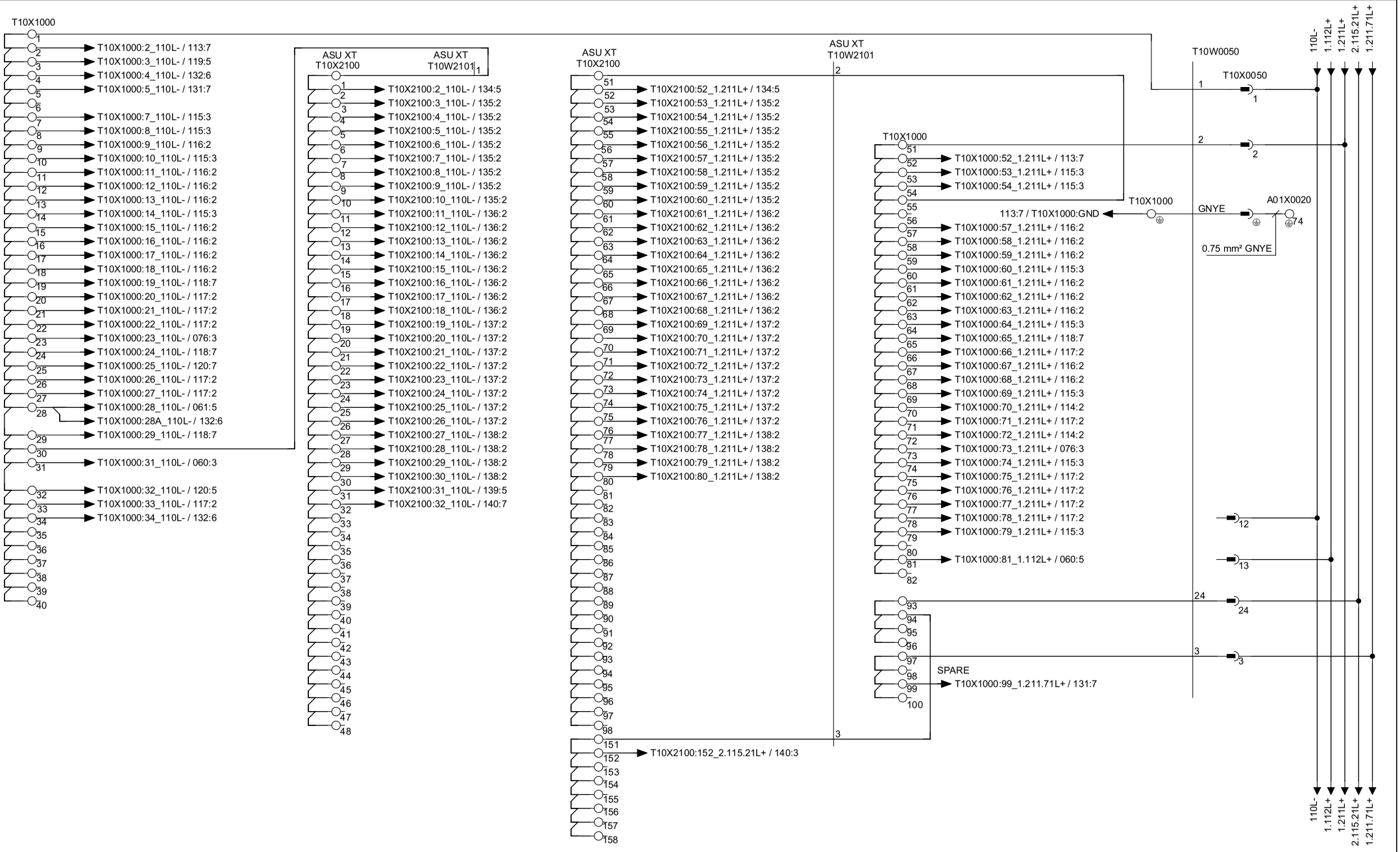

Tetra Pak®	Version Designer: RICO	Version Date: 01/10/2014	Machine: A3 CompactFlex 0300	
	ECM No: 687624	Denomination: CIRCUIT DIAGRAM	Page Type: TERMINAL STRIP COMMON, ASU (NEW)	
	Information Security Class: PUBLIC	Document No.: 3223337-0003	Doc. type: ELD	Version: AM	Page: 112

This drawing must not without the consent of Tetra Pak
be copied, transmitted or disclosed to any third party.

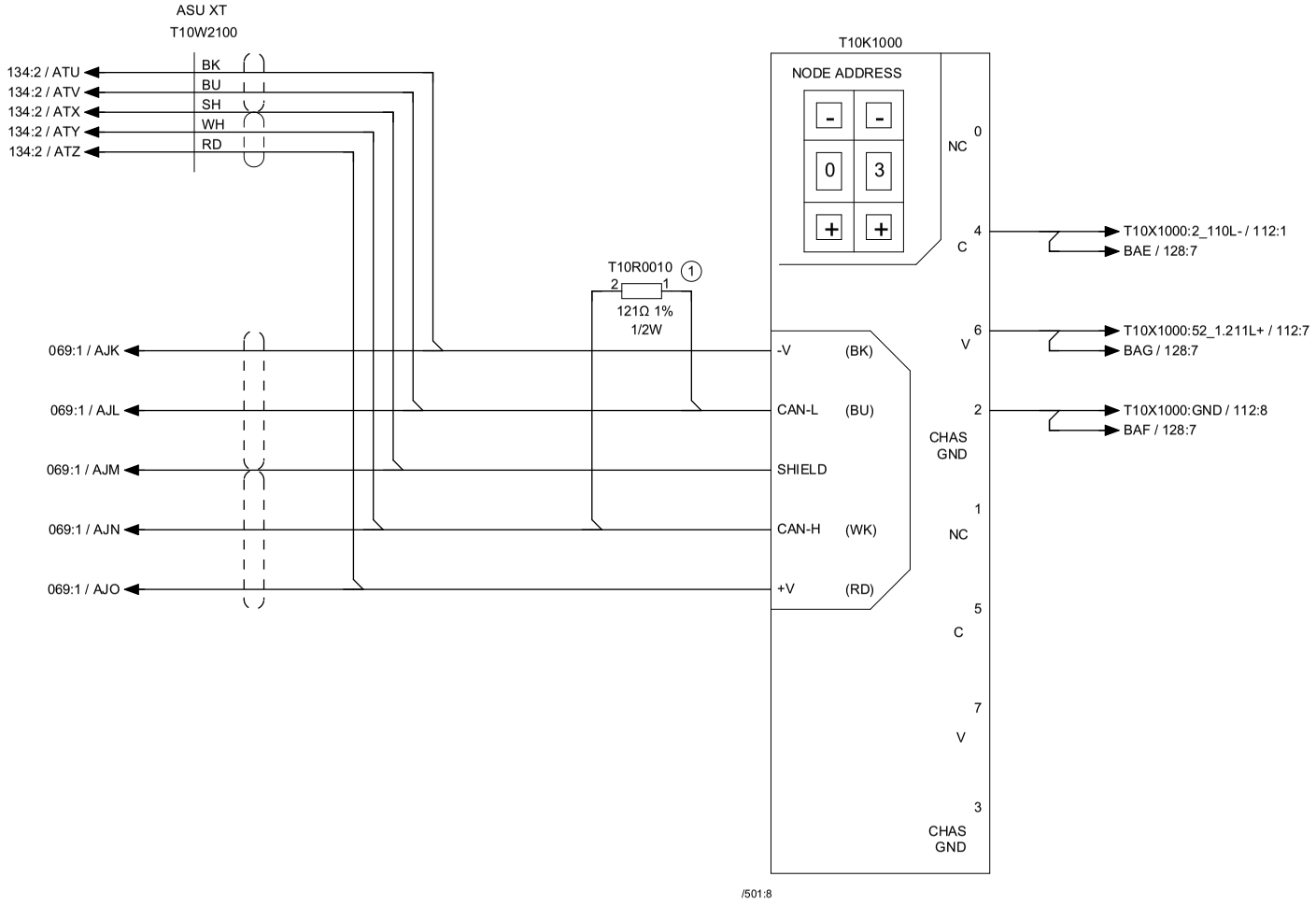

Tetra Pak®	Version Designer: RICO	Version Date: 01/10/2014	Machine: A3 CompactFlex 0300	
	ECM No: 687624	Denomination: CIRCUIT DIAGRAM	Page Type: DEVICENET ADAPTER, ASU	
Information Security Class: PUBLIC	Document No.: 3223337-0003	Doc. type: ELD	Version: AM	Page: 113

RELEASED

This drawing must not without the consent of Tetra Pak be copied, transmitted or disclosed to any third party.

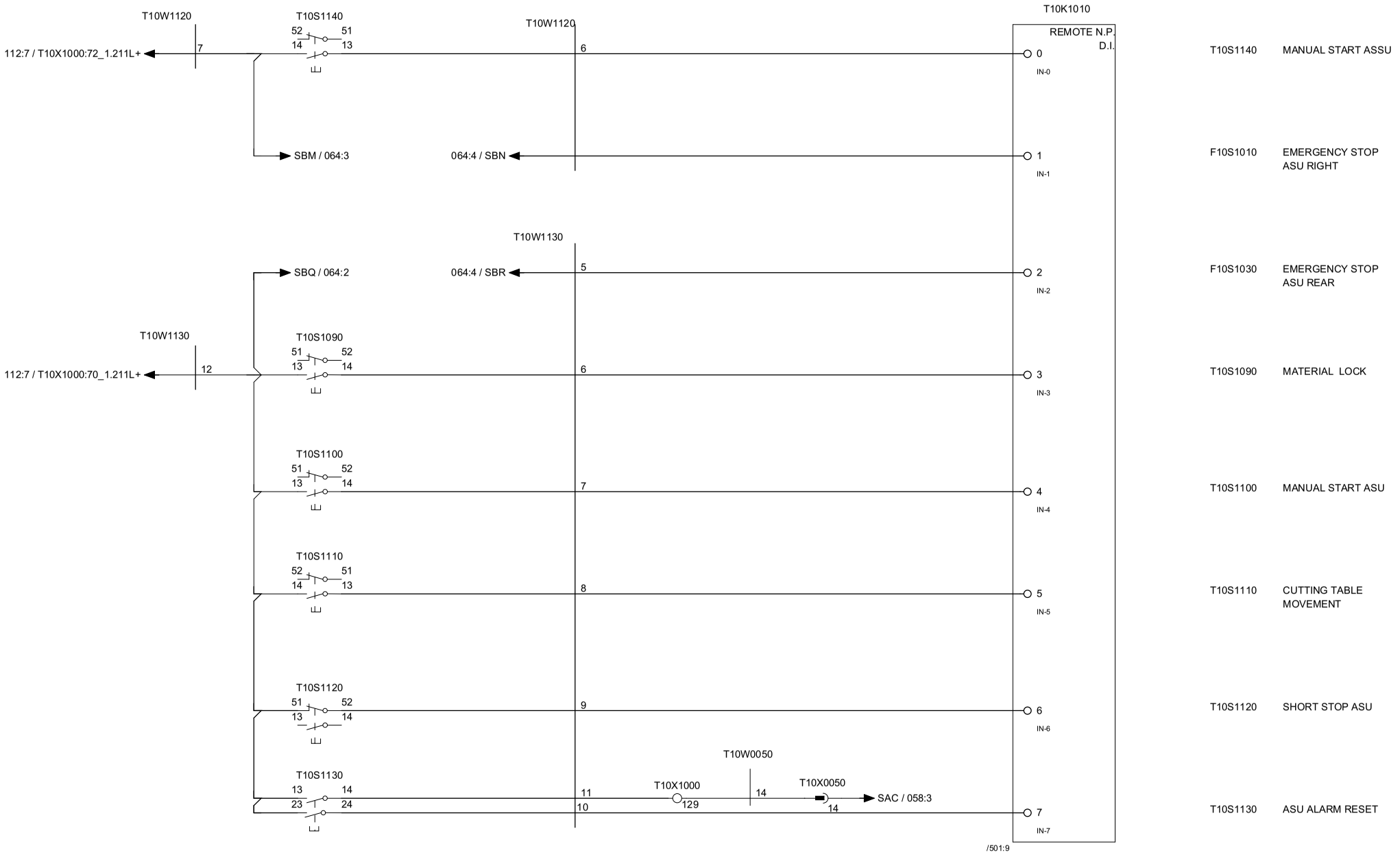

T10S1140	MANUAL START ASSU
F10S1010	EMERGENCY STOP ASU RIGHT
F10S1030	EMERGENCY STOP ASU REAR
T10S1090	MATERIAL LOCK
T10S1100	MANUAL START ASU
T10S1110	CUTTING TABLE MOVEMENT
T10S1120	SHORT STOP ASU
T10S1130	ASU ALARM RESET

Tetra Pak®	Version Designer: RICO	Version Date: 01/10/2014	Machine: A3 CompactFlex 0300	
	ECM No: 687624	Denomination: CIRCUIT DIAGRAM	Page Type: PLC REMOTE D.I, ASU	
	Information Security Class: PUBLIC	Document No.: 3223337-0003	Doc. type: ELD	Version: AM	Page: 114

This drawing must not without the consent of Tetra Pak be copied, transmitted or disclosed to any third party.

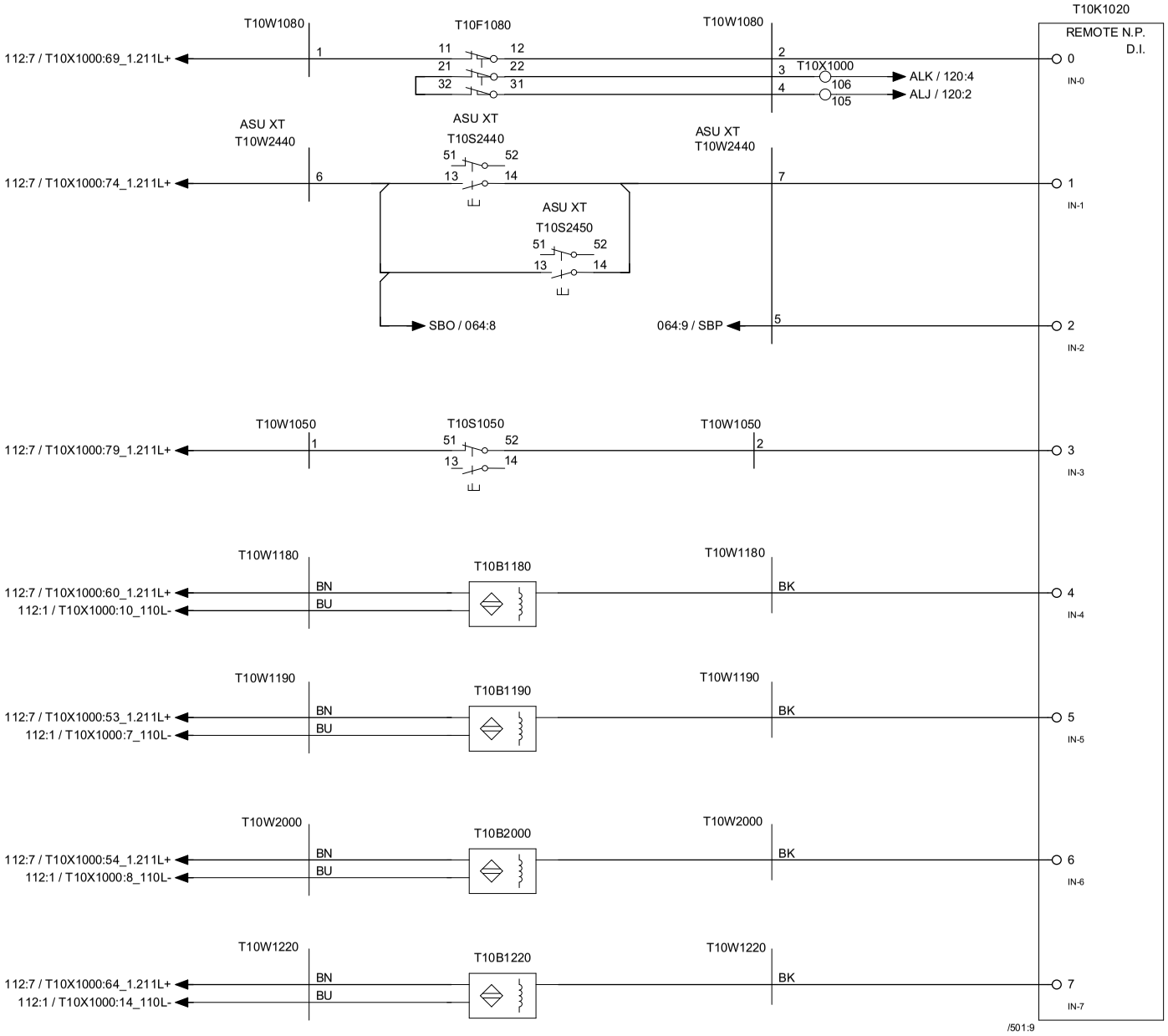

T10F1080	SA EXTERNAL DOOR GUARD
T10S2440 T10S2450	ASU DOORS MANUALLY OPEN/CLOSE
F10S2460	ASU INTERNAL EMERGENCY STOP
T10S1050	MANUAL UNLOCK COUNTER ROLLER MAGAZINE
T10B1180	SPLICE TABLE 2 IN POSITION
T10B1190	SPLICE TABLE 1 IN POSITION
T10B2000	STRIP MAGAZINE FULL
T10B1220	SIDE FEEDER POSITION 2

Tetra Pak®	Version Designer: RICO	Version Date: 01/10/2014	Machine: A3 CompactFlex 0300	
	ECM No: 687624	Denomination: CIRCUIT DIAGRAM	Page Type: PLC REMOTE D.I, ASU	
	Information Security Class: PUBLIC	Document No.: 3223337-0003	Doc. type: ELD	Version: AM	Page: 115

This drawing must not without the consent of Tetra Pak
be copied, transmitted or disclosed to any third party.

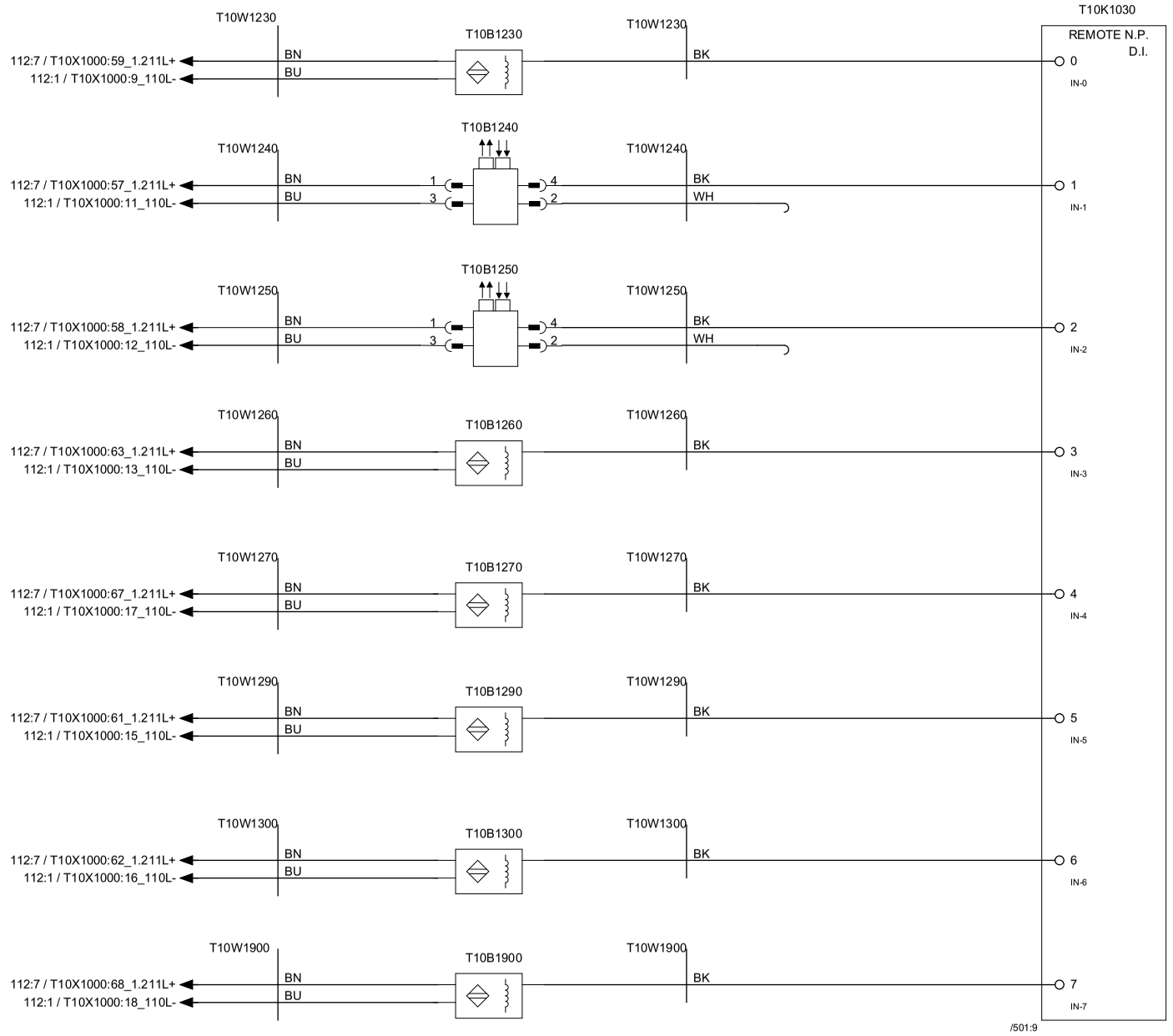

T10B1230	SIDE FEEDER POSITION 1
T10B1240	LOOP EMPTY
T10B1250	ADJUSTMENT LOOP
T10B1260	MAGAZINE EMPTY
T10B1270	MAGAZINE FULL
T10B1290	INDICATE STRIP END BOBBIN 1
T10B1300	INDICATE STRIP END BOBBIN 2
T10B1900	STRIP APPLICATOR PRODUCTION CYLINDER IN

Tetra Pak®	Version Designer: RICO	Version Date: 01/10/2014	Machine: A3 CompactFlex 0300	
	ECM No: 687624	Denomination: CIRCUIT DIAGRAM	Page Type: PLC REMOTE D.I, ASU	
	Information Security Class: PUBLIC	Document No.: 3223337-0003	Doc. type: ELD	Version: AM	Page: 116

This drawing must not without the consent of Tetra Pak
be copied, transmitted or disclosed to any third party.

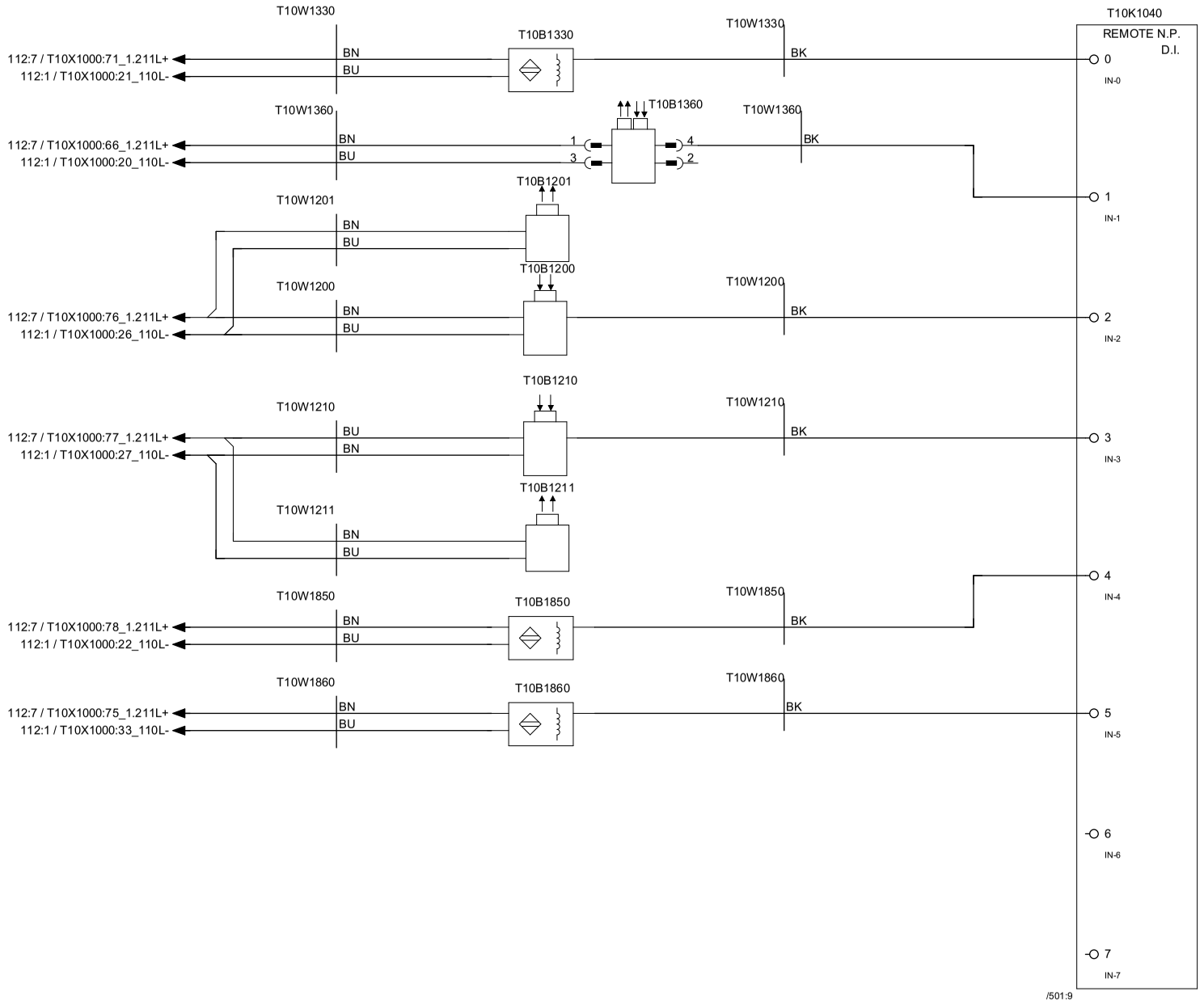

T10B1330	STRIP SPLICE NOT PREPARED
T10B1360	PRESSURE ROLLER ASU POSITION
T10B1200	PACKAGING MATERIAL REEL
T10B1201	1 EMPTY
T10B1210	PACKAGING MATERIAL REEL
T10B1211	2 EMPTY
T10B1850	SA SHORT STOP HEATER IN
T10B1860	SENSOR TENSION MISSING STRIP
	SPARE
	SPARE

Tetra Pak®	Version Designer: RICO	Version Date: 01/10/2014	Machine: A3 CompactFlex 0300	
	ECM No: 687624	Denomination: CIRCUIT DIAGRAM	Page Type: PLC REMOTE D.I, ASU	
Information Security Class: PUBLIC	Document No.: 3223337-0003	Doc. type: ELD	Version: AM	Page: 117

This drawing must not without the consent of Tetra Pak be copied, transmitted or disclosed to any third party.

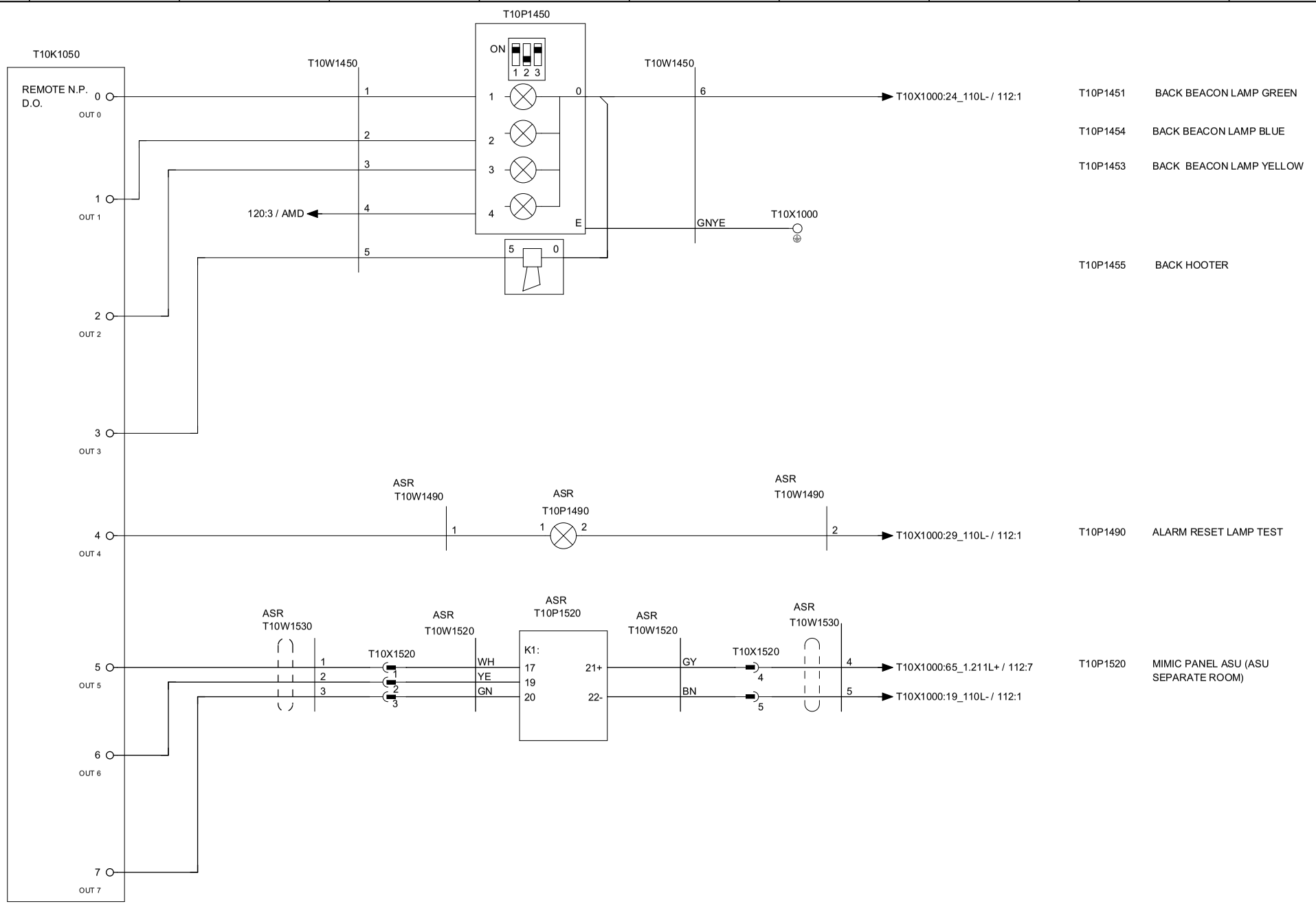

Tetra Pak®	Version Designer: RICO	Version Date: 01/10/2014	Machine: A3 CompactFlex 0300	
	ECM No: 687624	Denomination: CIRCUIT DIAGRAM	Page Type: PLC REMOTE D.O, ASU	
	Information Security Class: PUBLIC	Document No.: 3223337-0003	Doc. type: ELD	Version: AM	Page: 118

RELEASED

This drawing must not without the consent of Tetra Pak be copied, transmitted or disclosed to any third party.

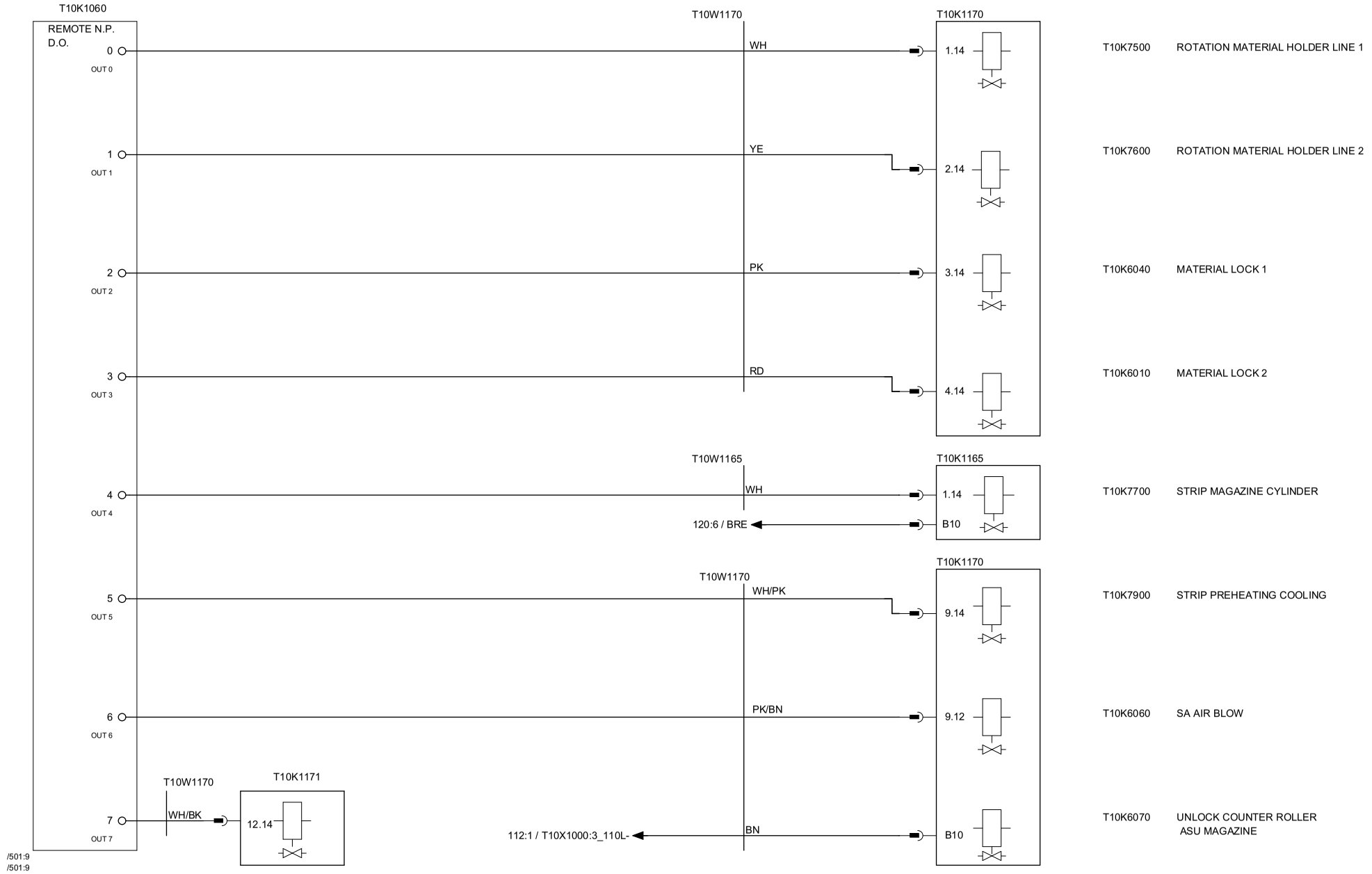

Tetra Pak®	Version Designer: RICO	Version Date: 01/10/2014	Machine: A3 CompactFlex 0300	
	ECM No: 687624	Denomination: CIRCUIT DIAGRAM	Page Type: PLC REMOTE D.O, ASU	
	Information Security Class: PUBLIC	Document No.: 3223337-0003	Doc. type: ELD	Version: AM	Page: 119

This drawing must not without the consent of Tetra Pak be copied, transmitted or disclosed to any third party.

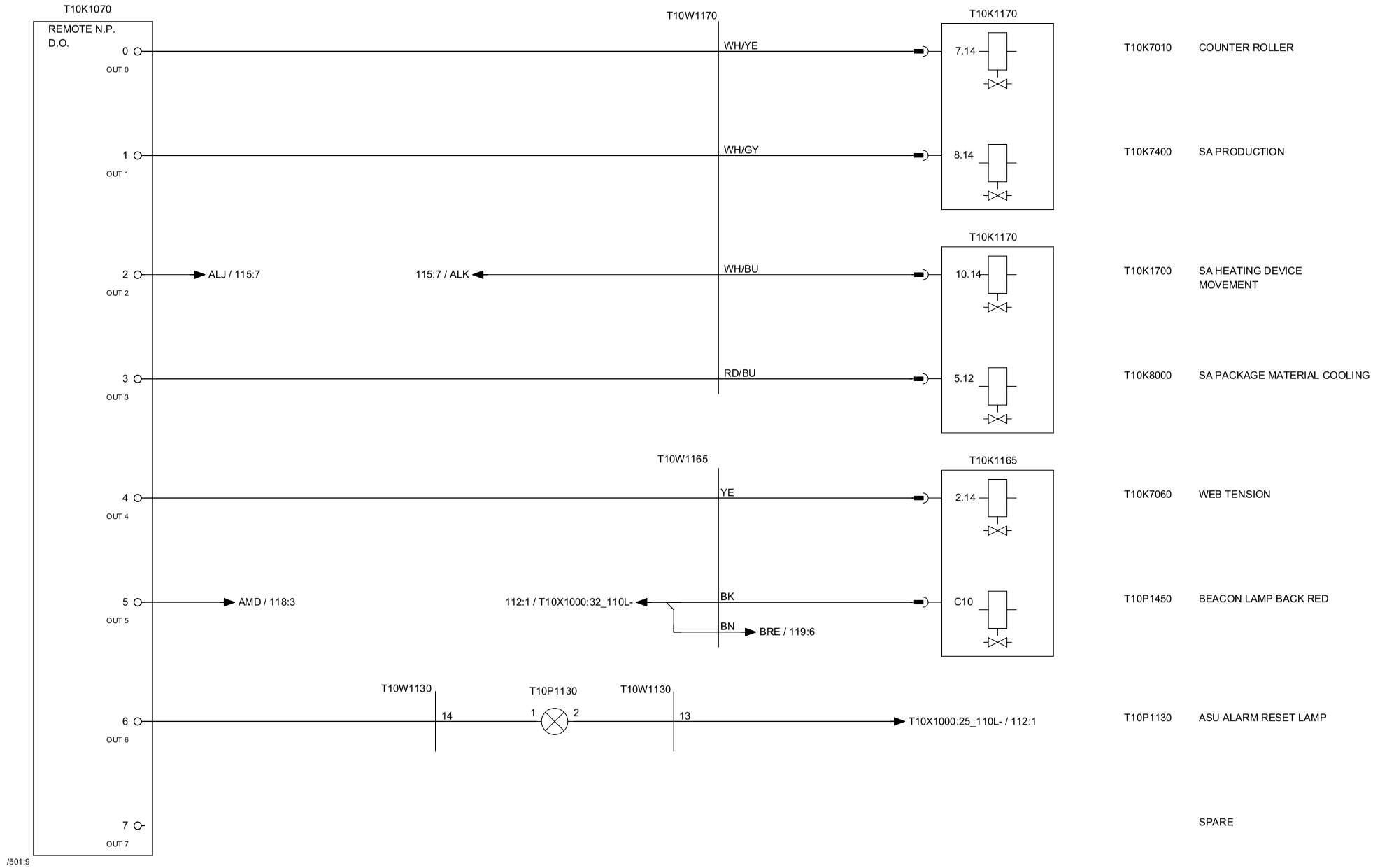

Tetra Pak®	Version Designer: RICO	Version Date: 01/10/2014	Machine: A3 CompactFlex 0300	
	ECM No: 687624	Denomination: CIRCUIT DIAGRAM	Page Type: PLC REMOTE D.O, ASU	
	Information Security Class: PUBLIC	Document No.: 3223337-0003	Doc. type: ELD	Version: AM / Page: 120

RELEASED

This drawing must not without the consent of Tetra Pak be copied, transmitted or disclosed to any third party.

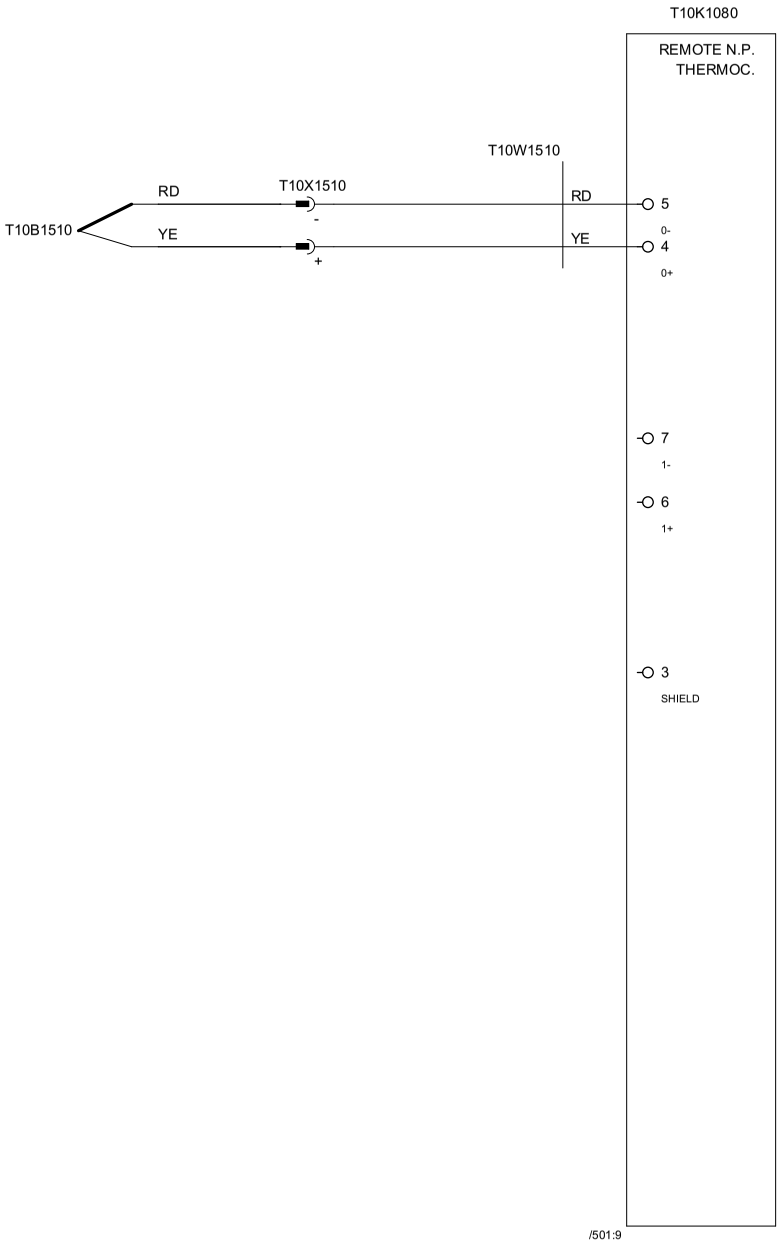

T10B1510 TEMP.ASU CONSTANT HEAT BAR

SPARE

Tetra Pak®	Version Designer: RICO	Version Date: 01/10/2014	Machine: A3 CompactFlex 0300	
	ECM No: 687624	Denomination: CIRCUIT DIAGRAM	Page Type: PLC REMOTE D.O, ASU	
Information Security Class: PUBLIC	Document No.: 3223337-0003	Doc. type: ELD	Version: AM	Page: 121

This drawing must not without the consent of Tetra Pak
be copied, transmitted or disclosed to any third party.

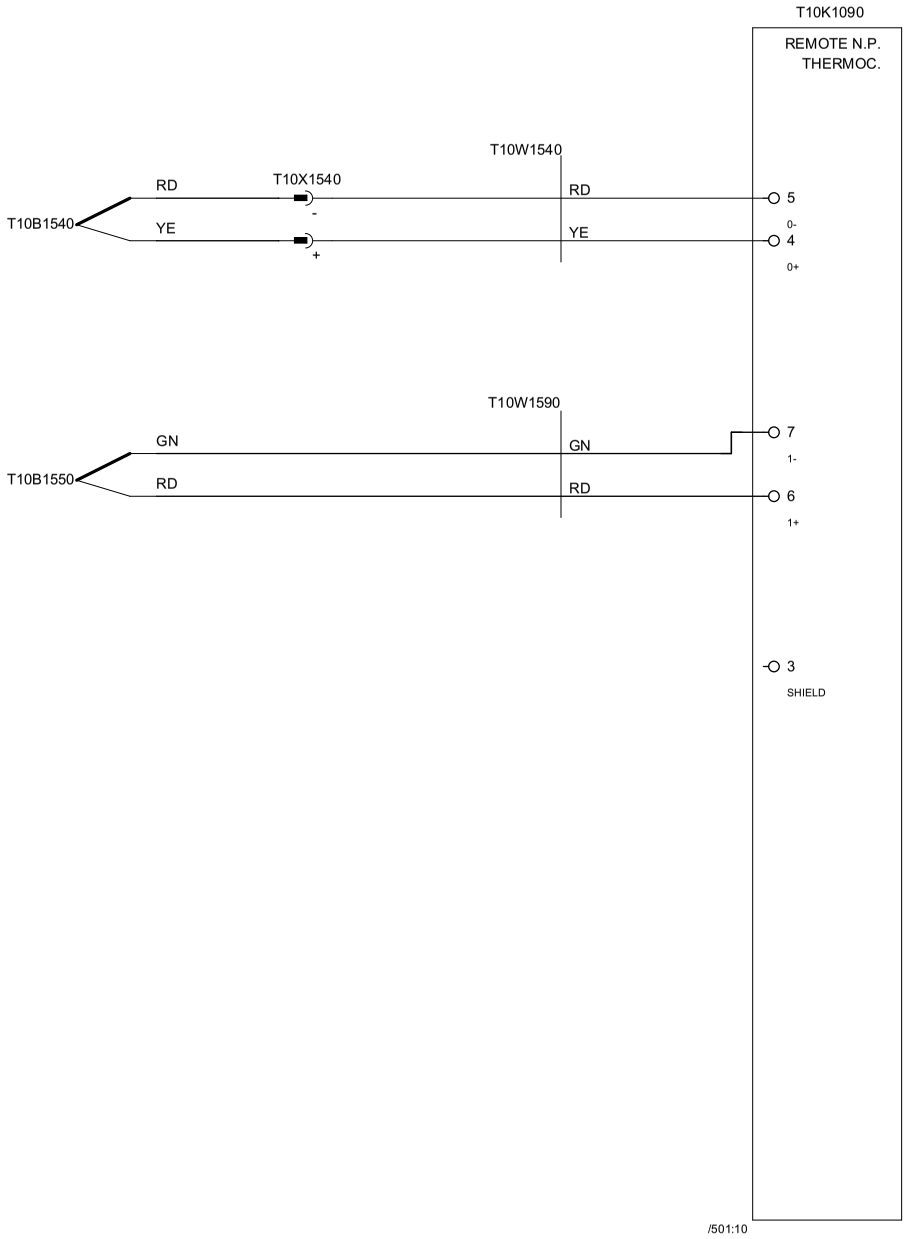

T10B1540 TEMP.SA ELEMENT

T10B1550 TEMP. SA SS ELEMENT

Tetra Pak®	Version Designer: RICO	Version Date: 01/10/2014	Machine: A3 CompactFlex 0300	
	ECM No: 687624	Denomination: CIRCUIT DIAGRAM	Page Type: PLC REMOTE TH., ASU	
	Information Security Class: PUBLIC	Document No.: 3223337-0003	Doc. type: ELD	Version: AM / Page: 122

This drawing must not without the consent of Tetra Pak
be copied, transmitted or disclosed to any third party.

1	2	3	4	5	6	7	8	9	10

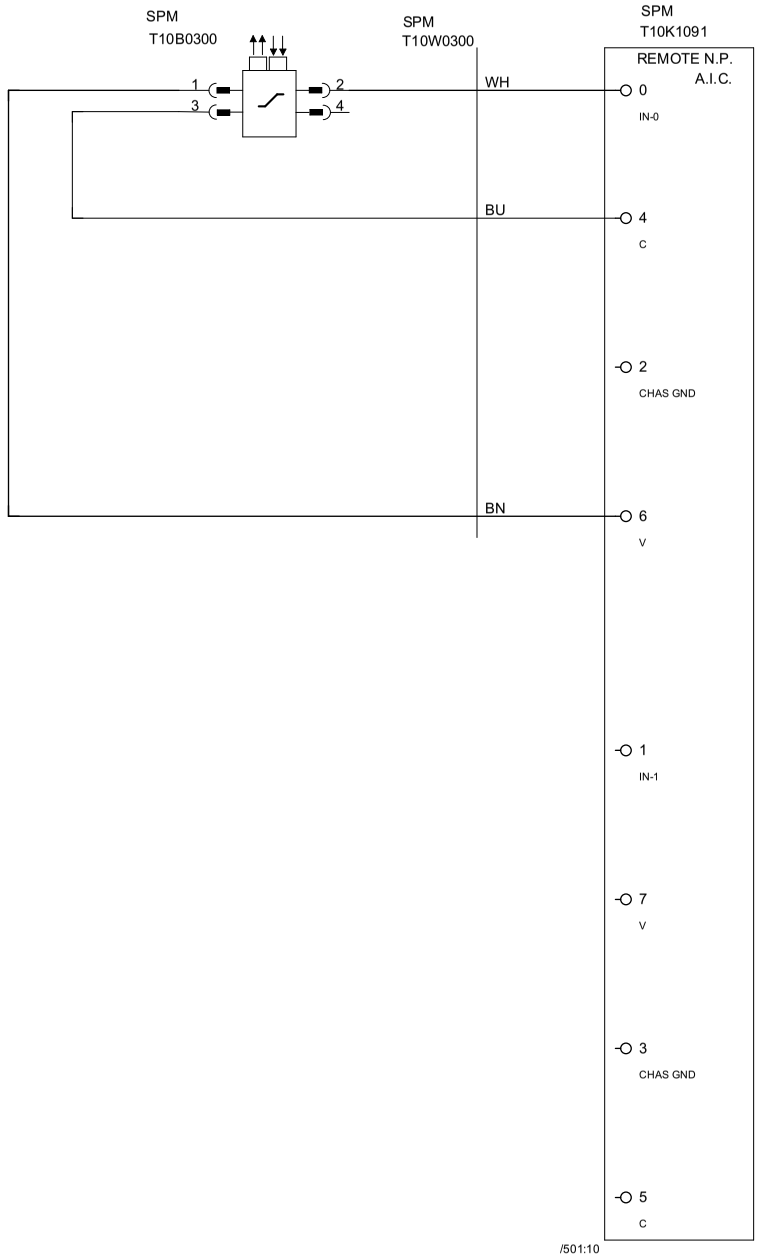

T10B0300 STRIP POSITION MONITORING

SPARE

Tetra Pak®	Version Designer: RICO	Version Date: 01/10/2014	Machine: A3 CompactFlex 0300			
	ECM No: 687624	Denomination: CIRCUIT DIAGRAM	Page Type: PLC REMOTE A.I.C., ASU			
	Information Security Class: PUBLIC	Document No.: 3223337-0003	Doc. type: ELD	Version: AM	Page: 123	

This drawing must not without the consent of Tetra Pak
be copied, transmitted or disclosed to any third party.

1	2	3	4	5	6	7	8	9	10

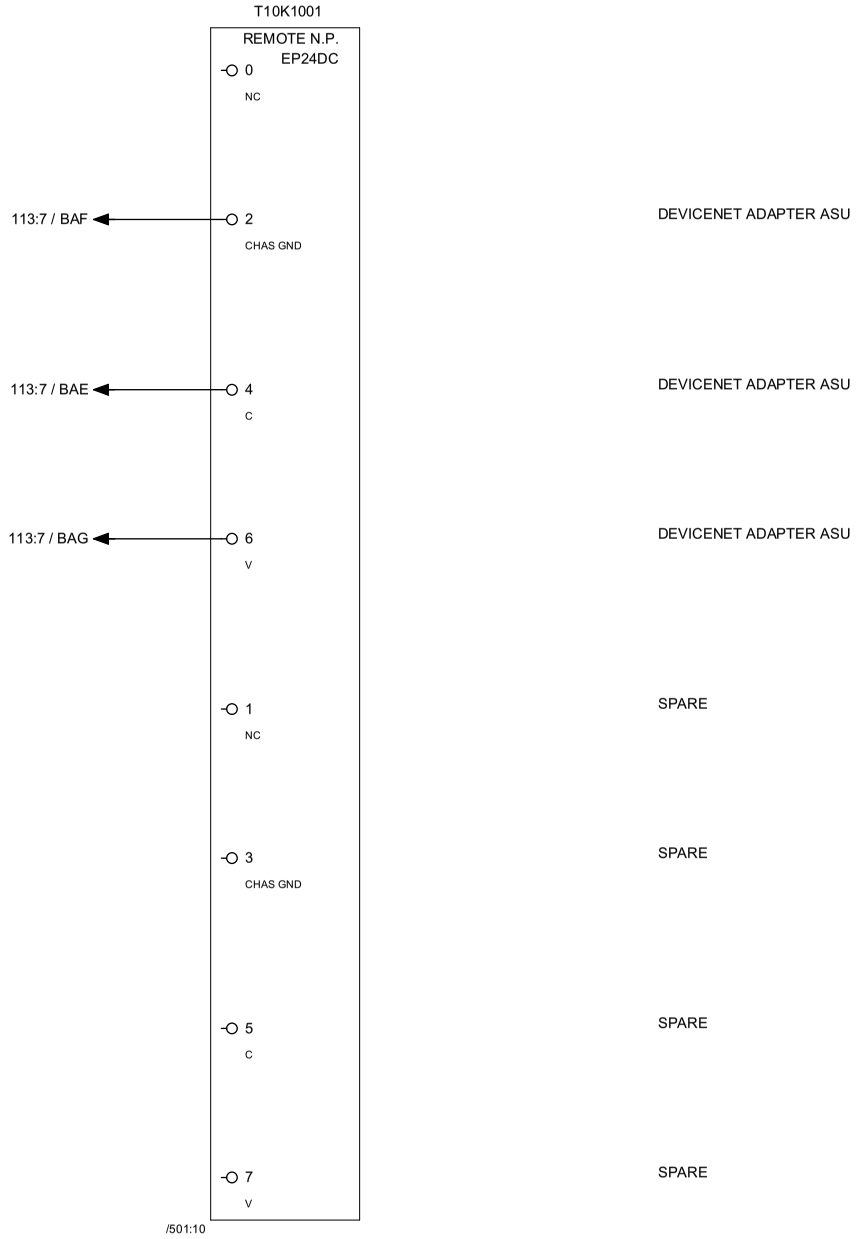

Tetra Pak®	Version Designer: RICO	Version Date: 01/10/2014	Machine: A3 CompactFlex 0300	
	ECM No: 687624	Denomination: CIRCUIT DIAGRAM	Page Type: PLC REMOTE DI, ASU	
	Information Security Class: PUBLIC	Document No.: 3223337-0003	Doc. type: ELD	Version: AM / Page: 128

RELEASED

This drawing must not without the consent of Tetra Pak be copied, transmitted or disclosed to any third party.

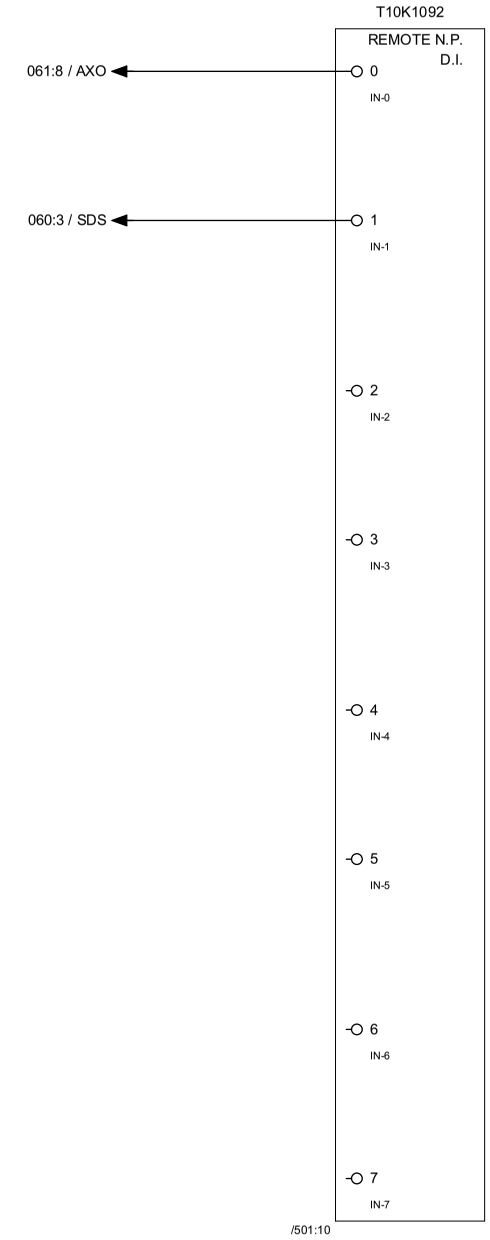

T10K3000	FEEDBACK NEW VENTING VALVE FESTO
T10B1310	FEEDBACK PRESSURE SWITCH
	SPARE
	SPARE
	SPARE
	SPARE
	SPARE
	SPARE

Tetra Pak®	Version Designer: RICO	Version Date: 01/10/2014	Machine: A3 CompactFlex 0300	
	ECM No: 687624	Denomination: CIRCUIT DIAGRAM	Page Type: PLC REMOTE DI, ASU	
	Information Security Class: PUBLIC	Document No.: 3223337-0003	Doc. type: ELD	Version: AM	Page: 129

This drawing must not without the consent of Tetra Pak
be copied, transmitted or disclosed to any third party.

1	2	3	4	5	6	7	8	9	10

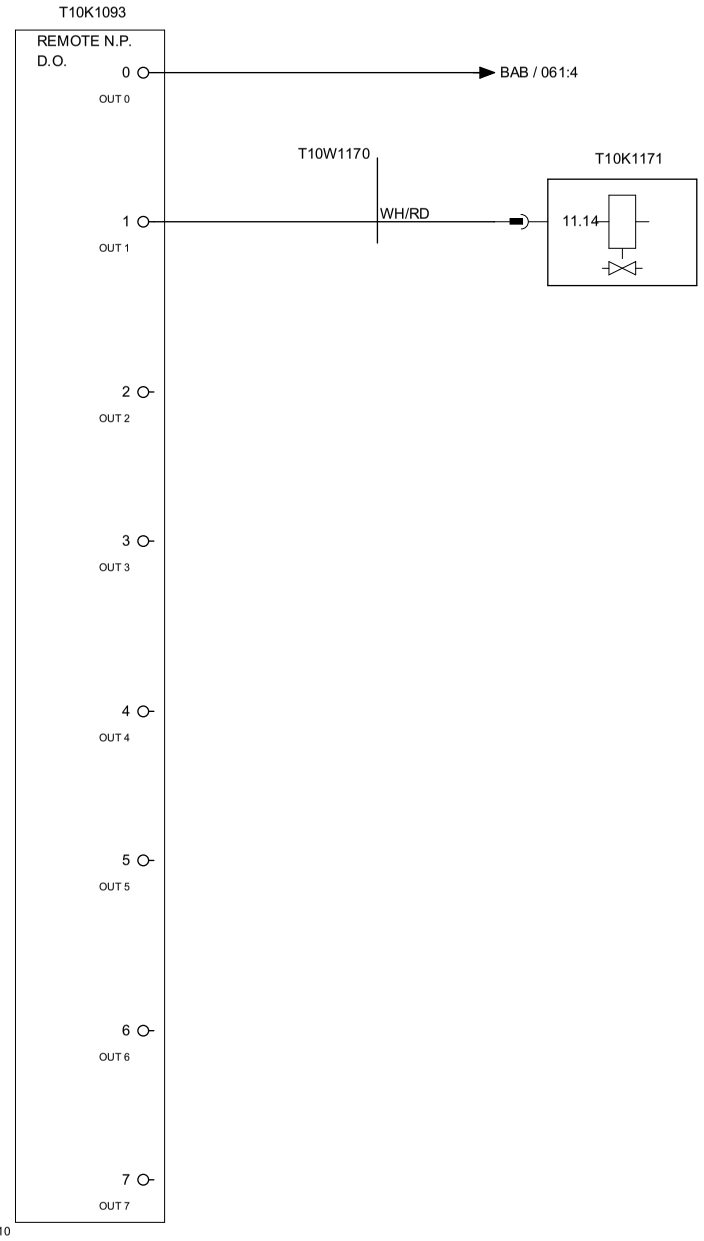

T10K3000	POWER VENTING VALVE
T10K1710	SA HEATING DEVICE MOUVEMENT BRAKE
	SPARE
	SPARE
	SPARE
	SPARE
	SPARE
	SPARE

Tetra Pak®

Version Designer: RICO	Version Date: 01/10/2014	Machine: A3 CompactFlex 0300	
ECM No: 687624	Denomination: CIRCUIT DIAGRAM	Page Type: PLC REMOTE RELAY OW4, ASU	
Information Security Class: PUBLIC	Document No.: 3223337-0003	Doc. type: ELD	Version: AM / Page: 130

This drawing must not without the consent of Tetra Pak
be copied, transmitted or disclosed to any third party.

1	2	3	4	5	6	7	8	9	10

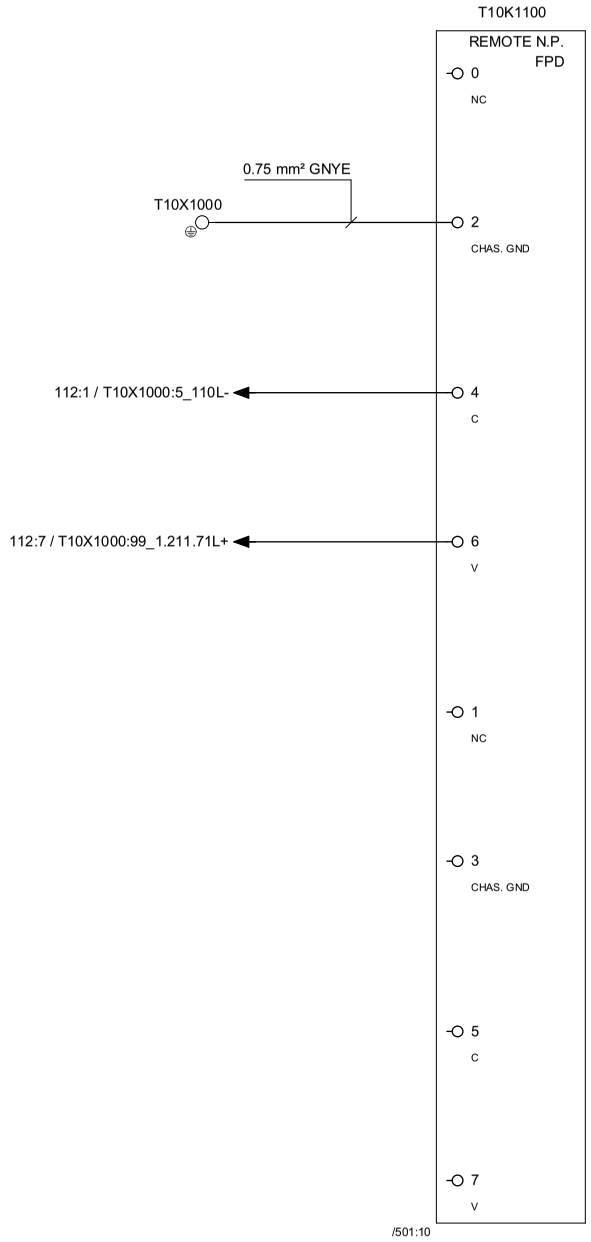

Tetra Pak®	Version Designer: RICO	Version Date: 01/10/2014	Machine: A3 CompactFlex 0300	
	ECM No: 687624	Denomination: CIRCUIT DIAGRAM	Page Type: PLC REMOTE FPD, ASU	
	Information Security Class: PUBLIC	Document No.: 3223337-0003	Doc. type: ELD	Version: AM	Page: 131

This drawing must not without the consent of Tetra Pak
be copied, transmitted or disclosed to any third party.

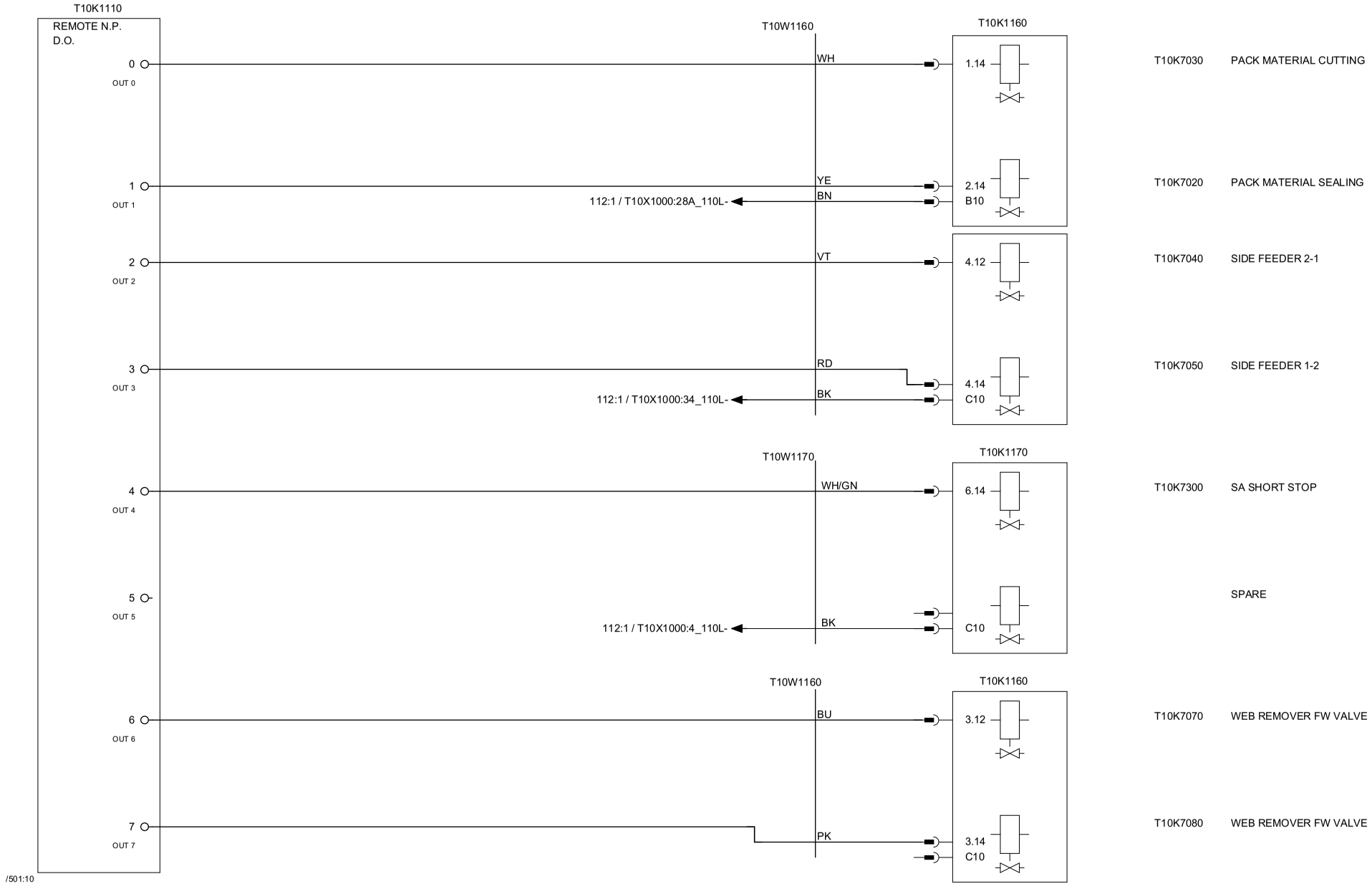

Tetra Pak®	Version Designer: RICO	Version Date: 01/10/2014	Machine: A3 CompactFlex 0300	
	ECM No: 687624	Denomination: CIRCUIT DIAGRAM	Page Type: PLC REMOTE DO, ASU	
	Information Security Class: PUBLIC	Document No.: 3223337-0003	Doc. type: ELD	Version: AM / Page: 132

RELEASED

This drawing must not without the consent of Tetra Pak be copied, transmitted or disclosed to any third party.

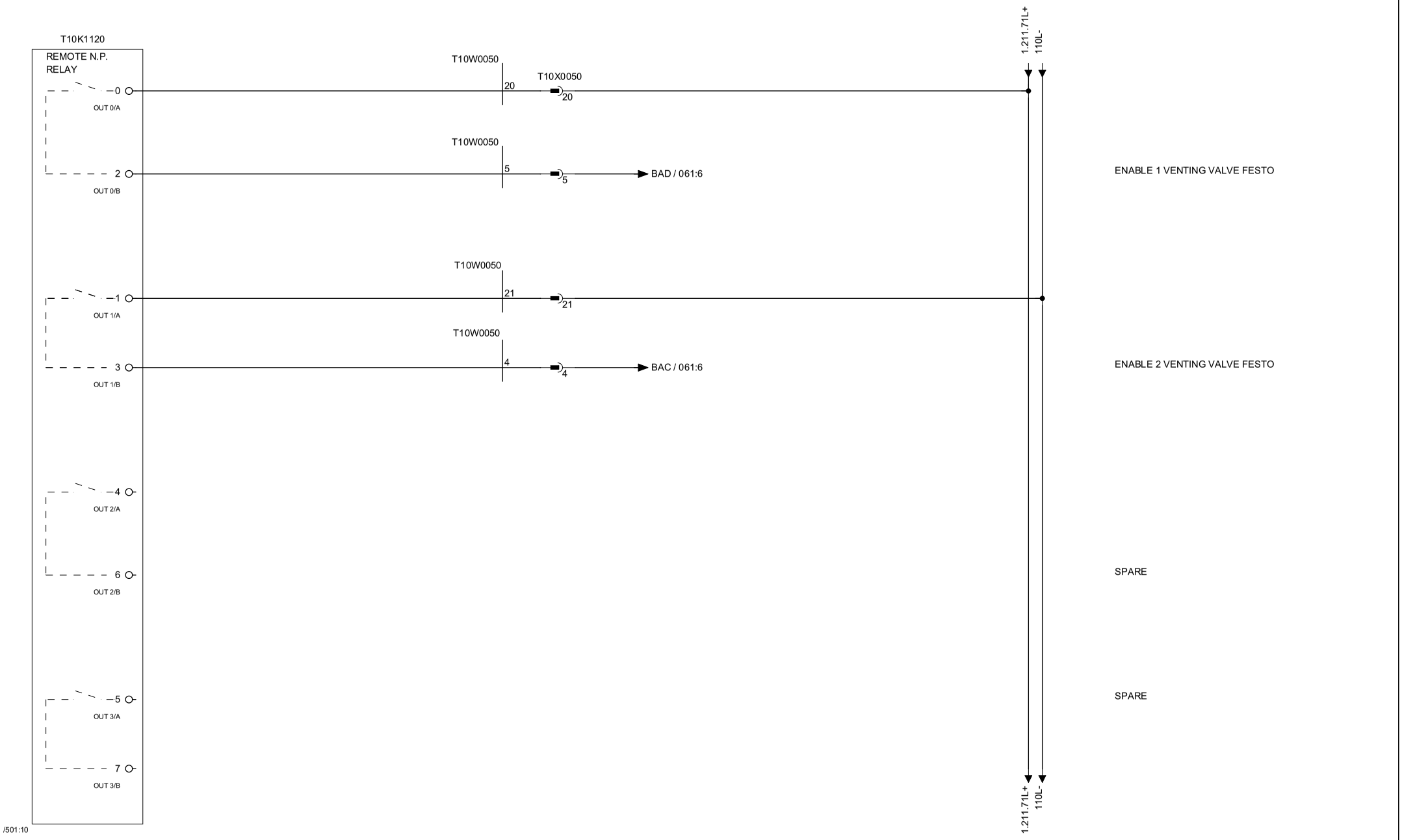

Tetra Pak®	Version Designer: RICO	Version Date: 01/10/2014	Machine: A3 CompactFlex 0300	
	ECM No: 687624	Denomination: CIRCUIT DIAGRAM	Page Type: PLC REMOTE DI, ASU	
	Information Security Class: PUBLIC	Document No.: 3223337-0003	Doc. type: ELD	Version: AM / Page: 133

This drawing must not without the consent of Tetra Pak
be copied, transmitted or disclosed to any third party.

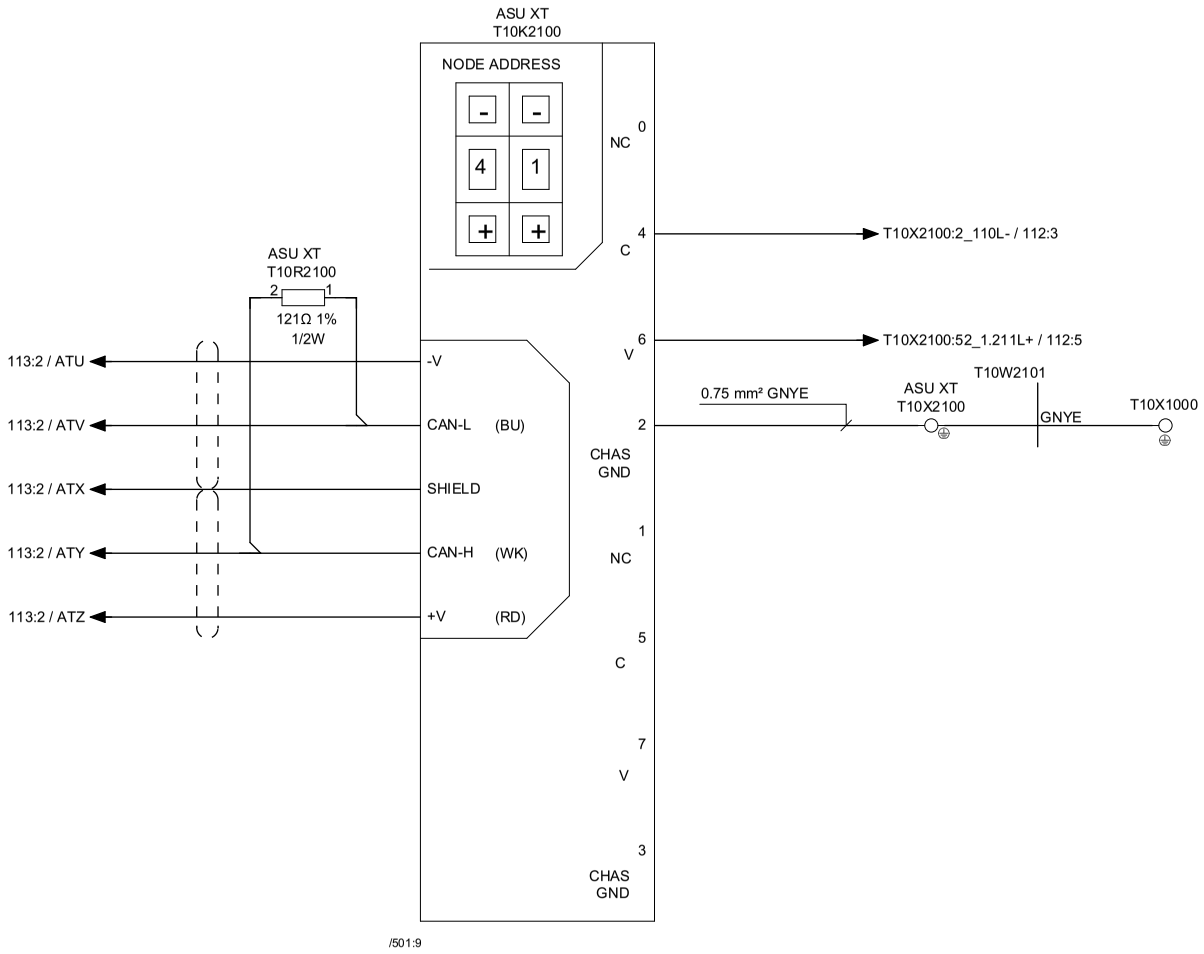

Tetra Pak®	Version Designer: RICO	Version Date: 01/10/2014	Machine: A3 CompactFlex 0300	
	ECM No: 687624	Denomination: CIRCUIT DIAGRAM	Page Type: DEVICENET ADAPTER,ASU XT	
	Information Security Class: PUBLIC	Document No.: 3223337-0003	Doc. type: ELD	Version: AM	Page: 134

This drawing must not without the consent of Tetra Pak
be copied, transmitted or disclosed to any third party.

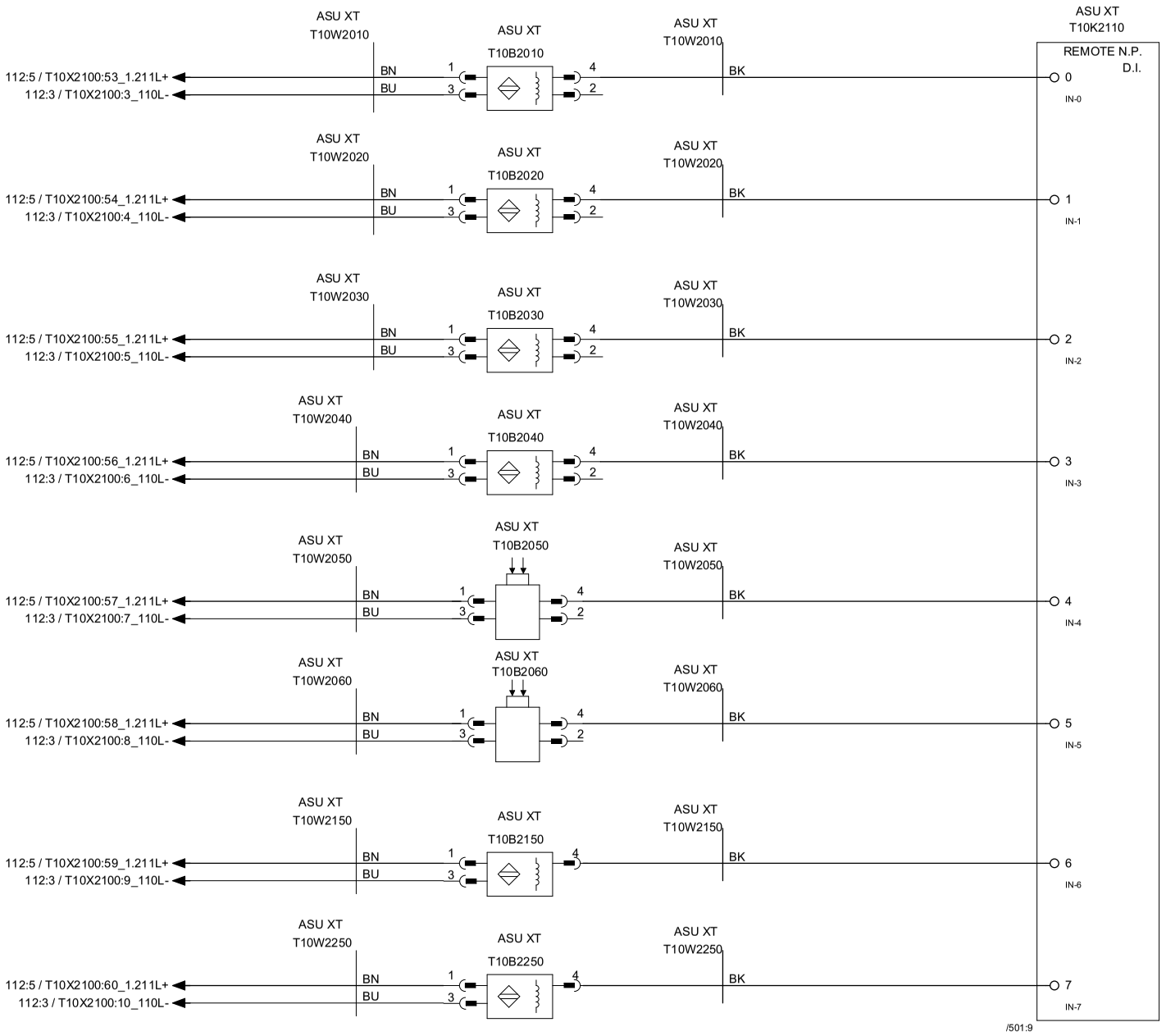

Tetra Pak®	Version Designer: RICO	Version Date: 01/10/2014	Machine: A3 CompactFlex 0300	
	ECM No: 687624	Denomination: CIRCUIT DIAGRAM	Page Type: PLC REMOTE D.I, PPI	
	Information Security Class: PUBLIC	Document No.: 3223337-0003	Doc. type: ELD	Version: AM	Page: 135

This drawing must not without the consent of Tetra Pak be copied, transmitted or disclosed to any third party.

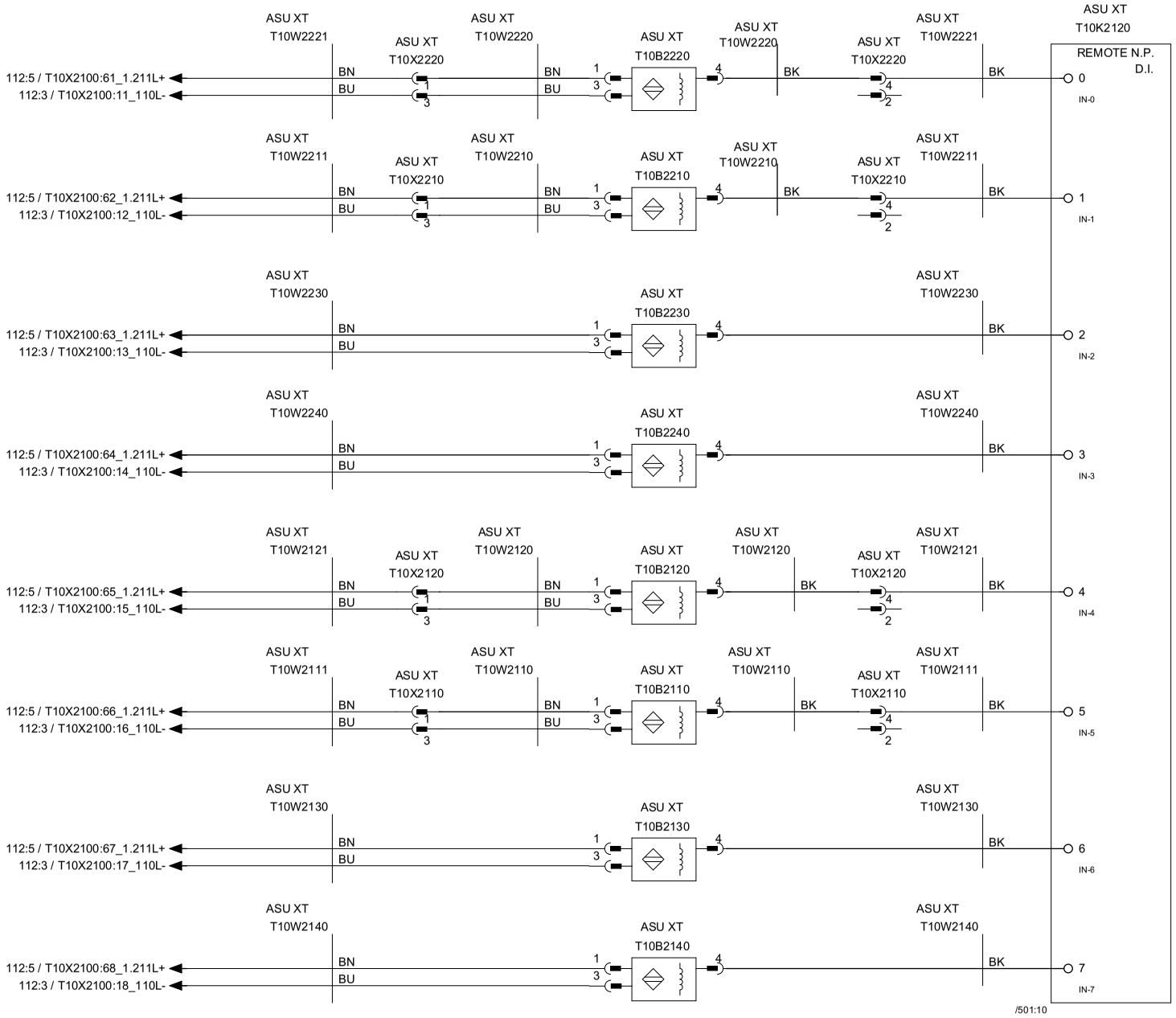

T10B2220	MANDREL SENSOR SIDE 1 LEFT
T10B2210	MANDREL SENSOR SIDE 1 RIGHT
T10B2230	MANDREL LOCK SENSOR SIDE 1 OPEN
T10B2240	MANDREL LOCK SENSOR SIDE 1 CLOSED
T10B2120	MANDREL SENSOR SIDE 2 LEFT
T10B2110	MANDREL SENSOR SIDE 2 RIGHT
T10B2130	MANDREL LOCK SENSOR SIDE 2 OPEN
T10B2140	MANDREL LOCK SENSOR SIDE 2 CLOSED

Tetra Pak®

Version Designer: RICO	Version Date: 01/10/2014	Machine: A3 CompactFlex 0300	
ECM No: 687624	Denomination: CIRCUIT DIAGRAM	Page Type: PLC REMOTE D.I, ASU XT	
Information Security Class: PUBLIC	Document No.: 3223337-0003	Doc. type: ELD	Version: AM	Page: 136

This drawing must not without the consent of Tetra Pak be copied, transmitted or disclosed to any third party.

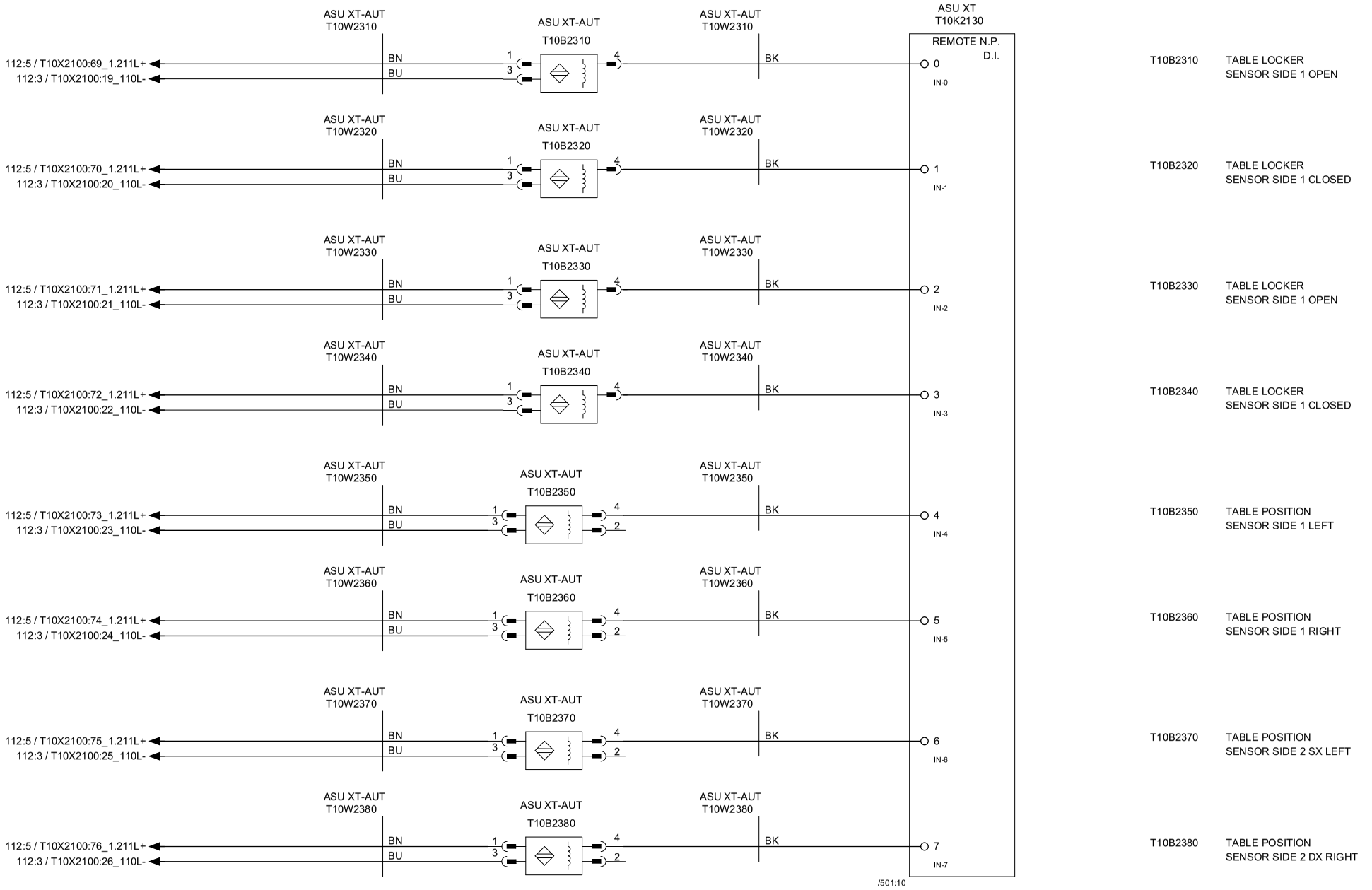

Tetra Pak®	Version Designer: RICO	Version Date: 01/10/2014	Machine: A3 CompactFlex 0300	
	ECM No: 687624	Denomination: CIRCUIT DIAGRAM	Page Type: PLC REMOTE D.I,ASU XT	
	Information Security Class: PUBLIC	Document No.: 3223337-0003	Doc. type: ELD	Version: AM	Page: 137

This drawing must not without the consent of Tetra Pak be copied, transmitted or disclosed to any third party.

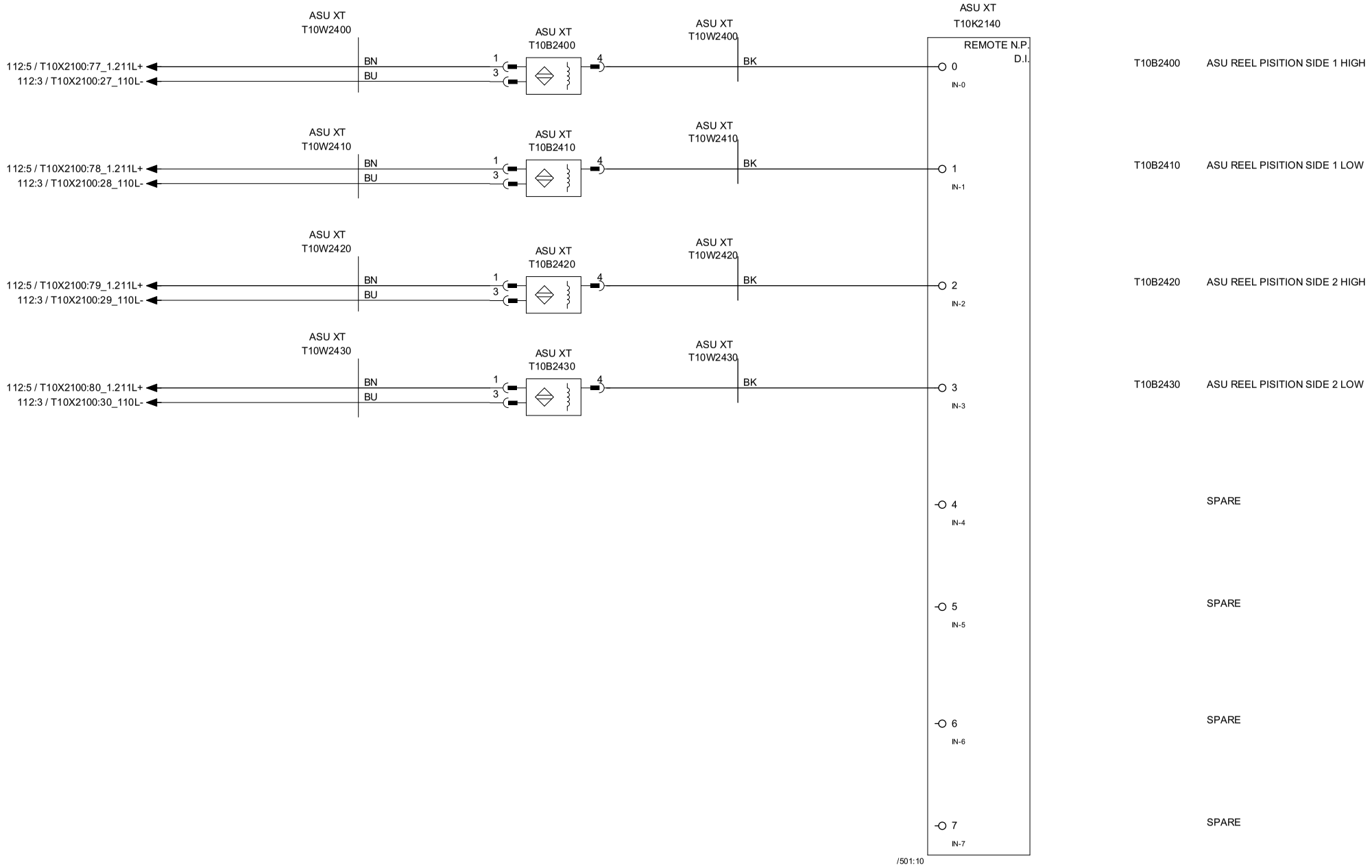

Tetra Pak®	Version Designer RICO	Version Date 01/10/2014	Machine A3 CompactFlex 0300					
	ECM No 687624	Denomination CIRCUIT DIAGRAM	Page Type PLC REMOTE D.I, ASU XT					
	Information Security Class PUBLIC	Document No. 3223337-0003	Doc. type ELD	Version AM	Page 138			

RELEASED

This drawing must not without the consent of Tetra Pak be copied, transmitted or disclosed to any third party.

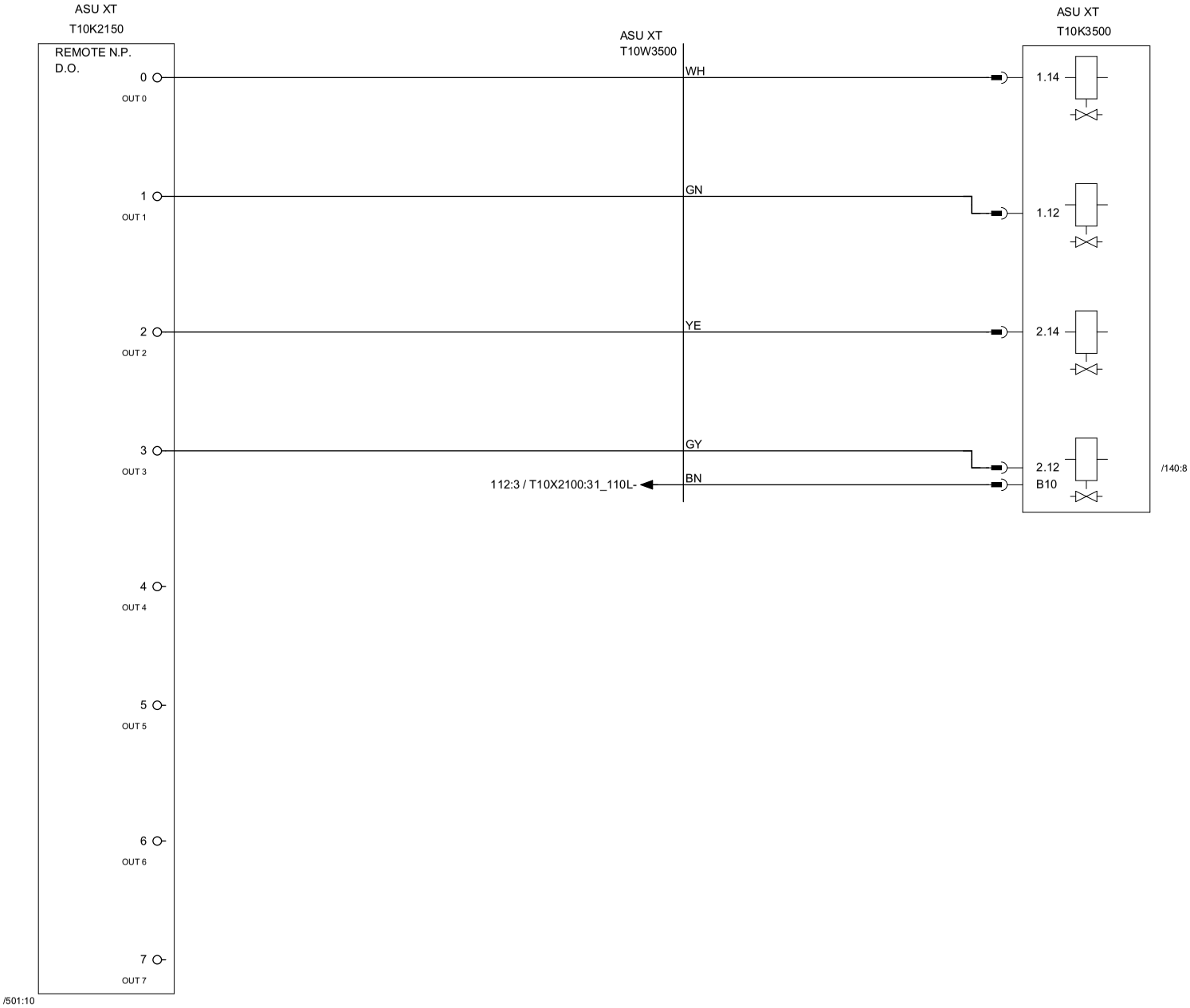

Tetra Pak®	Version Designer: RICO	Version Date: 01/10/2014	Machine: A3 CompactFlex 0300	
	ECM No: 687624	Denomination: CIRCUIT DIAGRAM	Page Type: PLC REMOTE D.O, ASU XT	
	Information Security Class: PUBLIC	Document No.: 3223337-0003	Doc. type: ELD	Version: AM / Page: 139

RELEASED

This drawing must not without the consent of Tetra Pak be copied, transmitted or disclosed to any third party.

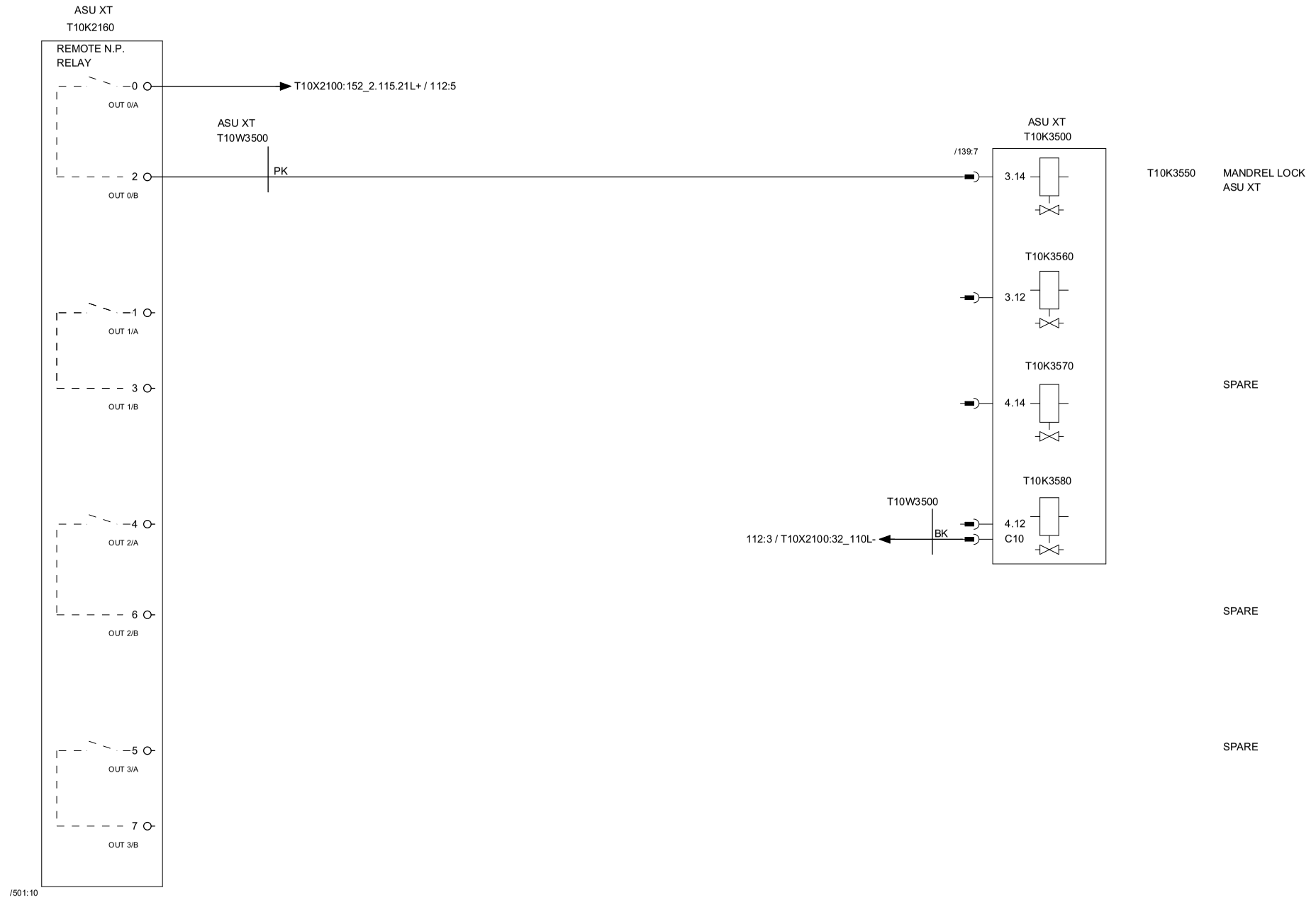

Tetra Pak®	Version Designer: RICO	Version Date: 01/10/2014	Machine: A3 CompactFlex 0300	
	ECM No: 687624	Denomination: CIRCUIT DIAGRAM	Page Type: PLC REMOTE RELAY OW4, ASU XT	
	Information Security Class: PUBLIC	Document No.: 3223337-0003	Doc. type: ELD	Version: AM	Page: 140

RELEASED

This drawing must not without the consent of Tetra Pak be copied, transmitted or disclosed to any third party.

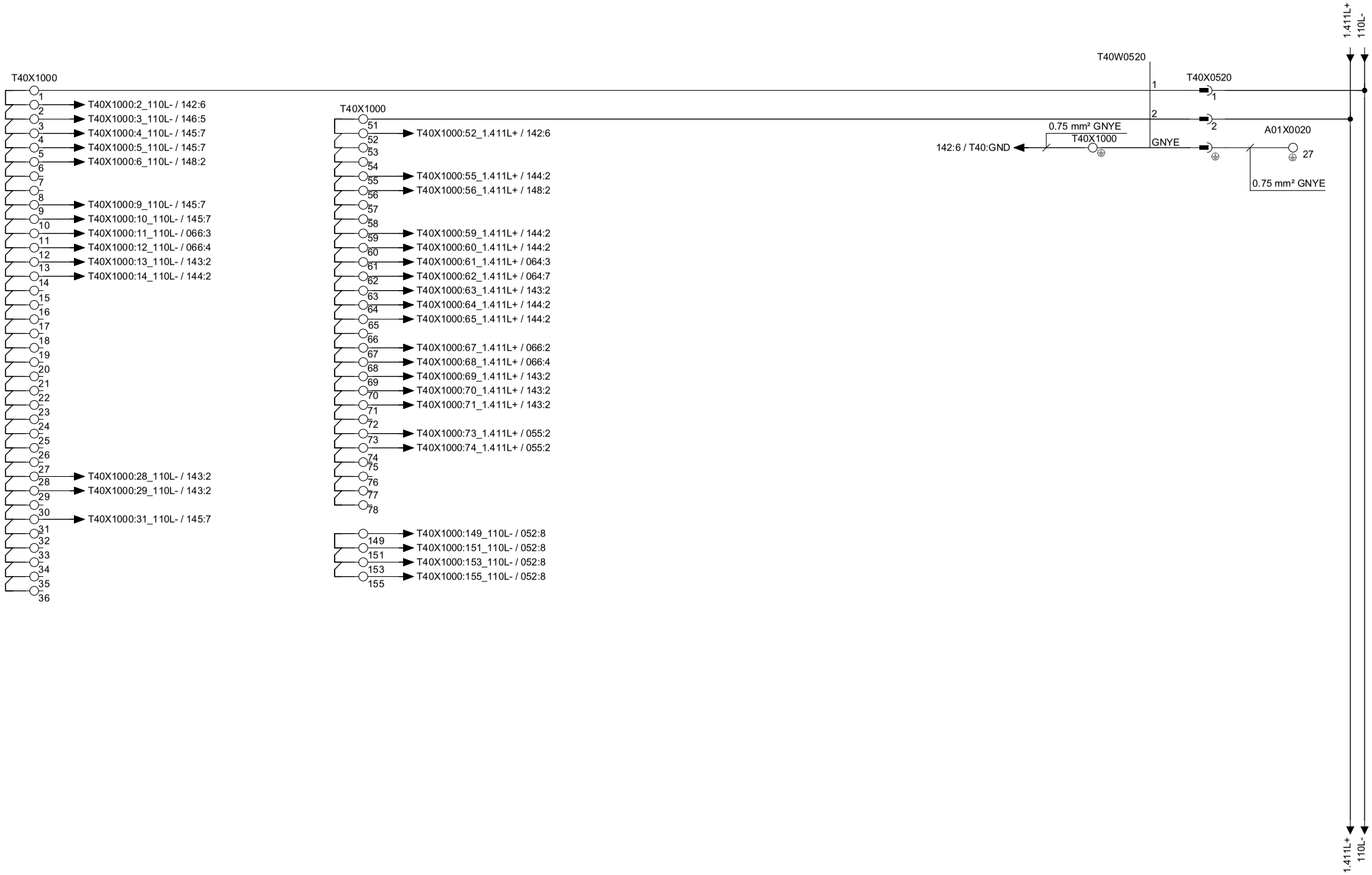

Tetra Pak®	Version Designer: RICO	Version Date: 01/10/2014	Machine: A3 CompactFlex 0300	
	ECM No: 687624	Denomination: CIRCUIT DIAGRAM	Page Type: TERMINAL STRIP COMMON, JAW (NEW)	
	Information Security Class: PUBLIC	Document No.: 3223337-0003	Doc. type: ELD	Version: AM	Page: 141

This drawing must not without the consent of Tetra Pak
be copied, transmitted or disclosed to any third party.

1	2	3	4	5	6	7	8	9	10

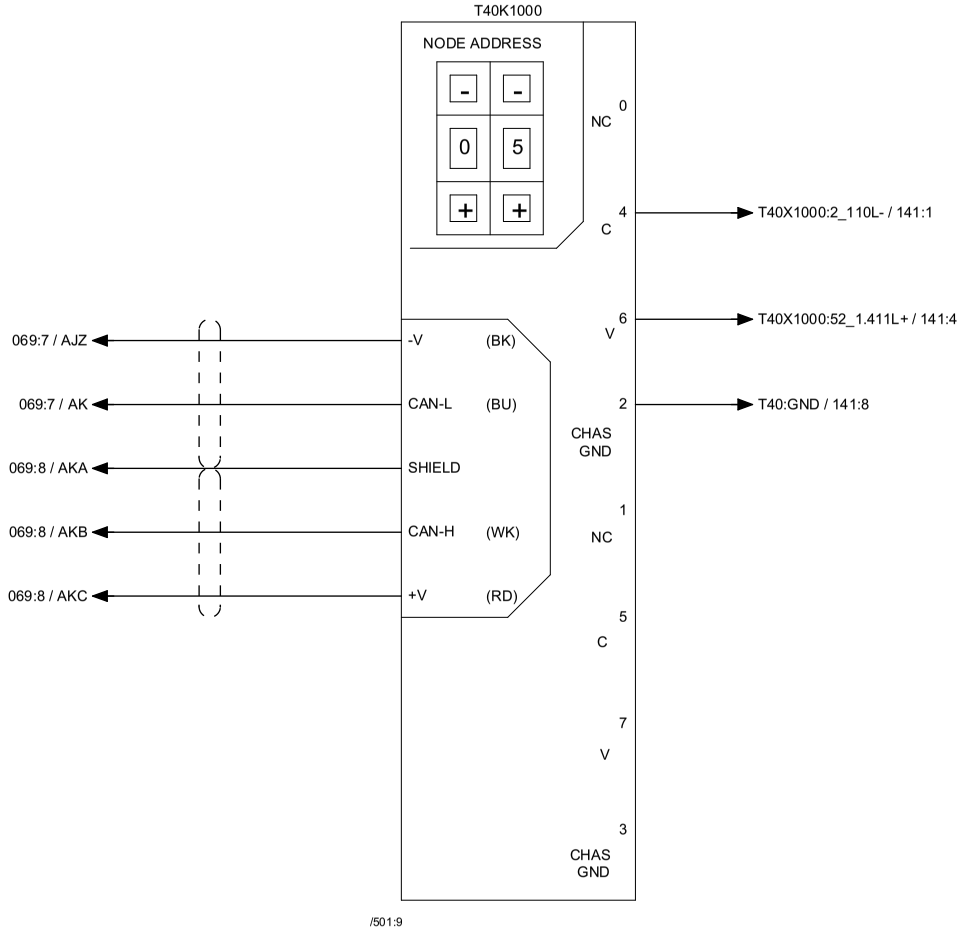

Tetra Pak®	Version Designer: RICO	Version Date: 01/10/2014	Machine: A3 CompactFlex 0300	
	ECM No: 687624	Denomination: CIRCUIT DIAGRAM	Page Type: DEVICENET ADAPTER, JAW	
	Information Security Class: PUBLIC	Document No.: 3223337-0003	Doc. type: ELD	Version: AM	Page: 142

This drawing must not without the consent of Tetra Pak be copied, transmitted or disclosed to any third party.

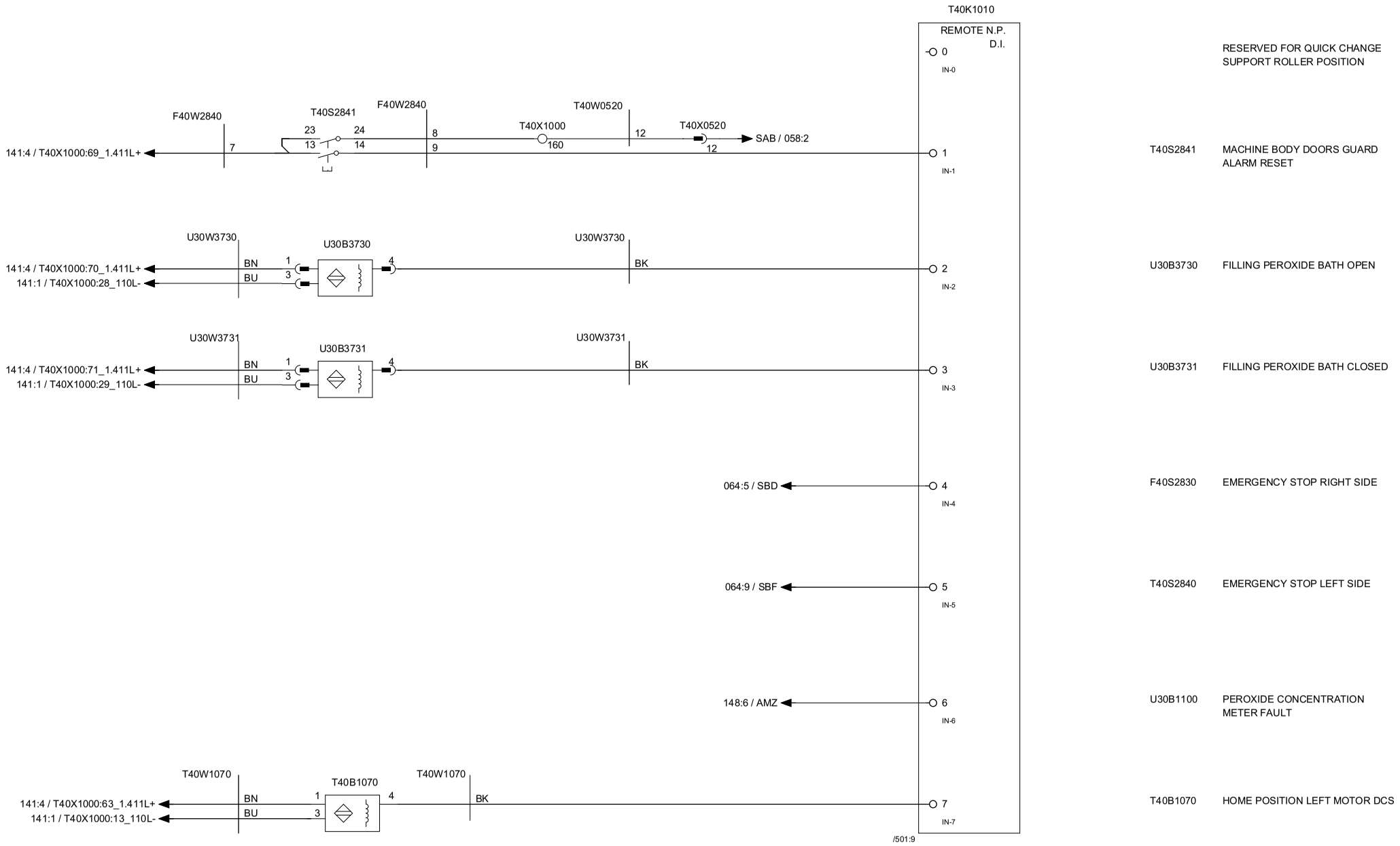

Tetra Pak®	Version Designer: RICO	Version Date: 01/10/2014	Machine: A3 CompactFlex 0300	
	ECM No: 687624	Denomination: CIRCUIT DIAGRAM	Page Type: PLC REMOTE D.I, JAW	
	Information Security Class: PUBLIC	Document No.: 3223337-0003	Doc. type: ELD	Version: AM	Page: 143

This drawing must not without the consent of Tetra Pak be copied, transmitted or disclosed to any third party.

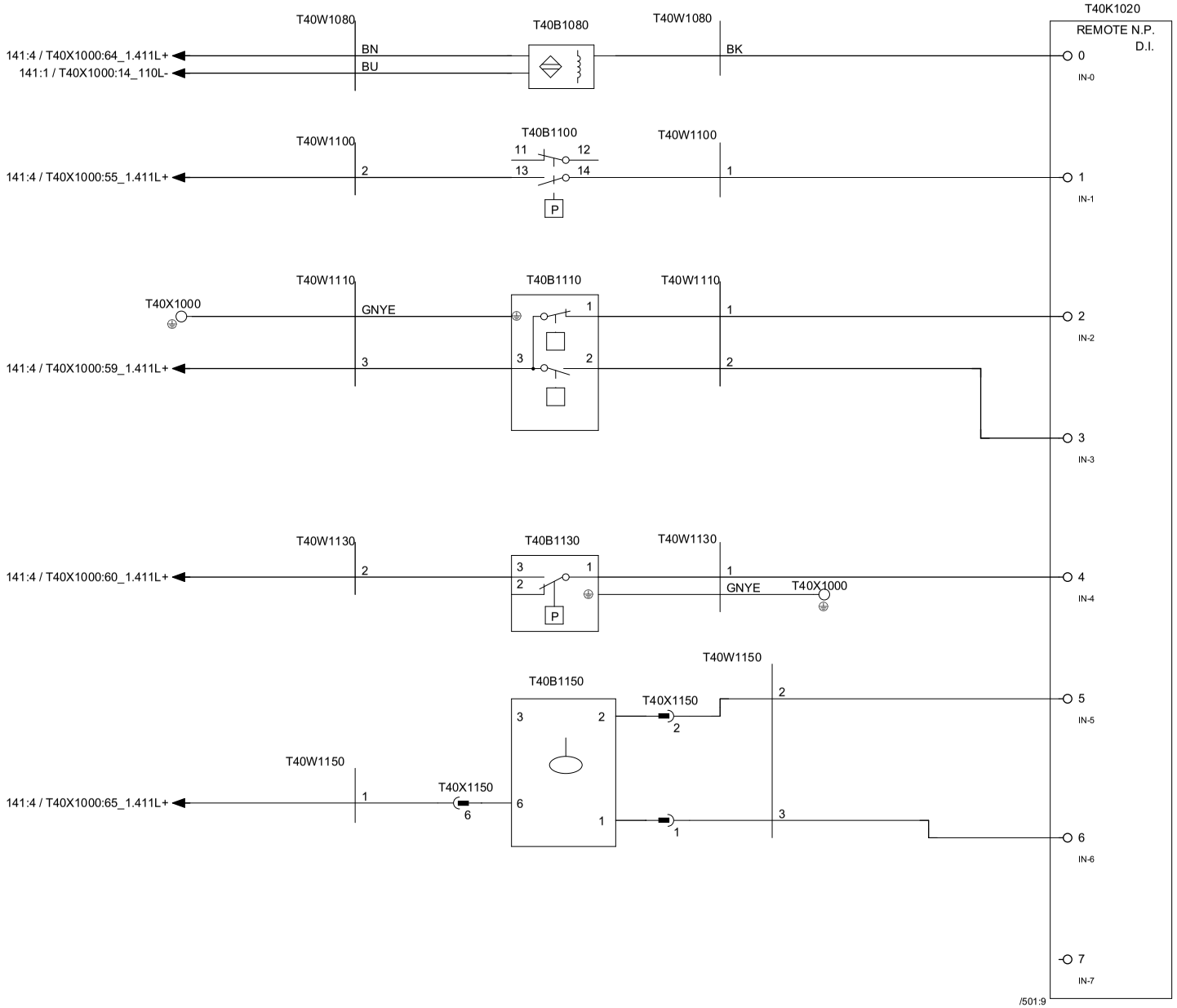

T40B1080	HOME POSITION RIGHT MOTOR DCS
T40B1100	LUBRICATION PRESSURE
T40B1110	NO LUBRICATION OIL TANK HIGH LEVEL
T40B1110	NO LUBRICATION OIL TANK LOW LEVEL
T40B1130	HYDRAULIC OIL FILTRATION
T40B1150	HYDRAULIC OIL NO HIGH LEVEL
T40B1150	HYDRAULIC OIL NO LOW LEVEL
	SPARE

Tetra Pak®	Version Designer: RICO	Version Date: 01/10/2014	Machine: A3 CompactFlex 0300	
	ECM No: 687624	Denomination: CIRCUIT DIAGRAM	Page Type: PLC REMOTE D.I, JAW	
	Information Security Class: PUBLIC	Document No.: 3223337-0003	Doc. type: ELD	Version: AM / Page: 144

This drawing must not without the consent of Tetra Pak be copied, transmitted or disclosed to any third party.

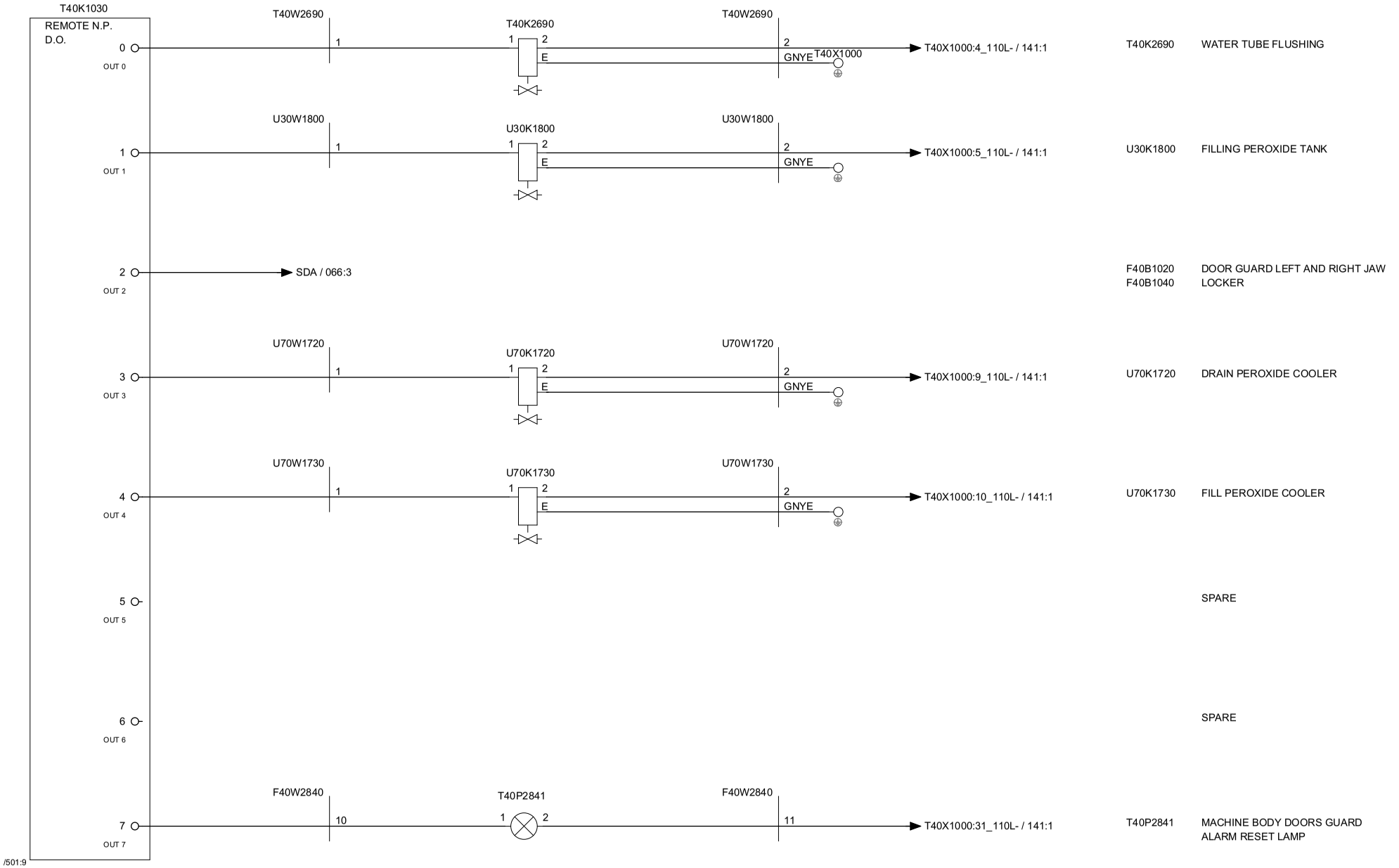

Tetra Pak®	Version Designer: RICO	Version Date: 01/10/2014	Machine: A3 CompactFlex 0300	
	ECM No: 687624	Denomination: CIRCUIT DIAGRAM	Page Type: PLC REMOTE D.O, JAW	
	Information Security Class: PUBLIC	Document No.: 3223337-0003	Doc. type: ELD	Version: AM / Page: 145

RELEASED

This drawing must not without the consent of Tetra Pak be copied, transmitted or disclosed to any third party.

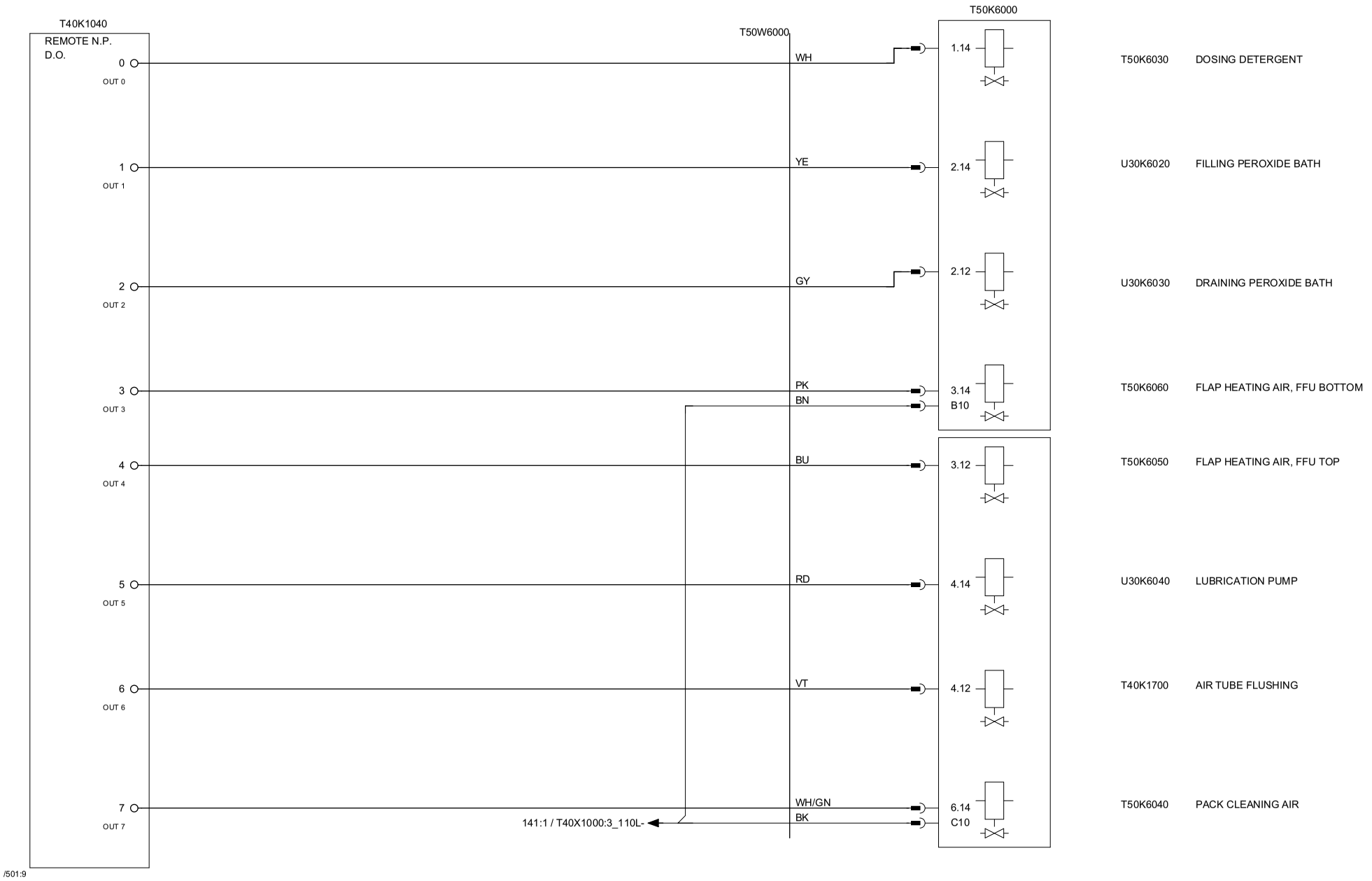

Tetra Pak®	Version Designer: RICO	Version Date: 01/10/2014	Machine: A3 CompactFlex 0300	
	ECM No: 687624	Denomination: CIRCUIT DIAGRAM	Page Type: PLC REMOTE D.O, JAW	
	Information Security Class: PUBLIC	Document No.: 3223337-0003	Doc. type: ELD	Version: AM / Page: 146

This drawing must not without the consent of Tetra Pak
be copied, transmitted or disclosed to any third party.

1	2	3	4	5	6	7	8	9	10

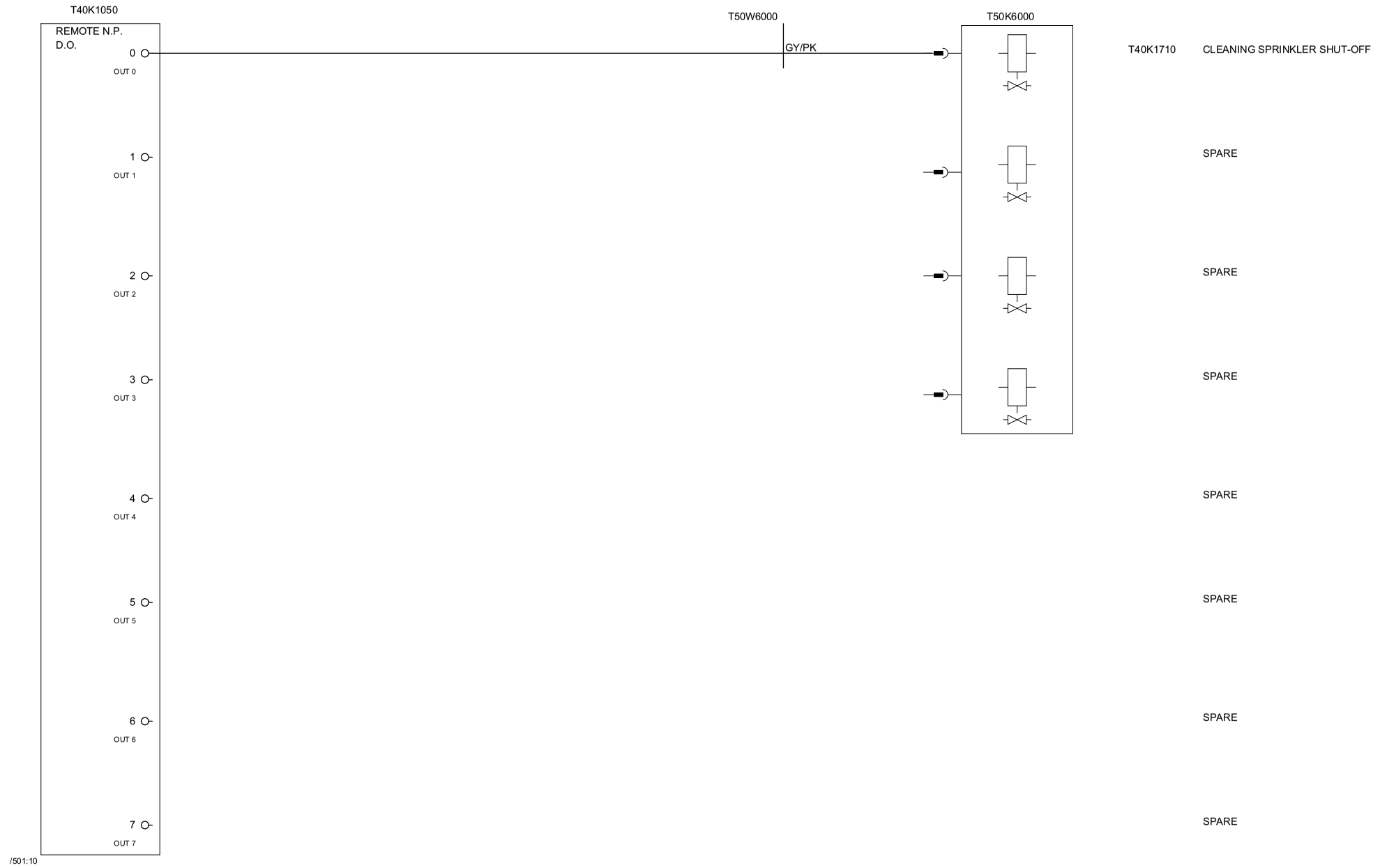

Tetra Pak®	Version Designer: RICO	Version Date: 01/10/2014	Machine: A3 CompactFlex 0300		
	ECM No: 687624	Denomination: CIRCUIT DIAGRAM	Page Type: PLC REMOTE D.O, JAW		
	Information Security Class: PUBLIC	Document No.: 3223337-0003	Doc. type: ELD	Version: AM	Page: 147

This drawing must not without the consent of Tetra Pak be copied, transmitted or disclosed to any third party.

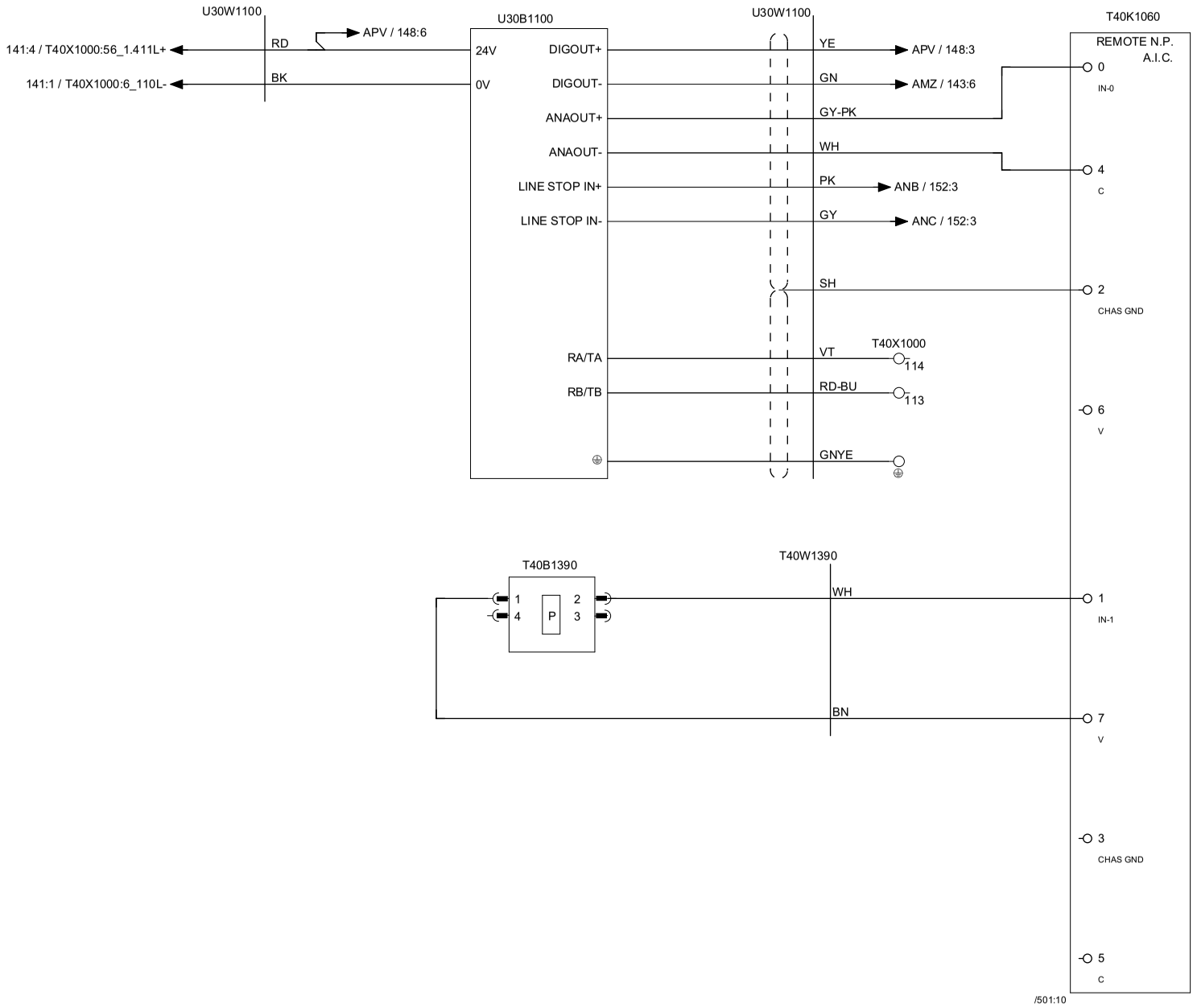

U30B1100 PEROXIDE CONCENTRATION METER

T40B1390 HYDRAULIC OIL PRESSURE

Tetra Pak®	Version Designer: RICO	Version Date: 01/10/2014	Machine: A3 CompactFlex 0300				
	ECM No: 687624	Denomination: CIRCUIT DIAGRAM	Page Type: PLC REMOTE A.I C.,JAW				
	Information Security Class: PUBLIC	Document No.: 3223337-0003	Doc. type: ELD	Version: AM	Page: 148		

RELEASED

This drawing must not without the consent of Tetra Pak be copied, transmitted or disclosed to any third party.

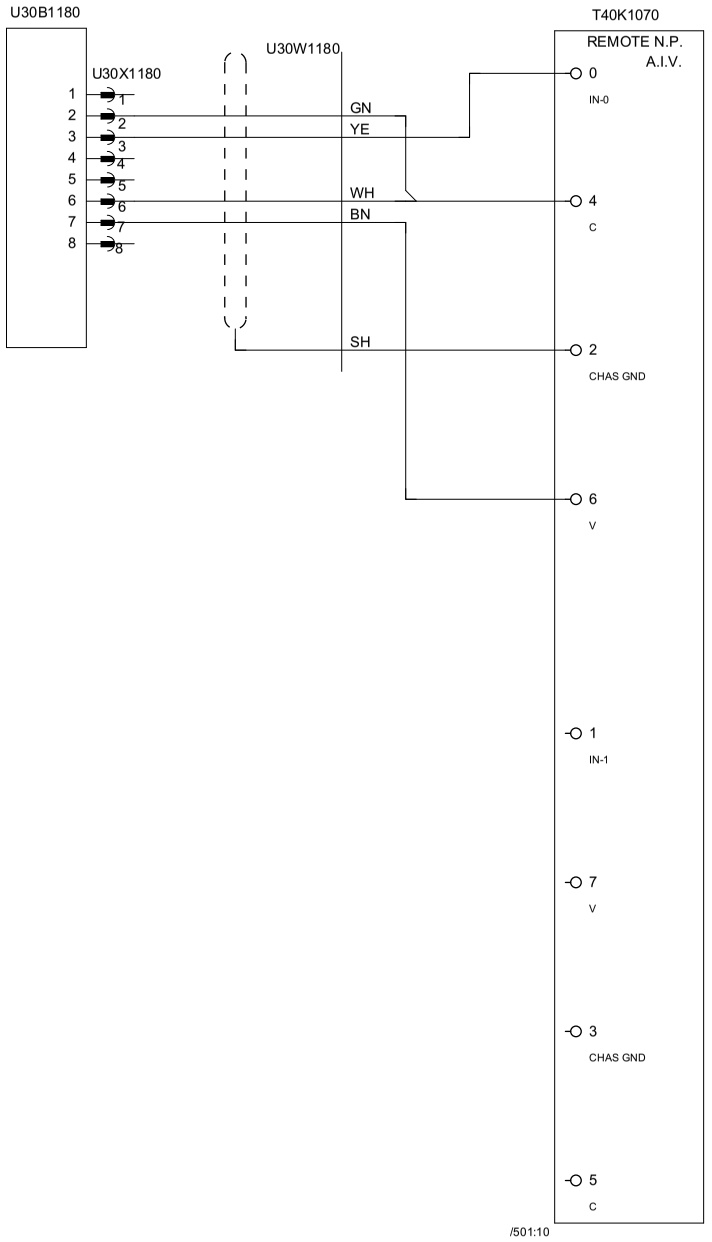

U30B1180 PEROXIDE TANK LEVEL

SPARE

Tetra Pak®	Version Designer: RICO	Version Date: 01/10/2014	Machine: A3 CompactFlex 0300					
	ECM No: 687624	Denomination: CIRCUIT DIAGRAM	Page Type: PLC REMOTE A.I.V., JAW					
	Information Security Class: PUBLIC	Document No.: 3223337-0003	Doc. type: ELD	Version: AM	Page: 149			

This drawing must not without the consent of Tetra Pak
be copied, transmitted or disclosed to any third party.

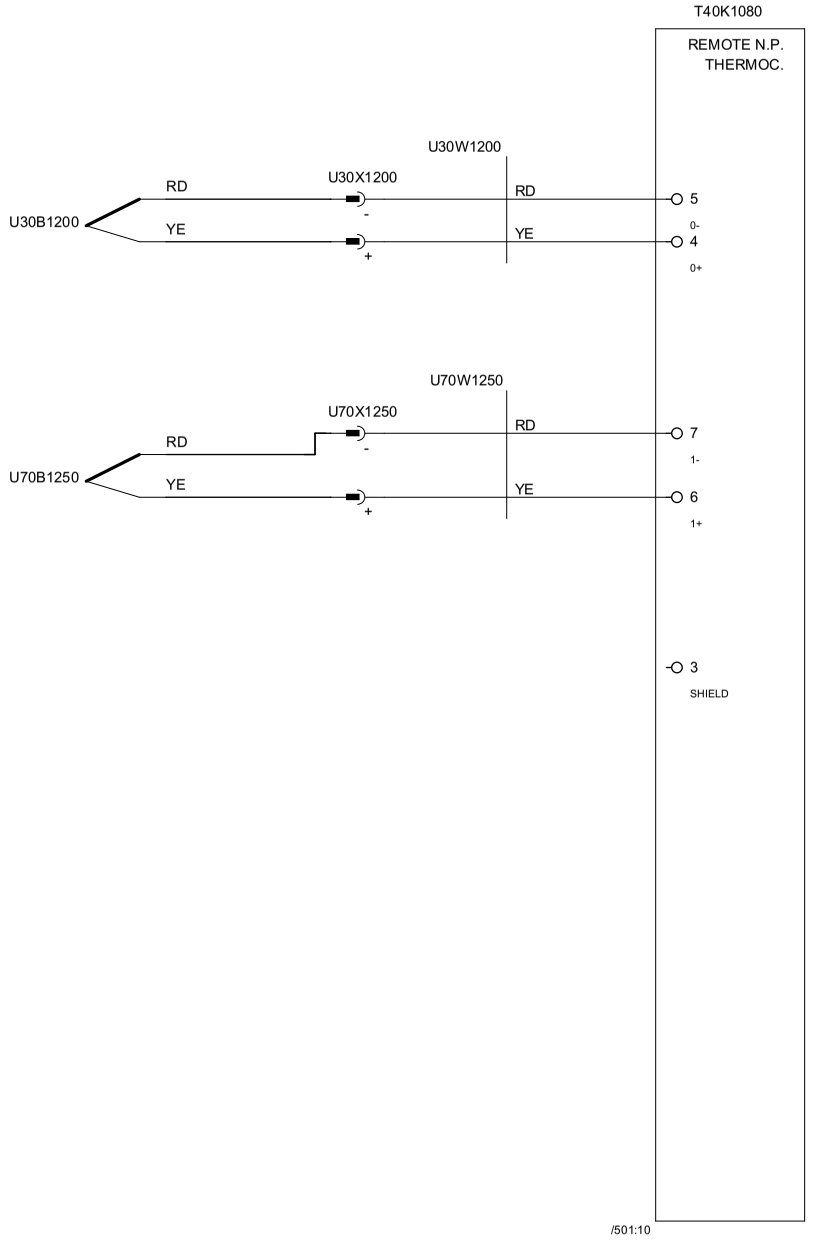

U30B1200	TEMP. PEROXIDE TANK
U70B1250	TEMP. WATER HEAT EXCHANGER

Tetra Pak®	Version Designer: RICO	Version Date: 01/10/2014	Machine: A3 CompactFlex 0300	
	ECM No: 687624	Denomination: CIRCUIT DIAGRAM	Page Type: PLC REMOTE TH., JAW	
Information Security Class: PUBLIC	Document No.: 3223337-0003	Doc. type: ELD	Version: AM	Page: 150

RELEASED

This drawing must not without the consent of Tetra Pak
be copied, transmitted or disclosed to any third party.

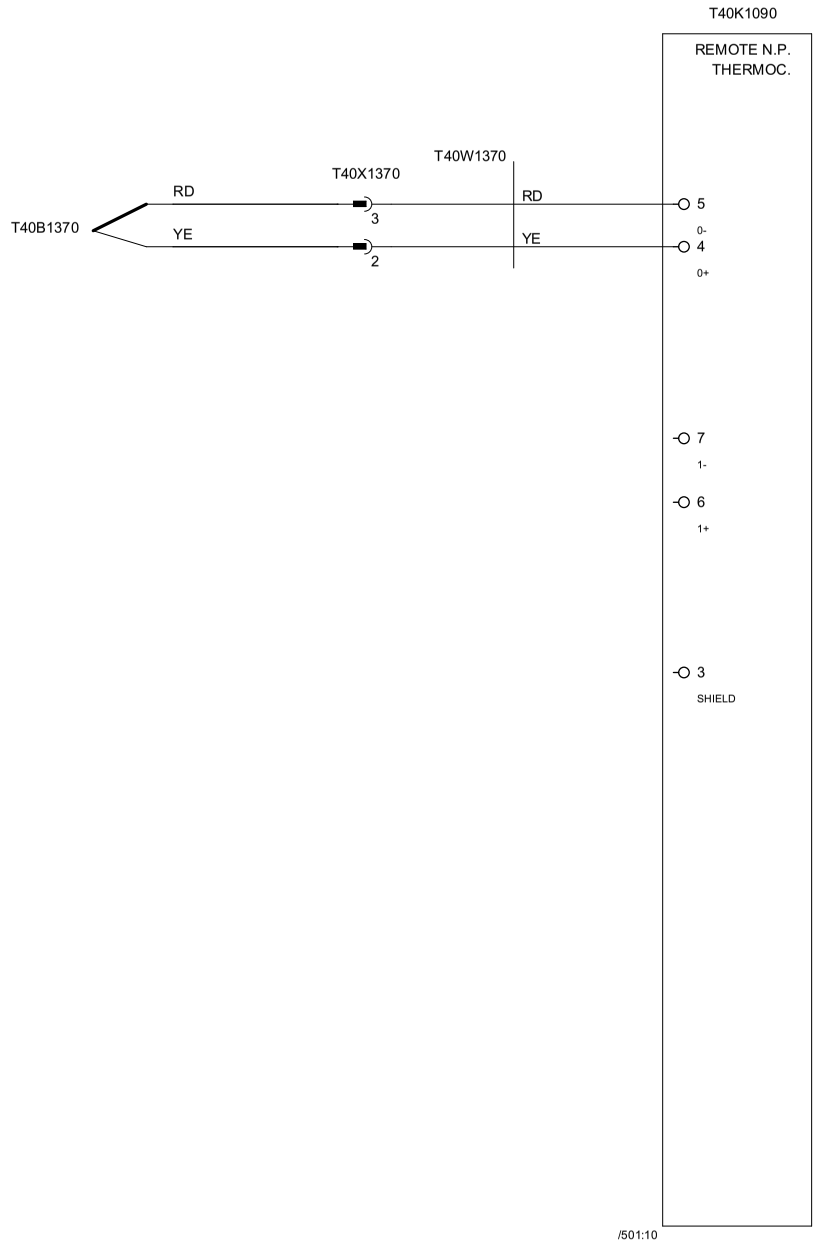

T40B1370 TEMP. HYDRAULIC OIL

SPARE

Tetra Pak®	Version Designer: RICO	Version Date: 01/10/2014	Machine: A3 CompactFlex 0300	
	ECM No: 687624	Denomination: CIRCUIT DIAGRAM	Page Type: PLC REMOTE TH., JAW	
	Information Security Class: PUBLIC	Document No.: 3223337-0003	Doc. type: ELD	Version: AM / Page: 151

This drawing must not without the consent of Tetra Pak be copied, transmitted or disclosed to any third party.

1	2	3	4	5	6	7	8	9	10

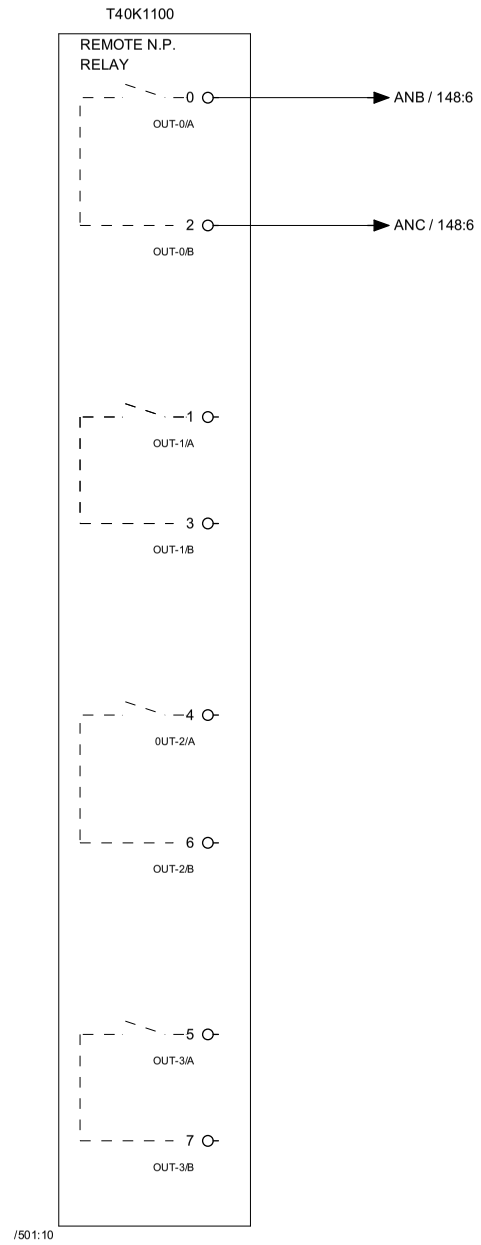

U30B1100	PEROXIDE CONCENTRATION METER TEMPERATURE
	SPARE
	SPARE
	SPARE

Tetra Pak®	Version Designer: RICO	Version Date: 01/10/2014	Machine: A3 CompactFlex 0300	
	ECM No: 687624	Denomination: CIRCUIT DIAGRAM	Page Type: PLC REMOTE OW4, JAW	
	Information Security Class: PUBLIC	Document No.: 3223337-0003	Doc. type: ELD	Version: AM / Page: 152

RELEASED

This drawing must not without the consent of Tetra Pak
be copied, transmitted or disclosed to any third party.

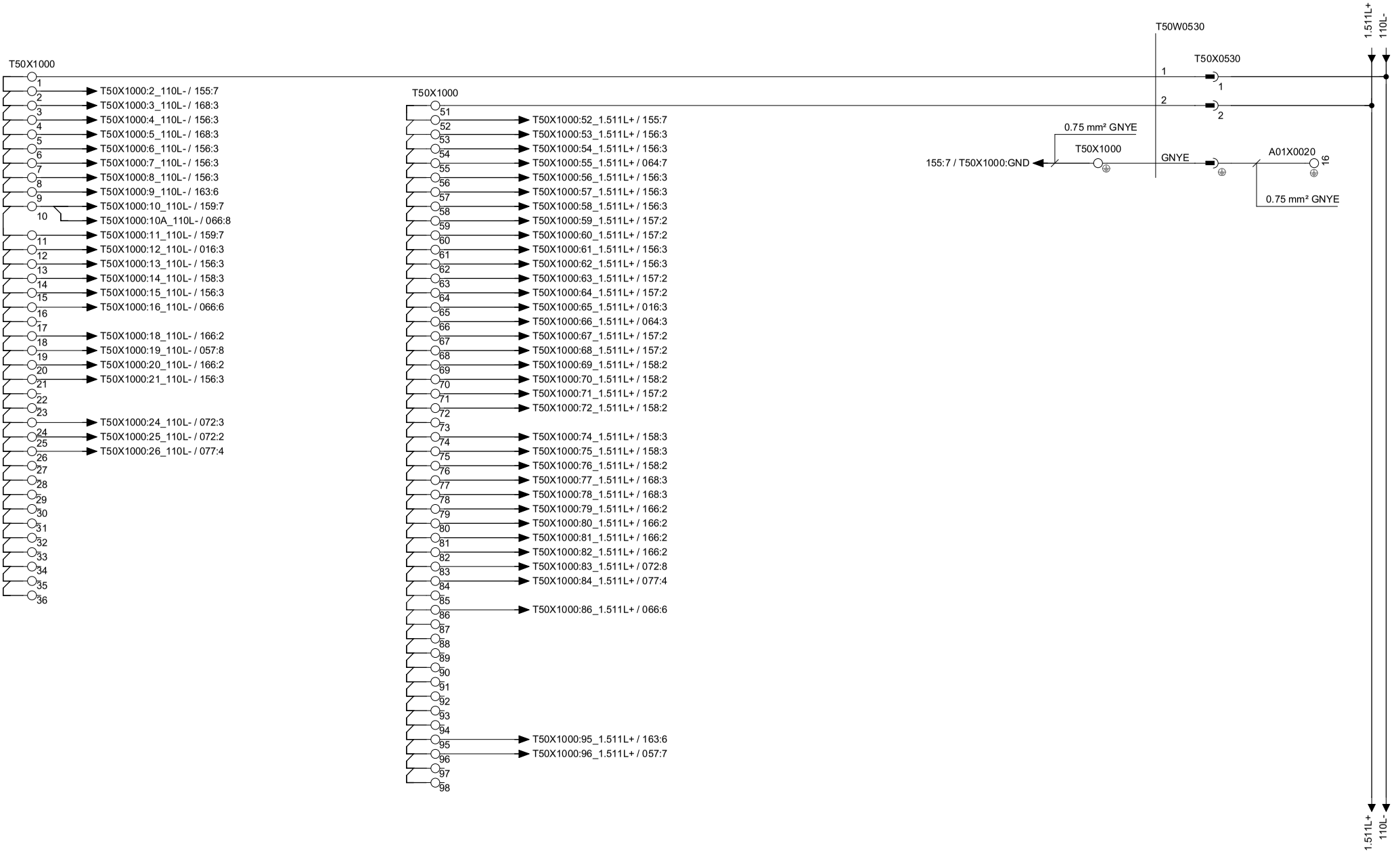

Tetra Pak®	Version Designer: RICO	Version Date: 01/10/2014	Machine: A3 CompactFlex 0300	
	ECM No: 687624	Denomination: CIRCUIT DIAGRAM	Page Type: TERMINAL STRIP COMMON, FFU (NEW)	
	Information Security Class: PUBLIC	Document No.: 3223337-0003	Doc. type: ELD	Version: AM	Page: 154

This drawing must not without the consent of Tetra Pak
be copied, transmitted or disclosed to any third party.

1	2	3	4	5	6	7	8	9	10

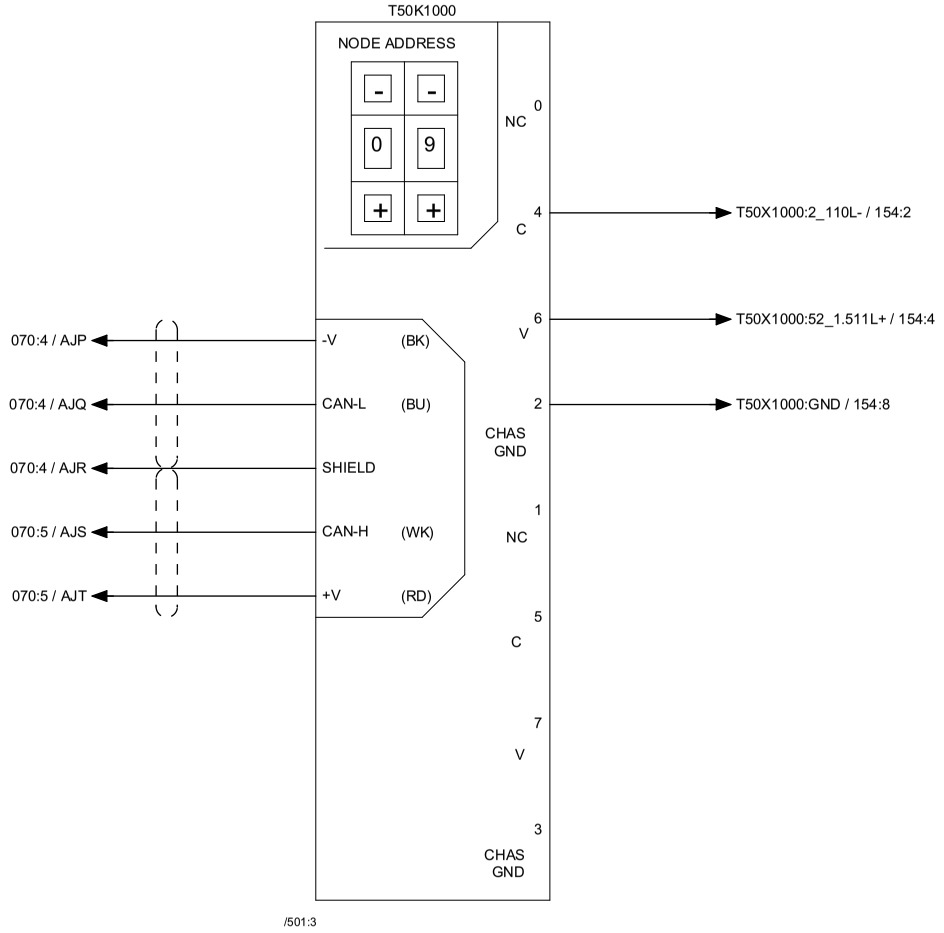

Tetra Pak®	Version Designer: RICO	Version Date: 01/10/2014	Machine: A3 CompactFlex 0300	
	ECM No: 687624	Denomination: CIRCUIT DIAGRAM	Page Type: DEVICENET ADAPTER, FFU	
	Information Security Class: PUBLIC	Document No.: 3223337-0003	Doc. type: ELD	Version: AM / Page: 155

This drawing must not without the consent of Tetra Pak
be copied, transmitted or disclosed to any third party.

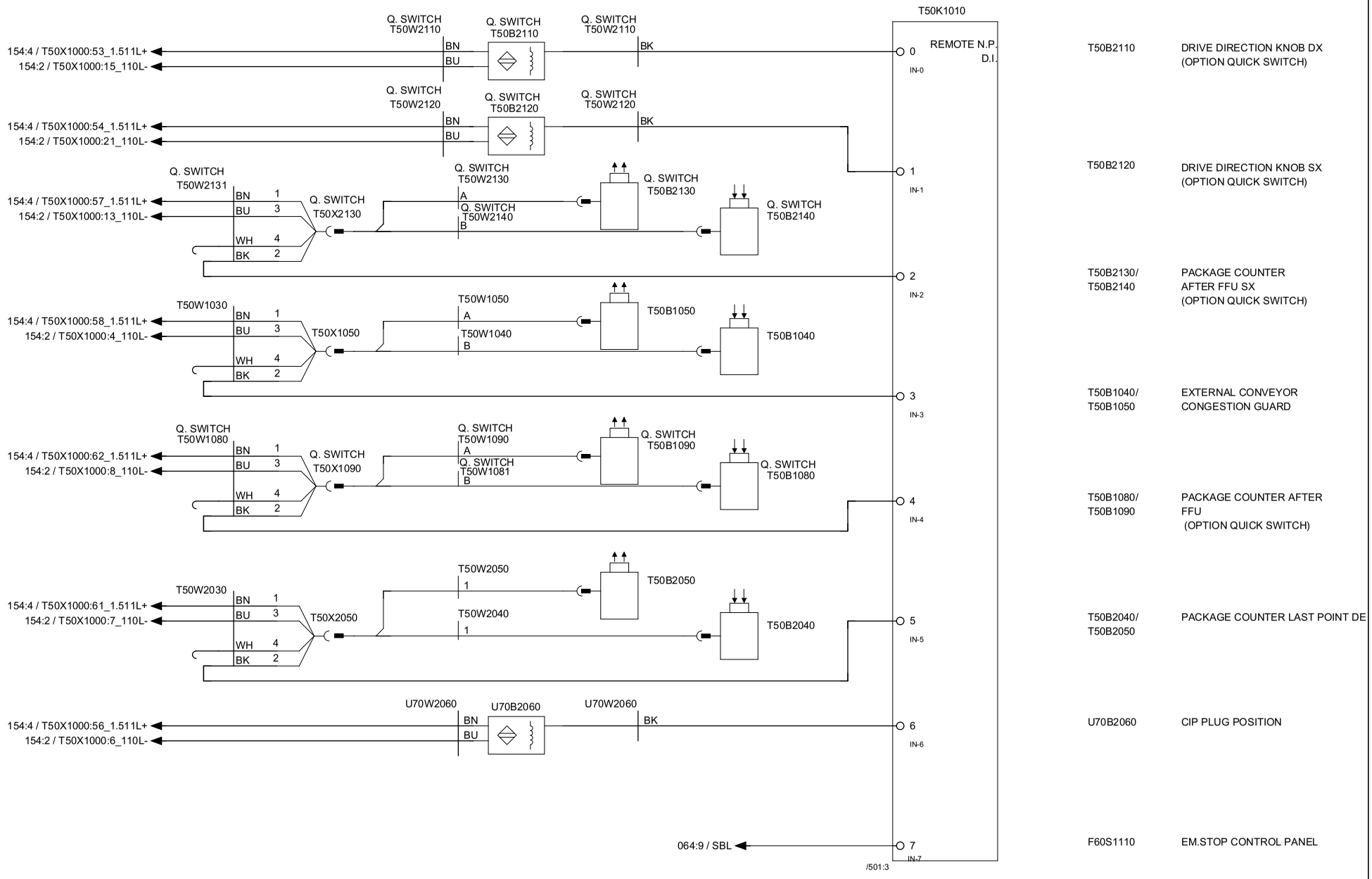

Tetra Pak®	Version Designer: RICO	Version Date: 01/10/2014	Machine: A3 CompactFlex 0300	
	ECM No: 687624	Denomination: CIRCUIT DIAGRAM	Page Type: PLC REMOTE D.I, FFU	
	Information Security Class: PUBLIC	Document No.: 3223337-0003	Doc. type: ELD	Version: AM	Page: 156

This drawing must not without the consent of Tetra Pak
be copied, transmitted or disclosed to any third party.

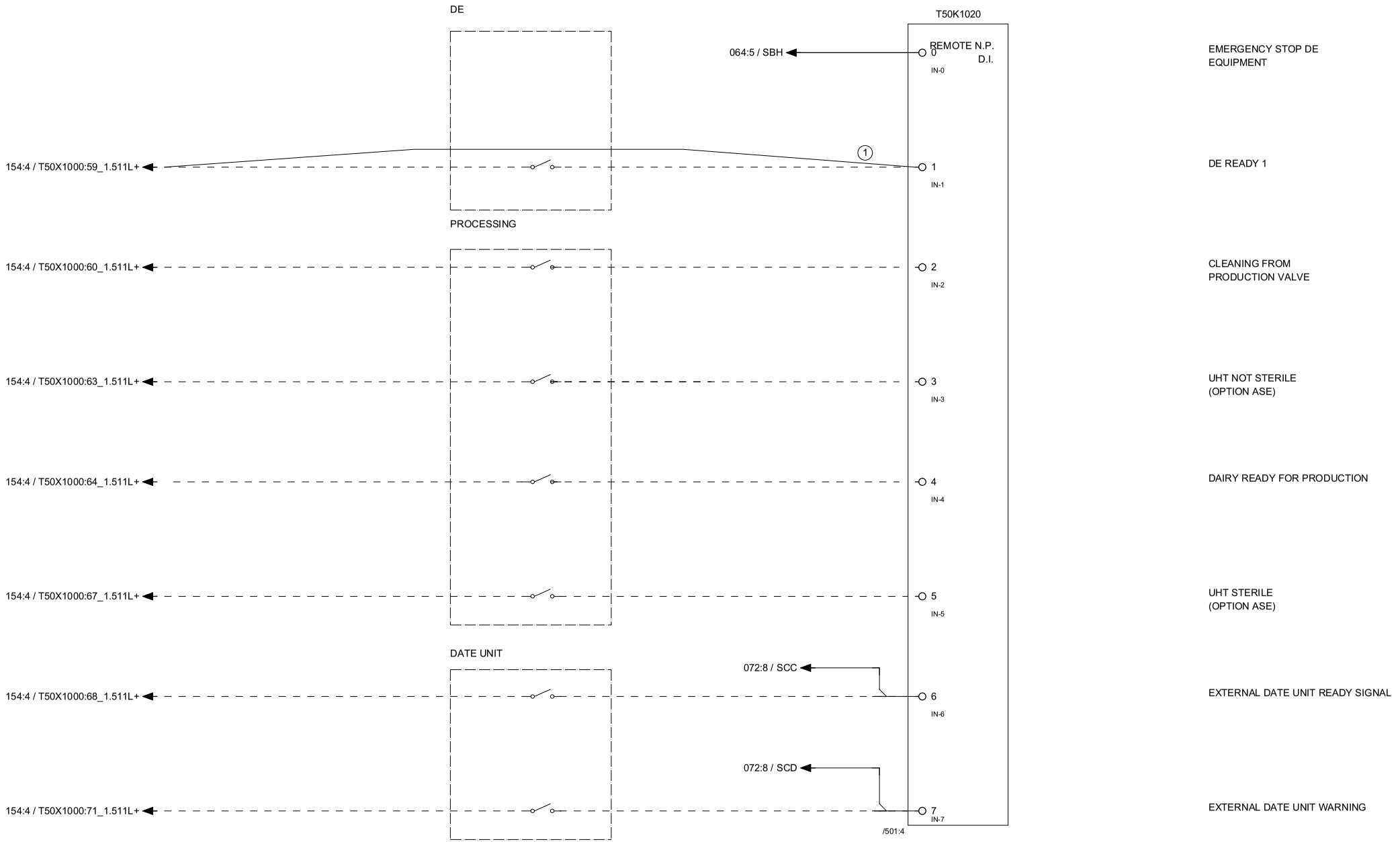

Tetra Pak®	Version Designer: RICO	Version Date: 01/10/2014	Machine: A3 CompactFlex 0300	
	ECM No: 687624	Denomination: CIRCUIT DIAGRAM	Page Type: PLC REMOTE D.I, FFU (DAIRY)	
	Information Security Class: PUBLIC	Document No.: 3223337-0003	Doc. type: ELD	Version: AM / Page: 157

RELEASED

This drawing must not without the consent of Tetra Pak be copied, transmitted or disclosed to any third party.

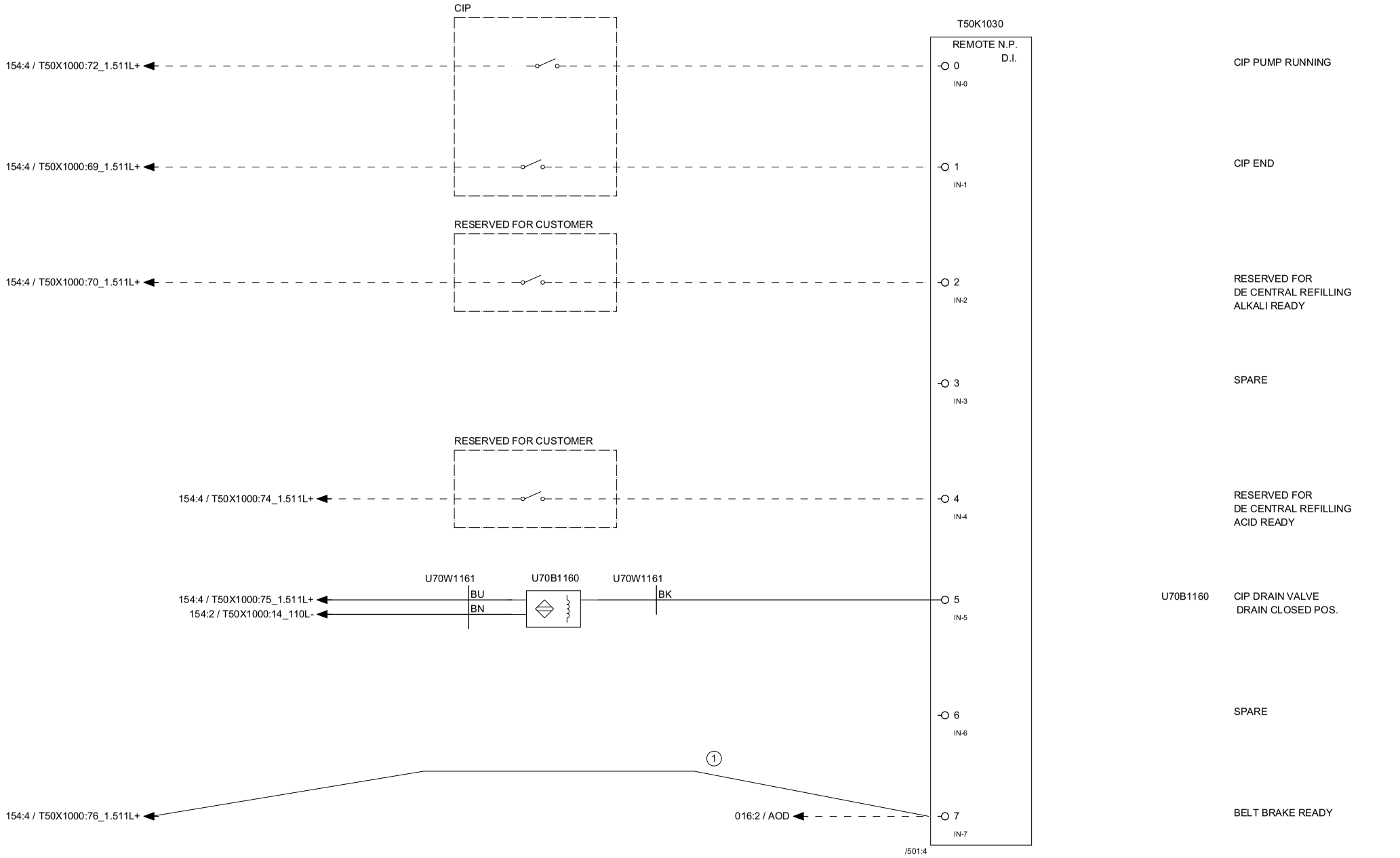

Tetra Pak®	Version Designer: RICO	Version Date: 01/10/2014	Machine: A3 CompactFlex 0300	
	ECM No: 687624	Denomination: CIRCUIT DIAGRAM	Page Type: PLC REMOTE D.I, FFU (DAIRY)	
	Information Security Class: PUBLIC	Document No.: 3223337-0003	Doc. type: ELD	Version: AM	Page: 158

This drawing must not without the consent of Tetra Pak be copied, transmitted or disclosed to any third party.

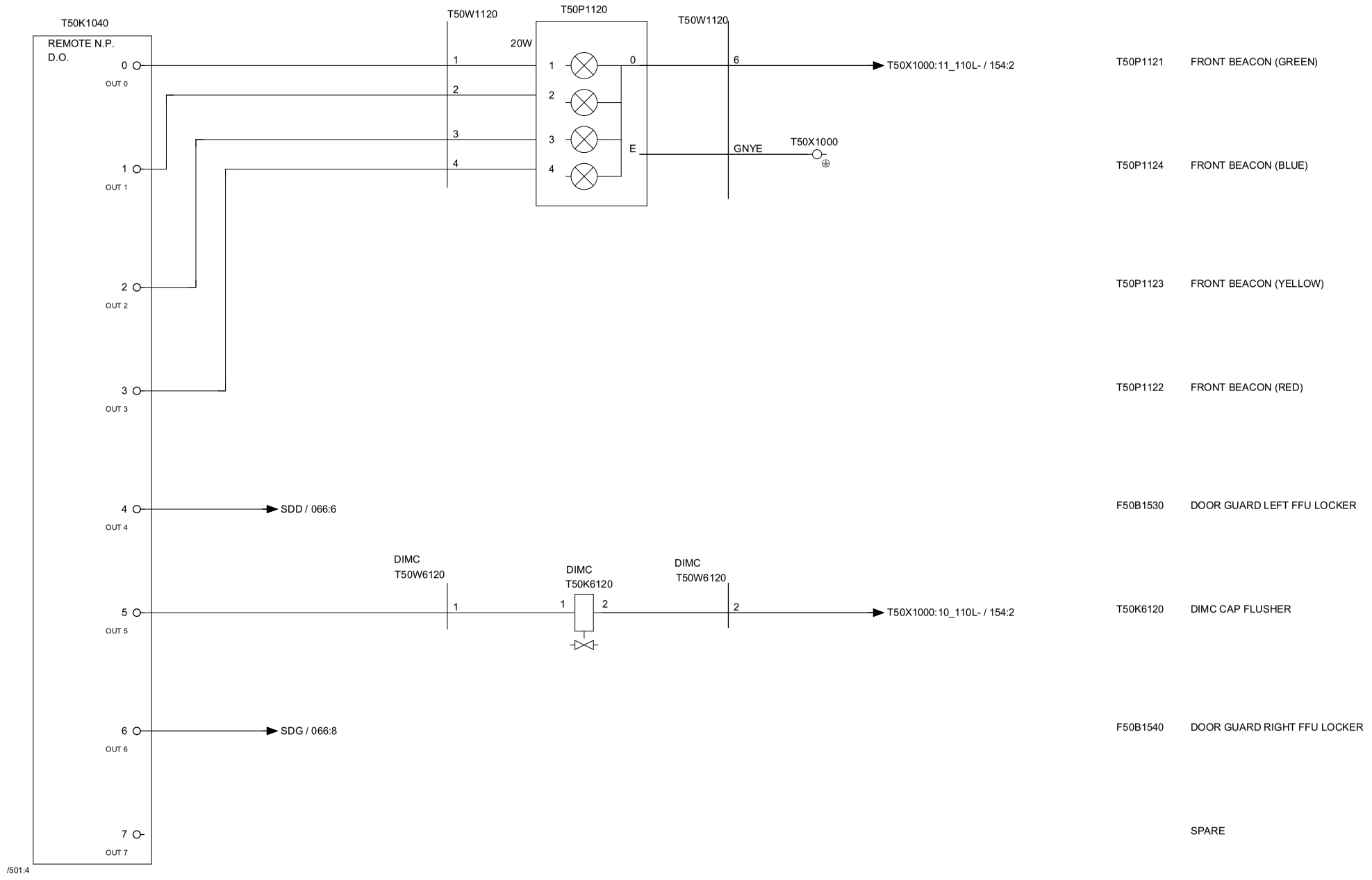

T50P1121	FRONT BEACON (GREEN)
T50P1124	FRONT BEACON (BLUE)
T50P1123	FRONT BEACON (YELLOW)
T50P1122	FRONT BEACON (RED)
F50B1530	DOOR GUARD LEFT FFU LOCKER
T50K6120	DIMC CAP FLUSHER
F50B1540	DOOR GUARD RIGHT FFU LOCKER
	SPARE

Version Designer: RICO	Version Date: 01/10/2014	Machine: A3 CompactFlex 0300	
ECM No: 687624	Denomination: CIRCUIT DIAGRAM	Page Type: PLC REMOTE D.O, FFU	
Information Security Class: PUBLIC	Document No.: 3223337-0003	Doc. type: ELD	Version: AM	Page: 159

This drawing must not without the consent of Tetra Pak
be copied, transmitted or disclosed to any third party.

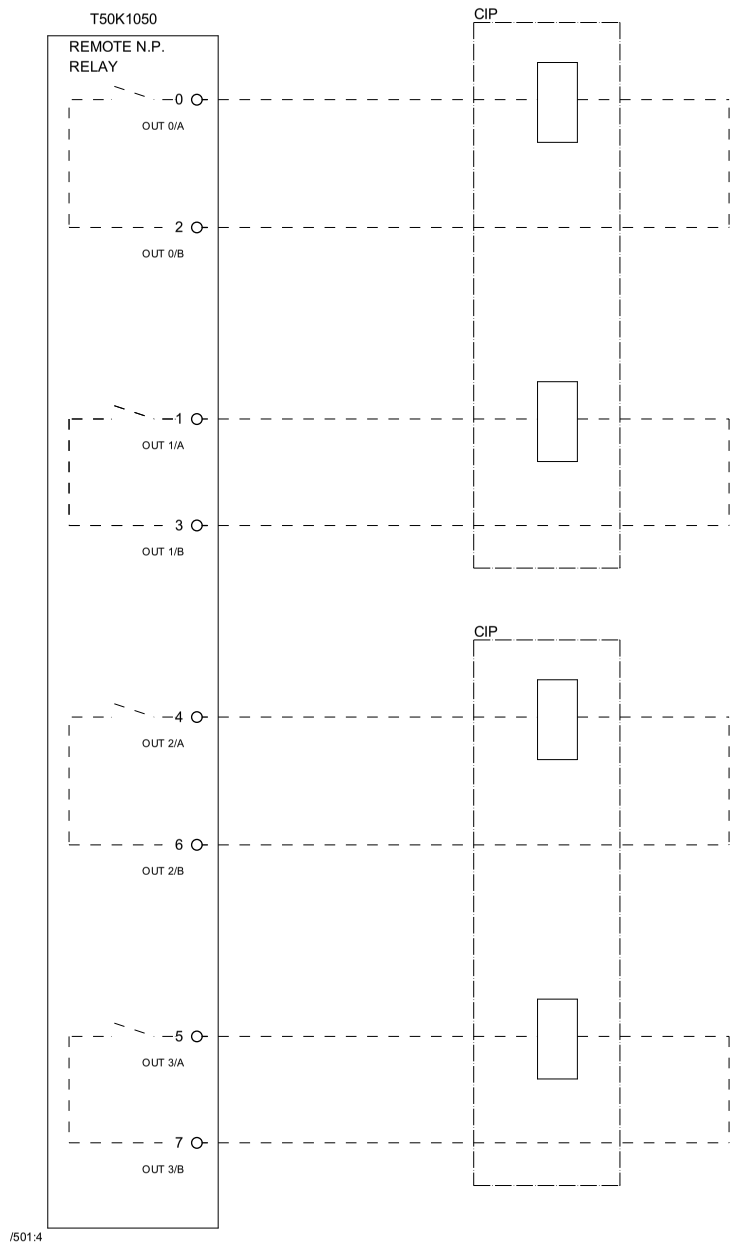

ICU CLEANING IS RUNNING
(OPTION ASE)

ICU CLEANING IS RUNNING
(OPTION ASE)

FILLING MACHINE
READY FOR C.I.P.

A-VALVE CLEANED BY A FINAL
CLEANING (OPTION ASE)

Tetra Pak®	Version Designer: RICO	Version Date: 01/10/2014	Machine: A3 CompactFlex 0300	
	ECM No: 687624	Denomination: CIRCUIT DIAGRAM	Page Type: PLC REMOTE OW4, FFU (DAIRY)	
	Information Security Class: PUBLIC	Document No.: 3223337-0003	Doc. type: ELD	Version: AM / Page: 160

This drawing must not without the consent of Tetra Pak
be copied, transmitted or disclosed to any third party.

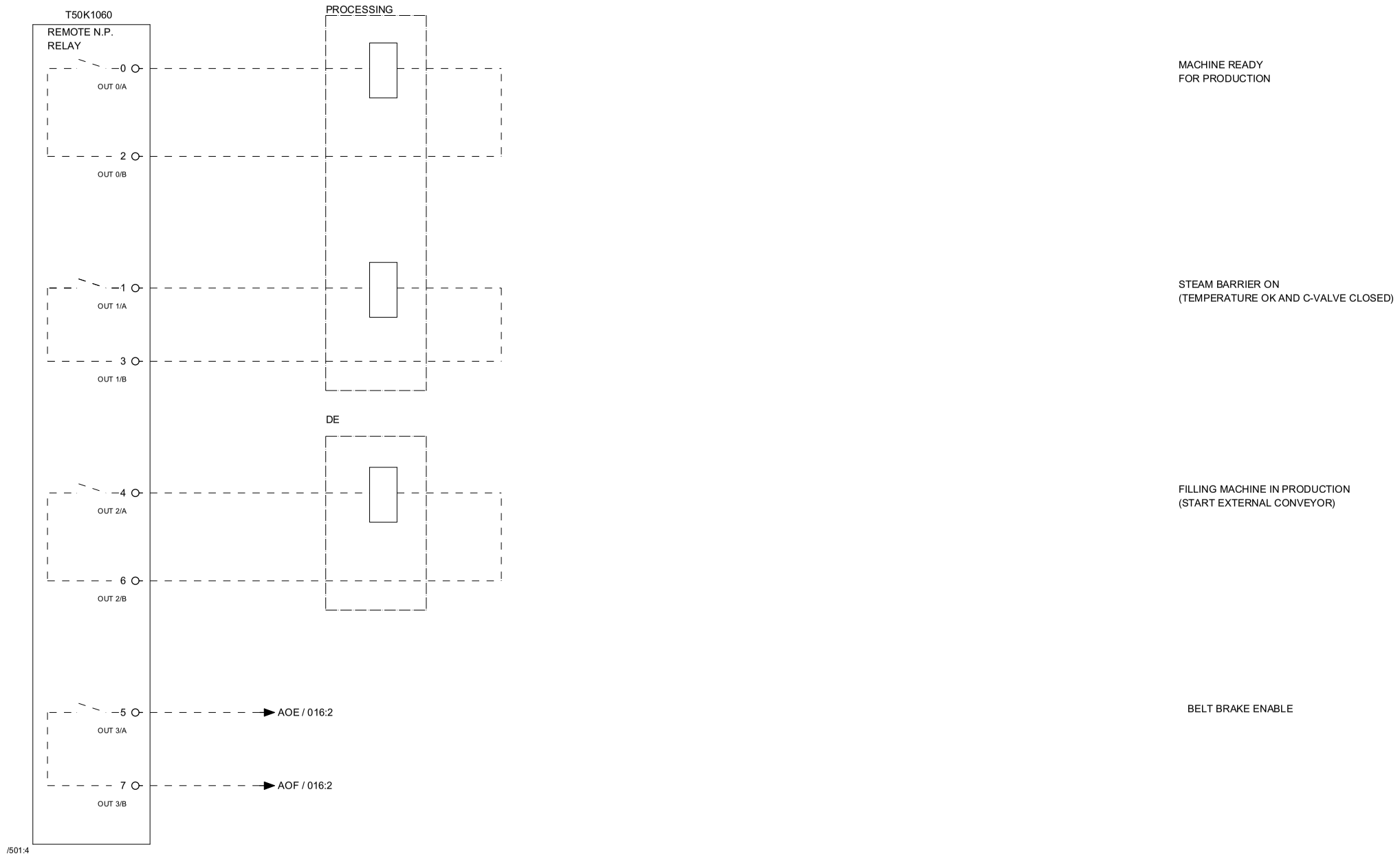

Tetra Pak®	Version Designer: RICO	Version Date: 01/10/2014	Machine: A3 CompactFlex 0300	
	ECM No: 687624	Denomination: CIRCUIT DIAGRAM	Page Type: PLC REMOTE OW4, FFU (DAIRY)	
	Information Security Class: PUBLIC	Document No.: 3223337-0003	Doc. type: ELD	Version: AM / Page: 161

RELEASED

This drawing must not without the consent of Tetra Pak be copied, transmitted or disclosed to any third party.

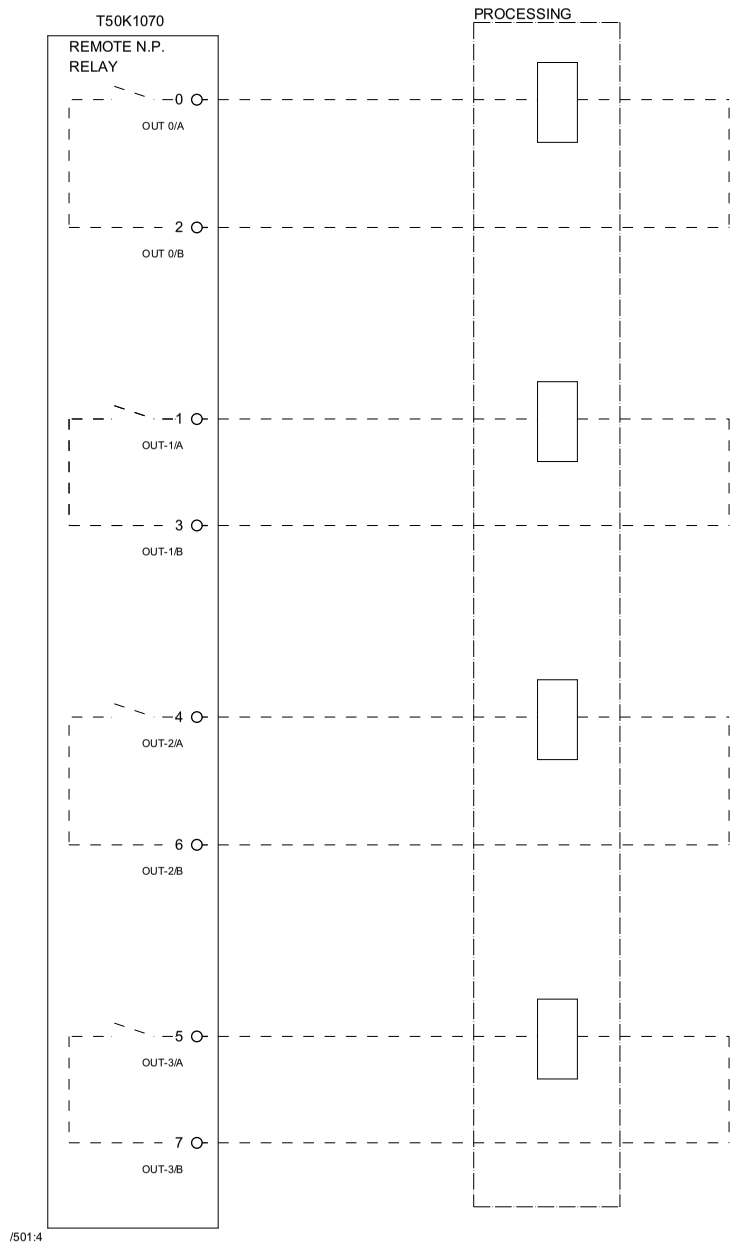

RESERVED FOR
OPTION CENTRAL REFILLING
ALKALI REQUEST

RESERVED FOR
OPTION CENTRAL REFILLING
ACID REQUEST

ICE WATER REQUEST

SPARE

Tetra Pak®	Version Designer: RICO	Version Date: 01/10/2014	Machine: A3 CompactFlex 0300	
	ECM No: 687624	Denomination: CIRCUIT DIAGRAM	Page Type: PLC REMOTE OW4, FFU (DAIRY)	
	Information Security Class: PUBLIC	Document No.: 3223337-0003	Doc. type: ELD	Version: AM	Page: 162

RELEASED

This drawing must not without the consent of Tetra Pak
be copied, transmitted or disclosed to any third party.

1	2	3	4	5	6	7	8	9	10

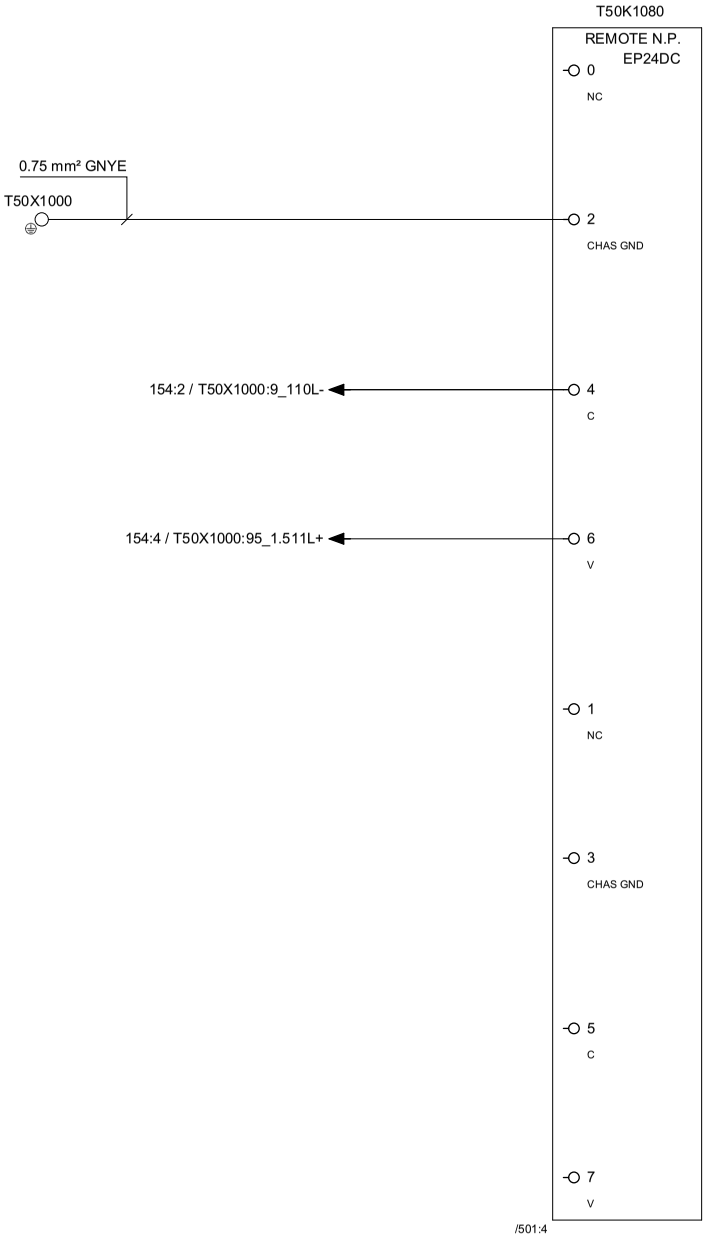

Tetra Pak®	Version Designer: RICO	Version Date: 01/10/2014	Machine: A3 CompactFlex 0300		
	ECM No: 687624	Denomination: CIRCUIT DIAGRAM	Page Type: PLC REMOTE EP24DC, FFU		
	Information Security Class: PUBLIC	Document No.: 3223337-0003	Doc. type: ELD	Version: AM	Page: 163

This drawing must not without the consent of Tetra Pak
be copied, transmitted or disclosed to any third party.

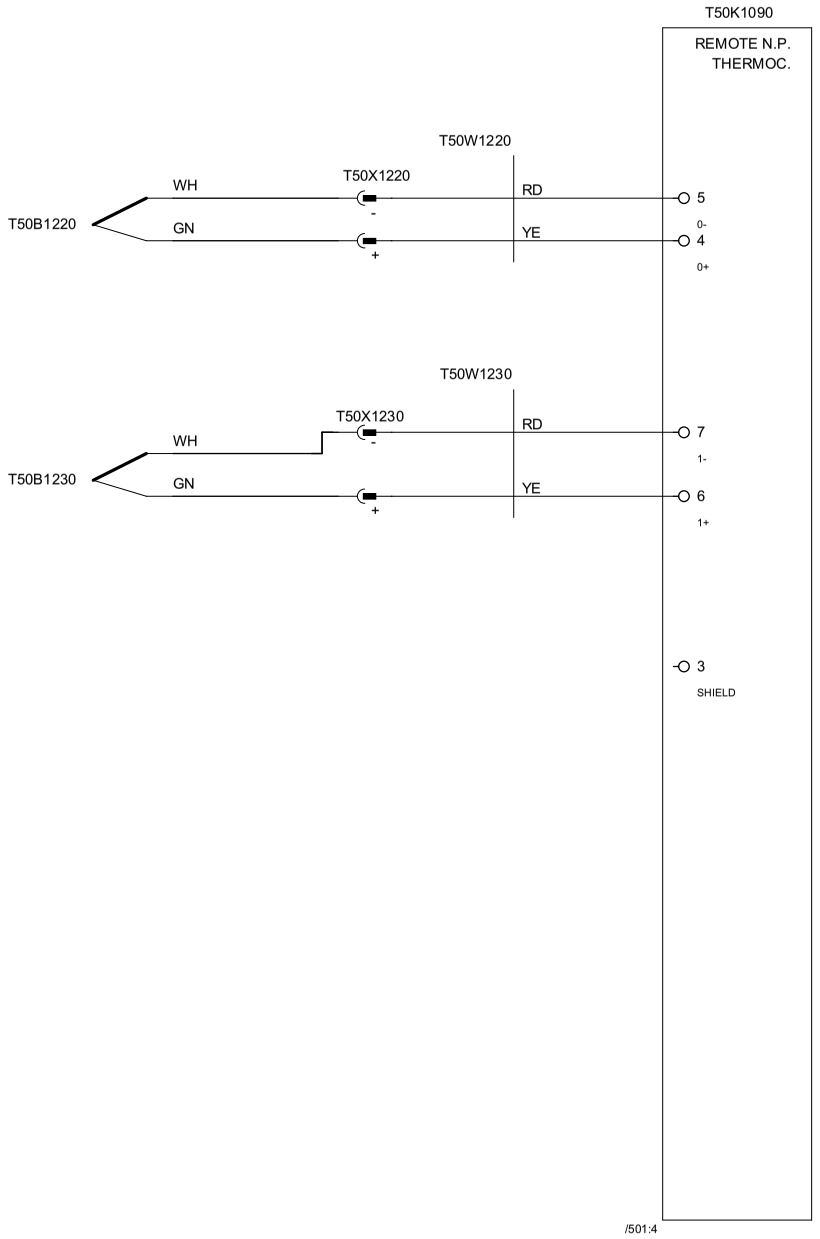

T50B1220	TEMP. TOP LEFT FLAP
T50B1230	TEMP. TOP RIGHT FLAP

Version Designer: RICO	Version Date: 01/10/2014	Machine: A3 CompactFlex 0300	
ECM No: 687624	Denomination: CIRCUIT DIAGRAM	Page Type: PLC REMOTE TH, FFU	
Information Security Class: PUBLIC	Document No.: 3223337-0003	Doc. type: ELD	Version: AM	Page: 164

RELEASED

This drawing must not without the consent of Tetra Pak be copied, transmitted or disclosed to any third party.

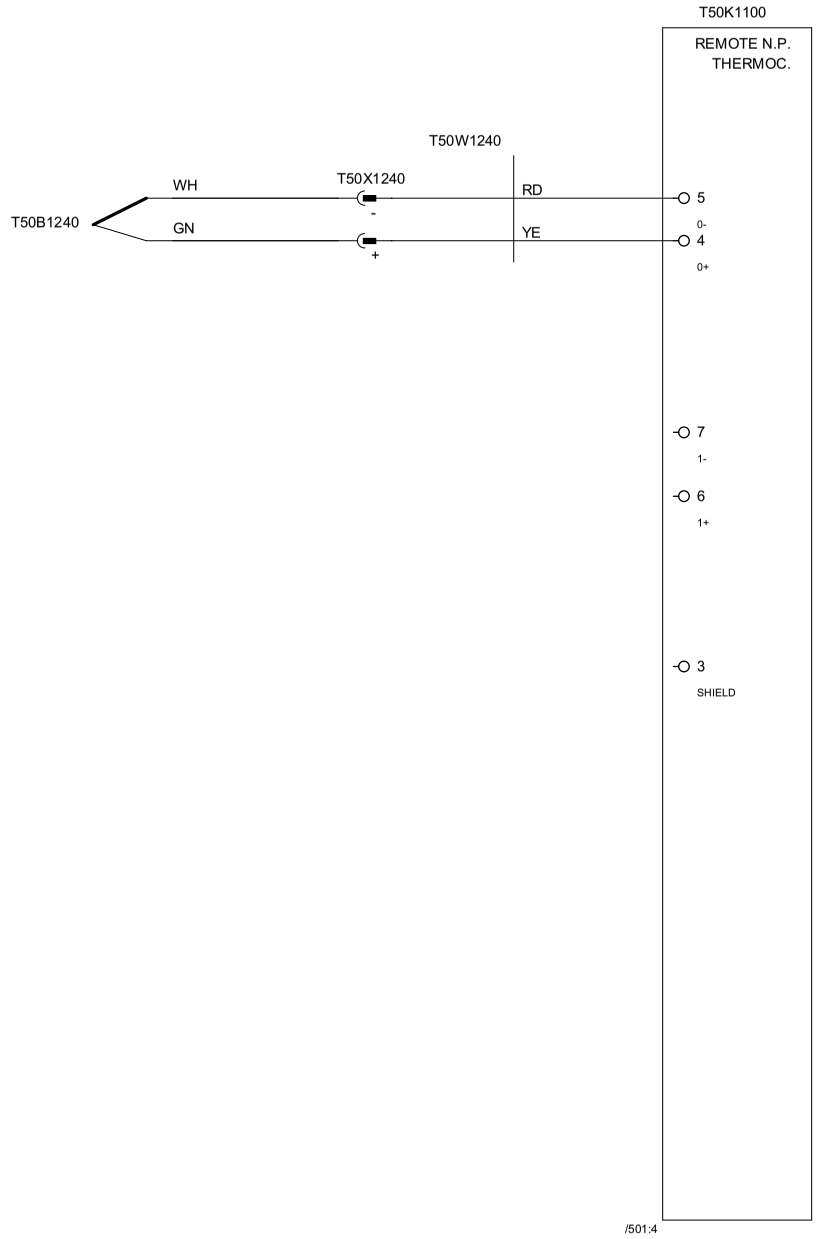

T50B1240	TEMP.LEFT BOTTOM FLAP
	SPARE

Tetra Pak®	Version Designer: RICO	Version Date: 01/10/2014	Machine: A3 CompactFlex 0300	
	ECM No: 687624	Denomination: CIRCUIT DIAGRAM	Page Type: PLC REMOTE TH, FFU	
Information Security Class: PUBLIC	Document No.: 3223337-0003	Doc. type: ELD	Version: AM	Page: 165

This drawing must not without the consent of Tetra Pak
be copied, transmitted or disclosed to any third party.

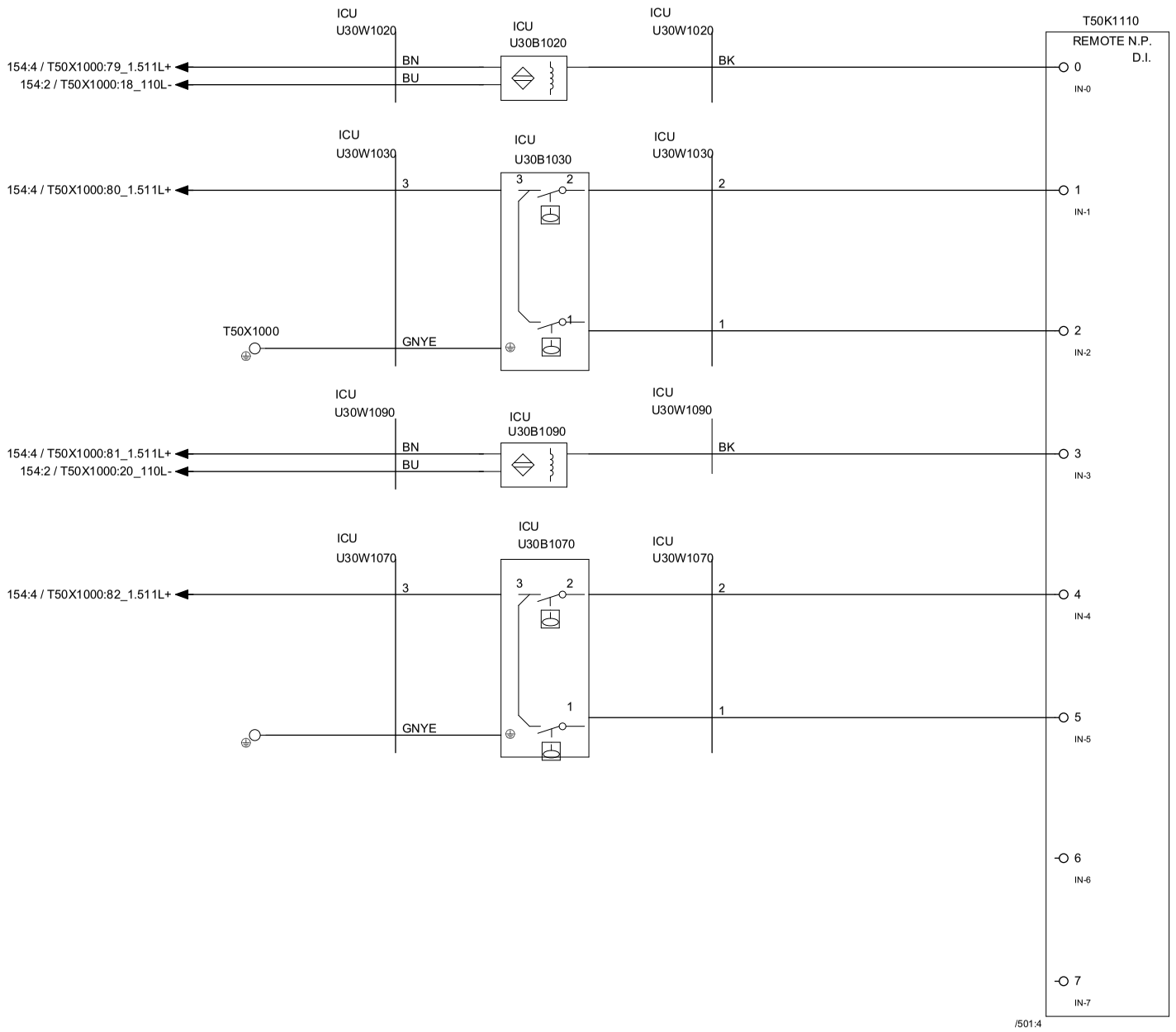

U30B1020	REFILLING PIPE ALKALI TANK ICU
U30B1030	LOW LEVEL ALKALI TANK ICU
U30B1030	HIGH LEVEL ALKALI TANK ICU
U30B1090	REFILLING PIPE ACID TANK ICU
U30B1070	LOW LEVEL ACID TANK ICU
U30B1070	HIGH LEVEL ACID TANK ICU
	SPARE
	SPARE

Tetra Pak®	Version Designer: RICO	Version Date: 01/10/2014	Machine: A3 CompactFlex 0300	
	ECM No: 687624	Denomination: CIRCUIT DIAGRAM	Page Type: PLC REMOTE D.I. FFU	
	Information Security Class: PUBLIC	Document No.: 3223337-0003	Doc. type: ELD	Version: AM	Page: 166

This drawing must not without the consent of Tetra Pak
be copied, transmitted or disclosed to any third party.

1	2	3	4	5	6	7	8	9	10

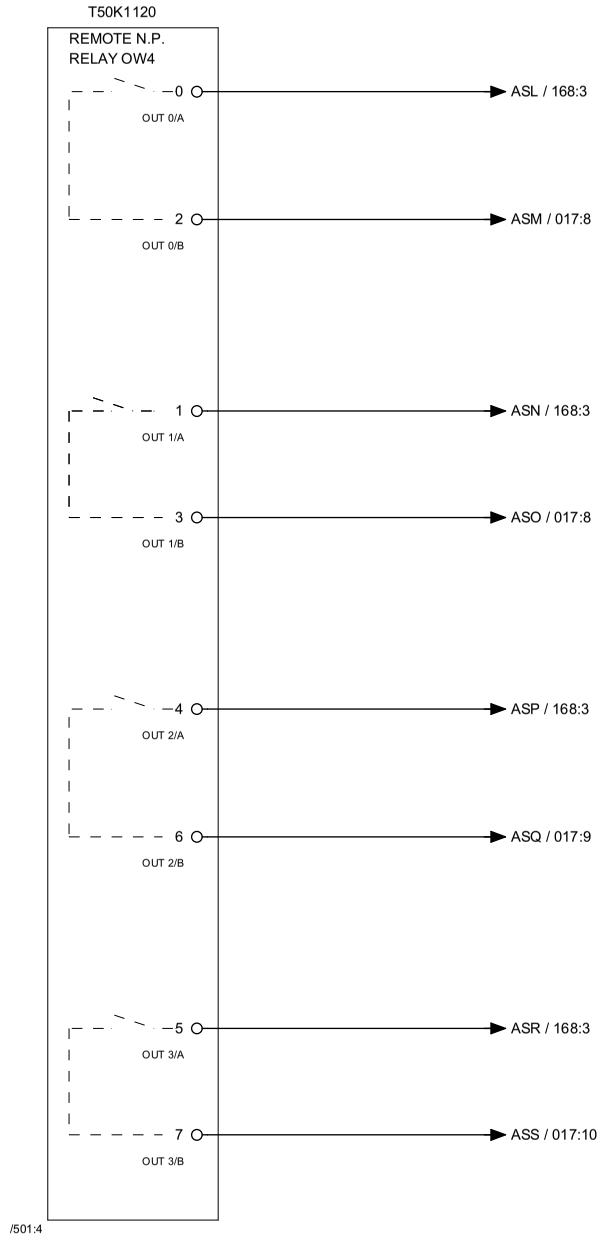

U30M1570 ALKALI PUMP POWER 1

U30M1570 ALKALI PUMP POWER 2

U30M1590 ACID PUMP POWER 1

U30M1590 ACID PUMP POWER 2

Tetra Pak®	Version Designer: RICO	Version Date: 01/10/2014	Machine: A3 CompactFlex 0300		
	ECM No: 687624	Denomination: CIRCUIT DIAGRAM	Page Type: PLC REMOTE OW4 FFU		
	Information Security Class: PUBLIC	Document No.: 3223337-0003	Doc. type: ELD	Version: AM	Page: 167

This drawing must not without the consent of Tetra Pak
be copied, transmitted or disclosed to any third party.

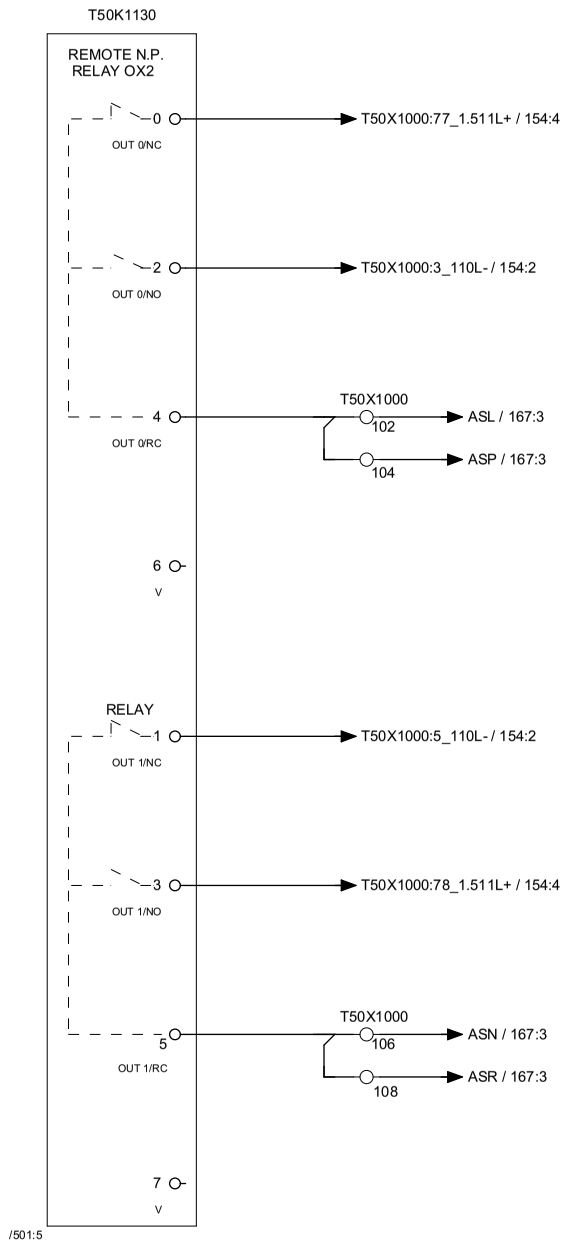

CHEMICALS PUMPS ROTATION ICU 1

CHEMICALS PUMPS ROTATION ICU 2

Tetra Pak®	Version Designer: RICO	Version Date: 01/10/2014	Machine: A3 CompactFlex 0300	
	ECM No: 687624	Denomination: CIRCUIT DIAGRAM	Page Type: PLC REMOTE OX2 FFU	
	Information Security Class: PUBLIC	Document No.: 3223337-0003	Doc. type: ELD	Version: AM / Page: 168

RELEASED

This drawing must not without the consent of Tetra Pak
be copied, transmitted or disclosed to any third party.

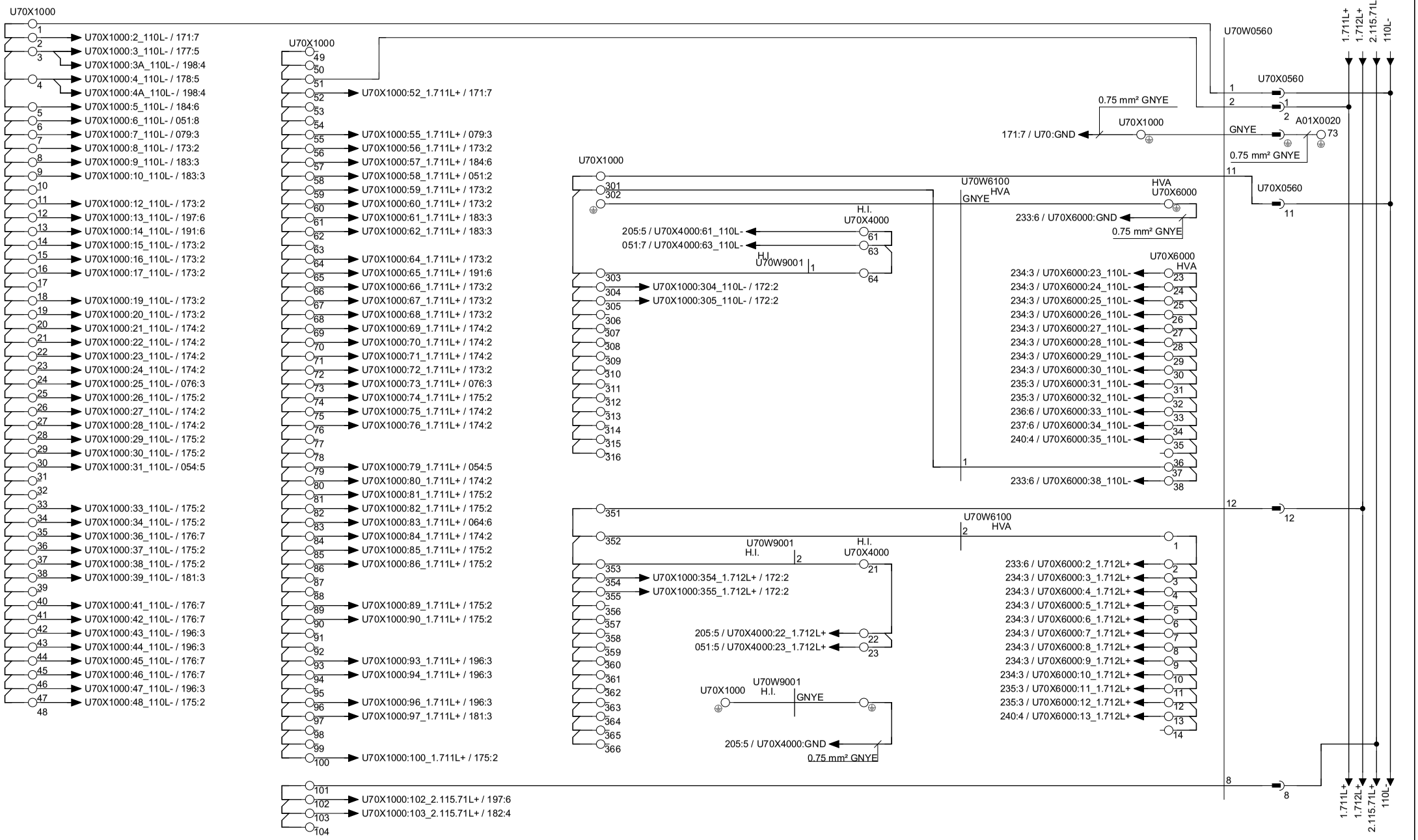

Tetra Pak®	Version Designer: RICO	Version Date: 01/10/2014	Machine: A3 CompactFlex 0300		
	ECM No: 687624	Denomination: CIRCUIT DIAGRAM	Page Type: TERMINAL STRIP COMMON, SUPERSTR (NEW)		
Information Security Class: PUBLIC	Document No.: 3223337-0003	Doc. type: ELD	Version: AM	Page: 170	

This drawing must not without the consent of Tetra Pak
be copied, transmitted or disclosed to any third party.

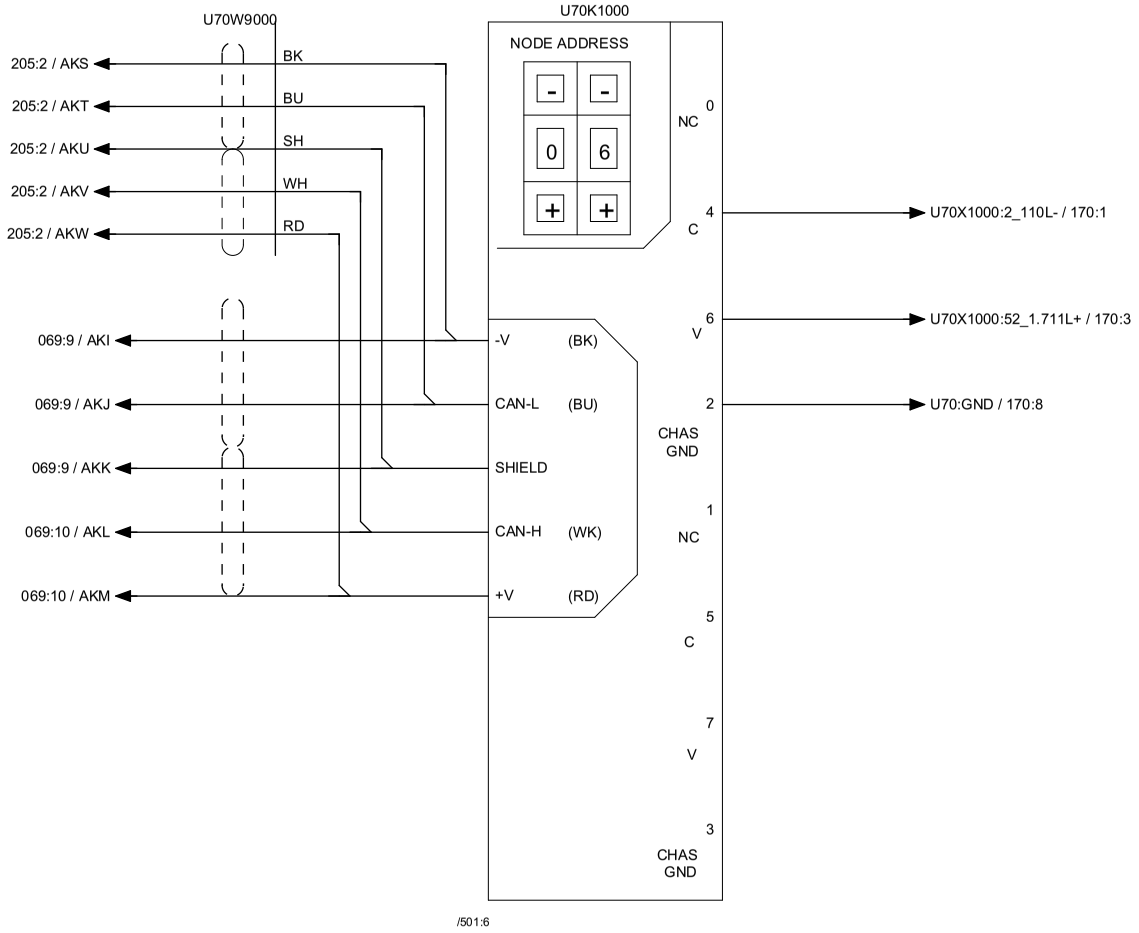

Tetra Pak®	Version Designer: RICO	Version Date: 01/10/2014	Machine: A3 CompactFlex 0300	
	ECM No: 687624	Denomination: CIRCUIT DIAGRAM	Page Type: DEVICENET ADAPTER, SUPERSTR.	
	Information Security Class: PUBLIC	Document No.: 3223337-0003	Doc. type: ELD	Version: AM	Page: 171

RELEASED

This drawing must not without the consent of Tetra Pak be copied, transmitted or disclosed to any third party.

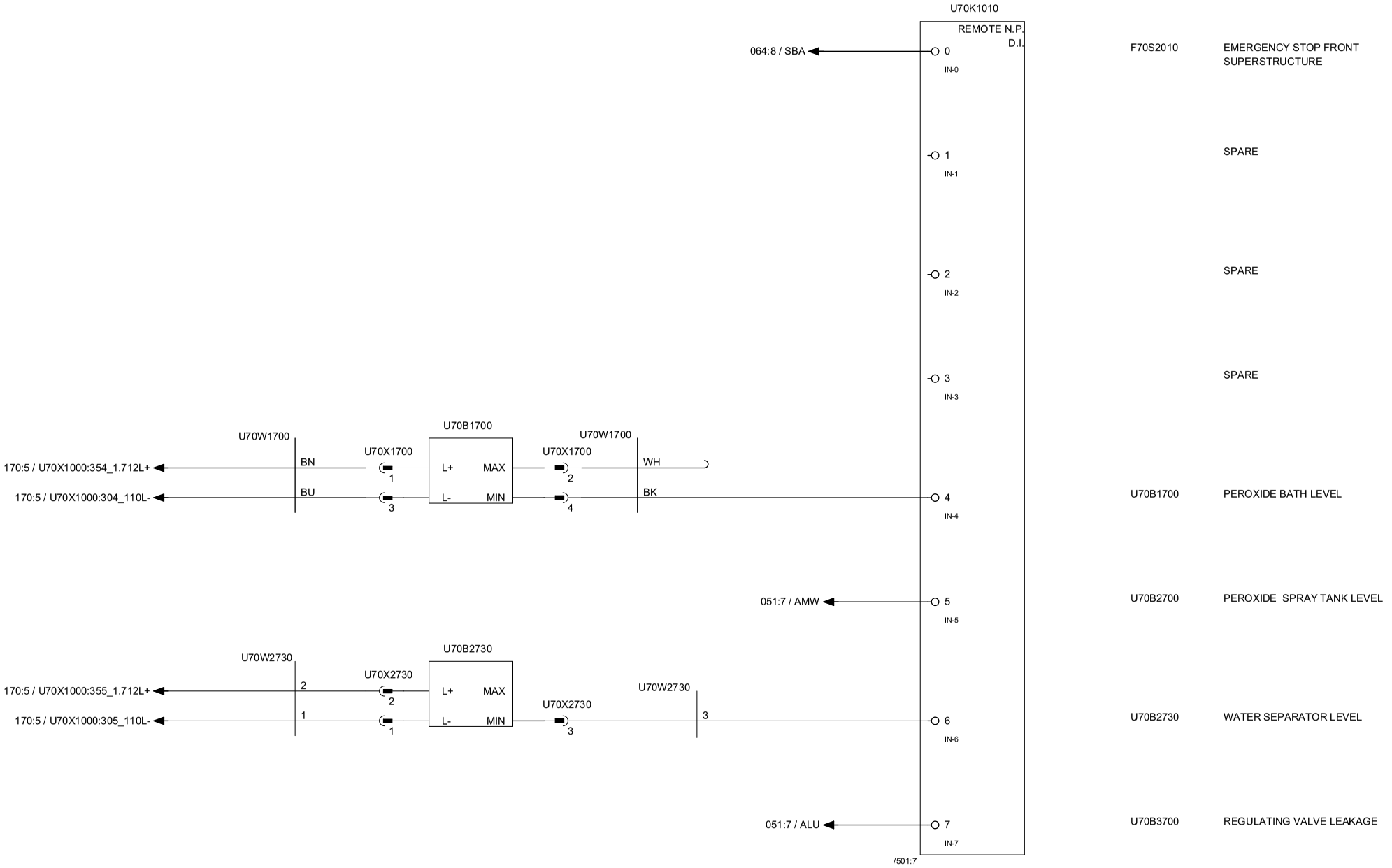

Tetra Pak®	Version Designer: RICO	Version Date: 01/10/2014	Machine: A3 CompactFlex 0300	
	ECM No: 687624	Denomination: CIRCUIT DIAGRAM	Page Type: PLC REMOTE D.I, SUPERSTR.	
	Information Security Class: PUBLIC	Document No.: 3223337-0003	Doc. type: ELD	Version: AM	Page: 172

This drawing must not without the consent of Tetra Pak
be copied, transmitted or disclosed to any third party.

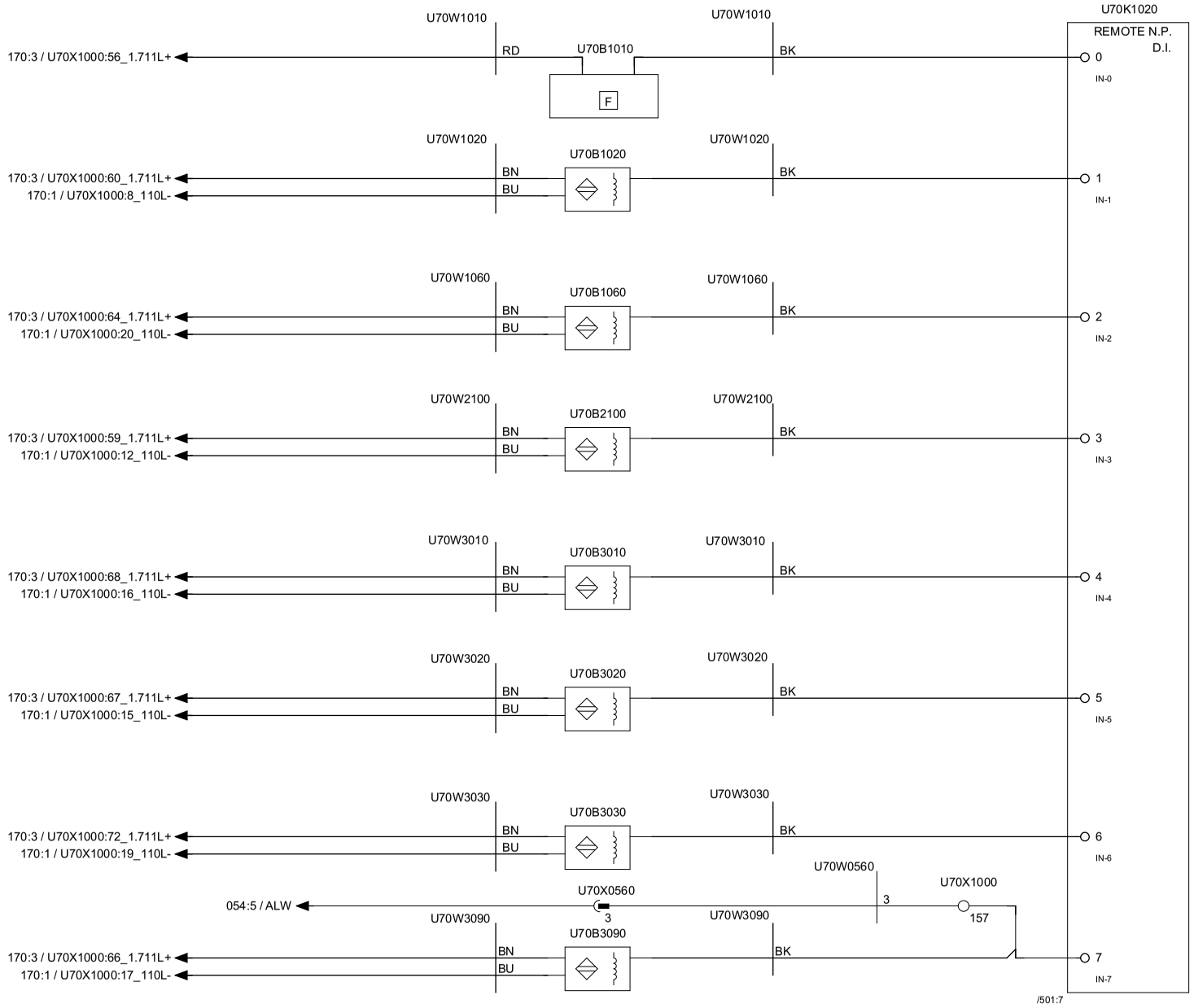

Tetra Pak®	Version Designer: RICO	Version Date: 01/10/2014	Machine: A3 CompactFlex 0300	
	ECM No: 687624	Denomination: CIRCUIT DIAGRAM	Page Type: PLC REMOTE D.I, SUPERSTR.	
	Information Security Class: PUBLIC	Document No.: 3223337-0003	Doc. type: ELD	Version: AM	Page: 173

RELEASED

This drawing must not without the consent of Tetra Pak be copied, transmitted or disclosed to any third party.

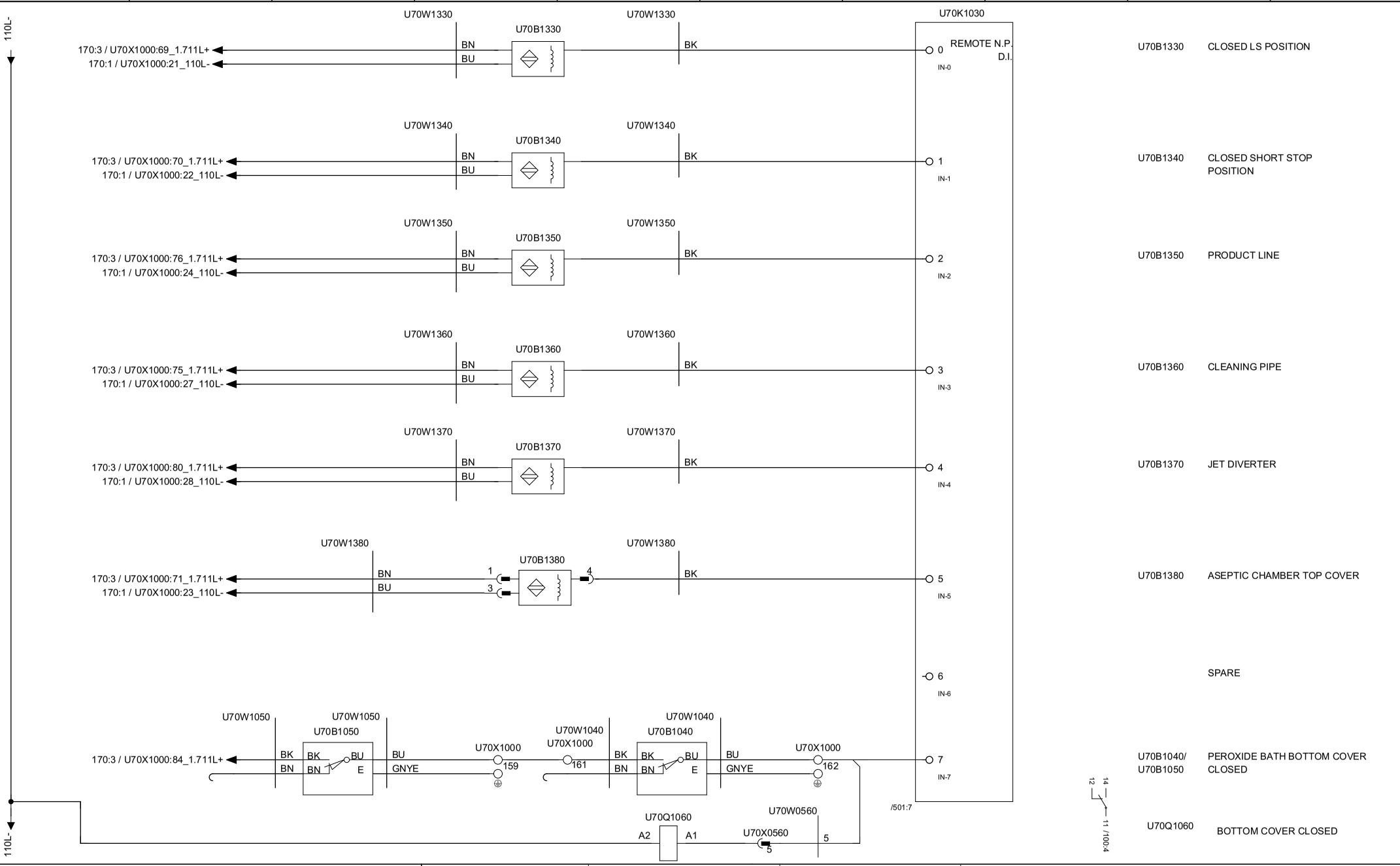

Tetra Pak®	Version Designer: RICO	Version Date: 01/10/2014	Machine: A3 CompactFlex 0300		
	ECM No: 687624	Denomination: CIRCUIT DIAGRAM	Page Type: PLC REMOTE D.I, SUPERSTR.		
	Information Security Class: PUBLIC	Document No.: 3223337-0003	Doc. type: ELD	Version: AM	Page: 174

This drawing must not without the consent of Tetra Pak be copied, transmitted or disclosed to any third party.

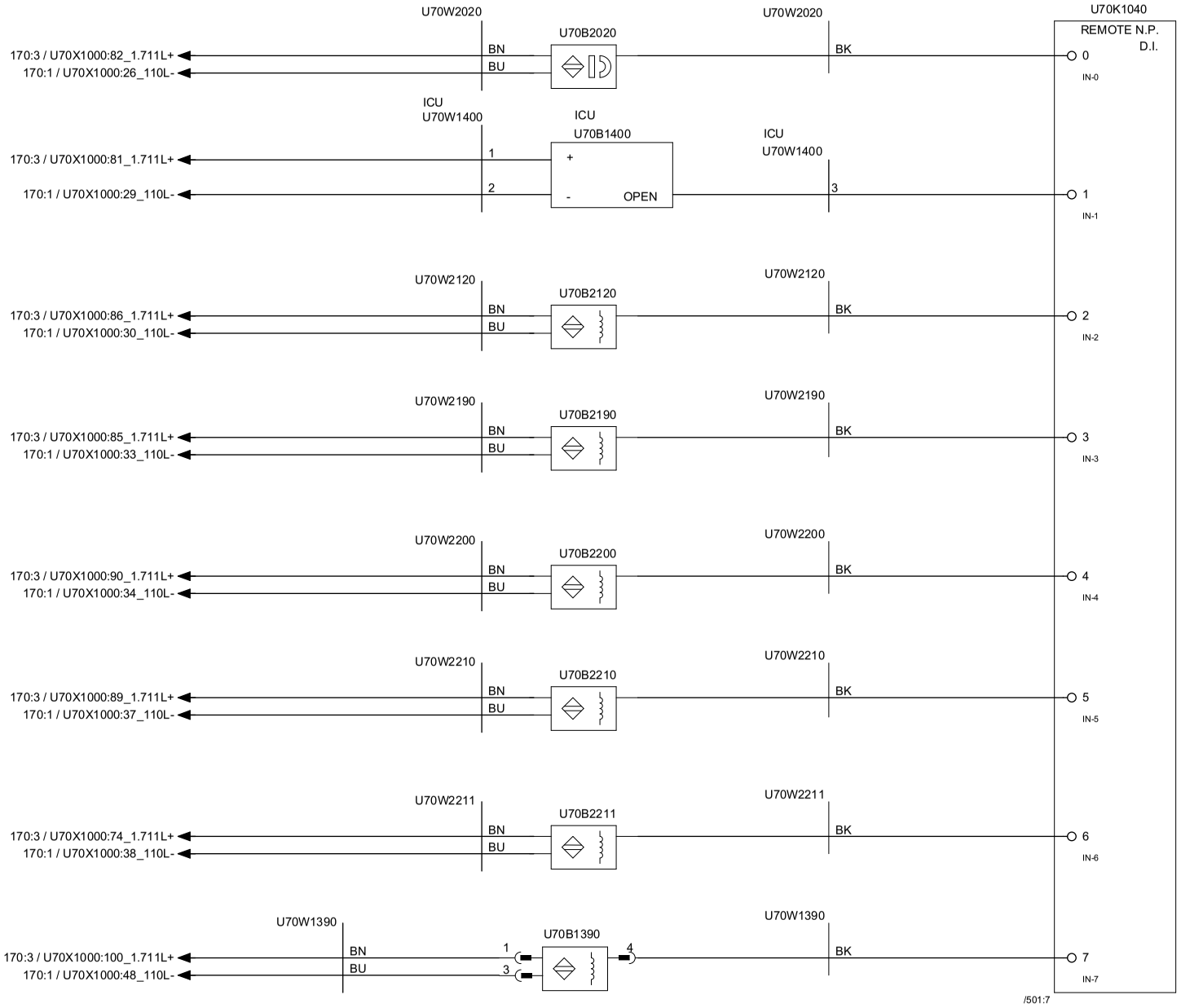

U70B2020	BUTTERFLY VALVE BACK POSITION
U70B1400	STEAM INLET VALVE OPEN ICU
U70B2120	MOVABLE CALENDER ROLLER
U70B2190	CHANGE OVER VALVE CLOSED
U70B2200	CHANGE OVER VALVE OPEN
U70B2210	CLOSED AIR KNIFE SENSOR 2
U70B2211	CLOSED AIR KINFE SENSOR 1
U70B1390	CLEANING PIPE OUTFEED CONNECTOR

Tetra Pak®

Version Designer: RICO	Version Date: 01/10/2014	Machine: A3 CompactFlex 0300		
ECM No: 687624	Denomination: CIRCUIT DIAGRAM	Page Type: PLC REMOTE D.I, SUPERSTR.		
Information Security Class: PUBLIC	Document No.: 3223337-0003	Doc. type: ELD	Version: AM	Page: 175

This drawing must not without the consent of Tetra Pak be copied, transmitted or disclosed to any third party.

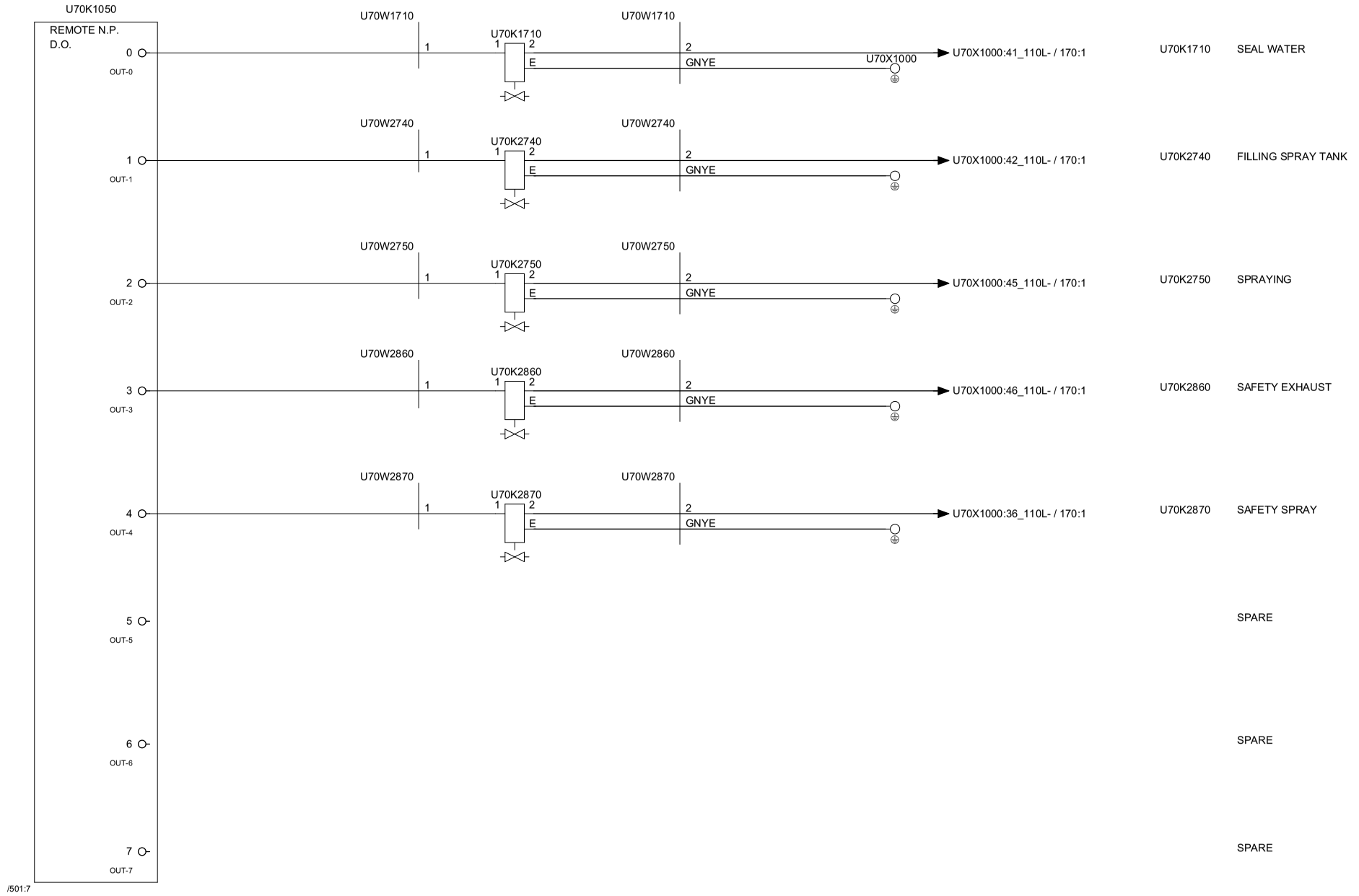

Tetra Pak®	Version Designer: RICO	Version Date: 01/10/2014	Machine: A3 CompactFlex 0300	
	ECM No: 687624	Denomination: CIRCUIT DIAGRAM	Page Type: PLC REMOTE D.O, SUPERSTR.	
	Information Security Class: PUBLIC	Document No.: 3223337-0003	Doc. type: ELD	Version: AM	Page: 176

RELEASED

This drawing must not without the consent of Tetra Pak be copied, transmitted or disclosed to any third party.

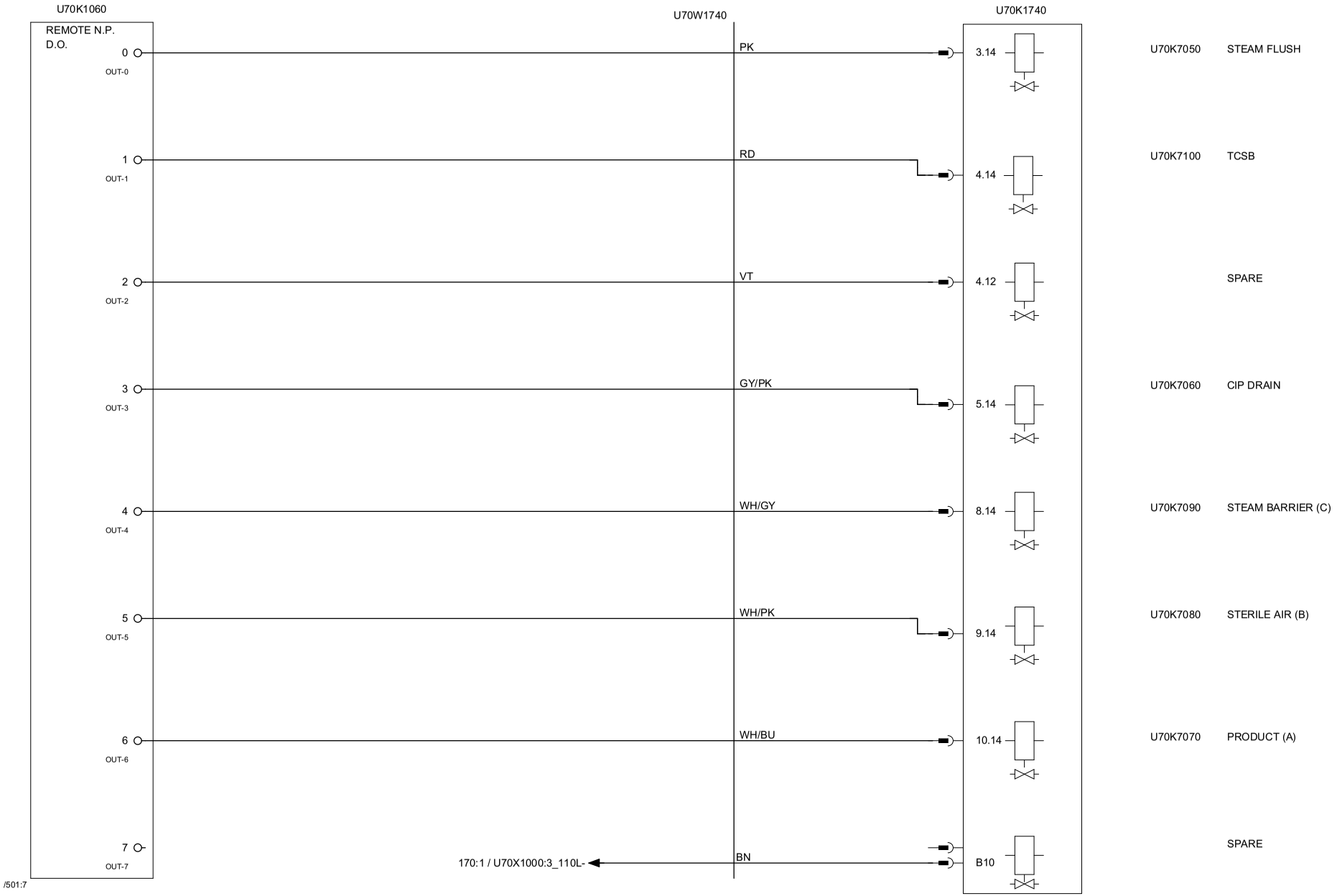

Tetra Pak®	Version Designer: RICO	Version Date: 01/10/2014	Machine: A3 CompactFlex 0300	
	ECM No: 687624	Denomination: CIRCUIT DIAGRAM	Page Type: PLC REMOTE D.O, SUPERSTR.	
	Information Security Class: PUBLIC	Document No.: 3223337-0003	Doc. type: ELD	Version: AM / Page: 177

This drawing must not without the consent of Tetra Pak be copied, transmitted or disclosed to any third party.

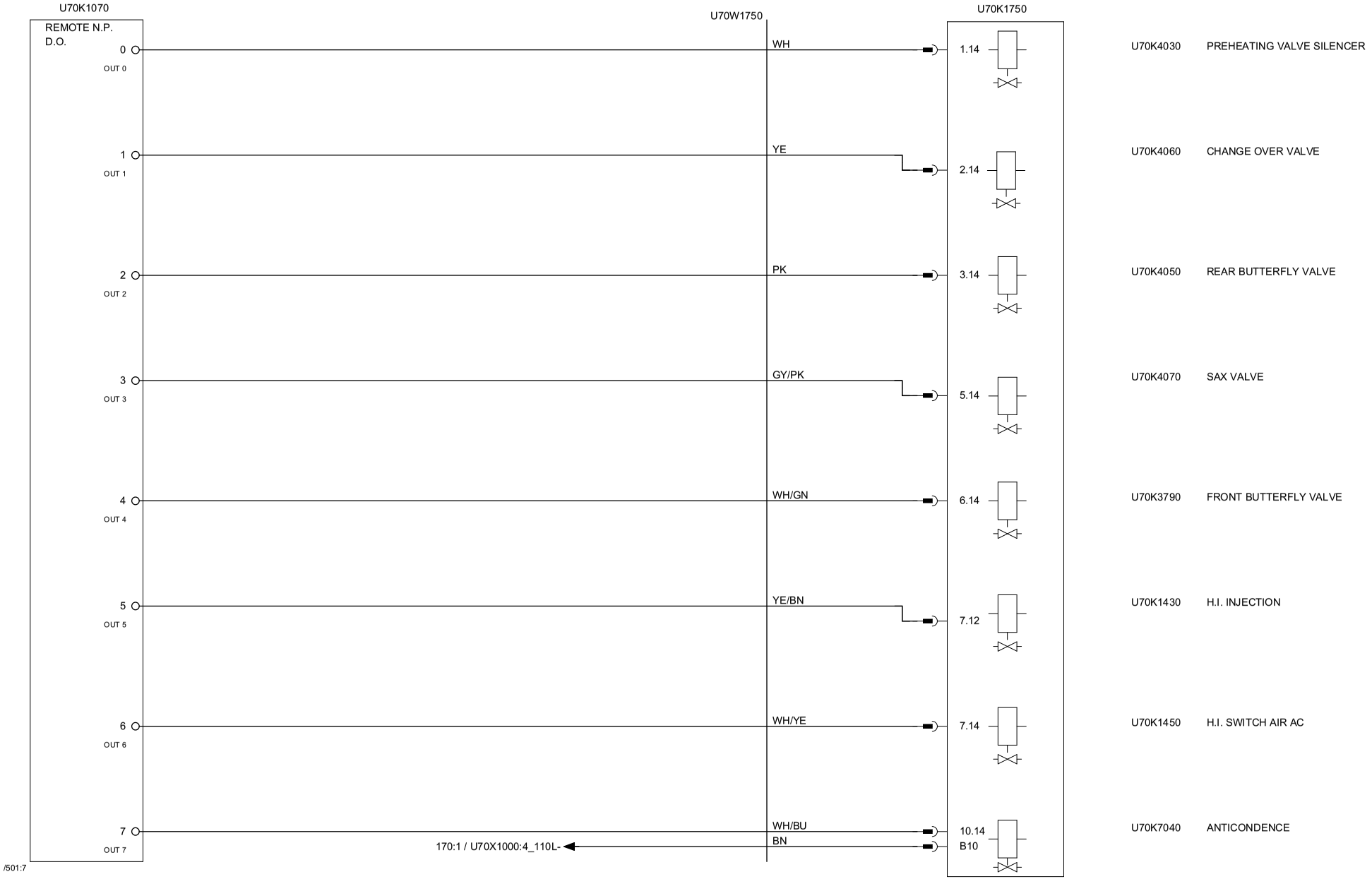

Tetra Pak®	Version Designer: RICO	Version Date: 01/10/2014	Machine: A3 CompactFlex 0300	
	ECM No: 687624	Denomination: CIRCUIT DIAGRAM	Page Type: PLC REMOTE D.O, SUPERSTR.	
	Information Security Class: PUBLIC	Document No.: 3223337-0003	Doc. type: ELD	Version: AM / Page: 178

This drawing must not without the consent of Tetra Pak
be copied, transmitted or disclosed to any third party.

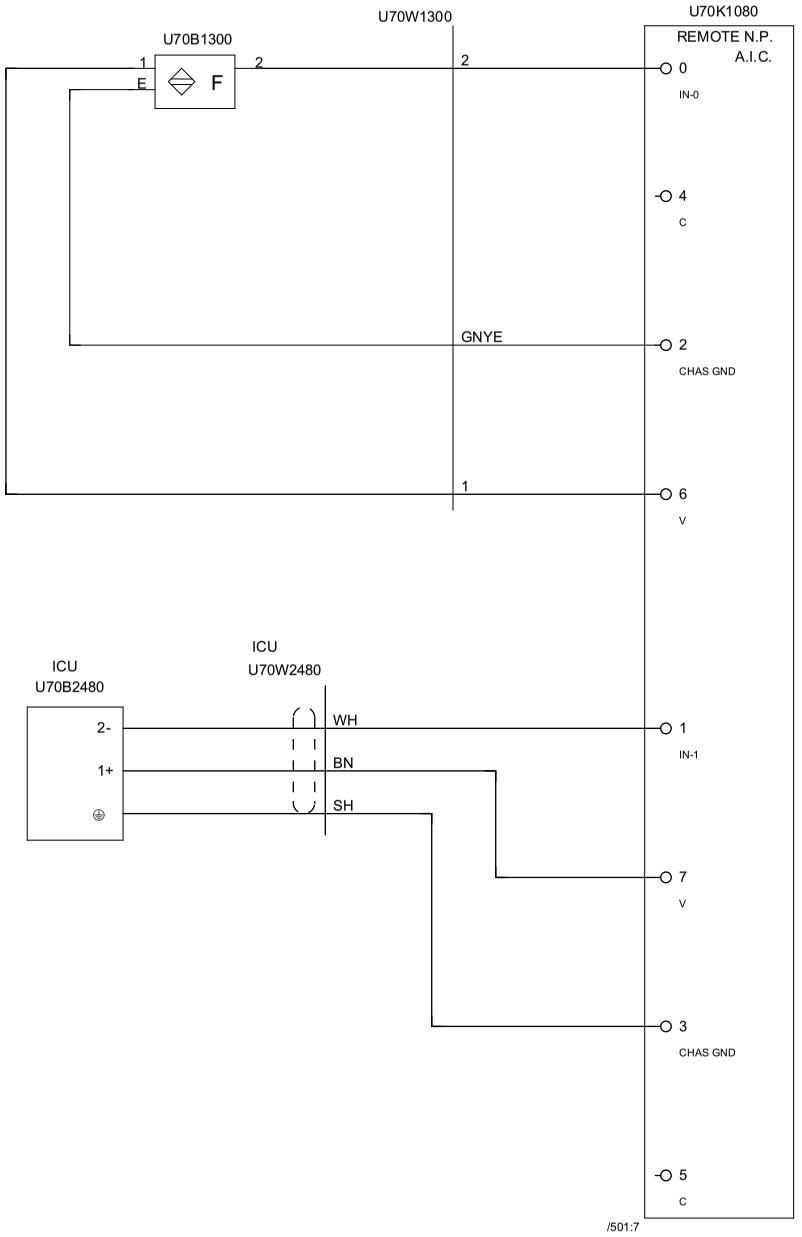

U70B1300 SEPARATOR AIR FLOW

U70B2480 ICU WATER TANK LEVEL

Tetra Pak®	Version Designer: RICO	Version Date: 01/10/2014	Machine: A3 CompactFlex 0300	
	ECM No: 687624	Denomination: CIRCUIT DIAGRAM	Page Type: PLC REMOTE A.I.C, SUPERSTR.	
Information Security Class: PUBLIC	Document No.: 3223337-0003	Doc. type: ELD	Version: AM	Page: 179

This drawing must not without the consent of Tetra Pak
be copied, transmitted or disclosed to any third party.

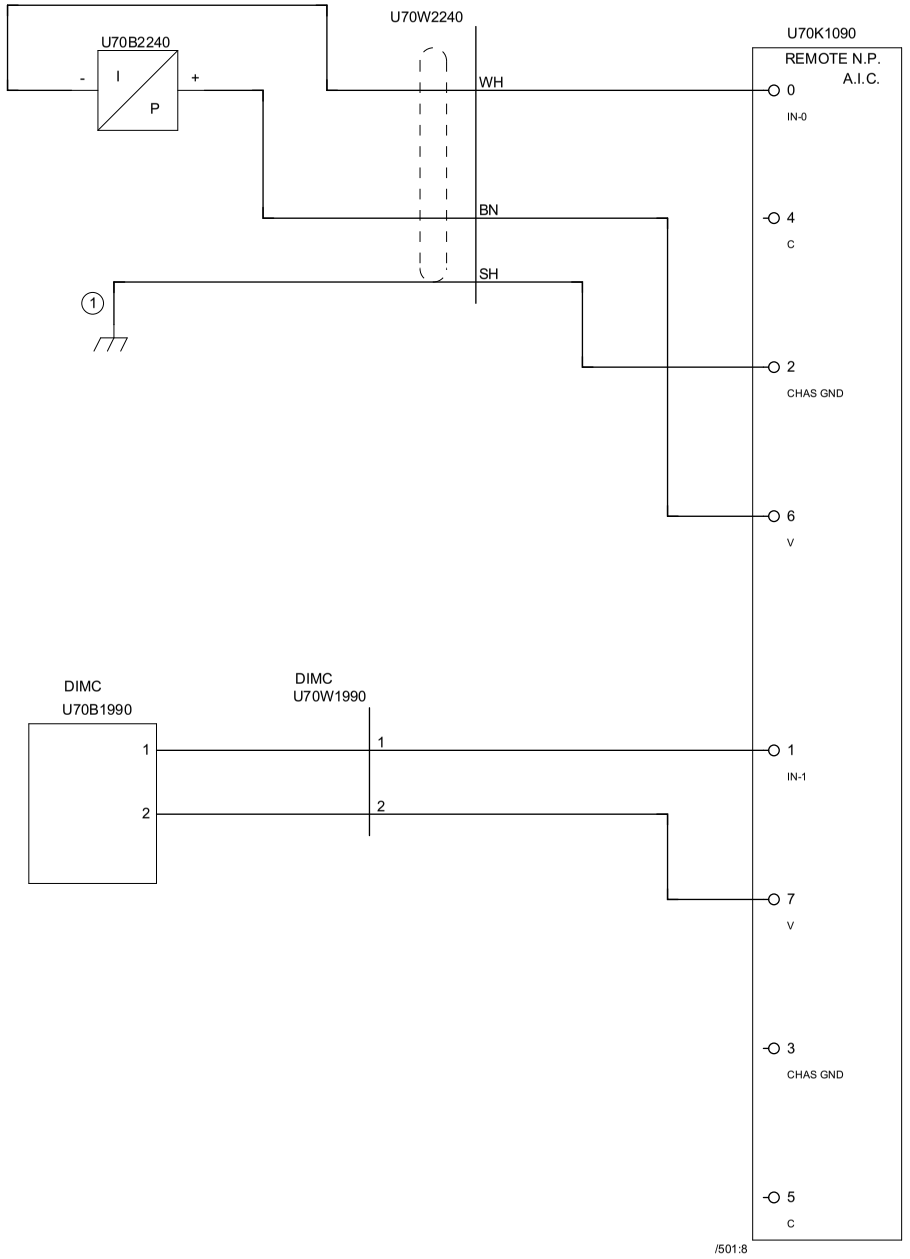

U70B2240 PRESSURE ASEPTIC CHAMBER

U70B1990 DIMC FAN AIR PRESSURE

Tetra Pak®	Version Designer: RICO	Version Date: 01/10/2014	Machine: A3 CompactFlex 0300				
	ECM No: 687624	Denomination: CIRCUIT DIAGRAM	Page Type: PLC REMOTE A.I.C. SUPERSTR.				
	Information Security Class: PUBLIC	Document No.: 3223337-0003	Doc. type: ELD	Version: AM	Page: 180		

This drawing must not without the consent of Tetra Pak
be copied, transmitted or disclosed to any third party.

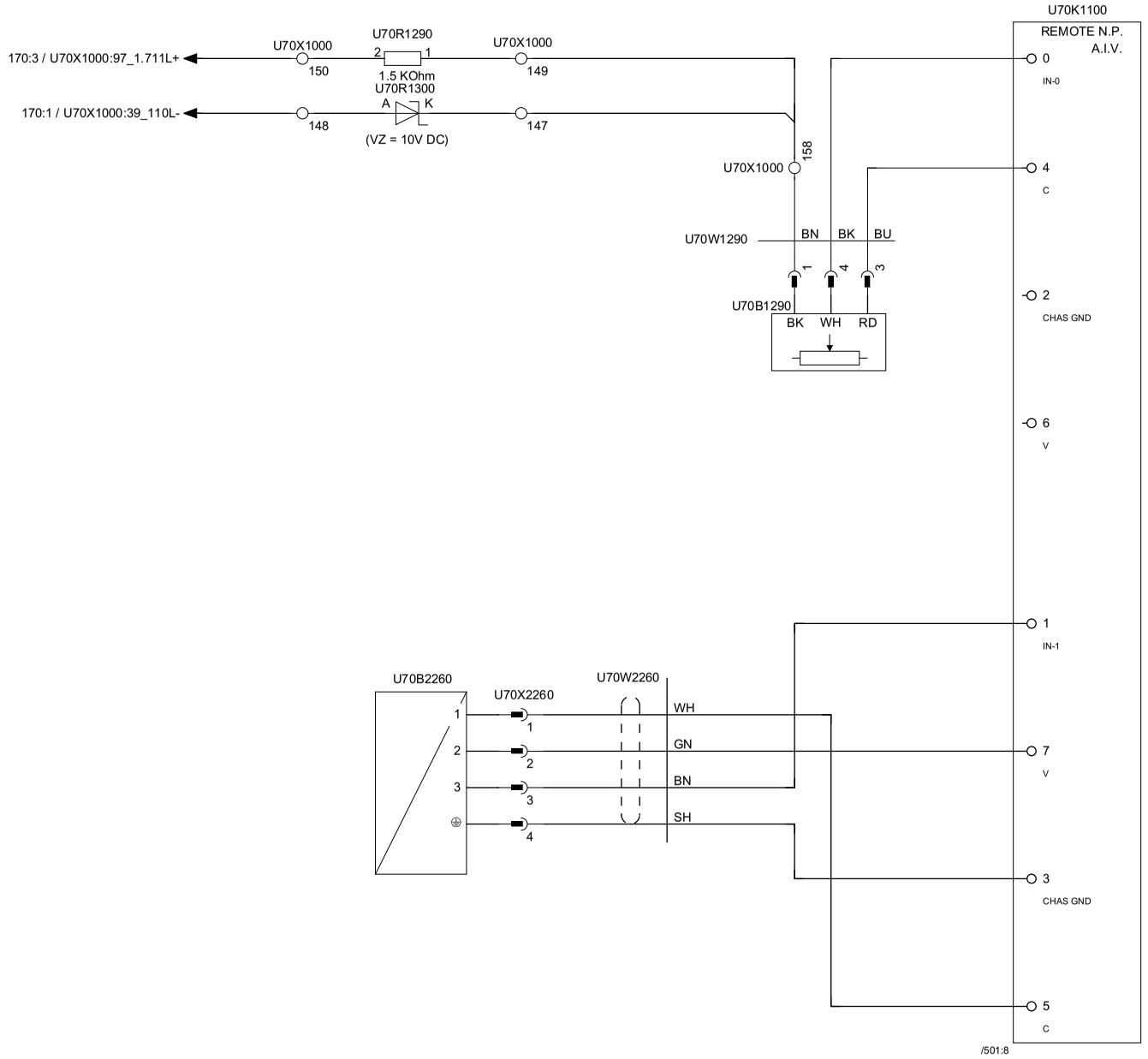

U70B1290 HEAT EXCHANGER VALVE POSITION SENSOR

U70B2260 PENDULUM POSITION

Tetra Pak®	Version Designer: RICO	Version Date: 01/10/2014	Machine: A3 CompactFlex 0300	
	ECM No: 687624	Denomination: CIRCUIT DIAGRAM	Page Type: PLC REMOTE A.I.V., SUPERSTR.	
	Information Security Class: PUBLIC	Document No.: 3223337-0003	Doc. type: ELD	Version: AM / Page: 181

This drawing must not without the consent of Tetra Pak
be copied, transmitted or disclosed to any third party.

1	2	3	4	5	6	7	8	9	10

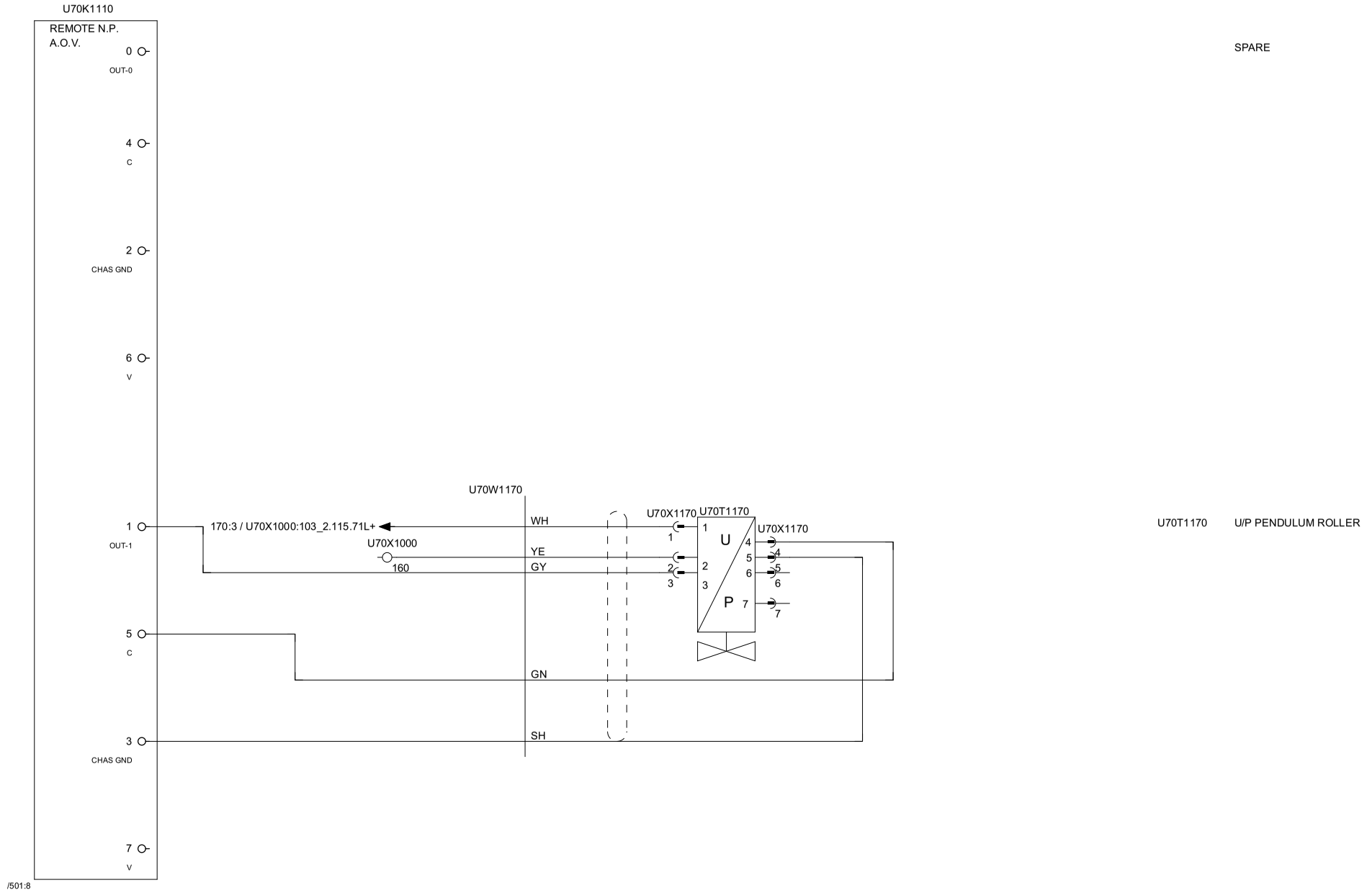

Tetra Pak®	Version Designer RICO	Version Date 01/10/2014	Machine A3 CompactFlex 0300				
	ECM No 687624	Denomination CIRCUIT DIAGRAM	Page Type PLC REMOTE A.O.V., SUPERSTR.				
	Information Security Class PUBLIC	Document No. 3223337-0003	Doc. type ELD	Version AM	Page 182		

This drawing must not without the consent of Tetra Pak
be copied, transmitted or disclosed to any third party.

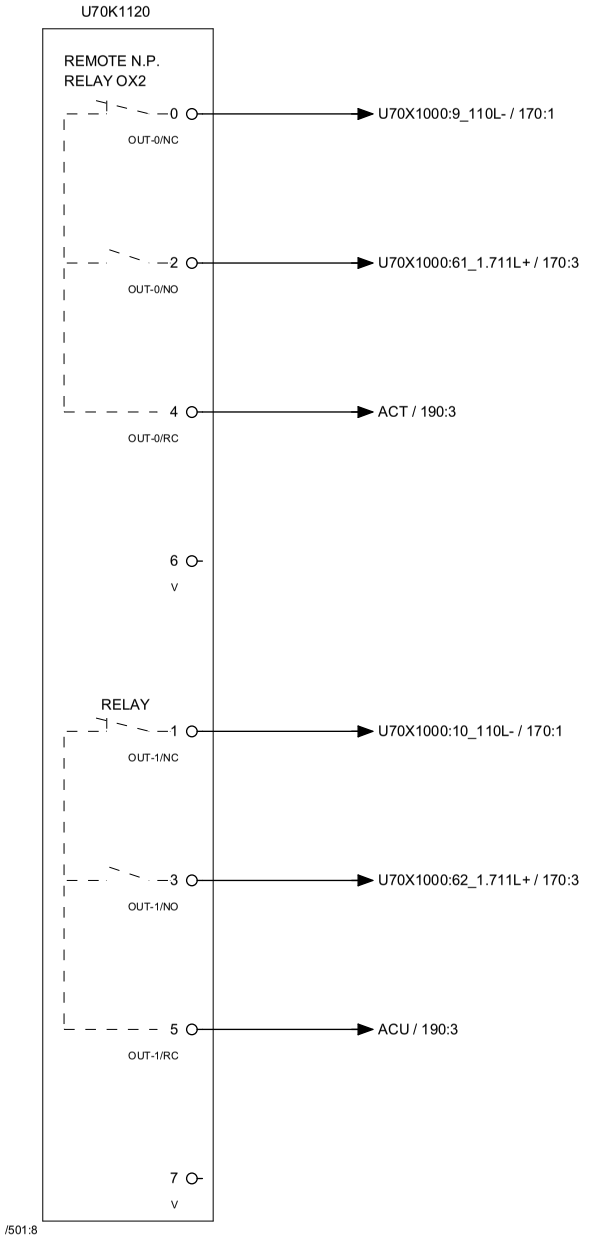

U70M1100 HEAT EXCHANGER VALVE
BACKWARD DIRECTION

U70M1100 HEAT EXCHANGER VALVE
FORWARD DIRECTION

Tetra Pak®	Version Designer: RICO	Version Date: 01/10/2014	Machine: A3 CompactFlex 0300	
	ECM No: 687624	Denomination: CIRCUIT DIAGRAM	Page Type: PLC REMOTE OX2, SUPERSTR.	
	Information Security Class: PUBLIC	Document No.: 3223337-0003	Doc. type: ELD	Version: AM / Page: 183

RELEASED

This drawing must not without the consent of Tetra Pak be copied, transmitted or disclosed to any third party.

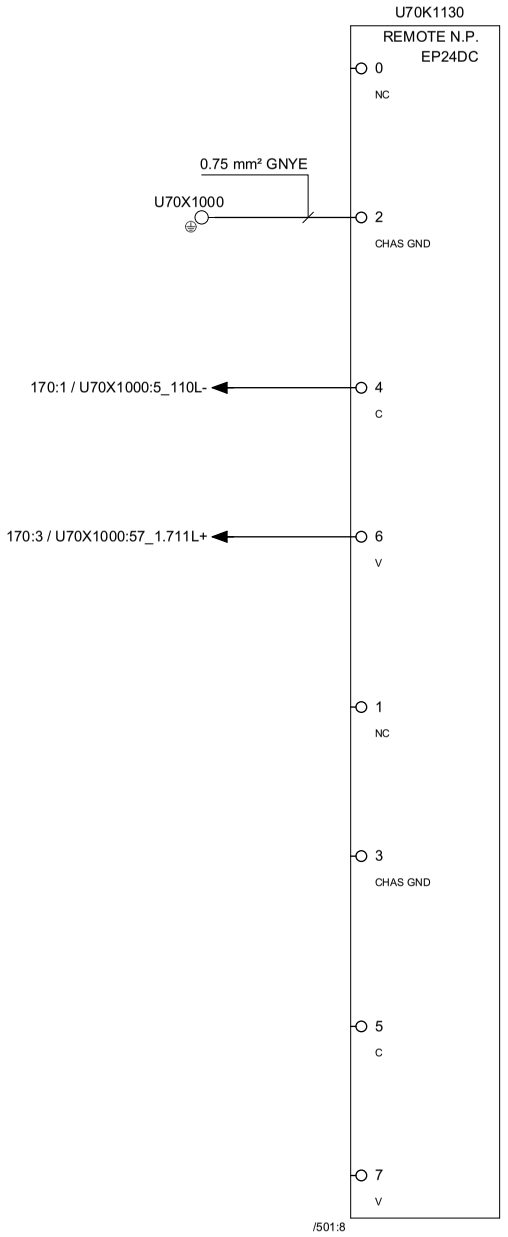

Tetra Pak®	Version Designer: RICO	Version Date: 01/10/2014	Machine: A3 CompactFlex 0300	
	ECM No: 687624	Denomination: CIRCUIT DIAGRAM	Page Type: PLC REMOTE EP24DC, SUPERSTR.	
	Information Security Class: PUBLIC	Document No.: 3223337-0003	Doc. type: ELD	Version: AM	Page: 184

This drawing must not without the consent of Tetra Pak
be copied, transmitted or disclosed to any third party.

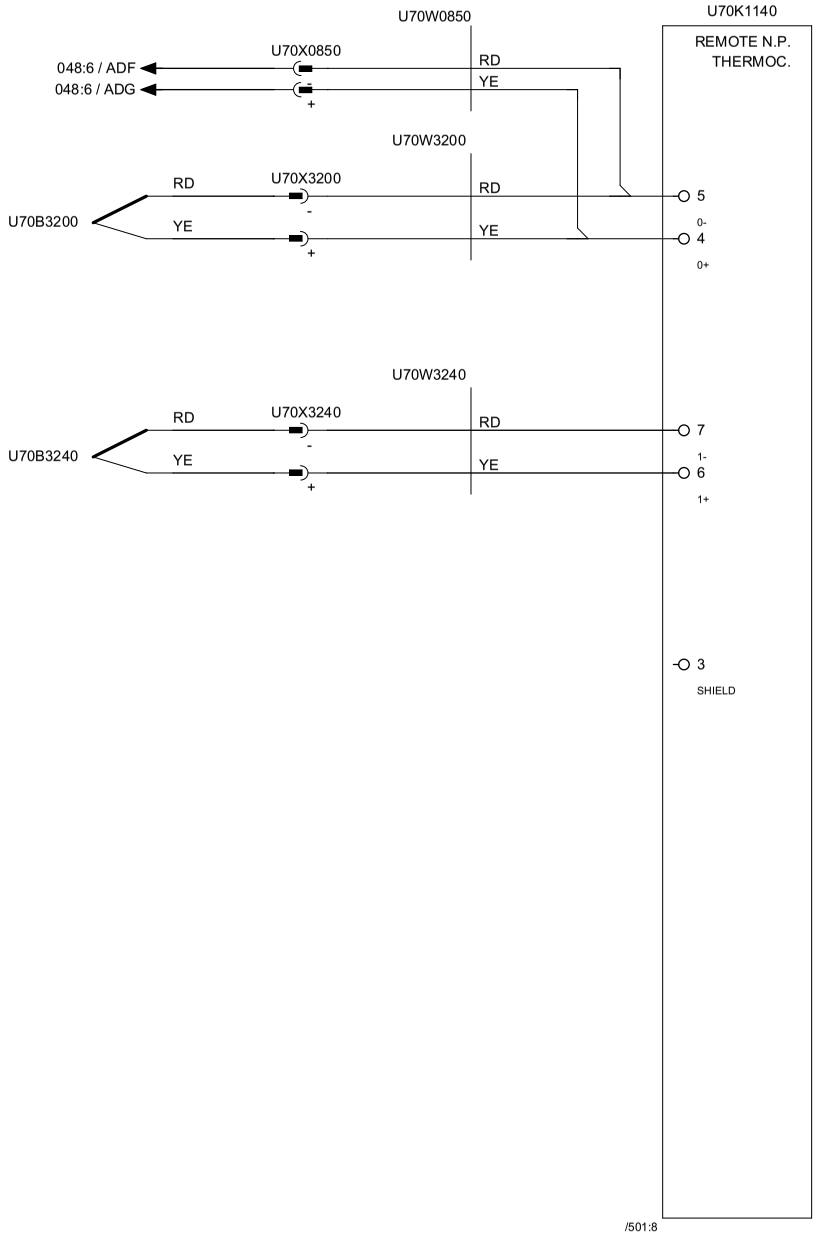

U70B3200 TEMP. AIR SUPER HEATER

U70B3240 TEMP. LS HEATER NOZZLE

Tetra Pak®	Version Designer: RICO	Version Date: 01/10/2014	Machine: A3 CompactFlex 0300	
	ECM No: 687624	Denomination: CIRCUIT DIAGRAM	Page Type: PLC REMOTE TH, SUPERSTR.	
	Information Security Class: PUBLIC	Document No.: 3223337-0003	Doc. type: ELD	Version: AM / Page: 185

This drawing must not without the consent of Tetra Pak
be copied, transmitted or disclosed to any third party.

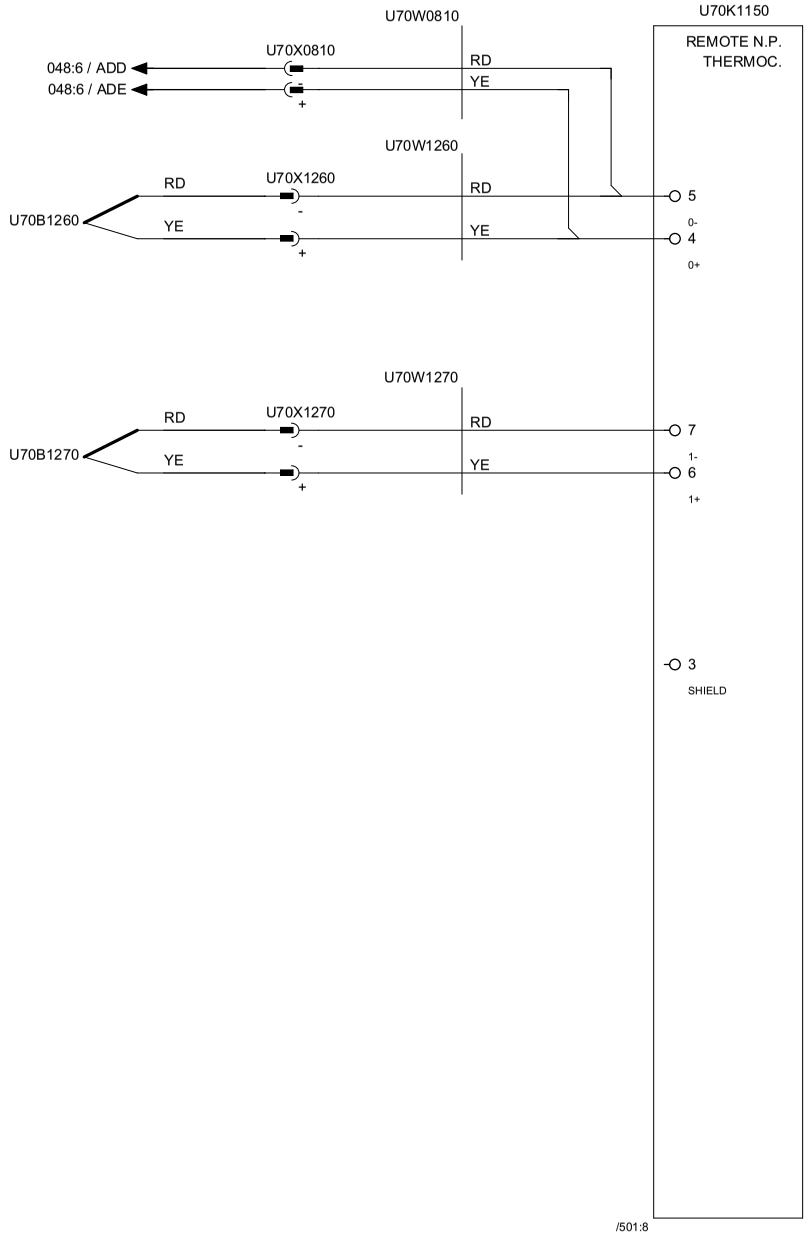

U70B1260 TEMP. HYDROGEN PEROXIDE BATH

U70B1270 TEMP. STERILE AIR OUTLET

Tetra Pak®	Version Designer: RICO	Version Date: 01/10/2014	Machine: A3 CompactFlex 0300	
	ECM No: 687624	Denomination: CIRCUIT DIAGRAM	Page Type: PLC REMOTE TH., SUPERSTR.	
	Information Security Class: PUBLIC	Document No.: 3223337-0003	Doc. type: ELD	Version: AM / Page: 186

This drawing must not without the consent of Tetra Pak
be copied, transmitted or disclosed to any third party.

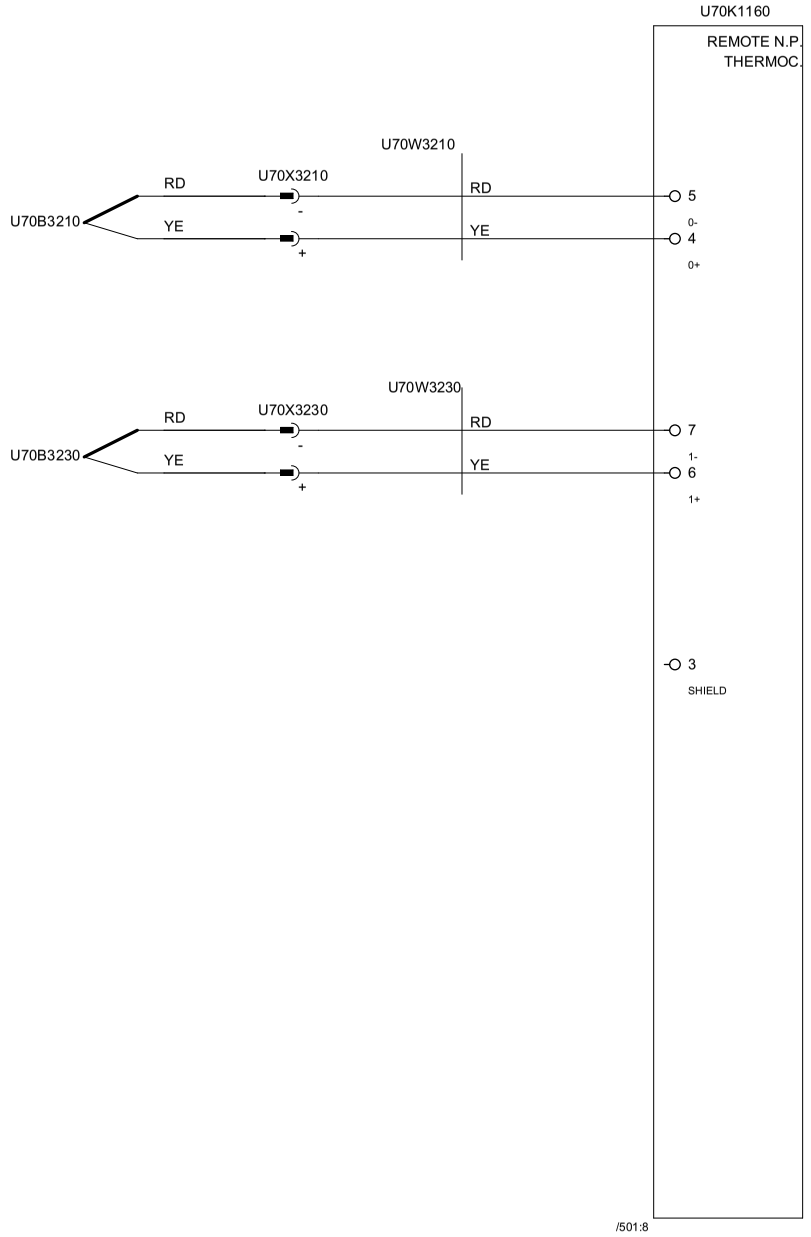

U70B3210 TEMP. LS SHORT STOP NOZZLE

U70B3230 TEMP. LS HEATER ELEMENT

Tetra Pak®	Version Designer: RICO	Version Date: 01/10/2014	Machine: A3 CompactFlex 0300	
	ECM No: 687624	Denomination: CIRCUIT DIAGRAM	Page Type: PLC REMOTE TH, SUPERSTR.	
Information Security Class: PUBLIC	Document No.: 3223337-0003	Doc. type: ELD	Version: AM	Page: 187

This drawing must not without the consent of Tetra Pak
be copied, transmitted or disclosed to any third party.

1	2	3	4	5	6	7	8	9	10

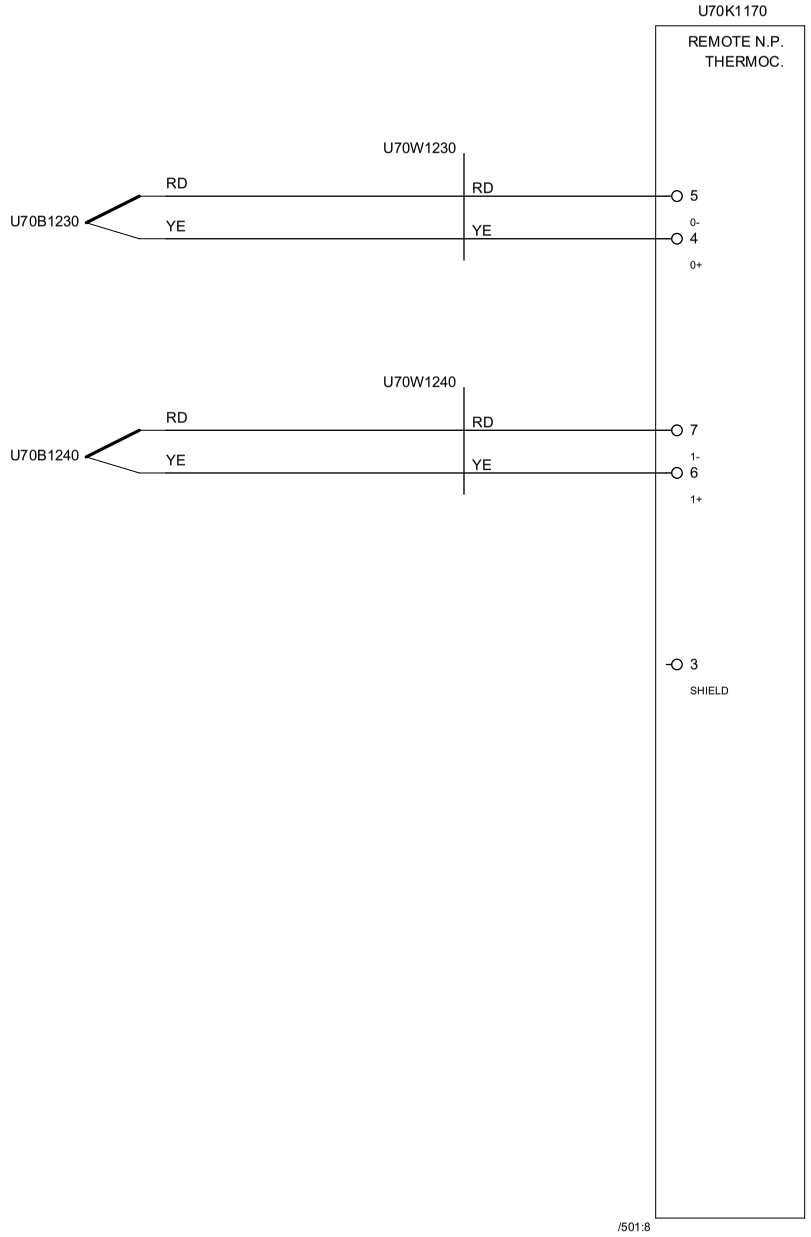

Tetra Pak®	Version Designer: RICO	Version Date: 01/10/2014	Machine: A3 CompactFlex 0300		
	ECM No: 687624	Denomination: CIRCUIT DIAGRAM	Page Type: PLC REMOTE TH, SUPERSTR.		
	Information Security Class: PUBLIC	Document No.: 3223337-0003	Doc. type: ELD	Version: AM	Page: 188

This drawing must not without the consent of Tetra Pak
be copied, transmitted or disclosed to any third party.

1	2	3	4	5	6	7	8	9	10

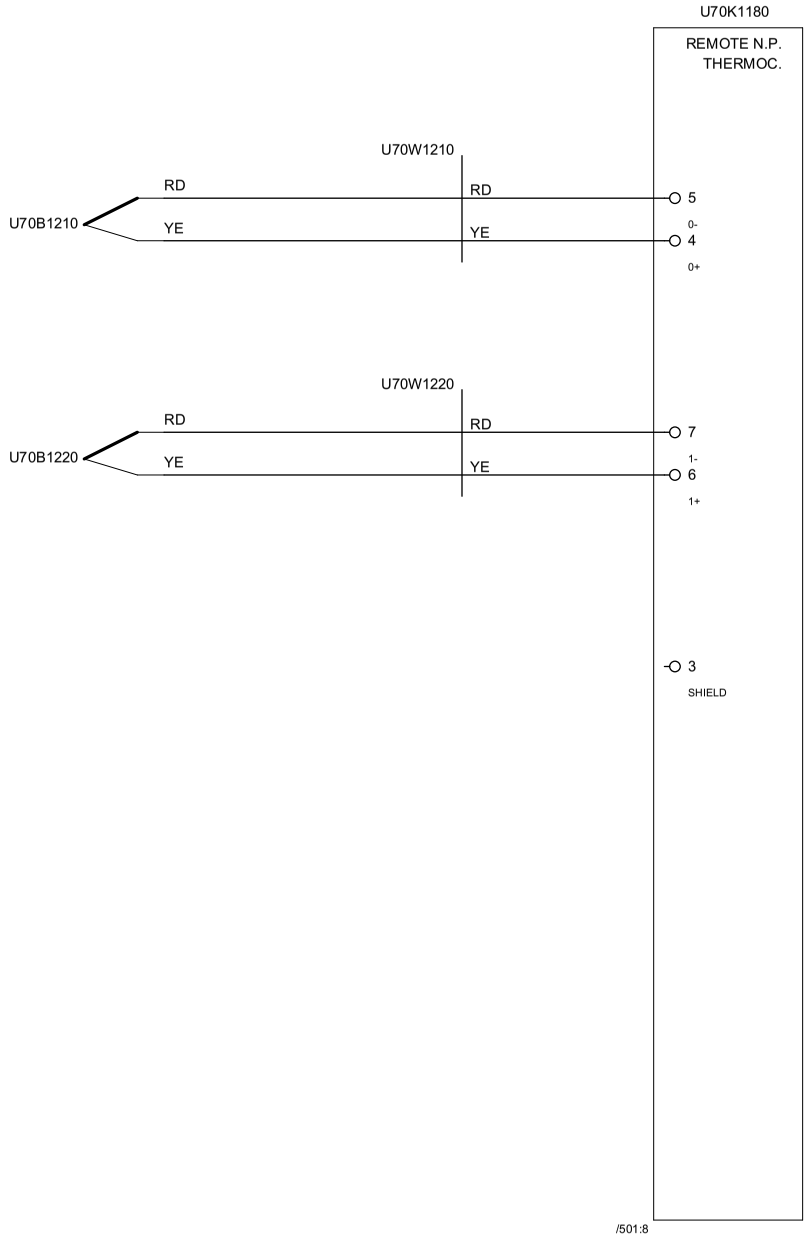

Tetra Pak®	Version Designer: RICO	Version Date: 01/10/2014	Machine: A3 CompactFlex 0300			
	ECM No: 687624	Denomination: CIRCUIT DIAGRAM	Page Type: PLC REMOTE TH, SUPERSTR.			
	Information Security Class: PUBLIC	Document No.: 3223337-0003	Doc. type: ELD	Version: AM	Page: 189	

This drawing must not without the consent of Tetra Pak be copied, transmitted or disclosed to any third party.

1	2	3	4	5	6	7	8	9	10

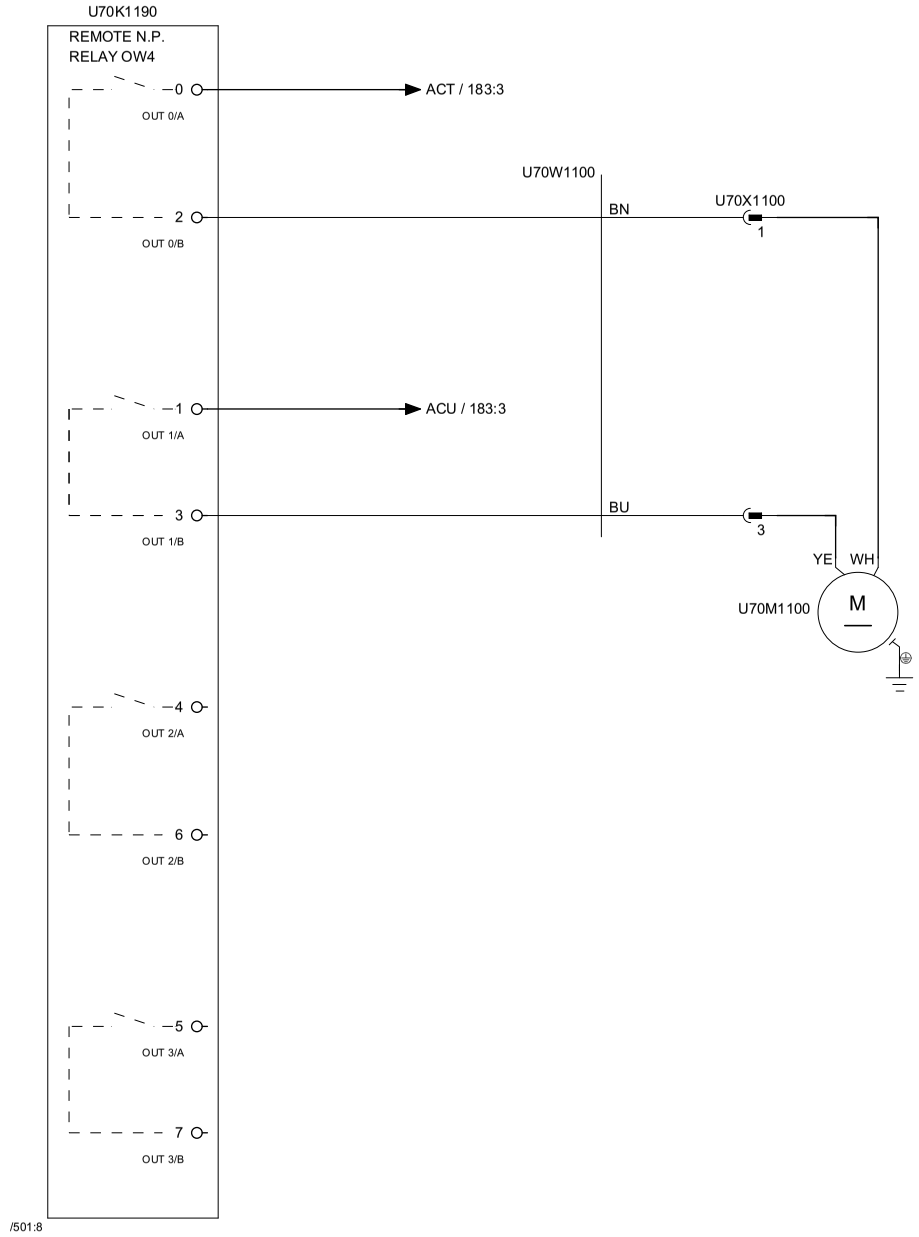

U70M1100	HEAT EXCHANGER VALVE POWER 1
U70M1100	HEAT EXCHANGER VALVE POWER 2
	SPARE
	SPARE

Tetra Pak®	Version Designer: RICO	Version Date: 01/10/2014	Machine: A3 CompactFlex 0300	
	ECM No: 687624	Denomination: CIRCUIT DIAGRAM	Page Type: PLC REMOTE OW4, SUPERSTR.	
	Information Security Class: PUBLIC	Document No.: 3223337-0003	Doc. type: ELD	Version: AM / Page: 190

RELEASED

This drawing must not without the consent of Tetra Pak be copied, transmitted or disclosed to any third party.

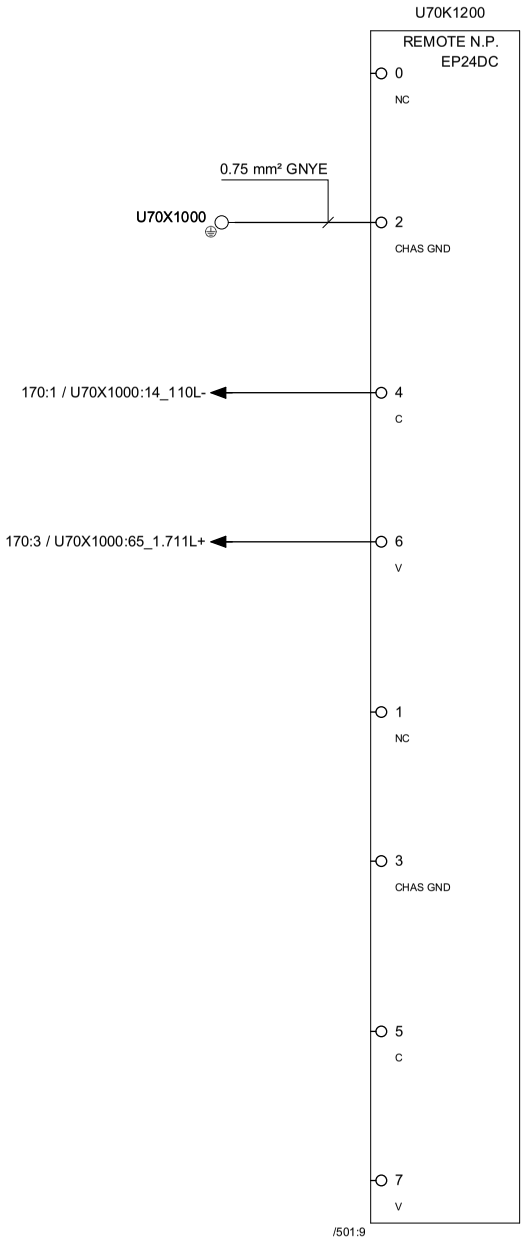

Tetra Pak®	Version Designer: RICO	Version Date: 01/10/2014	Machine: A3 CompactFlex 0300	
	ECM No: 687624	Denomination: CIRCUIT DIAGRAM	Page Type: PLC REMOTE EP24DC, SUPERSTR.	
	Information Security Class: PUBLIC	Document No.: 3223337-0003	Doc. type: ELD	Version: AM / Page: 191

This drawing must not without the consent of Tetra Pak
be copied, transmitted or disclosed to any third party.

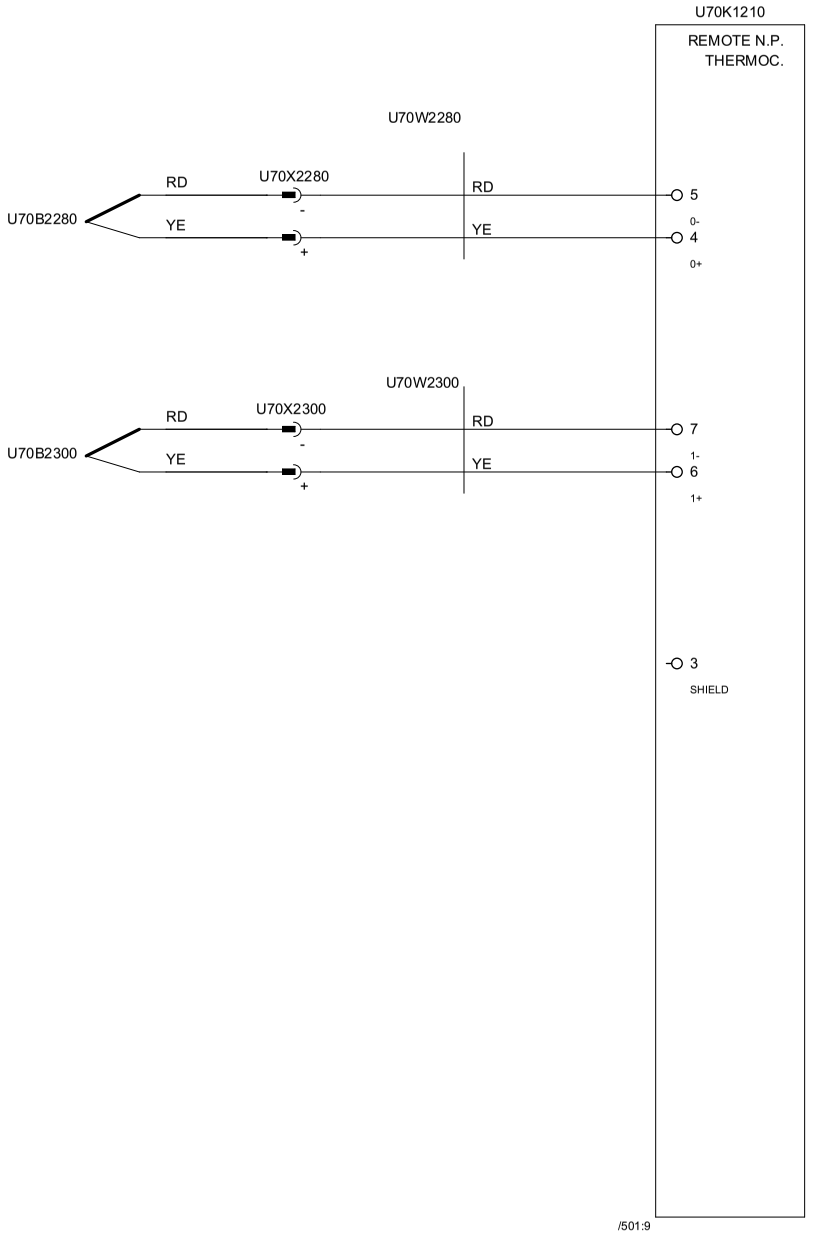

U70B2280 TEMP. HEAT STERILIZATION

U70B2300 TEMP. TOP ASEPTIC CHAMBER

Tetra Pak®	Version Designer: RICO	Version Date: 01/10/2014	Machine: A3 CompactFlex 0300	
	ECM No: 687624	Denomination: CIRCUIT DIAGRAM	Page Type: PLC REMOTE TH, SUPERSTR.	
Information Security Class: PUBLIC	Document No.: 3223337-0003	Doc. type: ELD	Version: AM	Page: 192

This drawing must not without the consent of Tetra Pak
be copied, transmitted or disclosed to any third party.

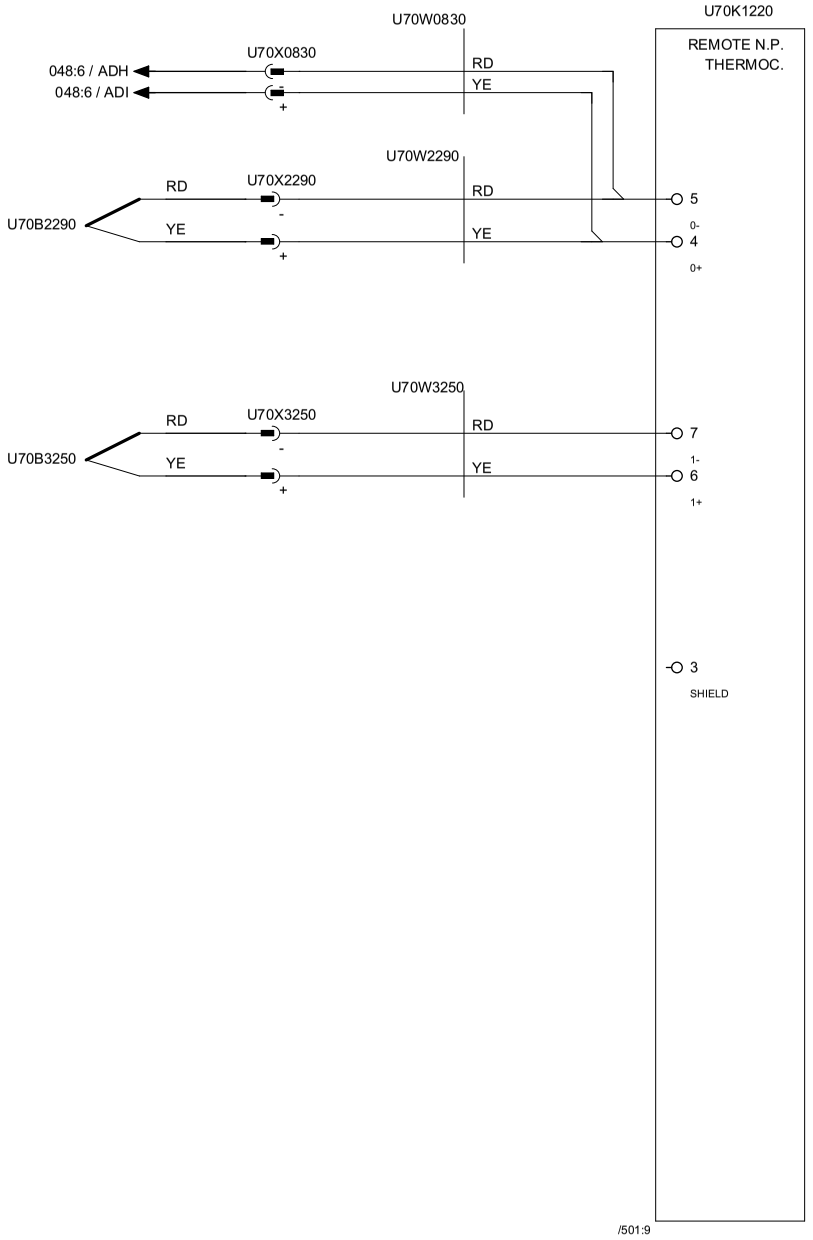

U70B2290	TEMP. AIR KNIFE
U70B3250	STEAM DRAIN TEMP.

Tetra Pak®	Version Designer: RICO	Version Date: 01/10/2014	Machine: A3 CompactFlex 0300	
	ECM No: 687624	Denomination: CIRCUIT DIAGRAM	Page Type: PLC REMOTE TH, SUPERSTR.	
Information Security Class: PUBLIC	Document No.: 3223337-0003	Doc. type: ELD	Version: AM	Page: 193

This drawing must not without the consent of Tetra Pak
be copied, transmitted or disclosed to any third party.

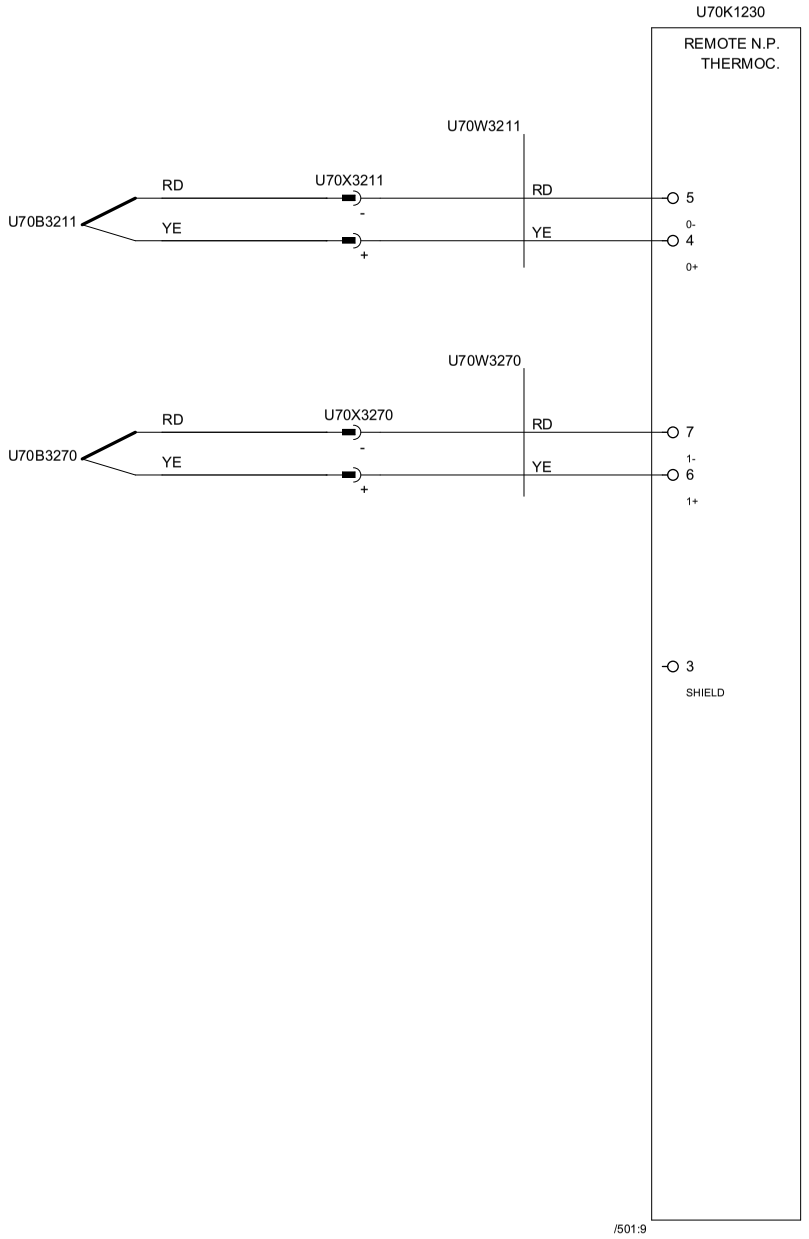

U70B3211 TEMP. SHORT STOP LS ELEMENT

U70B3270 TEMP. SCRUBBER WATER

Tetra Pak®	Version Designer: RICO	Version Date: 01/10/2014	Machine: A3 CompactFlex 0300	
	ECM No: 687624	Denomination: CIRCUIT DIAGRAM	Page Type: PLC REMOTE TH, SUPERSTR.	
Information Security Class: PUBLIC	Document No.: 3223337-0003	Doc. type: ELD	Version: AM	Page: 194

This drawing must not without the consent of Tetra Pak
be copied, transmitted or disclosed to any third party.

1	2	3	4	5	6	7	8	9	10

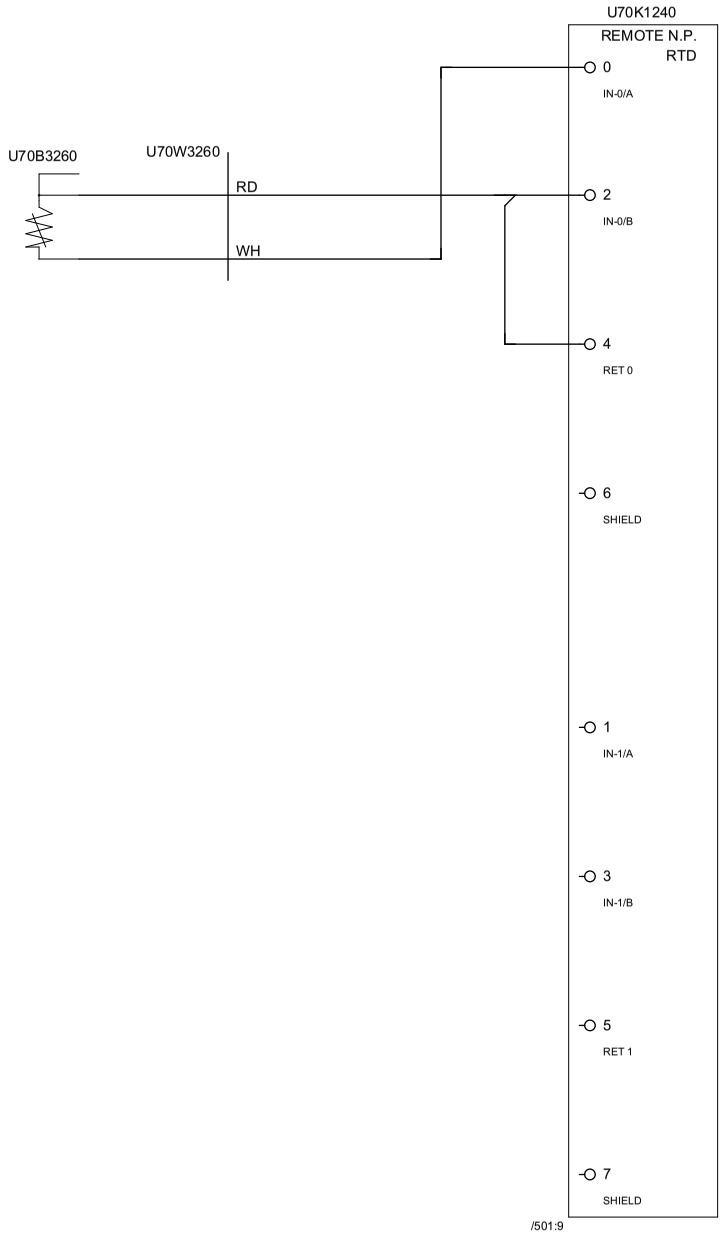

U70B3260 EXTERNAL TEMPERATURE FILLING PIPE

SPARE

Tetra Pak®	Version Designer: RICO	Version Date: 01/10/2014	Machine: A3 CompactFlex 0300			
	ECM No: 687624	Denomination: CIRCUIT DIAGRAM	Page Type: PLC REMOTE PT00, SUPERSTR.			
	Information Security Class: PUBLIC	Document No.: 3223337-0003	Doc. type: ELD	Version: AM	Page: 195	

This drawing must not without the consent of Tetra Pak
be copied, transmitted or disclosed to any third party.

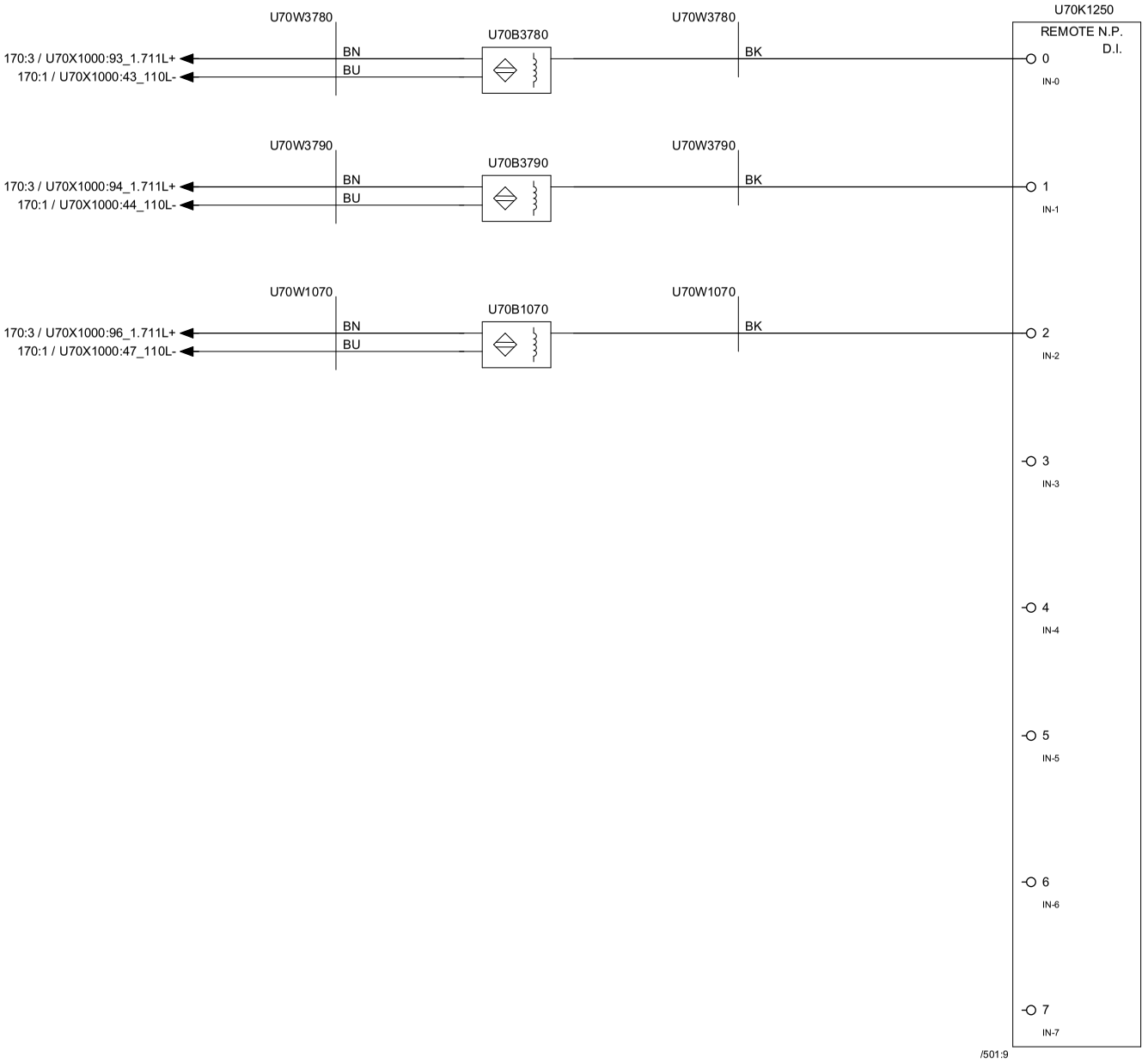

U70B3780	BUTTERFLY VALVE MIDDLE POSITION
U70B3790	BUTTERFLY VALVE FRONT POSITION
U70B1070	STERILE AIR PIPE CONNECTED
	SPARE
	SPARE
	SPARE
	SPARE
	SPARE

Tetra Pak®	Version Designer: RICO	Version Date: 01/10/2014	Machine: A3 CompactFlex 0300	
	ECM No: 687624	Denomination: CIRCUIT DIAGRAM	Page Type: PLC REMOTE DI, SUPERSTR.	
	Information Security Class: PUBLIC	Document No.: 3223337-0003	Doc. type: ELD	Version: AM	Page: 196

This drawing must not without the consent of Tetra Pak
be copied, transmitted or disclosed to any third party.

1	2	3	4	5	6	7	8	9	10

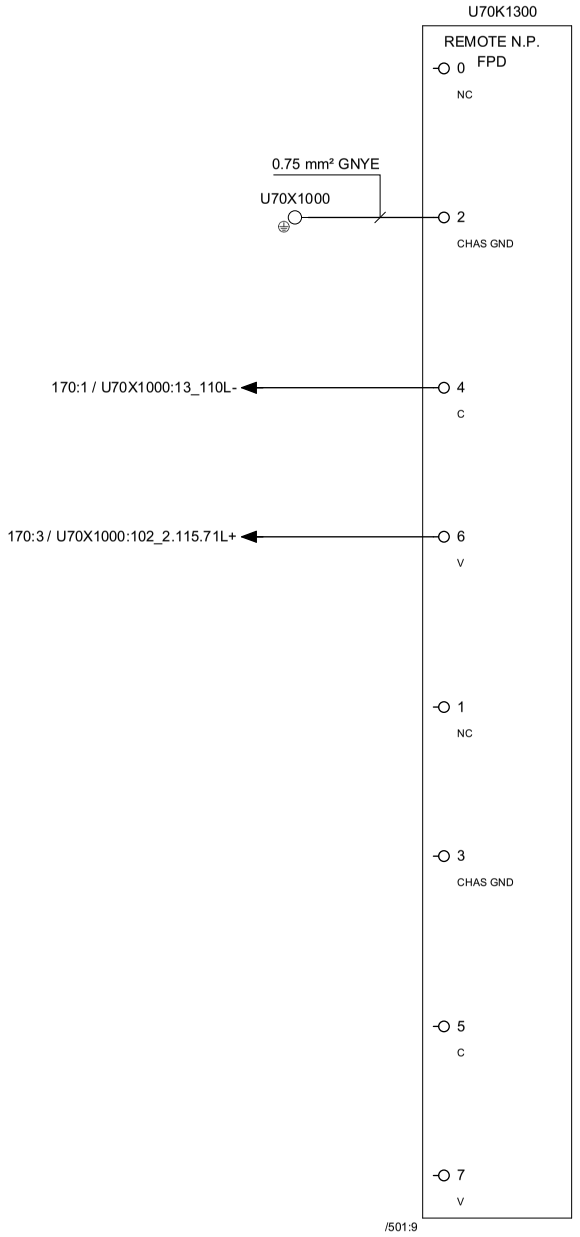

Tetra Pak®	Version Designer: RICO	Version Date: 01/10/2014	Machine: A3 CompactFlex 0300	
	ECM No: 687624	Denomination: CIRCUIT DIAGRAM	Page Type: PLC REMOTE FPD, SUPERSTR.	
	Information Security Class: PUBLIC	Document No.: 3223337-0003	Doc. type: ELD	Version: AM / Page: 197

RELEASED

This drawing must not without the consent of Tetra Pak be copied, transmitted or disclosed to any third party.

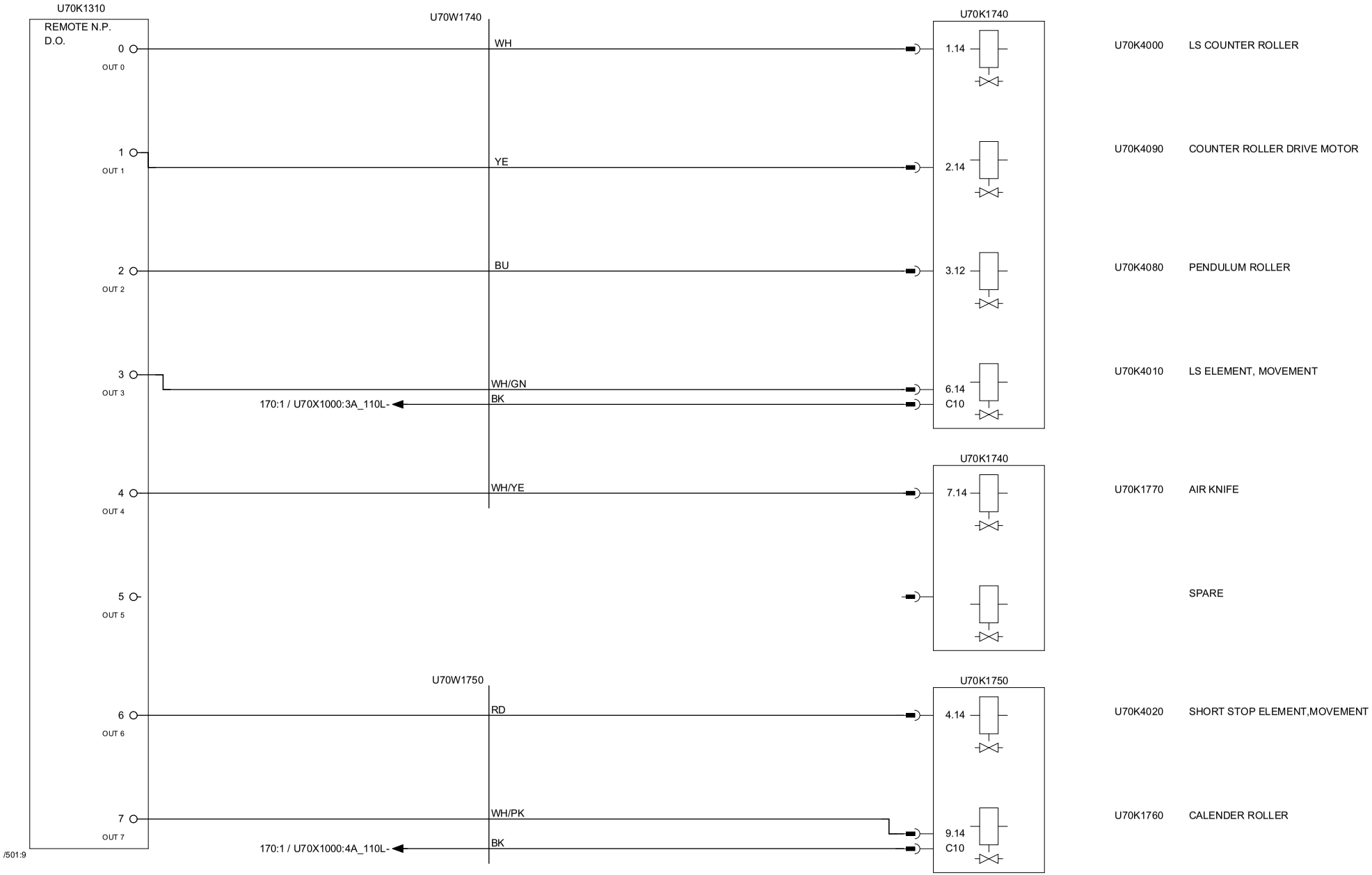

Tetra Pak®	Version Designer: RICO	Version Date: 01/10/2014	Machine: A3 CompactFlex 0300	
	ECM No: 687624	Denomination: CIRCUIT DIAGRAM	Page Type: PLC REMOTE D.O, SUPERSTR.	
	Information Security Class: PUBLIC	Document No.: 3223337-0003	Doc. type: ELD	Version: AM	Page: 198

This drawing must not without the consent of Tetra Pak
be copied, transmitted or disclosed to any third party.

1	2	3	4	5	6	7	8	9	10

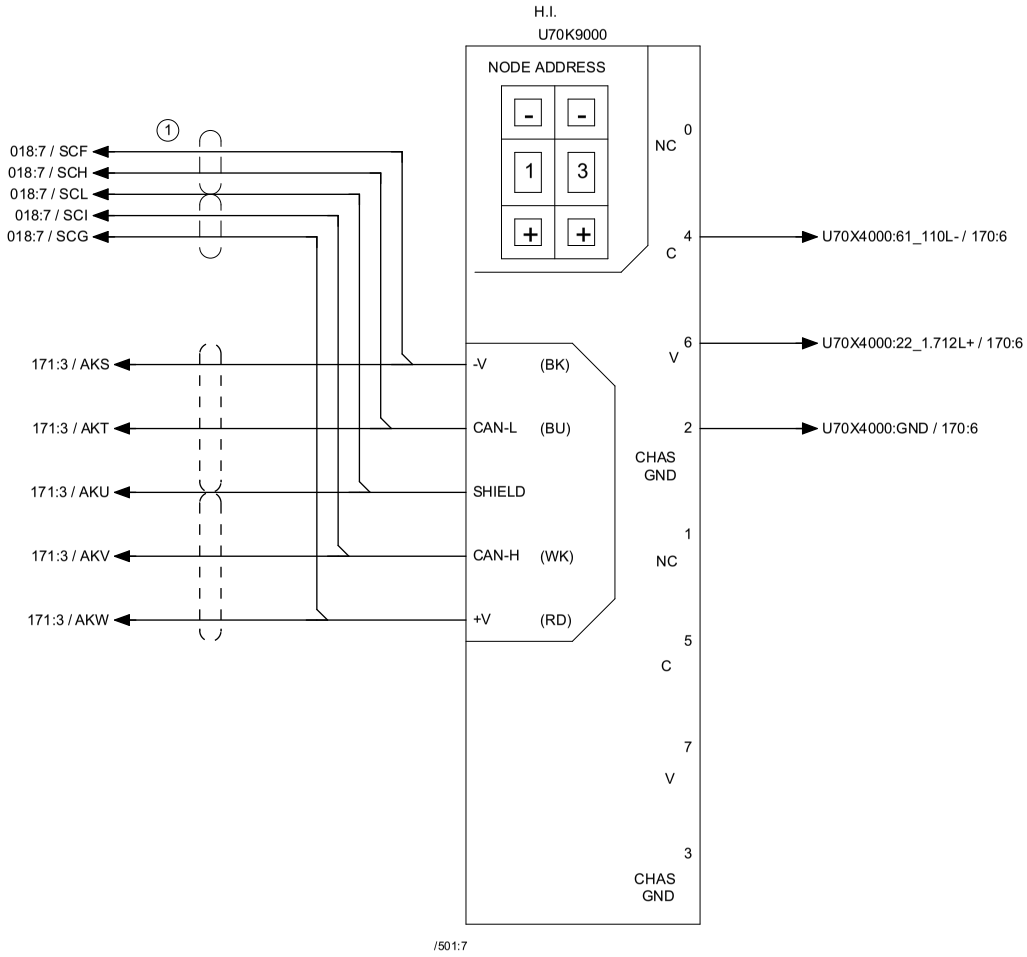

Tetra Pak®	Version Designer: RICO	Version Date: 01/10/2014	Machine: A3 CompactFlex 0300	
	ECM No: 687624	Denomination: CIRCUIT DIAGRAM	Page Type: DEVICENET ADAPTER, H.I.	
	Information Security Class: PUBLIC	Document No.: 3223337-0003	Doc. type: ELD	Version: AM	Page: 205

This drawing must not without the consent of Tetra Pak be copied, transmitted or disclosed to any third party.

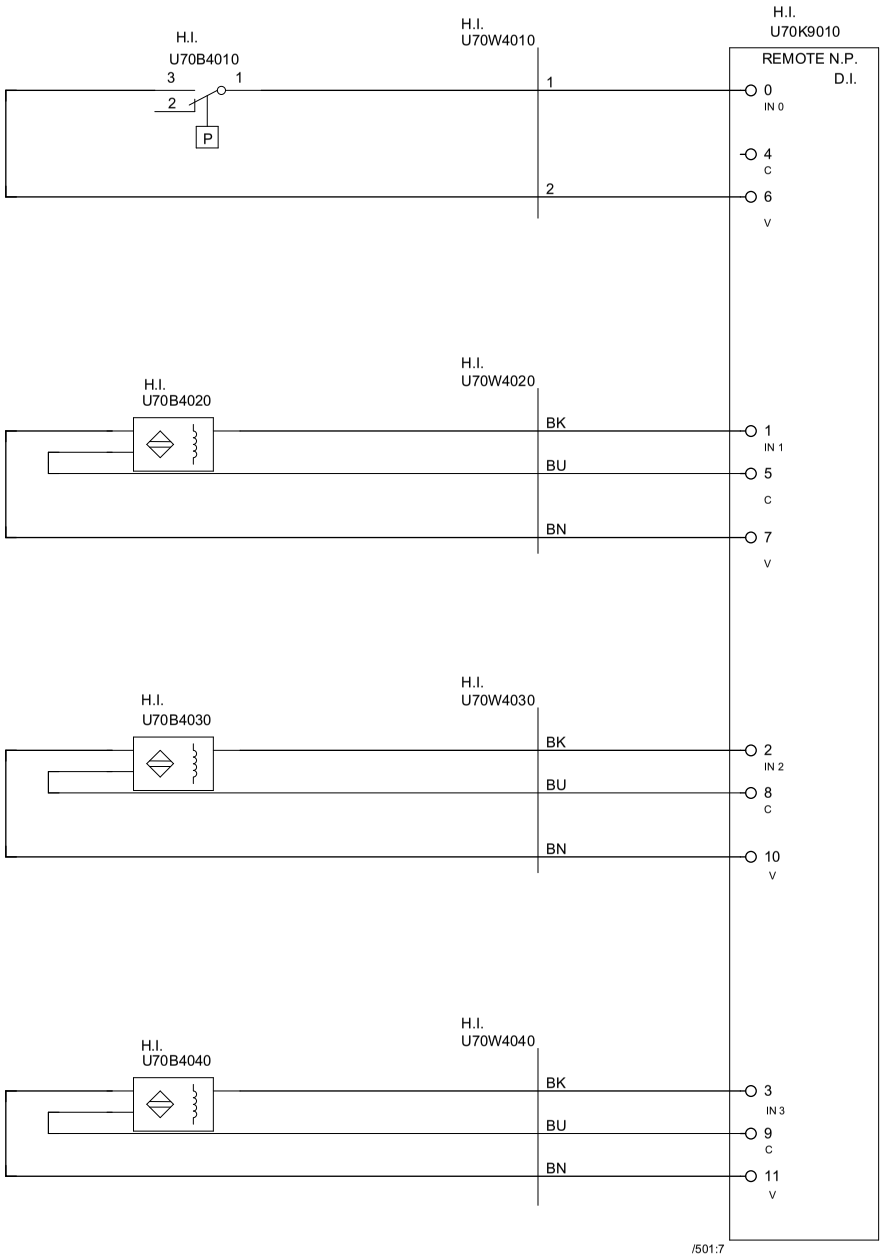

U70B4010	H.I. PRESSURE GUARD
U70B4020	NO H.I.
U70B4030	H.I. SPRAY NOZZLE PIPE IN POSITION
U70B4040	H.I. SWING PIPE CLEANING POSITION

Tetra Pak®	Version Designer: RICO	Version Date: 01/10/2014	Machine: A3 CompactFlex 0300			
	ECM No: 687624	Denomination: CIRCUIT DIAGRAM	Page Type: PLC REMOTE D.I., H.I.			
	Information Security Class: PUBLIC	Document No.: 3223337-0003	Doc. type: ELD	Version: AM	Page: 206	

This drawing must not without the consent of Tetra Pak
be copied, transmitted or disclosed to any third party.

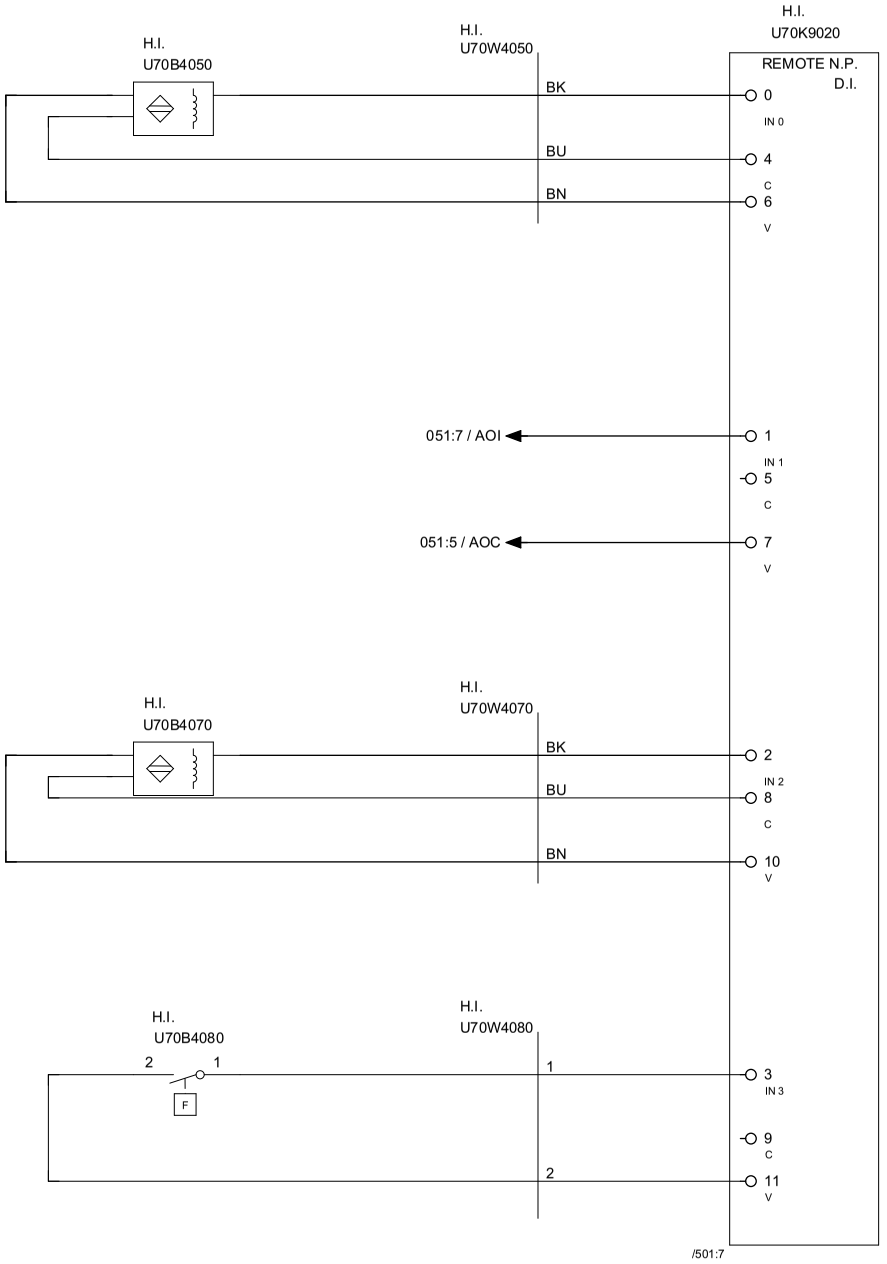

U70B4050	H.I. PLUG CIP POSITION
U70K4061	H.I. LEVEL PEROXIDE SPRAY TANK
U70B4070	H.I. SWING PIPE PRODUCTION POSITION
U70B4080	H.I. FLOW SWITCH

Tetra Pak®	Version Designer: RICO	Version Date: 01/10/2014	Machine: A3 CompactFlex 0300
	ECM No: 687624	Denomination: CIRCUIT DIAGRAM	Page Type: PLC REMOTE D.I., H.I.
	Information Security Class: PUBLIC	Document No.: 3223337-0003	Doc. type: ELD / Version: AM / Page: 207

This drawing must not without the consent of Tetra Pak
be copied, transmitted or disclosed to any third party.

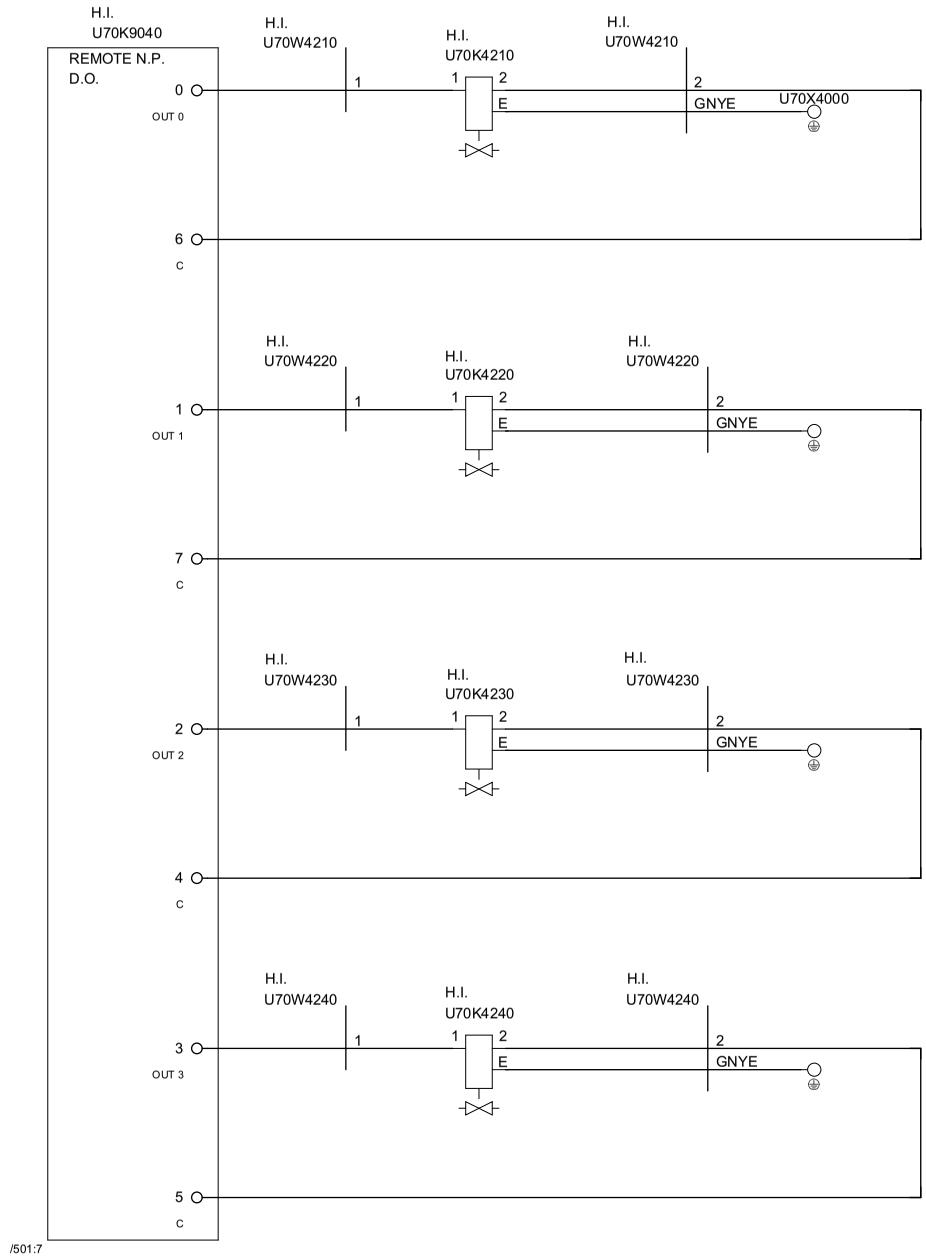

U70K4210	H.I. FILLING PEROXIDE
U70K4220	H.I. SPRAY PEROXIDE
U70K4230	H.I. AIR / N2 SUPPLY
U70K4240	H.I. ON

Tetra Pak®	Version Designer: RICO	Version Date: 01/10/2014	Machine: A3 CompactFlex 0300	
	ECM No: 687624	Denomination: CIRCUIT DIAGRAM	Page Type: PLC REMOTE D.O, H.I.	
	Information Security Class: PUBLIC	Document No.: 3223337-0003	Doc. type: ELD	Version: AM	Page: 208

This drawing must not without the consent of Tetra Pak
be copied, transmitted or disclosed to any third party.

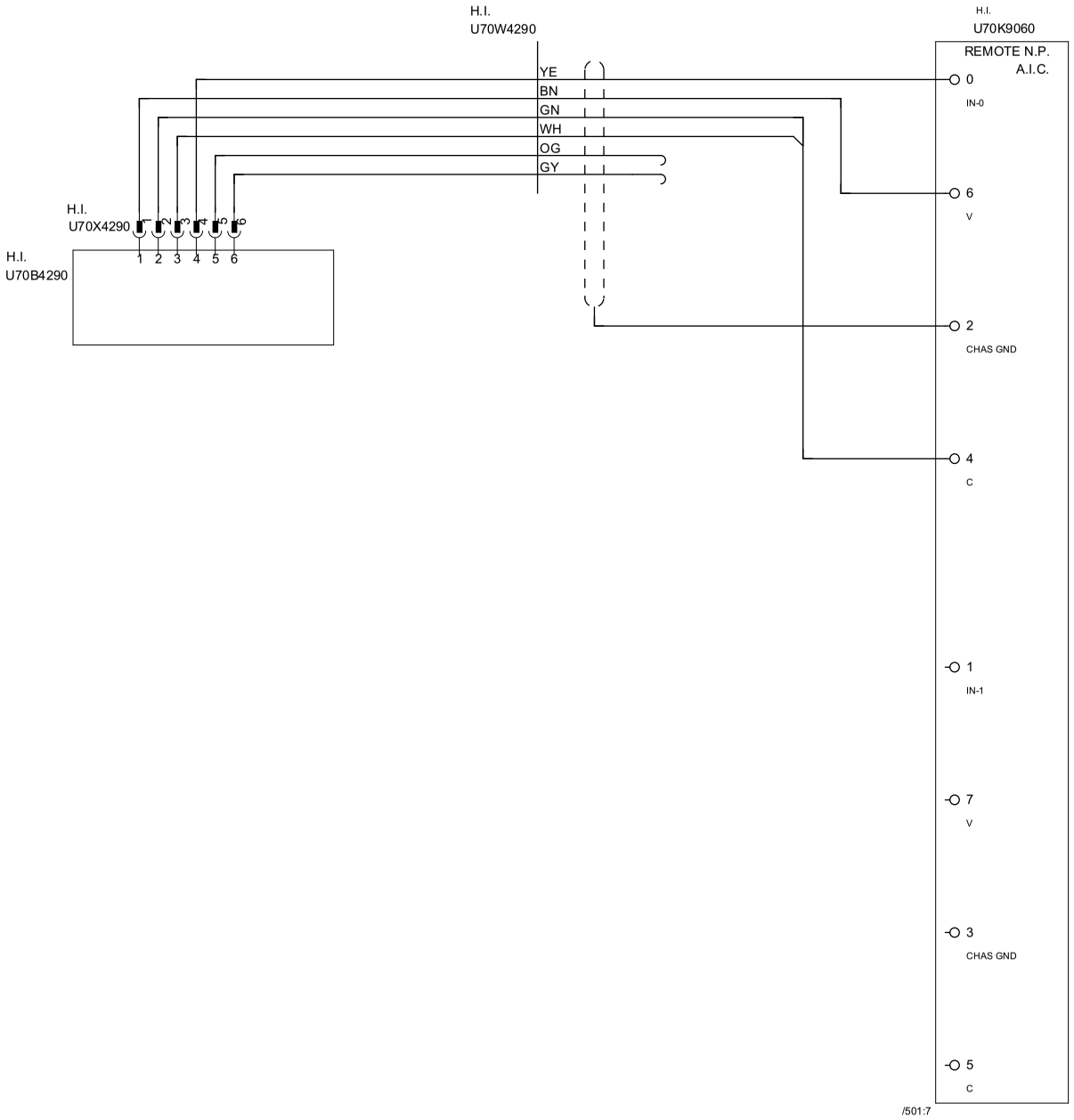

U70B4290 H.I. FLOW SENSOR

SPARE

Tetra Pak®	Version Designer RICO	Version Date 01/10/2014	Machine A3 CompactFlex 0300						
	ECM No 687624	Denomination CIRCUIT DIAGRAM	Page Type PLC REMOTE A.I.C, H.I.						
	Information Security Class PUBLIC	Document No. 3223337-0003	Doc. type ELD	Version AM	Page 209				

This drawing must not without the consent of Tetra Pak
be copied, transmitted or disclosed to any third party.

1	2	3	4	5	6	7	8	9	10

H.I.

U70K9070

REMOTE N.P.
A.I.V.

0	IN-0	USED BY COMPACT/FLEX 0100/0200
4	C	
2	CHAS GND	
6	V	
1	IN-1	SPARE
7	V	
3	CHAS GND	
5	C	

/501:8

Tetra Pak®	Version Designer: RICO	Version Date: 01/10/2014	Machine: A3 CompactFlex 0300	
	ECM No: 687624	Denomination: CIRCUIT DIAGRAM	Page Type: PLC REMOTE A.I.V., H.I.	
	Information Security Class: PUBLIC	Document No.: 3223337-0003	Doc. type: ELD	Version: AM / Page: 210

This drawing must not without the consent of Tetra Pak
be copied, transmitted or disclosed to any third party.

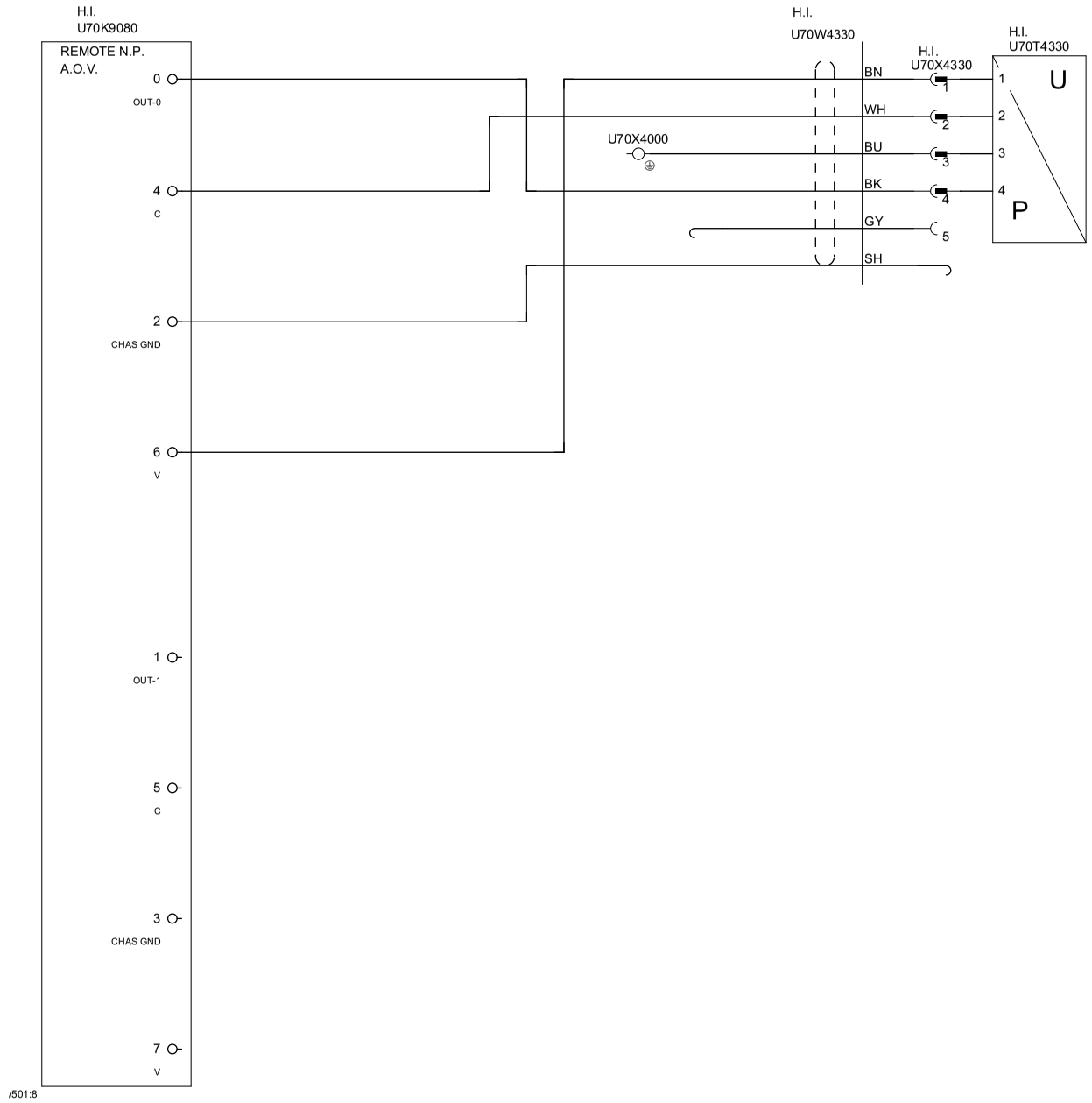

U70T4330 PRESSURE REGULATOR H.I.

SPARE

Tetra Pak®	Version Designer: RICO	Version Date: 01/10/2014	Machine: A3 CompactFlex 0300		
	ECM No: 687624	Denomination: CIRCUIT DIAGRAM	Page Type: PLC REMOTE A.O.V., H.I.		
	Information Security Class: PUBLIC	Document No.: 3223337-0003	Doc. type: ELD	Version: AM	Page: 211

This drawing must not without the consent of Tetra Pak
be copied, transmitted or disclosed to any third party.

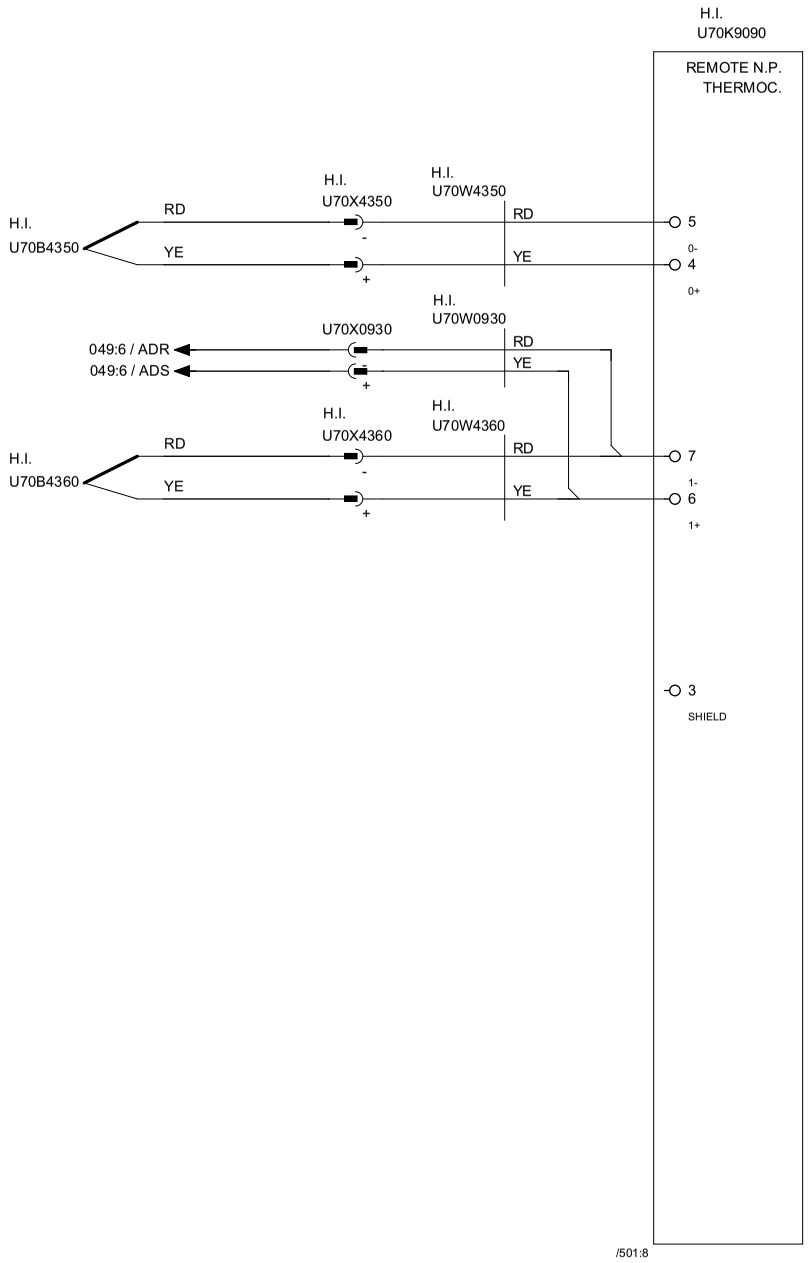

Tetra Pak®	Version Designer: RICO	Version Date: 01/10/2014	Machine: A3 CompactFlex 0300				
	ECM No: 687624	Denomination: CIRCUIT DIAGRAM	Page Type: PLC REMOTE TH., H.I.				
	Information Security Class: PUBLIC	Document No.: 3223337-0003	Doc. type: ELD	Version: AM	Page: 212		

RELEASED

This drawing must not without the consent of Tetra Pak be copied, transmitted or disclosed to any third party.

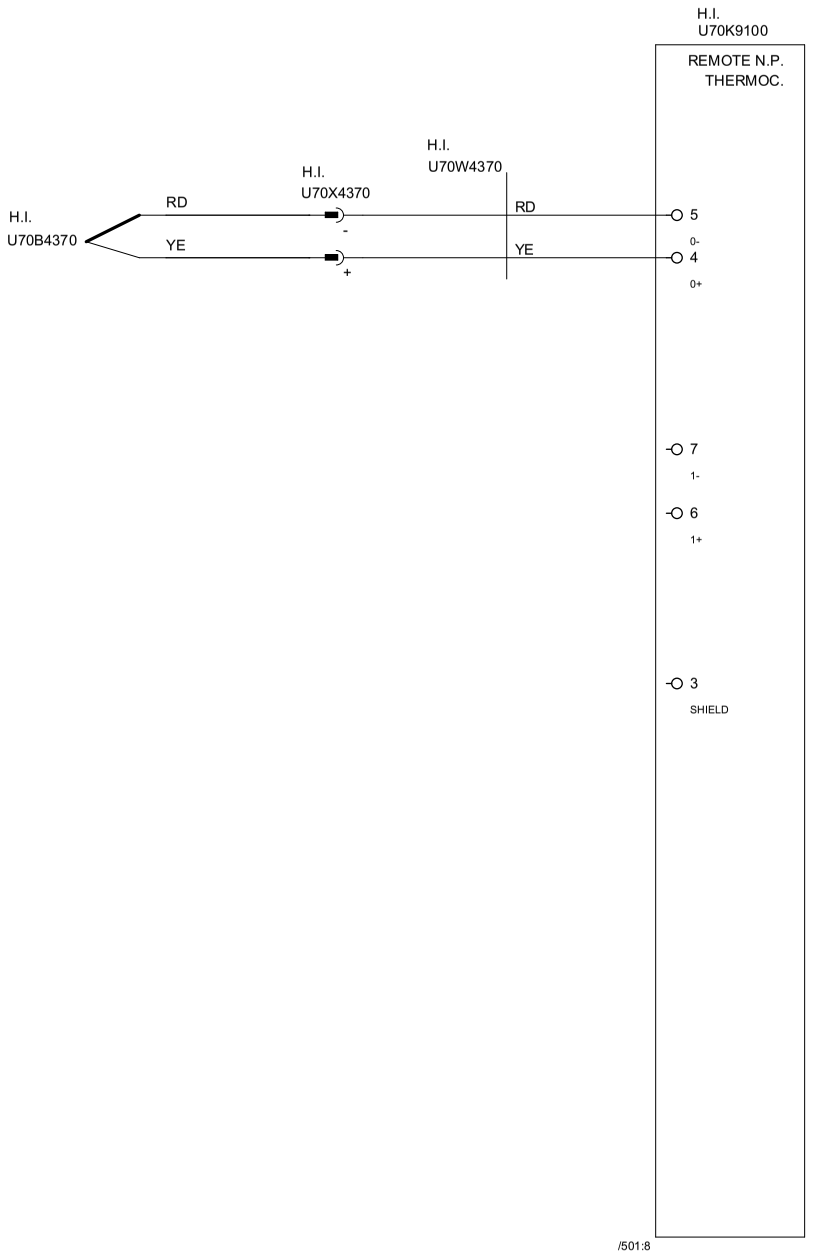

U70B4370 H.I. TEMP. SPRAY

SPARE

Tetra Pak®	Version Designer RICO	Version Date 01/10/2014	Machine A3 CompactFlex 0300					
	ECM No 687624	Denomination CIRCUIT DIAGRAM	Page Type PLC REMOTE TH., H.I.					
	Information Security Class PUBLIC	Document No. 3223337-0003	Doc. type ELD	Version AM	Page 213			

RELEASED

This drawing must not without the consent of Tetra Pak be copied, transmitted or disclosed to any third party.

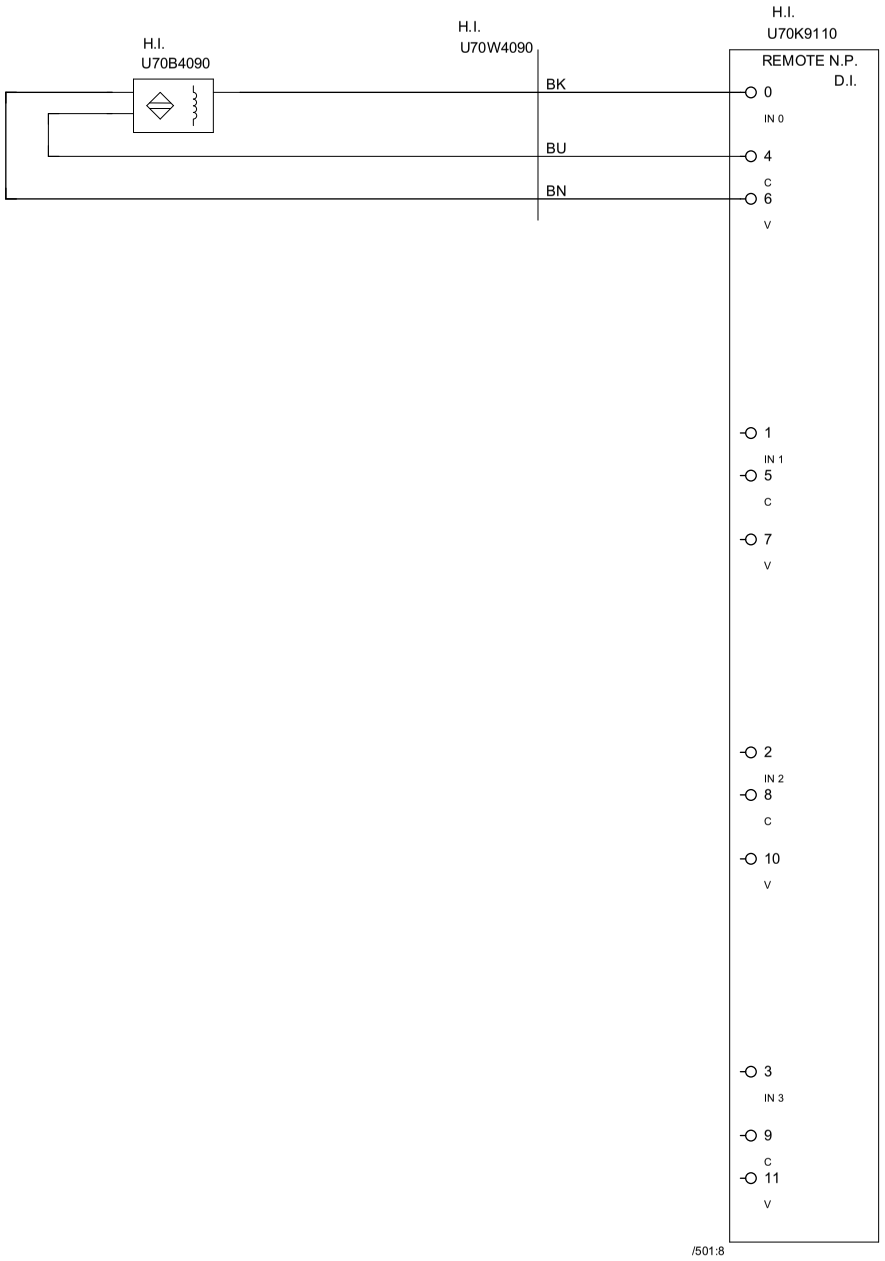

U70B4090 H.I. PRODUCTION PIPE EXTENSION

SPARE

SPARE

SPARE

Tetra Pak®	Version Designer RICO	Version Date 01/10/2014	Machine A3 CompactFlex 0300					
	ECM No 687624	Denomination CIRCUIT DIAGRAM	Page Type PLC REMOTE D.I., H.I.					
	Information Security Class PUBLIC	Document No. 3223337-0003	Doc. type ELD	Version AM	Page 214			

RELEASED

This drawing must not without the consent of Tetra Pak be copied, transmitted or disclosed to any third party.

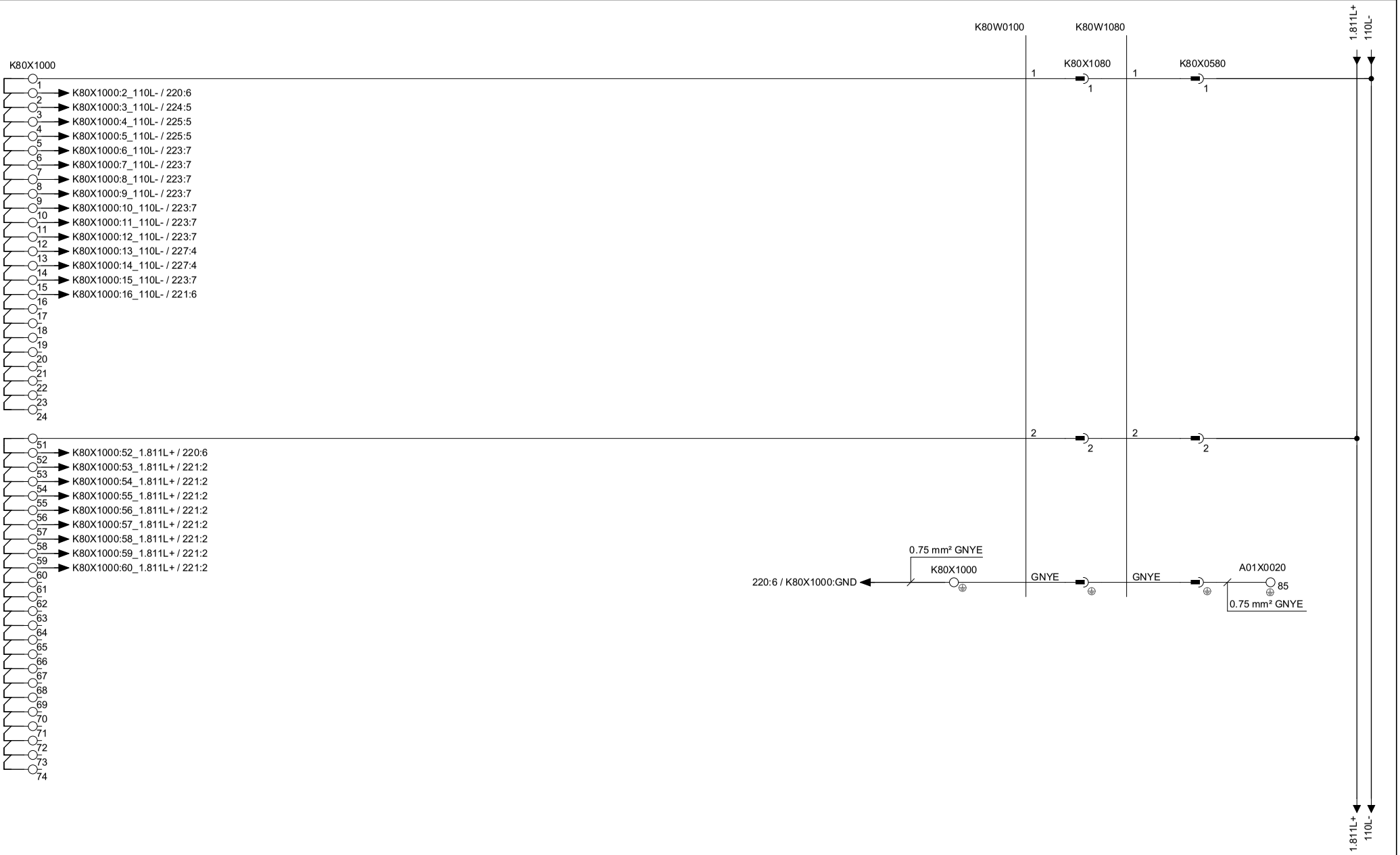

Tetra Pak®	Version Designer: RICO	Version Date: 01/10/2014	Machine: A3 CompactFlex 0300	
	ECM No: 687624	Denomination: CIRCUIT DIAGRAM	Page Type: TERMINAL STRIP COMMON (NEW)	
	Information Security Class: PUBLIC	Document No.: 3223337-0003	Doc. type: ELD	Version: AM	Page: 219

This drawing must not without the consent of Tetra Pak
be copied, transmitted or disclosed to any third party.

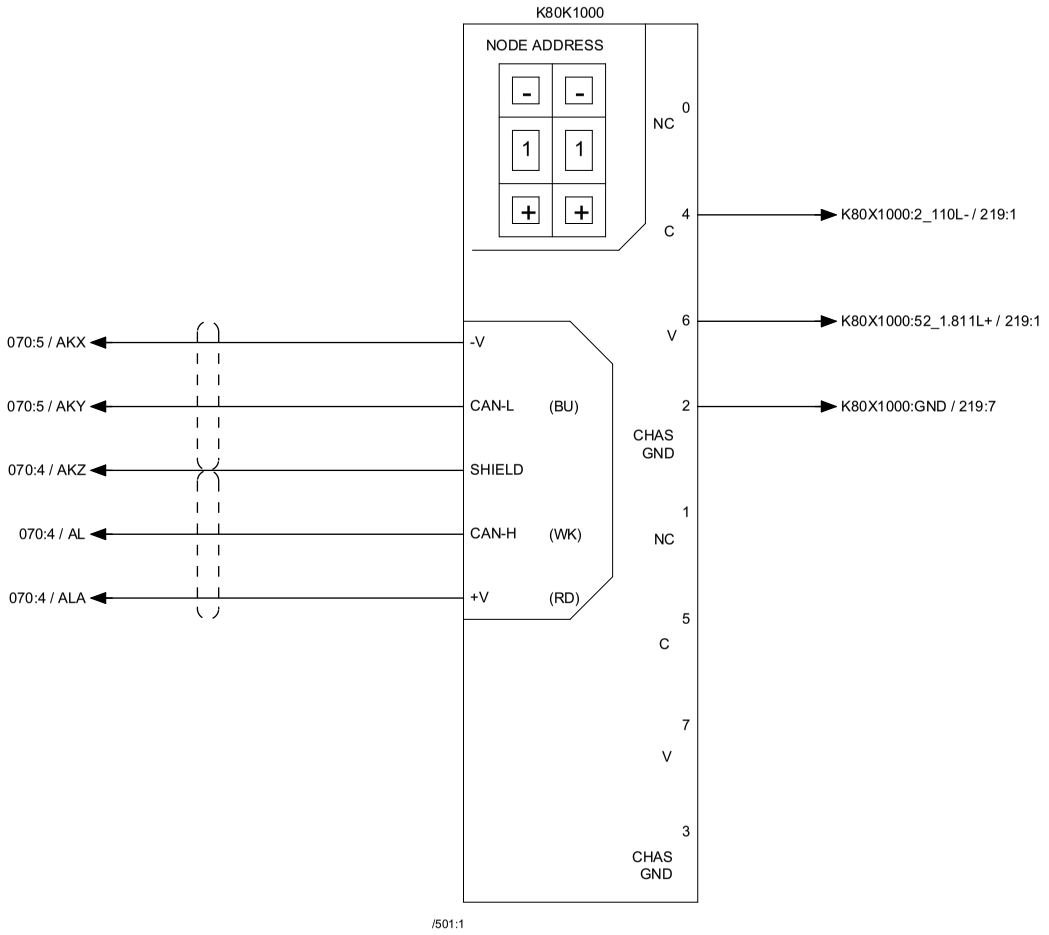

Tetra Pak®	Version Designer: RICO	Version Date: 01/10/2014	Machine: A3 CompactFlex 0300	
	ECM No: 687624	Denomination: CIRCUIT DIAGRAM	Page Type: DEVICENET ADAPTER, SERVICE	
	Information Security Class: PUBLIC	Document No.: 3223337-0003	Doc. type: ELD	Version: AM / Page: 220

This drawing must not without the consent of Tetra Pak be copied, transmitted or disclosed to any third party.

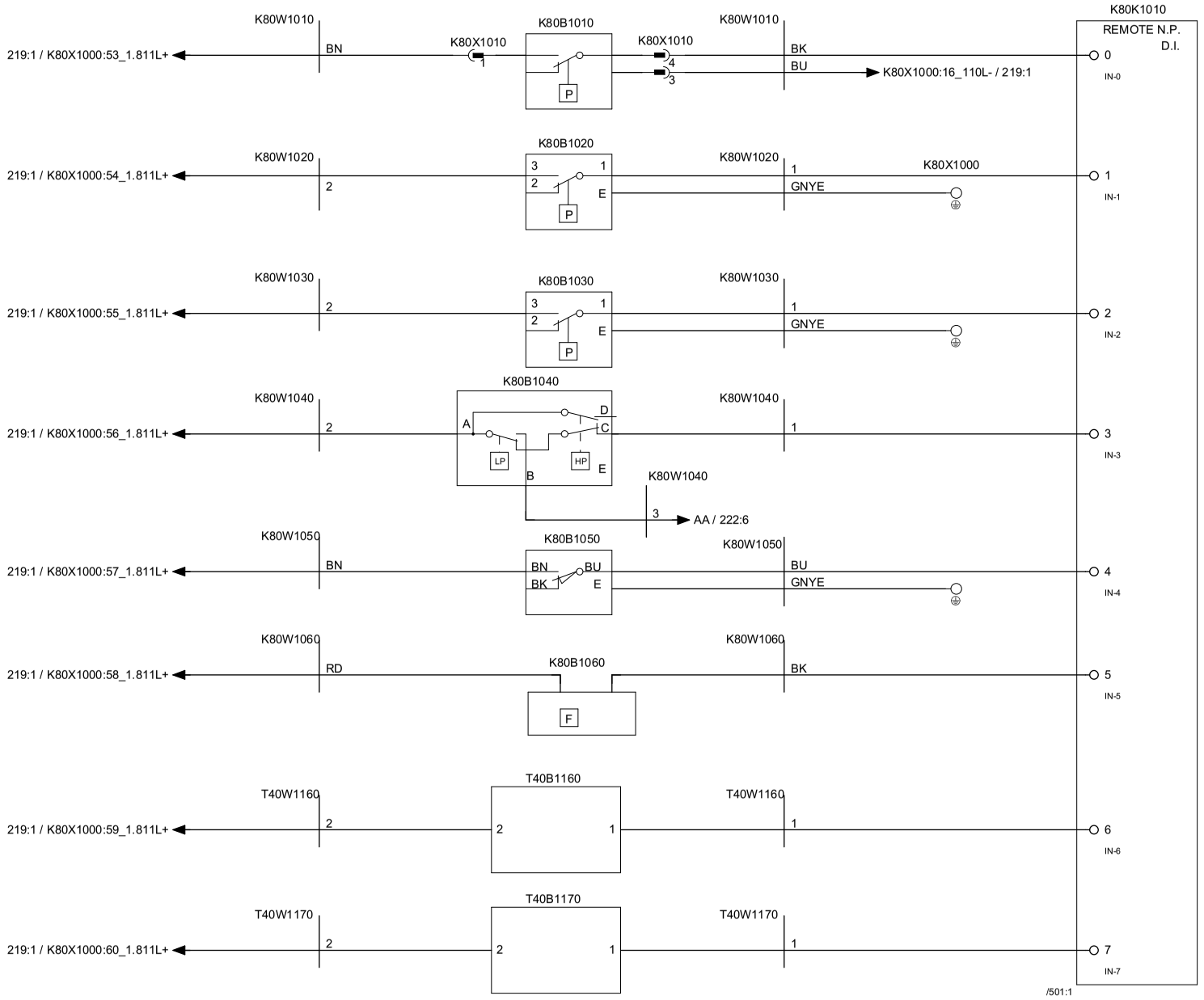

K80B1010	COLD WATER PRESSURE SWITCH
K80B1020	MAIN AIR PRESSURE
K80B1030	CIRCULATION COOLING WATER PRESSURE
K80B1040:C	CIRCULATION COOLING MEDIA HIGH PRESSURE
K80B1050	PUMPING WATER
K80B1060	DOSING CHEMICAL
T40B1160	COOLING FLOW LEFT
T40B1170	COOLING FLOW RIGHT

Tetra Pak®

Version Designer: RICO	Version Date: 01/10/2014	Machine: A3 CompactFlex 0300		
ECM No: 687624	Denomination: CIRCUIT DIAGRAM	Page Type: PLC REMOTE D.I, SERVICE		
Information Security Class: PUBLIC	Document No.: 3223337-0003	Doc. type: ELD	Version: AM	Page: 221

RELEASED

This drawing must not without the consent of Tetra Pak be copied, transmitted or disclosed to any third party.

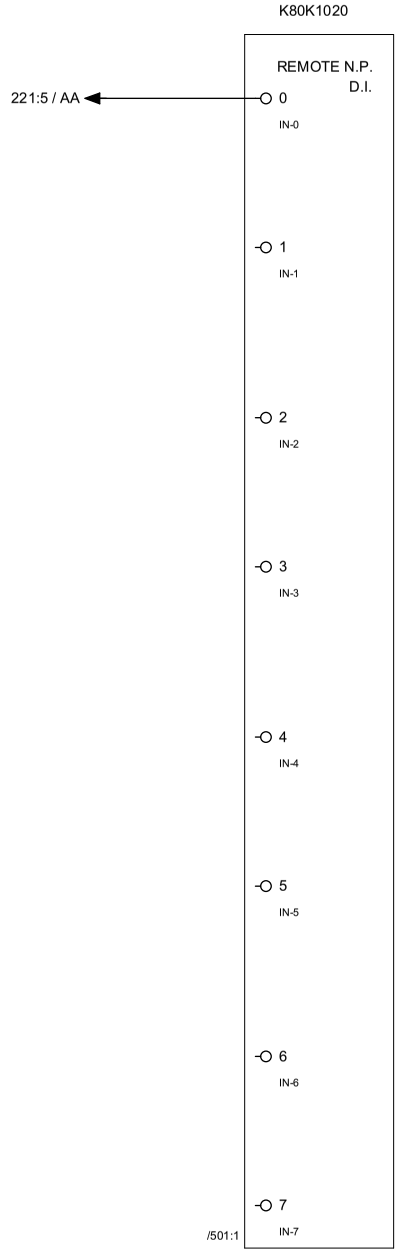

K80B1040:B CIRCULATION COOLING MEDIA LOW PRESSURE

SPARE

SPARE

SPARE

SPARE

SPARE

SPARE

SPARE

Tetra Pak®	Version Designer: RICO	Version Date: 01/10/2014	Machine: A3 CompactFlex 0300	
	ECM No: 687624	Denomination: CIRCUIT DIAGRAM	Page Type: PLC REMOTE D.I, SERVICE	
Information Security Class: PUBLIC	Document No.: 3223337-0003	Doc. type: ELD	Version: AM	Page: 222

This drawing must not without the consent of Tetra Pak be copied, transmitted or disclosed to any third party.

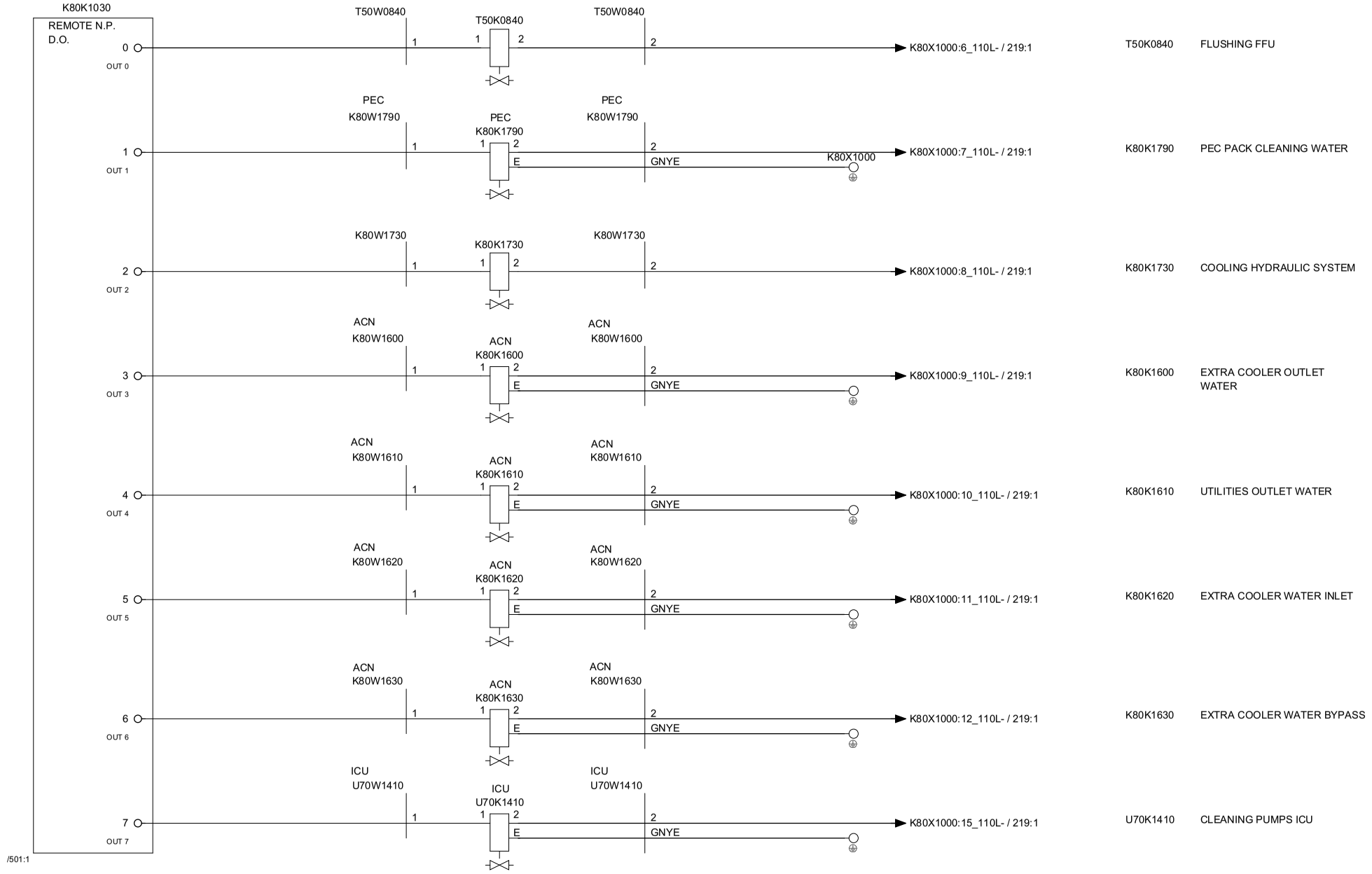

Tetra Pak®	Version Designer: RICO	Version Date: 01/10/2014	Machine: A3 CompactFlex 0300	
	ECM No: 687624	Denomination: CIRCUIT DIAGRAM	Page Type: PLC REMOTE D.O, SERVICE	
	Information Security Class: PUBLIC	Document No.: 3223337-0003	Doc. type: ELD	Version: AM / Page: 223

This drawing must not without the consent of Tetra Pak
be copied, transmitted or disclosed to any third party.

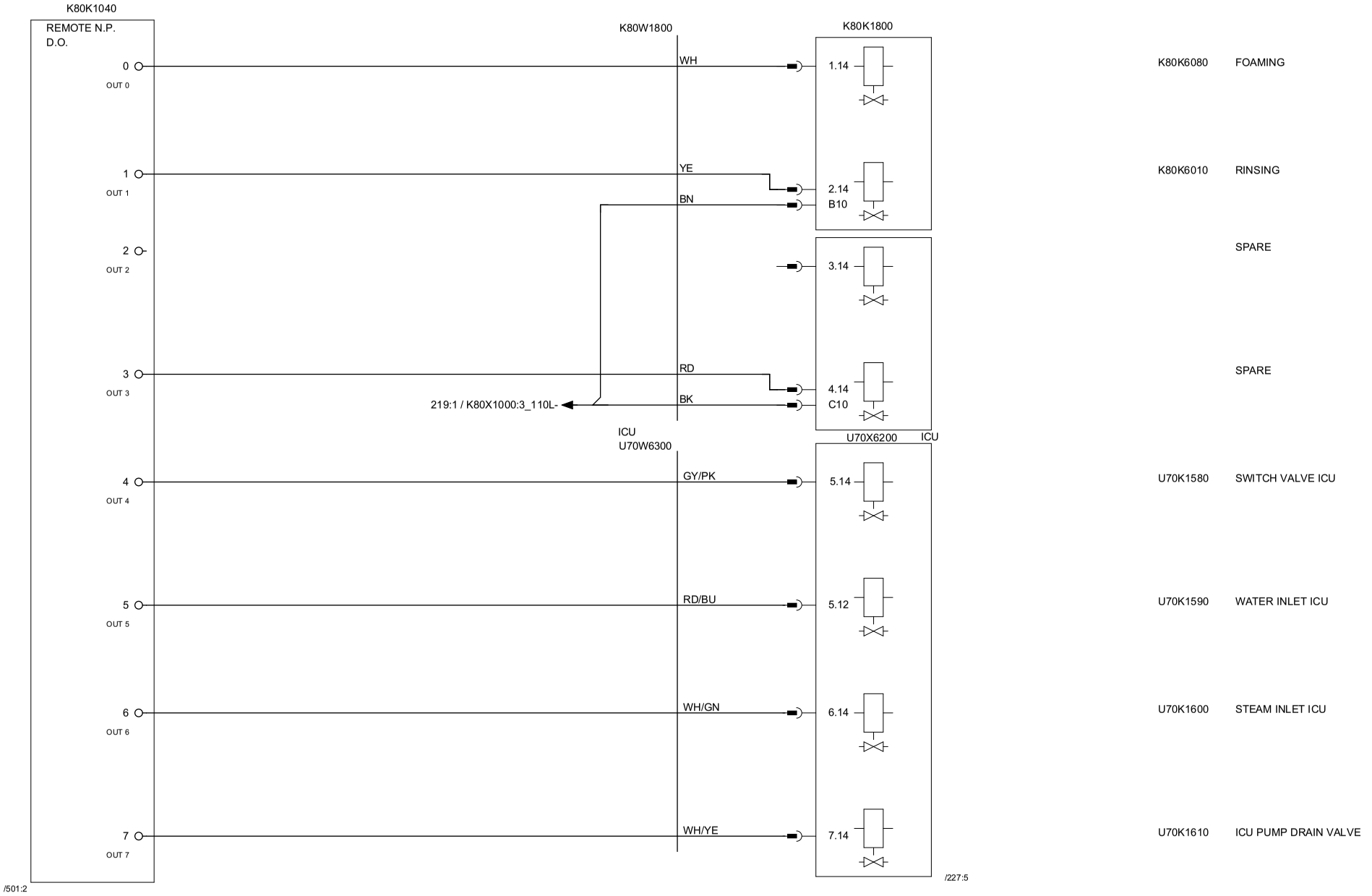

Tetra Pak®	Version Designer: RICO	Version Date: 01/10/2014	Machine: A3 CompactFlex 0300	
	ECM No: 687624	Denomination: CIRCUIT DIAGRAM	Page Type: PLC REMOTE D.O, SERVICE	
	Information Security Class: PUBLIC	Document No.: 3223337-0003	Doc. type: ELD	Version: AM / Page: 224

RELEASED

This drawing must not without the consent of Tetra Pak be copied, transmitted or disclosed to any third party.

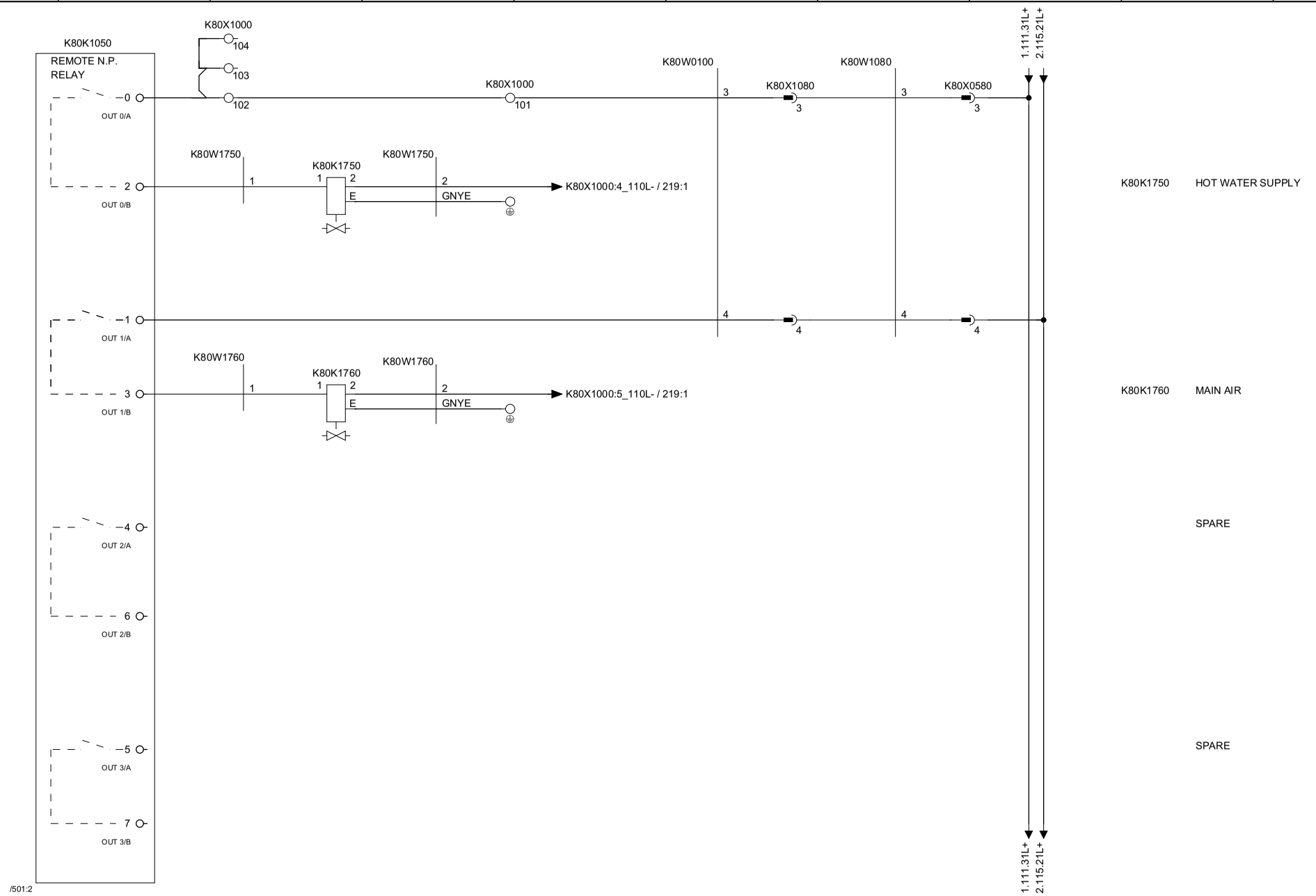

Tetra Pak®	Version Designer: RICO	Version Date: 01/10/2014	Machine: A3 CompactFlex 0300	
	ECM No: 687624	Denomination: CIRCUIT DIAGRAM	Page Type: PLC REMOTE OW4, SERVICE	
	Information Security Class: PUBLIC	Document No.: 3223337-0003	Doc. type: ELD	Version: AM	Page: 225

This drawing must not without the consent of Tetra Pak
be copied, transmitted or disclosed to any third party.

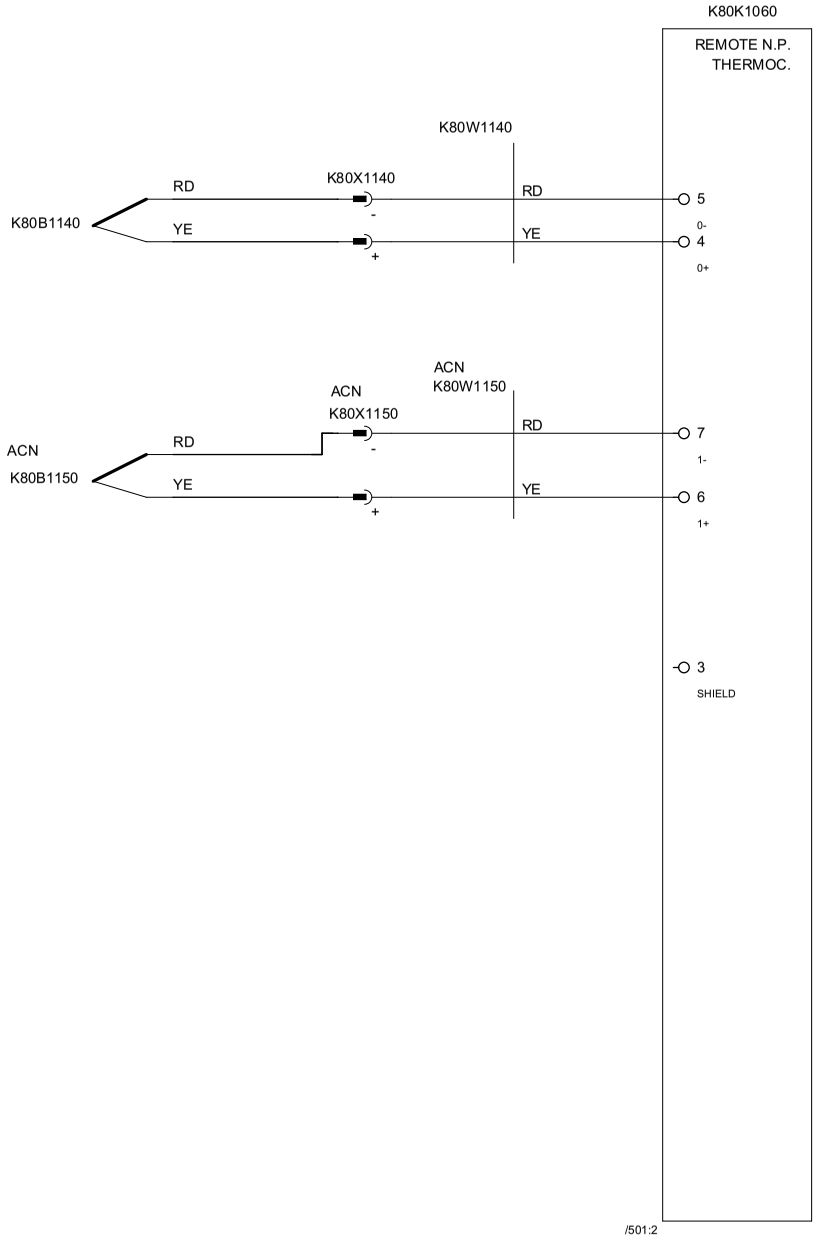

K80B1140 TEMP. CIRCUL. COOL WATER

K80B1150 TEMP. EXTRA COOLER WATER INLET

Tetra Pak®	Version Designer: RICO	Version Date: 01/10/2014	Machine: A3 CompactFlex 0300	
	ECM No: 687624	Denomination: CIRCUIT DIAGRAM	Page Type: PLC REMOTE TH, SERVICE	
	Information Security Class: PUBLIC	Document No.: 3223337-0003	Doc. type: ELD	Version: AM	Page: 226

This drawing must not without the consent of Tetra Pak
be copied, transmitted or disclosed to any third party.

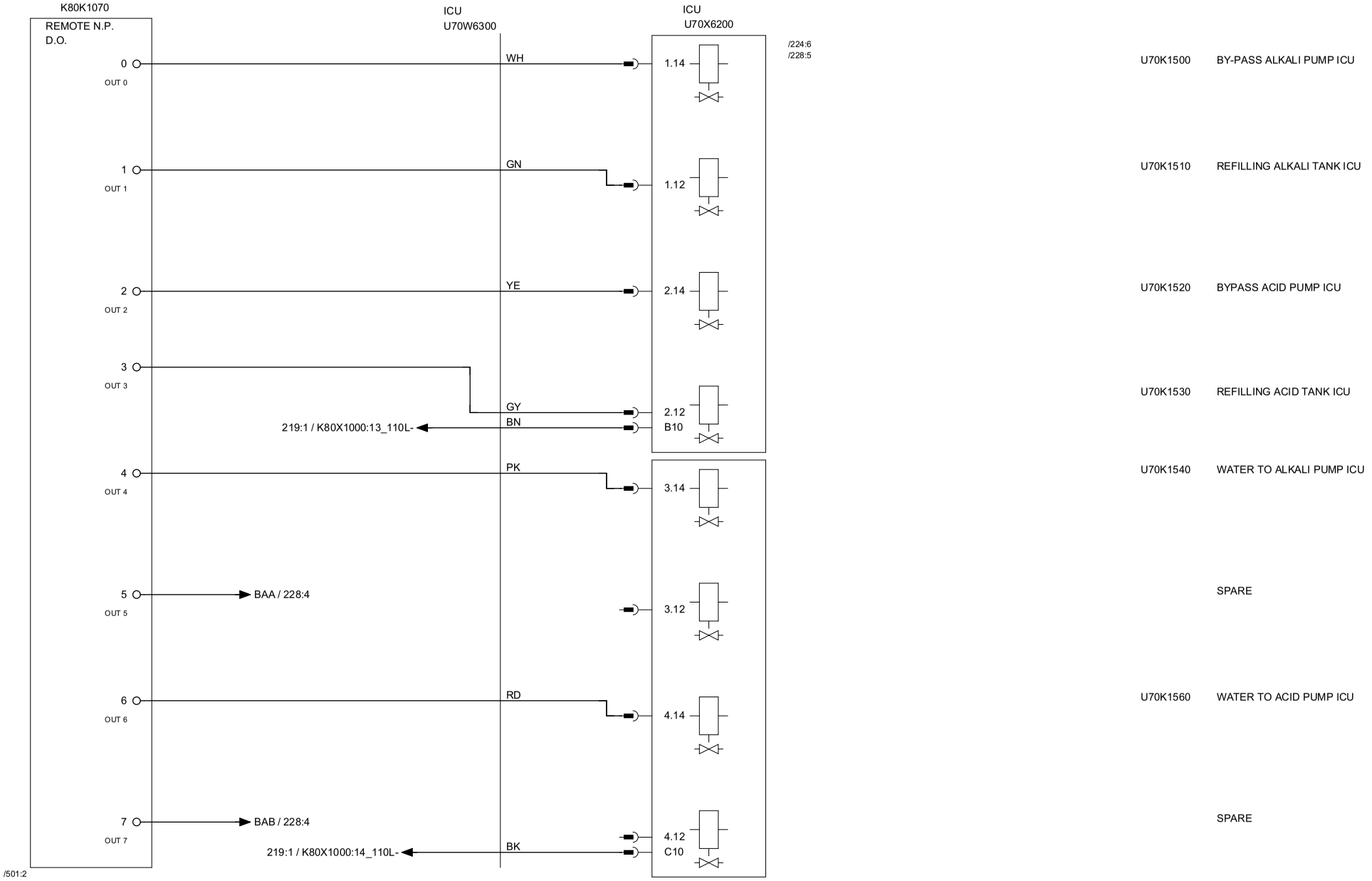

Tetra Pak®	Version Designer: RICO	Version Date: 01/10/2014	Machine: A3 CompactFlex 0300	
	ECM No: 687624	Denomination: CIRCUIT DIAGRAM	Page Type: PLC REMOTE D.O. SERVICE	
	Information Security Class: PUBLIC	Document No.: 3223337-0003	Doc. type: ELD	Version: AM / Page: 227

This drawing must not without the consent of Tetra Pak
be copied, transmitted or disclosed to any third party.

1	2	3	4	5	6	7	8	9	10

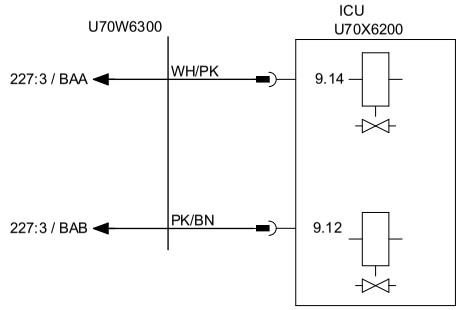

U70K1550	CLEANING ALKALI PUMP ICU
U70K1570	CLEANING ACID PUMP ICU

This drawing must not without the consent of Tetra Pak
be copied, transmitted or disclosed to any third party.

1	2	3	4	5	6	7	8	9	10

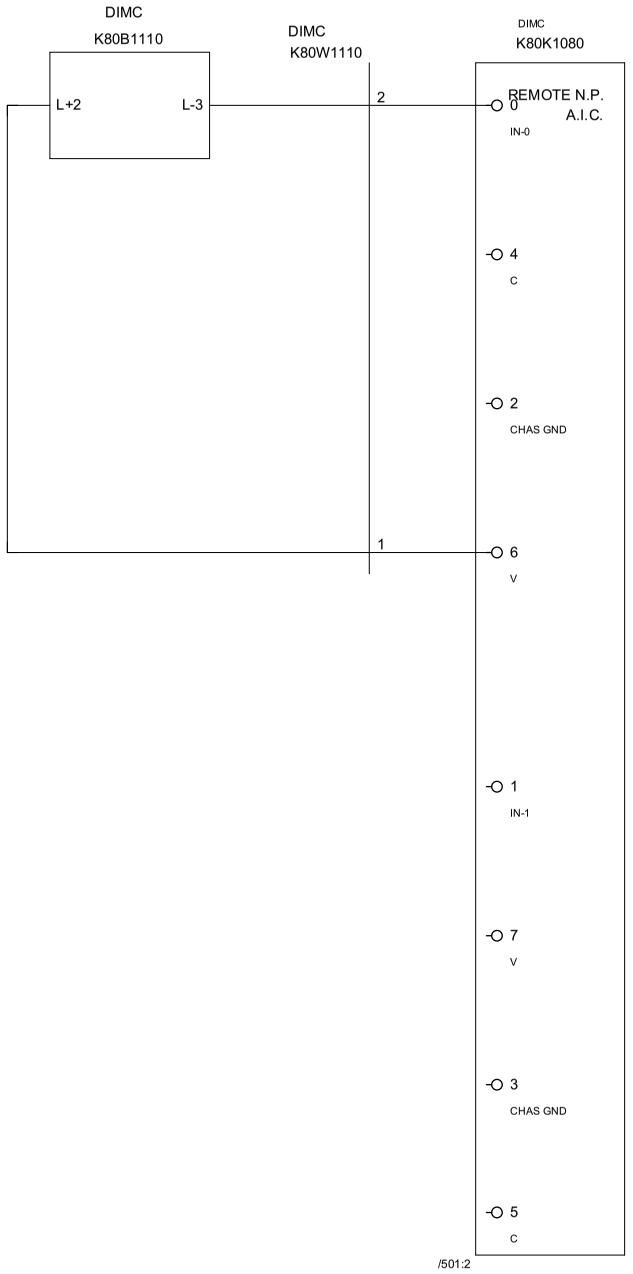

K80B1110 DIMC DILUTING CONDUCTIVITY

SPARE

Tetra Pak®	Version Designer: RICO	Version Date: 01/10/2014	Machine: A3 CompactFlex 0300			
	ECM No: 687624	Denomination: CIRCUIT DIAGRAM	Page Type: PLC REMOTE A.I.C. SERVICE (DIMC)			
	Information Security Class: PUBLIC	Document No.: 3223337-0003	Doc. type: ELD	Version: AM	Page: 229	

This drawing must not without the consent of Tetra Pak
be copied, transmitted or disclosed to any third party.

1	2	3	4	5	6	7	8	9	10

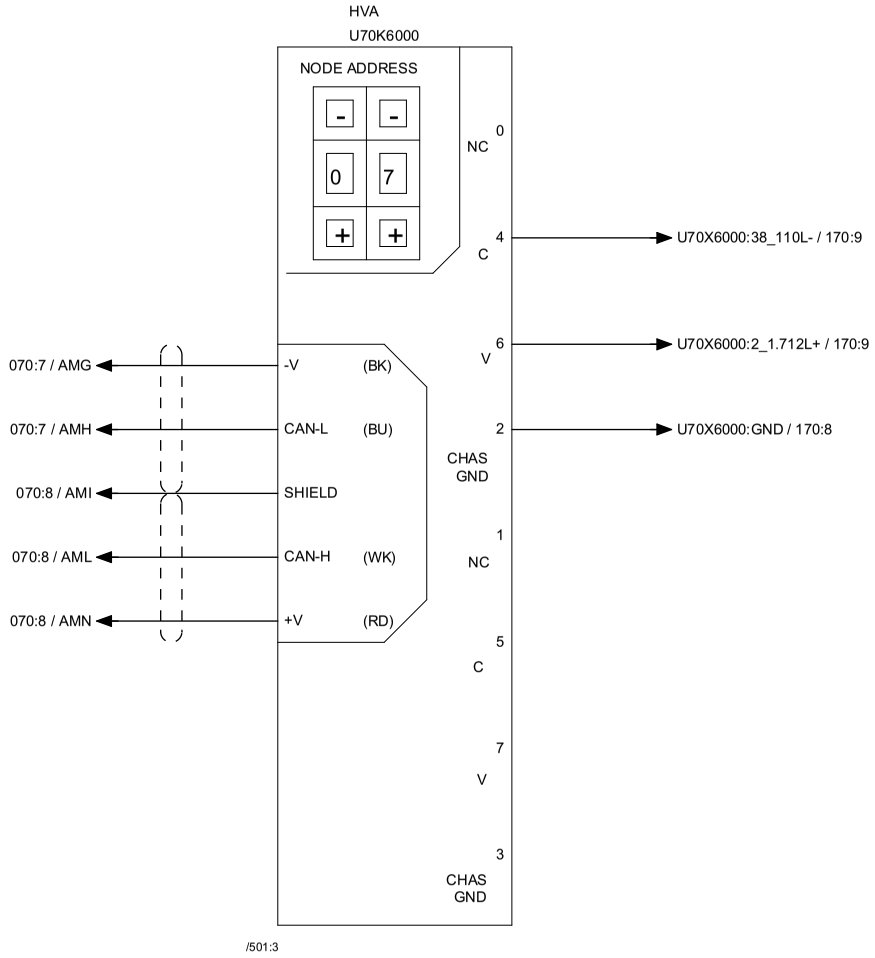

Tetra Pak®	Version Designer: RICO	Version Date: 01/10/2014	Machine: A3 CompactFlex 0300	
	ECM No: 687624	Denomination: CIRCUIT DIAGRAM	Page Type: DEVICENET ADAPTER HVA	
	Information Security Class: PUBLIC	Document No.: 3223337-0003	Doc. type: ELD	Version: AM	Page: 233

This drawing must not without the consent of Tetra Pak be copied, transmitted or disclosed to any third party.

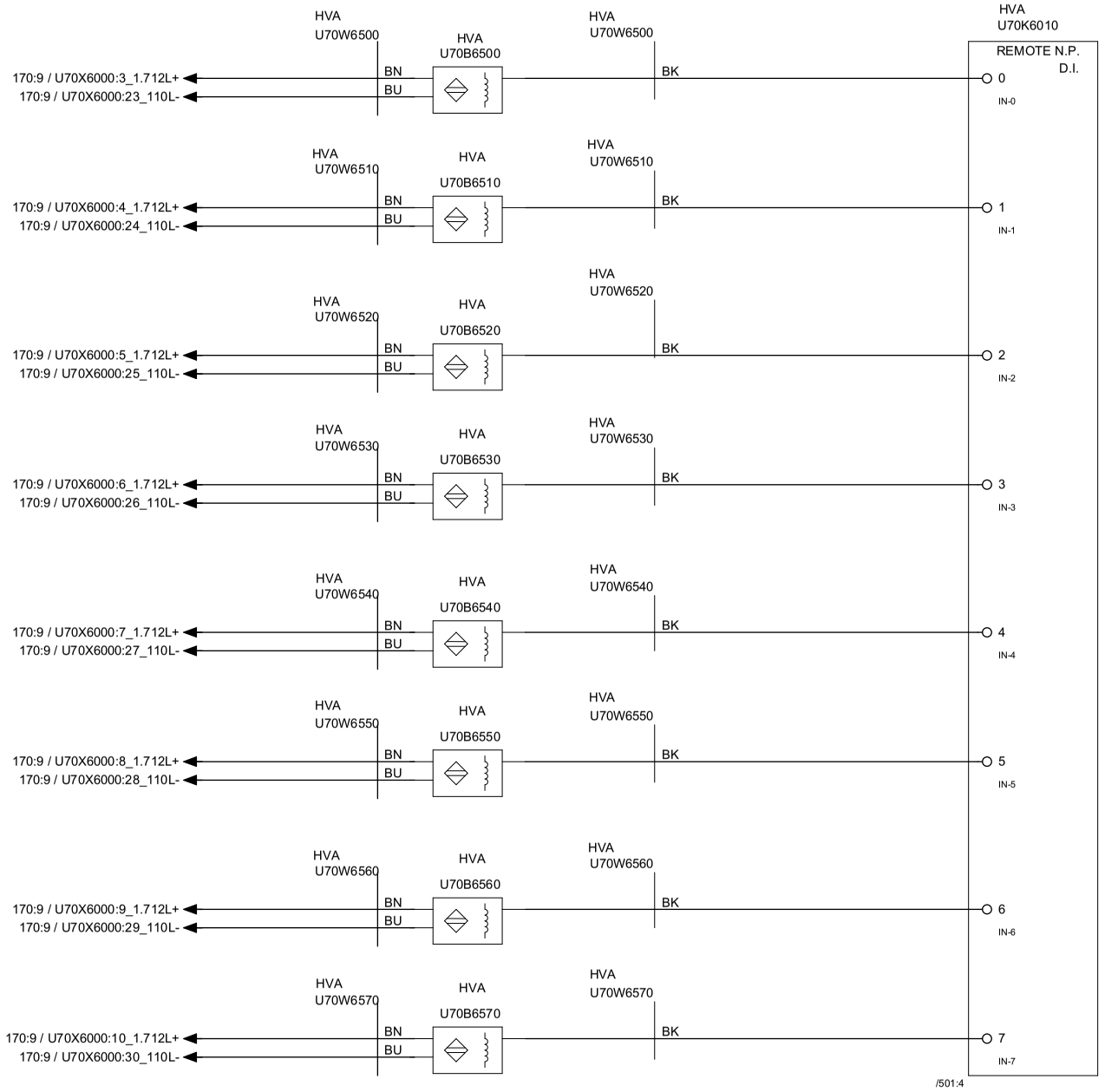

U70B6500	HVA C VALVE DOWN POSITION
U70B6510	HVA C VALVE UP POSITION
U70B6520	HVA PLUG IN POSITION
U70B6530	HVA CLEANING PIPE
U70B6540	HVA INTERNAL PRODUCT VALVE POSITION
U70B6550	HVA PUMP PIPE DETECT
U70B6560	HVA PUMP PIPE BYPASS
U70B6570	HVA LINE PRODUCT

Tetra Pak®

Version Designer: RICO	Version Date: 01/10/2014	Machine: A3 CompactFlex 0300	
ECM No: 687624	Denomination: CIRCUIT DIAGRAM	Page Type: PLC REMOTE D.I., HVA	
Information Security Class: PUBLIC	Document No.: 3223337-0003	Doc. type: ELD	Version: AM	Page: 234

RELEASED

This drawing must not without the consent of Tetra Pak be copied, transmitted or disclosed to any third party.

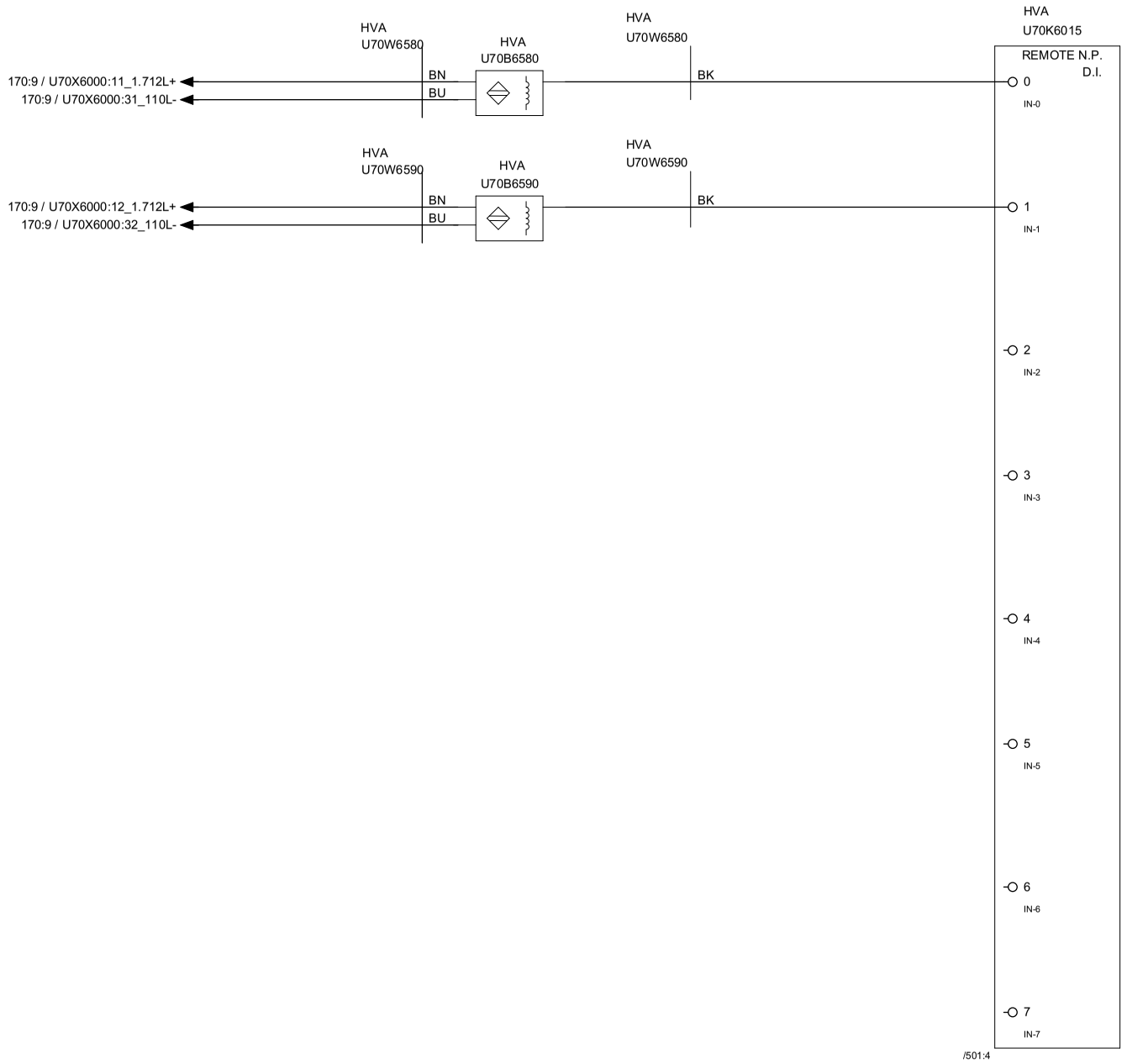

Tetra Pak®	Version Designer RICO	Version Date 01/10/2014	Machine A3 CompactFlex 0300				
	ECM No 687624	Denomination CIRCUIT DIAGRAM	Page Type PLC REMOTE D.I., HVA				
	Information Security Class PUBLIC	Document No. 3223337-0003	Doc. type ELD	Version AM	Page 235		

RELEASED

This drawing must not without the consent of Tetra Pak be copied, transmitted or disclosed to any third party.

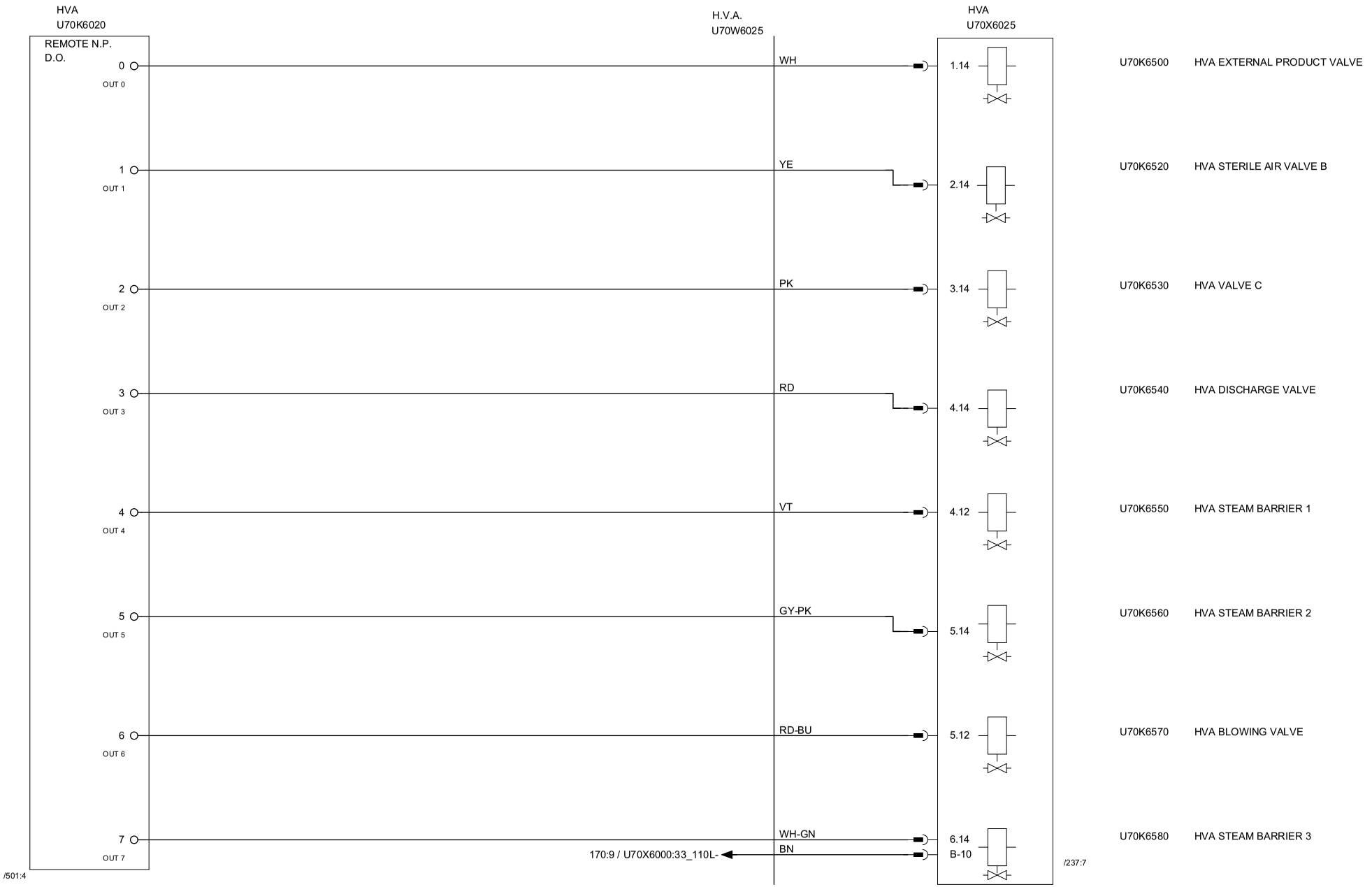

Tetra Pak®	Version Designer RICO	Version Date 01/10/2014	Machine A3 CompactFlex 0300					
	ECM No 687624	Denomination CIRCUIT DIAGRAM	Page Type PLC REMOTE D.O, HVA					
	Information Security Class PUBLIC	Document No. 3223337-0003	Doc. type ELD	Version AM	Page 236			

RELEASED

This drawing must not without the consent of Tetra Pak be copied, transmitted or disclosed to any third party.

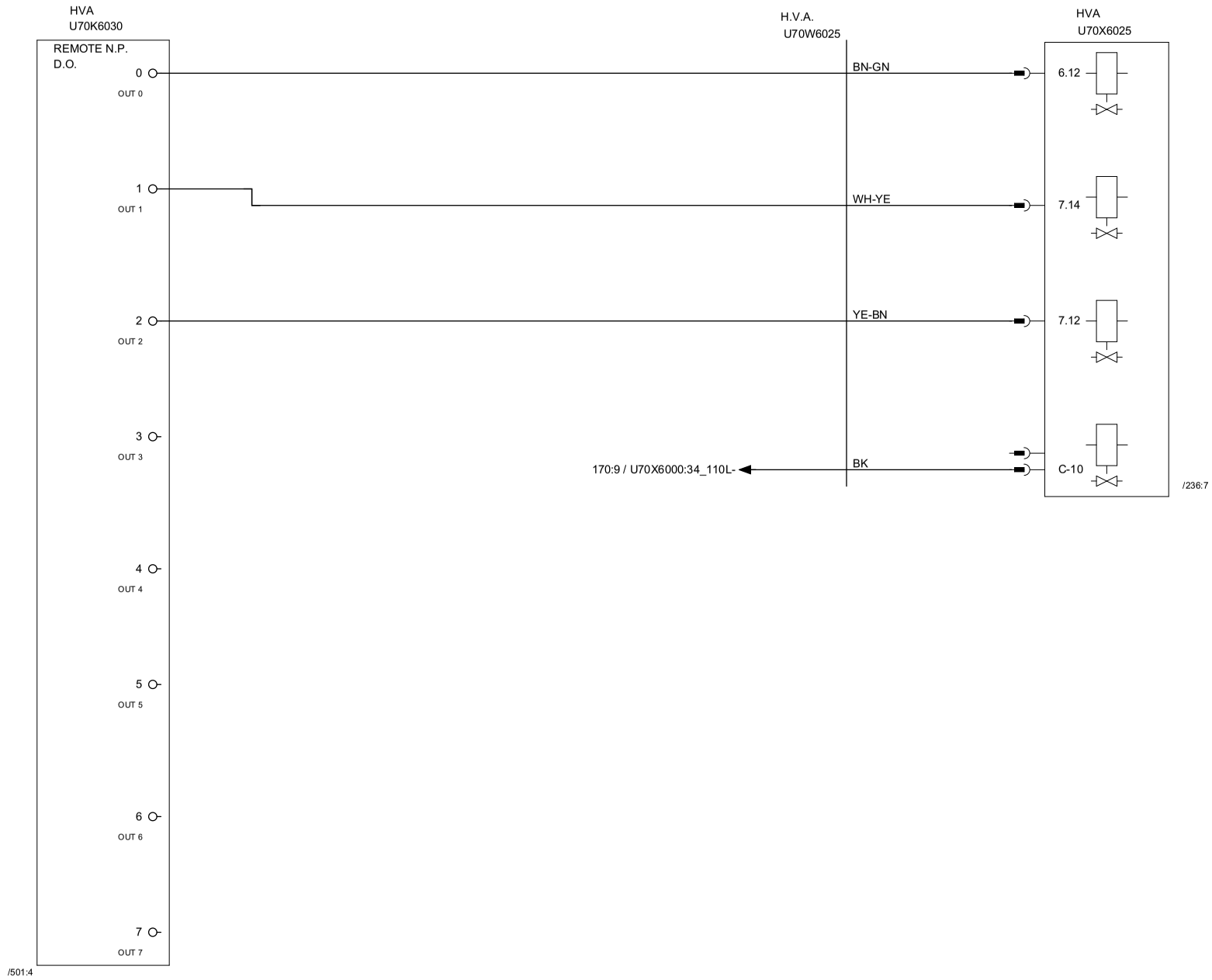

Tetra Pak®	Version Designer: RICO	Version Date: 01/10/2014	Machine: A3 CompactFlex 0300	
	ECM No: 687624	Denomination: CIRCUIT DIAGRAM	Page Type: PLC REMOTE D.O, HVA	
	Information Security Class: PUBLIC	Document No.: 3223337-0003	Doc. type: ELD	Version: AM	Page: 237

This drawing must not without the consent of Tetra Pak
be copied, transmitted or disclosed to any third party.

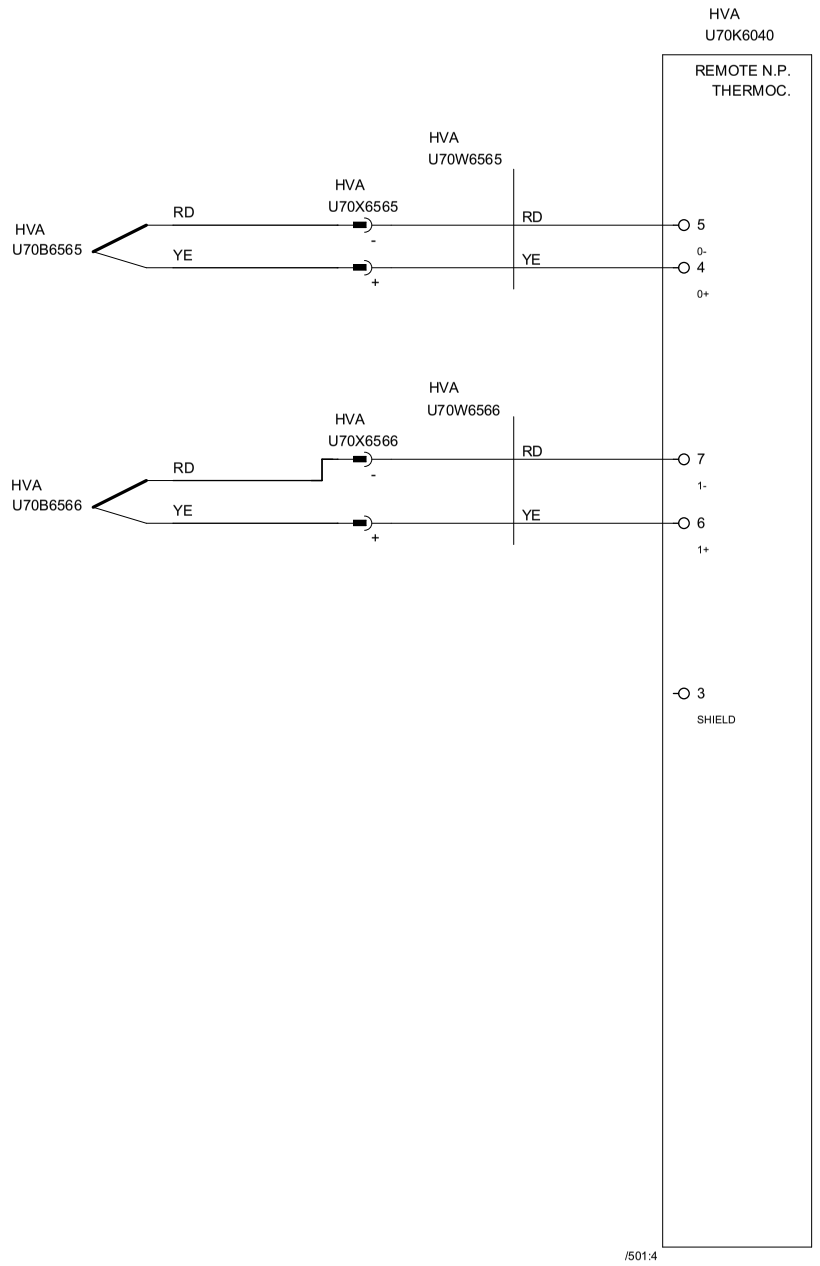

U70B6565	HVA PUMP BARRIER TEMP
U70B6566	HVA STERILIZATION TEMP

Tetra Pak®	Version Designer: RICO	Version Date: 01/10/2014	Machine: A3 CompactFlex 0300	
	ECM No: 687624	Denomination: CIRCUIT DIAGRAM	Page Type: PLC REMOTE TH., HVA	
Information Security Class: PUBLIC	Document No.: 3223337-0003	Doc. type: ELD	Version: AM	Page: 238

RELEASED

This drawing must not without the consent of Tetra Pak be copied, transmitted or disclosed to any third party.

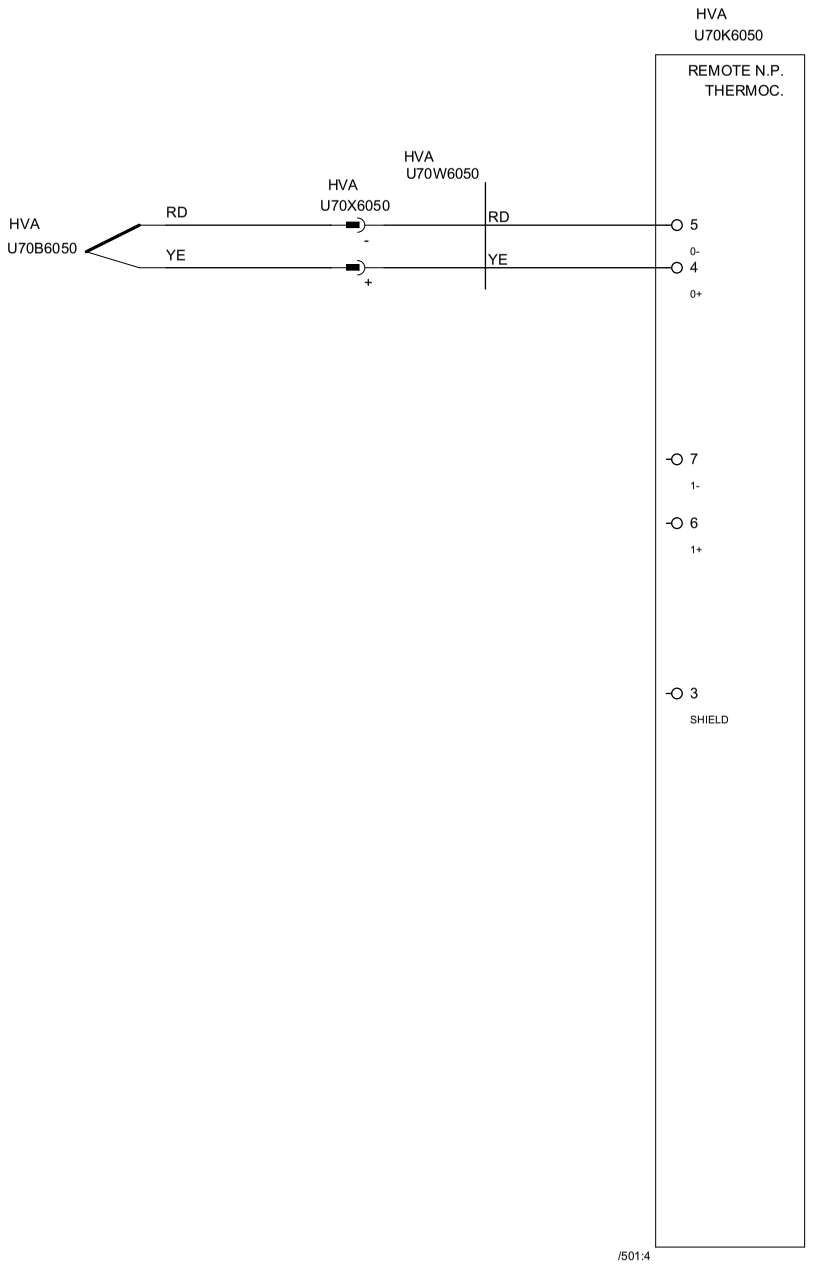

U70B6050	HVA EXTERNAL PRODUCT TEMP
	SPARE

Tetra Pak®	Version Designer: RICO	Version Date: 01/10/2014	Machine: A3 CompactFlex 0300
	ECM No: 687624	Denomination: CIRCUIT DIAGRAM	Page Type: PLC REMOTE TH., HVA
Information Security Class: PUBLIC	Document No.: 3223337-0003	Doc. type: ELD	Version: AM / Page: 239

This drawing must not without the consent of Tetra Pak
be copied, transmitted or disclosed to any third party.

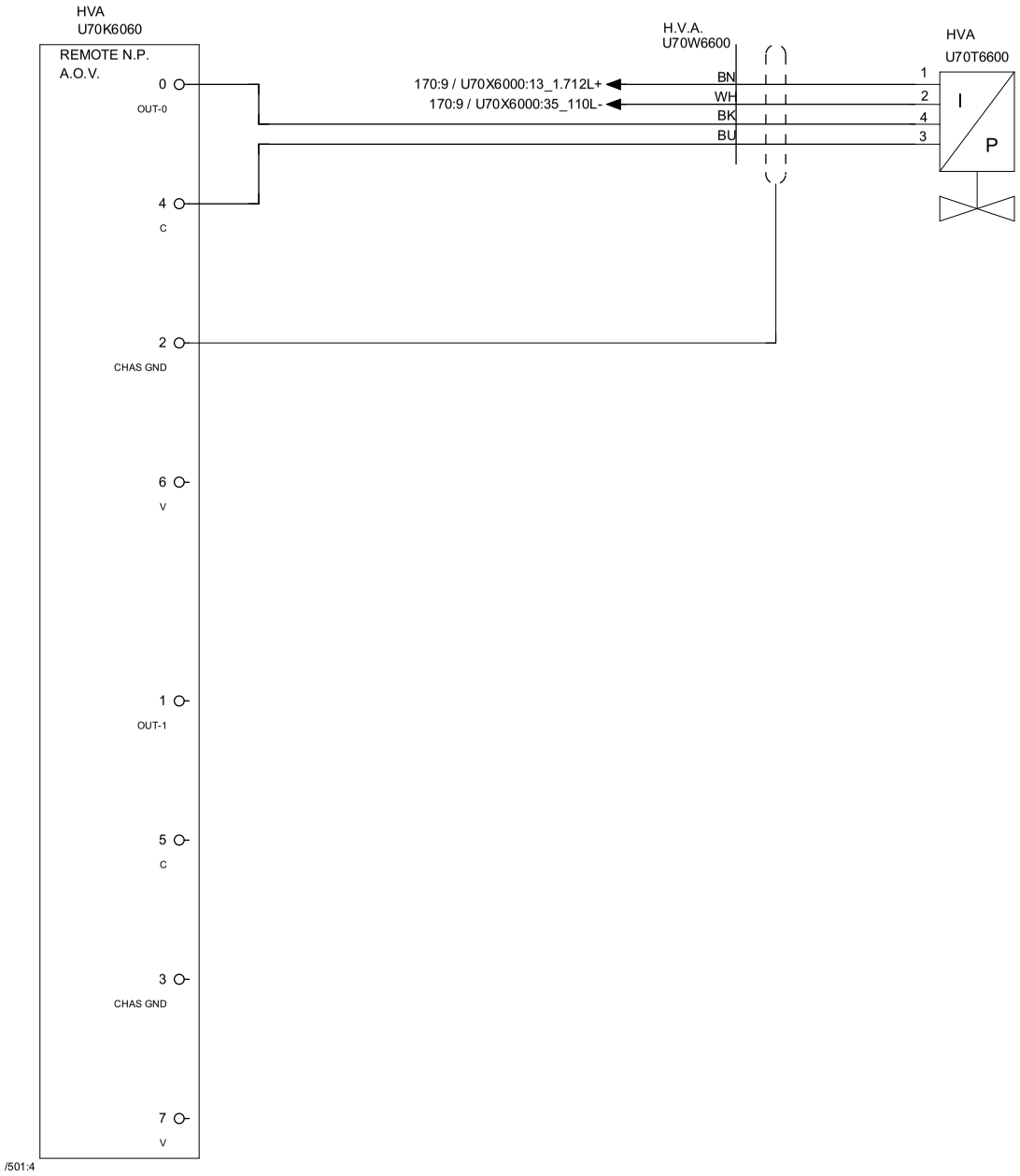

U70T6600 HVA PRESSURE REGULATOR

SPARE

Tetra Pak®	Version Designer RICO	Version Date 01/10/2014	Machine A3 CompactFlex 0300						
	ECM No 687624	Denomination CIRCUIT DIAGRAM	Page Type PLC REMOTE A.O.V., HVA						
	Information Security Class PUBLIC	Document No. 3223337-0003	Doc. type ELD	Version AM	Page 240				

This drawing must not without the consent of Tetra Pak
be copied, transmitted or disclosed to any third party.

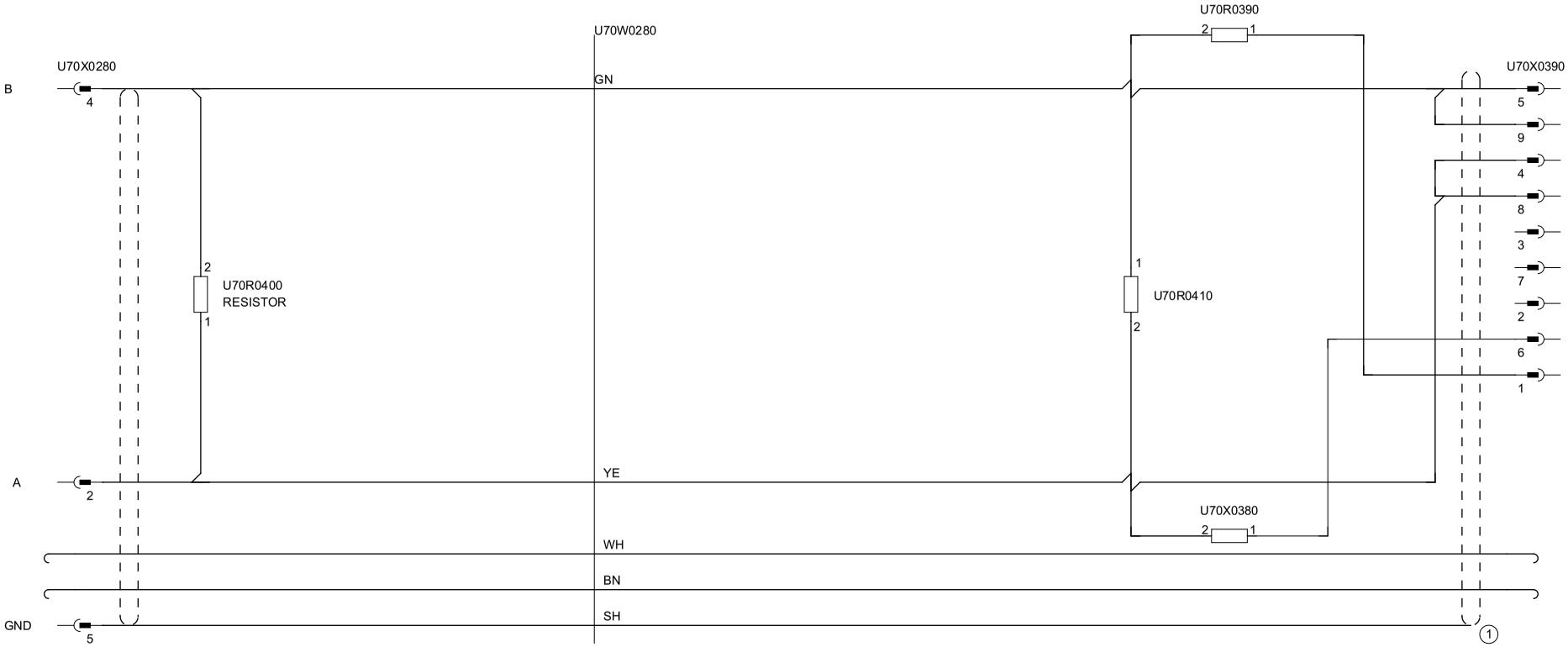

Tetra Pak®	Version Designer: RICO	Version Date: 01/10/2014	Machine: A3 CompactFlex 0300	
	ECM No: 687624	Denomination: CIRCUIT DIAGRAM	Page Type: CABLE U70W0280	
Information Security Class: PUBLIC	Document No.: 3223337-0003	Doc. type: ELD	Version: AM	Page: 241

This drawing must not without the consent of Tetra Pak be copied, transmitted or disclosed to any third party.

Dnet single cable connect

FIGURE A

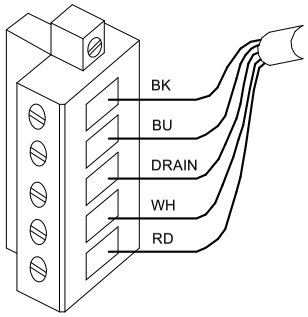

Dnet double cable connect

FIGURE B

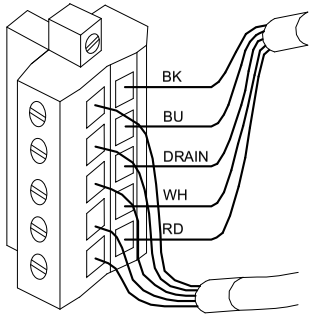

Dnet single cable w termination resistor

FIGURE C

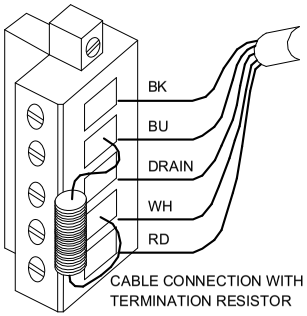

Dnet plc card w power / terminator

FIGURE D

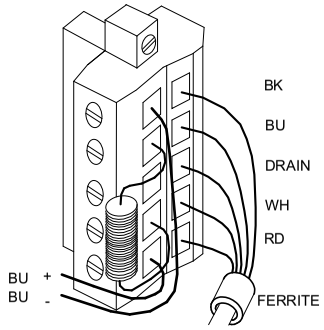

FIGURE E

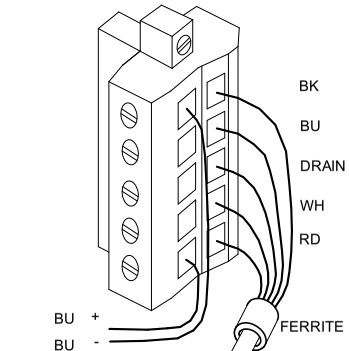

FIGURE F

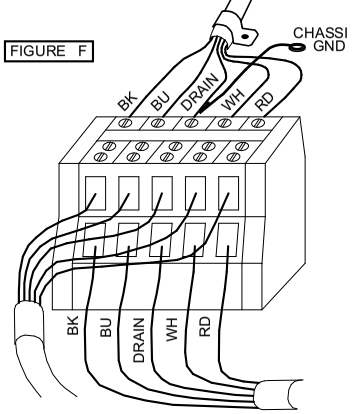

ARMOSTART external connections

FIGURE L

INPUT CONNECTOR

SOCKET



Pin 1 +V Out
Pin 2 Input 1 or 3
Pin 3 Comm
Pin 4 Input 0 or 2
Pin 5 NC (No Connection)

OUTPUT CONNECTOR

PIN

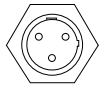

Pin 1 PE
Pin 2 Return
Pin 3 Relay Out

DEVICENET CONNECTOR

SOCKET



Pin 1 Drain (NC)
Pin 2 +VDNet
Pin 3 -VDNet
Pin 4 CAN_H

MOTOR CONNECTOR

SOCKET



Pin 1 T1 Black
Pin 2 T2 White
Pin 3 T3 Red
Pin 4 GND Green

Dnet Festo valve bank M12 connections

FIGURE H

BUS OUT

SOCKET



Pin 1 Drain
Pin 2 V+
Pin 3 V-
Pin 4 CAN_H
Pin 5 CAN_L

BUS IN

PIN



Pin 1 Drain
Pin 2 V+
Pin 3 V-
Pin 4 CAN_H

PWR IN

SOCKET



RS232 to RS485 adapter

FIGURE W2

RS485 OUT

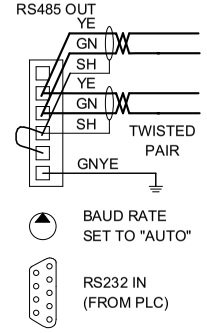

RS232 to RS485 adapter

FIGURE W

RS485 OUT

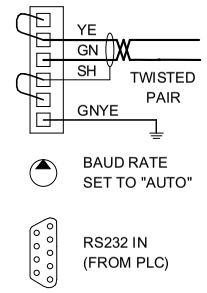

RS485 RJ45 adapter daisy chain

FIGURE X

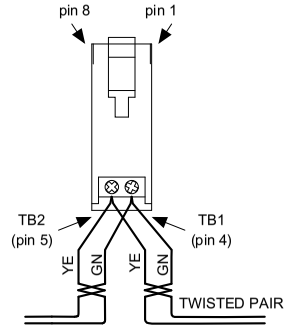

RS485 RJ45 adapter w termination

FIGURE Z

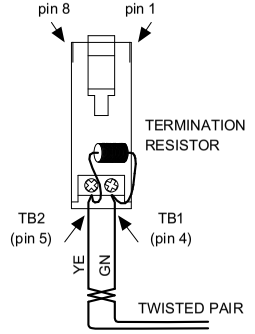

Tetra Pak®	Version Designer: RICO	Version Date: 01/10/2014	Machine: A3 CompactFlex 0300	
	ECM No: 687624	Denomination: CIRCUIT DIAGRAM	Page Type: NETWORK FIGURE DRAWING	
	Information Security Class: PUBLIC	Document No.: 3223337-0003	Doc. type: ELD	Version: AM / Page: 500

RELEASED

This drawing must not without the consent of Tetra Pak be copied, transmitted or disclosed to any third party.

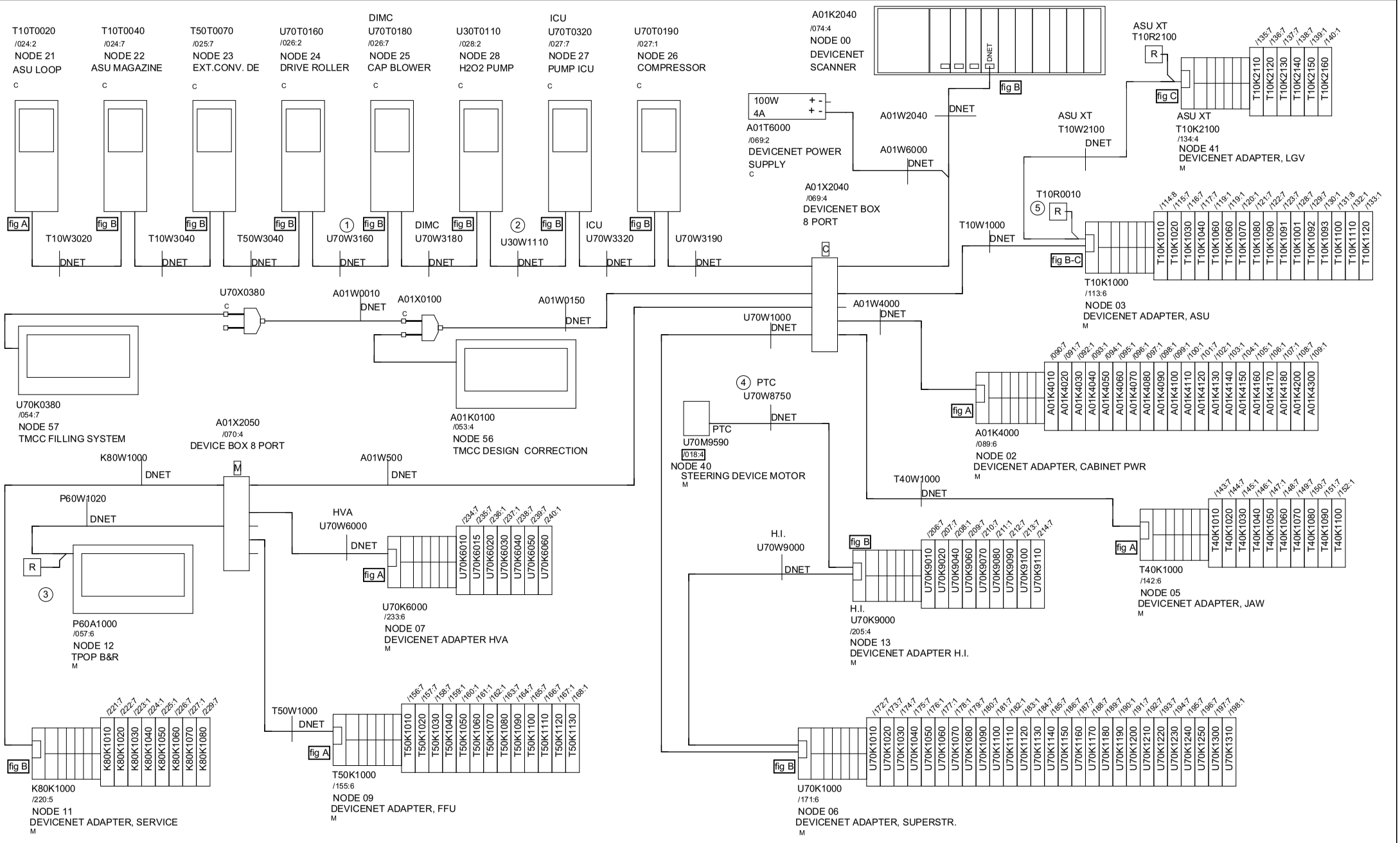

Tetra Pak®	Version Designer: RICO	Version Date: 01/10/2014	Machine: A3 CompactFlex 0300	
	ECM No: 687624	Denomination: CIRCUIT DIAGRAM	Page Type: DEVICENET NETWORK	
	Information Security Class: PUBLIC	Document No.: 3223337-0003	Doc. type: ELD	Version: AM	Page: 501

RELEASED

This drawing must not without the consent of Tetra Pak be copied, transmitted or disclosed to any third party.

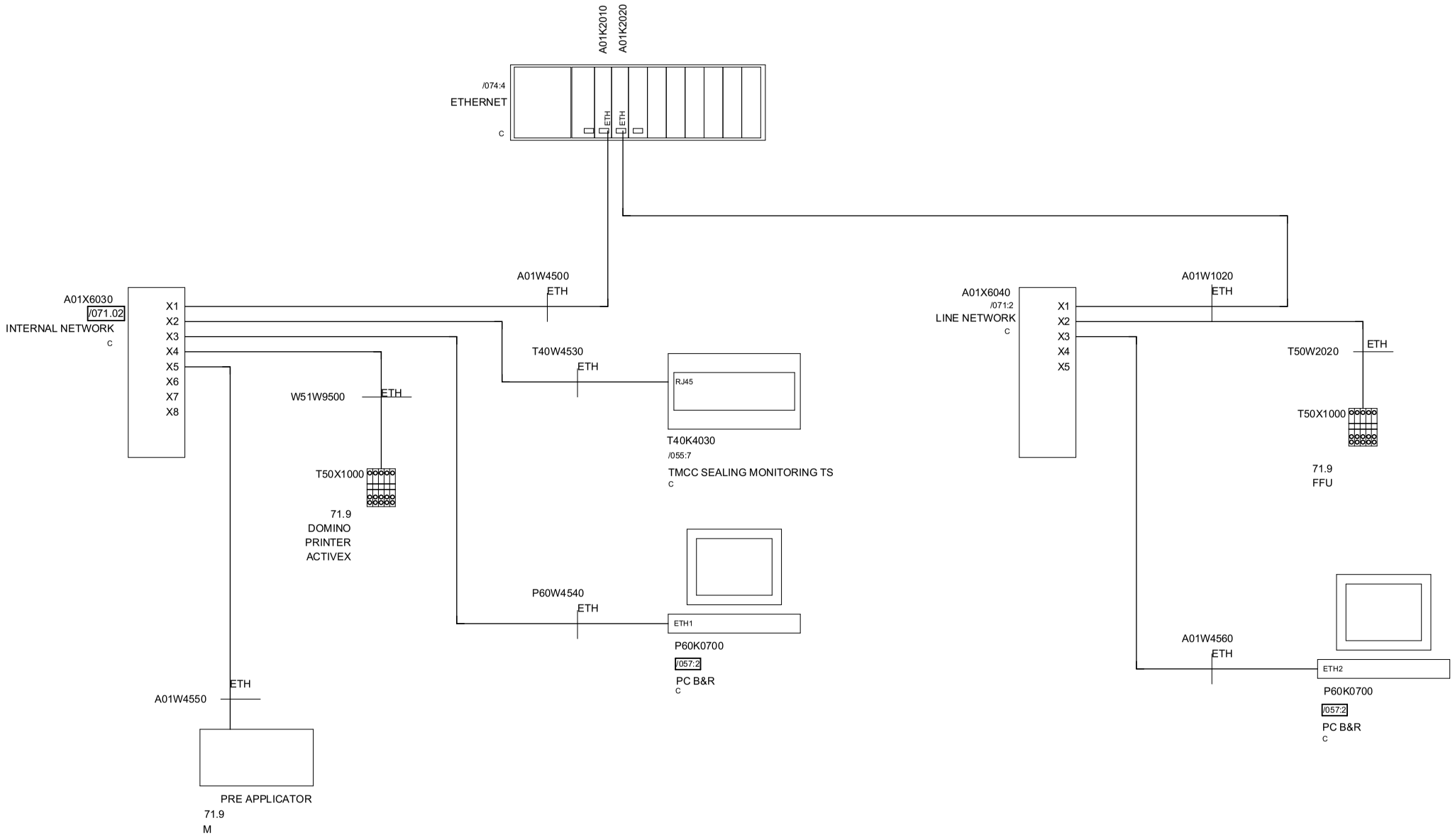

Tetra Pak®	Version Designer: RICO	Version Date: 01/10/2014	Machine: A3 CompactFlex 0300	
	ECM No: 687624	Denomination: CIRCUIT DIAGRAM	Page Type: ETHERNET NETWORK	
	Information Security Class: PUBLIC	Document No.: 3223337-0003	Doc. type: ELD	Version: AM	Page: 505

This page intentionally left blank

5 Line Summary

Description

All connections inside the electrical cabinet are listed in this chapter.

5.1 Line Summary

This page intentionally left blank

This drawing must not without the consent of Tetra Pak be copied, transmitted or disclosed to any third party.

Line summary : 3223337-0003

Net	Page.Col.	Option	Area/Color
1.111.31L+			
A01XL1310:102	002.2		0.75 BU
A01K2060:4	075.7		
1.111.31L+			
A01XL1310:103	002.2		0.75 BU
A01K4150:0	104.2		
1.111.31L+			
A01XL1310:104	002.2		0.75 BU
T50T0070:01	025.7		
1.111.31L+			
A01XL1310:105	002.2		0.75 BU
K80X0580:3	225.8		
1.111.31L+			
A01XL1310:106	002.2		0.75 BU
F01K5020:S14	060.5		
1.111.31L+			
A01XL1310:107	002.2		0.75 BU
A01K4150:1	104.2		
1.111.31L+			
A01XL1310:108	002.2		0.75 BU
A01K4150:4	104.2		
1.111.31L+			
A01XL1310:109	002.2		0.75 BU
A01K4150:5	104.2		
1.111.31L+			
A01XL1310:110	002.2		0.75 BU

Net	Page.Col.	Option	Area/Color
F01K5000:Q1	058.9		
F01K5020:A1	060.5		
1.111L+			
A01XL1110:101	001.1		1.5 BU
A01F0110:2	045.3		
1.111L+			
A01XL1110:102	001.1		0.75 BU
A01K4160:0	105.2		
1.111L+			
A01XL1110:103	001.1		0.75 BU
A01K2070:19	081.7		
1.111L+			
A01XL1110:104	001.1		0.75 BU
A01K2080:20	084.1		
1.111L+			
A01XL1110:105	001.1		0.75 BU
A01XL1190:101	046.8	CE	
1.111L+			
A01XL1110:106	001.1		0.75 BU
A01K0121	005.6		
1.111L+			
A01XL1110:107	001.2		0.75 BU
A01S5830:13	078.4		
1.111L+			
A01XL1110:108	001.2		0.75 BU
F01K5000:1L	058.9		

Net	Page.Col.	Option	Area/Color
1.111L+			
A01XL1110:109	001.2		0.75 BU
T40G0010:310	023.2		
1.111L+			
A01XL1110:110	001.2		0.75 BU
A01K5320:L	047.5		
1.111L+			
A01XL1110:111	001.2		0.75 BU
A01B3000:18	005.9		
1.111L+			
A01XL1110:112	001.2		0.75 BU
A01X6040:US1	071.2		
A01X6030:US1	071.2		
1.111L+			
A01XL1110:113	001.2		0.75 BU
F10K5030:A1	063.4	ASU XT	
1.112.41L+			
A01XL1410:101	002.5		0.75 BU
F01K5020:14	060.5		
1.112.41L+			
A01XL1410:102	002.5		0.75 BU
A01K2060:5	075.7		
1.112.41L+			
A01XL1410:103	002.5		0.75 BU
A01K2080:10	083.1		

Net	Page.Col.	Option	Area/Color
1.112L+			
A01XL1120:101	001.5		1.5 BU
A01F0120:2	045.4		
1.112L+			
A01XL1120:105	001.5		0.75 BU
F01K5020:13	060.5		
1.112L+			
A01XL1120:106	001.5		0.75 BU
T10X0050:13	112.9		
1.113L+			
A01XL1130:101	001.7		1.5 BU
A01F0130:2	045.4		
1.113L+			
A01XL1130:102	001.7		0.75 BU
A01K2070:21	081.7		
1.113L+			
A01XL1130:103	001.7		0.75 BU
A01K4000:6	089.6		
1.113L+			
A01XL1130:104	001.7		0.75 BU
A01F5750:1.13	090.4		
T40F0040:1.13	091.6		
T50F0140:1.13	090.4		
K80F0010:1.13	091.6		
K80F0020:1.13	091.6		
K80F0030:1.13	091.6		

Tetra Pak®

Version Designer: RICO	Version Date: 01/10/2014	Machine: A3 CompactFlex 0300	
ECM No: 687624	Denomination: LINE SUMMARY	Page Type: LINE SUMMARY	
Information Security Class: PUBLIC	Document No.: 3223337-0004	Doc. type: ELD	Version: AM	Page: 001

This drawing must not without the consent of Tetra Pak
be copied, transmitted or disclosed to any third party.

Line summary : 3223337-0003

1.113L+

Net	Page.Col.	Option	Area/Color
T10F0060:1.13	090.4		
T10F0060:1.13	090.4		
A01F5500:1.13	091.3		
A01F5520:1.13	091.5		
A01Q5760:6	090.4		

1.113L+

Net	Page.Col.	Option	Area/Color
A01XL1130:105	001.7		0.75 BU
A01B5860:13	090.2		

1.113L+

Net	Page.Col.	Option	Area/Color
A01XL1130:106	001.8		0.75 BU
A01K4120:6	101.7		

1.113L+

Net	Page.Col.	Option	Area/Color
A01XL1130:109	001.8		0.75 BU
A01K4130:1	102.2		

1.113L+

Net	Page.Col.	Option	Area/Color
A01XL1130:112	001.8		0.75 BU
U70F0230:1.13	091.1		

1.211.71L+

Net	Page.Col.	Option	Area/Color
A01XL2710:101	003.1		0.75 BU
A01K2060:6	075.7		

1.211.71L+

Net	Page.Col.	Option	Area/Color
A01XL2710:102	003.1		0.75 BU
F10K5032:A1	061.6		

1.211.71L+

Net	Page.Col.	Option	Area/Color
A01XL2710:104	003.1		0.75 BU
T10X0050:20	133.5		

1.211.71L+

Net	Page.Col.	Option	Area/Color
A01XL2710:105	003.2		0.75 BU
F01K5000:Q4	058.9		

1.211.71L+

Net	Page.Col.	Option	Area/Color
A01XL2710:106	003.2		0.75 BU
T10X0050:3	112.9		

1.211.71L+

Net	Page.Col.	Option	Area/Color
A01XL2710:107	003.2		0.75 BU
T10X0050:19	061.1		

1.211.72L+

Net	Page.Col.	Option	Area/Color
A01XL2720:102	003.4		0.75 BU
A01K2060:7	075.7		

1.211.72L+

Net	Page.Col.	Option	Area/Color
A01XL2720:103	003.4		0.75 BU
T10T0020:01	024.2		

1.211.72L+

Net	Page.Col.	Option	Area/Color
A01XL2720:104	003.4		0.75 BU
T10T0040:01	024.7		

1.211.72L+

Net	Page.Col.	Option	Area/Color
A01XL2720:105	003.4		0.75 BU
A01K4130:0	102.2		

1.211.72L+

Net	Page.Col.	Option	Area/Color
A01XL2720:107	003.4		0.75 BU
F01K5000:Q5	058.9		

1.211L+

Net	Page.Col.	Option	Area/Color
A01XL2110:101	002.7		0.75 BU
T10F0110:2	045.5		

1.211L+

Net	Page.Col.	Option	Area/Color
A01XL2110:102	002.7		0.75 BU
A01K2070:22	081.7		

1.211L+

Net	Page.Col.	Option	Area/Color
A01XL2110:104	002.8		0.75 BU
T10X0050:2	112.9		

1.211L+

Net	Page.Col.	Option	Area/Color
A01XL2110:107	002.8		0.75 BU
F01K5000:4L	058.9		

1.411L+

Net	Page.Col.	Option	Area/Color
A01XL4110:101	003.5		1.5 BU
T40F0110:2	045.5		

1.411L+

Net	Page.Col.	Option	Area/Color
A01XL4110:102	003.5		0.75 BU
A01K2070:23	081.7		

1.411L+

Net	Page.Col.	Option	Area/Color
A01XL4110:103	003.6		0.75 BU
T40X0520:2	141.9		

1.511L+

Net	Page.Col.	Option	Area/Color
A01XL5110:101	003.7		1.5 BU
T50F0110:2	045.6		

1.511L+

Net	Page.Col.	Option	Area/Color
A01XL5110:102	003.8		0.75 BU
A01K2070:24	081.7		

1.511L+

Net	Page.Col.	Option	Area/Color
A01XL5110:103	003.8		0.75 BU
T50X0530:2	154.9		

1.711L+

Net	Page.Col.	Option	Area/Color
A01XL7110:101	003.1		0.75 BU
U70F0110:2	045.6		

1.711L+

Net	Page.Col.	Option	Area/Color
A01XL7110:102	003.1		0.75 BU
A01K2070:26	081.7		

1.711L+

Net	Page.Col.	Option	Area/Color
A01XL7110:103	003.2		0.75 BU
U70X0560:2	170.10		

1.712L+

Net	Page.Col.	Option	Area/Color
A01XL7120:101	003.3		0.75 BU
U70F0120:2	045.7		

1.712L+

Net	Page.Col.	Option	Area/Color
A01XL7120:102	003.4		1.5 BU
A01K2070:27	082.7		

1.712L+

Net	Page.Col.	Option	Area/Color
A01XL7120:103	003.4		0.75 BU
U70X0560:12	170.10		

1.713L+

Net	Page.Col.	Option	Area/Color
A01XL7130:101	003.5		1.5 BU
U70F0130:2	045.8		

1.713L+

Net	Page.Col.	Option	Area/Color
A01XL7130:102	003.5		0.75 BU
A01K2070:25	081.7		

1.713L+

Net	Page.Col.	Option	Area/Color
A01XL7130:103	003.5		0.75 BU
U70X9590:1	018.2	PTC	

This drawing must not without the consent of Tetra Pak be copied, transmitted or disclosed to any third party.

Line summary : 3223337-0003

Net	Page.Col.	Option	Area/Color
1.811L+			
A01XL8110:101	003.9		0.75 BU
K80F0110:2	045.8		
1.811L+			
A01XL8110:102	003.9		0.75 BU
A01K2070:28	082.7		
1.811L+			
A01XL8110:103	003.9		0.75 BU
K80X0580:2	219.9		
2.114L+			
A01XL1140:101	001.1		0.75 BU
A01F0140:2	046.1		
2.114L+			
A01XL1140:102	001.1		0.75 BU
A01T2000:24V	074.4		
2.114L+			
A01XL1140:103	001.1		0.75 BU
A01K2070:29	082.7		
2.115.21L+			
A01XL1210:102	002.7		0.75 BU
F01X5720:6	073.3		
2.115.21L+			
A01XL1210:103	002.7		0.75 BU
A01K4140:0	103.2		
2.115.21L+			
A01XL1210:104	002.8		0.75 BU
A01K4140:1	103.2		

Net	Page.Col.	Option	Area/Color
2.115.21L+			
A01XL1210:105	002.8		0.75 BU
A01K4140:4	103.2		
2.115.21L+			
A01XL1210:106	002.8		0.75 BU
A01K4140:5	103.2		
2.115.21L+			
A01XL1210:108	002.8		0.75 BU
U70T0190:01	027.1		
2.115.21L+			
A01XL1210:109	002.8		0.75 BU
K80X0580:4	225.8		
2.115.21L+			
A01XL1210:110	002.8		0.75 BU
U70T0320:01	027.7	ICU	
2.115.21L+			
A01XL1210:114	002.8		0.75 BU
A01K4110:0	100.2		
2.115.21L+			
A01XL1210:115	002.9		0.75 BU
A01K4110:1	100.2		
2.115.21L+			
A01XL1210:116	002.9		0.75 BU
A01K4110:4	100.2		
2.115.21L+			
A01XL1210:117	002.9	ICU	0.75 BU
A01K4140:5	103.2		

Net	Page.Col.	Option	Area/Color
2.115.21L+			
A01XL1210:118	002.9		0.75 BU
A01K2060:3	075.7		
2.115.21L+			
A01XL1210:119	002.9		0.75 BU
T10X0050:24	112.9		
2.115.21L+			
A01XL1210:120	002.9		0.75 BU
F01K5001:14	059.5		
2.115.21L+			
A01XL1210:121	002.9		0.75 BU
F10K5030:13	063.4	ASU XT	
2.115.21L+			
A01XL1210:123	002.9		0.75 BU
U30T0110:01	028.2		
2.115.21L+			
A01XL1210:124	002.9		0.75 BU
U70T0180:01	026.7	DIMC	
2.115.43L+			
A01XL1430:101	002.1		0.75 BU
A01K2060:9	076.8		
2.115.43L+			
A01XL1430:105	002.2		0.75 BU
T40T0740:7	034.8		
2.115.43L+			
A01XL1430:106	002.2		0.75 BU
T40T0750:7	035.7		

Net	Page.Col.	Option	Area/Color
2.115.43L+			
A01XL1430:107	002.2		0.75 BU
T50T0800:7	038.8		
2.115.43L+			
A01XL1430:108	002.2		0.75 BU
T50T0810:7	039.8		
2.115.43L+			
A01XL1430:109	002.2		0.75 BU
T50T0820:7	040.8		
2.115.43L+			
A01XL1430:112	002.3		0.75 BU
F01K5020:34	060.5		
2.115.43L+			
A01XL1430:113	002.3		0.75 BU
T40T0700:7	030.8		
2.115.43L+			
A01XL1430:114	002.3		0.75 BU
T40T0710:7	031.8		
2.115.43L+			
A01XL1430:115	002.3		0.75 BU
T40T0720:7	032.7		
2.115.43L+			
A01XL1430:116	002.3		0.75 BU
T40T0730:7	033.7		
2.115.44L+			
A01XL1440:101	002.5		0.75 BU
A01K2060:10	076.8		

This drawing must not without the consent of Tetra Pak be copied, transmitted or disclosed to any third party.

Line summary : 3223337-0003

Net	Page.Col.	Option	Area/Color
2.115.44L+			
A01XL1440:105	002.5		0.75 BU
T40T0740:5	034.8		
2.115.44L+			
A01XL1440:106	002.5		0.75 BU
T40T0750:5	035.7		
2.115.44L+			
A01XL1440:107	002.5		0.75 BU
T50T0800:5	038.8		
2.115.44L+			
A01XL1440:108	002.5		0.75 BU
T50T0810:5	039.8		
2.115.44L+			
A01XL1440:109	002.5		0.75 BU
T50T0820:5	040.8		
2.115.44L+			
A01XL1440:112	002.6		0.75 BU
F01K5020:44	060.5		
2.115.44L+			
A01XL1440:113	002.6		0.75 BU
T40T0700:5	030.8		
2.115.44L+			
A01XL1440:114	002.6		0.75 BU
T40T0710:5	031.8		
2.115.44L+			
A01XL1440:115	002.6		0.75 BU
T40T0720:5	032.7		

Net	Page.Col.	Option	Area/Color
2.115.44L+			
A01XL1440:116	002.6		0.75 BU
T40T0730:5	033.7		
2.115.71L+			
A01XL7710:101	003.7		0.75 BU
A01K4130:4	102.2		
2.115.71L+			
A01XL7710:102	003.8		0.75 BU
A01K2060:8	075.7		
2.115.71L+			
A01XL7710:103	003.8		0.75 BU
U70X0560:8	170.10		
2.115.71L+			
A01XL7710:104	003.8		0.75 BU
U70T0160:01	026.2		
2.115.71L+			
A01XL7710:108	003.8		0.75 BU
F01K5000:Q0	058.9		
2.115L+			
A01XL1150:101	001.5		0.75 BU
A01F0150:2	046.2		
2.115L+			
A01XL1150:102	001.5		0.75 BU
F01S5870:31	064.1		
F01S5870:11	064.1		
F01S5880:31	064.3		

Net	Page.Col.	Option	Area/Color
2.115L+			
A01XL1150:103	001.5		0.75 BU
F01K5001:13	059.5		
2.115L+			
A01XL1150:106	001.5		0.75 BU
A01K2070:30	082.7		
2.115L+			
A01XL1150:107	001.5		0.75 BU
F01K5020:33	060.5		
F01K5020:43	060.5		
2.115L+			
A01XL1150:108	001.5		0.75 BU
F01K5000:+24V	058.1		
F01K5000:0L	058.9		
2.117L+			
A01XL1170:101	002.1		0.75 BU
A01F0170:2	046.2		
2.117L+			
A01XL1170:104	002.2		0.75 BU
T40Q9550:8+	052.2		
T40R9550:2	052.2		
2.117L+			
A01XL1170:106	002.2		0.75 BU
A01X3100:1+	053.1		
2.117L+			
A01XL1170:109	002.2		0.75 BU

Net	Page.Col.	Option	Area/Color
T40Q9551:8+	052.2		
T40R9551:2	052.2		
2.117L+			
A01XL1170:110	002.2		0.75 BU
T40Q9570:8+	052.2		
T40R9570:2	052.2		
2.117L+			
A01XL1170:111	002.2		0.75 BU
T40Q9590:8+	052.2		
T40R9590:2	052.2		
2.117L+			
A01XL1170:112	002.3		0.75 BU
A01K2070:32	082.7		
2.118L+			
A01XL1180:101	002.5		1.5 BU
A01F0180:2	046.3		
2.118L+			
A01XL1180:104	002.5		0.75 BU
P60Q0010:12	057.1		
2.118L+			
A01XL1180:105	002.5		0.75 BU
A01K2070:33	082.7		
050N			
A01XL0500:1	003.1		1.5 L.BU
A01X0030:25	045.9		

This drawing must not without the consent of Tetra Pak
be copied, transmitted or disclosed to any third party.

Line summary : 3223337-0003

Net	Page.Col.	Option	Area/Color
050N			
A01XL0500:2	003.1		2.5 L.BU
A01T6000:N	069.2		
050N			
A01XL0500:3	003.1		1.5 L.BU
A01C5300:N	048.8		
050N			
A01XL0500:4	003.1		2.5 L.BU
A01T5450:N	046.7	UL/CSA	
051L3			
A01XL0510:1	003.3		1.5 BK
A01F5740:2	045.8		
051L3			
A01XL0510:2	003.4		2.5 BK
A01T6000:L	069.2		
051L3			
A01XL0510:4	003.4		2.5 BK
A01T5450:L	046.7	UL/CSA	
052L2			
A01XL0520:101	003.5		1.5 BK
A01F5730:2	045.8		
052L2			
A01XL0520:102	003.5		1.5 BK
A01C5300:L1	048.8		
110L-			
A01XL1100:1	001.1		10 BU
A01T5400:-	045.2		

Net	Page.Col.	Option	Area/Color
110L-			
A01XL1100:1	001.1		6 BU
A01XL1100:126	001.4		
110L-			
A01XL1100:2	001.1		6 BU
A01T5410:-	046.1		
A01T5440:-	046.4		
110L-			
A01XL1100:2	001.1		6 BU
A01XL1100:139	001.5		
110L-			
A01XL1100:103	001.2		0.75 BU
F01K5020:A2	060.5		
F01K5020:S24	060.5		
110L-			
A01XL1100:104	001.2		0.75 BU
A01Q5750:A2	095.5		
U30Q0010:A2	100.5		
T40Q0040:A2	100.5		
T50Q0140:A2	104.5		
T50Q0150:A2	103.5		
K80Q0010:A2	093.5		
K80Q0020:A2	093.5		
K80Q0030:A2	104.5		
T10Q0060:A2	094.5		
U70Q0190:A2	100.5		

Net	Page.Col.	Option	Area/Color
A01Q5500:A2	095.5		
A01Q5520:A2	095.5		
110L-			
A01XL1100:105	001.2		0.75 BU
T10X0050:12	112.9		
110L-			
A01XL1100:106	001.2		0.75 BU
F10K5032:A2	061.6		
110L-			
A01XL1100:108	001.2		0.75 BU
T10X0050:21	133.5		
110L-			
A01XL1100:109	001.2		1.5 BU
A01T2000:0V	074.4		
110L-			
A01XL1100:110	001.2		0.75 BU
A01K4000:4	089.6		
110L-			
A01XL1100:111	001.2		0.75 BU
A01X6030:GND	071.2		
110L-			
A01XL1100:112	001.2		0.75 BU
A01K2080:9	083.1		
A01K2080:19	084.1		
110L-			
A01XL1100:113	001.3		0.75 BU

Net	Page.Col.	Option	Area/Color
A01Q5760:1	095.5		
T40Q0840:1	084.6		
A01Q5800:1	098.4		
110L-			
A01XL1100:114	001.3		0.75 BU
A01K4120:4	101.7		
110L-			
A01XL1100:116	001.3		0.75 BU
A01X3100:1-	053.1		
110L-			
A01XL1100:117	001.3		0.75 BU
U70Q0130:A2	103.5		
T10Q0050:A2	094.5		
T10Q0070:A2	094.5		
T10Q0080:A2	102.5		
U70Q0230:A2	100.5		
T10Q0120:A2	094.5		
T10Q0040:A2	102.5		
T50Q0070:A2	104.5		
U70Q0160:A2	102.5		
U70Q0371:A2	094.5		
110L-			
A01XL1100:119	001.3		0.75 BU
T10T0020:04	024.2		
110L-			
A01XL1100:120	001.3		0.75 BU
T10T0040:04	024.7		

This drawing must not without the consent of Tetra Pak be copied, transmitted or disclosed to any third party.

Line summary : 3223337-0003

Net	Page.Col.	Option	Area/Color
110L-			
A01XL1100:121	001.3		0.75 BU
T10X0050:1	112.9		
110L-			
A01XL1100:123	001.4		0.75 BU
T40Q9550:13-	052.2		
T40Q9551:13-	052.2		
T40Q9570:13-	052.2		
T40Q9590:13-	052.2		
110L-			
A01XL1100:124	001.4		0.75 BU
T40G0010:309	023.2		
110L-			
A01XL1100:127	001.4		0.75 BU
T40X0520:1	141.9		
110L-			
A01XL1100:128	001.4		0.75 BU
A01K5320:N	047.5		
110L-			
A01XL1100:129	001.4		0.75 BU
T50T0070:04	025.7		
110L-			
A01XL1100:130	001.4		0.75 BU
A01K4200:4	108.7		
110L-			
A01XL1100:131	001.4		0.75 BU
T50X0530:1	154.9		

Net	Page.Col.	Option	Area/Color
110L-			
A01XL1100:132	001.4		0.75 BU
U70Q0520:A2-	007.6		
U70Q0530:A2-	008.2		
U70Q0540:A2-	008.4		
U70Q0550:A2-	008.6		
U70Q0560:A2-	008.9		
U70Q0580:A2-	009.3		
U70Q0590:A2	009.7		
110L-			
A01XL1100:133	001.4		0.75 BU
U70Q1130:A2-	010.4		
U70Q1140:A2-	010.8		
T50Q0510:A2-	011.1		
T50Q0520:A2-	011.5		
T50Q0540:A2-	011.8		
T10Q0570:A2-	012.4		
T10Q0580:A2-	012.6		
T10Q0590:A2-	012.9		
U70Q0370:A2-	010.2	H.I.	
110L-			
A01XL1100:134	001.5		0.75 BU
T40T0700:15	030.8		
110L-			
A01XL1100:135	001.5		0.75 BU
P60X0700:3	057.2		

Net	Page.Col.	Option	Area/Color
110L-			
A01XL1100:136	001.5		0.75 BU
P60Q0010:A2	098.4		
110L-			
A01XL1100:137	001.5		0.75 BU
U70Q0010:A2	093.5		
U70Q0020:A2	093.5		
U70Q0030:A2	093.5		
U70Q0040:A2	098.4		
U70Q0050:A2	093.5		
U70Q0060:A2	098.4		
U70Q0080:A2	093.5		
U70Q0090:A2	093.5		
T40Q0010:A2	094.5		
T50Q0010:A2	094.5		
U70Q0180:A2	103.5	DIMC	
110L-			
A01XL1100:138	001.5		0.75 BU
U70Q1060:A2	174.5		
110L-			
A01XL1100:140	001.5		0.75 BU
U70T0160:04	026.2		
110L-			
A01XL1100:141	001.5		0.75 BU
U70T0180:04	026.7	DIMC	

Net	Page.Col.	Option	Area/Color
110L-			
A01XL1100:142	001.5		0.75 BU
U70T0190:04	027.1		
110L-			
A01XL1100:143	001.5		0.75 BU
A01K4200:5	108.7		
110L-			
A01XL1100:144	001.6		0.75 BU
U70X0560:1	170.10		
110L-			
A01XL1100:147	001.6		0.75 BU
T40T0740:4 COM	034.2		
110L-			
A01XL1100:148	001.6		0.75 BU
T40T0750:4 COM	035.1		
110L-			
A01XL1100:149	001.6		0.75 BU
K80X0580:1	219.9		
110L-			
A01XL1100:152	001.6		0.75 BU
A01T5450:V-	046.7	UL/CSA	
110L-			
A01XL1100:153	046.8		0.75 BU
A01E5810	046.8		
110L-			
A01XL1100:154	046.9		0.75 BU
A01E5820	046.9		

This drawing must not without the consent of Tetra Pak
be copied, transmitted or disclosed to any third party.

Line summary : 3223337-0003

Net	Page.Col.	Option	Area/Color
110L-			
A01XL1100:158	001.7		0.75 BU
A01X6040:GND	071.2		
110L-			
A01XL1100:161	001.7		0.75 BU
A01K2060:17	076.8		
110L-			
A01XL1100:162	001.7		0.75 BU
A01K2060:18	076.8		
110L-			
A01XL1100:163	001.7		0.75 BU
A01K2060:35	078.8		
110L-			
A01XL1100:164	001.8		0.75 BU
A01K2060:036	078.8		
110L-			
A01XL1100:165	001.8		0.75 BU
A01K2070:17	080.8		
110L-			
A01XL1100:166	001.8		0.75 BU
A01K2070:18	080.8		
110L-			
A01XL1100:167	001.8		0.75 BU
A01K2070:35	082.8		
110L-			
A01XL1100:168	001.8		0.75 BU
A01K2070:36	082.8		

Net	Page.Col.	Option	Area/Color
110L-			
A01XL1100:169	001.8		0.75 BU
T40T0700:6	030.8		
110L-			
A01XL1100:170	001.8		0.75 BU
T40T0710:6	031.8		
110L-			
A01XL1100:171	001.8		0.75 BU
T40T0720:6	032.7		
110L-			
A01XL1100:172	001.8		0.75 BU
T40T0730:6	033.7		
110L-			
A01XL1100:173	001.8		0.75 BU
T40T0740:6	034.8		
110L-			
A01XL1100:174	001.2		0.75 BU
T40T0750:6	035.7		
110L-			
A01XL1100:175	001.2		0.75 BU
T50T0800:6	038.8		
110L-			
A01XL1100:176	001.2		0.75 BU
T50T0810:6	039.8		
110L-			
A01XL1100:177	001.2		0.75 BU
T50T0820:6	040.8		

Net	Page.Col.	Option	Area/Color
110L-			
A01XL1100:178	001.2		0.75 BU
U70X0560:1	170.10		
110L-			
A01XL1100:180	001.2		0.75 BU
U70X9590:2	018.2	PTC	
110L-			
A01XL1100:181	001.2		0.75 BU
U70Q0320:A2	103.5		
110L-			
A01XL1100:182	001.2		0.75 BU
U70T0320:04	027.7	ICU	
110L-			
A01XL1100:183	001.2		0.75 BU
F01K5000:0V	058.1		
110L-			
A01XL1100:184	001.3		0.75 BU
F40Q2800:A2	058.5		
F40Q2810:A2	058.6		
F40Q2820:A2	058.7		
F40Q2830:A2	058.8		
110L-			
A01XL1100:189	001.3		0.75 BU
F01K5001:A1	059.5		
F01K5001:S14	059.5		
F01K5001:23	059.5		

Net	Page.Col.	Option	Area/Color
F01K5001:S14	059.5		
F01K5021:A1	062.6		
110L-			
A01XL1100:190	001.3		0.75 BU
F10K5030:A2	063.4	ASU XT	
T10X0330:4	063.3	ASU XT	
110L-			
A01XL1100:191	001.3		0.75 BU
F10K5031:A2	063.4	ASU XT	
F10K5031:S24	063.4	ASU XT	
110L-			
A01XL1100:192	001.3		0.75 BU
F10K5031:23	063.4	ASU XT	
F10K5031:43	063.4	ASU XT	
110L-			
A01XL1100:193	001.3		0.75 BU
T40T0700:4 COM	030.1		
110L-			
A01XL1100:194	001.3		0.75 BU
T40T0710:4 COM	031.1		
110L-			
A01XL1100:195	001.3		0.75 BU
T40T0720:4 COM	032.1		
110L-			
A01XL1100:196	001.3		0.75 BU
T40T0730:4 COM	033.1		

This drawing must not without the consent of Tetra Pak be copied, transmitted or disclosed to any third party.

Line summary : 3223337-0003

Net	Page.Col.	Option	Area/Color
110L-			
A01XL1100:197	001.3		0.75 BU
U30T0110:04	028.2		
A-PULSE			
A01XL1360:101	003.7		0.75 BU
F01K5000:IQ10	058.2		
F01K5021:X1	062.6		
A-PULSE			
A01XL1360:104	003.8		0.75 BU
T40T0700:3	030.8		
A-PULSE			
A01XL1360:105	003.8		0.75 BU
F01S5870:21	064.1		
A-PULSE			
A01XL1360:106	003.8		0.75 BU
T10X0050:18	061.1		
A-PULSE			
A01XL1360:110	003.8		0.75 BU
U30Q0010:21	059.2		
T10Q0040:21	058.8		
U70Q0160:21	058.6		
F40Q2800:21	058.8		
F40Q2810:21	058.9		
F40Q2820:21	058.9		
F40Q2830:21	058.10		

Net	Page.Col.	Option	Area/Color
A-PULSE			
A01XL1360:111	003.8		0.75 BU
T40X0520:19	060.2		
A-PULSE			
A01XL1360:112	003.8		0.75 BU
T50T0800:3	038.8		
L1			
A01X1010:L1	005.7		16 BK
A01F3000:1	005.9		
A01F5750:1	014.1		
T40F0040:1	015.7		
T50F0140:1	015.8		
T50F0150:1	016.1		
K80F0010:1	016.4		
K80F0020:1	016.6		
K80F0030:1	016.8		
T10F0060:1	016.9		
U70F0190:1	027.2		
A01F5500:1	030.2		
A01F5520:1	038.2		
U70F0180:1	026.7	DIMC	
L1			
A01X1010:L1	005.7		16 BK
U70F0230:1	017.3		
T40F0010:1	023.3		
T10F0020:1	024.2		

Net	Page.Col.	Option	Area/Color
U70F0090:1	009.8		
T40F0010:1	023.3		
A01F5400:1	045.2		
A01F5410:1	046.1		
U70F0320:1	027.7		
U30F0110:1	028.2		
U70F0030:1	008.2		
U70F0040:1	008.4		
U70F0060:1	008.9		
U70F1130:1	010.5		
T50F0040:1	011.8		
T10F0070:1	012.4		
T10F0020:1	024.2		
T10F0120:1	017.1		
U70F0160:1	026.2		
A01F5530:1	038.3		
L2			
A01X1010:L2	005.7		16 BK
A01F3000:3	005.9		
A01F5750:3	014.1		
T40F0040:3	015.7		
T50F0140:3	015.8		
T50F0150:3	016.1		
K80F0010:3	016.4		
K80F0020:3	016.6		
K80F0030:3	016.8		

Net	Page.Col.	Option	Area/Color
T10F0060:3	016.9		
U70F0190:3	027.2		
A01F5800:1	006.4		
A01F5500:3	030.2		
A01F5520:3	038.2		
U70F0180:3	026.7	DIMC	
L2			
A01X1010:L2	005.7		16 BK
U70F0080:1	009.4		
U70F0010:3	007.3		
U70F0020:3	007.7		
U70F0030:3	008.2		
U70F0090:3	009.8		
T40F0010:3	023.3		
A01F5400:3	045.2		
A01F5410:3	046.1		
U70F0320:3	027.7		
U70F0050:1	008.7		
U70F0060:3	008.9		
U70F1140:1	010.8		
A01F5780:1	017.5		
T10F0040:1	024.7		
T10F0080:1	012.7		
A01F5730:1	045.8		
U70F0370:1	010.2		
A01F5900:1	006.8	UL/CSA	

This drawing must not without the consent of Tetra Pak
be copied, transmitted or disclosed to any third party.

Line summary : 3223337-0003

Net	Page.Col.	Option	Area/Color
L3			
A01X1010:L3	005.7		16 BK
A01F3000:5	005.9		
A01F5750:5	014.1		
T40F0040:5	015.7		
T50F0140:5	015.8		
T50F0150:5	016.1		
K80F0010:5	016.4		
K80F0020:5	016.6		
K80F0030:5	016.8		
T10F0060:5	016.9		
U70F0190:5	027.2		
A01F5500:5	030.2		
A01F5520:5	038.2		
U70F0180:5	026.7	DIMC	
L3			
A01X1010:L3	005.7		16 BK
A01F5740:1	045.8		
U70F0010:5	007.3		
U70F0020:5	007.7		
U70F0090:5	009.8		
T40F0010:5	023.3		
A01F5400:5	045.2		
A01F5410:5	046.1		
U70F0320:5	027.7		
U70F0040:3	008.4		

Net	Page.Col.	Option	Area/Color
U70F0050:3	008.7		
T50F0010:1	011.2		
T50F0020:1	011.5		
T10F0050:1	012.1		
T10F0090:1	012.9		
T50F0070:1	025.7		
A01F5821:1	006.2		
A01F5510:1	030.4		
A01F5900:3	006.8	UL/CSA	

Net	Page.Col.	Option	Area/Color

Net	Page.Col.	Option	Area/Color

This page intentionally left blank

6 Cabinet Terminal Summary

Description

All terminals inside the electrical cabinet are listed in this chapter. The field *Opt.* specifies if the terminal is reserved for an option.

6.1 Cabinet Terminal Summary

This page intentionally left blank

This drawing must not without the consent of Tetra Pak be copied, transmitted or disclosed to any third party.

Cabinet terminal summary of 3223337-0003

A01X0010	Page .Col.	Opt.
A01X0010:1	005.4	
A01X0010:2	005.5	
A01X0010:4	005.4	
A01X0010:5	005.4	
A01X0010:6	005.5	
A01X0010:8	005.4	
A01X0010:9	005.4	
A01X0010:10	005.5	
A01X0010:12	005.4	
A01X0010:13	005.4	
A01X0010:14	005.5	
A01X0010:16	005.4	
A01X0010:⏚	005.4	
A01X0010:⏚	005.4	

A01X0020	Page .Col.	Opt.
A01X0020:1	005.7	
A01X0020:2	009.9	
A01X0020:3	008.2	
A01X0020:4	008.6	
A01X0020:5	009.3	
A01X0020:6	011.9	
A01X0020:7	010.7	
A01X0020:8	028.3	
A01X0020:9	010.8	

A01X0020:10	028.5	
A01X0020:11	024.8	
A01X0020:12	026.3	
A01X0020:13	025.8	
A01X0020:14	027.2	
A01X0020:15	009.4	
A01X0020:16	154.10	
A01X0020:17	016.8	
A01X0020:18	012.3	
A01X0020:19	012.6	
A01X0020:20	018.3	PTC
A01X0020:21	010.1	
A01X0020:22		
A01X0020:23	014.2	
A01X0020:24	017.4	
A01X0020:25	007.6	
A01X0020:26	015.7	
A01X0020:27	141.10	
A01X0020:28		
A01X0020:29	016.2	
A01X0020:30	016.5	
A01X0020:31	025.10	
A01X0020:32	006.9	
A01X0020:33	016.10	
A01X0020:34	017.2	

A01X0020:35	071.2	
A01X0020:36	023.4	
A01X0020:37	026.5	
A01X0020:38	007.4	
A01X0020:39	007.8	
A01X0020:40	101.7	
A01X0020:41	030.5	
A01X0020:42	038.4	
A01X0020:43	016.6	
A01X0020:44	015.9	
A01X0020:45	006.4	
A01X0020:46	017.5	
A01X0020:47	010.5	
A01X0020:48	010.4	
A01X0020:49	012.4	
A01X0020:50	012.8	
A01X0020:51	008.8	
A01X0020:52	005.7	
A01X0020:53	009.7	
A01X0020:54	030.1	
A01X0020:55	012.8	
A01X0020:56	038.2	
A01X0020:57	011.3	
A01X0020:58	045.3	
A01X0020:59	046.3	

A01X0020:60	011.6	
A01X0020:61	011.1	
A01X0020:62	024.3	
A01X0020:63	011.4	
A01X0020:64	011.8	
A01X0020:65	073.2	
A01X0020:66	012.6	
A01X0020:67	089.7	
A01X0020:68	024.5	
A01X0020:69	027.5	
A01X0020:70	046.2	
A01X0020:71	024.10	
A01X0020:72	053.9	
A01X0020:73	170.10	
A01X0020:74	112.10	
A01X0020:75	054.1	
A01X0020:76	045.3	
A01X0020:77	074.4	
A01X0020:78	048.8	
A01X0020:79	008.4	
A01X0020:80	069.3	
A01X0020:81	006.1	
A01X0020:82	012.3	
A01X0020:83	071.2	
A01X0020:84	006.6	

Tetra Pak®

Version Designer: RICO	Version Date: 01/10/2014	Machine: A3 CompactFlex 0300	
ECM No: 687624	Denomination: CABINET TERMINAL SUMMARY	Page Type: CABINET TERMINAL SUMMARY	
Information Security Class: PUBLIC	Document No.: 3223337-0005	Doc. type: ELD	Version: AM	Page: 001

This drawing must not without the consent of Tetra Pak be copied, transmitted or disclosed to any third party.

Cabinet terminal summary of 3223337-0003

A01X0020	Page .Col.	Opt.
A01X0020:85	219.10	
A01X0020:86	074.7	
A01X0020:87	065.5	
A01X0020:88	046.8	UL/CSA
A01X0020:89		UL/CSA
A01X0020:90	046.8	UL/CSA
A01X0020:91	006.6	
A01X0020:92	063.5	PPI
A01X0020:93	008.8	UL/CSA
A01X0020:94	063.4	PPI
A01X0020:95	010.2	
A01X0020:96	026.8	DIMC
A01X0020:97	006.8	
A01X0020:98	027.8	
A01X0020:99	047.6	
A01X0020:100	006.9	
A01X0020:101	026.10	DIMC
A01X0020:102	027.10	ICU

A01X0030	Page .Col.	Opt.
A01X0030:1		
A01X0030:2	006.5	
A01X0030:3	006.6	
A01X0030:4	006.7	
A01X0030:5	006.1	
A01X0030:6	010.3	H.I
A01X0030:7	010.6	
A01X0030:8	010.9	
A01X0030:9	011.3	
A01X0030:10	011.7	
A01X0030:11	011.10	
A01X0030:12	012.2	
A01X0030:13	012.5	
A01X0030:14	012.8	
A01X0030:15	012.10	
A01X0030:16	017.3	
A01X0030:17	017.2	
A01X0030:18	017.5	
A01X0030:19	024.3	
A01X0030:20	024.7	
A01X0030:21	025.7	
A01X0030:22	026.3	
A01X0030:23	030.4	
A01X0030:24	038.4	
A01X0030:25	045.9	
A01X0030:26	006.5	
A01X0030:27	009.5	
A01X0030:28	005.9	
A01X0030:29		
A01X0030:30	028.2	
A01X0030:31	006.10	
A01X0030:32		
A01X0030:33		
A01X0030:34		
A01X0030:35	005.7	
A01X0030:N	005.7	

A01X0040	Page .Col.	Opt.
A01X0040:1.1	053.6	
A01X0040:1.2	053.6	
A01X0040:1.3	053.6	
A01X0040:1.4	053.6	
A01X0040:1.5	053.6	
A01X0040:2.1	053.6	
A01X0040:2.2	053.6	
A01X0040:2.3	053.6	
A01X0040:2.4	053.6	
A01X0040:2.5	053.6	
A01X0040:3.1	053.6	
A01X0040:3.2	053.6	
A01X0040:3.3	053.6	
A01X0040:3.4	053.6	
A01X0040:4.1	053.6	
A01X0040:4.2	053.6	
A01X0040:4.3	053.6	
A01X0040:4.4	053.6	

A01X0070	Page .Col.	Opt.
A01X0070:101	067.4	ASU XT
A01X0070:102		
A01X0070:103	067.6	ASU XT
A01X0070:104		

A01X1025	Page .Col.	Opt.
A01X1025:1	014.1	
A01X1025:2	014.2	
A01X1025:3	014.2	
A01X1025:4	014.7	
A01X1025:5	014.8	
A01X1025:6		
A01X1025:⏚	014.2	

A01X2000	Page .Col.	Opt.
A01X2000:1	057.3	
A01X2000:2		
A01X2000:3		
A01X2000:4	057.3	
A01X2000:5	057.3	
A01X2000:6	057.3	
A01X2000:7		
A01X2000:8		
A01X2000:9	057.3	

This drawing must not without the consent of Tetra Pak be copied, transmitted or disclosed to any third party.

Cabinet terminal summary of 3223337-0003

A01X3100	Page .Col.	Opt.
A01X3100:1		
A01X3100:1+	053.1	
A01X3100:1-	053.1	
A01X3100:2	054.5	
A01X3100:2+	054.2	
A01X3100:2-	054.2	
A01X3100:3	054.2	
A01X3100:3+	054.2	
A01X3100:3-	054.2	
A01X3100:4		
A01X3100:4+	053.2	
A01X3100:11		
A01X3100:11		
A01X3100:4-	053.2	
A01X3100:5		
A01X3100:5+	054.5	
A01X3100:5-	054.5	
A01X3100:6		
A01X3100:6+	055.2	
A01X3100:6-	055.2	
A01X3100:7		
A01X3100:7+		
A01X3100:7-		
A01X3100:8		
A01X3100:8+		
A01X3100:8-	049.5	
A01X3100:9		
A01X3100:9-	098.5	
A01X3100:9+		
A01X3100:10		
A01X3100:10+		
A01X3100:10-	048.6	
A01X3100:11+		
A01X3100:11-		
A01X3100:12		
A01X3100:12+		
A01X3100:12-		
A01X3100:⏚	054.5	
A01X3100:⏚	054.2	
A01X3100:⏚	057.2	

A01X5780	Page .Col.	Opt.
A01X5780:1	017.5	
A01X5780:2	017.5	

A01X5940	Page .Col.	Opt.
A01X5940:-	110.6	
A01X5940:+	110.6	

F10X0200	Page .Col.	Opt.
F10X0200:1	067.3	
F10X0200:2	067.3	
F10X0200:3	067.3	
F10X0200:4	067.3	
F10X0200:5	067.3	
F10X0200:6	067.2	

F10X0201	Page .Col.	Opt.
F10X0201:1	067.8	
F10X0201:2	067.8	
F10X0201:3	067.8	
F10X0201:4	067.8	
F10X0201:5	067.8	
F10X0201:6	067.8	

F40X0210	Page .Col.	Opt.
F40X0210:1	065.2	
F40X0210:2	065.2	
F40X0210:3	065.2	
F40X0210:4	065.2	
F40X0210:5	065.4	
F40X0210:6	065.4	
F40X0210:7	065.4	
F40X0210:8	065.4	
F40X0210:9	065.4	
F40X0210:10	065.4	
F40X0210:11	065.4	
F40X0210:12	065.4	
F40X0210:13	065.4	
F40X0210:14	065.2	
F40X0210:15		
F40X0210:16		
F40X0210:17		
F40X0210:18		
F40X0210:19		
F40X0210:20		
F40X0210:21		
F40X0210:22		
F40X0210:23		
F40X0210:24		
F40X0210:⏚	065.5	

F70X2501	Page .Col.	Opt.
F70X2501:1	068.2	
F70X2501:2	068.2	
F70X2501:3	068.2	
F70X2501:4	068.2	
F70X2501:5	068.4	
F70X2501:6	068.5	

K80X0010	Page .Col.	Opt.
K80X0010:1	016.4	
K80X0010:2	016.4	
K80X0010:3	016.4	

This drawing must not without the consent of Tetra Pak be copied, transmitted or disclosed to any third party.

Cabinet terminal summary of 3223337-0003

K80X0010	Page .Col.	Opt.
K80X0010:⏚	016.5	

K80X0020	Page .Col.	Opt.
K80X0020:1	016.6	
K80X0020:2	016.6	
K80X0020:3	016.6	
K80X0020:⏚	016.6	

K80X0030	Page .Col.	Opt.
K80X0030:1	016.8	
K80X0030:2	016.8	
K80X0030:3	016.8	
K80X0030:⏚	016.8	

K80X0580	Page .Col.	Opt.
K80X0580:1	219.9	
K80X0580:2	219.9	
K80X0580:3	225.8	
K80X0580:4	225.8	
K80X0580:⏚	219.9	

P60X0700	Page .Col.	Opt.
P60X0700:1	057.2	
P60X0700:2	057.2	
P60X0700:3	057.2	

P60X0730	Page .Col.	Opt.
P60X0730:1	057.3	

T10X0050	Page .Col.	Opt.
T10X0050:1	112.9	
T10X0050:2	112.9	
T10X0050:3	112.9	
T10X0050:4	133.5	
T10X0050:5	133.5	
T10X0050:6	064.2	
T10X0050:7	064.6	
T10X0050:8	076.7	
T10X0050:9		
T10X0050:10	064.2	
T10X0050:11	064.6	
T10X0050:12	112.9	
T10X0050:13	112.9	
T10X0050:14	114.6	
T10X0050:15	061.7	
T10X0050:16	061.7	
T10X0050:17	061.6	
T10X0050:18	061.1	
T10X0050:19	061.1	
T10X0050:20	133.5	
T10X0050:21	133.5	
T10X0050:22		
T10X0050:23		
T10X0050:24	112.9	

T10X0050:⏚	112.9	

T10X0060	Page .Col.	Opt.
T10X0060:1	016.9	
T10X0060:2	016.10	
T10X0060:3	016.10	
T10X0060:⏚	016.10	

T10X0100	Page .Col.	Opt.
T10X0100:1	006.5	
T10X0100:2	006.5	
T10X0100:⏚	006.4	

T10X0120	Page .Col.	Opt.
T10X0120:1	017.1	
T10X0120:2	017.2	
T10X0120:⏚	017.2	

T10X0330	Page .Col.	Opt.
T10X0330:1	063.3	ASU XT
T10X0330:2	063.3	ASU XT
T10X0330:3	063.3	ASU XT
T10X0330:4	063.3	ASU XT
T10X0330:⏚	063.3	ASU XT

T10X0340	Page .Col.	Opt.
T10X0340:1	063.6	ASU XT
T10X0340:2	063.6	ASU XT
T10X0340:3	063.6	ASU XT
T10X0340:4	063.6	ASU XT
T10X0340:⏚	063.6	ASU XT

T10X0500	Page .Col.	Opt.
T10X0500:1	012.1	
T10X0500:2	012.2	
T10X0500:⏚	012.3	

T10X0570	Page .Col.	Opt.
T10X0570:1	012.4	
T10X0570:2	012.5	
T10X0570:⏚	012.6	

T10X0580	Page .Col.	Opt.
T10X0580:1	012.7	
T10X0580:2	012.8	
T10X0580:3	012.9	
T10X0580:4	012.10	
T10X0580:⏚	012.8	

T10X1020	Page .Col.	Opt.
T10X1020:1	024.4	
T10X1020:2	024.4	
T10X1020:3	024.4	
T10X1020:4	024.5	
T10X1020:5	024.5	
T10X1020:⏚	024.5	

This drawing must not without the consent of Tetra Pak be copied, transmitted or disclosed to any third party.

Cabinet terminal summary of 3223337-0003

T10X1040	Page .Col.	Opt.
T10X1040:1	024.9	
T10X1040:2	024.9	
T10X1040:3	024.9	
T10X1040:4	024.10	
T10X1040:5	024.9	
T10X1040:⏚	024.10	

T40X0010	Page .Col.	Opt.
T40X0010:1	006.8	
T40X0010:2	006.8	
T40X0010:⏚	006.8	

T40X0040	Page .Col.	Opt.
T40X0040:1	015.7	
T40X0040:2	015.7	
T40X0040:3	015.7	
T40X0040:⏚	015.7	

T40X0240	Page .Col.	Opt.
T40X0240:1	023.9	

T40X0520	Page .Col.	Opt.
T40X0520:1	141.9	
T40X0520:2	141.9	
T40X0520:3	083.3	
T40X0520:4	083.3	
T40X0520:5	083.3	
T40X0520:6	083.3	
T40X0520:7	064.1	
T40X0520:8	064.2	
T40X0520:9	055.6	
T40X0520:10	055.6	
T40X0520:11		
T40X0520:12	143.6	
T40X0520:13	052.4	
T40X0520:14	052.4	
T40X0520:15	052.4	
T40X0520:16	052.4	
T40X0520:17	064.2	
T40X0520:18	064.1	
T40X0520:19	060.2	
T40X0520:20	060.7	
T40X0520:21		
T40X0520:22		
T40X0520:23		
T40X0520:24		
T40X0520:⏚	141.9	

T40X0840	Page .Col.	Opt.
T40X0840:1	052.3	
T40X0840:2	052.4	
T40X0840:3	052.3	
T40X0840:4	052.4	

T40X1710	Page .Col.	Opt.
T40X1710:D0	031.5	
T40X1710:D1	031.3	
T40X1710:D2	031.4	
T40X1710:D3	031.4	
T40X1710:D4	031.4	
T40X1710:D5	031.4	
T40X1710:D6	031.4	
T40X1710:D7	031.4	
T40X1710:D8	031.4	
T40X1710:D9	031.4	
T40X1710:D10	031.4	
T40X1710:D11	031.4	
T40X1710:D12	031.4	
T40X1710:D13	031.5	
T40X1710:D14	031.5	
T40X1710:D15	031.5	

T40X1720	Page .Col.	Opt.
T40X1720:D0	032.5	
T40X1720:D1	032.3	
T40X1720:D2	032.4	
T40X1720:D3	032.4	
T40X1720:D4	032.4	
T40X1720:D5	032.4	
T40X1720:D6	032.4	
T40X1720:D7	032.4	
T40X1720:D8	032.4	
T40X1720:D9	032.4	
T40X1720:D10	032.4	
T40X1720:D11	032.4	
T40X1720:D12	032.4	
T40X1720:D13	032.5	
T40X1720:D14	032.5	
T40X1720:D15	032.5	

T40X1730	Page .Col.	Opt.
T40X1730:D0	033.5	
T40X1730:D1	033.3	
T40X1730:D2	033.4	
T40X1730:D3	033.4	
T40X1730:D4	033.4	
T40X1730:D5	033.4	
T40X1730:D6	033.4	
T40X1730:D7	033.4	
T40X1730:D8	033.4	
T40X1730:D9	033.4	
T40X1730:D10	033.4	
T40X1730:D11	033.4	
T40X1730:D12	033.4	
T40X1730:D13	033.5	
T40X1730:D14	033.5	

This drawing must not without the consent of Tetra Pak be copied, transmitted or disclosed to any third party.

Cabinet terminal summary of 3223337-0003

T40X1730	Page .Col.	Opt.
T40X1730:D15	033.5	

T40X1740	Page .Col.	Opt.
T40X1740:D0	034.5	
T40X1740:D1	034.4	
T40X1740:D2	034.4	
T40X1740:D3	034.4	
T40X1740:D4	034.4	
T40X1740:D5	034.4	
T40X1740:D6	034.4	
T40X1740:D7	034.4	
T40X1740:D8	034.4	
T40X1740:D9	034.4	
T40X1740:D10	034.5	
T40X1740:D11	034.5	
T40X1740:D12	034.5	
T40X1740:D13	034.5	
T40X1740:D14	034.5	
T40X1740:D15	034.5	

T40X1750	Page .Col.	Opt.
T40X1750:D0	035.5	
T40X1750:D1	035.4	
T40X1750:D2	035.4	
T40X1750:D3	035.4	
T40X1750:D4	035.4	
T40X1750:D5	035.4	
T40X1750:D6	035.4	
T40X1750:D7	035.4	
T40X1750:D8	035.4	
T40X1750:D9	035.4	
T40X1750:D10	035.4	
T40X1750:D11	035.5	
T40X1750:D12	035.5	
T40X1750:D13	035.5	
T40X1750:D14	035.5	
T40X1750:D15	035.5	

T50X0060	Page .Col.	Opt.
T50X0060:1	006.10	
T50X0060:2	006.10	
T50X0060:⏚	006.9	

T50X0140	Page .Col.	Opt.
T50X0140:1	015.8	
T50X0140:2	015.8	
T50X0140:3	015.8	
T50X0140:⏚	015.9	

T50X0150	Page .Col.	Opt.
T50X0150:1	016.1	
T50X0150:2	016.1	
T50X0150:3	016.1	
T50X0150:⏚	016.2	

T50X0530	Page .Col.	Opt.
T50X0530:1	154.9	
T50X0530:2	154.9	
T50X0530:3	064.2	
T50X0530:4	064.1	
T50X0530:5	072.2	
T50X0530:6	072.2	
T50X0530:7	077.7	
T50X0530:8	064.2	
T50X0530:9	064.1	
T50X0530:10	084.3	
T50X0530:11		
T50X0530:12		
T50X0530:13		
T50X0530:14		
T50X0530:15		
T50X0530:16		
T50X0530:17		
T50X0530:18		
T50X0530:19		
T50X0530:20		
T50X0530:21		
T50X0530:22		
T50X0530:23		
T50X0530:24		
T50X0530:⏚	154.9	

T50X0550	Page .Col.	Opt.
T50X0550:1	011.2	
T50X0550:2	011.3	
T50X0550:3		
T50X0550:4		
T50X0550:⏚	011.3	

T50X0551	Page .Col.	Opt.
T50X0551:1	011.5	
T50X0551:2	011.7	
T50X0551:3		
T50X0551:4		
T50X0551:⏚	011.6	

T50X0560	Page .Col.	Opt.
T50X0560:1	011.8	
T50X0560:2	011.10	
T50X0560:⏚	011.9	

T50X1070	Page .Col.	Opt.
T50X1070:1	025.9	
T50X1070:2	025.9	
T50X1070:3	025.9	
T50X1070:4	025.10	
T50X1070:5	025.9	

This drawing must not without the consent of Tetra Pak be copied, transmitted or disclosed to any third party.

Cabinet terminal summary of 3223337-0003

T50X1070	Page .Col.	Opt.
T50X1070:⏚	025.10	

T50X1800	Page .Col.	Opt.
T50X1800:D0	038.6	
T50X1800:D1	038.4	
T50X1800:D2	038.4	
T50X1800:D3	038.4	
T50X1800:D4	038.5	
T50X1800:D5	038.5	
T50X1800:D6	038.5	
T50X1800:D7	038.5	
T50X1800:D8	038.5	
T50X1800:D9	038.5	
T50X1800:D10	038.5	
T50X1800:D11	038.5	
T50X1800:D12	038.5	
T50X1800:D13	038.5	
T50X1800:D14	038.6	
T50X1800:D15	038.6	

T50X1810	Page .Col.	Opt.
T50X1810:D0	039.5	
T50X1810:D1	039.3	
T50X1810:D2	039.4	
T50X1810:D3	039.4	
T50X1810:D4	039.4	
T50X1810:D5	039.4	
T50X1810:D6	039.4	
T50X1810:D7	039.4	
T50X1810:D8	039.4	
T50X1810:D9	039.4	
T50X1810:D10	039.4	
T50X1810:D11	039.4	
T50X1810:D12	039.4	
T50X1810:D13	039.5	
T50X1810:D14	039.5	
T50X1810:D15	039.5	

T50X1820	Page .Col.	Opt.
T50X1820:D0	040.5	
T50X1820:D1	040.3	
T50X1820:D2	040.4	
T50X1820:D3	040.4	
T50X1820:D4	040.4	
T50X1820:D5	040.4	
T50X1820:D6	040.4	
T50X1820:D7	040.4	
T50X1820:D8	040.4	
T50X1820:D9	040.4	
T50X1820:D10	040.4	
T50X1820:D11	040.4	
T50X1820:D12	040.4	
T50X1820:D13	040.5	
T50X1820:D14	040.5	
T50X1820:D15	040.5	

U30X0010	Page .Col.	Opt.
U30X0010:1	028.4	
U30X0010:2	028.4	
U30X0010:3	028.4	
U30X0010:4	028.4	
U30X0010:5	028.4	
U30X0010:⏚	028.5	

U70X0010	Page .Col.	Opt.
U70X0010:1	007.2	
U70X0010:2	007.3	
U70X0010:3	007.3	
U70X0010:⏚	007.4	

U70X0020	Page .Col.	Opt.
U70X0020:1	007.6	
U70X0020:2	007.7	
U70X0020:3	007.7	
U70X0020:⏚	007.8	

U70X0080	Page .Col.	Opt.
U70X0080:1	009.4	
U70X0080:2	009.5	
U70X0080:⏚	009.4	

U70X0090	Page .Col.	Opt.
U70X0090:1	009.7	
U70X0090:2	009.8	
U70X0090:3	009.8	
U70X0090:⏚	009.9	

U70X0230	Page .Col.	Opt.
U70X0230:1	017.3	
U70X0230:2	017.3	
U70X0230:⏚	017.4	

U70X0320	Page .Col.	Opt.
U70X0320:1	027.9	ICU
U70X0320:2	027.9	ICU
U70X0320:3	027.9	ICU
U70X0320:4	027.9	ICU
U70X0320:5	027.9	ICU
U70X0320:⏚	027.10	ICU

U70X0370	Page .Col.	Opt.
U70X0370:1	010.2	H.I.
U70X0370:2	010.3	H.I.
U70X0370:⏚	010.2	H.I.

U70X0390	Page .Col.	Opt.
U70X0390:1	054.8	
U70X0390:2	054.8	
U70X0390:3	054.8	

This drawing must not without the consent of Tetra Pak be copied, transmitted or disclosed to any third party.

Cabinet terminal summary of 3223337-0003

U70X0390	Page .Col.	Opt.
U70X0390:4	054.8	
U70X0390:5	054.8	
U70X0390:6	054.8	
U70X0390:7	054.8	
U70X0390:8	054.8	
U70X0390:9	054.8	

U70X0450	Page .Col.	Opt.
U70X0450:1	008.2	
U70X0450:3	008.1	
U70X0450:5	008.4	
U70X0450:7	008.3	
U70X0450:10	008.7	
U70X0450:12	008.6	
U70X0450:14	008.9	
U70X0450:16	008.8	
U70X0450:⏚	008.2	
U70X0450:⏚	008.4	
U70X0450:⏚	008.6	
U70X0450:⏚	008.8	

U70X0560	Page .Col.	Opt.
U70X0560:1	170.10	
U70X0560:2	170.10	
U70X0560:3	173.4	
U70X0560:4		
U70X0560:5	174.6	
U70X0560:6	079.6	
U70X0560:7	076.7	
U70X0560:8	170.10	
U70X0560:9	064.5	
U70X0560:10	064.1	
U70X0560:11	170.10	
U70X0560:12	170.10	
U70X0560:13		
U70X0560:14	064.5	
U70X0560:15	064.1	
U70X0560:16		
U70X0560:17		
U70X0560:18		
U70X0560:19		
U70X0560:20		
U70X0560:21		
U70X0560:22		
U70X0560:23		
U70X0560:24		
U70X0560:⏚	170.10	

U70X0810	Page .Col.	Opt.
U70X0810:-	186.5	
U70X0810:+	186.5	

U70X0830	Page .Col.	Opt.
U70X0830:-	193.5	
U70X0830:+	193.5	

U70X0850	Page .Col.	Opt.
U70X0850:-	185.5	
U70X0850:+	185.5	

U70X0930	Page .Col.	Opt.
U70X0930:-	212.6	
U70X0930:+	212.6	

U70X1130	Page .Col.	Opt.
U70X1130:1	010.5	
U70X1130:2	010.6	
U70X1130:⏚	010.5	

U70X1140	Page .Col.	Opt.
U70X1140:1	010.8	
U70X1140:2	010.9	
U70X1140:⏚	010.8	

U70X1160	Page .Col.	Opt.
U70X1160:1	026.4	
U70X1160:2	026.4	
U70X1160:3	026.4	
U70X1160:4	026.5	
U70X1160:5	026.5	
U70X1160:⏚	026.5	

U70X1180	Page .Col.	Opt.
U70X1180:1	026.9	DIMC
U70X1180:2	026.9	DIMC
U70X1180:3	026.9	DIMC
U70X1180:4	026.10	DIMC
U70X1180:5	026.9	DIMC
U70X1180:⏚	026.10	DIMC

U70X1190	Page .Col.	Opt.
U70X1190:1	027.4	
U70X1190:2	027.4	
U70X1190:3	027.4	
U70X1190:4	027.5	
U70X1190:5	027.4	
U70X1190:⏚	027.5	

U70X6210	Page .Col.	Opt.
U70X6210:D0	037.5	HVA
U70X6210:D1	037.3	HVA
U70X6210:D2	037.4	HVA
U70X6210:D3	037.4	HVA
U70X6210:D4	037.4	HVA
U70X6210:D5	037.4	HVA
U70X6210:D6	037.4	HVA
U70X6210:D7	037.4	HVA
U70X6210:D8	037.4	HVA
U70X6210:D9	037.4	HVA

This drawing must not without the consent of Tetra Pak be copied, transmitted or disclosed to any third party.

1	2	3	4	5	6	7	8	9	10

Cabinet terminal summary of 3223337-0003

U70X6210	Page .Col.	Opt.
U70X6210:D10	037.4	HVA
U70X6210:D11	037.4	HVA
U70X6210:D12	037.4	HVA
U70X6210:D13	037.5	HVA
U70X6210:D14	037.5	HVA
U70X6210:D15	037.5	HVA

U70X9590	Page .Col.	Opt.
U70X9590:1	018.2	PTC
U70X9590:2	018.2	PTC
U70X9590:3		
U70X9590:4		
U70X9590:5		
U70X9590:⏚	018.3	PTC

This page intentionally left blank

7 Terminal Strip Overview

Description

All terminals used in the equipment except for those in the electrical cabinet are listed in this chapter.

7.1 Terminal Strip Overview

This page intentionally left blank

RELEASED

This drawing must not without the consent of Tetra Pak be copied, transmitted or disclosed to any third party.

1 2 3 4 5 6 7 8 9 10

Terminal strip of 3223337-0003

F01X5720

From	Cable	Internal Jumper	Terminal	External Jumper	Cable	To	Page.Col.	Option	Function text
F01K5001:24			1		F20W5600-1	F20X5600:1	073.3		
					F20W5600-SH	F20W5600			
			2		F20W5600-2	F20X5600:2	073.3		
			3		F20W5600-3	F20X5600:3	073.3		
			4		F20W5600-4	F20X5600:4	073.3		
			5		F20W5600-5	F20X5600:5	073.3		
A01XL1210:102			6		F20W5600-6	F20X5600:6	073.3		
			7		F20W5600-7	F20X5600:7	073.3		
			8		F20W5600-8	F20X5600:8	073.3		
			9		F20W5600-9	F20X5600:9	073.3		
			10		F20W5600-10	F20X5600:10	073.3		
			11		F20W5600-11	F20X5600:11	073.3		
			12		F20W5600-12	F20X5600:12	073.3		
			13		F20W5600-13	F20X5600:13	073.3		
			14		F20W5600-14	F20X5600:14	073.3		
			15		F20W5600-15	F20X5600:15	073.3		
			16		F20W5600-16	F20X5600:16	073.3		
			17		F20W5600-17	F20X5600:17	073.3		
			18		F20W5600-18	F20X5600:18	073.3		
			19		F20W5600-19	F20X5600:19	073.3		
A01K2070:12			20		F20W5600-20	F20X5600:20	073.3		
			21		F20W5600-21	F20X5600:21	073.3		
			22		F20W5600-22	F20X5600:22	073.3		
			23		F20W5600-23	F20X5600:23	073.3		
			24		F20W5600-24	F20X5600:24	073.3		
A01X0020:65			⏚		F20W5600-GNYE	F20X5600:⏚	073.3		

Tetra Pak®

Version Designer: RICO	Version Date: 01/10/2014	Machine: A3 CompactFlex 0300	
ECM No: 687624	Denomination: TERMINAL STRIP OVERVIEW	Page Type: TERMINAL STRIP OVERVIEW	
Information Security Class: PUBLIC	Document No.: 3223337-0006	Doc. type: ELD	Version: AM	Page: 001

RELEASED

This drawing must not without the consent of Tetra Pak be copied, transmitted or disclosed to any third party.

1 2 3 4 5 6 7 8 9 10

Terminal strip of 3223337-0003

F10X1740

From	Cable	Internal Jumper	Terminal	External Jumper	Cable	To	Page.Col.	Option	Function text
T10X1000:107	F10W1740-1		1				061.9		
T10X1000:108	F10W1740-2		2				061.9		
T10K1092:0	F10W1740-3		3				061.10		
T10X1000:109	F10W3510-1		4				061.10		
			5				061.10		
			6				061.10		
			7				061.9		
T10K1093:0	F10W3510-2		8				061.10		
T10X1000:28	F10W3510-3		9				061.9		

Tetra Pak®

Version Designer: RICO	Version Date: 01/10/2014	Machine: A3 CompactFlex 0300	
ECM No: 687624	Denomination: TERMINAL STRIP OVERVIEW	Page Type: TERMINAL STRIP OVERVIEW	
Information Security Class: PUBLIC	Document No.: 3223337-0006	Doc. type: ELD	Version: AM	Page: 002

RELEASED

This drawing must not without the consent of Tetra Pak be copied, transmitted or disclosed to any third party.

1 2 3 4 5 6 7 8 9 10

Terminal strip of 3223337-0003
F10X2600

From	Cable	Internal Jumper	Terminal	External Jumper	Cable	To	Page.Col.	Option	Function text
			1.1		F10W2610-BN	F10X2610	067.2		
			1.2		F10W2610-WH	F10X2610	067.2		
			1.3		F10W2610-BU	F10X2610	067.2		
					F10W2610-SH	F10X2610			
			1.4		F10W2610-BK	F10X2610	067.2		
			1.5		F10W2610-GY	F10X2610	067.2		
			2.1		F10W2620-BN	F10X2620	067.3		
			2.2		F10W2620-WH	F10X2620	067.4		
			2.3		F10W2620-BU	F10X2620	067.4		
					F10W2620-SH	F10X2620			
			2.4		F10W2620-BK	F10X2620	067.4		
			2.5		F10W2620-GY	F10X2620	067.4		
			3.1		F10W2600-BN	F10X0200:1	067.3		
			3.2		F10W2600-WH	F10X0200:2	067.3		
			3.3		F10W2600-BU	F10X0200:3	067.3		
			3.4		F10W2600-BK	F10X0200:4	067.3		
			3.5		F10W2600-GY	F10X0200:5	067.3		

Tetra Pak®

Version Designer	Version Date	Machine
RICO	01/10/2014	A3 CompactFlex 0300

ECM No	Denomination	Page Type
687624	TERMINAL STRIP OVERVIEW	TERMINAL STRIP OVERVIEW

Information Security Class	Document No.	Doc. type	Version	Page
PUBLIC	3223337-0006	ELD	AM	003

RELEASED

This drawing must not without the consent of Tetra Pak be copied, transmitted or disclosed to any third party.

1 2 3 4 5 6 7 8 9 10

Terminal strip of 3223337-0003
F20X5600

From	Cable	Internal Jumper	Terminal	External Jumper	Cable	To	Page.Col.	Option	Function text
			1		F20W5600-1	F01X5720:1	073.8		
			2		F20W5600-2	F01X5720:2	073.8		
			3		F20W5600-3	F01X5720:3	073.8		
			4		F20W5600-4	F01X5720:4	073.8		
			5		F20W5600-5	F01X5720:5	073.8		
			6		F20W5600-6	F01X5720:6	073.8		
			7		F20W5600-7	F01X5720:7	073.8		
			8		F20W5600-8	F01X5720:8	073.8		
			9		F20W5600-9	F01X5720:9	073.8		
			10		F20W5600-10	F01X5720:10	073.8		
			11		F20W5600-11	F01X5720:11	073.8		
			12		F20W5600-12	F01X5720:12	073.8		
			13		F20W5600-13	F01X5720:13	073.8		
			14		F20W5600-14	F01X5720:14	073.8		
			15		F20W5600-15	F01X5720:15	073.8		
			16		F20W5600-16	F01X5720:16	073.8		
			17		F20W5600-17	F01X5720:17	073.8		
			18		F20W5600-18	F01X5720:18	073.8		
			19		F20W5600-19	F01X5720:19	073.8		
			20		F20W5600-20	F01X5720:20	073.8		
			21		F20W5600-21	F01X5720:21	073.8		
			22		F20W5600-22	F01X5720:22	073.8		
			23		F20W5600-23	F01X5720:23	073.8		
			24		F20W5600-24	F01X5720:24	073.8		
			⏚		F20W5600-GNYE	F01X5720:⏚	073.8		

Tetra Pak®

Version Designer: RICO	Version Date: 01/10/2014	Machine: A3 CompactFlex 0300	
ECM No: 687624	Denomination: TERMINAL STRIP OVERVIEW	Page Type: TERMINAL STRIP OVERVIEW	
Information Security Class: PUBLIC	Document No.: 3223337-0006	Doc. type: ELD	Version: AM	Page: 004

This drawing must not without the consent of Tetra Pak be copied, transmitted or disclosed to any third party.

1 2 3 4 5 6 7 8 9 10

Terminal strip of 3223337-0003

F40X3850

From	Cable	Internal Jumper	Terminal	External Jumper	Cable	To	Page.Col.	Option	Function text
			1.1		F40W2010-BN	F40X2010	065.2		
			1.2		F40W2010-WH	F40X2010	065.2		
			1.3		F40W2010-BU	F40X2010	065.2		
					F40W2010-SH	F40X2010			
			1.4		F40W2010-BK	F40X2010	065.2		
			1.5		F40W2010-GY	F40X2010	065.2		
			2.1		F40W2020-BN	F40X2020	065.3		
			2.2		F40W2020-WH	F40X2020	065.3		
			2.3		F40W2020-BU	F40X2020	065.3		
					F40W2020-SH	F40X2020			
			2.4		F40W2020-BK	F40X2020	065.3		
			2.5		F40W2020-GY	F40X2020	065.3		
			3.1		F50W2510-BN	F50B2510	065.4		FFU RIGHT DOOR
			3.2		F50W2510-WH	F50B2510	065.4		FFU RIGHT DOOR
			3.3		F50W2510-BU	F50B2510	065.4		FFU RIGHT DOOR
					F50W2510-SH	F50B2510			FFU RIGHT DOOR
			3.4		F50W2510-BK	F50B2510	065.4		FFU RIGHT DOOR
			3.5		F50W2510-GY	F50B2510	065.4		FFU RIGHT DOOR
			4.1		F40W2030-BN	F40X2030	065.4		
			4.2		F40W2030-WH	F40X2030	065.4		
			4.3		F40W2030-BU	F40X2030	065.5		
					F40W2030-SH	F40X2030			
			4.4		F40W2030-BK	F40X2030	065.5		
			4.5		F40W2030-GY	F40X2030	065.5		
			5.1		F40W2040-BN	F40X2040	065.5		
			5.2		F40W2040-WH	F40X2040	065.5		
			5.3		F40W2040-BU	F40X2040	065.5		
					F40W2040-SH	F40X2040			
			5.4		F40W2040-BK	F40X2040	065.6		
			5.5		F40W2040-GY	F40X2040	065.6		

This drawing must not without the consent of Tetra Pak be copied, transmitted or disclosed to any third party.

1 2 3 4 5 6 7 8 9 10

Terminal strip of 3223337-0003
F40X3850

From	Cable	Internal Jumper	Terminal	External Jumper	Cable	To	Page.Col.	Option	Function text
			6.1		F50W2520-BN	F50X2520	065.6		
			6.2		F50W2520-WH	F50X2520	065.6		
			6.3		F50W2520-BU	F50X2520	065.6		
					F50W2520-SH	F50X2520			
			6.4		F50W2520-BK	F50X2520	065.6		
			6.5		F50W2520-GY	F50X2520	065.7		
			7.1			T40X3860	065.7		
			7.2			T40X3860	065.7		
			7.3			T40X3860	065.7		
			7.4			T40X3860	065.7		
			7.5			T40X3860	065.7		
			8.1			T40X3870	065.8		
			8.2			T40X3870	065.8		
			8.3			T40X3870	065.8		
			8.4			T40X3870	065.8		
			8.5			T40X3870	065.8		

Tetra Pak®

Version Designer: RICO	Version Date: 01/10/2014	Machine: A3 CompactFlex 0300	
ECM No: 687624	Denomination: TERMINAL STRIP OVERVIEW	Page Type: TERMINAL STRIP OVERVIEW	
Information Security Class: PUBLIC	Document No.: 3223337-0006	Doc. type: ELD	Version: AM	Page: 006

This drawing must not without the consent of Tetra Pak be copied, transmitted or disclosed to any third party.

1 2 3 4 5 6 7 8 9 10

Terminal strip of 3223337-0003
F70X2500

From	Cable	Internal Jumper	Terminal	External Jumper	Cable	To	Page.Col.	Option	Function text
			1.1		F70W2510-BN	F70X2510	068.2		
			1.2		F70W2510-WH	F70X2510	068.2		
			1.3		F70W2510-BU	F70X2510	068.2		
					F70W2510-SH	F70X2510			
			1.4		F70W2510-BK	F70X2510	068.2		
			1.5		F70W2510-GY	F70X2510	068.2		
			2.1		F70W2520-BN	F70X2520	068.3		
			2.2		F70W2520-WH	F70X2520	068.3		
			2.3		F70W2520-BU	F70X2520	068.3		
					F70W2520-SH	F70X2520			
			2.4		F70W2520-BK	F70X2520	068.3		
			2.5		F70W2520-GY	F70X2520	068.3		
			3.1		F70W2530-BN	F70X2530	068.4		
			3.2		F70W2530-WH	F70X2530	068.4		
			3.3		F70W2530-BU	F70X2530	068.4		
					F70W2530-SH	F70X2530			
			3.4		F70W2530-BK	F70X2530	068.4		
			3.5		F70W2530-GY	F70X2530	068.4		
			4.1			U70X2540	068.4		
			4.2			U70X2540	068.4		
			4.3			U70X2540	068.4		
			4.4			U70X2540	068.5		
			4.5			U70X2540	068.5		

Tetra Pak®

Version Designer	Version Date	Machine
RICO	01/10/2014	A3 CompactFlex 0300

ECM No	Denomination	Page Type
687624	TERMINAL STRIP OVERVIEW	TERMINAL STRIP OVERVIEW

Information Security Class	Document No.	Doc. type	Version	Page
PUBLIC	3223337-0006	ELD	AM	007

RELEASED

This drawing must not without the consent of Tetra Pak be copied, transmitted or disclosed to any third party.

1 2 3 4 5 6 7 8 9 10

Terminal strip of 3223337-0003

K80X0110

From	Cable	Internal Jumper	Terminal	External Jumper	Cable	To	Page.Col.	Option	Function text
K80X0010:1	K80W0010-1		1		K80W0110-1	K80M0110:U	016.4		CIRCULATION COOLING WATER
K80X0010:2	K80W0010-2		2		K80W0110-2	K80M0110:V	016.4		CIRCULATION COOLING WATER
K80X0010:3	K80W0010-3		3		K80W0110-3	K80M0110:W	016.4		CIRCULATION COOLING WATER
K80X0010:⏚	K80W0010-GNYE		⏚		K80W0110-GNYE	K80M0110:⏚	016.5		CIRCULATION COOLING WATER

Tetra Pak®

Version Designer: RICO	Version Date: 01/10/2014	Machine: A3 CompactFlex 0300	
ECM No: 687624	Denomination: TERMINAL STRIP OVERVIEW	Page Type: TERMINAL STRIP OVERVIEW	
Information Security Class: PUBLIC	Document No.: 3223337-0006	Doc. type: ELD	Version: AM	Page: 008

RELEASED

This drawing must not without the consent of Tetra Pak be copied, transmitted or disclosed to any third party.

1 2 3 4 5 6 7 8 9 10

Terminal strip of 3223337-0003

K80X0120

From	Cable	Internal Jumper	Terminal	External Jumper	Cable	To	Page.Col.	Option	Function text
K80X0020:1	K80W0020-1		1		K80W0120-1	K80M0120:U	016.6		COOLING MEDIA COMPRESSOR
K80X0020:2	K80W0020-2		2		K80W0120-2	K80M0120:V	016.6		COOLING MEDIA COMPRESSOR
K80X0020:3	K80W0020-3		3		K80W0120-3	K80M0120:W	016.6		COOLING MEDIA COMPRESSOR
K80X0020:⏚	K80W0020-GNYE		⏚		K80W0120-GNYE	K80M0120:⏚	016.6		COOLING MEDIA COMPRESSOR

Tetra Pak®

Version Designer: RICO	Version Date: 01/10/2014	Machine: A3 CompactFlex 0300	
ECM No: 687624	Denomination: TERMINAL STRIP OVERVIEW	Page Type: TERMINAL STRIP OVERVIEW	
Information Security Class: PUBLIC	Document No.: 3223337-0006	Doc. type: ELD	Version: AM	Page: 009

RELEASED

This drawing must not without the consent of Tetra Pak be copied, transmitted or disclosed to any third party.

1 2 3 4 5 6 7 8 9 10

Terminal strip of 3223337-0003
K80X0130

From	Cable	Internal Jumper	Terminal	External Jumper	Cable	To	Page.Col.	Option	Function text
K80X0030:1	K80W0030-1		1		K80W0130-1	K80M0130:V	016.8		EXTERNAL CLEANING PUMP
K80X0030:2	K80W0030-2		2		K80W0130-2	K80M0130:U	016.8		EXTERNAL CLEANING PUMP
K80X0030:3	K80W0030-3		3		K80W0130-3	K80M0130:W	016.8		EXTERNAL CLEANING PUMP
K80X0030:⏚	K80W0030-GNYE		⏚		K80W0130-GNYE	K80M0130:⏚	016.8		EXTERNAL CLEANING PUMP

Tetra Pak®

Version Designer: RICO	Version Date: 01/10/2014	Machine: A3 CompactFlex 0300	
ECM No: 687624	Denomination: TERMINAL STRIP OVERVIEW	Page Type: TERMINAL STRIP OVERVIEW	
Information Security Class: PUBLIC	Document No.: 3223337-0006	Doc. type: ELD	Version: AM	Page: 010

This drawing must not without the consent of Tetra Pak be copied, transmitted or disclosed to any third party.

1 2 3 4 5 6 7 8 9 10

Terminal strip of 3223337-0003

K80X1000

From	Cable	Internal Jumper	Terminal	External Jumper	Cable	To	Page.Col.	Option	Function text
K80B1050:E	K80W1050-GNYE		⏚				221.6		
			⏚						
K80X1080:1	K80W0100-1		1				219.1		
K80K1000:4			2				219.1		
			3		K80W1800-BK	K80K1800:C10	219.1		SERVICE UNIT (0V PNEUMATIC)
					K80W1800-BN	K80K1800			SERVICE UNIT (0V PNEUMATIC)
			4		K80W1750-2	K80K1750:2	219.1		HOT WATER SUPPLY
			5		K80W1760-2	K80K1760:2	219.1		MAIN AIR
			6		T50W0840-2	T50K0840:2	219.1		FLUSHING FFU
			7		K80W1790-2	K80K1790:2	219.1		PEC PACK CLEANING WATER
			8		K80W1730-2	K80K1730:2	219.1		COOLING HYDRAULIC SYSTEM
			9		K80W1600-2	K80K1600:2	219.1		EXTRA COOLER WATER OUTLET
			10		K80W1610-2	K80K1610:2	219.1		UTILITIES WATER OUTLET
			11		K80W1620-2	K80K1620:2	219.1		EXTRA COOLER WATER INLET
			12		K80W1630-2	K80K1630:2	219.1		EXTRA COOLER WATER BYPASS
			13		U70W6300-BN	U70X6200:B10	219.1	ICU	ICU VALVES
			14		U70W6300-BK	U70X6200:C10	219.1	ICU	ICU VALVES
U70K1410:2	U70W1410-2		15				219.1	ICU	
			16		K80W1010-BU	K80X1010:3	219.1		COLD WATER PRESSURE SWITCH
			17				219.1		
			18				219.1		
			19				219.1		
			20				219.1		
			21				219.1		
			22				219.1		
			23				219.1		
			24				219.1		
			⏚		K80W1020-GNYE	K80B1020:E	221.6		MAIN AIR PRESSURE
			⏚		K80W1030-GNYE	K80B1030:E	221.6		CIRCULATION COOLING WATER PRESSURE
			51		K80W0100-2	K80X1080:2	219.1		

This drawing must not without the consent of Tetra Pak be copied, transmitted or disclosed to any third party.

1 2 3 4 5 6 7 8 9 10

Terminal strip of 3223337-0003

K80X1000

From	Cable	Internal Jumper	Terminal	External Jumper	Cable	To	Page.Col.	Option	Function text
K80K1000:6			52				219.1		
			53		K80W1010-BN	K80X1010:1	219.1		COLD WATER PRESSURE SWITCH
			54			K80B1020:3	219.1		MAIN AIR PRESSURE
			55		K80W1030-2	K80B1030:3	219.1		CIRCULATION COOLING WATER PRESSURE
			56		K80W1040-2	K80B1040:A	219.1		CIRCULATION COOLING MEDIA LOW PRESSURE / HIGH PR
			57		K80W1050-BN	K80B1050:BN	219.1		PUMPING WATER
			58		K80W1060-RD	K80B1060	219.1		DOSING CHEMICAL
			59		T40W1160-2	T40B1160:2	219.1		COOLING FLOW LEFT
			60		T40W1170-2	T40B1170:2	219.1		COOLING FLOW RIGHT
			61				219.1		
			62				219.1		
			63				219.1		
			64				219.1		
			65				219.1		
			66				219.1		
			67				219.1		
			68				219.1		
			69				219.1		
			70				219.1		
			71				219.1		
			72				219.1		
			73				219.1		
			74				219.1		
			⏚		K80W1750-GNYE	K80K1750:E	225.4		HOT WATER SUPPLY
			⏚		K80W1760-GNYE	K80K1760:E	225.4		MAIN AIR
K80X1080:⏚	K80W0100-GNYE		⏚			K80K1000:2	219.8		DEVICENET ADAPTER, SERVICE
			101		K80W0100-3	K80X1080:3	225.4		
			102			K80K1050:0	225.3		
			103				225.3		
			104				225.3		

Tetra Pak®

Version Designer	Version Date	Machine
RICO	01/10/2014	A3 CompactFlex 0300

ECM No	Denomination	Page Type
687624	TERMINAL STRIP OVERVIEW	TERMINAL STRIP OVERVIEW

Information Security Class	Document No.	Doc. type	Version	Page
PUBLIC	3223337-0006	ELD	AM	012

This drawing must not without the consent of Tetra Pak be copied, transmitted or disclosed to any third party.

1 2 3 4 5 6 7 8 9 10

Terminal strip of 3223337-0003
K80X1000

From	Cable	Internal Jumper	Terminal	External Jumper	Cable	To	Page.Col.	Option	Function text
			⏚		K80W1790-GNYE	K80K1790:E	223.7	PEC	PEC PACK CLEANING WATER
			⏚		K80W1600-GNYE	K80K1600:E	223.7	ACN	EXTRA COOLER WATER OUTLET
			⏚		K80W1610-GNYE	K80K1610:E	223.7	ACN	UTILITIES WATER OUTLET
			⏚		K80W1620-GNYE	K80K1620:E	223.7	ACN	EXTRA COOLER WATER INLET
			⏚		K80W1630-GNYE	K80K1630:E	223.7	ACN	EXTRA COOLER WATER BYPASS
			⏚		U70W1410-GNYE	U70K1410:E	223.7	ICU	CLEANING PUMPS ICU

Tetra Pak®

Version Designer: RICO	Version Date: 01/10/2014	Machine: A3 CompactFlex 0300	
ECM No: 687624	Denomination: TERMINAL STRIP OVERVIEW	Page Type: TERMINAL STRIP OVERVIEW	
Information Security Class: PUBLIC	Document No.: 3223337-0006	Doc. type: ELD	Version: AM	Page: 013

This drawing must not without the consent of Tetra Pak
be copied, transmitted or disclosed to any third party.

1 2 3 4 5 6 7 8 9 10

Terminal strip of 3223337-0003
K80X1010

From	Cable	Internal Jumper	Terminal	External Jumper	Cable	To	Page.Col.	Option	Function text
K80X1000:53	K80W1010-BN		1			K80B1010	221.4		COLD WATER PRESSURE SWITCH
			2						
K80X1000:16	K80W1010-BU		3			K80B1010	221.5		COLD WATER PRESSURE SWITCH
K80K1010:0	K80W1010-BK		4			K80B1010	221.5		COLD WATER PRESSURE SWITCH

Tetra Pak®

Version Designer: RICO	Version Date: 01/10/2014	Machine: A3 CompactFlex 0300	
ECM No: 687624	Denomination: TERMINAL STRIP OVERVIEW	Page Type: TERMINAL STRIP OVERVIEW	
Information Security Class: PUBLIC	Document No.: 3223337-0006	Doc. type: ELD	Version: AM	Page: 014

This drawing must not without the consent of Tetra Pak be copied, transmitted or disclosed to any third party.

1 2 3 4 5 6 7 8 9 10

Terminal strip of 3223337-0003

K80X1080

From	Cable	Internal Jumper	Terminal	External Jumper	Cable	To	Page.Col.	Option	Function text
K80X0580:1	K80W1080-1		1		K80W0100-1	K80X1000:1	219.8		
K80X0580:2	K80W1080-2		2		K80W0100-2	K80X1000:51	219.8		
K80X0580:3	K80W1080-3		3		K80W0100-3	K80X1000:101	225.6		
K80X0580:4	K80W1080-4		4		K80W0100-4	K80K1050:1	225.6		
K80X0580:⏚	K80W1080-GNYE		⏚		K80W0100-GNYE	K80X1000:⏚	219.8		

Tetra Pak®

Version Designer	Version Date	Machine
RICO	01/10/2014	A3 CompactFlex 0300

ECM No	Denomination	Page Type
687624	TERMINAL STRIP OVERVIEW	TERMINAL STRIP OVERVIEW

Information Security Class	Document No.	Doc. type	Version	Page
PUBLIC	3223337-0006	ELD	AM	015

This drawing must not without the consent of Tetra Pak
be copied, transmitted or disclosed to any third party.

1 2 3 4 5 6 7 8 9 10

Terminal strip of 3223337-0003

K80X1140

From	Cable	Internal Jumper	Terminal	External Jumper	Cable	To	Page.Col.	Option	Function text
K80K1060:5	K80W1140-RD		-			K80B1140:RD	226.6		TEMP. CIRCUL. COOL WATER
K80K1060:4	K80W1140-YE		+			K80B1140:YE	226.6		TEMP. CIRCUL. COOL WATER

Tetra Pak®

Version Designer: RICO	Version Date: 01/10/2014	Machine: A3 CompactFlex 0300	
ECM No: 687624	Denomination: TERMINAL STRIP OVERVIEW	Page Type: TERMINAL STRIP OVERVIEW	
Information Security Class: PUBLIC	Document No.: 3223337-0006	Doc. type: ELD	Version: AM	Page: 016

This drawing must not without the consent of Tetra Pak
be copied, transmitted or disclosed to any third party.

1 2 3 4 5 6 7 8 9 10

Terminal strip of 3223337-0003
K80X1150

From	Cable	Internal Jumper	Terminal	External Jumper	Cable	To	Page.Col.	Option	Function text
K80K1060:7	K80W1150-RD		-			K80B1150:RD	226.6	ACN	TEMP. EXTRA COOLER WATER INLET
K80K1060:6	K80W1150-YE		+			K80B1150:YE	226.6	ACN	TEMP. EXTRA COOLER WATER INLET

Tetra Pak®

Version Designer: RICO	Version Date: 01/10/2014	Machine: A3 CompactFlex 0300	
ECM No: 687624	Denomination: TERMINAL STRIP OVERVIEW	Page Type: TERMINAL STRIP OVERVIEW	
Information Security Class: PUBLIC	Document No.: 3223337-0006	Doc. type: ELD	Version: AM	Page: 017

RELEASED

This drawing must not without the consent of Tetra Pak be copied, transmitted or disclosed to any third party.

1 2 3 4 5 6 7 8 9 10

Terminal strip of 3223337-0003
T10X0110

From	Cable	Internal Jumper	Terminal	External Jumper	Cable	To	Page.Col.	Option	Function text
A01XL0530:3			1		T10W0110-1	T10E0110:1	006.6		LIGHTING ASU
A01X0030:26			2		T10W0110-2	T10E0110:2	006.7		LIGHTING ASU
A01XL0530									
A01X0020:91			⏚		T10W0110-GNYE	T10E0110:E	006.6		LIGHTING ASU

Tetra Pak®	Version Designer RICO	Version Date 01/10/2014	Machine A3 CompactFlex 0300		
	ECM No 687624	Denomination TERMINAL STRIP OVERVIEW	Page Type TERMINAL STRIP OVERVIEW		
	Information Security Class PUBLIC	Document No. 3223337-0006	Doc. type ELD	Version AM	Page 018

This drawing must not without the consent of Tetra Pak
be copied, transmitted or disclosed to any third party.

1 2 3 4 5 6 7 8 9 10

Terminal strip of 3223337-0003
T10X0130

From	Cable	Internal Jumper	Terminal	External Jumper	Cable	To	Page.Col.	Option	Function text
T10X0120:1	T10W0120-1		1		T10W0130-1	T10M0120:U	017.1		FAN SA VENTILATION
T10X0120:2	T10W0120-2		2		T10W0130-2	T10M0120:N	017.2		FAN SA VENTILATION
T10X0120:⏚	T10W0120-GNYE		⏚		T10W0130-GNYE	T10M0120:⏚	017.2		FAN SA VENTILATION

Tetra Pak®

Version Designer: RICO	Version Date: 01/10/2014	Machine: A3 CompactFlex 0300	
ECM No: 687624	Denomination: TERMINAL STRIP OVERVIEW	Page Type: TERMINAL STRIP OVERVIEW	
Information Security Class: PUBLIC	Document No.: 3223337-0006	Doc. type: ELD	Version: AM	Page: 019

RELEASED

This drawing must not without the consent of Tetra Pak be copied, transmitted or disclosed to any third party.

1 2 3 4 5 6 7 8 9 10

Terminal strip of 3223337-0003 T10X1510

From	Cable	Internal Jumper	Terminal	External Jumper	Cable	To	Page.Col.	Option	Function text
T10K1080:5	T10W1510-RD		-			T10B1510:RD	121.6		TEMP.ASU CONSTANT HEAT BAR
T10K1080:4	T10W1510-YE		+			T10B1510:YE	121.6		TEMP.ASU CONSTANT HEAT BAR

Tetra Pak®

Version Designer: RICO	Version Date: 01/10/2014	Machine: A3 CompactFlex 0300	
ECM No: 687624	Denomination: TERMINAL STRIP OVERVIEW	Page Type: TERMINAL STRIP OVERVIEW	
Information Security Class: PUBLIC	Document No.: 3223337-0006	Doc. type: ELD	Version: AM	Page: 020

RELEASED

This drawing must not without the consent of Tetra Pak be copied, transmitted or disclosed to any third party.

1 2 3 4 5 6 7 8 9 10

Terminal strip of 3223337-0003

T10X1520

From	Cable	Internal Jumper	Terminal	External Jumper	Cable	To	Page.Col.	Option	Function text
T10K1050:5	T10W1530-1		1		T10W1520-WH	T10P1520:17	118.4	SEPROOM	MIMIC PANEL ASU (ASU SEPARATE ROOM)
T10K1050:6	T10W1530-2		2		T10W1520-YE	T10P1520:19	118.4	SEPROOM	MIMIC PANEL ASU (ASU SEPARATE ROOM)
T10K1050:7	T10W1530-3		3		T10W1520-GN	T10P1520:20	118.4	SEPROOM	MIMIC PANEL ASU (ASU SEPARATE ROOM)
T10X1000:65	T10W1530-4		4		T10W1520-GY	T10P1520:21+	118.6	SEPROOM	MIMIC PANEL ASU (ASU SEPARATE ROOM)
T10X1000:19	T10W1530-5		5		T10W1520-BN	T10P1520:22-	118.6	SEPROOM	MIMIC PANEL ASU (ASU SEPARATE ROOM)

Tetra Pak®

Version Designer: RICO	Version Date: 01/10/2014	Machine: A3 CompactFlex 0300	
ECM No: 687624	Denomination: TERMINAL STRIP OVERVIEW	Page Type: TERMINAL STRIP OVERVIEW	
Information Security Class: PUBLIC	Document No.: 3223337-0006	Doc. type: ELD	Version: AM	Page: 021

RELEASED

This drawing must not without the consent of Tetra Pak be copied, transmitted or disclosed to any third party.

1 2 3 4 5 6 7 8 9 10

Terminal strip of 3223337-0003

T10X1540

From	Cable	Internal Jumper	Terminal	External Jumper	Cable	To	Page.Col.	Option	Function text
T10K1090:5	T10W1540-RD		-			T10B1540:RD	122.5		TEMP.SA ELEMENT
T10K1090:4	T10W1540-YE		+			T10B1540:YE	122.5		TEMP.SA ELEMENT

Tetra Pak®

Version Designer: RICO	Version Date: 01/10/2014	Machine: A3 CompactFlex 0300	
ECM No: 687624	Denomination: TERMINAL STRIP OVERVIEW	Page Type: TERMINAL STRIP OVERVIEW	
Information Security Class: PUBLIC	Document No.: 3223337-0006	Doc. type: ELD	Version: AM	Page: 022

This drawing must not without the consent of Tetra Pak be copied, transmitted or disclosed to any third party.

1 2 3 4 5 6 7 8 9 10

Terminal strip of 3223337-0003 T10X1570

From	Cable	Internal Jumper	Terminal	External Jumper	Cable	To	Page.Col.	Option	Function text
T10X0570:1	T10W1570-1		1			T10E0570:1	012.4		CONSTANT HEAT BAR ASU
T10X0570:2	T10W1570-2		2			T10E0570:2	012.5		CONSTANT HEAT BAR ASU
T10X0570:⏚	T10W1570-GNYE		⏚			T10E0570:E	012.6		CONSTANT HEAT BAR ASU

Tetra Pak®

Version Designer: RICO	Version Date: 01/10/2014	Machine: A3 CompactFlex 0300	
ECM No: 687624	Denomination: TERMINAL STRIP OVERVIEW	Page Type: TERMINAL STRIP OVERVIEW	
Information Security Class: PUBLIC	Document No.: 3223337-0006	Doc. type: ELD	Version: AM	Page: 023

This drawing must not without the consent of Tetra Pak
be copied, transmitted or disclosed to any third party.

1 2 3 4 5 6 7 8 9 10

Terminal strip of 3223337-0003
T10X2100

From	Cable	Internal Jumper	Terminal	External Jumper	Cable	To	Page.Col.	Option	Function text
T10X1000:30	T10W2101-1		1				112.3	ASU XT	
			2			T10K2100:4	112.3	ASU XT	DEVICENET ADAPTER, LGV
			3		T10W2010-BU	T10B2010:3	112.3	ASU XT	DOORS SIDE 1 OPENED
			4		T10W2020-BU	T10B2020:3	112.3	ASU XT	DOORS SIDE 1 OPENED
			5		T10W2030-BU	T10B2030:3	112.3	ASU XT	DOORS SIDE 1 OPENED
			6		T10W2040-BU	T10B2040:3	112.3	ASU XT	DOORS SIDE 2 OPENED
			7		T10W2050-BU	T10B2050:3	112.3	ASU XT	ELETTRIC 80 SYNCHRO SIGNAL SIDE 1 INPUT
			8		T10W2060-BU	T10B2060:3	112.3	ASU XT	ELETTRIC 80 SYNCHRO SIGNAL SIDE 2 INPUT
			9		T10W2150-BU	T10B2150:3	112.3	ASU XT	MANDREL LOCK SENSOR SIDE 1AND 2 OPEN
			10		T10W2250-BU	T10B2250:3	112.3	ASU XT	MANDREL LOCK SENSOR SIDE 1AND 2 CLOSE
			11		T10W2221-BU	T10X2220:3	112.3	ASU XT	
			12		T10W2211-BU	T10X2210:3	112.3	ASU XT	
			13		T10W2230-BU	T10B2230:3	112.3	ASU XT	MANDREL LOCK SENSOR SIDE 1 OPEN
			14		T10W2240-BU	T10B2240:3	112.3	ASU XT	MANDREL LOCK SENSOR SIDE 1 CLOSE
			15		T10W2121-BU	T10X2120:3	112.3	ASU XT	
			16		T10W2111-BU	T10X2110:3	112.3	ASU XT	
			17		T10W2130-BU	T10B2130:3	112.3	ASU XT	MANDREL LOCK SENSOR SIDE 2 OPEN
			18		T10W2140-BU	T10B2140:3	112.3	ASU XT	MANDREL LOCK SENSOR SIDE 2 CLOSE
			19		T10W2310-BU	T10B2310:3	112.3	ASU XT	TABLE LOCKER SENSOR SIDE 1 OPEN
			20		T10W2320-BU	T10B2320:3	112.3	ASU XT	TABLE LOCKER SENSOR SIDE 1 CLOSE
			21		T10W2330-BU	T10B2330:3	112.3	ASU XT	TABLE LOCKER SENSOR SIDE 2 OPEN
			22		T10W2340-BU	T10B2340:3	112.3	ASU XT	TABLE LOCKER SENSOR SIDE 2 CLOSE
			23		T10W2350-BU	T10B2350:3	112.3	ASU XT	TABLE POSITION SENSOR SIDE 1 SX
			24		T10W2360-BU	T10B2360:3	112.3	ASU XT	TABLE POSITION SENSOR SIDE 1 DX
			25		T10W2370-BU	T10B2370:3	112.3	ASU XT	TABLE POSITION SENSOR SIDE 2 SX
			26		T10W2380-BU	T10B2380:3	112.3	ASU XT	TABLE POSITION SENSOR SIDE 2 DX
			27		T10W2400-BU	T10B2400:3	112.3	ASU XT	ASU REEL PISITION SIDE 1 HIGH
			28		T10W2410-BU	T10B2410:3	112.3	ASU XT	ASU REEL PISITION SIDE 1 LOW
			29		T10W2420-BU	T10B2420:3	112.3	ASU XT	ASU REEL PISITION SIDE 2 HIGH
			30		T10W2430-BU	T10B2430:3	112.3	ASU XT	ASU REEL PISITION SIDE 2 LOW

This drawing must not without the consent of Tetra Pak be copied, transmitted or disclosed to any third party.

1 2 3 4 5 6 7 8 9 10

Terminal strip of 3223337-0003
T10X2100

From	Cable	Internal Jumper	Terminal	External Jumper	Cable	To	Page.Col.	Option	Function text
			31		T10W3500-BN	T10K3500:B10	112.3	ASU XT	
			32		T10W3500-BK	T10K3500:C10	112.3	ASU XT	
			33				112.3	ASU XT	
			34				112.3	ASU XT	
			35				112.3	ASU XT	
			36				112.3	ASU XT	
			37				112.3	ASU XT	
			38				112.3	ASU XT	
			39				112.3	ASU XT	
			40				112.3	ASU XT	
			41				112.3	ASU XT	
			42				112.3	ASU XT	
			43				112.3	ASU XT	
			44				112.3	ASU XT	
			45				112.3	ASU XT	
			46				112.3	ASU XT	
			47				112.3	ASU XT	
			48				112.3	ASU XT	
T10X1000:55	T10W2101-2		51				112.5	ASU XT	
			52			T10K2100:6	112.5	ASU XT	DEVICENET ADAPTER, LGV
			53		T10W2010-BN	T10B2010:1	112.5	ASU XT	DOORS SIDE 1 OPENED
			54		T10W2020-BN	T10B2020:1	112.5	ASU XT	DOORS SIDE 1 OPENED
			55		T10W2030-BN	T10B2030:1	112.5	ASU XT	DOORS SIDE 1 OPENED
			56		T10W2040-BN	T10B2040:1	112.5	ASU XT	DOORS SIDE 2 OPENED
			57		T10W2050-BN	T10B2050:1	112.5	ASU XT	ELETTRIC 80 SYNCHRO SIGNAL SIDE 1 INPUT
			58		T10W2060-BN	T10B2060:1	112.5	ASU XT	ELETTRIC 80 SYNCHRO SIGNAL SIDE 2 INPUT
			59		T10W2150-BN	T10B2150:1	112.5	ASU XT	MANDREL LOCK SENSOR SIDE 1AND 2 OPEN
			60		T10W2250-BN	T10B2250:1	112.5	ASU XT	MANDREL LOCK SENSOR SIDE 1AND 2 CLOSE
			61		T10W2221-BN	T10X2220:1	112.5	ASU XT	
			62		T10W2211-BN	T10X2210:1	112.5	ASU XT	

This drawing must not without the consent of Tetra Pak be copied, transmitted or disclosed to any third party.

1 2 3 4 5 6 7 8 9 10

Terminal strip of 3223337-0003
T10X2100

From	Cable	Internal Jumper	Terminal	External Jumper	Cable	To	Page.Col.	Option	Function text
			63		T10W2230-BN	T10B2230:1	112.5	ASU XT	MANDREL LOCK SENSOR SIDE 1 OPEN
			64		T10W2240-BN	T10B2240:1	112.5	ASU XT	MANDREL LOCK SENSOR SIDE 1 CLOSE
			65		T10W2121-BN	T10X2120:1	112.5	ASU XT	
			66		T10W2111-BN	T10X2110:1	112.5	ASU XT	
			67		T10W2130-BN	T10B2130:1	112.5	ASU XT	MANDREL LOCK SENSOR SIDE 2 OPEN
			68		T10W2140-BN	T10B2140:1	112.5	ASU XT	MANDREL LOCK SENSOR SIDE 2 CLOSE
			69		T10W2310-BN	T10B2310:1	112.5	ASU XT	TABLE LOCKER SENSOR SIDE 1 OPEN
			70		T10W2320-BN	T10B2320:1	112.5	ASU XT	TABLE LOCKER SENSOR SIDE 1 CLOSE
			71		T10W2330-BN	T10B2330:1	112.5	ASU XT	TABLE LOCKER SENSOR SIDE 2 OPEN
			72		T10W2340-BN	T10B2340:1	112.5	ASU XT	TABLE LOCKER SENSOR SIDE 2 CLOSE
			73		T10W2350-BN	T10B2350:1	112.5	ASU XT	TABLE POSITION SENSOR SIDE 1 SX
			74		T10W2360-BN	T10B2360:1	112.5	ASU XT	TABLE POSITION SENSOR SIDE 1 DX
			75		T10W2370-BN	T10B2370:1	112.5	ASU XT	TABLE POSITION SENSOR SIDE 2 SX
			76		T10W2380-BN	T10B2380:1	112.5	ASU XT	TABLE POSITION SENSOR SIDE 2 DX
			77		T10W2400-BN	T10B2400:1	112.5	ASU XT	ASU REEL PISITION SIDE 1 HIGH
			78		T10W2410-BN	T10B2410:1	112.5	ASU XT	ASU REEL PISITION SIDE 1 LOW
			79		T10W2420-BN	T10B2420:1	112.5	ASU XT	ASU REEL PISITION SIDE 2 HIGH
			80		T10W2430-BN	T10B2430:1	112.5	ASU XT	ASU REEL PISITION SIDE 2 LOW
			81				112.5	ASU XT	
			82				112.5	ASU XT	
			83				112.5	ASU XT	
			84				112.5	ASU XT	
			85				112.5	ASU XT	
			86				112.5	ASU XT	
			87				112.5	ASU XT	
			88				112.5	ASU XT	
			89				112.5	ASU XT	
			90				112.5	ASU XT	
			91				112.5	ASU XT	
			92				112.5	ASU XT	

This drawing must not without the consent of Tetra Pak be copied, transmitted or disclosed to any third party.

1 2 3 4 5 6 7 8 9 10

Terminal strip of 3223337-0003 T10X2100

From	Cable	Internal Jumper	Terminal	External Jumper	Cable	To	Page.Col.	Option	Function text
			93				112.5	ASU XT	
			94				112.5	ASU XT	
			95				112.5	ASU XT	
			96				112.5	ASU XT	
			97				112.5	ASU XT	
			98				112.5	ASU XT	
T10X1000:⏚	T10W2101-GNYE		⏚			T10K2100:2	134.6	ASU XT	DEVICENET ADAPTER, LGV
T10X1000:94	T10W2101-3		151				112.5	ASU XT	
			152			T10K2160:0	112.5	ASU XT	
			153				112.5	ASU XT	
			154				112.5	ASU XT	
			155				112.5	ASU XT	
			156				112.5	ASU XT	
			157				112.5	ASU XT	
			158				112.5	ASU XT	
T10X0330:⏚	T10W0330-GNYE		⏚				063.2	ASU XT	
T10X0330:1	T10W0330-1		201		F10W2510-BU	T10X2510:2	063.2	ASU XT	
T10X0330:2	T10W0330-2		202		F10W2510-BN	T10X2510:1	063.2	ASU XT	
T10X0330:3	T10W0330-3		203		F10W2500-BN	T10X2500:2	063.2	ASU XT	
T10X0330:4	T10W0330-4		204		F10W2500-BU	T10X2500:1	063.2	ASU XT	
T10X0340:1	T10W0340-1		205		T10W2520-BN	T10B2520:1	063.7	ASU XT	ELETTRIC 80 SYNCHRO SIGNAL SIDE 1 OUTPUT
T10X0340:2	T10W0340-2		206		T10W2520-BU	T10B2520:2	063.7	ASU XT	ELETTRIC 80 SYNCHRO SIGNAL SIDE 1 OUTPUT
T10X0340:3	T10W0340-3		207		T10W2530-BN	T10B2530:1	063.7	ASU XT	ELETTRIC 80 SYNCHRO SIGNAL SIDE 2 OUTPUT
T10X0340:4	T10W0340-4		208		T10W2530-BU	T10B2530:2	063.7	ASU XT	ELETTRIC 80 SYNCHRO SIGNAL SIDE 2 OUTPUT
			209					ASU XT	
			210					ASU XT	
			211					ASU XT	
			212					ASU XT	
			213					ASU XT	
			214					ASU XT	

Tetra Pak®

Version Designer	Version Date	Machine
RICO	01/10/2014	A3 CompactFlex 0300

ECM No	Denomination	Page Type
687624	TERMINAL STRIP OVERVIEW	TERMINAL STRIP OVERVIEW

Information Security Class	Document No.	Doc. type	Version	Page
PUBLIC	3223337-0006	ELD	AM	027

This drawing must not without the consent of Tetra Pak
be copied, transmitted or disclosed to any third party.

1 2 3 4 5 6 7 8 9 10

Terminal strip of 3223337-0003
T10X2100

From		Cable	Internal Jumper	Terminal	External Jumper	Cable		To	Page.Col.	Option	Function text
				215						ASU XT	
				216						ASU XT	
				217						ASU XT	
				218						ASU XT	
				219						ASU XT	
				220						ASU XT	
				221						ASU XT	
				222						ASU XT	
				223						ASU XT	
				224						ASU XT	
				225						ASU XT	
				226						ASU XT	
				227						ASU XT	
				228						ASU XT	
				229						ASU XT	
				230						ASU XT	
				231						ASU XT	
				232						ASU XT	
				233						ASU XT	
				234						ASU XT	
				235						ASU XT	
				236						ASU XT	
				237						ASU XT	
				238						ASU XT	
				239						ASU XT	
				240						ASU XT	
				241						ASU XT	
				242						ASU XT	
				243						ASU XT	
				244						ASU XT	

RELEASED

This drawing must not without the consent of Tetra Pak be copied, transmitted or disclosed to any third party.

1 2 3 4 5 6 7 8 9 10

Terminal strip of 3223337-0003 T10X2100

From	Cable	Internal Jumper	Terminal	External Jumper	Cable	To	Page.Col.	Option	Function text
			245					ASU XT	
			246					ASU XT	
			247					ASU XT	
			248					ASU XT	
T10X0340:⏚	T10W0340-GNYE		⏚				063.7	ASU XT	

Tetra Pak®	Version Designer RICO	Version Date 01/10/2014	Machine A3 CompactFlex 0300	
	ECM No 687624	Denomination TERMINAL STRIP OVERVIEW	Page Type TERMINAL STRIP OVERVIEW	
Information Security Class PUBLIC	Document No. 3223337-0006	Doc. type ELD	Version AM	Page 029

This drawing must not without the consent of Tetra Pak be copied, transmitted or disclosed to any third party.

1 2 3 4 5 6 7 8 9 10

Terminal strip of 3223337-0003 T10X2110

From	Cable	Internal Jumper	Terminal	External Jumper	Cable	To	Page.Col.	Option	Function text
T10X2100:66	T10W2111-BN		1		T10W2110-BN	T10B2110:1	136.3	ASU XT	MANDREL SENSOR SIDE 2 DX
			2				136.6	ASU XT	
T10X2100:16	T10W2111-BU		3		T10W2110-BU	T10B2110:3	136.3	ASU XT	MANDREL SENSOR SIDE 2 DX
T10K2120:5	T10W2111-BK		4		T10W2110-BK	T10B2110:4	136.6	ASU XT	MANDREL SENSOR SIDE 2 DX

Tetra Pak®

Version Designer	Version Date	Machine
RICO	01/10/2014	A3 CompactFlex 0300

ECM No	Denomination	Page Type
687624	TERMINAL STRIP OVERVIEW	TERMINAL STRIP OVERVIEW

Information Security Class	Document No.	Doc. type	Version	Page
PUBLIC	3223337-0006	ELD	AM	030

This drawing must not without the consent of Tetra Pak be copied, transmitted or disclosed to any third party.

1 2 3 4 5 6 7 8 9 10

Terminal strip of 3223337-0003 T10X2120

From	Cable	Internal Jumper	Terminal	External Jumper	Cable	To	Page.Col.	Option	Function text
T10X2100:65	T10W2121-BN		1		T10W2120-BN	T10B2120:1	136.3	ASU XT	MANDREL SENSOR SIDE 2 SX
			2				136.6	ASU XT	
T10X2100:15	T10W2121-BU		3		T10W2120-BU	T10B2120:3	136.3	ASU XT	MANDREL SENSOR SIDE 2 SX
T10K2120:4	T10W2121-BK		4		T10W2120-BK	T10B2120:4	136.6	ASU XT	MANDREL SENSOR SIDE 2 SX

Tetra Pak®

Version Designer: RICO	Version Date: 01/10/2014	Machine: A3 CompactFlex 0300	
ECM No: 687624	Denomination: TERMINAL STRIP OVERVIEW	Page Type: TERMINAL STRIP OVERVIEW	
Information Security Class: PUBLIC	Document No.: 3223337-0006	Doc. type: ELD	Version: AM	Page: 031

This drawing must not without the consent of Tetra Pak be copied, transmitted or disclosed to any third party.

1 2 3 4 5 6 7 8 9 10

Terminal strip of 3223337-0003 T10X2210

From	Cable	Internal Jumper	Terminal	External Jumper	Cable	To	Page.Col.	Option	Function text
T10X2100:62	T10W2211-BN		1		T10W2210-BN	T10B2210:1	136.3	ASU XT	MANDREL SENSOR SIDE 1 DX
			2				136.6	ASU XT	
T10X2100:12	T10W2211-BU		3		T10W2210-BU	T10B2210:3	136.3	ASU XT	MANDREL SENSOR SIDE 1 DX
T10K2120:1	T10W2211-BK		4		T10W2210-BK	T10B2210:4	136.6	ASU XT	MANDREL SENSOR SIDE 1 DX

Tetra Pak®

Version Designer: RICO	Version Date: 01/10/2014	Machine: A3 CompactFlex 0300	
ECM No: 687624	Denomination: TERMINAL STRIP OVERVIEW	Page Type: TERMINAL STRIP OVERVIEW	
Information Security Class: PUBLIC	Document No.: 3223337-0006	Doc. type: ELD	Version: AM	Page: 032

This drawing must not without the consent of Tetra Pak
be copied, transmitted or disclosed to any third party.

1 2 3 4 5 6 7 8 9 10

Terminal strip of 3223337-0003
T10X2220

From	Cable	Internal Jumper	Terminal	External Jumper	Cable	To	Page.Col.	Option	Function text
T10X2100:61	T10W2221-BN		1		T10W2220-BN	T10B2220:1	136.3	ASU XT	MANDREL SENSOR SIDE 1 SX
			2				136.6	ASU XT	
T10X2100:11	T10W2221-BU		3		T10W2220-BU	T10B2220:3	136.3	ASU XT	MANDREL SENSOR SIDE 1 SX
T10K2120:0	T10W2221-BK		4		T10W2220-BK	T10B2220:4	136.6	ASU XT	MANDREL SENSOR SIDE 1 SX

Tetra Pak®

Version Designer: RICO	Version Date: 01/10/2014	Machine: A3 CompactFlex 0300	
ECM No: 687624	Denomination: TERMINAL STRIP OVERVIEW	Page Type: TERMINAL STRIP OVERVIEW	
Information Security Class: PUBLIC	Document No.: 3223337-0006	Doc. type: ELD	Version: AM	Page: 033

This drawing must not without the consent of Tetra Pak
be copied, transmitted or disclosed to any third party.

1 2 3 4 5 6 7 8 9 10

Terminal strip of 3223337-0003
T10X2500

From	Cable	Internal Jumper	Terminal	External Jumper	Cable	To	Page.Col.	Option	Function text
T10X2100:204	F10W2500-BU		1			F10B2500	063.1	ASU XT	ASU XT SAFETY BELT
T10X2100:203	F10W2500-BN		2			F10B2500	063.1	ASU XT	ASU XT SAFETY BELT

Tetra Pak®

Version Designer: RICO	Version Date: 01/10/2014	Machine: A3 CompactFlex 0300	
ECM No: 687624	Denomination: TERMINAL STRIP OVERVIEW	Page Type: TERMINAL STRIP OVERVIEW	
Information Security Class: PUBLIC	Document No.: 3223337-0006	Doc. type: ELD	Version: AM	Page: 034

This drawing must not without the consent of Tetra Pak
be copied, transmitted or disclosed to any third party.

1 2 3 4 5 6 7 8 9 10

Terminal strip of 3223337-0003
T10X2510

From	Cable	Internal Jumper	Terminal	External Jumper	Cable	To	Page.Col.	Option	Function text
F10B2500			1		F10W2510-BN	T10X2100:202	063.1	ASU XT	
F10B2500			2		F10W2510-BU	T10X2100:201	063.1	ASU XT	

This drawing must not without the consent of Tetra Pak be copied, transmitted or disclosed to any third party.

1 2 3 4 5 6 7 8 9 10

Terminal strip of 3223337-0003

T40X1000

From	Cable	Internal Jumper	Terminal	External Jumper	Cable	To	Page.Col.	Option	Function text
			⏚		T40W9550-GNYE	T40X9550:⏚	052.6		CUTTING LEFT
T40X9560:⏚	T40W9560-GNYE		⏚				052.6		
			1		T40W0520-1	T40X0520:1	141.1		
			2			T40K1000:4	141.1		DEVICENET ADAPTER, JAW
			3		T50W6000-BK	T50K6000:C10	141.1		
					T50W6000-BN	T50K6000			
			4		T40W2690-2	T40K2690:2	141.1		WATER TUBE FLUSHING
			5		U30W1800-2	U30K1800:2	141.1		FILLING PEROXIDE TANK
			6		U30W1100-BK	U30B1100:0V	141.1		PEROXIDE CONCENTRATION
			7				141.1		
			8				141.1		
U70K1720:2	U70W1720-2		9				141.1		
U70K1730:2	U70W1730-2		10				141.1		
F40X1020:3	F40W1020-BU		11				141.1		
F40X1040:3	F40W1040-BU		12				141.1		
T40B1070:3	T40W1070-BU		13				141.1		
T40B1080	T40W1080-BU		14				141.1		
			15				141.1		
			16				141.1		
			17				141.1		
			18				141.1		
			19				141.1		
			20				141.1		
			21				141.1		
			22				141.1		
			23				141.1		
			24				141.1		
			25				141.1		
			26				141.1		
			27				141.1		

This drawing must not without the consent of Tetra Pak be copied, transmitted or disclosed to any third party.

1 2 3 4 5 6 7 8 9 10

Terminal strip of 3223337-0003 T40X1000

From	Cable	Internal Jumper	Terminal	External Jumper	Cable	To	Page.Col.	Option	Function text
			28		U30W3730-BU	U30B3730:3	141.1		FILLING PEROXIDE BATH OPEN
			29		U30W3731-BU	U30B3731:3	141.1		FILLING PEROXIDE BATH CLOSED
			30				141.1		
			31		F40W2840-11	T40P2841:2	141.1		MACHINE BODY DOORS GUARD ALARM RESET LAMP
			32				141.1		
			33				141.1		
			34				141.1		
			35				141.1		
			36				141.1		
			⏚		U70W1720-GNYE	U70K1720:E	145.7		DRAIN PEROXIDE COOLER
			⏚		U70W1730-GNYE	U70K1730:E	145.7		FILL PEROXIDE COOLER
			⏚						
T40B1110:⏚	T40W1110-GNYE		⏚				144.2		
T40X0520:⏚	T40W0520-GNYE		⏚			T40K1000:2	141.8		DEVICENET ADAPTER, JAW
			⏚						
T40X0520:2	T40W0520-2		51				141.3		
			52			T40K1000:6	141.3		DEVICENET ADAPTER, JAW
			53				141.3		
			54				141.3		
			55		T40W1100-2	T40B1100:13	141.3		LUBRICATION PRESSURE
			56		U30W1100-RD	U30B1100:24V	141.3		PEROXIDE CONCENTRATION
			57				141.3		
			58				141.3		
			59		T40W1110-3	T40B1110:3	141.3		NO LUBRICATION OIL TANK HIGH LEVEL
			60		T40W1130-2	T40B1130:3	141.3		HYDRAULIC OIL FILTRATION
			61		F40W2830-5	F40S2830:31	141.3		
			62		F40W2840-5	F40S2840:31	141.3		EM.STOP JAW LEFT
			63		T40W1070-BN	T40B1070:1	141.3		HOME POSITION LEFT MOTOR DCS
			64		T40W1080-BN	T40B1080	141.3		HOMEPOSITION RIGHT MOTOR DCS
			65		T40W1150-1	T40X1150:6	141.3		

This drawing must not without the consent of Tetra Pak be copied, transmitted or disclosed to any third party.

1 2 3 4 5 6 7 8 9 10

Terminal strip of 3223337-0003
T40X1000

From	Cable	Internal Jumper	Terminal	External Jumper	Cable	To	Page.Col.	Option	Function text
			66				141.3		
			67		F40W1020-BN	F40X1020:1	141.3		
			68		F40W1040-BN	F40X1040:1	141.3		
			69		F40W2840-7	T40S2841:13	141.3		MACHINE BODY DOORS GUARD ALARM RESET
			70		U30W3730-BN	U30B3730:1	141.3		FILLING PEROXIDE BATH OPEN
			71		U30W3731-BN	U30B3731:1	141.3		FILLING PEROXIDE BATH CLOSED
			72				141.3		
			73		T40W9510-BN	T40B9510:1	141.3		HYDRAULIC PRESSURE LEFT
			74		T40W9520-BN	T40B9520:1	141.3		HYDRAULIC PRESSURE RIGHT
			75				141.3		
			76				141.3		
			77				141.3		
			78				141.3		
			⏚		T40W9600-GNYE	T40X9600:⏚	052.6		RIGHT JAW CATCHER ON
			⏚						
			⏚						
			⏚						
T40X0520:8	T40W0520-8		102		F40W2830-3	F40S2830:21	064.3		EM.STOP JAW RIGHT
			101		F40W2830-4	F40S2830:22	064.6		EM.STOP JAW RIGHT
			103		F40W2840-3	F40S2840:21	064.7		
T40X0520:7	T40W0520-7		104		F40W2840-4	F40S2840:22	064.10		
			105						
			106						
			107						
			108						
			109						
			110						
			111						
			112						
			113		U30W1100-RD-BU	U30B1100:RB/TB	148.6		PEROXIDE CONCENTRATION

This drawing must not without the consent of Tetra Pak be copied, transmitted or disclosed to any third party.

1 2 3 4 5 6 7 8 9 10

Terminal strip of 3223337-0003 T40X1000

From	Cable	Internal Jumper	Terminal	External Jumper	Cable	To	Page.Col.	Option	Function text
			114		U30W1100-VT	U30B1100:RA/TA	148.6		PEROXIDE CONCENTRATION
			⏚		T40W9580-GNYE	T40X9580:⏚	052.6		LEFT JAW CATCHER ON
			⏚				055.5		
			⏚		T40W1130-GNYE	T40B1130:⏚	144.6		HYDRAULIC OIL FILTRATION
			⏚		U30W1100-GNYE	U30B1100:⏚	148.6		PEROXIDE CONCENTRATION
			⏚		T40W2690-GNYE	T40K2690:E	145.7		WATER TUBE FLUSHING
			⏚		U30W1800-GNYE	U30K1800:E	145.7		FILLING PEROXIDE TANK
			⏚						
			⏚						
			⏚						
			⏚						
			⏚						
			⏚						
			121						
			122						
			123						
			124						
T40X0520:9	T40W0520-9		125		T40W9510-WH	T40B9510:2	055.5		HYDRAULIC PRESSURE LEFT
T40X0520:10	T40W0520-10		126		T40W9520-WH	T40B9520:2	055.5		HYDRAULIC PRESSURE RIGHT
T40K1030:2			127		F40W1020-BK	F40X1020:4	066.3		
T40X0520:4	T40W0520-4		128		T50W6000-WH/BU	T50K6000:10.14	083.5		MACHINE BODY (0V PNEUMATIC)
			129		F40W1040-BK	F40X1040:4	066.4		
T40X0520:6	T40W0520-6		130		T50W6000-WH/PK	T50K6000:9.14	083.5		MACHINE BODY (0V PNEUMATIC)
T40X0520:3	T40W0520-3		131		T50W6000-BN/GN	T50K6000:6.12	083.5		MACHINE BODY (0V PNEUMATIC)
T40X0520:5	T40W0520-5		132		T50W6000-BN/BU	T50K6000:10.12	083.5		MACHINE BODY (0V PNEUMATIC)
T40X0520:13	T40W0520-13		148		T40W9550-1	T40X9550:1	052.6		CUTTING LEFT
			149		T40W9550-2	T40X9550:2	141.3		CUTTING LEFT
T40X0520:14	T40W0520-14		150		T40W9560-1	T40X9560:1	052.6		CUTTING RIGHT
			151		T40W9560-2	T40X9560:2	141.3		CUTTING RIGHT
T40X0520:15	T40W0520-15		152		T40W9580-1	T40X9580:1	052.6		LEFT JAW CATCHER ON

This drawing must not without the consent of Tetra Pak be copied, transmitted or disclosed to any third party.

1 2 3 4 5 6 7 8 9 10

Terminal strip of 3223337-0003

T40X1000

From	Cable	Internal Jumper	Terminal	External Jumper	Cable	To	Page.Col.	Option	Function text
			153		T40W9580-2	T40X9580:2	141.3		LEFT JAW CATCHER ON
T40X0520:16	T40W0520-16		154		T40W9600-1	T40X9600:1	052.6		RIGHT JAW CATCHER ON
			155		T40W9600-2	T40X9600:2	141.3		RIGHT JAW CATCHER ON
T40X0520:17	T40W0520-17		156		F40W2830-1	F40S2830:11	064.3		EM.STOP JAW RIGHT
			157		F40W2830-2	F40S2830:12	064.6		EM.STOP JAW RIGHT
T40X0520:18	T40W0520-18		158		F40W2840-2	F40S2840:12	064.10		
			159		F40W2840-1	F40S2840:11	064.7		
T40X0520:12	T40W0520-12		160		F40W2840-8	T40S2841:24	143.4		MACHINE BODY DOORS GUARD ALARM RESET
			161						
			162						
			163						
			164						
			165						
			166						
			167						
			168						
			169						
			170						
			171						
			172						
			173						
			174						
			175						
			176						
			177						
T40X0520:19	T40W0520-19		178		T50W6110-2	T50B6110:2	060.3		PRESSURE SWITCH DROP CHUTE SHUT OFF
T40X0520:20	T40W0520-20		179		T50W6110-1	T50B6110:1	060.6		PRESSURE SWITCH DROP CHUTE SHUT OFF
			180						
			⏚		T50W6110-GNYE	T50B6110:⏚	060.6		PRESSURE SWITCH DROP CHUTE SHUT OFF
			⏚				055.5		

Tetra Pak®

Version Designer	Version Date	Machine
RICO	01/10/2014	A3 CompactFlex 0300

ECM No	Denomination	Page Type
687624	TERMINAL STRIP OVERVIEW	TERMINAL STRIP OVERVIEW

Information Security Class	Document No.	Doc. type	Version	Page
PUBLIC	3223337-0006	ELD	AM	040

This drawing must not without the consent of Tetra Pak be copied, transmitted or disclosed to any third party.

1 2 3 4 5 6 7 8 9 10

Terminal strip of 3223337-0003

T40X1150

From	Cable	Internal Jumper	Terminal	External Jumper	Cable	To	Page.Col.	Option	Function text
T40K1020:6	T40W1150-3		1			T40B1150:1	144.5		HYDRAULIC OIL NO LEVEL
T40K1020:5	T40W1150-2		2			T40B1150:2	144.5		HYDRAULIC OIL NO LEVEL
			3						
			4						
			5						
T40X1000:65	T40W1150-1		6			T40B1150:6	144.4		HYDRAULIC OIL NO LEVEL

Tetra Pak®

Version Designer: RICO	Version Date: 01/10/2014	Machine: A3 CompactFlex 0300	
ECM No: 687624	Denomination: TERMINAL STRIP OVERVIEW	Page Type: TERMINAL STRIP OVERVIEW	
Information Security Class: PUBLIC	Document No.: 3223337-0006	Doc. type: ELD	Version: AM	Page: 041

RELEASED

This drawing must not without the consent of Tetra Pak be copied, transmitted or disclosed to any third party.

1 2 3 4 5 6 7 8 9 10

Terminal strip of 3223337-0003
T40X1370

From	Cable	Internal Jumper	Terminal	External Jumper	Cable	To	Page.Col.	Option	Function text
T40K1090:5	T40W1370-RD		3			T40B1370:RD	151.6		TEMP. HYDRAULIC OIL
T40K1090:4	T40W1370-YE		2			T40B1370:YE	151.6		TEMP. HYDRAULIC OIL

Tetra Pak®

Version Designer: RICO	Version Date: 01/10/2014	Machine: A3 CompactFlex 0300	
ECM No: 687624	Denomination: TERMINAL STRIP OVERVIEW	Page Type: TERMINAL STRIP OVERVIEW	
Information Security Class: PUBLIC	Document No.: 3223337-0006	Doc. type: ELD	Version: AM	Page: 042

This drawing must not without the consent of Tetra Pak be copied, transmitted or disclosed to any third party.

1 2 3 4 5 6 7 8 9 10

Terminal strip of 3223337-0003 T40X3100

From	Cable	Internal Jumper	Terminal	External Jumper	Cable	To	Page.Col.	Option	Function text
T40G0010:X004	T40W3101-1		1		T40W3100-1	T40T3100	023.3		TPIH GENERATORS LS TS (TRANSFORM INDUCTOR)

Tetra Pak®

Version Designer: RICO	Version Date: 01/10/2014	Machine: A3 CompactFlex 0300	
ECM No: 687624	Denomination: TERMINAL STRIP OVERVIEW	Page Type: TERMINAL STRIP OVERVIEW	
Information Security Class: PUBLIC	Document No.: 3223337-0006	Doc. type: ELD	Version: AM	Page: 043

This drawing must not without the consent of Tetra Pak
be copied, transmitted or disclosed to any third party.

1 2 3 4 5 6 7 8 9 10

Terminal strip of 3223337-0003
T40X3200

From	Cable	Internal Jumper	Terminal	External Jumper	Cable	To	Page.Col.	Option	Function text
T40G0010:X005	T40W3201-1		1		T40W3200-1	T40T3200	023.3		TPIH GENERATORS LS TS (TRANSFORM INDUCTOR)

This drawing must not without the consent of Tetra Pak be copied, transmitted or disclosed to any third party.

1 2 3 4 5 6 7 8 9 10

Terminal strip of 3223337-0003 T40X9550

From	Cable	Internal Jumper	Terminal	External Jumper	Cable	To	Page.Col.	Option	Function text
T40X1000:148	T40W9550-1		1			T40K9550:1	052.7		
T40X1000:149	T40W9550-2		2			T40K9550:2	052.7		
			3			T40K9550:3	052.7		
T40X1000:⏚	T40W9550-GNYE		⏚			T40K9550:⏚	052.7		

Tetra Pak®

Version Designer: RICO	Version Date: 01/10/2014	Machine: A3 CompactFlex 0300	
ECM No: 687624	Denomination: TERMINAL STRIP OVERVIEW	Page Type: TERMINAL STRIP OVERVIEW	
Information Security Class: PUBLIC	Document No.: 3223337-0006	Doc. type: ELD	Version: AM	Page: 045

This drawing must not without the consent of Tetra Pak be copied, transmitted or disclosed to any third party.

1 2 3 4 5 6 7 8 9 10

Terminal strip of 3223337-0003 T40X9560

From	Cable	Internal Jumper	Terminal	External Jumper	Cable	To	Page.Col.	Option	Function text
T40X1000:150	T40W9560-1		1			T40K9550:1	052.7		
T40X1000:151	T40W9560-2		2			T40K9550:2	052.7		
			3			T40K9550:3	052.7		
T40X1000:⏚	T40W9560-GNYE		⏚			T40K9550:⏚	052.7		

Tetra Pak®

Version Designer: RICO	Version Date: 01/10/2014	Machine: A3 CompactFlex 0300	
ECM No: 687624	Denomination: TERMINAL STRIP OVERVIEW	Page Type: TERMINAL STRIP OVERVIEW	
Information Security Class: PUBLIC	Document No.: 3223337-0006	Doc. type: ELD	Version: AM	Page: 046

RELEASED

This drawing must not without the consent of Tetra Pak be copied, transmitted or disclosed to any third party.

1 2 3 4 5 6 7 8 9 10

Terminal strip of 3223337-0003

T40X9580

From	Cable	Internal Jumper	Terminal	External Jumper	Cable	To	Page.Col.	Option	Function text
T40X1000:152	T40W9580-1		1			T40K9570:1	052.7		LEFT JAW CATCHER ON
T40X1000:153	T40W9580-2		2			T40K9570:2	052.7		LEFT JAW CATCHER ON
			3			T40K9570:3	052.7		LEFT JAW CATCHER ON
T40X1000:⏚	T40W9580-GNYE		⏚			T40K9570:⏚	052.7		LEFT JAW CATCHER ON

Tetra Pak®

Version Designer: RICO	Version Date: 01/10/2014	Machine: A3 CompactFlex 0300	
ECM No: 687624	Denomination: TERMINAL STRIP OVERVIEW	Page Type: TERMINAL STRIP OVERVIEW	
Information Security Class: PUBLIC	Document No.: 3223337-0006	Doc. type: ELD	Version: AM	Page: 047

This drawing must not without the consent of Tetra Pak be copied, transmitted or disclosed to any third party.

1 2 3 4 5 6 7 8 9 10

Terminal strip of 3223337-0003 T40X9600

From	Cable	Internal Jumper	Terminal	External Jumper	Cable	To	Page.Col.	Option	Function text
T40X1000:154	T40W9600-1		1			T40K9590:1	052.7		RIGHT JAW CATCHER ON
T40X1000:155	T40W9600-2		2			T40K9590:2	052.7		RIGHT JAW CATCHER ON
			3			T40K9590:3	052.7		RIGHT JAW CATCHER ON
T40X1000:⏚	T40W9600-GNYE		⏚			T40K9590:⏚	052.7		RIGHT JAW CATCHER ON

Tetra Pak®

Version Designer: RICO	Version Date: 01/10/2014	Machine: A3 CompactFlex 0300	
ECM No: 687624	Denomination: TERMINAL STRIP OVERVIEW	Page Type: TERMINAL STRIP OVERVIEW	
Information Security Class: PUBLIC	Document No.: 3223337-0006	Doc. type: ELD	Version: AM	Page: 048

RELEASED

This drawing must not without the consent of Tetra Pak be copied, transmitted or disclosed to any third party.

1 2 3 4 5 6 7 8 9 10

Terminal strip of 3223337-0003 T50X0510

From	Cable	Internal Jumper	Terminal	External Jumper	Cable	To	Page.Col.	Option	Function text
T50X0570:1	T50W0510-BN		1			T50E0510:1	011.2		FLAP HEATING TOP LEFT
T50X0570:2	T50W0510-L.BU		2			T50E0510:2	011.3		FLAP HEATING TOP LEFT

Tetra Pak®

Version Designer: RICO	Version Date: 01/10/2014	Machine: A3 CompactFlex 0300	
ECM No: 687624	Denomination: TERMINAL STRIP OVERVIEW	Page Type: TERMINAL STRIP OVERVIEW	
Information Security Class: PUBLIC	Document No.: 3223337-0006	Doc. type: ELD	Version: AM	Page: 049

This drawing must not without the consent of Tetra Pak be copied, transmitted or disclosed to any third party.

1 2 3 4 5 6 7 8 9 10

Terminal strip of 3223337-0003 T50X0520

From	Cable	Internal Jumper	Terminal	External Jumper	Cable	To	Page.Col.	Option	Function text
T50X0570:3	T50W0520-BN		1			T50E0520:1	011.5		FLAP HEATING TOP RIGHT
T50X0570:4	T50W0520-L.BU		2			T50E0520:2	011.7		FLAP HEATING TOP RIGHT

Tetra Pak®	Version Designer: RICO	Version Date: 01/10/2014	Machine: A3 CompactFlex 0300		
	ECM No: 687624	Denomination: TERMINAL STRIP OVERVIEW	Page Type: TERMINAL STRIP OVERVIEW		
	Information Security Class: PUBLIC	Document No.: 3223337-0006	Doc. type: ELD	Version: AM	Page: 050

This drawing must not without the consent of Tetra Pak
be copied, transmitted or disclosed to any third party.

1 2 3 4 5 6 7 8 9 10

Terminal strip of 3223337-0003
T50X0540

From	Cable	Internal Jumper	Terminal	External Jumper	Cable	To	Page.Col.	Option	Function text
T50X0580:1	T50W0540-BN		1			T50E0540:1	011.8		FLAP HEATING BOTTOM
T50X0580:2	T50W0540-L.BU		2			T50E0540:2	011.10		FLAP HEATING BOTTOM

Tetra Pak®

Version Designer: RICO	Version Date: 01/10/2014	Machine: A3 CompactFlex 0300	
ECM No: 687624	Denomination: TERMINAL STRIP OVERVIEW	Page Type: TERMINAL STRIP OVERVIEW	
Information Security Class: PUBLIC	Document No.: 3223337-0006	Doc. type: ELD	Version: AM	Page: 051

This drawing must not without the consent of Tetra Pak be copied, transmitted or disclosed to any third party.

1 2 3 4 5 6 7 8 9 10

Terminal strip of 3223337-0003

T50X0570

From	Cable	Internal Jumper	Terminal	External Jumper	Cable	To	Page.Col.	Option	Function text
T50X0550:1	T50W0550-BN		1		T50W0510-BN	T50X0510:1	011.2		FLAP HEATING TOP LEFT
T50X0550:2	T50W0550-L.BU		2		T50W0510-L.BU	T50X0510:2	011.3		FLAP HEATING TOP LEFT
T50X0551:1	T50W0551-BN		3		T50W0520-BN	T50X0520:1	011.5		FLAP HEATING TOP RIGHT
T50X0551:2	T50W0551-L.BU		4		T50W0520-L.BU	T50X0520:2	011.7		FLAP HEATING TOP RIGHT
			5						
			6						
T50X0550:⏚	T50W0550-GNYE		⏚		T50W0510-GNYE	T50E0510:E	011.3		FLAP HEATING TOP LEFT
T50X0551	T50W0551-GNYE				T50W0520-GNYE	T50E0520			FLAP HEATING TOP RIGHT

Tetra Pak®

Version Designer: RICO	Version Date: 01/10/2014	Machine: A3 CompactFlex 0300	
ECM No: 687624	Denomination: TERMINAL STRIP OVERVIEW	Page Type: TERMINAL STRIP OVERVIEW	
Information Security Class: PUBLIC	Document No.: 3223337-0006	Doc. type: ELD	Version: AM	Page: 052

This drawing must not without the consent of Tetra Pak
be copied, transmitted or disclosed to any third party.

1 2 3 4 5 6 7 8 9 10

Terminal strip of 3223337-0003
T50X0580

From	Cable	Internal Jumper	Terminal	External Jumper	Cable	To	Page.Col.	Option	Function text
T50X0560:1	T50W0560-BN		1		T50W0540-BN	T50X0540:1	011.8		FLAP HEATING BOTTOM
T50X0560:2	T50W0560-L.BU		2		T50W0540-L.BU	T50X0540:2	011.10		FLAP HEATING BOTTOM
			3						
			4						
			5						
			6						
T50X0560:⏚	T50W0560-GNYE		⏚		T50W0540-GNYE	T50E0540:E	011.9		FLAP HEATING BOTTOM

Tetra Pak®

Version Designer	Version Date	Machine
RICO	01/10/2014	A3 CompactFlex 0300

ECM No	Denomination	Page Type
687624	TERMINAL STRIP OVERVIEW	TERMINAL STRIP OVERVIEW

Information Security Class	Document No.	Doc. type	Version	Page
PUBLIC	3223337-0006	ELD	AM	053

This drawing must not without the consent of Tetra Pak
be copied, transmitted or disclosed to any third party.

1 2 3 4 5 6 7 8 9 10

Terminal strip of 3223337-0003
T50X0600

From	Cable	Internal Jumper	Terminal	External Jumper	Cable	To	Page.Col.	Option	Function text
T50T0800:13	T50W0600-BN		1		T50W1290-BN	T50B1290:BN	038.8		PRESSURE DEVICE
T50T0800:14	T50W0600-WH		2		T50W1290-BK	T50B1290:BK	038.8		PRESSURE DEVICE
T50T0800:15	T50W0600-YE		3		T50W1290-BU	T50B1290:BU	038.8		PRESSURE DEVICE

Tetra Pak®

Version Designer: RICO	Version Date: 01/10/2014	Machine: A3 CompactFlex 0300	
ECM No: 687624	Denomination: TERMINAL STRIP OVERVIEW	Page Type: TERMINAL STRIP OVERVIEW	
Information Security Class: PUBLIC	Document No.: 3223337-0006	Doc. type: ELD	Version: AM	Page: 054

RELEASED

This drawing must not without the consent of Tetra Pak be copied, transmitted or disclosed to any third party.

1 2 3 4 5 6 7 8 9 10

Terminal strip of 3223337-0003

T50X0610

From	Cable	Internal Jumper	Terminal	External Jumper	Cable	To	Page.Col.	Option	Function text
T50T0800:16	T50W0610-BN		1		T50W1260-BN	T50B1260:BN	038.9		INFEED STATION ROTATION MONITOR
T50T0800:17	T50W0610-WH		2		T50W1260-BK	T50B1260:BK	038.9		INFEED STATION ROTATION MONITOR
T50T0800:18	T50W0610-YE		3		T50W1260-BU	T50B1260:BU	038.9		INFEED STATION ROTATION MONITOR

Tetra Pak®

Version Designer: RICO	Version Date: 01/10/2014	Machine: A3 CompactFlex 0300	
ECM No: 687624	Denomination: TERMINAL STRIP OVERVIEW	Page Type: TERMINAL STRIP OVERVIEW	
Information Security Class: PUBLIC	Document No.: 3223337-0006	Doc. type: ELD	Version: AM	Page: 055

This drawing must not without the consent of Tetra Pak
be copied, transmitted or disclosed to any third party.

1 2 3 4 5 6 7 8 9 10

Terminal strip of 3223337-0003
T50X0620

From	Cable	Internal Jumper	Terminal	External Jumper	Cable	To	Page.Col.	Option	Function text
T50T0810:13	T50W0620-BN		1		T50W1310-BN	T50B1310:BN	039.8		INDEX STATION ROTATION MONITOR
T50T0810:14	T50W0620-WH		2		T50W1310-BK	T50B1310:BK	039.8		INDEX STATION ROTATION MONITOR
T50T0810:15	T50W0620-YE		3		T50W1310-BU	T50B1310:BU	039.8		INDEX STATION ROTATION MONITOR

Tetra Pak®

Version Designer: RICO	Version Date: 01/10/2014	Machine: A3 CompactFlex 0300	
ECM No: 687624	Denomination: TERMINAL STRIP OVERVIEW	Page Type: TERMINAL STRIP OVERVIEW	
Information Security Class: PUBLIC	Document No.: 3223337-0006	Doc. type: ELD	Version: AM	Page: 056

This drawing must not without the consent of Tetra Pak
be copied, transmitted or disclosed to any third party.

1 2 3 4 5 6 7 8 9 10

Terminal strip of 3223337-0003
T50X0630

From	Cable	Internal Jumper	Terminal	External Jumper	Cable	To	Page.Col.	Option	Function text
T50T0820:13	T50W0630-BN		1		T50W1130-BN	T50B1130:BN	040.8		FFU OUTFEED HOME POSITION
T50T0820:14	T50W0630-WH		2		T50W1130-BK	T50B1130:BK	040.8		FFU OUTFEED HOME POSITION
T50T0820:15	T50W0630-YE		3		T50W1130-BU	T50B1130:BU	040.8		FFU OUTFEED HOME POSITION

Tetra Pak®

Version Designer: RICO	Version Date: 01/10/2014	Machine: A3 CompactFlex 0300	
ECM No: 687624	Denomination: TERMINAL STRIP OVERVIEW	Page Type: TERMINAL STRIP OVERVIEW	
Information Security Class: PUBLIC	Document No.: 3223337-0006	Doc. type: ELD	Version: AM	Page: 057

This drawing must not without the consent of Tetra Pak be copied, transmitted or disclosed to any third party.

1 2 3 4 5 6 7 8 9 10

Terminal strip of 3223337-0003 T50X1000

From	Cable	Internal Jumper	Terminal	External Jumper	Cable	To	Page.Col.	Option	Function text
T50K1080:2			⏚				163.5		
T50X0150:1	T50W0150-1		201				016.1		
T50X0150:2	T50W0150-2		202				016.1		
T50X0150:3	T50W0150-3		203				016.1		
U30B1030:⏚	U30W1030-GNYE		⏚				166.3	ICU	
T50X0530:1	T50W0530-1		1				154.1		
			2			T50K1000:4	154.1		DEVICENET ADAPTER, FFU
			3			T50K1130:2	154.1		CHEMICALS PUMPS ROTATION ICU 1
			4		T50W1030-BU	T50X1050:3	154.1		EXTERNAL CONVEYOR CONGESTION GUARD
			5			T50K1130:1	154.1		
			6		U70W2060-BU	U70B2060	154.1		CIP PLUG POSITION
			7		T50W2030-BU	T50X2050:3	154.1		PACKAGE COUNTER LAST POINT DE
			8		T50W1080-BU	T50X1090:3	154.1		PACKAGE COUNTER AFTER FFU
			9			T50K1080:4	154.1		PLC REMOTE EP24DC, FFU
			10		T50W6120-2	T50K6120:2	154.1		CAP FLUSHER
					F50W1540-2	F50K1540			DOOR GUARD RIGHT FFU LOCKER
			11		T50W1120-6	T50P1120:0	154.1		
			12				154.1	B.BRAKE	
T50X2130:3	T50W2131-BU		13				154.1		
			14		U70W1161-BN	U70B1160	154.1		CIP DRAIN VALVE DRAIN CLOSED POS.
			15		T50W2110-BU	T50B2110	154.1		CIP PLUG POSITION
			16		F50W1530-BU	F50X1530:3	154.1		
			17				154.1		
			18		U30W1020-BU	U30B1020	154.1		REFILLING PIPE ALKALI TANK ICU
			19		P60W1000-11	P60A1000:-	154.1		
			20		U30W1090-BU	U30B1090	154.1	ICU	REFILLING PIPE ACID TANK ICU
			21		T50W2120-BU	T50B2120	154.1		CIP PLUG POSITION
			22				154.1		
			23				154.1		
			24		W51W1700-BN	W51X1700:13	154.1		USER PORT

This drawing must not without the consent of Tetra Pak be copied, transmitted or disclosed to any third party.

1 2 3 4 5 6 7 8 9 10

Terminal strip of 3223337-0003 T50X1000

From	Cable	Internal Jumper	Terminal	External Jumper	Cable	To	Page.Col.	Option	Function text
			25			W51K1700:A1	154.1		
			26		W51W1020-BU	W51X1020:3	154.1		
			27				154.1		
			28				154.1		
			29				154.1		
			30				154.1		
			31				154.1		
			32				154.1		
			33				154.1		
			34				154.1		
			35				154.1		
			36				154.1		
			⏚						
			⏚						
			⏚						
			⏚						
			⏚						
			⏚						
			⏚						
			⏚						
T50X0530:2	T50W0530-2		51				154.4		
			52			T50K1000:6	154.4		DEVICENET ADAPTER, FFU
			53		T50W2110-BN	T50B2110	154.4		CIP PLUG POSITION
			54		T50W2120-BN	T50B2120	154.4		CIP PLUG POSITION
			55		P60W1000-5	F60S1110:31	154.4		EM.STOP CONTROL PANEL
			56		U70W2060-BN	U70B2060	154.4		CIP PLUG POSITION
			57		T50W2131-BN	T50X2130:1	154.4		EXTERNAL CONVEYOR CONGESTION GUARD
			58		T50W1030-BN	T50X1050:1	154.4		EXTERNAL CONVEYOR CONGESTION GUARD
			59				154.4		
			60				154.4		

Tetra Pak®

Version Designer	Version Date	Machine
RICO	01/10/2014	A3 CompactFlex 0300

ECM No	Denomination	Page Type
687624	TERMINAL STRIP OVERVIEW	TERMINAL STRIP OVERVIEW

Information Security Class	Document No.	Doc. type	Version	Page
PUBLIC	3223337-0006	ELD	AM	059

This drawing must not without the consent of Tetra Pak be copied, transmitted or disclosed to any third party.

1 2 3 4 5 6 7 8 9 10

Terminal strip of 3223337-0003
T50X1000

From	Cable	Internal Jumper	Terminal	External Jumper	Cable	To	Page.Col.	Option	Function text
			61		T50W2030-BN	T50X2050:1	154.4		PACKAGE COUNTER LAST POINT DE
			62		T50W1080-BN	T50X1090:1	154.4		PACKAGE COUNTER AFTER FFU
			63				154.4		
			64				154.4		
			65				154.4	B.BRAKE	
			66				154.4		
			67				154.4		
			68				154.4		
			69				154.4		
			70				154.4		
			71				154.4		
			72				154.4		
			73				154.4		
			74				154.4		
			75		U70W1161-BU	U70B1160	154.4		CIP DRAIN VALVE DRAIN CLOSED POS.
			76				154.4		
			77			T50K1130:0	154.4		
			78			T50K1130:3	154.4		CHEMICALS PUMPS ROTATION ICU 2
			79		U30W1020-BN	U30B1020	154.4		REFILLING PIPE ALKALI TANK ICU
			80		U30W1030-3	U30B1030:3	154.4		LEVEL ALKALI TANK ICU
			81		U30W1090-BN	U30B1090	154.4	ICU	REFILLING PIPE ACID TANK ICU
			82		U30W1070-3	U30B1070:3	154.4	ICU	LEVEL ACID TANK ICU
			83		W51W1720-RD	W51X1720:2	154.4		ALARM PORT
			84		W51W1020-BN	W51X1020:1	154.4		
			85				154.4		
			86		F50W1530-BN	F50X1530:1	154.4		
			87				154.4		
			88				154.4		
			89				154.4		
			90				154.4		

Tetra Pak®

Version Designer	Version Date	Machine
RICO	01/10/2014	A3 CompactFlex 0300

ECM No	Denomination	Page Type
687624	TERMINAL STRIP OVERVIEW	TERMINAL STRIP OVERVIEW

Information Security Class	Document No.	Doc. type	Version	Page
PUBLIC	3223337-0006	ELD	AM	060

This drawing must not without the consent of Tetra Pak be copied, transmitted or disclosed to any third party.

1 2 3 4 5 6 7 8 9 10

Terminal strip of 3223337-0003 T50X1000

From	Cable	Internal Jumper	Terminal	External Jumper	Cable	To	Page.Col.	Option	Function text
			91				154.4		
			92				154.4		
			93				154.4		
			94				154.4		
			95			T50K1080:6	154.4		PLC REMOTE EP24DC, FFU
			96		P60W1000-10	P60A1000:+	154.4		TPOP B&R
			97				154.4		
			98				154.4		
			⏚		P60W1000-GNYE	P60A1000:PE	057.8		TPOP B&R
T50X0150:⏚	T50W0150-GNYE		⏚				016.2	B.BRAKE	
T50X0530:7	T50W0530-7		101		W51W1020-BK	W51X1020:2	077.4		
T50K1120:0			102			T50K1130:4	168.3	ICU	
W51K1700:A2			103		T50W0530-10	T50X0530:10	084.4		
T50K1120:4			104				168.3		
			105						
T50K1130:5			106			T50K1120:1	168.3	ICU	
			107						
			108			T50K1120:5	168.3	ICU	
			⏚		U30W1070-GNYE	U30B1070:⏚	166.3	ICU	LEVEL ACID TANK ICU
			⏚		W51W1700-SH	W51X1700:25	072.4		USER PORT
A01X2000:4	T50W2000-WH		131				057.4		
A01X2000:1	T50W2000-BN		132				057.4		
A01X2000:6	T50W2000-YE		133				057.4		
A01X2000:9	T50W2000-GN		134				057.4		
A01X2000:5	T50W2000-SH		135				057.4		
			137		T50W2010-WH-OG	P60K0700:ETH3	057.1		
			138		T50W2010-OG	P60K0700:ETH3	057.1		
			139		T50W2010-WH-GN	P60K0700:ETH3	057.1		
			140		T50W2010-GN	P60K0700:ETH3	057.1		
			141		T50W2010-SH	P60K0700:ETH3	057.1		

This drawing must not without the consent of Tetra Pak be copied, transmitted or disclosed to any third party.

1 2 3 4 5 6 7 8 9 10

Terminal strip of 3223337-0003 T50X1000

From	Cable	Internal Jumper	Terminal	External Jumper	Cable	To	Page.Col.	Option	Function text
			142						
A01X6040:X2	T50W2020-WH-OG		143				071.8		
A01X6040:X2	T50W2020-OG		144				071.8		
A01X6040:X2	T50W2020-WH-GN		145				071.8		
A01X6040:X2	T50W2020-GN		146				071.8		
A01X6040:X2	T50W2020-SH		147				071.8		
T50K1120:2			149		U30W1570-1	U30M1570:1	017.8	ICU	ALKALI PUMP
T50K1120:3			150		U30W1570-2	U30M1570:2	017.8	ICU	ALKALI PUMP
T50K1120:6			151		U30W1590-1	U30M1590:1	017.9	ICU	ACID PUMP
T50K1120:7			152		U30W1590-2	U30M1590:2	017.10	ICU	ACID PUMP
			153						
			⏚		W51W1720-SH	W51X1720:9	072.8		ALARM PORT
			154		P60W1000-1	F60S1110:11	064.6		
F60S1110:12	P60W1000-2		155		T50W0530-9	T50X0530:9	064.10		
			156		P60W1000-3	F60S1110:21	064.6		
T50X0530:4	T50W0530-4		157		P60W1000-4	F60S1110:22	064.10		
T50X0530:8	T50W0530-8		158				064.3		
T50X0530:3	T50W0530-3		159				064.3		
			160						
W51P1700:ETH	W51W9501-WH-OG		161		W51W9500-WH-OG	A01X6030:X4	072.8		
W51P1700:ETH	W51W9501-OG		162		W51W9500-OG	A01X6030:X4	072.8		
W51P1700:ETH	W51W9501-WH-GN		163		W51W9500-WH-GN	A01X6030:X4	072.8		
W51P1700:ETH	W51W9501-GN		164		W51W9500-GN	A01X6030:X4	072.8		
W51P1700:ETH	W51W9501-SH		165		W51W9500-SH	A01X6030:X4	072.8		
T50X0530:5	T50W0530-5		166		W51W1700-WH	W51X1700:11	072.4		USER PORT
T50X0530:6	T50W0530-6		167		W51W1700-RD	W51X1700:1	072.4		USER PORT
			168						
			169						
			170						
			⏚		T50W1120-GNYE	T50P1120:E	159.7		ALARM BEACON

This drawing must not without the consent of Tetra Pak
be copied, transmitted or disclosed to any third party.

1 2 3 4 5 6 7 8 9 10

Terminal strip of 3223337-0003
T50X1000

From	Cable	Internal Jumper	Terminal	External Jumper	Cable	To	Page.Col.	Option	Function text
T50X0530:⏚	T50W0530-GNYE		⏚			T50K1000:2	154.8		DEVICENET ADAPTER, FFU
			⏚		W51W1710-GNYE	W51X1710:5	072.4		PRODUCT DETECTOR

This drawing must not without the consent of Tetra Pak
be copied, transmitted or disclosed to any third party.

1 2 3 4 5 6 7 8 9 10

Terminal strip of 3223337-0003
T50X1050

From	Cable	Internal Jumper	Terminal	External Jumper	Cable	To	Page.Col.	Option	Function text
T50B1040	T50W1040-B						156.4		
T50B1050	T50W1050-A								

RELEASED

This drawing must not without the consent of Tetra Pak be copied, transmitted or disclosed to any third party.

1 2 3 4 5 6 7 8 9 10

Terminal strip of 3223337-0003
T50X1090

From	Cable	Internal Jumper	Terminal	External Jumper	Cable	To	Page.Col.	Option	Function text
					T50W1081-B	T50B1080	156.4		PACKEGE COUTER AFTER FFU
					T50W1090-A	T50B1090			PACKEGE COUTER AFTER FFU

Tetra Pak®

Version Designer: RICO	Version Date: 01/10/2014	Machine: A3 CompactFlex 0300	
ECM No: 687624	Denomination: TERMINAL STRIP OVERVIEW	Page Type: TERMINAL STRIP OVERVIEW	
Information Security Class: PUBLIC	Document No.: 3223337-0006	Doc. type: ELD	Version: AM	Page: 065

RELEASED

This drawing must not without the consent of Tetra Pak be copied, transmitted or disclosed to any third party.

1 2 3 4 5 6 7 8 9 10

Terminal strip of 3223337-0003 T50X1220

From	Cable	Internal Jumper	Terminal	External Jumper	Cable	To	Page.Col.	Option	Function text
T50K1090:5	T50W1220-RD		-			T50B1220:WH	164.6		TEMP. TOP LEFT FLAP
T50K1090:4	T50W1220-YE		+			T50B1220:GN	164.6		TEMP. TOP LEFT FLAP

Tetra Pak®

Version Designer: RICO	Version Date: 01/10/2014	Machine: A3 CompactFlex 0300	
ECM No: 687624	Denomination: TERMINAL STRIP OVERVIEW	Page Type: TERMINAL STRIP OVERVIEW	
Information Security Class: PUBLIC	Document No.: 3223337-0006	Doc. type: ELD	Version: AM	Page: 066

This drawing must not without the consent of Tetra Pak be copied, transmitted or disclosed to any third party.

1 2 3 4 5 6 7 8 9 10

Terminal strip of 3223337-0003 T50X1230

From	Cable	Internal Jumper	Terminal	External Jumper	Cable	To	Page.Col.	Option	Function text
T50K1090:7	T50W1230-RD		-			T50B1230:WH	164.6		TEMP. TOP RIGHT FLAP
T50B1230:GN			+		T50W1230-YE	T50K1090:6	164.6		

Tetra Pak®

Version Designer: RICO	Version Date: 01/10/2014	Machine: A3 CompactFlex 0300	
ECM No: 687624	Denomination: TERMINAL STRIP OVERVIEW	Page Type: TERMINAL STRIP OVERVIEW	
Information Security Class: PUBLIC	Document No.: 3223337-0006	Doc. type: ELD	Version: AM	Page: 067

This drawing must not without the consent of Tetra Pak
be copied, transmitted or disclosed to any third party.

1 2 3 4 5 6 7 8 9 10

Terminal strip of 3223337-0003
T50X1240

From	Cable	Internal Jumper	Terminal	External Jumper	Cable	To	Page.Col.	Option	Function text
T50K1100:5	T50W1240-RD		-			T50B1240:WH	165.6		TEMP.LEFT BOTTOM FLAP
T50K1100:4	T50W1240-YE		+			T50B1240:GN	165.6		TEMP.LEFT BOTTOM FLAP

Tetra Pak®

Version Designer: RICO	Version Date: 01/10/2014	Machine: A3 CompactFlex 0300	
ECM No: 687624	Denomination: TERMINAL STRIP OVERVIEW	Page Type: TERMINAL STRIP OVERVIEW	
Information Security Class: PUBLIC	Document No.: 3223337-0006	Doc. type: ELD	Version: AM	Page: 068

This drawing must not without the consent of Tetra Pak
be copied, transmitted or disclosed to any third party.

1 2 3 4 5 6 7 8 9 10

Terminal strip of 3223337-0003
T50X2050

From	Cable	Internal Jumper	Terminal	External Jumper	Cable	To	Page.Col.	Option	Function text
T50B2040	T50W2040-1						156.4		
T50B2050	T50W2050-1								

RELEASED

This drawing must not without the consent of Tetra Pak be copied, transmitted or disclosed to any third party.

1 2 3 4 5 6 7 8 9 10

Terminal strip of 3223337-0003
T50X2130

From	Cable	Internal Jumper	Terminal	External Jumper	Cable	To	Page.Col.	Option	Function text
T50B2140	T50W2140-B						156.4		
T50B2130	T50W2130-A								

Tetra Pak®

Version Designer: RICO	Version Date: 01/10/2014	Machine: A3 CompactFlex 0300	
ECM No: 687624	Denomination: TERMINAL STRIP OVERVIEW	Page Type: TERMINAL STRIP OVERVIEW	
Information Security Class: PUBLIC	Document No.: 3223337-0006	Doc. type: ELD	Version: AM	Page: 070

This drawing must not without the consent of Tetra Pak be copied, transmitted or disclosed to any third party.

1 2 3 4 5 6 7 8 9 10

Terminal strip of 3223337-0003

U30X1180

From	Cable	Internal Jumper	Terminal	External Jumper	Cable	To	Page.Col.	Option	Function text
			1				149.5		
T40K1070:4	U30W1180-GN		2				149.5		
T40K1070:0	U30W1180-YE		3				149.5		
			4				149.5		
			5				149.5		
T40K1070:4	U30W1180-WH		6				149.5		
T40K1070:6	U30W1180-BN		7				149.5		
			8				149.5		

Tetra Pak®

Version Designer: RICO	Version Date: 01/10/2014	Machine: A3 CompactFlex 0300	
ECM No: 687624	Denomination: TERMINAL STRIP OVERVIEW	Page Type: TERMINAL STRIP OVERVIEW	
Information Security Class: PUBLIC	Document No.: 3223337-0006	Doc. type: ELD	Version: AM	Page: 071

RELEASED

This drawing must not without the consent of Tetra Pak be copied, transmitted or disclosed to any third party.

1 2 3 4 5 6 7 8 9 10

Terminal strip of 3223337-0003

U30X1200

From	Cable	Internal Jumper	Terminal	External Jumper	Cable	To	Page.Col.	Option	Function text
T40K1080:5	U30W1200-RD		-			U30B1200:RD	150.6		TEMP. PEROXIDE TANK
T40K1080:4	U30W1200-YE		+			U30B1200:YE	150.6		TEMP. PEROXIDE TANK

Tetra Pak®

Version Designer: RICO	Version Date: 01/10/2014	Machine: A3 CompactFlex 0300	
ECM No: 687624	Denomination: TERMINAL STRIP OVERVIEW	Page Type: TERMINAL STRIP OVERVIEW	
Information Security Class: PUBLIC	Document No.: 3223337-0006	Doc. type: ELD	Version: AM	Page: 072

RELEASED

This drawing must not without the consent of Tetra Pak be copied, transmitted or disclosed to any third party.

1 2 3 4 5 6 7 8 9 10

Terminal strip of 3223337-0003
U70X0280

From	Cable	Internal Jumper	Terminal	External Jumper	Cable	To	Page.Col.	Option	Function text
U70B0290			1				054.2		
U70B0290			3				054.2		
			A						
			B						
U70B0290			5		U70W0280-SH	PE	054.2		
U70B0290			2A		U70W0280-YE	U70X0390:5	054.2		
						U70R0400			RESISTOR
U70B0290			4B		U70W0280-GN	U70X0390:4	054.2		
						U70R0400			RESISTOR

Tetra Pak®

Version Designer: RICO	Version Date: 01/10/2014	Machine: A3 CompactFlex 0300	
ECM No: 687624	Denomination: TERMINAL STRIP OVERVIEW	Page Type: TERMINAL STRIP OVERVIEW	
Information Security Class: PUBLIC	Document No.: 3223337-0006	Doc. type: ELD	Version: AM	Page: 073

This drawing must not without the consent of Tetra Pak
be copied, transmitted or disclosed to any third party.

1 2 3 4 5 6 7 8 9 10

Terminal strip of 3223337-0003
U70X0290

From	Cable	Internal Jumper	Terminal	External Jumper	Cable	To	Page.Col.	Option	Function text
U70X1000:79	U70W0290-1		1			U70B0290	054.3		FLOW METER
			2			U70B0290	054.3		FLOW METER
			3			U70B0290	054.3		FLOW METER
U70X1000:31	U70W0290-2		4			U70B0290	054.3		FLOW METER
			5			U70B0290	054.3		FLOW METER

Tetra Pak®

Version Designer: RICO	Version Date: 01/10/2014	Machine: A3 CompactFlex 0300	
ECM No: 687624	Denomination: TERMINAL STRIP OVERVIEW	Page Type: TERMINAL STRIP OVERVIEW	
Information Security Class: PUBLIC	Document No.: 3223337-0006	Doc. type: ELD	Version: AM	Page: 074

This drawing must not without the consent of Tetra Pak
be copied, transmitted or disclosed to any third party.

1 2 3 4 5 6 7 8 9 10

Terminal strip of 3223337-0003
U70X1000

From	Cable	Internal Jumper	Terminal	External Jumper	Cable	To	Page.Col.	Option	Function text
			⏚			U70K1200:2	191.6		PLC REMOTE EP24DC, SUPERSTR.
			201						
			202						
			203						
			204						
			⏚		U70W2740-GNYE	U70K2740:E	176.7		FILLING SPRAY TANK
			205						
			206						
			207						
			208						
			⏚		U70W1040-GNYE	U70B1040:E	174.6		BOTTOM COVER CLOSED 2
U70X0560:1	U70W0560-1		1				170.1		
			2			U70K1000:4	170.1		DEVICENET ADAPTER, SUPERSTR.
			3		U70W1740-BN	U70K1740:B10	170.1		
					U70W1740-BK	U70K1740			SUPERSTRUCTURE (0V PNEUMATIC)
			4		U70W1750-BN	U70K1750:B10	170.1		SUPERSTRUCTURE (0V PNEUMATIC)
					U70W1750-BK	U70K1750			
			5			U70K1130:4	170.1		PLC REMOTE EP24DC, SUPERSTR.
			6			U70K2700:A2	170.1		HYDROGEN PEROXIDE SPRAY TANK
			7		U70W2310-BU	U70B2310	170.1		PACHAGING MATERIAL SPLICE DETECTION IN COLUMN
			8		U70W1020-BU	U70B1020	170.1		PREHEATING VALVE
			9			U70K1120:0	170.1		PLC REMOTE OX2, SUPERSTR.
			10			U70K1120:1	170.1		PLC REMOTE OX2, SUPERSTR.
			11				170.1		
			12		U70W2100-BU	U70B2100	170.1		LOWER FORMING RING UP
			13			U70K1300:4	170.1		PLC REMOTE FPD, SUPERSTR.
			14			U70K1200:4	170.1		PLC REMOTE EP24DC, SUPERSTR.
			15		U70W3020-BU	U70B3020	170.1		B-VALVE POSITION
			16		U70W3010-BU	U70B3010	170.1		A-VALVE POSITION
			17		U70W3090-BU	U70B3090	170.1		C-VALVE POSITION

Tetra Pak®

Version Designer	Version Date	Machine
RICO	01/10/2014	A3 CompactFlex 0300

ECM No	Denomination	Page Type
687624	TERMINAL STRIP OVERVIEW	TERMINAL STRIP OVERVIEW

Information Security Class	Document No.	Doc. type	Version	Page
PUBLIC	3223337-0006	ELD	AM	075

This drawing must not without the consent of Tetra Pak be copied, transmitted or disclosed to any third party.

1 2 3 4 5 6 7 8 9 10

Terminal strip of 3223337-0003

U70X1000

From	Cable	Internal Jumper	Terminal	External Jumper	Cable	To	Page.Col.	Option	Function text
			18				170.1		
			19		U70W3030-BU	U70B3030	170.1		C-VALVE POSITION
			20		U70W1060-BU	U70B1060	170.1		CLEANING PIPE INFEED CONNECTOR
			21		U70W1330-BU	U70B1330	170.1		CLOSED LS POSITION
			22		U70W1340-BU	U70B1340	170.1		CLOSED SHORT STOP POSITION
			23		U70W1380-BU	U70B1380:3	170.1		ASEPTIC CHAMBER TOP COVER
			24		U70W1350-BU	U70B1350	170.1		LOWER FORMING RING UP
			25		U70W1280-BU	U70B1280	170.1		ROTATION GUARD COLUMN
			26		U70W2020-BU	U70B2020	170.1		BUTTERFLY REAR CYLINDER BACK POSITION
			27		U70W1360-BU	U70B1360	170.1		A-VALVE POSITION
			28		U70W1370-BU	U70B1370	170.1		B-VALVE POSITION
			29		U70W1400-2	U70B1400:-	170.1		STEAM INLET VALVE OPEN ICU
			30		U70W2120-BU	U70B2120	170.1		MOVABLE CALENDER ROLLER
			31		U70W0290-2	U70X0290:4	170.1		FLOW METER
			32				170.1		
			33				170.1		
			34		U70W2190-BU	U70B2190	170.1		CHANGE OVER VALVE OPEN
			35		U70W2200-BU	U70B2200	170.1		CHANGE OVER VALVE CLOSED
			36		U70W2870-2	U70K2870:2	170.1		SPRAYING
			37		U70W2210-BU	U70B2210	170.1		CLOSED AIR KNIFE SENSOR 2
			38		U70W2211-BU	U70B2211	170.1		CLOSED AIR KINFE SENSOR 1
			39				170.1		
			40				170.1		
			41		U70W1710-2	U70K1710:2	170.1		SEAL WATER
			42		U70W2740-2	U70K2740:2	170.1		FILLING SPRAY TANK
			43		U70W3780-BU	U70B3780	170.1		BUTTERFLY FRONT CYLINDER BACK POSITION
			44		U70W3790-BU	U70B3790	170.1		BUTTERFLY FRONT CYLINDER FRONT POSITION
			45		U70W2750-2	U70K2750:2	170.1		SPRAYING
			46		U70W2860-2	U70K2860:2	170.1		FILLING SPRAY TANK
			47		U70W1070-BU	U70B1070	170.1		STERILE AIR PIPE CONNECTED

This drawing must not without the consent of Tetra Pak be copied, transmitted or disclosed to any third party.

1 2 3 4 5 6 7 8 9 10

Terminal strip of 3223337-0003

U70X1000

From	Cable	Internal Jumper	Terminal	External Jumper	Cable	To	Page.Col.	Option	Function text
			48		U70W1390-BU	U70B1390:3	170.1		CLEANING PIPE OUTFEED CONNECTOR
			⏚		U70W1710-GNYE	U70K1710:E	176.7		SEAL WATER
			⏚						
U70B2700:⏚	U70W2700-GNYE		⏚				051.4		
			⏚						
			49				170.3		
			50				170.3		
U70X0560:2	U70W0560-2		51				170.3		
U70K1000:6			52				170.3		
			53				170.3		
			54				170.3		
			55		U70W2310-BN	U70B2310	170.3		PACHAGING MATERIAL SPLICE DETECTION IN COLUMN
			56		U70W1010-RD	U70B1010	170.3		SEAL WATER FLOW
			57			U70K1130:6	170.3		PLC REMOTE EP24DC, SUPERSTR.
			58			U70K2700:A1	170.3		HYDROGEN PEROXIDE SPRAY TANK
			59		U70W2100-BN	U70B2100	170.3		LOWER FORMING RING UP
			60		U70W1020-BN	U70B1020	170.3		PREHEATING VALVE
			61			U70K1120:2	170.3		PLC REMOTE OX2, SUPERSTR.
			62			U70K1120:3	170.3		PLC REMOTE OX2, SUPERSTR.
			63				170.3		
			64		U70W1060-BN	U70B1060	170.3		CLEANING PIPE INFEED CONNECTOR
			65			U70K1200:6	170.3		PLC REMOTE EP24DC, SUPERSTR.
			66		U70W3090-BN	U70B3090	170.3		C-VALVE POSITION
			67		U70W3020-BN	U70B3020	170.3		B-VALVE POSITION
			68		U70W3010-BN	U70B3010	170.3		A-VALVE POSITION
			69		U70W1330-BN	U70B1330	170.3		CLOSED LS POSITION
			70		U70W1340-BN	U70B1340	170.3		CLOSED SHORT STOP POSITION
			71		U70W1380-BN	U70B1380:1	170.3		ASEPTIC CHAMBER TOP COVER
			72		U70W3030-BN	U70B3030	170.3		C-VALVE POSITION
			73		U70W1280-BN	U70B1280	170.3		ROTATION GUARD COLUMN

This drawing must not without the consent of Tetra Pak be copied, transmitted or disclosed to any third party.

1 2 3 4 5 6 7 8 9 10

Terminal strip of 3223337-0003

U70X1000

From	Cable	Internal Jumper	Terminal	External Jumper	Cable	To	Page.Col.	Option	Function text
			74		U70W2211-BN	U70B2211	170.3		CLOSED AIR KINFE SENSOR 1
			75		U70W1360-BN	U70B1360	170.3		A-VALVE POSITION
			76		U70W1350-BN	U70B1350	170.3		LOWER FORMING RING UP
			77				170.3		
			78				170.3		
			79		U70W0290-1	U70X0290:1	170.3		FLOW METER
			80		U70W1370-BN	U70B1370	170.3		B-VALVE POSITION
			81		U70W1400-1	U70B1400:+	170.3		STEAM INLET VALVE OPEN ICU
			82		U70W2020-BN	U70B2020	170.3		BUTTERFLY REAR CYLINDER BACK POSITION
			83		F70W2010-5	F70S2010:31	170.3		EM.STOP STR.FRONT
			84		U70W1050-BK	U70B1050:BK	170.3		BOTTOM COVER CLOSED 1
			85		U70W2190-BN	U70B2190	170.3		CHANGE OVER VALVE OPEN
			86		U70W2120-BN	U70B2120	170.3		MOVABLE CALENDER ROLLER
			87				170.3		
			88				170.3		
			89		U70W2210-BN	U70B2210	170.3		CLOSED AIR KNIFE SENSOR 2
			90		U70W2200-BN	U70B2200	170.3		CHANGE OVER VALVE CLOSED
			91				170.3		
			92				170.3		
			93		U70W3780-BN	U70B3780	170.3		BUTTERFLY FRONT CYLINDER BACK POSITION
			94		U70W3790-BN	U70B3790	170.3		BUTTERFLY FRONT CYLINDER FRONT POSITION
			95				170.3		
			96		U70W1070-BN	U70B1070	170.3		STERILE AIR PIPE CONNECTED
			97				170.3		
			98				170.3		
			99				170.3		
			100		U70W1390-BN	U70B1390:1	170.3		CLEANING PIPE OUTFEED CONNECTOR
			⏚		U70W2750-GNYE	U70K2750:E	176.7		SPRAYING
			⏚		U70W2860-GNYE	U70K2860:E	176.7		FILLING SPRAY TANK
U70X0560:8	U70W0560-8		101				170.3		

Tetra Pak®

Version Designer	Version Date	Machine
RICO	01/10/2014	A3 CompactFlex 0300

ECM No	Denomination	Page Type
687624	TERMINAL STRIP OVERVIEW	TERMINAL STRIP OVERVIEW

Information Security Class	Document No.	Doc. type	Version	Page
PUBLIC	3223337-0006	ELD	AM	078

This drawing must not without the consent of Tetra Pak be copied, transmitted or disclosed to any third party.

1 2 3 4 5 6 7 8 9 10

Terminal strip of 3223337-0003

U70X1000

From	Cable	Internal Jumper	Terminal	External Jumper	Cable	To	Page.Col.	Option	Function text
			102			U70K1300:6	170.3		PLC REMOTE FPD, SUPERSTR.
			103		U70W1170-WH	U70X1170:1	170.3		U/P PENDULUM ROLLER
			104				170.3		
			⏚		U70W2870-GNYE	U70K2870:E	176.7		SPRAYING
			⏚			U70K1130:2	184.6		PLC REMOTE EP24DC, SUPERSTR.
			147			U70R1300:K	181.4		
			148			U70R1300:A	181.3		
			149			U70R1290:1	181.4		HEAT EXCHANGER VALVE POSITION SENSOR (RESISTOR)
			150			U70R1290:2	181.3		HEAT EXCHANGER VALVE POSITION SENSOR (RESISTOR)
			151						
			152						
			153						
			154						
			155						
U70X0560:6	U70W0560-6		156		U70W2310-BK	U70B2310	079.5		PACHAGING MATERIAL SPLICE DETECTION IN COLUMN
U70X0560:3	U70W0560-3		157			U70K1020:7	173.6		REGULATING VALVE POSITION
					U70W3090BK	U70B3090			C-VALVE POSITION
			158		U70W1290-BN	U70X1290:1	181.6		
			159		U70W1050-BU	U70B1050:BU	174.4		BOTTOM COVER CLOSED 1
			160		U70W1170-YE	U70X1170:2	182.4		U/P PENDULUM ROLLER
			161		U70W1040-BK	U70B1040:BK	174.5		BOTTOM COVER CLOSED 2
U70K1030:7			162		U70W1040-BU	U70B1040:BU	174.6		BOTTOM COVER CLOSED 2
U70X0560	U70W0560-5								
U70X0560:7	U70W0560-7		163		U70W1280-BK	U70B1280	076.6		ROTATION GUARD COLUMN
U70X0560:14	U70W0560-14		165		F70W2010-1	F70S2010:11	064.7		EM.STOP STR.FRONT
U70X0560:15	U70W0560-15		166		F70W2010-2	F70S2010:12	064.9		EM.STOP STR.FRONT
U70X0560:9	U70W0560-9		167		F70W2010-3	F70S2010:21	064.7		EM.STOP STR.FRONT
U70X0560:10	U70W0560-10		168		F70W2010-4	F70S2010:22	064.9		EM.STOP STR.FRONT
U70X0560:⏚	U70W0560-GNYE		⏚			U70K1000:2	170.9		DEVICENET ADAPTER, SUPERSTR.
			⏚			U70K1300:2	197.6		PLC REMOTE FPD, SUPERSTR.

This drawing must not without the consent of Tetra Pak be copied, transmitted or disclosed to any third party.

1 2 3 4 5 6 7 8 9 10

Terminal strip of 3223337-0003

U70X1000

From	Cable	Internal Jumper	Terminal	External Jumper	Cable	To	Page.Col.	Option	Function text
U70X0560:11	U70W0560-11		301				170.5		
U70X6000:37	U70W6100-1		302				170.5	HVA	
U70X4000:64	U70W9001-1		303				170.5	H.I.	
			304		U70W1700-BU	U70X1700:3	170.5		
			305		U70W2730-1	U70X2730:1	170.5		
			306				170.5		
			307				170.5		
			308				170.5		
			309				170.5		
			310				170.5		
			311				170.5		
			312				170.5		
			313				170.5		
			314				170.5		
			315				170.5		
			316				170.5		
U70X0560:12	U70W0560-12		351				170.5		
			352		U70W6100-2	U70X6000:1	170.5	HVA	HVA DEVICENET ADAPTER
			353		U70W9001-2	U70X4000:21	170.5	H.I.	DEVICENET ADAPTER H.I.
			354		U70W1700-BN	U70X1700:1	170.5		
			355		U70W2730-2	U70X2730:2	170.5		
			356				170.5		
			357				170.5		
			358				170.5		
			359				170.5		
			360				170.5		
			361				170.5		
			362				170.5		
			363				170.5		
			364				170.5		

This drawing must not without the consent of Tetra Pak be copied, transmitted or disclosed to any third party.

1 2 3 4 5 6 7 8 9 10

Terminal strip of 3223337-0003

U70X1000

From	Cable	Internal Jumper	Terminal	External Jumper	Cable	To	Page.Col.	Option	Function text
			365				170.5		
			366				170.5		
			⏚		U70W3700-GNYE	U70B3700:⏚	051.4		REGULATING VALVE LEAKAGE
U70X6000:⏚	U70W6100-GNYE		⏚				170.5		
			⏚		U70W1050-GNYE	U70B1050:E	174.4		BOTTOM COVER CLOSED 1
U70X4000:⏚	U70W9001-GNYE		⏚				170.6	H.I.	

Tetra Pak®

Version Designer: RICO	Version Date: 01/10/2014	Machine: A3 CompactFlex 0300	
ECM No: 687624	Denomination: TERMINAL STRIP OVERVIEW	Page Type: TERMINAL STRIP OVERVIEW	
Information Security Class: PUBLIC	Document No.: 3223337-0006	Doc. type: ELD	Version: AM	Page: 081

RELEASED

This drawing must not without the consent of Tetra Pak be copied, transmitted or disclosed to any third party.

1 2 3 4 5 6 7 8 9 10

Terminal strip of 3223337-0003

U70X1100

From	Cable	Internal Jumper	Terminal	External Jumper	Cable	To	Page.Col.	Option	Function text
U70K1190:2	U70W1100-BN		1			U70M1100:WH	190.5		HEAT EXCHANGER VALVE
U70K1190:3	U70W1100-BU		3			U70M1100:YE	190.5		HEAT EXCHANGER VALVE

Tetra Pak®

Version Designer: RICO	Version Date: 01/10/2014	Machine: A3 CompactFlex 0300	
ECM No: 687624	Denomination: TERMINAL STRIP OVERVIEW	Page Type: TERMINAL STRIP OVERVIEW	
Information Security Class: PUBLIC	Document No.: 3223337-0006	Doc. type: ELD	Version: AM	Page: 082

This drawing must not without the consent of Tetra Pak be copied, transmitted or disclosed to any third party.

1 2 3 4 5 6 7 8 9 10

Terminal strip of 3223337-0003

U70X1170

From	Cable	Internal Jumper	Terminal	External Jumper	Cable	To	Page.Col.	Option	Function text
U70X1000:103	U70W1170-WH		1				182.5		
U70X1000:160	U70W1170-YE		2				182.5		
U70K1110:1	U70W1170-GY		3				182.5		
U70K1110:5	U70W1170-GN		4				182.6		
U70K1110:3	U70W1170-SH		5				182.6		
			6				182.6		
			7				182.6		

Tetra Pak®

Version Designer: RICO	Version Date: 01/10/2014	Machine: A3 CompactFlex 0300	
ECM No: 687624	Denomination: TERMINAL STRIP OVERVIEW	Page Type: TERMINAL STRIP OVERVIEW	
Information Security Class: PUBLIC	Document No.: 3223337-0006	Doc. type: ELD	Version: AM	Page: 083

RELEASED

This drawing must not without the consent of Tetra Pak be copied, transmitted or disclosed to any third party.

1 2 3 4 5 6 7 8 9 10

Terminal strip of 3223337-0003

U70X1250

From	Cable	Internal Jumper	Terminal	External Jumper	Cable	To	Page.Col.	Option	Function text
T40K1080:7	U70W1250-RD		-			U70B1250:RD	150.6		TEMP. WATER HEAT EXCHANGER
T40K1080:6	U70W1250-YE		+			U70B1250:YE	150.6		TEMP. WATER HEAT EXCHANGER

Tetra Pak®

Version Designer: RICO	Version Date: 01/10/2014	Machine: A3 CompactFlex 0300	
ECM No: 687624	Denomination: TERMINAL STRIP OVERVIEW	Page Type: TERMINAL STRIP OVERVIEW	
Information Security Class: PUBLIC	Document No.: 3223337-0006	Doc. type: ELD	Version: AM	Page: 084

This drawing must not without the consent of Tetra Pak be copied, transmitted or disclosed to any third party.

1 2 3 4 5 6 7 8 9 10

Terminal strip of 3223337-0003

U70X1260

From	Cable	Internal Jumper	Terminal	External Jumper	Cable	To	Page.Col.	Option	Function text
U70K1150:5	U70W1260-RD		-			U70B1260:RD	186.5		TEMP. HYDROGEN PEROXIDE BATH
U70K1150:4	U70W1260-YE		+			U70B1260:YE	186.5		TEMP. HYDROGEN PEROXIDE BATH

Tetra Pak®

Version Designer: RICO	Version Date: 01/10/2014	Machine: A3 CompactFlex 0300	
ECM No: 687624	Denomination: TERMINAL STRIP OVERVIEW	Page Type: TERMINAL STRIP OVERVIEW	
Information Security Class: PUBLIC	Document No.: 3223337-0006	Doc. type: ELD	Version: AM	Page: 085

This drawing must not without the consent of Tetra Pak
be copied, transmitted or disclosed to any third party.

1 2 3 4 5 6 7 8 9 10

Terminal strip of 3223337-0003
U70X1270

From	Cable	Internal Jumper	Terminal	External Jumper	Cable	To	Page.Col.	Option	Function text
U70K1150:7	U70W1270-RD		-			U70B1270:RD	186.5		TEMP. STERILE AIR OUTLET
U70K1150:6	U70W1270-YE		+			U70B1270:YE	186.5		TEMP. STERILE AIR OUTLET

Tetra Pak®

Version Designer: RICO	Version Date: 01/10/2014	Machine: A3 CompactFlex 0300	
ECM No: 687624	Denomination: TERMINAL STRIP OVERVIEW	Page Type: TERMINAL STRIP OVERVIEW	
Information Security Class: PUBLIC	Document No.: 3223337-0006	Doc. type: ELD	Version: AM	Page: 086

This drawing must not without the consent of Tetra Pak be copied, transmitted or disclosed to any third party.

1 2 3 4 5 6 7 8 9 10

Terminal strip of 3223337-0003
U70X1290

From	Cable	Internal Jumper	Terminal	External Jumper	Cable	To	Page.Col.	Option	Function text
U70X1000:158	U70W1290-BN		1			U70B1290:BK	181.6		HEAT EXCHANGER VALVE POSITION SENSOR
U70K1100:4	U70W1290-BU		3			U70B1290:RD	181.6		HEAT EXCHANGER VALVE POSITION SENSOR
U70K1100:0	U70W1290-BK		4			U70B1290:WH	181.6		HEAT EXCHANGER VALVE POSITION SENSOR

Tetra Pak®

Version Designer	Version Date	Machine
RICO	01/10/2014	A3 CompactFlex 0300

ECM No	Denomination	Page Type
687624	TERMINAL STRIP OVERVIEW	TERMINAL STRIP OVERVIEW

Information Security Class	Document No.	Doc. type	Version	Page
PUBLIC	3223337-0006	ELD	AM	087

This drawing must not without the consent of Tetra Pak be copied, transmitted or disclosed to any third party.

1 2 3 4 5 6 7 8 9 10

Terminal strip of 3223337-0003

U70X1700

From	Cable	Internal Jumper	Terminal	External Jumper	Cable	To	Page.Col.	Option	Function text
U70X1000:354	U70W1700-BN		1			U70B1700:L+	172.4		
	U70W1700-WH		2			U70B1700:MAX	172.5		
U70X1000:304	U70W1700-BU		3			U70B1700:L-	172.4		
U70K1010:4	U70W1700-BK		4			U70B1700:MIN	172.5		

This drawing must not without the consent of Tetra Pak
be copied, transmitted or disclosed to any third party.

1 2 3 4 5 6 7 8 9 10

Terminal strip of 3223337-0003
U70X2260

From	Cable	Internal Jumper	Terminal	External Jumper	Cable	To	Page.Col.	Option	Function text
U70K1100:5	U70W2260-WH		1			U70B2260:1	181.4		PENDULUM POSITION
U70K1100:7	U70W2260-GN		2			U70B2260:2	181.4		PENDULUM POSITION
U70K1100:1	U70W2260-BN		3			U70B2260:3	181.4		PENDULUM POSITION
U70K1100:3	U70W2260-SH		4			U70B2260:⏚	181.4		PENDULUM POSITION

Tetra Pak®

Version Designer: RICO	Version Date: 01/10/2014	Machine: A3 CompactFlex 0300	
ECM No: 687624	Denomination: TERMINAL STRIP OVERVIEW	Page Type: TERMINAL STRIP OVERVIEW	
Information Security Class: PUBLIC	Document No.: 3223337-0006	Doc. type: ELD	Version: AM	Page: 089

This drawing must not without the consent of Tetra Pak
be copied, transmitted or disclosed to any third party.

1 2 3 4 5 6 7 8 9 10

Terminal strip of 3223337-0003
U70X2280

From	Cable	Internal Jumper	Terminal	External Jumper	Cable	To	Page.Col.	Option	Function text
U70K1210:5	U70W2280-RD		-			U70B2280:RD	192.5		TEMP. HEAT STERILIZATION
U70K1210:4	U70W2280-YE		+			U70B2280:YE	192.5		TEMP. HEAT STERILIZATION

Tetra Pak®

Version Designer: RICO	Version Date: 01/10/2014	Machine: A3 CompactFlex 0300	
ECM No: 687624	Denomination: TERMINAL STRIP OVERVIEW	Page Type: TERMINAL STRIP OVERVIEW	
Information Security Class: PUBLIC	Document No.: 3223337-0006	Doc. type: ELD	Version: AM	Page: 090

This drawing must not without the consent of Tetra Pak be copied, transmitted or disclosed to any third party.

1 2 3 4 5 6 7 8 9 10

Terminal strip of 3223337-0003

U70X2290

From	Cable	Internal Jumper	Terminal	External Jumper	Cable	To	Page.Col.	Option	Function text
U70K1220:5	U70W2290-RD		-			U70B2290:RD	193.5		TEMP. AIR KNIFE
U70K1220:4	U70W2290-YE		+			U70B2290:YE	193.5		TEMP. AIR KNIFE

Tetra Pak®

Version Designer: RICO	Version Date: 01/10/2014	Machine: A3 CompactFlex 0300	
ECM No: 687624	Denomination: TERMINAL STRIP OVERVIEW	Page Type: TERMINAL STRIP OVERVIEW	
Information Security Class: PUBLIC	Document No.: 3223337-0006	Doc. type: ELD	Version: AM	Page: 091

This drawing must not without the consent of Tetra Pak
be copied, transmitted or disclosed to any third party.

1 2 3 4 5 6 7 8 9 10

Terminal strip of 3223337-0003
U70X2300

From	Cable	Internal Jumper	Terminal	External Jumper	Cable	To	Page.Col.	Option	Function text
U70K1210:7	U70W2300-RD		-			U70B2300:RD	192.5		TEMP. STERILE AIR OUTLET
U70K1210:6	U70W2300-YE		+			U70B2300:YE	192.5		TEMP. STERILE AIR OUTLET

Tetra Pak®

Version Designer: RICO	Version Date: 01/10/2014	Machine: A3 CompactFlex 0300	
ECM No: 687624	Denomination: TERMINAL STRIP OVERVIEW	Page Type: TERMINAL STRIP OVERVIEW	
Information Security Class: PUBLIC	Document No.: 3223337-0006	Doc. type: ELD	Version: AM	Page: 092

This drawing must not without the consent of Tetra Pak be copied, transmitted or disclosed to any third party.

1 2 3 4 5 6 7 8 9 10

Terminal strip of 3223337-0003

U70X2730

From	Cable	Internal Jumper	Terminal	External Jumper	Cable	To	Page.Col.	Option	Function text
U70X1000:305	U70W2730-1		1			U70B2730:L-	172.4		
U70X1000:355	U70W2730-2		2			U70B2730:L+	172.4		
U70K1010:6	U70W2730-3		3			U70B2730:MIN	172.5		

Tetra Pak®

Version Designer: RICO	Version Date: 01/10/2014	Machine: A3 CompactFlex 0300	
ECM No: 687624	Denomination: TERMINAL STRIP OVERVIEW	Page Type: TERMINAL STRIP OVERVIEW	
Information Security Class: PUBLIC	Document No.: 3223337-0006	Doc. type: ELD	Version: AM	Page: 093

RELEASED

This drawing must not without the consent of Tetra Pak be copied, transmitted or disclosed to any third party.

1 2 3 4 5 6 7 8 9 10

Terminal strip of 3223337-0003

U70X3100

From	Cable	Internal Jumper	Terminal	External Jumper	Cable	To	Page.Col.	Option	Function text
A01X3100:3+	U70W3100-WH		1				054.3		
	U70W3100-YE		2				054.3		
A01X3100:3	U70W3100-GY		3				054.3		
A01X3100:3-	U70W3100-GN		4				054.3		
A01X3100:⏚	U70W3100-BN		5				054.3		
			6				054.3		
			7				054.3		

Tetra Pak®

Version Designer: RICO	Version Date: 01/10/2014	Machine: A3 CompactFlex 0300	
ECM No: 687624	Denomination: TERMINAL STRIP OVERVIEW	Page Type: TERMINAL STRIP OVERVIEW	
Information Security Class: PUBLIC	Document No.: 3223337-0006	Doc. type: ELD	Version: AM	Page: 094

RELEASED

This drawing must not without the consent of Tetra Pak be copied, transmitted or disclosed to any third party.

1 2 3 4 5 6 7 8 9 10

Terminal strip of 3223337-0003

U70X3200

From	Cable	Internal Jumper	Terminal	External Jumper	Cable	To	Page.Col.	Option	Function text
U70K1140:5	U70W3200-RD		-			U70B3200:RD	185.5		TEMP. AIR SUPER HEATER
U70K1140:4	U70W3200-YE		+			U70B3200:YE	185.5		TEMP. AIR SUPER HEATER

Tetra Pak®

Version Designer: RICO	Version Date: 01/10/2014	Machine: A3 CompactFlex 0300	
ECM No: 687624	Denomination: TERMINAL STRIP OVERVIEW	Page Type: TERMINAL STRIP OVERVIEW	
Information Security Class: PUBLIC	Document No.: 3223337-0006	Doc. type: ELD	Version: AM	Page: 095

RELEASED

This drawing must not without the consent of Tetra Pak be copied, transmitted or disclosed to any third party.

1 2 3 4 5 6 7 8 9 10

Terminal strip of 3223337-0003

U70X3210

From	Cable	Internal Jumper	Terminal	External Jumper	Cable	To	Page.Col.	Option	Function text
U70K1160:5	U70W3210-RD		-			U70B3210:RD	187.5		TEMP. LS SHORT STOP NOZZLE
U70K1160:4	U70W3210-YE		+			U70B3210:YE	187.5		TEMP. LS SHORT STOP NOZZLE

Tetra Pak®

Version Designer: RICO	Version Date: 01/10/2014	Machine: A3 CompactFlex 0300	
ECM No: 687624	Denomination: TERMINAL STRIP OVERVIEW	Page Type: TERMINAL STRIP OVERVIEW	
Information Security Class: PUBLIC	Document No.: 3223337-0006	Doc. type: ELD	Version: AM	Page: 096

This drawing must not without the consent of Tetra Pak
be copied, transmitted or disclosed to any third party.

1 2 3 4 5 6 7 8 9 10

Terminal strip of 3223337-0003
U70X3211

From	Cable	Internal Jumper	Terminal	External Jumper	Cable	To	Page.Col.	Option	Function text
U70K1230:5	U70W3211-RD		-			U70B3211:RD	194.6		TEMP. LS SHORT STOP ELEMENT
U70K1230:4	U70W3211-YE		+			U70B3211:YE	194.6		TEMP. LS SHORT STOP ELEMENT

Tetra Pak®

Version Designer: RICO	Version Date: 01/10/2014	Machine: A3 CompactFlex 0300	
ECM No: 687624	Denomination: TERMINAL STRIP OVERVIEW	Page Type: TERMINAL STRIP OVERVIEW	
Information Security Class: PUBLIC	Document No.: 3223337-0006	Doc. type: ELD	Version: AM	Page: 097

This drawing must not without the consent of Tetra Pak be copied, transmitted or disclosed to any third party.

1 2 3 4 5 6 7 8 9 10

Terminal strip of 3223337-0003

U70X3230

From	Cable	Internal Jumper	Terminal	External Jumper	Cable	To	Page.Col.	Option	Function text
U70K1160:7	U70W3230-RD		-			U70B3230:RD	187.5		TEMP. LS HEATER ELEMENT
U70K1160:6	U70W3230-YE		+			U70B3230:YE	187.5		TEMP. LS HEATER ELEMENT

Tetra Pak®

Version Designer: RICO	Version Date: 01/10/2014	Machine: A3 CompactFlex 0300	
ECM No: 687624	Denomination: TERMINAL STRIP OVERVIEW	Page Type: TERMINAL STRIP OVERVIEW	
Information Security Class: PUBLIC	Document No.: 3223337-0006	Doc. type: ELD	Version: AM	Page: 098

This drawing must not without the consent of Tetra Pak be copied, transmitted or disclosed to any third party.

1 2 3 4 5 6 7 8 9 10

Terminal strip of 3223337-0003

U70X3240

From	Cable	Internal Jumper	Terminal	External Jumper	Cable	To	Page.Col.	Option	Function text
U70K1140:7	U70W3240-RD		-			U70B3240:RD	185.5		TEMP. LS HEATER NOZZLE
U70K1140:6	U70W3240-YE		+			U70B3240:YE	185.5		TEMP. LS HEATER NOZZLE

Tetra Pak®

Version Designer: RICO	Version Date: 01/10/2014	Machine: A3 CompactFlex 0300	
ECM No: 687624	Denomination: TERMINAL STRIP OVERVIEW	Page Type: TERMINAL STRIP OVERVIEW	
Information Security Class: PUBLIC	Document No.: 3223337-0006	Doc. type: ELD	Version: AM	Page: 099

This drawing must not without the consent of Tetra Pak
be copied, transmitted or disclosed to any third party.

1 2 3 4 5 6 7 8 9 10

Terminal strip of 3223337-0003
U70X3250

From	Cable	Internal Jumper	Terminal	External Jumper	Cable	To	Page.Col.	Option	Function text
U70K1220:7	U70W3250-RD		-			U70B3250:RD	193.5		STEAM DRAIN TEMP.
U70K1220:6	U70W3250-YE		+			U70B3250:YE	193.5		STEAM DRAIN TEMP.

Tetra Pak®

Version Designer: RICO	Version Date: 01/10/2014	Machine: A3 CompactFlex 0300	
ECM No: 687624	Denomination: TERMINAL STRIP OVERVIEW	Page Type: TERMINAL STRIP OVERVIEW	
Information Security Class: PUBLIC	Document No.: 3223337-0006	Doc. type: ELD	Version: AM	Page: 100

This drawing must not without the consent of Tetra Pak
be copied, transmitted or disclosed to any third party.

1 2 3 4 5 6 7 8 9 10

Terminal strip of 3223337-0003
U70X3270

From	Cable	Internal Jumper	Terminal	External Jumper	Cable	To	Page.Col.	Option	Function text
U70K1230:7	U70W3270-RD		-			U70B3270:RD	194.6		TEMP. SCRUBBER WATER
U70K1230:6	U70W3270-YE		+			U70B3270:YE	194.6		TEMP. SCRUBBER WATER

Tetra Pak®

Version Designer: RICO	Version Date: 01/10/2014	Machine: A3 CompactFlex 0300	
ECM No: 687624	Denomination: TERMINAL STRIP OVERVIEW	Page Type: TERMINAL STRIP OVERVIEW	
Information Security Class: PUBLIC	Document No.: 3223337-0006	Doc. type: ELD	Version: AM	Page: 101

This drawing must not without the consent of Tetra Pak be copied, transmitted or disclosed to any third party.

1 2 3 4 5 6 7 8 9 10

Terminal strip of 3223337-0003

U70X4000

From	Cable	Internal Jumper	Terminal	External Jumper	Cable	To	Page.Col.	Option	Function text
			21		U70W9001-2	U70X1000:353	170.7	H.I.	
			22			U70K9000:6	170.7	H.I.	DEVICENET ADAPTER H.I.
			23			U70K4061:A1	170.7	H.I.	H.I. LEVEL PEROXIDE SPRAY TANK
			61			U70K9000:4	170.7	H.I.	DEVICENET ADAPTER H.I.
U70K4061:A2			63				170.7	H.I.	
			64		U70W9001-1	U70X1000:303	170.7	H.I.	
U70X1000:⏚	U70W9001-GNYE		⏚			U70K9000:2	170.7	H.I.	DEVICENET ADAPTER H.I.
			⏚		U70W4330-BU	U70X4330:3	211.4	RK	
U70K4210:E	U70W4210-GNYE		⏚				208.5	H.I.	
U70K4220:E	U70W4220-GNYE		⏚				208.5	H.I.	
U70K4230:E	U70W4230-GNYE		⏚				208.5	H.I.	
U70K4240:E	U70W4240-GNYE		⏚				208.5	H.I.	
U70B4060:⏚	U70W4060-GNYE		⏚				051.4	H.I.	

Tetra Pak®

Version Designer: RICO	Version Date: 01/10/2014	Machine: A3 CompactFlex 0300	
ECM No: 687624	Denomination: TERMINAL STRIP OVERVIEW	Page Type: TERMINAL STRIP OVERVIEW	
Information Security Class: PUBLIC	Document No.: 3223337-0006	Doc. type: ELD	Version: AM	Page: 102

This drawing must not without the consent of Tetra Pak be copied, transmitted or disclosed to any third party.

1 2 3 4 5 6 7 8 9 10

Terminal strip of 3223337-0003

U70X4290

From	Cable	Internal Jumper	Terminal	External Jumper	Cable	To	Page.Col.	Option	Function text
U70B4290:1			1		U70W4290-BN	U70K9060:6	209.3	H.I.	
U70B4290:2			2		U70W4290-GN	U70K9060:4	209.3	H.I.	
U70B4290:3			3		U70W4290-WH	U70K9060:4	209.3	H.I.	
U70B4290:4			4		U70W4290-YE	U70K9060:0	209.3	H.I.	H.I. FLOW SENSOR
U70B4290:5			5		U70W4290-OG		209.3	H.I.	
U70B4290:6			6		U70W4290-GY		209.3	H.I.	

Tetra Pak®

Version Designer: RICO	Version Date: 01/10/2014	Machine: A3 CompactFlex 0300	
ECM No: 687624	Denomination: TERMINAL STRIP OVERVIEW	Page Type: TERMINAL STRIP OVERVIEW	
Information Security Class: PUBLIC	Document No.: 3223337-0006	Doc. type: ELD	Version: AM	Page: 103

This drawing must not without the consent of Tetra Pak
be copied, transmitted or disclosed to any third party.

1 2 3 4 5 6 7 8 9 10

Terminal strip of 3223337-0003
U70X4330

From	Cable	Internal Jumper	Terminal	External Jumper	Cable	To	Page.Col.	Option	Function text
U70K9080:6	U70W4330-BN		1			U70T4330:1	211.6	H.I.	PRESSURE REGULATOR H.I.
U70K9080:4	U70W4330-WH		2			U70T4330:2	211.6	H.I.	PRESSURE REGULATOR H.I.
U70X4000:⏚	U70W4330-BU		3			U70T4330:3	211.6	H.I.	PRESSURE REGULATOR H.I.
U70K9080:0	U70W4330-BK		4			U70T4330:4	211.6	H.I.	PRESSURE REGULATOR H.I.
	U70W4330-GY		5				211.6	H.I.	

Tetra Pak®

Version Designer: RICO	Version Date: 01/10/2014	Machine: A3 CompactFlex 0300	
ECM No: 687624	Denomination: TERMINAL STRIP OVERVIEW	Page Type: TERMINAL STRIP OVERVIEW	
Information Security Class: PUBLIC	Document No.: 3223337-0006	Doc. type: ELD	Version: AM	Page: 104

This drawing must not without the consent of Tetra Pak be copied, transmitted or disclosed to any third party.

1 2 3 4 5 6 7 8 9 10

Terminal strip of 3223337-0003

U70X4350

From	Cable	Internal Jumper	Terminal	External Jumper	Cable	To	Page.Col.	Option	Function text
U70K9090:5	U70W4350-RD		-			U70B4350:RD	212.6	H.I.	TEMP. H.I. HEATER
U70K9090:4	U70W4350-YE		+			U70B4350:YE	212.6	H.I.	TEMP. H.I. HEATER

Tetra Pak®

Version Designer: RICO	Version Date: 01/10/2014	Machine: A3 CompactFlex 0300	
ECM No: 687624	Denomination: TERMINAL STRIP OVERVIEW	Page Type: TERMINAL STRIP OVERVIEW	
Information Security Class: PUBLIC	Document No.: 3223337-0006	Doc. type: ELD	Version: AM	Page: 105

This drawing must not without the consent of Tetra Pak
be copied, transmitted or disclosed to any third party.

1 2 3 4 5 6 7 8 9 10

Terminal strip of 3223337-0003
U70X4360

From	Cable	Internal Jumper	Terminal	External Jumper	Cable	To	Page.Col.	Option	Function text
U70K9090:7	U70W4360-RD		-			U70B4360:RD	212.6	H.I.	TEMP. H.I. AIR
U70K9090:6	U70W4360-YE		+			U70B4360:YE	212.6	H.I.	TEMP. H.I. AIR

Tetra Pak®

Version Designer: RICO	Version Date: 01/10/2014	Machine: A3 CompactFlex 0300	
ECM No: 687624	Denomination: TERMINAL STRIP OVERVIEW	Page Type: TERMINAL STRIP OVERVIEW	
Information Security Class: PUBLIC	Document No.: 3223337-0006	Doc. type: ELD	Version: AM	Page: 106

This drawing must not without the consent of Tetra Pak
be copied, transmitted or disclosed to any third party.

1 2 3 4 5 6 7 8 9 10

Terminal strip of 3223337-0003
U70X4370

From	Cable	Internal Jumper	Terminal	External Jumper	Cable	To	Page.Col.	Option	Function text
U70K9100:5	U70W4370-RD		-			U70B4370:RD	213.6	H.I.	TEMP. HI SPRAY
U70K9100:4	U70W4370-YE		+			U70B4370:YE	213.6	H.I.	TEMP. HI SPRAY

Tetra Pak®

Version Designer: RICO	Version Date: 01/10/2014	Machine: A3 CompactFlex 0300	
ECM No: 687624	Denomination: TERMINAL STRIP OVERVIEW	Page Type: TERMINAL STRIP OVERVIEW	
Information Security Class: PUBLIC	Document No.: 3223337-0006	Doc. type: ELD	Version: AM	Page: 107

This drawing must not without the consent of Tetra Pak be copied, transmitted or disclosed to any third party.

1 2 3 4 5 6 7 8 9 10

Terminal strip of 3223337-0003

U70X6000

From	Cable	Internal Jumper	Terminal	External Jumper	Cable	To	Page.Col.	Option	Function text
U70X1000:352	U70W6100-2		1				170.9	HVA	
			2			U70K6000:6	170.9	HVA	DEVICENET ADAPTER HVA
			3		U70W6500-BN	U70B6500	170.9	HVA	HVA C VALVE DOWN POSITION
			4		U70W6510-BN	U70B6510	170.9	HVA	HVA C VALVE UP POSITION
			5		U70W6520-BN	U70B6520	170.9	HVA	HVA PLUG IN POSITION
			6		U70W6530-BN	U70B6530	170.9	HVA	HVA CLEANING PIPE
			7		U70W6540-BN	U70B6540	170.9	HVA	HVA INTERNAL PRODUCT VALVE POSITION
			8		U70W6550-BN	U70B6550	170.9	HVA	HVA PUMP PIPE DETECT
			9		U70W6560-BN	U70B6560	170.9	HVA	HVA PUMP PIPE BYPASS
			10		U70W6570-BN	U70B6570	170.9	HVA	HVA LINE PRODUCT
			11		U70W6580-BN	U70B6580	170.9	HVA	HVA EXTERNAL PRODUCT VALVE POSITION
			12		U70W6590-BN	U70B6590	170.9	HVA	HVA B VALVE POSITION
			13		U70W6600-BN	U70T6600:1	170.9	HVA	HVA PRESSURE REGULATOR
			14				170.9	HVA	
			23		U70W6500-BU	U70B6500	170.9	HVA	HVA C VALVE DOWN POSITION
			24		U70W6510-BU	U70B6510	170.9	HVA	HVA C VALVE UP POSITION
			25		U70W6520-BU	U70B6520	170.9	HVA	HVA PLUG IN POSITION
			26		U70W6530-BU	U70B6530	170.9	HVA	HVA CLEANING PIPE
			27		U70W6540-BU	U70B6540	170.9	HVA	HVA INTERNAL PRODUCT VALVE POSITION
			28		U70W6550-BU	U70B6550	170.9	HVA	HVA PUMP PIPE DETECT
			29		U70W6560-BU	U70B6560	170.9	HVA	HVA PUMP PIPE BYPASS
			30		U70W6570-BU	U70B6570	170.9	HVA	HVA LINE PRODUCT
			31		U70W6580-BU	U70B6580	170.9	HVA	HVA EXTERNAL PRODUCT VALVE POSITION
			32		U70W6590-BU	U70B6590	170.9	HVA	HVA B VALVE POSITION
			33		U70W6025-BN	U70X6025:B-10	170.9	HVA	HVA (0V PNEUMATIC)
			34		U70W6025-BK	U70X6025:C-10	170.9	HVA	
			35		U70W6600-WH	U70T6600:2	170.9	HVA	HVA PRESSURE REGULATOR
			36				170.9	HVA	
U70X1000:302	U70W6100-1		37				170.9	HVA	
			38			U70K6000:4	170.9	HVA	DEVICENET ADAPTER HVA

This drawing must not without the consent of Tetra Pak
be copied, transmitted or disclosed to any third party.

1 2 3 4 5 6 7 8 9 10

Terminal strip of 3223337-0003
U70X6000

From	Cable	Internal Jumper	Terminal	External Jumper	Cable	To	Page.Col.	Option	Function text
U70X1000:⏚	U70W6100-GNYE		⏚			U70K6000:2	170.9	HVA	DEVICENET ADAPTER HVA
			⏚						

This drawing must not without the consent of Tetra Pak be copied, transmitted or disclosed to any third party.

1 2 3 4 5 6 7 8 9 10

Terminal strip of 3223337-0003

U70X6050

From	Cable	Internal Jumper	Terminal	External Jumper	Cable	To	Page.Col.	Option	Function text
U70K6050:5	U70W6050-RD		-			U70B6050:RD	239.6	HVA	HVA EXTERNAL PRODUCT TEMP
U70K6050:4	U70W6050-YE		+			U70B6050:YE	239.6	HVA	HVA EXTERNAL PRODUCT TEMP

This drawing must not without the consent of Tetra Pak
be copied, transmitted or disclosed to any third party.

1 2 3 4 5 6 7 8 9 10

Terminal strip of 3223337-0003
U70X6565

From	Cable	Internal Jumper	Terminal	External Jumper	Cable	To	Page.Col.	Option	Function text
U70K6040:5	U70W6565-RD		-			U70B6565:RD	238.6	HVA	HVA PUMP BARRIER TEMP
U70K6040:4	U70W6565-YE		+			U70B6565:YE	238.6	HVA	HVA PUMP BARRIER TEMP

Tetra Pak®

Version Designer: RICO	Version Date: 01/10/2014	Machine: A3 CompactFlex 0300	
ECM No: 687624	Denomination: TERMINAL STRIP OVERVIEW	Page Type: TERMINAL STRIP OVERVIEW	
Information Security Class: PUBLIC	Document No.: 3223337-0006	Doc. type: ELD	Version: AM	Page: 111

This drawing must not without the consent of Tetra Pak
be copied, transmitted or disclosed to any third party.

1 2 3 4 5 6 7 8 9 10

Terminal strip of 3223337-0003
U70X6566

From	Cable	Internal Jumper	Terminal	External Jumper	Cable	To	Page.Col.	Option	Function text
U70K6040:7	U70W6566-RD		-			U70B6566:RD	238.6	HVA	HVA STERILIZATION TEMP
U70K6040:6	U70W6566-YE		+			U70B6566:YE	238.6	HVA	HVA STERILIZATION TEMP

This drawing must not without the consent of Tetra Pak
be copied, transmitted or disclosed to any third party.

1 2 3 4 5 6 7 8 9 10

Terminal strip of 3223337-0003

W51X1020

From	Cable	Internal Jumper	Terminal	External Jumper	Cable	To	Page.Col.	Option	Function text
					W51W1010-A	W51B1010	077.3		PRINTER PRODUCT DETECTION
					W51W1011-B	W51B1011			PRINTER PRODUCT DETECTION

This drawing must not without the consent of Tetra Pak be copied, transmitted or disclosed to any third party.

1 2 3 4 5 6 7 8 9 10

Terminal strip of 3223337-0003
W51X1700

From	Cable	Internal Jumper	Terminal	External Jumper	Cable	To	Page.Col.	Option	Function text
W51P1700:1			1		W51W1700-RD	T50X1000:167	072.5		
			2			W51P1700:2	072.5		
			3			W51P1700:3	072.5		
			4			W51P1700:4	072.5		
			5			W51P1700:5	072.5		
			6			W51P1700:6	072.5		
			7			W51P1700:7	072.5		
			8			W51P1700:8	072.5		
			9			W51P1700:9	072.5		
			10			W51P1700:10	072.5		
T50X1000:166	W51W1700-WH		11			W51P1700:11	072.5		
			12			W51P1700:12	072.5		
T50X1000:24	W51W1700-BN		13			W51P1700:13	072.5		
			14			W51P1700:14	072.5		
			15			W51P1700:15	072.5		
			16			W51P1700:16	072.5		
			17			W51P1700:17	072.5		
			18			W51P1700:18	072.5		
			19			W51P1700:19	072.5		
			20			W51P1700:20	072.5		
			21			W51P1700:21	072.5		
			22			W51P1700:22	072.5		
			23			W51P1700:23	072.5		
			24			W51P1700:24	072.5		
T50X1000:⏚	W51W1700-SH		25			W51P1700:25	072.5		

Tetra Pak®

Version Designer: RICO	Version Date: 01/10/2014	Machine: A3 CompactFlex 0300	
ECM No: 687624	Denomination: TERMINAL STRIP OVERVIEW	Page Type: TERMINAL STRIP OVERVIEW	
Information Security Class: PUBLIC	Document No.: 3223337-0006	Doc. type: ELD	Version: AM	Page: 114

This drawing must not without the consent of Tetra Pak be copied, transmitted or disclosed to any third party.

1 2 3 4 5 6 7 8 9 10

Terminal strip of 3223337-0003

W51X1710

From	Cable	Internal Jumper	Terminal	External Jumper	Cable	To	Page.Col.	Option	Function text
W51P1700:1			1		W51W1710-1	W51K1700:14	072.5		
W51P1700:2			2		W51W1710-2		072.5		
W51P1700:3			3		W51W1710-3	W51K1700:13	072.5		
W51P1700:4			4				072.5		
W51P1700:5			5		W51W1710-GNYE	T50X1000:⏚	072.5		
W51P1700:6			6				072.5		

Tetra Pak®	Version Designer RICO	Version Date 01/10/2014	Machine A3 CompactFlex 0300		
	ECM No 687624	Denomination TERMINAL STRIP OVERVIEW	Page Type TERMINAL STRIP OVERVIEW		
	Information Security Class PUBLIC	Document No. 3223337-0006	Doc. type ELD	Version AM	Page 115

This drawing must not without the consent of Tetra Pak be copied, transmitted or disclosed to any third party.

1 2 3 4 5 6 7 8 9 10

Terminal strip of 3223337-0003

W51X1720

From	Cable	Internal Jumper	Terminal	External Jumper	Cable	To	Page.Col.	Option	Function text
	W51W1720-BK		1			W51P1700:1	072.6		
T50X1000:83	W51W1720-RD		2			W51P1700:2	072.6		
	W51W1720-WH		3			W51P1700:3	072.6		
	W51W1720-YE		4			W51P1700:4	072.6		
T50K1020:7	W51W1720-GN		5			W51P1700:5	072.6		
	W51W1720-BU		6			W51P1700:6	072.6		
T50K1020:6	W51W1720-VT		7			W51P1700:7	072.6		
			8			W51P1700:8	072.6		
T50X1000:⏚	W51W1720-SH		9			W51P1700:9	072.6		

Tetra Pak®

Version Designer: RICO	Version Date: 01/10/2014	Machine: A3 CompactFlex 0300	
ECM No: 687624	Denomination: TERMINAL STRIP OVERVIEW	Page Type: TERMINAL STRIP OVERVIEW	
Information Security Class: PUBLIC	Document No.: 3223337-0006	Doc. type: ELD	Version: AM	Page: 116

8 Cable Connection List

Description

The following pages contain the drawing remarks referenced in chapter 4 Circuit Diagrams.

8.1 Cable Connection List

This page intentionally left blank

This drawing must not without the consent of Tetra Pak be copied, transmitted or disclosed to any third party.

Cable Connection List of 3223337-0003

From	Cable	To	Page.Col.	Option
	W0001			
A01X1025:1	1	A01M5750:L1	014.1	
A01X1025:2	2	A01M5750:L2	014.2	
A01X1025:3	3	A01M5750:L3	014.2	
A01X1025:4	4	A01M5750:0	014.7	
A01X1025:5	5	A01M5750:6	014.8	
	6			
A01X1025:⏚	GNYE	A01M5750:PE	014.2	
	A01W0010			
A01X0100:6	BU	U70X0380:4	054.8	
A01X0100:7	WH	U70X0380:5	054.8	
	SH	U70X0380:⏚	054.7	
	A01W0020			
T40T0700:TX	1	T40T0710:RX	031.1	
	A01W0030			
T40T0710:TX	1	T40T0720:RX	032.1	
	A01W0040			
T40T0720:TX	1	T40T0730:RX	033.1	
	A01W0050			
T40T0730:TX	1	T40T0740:RX	034.2	
	A01W0060			
T40T0740:TX	1	T40T0750:RX	035.1	
	A01W0070			
T40T0750:TX	1	U70T6200:RX	037.1	

From	Cable	To	Page.Col.	Option
	A01W0090			
T50T0800:RX	1	U70T6200:TX	037.1	HVA
	A01W0100			
A01X0040:1.1	BN	A01X3100:1+	053.1	
A01X0040:1.3	BU	A01X3100:1-	053.1	
A01X0040:1.2	GY/PK	A01K0100:19	053.4	
A01X0040:2.2	RD/BU	A01K0100:20	053.4	
A01X0040:3.2	WH/GN	A01K0100:17	053.4	
A01X0040:4.2	BN/GN	A01K0100:18	053.4	
A01X0040:1.4	WH	A01K0100:11	053.4	
A01X0040:2.4	GN	A01K0100:12	053.4	
A01X0040:3.4	YE	A01K0100:7	053.4	
A01X0040:4.4	GY	A01K0100:8	053.4	
	GNYE			
	A01W0110			
T50T0800:TX	1	T50T0810:RX	039.1	
	A01W0120			
T50T0810:TX	1	T50T0820:RX	040.1	
	A01W0130			
A01K2120:Rx	1	T50T0820:TX	040.1	
	A01W0150			
	BK			
A01X0100:4	BU	A01X2040:BLUE	069.4	
	DRAIN	A01X2040:DRAIN	069.4	
A01X0100:5	WH	A01X2040:WHITE	069.4	
	RD			

Tetra Pak®	Version Designer: RICO	Version Date: 01/10/2014	Machine: A3 CompactFlex 0300	
	ECM No: 687624	Denomination: CABLE CONNECTION LIST	Page Type: CABLE CONNECTION LIST	
	Information Security Class: PUBLIC	Document No.: 3223337-0007	Doc. type: ELD	Version: AM / Page: 001

This drawing must not without the consent of Tetra Pak be copied, transmitted or disclosed to any third party.

Cable Connection List of 3223337-0003

From	Cable	To	Page.Col.	Option
	A01W0500			
A01X2040:BLACK	BK	A01X2050:BLACK	070.4	
A01X2040:BLUE	BU	A01X2050:BLUE	070.4	
A01X2040:DRAIN	DRAIN	A01X2050:DRAIN	070.4	
A01X2040:WHITE	WH	A01X2050:WHITE	070.4	
A01X2040:RED	RD	A01X2050:RED	070.4	
	A01W1000			
A01K2120:Tx	1	T40T0700:RX	030.1	
	A01W1020			
A01X6040:X1	1	A01K2020	074.4	
	A01W2040			
A01K2040:V-	BK	A01X2040:BLACK	069.4	
A01K2040:CAN-L	BU	A01X2040:BLUE	069.4	
A01K2040:SHIELD	DRAIN	A01X2040:DRAIN	069.4	
A01K2040:CAN-H	WH	A01X2040:WHITE	069.4	
A01K2040:V+	RD	A01X2040:RED	069.4	
	A01W4000			
A01K4000:-V	BK	A01X2040:BLACK	069.4	
A01K4000:CAN-L	BU	A01X2040:BLUE	069.4	
A01K4000:SHIELD	DRAIN	A01X2040:DRAIN	069.4	
A01K4000:CAN-H	WH	A01X2040:WHITE	069.4	
A01K4000:+V	RD	A01X2040:RED	069.4	
	A01W4500			
A01X6030:X1	1	A01K2010	074.4	
	A01W4550			
	1	A01X6030:X5	071.3	

From	Cable	To	Page.Col.	Option
	A01W4560			
P60K0700:ETH2	1	A01X6040:X3	071.3	
	A01W5300			
A01C5300:10.4	WH	A01K4200:0	108.7	
A01C5300:12.4	BN	A01K4200:1	108.7	
PE	SH	A01W5300:SH	049.2	
	A01W5320			
A01C5300:10.3	WH	A01C5320:31	047.5	
A01C5300:12.3	BN	A01C5320:33	047.5	
PE	SH	A01W5320:SH	047.4	
	A01W5810			
A01XL1190:102	BN	A01E5810	046.8	
	A01W5820			
A01XL1190:106	BN	A01E5820	046.9	
	A01W5940			
A01X5940:-	RD	A01K4310:5	110.7	
A01X5940:+	YE	A01K4310:4	110.7	
	A01W6000			
A01T6000:V-	BK	A01X2040:BLACK	069.4	
	BU			
A01T6000:V-	DRAIN	A01X2040:DRAIN	069.4	
	WH			
A01T6000:V+	RD	A01X2040:RED	069.4	
	F10W0200			
	GY			

Tetra Pak®

Version Designer	Version Date	Machine
RICO	01/10/2014	A3 CompactFlex 0300

ECM No	Denomination	Page Type
687624	CABLE CONNECTION LIST	CABLE CONNECTION LIST

Information Security Class	Document No.	Doc. type	Version	Page
PUBLIC	3223337-0007	ELD	AM	002

This drawing must not without the consent of Tetra Pak be copied, transmitted or disclosed to any third party.

Cable Connection List of 3223337-0003

From	Cable	To	Page.Col.	Option
F10W0200				
F10X0200:4	WH	F01K5000:I4	058.4	
F10X0200:3	YE	A01XL1100:186	067.4	
F10X0200:2	GN	A01XL1360:107	067.3	
F10X0200:1	BN	A01XL1110:117	067.3	
F10X0200:6	SH	PE	067.2	
F10W0201				
	GY			
F10X0201:4	WH	F01K5000:I5	058.4	
F10X0201:3	YE	A01XL1100:187	067.9	
F10X0201:2	GN	A01XL1360:108	067.9	
F10X0201:1	BN	A01XL1110:118	067.8	
F10X0201:6	SH	F10W0201:SH	067.8	
F10W1340				
T10X1000:133	1	F10B1340:1	061.5	
T10X1000:132	2	F10B1340:2	061.5	
T10X1000:⏚	GNYE	F10B1340:⏚	061.5	
F10W1350				
T10X1000:130	1	F10B1350:2	061.3	
T10X1000:131	2	F10B1350:1	061.3	
T10X1000:⏚	GNYE	F10B1350:⏚	061.3	
F10W1740				
F10X1740:1	1	T10X1000:107	061.8	
F10X1740:2	2	T10X1000:108	061.8	
F10X1740:3	3	T10K1092:0	129.7	
	4			
	5			

From	Cable	To	Page.Col.	Option
F10W2500				
T10X2100:203	BN	T10X2500:2	063.1	ASU XT
T10X2100:204	BU	T10X2500:1	063.1	ASU XT
F10W2510				
T10X2100:202	BN	T10X2510:1	063.1	ASU XT
T10X2100:201	BU	T10X2510:2	063.1	ASU XT
F10W2600				
F10X2600:3.1	BN	F10X0200:1	067.3	
F10X2600:3.2	WH	F10X0200:2	067.3	
F10X2600:3.3	BU	F10X0200:3	067.3	
F10X2600:3.4	BK	F10X0200:4	067.3	
F10X2600:3.5	GY	F10X0200:5	067.3	
F10W2600:SH	SH	F10X0200:6	067.2	
F10W2610				
F10X2600:1.4	BK	F10X2610	067.2	
F10X2600:1.3	BU	F10X2610	067.2	
F10X2600:1.1	BN	F10X2610	067.2	
F10X2600:1.2	WH	F10X2610	067.2	
F10X2600:1.5	GY	F10X2610	067.2	
F10X2600:1.3	SH	F10X2610	067.2	
F10W2620				
F10X2600:2.4	BK	F10X2620	067.4	
F10X2600:2.3	BU	F10X2620	067.4	
F10X2600:2.1	BN	F10X2620	067.3	
F10X2600:2.2	WH	F10X2620	067.4	
F10X2600:2.5	GY	F10X2620	067.4	
F10X2600:2.3	SH	F10X2620	067.4	

Tetra Pak®

Version Designer: RICO	Version Date: 01/10/2014	Machine: A3 CompactFlex 0300	
ECM No: 687624	Denomination: CABLE CONNECTION LIST	Page Type: CABLE CONNECTION LIST	
Information Security Class: PUBLIC	Document No.: 3223337-0007	Doc. type: ELD	Version: AM / Page: 003

This drawing must not without the consent of Tetra Pak be copied, transmitted or disclosed to any third party.

Cable Connection List of 3223337-0003

From	Cable	To	Page.Col.	Option
F10W2630				
F10X0201:1	BN	F10X2630	067.8	
F10X0201:2	WH	F10X2630	067.8	
F10X0201:3	BU	F10X2630	067.8	
F10X0201:4	BK	F10X2630	067.8	
F10X0201:5	GY	F10X2630	067.8	
F10X0201:6	SH	PE	067.8	
F10W3510				
	GNYE			
T10X1000:109	1	F10X1740:4	061.10	
T10K1093:0	2	F10X1740:8	061.10	
T10X1000:28	3	F10X1740:9	061.9	
	4			
	5			
	6			
	7			
	8			
	9			
F20W5600				
F01X5720:1	1	F20X5600:1	073.8	
F01X5720:2	2	F20X5600:2	073.8	
F01X5720:3	3	F20X5600:3	073.8	
F01X5720:4	4	F20X5600:4	073.8	
F01X5720:5	5	F20X5600:5	073.8	
F01X5720:6	6	F20X5600:6	073.8	
F01X5720:7	7	F20X5600:7	073.8	
F01X5720:8	8	F20X5600:8	073.8	
F01X5720:9	9	F20X5600:9	073.8	
F01X5720:10	10	F20X5600:10	073.8	
F01X5720:11	11	F20X5600:11	073.8	
F01X5720:12	12	F20X5600:12	073.8	
F01X5720:13	13	F20X5600:13	073.8	

From	Cable	To	Page.Col.	Option
F01X5720:14	14	F20X5600:14	073.8	
F01X5720:15	15	F20X5600:15	073.8	
F01X5720:16	16	F20X5600:16	073.8	
F01X5720:17	17	F20X5600:17	073.8	
F01X5720:18	18	F20X5600:18	073.8	
F01X5720:19	19	F20X5600:19	073.8	
F01X5720:20	20	F20X5600:20	073.8	
F01X5720:21	21	F20X5600:21	073.8	
F01X5720:22	22	F20X5600:22	073.8	
F01X5720:23	23	F20X5600:23	073.8	
F01X5720:24	24	F20X5600:24	073.8	
F01X5720:⏚	GNYE	F20X5600:⏚	073.8	
F01X5720:1	SH	F20W5600:SH	073.5	
F40W0210				
	GY			
F40X0210:4	WH	F01K5000:I3	058.3	
F40X0210:3	YE	A01XL1100:188	065.3	
F40X0210:2	GN	A01XL1360:109	065.3	
F40X0210:1	BN	A01XL1110:119	065.2	
F40X0210:14	SH	PE	065.2	
F40W1020				
T40X1000:67	BN	F40X1020:1	066.2	
T40X1000:11	BU	F40X1020:3	066.3	
F40X1020	GY	F40X1020:5	066.3	
T40X1000:127	BK	F40X1020:4	066.3	
F40X1020	WH	F40X1020:2	066.3	
F40W1040				
T40X1000:68	BN	F40X1040:1	066.4	
T40X1000:12	BU	F40X1040:3	066.4	
F40X1040	GY	F40X1040:5	066.4	
T40X1000:129	BK	F40X1040:4	066.4	

This drawing must not without the consent of Tetra Pak
be copied, transmitted or disclosed to any third party.

Cable Connection List of 3223337-0003

From	Cable	To	Page.Col.	Option
	F40W1040			
F40X1040	WH	F40X1040:2	066.4	
	F40W2010			
F40X2010	BN	F40X3850:1.1	065.2	
F40X2010	WH	F40X3850:1.2	065.2	
F40X2010	BU	F40X3850:1.3	065.2	
F40X2010	BK	F40X3850:1.4	065.2	
F40X2010	GY	F40X3850:1.5	065.2	
F40X2010	SH	F40X3850:1.3	065.2	
	F40W2020			
F40X2020	BN	F40X3850:2.1	065.3	
F40X2020	WH	F40X3850:2.2	065.3	
F40X2020	BU	F40X3850:2.3	065.3	
F40X2020	BK	F40X3850:2.4	065.3	
F40X2020	GY	F40X3850:2.5	065.3	
F40X2020	SH	F40X3850:2.3	065.3	
	F40W2030			
F40X2030	BK	F40X3850:4.4	065.5	
F40X2030	BU	F40X3850:4.3	065.5	
F40X2030	BN	F40X3850:4.1	065.4	
F40X2030	WH	F40X3850:4.2	065.4	
F40X2030	GY	F40X3850:4.5	065.5	
F40X2030	SH	F40X3850:4.3	065.5	
	F40W2040			
F40X2040	BN	F40X3850:5.1	065.5	
F40X2040	WH	F40X3850:5.2	065.5	
F40X2040	BU	F40X3850:5.3	065.5	
F40X2040	BK	F40X3850:5.4	065.6	
F40X2040	GY	F40X3850:5.5	065.6	

From	Cable	To	Page.Col.	Option
F40X2040	SH	F40X3850:5.3	065.5	
	F40W2830			
T40X1000:156	1	F40S2830:11	064.4	
T40X1000:157	2	F40S2830:12	064.4	
T40X1000:102	3	F40S2830:21	064.4	
T40X1000:101	4	F40S2830:22	064.4	
T40X1000:61	5	F40S2830:31	064.4	
T40K1010:4	6	F40S2830:32	064.4	
	7			
	8			
	9			
	10			
	11			
	GNYE			
	F40W2840			
T40X1000:159	1	F40S2840:11	064.8	
T40X1000:158	2	F40S2840:12	064.8	
T40X1000:103	3	F40S2840:21	064.8	
T40X1000:104	4	F40S2840:22	064.8	
T40X1000:62	5	F40S2840:31	064.8	
T40K1010:5	6	F40S2840:32	064.8	
T40X1000:69	7	T40S2841:13	143.3	
T40X1000:160	8	T40S2841:24	143.3	
T40K1010:1	9	T40S2841:14	143.3	
T40K1030:7	10	T40P2841:1	145.5	
T40X1000:31	11	T40P2841:2	145.5	
	GNYE			
	F40W3850			
	GNYE			
F40X0210:4	BK	F40X3850:4	065.2	
F40X0210:3	BU	F40X3850:3	065.2	

This drawing must not without the consent of Tetra Pak be copied, transmitted or disclosed to any third party.

Cable Connection List of 3223337-0003

From	Cable	To	Page.Col.	Option
F40W3850				
F40X0210:1	BN	F40X3850:1	065.2	
	BG			
F40X0210:6	YE	F40X3850:6	065.2	
F40X0210:5	GN	F40X3850:5	065.2	
F40X0210:8	VT	F40X3850:8	065.2	
F40X0210:7	PK	F40X3850:7	065.2	
F40X0210:2	OG	F40X3850:2	065.2	
	TRANS			
F40X0210:11	RDWH	F40X3850:11	065.2	
F40X0210:9	BUWH	F40X3850:9	065.2	
F40X0210:12	YEWH	F40X3850:12	065.2	
F40X0210:10	GNWH	F40X3850:10	065.2	
F40X0210:13	VTWH	F40X3850:13	065.2	
F40X0210:14	SH	F40W3850	065.2	
F50W1530				
F50X1530:1	BN	T50X1000:86	154.4	
F50X1530:3	BU	T50X1000:16	154.1	
F50X1530	GY	F50X1530:5	066.6	
T50K1040:4	BK	F50X1530:4	066.6	
F50X1530	WH	F50X1530:2	066.6	
F50W1540				
T50K1040:6	1	F50K1540:A1	066.8	
T50X1000:10	2	F50K1540:A2	066.8	
	3			
	4			
	5			
	6			
	GNYE			
F50W2510				
F40X3850:3.1	BN	F50B2510	065.4	

From	Cable	To	Page.Col.	Option
F40X3850:3.2	WH	F50B2510	065.4	
F40X3850:3.3	BU	F50B2510	065.4	
F40X3850:3.4	BK	F50B2510	065.4	
F40X3850:3.5	GY	F50B2510	065.4	
F40X3850:3.3	SH	F50B2510	065.4	
F50W2520				
F40X3850:6.1	BN	F50X2520	065.6	
F40X3850:6.2	WH	F50X2520	065.6	
F40X3850:6.3	BU	F50X2520	065.6	
F40X3850:6.4	BK	F50X2520	065.6	
F40X3850:6.5	GY	F50X2520	065.7	
F40X3850:6.3	SH	F50X2520	065.6	
F70W2010				
U70X1000:165	1	F70S2010:11	064.7	
U70X1000:166	2	F70S2010:12	064.7	
U70X1000:167	3	F70S2010:21	064.7	
U70X1000:168	4	F70S2010:22	064.7	
U70X1000:83	5	F70S2010:31	064.8	
U70K1010:0	6	F70S2010:32	064.8	
	GNYE			
F70W2500				
F70X2501:5	GY	F70X2500:13	068.2	
F70X2501:4	WH	F70X2500:4	068.2	
F70X2501:3	YE	F70X2500:3	068.2	
F70X2501:2	GN	F70X2500:2	068.2	
F70X2501:1	BN	F70X2500:1	068.2	
F70X2501:6	SH	F70X2500:⏚	068.2	
F70W2501				
	GY			
F70X2501:4	WH	F01K5000:I2	058.2	

Tetra Pak®	Version Designer: RICO	Version Date: 01/10/2014	Machine: A3 CompactFlex 0300	
	ECM No: 687624	Denomination: CABLE CONNECTION LIST	Page Type: CABLE CONNECTION LIST	
	Information Security Class: PUBLIC	Document No.: 3223337-0007	Doc. type: ELD	Version: AM / Page: 006

This drawing must not without the consent of Tetra Pak be copied, transmitted or disclosed to any third party.

Cable Connection List of 3223337-0003

From	Cable	To	Page.Col.	Option
	F70W2501			
F70X2501:3	YE	A01XL1100:185	068.3	
F70X2501:2	GN	A01XL1360:102	068.3	
F70X2501:1	BN	A01XL1110:116	068.2	
F70X2501:6	SH	PE	068.5	
	F70W2510			
F70X2500:1.1	BN	F70X2510	068.2	
F70X2500:1.2	WH	F70X2510	068.2	
F70X2500:1.3	BU	F70X2510	068.2	
F70X2500:1.4	BK	F70X2510	068.2	
F70X2500:1.5	GY	F70X2510	068.2	
F70X2500:1.3	SH	F70X2510	068.2	
	F70W2520			
F70X2500:2.1	BN	F70X2520	068.3	
F70X2500:2.2	WH	F70X2520	068.3	
F70X2500:2.3	BU	F70X2520	068.3	
F70X2500:2.4	BK	F70X2520	068.3	
F70X2500:2.5	GY	F70X2520	068.3	
F70X2500:2.3	SH	F70X2520	068.3	
	F70W2530			
F70X2500:3.1	BN	F70X2530	068.4	
F70X2500:3.2	WH	F70X2530	068.4	
F70X2500:3.3	BU	F70X2530	068.4	
F70X2500:3.4	BK	F70X2530	068.4	
F70X2500:3.5	GY	F70X2530	068.4	
F70X2500:3.3	SH	F70X2530	068.4	
	G25W1110			
T40X0240:A1	BU	G25X1110:A1	023.7	
T40X0240:B2	WH	G25X1110:B2	023.7	

From	Cable	To	Page.Col.	Option
PE	SH	G25W1110:SH	023.5	
	K80W0010			
K80X0010:1	1	K80X0110:1	016.4	
K80X0010:2	2	K80X0110:2	016.4	
K80X0010:3	3	K80X0110:3	016.4	
K80X0010:⏚	GNYE	K80X0110:⏚	016.5	
	K80W0020			
K80X0020:1	1	K80X0120:1	016.6	
K80X0020:2	2	K80X0120:2	016.6	
K80X0020:3	3	K80X0120:3	016.6	
K80X0020:⏚	GNYE	K80X0120:⏚	016.6	
	K80W0030			
K80X0030:1	1	K80X0130:1	016.8	
K80X0030:2	2	K80X0130:2	016.8	
K80X0030:3	3	K80X0130:3	016.8	
K80X0030:⏚	GNYE	K80X0130:⏚	016.8	
	K80W0100			
K80X1080:1	1	K80X1000:1	219.1	
K80X1080:2	2	K80X1000:51	219.1	
K80X1080:3	3	K80X1000:101	225.4	
K80X1080:4	4	K80K1050:1	225.2	
	5			
	6			
	7			
	8			
	9			
	10			
	11			
	12			
	13			

Tetra Pak®

Version Designer: RICO	Version Date: 01/10/2014	Machine: A3 CompactFlex 0300	
ECM No: 687624	Denomination: CABLE CONNECTION LIST	Page Type: CABLE CONNECTION LIST	
Information Security Class: PUBLIC	Document No.: 3223337-0007	Doc. type: ELD	Version: AM / Page: 007

This drawing must not without the consent of Tetra Pak be copied, transmitted or disclosed to any third party.

Cable Connection List of 3223337-0003

From	Cable	To	Page.Col.	Option
	K80W0100			
	14			
	15			
	16			
	17			
K80X1080:⏚	GNYE	K80X1000:⏚	219.8	
	K80W0110			
K80X0110:1	1	K80M0110:U	016.4	
K80X0110:2	2	K80M0110:V	016.4	
K80X0110:3	3	K80M0110:W	016.4	
K80X0110:⏚	GNYE	K80M0110:⏚	016.4	
	K80W0120			
K80X0120:1	1	K80M0120:U	016.6	
K80X0120:2	2	K80M0120:V	016.6	
K80X0120:3	3	K80M0120:W	016.6	
K80X0120:⏚	GNYE	K80M0120:⏚	016.6	
	K80W0130			
K80X0130:1	1	K80M0130:V	016.8	
K80X0130:2	2	K80M0130:U	016.8	
K80X0130:3	3	K80M0130:W	016.8	
K80X0130:⏚	GNYE	K80M0130:⏚	016.8	
	K80W1000			
A01X2050:RED	RD	K80K1000:+V	220.5	
A01X2050:WHITE	WH	K80K1000:CAN-H	220.5	
A01X2050:BLACK	BK	K80K1000:-V	220.5	
A01X2050:BLUE	BU	K80K1000:CAN-L	220.5	
A01X2050:DRAIN	SH	K80K1000:SHIELD	220.5	

From	Cable	To	Page.Col.	Option
	K80W1010			
K80X1000:53	BN	K80X1010:1	221.4	
K80X1000:16	BU	K80X1010:3	221.5	
K80K1010:0	BK	K80X1010:4	221.5	
	K80W1020			
K80B1020:1	1	K80K1010:1	221.7	
	2			
K80B1020:E	GNYE	K80X1000:⏚	221.6	
	K80W1030			
K80K1010:2	1	K80B1030:1	221.4	
K80X1000:55	2	K80B1030:3	221.4	
K80X1000:⏚	GNYE	K80B1030:E	221.4	
	K80W1040			
K80K1010:3	1	K80B1040:C	221.4	
K80X1000:56	2	K80B1040:A	221.4	
K80K1020:0	3	K80B1040:B	221.4	
	GNYE			
	K80W1050			
K80X1000:57	BN	K80B1050:BN	221.4	
K80K1010:4	BU	K80B1050:BU	221.4	
K80X1000:⏚	GNYE	K80B1050:E	221.4	
	K80W1060			
K80X1000:58	RD	K80B1060	221.4	
K80K1010:5	BK	K80B1060	221.4	
	K80W1080			
K80X1080:1	1	K80X0580:1	219.9	
K80X1080:2	2	K80X0580:2	219.9	

This drawing must not without the consent of Tetra Pak be copied, transmitted or disclosed to any third party.

Cable Connection List of 3223337-0003

From	Cable	To	Page.Col.	Option
	K80W1080			
K80X1080:3	3	K80X0580:3	225.8	
K80X1080:4	4	K80X0580:4	225.8	
	5			
	6			
	7			
	8			
	9			
	10			
	11			
	12			
	13			
	14			
	15			
	16			
	17			
K80X1080:⏚	GNYE	K80X0580:⏚	219.9	
	K80W1110			
K80B1110:L+2	1	K80K1080:6	229.7	DIMC
K80B1110:L-3	2	K80K1080:0	229.7	DIMC
	K80W1140			
K80X1140:-	RD	K80K1060:5	226.7	
K80X1140:+	YE	K80K1060:4	226.7	
	K80W1150			
K80X1150:-	RD	K80K1060:7	226.7	ACN
K80X1150:+	YE	K80K1060:6	226.7	ACN
	K80W1600			
K80K1030:3	1	K80K1600:1	223.4	ACN
K80X1000:9	2	K80K1600:2	223.4	ACN
K80X1000:⏚	GNYE	K80K1600:E	223.4	ACN
	K80W1610			
K80K1030:4	1	K80K1610:1	223.4	ACN
K80X1000:10	2	K80K1610:2	223.4	ACN
K80X1000:⏚	GNYE	K80K1610:E	223.4	ACN
	K80W1620			
K80K1030:5	1	K80K1620:1	223.4	ACN
K80X1000:11	2	K80K1620:2	223.4	ACN
K80X1000:⏚	GNYE	K80K1620:E	223.4	ACN
	K80W1630			
K80K1030:6	1	K80K1630:1	223.4	ACN
K80X1000:12	2	K80K1630:2	223.4	ACN
K80X1000:⏚	GNYE	K80K1630:E	223.4	ACN
	K80W1730			
K80K1030:2	1	K80K1730:1	223.4	
K80X1000:8	2	K80K1730:2	223.4	
	K80W1750			
K80K1050:2	1	K80K1750:1	225.3	
K80X1000:4	2	K80K1750:2	225.3	
	GNYE			
K80X1000:⏚	GNYE	K80K1750:E	225.3	
	K80W1760			
K80K1050:3	1	K80K1760:1	225.3	
K80X1000:5	2	K80K1760:2	225.3	
	GNYE			
K80X1000:⏚	GNYE	K80K1760:E	225.3	

Tetra Pak®	Version Designer: RICO	Version Date: 01/10/2014	Machine: A3 CompactFlex 0300		
	ECM No: 687624	Denomination: CABLE CONNECTION LIST	Page Type: CABLE CONNECTION LIST		
	Information Security Class: PUBLIC	Document No.: 3223337-0007	Doc. type: ELD	Version: AM	Page: 009

This drawing must not without the consent of Tetra Pak be copied, transmitted or disclosed to any third party.

Cable Connection List of 3223337-0003

From	Cable	To	Page.Col.	Option
	K80W1790			
K80K1030:1	1	K80K1790:1	223.4	PEC
K80X1000:7	2	K80K1790:2	223.4	PEC
K80X1000:⏚	GNYE	K80K1790:E	223.4	PEC
	K80W1800			
K80X1000:3	BK	K80K1800:C10	224.6	
K80X1000:3	BN	K80K1800:B10	224.6	
K80K1040:3	RD	K80K1800:4.14	224.6	
K80K1040:1	YE	K80K1800:2.14	224.6	
	GN			
	BU			
	VT			
	GY			
K80K1040:0	WH	K80K1800:1.14	224.6	
	PK			
	GY/BN			
	GY/GN			
	GY/PK			
	WH/BK			
	WH/RD			
	WH/YE			
	WH/GN			
	WH/BU			
	WH/GY			
	WH/PK			
	BN/BK			
	BN/RD			
	BN/GN			
	BN/BU			
	RD/BU			
	SH			

From	Cable	To	Page.Col.	Option
	P60W0730			
P60X0730:1	1	P60A1000:PANEL IN	057.9	
	P60W1000			
T50X1000:154	1	F60S1110:11	064.8	
T50X1000:155	2	F60S1110:12	064.8	
T50X1000:156	3	F60S1110:21	064.8	
T50X1000:157	4	F60S1110:22	064.8	
T50X1000:55	5	F60S1110:31	064.8	
T50K1010:7	6	F60S1110:32	064.8	
	7			
	8			
	9			
T50X1000:96	10	P60A1000:+	057.7	
T50X1000:19	11	P60A1000:-	057.8	
	GNYE			
T50X1000:⏚	GNYE	P60A1000:PE	057.8	
	P60W1020			
A01X2050:RED	RD	P60A1000:5 V+	057.10	
A01X2050:WHITE	WH	P60A1000:4 CAN-H	057.10	
A01X2050:BLACK	BK	P60A1000:1 V-	057.9	
A01X2050:BLUE	BU	P60A1000:2 CAN-L	057.9	
A01X2050:DRAIN	SH		057.9	
	P60W4540			
P60K0700:ETH1	1	A01X6030:X3	071.3	
	T10W0020			
T10X1020:1	1	T10T0020:U/T1	024.2	
T10X1020:2	2	T10T0020:V/T2	024.2	
T10X1020:3	3	T10T0020:W/T3	024.2	
T10X1020:5	GNYE	T10T0020:⏚	024.2	

Tetra Pak®

Version Designer: RICO	Version Date: 01/10/2014	Machine: A3 CompactFlex 0300	
ECM No: 687624	Denomination: CABLE CONNECTION LIST	Page Type: CABLE CONNECTION LIST	
Information Security Class: PUBLIC	Document No.: 3223337-0007	Doc. type: ELD	Version: AM / Page: 010

This drawing must not without the consent of Tetra Pak be copied, transmitted or disclosed to any third party.

Cable Connection List of 3223337-0003

From	Cable	To	Page.Col.	Option
	T10W0020			
T10X1020:4	SH	PE	024.4	
	T10W0040			
T10X1040:1	1	T10T0040:U/T1	024.7	
T10X1040:2	2	T10T0040:V/T2	024.7	
T10X1040:3	3	T10T0040:W/T3	024.7	
T10X1040:5	GNYE	T10T0040:⏚	024.7	
T10X1040:4	SH	PE	024.8	
	T10W0050			
T10X1000:1	1	T10X0050:1	112.9	
T10X1000:51	2	T10X0050:2	112.9	
T10X1000:97	3	T10X0050:3	112.9	
T10K1120:3	4	T10X0050:4	133.5	
T10K1120:2	5	T10X0050:5	133.5	
T10X1000:103	6	T10X0050:6	064.2	
T10X1000:124	7	T10X0050:7	064.6	
T10X1000:111	8	T10X0050:8	076.7	
	9			
T10X1000:101	10	T10X0050:10	064.2	
T10X1000:122	11	T10X0050:11	064.6	
	12			
	13			
T10X1000:129	14	T10X0050:14	114.6	
T10X1000:107	15	T10X0050:15	061.7	
T10X1000:108	16	T10X0050:16	061.7	
T10X1000:133	17	T10X0050:17	061.6	
T10X1000:130	18	T10X0050:18	061.1	
T10X1000:109	19	T10X0050:19	061.1	
T10K1120:0	20	T10X0050:20	133.5	
T10K1120:1	21	T10X0050:21	133.5	
	22			
	23			

From	Cable	To	Page.Col.	Option
T10X1000:93	24	T10X0050:24	112.9	
T10X1000:⏚	GNYE	T10X0050:⏚	112.9	
	T10W0060			
T10X0060:1	1	T10M0060:U	016.9	
T10X0060:2	2	T10M0060:V	016.9	
T10X0060:3	3	T10M0060:W	016.9	
T10X0060:⏚	GNYE	T10M0060:⏚	016.9	
	T10W0070			
T10X1000:203	1	T10E0070:1	012.2	
T10X1000:204	2	T10E0070:2	012.2	
T10X1000:⏚	GNYE	T10E0070:E	012.2	
	T10W0080			
T10X1000:201	1	T10E0080:1	012.1	
T10X1000:202	2	T10E0080:2	012.1	
	GNYE			
	T10W0100			
T10X0100:1	1	T10E0100:1	006.5	
T10X0100:2	2	T10E0100:2	006.5	
T10X0100:⏚	GNYE	T10E0100:E	006.5	
	T10W0110			
T10X0110:1	1	T10E0110:1	006.6	
T10X0110:2	2	T10E0110:2	006.6	
T10X0110:⏚	GNYE	T10E0110:E	006.6	
	T10W0120			
T10X0120:1	1	T10X0130:1	017.1	
T10X0120:2	2	T10X0130:2	017.2	
	3			

This drawing must not without the consent of Tetra Pak
be copied, transmitted or disclosed to any third party.

Cable Connection List of 3223337-0003

From	Cable	To	Page.Col.	Option
T10W0120				
T10X0120:⏚	GNYE	T10X0130:⏚	017.2	
T10W0130				
T10X0130:1	1	T10M0120:U	017.1	
T10X0130:2	2	T10M0120:N	017.1	
	3			
T10X0130:⏚	GNYE	T10M0120:⏚	017.1	
T10W0300				
T10B0300:1	BN	T10K1091:6	123.7	SPM
T10B0300:3	BU	T10K1091:4	123.7	SPM
T10B0300:2	WH	T10K1091:0	123.7	SPM
T10W0330				
T10X2100:201	1	T10X0330:1	063.3	ASU XT
T10X2100:202	2	T10X0330:2	063.3	ASU XT
T10X2100:203	3	T10X0330:3	063.3	ASU XT
T10X2100:204	4	T10X0330:4	063.3	ASU XT
T10X2100:⏚	GNYE	T10X0330:⏚	063.3	ASU XT
T10W0340				
T10X0340:1	1	T10X2100:205	063.7	ASU XT
T10X0340:2	2	T10X2100:206	063.7	ASU XT
T10X0340:3	3	T10X2100:207	063.7	ASU XT
T10X0340:4	4	T10X2100:208	063.7	ASU XT
T10X0340:⏚	GNYE	T10X2100:⏚	063.7	ASU XT
T10W0500				
T10X0500:1	1	T10X1000:201	012.1	
T10X0500:2	2	T10X1000:204	012.3	
T10X0500:⏚	GNYE	T10X1000:⏚	012.3	

From	Cable	To	Page.Col.	Option
T10W0580				
T10X0580:1	1	T10X1000:205	012.7	
T10X0580:2	2	T10X1000:206	012.8	
T10X0580:3	3	T10X1000:207	012.9	
T10X0580:4	4	T10X1000:208	012.10	
T10X0580:⏚	GNYE	T10X1000:⏚	012.8	
T10W1000				
A01X2040:BLACK	BK	T10K1000:-V	113.6	
A01X2040:BLUE	BU	T10K1000:CAN-L	113.6	
A01X2040:DRAIN	DRAIN	T10K1000:SHIELD	113.6	
A01X2040:WHITE	WH	T10K1000:CAN-H	113.6	
A01X2040:RED	RD	T10K1000:+V	113.6	
T10W1020				
T10X1020:1	1	T10M1020:W	024.4	
T10X1020:2	2	T10M1020:V	024.4	
T10X1020:3	3	T10M1020:U	024.4	
T10X1020:5	GNYE	T10M1020:⏚	024.4	
T10X1020:4	SH	PE	024.5	
T10W1040				
T10X1040:1	1	T10M1040:U	024.9	
T10X1040:2	2	T10M1040:V	024.9	
T10X1040:3	3	T10M1040:W	024.9	
T10X1040:5	GNYE	T10M1040:⏚	024.9	
T10X1040:4	SH	PE	024.10	
T10W1050				
T10X1000:79	1	T10S1050:51	115.4	
T10K1020:3	2	T10S1050:52	115.4	

This drawing must not without the consent of Tetra Pak be copied, transmitted or disclosed to any third party.

Cable Connection List of 3223337-0003

From	Cable	To	Page.Col.	Option
T10W1080				
T10X1000:69	1	T10F1080:11	115.4	
T10K1020:0	2	T10F1080:12	115.4	
T10X1000:106	3	T10F1080:22	115.4	
T10X1000:105	4	T10F1080:31	115.4	
	GNYE			
T10W1120				
T10X1000:101	1	F10S1010:11	064.4	
T10X1000:102	2	F10S1010:12	064.4	
T10X1000:103	3	F10S1010:21	064.4	
T10X1000:104	4	F10S1010:22	064.4	
T10K1010:1	5	F10S1010:32	064.4	
T10K1010:0	6	T10S1140:13	114.3	
T10X1000:72	7	T10S1140:14	114.3	
	8			
	9			
	10			
	11			
	GNYE			
T10W1130				
T10X1000:121	1	T10F1030:11	064.3	
T10X1000:122	2	T10F1030:12	064.3	
T10X1000:123	3	T10F1030:21	064.3	
T10X1000:124	4	T10F1030:22	064.3	
T10K1010:2	5	F10S1030:32	064.3	
T10K1010:3	6	T10S1090:14	114.3	
T10K1010:4	7	T10S1100:14	114.3	
T10K1010:5	8	T10S1110:13	114.3	
T10K1010:6	9	T10S1120:52	114.3	
T10K1010:7	10	T10S1130:24	114.3	
T10X1000:129	11	T10S1130:14	114.3	
T10X1000:70	12	T10S1090:13	114.3	

From	Cable	To	Page.Col.	Option
T10X1000:25	13	T10P1130:2	120.5	
T10K1070:6	14	T10P1130:1	120.5	
	15			
	16			
	17			
	GNYE			
T10W1160				
T10K1110:0	WH	T10K1160:1.14	132.7	
	GN			
T10K1110:1	YE	T10K1160:2.14	132.7	
	GY			
T10K1110:7	PK	T10K1160:3.14	132.7	
T10K1110:6	BU	T10K1160:3.12	132.7	
T10K1110:3	RD	T10K1160:4.14	132.7	
T10K1110:2	VT	T10K1160:4.12	132.7	
	GY/PK			
	RD/BU			
	WH/GN			
	BN/GN			
	WH/YE			
	YE/BN			
	WH/GY			
	GY/BN			
	WH/PK			
	PK/BN			
	WH/BU			
	BN/BU			
	WH/RD			
	BN/RD			
	WH/BK			
	BN/BK			
T10X1000:28	BN	T10K1160:B10	132.7	
T10X1000:34	BK	T10K1160:C10	132.7	

This drawing must not without the consent of Tetra Pak be copied, transmitted or disclosed to any third party.

Cable Connection List of 3223337-0003

From	Cable	To	Page.Col.	Option
	T10W1165			
T10K1165:1.14	WH	T10K1060:4	119.2	
	GN			
T10K1165:2.14	YE	T10K1070:4	120.2	
	GY			
	PK			
	BU			
	RD			
	VT			
	GY/PK			
	RD/BU			
	WH/GN			
	BN/GN			
	WH/YE			
	YE/BN			
	WH/GY			
	GY/BN			
	WH/PK			
	PK/BN			
	WH/BU			
	BN/BU			
	WH/RD			
	BN/RD			
	WH/BK			
	BN/BK			
T10K1165:B10	BN	T10X1000:32	112.1	
T10K1165:C10	BK	T10X1000:32	112.1	
	T10W1170			
T10K1170	WH	T10K1060:0	119.2	
	GN			
T10K1170	YE	T10K1060:1	119.2	
	GY			
T10K1170	PK	T10K1060:2	119.2	

From	Cable	To	Page.Col.	Option
	BU			
T10K1170	RD	T10K1060:3	119.2	
	VT			
	GY/PK			
T10K1170:5.12	RD/BU	T10K1070:3	120.2	
T10K1170:6.14	WH/GN	T10K1110:4	132.2	
	BN/GN			
T10K1170:7.14	WH/YE	T10K1070:0	120.2	
	YE/BN			
T10K1170:8.14	WH/GY	T10K1070:1	120.2	
	GY/BN			
T10K1170	WH/PK	T10K1060:5	119.2	
T10K1170	PK/BN	T10K1060:6	119.2	
T10K1170:10.14	WH/BU	T10X1000:106	115.6	
	BN/BU			
T10K1171	WH/RD	T10K1093:1	130.2	
	BN/RD			
T10K1171:12.14	WH/BK	T10K1060:7	119.2	
	BN/BK			
T10K1170	BN	T10X1000:3	112.1	
T10K1170:C10	BK	T10X1000:4	112.1	
	T10W1180			
T10X1000:60	BN	T10B1180	115.5	
T10X1000:10	BU	T10B1180	115.5	
T10K1020:4	BK	T10B1180	115.5	
	T10W1190			
T10X1000:53	BN	T10B1190	115.5	
T10X1000:7	BU	T10B1190	115.5	
T10K1020:5	BK	T10B1190	115.5	
	T10W1200			
T10X1000:76	BN	T10B1200	117.4	

This drawing must not without the consent of Tetra Pak be copied, transmitted or disclosed to any third party.

Cable Connection List of 3223337-0003

From	Cable	To	Page.Col.	Option
	T10W1200			
T10X1000:26	BU	T10B1200	117.4	
T10K1040:2	BK	T10B1200	117.4	
	T10W1201			
T10X1000:76	BN	T10B1201	117.4	
T10X1000:26	BU	T10B1201	117.4	
	BK			
	T10W1210			
T10X1000:27	BN	T10B1210	117.4	
T10X1000:77	BU	T10B1210	117.4	
T10K1040:3	BK	T10B1210	117.4	
	T10W1211			
T10X1000:77	BN	T10B1211	117.4	
T10X1000:27	BU	T10B1211	117.4	
	BK			
	T10W1220			
T10X1000:64	BN	T10B1220	115.5	
T10X1000:14	BU	T10B1220	115.5	
T10K1020:7	BK	T10B1220	115.5	
	T10W1230			
T10X1000:59	BN	T10B1230	116.4	
T10X1000:9	BU	T10B1230	116.4	
T10K1030:0	BK	T10B1230	116.4	
	T10W1240			
T10X1000:57	BN	T10B1240:1	116.4	
	WH	T10B1240:2	116.4	
T10X1000:11	BU	T10B1240:3	116.4	

From	Cable	To	Page.Col.	Option
T10K1030:1	BK	T10B1240:4	116.4	
	T10W1250			
	BN			
	WH	T10B1250:2	116.4	
T10X1000:12	BU	T10B1250:3	116.4	
T10K1030:2	BK	T10B1250:4	116.4	
T10X1000:58	BN	T10B1250:1	116.4	
	T10W1260			
T10X1000:13	BU	T10B1260	116.4	
T10X1000:63	BN	T10B1260	116.4	
T10K1030:3	BK	T10B1260	116.4	
	T10W1270			
T10X1000:17	BU	T10B1270	116.4	
T10X1000:67	BN	T10B1270	116.4	
T10K1030:4	BK	T10B1270	116.4	
	T10W1290			
T10X1000:15	BU	T10B1290	116.4	
T10X1000:61	BN	T10B1290	116.4	
T10K1030:5	BK	T10B1290	116.4	
	T10W1300			
T10X1000:16	BU	T10B1300	116.4	
T10X1000:62	BN	T10B1300	116.4	
T10K1030:6	BK	T10B1300	116.4	
	T10W1310			
T10X1000:81	BN	T10B1310:3	060.3	
T10X1000:31	BU	T10B1310:1	060.3	
T10K1092:1	BK	T10B1310:4	060.3	

This drawing must not without the consent of Tetra Pak be copied, transmitted or disclosed to any third party.

Cable Connection List of 3223337-0003

From	Cable	To	Page.Col.	Option
T10W1330				
T10X1000:71	BN	T10B1330	117.4	
T10X1000:21	BU	T10B1330	117.4	
T10K1040:0	BK	T10B1330	117.4	
T10W1360				
T10X1000:66	BN	T10B1360:1	117.4	
T10X1000:20	BU	T10B1360:3	117.4	
T10K1040:1	BK	T10B1360:4	117.4	
T10W1450				
T10K1050:0	1	T10P1450:1	118.4	
T10K1050:1	2	T10P1450:2	118.4	
T10K1050:2	3	T10P1450:3	118.4	
T10K1070:5	4	T10P1450:4	118.4	
T10K1050:3	5	T10P1450:5	118.5	
T10X1000:24	6	T10P1450:0	118.5	
T10X1000:⏚	GNYE	T10P1450:E	118.5	
T10W1490				
T10K1050:4	1	T10P1490:1	118.5	ASR
T10X1000:29	2	T10P1490:2	118.5	ASR
	GNYE			
T10W1510				
T10X1510:-	RD	T10K1080:5	121.7	
T10X1510:+	YE	T10K1080:4	121.7	
T10W1520				
T10X1520:4	GY	T10P1520:21+	118.5	ASR
T10X1520:1	WH	T10P1520:17	118.5	ASR
T10X1520:2	YE	T10P1520:19	118.5	ASR
T10X1520:3	GN	T10P1520:20	118.5	ASR

From	Cable	To	Page.Col.	Option
T10X1520:5	BN	T10P1520:22-	118.5	ASR
	SH			
T10W1530				
T10K1050:5	1	T10X1520:1	118.4	ASR
T10K1050:6	2	T10X1520:2	118.4	ASR
T10K1050:7	3	T10X1520:3	118.4	ASR
T10X1000:65	4	T10X1520:4	118.6	ASR
T10X1000:19	5	T10X1520:5	118.6	ASR
	6			
	GNYE			
	SH			
T10W1540				
T10X1540:-	RD	T10K1090:5	122.7	
T10X1540:+	YE	T10K1090:4	122.7	
T10W1570				
T10X0570:1	1	T10X1570:1	012.4	
T10X0570:2	2	T10X1570:2	012.5	
T10X0570:⏚	GNYE	T10X1570:⏚	012.6	
T10W1580				
T10X1000:205	1	T10E0580:1	012.7	
T10X1000:206	2	T10E0580:2	012.7	
T10X1000:⏚	GNYE	T10E0580:E	012.7	
T10W1590				
T10B1550:GN	GN	T10K1090:7	122.7	
T10X1000:⏚	GNYE	T10E0590:E	012.9	
T10B1550:RD	RD	T10K1090:6	122.7	
T10X1000:207	WH/BN	T10E0590:1	012.9	
T10X1000:208	WH/BN	T10E0590:2	012.9	

This drawing must not without the consent of Tetra Pak be copied, transmitted or disclosed to any third party.

Cable Connection List of 3223337-0003

From	Cable	To	Page.Col.	Option
T10W1620				
T10X1000:73	BN	T10B1620	076.5	
T10X1000:23	BU	T10B1620	076.5	
T10X1000:111	BK	T10B1620	076.5	
T10W1800				
T10B1800:12	RD	T40T0700:A/F D14	030.1	
T10B1800:1	BK	T40T0700:A/F D4	030.1	
T10B1800:5	WH	T40T0700:A/F D1	030.1	
T10B1800:6	BN	T40T0700:A/F D2	030.1	
	GN			
T10B1800:4	YE	T40T0700:A/F D10	030.1	
	GY			
T10B1800:10	BU	T40T0700:A/F D6	030.1	
T10B1800:3	VT	T40T0700:A/F D5	030.1	
T10B1800:8	PK	T40T0700:A/FD3	030.1	
GND	SH	T10W1800:SH	030.5	
T10W1850				
T10X1000:78	BN	T10B1850	117.4	
T10X1000:22	BU	T10B1850	117.4	
T10K1040:4	BK	T10B1850	117.4	
T10W1860				
T10X1000:75	BN	T10B1860	117.4	
T10X1000:33	BU	T10B1860	117.4	
T10K1040:5	BK	T10B1860	117.4	
T10W1900				
T10X1000:68	BN	T10B1900	116.4	
T10X1000:18	BU	T10B1900	116.4	
T10K1030:7	BK	T10B1900	116.4	

From	Cable	To	Page.Col.	Option
T10W1930				
A01X0040:3.1	BN	T10B1930:1	056.2	
	WH			
A01X0040:3.3	BU	T10B1930:3	056.2	
A01X0040:3.4	BK	T10B1930:4	056.2	
A01X0040:3.2	GY	T10B1930:5	056.2	
T10W1940				
A01X0040:4.1	BN	T10B1940:1	056.2	
	WH			
A01X0040:4.3	BU	T10B1940:3	056.2	
A01X0040:4.4	BK	T10B1940:4	056.2	
A01X0040:4.2	GY	T10B1940:5	056.2	
T10W2000				
T10X1000:54	BN	T10B2000	115.5	
T10X1000:8	BU	T10B2000	115.5	
T10K1020:6	BK	T10B2000	115.5	
T10W2010				
T10X2100:53	BN	T10B2010:1	135.4	ASU XT
T10X2100:3	BU	T10B2010:3	135.4	ASU XT
T10K2110:0	BK	T10B2010:4	135.4	ASU XT
T10W2020				
T10X2100:54	BN	T10B2020:1	135.4	ASU XT
T10X2100:4	BU	T10B2020:3	135.4	ASU XT
T10K2110:1	BK	T10B2020:4	135.4	ASU XT
T10W2030				
T10X2100:55	BN	T10B2030:1	135.4	ASU XT
T10X2100:5	BU	T10B2030:3	135.4	ASU XT

This drawing must not without the consent of Tetra Pak be copied, transmitted or disclosed to any third party.

Cable Connection List of 3223337-0003

From	Cable	To	Page.Col.	Option
	T10W2030			
T10K2110:2	BK	T10B2030:4	135.4	ASU XT
	T10W2040			
T10X2100:56	BN	T10B2040:1	135.4	ASU XT
T10X2100:6	BU	T10B2040:3	135.4	ASU XT
T10K2110:3	BK	T10B2040:4	135.4	ASU XT
	T10W2050			
T10X2100:57	BN	T10B2050:1	135.4	ASU XT
T10X2100:7	BU	T10B2050:3	135.4	ASU XT
T10K2110:4	BK	T10B2050:4	135.4	ASU XT
	T10W2060			
T10X2100:58	BN	T10B2060:1	135.4	ASU XT
T10X2100:8	BU	T10B2060:3	135.4	ASU XT
T10K2110:5	BK	T10B2060:4	135.4	ASU XT
	T10W2100			
T10K1000:+V	RD	T10K2100:+V	134.4	
T10K1000:CAN-H	WH	T10K2100:CAN-H	134.4	
T10K1000:-V	BK	T10K2100:-V	134.4	
T10K1000:CAN-L	BU	T10K2100:CAN-L	134.4	
T10K1000:SHIELD	SH	T10K2100:SHIELD	134.4	
	T10W2101			
T10X2100:1	1	T10X1000:30	112.1	
T10X2100:51	2	T10X1000:55	112.7	
T10X2100:151	3	T10X1000:94	112.7	
	4			
	5			
	6			
	7			

From	Cable	To	Page.Col.	Option
	8			
	9			
	10			
	11			
T10X2100:⏚	GNYE	T10X1000:⏚	134.7	
	T10W2110			
T10X2110:1	BN	T10B2110:1	136.4	ASU XT
T10X2110:3	BU	T10B2110:3	136.4	ASU XT
T10X2110:4	BK	T10B2110:4	136.4	ASU XT
	T10W2111			
T10X2100:66	BN	T10X2110:1	136.3	ASU XT
T10X2100:16	BU	T10X2110:3	136.3	ASU XT
T10K2120:5	BK	T10X2110:4	136.6	ASU XT
	T10W2120			
T10X2120:1	BN	T10B2120:1	136.4	ASU XT
T10X2120:3	BU	T10B2120:3	136.4	ASU XT
T10X2120:4	BK	T10B2120:4	136.4	ASU XT
	T10W2121			
T10X2100:65	BN	T10X2120:1	136.3	ASU XT
T10X2100:15	BU	T10X2120:3	136.3	ASU XT
T10K2120:4	BK	T10X2120:4	136.6	ASU XT
	T10W2130			
T10X2100:67	BN	T10B2130:1	136.4	ASU XT
T10X2100:17	BU	T10B2130:3	136.4	ASU XT
T10K2120:6	BK	T10B2130:4	136.4	ASU XT
	T10W2140			
T10X2100:68	BN	T10B2140:1	136.4	ASU XT

Tetra Pak®

Version Designer	Version Date	Machine
RICO	01/10/2014	A3 CompactFlex 0300

ECM No	Denomination	Page Type
687624	CABLE CONNECTION LIST	CABLE CONNECTION LIST

Information Security Class	Document No.	Doc. type	Version	Page
PUBLIC	3223337-0007	ELD	AM	018

This drawing must not without the consent of Tetra Pak be copied, transmitted or disclosed to any third party.

Cable Connection List of 3223337-0003

From	Cable	To	Page.Col.	Option
	T10W2140			
T10X2100:18	BU	T10B2140:3	136.4	ASU XT
T10K2120:7	BK	T10B2140:4	136.4	ASU XT
	T10W2150			
T10X2100:59	BN	T10B2150:1	135.4	ASU XT
T10X2100:9	BU	T10B2150:3	135.4	ASU XT
T10K2110:6	BK	T10B2150:4	135.4	ASU XT
	T10W2210			
T10X2210:1	BN	T10B2210:1	136.4	ASU XT
T10X2210:3	BU	T10B2210:3	136.4	ASU XT
T10X2210:4	BK	T10B2210:4	136.4	ASU XT
	T10W2211			
T10X2100:62	BN	T10X2210:1	136.3	ASU XT
T10X2100:12	BU	T10X2210:3	136.3	ASU XT
T10K2120:1	BK	T10X2210:4	136.6	ASU XT
	T10W2220			
T10X2220:1	BN	T10B2220:1	136.4	ASU XT
T10X2220:3	BU	T10B2220:3	136.4	ASU XT
T10X2220:4	BK	T10B2220:4	136.4	ASU XT
	T10W2221			
T10X2100:61	BN	T10X2220:1	136.3	ASU XT
T10X2100:11	BU	T10X2220:3	136.3	ASU XT
T10K2120:0	BK	T10X2220:4	136.6	ASU XT
	T10W2230			
T10X2100:63	BN	T10B2230:1	136.4	ASU XT
T10X2100:13	BU	T10B2230:3	136.4	ASU XT

From	Cable	To	Page.Col.	Option
T10K2120:2	BK	T10B2230:4	136.4	ASU XT
	T10W2240			
T10X2100:64	BN	T10B2240:1	136.4	ASU XT
T10X2100:14	BU	T10B2240:3	136.4	ASU XT
T10K2120:3	BK	T10B2240:4	136.4	ASU XT
	T10W2250			
T10X2100:60	BN	T10B2250:1	135.4	ASU XT
T10X2100:10	BU	T10B2250:3	135.4	ASU XT
T10K2110:7	BK	T10B2250:4	135.4	ASU XT
	T10W2310			
T10X2100:69	BN	T10B2310:1	137.4	ASU XT
T10X2100:19	BU	T10B2310:3	137.4	ASU XT-AUT
T10K2130:0	BK	T10B2310:4	137.4	ASU XT
	T10W2320			
T10X2100:70	BN	T10B2320:1	137.4	ASU XT
T10X2100:20	BU	T10B2320:3	137.4	ASU XT-AUT
T10K2130:1	BK	T10B2320:4	137.4	ASU XT
	T10W2330			
T10X2100:71	BN	T10B2330:1	137.4	ASU XT
T10X2100:21	BU	T10B2330:3	137.4	ASU XT-AUT
T10K2130:2	BK	T10B2330:4	137.4	ASU XT
	T10W2340			
T10X2100:72	BN	T10B2340:1	137.4	ASU XT
T10X2100:22	BU	T10B2340:3	137.4	ASU XT-AUT
T10K2130:3	BK	T10B2340:4	137.4	ASU XT

This drawing must not without the consent of Tetra Pak be copied, transmitted or disclosed to any third party.

Cable Connection List of 3223337-0003

From	Cable	To	Page.Col.	Option
	T10W2350			
T10X2100:73	BN	T10B2350:1	137.4	ASU XT
T10X2100:23	BU	T10B2350:3	137.4	ASU XT
T10K2130:4	BK	T10B2350:4	137.4	ASU XT
	T10W2360			
T10X2100:74	BN	T10B2360:1	137.4	ASU XT
T10X2100:24	BU	T10B2360:3	137.4	ASU XT
T10K2130:5	BK	T10B2360:4	137.4	ASU XT
	T10W2370			
T10X2100:75	BN	T10B2370:1	137.4	ASU XT
T10X2100:25	BU	T10B2370:3	137.4	ASU XT
T10K2130:6	BK	T10B2370:4	137.4	ASU XT
	T10W2380			
T10X2100:76	BN	T10B2380:1	137.4	ASU XT
T10X2100:26	BU	T10B2380:3	137.4	ASU XT
T10K2130:7	BK	T10B2380:4	137.4	ASU XT
	T10W2400			
T10X2100:77	BN	T10B2400:1	138.4	ASU XT
T10X2100:27	BU	T10B2400:3	138.4	ASU XT
T10K2140:0	BK	T10B2400:4	138.4	ASU XT
	T10W2410			
T10X2100:78	BN	T10B2410:1	138.4	ASU XT
T10X2100:28	BU	T10B2410:3	138.4	ASU XT
T10K2140:1	BK	T10B2410:4	138.4	ASU XT
	T10W2420			
T10X2100:79	BN	T10B2420:1	138.4	ASU XT
T10X2100:29	BU	T10B2420:3	138.4	ASU XT

From	Cable	To	Page.Col.	Option
T10K2140:2	BK	T10B2420:4	138.4	ASU XT
	T10W2430			
T10X2100:80	BN	T10B2430:1	138.4	ASU XT
T10X2100:30	BU	T10B2430:3	138.4	ASU XT
T10K2140:3	BK	T10B2430:4	138.4	ASU XT
	T10W2440			
T10X1000:102	1	F10F2460:11	064.8	ASU XT
T10X1000:121	2	F10F2460:12	064.8	ASU XT
T10X1000:104	3	F10F2460:21	064.8	ASU XT
T10X1000:123	4	F10F2460:22	064.8	ASU XT
T10K1020:2	5	F10S2460:32	064.8	ASU XT
T10X1000:74	6	T10S2440:13	115.4	
T10K1020:1	7	T10S2440:14	115.4	
	8			
	9			
	10			
	11			
	GNYE			
	T10W2520			
	WH	T10B2520:3	063.8	ASU XT
T10X2100:206	BU	T10B2520:2	063.8	ASU XT
	BK	T10B2520:4	063.8	ASU XT
T10X2100:205	BN	T10B2520:1	063.8	ASU XT
	T10W2530			
	WH	T10B2530:3	063.8	ASU XT
T10X2100:208	BU	T10B2530:2	063.8	ASU XT
	BK	T10B2530:4	063.8	ASU XT
T10X2100:207	BN	T10B2530:1	063.8	ASU XT

This drawing must not without the consent of Tetra Pak be copied, transmitted or disclosed to any third party.

Cable Connection List of 3223337-0003

From	Cable	To	Page.Col.	Option
T10W3020				
T10K0020:V+	RD	T10K0040:V+	024.7	
T10K0020:CAN-H	WH	T10K0040:CAN-H	024.7	
T10K0020:V-	BK	T10K0040:V-	024.7	
T10K0020:CAN-L	BU	T10K0040:CAN-L	024.7	
T10K0020:SH	SH	T10K0040:SH	024.7	
T10W3040				
T10K0040:V+	RD	T50K0070:V+	025.7	
T10K0040:CAN-H	WH	T50K0070:CAN-H	025.7	
T10K0040:V-	BK	T50K0070:V-	025.7	
T10K0040:CAN-L	BU	T50K0070:CAN-L	025.7	
T10K0040:SH	SH	T50K0070:SH	025.7	
T10W3500				
T10K2150:0	WH	T10K3500:1.14	139.7	
T10K2150:1	GN	T10K3500:1.12	139.7	
T10K2150:2	YE	T10K3500:2.14	139.7	
T10K2150:3	GY	T10K3500:2.12	139.7	
T10K2160:2	PK	T10K3500:3.14	140.8	ASU XT
	BU			
	RD			
	VT			
	GY/PK			
	RD/BU			
	WH/GN			
	BN/GN			
	WH/YE			
	YE/BN			
	WH/GY			
	GY/BN			
	WH/PK			
	PK/BN			
	WH/BU			

From	Cable	To	Page.Col.	Option
	BN/BU			
	WH/RD			
	BN/RD			
	WH/BK			
	BN/BK			
T10X2100:31	BN	T10K3500:B10	139.7	
T10X2100:32	BK	T10K3500:C10	140.8	
T40W0010				
T40X0010:1	1	T40E0010:1	006.8	
T40X0010:2	2	T40E0010:2	006.8	
T40X0010:⏚	GNYE	T40E0010:E	006.8	
T40W0040				
T40X0040:1	1	T40M0040:U	015.7	
T40X0040:2	2	T40M0040:V	015.7	
T40X0040:3	3	T40M0040:W	015.7	
T40X0040:⏚	GNYE	T40M0040:⏚	015.7	
T40W0110				
	WH			
A01K4170:0	BN	T40G0010:301	023.2	
A01K4170:2	SH	T40W0110:SH	106.3	
T40W0120				
	WH			
A01K4170:1	BN	T40G0010:302	023.2	
A01K4170:3	SH	T40W0120:SH	106.3	
T40W0240				
T40X0240:A1	BU	T40X4030:4	055.5	
T40X0240:B2	WH	T40X4030:5	055.5	
PE	SH	T40W0240:SH	023.7	

Tetra Pak®

Version Designer	Version Date	Machine
RICO	01/10/2014	A3 CompactFlex 0300

ECM No	Denomination	Page Type
687624	CABLE CONNECTION LIST	CABLE CONNECTION LIST

Information Security Class	Document No.	Doc. type	Version	Page
PUBLIC	3223337-0007	ELD	AM	021

This drawing must not without the consent of Tetra Pak be copied, transmitted or disclosed to any third party.

Cable Connection List of 3223337-0003

From	Cable	To	Page.Col.	Option
T40W0520				
T40X0520:1	1	T40X1000:1	141.1	
T40X0520:2	2	T40X1000:51	141.3	
T40X0520:3	3	T40X1000:131	083.5	
T40X0520:4	4	T40X1000:128	083.5	
T40X0520:5	5	T40X1000:132	083.5	
T40X0520:6	6	T40X1000:130	083.5	
T40X0520:7	7	T40X1000:104	064.10	
T40X0520:8	8	T40X1000:102	064.3	
T40X0520:9	9	T40X1000:125	055.5	
T40X0520:10	10	T40X1000:126	055.5	
	11			
T40X0520:12	12	T40X1000:160	143.4	
T40X0520:13	13	T40X1000:148	052.6	
T40X0520:14	14	T40X1000:150	052.6	
T40X0520:15	15	T40X1000:152	052.6	
T40X0520:16	16	T40X1000:154	052.6	
T40X0520:17	17	T40X1000:156	064.3	
T40X0520:18	18	T40X1000:158	064.10	
T40X0520:19	19	T40X1000:178	060.3	
T40X0520:20	20	T40X1000:179	060.6	
	21			
	22			
	23			
	24			
T40X0520:⏚	GNYE	T40X1000:⏚	141.8	
T40W0700				
T40M0700:U A	BN	T40T0700:1 U	030.1	
T40M0700:BR- C	BK	T40T0700:6 MBRK-	030.1	
T40M0700:W C	BU	T40T0700:3 W	030.1	
T40M0700:GND	GNYE	T40T0700:4 GND	030.1	
T40M0700:BR+ A	WH	T40T0700:5 MBRK+	030.1	
T40M0700:V B	BK	T40T0700:2 V	030.1	

From	Cable	To	Page.Col.	Option
GND	SH	T40W0700	030.1	
GND	SH	T40W0700	030.1	
T40W0710				
T40M0710:U A	BN	T40T0710:1 U	031.1	
T40M0710:BR- C	BK	T40T0710:6 MBRK-	031.1	
T40M0710:W C	BU	T40T0710:3 W	031.1	
T40M0710:GND	GNYE	T40T0710:4 GND	031.1	
T40M0710:BR+ A	WH	T40T0710:5 MBRK+	031.1	
T40M0710:V B	BK	T40T0710:2 V	031.1	
GND	SH	T40W0710:SH	031.2	
GND	SH	T40W0710	031.2	
T40W0720				
T40M0720:U A	BN	T40T0720:1 U	032.1	
T40M0720:BR- C	BK	T40T0720:6 MBRK-	032.1	
T40M0720:W C	BU	T40T0720:3 W	032.1	
T40M0720:GND	GNYE	T40T0720:4 GND	032.1	
T40M0720:BR+ A	WH	T40T0720:5 MBRK+	032.1	
T40M0720:V B	BK	T40T0720:2 V	032.1	
GND	SH	T40W0720:SH	032.2	
GND	SH	T40W0720	032.2	
T40W0730				
T40M0730:U A	BN	T40T0730:1 U	033.1	
T40M0730:BR- C	BK	T40T0730:6 MBRK-	033.1	
T40M0730:W C	BU	T40T0730:3 W	033.1	
T40M0730:GND	GNYE	T40T0730:4 GND	033.1	
T40M0730:BR+ A	WH	T40T0730:5 MBRK+	033.1	
T40M0730:V B	BK	T40T0730:2 V	033.1	
GND	SH	T40W0730:SH	033.2	
GND	SH	T40W0730	033.2	

This drawing must not without the consent of Tetra Pak be copied, transmitted or disclosed to any third party.

Cable Connection List of 3223337-0003

From	Cable	To	Page.Col.	Option
T40W0740				
T40M0740:U A	BN	T40T0740:1 U	034.2	
T40M0740:BR- C	BK	T40T0740:6 MBRK-	034.2	
T40M0740:W C	BU	T40T0740:3 W	034.2	
T40M0740:GND	GNYE	T40T0740:4 GND	034.2	
T40M0740:BR+ A	WH	T40T0740:5 MBRK+	034.2	
T40M0740:V B	BK	T40T0740:2 V	034.2	
GND	SH	T40W0740:SH	034.2	
GND	SH	T40W0740	034.2	
T40W0750				
T40M0750:U A	BN	T40T0750:1 U	035.1	
T40M0750:BR- C	BK	T40T0750:6 MBRK-	035.1	
T40M0750:W C	BU	T40T0750:3 W	035.1	
T40M0750:GND	GNYE	T40T0750:4 GND	035.1	
T40M0750:BR+ A	WH	T40T0750:5 MBRK+	035.1	
T40M0750:V B	BK	T40T0750:2 V	035.1	
GND	SH	T40W0750:SH	035.2	
GND	SH	T40W0750	035.2	
T40W1000				
A01X2040:BLACK	BK	T40K1000:-V	142.6	
A01X2040:BLUE	BU	T40K1000:CAN-L	142.6	
A01X2040:DRAIN	DRAIN	T40K1000:SHIELD	142.6	
A01X2040:WHITE	WH	T40K1000:CAN-H	142.6	
A01X2040:RED	RD	T40K1000:+V	142.6	
T40W1070				
T40X1000:63	BN	T40B1070:1	143.4	
T40X1000:13	BU	T40B1070:3	143.4	
T40K1010:7	BK	T40B1070:4	143.4	
T40W1080				
T40X1000:64	BN	T40B1080	144.5	

From	Cable	To	Page.Col.	Option
T40X1000:14	BU	T40B1080	144.5	
T40K1020:0	BK	T40B1080	144.5	
T40W1100				
T40K1020:1	1	T40B1100:14	144.4	
T40X1000:55	2	T40B1100:13	144.4	
	GNYE			
T40W1110				
T40K1020:2	1	T40B1110:1	144.4	
T40K1020:3	2	T40B1110:2	144.4	
T40X1000:59	3	T40B1110:3	144.4	
T40X1000:⏚	GNYE	T40B1110:⏚	144.4	
T40W1130				
T40K1020:4	1	T40B1130:1	144.4	
T40X1000:60	2	T40B1130:3	144.4	
T40X1000:⏚	GNYE	T40B1130:⏚	144.4	
T40W1150				
T40X1000:65	1	T40X1150:6	144.4	
T40K1020:5	2	T40X1150:2	144.5	
T40K1020:6	3	T40X1150:1	144.5	
	4			
	GNYE			
T40W1160				
K80K1010:6	1	T40B1160:1	221.4	
K80X1000:59	2	T40B1160:2	221.4	
	GNYE			
T40W1170				
K80K1010:7	1	T40B1170:1	221.4	

This drawing must not without the consent of Tetra Pak be copied, transmitted or disclosed to any third party.

Cable Connection List of 3223337-0003

From	Cable	To	Page.Col.	Option
	T40W1170			
K80X1000:60	2	T40B1170:2	221.4	
	GNYE			
	T40W1240			
A01X0040:1.1	RD	T40B1240	056.2	
A01X0040:1.4	GY	T40B1240	056.2	
A01X0040:1.3	BU	T40B1240	056.2	
A01X0040:1.5	BK	T40B1240	056.2	
A01X0040:1.2	YE	T40B1240	056.2	
	T40W1250			
A01X0040:2.1	RD	T40B1250	056.2	
A01X0040:2.4	GY	T40B1250	056.2	
A01X0040:2.3	BU	T40B1250	056.2	
A01X0040:2.5	BK	T40B1250	056.2	
A01X0040:2.2	YE	T40B1250	056.2	
	T40W1370			
T40X1370:3	RD	T40K1090:5	151.7	
T40X1370:2	YE	T40K1090:4	151.7	
	T40W1390			
T40B1390:2	WH	T40K1060:1	148.7	
T40B1390:1	BN	T40K1060:7	148.7	
	T40W1700			
T40M0700:SIN+ A	BK	T40T0700:M/F D1	030.1	
T40M0700:SIN- B	WH/BK	T40T0700:M/F D2	030.1	
T40M0700:COS+ C	RD	T40T0700:M/F D3	030.1	
T40M0700:COS- D	WH/RD	T40T0700:M/F D4	030.1	
T40M0700:DATA+ E	GN	T40T0700:M/F D5	030.1	
T40M0700:DATA- F	WH/GN	T40T0700:M/F D10	030.1	

From	Cable	To	Page.Col.	Option
T40M0700:K	GY	T40T0700:M/F D14	030.1	
T40M0700:ECOM L	WH/GY	T40T0700:M/F D6	030.1	
T40M0700:+9VDC N	OG	T40T0700:M/F D7	030.1	
T40M0700:TS+ R	WH/OG	T40T0700:M/F D11	030.1	
	BU			
	WT/BU			
	YE			
	WH/YE			
	BN			
	WH/BN			
GND	SH	T40W1700:SH	030.3	
	T40W1710			
T40X1710:D1	BK	T40M0710:SIN+ A	031.2	
T40X1710:D2	WH/BK	T40M0710:SIN- B	031.2	
T40X1710:D3	RD	T40M0710:COS+ C	031.2	
T40X1710:D4	WH/RD	T40M0710:COS- D	031.2	
T40X1710:D5	GN	T40M0710:DATA+ E	031.2	
T40X1710:D10	WH/GN	T40M0710:DATA- F	031.2	
T40X1710:D14	GY	T40M0710:K	031.2	
T40X1710:D6	WH/GY	T40M0710:ECOM L	031.2	
T40X1710:D7	OG	T40M0710:+9VDC N	031.2	
T40X1710:D11	WH/OG	T40M0710:TS+ R	031.2	
	BU			
	WT/BU			
	YE			
	WH/YE			
	BN			
	WH/BN			
GND	SH	T40W1710:SH	031.3	
	T40W1720			
T40X1720:D1	BK	T40M0720:SIN+ A	032.2	
T40X1720:D2	WH/BK	T40M0720:SIN- B	032.2	

This drawing must not without the consent of Tetra Pak be copied, transmitted or disclosed to any third party.

Cable Connection List of 3223337-0003

From	Cable	To	Page.Col.	Option
	T40W1720			
T40X1720:D3	RD	T40M0720:COS+ C	032.2	
T40X1720:D4	WH/RD	T40M0720:COS- D	032.2	
T40X1720:D5	GN	T40M0720:DATA+ E	032.2	
T40X1720:D10	WH/GN	T40M0720:DATA- F	032.2	
T40X1720:D14	GY	T40M0720:K	032.2	
T40X1720:D6	WH/GY	T40M0720:ECOM L	032.2	
T40X1720:D7	OG	T40M0720:+9VDC N	032.2	
T40X1720:D11	WH/OG	T40M0720:TS+ R	032.2	
	BU			
	WT/BU			
	YE			
	WH/YE			
	BN			
	WH/BN			
GND	SH	T40W1720:SH	032.3	
	T40W1730			
T40X1730:D1	BK	T40M0730:SIN+ A	033.2	
T40X1730:D2	WH/BK	T40M0730:SIN- B	033.2	
T40X1730:D3	RD	T40M0730:COS+ C	033.2	
T40X1730:D4	WH/RD	T40M0730:COS- D	033.2	
T40X1730:D5	GN	T40M0730:DATA+ E	033.2	
T40X1730:D10	WH/GN	T40M0730:DATA- F	033.2	
T40X1730:D14	GY	T40M0730:K	033.2	
T40X1730:D6	WH/GY	T40M0730:ECOM L	033.2	
T40X1730:D7	OG	T40M0730:+9VDC N	033.2	
T40X1730:D11	WH/OG	T40M0730:TS+ R	033.2	
	BU			
	WT/BU			
	YE			
	WH/YE			
	BN			
	WH/BN			

From	Cable	To	Page.Col.	Option
GND	SH	T40W1730:SH	033.3	
	T40W1740			
T40X1740:D1	BK	T40M0740:SIN+ A	034.2	
T40X1740:D2	WH/BK	T40M0740:SIN- B	034.2	
T40X1740:D3	RD	T40M0740:COS+ C	034.2	
T40X1740:D4	WH/RD	T40M0740:COS- D	034.2	
T40X1740:D5	GN	T40M0740:DATA+ E	034.2	
T40X1740:D10	WH/GN	T40M0740:DATA- F	034.2	
T40X1740:D14	GY	T40M0740:K	034.2	
T40X1740:D6	WH/GY	T40M0740:ECOM L	034.2	
T40X1740:D7	OG	T40M0740:+9VDC N	034.2	
T40X1740:D11	WH/OG	T40M0740:TS+ R	034.2	
	BU			
	WT/BU			
	YE			
	WH/YE			
	BN			
	WH/BN			
GND	SH	T40W1740:SH	034.4	
	T40W1750			
T40X1750:D1	BK	T40M0750:SIN+ A	035.2	
T40X1750:D2	WH/BK	T40M0750:SIN- B	035.2	
T40X1750:D3	RD	T40M0750:COS+ C	035.2	
T40X1750:D4	WH/RD	T40M0750:COS- D	035.2	
T40X1750:D5	GN	T40M0750:DATA+ E	035.2	
T40X1750:D10	WH/GN	T40M0750:DATA- F	035.2	
T40X1750:D14	GY	T40M0750:K	035.2	
T40X1750:D6	WH/GY	T40M0750:ECOM L	035.2	
T40X1750:D7	OG	T40M0750:+9VDC N	035.2	
T40X1750:D11	WH/OG	T40M0750:TS+ R	035.2	
	BU			
	WT/BU			

This drawing must not without the consent of Tetra Pak be copied, transmitted or disclosed to any third party.

Cable Connection List of 3223337-0003

From	Cable	To	Page.Col.	Option
	T40W1750			
	YE			
	WH/YE			
	BN			
	WH/BN			
GND	SH	T40W1750:SH	035.4	
	T40W2690			
T40K1030:0	1	T40K2690:1	145.4	
T40X1000:4	2	T40K2690:2	145.4	
T40X1000:⏚	GNYE	T40K2690:E	145.4	
	T40W3100			
T40X3100:1	1	T40T3100	023.3	
	T40W3101			
T40X3100:1	1	T40G0010:X004	023.2	
	T40W3200			
T40X3200:1	1	T40T3200	023.3	
	T40W3201			
T40X3200:1	1	T40G0010:X005	023.2	
	T40W4530			
T40K4030:RJ45	1	A01X6030:X2	071.3	
	T40W9510			
T40X1000:125	WH	T40B9510:2	055.3	
T40X1000:73	BN	T40B9510:1	055.3	
	T40W9520			
T40X1000:126	WH	T40B9520:2	055.3	

From	Cable	To	Page.Col.	Option
T40X1000:74	BN	T40B9520:1	055.3	
	T40W9550			
T40X1000:148	1	T40X9550:1	052.7	
T40X1000:149	2	T40X9550:2	052.7	
T40X1000:⏚	GNYE	T40X9550:⏚	052.7	
	T40W9560			
T40X1000:150	1	T40X9560:1	052.7	
T40X1000:151	2	T40X9560:2	052.7	
T40X1000:⏚	GNYE	T40X9560:⏚	052.7	
	T40W9580			
T40X1000:152	1	T40X9580:1	052.7	
T40X1000:153	2	T40X9580:2	052.7	
T40X1000:⏚	GNYE	T40X9580:⏚	052.7	
	T40W9600			
T40X1000:154	1	T40X9600:1	052.7	
T40X1000:155	2	T40X9600:2	052.7	
T40X1000:⏚	GNYE	T40X9600:⏚	052.7	
	T50W0060			
T50X0060:1	1	T50E0060:1	006.10	
T50X0060:2	2	T50E0060:2	006.10	
T50X0060:⏚	GNYE	T50E0060:E	006.10	
	T50W0070			
T50X1070:1	1	T50T0070:U/T1	025.7	
T50X1070:2	2	T50T0070:V/T2	025.7	
T50X1070:3	3	T50T0070:W/T3	025.7	
T50X1070:5	GNYE	T50T0070:⏚	025.7	
T50X1070:4	SH	PE	025.8	

This drawing must not without the consent of Tetra Pak be copied, transmitted or disclosed to any third party.

Cable Connection List of 3223337-0003

From	Cable	To	Page.Col.	Option
T50W0140				
T50X0140:1	1	T50M0140:U	015.8	
T50X0140:2	2	T50M0140:V	015.8	
T50X0140:3	3	T50M0140:W	015.8	
T50X0140:⏚	GNYE	T50M0140:⏚	015.8	
T50W0150				
T50X0150:1	1	T50X1000:201	016.1	B.BRAKE
T50X0150:2	2	T50X1000:202	016.1	B.BRAKE
T50X0150:3	3	T50X1000:203	016.1	B.BRAKE
T50X0150:⏚	GNYE	T50X1000:⏚	016.2	B.BRAKE
T50W0510				
T50X0570:⏚	GNYE	T50E0510:E	011.2	
T50X0570:1	BN	T50X0510:1	011.2	
T50X0570:2	L.BU	T50X0510:2	011.3	
T50W0520				
T50X0570:⏚	GNYE	T50E0520:E	011.5	
T50X0570:3	BN	T50X0520:1	011.5	
T50X0570:4	L.BU	T50X0520:2	011.7	
T50W0530				
T50X0530:1	1	T50X1000:1	154.1	
T50X0530:2	2	T50X1000:51	154.4	
T50X0530:3	3	T50X1000:159	064.3	
T50X0530:4	4	T50X1000:157	064.10	
T50X0530:5	5	T50X1000:166	072.4	
T50X0530:6	6	T50X1000:167	072.4	
T50X0530:7	7	T50X1000:101	077.4	
T50X0530:8	8	T50X1000:158	064.3	
T50X0530:9	9	T50X1000:155	064.10	
T50X0530:10	10	T50X1000:103	084.4	
	11			
	12			
	13			
	14			
	15			
	16			
	17			
T50X0530:⏚	GNYE	T50X1000:⏚	154.8	
T50W0540				
T50X0580:⏚	GNYE	T50E0540:E	011.8	
T50X0580:1	BN	T50X0540:1	011.8	
T50X0580:2	L.BU	T50X0540:2	011.10	
T50W0550				
T50X0550:⏚	GNYE	T50X0570:⏚	011.3	
T50X0550:1	BN	T50X0570:1	011.2	
T50X0550:2	L.BU	T50X0570:2	011.3	
T50W0551				
T50X0551:⏚	GNYE	T50X0570:⏚	011.3	
T50X0551:1	BN	T50X0570:3	011.5	
T50X0551:2	L.BU	T50X0570:4	011.7	
T50W0560				
T50X0560:⏚	GNYE	T50X0580:⏚	011.9	
T50X0560:1	BN	T50X0580:1	011.8	
T50X0560:2	L.BU	T50X0580:2	011.10	
T50W0600				
T50X0600:1	BN	T50T0800:13	038.8	
	GN			
T50X0600:2	WH	T50T0800:14	038.8	
T50X0600:3	YE	T50T0800:15	038.8	

This drawing must not without the consent of Tetra Pak
be copied, transmitted or disclosed to any third party.

Cable Connection List of 3223337-0003

From	Cable	To	Page.Col.	Option
	T50W0600			
GND	SH	GND	038.8	
	T50W0610			
T50X0610:1	BN	T50T0800:16	038.8	
	GN			
T50X0610:2	WH	T50T0800:17	038.8	
T50X0610:3	YE	T50T0800:18	038.8	
	SH			
GND	SH	GND	038.9	
	T50W0620			
T50X0620:1	BN	T50T0810:13	039.8	
	GN			
T50X0620:2	WH	T50T0810:14	039.8	
T50X0620:3	YE	T50T0810:15	039.8	
GND	SH	GND	039.8	
	T50W0630			
T50X0630:1	BN	T50T0820:13	040.8	
	GN			
T50X0630:2	WH	T50T0820:14	040.8	
T50X0630:3	YE	T50T0820:15	040.8	
GND	SH	GND	040.7	
	T50W0800			
T50M0800:U A	BN	T50T0800:1 U	038.2	
T50M0800:V B	BK	T50T0800:2 V	038.2	
T50M0800:W C	BU	T50T0800:3 W	038.2	
T50M0800:GND	GNYE	T50T0800:4 GND	038.2	
GND	SH	T50W0800:SH	038.3	

From	Cable	To	Page.Col.	Option
	T50W0810			
T50M0810:U A	BN	T50T0810:1 U	039.1	
T50M0810:V B	BK	T50T0810:2 V	039.1	
T50M0810:W C	BU	T50T0810:3 W	039.1	
T50M0810:GND	GNYE	T50T0810:4 GND	039.1	
GND	SH	T50W0810:SH	039.2	
	T50W0820			
T50M0820:U A	BN	T50T0820:1 U	040.1	
T50M0820:V B	BK	T50T0820:2 V	040.1	
T50M0820:W C	BU	T50T0820:3 W	040.1	
T50M0820:GND	GNYE	T50T0820:4 GND	040.1	
GND	SH	T50W0820:SH	040.2	
	T50W0840			
K80K1030:0	1	T50K0840:1	223.4	
K80X1000:6	2	T50K0840:2	223.4	
	T50W1000			
A01X2050:RED	RD	T50K1000:+V	155.6	
A01X2050:WHITE	WH	T50K1000:CAN-H	155.6	
A01X2050:BLACK	BK	T50K1000:-V	155.6	
A01X2050:BLUE	BU	T50K1000:CAN-L	155.6	
A01X2050:DRAIN	SH	T50K1000:SHIELD	155.6	
	T50W1030			
T50X1000:58	BN	T50X1050:1	156.3	
	WH	T50X1050:4	156.3	
T50X1000:4	BU	T50X1050:3	156.3	
T50K1010:3	BK	T50X1050:2	156.3	
	T50W1040			
T50X1050	B	T50B1040	156.6	

This drawing must not without the consent of Tetra Pak be copied, transmitted or disclosed to any third party.

Cable Connection List of 3223337-0003

From	Cable	To	Page.Col.	Option
T50W1050				
T50X1050	A	T50B1050	156.5	
T50W1070				
T50X1070:1	1	T50M1070:U	025.9	
T50X1070:2	2	T50M1070:V	025.9	
T50X1070:3	3	T50M1070:W	025.9	
T50X1070:5	GNYE	T50M1070:⏚	025.9	
T50X1070:4	SH	PE	025.10	
T50W1080				
T50X1000:62	BN	T50X1090:1	156.3	
	WH	T50X1090:4	156.3	
T50X1000:8	BU	T50X1090:3	156.3	
T50K1010:4	BK	T50X1090:2	156.3	
T50W1081				
T50X1090	B	T50B1080	156.6	
T50W1090				
T50X1090	A	T50B1090	156.5	
T50W1120				
T50K1040:0	1	T50P1120:1	159.5	
T50K1040:1	2	T50P1120:2	159.5	
T50K1040:2	3	T50P1120:3	159.5	
T50K1040:3	4	T50P1120:4	159.5	
	5			
T50X1000:11	6	T50P1120:0	159.5	
T50X1000:⏚	GNYE	T50P1120:E	159.5	
T50W1130				
T50X0630:1	BN	T50B1130:BN	040.7	
T50X0630:3	BU	T50B1130:BU	040.7	
T50X0630:2	BK	T50B1130:BK	040.7	
T50W1220				
T50X1220:-	RD	T50K1090:5	164.7	
T50X1220:+	YE	T50K1090:4	164.7	
T50W1230				
T50X1230:-	RD	T50K1090:7	164.7	
T50X1230:+	YE	T50K1090:6	164.7	
T50W1240				
T50X1240:-	RD	T50K1100:5	165.7	
T50X1240:+	YE	T50K1100:4	165.7	
T50W1260				
T50X0610:1	BN	T50B1260:BN	038.9	
T50X0610:3	BU	T50B1260:BU	038.9	
T50X0610:2	BK	T50B1260:BK	038.9	
T50W1290				
T50X0600:1	BN	T50B1290:BN	038.8	
T50X0600:3	BU	T50B1290:BU	038.8	
T50X0600:2	BK	T50B1290:BK	038.8	
T50W1300				
T50B1290:BN	BN	T50B1300:BN	038.8	
T50B1290:BU	BU	T50B1300:BU	038.8	
T50B1290:BK	BK	T50B1300:BK	038.8	
T50W1310				
T50X0620:1	BN	T50B1310:BN	039.8	
T50X0620:3	BU	T50B1310:BU	039.8	

This drawing must not without the consent of Tetra Pak be copied, transmitted or disclosed to any third party.

Cable Connection List of 3223337-0003

From	Cable	To	Page.Col.	Option
	T50W1310			
T50X0620:2	BK	T50B1310:BK	039.8	
	T50W1800			
T50X1800:D1	BK	T50M0800:SIN+ A	038.3	
T50X1800:D2	WH/BK	T50M0800:SIN- B	038.3	
T50X1800:D3	RD	T50M0800:COS+ C	038.3	
T50X1800:D4	WH/RD	T50M0800:COS- D	038.3	
T50X1800:D5	GN	T50M0800:DATA+ E	038.3	
T50X1800:D10	WH/GN	T50M0800:DATA- F	038.3	
T50X1800:D14	GY	T50M0800:K	038.3	
T50X1800:D6	WH/GY	T50M0800:ECOM L	038.3	
T50X1800:D7	OG	T50M0800:+9VDC N	038.3	
T50X1800:D11	WH/OG	T50M0800:TS+ R	038.3	
	BU			
	WT/BU			
	YE			
	WH/YE			
	BN			
	WH/BN			
GND	SH	T50W1800:SH	038.4	
	T50W1810			
T50X1810:D1	BK	T50M0810:SIN+ A	039.2	
T50X1810:D2	WH/BK	T50M0810:SIN- B	039.2	
T50X1810:D3	RD	T50M0810:COS+ C	039.2	
T50X1810:D4	WH/RD	T50M0810:COS- D	039.2	
T50X1810:D5	GN	T50M0810:DATA+ E	039.2	
T50X1810:D10	WH/GN	T50M0810:DATA- F	039.2	
T50X1810:D14	GY	T50M0810:K	039.2	
T50X1810:D6	WH/GY	T50M0810:ECOM L	039.2	
T50X1810:D7	OG	T50M0810:+9VDC N	039.2	
T50X1810:D11	WH/OG	T50M0810:TS+ R	039.2	
	BU			
	WT/BU			
	YE			
	WH/YE			
	BN			
	WH/BN			
GND	SH	T50W1810:SH	039.3	
	T50W1820			
T50X1820:D1	BK	T50M0820:SIN+ A	040.2	
T50X1820:D2	WH/BK	T50M0820:SIN- B	040.2	
T50X1820:D3	RD	T50M0820:COS+ C	040.2	
T50X1820:D4	WH/RD	T50M0820:COS- D	040.2	
T50X1820:D5	GN	T50M0820:DATA+ E	040.2	
T50X1820:D10	WH/GN	T50M0820:DATA- F	040.2	
T50X1820:D14	GY	T50M0820:K	040.2	
T50X1820:D6	WH/GY	T50M0820:ECOM L	040.2	
T50X1820:D7	OG	T50M0820:+9VDC N	040.2	
T50X1820:D11	WH/OG	T50M0820:TS+ R	040.2	
	BU			
	WT/BU			
	YE			
	WH/YE			
	BN			
	WH/BN			
GND	SH	T50W1820:SH	040.3	
	T50W2000			
A01X2000:4	WH	T50X1000:131	057.4	
A01X2000:1	BN	T50X1000:132	057.4	
A01X2000:6	YE	T50X1000:133	057.4	
A01X2000:9	GN	T50X1000:134	057.4	
A01X2000:5	SH	T50X1000:135	057.4	

This drawing must not without the consent of Tetra Pak
be copied, transmitted or disclosed to any third party.

Cable Connection List of 3223337-0003

From	Cable	To	Page.Col.	Option
T50W2010				
	WH-OG			
	OG			
	WH-GN			
	GN			
T50X1000:141	SH	P60K0700:ETH3	057.2	
T50X1000:140	GN	P60K0700:ETH3	057.2	
T50X1000:138	OG	P60K0700:ETH3	057.2	
T50X1000:139	WH-GN	P60K0700:ETH3	057.2	
T50X1000:137	WH-OG	P60K0700:ETH3	057.2	
T50W2020				
T50X1000:143	WH-OG	A01X6040:X2	071.3	
T50X1000:144	OG	A01X6040:X2	071.3	
T50X1000:145	WH-GN	A01X6040:X2	071.3	
T50X1000:146	GN	A01X6040:X2	071.3	
T50X1000:147	SH	A01X6040:X2	071.3	
T50W2030				
T50X1000:61	BN	T50X2050:1	156.3	
	WH	T50X2050:4	156.3	
T50X1000:7	BU	T50X2050:3	156.3	
T50K1010:5	BK	T50X2050:2	156.3	
T50W2040				
T50X2050	1	T50B2040	156.6	
T50W2050				
T50X2050	1	T50B2050	156.5	
T50W2110				
T50X1000:53	BN	T50B2110	156.5	
T50X1000:15	BU	T50B2110	156.5	

From	Cable	To	Page.Col.	Option
T50K1010:0	BK	T50B2110	156.5	
T50W2120				
T50X1000:54	BN	T50B2120	156.5	
T50X1000:21	BU	T50B2120	156.5	
T50K1010:1	BK	T50B2120	156.5	
T50W2130				
T50X2130	A	T50B2130	156.5	
T50W2131				
T50X1000:57	BN	T50X2130:1	156.3	
	WH	T50X2130:4	156.3	
T50X1000:13	BU	T50X2130:3	156.3	
T50K1010:2	BK	T50X2130:2	156.3	
T50W2140				
T50X2130	B	T50B2140	156.6	
T50W3040				
T50K0070:V+	RD	U70K0160:V+	026.2	
T50K0070:CAN-H	WH	U70K0160:CAN-H	026.2	
T50K0070:V-	BK	U70K0160:V-	026.2	
T50K0070:CAN-L	BU	U70K0160:CAN-L	026.2	
T50K0070:SH	SH	U70K0160:SH	026.2	
T50W6000				
T40K1040:0	WH	T50K6000:1.14	146.7	
	GN			
T40K1040:1	YE	T50K6000:2.14	146.7	
T40K1040:2	GY	T50K6000:2.12	146.7	
T40K1040:3	PK	T50K6000:3.14	146.7	
T40K1040:4	BU	T50K6000:3.12	146.7	

This drawing must not without the consent of Tetra Pak be copied, transmitted or disclosed to any third party.

Cable Connection List of 3223337-0003

From	Cable	To	Page.Col.	Option
	T50W6000			
T40K1040:5	RD	T50K6000:4.14	146.7	
T40K1040:6	VT	T50K6000:4.12	146.7	
T40K1050:0	GY/PK	T50K6000	147.7	
	RD/BU			
T40K1040:7	WH/GN	T50K6000:6.14	146.7	
T40X1000:131	BN/GN	T50K6000:6.12	083.7	
	WH/YE			
	YE/BN			
	WH/GY			
	GY/BN			
T40X1000:130	WH/PK	T50K6000:9.14	083.7	
	PK/BN			
T40X1000:128	WH/BU	T50K6000:10.14	083.7	
T40X1000:132	BN/BU	T50K6000:10.12	083.7	
	WH/RD			
	BN/RD			
	WH/BK			
	BN/BK			
T40X1000:3	BN	T50K6000:B10	146.7	
T40X1000:3	BK	T50K6000:C10	146.7	
	T50W6110			
T40X1000:179	1	T50B6110:1	060.4	
T40X1000:178	2	T50B6110:2	060.4	
T40X1000:⏚	GNYE	T50B6110:⏚	060.4	
	T50W6120			
T50K1040:5	1	T50K6120:1	159.5	DIMC
T50X1000:10	2	T50K6120:2	159.5	DIMC
	U30W0010			
U30X0010:1	1	U30M0010:U	028.4	
U30X0010:2	2	U30M0010:V	028.4	
U30X0010:3	3	U30M0010:W	028.4	
U30X0010:4	GNYE	U30M0010:⏚	028.4	
U30X0010:5	SH	GND	028.4	
	U30W0110			
U30X0010:1	1	U30T0110:U/T1	028.2	
U30X0010:2	2	U30T0110:V/T2	028.2	
U30X0010:3	3	U30T0110:W/T3	028.2	
U30X0010:4	GNYE	U30T0110:⏚	028.2	
U30X0010:5	SH	GND	028.3	
	U30W1020			
T50X1000:79	BN	U30B1020	166.4	ICU
T50X1000:18	BU	U30B1020	166.4	ICU
T50K1110:0	BK	U30B1020	166.4	ICU
	U30W1030			
T50K1110:2	1	U30B1030:1	166.4	ICU
T50K1110:1	2	U30B1030:2	166.4	ICU
T50X1000:80	3	U30B1030:3	166.4	ICU
T50X1000:⏚	GNYE	U30B1030:⏚	166.4	ICU
	U30W1070			
T50K1110:5	1	U30B1070:1	166.4	ICU
T50K1110:4	2	U30B1070:2	166.4	ICU
T50X1000:82	3	U30B1070:3	166.4	ICU
T50X1000:⏚	GNYE	U30B1070:⏚	166.4	ICU
	U30W1090			
T50X1000:81	BN	U30B1090	166.4	ICU
T50X1000:20	BU	U30B1090	166.4	ICU
T50K1110:3	BK	U30B1090	166.4	ICU

This drawing must not without the consent of Tetra Pak be copied, transmitted or disclosed to any third party.

Cable Connection List of 3223337-0003

From	Cable	To	Page.Col.	Option
U30W1100				
T40K1060:4	WH	U30B1100:ANAOUT-	148.4	
	BN			
T40K1060:2	SH	U30W1100	148.6	
U30B1100:24V	YE	U30B1100:DIGOUT+	148.4	
T40K1010:6	GN	U30B1100:DIGOUT-	148.4	
	SH			
T40K1100:2	GY	U30B1100:LINE STOP IN-	148.4	
T40K1100:0	PK	U30B1100:LINE STOP IN+	148.4	
	SH			
	BU			
T40X1000:56	RD	U30B1100:24V	148.4	
	SH			
T40X1000:114	VT	U30B1100:RA/TA	148.4	
T40X1000:6	BK	U30B1100:0V	148.4	
	SH			
T40K1060:0	GY-PK	U30B1100:ANAOUT+	148.4	
T40X1000:113	RD-BU	U30B1100:RB/TB	148.4	
	SH			
	SH			
T40X1000:⏚	GNYE	U30B1100:⏚	148.4	
U30W1110				
U30K0110:V+	RD	U70K0320:V+	027.7	
U30K0110:CAN-H	WH	U70K0320:CAN-H	027.7	
U30K0110:V-	BK	U70K0320:V-	027.7	
U30K0110:CAN-L	BU	U70K0320:CAN-L	027.7	
U30K0110:SH	SH	U70K0320:SH	027.7	
U30W1180				
U30X1180:7	BN	T40K1070:6	149.7	
U30X1180:2	GN	T40K1070:4	149.7	
U30X1180:6	WH	T40K1070:4	149.7	
U30X1180:3	YE	T40K1070:0	149.7	

From	Cable	To	Page.Col.	Option
U30W1180	SH	T40K1070:2	149.7	
U30W1200				
U30X1200:-	RD	T40K1080:5	150.7	
U30X1200:+	YE	T40K1080:4	150.7	
U30W1570				
T50X1000:149	1	U30M1570:1	017.8	ICU
T50X1000:150	2	U30M1570:2	017.8	ICU
U30W1590				
T50X1000:151	1	U30M1590:1	017.9	ICU
T50X1000:152	2	U30M1590:2	017.9	ICU
U30W1800				
T40K1030:1	1	U30K1800:1	145.4	
T40X1000:5	2	U30K1800:2	145.4	
T40X1000:⏚	GNYE	U30K1800:E	145.4	
U30W3730				
T40X1000:70	BN	U30B3730:1	143.3	
T40X1000:28	BU	U30B3730:3	143.3	
T40K1010:2	BK	U30B3730:4	143.3	
U30W3731				
T40X1000:71	BN	U30B3731:1	143.3	
T40X1000:29	BU	U30B3731:3	143.3	
T40K1010:3	BK	U30B3731:4	143.3	
U70W0010				
U70X0010:3	BN	U70E0010:Y	007.2	
U70X0010:2	BK	U70E0010:X	007.2	
U70X0010:1	GY	U70E0010:Z	007.2	

Tetra Pak®

Version Designer	Version Date	Machine
RICO	01/10/2014	A3 CompactFlex 0300

ECM No	Denomination	Page Type
687624	CABLE CONNECTION LIST	CABLE CONNECTION LIST

Information Security Class	Document No.	Doc. type	Version	Page
PUBLIC	3223337-0007	ELD	AM	033

This drawing must not without the consent of Tetra Pak be copied, transmitted or disclosed to any third party.

Cable Connection List of 3223337-0003

From	Cable	To	Page.Col.	Option
	U70W0010			
U70X0010:⏚	GNYE	U70E0010:E	007.2	
	U70W0020			
U70X0020:3	BN	U70E0020:Y	007.6	
U70X0020:2	BK	U70E0020:X	007.6	
U70X0020:1	GY	U70E0020:Z	007.6	
U70X0020:⏚	GNYE	U70E0020:E	007.6	
	U70W0030			
U70X0450:3	BU	U70E0030:2	008.2	
U70X0450:1	BN	U70E0030:1	008.2	
	U70W0040			
U70X0450:5	BN	U70E0040:1	008.4	
U70X0450:7	BU	U70E0040:2	008.4	
	GNYE			
	U70W0050			
U70X0450:12	BU	U70E0050:2	008.7	
U70X0450:10	BN	U70E0050:1	008.7	
	U70W0060			
U70X0450:16	BU	U70E0060:2	008.9	
U70X0450:14	BN	U70E0060:1	008.9	
	U70W0080			
U70X0080:⏚	GNYE	U70E0080:E	009.4	
U70X0080:1	BN	U70E0080:1	009.4	
U70X0080:2	L.BU	U70E0080:2	009.4	
	U70W0090			
U70X0090:3	BN	U70E0090:V1	009.8	

From	Cable	To	Page.Col.	Option
U70X0090:2	BK	U70E0090:U1	009.8	
U70X0090:1	GY	U70E0090:W1	009.7	
U70X0090:⏚	GNYE	U70E0090:E	009.9	
	U70W0160			
U70X1160:1	1	U70T0160:U/T1	026.2	
U70X1160:2	2	U70T0160:V/T2	026.2	
U70X1160:3	3	U70T0160:W/T3	026.2	
U70X1160:5	GNYE	U70T0160:⏚	026.2	
U70X1160:4	SH	PE	026.4	
	U70W0180			
U70X1180:1	1	U70T0180:U/T1	026.7	DIMC
U70X1180:2	2	U70T0180:V/T2	026.7	DIMC
U70X1180:3	3	U70T0180:W/T3	026.7	DIMC
U70X1180:5	GNYE	U70T0180:⏚	026.7	DIMC
U70X1180:4	SH	PE	026.8	DIMC
	U70W0190			
U70X1190:1	1	U70T0190:U/T1	027.1	
U70X1190:2	2	U70T0190:V/T2	027.1	
U70X1190:3	3	U70T0190:W/T3	027.1	
U70X1190:5	GNYE	U70T0190:⏚	027.1	
U70X1190:4	SH	PE	027.3	
	U70W0230			
U70X0230:1	BN	U70M0230:U	017.3	
U70X0230:2	BU	U70M0230:N	017.3	
U70X0230:⏚	GNYE	U70M0230:⏚	017.3	
	U70W0280			
	WH		054.2	
	BN		054.2	

RELEASED

This drawing must not without the consent of Tetra Pak be copied, transmitted or disclosed to any third party.

Cable Connection List of 3223337-0003

From	Cable	To	Page.Col.	Option
U70W0280				
U70X0280:4B	GN	U70X0390:4	054.8	
U70X0280:2A	YE	U70X0390:5	054.8	
U70X0280:5	SH	PE	054.10	
U70W0290				
U70X0290:1	1	U70X1000:79	170.3	
U70X0290:4	2	U70X1000:31	170.1	
U70W0300				
A01X3100:2-	WH	U70B0300:2	054.4	
A01X3100:2+	BN	U70B0300:1	054.4	
A01X3100:2	GN	U70B0300:3	054.4	
A01X3100:2-	YE	U70B0300:4	054.4	
PE	SH	U70W0300:SH	054.5	
U70W0320				
U70X0320:1	1	U70M0320:U	027.9	ICU
U70X0320:2	2	U70M0320:V	027.9	ICU
U70X0320:3	3	U70M0320:W	027.9	ICU
U70X0320:5	GNYE	U70M0320:⏚	027.9	ICU
U70X0320:4	SH	PE	027.9	ICU
U70W0321				
U70X0320:1	1	U70T0320:U/T1	027.7	ICU
U70X0320:2	2	U70T0320:V/T2	027.7	ICU
U70X0320:3	3	U70T0320:W/T3	027.7	ICU
U70X0320:5	GNYE	U70T0320:⏚	027.7	ICU
	SH			
U70W0370				
U70X0370:1	1	U70E0370:1	010.2	H.I.
U70X0370:2	2	U70E0370:2	010.2	H.I.

From	Cable	To	Page.Col.	Option
U70X0370:⏚	GNYE	U70E0370:E	010.2	H.I.
U70W0560				
U70X0560:1	1	U70X1000:1	170.1	
U70X0560:2	2	U70X1000:51	170.3	
U70X0560:3	3	U70X1000:157	173.6	
	4			
U70X0560:5	5	U70X1000:162	174.6	
U70X0560:6	6	U70X1000:156	079.5	
U70X0560:7	7	U70X1000:163	076.6	
U70X0560:8	8	U70X1000:101	170.3	
U70X0560:9	9	U70X1000:167	064.7	
U70X0560:10	10	U70X1000:168	064.9	
U70X0560:11	11	U70X1000:301	170.5	
U70X0560:12	12	U70X1000:351	170.5	
	13			
U70X0560:14	14	U70X1000:165	064.7	
U70X0560:15	15	U70X1000:166	064.9	
	16			
	17			
	18			
	19			
	20			
	21			
	22			
	23			
	24			
U70X0560:⏚	GNYE	U70X1000:⏚	170.9	
U70W0800				
U70X0810:-	RD	A01C5300:1.3	048.6	
U70X0810:+	YE	A01C5300:1.2	048.6	

This drawing must not without the consent of Tetra Pak be copied, transmitted or disclosed to any third party.

Cable Connection List of 3223337-0003

From	Cable	To	Page.Col.	Option
	U70W0810			
U70X0810:-	RD	U70K1150:5	186.7	
U70X0810:+	YE	U70K1150:4	186.7	
	U70W0820			
U70X0830:-	RD	A01C5300:2.3	048.6	
U70X0830:+	YE	A01C5300:2.2	048.6	
	U70W0830			
U70X0830:-	RD	U70K1220:5	193.7	
U70X0830:+	YE	U70K1220:4	193.7	
	U70W0840			
U70X0850:-	RD	A01C5300:3.3	048.6	
U70X0850:+	YE	A01C5300:3.2	048.6	
	U70W0850			
U70X0850:-	RD	U70K1140:5	185.7	
U70X0850:+	YE	U70K1140:4	185.7	
	U70W0930			
U70X0930:-	RD	U70K9090:7	212.7	H.I.
U70X0930:+	YE	U70K9090:6	212.7	H.I.
	U70W0960			
U70X0930:+	RD	A01C5300:9.3	049.7	
U70X0930:-	YE	A01C5300:9.2	049.7	
	U70W1000			
A01X2040:BLACK	BK	U70K1000:-V	171.6	
A01X2040:BLUE	BU	U70K1000:CAN-L	171.6	
A01X2040:DRAIN	DRAIN	U70K1000:SHIELD	171.6	
A01X2040:WHITE	WH	U70K1000:CAN-H	171.6	

From	Cable	To	Page.Col.	Option
A01X2040:RED	RD	U70K1000:+V	171.6	
	U70W1010			
U70X1000:56	RD	U70B1010	173.4	
U70K1020:0	BK	U70B1010	173.4	
	U70W1020			
U70X1000:60	BN	U70B1020	173.5	
U70X1000:8	BU	U70B1020	173.5	
U70K1020:1	BK	U70B1020	173.5	
	U70W1040			
U70X1000:161	BK	U70B1040:BK	174.6	
	BN	U70B1040:BN	174.6	
U70X1000:162	BU	U70B1040:BU	174.6	
U70X1000:⏚	GNYE	U70B1040:E	174.6	
	U70W1050			
U70X1000:84	BK	U70B1050:BK	174.3	
	BN	U70B1050:BN	174.3	
U70X1000:159	BU	U70B1050:BU	174.3	
U70X1000:⏚	GNYE	U70B1050:E	174.3	
	U70W1060			
U70X1000:64	BN	U70B1060	173.5	
U70X1000:20	BU	U70B1060	173.5	
U70K1020:2	BK	U70B1060	173.5	
	U70W1070			
U70X1000:96	BN	U70B1070	196.5	
U70X1000:47	BU	U70B1070	196.5	
U70K1250:2	BK	U70B1070	196.5	

This drawing must not without the consent of Tetra Pak be copied, transmitted or disclosed to any third party.

Cable Connection List of 3223337-0003

From	Cable	To	Page.Col.	Option
U70W1100				
U70X1100:1	BN	U70K1190:2	190.2	
U70X1100:3	BU	U70K1190:3	190.2	
U70W1130				
U70X1130:⏚	GNYE	U70E1130:E	010.5	
U70X1130:1	BN	U70E1130:1	010.5	
U70X1130:2	L.BU	U70E1130:2	010.5	
U70W1140				
U70X1140:⏚	GNYE	U70E1140:E	010.8	
U70X1140:1	BN	U70E1140:1	010.8	
U70X1140:2	L.BU	U70E1140:2	010.8	
U70W1160				
U70X1160:1	1	U70M1160:U	026.4	
U70X1160:2	2	U70M1160:V	026.4	
U70X1160:3	3	U70M1160:W	026.4	
U70X1160:5	GNYE	U70M1160:⏚	026.4	
U70X1160:4	SH	PE	026.5	
U70W1161				
T50X1000:14	BN	U70B1160	158.5	
T50X1000:75	BU	U70B1160	158.5	
T50K1030:5	BK	U70B1160	158.5	
U70W1170				
U70X1170:3	GY	U70K1110:1	182.2	
U70X1170:1	WH	U70X1000:103	170.3	
U70X1170:2	YE	U70X1000:160	182.4	
U70X1170:4	GN	U70K1110:5	182.2	
	BN			
U70X1170:5	SH	U70K1110:3	182.2	

From	Cable	To	Page.Col.	Option
U70W1180				
U70X1180:1	1	U70M1180:U	026.9	DIMC
U70X1180:2	2	U70M1180:V	026.9	DIMC
U70X1180:3	3	U70M1180:W	026.9	DIMC
U70X1180:5	GNYE	U70M1180:⏚	026.9	DIMC
U70X1180:4	SH	PE	026.10	DIMC
U70W1190				
U70X1190:1	1	U70M1190:W	027.4	
U70X1190:2	2	U70M1190:V	027.4	
U70X1190:3	3	U70M1190:U	027.4	
U70X1190:5	GNYE	U70M1190:⏚	027.4	
U70X1190:4	SH	PE	027.5	
U70W1210				
U70B1210:RD	RD	U70K1180:5	189.7	
U70B1210:YE	YE	U70K1180:4	189.7	
U70W1220				
U70B1220:RD	RD	U70K1180:7	189.7	
U70B1220:YE	YE	U70K1180:6	189.7	
U70W1230				
U70B1230:RD	RD	U70K1170:5	188.7	
U70B1230:YE	YE	U70K1170:4	188.7	
U70W1240				
U70B1240:RD	RD	U70K1170:7	188.7	
U70B1240:YE	YE	U70K1170:6	188.7	
U70W1250				
U70X1250:-	RD	T40K1080:7	150.7	

Tetra Pak®

Version Designer: RICO	Version Date: 01/10/2014	Machine: A3 CompactFlex 0300	
ECM No: 687624	Denomination: CABLE CONNECTION LIST	Page Type: CABLE CONNECTION LIST	
Information Security Class: PUBLIC	Document No.: 3223337-0007	Doc. type: ELD	Version: AM / Page: 037

This drawing must not without the consent of Tetra Pak be copied, transmitted or disclosed to any third party.

Cable Connection List of 3223337-0003

From	Cable	To	Page.Col.	Option
	U70W1250			
U70X1250:+	YE	T40K1080:6	150.7	
	U70W1260			
U70X1260:-	RD	U70K1150:5	186.7	
U70X1260:+	YE	U70K1150:4	186.7	
	U70W1270			
U70X1270:-	RD	U70K1150:7	186.7	
U70X1270:+	YE	U70K1150:6	186.7	
	U70W1280			
U70X1000:73	BN	U70B1280	076.5	
U70X1000:25	BU	U70B1280	076.5	
U70X1000:163	BK	U70B1280	076.5	
	U70W1290			
U70X1290:1	BN	U70X1000:158	181.6	
U70X1290:3	BU	U70K1100:4	181.7	
U70X1290:4	BK	U70K1100:0	181.7	
	U70W1300			
U70B1300:1	1	U70K1080:6	179.7	
U70B1300:2	2	U70K1080:0	179.7	
U70B1300:E	GNYE	U70K1080:2	179.7	
	U70W1330			
U70X1000:69	BN	U70B1330	174.5	
U70X1000:21	BU	U70B1330	174.5	
U70K1030:0	BK	U70B1330	174.5	
	U70W1340			
U70X1000:70	BN	U70B1340	174.5	

From	Cable	To	Page.Col.	Option
U70X1000:22	BU	U70B1340	174.5	
U70K1030:1	BK	U70B1340	174.5	
	U70W1350			
U70X1000:76	BN	U70B1350	174.5	
U70X1000:24	BU	U70B1350	174.5	
U70K1030:2	BK	U70B1350	174.5	
	U70W1360			
U70X1000:75	BN	U70B1360	174.5	
U70X1000:27	BU	U70B1360	174.5	
U70K1030:3	BK	U70B1360	174.5	
	U70W1370			
U70X1000:80	BN	U70B1370	174.5	
U70X1000:28	BU	U70B1370	174.5	
U70K1030:4	BK	U70B1370	174.5	
	U70W1380			
U70X1000:71	BN	U70B1380:1	174.4	
U70X1000:23	BU	U70B1380:3	174.4	
U70K1030:5	BK	U70B1380:4	174.4	
	U70W1390			
U70X1000:100	BN	U70B1390:1	175.4	
U70X1000:48	BU	U70B1390:3	175.4	
U70K1040:7	BK	U70B1390:4	175.4	
	U70W1400			
U70X1000:81	1	U70B1400:+	175.4	ICU
U70X1000:29	2	U70B1400:-	175.4	ICU
U70K1040:1	3	U70B1400:OPEN	175.5	
	GNYE			

Tetra Pak®	Version Designer: RICO	Version Date: 01/10/2014	Machine: A3 CompactFlex 0300	
	ECM No: 687624	Denomination: CABLE CONNECTION LIST	Page Type: CABLE CONNECTION LIST	
Information Security Class: PUBLIC	Document No.: 3223337-0007	Doc. type: ELD	Version: AM	Page: 038

This drawing must not without the consent of Tetra Pak be copied, transmitted or disclosed to any third party.

Cable Connection List of 3223337-0003

From	Cable	To	Page.Col.	Option
U70W1410				
K80K1030:7	1	U70K1410:1	223.4	ICU
K80X1000:15	2	U70K1410:2	223.4	ICU
K80X1000:⏚	GNYE	U70K1410:E	223.4	ICU
U70W1700				
U70X1000:354	BN	U70X1700:1	172.4	
	WH	U70X1700:2	172.5	
U70X1000:304	BU	U70X1700:3	172.4	
U70K1010:4	BK	U70X1700:4	172.5	
U70W1710				
U70K1050:0	1	U70K1710:1	176.4	
U70X1000:41	2	U70K1710:2	176.4	
U70X1000:⏚	GNYE	U70K1710:E	176.4	
U70W1720				
T40K1030:3	1	U70K1720:1	145.4	
T40X1000:9	2	U70K1720:2	145.4	
T40X1000:⏚	GNYE	U70K1720:E	145.4	
U70W1730				
T40K1030:4	1	U70K1730:1	145.4	
T40X1000:10	2	U70K1730:2	145.4	
T40X1000:⏚	GNYE	U70K1730:E	145.4	
U70W1740				
U70K1310:0	WH	U70K1740:1.14	198.7	
	GN			
U70K1310:1	YE	U70K1740:2.14	198.7	
	GY			
U70K1060:0	PK	U70K1740:3.14	177.7	
U70K1310:2	BU	U70K1740:3.12	198.7	

From	Cable	To	Page.Col.	Option
U70K1060:1	RD	U70K1740:4.14	177.7	
U70K1060:2	VT	U70K1740:4.12	177.7	
U70K1060:3	GY/PK	U70K1740:5.14	177.7	
	RD/BU			
U70K1310:3	WH/GN	U70K1740:6.14	198.7	
	BN/GN			
U70K1310:4	WH/YE	U70K1740:7.14	198.7	
	YE/BN			
U70K1060:4	WH/GY	U70K1740:8.14	177.7	
	GY/BN			
U70K1060:5	WH/PK	U70K1740:9.14	177.7	
	PK/BN			
U70K1060:6	WH/BU	U70K1740:10.14	177.7	
	BN/BU			
	WH/RD			
	BN/RD			
	WH/BK			
	BN/BK			
U70X1000:3	BN	U70K1740:B10	177.7	
U70X1000:3	BK	U70K1740:C10	198.7	
U70W1750				
U70K1070:0	WH	U70K1750:1.14	178.7	
	GN			
U70K1070:1	YE	U70K1750:2.14	178.7	
	GY			
U70K1070:2	PK	U70K1750:3.14	178.7	
	BU			
U70K1310:6	RD	U70K1750:4.14	198.7	
	VT			
U70K1070:3	GY/PK	U70K1750:5.14	178.7	
	RD/BU			
U70K1070:4	WH/GN	U70K1750:6.14	178.7	
	BN/GN			

This drawing must not without the consent of Tetra Pak be copied, transmitted or disclosed to any third party.

Cable Connection List of 3223337-0003

From	Cable	To	Page.Col.	Option
U70W1750				
U70K1070:6	WH/YE	U70K1750:7.14	178.7	
U70K1070:5	YE/BN	U70K1750:7.12	178.7	
	WH/GY			
	GY/BN			
U70K1310:7	WH/PK	U70K1750:9.14	198.7	
	PK/BN			
U70K1070:7	WH/BU	U70K1750:10.14	178.7	
	BN/BU			
	WH/RD			
	BN/RD			
	WH/BK			
	BN/BK			
U70X1000:4	BN	U70K1750:B10	178.7	
U70X1000:4	BK	U70K1750:C10	198.7	
U70W1990				
U70B1990:1	1	U70K1090:1	180.7	DIMC
U70B1990:2	2	U70K1090:7	180.7	DIMC
U70W2000				
U70W2000:WH/SH	WH/SH	A01C5320:15	047.5	
U70B2000	BL/WH	A01C5320:84	047.5	
U70B2000	WH	A01C5320:12	047.5	
U70B2000	YE	A01C5320:13	047.5	
U70B2000	GN	A01C5320:11	047.5	
U70W2000:RD/SH	RD/SH	A01C5320:16	047.5	
U70B2000	BL/RD	A01C5320:83	047.5	
U70B2000	SH		047.6	
	BN			
U70W2020				
U70X1000:82	BN	U70B2020	175.5	
U70X1000:26	BU	U70B2020	175.5	

From	Cable	To	Page.Col.	Option
U70K1040:0	BK	U70B2020	175.5	
U70W2060				
T50X1000:56	BN	U70B2060	156.5	
T50X1000:6	BU	U70B2060	156.5	
T50K1010:6	BK	U70B2060	156.5	
U70W2100				
U70X1000:59	BN	U70B2100	173.5	
U70X1000:12	BU	U70B2100	173.5	
U70K1020:3	BK	U70B2100	173.5	
U70W2120				
U70X1000:86	BN	U70B2120	175.5	
U70X1000:30	BU	U70B2120	175.5	
U70K1040:2	BK	U70B2120	175.5	
U70W2190				
U70X1000:85	BN	U70B2190	175.5	
U70X1000:34	BU	U70B2190	175.5	
U70K1040:3	BK	U70B2190	175.5	
U70W2200				
U70X1000:90	BN	U70B2200	175.5	
U70X1000:35	BU	U70B2200	175.5	
U70K1040:4	BK	U70B2200	175.5	
U70W2210				
U70X1000:89	BN	U70B2210	175.5	
U70X1000:37	BU	U70B2210	175.5	
U70K1040:5	BK	U70B2210	175.5	

This drawing must not without the consent of Tetra Pak be copied, transmitted or disclosed to any third party.

Cable Connection List of 3223337-0003

From	Cable	To	Page.Col.	Option
U70W2211				
U70X1000:74	BN	U70B2211	175.5	
U70X1000:38	BU	U70B2211	175.5	
U70K1040:6	BK	U70B2211	175.5	
U70W2240				
U70B2240:-	WH	U70K1090:0	180.7	
U70B2240:+	BN	U70K1090:6	180.7	
GND	SH	U70K1090:2	180.7	
U70W2260				
	GY			
U70X2260:1	WH	U70K1100:5	181.7	
	YE			
U70X2260:2	GN	U70K1100:7	181.7	
U70X2260:3	BN	U70K1100:1	181.7	
U70X2260:4	SH	U70K1100:3	181.7	
U70W2280				
U70X2280:-	RD	U70K1210:5	192.7	
U70X2280:+	YE	U70K1210:4	192.7	
U70W2290				
U70X2290:-	RD	U70K1220:5	193.7	
U70X2290:+	YE	U70K1220:4	193.7	
U70W2300				
U70X2300:-	RD	U70K1210:7	192.7	
U70X2300:+	YE	U70K1210:6	192.7	
U70W2310				
U70X1000:55	BN	U70B2310	079.4	
U70X1000:7	BU	U70B2310	079.4	

From	Cable	To	Page.Col.	Option
U70X1000:156	BK	U70B2310	079.4	
U70W2480				
U70B2480:2-	WH	U70K1080:1	179.7	ICU
U70B2480:1+	BN	U70K1080:7	179.7	ICU
U70B2480:⏚	SH	U70K1080:3	179.7	ICU
U70W2700				
U70K2700:B2	1	U70B2700:1	051.3	
U70K2700:B3	2	U70B2700:2	051.3	
U70K2700:B1	3	U70B2700:⏚	051.3	
U70X1000:⏚	GNYE	U70B2700:⏚	051.3	
U70W2730				
U70X1000:305	1	U70X2730:1	172.4	
U70X1000:355	2	U70X2730:2	172.4	
U70K1010:6	3	U70X2730:3	172.5	
U70W2740				
U70K1050:1	1	U70K2740:1	176.4	
U70X1000:42	2	U70K2740:2	176.4	
U70X1000:⏚	GNYE	U70K2740:E	176.4	
U70W2750				
U70K1050:2	1	U70K2750:1	176.4	
U70X1000:45	2	U70K2750:2	176.4	
U70X1000:⏚	GNYE	U70K2750:E	176.4	
U70W2860				
U70K1050:3	1	U70K2860:1	176.4	
U70X1000:46	2	U70K2860:2	176.4	
U70X1000:⏚	GNYE	U70K2860:E	176.4	

Tetra Pak®

Version Designer	Version Date	Machine
RICO	01/10/2014	A3 CompactFlex 0300

ECM No	Denomination	Page Type
687624	CABLE CONNECTION LIST	CABLE CONNECTION LIST

Information Security Class	Document No.	Doc. type	Version	Page
PUBLIC	3223337-0007	ELD	AM	041

This drawing must not without the consent of Tetra Pak be copied, transmitted or disclosed to any third party.

Cable Connection List of 3223337-0003

From	Cable	To	Page.Col.	Option
U70W2870				
U70K1050:4	1	U70K2870:1	176.4	
U70X1000:36	2	U70K2870:2	176.4	
U70X1000:⏚	GNYE	U70K2870:E	176.4	
U70W3010				
U70X1000:68	BN	U70B3010	173.5	
U70X1000:16	BU	U70B3010	173.5	
U70K1020:4	BK	U70B3010	173.5	
U70W3020				
U70X1000:67	BN	U70B3020	173.5	
U70X1000:15	BU	U70B3020	173.5	
U70K1020:5	BK	U70B3020	173.5	
U70W3030				
U70X1000:72	BN	U70B3030	173.5	
U70X1000:19	BU	U70B3030	173.5	
U70K1020:6	BK	U70B3030	173.5	
U70W3090				
U70X1000:66	BN	U70B3090	173.5	
U70X1000:17	BU	U70B3090	173.5	
U70X1000:157	BK	U70B3090	173.5	
U70W3100				
A01X3100:3	GY	U70X3100:3	054.3	
A01X3100:3+	WH	U70X3100:1	054.3	
	YE	U70X3100:2	054.3	
A01X3100:3-	GN	U70X3100:4	054.3	
A01X3100:⏚	BN	U70X3100:5	054.3	
A01X3100:⏚	SH	U70W3100:SH	054.4	

From	Cable	To	Page.Col.	Option
U70W3160				
U70K0160:V+	RD	U70K0180:V+	026.7	
U70K0160:CAN-H	WH	U70K0180:CAN-H	026.7	
U70K0160:V-	BK	U70K0180:V-	026.7	
U70K0160:CAN-L	BU	U70K0180:CAN-L	026.7	
U70K0160:SH	SH	U70K0180:SH	026.7	
U70W3180				
U30K0110:V+	RD	U70K0180:V+	026.7	DIMC
U30K0110:CAN-H	WH	U70K0180:CAN-H	026.7	DIMC
U30K0110:V-	BK	U70K0180:V-	026.7	DIMC
U30K0110:CAN-L	BU	U70K0180:CAN-L	026.7	DIMC
U30K0110:SH	SH	U70K0180:SH	026.7	DIMC
U70W3190				
A01X2040:RED	RD	U70K0190:V+	027.2	
A01X2040:WHITE	WH	U70K0190:CAN-H	027.2	
A01X2040:BLACK	BK	U70K0190:V-	027.2	
A01X2040:BLUE	BU	U70K0190:CAN-L	027.2	
A01X2040:DRAIN	SH	U70K0190:SH	027.2	
U70W3200				
U70X3200:-	RD	U70K1140:5	185.7	
U70X3200:+	YE	U70K1140:4	185.7	
U70W3210				
U70X3210:-	RD	U70K1160:5	187.7	
U70X3210:+	YE	U70K1160:4	187.7	
U70W3211				
U70X3211:-	RD	U70K1230:5	194.7	
U70X3211:+	YE	U70K1230:4	194.7	

This drawing must not without the consent of Tetra Pak be copied, transmitted or disclosed to any third party.

Cable Connection List of 3223337-0003

From	Cable	To	Page.Col.	Option
U70W3230				
U70X3230:-	RD	U70K1160:7	187.7	
U70X3230:+	YE	U70K1160:6	187.7	
U70W3240				
U70X3240:-	RD	U70K1140:7	185.7	
U70X3240:+	YE	U70K1140:6	185.7	
U70W3250				
U70X3250:-	RD	U70K1220:7	193.7	
U70X3250:+	YE	U70K1220:6	193.7	
U70W3260				
U70B3260	RD	U70K1240:2	195.7	
U70B3260	WH	U70K1240:0	195.7	
U70W3270				
U70X3270:-	RD	U70K1230:7	194.7	
U70X3270:+	YE	U70K1230:6	194.7	
U70W3320				
U70K0190:V+	RD	U70K0320:V+	027.7	ICU
U70K0190:CAN-H	WH	U70K0320:CAN-H	027.7	ICU
U70K0190:V-	BK	U70K0320:V-	027.7	ICU
U70K0190:CAN-L	BU	U70K0320:CAN-L	027.7	ICU
U70K0190:SH	SH	U70K0320:SH	027.7	ICU
U70W3700				
U70K3700:B3	1	U70B3700:1	051.3	
U70K3700:B1	2	U70B3700:⏚	051.3	
	GNYE			
U70X1000:⏚	GNYE	U70B3700:⏚	051.3	

From	Cable	To	Page.Col.	Option
U70W3780				
U70X1000:93	BN	U70B3780	196.5	
U70X1000:43	BU	U70B3780	196.5	
U70K1250:0	BK	U70B3780	196.5	
U70W3790				
U70X1000:94	BN	U70B3790	196.5	
U70X1000:44	BU	U70B3790	196.5	
U70K1250:1	BK	U70B3790	196.5	
U70W4010				
U70B4010:1	1	U70K9010:0	206.7	H.I.
U70B4010:3	2	U70K9010:6	206.7	H.I.
U70W4020				
U70B4020	BN	U70K9010:7	206.7	H.I.
U70B4020	BU	U70K9010:5	206.7	H.I.
U70B4020	BK	U70K9010:1	206.7	H.I.
U70W4030				
U70B4030	BN	U70K9010:10	206.7	H.I.
U70B4030	BU	U70K9010:8	206.7	H.I.
U70B4030	BK	U70K9010:2	206.7	H.I.
U70W4040				
U70B4040	BN	U70K9010:11	206.7	H.I.
U70B4040	BU	U70K9010:9	206.7	H.I.
U70B4040	BK	U70K9010:3	206.7	H.I.
U70W4050				
U70B4050	BN	U70K9020:6	207.7	H.I.
U70B4050	BU	U70K9020:4	207.7	H.I.

This drawing must not without the consent of Tetra Pak be copied, transmitted or disclosed to any third party.

Cable Connection List of 3223337-0003

From	Cable	To	Page.Col.	Option
	U70W4050			
U70B4050	BK	U70K9020:0	207.7	H.I.
	U70W4060			
U70K4061:B2	1	U70B4060:1	051.3	H.I.
U70K4061:B3	2	U70B4060:2	051.3	H.I.
U70K4061:B1	3	U70B4060:⏚	051.3	H.I.
	GNYE			
U70X4000:⏚	GNYE	U70B4060:⏚	051.3	H.I.
	U70W4070			
U70B4070	BN	U70K9020:10	207.7	H.I.
U70B4070	BU	U70K9020:8	207.7	H.I.
U70B4070	BK	U70K9020:2	207.7	H.I.
	U70W4080			
U70B4080:1	1	U70K9020:3	207.7	H.I.
U70B4080:2	2	U70K9020:11	207.7	H.I.
	U70W4090			
U70B4090	BN	U70K9110:6	214.7	H.I.
U70B4090	BU	U70K9110:4	214.7	H.I.
U70B4090	BK	U70K9110:0	214.7	H.I.
	U70W4210			
U70K4210:1	1	U70K9040:0	208.2	H.I.
U70K4210:2	2	U70K9040:6	208.2	H.I.
U70K4210:E	GNYE	U70X4000:⏚	208.5	H.I.
	U70W4220			
U70K4220:1	1	U70K9040:1	208.2	H.I.
U70K4220:2	2	U70K9040:7	208.2	H.I.

From	Cable	To	Page.Col.	Option
U70K4220:E	GNYE	U70X4000:⏚	208.5	H.I.
	U70W4230			
U70K4230:1	1	U70K9040:2	208.2	H.I.
U70K4230:2	2	U70K9040:4	208.2	H.I.
U70K4230:E	GNYE	U70X4000:⏚	208.5	H.I.
	U70W4240			
U70K4240:1	1	U70K9040:3	208.2	H.I.
U70K4240:2	2	U70K9040:5	208.2	H.I.
U70K4240:E	GNYE	U70X4000:⏚	208.5	H.I.
	U70W4290			
U70X4290:3	WH	U70K9060:4	209.7	H.I.
U70X4290:1	BN	U70K9060:6	209.7	H.I.
U70X4290:2	GN	U70K9060:4	209.7	H.I.
U70X4290:4	YE	U70K9060:0	209.7	H.I.
U70X4290:5	OG		209.6	H.I.
U70X4290:6	GY		209.6	H.I.
U70W4290:SH	SH	U70K9060:2	209.7	
	U70W4330			
U70X4330:4	BK	U70K9080:0	211.2	RK
U70X4330:3	BU	U70X4000:⏚	211.4	RK
U70X4330:1	BN	U70K9080:6	211.2	RK
U70X4330:2	WH	U70K9080:4	211.2	RK
U70X4330:5	GY		211.5	RK
U70X4330	SH	U70K9080:2	211.2	RK
	U70W4350			
U70X4350:-	RD	U70K9090:5	212.7	H.I.
U70X4350:+	YE	U70K9090:4	212.7	H.I.

This drawing must not without the consent of Tetra Pak be copied, transmitted or disclosed to any third party.

Cable Connection List of 3223337-0003

From	Cable	To	Page.Col.	Option
	U70W4360			
U70X4360:-	RD	U70K9090:7	212.7	H.I.
U70X4360:+	YE	U70K9090:6	212.7	H.I.
	U70W4370			
U70X4370:-	RD	U70K9100:5	213.7	H.I.
U70X4370:+	YE	U70K9100:4	213.7	H.I.
	U70W6000			
A01X2050:RED	RD	U70K6000:+V	233.6	HVA
A01X2050:WHITE	WH	U70K6000:CAN-H	233.6	HVA
A01X2050:BLACK	BK	U70K6000:-V	233.6	HVA
A01X2050:BLUE	BU	U70K6000:CAN-L	233.6	HVA
A01X2050:DRAIN	SH	U70K6000:SHIELD	233.6	HVA
	U70W6025			
U70K6020:0	WH	U70X6025:1.14	236.7	HVA
	GN			
U70K6020:1	YE	U70X6025:2.14	236.7	HVA
	GY			
U70K6020:2	PK	U70X6025:3.14	236.7	HVA
	BU			
U70K6020:3	RD	U70X6025:4.14	236.7	HVA
U70K6020:4	VT	U70X6025:4.12	236.7	HVA
U70K6020:5	GY-PK	U70X6025:5.14	236.7	HVA
U70K6020:6	RD-BU	U70X6025:5.12	236.7	HVA
U70K6020:7	WH-GN	U70X6025:6.14	236.7	HVA
U70K6030:0	BN-GN	U70X6025:6.12	237.7	HVA
U70K6030:1	WH-YE	U70X6025:7.14	237.7	HVA
U70K6030:2	YE-BN	U70X6025:7.12	237.7	HVA
	WH-GY			
	GY-BN			
	WH-PK			
	PK-BN			

From	Cable	To	Page.Col.	Option
	WH-BU			
	BN-BU			
	WH-RD			
	BN-RD			
	WH-BK			
	BN-BK			
U70X6000:33	BN	U70X6025:B-10	236.7	HVA
U70X6000:34	BK	U70X6025:C-10	237.7	HVA
	U70W6050			
U70X6050:-	RD	U70K6050:5	239.7	HVA
U70X6050:+	YE	U70K6050:4	239.7	HVA
	U70W6100			
U70X6000:37	1	U70X1000:302	170.5	
U70X6000:1	2	U70X1000:352	170.5	
U70X6000:⏚	GNYE	U70X1000:⏚	170.5	
	U70W6200			
U70M6200:U A	BN	U70T6200:1 U	037.1	HVA
U70M6200:V B	BK	U70T6200:2 V	037.1	HVA
U70M6200:W C	BU	U70T6200:3 W	037.1	HVA
U70M6200:GND	GNYE	U70T6200:4 GND	037.1	HVA
U70M6200:BR+ A	WH		037.2	HVA
U70M6200:BR- C	BK		037.2	HVA
GND	SH	U70W6200:SH	037.2	HVA
GND	SH	U70W6200	037.2	HVA
	U70W6210			
U70X6210:D1	BK	U70M6200:SIN+ A	037.2	HVA
U70X6210:D2	WH/BK	U70M6200:SIN- B	037.2	HVA
U70X6210:D3	RD	U70M6200:COS+ C	037.2	HVA
U70X6210:D4	WH/RD	U70M6200:COS- D	037.2	HVA
U70X6210:D5	GN	U70M6200:DATA+ E	037.2	HVA

This drawing must not without the consent of Tetra Pak be copied, transmitted or disclosed to any third party.

Cable Connection List of 3223337-0003

From	Cable	To	Page.Col.	Option
	U70W6210			
U70X6210:D10	WH/GN	U70M6200:DATA- F	037.2	HVA
U70X6210:D14	GY	U70M6200:K	037.2	HVA
U70X6210:D6	WH/GY	U70M6200:ECOM L	037.2	HVA
U70X6210:D7	OG	U70M6200:+9VDC N	037.2	HVA
U70X6210:D11	WH/OG	U70M6200:TS+ R	037.2	HVA
	BU			
	WT/BU			
	YE			
	WH/YE			
	BN			
	WH/BN			
GND	SH	U70W6210:SH	037.3	HVA
	U70W6300			
K80K1070:0	WH	U70X6200:1.14	227.5	ICU
K80K1070:1	GN	U70X6200:1.12	227.5	ICU
K80K1070:2	YE	U70X6200:2.14	227.5	ICU
K80K1070:3	GY	U70X6200:2.12	227.5	ICU
K80K1070:4	PK	U70X6200:3.14	227.5	ICU
	BU			
K80K1070:6	RD	U70X6200:4.14	227.5	ICU
	VT			
K80K1040:4	GY/PK	U70X6200:5.14	224.6	ICU
K80K1040:5	RD/BU	U70X6200:5.12	224.6	ICU
K80K1040:6	WH/GN	U70X6200:6.14	224.6	ICU
	BN/GN			
K80K1040:7	WH/YE	U70X6200:7.14	224.6	ICU
	YE/BN			
	WH/GY			
	GY/BN			
K80K1070:5	WH/PK	U70X6200:9.14	228.5	
K80K1070:7	PK/BN	U70X6200:9.12	228.5	
	WH/BU			

From	Cable	To	Page.Col.	Option
	BN/BU			
	WH/RD			
	BN/RD			
	WH/BK			
	BN/BK			
K80X1000:13	BN	U70X6200:B10	227.5	ICU
K80X1000:14	BK	U70X6200:C10	227.5	ICU
	U70W6500			
U70X6000:3	BN	U70B6500	234.5	HVA
U70X6000:23	BU	U70B6500	234.5	HVA
U70K6010:0	BK	U70B6500	234.5	HVA
	U70W6510			
U70X6000:4	BN	U70B6510	234.5	HVA
U70X6000:24	BU	U70B6510	234.5	HVA
U70K6010:1	BK	U70B6510	234.5	HVA
	U70W6520			
U70X6000:5	BN	U70B6520	234.5	HVA
U70X6000:25	BU	U70B6520	234.5	HVA
U70K6010:2	BK	U70B6520	234.5	HVA
	U70W6530			
U70X6000:6	BN	U70B6530	234.5	HVA
U70X6000:26	BU	U70B6530	234.5	HVA
U70K6010:3	BK	U70B6530	234.5	HVA
	U70W6540			
U70X6000:7	BN	U70B6540	234.5	HVA
U70X6000:27	BU	U70B6540	234.5	HVA
U70K6010:4	BK	U70B6540	234.5	HVA

This drawing must not without the consent of Tetra Pak be copied, transmitted or disclosed to any third party.

Cable Connection List of 3223337-0003

From	Cable	To	Page.Col.	Option
U70W6550				
U70X6000:8	BN	U70B6550	234.5	HVA
U70X6000:28	BU	U70B6550	234.5	HVA
U70K6010:5	BK	U70B6550	234.5	HVA
U70W6560				
U70X6000:9	BN	U70B6560	234.5	HVA
U70X6000:29	BU	U70B6560	234.5	HVA
U70K6010:6	BK	U70B6560	234.5	HVA
U70W6565				
U70X6565:-	RD	U70K6040:5	238.7	HVA
U70X6565:+	YE	U70K6040:4	238.7	HVA
U70W6566				
U70X6566:-	RD	U70K6040:7	238.7	HVA
U70X6566:+	YE	U70K6040:6	238.7	HVA
U70W6570				
U70X6000:10	BN	U70B6570	234.5	HVA
U70X6000:30	BU	U70B6570	234.5	HVA
U70K6010:7	BK	U70B6570	234.5	HVA
U70W6580				
U70X6000:11	BN	U70B6580	235.5	HVA
U70X6000:31	BU	U70B6580	235.5	HVA
U70K6015:0	BK	U70B6580	235.5	HVA
U70W6590				
U70X6000:12	BN	U70B6590	235.5	HVA
U70X6000:32	BU	U70B6590	235.5	HVA
U70K6015:1	BK	U70B6590	235.5	HVA

From	Cable	To	Page.Col.	Option
U70W6600				
U70K6060:0	BK	U70T6600:4	240.6	HVA
U70X6000:13	BN	U70T6600:1	240.6	HVA
U70K6060:4	BU	U70T6600:3	240.6	HVA
U70K6060:2	SH	U70W6600	240.5	HVA
U70X6000:35	WH	U70T6600:2	240.6	HVA
U70W8750				
U70K9000:+V	RD	U70M9590:VCD2 BUS	018.5	PTC
U70K9000:CAN-H	WH	U70M9590:H	018.6	PTC
U70K9000:-V	BK	U70M9590:GND2 BUS	018.4	PTC
U70K9000:CAN-L	BU	U70M9590:L	018.6	PTC
U70K9000:SHIELD	SH	U70M9590:SH	018.6	PTC
U70W9000				
U70K1000:+V	RD	U70K9000:+V	205.4	H.I.
U70K1000:CAN-H	WH	U70K9000:CAN-H	205.4	H.I.
U70K1000:-V	BK	U70K9000:-V	205.4	H.I.
U70K1000:CAN-L	BU	U70K9000:CAN-L	205.4	H.I.
U70K1000:SHIELD	SH	U70K9000:SHIELD	205.4	H.I.
U70W9001				
U70X1000:303	1	U70X4000:64	170.7	
U70X1000:353	2	U70X4000:21	170.7	
	3			
	4			
	5			
	6			
U70X1000:⏚	GNYE	U70X4000:⏚	170.7	
U70W9590				
U70X9590:1	1	U70M9590:VDC1	018.4	PTC
U70X9590:2	2	U70M9590:GND1	018.4	PTC

This drawing must not without the consent of Tetra Pak be copied, transmitted or disclosed to any third party.

Cable Connection List of 3223337-0003

From	Cable	To	Page.Col.	Option
U70W9590				
U70X9590:⏚	GNYE	U70M9590:PE	018.4	PTC
U70X9590:⏚	SH	PE	018.3	PTC
W51W1010				
W51X1020	A	W51B1010	077.2	
W51W1011				
W51X1020	B	W51B1011	077.2	
W51W1020				
T50X1000:84	BN	W51X1020:1	077.3	
	WH	W51X1020:4	077.3	
T50X1000:26	BU	W51X1020:3	077.3	
T50X1000:101	BK	W51X1020:2	077.3	
W51W1700				
T50X1000:24	BN	W51X1700:13	072.5	
T50X1000:167	RD	W51X1700:1	072.5	
T50X1000:⏚	SH	W51X1700:25	072.5	
T50X1000:166	WH	W51X1700:11	072.5	
W51W1710				
W51X1710:1	1	W51K1700:14	072.2	
W51X1710:2	2		072.4	
W51X1710:3	3	W51K1700:13	072.2	
W51X1710:5	GNYE	T50X1000:⏚	072.4	
W51W1720				
T50K1020:7	GN	W51X1720:5	072.6	
	WH	W51X1720:3	072.6	
	BK	W51X1720:1	072.6	
	YE	W51X1720:4	072.6	

From	Cable	To	Page.Col.	Option
T50X1000:83	RD	W51X1720:2	072.6	
	BU	W51X1720:6	072.6	
	BN			
T50K1020:6	VT	W51X1720:7	072.6	
T50X1000:⏚	SH	W51X1720:9	072.6	
W51W9500				
T50X1000:161	WH-OG	A01X6030:X4	071.3	
T50X1000:162	OG	A01X6030:X4	071.3	
T50X1000:163	WH-GN	A01X6030:X4	071.3	
T50X1000:164	GN	A01X6030:X4	071.3	
T50X1000:165	SH	A01X6030:X4	071.3	
W51W9501				
T50X1000:161	WH-OG	W51P1700:ETH	072.6	
T50X1000:162	OG	W51P1700:ETH	072.6	
T50X1000:163	WH-GN	W51P1700:ETH	072.6	
T50X1000:164	GN	W51P1700:ETH	072.6	
T50X1000:165	SH	W51P1700:ETH	072.6	

9 Mains Connections

Description

The drawings that show the connection from the mains power to the electrical cabinet are included in this chapter.

9.1 Mains Connections

This page intentionally left blank

This drawing must not without the consent of Tetra Pak be copied, transmitted or disclosed to any third party.

Main voltage 200-600V except 400/230V

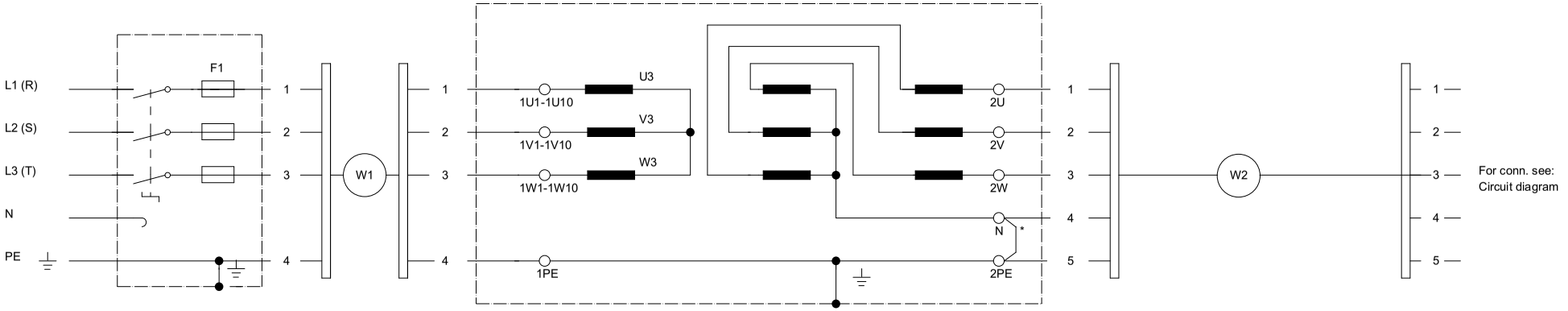

Mains supply

Low voltage switchgear

Matching transformer connection according to diagram Mains Conncetion page 002 and page 003.

* NOTE: Make sure that the bridge is connected.

Supply disconnecting device

Main voltage 400/230V

FUSE	CABLE AREA mm2	MAIN SWITCH	
			I>
125 A	4X35/16	80 A	600 A

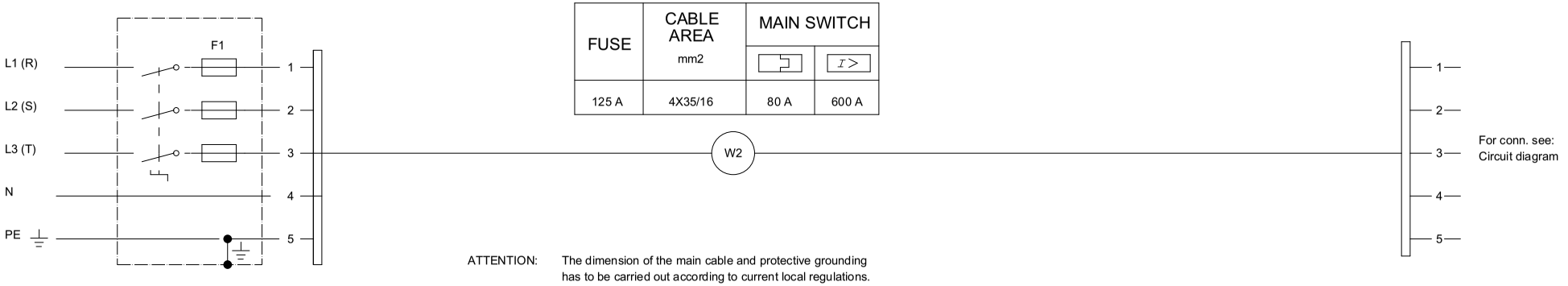

ATTENTION: The dimension of the main cable and protective grounding has to be carried out according to current local regulations.

Mains supply

Low voltage switchgear

Supply disconnecting device

Tetra Pak®	Version Designer: RICO	Version Date: 01/10/2014	Machine: A3 CompactFlex 0300			
	ECM No: 687624	Denomination: MAINS CONNECTION	Page Type: MAINS CONNECTION			
	Information Security Class: PUBLIC	Document No.: 3223337-0008	Doc. type: ELD	Version: AM	Page: 001	

This drawing must not without the consent of Tetra Pak
be copied, transmitted or disclosed to any third party.

1	2	3	4	5	6	7	8	9	10

MAIN VOLTAGE	[MCCB] F1	AREA TO COPPER (CU) CABLE, MAXIMUM LENGTH, AND VOLTAGE DROP (%) WITH CABLE W1 AND W2 ACCORDING TO MAINS CONNECTION PAGE 001						SETTING VALUE SUPPLY DISCONNECTING DEVICE (A01Q0010)	CONNECTIONS ON MATCHING TRANSFORMER		MATCHING TRANSFORMER
		W1			W2						
V	A	AREA (mm²)	Lmax (m)	DROP (%)	AREA (mm²)	Lmax (m)	DROP (%)	Ir / Ii (A)	MAINS	TAP	CONNECT
600/347 3x600	80	16	10	0.22	35	65	1.48	80 / 600	L1 L2 L3 PE	1U9 1V9 1W9 ⏚	1U3 - U4 1V3 - V4 1W3 - W4
550/318 3x550	80	25	10	0.17	35	65	1.48	80 / 600	L1 L2 L3 PE	1U8 1V8 1W8 ⏚	1U3 - U4 1V3 - V4 1W3 - W4
500/289 3x500	80	25	10	0.20	35	65	1.48	80 / 600	L1 L2 L3 PE	1U7 1V7 1W7 ⏚	1U3 - U4 1V3 - V4 1W3 - W4
480/277 3x480	80	25	10	0.22	35	65	1.48	80 / 600	L1 L2 L3 PE	1U6 1V6 1W6 ⏚	1U3 - U4 1V3 - V4 1W3 - W4
440/254 3x440	100	35	10	0.19	35	65	1.48	80 / 600	L1 L2 L3 PE	1U5 1V5 1W5 ⏚	1U2 - U4 1V2 - V4 1W2 - W4
415/240 3x415	100	35	10	0.21	35	65	1.48	80 / 600	L1 L2 L3 PE	1U5 1V5 1W5 ⏚	1U1 - U4 1V1 - V4 1W1 - W4
3x400	100	35	10	0.23	35	65	1.48	80 / 600	L1 L2 L3 PE	1U4 1V4 1W4 ⏚	1U1 - U4 1V1 - V4 1W1 - W4
400/230	80	N/A	N/A	N/A	35	75	1.71	80 / 600	N/A		N/A
380/220 3x380	100	35	10	0.25	35	65	1.48	80 / 600	L1 L2 L3 PE	1U10 1V10 1W10 ⏚	1U1 - U4 1V1 - V4 1W1 - W4
240/140 3x240	160	95	10	0.23	35	65	1.48	80 / 600	L1 L2 L3 PE	1U3 1V3 1W3 ⏚	U3 - U4 1U3-1U6 V3 - V4 1V3-1V6 W3 - W4 1W3-1W6
220/127 3x220	200	95	10	0.28	35	65	1.48	80 / 600	L1 L2 L3 PE	1U2 1V2 1W2 ⏚	U3 - U4 1U2-1U5 V3 - V4 1V2-1V5 W3 - W4 1W2-1W5
200/115 3x200	200	95	10	0.34	35	65	1.48	80 / 600	L1 L2 L3 PE	1U1 1V1 1W1 ⏚	U3 - U4 1U1-1U4 V3 - V4 1V1-1V4 W3 - W4 1W1-1W4

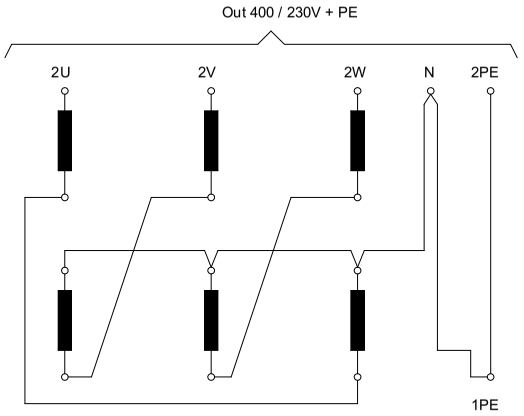

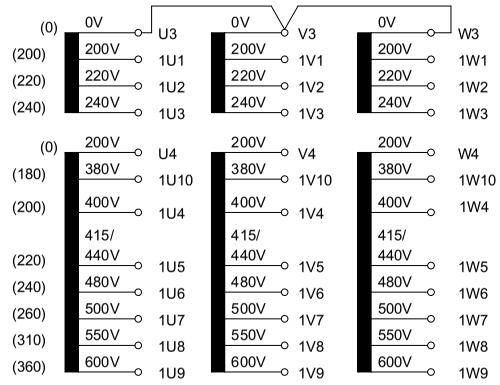

ATTENTION:

Preconditions for the calculation is described in the Installation Manual chapter "Preconditions for the mains connection calculation".
National regulations have to be followed in each country.
Tetra Pak is not responsible for the dimensioning at installation.
Tetra Pak only provides recomendations.

Tetra Pak®	Version Designer: RICO	Version Date: 01/10/2014	Machine: A3 CompactFlex 0300		
	ECM No: 687624	Denomination: MAINS CONNECTION	Page Type: MAINS CONNECTION		
	Information Security Class: PUBLIC	Document No.: 3223337-0008	Doc. type: ELD	Version: AM	Page: 002

10 Drawing Remarks

Description

The following pages contain the drawing remarks referenced in chapter 4 Circuit Diagrams.

10.1 Drawings Remarks

Identity	Document type	Version	ECM 687624
3223337-0098	**ELD**	**AM**	**Issued by/Date: RICO/2014-10-01**
			Approved/Date: ADI/2014-10-01

Drawing No.	Page	Note	Remark
3223337-0003-AJ	005	1	IN CASE OF UL/CSA VARIANT MAIN SWITCH A01F0010 IS EQUIPPED WITH ONLY 3 POLES AND NEUTRAL CONDUCTOR IS NOT SECTIONED BUT DIRECTLY CONNECTED TO TERMINAL STRIP A01X0010:13.
	006	1	CONNECTION PRESENT ONLY IN STANDARD MACHINE WITHOUT UL/CSA VARIANT.
		2	CONNECTION PRESENT ONLY IN UL/CSA VARIANT MACHINE.
		3	COMPONENT PRESENT ONLY IN STANDARD MACHINE WITHOUT UL/CSA VARIANT.
		4	CONNECT AT "LINE INPUT" SIDE.
	012	1	CONNECTED TO THE CHASSIS
	016	1	FOR 60Hz STAR CONNECTION MOTOR PINS V AND W ARE INVERTED.
	018	1	CONNECTED TO THE CHASSIS.
		2	IF H.I. DEVICENET ADAPTER U70K9000 IS NOT PRESENT THE CABLE U70W8750 IS CONNECTED TO SUPERSTRUCTURE DEVICENET ADAPTER U70K1000.
	023	1	CONNECTOR LOCKER.
		2	FOR OPTION PRE-APPLICATORS : REMOVED T40R0240 COMPONENT.
	024	1	CONNECTED TO THE RAIL.
		2	CONNECTED TO THE GLAND.
	025	1	CONNECTED TO THE RAIL.
		2	CONNECTED TO THE GLAND.
	026	1	CONNECTED TO THE RAIL.
		2	CONNECTED TO THE GLAND.
		3	CONNECTED TO FREQUENCY CONVERTER U70T0190 IF DIMC IS NOT PRESENT.
	027	1	CONNECTED TO THE RAIL.
		2	CONNECTED TO THE GLAND.
	028	3	IF ICU PUMP FREQUENCY CONVERTER U70T0320 IS NOT PRESENT THE CABLE U30W1110 IS CONNECTED TO STERIL AIR COMPRESSOR FREQUENCY CONVERTER U70T0190.
	030	1	CONNECTED TO THE DRIVE.
		2	BRAIDED GND STRAP CONNECTED TO THE CHASSIS.
		3	CONNECTED TO THE GLAND.
		4	TWO TURNS.
		5	CABLE STRAIGHT THROUGH THE FERRITE.

(Cont'd)

(Cont'd)

Identity	Document type	Version	ECM 687624
3223337-0098	ELD	AM	Issued by/Date: RICO/2014-10-01
			Approved/Date: ADI/2014-10-01

Drawing No.	Page	Note	Remark
		7	CLAMP THE SHIELD FROM THE PAIRS OF CONDUCTORS (WH-BK), TOGETHER WITH THE MAIN CABLE SHIELD.
	031	1	CONNECTED TO THE DRIVE.
		2	CONNECTED TO THE GLAND.
		3	TWO TURNS.
		7	CLAMP THE SHIELD FROM THE PAIRS OF CONDUCTORS (WH-BK), TOGETHER WITH THE MAIN CABLE SHIELD.
	032	1	CONNECTED TO THE DRIVE.
		2	CONNECTED TO THE GLAND.
		3	TWO TURNS.
		7	CLAMP THE SHIELD FROM THE PAIRS OF CONDUCTORS (WH-BK), TOGETHER WITH THE MAIN CABLE SHIELD.
	033	1	CONNECTED TO THE DRIVE.
		2	CONNECTED TO THE GLAND.
		3	TWO TURNS.
		7	CLAMP THE SHIELD FROM THE PAIRS OF CONDUCTORS (WH-BK), TOGETHER WITH THE MAIN CABLE SHIELD.
	034	1	CONNECTED TO THE DRIVE.
		2	CONNECTED TO THE GLAND.
		3	TWO TURNS.
		7	CLAMP THE SHIELD FROM THE PAIRS OF CONDUCTORS (WH-BK), TOGETHER WITH THE MAIN CABLE SHIELD.
	035	1	CONNECTED TO THE DRIVE.
		2	CONNECTED TO THE GLAND.
		3	TWO TURNS.
		7	CLAMP THE SHIELD FROM THE PAIRS OF CONDUCTORS (WH-BK), TOGETHER WITH THE MAIN CABLE SHIELD.
	037	1	CONNECTED TO THE DRIVE.
		2	CONNECTED TO THE GLAND.
		7	CUT OFF THE EXTRA PAIRS OF CONDUCTORS (WH-RD / WH-BK) AND SHIELD, CLOSE TO THE SHIELD CLAMP.
	038	1	CONNECTED TO THE DRIVER
		2	BRAIDED GND STRAP CONNECTED TO THE CHASSIS.
		3	CONNECTED TO THE GLAND.
		4	CONNECTED TO THE CONNECTOR.
		5	TWO TURNS.
	039	1	CONNECTED TO THE DRIVE.
		2	CONNECTED TO THE CONNECTOR
		3	CONNECTED TO THE GLAND.
		4	TWO TURNS.

(Cont'd)

(Cont'd)

Identity	Document type	Version	ECM 687624
3223337-0098	**ELD**	**AM**	**Issued by/Date: RICO/2014-10-01**
			Approved/Date: ADI/2014-10-01

Drawing No.	Page	Note	Remark
	040	1	CONNECTED TO THE DRIVE.
		2	CONNECTED TO THE CONNECTOR
		3	CONNECTED TO THE GLAND.
		4	TWO TURNS.
	046	1	CONNECTION PRESENT ONLY IN STANDARD MACHINE WITHOUT UL/CSA VARIANT.
		2	CONNECTION PRESENT ONLY IN UL/CSA VARIANT MACHINE.
	047	1	CONNECTED TO CABLES CLAMP.
	049	1	CONNECTED TO CABLES CLAMP.
	053	1	DON' T CONNECTED SCREEN TO CABLES CLAMP.
		2	CONNECTED TO THE CHASSIS.
	054	1	CONNECTED TO CABLES CLAMP.
		2	CONNECTOR INTERNALLY BOTH PINS 1.
	055	1	CONNECTED TO CABLES CLAMP.
	056	1	WIRING VALID ONLY WITH "BAR CODE SCANNER" SYSTEM.
	057	1	TWO TURNS.
		2	DON' T CONNECTED SCREEN TO CABLES CLAMP.
	058	1	CONNECTION PRESENT ONLY WITH OPTION ASU XT
	061	1	CONNECTED TO THE CHASSIS.
	063	1	CONNECTION PRESENT ONLY WITH OPTION ASU XT
	064	1	REMOVED WHEN THE EMERGENCY STOP SIGNAL FROM DE IS AVAILABLE.
		2	REMOVED WHEN THE EMERGENCY STOP SIGNAL FROM ASU XT IS AVAILABLE.
	065	1	CONNECTED TO THE CHASSIS.
	067	1	CONNECTED TO THE CHASSIS.
		2	IF OPTION ASU XT IS PRESENT THE WHITE WIRE OF CABLE T10W0200 IS CONNECTED TO TERMINAL 101 OF TERMINAL STRIP A01X0070.
		3	IF OPTION ASU XT IS PRESENT THE INTERRUPTION POINT "AIN" IS CONNECTED TO TERMINAL 103 OF TERMINAL STRIP A01X0070.
	068	1	CONNECTED TO THE CHASSIS.
	069	1	ONE TURN.
		2	EARTH BRAID.
	71	1	CONNECTED EXTERNAL WIRES IN THE SAME STRIP SIDE
	072	1	CONNECTION VALID USING CABLE SUPPLIED BY DOMINO MARKED AS "ETHERNET CABLE T568B".

(Cont'd)

(Cont'd)

Identity	Document type	Version	ECM 687624
3223337-0098	ELD	AM	Issued by/Date: RICO/2014-10-01
			Approved/Date: ADI/2014-10-01

Drawing No.	Page	Note	Remark
		2	CONNECTION VALID USING CABLE SUPPLIED BY DOMINO NOT MARKED AS "ETHERNET CABLE T568B".
	074	1	EQUIPEMENT PROTECTIVE EARTH TERMINAL STUD.
		2	CABLE STRAIGHT THROUGH THE FERRITE.
	075	1	CONNECTION PRESENT ONLY WITH OPTION ASU XT
	091	1	AUXILIARY CONTACT OF MINIATURE CIRCUIT BREAKER USED IN STANDARD MACHINE
		2	AUXILIARY CONTACT OF MINIATURE CIRCUIT BREAKER USED IN UL/CSA VARIANT MACHINE.
	113	1	NOT CONNECT IF IS PRESENT OPTION ASU XT.
	158	1	REMOVED WHEN THE SIGNAL FROM DAIRY IS AVAILABLE
	180	1	CONNECTED TO THE CABLE GLAND
	205	1	IF H.I. DEVICENET ADAPTER U70K9000 IS NOT PRESENT THE CABLE U70W8750 IS CONNECTED TO SUPERSTRUCTURE DEVICENET ADAPTER U70K1000.
	241	1	SHIELD CONNECTED TO THE COVER U70X0390
	501	1	CONNECTED TO FREQUENCY CONVERTER U30T0110 IF DIMC IS NOT PRESENT.
		2	IF ICU PUMP FREQUENCY CONVERTER U70T0330 IS NOT PRESENT THE CABLE U30W1110 IS CONNECTED TO STERIL AIR COMPRESSOR FREQUENCY CONVERTER U70T0190.
		3	TERMINATION RESISTOR INCLUDED BY DIP SWITCH.
		4	IF H.I. DEVICENET ADAPTER U70K9000 IS NOT PRESENT THE CABLE U70W8750 IS CONNECTED TO SUPERSTRUCTURE DEVICENET ADAPTER U70K1000.
		5	NOT CONNECT IF IS PRESENT OPTION ASU XT.

11 Engineering Change Description

Description

This chapter describes the changes introduced with the ECM.

11.1 Engineering Change Description

This page intentionally left blank

ECM No.	Drawing No.	Alteration
687624		ELECTRICAL MANUAL IS RELEASED. FOR CHANGES ON LISTS SEE ECM APPENDIX.
	3223337-0001:AM	DOCUMENT LIST: CHANGED ACCORDING TO UPDATE VERSION.
	3223337-0002:AM	POSITION SUMMARY: CHANGED ACCORDING TO UPDATE CIRCUIT DIAGRAM.
	3223337-0003:AM	**SH. 015**: T40M0040, motor phases inverted U,V,W (was W,V,U). **SH. 055**: T40B9510, T40B9520 new hydraulic pressure introduced . T40W9510, T40W9520 new cables introduced. T40X1000:PE, disconnected. **SH. 144**: T40B1130, contact corrected (1-2 NC, 1-3 NO) T40B1150, new hydraulic level introduced . T40X1150:1, T40X1150:2, T40X1150:6, terminal strip modified (were T40X1150:1,2,3,4). **SH. 148**: T40B1390, new hydraulic pressure introduced . T40W1390, new cable introduced. **SH. 151**: T40X1370, terminal strip modified (was T40X1370:, T40X1370:+). **SH. 179**: U70B2480, new level sensor introduced.
	3223337-0004:AM	LINE SUMMARY: CHANGED ACCORDING TO UPDATE CIRCUIT DIAGRAM.
	3223337-0005:AM	CABINET TERMINAL SUMMARY: CHANGED ACCORDING TO UPDATE CIRCUIT DIAGRAM.
	3223337-0006:AM	TERMINAL STRIP OVERVIEW: CHANGED ACCORDING TO UPDATE CIRCUIT DIAGRAM.
	3223337-0007:AM	CABLE CONNECTION LIST: CHANGED ACCORDING TO UPDATE CIRCUIT DIAGRAM.
	3223337-0008:AM	MAINS CONNECTION: CHANGED ACCORDING TO UPDATE CIRCUIT DIAGRAM.
	3223337-0098:AM	DRAWING REMARKS: CHANGED ACCORDING TO UPDATE CIRCUIT DIAGRAM.
	3223337-0099:AM	EC DESCRIPTION: CHANGED ACCORDING TO UPDATE CIRCUIT DIAGRAM.
684089		ELECTRICAL MANUAL IS RELEASED. FOR CHANGES ON LISTS SEE ECM APPENDIX.
	3223337-0001:AL	DOCUMENT LIST: CHANGED ACCORDING TO UPDATE VERSION.
	3223337-0002:AL	POSITION SUMMARY: CHANGED ACCORDING TO UPDATE CIRCUIT DIAGRAM.
	3223337-0003:AL	**SH. 048**: New JUMO component (A01C5300) introduced and modified connection. **SH. 049**: New JUMO component (A01C5300) introduced and modified connection

This drawing must not without the consent of Tetra Pak be copied, transmitted or disclosed to any third party.

ECM No.	Drawing No.	Alteration
		SH. 055: Cross ref. (SCX) deleted
	3223337-0004:AL	LINE SUMMARY: CHANGED ACCORDING TO UPDATE CIRCUIT DIAGRAM.
	3223337-0005:AL	CABINET TERMINAL SUMMARY: CHANGED ACCORDING TO UPDATE CIRCUIT DIAGRAM.
	3223337-0006:AL	TERMINAL STRIP OVERVIEW: CHANGED ACCORDING TO UPDATE CIRCUIT DIAGRAM.
	3223337-0007:AL	CABLE CONNECTION LIST: CHANGED ACCORDING TO UPDATE CIRCUIT DIAGRAM.
	3223337-0008:AL	MAINS CONNECTION: CHANGED ACCORDING TO UPDATE CIRCUIT DIAGRAM.
	3223337-0098:AL	DRAWING REMARKS: CHANGED ACCORDING TO UPDATE CIRCUIT DIAGRAM.
	3223337-0099:AL	EC DESCRIPTION: CHANGED ACCORDING TO UPDATE CIRCUIT DIAGRAM.
668363		ELECTRICAL MANUAL IS RELEASED. FOR CHANGES ON LISTS SEE ECM APPENDIX.
	3223337-0001:AK	DOCUMENT LIST: CHANGED ACCORDING TO UPDATE NEW AD VERSION.
	3223337-0002:AK	POSITION SUMMARY: CHANGED ACCORDING TO UPDATE CIRCUIT DIAGRAM.
	3223337-0003:AK	**SH. 030**: Inverted wire T40W1700:WH/GY with T40W1700:WH/GN **SH. 049**: Restore signal flow meter (A01C5300, pin 8.5) **SH. 054**: Corrected pin U70X0280:2A,4B (was U70X0280:A,B) Connected signal TMCC (U70K0380, pin 13) **SH. 057**: P60K0700 (updated symbol TPOP communication) **SH. 061**: Cable T10W0050:17, connection corrected Wire section 4 mm² GNYE deleted. **SH. 071**: Introduced information for external connection to the terminal strip T50X1000 **SH. 090**: A01B5860, A01B5870 added doors closed **SH. 105**: A01K4160: OUT 1,3 test modified (USED BY COMPACT/FLEX 0100) was SPARE
	3223337-0004:AK	LINE SUMMARY: CHANGED ACCORDING TO UPDATE CIRCUIT DIAGRAM.
	3223337-0005:AK	CABINET TERMINAL SUMMARY: CHANGED ACCORDING TO UPDATE CIRCUIT DIAGRAM.
	3223337-0006:AK	TERMINAL STRIP OVERVIEW: CHANGED ACCORDING TO UPDATE CIRCUIT DIAGRAM.
	3223337-0007:AK	CABLE CONNECTION LIST: CHANGED ACCORDING TO UPDATE CIRCUIT DIAGRAM.

This drawing must not without the consent of Tetra Pak be copied, transmitted or disclosed to any third party.

ECM No.	Drawing No.	Alteration
	3223337-0008:AK	MAINS CONNECTION: CHANGED ACCORDING TO UPDATE CIRCUIT DIAGRAM.
	3223337-0098:AK	DRAWING REMARKS: CHANGED ACCORDING TO UPDATE CIRCUIT DIAGRAM.
	3223337-0099:AK	EC DESCRIPTION: CHANGED ACCORDING TO UPDATE CIRCUIT DIAGRAM.
653946		ELECTRICAL MANUAL IS RELEASED. FOR CHANGES ON LISTS SEE ECM APPENDIX.
	3223337-0001:AJ	DOCUMENT LIST: CHANGED ACCORDING TO UPDATE NEW AD VERSION.
	3223337-0002:AJ	POSITION SUMMARY: CHANGED ACCORDING TO UPDATE CIRCUIT DIAGRAM.
	3223337-0003:AJ	**SH. 016**: K80M0130: motor phases inverted V,U,W (was U,V,W). **SH. 017**: Changed electrical characteristic motor U70M0230 114W/0.55A (was 100W/0.44A). Changed electrical characteristic fuse U70F0230, 0.55A (was 0.44A). **SH. 046**: Added new connector A01X5810, A01X5821 for Waldman lamp **SH. 048**: Deleted comment (used in A3Speed) was analog CH.5 used in A3Speed. **SH. 049**: Deleted signal flow meter (A01C5300, pin 8.5) **SH. 054**: U70B0290, new flow meter introduced. U70X0280, U70X0290 corrected connectors **SH. 061**: Valve F10K1740, size ground wire correct in 4 mmq (was 0.75 mmq). **SH. 115**: Change reference T10S1050 ,T10W1050 (was T10S1090, T10W1090), because reference existing . **SH. 119**: Inverted wire T10W1165:WH (was T10W1165:GYPK) T10K1165,restore connection to slot position 1:14(was 5.14) **SH. 120**: Inverted wire T10W1165:YE (was T10W1165:WHGN) T10K1165, restore connection to slot position 2.14 (was 6.14) **SH. 139**: Corrected reference inT10W3500 (was T10W1165) T10W3500:BN wire added wire for connection Valve T10K3540:B10 Corrected reference inT10K3500 (was T10K1165) T10W3510: deleted cable T10X1000:134,135,136,137 deleted strip.

This drawing must not without the consent of Tetra Pak be copied, transmitted or disclosed to any third party.

ECM No.	Drawing No.	Alteration
		SH. 140: T10X1000:138 deleted strip. T10W1165:PK deleted wire. T10W3500:BK added wire for connection Valve T10K3580:C10 **SH. 158**: Change reference U70W1161 (was U70W1160), because reference existing . **SH. 221**: K80B1010, new pressure switch introduced Corrected terminal strip K80X1010:1,3,4(was K80X1010: 1,3,PE). Corrected cable K80W1010:BN,BU,BK(was K80W1010:1,2,GNYE). **SH. 241**: Added new page (CABLE U70W0280) Added Drawing Remark (1) for shield.
	3223337-0004:AJ	LINE SUMMARY: CHANGED ACCORDING TO UPDATE CIRCUIT DIAGRAM.
	3223337-0005:AJ	CABINET TERMINAL SUMMARY: CHANGED ACCORDING TO UPDATE CIRCUIT DIAGRAM.
	3223337-0006:AJ	TERMINAL STRIP OVERVIEW: CHANGED ACCORDING TO UPDATE CIRCUIT DIAGRAM.
	3223337-0007:AJ	CABLE CONNECTION LIST: CHANGED ACCORDING TO UPDATE CIRCUIT DIAGRAM.
	3223337-0008:AJ	MAINS CONNECTION: CHANGED ACCORDING TO UPDATE CIRCUIT DIAGRAM.
	3223337-0098:AJ	DRAWING REMARKS: CHANGED ACCORDING TO UPDATE CIRCUIT DIAGRAM.
	3223337-0099:AJ	EC DESCRIPTION: CHANGED ACCORDING TO UPDATE CIRCUIT DIAGRAM.
634738		ELECTRICAL MANUAL IS RELEASED. FOR CHANGES ON LISTS SEE ECM APPENDIX.
	3223337-0001:AH	DOCUMENT LIST: CHANGED ACCORDING TO UPDATE NEW AD VERSION.
	3223337-0002:AH	POSITION SUMMARY: CHANGED ACCORDING TO UPDATE CIRCUIT DIAGRAM.
	3223337-0003:AH	**SH. 112**: Deleted connection pin T10X0050:12, T10X0050:13 **SH. 047**: Modify screen cable U70W200 **SH. 115**: added switch T10S1090 **SH. 119**: added valve T10K6070
	3223337-0004:AH	LINE SUMMARY: CHANGED ACCORDING TO UPDATE CIRCUIT DIAGRAM.
	3223337-0005:AH	CABINET TERMINAL SUMMARY: CHANGED ACCORDING TO UPDATE CIRCUIT DIAGRAM.
	3223337-0006:AH	TERMINAL STRIP OVERVIEW: CHANGED ACCORDING TO UPDATE CIRCUIT DIAGRAM.
	3223337-0007:AH	CABLE CONNECTION LIST: CHANGED ACCORDING TO UPDATE CIRCUIT DIAGRAM.

This drawing must not without the consent of Tetra Pak be copied, transmitted or disclosed to any third party.

ECM No.	Drawing No.	Alteration
	3223337-0008:AH	MAINS CONNECTION: CHANGED ACCORDING TO UPDATE CIRCUIT DIAGRAM.
	3223337-0098:AH	DRAWING REMARKS: CHANGED ACCORDING TO UPDATE CIRCUIT DIAGRAM.
	3223337-0099:AH	EC DESCRIPTION: CHANGED ACCORDING TO UPDATE CIRCUIT DIAGRAM.
614734		ELECTRICAL MANUAL IS RELEASED. FOR CHANGES ON LISTS SEE ECM APPENDIX.
	3223337-0001:AG	DOCUMENT LIST: CHANGED ACCORDING TO UPDATE NEW AD VERSION.
	3223337-0002:AG	POSITION SUMMARY: CHANGED ACCORDING TO UPDATE CIRCUIT DIAGRAM.
	3223337-0003:AG	**SH. 003**: Changed name Line potential 2.115.71L+ (was 1.4.2L+). **SH. 006**: Added Drawing Remark 4 for A01X5890 (CONNECT AT “LINE INPU” SIDE). **SH. 026**: Changed name Line potential 2.115.71L+ (was 1.4.2L+). **SH. 051**: Corrected Interruption point AOC to U70K4061:15 (was U70K4061:25). **SH. 058**: Changed name Line potential 2.115.71L+ (was 1.4.2L+). **SH. 065**: Corrected Reference Designation of: F40X2010 (was T40X2010), F40X2020 (was T40X2020), F40X2030 (was T40X2030), F40X2040 (was T40X2040) and F50X2520 (was T50X2520). **SH. 066**: Corrected Reference Designation of: F50W1530 (was F70W1531), F40X1020 (was T40X1020), F40X1040 (was T40X1040) AND F50X1530 (was T50X1530). **SH. 067**: Corrected Reference Designation of:F10X2610 (was T10X2610), F10X2620 (was T10X2620) AND F10X2630 (was T10X2630). **SH. 068**: Corrected Reference Designation of:F70X2510 (was U70X2510), F70X2520 (was U70X2520) and F70X2530 (was U70X2530). **SH. 072**: Corrected/Added wire W51W1720. **SH. 075**: Changed name Line potential 2.115.71L+ (was 1.4.2L+).

This drawing must not without the consent of Tetra Pak be copied, transmitted or disclosed to any third party.

ECM No.	Drawing No.	Alteration

SH. 077:
Corrected Reference Designation : F50B2520 (was T50F2520) , F40B2030 (was T40F2030) and F40B2040 (was T40F2040).
SH. 102:
Changed name Line potential 2.115.71L+ (was 1.4.2L+).
SH. 112:
Delete Interruption Point : T10X2100:32_110L- and T10X2100:31_110L-.
SH. 113:
Added Drawing Remark 1 for component T10R0010.
SH. 119:
Changed T10W1165:GY/PK (was T10W1165:WH); Changed T10K1165:5.14 (was T10K1165:1.14); Changed reference T10K1170 (was T10K1171)
SH. 120:
Changed T10W1165:WH/GN (was T10W1165:YE); Changed T10K1165:6.14 (was T10K1165:2.14).
SH. 132:
Changed: T10K1160:1.14 (was T10K1160:2.14) and . T10K1160:2.14 (was T10K1160:3.14)
SH. 134:
Added component T10R2100 (option ASU XT).
SH. 139:
Delete: Interruption Point T10X2100:32_110L- and wire T10W3500 ; Added : T10X1000:134 , 135 , 136 , 137 and T10W1165: WH , GN , Ye , GY ; Changed T10K1165 (was T10K3500) ; Added comment ASU XT for T10K3510 , T10K3520 , T10K 3530 and T10K3540 comments.
SH. 140:
Delete: Interruption Point T10X2100:31_110L- and wire T10W3500 ; Added : T10X1000:138 and T10W1165:PK ; Changed T10K1165 (was T10K3500).
SH. 154:
Removed Interruption Point T50X1000:75_1.511L+
SH. 157:
Removed jumper “Dairy Ready For Production” signal and drawing Remark nr.1.
SH. 158:
Changed U70B1160 (was T40B1060) and U70W1160 (was T40W1060).
Removed ALARM + WARNING WATER TREATMENT (CULLIGAN) signals T50K1030:IN-3 and IN-6 Restored Spare.
SH. 162:
Removed WATER REQUEST WATER TREATMENT (CULLIGAN) signals T50K1070:OUT-3 Restored Spare.

This drawing must not without the consent of Tetra Pak be copied, transmitted or disclosed to any third party.

ECM No.	Drawing No.	Alteration
		SH. 170: Changed Interruption Point: U70X1000:103_2.115.71L+ (was U70X1000:103_1.711L+) and U70X1000:102_2.115.71L+ (was U70X1000:103_2.115.71L+). Changed name Line potential 2.115.71L+ (was 1.4.2L+). **SH. 179**: Restored connection of U70B2480: 1- , 2+ (was 2- , 1+). **SH. 182**: Changed Interruption Point : U70X1000:103_2.115.71L+ (was U70X1000:103_1.711L+). **SH. 197**: Changed Interruption Point : U70X1000:102_2.115.71L+ (was U70X1000:10_1.4.2L+). **SH. 501**: Added component T10R2100 (option ASU XT) and Added Drawing Remark 5 for component T10R0010.
	3223337-0004:AG	LINE SUMMARY: CHANGED ACCORDING TO UPDATE CIRCUIT DIAGRAM.
	3223337-0005:AG	CABINET TERMINAL SUMMARY: CHANGED ACCORDING TO UPDATE CIRCUIT DIAGRAM.
	3223337-0006:AG	TERMINAL STRIP OVERVIEW: CHANGED ACCORDING TO UPDATE CIRCUIT DIAGRAM.
	3223337-0007:AG	CABLE CONNECTION LIST: CHANGED ACCORDING TO UPDATE CIRCUIT DIAGRAM.
	3223337-0008:AG	**SH. 001**: Update page for new Form. **SH. 002**: Update page for new Form.
	3223337-0098:AG	**SH. 006**: Added note 4 : CONNECT AT “LINE INPU” SIDE. **SH. 113**: Added note 1 : NOT CONNECT IF IS PRESENT OPTION ASU XT. **SH. 157**: Removed page note. **SH. 501**: Added note 5 : NOT CONNECT IF IS PRESENT OPTION ASU XT.
	3223337-0099:AG	EC DESCRIPTION: CHANGED ACCORDING TO UPDATE CIRCUIT DIAGRAM.
585778		ELECTRICAL MANUAL IS RELEASED. FOR CHANGES ON LISTS SEE ECM APPENDIX.
	3223337-0001:AF	DOCUMENT LIST: CHANGED ACCORDING TO UPDATE NEW AD VERSION.
	3223337-0002:AF	POSITION SUMMARY: CHANGED ACCORDING TO UPDATE CIRCUIT DIAGRAM.
	3223337-0003:AF	**SH. 005**: Added A01Q0010 SETTING window.

This drawing must not without the consent of Tetra Pak be copied, transmitted or disclosed to any third party.

ECM No.	Drawing No.	Alteration
		SH. 006: Removed connection A01X0030:89 , Added connection A01B5900:0 (0-110V) to A01X0030:31 (N) **SH. 008**: Changed description of U70E0030-U70E0040 ….(INLET) (was …..OUTLET). **SH. 023**: Added: connections G25W1110 + G25X1110 + G25R1110 ; Added Drawing Remark note nr.2. **SH. 053**: Added: connection A01W0010:SH , Interruption Point AEI , A01W0150:Drain and Interruption Point AEG ; Moved interruption Point: ACO to A01K0100:27 (was :23) , AED to A01K0100:31 (was :24) ; Removed bridge connection pin 18 – 21 and 20 – 22 of A01K0100 **SH. 054**: Corrected connection A01W0010:SH , Deleted Drawing Remark nr.3 and Changed Interruption Point AEJ (was AEG). **SH. 056**: Removed T40B1245 + T40B1255 + T10B1935 + T10B145 sensors ; Changed Page Type BAR CODE SCANNER (was BAR CODE SCANNER / M.D.R.). **SH. 061**: Corrected Reference designation F10W1350:1 (was T10W1350:1). **SH. 154**: Added Interruption Point T50X100:73_1.511L+ **SH. 158**: Changed T50K1030:IN3 ALARM WATER TREATMENT (CULLIGAN) (was SPARE) and T50K1030:IN6 WARNING WATER TREATMENT (CULLIGAN) (was SPARE). **SH. 162**: Changed T50K1070:OUT-3 WATER REQUEST WATER TREATMENT (CULLIGAN) (was SPARE). **SH. 170**: Added Interruption Point U70X1000:3_110L- **SH. 175**: Corrected Reference Designation of: U70B1400 (was U70B1130) + U70W1400 (was U70W1130). **SH. 177**: Corrected connection wire (U70W1740:BN) To pin B10 valve (U70K1740) **SH. 179**: Changed connection of U70B2480: 1+ , 2- (was 2+ , 1-).
	3223337-0004:AF	LINE SUMMARY: CHANGED ACCORDING TO UPDATE CIRCUIT DIAGRAM.
	3223337-0005:AF	CABINET TERMINAL SUMMARY: CHANGED ACCORDING TO UPDATE CIRCUIT DIAGRAM.
	3223337-0006:AF	TERMINAL STRIP OVERVIEW: CHANGED ACCORDING TO UPDATE CIRCUIT DIAGRAM.

This drawing must not without the consent of Tetra Pak be copied, transmitted or disclosed to any third party.

ECM No.	Drawing No.	Alteration
	3223337-0007:AF	CABLE CONNECTION LIST: CHANGED ACCORDING TO UPDATE CIRCUIT DIAGRAM.
	3223337-0008:AF	MAINS CONNECTION: CHANGED ACCORDING TO UPDATE CIRCUIT DIAGRAM.
	3223337-0098:AF	**SH. 23**: Added note 2: FOR OPTION PRE-APPLICATORS: REMOVED T40R0240 COMPONENT AND USE FOR G25R1110. **SH. 54**: Deleted note 3 (DON' T CONNECTED SCREEN TO CABLES CLAMP). **SH. 56**: Removed note 2 + 3 + 4 .
	3223337-0099:AF	EC DESCRIPTION: CHANGED ACCORDING TO UPDATE CIRCUIT DIAGRAM.
581467		ELECTRICAL MANUAL IS RELEASED. FOR CHANGES ON LISTS SEE ECM APPENDIX.
	3223337-0001:AE	DOCUMENT LIST: CHANGED ACCORDING TO UPDATE NEW AD VERSION.
	3223337-0002:AE	POSITION SUMMARY: CHANGED ACCORDING TO UPDATE CIRCUIT DIAGRAM.
	3223337-0003:AE	**SH. 001**: Changed A01XL1100 (removed point 3). **SH. 008**: Delete earth wire for: U70W0030 – U70W0040 – U70W0050 – U70W0060; Corrected connections of U70F0040: 1-L1 (was L3) 3-L3 (was L1). **SH. 014**: Removed Sensor TS into A01M5750. **SH. 030**: Added electrical characteristic of A01F5500. **SH. 053**: Removed Connection Screen from A01X0100; Changed note1 DON' T CONNECTED SCREEN TO CABLES CLAMP (was CONNECTOR CABLES CLAMP); Moved Interruption Point ACO to A01K0100:23 (was :27) and AED to A01K0100:24 (was :31),); Added bridge connection pin 18 – 21 and 20 – 22 of A01K0100; Moved T40B1240 – T40B1250 – T10B1930 – T10B1940 to SH.56; added Interruption Point MAA-MAB-MAC-MAD-MAE-MAF-MAG-MAH-MAI-MAL-MAM-MAN-MAO-MAP-MAR-MAS-MAT-MAU. **SH. 054**: Removed Connection Screen from U70X0330. **SH. 055**: Changed Reference Designation of: T40R4030 (was P60R4030) + T40X4030 (was P60X4030) + T40K4030 (was P60K4030) **SH. 056**: New page introduced.

This drawing must not without the consent of Tetra Pak be copied, transmitted or disclosed to any third party.

ECM No.	Drawing No.	Alteration
		SH. 057: Removed Connection Screen from P60A1000 on P60W1020. **SH. 064**: Corrected EM.STOP JAW LEFT comment of F40S2840 (was EM.STOP CONTROL PANEL). **SH. 069**: Removed Connection Screen from P60A1000 on P60W1020. **SH. 071**: Changed Reference Designation T40W4530 (was P60W4530); Removed connection A01X6030:US2. **SH. 175**: Corrected Reference Designation of: U70B1130 (was U70B1400) + U70W1130 (was U70W1400). **SH. 179**: Corrected connections point U70B2480 1-, 2+ (was L- , L+). **SH. 505**: Changed Reference Designation : T40W4530 (was P60W4530) – T40K4030 (was P60P4030).
	3223337-0004:AE	LINE SUMMARY: CHANGED ACCORDING TO UPDATE CIRCUIT DIAGRAM.
	3223337-0005:AE	CABINET TERMINAL SUMMARY: CHANGED ACCORDING TO UPDATE CIRCUIT DIAGRAM.
	3223337-0006:AE	TERMINAL STRIP OVERVIEW: CHANGED ACCORDING TO UPDATE CIRCUIT DIAGRAM.
	3223337-0007:AE	CABLE CONNECTION LIST: CHANGED ACCORDING TO UPDATE CIRCUIT DIAGRAM.
	3223337-0008:AE	MAINS CONNECTION: CHANGED ACCORDING TO UPDATE CIRCUIT DIAGRAM.
	3223337-0098:AE	**SH. 053**: Changed note 1 DON' T CONNECTED SCREEN TO CABLES CLAMP (was CONNECTED TO CABLES CLAMP). **SH. 054**: Added note 3 DON' T CONNECTED SCREEN TO CABLES CLAMP. **SH. 056**: Added page056 with note: 1-2-3-4 **SH. 057**: Added note 2 DON' T CONNECTED SCREEN TO CABLES CLAMP.
	3223337-0099:AE	EC DESCRIPTION: CHANGED ACCORDING TO UPDATE CIRCUIT DIAGRAM.
575150		ELECTRICAL MANUAL IS RELEASED. FOR CHANGES ON LISTS SEE ECM APPENDIX.
	3223337-0001:AD	DOCUMENT LIST: CHANGED ACCORDING TO UPDATE NEW AB VERSION.
	3223337-0002:AD	POSITION SUMMARY: CHANGED ACCORDING TO UPDATE CIRCUIT DIAGRAM.

This drawing must not without the consent of Tetra Pak be copied, transmitted or disclosed to any third party.

ECM No.	Drawing No.	Alteration
	3223337-0003:AD	**SH. 170**: Corrected connection U70X0560:12 on 1.712L+ (was 1.4.2L+).
	3223337-0004:AD	LINE SUMMARY: CHANGED ACCORDING TO UPDATE CIRCUIT DIAGRAM.
	3223337-0005:AD	CABINET TERMINAL SUMMARY: CHANGED ACCORDING TO UPDATE CIRCUIT DIAGRAM.
	3223337-0006:AD	TERMINAL STRIP OVERVIEW: CHANGED ACCORDING TO UPDATE CIRCUIT DIAGRAM.
	3223337-0007:AD	CABLE CONNECTION LIST: CHANGED ACCORDING TO UPDATE CIRCUIT DIAGRAM.
	3223337-0008:AD	MAINS CONNECTION: CHANGED ACCORDING TO UPDATE CIRCUIT DIAGRAM.
	3223337-0098:AD	DRAWING REMARKS: CHANGED ACCORDING TO UPDATE CIRCUIT DIAGRAM.
	3223337-0099:AD	EC DESCRIPTION: CHANGED ACCORDING TO UPDATE CIRCUIT DIAGRAM.
560325		ELECTRICAL MANUAL IS RELEASED. FOR CHANGES ON LISTS SEE ECM APPENDIX.
	3223337-0001:AC	DOCUMENT LIST: CHANGED ACCORDING TO UPDATE NEW AB VERSION.
	3223337-0002:AC	POSITION SUMMARY: CHANGED ACCORDING TO UPDATE CIRCUIT DIAGRAM.
	3223337-0003:AC	**SH. 005**: Changed size of A01B300 2,5mm2 BK (was 4mm2 BK) and 1,5mm2 L BU (was 4mm2 L BU). **SH. 006**: Corrected L2 for A01F5800 (was L1). **SH. 007**: Changed Interruption Point AAT (was AA). **SH. 008**: Corrected reference Designation of U70X0450 (was U70X0460); Changed colors wires U70W0030-0040-0050-0060 BU (was 2) BN (was 1). **SH. 010**: Changed component U70F0370 16A (was 10A), changed electrical characteristic of U70E0370 3000W (was 2000). **SH. 016**: Changed electrical description of K80M0120 COOLING MEDIA COMPRESSOR (was circulation cooling media); changed electrical characteristic of T10M0060 1,6A (was 1,5A). **SH. 017**: Changed circuit for U70F0230 – U70Q0230. **SH. 026**: Changed Component U70F0180.

This drawing must not without the consent of Tetra Pak be copied, transmitted or disclosed to any third party.

ECM No.	Drawing No.	Alteration
		SH. 027: Changed Interruption Point AZA-AZB-AZC-AZD-AZE (was ABY-ABZ-ACA-ACB-AC), Added Interruption Point ACC-ACD-ACF-ACE-ACG-ARA-ARB-ARC-ARD-ARE, Reassigned wires U70W3190 – U70W3320. **SH. 028**: Changed connections of U30M0010 U-V-W (was V-U-W), Changed Interruption Point ABY-ABZ-ACA-ACB-AC-ARA-ARB-ARC-ARD-ARE (was AZA-AZB-AZC-AZD-AZE-ACC-ACD-ACF-ACE-ACG). **SH. 030**: Changed reference designation of: T40K0700 (was T40V0700), T40K0701 (was T40V0701). **SH. 031**: Changed reference designation of: T40K0710 (was T40V0710). **SH. 032**: Changed reference designation of: T40K0720 (was T40V0720). **SH. 033**: Changed reference designation of: T40K0730 (was T40V0730). **SH. 034**: Changed reference designation of: T40K0740 (was T40V0740). **SH. 035**: Changed reference designation of: T40K0750 (was T40V0750). **SH. 038**: Changed reference designation of: T50K0800 (was T50V0800), T50K0600 (was T50V0600), T50K0610 (was T50V0610). **SH. 039**: Changed reference designation of: T50K0810 (was T50V0810), T50K0811 (was T50V0811). **SH. 040**: Changed reference designation of: T50K0820 (was T50V0820), T50K0821 (was T50V0821). **SH. 045**: Change connection A01T5400 to 110L- 10mm2 (was 2x6mm2). **SH. 057**: Changed reference designation of: P60K1000 (was P60V1000), P60K1001 (was P60V1001). **SH. 061**: Changed reference designation of : F10W1350 (WAS T10W1700), F10B1350 (was T10B1350), F10W1340 (was T10W1710), F10B1340 (was T10B1340), F10K5032 (was T10F5032), F10K1740 (was T10K1740), F10W1740 (was T101740), F10W3510 (was T10W3510). **SH. 064**: Added comment for F70S2010.

This drawing must not without the consent of Tetra Pak be copied, transmitted or disclosed to any third party.

ECM No.	Drawing No.	Alteration
		SH. 076: Changed comment for A01K2080 IN-11 F40B2020 (was T40B2020) and IN-12 F50B2510 (wasT50F2510). **SH. 091**: Update A01K4020:4 used in CompactFlex-0200 (was U30F0010 overload protection Hydrogen peroxide pump). **SH. 096**: Changed Interruption Point AAT (was AA). **SH. 115**: Changed comment for T10K1020 IN-2 F10S2460 (was T10S4060). **SH. 119**: Pin B10 valve T10K1165 connected to T10X1000:32 (Line 110 L-) **SH. 120**: Pin C10 valve T10K1165 connected to T10X1000:32 (Line 110 L-) **SH. 172**: Changed comment for U70K1010 IN-0 F70S2010 (was U70S2010). **SH. 174**: Changed symbol with connector for U70B1380. **SH. 175**: Changed symbol with connector for U70B1390. **SH. 237**: Added valve U70K6610. **SH. 300**: spare terminal page delete, added new graphical representations **SH. 501**: Changed position DNET for U30T0110-U70T0320-U70T0190), moved Drawing Remark 2 to U30W1110 (was U70W3190).
	3223337-0004:AC	LINE SUMMARY: CHANGED ACCORDING TO UPDATE CIRCUIT DIAGRAM.
	3223337-0005:AC	CABINET TERMINAL SUMMARY: CHANGED ACCORDING TO UPDATE CIRCUIT DIAGRAM.
	3223337-0006:AC	TERMINAL STRIP OVERVIEW: CHANGED ACCORDING TO UPDATE CIRCUIT DIAGRAM.
	3223337-0007:AC	CABLE CONNECTION LIST: CHANGED ACCORDING TO UPDATE CIRCUIT DIAGRAM.
	3223337-0008:AC	MAINS CONNECTION: CHANGED ACCORDING TO UPDATE CIRCUIT DIAGRAM.
	3223337-0098:AC	**SH. 027**: Removed note3. **SH. 028**: Added page028 with note3 (IF ICU PUMP FREQUENCY CONVERTER U70T0320 IS NOT PRESENT THE CABLE U30W1110 IS CONNECTED TO STERIAL AIR COMPRESSOR FREQUENCY CONVERTER U70T0190).

This drawing must not without the consent of Tetra Pak be copied, transmitted or disclosed to any third party.

ECM No.	Drawing No.	Alteration
		SH. 030: Changed note4 TWO TURNS (was ONE TURN). **SH. 031**: Changed note3 TWO TURNS (was ONE TURN). **SH. 032**: Changed note3 TWO TURNS (was ONE TURN). **SH. 033**: Changed note2 TWO TURNS (was ONE TURN). **SH. 034**: Changed note3 TWO TURNS (was ONE TURN). **SH. 035**: Changed note3 TWO TURNS (was ONE TURN). **SH. 038**: Changed note5 TWO TURNS (was ONE TURN). **SH. 039**: Changed note4 TWO TURNS (was ONE TURN). **SH. 040**: Changed note4 TWO TURNS (was ONE TURN). **SH. 064**: Changed note3 ASU XT (was LGV). **SH. 501**: Corrected: note1 U30T0110 (was U70T0190), note2 U70T0320 – U30W1110 (was V20T0320 – U70W3190).
	3223337-0099:AC	EC DESCRIPTION: CHANGED ACCORDING TO UPDATE CIRCUIT DIAGRAM.
548039		ELECTRICAL MANUAL IS RELEASED. FOR CHANGES ON LISTS SEE ECM APPENDIX.
	3223337-0001:AB	DOCUMENT LIST: CHANGED ACCORDING TO UPDATE NEW AB VERSION.
	3223337-0002:AB	POSITION SUMMARY: CHANGED ACCORDING TO UPDATE CIRCUIT DIAGRAM.
	3223337-0003:AB	**SH.006:** New connection wire A01X5890:2 to A01XL0530:12,(was A01X5890:2 to A01B5900:0) **SH.008:** Earth terminal A01X0020:51 added **SH. 012**: Drawing Remark 1 added (connected to the chassis) **SH. 014**: Earth terminal A01X0020:23 added **SH. 015**: T50F0140 electrical characteristic changed, new technical characteristics and setting 0.6-1A (0.71A) **SH. 016**: K80F0010, new setting 2.7A (was 2.5A) K80M0110, new setting 2.7A (was 2.5A) **SH.24:** New reference T10K0041 (was T10K0040 AS Device net adapter.)

This drawing must not without the consent of Tetra Pak be copied, transmitted or disclosed to any third party.

ECM No. Drawing No. Alteration

SH.028:
Substitute old ref. (U30V0010) with new ref.(U30K0111)
Substitute old ref.(U30T0010) with new ref.(U30T0110)
Substitute old ref.(U30K0010) with new ref.(U30K0110)
Substitute old ref. (U30V0010) with new ref.(U30W0110)
SH. 035:
FDBK2- update connection (servo Kinetix T40T0750)
SH. 051:
Move input to the pin 18
(level U70K2700, U70K3700,U70K4061)
SH. 055:
T40W0520: correct wire 9,10
SH. 058:
input I36 (F01K5000, Safety system Pluto B46) update connection
SH. 061:
Connection inverted (T10F5032:A1, S14 to line 1.211.71L+)
Connection inverted (T10F5032:A2, S24 to line 110L-)

SH. 064:
T40W0520: correct wire 7,18
New reference F01S5880 (was A01S5880)
SH. 098:
A01K4090 out-4 (reserved to A3/CFlex-0100)
Move coil (U70Q0040) to the A01K4090 out-5
Move coil (U70Q0060) to the A01K4090 out-6
SH. 128:
Renamed page to 128 (was 131)
Substitute old reference (T10K1200) with new reference (T10K1001).
SH. 129:
Renamed page to 129 (was 132)
Substitute old reference (T10K1210) with new reference (T10K1092).
SH. 130:
Renamed page to 130 (was 133)
Substitute old reference (T10K1220) with new reference (T10K1093).
SH. 131:
Renamed page to 131 (was 128)
SH. 132:
Renamed page to 132 (was 129)
Valve T10K7070 connection wire BU (was PK)
Valve T10K7080 connection wire PK (was BU)
SH. 133:
Renamed page to 133 (was 130)
SH. 156:
Added description (OPTION QUICK SWITCH) for ref. T50B1080/T50B1090
SH. 211:
Modify symbol U70T4330 and introduced connector U70X4330

This drawing must not without the consent of Tetra Pak be copied, transmitted or disclosed to any third party.

ECM No.	Drawing No.	Alteration
		SH. 501: Device net added (T10K1091,T10K1001,T10K1092,T10K1093,T10K1100, T10K1110,T10K1120)
	3223337-0004:AB	LINE SUMMARY: CHANGED ACCORDING TO UPDATE CIRCUIT DIAGRAM.
	3223337-0005:AB	CABINET TERMINAL SUMMARY: CHANGED ACCORDING TO UPDATE CIRCUIT DIAGRAM.
	3223337-0006:AB	TERMINAL STRIP OVERVIEW: CHANGED ACCORDING TO UPDATE CIRCUIT DIAGRAM.
	3223337-0007:AB	CABLE CONNECTION LIST: CHANGED ACCORDING TO UPDATE CIRCUIT DIAGRAM.
	3223337-0008:AB	MAINS CONNECTION: CHANGED ACCORDING TO UPDATE CIRCUIT DIAGRAM.
	3223337-0098:AB	DRAWING REMARKS: CHANGED ACCORDING TO UPDATE CIRCUIT DIAGRAM.
	3223337-0099:AB	EC DESCRIPTION: CHANGED ACCORDING TO UPDATE CIRCUIT DIAGRAM.
530145		ELECTRICAL MANUAL IS RELEASED. FOR CHANGES ON LISTS SEE ECM APPENDIX.
	3223337-0001:AA	DOCUMENT LIST: CHANGED ACCORDING TO UPDATE NEW AB VERSION.
	3223337-0002:AA	POSITION SUMMARY: CHANGED ACCORDING TO UPDATE CIRCUIT DIAGRAM.
	3223337-0003:AA	CIRCUIT DIAGRAM: TO UPDATE
	3223337-0004:AA	LINE SUMMARY: CHANGED ACCORDING TO UPDATE CIRCUIT DIAGRAM.
	3223337-0005:AA	CABINET TERMINAL SUMMARY: CHANGED ACCORDING TO UPDATE CIRCUIT DIAGRAM.
	3223337-0006:AA	TERMINAL STRIP OVERVIEW: CHANGED ACCORDING TO UPDATE CIRCUIT DIAGRAM.
	3223337-0007:AA	CABLE CONNECTION LIST: CHANGED ACCORDING TO UPDATE CIRCUIT DIAGRAM.
	3223337-0008:AA	MAINS CONNECTION: CHANGED ACCORDING TO UPDATE CIRCUIT DIAGRAM.
	3223337-0098:AA	DRAWING REMARKS: CHANGED ACCORDING TO UPDATE CIRCUIT DIAGRAM.
	3223337-0099:AA	EC DESCRIPTION: CHANGED ACCORDING TO UPDATE CIRCUIT DIAGRAM.

This drawing must not without the consent of Tetra Pak be copied, transmitted or disclosed to any third party.

12 Component Location

Description

This chapter is the list of the components located on the machine.

Note! To find the component location see the Reference Designation Parts Index in the SPC.

13 Dairy Signal Exchange

Description

This chapter is a description of the advanced signal exchange function.

Description 13-2

13.1 Signal Exchange 13-5

13.1.1 Inputs from External Equipment 13-5

13.1.2 Outputs to External Equipment 13-6

This page intentionally left blank

13.1 Signal Exchange

CAUTION
Risk of serious production fault!
It is strongly recommended that following signals are connected to plant control system. Functionality and correctness must be verified and validated during equipment start-up and commissioning phases (see checklists in IM).
Signals connections between equipments and plant control system must be documented by appropriate circuit diagrams and/or flowcharts.
Make sure that there are no electrical bypass bridges on equipment and plant sides.
Make sure that there are no undocumented electrical modifications on equipment and plant sides.

See the Circuit Diagrams on page 157 for signal connection details.

13.1.1 Inputs from External Equipment

Type	Signal	Description
Processing Product Line	UHT Not Sterile (Option ASE)	The processing product line is not sterile. (Option ASE)
	UHT Sterile (Option ASE)	The processing product line is sterile. (Option ASE)
	Dairy ready for Production	The processing product line is filled with product to the connection point for the filling machine.
Ext. Equipment	External date unit ready signal	External date unit ready to start printing
	External date unit warning	Warning in external date unit. Check the Domino manual
	Belt brake ready	Belt brake ready to run
DE Line	Emergency stop DE equipment	Predisposition to connect a further Emergency Stop button beside the Filling Machine and Distribution Equipment.
	DE ready 1	DE line ready to run

(Cont'd)

(Cont'd)

Type	Signal	Description
Cleaning System	Cleaning from production valve	
	CIP pump running	
	CIP end	
	Reserved for DE central refilling Alkali ready	The central refilling alkali line is filled. (Option ICU Central Refilling)
	Reserved for DE central refilling Acid ready	The central refilling acid line is filled. (Option ICU Central Refilling)
	CIP drain valve drain closed pos.	

13.1.2 Outputs to External Equipment

Type	Signal	Description
Processing Product Line	Machine ready for Production	The filling machine is ready for production.
	Steam barrier ON	The FM steam barrier is ON. The C-Valve is closed and the steam temperature is ok.
	Filling Machine in PRODUCTION (start external conveyor)	The filling machine is in production , delivering packages on the external conveyor. This signal is ON once the FM external conveyor is started some minutes before the Production step.
Ext. Equipment	Belt brake enable	Belt brake enabled. Waiting to start.

(Cont'd)

(Cont'd)

Type	Signal	Description
Cleaning System	ICU Cleaning is running (Option ASE)	Used to protect the process product line. When a main cleaning is running, the steriliser is not allowed to start working until the CIP has finished. It's necessary only if there is no signal exchange between steriliser and CIP. (Option ASE)
	Filling machine ready for CIP	
	A valve cleaned by a final cleaning (Option ASE)	Used to inform the processing product line on the last FM final cleaning done
	Reserved for option central refilling Alkali request	Alkali request to the Central Refilling System (Option ICU Central Refilling)
	Reserved for option central refilling Acid request	Acid request to the Central Refilling System (Option ICU Central Refilling)
	Ice water request	To provide ice water if it's needed. Also a pump is started. (Optional)

This page intentionally left blank

14 Other Information

Description

This chapter is used for Bills of Material, Fuse Panel Labels, and so on.

Description 14-2

14.1 Bills of Material..... 14-5

14.2 Fuse Panel Label..... 14-9

This page intentionally left blank

14.1 Bills of Material

This page intentionally left blank

ECM	P540611(L530146)	P558761(L544814)
Release date	2012.04.01	2012.04.02

Chg	Position	Sp	SH	Description	As	Cr	Identity	DTp	Prt	Vs	Unit	Column quantity All
	010			Electrical Document	X		2922287-0300				PC	1
I	020			Software	X		2922286-0300				PC	1

**********This is the Last Page**********

ECM	P540610(L530146)	P554163(L548040)	P569482(L560327)	P575187(L575151)	P582102(L581468)	P595495(L585779)
Release date	2012.04.01	2012.04.02	2012.10.01	2012.10.02	2013.01.01	2013.04.01

ECM	P626990(L614738)	P640468(L634740)	P658520(L653947)	P668368(L668366)	P684890(L684090)	P687637(L687625)
Release date	2013.10.01	2014.01.01	2014.04.01	2014.07.01	2014.07.02	2014.10.01

Chg	Position	Sp	SH	Description	As	Cr	Identity	DTp	Prt	Vs	Unit	Column quantity All
				Ins.for inst.of elec.equip.in pack.mach.			2832086-0000	INS	000	02		x
I				FUSE PANEL LABEL			3345729-0009	ELD	000	AB		x
I	010			DOCUMENTS LIST			3223337-0001	ELD	000	AM		x
I	020			POSITION SUMMARY			3223337-0002	ELD	000	AM		x
I	030			CIRCUIT DIAGRAM			3223337-0003	ELD	000	AM		x
I	040			LINE SUMMARY			3223337-0004	ELD	000	AM		x
I	050			CABINET TERMINAL SUMMARY			3223337-0005	ELD	000	AM		x
I	060			TERMINAL STRIP OVERVIEW			3223337-0006	ELD	000	AM		x
I	070			CABLE CONNECTION LIST			3223337-0007	ELD	000	AM		x
I	080			MAINS CONNECTION			3223337-0008	ELD	000	AM		x
I	098			DRAWING REMARKS			3223337-0098	ELD	000	AM		x
I	099			ENGINEERING CHANGE DESCRIPTION			3223337-0099	ELD	000	AM		x

14.2 Fuse Panel Label

This page intentionally left blank

RELEASED

This drawing must not without the consent of Tetra Pak
be copied, transmitted or disclosed to any third party.

1	2	3	4	5	6	7	8	9	10

THIS DOCUMENT IS TO BE TREATED AS AN INVENTORY
AND THE FOLLOWING PROCEDURES SHALL BE FOLLOWED:

REDUCED TO: A4 ☒ REDUCED TO: A3 ☐

Plasticized According to DS 202.36

Detail "A"

A01F0110	A01F0120	A01F0130	T10F0110	T40F0110	T50F0110	U70F0110	U70F0120	U70F0130	K80F0110	A01F0140	A01F0150	A01F0170	A01F0180	T40F2700	T40F2710	T40F2720	T40F2730	T40F2740

Detail "B"

U30F0110	U70F0080	A01F5740	U70F0010	U70F0020	U70F0090	T40F0010	A01F5400	A01F5410	U70F0320	A01F3000	U70F0030	U70F0040	U70F0050	U70F0060	T50F0010	U70F1130	U70F1140	T50F0020	T50F0040	A01F5780	T10F0050	T10F0070	T10F0040	T10F0090	T10F0020	T10F0080	T50F0070	T10F0120	U70F0370	A01F5821	U70F0160	A01F5800

Detail "C"

A01F5750	T40F0040	T50F0140	T50F0150	K80F0010	K80F0020	K80F0030	T10F0060	U70F0230

Detail "D"

U70F0190	A01F5500	A01F5520	A01F5510	A01F5530	A01F5730	A01F5900	A01F5910

Tetra Pak

Version Designer	Version Date	Machine
RICO	01/10/2014	A3 CompactFlex 0300

ECM No	Denomination	Page Type
691852	FUSE PANEL LABEL	FUSE PANEL LABEL

Information Security Class	Document No.	Doc. type	Version	Page
PUBLIC	3345729-0009	ELD	AB	001

This drawing must not without the consent of Tetra Pak be copied, transmitted or disclosed to any third party.

1	2	3	4	5	6	7	8	9	10

THIS DOCUMENT IS TO BE TREATED AS AN INVENTORY AND THE FOLLOWING PROCEDURES SHALL BE FOLLOWED:

REDUCED TO: A4 ☒ REDUCED TO: A3 ☐

Plasticized According to DS 202.36

Detail "A"

REFERENCE DESIGNATION	FUNCTION	CURRENT SETTING	TYPE
A01F0110	1.111L+ LINE CABINET 1	4A	C
A01F0120	1.112L+ RIGHT BRAKES	4A	C
A01F0130	1.113L+ LINE CABINET 2	4A	C
T10F0110	1.211L+ LINE ASU	4A	C
T40F0110	1.411L+ LINE JAW	4A	C
T50F0110	1.511L+ LINE FFU	4A	C
U70F0110	1.711L+ LINE SUPERSTR.1	4A	C
U70F0120	1.712L+ LINE SUPERSTR.2 HI, HVA	4A	C
U70F0130	1.713L+ LINE SUPERSTR.3	4A	D
K80F0110	1.811L+ LINE SERVICE	4A	C
A01F0140	2.114L+ CLX	4A	C
A01F0150	2.115L+ SAFETY	4A	C
A01F0170	2.117L+ TMCC, CATCHES	4A	C
A01F0180	2.118L+ PC	6A	C
T40F2700	JAW RIGHT MOTOR BRAKE	3A	D
T40F2710	YOKE RIGHT MOTOR BRAKE	3A	D
T40F2720	YOKE LEFT MOTOR BRAKE	3A	D
T40F2730	JAW RIGHT MOTOR BRAKE	3A	D
T40F2740	DCS LEFT/RIGHT MOTOR BRAKE	2A	D

Detail "B"

REFERENCE DESIGNATION	FUNCTION	CURRENT SETTING	TYPE
U30F0110	HYDROGEN PEROXIDE PUMP	16A	D
U70F0080	AIR KNIFE HEATER	16A	C
A01F5740	CONTROL DEVICES POWER SUPPLY	6A	D
U70F0010	PEROXIDE TANK HEATERS 1	10A	C
U70F0020	PEROXIDE TANK HEATERS 2	10A	C
U70F0090	SUPER AIR HEATER	25A	C
T40F0010	INDUCTOR TS LEFT/RIGHT	6A	D
A01F5400	24V POWER SUPPLY	10A	C
A01F5410	24V POWER SUPPLY	6A	C
U70F0320	ICU PUMP	10A	D
A01F3000	POWER FAILURE SIGNAL	10A	C
U70F0030	HEATING SURFACE 1	10A	C
U70F0040	HEATING SURFACE 2	10A	C
U70F0050	HEATING SURFACE 3	10A	C
U70F0060	HEATING SURFACE 4	10A	C
T50F0010	FLAP HEATING TOP LEFT	16A	C
U70F1130	LS SHORT STOP	10A	C
U70F1140	LONGITUDINAL SEALING	16A	C
T50F0020	FLAP HEATING TOP RIGHT	16A	C
T50F0040	FLAP HEATING BOTTOM	16A	C
A01F5780	ELECTRICAL CABINET FAN 1	0.5A	D
T10F0050	ASSU HEAD SPLICING/CUTTING	1A	C
T10F0070	COSTANT HEAT BAR ASU	4A	C
T10F0040	ASU MAGAZINE	16A	D
T10F0090	SA SS HEATING	2A	C
T10F0020	ASU LOOP	16A	D
T10F0080	SA HEATING	16A	C
T50F0070	EXTERNAL CONVEYOR DE	16A	D
T10F0120	FAN SA VENTILATION	0.5A	D
U70F0370	H.I. HEATHER	16A	C
A01F5821	WALL SOCKET	10A	D
U70F0160	DRIVE ROLLER	16A	D
A01F5800	LIGHTING CABINET ASU.JAW.FFU	1A	D

This drawing must not without the consent of Tetra Pak
be copied, transmitted or disclosed to any third party.

1	2	3	4	5	6	7	8	9	10

THIS DOCUMENT IS TO BE TREATED AS AN INVENTORY
AND THE FOLLOWING PROCEDURES SHALL BE FOLLOWED:

REDUCED TO: A4 ☒ REDUCED TO: A3 ☐

Plasticized According to DS 202.36

Detail "C"

REFERENCE DESIGNATION	FUNCTION	CURRENT SETTING	TYPE
A01F5750	COOLING EL.CABINET	3.5A	
T40F0040	HYDRAULIC PUMP	2.66A	
T50F0140	TRANSPORTATION OF WASTE	0.71A	
T50F0150	BELT BRAKE	1.2A	
K80F0010	CIRCULATION COOLING WATER	2.7A 50 Hz 2.75A 60 Hz	
K80F0020	CIRCULATION COOLING MEDIA	2.3A	
K80F0030	EXTERNAL CLEANING PUMP	10.1A 50 Hz 11.3A 60 Hz	
T10F0060	FAN SA SEALING AIR	1.6A	
U70F0230	PEROXIDE HEAT EXCHANGER WATER CIRCULATION PUMP	0.55A	C

Detail "D"

REFERENCE DESIGNATION	FUNCTION	CURRENT SETTING	TYPE
U70F0190	AIR COMPRESSOR	16A	D
A01F5500	JAW RIGHT	25A	D
A01F5520	INFEED FFU	25A	D
A01F5510	JAW CONTROL POWER SUPPLY	6A	D
A01F5530	FFU CONTROL POWER SUPPLY	6A	D
A01F5730	AUXILIARY DEVICES POWER SUPPLY	6A	D
A01F5900	PRIMARY 110 VAC TRANSFORMER (UL-CSA)	4A	D
A01F5910	SECONDARY 110 VAC TRANSFORMER (UL-CSA)	4A	D

Tetra Pak®

Label for 40 mm binder ***Note!*** *This page is generated* ***automatically.***

Tetra Pak A3/CompactFlex
641550-0300 Issue 2014-10
Doc. No. EM-3212180-0111

Tetra Pak A3/CompactFlex
641550-0300 Issue 2014-10
Doc. No. EM-3212180-0111

Tetra Pak A3/CompactFlex
641550-0300 Issue 2014-10
Doc. No. EM-3212180-0111

Tetra Pak A3/CompactFlex
641550-0300 Issue 2014-10
Doc. No. EM-3212180-0111

Tetra Pak A3/CompactFlex
641550-0300 Issue 2014-10
Doc. No. EM-3212180-0111

Tetra Pak A3/CompactFlex
641550-0300 Issue 2014-10
Doc. No. EM-3212180-0111

Tetra Pak A3/CompactFlex
641550-0300 Issue 2014-10
Doc. No. EM-3212180-0111

Tetra Pak A3/CompactFlex
641550-0300 Issue 2014-10
Doc. No. EM-3212180-0111

Tetra Pak A3/CompactFlex 1(2)
641550-0300 Issue 2014-10
Doc. No. EM-3212180-0111

Tetra Pak A3/CompactFlex 2(2)
641550-0300 Issue 2014-10
Doc. No. EM-3212180-0111

Tetra Pak A3/CompactFlex 1(2)
641550-0300 Issue 2014-10
Doc. No. EM-3212180-0111

Tetra Pak A3/CompactFlex 2(2)
641550-0300 Issue 2014-10
Doc. No. EM-3212180-0111

Tetra Pak A3/CompactFlex1(3)
641550-0300 Issue 2014-10
Doc. No. EM-3212180-0111

Tetra Pak A3/CompactFlex 2(3)
641550-0300 Issue 2014-10
Doc. No. EM-3212180-0111

Tetra Pak A3/CompactFlex 3(3)
641550-0300 Issue 2014-10
Doc. No. EM-3212180-0111

Tetra Pak A3/CompactFlex3(3)
641550-0300 Issue 2014-10
Doc. No. EM-3212180-0111

Tetra Pak A3/CompactFlex
641550-0300 Issue 2014-10
Doc. No. EM-3212180-0111

Tetra Pak A3/CompactFlex
641550-0300 Issue 2014-10
Doc. No. EM-3212180-0111

Tetra Pak A3/CompactFlex 1(2)
641550-0300 Issue 2014-10
Doc. No. EM-3212180-0111

Tetra Pak A3/CompactFlex
641550-0300 Issue 2014-10
Doc. No. EM-3212180-0111

Tetra Pak A3/CompactFlex 2(2)
641550-0300 Issue 2014-10
Doc. No. EM-3212180-0111

Tetra Pak A3/CompactFlex
641550-0300 Issue 2014-10
Doc. No. EM-3212180-0111

Tetra Pak A3/CompactFlex 1(3)
641550-0300 Issue 2014-10
Doc. No. EM-3212180-0111

Tetra Pak A3/CompactFlex
641550-0300 Issue 2014-10
Doc. No. EM-3212180-0111

Tetra Pak A3/CompactFlex 2(3)
641550-0300 Issue 2014-10
Doc. No. EM-3212180-0111

Tetra Pak A3/CompactFlex
641550-0300 Issue 2014-10
Doc. No. EM-3212180-0111

Tetra Pak A3/CompactFlex 3(3)
641550-0300 Issue 2014-10
Doc. No. EM-3212180-0111

Tetra Pak A3/CompactFlex
641550-0300 Issue 2014-10
Doc. No. EM-3212180-0111

Tetra Pak A3/CompactFlex 3(3)
641550-0300 Issue 2014-10
Doc. No. EM-3212180-0111

Tetra Pak A3/CompactFlex
641550-0300 Issue 2014-10
Doc. No. EM-3212180-0111

Tetra Pak A3/CompactFlex
641550-0300 Issue 2014-10
Doc. No. EM-3212180-0111

Tetra Pak A3/CompactFlex
641550-0300 Issue 2014-10
Doc. No. EM-3212180-0111

Tetra Pak A3/CompactFlex 1(3)
641550-0300 Issue 2014-10
Doc. No. EM-3212180-0111

Tetra Pak A3/CompactFlex 1(2)
641550-0300 Issue 2014-10
Doc. No. EM-3212180-0111

Tetra Pak A3/CompactFlex 2(3)
641550-0300 Issue 2014-10
Doc. No. EM-3212180-0111

Tetra Pak A3/CompactFlex 2(2)

641550-0300 Issue 2014-10

Doc. No. EM-3212180-0111

Tetra Pak A3/CompactFlex 3(3)

641550-0300 Issue 2014-10

Doc. No. EM-3212180-0111