MM

Maintenance Manual

Tetra Pak® A3/CompactFlex

641550-0300

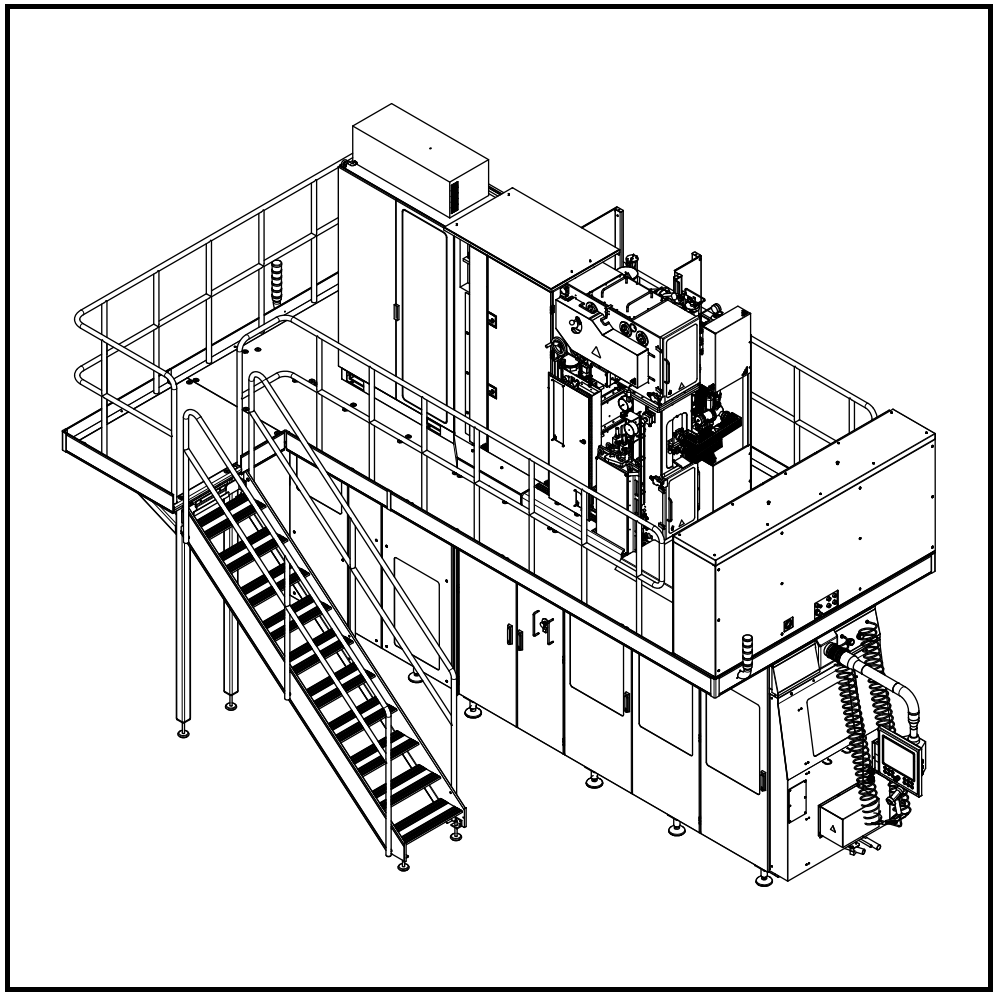

WARNING

Read and follow all safety precaution instructions throughout this manual and on safety signs attached to this equipment.

Failure to follow all safety precaution instructions could result in death or serious injury.

Tetra Pak®

Doc. No. MM-3212175-0111

Copyright © 2014 Tetra Pak International S.A.

All rights reserved. No part of this document may be reproduced or copied in any form or by any means without written permission from Tetra Pak Packaging Solutions.

, Tetra Pak, and all other trademarks displayed in this document are the property of the Tetra Pak International SA. Tetra Pak Packaging Solutions together with Tetra Pak International SA form part of ‘the Tetra Pak Group’. The content of this manual is in accordance with the design and construction of the machine or equipment at the time of publishing. The Tetra Pak Group reserves the right to introduce design modifications without prior notice.

The English language version of this document contains the original instructions. All other language versions are translations of the original instructions.

This document was produced and printed by:

Tetra Pak Packaging Solutions
Via Delfini 1
41123 Modena
Italy

Doc. No. MM-3212175-0111

Issue 2014-09

This manual is valid for:

Series No. / Machine No.
Year of Manufacture Sign.

MM
Maintenance Manual

Tetra Pak®
A3/CompactFlex
641550-0300

i Introduction
ii Safety Precautions
1 Superstructure
2 Machine Body
3 Drive Unit
4 Jaw System
5 Final Folder
6 Service Unit
7 Automatic Splicing Unit
8 Electrical System
9 General

Machine or equipment configurations that this manual is valid for are described on the next page.

Doc. No. MM-3212175-0111
Issue 2014-09

Tetra Pak®
Tetra Pak Packaging Solutions

Valid for:

Name	Drawing Specification and Development Step	Additional Information
Tetra Pak A3/CompactFlex	641550-0300	Optional Equipment: ICU - Integrated Cleaning Unit

Update Log for Doc. No. MM-3212175-0111

This table shows all changes made to this manual, including installed rebuilding kits, added or removed pages. Page numbering on added pages begins with UP.

Date	Installed Kit	Added Pages (Doc. No.)	Removed Pages	Signature

Date	Installed Kit	Added Pages (Doc. No.)	Removed Pages	Signature

i Introduction

About the Introduction Chapter

This chapter contains basic information about this manual and the related Tetra Pak equipment.

About the Introduction Chapter i-2

Abbreviations and Terminology i-5

Manual Information i-7

Delivered Manuals i-7

CM i-7

EM i-7

IM i-7

MM i-7

OM i-7

SPC i-7

TeM i-8

Page Layout i-9

Page Numbering i-10

Typographical Conventions i-10

Symbols i-10

Machine Introduction i-11

Intended Use of the Equipment i-11

Manufacturer i-11

Assistance and Inquiries i-11

Declaration of Conformity i-11

Identification i-12

CE Classification i-12

3-A Compliance i-12

Machine Plate i-12

Food Grade Lubricated Machine Plate i-13

Delivered Design Label i-13

Orientation i-14

Hygiene i-15

Packaging Material i-15
Steam Barrier in the Product Valve i-15
How to Use This MM i-16
Procedures i-16
Procedure Start Table i-16
TPMS i-17
How TPMS Works i-17
TPMS Maintenance Recommendation Overview i-18

Abbreviations and Terminology

Abbreviation/Terminology	Meaning	Translation
ASU	Automatic Splicing Unit	Automatic Splicing Unit
B	Base (package shape)	Base (package shape)
CE	Communautés Européennes/European Communities	Communautés Européennes/European Communities
CF	CompactFlex	CompactFlex
CM	Conversion Manual	Conversion Manual
CIP	Cleaning In Place	Cleaning In Place
DE	Distribution Equipment	Distribution Equipment
E	Edge (package shape)	Edge (package shape)
ECM	Engineering Change Management	Engineering Change Management
EM	Electrical Manual	Electrical Manual
HI	Headspace by gas Injection	Headspace by gas Injection
HVA	High Viscosity Aseptic	High Viscosity Aseptic
ICU	Integrated Cleaning Unit	Integrated Cleaning Unit
IM	Installation Manual	Installation Manual
LED	Light Emitted Diode	Light Emitted Diode
LH	Left Hand	Left Hand
LS	Longitudinal Seal(ing)	Longitudinal Seal(ing)
MB	Master Batch	Master Batch
min	Minimum	Minimum
max	Maximum	Maximum
MKC	Mandatory Kit Corrective	Mandatory Kit Corrective
MKS	Mandatory Kit Human and Product Safety	Mandatory Kit Human and Product Safety
MM	Maintenance Manual	Maintenance Manual
OE	Optional Equipment	Optional Equipment
OK	Optional Kit	Optional Kit
OM	Operation Manual	Operation Manual
PE	Polyethylene	Polyethylene
PM	Packaging Material	Packaging Material
PT	PullTab	PullTab
RH	Right Hand	Right Hand
RK	Rebuilding Kit	Rebuilding Kit
RM	Rebuilding Manual	Rebuilding Manual
S	Slim (package shape)	Slim (package shape)
SA	Strip Applicator	Strip Applicator
SPC	Spare Parts Catalogue	Spare Parts Catalogue

Abbreviation/Terminology	Meaning	Translation
Sq	Square (package shape)	Square (package shape)
TBA	Tetra Brik® Aseptic	Tetra Brik® Aseptic
TeM	Technical Manual	Technical Manual
TMCC	Tetra Multi-purpose Compact Controller	Tetra Multi-purpose Compact Controller
TPMS	Tetra Pak Maintenance System	Tetra Pak Maintenance System
TPOP	Tetra Pak Operator Panel	Tetra Pak Operator Panel
TS	Transversal Sealing	Transversal Sealing
UK	Upgrade Kit	Upgrade Kit
UP	Update Pages	Update Pages

Manual Information

The Tetra Pak Group recommends reading all delivered manuals carefully. Make sure that the delivered manuals are available to personnel who operate or maintain the equipment.

It is important to keep this manual for the lifetime of the equipment and to pass the manual on to any subsequent holder or user.

Any item that is named specifically in this manual is to be considered a designated item for the equipment. Designated items are verified by the Tetra Pak Group for use with the equipment.

The Tetra Pak Group will not be held responsible for any damage, loss, injury, or death caused by not following the instructions in the manuals that accompany this equipment, or by a failure to use designated items specified in the manuals that accompany this equipment.

Delivered Manuals

Manuals delivered with this equipment:

CM

The Conversion Manual provides technicians with information on converting the equipment between different production modes.

EM

The Electrical Manual provides technicians with information about the equipment's electrical system.

IM

The Installation Manual provides technicians with information required to safely install the equipment.

MM

The Maintenance Manual provides technicians with information on maintaining the equipment.

OM

The Operation Manual provides the operator with information on handling and operating the equipment before, during, and after production.

SPC

The Spare Parts Catalogue provides the information necessary to order spare parts from the Tetra Pak Group.

TeM

The Technical Manual provides technicians with information which can be:

- information required to safely install the equipment
- information required to maintaining the equipment
- information about the machine's/equipment's electrical system
- information necessary to order spare parts from the Tetra Pak Group
- other technical information

Page Layout

Every main page in a manual contains a header and a footer. The page header contains the chapter name (1) and the section name (2). The page footer contains the page number (3), and the document number (4). See also the Page Numbering section.

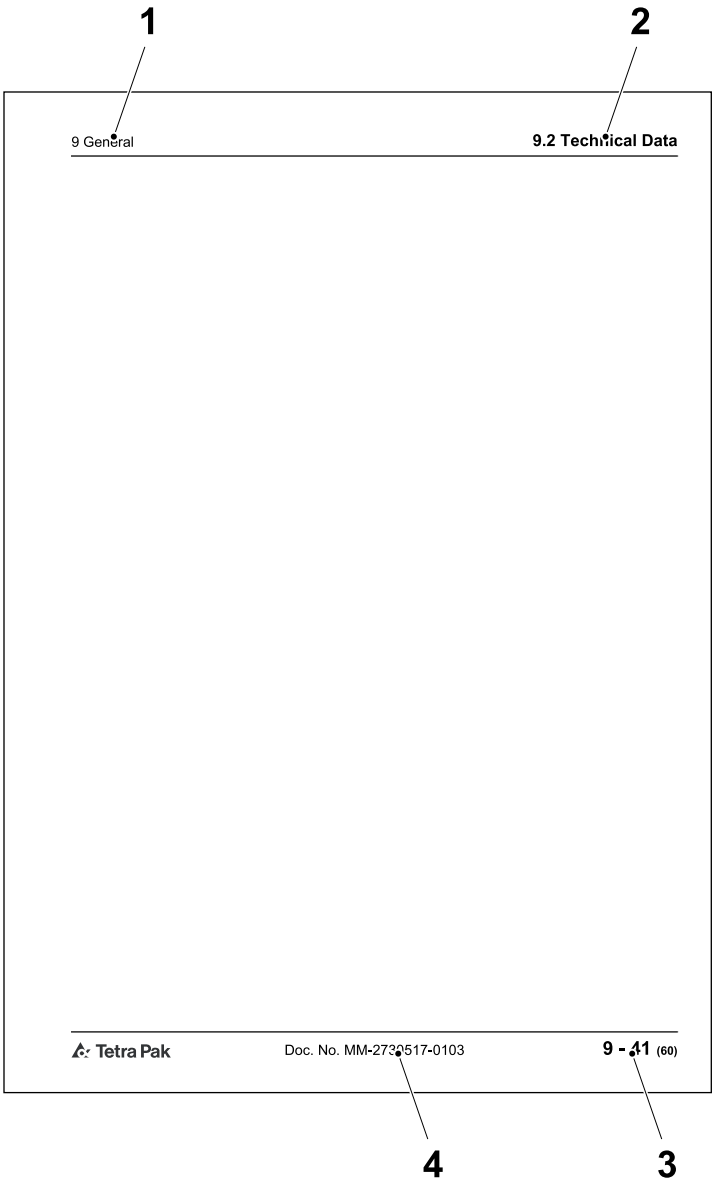

1 Chapter name
2 Section name
3 Page number
4 Document number

Page Numbering

A page number has three parts:

- chapter number (1)
- consecutive page number (2) within the chapter
- total number of pages (3) in the chapter

Note! The letters UP may replace the chapter number (1) if the manual includes update pages. The consecutive page number (2) and the total number of pages (3) of update pages do not follow the existing sequential page numbering of the chapter.

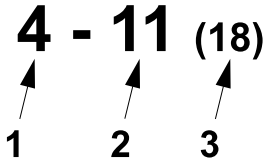

1 Chapter number
2 Consecutive page number
3 Total number of pages

Typographical Conventions

Controls on the operator panel, emergency stop devices, and program steps are printed in CAPITAL LETTERS.

Menu names, button names and other text displayed in software are printed in COURIER.

Cross-references are underlined.

Symbols

Symbols used in illustrations.

	A pointer arrow indicates the position of an object.
	A zoom arrow indicates that an object view is enlarged. The arrow points towards the enlarged view of the object.
	A rotation movement arrow indicates rotational movement of an object. The arrow points in the direction of rotation.
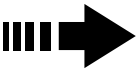	A straight movement arrow indicates movement of an object. The arrow points in the direction of movement.

Machine Introduction

Intended Use of the Equipment

The intended use of this Tetra Pak® equipment is to pack liquid food products.

All other use is strictly prohibited. The Tetra Pak Group will not be held responsible for injury or damage if the equipment is used for any other purpose than the intended use described above.

Manufacturer

This Tetra Pak equipment has been manufactured by

Tetra Pak Packaging Solutions
Via Delfini 1
41123 Modena
Italy

Assistance and Inquiries

For assistance when operating this equipment, or other inquiries, comments, or suggestions, submit the questions or give feedback by using the QuTI-P tool. Type QuTI-P in the address field of your browser. If access to QuTI-P is not available, request access by contacting the Global Service Desk.

If access to the Tetra Pak® intranet is not available, contact the nearest Tetra Pak representative.

Declaration of Conformity

A copy of the Declaration of Conformity can be found in the Installation Manual. The signed Declaration of Conformity is delivered separately with the equipment.

Identification

CE Classification

This equipment complies with the basic health and safety regulations of the European Economic Area (EEA).

3-A Compliance

This equipment complies with the 3-A Sanitary Standards for Formers, Fillers, and Sealers of Containers for Fluid Milk and Fluid Milk Products, Number 17-11.

Machine Plate

The illustration below shows an example of the machine plate and its location on the equipment. The machine plate carries data needed when contacting Tetra Pak® concerning this specific equipment.

Make sure that the equipment data in the front pages of this manual corresponds to the machine plate data and the machine specification.

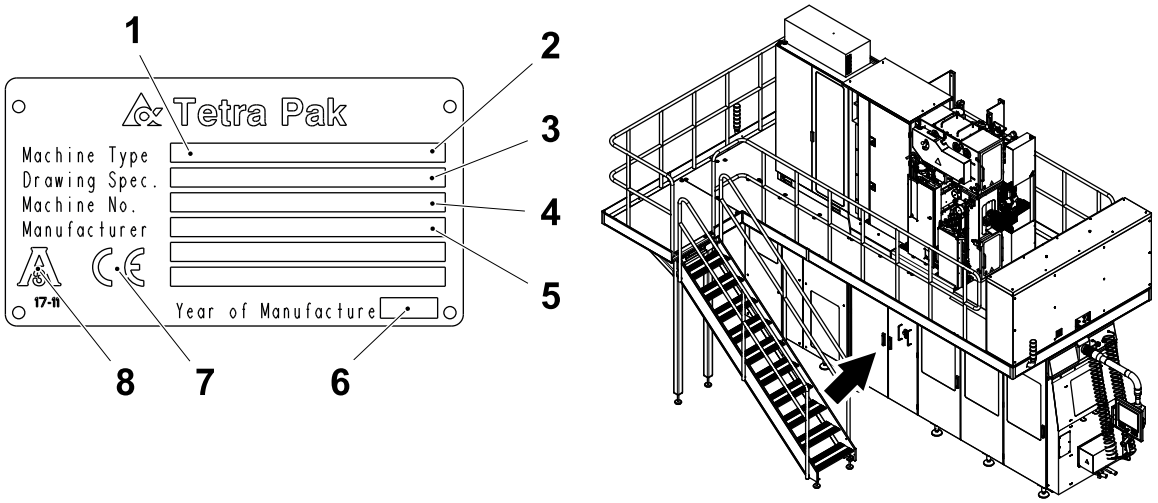

1 Machine type
2 Volume
3 Drawing specifications
4 Machine serial number
5 Manufacturer
6 Year of manufacture
7 CE mark
8 3-A mark (if applicable)

Food Grade Lubricated Machine Plate

The illustration below shows an example of the Food Grade Lubricated Machine plate and its location on the equipment. The Food Grade Lubricated Machine plate indicates that lubricants used in this equipment are of food grade quality.

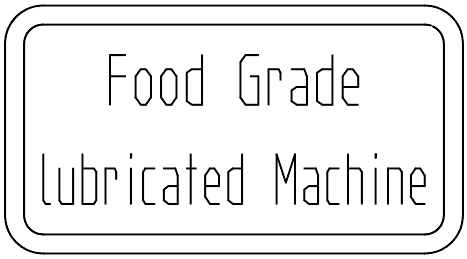

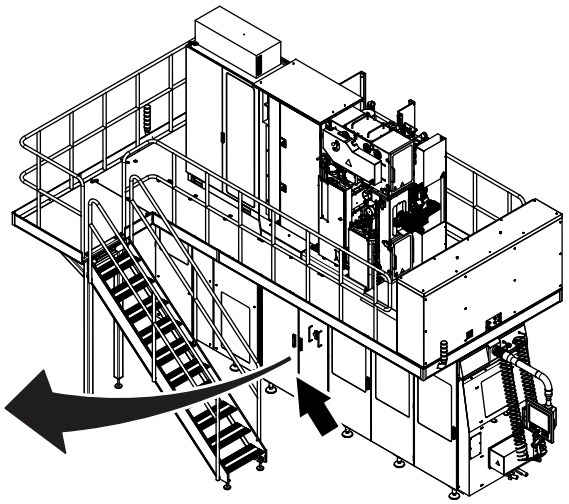

Delivered Design Label

The illustration below shows an example of the delivered design label and its location on the equipment. The delivered design label lists information tracking any rebuilding done to the electrical design, and any alterations done in the electrical cabinet and to related electrical components.

The delivered design label is filled in by the person performing the rebuilding or alteration.

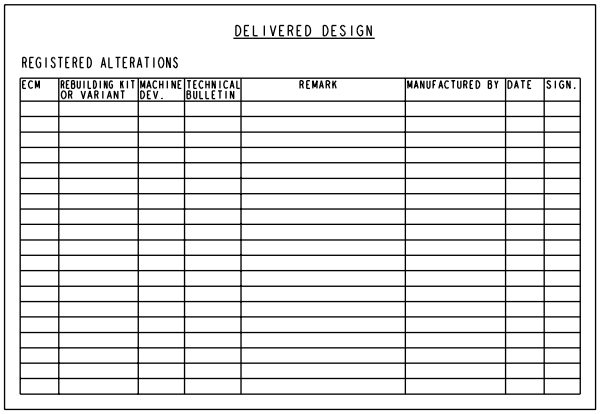

DELIVERED DESIGN

REGISTERED ALTERATIONS

ECM	REBUILDING KIT OR VARIANT	MACHINE DEV.	TECHNICAL BULLETIN	REMARK	MANUFACTURED BY	DATE	SIGN.

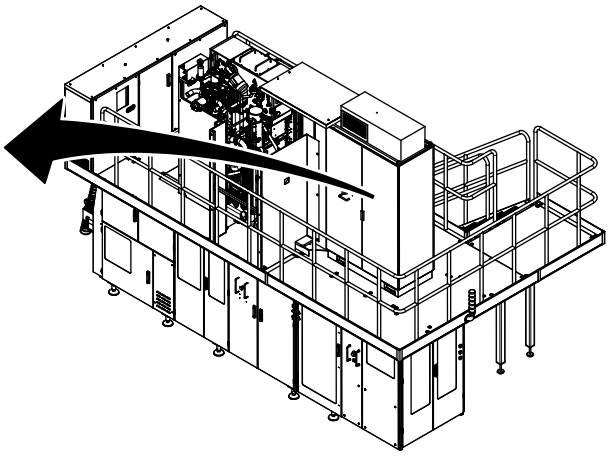

Orientation

The illustration below shows the orientation of the equipment. This orientation information will be used throughout this manual. The arrows indicate the flow of material.

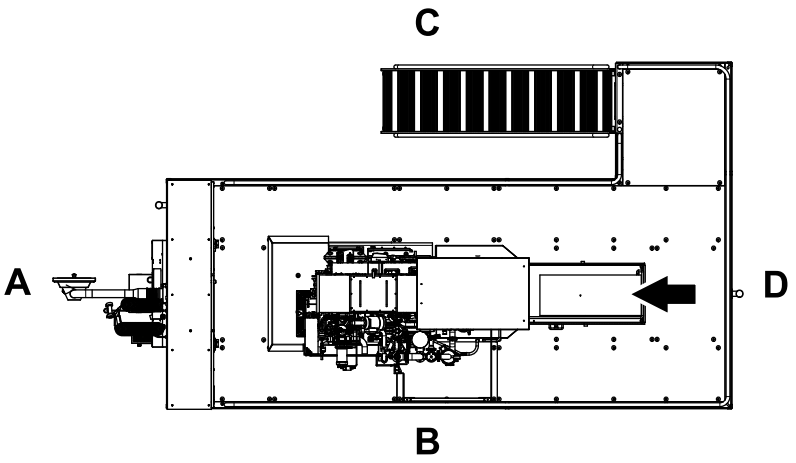

A Front
B Right-hand side
C Left-hand side
D Back

Hygiene

Packaging Material

Avoid microbiological contamination of the packaging material:

- Always protect your packaging material against contamination.
- Always keep the doors to the filling room (area) closed. To prevent contamination via air streams, never open a window when the machine is in production.
- Never clean the floors or the machine in the filling room (area) when the machine is in production.
- Compressed air used for cleaning purposes is to be used only for cleaning filters and should only be used outside of the filling room (area) or in the final folder compartment of the filling machine.
- Prepare the splicing of the packaging material as late as possible.
- Disinfect your hands before touching anything that may come into contact with the product. Use code H disinfectant. See the Technical Data chapter of the Maintenance Manual.
- Keep your hands clean.
- Always wear some type of hair protection (cap or hairnet) and clean clothes (preferably white).
- Do not wear a watch, ring, necklace, earrings, or any other exposed jewellery.

Steam Barrier in the Product Valve

The filling machine's product valve employs a steam barrier to separate the product supply line from the filling machine. The steam barrier allows the machine and the product supply line to be independently sterilised to commercial sterility conditions.

- Never disengage the steam barrier, and never interrupt the steam supply when the filling machine or the product supply line is being brought to the pre-sterilization phase, or when the machine is already in the production phase.
- If any maintenance activity requires disengagement of the steam barrier or the interruption of the steam supply to the machine, make sure that the product supply line is idle and empty of product.

How to Use This MM

Procedures

The name of the chapters and sections in the MM correspond to the groups in the structure of the equipment. Procedures correspond to a chapter or a section:

- The hyphens indicate that it is a procedure heading. The example shows a heading for Procedure number 3 in Section 1.5.
- The text after the second hyphen tells what type of procedure it is. Check, Change, and Set are common procedure types.

1.5-3 Outfeed Servo - Change Bearings

Maintenance procedures in this manual are connected to the Tetra Pak Maintenance System, TPMS. See the TPMS section.

Procedure Start Table

Procedures in this manual begin with a table providing information needed to perform the procedure.

- Machine Status (1) shows actuator status, program step, and any other machine status necessary to begin the procedure.
- Special Equipment (2) shows a list of personal protective equipment and special tools that are not normally carried by a service technician, but are needed in the procedure.
- Consumables (3) shows items, such as lubricants, that are required to perform the procedure. Consumables do not include replacement parts.
- SPC Reference (4) shows the assembly number, found in the index of the SPC.

Machine Status (1)	Electrical supply disconnecting device in position O (OFF) Main air valve OFF Main water valve OFF
Special Equipment (2)	Hook spanner TP No. 777170-0105 Dial indicator
Consumables (3)	Lint-free cloths
SPC Reference (4)	2501234-0100

1 Machine Status
2 Special Equipment
3 Consumables
4 SPC Reference

TPMS

TPMS is the maintenance methodology to handle all maintenance-related work processes from development and the whole life cycles for Tetra Pak® machines and equipment. The TPMS methodology is reliability-centred (best industry practice) and aims at finding the right combination of predetermined, condition-based, and corrective maintenance. In maintenance, the challenge is to find the right level of investment in parts and labour effort to achieve the desired performance, quality, and reliability. Thanks to TPMS, it is possible to create maintenance plans with a good balance between what is invested and what it received in return.

How TPMS Works

Users around the globe continuously feed the system with maintenance data. The data is continuously evaluated and then utilised to improve maintenance recommendations and customer-specific scheduling of maintenance tasks. TPMS takes a holistic approach to maintenance by including the actions needed to contribute to plant efficiency. With this advanced maintenance management tool, the maintenance checklists are designed to include latest updates of our recommendations to meet the demands for fewer unscheduled stops, reduced waste, and less interference with production.

TPMS Maintenance Recommendation Overview

With the Tetra Pak Group's extensive experience of managing maintenance on Tetra Pak® packaging lines, together with our advanced maintenance management tools, we can support you in tailoring the right maintenance plans (checklists) to follow the maintenance system in a consistent way. Using TPMS is a foundation to having your machine run at its best. Checklists can be managed and delivered directly from your local Tetra Pak service station. In the checklist you will find information concerning what tasks shall be done and when they shall be done. Furthermore, the document reference will give guidance as to how to perform the work. The document references are MM, SPC, OM, RM, EM, and TeM.

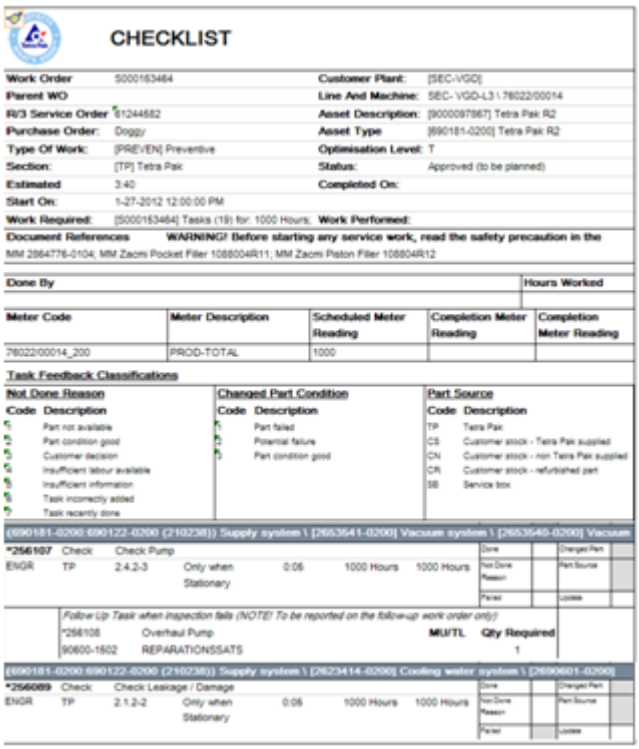

CHECKLIST

Work Order	5000163464	**Customer Plant:**	[SEC-VGO]
Parent WO		**Line And Machine:**	SEC- VGO-L3 \ 76022/00014
R/3 Service Order	61244682	**Asset Description:**	[9000097867] Tetra Pak R2
Purchase Order:	Doggy	**Asset Type**	[690181-0200] Tetra Pak R2
Type Of Work:	[PREVEN] Preventive	**Optimisation Level:**	T
Section:	[TP] Tetra Pak	**Status:**	Approved (to be planned)
Estimated	3:40	**Completed On:**	
Start On:	1-27-2012 12:00:00 PM		
Work Required:	[5000163464] Tasks (19) for: 1000 Hours;	**Work Performed:**	

Document References **WARNING! Before starting any service work, read the safety precaution in the**
MM 2864776-0104; MM Zaomi Pocket Filter 1088004R11; MM Zaomi Piston Filter 108804R12

Done By	**Hours Worked**

Meter Code	**Meter Description**	**Scheduled Meter Reading**	**Completion Meter Reading**	**Completion Meter Reading**
76022/00014_200	PROD-TOTAL	1000		

Task Feedback Classifications

Not Done Reason		**Changed Part Condition**		**Part Source**	
Code	**Description**	**Code**	**Description**	**Code**	**Description**
1	Part not available	1	Part failed	TP	Tetra Pak
2	Part condition good	2	Potential failure	CS	Customer stock - Tetra Pak supplied
3	Customer decision	3	Part condition good	CN	Customer stock - non Tetra Pak supplied
4	Insufficient labour available			CR	Customer stock - refurbished part
5	Insufficient information			SB	Service box
6	Task incorrectly added				
7	Task recently done				

((690181-0200 690122-0200 (210238)) Supply system \ [2653541-0200] Vacuum system \ [2653540-0200] Vacuum

*256107	Check:	Check Pump					Done	Changed Part
ENGR	TP	2.4.2-3	Only when Stationary	0:05	1000 Hours	1000 Hours	Not Done Reason	Part Source
							Failed	Update

Follow Up Task when inspection fails (NOTE! To be reported on the follow-up work order only)

*256108	Overhaul Pump	MU/TL	Qty Required
90600-1502	REPARATIONSSATS		1

((690181-0200 690122-0200 (210238)) Supply system \ [2623414-0200] Cooling water system \ [2690601-0200]

*256089	Check:	Check Leakage / Damage					Done	Changed Part
ENGR	TP	2.1.2-2	Only when Stationary	0:05	1000 Hours	1000 Hours	Not Done Reason	Part Source
							Failed	Update

Note! The layout of the checklist is subject to change.

For those customers that intend to set up their own maintenance system and plans, the Tetra Pak Group can on a upon-request basis provide a maintenance recommendation overview for the specific equipment, including tasks required to keep the equipment in good condition. The recommendation will be provided free of charge for up to a year after delivery.

(Cont'd)

(Cont'd)

The following items can be found in the maintenance recommendation overview:

Task Code	**Trade**	**Task Action**	**Task Description**	**Document Reference**	**Interval**
Number of the task	Skill required to perform the task	Check, Change, Turn, and so on	Work description	Where info can be found on how to perform this task	When the task shall be performed

Task Code	Trade	Task Action	Task Description	Document Reference	Interval
*2812811	ENGR	Change	Change Shaft / Cylinder	1.4.4-1	
Superstructure \ [2528076-0100] Sterile air system \ [1499158-0100] Air super-heater					
*181142	ENGR	Delime	Delime Heat exchanger	1.4.5-2	3000 Hours
Superstructure \ [2528076-0100] Sterile air system \ [1538166-0100] Air valve					
*3732	ENGR	Change	Change Seal ring / Plain bearing	1.4.6-2	9000 Hours
*2806794	ENGR	Check	Check Shaft / Cylinder	1.4.6-2	1000 Hours
*2807375	ENGR	Change	Change Shaft / Cylinder	1.4.6-2	

The Tetra Pak Group's Maintenance recommendations are continuously updated and improved based on user feedback.

Note! Contact the local Tetra Pak® office for additional information and support regarding TPMS.

This page intentionally left blank

ii Safety Precautions

Description

Safety Precaution Instructions

WARNING

Read and understand this manual before using the machine.
Failure to follow safety precautions and instructions can result in death or serious injury.

Definition of Lockout Procedure

A lockout procedure is a procedure to put each necessary energy isolating device in its safe position to prevent the energisation of the equipment, such as when a maintenance procedure should be carried out.

A lockout is the use of a device, for example, a padlock, to make sure that an energy isolating device cannot be operated.

An energy isolating device is a mechanical device that physically prevents transmission or release of energy, such as an electrical supply disconnecting device.

Description ii-2

Safety Messages Description..... ii-7

Personnel Requirements ii-8

Skilled Person ii-8

Instructed Person ii-8

Safety Signs..... ii-9

Location of Safety Signs ii-11

Location of Safety Signs - ICU (OE) ii-20

ASU iLine XT Version (OE) ii-21

Protective Devices ii-22

Emergency Stop..... ii-22

Emergency Stop Push-Buttons ii-23

Safeguards..... ii-23

Safety Mat ii-26

Indicating Tower..... ii-27

Audible Alarm ii-28

Safe Manual Handling ii-29

Personal Protection ii-30

Noise ii-30

Entanglement..... ii-30

Hazardous Substances..... ii-31

Disposal of Chemical Substances..... ii-31

Hydrogen Peroxide (H_2O_2)..... ii-31

Emergency Procedures ii-31

Eyes ii-32

Skin..... ii-32

Inhalation ii-32

Ingestion..... ii-32

Personal Protective Equipment ii-32
Handling of Hydrogen Peroxide ii-33
Storage of Hydrogen Peroxide ii-34
Disposal of Hydrogen Peroxide ii-35
Caustic Soda/Sodium Hydroxide (NaOH) ii-35
Emergency Procedures ii-35
Inhalation ii-35
Ingestion ii-35
Skin Contact ii-35
Eye Contact ii-35
Accidental Release, Spillage or Splashing ii-35
Personal Protective Equipment ii-36
Handling and Storage of Caustic Soda/Sodium Hydroxide ii-36
Disposal of Caustic Soda/Sodium Hydroxide ii-36
Estinguishing Media ii-36
Specific Hazards ii-36
Protective Measures in Fire ii-37
Nitric Acid (HNO_3) ii-37
Emergency Procedures ii-37
Inhalation ii-37
Ingestion ii-37
Skin Contact ii-37
Eye Contact ii-37
Accidental Release, Spillage or Splashing ii-38
Personal Protective Equipment ii-38
Handling and Storage of Nitric Acid ii-38
Disposal of Nitric Acid ii-39
Fire ii-39
Explosion ii-39
Estinguishing Media ii-39
Special Information ii-39
Protective Measures In Fire ii-39

Supply Systems **ii-40**

Electrical Supply **ii-40**

Residual Voltage **ii-41**

Electrical Cabinet **ii-41**

Socket Outlet **ii-42**

Air Supply **ii-43**

Steam Supply **ii-44**

Water Supply **ii-45**

This page intentionally left blank

Safety Messages Description

A safety message is always accompanied by a safety alert symbol and a signal word.

The safety alert symbol is used to alert about potential personal injury hazards. To avoid hazards, obey all safety messages that follow this symbol.

The following safety alert symbols and signal words are used in this manual to inform the user of hazards.

DANGER	Danger indicates an imminently hazardous situation which, if not avoided, **will** result in **death or serious injury**.
WARNING	Warning indicates a potentially hazardous situation which, if not avoided, **could** result in **death or serious injury**.
CAUTION	Caution indicates a potentially hazardous situation which, if not avoided, **may** result in **minor or moderate injury.** It may also be used to alert against unsafe practices.
CAUTION	Caution without the safety alert symbol indicates a potentially hazardous situation which, if not avoided, **may** result in **property damage**.

Personnel Requirements

Note! Personnel includes all persons working on or near this equipment.

Only skilled or instructed persons are allowed to work with this equipment.

Skilled Person

A skilled person must have relevant education and experience to enable him or her to identify hazards, analyse risks, and avoid hazards which electricity, machinery, chemicals, other energies, and supply systems on this equipment can create.

Skilled persons must meet local regulations, such as certifications and qualifications for working with these energies and systems.

Instructed Person

An instructed person must be adequately advised or supervised by a skilled person. The skilled person enables the instructed person to identify hazards, analyse risks, and avoid hazards which electricity, machinery, chemicals, other energies, and supply systems on this equipment can create.

Safety Signs

WARNING

Damaged or missing safety signs.
Safety signs are used to indicate safety hazards. If the signs are missing or damaged, they can not fulfil this function. Replace all missing or damaged safety signs immediately.

Safety signs are attached to the equipment. The table below lists all the signs that are used, and illustrations show their locations on the equipment. Each position number refers to two standards of a safety sign in the table, but only one is used on the equipment.

- Make sure that each safety sign is legible and in its correct position after installation and maintenance.
- Replace all missing or damaged safety signs immediately.

Pos	ISO Standard	ANSI Standard
1	 **Moving part can crush and cut.** Do not operate with guard removed. Follow lockout procedure before maintenance.	
2	 **Hazardous voltage.** Will shock, burn, or cause death. Follow lockout procedure before maintenance.	
3	 **Chemical burn hazard.** Wear personal protective equipment.	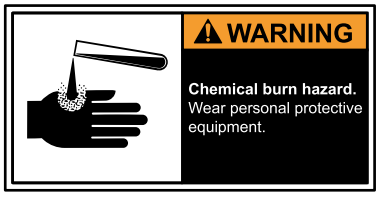

(Cont'd)

(Cont'd)

Pos	ISO Standard	ANSI Standard
4	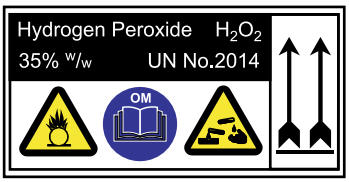	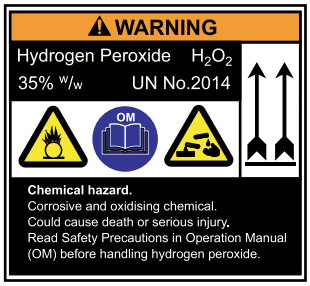
	Chemical hazard. Corrosive and oxidising chemical. Could cause death or serious injury. Read Safety Precautions in Operation Manual (OM) before handling hydrogen peroxide.	
5		
	Risk of eye injury. Wear eye protection.	
6		
	Hot surface. Do not touch. Follow lockout procedure before maintenance.	
7		
	Hazardous voltage. Can shock, burn, or cause death. Read Maintenance Manual (MM) before using this socket outlet.	
8		
	Hazardous rotating shafts and belts. Can crush and cut. Keep hands clear while the machine is operating.	

(Cont'd)

(Cont'd)

Pos	ISO Standard	ANSI Standard
9		
	Hot oil. Wear protective gloves.	

Location of Safety Signs

The illustration shows where the safety signs are located. The position numbers refer to the table in the Safety Signs section.

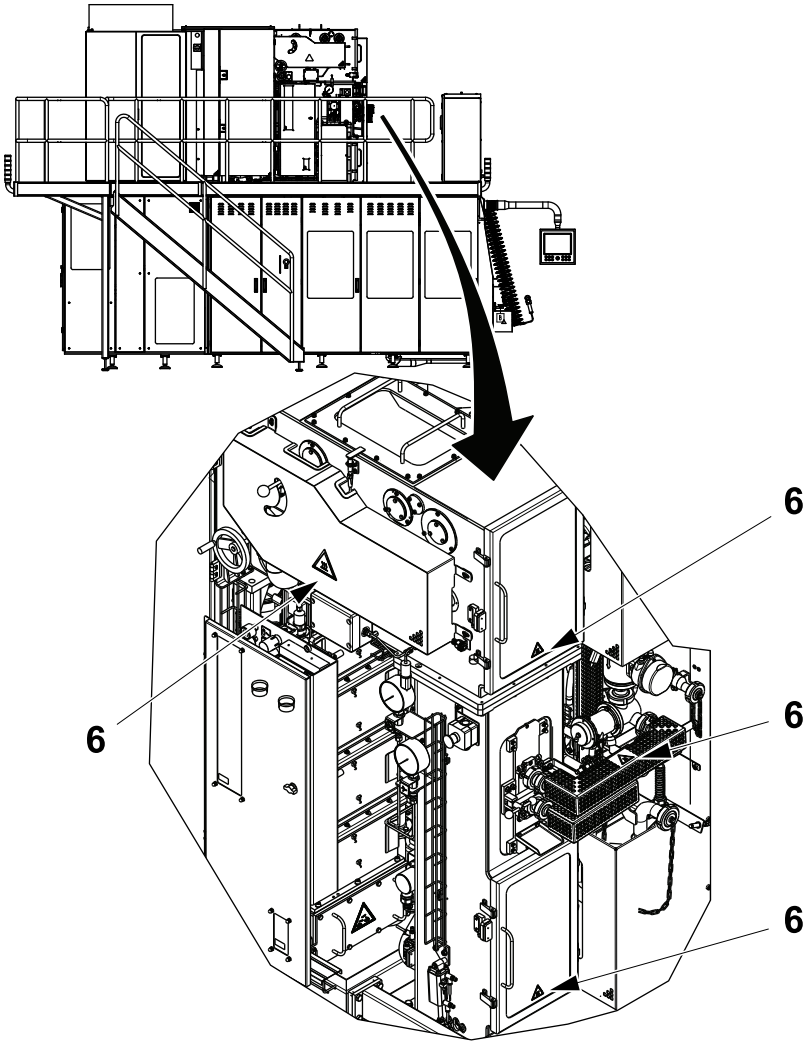

(Cont'd)

(Cont'd)

The illustration shows where the safety signs are located. The position numbers refer to the table in the Safety Signs section.

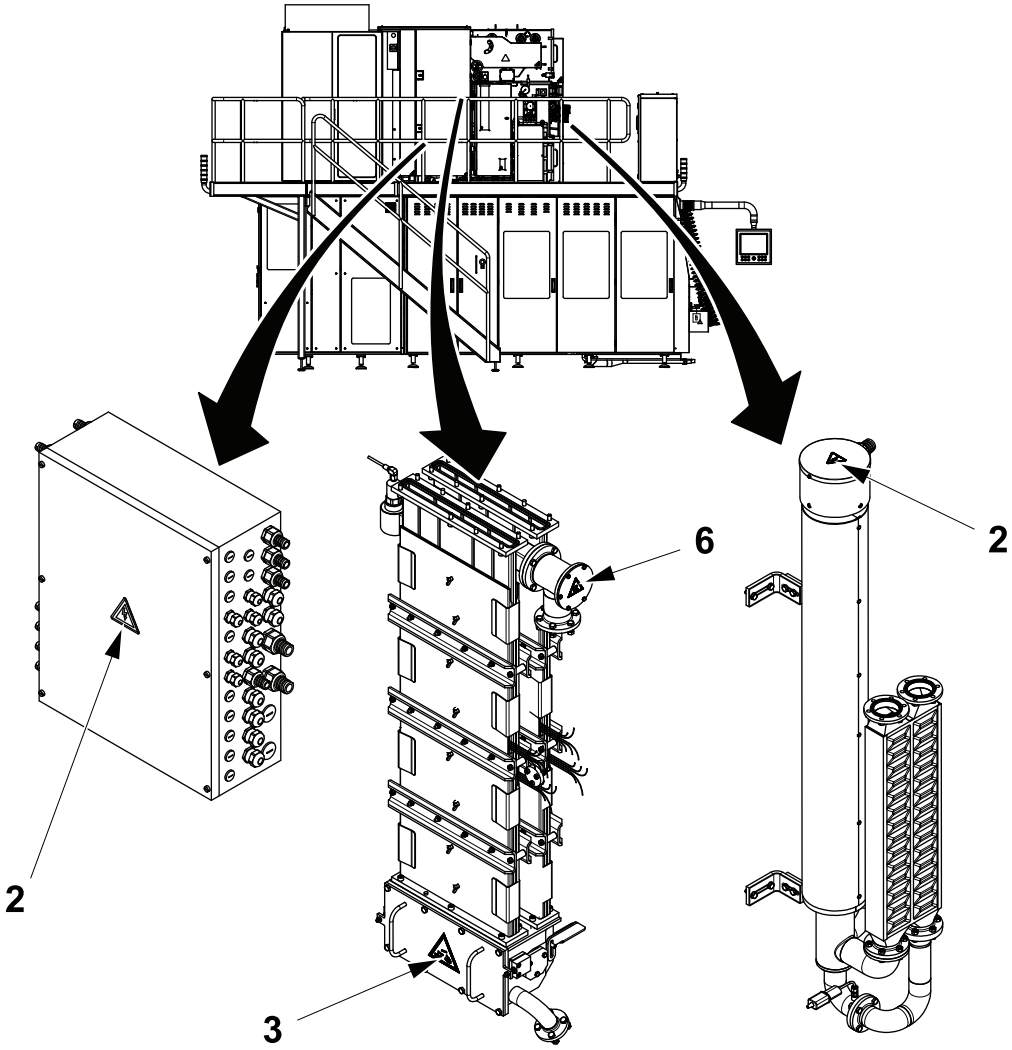

(Cont'd)

(Cont'd)

The illustration shows where the safety signs are located. The position numbers refer to the table in the Safety Signs section.

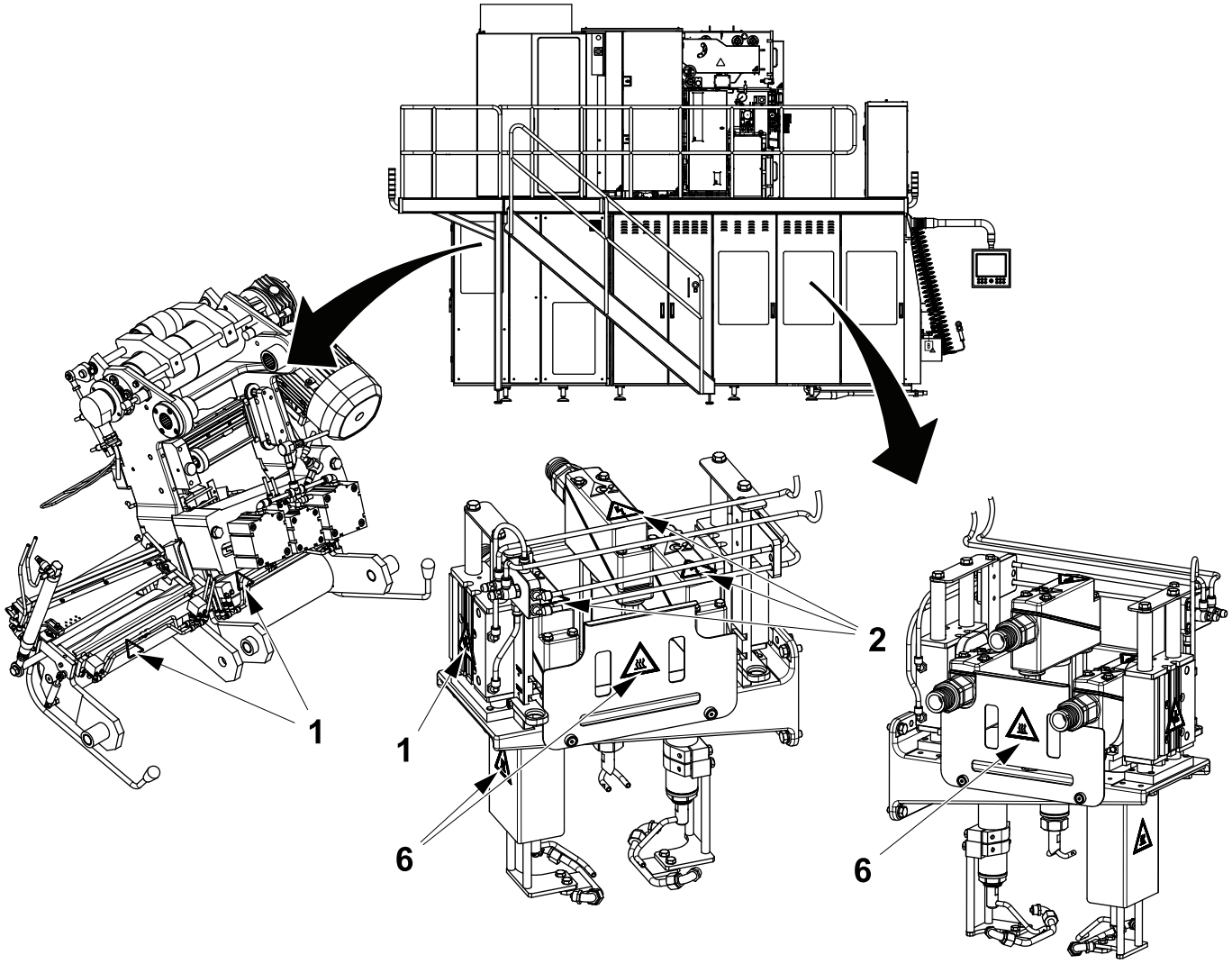

(Cont'd)

(Cont'd)

The illustration shows where the safety signs are located. The position numbers refer to the table in the Safety Signs section.

Note! The sign (6), on the outer plate of the hot air element SS, in the ASU is introduced for Tetra Pak A3/CompactFlex from T-order 21220/00290.

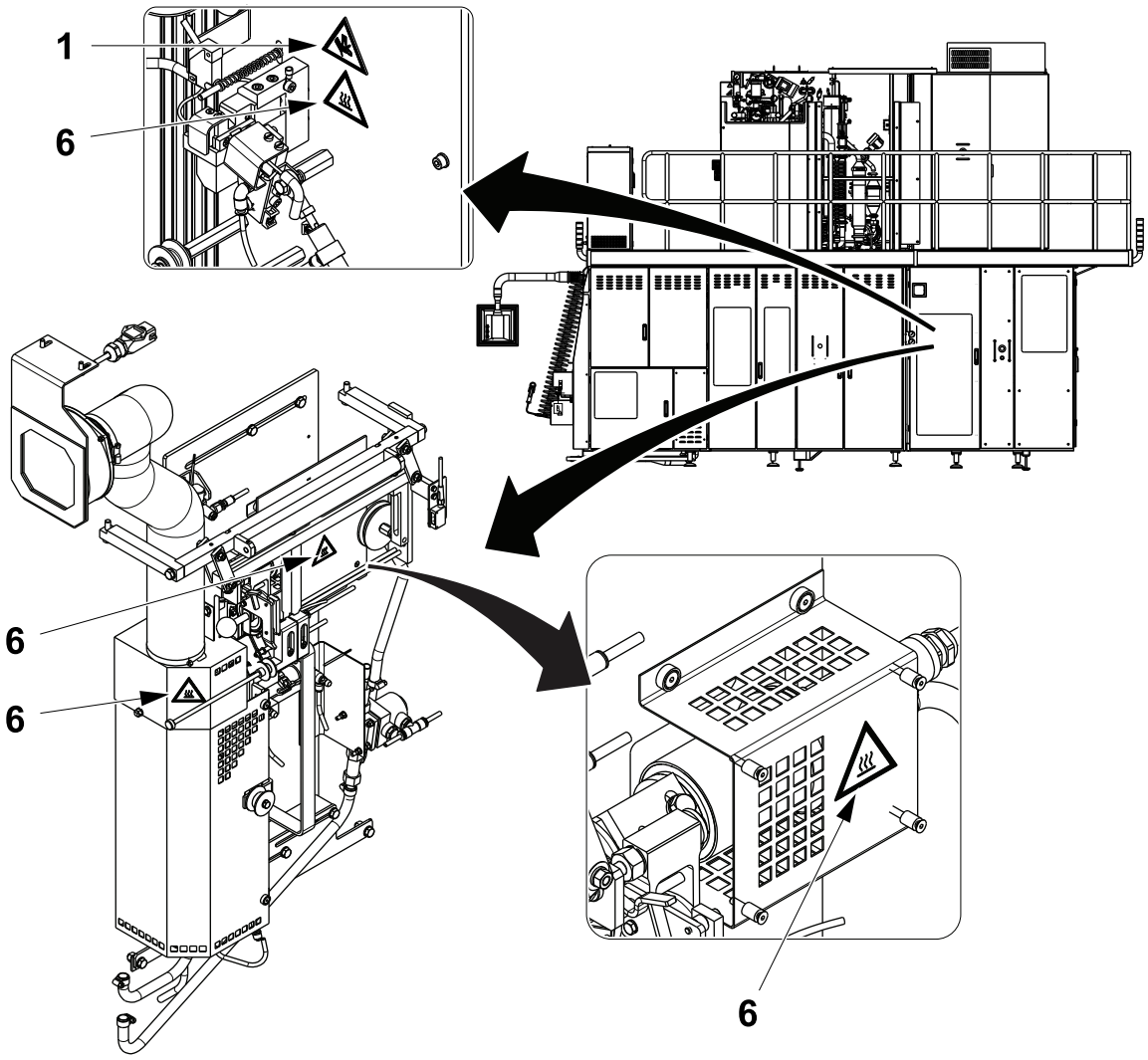

(Cont'd)

(Cont'd)

The illustration shows where the safety signs are located. The position numbers refer to the table in the Safety Signs section.

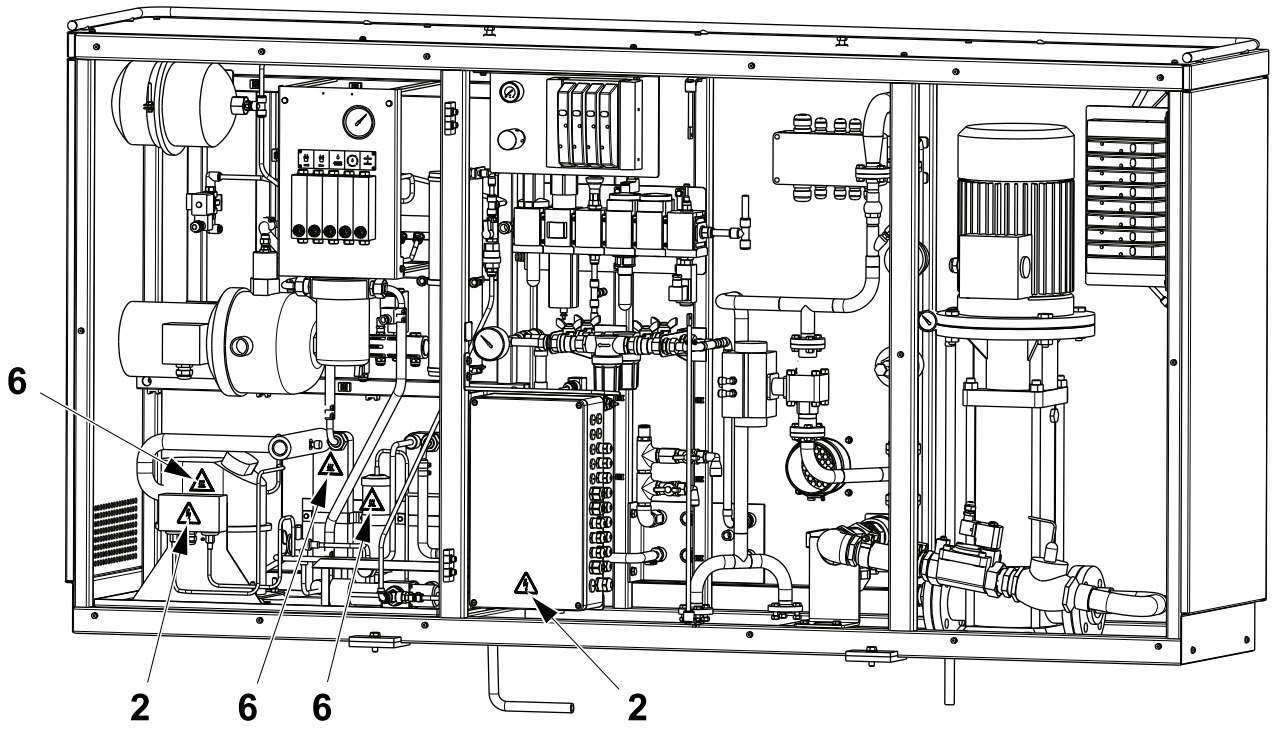

(Cont'd)

(Cont'd)

The illustration shows where the safety signs are located. The position numbers refer to the table in the Safety Signs section.

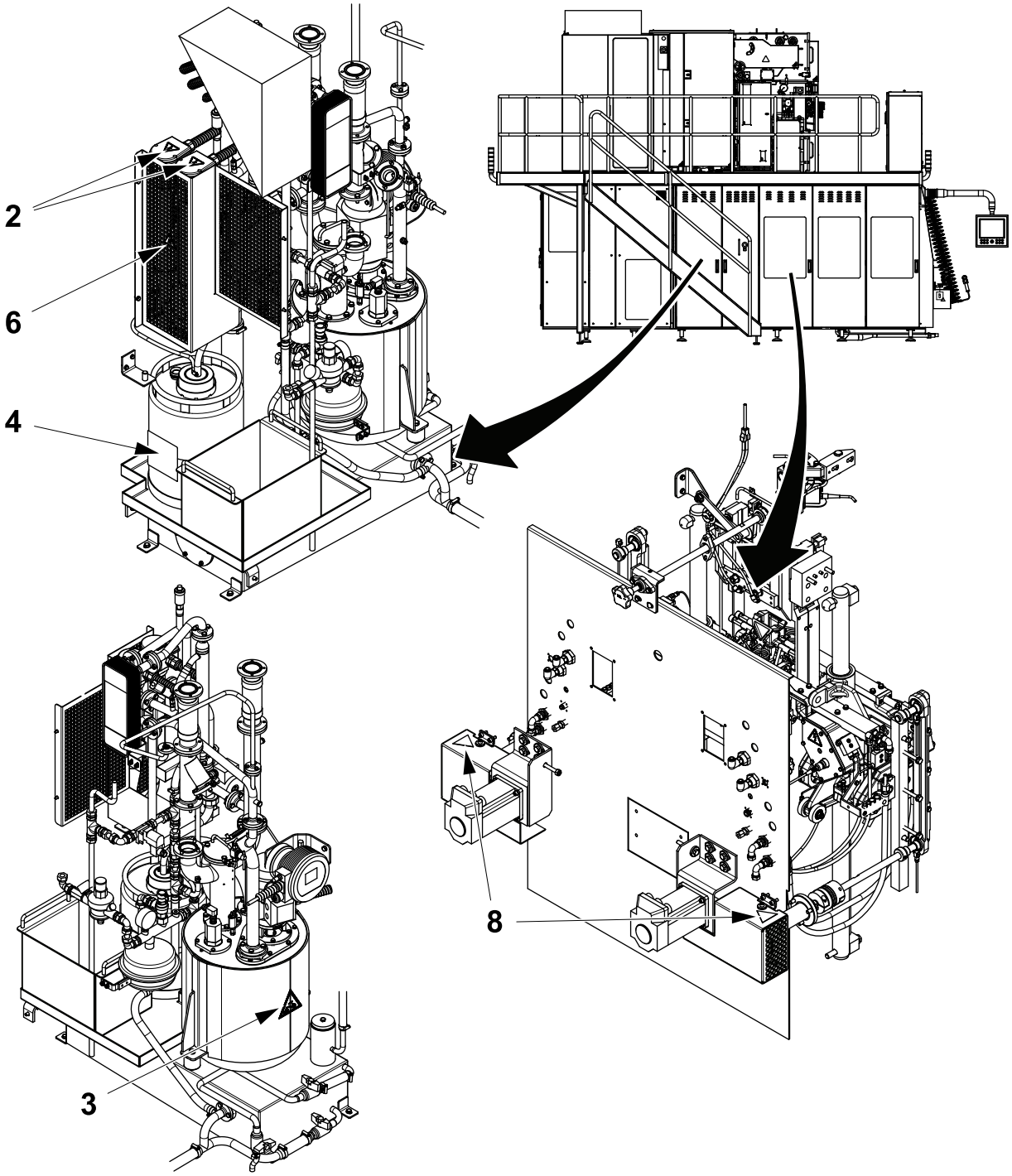

(Cont'd)

(Cont'd)

The illustration shows where the safety signs are located. The position numbers refer to the table in the Safety Signs section.

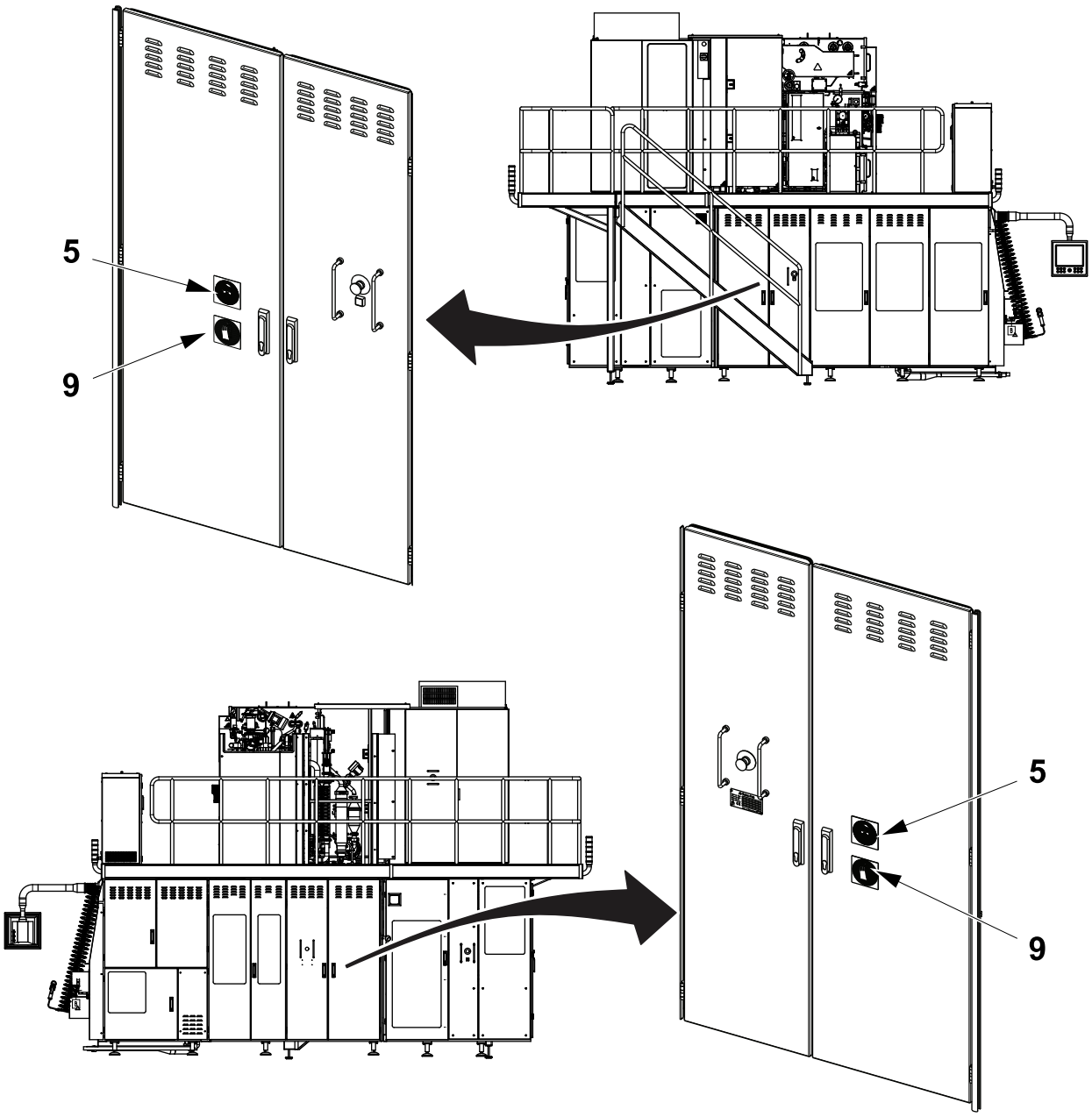

(Cont'd)

(Cont'd)

The illustration shows where the safety signs are located. The position numbers refer to the table in the Safety Signs section.

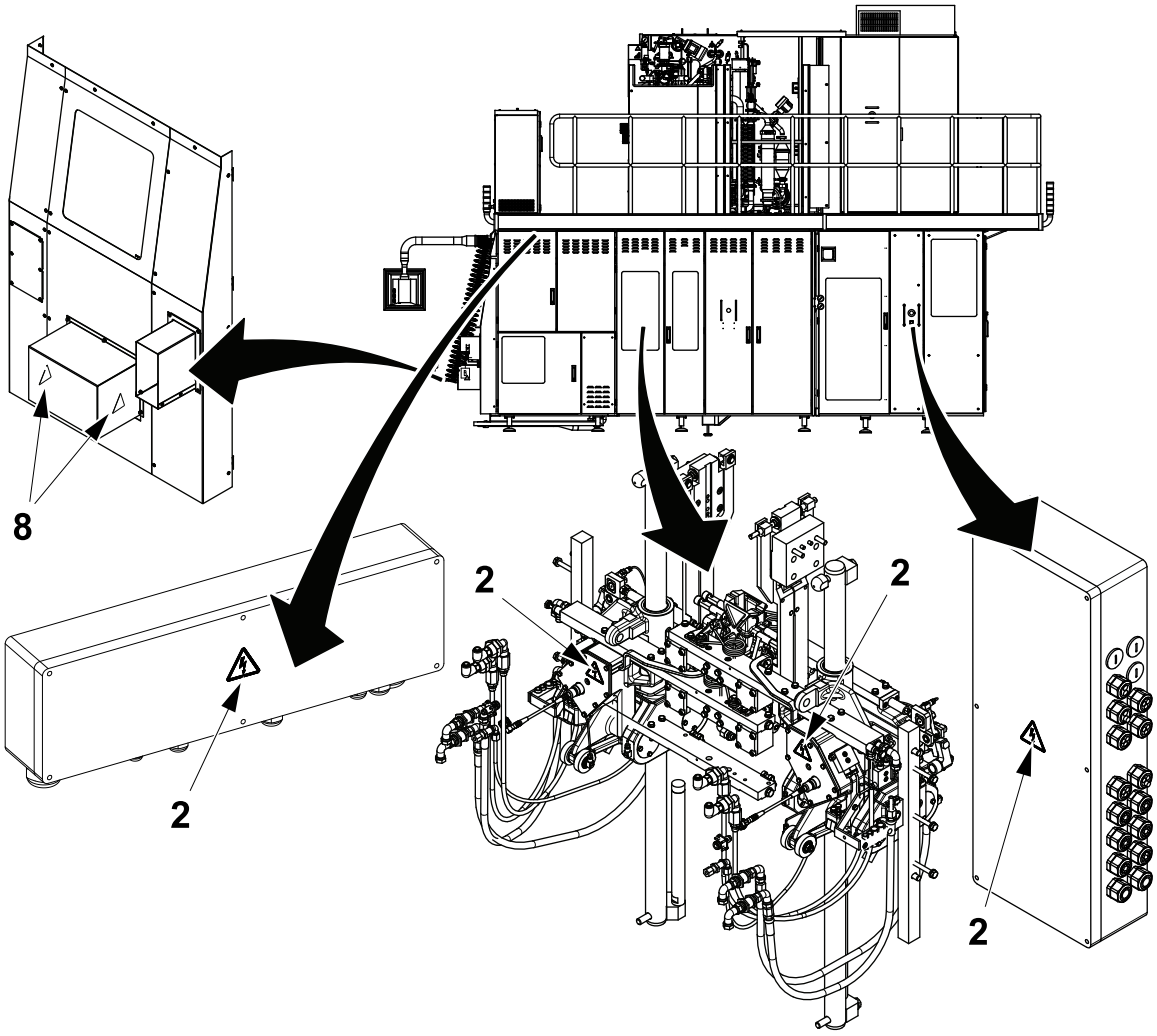

(Cont'd)

(Cont'd)

The illustration shows where the safety signs are located. The position numbers refer to the table in the Safety Signs section.

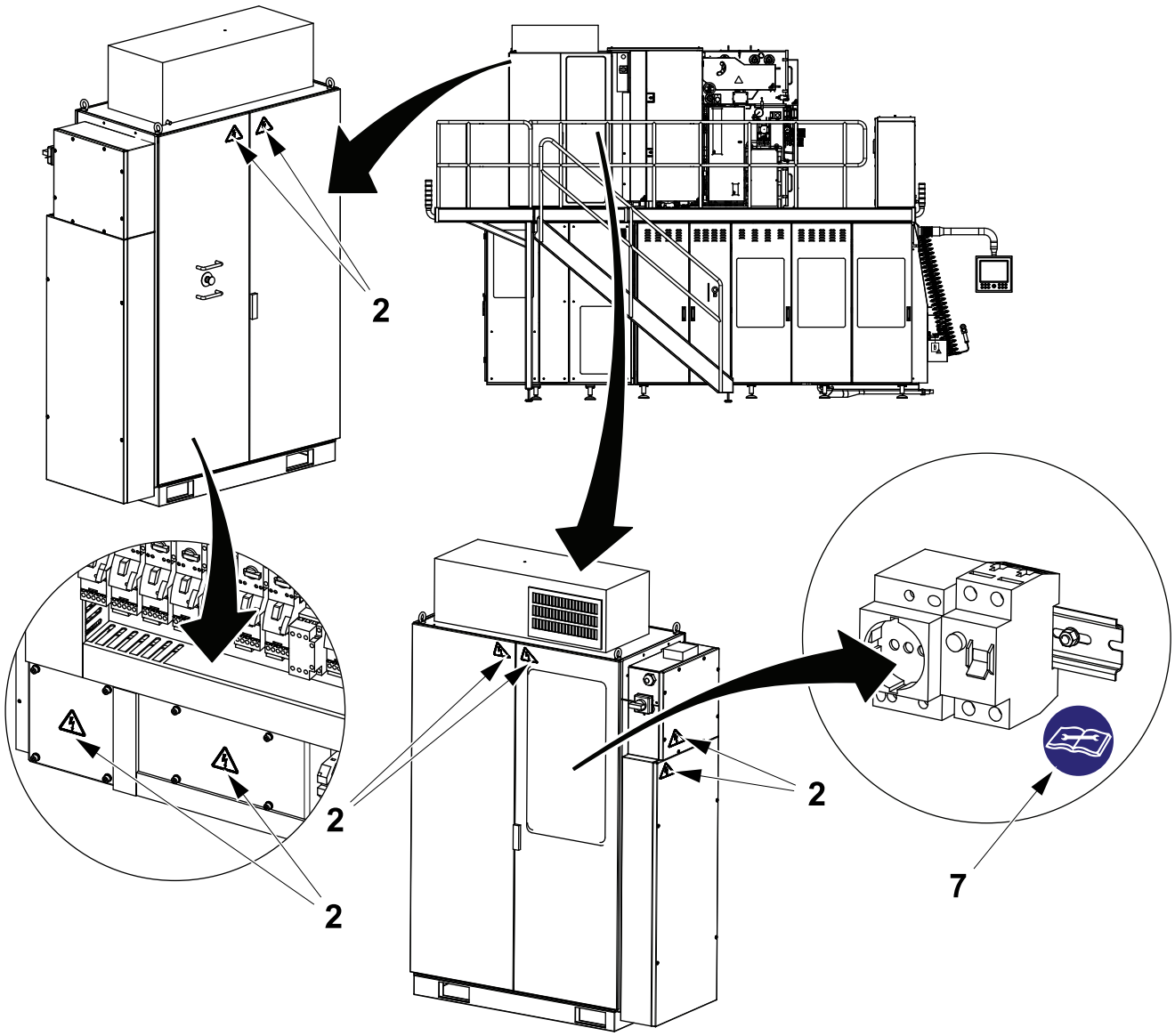

Location of Safety Signs - ICU (OE)

The illustration shows where the safety signs are located. The position numbers refer to the table in the Safety Signs section.

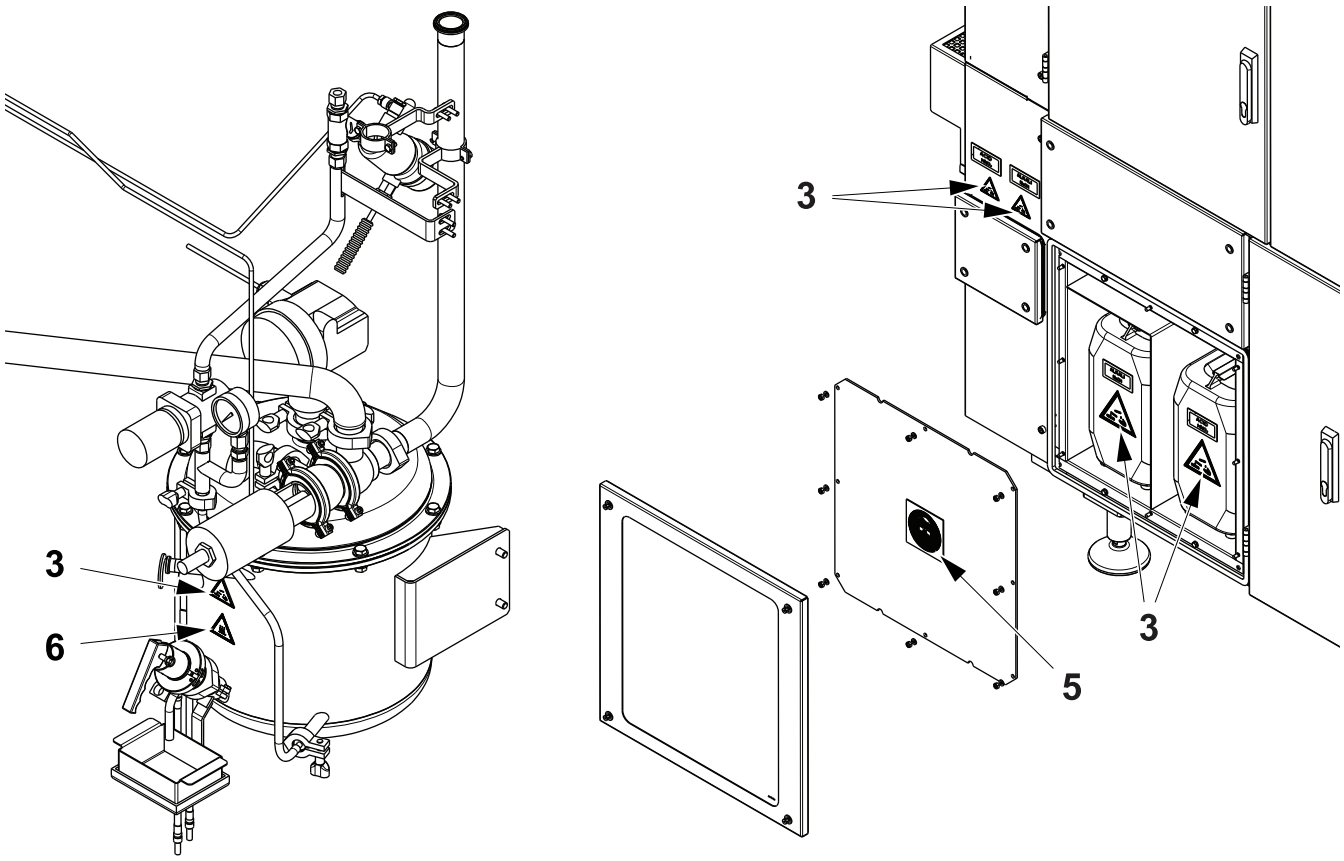

ASU iLine XT Version (OE)

The illustration shows where the safety signs are located. The position numbers refer to the table in the Safety Signs section.

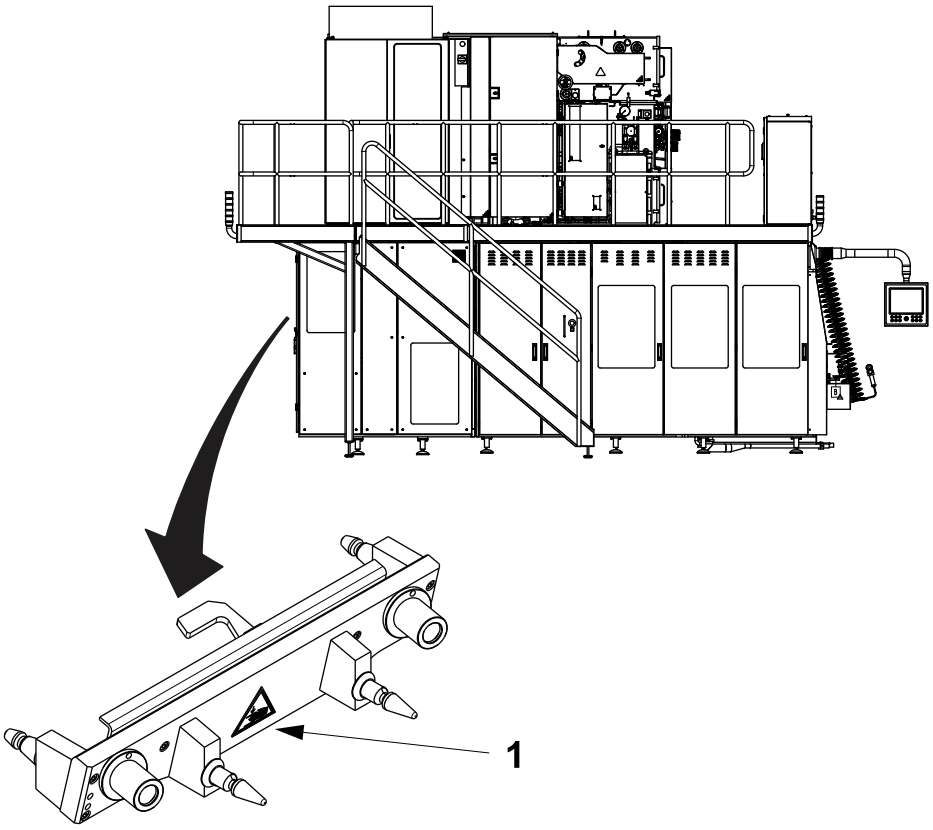

Protective Devices

There are different kinds of protective device designed to ensure safe use of the equipment. See the sections below.

WARNING

Hazardous zones.

Hazardous zones are safeguarded and provided with protective devices. Do not inch or run this equipment if any protective device is inoperative.

Change inoperative components of the safety system immediately.

For the locations of safeguards and/or other protective devices not mentioned in this section, see the Maintenance Manual.

Emergency Stop

DANGER

Hazardous voltage.

Will shock, burn, or cause death.

Hazardous voltage remains ON after activating an EMERGENCY STOP.

Emergency stop devices are used to stop this equipment immediately in a hazardous situation. Learn the positions of all emergency stop devices and how to use them.

Instructions for a normal production stop are included in the Stop chapter of the Operation Manual.

Emergency Stop Push-Buttons

Push one of the EMERGENCY STOP push-buttons to stop this equipment immediately.

The location of each EMERGENCY STOP push-button for the filling machine is shown by an arrow.

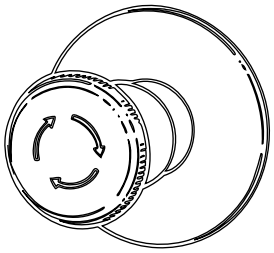

(behind door)

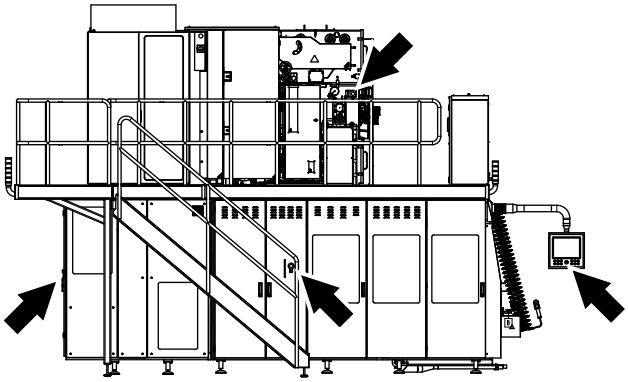

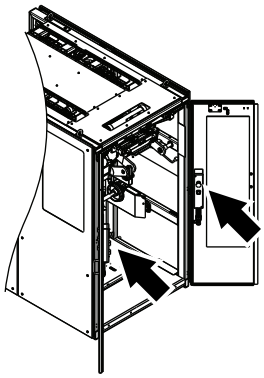

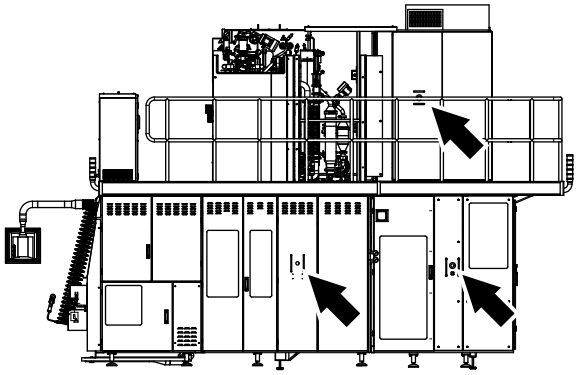

ASU iLine XT Version
(behind door)

Safeguards

WARNING

Moving machinery parts.

Never defeat or bypass the interlocking devices.

Movable guards, for example, doors and covers leading to hazardous zones, are fitted with interlocking devices where required. These devices are usually electric safety switches that are parts of the safety system and must never be defeated, bypassed, or otherwise made inoperative.

Where movable guards (doors) are equipped with means to be locked in a nonclosed position, any person with the intention to preside, for any reason, behind such a guard must lock the guard in the nonclosed position by use of a padlock.

(Cont'd)

(Cont'd)

Note! For work on the electrical equipment, the electrical power must also be disconnected.

CAUTION
Corners and edges.
Close the doors, guards, or parts of the equipment unless they must be open during work.

CAUTION
Burn hazard.
Parts of the equipment protected by guards may be hot after operation. Allow components to cool down or use personal protective equipment.

After installation and maintenance, and before this equipment is inched or run, check that all safeguards are in place and that they operate correctly.

CAUTION
Equipment damage.
The equipment can be damaged if it is not stopped in the correct way. Never stop this equipment by opening a movable guard, for example, a door or cover, equipped with an interlocking device.

(Cont'd)

(Cont'd)

The location of each interlocking device for filling machine is shown by an arrow.

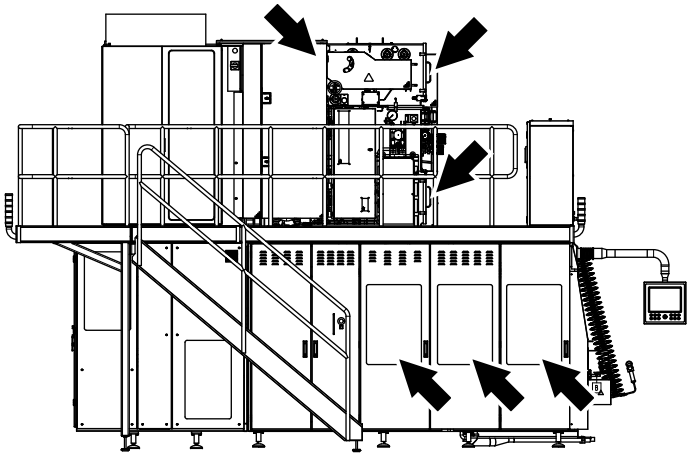

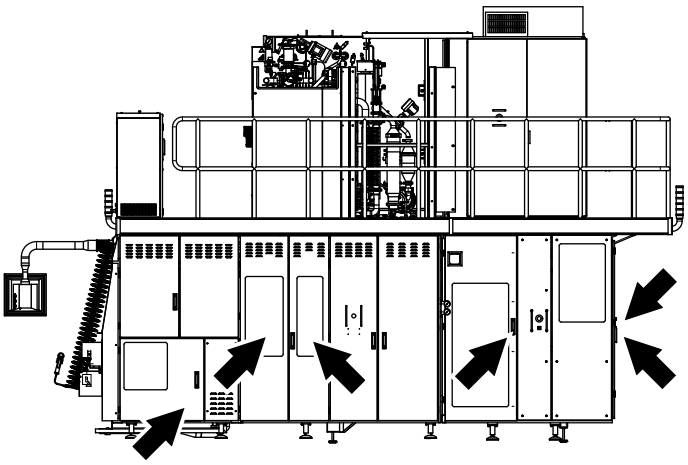

Safety Mat

Note! Valid only for ASU iLine XT Version (OE).

The safety mat is a safety device that disables the pneumatic system for the ASU automatic doors and the signal to the LGV (Laser Guide Vehicle) when activated.

The safety device is activated when a pressure is applied on the surface of the safety mat as for example a person standing on it.

The location of the safety mat is shown by the arrows.

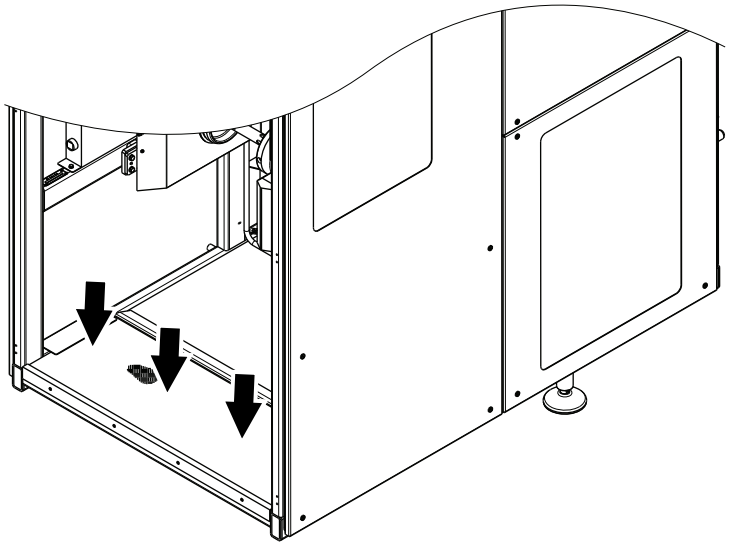

Indicating Tower

An indicating tower is a column of warning lights:

- A red light (1) indicates a hazardous condition. This is a situation that requires immediate action.
- A yellow light (2) indicates an abnormal or impending critical condition. This is a condition calling for action by the operator.
- A blue light (3) indicates that operator action is required.
- A green light (4) indicates a normal condition.

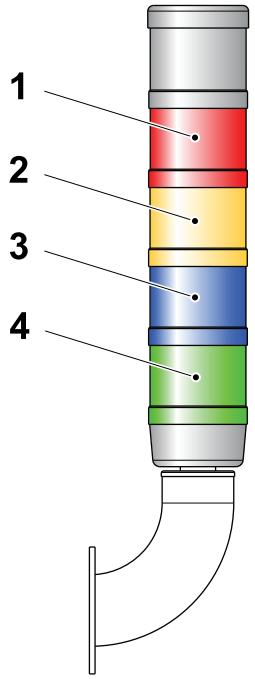

1 Red light
2 Yellow light
3 Blue light
4 Green light

Audible Alarm

The audible alarm (1) produces a warning signal every time this equipment is about to start. The warning signal sounds for approximately three seconds prior to starting to alert personnel.

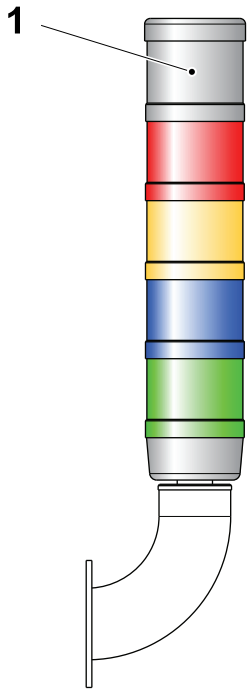

1 Audible alarm

Safe Manual Handling

Use mechanical lifting aids whenever possible. If mechanical lifting aids are not available, do not attempt to lift loads over 23 kg without the assistance of a colleague. Avoid lifting below knee height and above shoulder height. If it is necessary to lift from the floor, follow the instructions below to reduce the risk of back and disc injuries.

- Use safety shoes and be sure that the surface of the floor is not slippery.
- Get close to the load.
- Take a wide stance and find the best positions for your feet.
- Bend your hips and knees, and use your leg muscles.
- Keep the load close to your body.
- Do not twist your body while moving the load.
- Take small steps when turning.

In order to reduce the risk of injury to discs and back muscles, be careful to not bend or twist your back when lifting. Keep the load close to your body to reduce the strain on your back.

To reduce the ergonomic risks to each individual operator, job rotation is recommended, so that recovery and variety are provided.

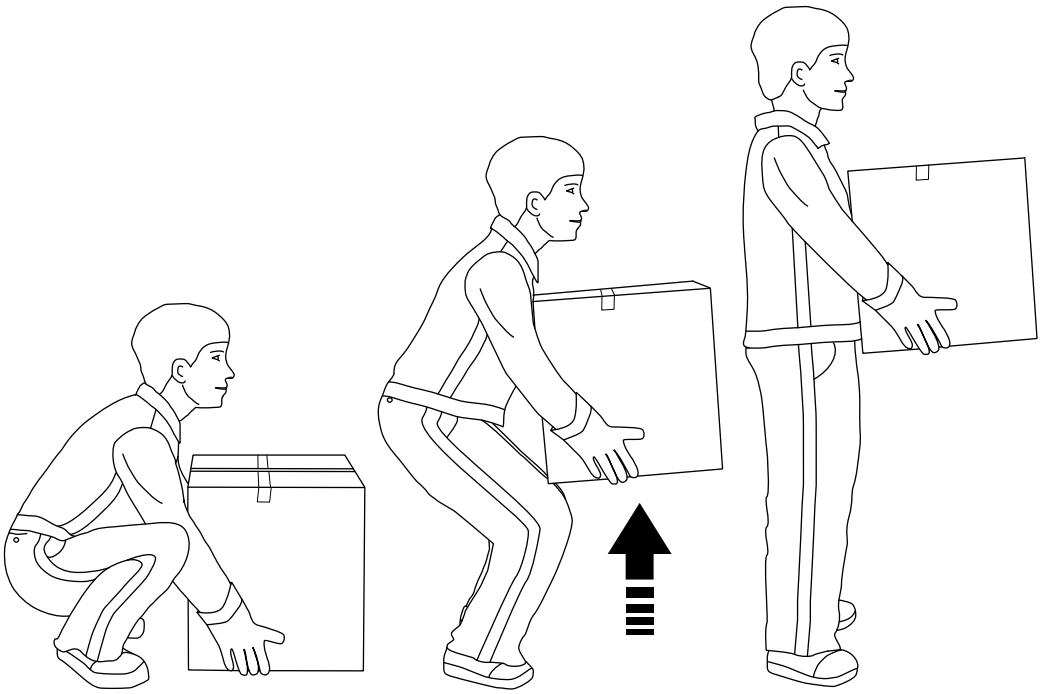

Personal Protection

This section applies to all personnel at all times when this equipment is in operation. For special personal protective equipment required when handling hazardous substances, see the Hazardous Substances section.

Noise

WARNING

Hazardous noise.
Can cause impaired hearing.
Wear hearing protection whenever this equipment is in operation.

CAUTION

Hazardous noise.
May cause impaired hearing.
Hearing protection is recommended whenever this equipment is in operation.

Entanglement

WARNING

Risk of entanglement.
Do not wear jewellery or loose clothing when working on or near this equipment.
Restrain long hair with, for example, clips or rubber bands.

Hazardous Substances

WARNING

Contact with chemicals can cause death, serious injury, or illness.
Always read and follow the instructions in the safety data sheet supplied by the manufacturer or local supplier, when handling chemicals.

Make sure that

- the safety data sheet is available
- preparations have been done to ensure that the stated safety measures in the safety data sheet can be followed
- the locations of the first aid equipment are learned in order to act immediately in case of an accident

Disposal of Chemical Substances

Always read and follow the disposal instructions in the safety data sheet supplied by the manufacturer or local supplier.

It is strongly recommended that used chemical containers are

- disposed of according to the instructions immediately after use
- not used as disposal containers for other chemicals in order to avoid uncontrolled chemical reactions within the container

Hydrogen Peroxide (H_2O_2)

WARNING

Corrosive chemical.
Wear personal protective equipment.

In both liquid and gas states, hydrogen peroxide may cause irritation or damage if it comes into contact with skin, mucous membranes, eyes, or clothes. Call for medical attention immediately if there is an accident.

Liquid hydrogen peroxide in concentrations of less than 1% is generally considered harmless to humans.

Consult the instructions on the label of the tank or container.

Emergency Procedures

If there is an accident involving hydrogen peroxide, rinse the affected area as soon as possible with large amounts of water.

Eyes

If splashes or vapour from hydrogen peroxide come in contact with the eyes

- wash the eyes thoroughly with lukewarm water for 15 minutes (keep eyelids wide apart)
- call for medical attention immediately

Skin

If hydrogen peroxide comes into contact with skin or clothes

- rinse immediately with plenty of water
- call for medical attention immediately if skin burns appear
- thoroughly wash the clothes before wearing them again

Inhalation

If irritation or pain is experienced due to having **inhaled** hydrogen peroxide vapour

- leave the affected area and get some fresh air
- call for medical attention if the symptoms get worse

Ingestion

If hydrogen peroxide is swallowed

- do not attempt to cause vomiting
- drink large amounts of lukewarm water to dilute the peroxide
- call for medical attention immediately

Personal Protective Equipment

The personal protective equipment for hydrogen peroxide is

- protective goggles (for instance, TP No. 90303-11), tight fitting
  If there is a risk of splashes, a visor is a suitable complement
- protective gloves made of neoprene (for instance, TP No. 90303-12), nitrile, or butyl rubber
- protective apron (for instance, TP No. 90303-13), or protective suit when handling larger amounts
- protective shoes or boots made of PVC, PE plastic, or rubber
- proper respiratory equipment, if ventilation is insufficient

Handling of Hydrogen Peroxide

WARNING

Sudden and violent chemical reaction.

Avoid any contamination of hydrogen peroxide.

Hydrogen peroxide can react very suddenly and violently in combination with many compounds, or if it is contaminated. Never pour surplus hydrogen peroxide back into the original container. There is a risk of a violent decomposition liberating oxygen and heat, with a big increase in volume due to the oxygen generated by the peroxide decomposition. This will cause a large overpressure if the contaminated hydrogen peroxide is in a closed container. If the integrity of the container fails, this could result in a dangerous hazard.

Ensure that equipment used for handling and diluting hydrogen peroxide is clean before it comes in contact with hydrogen peroxide. Pumps or other equipment used for handling hydrogen peroxide must be **used for this purpose only** and must be manufactured from appropriate materials, such as stainless steel 316 L, glass, polyethylene, or teflon. After use, make sure that all peroxide residue is rinsed away.

If hydrogen peroxide is spilled, dilute it with large amounts of water. Dispose of the diluted hydrogen peroxide according to local regulations.

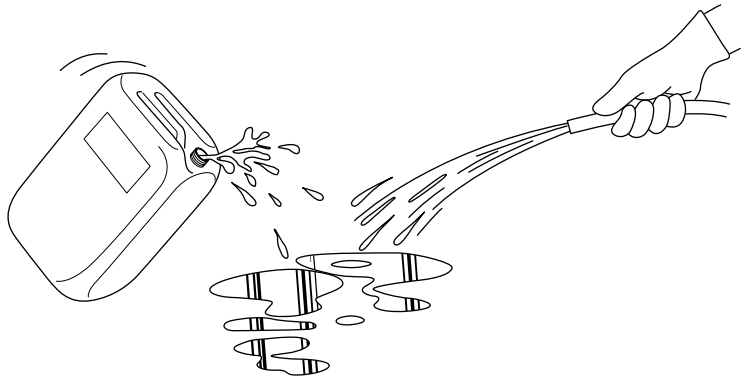

WARNING

Self-ignition.

Never wipe up hydrogen peroxide with materials such as rags or paper as these may self-ignite several hours after contact. If there is a fire, spray with large quantities of water.

Storage of Hydrogen Peroxide

WARNING

Containers may become overpressurised if they are not properly ventilated. If the integrity of a container fails, this could result in a dangerous hazard.
Keep the container upright and fitted with its proper ventilation cap. If there is a fire, cool all containers by spraying them with large quantities of water.

Hydrogen peroxide decomposes much faster with increasing temperature. There is a risk of a container becoming overpressurised at high temperatures, since the ventilation cap cannot release the gases produced quickly enough. If the integrity of the container fails, this could result in a dangerous hazard.

Hydrogen peroxide **must** be stored in the **original container** delivered by the supplier. Keep the container upright and fitted with its proper ventilation cap, which allows oxygen to escape. Otherwise there is a risk of overpressurisation of the container due to violent decomposition of the peroxide. If the integrity of the container fails, this could result in a dangerous hazard.

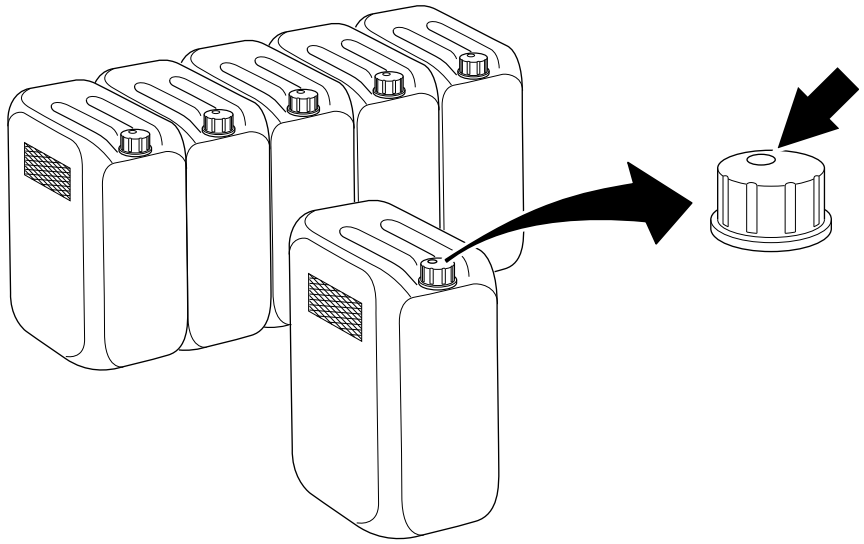

Make sure that the container is always properly closed.

Commercial food-grade hydrogen peroxide has been stabilized to inhibit the catalytic decomposition effects of metals and other impurities, but it can decompose into oxygen and water if it is exposed to heat or contaminated.

Make sure that the area used for storage of hydrogen peroxide is

- cool, clean, and well ventilated
- shielded from direct sunlight
- kept free from combustible materials

Disposal of Hydrogen Peroxide

Always read and follow the disposal instructions in the safety data sheet supplied by the manufacturer or local supplier.

Caustic Soda/Sodium Hydroxide (NaOH)

WARNING
Corrosive chemical.
Wear personal protective equipment.

Caustic soda/sodium hydroxide is highly corrosive in all forms and can cause serious burns on contact with skin and eyes.

Emergency Procedures

Inhalation

Remove victim immediately from source of exposure, provide rest, warmth and fresh air, get medical attention if any discomfort continues.

Ingestion

Do not induce vomiting, immediately rinse mouth and drink plenty of water (200 - 300 ml) and get medical attention immediately!

Skin Contact

Immediately remove contaminated clothing, rinse the skin with lots of water and get medical attention.

Eye Contact

May cause permanent damage if eye is not immediately irrigated. Make sure to remove any contact lenses from eyes before rinsing. Promptly wash eyes with plenty of water while lifting the eyelids, get immediately medical attention and continue to rinse.

Accidental Release, Spillage or Splashing

WARNING
Corrosive chemical.
Wear personal protective equipment.

In case of accidental release, spillage or splashing

- wash contaminated area with water. Alternatively, absorb in vermiculite, dry sand or earth, place into containers and wash the affected area
- in case of contact with eyes or skin wash with plenty of water
- remove any contaminated clothing immediately

Personal Protective Equipment

The personal protective equipment for caustic soda/sodium hydroxide is

- protective goggles (TP No. 90303-11)
- protective gloves made of neoprene (TP No. 90303-12)
- protective apron (TP No. 90303-13)
- protective shoes made of PVC, PE plastic, or rubber

Handling and Storage of Caustic Soda/Sodium Hydroxide

WARNING

Sudden and violent chemical reaction.

Avoid any contamination of caustic soda/sodium hydroxide. Never store or mix caustic soda together with hydrogen peroxide.

Ensure that

- containers are kept tightly closed
- containers are stored in a cool dry place away from direct sunlight or sources of heat
- designated storage and handling areas are adequately ventilated and that emergency shower and eye wash facilities are available nearby
- handle containers carefully during transport
- avoid spilling, skin and eye contact
- use dedicated equipment when sampling, pouring or decanting
- never store or mix caustic soda together with hydrogen peroxide

Disposal of Caustic Soda/Sodium Hydroxide

Dispose of waste and residues in accordance with local authority requirements. Used caustic soda should be sent to an approved facility for destruction. Never allow caustic soda to be disposed into the drain.

Estinguishing Media

CAUTION

Fire-Fighting Measures

Always apply the following measures.

The product is non-combustible, use fire extinguishing media appropriate for surrounding materials.

Specific Hazards

Corrosive liquid.

Protective Measures in Fire

Self-contained breathing apparatus and full-protective clothing must be worn in case of fire.

Note! Always refer to your supplier's Material Safety Data Sheet (MSDS) for caustic soda.

Nitric Acid (HNO_3)

WARNING
Corrosive chemical.
Wear personal protective equipment.

Nitric acid is extremely hazardous; it is corrosive, reactive, a strong oxidizer and a poison. Liquid and mist can cause serious burns on contact with skin and eyes; contact with other material may cause fire; liquid and mist cause severe burns to skin and eyes; inhalation may cause lung and tooth damage.

Emergency Procedures

Inhalation

Remove victim immediately from source of exposure, provide rest, warmth and fresh air. If not breathing, give artificial respiration; if breathing is difficult give oxigen. Get medical attention immediately.

Ingestion

Do not induce vomiting, immediately rinse mouth and drink plenty of water or milk if available. Never give anything by mouth to an unconscious person. Get medical attention immediately.

Skin Contact

Immediately remove contaminated clothing, rinse the skin with lots of water and get medical attention.

Eye Contact

May cause permanent damage if eye is not immediately irrigated. Make sure to remove any contact lenses from eyes before rinsing. Promptly wash eyes with plenty of water while lifting the eyelids, get immediately medical attention and continue to rinse. Get medical attention if any discomfort continues.

Accidental Release, Spillage or Splashing

WARNING
Corrosive chemical.
Wear personal protective equipment.

In case of accidental release, spillage or splashing

- ventilate area of leak or spill, isolate hazard area, keep unnecessary and unprotected personnel from entering, contain and recover liquid when possible, neutralise with alkaline material (soda ash, lime) then absorb with an inert material (e.g. ,vermiculite, dry sand or earth), place in a chemical waste container; do not use combustible materials, such as saw dust, rags, paper, wood
- in case of contact with eyes or skin wash with plenty of water
- remove any contaminated clothing immediately; see the Fire-fighting (fire) measures section on page ii-39

Personal Protective Equipment

The personal protective equipment for nitric acid is

- protective goggles (TP No. 90303-11)
- protective gloves made of neoprene (TP No. 90303-12)
- protective apron (TP No. 90303-13)
- protective shoes made of PVC, PE plastic, or rubber

Handling and Storage of Nitric Acid

WARNING
Sudden and violent chemical reaction.
Avoid any contamination of nitric acid.

Ensure that

- containers are kept tightly closed
- containers are stored in a cool dry place away from direct sunlight or sources of heat, water and incompatible materials and that emergency shower and eye wash facilities are available nearby
- designated storage and handling areas are adequately ventilated and have acid-resistant floors
- handle containers carefully during transport
- avoid spilling, skin and eye contact
- use dedicated equipment when sampling, pouring or decanting
- do not wash out container and use it for other purposes. Containers of this material may be hazardous when empty since they retain product residues (vapours, liquid)

Disposal of Nitric Acid

Dispose of waste and residue in accordance with local authority requirements. Used nitric acid should be sent to an approved facility for destruction. Never allow nitric acid to be disposed into the drain.

Fire

The product is non-combustible, but it is a strong oxidiser and its heat of reaction with reducing agents or combustibles may cause ignition. Can react with metals to release flammable hydrogen gas.

Explosion

Reacts explosively with combustible organic or readily oxidizable materials such as alcohols, turpentine, charcoal, organic refuse, metal powder, hydrogen sulphide, etc. Reacts with most metals to release hydrogen gas which can form explosive mixtures with air.

Estinguishing Media

CAUTION
Fire-Fighting Measures
Always apply the following measures.

The product is non-combustible, use fire extinguishing media appropriate for surrounding materials.

Special Information

Increases the flammability of combustible, organic and readily oxidizable materials.

Protective Measures In Fire

Self-contained breathing apparatus and full-protective clothing must be worn in case of fire.

Note! Always refer to your supplier's Material Safety Data Sheet (MSDS) for nitric acid.

Supply Systems

Electrical Supply

DANGER

Hazardous voltage and moving machinery.
The electrical supply disconnecting device must be in position O (OFF) and secured with a lock before any work with the equipment that requires the electrical supply to be disconnected. See the Machine Status section of the MM Procedure Start Table.

Note! The key to the lock must be removed by the technician and retained in his/her possession until all work is completed.

DANGER

Hazardous voltage can be present with the electrical supply disconnecting device in position O (OFF).
Circuits identified by orange-coloured conductors are not disconnected by the main electrical supply disconnecting device. The location of the electrical supply disconnecting device of these circuits is described in the Maintenance Manual procedures that include work on these types of circuit.

Certain procedures may require that the electrical supply disconnecting device is in position I (ON). These exceptions are clearly stated in the manuals.

The illustrations show the electrical supply disconnecting device and its location.

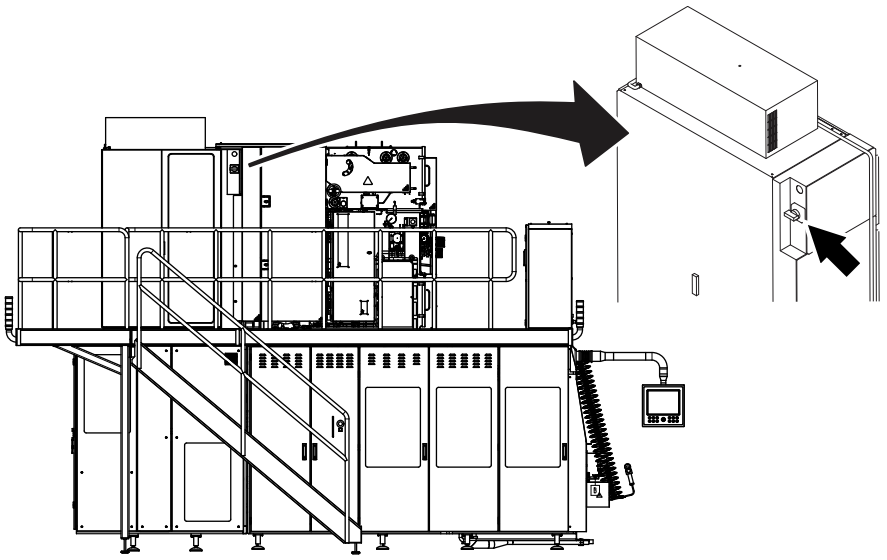

Residual Voltage

DANGER

Hazardous voltage.
Will shock, burn, or cause death.
After the electrical supply disconnecting device is turned to position O (OFF), residual voltage remains in the capacitor circuits. Wait five minutes before opening the enclosure containing these circuits. Ensure that no residual voltage remains on the capacitors before touching them.

Electrical Cabinet

DANGER

Hazardous voltage
Will shock, burn, or cause death.
Parts behind doors to electrical enclosures may be live. The electrical supply disconnecting device must be turned to position O (OFF) and secured with a lock before maintenance inside the electrical cabinet.

Note! The key to the lock must be removed by the technician and retained in his/her possession until all work is completed.

Make sure that the electrical cabinet doors are closed after working inside the electrical cabinet. Doors with locks must be locked.

The location of each electrical cabinet for filling machine is shown by an arrow.

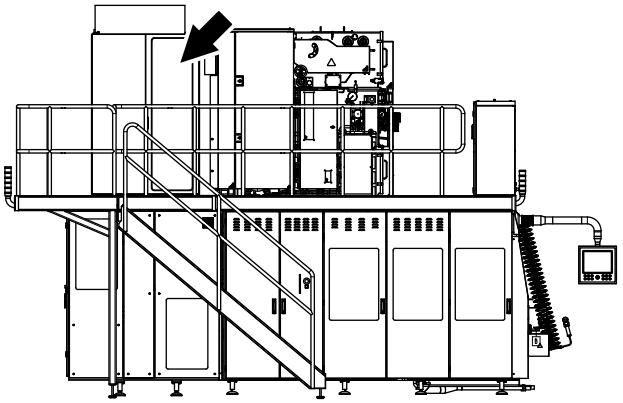

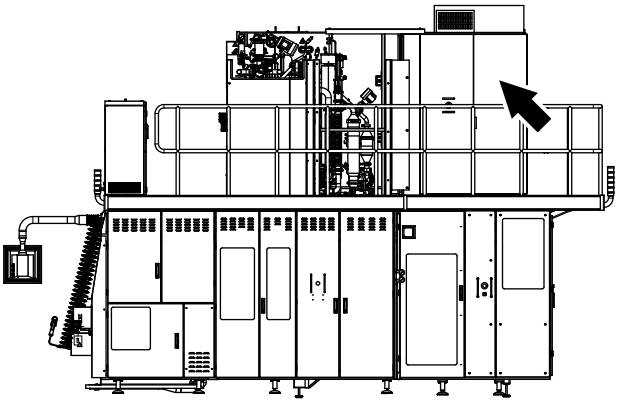

Socket Outlet

WARNING

Hazardous voltage.
Can shock, burn, or cause death.
Read the Maintenance Manual before using this socket outlet.

The socket outlet (1) is connected to a residual current device (2) to protect users against electrical shock if there is an earth fault in the connected equipment. The residual current device must be tested each time before the socket outlet is being used. See the MM for test procedure.

The illustrations show the socket outlet, the residual current device, and their locations.

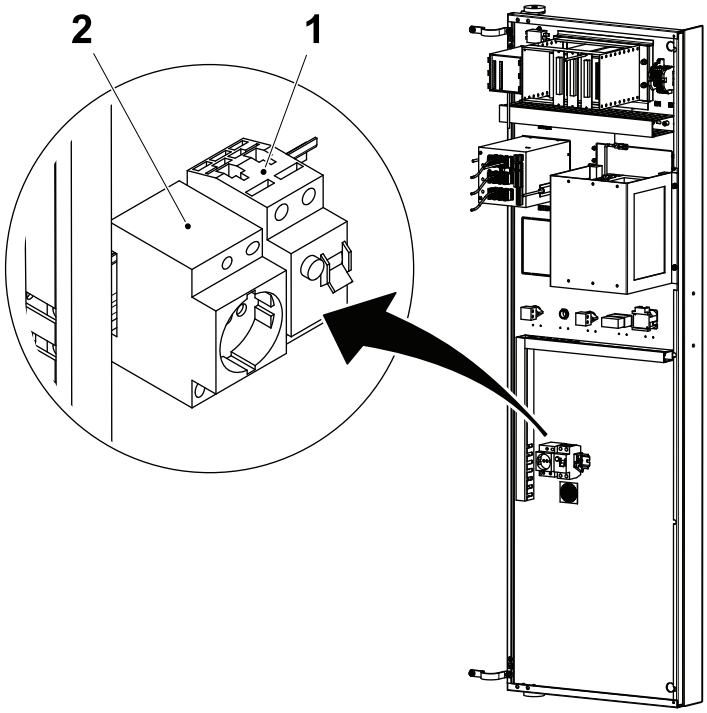

1 Socket outlet
2 Residual current device

Air Supply

WARNING

Compressed air and moving machinery.
Close the main air valve and lock it, and safely release compressed air from the air system before any work with the equipment that requires the air supply to be closed. See the Machine Status section of the Procedure Start Table.

Note! The key to the lock must be removed by the technician and retained in his/her possession until all work is completed.

Certain maintenance procedures may require the air supply systems to be on. These exceptions are clearly stated in the manuals.

The illustrations show the main air valve (1) and its location.

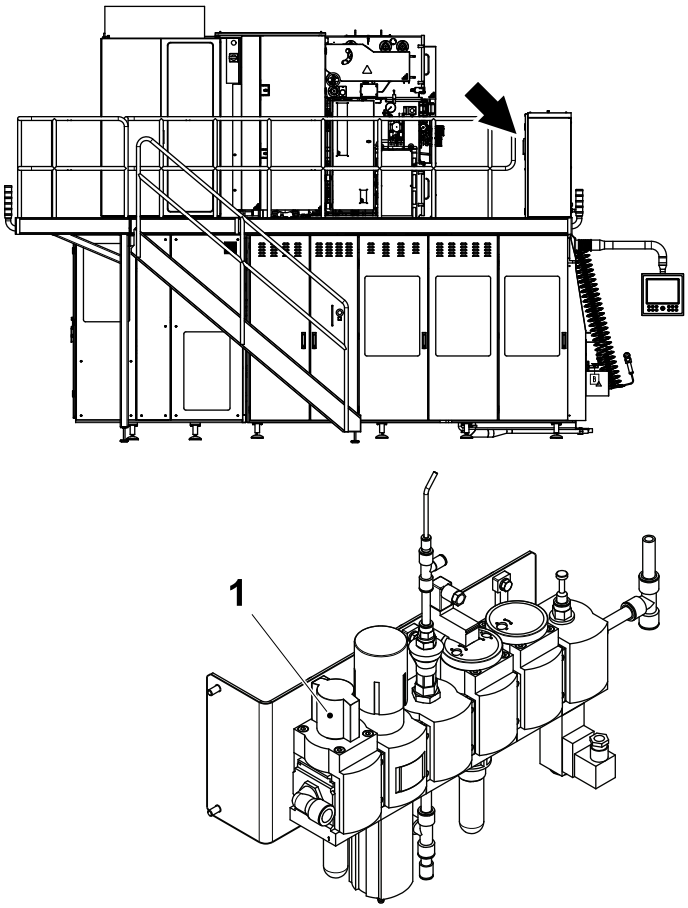

1 Main air valve

Steam Supply

WARNING

Hot steam can cause scalds.

Pressurised steam can be discharged unexpectedly.

Close the steam supply valve and lock it, and safely vent all steam pressure from the steam system before any work on parts with steam, such as pipes and valves, that requires the steam supply to be closed. See the Machine Status section of the Procedure Start Table.

Note! The key to the lock must be removed by the technician and retained in his/her possession until all work is completed.

Certain procedures may require the steam supply systems to be on. These exceptions are clearly stated in the manuals.

The illustrations show the steam supply valve (1), and its location.

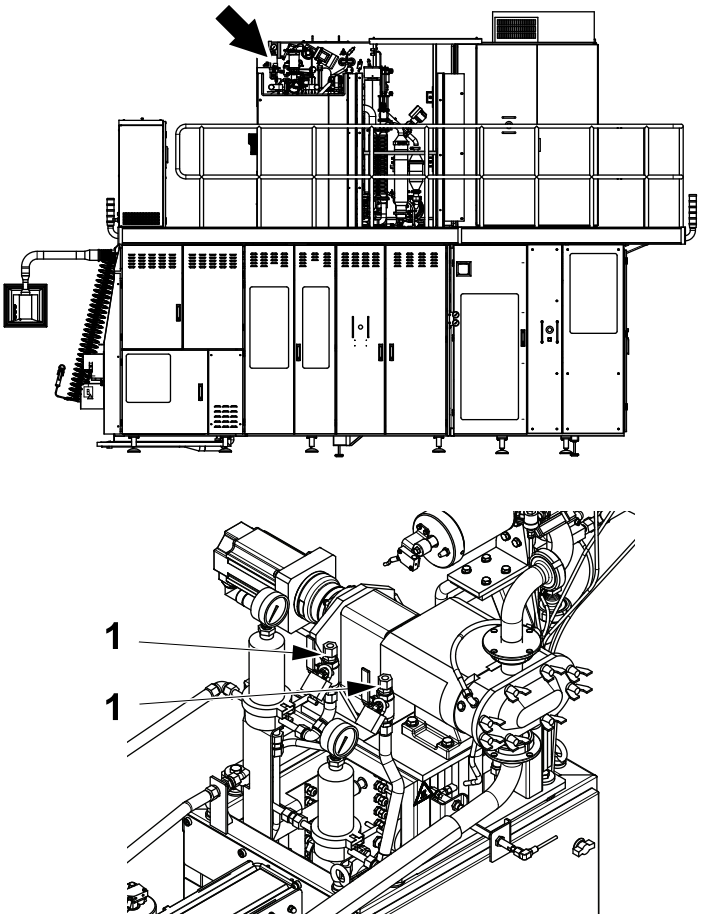

Machine equipped with HVA

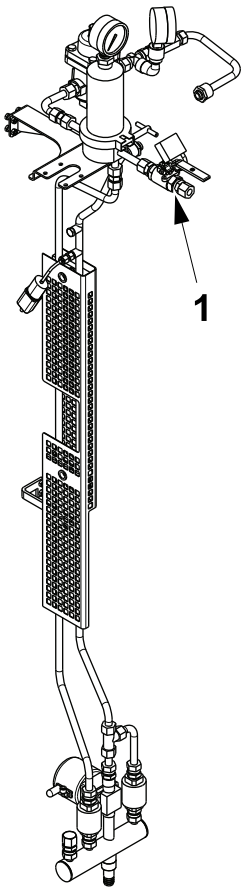

Machine not equipped with HVA

Water Supply

CAUTION

Water under pressure.

Close the water supply valves before any work with the equipment that requires the water supply to be closed. See the Machine Status section of the Procedure Start Table.

Certain maintenance procedures may require the water supply systems to be on. These exceptions are clearly stated in the manuals.

The illustration shows the water supply valve (1) and the water supply valve (2), and their location.

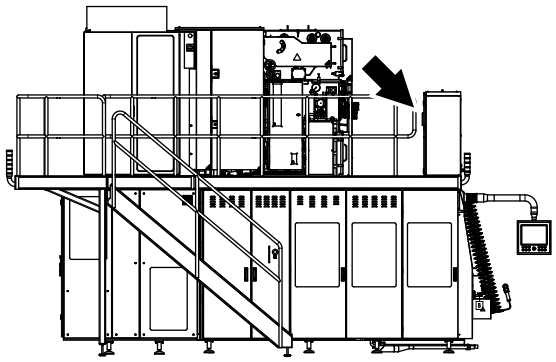

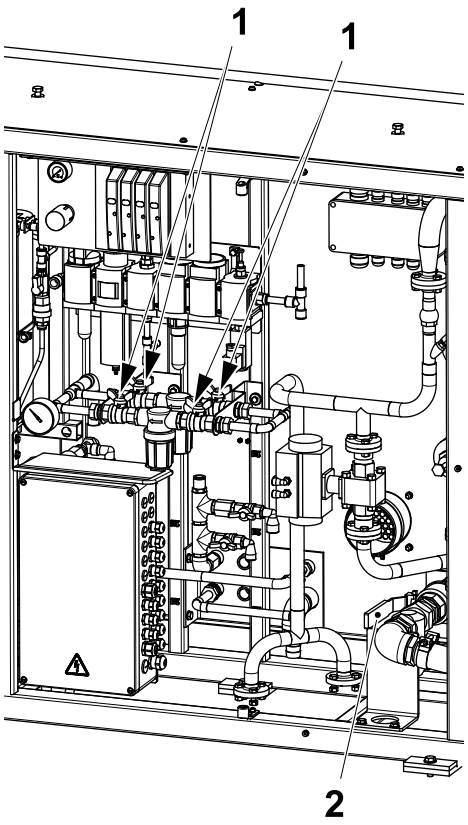

1 Valve, circulating cooling water
2 Valve, hot water external cleaning

This page intentionally left blank

1 Superstructure

Superstructure - Description

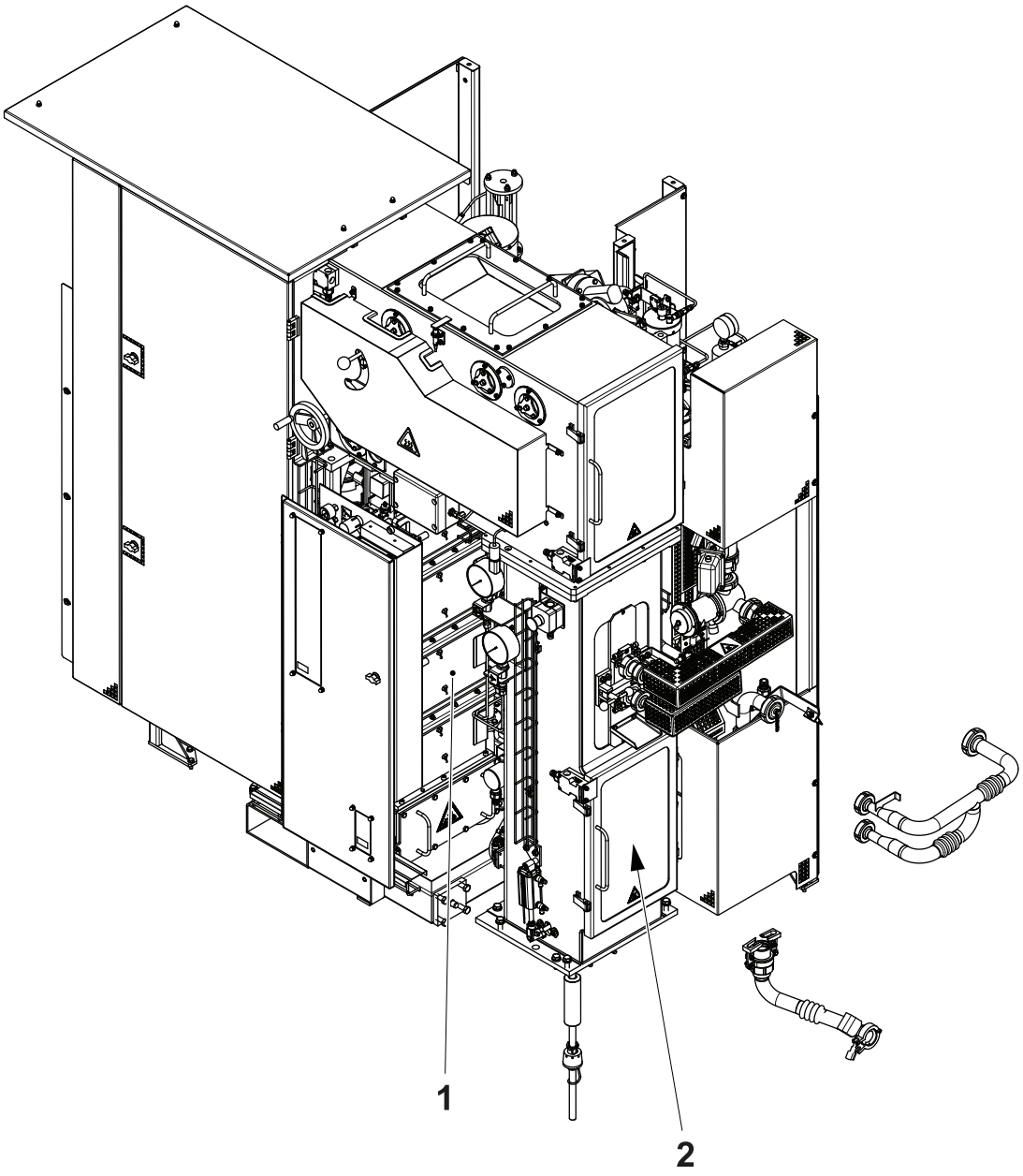

1 Base Unit
2 Forming Unit

Superstructure - Description 1-2
1-1 Superstructure - Setting Sequence, Type I 1-11
1-2 Superstructure - Setting Sequence, Type II 1-12
1-3 Superstructure - Settings, Type III 1-13

1.1 Base Unit 1-14

1.1.1 Drying Chamber 1-14

1.1.1-1 Drying Chamber - Check Rollers 1-14
1.1.1-2 Drying Chamber - Leakage Detection 1-16
1.1.1-3 Drying Chamber - Check Overpressure 1-24
1.1.1-4 Drying Chamber - Set Overpressure 1-26
1.1.1-5 Drying Chamber - Check Seal and Gasket Housing 1-28
1.1.1-6 Drying Chamber - Change Seal and Gasket Housing 1-29
1.1.1-7 Drying Chamber - Set Inductive Switch 1-30

1.1.1.1 Calender Roller 1-31

1.1.1.1-1 Calender Roller - Check 1-31
1.1.1.1-2 Calender Roller - Change 1-33
1.1.1.1-3 Calender Roller - Set Distance 1-36
1.1.1.1-4 Calender Roller - Set Proximity Switch 1-38

1.1.1.2 Squee-gee Roller 1-39

1.1.1.2-1 Squee-gee Roller - Change 1-39

1.1.1.3 Bending Roller 1-40

1.1.1.3-1 Bending Roller - Overhaul 1-40
1.1.1.3-2 Bending Roller - Set Width 1-44

1.1.1.4 Pendulum Roller 1-48

1.1.1.4-1 Pendulum Roller - Check 1-48
1.1.1.4-2 Pendulum Roller - Change Bushings 1-50
1.1.1.4-3 Pendulum Roller - Set U/P Transducer 1-53
1.1.1.4-4 Pendulum Roller - Set Cylinder 1-56
1.1.1.4-5 Pendulum Roller - Set Lever Position 1-57
1.1.1.4-6 Pendulum Roller - Referencing 1-58
1.1.1.4-7 Pendulum Roller - Check Parallelism 1-59

1.1.1.5 Bending Roller 1-62
1.1.1.5-1 Bending Roller - Change 1-62
1.1.1.6 Air Knife 1-65
1.1.1.6-1 Air Knife - Check and Clean 1-65
1.1.1.6-2 Air Knife - Set Proximity Sensor 1-67
1.1.1.7 Pressure Roller 1-69
1.1.1.7-1 Pressure Roller - Check 1-69
1.1.1.7-2 Pressure Roller - Change 1-71
1.1.1.7-3 Pressure Roller - Set 1-73
1.1.1.8 Drive Roller 1-74
1.1.1.8-1 Drive Roller - Check 1-74
1.1.1.8-2 Drive Roller - Overhaul 1-75
1.1.1.8-3 Drive Roller - Set Width 1-78
1.1.1.9 Crank 1-82
1.1.1.9-1 Crank - Check Chain 1-82
1.1.1.10 Valve 1-84
1.1.1.10-1 Valve - Check 1-84
1.1.1.11 Bending Roller 1-85
1.1.1.11-1 Bending Roller - Overhaul 1-85
1.1.1.11-2 Bending Roller - Set Width 1-90
1.1.2 Sterile Air System 1-94
1.1.2-1 Sterile Air System - Check for Leaks 1-94
1.1.2.1 Pipe Work Air 1-97
1.1.2.1-1 Pipe Work Air - Clean Balls 1-97
1.1.2.1-2 Pipe Work Air - Check Change Over Valve 1-99
1.1.2.1-3 Pipe Work Air - Overhaul Change Over Valve 1-100
1.1.2.1-4 Pipe Work Air - Set Change Over Valve Sensors 1-103
1.1.2.2 Compressor Unit 1-104
1.1.2.2-1 Compressor Unit - Check Pressure 1-104
1.1.2.2-2 Compressor Unit - Change Gaskets 1-106
1.1.2.2-3 Compressor Unit - Clean Impeller 1-107
1.1.2.3 Heat Exchanger Valve 1-110
1.1.2.3-1 Heat Exchanger Valve - Overhaul 1-110

1.1.2.3-2 Heat Exchanger Valve - Set 1-115
1.1.2.3-3 Heat Exchanger Valve - Change Linear Actuator 1-118
1.1.2.4 Spray Nozzle 1-120
1.1.2.4-1 Spray Nozzle - Check. 1-120
1.1.2.4-2 Spray Nozzle - Clean 1-124
1.1.2.5 Air Valve. 1-127
1.1.2.5-1 Air Valve - Set. 1-127
1.1.2.5-2 Air Valve - Overhaul 1-130
1.1.2.5-3 Air Valve - Set Proximity Switch. 1-133
1.1.2.6 Scrubber 1-134
1.1.2.6-1 Scrubber - Clean Filters. 1-134
1.1.2.6-2 Scrubber - Check Flow Meter. 1-137
1.1.2.6-3 Scrubber - Set Pressure Regulator. 1-138
1.1.2.7 Separator. 1-139
1.1.2.7-1 Separator - Clean Filter and Floater 1-139
1.1.2.7-2 Separator - Change Valve and Valve Seat. 1-142
1.1.2.7-3 Separator - Set Float Unit 1-144
1.1.2.7-4 Separator - Check Pressure Gauge 1-145
1.1.2.8 Air Super Heater 1-146
1.1.2.8-1 Air Super Heater - Check 1-146
1.1.2.8-2 Air Super Heater - Check Heat Exchanger 1-147
1.1.3 Filling System 1-152
1.1.3-1 Filling System - Description 1-152
1.1.3-2 Filling System - Set Regulating Valve U/P Transducer 1-154
1.1.3-3 Filling System - Fit Pipes. 1-155
1.1.3.1 Product Valve. 1-168
1.1.3.1-1 Product Valve - Remove Cylinders 1-169
1.1.3.1-2 Product Valve - Change Seals and Membranes 1-172
1.1.3.1-3 Product Valve - Change O-Rings 1-178
1.1.3.1-4 Product Valve - Set Proximity Switches. 1-185
1.1.3.1-5 Product Valve - Change Flow Meter Gaskets 1-186

1.1.3.2 Steam System 1-188
1.1.3.2-1 Steam System - Clean Steam Trap 1-188
1.1.3.2-2 Steam System - Clean Filter 1-190
1.1.3.2-3 Steam System - Check Membrane 1-193
1.1.3.2-4 Steam System - Change Pressure Regulator 1-194
1.1.3.2-5 Steam System - Set Pressure Regulator 1-196
1.1.3.3 Product Line 1-197
1.1.3.3-1 Product Line - Overhaul Regulating Valve 1-197
1.1.3.3-2 Product Line - Set Regulating Valve Proximity Switch 1-209
1.1.3.3-3 Product Lines - Check Leakages 1-210
1.1.3.3-4 Product Lines - Check Tester 1-218
1.1.4 Hydrogen Peroxide 1-220
1.1.4-1 Hydrogen Peroxide - Check Leaks 1-220
1.1.4.1 Bath 1-222
1.1.4.1-1 Bath - Check Roller 1-222
1.1.4.1-2 Bath - Change Roller Bushings 1-224
1.1.4.1-3 Bath - Change Heating Elements 1-226
1.1.4.1-4 Bath - Set Micro Switches 1-228
1.1.4.2 Spray System 1-229
1.1.4.2-1 Spray System - Check 1-229
1.1.4.2-2 Spray System - Clean Peroxide Filter 1-230
1.1.4.2-3 Spray System - Set Pressure 1-231
1.1.4.2-4 Spray System - Clean Filter 1-232
1.1.5 Frame Section, Upper 1-233
1.1.5.1 Bending Roller 1-233
1.1.5.1-1 Bending Roller - Overhaul 1-233
1.1.5.1-2 Bending Roller - Check Splice Detector 1-235
1.1.5.1-3 Bending Roller - Set Splice Detector 1-236
1.1.5.1-4 Bending Roller - Set Paper Guide Position 1-237
1.1.5.1-5 Bending Roller - Check Paper Guide 1-239
1.1.5.1-6 Bending Roller - Set Web Width 1-245
1.1.5.1-7 Bending Roller - Set Paper Guide Pressure 1-247

1.1.5.1-8 Bending Roller - Check Proximity Switch 1-248
1.1.5.1-9 Bending Roller - Set Proximity Switch 1-249
1.1.5.1-10 Bending Roller - Set Brake Unit..... 1-250

1.1.6 Pneumatic System 1-251

1.1.6-1 Pneumatic System - Check..... 1-251
1.1.6-2 Pneumatic System - Change filter..... 1-252

1.1.7 Cleaning System 1-253

1.1.7-1 Cleaning System - Check 1-253
1.1.7-2 Cleaning System - Check Conductivity Sensor 1-254

1.1.8 Pressure Switch..... 1-255

1.1.8-1 Pressure Switch - Check Pressure Sensor 1-255

1.1.9 Hot Air Element LS..... 1-258

1.1.9-1 Hot Air Element LS - Check 1-258
1.1.9-2 Hot Air Element LS - Set Proximity Switch 1-259

1.1.10 Hot Air Element LS SS..... 1-260

1.1.10-1 Hot Air Element LS SS - Check..... 1-260

1.1.11 Cap Guide (OE)..... 1-261

1.1.11-1 Cap Guide - Set Position..... 1-261

1.1.12 Sterile Air Pipe (OE)..... 1-262

1.1.12-1 Sterile Air Pipe - Set Nozzle Position..... 1-262
1.1.12-2 Sterile Air Pipe - Change Nozzle..... 1-263

1.1.13 ICU (OE)..... 1-266

1.1.13-1 ICU (OE) - Check Leakages..... 1-266
1.1.13-2 ICU (OE) - Check Pump 1-267
1.1.13-3 ICU (OE) - Change Pump Seals 1-269
1.1.13-4 ICU (OE) - Set Pump Shaft..... 1-277
1.1.13-5 ICU (OE) - Sample Cleaning Liquid 1-280

1.1.13.1 Pipe Work 1-281

1.1.13.1-1 Pipe Work - Check 1-281

1.2 Forming Unit..... 1-283

1.2.1 Forming Section..... 1-283

1.2.1-1 Forming Section - Check Forming Rings 1-283
1.2.1-2 Forming Section - Change Forming Ring Bushings 1-286
1.2.1-3 Forming Section - Forming Ring Positioning 1-287
1.2.1.1 Seal Ring 1-289
1.2.1.1-1 Seal Ring - Check 1-289
1.2.1.1-2 Seal Ring - Change 1-290
1.2.1.1-3 Seal Ring - Set 1-292
1.2.1.1-4 Seal Ring - Set Clearance 1-293
1.2.1.2 Lower Forming Ring 1-294
1.2.1.2-1 Lower Forming Ring - Set Clearance 1-294
1.2.1.2-2 Lower Forming Ring - Set Position 1-295
1.2.1.2-3 Lower Forming Ring - Set Overlap 1-299
1.2.1.2-4 Lower Forming Ring - Set Cylinder 1-302
1.2.1.2-5 Lower Forming Ring - Check 1-303
1.2.1.2-6 Lower Forming Ring - Set Finger 1-304
1.2.1.3 Upper Forming Ring 1-306
1.2.1.3-1 Upper Forming Ring - Set Clearance 1-306
1.2.1.3-2 Upper Forming Ring - Set Finger 1-307
1.2.1.4 Lower Support Roller 1-308
1.2.1.4-1 Lower Support Roller - Set Clearance 1-308
1.2.1.5 Edge Roller 1-309
1.2.1.5-1 Edge Roller - Set 1-309
1.2.1.6 Air Nozzle (LS) 1-311
1.2.1.6-1 Air Nozzle (LS) - Set 1-311
1.2.1.6-2 Air Nozzle (LS) - Check Pressures 1-317
1.2.1.7 Air Nozzle (LS SS) 1-318
1.2.1.7-1 Air Nozzle (LS SS) - Check Packages 1-318
1.2.1.7-2 Air Nozzle (LS SS) - Set 1-319
1.2.1.8 Reverse Bending Roller 1-322
1.2.1.8-1 Reverse Bending Roller - Overhaul 1-322
1.2.1.9 Guide Roller 1-322
1.2.1.9-1 Guide Roller - Change Bushings 1-323
1.2.2 Cleaning Cup 1-325

1.2.2-1 Cleaning Cup - Check Gaskets 1-325
1.2.2-2 Cleaning Cup - Set Sensor 1-326
1.2.3 Filling Pipe 1-327
1.2.3-1 Filling Pipe - Check 1-327
1.2.3-2 Filling Pipe - Remove 1-328
1.2.3-3 Filling Pipe - Fit 1-332
1.2.3-4 Filling Pipe - Set Position. 1-337
1.2.3-5 Filling Pipe - Set Pressure Roller. 1-345
1.2.3-6 Filling Pipe - Set Level Detector Position 1-347
1.2.3-7 Filling Pipe - Check Level Detector Function 1-352
1.2.3-8 Filling Pipe - Check Lower Filling Pipe. 1-353
1.2.3-9 Filling Pipe - Change Locking Pin 1-355

This page intentionally left blank

1-1 Superstructure - Setting Sequence, Type I

Type I settings must be performed in sequence and according to the flowchart below. These settings are performed before the first start-up or commissioning of the filling machine.

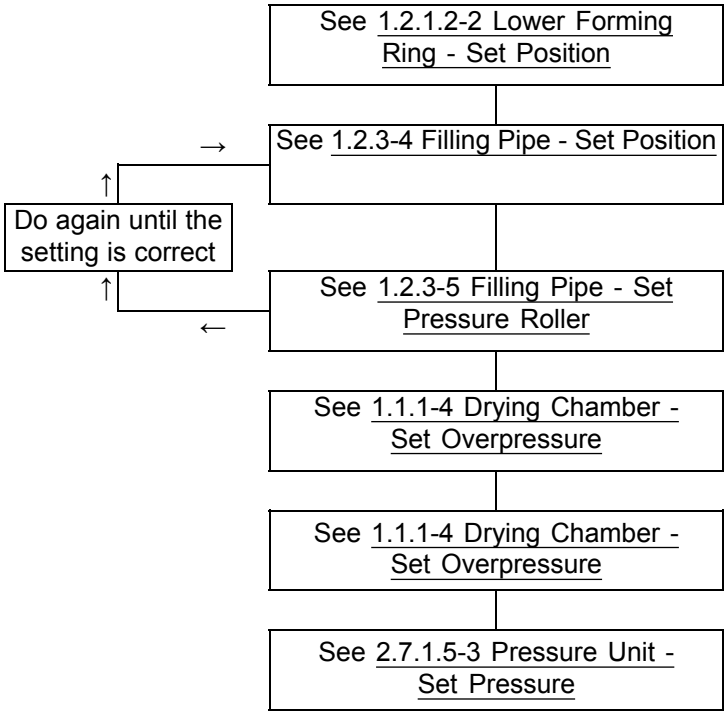

1-2 Superstructure - Setting Sequence, Type II

Type II settings must be performed in sequence and according to the flowchart below. These settings are specifically related to the setting and correction of the packaging material tracking and to the fine tuning of the longitudinal sealing.

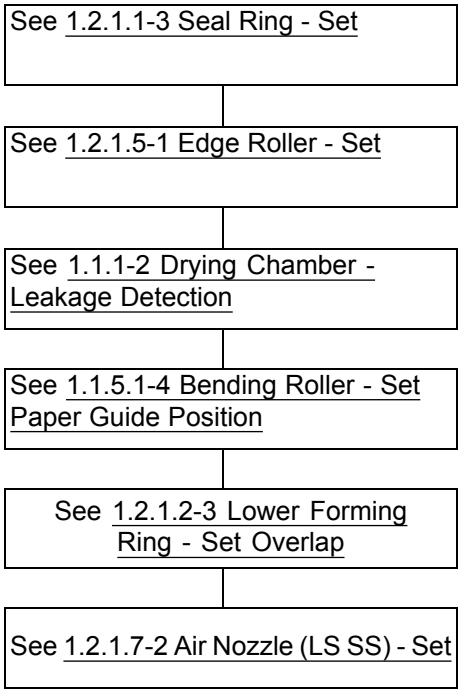

1-3 Superstructure - Settings, Type III

Type III settings include all of the remaining superstructure setting procedures. These settings can be performed independently and have no affect on any of the other superstructure settings.

1.1 Base Unit

1.1.1 Drying Chamber

1.1.1-1 Drying Chamber - Check Rollers

Machine Status	Electrical supply disconnecting device in position O (OFF) Main air valve OFF Main steam valve ON Main water valve OFF
SPC Reference	2808310-0400

WARNING
Hydrogen Peroxide.
Follow the Safety Precautions.

Check the following rollers for wear or damage:

- the bending roller (1). Change if necessary, see 1.1.1.3-1 Bending Roller - Overhaul
- the calender roller (2). Change if necessary, see 1.1.1.1-2 Calender Roller - Change
- the squee-gee roller (3). Change if necessary, see 1.1.1.2-1 Squee-gee Roller - Change

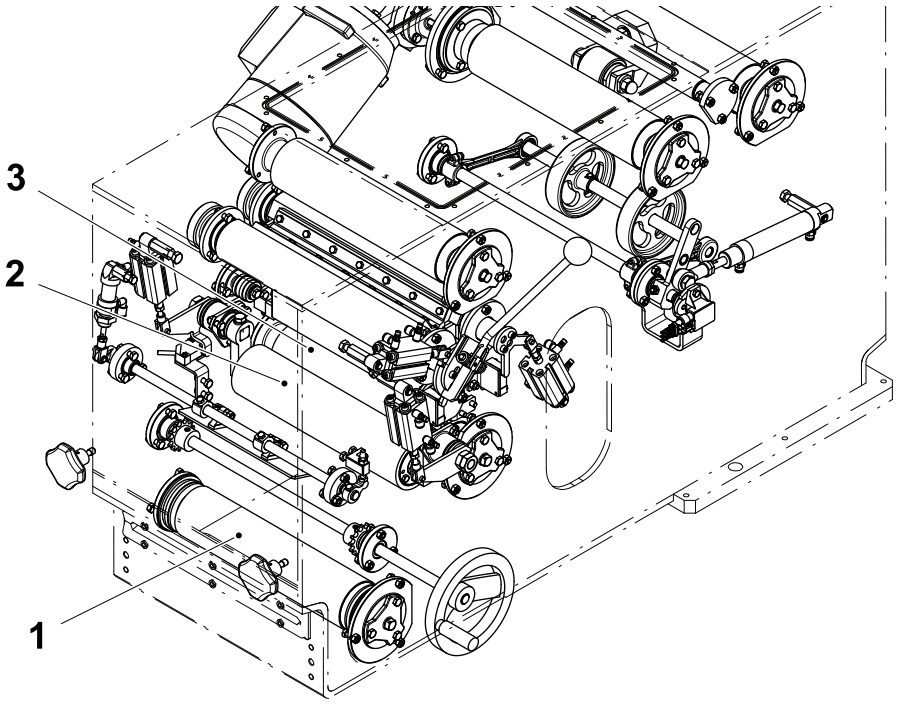

1 Bending roller
2 Calender roller
3 Squee-gee roller

(Cont'd)

(Cont'd)

- the bending roller (4). Change if necessary, see 1.1.1.3-1 Bending Roller - Overhaul
- the drive roller (5). Change if necessary, see 1.1.1.8-2 Drive Roller - Overhaul
- the pendulum roller (6). See 1.1.1.4-1 Pendulum Roller - Check
- the counter pressure roller (7). See 1.1.1.7-1 Pressure Roller - Check
- the bending roller (8). Change if necessary, see 1.1.1.11-1 Bending Roller - Overhaul.

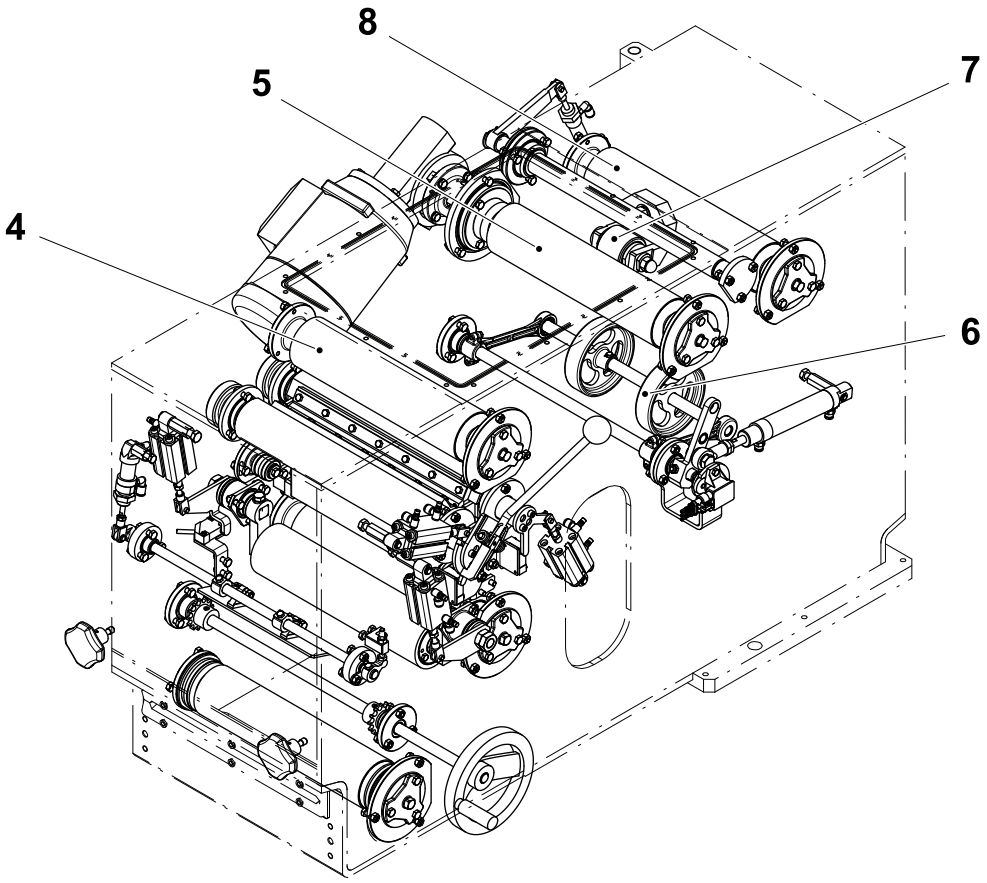

4 Bending roller
5 Drive roller
6 Pendulum roller
7 Counter pressure roller
8 Bending roller

1.1.1-2 Drying Chamber - Leakage Detection

Machine Status	PRODUCTION
Special Equipment	Leak Finding Equipment TP No. 533014-0200
SPC Reference	2808310-0400

WARNING
Hydrogen Peroxide.
Follow the Safety Precautions.

(Cont'd)

(Cont'd)

a) Operate the machine in PRODUCTION and perform a SHORT STOP

b) Step down the machine to ZERO with the packaging material tube filled with product. If possible let the machine cool down.

c) Check the overlap, see 1.2.1.2-3 Lower Forming Ring - Set Overlap

d) Remove the thermocouple (1) and insert the flow meter hose (2) into the threaded hole (3).

e) Connect the hose (4) from the equipment for finding leakages to a compressed air line.

f) Remove the nut (5) and the screw (6) from the edge roller.

g) Fit the nipple (7) to the hole (8).

h) Connect the pressure gauge hose (9) to the hole (8) on the column.

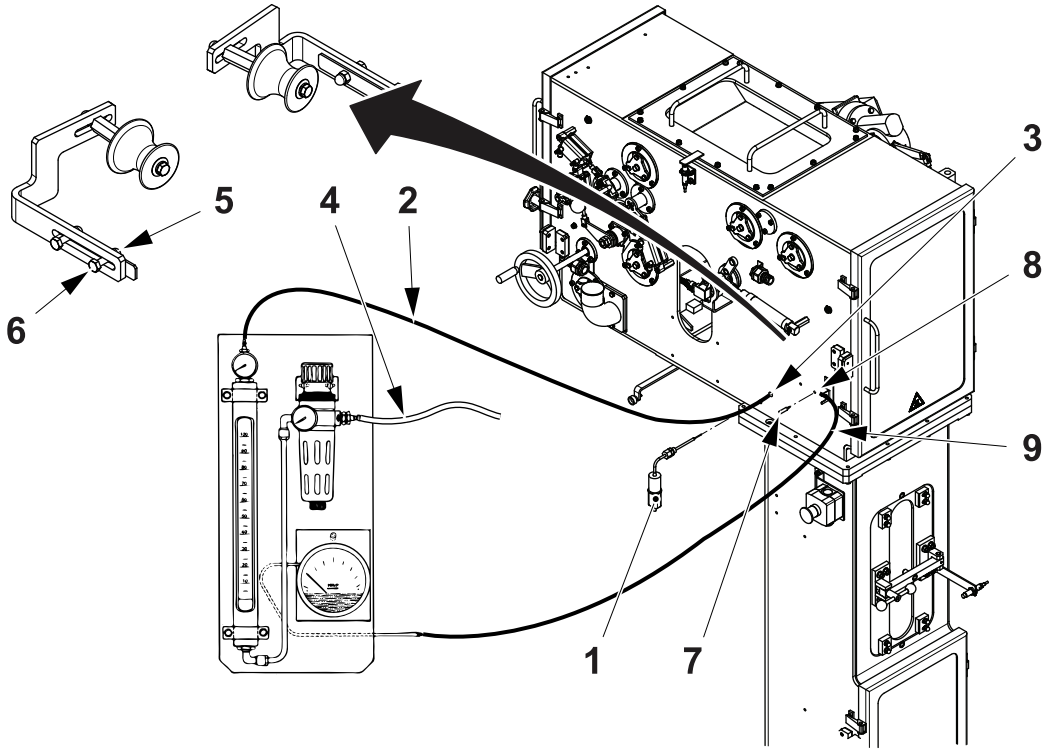

1 Thermocouple
2 Hose
3 Hole
4 Hose
5 Nut
6 Screw
7 Nipple
8 Hole
9 Hose

(Cont'd)

(Cont'd)

CAUTION
Risk of damage to the equipment.
High pressure in the aseptic chamber may damage the pressure sensor (10).
Disconnect the hose (11) before operating the leak finding equipment.

i) Disconnect the hose (11) marked with the plus sign from the pressure sensor (10).

j) Bend the end of the hose (11) and clench it with a strip.

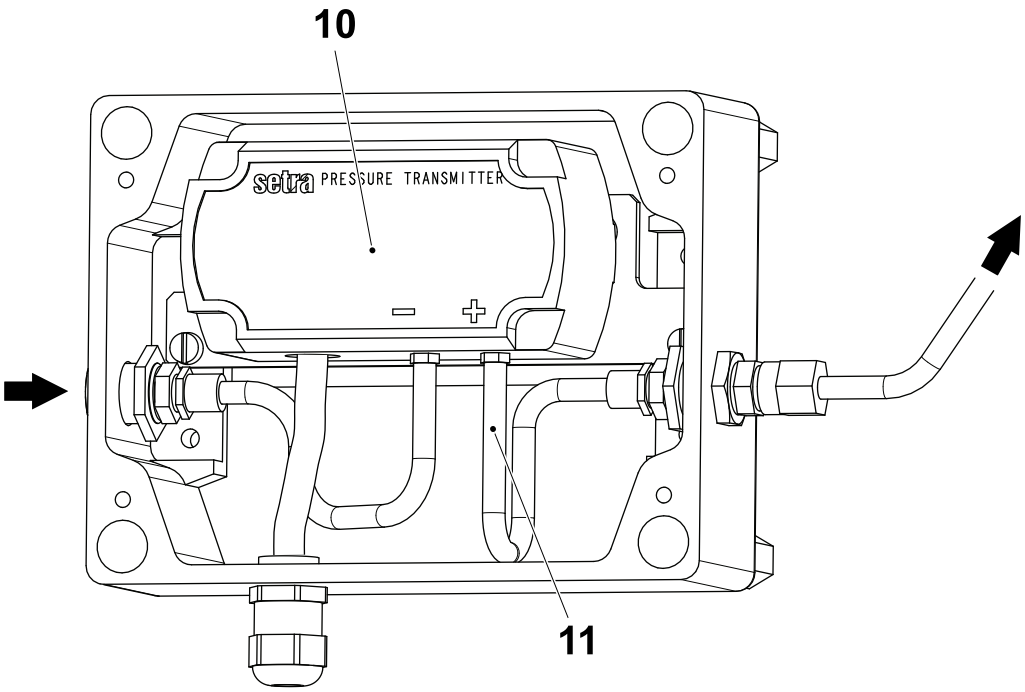

10 Pressure sensor
11 Hose

(Cont'd)

(Cont'd)

Note! Clamp the drainage hose from the electrical cabinet cooler(s).

k) Check that all connections and screws in the drying chamber are tight.

l) Check the door locks, the door hinges and the micro switch, so that the sealing is properly tight and no leaks occur.

m) Check the drying chamber seals. See also 1.2.1.1-1 Seal Ring - Check and 1.1.1-5 Drying Chamber - Check Seal and Gasket Housing.

n) Close the valves (12), (13) and (14) in the dilution tank.

o) Slowly open the pressure regulator (16) until 200 Pa (20 mm WC) is reached on the pressure gauge (15).

p) Read the flow F% on the flow meter (17) and the pressure P2 on the pressure gauge (18).

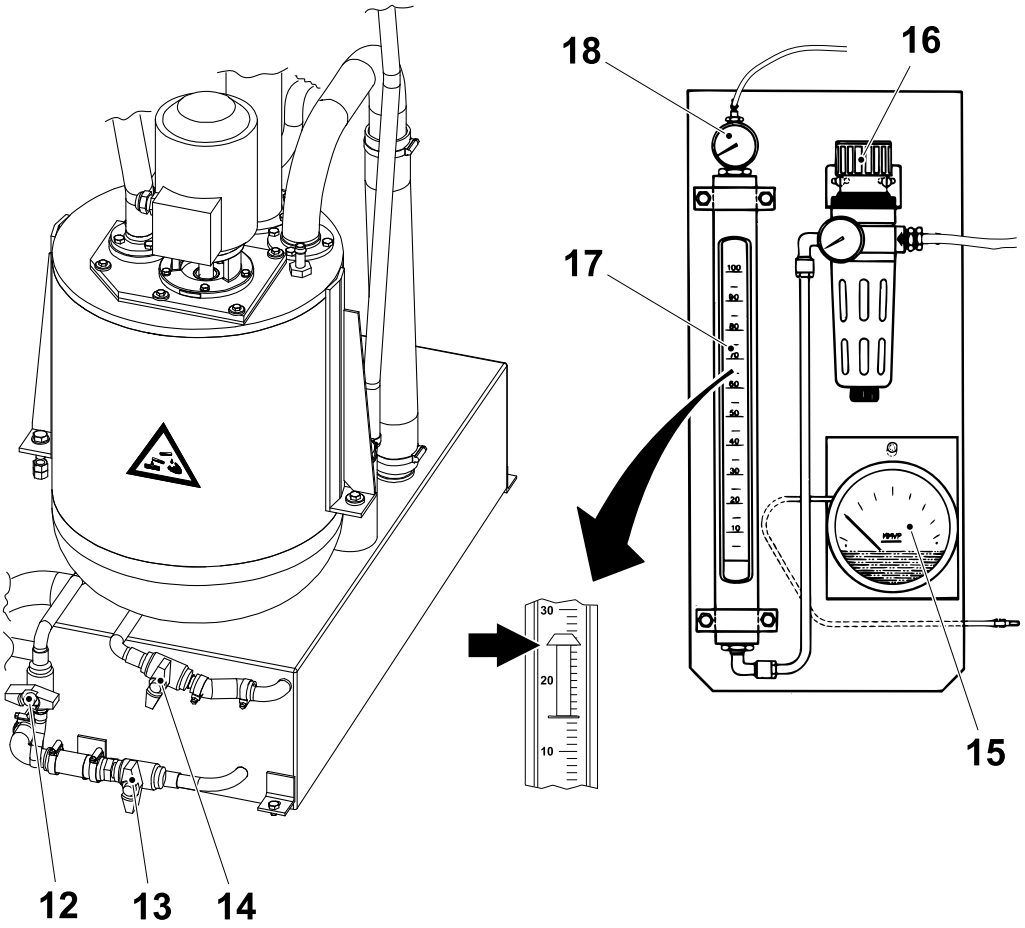

12 Valve
13 Valve
14 Valve
15 Pressure gauge
16 Pressure regulator
17 Flow meter
18 Pressure gauge

(Cont'd)

(Cont'd)

q) Enter the values on the diagram and read the leakage Q. The allowed is 3 m³/h.

Note! The picture shows a blank diagram, an example is given in the next page.

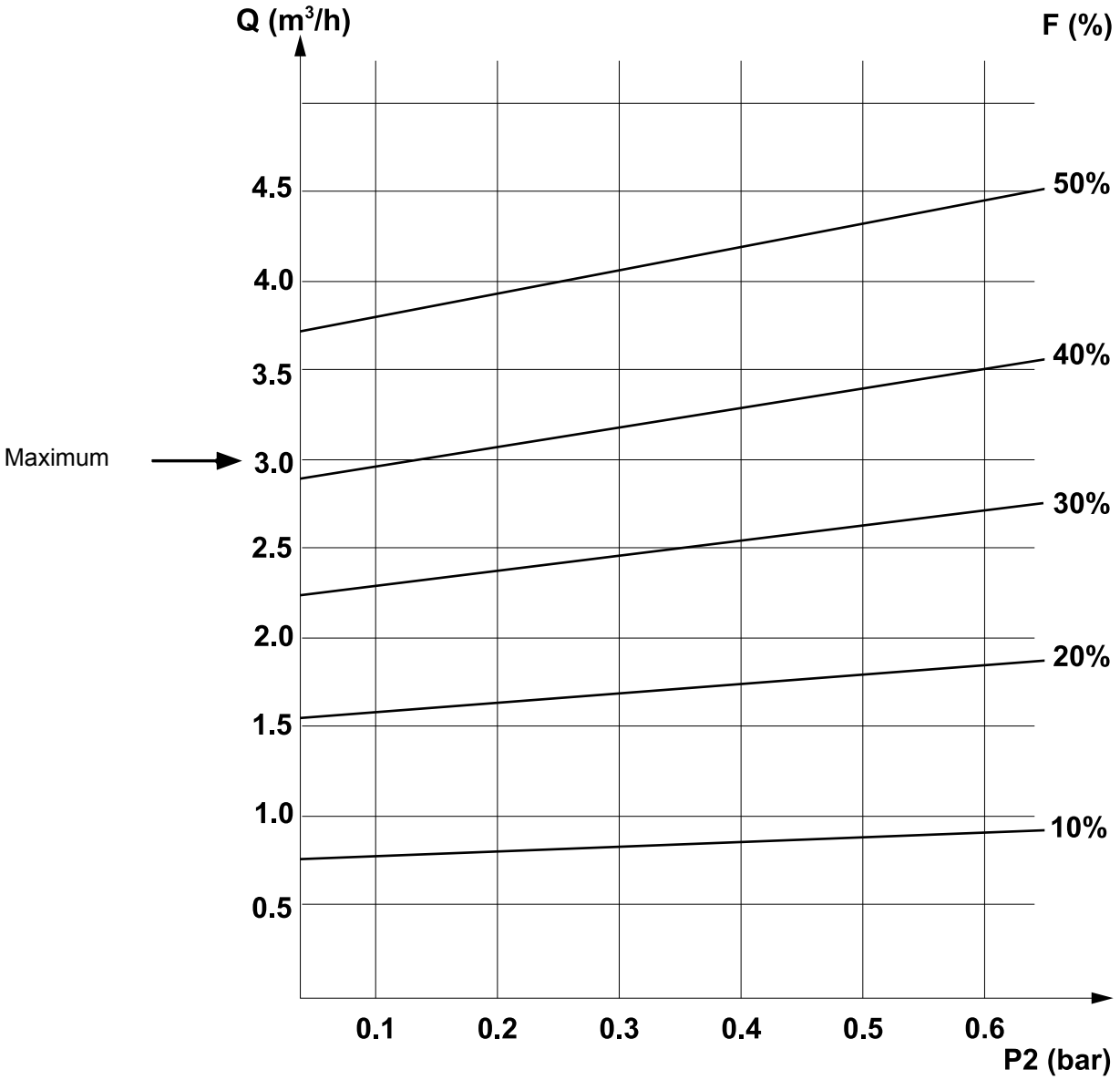

(Cont'd)

(Cont'd)

r) In the example below the flow value obtained was 26% and the pressure P2 was 0.23. To determine the value for Q proceed as follows:

- draw a diagonal line beginning at the F% value of 26, so that the line is parallel to the closest line in the chart.
- draw a vertical line from the point where the P2 value is 0,23.
- from the point where the diagonal F5 line and the vertical P2 line intersect, draw a horizontal line and read the value Q (m^3/h) which in this example it is 2.1
- the maximum leakage allowed is $3m^3/h$ so the leakage is acceptable.

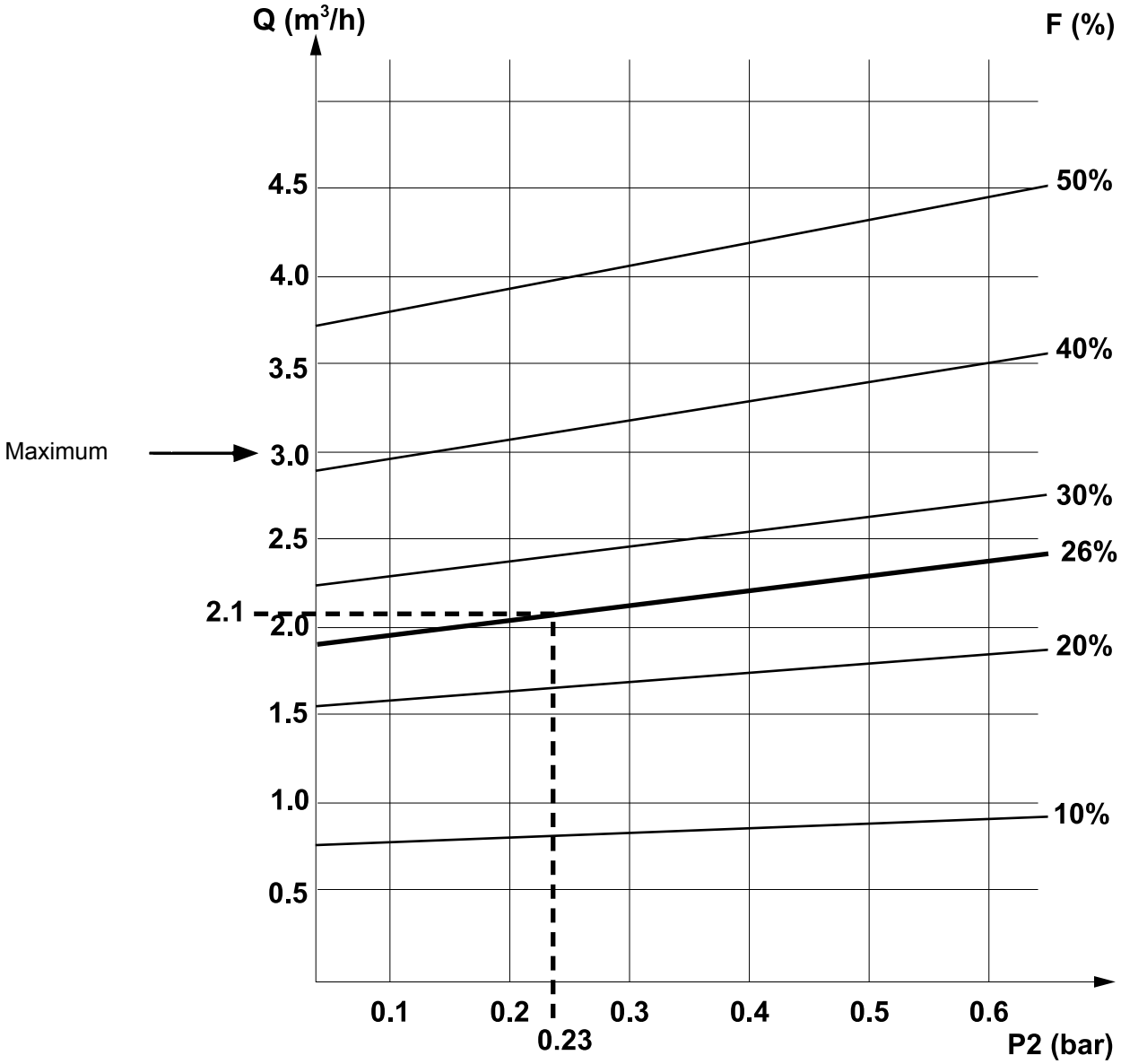

(Cont'd)

(Cont'd)

s) An alternative and more accurate method is to use the mathematical formula below :

$$Q = \frac{7.5}{100} \times \sqrt{\frac{P2 + 1{,}013}{1{,}013}} \times F\% = \boxed{2.1}$$

t) If the maximum allowed leakage is exceeded, check tightness at the following points:

- the safety lids in the hydrogen peroxide tank
- the door seals of the drying chamber
- the plug holes in the drying chamber
- the chain seals in the drier
- the bath entry seal; change if necessary; see 1.1.1-6 Drying Chamber - Change Seal and Gasket Housing
- the seal in the pillar; see 1.2.1.1-1 Seal Ring - Check .

(Cont'd)

(Cont'd)

u) If not, disconnect the equipment for finding leaks.

v) Connect the hose (11) marked with the plus sign to the pressure sensor (10).

w) Fit the nut (5) and the screw (6) to the edge roller.

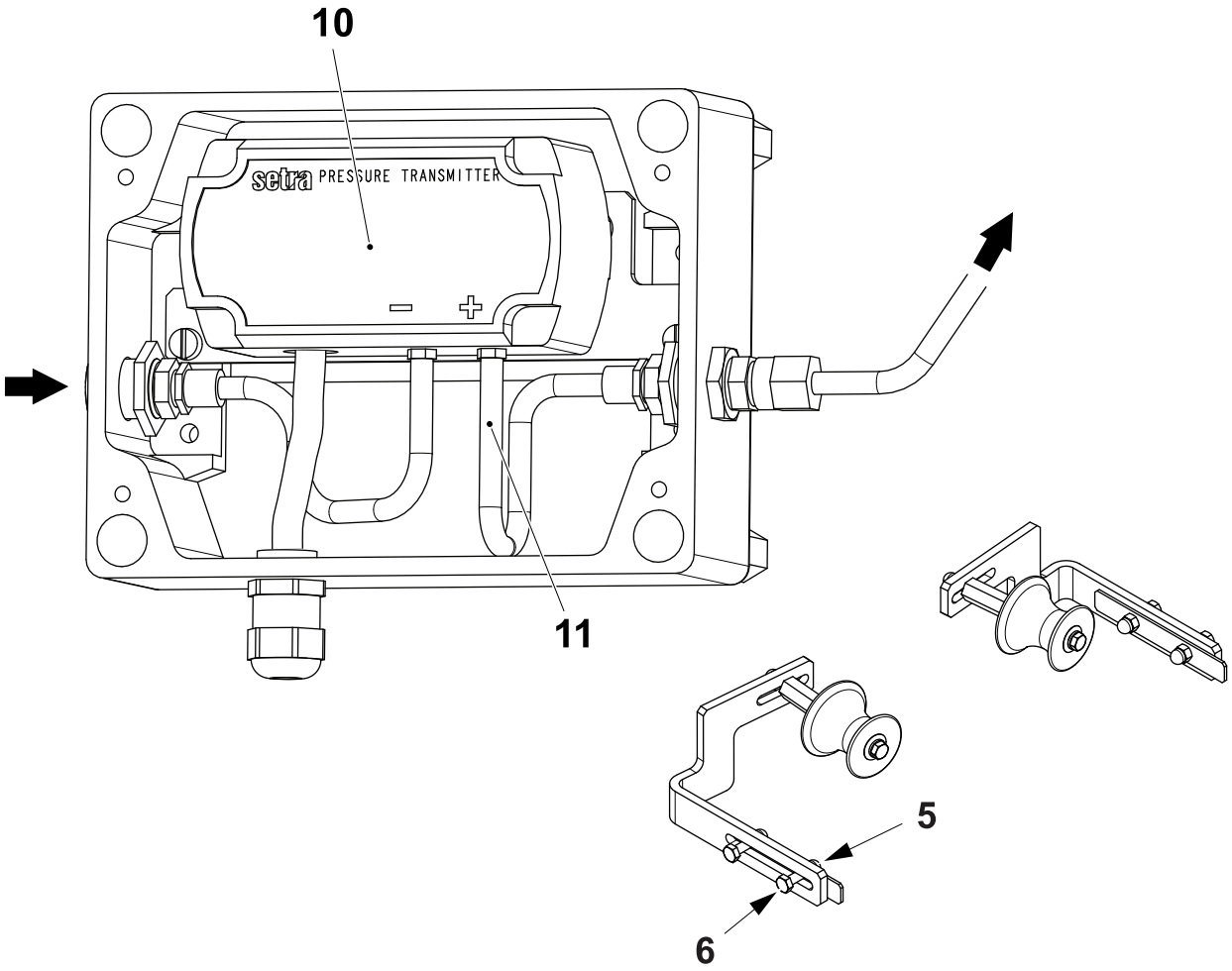

5 Nut
6 Screw
10 Pressure sensor
11 Hose

1.1.1-3 Drying Chamber - Check Overpressure

Machine Status	PRODUCTION
SPC Reference	2808310-0400

WARNING
Hydrogen Peroxide.
Follow the Safety Precautions.

a) Check the environmental seal, see 1.2.1.1-1 Seal Ring - Check .

b) Touch the PRODUCTION CONTROL button (1) on the filling machine TPOP screen.

c) Touch the STERILE AIR SYSTEM button (2).

d) Touch the ASEPTIC CHAMBER AIR PRESSURE icon (3) to display the ASEPTIC CHAMBER AIR PRESSURE monitor (4).

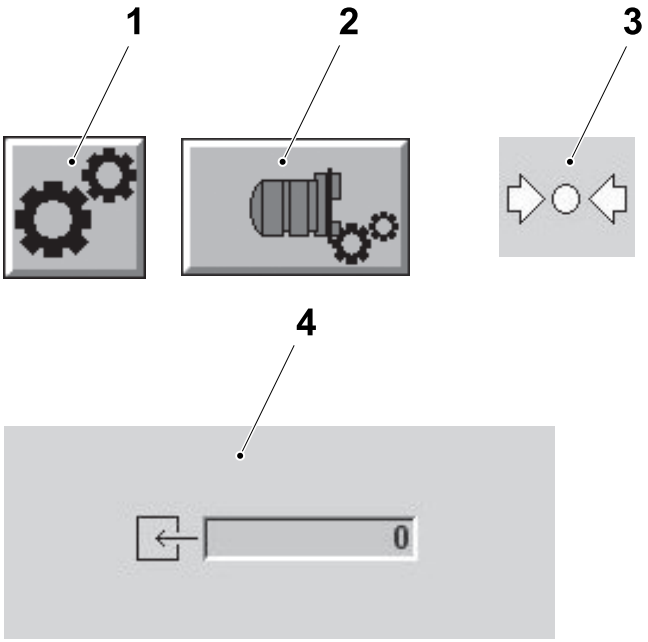

1 PRODUCTION CONTROL button
2 STERILE AIR SYSTEM button
3 ASEPTIC CHAMBER AIR PRESSURE icon
4 ASEPTIC CHAMBER AIR PRESSURE monitor

(Cont'd)

(Cont'd)

Note! If the correct overpressure in the drying chamber (5) cannot be obtained, check with the equipment for tracing leakage, see 1.1.1-2 Drying Chamber - Leakage Detection.

e) Check that the pressure on the TPOP for the drying chamber (5) is as follows:

- When the machine is in NORMAL STOP and DRYING the overpressure should be within the range of 80 - 150 Pa. For setting instructions, see 1.1.1-4 Drying Chamber - Set Overpressure
- When the machine is in PRODUCTION the overpressure should be within the range of 200 - 300 Pa. For setting instructions, see 1.1.1-4 Drying Chamber - Set Overpressure

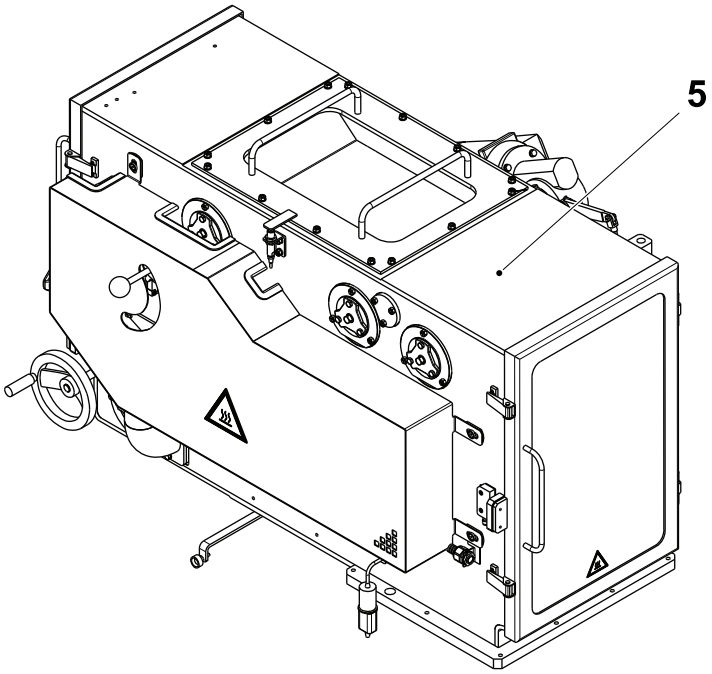

5 Drying chamber

1.1.1-4 Drying Chamber - Set Overpressure

Machine Status	PRODUCTION
SPC Reference	2808310-0400

WARNING
Hydrogen Peroxide.
Follow the Safety Precautions.

a) Touch the PRODUCTION CONTROL button (1) on the filling machine TPOP screen.

b) Touch the STERILE AIR SYSTEM button (2).

c) Touch the ASEPTIC CHAMBER AIR PRESSURE icon (3) to display the ASEPTIC CHAMBER AIR PRESSURE monitor (4).

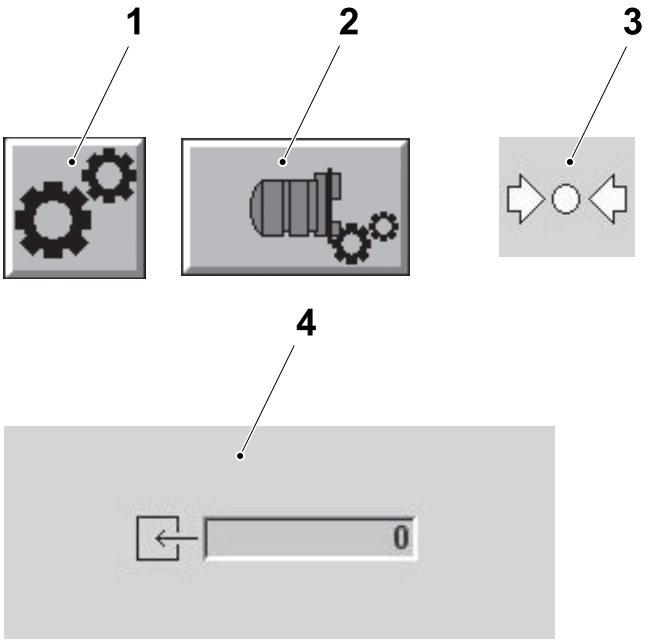

1 PRODUCTION CONTROL button
2 STERILE AIR SYSTEM button
3 ASEPTIC CHAMBER AIR PRESSURE icon
4 ASEPTIC CHAMBER AIR PRESSURE monitor

Note! If the correct overpressure cannot be obtained, check with the leak tracing equipment, see 1.1.1-2 Drying Chamber - Leakage Detection.

d) The pressure of the drying chamber should be as follows:

- When the machine is in NORMAL STOP and DRYING the overpressure should be within the range of: **80 to 150 Pa**.
- When the machine is in PRODUCTION the overpressure should be within the range of: **200 to 300 Pa**.

(Cont'd)

(Cont'd)

Set overpressure during NORMAL STOP and DRYING

If the pressure is below **80 Pa**, check that there are no leakages in the drying chamber, see 1.1.1-2 Drying Chamber - Leakage Detection.

Set overpressure during PRODUCTION

a) Loosen the screw (1).

b) Adjust the angle of the shaft (2) by means of the stop screw (3).
   - If the pressure is too high, the valve (4) should be open more.
   - If the pressure is too low, the valve (4) should be closed more.

c) Tighten the screw (1).

d) Check that the cylinder (5) can still close the valve (4) completely.

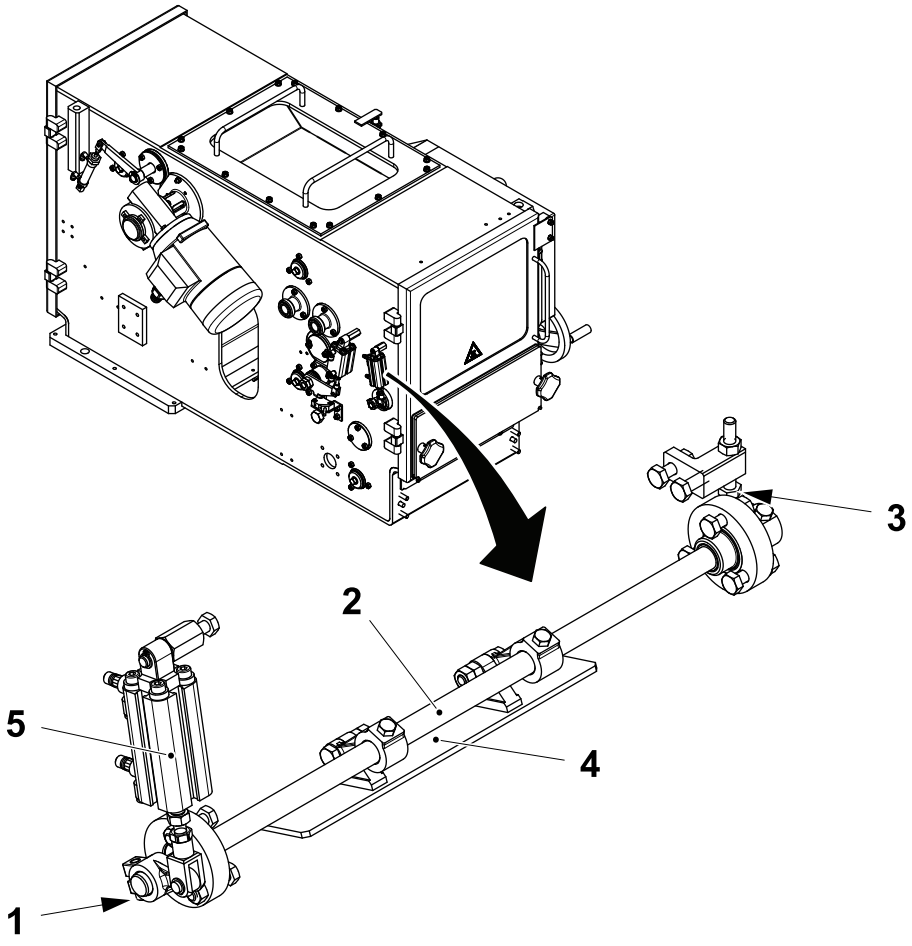

1 Screw
2 Shaft
3 Screw
4 Valve
5 Cylinder

1.1.1-5 Drying Chamber - Check Seal and Gasket Housing

Machine Status	Electrical supply disconnecting device in position O (OFF) Main air valve OFF Main steam valve ON Main water valve OFF
SPC Reference	2808310-0400

WARNING

Hydrogen Peroxide.
Follow the Safety Precautions.

Check the following parts for wear or damage:

- the seal (1). Change it if necessary, see 1.1.1-6 Drying Chamber - Change Seal and Gasket Housing
- the gasket (2). Change it if necessary, see 1.1.1-6 Drying Chamber - Change Seal and Gasket Housing
- the lid (3). Make sure that the lid (3) is securely fitted against the pillar by the two handles (4). Make sure that there is no packaging material residue. Clean if necessary.

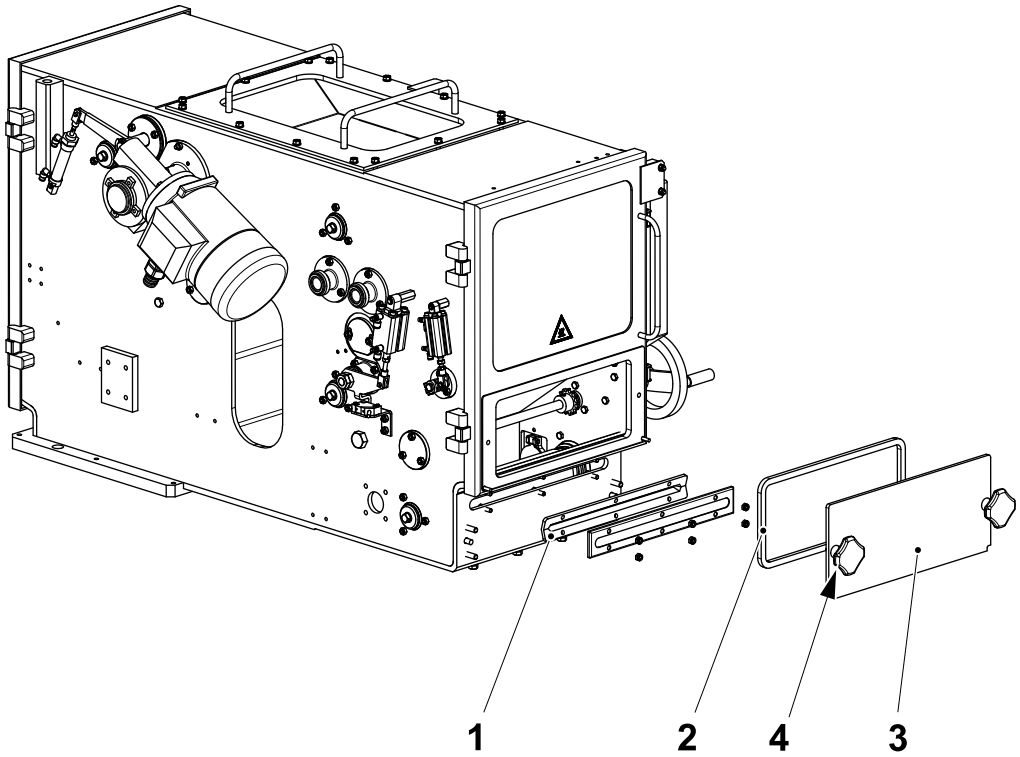

1 Seal
2 Gasket
3 Lid
4 Handle

1.1.1-6 Drying Chamber - Change Seal and Gasket Housing

Machine Status	Electrical supply disconnecting device in position O (OFF) Main air valve OFF Main steam valve ON Main water valve OFF
SPC Reference	2808310-0400

WARNING

Hydrogen Peroxide.

Follow the Safety Precautions.

a) Remove the twohandles (1) and the lid (2).

b) Change the gasket (3).

c) Remove the screws (4) and the cover (5).

d) Change the seal (6).

e) Assemble in the reverse order.

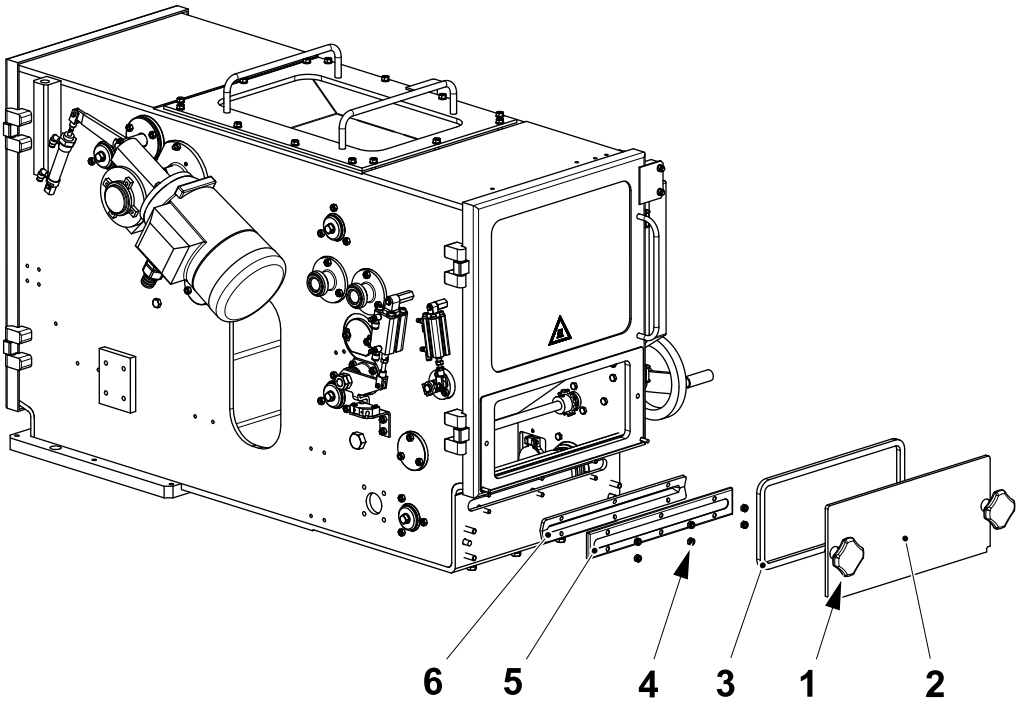

1 Handle
2 Lid
3 Gasket
4 Screw
5 Cover
6 Seal

1.1.1-7 Drying Chamber - Set Inductive Switch

Machine Status	Electrical supply disconnecting device in position I (ON) Main air valve OFF Main steam valve ON Main water valve OFF
SPC Reference	2808310-0400

WARNING

Hydrogen Peroxide.

Follow the Safety Precautions.

a) Loosen the nuts (1).

b) Set distance **A** between the inductive switch (2) and the bracket (3).

c) Tighten the nuts (1).

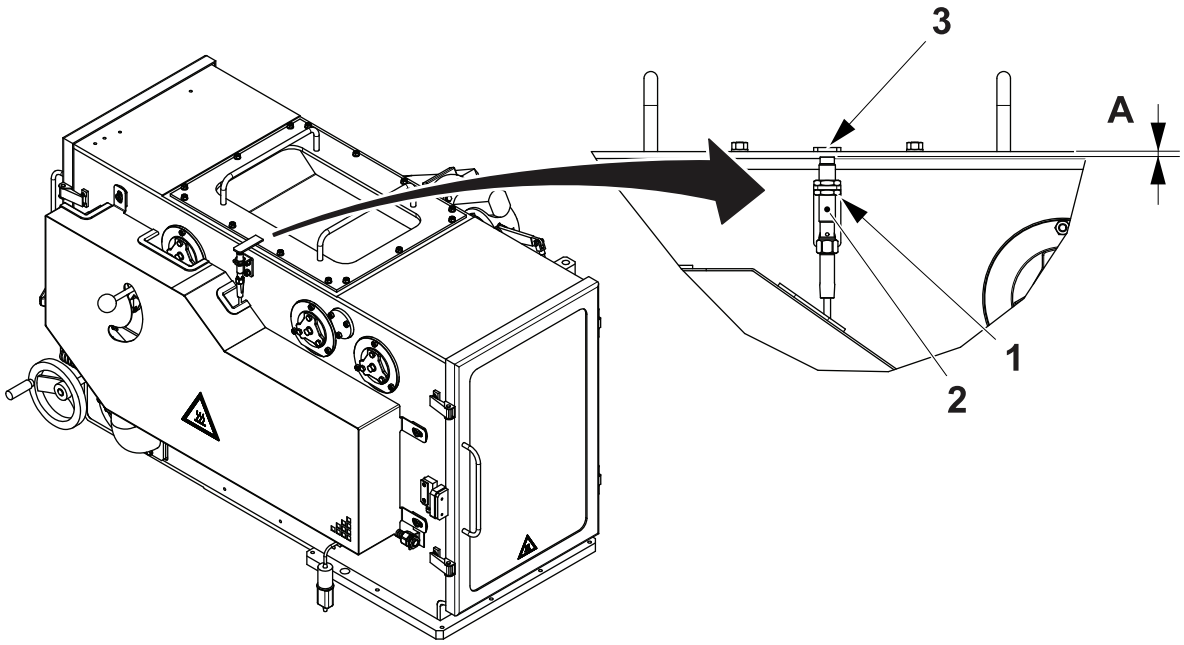

A = 2.0 mm

1 Nut

2 Inductive switch

3 Bracket

1.1.1.1 Calender Roller

1.1.1.1-1 Calender Roller - Check

Machine Status	Electrical supply disconnecting device in position I (ON) Main air valve OFF Main steam valve ON Main water valve OFF
Consumables	Grease, Fluolub 210 TP No. 90296-0091
SPC Reference	2808145-0200

WARNING
Hydrogen Peroxide.
Follow the Safety Precautions.

Check that:

- the calender roller (1) is not worn or damaged. Make sure that the roller rotates freely and that the surface is undamaged, change if necessary
- the radial play of theball bearings (2) is not excessive. If excessive, change them, see 1.1.1.1-2 Calender Roller - Change

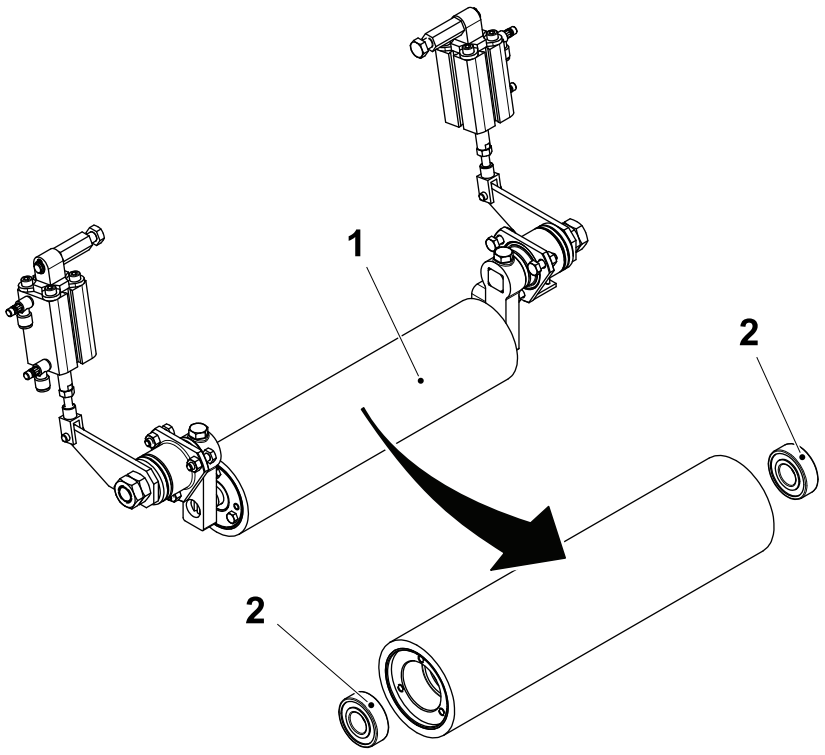

1 Calender roller
2 Ball bearing

(Cont'd)

(Cont'd)

- the ball bearings (2) are correctly greased.
- the two pneumatic cylinders (3) move easily
- the proximity switch (4) functions correctly. Adjust if necessary, see 1.1.1.1-4 Calender Roller - Set Proximity Switch .

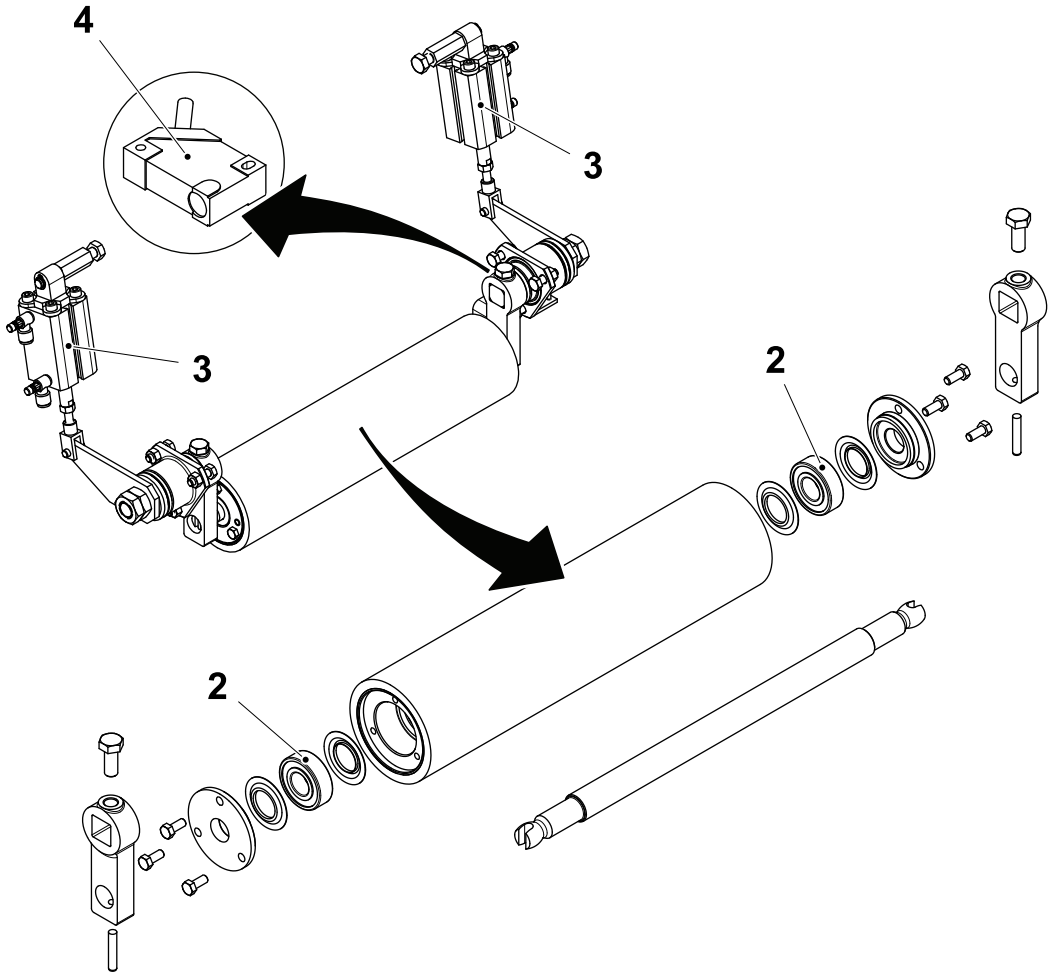

2 Ball bearing
3 Pneumatic cylinder
4 Proximity switch

1.1.1.1-2 Calender Roller - Change

Machine Status	Electrical supply disconnecting device in position O (OFF) Main air valve OFF Main steam valve ON Main water valve OFF
Consumables	Grease, Fluolub 210 TP No. 90296-0091
SPC Reference	2808145-0200

WARNING
Hydrogen Peroxide.
Follow the Safety Precautions.

(Cont'd)

(Cont'd)

a) Remove the nuts (1) and move the levers (2) down.

b) Loosen the screws (3) on the arms (4).

c) Remove the screws (5) and the nuts (6) from the flanges (7).

d) Remove the shaft (8) and the roller assembly (9).

e) Check the twobushings (10), the four seals (11) and the two O-rings (12) for wear or damage. Change them if necessary.

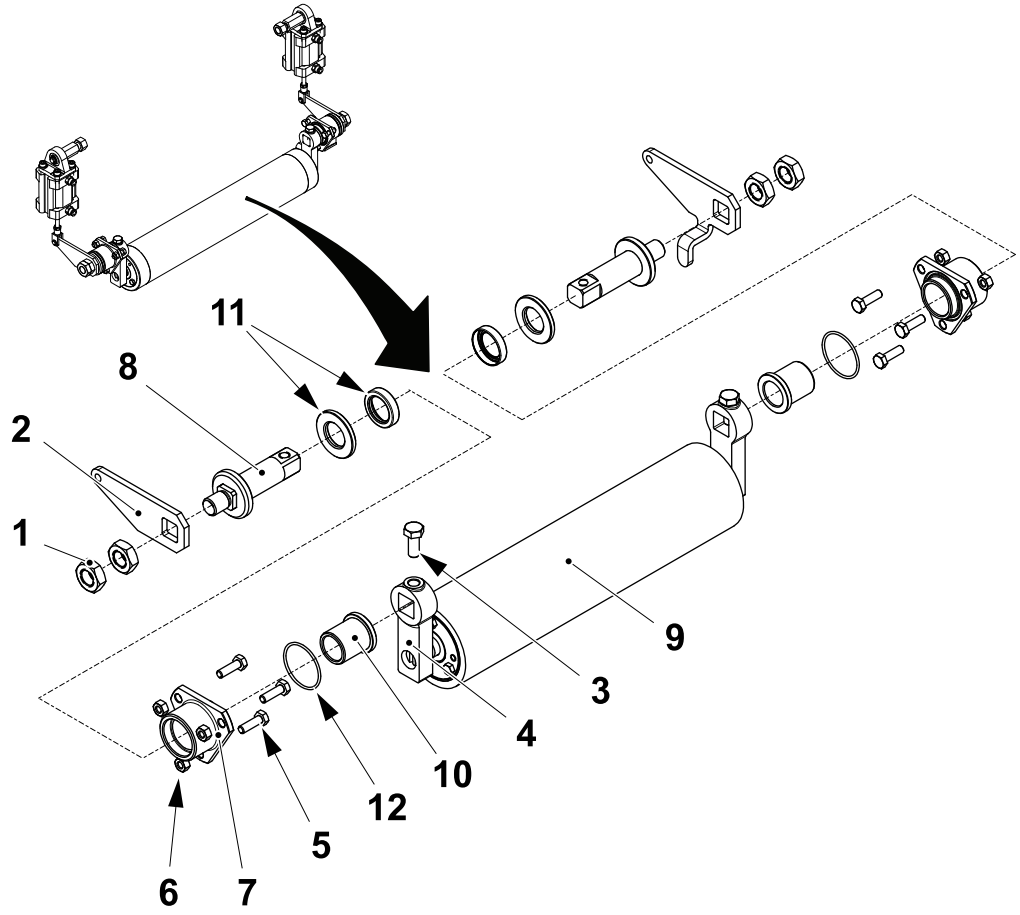

1 Nut
2 Lever
3 Screw
4 Arm
5 Screw
6 Nut
7 Flange
8 Shaft
9 Roller assembly
10 Bushing
11 Seal
12 O-ring

(Cont'd)

(Cont'd)

f) Remove the two arms (4).

g) Loosen the screws (13) and remove the flanges (14).

h) Remove the shaft (15) from the roller (16).

i) Remove the sealing rings (17), the ball bearings (18) and the sealing rings (19) from their position.

j) Check the roller (16), the sealing rings (17) and the sealing rings (19) and the ball bearings (18) for wear or damage and change them if necessary.

Note! Always fit the arms (4) with the flat surface (20) facing the roller (16).

k) Assemble in the reverse order.

l) Grease the ball bearings (18).

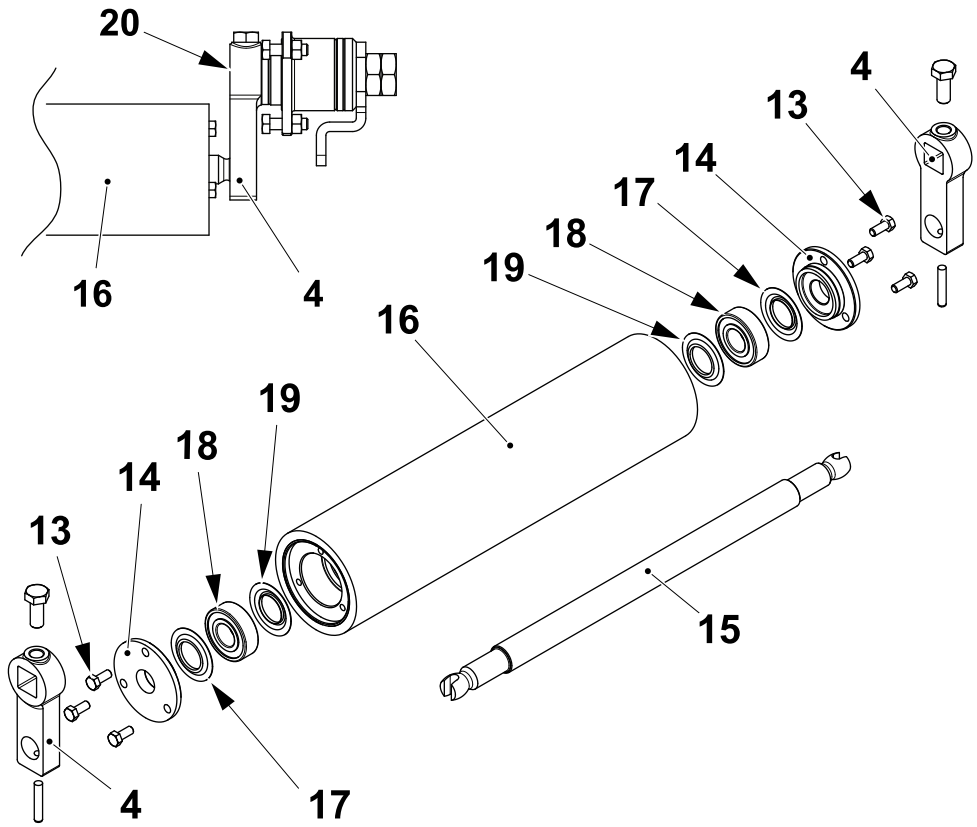

4 Arm	15 Shaft	18 Ball bearing
13 Screw	16 Roller	19 Sealing ring
14 Flange	17 Sealing ring	20 Surface

1.1.1.1-3 Calender Roller - Set Distance

Machine Status	Electrical supply disconnecting device in position I (ON) Main air valve OFF Main steam valve ON Main water valve OFF
Special Equipment	Template TP No. 2986717
SPC Reference	2808145-0200

CAUTION
Risk of damage to the equipment.
The calender roller (1) and the squee-gee roller (2) are made of rubber and can be easily damaged.

a) Disconnect the rods (3) from the plates (4) on both cylinders (5).

b) Step up the machine to PREPARATION.

c) Power **OFF** the valve U70K1760 (6).

d) Loosen the nuts (7) and tighten thepiston rods (8) fully in.

e) Tighten the nuts (7).

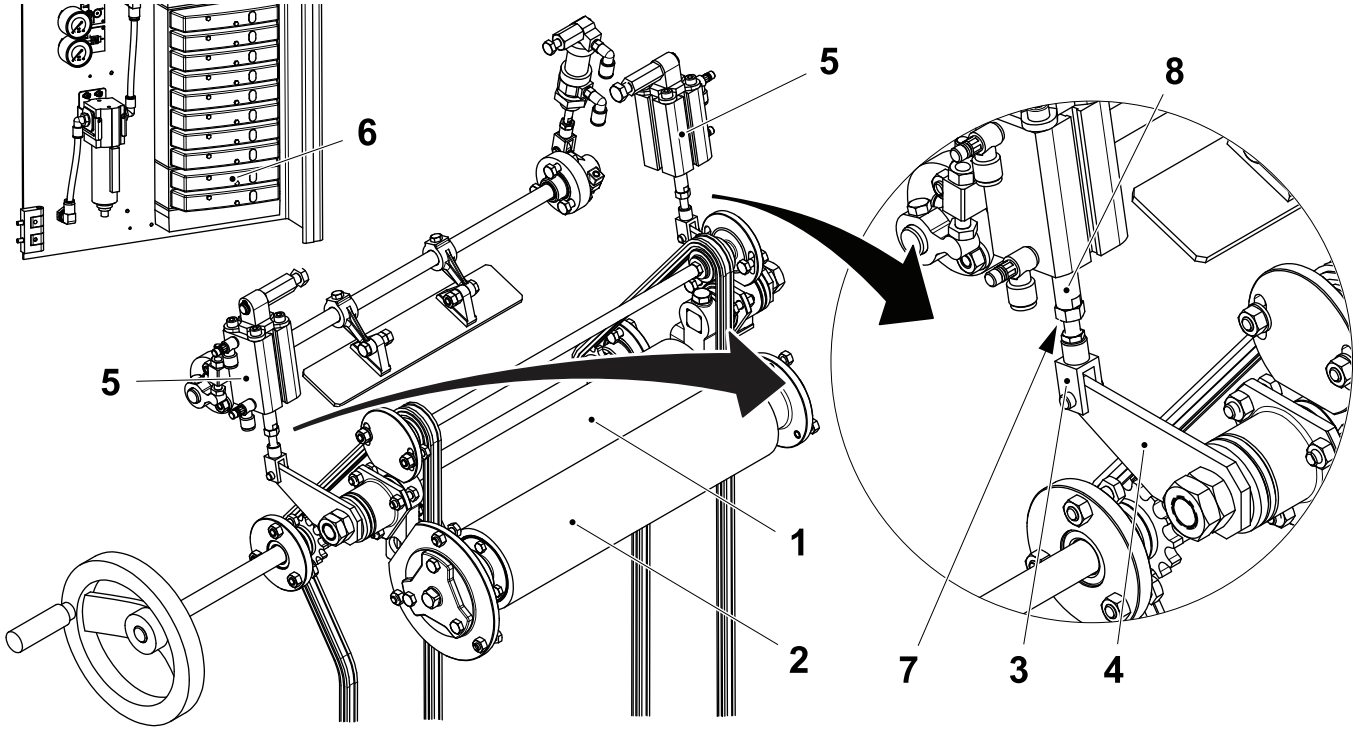

1 Calender roller
2 Squee-gee roller
3 Rod
4 Plate
5 Cylinder
6 Valve U70K1760
7 Nut
8 Piston rod

(Cont'd)

(Cont'd)

f) Lift the air knife (9) with the handle (10) and fit the template (11) between the calender roller (1) and squee-gee roller (2).

g) Close the door and reset the alarm on the TPOP.

h) Step up the machine to PREPARATION.

i) Push down the plates (4) until the template (11) is in contact with the calender roller (1) and the squee-gee roller (2).

j) Loosen the nuts (12), keeping the plates (4) pushed down, turn the rods (3) until it is possible to connect the rods (3) to the plates (4).

k) Tighten the nuts (12) and remove the template (11).

l) Power **ON** the valve U70K1760 (6).

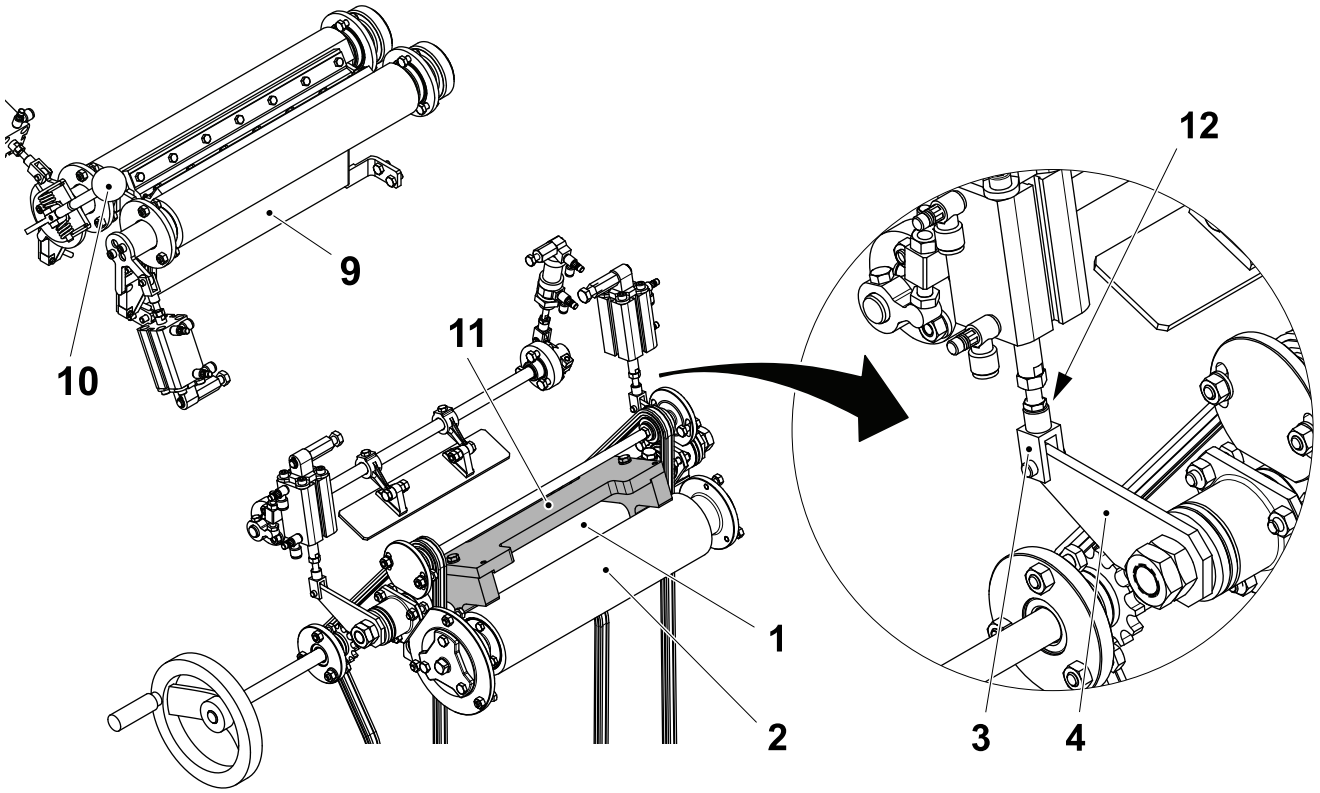

1 Calender roller
2 Squee-gee roller
3 Rod
4 Plate
9 Air knife
10 Handle
11 Template
12 Nut

1.1.1.1-4 Calender Roller - Set Proximity Switch

Machine Status	Electrical supply disconnecting device in position I (ON) Main air valve ON Main steam valve ON Main water valve OFF
SPC Reference	2808145-0200

a) Set the distance between the calender roller and the squee-gee roller, see 1.1.1.1-3 Calender Roller - Set Distance.

b) Activate the valve U70K1760 on the superstructure pneumatic panel for the pneumatic cylinders (1).

c) Make sure that the two pneumatic cylinders (1) are fully extended.

d) Loosen the screws (2) and adjust the angle bracket (3) until the proximity switch (4) LED goes ON.

e) Tighten the screws (2).

f) Make sure that the proximity switch (4) LED goes ON when the two cylinders (1) are fully extended.

g) Deactivate the valve U70K1760.

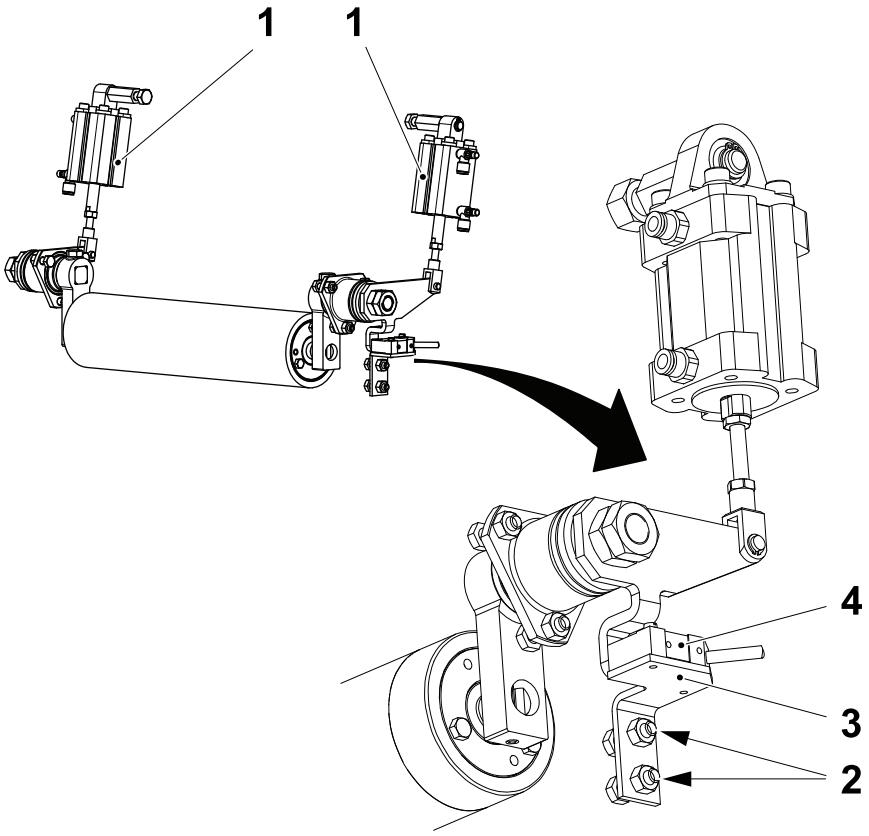

1 Cylinder
2 Screw
3 Angle bracket
4 Proximity switch

1.1.1.2 Squee-gee Roller

1.1.1.2-1 Squee-gee Roller - Change

Machine Status	Electrical supply disconnecting device in position O (OFF) Main air valve OFF Main steam valve ON Main water valve OFF
Consumables	Grease, Fluolub 210 TP No. 90296-0091
SPC Reference	2808150-0100

WARNING

Hydrogen Peroxide.
Follow the Safety Precautions.

a) Remove the screws (1), the lid (2) and the O-ring (3).

b) Remove the lock ring (4).

c) Remove the ball bearing (5) and the seal (6).

d) Grease the ball bearing (5).

e) Remove the screws and nuts (7) and the flange (8).

f) Check the O-ring (3) and (9) and the seal (6). Change the parts if necessary.

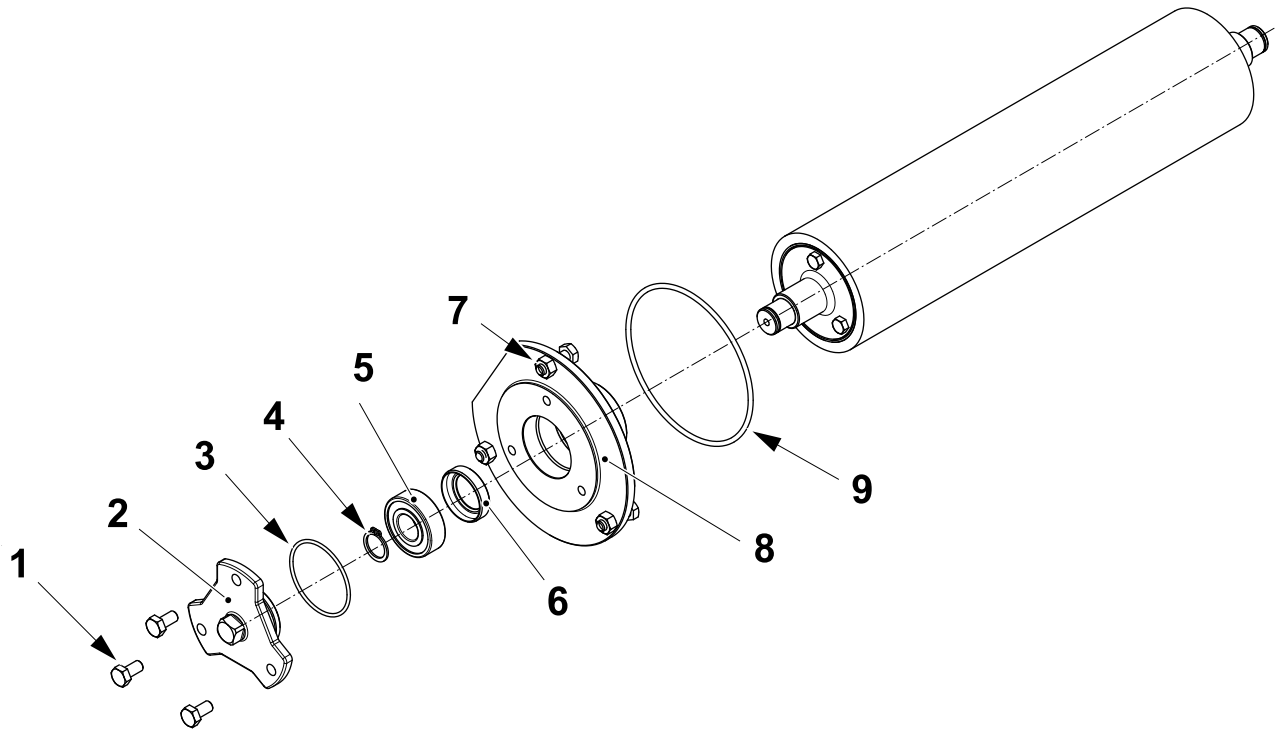

1 Screw
2 Lid
3 O-ring
4 Lock ring
5 Ball bearing
6 Seal
7 Screw and nut
8 Flange
9 O-ring

(Cont'd)

(Cont'd)

g) Remove the lid (10) and change the O-ring (11).

h) Remove the retaining ring (12) and the roller (13).

i) Remove the nuts (14), the flange (15) and change the O-ring (16).

j) Check the seal (17) and the ball bearing (18). Change the parts if necessary.

k) Change the roller (13).

l) Grease the ball bearing (18).

m) Assemble in the reverse order.

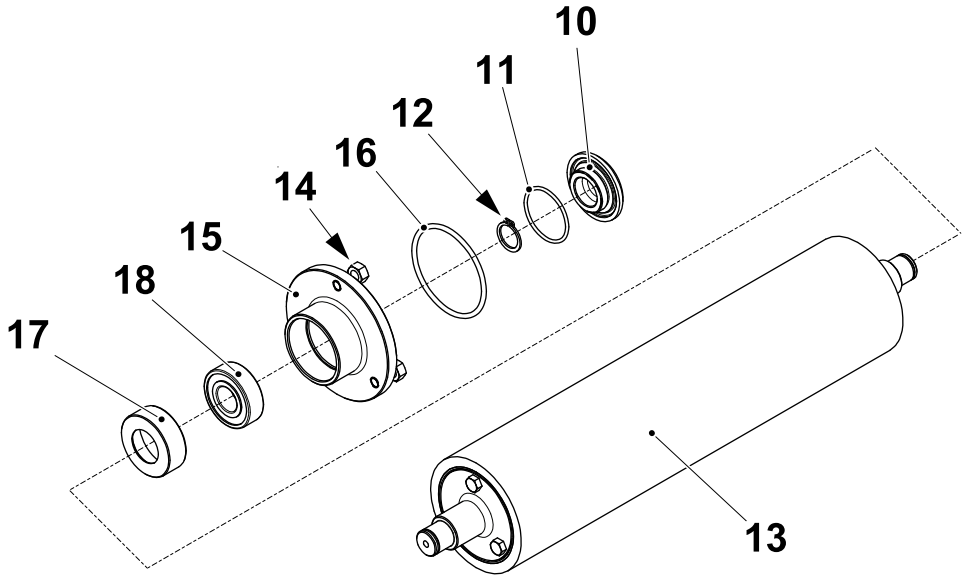

10 Lid
11 O-ring
12 Retaining ring
13 Roller
14 Nut
15 Flange
16 O-ring
17 Seal
18 Ball bearing

1.1.1.3 Bending Roller

1.1.1.3-1 Bending Roller - Overhaul

Machine Status	Electrical supply disconnecting device in position I (ON) Main air valve ON Main steam valve ON Main water valve ON
SPC Reference	2808155-0200

WARNING
Hydrogen Peroxide
Follow the Safety Precautions.

(Cont'd)

(Cont'd)

a) Loosen the flange (1).

b) Remove the nuts (2) from the flange (3).

c) Remove the nuts (4) from the flange (5).

d) Pull out the bending roller (6) from the drying chamber.

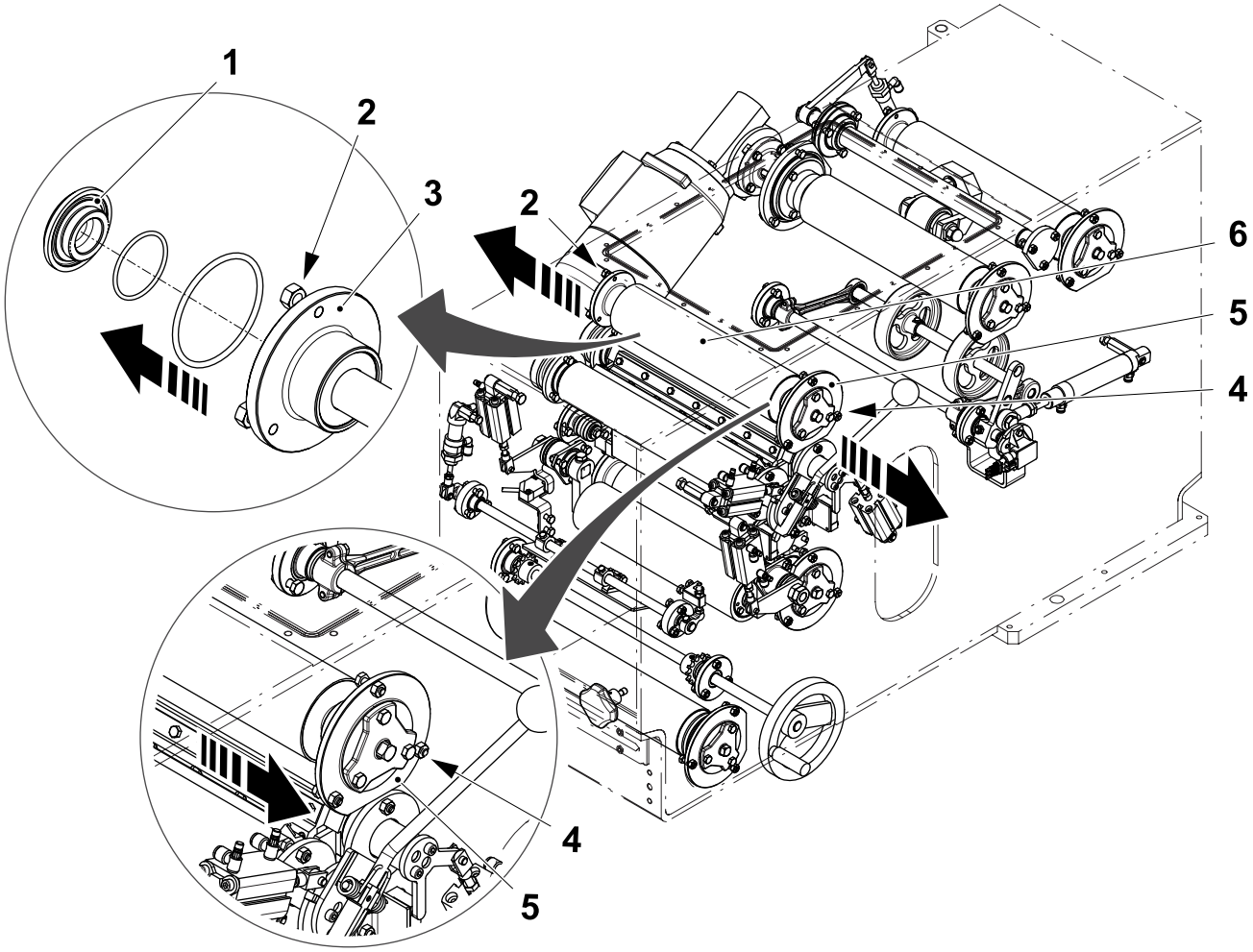

1 Flange
2 Nut
3 Flange
4 Nut
5 Flange
6 Bending Roller

(Cont'd)

(Cont'd)

e) Remove the flange assemblies with the following components:
- the screw (7)
- the lid (8), the lid (12) and the lid (14)
- the O-ring (9), the O-ring (13), the O-ring (17) and the O-ring (18)
- the retaining ring (10) and the retaining ring (16)
- the ball bearing (11) and the ball bearing (15)
- the flange (1), the flange (3) and the flange (5).

f) Change the O-ring (9), the O-ring (13), the O-ring (17), the O-ring (18), the ball bearing (11), the ball bearing (15), the lid (12), the lid (14) and the retaining ring (10) and the retaining ring (16).

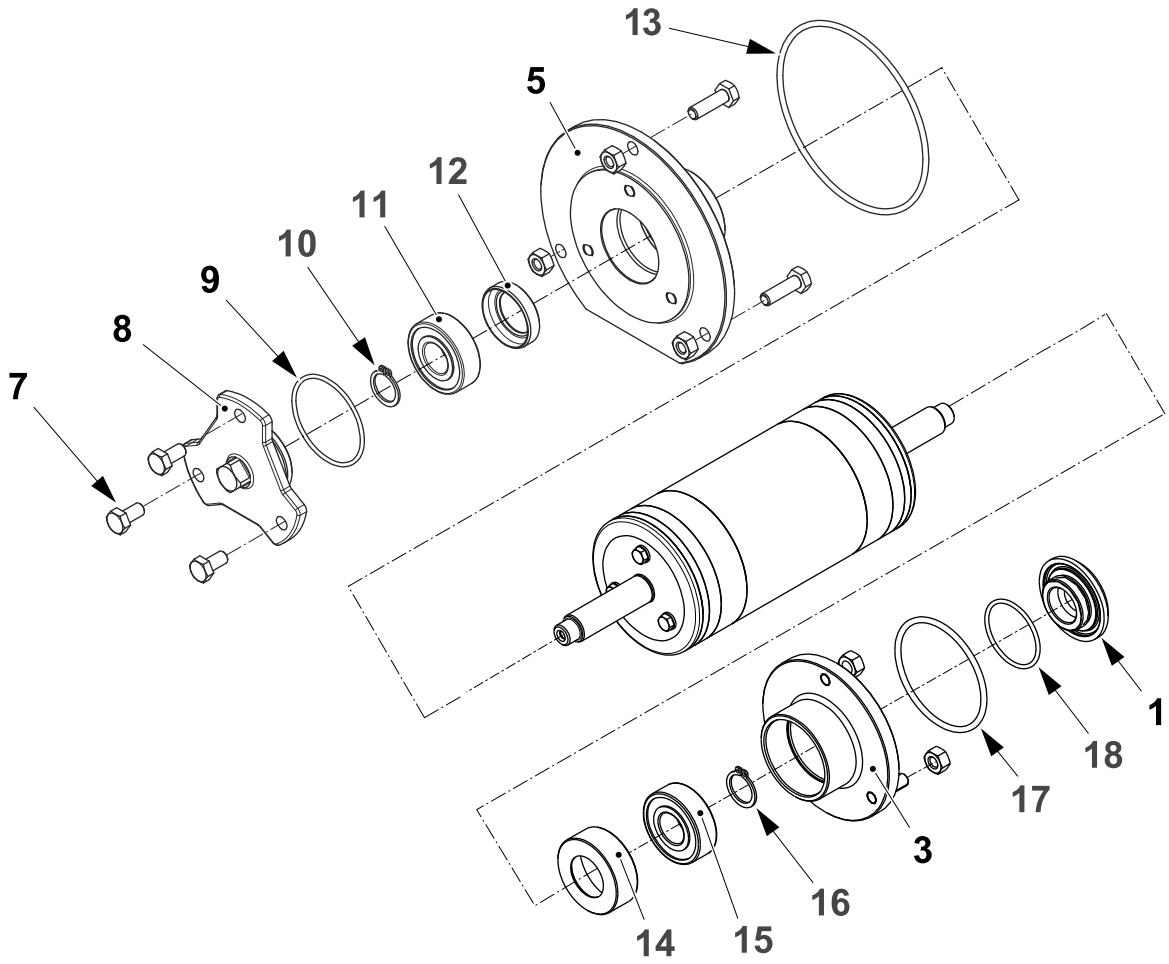

Modular bending roller is shown

1 Flange
3 Flange
5 Flange
7 Screw
8 Lid
9 O-ring
10 Retaining ring
11 Ball bearing
12 Lid
13 O-ring
14 Lid
15 Ball bearing
16 Retaining ring
17 O-ring
18 O-ring

(Cont'd)

(Cont'd)

Note! The following procedure is only necessary for modular bending rollers, and if the O-rings (19) and the O-rings (20) must be changed, otherwise assemble the bending roller (6) into the drying chamber in the reverse order.

Note! Handle the covers (21) and the spacers (24) with care.

g) Remove the following components from the roller **A**:
- the O-rings (19) and the O-rings (20)
- the covers (21)
- the screws (22)
- the washers (23)
- the spacers (24)

h) Change O-rings (19) and the O-rings (20).

i) Set the width of the roller **A**, see 1.1.1.3-2 Bending Roller - Set Width.

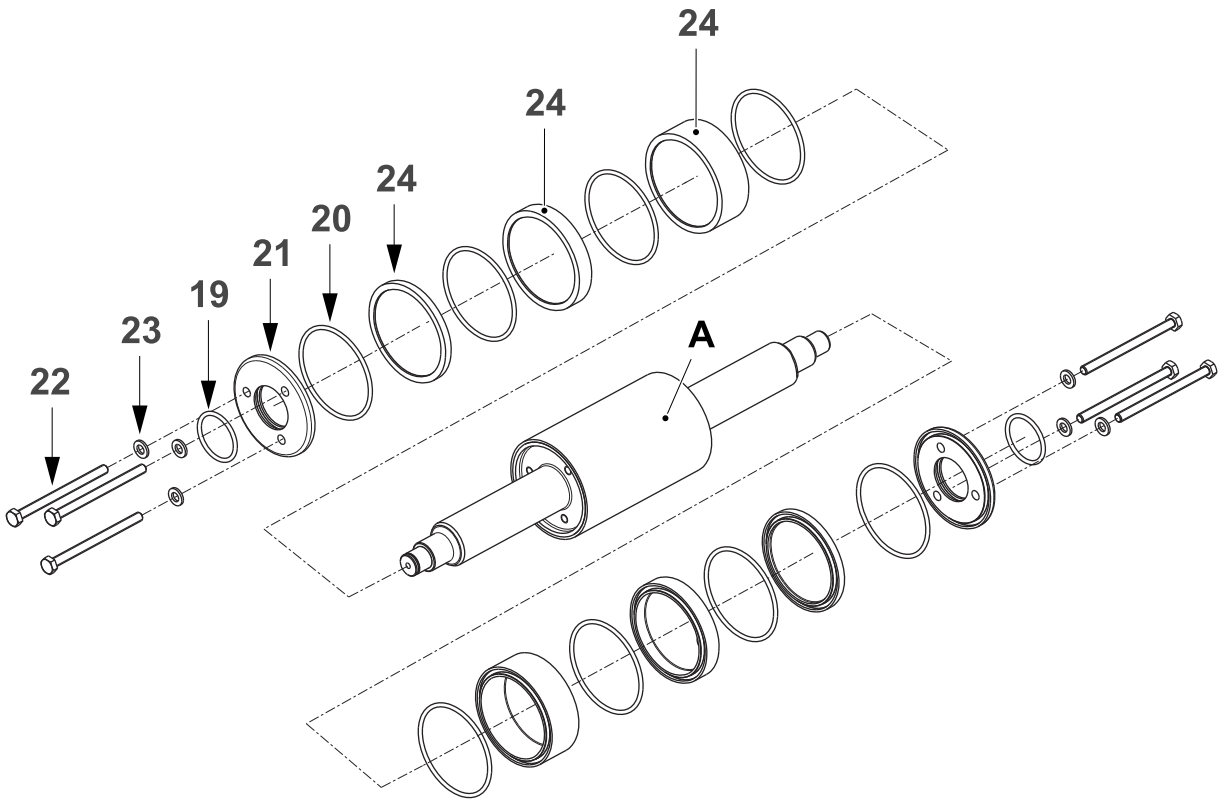

19 O-ring
20 O-ring
21 Cover
22 Screw
23 Washer
24 Spacer

1.1.1.3-2 Bending Roller - Set Width

Machine Status	Electrical supply disconnecting device in position I (ON) Main air valve ON Main steam valve ON Main water valve ON
Consumables	Lubrication grease, Fluolub 210 TP No. 90296-0091
SPC Reference	2808155-0200

WARNING

Hydrogen Peroxide

Follow the Safety Precautions.

Note! The following procedure is only necessary to perform for filling machines using *80-150 mN* bleached packaging material.

(Cont'd)

(Cont'd)

a) Assemble the spacers on to the roller **A** to set the correct width for the package to be produced. See the illustration and the table below.

b) Fit the O-ring (1) between each spacer.

Package	Central body A TP No.	Position B TP No.	Position C TP No.	Position D TP No.	Width E (mm)
TBA 80 S TPA 125 Sq	3296635-0000	NA	NA	NA	112.00
TBA 100 B TBA 125 S	3296635-0000	3296630-0000	NA	NA	134.00
TBA 160 S TBA 180 S TBA 200 S TPA 200 Sq TPA 250 Sq	3296635-0000	3296630-0000	3296631-0000	NA	144.00
TBA 200 E TBA 200 M TBA 250 E TBA 250 S	3296635-0000	3296629-0000	NA	NA	160.00
TPA 330 Sq	3296635-0000	3296629-0000	3296631-0000	NA	170.00
TBA 200 B TBA 200 Sq TBA 250 B TBA 250 Sq TBA 284 B TBA 300 S TBA 330 S	3296635-0000	3296629-0000	3296630-0000	NA	182.00
TBA 375 S	3296635-0000	3296629-0000	3296630-0000	3296631-0000	192.00

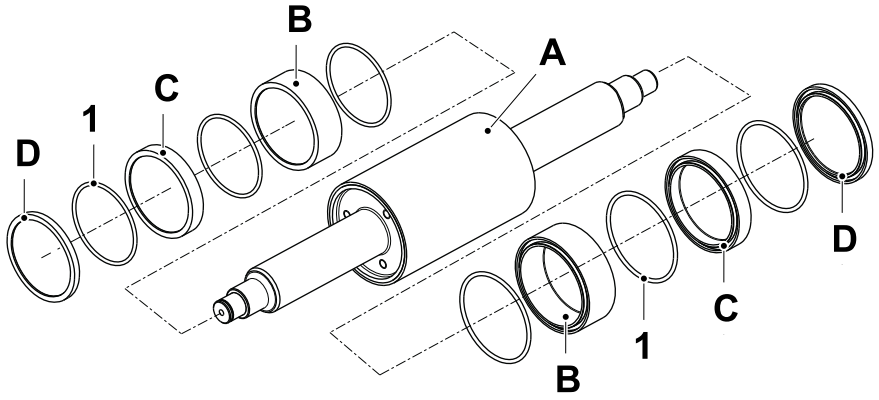

1 O-ring

(Cont'd)

(Cont'd)

c) Measure the width **E** of the roller **A** assembled with spacers and check it with the table on the previous page.

Note! Do not mount the covers (2), the width **E** is to be taken with roller **A** and spacers only. See the illustration below.

Note! Handle the spacers with care. Wrap the remaining spacers in protective packaging and store them in a safe place.

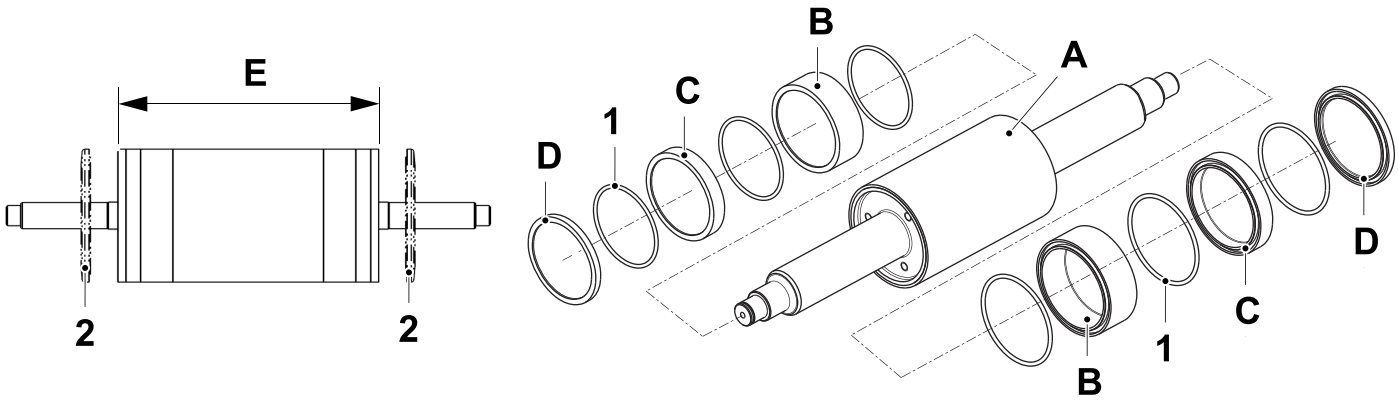

1 O-ring
2 Cover

(Cont'd)

(Cont'd)

d) Fit the O-ring (1) and the O-ring (2) into the covers (3). If necessary use lubrication grease on the O-ring (2) to fit the covers (3) onto the bending roller.

e) Fit the covers (3) on the bending roller with the screws (4) and the washers (5). If necessary use lubrication grease on the screws (4) to tighten the screws (4) to the bending roller.

Note! The width of the bending roller when assembled with the covers (3) is less than the packaging material width.

Note! Handle the covers (3) with care.

f) Fit the bending roller in the drying chamber follow the procedure 1.1.1.3-1 Bending Roller - Overhaul in the reverse order.

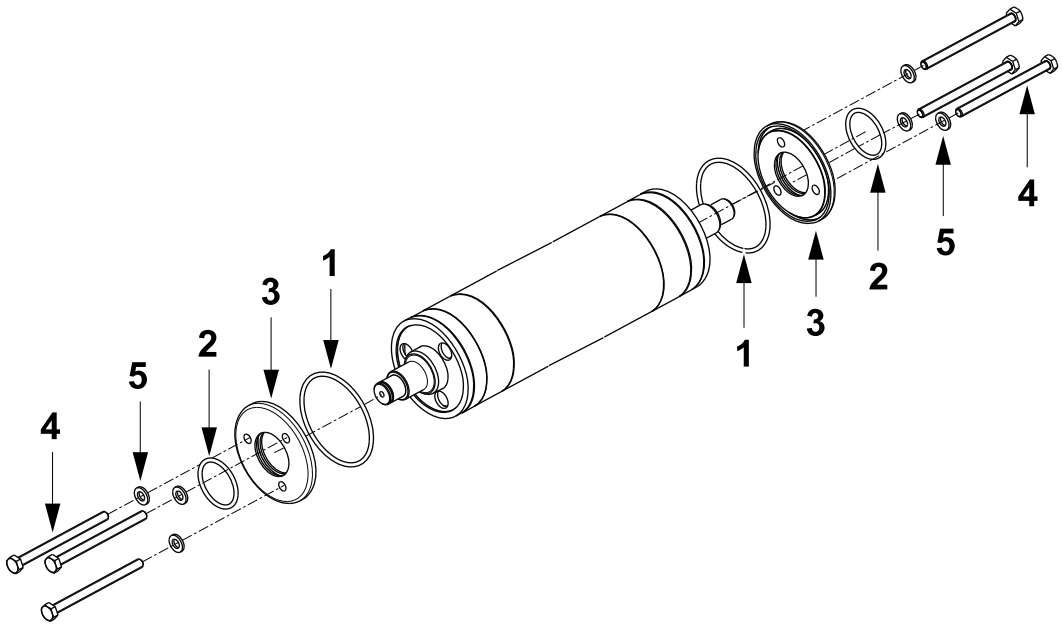

1 O-ring
2 O-ring
3 Cover
4 Screw
5 Washer

1.1.1.4 Pendulum Roller

1.1.1.4-1 Pendulum Roller - Check

Machine Status	Electrical supply disconnecting device in position I (ON) Main air valve OFF Main steam valve ON Main water valve OFF
SPC Reference	2808160-0200

CAUTION

Risk of personal injury.
Moving parts can crush or cut.

Check that:

- the surface of the two wheels (1) are not worn or damaged
- the radial play in the bearings (2) is not excessive. Change them if necessary, see 1.1.1.4-2 Pendulum Roller - Change Bushings
- the sensor (3) is working properly
- the shaft (4) rotates easily.

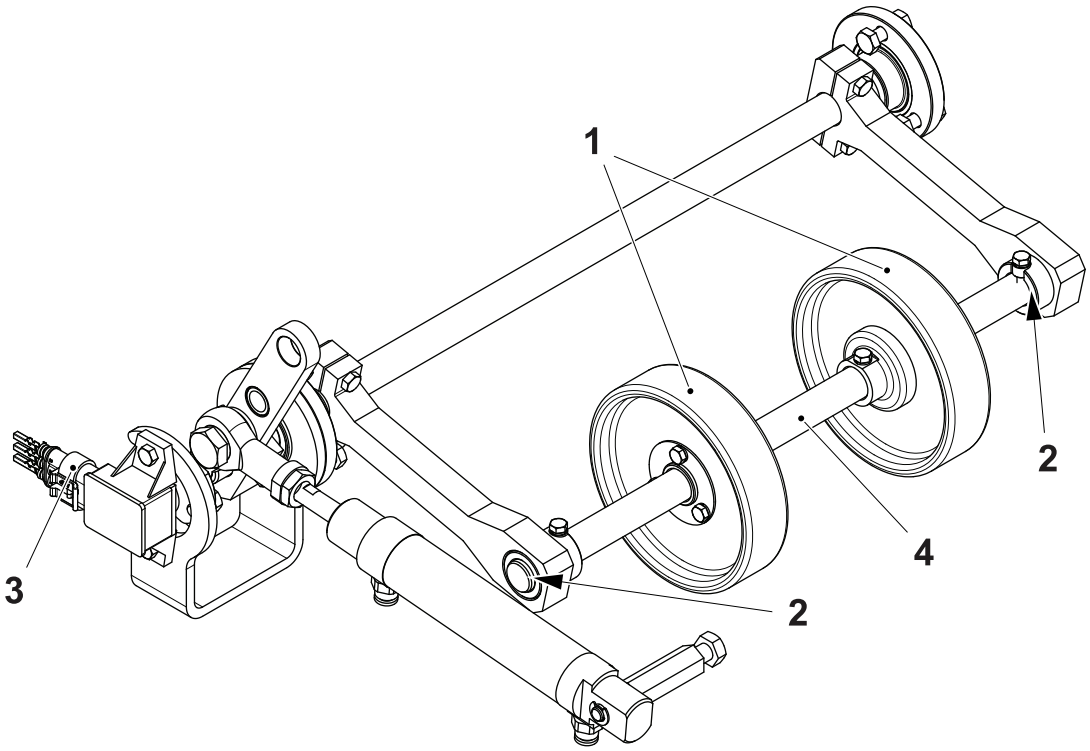

1 Wheel
2 Bearing
3 Sensor
4 Shaft

(Cont'd)

(Cont'd)

Check during PRODUCTION

Turn ON the main air supply and make sure that the pneumatic cylinder (5) moves easily. Check for air leaks.

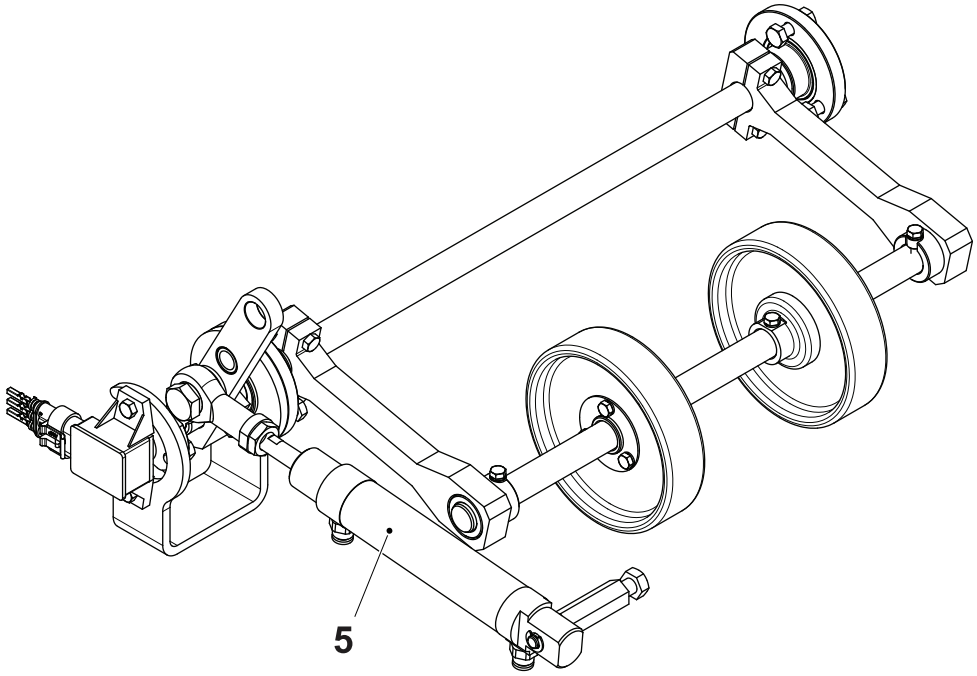

5 Pneumatic cylinder

1.1.1.4-2 Pendulum Roller - Change Bushings

Machine Status	Electrical supply disconnecting device in position I (ON) Main air valve OFF Main steam valve ON Main water valve OFF
Consumables	Grease, Fluolub 210 TP No. 90296-00091
SPC Reference	2808160-0200

a) On both levers (1) remove the screws (2) and bring the wheel assembly (3) on the work bench.

b) On both sides remove and change the bushing (4).

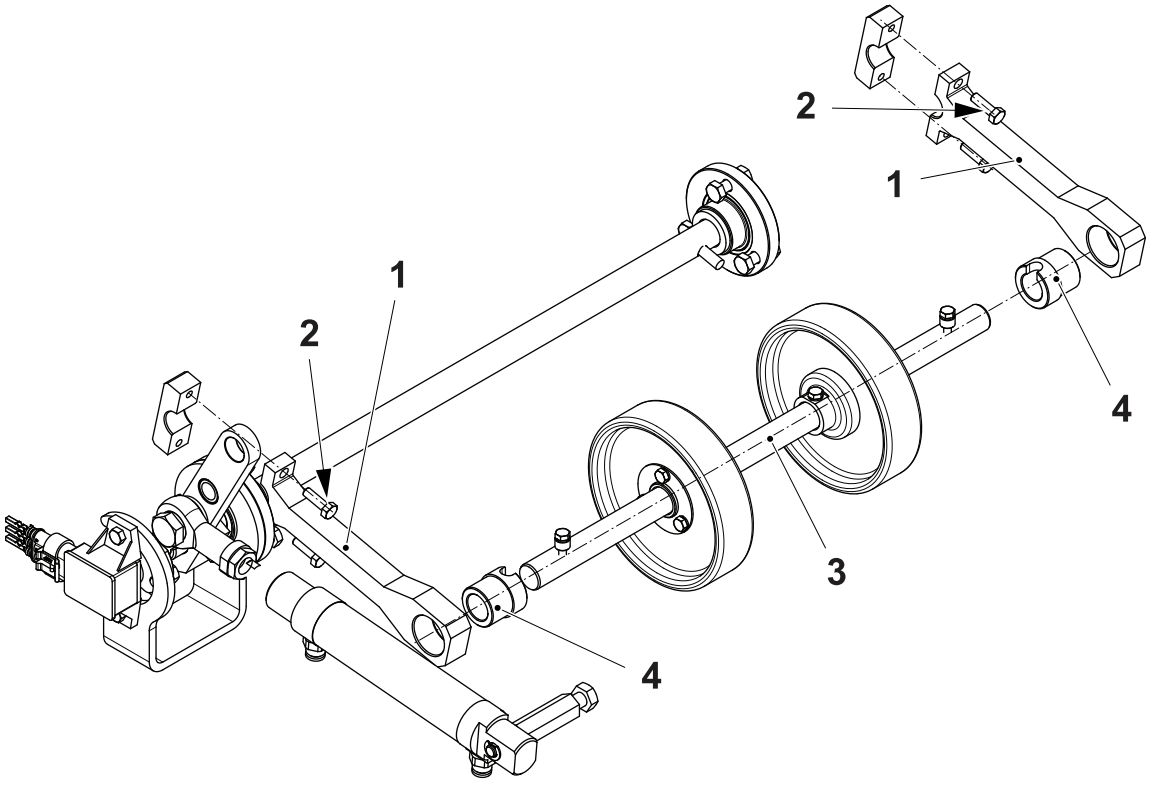

1 Lever
2 Screw
3 Wheel assembly
4 Bushing

(Cont'd)

(Cont'd)

Note! Apply a thin layer of food-grade lubricant grease TP No. 90296-00091 to the bushing (4).

c) Assemble in the reverse order paying attention that the screw (5) on the shaft is fitted into the slot of the bushing (4).

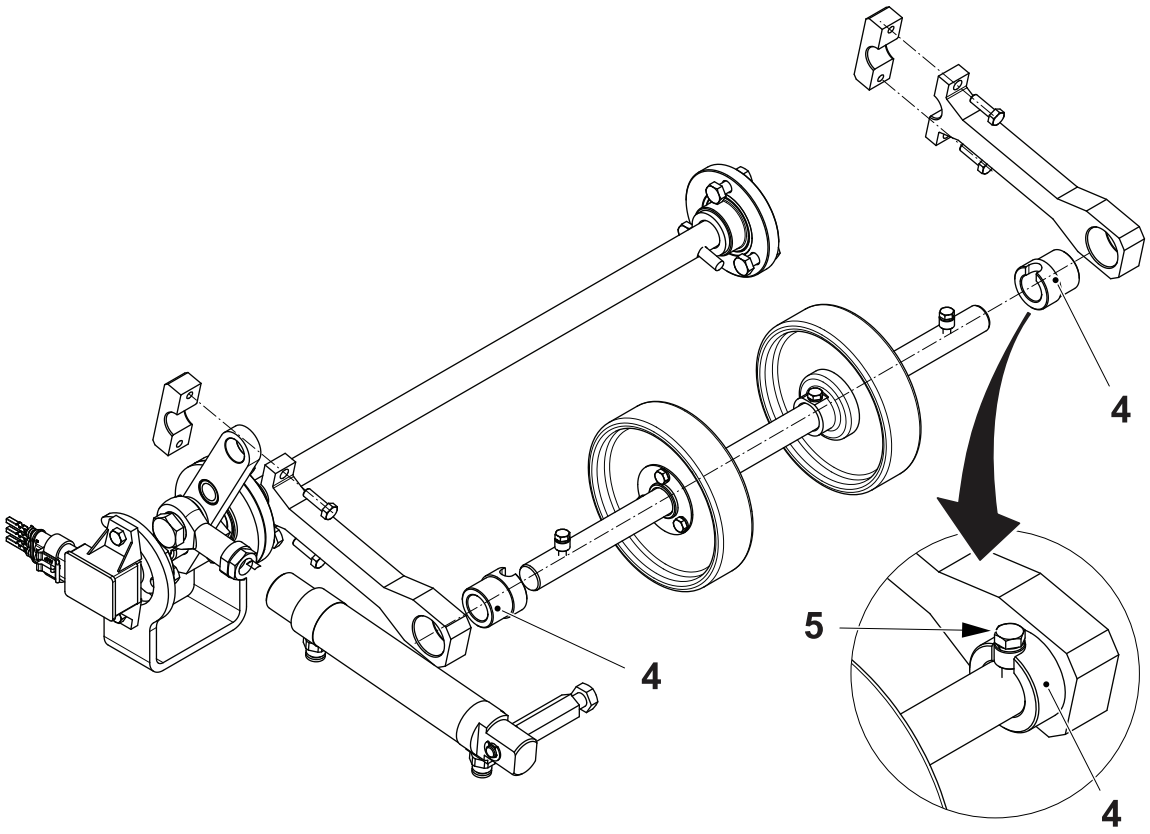

5 Screw

(Cont'd)

(Cont'd)

d) Mount the bushing (4) according to the package volumes, see table below.

Package	Configuration
TBA 160 S, TBA 180 S, TBA 200 B, TBA 200 M, TBA 200 S, TBA 200 Sq, TBA 250 B, TBA 250 S, TBA 250 Sq, TBA 284 B, TBA 300 S, TBA 330 S, TBA 375 S, TPA 200 Sq, TPA 250 Sq, TPA 330 Sq, TBA 200 E, TBA 250 E	A
TBA 80 S, TBA 100 B, TBA 125 S, TPA 125 Sq	B

e) Assemble in the reverse order.

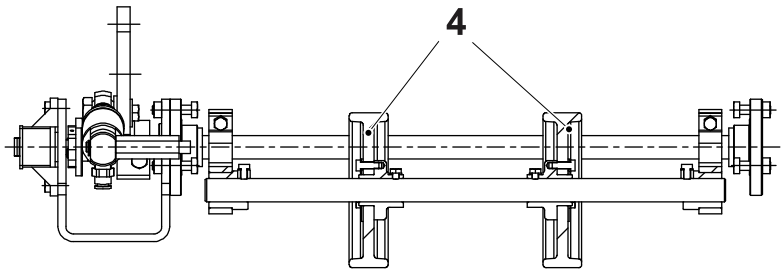

Configuration A

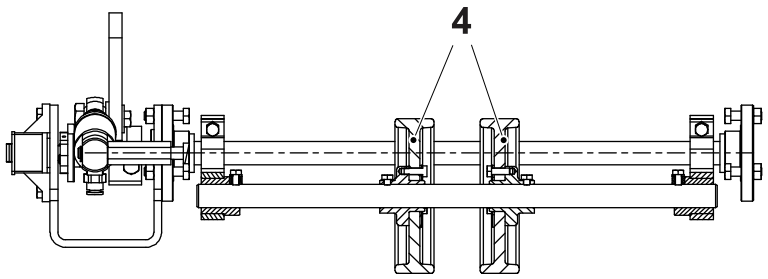

Configuration B

4 Bushing

1.1.1.4-3 Pendulum Roller - Set U/P Transducer

Machine Status	PREPARATION
SPC Reference	2808160-0200

CAUTION
Risk of damage to the equipment.
Be careful not to damage the trimmers with the screw driver.

a) Remove the rubber cover (1) to display the three trimmers Z, S and G.

b) Turn the gain trimmer G (2) fully anti-clockwise.

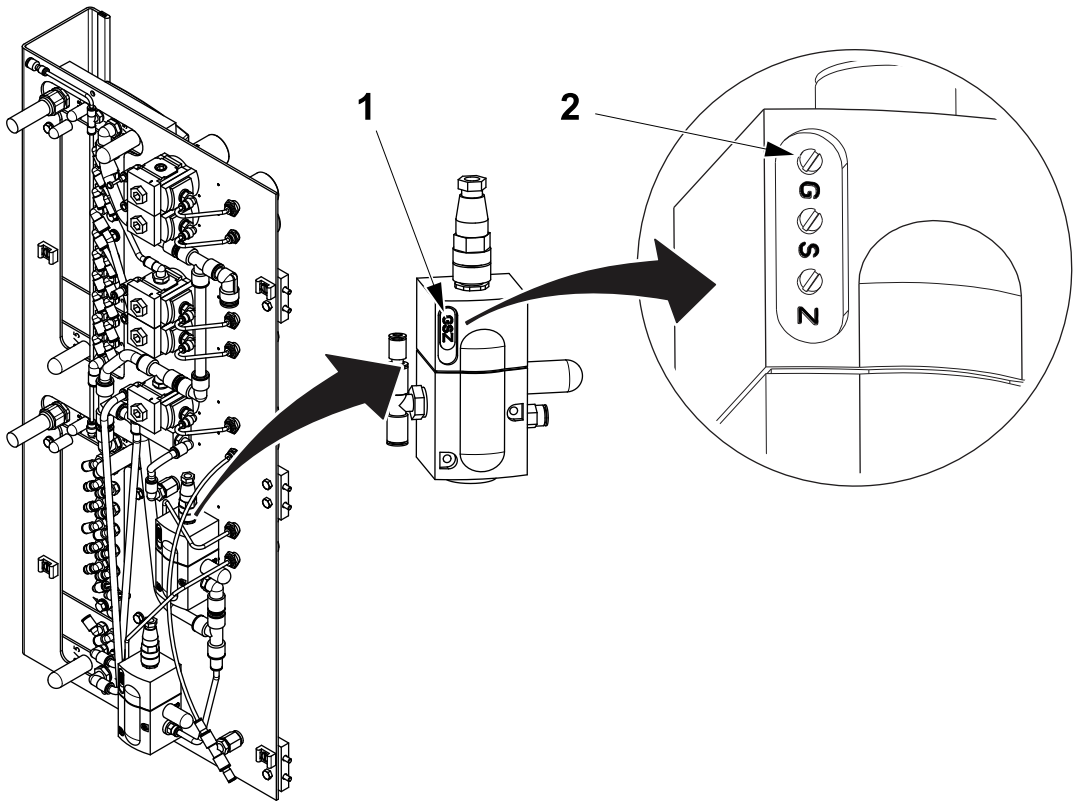

1 Rubber cover
2 Gain trimmer G

(Cont'd)

(Cont'd)

c) On the TPOP, touch the PRODUCTION control button (3).

d) Touch the TUBE FORMING UNIT button (4).

e) Touch the PENDULUM ROLLER icon (5).

f) Set the value to **1** bar by the ARROWS button (6) or the KEYBOARD button (7).

g) Set the pressure for the pendulum roller on the pressure gauge (8) to **1** bar by means of the trimmer Z (9).

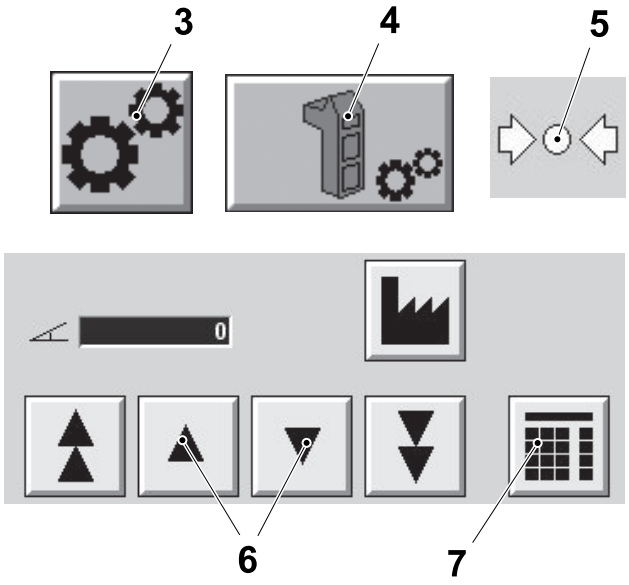

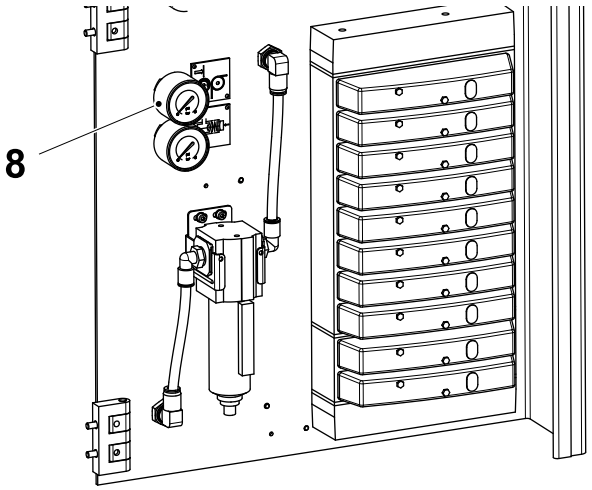

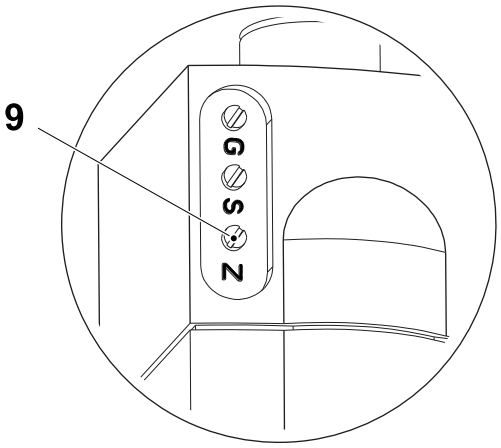

3 PRODUCTION CONTROL button
4 TUBE FORMING UNIT button
5 PENDULUM ROLLER icon
6 ARROW button
7 KEYBOARD button
8 Pressure gauge
9 Trimmer Z

(Cont'd)

(Cont'd)

h) Set the value to **6** bar by the ARROWS button (6) or the KEYBOARD button (7).

i) Make sure that the pressure on the pressure gauge (8) is **6** bar. If necessary, adjust by using the trimmer S (10).

j) Touch the EXIT button (11).

k) Fit back the rubber cover (1).

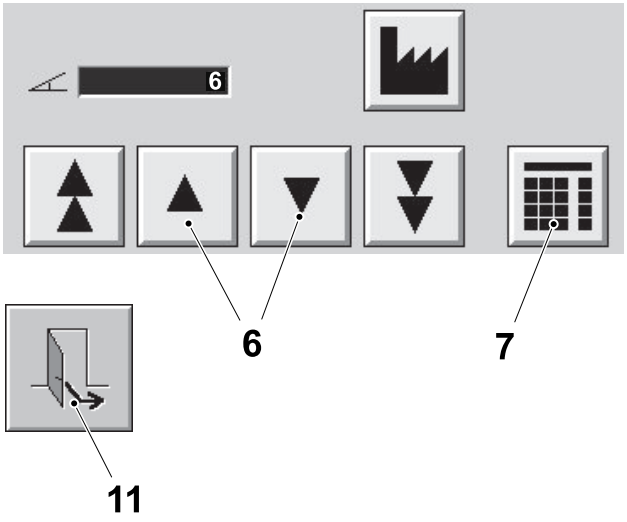

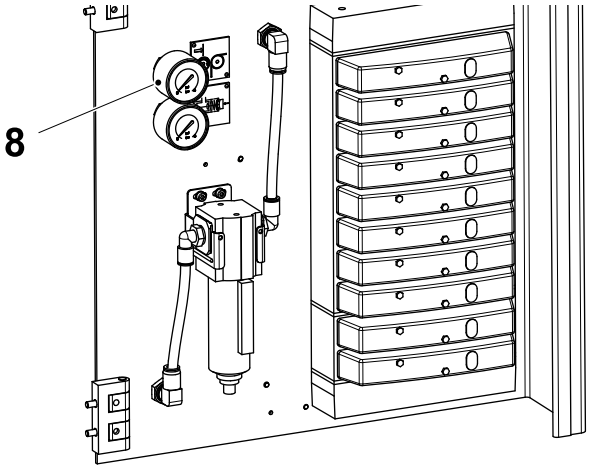

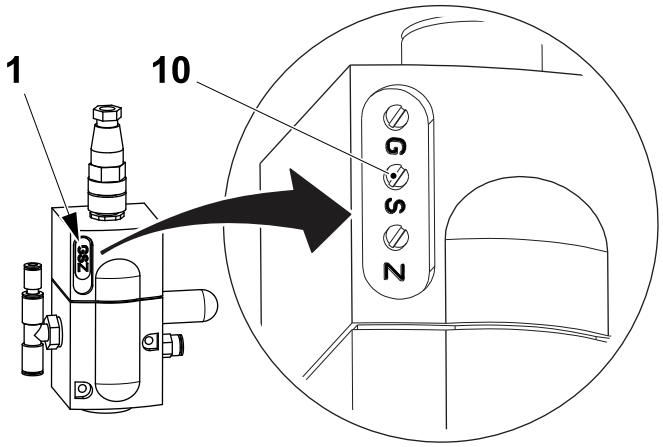

1 Rubber cover
6 ARROW button
7 KEYBOARD button
8 Pressure gauge
10 Trimmer S
11 EXIT button

1.1.1.4-4 Pendulum Roller - Set Cylinder

Machine Status	Electrical supply disconnecting device in position O (OFF) Main air valve OFF Main steam valve ON Main water valve OFF
SPC Reference	2808160-0200

a) Loosen the screw (1) and remove the shaft (2).

b) Move the cylinder (3) from the lever (4).

c) Pull out completely the piston rod (5).

d) Set the distance **A** between the ball joint (6) and the cylinder by adjusting the nut (7).

e) Connect the cylinder (3) to the lever (4) by inserting the shaft (2) and the screw (1).

f) Manually move the pendulum roller (8) and make sure that the levers (9) touches both pins (10) at the same time. If not see 1.1.1.4-7 Pendulum Roller - Check Parallelism.

g) Perform the referencing, see 1.1.1.4-6 Pendulum Roller - Referencing.

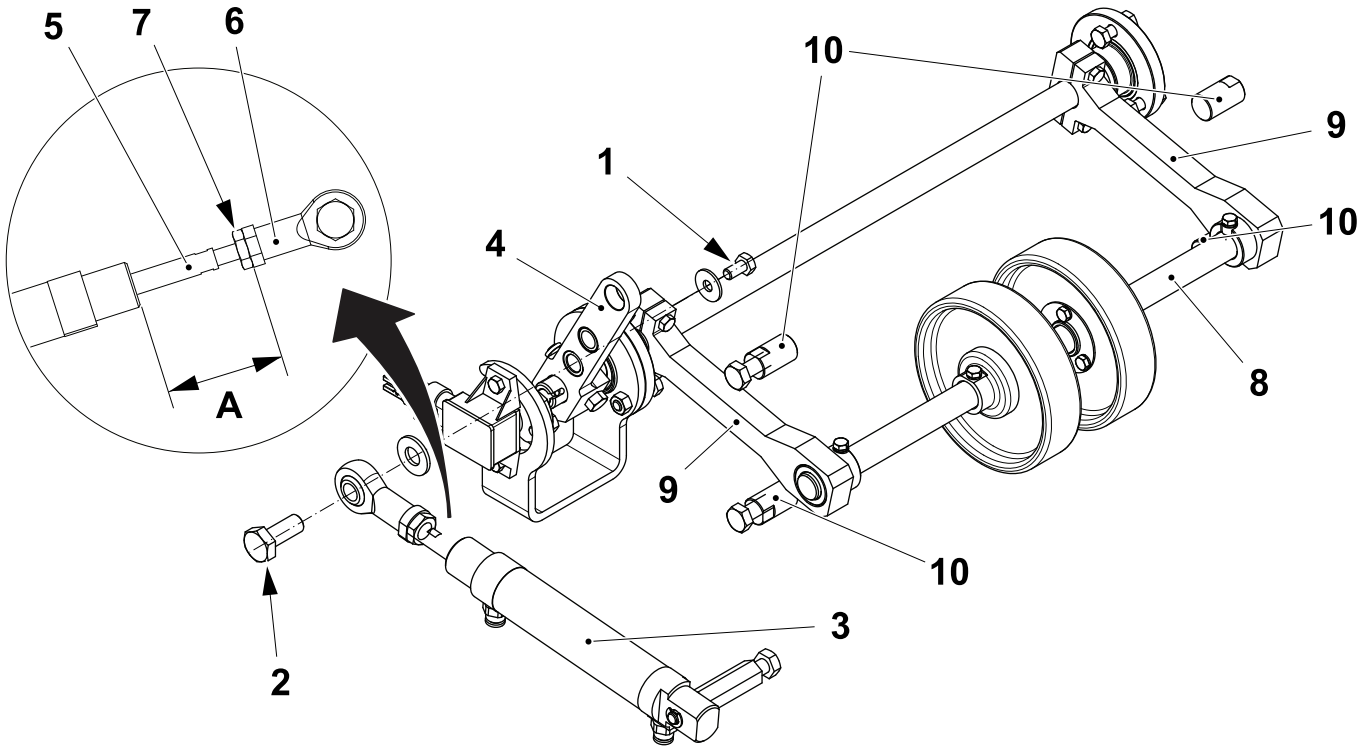

A = 56.0 mm

1 Screw
2 Shaft
3 Cylinder
4 Lever
5 Piston rod
6 Ball joint
7 Nut
8 Pendulum roller
9 Lever
10 Pin

1.1.1.4-5 Pendulum Roller - Set Lever Position

Machine Status	Electrical supply disconnecting device in position O (OFF) Main air valve OFF Main steam valve OFF Main water valve OFF
SPC Reference	2808321-0200

Note! The position of the ball joint (1) on the lever (2) changes according to the volume to be produced.

a) Loosen the screw (3) and remove the shaft (4).

b) With the piston rod (5) fully retracted, connect the ball joint (1) to the lever (2) by inserting the shaft (4) in the position required by the volume, see the table below.

c) Tighten the screw (3).

Package	Position
TBA 80 S, TBA 100 B, TBA 125 S,TBA 160 S, TBA 180 S, TBA 200 M, TBA 200 B, TBA 200 S, TBA 200 Sq, TBA 250 B, TBA 250 S, TBA 250 Sq, TBA 284 B, TBA 300 S, TBA 330 S, TBA 375 S, TPA 125 Sq, TPA 200 Sq, TPA 250 Sq, TPA 330 Sq, TBA 200 E, TBA 250 E	A

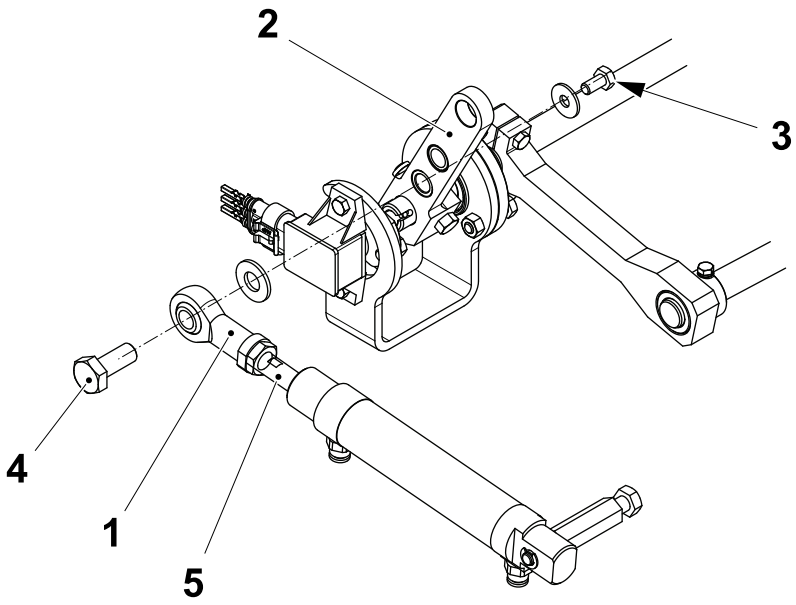

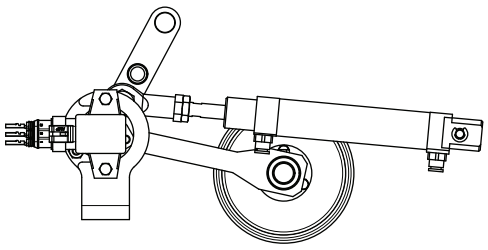

Pos. A

1 Ball joint
2 Lever
3 Screw
4 Shaft
5 Piston rod

1.1.1.4-6 Pendulum Roller - Referencing

Machine Status	PREPARATION
SPC Reference	2808160-0200

Note! Remove the packaging material from the drying chamber.

a) Close all doors and clear all alarms on the TPOP display.

b) Log on to access the `MAINTENANCE CONTROL` window, see 8.6.3-2 HMI - User Management Log On.

c) Touch the `MAINTENANCE CONTROL` button (1).

d) Touch the `TUBE FORMING UNIT` button (2).

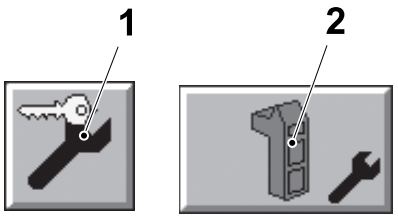

1 Maintenance control button
2 Tube forming unit button

(Cont'd)

(Cont'd)

e) Touch the PENDULUM ROLLER REFERENCING icon (3).

f) Touch the ON button (4).

g) Touch the OK button (5) to start the referencing and wait for the ON button (4) to become green.

h) Touch the EXIT button (6) to exit from the TUBE FORMING UNIT window.

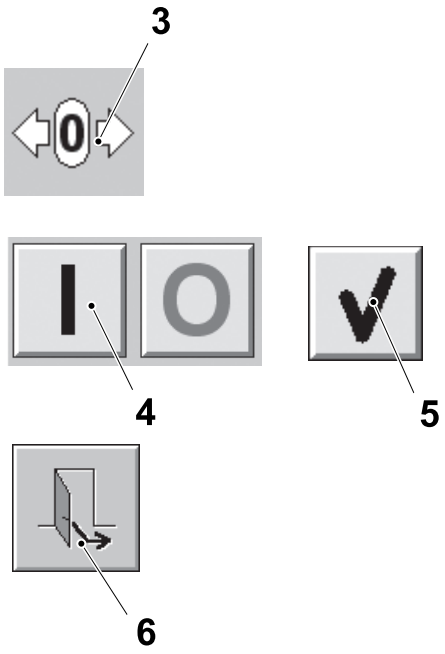

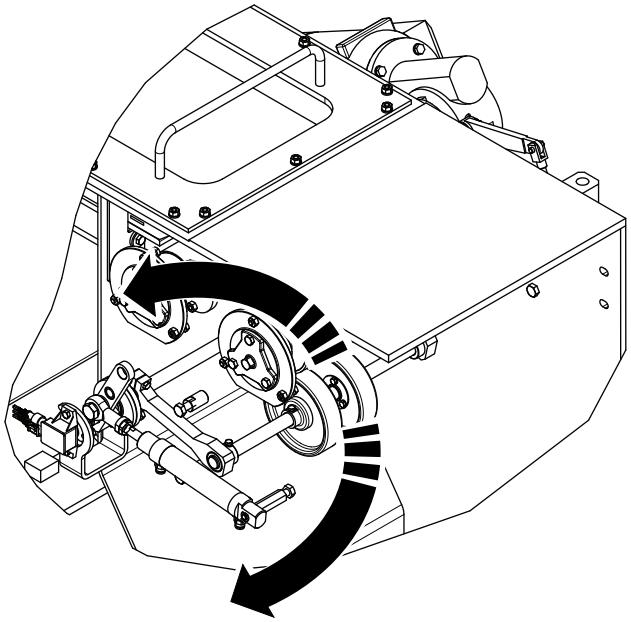

3 Pendulum roller referencing icon
4 On button
5 OK button
6 Exit button

1.1.1.4-7 Pendulum Roller - Check Parallelism

Machine Status	Electrical supply disconnecting device in position O (OFF) Main air valve OFF Main steam valve ON Main water valve OFF
SPC Reference	2808160-0200

Note! Follow this procedure only if the restore to the pendulum basic setting is required.

(Cont'd)

(Cont'd)

Note! The LH upper stop (2) and LH lower stop (8) are eccentric to allow parallelism adjustment.

a) Disconnect the cylinder (1).

b) Remove the LH upper stop (2) and the RH upper stop (3).

c) Raise the pendulum roller (4) until the wheels (5) touch the drive roller (6) equally. If the pendulum roller (4) is not parallel to the drive roller (6), the damaged component must be identified and replaced.

d) Lower the pendulum roller (4) and make sure that both arms (7) touch the LH lower stop (8) and the RH lower stop (9).

If required adjust with the eccentric LH lower stop (8).

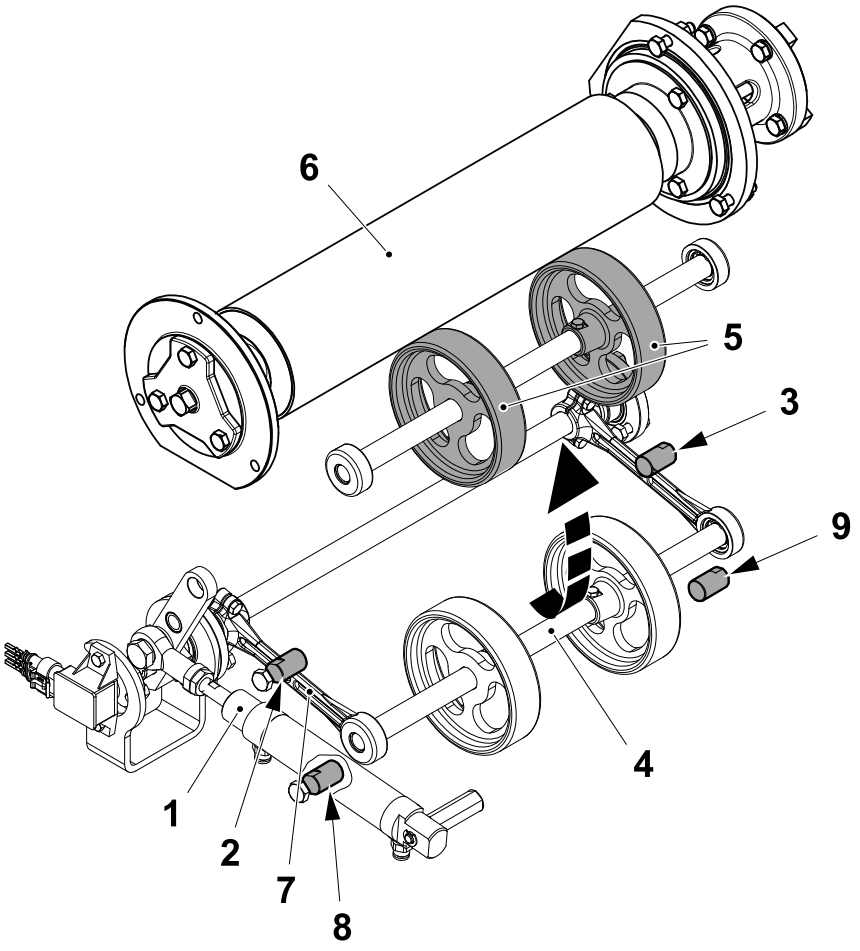

1 Cylinder
2 LH upper stop
3 RH upper stop
4 Pendulum roller
5 Wheel
6 Drive roller
7 Arm
8 LH lower stop
9 RH lower stop

(Cont'd)

(Cont'd)

e) Fit the LH upper stop (2) and the RH upper stop (3) in the correct position.

f) Raise the pendulum roller (4) and make sure that both arms (7) touch the LH upper stop (2) and the RH upper stop (3).

If required adjust with the eccentric LH upper stop (2).

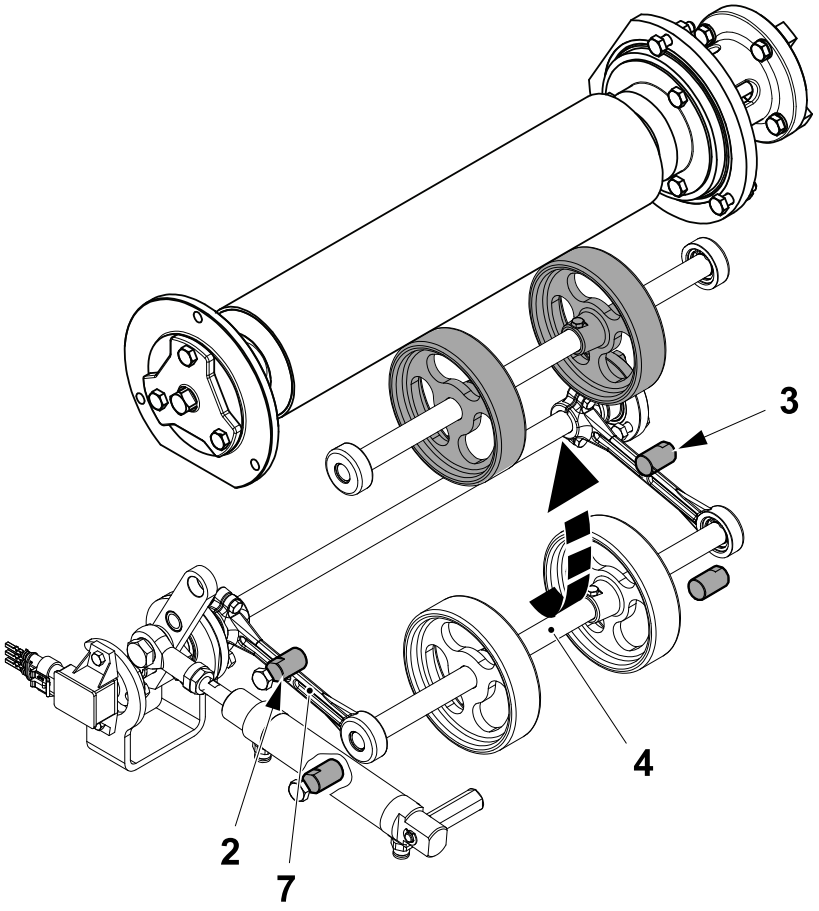

2 LH upper stop
3 RH upper stop
4 Pendulum roller
7 Arm

1.1.1.5 Bending Roller

1.1.1.5-1 Bending Roller - Change

Machine Status	Electrical supply disconnecting device in position O (OFF) Main air valve OFF Main steam valve ON Main water valve OFF
SPC Reference	2808165-0100

a) Remove the nuts (1) and (2).

b) Pull out the bending roller (3) from the drying chamber.

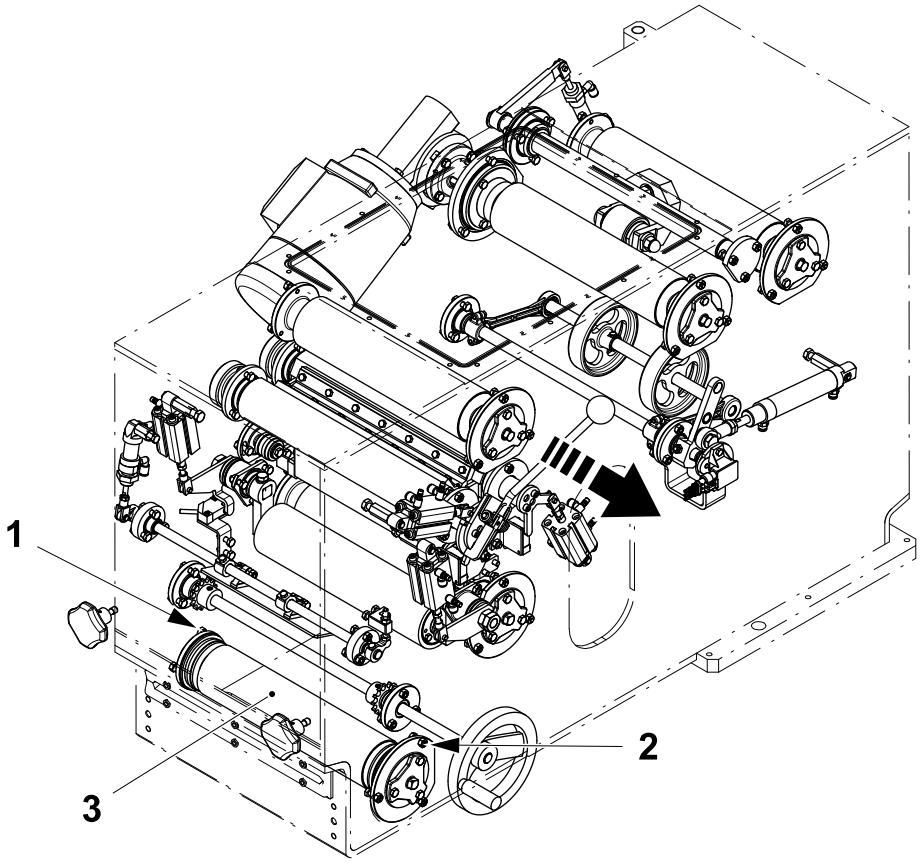

1 Nut
2 Nut
3 Bending roller

(Cont'd)

(Cont'd)

c) Remove the screws (4) and the cover (5) and change the O-ring (6).

d) Remove the retaining ring (7) and the flange (8).

e) Change the bearing (9), the seal (10) and the O-ring (11).

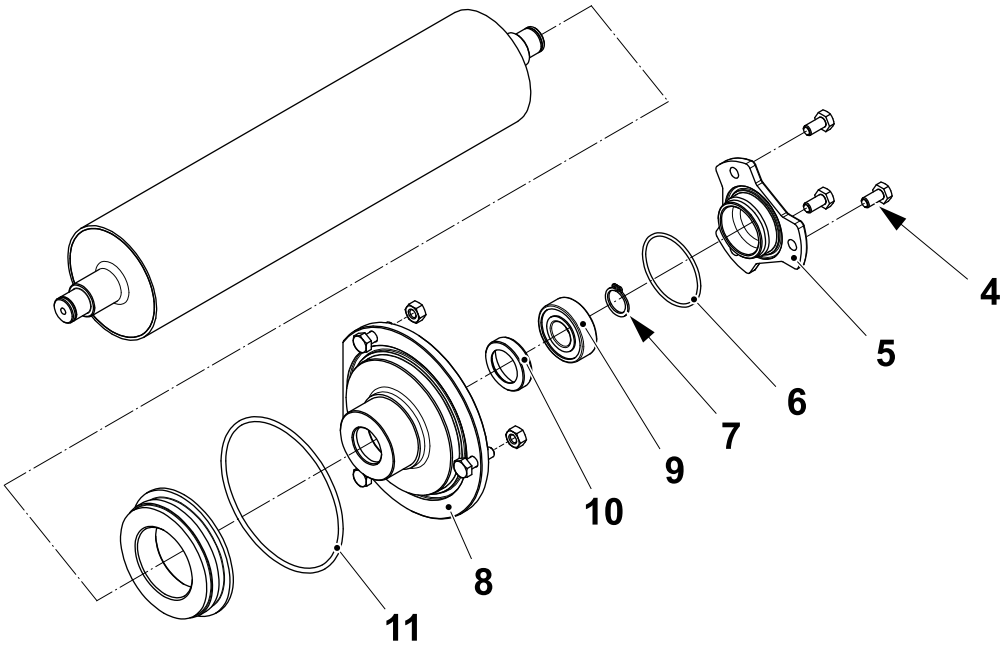

4 Screw	7 Retaining ring	10 Seal
5 Cover	8 Flange	11 O-ring
6 O-ring	9 Bearing	

(Cont'd)

(Cont'd)

f) Remove the lid (12) and change the O-ring (13).

g) Remove the retaining ring (14) and the flange (15).

h) Change the O-ring (16), the seal (17) and the bushing (18).

i) Remove the wheels (19) and change the bending roller (20).

j) Assemble in the reverse order.

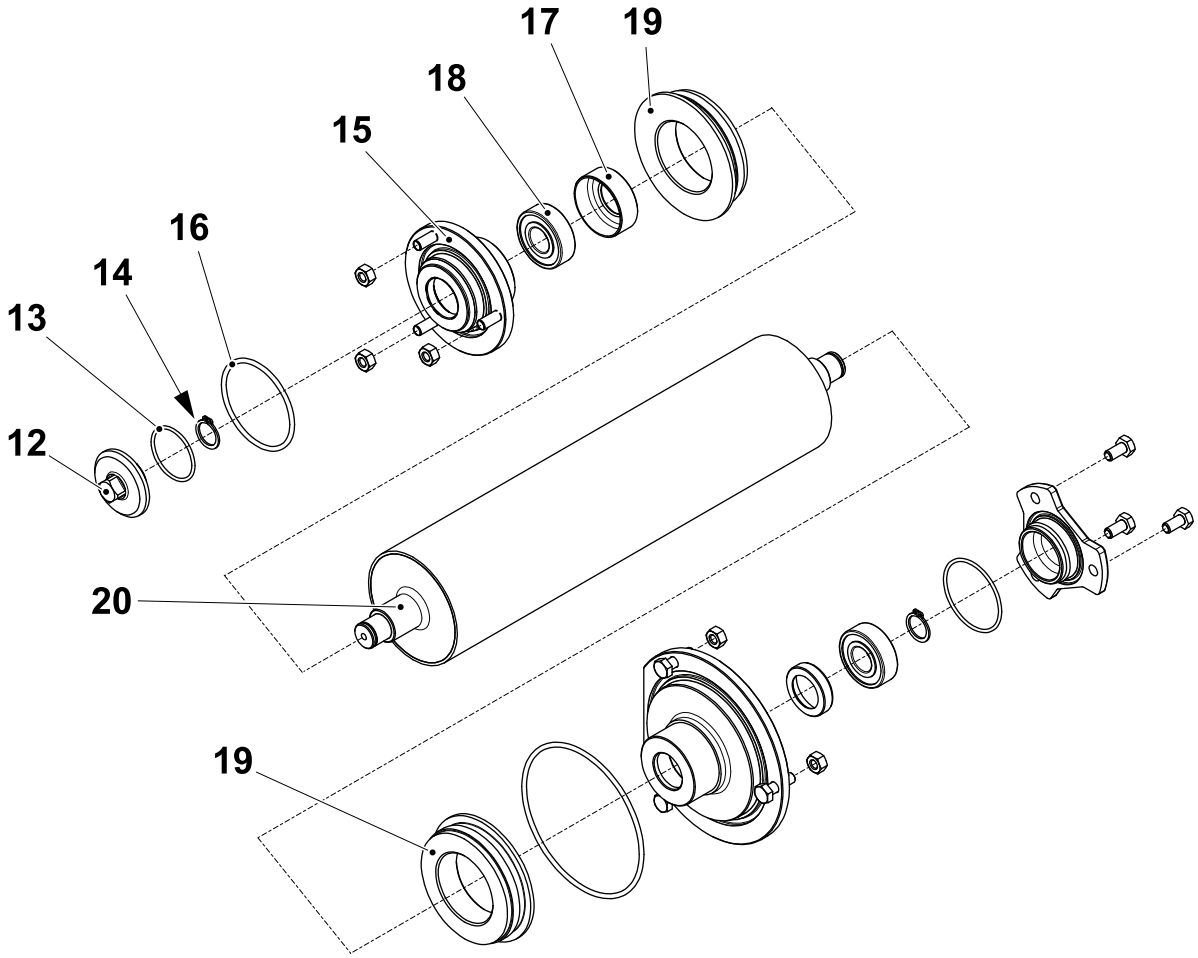

12 Lid
13 O-ring
14 Retaining ring
15 Flange
16 O-ring
17 Seal
18 Bushing
19 Wheel
20 Bending roller

1.1.1.6 Air Knife

1.1.1.6-1 Air Knife - Check and Clean

Machine Status	Electrical supply disconnecting device in position I (ON) Main air valve OFF Main steam valve ON Main water valve OFF
Consumables	Soapy Water Sandpaper
SPC Reference	2808170-0200

WARNING
Hydrogen Peroxide.
Follow the Safety Precautions.

a) Manually check that the air guides (1) moves smoothly.

b) Check that the LED on the micro switch (2) is lit when the cylinder (3) in fully retracted.

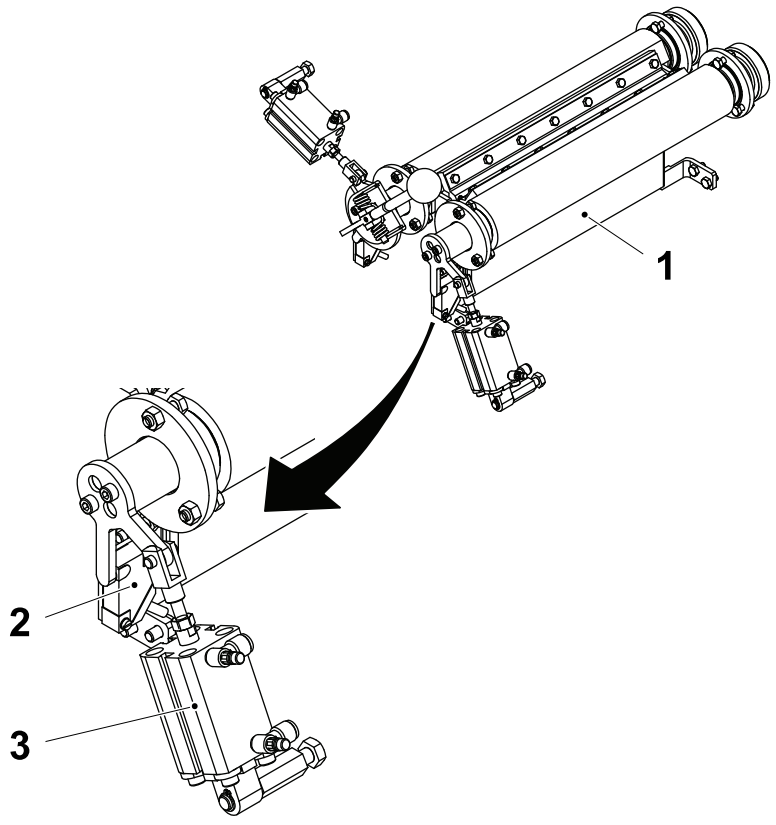

1 Air guide
2 Micro switch
3 Cylinder

(Cont'd)

(Cont'd)

c) Check that the bushings (4) and the steering rail (5) are intact.

d) Check that the air guides (1) are straight and parallel.

e) Clean the air guides (1) with soapy water and the steering rail (5) with sandpaper.

f) Change if necessary.

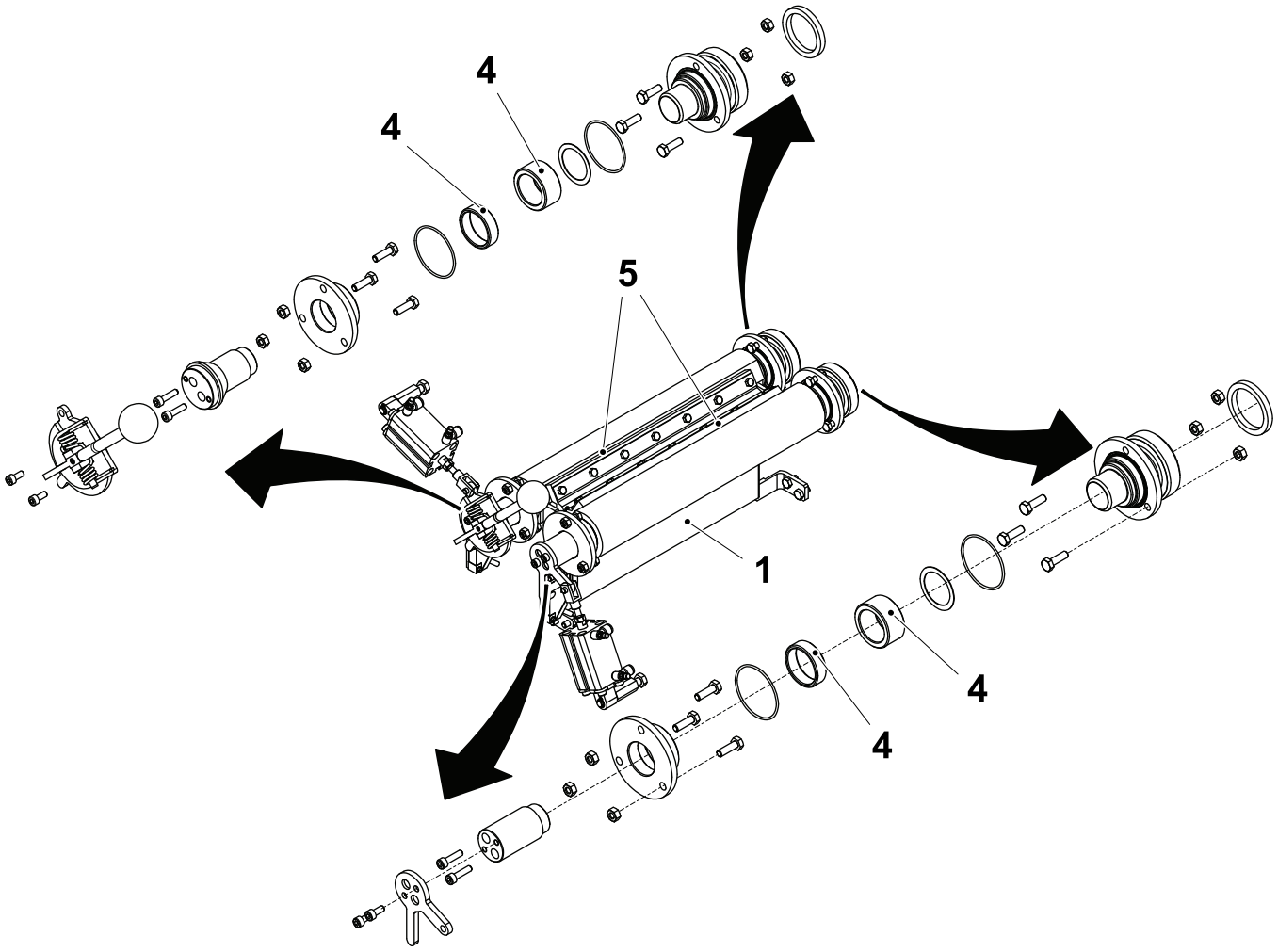

1 Air guide
4 Bushing
5 Steering rail

1.1.1.6-2 Air Knife - Set Proximity Sensor

Machine Status	Electrical supply disconnecting device in position O (OFF) Main air valve OFF Main steam valve ON Main water valve OFF
SPC Reference	2808170-0200

Check the distance **A** between the proximity sensor (1) and the plate (2) when the piston rod (3) is fully retracted. If necessary, set the distance **A** with the screws (4).

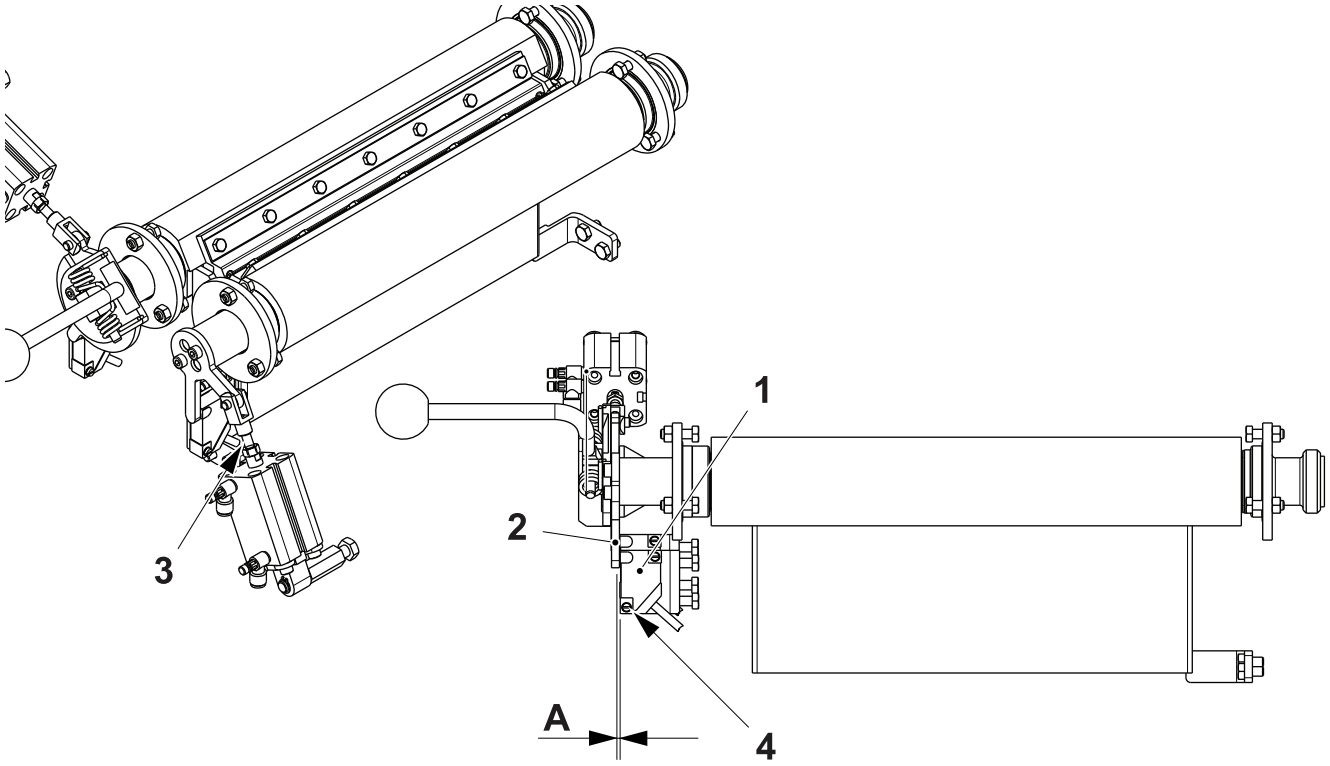

A = 0.5 ÷ 1.0 mm

1 Proximity sensor
2 Plate
3 Piston rod
4 Screw

(Cont'd)

(Cont'd)

Check the distance **B** between the proximity sensor (5) and the plate (6) when the piston rod (7) is fully retracted. If necessary, set the distance **B** with the screws (8).

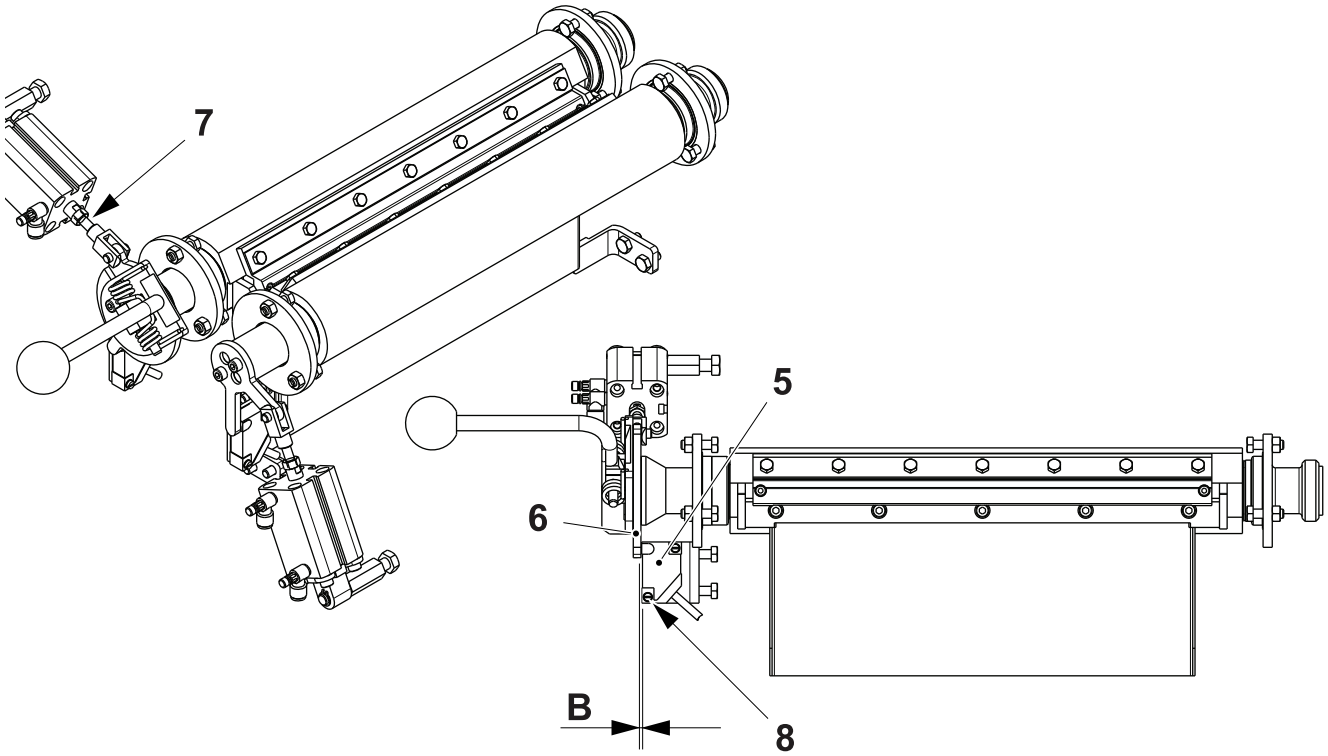

B = 0.5 ÷ 1.0 mm

5 Proximity sensor
6 Plate
7 Piston rod
8 Screw

1.1.1.7 Pressure Roller

1.1.1.7-1 Pressure Roller - Check

Machine Status	Electrical supply disconnecting device in position I (ON) Main air valve OFF Main steam valve ON Main water valve ON
SPC Reference	2871525-0200 2808175-0300

CAUTION

Risk of personal injury.
Moving parts can crush or cut.

Check that:

- the surfaces of the roller (1) are not worn or damaged
- the radial play in the ball bearings (2) is not excessive. Change them if necessary, see 1.1.1.7-2 Pressure Roller - Change
- the play in the bushings (3) is not excessive. Change it if necessary, see 1.1.1.7-2 Pressure Roller - Change.

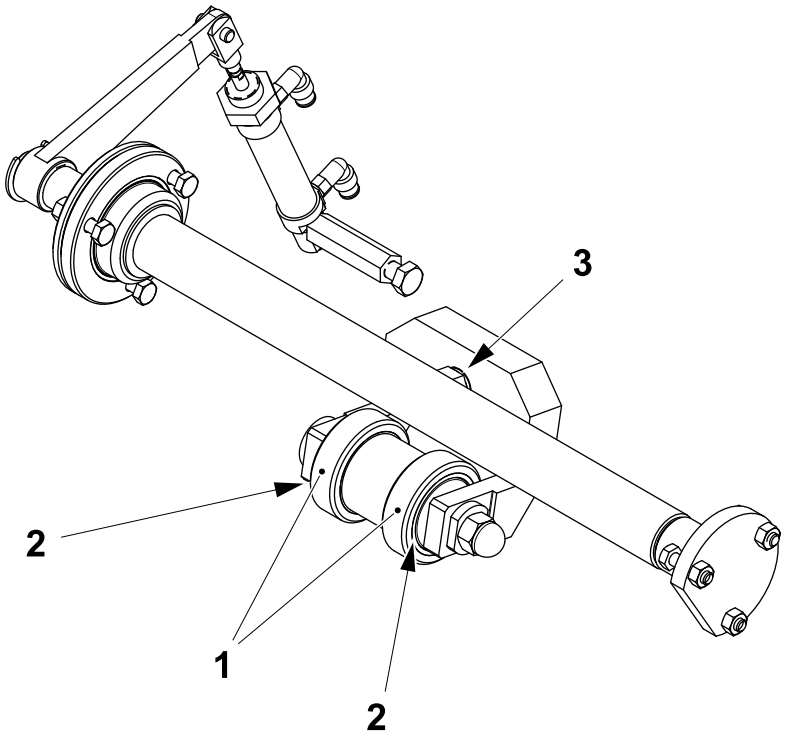

1 Roller
2 Ball Bearing
3 Bushing

(Cont'd)

(Cont'd)

Check during PRODUCTION

Turn ON the main air supply and make sure that the pneumatic pneumatic cylinder (4) moves easily. Check for air leaks.

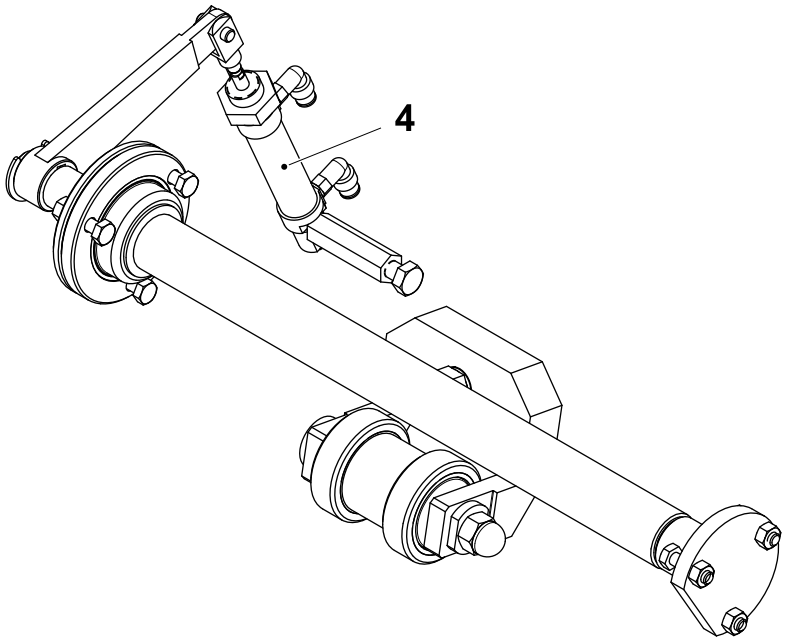

4 Pneumatic cylinder

1.1.1.7-2 Pressure Roller - Change

Machine Status	Electrical supply disconnecting device in position I (ON) Main air valve OFF Main steam valve ON Main water valve ON
SPC Reference	2808175-0300 2871525-0200

a) Remove the nuts (1) and the lid (2).

b) Remove the O-ring (3) and the bushings (4). Change them if necessary.

c) Remove the nuts (5), the lid (6), the sealing ring (7) and the flange (8).

d) Remove the O-ring (9) and the bushing (10). Change them if necessary.

e) Remove the screw (11) and the wheel assembly (12) and the bushing (13). Change the bushing (13) if necessary.

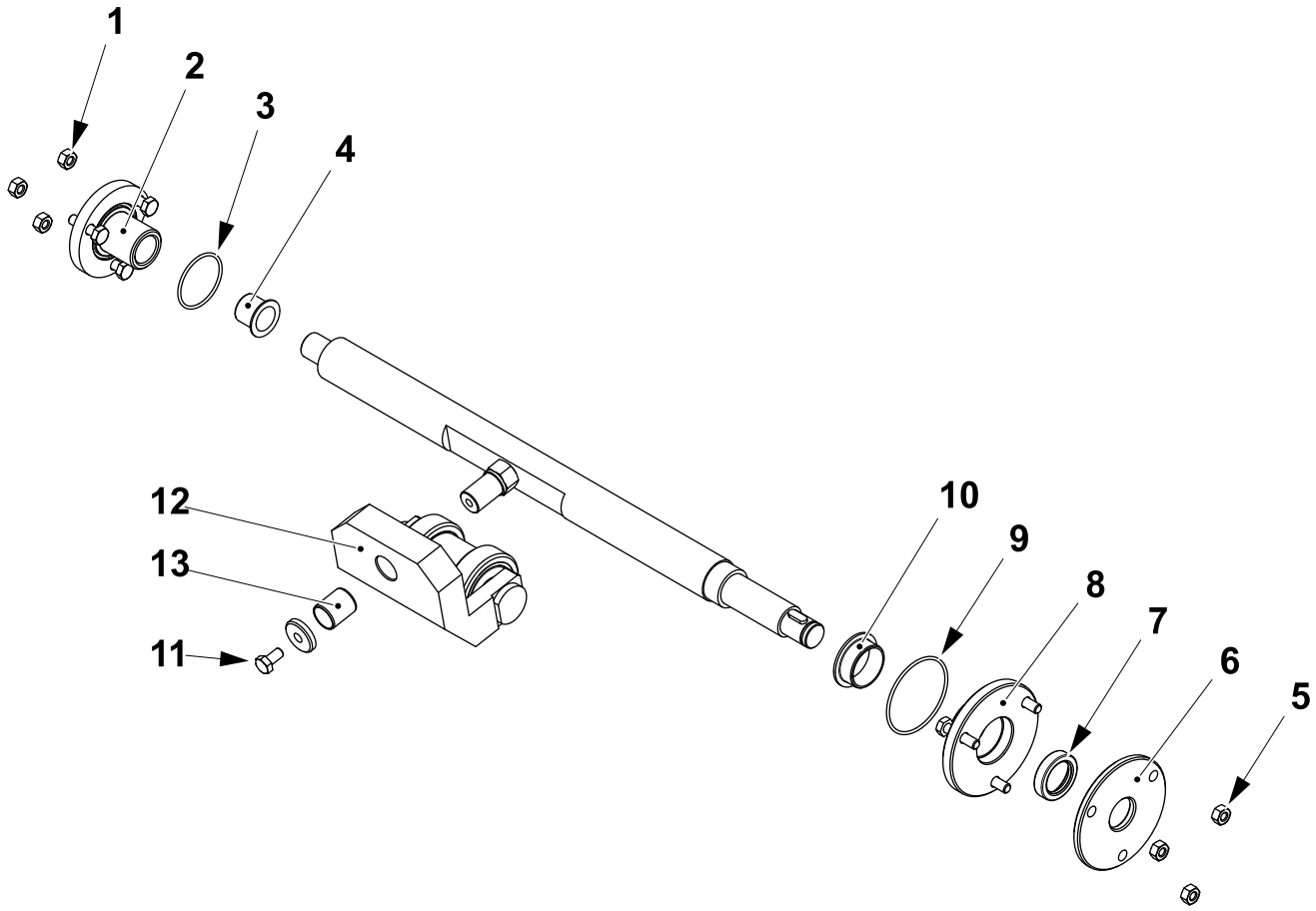

1 Nut
2 Lid
3 O-ring
4 Bushing
5 Nut
6 Lid
7 Sealing ring
8 Flange
9 O-ring
10 Bushing
11 Screw
12 Wheel assembly
13 Bushing

(Cont'd)

(Cont'd)

f) Remove the cup nut (14), the nut (15) and the shaft (16).

g) Remove the lids (17) and the ball bearings (18). Change them if necessary.

h) Remove and change the wheel (19).

i) Assemble in the reverse order.

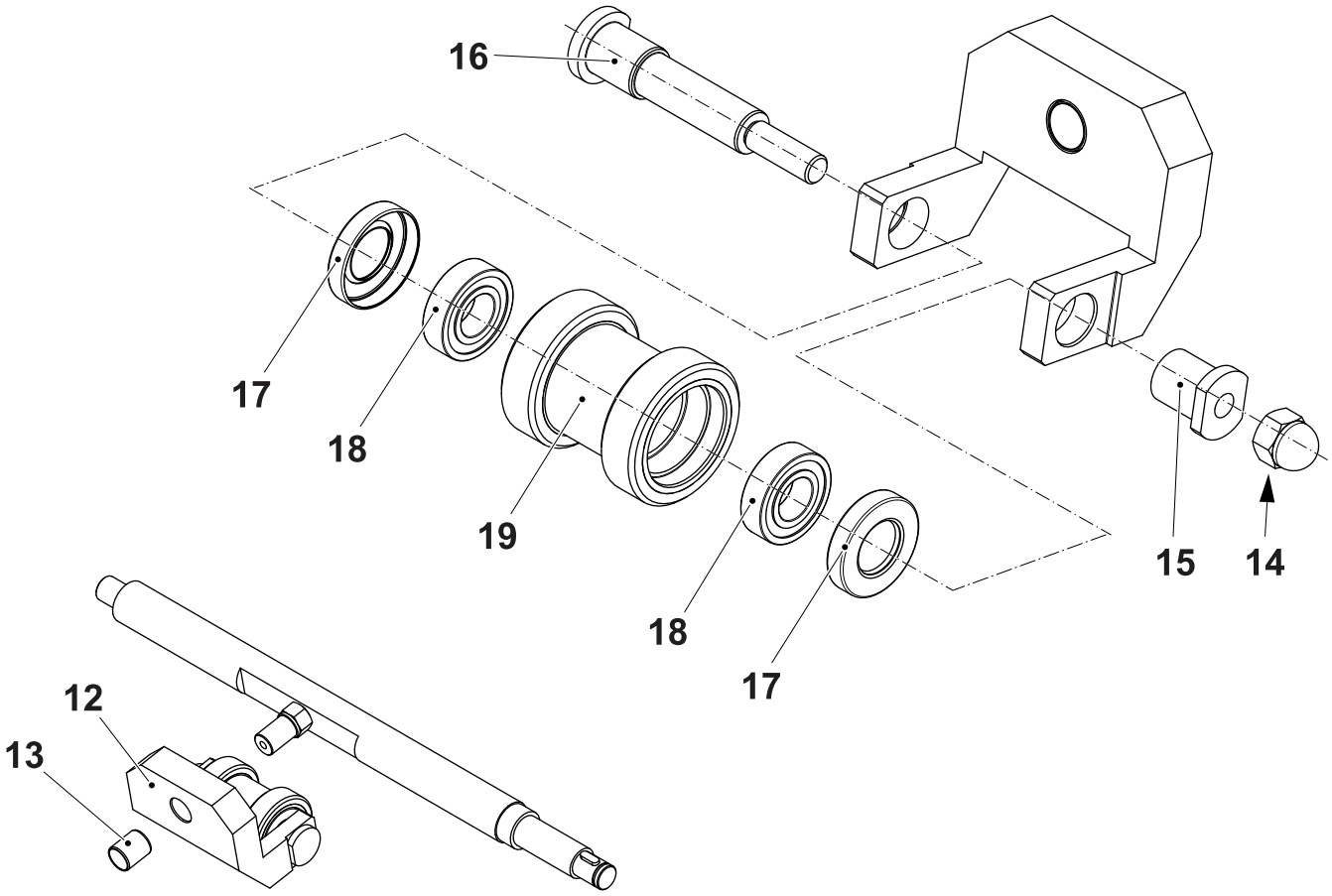

12 Wheel assembly
13 Bushing
14 Cup nut
15 Nut
16 Shaft
17 Lid
18 Ball bearing
19 Wheel

1.1.1.7-3 Pressure Roller - Set

Machine Status	Electrical supply disconnecting device in position I (ON) Main air valve ON Main steam valve ON Main water valve ON
SPC Reference	2871525-0200 2808175-0300

Set the pressure for the pressure roller cylinder (1) between 2.0 and 2.5 bar with the pressure regulator (2) located on the superstructure valve panel.

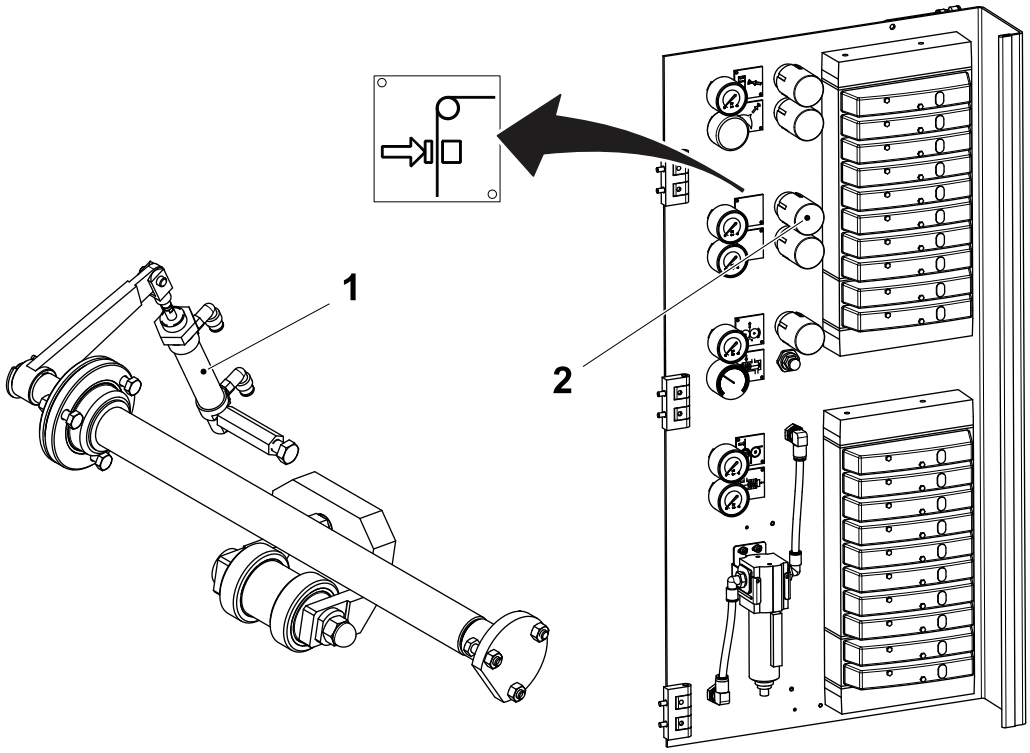

1 Pressure roller cylinder
2 Pressure regulator

1.1.1.8 Drive Roller

1.1.1.8-1 Drive Roller - Check

Machine Status	Electrical supply disconnecting device in position O (OFF) Main air valve OFF Main steam valve ON Main water valve OFF
SPC Reference	2808190-0300

Check the following parts for visual wear or damage:

- the drive motor (1) and gear (2) for abnormal noises
- the bending roller (3), check the rubber surface of the bending roller (3) for any marks. Also check for excessive play in the ball bearings by turning the bending roller (3) back and forwards.

If the packaging material is slipping on the roller surface, remove the roller see 1.1.1.8-2 Drive Roller - Overhaul and remove any layers of peroxide residue with a fine sand paper. Change damaged or worn parts if necessary.

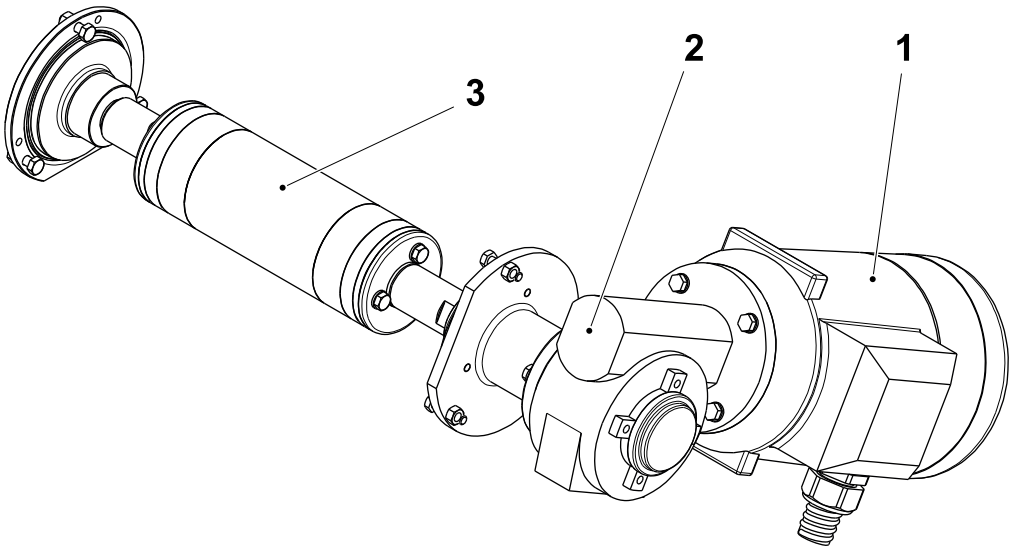

Modular bending roller is shown

1 Drive motor
2 Gear
3 Bending roller

Checking During PRODUCTION

Check that there are no drops of hydrogen peroxide on the packaging material after it has passed the calender rollers. If necessary see 1.1.1.1-3 Calender Roller - Set Distance or 1.1.1.1-2 Calender Roller - Change.

1.1.1.8-2 Drive Roller - Overhaul

Machine Status	Electrical supply disconnecting device in position I (ON) Main air valve ON Main steam valve ON Main water valve ON
SPC Reference	2808190-0300

a) Remove the nuts (1) from the flange (2). Pull out the complete drive roller (3) assembly.

b) Remove the screws (5), the lid (6) and the O-ring (4) and the O-ring (7).

c) Check the O-ring (4) and the O-ring (7) for damage and change if necessary.

d) Remove the retaining ring (8) the ball bearing (9) and the lid (10).

e) If necessary replace the ball bearing (9), the lid (10) and the retaining ring (8).

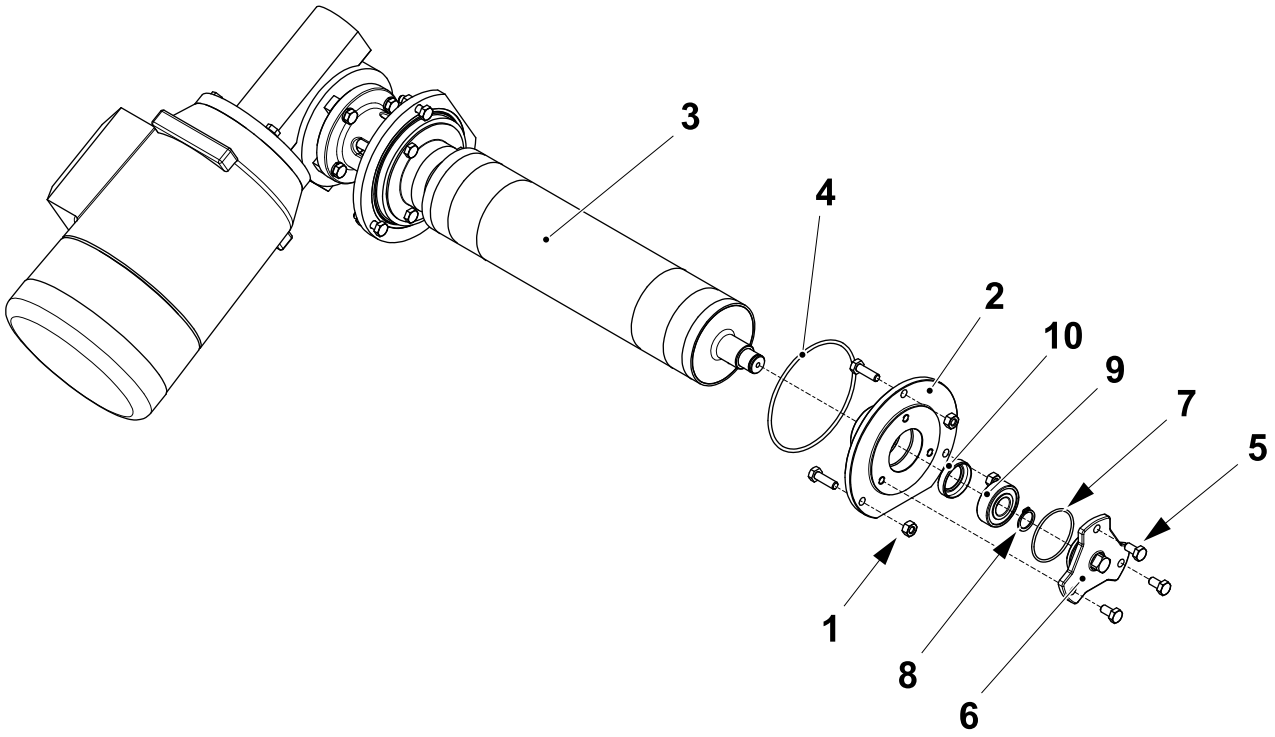

Modular bending roller is shown

1 Nut
2 Flange
3 Drive roller
4 O-ring
5 Screw
6 Lid
7 O-ring
8 Retaining ring
9 Ball bearing
10 Lid

(Cont'd)

(Cont'd)

f) Check the O-ring (11) for damage and change if necessary.

g) Remove the bushing (12) and the parallel key (13).

h) If necessary replace the parallel key (13).

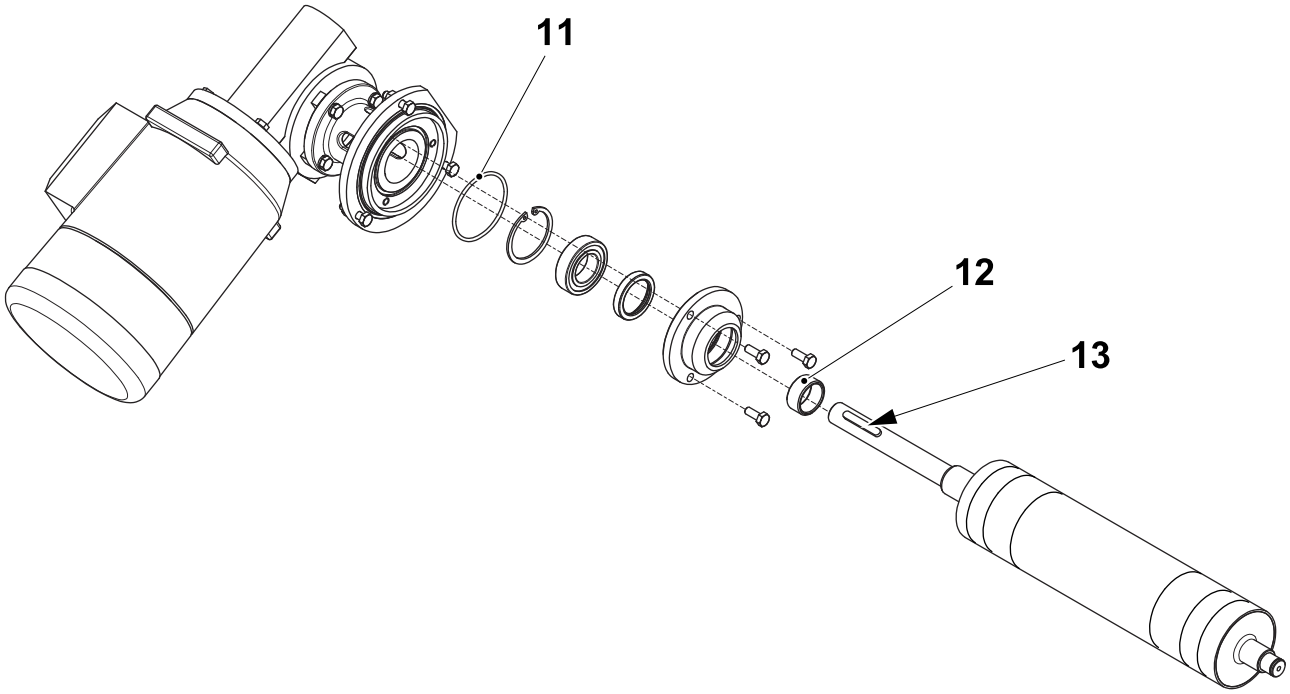

Modular bending roller is shown

11 O-ring
12 Bushing
13 Parallel Key

(Cont'd)

(Cont'd)

Note! The following procedure is only necessary for modular bending rollers, and if the O-rings (14) and the O-rings (15) must be changed, otherwise assemble the drive roller (3) into the drying chamber in the reverse order.

Note! Handle the covers (16) and the spacers (19) with care.

i) Remove the following components from the roller **A**:
   - the O-rings (14) and the O-rings (15)
   - the covers (16)
   - the screws (17)
   - the washers (18)
   - the spacers (19).

j) Change O-rings (14) and the O-rings (15).

k) To set the roller **A** width, see 1.1.1.8-3 Drive Roller - Set Width.

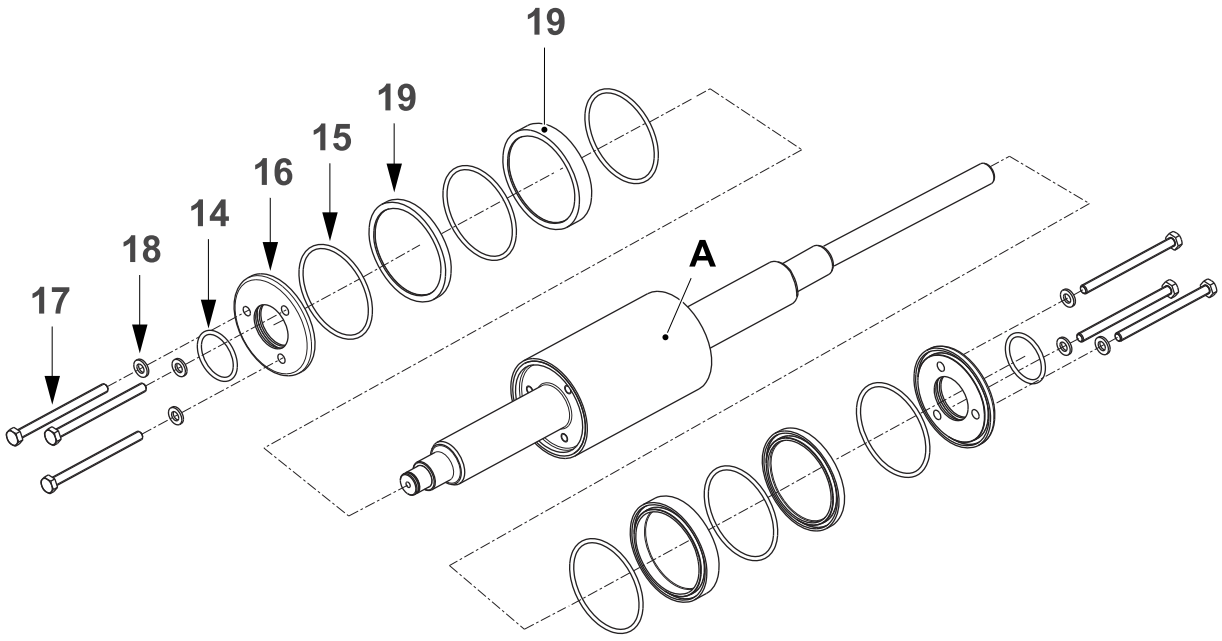

14 O-ring
15 O-ring
16 Cover
17 Screw
18 Washer
19 Spacer

1.1.1.8-3 Drive Roller - Set Width

Machine Status	Electrical supply disconnecting device in position I (ON) Main air valve ON Main steam valve ON Main water valve ON
Consumables	Lubrication grease, Fluolub 210 TP No. 90296-0091
SPC Reference	2808190-0300

Note! The following procedure is only necessary to perform for filling machines using *80-150 mN* bleached packaging material.

(Cont'd)

(Cont'd)

a) Assemble the spacers on to the roller **A** to set the correct width for the package to be produced. See the illustration and the table below.

b) Fit the O-rings (1) between each spacer.

Pack. Type Volume Shape	Central body A TP No.	Position B TP No.	Position C TP No.	Position D TP No.	Width E (mm)
TBA 80 S TPA 125 Sq	3259486-0000	NA	NA	NA	112.00
TBA 100 B TBA 125 S	3259486-0000	3296630-0000	NA	NA	134.00
TBA 160 S TBA 180 S TBA 200 S TPA 200 Sq TPA 250 Sq	3259486-0000	3296630-0000	3296631-0000	NA	144.00
TBA 200 E TBA 200 M TBA 250 E TBA 250 S	3259486-0000	3296629-0000	NA	NA	160.00
TPA 330 Sq	3259486-0000	3296629-0000	3296631-0000	NA	170.00
TBA 200 B TBA 250 B TBA 284 B TBA 300 S TBA 330 S TBA 200 Sq TBA 250 Sq	3259486-0000	3296629-0000	3296630-0000	NA	182.00
TBA 375 S	3259486-0000	3296629-0000	3296630-0000	3296631-0000	192.00

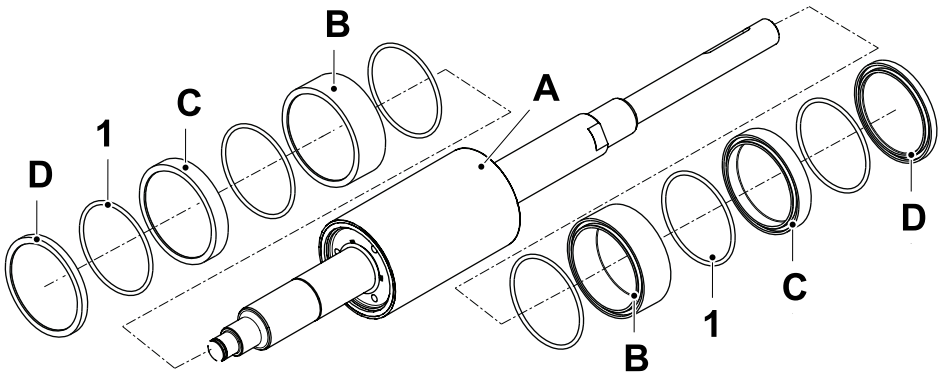

1 O-ring

(Cont'd)

(Cont'd)

c) Measure the width **E** of the roller **A** assembled with spacers and check it with the table on the previous page.

Note! Do not mount the covers (2), the width **E** is taken with roller **A** and spacers only. See the illustration below.

Note! Handle the spacers with care. Wrap the remaining spacers in protective packaging and store them in a safe place.

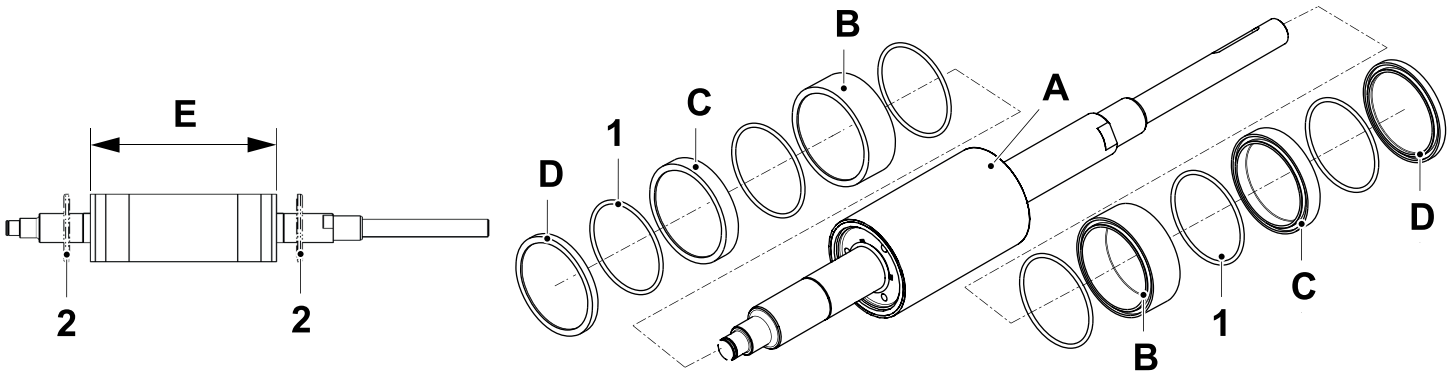

1 O-ring
2 Cover

(Cont'd)

(Cont'd)

d) Fit the O-ring (1) and the O-ring (3) into the covers (2). If necessary use lubrication grease on the O-ring (3) to fit the covers (2) onto the bending roller.

e) Fit the covers (2) on the bending roller with the screws (4) and the washers (5). If necessary use lubrication grease on the screws (4) to tighten the screws (4) to the bending roller.

Note! The width of the drive roller when assembled with the covers (2) is less than the packaging material width.

Note! Handle the covers (2) with care.

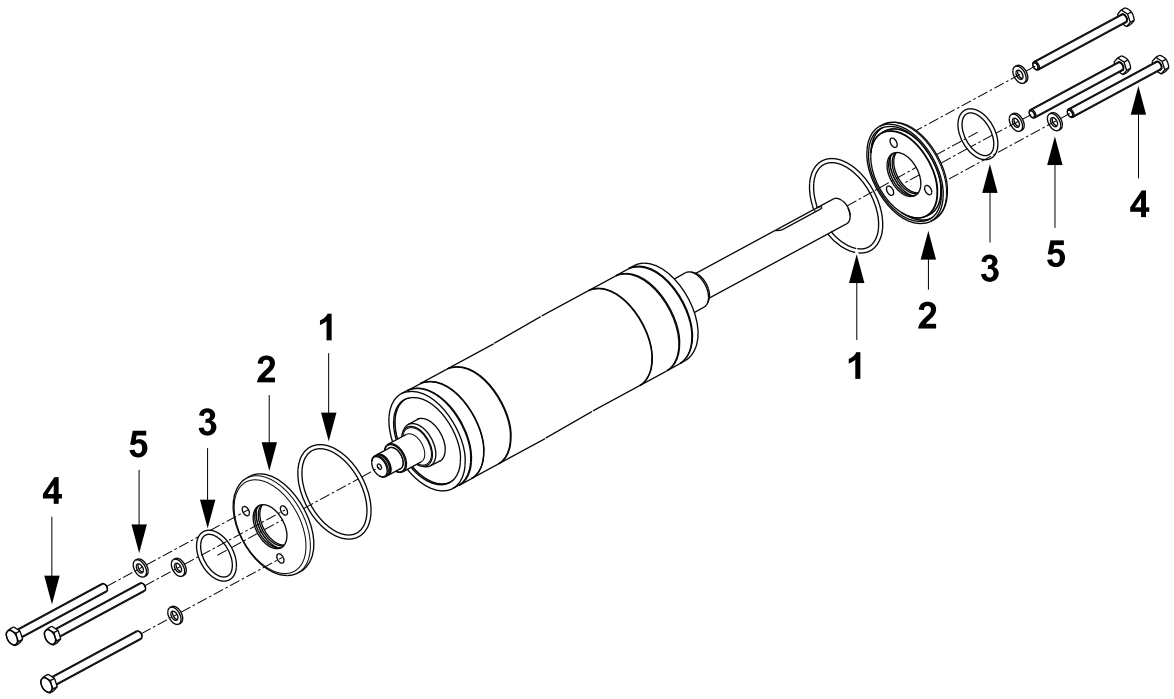

1 O-ring
2 Cover
3 O-ring
4 Screw
5 Washer

f) Fit the drive roller in the drying chamber follow the procedure 1.1.1.8-2 Drive Roller - Overhaul in the reverse order.

1.1.1.9 Crank

1.1.1.9-1 Crank - Check Chain

Machine Status	Electrical supply disconnecting device in position O (OFF) Main air valve OFF Main steam valve ON Main water valve OFF
SPC Reference	2808195-0100

WARNING

Risk of pinching or crushing injury.

Take care when cranking the packaging material carrier (1) with the handle (2).

Crank the packaging material carrier (1) with the handle (2) until it reaches the highest position. Check the following parts for visual wear or damage:

- the chains (3) Crank the chains (3) and make sure that they move freely. If the chains are too loose, tighten them by loosening the nuts (4) and raising the wheels (5).

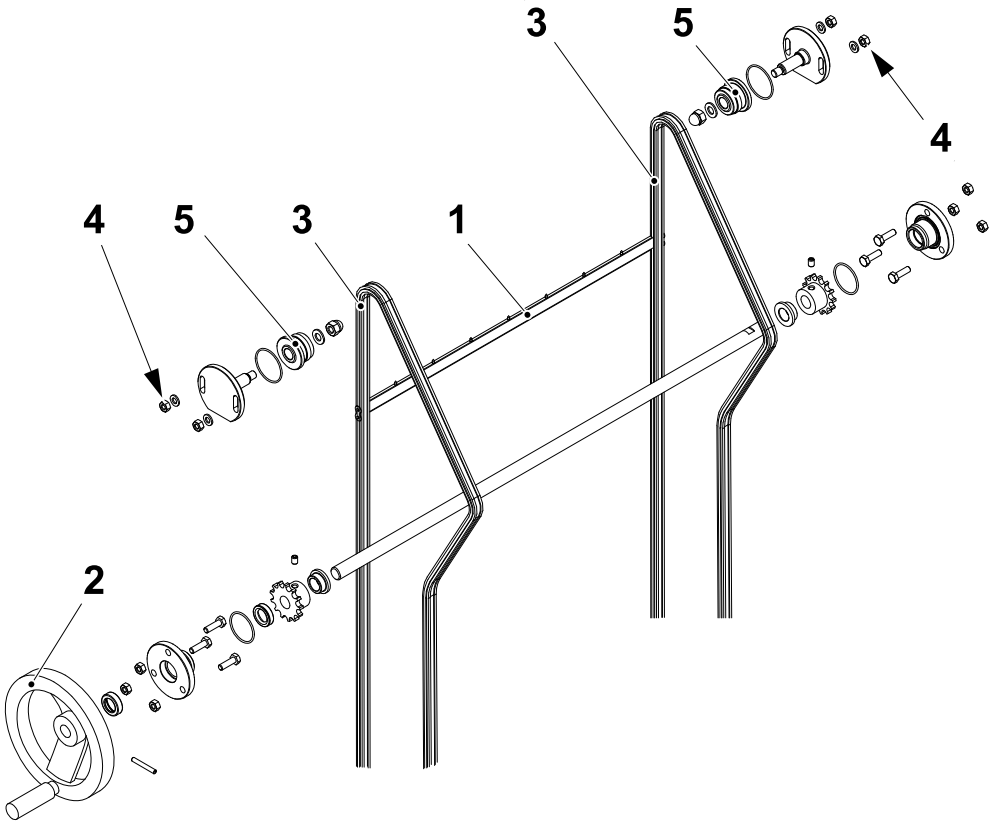

1 Carrier
2 Handle
3 Chain
4 Nut
5 Wheel

(Cont'd)

(Cont'd)

- the packaging material carrier (1). Check that the teeth in the packaging material carrier (1) are not damaged and that the packaging material carrier is not bent. Change if necessary
- the wheels (5) and the bushings (6). Make sure that the radial play is not excessive
- the shaft (7).
- the O-rings (8) and (9). Change if necessary
- the sprocket (10).

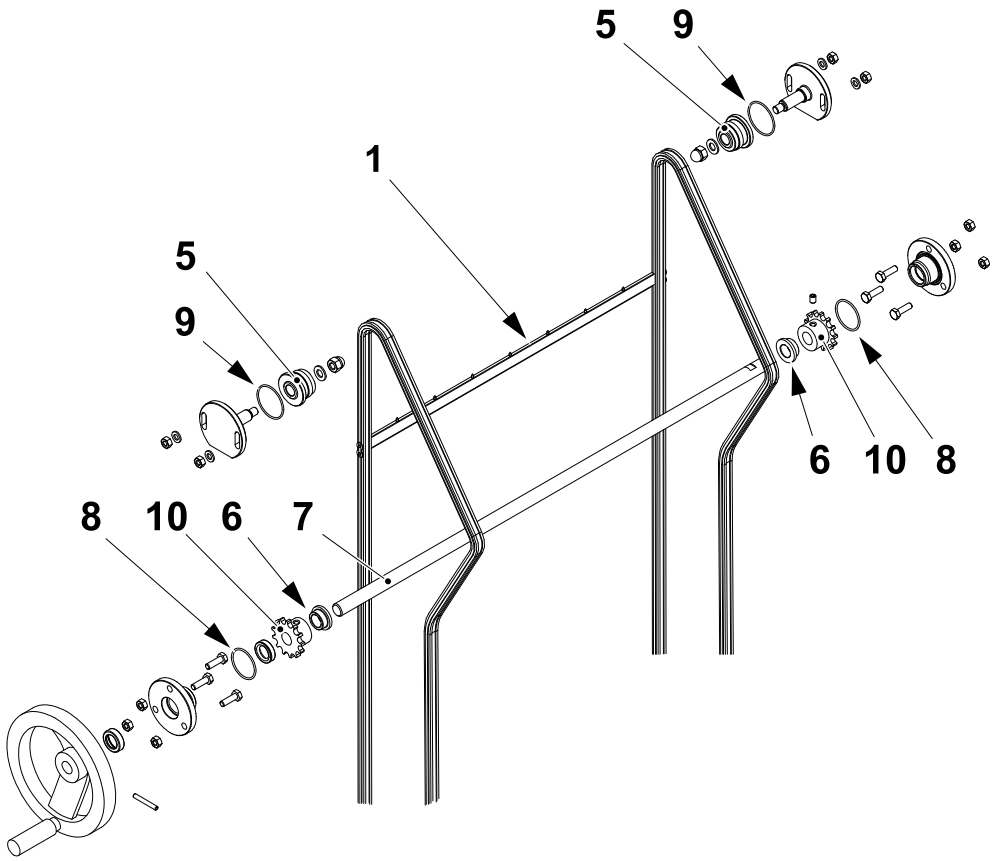

1 Carrier
5 Wheel
6 Bushing
7 Shaft
8 O-ring
9 O-ring
10 Sprocket

1.1.1.10 Valve

1.1.1.10-1 Valve - Check

Machine Status	Electrical supply disconnecting device in position O (OFF) Main air valve OFF Main steam valve OFF Main water valve OFF
SPC Reference	2808185-0100

WARNING

Hydrogen Peroxide.
Follow the Safety Precautions.

Remove the cover (1) and check that the valve (2) moves freely.

Check that the valve (2) seals correctly when closed.

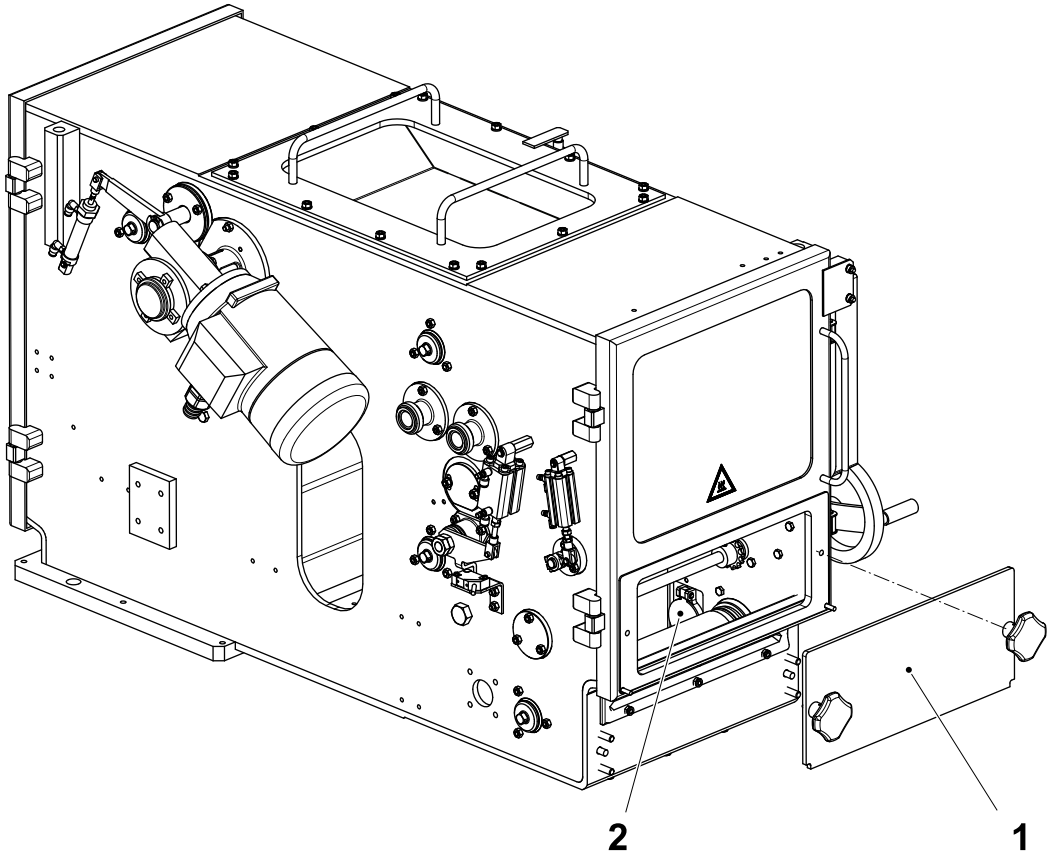

1 Cover
2 Valve

1.1.1.11 Bending Roller

1.1.1.11-1 Bending Roller - Overhaul

Machine Status	Electrical supply disconnecting device in position I (ON) Main air valve ON Main steam valve ON Main water valve ON
SPC Reference	2808400-0300

WARNING
Hydrogen Peroxide
Follow the Safety Precautions.

(Cont'd)

(Cont'd)

a) Loosen the flange (1).

b) Remove the nuts (2) from the flange (3).

c) Remove the nuts (4) from the flange (5).

d) Pull out the bending roller (6) from the drying chamber.

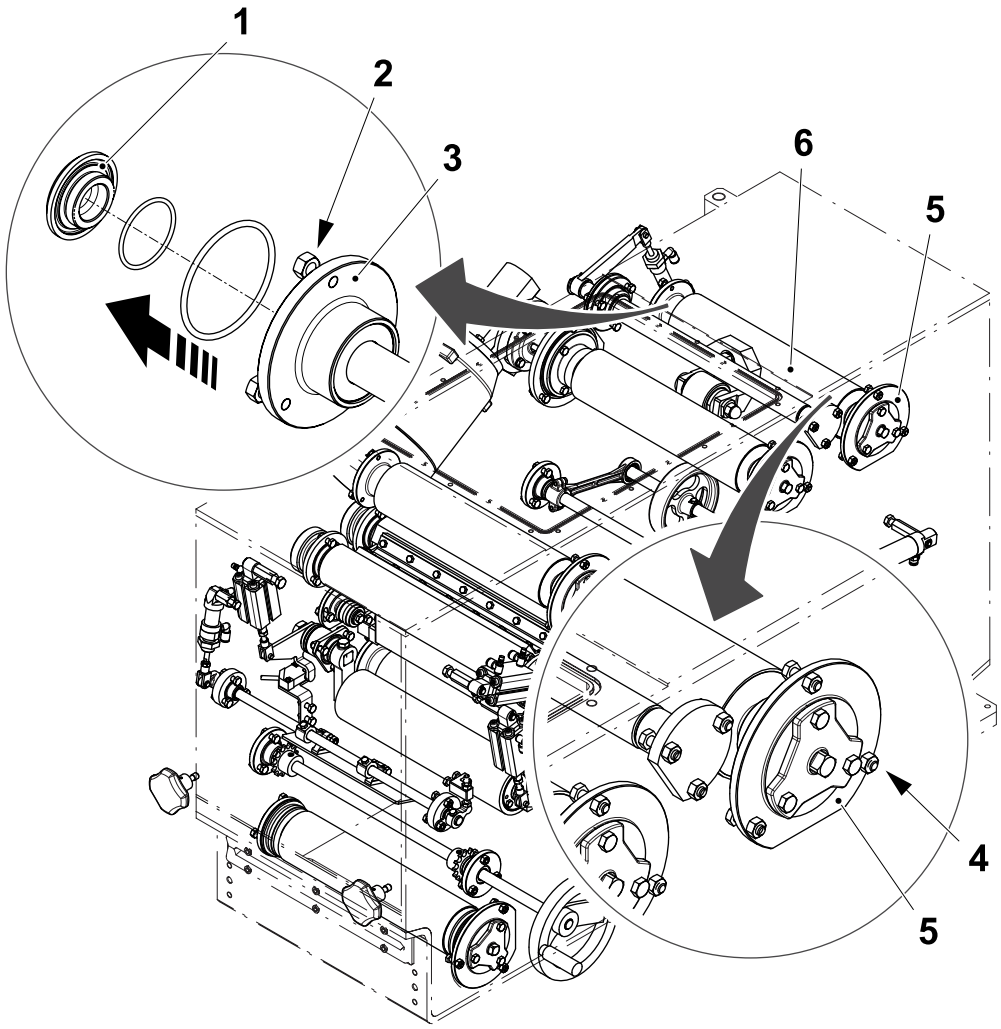

1 Flange
2 Nut
3 Flange
4 Nut
5 Flange
6 Bending Roller

(Cont'd)

(Cont'd)

e) Remove the flange assembly components as follows:

- the flange (1), the flange (3), the flange (5) and the screw (7)
- the lid (8), the O-ring (9), the screw (10), the washer (11), the ball bearing (12) and the lid (13).

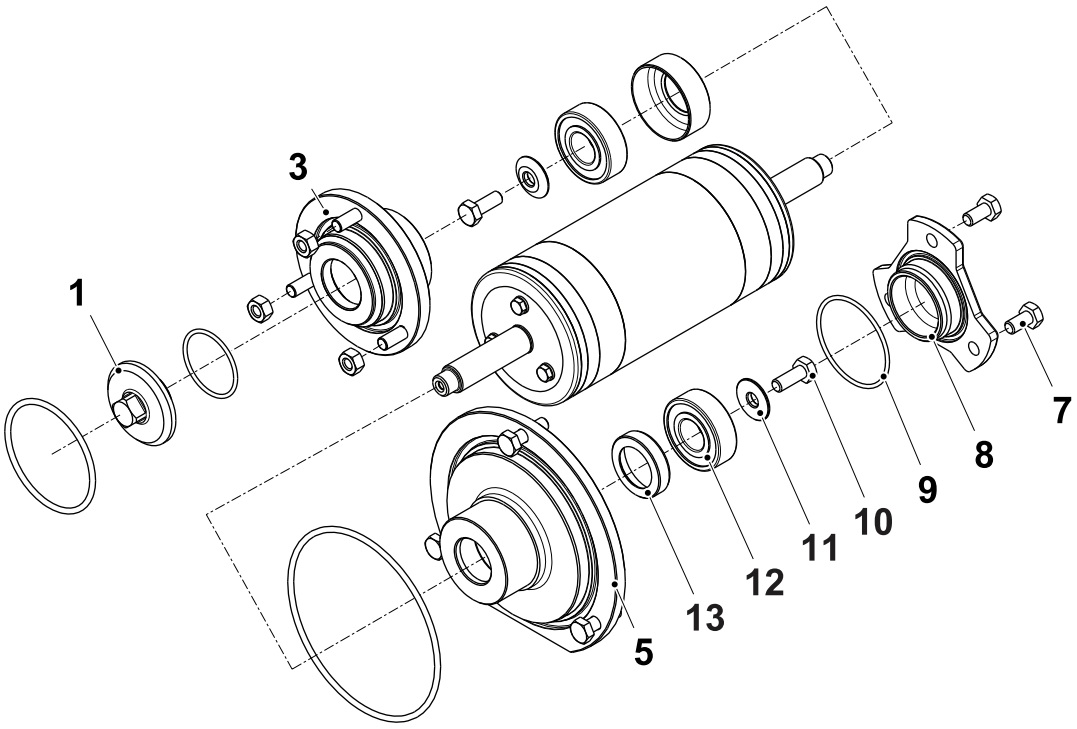

Modular bending roller is shown

1 Flange
3 Flange
5 Flange
7 Screw
8 Lid
9 O-ring
10 Screw
11 Washer
12 Ball bearing
13 Lid

(Cont'd)

(Cont'd)

f) Remove the flange assembly components as follows:
- the O-ring (14), theO-ring (15) and the O-ring (16)
- the screw (17), the washer (18), the ball bearing (19) and the lid (20).

g) Change the O-ring (9), the O-ring (14), the O-ring (15), the O-ring (16), the ball bearing (12), the ball bearing (19), the lid (13), and the lid (20).

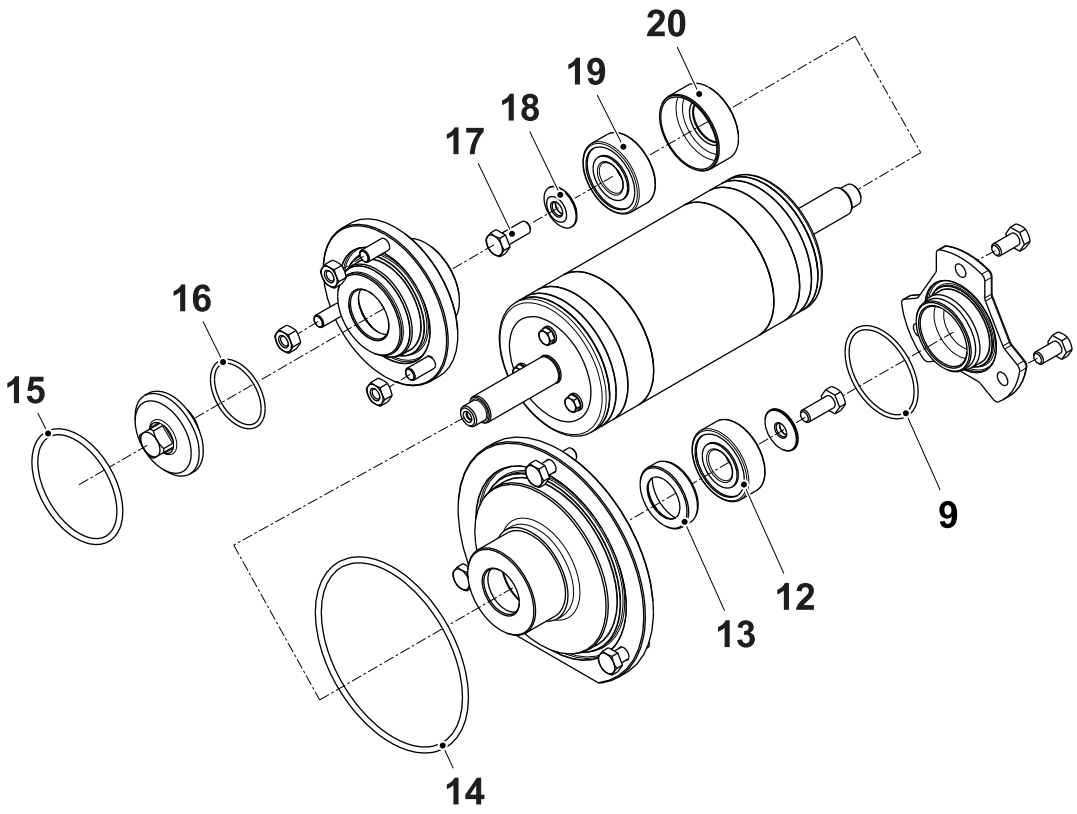

Modular bending roller is shown

9 O-ring
12 Ball bearing
13 Lid
14 O-ring
15 O-ring
16 O-ring
17 Screw
18 Washer
19 Ball bearing
20 Lid

(Cont'd)

(Cont'd)

Note! The following procedure is only necessary for modular bending rollers, and if the O-rings (21) and the O-rings (22) must be changed, otherwise assemble the bending roller (6) into the drying chamber in the reverse order.

Note! Handle the covers (23) and the spacers (26) with care.

h) Remove the following components from the roller **A**:
- the O-rings (21) and the O-rings (22)
- the covers (23)
- the screws (24)
- the washers (25)
- the spacers (26).

i) Change O-rings (21) and the O-rings (22).

j) Set the width of the roller **A**, see 1.1.1.11-2 Bending Roller - Set Width.

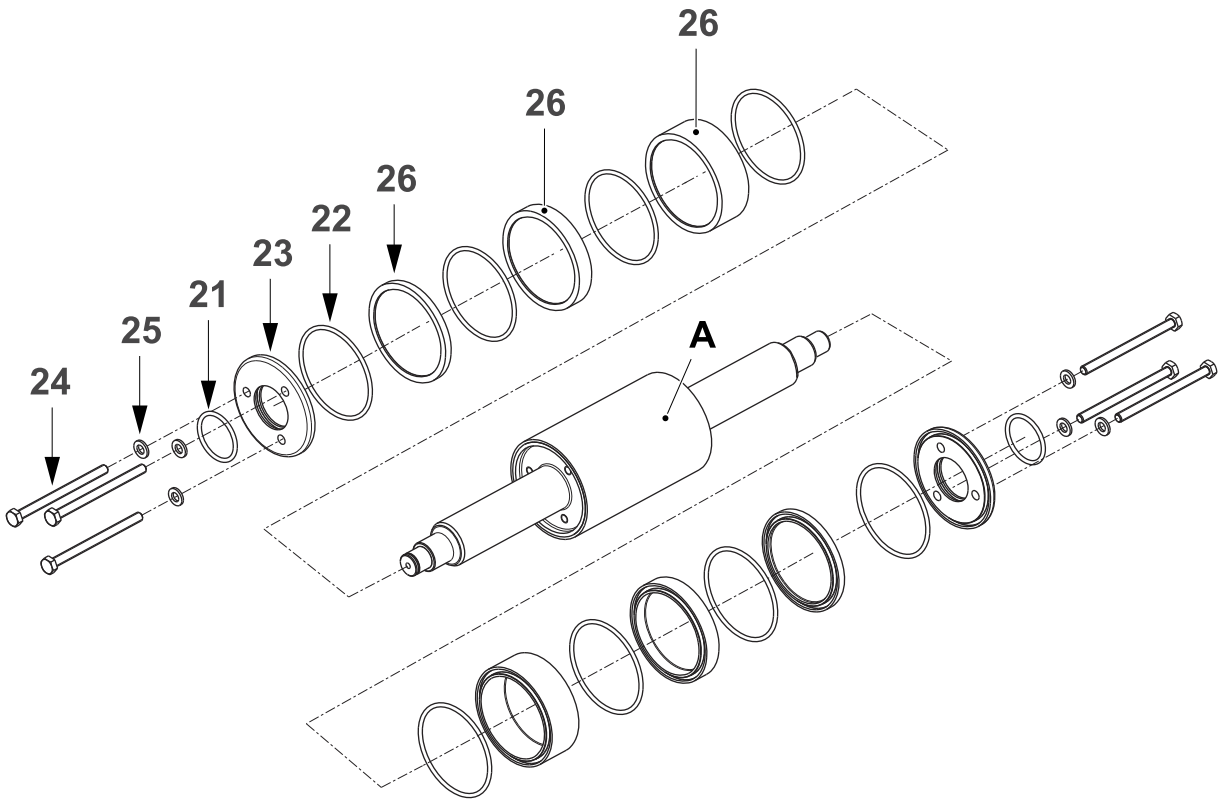

21 O-ring
22 O-ring
23 Cover
24 Screw
25 Washer
26 Spacer

1.1.1.11-2 Bending Roller - Set Width

Machine Status	Electrical supply disconnecting device in position I (ON) Main air valve ON Main steam valve ON Main water valve ON
Consumables	Lubrication grease, Fluolub 210 TP No. 90296-0091
SPC Reference	2808400-0300

WARNING

Hydrogen Peroxide

Follow the Safety Precautions.

Note! The following procedure is only necessary to perform for filling machines using *80-150 mN* bleached packaging material.

(Cont'd)

(Cont'd)

a) Assemble the spacers on to the roller **A** to set the correct width for the package to be produced. See the illustration and the table below.

b) Fit an O-ring (1) between each spacer.

Package	Central body A TP No.	Position B TP No.	Position C TP No.	Position D TP No.	Width E (mm)
TBA 80 S TPA 125 Sq	3285134-0000	NA	NA	NA	112.00
TBA 100 B TBA 125 S	3285134-0000	3285137-0000	NA	NA	134.00
TBA 160 S TBA 180 S TBA 200 S TPA 200 Sq TPA 250 Sq	3285134-0000	3285137-0000	3285138-0000	NA	146.00
TBA 200 E TBA 200 M TBA 250 E TBA 250 S	3285134-0000	3285136-0000	NA	NA	160.00
TPA 330 Sq	3285134-0000	3285136-0000	3285138-0000	NA	172.00
TBA 200 B TBA 200 Sq TBA 250 B TBA 250 Sq TBA 284 B TBA 300 S TBA 330 S	3285134-0000	3285136-0000	3285137-0000	NA	182.00
TBA375S	3285134-0000	3285136-0000	3285137-0000	3285138-0000	194.00

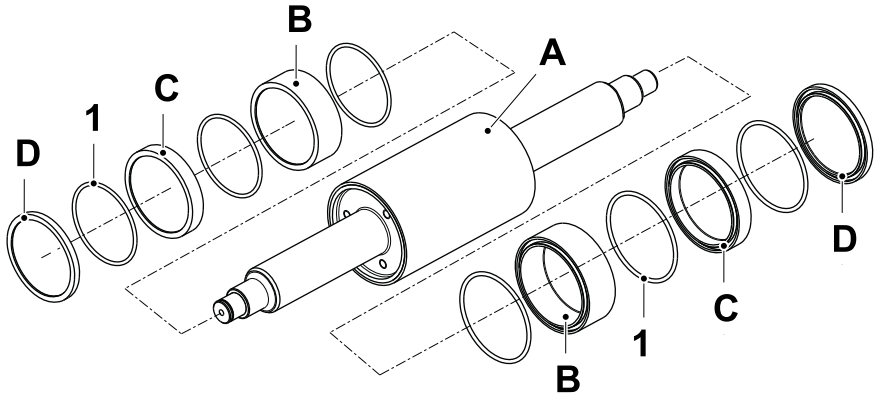

1 O-ring

(Cont'd)

(Cont'd)

c) Measure the width **E** of the roller **A** assembled with spacers and check it with the table on the previous page.

Note! Do not mount the covers (2), the width **E** is taken with roller **A** and spacers only. See the illustration below.

Note! Handle the spacers with care. Wrap the remaining spacers in protective packaging and store them in a safe place.

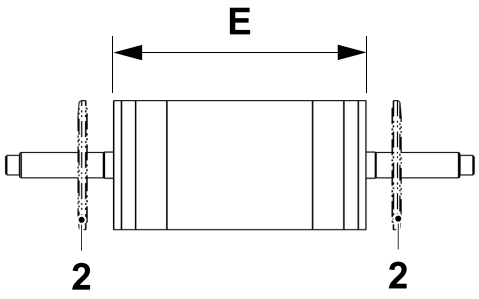

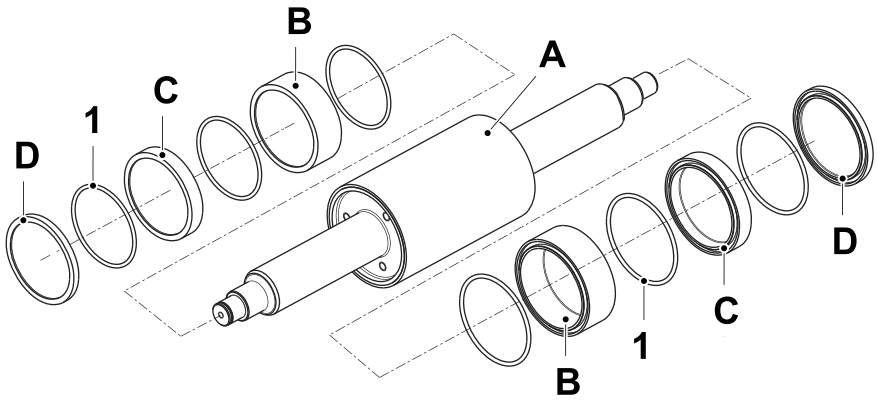

1 O-ring
2 Cover

(Cont'd)

(Cont'd)

d) Fit the O-ring (1) and the O-ring (3) into the covers (2). If necessary use lubrication grease on the O-ring (3) to fit the covers (2) onto the bending roller.

e) Fit the covers (2) on the bending roller with the screws (4) and the washers (5). If necessary use lubrication grease on the screws (4) to tighten the screws (4) to the bending roller.

Note! The width of the bending roller when assembled with the covers (2) is less than the packaging material width.

Note! Handle the covers (2) with care.

f) Fit the bending roller in the drying chamber, follow the procedure 1.1.1.11-1 Bending Roller - Overhaul in the reverse order.

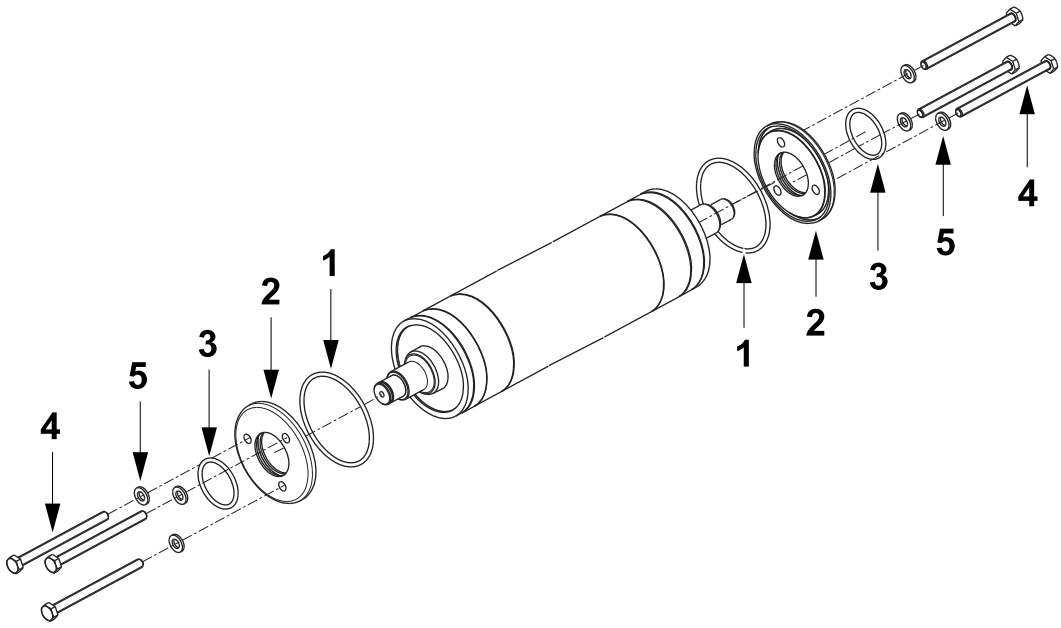

1 O-ring
2 Cover
3 O-ring
4 Screw
5 Washer

1.1.2 Sterile Air System

1.1.2-1 Sterile Air System - Check for Leaks

Machine Status	Electrical supply disconnecting device in position I (ON) Main air valve ON Main steam valve ON Main water valve ON
Consumables	Leakage detector spray
SPC Reference	2808271-0300

WARNING
Hydrogen Peroxide.
Follow the Safety Precautions.

(Cont'd)

(Cont'd)

Check the connections for air leaks at the following points:

- the spray generator (1)
- the compressor unit (2)
- the superheater (3)
- the heat exchanger (4)
- the separator (5).

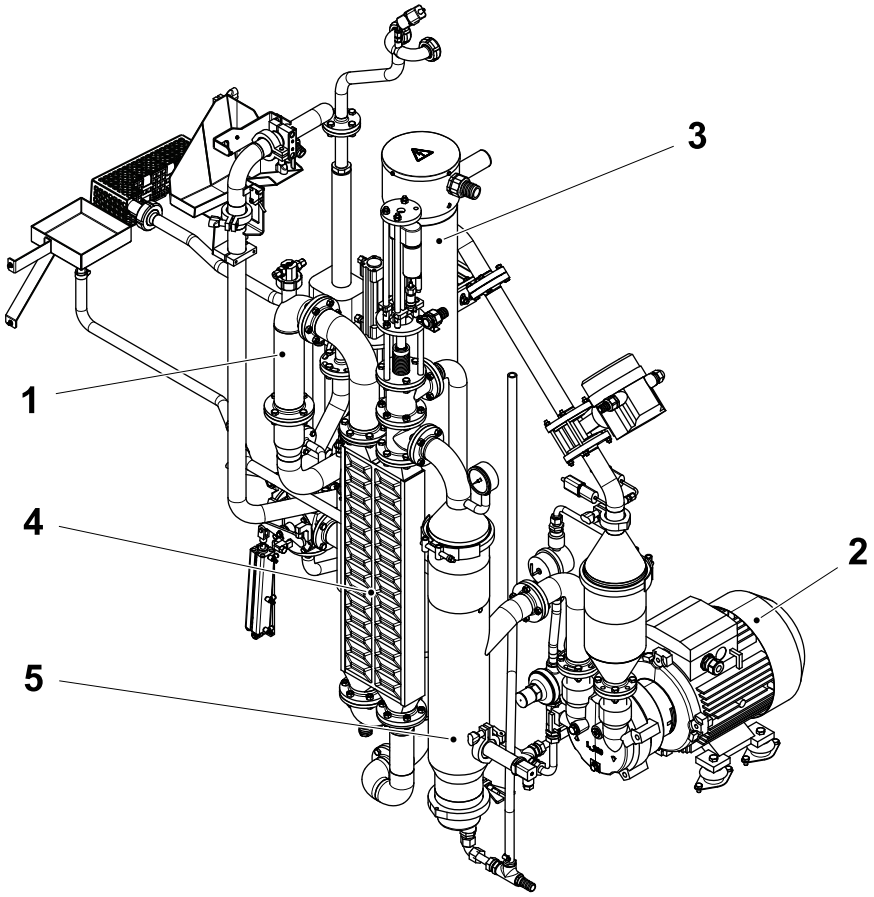

1 Spray generator
2 Compressor unit
3 Superheater
4 Heat exchanger
5 Separator

(Cont'd)

(Cont'd)

- the scrubber (6)
- the heat exchanger valve (7)
- the air preheating valve (8)
- the change over valve (9)
- the air knife heater (10).

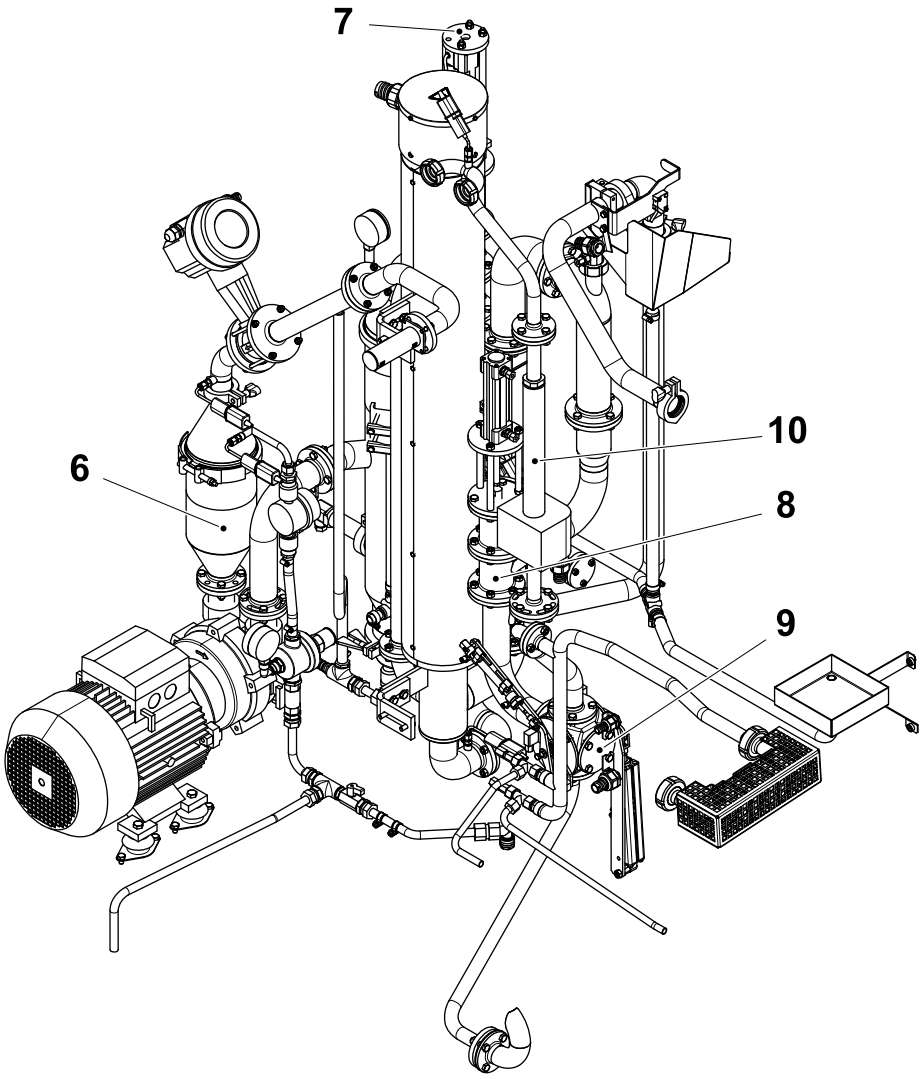

6 Scrubber
7 Heat exchanger valve
8 Air preheating valve
9 Change over valve
10 Air knife heater

1.1.2.1 Pipe Work Air

1.1.2.1-1 Pipe Work Air - Clean Balls

Machine Status	Electrical supply disconnecting device in position O (OFF) Main air valve OFF Main steam valve OFF Main water valve OFF
Consumables	De-liming Acid, See List
SPC Reference	2808255-0200

WARNING
Burn hazard.
Follow the Safety Precautions.

WARNING
Hydrogen Peroxide.
Follow the Safety Precautions.

CAUTION
Risk of serious production fault.
Never close the steam valve when the dairy product line is still in use by other machines. The steam in the product valve forms an aseptic barrier between the machine and the remaining dairy product line. Closing the steam valve will remove this barrier.

(Cont'd)

(Cont'd)

WARNING

Acids.

Follow the Safety Precautions.

a) Remove the screws (1) and the spray generator (2).

b) Remove the container (3).

c) Clean the container (3) containing the balls with nitric acid (HNO_3) at 5-10%. The solution must have a temperature of 50° - 60°C during peroxide residue removal.

d) After cleaning flush the container (3) with water and then rinse with softened or distilled water.

e) Assemble in the reverse order.

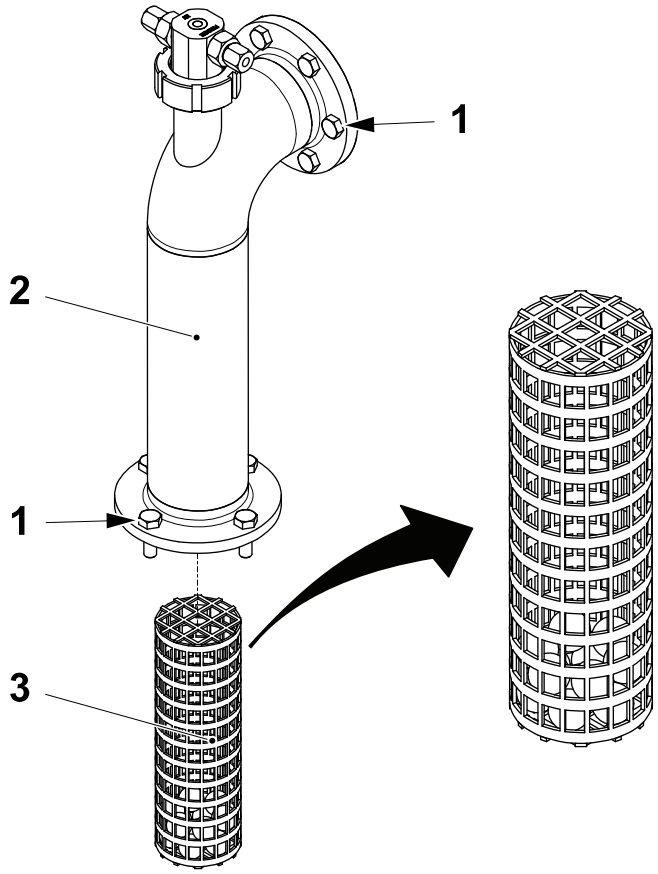

1 Screw
2 Spray generator
3 Container

1.1.2.1-2 Pipe Work Air - Check Change Over Valve

Machine Status	Electrical supply disconnecting device in position O (OFF) Main air valve OFF Main steam valve OFF Main water valve OFF
SPC Reference	2808255-0200

WARNING

Burn hazard.

Follow the Safety Precautions.

CAUTION

Risk of serious production fault.

Never close the steam valve when the dairy product line is still in use by other machines. The steam in the product valve forms an aseptic barrier between the machine and the remaining dairy product line. Closing the steam valve will remove this barrier.

Check the valve functions correctly and that the shafts (1) move freely. If not change the bushings, see 1.1.2.1-3 Pipe Work Air - Overhaul Change Over Valve.

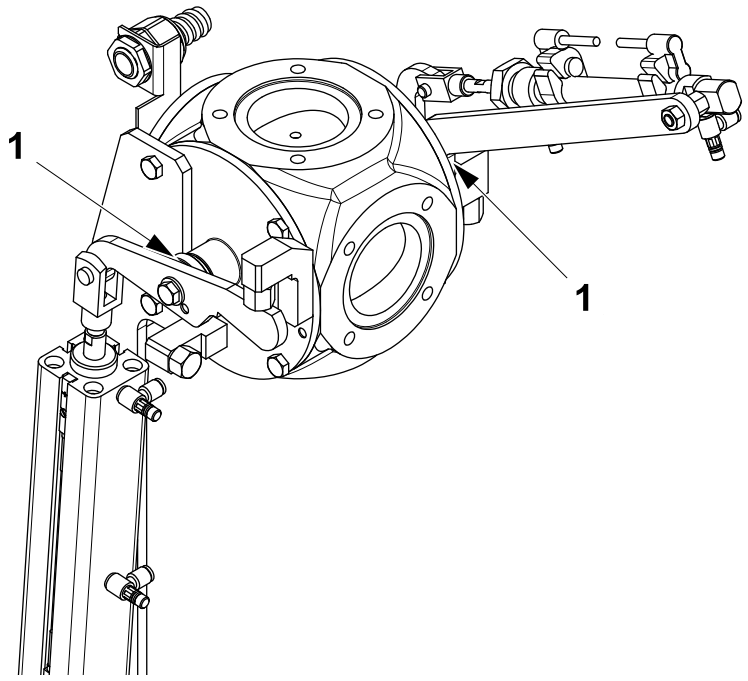

1 Shaft

1.1.2.1-3 Pipe Work Air - Overhaul Change Over Valve

Machine Status	Electrical supply disconnecting device in position O (OFF) Main air valve OFF Main steam valve OFF Main water valve OFF
SPC Reference	2808255-0200

WARNING

Burn hazard.

Follow the Safety Precautions.

CAUTION

Risk of serious production fault.

Never close the steam valve when the dairy product line is still in use by other machines. The steam in the product valve forms an aseptic barrier between the machine and the remaining dairy product line. Closing the steam valve will remove this barrier.

(Cont'd)

(Cont'd)

Note! Before removing, note each spacer position (A) to (D). Wrongly assembled spacers may cause the valve to malfunction.

a) Remove the screw (1) and the arm (2).

b) Remove the screws (3) and the assembly (4).

Position	TP No.	Position	TP No.
A	2898880-1	C	2898880-3
B	2898880-2	D	2898880-4

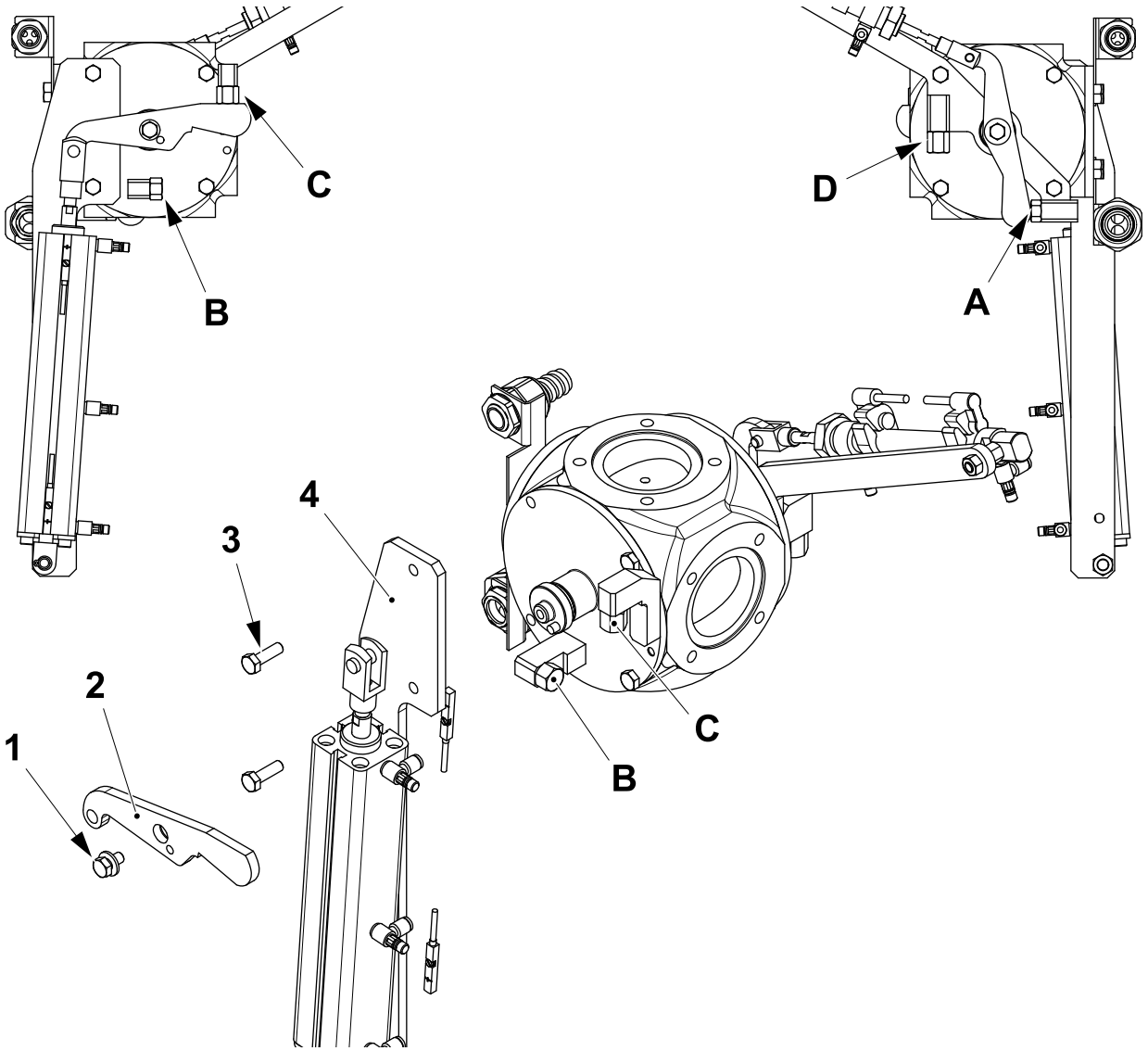

1 Screw
2 Arm
3 Screw
4 Assembly

(Cont'd)

(Cont'd)

c) Remove the shaft (5).

d) Remove and change the O-ring (6) and the bushing (7).

e) Remove the screws (8) and the lid (9).

f) Change the O-ring (10).

Note! Before assembling, position each spacer correctly, (A) to (D).

g) Assemble in the reverse order. Repeat the procedure for the other side of the change over valve.

Position	TP No.	Position	TP No.
A	2898880-1	C	2898880-3
B	2898880-2	D	2898880-4

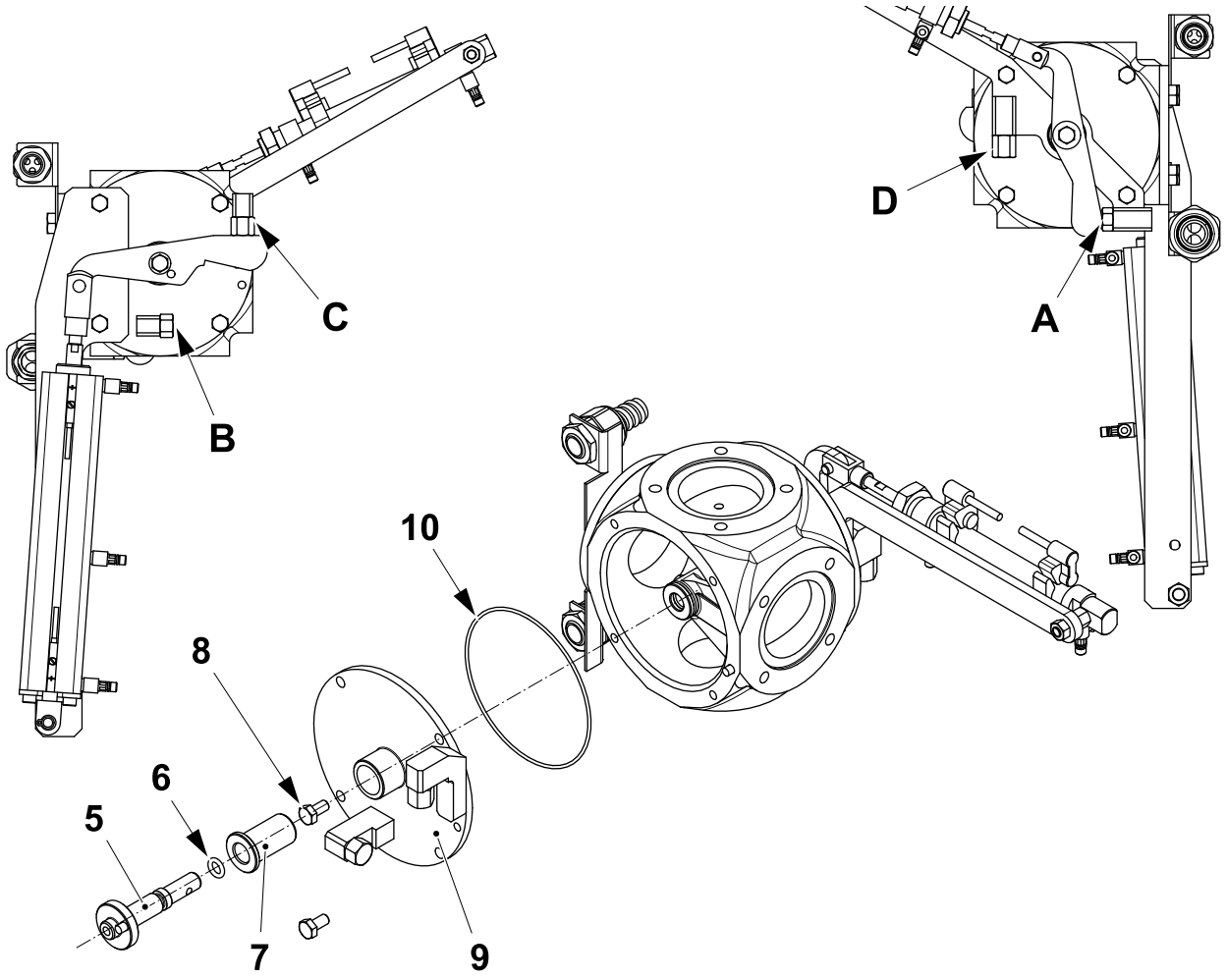

5 Shaft
6 O-ring
7 Bushing
8 Screw
9 Lid
10 O-ring

1.1.2.1-4 Pipe Work Air - Set Change Over Valve Sensors

Machine Status	Electrical supply disconnecting device in position I (ON) Main air valve ON Main steam valve ON Main water valve ON
SPC Reference	2808255-0200

WARNING

Burn hazard.

The pipes and other adjacent parts to the change over valve may be hot.
Wear personal protective clothing.

a) Fully extend the piston (1) on the cylinder (2).

b) Loosen the screw (3) on the sensor U70B3790 (4) and move the sensor U70B3790 (4) until the LED switches ON.

c) Tighten the screw (3).

d) Fully extend the piston (1) on the cylinder (2).

e) Loosen the screw (5) on the sensor U70B3780 (6), push the piston (1) down until it reaches the mechanical stop.

f) Adjust the position of the sensor U70B3780 (6) until the LED switches ON.

g) Tighten the screw (5).

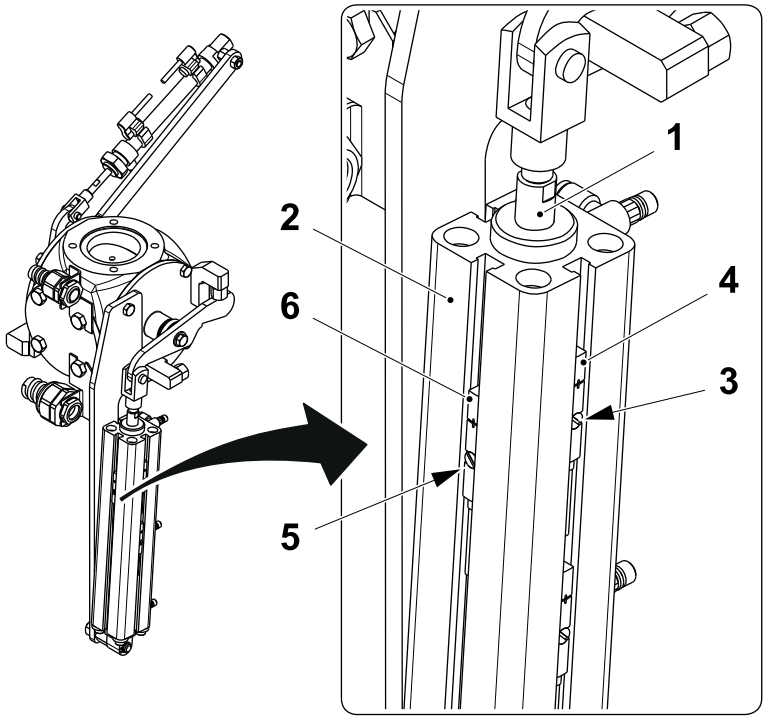

1 Piston
2 Cylinder
3 Screw
4 Sensor U70B3790
5 Screw
6 Sensor U70B3780

(Cont'd)

(Cont'd)

h) Fully retract the piston (1) on the cylinder (2).

i) Loosen the screw (7) on the sensor U70B2020 (8) and move the sensor U70B2020 (8) until the LED switches ON.

j) Tighten the screw (7).

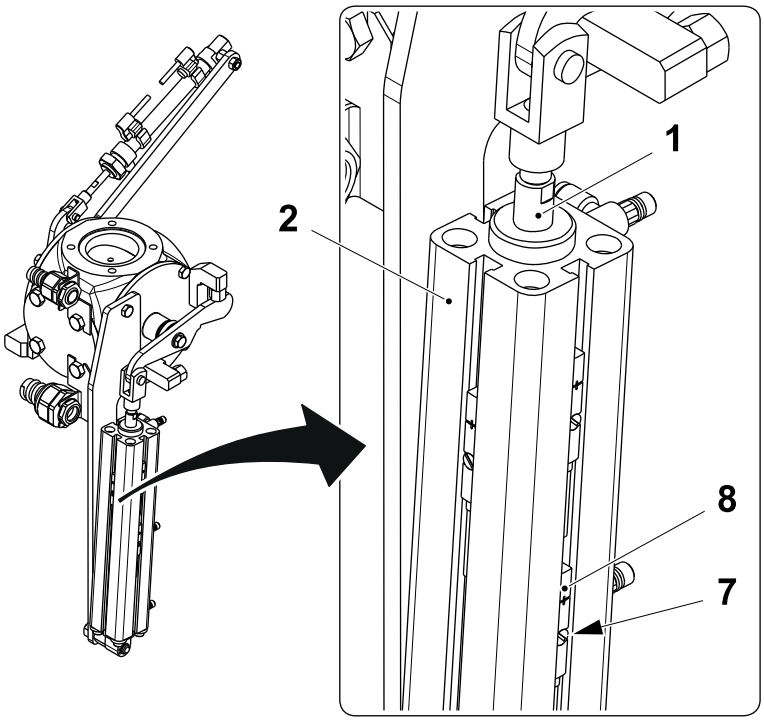

1 Piston
2 Cylinder
7 Screw
8 Sensor U70B2020

1.1.2.2 Compressor Unit

1.1.2.2-1 Compressor Unit - Check Pressure

Machine Status	PRODUCTION
SPC Reference	2808196-0200

WARNING
Burn hazard.
Follow the Safety Precautions.

(Cont'd)

(Cont'd)

Check that the pressure gauge (1) on the water separator (2) indicates the nominal sterile air pressure of 0.25 bar.

If the correct sterile air pressure cannot be achieved, check the following:

- that the cause of too high sterile air pressure may be due to a blockage somewhere in the sterile air system pipe work
- that the cause of too low air pressure in the sterile air system may be due to a leakage in the sterile air system pipe work, a blocked filter in the suction system or insufficient compressor capacity.

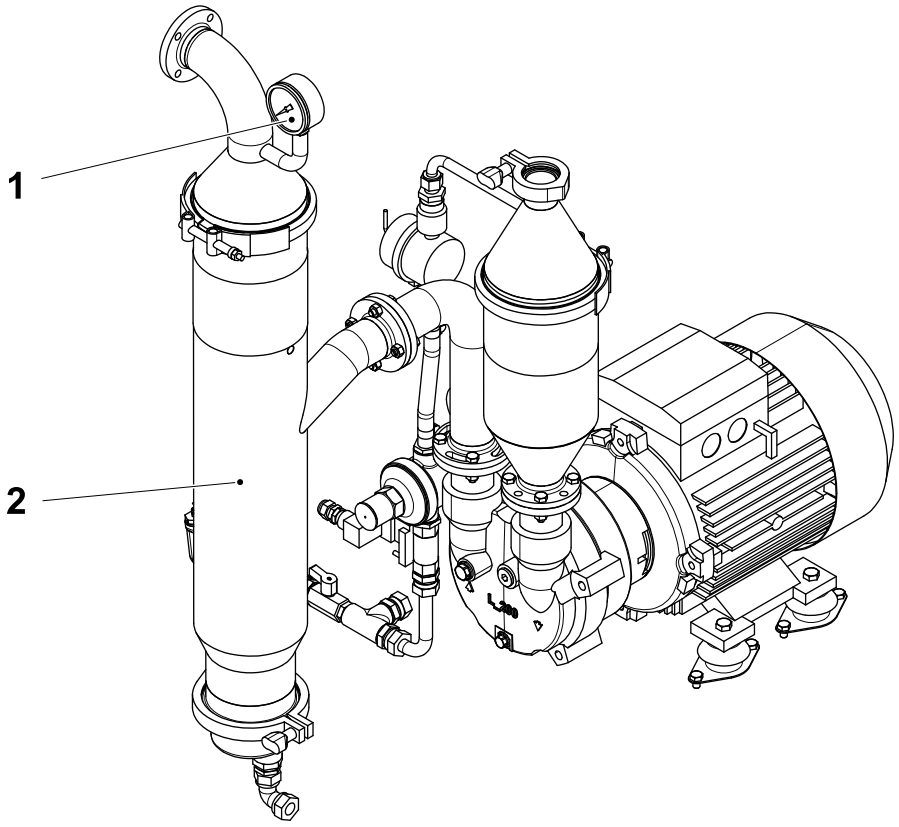

1 Pressure gauge
2 Water separator

1.1.2.2-2 Compressor Unit - Change Gaskets

Machine Status	Electrical supply disconnecting device in position O (OFF) Main air valve OFF Main steam valve OFF Main water valve OFF
SPC Reference	2808196-0200

WARNING

Burn hazard.

Follow the Safety Precautions.

Check the flanges (1) of the compressor (2) for leaks. Remove the screws (3) and change the gaskets (4) if necessary

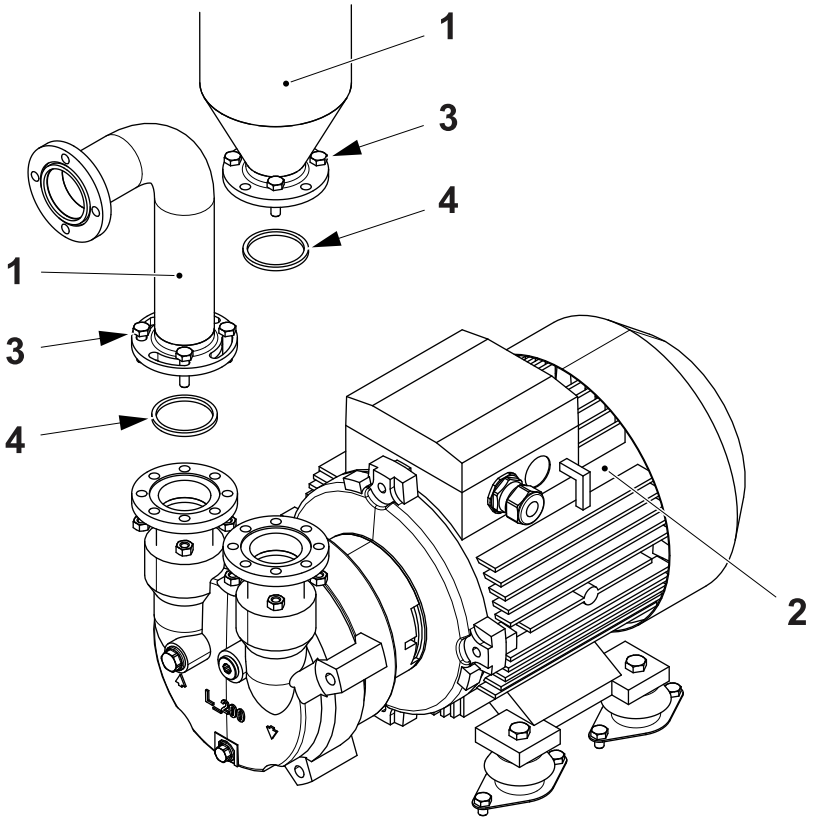

1 Flange
2 Compressor
3 Screw
4 Gasket

1.1.2.2-3 Compressor Unit - Clean Impeller

Machine Status	Electrical supply disconnecting device in position O (OFF) Main air valve OFF Main steam valve OFF Main water valve OFF
SPC Reference	2808196-0200

WARNING

Burn hazard.

Follow the Safety Precautions.

a) Put a container (1) under the drain plug (2) of the compressor.

b) Remove the drain plug (2) and drain the water in the container (1).

c) Rotate occasionally the motor until no more water runs out, proceeding as follows:

- remove the fan cowl (3)
- rotate the motor fan (4) by hand in the running direction.

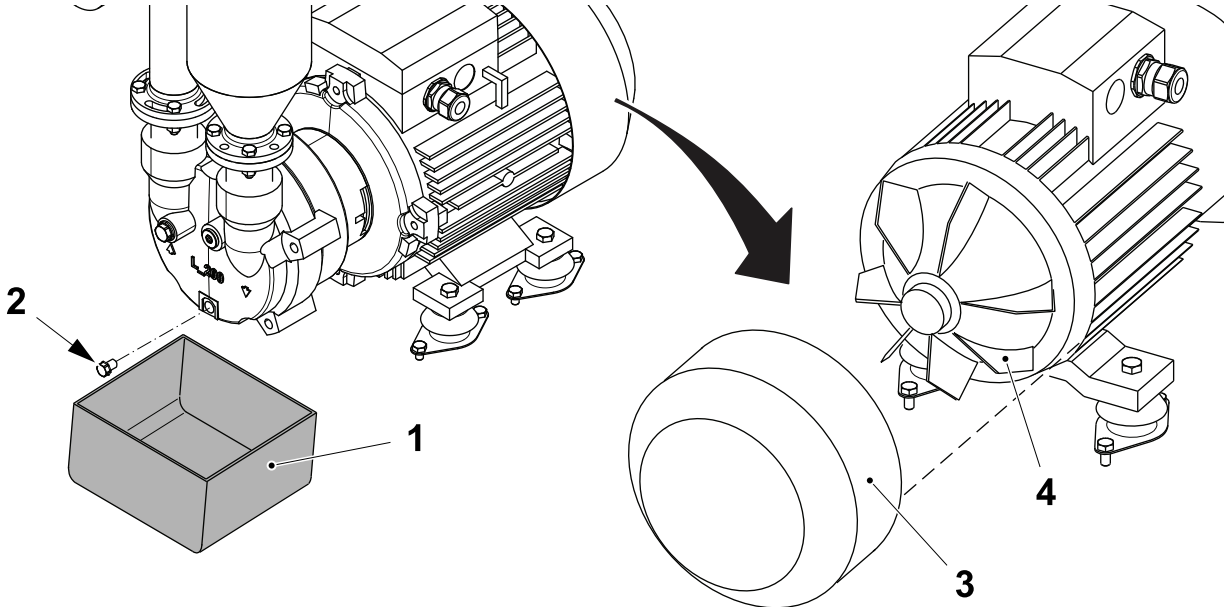

1 Container
2 Drain plug
3 Fan cowl
4 Motor fan

(Cont'd)

(Cont'd)

d) Remove the flanges (5) and (6) with the screws (7).

e) Remove the gaskets (8).

f) Fit back the drain plug (2).

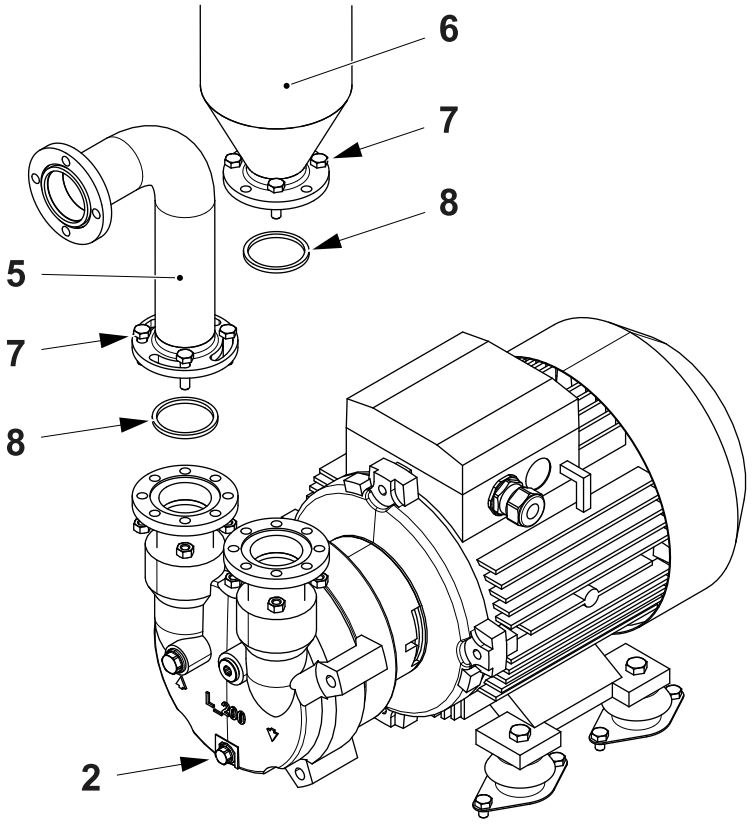

2 Drain plug
5 Flange
6 Flange
7 Screw
8 Gasket

(Cont'd)

(Cont'd)

g) Fill the impeller chamber (9) through one of the pipes (10) with 5 litres about of acetic acid (CH_3COOH) 10% or other commercial available decalcifying agent.

h) Plug the pipes (10).

i) Let the decalcifying liquid operating for approx. 30 minutes, rotating occasionally the motor fan (4) in the running direction.

j) After 30 minutes, remove the drain plug (2) and drain the decalcifying liquid in a container, rotating the motor fan (4) in the running direction until no more liquid runs out.

k) Fit back the drain plug (2) and assemble in the reverse order.

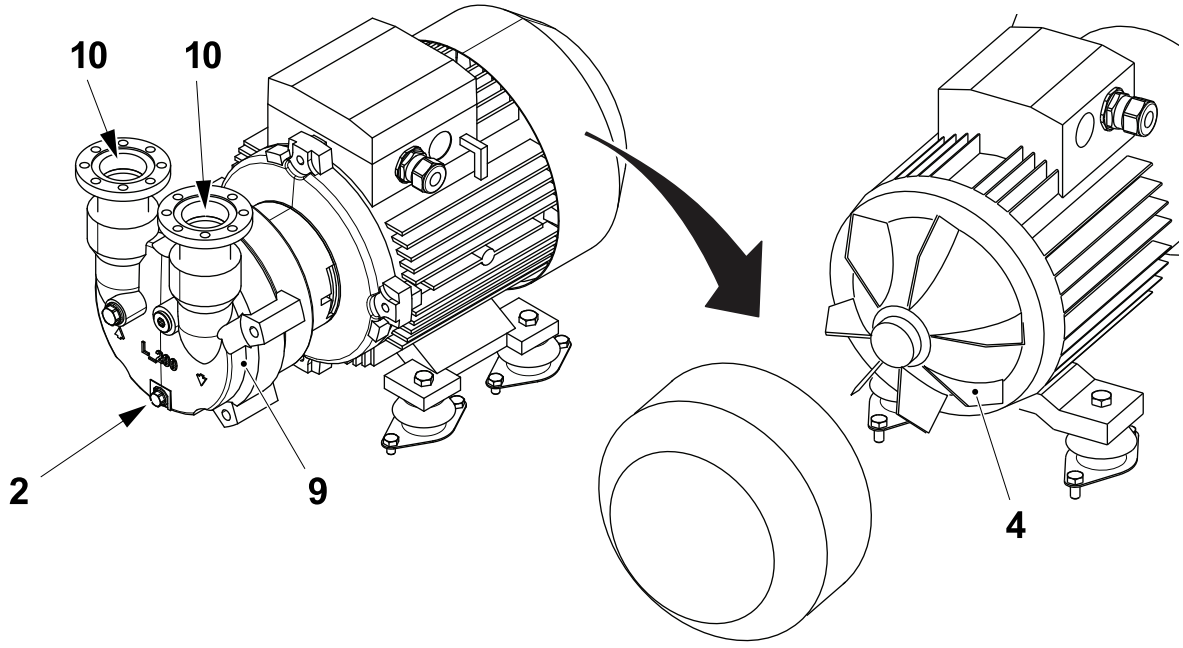

2 Drain plug
4 Motor fan
9 Impeller chamber
10 Pipe

1.1.2.3 Heat Exchanger Valve

1.1.2.3-1 Heat Exchanger Valve - Overhaul

Machine Status	Electrical supply disconnecting device in position O (OFF) Main air valve OFF Main steam valve OFF Main water valve OFF
SPC Reference	2808254-0200

WARNING

Burn hazard.

Follow the Safety Precautions.

CAUTION

Risk of serious production fault.

Never close the steam valve when the dairy product line is still in use by other machines. The steam in the product valve forms an aseptic barrier between the machine and the remaining dairy product line. Closing the steam valve will remove this barrier.

(Cont'd)

(Cont'd)

a) Disconnect the cables from the linear actuator (1).

b) Remove the screws (2) and nuts securing the flange to the heat exchanger valve (3).

c) Remove the screws (4) and nuts securing the T-pipe flange and the pipe flange to the heat exchanger valve (3).

d) Remove the screws (5) and nuts securing the pipe flange to the heat exchanger valve (3).

e) Remove the heat exchanger valve (3).

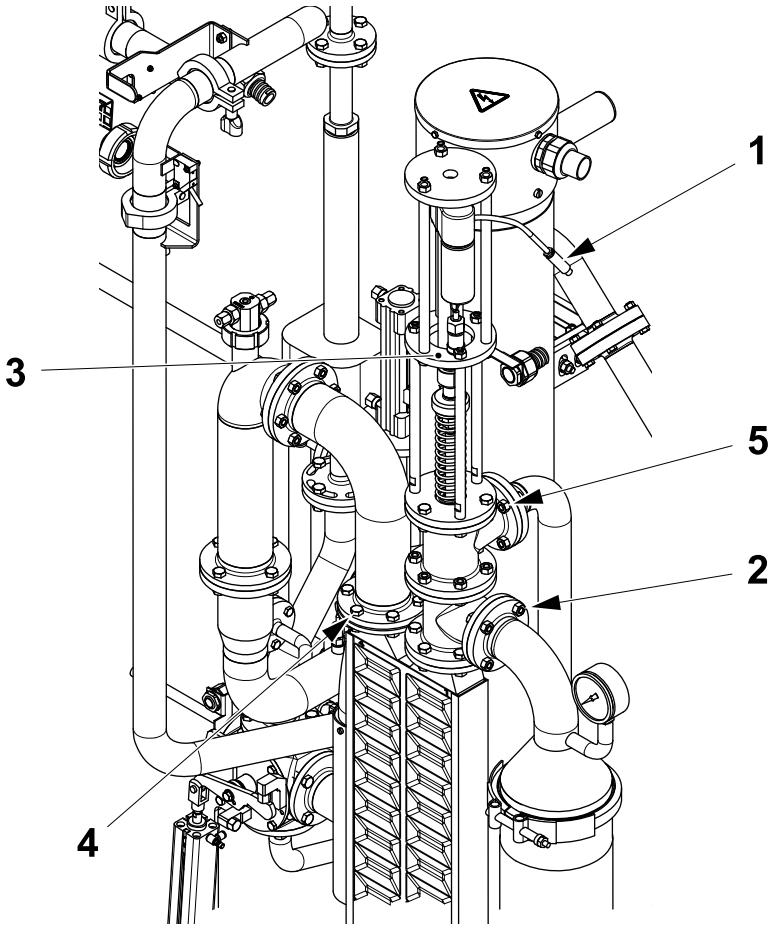

1 Linear actuator
2 Screw
3 Heat exchanger valve
4 Screw
5 Screw

(Cont'd)

(Cont'd)

f) Remove the nuts (6), the screws (7) and the T-pipe (8).

g) Change the gaskets (9).

h) On the shaft (10), remove the nuts (11) and slip off the shutter (12). Change the shutter (12) if necessary.

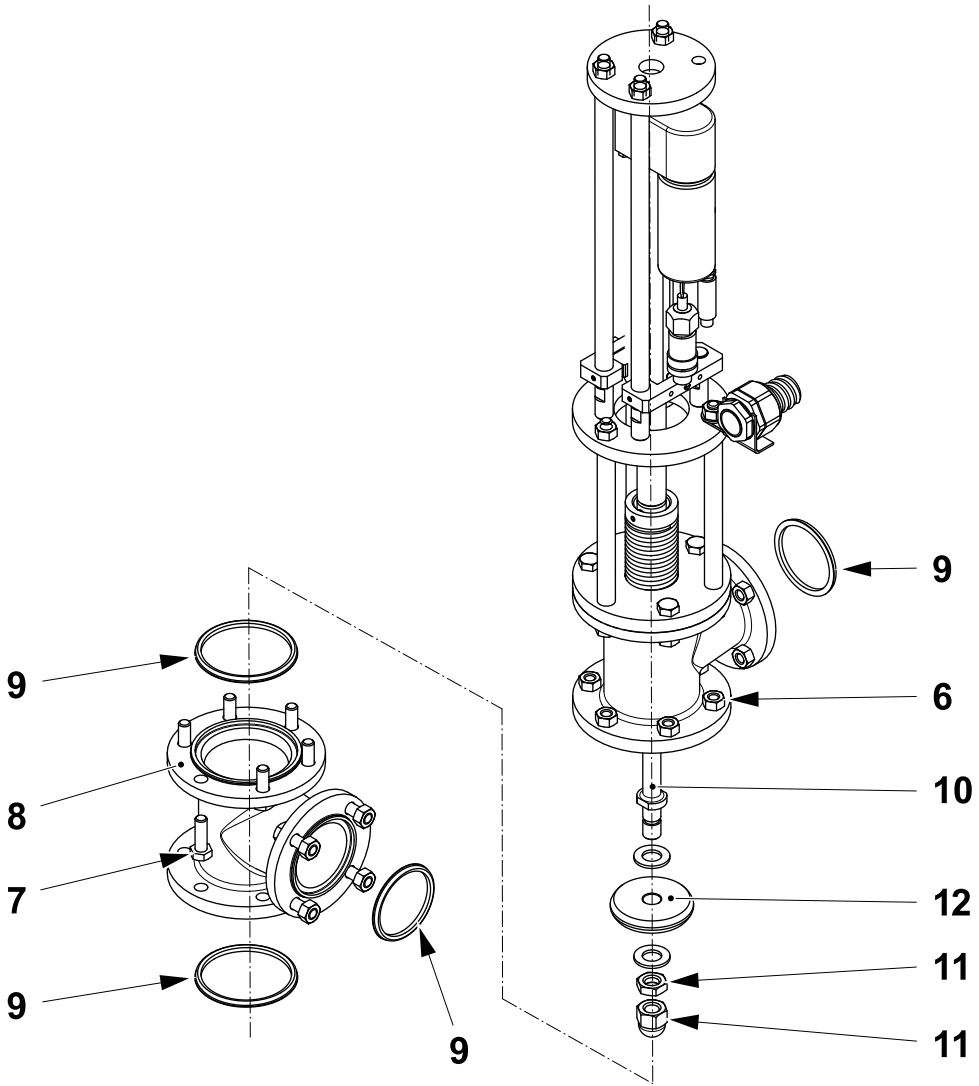

6 Nut
7 Screw
8 T-pipe
9 Gasket
10 Shaft
11 Nut
12 Shutter

(Cont'd)

(Cont'd)

i) Remove the nuts (13), the screws (14) and theT-pipe (15).

j) Change the gasket (16).

k) Compress the spring (17) and remove the screw (18).

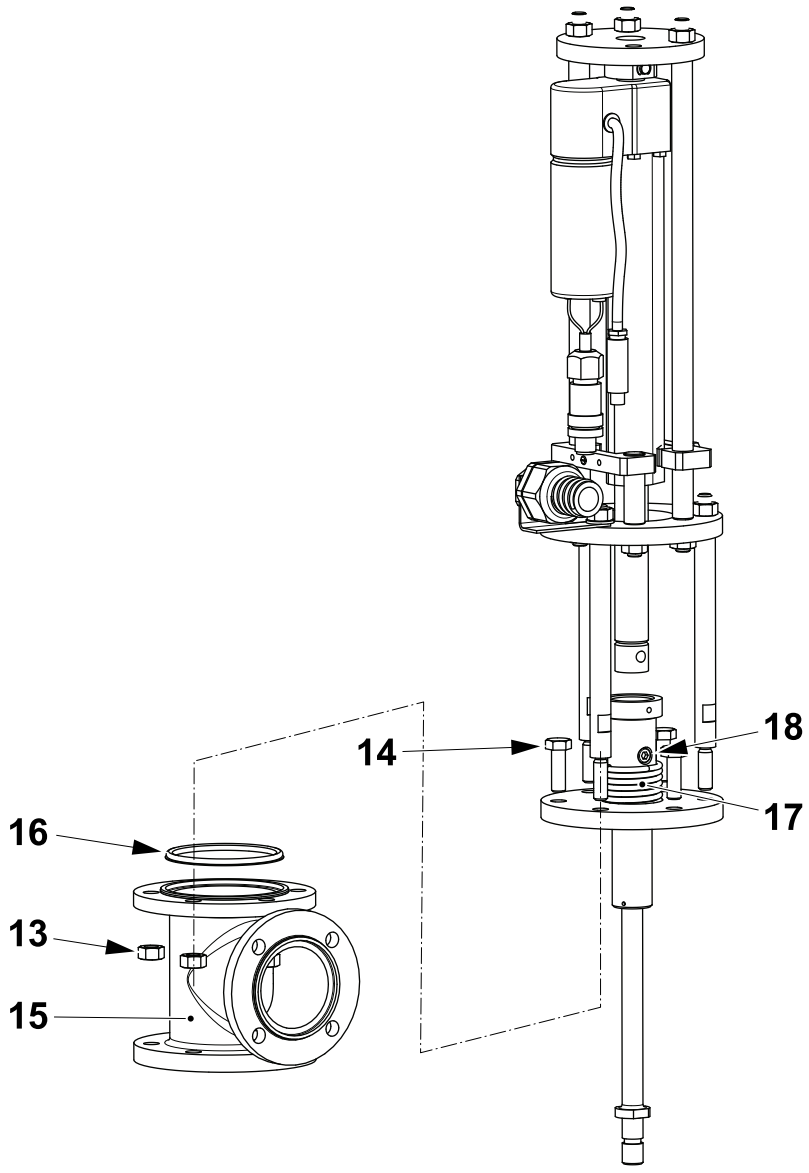

13 Nut
14 Screw
15 T-pipe
16 Gasket
17 Spring
18 Screw

(Cont'd)

(Cont'd)

l) Separate the shaft (10), the O-ring (19) and the bearing (20) from the flange (21).

m) Make sure that the shaft (10) is not damaged or bent. Change the shaft (10) if necessary.

n) Change the O-ring (19) and the bearing (20).

o) Assemble in the reverse order.

p) Set the heat exchanger valve, see 1.1.2.3-2 Heat Exchanger Valve - Set.

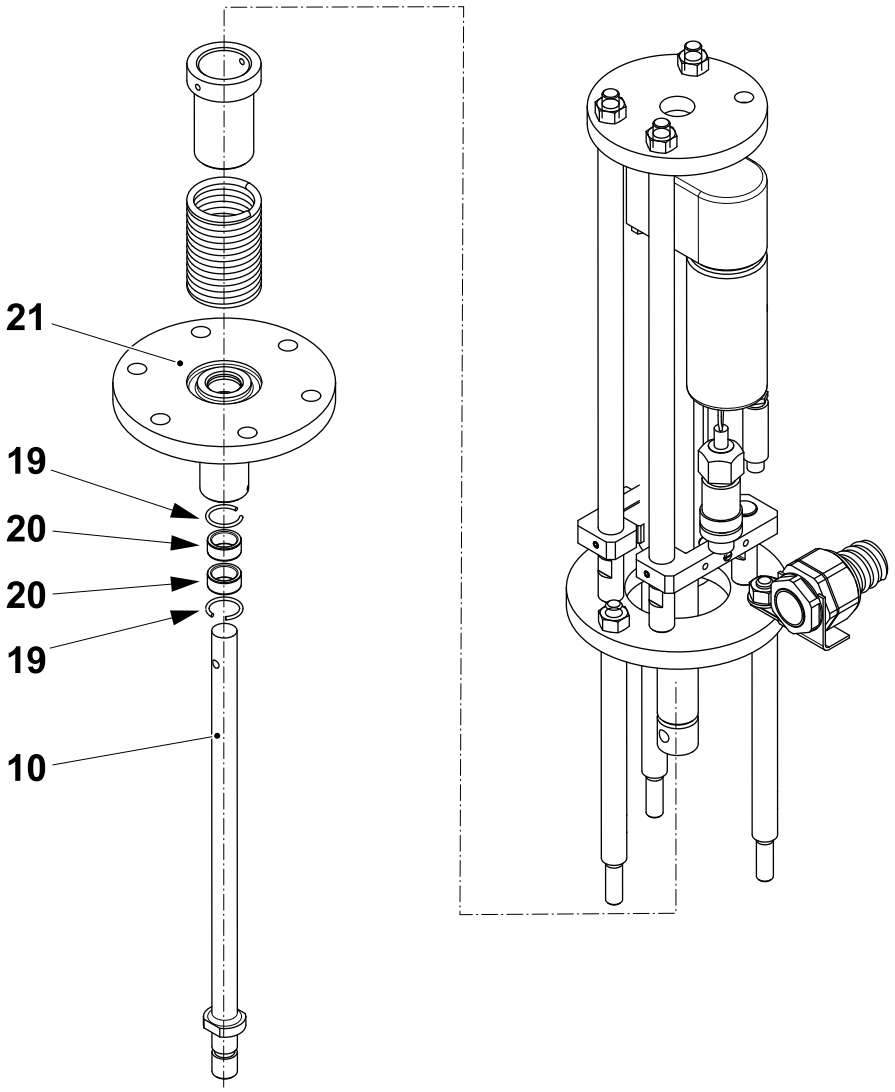

10 Shaft
19 O-ring
20 Bearing
21 Flange

1.1.2.3-2 Heat Exchanger Valve - Set

Machine Status	PREPARATION
SPC Reference	2808254-0200

Align

a) Loosen the nuts (1) and align vertically the cylinder (2) with the screw (3) and the stop screw (4).

b) Tighten the nuts (1).

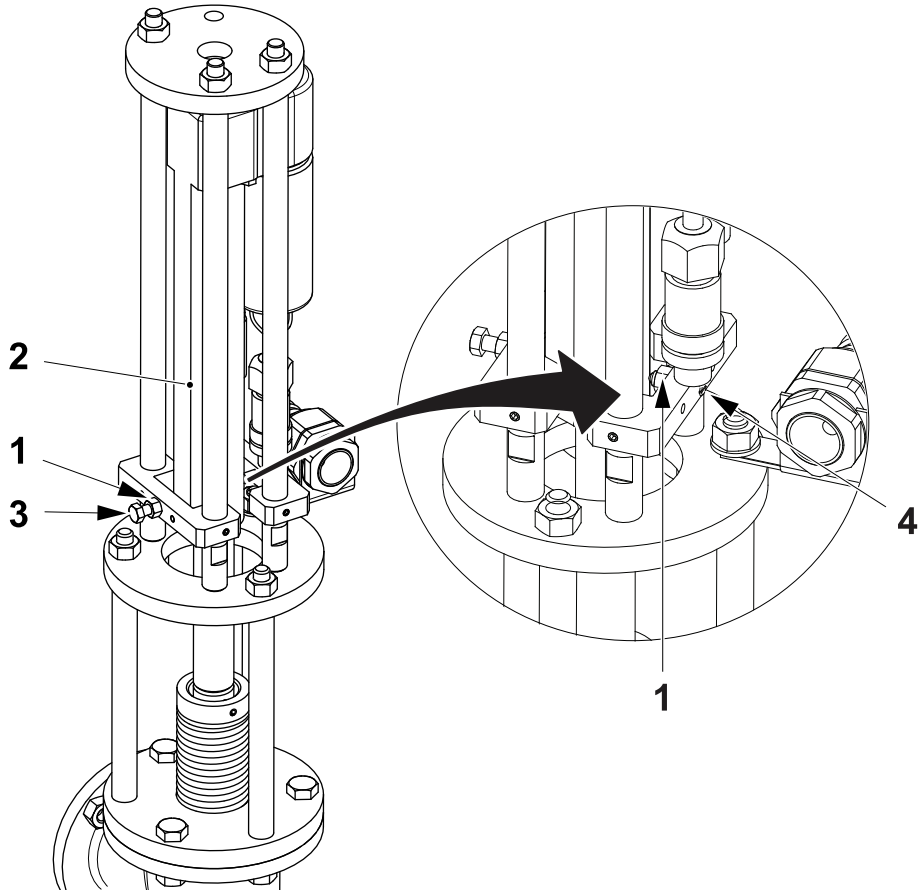

1 Nut
2 Cylinder
3 Screw
4 Stop screw

(Cont'd)

(Cont'd)

Home Position

If necessary, set manually the heat exchanger valve home position. Proceed as follows:

a) In step PREPARATION, press the MACHINE CONTROL button (1) enter the password required, see 8.6.3-2 HMI - User Management Log On.

b) Touch the STERILE SYSTEM button (2).

c) Touch the HOME HEAT EXCHANGER VALVE icon (3). TheON button (4) is displayed.

d) Touch the ON button (4) to start the home position function.

e) Touch the OK button (5) to start the home position function. The maximum cooling position and the by pass position are set.

f) Press the EXIT button (6).

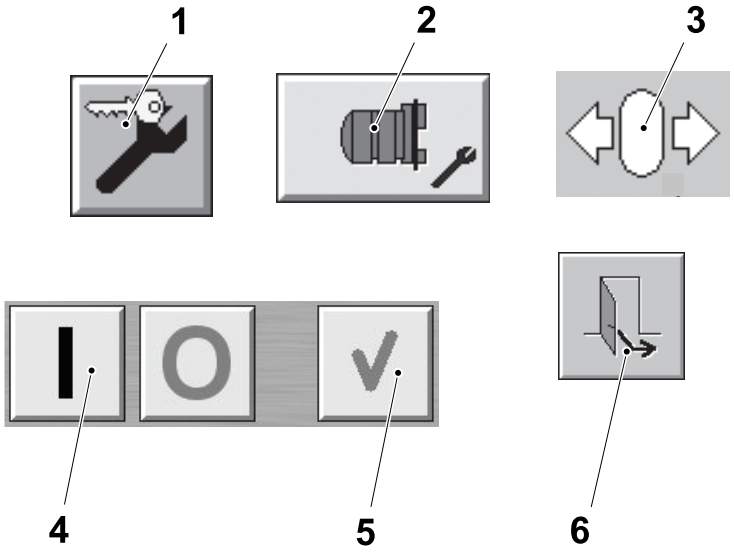

1 MACHINE CONTROL button
2 STERILE SYSTEM button
3 HOME HEAT EXCHANGER VALVE icon
4 ON button
5 OK button
6 EXIT button

(Cont'd)

(Cont'd)

Valve Manual Position

a) In step PREPARATION or STERILIZATION DONE, touch the MAINTENANCE CONTROL button (1) and enter the password required, see 8.6.3-2 HMI - User Management Log On.

b) Touch the STERILE SYSTEM button (2).

c) Touch the HEAT EXCHANGER VALVE SET POSITION icon (3).

Note! The minimum position correspond to 0% and the maximum position is 100%.

d) Touch the ON button (4).

e) Touch the ARROW UP button (5) or ARROW DOWN button (6) to set the valve position.

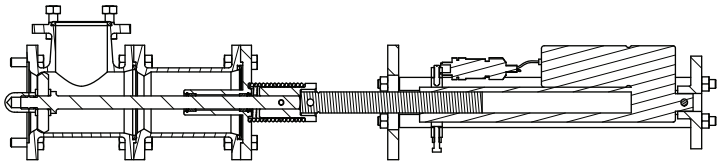

By-pass (100%)

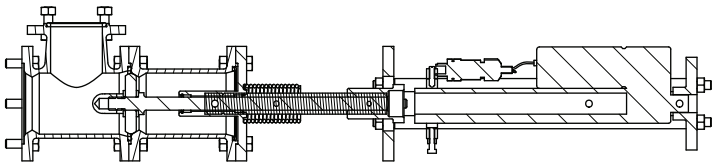

Maximum cooling (35%)

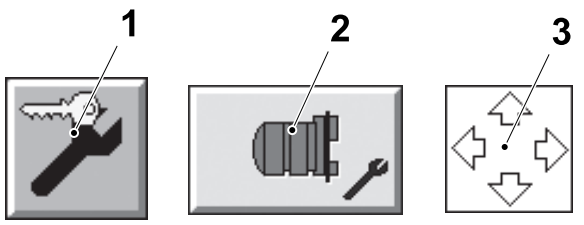

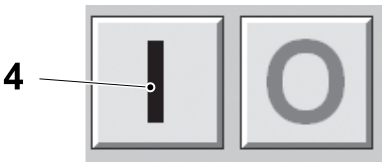

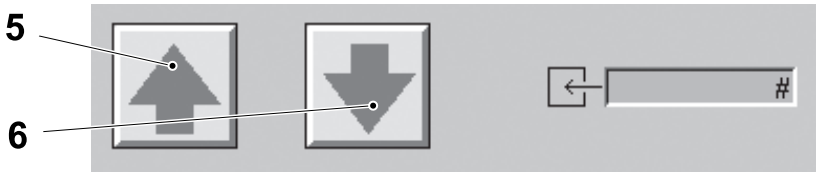

1 MAINTENANCE CONTROL button
2 STERILE SYSTEM button
3 HEAT EXCHANGER VALVE SET POSITION icon
4 ON button
5 ARROW UP button
6 ARROW DOWN button

(Cont'd)

(Cont'd)

f) Touch the ZERO button (7) to disable the function.

g) Touch the EXIT button (8).

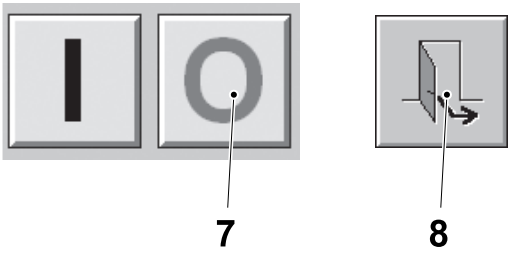

7 ZERO button
8 EXIT button

1.1.2.3-3 Heat Exchanger Valve - Change Linear Actuator

Machine Status	Electrical supply disconnecting device in position O (OFF) Main air valve OFF Main steam valve ON Main water valve ON
SPC Reference	2808254-0200

WARNING
Burn hazard.
Follow the Safety Precautions.

(Cont'd)

(Cont'd)

a) Disconnect the cables from the linear actuator (1).
b) Remove the nuts (2) and the flange (3).
c) Compress the spring (4) to access the screw (5).
d) Remove the screw (5).
e) Remove the retaining ring (6), the pin (7).
f) Remove and change the linear actuator (1).
g) Assemble in the reverse order.
h) Set the heat exchanger valve, see 1.1.2.3-2 Heat Exchanger Valve - Set.

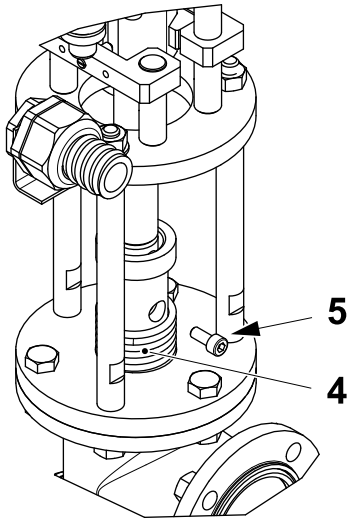

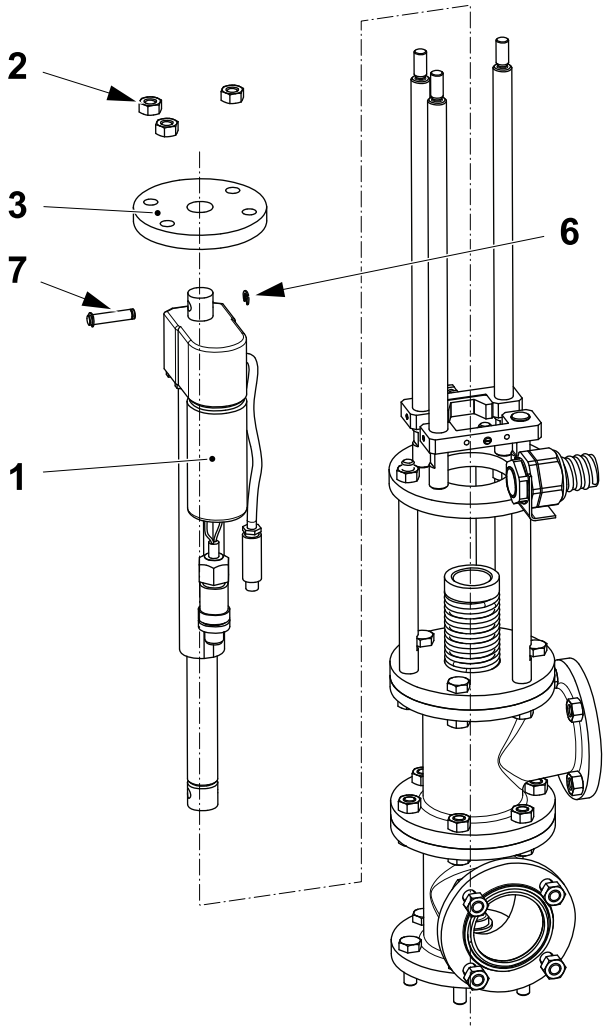

1 Linear actuator
2 Nut
3 Flange
4 Spring
5 Screw
6 Retaining ring
7 Pin

1.1.2.4 Spray Nozzle

1.1.2.4-1 Spray Nozzle - Check

Machine Status	Electrical supply disconnecting device in position O (OFF) Main air valve OFF Main steam valve OFF Main water valve OFF
SPC Reference	2547391-0100

WARNING
Burn hazard.
Follow the Safety Precautions.

WARNING
Hydrogen Peroxide.
Follow the Safety Precautions.

CAUTION
Risk of serious production fault.
Never close the steam valve when the dairy product line is still in use by other machines. The steam in the product valve forms an aseptic barrier between the machine and the remaining dairy product line. Closing the steam valve will remove this barrier.

(Cont'd)

(Cont'd)

a) Remove the pipes from the connections (1).

b) Remove the spraynozzle group (2) by means of the nut (3).

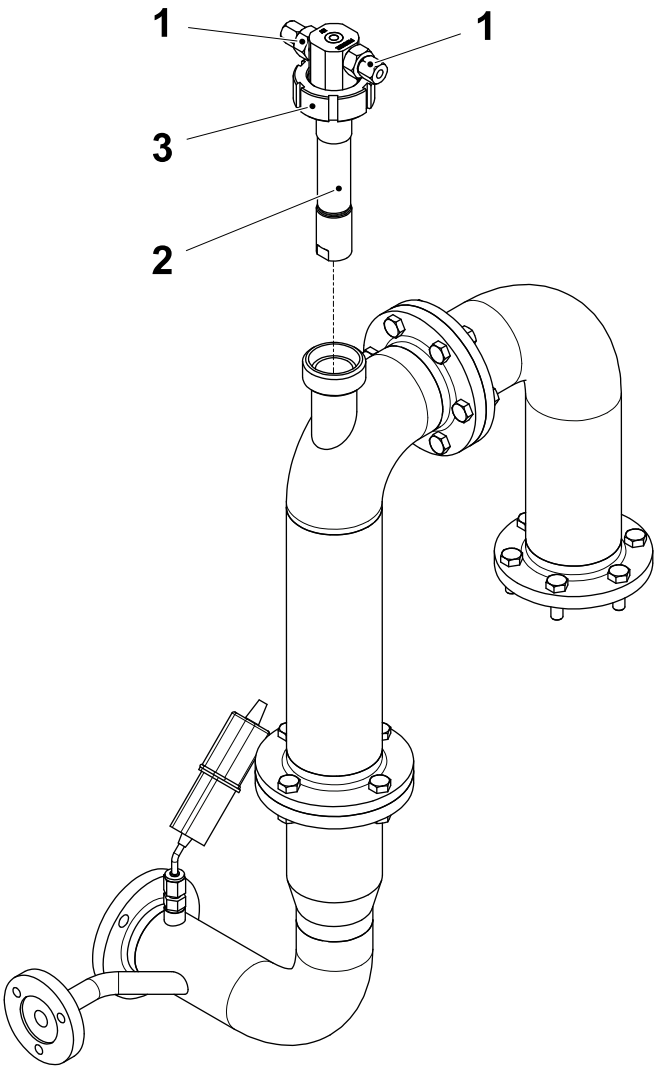

1 Connection
2 Nozzle group
3 Nut

(Cont'd)

(Cont'd)

c) Remove the nut (4).

d) Disassemble the nozzle (5) from the dome (6), the spacer (7) and the nut (4).

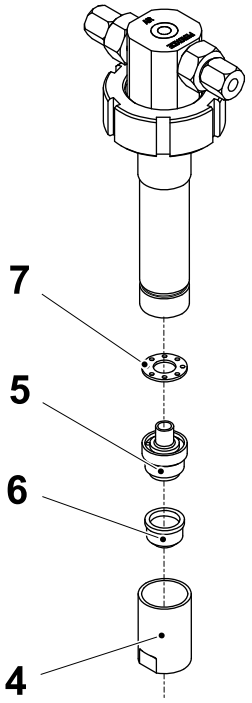

4 Nut
5 Nozzle
6 Dome
7 Spacer

(Cont'd)

(Cont'd)

Note! If the connections (1) have been removed from the spray nozzle body (9), use Teflon tape on the joints when assembling to avoid leakage.

e) Remove the external pipe (8) and the nut (3).

f) Check all the parts for wear or damage and clean them if necessary with compressed air, see 1.1.2.4-2 Spray Nozzle - Clean.

g) Assemble in the reverse order.

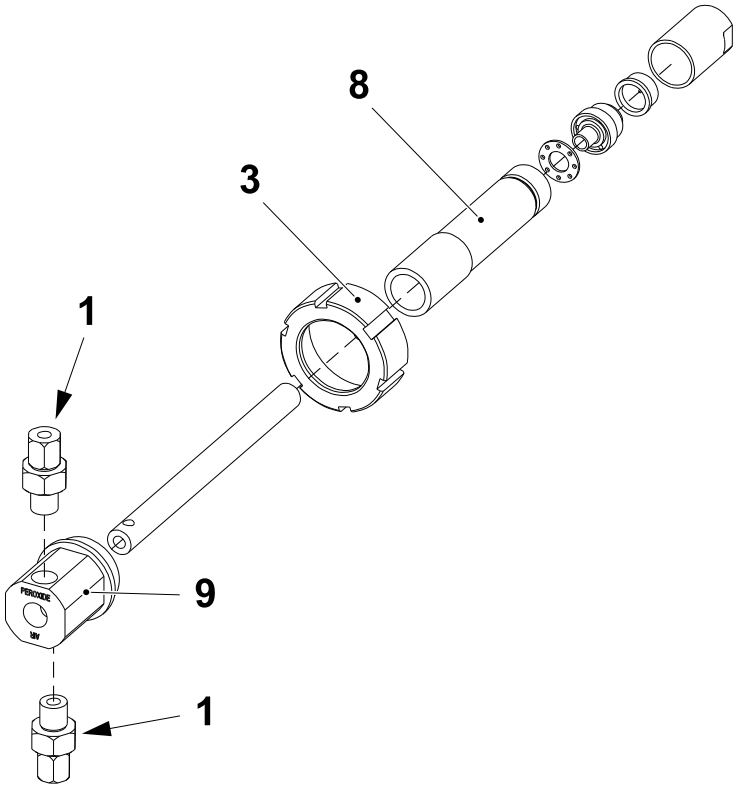

1 Connection
3 Nut
8 External pipe
9 Spray nozzle body

1.1.2.4-2 Spray Nozzle - Clean

Machine Status	Electrical supply disconnecting device in position O (OFF) Main air valve OFF Main steam valve OFF Main water valve OFF
Consumables	De-liming Acid, See List
SPC Reference	2547391-0100

WARNING
Burn hazard.
Follow the Safety Precautions.

WARNING
Hydrogen Peroxide.
Follow the Safety Precautions.

CAUTION
Risk of serious production fault.
Never close the steam valve when the dairy product line is still in use by other machines. The steam in the product valve forms an aseptic barrier between the machine and the remaining dairy product line. Closing the steam valve will remove this barrier.

(Cont'd)

(Cont'd)

a) Remove the H_2O_2 pipe and the compressed air pipe from the connections (1) and (2).

b) Loosen the nut (3) and remove the spray nozzle group (4).

c) Remove the nut (5).

d) Disassemble the nozzle (6) from the dome (7), the spacer (8) and the nut (5).

e) Clean all the parts with compressed air. If necessary, use a needle to clean the spacer (8), the nozzle (6) and the dome (7).

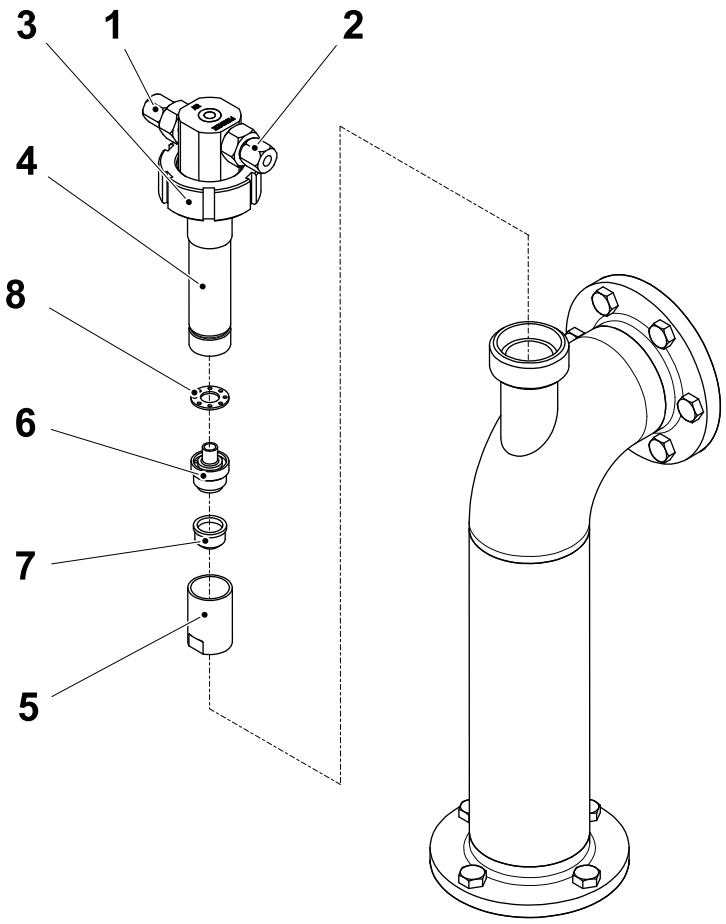

1 Connection
2 Connection
3 Nut
4 Nozzle group
5 Nut
6 Nozzle
7 Dome
8 Spacer

(Cont'd)

(Cont'd)

WARNING

Acids.

Follow the Safety Precautions.

f) Remove the screws (9) and the nuts (10) and disconnect the pipe (11) from the pipe (12) and the pipe (13).

g) Remove the container (14).

h) Clean the container (14) containing the balls with nitric acid (HNO_3) at 5-10%. The solution must have a temperature of 50° to 60° C during peroxide residue removal.

i) After cleaning flush the container (14) with water and then rinse with softened or distilled water.

j) Assemble in the reverse order.

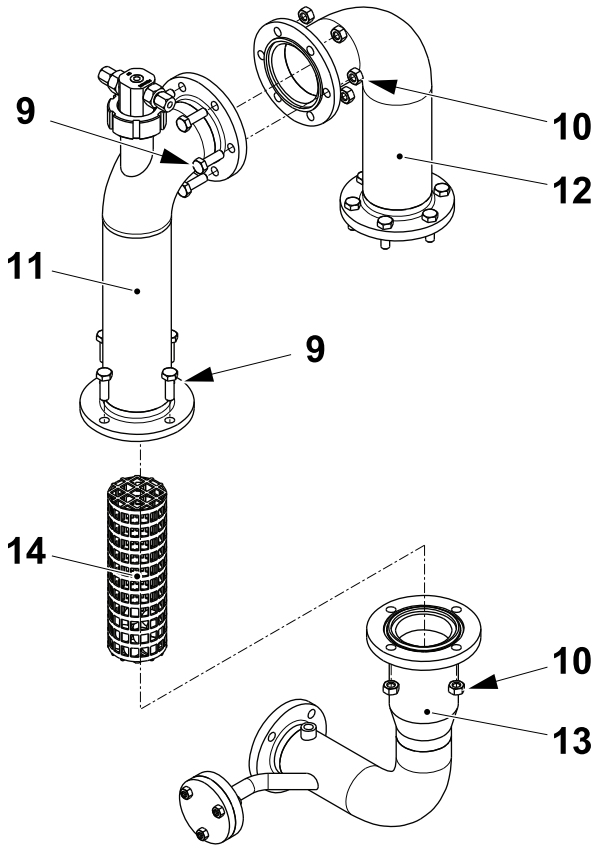

9 Screw	11 Pipe	13 Pipe
10 Nut	12 Pipe	14 Container

1.1.2.5 Air Valve

1.1.2.5-1 Air Valve - Set

Machine Status	Electrical supply disconnecting device in position O (OFF) Main air valve OFF Main steam valve OFF Main water valve OFF
SPC Reference	2808265-0100

CAUTION
Risk of serious production fault.
Never close the steam valve when the dairy product line is still in use by other machines. The steam in the product valve forms an aseptic barrier between the machine and the remaining dairy product line. Closing the steam valve will remove this barrier.

a) Close the main air at the service unit.

b) Remove the air valve (1) and place it on a work bench, see 1.1.2.5-2 Air Valve - Overhaul.

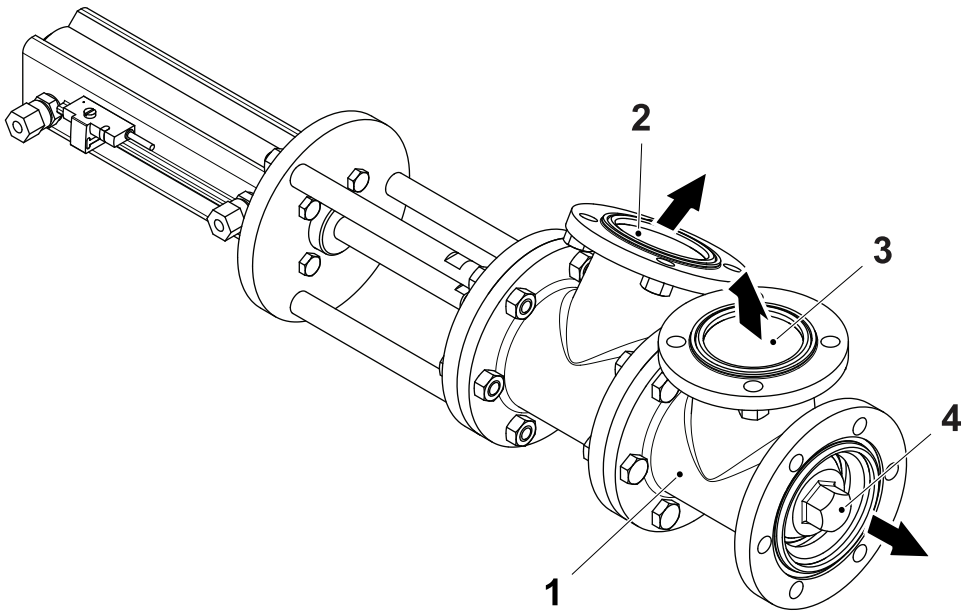

1 Air valve
2 To silencer
3 To heat exchanger
4 To aseptic chamber and product valve

(Cont'd)

(Cont'd)

c) Loosen the nut (5).

d) Unscrew and disconnect the piston rod (6) from the pendulum suspension (7).

e) Push the piston rod (6) all the way into the cylinder.

f) Move the shaft (8) so that the valve (9) is in position **A** as indicated in the illustration.

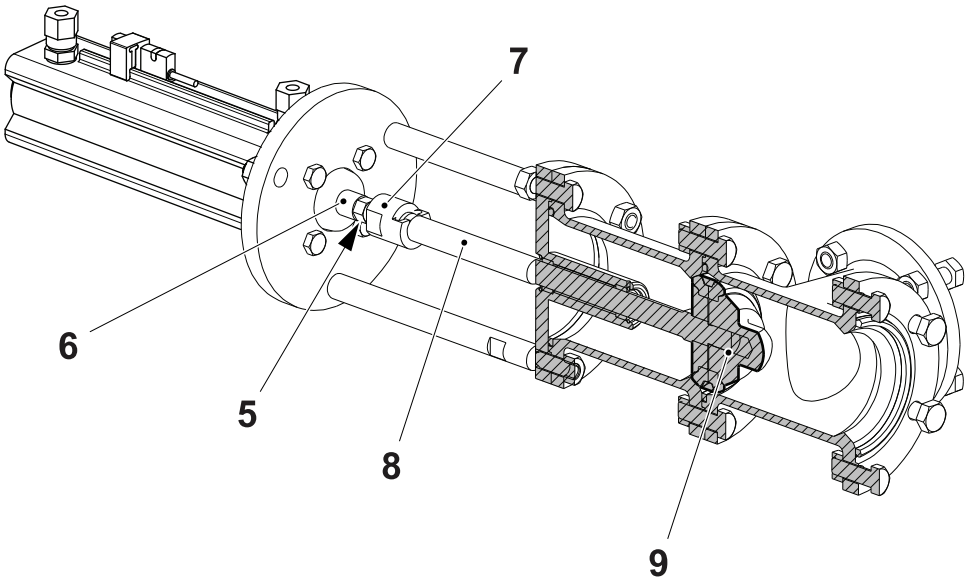

Pos. **A**

5 Nut
6 Piston rod
7 Pendulum suspension
8 Shaft
9 Valve

(Cont'd)

(Cont'd)

g) Holding the piston rod (6) in its position, screw the pendulum suspension (7) into the piston rod (6) until it starts to move, then screw in a half turn more. Tighten the nut (5).

h) Move the shaft (8) by hand and check that the valve (9) closes completely in both positions: **A** and **B**. If not repeat from item c).

i) Assemble in the reverse order.

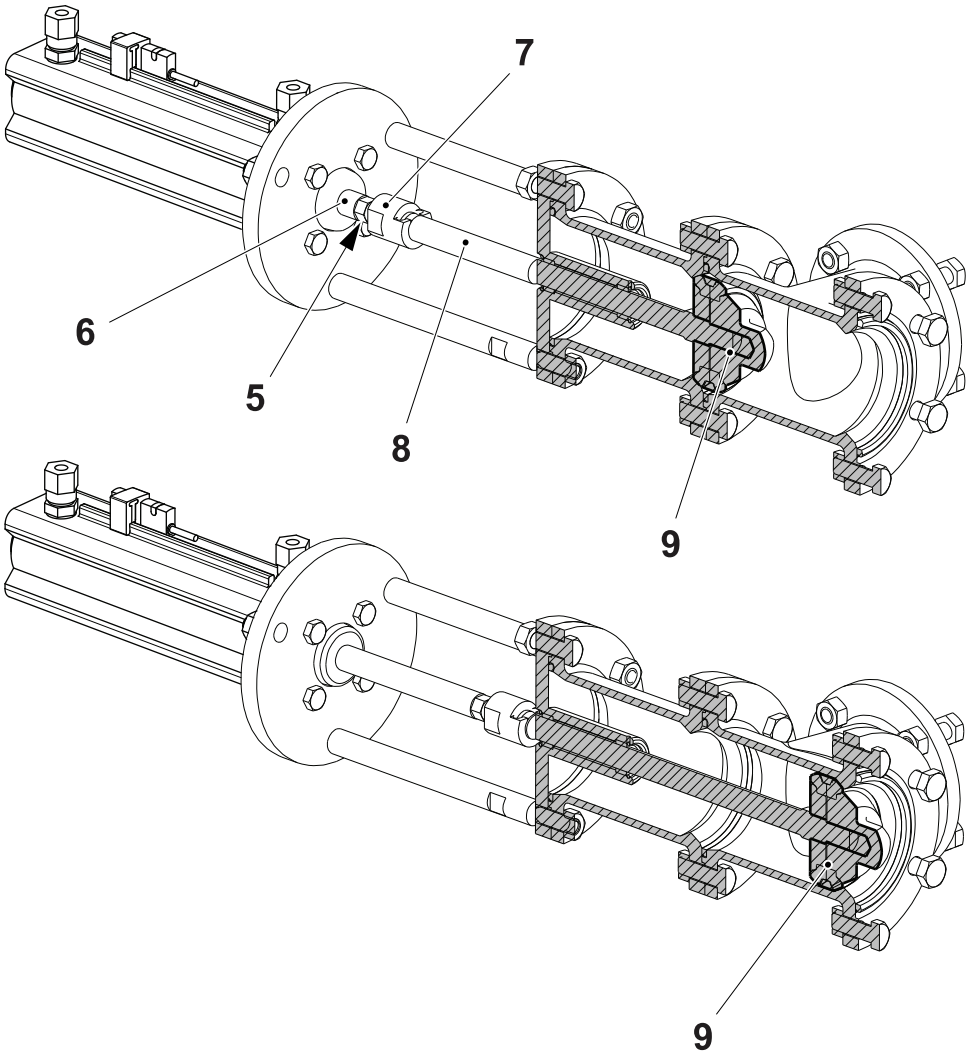

5 Nut
6 Piston rod
7 Pendulum suspension
8 Shaft
9 Valve

1.1.2.5-2 Air Valve - Overhaul

Machine Status	Electrical supply disconnecting device in position O (OFF) Main air valve OFF Main steam valve OFF Main water valve OFF
SPC Reference	2808265-0100

WARNING

Burn hazard.

Follow the Safety Precautions.

CAUTION

Risk of serious production fault.

Never close the steam valve when the dairy product line is still in use by other machines. The steam in the product valve forms an aseptic barrier between the machine and the remaining dairy product line. Closing the steam valve will remove this barrier.

(Cont'd)

(Cont'd)

a) Remove the screws (1) and the nuts from the flange.

b) Remove the screws (2) and the nuts from the flange.

c) Remove the air preheating valve (3).

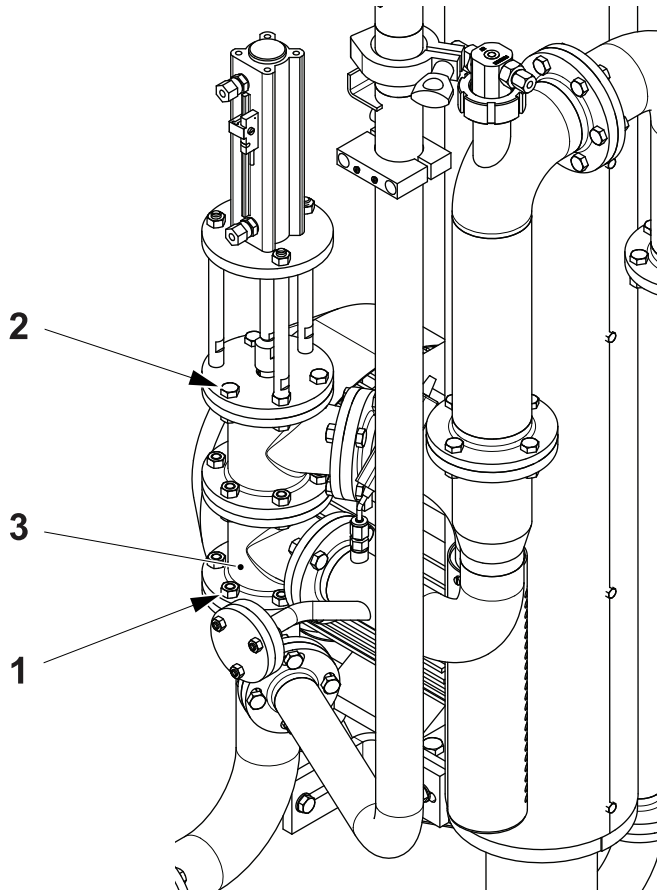

1 Screw
2 Screw
3 Air preheating valve

(Cont'd)

(Cont'd)

d) Change the gaskets (4), (5) and (6).

e) Remove the screws (7) and change the gasket (8).

f) Remove the valve cone (9) and change the seal rings (10) and (11).

g) Remove the nuts (12) and change the gasket (13).

h) Disconnect the joint (14) and make sure that the shaft (15) is not damaged or bent. Change the shaft (15) if necessary.

i) Change the bearings (16) and the O-rings (17).

j) Make sure that the cylinder (18) moves freely. Change if necessary.

Note! Tighten the valve cone (9) to 50 Nm using a torque wrench.

k) Assemble in the reverse order.

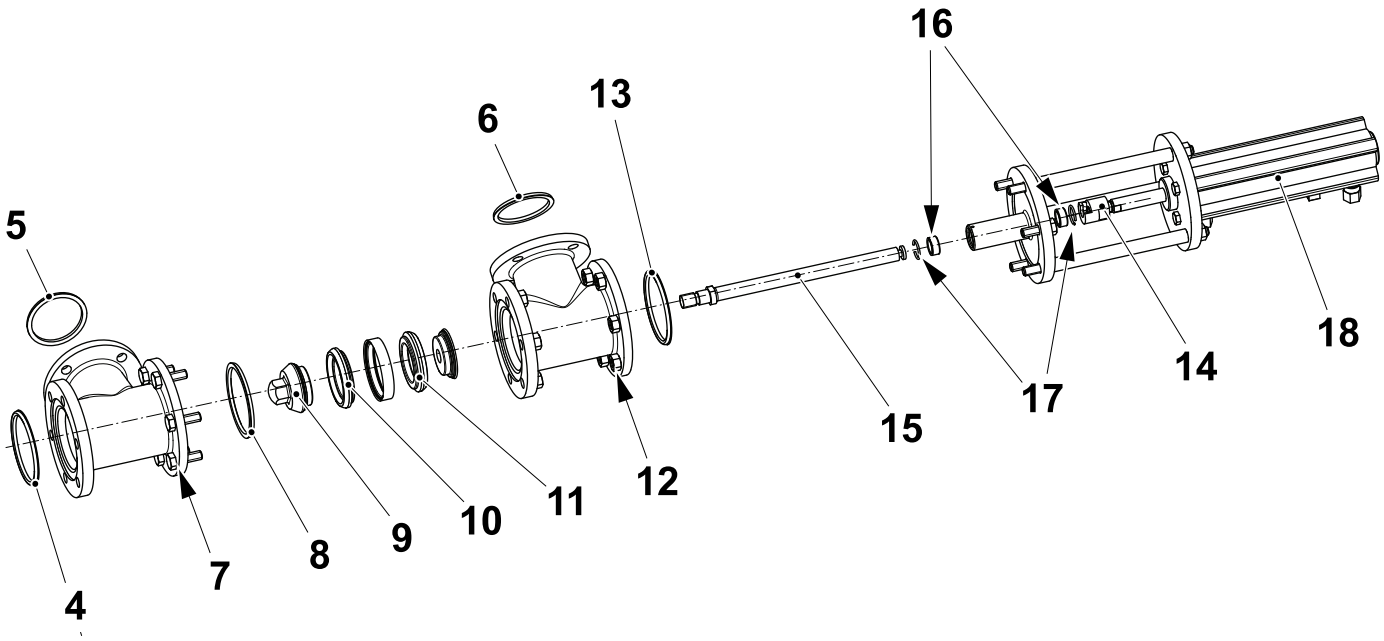

4 Gasket
5 Gasket
6 Gasket
7 Screw
8 Gasket
9 Valve cone
10 Seal ring
11 Seal ring
12 Nut
13 Gasket
14 Joint
15 Shaft
16 Bearing
17 O-ring
18 Cylinder

1.1.2.5-3 Air Valve - Set Proximity Switch

Machine Status	Electrical supply disconnecting device in position I (ON) Main air valve ON Main steam valve OFF Main water valve OFF
SPC Reference	2808265-0100

WARNING

Burn hazard.

Follow the Safety Precautions.

CAUTION

Risk of serious production fault.

Never close the steam valve when the dairy product line is still in use by other machines. The steam in the product valve forms an aseptic barrier between the machine and the remaining dairy product line. Closing the steam valve will remove this barrier.

a) Activate the valve Y1111 on the superstructure pneumatic panel.

b) Set the proximity switch (1) position so that it is activated when the cylinder shaft (2) is in the lowest back position.

c) Deactivate the valve Y1111 and make sure that the proximity switch is deactivated.

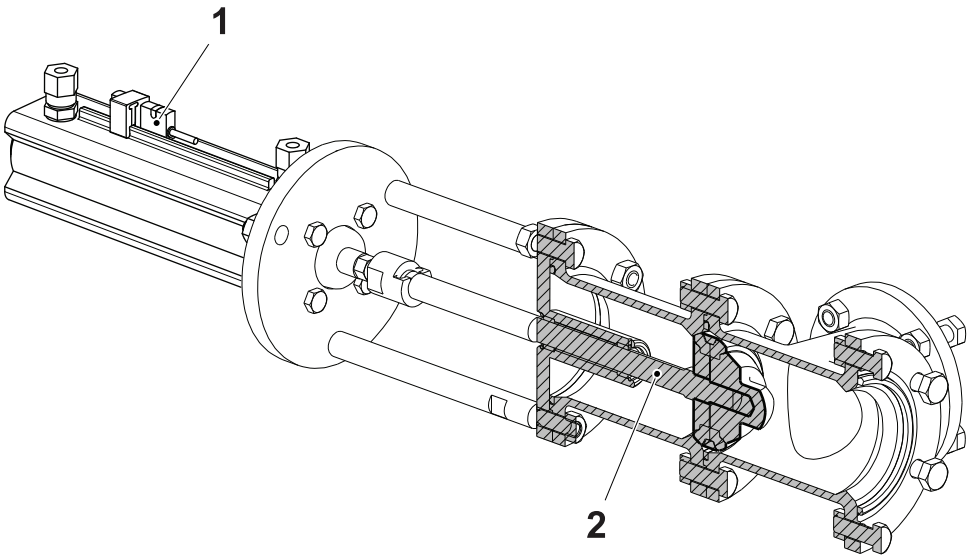

1 Proximity switch
2 Shaft

1.1.2.6 Scrubber

1.1.2.6-1 Scrubber - Clean Filters

Machine Status	Electrical supply disconnecting device in position O (OFF) Main air valve OFF Main steam valve OFF Main water valve OFF
Consumables	Limescale Removal Acid, See list
SPC Reference	2808247-0300

WARNING

Acids.

Follow the Safety Precautions.

CAUTION

Risk of serious production fault.

Never close the steam valve when the dairy product line is still in use by other machines. The steam in the product valve forms an aseptic barrier between the machine and the remaining dairy product line. Closing the steam valve will remove this barrier.

(Cont'd)

(Cont'd)

a) Loosen the clamp (1) and the holder (2) and remove the upper section cover (3).

b) Remove and clean the nozzle (4) with compressed air. If necessary, carefully use a needle to clean it.

c) Remove the O-ring (5) and check for damage. Change if necessary.

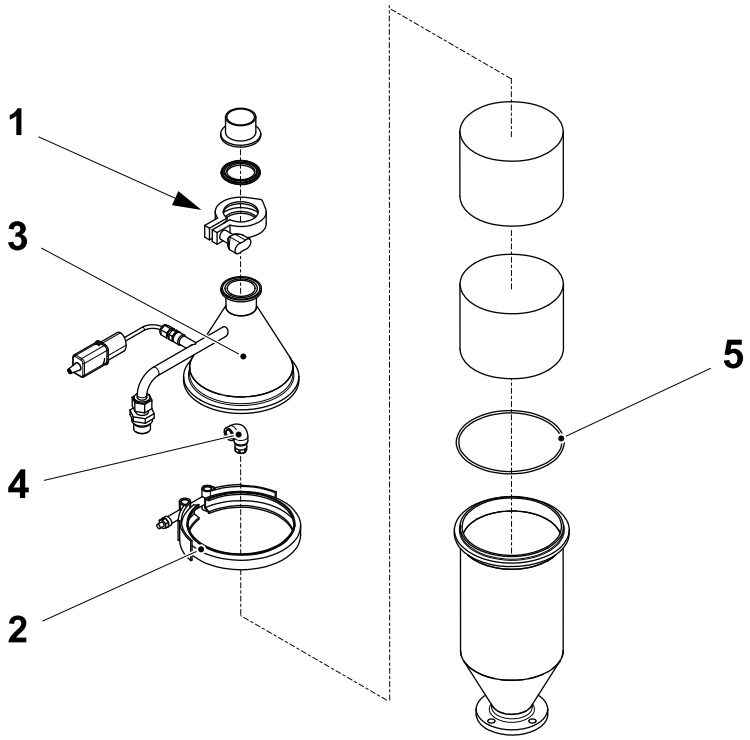

1 Clamp
2 Holder
3 Upper section cover
4 Nozzle
5 O-ring

(Cont'd)

(Cont'd)

CAUTION
Risk of damage to the equipment.
Only use the acids listed below.

d) Pull out the filters (6) and remove limescale with one of the four acid solutions listed below. All solutions must have an ambient temperature during limescale removal.
   - acetic acid (CH_3COOH), 20%
   - nitric acid (HNO_3), 5-10%
   - citric acid ($C_6H_8O_7$), 20%
   - phosphoric acid (H_3PO_4), 5-10%.

e) After limescale removal, flush with water and then perform a final rinse with softened or distilled water.

f) Assemble in the reverse order and make sure that the upper filters (6) is in close contact with the upper section cover (3).

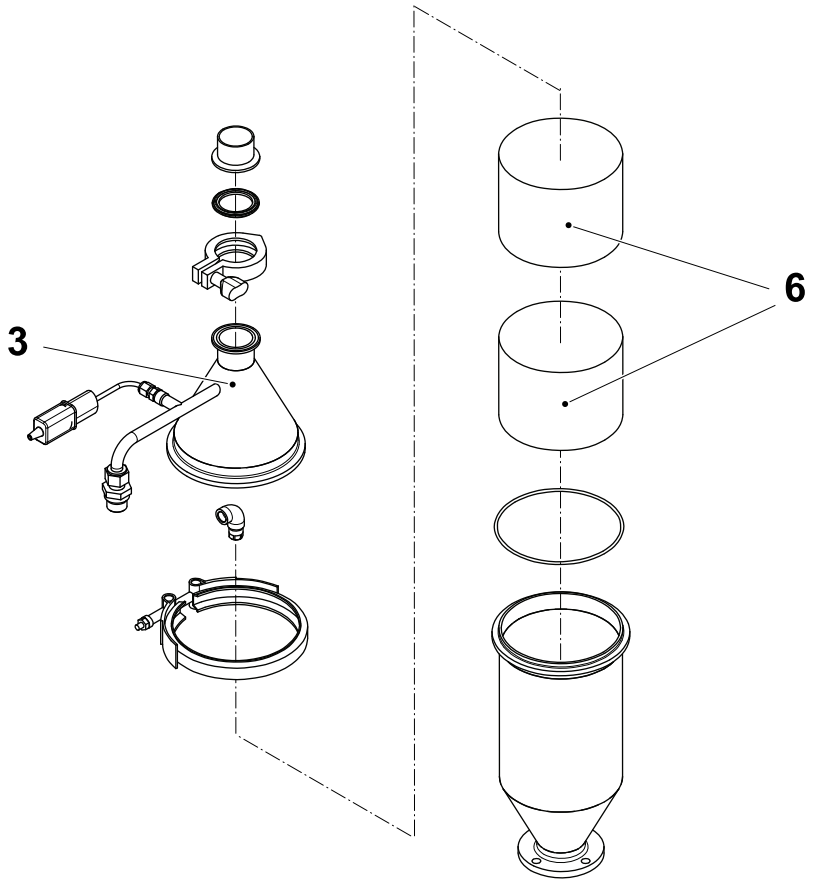

3 Upper section cover
6 Filter

1.1.2.6-2 Scrubber - Check Flow Meter

Machine Status	HEAT STERILIZATION
SPC Reference	2808247-0300

Note! This check can only be performed if the compressor is running and air flows through the pipe (1).

a) On the flow sensor (2), check if the green LED (3) is activated.

b) Check that the flow sensor (2) is connected properly.

c) Check the water separator pressure gauge (4) for proper function. Change if necessary.

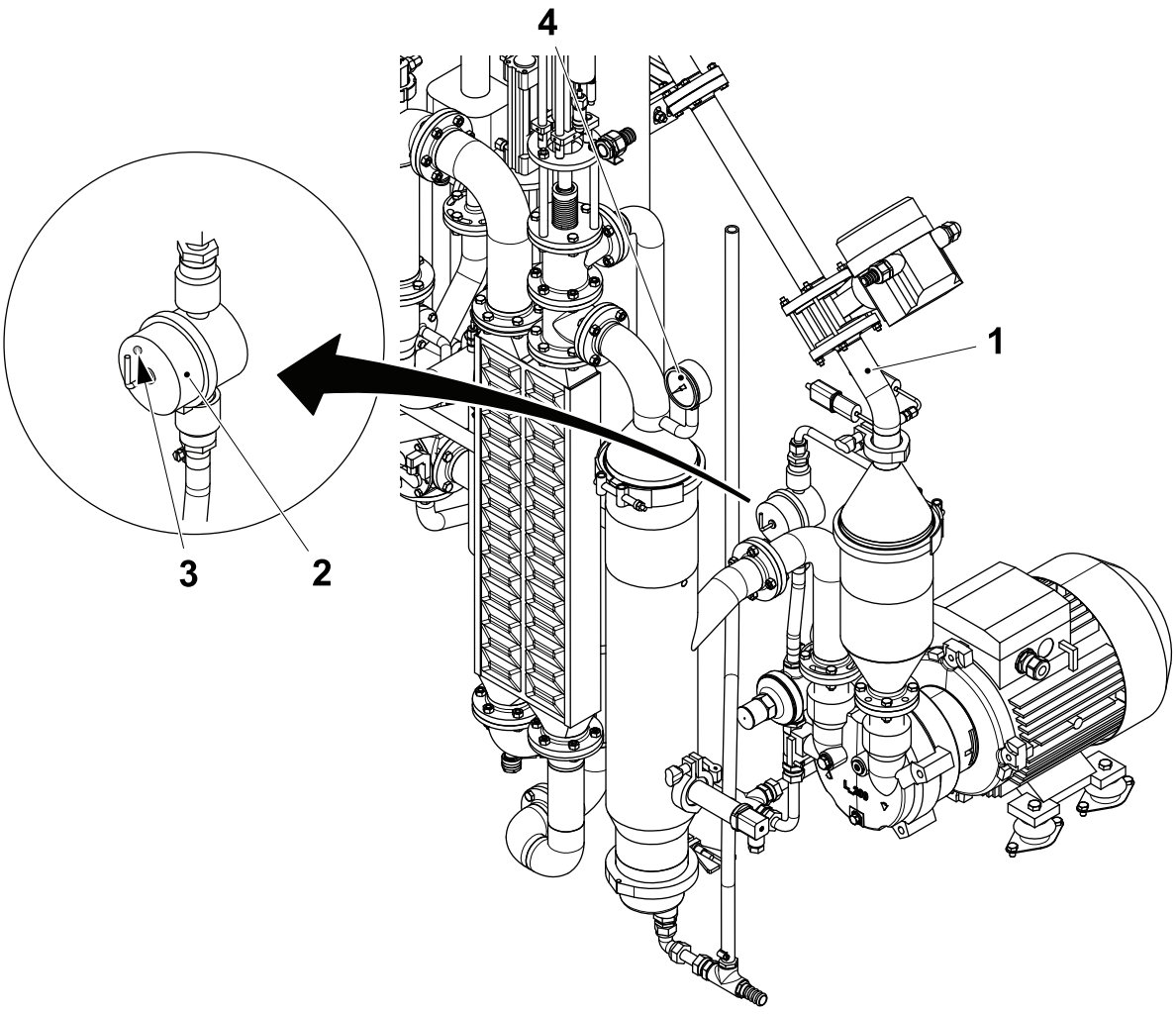

1 Pipe
2 Flow sensor
3 LED
4 Pressure gauge

1.1.2.6-3 Scrubber - Set Pressure Regulator

Machine Status	HEAT STERILIZATION
SPC Reference	2808247-0300

WARNING
Burn hazard.
Follow the Safety Precautions.

To reach the correct water flow of **4** l/min proceed as follows:

a) touch the STERILE AIR SYSTEM button (1), then touch the icon (2) to display the air compressor sealing water flow,

b) remove the cap (3),

c) turn the pressure regulator (4) until the TPOP shows the correct value.

d) Fit back the cap (3).

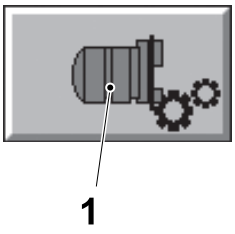

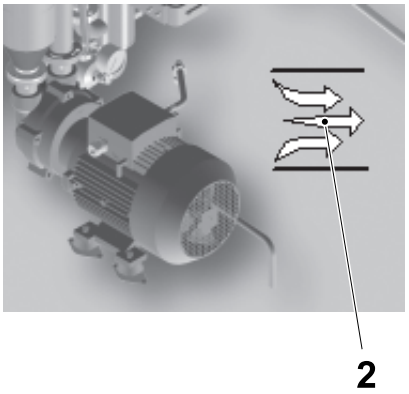

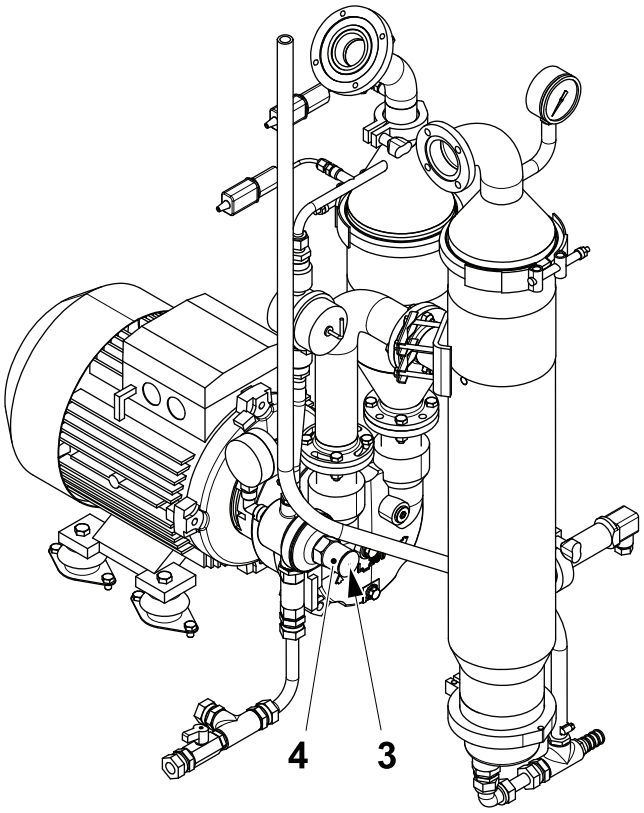

1 STERILE AIR SYSTEM button
2 Icon
3 Cap
4 Pressure regulator

1.1.2.7 Separator

1.1.2.7-1 Separator - Clean Filter and Floater

Machine Status	Electrical supply disconnecting device in position O (OFF) Main air valve OFF Main steam valve OFF Main water valve OFF
Consumables	Limescale Removal Acid, See List
SPC Reference	2808226-0300

WARNING

Chemical products.

Follow the Safety Precautions.

CAUTION

Risk of serious production fault.

Never close the steam valve when the dairy product line is still in use by other machines. The steam in the product valve forms an aseptic barrier between the machine and the remaining dairy product line. Closing the steam valve will remove this barrier.

(Cont'd)

(Cont'd)

a) Remove the pipe connection (1).

b) Loosen the clamp (2) and remove the float guard (3), the float unit (4), the seal (5) and the draining (6).

c) Remove the float unit (4) and clean it.

d) Shake the float unit (4) to make sure that no liquid has leaked into it. Change the float unit (4) if necessary.

e) If the valve (8) or the valve seat (7) is defective, change them, see 1.1.2.7-2 Separator - Change Valve and Valve Seat.

f) Dip the draining (6) into a container with deliming agent to remove the limescale residues.

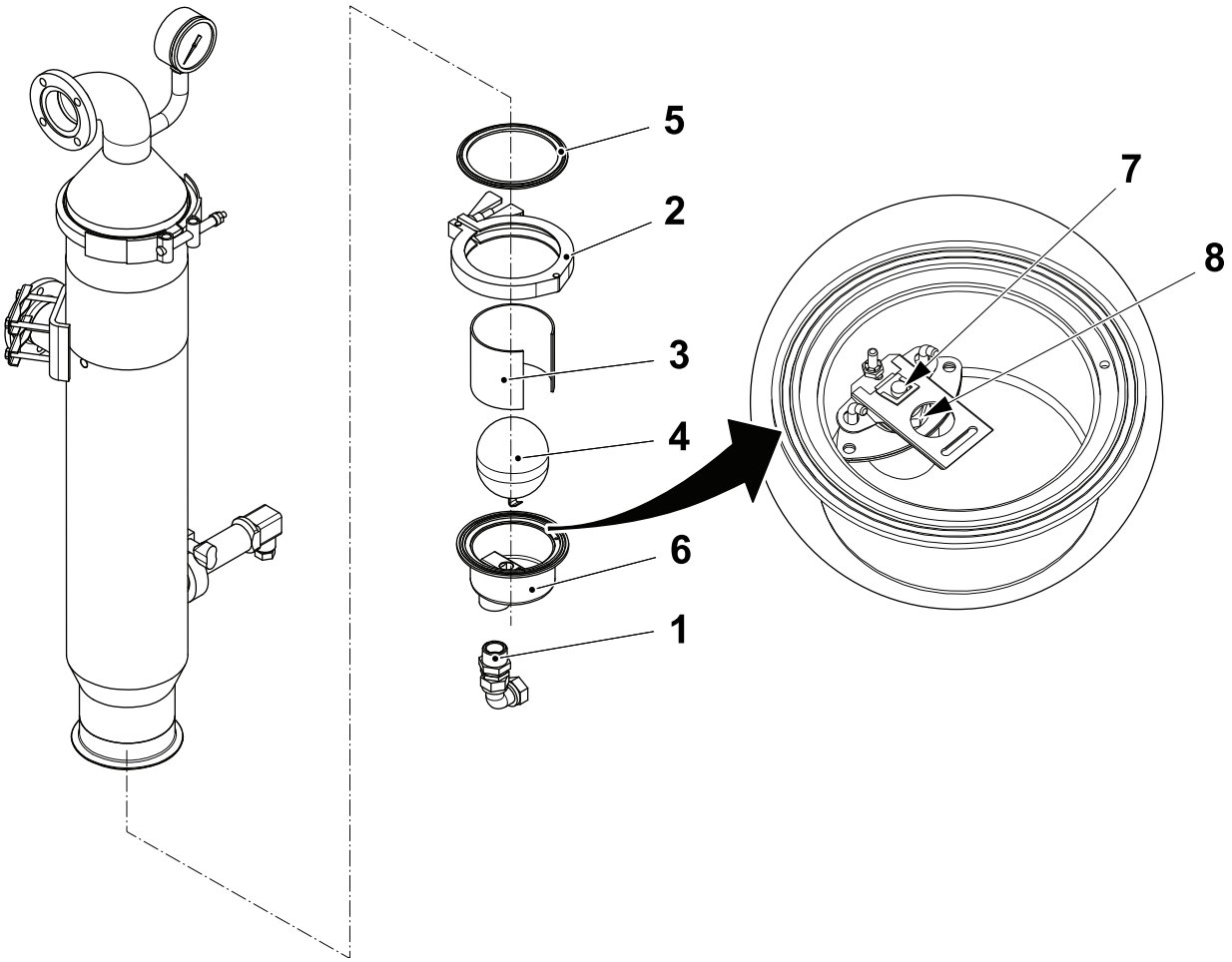

1 Pipe connection
2 Clamp
3 Float guard
4 Float unit
5 Seal
6 Draining
7 Valve seat
8 Valve

(Cont'd)

(Cont'd)

WARNING

Acids.

Follow the Safety Precautions. Only use the acids listed below, do not use detergents.

g) Clean the inside of the separator with a sponge and water. Blow dry with compressed air.

h) Release the clamps (9).

i) Remove the upper section cover (10) and the O-ring (11).

j) Remove limescale from the filter (12) with one of the four acid solutions listed below. All the solutions must have an ambient temperature during limescale removal.

- acetic acid (CH_3COOH), 20%
- nitric acid (HNO_3), 5-10%
- citric acid ($C_6H_8O_7$), 20%
- phosphoric acid (H_3PO_4), 5-10%

k) After limescale removal flush with water and then perform a final rinse with softened or distilled water.

l) Assemble in the reverse order and set the float unit, see 1.1.2.7-3 Separator - Set Float Unit.

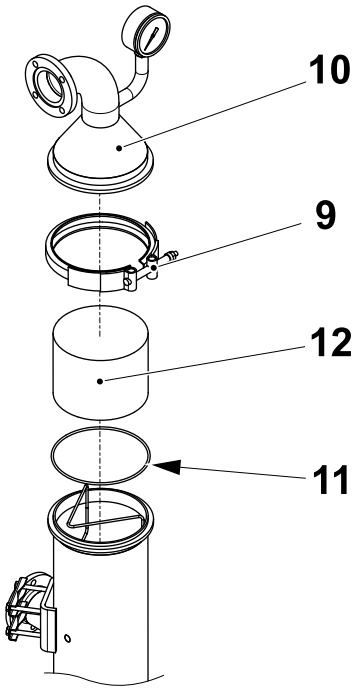

9 Clamp
10 Cover
11 O-ring
12 Filter

1.1.2.7-2 Separator - Change Valve and Valve Seat

Machine Status	Electrical supply disconnecting device in position O (OFF) Main air valve OFF Main steam valve OFF Main water valve OFF
SPC Reference	2808226-0300

CAUTION

Risk of serious production fault.

Never close the steam valve when the dairy product line is still in use by other machines. The steam in the product valve forms an aseptic barrier between the machine and the remaining dairy product line. Closing the steam valve will remove this barrier.

(Cont'd)

(Cont'd)

a) Remove the float unit, see 1.1.2.7-1 Separator - Clean Filter and Floater.

b) On the draining (1), remove the nut (2) and lift off the valve lever (3).

c) Remove the clip (4), the valve (5) and the valve seat (6).

d) Change the valve (5) and the valve seat (6).

e) Install the valve lever (3) and the nut (2).

f) Set the float unit, see 1.1.2.7-3 Separator - Set Float Unit.

g) Assemble the float unit in the reverse order, see 1.1.2.7-1 Separator - Clean Filter and Floater.

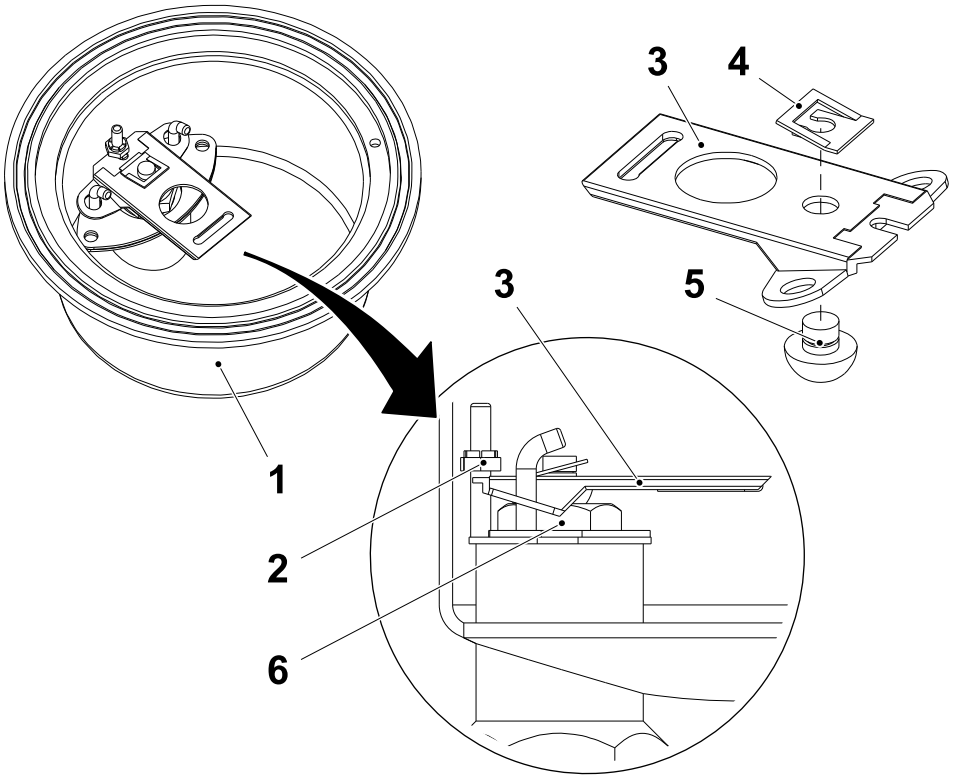

1 Draining
2 Nut
3 Valve lever
4 Clip
5 Valve
6 Valve seat

1.1.2.7-3 Separator - Set Float Unit

Machine Status	Electrical supply disconnecting device in position O (OFF) Main air valve OFF Main steam valve OFF Main water valve OFF
SPC Reference	2808226-0300

CAUTION
Risk of serious production fault.
Never close the steam valve when the dairy product line is still in use by other machines. The steam in the product valve forms an aseptic barrier between the machine and the remaining dairy product line. Closing the steam valve will remove this barrier.

Press down on the valve lever (1) on each side of the valve (2) as indicated by the arrows in the illustration, to make the fulcrum points (3) horizontal on the valve seat (4).

In this position, set the distance **A** between the nut (5) and the valve lever (1).

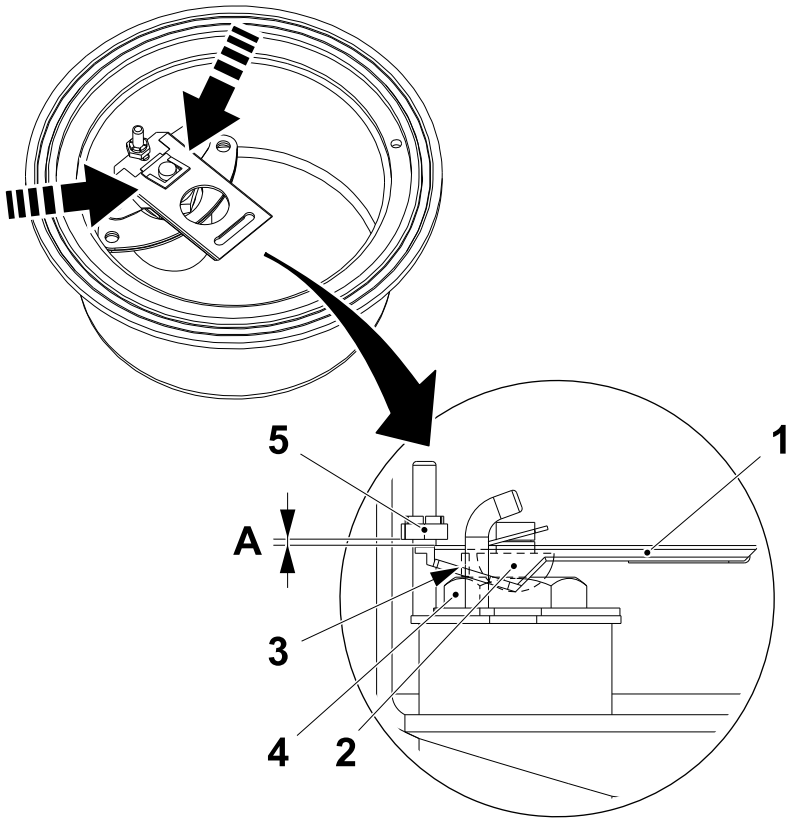

A = 0.4 ±0.1 mm

1 Valve lever
2 Valve
3 Fulcrum point
4 Valve seat
5 Nut

1.1.2.7-4 Separator - Check Pressure Gauge

Machine Status	Electrical supply disconnecting device in position O (OFF) Main air valve OFF Main steam valve OFF Main water valve OFF
SPC Reference	2808226-0300

Check the level of the glycerine into the pressure gauge (1): the glycerine may leak out into the air flow. If necessary, change the pressure gauge (1).

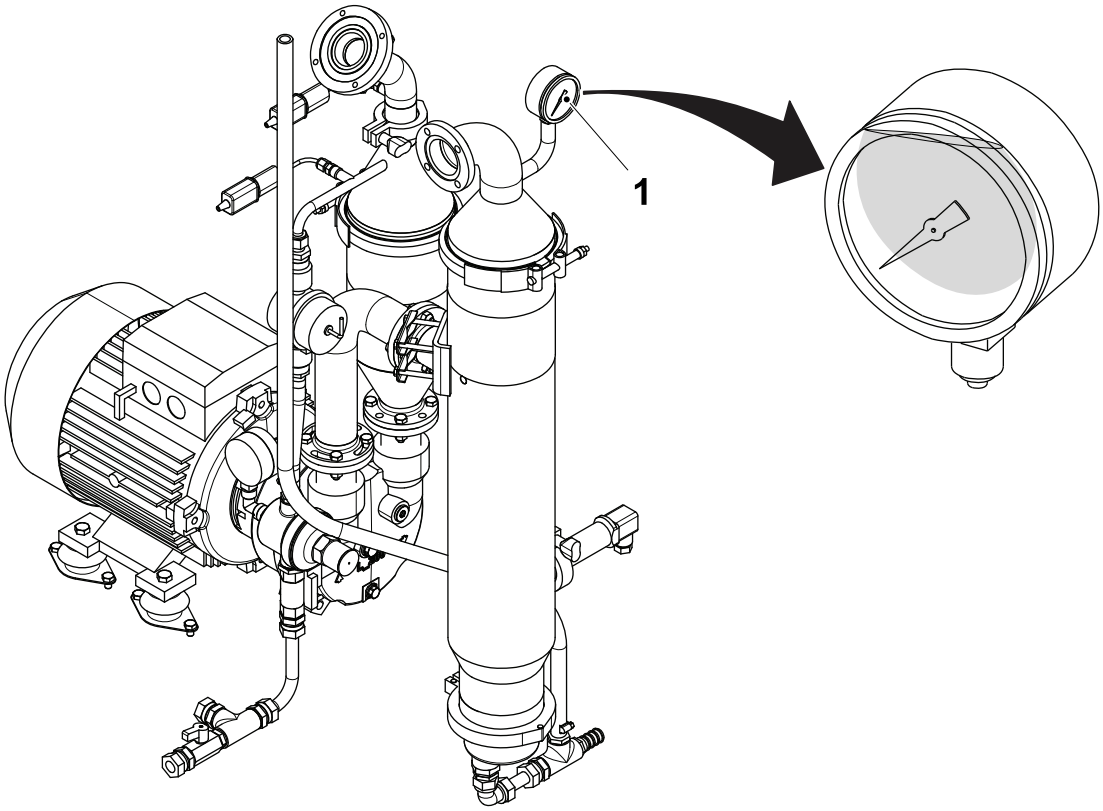

1 Pressure gauge

1.1.2.8 Air Super Heater

1.1.2.8-1 Air Super Heater - Check

Machine Status	Electrical supply disconnecting device in position I (ON) Main air valve ON Main steam valve ON Main water valve ON
SPC Reference	2808251-0200

WARNING

Burn hazard.

Follow the Safety Precautions.

Make sure that the air superheater (1) temperature reaches 360°C.

a) Touch the PRODUCTION CONTROL button (2) on the TPOP display.

b) Touch the STERILE SYSTEM button (3).

c) Touch the SUPERHEATER TEMPERATURE icon (4)

d) Check the indication on the temperature display (5).

e) Press the EXIT button (6) to close the window.

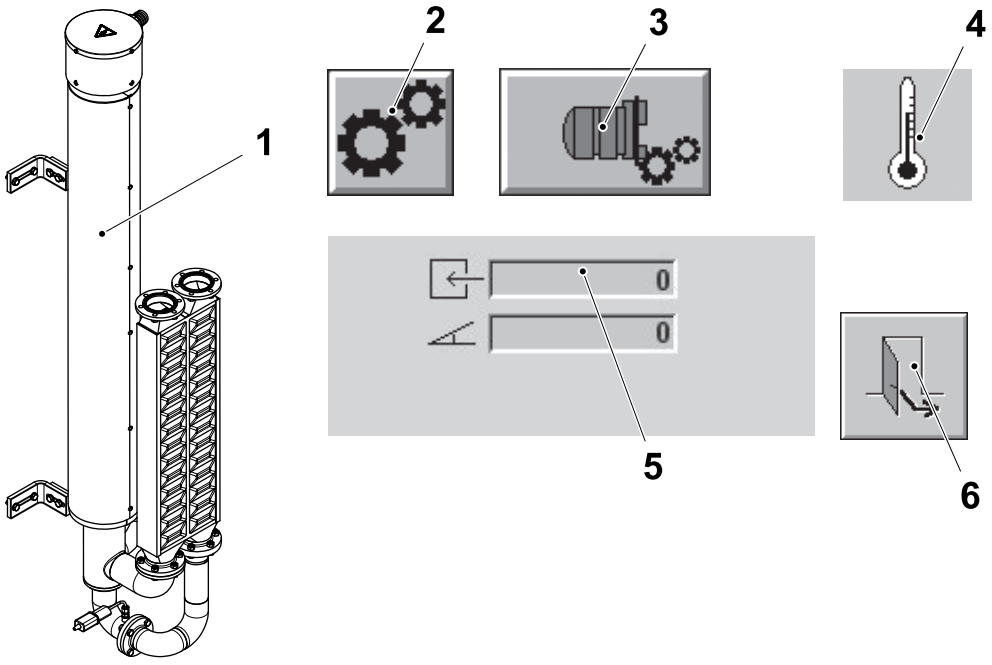

1 Air superheater
2 PRODUCTION CONTROL button
3 STERILE SYSTEM button
4 SUPERHEATER TEMPERATURE icon
5 Temperature display
6 EXIT button

1.1.2.8-2 Air Super Heater - Check Heat Exchanger

Machine Status	Electrical supply disconnecting device in position I (ON) Main air valve ON Main steam valve ON Main water valve ON
Special Equipment	Pressure Test Equipment (Optional Accessories) TP No. 565536-0100
SPC Reference	2808251-0200

WARNING

Burn hazard.

The heat exchanger components may be extremely hot. Always wear personal protective equipment and wait for the heat exchanger to cool down before performing the following procedure.

If the temperature of the top aseptic chamber exceeds 95°C during PRODUCTION, remove limescale from the heat exchanger with one of the four acid solutions listed on the next page.

(Cont'd)

(Cont'd)

a) Remove the screws (1) from the upper flanges and the screws (2) from the lower flanges.

b) Remove the heat exchanger (3) from the filling machine.

Note! All solutions must have an ambient temperature during limescale removal.

WARNING

Acids.

Follow the Safety Precautions. Only use the Acids listed below.

- acetic acid (CH_3COOH), 20%
- nitric acid (HNO_3), 5-10%
- citric acid ($C_6H_8O_7$), 20%
- phosphoric acid (H_3PO_4), 5-10%.

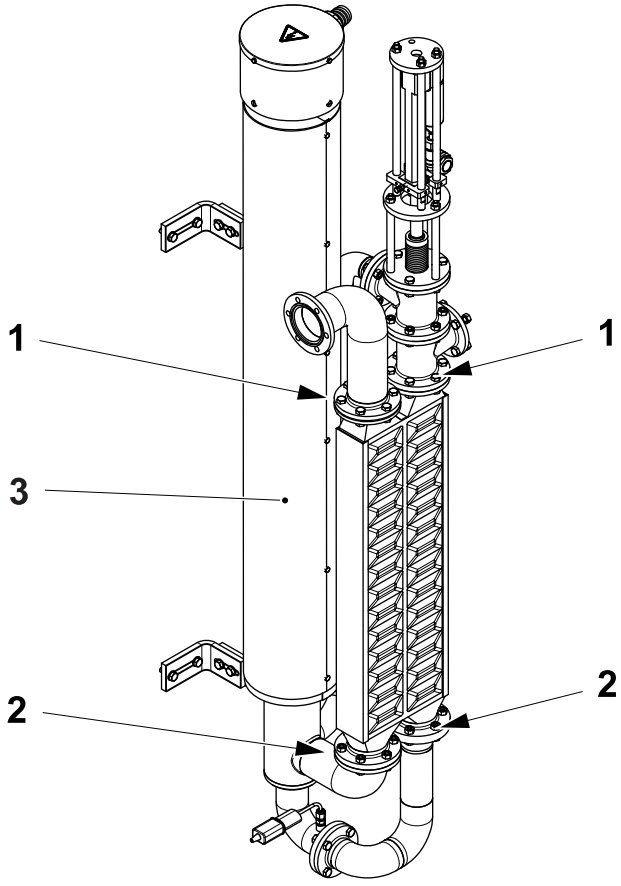

1 Screw
2 Screw
3 Heat exchanger

(Cont'd)

(Cont'd)

c) After limescale removal flush with water and then perform a final rinse with softened or distilled water.

d) Check the heat exchanger (3) for leaks as described below.

e) Seal the heat exchanger bottom connections using the blank-off flange (4).

f) Connect the pressure test equipment (5) with the flange (6), to one of the heat exchanger top connections.

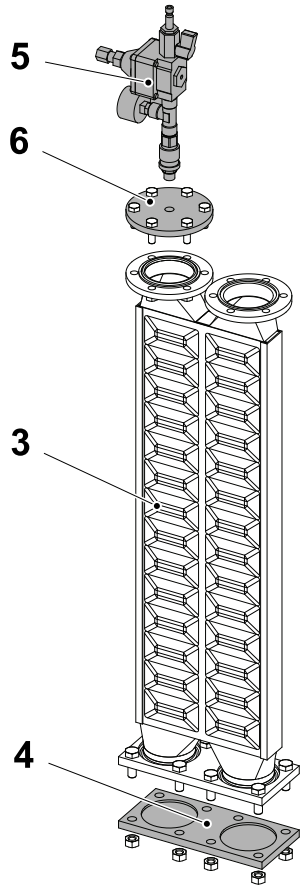

3 Heat exchanger
4 Blank-off flange
5 Pressure test equipment
6 Flange

(Cont'd)

(Cont'd)

CAUTION
Risk of damage to the equipment.
Before turning on the compressed air, turn the adjustment screw (7) anti-clockwise until the spring load is released and close the valve (8).

Note! Make sure that the equipment is connected in the correct direction. The flow must run from the valve (8) **towards** the pressure gauge (9) in the direction shown by arrow.

g) Connect the compressed compressed air connection (10).

h) Submerge the heat exchanger in water. Take care **not** to drench the pressure controller (11). Let the air bubbles disappear.

i) Open the valve (8). Adjust the pressure to 0.5 bar on the pressure gauge (9), using the adjustment screw (7). Air bubbles will immediately show any leaking points in the heat exchanger.

j) Repeat the procedure with the other cooling coil (other connections).

k) If any leaks are detected or suspected, change the heat exchanger.

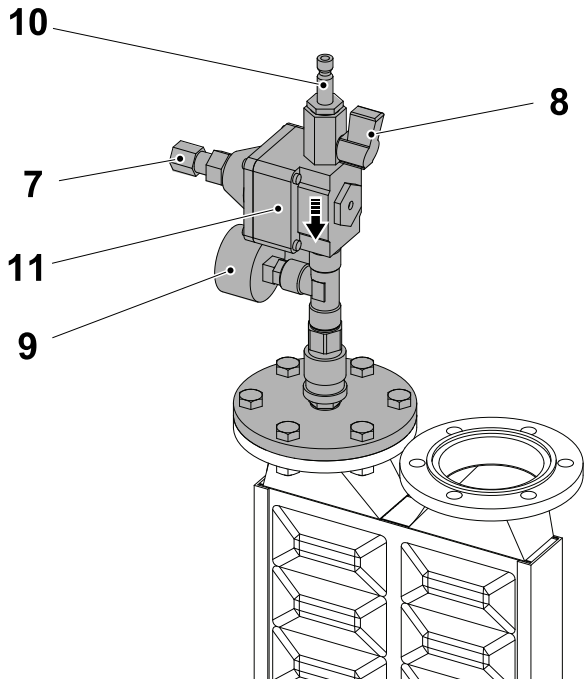

7 Adjustment screw
8 Valve
9 Pressure gauge
10 Compressed air connection
11 Pressure controller

(Cont'd)

(Cont'd)

Note! Make sure that the numbers arrows on the heat exchanger flanges correspond with the numbers on the pipes.

l) Change the four joint gaskets.

m) Install the heat exchanger on to the machine.

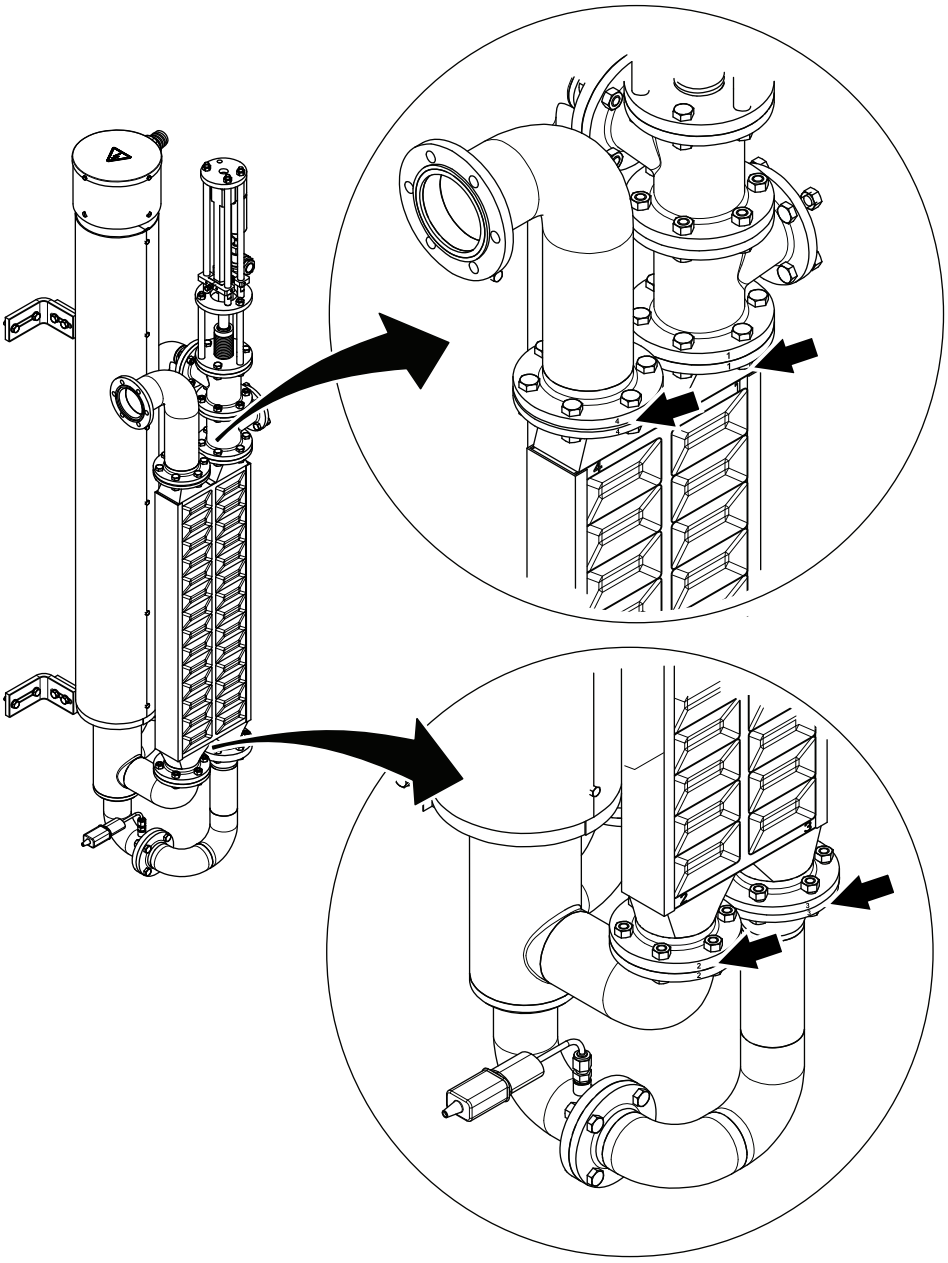

1.1.3 Filling System

1.1.3-1 Filling System - Description

The level detector (1) uses the position of the floater (2) to determine the level of the product inside the packaging material tube. A product flow meter (3) placed before the regulating valve (4) reads the amount of the product flow.

These two signals are sent to the TMCC card that calculates the correct position of the regulating valve (4) in order to keep a constant flow and a constant level of product in the filling system.

A control signal is sent to the U/P transducer (5) and then converted to a pneumatic output which regulates the air pressure to the regulating valve (4).

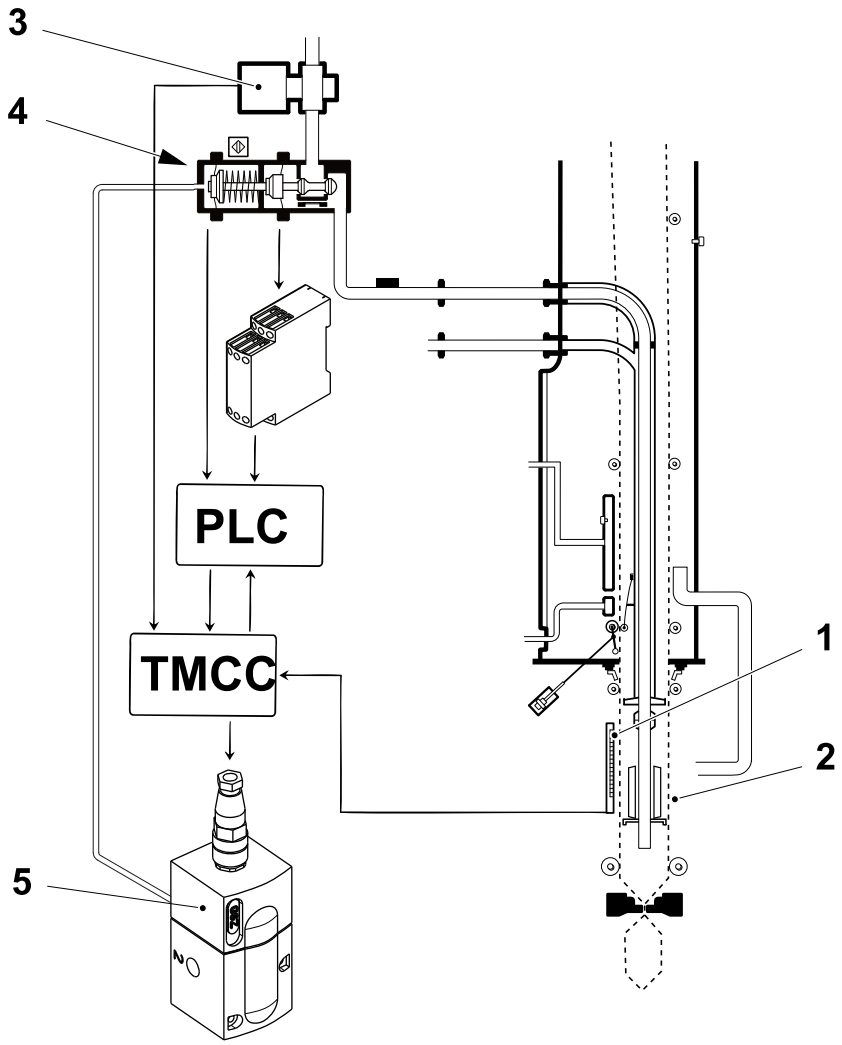

1 Level detector
2 Floater
3 Product flow meter
4 Regulating valve
5 U/P transducer

(Cont'd)

(Cont'd)

A leakage detector (6) alerts the system if leaks in the membranes of the regulating valve (4) are detected. Change the membranes if an alarm is activated on the TPOP, see 1.1.3.3-1 Product Line - Overhaul Regulating Valve.

The outlet of the filling pipe (7) is positioned below the product level to prevent foaming and incorporates a counter pressure flange which increases the product pressure in the bottom of the packaging material tube when the jaw system forms the packages.

On standard machines a swing pipe can be moved manually to switch between the production and CIP modes of the filling system.

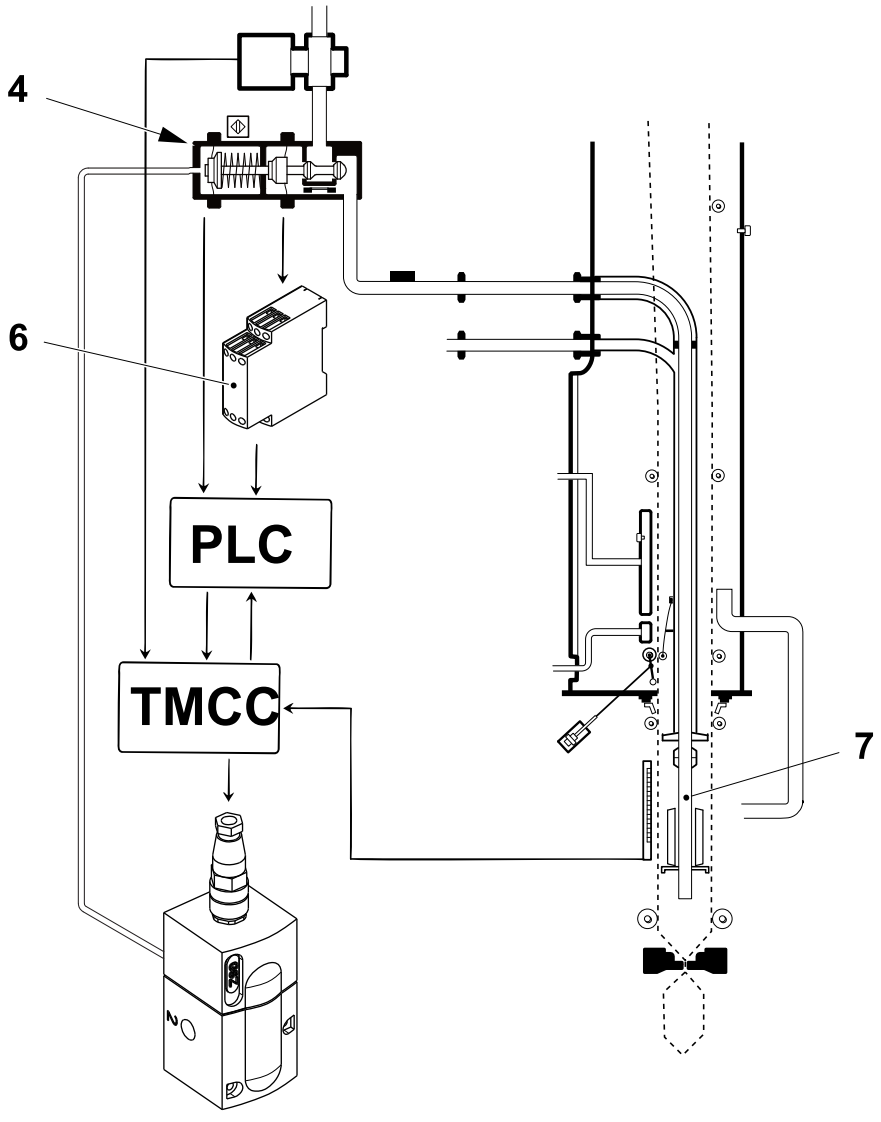

4 Regulating valve 6 Leakage detector 7 Filling pipe

1.1.3-2 Filling System - Set Regulating Valve U/P Transducer

Machine Status	Electrical supply disconnecting device in position I (ON) Main air valve ON Main steam valve ON Main water valve ON
SPC Reference	2835307-0300

CAUTION
Risk of damage to the equipment.
Be careful not to damage the trimmers with the screw driver.

a) Remove the rubber cover (1) on the U/P transducer U70T3100 to display the three trimmers Z, S and G.

b) Step up the machine to PREPARATION.

c) On the back plane of the TMCC2 card (2) U70K0380 connect the voltmeter between pin 5 and pin 2 (analogue output). Make sure that the voltage is 0V.

d) Turn the gain trimmer G (3) fully anti-clockwise.

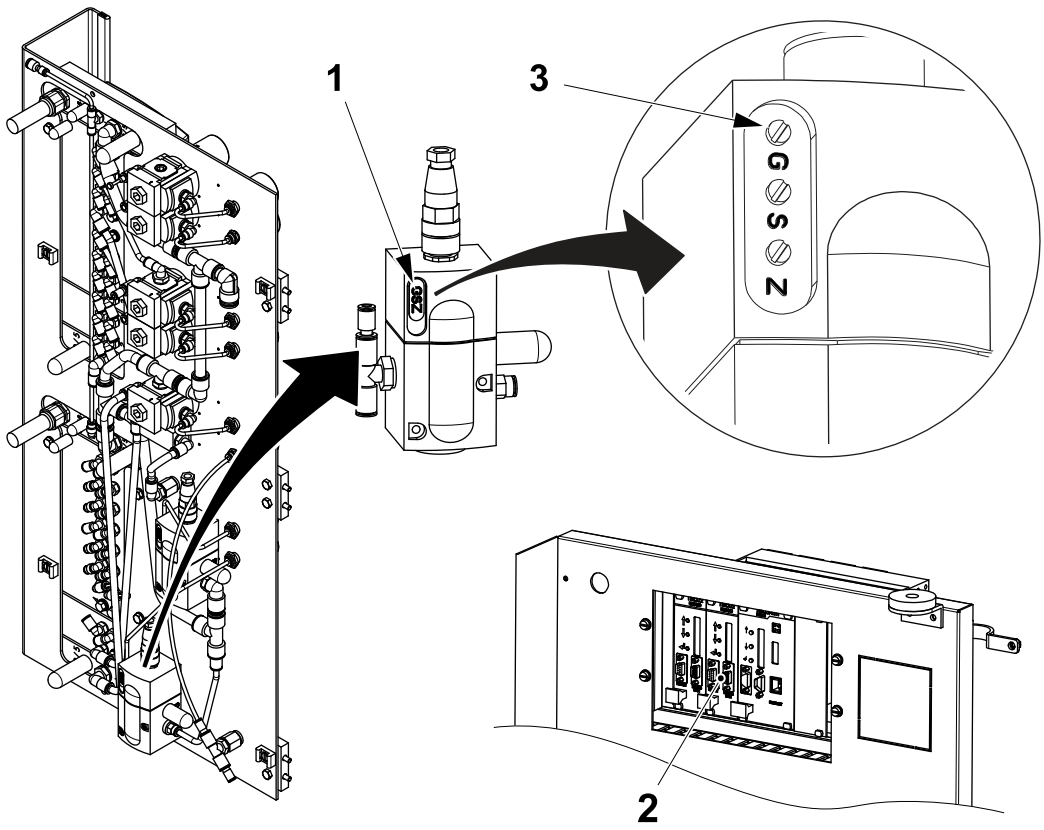

1 Rubber cover 2 TMCC2 card 3 Gain trimmer G

(Cont'd)

(Cont'd)

e) Set the pressure for the regulating valve on the pressure gauge (4) to **0.1** bar by means of the trimmer Z (5).

f) Step up the machine to PREHEATING I.

g) On the back plane of the TMCC2 card U70K0380 connect the voltmeter between pin 5 and pin 2 (analogue output). Make sure that the voltage is approx.10V.

h) Make sure that the pressure on the pressure gauge (4) is **4** bar. If necessary, adjust by using the trimmer S (6).

i) If necessary, repeat items from b) to h).

j) Fit back the rubber cover (1).

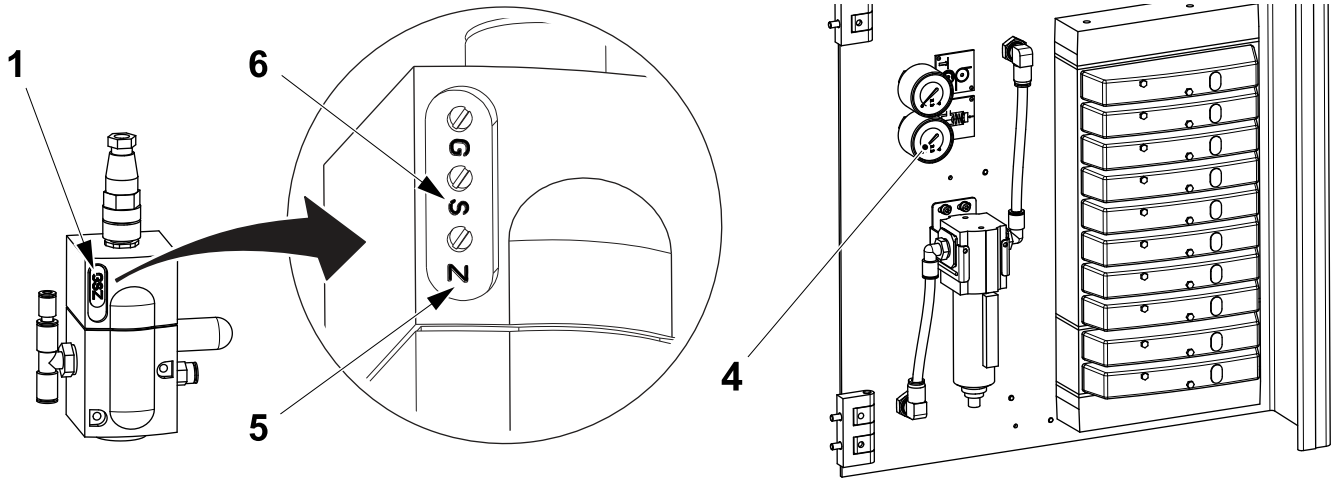

1 Rubber cover
4 Pressure gauge
5 Trimmer Z
6 Trimmer S

1.1.3-3 Filling System - Fit Pipes

Machine Status	Electrical supply disconnecting device in position O (OFF) Main air valve OFF Main steam valve ON Main water valve OFF
Special Equipment	Pipe Wrench TP No.777200-0101 Heat sink compound TP No. 90296-51
SPC Reference	2835307-0300

Valid for machines fitted with the flow meter TP No. 90606-2725.

Note! For all other machines see page 1-163.

(Cont'd)

(Cont'd)

WARNING

Burn hazard.

The product pipe and adjacent components may be hot. If necessary wear personal protective equipment.

Note! Follow this assembling procedure every time the regulating valve or the flow meter are removed for maintenance reasons.

Note! Change the gasket (2) every time that the pipes are removed.

a) Fit the product pipe (1) and the gasket (2) to the filling pipe (3).

b) Tighten the nut (4).

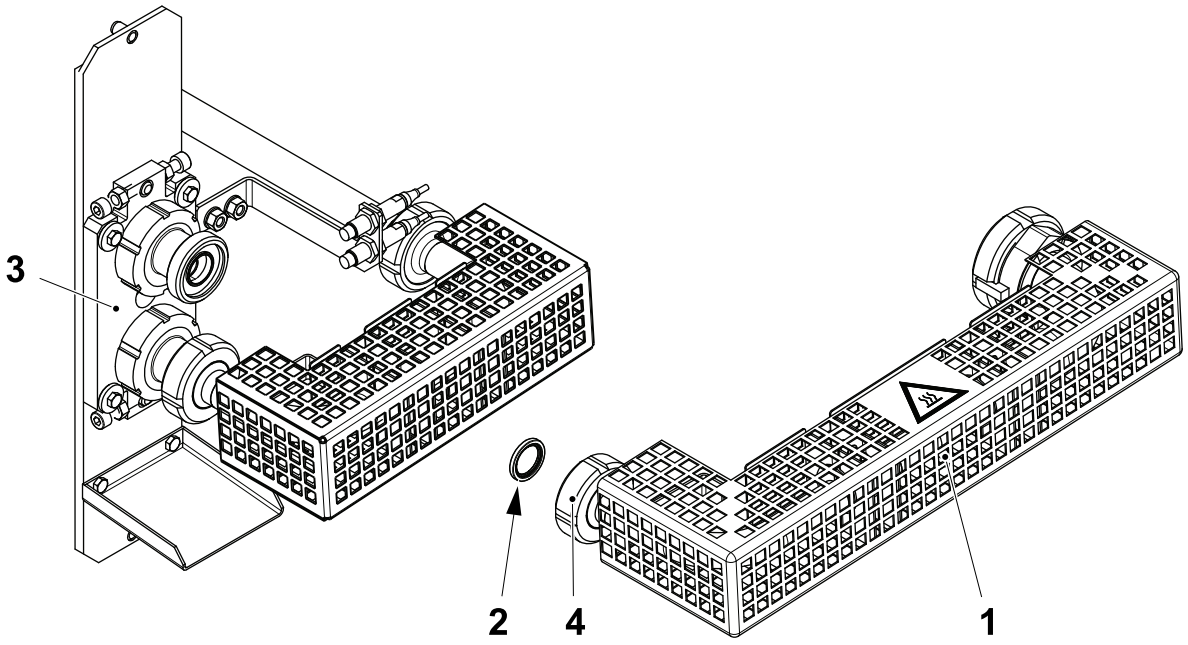

1 Product pipe
2 Gasket
3 Filling pipe
4 Nut

(Cont'd)

(Cont'd)

Note! Change the gasket (6) every time that the pipes are removed.

c) Fit the pipe (5) and the gasket (6) to the AP Valve (7).

d) Once the pipe (5) is in vertical position as much as possible, hand tighten the nut (8).

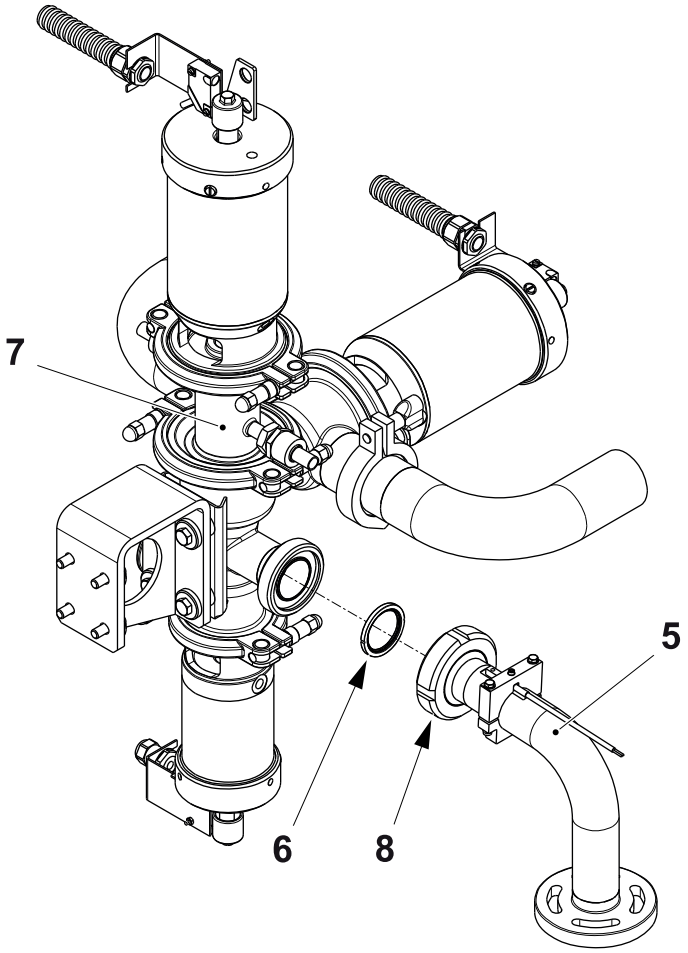

5 Pipe
6 Gasket
7 AP Valve
8 Nut

(Cont'd)

(Cont'd)

Note! Change the gasket (10) and every time that the pipes are removed.

e) Fit the flow meter (9) and the gasket (10) to the pipe (5) with the screws (11). Do not fully tighten the screws (11).

Note! Make sure that the flow meter (9) is fitted with the flow direction indicator in the **same direction** to the product flow.

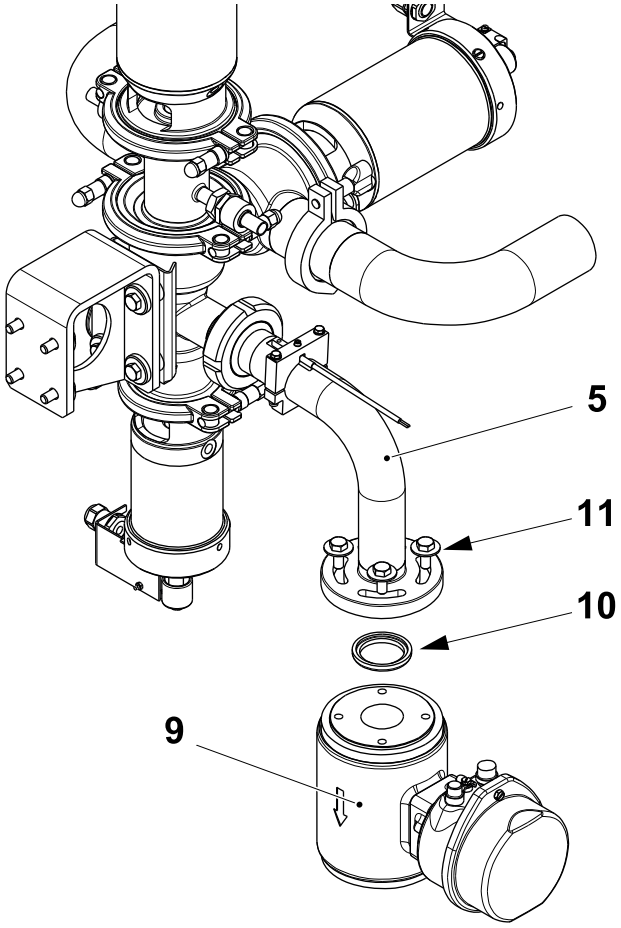

5 Pipe
9 Flow meter
10 Gasket
11 Screw

(Cont'd)

(Cont'd)

Note! Change the gasket (12), the gasket (15) and the gasket (18) every time that the pipes are removed.

f) Fit the gasket (12) between the flow meter (9) and the eccentric pipe (13).

g) Fit the regulating valve (14) and the gasket (15) to the product pipe (1).

h) Manually tighten the nut (16).

i) Fit the gasket (17) between the eccentric pipe (13) and the regulating valve (14).

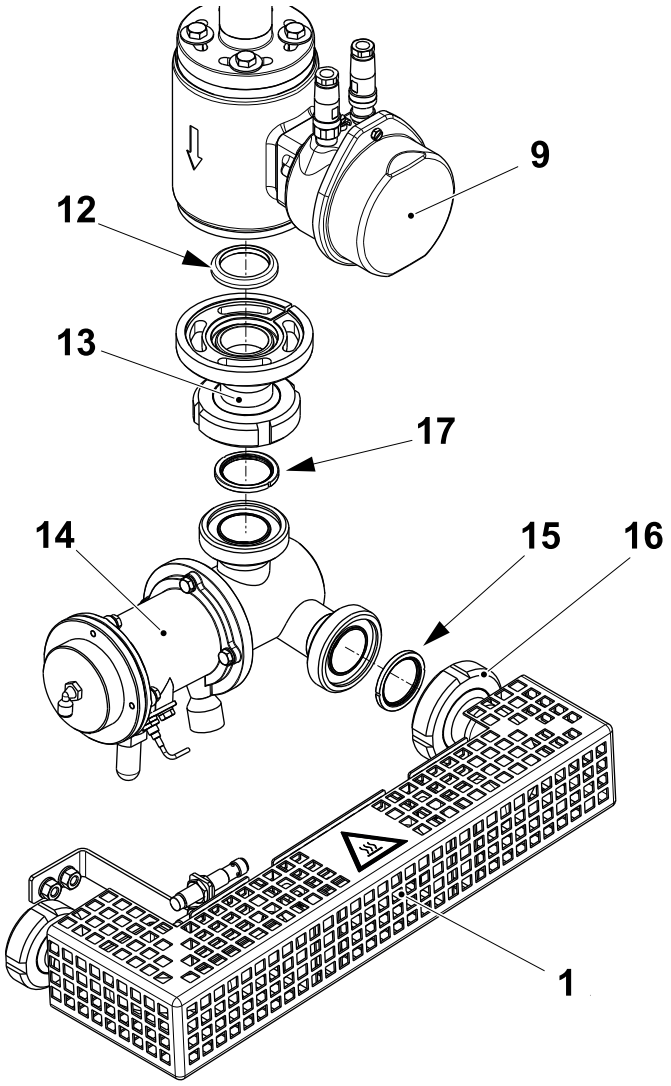

1 Product pipe
12 Gasket
13 Eccentric pipe
14 Regulating valve
15 Gasket
16 Nut
17 Gasket

(Cont'd)

(Cont'd)

j) Rotate the eccentric pipe (13) until the connection surface of the eccentric pipe is parallel and in full contact with the connection surface of the regulating valve (14).

Note! If it is not possible to align the two connection surfaces, the flow meter (9) maybe rotated to allow further adjustment of the eccentric pipe (13).

k) Manually tighten the nut (18).

l) Fit and tighten the screws (19).

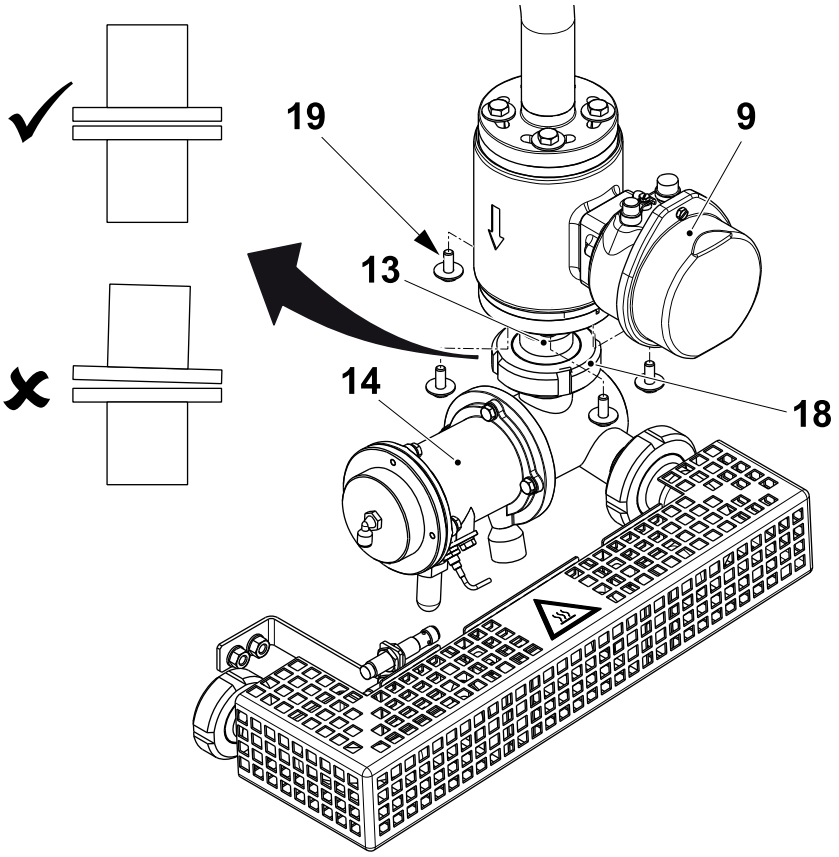

9 Flow meter
13 Eccentric pipe
14 Regulating valve
18 Nut
19 Screw

(Cont'd)

(Cont'd)

m) Tighten the screws (11) on the top of the flow meter (9).

n) Tighten all the locking nuts to the mechanical stop using the pipe wrench TP No. 777200-0101, starting from the AP Valve (7) and ending with the filling pipe (3).

o) Fit and tighten the locking camps (20) and (21).

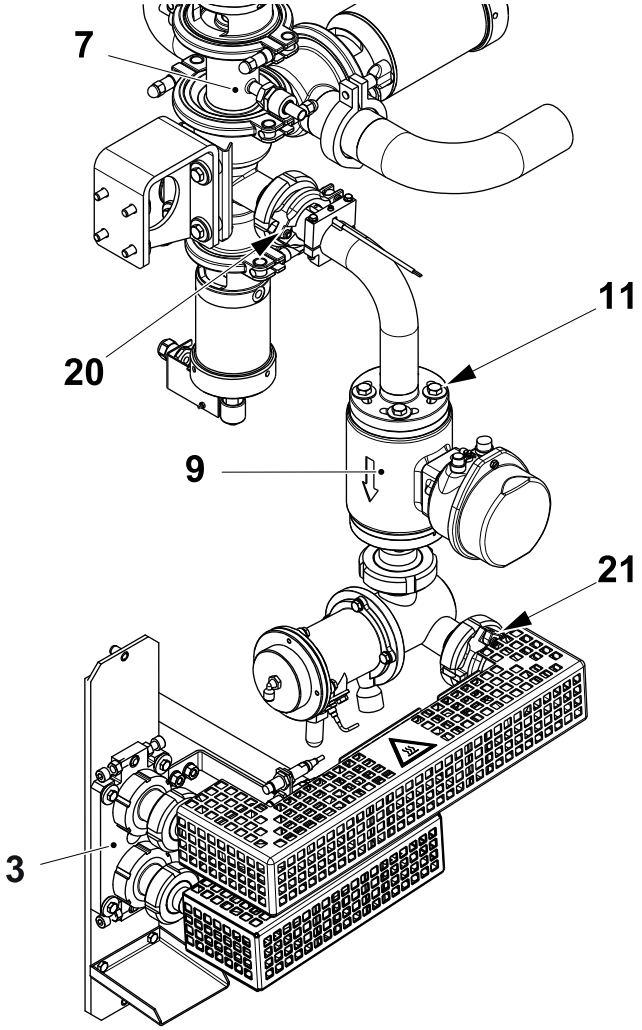

3 Filling pipe
7 AP Valve
9 Flow meter
11 Screw
20 Locking camp
21 Locking camp

(Cont'd)

(Cont'd)

p) Fit the cable connectors (22) to the flow meter (9).

q) Connect the electrical wires (23) and tighten the screws (24) and (25).

r) Fit the pneumatic pipes (26) to the connections on the regulating valve.

Note! Apply the heat sink compound between the pipe (5) and the sensor (27).

s) Fit the sensor (27) to the pipe (5) with the bracket (28).

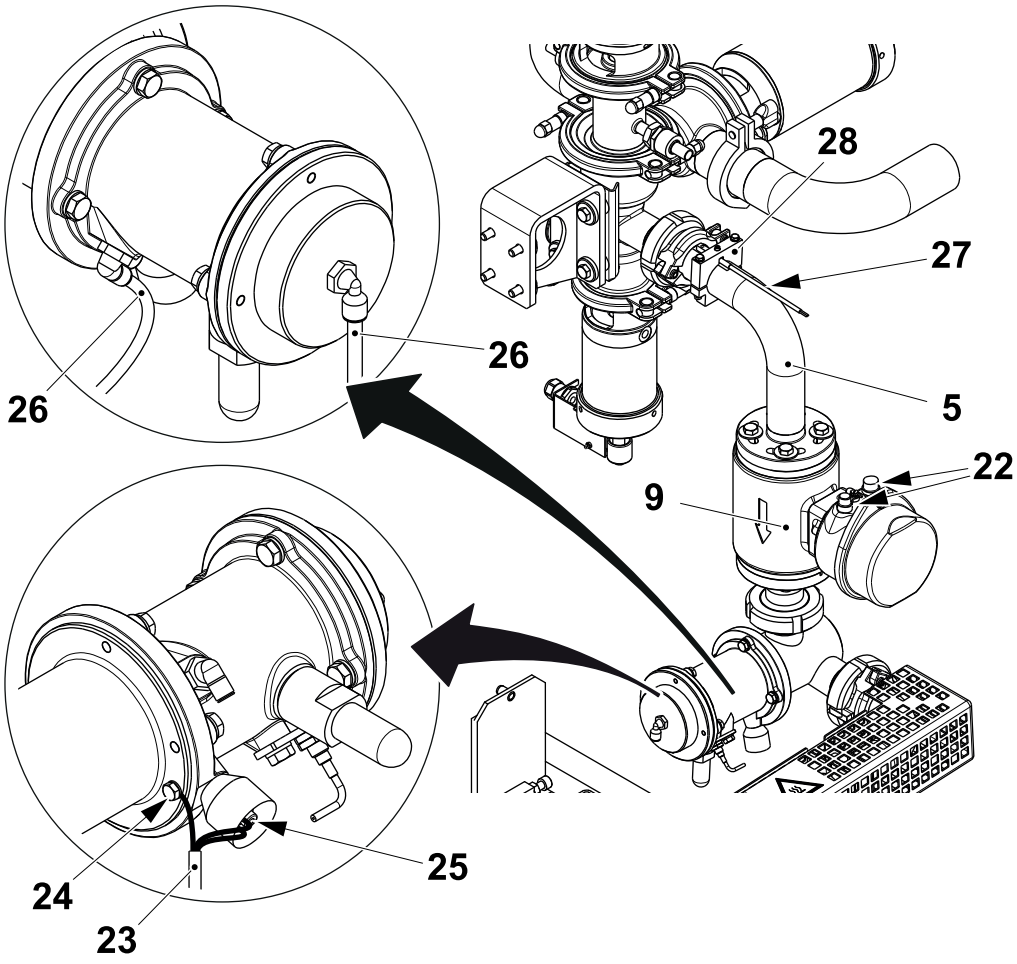

5 Pipe
9 Flow meter
22 Cable connector
23 Electrical wire
24 Screw
25 Screw
26 Pneumatic pipe
27 Sensor
28 Bracket

(Cont'd)

(Cont'd)

Valid for machines fitted with the flow meter TP No. 90458-0806.

WARNING

Burn hazard.

The product pipe and adjacent components may be hot. If necessary wear personal protective equipment.

Note! Follow this assembling procedure every time the regulating valve or the flow meter are removed for maintenance reasons.

Note! Change the gasket (2) every time that the pipes are removed.

a) Fit the product pipe (1) and gasket (2) to the filling pipe (3).

b) Hand tighten the nut (4).

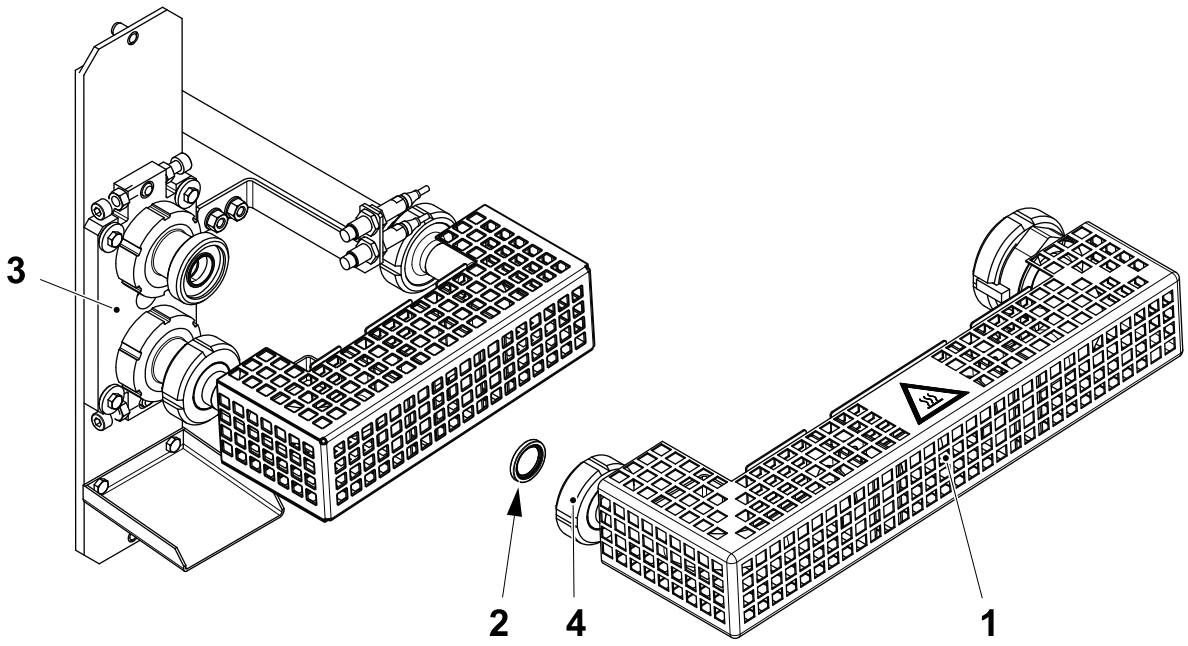

1 Product pipe
2 Gasket
3 Filling pipe
4 Nut

(Cont'd)

(Cont'd)

Note! Change the gasket (6) every time that the pipes are removed.

c) Fit the pipe (5) and the gasket (6) to the AP Valve (7).

d) Once the pipe (5) is in vertical position as much as possible, hand tighten the nut (8).

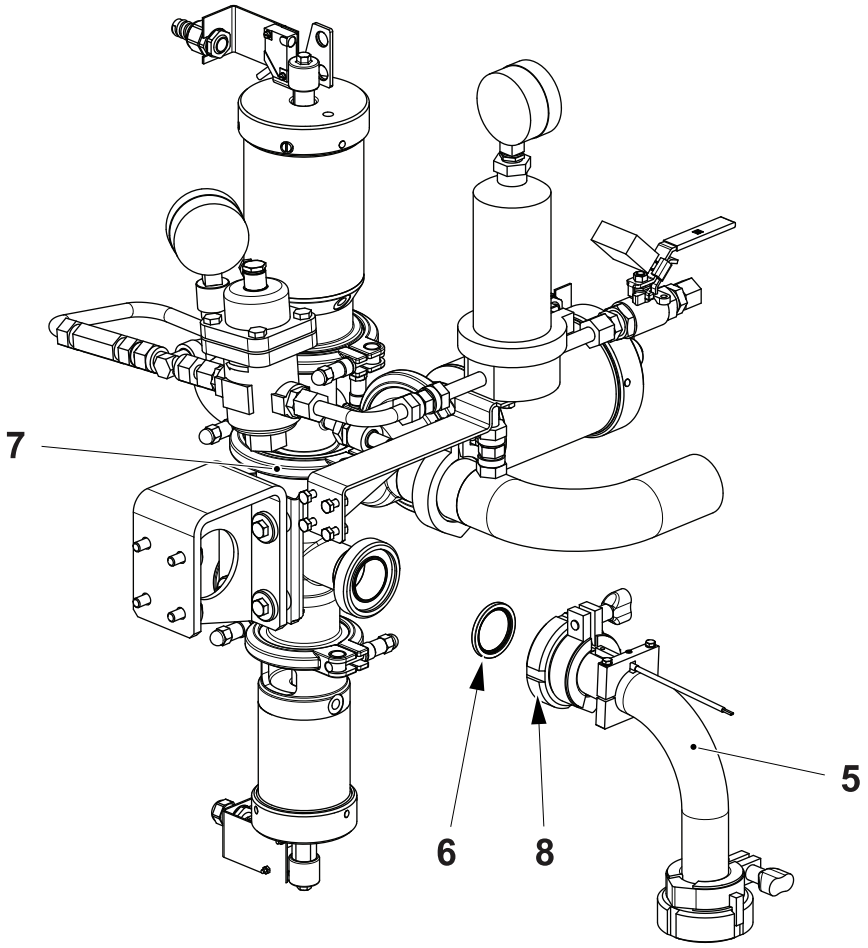

5 Pipe
6 Gasket
7 AP Valve
8 Nut

(Cont'd)

(Cont'd)

Note! Change the gasket (10) and the gasket (12) every time that the pipes are removed.

e) Fit the flow meter (9) and the gasket (10) to the pipe (5).

f) Hand tighten the nut (11).

g) Fit the gasket (12) and the eccentric pipe (13) to the flow meter (9).

h) Hand tighten the nut (14).

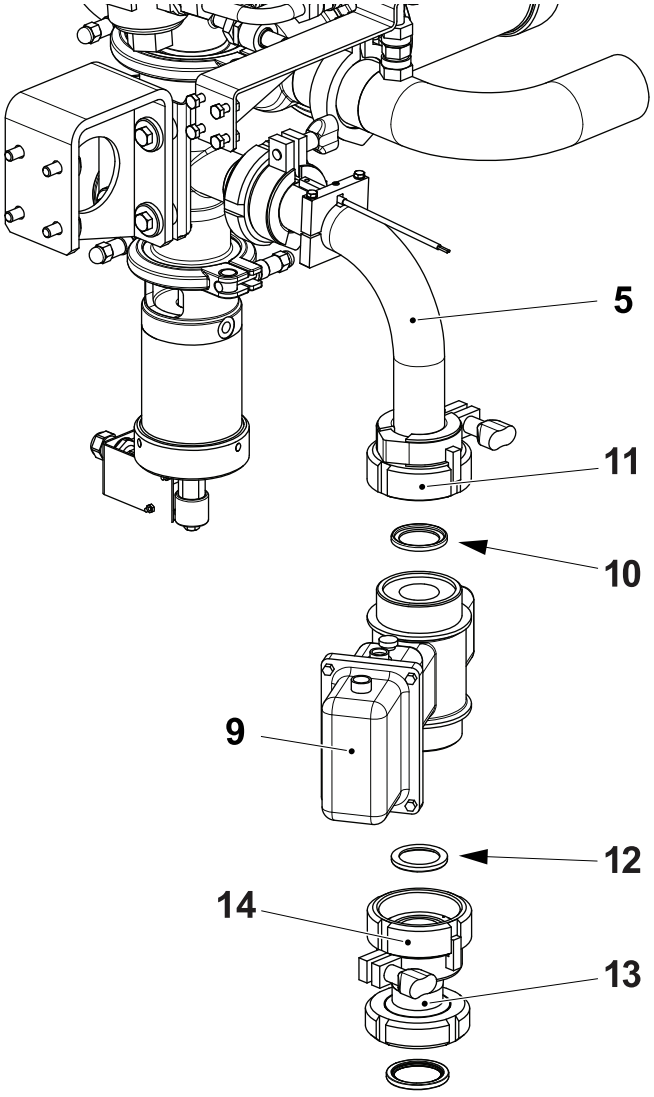

5 Pipe
9 Flow meter
10 Gasket
11 Nut
12 Gasket
13 Eccentric pipe
14 Nut

(Cont'd)

(Cont'd)

Note! Change the gasket (16) and the gasket (18) every time that the pipes are removed.

i) Fit the regulating valve (15) and the gasket (16) to the product pipe (1).

j) Hand tighten the nut (17).

k) Fit the gasket (18) between the eccentric pipe (13) and the regulating valve (15).

l) Rotate the eccentric pipe (13) until the connection surface of the eccentric pipe is parallel and in full contact with the connection surface of the regulating valve (15).

m) Hand tighten the nut (19).

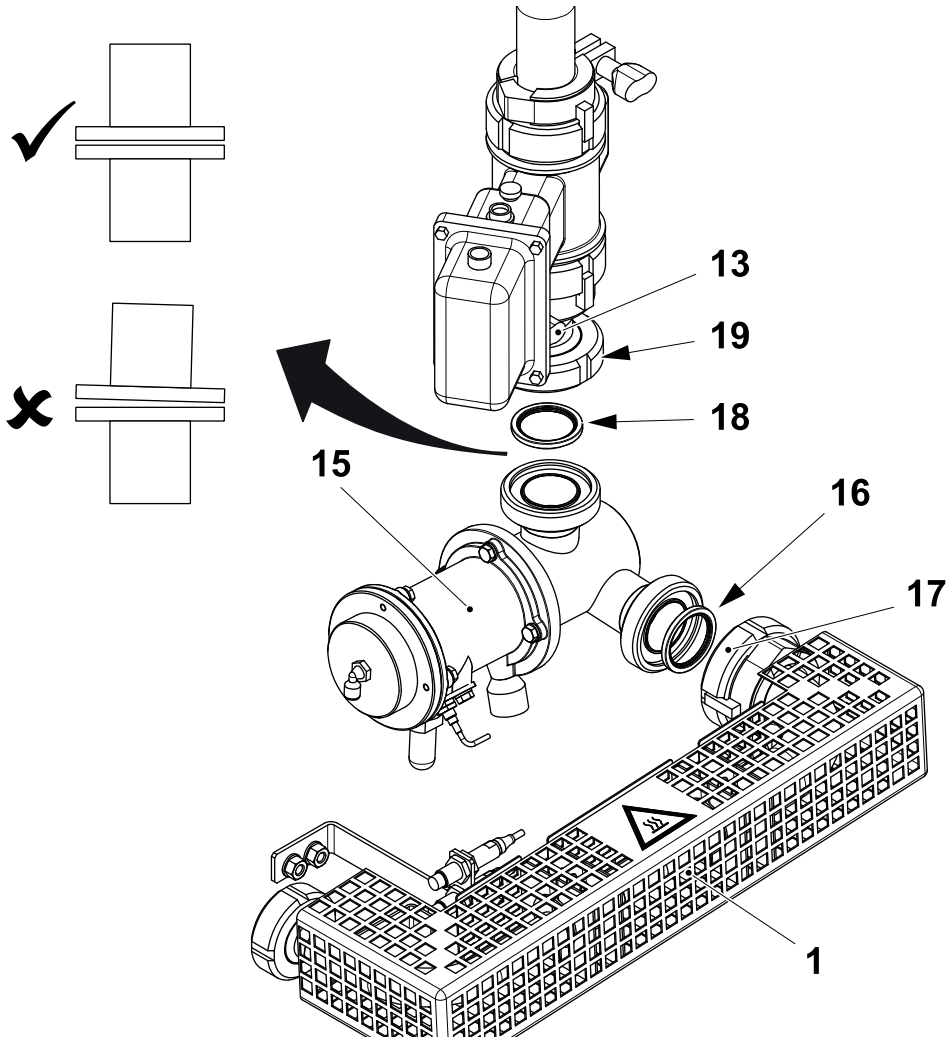

1 Product pipe
13 Eccentric pipe
15 Regulating valve
16 Gasket
17 Nut
18 Gasket
19 Nut

(Cont'd)

(Cont'd)

n) Well tighten all nuts starting from the AP Valve (7) and ending down to the filling pipe (3) with the pipe wrench until the nuts reach the end position.

o) Fit and tighten the locking camps (20), (21), (22) and (23).

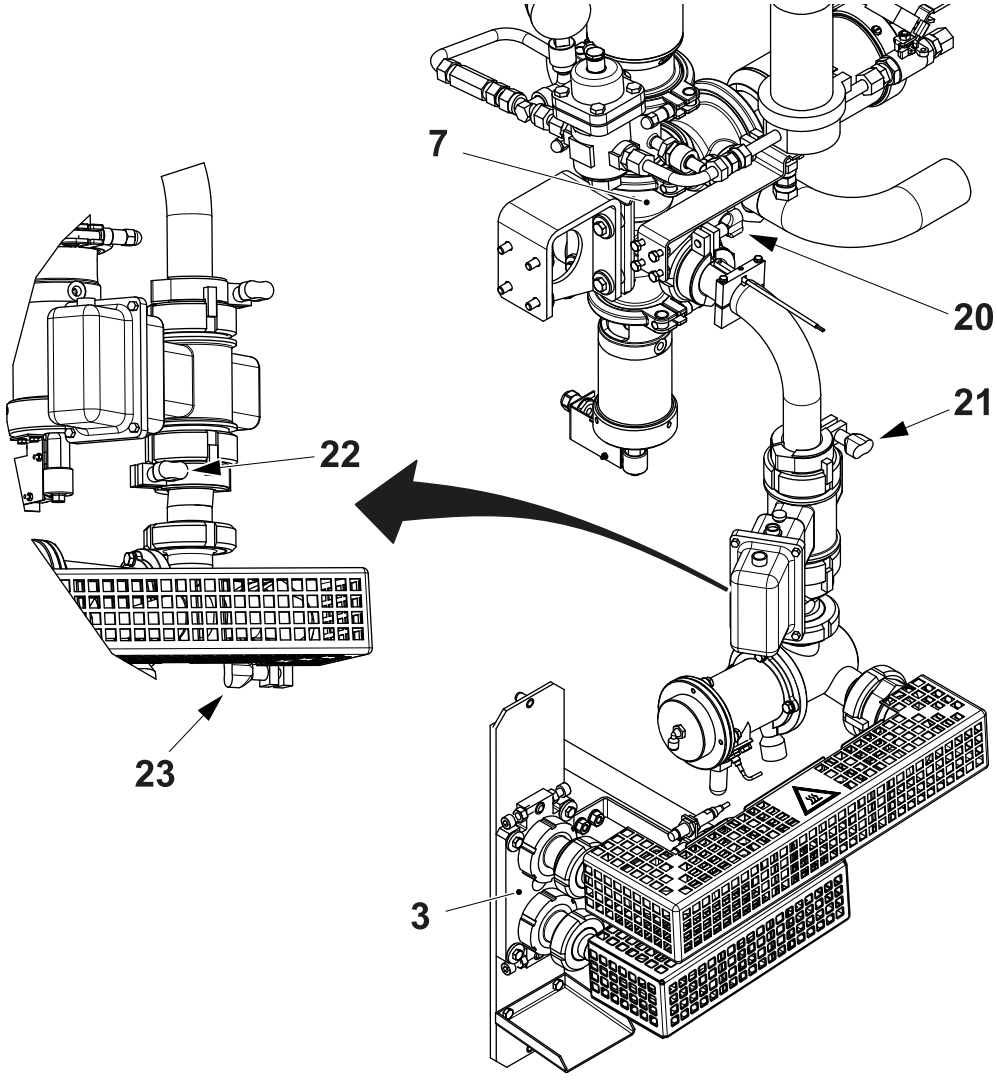

3 Filling pipe
7 AP Valve
20 Locking camp
21 Locking camp
22 Locking camp
23 Locking camp

(Cont'd)

(Cont'd)

p) Connect the connectors (24) to the flow meter (9).

q) Connect the electrical wires (25) and tighten the screws (26) and (27).

r) Fit the pneumatic pipes (28) to the connections on the regulating valve.

Note! Apply the heat sink compound between the pipe (5) and the sensor (29).

s) Fit the sensor (29) to the pipe (5) with the bracket (30).

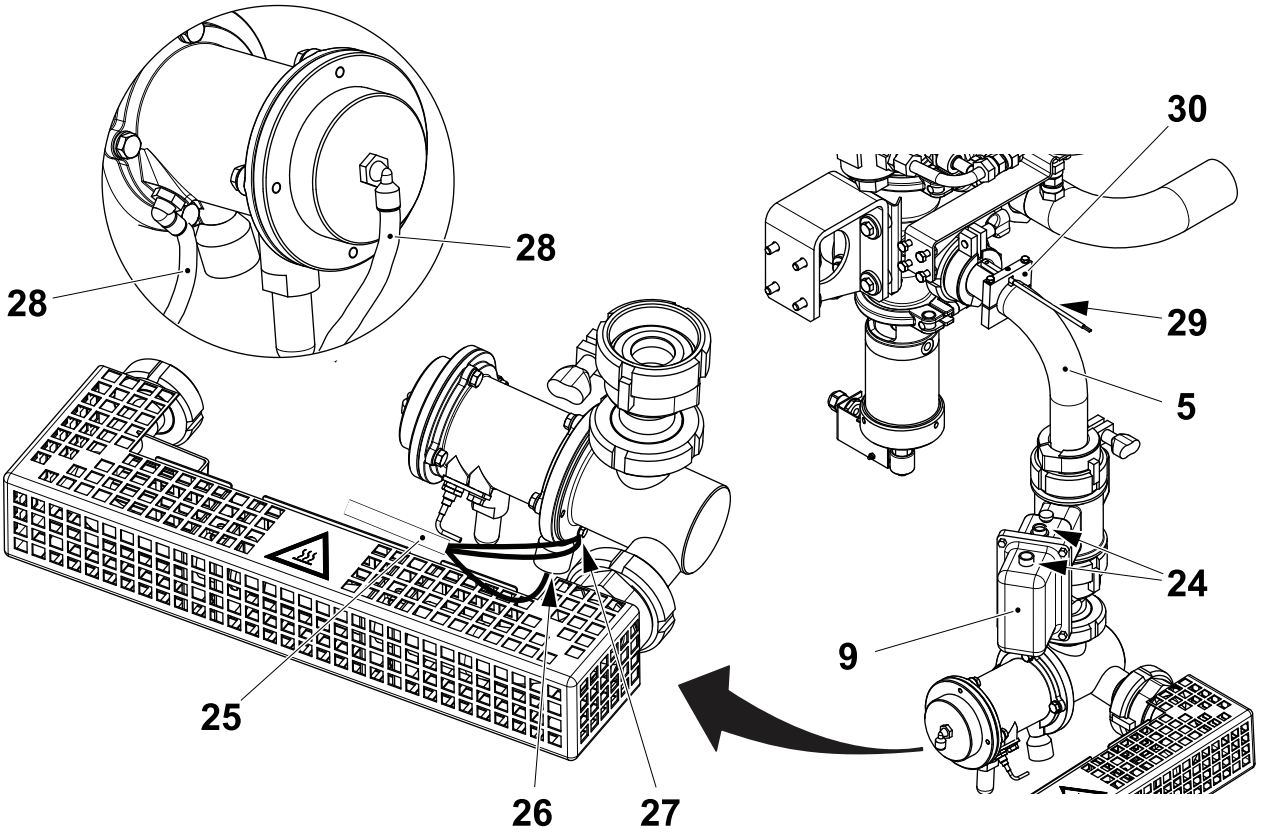

5 Pipe	25 Electrical wire	28 Pneumatic pipe
9 Flow meter	26 Screw	29 Sensor
24 Connector	27 Screw	30 Bracket

1.1.3.1 Product Valve

CAUTION

Risk of serious production fault.

No maintenance activity is authorised on the Product Valve unless the product supply line is idle and empty from product. Any operation requiring the interruption of the steam supply and disruption of the stream barrier between the machine and the product supply line can only be carried out when the product supply line is idle and empty from product.

1.1.3.1-1 Product Valve - Remove Cylinders

Machine Status	Electrical supply disconnecting device in position O (OFF) Main air valve OFF Main steam valve OFF Main water valve OFF
Special Equipment	Tool Dismounting TP No.449969-0100
SPC Reference	2835303-0200

WARNING

Risk of personal injury.

Make sure that the steam and the compressed air have been turned off. Make sure that there is no product, steam or cleaning liquid in the line. In case of accident call for medical attention.

CAUTION

Risk of serious production fault.

Never close the steam supply valve to the machine until the product line is idle and empty from product. The steam in the product valve forms an aseptic barrier between the machine and the product supply line. Closing the steam valve will disrupt this barrier.

(Cont'd)

(Cont'd)

a) Remove the air connections (1) and, when required, the steam valve connections (2) from the cylinder.

b) Remove the two screws (3), collect the washers and remove the proximity switch brackets (4).

c) Remove the sleeves (5) from the cylinder.

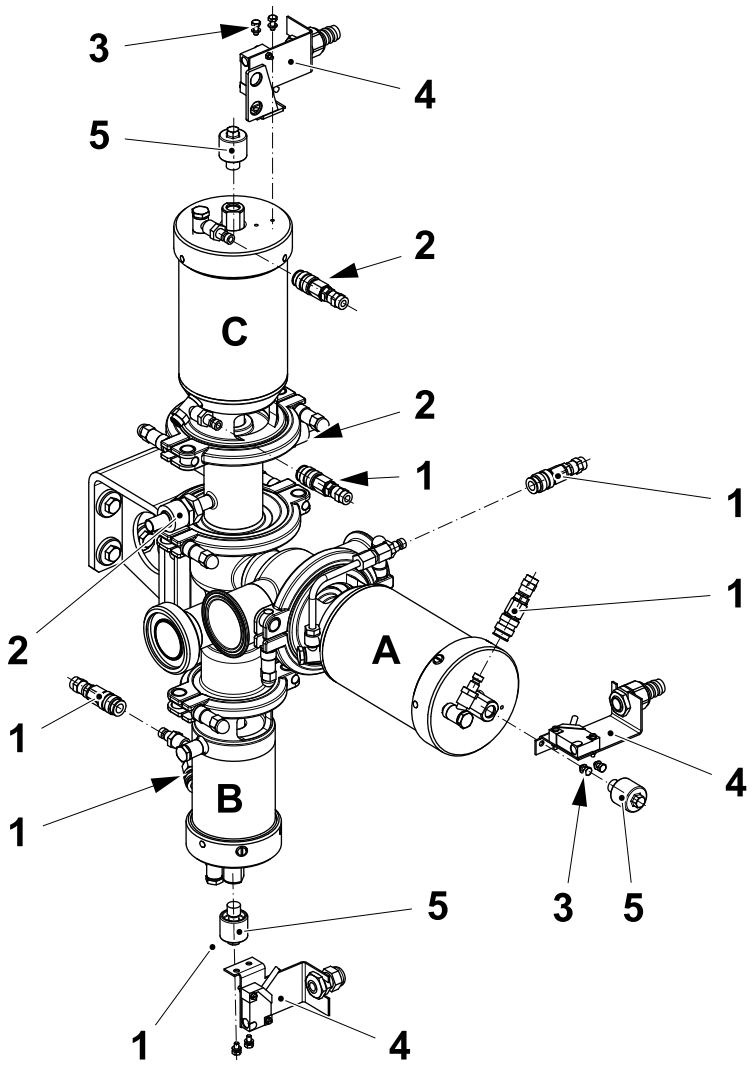

1 Air connection
2 Steam valve connection
3 Screw
4 Bracket
5 Sleeve

(Cont'd)

(Cont'd)

d) Fit the tool dismounting (6) and turn the handle clockwise to release the piston pressure from the valve seat.

e) Remove the clamp ring (7) and the valve **A**.

f) Change the O-rings if necessary, see 1.1.3.1-3 Product Valve - Change O-Rings.

g) Repeat the same procedure for the valves **B** and **C**.

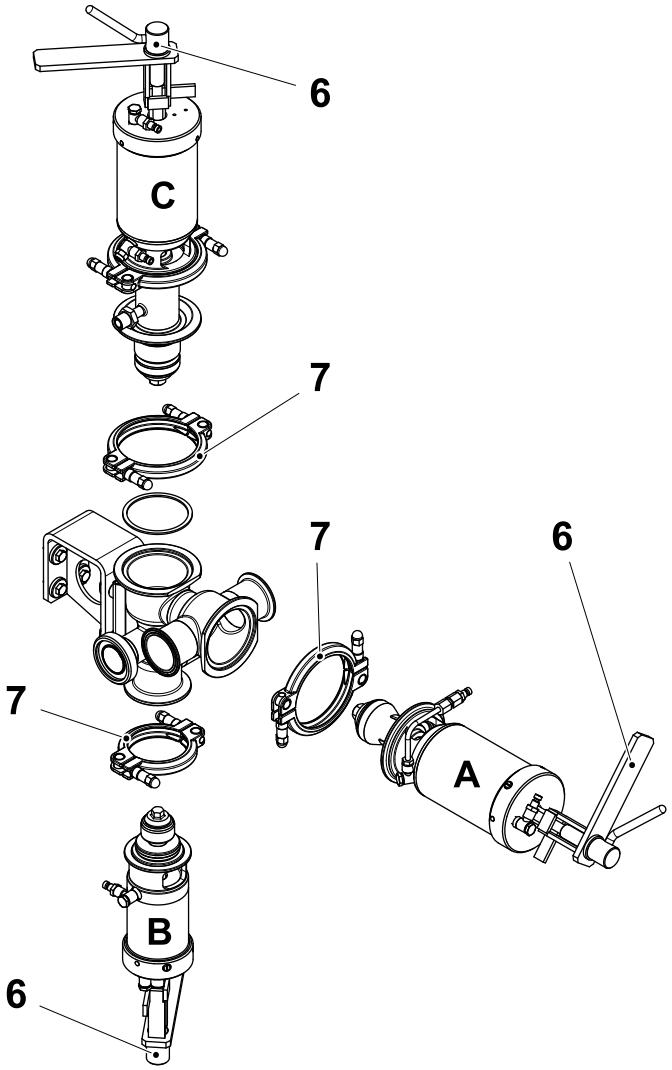

6 Tool dismounting
7 Clamp ring

1.1.3.1-2 Product Valve - Change Seals and Membranes

Machine Status	Electrical supply disconnecting device in position O (OFF) Main air valve OFF Main steam valve OFF Main water valve OFF
Special Equipment	Torque Wrench min. 50 Nm Tool Dismounting TP No.449969-0100
Consumables	Grease Dow Corning 7 TP No. 90296-0009
SPC Reference	2835303-0200

WARNING

Risk of personal injury.

Make sure that the steam and the compressed air have been turned off. Make sure that there is no product, steam or cleaning liquid in the line. In case of accident call for medical attention.

CAUTION

Risk of serious production fault.

Never close the steam supply valve to the machine until the product line is idle and empty from product. The steam in the product valve forms an aseptic barrier between the machine and the product supply line. Closing the steam valve will disrupt this barrier.

(Cont'd)

(Cont'd)

A-Cylinder (Product Valve)

a) Remove the valve, see 1.1.3.1-1 Product Valve - Remove Cylinders.

b) Release the cylinder spring completely using the tool dismounting (1).

c) Remove the valve cone (2). Check the seal ring (3) and change it if necessary.

d) Remove the seal ring holder (4), the diaphragm (5), the ring (6) and the washer (7). Check the diaphragm (5) for damage and change if necessary.

e) Fit the ring (6) and the washer (7) in to the cylinder housing with the grooves (8) facing the diaphragm (5).

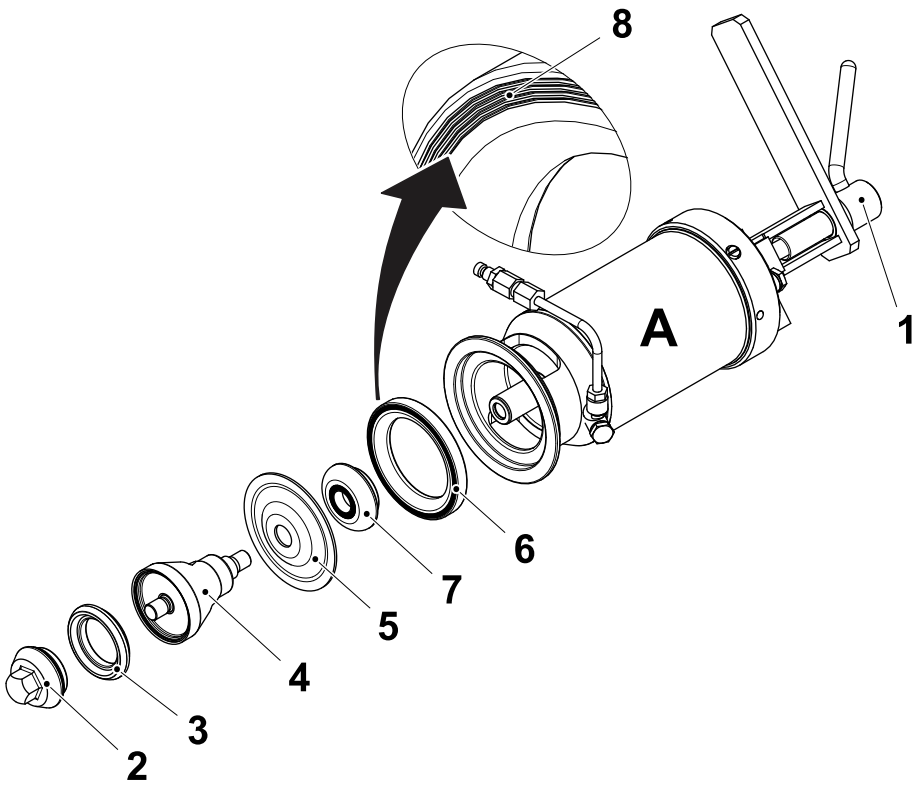

1 Tool dismounting
2 Valve cone
3 Seal ring
4 Seal ring holder
5 Diaphragm
6 Ring
7 Washer
8 Groove

(Cont'd)

(Cont'd)

CAUTION
Risk of serious production fault.
Fit the diaphragm (5) with the bulge pointing outside from the valve.

f) Fit the new diaphragm (5) and the complete seal ring holder (4) on to the piston rod.

g) Tighten the seal ring holder (4) completely.

h) Fit the seal ring (3) and the valve cone (2).

Note! Slowly tighten the valve cone (2) with a torque wrench set to 50 Nm.

i) Compress the cylinder spring completely using the tool dismounting (1).

j) Fit the cylinder and tighten the clamp ring (9).

k) Remove the tool dismounting (1) and screw in the sleeve (10) on the cylinder.

l) Fit the proximity switch bracket (11) and the air connection (12).

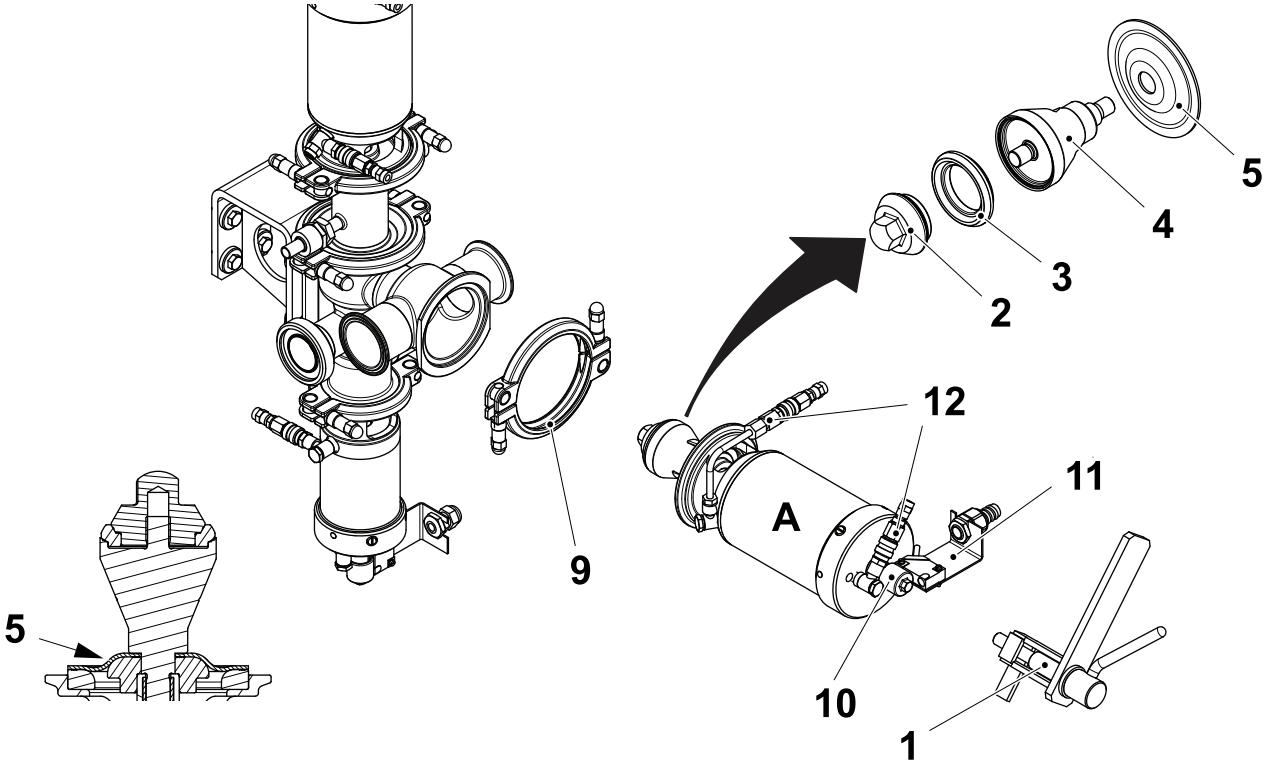

1 Tool dismounting
2 Valve cone
3 Seal ring
4 Seal ring holder
5 Diaphragm
9 Clamp ring
10 Sleeve
11 Bracket
12 Air connection

(Cont'd)

(Cont'd)

B-Cylinder (Sterile Air Valve)

a) Remove the valve, see 1.1.3.1-1 Product Valve - Remove Cylinders.

b) Release the cylinder spring completely using the tool dismounting (1).

c) Remove the valve cone (2) and change the seal ring (3).

d) Remove the washer (4) and change the O-ring (5).

e) Remove the flange (6) and change the O-ring (7), the rod seal (8) and the seal (9).

Note! Tighten the valve cone (2) using a torque wrench set to 50 Nm.

f) Assemble in the reverse order.

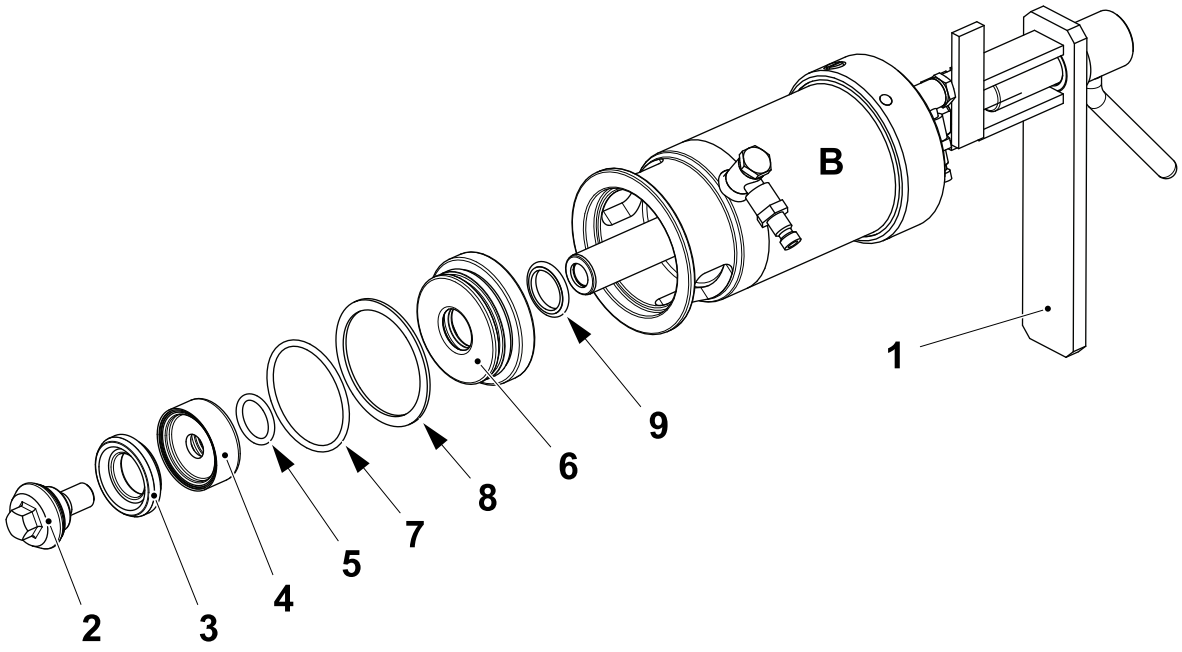

1 Tool dismounting	4 Washer	7 O-ring
2 Valve cone	5 O-ring	8 Rod seal
3 Seal ring	6 Flange	9 Seal

(Cont'd)

(Cont'd)

C-Cylinder (Steam Valve)

a) Remove the valve, see 1.1.3.1-1 Product Valve - Remove Cylinders.

b) Remove the gasket (1) and change if necessary.

c) Release the cylinder spring completely using the tool dismounting (2)

d) Remove the valve cone (3) and the ring (4)

e) Check the seal rings (5) and change if necessary.

f) Remove the washer (6).

g) Remove the spring (7).

h) Loosen the screws (8) and remove the seal ring (9) from the holder (10).

i) Check the seal ring (9) and change if necessary.

j) Remove the washer (11).

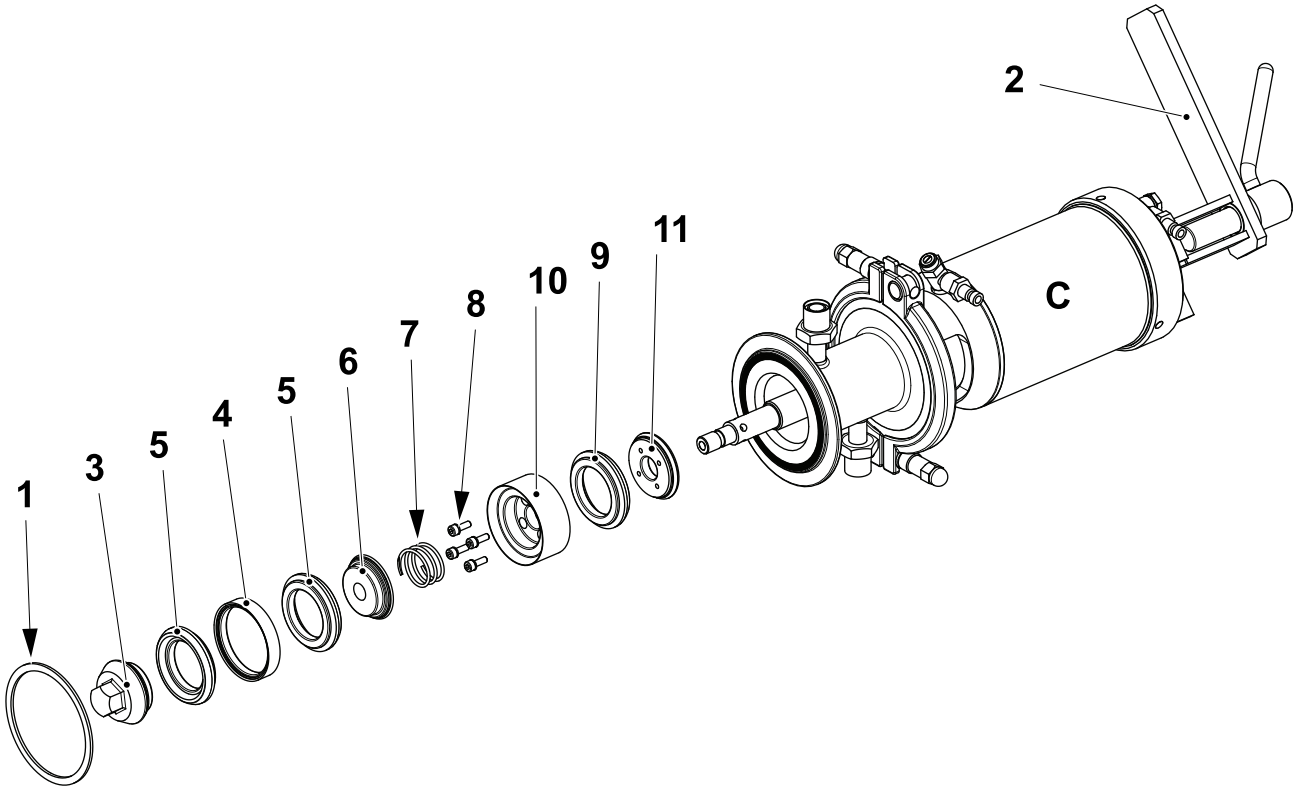

1 Gasket
2 Tool dismounting
3 Valve cone
4 Ring
5 Seal ring
6 Washer
7 Spring
8 Screw
9 Seal ring
10 Holder
11 Washer

(Cont'd)

(Cont'd)

k) Remove the clamp (12) and the seam house (13).

l) Remove and check the gasket (14) Change if necessary.

Note! Tighten the valve cone (3) using a torque wrench set to 50 Nm.

m) Assemble in the reverse order.

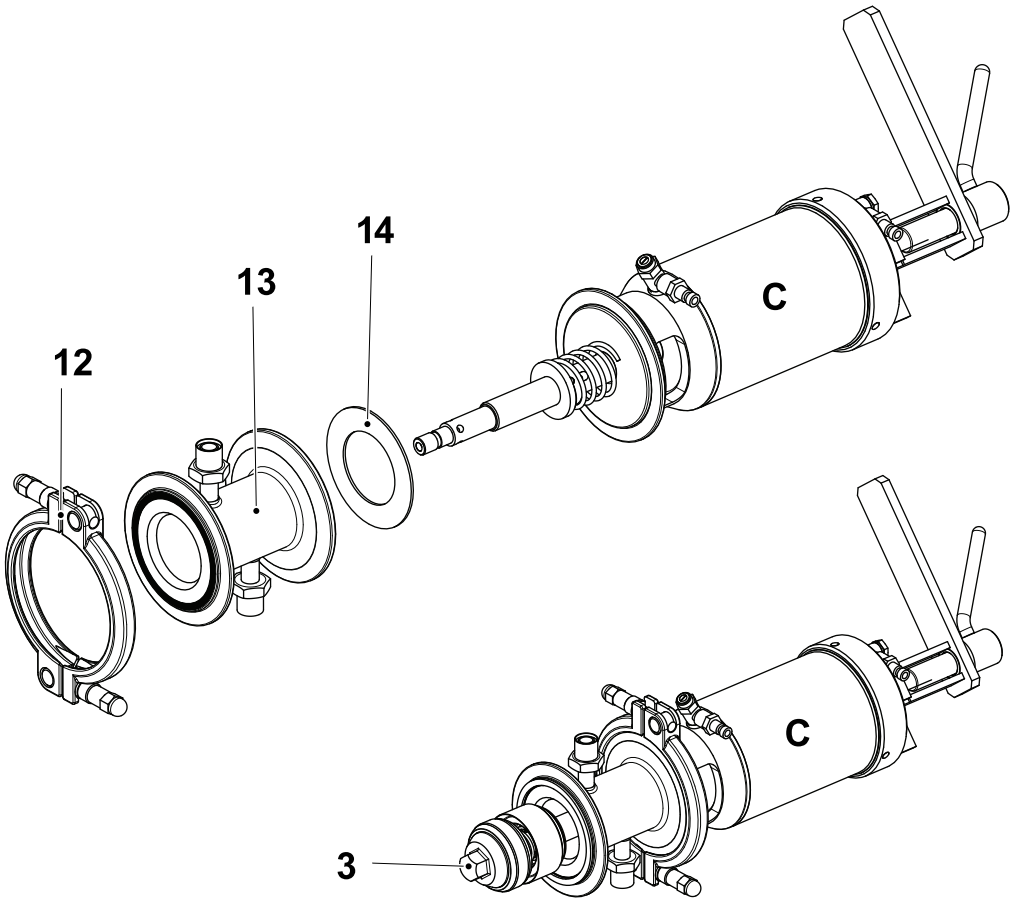

3 Valve cone
12 Clamp
13 Steam house
14 Gasket

1.1.3.1-3 Product Valve - Change O-Rings

Machine Status	Electrical supply disconnecting device in position O (OFF) Main air valve OFF Main steam valve OFF Main water valve OFF
Special Equipment	Tool Dismounting TP No.449969-0100
Consumables	Grease Dow Corning 7 TP No. 90296-0009
SPC Reference	2835303-0200

WARNING

Risk of personal injury.

Make sure that the steam and the compressed air have been turned off. Make sure that there is no product, steam or cleaning liquid to the line. In case of accident call for medical attention.

CAUTION

Risk of serious production fault.

Never close the steam supply valve to the machine until the product line is idle and empty from product. The steam in the product valve forms an aseptic barrier between the machine and the product supply line. Closing the steam valve will disrupt this barrier.

(Cont'd)

(Cont'd)

A-Cylinder (Product Valve)

a) Remove the product valve, see 1.1.3.1-1 Product Valve - Remove Cylinders.

b) Release the cylinder spring completely using the tool dismounting (1).

c) Remove the valve cone (2).

d) Remove the seal ring holder (3), the diaphragm (4), the ring (5) and the washer (6).

Note! Make sure that the tool dismounting (1) is fully tighten before removing the end section (8).

e) Remove the lock screws (7) and turn the end section (8) anti-clockwise to release it from the hooks (9).

f) Loosen the tool dismounting (1) and remove the end section (8).

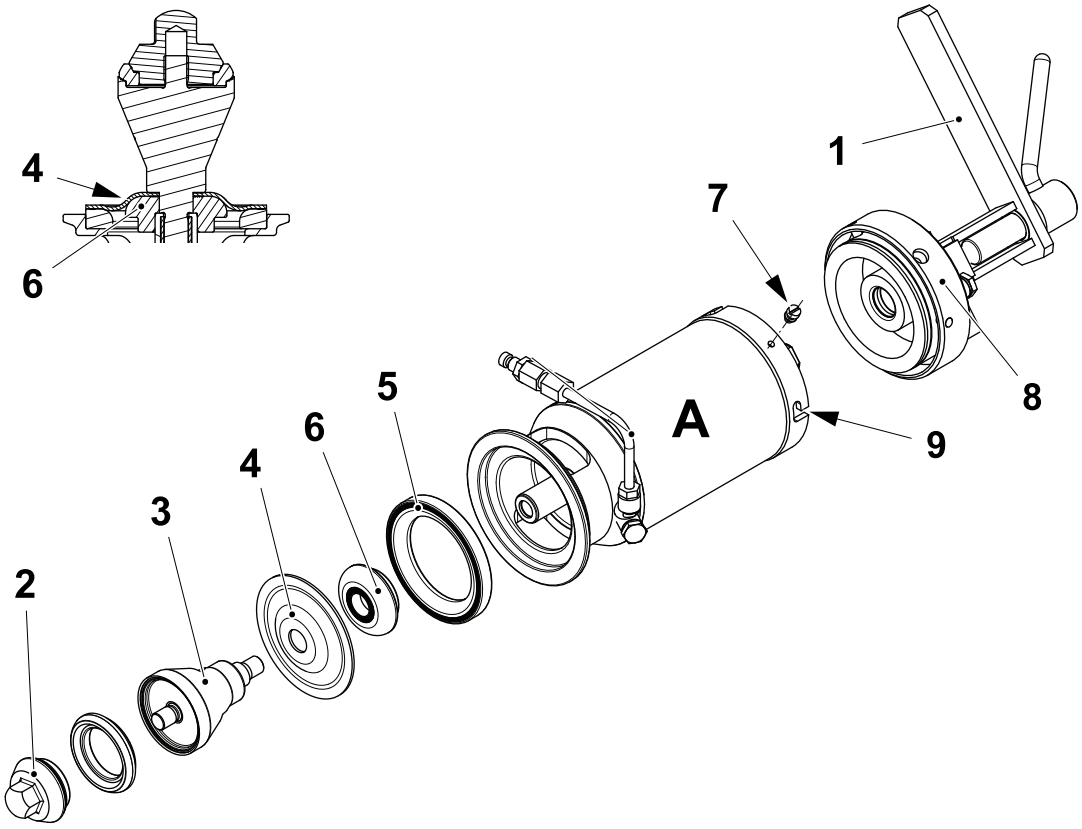

1 Tool dismounting
2 Valve cone
3 Seal ring holder
4 Diaphragm
5 Ring
6 Washer
7 Lock screw
8 End section
9 Hook

(Cont'd)

(Cont'd)

g) Check the O-ring (10), the wear ring (11) and the rod seal (12) Change if necessary.

h) Remove the spacer (13) and the compression spring (14).

i) Remove the piston rod (15), the piston (16) and the washers (17).

j) Remove thelocking washers (18) and remove the piston (16) from the piston rod (15).

k) Check the O-ring (19) and the piston seal (20). Change if necessary.

l) Remove the spacer (21) and check the wear ring (22). Change if necessary.

m) Lubricate the threads of the piston rod (15) with grease TP No. 90296-0009.

n) Assemble in the reverse order.

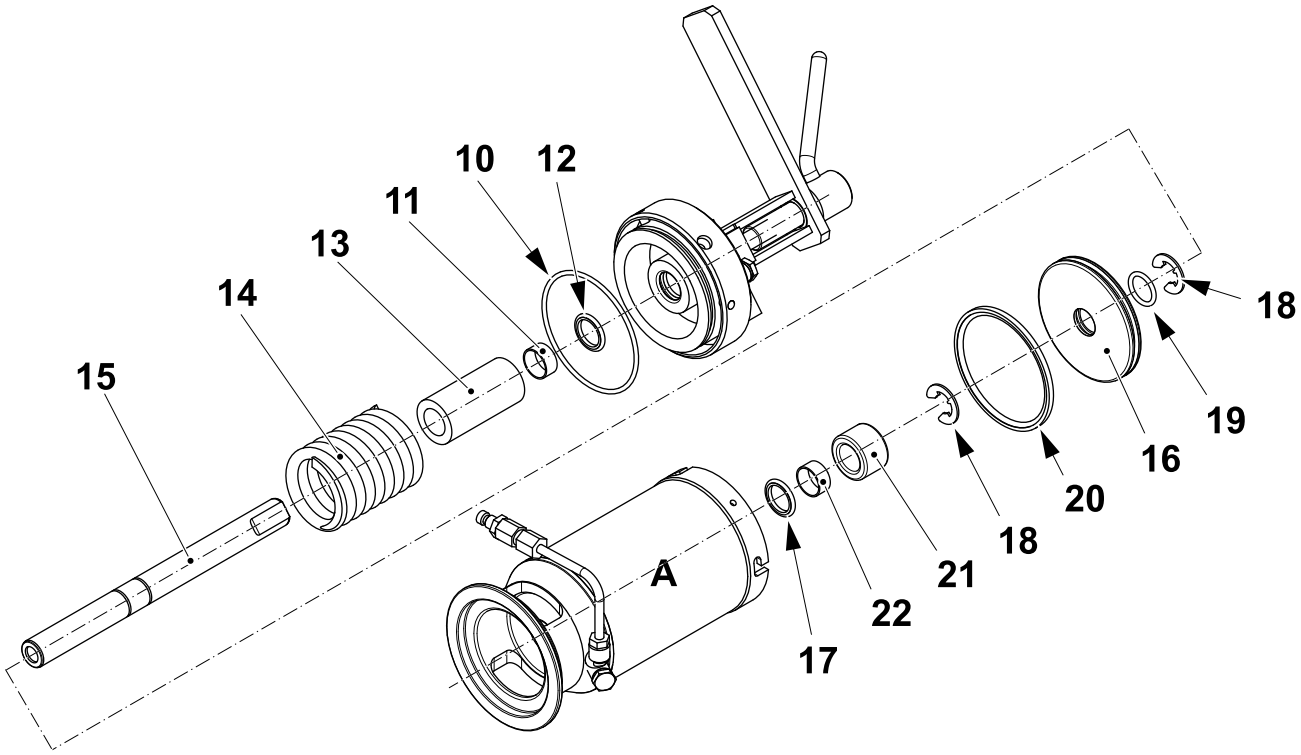

10 O-ring
11 Wear ring
12 Rod seal
13 Spacer
14 Compression spring
15 Piston rod
16 Piston
17 Washer
18 Locking washer
19 O-ring
20 Piston seal
21 Spacer
22 Wear ring

(Cont'd)

(Cont'd)

B-Cylinder (Sterile Air Valve)

a) Remove the sterile air valve, see 1.1.3.1-1 Product Valve - Remove Cylinders.

b) Release the cylinder spring completely using the tool dismounting (1).

c) Remove the valve cone (2).

d) Remove the washer (3) , the O-ring (4) and (5).

e) Remove thepiston seal (6) and the seal washer (7).

f) Remove the seal ring (8).

Note! Make sure that the tool dismounting (1) is fully tighten before removing the end section (10).

g) Remove the lock screws (9) and turn the end section (10) anti-clockwise to release it from the hooks (11).

h) Loosen the tool dismounting (1) and remove the end section (10).

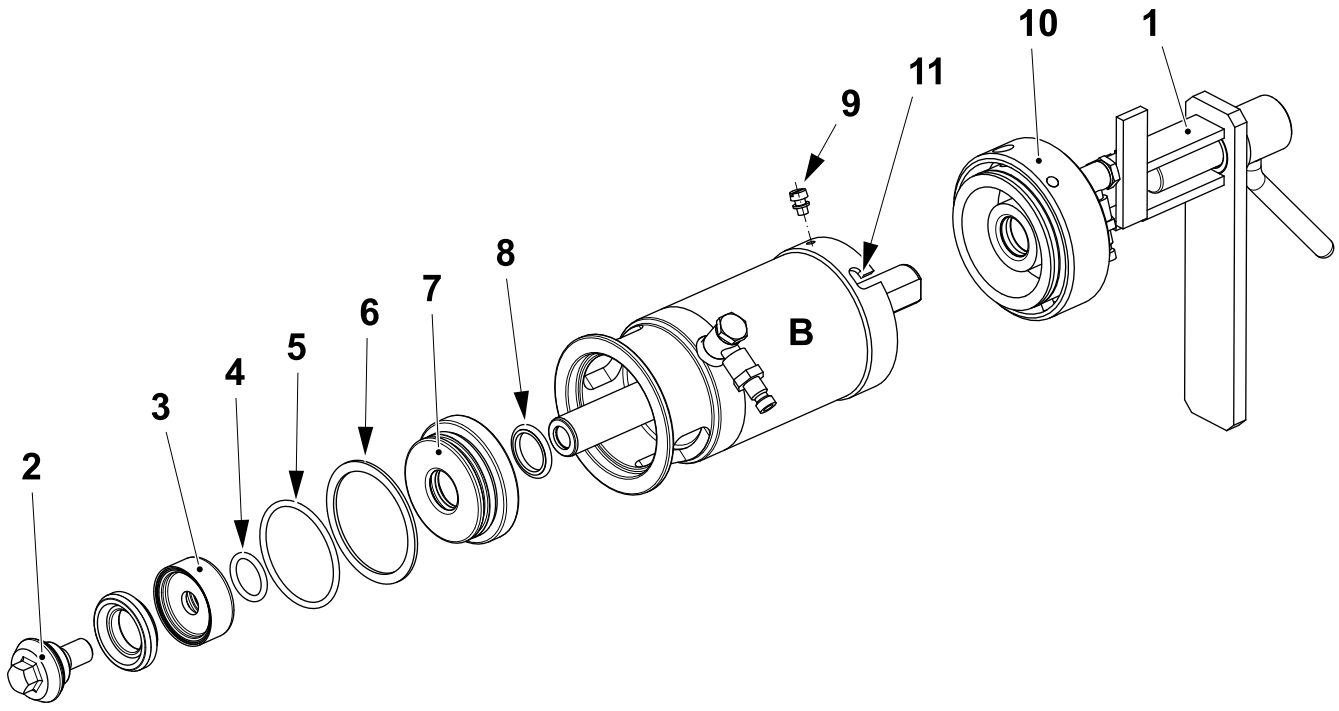

1 Tool dismounting
2 Valve cone
3 Washer
4 O-ring
5 O-ring
6 Piston seal
7 Seal washer
8 Seal ring
9 Lock screw
10 End section
11 Hook

(Cont'd)

(Cont'd)

i) Check the O-ring (12), the wear ring (13) and the rod seal (14). Change if necessary.

j) Remove the spacer (15) and the compression spring (16).

k) Remove the piston rod (17), the piston (18) and the washers (19).

l) Remove the locking washers (20) and remove the piston (18) from the piston rod (17).

m) Check the O-rings (21) and the piston seal (22). Change if necessary.

n) Remove and check the wear ring (23). Change if necessary.

o) Lubricate the threads of the piston rod (17) with grease TP No. 90296-0009.

p) Assemble in the reverse order.

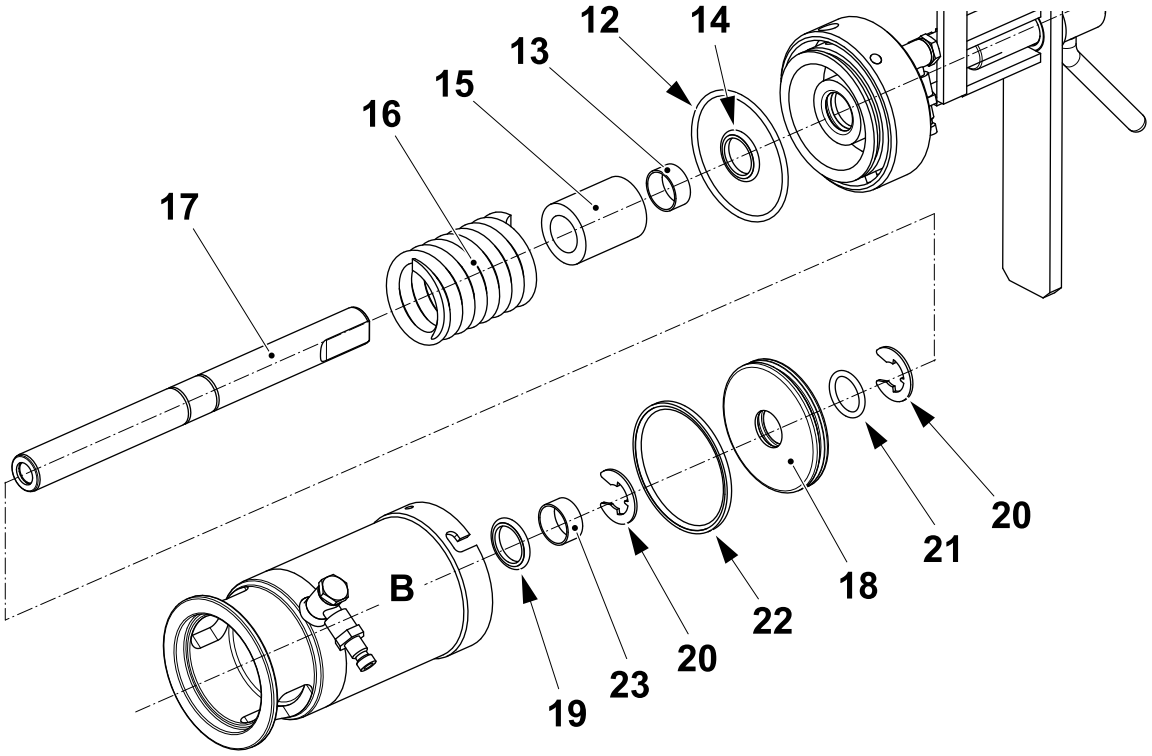

12 O-ring
13 Wear ring
14 Rod seal
15 Spacer
16 Compression spring
17 Piston rod
18 Piston
19 Washer
20 Locking washer
21 O-ring
22 Piston seal
23 Wear ring

(Cont'd)

(Cont'd)

C-Cylinder (Steam Valve)

a) Remove the steam valve (1), see 1.1.3.1-1 Product Valve - Remove Cylinders.

b) Remove the steam house (2), see 1.1.3.1-2 Product Valve - Change Seals and Membranes.

c) Remove the cylindrical pin (3), the washer (4) and the compression spring (5).

d) Remove the sealing washer (6)

e) Check the rod seal (7). Change if necessary.

Note! Make sure that the tool dismounting (8) is fully tighten before removing the end section (9).

f) Remove the lock screw (10) and turn the end section (9) anti-clockwise to release it from the hooks (11).

g) Loosen the tool dismounting (8) and remove the end section (9).

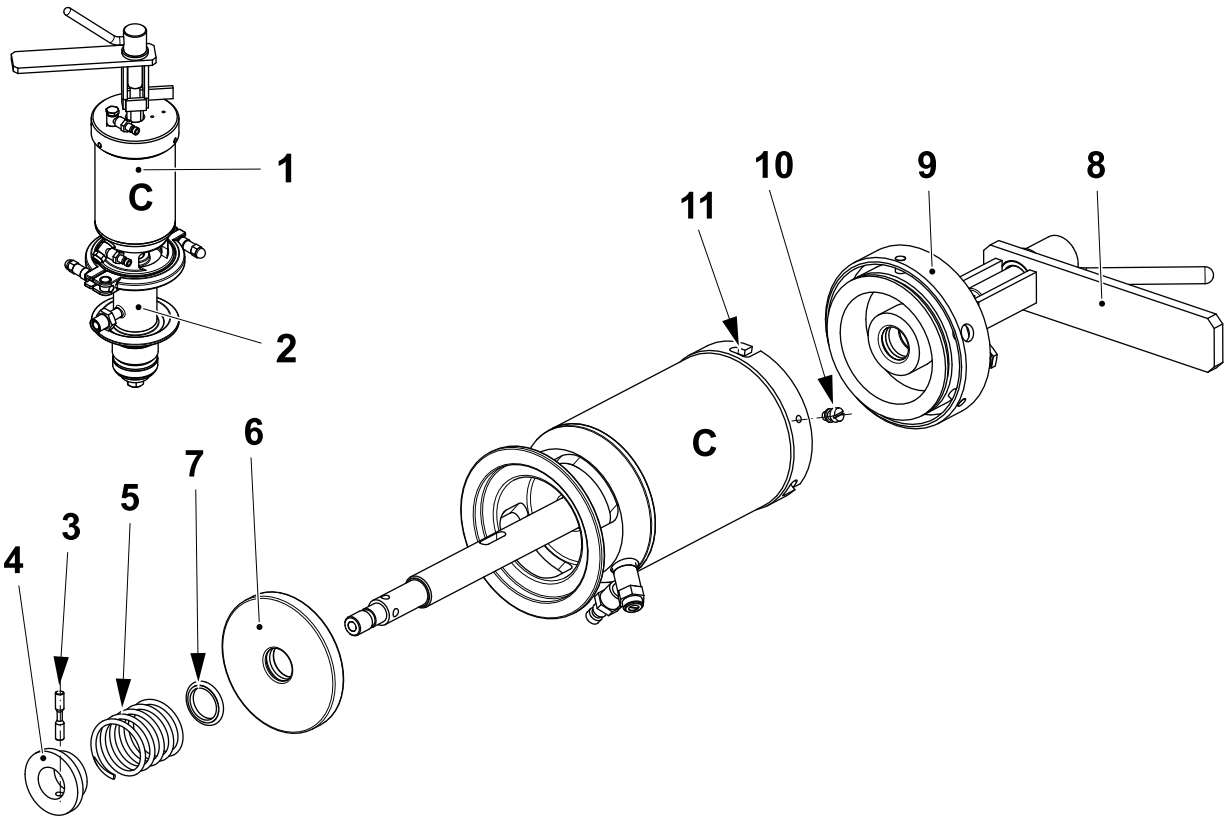

1 Steam valve
2 Steam house
3 Cylindrical pin
4 Washer
5 Compression spring
6 Sealing washer
7 Rod seal
8 Tool dismounting
9 End section
10 Lock screw
11 Hook

(Cont'd)

(Cont'd)

h) Check the o-ring (12) , the wear ring (13) and the rod seal (14). Change if necessary.

i) Remove the compression spring (15).

j) Remove the piston rod (16), the piston (17) and the washers (18).

k) Remove the locking washer (19) and remove the piston (17) from the piston rod (16).

l) Check the O-ring (20), the piston seal (21), the rod seals (22) and the wear ring (23). Change them if necessary.

m) Lubricate the threads of the piston rod (16) with grease TP No. 90296-0009.

n) Assemble in the reverse order.

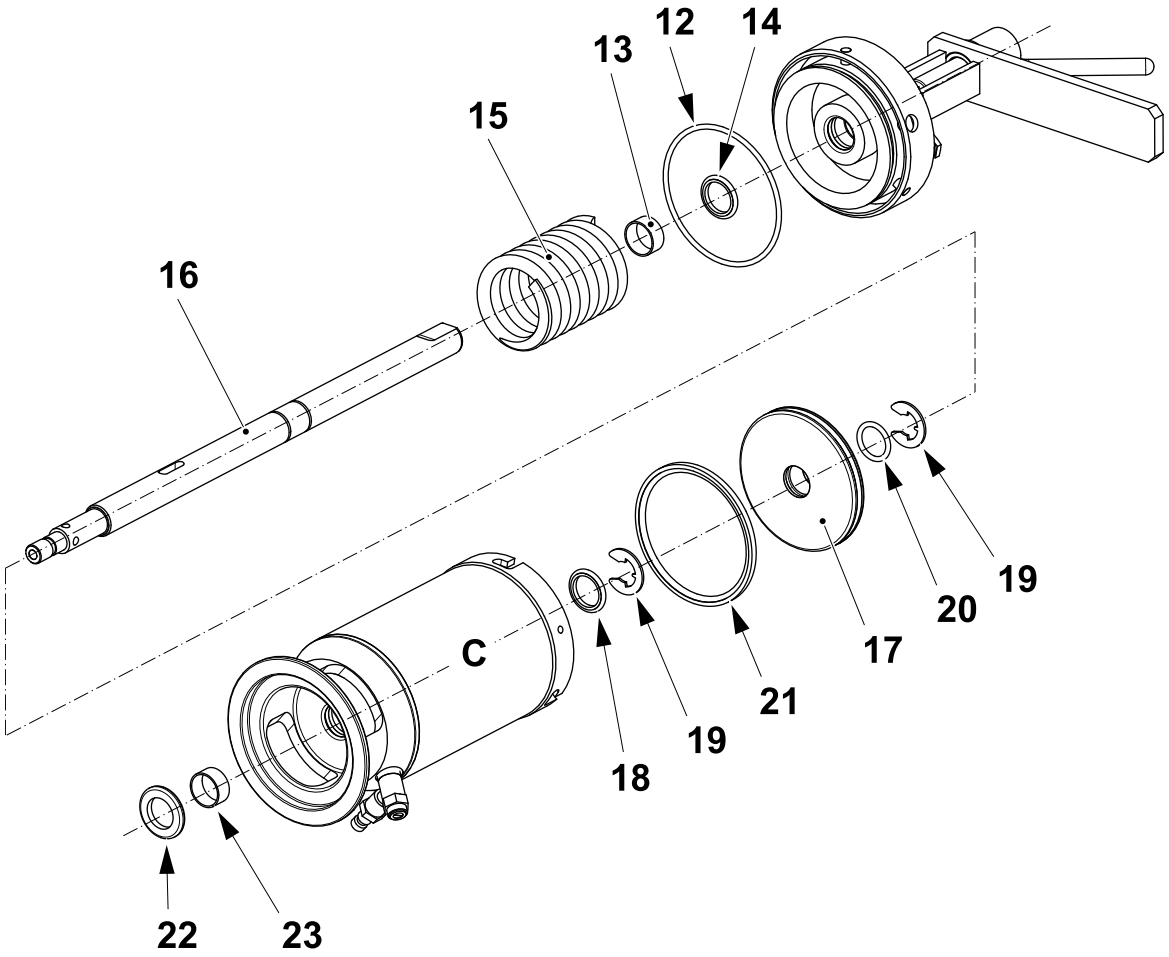

12 O-ring
13 Wear ring
14 Rod seal
15 Compression spring
16 Piston rod
17 Piston
18 Washer
19 Locking washer
20 O-ring
21 Piston seal
22 Rod seal
23 Wear ring

1.1.3.1-4 Product Valve - Set Proximity Switches

Machine Status	Electrical supply disconnecting device in position I (ON) Main air valve OFF Main steam valve ON Main water valve OFF
SPC Reference	2835303-0200

a) Set the position of the proximity switch (1) so that they are activated when the cylinder sleeve (3) is in its highest position.

b) Adjust by moving either the proximity switch (1) or the bracket (2).

c) Set the distance **A** between the proximity switch (1) and the cylinder sleeve (3).

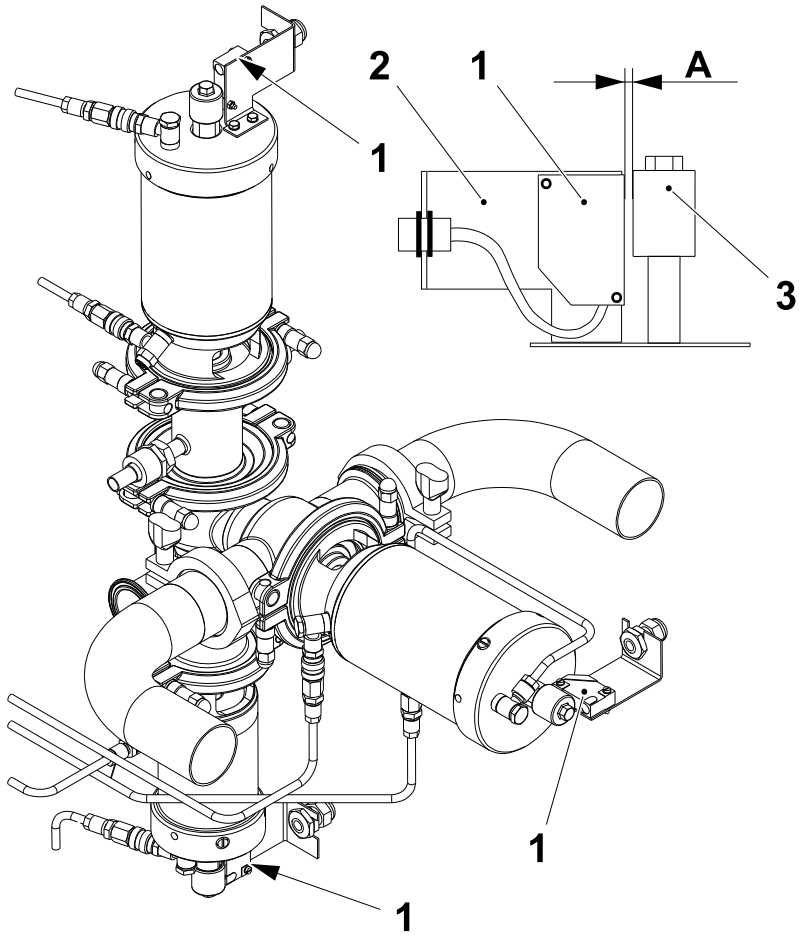

A = 1.0 ^{0} / $^{-0.5}$ mm

1 Proximity switch
2 Bracket
3 Cylinder sleeve

1.1.3.1-5 Product Valve - Change Flow Meter Gaskets

Machine Status	Electrical supply disconnecting device in position I (ON) Main air valve OFF Main steam valve ON Main water valve OFF
SPC Reference	2835303-0200

Valid for machines fitted with the flow meter TP No. 90606-2725.

Note! For all other machines see page 1-187.

a) Remove the screws (1) and the screws (2).

b) Remove the flow meter (3).

c) Change the gaskets (4).

d) Assemble in the reverse order.

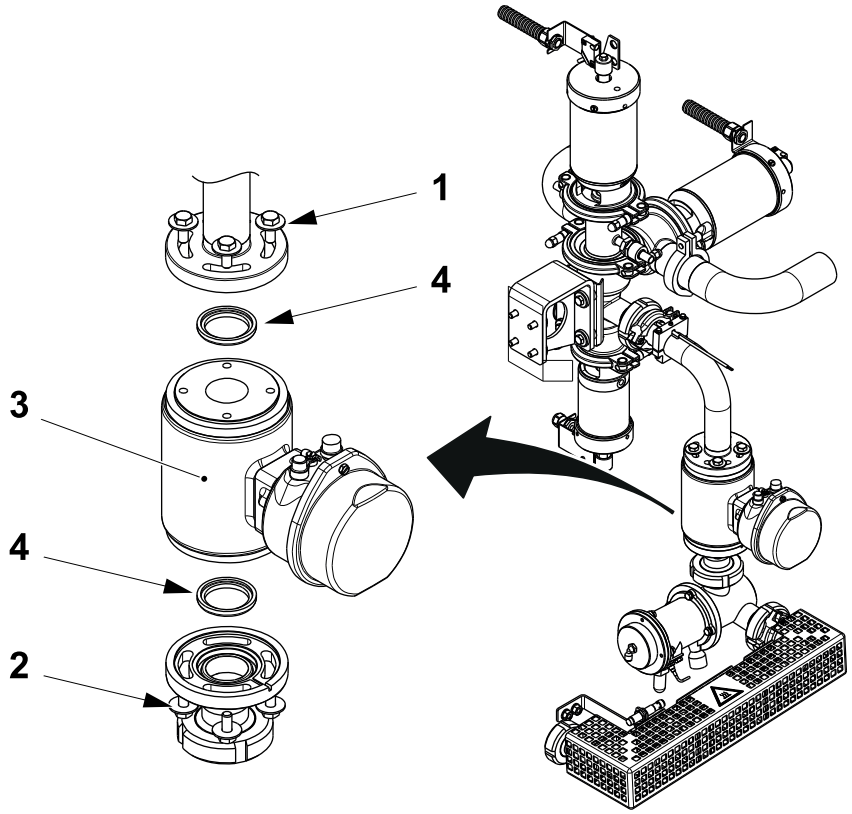

1 Screw
2 Screw
3 Flow meter
4 Gasket

(Cont'd)

(Cont'd)

Valid for machines fitted with the flow meter TP No. 90458-0806.

a) Loosen the clamping piece (1) and unscrew the locking rings (2).

b) Remove the flow meter (3).

c) Change the gaskets (4).

d) Assemble in the reverse order.

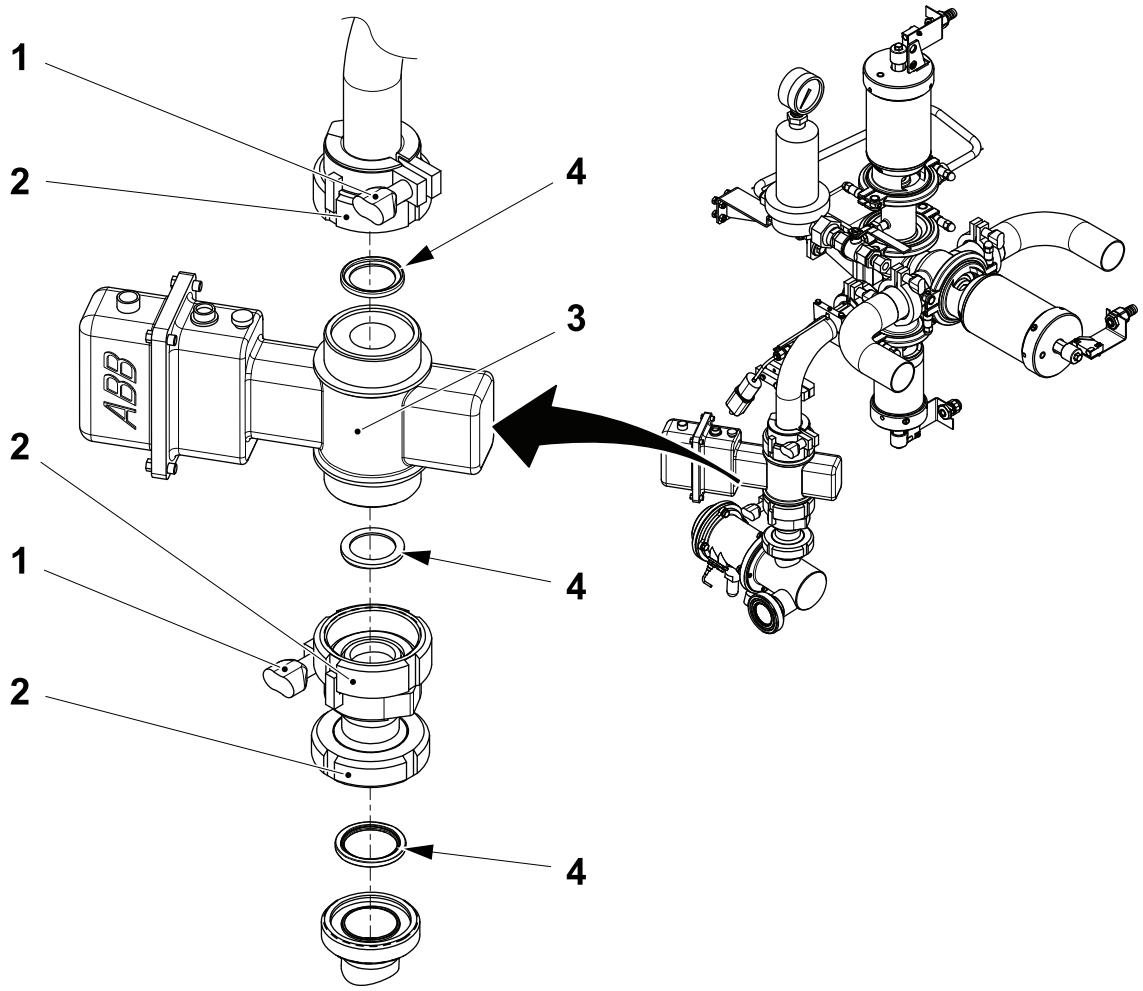

1 Clamping piece
2 Locking ring
3 Flow meter
4 Gasket

1.1.3.2 Steam System

1.1.3.2-1 Steam System - Clean Steam Trap

Machine Status	Electrical supply disconnecting device in position O (OFF) Main air valve OFF Main steam valve OFF Main water valve OFF
SPC Reference	2808321-0300

WARNING

Risk of personal injury.

Turn off the steam and the compressed air. Make sure there is no product, steam or cleaning liquid on the line.

WARNING

Burn hazard.

The steam system and adjacent components may be hot. If necessary wear personal protective equipment.

CAUTION

Risk of serious production fault.

Never close the steam supply valve to the machine until the product line is idle and empty from product. The steam in the product valve forms an aseptic barrier between the machine and the product supply line. Closing the steam valve will disrupt this barrier.

(Cont'd)

(Cont'd)

a) Release the pad lock (1), close the steam supply valve (2) and lock it in closed position the with the pad lock (1).

b) Remove the steam trap (3) from the line.

c) Unscrew the cap (4).

d) Remove the spacer (5), the spring (6) and the strainer (7). Clean the parts if necessary.

e) Assemble in the reverse order.

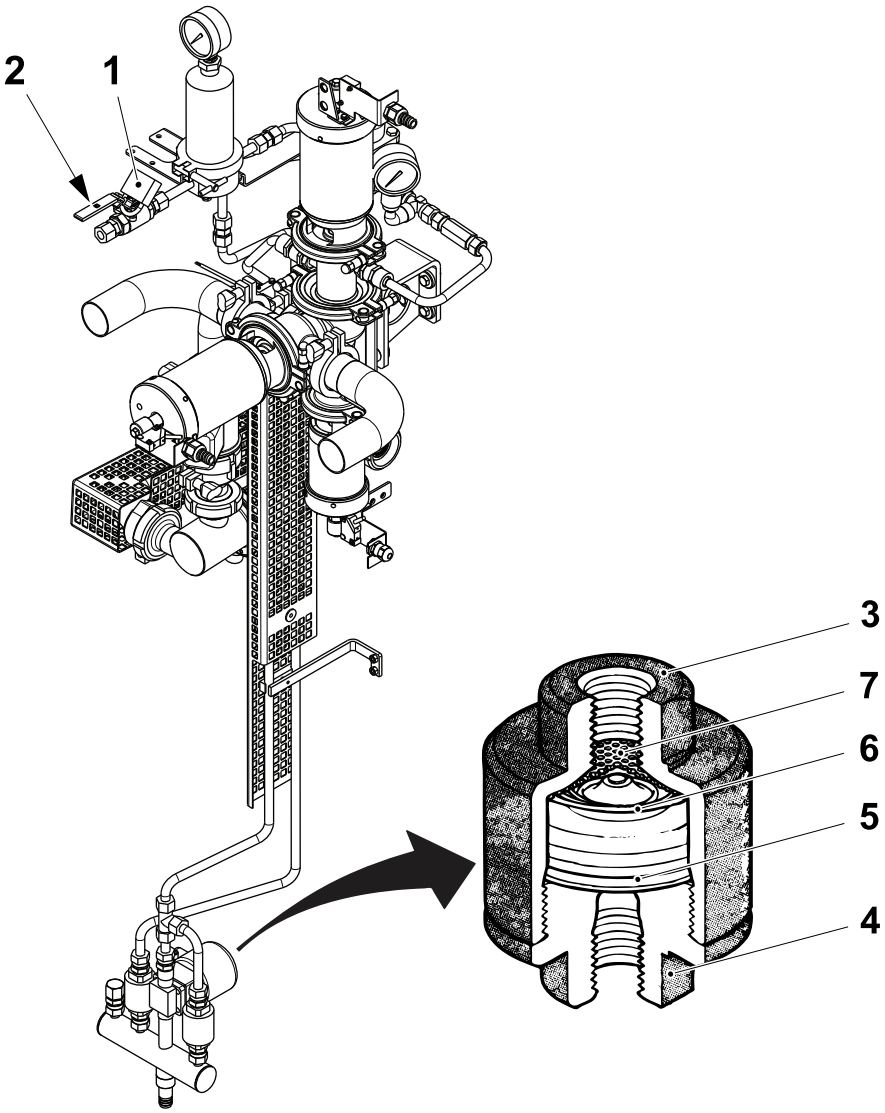

1 Pad lock
2 Supply valve
3 Steam trap
4 Cap
5 Spacer
6 Spring
7 Strainer

1.1.3.2-2 Steam System - Clean Filter

Machine Status	Main air valve OFF Main steam valve OFF Main water valve OFF
SPC Reference	2808321-0300

WARNING

Risk of personal injury.

Turn off the steam and the compressed air. Make sure there is no product, steam or cleaning liquid in the line.

WARNING

Burn hazard.

The steam system and adjacent components may be hot. If necessary wear personal protective equipment.

CAUTION

Risk of serious production fault.

Never close the steam supply valve to the machine until the product line is idle and empty from product. The steam in the product valve forms an aseptic barrier between the machine and the product supply line. Closing the steam valve will disrupt this barrier.

a) Release the pad lock (1), close the steam supply valve (2) and lock it in the closed position with the pad lock (1).

b) Remove the O-ring (3) from the filter cartridge.

Note! Change the O-ring (3) every time the filter housing is disassembled.

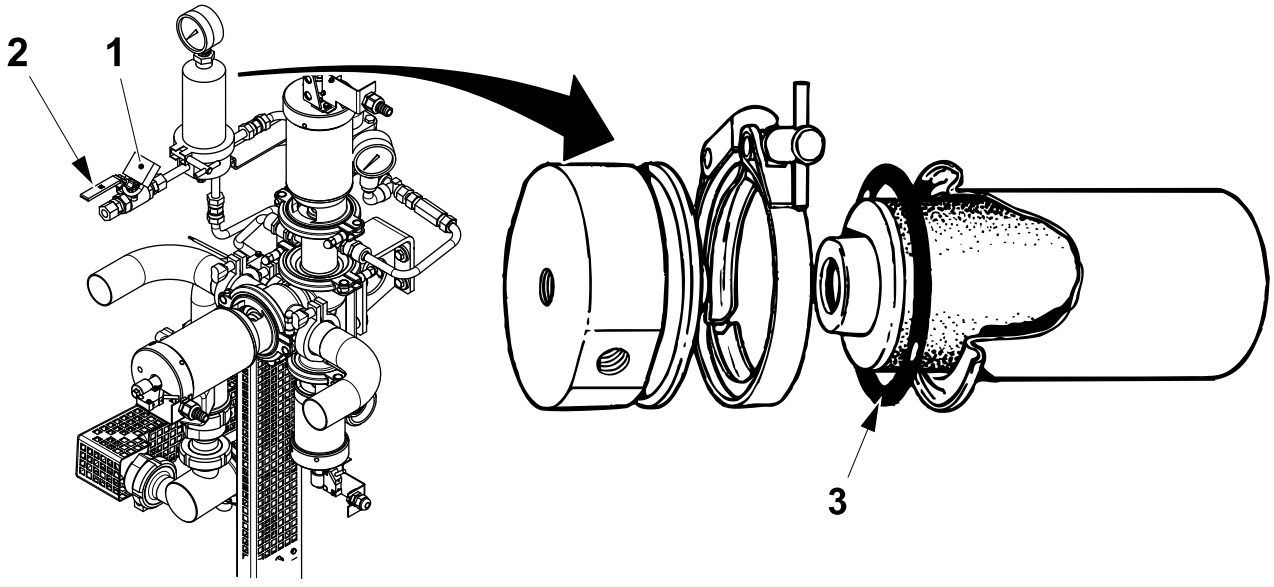

1 Pad lock
2 Steam supply valve
3 O-ring

(Cont'd)

(Cont'd)

General Information

To obtain optimum performance of the filter cartridge:

- Clean the filter cartridge thoroughly before reusing (or return to Pall for cleaning and testing)
- First remove the O-ring, then label and store used cartridges.

Clean with distilled **and** filtered water.

Rinse using a 50 litre tank designed to avoid "dead spaces". Filter the incoming water (renewal rate 5 l/min.) with a 10µm Pall Profile.

Agitate the contents of the tank with compressed air, filtered through a Pall SU Coalecher element.

Cleaning with Nitric Acid

WARNING

Risk of personal injury.
Follow the Safety Precautions. The cleaning procedure must not contravene any legal or local safety regulations.

Note! If the cartridge is highly contaminated or if the recommended temperature cannot be used, contact Pall Scientific & Laboratory Services for advice.

a) Immerse the filter cartridge in 14 - 15% (w/w) nitric acid at 60 - 70°C for 10 - 20 minutes.

b) Rinse the cartridge in water for at **least** 10 minutes.

c) Empty the tank and refill with water. Check the pH level of the tank contents is 6 - 8.

d) Rinse the cartridge again for at least two hours, or until the pH level of the tank contents is the same as that of the incoming water.

e) Flush the cartridge in the reverse direction with water. If the water from the cartridge is discoloured or is visibly contaminated, repeat steps a) and b).

(Cont'd)

(Cont'd)

Reverse Bubble Point Testing

Note! Do this **immediately** after the cleaning procedure.

a) Thoroughly soak the filter cartridge in water.

b) Plug one end of the cartridge and connect the other end to a compressed air line. The pressure should be 0 - 0.13 bar.

c) Submerge the filter cartridge in water. Keep the filter approximately 125 mm below the surface.

d) Gradually increase the air pressure while slowly rotating the cartridge, until air bubbles emerge. Record the air pressure at this point.

e) Carefully inspect the filter cartridge to ensure the air bubbles emerge at a similar rate from the entire cartridge.

f) Lower the pressure to half the recorded pressure. If air bubbles emerge from an isolated area of the cartridge at this pressure, replace the filter.

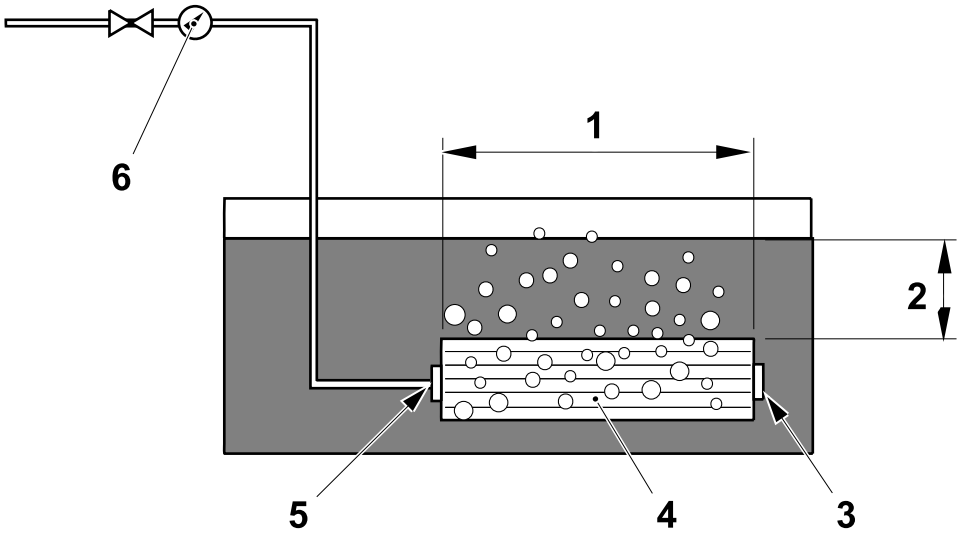

1 Dispersion of air bubbles
2 ~ 125 mm
3 Air tight connection
4 Filter cartridge
5 Air tight end piece
6 Pressure gauge

Drying Procedure

Dry the filter at 105 - 120°C for 1 - 2 hours.

After drying, visually check the filter cartridge for damage or corrosion. Change the cartridge if necessary.

Fit a new O-ring before fitting the filter cartridge.

1.1.3.2-3 Steam System - Check Membrane

Machine Status	Electrical supply disconnecting device in position O (OFF) Main air valve OFF Main steam valve OFF Main water valve OFF
SPC Reference	2808321-0300

WARNING

Burn hazard.

The diaphragm valve and adjacent components may be hot. Wear heat-resistant protective gloves.

CAUTION

Risk of serious production fault.

Never close the steam supply valve to the machine until the product line is idle and empty from product. The steam in the product valve forms an aseptic barrier between the machine and the product supply line. Closing the steam valve will disrupt this barrier.

(Cont'd)

(Cont'd)

a) Release the pad lock (1), close the steam supply valve (2) and lock it in closed position the with the pad lock (1).

b) Remove the screws (3) and the diaphragm valve (4).

c) Remove and check the membrane (5) for wear or damage. Change if necessary.

d) Assemble in the reverse order.

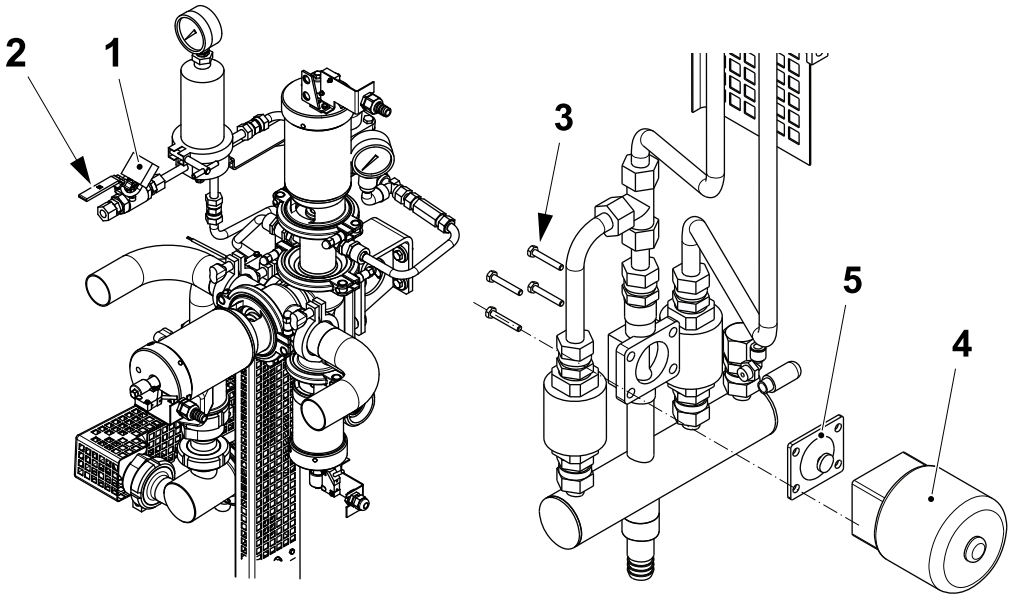

1 Pad lock
2 Steam supply valve
3 Screw
4 Diaphragm valve
5 Membrane

1.1.3.2-4 Steam System - Change Pressure Regulator

Machine Status	Electrical supply disconnecting device in position O (OFF) Main air valve OFF Main steam valve OFF Main water valve OFF
SPC Reference	2808321-0300

WARNING

Burn hazard.

The pressure regulator and adjacent components may be hot. Wear heat-resistant protective gloves.

(Cont'd)

(Cont'd)

CAUTION
Risk of serious production fault.
Never close the steam supply valve to the machine until the product line is idle and empty from product. The steam in the product valve forms an aseptic barrier between the machine and the product supply line. Closing the steam valve will disrupt this barrier.

a) Release the pad lock (1), close the steam steam supply valve (2) and lock it in closed position the with the pad lock (1).

b) Turn OFF the air to the pressure gauge (3).

c) Loosen the couplings (4) and the connection (5).

d) Change the pressure regulator (6).

e) Assemble in the reverse order.

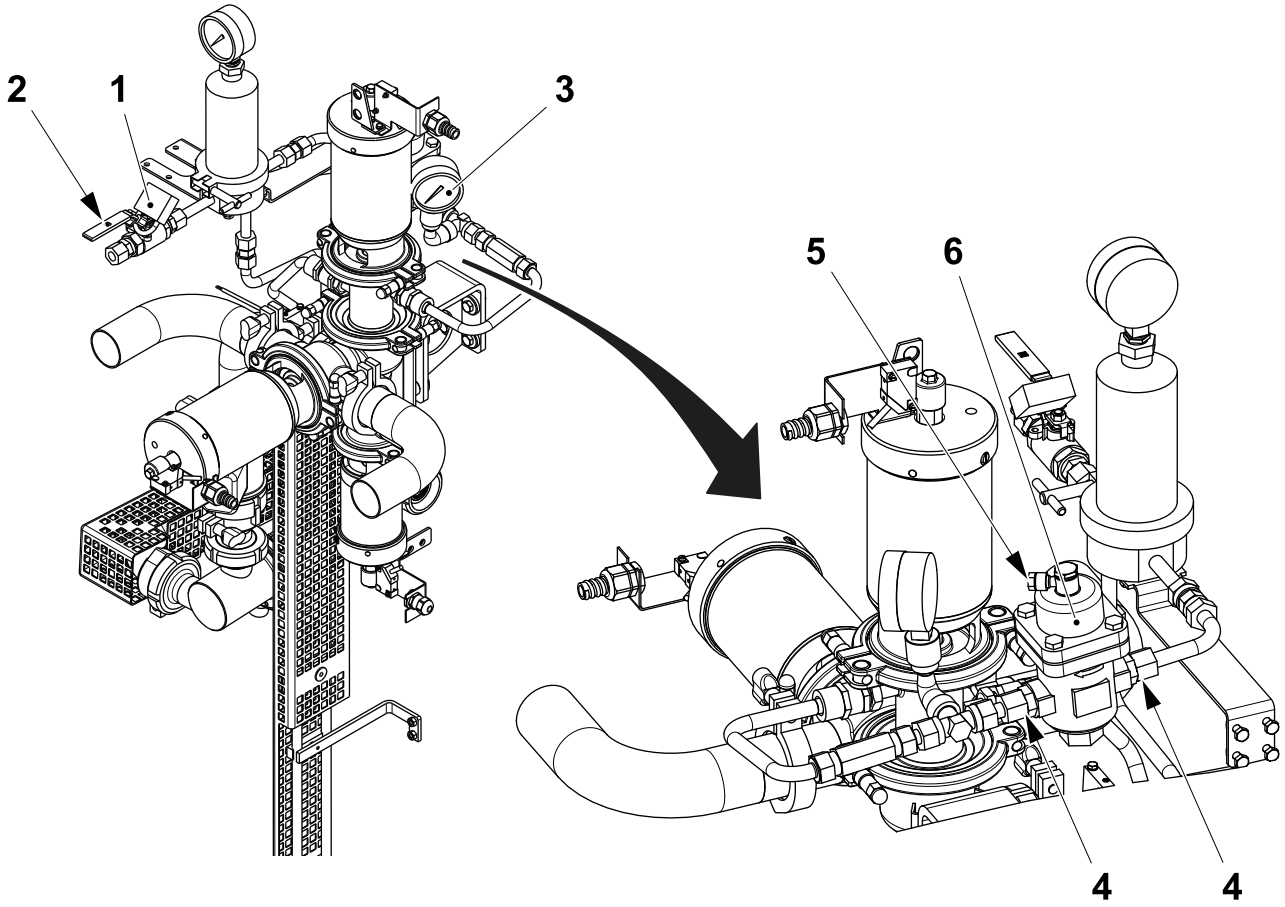

1 Pad lock
2 Steam supply valve
3 Pressure gauge
4 Coupling
5 Connection
6 Pressure regulator

1.1.3.2-5 Steam System - Set Pressure Regulator

Machine Status	Electrical supply disconnecting device in position I (ON) Main air valve ON Main steam valve ON Main water valve ON
SPC Reference	2808321-0300

WARNING

Burn hazard.

Forcing the valves open allows hot steam to exit from the machine body. Keep the doors closed.

a) Release the pad lock (1), open the steam steam supply valve (2) and lock it in open position the with the pad lock (1).

b) Manually force open the TCSB valve (3).

c) Make sure the steam flush valve (4) is closed.

Note! The temperature must be higher than 125 degrees, otherwise an alarm will be triggered during the sterilisation phase.

d) Wait for the steam temperature to stabilize. Then adjust the regulator (6) until a steam barrier temperature of 130 ºC is obtained (corresponds to approximately 1.7 bar on the pressure gauge (5)). The steam barrier temperature is displayed on the TPOP.

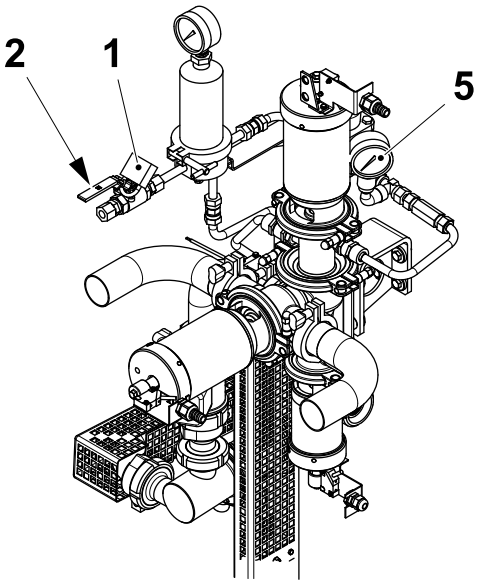

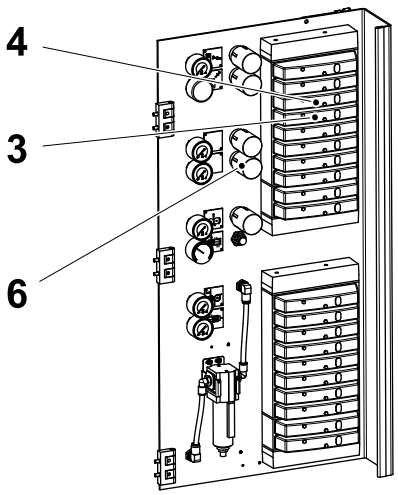

1 Pad lock
2 Steam supply valve
3 TCSB valve
4 Steam flush valve
5 Pressure gauge
6 Regulator

1.1.3.3 Product Line

1.1.3.3-1 Product Line - Overhaul Regulating Valve

Machine Status	Electrical supply disconnecting device in position O (OFF) Main air valve OFF Main steam valve ON Main water valve OFF
Special Equipment	Pipe wrench Tp No. 777200-0101
SPC Reference	2835279-0300

Remove the Regulating Valve

CAUTION
Risk of minor or moderate injury.
Spring under force.

(Cont'd)

(Cont'd)

a) Remove the pneumatic pipes (1) from the connections on the regulating valve.

b) Remove the screw (2) and remove the proximity switch (3).

c) Remove the screws (4) and (5) and remove the three electrical wires (6).

d) Loosen the nut (7) and disconnect the eccentric pipe (8).

e) Loosen the nut (9), disconnect the product pipe (10) and pull out the regulating valve.

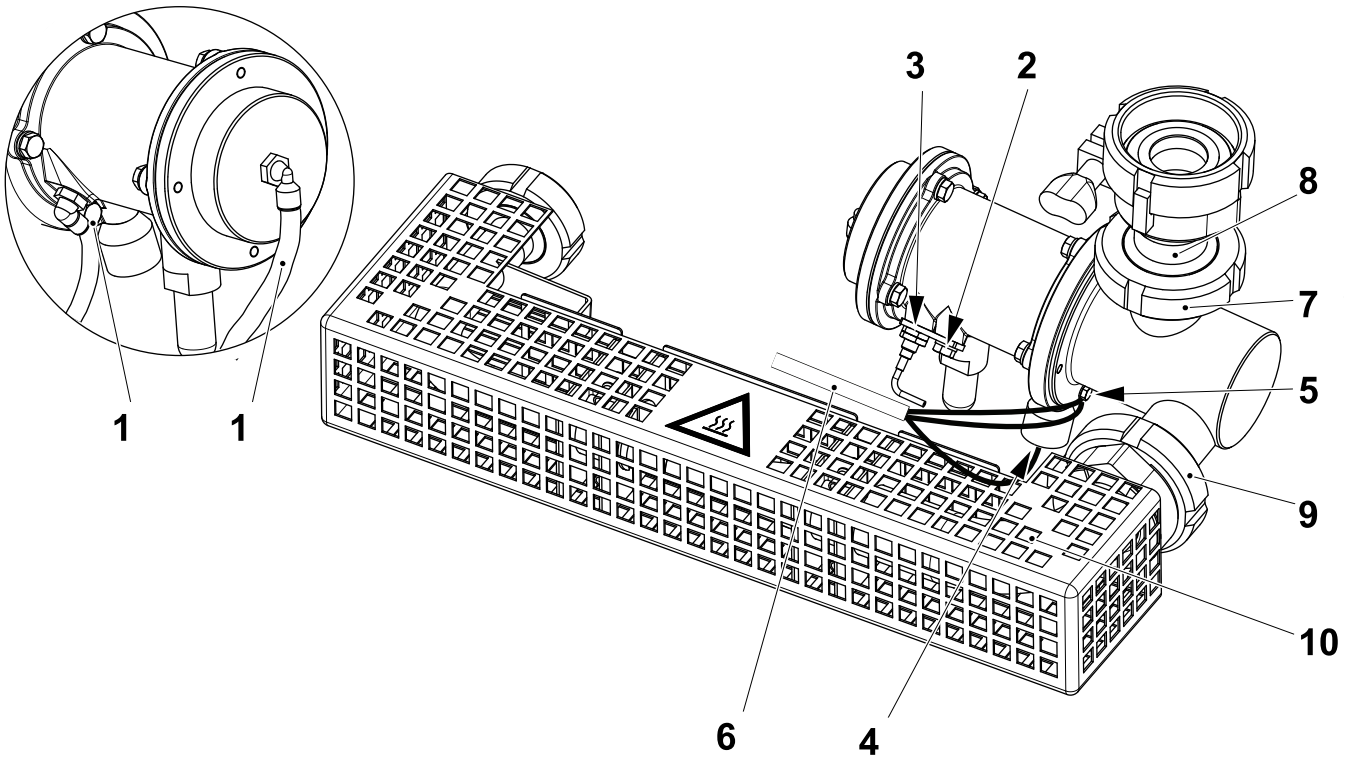

1 Pipe
2 Screw
3 Proximity switch
4 Screw
5 Screw
6 Wire
7 Nut
8 Eccentric pipe
9 Nut
10 Product pipe

(Cont'd)

(Cont'd)

CAUTION
Risk of minor or moderate injury.
Spring under force.

CAUTION
Risk of damage to the equipment.
Take care not to damage the shutter.

f) Remove the four screws (11) and the cover (12) from the regulating valve.

g) Remove the four screws (13) in small steps and in sequence, and carefully remove the regulator body (14) from the central body.

h) Remove the shutter (15) by locking the shutter (15) and turning the screw (16).

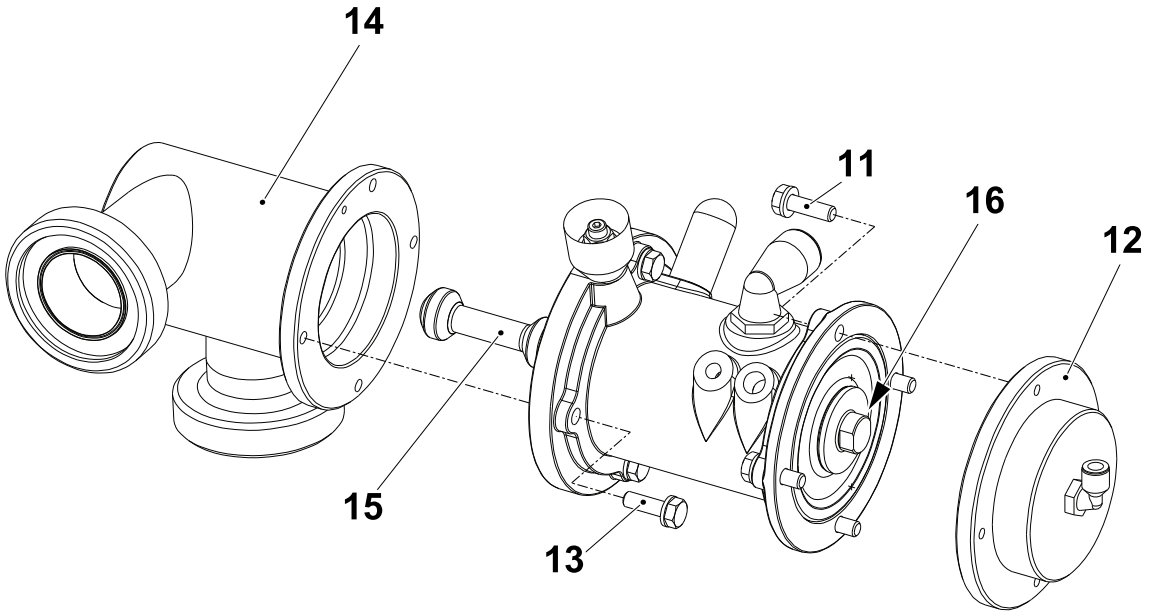

11 Screw
12 Cover
13 Screw
14 Regulator body
15 Shutter
16 Screw

(Cont'd)

(Cont'd)

i) Remove the diaphragms (17), the spacer (18), the spring (19) and pull out the shutter (15).

j) Remove the shock absorber (20). Loosen the bushing (21) and remove the spacer (22) and the diaphragms (23).

k) Change the diaphragms (17) and diaphragms (23), the bushing (21) and the shock absorber (20) if necessary.

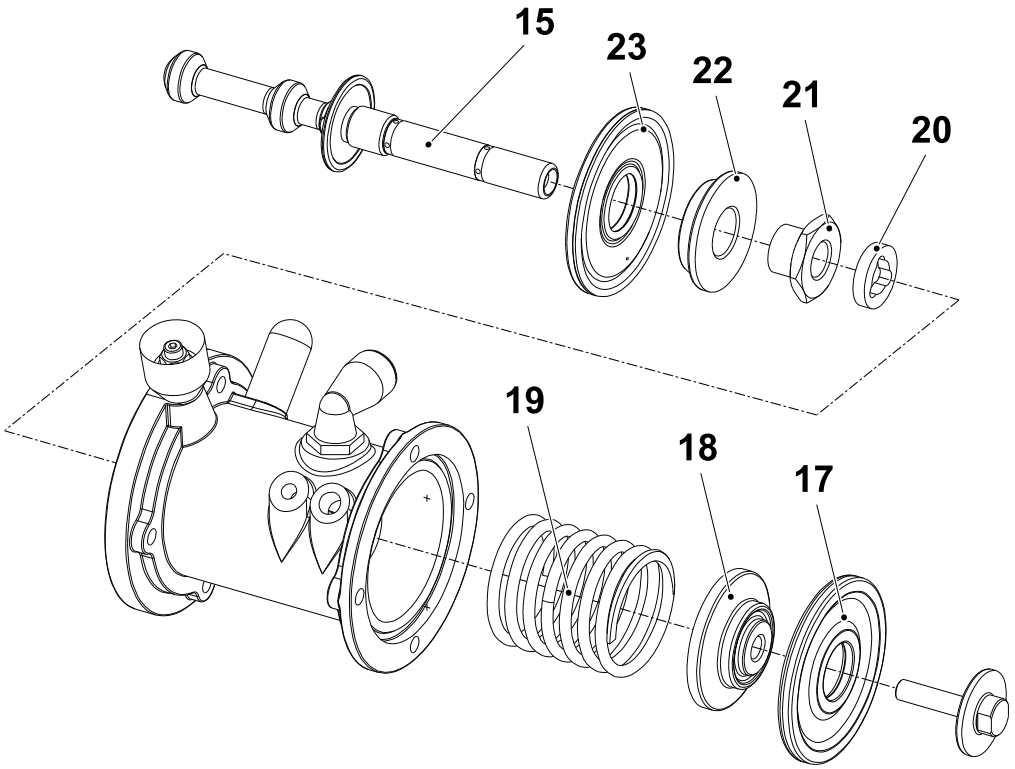

15 Shutter
17 Diaphragm
18 Spacer
19 Spring
20 Shock absorber
21 Bushing
22 Spacer
23 Diaphragm

(Cont'd)

(Cont'd)

Assemble the Regulating Valve

CAUTION
Risk of damage to the equipment.
Make sure that all parts are clean and dry. Do not lubricate. Make sure not to damage the diaphragm (1) and that it is fitted in the correct direction (the transparent side of the diaphragm must be against the product side).

CAUTION
Risk of damage to the equipment.
Make sure not to damage the diaphragm (9) and that it is fitted in the correct direction (the transparent side of the diaphragm must be against the air side).

a) Assemble the diaphragm (1) and thespacer (2) on the shutter (3) and fit the bushing (4). Tighten until the bushing reaches its stop position.

b) Install the shock absorber (5) on the shutter (3) and insert the shutter assembly in the central body (6).

c) Fit the spring (7), the spacer (8), the diaphragm (9) into the central body (6) using the screw (10).

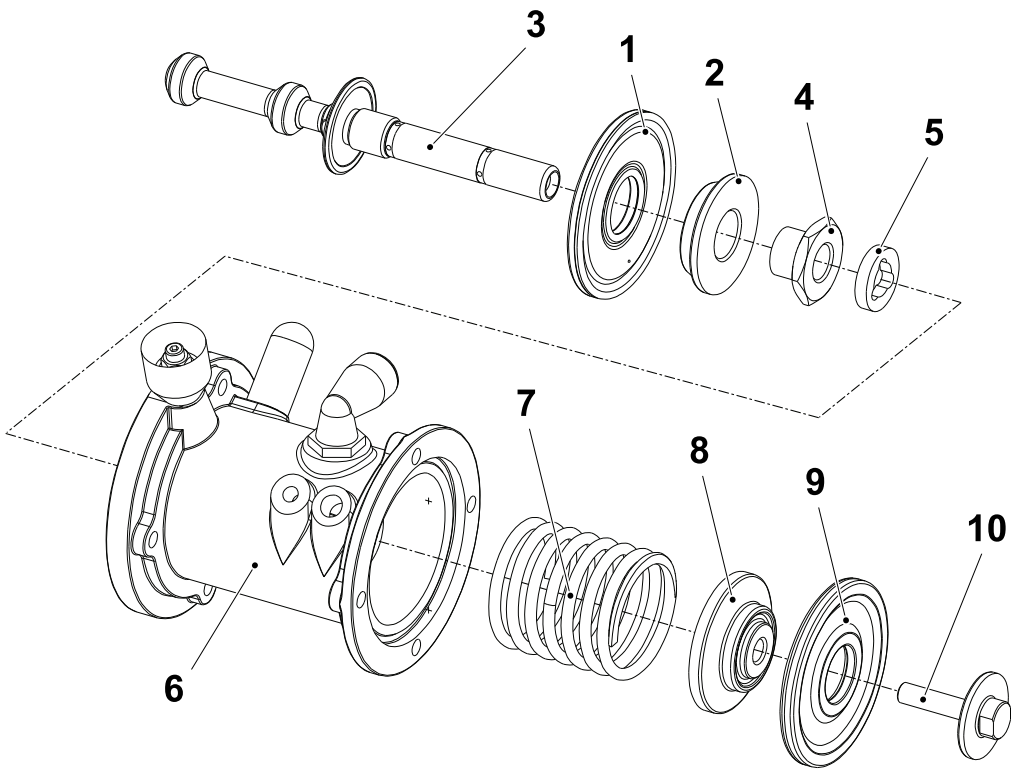

1 Diaphragm
2 Spacer
3 Shutter
4 Bushing
5 Shock absorber
6 Central body
7 Spring
8 Spacer
9 Diaphragm
10 Screw

(Cont'd)

(Cont'd)

CAUTION
Risk of damage to the equipment.
Be careful not to damage the shutter.

d) Install the regulator body (11) to the central body (6). Fit the four screws (12) and washers and tighten the screws (12) crosswise in small steps.

e) Make sure, by manually pushing the screw, indicated by the arrow, that the shutter (3) moves smoothly.

f) If not, change the shutter (3) if necessary.

g) Fit the cover (13) to the central body (6). Fit the four screws (14) and washers and tighten the screws (14) crosswise.

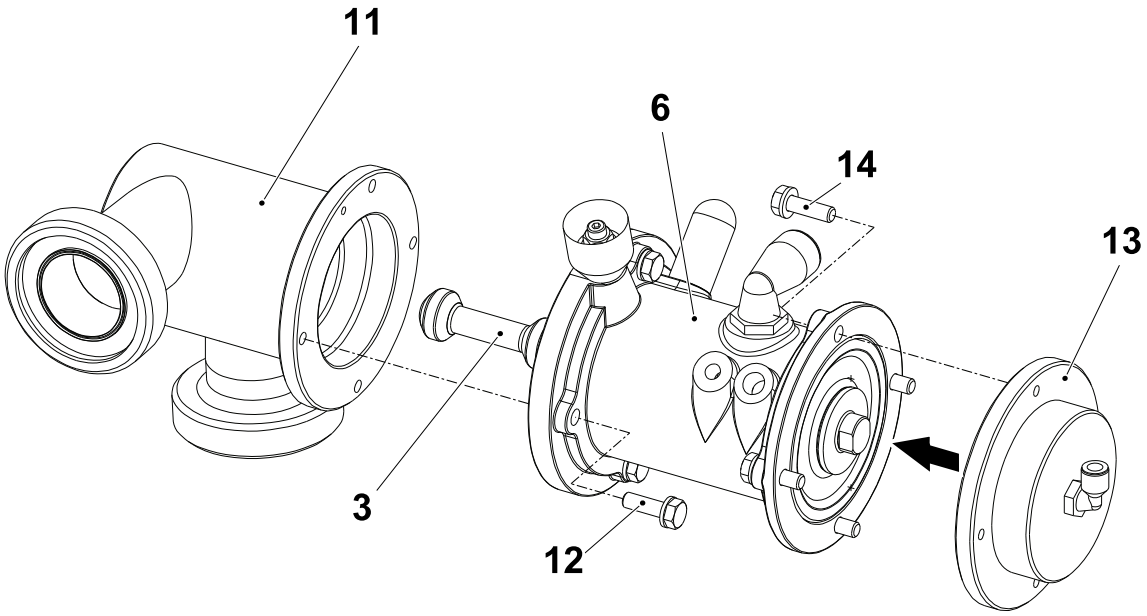

3 Shutter
6 Central body
11 Regulator body
12 Screw
13 Cover
14 Screw

Fit the Regulating Valve

Note! Valid for machines fitted with the flow meter TP No. 90606-2725.

(Cont'd)

(Cont'd)

Note! Change the gasket (2) and the gasket (5) every time that the pipes are removed.

a) Fit the regulating valve (1) and the gasket (2) to the product pipe (3).

b) Hand tighten the nut (4).

c) Fit the gasket (5) between the eccentric pipe (6) and the regulating valve (1).

d) Rotate the eccentric pipe (6) until the connection surface of the eccentric pipe (6) is parallel and in full contact with the connection surface of the regulating valve (1).

e) Hand tighten the nut (7).

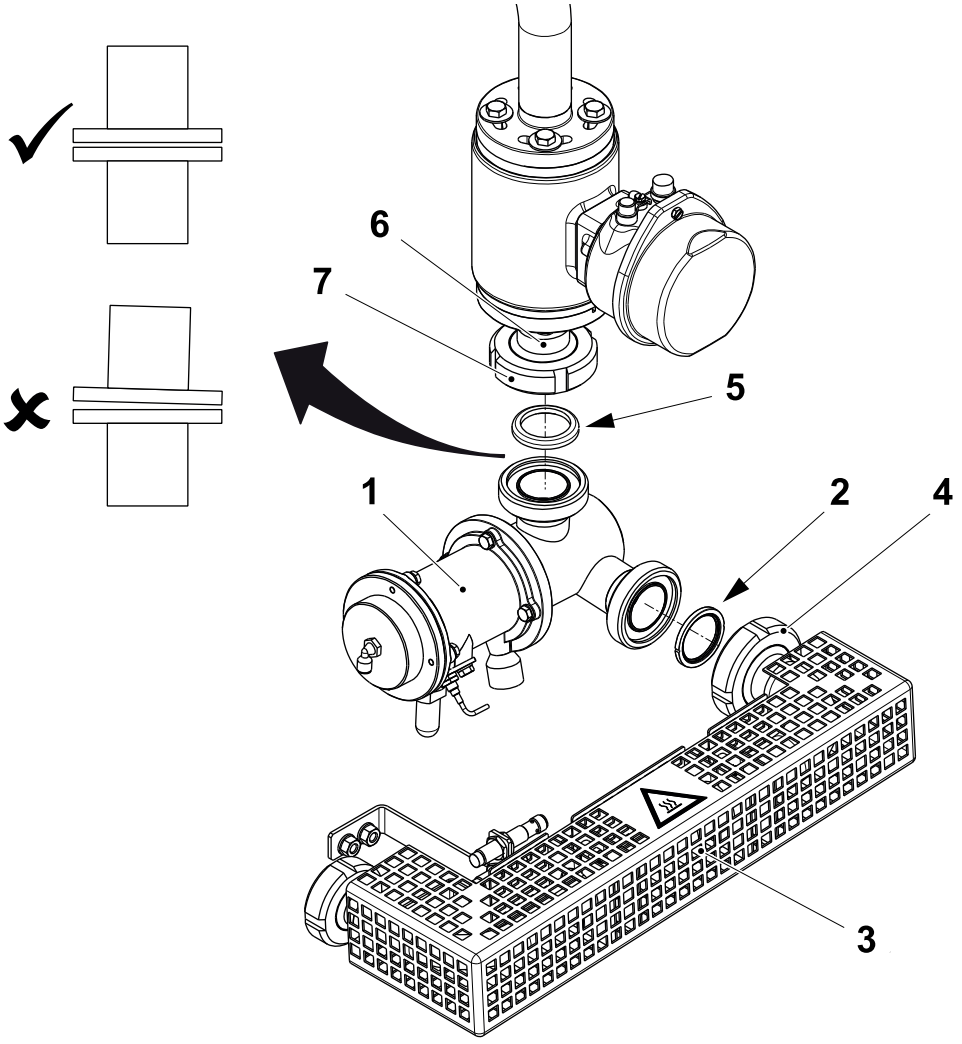

1 Regulating valve
2 Gasket
3 Product pipe
4 Nut
5 Gasket
6 Eccentric pipe
7 Nut

(Cont'd)

(Cont'd)

f) Tighten the locking nut (8) and the locking nut (9) to the mechanical stop using the pipe wrench TP No. 777200-0101.

g) Fit and tighten the locking camp (10).

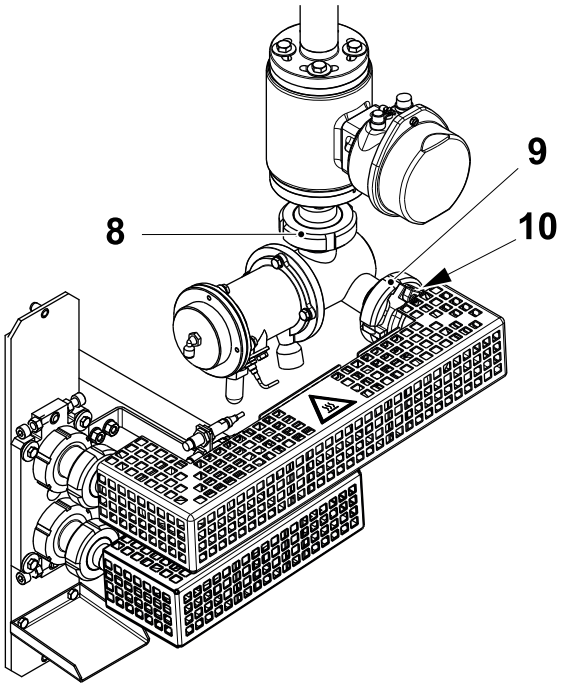

8 Locking nut
9 Locking nut
10 Locking camp

(Cont'd)

(Cont'd)

h) Connect the electrical wires (11) and tighten the screws (12) and (13).

i) Fit the pneumatic pipes (14).

j) Fit the proximity switch (15) and tighten the screw (16).

k) Set the proximity switch (15), see 1.1.3.3-2 Product Line - Set Regulating Valve Proximity Switch.

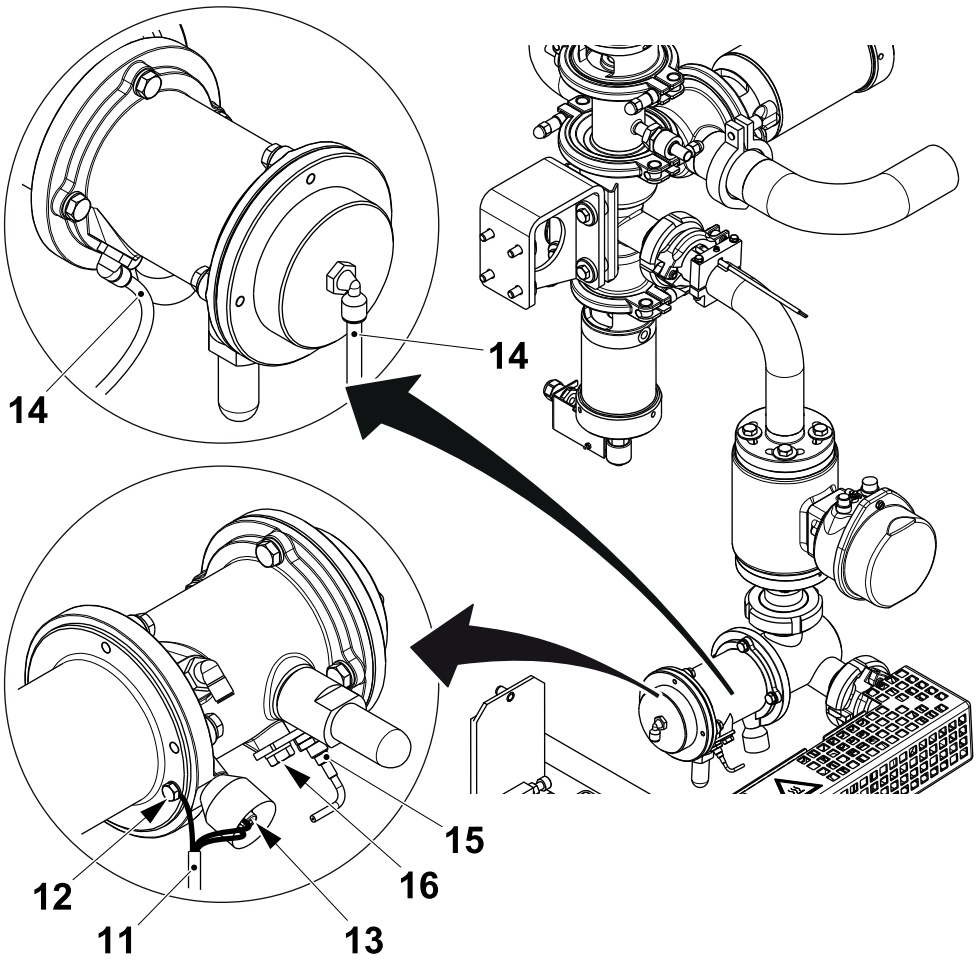

11 Electrical wire
12 Screw
13 Screw
14 Pneumatic pipe
15 Proximity switch
16 Screw

Fit the Regulating Valve

Note! Valid for machines fitted with the flow meter TP No. 90458-0806.

(Cont'd)

(Cont'd)

Note! Change the gasket (2) and the gasket (5) every time that the pipes are removed.

a) Fit the regulating valve (1) and the gasket (2) to the product pipe (3).

b) Hand tighten the nut (4).

c) Fit the gasket (5) between the eccentric pipe (6) and the regulating valve (1).

d) Rotate the eccentric pipe (6) until the connection surface of the eccentric pipe (6) is parallel and in full contact with the connection surface of the regulating valve (1).

e) Hand tighten the nut (7).

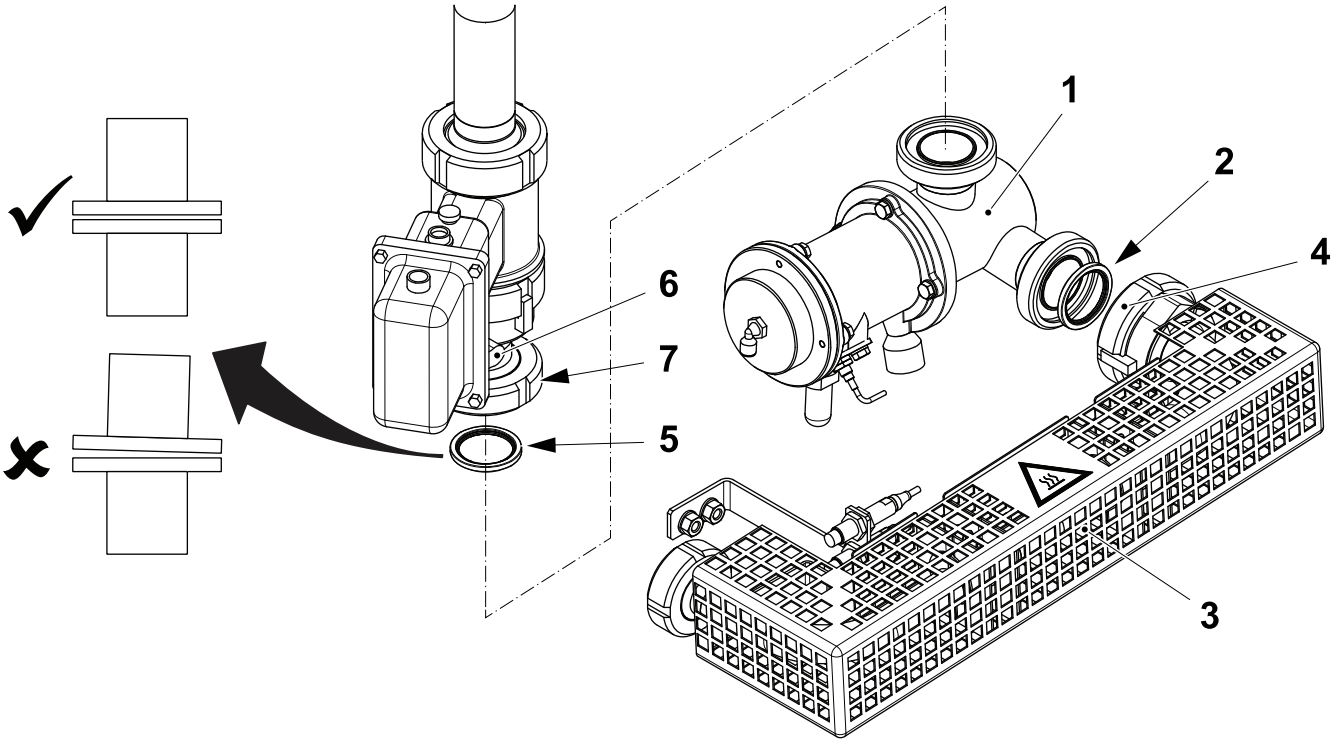

1 Regulating valve
2 Gasket
3 Product pipe
4 Nut
5 Gasket
6 Eccentric pipe
7 Nut

(Cont'd)

(Cont'd)

f) Tighten the nuts to the mechanical stop using the pipe wrench TP No. 777200-0101, starting from the flow meter (8) and ending down to the filling pipe (9).

g) Fit and tighten the locking clamps (10) and (11).

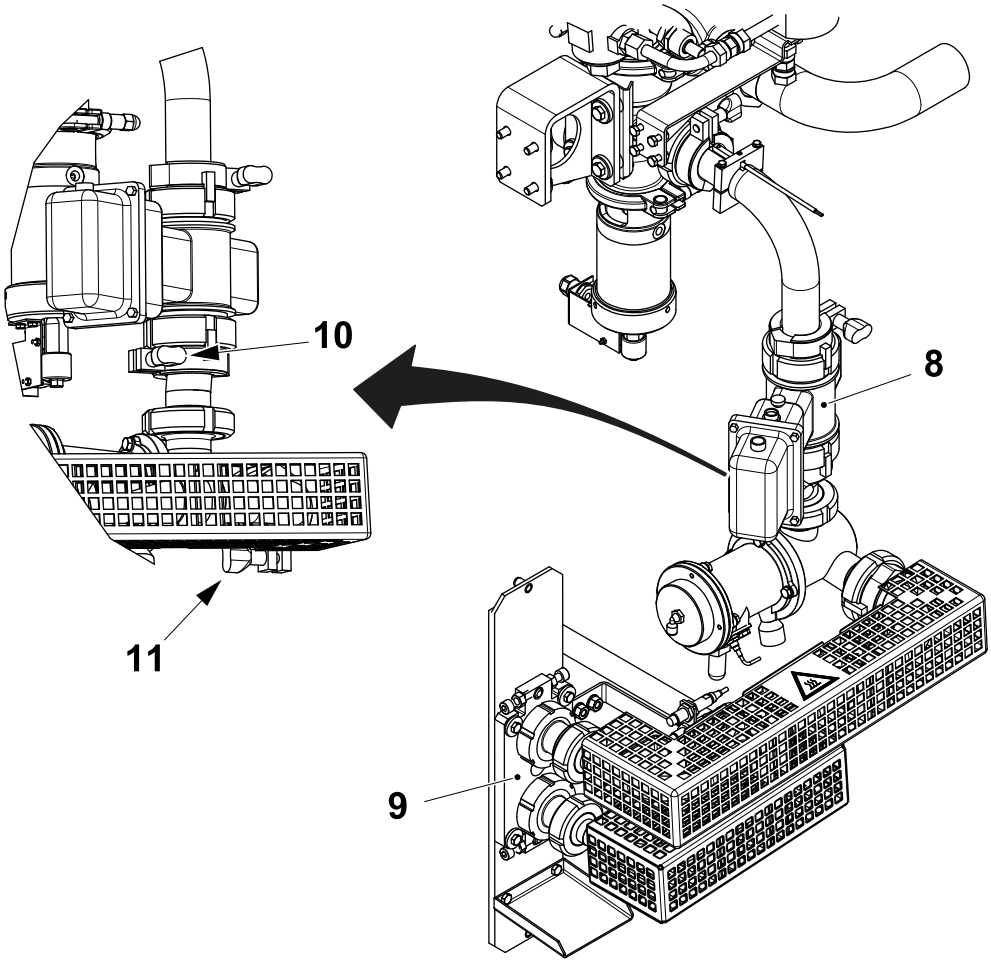

8 Flow meter
9 Filling pipe
10 Locking clamp
11 Locking clamp

(Cont'd)

(Cont'd)

h) Connect the regulating valve to the eccentric pipe (12) with the nut (13) and to the product pipe (14) by means of the nut (15).

i) Connect the electrical wires (16) and tighten the screws (17) and (18).

j) Fit the proximity switch (19) and tighten the screw (20).

k) Set the proximity switch (19), see 1.1.3.3-2 Product Line - Set Regulating Valve Proximity Switch.

l) Fit the pneumatic pipes (21) to the connections on the regulator valve.

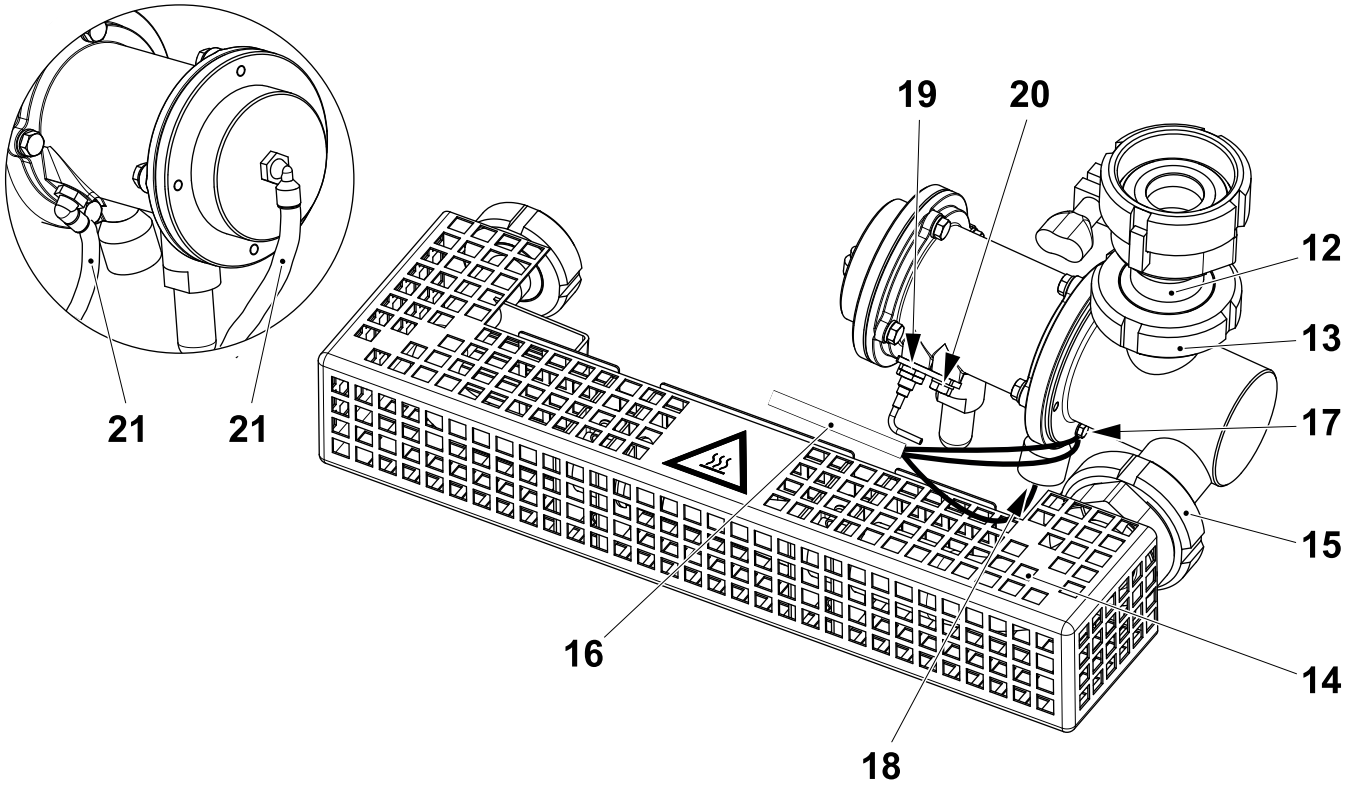

12 Pipe
13 Nut
14 Pipe
15 Nut
16 Wire
17 Screw
18 Screw
19 Proximity switch
20 Screw
21 Pneumatic pipe

1.1.3.3-2 Product Line - Set Regulating Valve Proximity Switch

Machine Status	Electrical supply disconnecting device in position I (ON) Main air valve OFF Main steam valve ON Main water valve OFF
SPC Reference	2835279-0300

a) Remove the pipe (1) from the air connection and connect an external air supply.

b) Activate the external air supply to compress the spring to the maximum stroke.

c) Loosen thenut (3) and screw out the proximity switch (2).

d) Screw in the proximity switch (2) until it just touches the spacer (4).

e) Make sure that the LED (5) on the proximity switch (2) lights up.

f) Screw the proximity switch (2) out half a turn and tighten the nut (3).

g) Make sure that the LED (5) is still lit.

h) Deactivate the external air supply and check that the LED (5) goes out.

i) Remove the external air supply and connect the pipe (1).

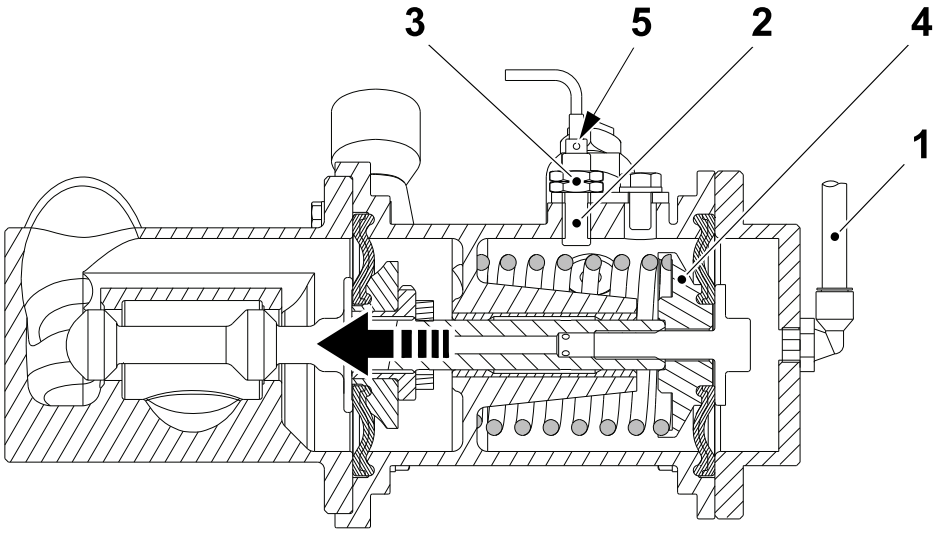

1 Pipe
2 Proximity switch
3 Nut
4 Spacer
5 LED

1.1.3.3-3 Product Lines - Check Leakages

Machine Status	PREPARATION
Special Equipment	Product Line Leakage Detector TP No. 3047649-0200
SPC Reference	2835307-0300

Test Preparation

Note! Make sure that CIP is performed before starting the test.

a) Open the jaw system door and hang the test panel (1) on the door.

Note! Keep the test panel (1) vertical or the filter will not work properly.

b) Turn off all the valves (2) as shown in the picture.

c) Turn the handles (3) as shown in the picture.

d) Fit the cleaning sleeve (4) to the filling pipe (5) with its gasket and let loose the other end.

Note! Make sure to fully tighten the cleaning sleeve (4) to the filling pipe (5), otherwise the test result might be altered.

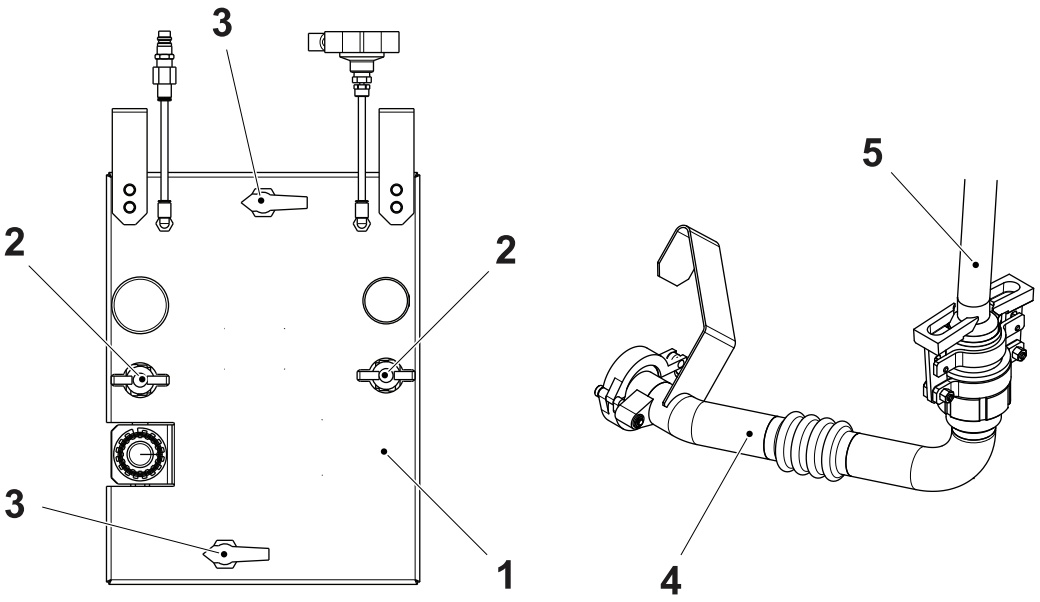

1 Test panel
2 Valve
3 Handle
4 Cleaning sleeve
5 Filling pipe

(Cont'd)

(Cont'd)

e) Fit the pressure output pipe (6) to the loosen end of the cleaning sleeve (4) with the clamp (7) and its gasket.

Note! Make sure to fully tighten the clamp (7) to the cleaning sleeve (4), otherwise the test result may be altered.

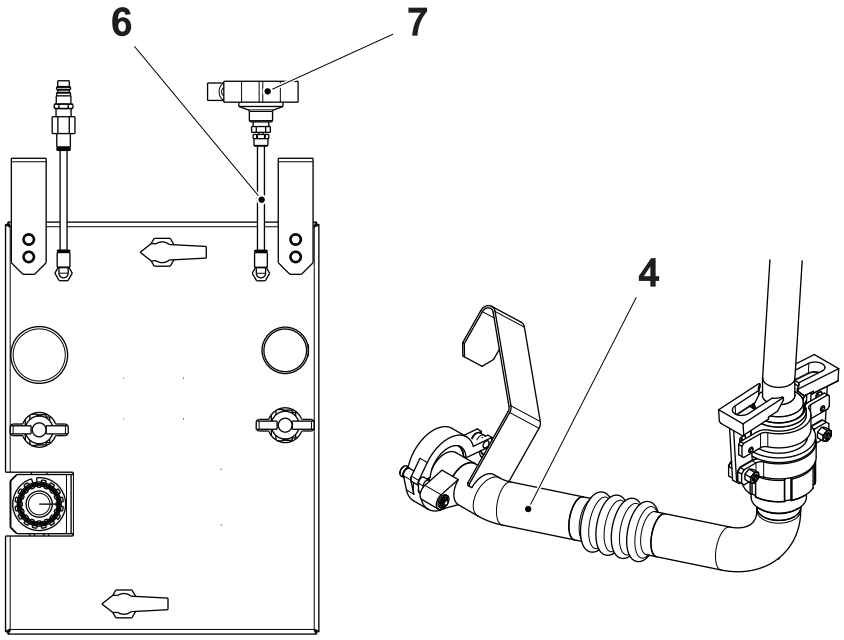

4 Cleaning sleeve
6 Pressure output pipe
7 Clamp

(Cont'd)

(Cont'd)

f) Loosen the locking nuts (8) and remove the cleaning pipe (9).

g) Fit the product pipe (10) with the new gaskets and tighten manually the locking nuts (11).

h) Use the pipe wrench tool (TP No. 777200-0101) to tighten the locking nuts (11) further to the mechanical stop.

i) Fit the gasket (12), the plug (13) and the locking nut (14) to the sterile air connector (15).

Note! Make sure to fully tighten the locking nut (14) to the sterile air connector (15), otherwise the test result may be altered.

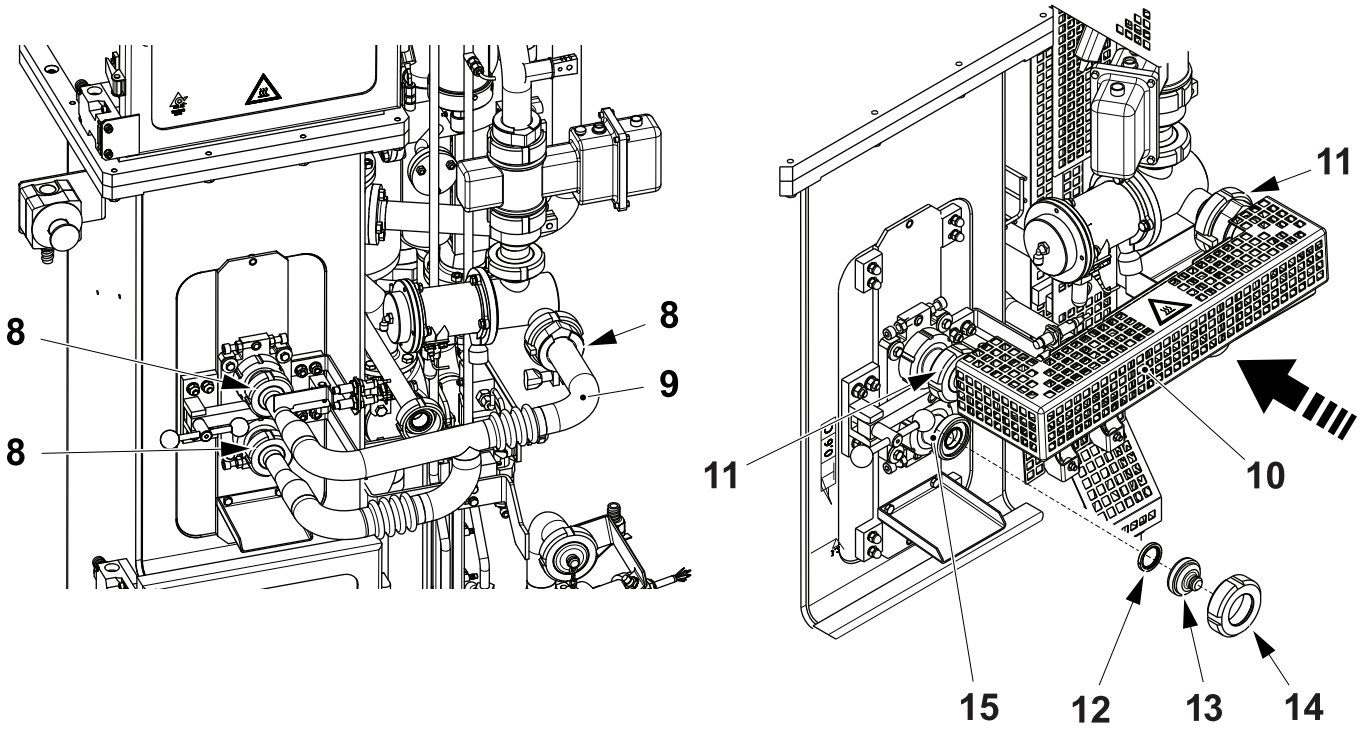

8 Locking nut
9 Cleaning pipe
10 Product pipe
11 Locking nut
12 Gasket
13 Plug
14 Locking nut
15 Sterile air connector

(Cont'd)

(Cont'd)

Pressure Test

a) Set the pressure regulator (1) to the minimum value.

b) Fit the pressure input pipe male connector (2) to the female connector (3) on the air hose (max.10 bar).

c) Open the valve (4) and set the pressure to **2.5** bar with the pressure regulator (1).

d) When the pressure in the manometer (5) reaches **2.5** bar, close the valve (4) and check that the pressure remains at **2.5** bar.

Note! If the pressure does not reach **2.5** bar, check the tester filter, see 1.1.3.3-4 Product Lines - Check Tester

e) Set the pressure regulator (1) to the minimum value and remove the pressure input pipe male connector (2) from the female connector (3).

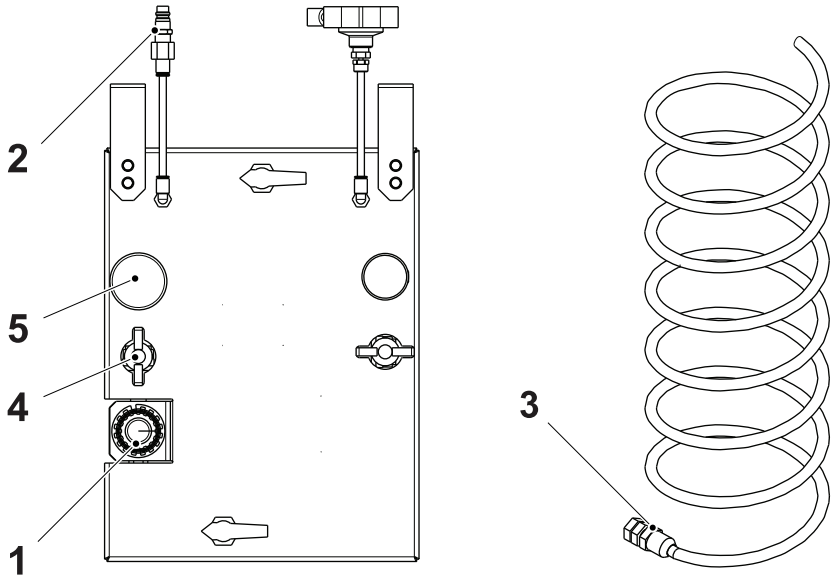

1 Pressure regulator
2 Male connector
3 Female connector
4 Valve
5 Manometer

(Cont'd)

(Cont'd)

f) Wait 5 minutes and check if the pressure shown on the manometer (5) remains at a constant value of **2.5** bar.

g) If the pressure is not decreased open the valve (4) to release the pressure.

h) If the pressure is decreased open the valve (4) to release the pressure and perform the following checks:

- make sure that all the fittings of the product line are fully tightened,
- check the status and the presence of all the gasket on the product line,
- open the clamp (6), disconnect the cleaning sleeve (7) and check tester tightness, see 1.1.3.3-4 Product Lines - Check Tester.

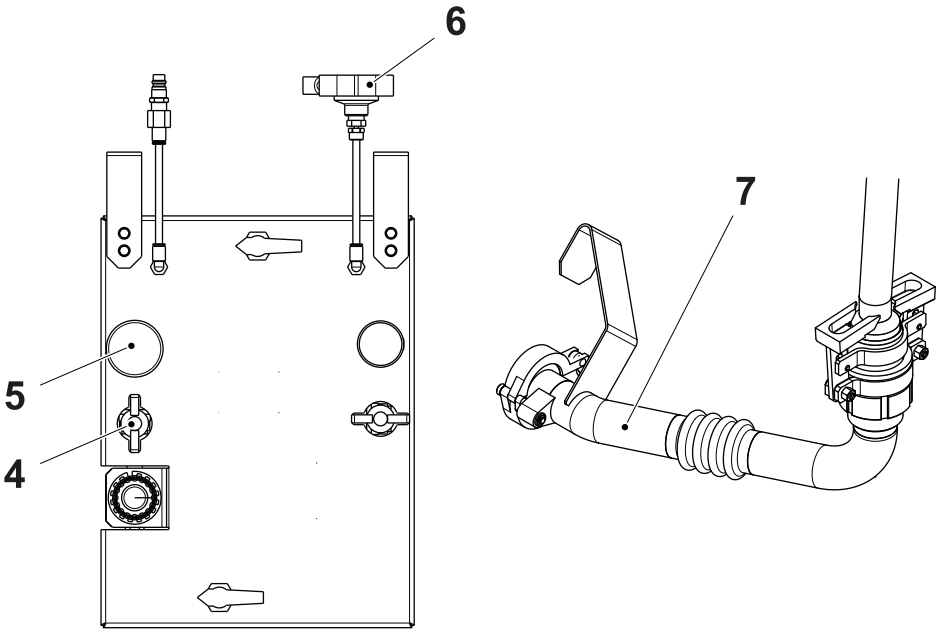

4 Valve
5 Manometer
6 Clamp
7 Cleaning sleeve

(Cont'd)

(Cont'd)

Vacuum Test

a) Make sure that the valve (1) and the valve (2) are closed.

b) Turn the handles (3) as shown in the picture.

c) Fit the pressure input pipe male connector (4) to the female connector (5) on the air hose.

d) Open the valve (2) then wait until the depression on the manometer (6) reaches at least **-0,6** bar or below (eg. -0.7 bar) and it stay constant to that value.

Note! If the pressure does not reach -0.6 bar, check the tester filter, see 1.1.3.3-4 Product Lines - Check Tester

e) Close the valve (2) and check carefully that the depression shown on the manometer (6) is at **-0,6** bar or below. Record the value.

f) Remove the pressure input pipe male connector (4) from the female connector (5) on the air hose.

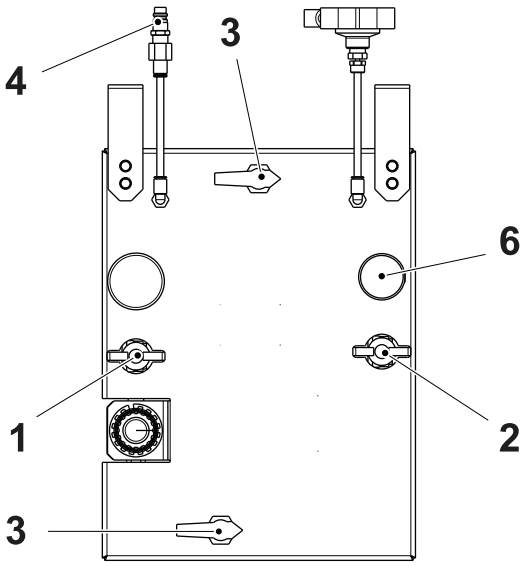

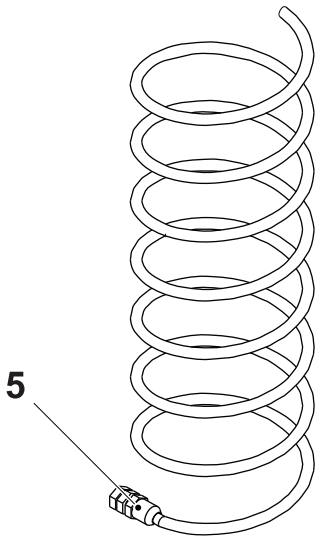

1 Valve
2 Valve
3 Handle
4 Male connector
5 Female connector
6 Manometer

(Cont'd)

(Cont'd)

g) Wait for 30 minutes and check if the depression shown on the manometer (6) remains constant to the value took at point e).

h) If the pressure is not raised, open the valve (2) to release the pressure.

i) If the pressure is raised, open the valve (2) to release the pressure and perform the following checks:

- make sure that all the fittings of the product line are fully tightened,
- check the status and the presence of all the gasket on the product line,
- open the clamp (7), disconnect the cleaning sleeve (8) and check the tester tightness, see 1.1.3.3-4 Product Lines - Check Tester.

j) Remove the clamp (7) from the cleaning sleeve (8).

k) Remove the test panel (9).

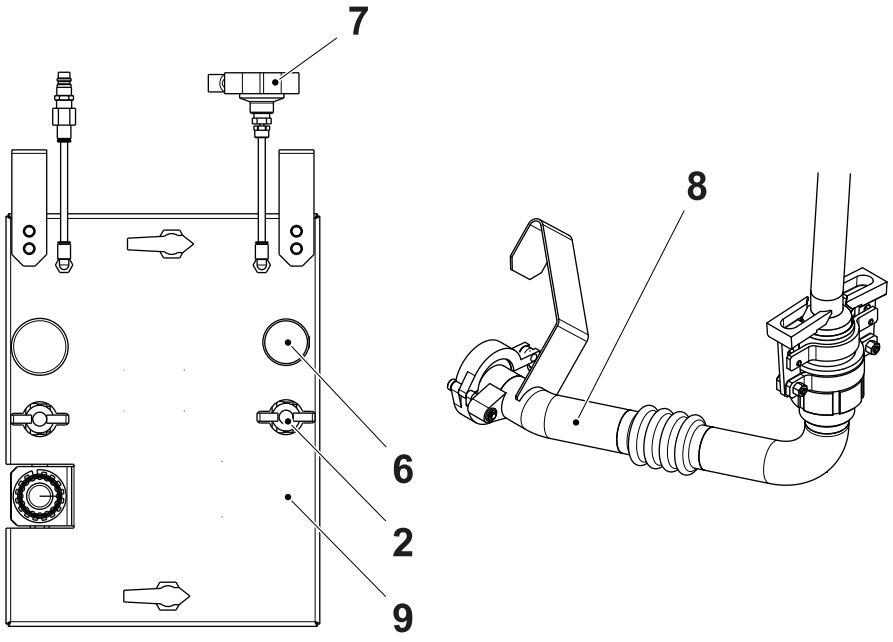

2 Valve
6 Manometer
7 Clamp
8 Cleaning sleeve
9 Test panel

(Cont'd)

(Cont'd)

l) Remove the cleaning sleeve (8) from the filling pipe (10).

m) Fit the sterile air pipe (11) with the new gaskets and tighten manually the locking nuts (12).

n) Use the pipe wrench tool (TP No. 777200-0101) to tighten the locking nuts (12) further to the mechanical stop.

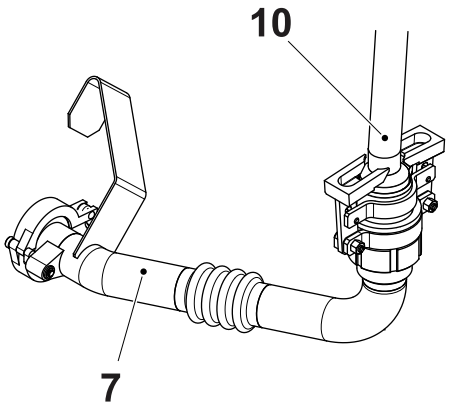

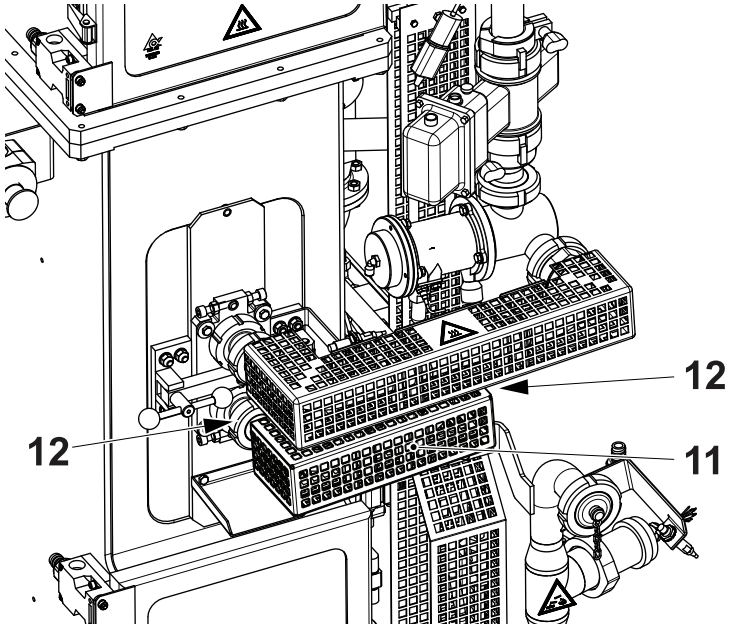

8 Cleaning sleeve
10 Filling pipe
11 Sterile air pipe
12 Locking nut

1.1.3.3-4 Product Lines - Check Tester

Special Equipment	Product Line Leakage Detector TP No. 3047649-0200
SPC Reference	2835307-0300

Check Tightness (Pressure Test)

a) Fit the plug (1) on the pressure output pipe (2) and tighten the clamp (3).

Note! Make sure to fully tighten the clamp (3) otherwise the test result might be altered.

b) Perform the pressure test as described from step a) to f) on page 1-213.

c) Open the valve (4) to release the pressure.

d) Loosen the clamp (3) and remove the plug (1) from the pressure output pipe (2).

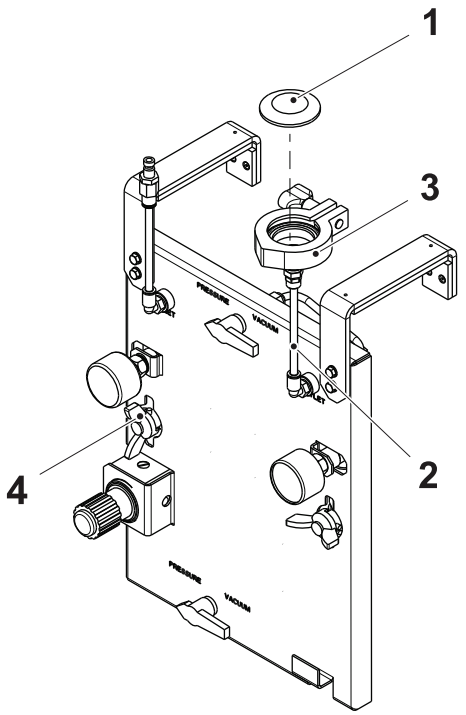

1 Plug
2 Pressure output pipe
3 Clamp
4 Valve

(Cont'd)

(Cont'd)

Check Tightness (Vacuum Test)

a) Fit the plug (1) on the pressure output pipe (2) and tighten the clamp (3).

Note! Make sure to fully tighten the clamp (3), otherwise the test result might be altered.

b) Perform the pressure test as described from step a) to g) on page 1-215.

c) Open the valve (4) to release the pressure.

d) Loosen the clamp (3) and remove the plug (1) from the pressure output pipe (2).

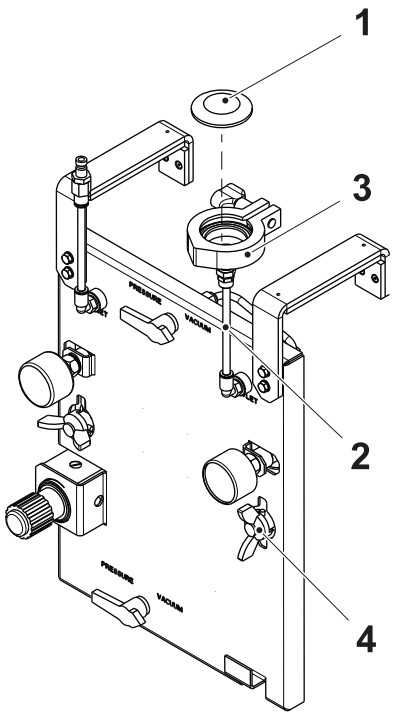

1 Plug
2 Pressure output pipe
3 Clamp
4 Valve

(Cont'd)

(Cont'd)

Check Filter

With the tester circuit pressurized, check the colour of the filter indicator (1): if it is fully red the filter (2) must be replaced.

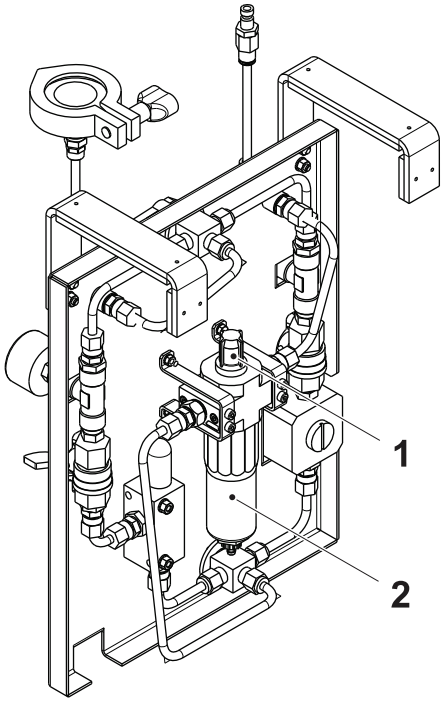

1 Filter indicator
2 Filter

1.1.4 Hydrogen Peroxide

1.1.4-1 Hydrogen Peroxide - Check Leaks

Machine Status	HEAT STERILISATION
SPC Reference	2808246-0300

WARNING
Hydrogen Peroxide.
Follow the Safety Precautions.

(Cont'd)

(Cont'd)

Check the connections for leaks at the following points:

- the peroxide pipes (1).
- the bath (2).
- the spray system (3).

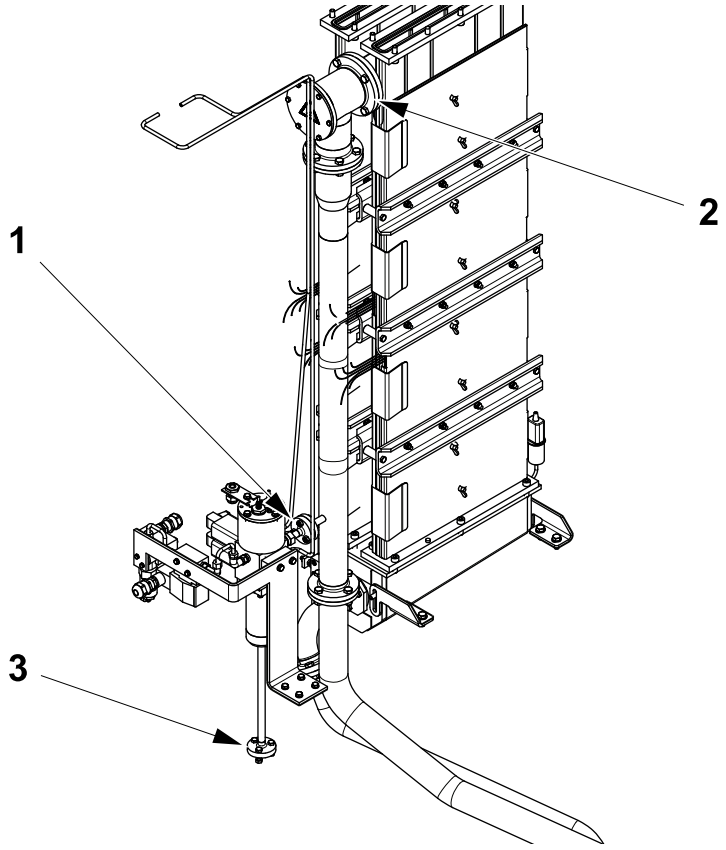

1 Peroxide pipe
2 Bath
3 Spray system

1.1.4.1 Bath

1.1.4.1-1 Bath - Check Roller

Machine Status	Electrical supply disconnecting device in position O (OFF) Main air valve OFF Main steam valve ON Main water valve OFF
SPC Reference	2808229-0300

WARNING

Hydrogen Peroxide.

Follow the Safety Precautions.

(Cont'd)

(Cont'd)

a) Remove the screws (1) and remove the bottom cover (2).

b) Remove the gasket (3) and check for wear or damage. Change if necessary.

c) Remove any LS strip residue from the bath (4) and the roller (5).

d) Check the surface and rotation of the peroxide bath roller (5). Make sure that the roller (5) rotates freely.

e) Check the radial play of the bearings on the roller (5). If excessive change them, see 1.1.4.1-2 Bath - Change Roller Bushings.

f) Assemble in the reverse order.

g) Set the micro micro switches (6), see 1.1.4.1-4 Bath - Set Micro Switches.

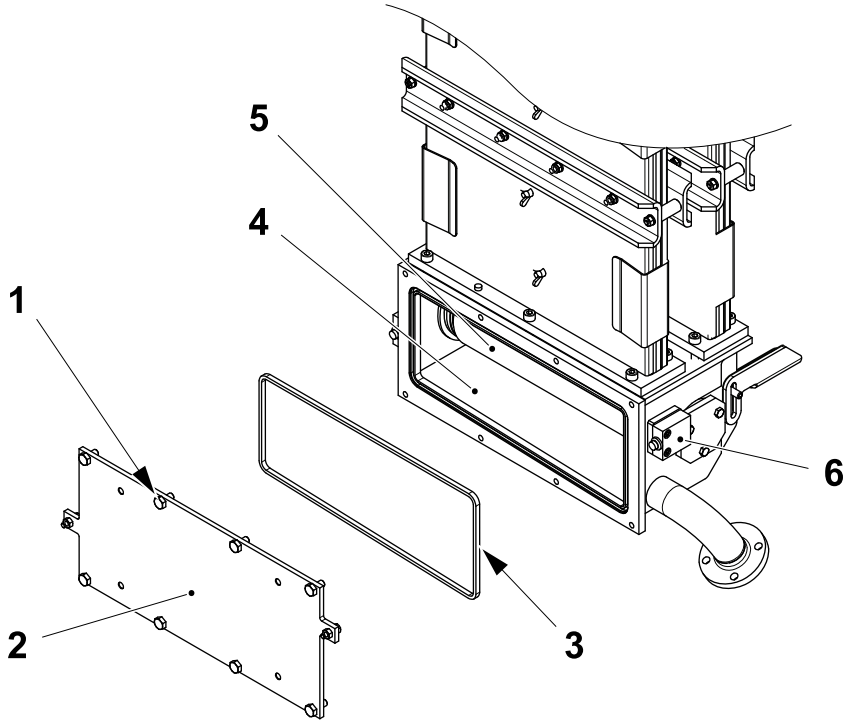

1 Screw
2 Bottom cover
3 Gasket
4 Bath
5 Roller
6 Micro switch

1.1.4.1-2 Bath - Change Roller Bushings

Machine Status	Electrical supply disconnecting device in position O (OFF) Main air valve OFF Main steam valve ON Main water valve OFF
SPC Reference	2808229-0300

WARNING
Hydrogen Peroxide.
Follow the Safety Precautions.

a) Loosen the two screws (1) and remove the bottom cover (2).

b) Remove the gasket (3) and change it.

c) Remove the screws (4) and the plates (5).

d) Remove the flanges (6) and the O-rings (7). Change the O-rings (7).

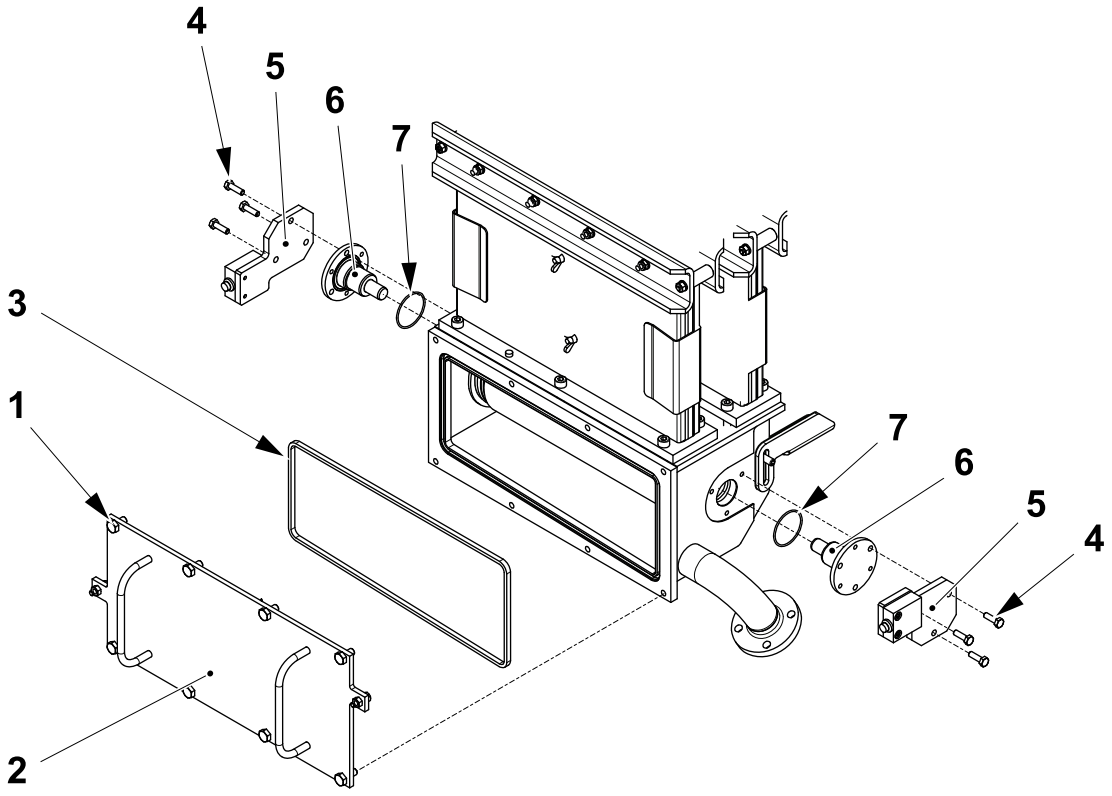

1 Screw
2 Bottom cover
3 Gasket
4 Screw
5 Plate
6 Flange
7 O-ring

(Cont'd)

(Cont'd)

e) Remove the bending roller (8) and the wheels (9).

f) Remove and change the bushings (10).

Note! When assembling, on both ends rotate the flanges (6) by 120°.

g) Assemble in the reverse order.

h) Set the micro switches (11), see 1.1.4.1-4 Bath - Set Micro Switches.

i) Check for any peroxide leaks, see 1.1.4-1 Hydrogen Peroxide - Check Leaks.

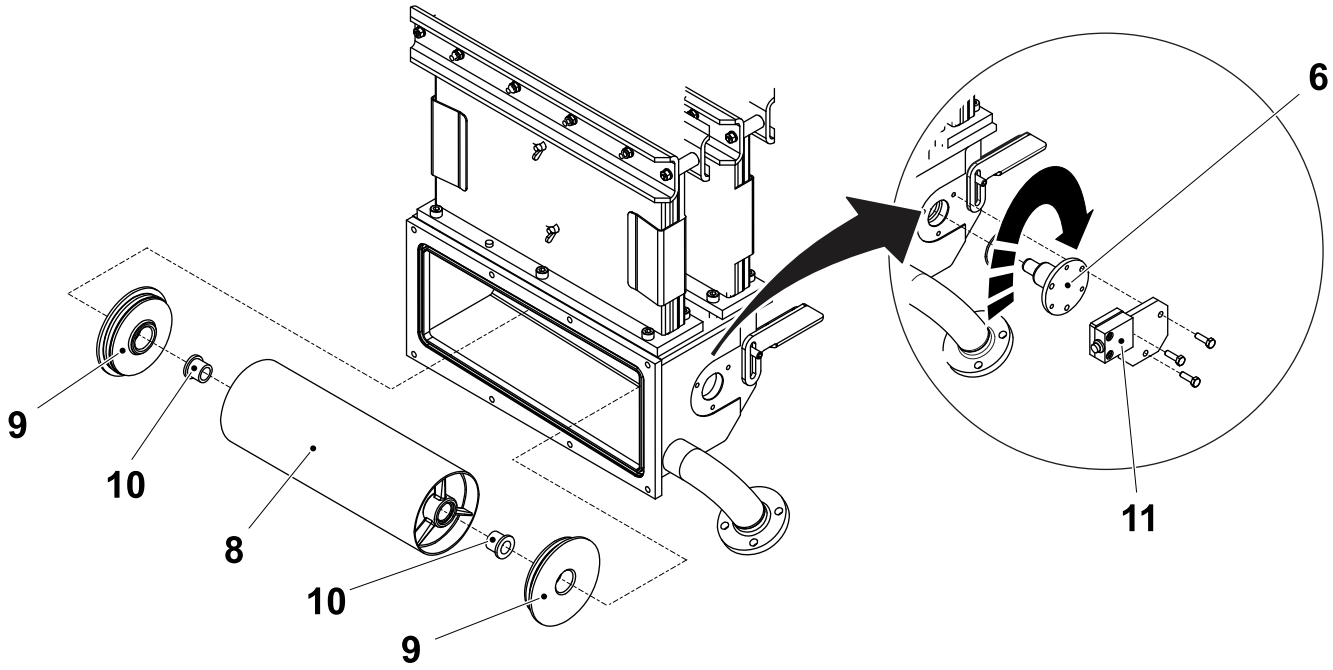

6 Flange
8 Roller
9 Wheel
10 Bushing
11 Micro switch

1.1.4.1-3 Bath - Change Heating Elements

Machine Status	Electrical supply disconnecting device in position O (OFF) Main air valve OFF Main steam valve ON Main water valve OFF
SPC Reference	2808229-0300

WARNING

Burn hazard.

The hydrogen peroxide system and adjacent components may be hot. Wear heat-resistant protective gloves.

a) Mark and remove all the electrical connections (1).

b) Remove all the springs (2).

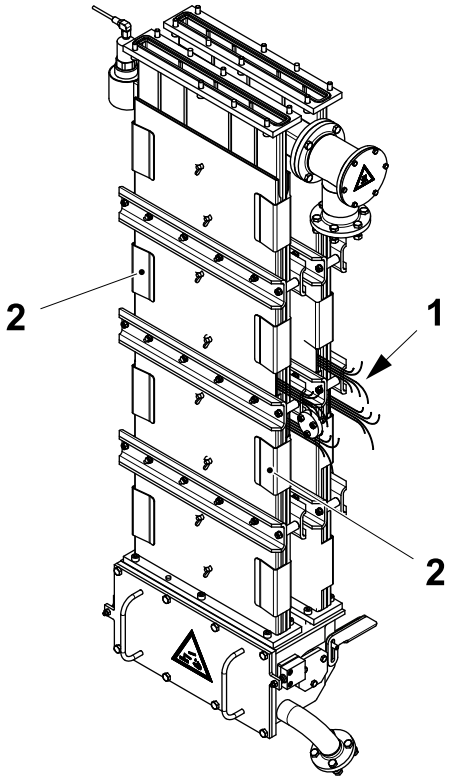

1 Electrical connection
2 Spring

(Cont'd)

(Cont'd)

CAUTION
Risk of damage to the equipment
The heating elements are fragile and must be handled with care. Do not fold the elements.

Note! The heating elements are not symmetrical. The surfaces of the heating elements are marked "in" and "out". Make sure the inside of the heating elements are fitted facing the bath.

c) Remove the nuts (3) and the plates (4).

d) Remove the wing nuts (5).

e) Remove the cover (6).

f) Change the heating elements (7).

g) Assemble in the reverse order.

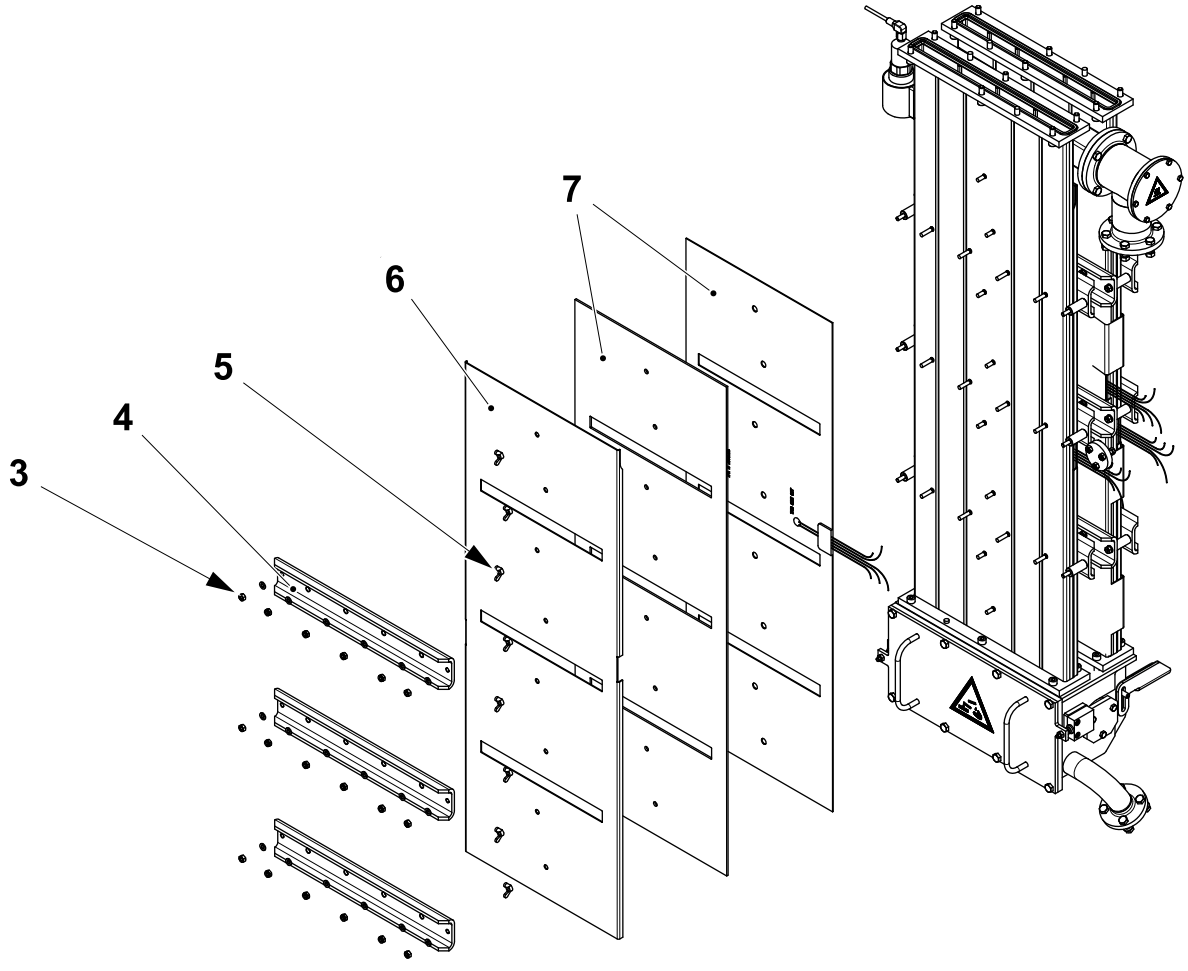

3 Nut
4 Plate
5 Wing nut
6 Cover
7 Heating element

1.1.4.1-4 Bath - Set Micro Switches

Machine Status	Electrical supply disconnecting device in position I (ON) Main air valve OFF Main steam valve ON Main water valve OFF
SPC Reference	2808229-0300

WARNING
Hydrogen Peroxide.
Follow the Safety Precautions.

Set the micro switches (1) so that the alarm is:

- **activated** as soon as the screws (2) securing the covers (3) are not tightened in the correct position
- **not activated** when the covers (3) are in the correct position.

If necessary, set using the screws (4).

Make sure that the alarm function in the TPOP display.

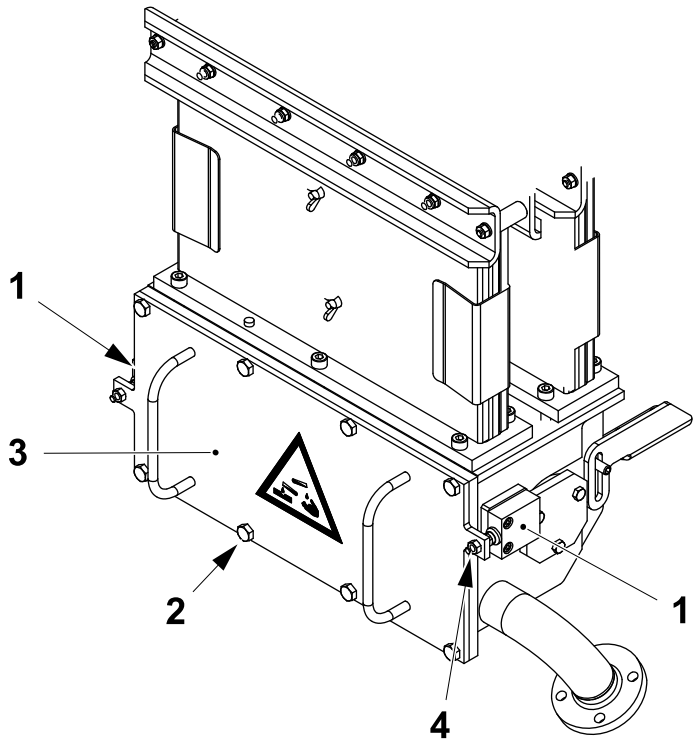

1 Micro switch
2 Screw
3 Cover
4 Screw

1.1.4.2 Spray System

1.1.4.2-1 Spray System - Check

Machine Status	Electrical supply disconnecting device in position O (OFF) Main air valve OFF Main steam valve ON Main water valve OFF
SPC Reference	2846090-0100

WARNING

Hydrogen Peroxide

Follow the Safety Precautions.

Check for peroxide leakages in the spray unit.

Note! Mark all connections before removal.

Change the O-ring (1) if damaged or worn out.

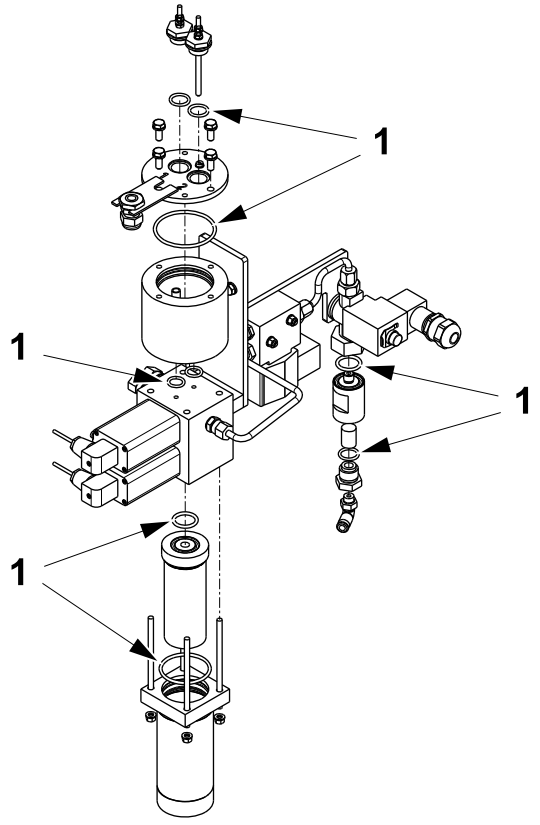

1 O-ring

1.1.4.2-2 Spray System - Clean Peroxide Filter

Machine Status	Electrical supply disconnecting device in position O (OFF) Main air valve OFF Main steam valve ON Main water valve OFF
SPC Reference	2846090-0100

WARNING

Hydrogen Peroxide.

Follow the Safety Precautions.

a) Remove the nuts (1) and the filter housing (2).

b) Pull out the peroxide filter (3), rinse it with deionized water and clean it with compressed air.

c) If necessary change the peroxide filter (3).

d) Fit the peroxide filter (3) and the filter housing (2).

e) Tighten the nuts (1).

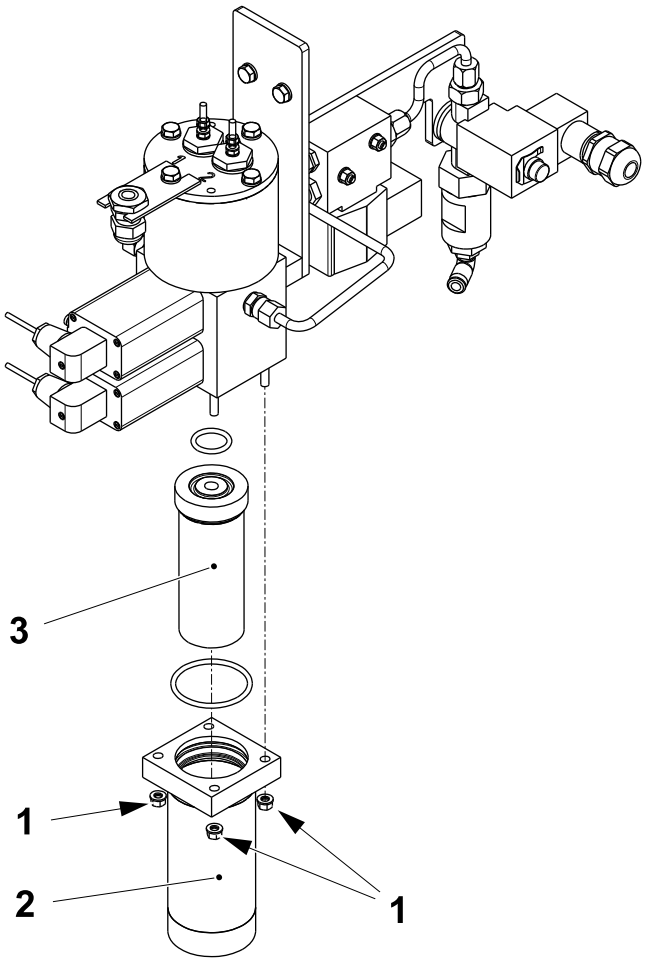

1 Nut
2 Filter housing
3 Peroxide filter

1.1.4.2-3 Spray System - Set Pressure

Machine Status	Electrical supply disconnecting device in position O (OFF) Main air valve ON Main steam valve ON Main water valve OFF
SPC Reference	2846090-0100

Set the air pressure for the spray system according to 9.1 Technical Data, with the pressure regulator (2) located on the superstructure air panel. The pressure is shown on the pressure gauge (1).

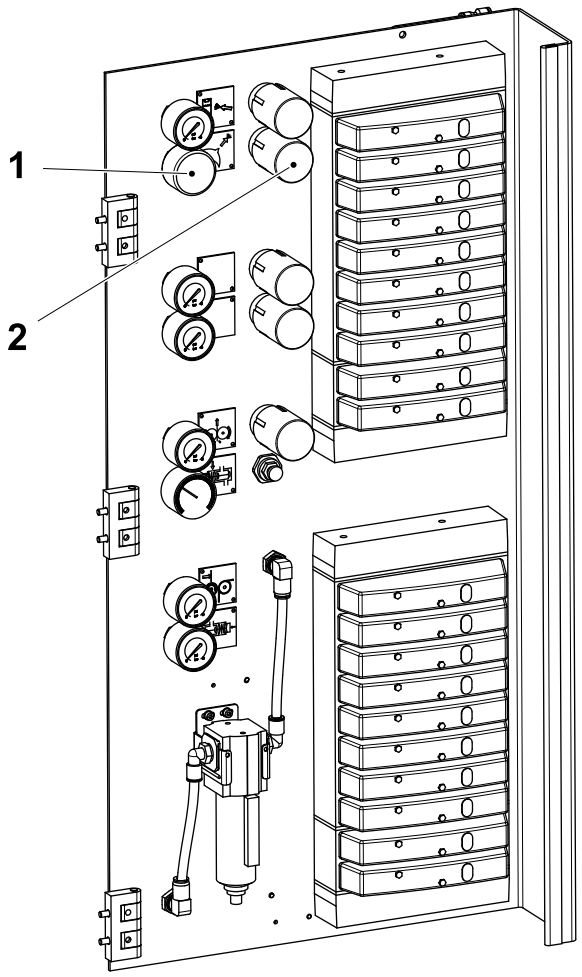

1 Pressure gauge
2 Pressure regulator

1.1.4.2-4 Spray System - Clean Filter

Machine Status	Electrical supply disconnecting device in position O (OFF) Main air valve OFF Main steam valve ON Main water valve OFF
SPC Reference	2846090-0100

WARNING

Hydrogen Peroxide.
Follow the Safety precautions.

a) Remove the air pipe (1).

b) Remove the filter housing (2).

c) Remove the filter (3) from the filter housing (2).

d) Clean the filter (3) with compressed air.

e) Check the gaskets (4) for wear or damage and change if necessary.

Note! Make sure the gaskets (4) are fitted correctly during assembly.

f) Assemble in the reverse order.

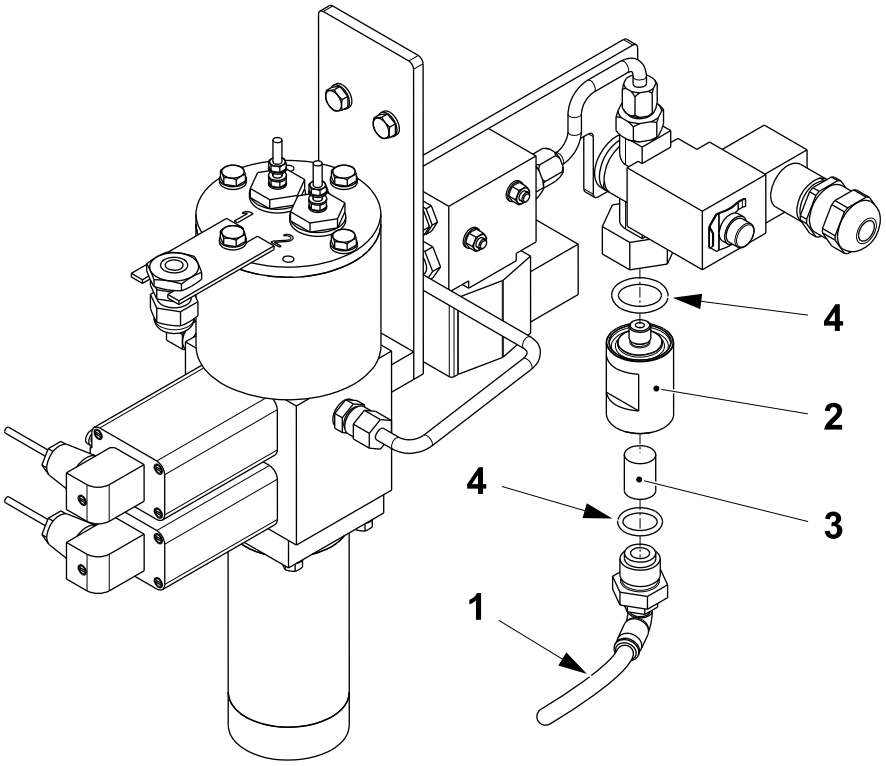

1 Air pipe
2 Filter housing
3 Filter
4 Gasket

1.1.5 Frame Section, Upper

1.1.5.1 Bending Roller

1.1.5.1-1 Bending Roller - Overhaul

Machine Status	Electrical supply disconnecting device in position O (OFF) Main air valve OFF Main steam valve ON Main water valve OFF
SPC Reference	2835324-0100

a) Set the brake unit (1) to ZERO.

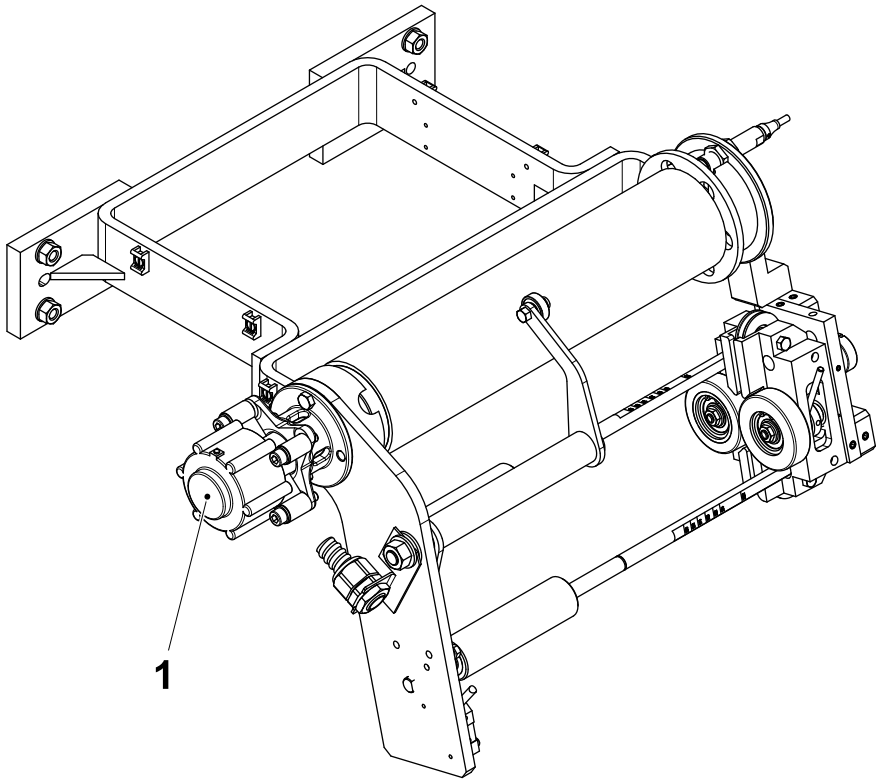

1 Brake unit

(Cont'd)

(Cont'd)

b) Make sure that the roller (2) rotates freely. If not, remove the screws (3), the brake unit (1) and the splice detector (4).

c) Remove the screws (5) and the paper guide (6).

d) Remove the bending roller (2) and change the bearings (7).

e) Assemble in the reverse order and adjust if necessary, see 1.1.5.1-3 Bending Roller - Set Splice Detector .

f) Set the brake unit (1), see 1.1.5.1-10 Bending Roller - Set Brake Unit.

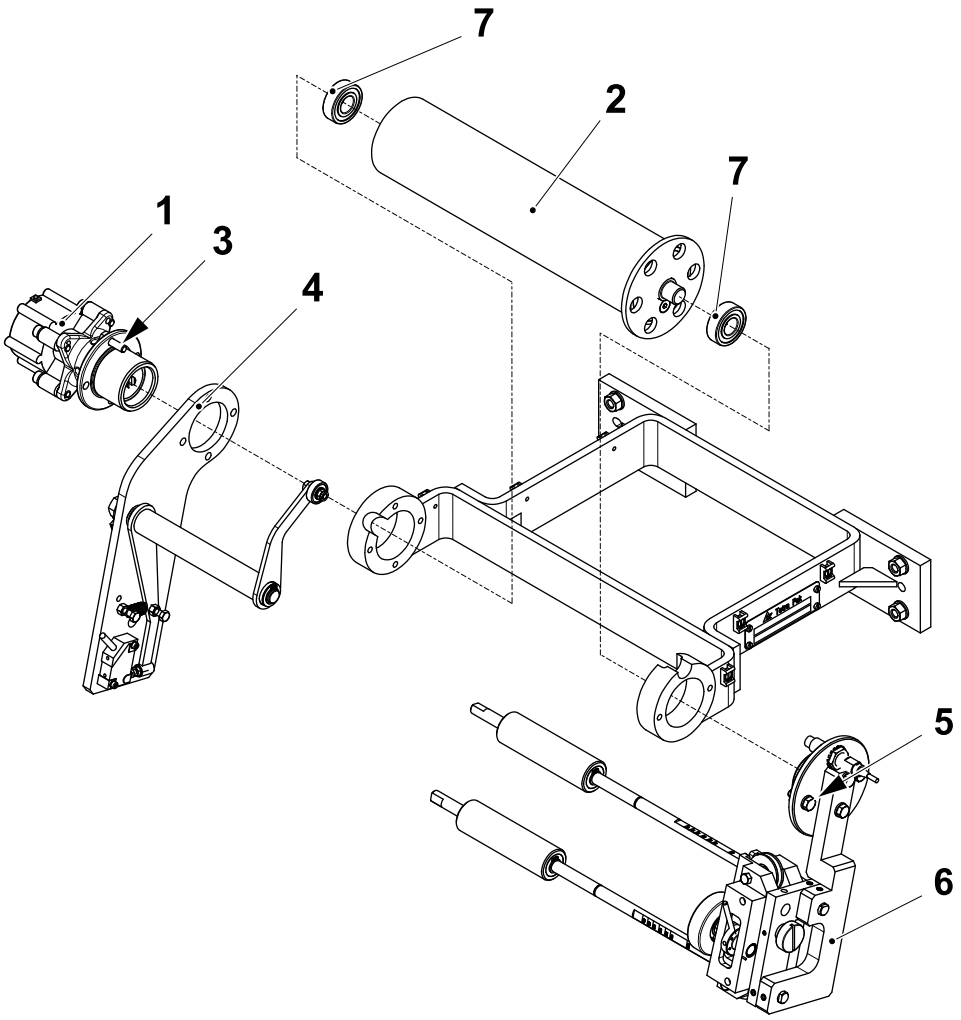

1 Brake unit
2 Roller
3 Screw
4 Splice detector
5 Screw
6 Paper guide
7 Bearing

1.1.5.1-2 Bending Roller - Check Splice Detector

Machine Status	Electrical supply disconnecting device in position I (ON) Main air valve OFF Main steam valve ON Main water valve OFF
SPC Reference	2835324-0100

a) Make sure that the bearing (1) rotates easily, if not change it.

b) Make sure that the spring (2) is intact, if not change it.

c) Make sure that the bracket (3) moves freely. If not, remove the retaining ring (4), the spring (2) and pull out the bracket. Clean and change the bushings (5) if necessary. Assemble in the reverse order.

d) Place a piece of packaging material under the bearing (1) and make sure the LED in the switch (6) is ON.

e) Place two pieces of packaging material under the bearing (1) and make sure the LED goes OFF. If not, adjust the splice detector, see 1.1.5.1-3 Bending Roller - Set Splice Detector .

f) Check that the machine ejects three packages and that the package with the taped piece is among these.

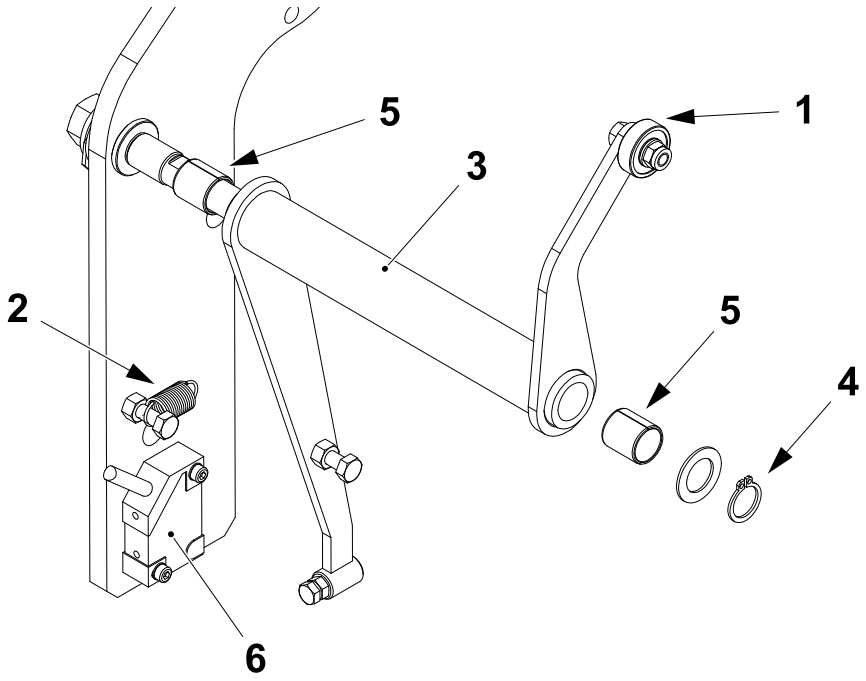

1 Bearing
2 Spring
3 Bracket
4 Retaining ring
5 Bushing
6 Switch

1.1.5.1-3 Bending Roller - Set Splice Detector

Machine Status	Electrical supply disconnecting device in position I (ON) Main air valve OFF Main steam valve ON Main water valve OFF
SPC Reference	2835324-0100

a) Set the screw (1) so that it touches the switch (2) and that the LED (3) goes ON.

b) Place two pieces of packaging material under the bearing (4).

c) Turn the screw (1) until the LED (3) goes OFF. Lock the screw (1).

Note! Make sure that with a single piece of packaging material the LED goes ON and that with two pieces of packaging material LED goes OFF.

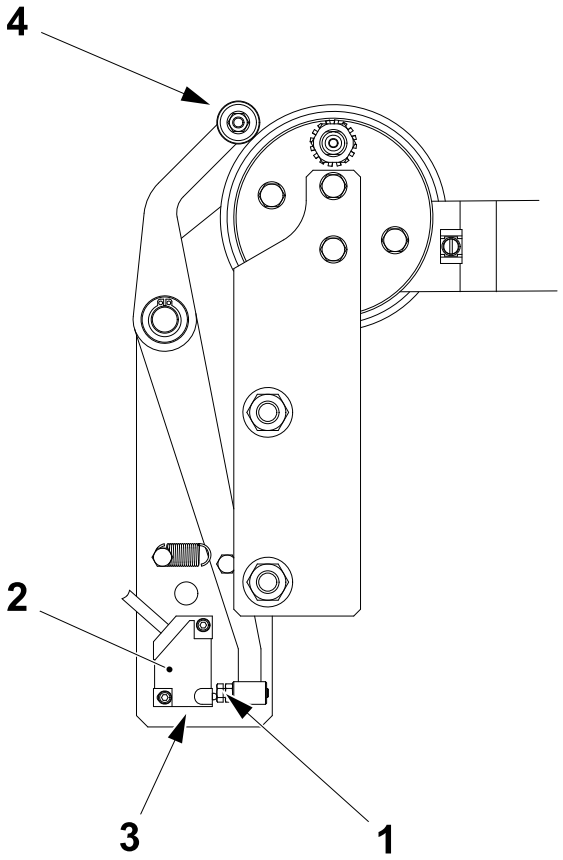

1 Screw
2 Switch
3 LED
4 Bearing

1.1.5.1-4 Bending Roller - Set Paper Guide Position

Machine Status	Electrical supply disconnecting device in position O (OFF) Main air valve OFF Main steam valve ON Main water valve OFF
SPC Reference	2835324-0100

a) Adjust the paper guide (1) so that the packaging material (2) is approximately centred over the bending roller (3).

b) The packaging material must pass:
   - in front of the roller (4) and behind the roller (5).
   - between the guide rollers (6) and the edge guide roller (7) in such a way that the edge guide roller does not damage or bend the edge of the packaging material.

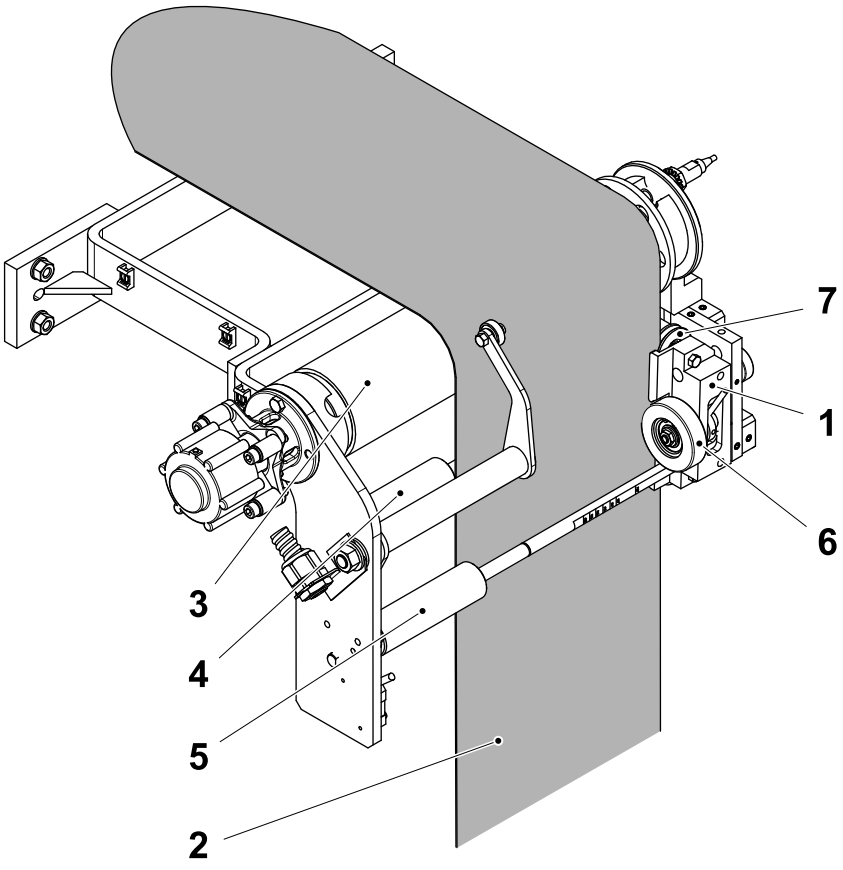

1 Paper guide
2 Packaging material
3 Bending roller
4 Roller
5 Roller
6 Guide roller
7 Edge guide roller

(Cont'd)

(Cont'd)

c) Loosen the screws (8) and (9).

d) Pull down the lever (10) to release the roller tension and feed the packaging material through the bending roller unit.

e) Pull down the lever (10) and slide the paper guide (1) until the packaging material is positioned between the guide rollers (6) and between the flanges of the edge guide roller (7).

f) Release the lever (10) and tighten the screws (8) and (9).

g) Turn the screw (11) to finely adjust the position of the packaging material between the flanges of the edge guide roller (7).

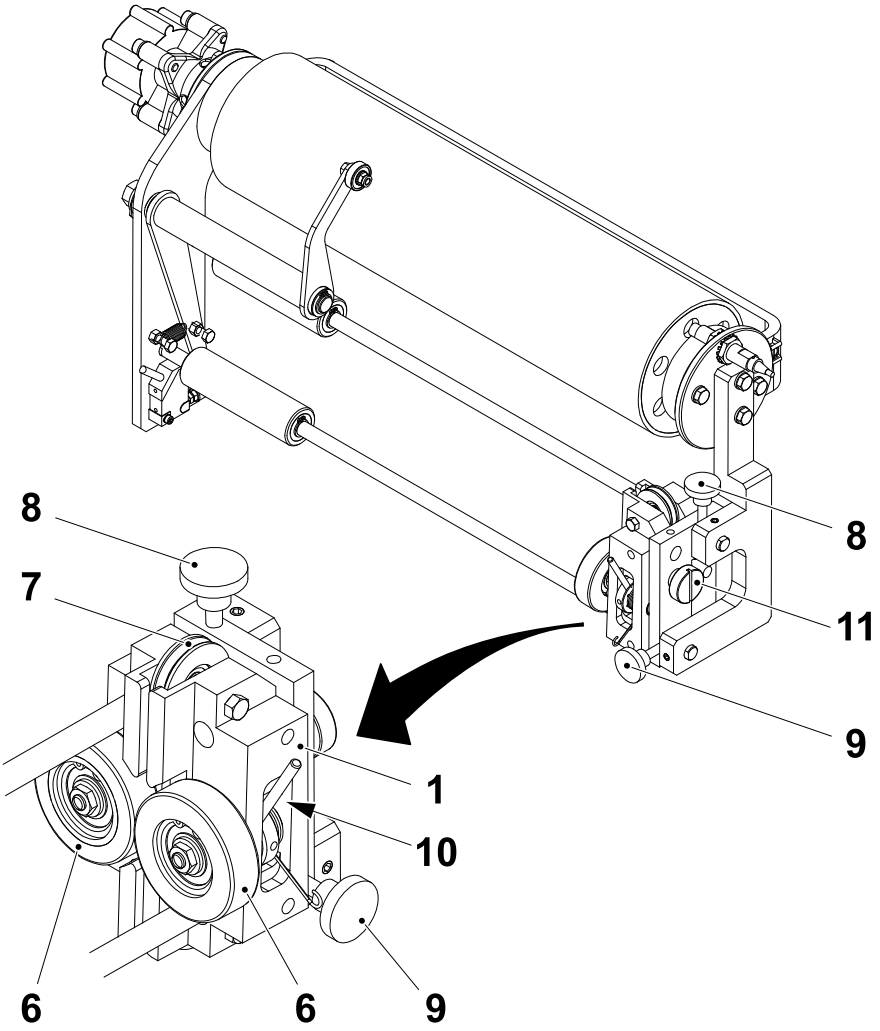

1 Paper guide
6 Guide roller
7 Edge guide roller
8 Screw
9 Screw
10 Lever
11 Screw

1.1.5.1-5 Bending Roller - Check Paper Guide

Machine Status	Electrical supply disconnecting device in position O (OFF) Main air valve OFF Main steam valve ON Main water valve OFF
SPC Reference	2835324-0100

a) Check that the surfaces of the steel roller (1) and the rubber roller (2) are not damaged. Check also that they rotate freely. If there are any irregularities change the defective components.

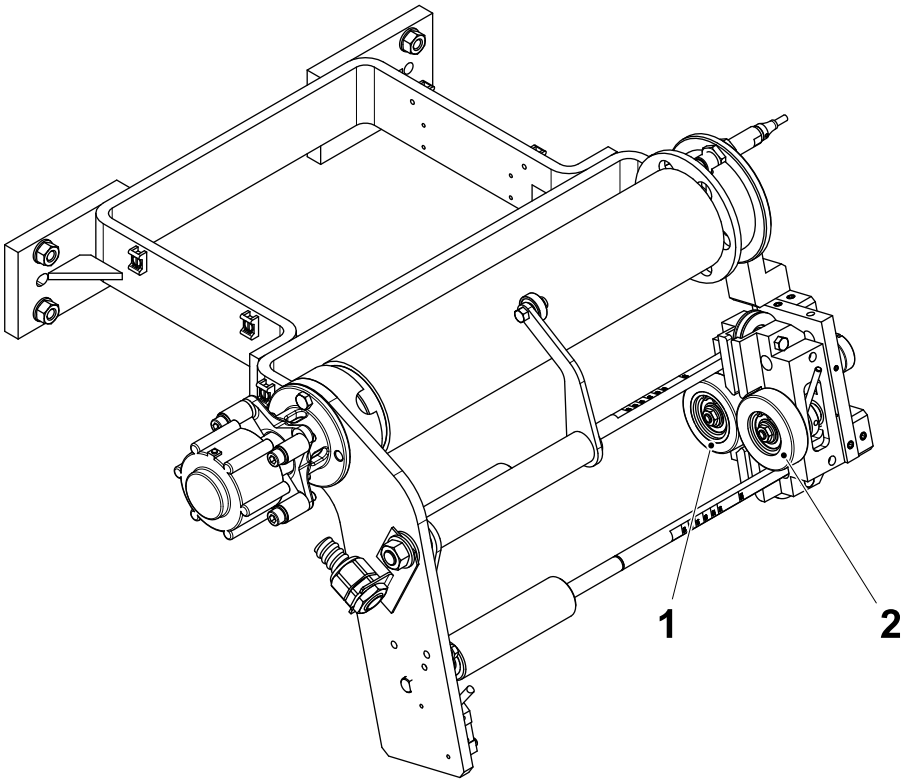

1 Steel roller
2 Rubber roller

(Cont'd)

(Cont'd)

b) Remove the screws (3) and separate the plate (4) from the roller (5).

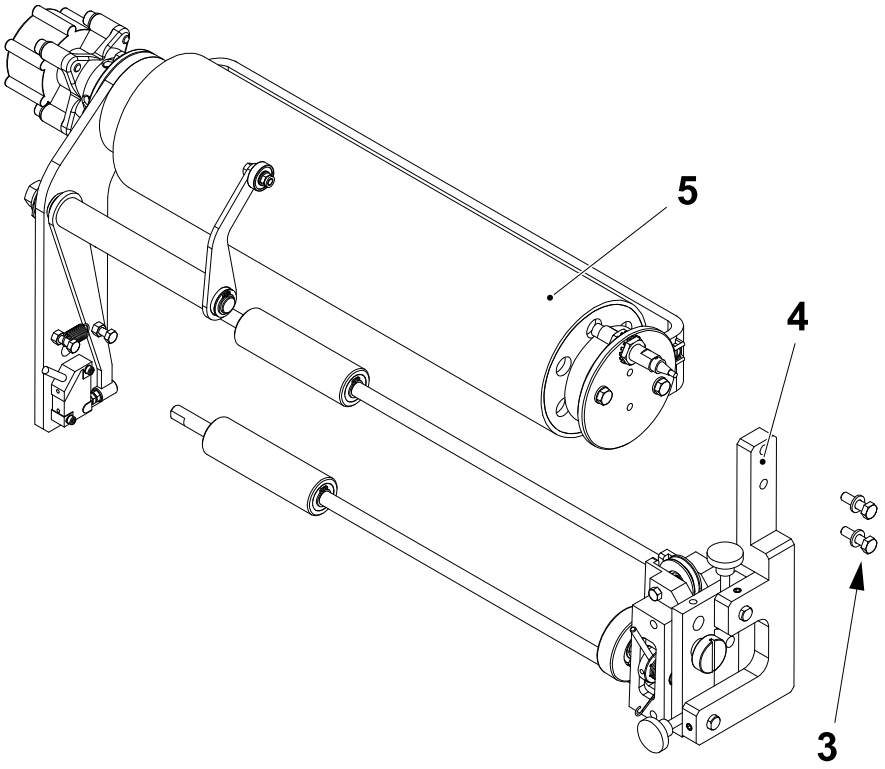

3 Screw
4 Plate
5 Roller

(Cont'd)

(Cont'd)

c) Remove the grub screws (6) and (7).

d) Separate the guide rollers (8) and (9) from the paper guide (10) and the plate (4).

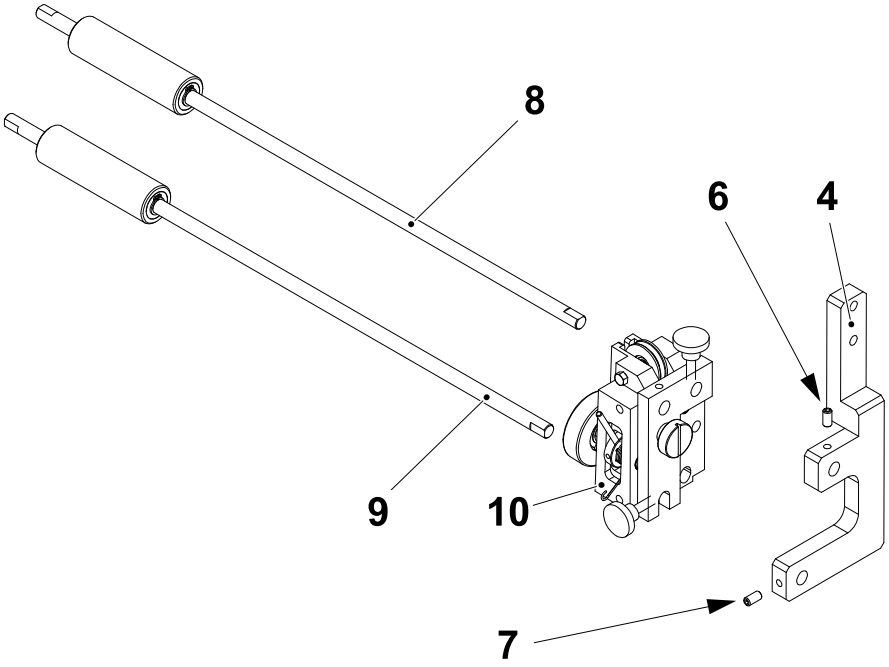

4 Plate
6 Grub screw
7 Grub screw
8 Guide roller
9 Guide roller
10 Paper guide

(Cont'd)

(Cont'd)

Note! When assembling, make sure that the datum line (11) on the guide rollers (8) and (9) are both perfectly aligned with the plate (4).

e) Set the correct packaging material width, see 1.1.5.1-6 Bending Roller - Set Web Width.

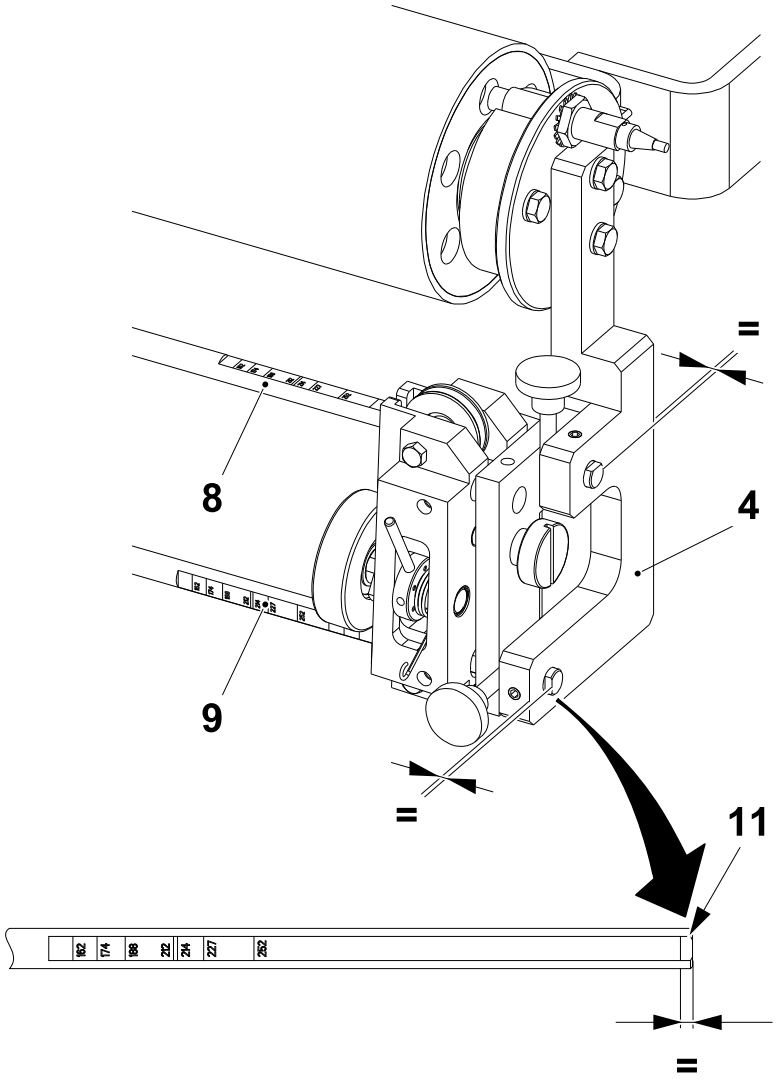

4 Plate
8 Guide roller
9 Guide roller
11 Datum line

(Cont'd)

(Cont'd)

f) Remove the nuts (12), the washers (13) and the retaining rings (14).

g) Change the steel roller (1), the rubber roller (2) and the bearing (15).

h) Remove the shaft (16) and the wheel (17).

i) Change the bushing (18) and the bearing (19).

Note! When assembling, fit the rubber roller (2) on to the printed side of the packaging material web.

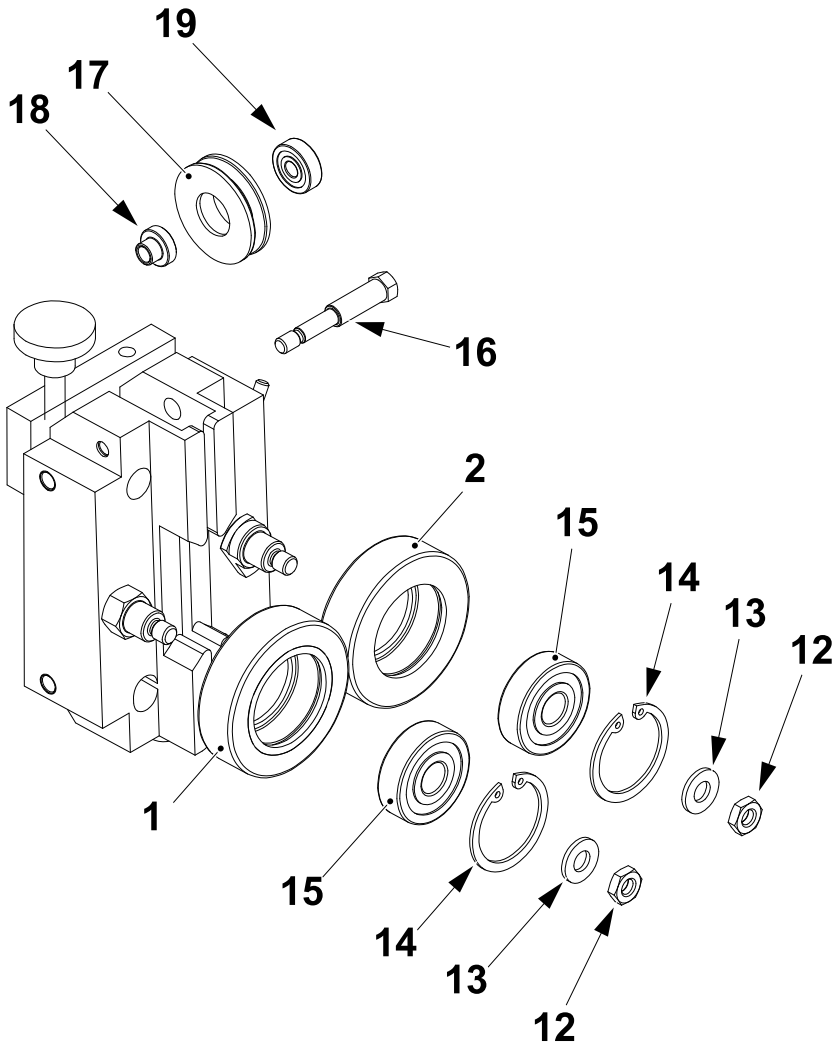

1 Steel roller
2 Rubber roller
12 Nut
13 Washer
14 Retaining ring
15 Bearing
16 Shaft
17 Wheel
18 Bushing
19 Bearing

(Cont'd)

(Cont'd)

j) Remove the lever (20).

k) Loosen the grub screw (21) and the eccentric shaft (22).

l) Remove the wheel (23) and change the spring (24).

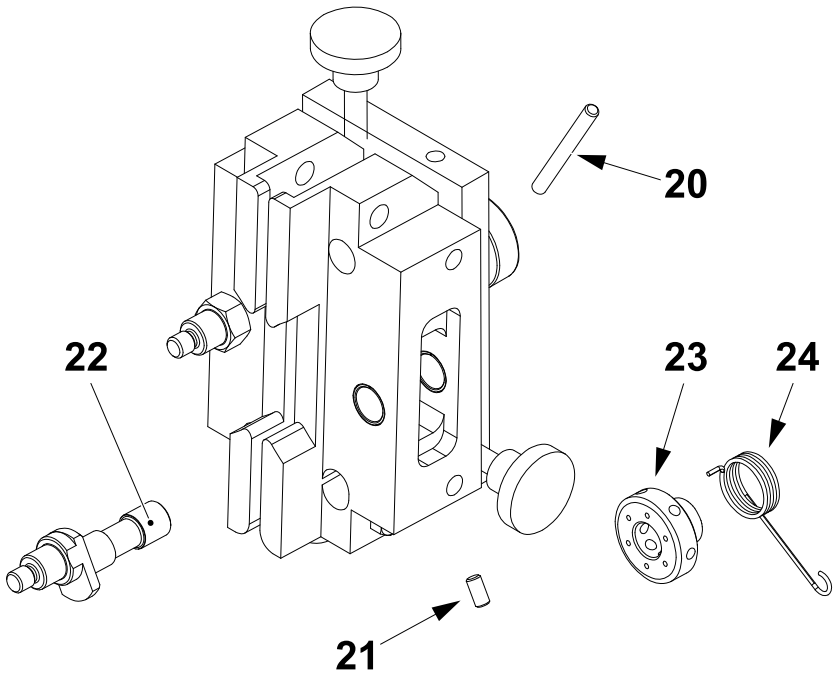

20 Lever
21 Grub screw
22 Shaft
23 Wheel
24 Spring

1.1.5.1-6 Bending Roller - Set Web Width

Machine Status	Electrical supply disconnecting device in position O (OFF) Main air valve OFF Main steam valve ON Main water valve OFF
SPC Reference	2835324-0100

a) Loosen the screw (1) and set the distance **A** with the screw (2).

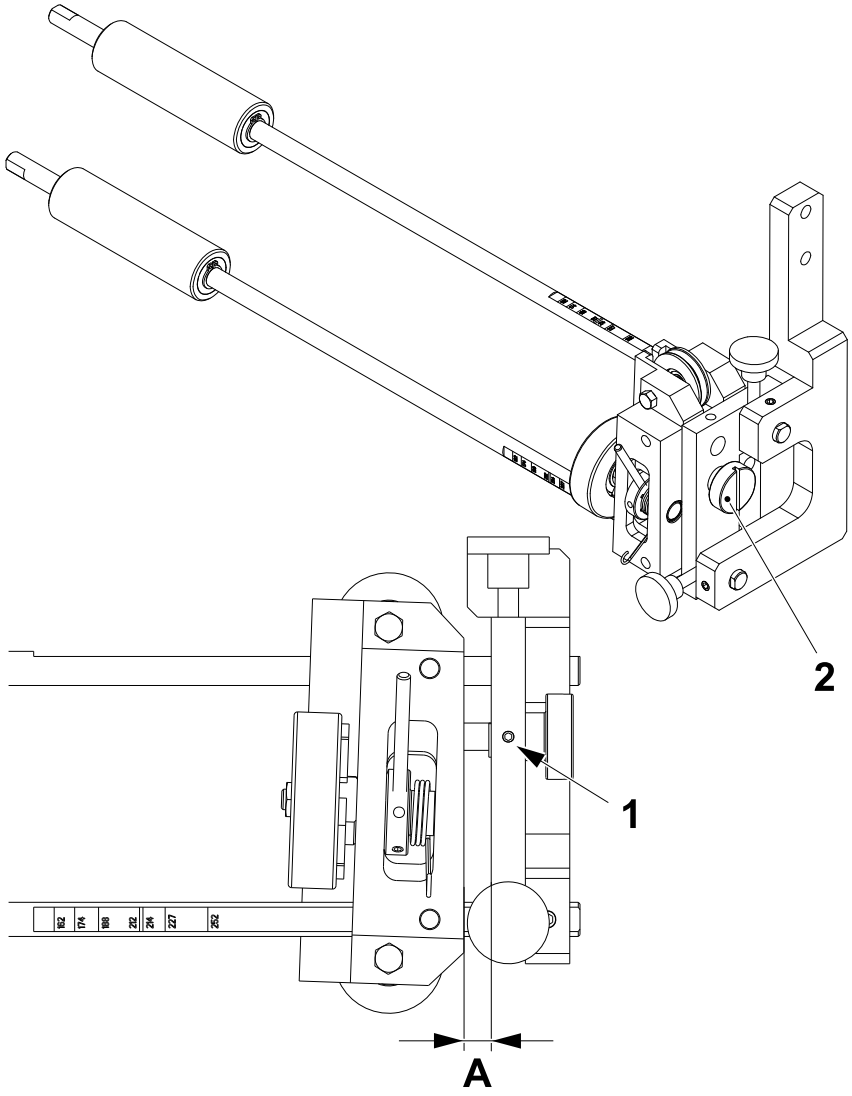

A = 16.0 mm
1 Screw
2 Screw

(Cont'd)

(Cont'd)

b) Loosen the screws (3) and set the web width, see table below, by aligning the correct datum line (4) on the rods (5) with the paper guide (6).

c) Fine adjust the web width with the screw (2).

d) Tighten the screw (1).

Package	Web Width (mm)
TBA 80 S	146
TBA 100 B, TBA 125 S	162
TBA 200 B, TBA 200 Sq, TBA 250 B, TBA 250 Sq, TBA 284 B, TBA 300 S, TBA 330 S	214
TBA 375 S	227
TBA 160 S, TBA 180 S, TBA 200 S, TPA 200 Sq, TPA 250 Sq	174
TBA 200 M, TBA 250 S, TBA 200 E, TBA 250 E	188
TPA 125 Sq	140
TPA 330 Sq	202

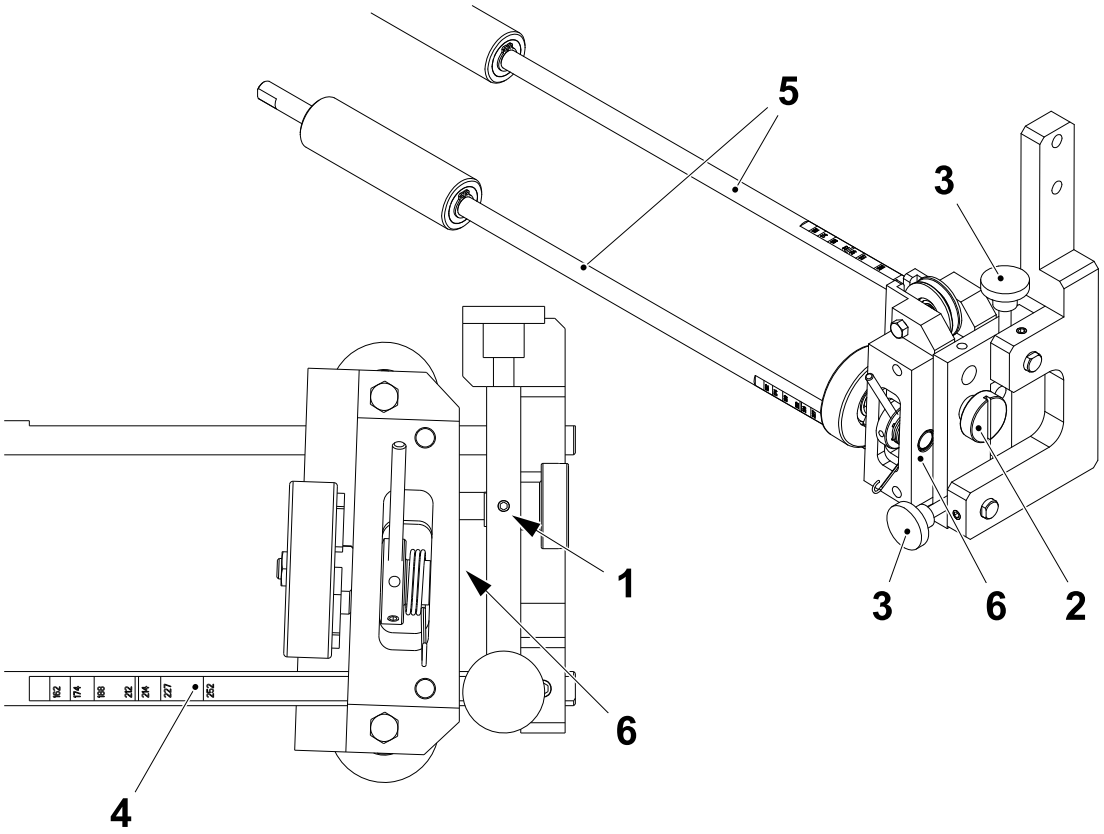

1 Screw
2 Screw
3 Screw
4 Datum line
5 Rod
6 Paper guide

1.1.5.1-7 Bending Roller - Set Paper Guide Pressure

Machine Status	Electrical supply disconnecting device in position O (OFF) Main air valve OFF Main steam valve ON Main water valve OFF
SPC Reference	2835324-0100

a) Remove the lever (1) and loosen the grub screw (2).

b) Rotate the wheel (3) to adjust the tension:

- increase the pressure on the roller (4) until the packaging material (5) stays up against the guide wheel (6). If the packaging material edge curls or is damaged in any way, the pressure has been increased too much.

c) Tighten the grub screw (2).

d) Fit the lever (1) to test the tension.

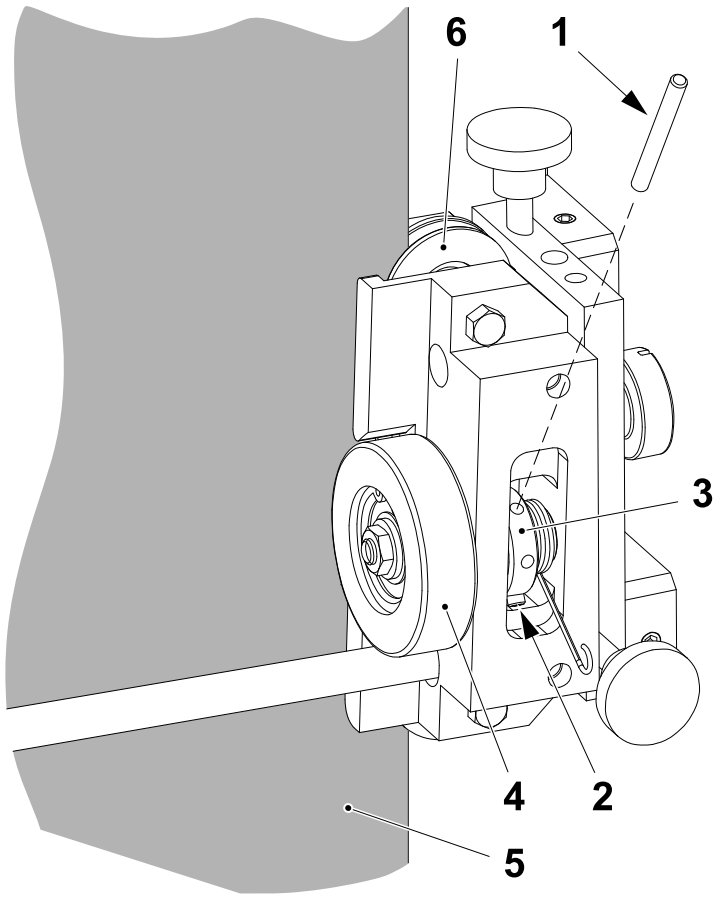

1 Lever
2 Grub screw
3 Wheel
4 Roller
5 Packaging material
6 Guide wheel

1.1.5.1-8 Bending Roller - Check Proximity Switch

Machine Status	Electrical supply disconnecting device in position I (ON) Main air valve OFF Main steam valve ON Main water valve OFF
SPC Reference	2835324-0100

Check:

- the distance **A** between the roller (1) and the proximity switch (2).
- the function of the proximity switch (2). Turn the roller (1) and check that the proximity switch LED goes out when the proximity switch (2) passes over the holes in the bending roller (1).

Set the proximity switch if necessary, see 1.1.5.1-9 Bending Roller - Set Proximity Switch.

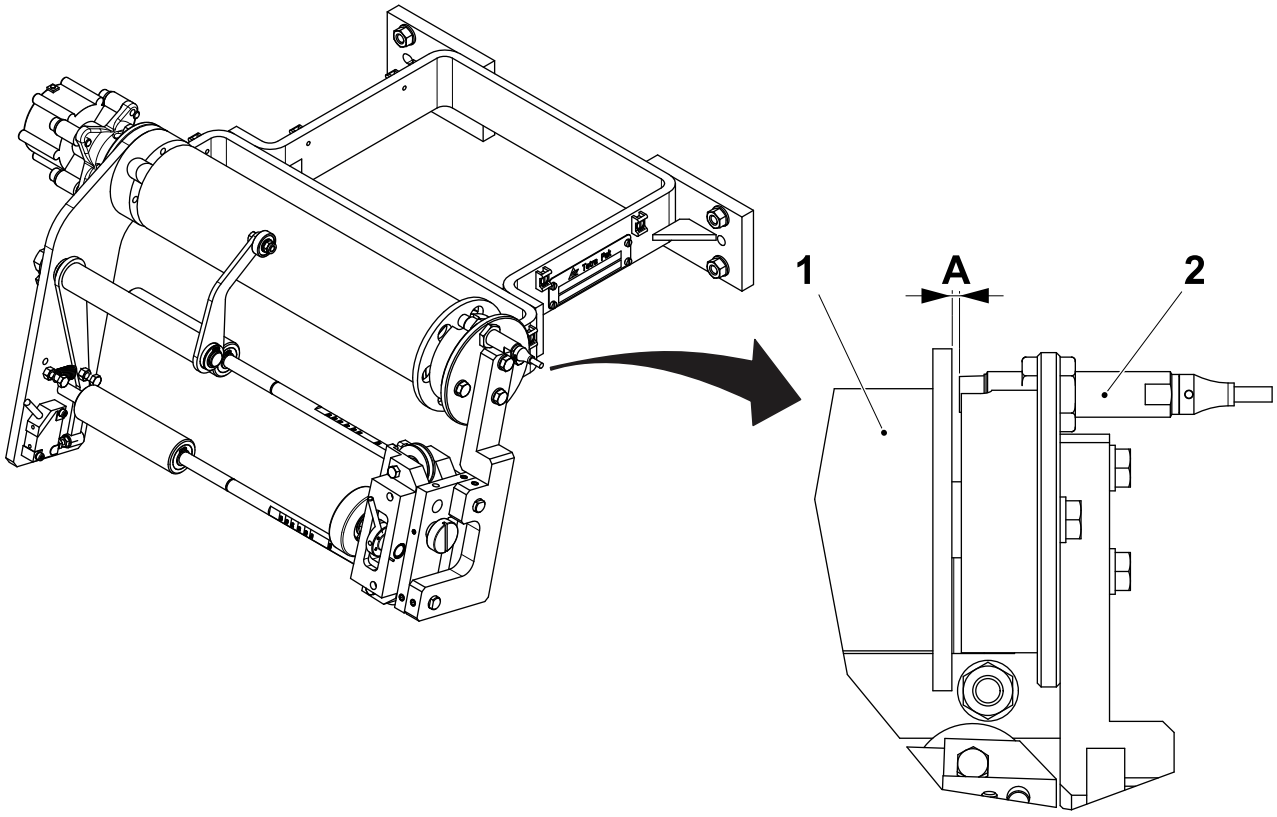

A = 4.0 mm
1 Roller
2 Proximity switch

1.1.5.1-9 Bending Roller - Set Proximity Switch

Machine Status	Electrical supply disconnecting device in position I (ON) Main air valve OFF Main steam valve ON Main water valve OFF
SPC Reference	2835324-0100

a) Loosen the nut (1).

b) Set distance **A** between the proximity switch (2) and the surface of the roller (3).

c) Tighten the nut (1).

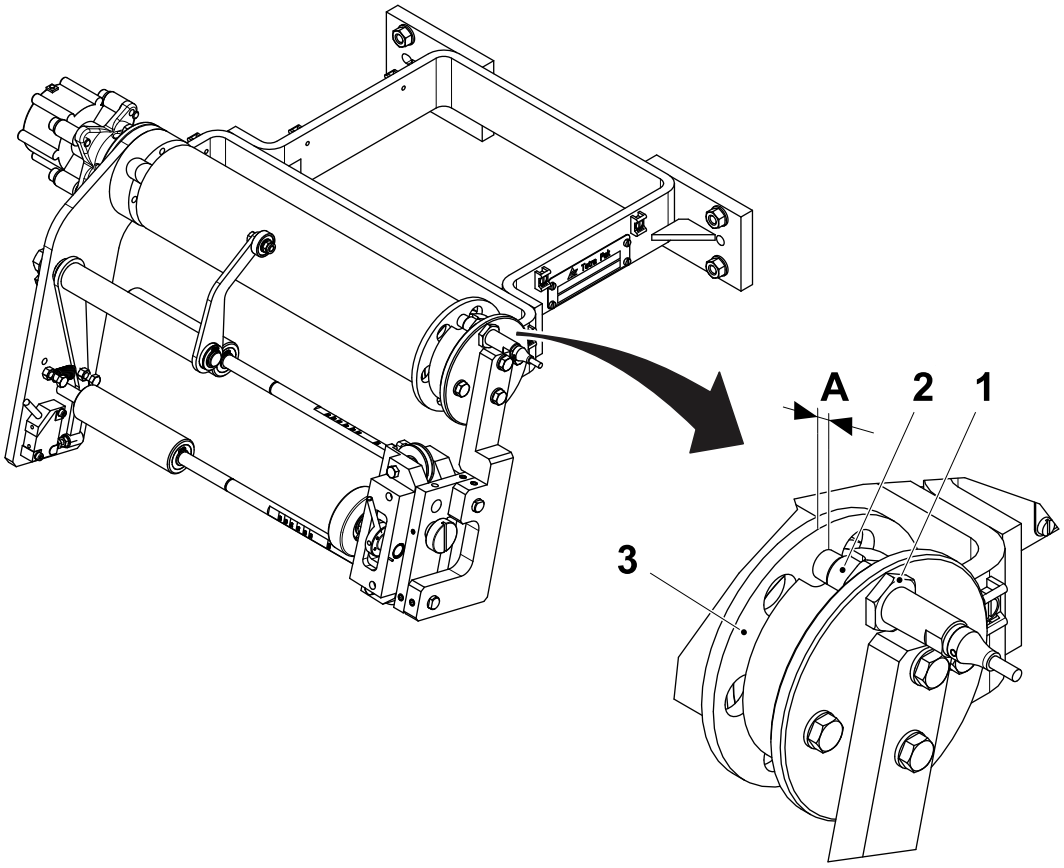

A = 4.0 mm

1 Nut

2 Proximity switch

3 Roller

1.1.5.1-10 Bending Roller - Set Brake Unit

Machine Status	Electrical supply disconnecting device in position I (ON) Main air valve OFF Main steam valve ON Main water valve OFF
SPC Reference	2835324-0100

Note! The brake friction value may vary depending on the packaging material type.

Basic set the brake friction value to **1** (1) by rotating the dial (2).

Note! Do not set the brake friction to a value higher than 5.

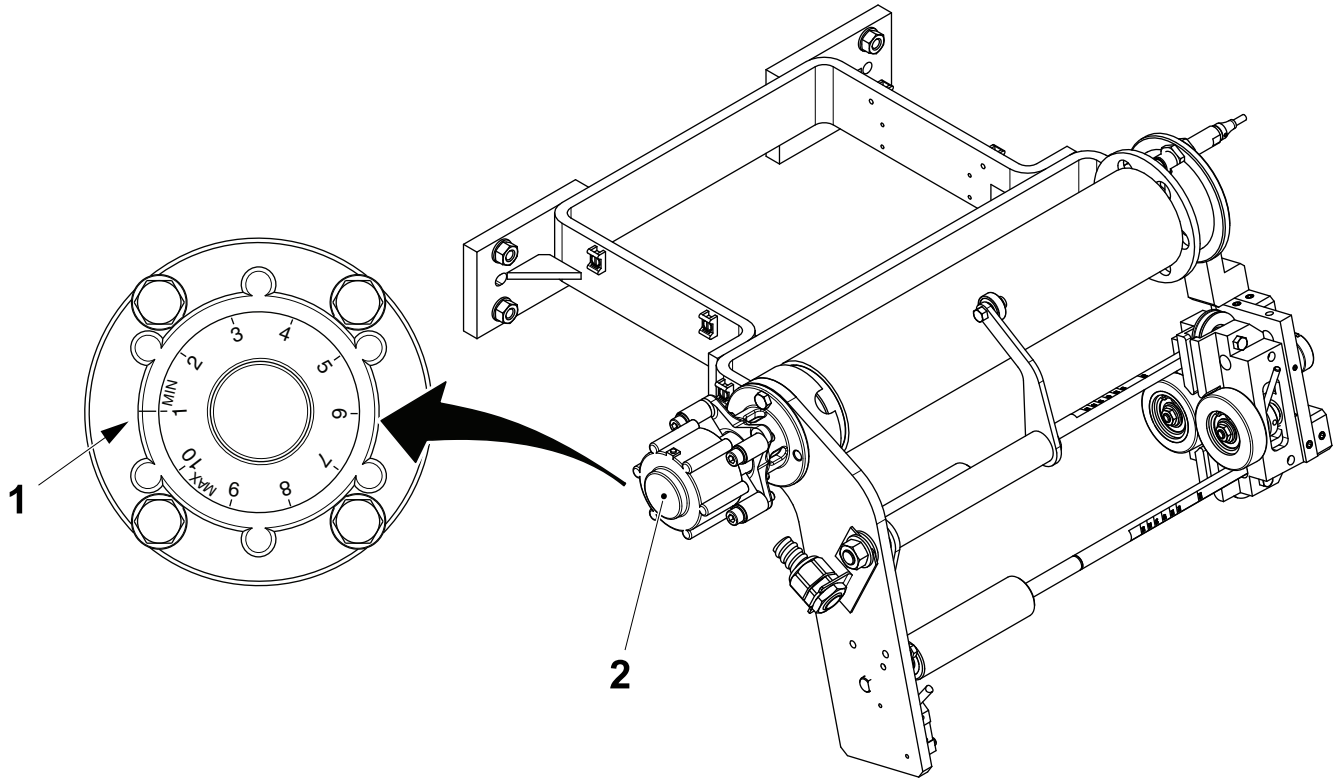

1 Mark
2 Dial

1.1.6 Pneumatic System

1.1.6-1 Pneumatic System - Check

Machine Status	Electrical supply disconnecting device in position O (OFF) Main air valve ON Main steam valve ON Main water valve OFF
SPC Reference	2839244-0200

Check that:

- the pneumatic pipes do not leak
- the filter (1) on the valve panel is clean and undamaged. The filter indicator (2) is green when the filter is clean, it becomes red when the filter needs to be changed. If necessary change the filter (1), see 1.1.6-2 Pneumatic System - Change filter.

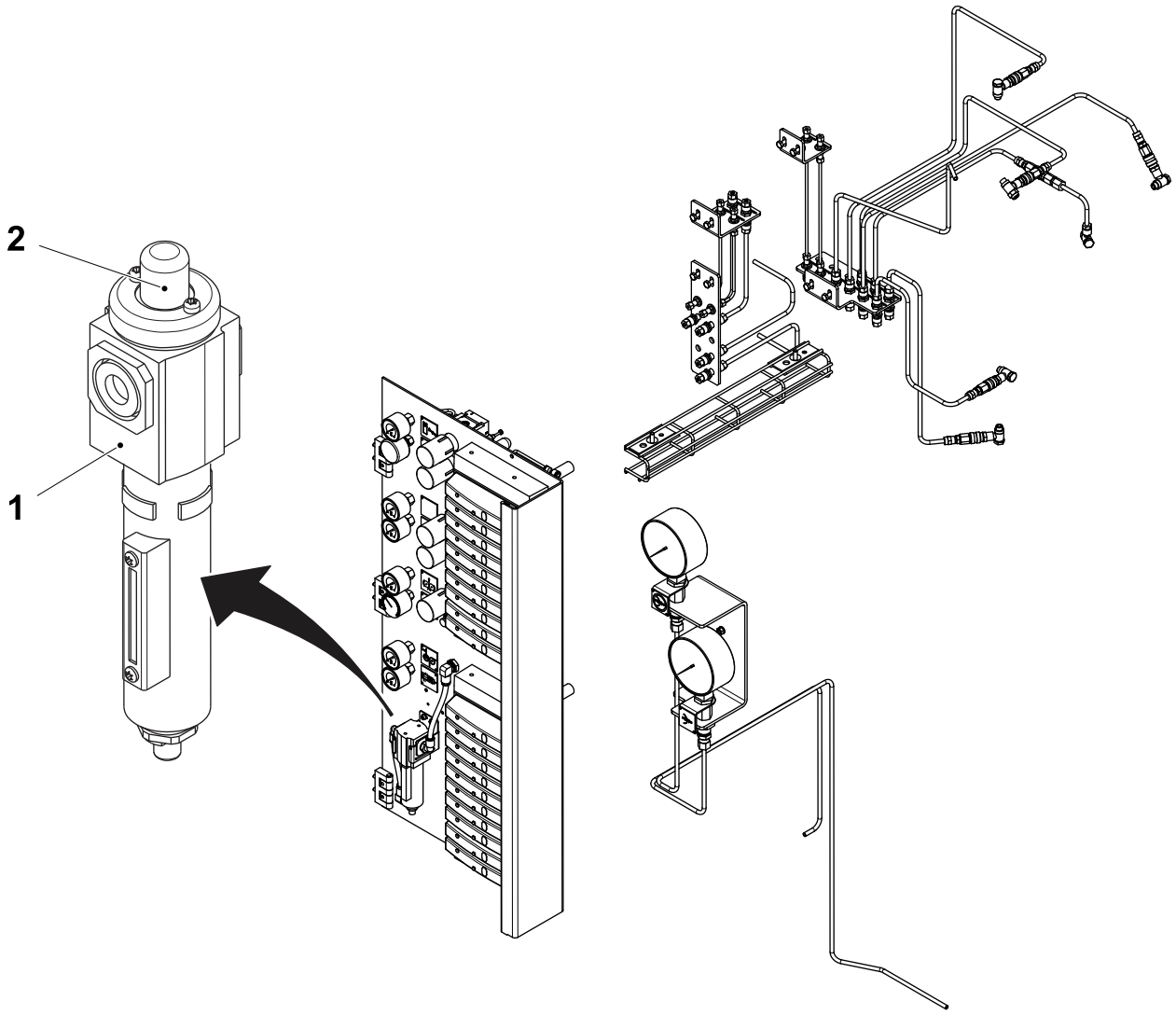

1 Filter
2 Filter indicator

1.1.6-2 Pneumatic System - Change filter

Machine Status	Electrical supply disconnecting device in position O (OFF) Main air valve OFF Main steam valve ON Main water valve OFF
SPC Reference	2839244-0200

a) Turn off the air supply.

b) Remove the filter housing (1) from the valve panel (2).

c) Remove the filter cartridge (3).

d) Change the filter cartridge (3).

e) Assemble in the reverse order.

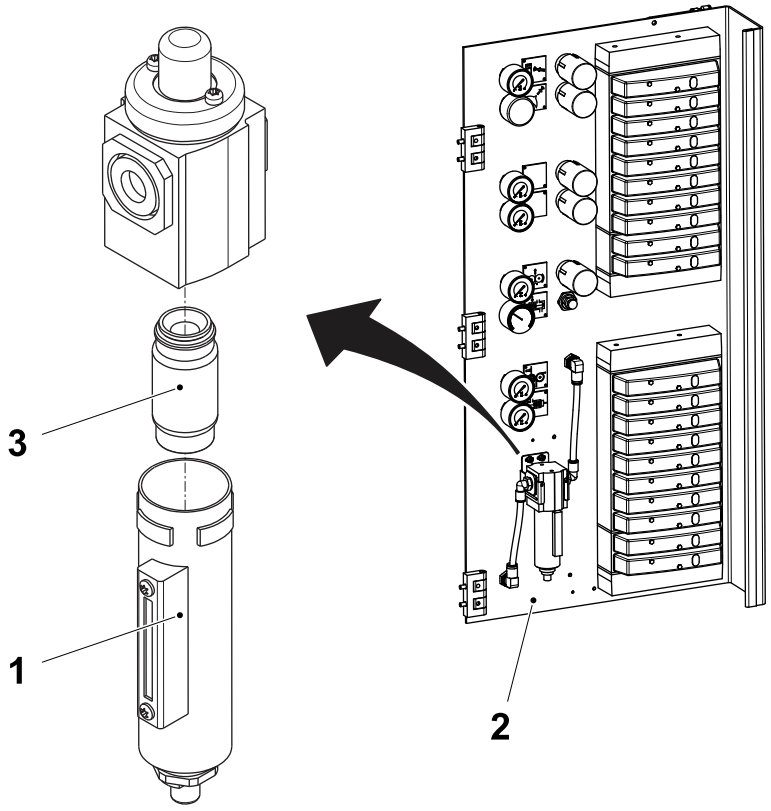

1 Filter housing
2 Valve panel
3 Filter cartridge

1.1.7 Cleaning System

1.1.7-1 Cleaning System - Check

Machine Status	Electrical supply disconnecting device in position O (OFF) Main air valve OFF Main steam valve ON Main water valve OFF
SPC Reference	2846109-0200

WARNING
Hydrogen Peroxide.
Follow the Safety Precautions.

Check the gaskets as indicated by the arrows in the illustration. Change if necessary.

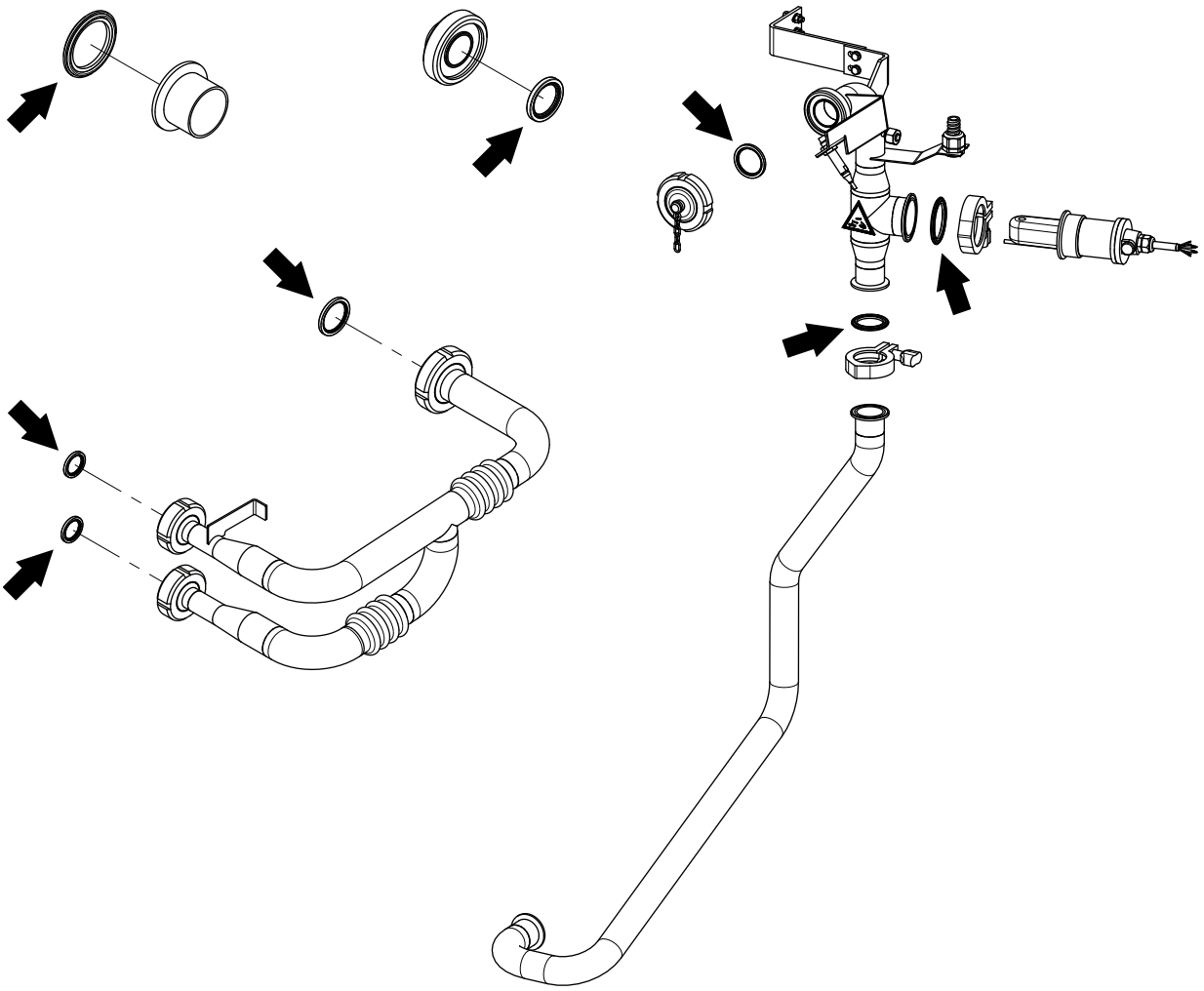

1.1.7-2 Cleaning System - Check Conductivity Sensor

Machine Status	Electrical supply disconnecting device in position O (OFF) Main air valve OFF Main steam valve ON Main water valve OFF
SPC Reference	2846109-0200

WARNING

Burn hazard.

The components around the conductivity sensor may be hot. Use protective gloves when removing the conductivity sensor.

Note! Make sure that the sensor (3) is fitted with the arrow (5) oriented in the direction of the flow.

a) Remove the clamp (1) from the pipe (2) and the sensor (3).

b) Clean the sensor (3) with non-abrasive brush.

c) Check the gasket (4). Change the gasket (4) if it is damaged or worn.

d) Assemble in the reverse order.

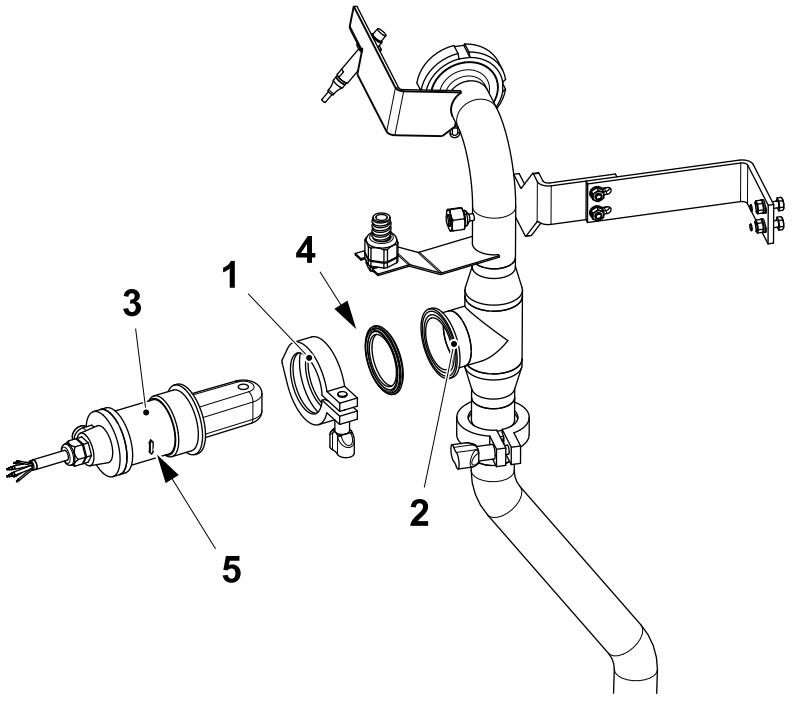

1 Clamp
2 Pipe
3 Sensor
4 Gasket
5 Arrow

1.1.8 Pressure Switch

1.1.8-1 Pressure Switch - Check Pressure Sensor

Machine Status	PRODUCTION
Special Equipment	Leak Finding Equipment TP No. 533014-0100
SPC Reference	2839255-0100

a) Remove the hoses (1) and (2) from the pressure sensor (3).

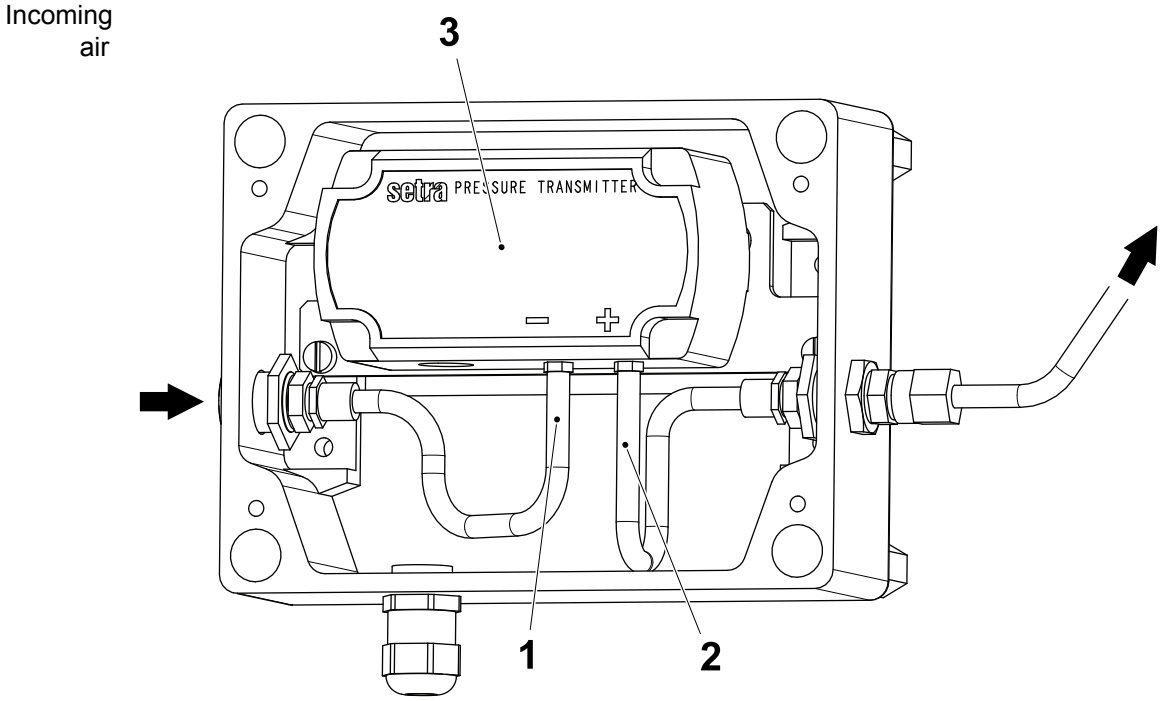

1 Hose
2 Hose
3 Pressure sensor

(Cont'd)

(Cont'd)

b) Touch the PRODUCTION CONTROL button (4) on the filling machine TPOP screen.

c) Touch the STERILE AIR SYSTEM button (5).

d) Touch the ASEPTIC CHAMBER AIR PRESSURE icon (6) to display theASEPTIC CHAMBER AIR PRESSURE monitor (7).

e) TheASEPTIC CHAMBER AIR PRESSURE monitor (7) should show 0 ±2 units. If not, change the pressure sensor.

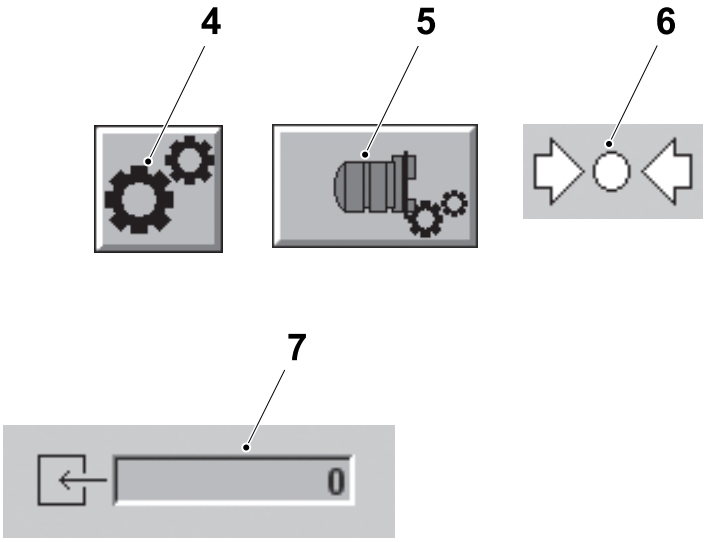

4 PRODUCTION CONTROL button
5 STERILE AIR SYSTEM button
6 ASEPTIC CHAMBER AIR PRESSURE icon
7 ASEPTIC CHAMBER AIR PRESSURE monitor

(Cont'd)

(Cont'd)

Note! If the pressure sensor must be changed, ensure that the cable (10) is wired and shielded according to the Electrical Manual.

Note! When assembling, make sure that the hoses (1) and (2) are properly connected.

f) Connect the hoses (1) to the connection marked with the minus sign (8).

g) Connect the hose (2) from the aseptic chamber to the connection marked with the plus sign (9).

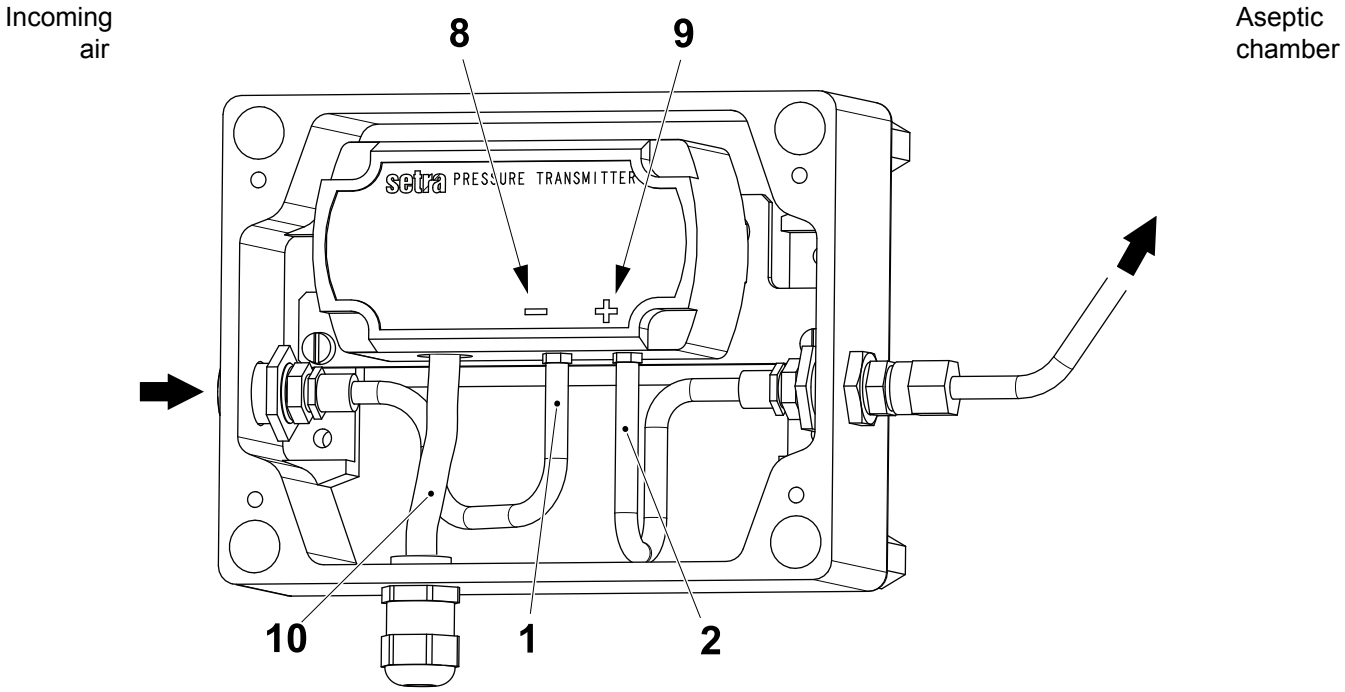

1 Hose
8 Minus sign
9 Plus sign
10 Cable

1.1.9 Hot Air Element LS

1.1.9-1 Hot Air Element LS - Check

Machine Status	Electrical supply disconnecting device in position O (OFF) Main air valve ON Main steam valve ON Main water valve OFF
SPC Reference	2808330-0300

a) Remove the screws (1) and the cover (2).

b) Remove and check the gasket (3). Change if required.

c) Remove the screws (4) and the base plate (5).

d) Remove the spacer (6) and check the O-ring (7). Change the O-ring (7) if required.

e) Carefully remove the heating element (8). Change if required.

f) Assemble in the reverse order.

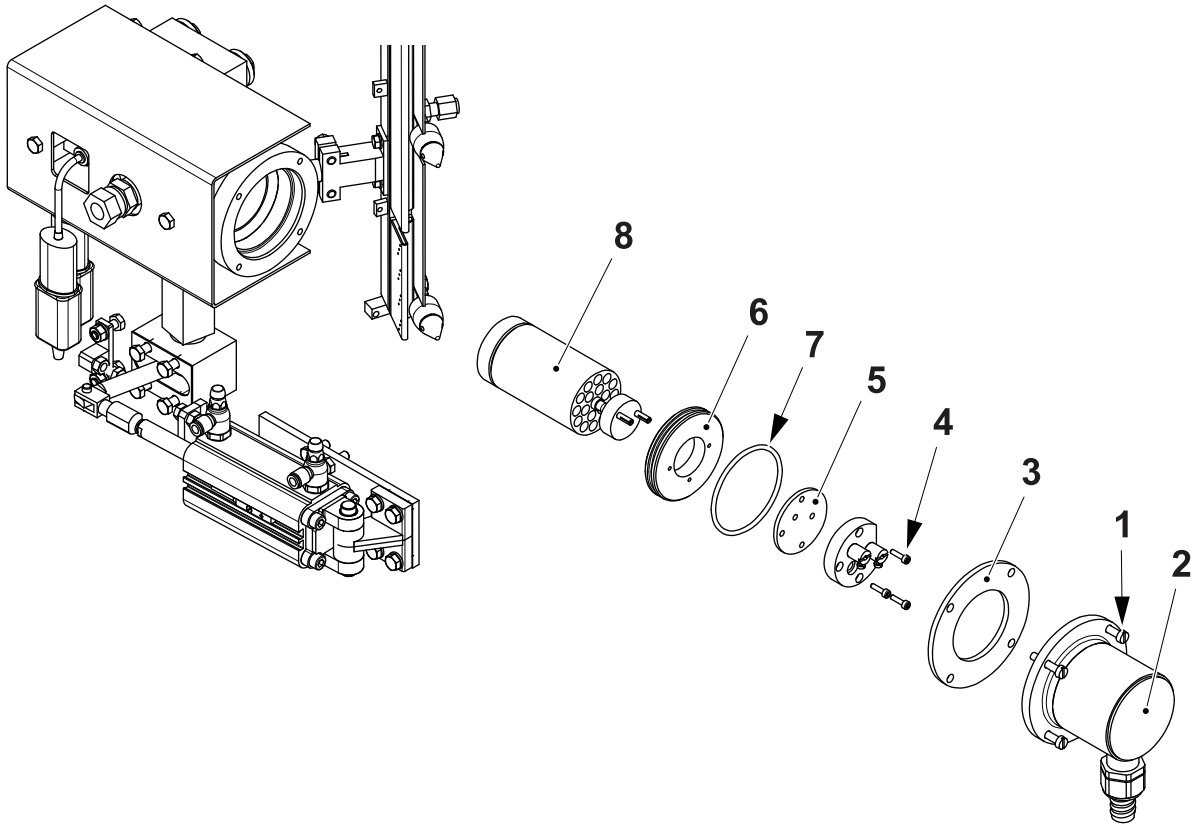

1 Screw
2 Cover
3 Gasket
4 Screw
5 Base plate
6 Spacer
7 O-ring
8 Heating element

1.1.9-2 Hot Air Element LS - Set Proximity Switch

Machine Status	STEP ZERO
SPC Reference	2808330-0300

a) Make sure that the cylinder (1) reach the mechanical stop (2).

b) Loosen the screw (3) and set the proximity switch (4) position so that it is activated when the cylinder (1) is in the outer position.

c) Tighten the screw (3).

d) Move in the cylinder (1) and make sure that the proximity switch (4) is deactivated.

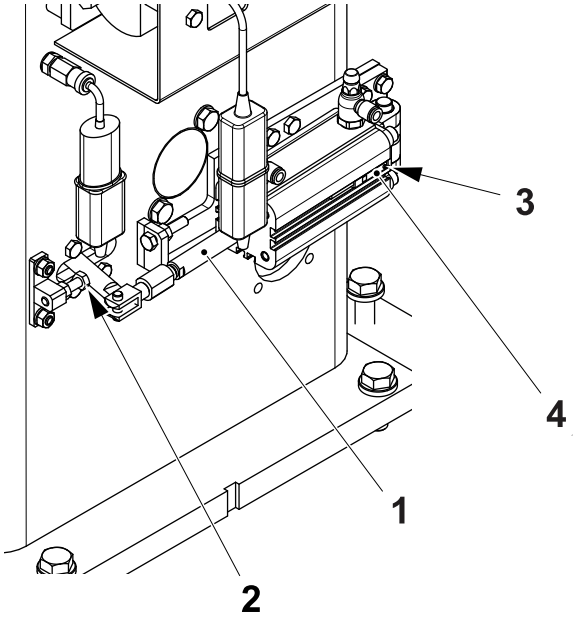

1 Cylinder
2 Mechanical stop
3 Screw
4 Proximity switch

1.1.10 Hot Air Element LS SS

1.1.10-1 Hot Air Element LS SS - Check

Machine Status	Electrical supply disconnecting device in position O (OFF) Main air valve ON Main steam valve ON Main water valve OFF
SPC Reference	2808335-0300

a) Remove the screws (1) and the cover (2) together with the base plate (3).

b) Remove the screws (4) and the base plate (3).

c) Remove and check the gasket (5). Change if required.

d) Carefully remove the heating element (6). Change the heating element (6) if required.

e) Assemble in the reverse order.

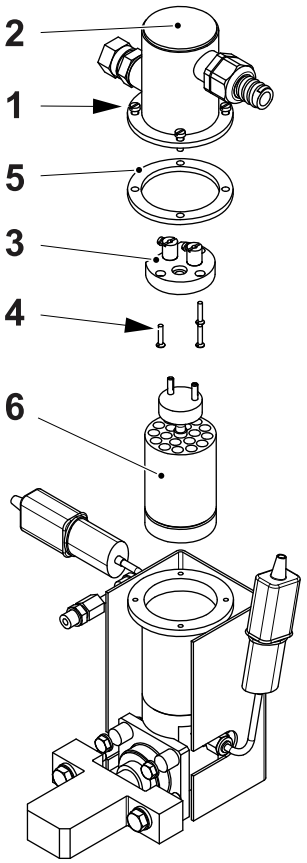

1 Screw
2 Cover
3 Base plate
4 Screw
5 Gasket
6 Heating element

1.1.11 Cap Guide (OE)

1.1.11-1 Cap Guide - Set Position

Machine Status	Electrical supply disconnecting device in position O (OFF) Main air valve ON Main steam valve ON Main water valve OFF
SPC Reference	2966625-0100

Note! Valid only for machines equipped with PT.

a) Step up the machine to PRODUCTION, loosen thescrew (1) and align the cap guide (2) with the tab (3) of the packaging material (4).

b) Tighten the screw (1).

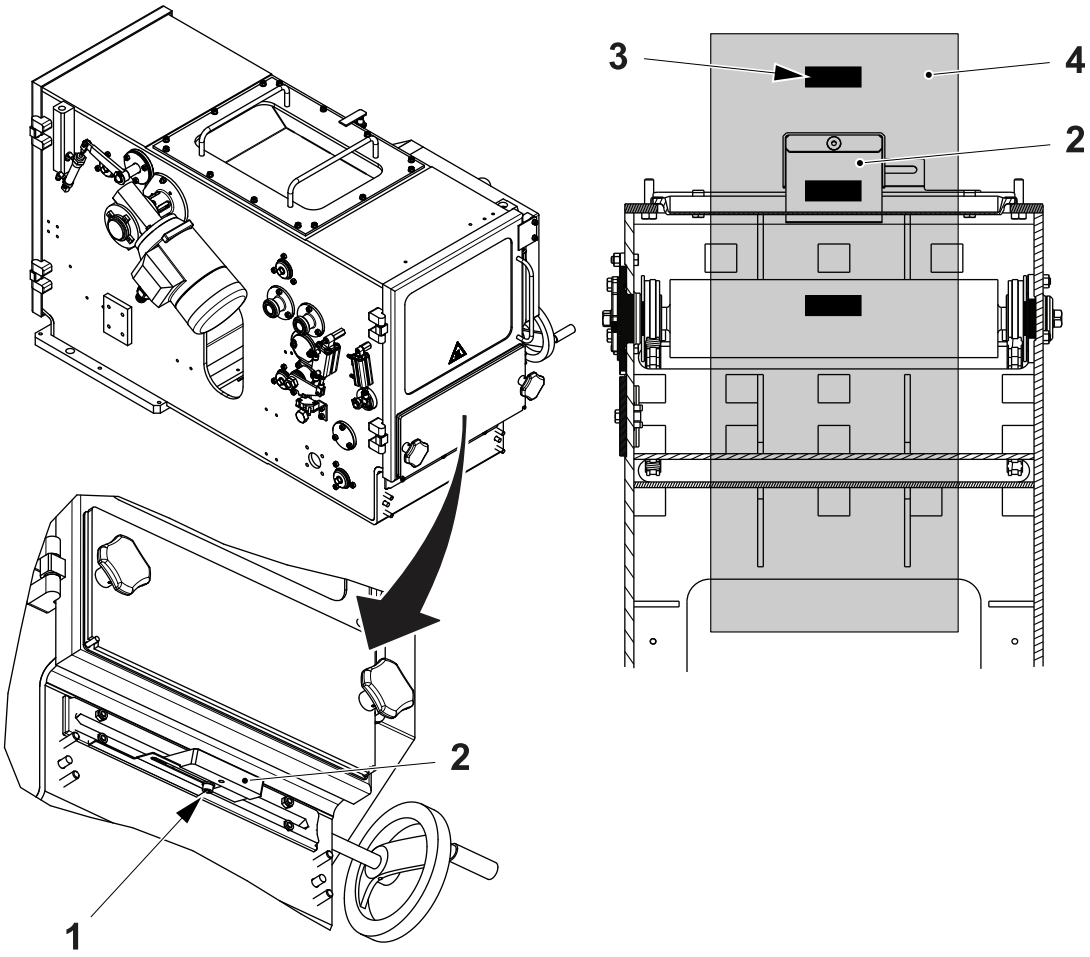

1 Screw
2 Cap guide
3 Tab
4 Packaging material

1.1.12 Sterile Air Pipe (OE)

1.1.12-1 Sterile Air Pipe - Set Nozzle Position

Machine Status	Electrical supply disconnecting device in position O (OFF) Main air valve ON Main steam valve ON Main water valve OFF
SPC Reference	2966630-0100

WARNING

Burn hazard.

Follow the Safety Precautions.

a) Make sure that the packaging material (4) is threaded and correctly positioned over the rollers of the drying chamber.

b) Loosen thescrews (1).

c) Set the position of the nozzle (2) so that it is centered in the tab (3) of the packaging material (4) by moving the bracket (5).

d) Tighten the screws (1).

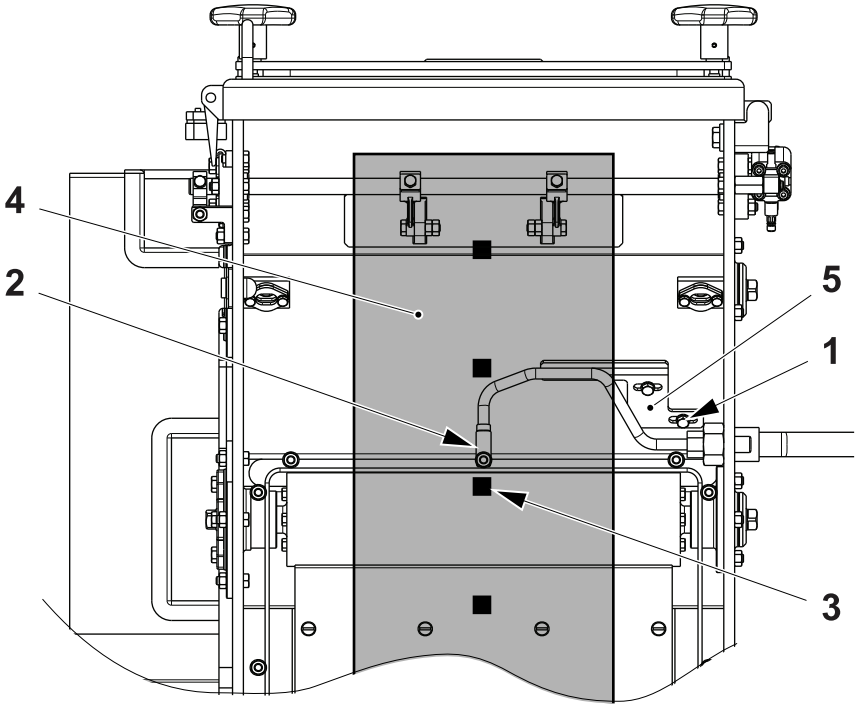

1 Screw
2 Nozzle
3 Tab
4 Packaging material
5 Bracket

1.1.12-2 Sterile Air Pipe - Change Nozzle

Machine Status	Electrical supply disconnecting device in position O (OFF) Main air valve ON Main steam valve ON Main water valve OFF
SPC Reference	2966630-0100

a) Remove the calender roller (1), proceed as follows:
- on both sides, loosen the screws (2)
- on both sides, loosen thenuts (3)
- move backwards the shafts (4)
- pull out the calender roller (1)

b) Loosen the nut (5).

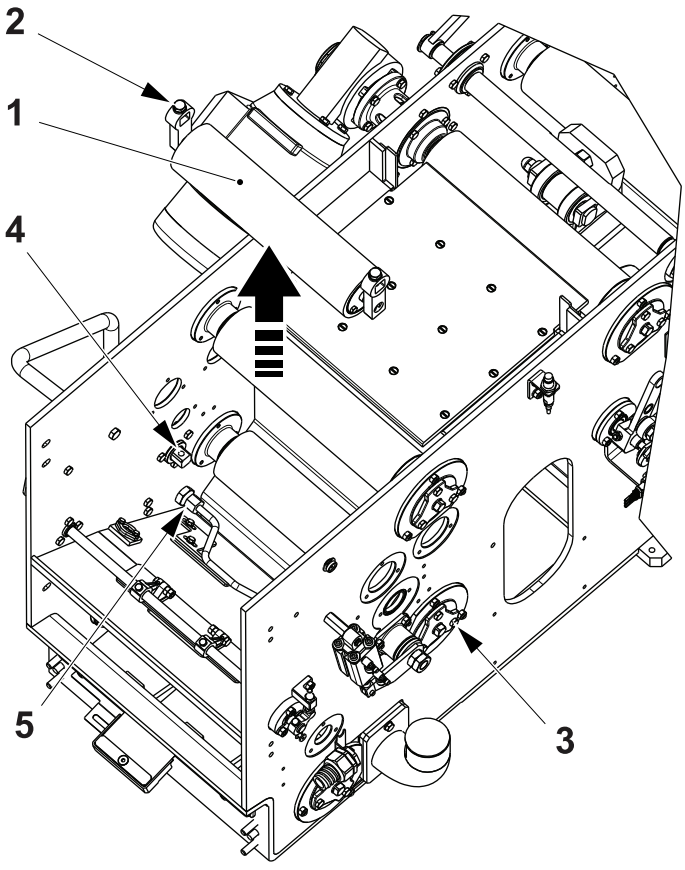

1 Calender roller
2 Screw
3 Nut
4 Shaft
5 Nut

(Cont'd)

(Cont'd)

c) Loosen the screws (6) and remove the nozzle (7).

d) Fit back the nozzle making sure that the O-ring (8) is in the nut (5).

e) Set the nozzle position, see 1.1.12-1 Sterile Air Pipe - Set Nozzle Position.

f) Assemble in the reverse order.

Note! Check the following table for the nozzle suitable for the package.

Package	Nozzle TP No.
TPA 125 Sq, TBA 250 Sq,TPA 200 Sq, TPA 250 Sq, TPA 330 Sq, TBA 200 Sq, TBA 200 E, TBA 250 E	2966622-0000
TBA 375 S, TBA 330 S, TBA 300 S, TBA 250 B, TBA 284 B, TBA 200 B	2986731-0000
TBA 80 S, TBA 250 S, TBA 200 S, TBA 200 M, TBA 160 S, TBA 125 S, TBA 100 B	3058493-0000

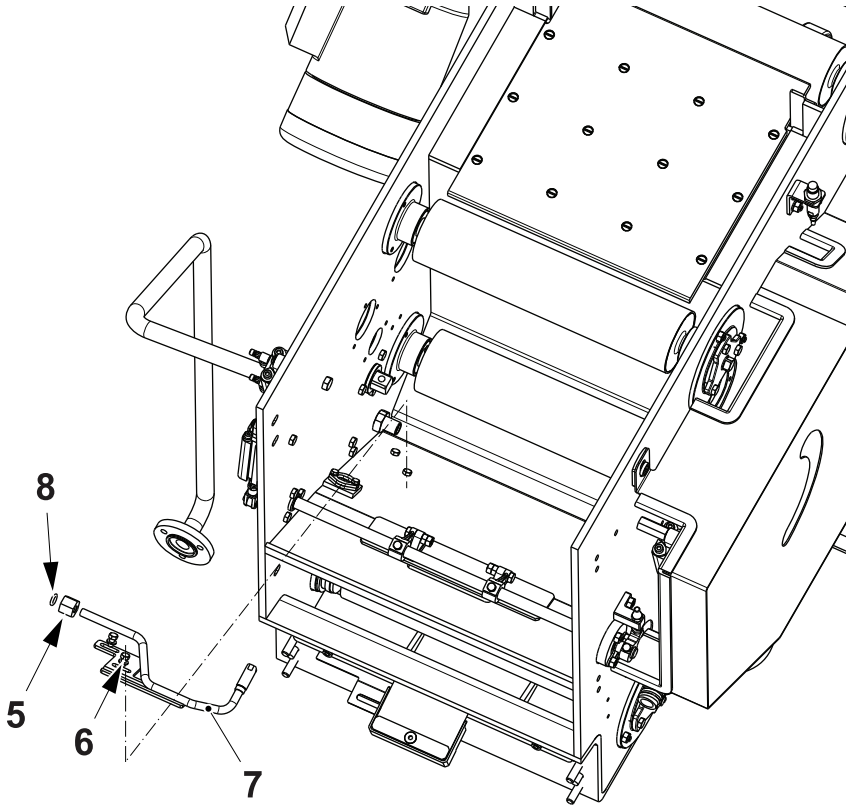

5 Nut
6 Screw
7 Nozzle
8 O-ring

(Cont'd)

(Cont'd)

g) If the package in production does not need the sterile air blower, fit the O-ring (8) and the plug (9) and store the nozzle for later possible use.

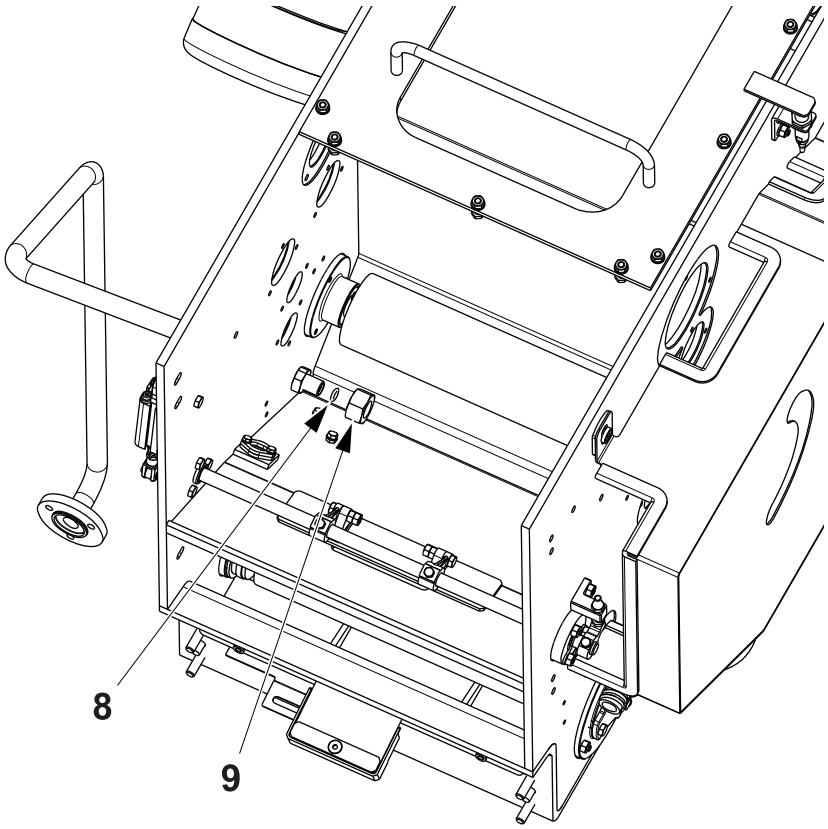

8 O-ring
9 Plug

1.1.13 ICU (OE)

1.1.13-1 ICU (OE) - Check Leakages

Machine Status	Electrical supply disconnecting device in position O (OFF) Main air valve OFF Main steam valve ON Main water valve OFF
SPC Reference	2906140-000

WARNING
Caustic soda and nitric acid.
Read the Safety Precautions.

Check that there are no leakages around the connections indicated by the arrows in the illustration. Loosen the clamps (1) and change the gaskets (2) if necessary.

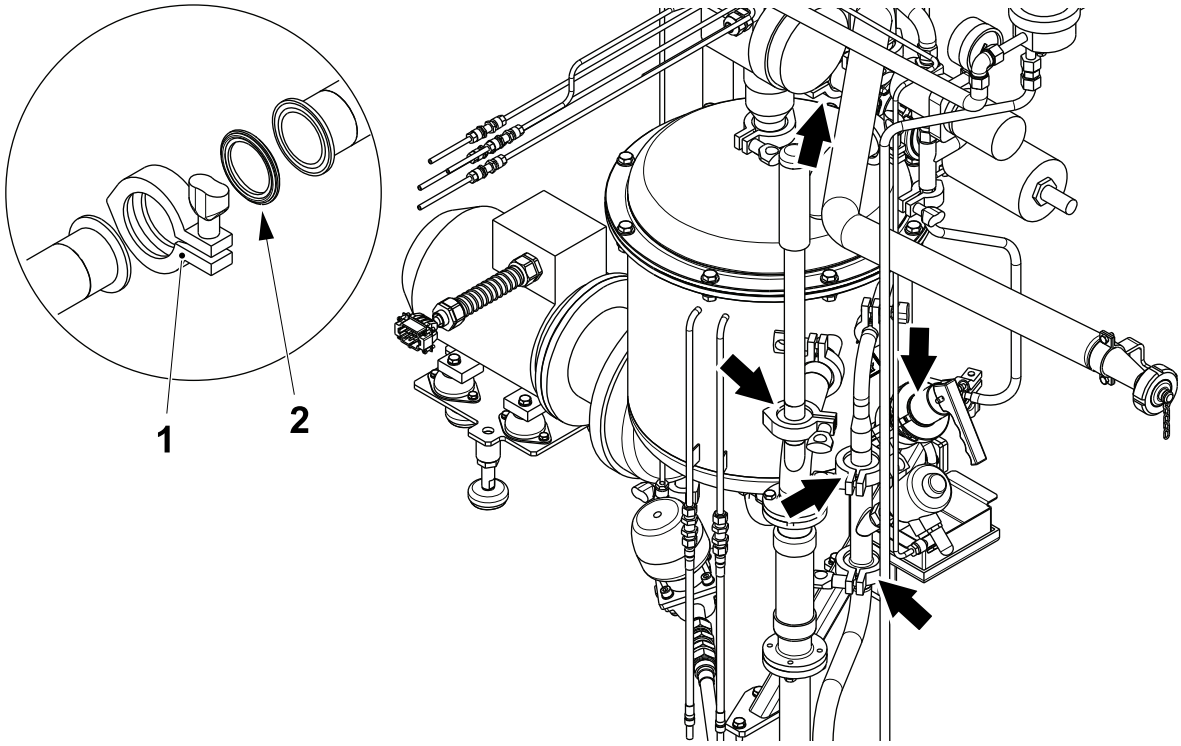

1 Clamp
2 Gasket

1.1.13-2 ICU (OE) - Check Pump

Machine Status	Electrical supply disconnecting device in position O (OFF) Main air valve OFF Main steam valve ON Main water valve OFF
SPC Reference	2906140-0200

WARNING
Risk of burns.
Never service the pump when it is hot.

WARNING
Caustic soda and nitric acid.
Read the Safety Precautions.

(Cont'd)

(Cont'd)

Check that there are no leakages:

- around the pump housing (1) and the connections indicated by the arrows; if necessary, loosen the clamps (2) and change the gasket (3).
- around the pneumatic valve (4); if necessary, remove the pneumatic valve (4) by the screws (5) and change the diaphragm (6).

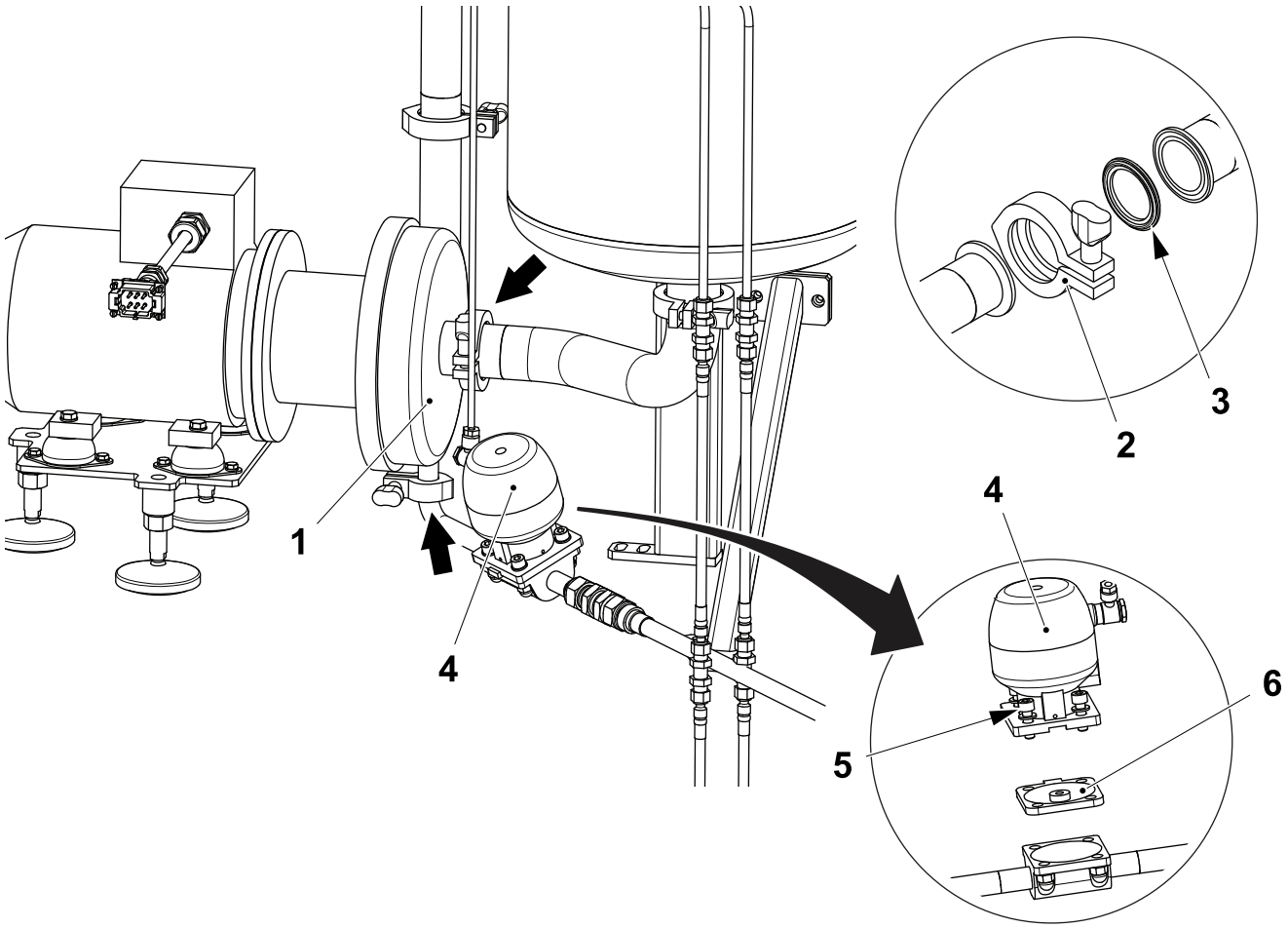

1 Pump housing
2 Clamp
3 Gasket
4 Pneumatic valve
5 Screw
6 Diaphragm

1.1.13-3 ICU (OE) - Change Pump Seals

Machine Status	Electrical supply disconnecting device in position O (OFF) Main air valve OFF Main steam valve ON Main water valve OFF
Special Equipment	Tools TP No. 6-962 90 3601 and 90602-7227
Consumables	Grease Dow Corning 7 TP No. 90296-0009
SPC Reference	2906140-0200

WARNING
Risk of burns.
Never service the pump when it is hot.

WARNING
Caustic soda and nitric acid.
Read the Safety Precautions.

a) Loosen the clamp indicated by the arrows.

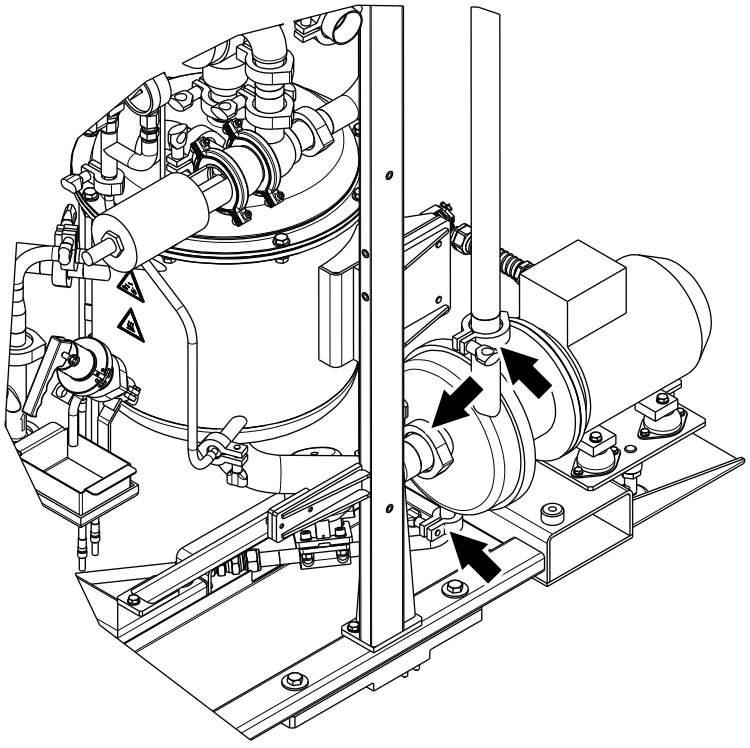

(Cont'd)

(Cont'd)

b) Remove the clamps (1) with the screws (2).

c) Remove the pump casing (3).

d) Fit a screwdriver in the slot (5) to remove the safety guards (4).

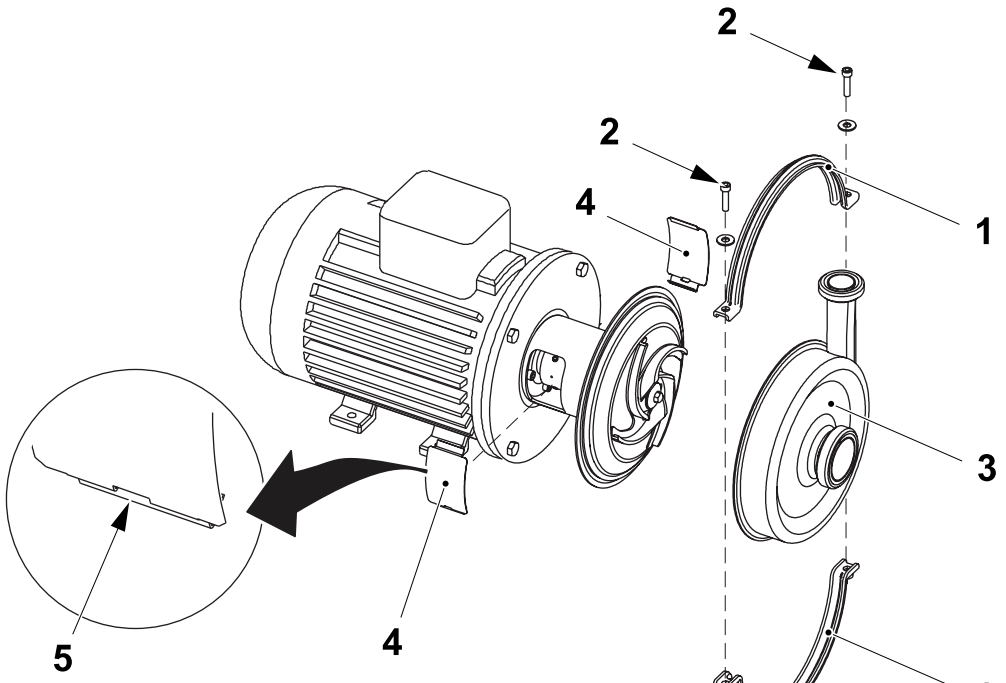

1 Clamp
2 Screw
3 Pump casing
4 Safety guard
5 Slot

(Cont'd)

(Cont'd)

e) Remove the screw (6).

f) Remove the impeller (7). If necessary, loosen the impeller (7) by tapping gently on the impeller vanes.

g) Remove the O-ring (8) from the impeller (7).

h) Remove the O-ring (9) from back plate (10).

i) Remove the nuts (11) and the back plate (10).

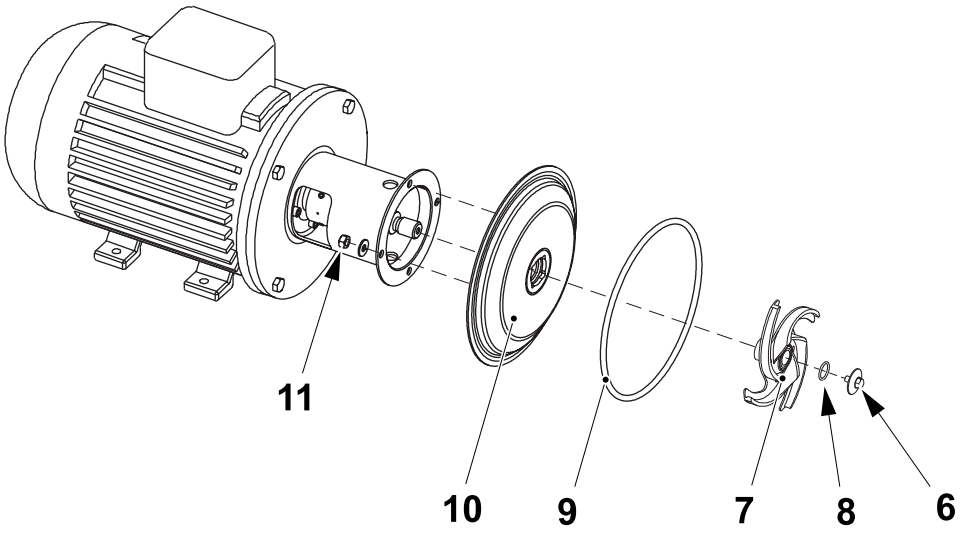

6 Screw
7 Impeller
8 O-ring
9 O-ring
10 Back plate
11 Nut

(Cont'd)

(Cont'd)

Note! The tools TP No. 6-962 90 3601 and 90602-7227 are provided with the pump.

j) Remove the stationary seal ring (12) by the tool (13).

k) Remove the O-ring (14) from the stationary seal ring (12).

l) Remove the complete shaft seal (15) from the stub shaft (16).

m) Remove the spring (17) and the rotating seal ring (18) from the drive ring (19). Change if necessary.

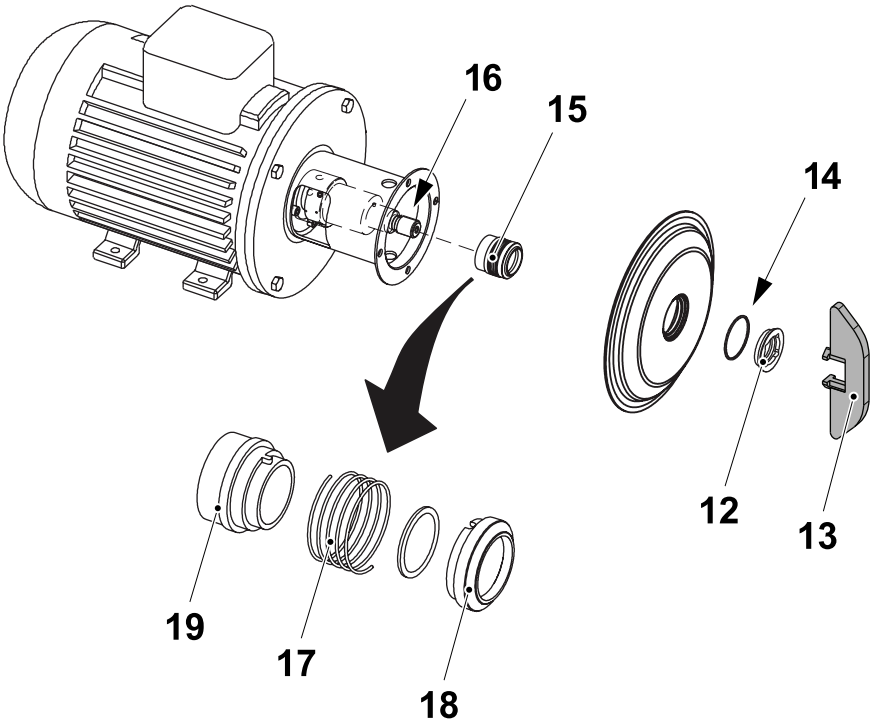

12 Stationary seal ring
13 Tool
14 O-ring
15 Complete shaft seal
16 Stub shaft
17 Spring
18 Rotating seal ring
19 Drive ring

(Cont'd)

(Cont'd)

CAUTION
Risk of damage to the equipment.
Ensure that the driver on the drive ring (19) enters the notch in the rotating seal ring (18).

Note! Make sure that the O-ring (20) has max. clearance from the sealing surface.

n) Lubricate the O-ring (20) and fit it in the rotating seal ring (18).

o) Fit the spring (17) on the rotating seal ring (18).

p) Fit the spring (17) and rotating seal ring (18) on the drive ring (19).

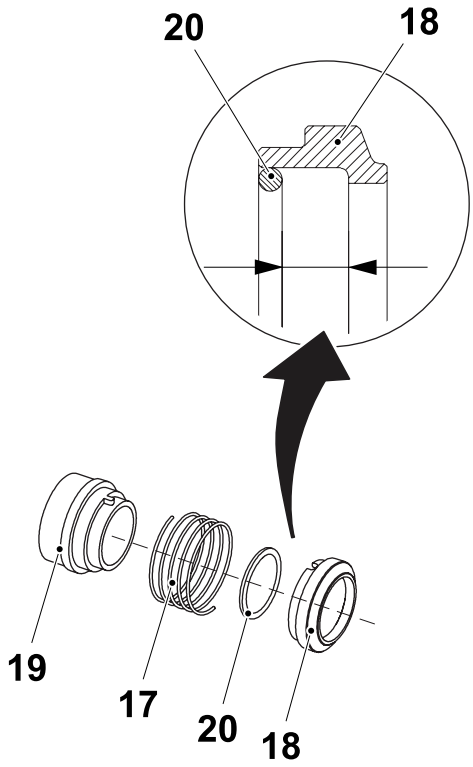

17 Spring
18 Rotating seal ring
19 Drive ring
20 O-ring

(Cont'd)

(Cont'd)

CAUTION
Risk of damage to the equipment
Only tighten by hand to avoid deforming the stationary seal ring (12).

Note! Make sure that pin (21) on the stub shaft (16) enters the notch in drive ring (19).

q) Fit the complete complete shaft seal (15) on stub shaft (16).

r) Fit the O-ring (14) on stationary seal ring (12) and lubricate.

s) Screw the stationary seal ring (12) into back plate (10) with the tool (13).

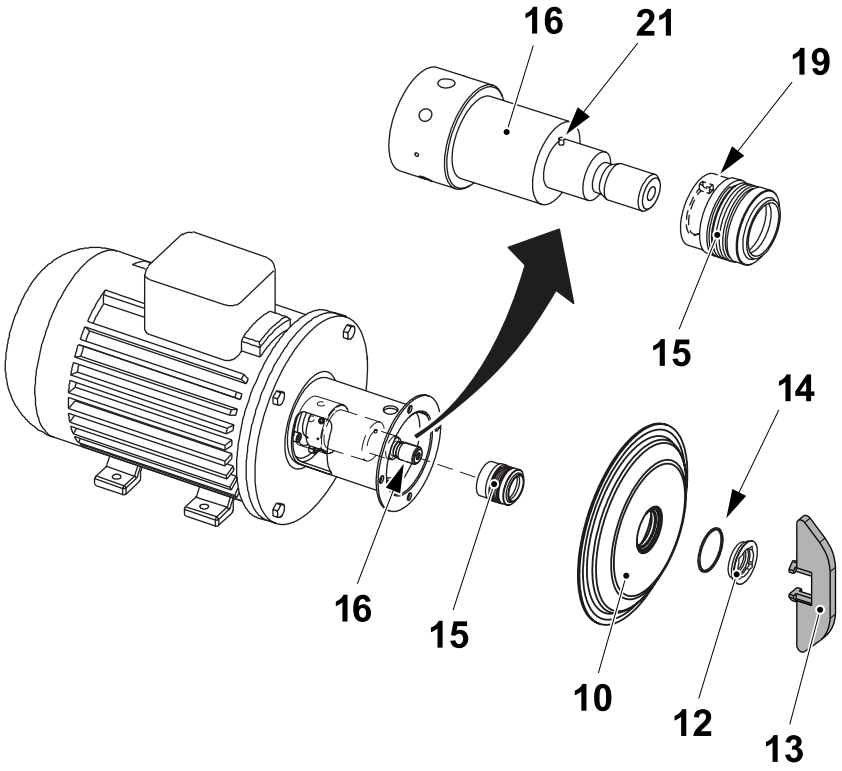

10 Back plate
12 Stationary seal ring
13 Tool
14 O-ring
15 Complete shaft seal
16 Stub shaft
19 Drive ring
21 Pin

(Cont'd)

(Cont'd)

t) Clean the sealing surfaces with contact cleaner before fitting the back plate (10).

u) Carefully guide the back plate (10) onto the adaptor (22).

v) Fit the washers and the nuts (11).

w) Lubricate the O-ring (9) and slide it onto the back plate (10).

x) Lubricate the O-ring (8) and fit it in impeller (7).

y) Lubricate the impeller hub with grease TP No. 90296-0009.

z) Fit the impeller (7) onto the stub stub shaft (16) by the screw (6).

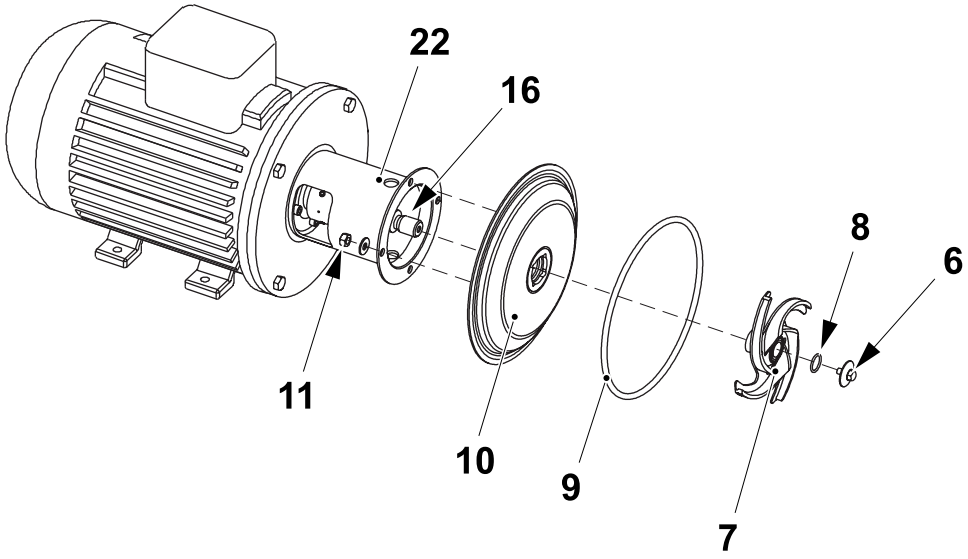

6 Screw	9 O-ring	16 Stub shaft
7 Impeller	10 Back plate	22 Adaptor
8 O-ring	11 Nut	

(Cont'd)

(Cont'd)

aa) Check that the clearance between the impeller (7) and back plate (10) is 1 mm by using the tool (23) supplied. If not, set the pump shaft, see 1.1.13-4 ICU (OE) - Set Pump Shaft.

ab) Assemble in the reverse order from step d).

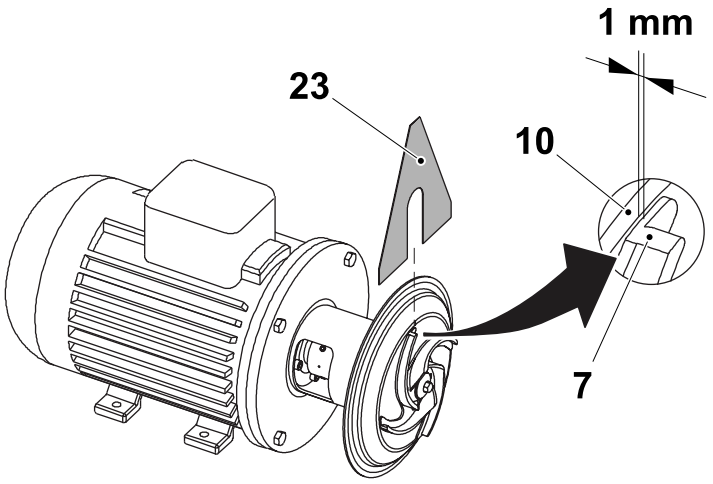

7 Impeller
10 Back plate
23 Tool

1.1.13-4 ICU (OE) - Set Pump Shaft

Machine Status	Electrical supply disconnecting device in position O (OFF) Main air valve OFF Main steam valve ON Main water valve OFF
Special Equipment	Tool TP No. 90602-7227
SPC Reference	2906140-0200

WARNING
Burn hazard.
Never service the pump when it is hot.

WARNING
Caustic soda and nitric acid.
Read the Safety Precautions.

a) Remove the pump casing, the impeller and the back plate, see 1.1.13-3 ICU (OE) - Change Pump Seals.

b) Loosen the screws (1).

c) Pull off stub shaft (2). Change if necessary.

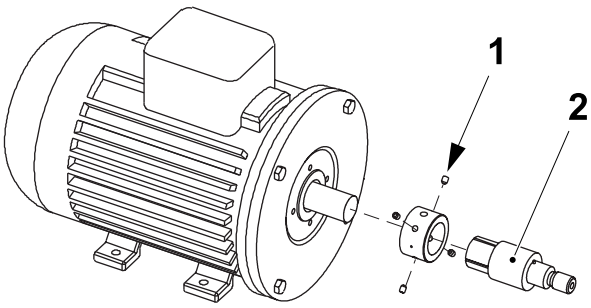

1 Screw
2 Stub shaft

(Cont'd)

(Cont'd)

d) Push the stub shaft (2) onto the motor shaft.

e) Check that the clearance between the end of the stub shaft (2) and the motor flange (3) is in the range of the distance **A**.

f) Tighten the screws (1) lightly and evenly.

g) Ensure that the stub shaft (2) can be moved on the motor shaft.

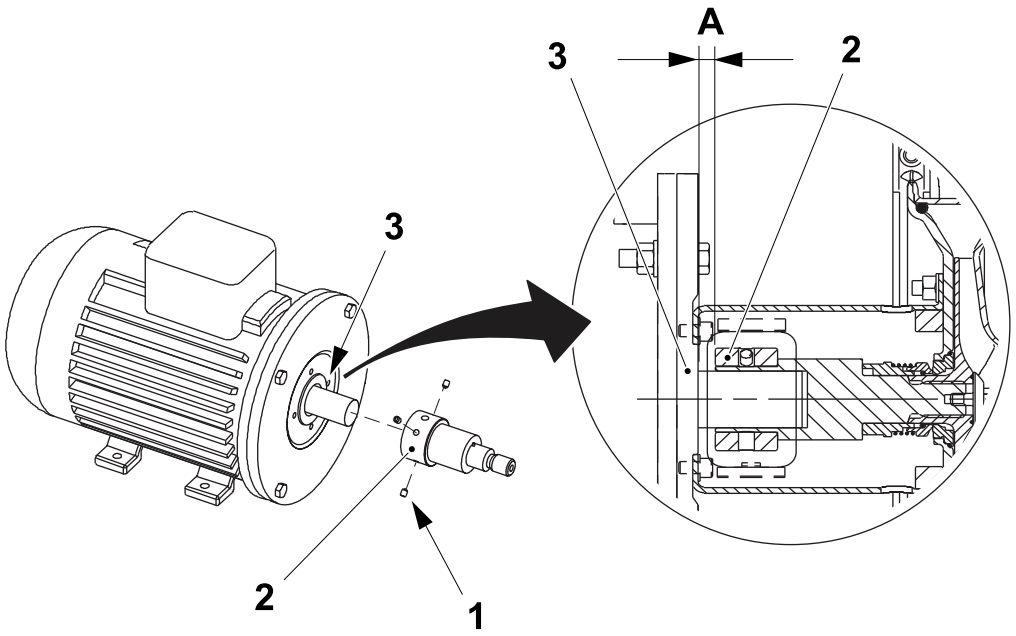

A = 10÷20 mm
1 Screw
2 Stub shaft
3 Motor flange

(Cont'd)

(Cont'd)

Note! The tool TP No. 90602-7227 is provided with the pump.

h) Fit the back plate (4) by the nuts (5).

i) Fit the impeller (6) on the stub shaft (2) by the screw (7).

j) Check that the clearance between the impeller (6) and back plate (4) is 1 mm by using the tool (8) supplied.

k) Tighten screws (1) evenly to 18 Nm.

l) Fit back the pump casing, see 1.1.13-3 ICU (OE) - Change Pump Seals.

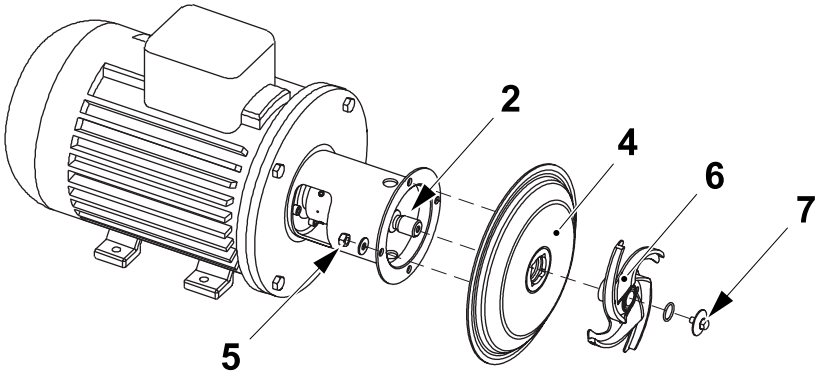

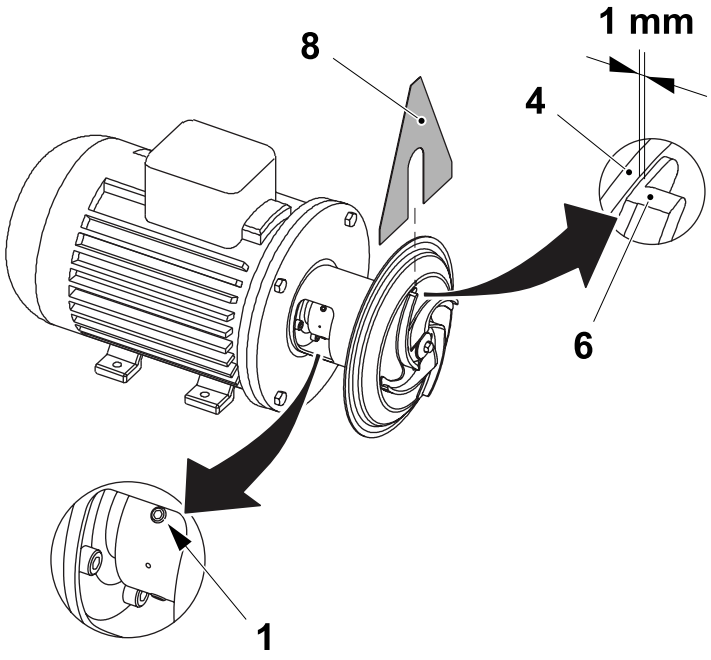

1 Screw
2 Stub shaft
4 Back plate
5 Nut
6 Impeller
7 Screw
8 Tool

1.1.13-5 ICU (OE) - Sample Cleaning Liquid

Machine Status	CLEANING CIP
SPC Reference	2906140-0200

WARNING
Caustic soda and nitric acid.
Read the Safety Precautions.

WARNING
Risk of burn.
The pipes behind the door (1) are hot.

Note! The sampling of the cleaning liquid must be done by a skilled or instructed person through the door (1).

a) Open the door (1).

b) Open the valve (2) and sample the cleaning liquid coming out from the pipe (3).

c) Close the valve (2).

d) Close the door (1).

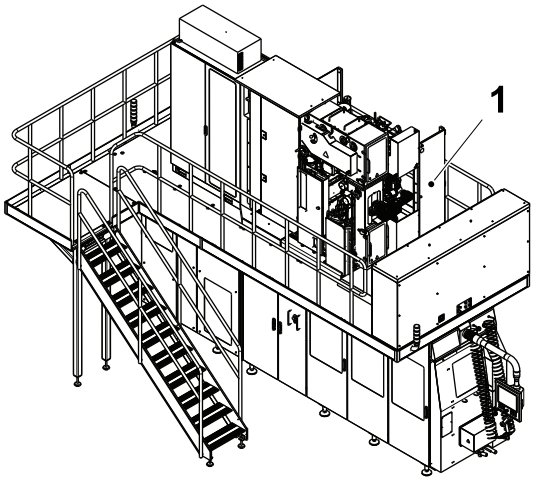

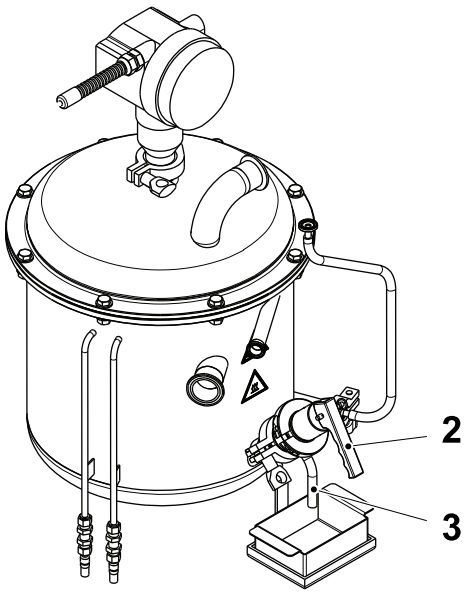

1 Door
2 Valve
3 Pipe

1.1.13.1 Pipe Work

1.1.13.1-1 Pipe Work - Check

Machine Status	Electrical supply disconnecting device in position O (OFF) Main air valve OFF Main steam valve ON Main water valve OFF
SPC Reference	2906160-0100

WARNING

Caustic soda and nitric acid.
Read the Safety Precautions.

Check that there are no leakages at the clamps (1) of the change over valve.

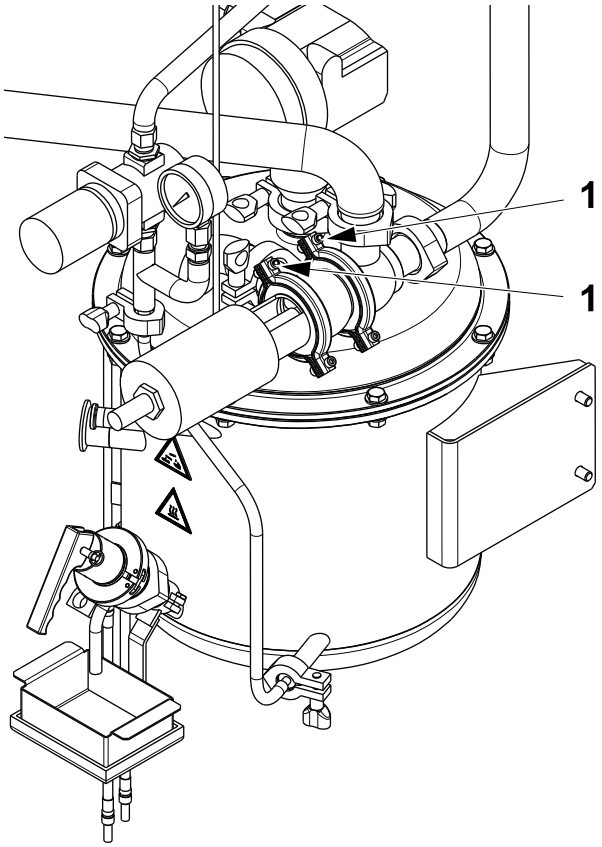

1 Clamp

(Cont'd)

(Cont'd)

Check that there are no leakages around the connections indicated by the arrows. Loosen the clamps (2) and change the gasket (3) if necessary.

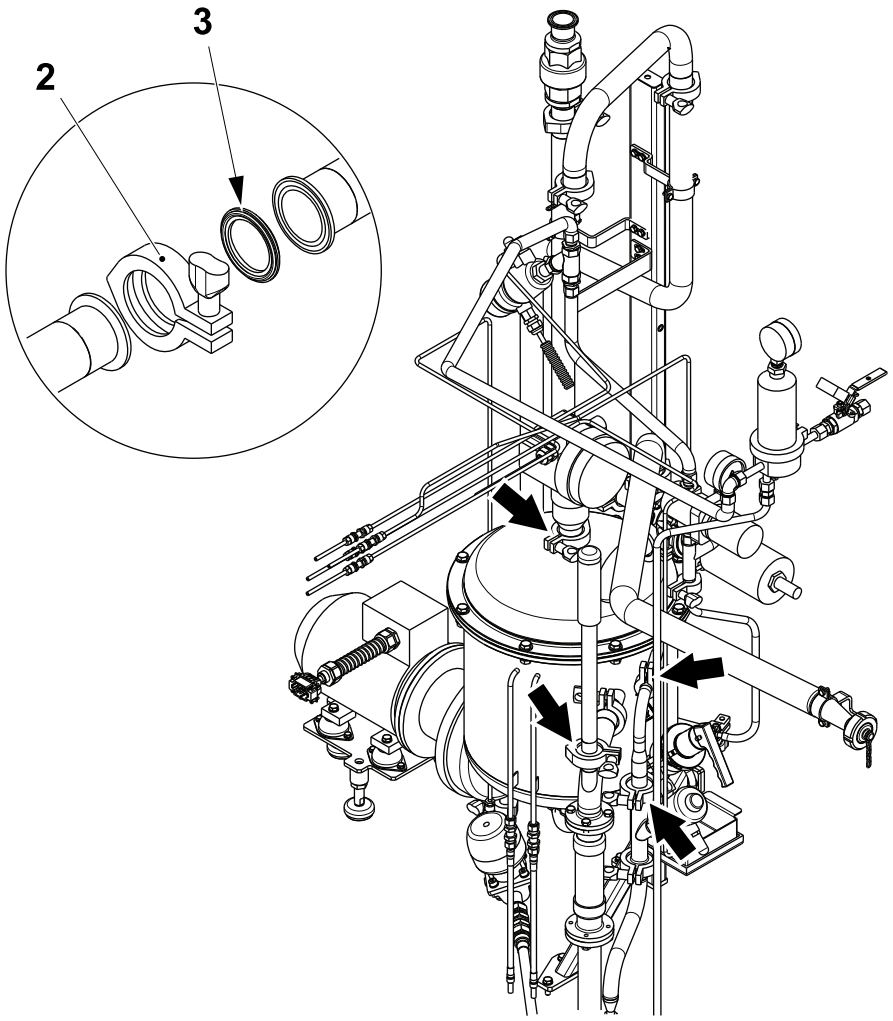

2 Clamp
3 Gasket

1.2 Forming Unit

1.2.1 Forming Section

1.2.1-1 Forming Section - Check Forming Rings

Machine Status	Electrical supply disconnecting device in position O (OFF) Main air valve OFF Main steam valve ON Main water valve OFF
SPC Reference	2808305-0300

Note! Valid for volumes with four forming rings and edge rollers.

(Cont'd)

(Cont'd)

a) Check that the surface of the rollers are not damaged and that the rollers rotate freely in the:
   - seal ring (1)
   - lower forming ring (2)
   - upper forming ring (3)
   - lower support roller (4)
   - edge roller (5).

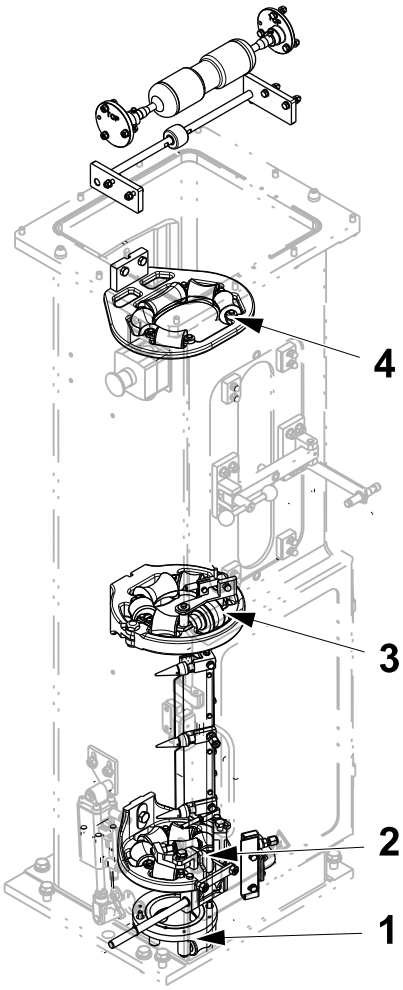

TBA 375 S

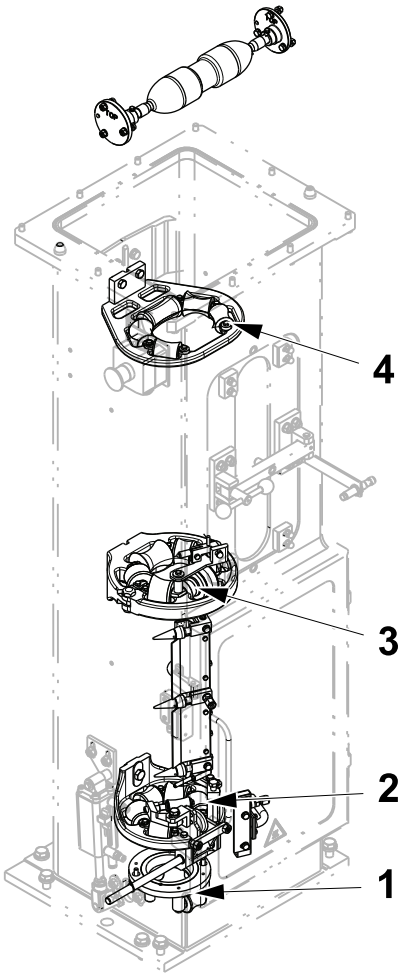

Standard machines

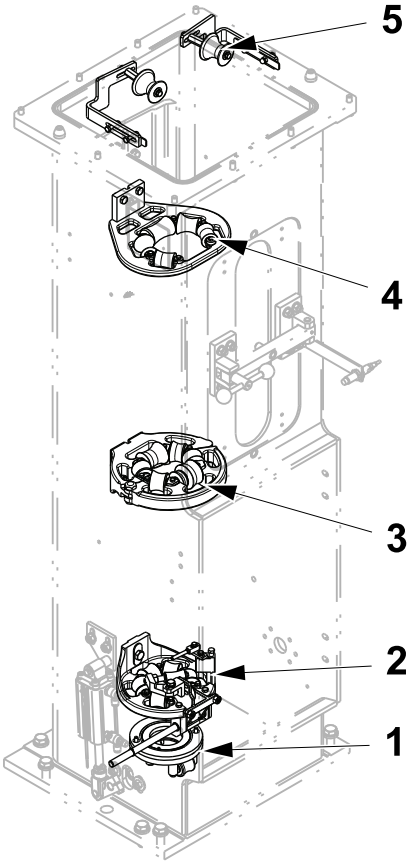

Machines with edge rollers

1 Seal ring
2 Lower forming ring
3 Upper forming ring
4 Lower support roller
5 Edge roller

(Cont'd)

(Cont'd)

b) If necessary, clean the rollers or change them, see 1.2.1-2 Forming Section - Change Forming Ring Bushings.

c) Check on the upper forming rings that the screw (6) securing the knob (7) is tight. If necessary, tighten the screw.

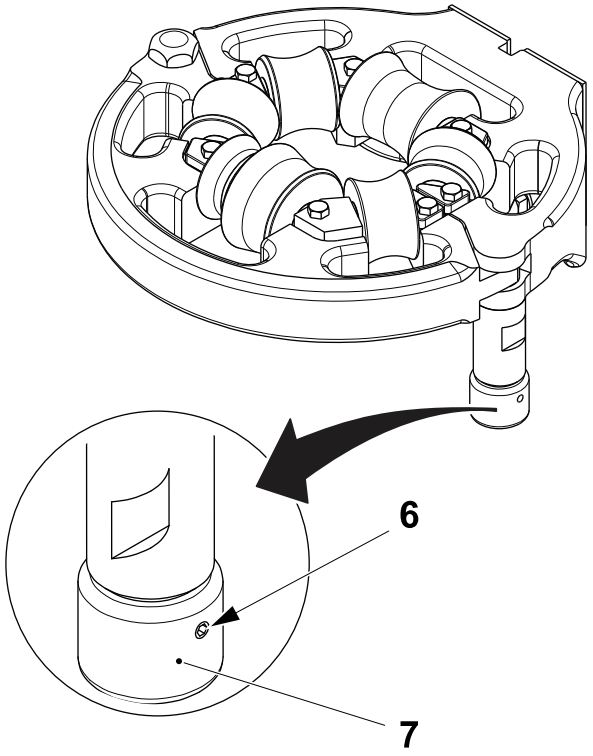

Upper forming ring shown

6 Screw
7 Knob

1.2.1-2 Forming Section - Change Forming Ring Bushings

Machine Status	Electrical supply disconnecting device in position O (OFF) Main air valve OFF Main steam valve ON Main water valve OFF
SPC Reference	2808305-0300

Note! This procedure is valid for all forming section rollers.

Note! Make sure that the lock plate (2) and the washer (4) are fitted into their original positions.

a) Remove the screws (1) and the lock plate (2).

b) Remove the rollers (3) and the washer (4).

c) Change the bushing (5) and the shaft (6) if necessary.

d) Assemble in the reverse order.

Check the play between the rollers (3). If necessary, see 1.2.1.2-1 Lower Forming Ring - Set Clearance. If the edge roller bushings have been changed, see 1.2.1.5-1 Edge Roller - Set.

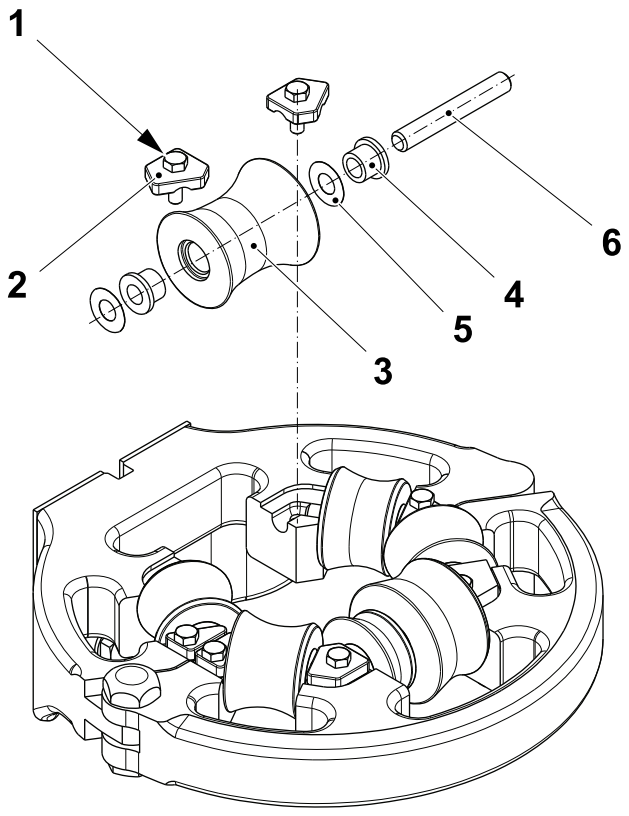

1 Screw
2 Lock plate
3 Roller
4 Washer
5 Bushing
6 Shaft

1.2.1-3 Forming Section - Forming Ring Positioning

Machine Status	Electrical supply disconnecting device in position O (OFF) Main air valve OFF Main steam valve ON Main water valve OFF
SPC Reference	2808305-0300

Use the table to set the forming rings in the correct position. The distances are measured from the centre of the roller axles on each forming ring and based on the lower forming ring being in its upper position.

(Cont'd)

(Cont'd)

Package	Dimension ±5.0 (mm)				
	A	B	C	D	E
TBA 80 S	485	520	385	1395	1009
TBA 100 B, TBA 125 S	489	453	450	1390.5	942
TBA 200 B, TBA 200 Sq, TBA 250 B, TBA 250 Sq, TBA 284 B, TBA 300 S, TBA 330 S, TPA 330 Sq	479	494	415	1389	973
TBA 200 M, TBA 250 S, TBA 200 E, TBA 250 E	488	519	385	1395	1007
TBA 160 S, TBA 180 S, TBA 200 S	486	477	427	1390	963
TPA 200 Sq, TPA 250 Sq	486	510	394	1390	996
TBA 375 S	479	527	526	1535	1006
TPA 125 Sq	489	519	385	1395	1008

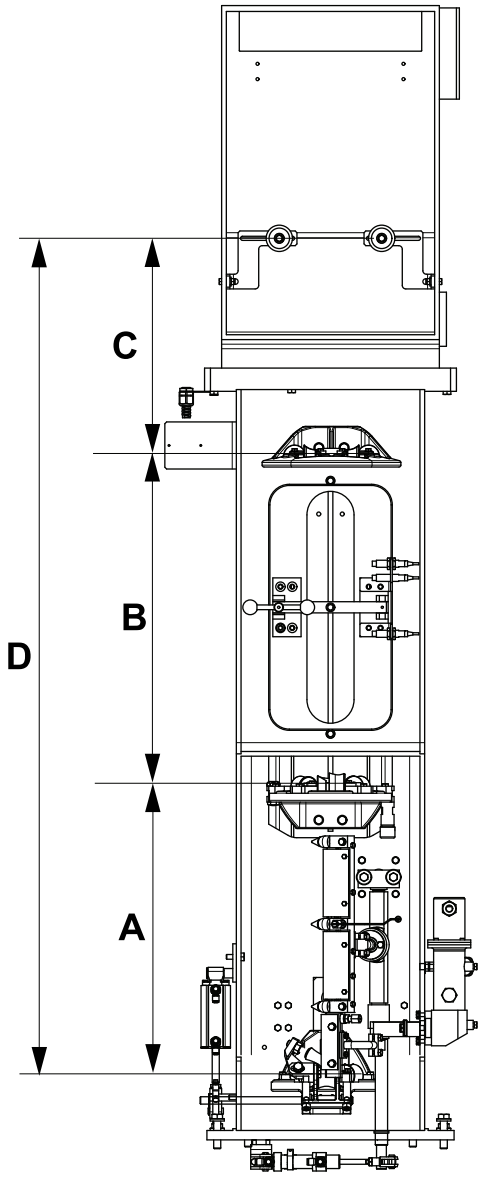

Machines **with** Edge Rollers

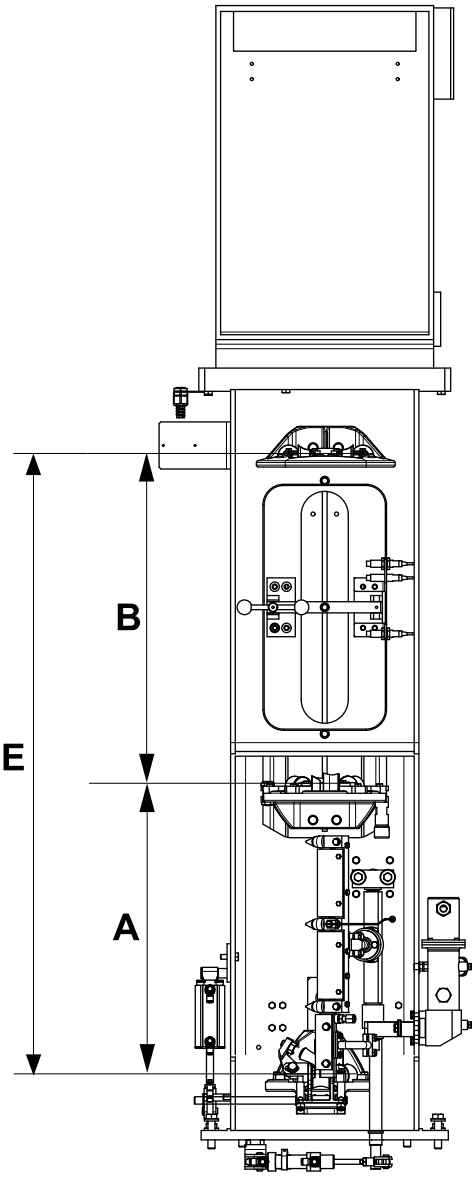

Machines **without** Edge Rollers

1.2.1.1 Seal Ring

1.2.1.1-1 Seal Ring - Check

Machine Status	Electrical supply disconnecting device in position O (OFF) Main air valve OFF Main steam valve ON Main water valve OFF
SPC Reference	2808315-0200

Check that:

- the seal (1) is not worn or damaged. Change the seal (1) if the thickness is less than distance **A.**
- the O-ring (2) is not damaged, change if necessary.
- the front and rear rollers are in contact with the packaging material with the same pressure.
- all rollers in the seal unit rotate freely and are intact, clean or change the rollers if necessary.

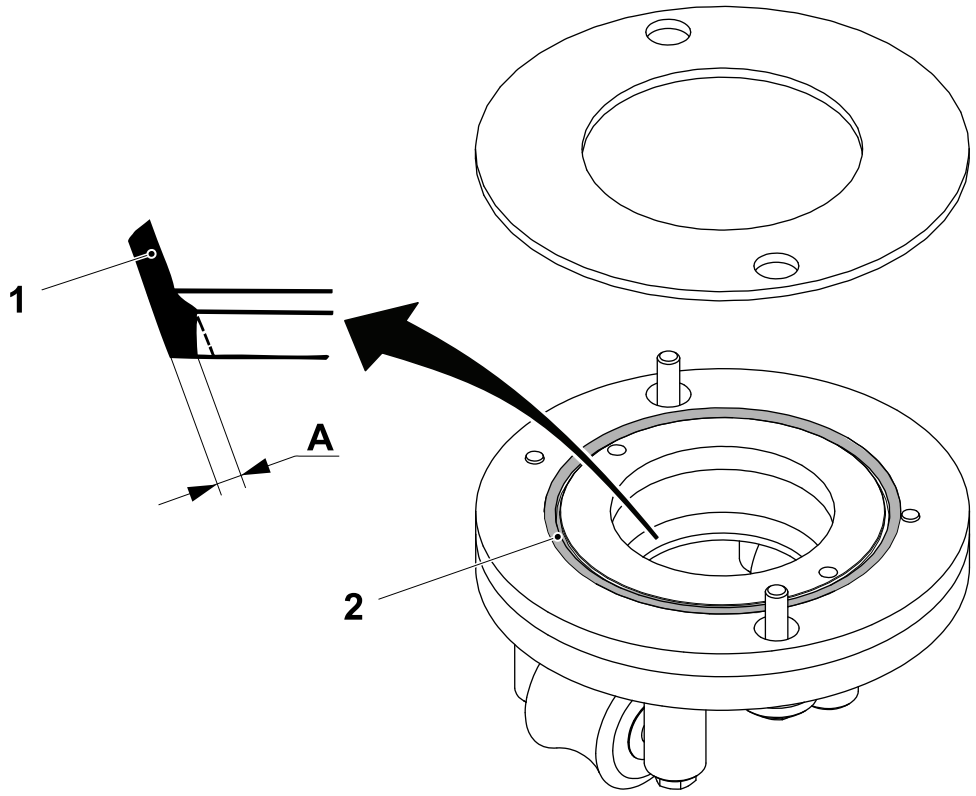

A = min. 1.0 mm
1 Seal
2 O-ring

1.2.1.1-2 Seal Ring - Change

Machine Status	Electrical supply disconnecting device in position O (OFF) Main air valve OFF Main steam valve ON Main water valve OFF
SPC Reference	2808315-0200

a) Remove the filling pipe from the filling machine.

(Cont'd)

(Cont'd)

Note! Do not losen the screws (1) or the reference position of the seal ring (2) is lost.

b) Remove the screws (3) and the seal assembly.

c) Remove the washer (4) and the pins (5) and the ring (6).

d) Change the O-ring (7) and the seal (8).

Note! Make sure that the O-ring (7), and seal (8) are correctly fitted.

e) Assemble in the reverse order.

Fit the seal ring (2) against the plates (9) and tighten the screws (3).

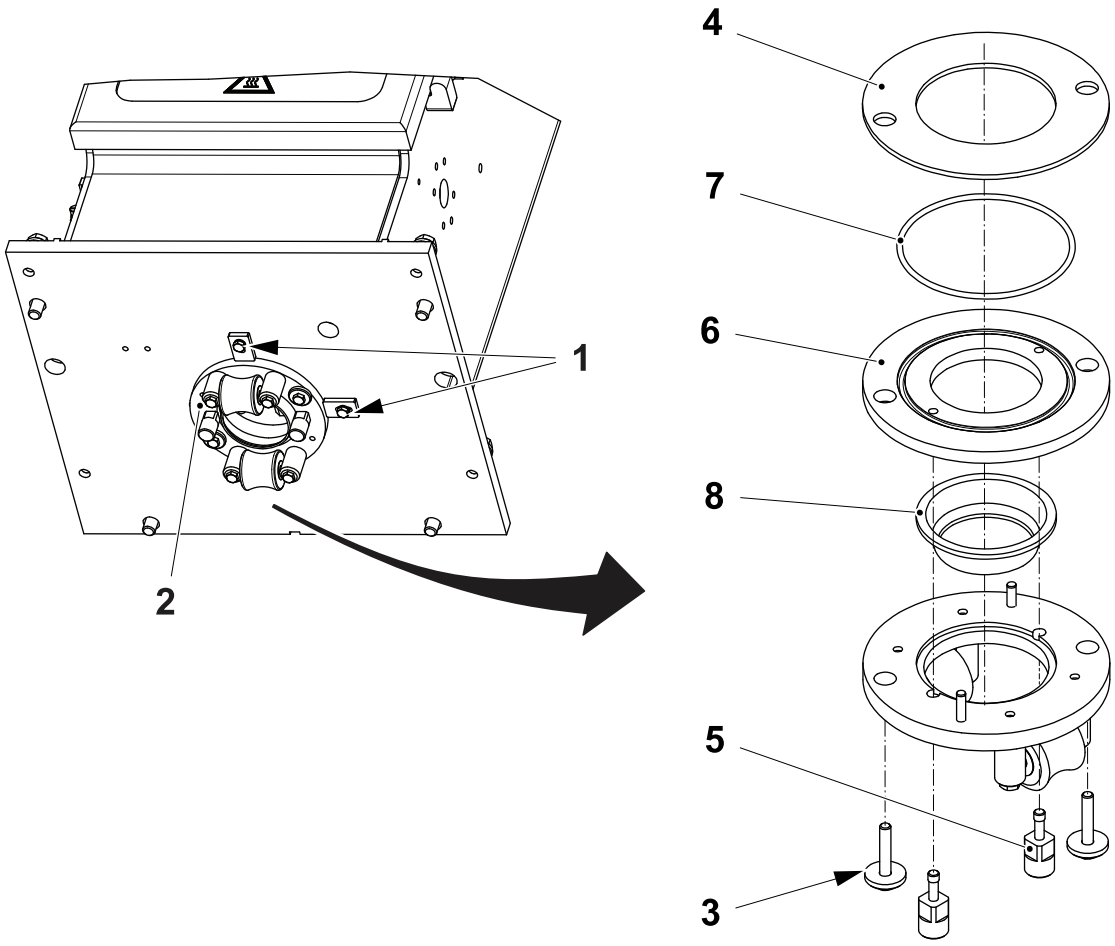

1 Screw
2 Seal ring
3 Screw
4 Washer
5 Pin
6 Ring
7 O-ring
8 Seal
9 Plate

1.2.1.1-3 Seal Ring - Set

Machine Status	Electrical supply disconnecting device in position O (OFF) Main air valve OFF Main steam valve ON Main water valve OFF
SPC Reference	2808315-0200

a) Loosen the screws (1) and the screws (2) so that the seal ring (3) can move freely.

b) Step up the machine to TUBE SEALING and set the position of the seal ring (3) so that the rollers (4) apply the same pressure to the packaging material tube (5).

c) Lock the seal ring (3) in position by tightening the screws (2).

d) Push the plates (6) against the seal ring (3) and tighten the screws (1).

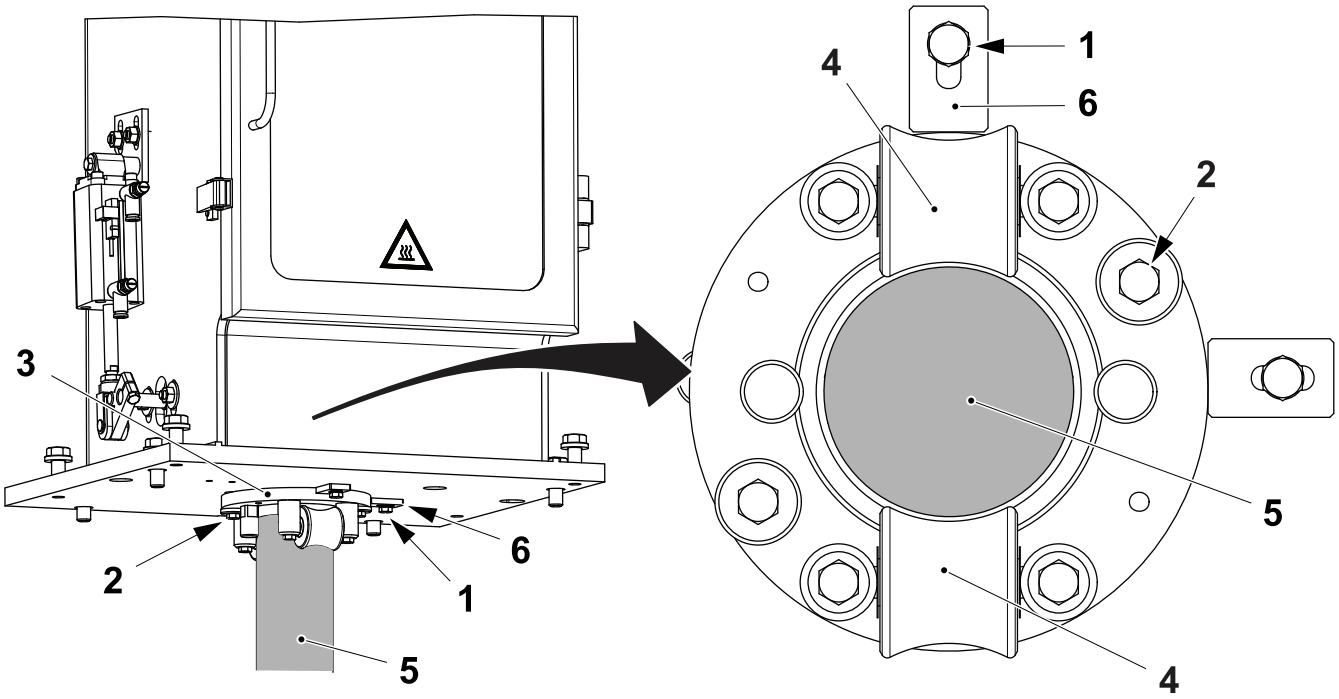

1 Screw
2 Screw
3 Seal ring
4 Roller
5 Packaging material tube
6 Plate

1.2.1.1-4 Seal Ring - Set Clearance

Machine Status	Electrical supply disconnecting device in position O (OFF) Main air valve OFF Main steam valve ON Main water valve OFF
SPC Reference	2808315-0200

Set the distance **A** and **B** between the roller (1) and the axle supports (2) by adding or removing the shimming washers.

Repeat the setting for the roller (3).

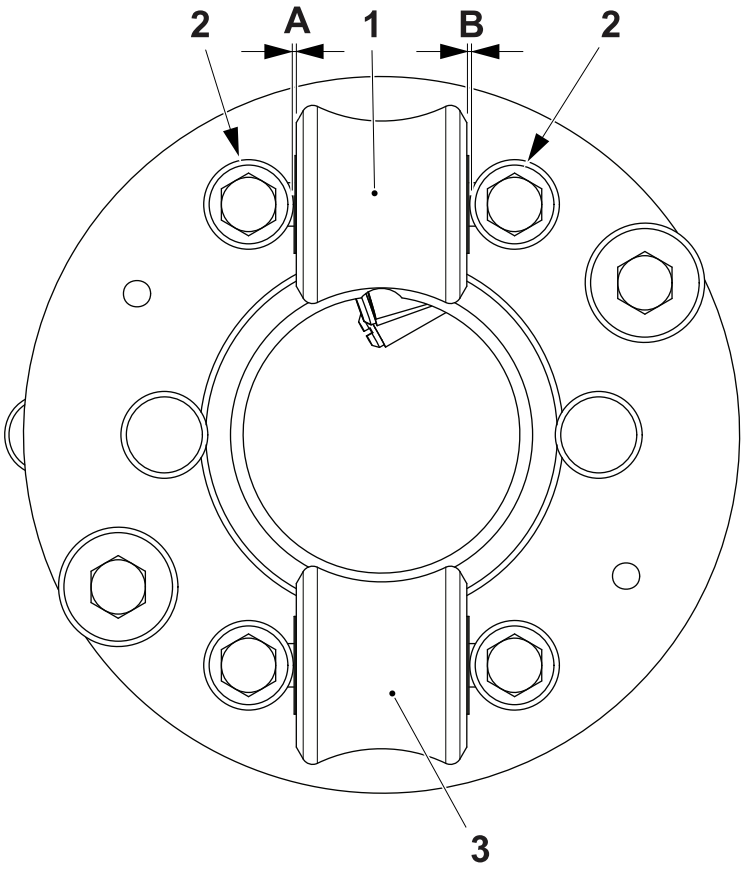

A = B = 0.15 to 0.25 mm

1 Roller
2 Axle support
3 Roller

1.2.1.2 Lower Forming Ring

1.2.1.2-1 Lower Forming Ring - Set Clearance

Machine Status	Electrical supply disconnecting device in position O (OFF) Main air valve OFF Main steam valve ON Main water valve OFF
SPC Reference	2808290-0150

Note! Always follow the setting order: 1-2, 2-3, 1-2, 2-3, as indicated in the illustration.

Make sure that the filling pipe is removed from the machine. Set the distance **A** between the rollers by adding or removing the shimming washer (1).

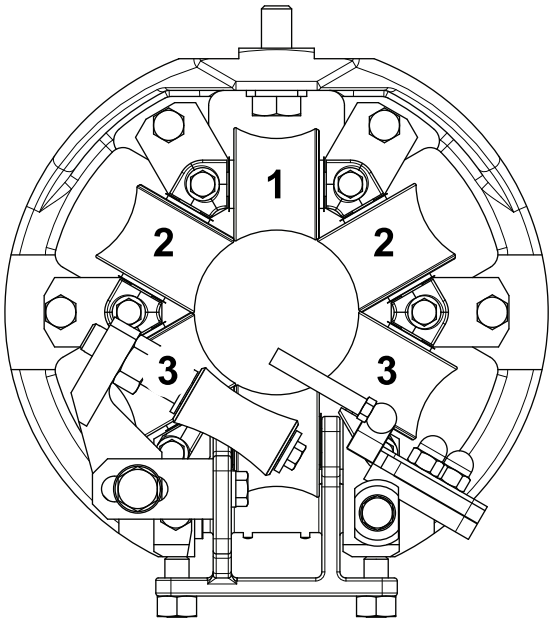

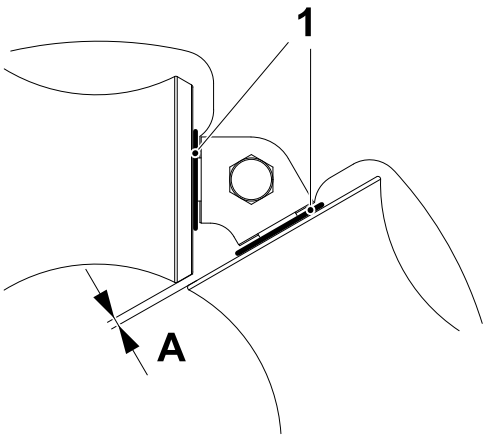

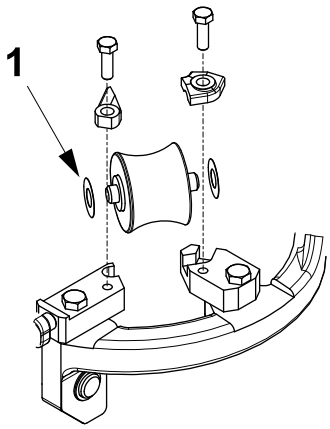

A = 0.15 to 0.25 mm

1 Shimming washer

1.2.1.2-2 Lower Forming Ring - Set Position

Machine Status	Electrical supply disconnecting device in position I (ON) Main air valve ON Main steam valve ON Main water valve ON
Special Equipment	See 9.2 Templates and Tools
SPC Reference	2808290-0150

Setting with Template

a) Remove the screw (1) and the finger assembly (2).

b) Remove the screws (3) and the locking plates (4).

c) Remove the screws (5) and the rollers (6).

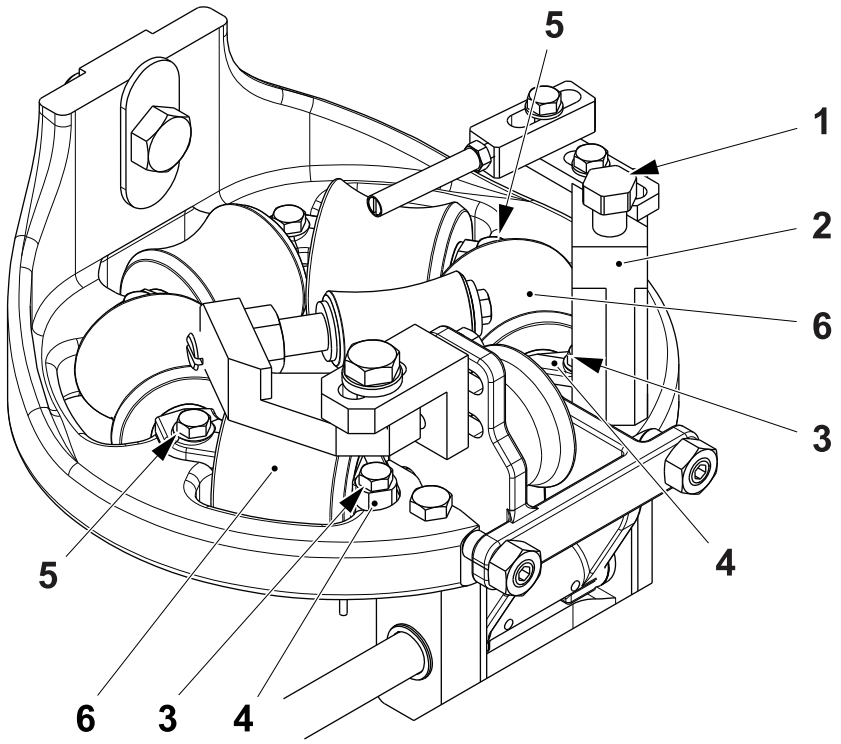

1 Screw
2 Finger assembly
3 Screw
4 Locking plate
5 Screw
6 Roller

(Cont'd)

(Cont'd)

d) Remove the pressure roller assembly (7) from the filling pipe (8).

e) Fit the template (9) and secure it into position with the screws (10).

f) Loosen the screw (11) and move the plate (12) under the spring (13).

g) Loosen the screws (14) and the screw (15).

h) Move the lower lower forming ring (16) until the plate (12) slightly touches the bottom surface of the spring (13).

i) Tighten the screw (15) and the screws (14).

j) Remove the template (9) and assemble in the reverse order.

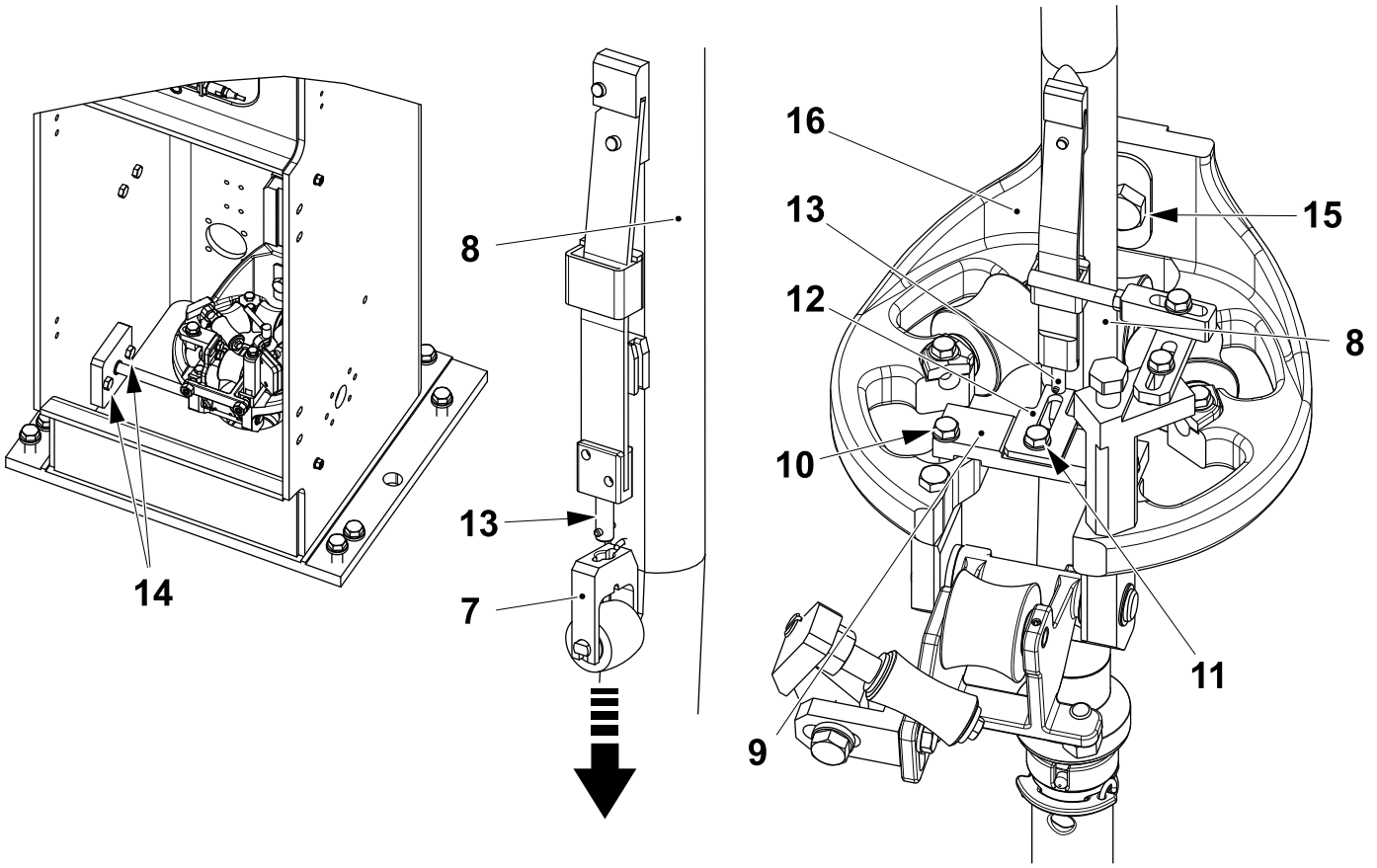

7 Pressure roller assembly
8 Filling pipe
9 Template
10 Screw
11 Screw
12 Plate
13 Spring
14 Screw
15 Screw
16 Lower forming ring

(Cont'd)

(Cont'd)

Setting without Template

a) Loosen the screws (1) and the screw (2).

b) Move the lower lower forming ring (3) until distance **A** between the pressure roller (4) and the counter roller (5) is obtained.

c) Tighten the screw (2) and the screws (1).

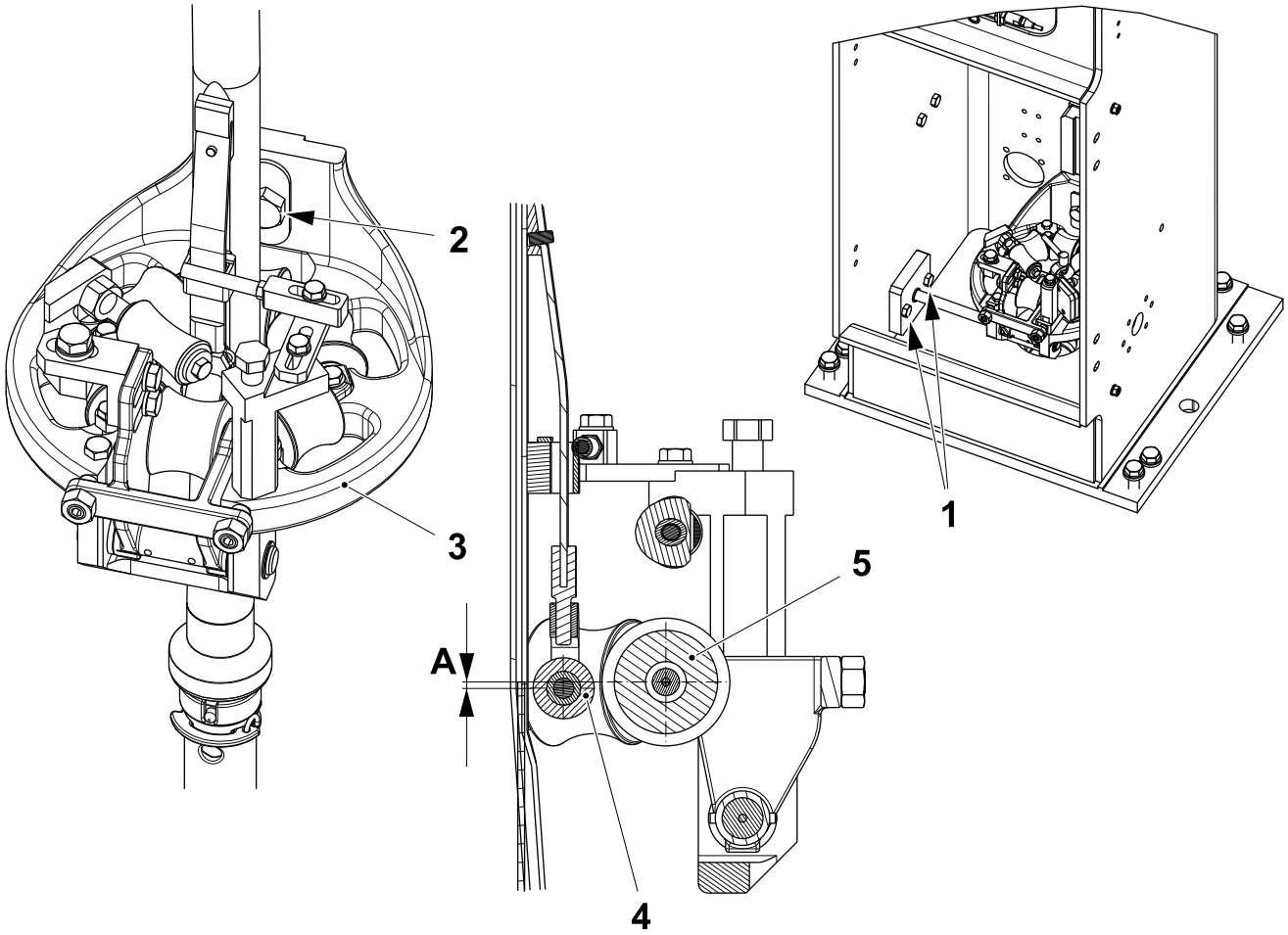

A = 2.0 ±0.5 mm

1 Screw
2 Screw
3 Lower forming ring
4 Pressure roller
5 Counter roller

(Cont'd)

(Cont'd)

Set Support Roller

a) With the packaging material threaded through the machine set the distance **A** between the support roller (1) and the edge of the packaging material tube (2). If required adjust with the screws (3) and the screw (4).

b) Step up the machine to PRODUCTION and check that the support roller (1) does not guide the packaging material tube (2) or affects the overlap.

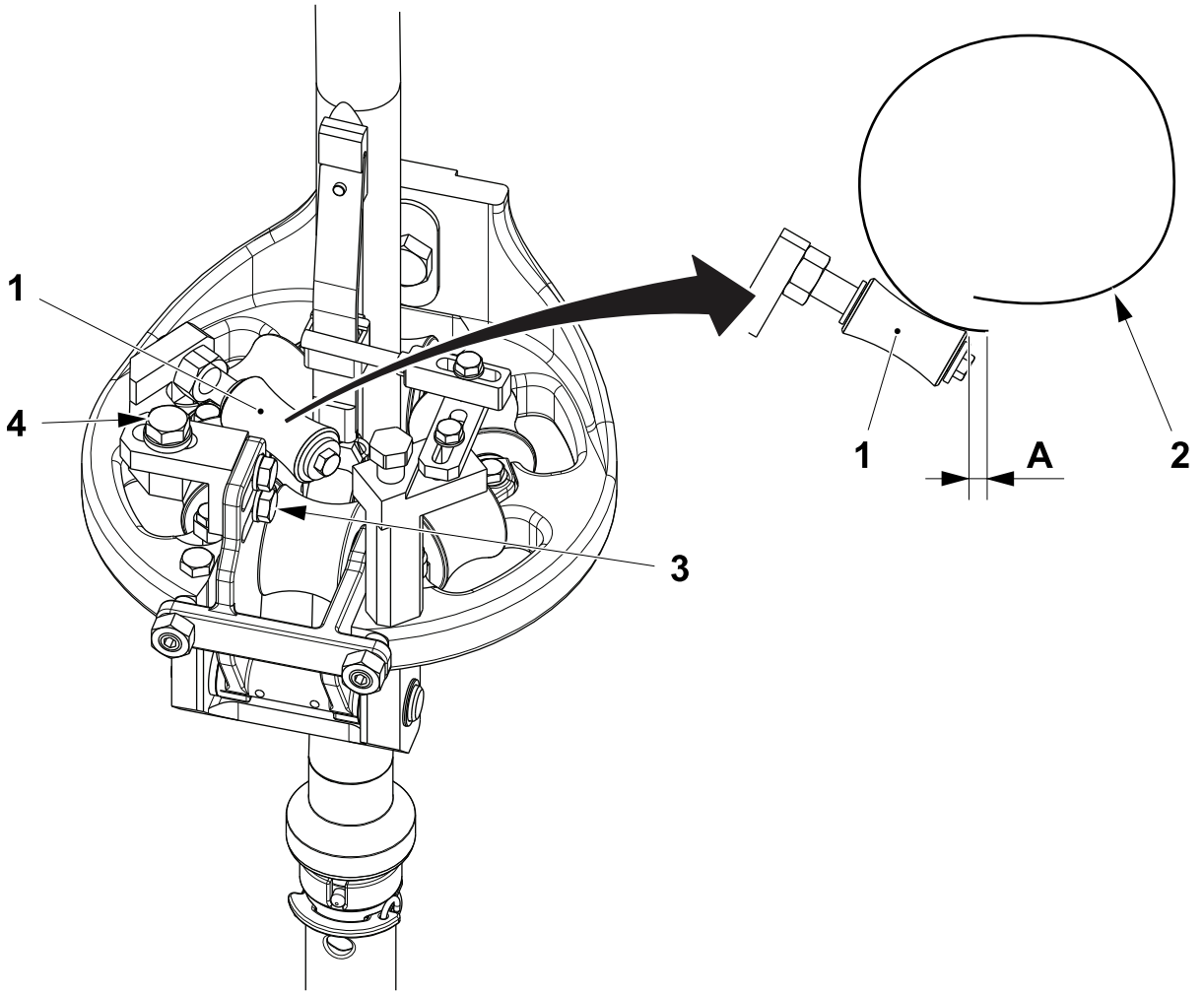

A = 1 ±0.5 mm

1 Support roller
2 Packaging material tube
3 Screw
4 Screw

1.2.1.2-3 Lower Forming Ring - Set Overlap

Machine Status	Electrical supply disconnecting device in position O (OFF) Main air valve OFF Main steam valve ON Main water valve OFF
SPC Reference	2808290-0150

Pick out two packages and measure the LS overlap **A**, for the nominal LS overlap value see the LS Overlap section in the Package Checks of the Operation Manual.

(Cont'd)

(Cont'd)

Lower Forming Ring Plus, Minus and Standard Rollers

Package	Roller (1) TP No.			Roller (2) TP No.		
	Standard	Plus	Minus	Standard	Plus	Minus
TBA 80 S	2945446-1	2945446-3	2945446-2	2922709-1	2922709-3	2922709-2
TBA 100 B, TBA 125 S	2969725-1	2969725-3	2969725-2	752153	752466	752467
TBA 200 B, TBA 200 Sq, TBA 250 B, TBA 250 Sq, TBA 330 S	2966602-1	2966602-3	2966602-2	751502	752462	752463
TBA 284 B, TBA 300 S	2966602-1	2945469-3	2945469-2	751502	2922717-3	2922717-2
TBA 160 S, TBA 180 S, TBA 200 S	2966599-1	2966599-3	2966599-2	752138	752464	752465
TBA 200 M, TBA 250 S	3006309-1	2966628-3	2966628-2	3006310	574446	574447
TBA 375 S	3058447-1	3058447-3	3058447-2	3058446-1	3058446-3	3058446-2
TPA 125 Sq	2966605-1	2966605-3	2966605-2	2890091-1	2890091-3	2890091-2
TPA 200 Sq, TPA 250 Sq	3340553	-	-	2922767-1	2922767-3	2922767-2
TPA 330 Sq	2986698	2986698-3	2986698-2	929279	929282	929283
TBA 200 E, TBA 250 E	3089568-1	3089567-3	3089567-2	3089567-1	3089567-3	3089567-2

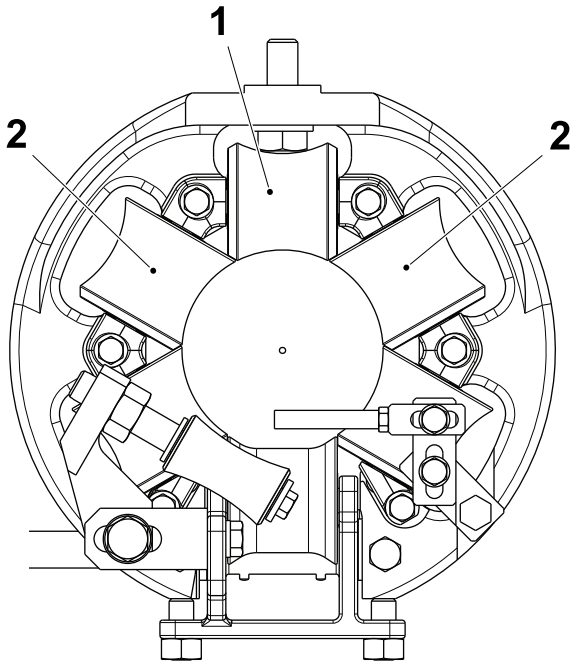

1 Where to put one trimming roller

2 Where to put two trimming rollers

(Cont'd)

(Cont'd)

Set the overlap by changing rollers in the lower forming ring. See the table on the previous page for a guide to the plus, minus and standard rollers. Always fit trimming rollers symmetrically in respect to the pressure roller (3). Never fit plus and minus trimming rollers together.

Remove the finger (4).

Set the overlap **A** by changing rollers in the lower forming ring.

- to INCREASE the overlap **A**, change up to two of the standard rollers for minus trimming rollers
- to DECREASE the overlap **A**, change up to two standard rollers for plus trimming rollers.

After the forming ring has been set it will function correctly with all packaging material widths within the given limits.

Fit the finger (4) and set its position, see 1.2.1.2-6 Lower Forming Ring - Set Finger.

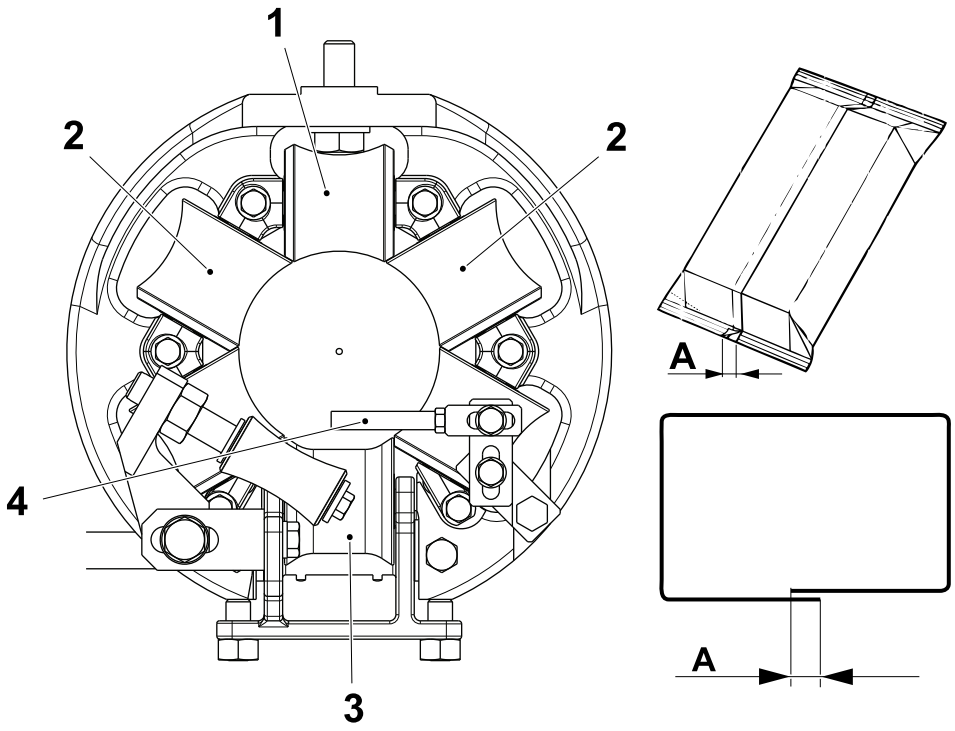

1 Where to put one trimming roller
2 Where to put two trimming rollers
3 Pressure roller
4 Finger

1.2.1.2-4 Lower Forming Ring - Set Cylinder

Machine Status	Electrical supply disconnecting device in position O (OFF) Main air valve OFF Main steam valve ON Main water valve OFF
SPC Reference	2808290-0150

Adjust the cylinder restrictor valves (1) as described below to set the correct speed of movement for the lower forming ring.

a) Close the restrictor valves (1) on both the plus (+) and minus (-) sides.

b) On the minus (-) side, open the restrictor valves (1) **6** turns.

c) On the plus (+) side, open the restrictor valves (1) **5** turns.

Note! Make sure that the screw (2) is tightened to a torque of 10Nm.

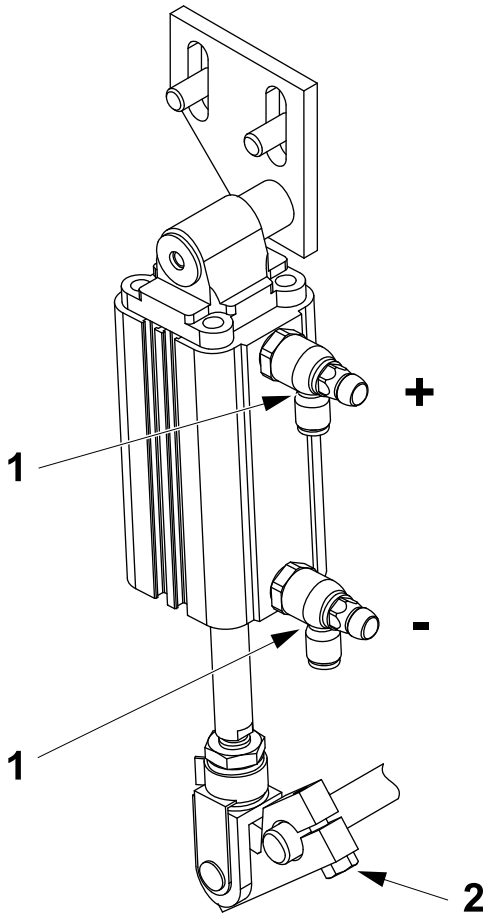

1 Restrictor valve
2 Screw

1.2.1.2-5 Lower Forming Ring - Check

Machine Status	Electrical supply disconnecting device in position O (OFF) Main air valve OFF Main steam valve ON Main water valve OFF
SPC Reference	2808290-0150

Check the rollers (1) and (2), the flange bushings (3) and the finger (4) for wear or damage. Proceed as follows:

a) Open thebracket (5) and loosen the grub screw (6).

b) Pull out the shaft (7) and remove the screw (8).

c) Remove the rollers (1) and the (2) and the flange bushings (3). Change if necessary.

d) Loosen the nut (9) and remove the screw (10) and the finger (4).

e) Assemble in the reverse order.

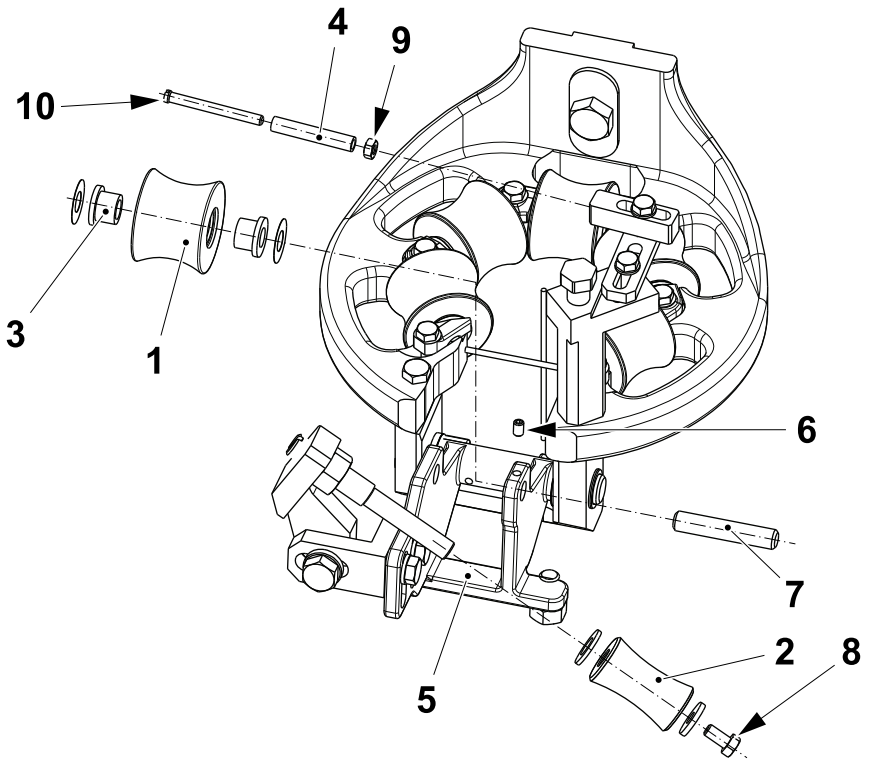

1 Roller
2 Roller
3 Flange bushing
4 Finger
5 Bracket
6 Grub screw
7 Shaft
8 Screw
9 Nut
10 Screw

1.2.1.2-6 Lower Forming Ring - Set Finger

Machine Status	Electrical supply disconnecting device in position O (OFF) Main air valve OFF Main steam valve ON Main water valve OFF Packaging material threaded
SPC Reference	2808290-0150

Note! Before performing this procedure make sure that the packaging material tube (5) is not twisted.

Note! This procedure must always be performed after 1.2.1.6-1 Air Nozzle (LS) - Set.

Basic Set

a) Loosen the screw (1) and the screw (2) and adjust the finger (3) until it is as much as possible parallel and vertically aligned with the lower roller (4) on the back of the LS element when the LS element is in the production position.

b) Adjust the finger (3) until it is distance **A** from the edge of the packaging material tube (5) as indicated in the illustration.

Note! For some volumes distance **A** may not be achievable, it is however important that the finger is positioned so as not to interfere or fold the LS strip.

c) Tighten the screw (1) and the screw (2).

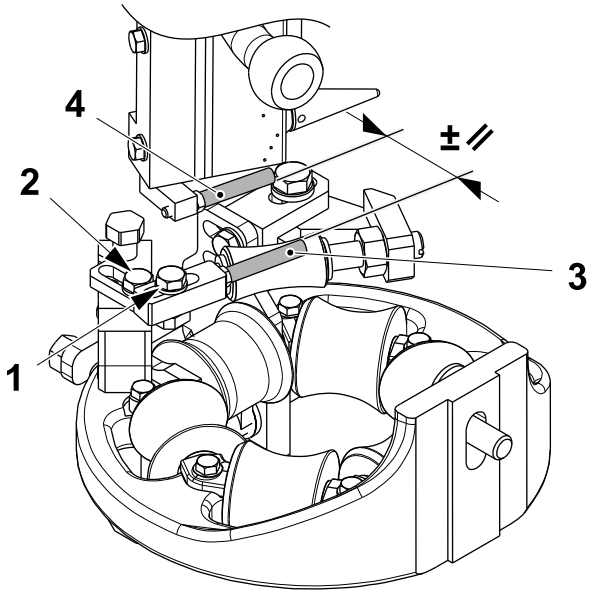

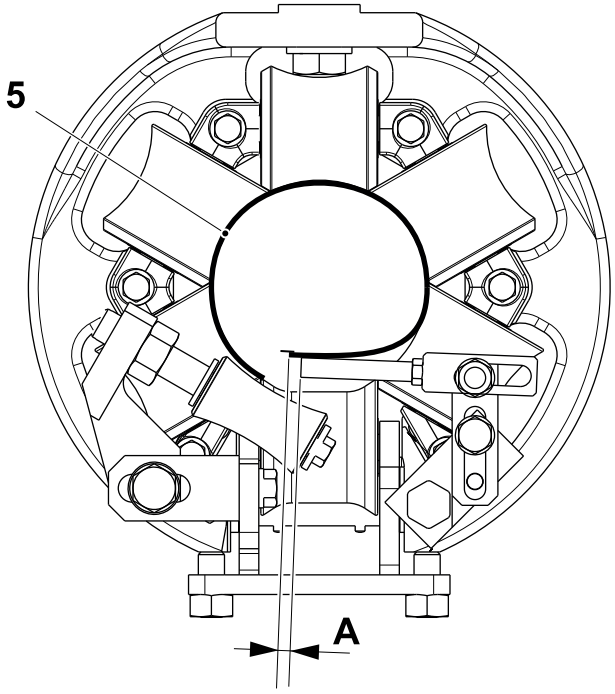

A = 3.0 ±0.1 mm

1 Screw
2 Screw
3 Finger
4 Roller
5 Packaging material tube

(Cont'd)

(Cont'd)

Fine Set

a) Push and hold the roller (1) and the LS element (2) in the production position.

b) Make sure that the finger (3) rotates freely without touching both the inside and outside of the packaging material tube (4).

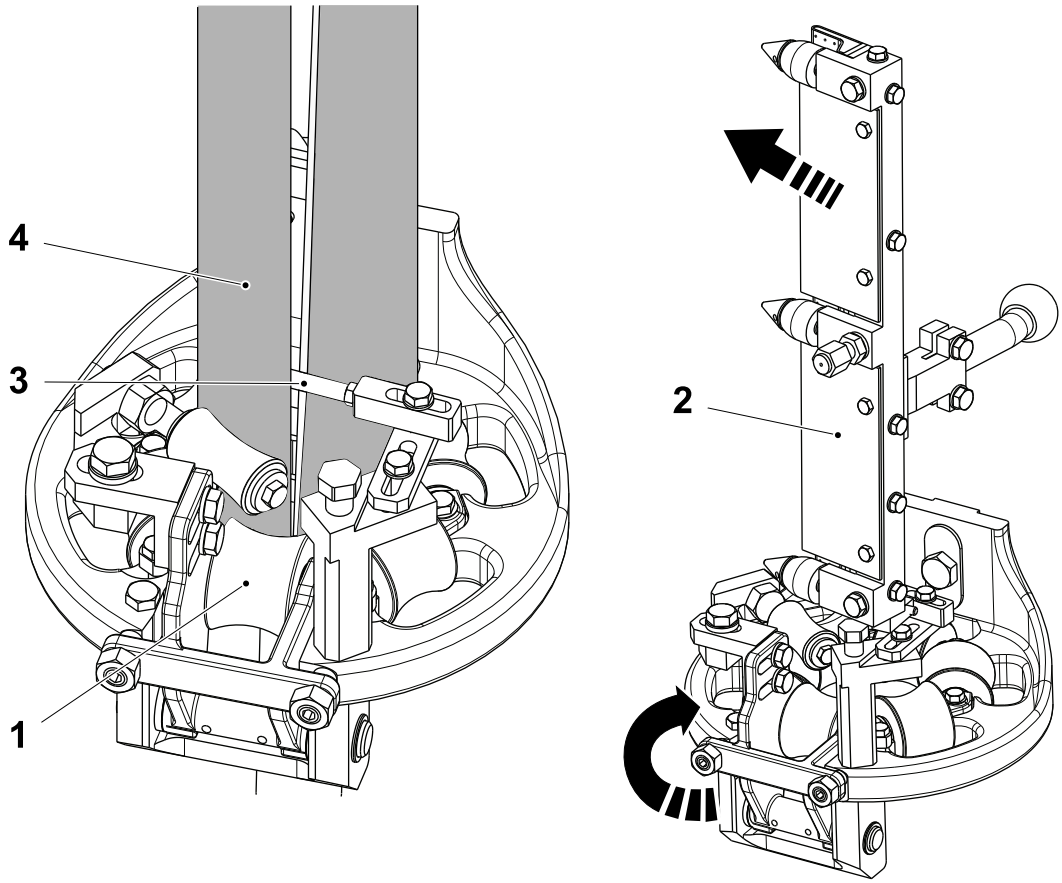

1 Roller
2 LS element
3 Finger
4 Packaging material tube

1.2.1.3 Upper Forming Ring

1.2.1.3-1 Upper Forming Ring - Set Clearance

Machine Status	Electrical supply disconnecting device in position O (OFF) Main air valve OFF Main steam valve ON Main water valve OFF
SPC Reference	2808285-0150

Note! Always follow the setting order: 1-2, 2-3, 3-4, 1-5, 5-6, 6-7, 4-7 as indicated in the illustration.

Make sure that the filling pipe is removed from the machine. Set the distance **A** between the rollers by adding or removing the shimming washer (1).

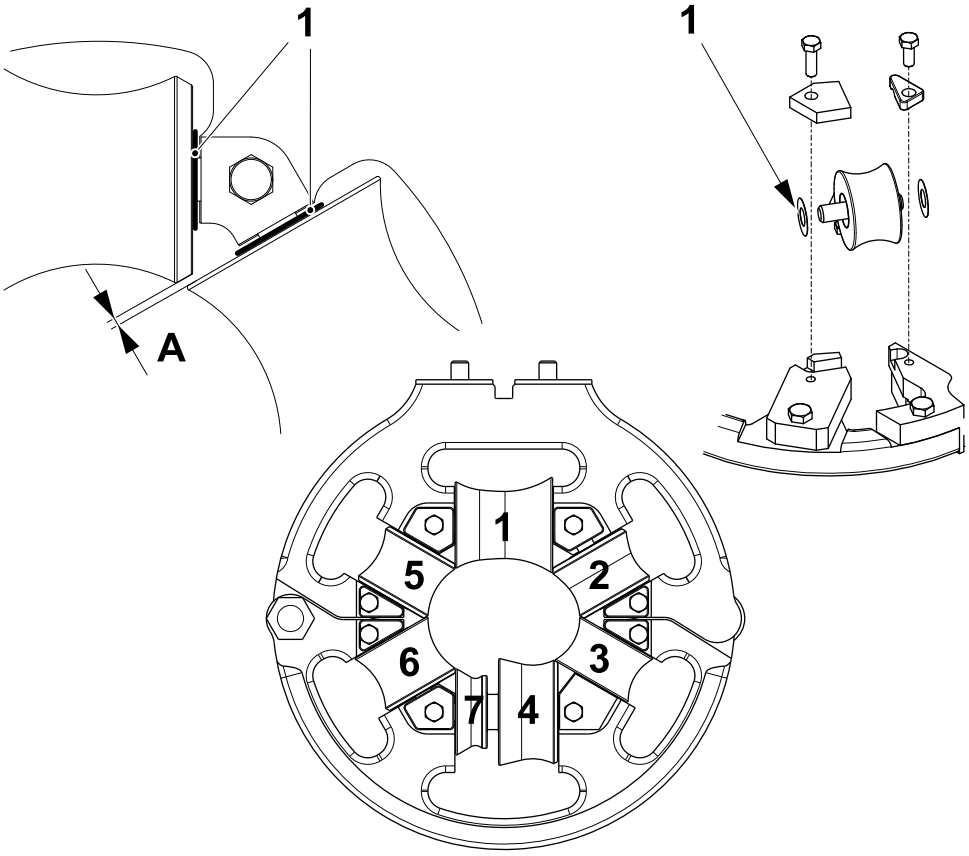

A = 0.15 to 0.25 mm
1 Shimming washer

1.2.1.3-2 Upper Forming Ring - Set Finger

Machine Status	Electrical supply disconnecting device in position O (OFF) Main air valve OFF Main steam valve ON Main water valve OFF
SPC Reference	2808285-0150

Note! Valid for TBA 200 B, TBA 200 Sq, TBA 200 E, TBA 250 E, TBA 200 M, TBA 250 B, TBA 250 S, TBA 250 Sq, TBA 284 B, TBA 300 S, TBA 330 S, TBA 375 S and TPA 330 Sq volumes only.

Set the distance **A** between the roller (1) and the packaging material (2) with the screws (3) and (4).

The roller (1) should not touch the packaging material under normal operating conditions.

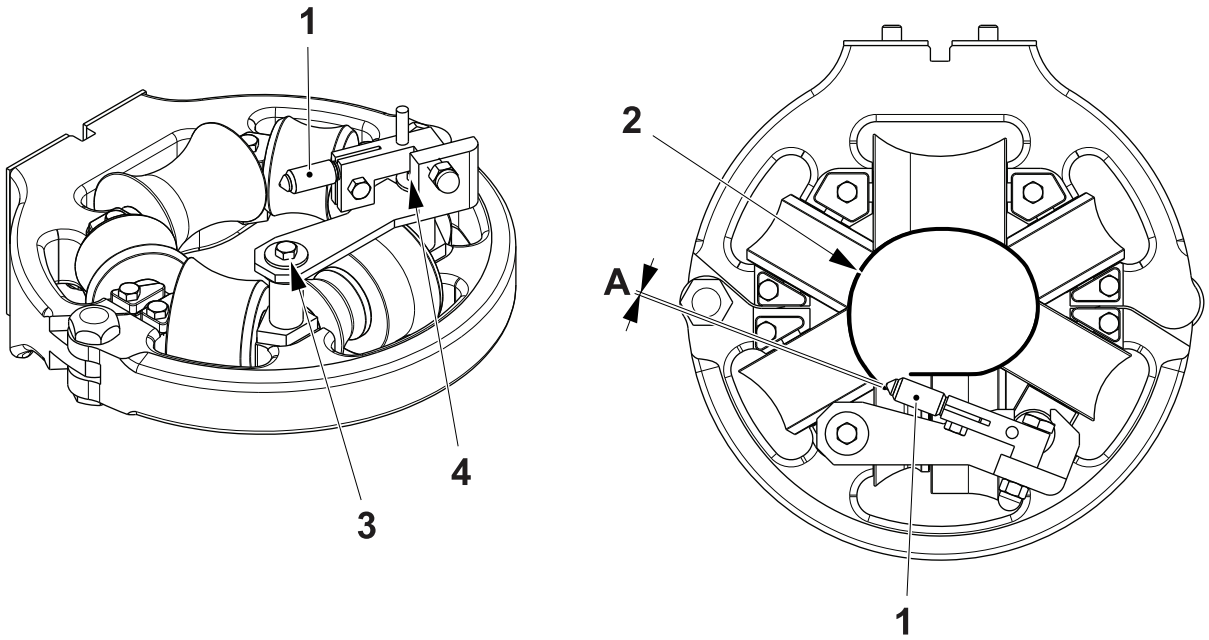

A = 2 mm

1 Roller
2 Packaging material
3 Screw
4 Screw

1.2.1.4 Lower Support Roller

1.2.1.4-1 Lower Support Roller - Set Clearance

Machine Status	Electrical supply disconnecting device in position O (OFF) Main air valve OFF Main steam valve ON Main water valve OFF
SPC Reference	2890090-0100

Note! Always set the rollers in the following order: 1-2, 2-3, 1-2, 2-3 as indicated in the illustration.

Make sure that the filling pipe is removed from the filling machine. Set the distance **A** between the rollers by adding or removing the shimming washer (1).

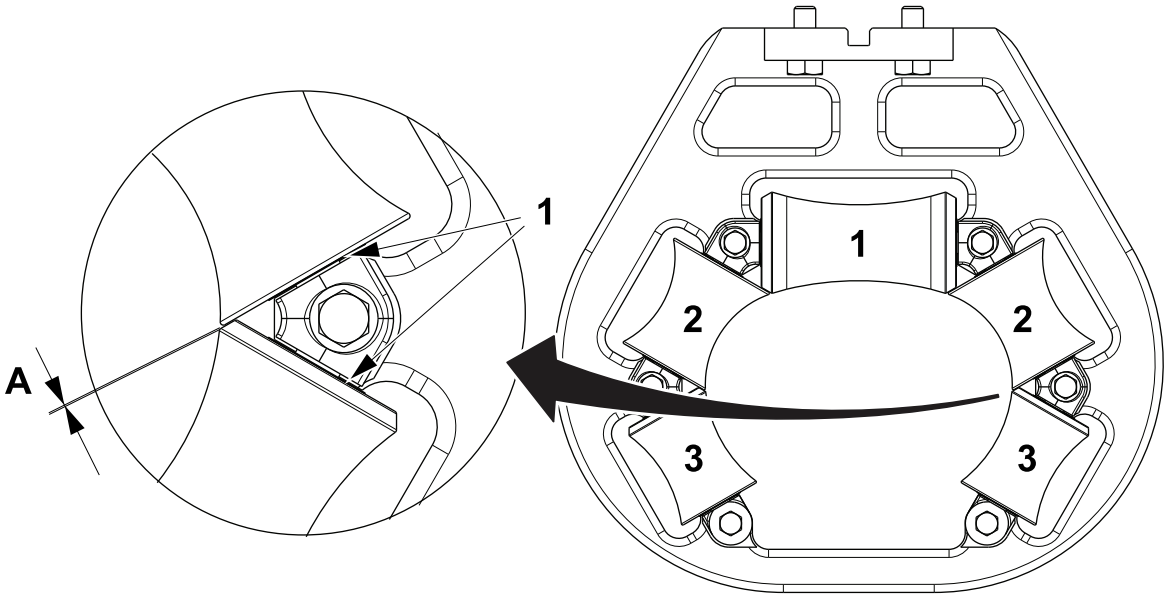

A max 0.3 mm
1 Shimming washer

1.2.1.5 Edge Roller

1.2.1.5-1 Edge Roller - Set

Machine Status	Electrical supply disconnecting device in position O (OFF) Main air valve OFF Main steam valve ON Main water valve OFF
SPC Reference	2808295-0100

a) Loosen the screws (1) and adjust the two roller assemblies until the rollers (2) are positioned centrally in relation to the edge of the packaging material.

b) Tighten the screws (1).

c) Loosen the screws (3) and adjust the rollers (2) until they are in contact with the packaging material. Fine adjust the rollers (2) until the correct packaging material movement is achieved.

d) Tighten the screws (3).

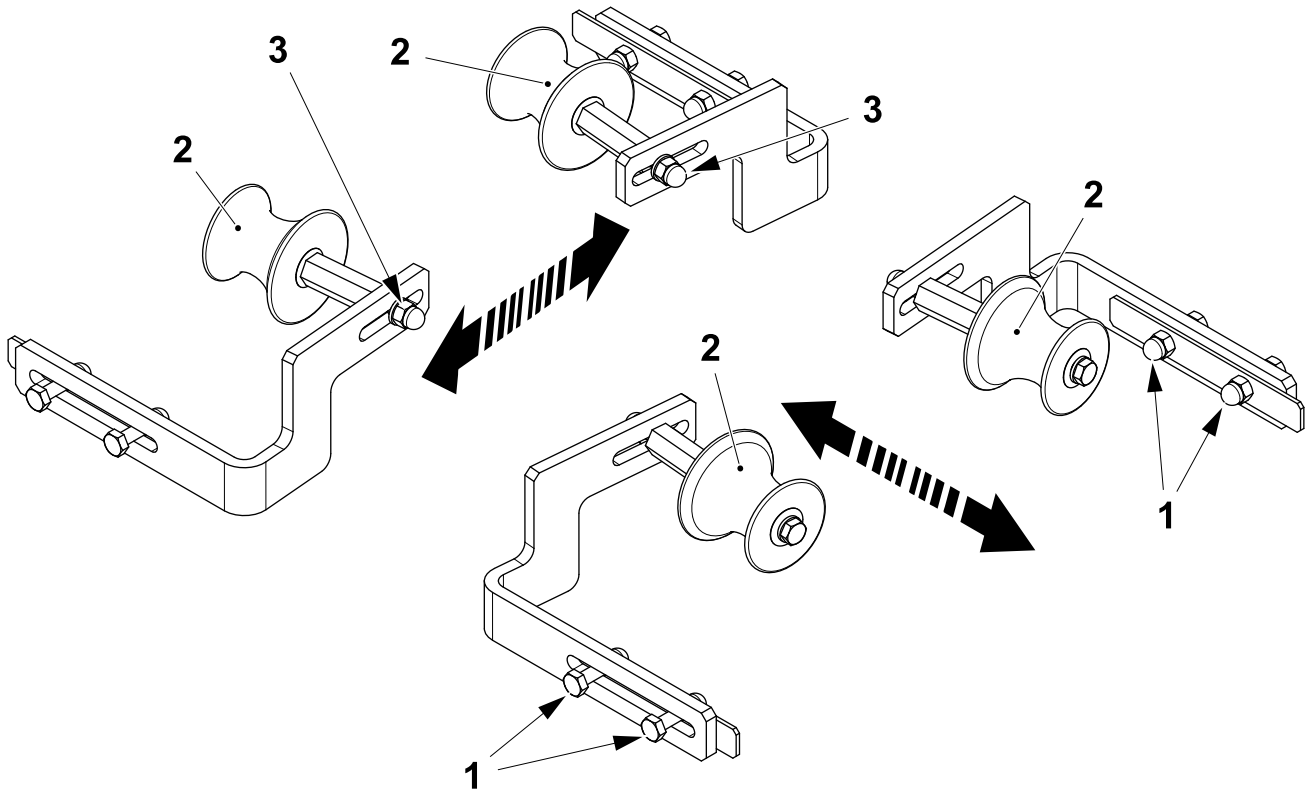

1 Screw
2 Roller
3 Screw

(Cont'd)

(Cont'd)

Fine Setting

Set the edge roller assembly so that the packaging material web (1) is in contact with the central surface of the rollers (2), as shown below.

Adjust the position of the rollers (2) by loosening the nuts (3) and the nuts (4).

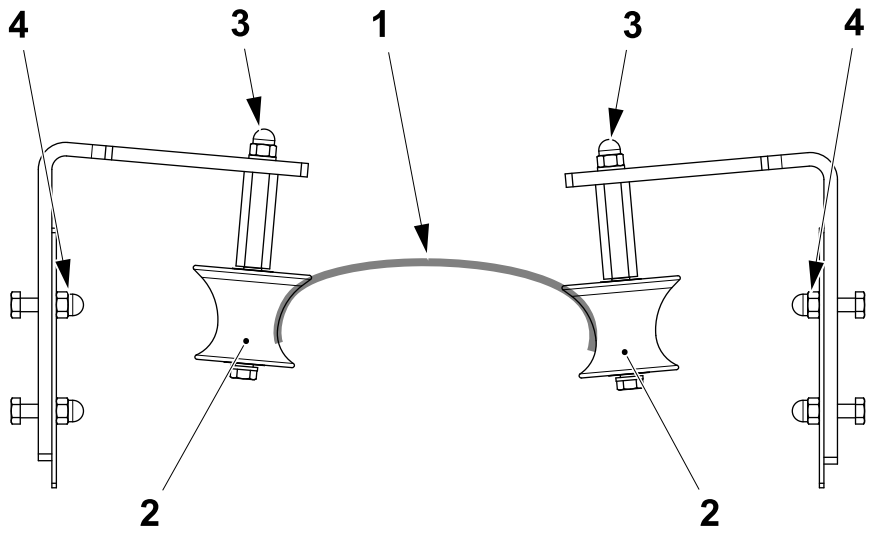

1 Packaging material web
2 Roller
3 Nut
4 Nut

1.2.1.6 Air Nozzle (LS)

1.2.1.6-1 Air Nozzle (LS) - Set

Machine Status	Electrical supply disconnecting device in position O (OFF) Main air valve OFF Main steam valve ON Main water valve OFF
Special Equipment	Setting Template, see Templates and Tools
SPC Reference	2808340-0300 2808330-0200

Basic Setting

a) Remove the cover plates from the LS nozzle.

b) Set the distances **A** and **B** between the nozzles (2) surface and the edge of the rollers (1).

c) To adjust, loosen the four screws (3) and shift the nozzles (2).

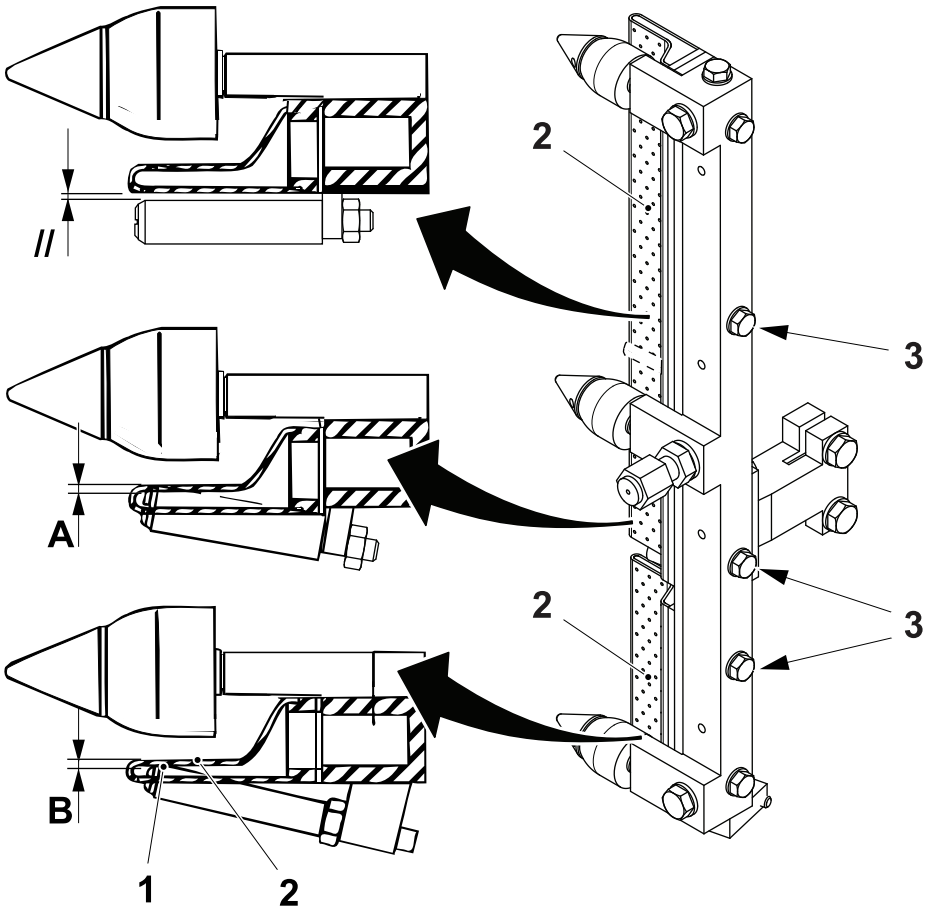

A = 1.0 to 1.5 mm
B = 0.5 to 1.0 mm
1 Roller 2 Nozzle 3 Screw

(Cont'd)

(Cont'd)

d) Remove the upper forming ring (4) by means the screws (5).

e) Remove the bracket assembly (6) by means the screws (7).

f) Remove the screws (8) and the lock plates (9) and the roller (10).

g) Remove the upper roller (11).

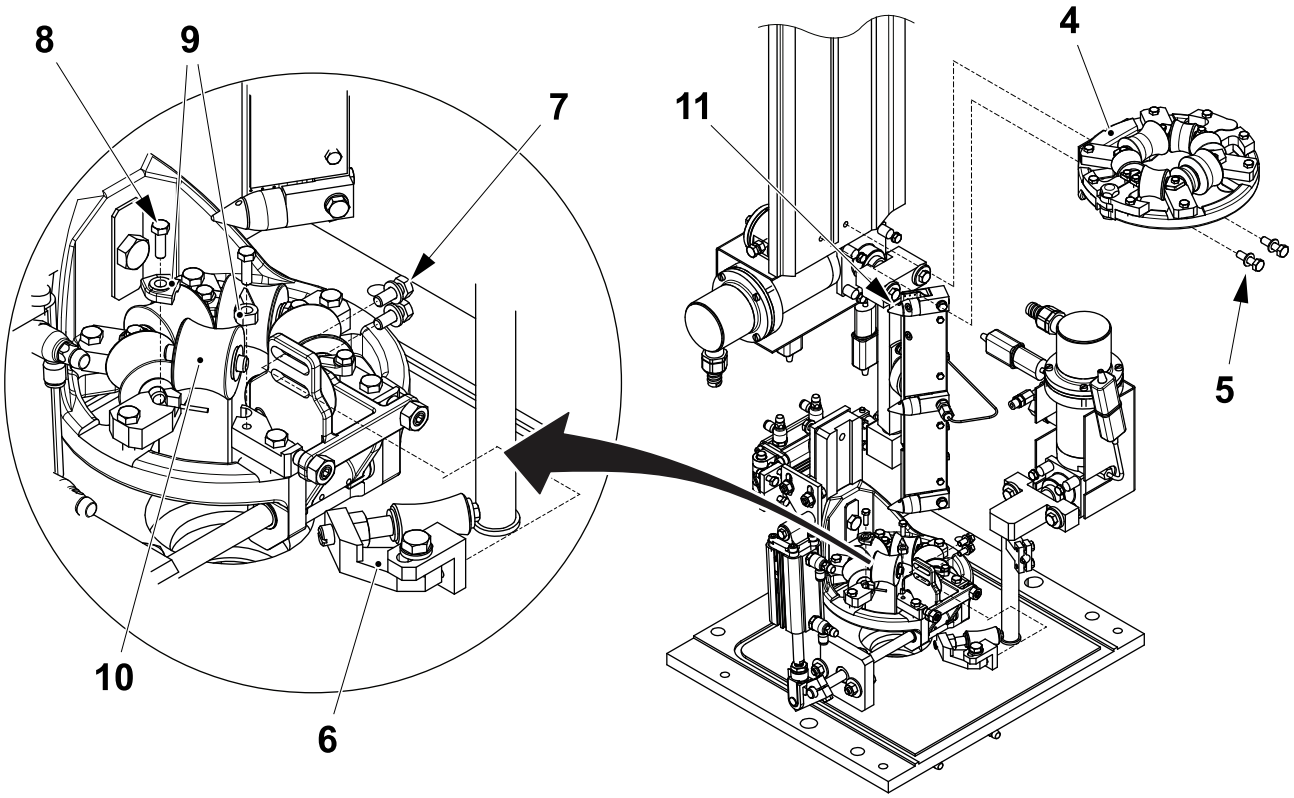

4 Upper forming ring
5 Screw
6 Bracket assembly
7 Screw
8 Screw
9 Lock plate
10 Roller
11 Roller

(Cont'd)

(Cont'd)

h) Put the lower pin of the template (12), in the place of the roller in the forming ring.

i) Install the bracket (13) and secure the template (12) with the knob (14).

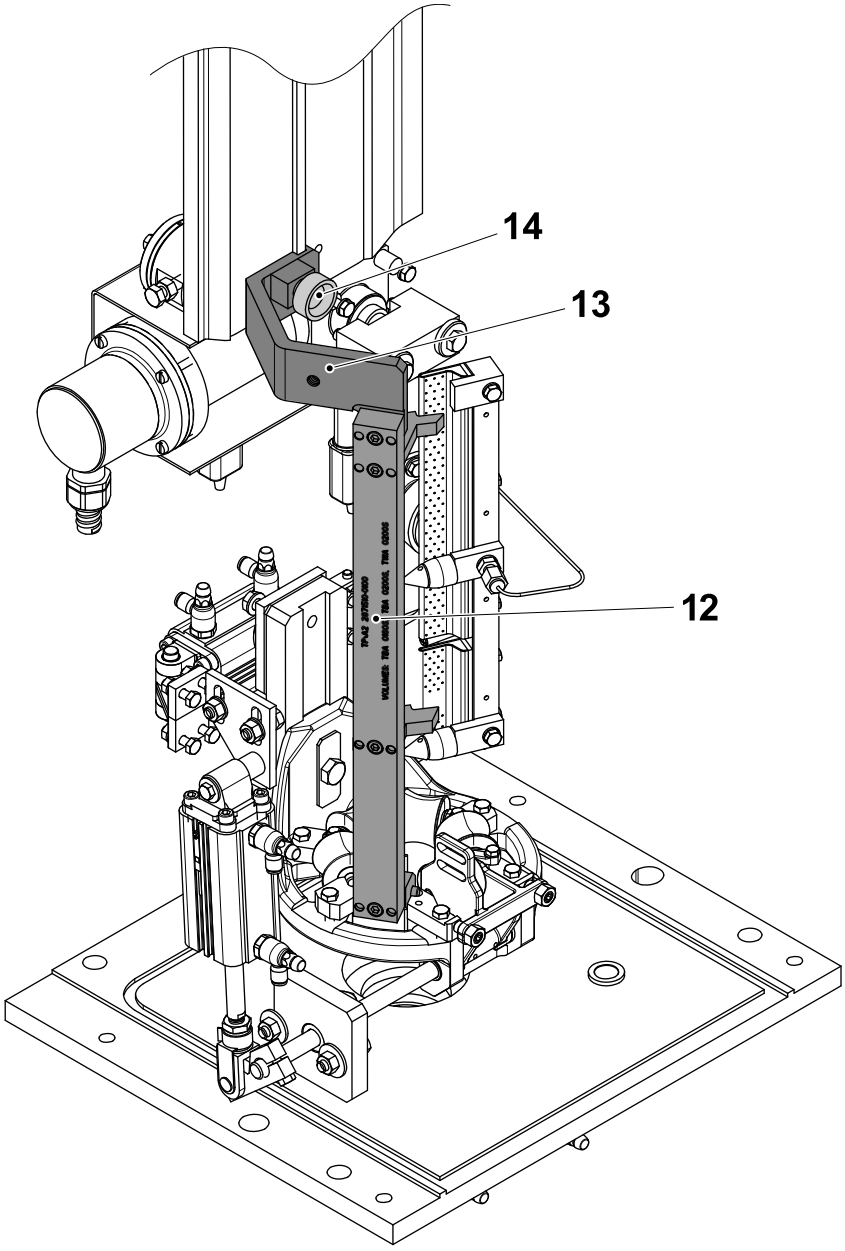

12 Template
13 Bracket
14 Knob

(Cont'd)

(Cont'd)

j) Loosen the screws (15) and (16).

Note! Make sure that the nozzle is not "forced" towards the template.

k) Set the LS nozzle against the contact surfaces of the template to distances **C** and **D**.

l) It may be necessary to adjust the cylinder stroke.

m) Tighten the screws (15) and (16).

n) Remove the template (12) and fit the roller (11).

o) Fit the knob (14) in the hole (17).

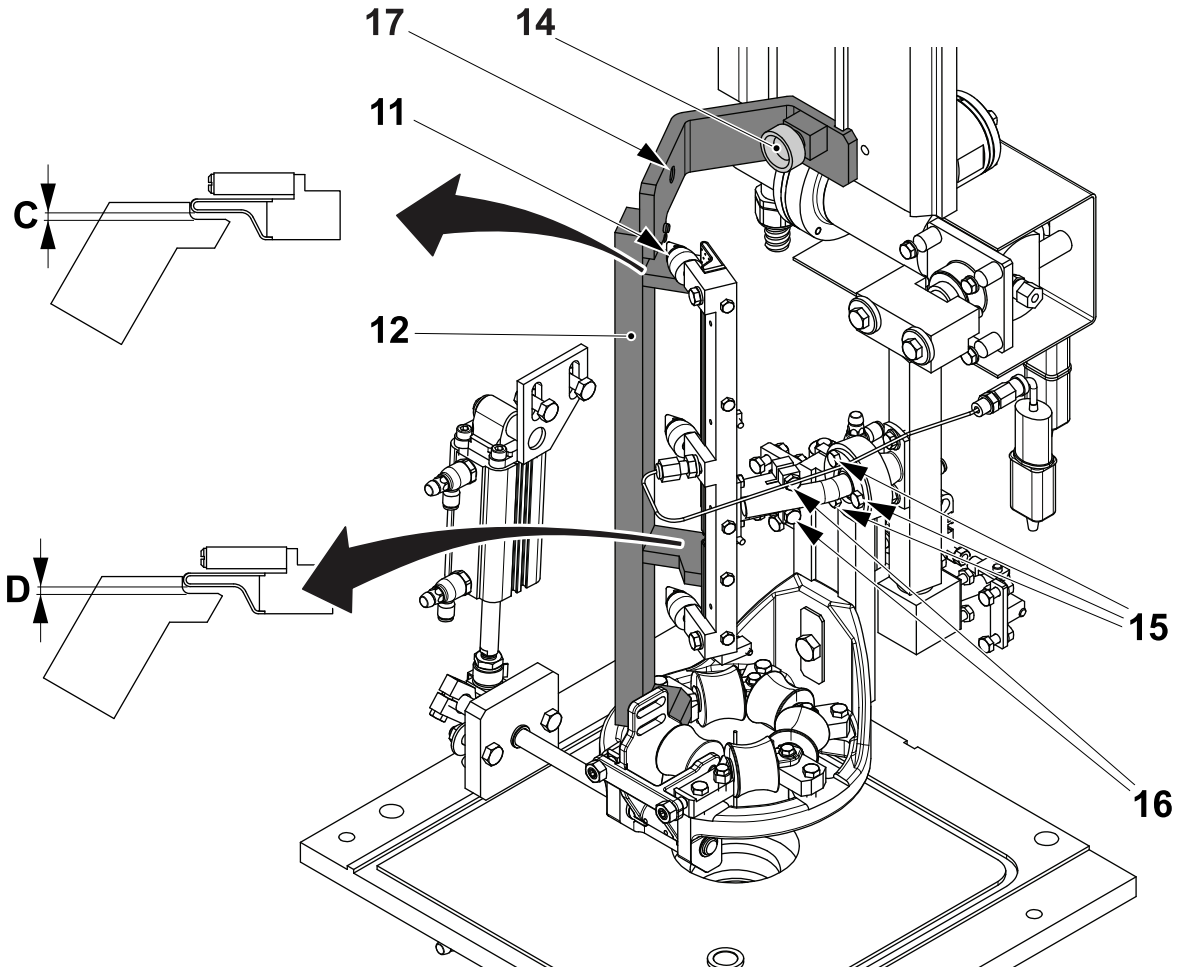

C = 0.0 mm
D = 0.0 mm

11 Roller	14 Knob	16 Screw
12 Template	15 Screw	17 Hole

(Cont'd)

(Cont'd)

Final Setting

WARNING
Hot surfaces.
Risk of burns. Wear protective gloves.

Verify the following details:

- The second row of holes **A** must be aligned directly underneath the edge of the packaging material. If necessary, loosen the nut (1) and adjust using the screw (2).

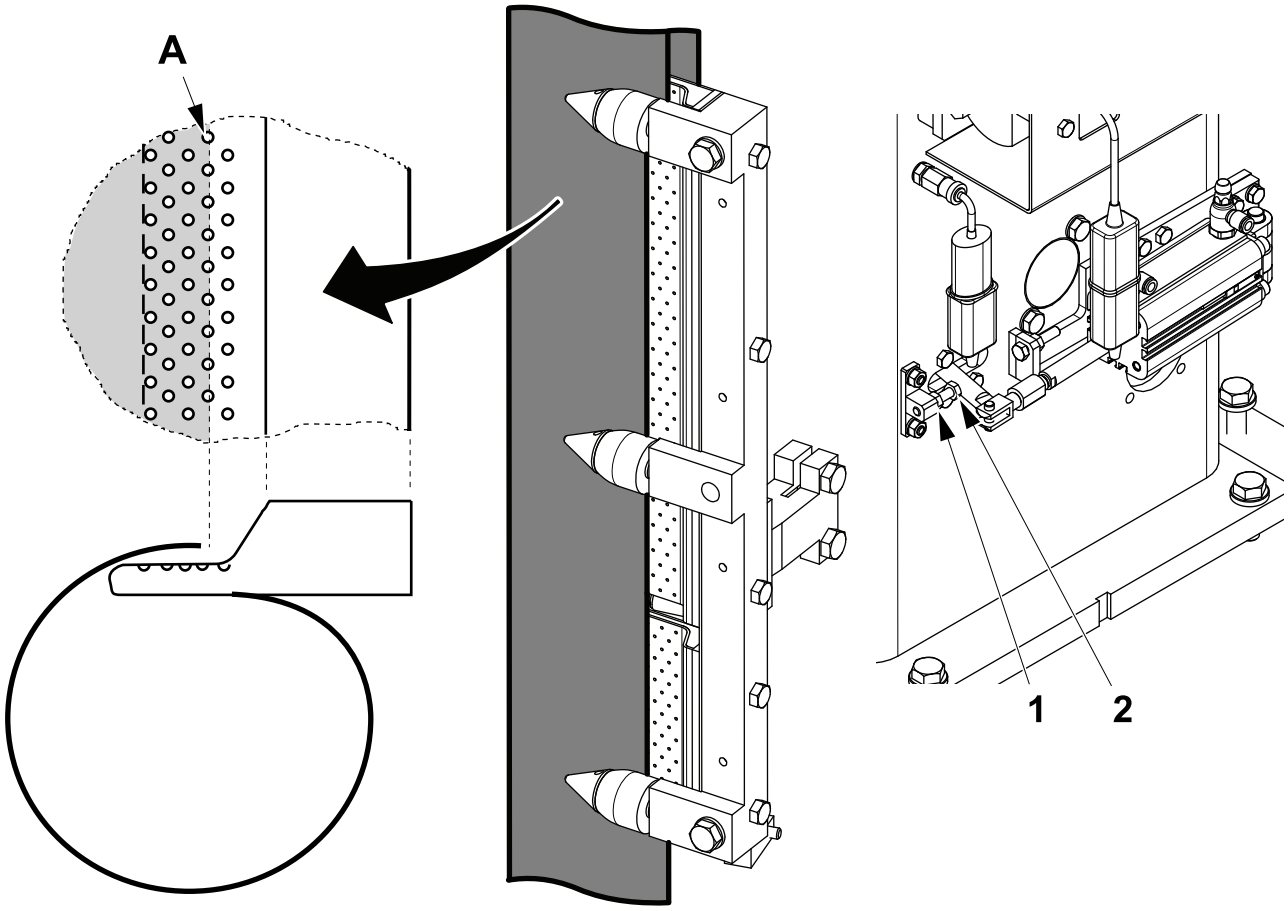

1 Nut
2 Screw

(Cont'd)

(Cont'd)

- The upper and the lower rollers (3) should slightly touch the packaging material and the rows of holes on the nozzle must be parallel with the edge of the packaging material.

  If necessary, stop the machine and adjust by loosening the screws (4) and moving the bracket (5).

After adjustment, run the machine and check again.

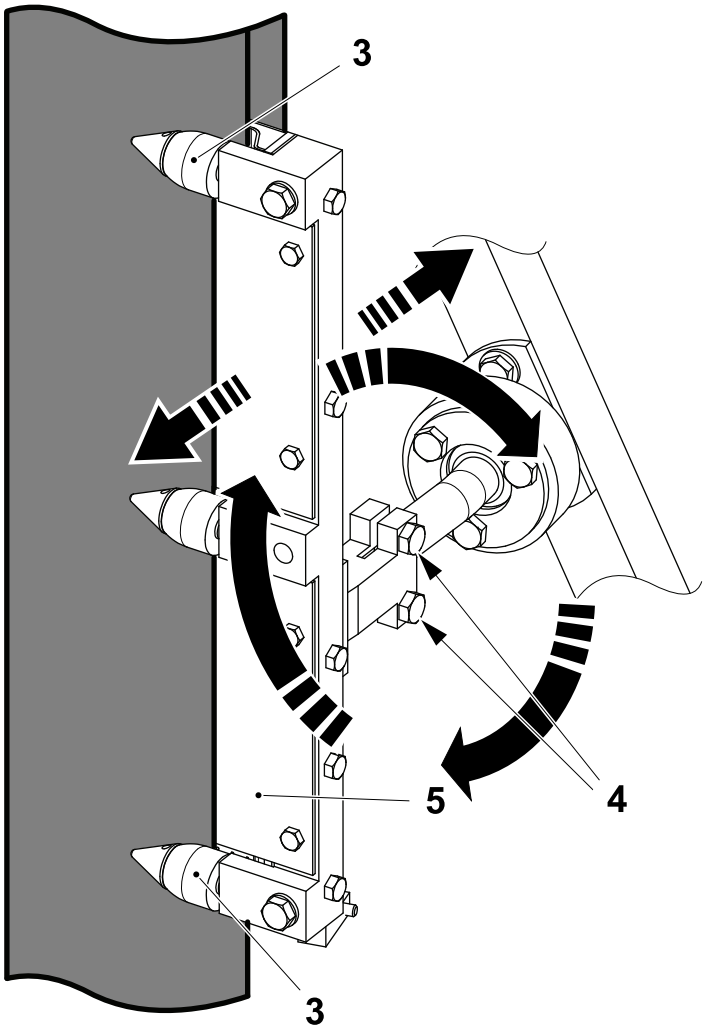

3 Roller
4 Screw
5 Bracket

1.2.1.6-2 Air Nozzle (LS) - Check Pressures

Machine Status	PRODUCTION
SPC Reference	2808340-0300

a) Check the LS short stop pressure (1) and the LS pressure (2).

b) Record the values on the pressure gauges.

Refer to 9.1 Technical Data for the correct values.

c) If necessary, adjust the LS pressure (2) using screw (3), and the LS short stop pressure (1) using adjustment screw (4).

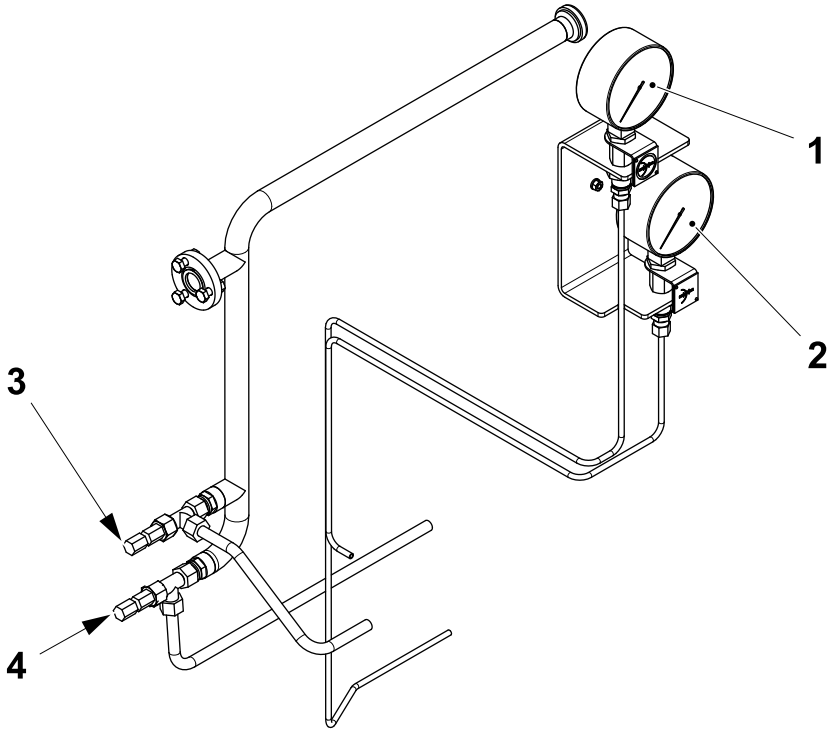

1 LS short stop pressure
2 LS pressure
3 Screw
4 Adjustment screw

1.2.1.7 Air Nozzle (LS SS)

1.2.1.7-1 Air Nozzle (LS SS) - Check Packages

Machine Status	PRODUCTION
SPC Reference	2871540-0100

a) Make a SHORT STOP.

b) Step up the machine to step PRODUCTION again.

c) Pick out the discarded packages. Check the LS strip.

If there is no sealing at all, check the element.

If the sealing is not satisfactory, check:

- the LS SS air pressure, refer to 9.1 Technical Data.

  (to obtain reliable data, this pressure must be **checked** after about **five minutes** of **production**).

- the setting of the nozzle and the cylinder movement, refer to 1.2.1.7-2 Air Nozzle (LS SS) - Set.

1.2.1.7-2 Air Nozzle (LS SS) - Set

Machine Status	PREHEATING I
SPC Reference	2871540-0100

WARNING
Hot surfaces.
Risk of burns. Wear protective gloves.

a) Set the distances **A** and **B** from the heat shield (2) to the short stop nozzle (3) using the screws (1).

b) Inch the machine until the packaging material is correctly aligned as far as the jaws.

c) Activate the pneumatic valve **U70K4020** on the valve panel.

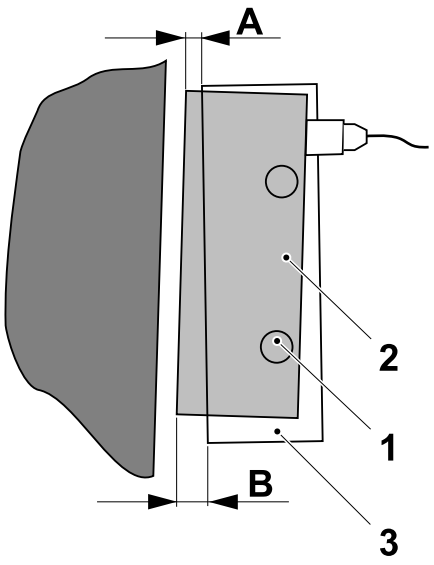

A = 6 ±0.5 mm
B = 8 ±0.5 mm
1 Screw
2 Heat shield
3 Short stop nozzle

(Cont'd)

(Cont'd)

d) Loosen the screw (4) and move the short stop nozzle (3) to align the edge of the heat shield (2) with the packaging material tube (6).

e) Loosen the screws (5) and align the corner of the short stop nozzle (3) distance **C** along the edge of the packaging material.

f) Set the distance between the LS nozzle and the short stop nozzle (3), see 1.2.1.6-1 Air Nozzle (LS) - Set.

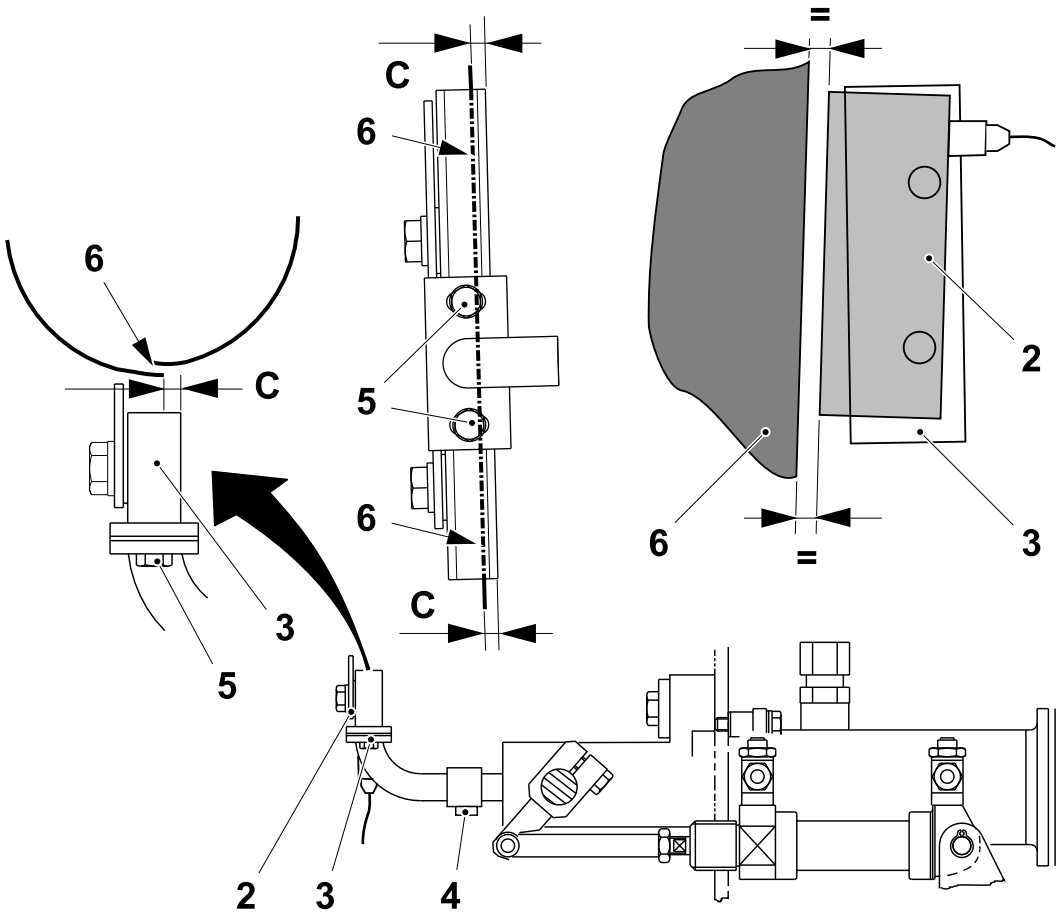

C = 1.0 ±0.5 mm

2 Heat shield
3 Short stop nozzle
4 Screw
5 Screw
6 Packaging material tube

(Cont'd)

(Cont'd)

g) Set distance **D** between the heat shield (2) and the packaging material tube (6). Adjust using the clamp union (7).

h) With the machine in step PRODUCTION, make a SHORT STOP and check that the nozzle moves without fouling the pressure roller and the LS nozzle. If necessary, adjust on the cylinder throttles.

i) Step the machine to step PRODUCTION again.

j) Pick out the packages that are discarded. Take the packages and check that the LS strip is properly sealed.

k) If necessary, adjust the temperature on the TPOP panel.

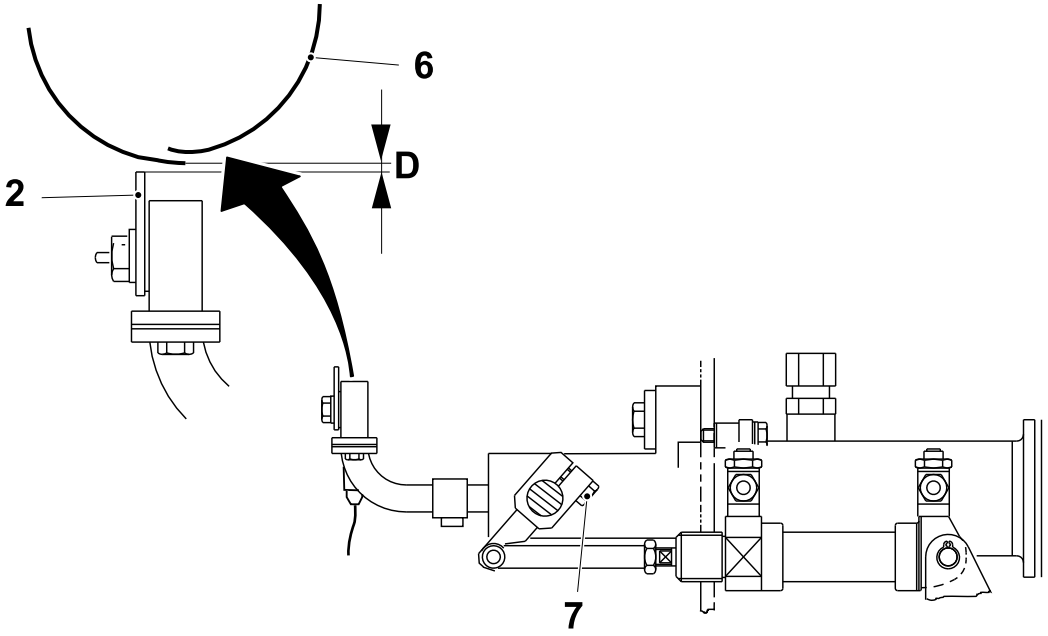

D = 0.0 ±0.5 mm
2 Heat shield
6 Packaging material tube
7 Clamp union

1.2.1.8 Reverse Bending Roller

1.2.1.8-1 Reverse Bending Roller - Overhaul

Machine Status	Electrical supply disconnecting device in position I (ON) Main steam valve ON Main water valve ON
SPC Reference	3298236-0100

a) Remove the nuts (1) and the screws (2).

b) Remove the flange (3) and the O-ring (4). Change the O-ring (4).

c) Remove and change the bushing (5).

d) Assemble in the reverse order. Repeat the procedure for the other end of the reverse bending roller.

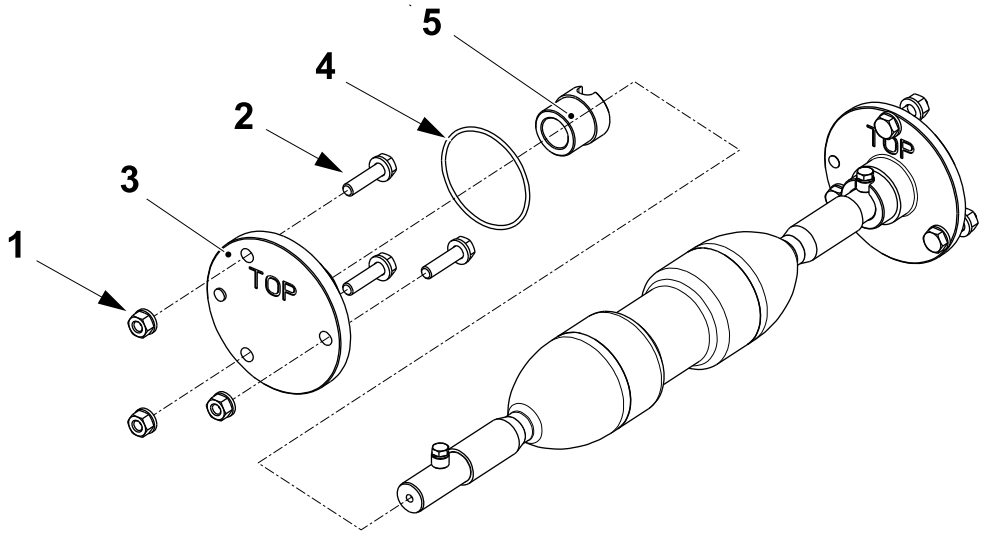

1 Nut
2 Screw
3 Flange
4 O-ring
5 Bushing

1.2.1.9 Guide Roller

Note! Valid for filling machine producing the TBA 375 S package only.

1.2.1.9-1 Guide Roller - Change Bushings

Machine Status	Electrical supply disconnecting device in position I (ON) Main air valve OFF Main steam valve ON Main water valve ON
SPC Reference	3298664-0100

a) Remove the screws (1) and the guide roller (2) from the forming section.

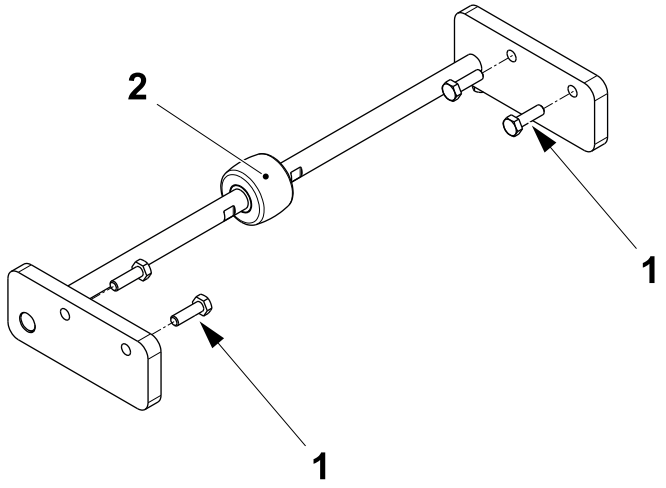

1 Screw
2 Guide roller

(Cont'd)

(Cont'd)

b) Remove the screw (3) and the shaft (4) from the plate (5).

c) Remove the shaft (6) from the plate (7).

d) Unscrew the shaft (4) from the shaft (6).

e) Remove the bushings (8) from the roller (9). Change the bushings (8).

f) Assemble in the reverse order.

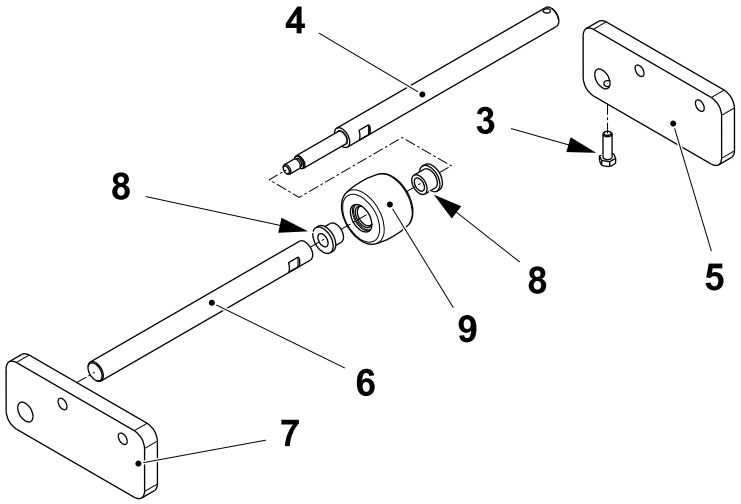

3 Screw
4 Shaft
5 Plate
6 Shaft
7 Plate
8 Bushing
9 Roller

1.2.2 Cleaning Cup

1.2.2-1 Cleaning Cup - Check Gaskets

Machine Status	Electrical supply disconnecting device in position O (OFF) Main air valve OFF Main steam valve ON Main water valve OFF
SPC Reference	2839259-0100

Check the gaskets (1) and (2). Change if necessary.

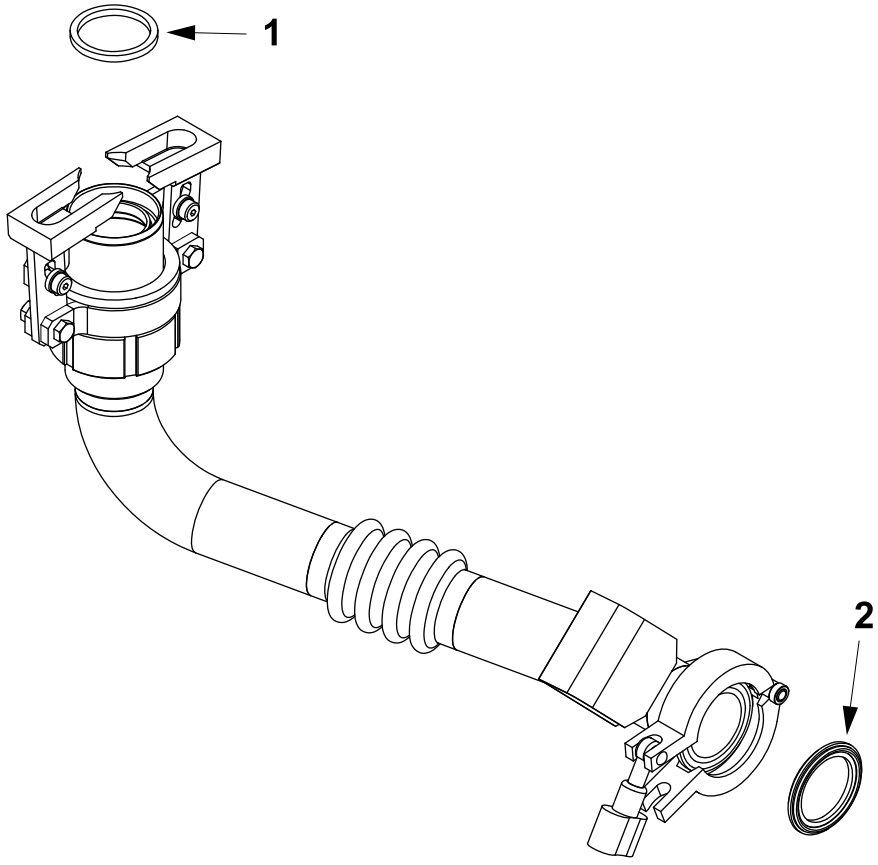

1 Gasket
2 Gasket

1.2.2-2 Cleaning Cup - Set Sensor

Machine Status	Electrical supply disconnecting device in position O (OFF) Main air valve OFF Main steam valve ON Main water valve OFF
SPC Reference	2839259-0100

a) Fit the cleaning cup (1) onto the filling pipe (2).

b) Loosen the nuts (3) and set the distance **A** between the sensor (4) and the cleaning cup (1).

c) Tighten the nuts (3).

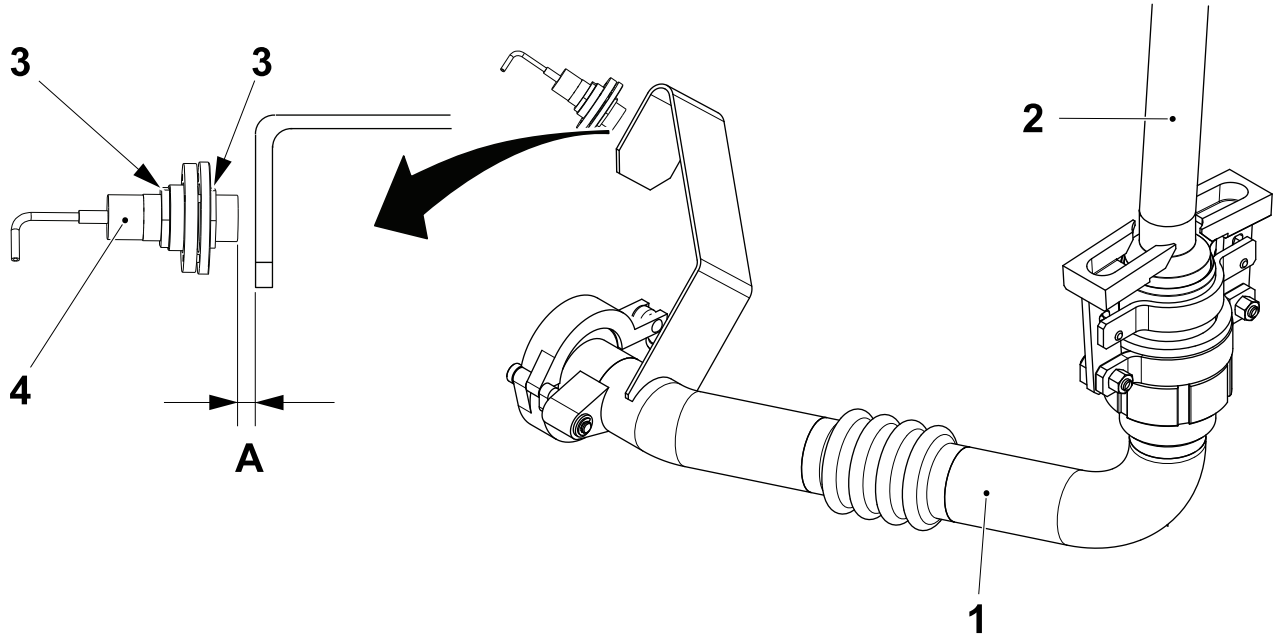

A = 5.0 ±0.5 mm

1 Cleaning cup
2 Filling pipe
3 Nut
4 Sensor

1.2.3 Filling Pipe

1.2.3-1 Filling Pipe - Check

Machine Status	Electrical supply disconnecting device in position O (OFF) Main air valve OFF Main steam valve ON Main water valve OFF
SPC Reference	2839240-0200

Check that:

- the pressure roller (1) is intact and rotates freely. Change if necessary
- the float (2) is intact and slides freely. Change if necessary
- the filling pipe (3) is centred to the lower forming ring (4). Set if necessary, see 1.2.3-4 Filling Pipe - Set Position.

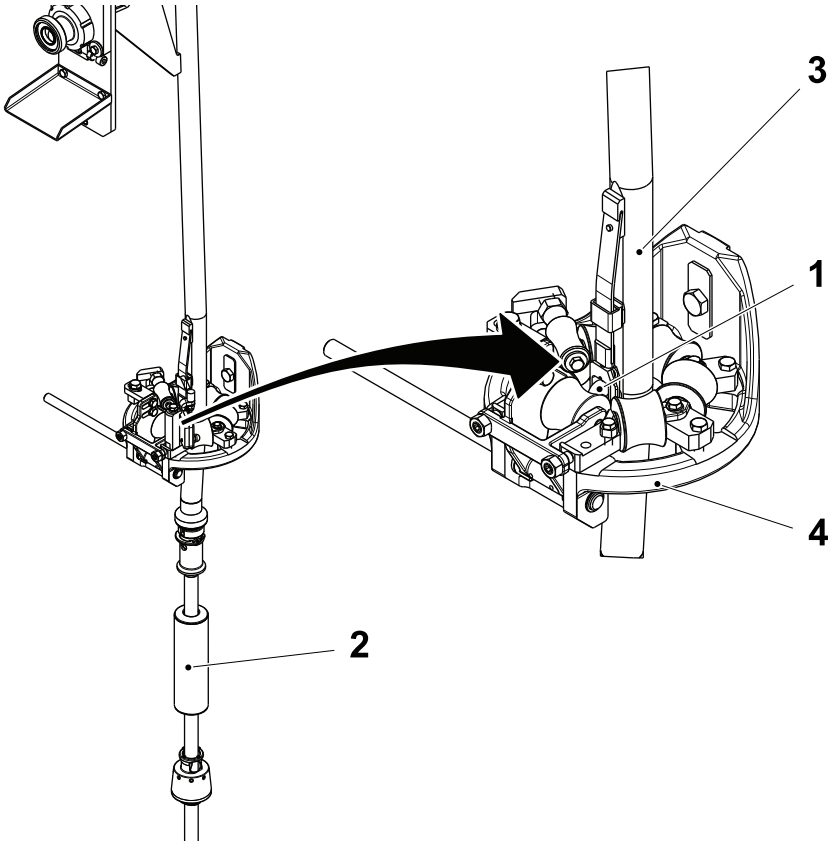

1 Pressure roller
2 Float
3 Filling pipe
4 Lower forming ring

1.2.3-2 Filling Pipe - Remove

Machine Status	Electrical supply disconnecting device in position O (OFF) Main air valve OFF Main steam valve ON Main water valve OFF
SPC Reference	2839240-0200

a) Remove the fork (1) and the lower part of the filling pipe (2).

b) Change the O-ring (3).

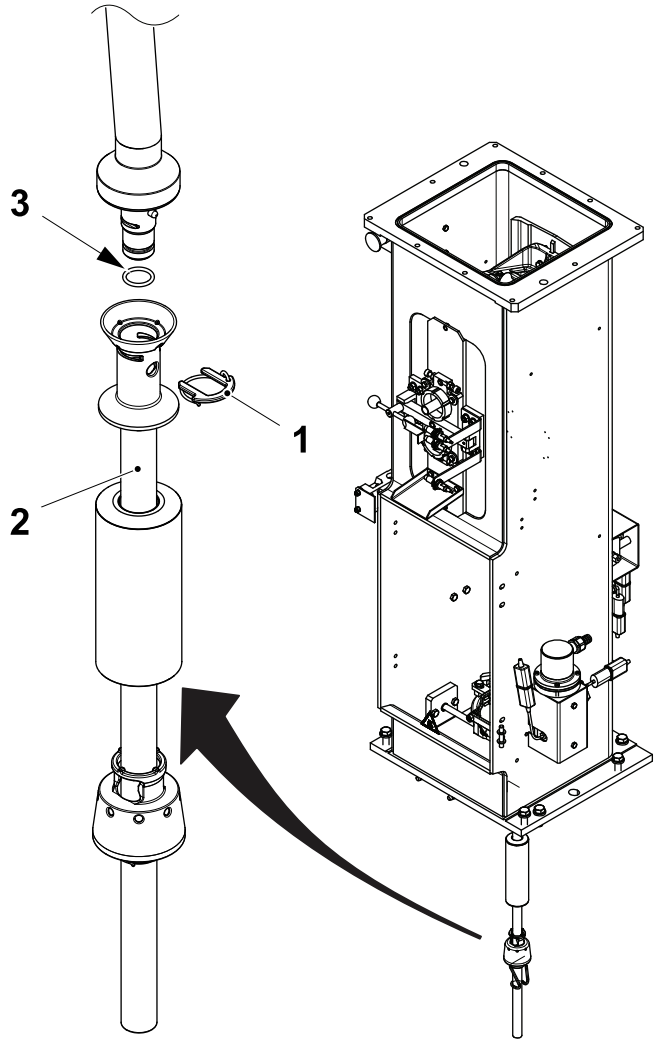

1 Fork 2 Filling pipe 3 O-ring

(Cont'd)

(Cont'd)

c) Make sure that the air nozzle (4) is open.

d) Pull up the knob (5) and open the upper forming ring (6).

e) Remove the pressure roller assembly (7) from the filling pipe.

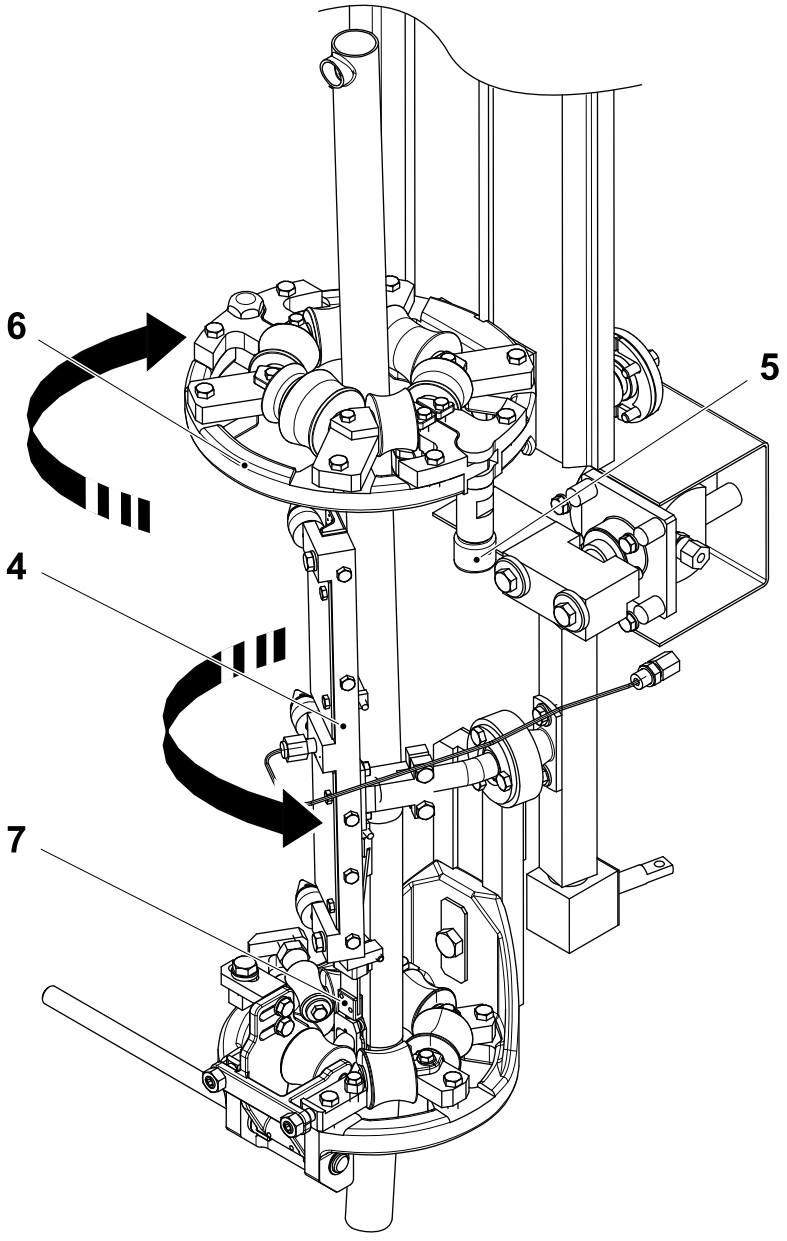

4 Air nozzle
5 Knob
6 Upper forming ring
7 Pressure roller assembly

(Cont'd)

(Cont'd)

f) Loosen the screws (8) and remove the covering panels (9).

g) Loosen the clamps (10) and the nuts (11).

h) Remove the product pipe (12) and the pipe (13).

i) Remove the gaskets (14).

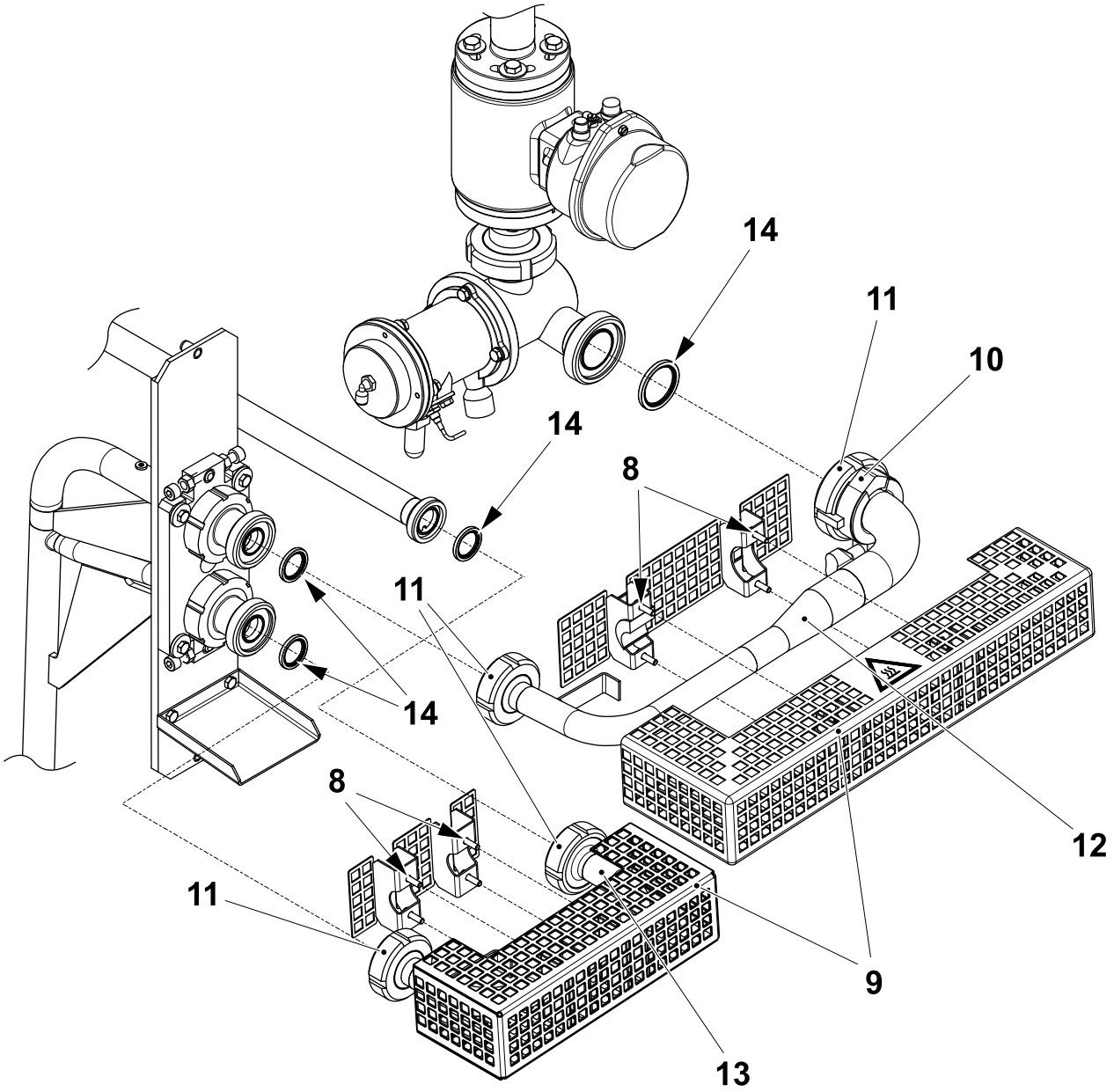

8 Screw
9 Covering panel
10 Clamp
11 Nut
12 Product pipe
13 Pipe
14 Gasket

(Cont'd)

(Cont'd)

j) With one hand firmly holding the filling pipe (15), undo the locking handles (16).

k) Remove the filling pipe (15) and store it in a safe place.

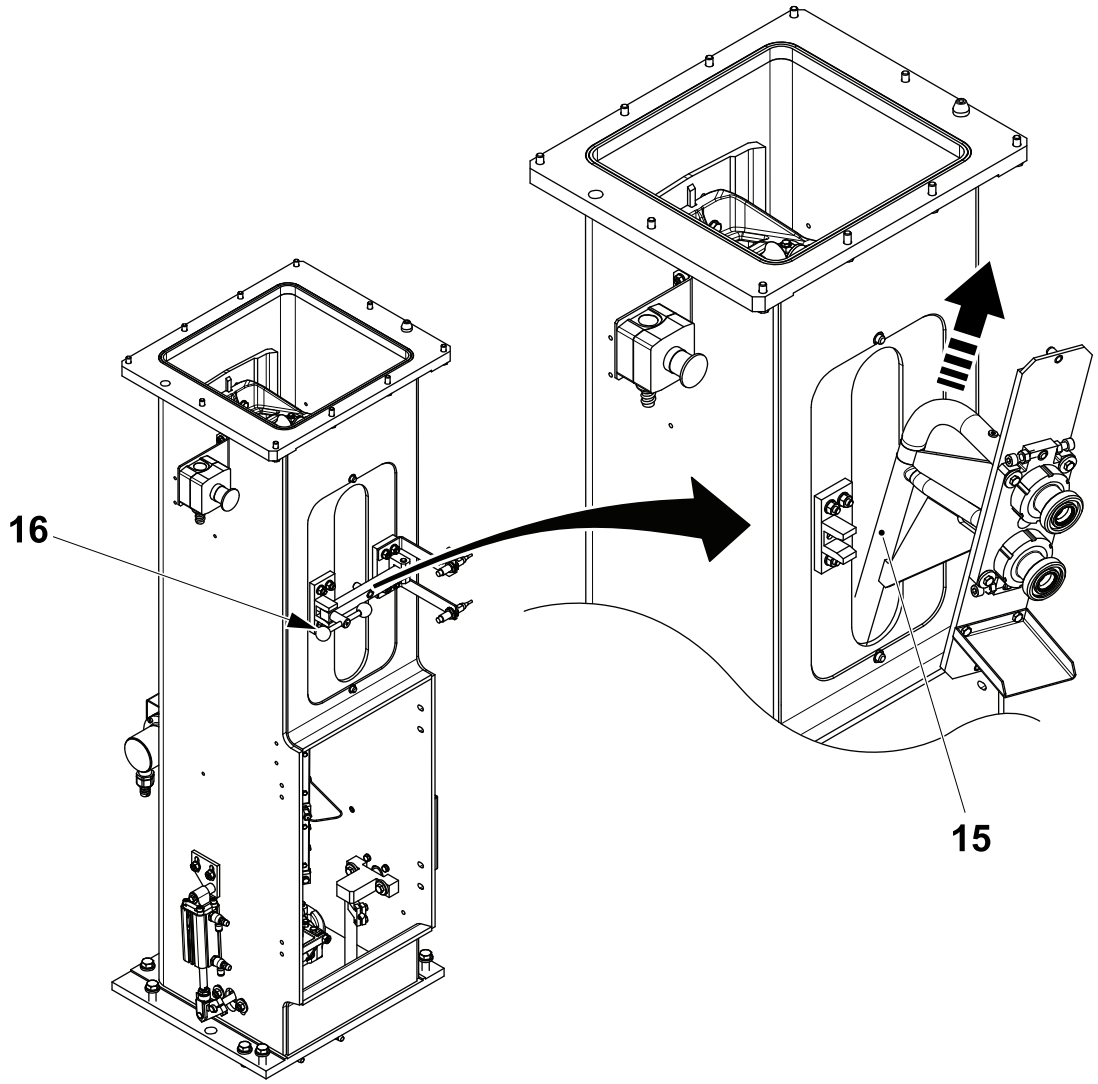

15 Filling pipe
16 Locking handle

1.2.3-3 Filling Pipe - Fit

Machine Status	Electrical supply disconnecting device in position O (OFF) Main air valve OFF Main steam valve ON Main water valve OFF
SPC Reference	2839240-0200

a) Make sure that the air nozzle (1) is open.

b) Pull down the knob (2) and open the upper forming ring (3).

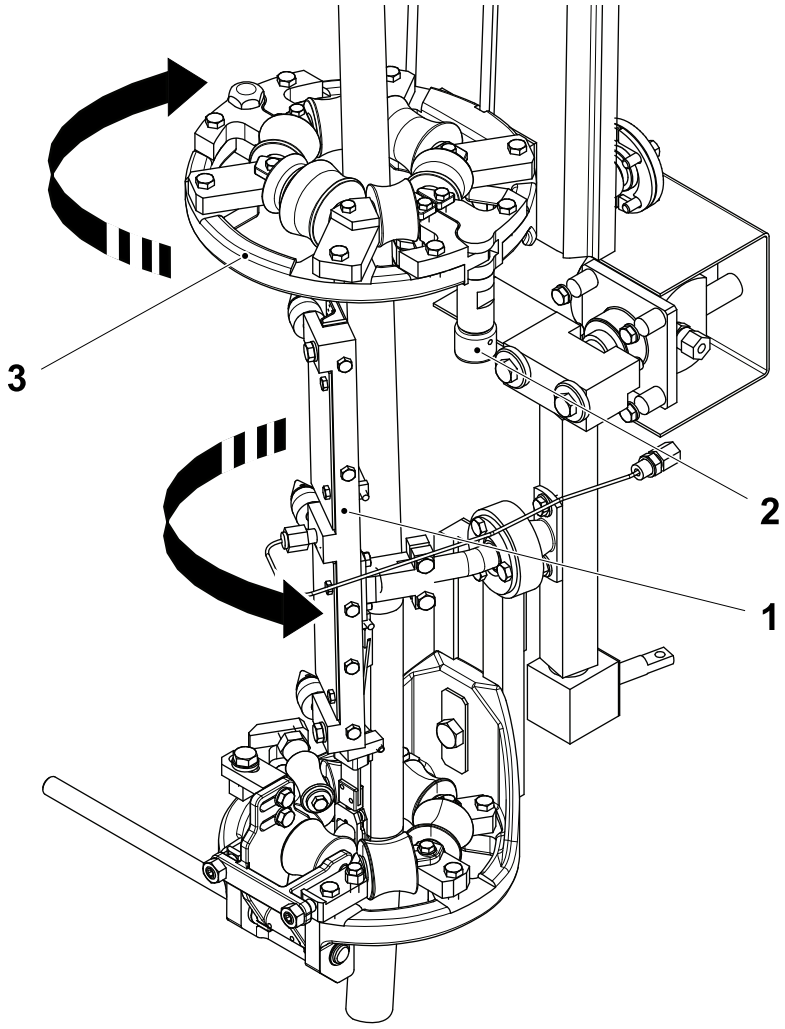

1 Air nozzle
2 Knob
3 Upper forming

(Cont'd)

(Cont'd)

c) Fit the filling pipe (4) and secure it in to position with the locking handles (5).

Note! Make sure that the plate (6) is in contact with the blocks (7).

d) Mount the pressure roller assembly (8) on to the filling pipe.

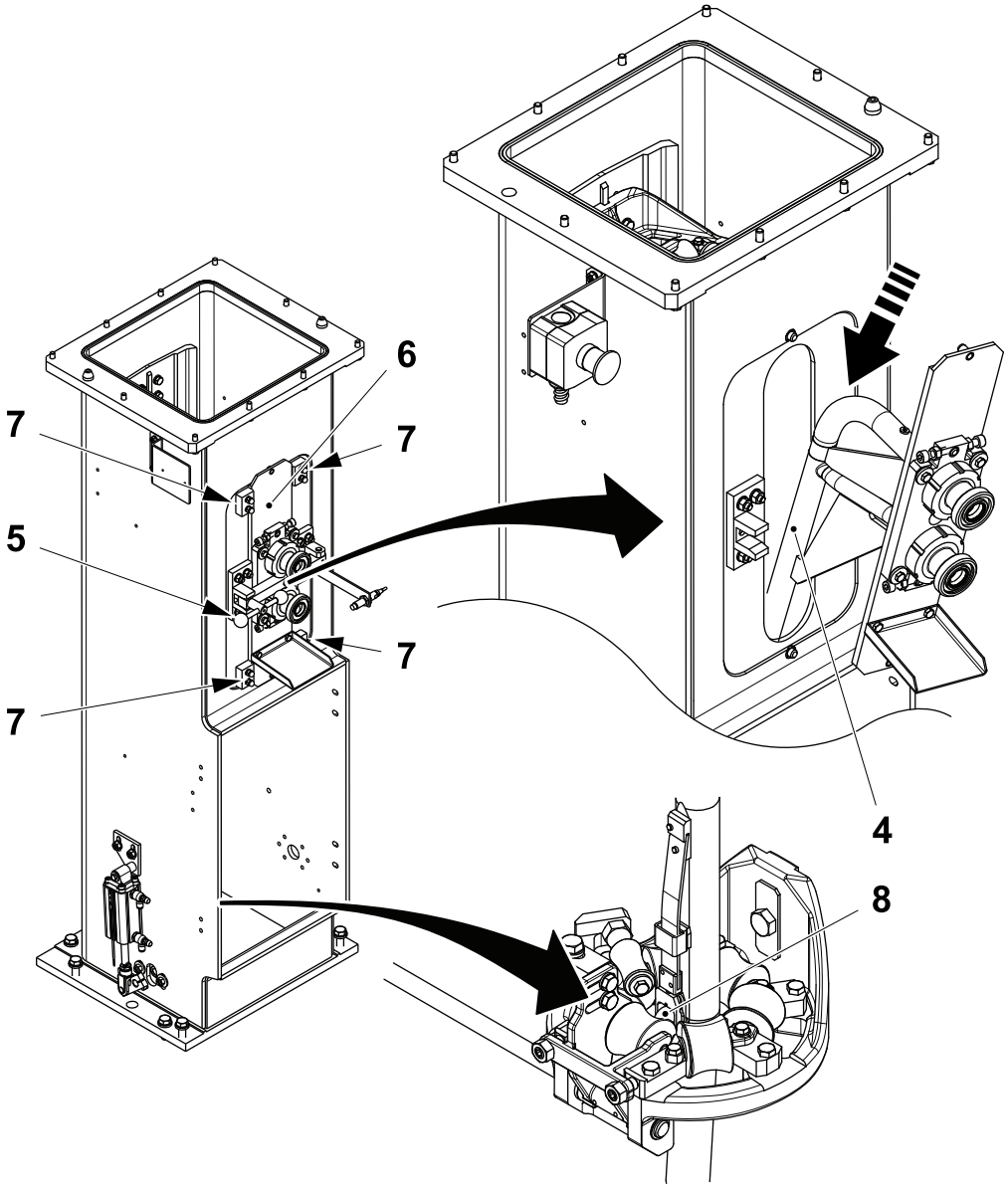

4 Filling pipe
5 Locking handle
6 Plate
7 Block
8 Pressure roller assembly

(Cont'd)

(Cont'd)

e) Pull down the knob (2) and close the upper forming ring (3).

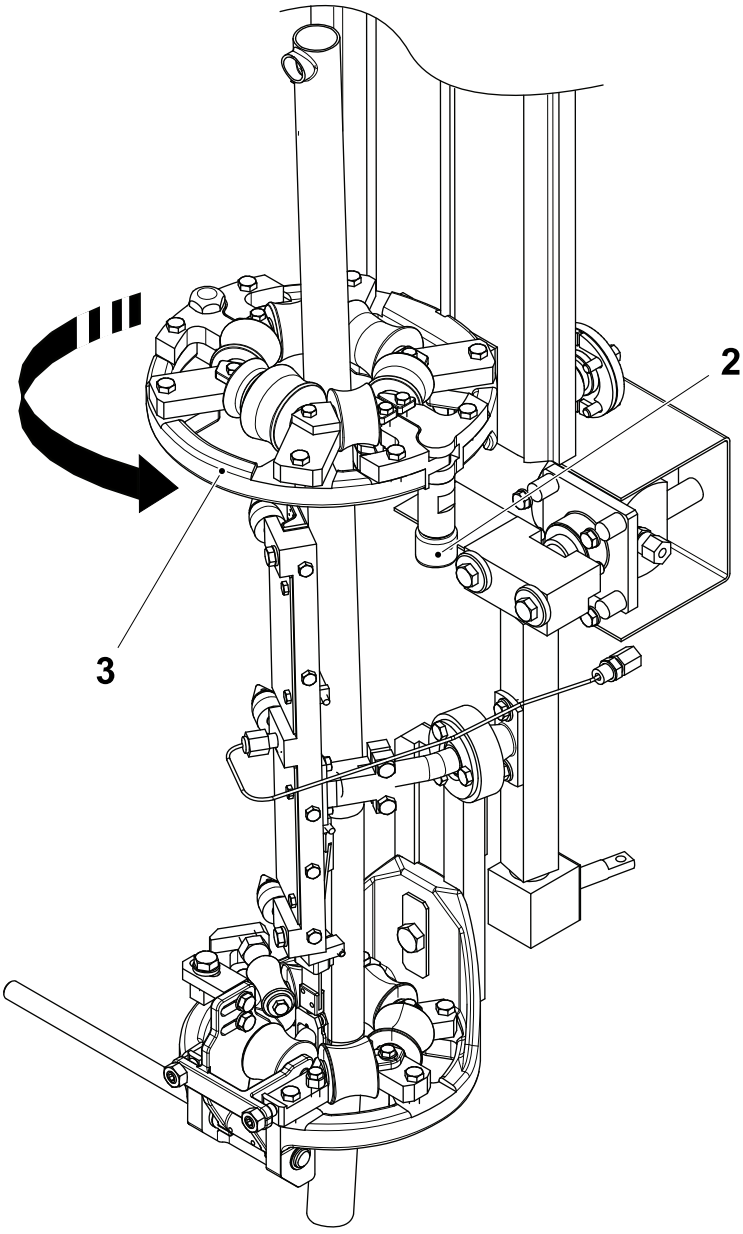

2 Knob
3 Upper forming

(Cont'd)

(Cont'd)

Note! Change the gaskets (10) every time that the pipes are removed.

f) Fit the product pipe (9) and gaskets (10) by tightening manually the nuts (11).

g) Tighten the nuts (11) to the mechanical stop using the pipe wrench and locking them with the clamps (12).

h) Repeat the steps f) and g) for the pipe (13).

i) Fit the covering panel (14) by means the screws (15).

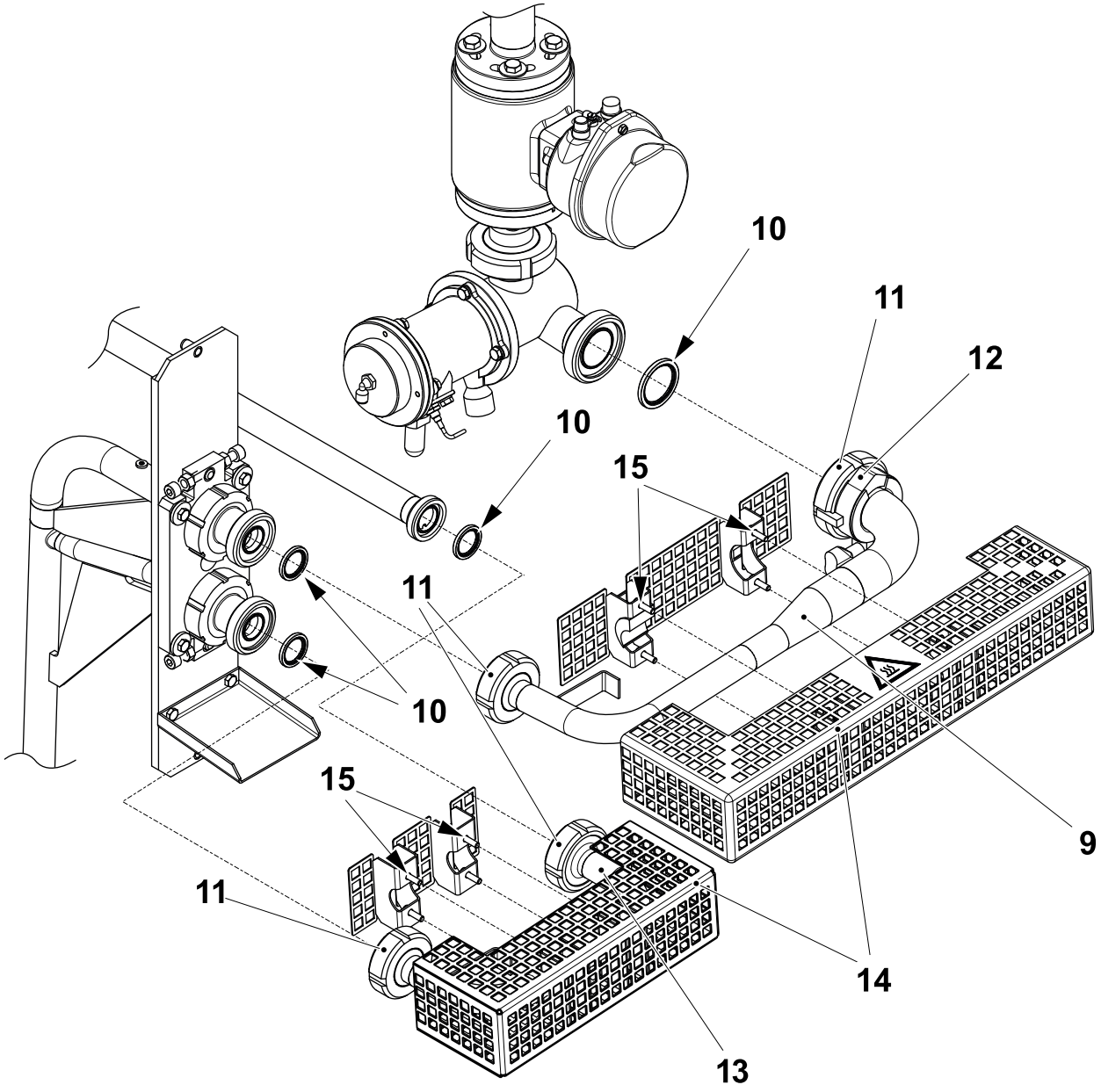

9 Product pipe
10 Gasket
11 Nut
12 Clamp
13 Pipe
14 Covering panel
15 Screw

(Cont'd)

(Cont'd)

j) Fit the O-ring (16) in its seat on the upper filling pipe (17).

k) Fit the lower filling pipe (18) and secure it in to position with the fork (19).

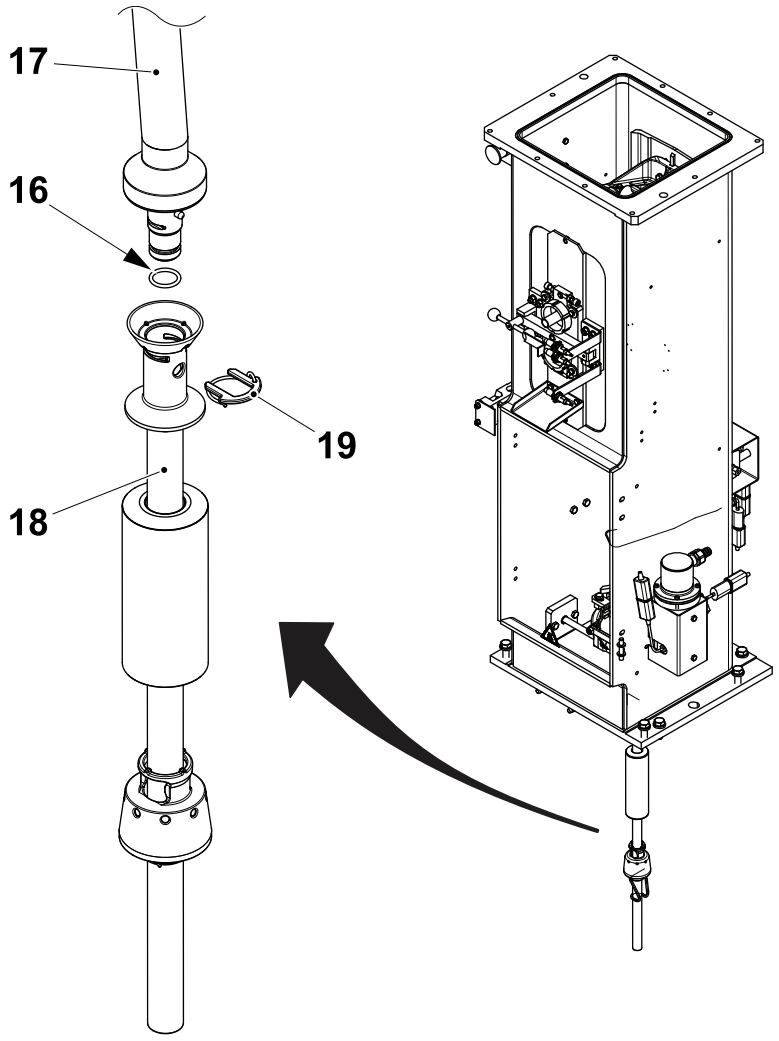

16 O-ring
17 Upper filling pipe
18 Lower filling pipe
19 Fork

1.2.3-4 Filling Pipe - Set Position

Machine Status	PREPARATION
Special Equipment	Template TP No. 3107113-0100 Tool TP No. 3224551-0100
SPC Reference	2839240-0200

Note! Make sure that the lower forming ring is correctly set, see 1.2.1.2-2 Lower Forming Ring - Set Position.

a) Remove the filling pipe from the machine, see 1.2.3-2 Filling Pipe - Remove.

(Cont'd)

(Cont'd)

b) Make sure that the nuts (1), (2), (3), and (4) are turned with the tapered sides turned towards each other.

c) As a basic setting set the distance **A** using the nuts (1) and (2).

Package	A ±0.5 mm	Package	A ±0.5 mm
TBA 80 S, TBA 100 B, TBA 125 S, TPA 125 Sq	57	TBA 284 B, TBA 300 S	60.5
TBA 200 B, TBA 250 B, TBA 330 S	55	TBA 375 S	62
TBA 200 M, TBA 250 S	58	TPA 200 Sq, TPA 250 Sq	61.5
TBA 160 S, TBA 180 S, TBA 200 S	62	TPA 330 Sq	58
TBA 200 Sq, TBA 250 Sq	60	TBA 200 E, TBA 250 E	58

d) Hand tighten the nuts (3) and (4).

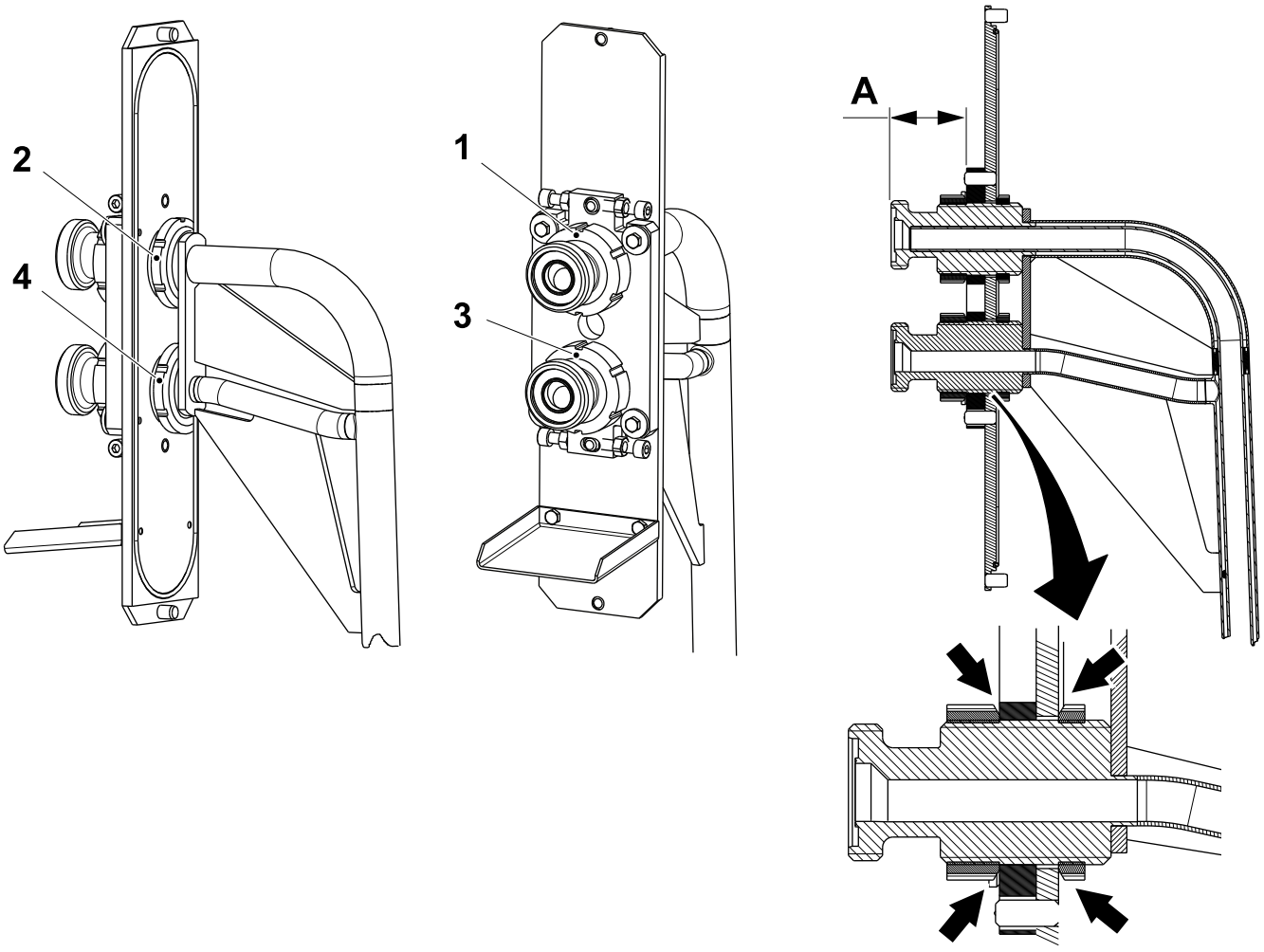

1 Nut
2 Nut
3 Nut
4 Nut

(Cont'd)

(Cont'd)

e) Loosen the screws (5).

f) Adjust the nuts (6), so that the pin (7) is in the middle of the hole.

g) Tighten the screws (5).

h) Install the upper filling pipe on the machine.

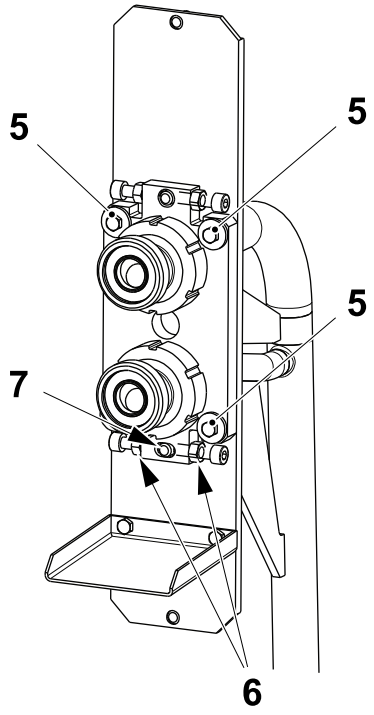

5 Screw
6 Nut
7 Pin

(Cont'd)

(Cont'd)

i) To move up the counter roller (8) to the operation position proceed as follows:

- log on to the MAINTENANCE CONTROL window, see 8.6.3-2 HMI - User Management Log On.
- touch the STERILE AIR SYSTEM MAINTENANCE tab (9)
- touch the COUNTER ROLLER MOVEMENT icon (10)
- touch the START button (11) to enable the movement
- touch the ARROW UP button (12), the counter roller (8) will move in the upper position.

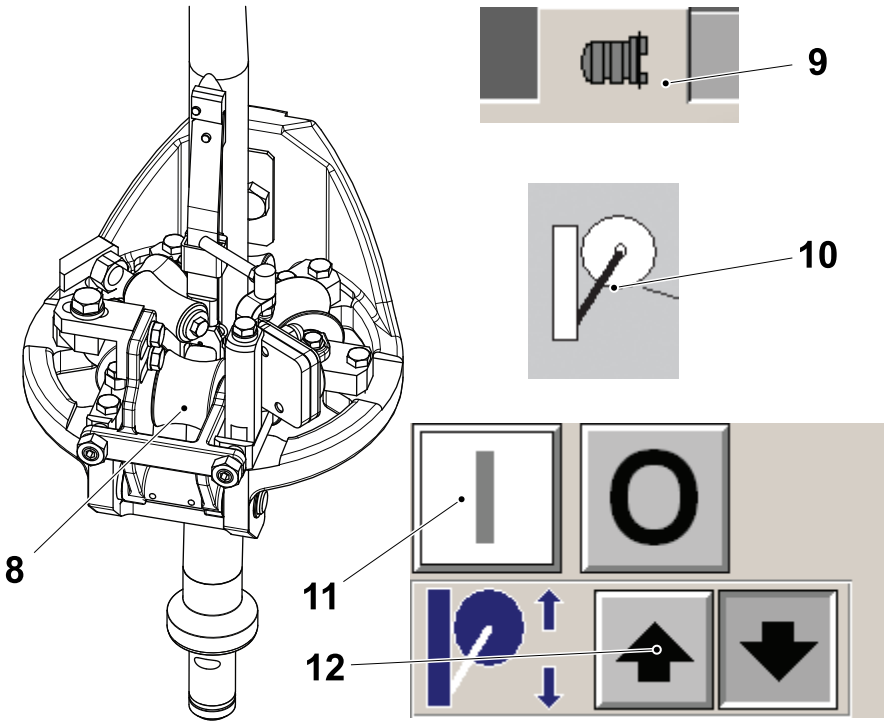

8 Counter roller
9 Sterile air system maintenance tab
10 Counter roller movement icon
11 Start button
12 Arrow up button

(Cont'd)

(Cont'd)

j) Check the height of the counter roller (8), see 1.2.1-3 Forming Section - Forming Ring Positioning.

k) Remove the screws (13) on both sides and remove the support roller (14).

l) Loosen the nuts (15) and move aside the blocks (16).

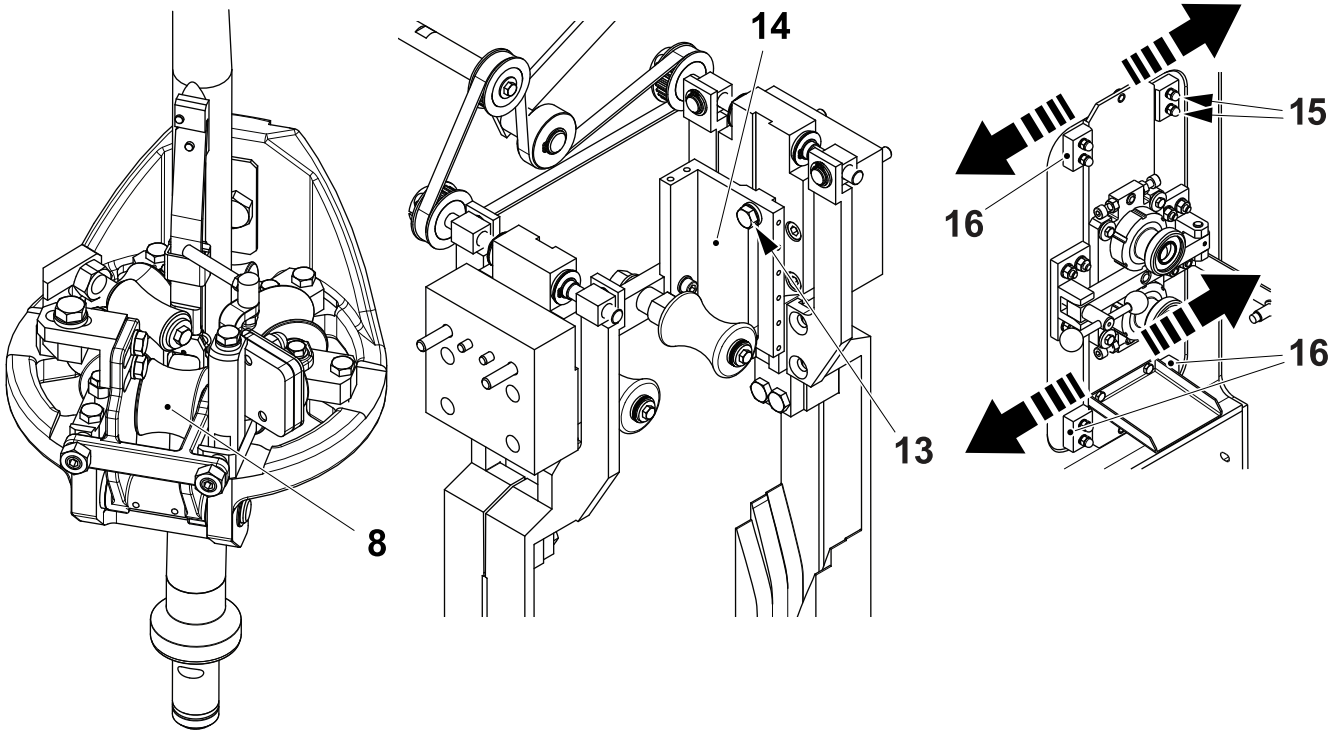

8 Counter roller
13 Screw
14 Support roller
15 Nut
16 Block

(Cont'd)

(Cont'd)

m) Fit the template (17) to the volume curve piece (18) with the screws (19).

n) Fit the ruler (20) and the template (21).

o) Check that the upper filling pipe (22) is centred relative to the template (21). If required adjust as follow:

- to move the upper filling pipe (22) left or right loosen the screws (5) and the nuts (6) and turn the screws (23).
- to move the upper filling pipe (22) in or out turn the nuts (1) and (2) or (3) and (4).

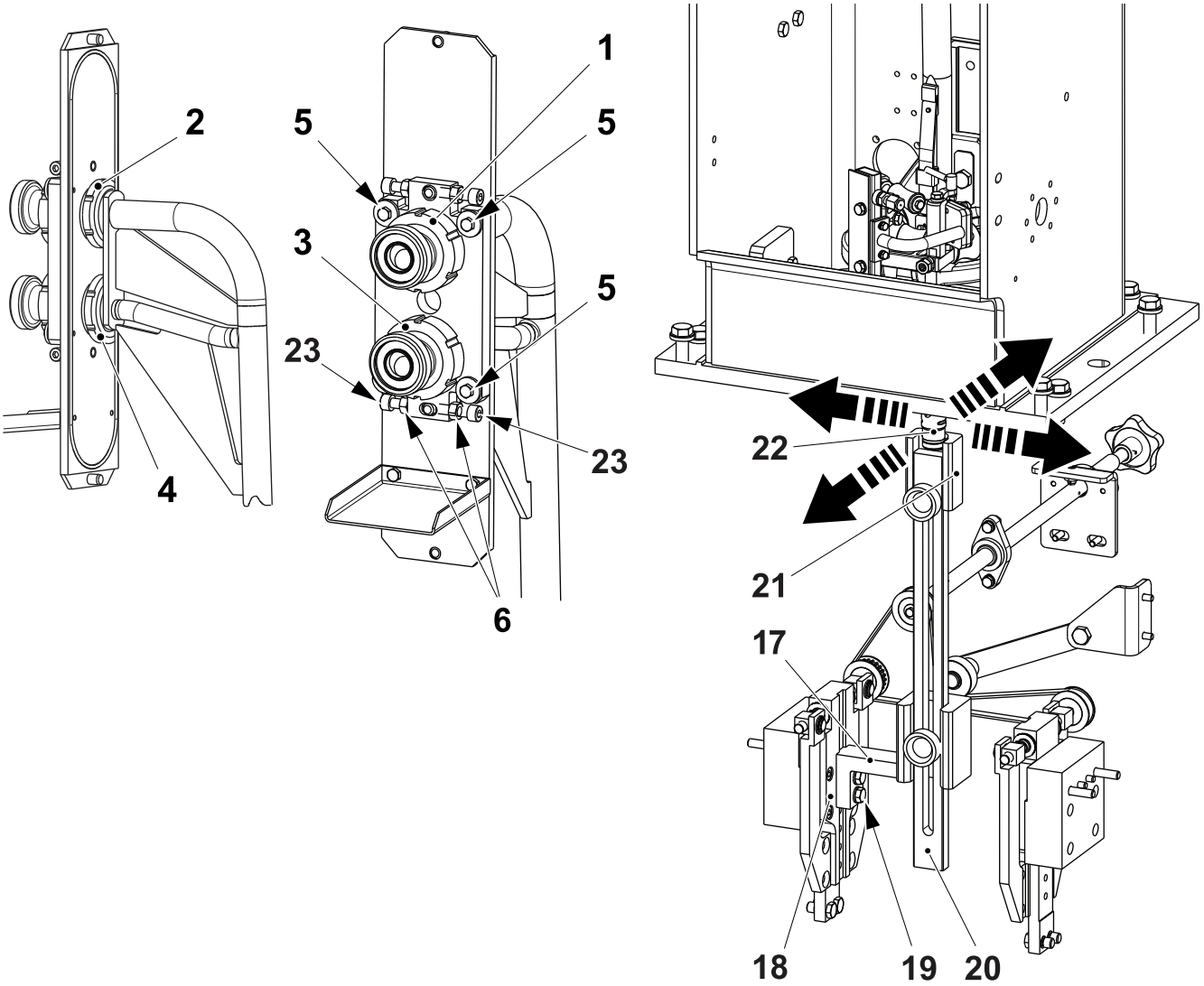

1 Nut
2 Nut
3 Nut
4 Nut
5 Screw
6 Nut
17 Template
18 Volume curve piece
19 Screw
20 Ruler
21 Template
22 Upper filling pipe
23 Screw

(Cont'd)

(Cont'd)

p) Move the blocks (16) against the upper filling pipe plate (24) and tighten the nuts (15).

q) Remove the template (17), template (21) and the ruler (20).

r) Fit the support roller (14).

s) Fit the lower filling pipe (25).

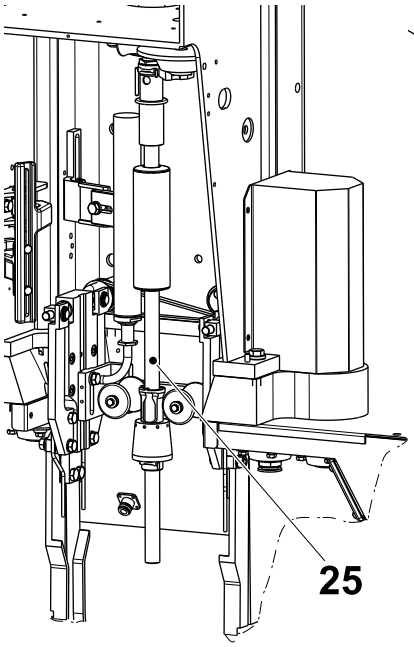

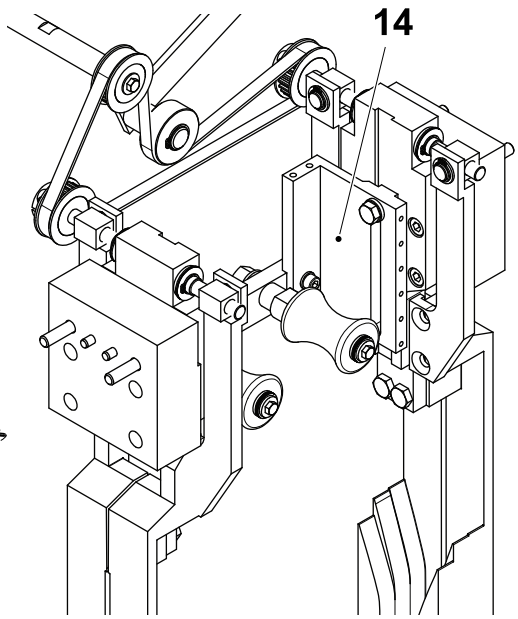

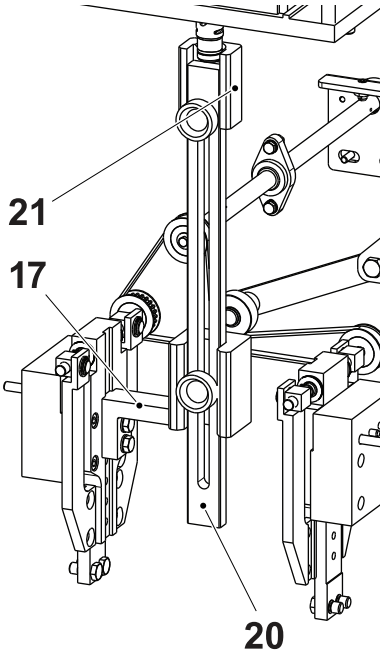

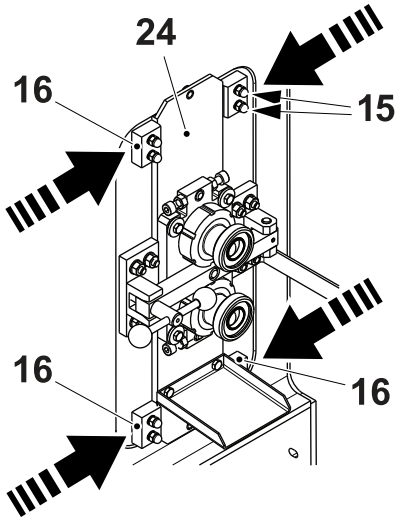

14 Support roller
15 Nut
16 Block
17 Template
20 Ruler
21 Template
24 Plate
25 Lower filling pipe

(Cont'd)

(Cont'd)

t) Put a double thickness of packaging material between the counter roller (8) and the pressure roller (26).

u) Move the counter roller (8) into PRODUCTION position and fit the tool (27) between the counter roller (8) and the aseptic chamber (28).

Note! Do not over tighten the knob (29).

v) Turn the knob (29) until the counter roller (8) is in PRODUCTION position.

w) Make sure that there is **0.5 - 1 mm** between the pressure roller (26) and the upper filling pipe (22). If required, adjust with the nuts (3) and (4).

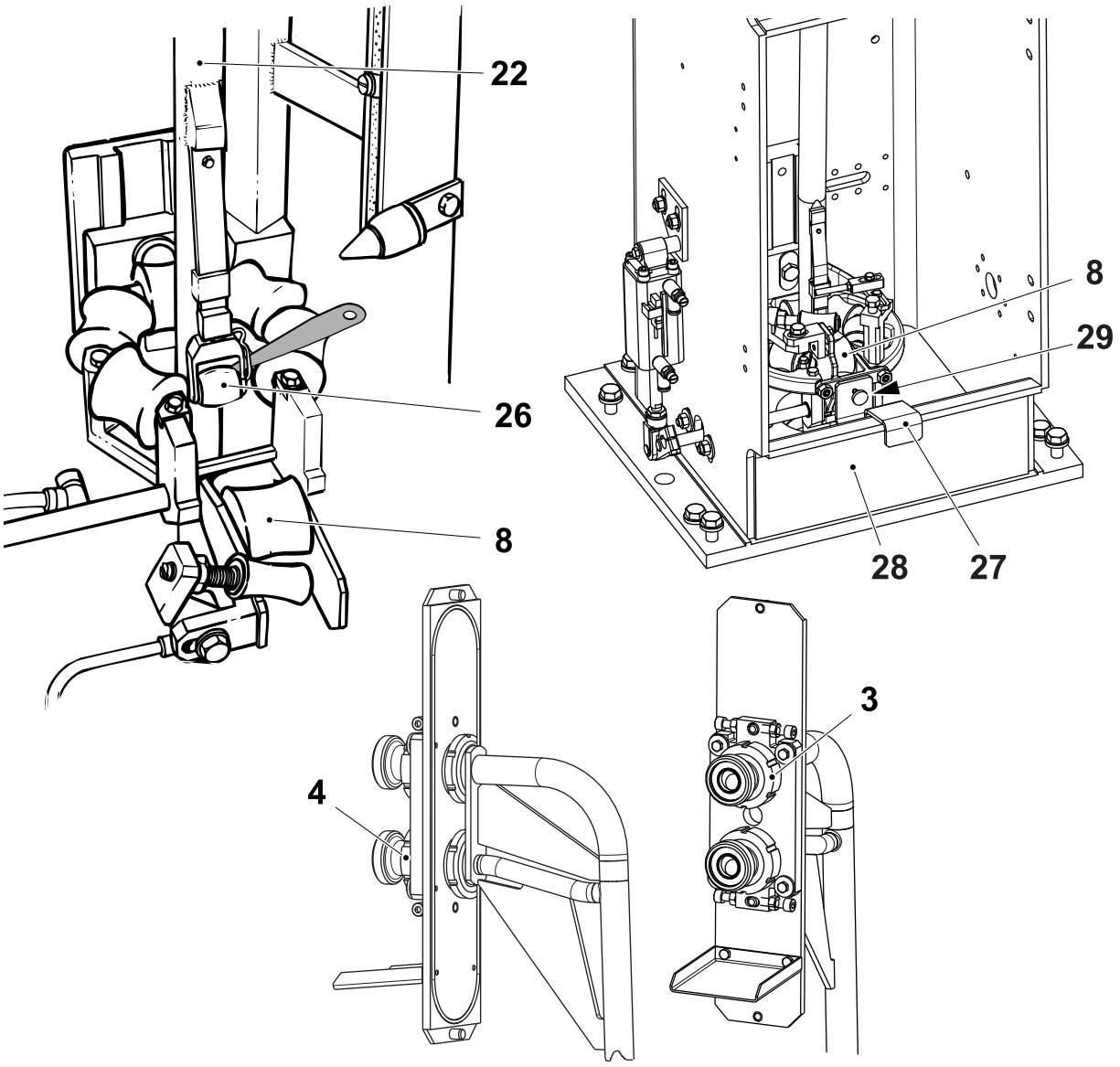

3 Nut
4 Nut
8 Counter roller
22 Upper filling pipe
26 Pressure roller
27 Tool
28 Aseptic chamber
29 Knob

(Cont'd)

(Cont'd)

x) Touch the STOP button (30) to restore the position of the counter roller (8).

y) Loosen the knob (29) and remove the tool (27).

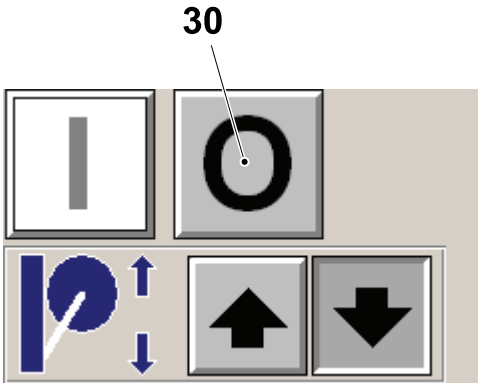

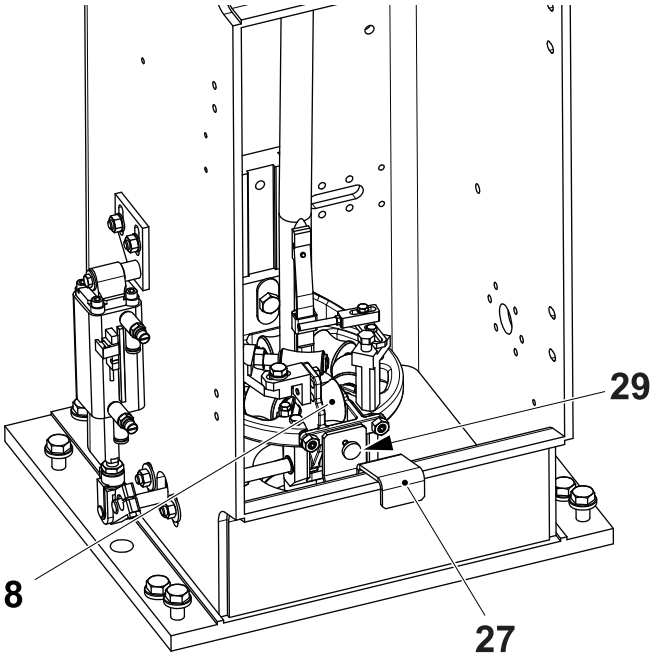

27 Tool
29 Knob
30 STOP button

1.2.3-5 Filling Pipe - Set Pressure Roller

Machine Status	Electrical supply disconnecting device in position O (OFF) Main air valve OFF Main steam valve ON Main water valve OFF
Special Equipment	Dynamometer TP No. 90459-7315 Tool TP No. 3224551-0100
SPC Reference	2839240-0200

Note! This setting procedure must be performed in accordance with the instructions described in 1-1 Superstructure - Setting Sequence, Type I.

(Cont'd)

(Cont'd)

a) Put a double thickness of packaging material (1) between the counter roller (2) and the pressure roller (3).

b) Move the counter roller (2) into PRODUCTION position and fit the tool (4) between the counter roller (2) and the aseptic chamber (5)

Note! Do not over tighten the knob (6).

c) Turn the knob (6) until the counter roller (2) is in PRODUCTION position.

d) Fit the adapter (7) to the dynamometer (8)

e) Press the dynamometer (8) against the spring (9). Take an accurate reading when the packaging material slips down, the force must be **50 ±5 N**.

f) Adjust by bending or changing the spring (9) until the correct force is obtained.

g) Loosen the knob (6) and remove the tool (4).

h) Check the filling pipe position, see 1.2.3-4 Filling Pipe - Set Position.

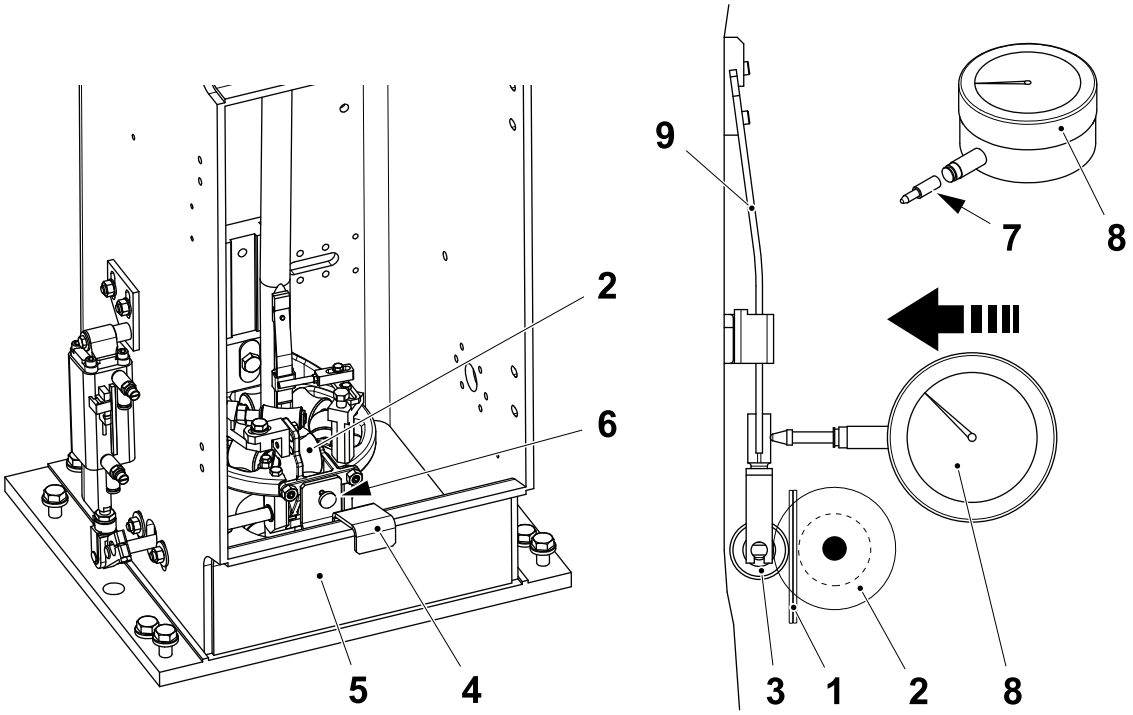

1 Packaging material
2 Counter roller
3 Pressure roller
4 Tool
5 Aseptic chamber
6 Knob
7 Adapter
8 Dynamometer
9 Spring

1.2.3-6 Filling Pipe - Set Level Detector Position

Machine Status	Electrical supply disconnecting device in position I (ON) Main air valve OFF Main steam valve ON Main water valve OFF
SPC Reference	2839240-0200

Basic Setting

a) Set the distance **A** between the level detector (1) and the pressure flange (2) with the screws (3).

Package	A ±1.0 (mm)	Package	A ±1.0 (mm)
TBA 80 S	207	TBA 284 B, TBA 300 S	125
TBA 100 B, TBA 125 S	155	TBA 375 S	123
TBA 200 B, TBA 250 B, TBA 330 S	125	TPA 125 Sq	135
TBA 160 S, TBA 180 S, TBA 200 S	104	TPA 200 Sq, TPA 250 Sq	102
TBA 200 M, TBA 250 S	105	TPA 330 Sq	118
TBA 200 Sq, TBA 250 Sq	113	TBA 200 E, TBA 250 E	100

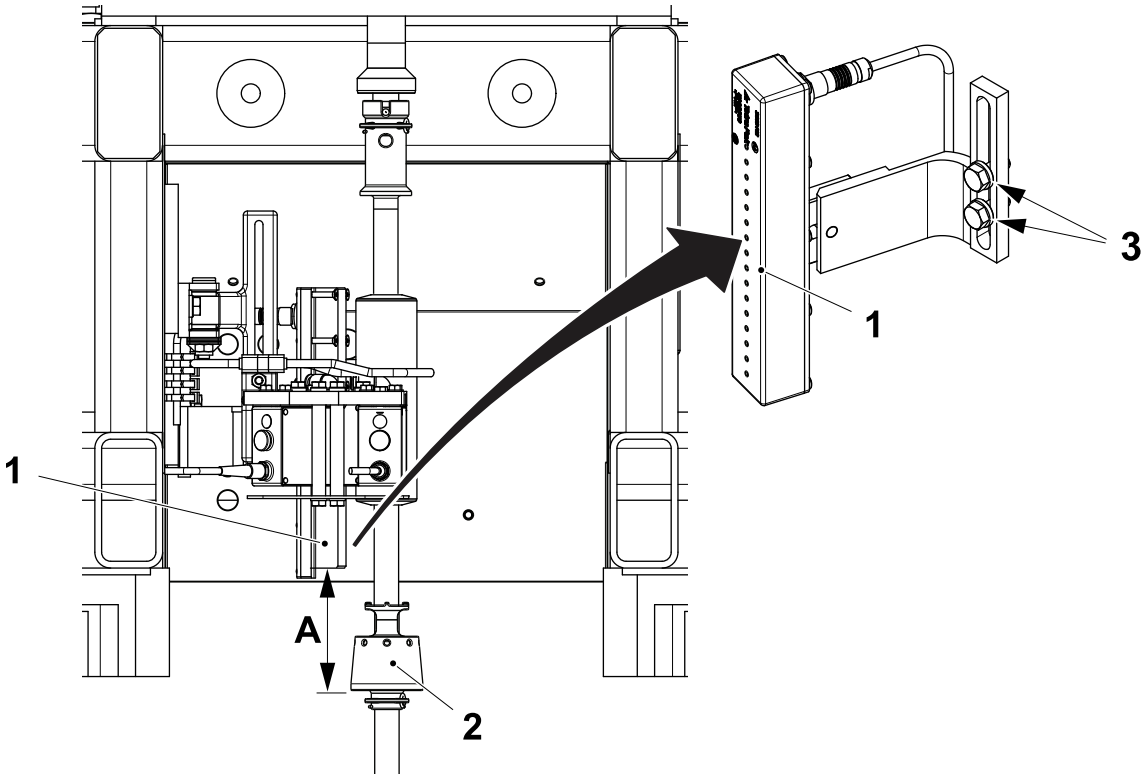

1 Level detector
2 Pressure flange
3 Screw

(Cont'd)

(Cont'd)

b) Set the alignment and parallelism of the level detector (1) to the lower filling pipe (4) with the screws (5).

c) Step up the machine to step TIGHT TUBE.

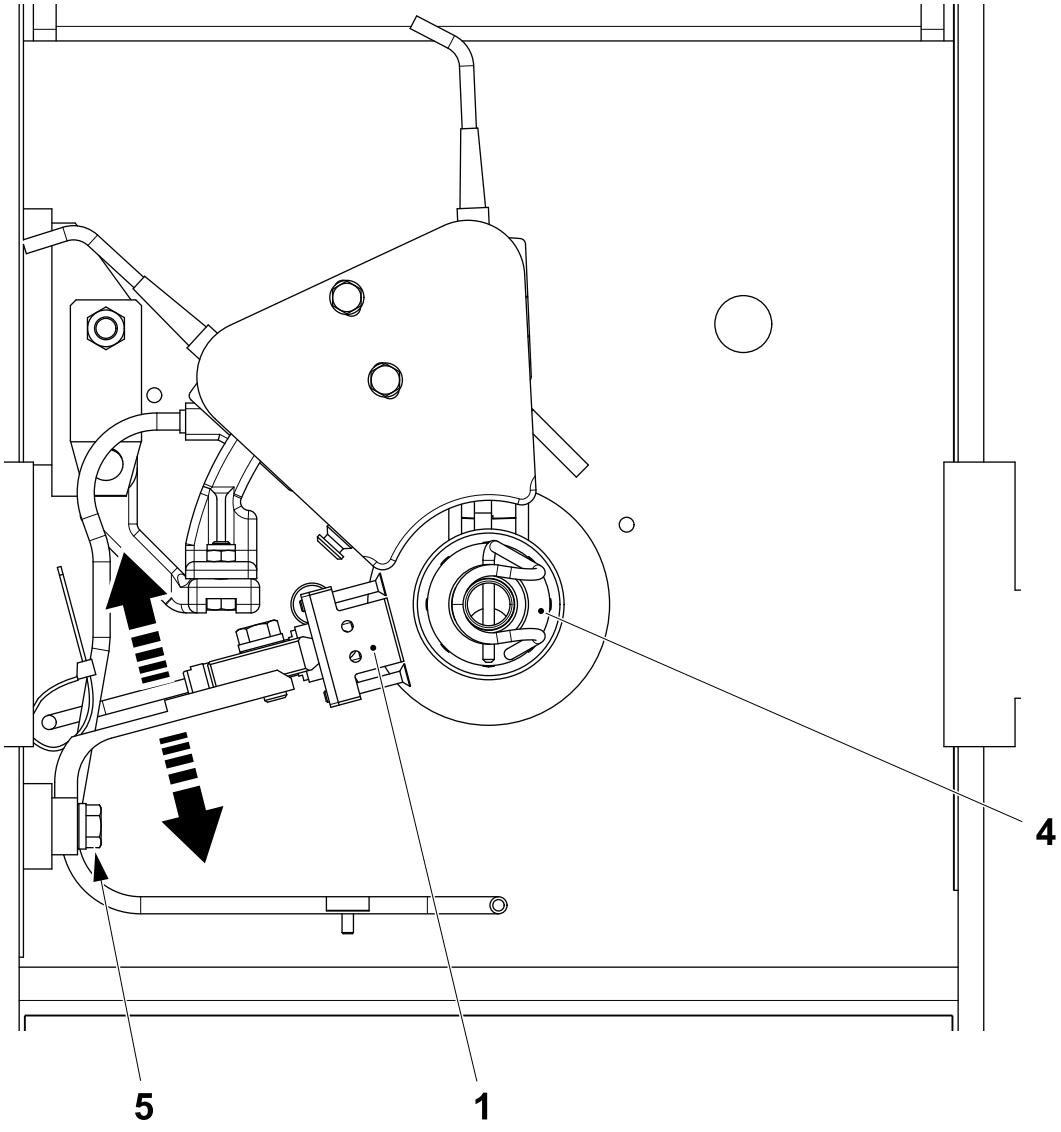

1 Level detector
4 Lower filling pipe
5 Screw

(Cont'd)

(Cont'd)

d) Check that the level detector (1) is parallel and aligned to the packaging material tube (6).

e) Set the distance **B** between the level detector (1) and the packaging material tube (6) with the screw (7).

Note! The level detector (1) will have reading defects if the distance between the level detector (1) and the float (8) is above 15 mm or lower than 6 mm. Consider this range when setting the distance **B**.

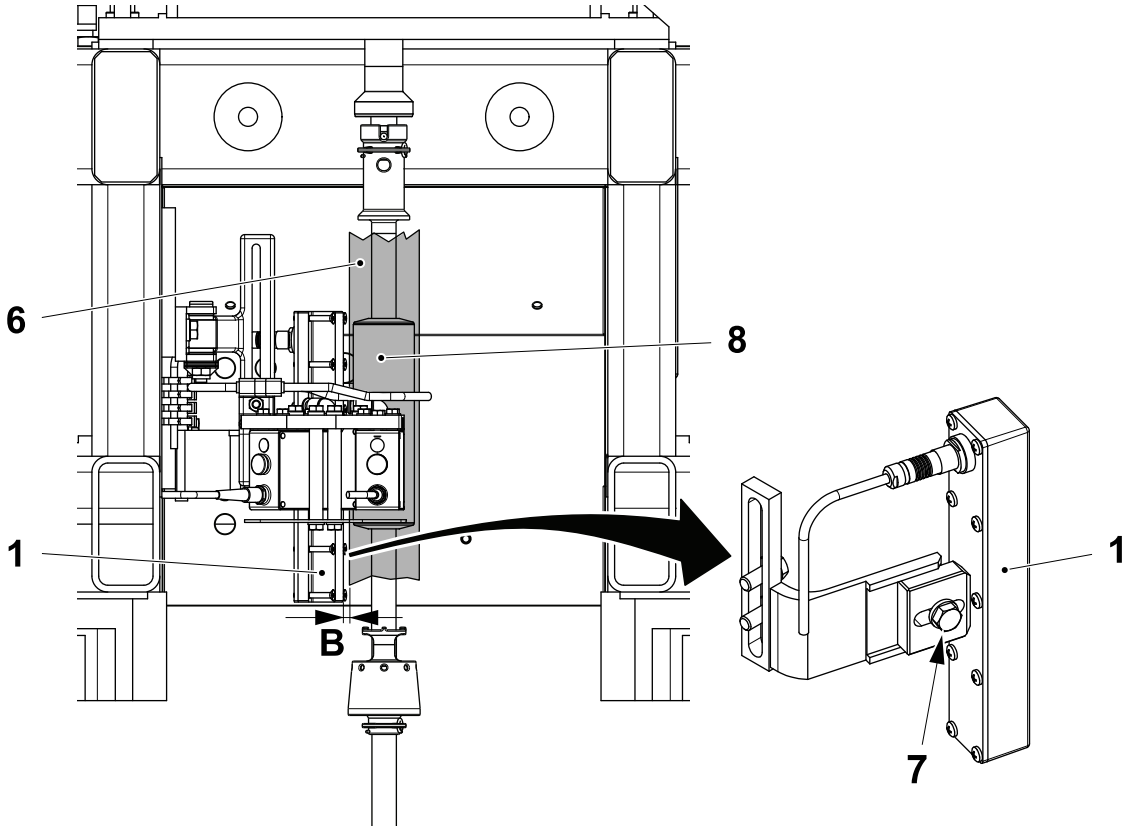

B = 2.0 ±1.0 mm

1 Level detector
6 Packaging material tube
7 Screw
8 Float

(Cont'd)

(Cont'd)

Fine Setting

a) Make sure the float (1) is at its lowest position.

b) Touch the PRODUCTION CONTROL button (3).

c) Touch the FILLING SYSTEM button (4).

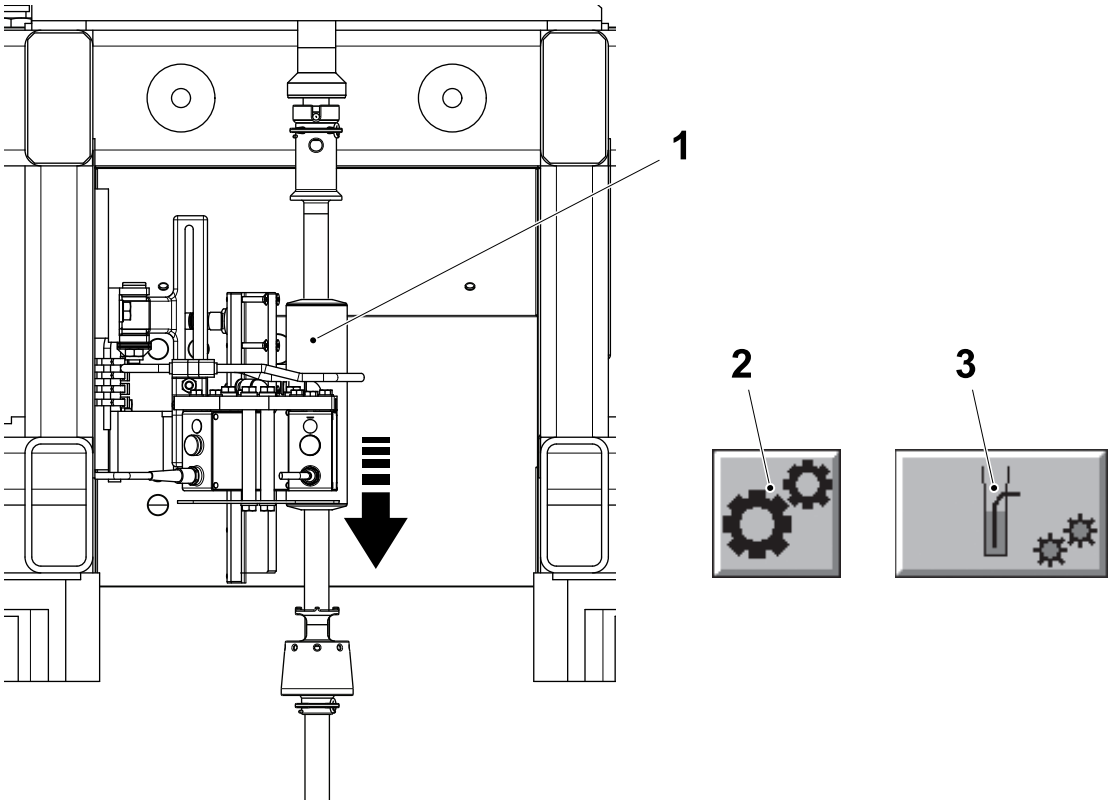

1 Float
2 Manoeuvre button
3 PRODUCTION CONTROL button
4 FILLING SYSTEM button

(Cont'd)

(Cont'd)

d) In the FILLING SYSTEM SETTINGS window (5), touch the LEVEL INDICATOR icon (6), the window (7) will appear.

e) Check that the LEVEL INDICATOR (8) is at 7% of the range. If not, loosen the screw (9) and adjust the level probe (10) until the level is at 7%. Tighten the screw (9) when the level is set.

Note! When the LEVEL INDICATOR (8) is at 7% of the range, the green LED (11) must be lit and horizontally aligned with the center of the float (1).

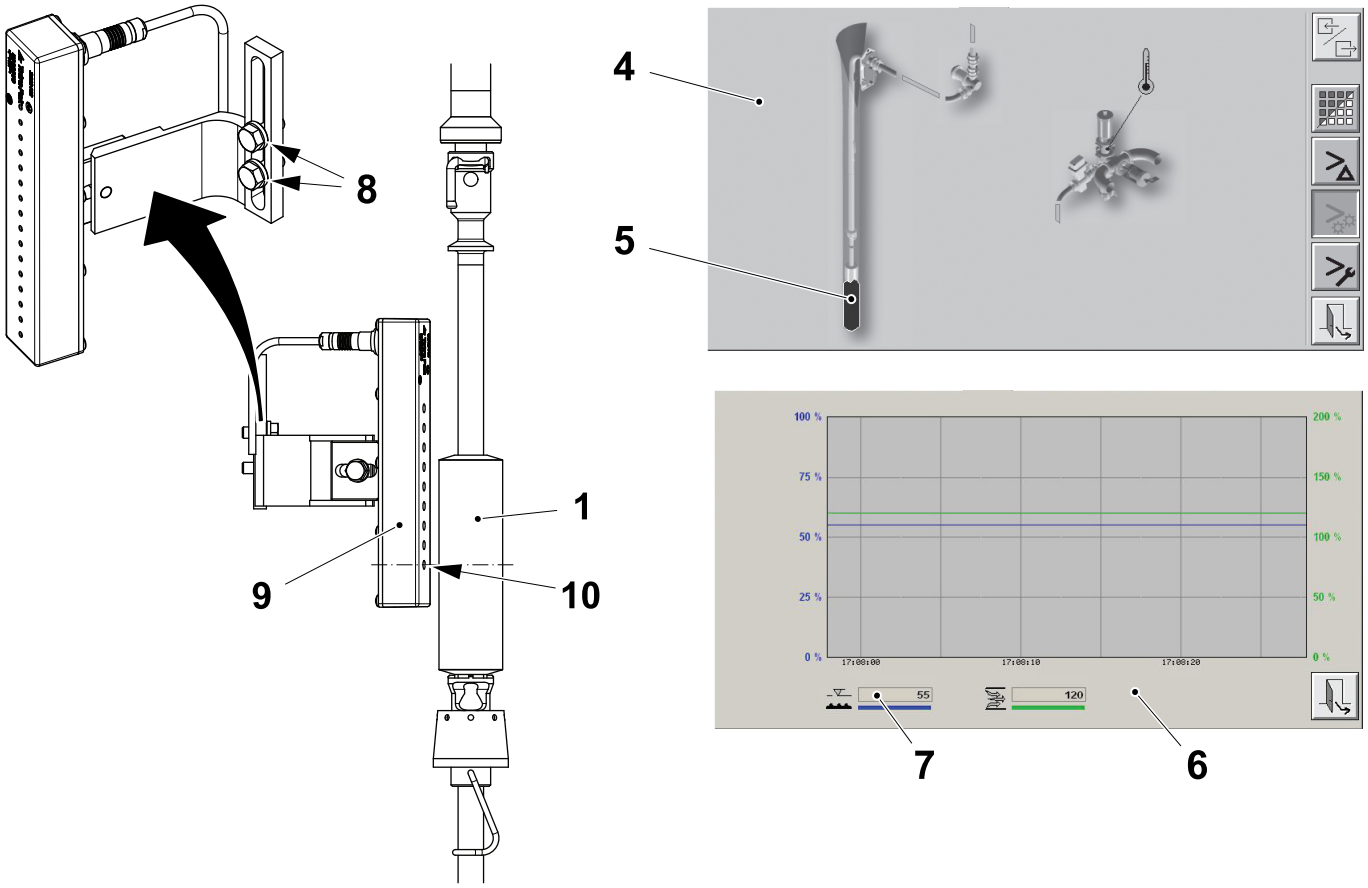

1 Float
5 Filling system setting window
6 Level indicator icon
7 Window
8 Level indicator
9 Screw
10 Level probe
11 Green LED

1.2.3-7 Filling Pipe - Check Level Detector Function

Machine Status	Electrical supply disconnecting device in position I (ON) Main air valve OFF Main steam valve ON Main water valve OFF
SPC Reference	2839240-0200

a) Connect a voltmeter to the terminal board X031 in the electrical cabinet.

b) Cut a small slot (1) in the packaging material tube (2) above the pressure flange, so that is possible to reach the float (3).

c) Make sure that the float (3) is in the lowest position by lifting it up and releasing it.

d) Check that the voltmeter shows approximately 0.6 Volts and verify that, by moving the float (3) up and down, the LED on the level regulator TMCC card works.

Note! If the LED is not working verify the TMCC card program down loading procedure, see 8.8.2-2 TMCC2 Controller - Load Program.

e) Check the level detector setting, see 1.2.3-6 Filling Pipe - Set Level Detector Position.

f) Change the level detector if necessary.

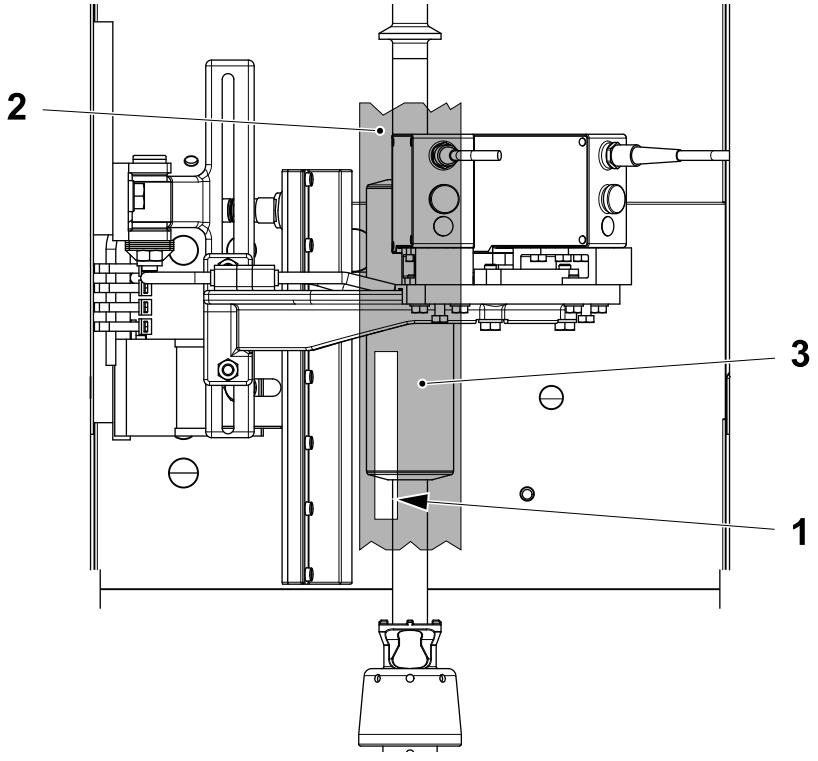

1 Slot 2 Packaging material tube 3 Float

1.2.3-8 Filling Pipe - Check Lower Filling Pipe

Machine Status	Electrical supply disconnecting device in position I (ON) Main air valve OFF Main steam valve ON Main water valve OFF
SPC Reference	2839240-0200

Note! Valid for machine equipped with the new lower forming ring only.

a) Remove the forks (1) and the lower filling pipe (2).

b) Remove the fork (3), the flange (4) and the float (5).

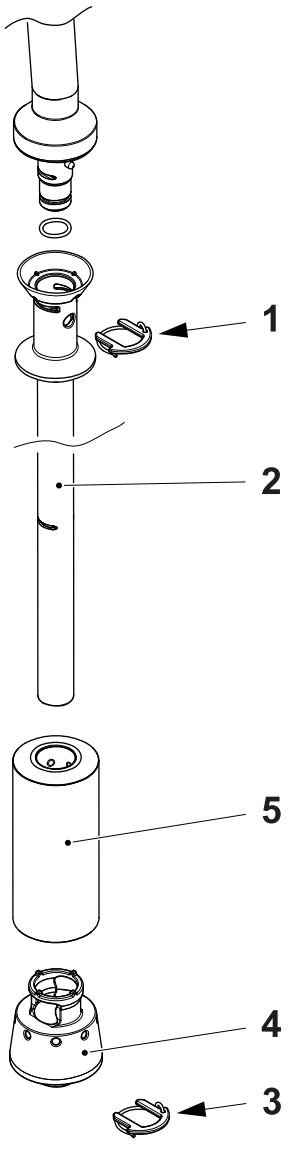

1 Fork
2 Lower filling pipe
3 Fork
4 Flange
5 Float

(Cont'd)

(Cont'd)

c) Check the locking forks (1) and fork (3) for wear or damage. Change if required.

Note! The below item d) is not valid for machine equipped with a plastic float.

d) Check the float (5) for cracks or mechanical damage. Change if required.

e) Change the O-ring (6) between the upper filling pipe (7) and the lower filling pipe (2).

f) Assemble in the reverse order.

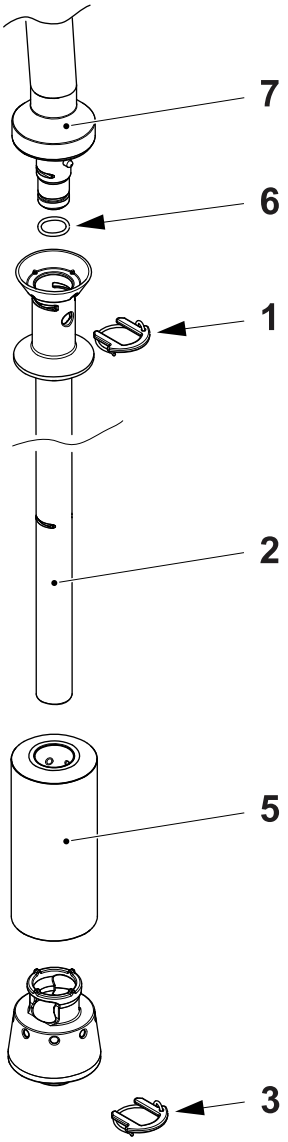

1 Fork
2 Lower filling pipe
3 Fork
5 Float
6 O-ring
7 Upper filling pipe

1.2.3-9 Filling Pipe - Change Locking Pin

Machine Status	Electrical supply disconnecting device in position I (ON) Main air valve OFF Main steam valve ON Main water valve OFF
SPC Reference	2839240-0100

Note! Valid for machine equipped with the old lower forming ring only.

a) Remove the stop pin (1) and the lower filling pipe (2).

b) Remove the locking pin (3), the flange (4) and the floater (5).

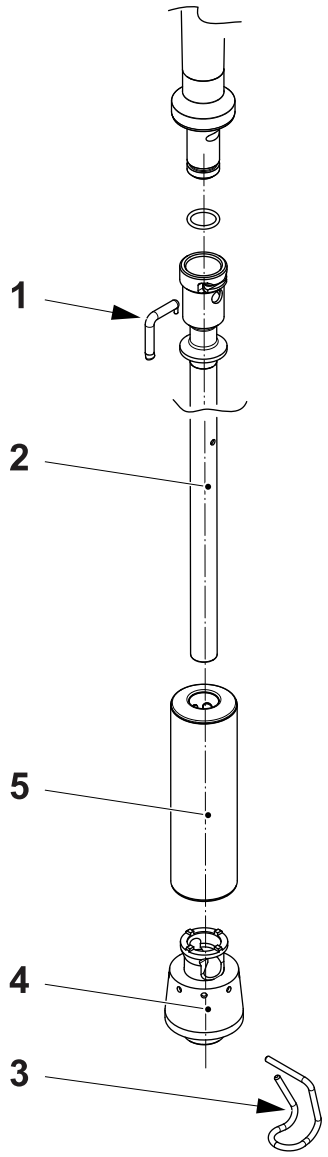

1 Stop pin
2 Lower filling pipe
3 Locking pin
4 Flange
5 Floater

(Cont'd)

(Cont'd)

c) Check for wear or damage:
   - the grooved seat (6) of the stop pin (1)
   - the hole (7) of the locking pin (3).

d) If necessary, change the lower filling pipe (2).

e) Change the stop pin (1) and the locking pin (3).

f) Assemble in the reverse order.

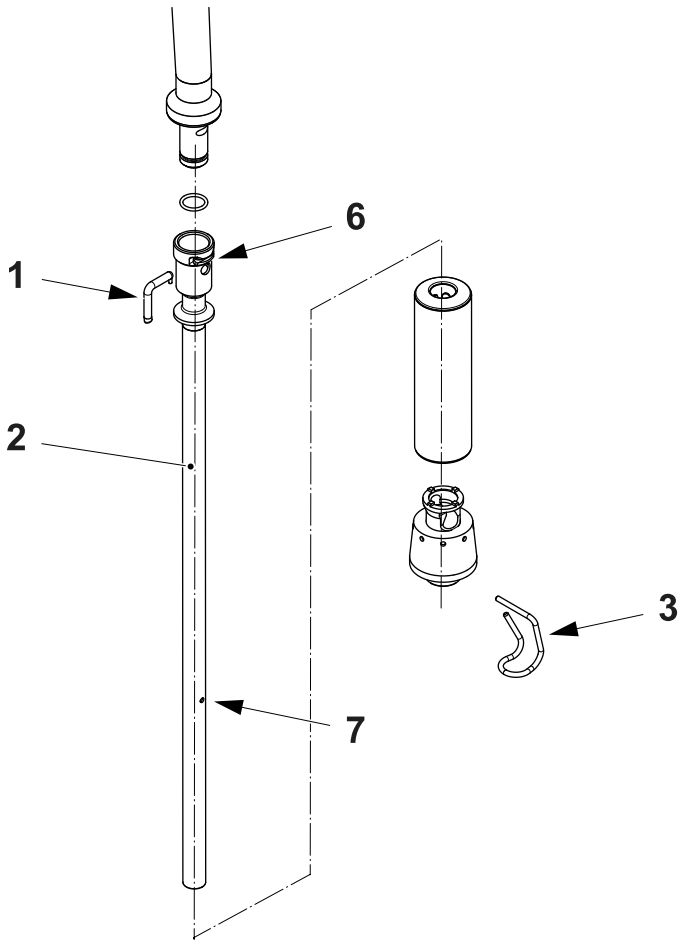

1 Stop pin
2 Lower filling pipe
3 Locking pin
6 Grooved seat
7 Hole

2 Machine Body

Machine Body -Description

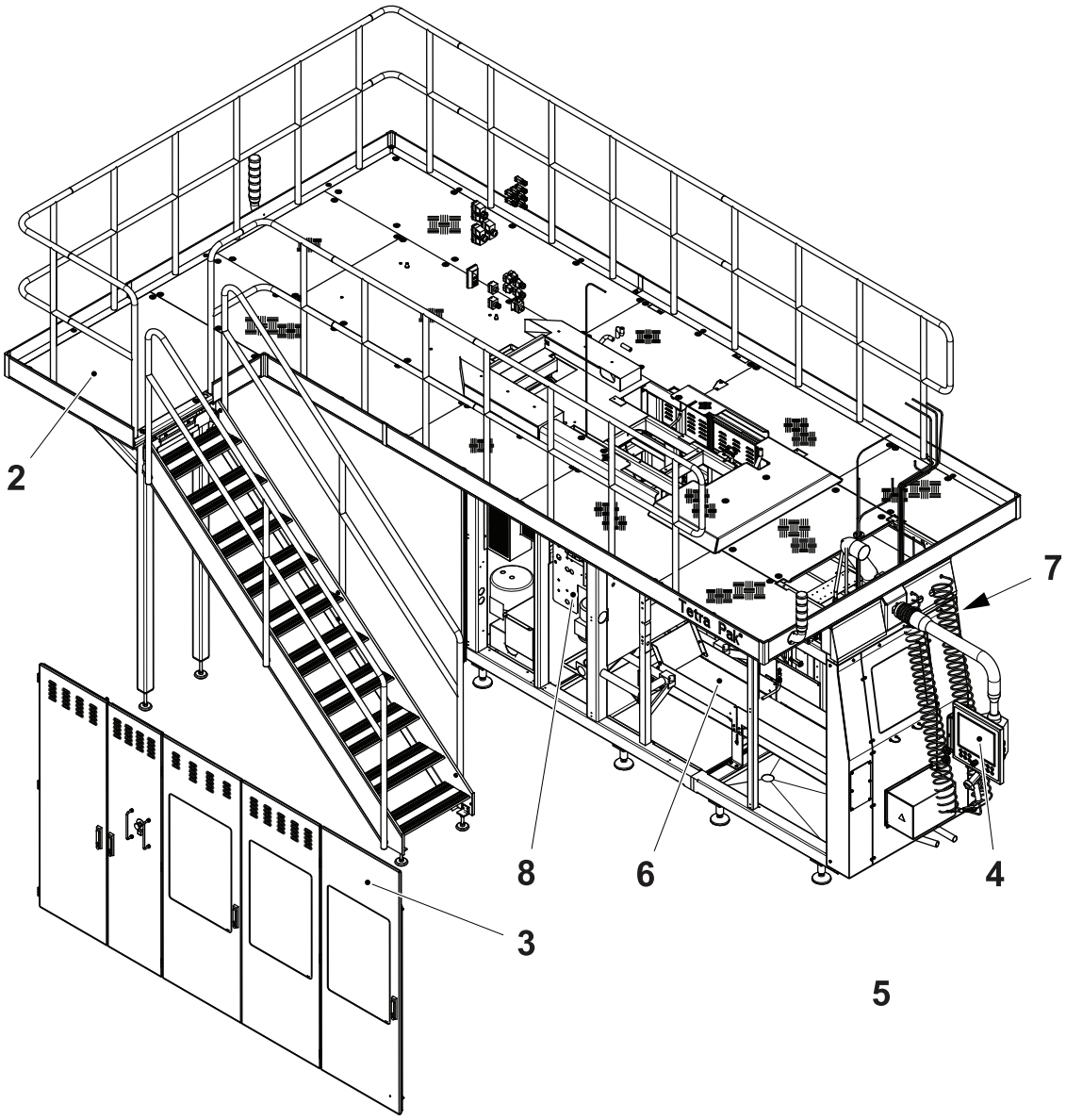

1 Central Module
2 Platform
3 Doors and Covers
4 TPOP
5 Cleaning System
6 Waste Conveyor
7 Superstructure Chemical Unit
8 Outfeed Supply

Machine Body -Description 2-2

2.1 Central Module 2-9

2.1.1 Valve Panel 2-9

2.1.1-1 Valve Panel - Check Photocell Filters 2-9

2.1.1-2 Valve Panel - Set Pressure Switch 2-10

2.1.2 Bending Roller 2-14

2.1.2-1 Bending Roller - Check 2-14

2.1.2-2 Bending Roller - Change Ball Bearings 2-15

2.1.2-3 Bending Roller - Set 2-16

2.1.3 Pipe Work Water 2-19

2.1.3-1 Pipe Work Water- Check 2-19

2.2 Platform 2-20

2.2.1 Signal Lamp 2-20

2.2.1-1 Signal Lamp - Set 2-20

2.3 Doors and Covers 2-21

2.3-1 Doors and Covers - Remove 2-21

2.3-2 Doors and Covers - Grease Locking Devices 2-23

2.3-3 Doors and Covers - Change Door Locking Unit 2-24

2.3-4 Doors and Covers - Set Locking Unit 2-26

2.3-5 Doors and Covers - Locking Unit LED Description 2-29

2.4 TPOP 2-30

2.4-1 TPOP - Open Front Panel 2-32

2.4-2 TPOP - Change Push Button Module 2-33

2.4-3 TPOP - Change AP Link SDL Receiver 2-37

2.4-4 TPOP - Change Gateway PCB 2-39

2.4.1 Bar Code Scanner 2-40

2.4.1-1 Bar Code Scanner - Configure and Test 2-40

2.4.1-2 Bar Code Scanner - Change Cable 2-49

2.5 Cleaning System 2-51

2.5-1 Cleaning System - Check Nozzles 2-51

2.6 Waste Conveyor 2-52

2.6-1 Waste Conveyor - Check 2-52

2.6-2 Waste Conveyor - Change Coupling 2-53

2.6-3 Waste Conveyor - Change Conveyor Belt 2-55

2.7 Superstructure Chemical Unit 2-56

2.7.1 Hydrogen Peroxide 2-56

2.7.1-1 Hydrogen Peroxide - Check Leakages 2-56

2.7.1-2 Hydrogen Peroxide - Check Pump 2-57

2.7.1-3 Hydrogen Peroxide - Set Pressure 2-58

2.7.1.1 Peroxide Tank 2-59

2.7.1.1-1 Peroxide Tank - Check 2-59

2.7.1.2 Dilution Tank 2-61

2.7.1.2-1 Dilution Tank - Check 2-61

2.7.1.3 Peroxide Pipe 2-62

2.7.1.3-1 Peroxide Pipe - Check 2-62

2.7.1.3-2 Peroxide Pipe - Clean Strainer 2-64

2.7.1.3-3 Peroxide Pipe - Replace Valves 2-65

2.7.1.4 Heating Unit 2-68

2.7.1.4-1 Heating Unit - Change Heating Elements 2-68

2.7.1.4-2 Heating Unit - Change Heat Exchanger 2-70

2.7.1.4-3 Heating Unit - Drain U-bend 2-72

2.7.1.4-4 Heating Unit - Check Pump 2-73

2.7.1.4-5 Heating Unit - Change Venting Valve 2-74

2.7.1.4-6 Heating Unit - Check Venting Valve Floater 2-76

2.7.1.5 Pressure Unit 2-77

2.7.1.5-1 Pressure Unit - Check Leaks 2-77

2.7.1.5-2 Pressure Unit - Fill 2-79

2.7.1.5-3 Pressure Unit - Set Pressure 2-81

2.7.1.6 Air Pipe-Line 2-83

2.7.1.6-1 Air Pipe-Line - Check 2-83

2.7.1.6-2 Air Pipe-Line - Change Gasket and Non Return Valve 2-85

2.7.1.6-3 Air Pipe-Line - Clean Filter 2-87
2.7.1.6-4 Air Pipe-Line - Change Hoses 2-88
2.7.1.7 Peroxide Pump 2-90
2.7.1.7-1 Peroxide Pump - Change Pump 2-90
2.7.1.7-2 Peroxide Pump - Overhaul Pump 2-91
2.7.1.7-3 Peroxide Pump - Set Impeller 2-94
2.7.1.8 Peroxide Container 2-95
2.7.1.8-1 Peroxide Container - Check 2-95
2.7.1.8-2 Peroxide Container - Change 2-96
2.7.1.9 H_2O_2 Concentration Meter 2-99
2.7.1.9-1 H_2O_2 Concentration Meter - Check Desiccant Cartridge 2-99
2.7.1.9-2 H_2O_2 Concentration Meter - Change O-ring 2-100
2.7.1.9-3 H_2O_2 Concentration Meter - Remove 2-102
2.7.1.9-4 H_2O_2 Concentration Meter - Check Pt100 Sensor 2-104
2.7.1.9-5 H_2O_2 Concentration Meter - Change Pt100 Sensor 2-105
2.7.1.9-6 H_2O_2 Concentration Meter - Check Prism and Led 2-106
2.7.2 Chemicals 2-108
2.7.2-1 Chemicals - Check 2-108
2.7.3 ICU (OE) 2-109
2.7.3-1 ICU - Check for Leakage 2-109
2.7.3-2 ICU - Drain 2-112
2.7.3-3 ICU - Check Floats 2-112
2.7.3-4 ICU - Check Float Function 2-116
2.7.3-5 ICU - Set Proximity Sensor 2-118
2.7.3-6 ICU - Change Pump 2-119
2.7.3-7 ICU - Change Diaphragm 2-123
2.7.3-8 Integrated Cleaning Unit - Rinse Chemical Pumps 2-127
2.7.3.1 Refilling 2-130
2.7.3.1-1 Refilling - Check 2-130
2.7.3.1-2 Refilling - Change Filter 2-131

2.8 Outfeed Supply 2-132

2.8.1 Hydraulic Unit 2-132

2.8.1-1 Hydraulic Unit - Functional Description 2-132

2.8.1-2 Hydraulic Unit - Change Oil 2-134

2.8.1-3 Hydraulic Unit - Clean Tank 2-139

2.8.1-4 Hydraulic Unit - Bleed 2-143

2.8.1.1 Hydraulic Unit (Bosch) 2-148

2.8.1.1-1 Hydraulic Unit - Check 2-148

2.8.1.1-2 Hydraulic Unit - Set Pressure 2-150

2.8.1.1-3 Hydraulic Unit - Check Level Probe 2-152

2.8.1.1-4 Hydraulic Unit - Change Air Filter 2-154

2.8.1.1-5 Hydraulic Unit - Drain Water 2-155

2.8.1.1-6 Hydraulic Unit - Check Accumulator 2-156

2.8.1.1-7 Hydraulic Unit - Change Accumulator 2-157

2.8.1.1-8 Hydraulic Unit - Change Bi-stable Valve, Directional Valve and Solenoid 2-159

2.8.1.1-9 Hydraulic Unit - Change Check Valves 2-161

2.8.1.1-10 Hydraulic Unit - Change Pressure Reducing Valve 2-163

2.8.1.1-11 Hydraulic unit - Change Pressure Relief Valve 2-165

2.8.1.1-12 Hydraulic Unit - Change Filter Element 2-166

2.8.1.1-13 Hydraulic Unit - Change Pump 2-169

2.8.1.1-14 Hydraulic Unit - Change Electrical Motor 2-171

2.8.1.2 Hydraulic Unit (PMC) 2-173

2.8.1.2-1 Hydraulic Unit - Check 2-173

2.8.1.2-2 Hydraulic Unit - Set Pressure 2-175

2.8.1.2-3 Hydraulic Unit - Check Level Probe 2-178

2.8.1.2-4 Hydraulic Unit - Change Air Filter 2-180

2.8.1.2-5 Hydraulic Unit - Drain Collection Tray 2-181

2.8.1.2-6 Hydraulic Unit - Check Accumulator 2-182

2.8.1.2-7 Hydraulic Unit - Change Accumulator 2-184

2.8.1.2-8 Hydraulic Unit - Change Directional Valves and Solenoid 2-187

2.8.1.2-9 Hydraulic Unit - Change Check Valves 2-189

2.8.1.2-10 Hydraulic Unit - Change Pressure Reducing Valve 2-191
2.8.1.2-11 Hydraulic Unit - Change Pressure Relief Valve 2-193
2.8.1.2-12 Hydraulic Unit - Change Pump Filter Element 2-195
2.8.1.2-13 Hydraulic Unit - Change Pump. 2-197
2.8.1.2-14 Hydraulic Unit - Change Motor. 2-200

2.8.2 Lubrication Unit 2-202

2.8.2-1 Lubrication Unit - Check Pressure Guard 2-202
2.8.2-2 Lubrication Unit - Check Oil Pressure 2-203
2.8.2-3 Lubrication Unit - Check Oil Feed 2-204
2.8.2-4 Lubrication Unit - Clean Oil Tank. 2-205
2.8.2-5 Lubrication Unit - Bleed 2-206
2.8.2-6 Lubrication Unit - Fill Oil. 2-208
2.8.2-7 Lubrication Unit - Change Filter Insert 2-209
2.8.2-8 Lubrication Unit - Change Oil Pump 2-210

This page intentionally left blank

2.1 Central Module

2.1.1 Valve Panel

2.1.1-1 Valve Panel - Check Photocell Filters

Machine Status	Electrical supply disconnecting device in position O (OFF) Main air valve OFF Main steam valve ON Main water valve OFF
SPC Reference	2839628-0200

Check the following parts for wear or damage:

- the filter (1), the normal colour of the filter is white. If it is coloured RED, it must be changed

  Note! Red indicates that water is in the air supply.

- the filter (2), the normal colour of the filter is blue. If it is coloured PINK, it must be changed

  Note! Pink indicates that water is in the air supply.

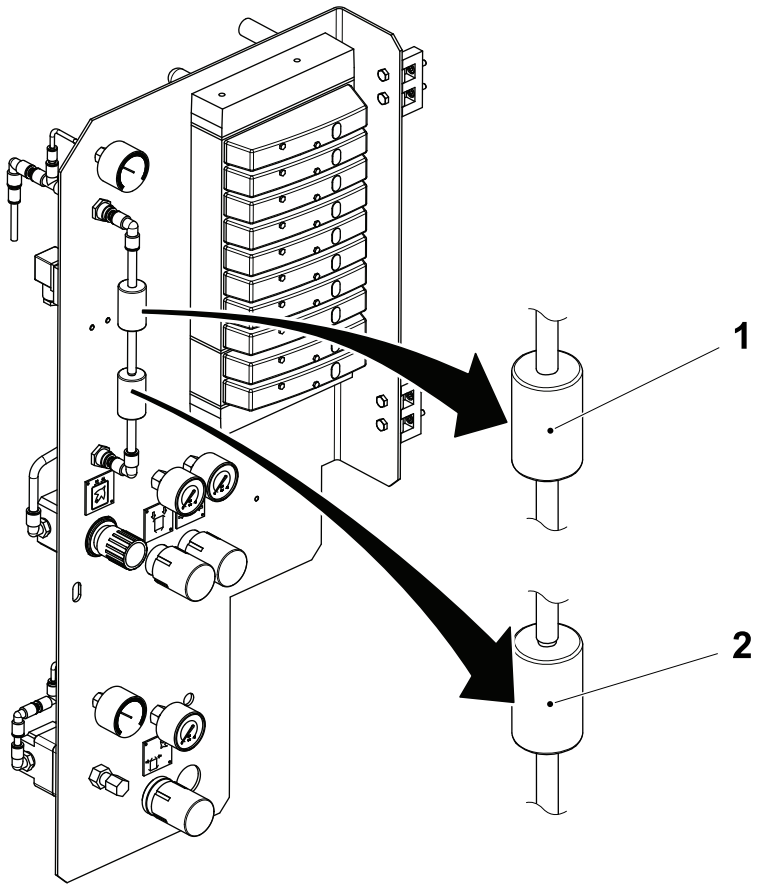

1 Filter
2 Filter

2.1.1-2 Valve Panel - Set Pressure Switch

Machine Status	PREPARATION
Special Equipment	Multimeter
SPC Reference	2839628-0200

Note! When the main air supply pressure is less than 5.5 bar, the AIR SUPPLY ALARM will flash on the TPOP.

a) Use the pressure regulator (1) in the service unit to reduce the main air supply pressure to 4.0 bar as indicated by the pressure gauge (2).

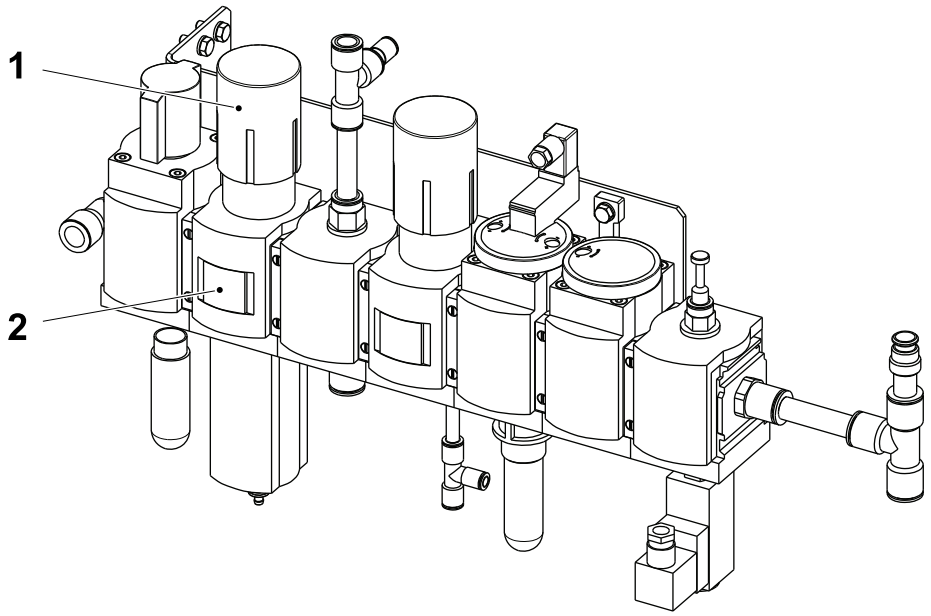

1 Pressure regulator
2 Pressure gauge

(Cont'd)

(Cont'd)

b) Remove the cover from the connection box T40X1000 (3) and connect the multimeter between terminals 46 and T40K1020:7.

c) Check that the multimeter indicates a value other than zero.

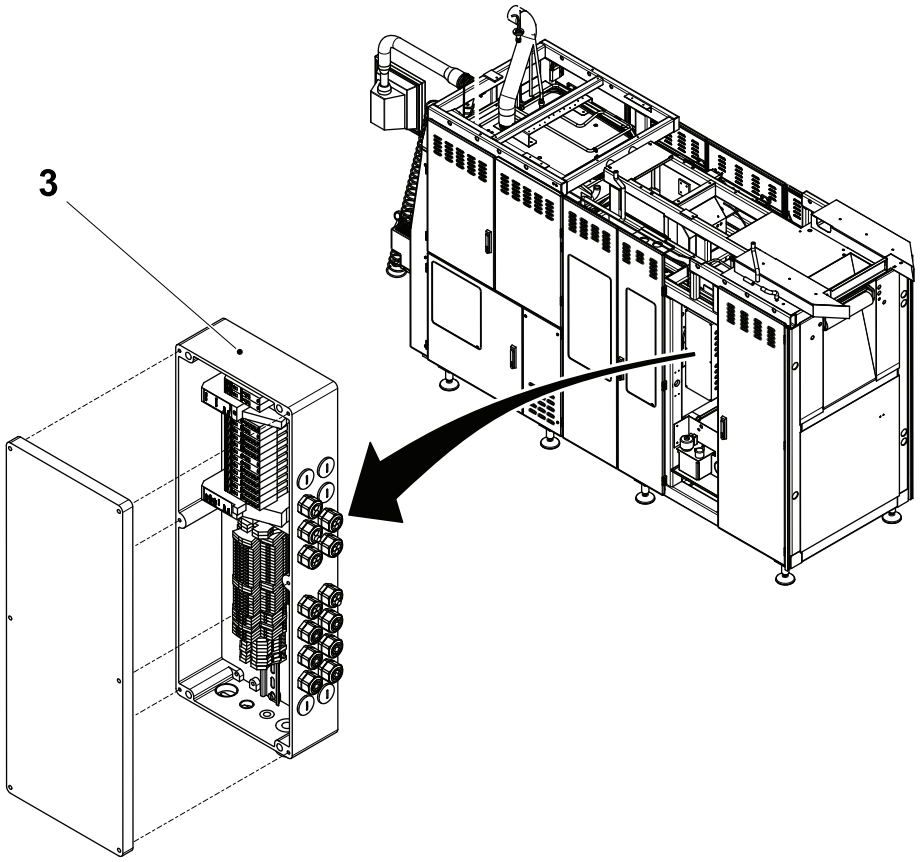

3 Connection box T40X1000

(Cont'd)

(Cont'd)

Note! When the pressure switch is set correctly, the PRESSURE GUARD DROP CHUTE ALARM will flash when the air supply pressure is 4.0 bar or less.

d) On the valve panel (4), turn the screw (5) on the pressure switch (6) clockwise until the multimeter indicates zero and the `PRESSURE GUARD DROP CHUTE ALARM` flashes.

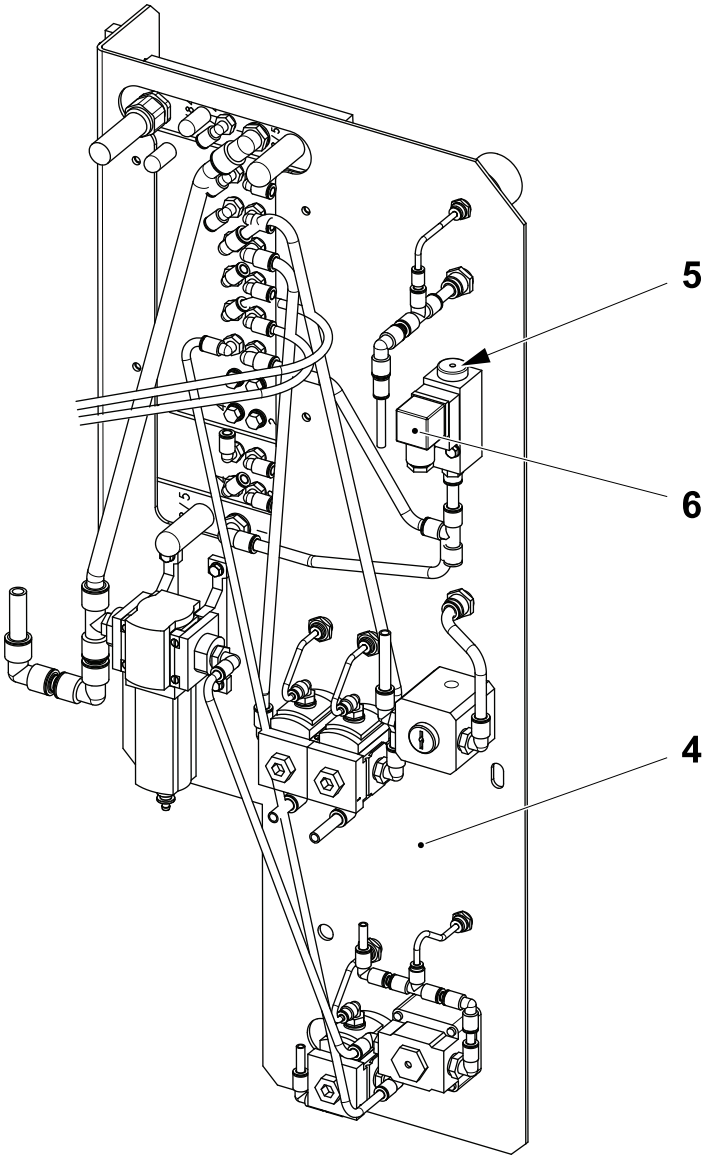

4 Valve panel
5 Screw
6 Pressure switch

(Cont'd)

(Cont'd)

e) Using the pressure regulator (1), increase the air supply pressure to 6 - 7 bar as indicated by the pressure gauge (2) and check that the `PRESSURE GUARD DROP CHUTE ALARM` disappears.

f) Reduce the pressure again and check that the `PRESSURE GUARD DROP CHUTE ALARM` flashes when the pressure is 4.0 bar or less.

g) Set the main air supply pressure to 6 - 7 bar.

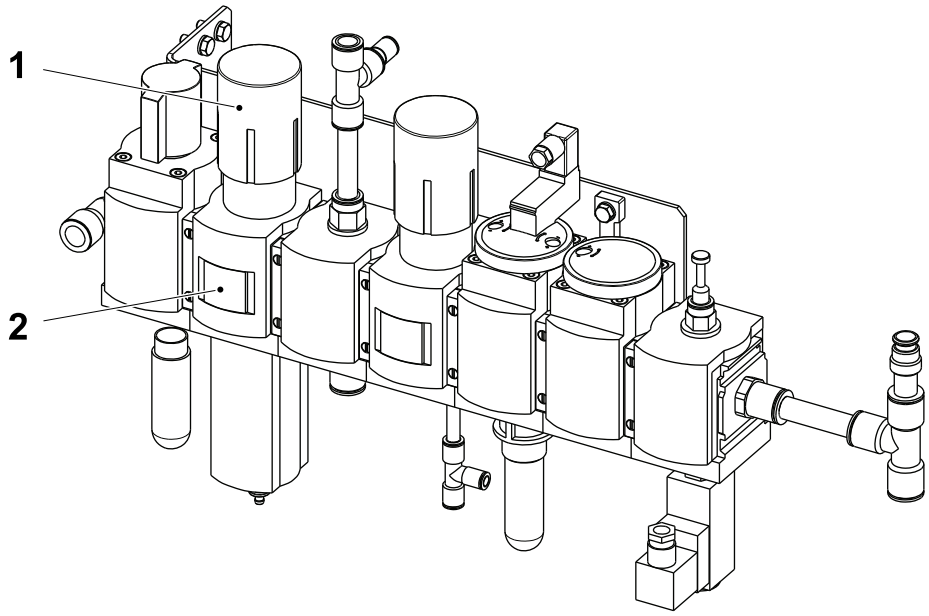

1 Pressure regulator
2 Pressure gauge

2.1.2 Bending Roller

2.1.2-1 Bending Roller - Check

Machine Status	Electrical supply disconnecting device in position O (OFF) Main air valve OFF Main steam valve ON Main water valve OFF
SPC Reference	2504784-0300

Check:

- the surface of the bending roller (1) for wear or damage
- for excessive play in the ball bearings by turning the bending roller (1) back and forwards
- that the material lock (2) grips the packaging material when it is positioned against the bending roller.

If necessary change the ball bearings or the bending roller, see 2.1.2-2 Bending Roller - Change Ball Bearings.

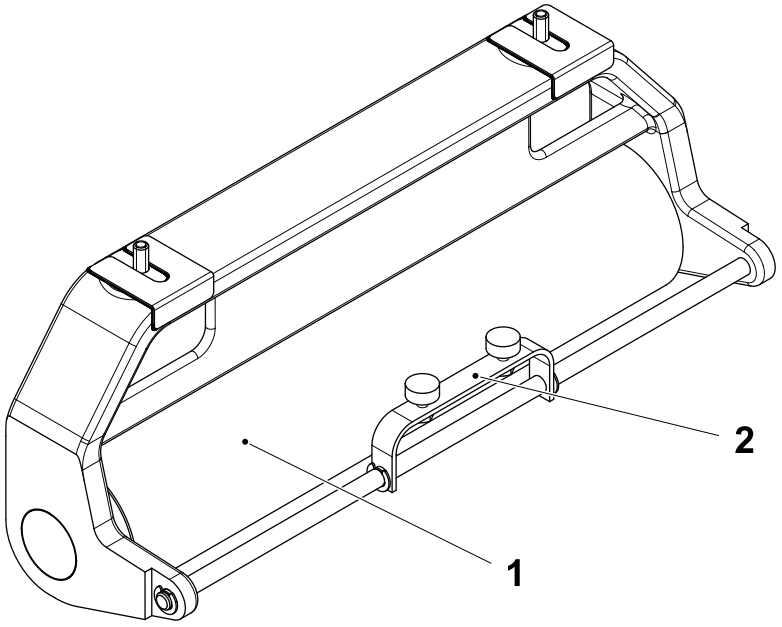

1 Bending roller
2 Material lock

2.1.2-2 Bending Roller - Change Ball Bearings

Machine Status	Electrical supply disconnecting device in position O (OFF) Main air valve OFF Main steam valve ON Main water valve OFF
SPC Reference	2504784-0300

a) Remove the screws (1).

b) Remove the axle pins (2) and the bending roller (3).

c) Change the ball bearings (4).

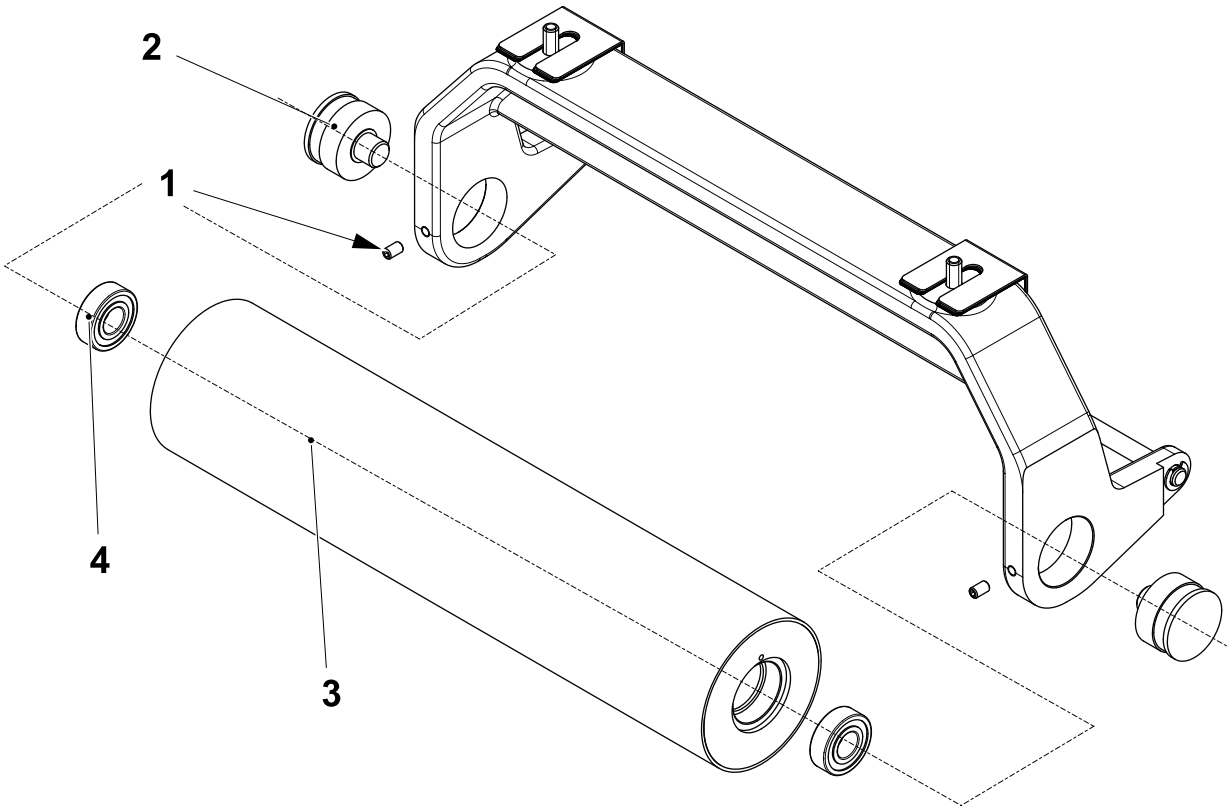

1 Screw
2 Axle pin
3 Bending roller
4 Ball bearing

2.1.2-3 Bending Roller - Set

Machine Status	Electrical supply disconnecting device in position I (ON) Main air valve ON Main steam valve ON Main water valve ON
SPC Reference	2504784-0300

Set the thickness of the shims (1) to change the position of the bending roller.

Proceed as follows.

a) Loosen the screws (2) without removing them.

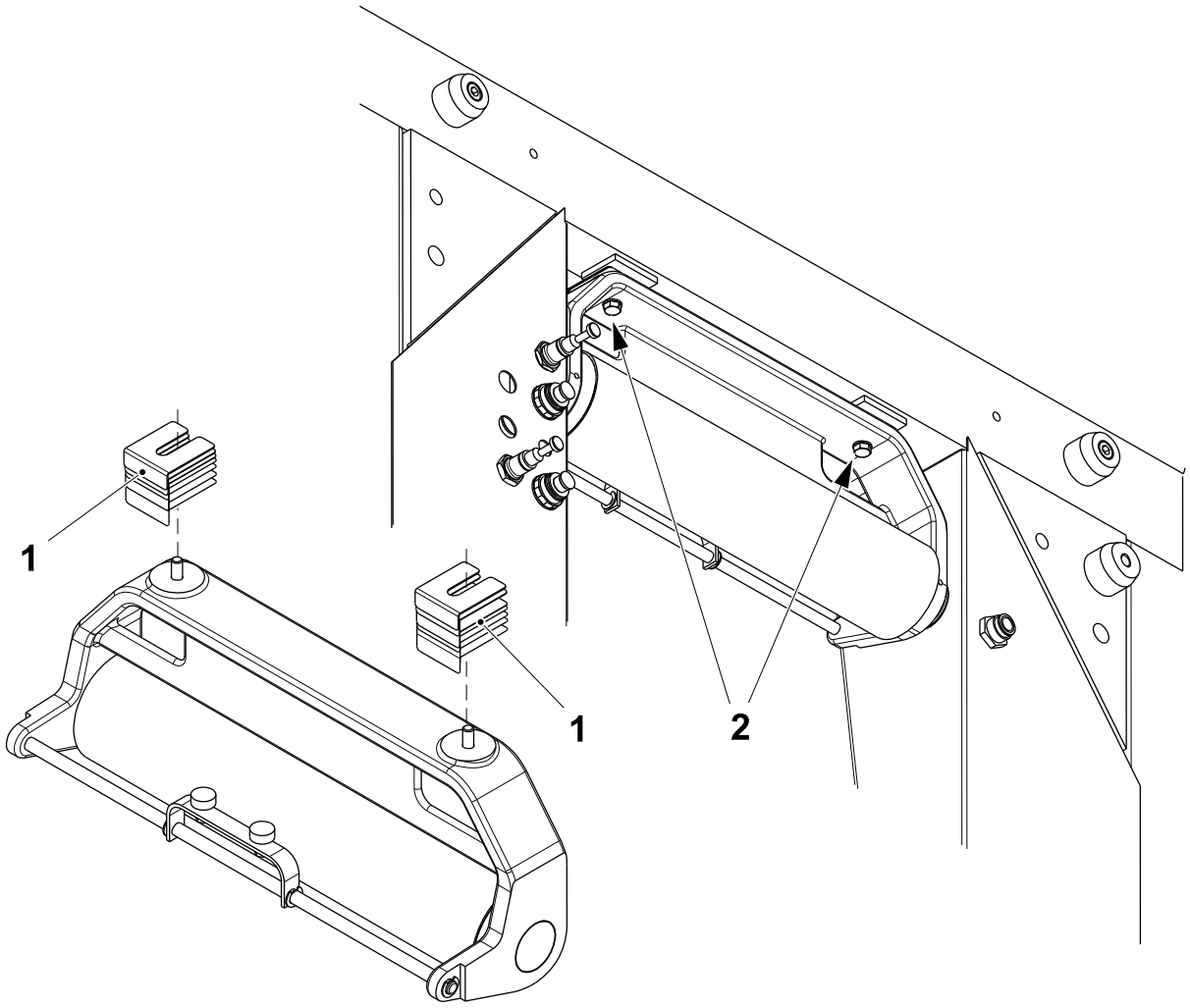

1 Shim
2 Screw

(Cont'd)

(Cont'd)

b) Access the bending roller area from the superstructure floor.

c) Remove all the shims (1) between the bending roller bracket (3) and the frame (4).

d) Change the thickness of the shims (1) on one side or in both sides by removing one or more shims (1).

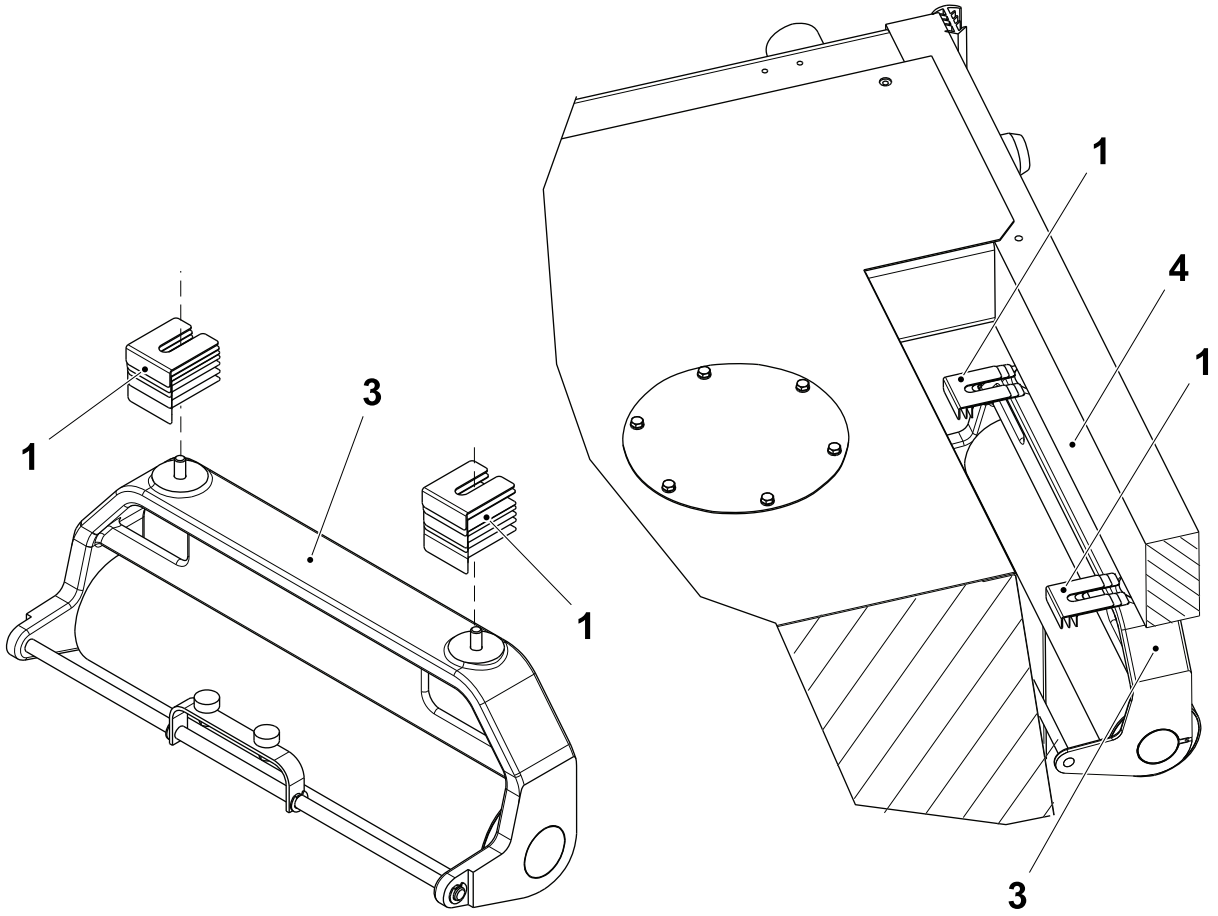

1 Shim
3 Bending roller bracket
4 Frame

(Cont'd)

(Cont'd)

Note! For machines without pre-applicator, the shims (1) can be fitted from the ASU floor as shown below.

e) Assemble in the reverse order.

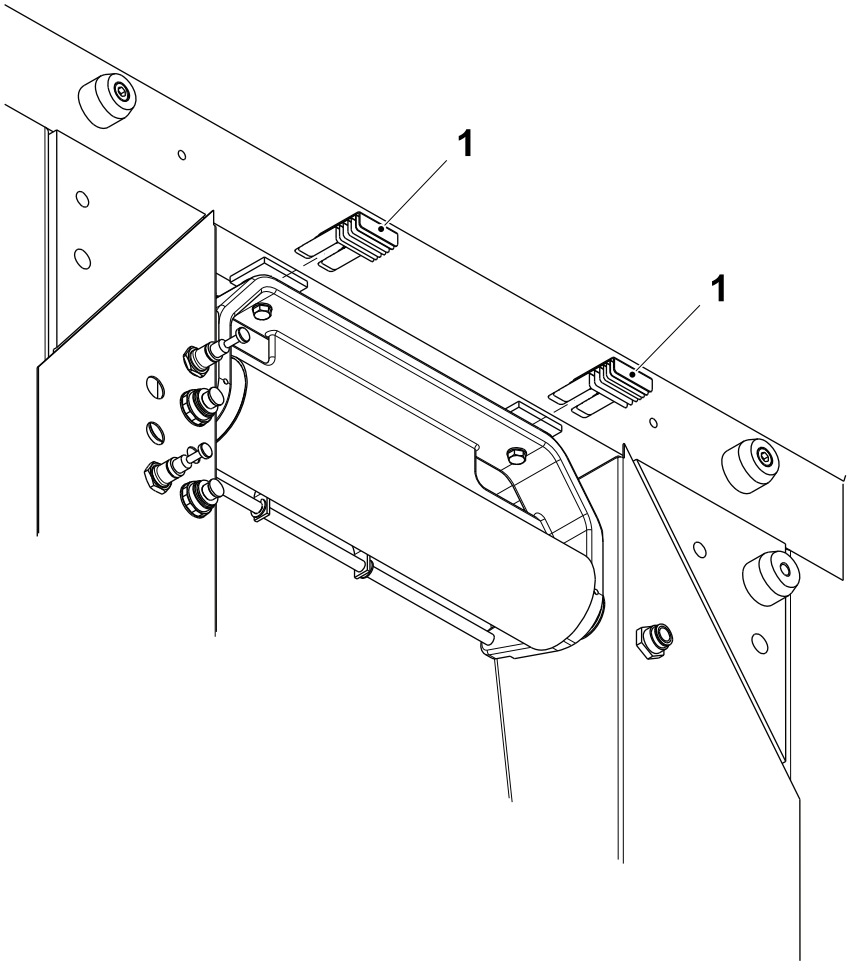

1 Shim

2.1.3 Pipe Work Water

2.1.3-1 Pipe Work Water- Check

Machine Status	PRODUCTION
SPC Reference	2845716-0100

Make sure that:

- the hoses and the pipes are intact and their connections are secure
- there are no obvious obstructions or leaks
- all the hoses and cables are clamped securely.

Change if necessary.

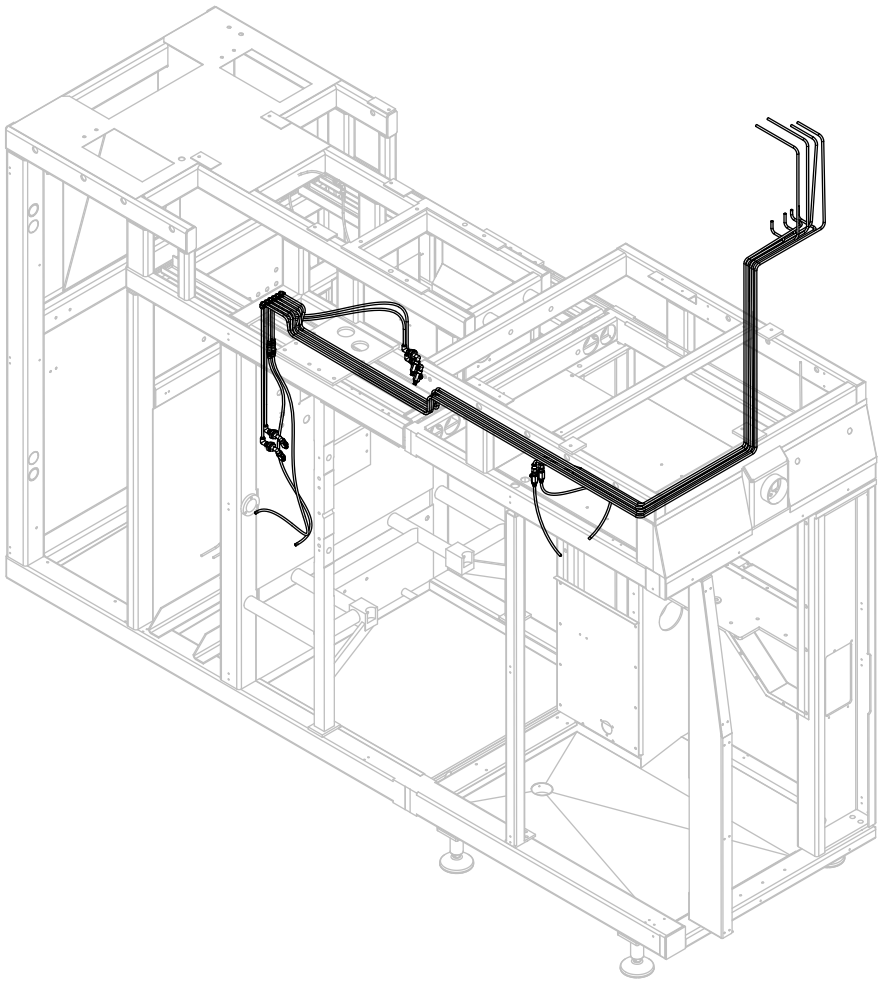

2.2 Platform

2.2.1 Signal Lamp

2.2.1-1 Signal Lamp - Set

SPC Reference	2893407-0200

Perform the following procedure on both the front and rear signal lamps.

a) Twist off the siren element (1) from the top of the signal lamp (2).

b) Set the DIP switches (3) as indicated in the table below.

DIP Switch	Position
1	ON
2	OFF
3	ON

c) If necessary adjust the volume of the siren element by turning the potentiometer (4).

d) Fit the siren element (1) back onto the signal lamp (2).

Note! Align the white mark (5) on the siren element (1) with the arrow (6) when fitting.

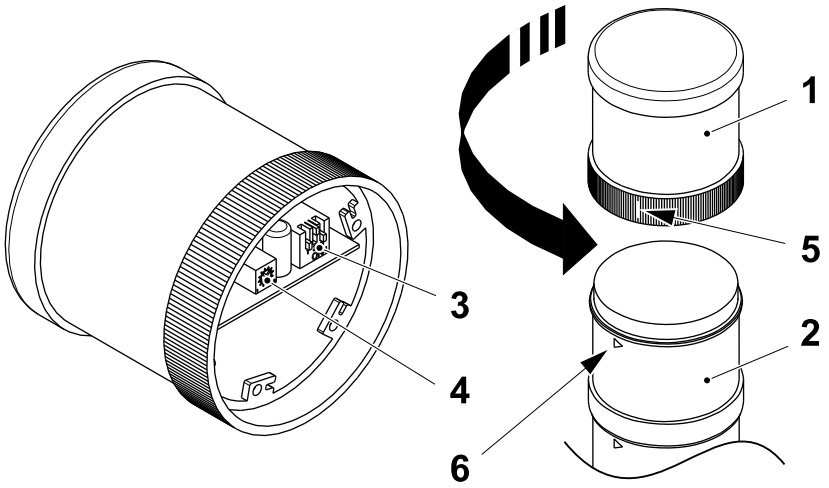

1 Siren element
2 Signal lamp
3 DIP switch
4 Potentiometer
5 White mark
6 Arrow

2.3 Doors and Covers

2.3-1 Doors and Covers - Remove

Machine Status	Electrical supply disconnecting device in position O (OFF) Main air valve OFF Main steam valve ON Main water valve OFF
SPC Reference	2838100-0300

Note! The RH door (2) must always be removed first, even if only the LH door (1) needs to be removed. Disconnect any electrical connections from the doors before removal. Doors with glass panels are heavy.

Remove the doors and the covers following this procedure:

a) Close the corresponding LH side door or cover.

b) Support the RH side door or cover.

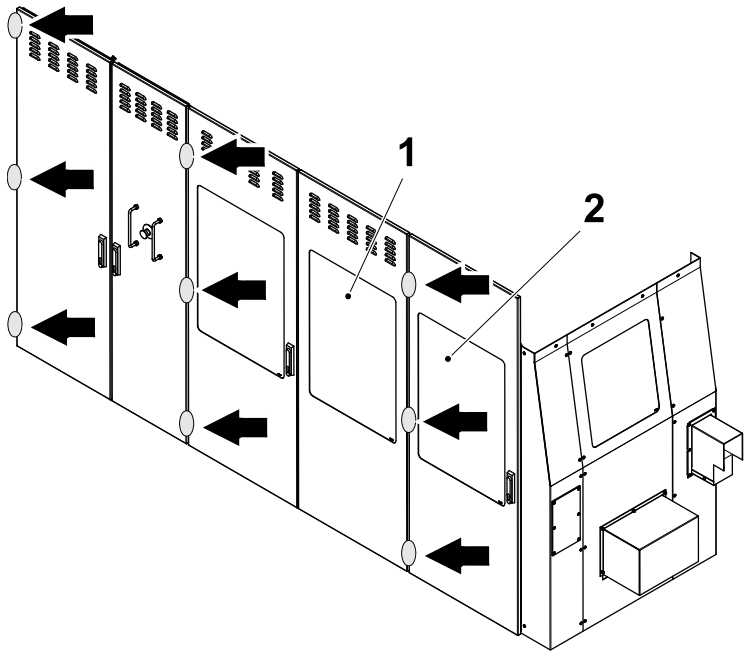

1 LH door
2 RH door

(Cont'd)

(Cont'd)

Note! The hinge pins (3) must be tapped out from the underside of the hinges (5).

c) Tap out the hinge pins (3) in the following order:
   - top hinge pin
   - bottom hinge pin
   - middle hinge pin (when used).

d) Move the LH door (1) or the RH door (2) to disengage the hinge blocks (4) from the hinges (5).

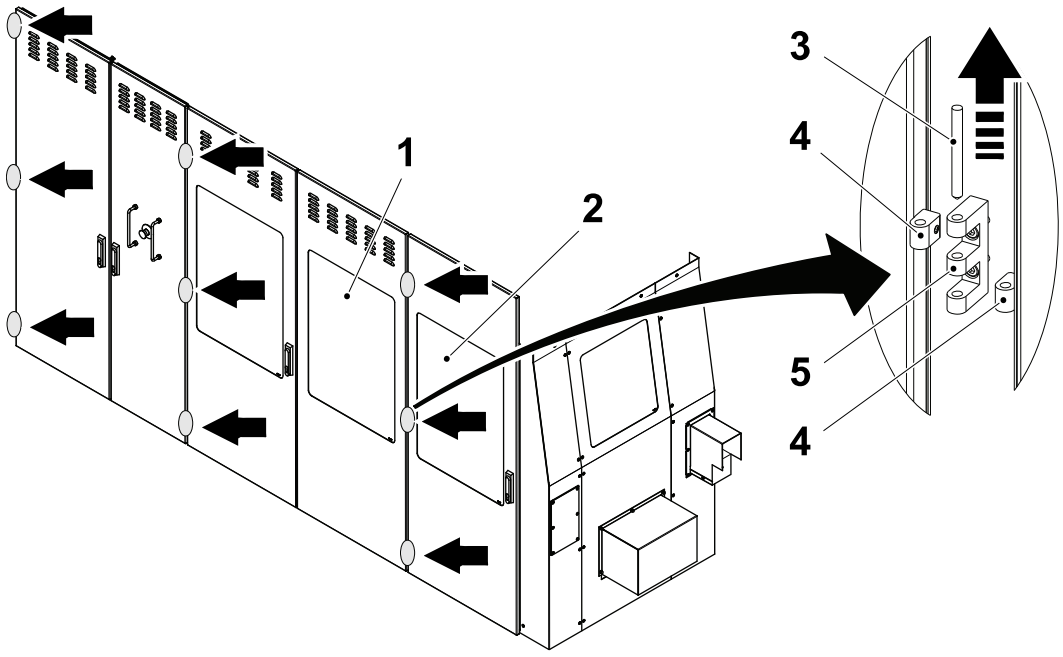

1 LH door
2 RH door
3 Hinge pin
4 Hinge block
5 Hinge

2.3-2 Doors and Covers - Grease Locking Devices

Machine Status	Electrical supply disconnecting device in position O (OFF) Main air valve OFF Main steam valve ON Main water valve OFF
Consumables	Synthetic Grease, Kubersynth UH1 14-1600 TP No. 90459-0246
SPC Reference	2838100-0300

On both sides of the machine body, grease the locking device (1) in the JS/FFU doors (2), see parts shown in grey, then open and close the turning handle (3) to check that the movement is smooth.

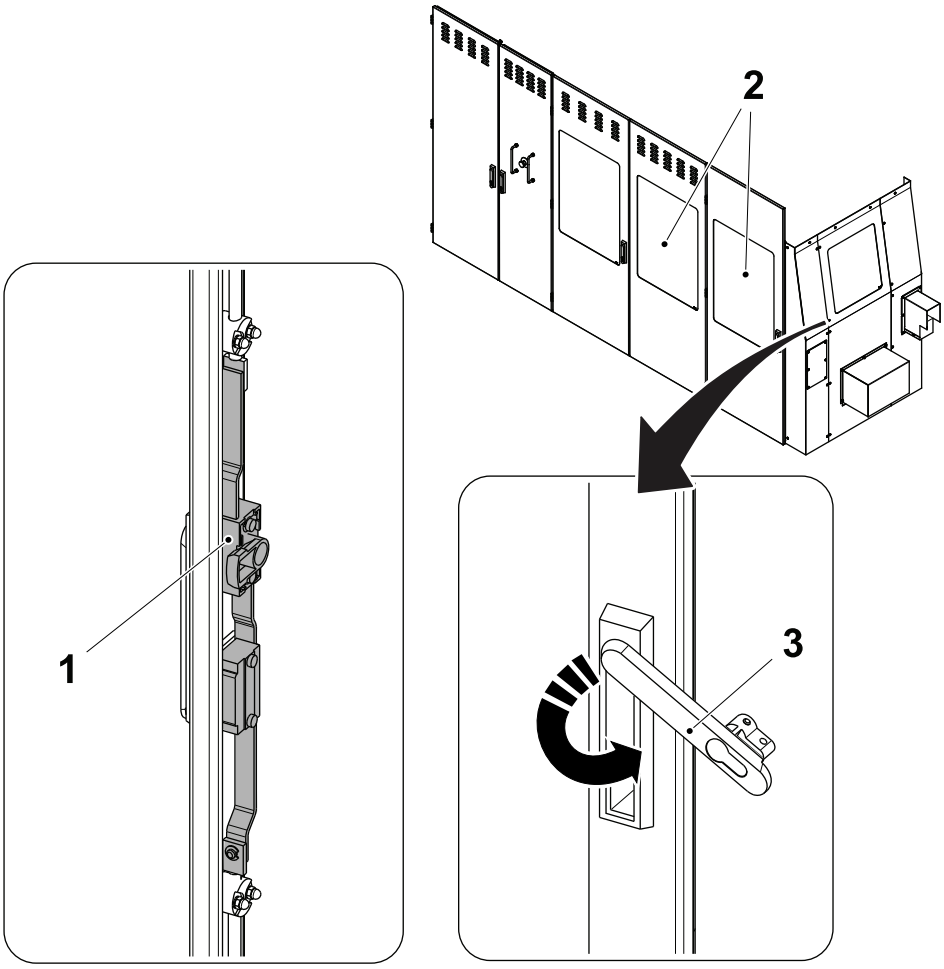

Inside view

1 Locking device
2 JS/FFU doors
3 Turning handle

2.3-3 Doors and Covers - Change Door Locking Unit

Machine Status	Electrical supply disconnecting device in position I (ON)
Special Equipment	Tool for special round nuts TP No. 2863968-0000 Tool for safety screws TP No. 90600-3567
SPC Reference	3223938-0100

Open the doors and change the door locking unit as follows:

a) On the door side, remove the round nuts (1) with the tool TP No. 2863968-0000 and remove the spacer plate (2).

b) Remove the screws (3) and the round nuts (4) and change the key (5).

Note! Make sure to set correctly the key (5), see 2.3-4 Doors and Covers - Set Locking Unit.

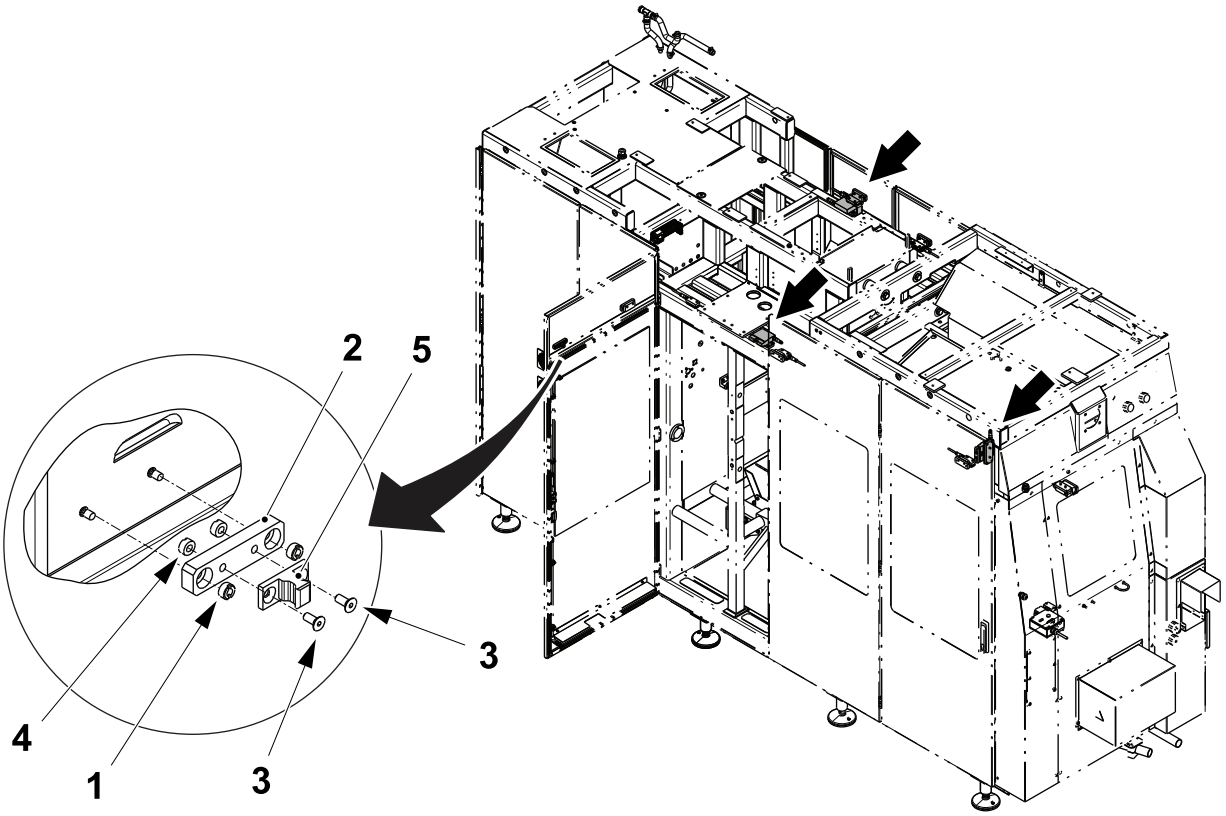

1 Round nut
2 Spacer plate
3 Screw
4 Round nut
5 Key

(Cont'd)

(Cont'd)

c) On the machine body side, disconnect the connector (6) from the locking unit (7).

d) Remove the screws (8) with the tool TP No. 90600-3567 and change the locking unit (7).

e) Assemble in the reverse order.

Note! Make sure to set correctly the locking unit (7), see 2.3-4 Doors and Covers - Set Locking Unit.

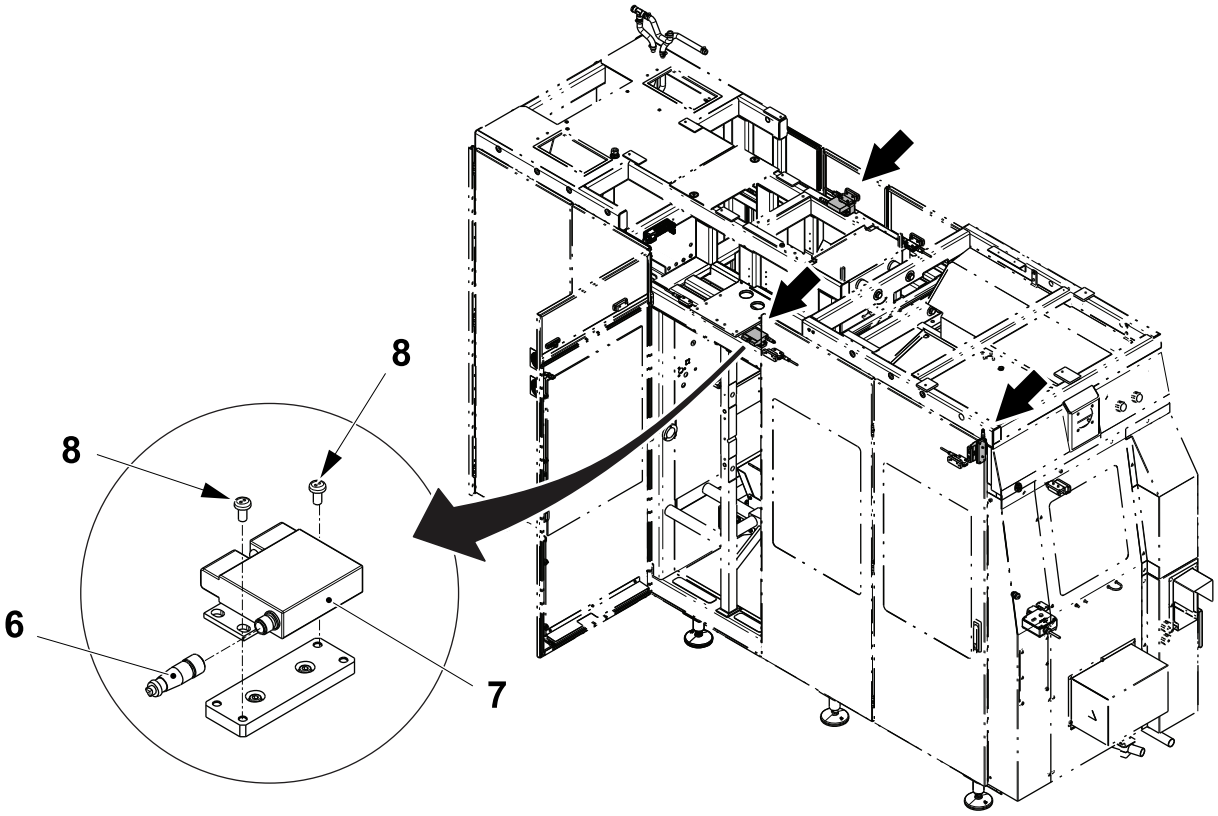

6 Connector
7 Locking unit
8 Screw

2.3-4 Doors and Covers - Set Locking Unit

Machine Status	Electrical supply disconnecting device in position I (ON)
Special Equipment	Tool for safety screws TP No. 90600-3567
SPC Reference	2841055-0100

Key Positioning

The key (1) has to be mounted correctly to ensure an optimized detection by the locking unit (2). The smallest screw (3) on the back side of the mounting bracket for the key (1) must always be heading downwards or towards the locking unit (2), as shown in the pictures below.

Check that the mark "A" (4) is printed on the key. This indicates the correct type of key.

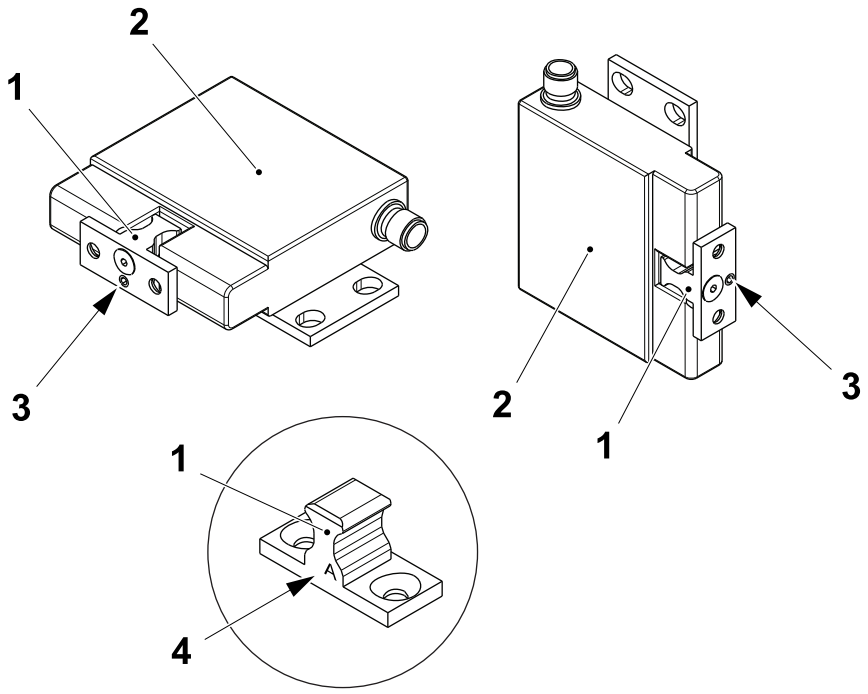

1 Key
2 Locking unit
3 Screw
4 Mark "A"

(Cont'd)

(Cont'd)

Key Adjustment

When the door is closed the balls of the ball-catch must not be pressed by the key (shown as grey). The locking unit has to be adjusted by the safety screws (1) so that the key is well centred in the ball-catch in the X direction and within the measurements stated for the Y and Z directions. When the balls are under pressure, the lock will not work reliably and the dust and liquid protection is reduced.

Direction	Tolerance (mm)
X	± 0.6
Y	± 5 m
Z	min. 2 - max. 4

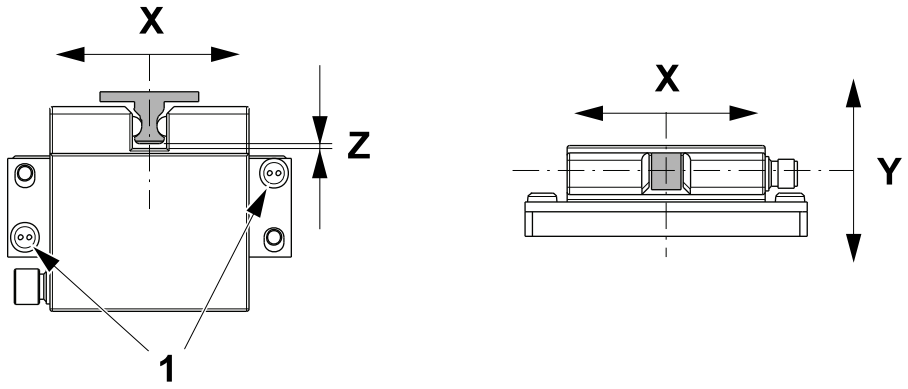

1 Safety screw

(Cont'd)

(Cont'd)

Locking Unit Tension Adjustment

The force required to open and close can be adjusted in the locking unit. Turn two set screws (2) to adjust the tension so that more or less force is required before release. The two set screws (2) should be set to equal depth.

a) Remove the protective caps (1).

b) Adjust the set screws to distance A to obtain the desired strength. The thread pitch is 1 mm so one turn equals 1 mm adjustment.

Note! Tightening the set screws (2) more than 7.5 mm (turns) will damage the locking unit.

c) Fit back the protective caps (1).

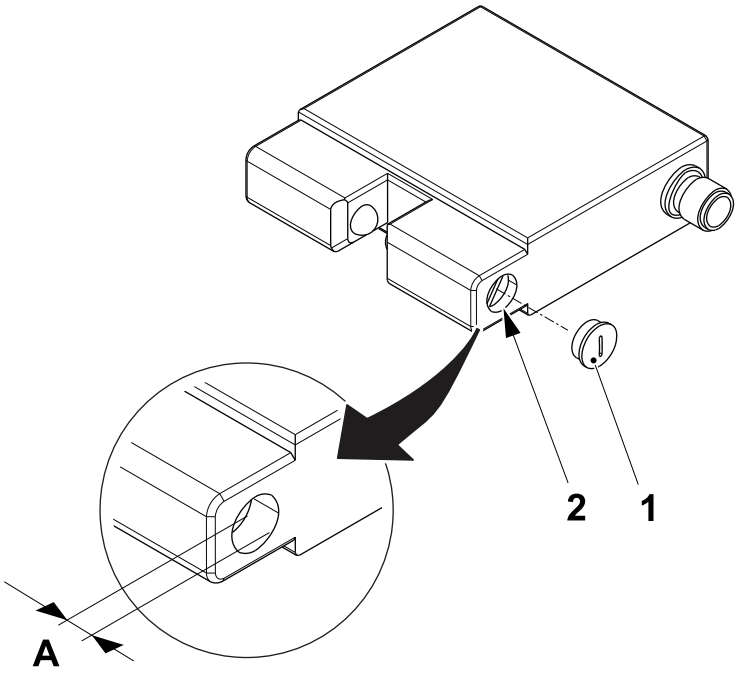

A = min. 4 mm - max 7,5 mm
1 Protective cap
2 Set screw

2.3-5 Doors and Covers - Locking Unit LED Description

Machine Status	Electrical supply disconnecting device in position I (ON)
SPC Reference	2841055-0100

The status of the locking unit (1) is indicated by the LED indicator (2). Check the pulses emitted by the LED indicator (2) to have informations about the locking unit status.

LED pulse	Info	Description
Steady green	1	Locked
Green and red alternate continuously	0	Closed, unlocked
Steady red	0	Open
3 green pulses	0	The locking unit has not entered the unlocked state
1 pulse red	0	Eden or ball-catch not in position
2 red pulses	0	Open, locking is not permitted
3 red pulses	0	The unit has not entered locked state
1 pulse red/green	0	Undervoltage - locking not permitted
2 pulses red/green	0	Overvoltage
3 pulses red/green	0	Overtemperature (>80oC)

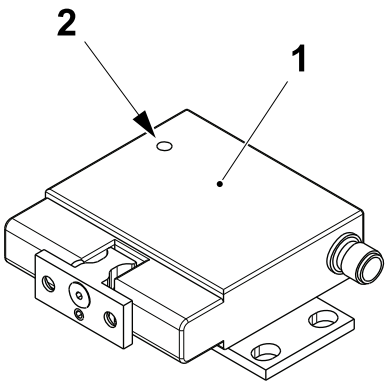

1 Locking unit
2 LED indicator

2.4 TPOP

The TPOP (Tetra Pak Operator Panel) is a touch screen where the control software allows operating and controlling filling machines.

- Arm connection (1)
- USB connector (x3) (2), type A outlet
- Emergency stop button (3)
- Push button (x12) (4)
- Touch screen (5)

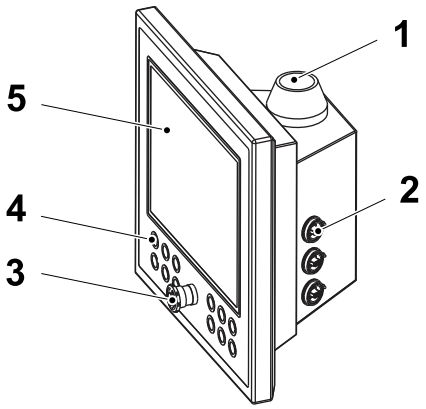

1 Arm connection
2 USB connector
3 Emergency stop button
4 Push button
5 Touch screen

(Cont'd)

(Cont'd)

- Display unit (6)
- X2X OUT (7)
- X2X IN (8)
- Power 24V DC (9)
- Push button module (10)
- Emergency stop (11)
- Push button module (12)
- Panel IN (13)
- Power 24V DC (14)
- DeviceNet & Ethernet/IP module (15)
- 24V DC (16))
- X2X (17)
- DeviceNet (18)

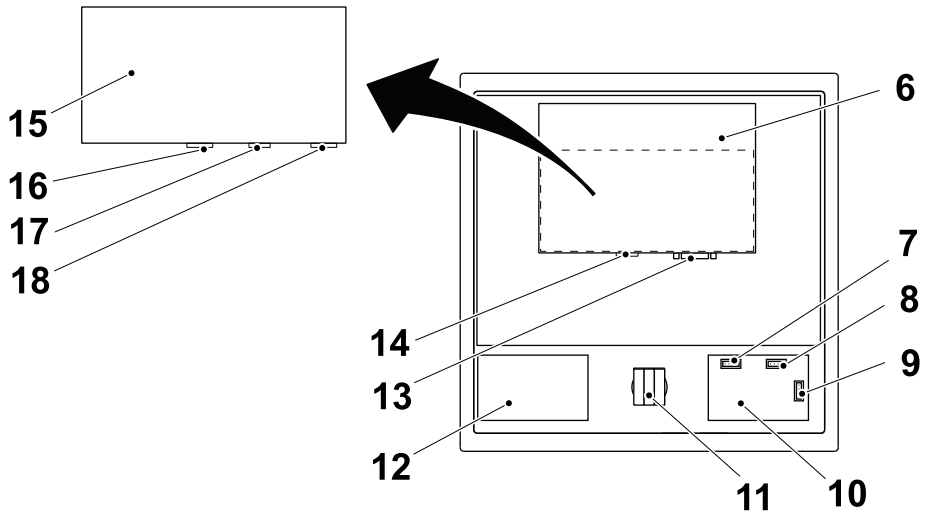

Panel rear view

6 Display unit
7 X2X OUT
8 X2X IN
9 Power 24V DC
10 Push button module
11 Emergency stop
12 Push button module
13 Panel IN
14 Power 24V DC
15 DeviceNet & Ethernet/IP module
16 24V DC
17 X2X
18 DeviceNet

2.4-1 TPOP - Open Front Panel

Machine Status	Electrical supply disconnecting device in position O (OFF) Main air valve ON Main steam valve ON Main water valve ON
SPC Reference	2937883-0200

WARNING

Hazardous voltage.

May shock, burn, or cause death. The main power supply connector must be switched off and secured with a lock before starting any work on the IPC.

a) Disconnect the IPC power supply.

b) Remove the 16 screw (1) on the TPOP front.

c) Lift the TPOP front (2) approximately 10 mm and then open it.

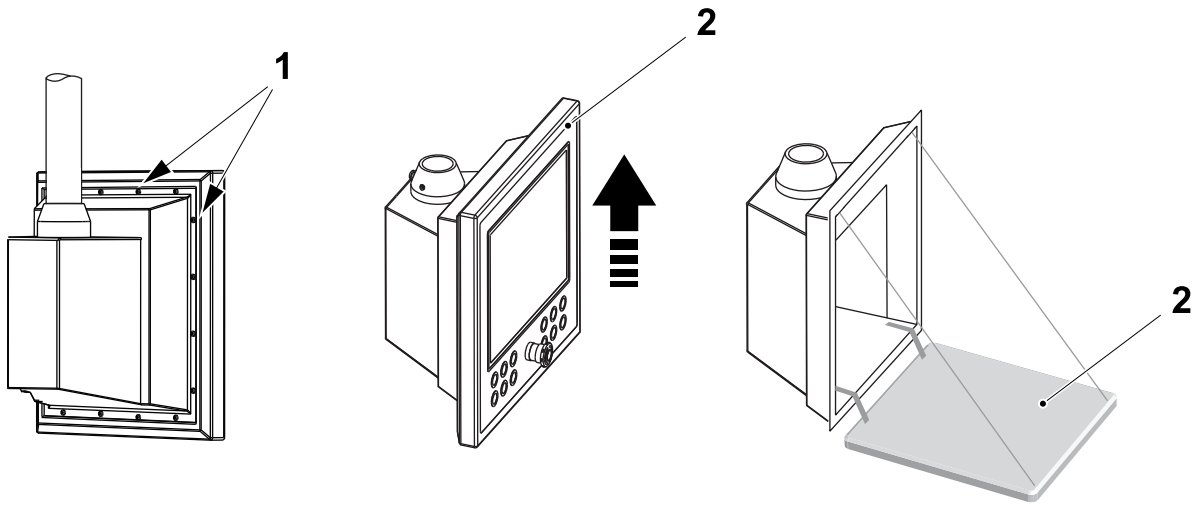

1 Screw
2 TPOP front

2.4-2 TPOP - Change Push Button Module

Machine Status	Electrical supply disconnecting device in position O (OFF) Main air valve ON Main steam valve ON Main water valve ON
SPC Reference	2937883-0200

Open the TPOP front panel, see 2.4-1 TPOP - Open Front Panel.

If changing the RH push button module (1), see Change RH Push Button Module on page 2-34.

If changing the LH push button module (2), see Change Left Push Button Module on page 2-36.

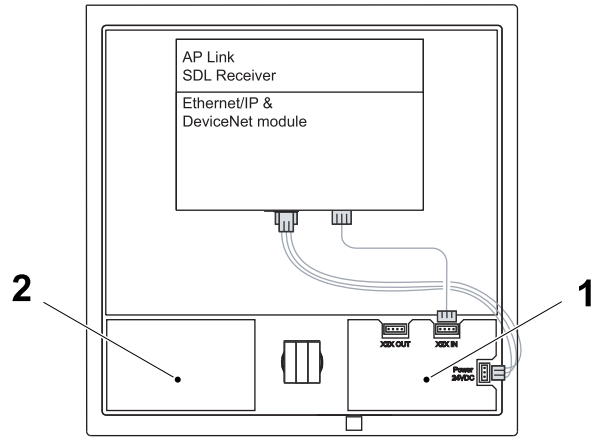

1 RH push button module
2 LH push button module

(Cont'd)

(Cont'd)

Change RH Push Button Module

a) Disconnect the X2X connector (1) and the 24V DC connector (2).

b) Remove the screws (3) securing the push button module and remove the metal top.

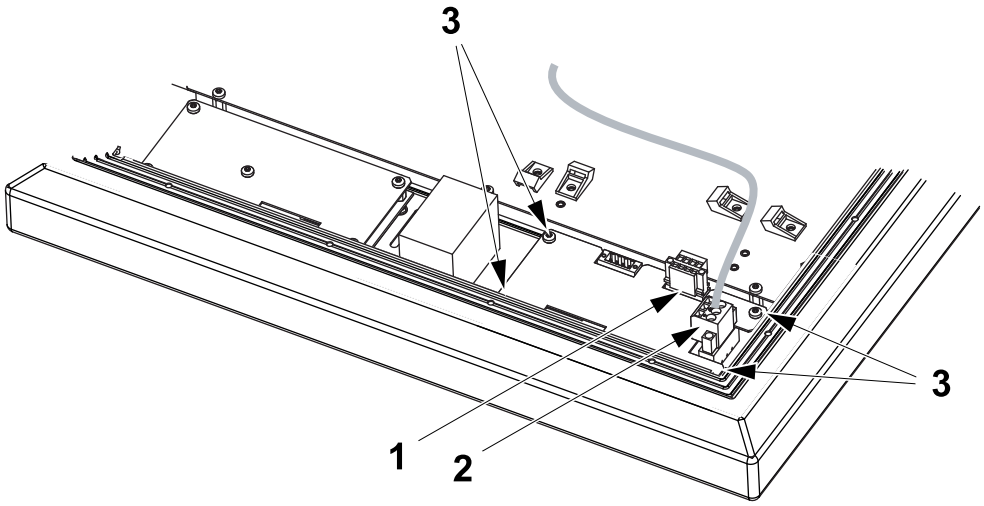

1 X2X connector
2 24V DC connector
3 Screw

(Cont'd)

(Cont'd)

c) Disconnect the flat cable (4) and remove the nuts (5).

d) Remove the push button module (6).

e) Assemble the new push button module in reverse order.

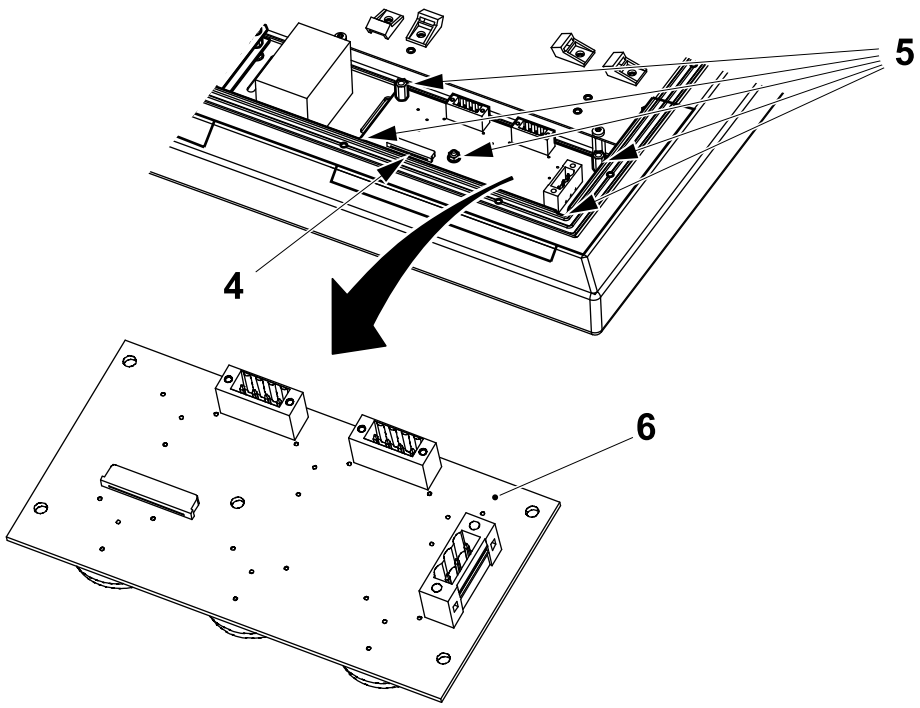

4 Flat cable
5 Nut
6 Push button module

(Cont'd)

(Cont'd)

Change Left Push Button Module

a) Remove the nuts (1) securing the push button module and lift the metal top.

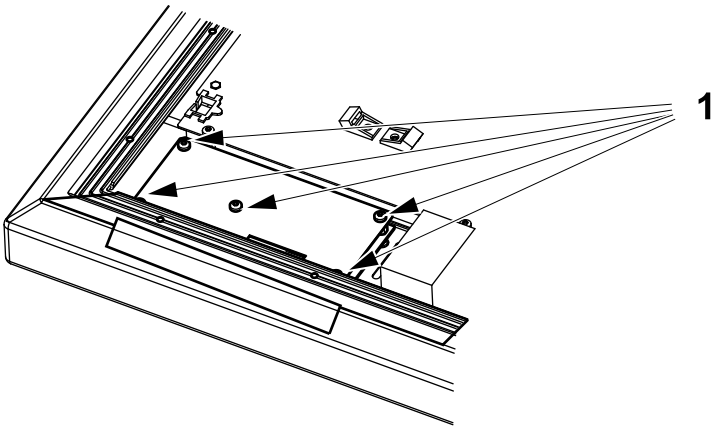

1 Nut

b) Disconnect the flat cable (2) and remove the nuts (3).

c) Remove the push button module (4).

d) Assemble the new push button module in reverse order.

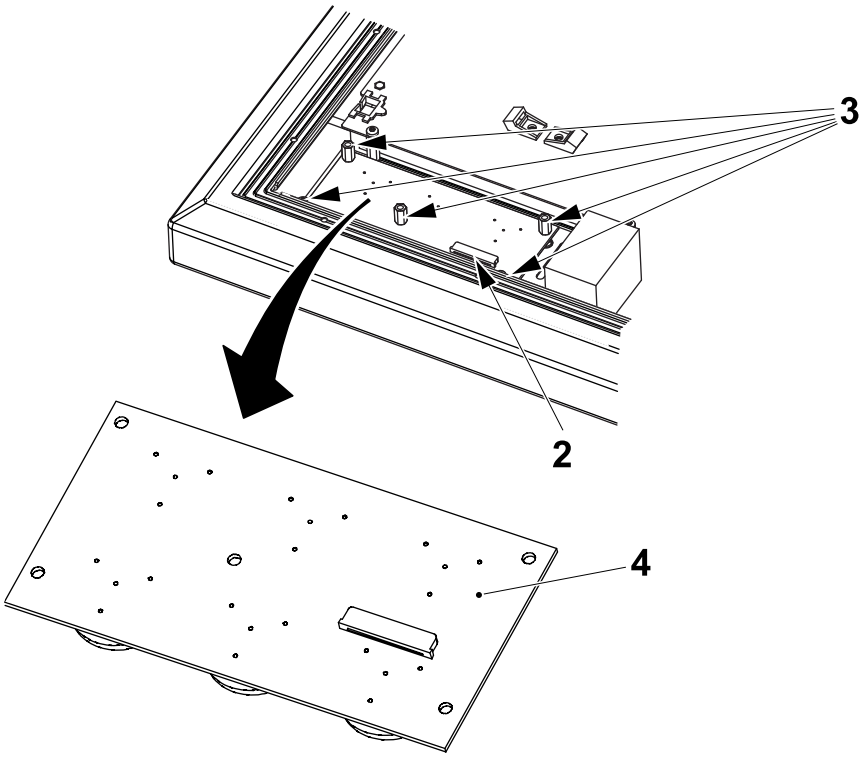

2 Flat cable
3 Nut
4 Push button module

2.4-3 TPOP - Change AP Link SDL Receiver

Machine Status	Electrical supply disconnecting device in position O (OFF) Main air valve ON Main steam valve ON Main water valve ON
SPC Reference	2937883-0200

a) Open the TPOP front panel, see 2.4-1 TPOP - Open Front Panel.

b) Disconnect the SDL cable connector (1) by cutting the cable tie (2) and removing the connector securing screws.

c) Disconnect the 24V DC connector (3) and remove the cable tie anchors (4).

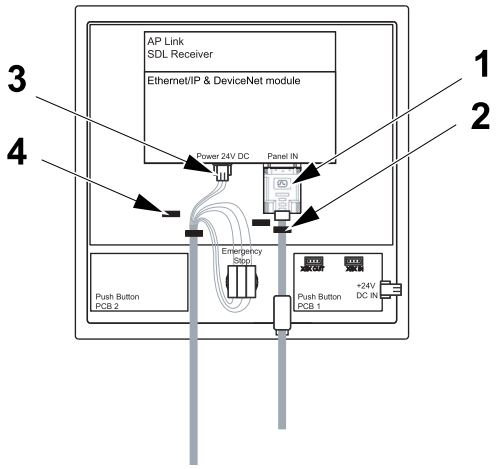

1 SDL cable connector
2 Cable tie
3 24V DC connector
4 Cable tie anchor

(Cont'd)

(Cont'd)

d) Remove the screws (5) and then remove the Panel Link SDL receiver (6).

e) Assemble the new SDL receiver in reverse order.

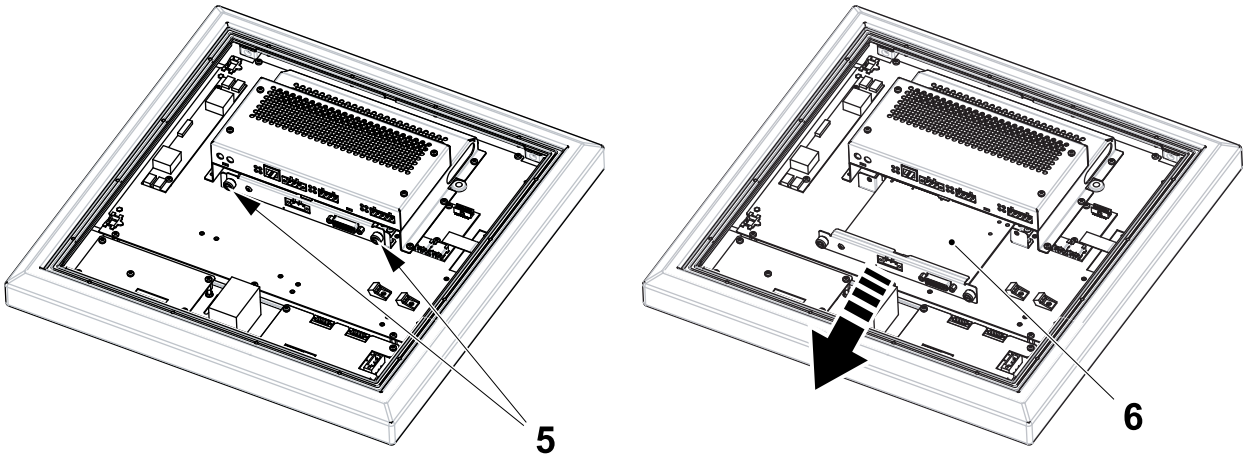

5 Screw
6 SDL receiver

2.4-4 TPOP - Change Gateway PCB

Machine Status	Electrical supply disconnecting device in position O (OFF) Main air valve ON Main steam valve ON Main water valve ON
SPC Reference	2937883-0200

a) Open the TPOP front panel, see 2.4-1 TPOP - Open Front Panel.

b) Remove the 24V DC connector (1), the X2X connector (2), and the incoming Devicenet connection (3) from the Gateway PCB.

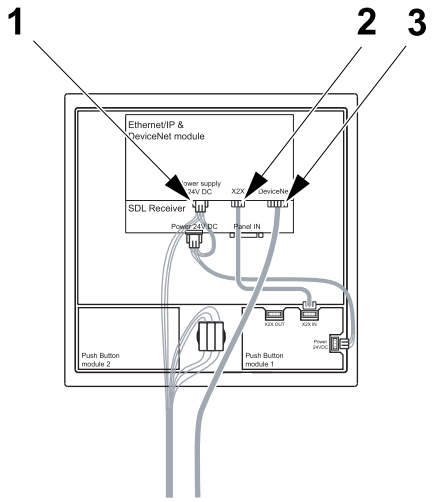

1 24V DC connector
2 X2X connector
3 Devicenet connection

c) Remove the screws (4) holding the metal cover.

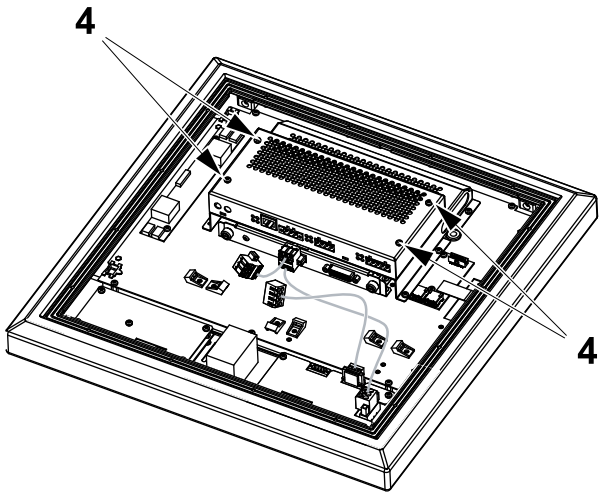

4 Screw

(Cont'd)

(Cont'd)

d) Remove the spacer nuts (5) and remove the Gateway PCB (6).

e) Assemble the new Gateway PCB in the reverse order.

Note! Check that the TERM OFF dip switch is set according to the Circuit Diagrams in the EM.

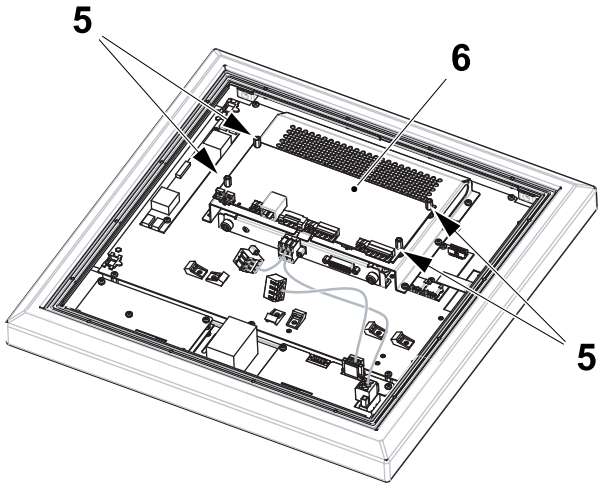

5 Spacer nut
6 Gateway PCB

2.4.1 Bar Code Scanner

Note! The bar code scanner is an optional accessory.

2.4.1-1 Bar Code Scanner - Configure and Test

Machine Status	Electrical supply disconnecting device in position I (ON) Main air valve ON Main steam valve ON Main water valve ON
SPC Reference	90600-2982

To setup the bar code scanner for use with the TPOP and PLMS operator sheet, perform the following configuration and testing procedures in the given order.

(Cont'd)

(Cont'd)

Configuration

a) Reset the bar code scanner to the default factory settings by scanning the following bar code.

b) Wait for five seconds after the bar code has been scanned.

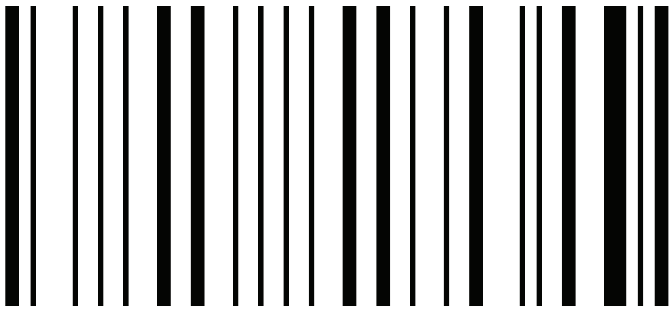

Bar code for factory setting

c) Set the scanner for use with the Tetra Pak operator sheet by scanning the following two bar codes.

d) Wait for five seconds after each bar code has been scanned.

e) Perform the Configuration Teston page 2-42.



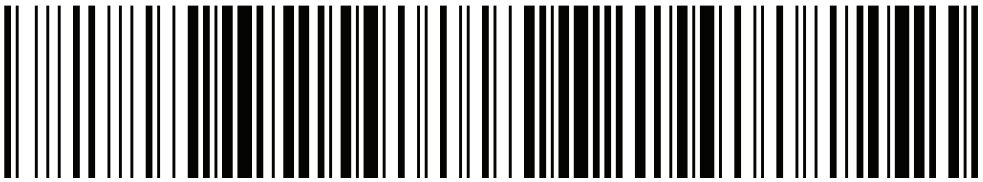

Bar codes for Tetra Pak operator sheet

(Cont'd)

(Cont'd)

Configuration Test

a) Navigate to the operator sheet on the TPOP and select the first operator sheet item to be entered.

b) To check that the bar code scanner is correctly configured to terminate the scanned entry with the `TAB` command and not with the `CARRIAGE RETURN` command, scan the bar code below.

After scanning the bar code, check that:

- the text displayed in the operator sheet is as indicated in the illustration
- the next operator sheet dialogue box has opened and is ready for the next entry to be scanned.

c) If after scanning the bar code the operator sheet is not as described above, repeat the procedure Configurationon page 2-41.

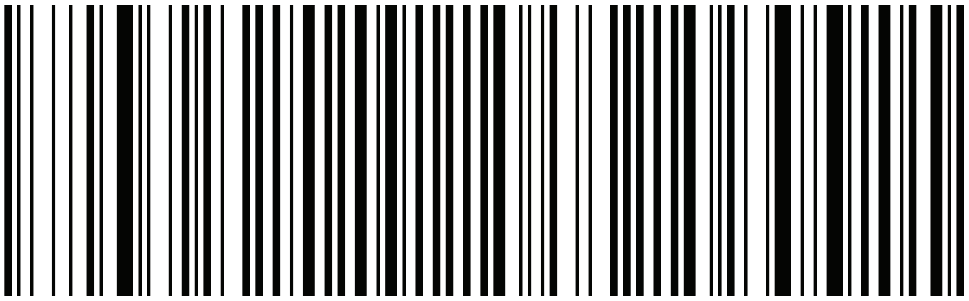

Code 128 Tab Test

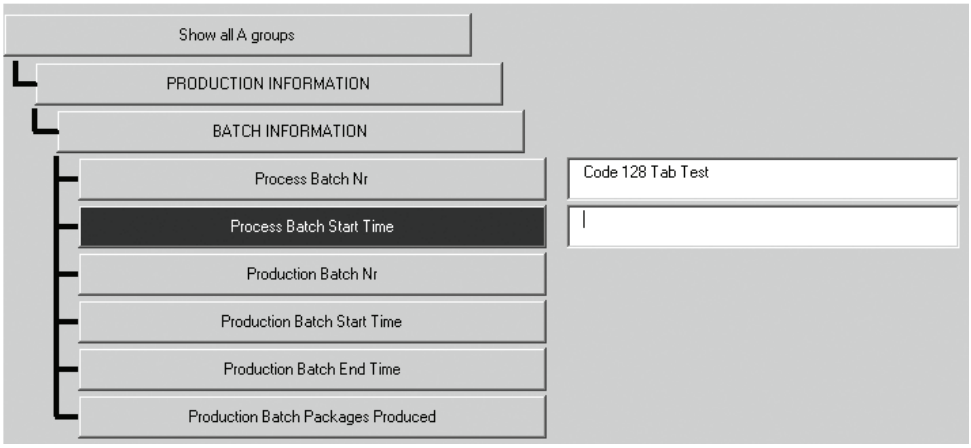

Bar code test for tab terminator

(Cont'd)

(Cont'd)

d) To check that the bar code scanner is correctly configured to register bar codes with text characters all in upper case, scan the bar code below.

After scanning the bar code, check that:

- the text displayed in the operator sheet is as indicated in the illustration.
- the next operator sheet dialogue box has opened and is ready for the next entry to be scanned.

e) If after scanning the bar code the operator sheet is not as described above, repeat the procedure Configurationon page 2-41.

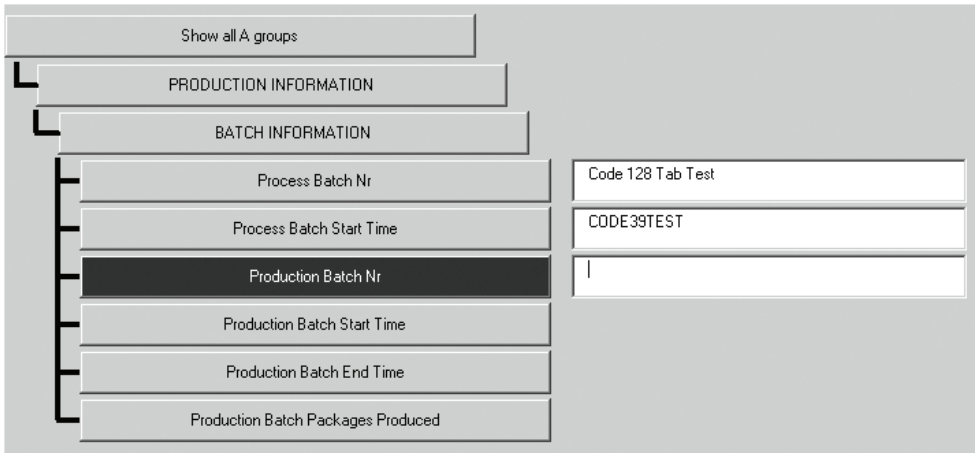

Bar code test for all upper case characters

(Cont'd)

(Cont'd)

f) To check that the bar code scanner is correctly configured to register bar codes with text characters mixed in both upper case and lower case, scan the bar code below.

After scanning the bar code, check that:

- the text displayed in the operator sheet is as indicated in the illustration.
- the next operator sheet dialogue box has opened and is ready for the next entry to be scanned.

g) If after scanning the bar code the operator sheet is not as described above, repeat the procedure Configurationon page 2-41.

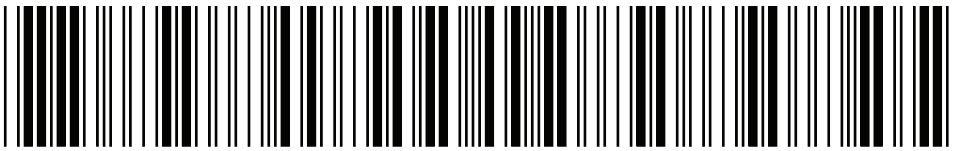

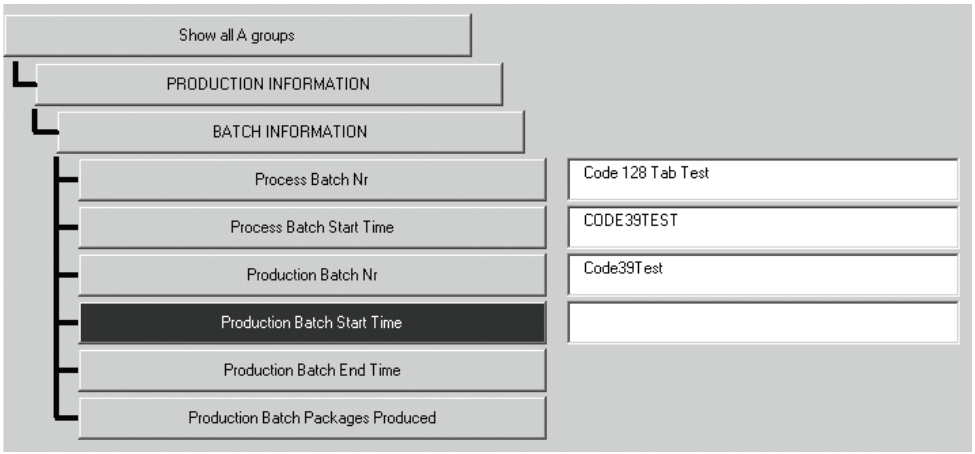

Bar code test for mixed upper and lower case characters

(Cont'd)

(Cont'd)

h) To check that the bar code scanner is correctly configured to register bar codes that require the replacement of separators with the special pipe text character (also known as broken bar), scan the bar code below.

After scanning the bar code, check that:

- the text displayed in the operator sheet is as indicated in the illustration
- in particular, that the special pipe text character positioned ninth from the end of the string is as indicated (by the arrow) in the illustration.
- the next operator sheet dialogue box has opened and is ready for the next entry to be scanned.

i) If after scanning the bar code the operator sheet is not as described above, repeat the procedure Configurationon page 2-41.

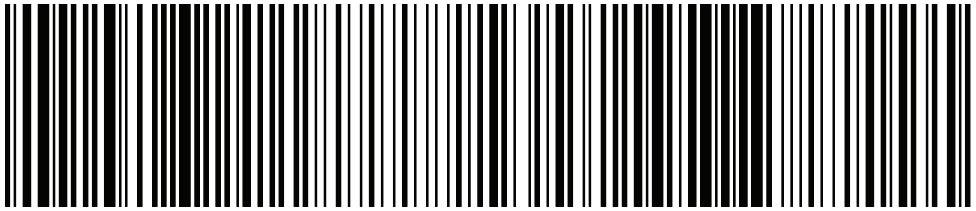

(01) 97329001153109(10) 10100514612040014(11) 060828

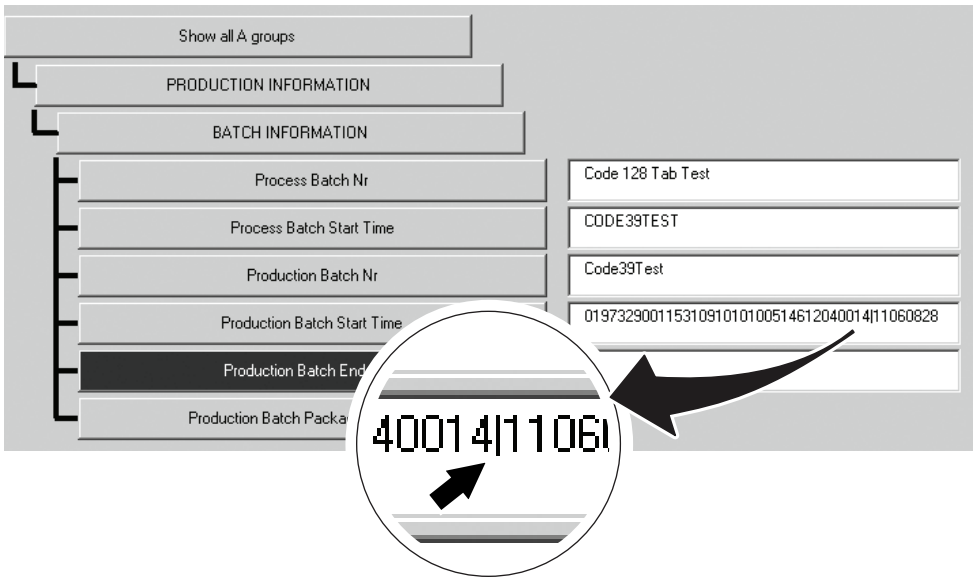

Bar code for character replacement

(Cont'd)

(Cont'd)

j) To check that the bar code scanner is correctly configured to register bar codes that require removal of parenthesis text characters, scan the bar code below.

After scanning the bar code, check that:

- the text displayed in the operator sheet is as indicated in the illustration
- in particular, the text is displayed and formatted without parenthesis text characters as indicated in the illustration.
- the next operator sheet dialogue box has opened and is ready for the next entry to be scanned.

k) If after scanning the bar code the operator sheet is not as described above, repeat the procedure Configurationon page 2-41.

l) The configuration test in now complete. If the bar code scanner will be used for the purpose of registering non-operator sheet bar coded information to the TPOP, continue with the procedure Configuration for Non-Operator Sheet Usage on page 2-46.

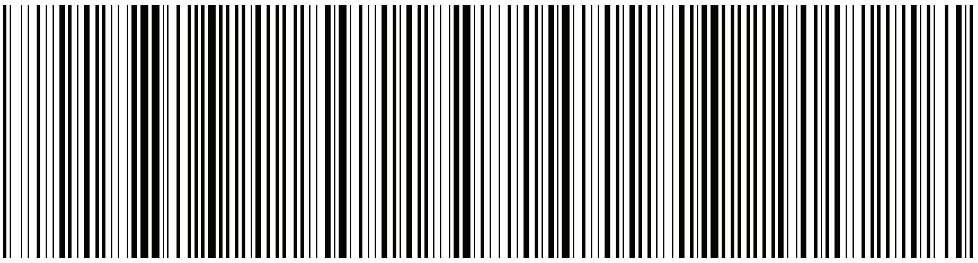

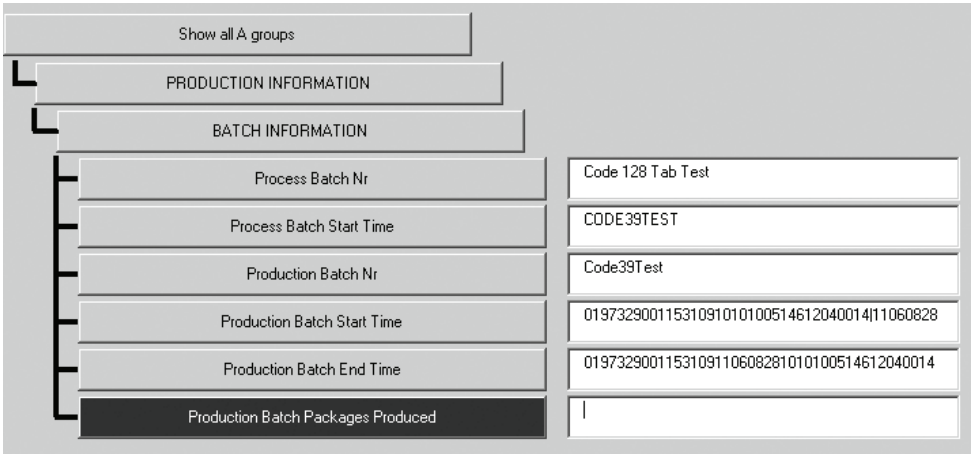

Bar code for parenthesis removal

Configuration for Non-Operator Sheet Usage

Note! The following configuration must only be performed if the bar code scanner will be used for registering non-operator sheet bar coded information to the TPOP.

(Cont'd)

(Cont'd)

Note! The following procedure must always be performed after the procedure Configuration Teston page 2-42has been performed.

a) To configure the bar code scanner to terminate the scanned entry with the `CARRIAGE RETURN` command and not with the `TAB` command, scan the bar code below.

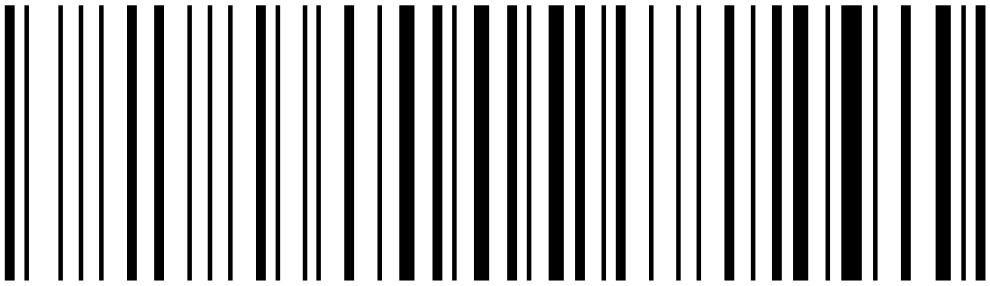

Bar code for CR terminator

(Cont'd)

(Cont'd)

b) To check that the bar code scanner is correctly configured to terminate the scanned entry with the `CARRIAGE RETURN` command and not with the `TAB` command, scan the bar code below.

After scanning the bar code, check that:

- the text displayed in the operator sheet is as indicated in the illustration
- the next operator sheet dialogue box has **not** automatically opened.

c) If after scanning the bar code, the operator sheet is not as described above, repeat the procedure Configuration for Non-Operator Sheet Usage on page 2-46.

Code 128 Tab Test

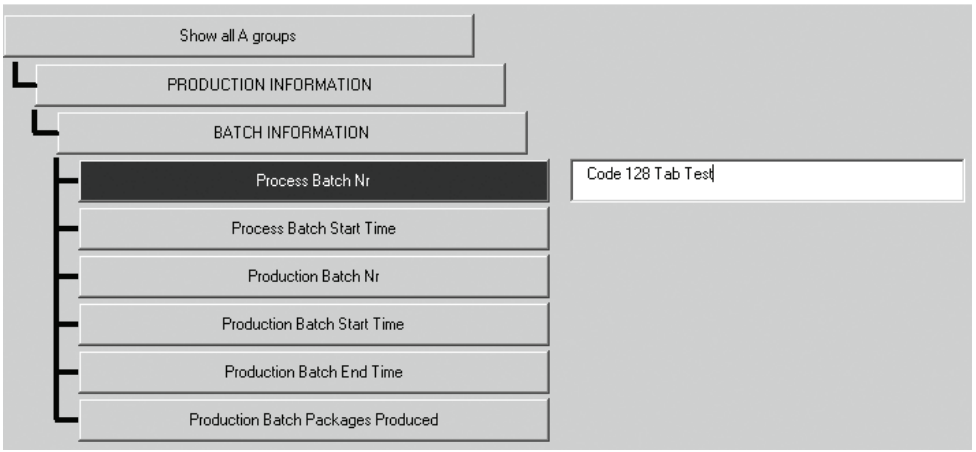

Bar code test for CR terminator

2.4.1-2 Bar Code Scanner - Change Cable

Machine Status	Electrical supply disconnecting device in position O (OFF) Main air valve OFF Main steam valve ON Main water valve OFF
SPC Reference	90600-2982

Note! Identify the bar code scanner model fitted to the filling machine, for the Powerscan D8300 model, see page 2-50. For the Dragon D131 model, continue with the following procedure.

Bar Code Scanner Model Dragon D131

a) Remove the screw (1) and the cable strain relief plate (2).

b) Remove the cover (3).

c) Remove the cable connector (4) from the bar code scanner (5) together with the plastic boot (6) and the rubber gasket (7).

d) Open the plastic boot (6) and remove the plastic boot (6) from the cable connector (4).

e) Remove the rubber gasket (7) from the cable connector (4).

f) Change the cable and assemble in the reverse order.

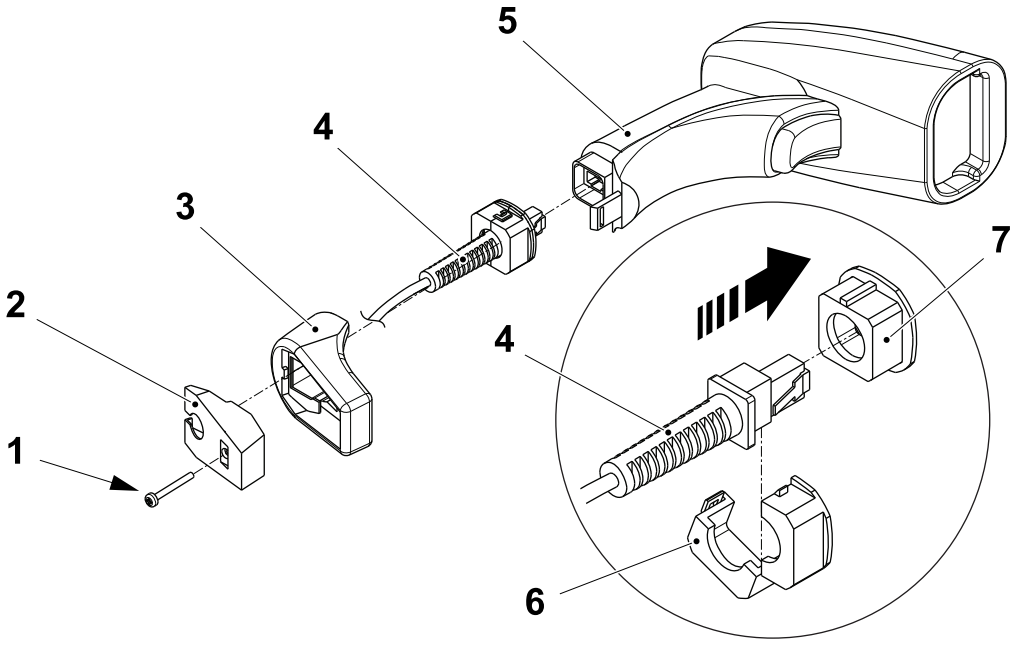

1 Screw
2 Cable strain relief plate
3 Cover
4 Cable connector
5 Bar code scanner
6 Plastic boot
7 Rubber gasket

(Cont'd)

(Cont'd)

Bar Code Scanner Model Powerscan D8300

a) Remove the screw (1) and the cable strain relief plate (2).

b) Remove the cover (3).

c) Remove the cable connector (4) from the bar code scanner (5) together with the plastic boot (6) and the rubber gasket (7).

d) Separate the plastic boot (6) and the rubber gasket (7) from the cable connector (4).

Note! Make sure that the plastic boot (6) is fitted with the tab (8) correctly aligned with the slot (9) in the rubber gasket (7). The plastic boot (6) must be fitted with the arrow (10) pointing towards the front of the bar code scanner (5).

e) Change the cable and assemble in the reverse order.

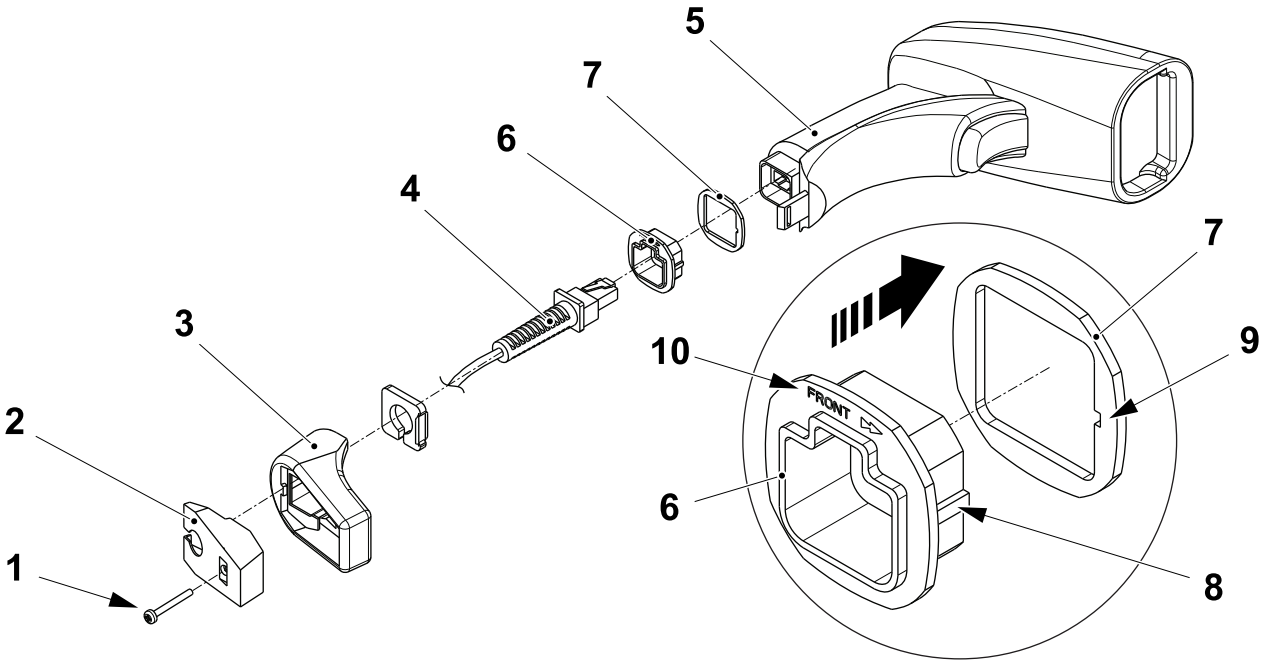

1 Screw
2 Cable strain relief plate
3 Cover
4 Cable connector
5 Bar code scanner
6 Plastic boot
7 Rubber gasket
8 Tab
9 Slot
10 Arrow

2.5 Cleaning System

2.5-1 Cleaning System - Check Nozzles

Machine Status	EXTERNAL CLEANING
SPC Reference	2838995-0300

Make sure that:

- the nozzles, indicated by the arrows in the illustration rotate easily
- the nozzles are not clogged and are free from any cleaning solution deposit.

If necessary, remove and clean the nozzles.

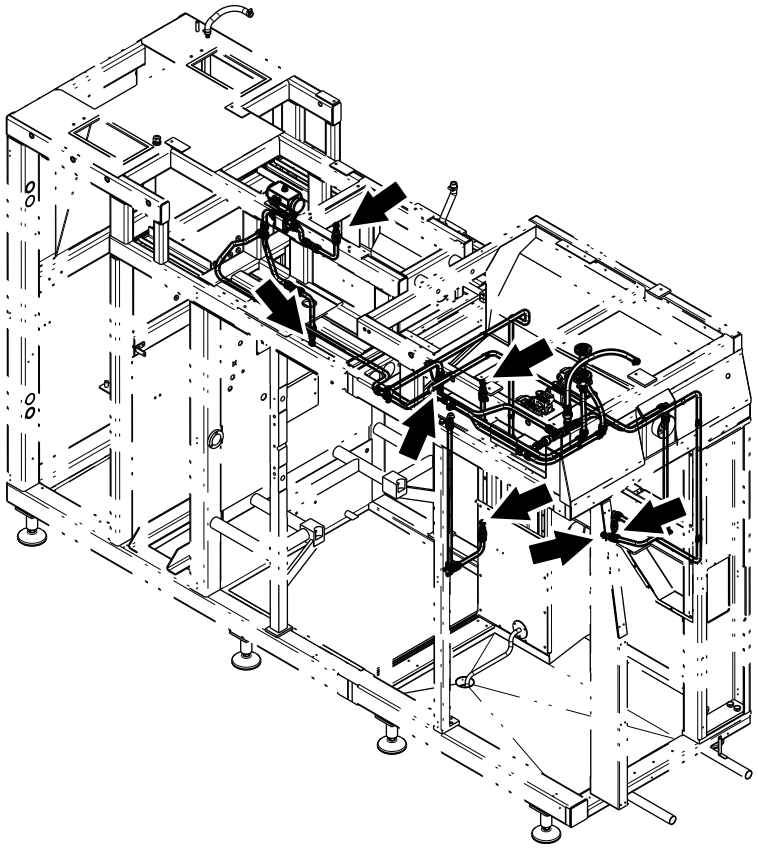

2.6 Waste Conveyor

2.6-1 Waste Conveyor - Check

Machine Status	Electrical supply disconnecting device in position I (ON) Main air valve ON Main steam valve ON Main water valve OFF
SPC Reference	2845290-0200

Check that:

- the teeth edge of the guard plate (1) is not worn out
- the conveyor belt (2) is not damaged. Change if necessary, see 2.6-3 Waste Conveyor - Change Conveyor Belt.

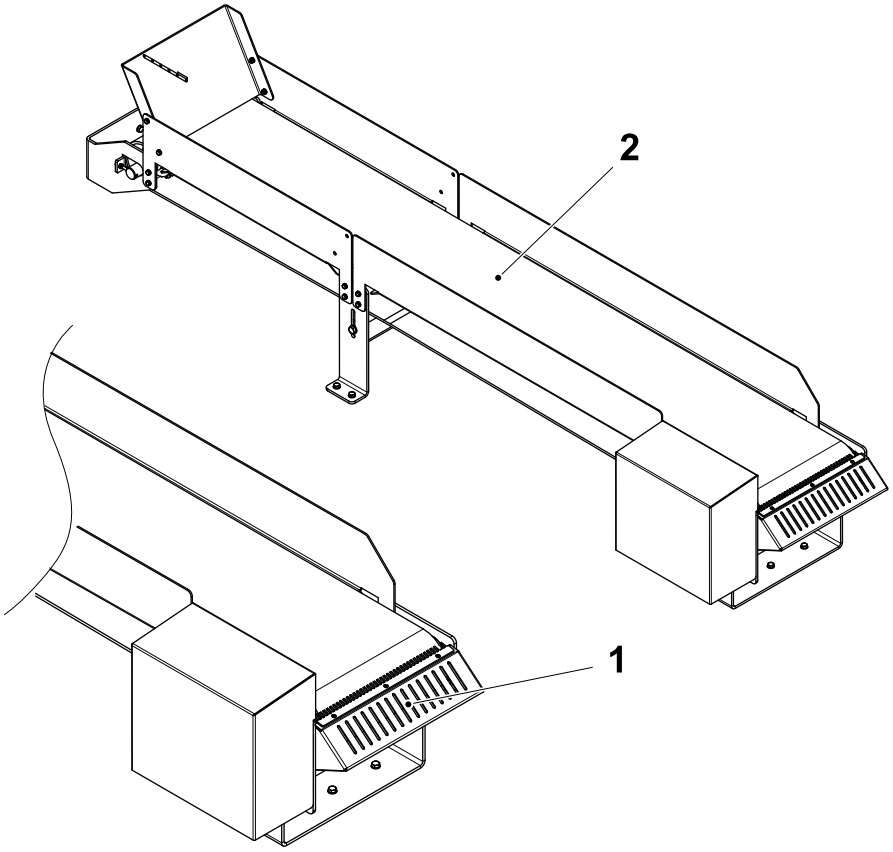

1 Guard plate
2 Conveyor belt

2.6-2 Waste Conveyor - Change Coupling

Machine Status	Electrical supply disconnecting device in position O (OFF) Main air valve OFF Main steam valve ON Main water valve OFF
SPC Reference	2845290-0200

a) Remove the nuts (1) and the motor cover (2).

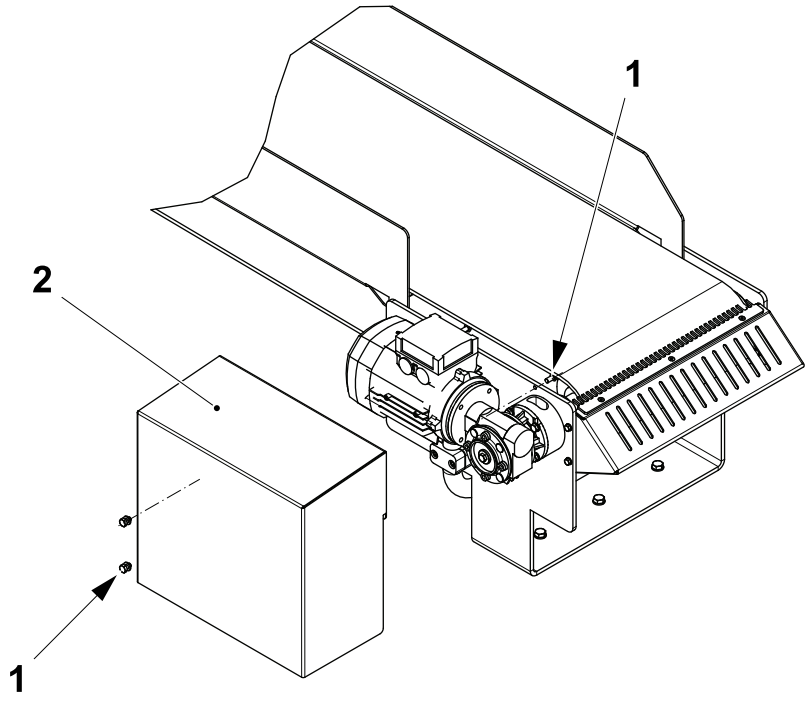

1 Nut
2 Motor cover

(Cont'd)

(Cont'd)

b) Remove the screws (3) and the motor (4).

c) Remove screw (5).

d) Remove the coupling (6) by means the Grub screws (7). Change it if necessary.

e) Assemble in the reverse order.

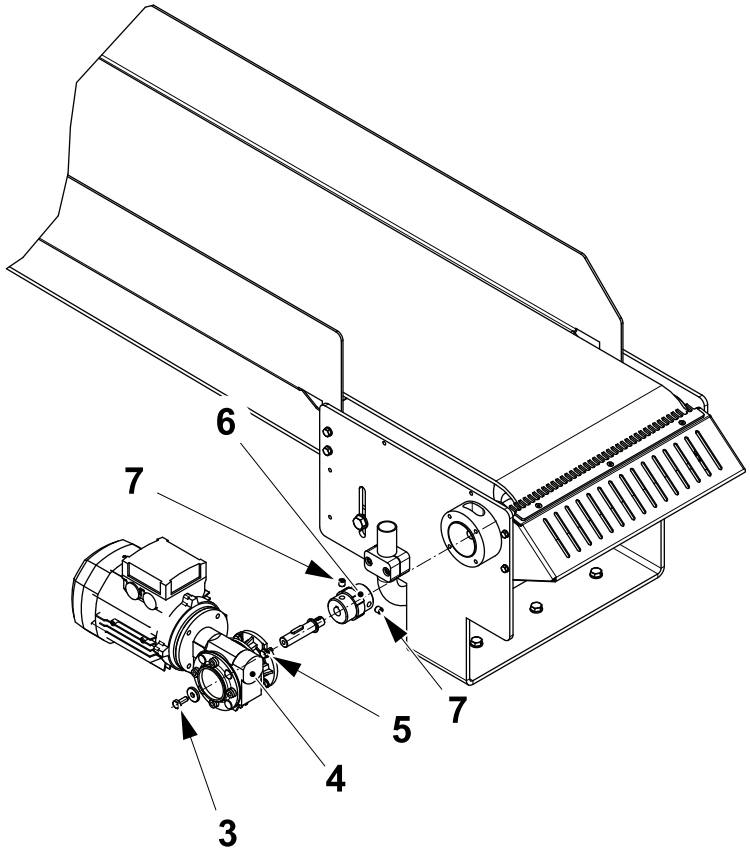

3 Screw
4 Motor
5 Screw
6 Coupling
7 Grub screw

2.6-3 Waste Conveyor - Change Conveyor Belt

Machine Status	Electrical supply disconnecting device in position O (OFF) Main air valve OFF Main steam valve ON Main water valve OFF
Special Equipment	4 mm Drift
SPC Reference	2845290-0200

a) Loosen the tensioning screws (1) on each side of the conveyor belt (2).

b) Release the tension of the conveyor belt (2).

c) Push out one of the plastic connecting pins (3) in the conveyor belt with the aid of a 4 mm drift.

d) Remove the conveyor belt and change it if necessary.

e) Assemble in the reverse order.

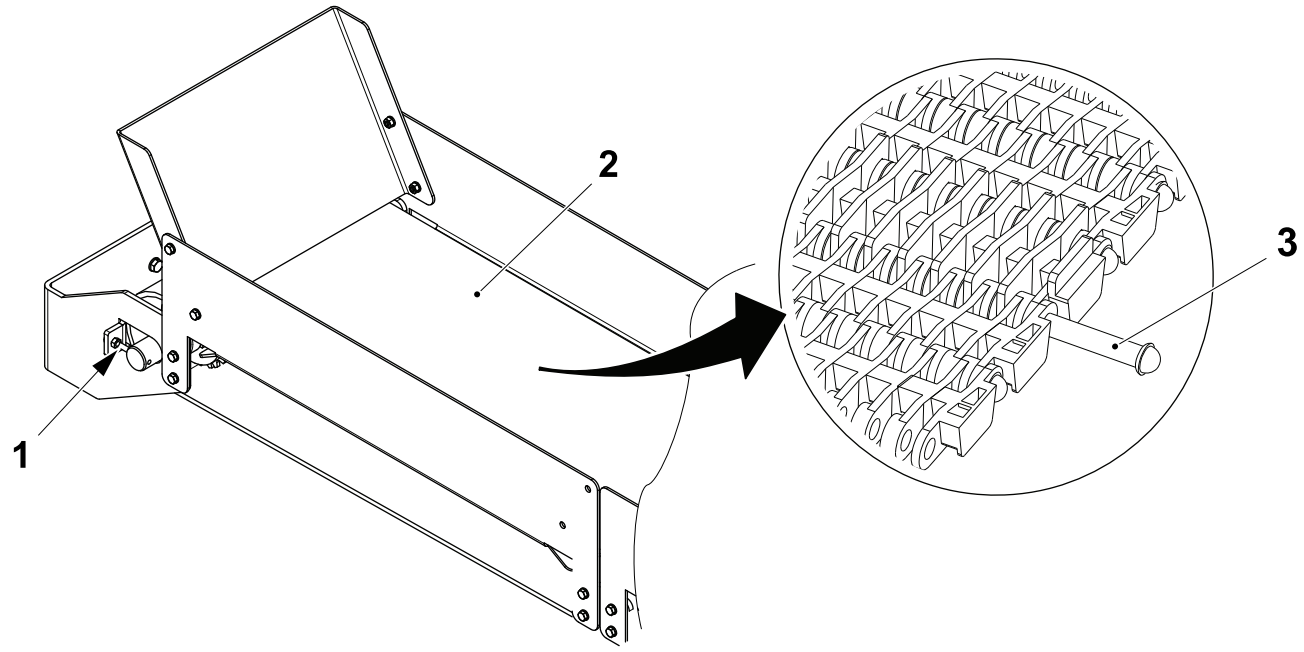

1 Screw
2 Conveyor belt
3 Pin

2.7 Superstructure Chemical Unit

2.7.1 Hydrogen Peroxide

2.7.1-1 Hydrogen Peroxide - Check Leakages

Machine Status	Electrical supply disconnecting device in position O (OFF) Main air valve OFF Main steam valve ON Main water valve OFF
SPC Reference	2808245-0300

WARNING

Hydrogen Peroxide.
Follow the Safety Precautions.

Check the connections for leakages at:

- the peroxide pipe (1)
- the peroxide pump (2)
- the dilution tank (3)
- the peroxide tank (4).

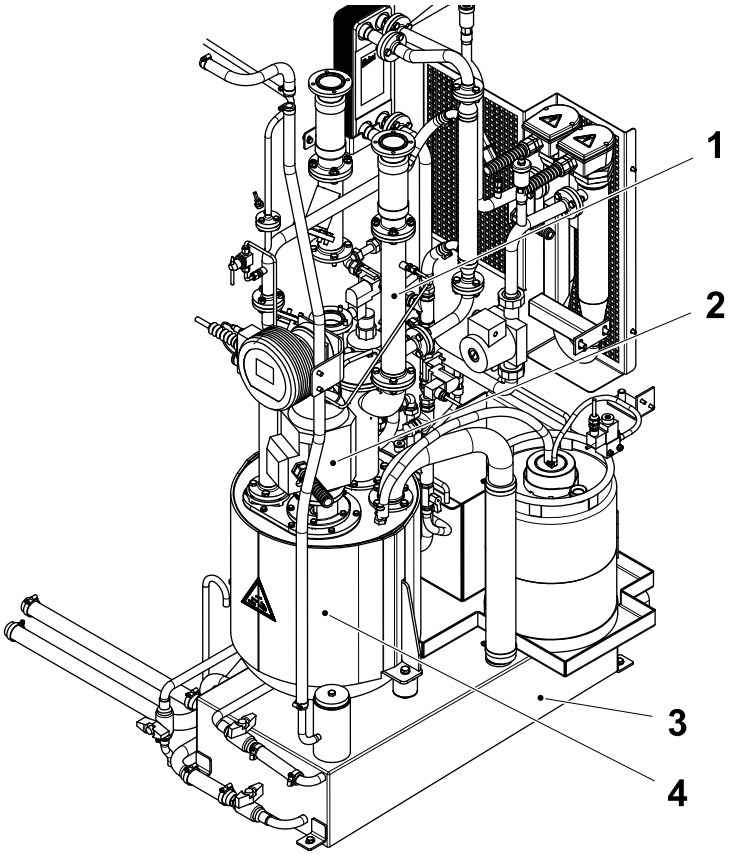

1 Peroxide pipe
2 Peroxide pump
3 Dilution tank
4 Peroxide tank

2.7.1-2 Hydrogen Peroxide - Check Pump

Machine Status	HEAT STERILIZATION
SPC Reference	2808245-0300

Check the peroxide pump (1) for abnormal noise or vibrations.

Change the peroxide pump (1) if necessary, see 2.7.1.7-1 Peroxide Pump - Change Pump

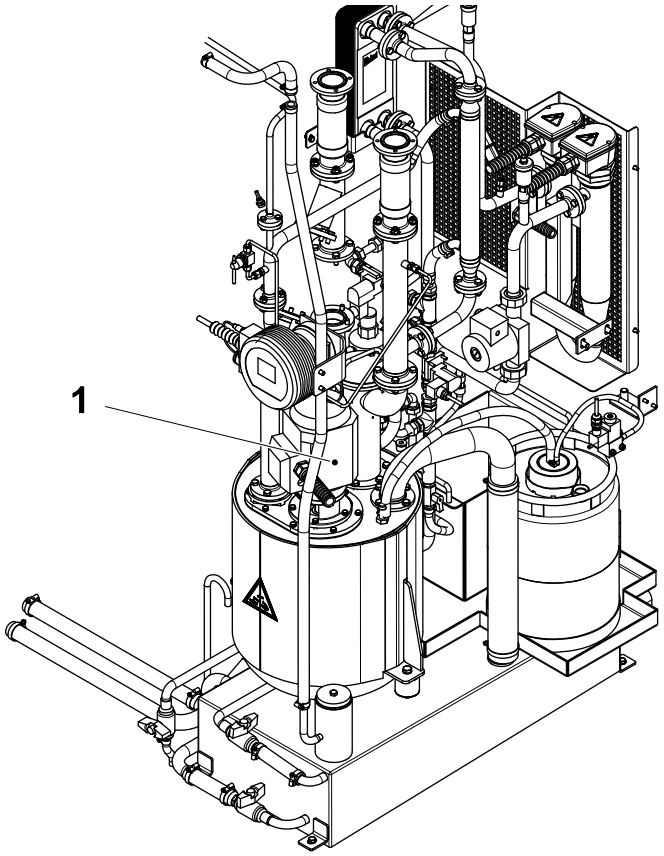

1 Peroxide pump

2.7.1-3 Hydrogen Peroxide - Set Pressure

Machine Status	STERILISATION
SPC Reference	2808245-0300

Set the hydrogen peroxide tank filling pressure to 0.2 bar using the pressure regulator (1).

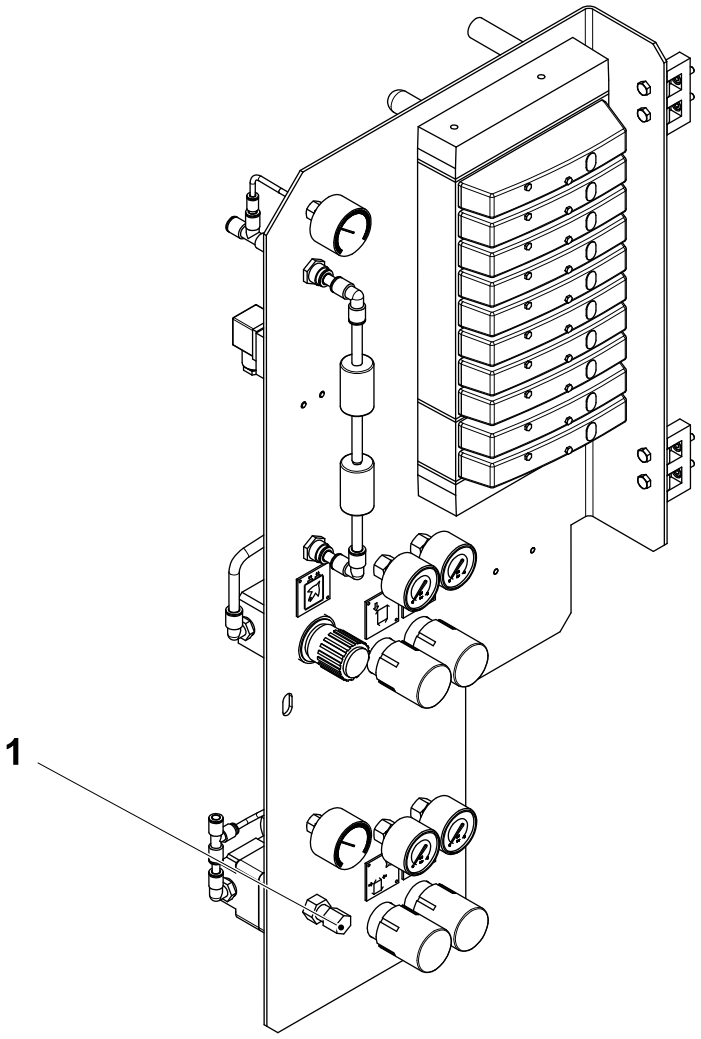

1 Pressure regulator

2.7.1.1 Peroxide Tank

2.7.1.1-1 Peroxide Tank - Check

Machine Status	Electrical supply disconnecting device in position O (OFF) Main air valve OFF Main steam valve ON Main water valve OFF
Special Equipment	Brass Brush
SPC Reference	2808202-0200

WARNING
Hydrogen Peroxide.
Follow the Safety Precautions.

Check that:

- the electrical connections (1) are not rusted. Clean the connections with a brass brush if necessary

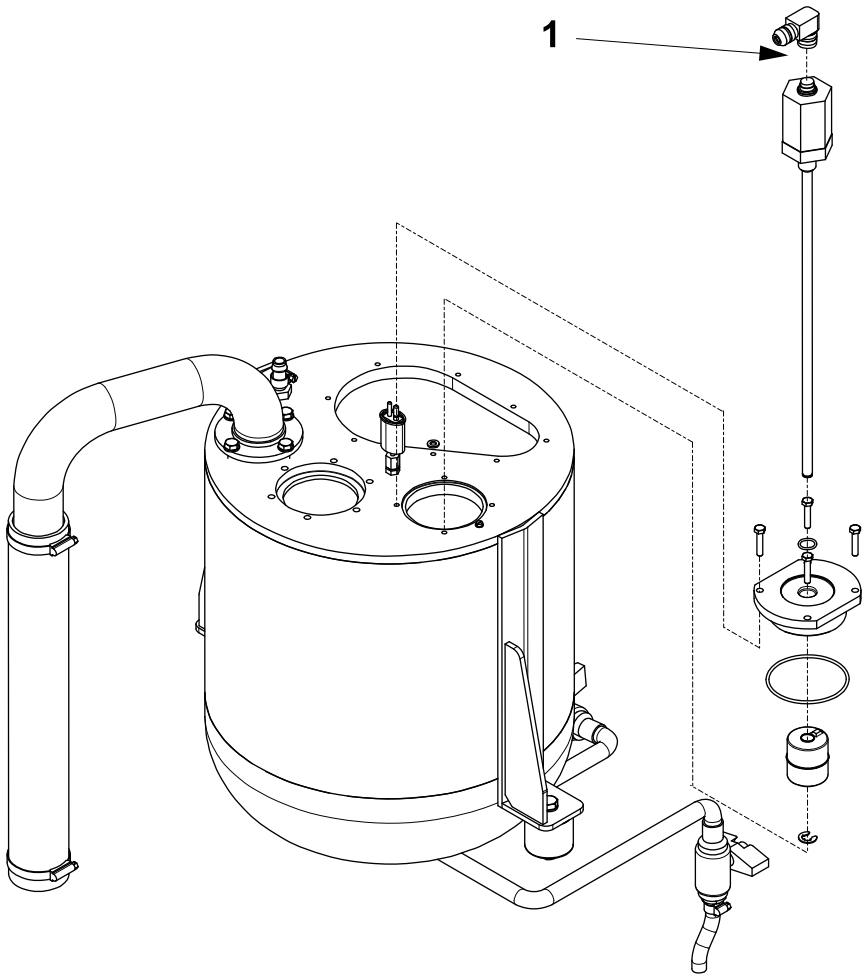

1 Connection

(Cont'd)

(Cont'd)

- there are no leaks at the connections (2) on the peroxide tank
- the float (3) is undamaged
- the O-rings (4) are not worn or damaged.

Note! Make sure that the raised area (5) of the float (3) is facing up during the assembly.

Change the parts if necessary.

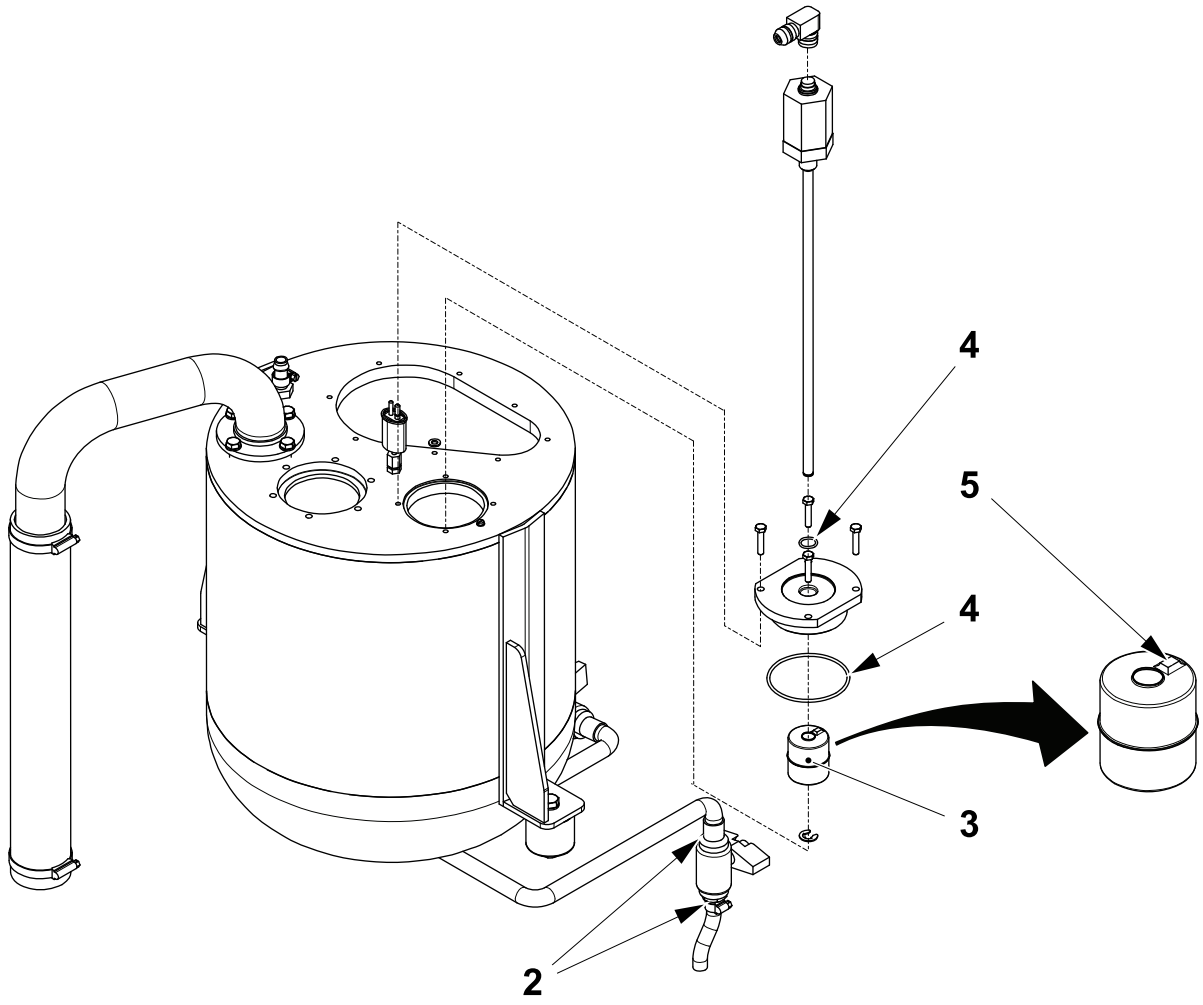

2 Connection
3 Float
4 O-ring
5 Raised area

2.7.1.2 Dilution Tank

2.7.1.2-1 Dilution Tank - Check

Machine Status	PRODUCTION
SPC Reference	2808199-0200

WARNING
Hydrogen Peroxide.
Follow the Safety Precautions.

Check that:

- the drain hole (1) is not clogged. If necessary, clean the hole using a proper tool bar
- the outlet hose (2) and (3) do not leak, see arrows
- the cover (4) does not leak
- the safety lid (5) is not stuck. Make sure that it moves freely, lifting by hand. If necessary, remove the safety lid (5) and clean it with water.

  Note! To ensure the outlet concentration of peroxide is less than 1% w/w, run the machine for 24 hours in production before emptying the dilution tank.

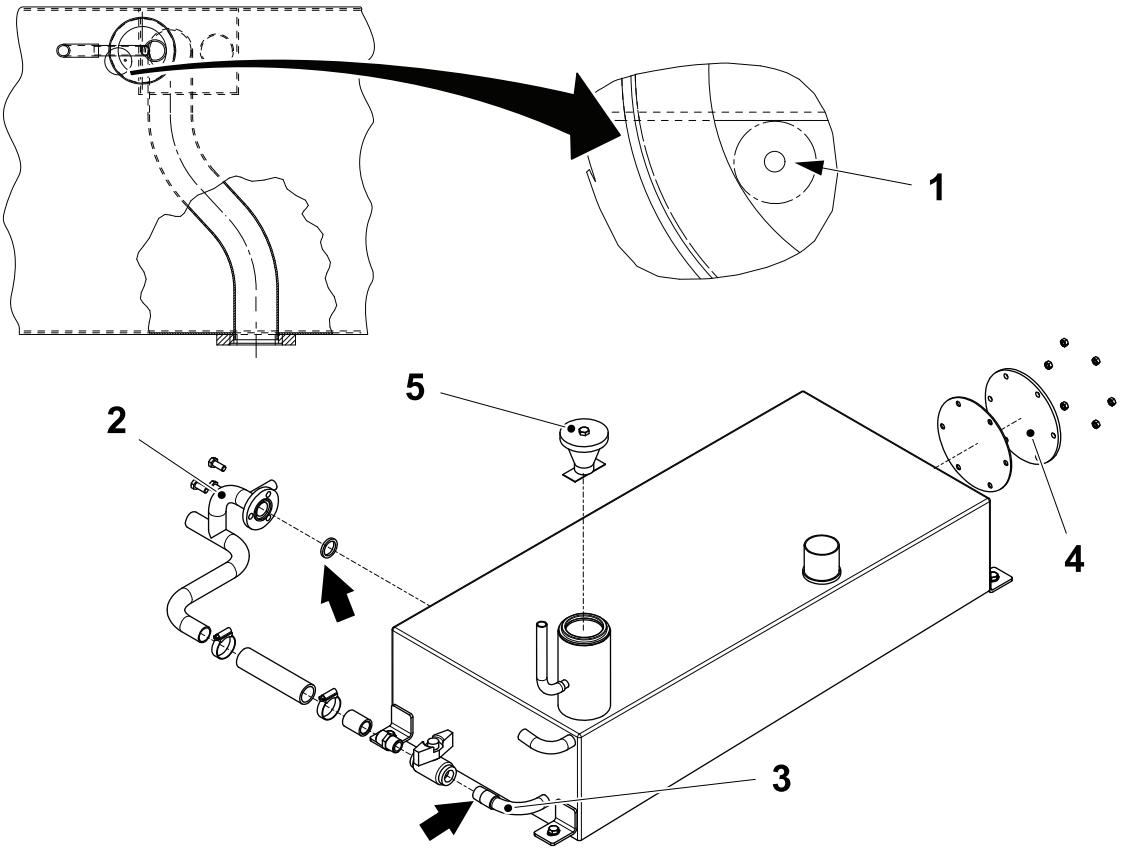

1 Drain hole
2 Outlet hose
3 Outlet hose
4 Cover
5 Safety lid

2.7.1.3 Peroxide Pipe

2.7.1.3-1 Peroxide Pipe - Check

Machine Status	Electrical supply disconnecting device in position O (OFF) Main air valve OFF Main steam valve ON Main water valve OFF
SPC Reference	2910399-0300

WARNING

Hydrogen Peroxide.

Follow the Safety Precautions.

Check that the strainer (1) is not dirty. Clean or change it if necessary, see 2.7.1.3-2 Peroxide Pipe - Clean Strainer.

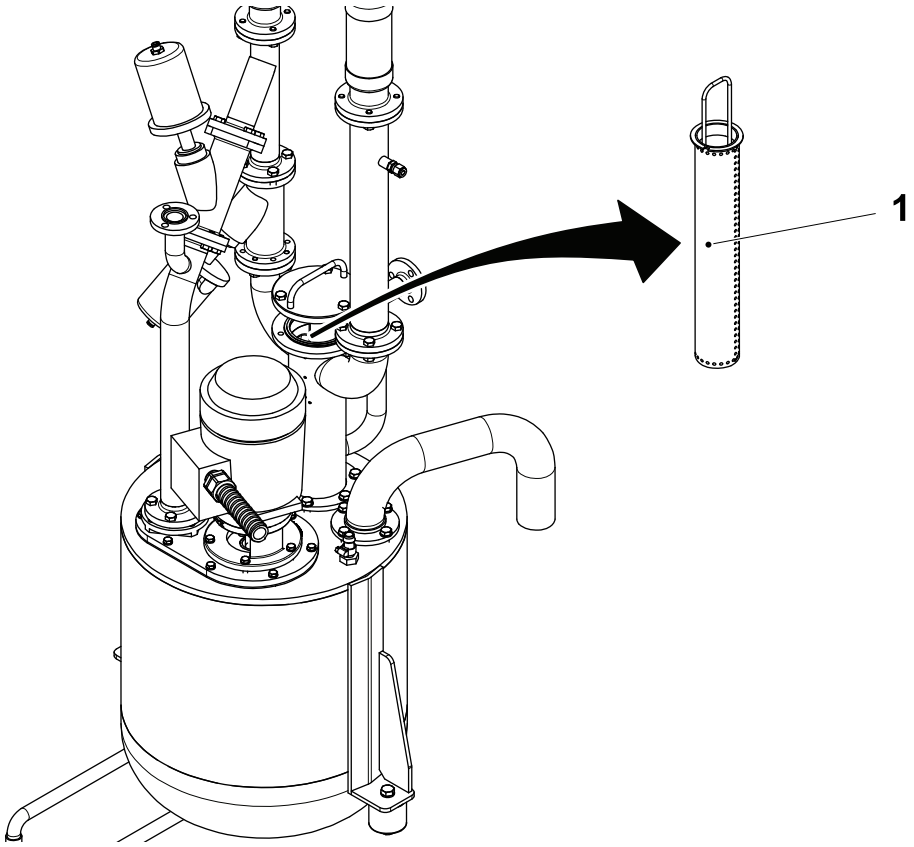

1 Strainer

(Cont'd)

(Cont'd)

Check during PRODUCTION

Turn the air and the mains power ON.

a) Check the pipe connections (indicated by the arrows) for any peroxide leakages. If there are leaks, change the gaskets (1).

b) Check the holes (2) in the valve (3) for peroxide leakages or air. If there are leaks, follow the procedure in section 2.7.1.3-3 Peroxide Pipe - Replace Valves.

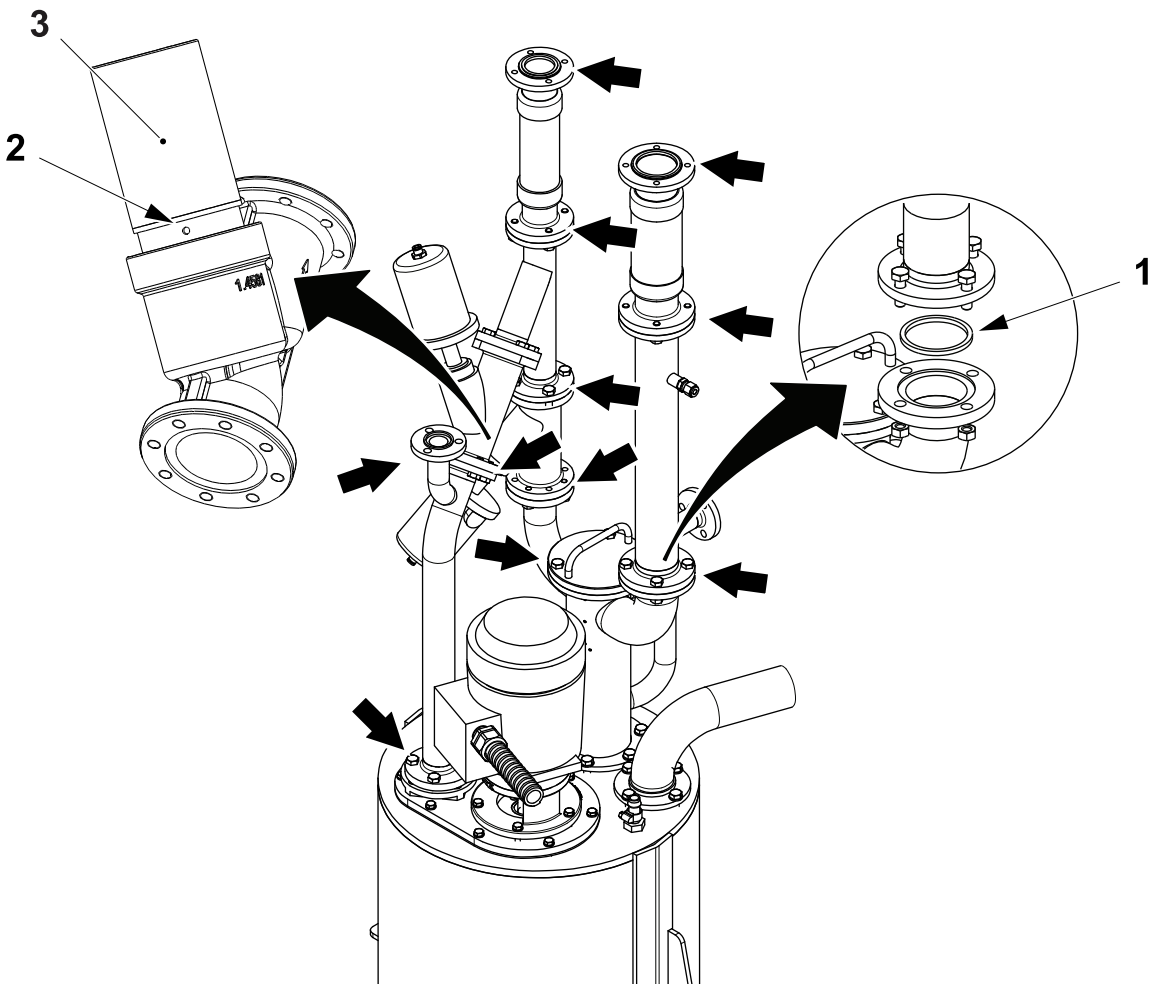

1 Gasket
2 Hole
3 Valve

2.7.1.3-2 Peroxide Pipe - Clean Strainer

Machine Status	Electrical supply disconnecting device in position O (OFF) Main air valve OFF Main steam valve ON Main water valve OFF
SPC Reference	2910399-0300

WARNING
Hydrogen Peroxide.
Follow the Safety Precautions.

WARNING
Risk of eye injury.
Wear eye protection when blow drying the strainer.

a) Remove the screws (1).

b) Lift up the cover (2) and remove the strainer (3).

c) Clean the strainer (3) with distilled water and, if needed, blow dry with compressed air. Rinse the strainer (3) with distilled water.

d) Change the strainer (3) if necessary.

e) Check the gasket (4) and change it if necessary.

f) Assemble in the reverse order.

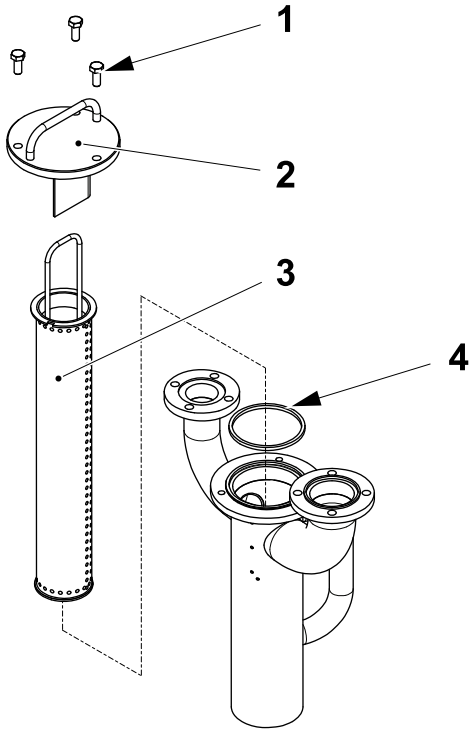

1 Screw
2 Cover
3 Strainer
4 Gasket

2.7.1.3-3 Peroxide Pipe - Replace Valves

Machine Status	Electrical supply disconnecting device in position O (OFF) Main air valve OFF Main steam valve ON Main water valve OFF
SPC Reference	2910399-0300

WARNING

Burn hazard.

The hydrogen peroxide system and adjacent components may be hot. Wear protective gloves.

WARNING

Hydrogen Peroxide.

Follow the Safety Precautions.

(Cont'd)

(Cont'd)

Filling Peroxide Valve - Replace

a) Disconnect the hose U30W6024 (1) from the filling peroxide valve (5).

b) Loosen the screws (2) from the pipe (3).

c) Remove the screws (4), the filling peroxide valve (5) and the gasket (6).

d) Change the filling peroxide valve (5) and assemble in the reverse order.

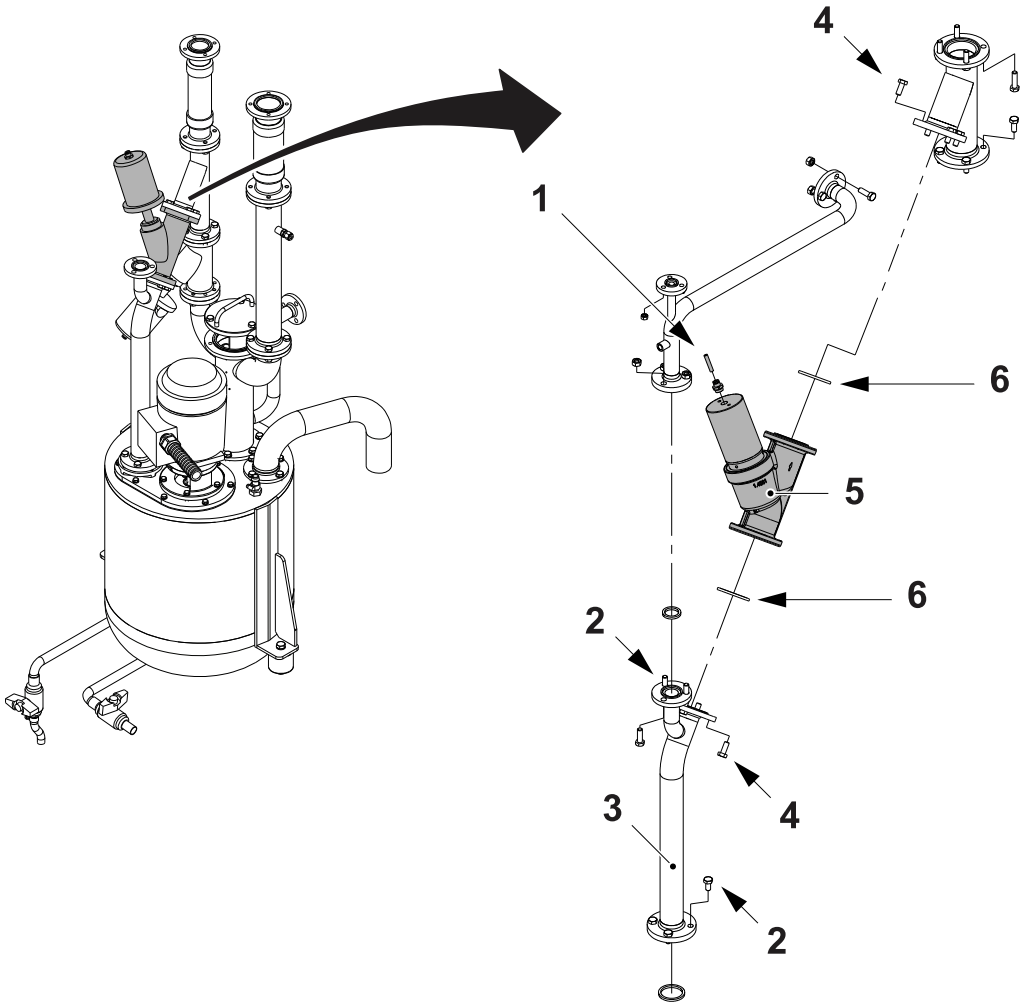

1 Hose U30W6024
2 Screw
3 Pipe
4 Screw
5 Filling peroxide valve
6 Gasket

(Cont'd)

(Cont'd)

Draining Peroxide Valve - Replace

a) Disconnect the hose U30W6032 (1) from the draining peroxide valve (4).

b) Loosen the screws (2).

c) Remove the screws (3), the draining peroxide valve (4) and the gaskets (5)

d) Change the draining peroxide valve and assemble in the reverse order.

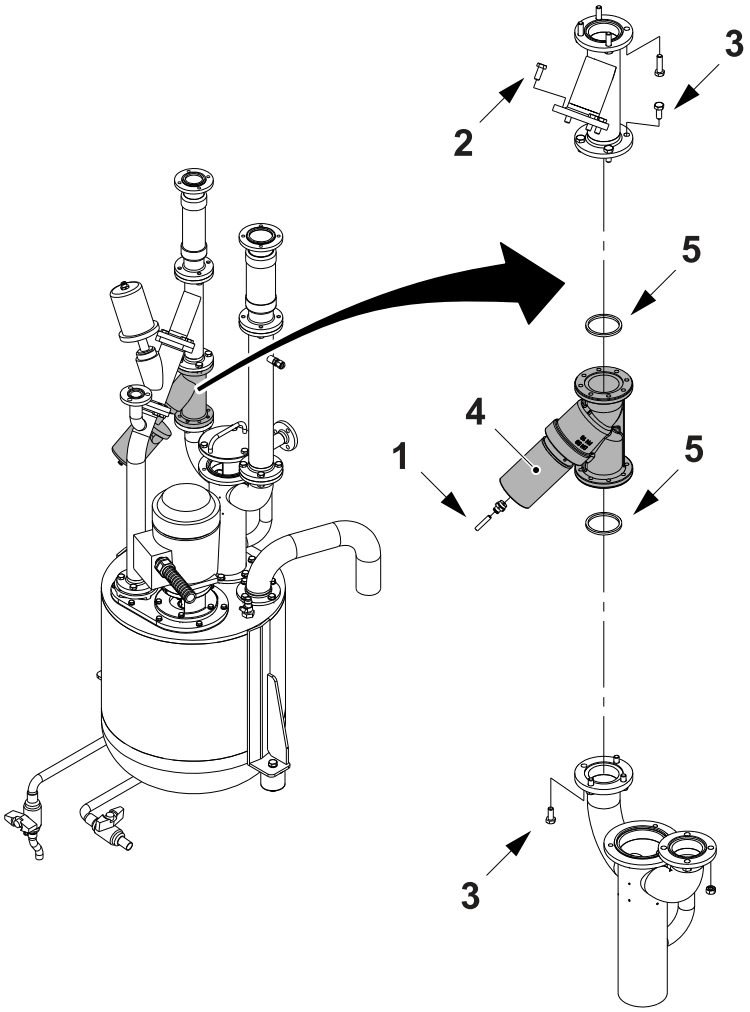

1 Hose U30W6032
2 Screw
3 Screw
4 Draining peroxide valve
5 Gasket

2.7.1.4 Heating Unit

2.7.1.4-1 Heating Unit - Change Heating Elements

Machine Status	Electrical supply disconnecting device in position O (OFF) Main air valve OFF Main steam valve ON Main water valve OFF
Special Equipment	Socket Wrench TP No. 90206-0330
Consumables	Thread Sealant TP No. 90157-0034
SPC Reference	2808216-0200

WARNING

Burn hazard.

The hydrogen peroxide system and adjacent components may be hot. Wear heat-resistant protective gloves.

a) Drain the water system by closing the shut off valve (1), opening the drain valve (2) and slightly unscrewing the venting valves (3).

b) Remove the connection boxes (4).

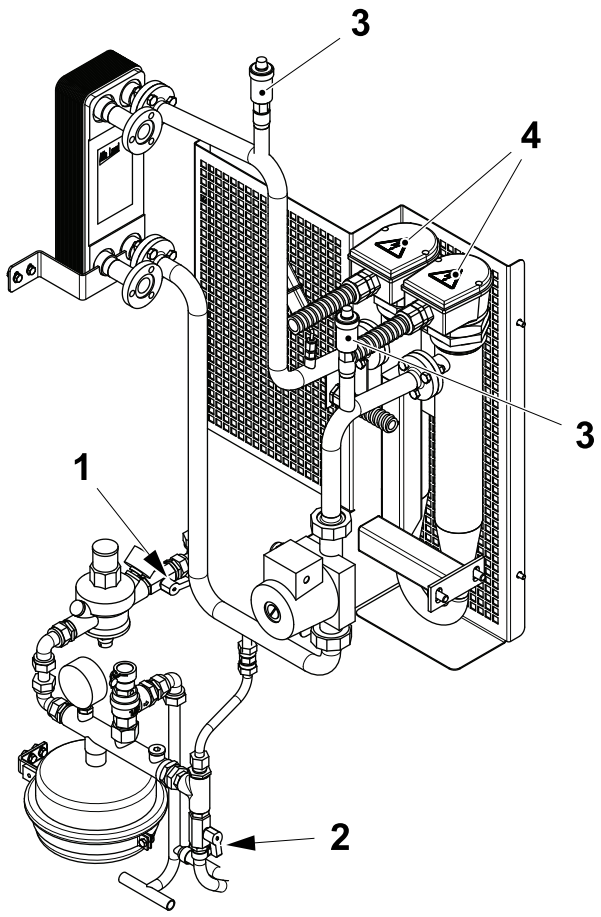

1 Shut off valve
2 Drain valve
3 Venting valve
4 Connection box

(Cont'd)

(Cont'd)

CAUTION
Risk of damage to the equipment.
Do not swap the position or the cables of the heating elements. See the EM Circuit Diagram.

c) Mark and remove all the electrical connections.

d) Remove the heating element (5) and heating element (6) with the aid of the tool (7).

e) Change the heating element (5) and heating element (6). Coat the threads (8) of the new heating elements with thread sealant.

f) Assemble in the reverse order. Refill the water circuit, see 2.7.1.5-2 Pressure Unit - Fill.

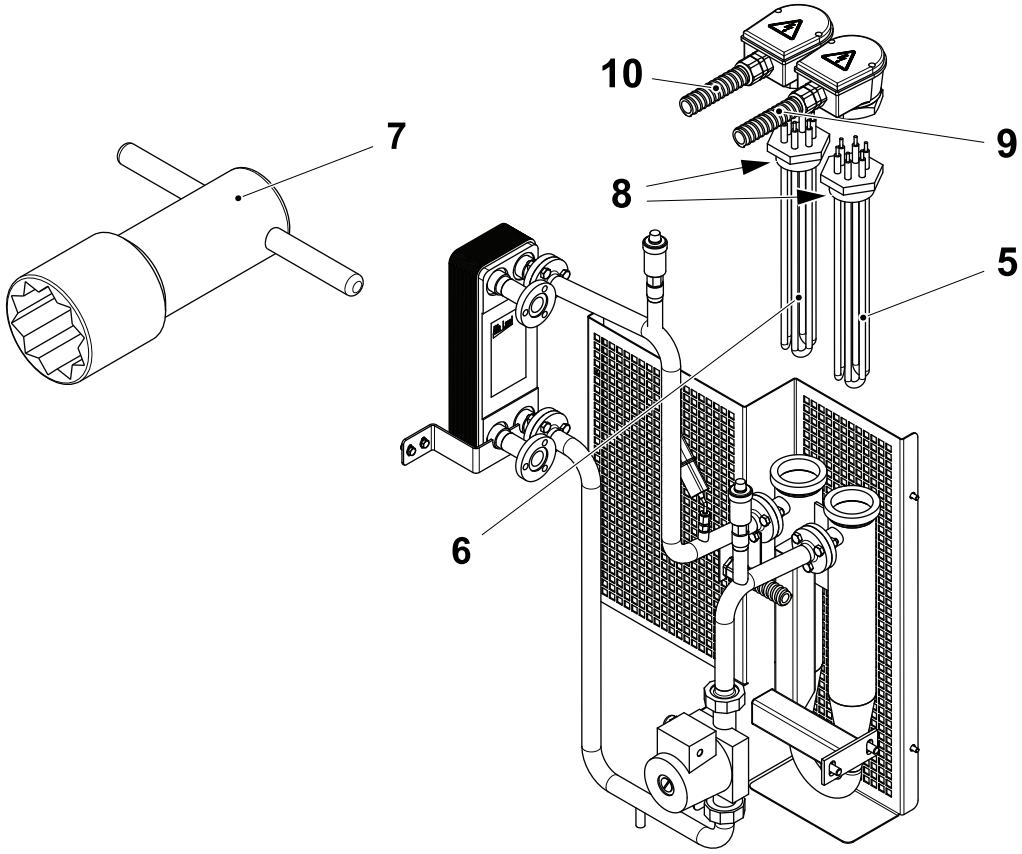

5 Heating element
6 Heating element
7 Tool
8 Thread
9 Cable
10 Cable

2.7.1.4-2 Heating Unit - Change Heat Exchanger

Machine Status	Electrical supply disconnecting device in position O (OFF) Main air valve OFF Main steam valve ON Main water valve OFF
SPC Reference	2808216-0200

WARNING

Burn hazard.

The hydrogen peroxide system and adjacent components may be hot. Wear heat-resistant protective gloves.

a) Close the shut off valve (1).

b) Drain the water system by opening the drain valve (2).

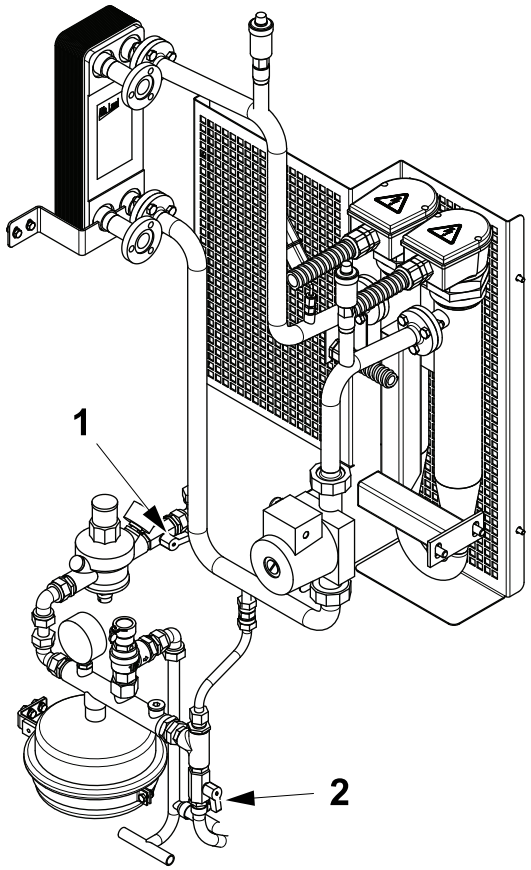

1 Shut off valve
2 Drain valve

(Cont'd)

(Cont'd)

c) Loosen the flanges (3) on the heat exchanger and remove it.

d) Change the heat exchanger, ensuring that the flanges (3) are sealed by means of new gaskets.

e) Close the drain valve (2) and open the shut off valve (1), see 2.7.1.5-2 Pressure Unit - Fill.

f) Check for leaks, see 2.7.1.9-1 H_2O_2 Concentration Meter - Check Desiccant Cartridge.

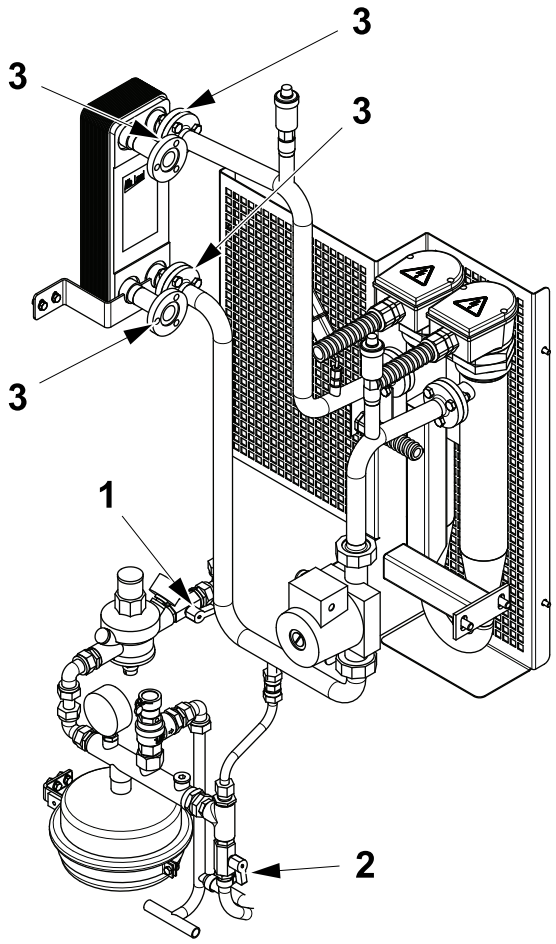

1 Shut off valve
2 Drain valve
3 Flange

2.7.1.4-3 Heating Unit - Drain U-bend

Machine Status	Electrical supply disconnecting device in position O (OFF) Main air valve OFF Main steam valve ON Main water valve OFF
SPC Reference	2808216-0200

WARNING

Burn hazard.

The hydrogen peroxide system and adjacent components may be hot. Wear heat-resistant protective gloves.

a) Shut off the water supply to the heating unit and drain the system, see items a) and b) on page 2-70.

b) With the aid of a screwdriver, open the valve (1) and drain any water from the heating unit U-bend into a bucket.

c) Fill the system with water, see 2.7.1.5-2 Pressure Unit - Fill.

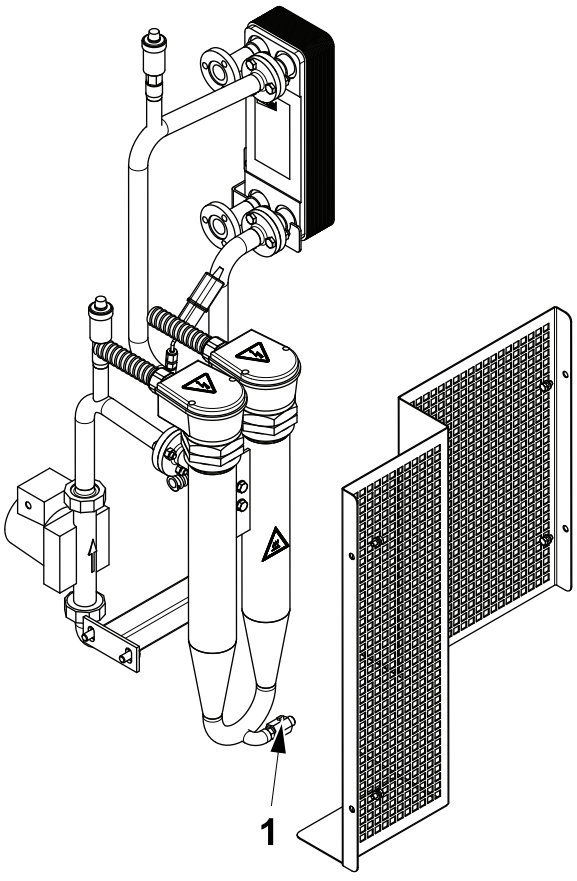

1 Valve

2.7.1.4-4 Heating Unit - Check Pump

Machine Status	Electrical supply disconnecting device in position I (ON) Main air valve OFF Main steam valve ON Main water valve ON
SPC Reference	2808216-0200

WARNING

Burn hazard.

The hydrogen peroxide system and adjacent components may be hot. Wear heat-resistant protective gloves.

Check the pump (1) for leaks or excessive noise.

Note! Make sure that the pump (1) is set at the highest speed. The selector (2) must be positioned on the maximum value.

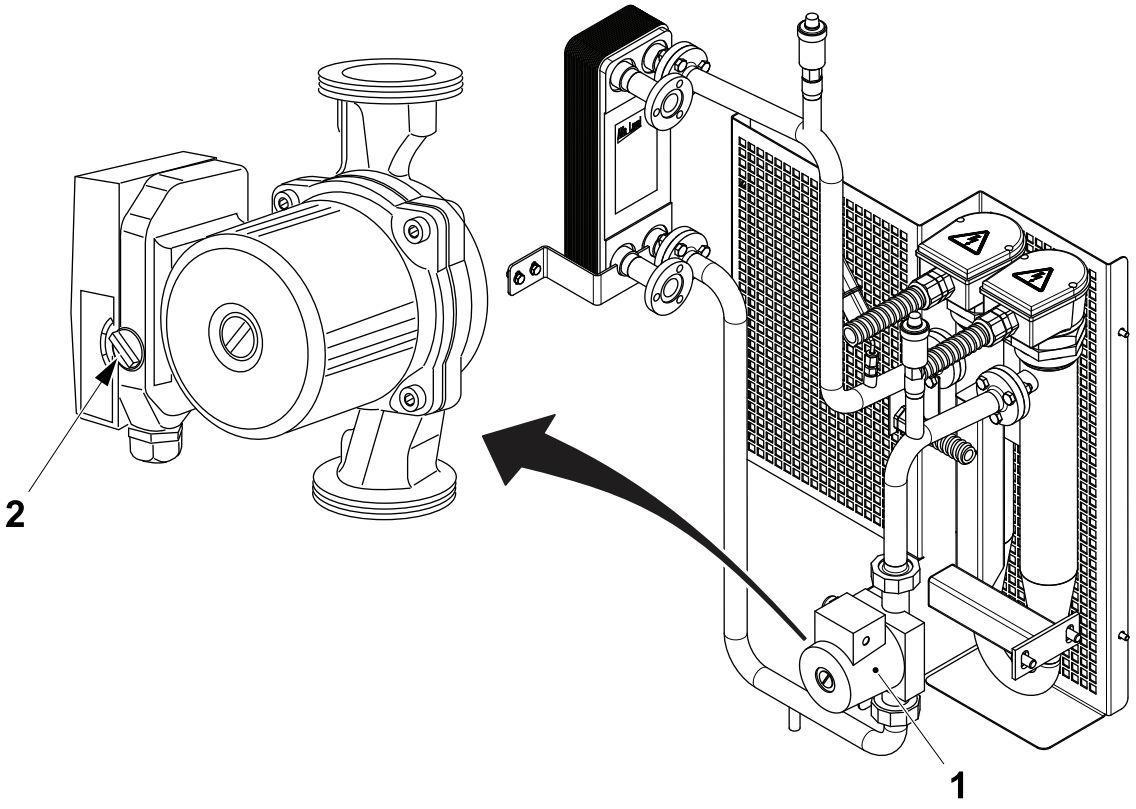

1 Pump
2 Selector

2.7.1.4-5 Heating Unit - Change Venting Valve

Machine Status	Electrical supply disconnecting device in position I (ON) Main air valve OFF Main steam valve ON Main water valve OFF
SPC Reference	2808216-0200

WARNING

Burn hazard.

The hydrogen peroxide system and adjacent components may be hot. Wear heat-resistant protective gloves.

a) Shut off the water supply to the heating unit and drain the system, see items a) and b) on page 2-70.

(Cont'd)

(Cont'd)

CAUTION
Risk of damage to the equipment.
The cap (3) must always be removed and discarded to ensure the correct function of the venting valve (2).

b) Remove the venting valve (1).

c) Before fitting the new venting valve (2), remove and discard the cap (3).

d) Assemble in the reverse order.

e) Fill the system with water, see 2.7.1.5-2 Pressure Unit - Fill.

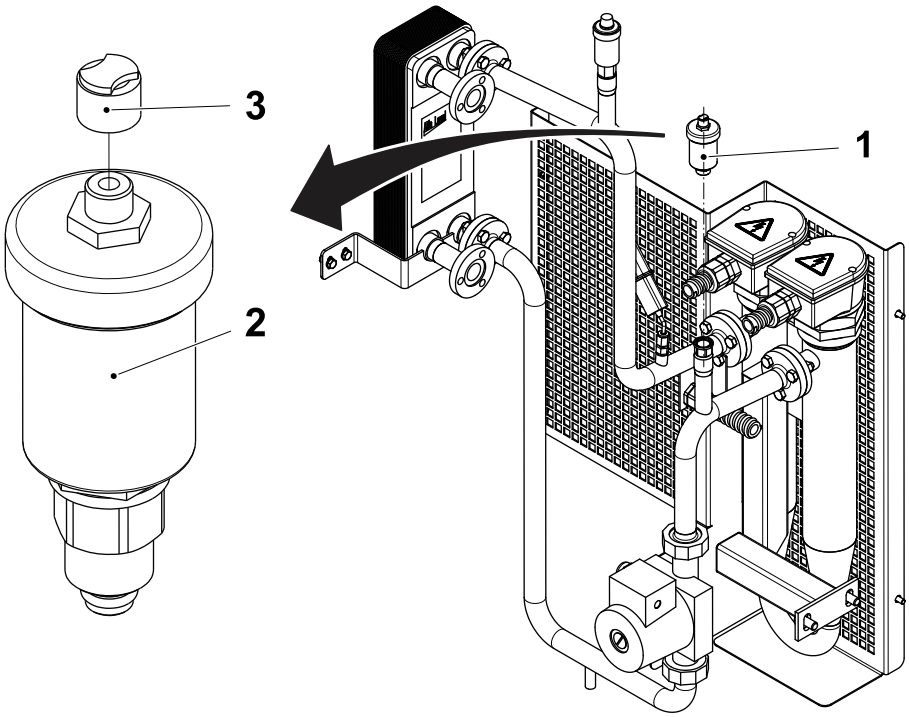

1 Venting valve
2 Venting valve
3 Cap

2.7.1.4-6 Heating Unit - Check Venting Valve Floater

Machine Status	Electrical supply disconnecting device in position I (ON) Main air valve OFF Main steam valve ON Main water valve OFF
SPC Reference	2808216-0200

WARNING

Burn hazard.

The hydrogen peroxide system and adjacent components may be hot. Wear heat-resistant protective gloves.

a) Shut off the water supply to the heating unit and drain the system, see items a) and b) on page 2-70.

b) Unscrew the venting valve (1) from the nipple (2)

Note! Do not remove the nipple (2).

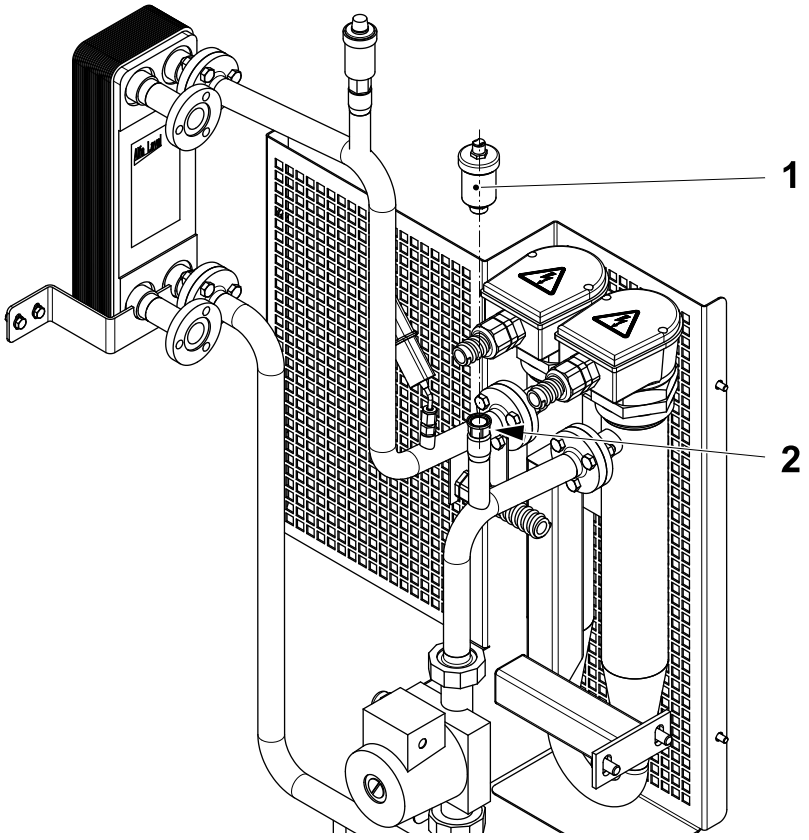

1 Venting valve
2 Nipple

(Cont'd)

(Cont'd)

c) Unscrew the venting valve lid (3) and check that the floater (4) inside the venting valve (1) is not damaged and moves freely.

d) Check that the hole (5) is not clogged.

e) Clean inside the venting valve (1) and remove any deposits of lime scale.

f) Change the O-rings (6).

g) Assemble in the reverse order.

h) Fill the system with water, see 2.7.1.5-2 Pressure Unit - Fill.

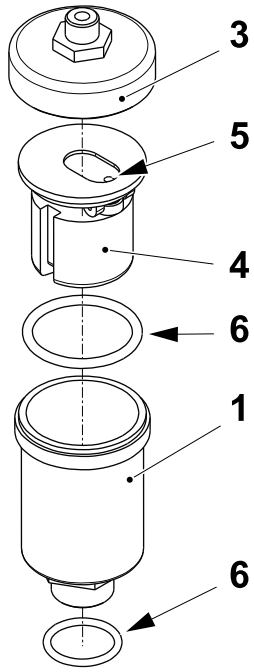

1 Venting valve
3 Venting valve lid
4 Floater
5 Hole
6 O-ring

2.7.1.5 Pressure Unit

2.7.1.5-1 Pressure Unit - Check Leaks

Machine Status	Electrical supply disconnecting device in position O (OFF) Main air valve OFF Main steam valve ON Main water valve OFF
SPC Reference	2808220-0300

WARNING
Hydrogen Peroxide.
Follow the Safety Precautions.

(Cont'd)

(Cont'd)

a) With a cold machine, check that the pressure in the liquid container (1) indicated on the pressure gauge (2) reaches at least 1.8 bar. If not, set the pressure with the automatic feeder (3), see 2.7.1.5-3 Pressure Unit - Set Pressure.

b) Step up the machine to step HEAT STERILISATION.

c) Check the pipe connections for leaks, see arrows. Change the seals if necessary.

d) Check the pump (4) for abnormal noise or vibrations.

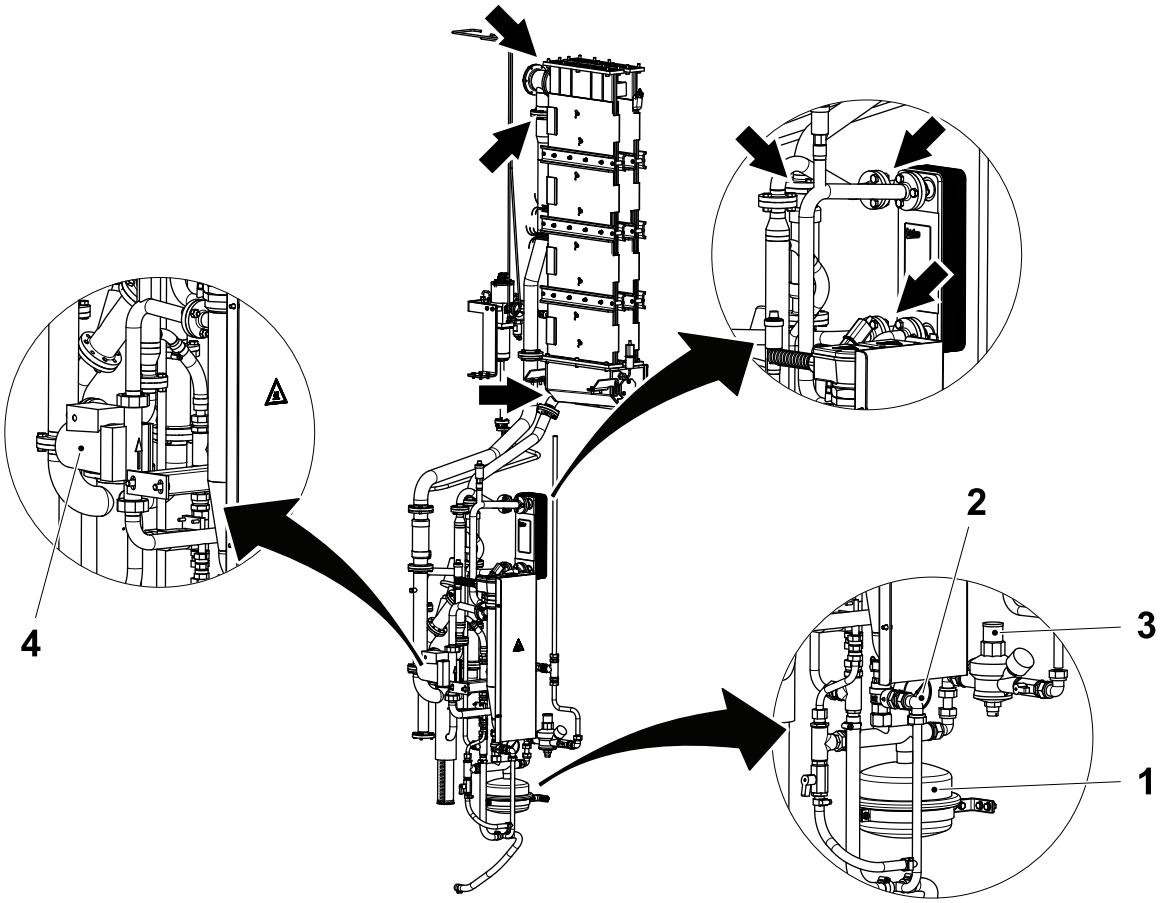

1 Container
2 Pressure gauge
3 Automatic feeder
4 Pump

2.7.1.5-2 Pressure Unit - Fill

Machine Status	Electrical supply disconnecting device in position O (OFF) Main air valve OFF Main steam valve ON Main water valve ON
Special Equipment	Allen Key (10 mm)
SPC Reference	2808220-0300

WARNING
Hydrogen Peroxide.
Follow the Safety Precautions.

WARNING
Burn hazard.
The hydrogen peroxide system and adjacent components may be hot. Wear heat-resistant protective gloves.

a) Make sure the factory water supply is turned on.

b) Make sure the drain valve (1) is closed.

c) Open the shut off valve (2) to fill the system.

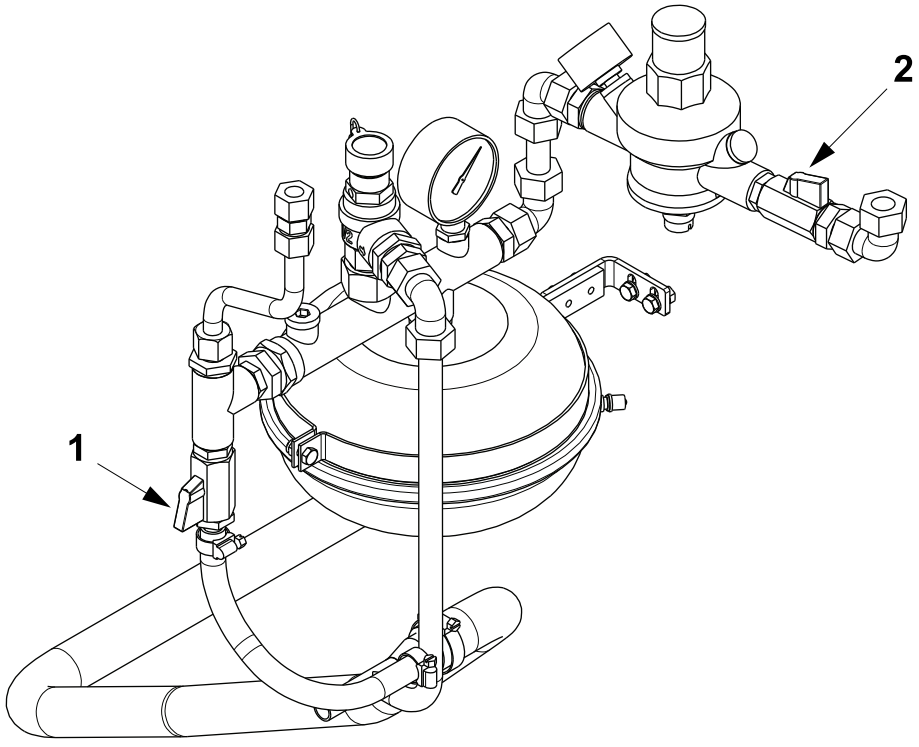

1 Drain valve
2 Shut off valve

(Cont'd)

(Cont'd)

Note! The shut off valve (2) must be left open to allow the circuit pressure to be held constant by the recharge valve (4).

d) Remove the cap (3) from the valve (4).

e) Turn the plug nut (5) with an allen key until a value of 1.8 ±0.3 bar is indicated by the pressure gauge (6).

f) Fit the cap (3) on to the valve (4).

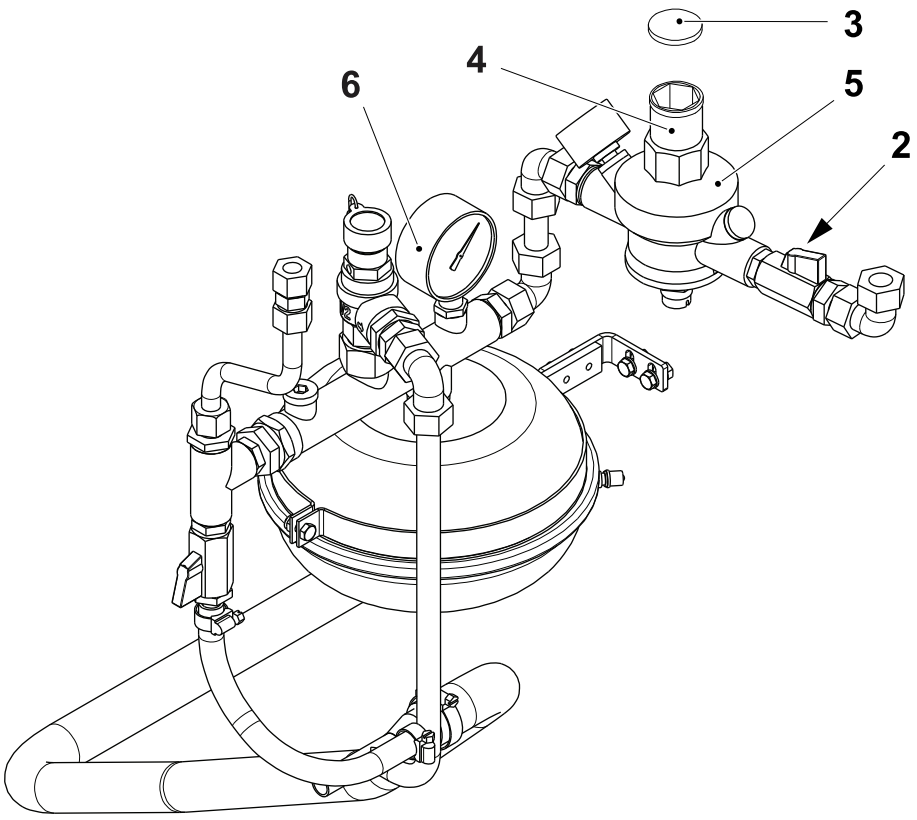

2 Shut off valve
3 Cap
4 Valve
5 Plug nut
6 Pressure gauge

2.7.1.5-3 Pressure Unit - Set Pressure

Machine Status	Electrical supply disconnecting device in position O (OFF) Main air valve OFF Main steam valve ON Main water valve ON
Special Equipment	Allen Key (10 mm)
SPC Reference	2808220-0300

WARNING
Hydrogen Peroxide.
Follow the Safety Precautions.

(Cont'd)

(Cont'd)

a) Remove the cap (1) from the valve (2).

b) If the pressure is too high, first close the shut off valve (3), then tighten the plug nut (4) a few turns with an allen key. Release some pressure by opening and closing the ventilating valve (5).

c) Make sure that the ventilating valve (5) is closed, and that the shut off valve (3) is open.

d) Adjust the pressure to 2.3 ±0.3 bar by turning the plug nut (4) with an allen key.

e) Fit the cap (1) on to the valve (2).

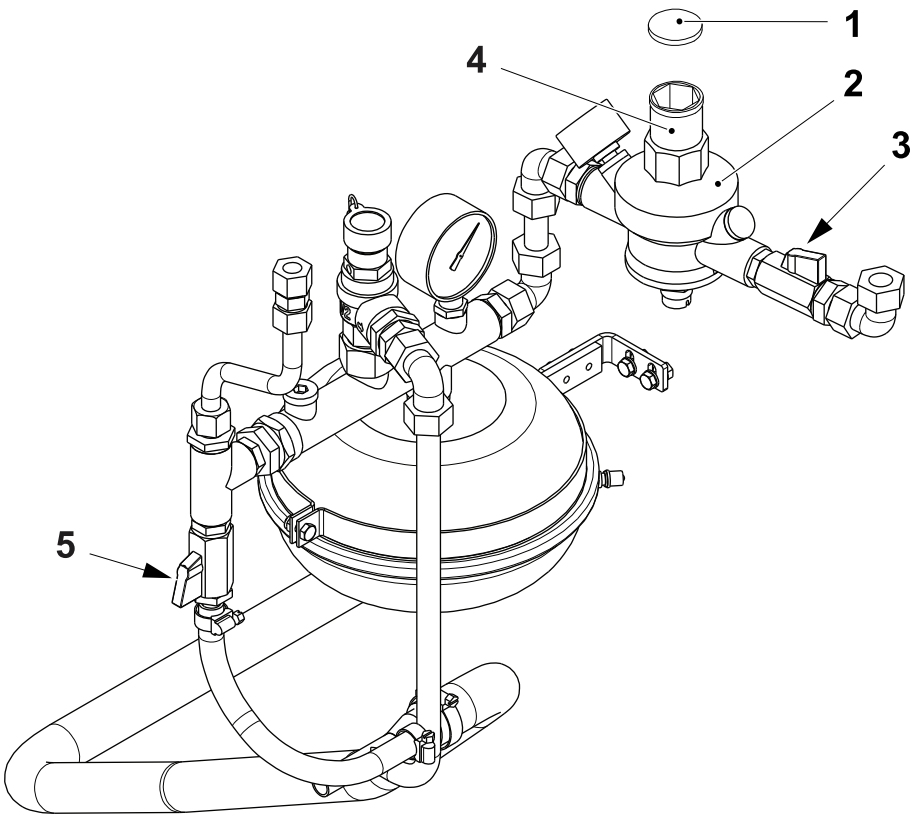

1 Cap
2 Valve
3 Shut off valve
4 Plug nut
5 Ventilating valve

2.7.1.6 Air Pipe-Line

2.7.1.6-1 Air Pipe-Line - Check

Machine Status	Electrical supply disconnecting device in position O (OFF) Main air valve OFF Main steam valve ON Main water valve OFF
SPC Reference	2808224-0200

WARNING

Hydrogen Peroxide.
Follow the Safety Precautions.

Check that the hoses (1), the non return valve (2) and the gasket (3) do not leak. Change the non return valve (2) and the gasket (3) if necessary, see 2.7.1.6-2 Air Pipe-Line - Change Gasket and Non Return Valve

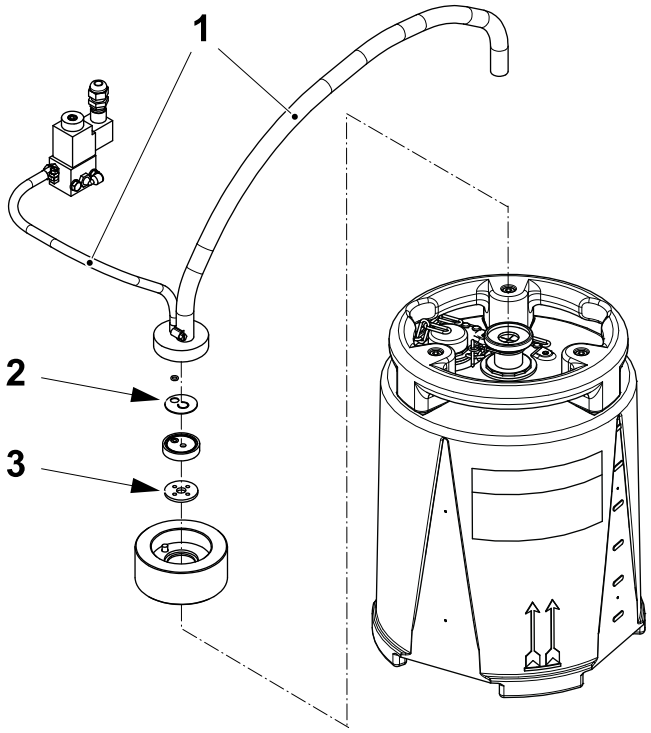

1 Hose
2 Non return valve
3 Gasket

(Cont'd)

(Cont'd)

Check that the filter (4) on the valve panel (5) is not dirty. Clean or change if necessary, see 2.7.1.6-3 Air Pipe-Line - Clean Filter.

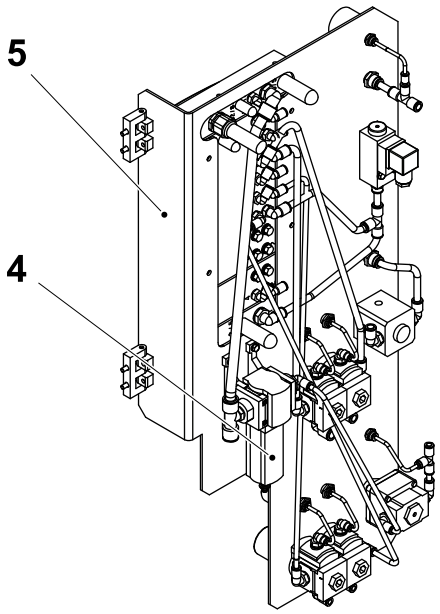

4 Filter
5 Valve panel

(Cont'd)

(Cont'd)

Check during PRODUCTION

Check that the weight (1) is properly installed on the peroxide container (2) and that it does not leak.

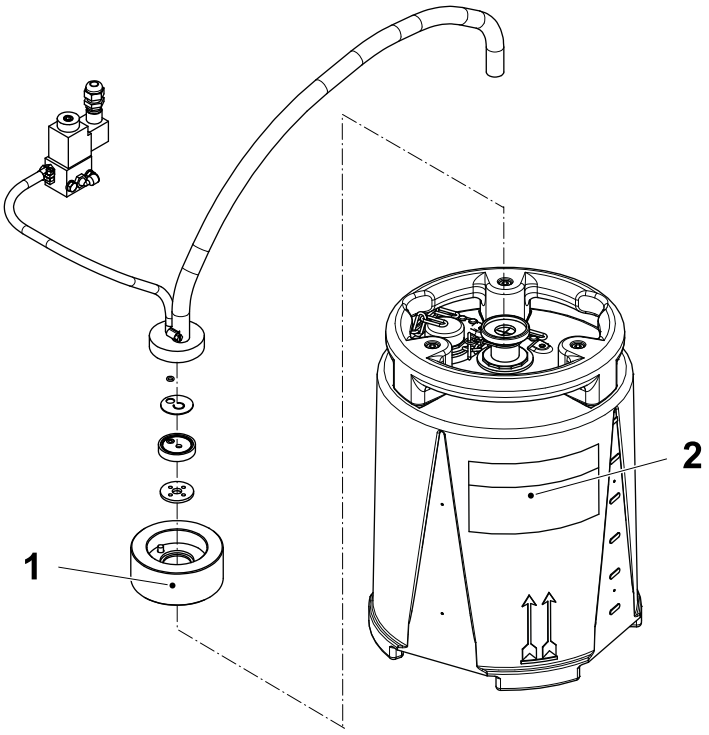

1 Weight
2 Peroxide container

2.7.1.6-2 Air Pipe-Line - Change Gasket and Non Return Valve

Machine Status	Electrical supply disconnecting device in position O (OFF) Main air valve OFF Main steam valve ON Main water valve OFF
SPC Reference	2808224-0200

WARNING
Hydrogen Peroxide.
Follow the Safety Precautions.

(Cont'd)

(Cont'd)

a) Remove the weight (1) from the peroxide container (2).

b) Remove the two screws (3) securing the hose attachment (4) to the weight (1).

c) Remove the gasket (5) and change it if necessary.

d) Remove the washer (6) from the weight (1).

e) Remove the non return valve (7) from the hose attachment (4). Change the non-return valve if necessary.

f) Assemble in the reverse order. Make sure that the O-ring (8) is fitted correctly.

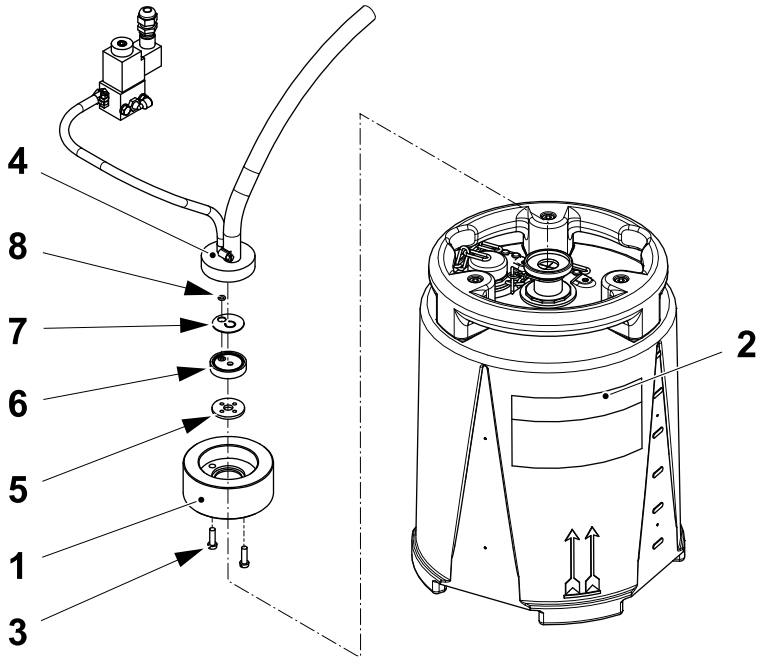

1 Weight
2 Peroxide container
3 Screw
4 Hose attachment
5 Gasket
6 Washer
7 Non return valve
8 O-ring

2.7.1.6-3 Air Pipe-Line - Clean Filter

Machine Status	Electrical supply disconnecting device in position O (OFF) Main air valve OFF Main steam valve ON Main water valve OFF
Special Equipment	Pliers
Consumables	Soap
SPC Reference	2808224-0200

WARNING
Hydrogen Peroxide.
Follow the Safety Precautions.

a) Remove the filter cover (1) from the valve panel (2).

b) Remove the reservoir (3). Change the O-ring if necessary.

c) Clean the reservoir (3) with soapy water and then rinse with plenty of distilled water.

d) Using a pair of pliers, remove and clean the filter insert inside the reservoir (3). Change it if necessary.

e) Fit the reservoir (3), making sure the O-ring is fitted correctly.

f) Fit the filter cover (1).

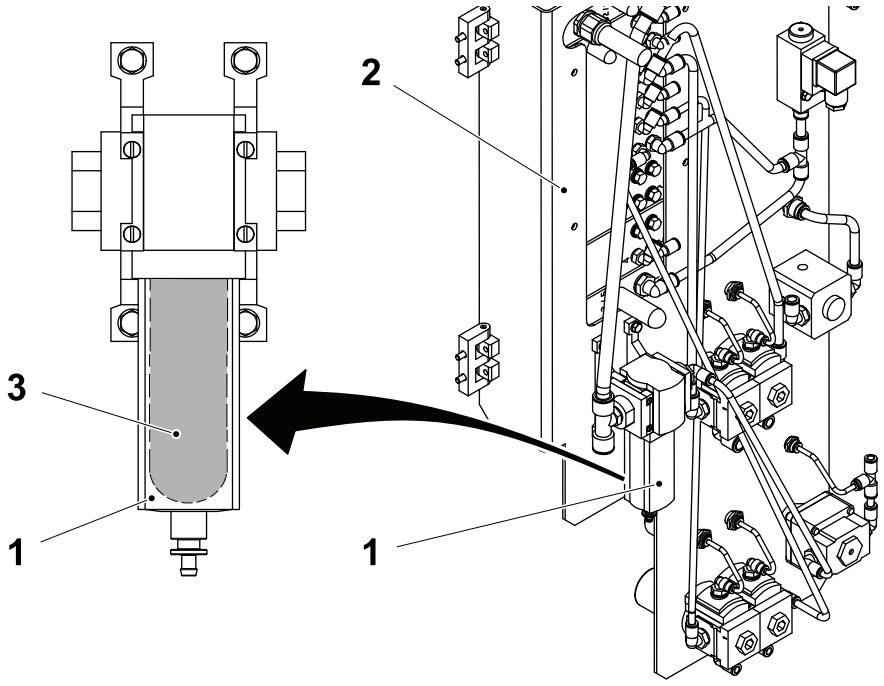

1 Cover
2 Valve panel
3 Reservoir

2.7.1.6-4 Air Pipe-Line - Change Hoses

Machine Status	Main air valve OFF STEP ZERO
SPC Reference	2506637-0400

WARNING

Hydrogen Peroxide.
Follow the Safety Precautions.

a) Remove the hose clip (1) and the hose (2) from the nipple (3).

b) Remove the hose clip (4) and the hose (5) from the valve (6).

Note! Change the hose clip (1) and the hose clip (4) on assembly.

c) Lift out the lid (7) together with the hose (2) and the hose (5) from the machine.

Note! If necessary remove any plastic ties securing the hose (2) and the hose (5).

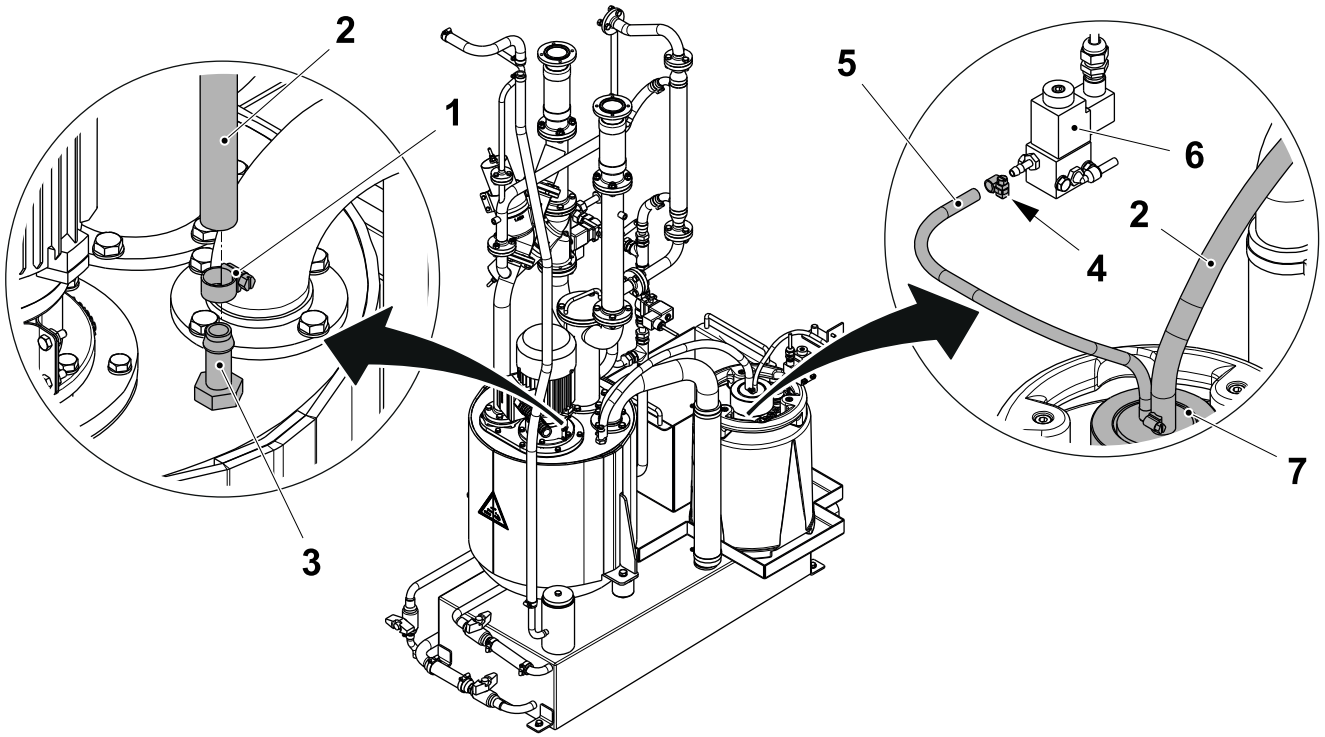

1 Hose clip
2 Hose
3 Nipple
4 Hose clip
5 Hose
6 Valve
7 Lid

(Cont'd)

(Cont'd)

d) Remove the hose clip (8) and the hose (2) from the lid (7).

e) Remove the hose clip (9) and the hose (5) from the lid (7).

f) Change the hose (2), the hose clip (8), the hose (5) and the hose clip (9).

g) Assemble in the reverse order.

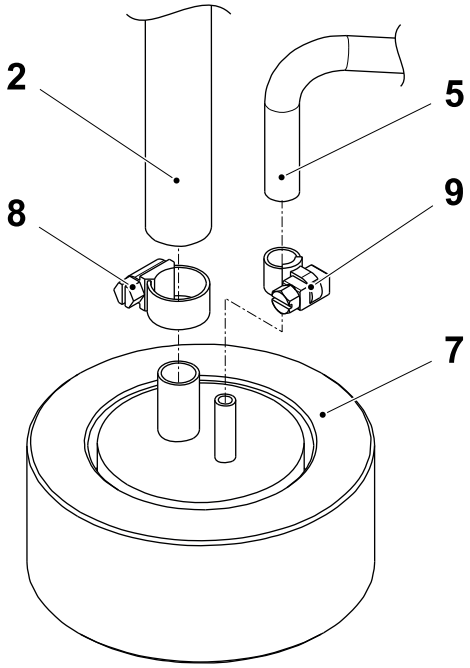

2 Hose
5 Hose
7 Lid
8 Hose clip
9 Hose clip

2.7.1.7 Peroxide Pump

2.7.1.7-1 Peroxide Pump - Change Pump

Machine Status	Electrical supply disconnecting device in position O (OFF) Main air valve OFF Main steam valve ON Main water valve OFF
SPC Reference	2808418-0100

WARNING

Hydrogen Peroxide.

Follow the Safety Precautions.

a) Make sure that the peroxide is not too concentrated and then drain the dilution tank.

b) Drain the hydrogen peroxide and rinse carefully with distilled water.

c) Label and disconnect the electrical connections to the motor (1).

d) Remove the screws (2) at the flanges and the pipe (3).

e) Remove the screws (4) and lift and change the motor (1) together with the pump (5).

f) Assemble in the reverse order.

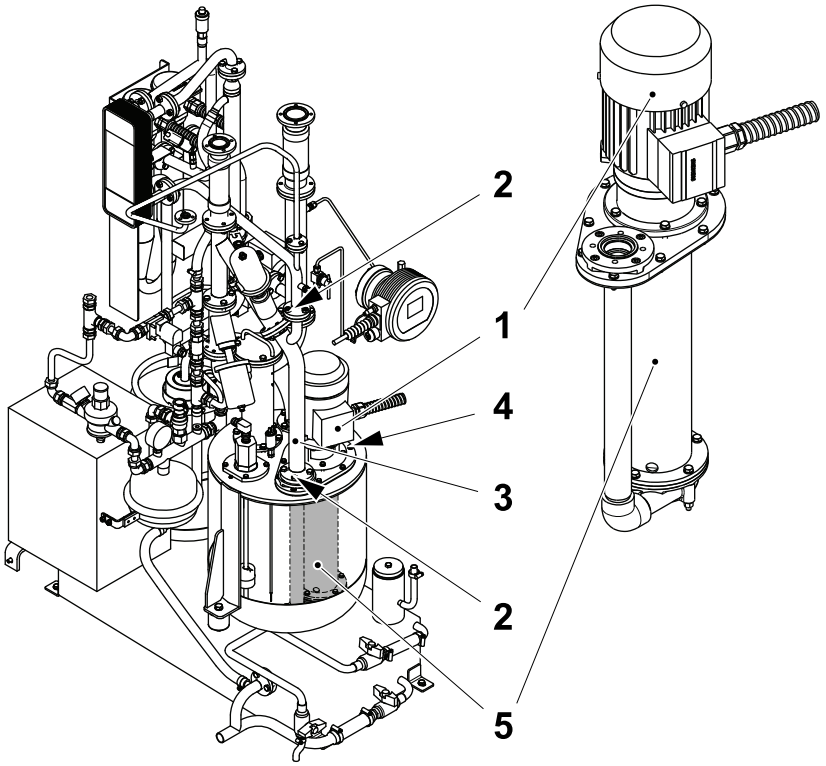

1 Motor
2 Screw
3 Pipe
4 Screw
5 Pump

2.7.1.7-2 Peroxide Pump - Overhaul Pump

Machine Status	Electrical supply disconnecting device in position O (OFF) Main air valve OFF Main steam valve ON Main water valve OFF
SPC Reference	2808418-0100

WARNING
Hydrogen Peroxide.
Follow the Safety precautions.

a) Remove the peroxide pump, see 2.7.1.7-1 Peroxide Pump - Change Pump .

b) Unscrew the screws (1) and remove the pipe (2).

c) Remove the O-rings (3), (4) and (5). Change them if necessary.

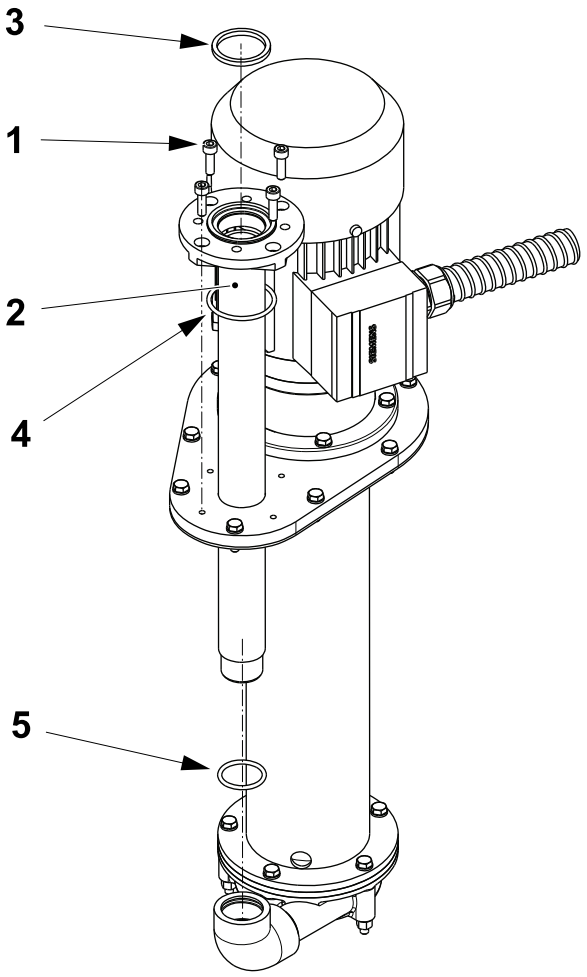

1 Screw
2 Pipe
3 O-ring
4 O-ring
5 O-ring

(Cont'd)

(Cont'd)

d) Mark the position of the pump housing (6) on the extension pipe (7).

e) Remove the screws (8), the nuts (9) and the pump housing (6).

f) Remove the split pin (10), the nut (11) and the washer (12).

g) Remove the impeller wheel (13) and the key (14). If necessary, change the impeller wheel (13).

h) Remove the lid (15) loosen the screws (16) and remove the bushing (17).

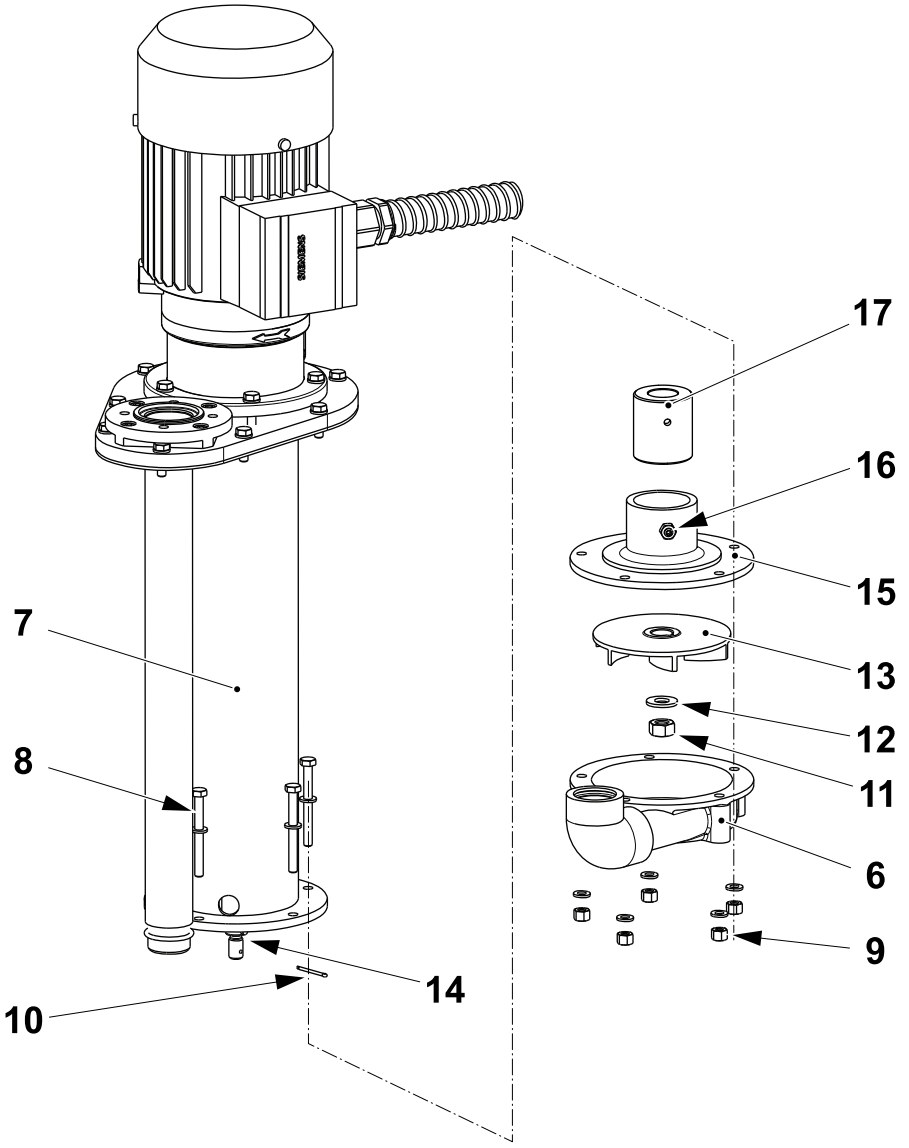

6 Pump housing	9 Nut	12 Washer	15 Lid
7 Extension pipe	10 Split pin	13 Impeller wheel	16 Screw
8 Screw	11 Nut	14 Key	17 Bushing

(Cont'd)

(Cont'd)

i) Push out the pin (18).

j) Loosen the screws (19), and remove the motor (20) from the plate.

k) Remove the shaft (21) and change the seal ring (22) if necessary.

l) Assemble in the reverse order.

m) Set the impeller, see 2.7.1.7-3 Peroxide Pump - Set Impeller.

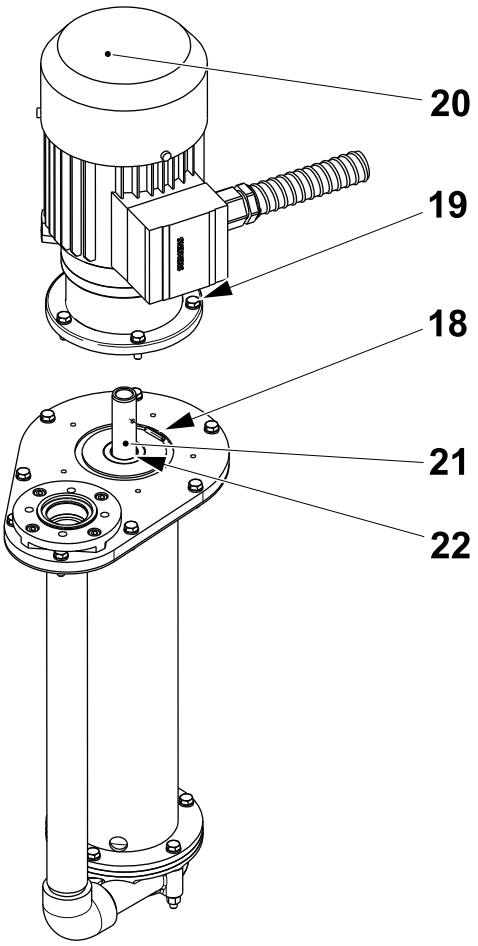

18 Pin
19 Screw
20 Motor
21 Shaft
22 Seal ring

2.7.1.7-3 Peroxide Pump - Set Impeller

Machine Status	Electrical supply disconnecting device in position O (OFF) Main air valve OFF Main steam valve ON Main water valve OFF
SPC Reference	2808418-0100

WARNING

Hydrogen Peroxide.

Follow the Safety Precautions.

a) Remove the peroxide pump, see 2.7.1.7-1 Peroxide Pump - Change Pump .

b) Remove the screws (1) with the nuts and the pump housing (2).

c) Check the distance **A** between the impeller wheel (3) and the extension pipe (4) by means of a feeler gauge. If necessary, proceed as follows to set the distance **A**:

- lower the shaft (5)
- set the distance **A** by means of a feeler gauge.

d) Fit the pump housing (2) and tighten the screws (1).

e) Fit the peroxide pump, see 2.7.1.7-1 Peroxide Pump - Change Pump .

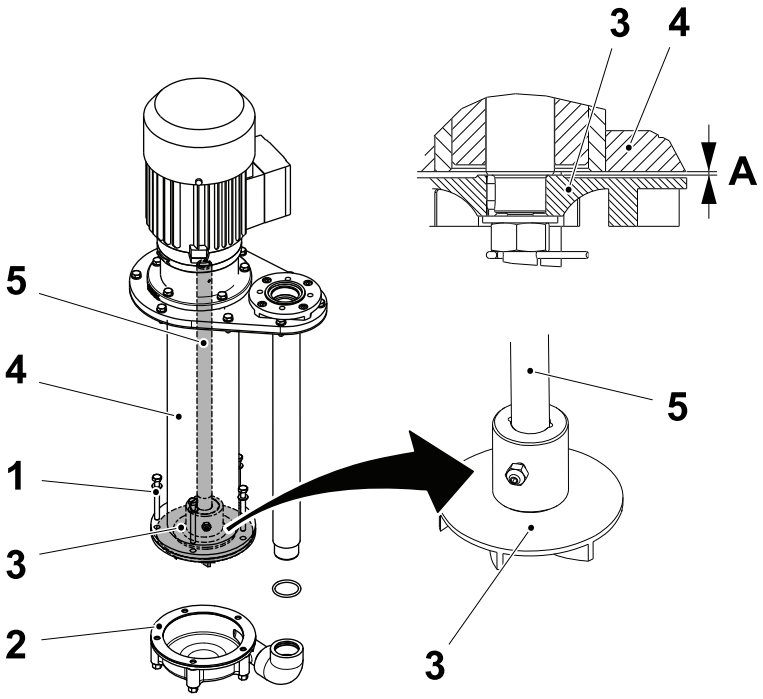

A = 1.0 ±0.2 mm

1 Screw
2 Pump housing
3 Impeller wheel
4 Extension pipe
5 Shaft

2.7.1.8 Peroxide Container

2.7.1.8-1 Peroxide Container - Check

SPC Reference	527898-0200

WARNING
Hydrogen Peroxide.
Follow the Safety Precautions.

CAUTION
Ergonomic hazard.
Risk of personal injury due to strain when lifting heavy objects. The peroxide container is heavy (approximately 21 kg when full). Avoid twisting the body, especially when bending forward while lifting the peroxide container. Use a trolley when transporting the container.

a) Check that there is no leakage from the non return valve (1). If the non return valve (1) leaks, change the peroxide container.

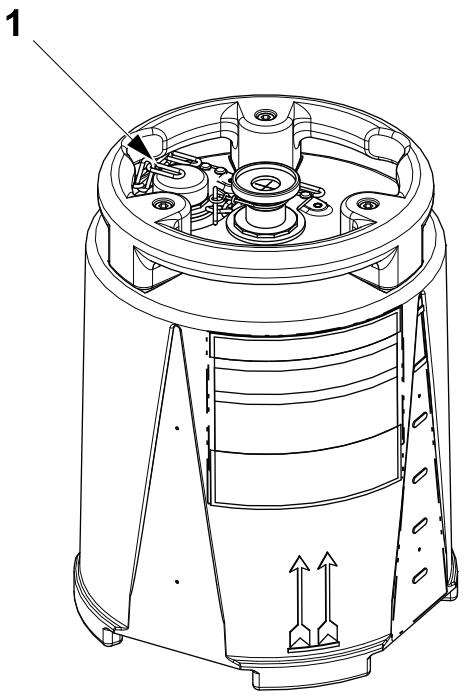

1 Non return valve

(Cont'd)

(Cont'd)

b) Check the slit (2) on the membrane valve (3) in the cap nut. Change the membrane valve (3) if defective.

c) Check the washer (4). Change the washer (4) if defective.

d) After checking the container, mark the container with the date and a signature.

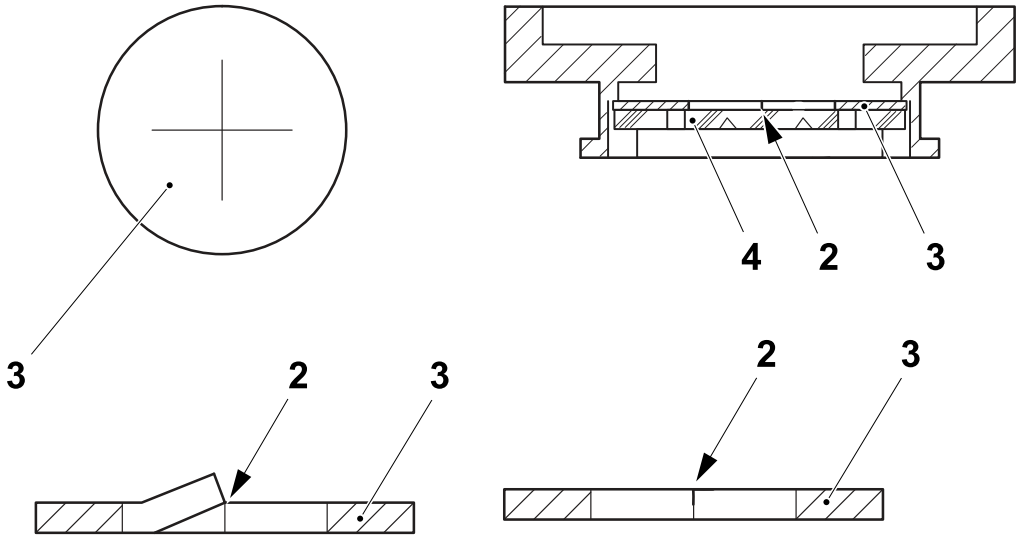

Defective membrane Intact membrane

2 Slit
3 Membrane valve
4 Washer

2.7.1.8-2 Peroxide Container - Change

SPC Reference	527898-0200

WARNING
Hydrogen Peroxide.
Follow the Safety Precautions.

(Cont'd)

(Cont'd)

CAUTION

Ergonomic hazard.

Risk of personal injury due to strain when lifting heavy objects. The peroxide container (1) is heavy (approximately 21 kg when full). Avoid twisting the body, especially when bending forward while lifting the peroxide container (1). Use a trolley when transporting the container.

a) Check under the peroxide container (1) the following information:

- production progressive number (2)
- production date (3)
- expiry date (4)
- TP manufacturer ID (5)
- material symbol (6).

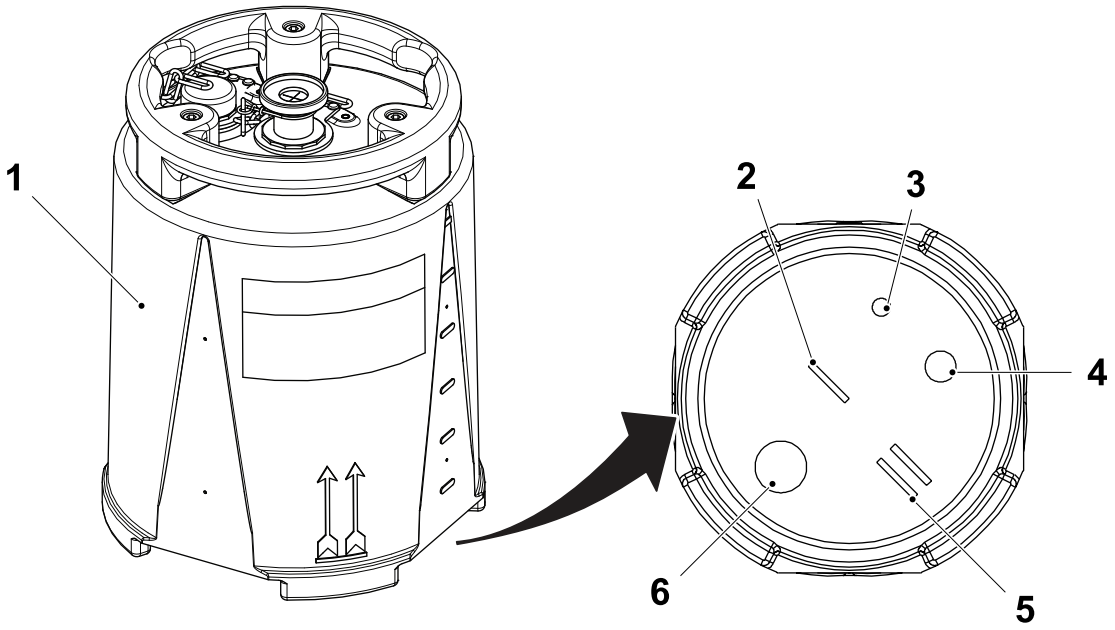

1 Peroxide container
2 Production progressive number
3 Production date
4 Expiry date
5 TP manufacturer ID
6 Material symbol

(Cont'd)

(Cont'd)

Note! The production date (3) indicates the year that the peroxide container (1) has been manufactured. The numbers 1,2,3,4 positioned around the production date (3) correspond to the quarter of the year that the peroxide container (1) has been manufactured.

Note! The expiry date (4) indicates the lifetime of the peroxide container (1). The arrow (7) indicates the quarter of the year that the peroxide container (1) must be changed.

b) Compare the current date with the expiry date (4) and follow the instructions below:
   - if the current date is before the expiry date (4) continue with the checks for the peroxide container (1)
   - if the current date is after the expiry date (4) change the peroxide container (1).

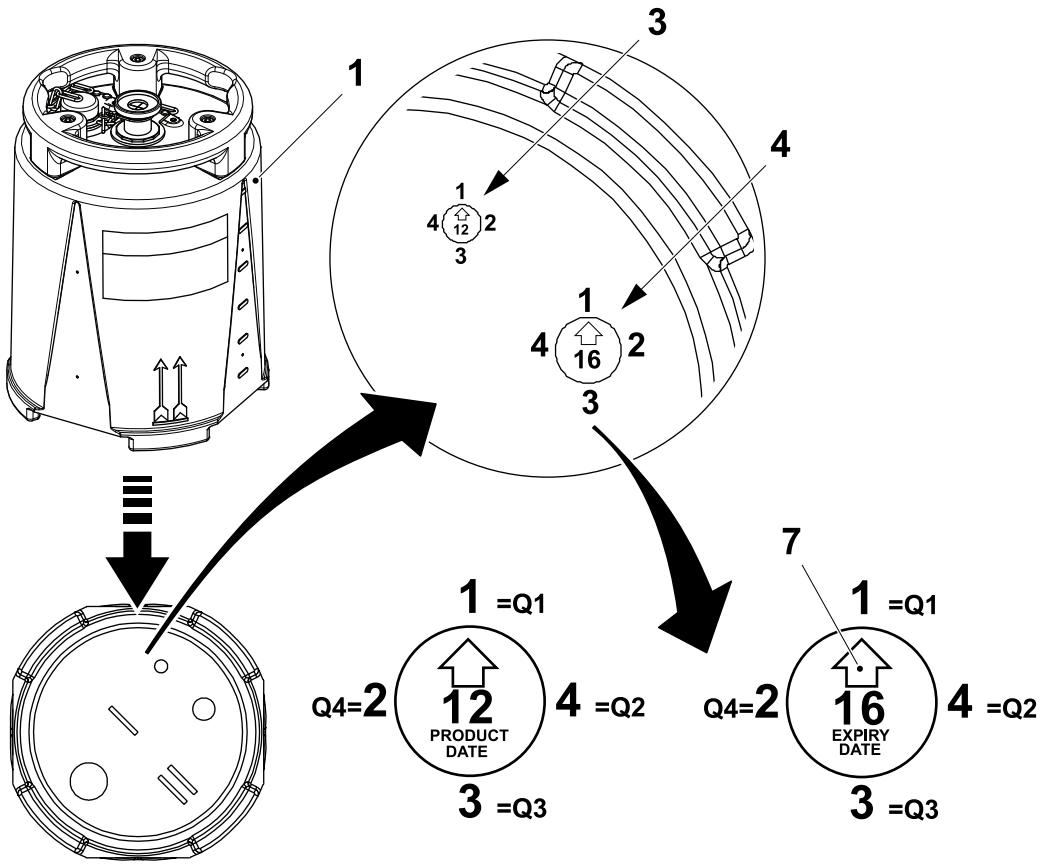

1 Peroxide container
3 Production date
4 Expiry date
7 Arrow

2.7.1.9 H_2O_2 Concentration Meter

2.7.1.9-1 H_2O_2 Concentration Meter - Check Desiccant Cartridge

Machine Status	Electrical supply disconnecting device in position O (OFF) Main air valve OFF Main steam valve ON Main water valve OFF
SPC Reference	2839270-0200

WARNING
Hydrogen Peroxide.
Follow the Safety Precautions.

CAUTION
Risk of damage to the equipment.
If the cartridge has to be changed, prepare the new cartridge before removing the old cartridge and perform the replacement as quickly as possible to avoid humidity entering the meter. Humidity may cause reading errors.

Check the colour of the cartridge (1). If the cartridge is coloured light cyan or white, change the cartridge as follows:

a) Unscrew the old cartridge using the plastic housing (2) of the new cartridge.

b) Fit the new cartridge.

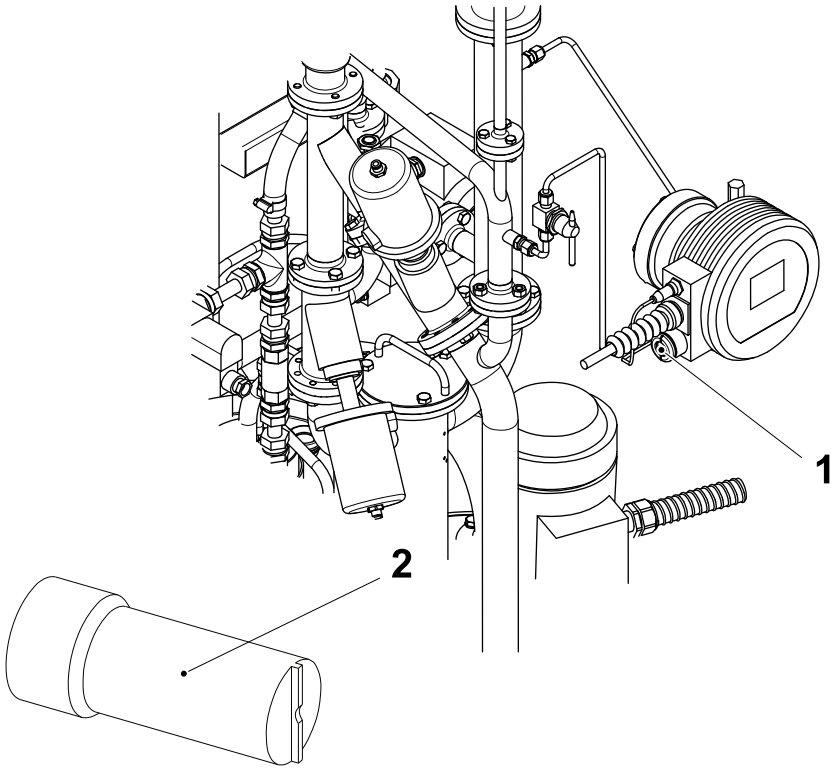

1 Cartridge
2 Housing

2.7.1.9-2 H_2O_2 Concentration Meter - Change O-ring

Machine Status	STEP ZERO
SPC Reference	2839270-0200

WARNING
Hydrogen Peroxide.
Follow the Safety Precautions.

CAUTION
Risk of damage to the equipment.
Sealing the cables with the plugs prevents oxidization and possible damage by peroxide.

a) Protect the pump (1) with a plastic bag, as peroxide may still be present inside the deflector (2) and close the tap (3).

b) Disconnect the power connection (4) and the PT100 connection (5).

c) Fit the plugs (6) and (7).

d) Seal the ends of the power connection (4) and the PT100 connection (5) with the plugs (8) and (9).

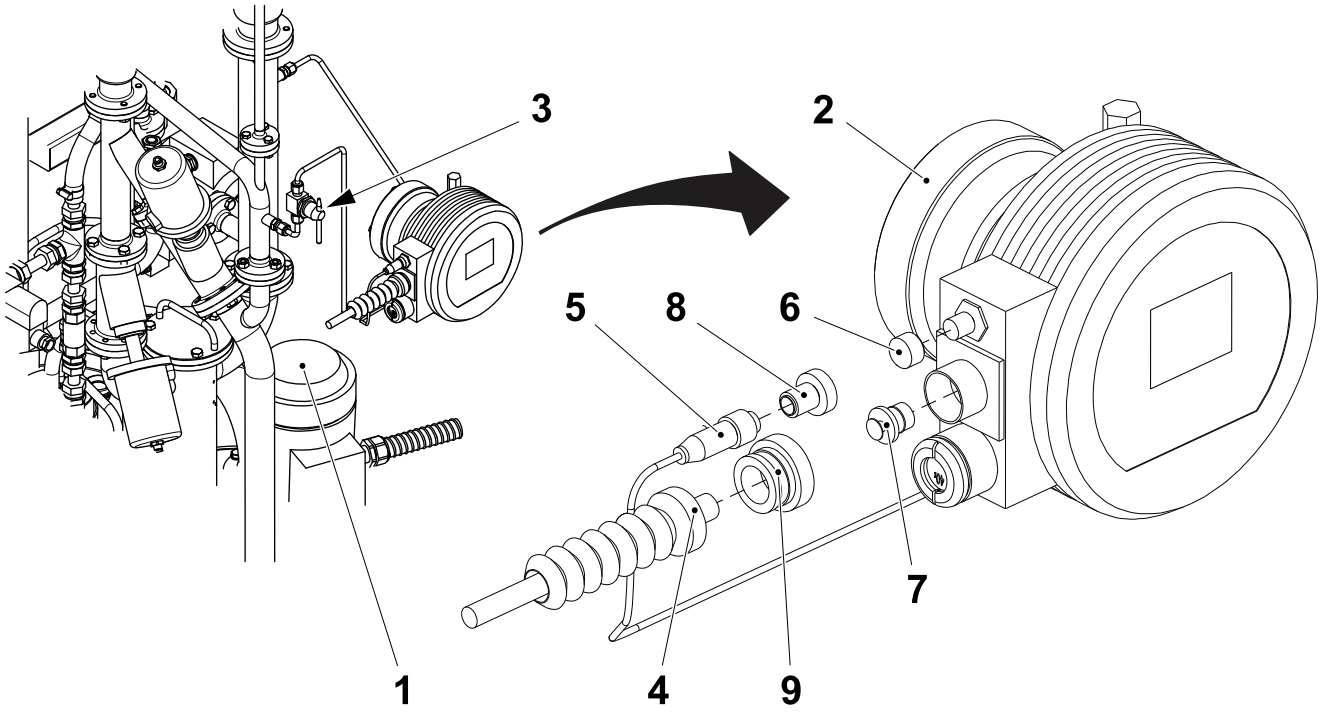

1 Pump
2 Deflector
3 Tap
4 Power connection
5 PT100 connection
6 Plug
7 Plug
8 Plug
9 Plug

(Cont'd)

(Cont'd)

CAUTION
Risk of damage to the equipment.
Avoid scratching the prism glass.

e) Remove the clamp (10) and the peroxide concentration meter (11).

f) Dissolve 7 grams of cleaning powder (TP No. 90459-1098) in 3 millilitres of distilled water. Pour the liquid on the prism (14) and wipe it off with clean paper to remove any peroxide residue.

g) Remove any rubber residue remaining from the O-ring (13) and clean the deflector (2) with paper soaked in distilled water.

Note! When assembling, connect the PT100 connection first and the power connection last.

h) Change the O-ring (12) and the O-ring (13) and assemble in the reverse order.

i) Open the tap (3).

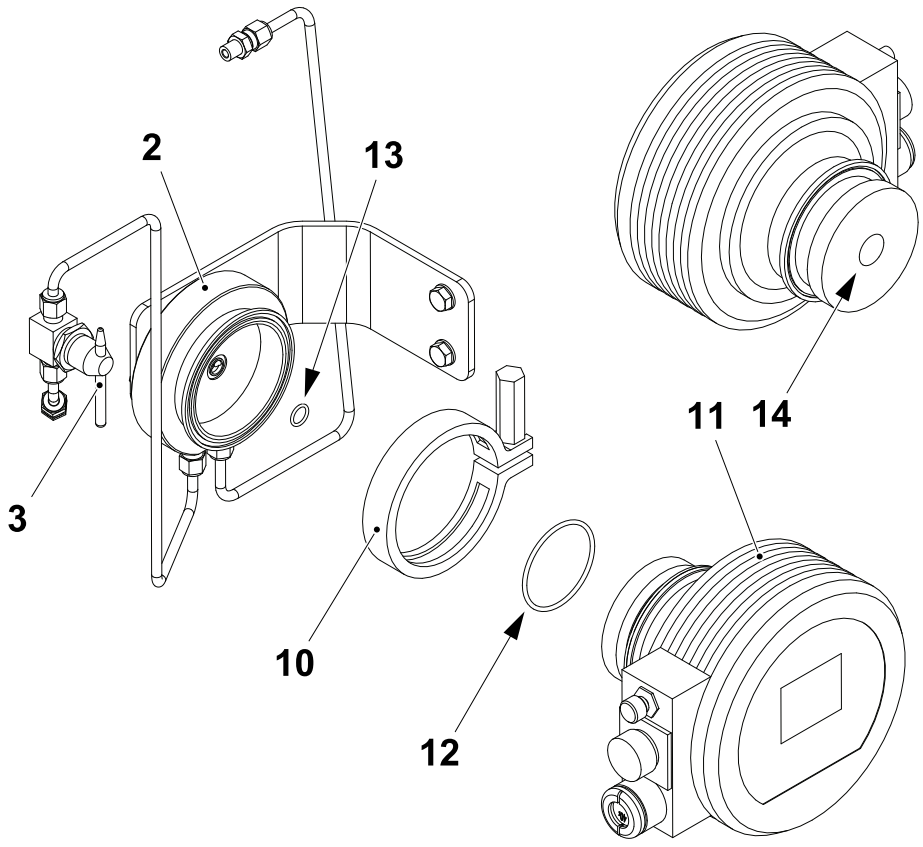

2 Deflector
3 Tap
10 Clamp
11 Peroxide concentration meter
12 O-ring
13 O-ring
14 Prism

2.7.1.9-3 H_2O_2 Concentration Meter - Remove

Machine Status	STEP ZERO
SPC Reference	2839270-0200

WARNING
Hydrogen Peroxide.
Follow the Safety Precautions.

CAUTION
Risk of damage to the equipment.
Sealing the cables with the plugs prevents oxidization and possible damage by peroxide.

a) Protect the pump (1) with a plastic bag, as peroxide may still be present inside the deflector (2).

b) Close the tap (3).

c) Disconnect the power connection (4) and the PT100 connection (5).

d) Fit the plugs (6) and (7).

e) Seal the end of the power connection (4) with the plug (8).

f) Seal the end of the PT100 connection (5) with the plug (9).

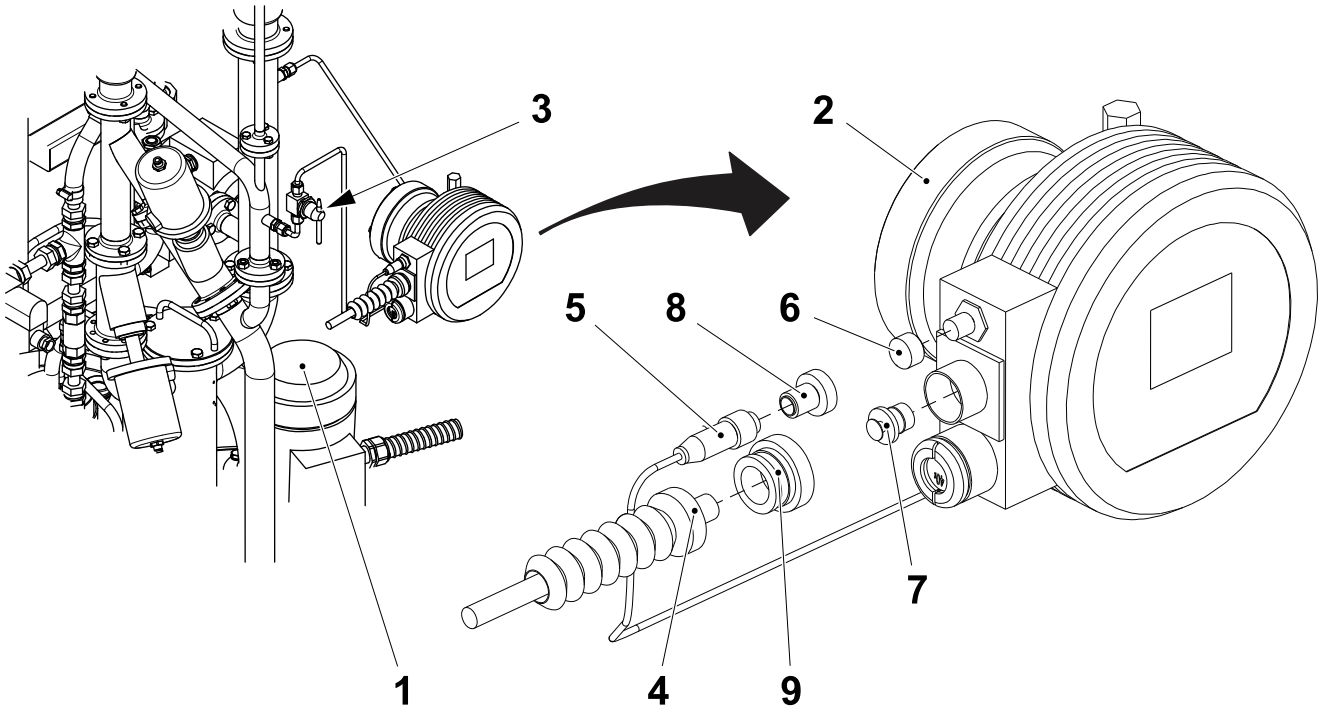

1 Pump
2 Deflector
3 Tap
4 Power connection
5 PT100 connection
6 Plug
7 Plug
8 Plug
9 Plug

(Cont'd)

(Cont'd)

WARNING

Risk of hydrogen peroxide leakage.

Make sure that the O-ring (14) is in place and in a good condition before assembling the plug (13).

g) Remove the clamp (10) and the peroxide concentration meter (11).

h) Fit the spacer (12) and the plug (13) onto the deflector (2) and lock it in to place with the clamp (10).

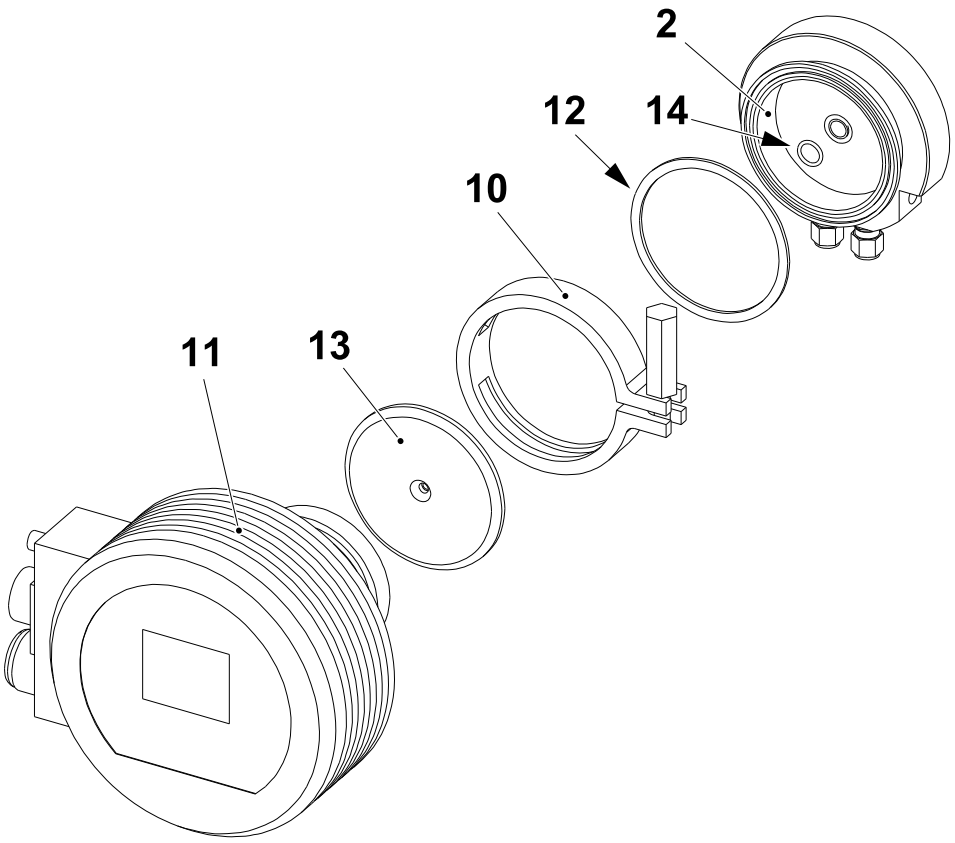

2	Deflector	12	Spacer
10	Clamp	13	Plug
11	Peroxide concentration meter	14	O-ring

2.7.1.9-4 H_2O_2 Concentration Meter - Check Pt100 Sensor

Machine Status	PRODUCTION
SPC Reference	2839270-0200

WARNING
Hydrogen Peroxide.
Follow the Safety Precautions.

Check the peroxide temperature, see the TPOP.

Check the peroxide temperature in the tank, see the TPOP. If the temperature values differ more than 3 to 5 °C, check the contacts of the PT100 Connection (1) for oxidation. If necessary change the sensor, see 2.7.1.9-5 H_2O_2 Concentration Meter - Change Pt100 Sensor.

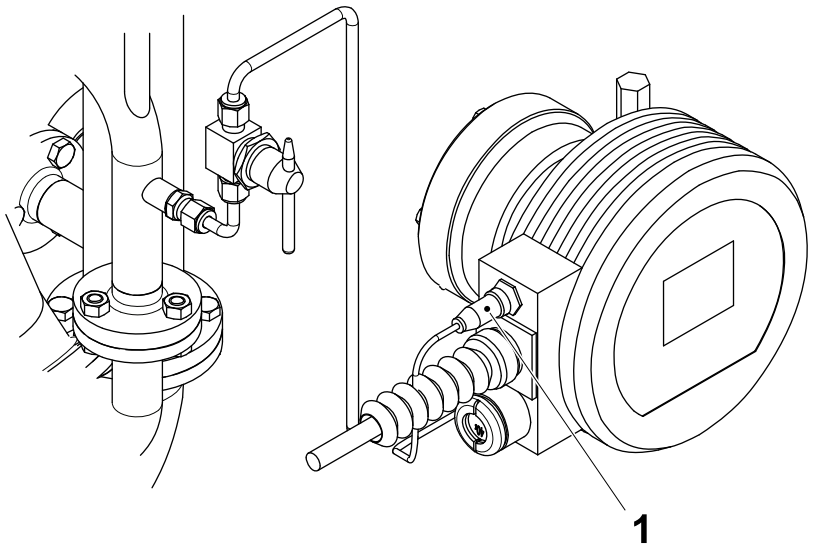

1 PT100 Connection

2.7.1.9-5 H_2O_2 Concentration Meter - Change Pt100 Sensor

Machine Status	STEP ZERO
SPC Reference	2839270-0200

CAUTION
Risk of damage to the equipment.
Apply teflon tape on threads before assembling the new sensor.

a) Close the tap (1).

b) Disconnect the power connection (2).

c) Protect the pump (3) with a plastic bag, as peroxide may still be present inside the deflector (4).

d) Disconnect the PT100 connection (5) from the peroxide concentration meter (6) and unscrew the sensor (7) from the deflector (4).

e) Change the PT 100 sensor and assemble in the reverse order.

f) Connect the power connection (2).

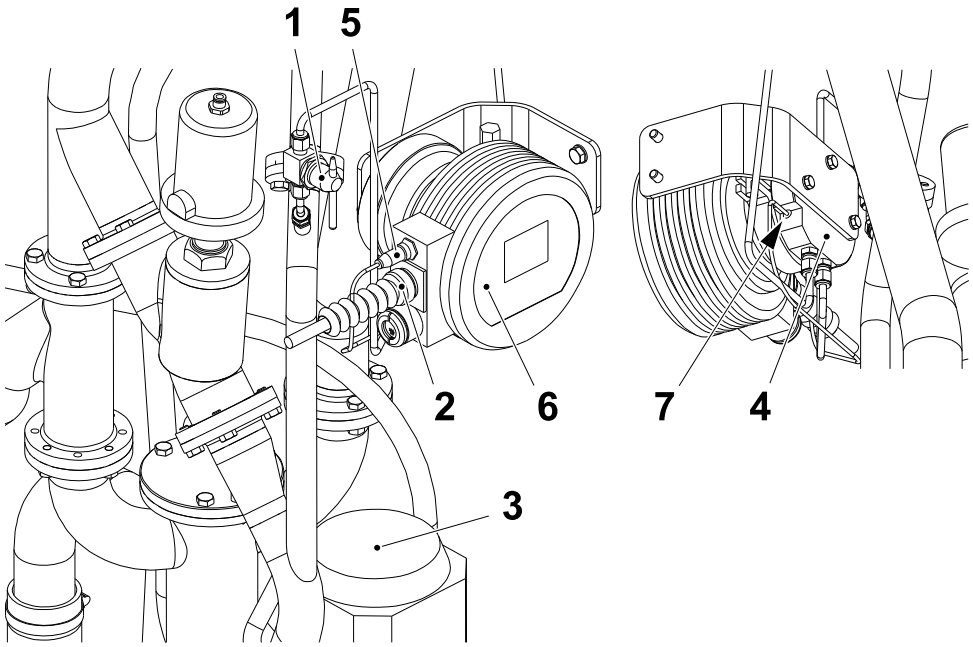

1 Tap
2 Power connection
3 Pump
4 Deflector
5 PT100 Connection
6 Peroxide concentration meter
7 Sensor

2.7.1.9-6 H_2O_2 Concentration Meter - Check Prism and Led

Machine Status	PRODUCTION
SPC Reference	2839270-0200

WARNING
Hydrogen Peroxide.
Follow the Safety precautions.

a) Press and hold the ENTER button (1) to display the menu.

b) Read the numeric value in the deriv. value (2).

c) If the value is lower than 55000, clean the prism and change the O-ring, see 2.7.1.9-2 H_2O_2 Concentration Meter - Change O-ring.

d) Read the numeric value in the LED perform.% (3).

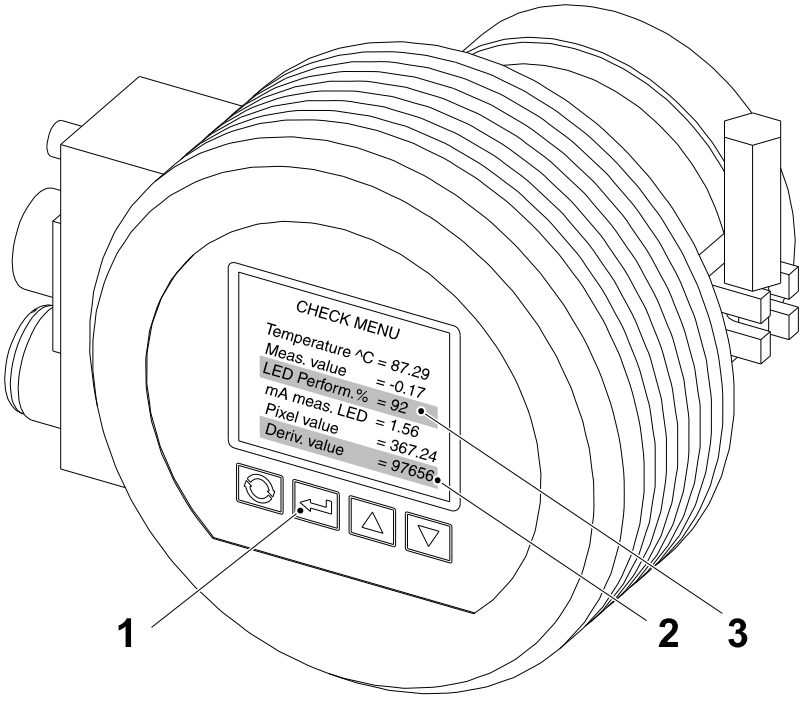

1 Button
2 Deriv. value
3 LED perform.%

(Cont'd)

(Cont'd)

Note! If the value is lower than 50% the filling machine will stop.

e) If the value is between 50% and 60%, there will be a TPOP alarm. Clean the prism, see 2.7.1.9-2 H_2O_2 Concentration Meter - Change O-ring.

f) If after cleaning the alarm is still present, remove the instrument and send it to the manufacturer, see 2.7.1.9-3 H_2O_2 Concentration Meter - Remove.

g) To exit from the menu, press the ENTER button (1) twice.

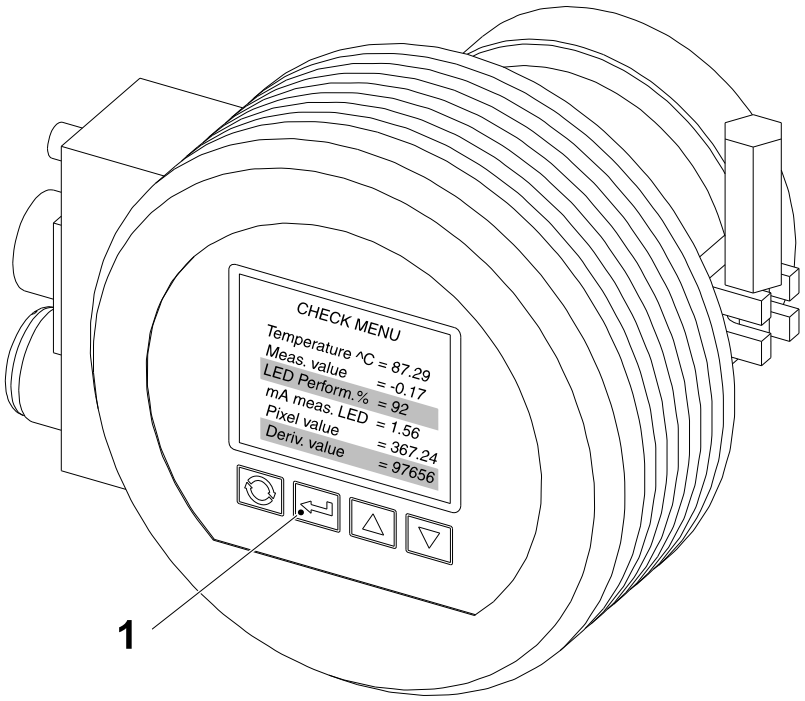

1 Button

2.7.2 Chemicals

2.7.2-1 Chemicals - Check

Machine Status	Electrical supply disconnecting device in position I (ON) Main air valve ON Main steam valve ON Main water valve OFF
SPC Reference	2875858-0200

WARNING

Chemical products.

Follow the Safety Precautions.

Check that:

- the pump (1) runs smoothly without noise
- the pipe connections are free from detergent residue. Clean if necessary
- there are no leaks at the pipe connections
- the filter (2) is not clogged. Clean with compressed air or change if necessary.

Detergent	Consumption (l/cycle)
Detergent	1.2

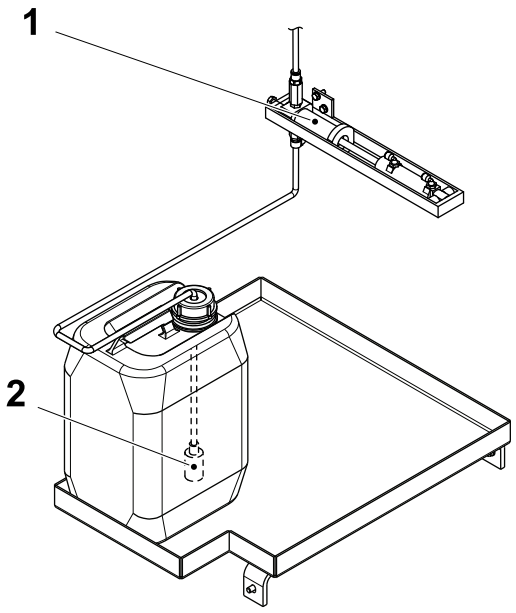

1 Pump
2 Filter

2.7.3 ICU (OE)

2.7.3-1 ICU - Check for Leakage

Machine Status	Electrical supply disconnecting device in position O (OFF) Main air valve OFF Main steam valve ON Main water valve OFF
SPC Reference	3058525-0200

WARNING

Caustic soda and nitric acid.
Follow the Safety Precautions.

Loosen the screws (1) and the protective cover (2).

Remove thenuts (3) and the protective cover (4).

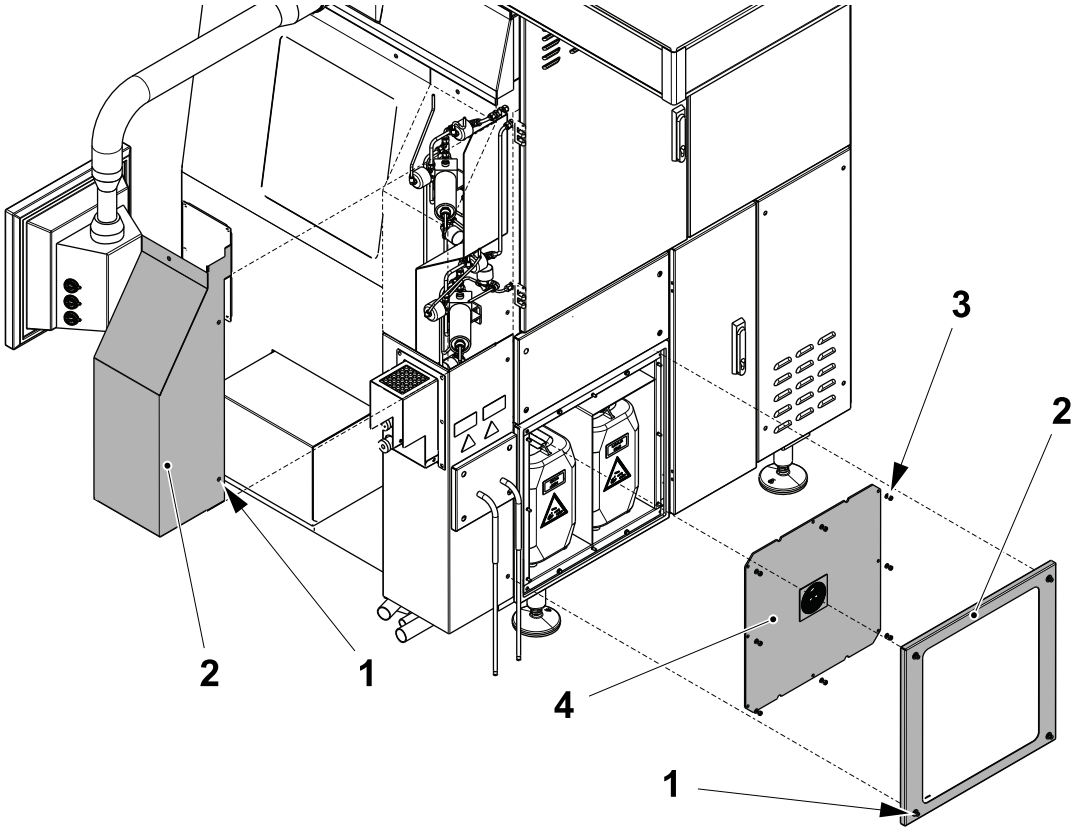

1 Screw
2 Protective cover
3 Nut
4 Protective cover

(Cont'd)

(Cont'd)

Check that there is no leakage:

- around the canisters (5)
- inside the ICU box (6)
- around the drain hoses (7)
- around the refilling valve connections (8).

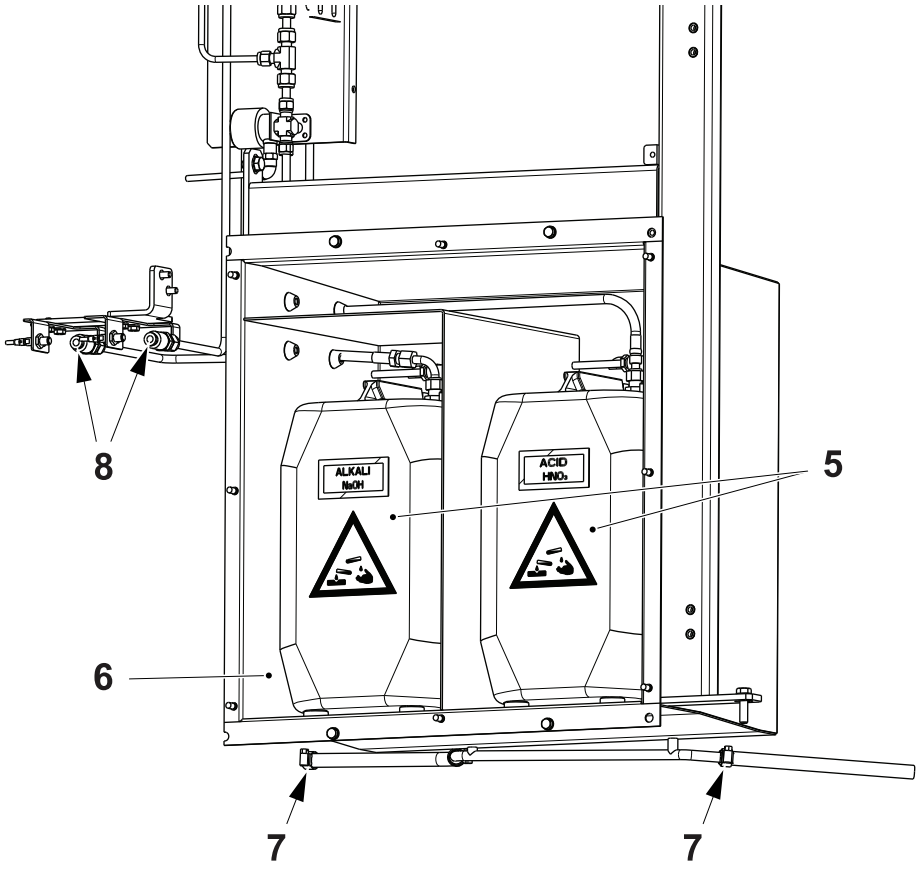

5 Canister
6 ICU box
7 Drain hose
8 Refilling valve connection

(Cont'd)

(Cont'd)

On both canisters, check that there is no leakage:

- in the connections indicated by the arrows
- around the plastic plug (9); if necessary change the O-ring (10).

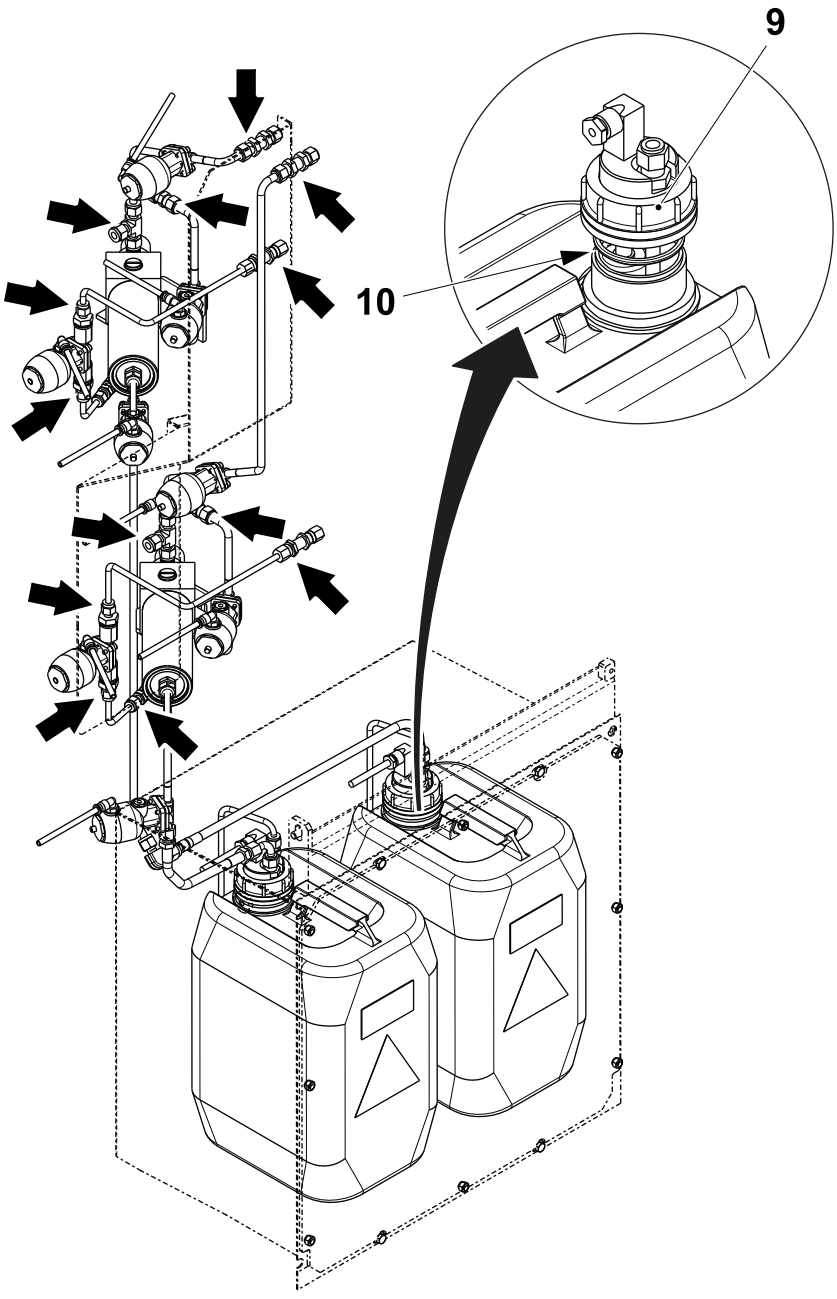

9 Plastic plug
10 O-ring

2.7.3-2 ICU - Drain

Machine Status	Electrical supply disconnecting device in position O (OFF) Main air valve OFF Main steam valve ON Main water valve OFF
SPC Reference	3058525-0200

WARNING
Caustic soda and nitric acid.
Follow the Safety Precautions.

Turn the main switch OFF and the system will automatically drain and return the chemicals to the canisters.

2.7.3-3 ICU - Check Floats

Machine Status	Electrical supply disconnecting device in position O (OFF) Main air valve OFF Main steam valve ON Main water valve OFF
SPC Reference	3058525-0200

WARNING
Caustic soda and nitric acid.
Follow the Safety Precautions.

(Cont'd)

(Cont'd)

a) Turn the main power switch OFF.

b) Loosen the screws (1) and the protective cover (2).

c) Remove the nuts (3) and the protective cover (4).

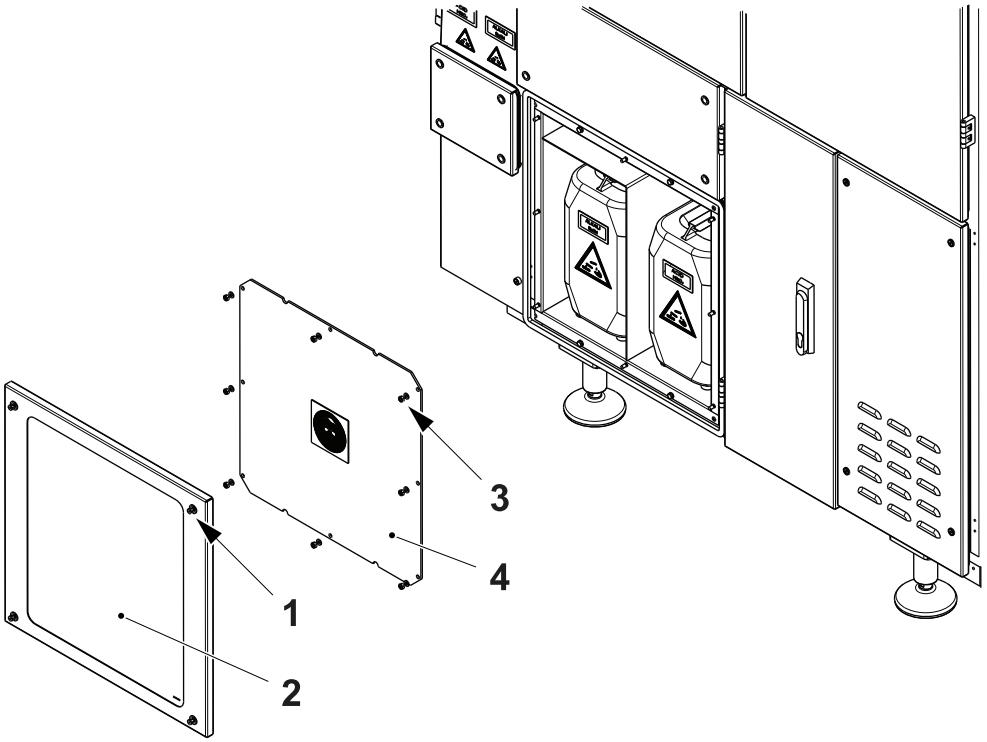

1 Screw
2 Protective cover
3 Nut
4 Protective cover

(Cont'd)

(Cont'd)

d) Disconnect the pipes (5) and (6) from the float (7).

e) Disconnect the electrical connection (8) from the float (7).

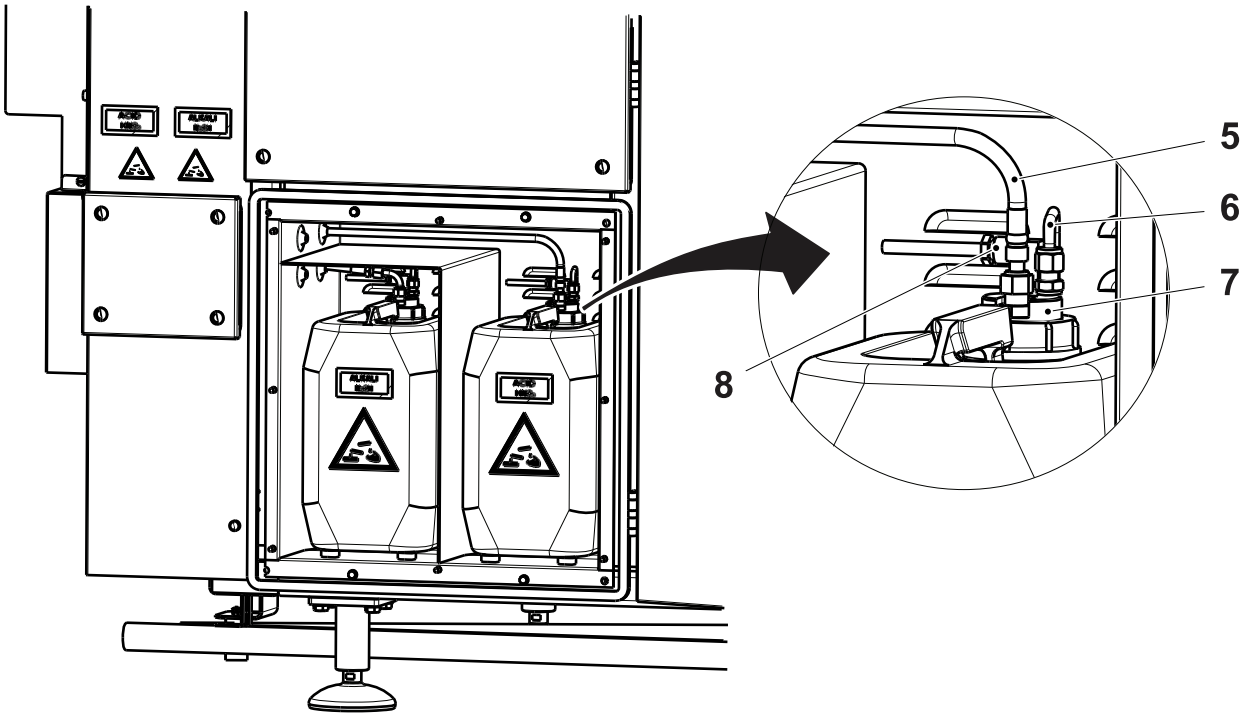

5 Pipe
6 Pipe
7 Float
8 Electrical connection

(Cont'd)

(Cont'd)

f) Unscrew and remove the float (7).

g) Check that the safety hole (9) is not blocked.

h) Check that there are no holes in the floats (10) and that their movements are smooth and free.

i) Check that the circlips (11) are correctly installed and are not damaged.

j) Check that the O-ring (12) is not damaged.

k) Assemble in the reverse order.

l) Repeat the procedure for the other float.

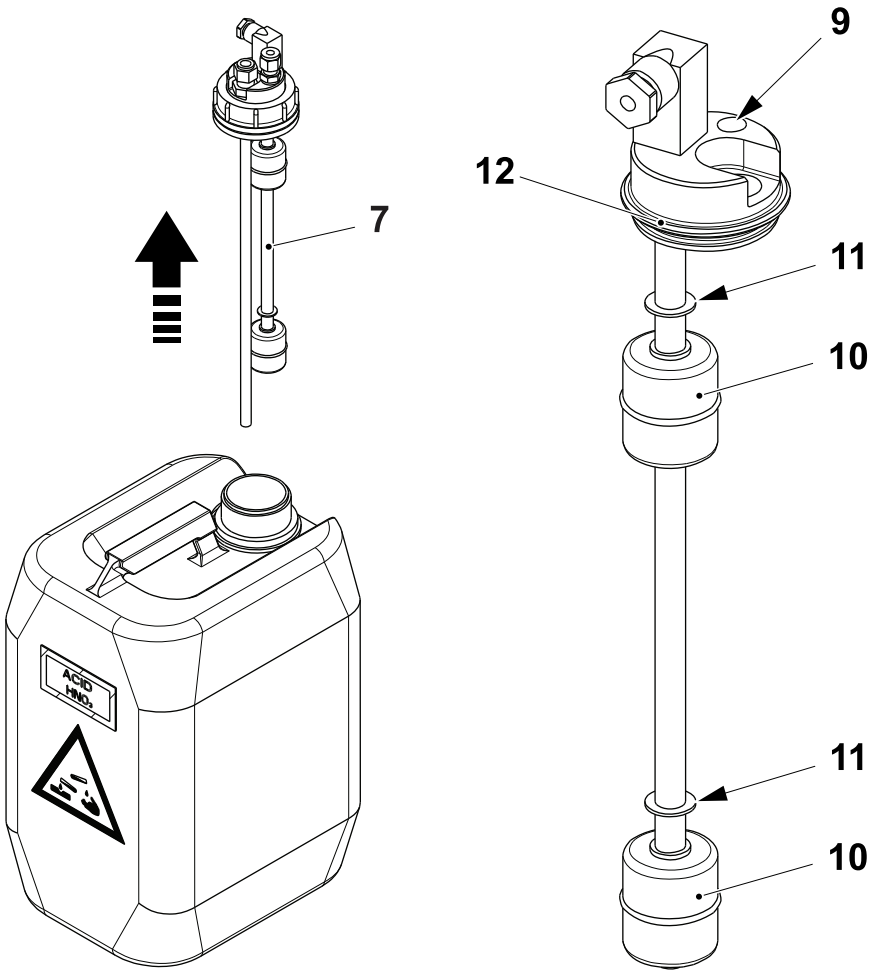

7 Float
9 Safety hole
10 Float
11 Circlip
12 O-ring

2.7.3-4 ICU - Check Float Function

Machine Status	Electrical supply disconnecting device in position O (OFF) Main air valve OFF Main steam valve ON Main water valve OFF
SPC Reference	3058525-0200

WARNING

Caustic soda and nitric acid.
Follow the Safety Precautions.

a) Connect an ohmmeter between the connectors (1) and (2).

b) Lift the float (3) to its upper position and check that the value on the ohmmeter display is 0.

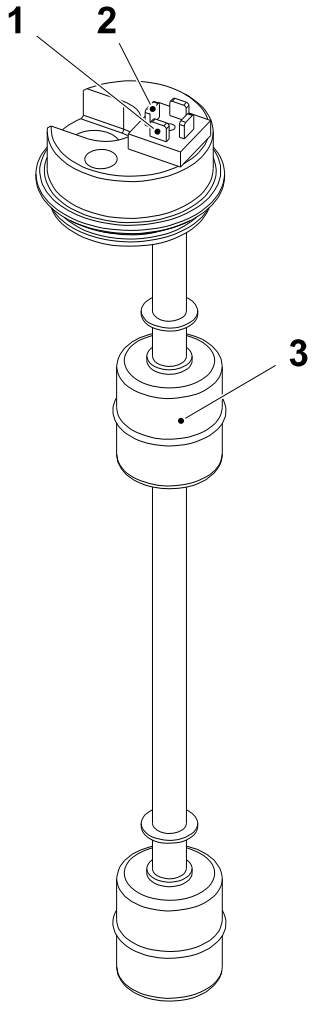

1 Connector
2 Connector
3 Float

(Cont'd)

(Cont'd)

c) Connect the ohmmeter between the connectors (1) and (4).

d) Lift the float (5) to its upper position and check that the value on the ohmmeter display is 0.

Note! If the value displayed on the ohmmeter is not 0, remove the float (3) or float (5) turn them upside down and repeat the check. The numbering of the connectors in the illustration corresponds to the physical markings on the equipment and as stated in the EM.

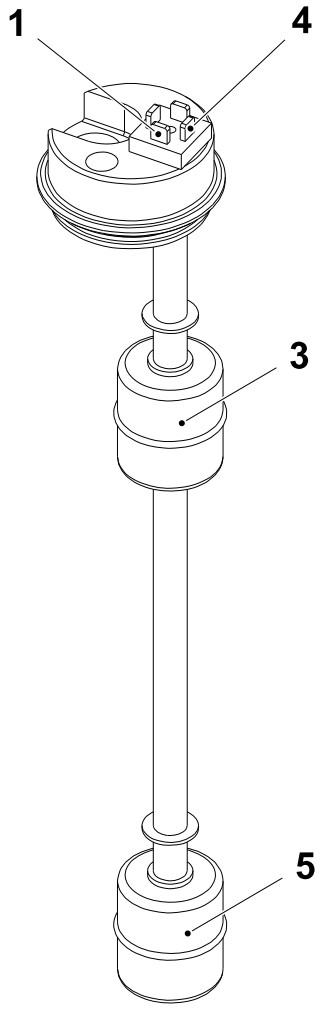

1 Connector
3 Float
4 Connector
5 Float

2.7.3-5 ICU - Set Proximity Sensor

Machine Status	Electrical supply disconnecting device in position I (ON) Main air valve OFF Main steam valve ON Main water valve OFF
SPC Reference	3058525-0200

WARNING

Caustic soda and nitric acid.

Follow the Safety Precautions.

a) Loosen the screws (1) and remove the cover (2).

b) Fit the refilling plug (3) to the autoload connection (4).

c) Loosen the nuts (5) and set the distance **A** between the proximity sensor (6) and the refilling plug (3).

d) Check that the LED on the proximity sensor (6) turns ON.

e) Repeat the procedure to set the proximity sensor for the other connection.

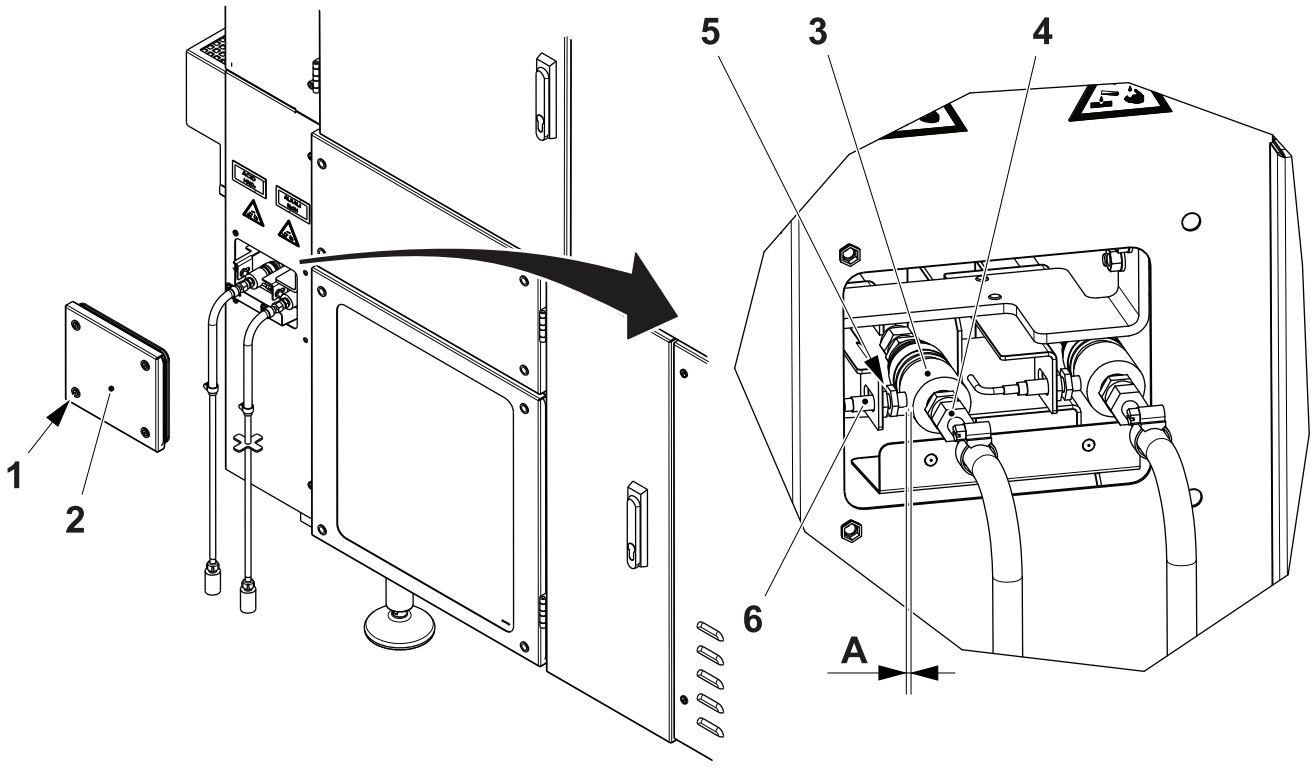

A = 0.3 mm

1 Screw
2 Cover
3 Plug
4 Autoload connection
5 Nut
6 Sensor

2.7.3-6 ICU - Change Pump

Machine Status	Electrical supply disconnecting device in position I (ON) Main air valve OFF Main steam valve ON Main water valve OFF
SPC Reference	3058525-0200

WARNING

Caustic soda and nitric acid.

Follow the Safety Precautions.

a) Remove the screws (1) and the protective cover (2).

b) Remove the screws (3) and the cover (4).

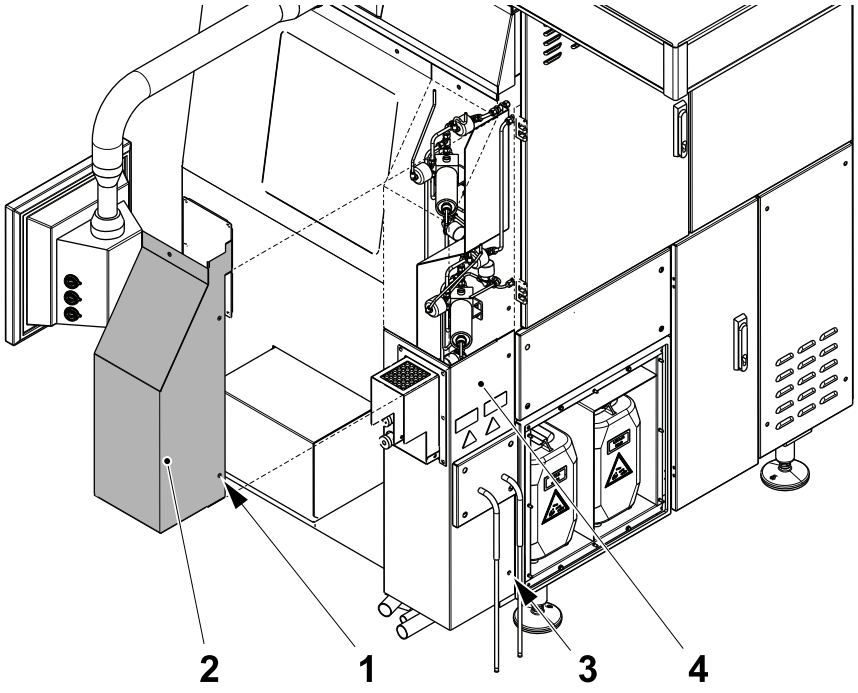

1 Screw
2 Protective cover
3 Screw
4 Cover

(Cont'd)

(Cont'd)

c) Disconnect the hoses (5) and (6).

d) Disconnect the pipes (7) and remove the valve (8).

e) Disconnect the pipes (9).

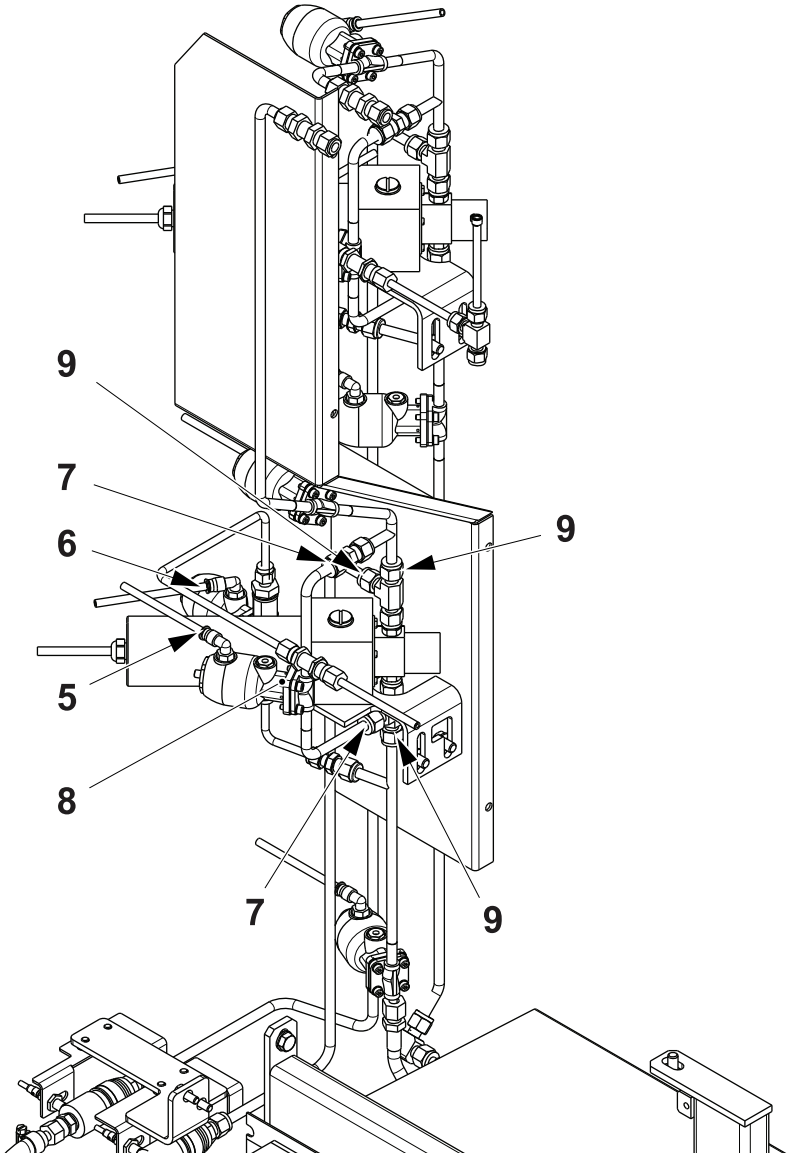

5 Hose
6 Hose
7 Pipe
8 Valve
9 Pipe

(Cont'd)

(Cont'd)

f) Disconnect the pipes (10) and remove the valve (11).

g) Remove the retaining ring (12).

h) To access the terminal block (13) disconnect the cable U30W1570. If necessary, change the O-ring (14).

i) Remove the screws (15) and move the pump assembly (16) on the work bench.

j) Remove the gear pump (17) with the screws (18). If necessary, change the O-ring (19).

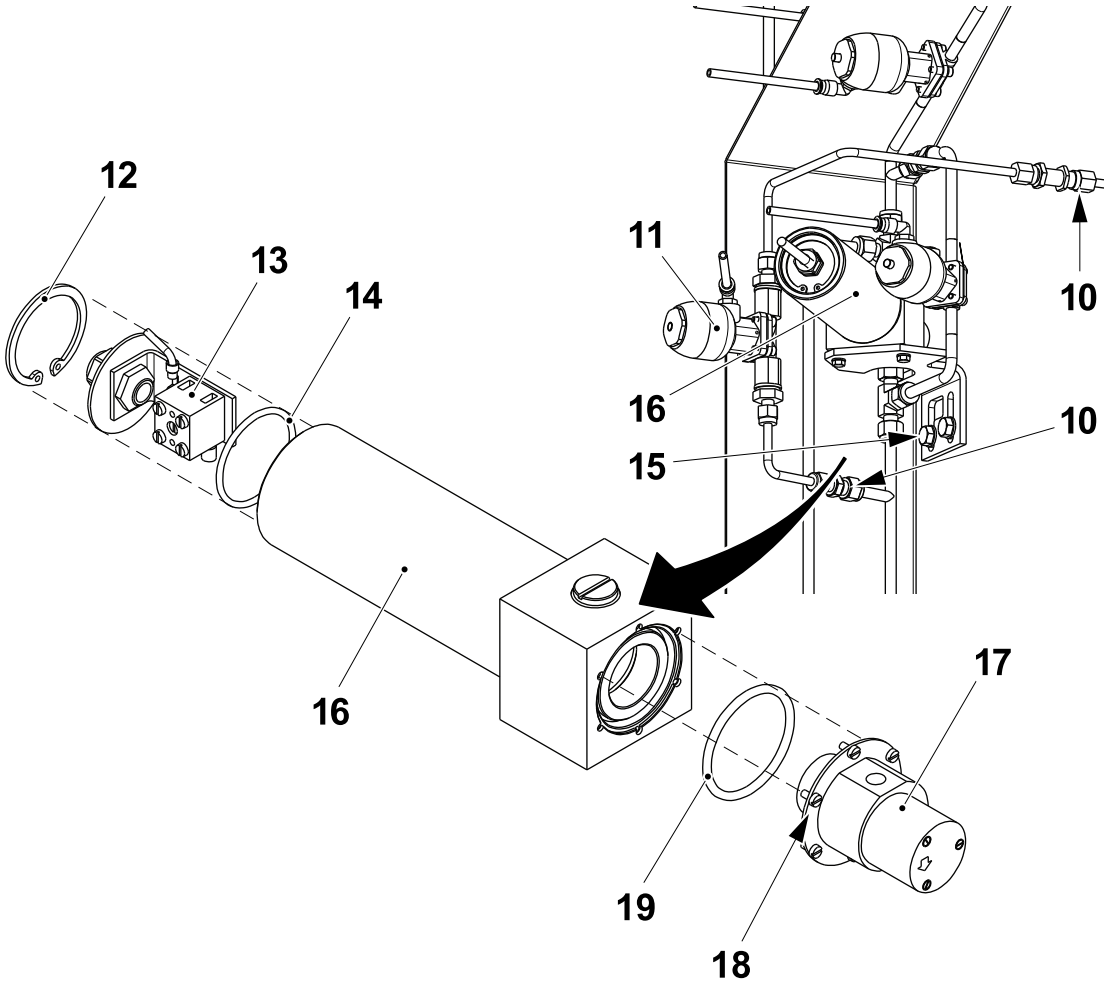

10 Pipe
11 Valve
12 Retaining ring
13 Terminal block
14 O-ring
15 Screw
16 Pump assembly
17 Gear pump
18 Screw
19 O-ring

(Cont'd)

(Cont'd)

k) Check the distance **A** between the housing (20) and the magnet (21). If necessary remove the plug (22) and loosen the grub screw (23), then set the distance **A** and tighten the grub screw (23).

l) Install the new gear pump (17) and assemble in the reverse order.

m) Repeat the same procedure for the pump of the acid.

Note! Perform two internal cleaning (acid and alkali) and verify that no leakages are present in both circuits.

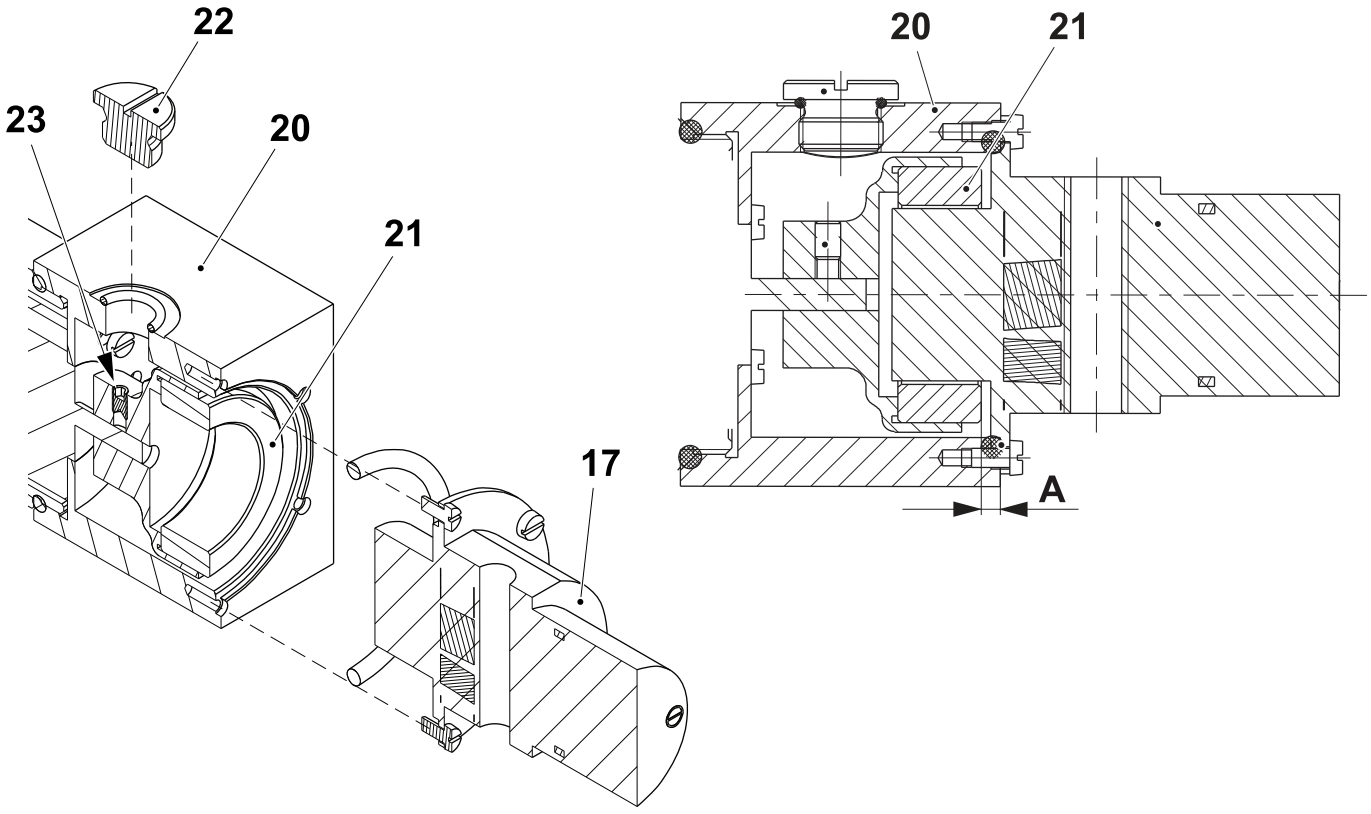

A = 3 ±0.1 mm

17 Gear pump
19 O-ring
20 Housing
21 Magnet
22 Plug
23 Grub screw

2.7.3-7 ICU - Change Diaphragm

Machine Status	Electrical supply disconnecting device in position O (OFF) Main air valve OFF Main steam valve ON Main water valve OFF
SPC Reference	3058525-0200

WARNING
Caustic soda and nitric acid.
Follow the Safety Precautions.

Close the external supply of the ICU water cleaning pipe (1).

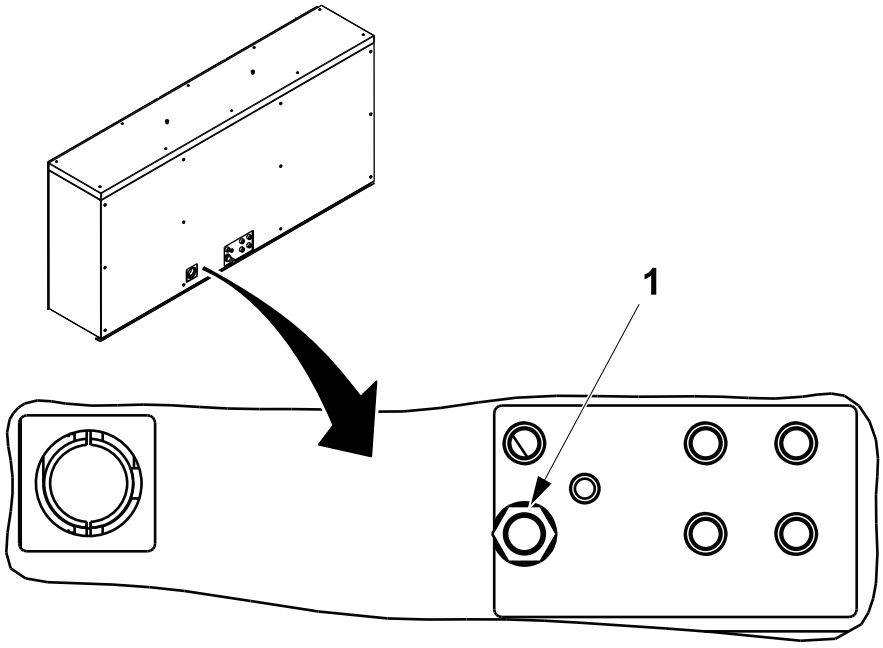

1 Cleaning pipe

(Cont'd)

(Cont'd)

Remove Circuit

a) Remove the caustic soda circuit (1) as follow:

- disconnect all the air hoses from the valve (3), the valve (4), the valve (5) and the valve (6).
- disconnect the pipes (7) and remove the valve (3),
- disconnect the pipes (8) and remove the valve (4),
- disconnect the pipes (9) and remove the valve (5),
- disconnect the pipes (10) and remove the valve (6).

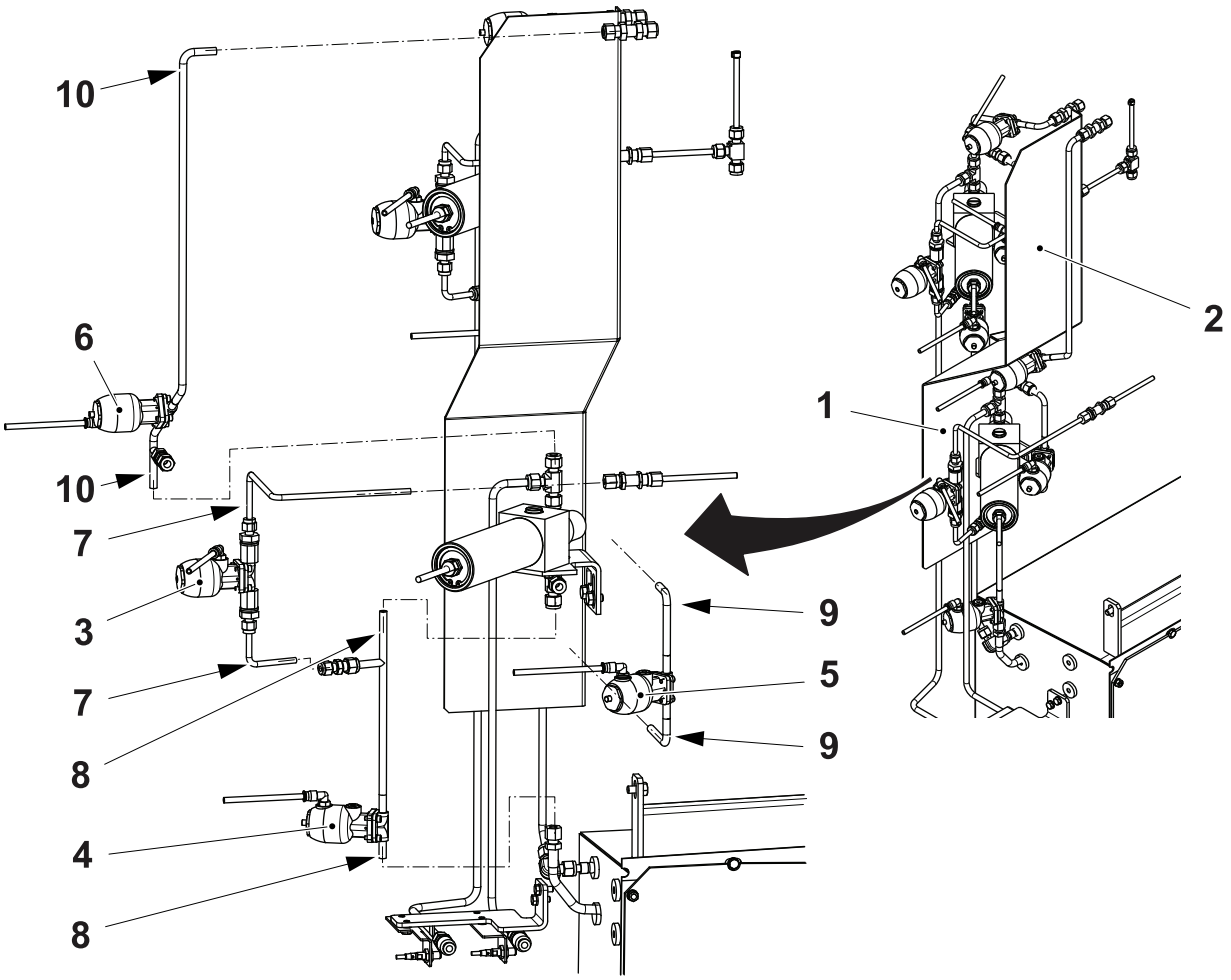

1 Caustic soda circuit
2 Acid circuit
3 Normally closed valve
4 Normally open valve
5 Normally open valve
6 Normally open valve
7 Pipe
8 Pipe
9 Pipe
10 Pipe

(Cont'd)

(Cont'd)

Change Diaphragms to Normally Closed Valves

a) Pressurize the actuator (12) (max. 7 bar) and remove the screws (11) and the actuator (12).

b) De-pressurize the valve (3) and remove the diaphragm (13).

c) Fit the new diaphragm (13) so that the tab (14) is aligned with the milling (15) of the actuator (12).

d) Pressurize the valve (3) (max. 7 bar).

e) Fit the actuator (12) to the shutter rim (16) so that the tab (14) is aligned with the milling of the shutter rim (16).

f) Tighten the screws (11) crosswise in several steps.

g) De-pressurize the valve (3).

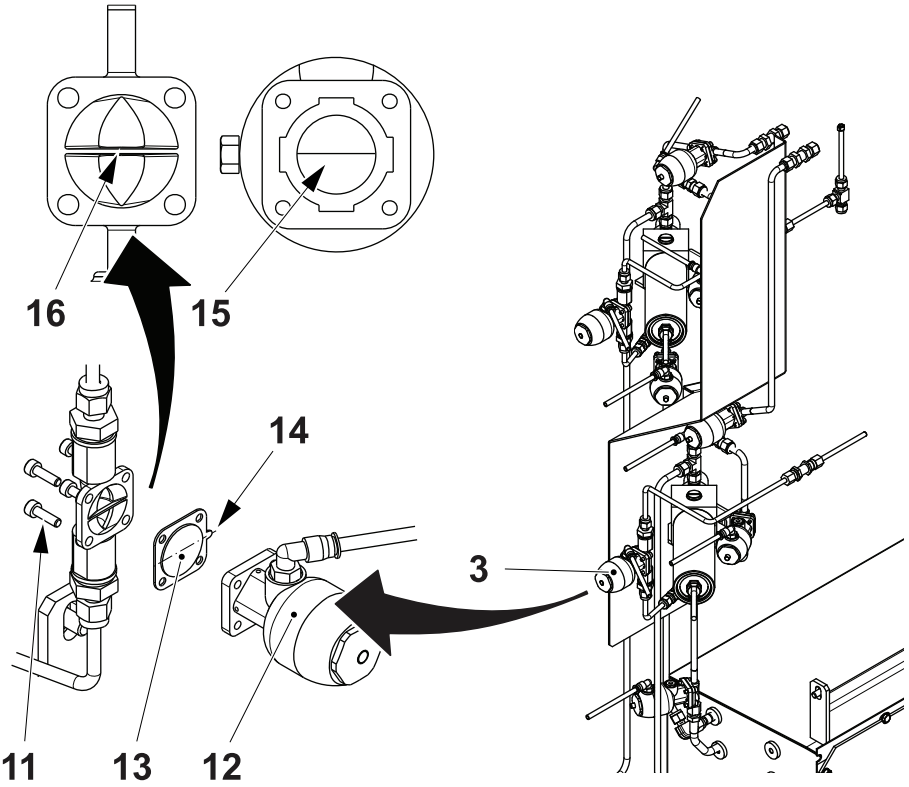

3 Normally closed valve
11 Screw
12 Actuator
13 Diaphragm
14 Tab
15 Milling
16 Shutter rim

(Cont'd)

(Cont'd)

Change Diaphragms to Normally Open Valves

a) Remove the screws (17) and the actuator (18) from the valve (4).

b) Pressurize the actuator (18) (max. 7 bar) and remove the diaphragm (19).

c) Fit the new diaphragm (19) so that the tab (20) is aligned with the milling (21) of the actuator (18).

d) Fit the actuator (18) to the shutter rim (22) so that the tab (20) is aligned with the milling of the shutter rim (22).

e) De-pressurize the valve (4) and tighten the screws (17).

f) Repeat the procedure Change Diaphragms to Normally Open Valves for the valve (5) and the valve (6).

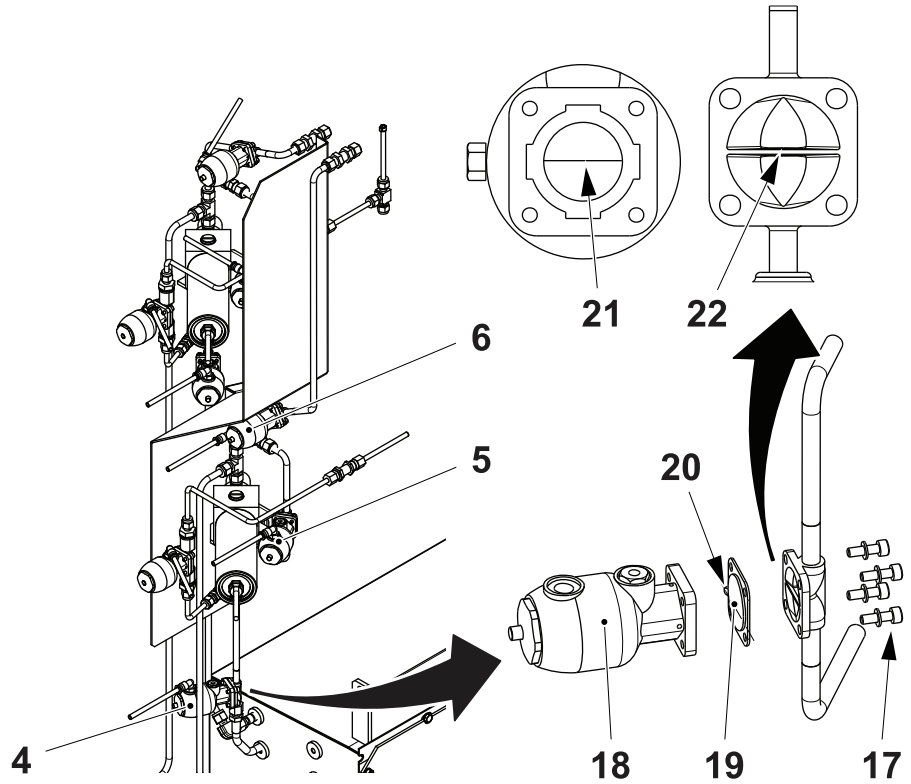

4 Normally open valve
5 Normally open valve
6 Normally open valve
17 Screw
18 Actuator
19 Diaphragm
20 Tab
21 Milling
22 Shutter rim

(Cont'd)

(Cont'd)

Completion Work

a) Fit the caustic soda circuit (1), follow the instructions in Remove Circuit in the reverse order.

b) Repeat the complete procedure for the acid circuit (2).

c) Perform two cycles of CIP and make sure that there are no leakages in the circuits, see 2.7.3-1 ICU - Check for Leakage on page 2-109.

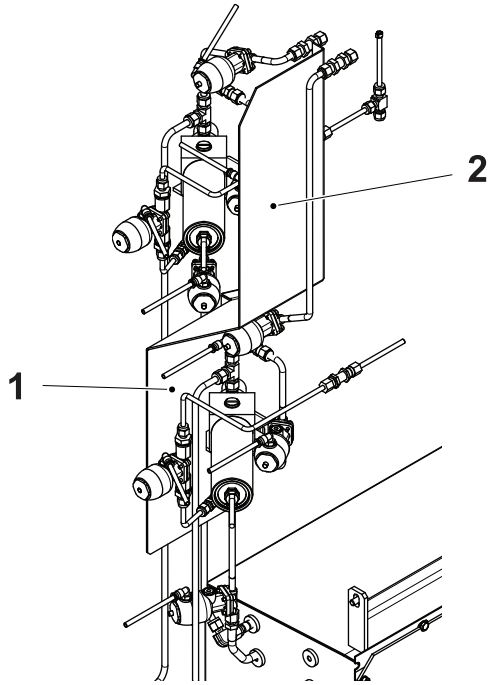

1 Caustic soda circuit
2 Acid circuit

2.7.3-8 Integrated Cleaning Unit - Rinse Chemical Pumps

Machine Status	INTERNAL CLEANING
SPC Reference	3058525-0200

Note! The manual rinsing of the chemical pumps is recommended before starting the CIP and if the filling machine has been stopped for long time (1 month or more) to avoid the risk of clogging the pumps.

(Cont'd)

(Cont'd)

a) Touch the PRODUCTION CONTROL button (1).

b) Touch the CIP button (2).

c) In the CIP window touch CLEANING FUNCTION icon (3).

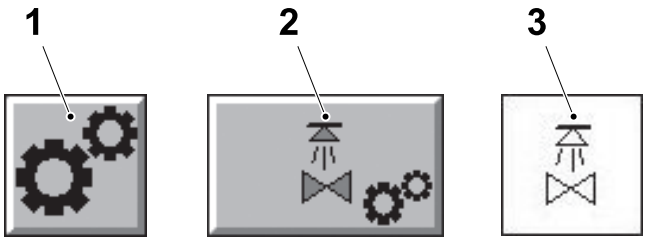

1 Production control button
2 CIP button
3 Cleaning function icon

(Cont'd)

(Cont'd)

d) Log on to access the MAINTENANCE CONTROL window, see 8.6.3-2 HMI - User Management Log On.

e) Touch the MAINTENANCE CONTROL button (4).

f) Touch the INTEGRATED CLEANING UNIT button (5).

g) Touch the RUN CHEMICAL PUMPS icon (6).

h) Touch the ALKALI button (7) to rinse the alkali pump or the ACID button (8) to rinse the acid pump. The rinsing cycle takes approximately one minute. Repeat the cycle if necessary.

i) Touch the STOP button (9) to interrupt the rinsing cycle.

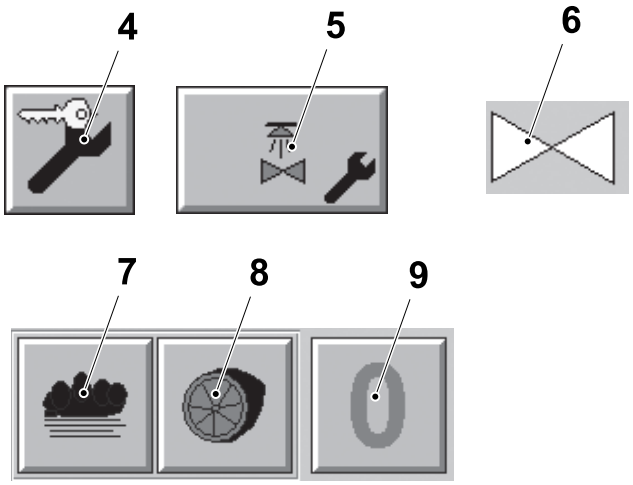

4 Maintenance control button
5 Integrated cleaning unit button
6 Run chemical pumps icon
7 Alkali button
8 Acid button
9 Stop button

2.7.3.1 Refilling

2.7.3.1-1 Refilling - Check

Machine Status	Electrical supply disconnecting device in position O (OFF) Main air valve OFF Main steam valve ON Main water valve OFF
SPC Reference	3037895-0200

WARNING

Caustic soda and nitric acid.

Follow the Safety Precautions.

Check the two refilling pipe for wear or damage:

- the plug (1)
- the pipe (2)
- the filter (3).

Change the parts if necessary.

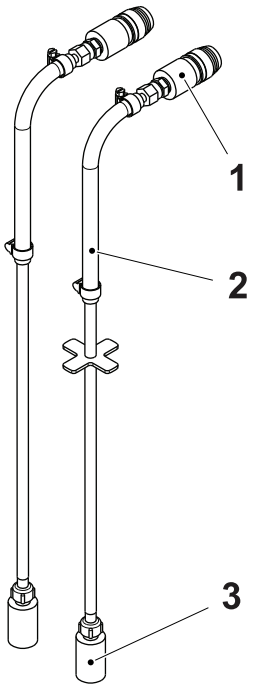

1 Plug
2 Pipe
3 Filter

2.7.3.1-2 Refilling - Change Filter

Machine Status	Electrical supply disconnecting device in position O (OFF) Main air valve OFF Main steam valve ON Main water valve OFF
SPC Reference	3037895-0200

WARNING

Caustic soda and nitric acid.

Follow the supplier's instructions for the handling and disposal of the chemical products.

On both the refilling pipes:

a) Loosen the nut (1).

b) Remove and change the filter (2).

c) Tighten the nut (1).

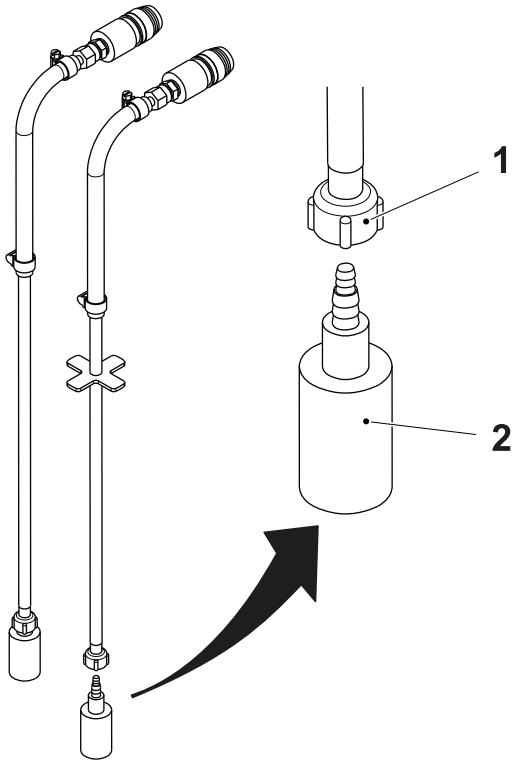

1 Nut
2 Filter

2.8 Outfeed Supply

2.8.1 Hydraulic Unit

2.8.1-1 Hydraulic Unit - Functional Description

SPC Reference	2828687-0300 3327773-0100

Valid for Hydraulic Unit TP No. 3215132-0100

Note! The Hydraulic Unit TP No. 3215132-0100 is installed in machines with T-order: 21220/00001 to 21220/00387.

The hydraulic system provides the hydraulic cylinders in the jaw system with oil. The movement of the pressure jaws and the cutting jaws in the jaw system are controlled by the three hydraulic valves (1). The oil to the hydraulic valves (1) comes from the hydraulic tank (2) via the hydraulic pump (3).

The oil passes through a hydraulic pressure filter (4) before it reaches the hydraulic valves (1). The return oil from the jaw system passes through the hydraulic valves (1) before it returns to the hydraulic tank (2).

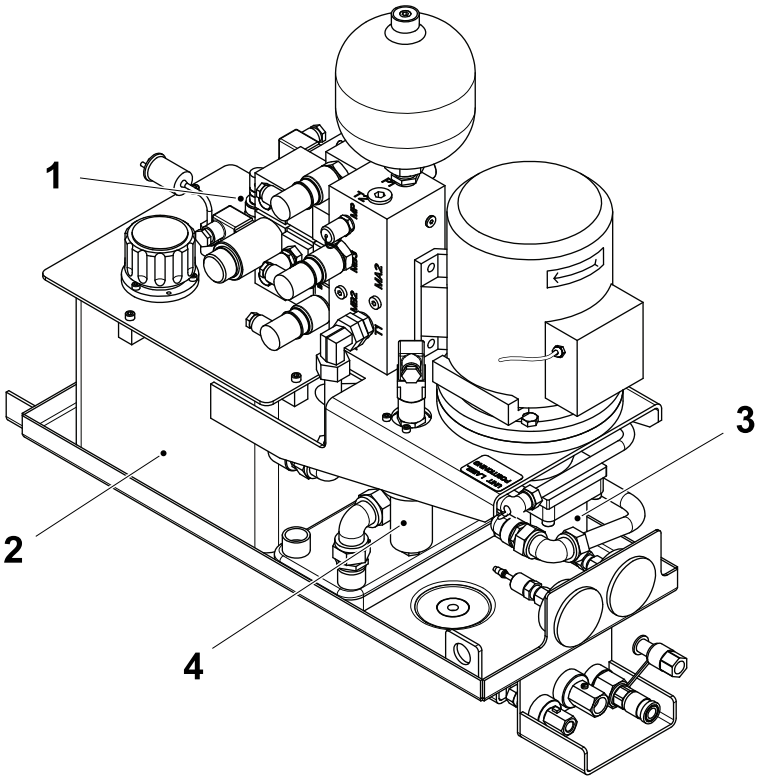

1 Hydraulic valve
2 Hydraulic tank
3 Hydraulic pump
4 Hydraulic pressure filter

(Cont'd)

(Cont'd)

Valid for Hydraulic Unit TP No. 3327773-0100

Note! The Hydraulic Unit TP No. 3327773-0100 is installed in machines with T-order: 21220/00388 and above.

The hydraulic system provides the hydraulic cylinders in the jaw system with oil. The movement of the pressure jaws and the cutting jaws in the jaw system are controlled by the three hydraulic valves (1). The oil to the hydraulic valves (1) comes from the hydraulic tank (2) via the hydraulic pump (3).

The oil passes through a hydraulic pressure filter (4) before it reaches the hydraulic valves (1). The return oil from the jaw system passes through the hydraulic valves (1) before it returns to the hydraulic tank (2).

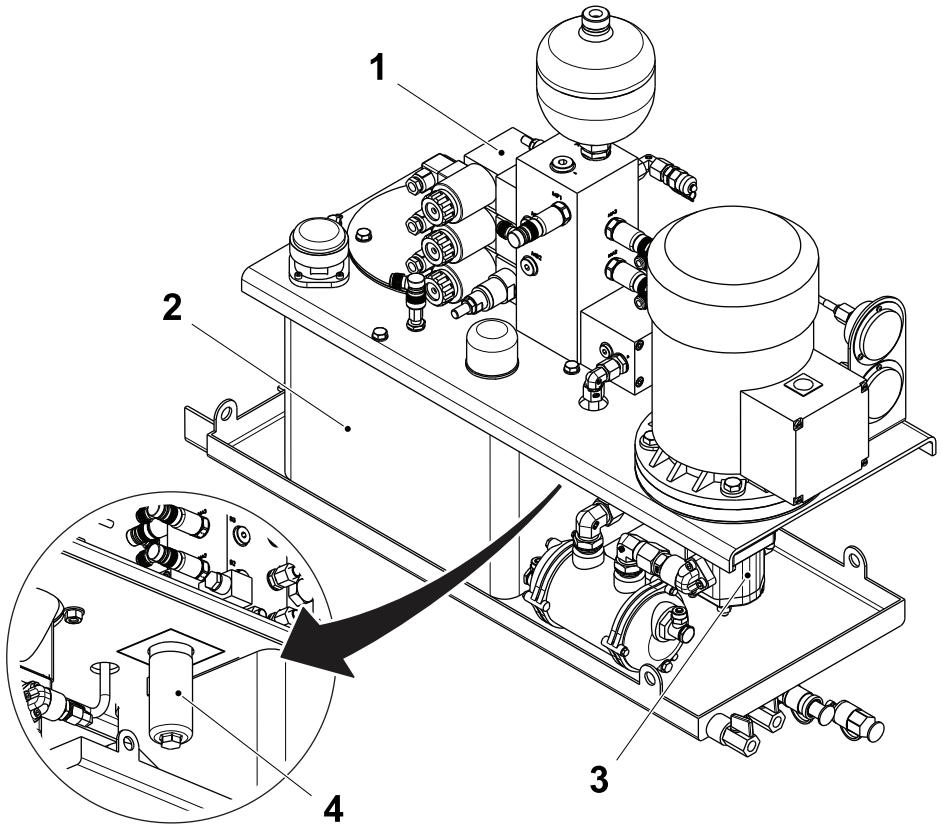

1 Hydraulic valve
2 Hydraulic tank
3 Hydraulic pump
4 Hydraulic pressure filter

2.8.1-2 Hydraulic Unit - Change Oil

Machine Status	Electrical supply disconnecting device in position O (OFF) Main air valve OFF Main steam valve ON Main water valve OFF
Consumables	Lubricant, Kluberfood NH1-32 Tp No. 344390-0000
SPC Reference	2828687-0300 3327773-0100

WARNING

Hydraulic oil.

Wear personal protective equipment.

CAUTION

Risk of damage to the equipment.

Mixing lubricants with no compatible bases will lead to severe loss of lubrication and probable damage to the equipment. Use only recommended consumables, see section 9.3.1 Lubricants.

(Cont'd)

(Cont'd)

Valid for Hydraulic Unit TP No. 3215132-0100

Note! The Hydraulic Unit TP No. 3215132-0100 is installed in machines with T-order: 21220/00001 to 21220/00387.

a) Drain the oil through the valve (1).

b) Change the pressure filter (4), see 2.8.1.1-12 Hydraulic Unit - Change Filter Element, and the air filter (5), see 2.8.1.1-4 Hydraulic Unit - Change Air Filter.

c) Open the drain valve (2) to drain any oil from the collecting vessel (3).

d) Close the drain valve (2).

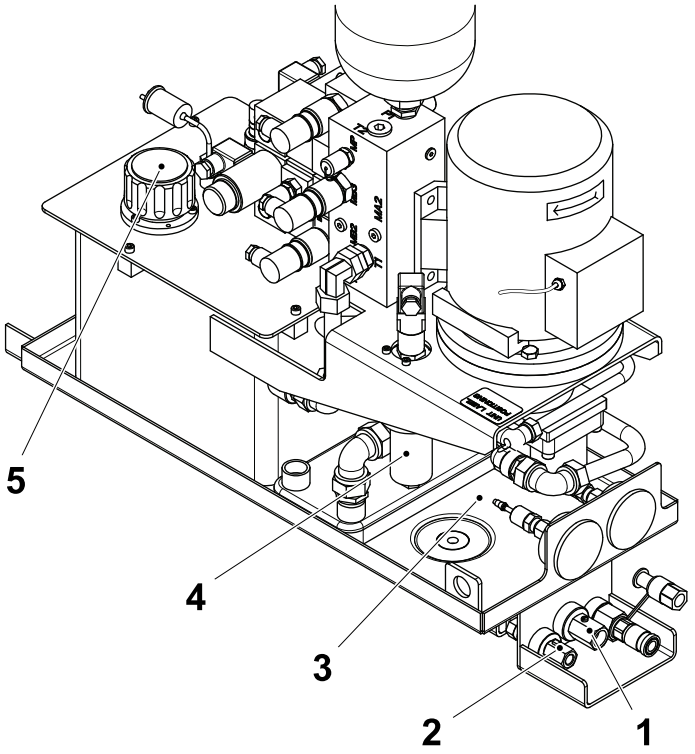

1 Valve
2 Drain valve
3 Collecting vessel
4 Pressure filter
5 Air filter

(Cont'd)

(Cont'd)

e) Touch the PRODUCTION CONTROL button (6) on the TPOP.

f) Touch the PACKAGE FORMING UNIT button (7).

g) Touch the HYDRAULIC OIL LEVEL icon (8).

h) Fill with oil through the quick coupling female (10) using the quick coupling male (11) until the HYDRAULIC OIL LEVEL display (9) is at the maximum (green) level.

Note! Do not overfill.

i) Bleed the circuit, see 2.8.1-4 Hydraulic Unit - Bleed.

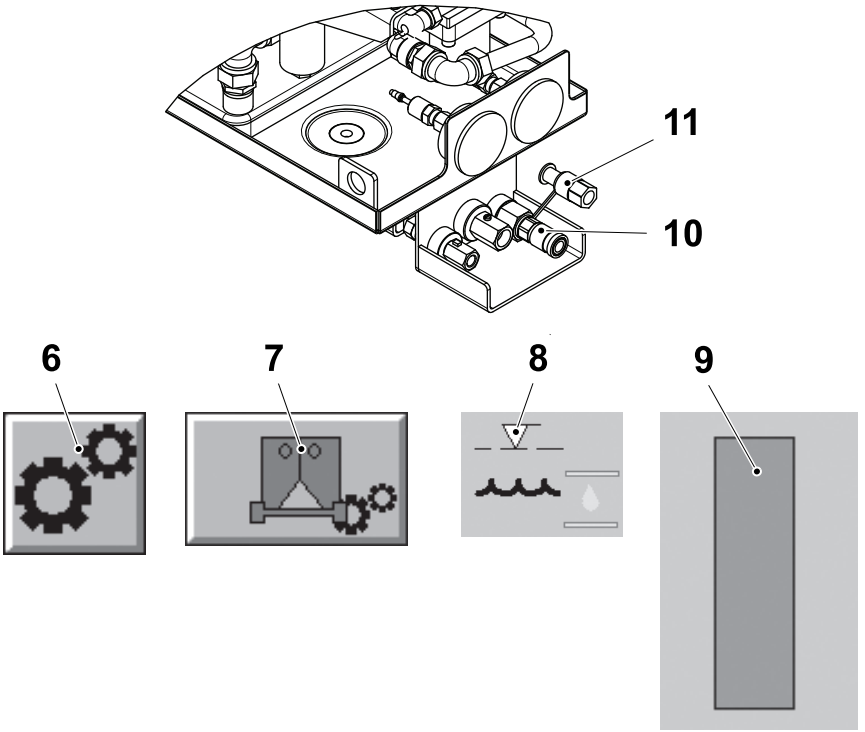

6 PRODUCTION CONTROL button
7 PACKAGE FORMING UNIT button
8 HYDRAULIC OIL LEVEL icon
9 HYDRAULIC OIL LEVEL display
10 Quick coupling female
11 Quick coupling male

(Cont'd)

(Cont'd)

Valid for Hydraulic Unit TP No. 3327773-0100

Note! The Hydraulic Unit TP No. 3327773-0100 is installed in machines with T-order: 21220/00388 and above.

a) Drain the oil through the valve (1).

b) Change the pressure filter (2), see 2.8.1.2-12 Hydraulic Unit - Change Pump Filter Element, and the air filter (3), see 2.8.1.2-4 Hydraulic Unit - Change Air Filter.

c) Open the drain valve (4) to drain any oil from the collecting vessel (5).

d) Close the drain valve (4).

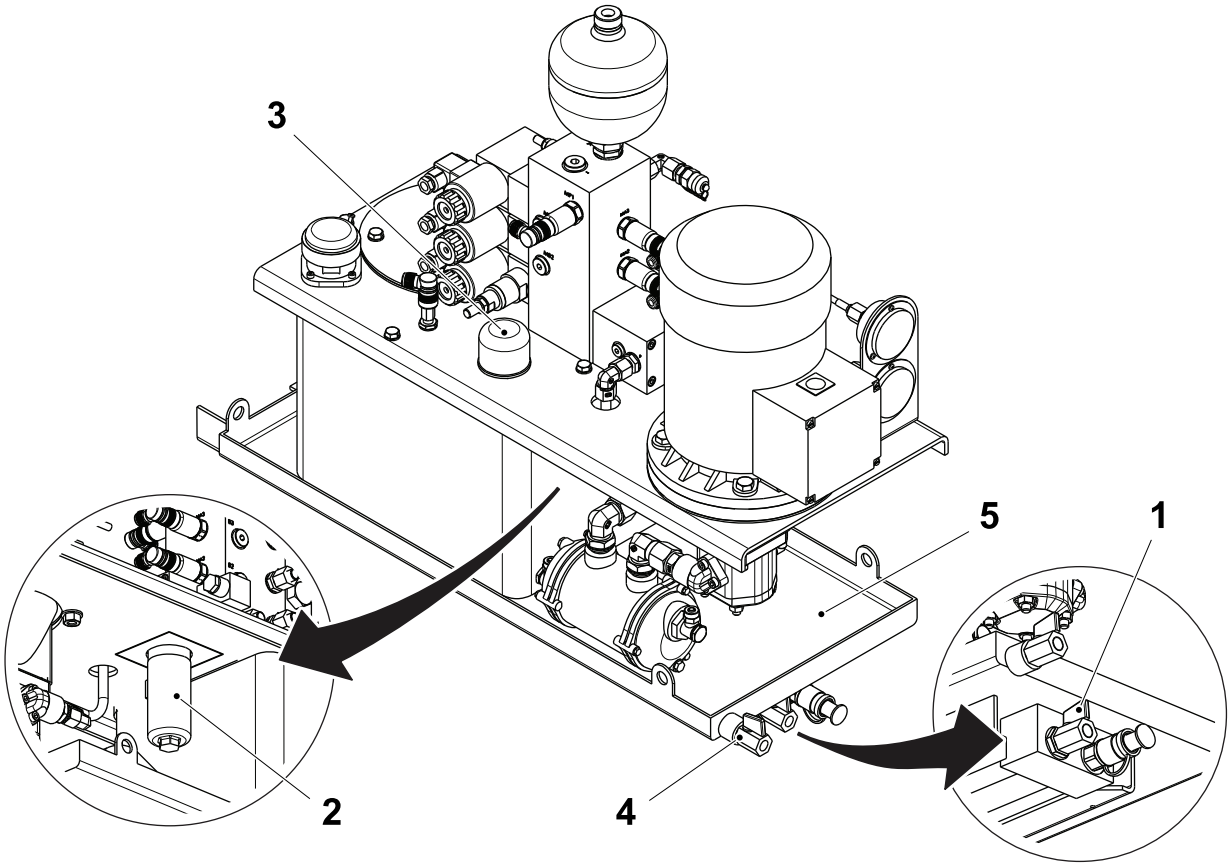

1 Valve
2 Pressure filter
3 Air filter
4 Drain valve
5 Collecting vessel

(Cont'd)

(Cont'd)

e) Touch the PRODUCTION CONTROL button (6) on the TPOP.

f) Touch the PACKAGE FORMING UNIT button (7).

g) Touch the HYDRAULIC OIL LEVEL icon (8).

h) Fill with oil through the quick coupling female (10) using the quick coupling male (11) until the HYDRAULIC OIL LEVEL display (9) is at the maximum (green) level.

Note! Do not overfill.

i) Bleed the circuit, see 2.8.1-4 Hydraulic Unit - Bleed.

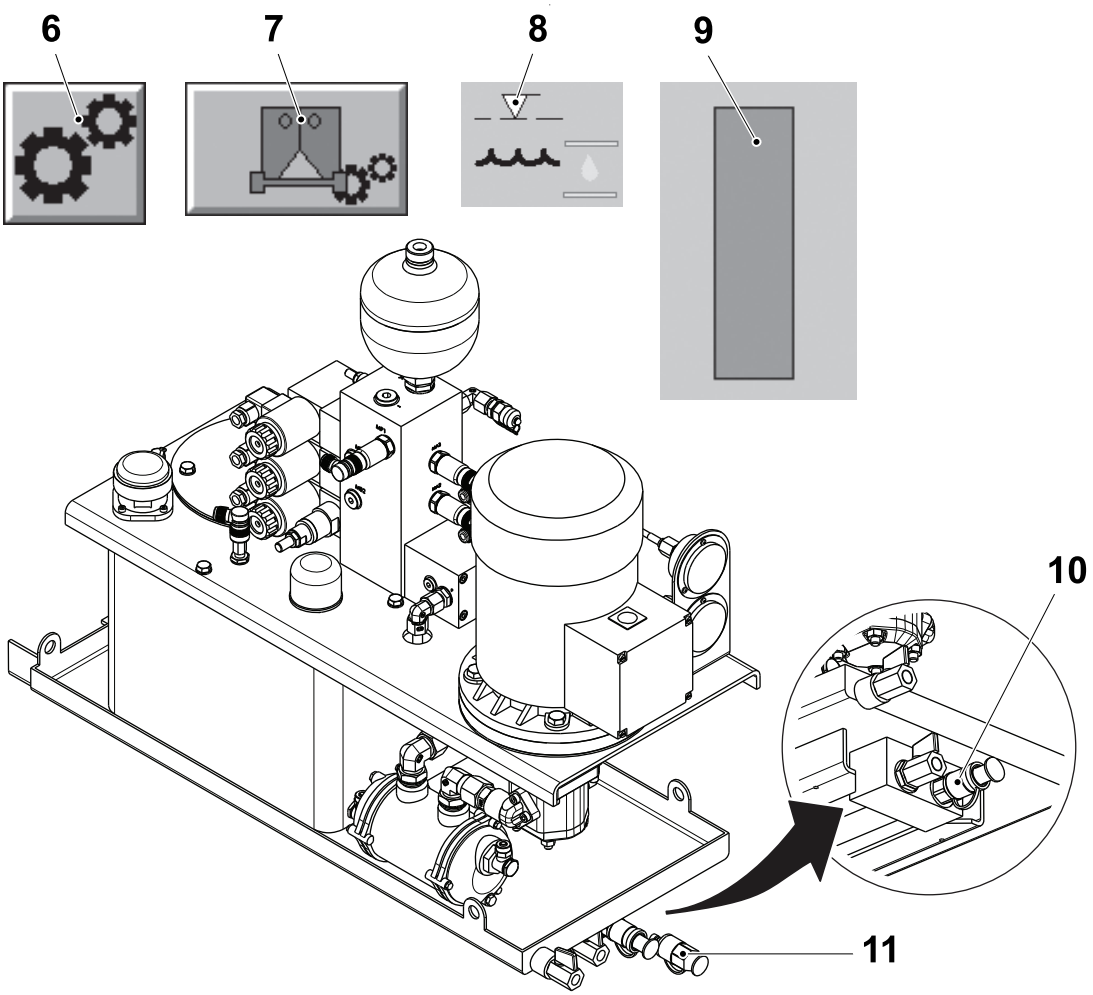

6 Production control button
7 Package forming unit button
8 Hydraulic oil level icon
9 Hydraulic oil level display
10 Quick coupling female
11 Quick coupling male

2.8.1-3 Hydraulic Unit - Clean Tank

Machine Status	Electrical supply disconnecting device in position O (OFF) Main air valve OFF Main steam valve ON Main water valve OFF
Consumables	Lubricant, Kluberfood NH1-32 Tp No. 344390-0000
SPC Reference	3215132-0100 3327773-0100

WARNING
Hydraulic oil.
Wear personal protective equipment.

CAUTION
Risk of damage to the equipment.
Use the lubricant indicated in the table above. Do not mix synthetic with mineral lubricants or synthetic lubricants having a different base, see the section 9.3.1 Lubricants.

(Cont'd)

(Cont'd)

Valid for Hydraulic Unit TP No. 3215132-0100

Note! The Hydraulic Unit TP No. 3215132-0100 is installed in machines with T-order: 21220/00001 to 21220/00387.

a) Drain the oil by opening the valve (1).

b) Disconnect all four oil connections (2).

c) Remove the screws (3) and the fixing unit (4).

d) Pull out the hydraulic unit until it locks open.

e) Remove the level probe (5), see 2.8.1.1-3 Hydraulic Unit - Check Level Probe.

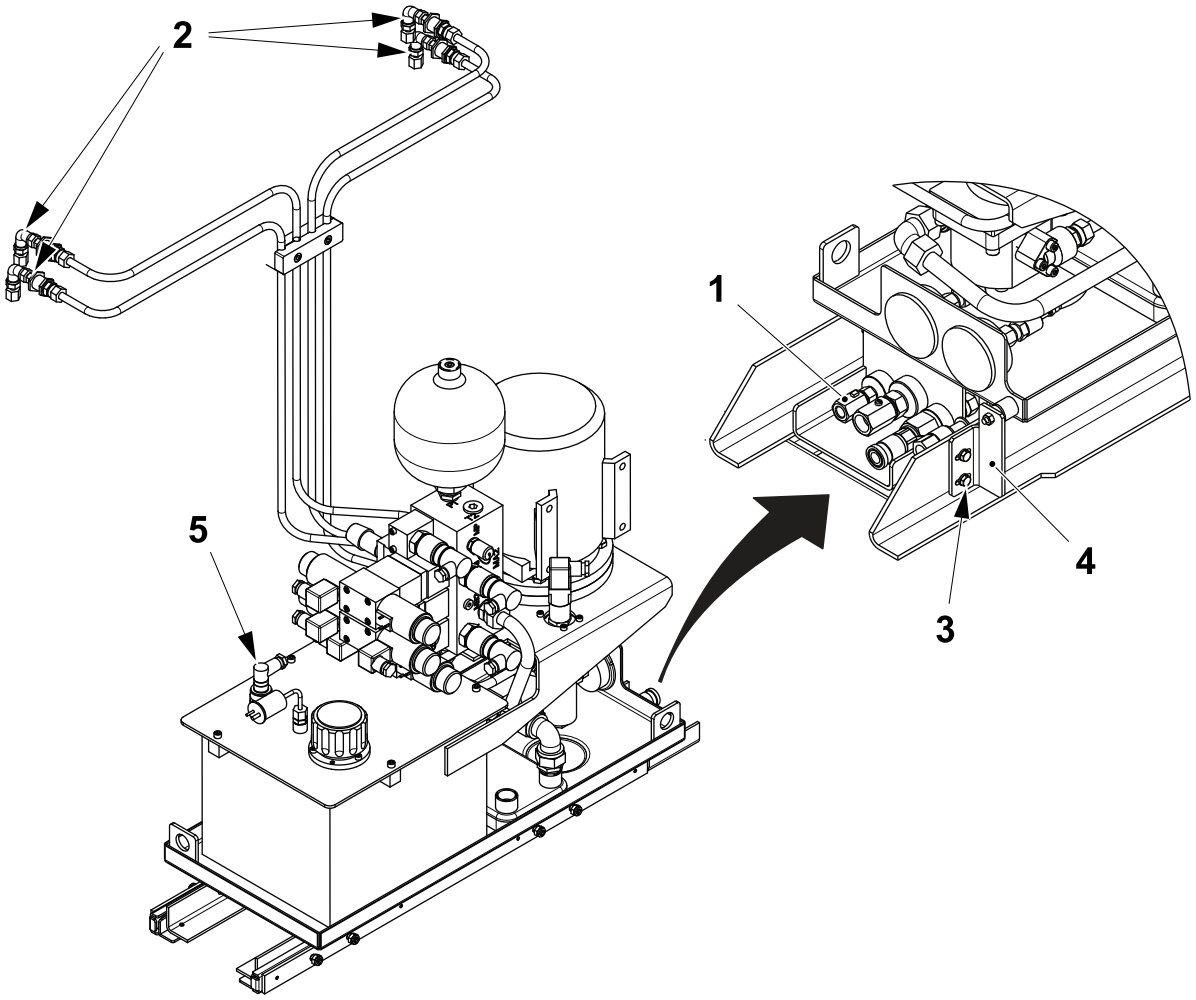

1 Valve
2 Oil connection
3 Screw
4 Fixing unit
5 Level probe

(Cont'd)

(Cont'd)

f) Remove the four screws (6), the washers and the cover (7).

g) Clean the tank (8) with lint-free cloth.

Note! Make sure that there is no lint after cleaning.

h) Assemble in the reverse order.

i) Connect all four oil connections (2).

j) Close the valve (1) and fill with oil through the quick coupling female (9), see 2.8.1-2 Hydraulic Unit - Change Oil.

k) Bleed the circuit, see 2.8.1-4 Hydraulic Unit - Bleed.

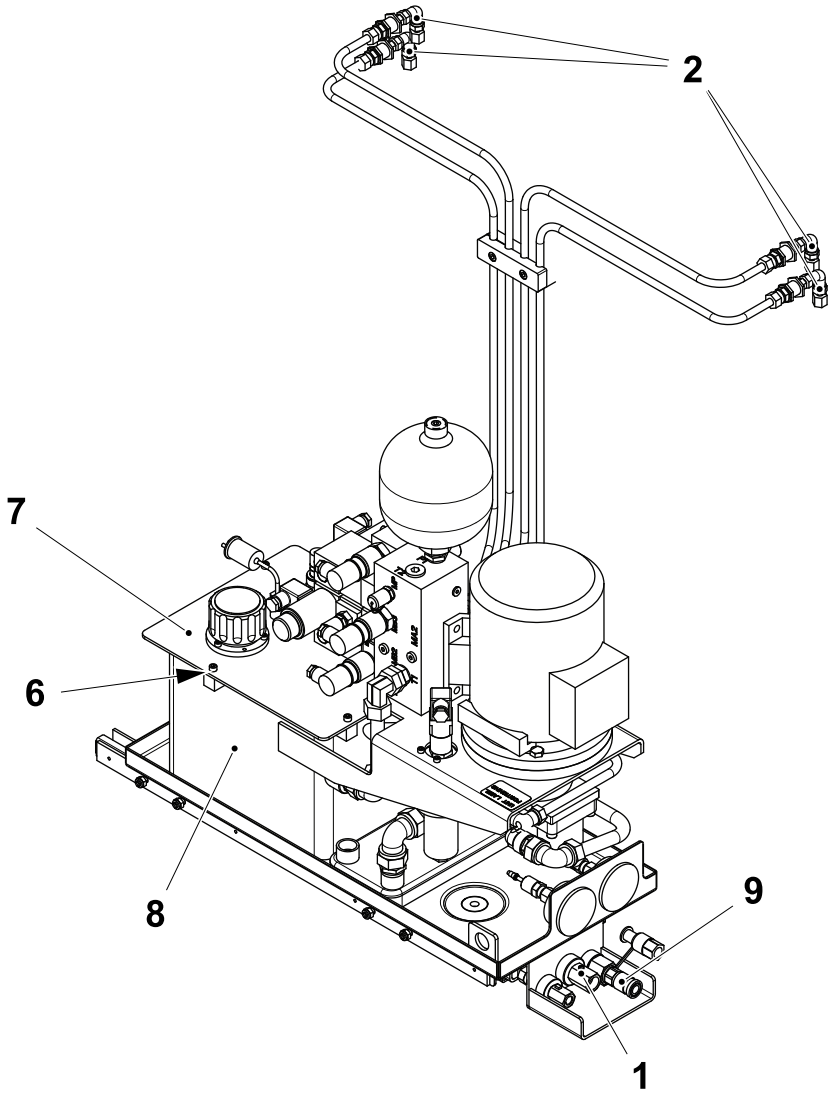

1 Valve
2 Oil connection
6 Screw
7 Cover
8 Tank
9 Quick coupling female

(Cont'd)

(Cont'd)

Valid for Hydraulic Unit TP No. 3327773-0100

Note! The Hydraulic Unit TP No. 3327773-0100 is installed in machines with T-order: 21220/00388 and above.

a) Remove the four screws (1) and the lid (2) with the gasket (3).

b) Drain the oil by opening the valve (4).

c) Clean the tank (5) with lint-free cloth.

Note! Make sure that there is no lint after cleaning.

d) Close the valve (4) and fill with oil through the quick coupling female (6), see 2.8.1-2 Hydraulic Unit - Change Oil.

e) Assemble in the reverse order.

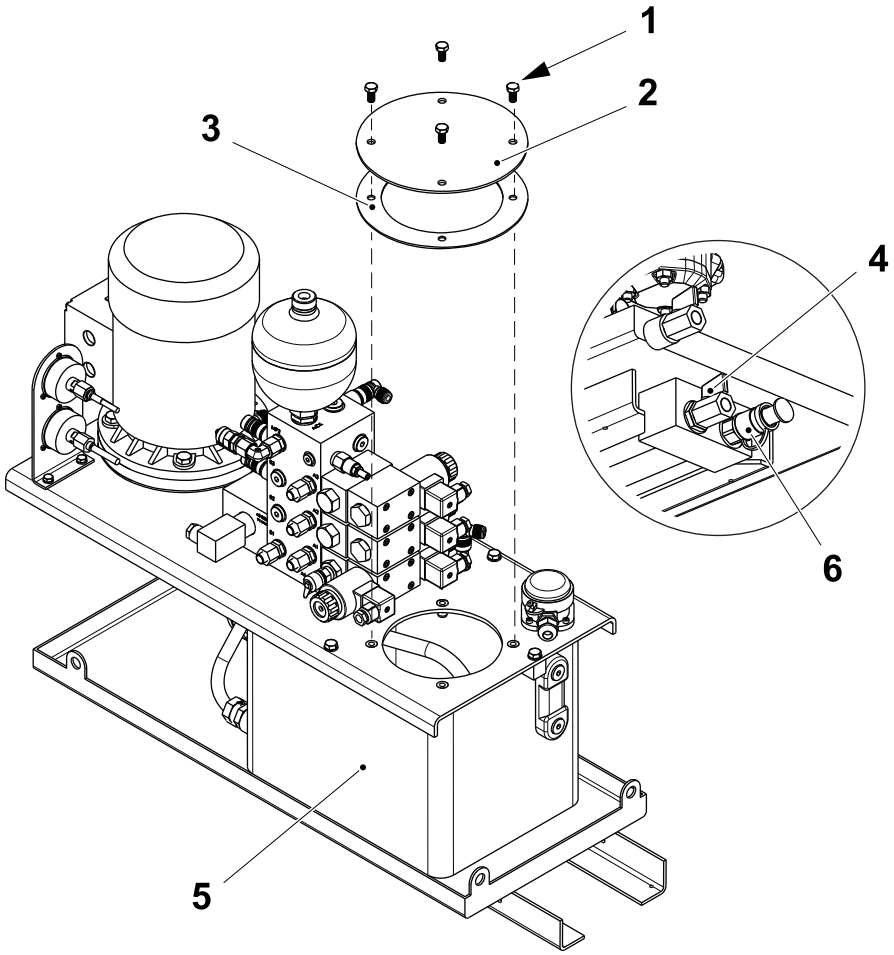

1 Screw
2 Lid
3 Gasket
4 Valve
5 Tank
6 Quick coupling female

2.8.1-4 Hydraulic Unit - Bleed

Machine Status	PREPARATION
Consumables	Lubricant, Kluberfood NH1-32 TP No. 344390-0000
SPC Reference	2828687-0300 3327773-0100

WARNING
Hydraulic oil.
Wear personal protective equipment.

a) Log on to access the MAINTENANCE CONTROL window, see 8.6.3-2 HMI - User Management Log On.

b) Touch the MAINTENANCE CONTROL button (1).

c) Touch the PACKAGE FORMING UNIT button (2) to display the PACKAGE FORMING UNIT window.

d) Touch the HYDRAULIC SYSTEM icon (3).

e) Touch the START button (4).

f) Touch the OK button (5) and wait for the machine movement to complete.

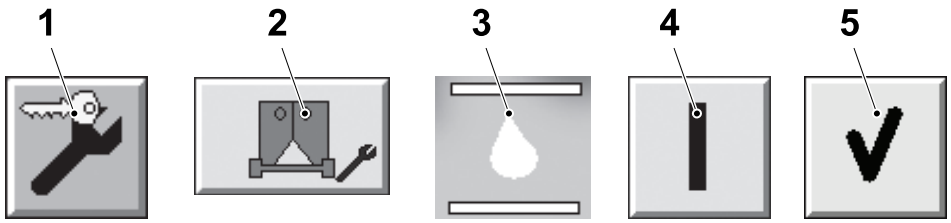

1 MAINTENANCE CONTROL button
2 PACKAGE FORMING UNIT button
3 HYDRAULIC SYSTEM icon
4 START button
5 OK button

(Cont'd)

(Cont'd)

Bleed the Knife Circuit

CAUTION

Risk of personal injury.

Touching the KNIFE button (2) activates the cutting movement of the knife.

a) Touch the LH JAW SYSTEM button (1) to bleed the LH side jaw.

b) Touch the KNIFE button (2).

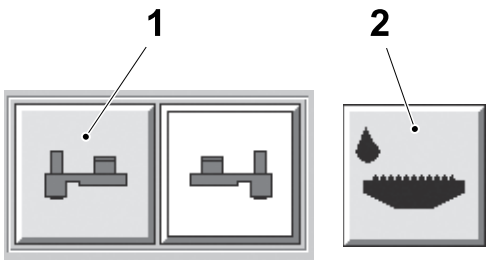

1 LH JAW SYSTEM button
2 Knife button

(Cont'd)

(Cont'd)

CAUTION

Risk of personal injury.

The venting screw (3) may be ejected with force by the hydraulic pressure. Never loosen the screw by more than two turns.

c) Loosen the venting screw (3) on the cutting jaw and bleed into a suitable container until oil with no air bubbles emerges.

d) Tighten the venting screw (3).

e) Touch the CYCLE button (4).

f) Repeat the items b) to d) until no air is visible in the oil. When no air is visible repeat the procedure three more time to guarantee that the circuit is free from air.

g) Bleed the RH side jaw, repeat the items from a) to f).

h) Dispose of oil according to local regulations.

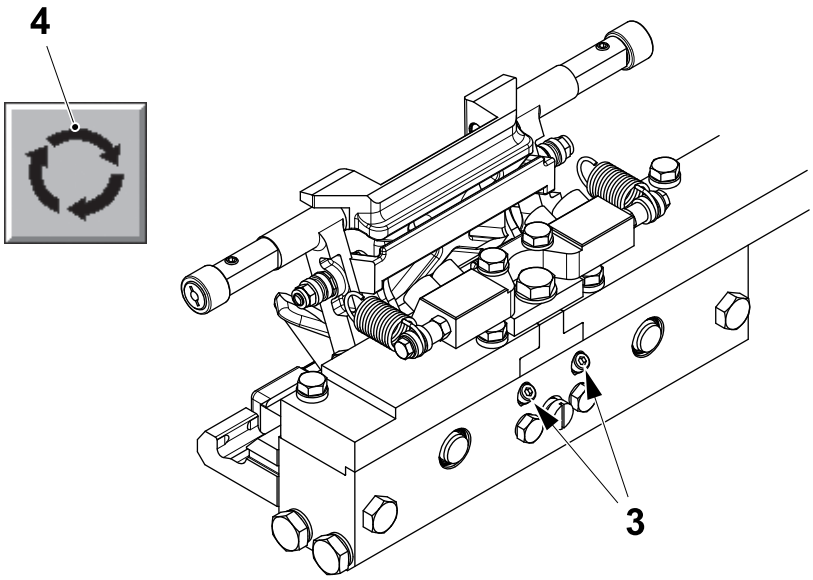

3 Venting screw
4 CYCLE button

(Cont'd)

(Cont'd)

Bleed the Catches Circuit

a) Touch the LH JAW SYSTEM button (1) to bleed the LH side jaw.

b) Touch the CATCHES CLOSED button (2).

c) **CAUTION**
Risk of personal injury.
The venting screw (3) may be ejected with force by the hydraulic pressure. Never loosen the screw by more than two turns.
Loosen the venting screw (3) on the pressure jaw and bleed into a suitable container until oil with no air bubbles emerges.

d) Tighten the venting screw (3).

e) Touch the CYCLE button (4).

f) After 10 seconds touch the STOP button (5) and the OK button (6) to stop the cycle.

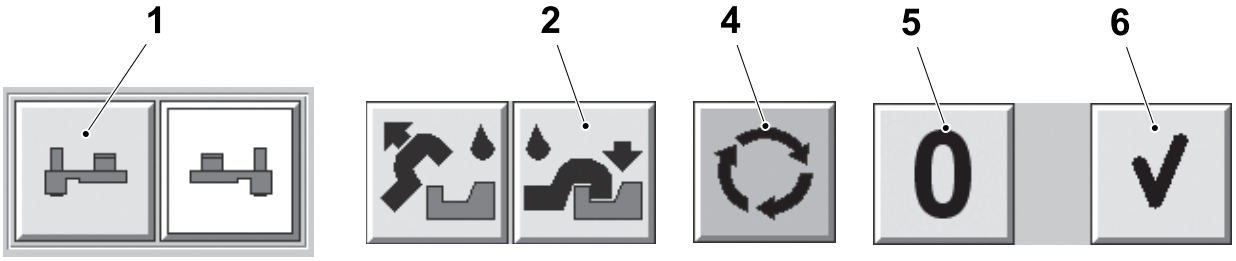

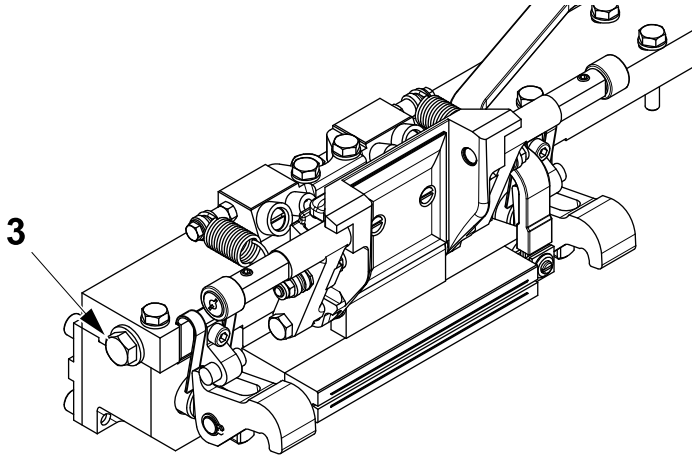

1 LH JAW SYSTEM button
2 CATCHES CLOSED button
3 Venting screw
4 CYCLE button
5 STOP button
6 OK button

(Cont'd)

(Cont'd)

g) Repeat the items b) to f) until no air is visible in the oil. When no air is visible repeat the procedure three more time to guarantee that the circuit is free from air.

h) Bleed the RH side jaw, repeat the items from a) to g).

i) Dispose of oil according to local regulations.

j) Fill the oil tank if necessary, see 2.8.1-2 Hydraulic Unit - Change Oil.

2.8.1.1 Hydraulic Unit (Bosch)

2.8.1.1-1 Hydraulic Unit - Check

Machine Status	Electrical supply disconnecting device in position I (ON) Main air valve ON Main steam valve ON Main water valve OFF Hydraulic System ON
SPC Reference	3215132-0100

WARNING

Hydraulic oil.
Wear personal protective equipment.

Check the following parts for wear or damage:

- the hydraulic pump (1), check for noise and leaks. Change if necessary
- the hydraulic circuit, visually check for leaks in the hydraulic system.

Also check that all connections are tightened.

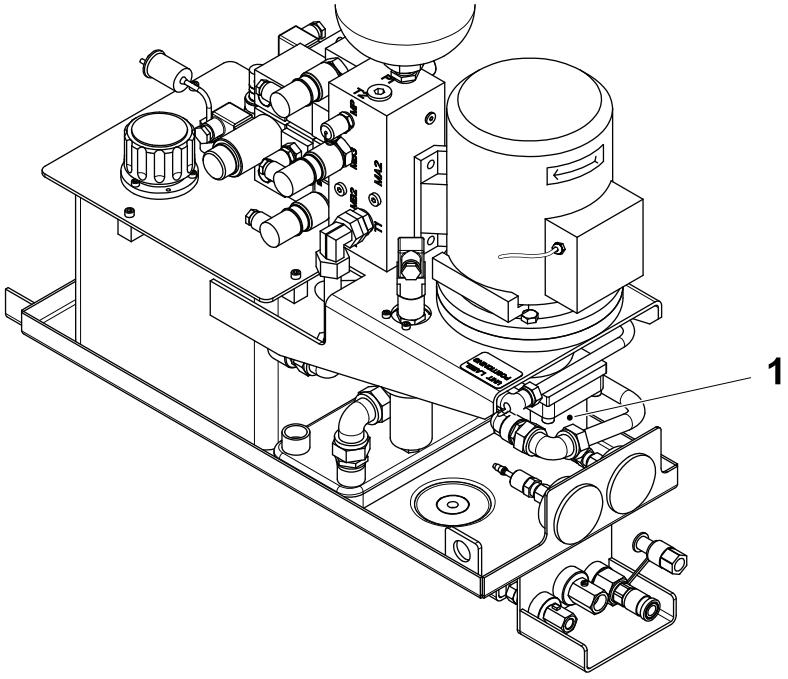

1 Hydraulic pump

(Cont'd)

(Cont'd)

Check that:

- that the rotation of the electrical motor (2) is in accordance with the directional arrow (3). Start the hydraulic unit to check
- that the oil tank is filled with oil. If necessary refill the oil tank according to 2.8.1-2 Hydraulic Unit - Change Oil
- for the presence of water in the oil, open the drain valve (4). Change the oil if necessary, see 2.8.1-2 Hydraulic Unit - Change Oil
- the performance of the hydraulic pump (1) on the pressure gauge (5). The pressure should be according to Hydraulic unit, pressure jaw in the 9.1 Technical Data section.
- that the cutting jaw and the pressure jaw cylinders move correctly. If not, see 2.8.1-4 Hydraulic Unit - Bleed
- the complete system for oil leaks
- that there are no warnings or alarms on the TPOP.

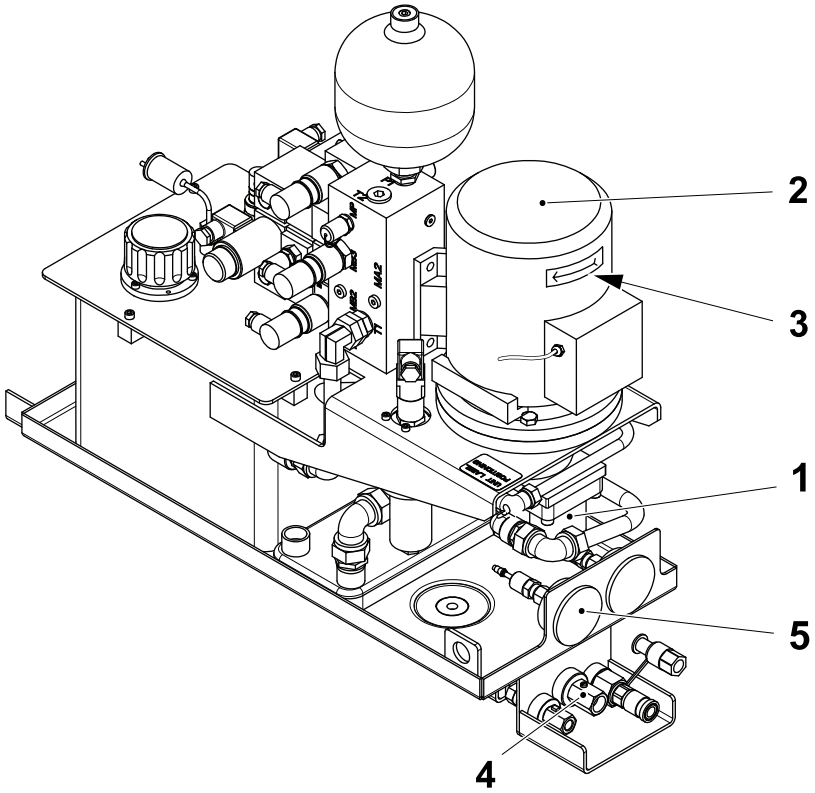

1 Hydraulic pump
2 Electrical motor
3 Arrow
4 Drain valve
5 Pressure gauge

2.8.1.1-2 Hydraulic Unit - Set Pressure

Machine Status	PRODUCTION
SPC Reference	3215132-0100

WARNING
Hydraulic oil.
Wear personal protective equipment.

Jaw Pressure Setting

a) Touch the PRODUCTION CONTROL button (1).

b) Touch the PACKAGE FORMING UNIT button (2).

c) Touch the TS MONITORING icon (3) to display the HYDRAULIC OIL PRESSURE display (4).

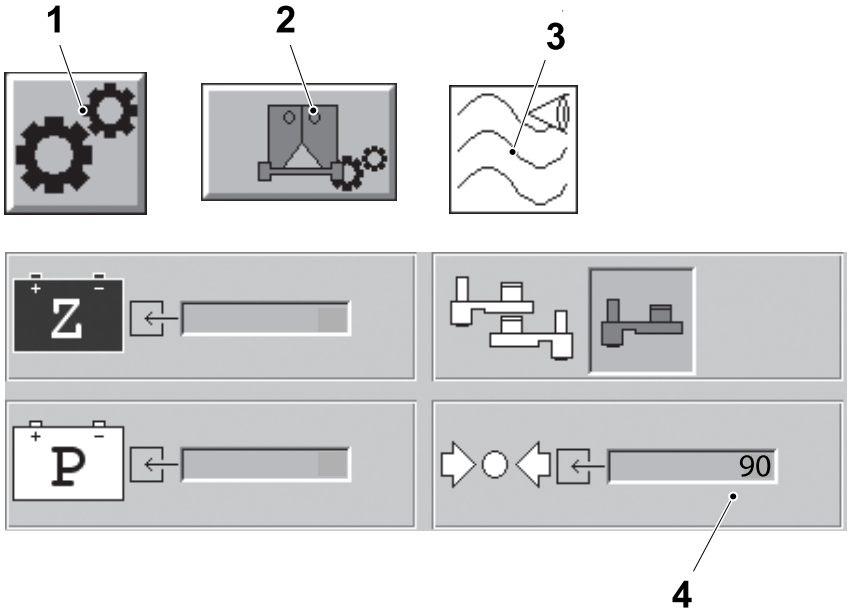

1 PRODUCTION CONTROL button
2 PACKAGE FORMING UNIT button
3 TS MONITORING icon
4 HYDRAULIC OIL PRESSURE display

(Cont'd)

(Cont'd)

d) Remove the plug (5) and loosen the lock nut (6).

e) Set the jaw pressure by turning the adjustment screw (7) and checking the value shown on the HYDRAULIC OIL PRESSURE display (4), see 9.1 Technical Data for the correct value.

f) Make sure that the value shown on the HYDRAULIC OIL PRESSURE display (4) correspond to the value shown on the pressure gauge (8).

g) Tighten the lock nut (6) and fit the plug (5).

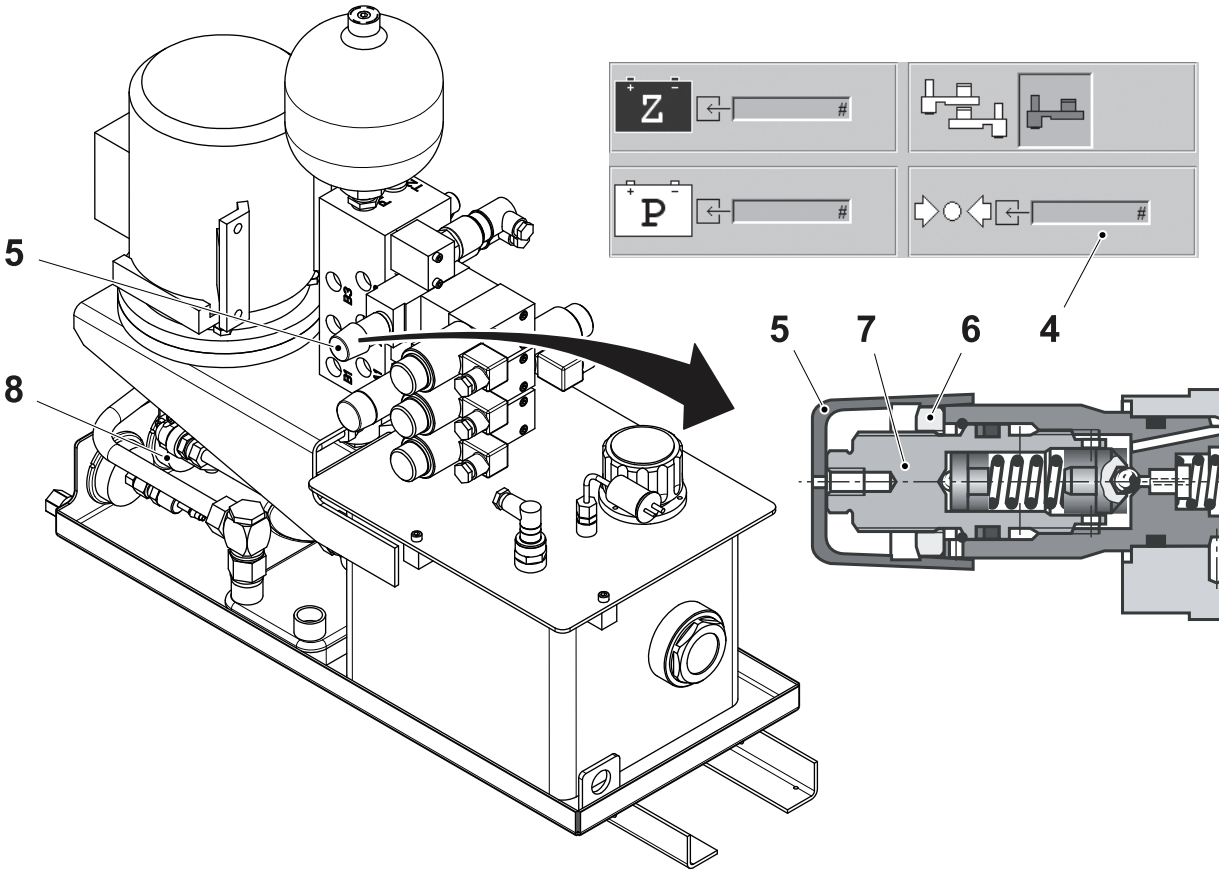

4 HYDRAULIC OIL PRESSURE display
5 Plug
6 Lock nut
7 Adjustment screw
8 Pressure gauge

(Cont'd)

(Cont'd)

Cutting Pressure Setting

a) Remove the plug (1) and loosen the lock nut (2).

b) Set the cutting pressure by turning the screw (3) and checking the value shown on the pressure gauge (4), see 9.1 Technical Data for the correct value.

c) Tighten the lock nut (2) and fit the plug (1).

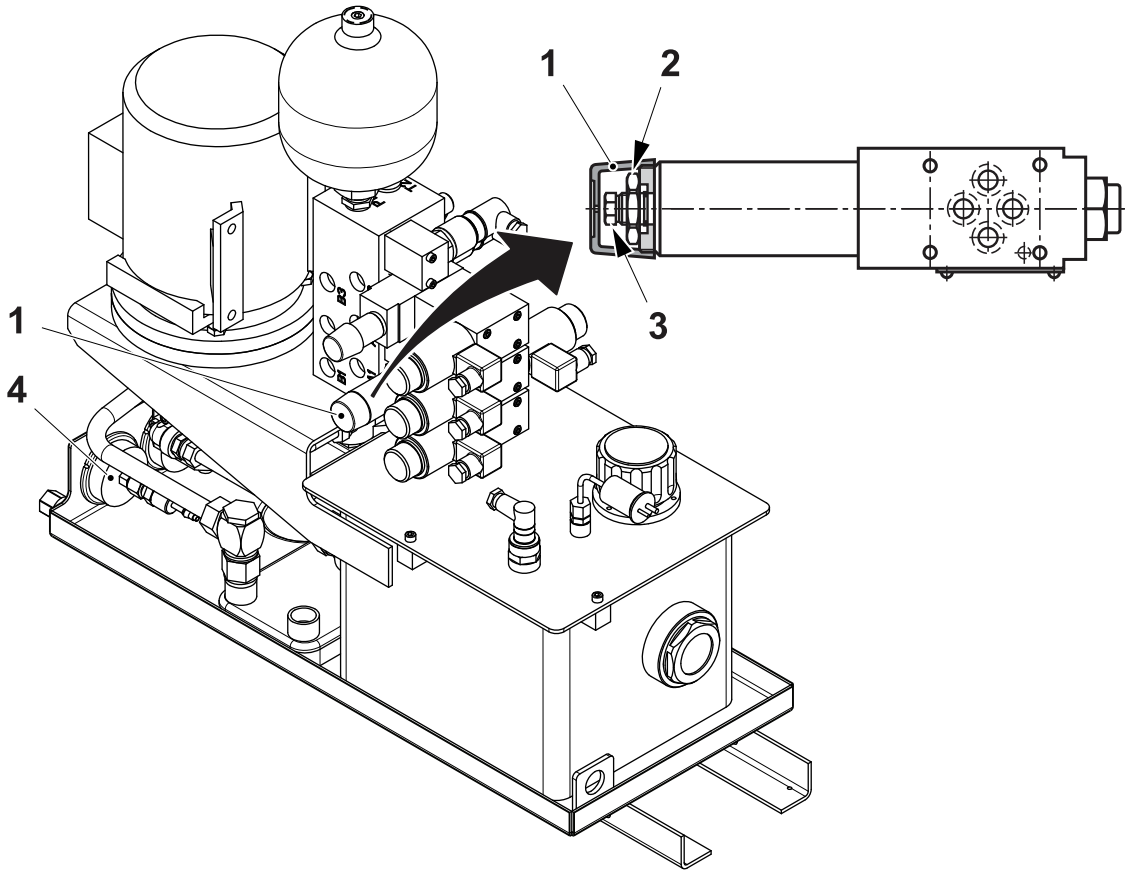

1 Plug
2 Lock nut
3 Screw
4 Pressure gauge

2.8.1.1-3 Hydraulic Unit - Check Level Probe

Machine Status	Electrical supply disconnecting device in position I (ON) Main air valve OFF Main steam valve ON Main water valve OFF
SPC Reference	3215132-0100

WARNING
Hydraulic oil.
Wear personal protective equipment.

(Cont'd)

(Cont'd)

a) Remove the level probe (1) from the hydraulic tank (2).

b) Touch the PRODUCTION CONTROL button (3) on the TPOP.

c) Touch the JAW SYSTEM button (4).

d) Touch the HYDRAULIC OIL LEVEL icon (5).

e) Move the float (6) and check that three different colour zones on the HYDRAULIC OIL LEVEL display (7) are visible.

f) Assemble in the reverse order.

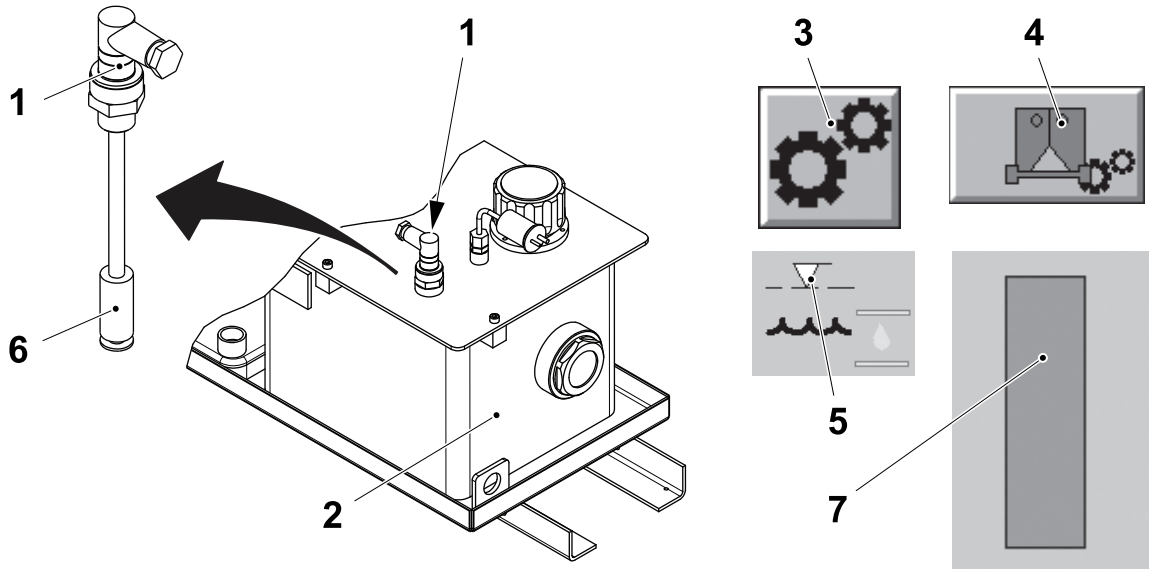

1 Level probe
2 Hydraulic tank
3 PRODUCTION CONTROL button
4 JAW SYSTEM button
5 HYDRAULIC OIL LEVEL icon
6 Float
7 HYDRAULIC OIL LEVEL display

2.8.1.1-4 Hydraulic Unit - Change Air Filter

Machine Status	Electrical supply disconnecting device in position O (OFF) Main air valve OFF Main steam valve ON Main water valve OFF
SPC Reference	3215132-0100

WARNING

Hydraulic oil.
Wear personal protective equipment.

Note! Change the air filter (1) only when the pressure filter element (2) is replaced or when the air filter (1) is clogged (visual check).

a) Remove the air filter (1) by screwing it out from the hydraulic tank (3).

b) Blow clean the air filter (1) with compressed air or change if necessary.

c) Assemble in the reverse order.

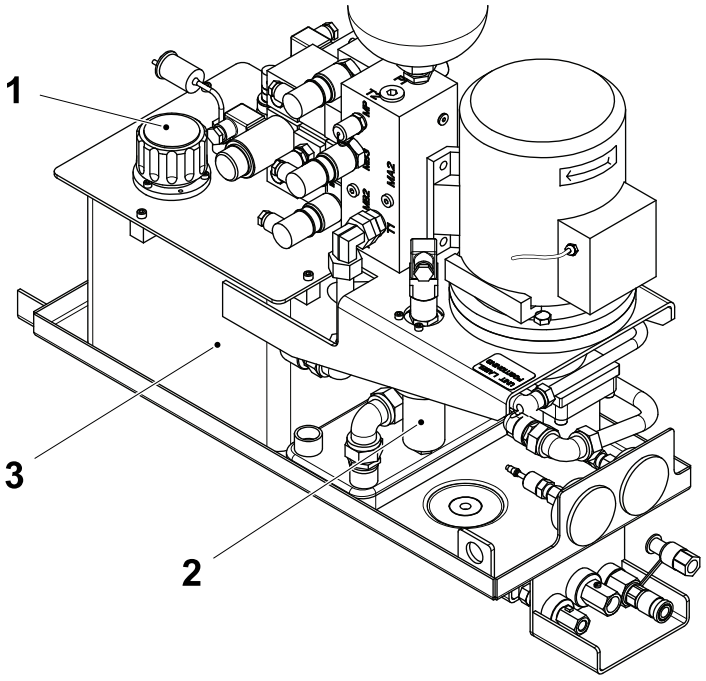

1 Air filter
2 Pressure filter element
3 Hydraulic tank

2.8.1.1-5 Hydraulic Unit - Drain Water

Machine Status	Electrical supply disconnecting device in position O (OFF) Main air valve OFF Main steam valve ON Main water valve OFF
SPC Reference	3215132-0100

WARNING
Hydraulic oil.
Wear personal protective equipment.

Note! This water should be handled as hazardous waste.

a) Place a collecting vessel under the drain valve (1).

b) Open the drain valve (1) until pure oil flows out.

c) Close the drain valve (1).

d) Fill the hydraulic tank (2) with oil according to 2.8.1-2 Hydraulic Unit - Change Oil.

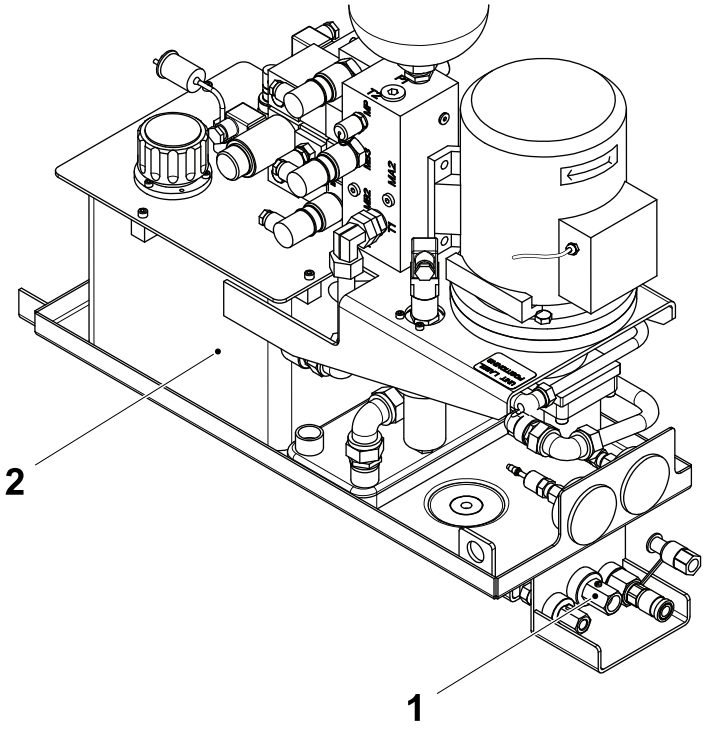

1 Drain valve
2 Hydraulic tank

2.8.1.1-6 Hydraulic Unit - Check Accumulator

Machine Status	Electrical supply disconnecting device in position I (ON) Main air valve ON Main steam valve ON Main water valve ON
SPC Reference	3215132-0100

a) Step up the machine to PREPARATION and make sure that the hydraulic unit starts.

b) Press the PROGRAM DOWN button (1) on the TPOP to stop the hydraulic unit.

Note! The oil temperature must by at least 30°C.

c) Check the oil pressure on the pressure gauge (2). The hydraulic pressure first drops slowly to an intermediate pressure before the pressure drops quickly to zero.

d) If the intermediate pressure is below 55 bar, step down the machine to ZERO and change the accumulator (3), see 2.8.1.1-7 Hydraulic Unit - Change Accumulator.

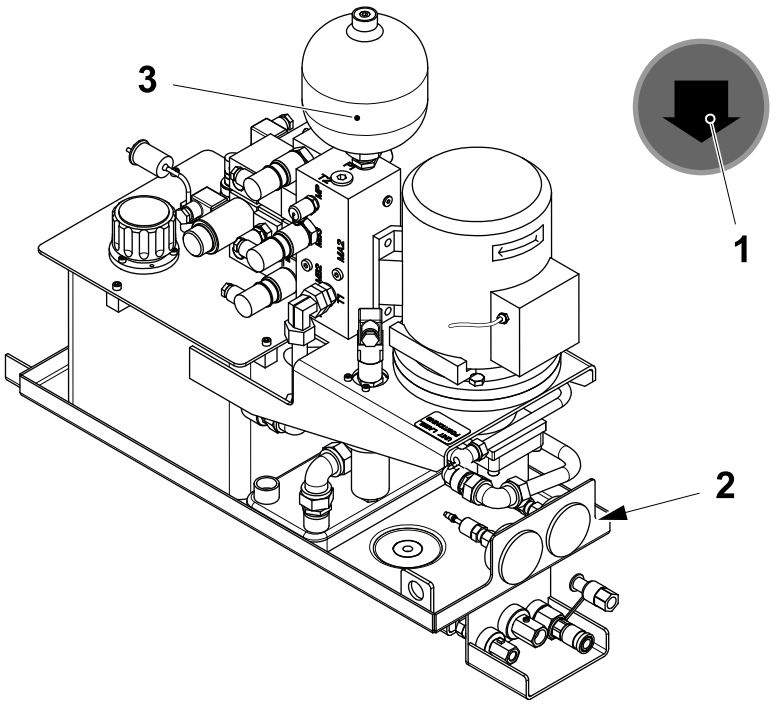

1 PROGRAM DOWN button
2 Pressure gauge
3 Accumulator

2.8.1.1-7 Hydraulic Unit - Change Accumulator

Machine Status	Electrical supply disconnecting device in position O (OFF) Main air valve OFF Main steam valve ON Main water valve OFF
Special Equipment	Oil Filter Pliers
SPC Reference	3215132-0100

WARNING
Hydraulic oil.
Wear personal protective equipment.

CAUTION
Risk of personal injury.
Follow the lockout procedure to secure the mains power switch in the OFF position.

a) Press the PROGRAM DOWN button (1) on the TPOP to stop the hydraulic unit and wait until pressure gauge (2) shows 0 bar.

b) Remove the accumulator (3) from the manifold block (4) with the aid of oil filter pliers.

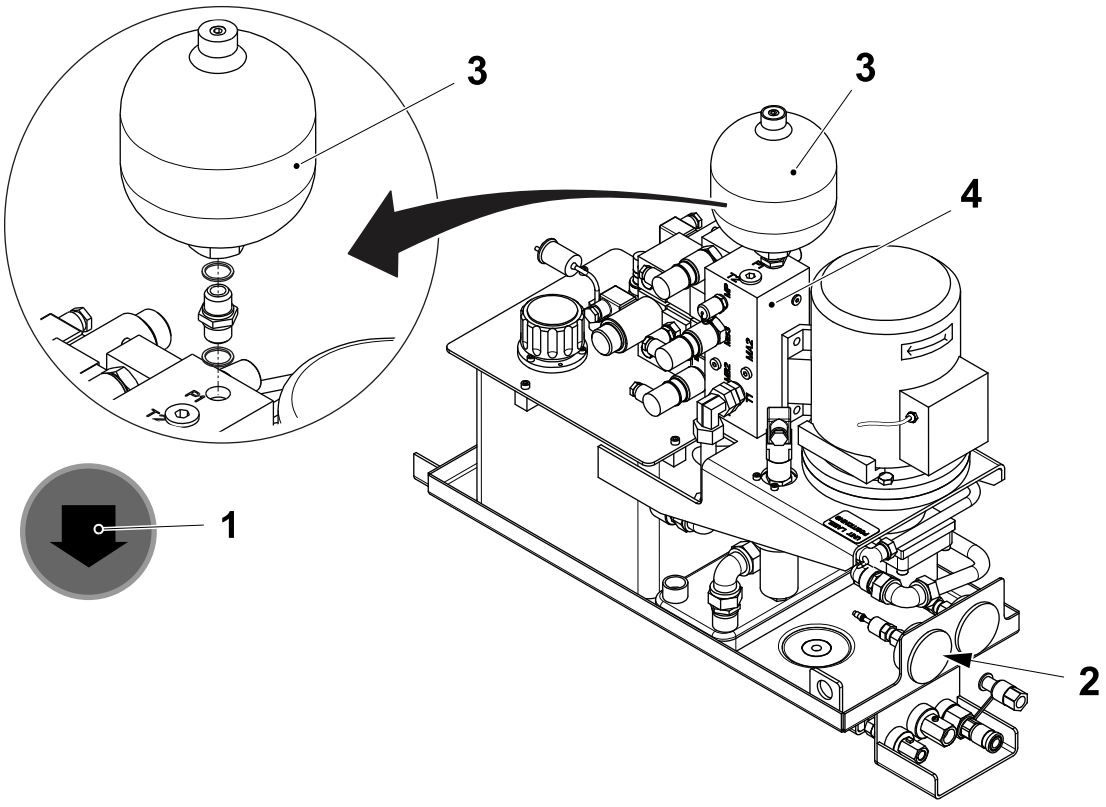

1 PROGRAM DOWN button
2 Pressure gauge
3 Accumulator
4 Manifold block

(Cont'd)

(Cont'd)

c) Remove the double nipple (5) from the accumulator (3) by holding the accumulator nut (6).

d) Change the accumulator (3) and assemble in the reverse order.

e) Press the PROGRAM UP button (7) to start the hydraulic unit.

f) Bleed the system according to 2.8.1-4 Hydraulic Unit - Bleed.

g) Check for leaks in the hydraulic system.

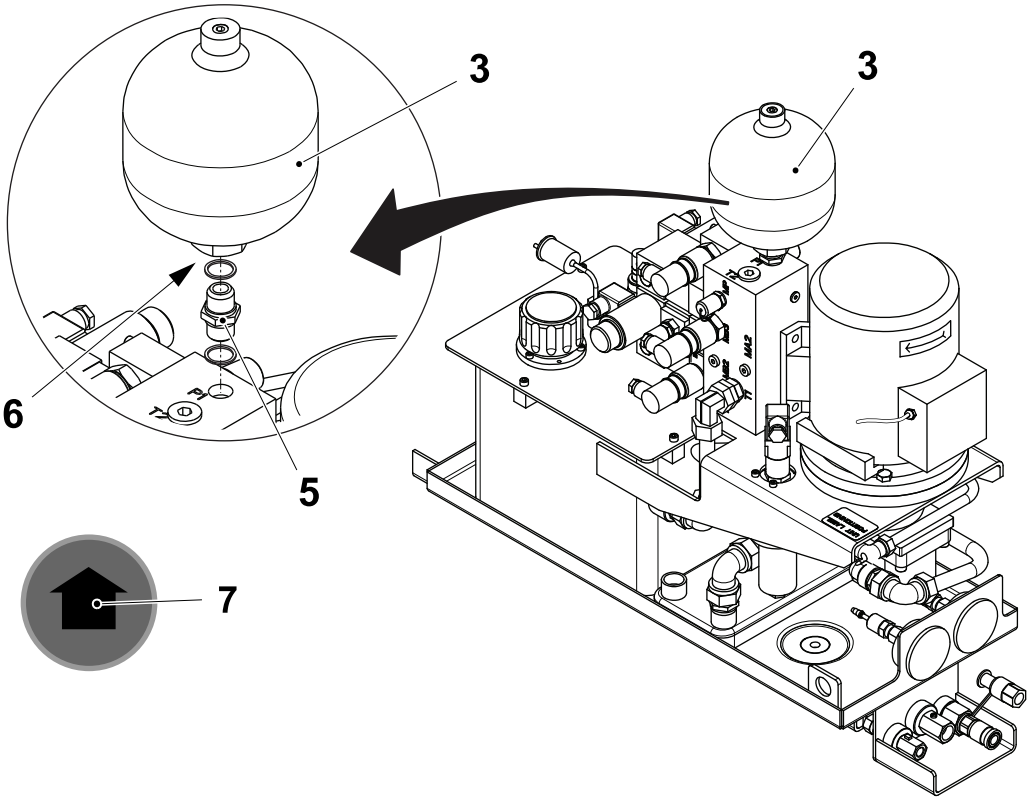

3 Accumulator
5 Double nipple
6 Accumulator nut
7 PROGRAM UP button

2.8.1.1-8 Hydraulic Unit - Change Bi-stable Valve, Directional Valve and Solenoid

Machine Status	Electrical supply disconnecting device in position O (OFF) Main air valve OFF Main steam valve ON Main water valve OFF
Special Equipment	Torque Wrench, min. 7 Nm
SPC Reference	3215132-0100

WARNING
Hydraulic oil.
Wear personal protective equipment.

CAUTION
Risk of personal injury.
Follow the lockout procedure to secure the mains power switch in the OFF position.

Change Bi-stable and Directional Valve

a) Remove all the cable connections (1).

b) Remove the four screws (2).

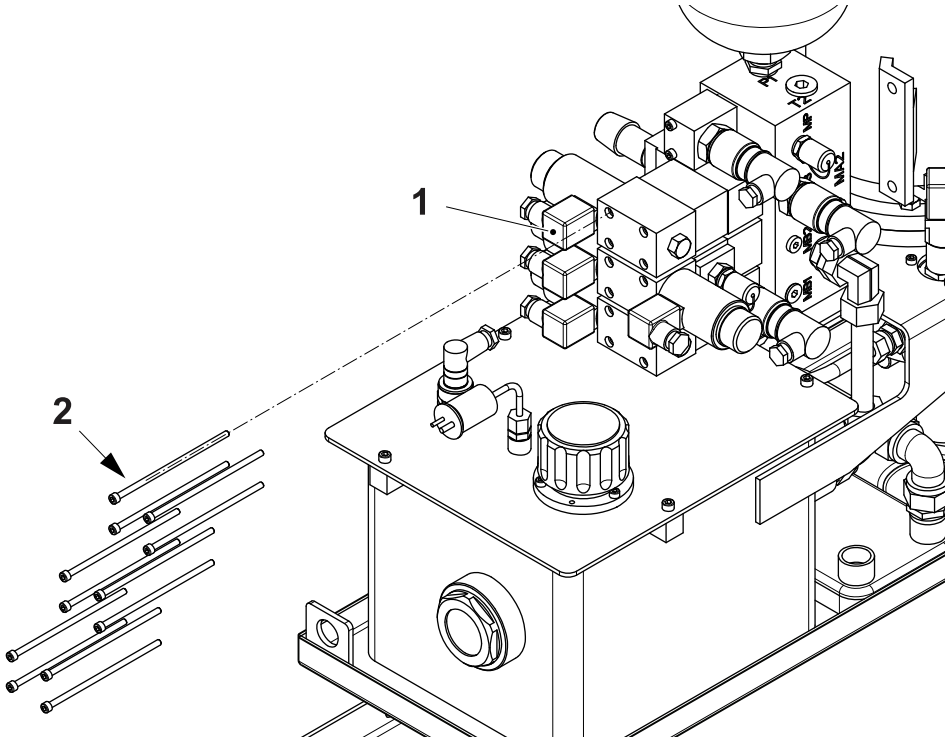

1 Connection
2 Screw

(Cont'd)

(Cont'd)

Note! Check that the flow restrictors (3) Ø1.5 mm are fitted on port P (4) on the directional valves (5) and (6) and the bi-stable valve (7). Check the O-ring (8) and change them if necessary.

c) Change the bi-stable valve (7) and the directional valves (5) and (6).

Note! The screws must be tightened to a torque of 7-9 Nm on assembly.

d) Assemble in the reverse order.

e) Bleed the system according to 2.8.1-4 Hydraulic Unit - Bleed.

f) Check for leaks in the hydraulic system.

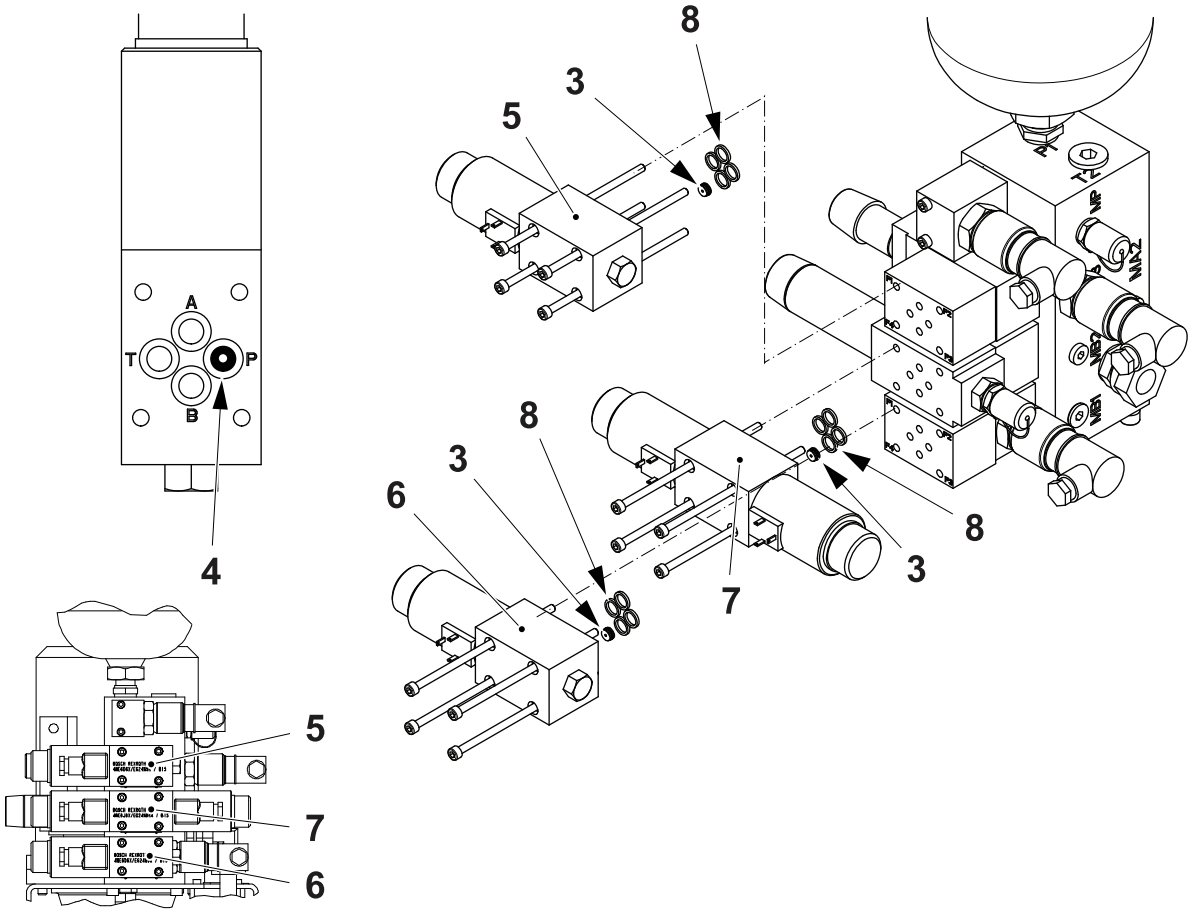

3 Flow restrictor
4 Port P
5 Directional valve 4WE6D6X/EG24N9K/B15
6 Directional valve 4WE6D6X/EG24N9K/B15
7 Bi-stable valve 4WE6J6X/EG24N9K4/B15
8 O-ring

(Cont'd)

(Cont'd)

Change Solenoid

a) Remove the solenoid (1) from the bi-stable valve (2) or directional valve (3) by unscrewing the nut (4).

b) Assemble the new solenoid (1) on the bi-stable valve (2) or directional valve (3) by tightening the nut (4).

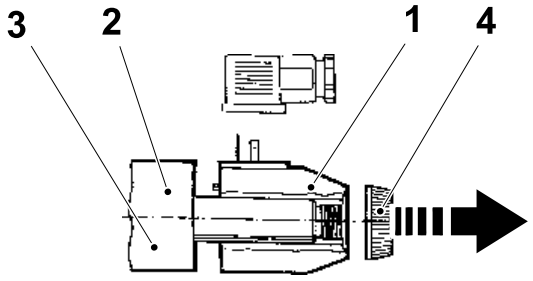

1 Solenoid
2 Bi-stable valve
3 Directional valve
4 Nut

2.8.1.1-9 Hydraulic Unit - Change Check Valves

Machine Status	Electrical supply disconnecting device in position O (OFF) Main air valve OFF Main steam valve ON Main water valve OFF
SPC Reference	3215132-0100

WARNING
Hydraulic oil.
Wear personal protective equipment.

CAUTION
Risk of personal injury.
Follow the lockout procedure to secure the mains power switch in the OFF position.

(Cont'd)

(Cont'd)

a) Remove the valves (1) according to 2.8.1.1-8 Hydraulic Unit - Change Bi-stable Valve, Directional Valve and Solenoid.

b) Remove the check valves (2).

c) Change the O-ring (3) if necessary according to 2.8.1.1-8 Hydraulic Unit - Change Bi-stable Valve, Directional Valve and Solenoid.

d) Assemble the new check valves (2).

e) Assemble the valves (1) according to 2.8.1.1-8 Hydraulic Unit - Change Bi-stable Valve, Directional Valve and Solenoid.

f) Bleed the system according to 2.8.1-4 Hydraulic Unit - Bleed.

g) Check for leaks in the hydraulic system.

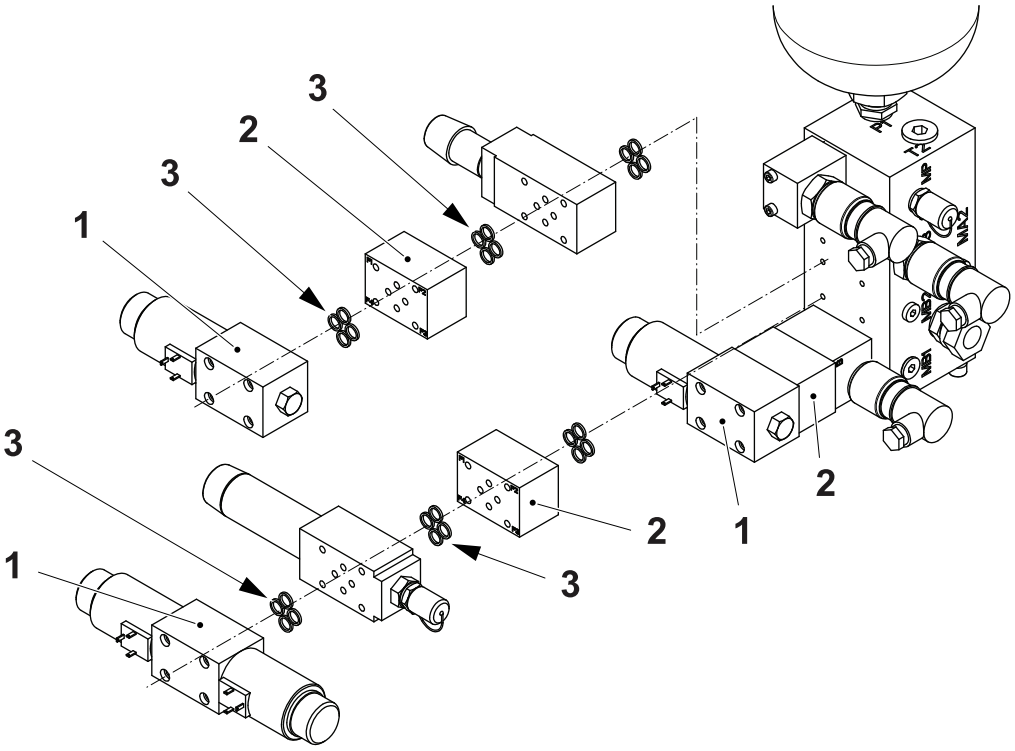

1 Valve
2 Check valve
3 O-ring

2.8.1.1-10 Hydraulic Unit - Change Pressure Reducing Valve

Machine Status	Electrical supply disconnecting device in position O (OFF) Main air valve OFF Main steam valve ON Main water valve OFF
SPC Reference	3215132-0100

WARNING

Hydraulic oil.

Wear personal protective equipment.

CAUTION

Risk of personal injury.

Follow the lockout procedure to secure the mains power switch in the OFF position.

(Cont'd)

(Cont'd)

a) Remove the bi-stable valve (1) and the directional valve (2) according to 2.8.1.1-8 Hydraulic Unit - Change Bi-stable Valve, Directional Valve and Solenoid.

b) Change the pressure reducing valve (3).

c) Change the O-rings (4) if necessary.

d) Set the pressure according to 2.8.1.1-2 Hydraulic Unit - Set Pressure.

e) Bleed the system according to 2.8.1-4 Hydraulic Unit - Bleed.

f) Check for leaks in the hydraulic system.

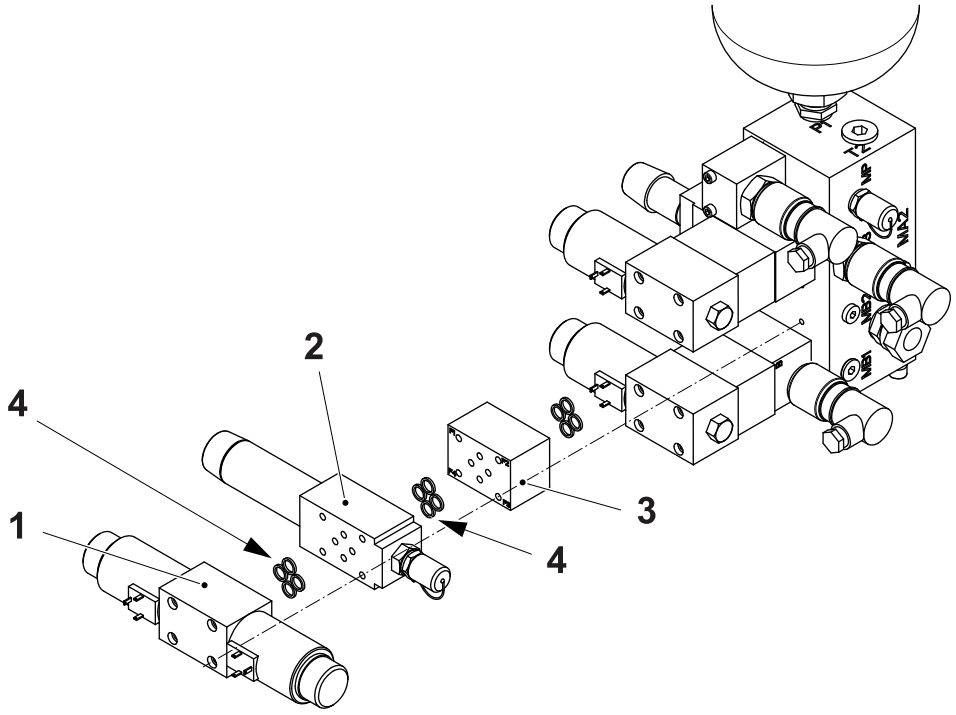

1 Bi-stable valve
2 Directional valve
3 Pressure reducing valve
4 O-ring

2.8.1.1-11 Hydraulic unit - Change Pressure Relief Valve

Machine Status	Electrical supply disconnecting device in position O (OFF) Main air valve OFF Main steam valve ON Main water valve OFF
Special Equipment	Torque Wrench, min. 35 Nm
SPC Reference	3215132-0100

WARNING
Hydraulic oil.
Wear personal protective equipment.

CAUTION
Risk of personal injury.
Follow the lockout procedure to secure the mains power switch in the OFF position.

a) Remove the directional valve (1) according to 2.8.1.1-8 Hydraulic Unit - Change Bi-stable Valve, Directional Valve and Solenoid.

b) Remove the pressure relief valve (2).

c) Fit the new pressure relief valve (2) and tighten to a torque of 35-40 Nm with the aid of a torque wrench.

d) Set the pressure relief valve (2) according to 2.8.1.1-2 Hydraulic Unit - Set Pressure.

e) Bleed the system according to 2.8.1-4 Hydraulic Unit - Bleed.

f) Check for leaks in the hydraulic system.

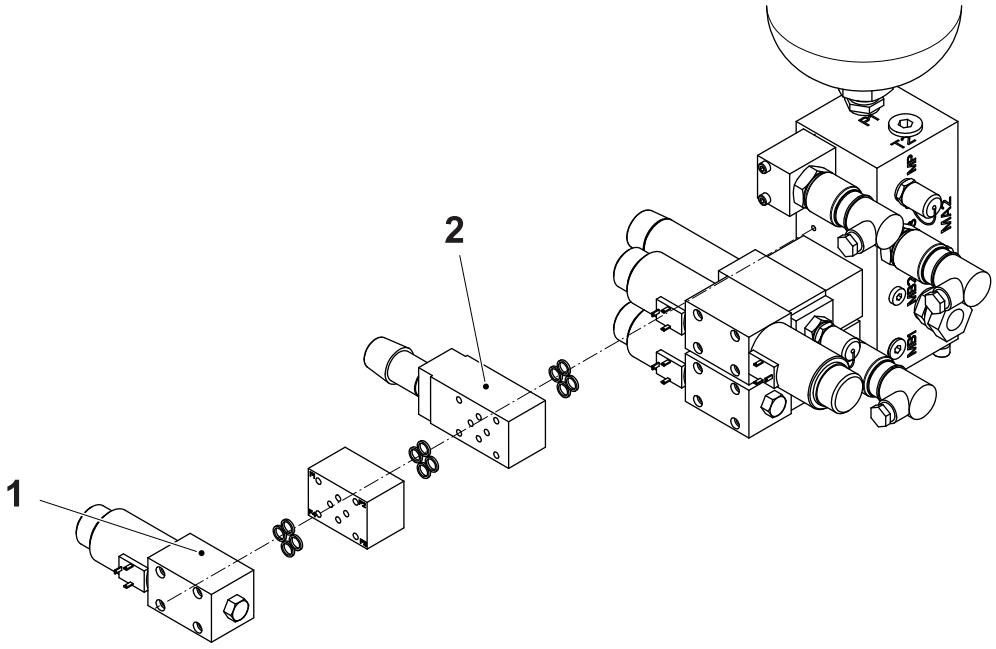

1 Directional valve
2 Pressure relief valve

2.8.1.1-12 Hydraulic Unit - Change Filter Element

Machine Status	Electrical supply disconnecting device in position O (OFF) Main air valve OFF Main steam valve ON Main water valve OFF
SPC Reference	3215132-0100

WARNING
Hydraulic oil.
Wear personal protective equipment.

CAUTION
Risk of personal injury.
Follow the lockout procedure to secure the mains power switch in the OFF position.

a) Change the filter element (1) when the TPOP shows the alarm `BLOCKED PRESSURE FILTER ELEMENT`.

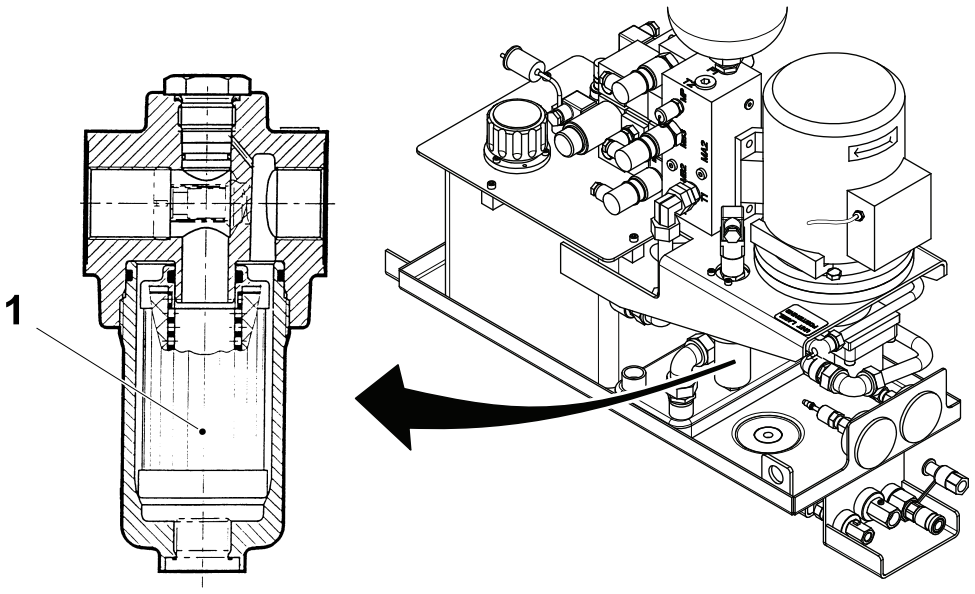

1 Filter element

(Cont'd)

(Cont'd)

b) Remove the filter bowl (2) by unscrewing it.

c) Remove the filter element (1) and check for dirt residue and particles.

Note! The presence of dirt residue and particles may be due to damaged components within the system. Change the damaged parts if necessary.

d) Clean the inside of the filter bowl (2) with the aid of a lubricant.

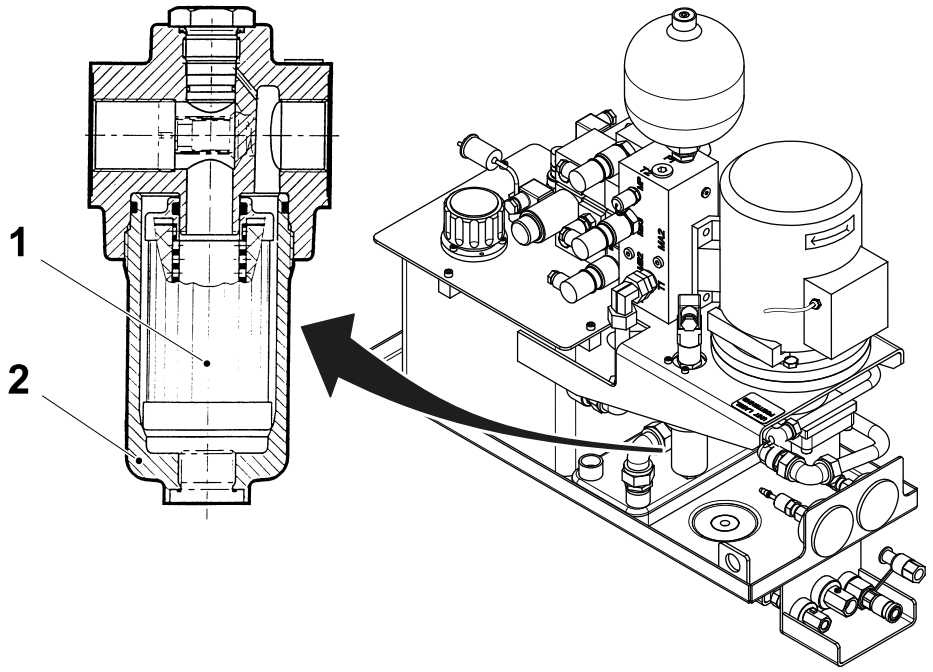

1 Filter element
2 Filter bowl

(Cont'd)

(Cont'd)

e) Change the O-rings (3) if necessary. Lubricate the O-rings (3) with clean oil before assembling.

f) Fit the new filter element (1). Fit the filter bowl (2) completely and then loosen it by a quarter of a turn.

g) Open the drain valve (4) to empty the collecting tray.

h) Bleed the hydraulic system according to 2.8.1-4 Hydraulic Unit - Bleed.

i) Check for leaks in the hydraulic system.

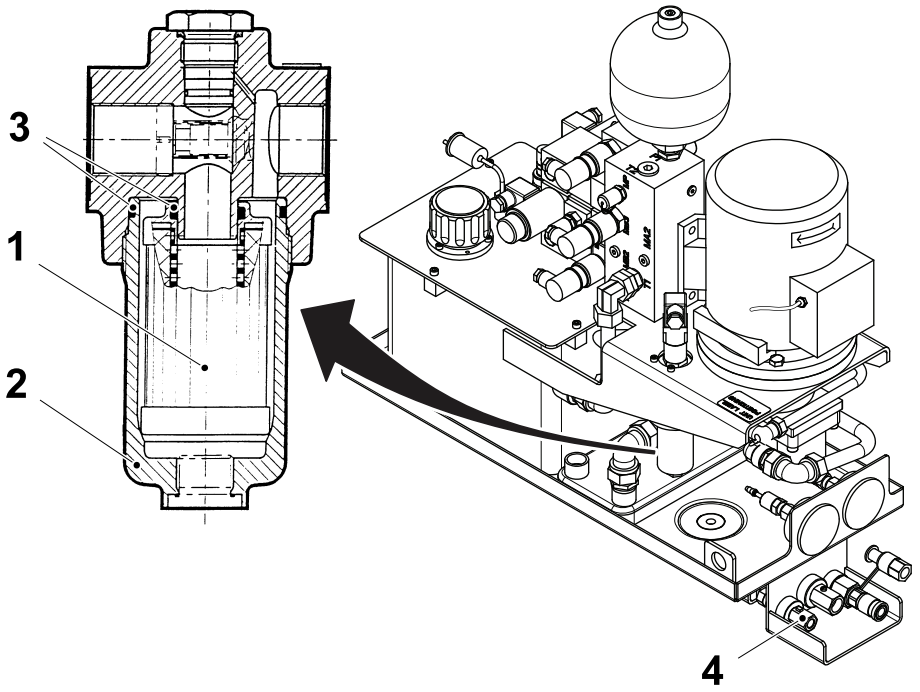

1 Filter element
2 Filter bowl
3 O-ring
4 Drain valve

2.8.1.1-13 Hydraulic Unit - Change Pump

Machine Status	Electrical supply disconnecting device in position O (OFF) Main air valve OFF Main steam valve ON Main water valve OFF
Special Equipment	Dismounting tool TP No. 3047678
SPC Reference	3215132-0100

WARNING

Hydraulic oil.

Wear personal protective equipment.

CAUTION

Risk of personal injury.

Follow the lockout procedure to secure the mains power switch in the OFF position.

a) Remove the motor, see 2.8.1.1-14 Hydraulic Unit - Change Electrical Motor.

(Cont'd)

(Cont'd)

b) Remove the screws (1) and the elbows (2).

c) Remove the coupling spider (3).

Note! Make sure that the dismounting tool (4) is correctly fitted onto the coupling (5).

d) Fit the dismounting tool (4) to the bell housing (6) with the screws (7).

e) Remove the nut (8).

f) Remove screws (9) and the pump (10).

g) Assemble the new pump in the reverse order.

h) Bleed the system according to 2.8.1-4 Hydraulic Unit - Bleed.

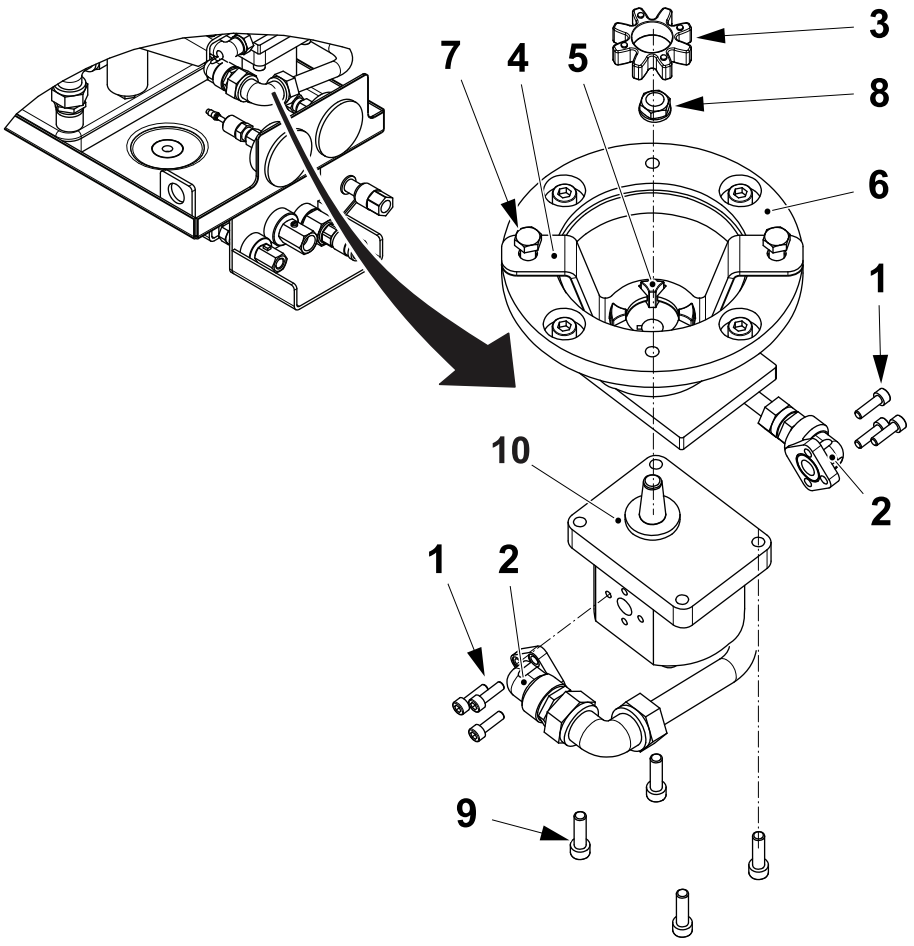

1 Screw
2 Elbow
3 Coupling spider
4 Dismounting tool
5 Coupling
6 Bell housing
7 Screw
8 Nut
9 Screw
10 Pump

2.8.1.1-14 Hydraulic Unit - Change Electrical Motor

Machine Status	Electrical supply disconnecting device in position O (OFF) Main air valve OFF Main steam valve ON Main water valve OFF
SPC Reference	3215132-0100

WARNING

Hydraulic oil.

Wear personal protective equipment.

a) Remove the cable (1) from the electrical motor (2).

b) Remove the four screws (3) holding the electrical motor (2) to the bell housing (4).

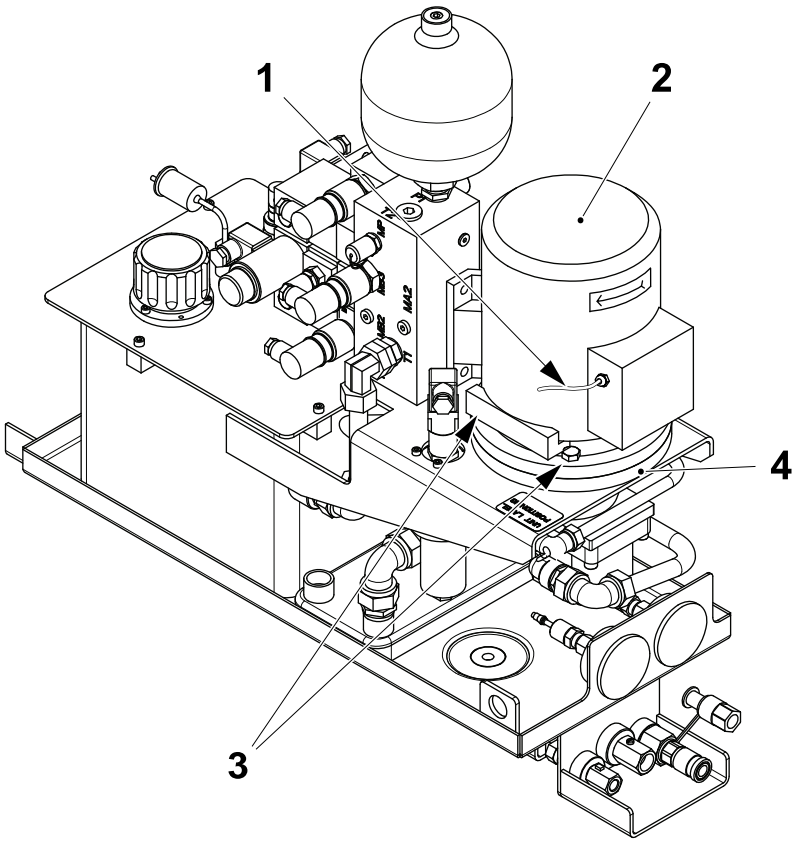

1 Cable
2 Electrical motor
3 Screw
4 Bell housing

(Cont'd)

(Cont'd)

c) Remove the electrical motor (2).

d) Remove the shaft coupling (5) from the electrical motor (2).

e) Fit the shaft coupling (5) to the new electrical motor.

f) Assemble in the reverse order.

g) Press PROGRAM UP button (6) to start the hydraulic unit.

h) Check that the pressure gauge (7) shows **100** bar and that the rotation on the electrical motor (2) is correct according to the arrow (8).

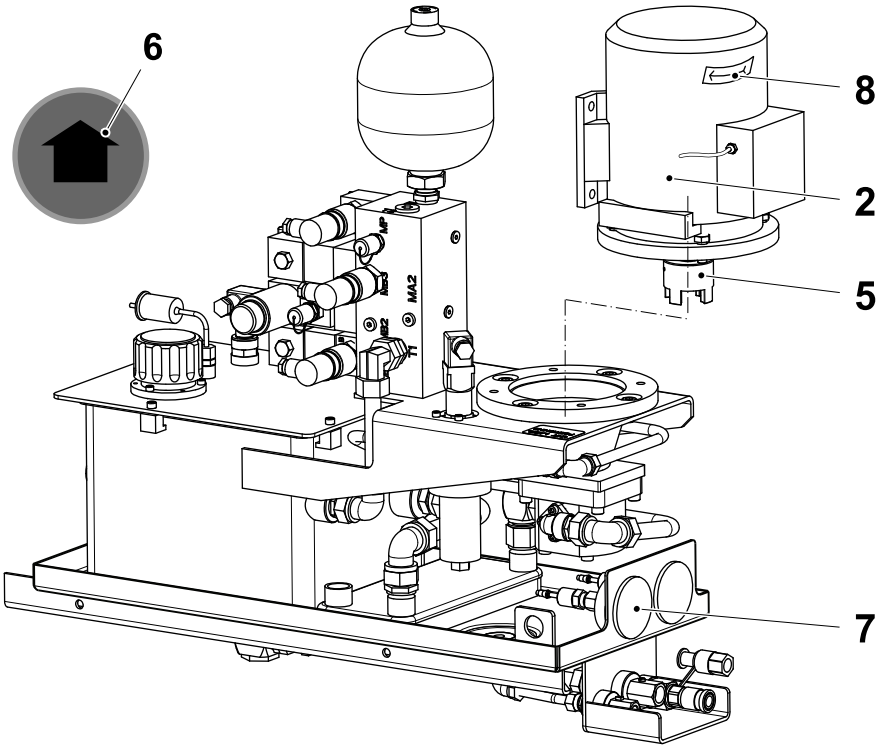

2 Electrical motor
5 Shaft coupling
6 PROGRAM UP button
7 Pressure gauge
8 Arrow

2.8.1.2 Hydraulic Unit (PMC)

2.8.1.2-1 Hydraulic Unit - Check

Machine Status	PREPARATION
SPC Reference	3327773-0100

WARNING
Hydraulic oil.
Wear personal protective equipment.

Check:

- the hydraulic pump (1), check for noise and leaks. Change if necessary
- the hydraulic circuit, visually check for leaks in the hydraulic system.
- that all connections are tightened
- that the rotation of the electrical motor (2) is in accordance with the arrow (3). Start the hydraulic unit to check
- that the oil tank is filled with oil. If necessary refill the oil tank according to 2.8.1-2 Hydraulic Unit - Change Oil

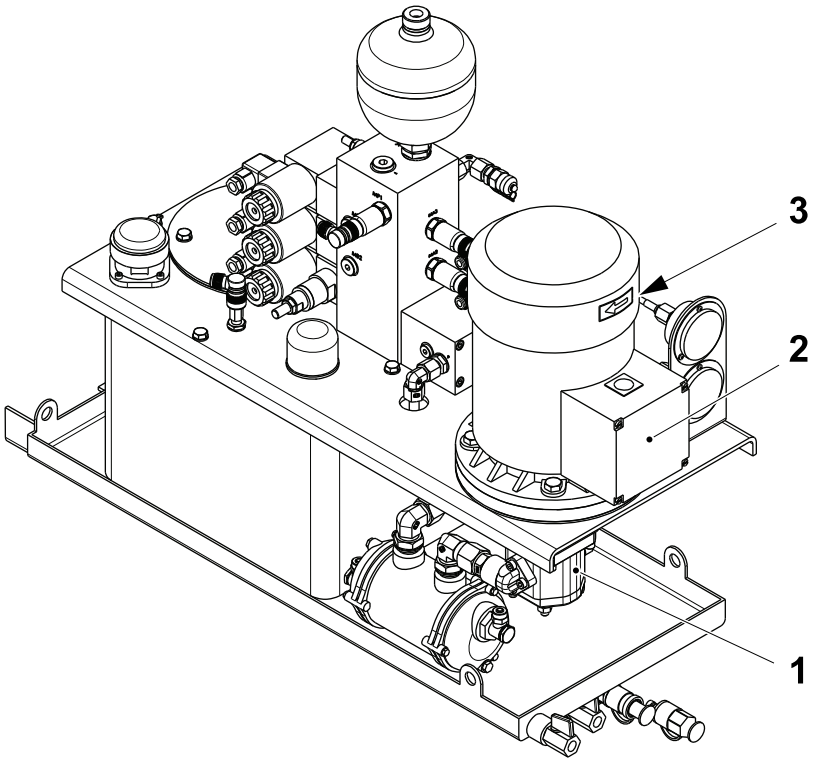

1 Hydraulic pump
2 Electrical motor
3 Arrow

(Cont'd)

(Cont'd)

- for the presence of water in the oil, open the drain valve (4). Change the oil if necessary, see 2.8.1-2 Hydraulic Unit - Change Oil.
- the condition of the hydraulic pump (1) on the pressure gauge (5). The pressure should be 100 bar ±5 (see 9.1 Technical Data). If necessary, set the jaw pressure, see 2.8.1.2-2 Hydraulic Unit - Set Pressure.
- the cutting pressure on the pressure gauge (6). The pressure should be 85 bar (see 9.1 Technical Data). If necessary, set the cutting pressure, see 2.8.1.2-2 Hydraulic Unit - Set Pressure.
- that the cutting jaw and the pressure jaw cylinders move correctly. If not, see 2.8.1-4 Hydraulic Unit - Bleed.
- the complete system for oil leaks
- that there are no warnings or alarms on the TPOP.

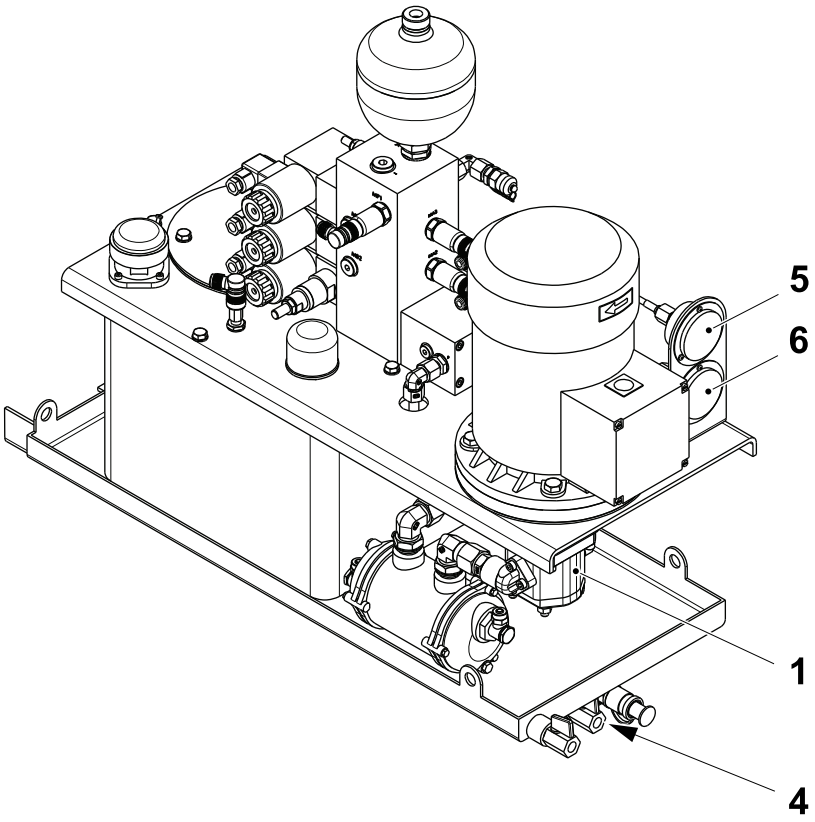

1 Hydraulic pump
4 Drain valve
5 Pressure gauge
6 Pressure gauge

2.8.1.2-2 Hydraulic Unit - Set Pressure

Machine Status	PREPARATION
SPC Reference	3327773-0100

WARNING
Hydraulic oil.
Wear personal protective equipment.

Jaw Pressure Setting

a) Touch the `PRODUCTION CONTROL` button (1) on the TPOP.

b) Touch the `PACKAGE FORMING UNIT` button (2).

c) Touch the `HYDRAULIC OIL PRESSURE` icon (3) to display the `HYDRAULIC OIL PRESSURE` display (4).

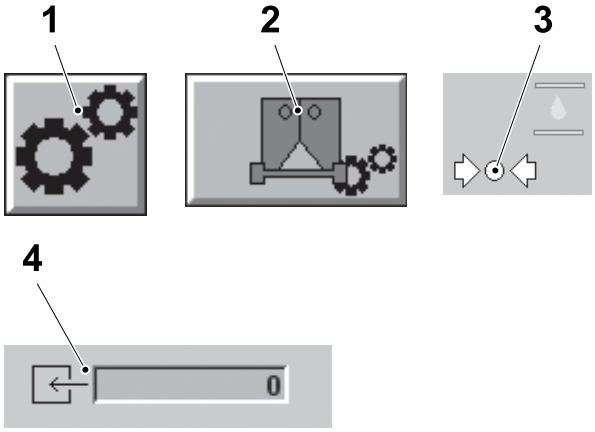

1 Production control button
2 Package forming unit button
3 Hydraulic oil pressure icon
4 Hydraulic oil pressure display

(Cont'd)

(Cont'd)

d) Loosen the lock nut (5).

e) Set the jaw pressure by turning the adjustment screw (6) and checking the value on the , see 9.1 Technical Data for the correct value.

f) Make sure that the value shown on the HYDRAULIC OIL PRESSURE display (4) correspond to the value shown on the pressure gauge (7).

g) Tighten the lock nut (5).

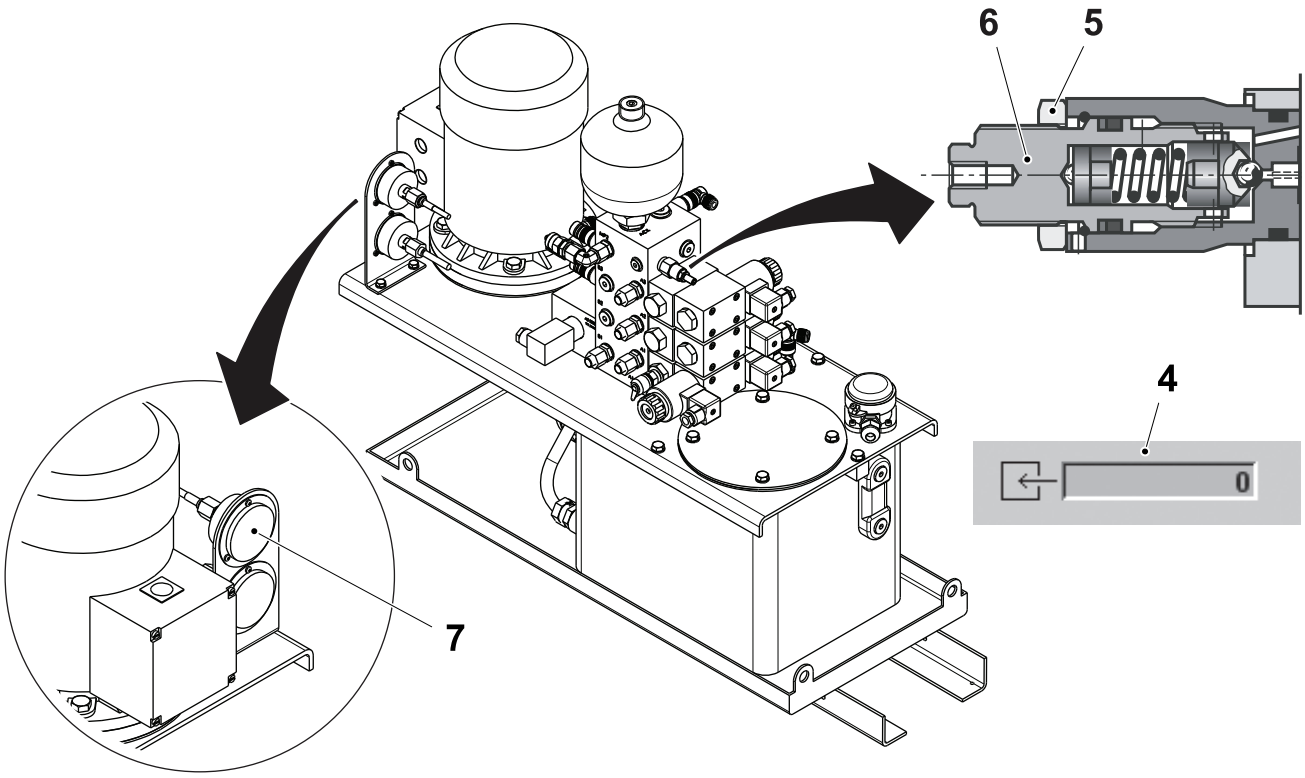

4 Hydraulic oil pressure display
5 Lock nut
6 Adjustment screw
7 Pressure gauge

(Cont'd)

(Cont'd)

Cutting Pressure Setting

a) Loosen the lock nut (1).

b) Set the cutting pressure by turning the screw (2) on the pressure reducing valve (3) and checking the value shown on the pressure gauge (4), see 9.1 Technical Data for the correct value.

c) Tighten the lock nut (1).

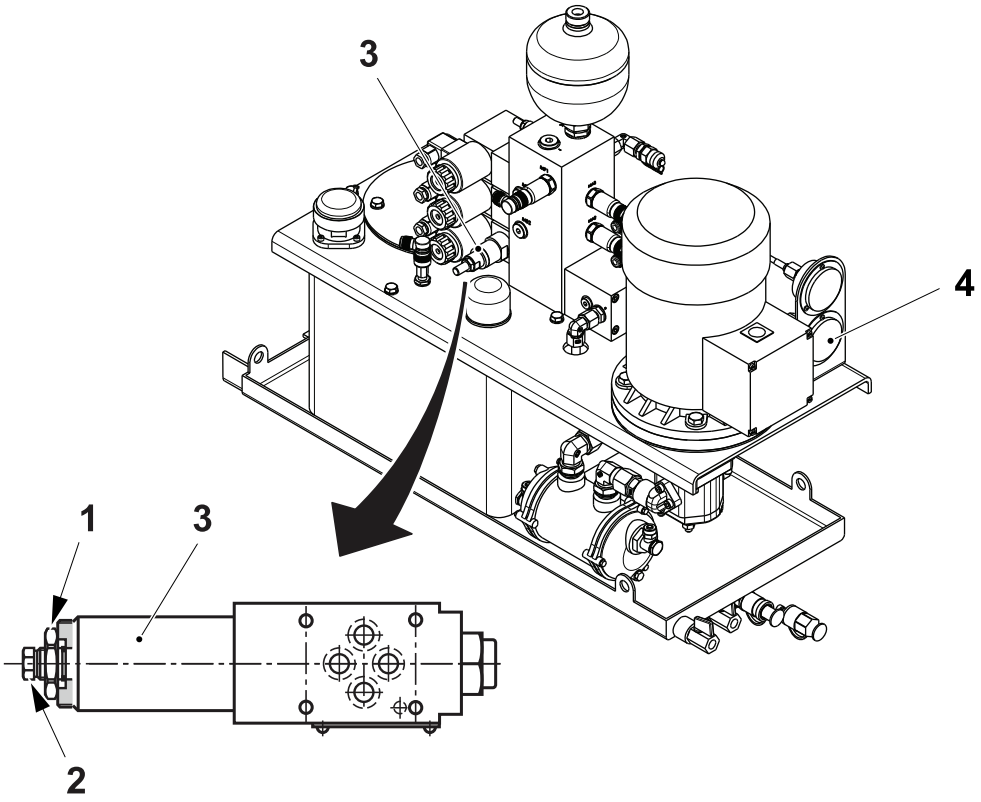

1 Lock nut
2 Screw
3 Pressure reducing valve
4 Pressure gauge

2.8.1.2-3 Hydraulic Unit - Check Level Probe

Machine Status	Electrical supply disconnecting device in position I (ON) Main air valve OFF Main steam valve ON Main water valve OFF
SPC Reference	3327773-0100

WARNING

Hydraulic oil.

Wear personal protective equipment.

(Cont'd)

(Cont'd)

a) Remove the level probe (1) from the hydraulic tank (2).

b) Touch the PRODUCTION CONTROL button (3) on the TPOP.

c) Touch the PACKAGE FORMING UNIT button (4).

d) Touch the HYDRAULIC OIL LEVEL icon (5).

e) Move the float (6) and check that three different colour zones on the HYDRAULIC OIL LEVEL display (7) are visible.

f) Assemble in the reverse order.

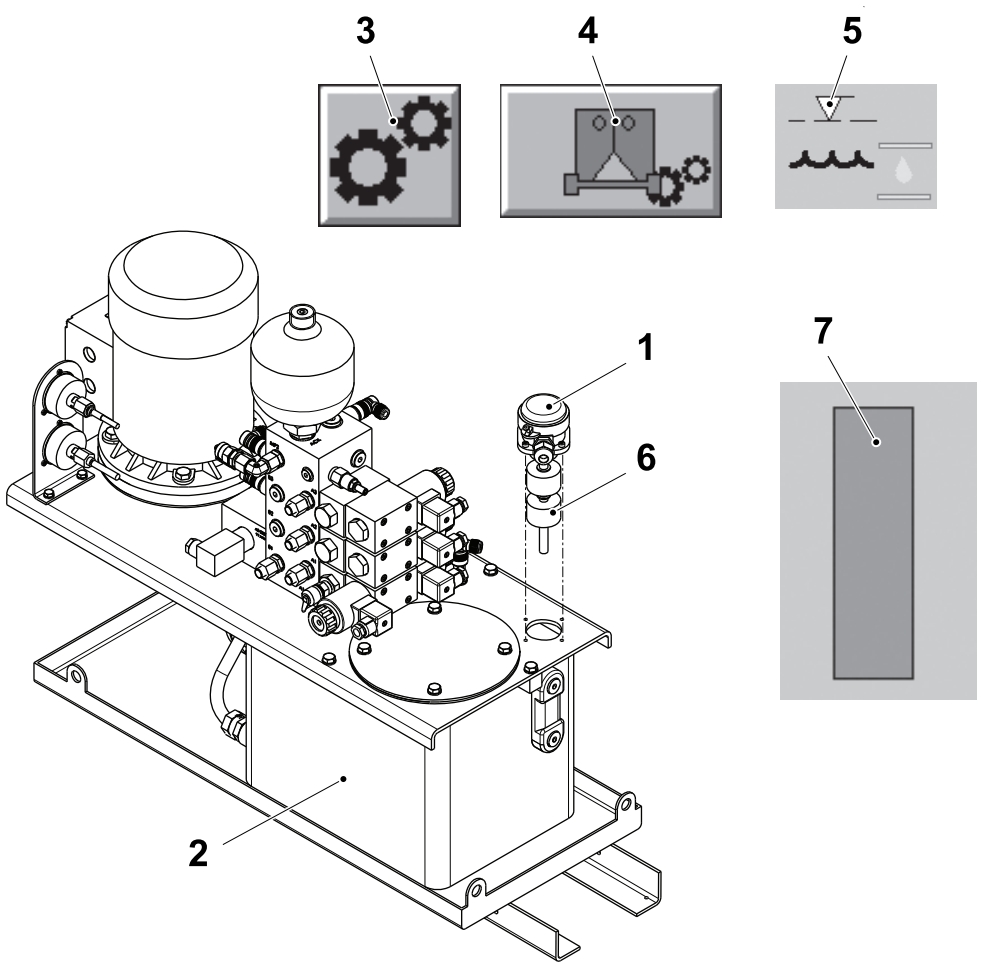

1 Level probe
2 Hydraulic tank
3 Production control button
4 Package forming unit button
5 Hydraulic oil level icon
6 Float
7 Hydraulic oil level display

2.8.1.2-4 Hydraulic Unit - Change Air Filter

Machine Status	Electrical supply disconnecting device in position O (OFF) Main air valve OFF Main steam valve ON Main water valve OFF
SPC Reference	3327773-0100

WARNING

Hydraulic oil.
Wear personal protective equipment.

Note! Change the air filter (1) only when the pressure filter element (2) is replaced or when the air filter (1) is clogged (visual check).

a) Remove the air filter (1) by screwing it out from the hydraulic tank (3).

b) Blow clean the air filter (1) with compressed air or change if necessary.

c) Assemble in the reverse order.

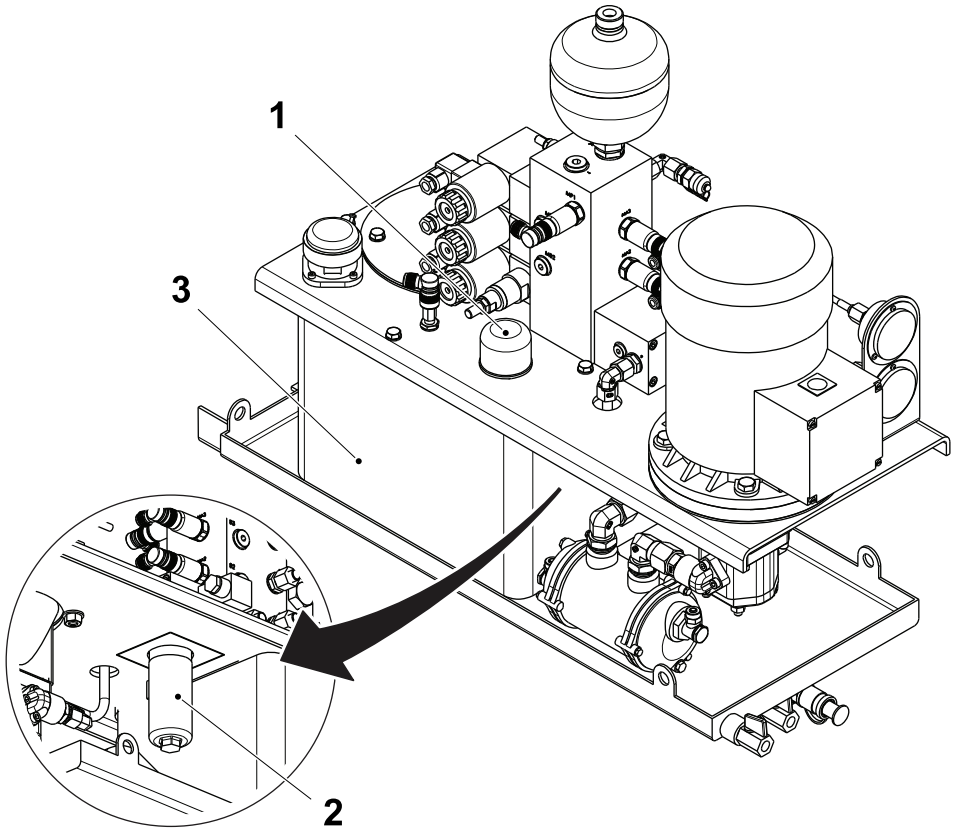

1 Air filter
2 Pressure filter element
3 Hydraulic tank

2.8.1.2-5 Hydraulic Unit - Drain Collection Tray

Machine Status	Electrical supply disconnecting device in position O (OFF) Main air valve OFF Main steam valve ON Main water valve OFF
SPC Reference	3327773-0100

WARNING
Hydraulic oil.
Wear personal protective equipment.

Note! The waste water and oil should be handled as hazardous waste.

a) Place a collecting vessel under the valve (1).

b) Open the valve (1) and drain the oil and water from the collection tray.

c) Close the valve (1).

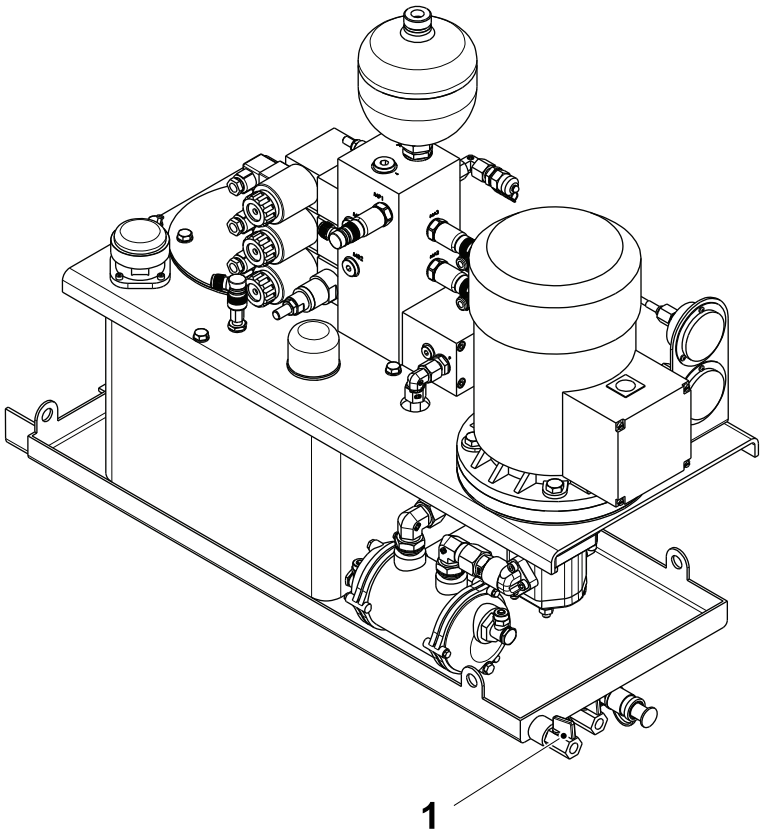

1 Valve

2.8.1.2-6 Hydraulic Unit - Check Accumulator

Machine Status	PREPARATION
SPC Reference	3327773-0100

a) Step up the machine to PREPARATION and make sure that the hydraulic unit starts.

b) Log on to the MAINTENANCE CONTROL window, see 8.6.3-2 HMI - User Management Log On.

c) Touch the MAINTENANCE CONTROL button (1).

d) Touch the PACKAGE FORMING UNIT button (2) to display the PACKAGE FORMING UNIT window.

e) Touch the HYDRAULIC SYSTEM STOP icon (3).

f) Touch the START button (4).

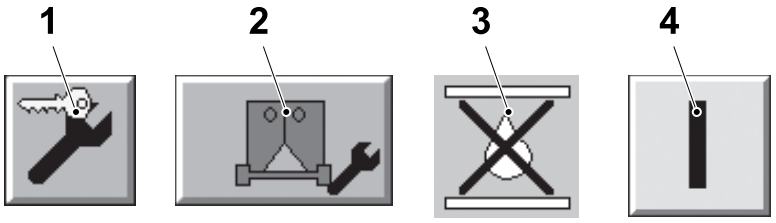

1 Maintenance control button
2 Package forming unit button
3 Hydraulic system stop icon
4 Start button

(Cont'd)

(Cont'd)

Note! The oil temperature must by at least 30°C.

g) Check the oil pressure on the pressure gauge (5). The hydraulic pressure first drops slowly to an intermediate pressure before the pressure drops quickly to zero.

h) If the intermediate pressure is below 55 bar, step down the machine to ZERO and change the accumulator (6), see 2.8.1.2-7 Hydraulic Unit - Change Accumulator.

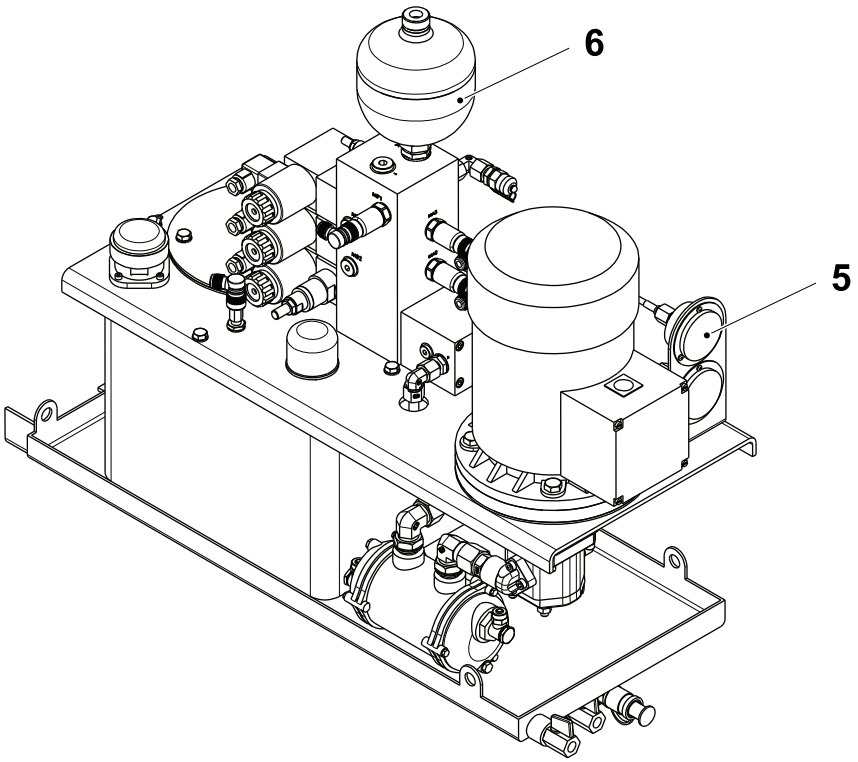

5 Pressure gauge
6 Accumulator

2.8.1.2-7 Hydraulic Unit - Change Accumulator

Machine Status	Electrical supply disconnecting device in position O (OFF) Main air valve OFF Main steam valve ON Main water valve OFF
Special Equipment	Oil filter pliers
SPC Reference	3327773-0100

WARNING

Hydraulic oil.

Wear personal protective equipment.

(Cont'd)

(Cont'd)

CAUTION
Risk of personal injury.
Make sure that the pressure gauge (2) displays 0 bar before removing the accumulator.

a) Press the PROGRAM DOWN button (1) on the TPOP to stop the hydraulic unit and wait until pressure gauge (2) shows 0 bar.

b) Remove the accumulator (3) from the manifold block (4) with the aid of oil filter pliers.

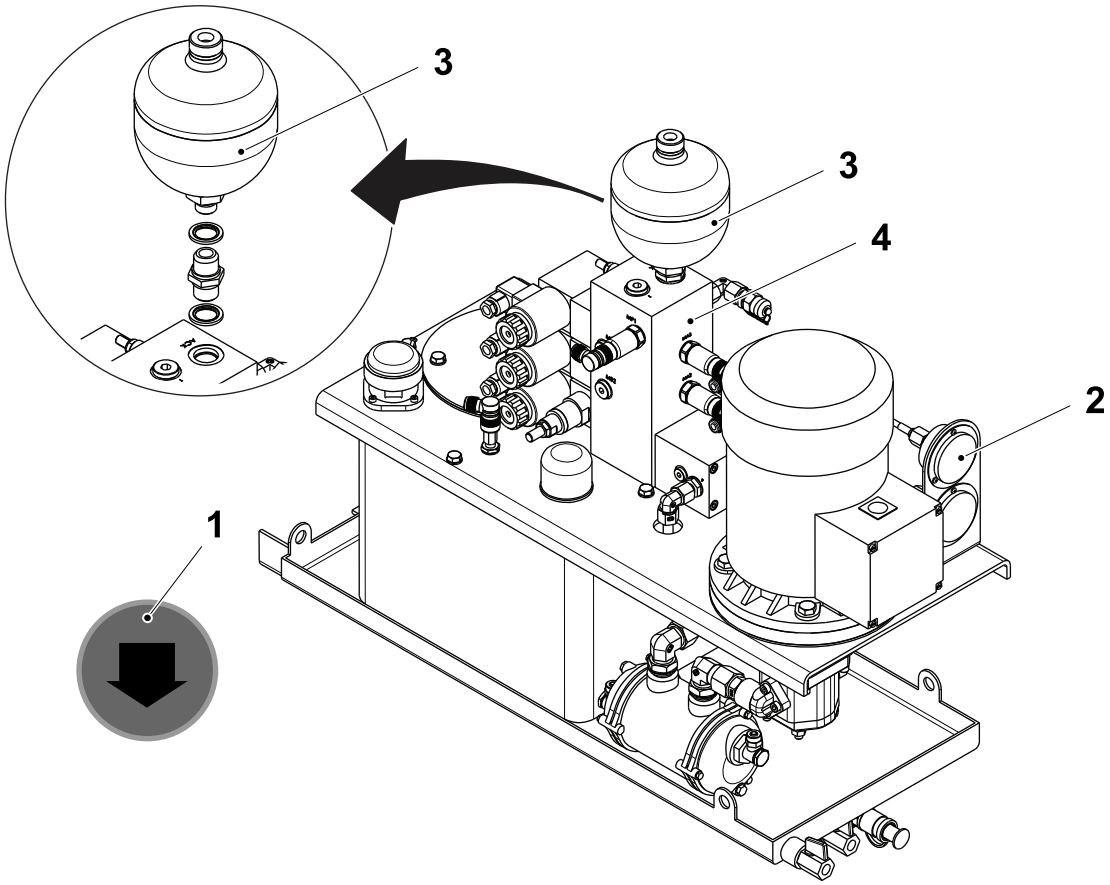

1 Program down button
2 Pressure gauge
3 Accumulator
4 Manifold block

(Cont'd)

(Cont'd)

c) Remove the double nipple (5) from the accumulator (3) by holding the accumulator nut (6).

d) Change the accumulator (3) and assemble in the reverse order.

e) Press the PROGRAM UP button (7) to start the hydraulic unit.

f) Bleed the system according to 2.8.1-4 Hydraulic Unit - Bleed

g) Check for leaks in the hydraulic system.

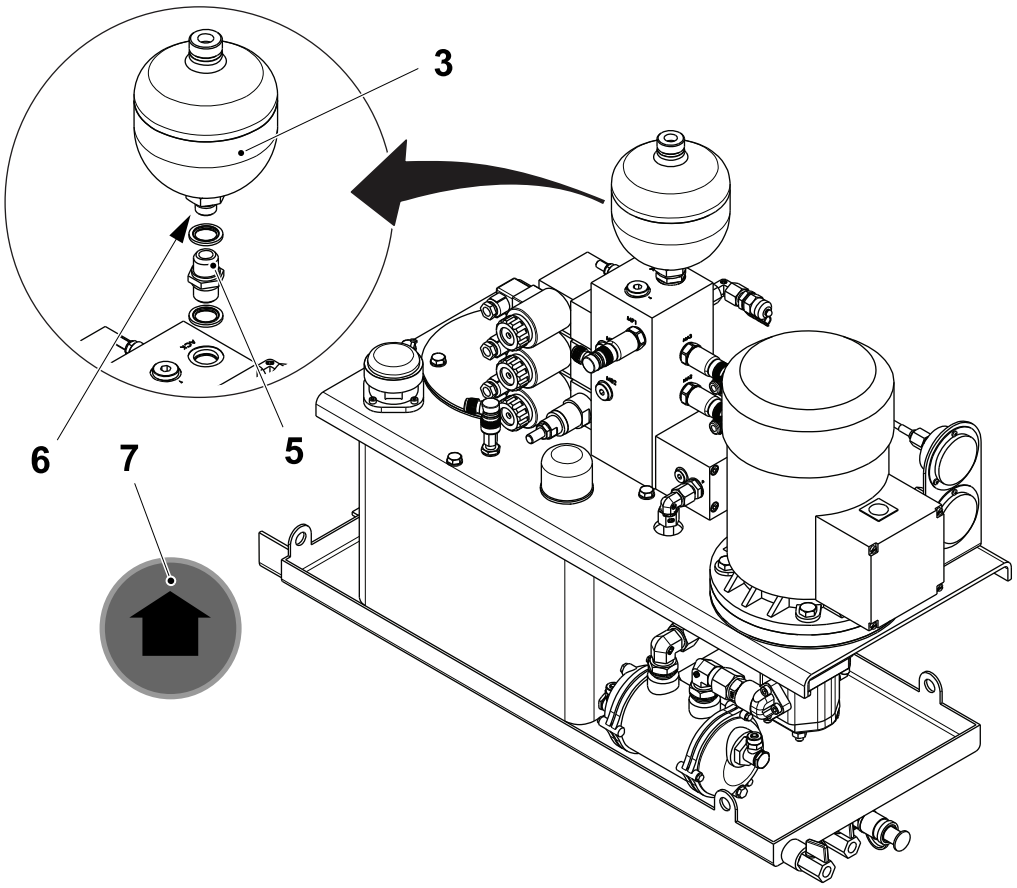

3 Accumulator
5 Double nipple
6 Accumulator nut
7 Program up button

2.8.1.2-8 Hydraulic Unit - Change Directional Valves and Solenoid

Machine Status	Electrical supply disconnecting device in position O (OFF) Main air valve OFF Main steam valve ON Main water valve OFF
Special Equipment	Torque Wrench, minimum 7 Nm
SPC Reference	3327773-0100

WARNING
Hydraulic oil.
Wear personal protective equipment.

CAUTION
Risk of personal injury.
Follow the lockout procedure to secure the mains power switch in the OFF position.

Change Directional Valves

a) Remove the electrical connection (1).

b) Remove the screws (2).

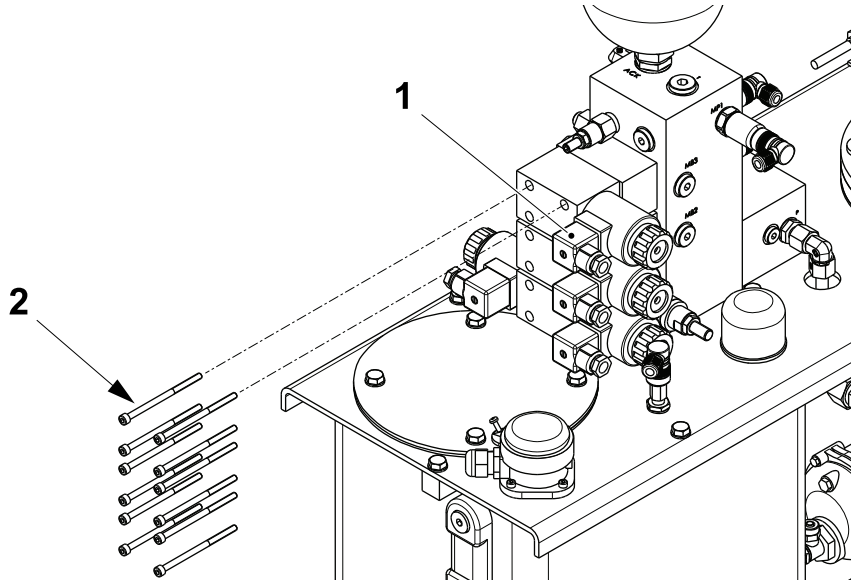

1 Electrical connection
2 Screw

(Cont'd)

(Cont'd)

Note! Check that the flow restrictor (3) Ø1.5 mm is fitted in port P (4) on the directional valve (7) (for knives).

Note! Check theO-rings (8) and change them if necessary.

c) Change the directional valves (5) and (6) (for catches).

d) Change the directional valve (7) (for knives) fitting the flow restrictor (3) in its seat on the new valve.

Note! Tighten the screws to a torque of 7 to 9 Nm on assembly.

e) Assemble in the reverse order, making sure to position the valves as in the illustration.

f) Bleed the system according to 2.8.1-4 Hydraulic Unit - Bleed.

g) Check for leaks in the hydraulic system.

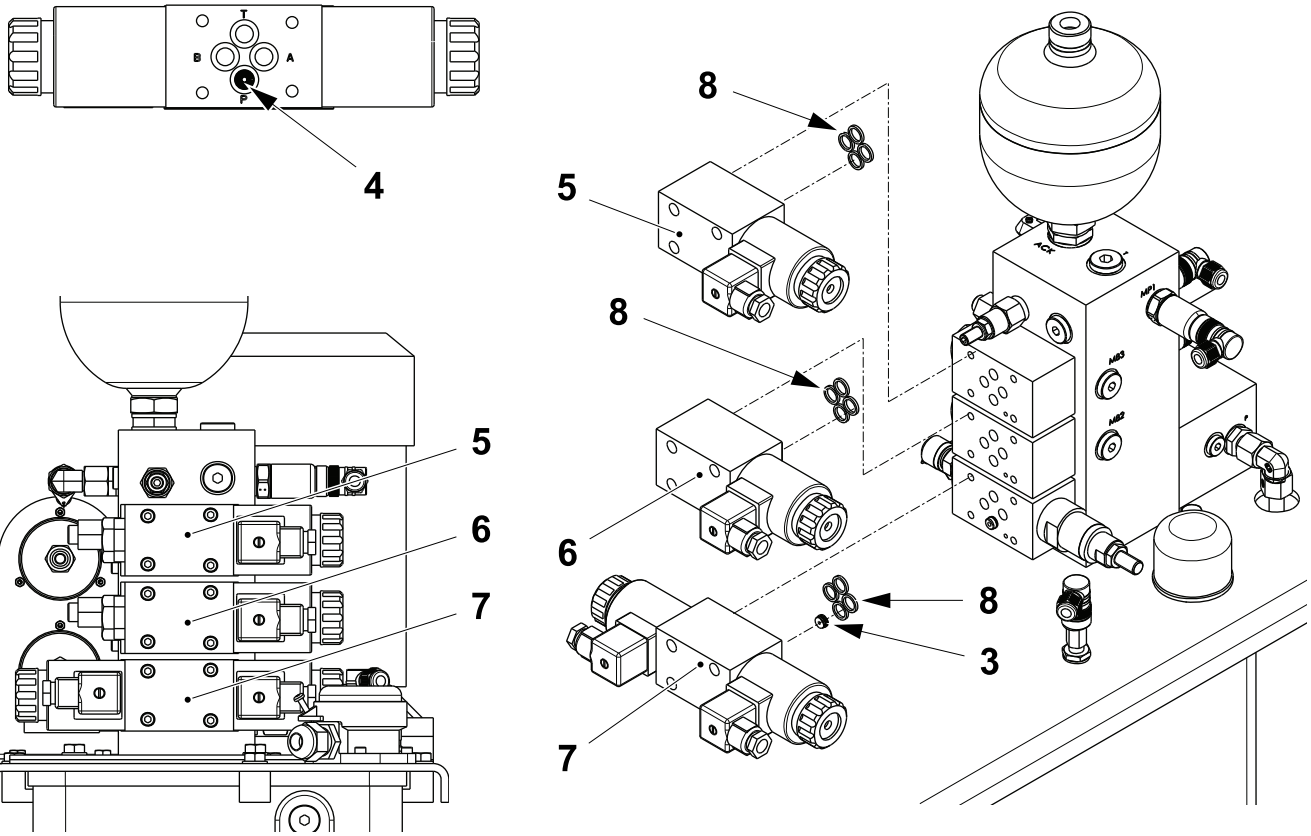

3 Flow restrictor
4 Port P
5 Directional valve T40K9570
6 Directional valve T40K9590
7 Directional valve T40K9550
8 O-ring

(Cont'd)

(Cont'd)

Change Solenoid

a) Remove the solenoid (1) from the directional valve (2) by unscrewing the nut (3).

b) Assemble the new solenoid (1) on the directional valve (2) by tightening the nut (3).

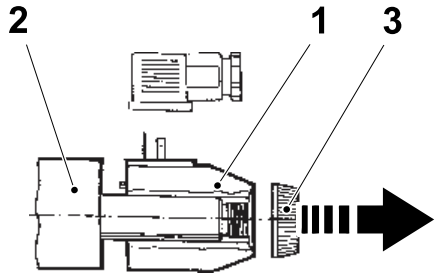

1 Solenoid
2 Directional valve
3 Nut

2.8.1.2-9 Hydraulic Unit - Change Check Valves

Machine Status	Electrical supply disconnecting device in position O (OFF) Main air valve OFF Main steam valve ON Main water valve OFF
SPC Reference	3327773-0100

WARNING
Hydraulic oil.
Wear personal protective equipment.

CAUTION
Risk of personal injury.
Follow the lockout procedure to secure the mains power switch in the OFF position.

(Cont'd)

(Cont'd)

a) Remove the valves (1) (for catches) according to 2.8.1.2-8 Hydraulic Unit - Change Directional Valves and Solenoid.

b) Remove the check valves (2).

c) Change the O-rings (3) if necessary according to 2.8.1.2-8 Hydraulic Unit - Change Directional Valves and Solenoid.

d) Assemble the new check valves (2).

e) Assemble the valves (1) according to 2.8.1.2-8 Hydraulic Unit - Change Directional Valves and Solenoid.

f) Bleed the system according to 2.8.1-4 Hydraulic Unit - Bleed.

g) Check for leaks in the hydraulic system.

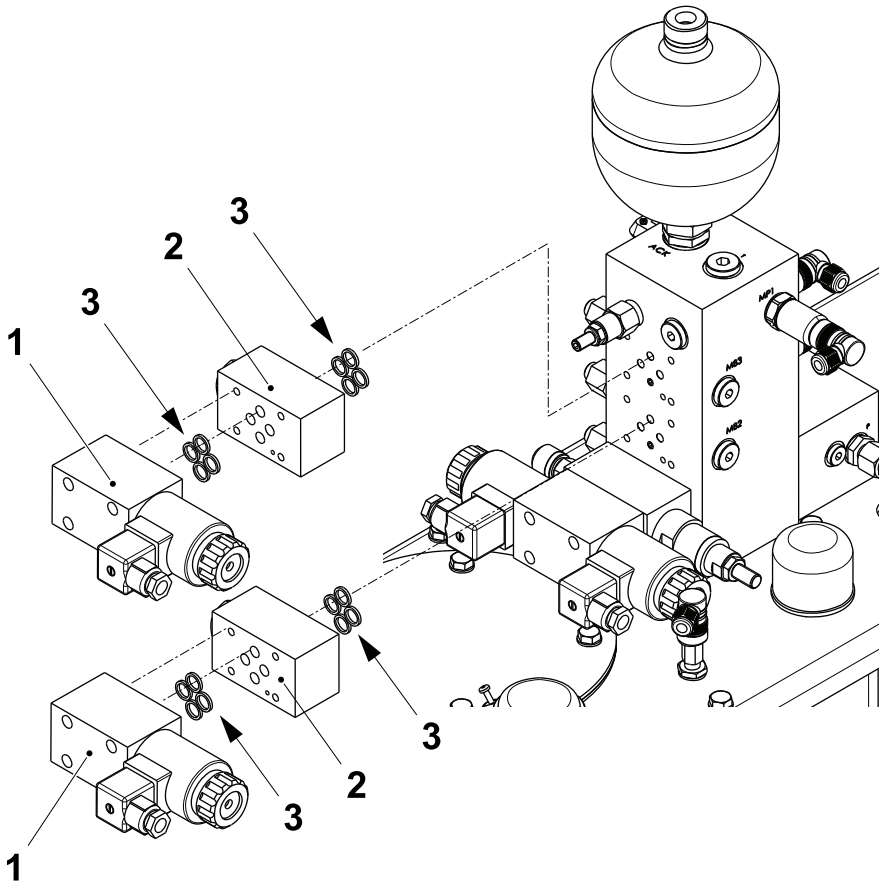

1 Valve
2 Check valve
3 O-ring

2.8.1.2-10 Hydraulic Unit - Change Pressure Reducing Valve

Machine Status	Electrical supply disconnecting device in position O (OFF) Main air valve OFF Main steam valve ON Main water valve OFF
SPC Reference	3327773-0100

WARNING

Hydraulic oil.

Wear personal protective equipment.

CAUTION

Risk of personal injury.

Follow the lockout procedure to secure the electrical supply disconnecting device in the position O (OFF).

(Cont'd)

(Cont'd)

a) Remove the directional valve (1) (for knives) according to 2.8.1.2-8 Hydraulic Unit - Change Directional Valves and Solenoid.

b) Change the pressure reducing valve (2).

c) Change the O-rings (3) if necessary.

d) Set the pressure according to 2.8.1.2-2 Hydraulic Unit - Set Pressure.

e) Bleed the system according to 2.8.1-4 Hydraulic Unit - Bleed.

f) Check for leaks in the hydraulic system.

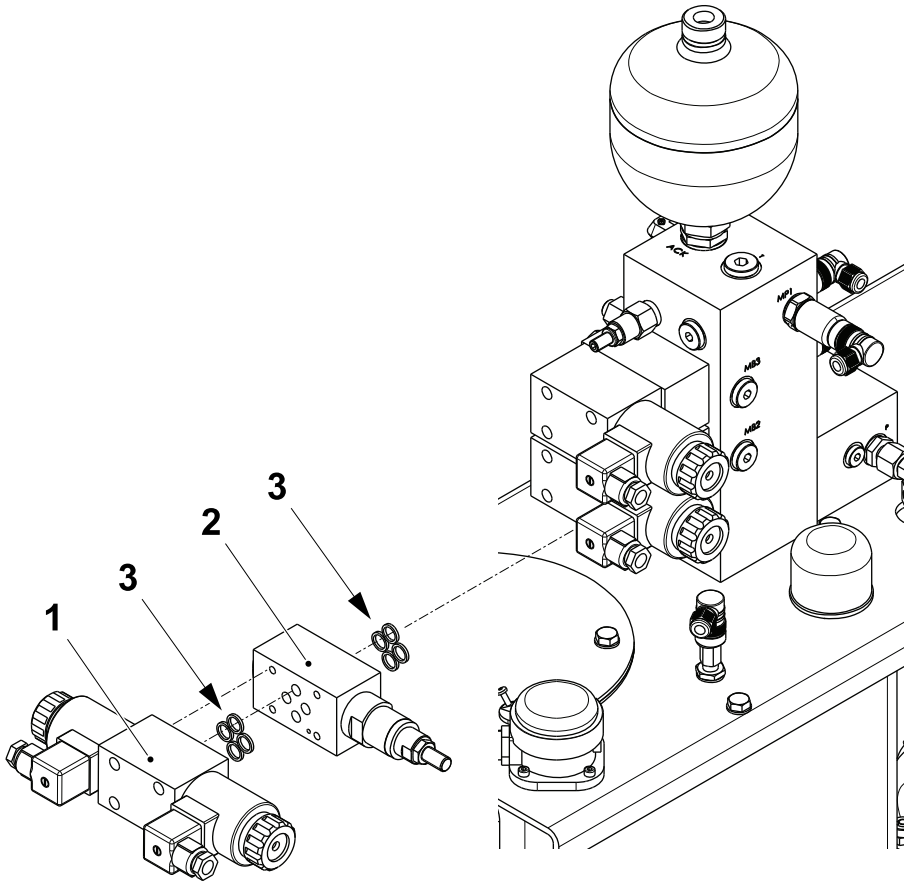

1 Directional valve
2 Pressure reducing valve
3 O-ring

2.8.1.2-11 Hydraulic Unit - Change Pressure Relief Valve

Machine Status	Electrical supply disconnecting device in position O (OFF) Main air valve OFF Main steam valve ON Main water valve OFF
Special Equipment	Torque wrench, min. 35 Nm
SPC Reference	3327773-0100

WARNING

Hydraulic oil.

Wear personal protective equipment.

CAUTION

Risk of personal injury.

Follow the lockout procedure to secure the electrical supply disconnecting device in the position O (OFF).

CAUTION

Risk of personal injury.

Before starting the procedure ensure that the hydraulic pressure is 0 bar.

(Cont'd)

(Cont'd)

a) Remove the pressure relief valve (1) from the manifold (2) using a wrench.

b) Fit the new pressure relief valve (1) and tighten to a torque of 35-40 Nm with the aid of a torque wrench.

c) Set the pressure relief valve (1) according to 2.8.1.2-2 Hydraulic Unit - Set Pressure.

d) Bleed the system according to 2.8.1-4 Hydraulic Unit - Bleed.

e) Check for leaks in the hydraulic system.

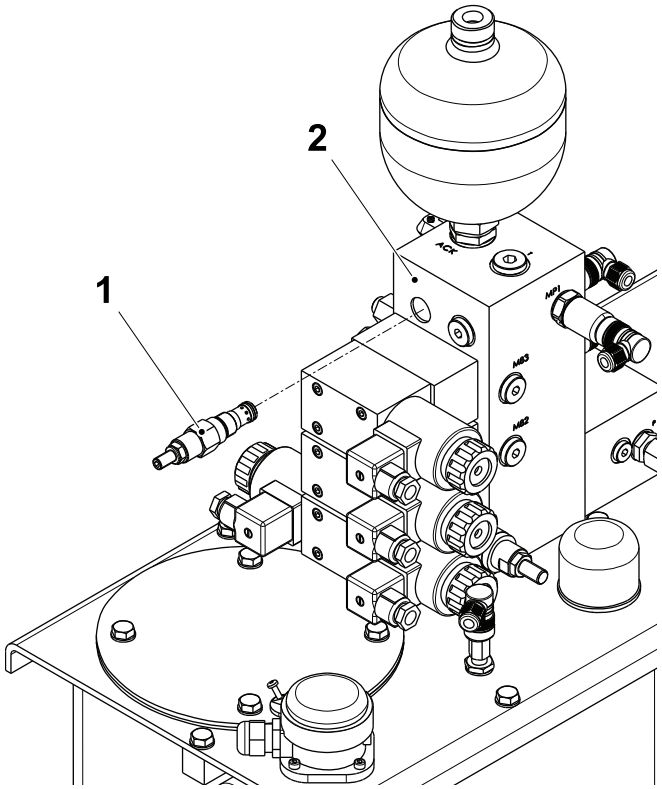

1 Pressure relief valve
2 Manifold

2.8.1.2-12 Hydraulic Unit - Change Pump Filter Element

Machine Status	Electrical supply disconnecting device in position O (OFF) Main air valve OFF Main steam valve ON Main water valve ON
Consumables	Lubricant Kluberfood 4 NH1-32, TP No. 344390-0000
SPC Reference	3327773-0100

WARNING
Hydraulic oil.
Wear personal protective equipment.

CAUTION
Risk of personal injury.
Follow the lockout procedure to secure the electrical supply disconnecting device in the position O (OFF).

CAUTION
Risk of damage to the equipment.
Use the lubricant indicated in the table above. Do not mix synthetic with mineral lubricants or synthetic lubricants having a different base, see the section 9.3.1 Lubricants.

(Cont'd)

(Cont'd)

Note! Change the filter element (1) when the TPOP displays the alarm text BLOCKED PRESSURE FILTER ELEMENT.

a) Unscrew and remove the filter bowl (2).

b) Remove the filter element (1) and check for dirt residue and particles.

Note! The presence of dirt residue and particles may be due to damaged components within the system. Change the damaged parts if necessary.

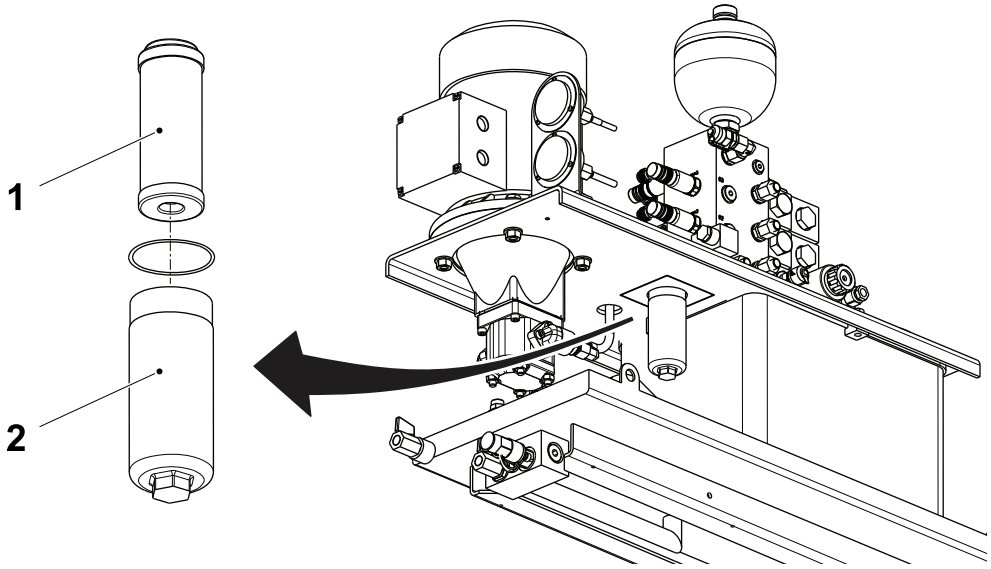

1 Filter element
2 Filter bowl

(Cont'd)

(Cont'd)

c) Change the O-rings (3) if necessary. Lubricate the O-rings (3) with clean oil before assembling.

d) Fit the new filter element (1). Fit the filter bowl (2) completely and then loosen it by a quarter of a turn.

e) Open the drain valve (4) to empty the collecting tray.

f) Bleed the hydraulic system according to 2.8.1-4 Hydraulic Unit - Bleed

g) Check for leaks in the hydraulic system.

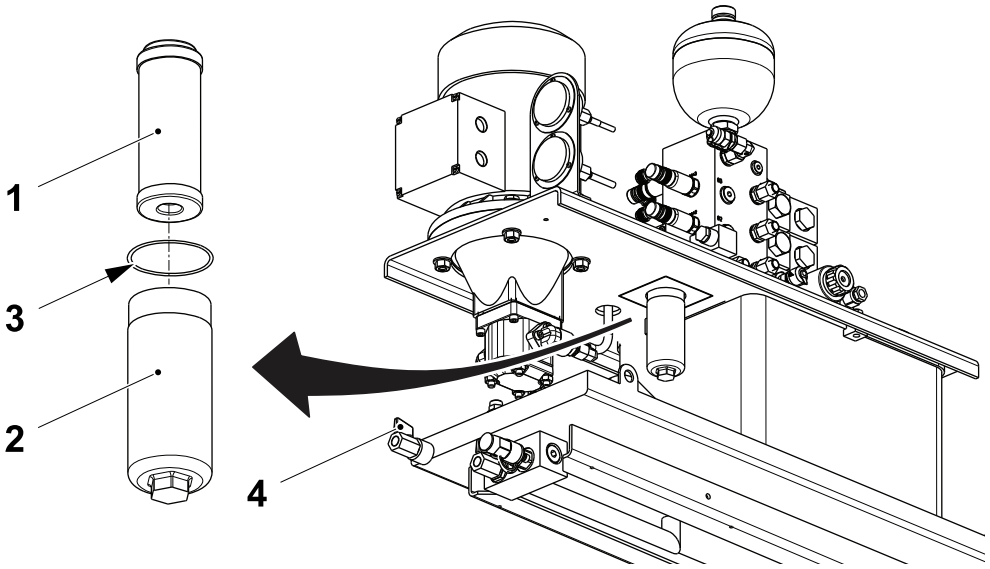

1 Filter element
2 Filter bowl
3 O-ring
4 Drain valve

2.8.1.2-13 Hydraulic Unit - Change Pump

Machine Status	Electrical supply disconnecting device in position O (OFF) Main air valve OFF Main steam valve ON Main water valve OFF
Special Equipment	Dismounting tool, TP No. 3347709-0000
SPC Reference	3327773-0100

WARNING
Hydraulic oil.
Wear personal protective equipment.

(Cont'd)

(Cont'd)

CAUTION

Risk of personal injury.

Follow the lockout procedure to secure the electrical supply disconnecting device in the position O (OFF).

a) Remove the motor, see 2.8.1.2-14 Hydraulic Unit - Change Motor.

b) Remove the screws (1) and disconnect the elbows (2).

c) Remove the screws (3).

d) Extract the bell housing (4) with the pump (5) assembled and move them on the work bench.

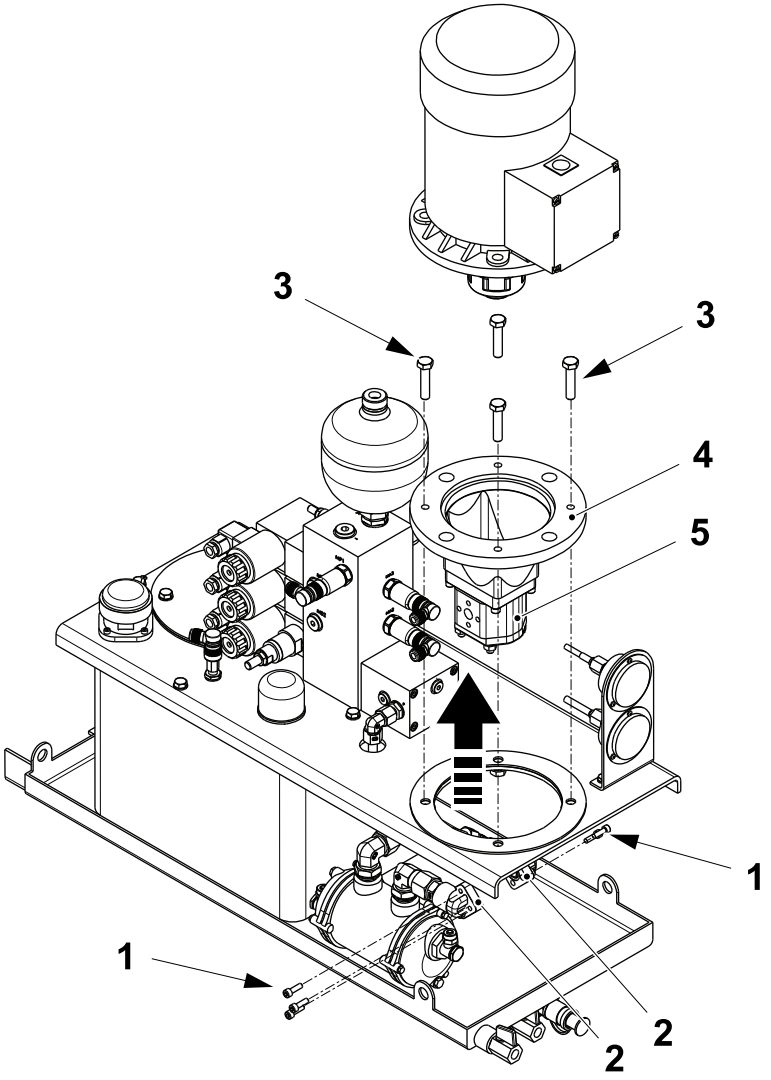

1 Screw
2 Elbow
3 Screw
4 Bell housing
5 Pump

(Cont'd)

(Cont'd)

e) Remove the coupling spider (6).

f) Fit the dismounting tool (7) to the bell housing (4) with the screws (8).

Note! Make sure that the dismounting tool (7) is correctly fitted onto the coupling (9).

g) Remove the nut (10).

h) Tighten the screw (11).

i) Remove the screws (12) and the pump (5).

j) Assemble the new pump in the reverse order.

k) Bleed the system according to 2.8.1-4 Hydraulic Unit - Bleed.

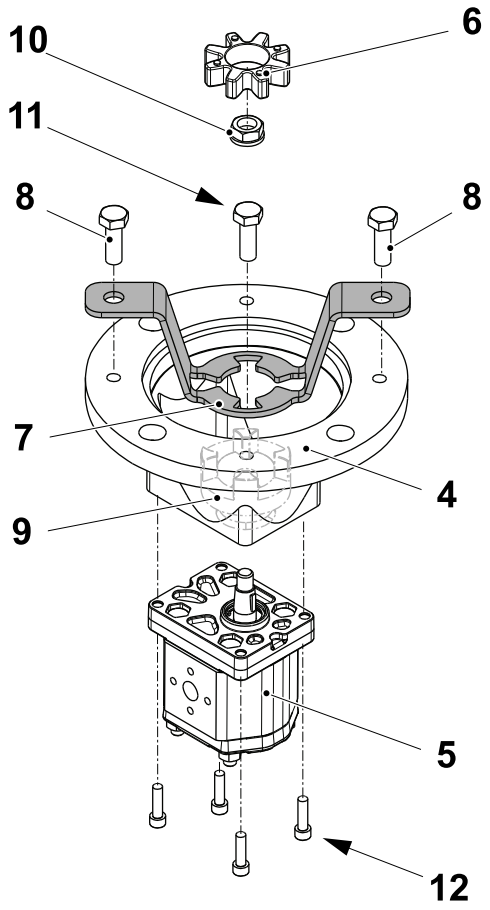

4 Bell housing
5 Pump
6 Coupling spider
7 Dismounting tool
8 Screw
9 Coupling
10 Nut
11 Screw
12 Screw

2.8.1.2-14 Hydraulic Unit - Change Motor

Machine Status	Electrical supply disconnecting device in position O (OFF) Main air valve OFF Main steam valve ON Main water valve OFF
SPC Reference	3327773-0100

WARNING

Hydraulic oil.

Wear personal protective equipment.

a) Remove the cable (1) from the electrical motor (2).

b) Remove the four screws (3) on the motor flange.

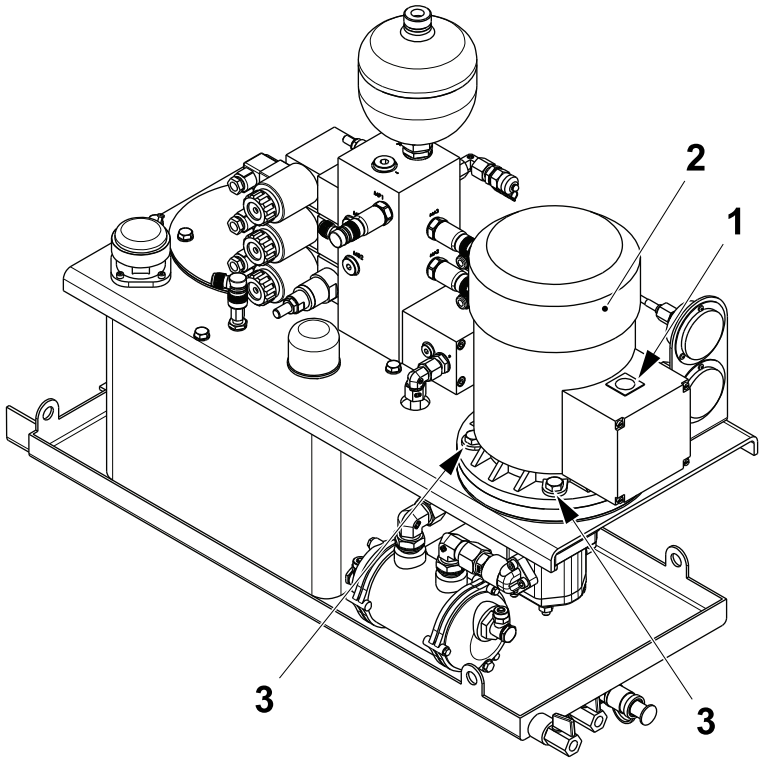

1 Cable
2 Electrical motor
3 Screw

(Cont'd)

(Cont'd)

c) Remove the electrical motor (2).

d) Remove the shaft coupling (4) from the electrical motor (2).

e) Fit the shaft coupling (4) to the new electrical motor.

f) Assemble in the reverse order.

g) Press the PROGRAM UP button (5) to start the hydraulic unit.

h) Check that the pressure gauge (6) shows 100 bar and that the rotation on the electrical motor (2) is correct according to the arrow (7).

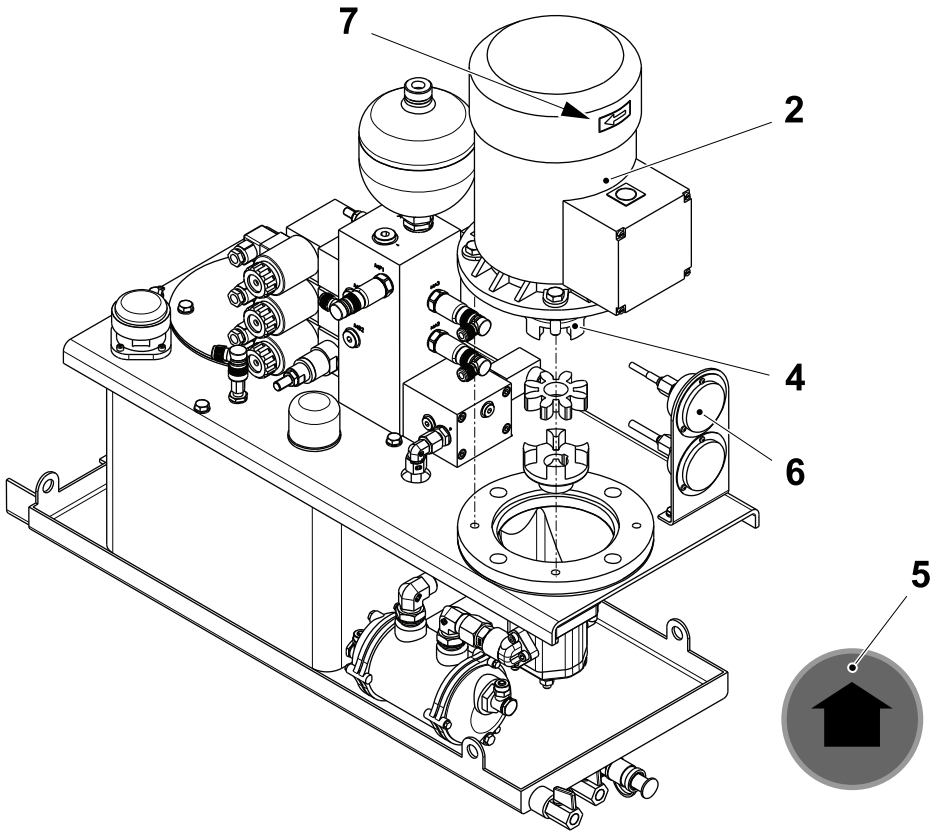

2 Electrical motor
4 Shaft coupling
5 Program up button
6 Pressure gauge
7 Arrow

2.8.2 Lubrication Unit

2.8.2-1 Lubrication Unit - Check Pressure Guard

Machine Status	Electrical supply disconnecting device in position I (ON) Main air valve ON Main steam valve ON Main water valve OFF
SPC Reference	2844594-0200

a) Loosen the screw (1) and remove the pressure guard cover (2).

b) Touch the `PRODUCTION CONTROL` button (3) on the TPOP display.

c) Touch the `JAW UNIT` button (4).

d) Touch the `JAW LUBRICATION` icon (5).

e) Touch the `START` button (6) to enable the lubricating system.

f) Make sure that the mechanism inside the pressure guard is working. If not, change the pressure guard.

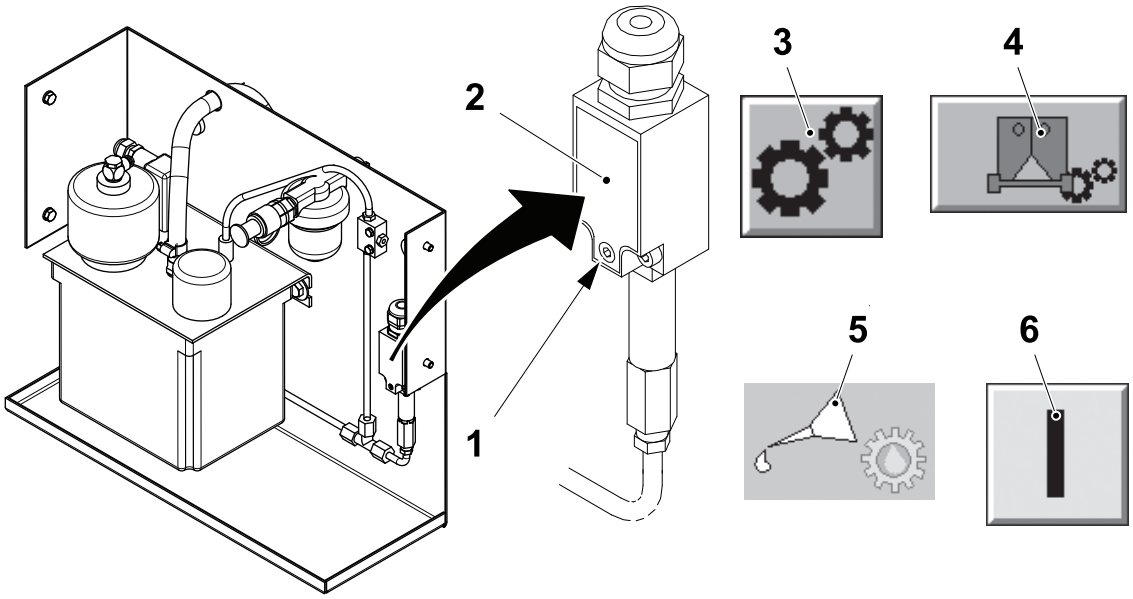

1 Screw
2 Pressure guard cover
3 `PRODUCTION CONTROL` button
4 `JAW UNIT` button
5 `JAW LUBRICATION` icon
6 `START` button

2.8.2-2 Lubrication Unit - Check Oil Pressure

Machine Status	Electrical supply disconnecting device in position I (ON) Main air valve ON Main steam valve ON Main water valve OFF
Consumables	Lubricant, Kluberoil 4 UH1 320-N TP No. 344414-0000
SPC Reference	2844594-0200

a) Remove the hose (1) and connect a 0-6 MPa pressure gauge (2) to the nipple (3).

b) Perform the items b), c), d) and e) in the pressure guard procedure, see 2.8.2-7 Lubrication Unit - Change Filter Insert.

c) Check that the pressure rises to at least 30 bar.

d) Thereafter, within 30 seconds, the pressure must drop to a value below 1 bar.

e) If not, check for leaks in the lubricating system, see 2.8.2-6 Lubrication Unit - Fill Oil.

f) If the pressure is satisfactory remove the 0-6 MPa pressure gauge (2) and fit back the hose (1).

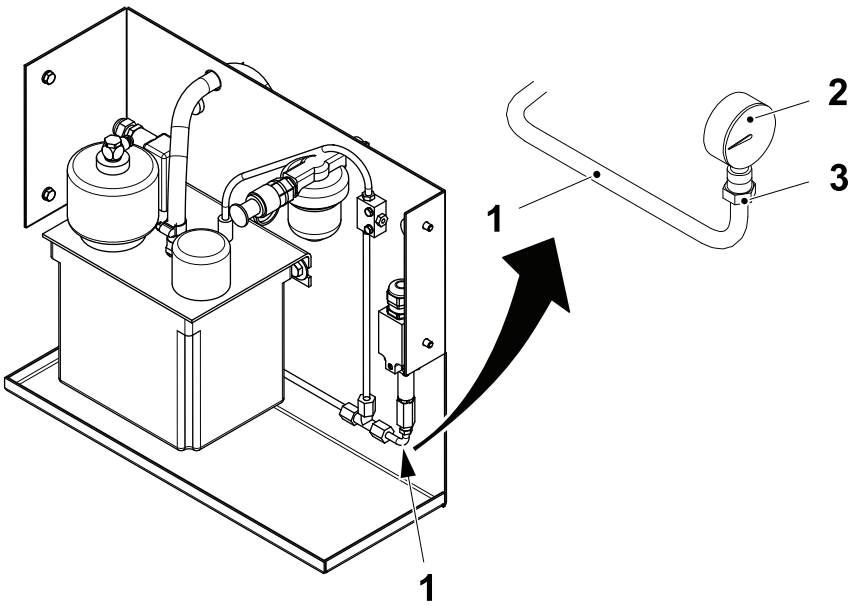

1 Hose
2 Pressure gauge
3 Nipple

2.8.2-3 Lubrication Unit - Check Oil Feed

Machine Status	Electrical supply disconnecting device in position I (ON) Main air valve ON Main steam valve ON Main water valve OFF
SPC Reference	2844594-0200

a) Perform items from b) to e) on page 2-202.

b) Make sure that the oil reaches:

- the areas marked with arrows in the jaw system and design correction, see the illustration below
- the four lubrication points on the jaw and yoke links on the drive unit

c) Check for oil leakage by checking for air bubbles in the oil hoses. This indicates that the lubrication pump is leaking or there is a leak in the lubrication system.

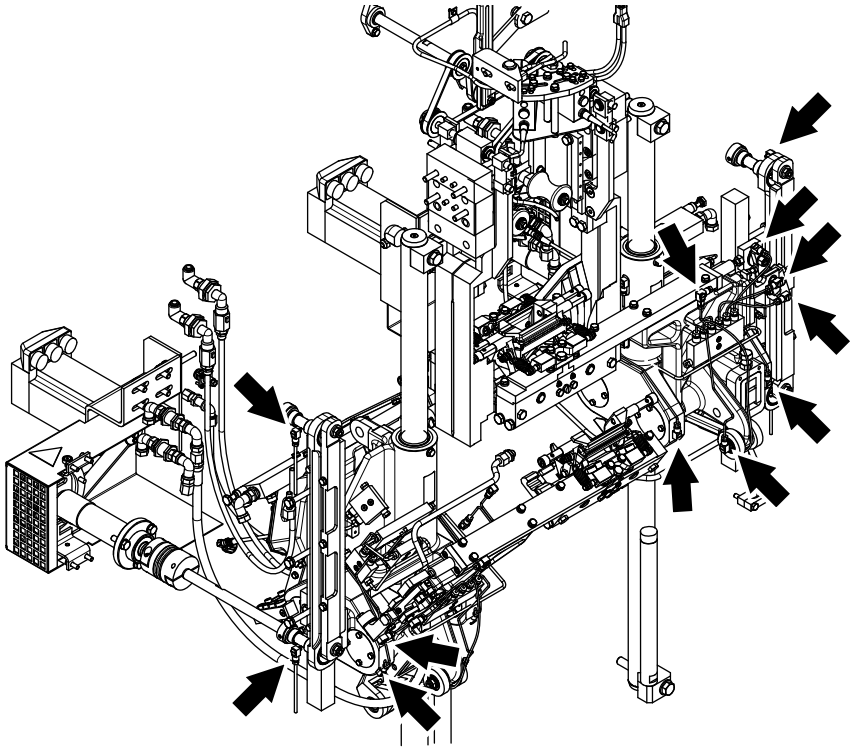

2.8.2-4 Lubrication Unit - Clean Oil Tank

Machine Status	Electrical supply disconnecting device in position O (OFF) Main air valve OFF Main steam valve ON Main water valve OFF
SPC Reference	2844594-0200

a) Loosen the screws (1) and remove the oil tank (2).

b) Empty the oil tank (2) and clean it with a lint-free cloth.

c) Fit the clean oil tank (2) with the screws (1).

d) Fill the oil tank (2) with oil, see 2.8.2-6 Lubrication Unit - Fill Oil.

e) Bleed the system, see 2.8.2-5 Lubrication Unit - Bleed.

f) Check the oil pressure, see 2.8.2-2 Lubrication Unit - Check Oil Pressure.

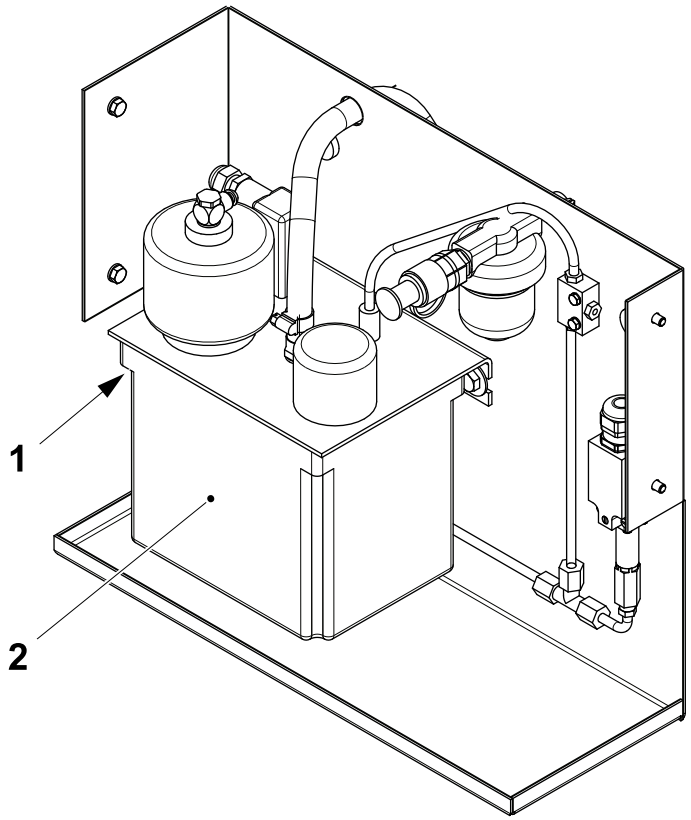

1 Screw
2 Oil tank

2.8.2-5 Lubrication Unit - Bleed

Machine Status	Electrical supply disconnecting device in position O (OFF) Main air valve OFF Main steam valve ON Main water valve OFF
SPC Reference	2844594-0200

Note! Loosen one bleeding point at a time.

a) To bleed the lubrication system loosen:

- one distribution bleed nipple or hose nipple, indicated by the arrows
- one venting valve on each drive unit runner block.

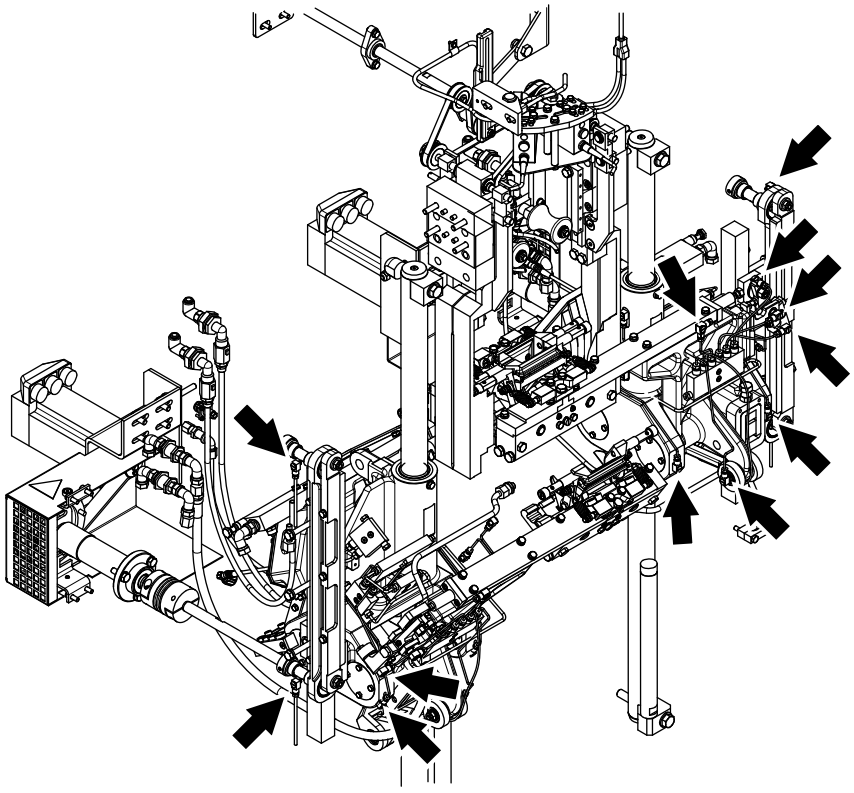

(Cont'd)

(Cont'd)

b) Follow the instructions from b) to d) on page 2-209.

c) Perform item e) on page 2-209, at 5 minute intervals until air free oil is bled out.

d) Tighten the distribution venting valve, bleed nipple or hose nipple.

Note! Always bleed the system whenever one of the main lines between the pump and the metering valve has been disconnected.

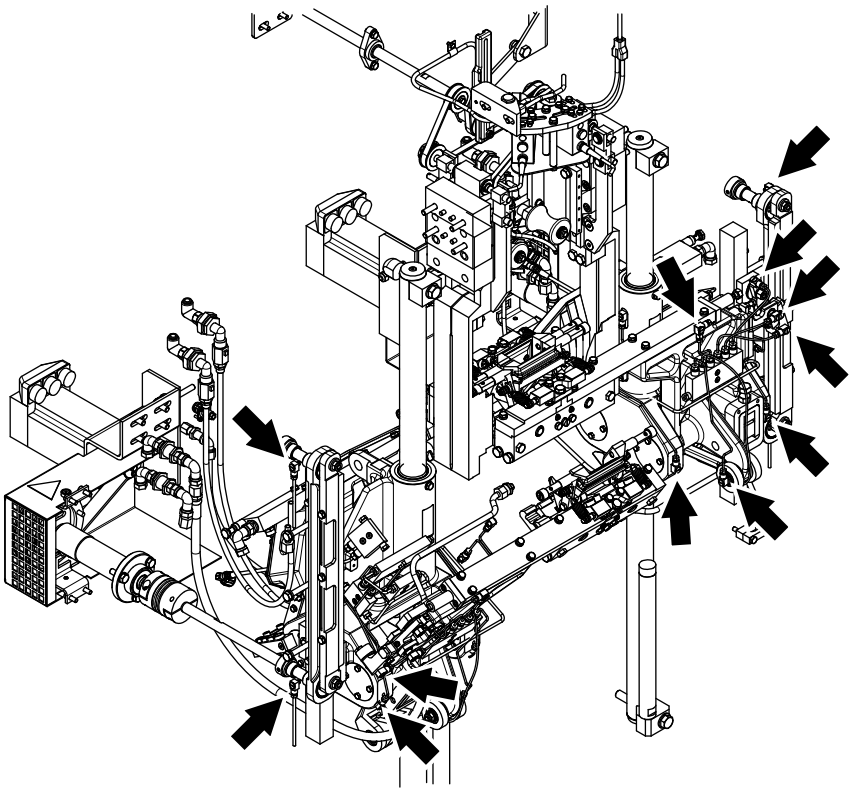

2.8.2-6 Lubrication Unit - Fill Oil

Machine Status	Electrical supply disconnecting device in position O (OFF) Main air valve OFF Main steam valve ON Main water valve OFF
Consumables	Lubricant, Kluberoil 4 UH1 320-N TP No. 344414-0000
SPC Reference	2844594-0200

CAUTION
Risk of damage to the equipment.
Mixing lubricants with no compatible bases will lead to severe loss of lubrication and probable damage to the equipment. Use only recommended consumables, see section 9.3.1 Lubricants.

a) Fill with oil through the nipple (1).

b) Check the oil pressure, see 2.8.2-2 Lubrication Unit - Check Oil Pressure.

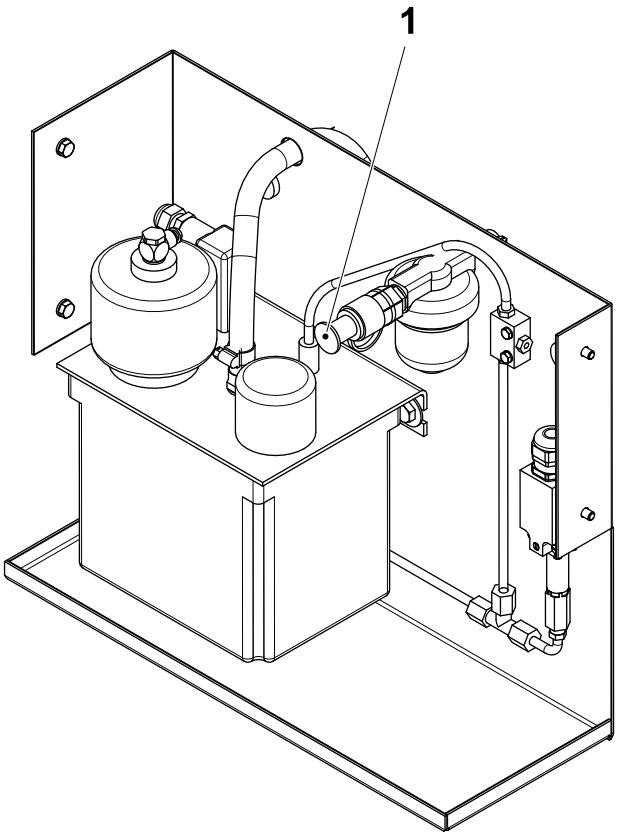

1 Nipple

2.8.2-7 Lubrication Unit - Change Filter Insert

Machine Status	Electrical supply disconnecting device in position O (OFF) Main air valve OFF Main steam valve ON Main water valve OFF
SPC Reference	2844594-0200

a) Remove the oil filter cover (1) and pull out the filter insert (2).

b) Remove and clean the filter insert (2) with compressed air. Change the filter insert (2) if necessary.

c) Fit back the filter insert (2) and tighten the oil filter cover (1).

d) Bleed the system according to 2.8.2-5 Lubrication Unit - Bleed.

e) Check the oil pressure according to 2.8.2-2 Lubrication Unit - Check Oil Pressure.

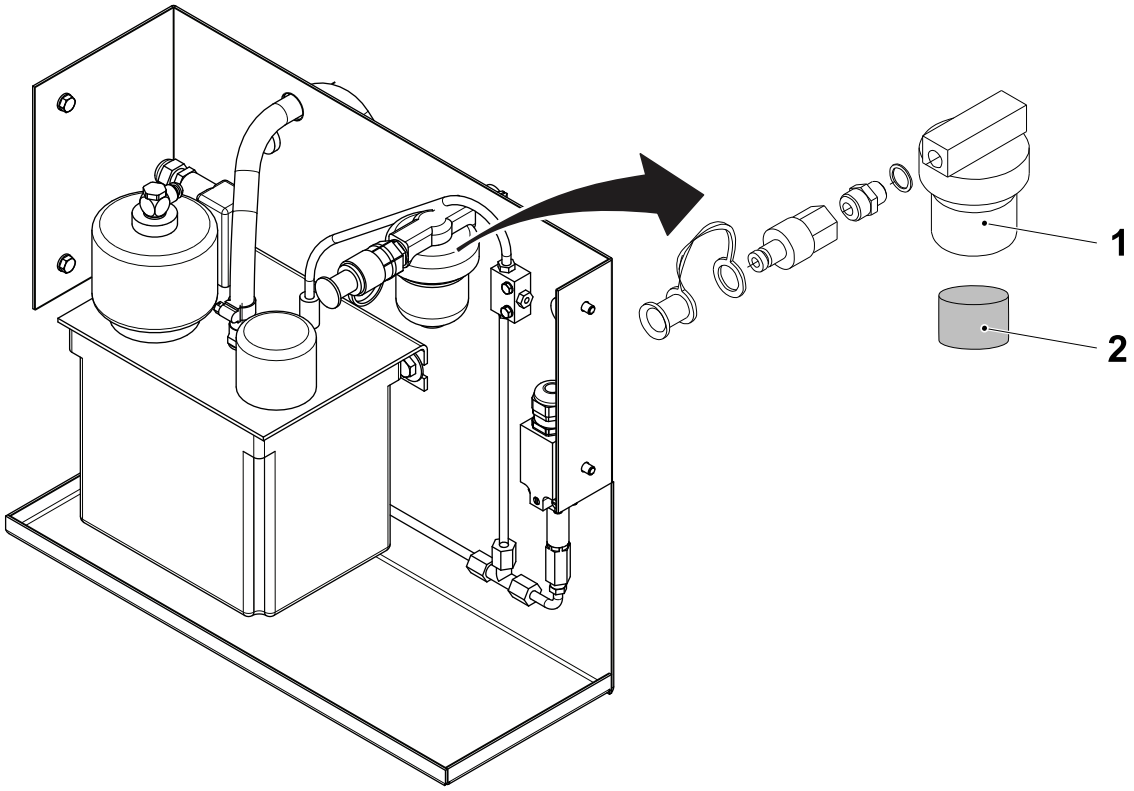

1 Oil filter cover
2 Filter insert

2.8.2-8 Lubrication Unit - Change Oil Pump

Machine Status	STEP ZERO
SPC Reference	2844594-0200

CAUTION
Lubricants.
Wear personal protective equipment.

a) Disconnect the cable T40W1110 (1) from the level guard, see the EM.

b) Disconnect the air hose U30W6044 (2).

c) Disconnect the oil tube T50W0088 (3).

d) Disconnect the hose (4).

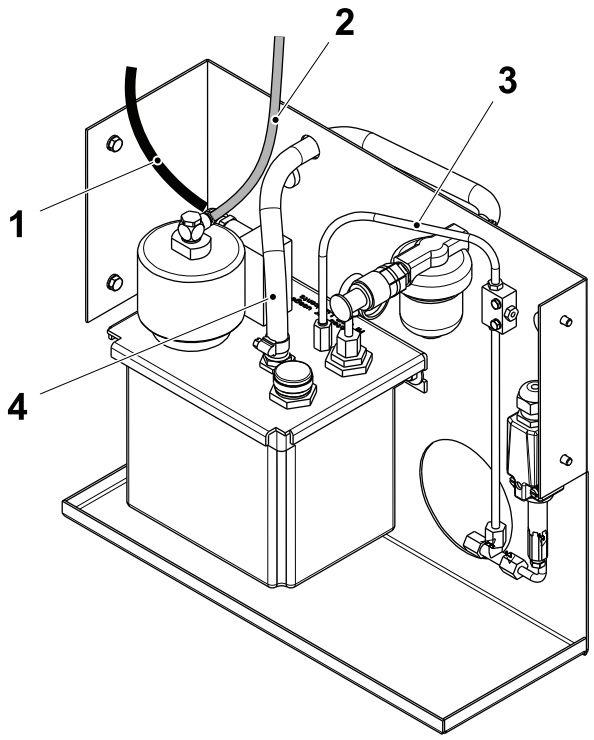

1 Cable T40W1110
2 Air hose U30W6044
3 Oil tube T50W0088
4 Hose

(Cont'd)

(Cont'd)

e) Remove the screw (5) and remove the oil pump assembly (6).

f) Remove the hose nipple (7) and the banjo connection (8).

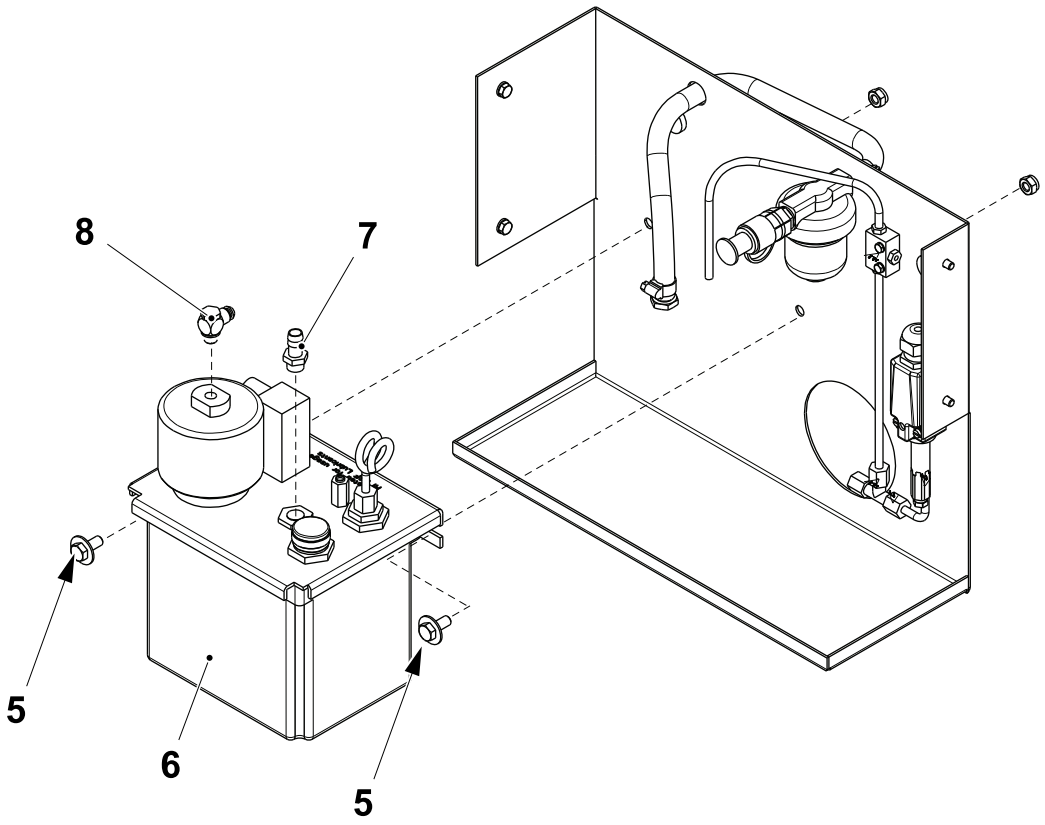

5 Screw
6 Oil pump assembly
7 Hose nipple
8 Banjo connection

(Cont'd)

(Cont'd)

g) On the new oil pump assembly (9), remove the connection (10) supplied.

h) Fit the hose nipple (7) and the banjo connection (8).

i) Assemble the new oil pump assembly (9) in the reverse order.

j) Fill with oil, see .2.8.2-6 Lubrication Unit - Fill Oil and check the oil pressure according to 2.8.2-2 Lubrication Unit - Check Oil Pressure

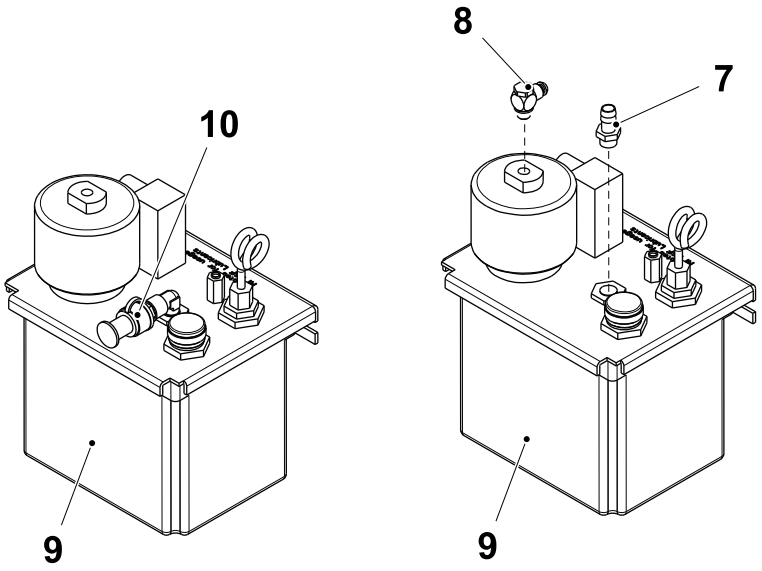

7 Hose nipple
8 Banjo connection
9 New oil pump assembly
10 Connection

3 Drive Unit

Drive Unit - Description

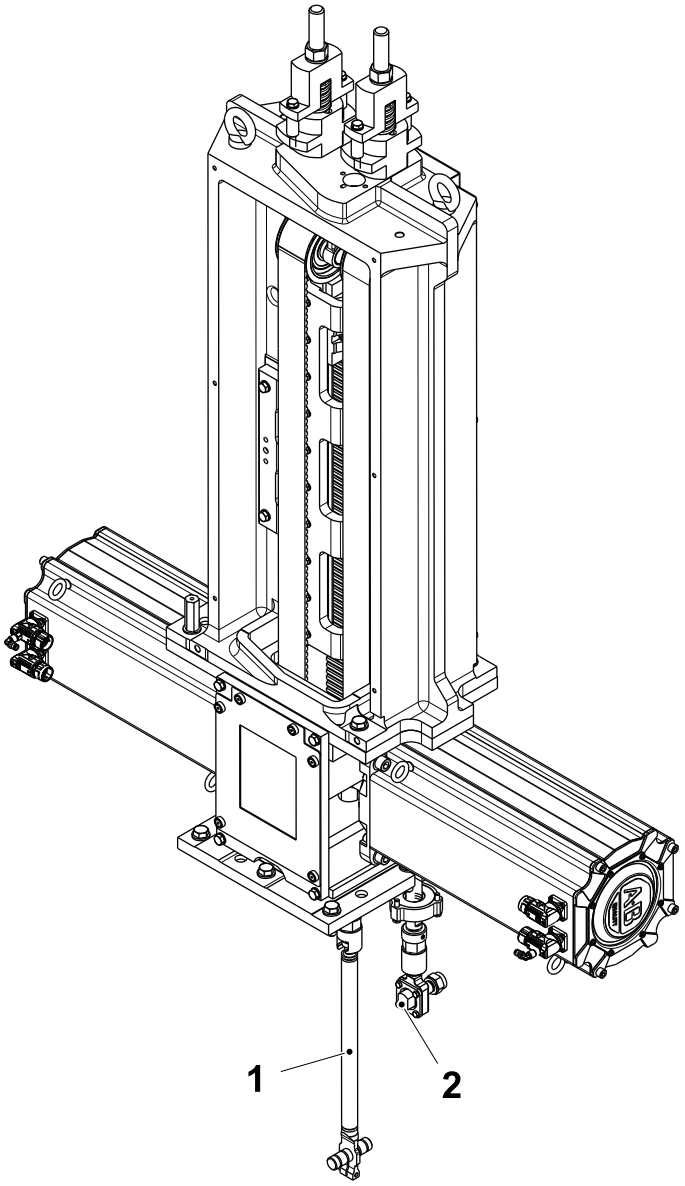

1 Support
2 Link

Drive Unit - Description 3-2
3-1 Drive Unit - Setting Sequence 3-5
3-2 Drive Unit - Lower Jaw System 3-6
3-3 Drive Unit - Release Brakes 3-8
3-4 Drive Unit - Referencing 3-10
3-5 Drive Unit - Check Drive Belt 3-12
3-6 Drive Unit - Set Drive Belt Tension 3-13

3.1 Support 3-14
3.1-1 Support - Change Drive Belts. 3-14
3.1.1 Belt Tensioner 3-21
3.1.1-1 Belt Tensioner - Remove 3-21
3.1.1-2 Belt Tensioner - Overhaul 3-23
3.1.2 Pulley Unit 3-24
3.1.2-1 Pulley Unit - Change Wheel and Bearings 3-24
3.1.3 Support Guide 3-26
3.1.3-1 Support Guide - Grease Runner Block 3-26
3.1.3-2 Support Guide - Check Linear Units and Runner Blocks 3-27
3.1.3-3 Support Guide - Overhaul 3-28
3.1.4 Motor Bracket 3-30
3.1.4-1 Motor Bracket - Check Servomotor. 3-30
3.1.4-2 Motor Bracket - Change Servomotor 3-31
3.1.4-3 Motor Bracket - Overhaul Servomotor 3-45

3.2 Link 3-48
3.2-1 Link - Check 3-48
3.2-2 Link - Change 3-49

This page intentionally left blank

3-1 Drive Unit - Setting Sequence

SPC Reference	641503-0300

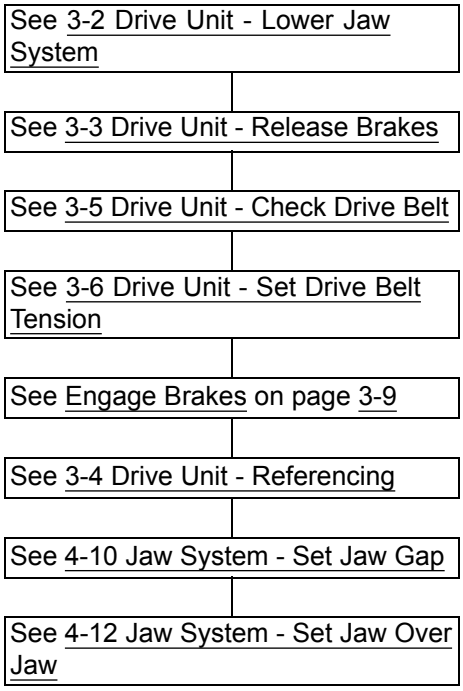

3-2 Drive Unit - Lower Jaw System

Machine Status	PREPARATION
SPC Reference	641503-0300

This procedure describes how to lower the jaw system so that the weight of the jaw system is supported and no further movement is possible.

Note! If the jaw system cannot be moved due to an abnormal mechanical condition, follow the procedure Lower Jaw System in Bypass.

a) Log on access the MAINTENANCE CONTROL window, see 8.6.3-2 HMI - User Management Log On.

b) Touch the JAW SYSTEM button (1) to display the JAW SYSTEM window.

c) Touch the GO TO LOWEST POSITION button (2).

d) Touch the LOWER LEFT JAW button (3) or the LOWER RIGHT JAW button (4).

e) Touch the OK button (5). The machine will now lower the chosen jaw pair.

f) To lower both jaw pairs the first jaw pair lowered must be disconnected before lowering the second jaw pair, see 3.2-2 Link - Change.

Note! When lowering both jaw pair the referencing of the drive unit servo motors is automatically erased from the servo system.

g) If the other jaw pair must also be lowered touch the LOWER LEFT JAW button (3) or the LOWER RIGHT JAW button (4).

h) Touch the OK button (5). The machine will now lower the chosen jaw pair.

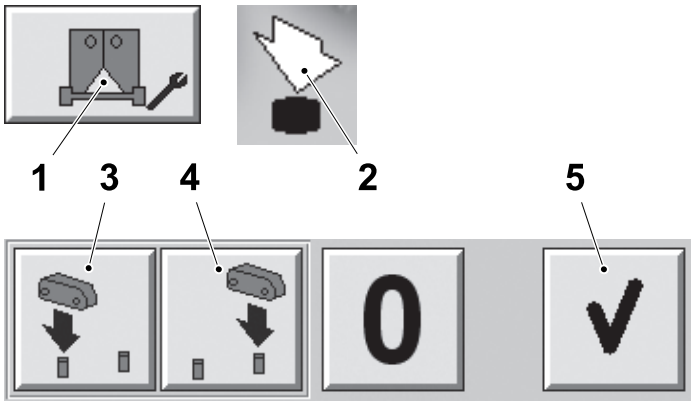

1 JAW SYSTEM button
2 GO TO LOWEST POSITION button
3 LOWER LEFT JAW button
4 LOWER RIGHT JAW button
5 OK button

i) Perform the necessary mechanical work. The jaw system will automatically return to the working position when the machine is stepped up.

j) If both jaw pairs have been lowered restore the drive unit referencing, follow the instruction in 3-4 Drive Unit - Referencing.

(Cont'd)

(Cont'd)

Lower Jaw System in Bypass

CAUTION

Risk of personal injury.
Do not stand or remain in the operational area of the jaw system. Unexpected movement of the jaw system may cause injury.

This procedure describes how to release the brake without lowering the jaw system.

a) Fit the supports to secure the jaw system in the current position so that no further movement is possible.

b) Log on access the MAINTENANCE CONTROL window, see 8.6.3-2 HMI - User Management Log On.

c) Touch the GO TO LOWEST POSITION button (1).

d) Touch the BYPASS button (2).

e) Touch the START button (3).

Note! If the servo motor brakes are to be released continue with item i).

f) Perform the necessary mechanical work. The jaw system will automatically return to the working position when the machine is stepped up.

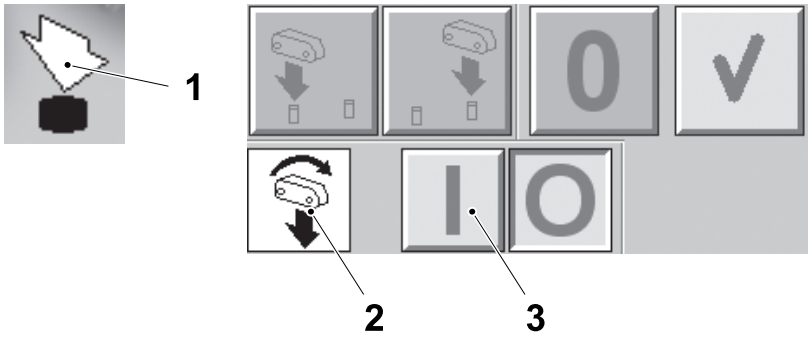

1 GO TO LOWEST POSITION button

2 BYPASS button

3 START button

3-3 Drive Unit - Release Brakes

Machine Status	PREPARATION
SPC Reference	641503-0300

Note! This procedure describes how to release the brakes on the drive system. This procedure allows for the releasing of individual drive links.

Note! If the jaw system cannot be moved due to an alarm or mechanical condition and the normal lowering procedure can not be accomplished, follow the procedure Lower Jaw System in Bypass on page 3-7.

a) Lower the jaw system, see 3-2 Drive Unit - Lower Jaw System. The brakes cannot be released until the weight of the jaw system is supported and no further movement is possible. Both sides of the jaw system must be lowered to enable the brake release procedure.

b) Touch the `JAW SYSTEM` button (1).

c) Touch the `JAW SYSTEM BRAKES` icon (2).

Note! Make sure that the jaw system is in safe condition.

d) The `BRAKES COMMAND` window appears.

e) Touch one of the four buttons for the required brake to be released, e.g. the `LEFT JAW` button (3).

f) Touch the `OK` button (4). The drive system operates.

g) Perform all mechanical work necessary.

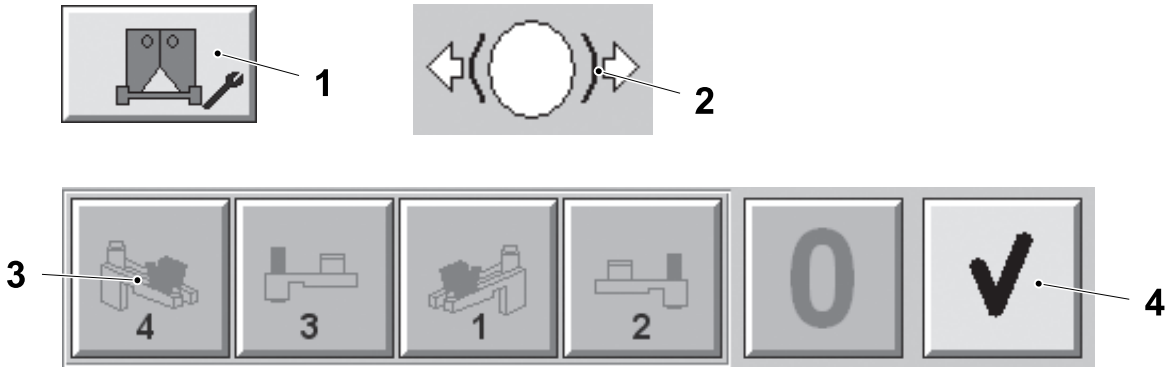

1 `JAW SYSTEM` button
2 `JAW SYSTEM BRAKES` icon
3 `LEFT JAW` button
4 `OK` button

(Cont'd)

(Cont'd)

Engage Brakes

a) Close all doors and clear any alarms on the TPOP display.

b) Touch the ZERO button (1) and then touch the OK button (2).

Note! Touch the OK button (2) to cancel all selections and return to the BRAKES COMMAND window. There can be only one released brake at any time.

c) Touch the EXIT button (3) to exit from the SERVO SETTINGS window.

d) If further breaks have to be released, repeat the procedure 3-3 Drive Unit - Release Brakes.

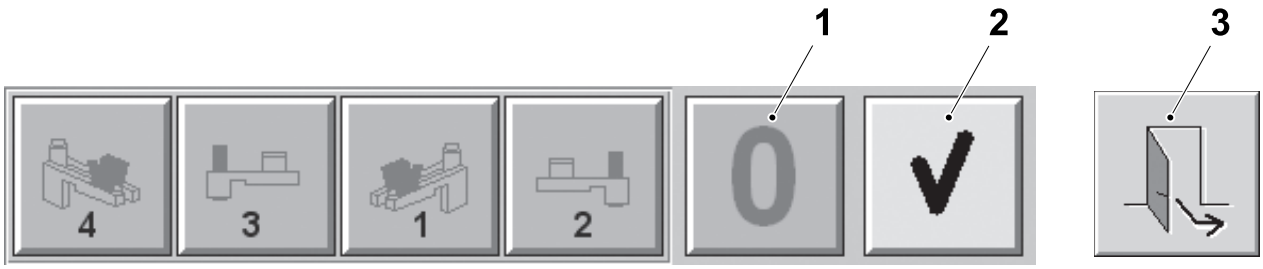

1 ZERO button
2 OK button
3 EXIT button

3-4 Drive Unit - Referencing

Machine Status	Step ZERO
SPC Reference	641503-0300

CAUTION
Risk of damage to the equipment.
Never reference the drive unit without first disconnecting and removing the jaw link to be referenced.

Note! The referencing procedure must be completed if any mechanical change has been made to the drive units or if a servo drive has been changed. The referencing procedure is not necessary if only the links connecting the drives to the jaw system have been disconnected.

a) Release the brakes, see 3-3 Drive Unit - Release Brakes.

b) On the servo motor to be referenced, disconnect and remove the upper and lower links, see 3.2-2 Link - Change.

c) Remove all tools and equipment from the jaw system area.

d) Close all doors and clear all alarms on the TPOP display.

e) Log on to access the `MAINTENANCE CONTROL` window, see 8.6.3-2 HMI - User Management Log On.

f) Touch the `JAW SYSTEM` button (1) to display the `JAW SYSTEM` window.

g) Touch the `DRIVE UNIT REFERENCING` button (2).

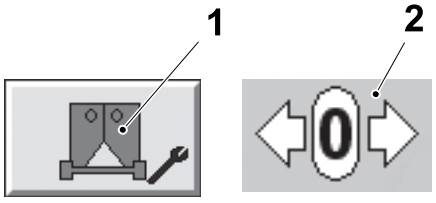

1 `JAW SYSTEM` button
2 `DRIVE UNIT REFERENCING` button

(Cont'd)

(Cont'd)

h) The DRIVE UNIT REFERENCING window is displayed.

i) Touch the button of the link to be referenced, for example; the LEFT YOKE button (3).

j) Touch the OK button (4). Monitor the progress of the link during the referencing manoeuvre.

Note! If the link touches any part of the machine the procedure will be aborted automatically.

k) The link button of the referenced link becomes green, e.g. LEFT YOKE button (3). If referencing is finished (all link buttons are green) go to item m).

l) If necessary, reference the other three links following the same sequence from item i) to item k).

m) Touch the REFERENCING FINISHED button (5) until it becomes green.

n) Release the brakes in bypass mode, see 3-2 Drive Unit - Lower Jaw System on page 3-6 and fit the links, see 3.2-2 Link - Change.

o) If a new servo motor or drive belt has been fitted or during machine installation set the stroke, see 4-4 Jaw System - Set Stroke.

p) Set the jaw gap, see 4-10 Jaw System - Set Jaw Gap.

q) Set the jaw over jaw gap, see 4-12 Jaw System - Set Jaw Over Jaw.

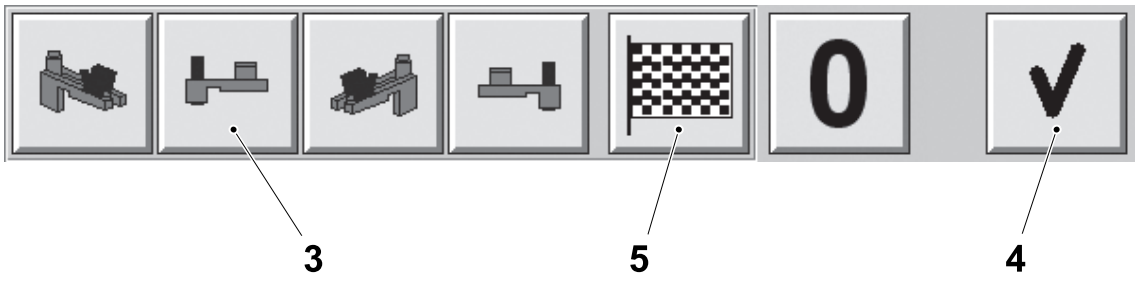

3 LEFT YOKE button
4 OK button
5 REFERENCING FINISHED button

3-5 Drive Unit - Check Drive Belt

Machine Status	Electrical supply disconnecting device in position O (OFF) Main air valve OFF Main steam valve ON Main water valve OFF
SPC Reference	641503-0300

a) Remove all necessary machine covers.

b) Make sure that the drive belts (1) are correctly aligned and seated correctly on the servo motor (2) pulley and on the drive belt tensioner wheels (3).

c) Check that the drive belts (1) are free from visible wear or damage.

d) Change the drive belts (1) if necessary, see 3.1-1 Support - Change Drive Belts.

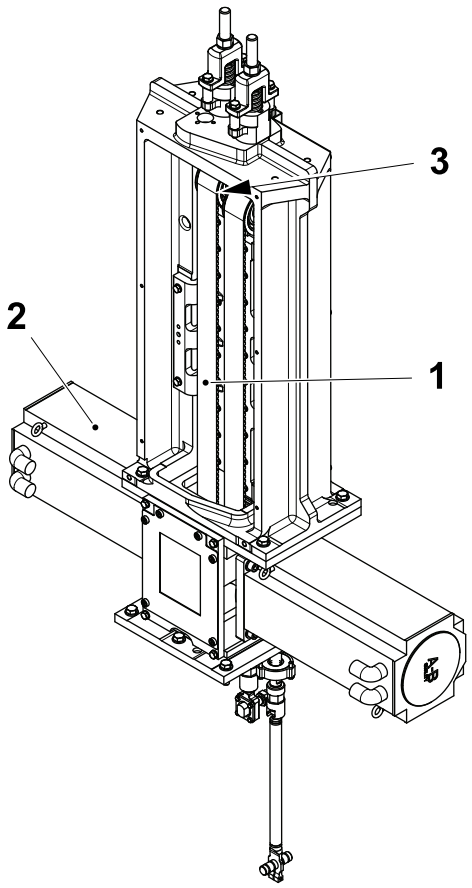

1 Drive belt
2 Servo motor
3 Tensioner wheels

3-6 Drive Unit - Set Drive Belt Tension

Machine Status	Electrical supply disconnecting device in position O (OFF) Main air valve OFF Main steam valve ON Main water valve OFF
SPC Reference	641503-0300

CAUTION
Risk of damage to the equipment.
Do not continue tightening the hexagonal nut (1) after the rocker (4) has made contact with the spacers (5) to avoid excessive wear to the drive belt (3).

Note! The belt tensioner is designed so that by tightening the hexagonal nut (1) and the screws (2) the correct tension of the drive belt (3) is automatically established.

a) Tighten the hexagonal nut (1) until the rocker (4) is in contact with both spacers (5).

b) Tighten the screws (2).

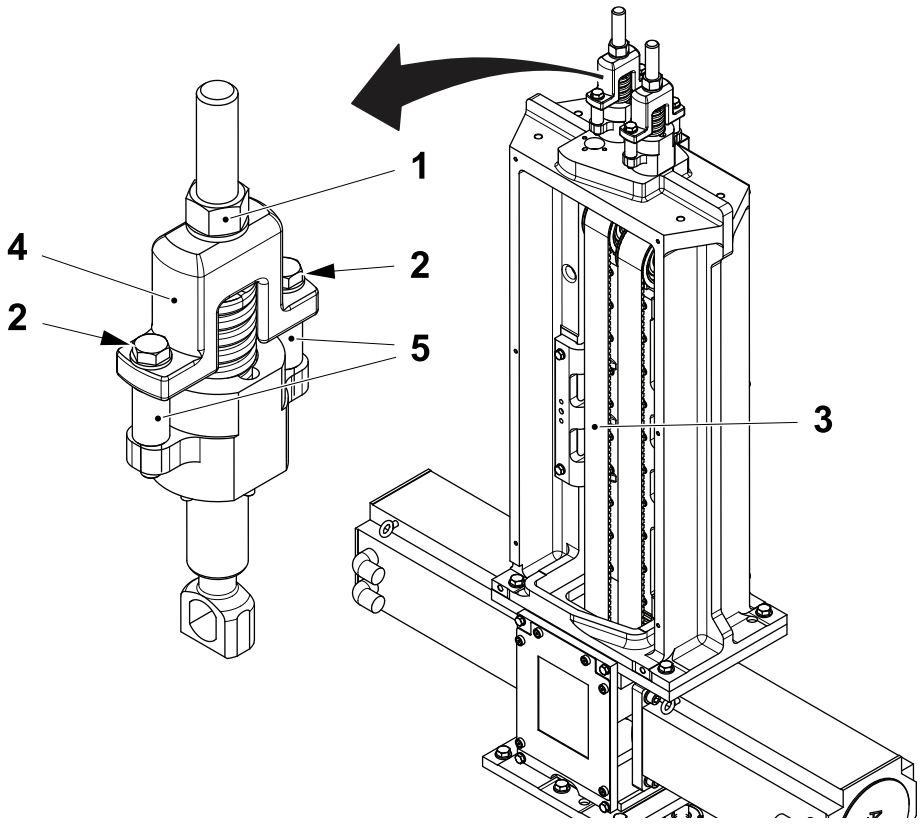

1 Hexagonal nut
2 Screw
3 Drive belt
4 Rocker
5 Spacer

3.1 Support

3.1-1 Support - Change Drive Belts

Machine Status	Electrical supply disconnecting device in position O (OFF) Main air valve OFF Main steam valve ON Main water valve OFF
SPC Reference	2931512-0300 2931513-0300

CAUTION
Risk of damage to the equipment.
Never change individual drive belts. Always change all four of the drive belts at the same time, regardless of their condition.

The following procedure describes the removal of one of the drive belts. Repeat this procedure for all four drive belts on the machine.

Remove the Drive Belt

a) Remove all the necessary machine covers.

b) Lower the jaw system, see 3-2 Drive Unit - Lower Jaw System so that the weight is supported and no further movement is possible.

(Cont'd)

(Cont'd)

c) Open the jaw system doors and disconnect the required jaw system link:
   - disconnect the link (LH or RH, or both) at the connection clamp, see 3.2-2 Link - Change.

d) Loosen the screws (1).

e) Remove the cover (2).

f) Loosen the nut (3) until it is levelled with the top of the shaft (4) on the drive belt tensioner (5).

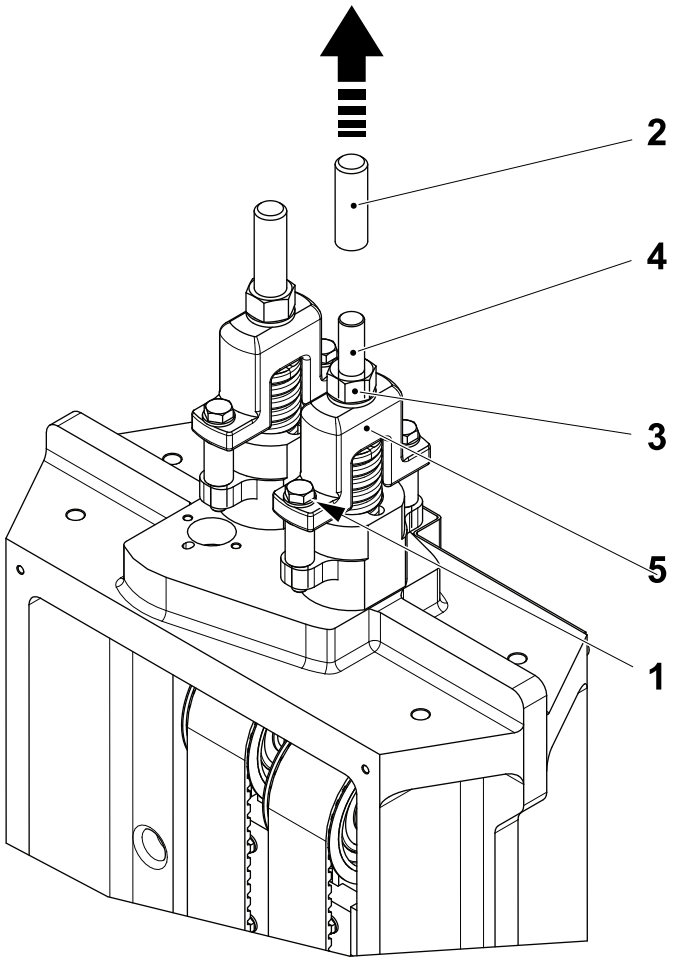

1 Screw
2 Cover
3 Nut
4 Shaft
5 Belt tensioner

(Cont'd)

(Cont'd)

g) Remove the shoulder screws (6) securing the lower belt holder (7) to the plate (8) on the runner block unit (9).

h) Remove the shoulder screws (6) securing the upper belt holder (10) to the plate (8) on the runner block unit (9).

i) Remove the lower belt holder (7) and upper belt holder (10) and remove the drive belt (11).

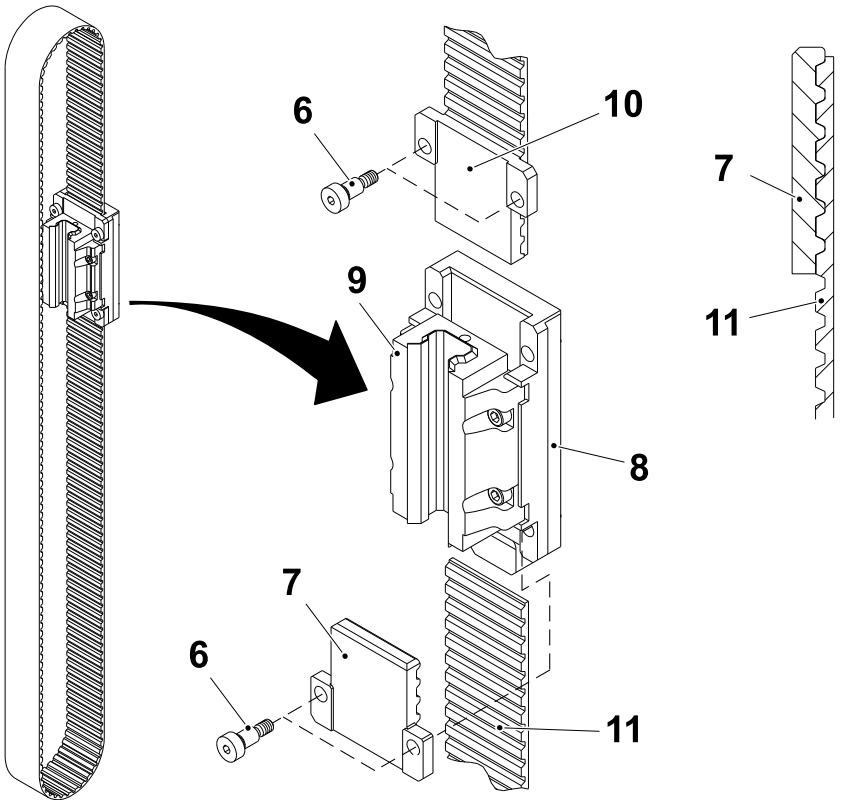

6 Shoulder screw
7 Lower belt holder
8 Plate
9 Runner block unit
10 Upper belt holder
11 Drive belt

(Cont'd)

(Cont'd)

Machine Checks when the Drive Belt is Removed

a) Check for lateral play in the motor pulley and for any visible wear and damage.

b) Check the runner block unit (1) for wear or damage.

c) Check the lower belt holders (2) and upper belt holder (3) for damage.

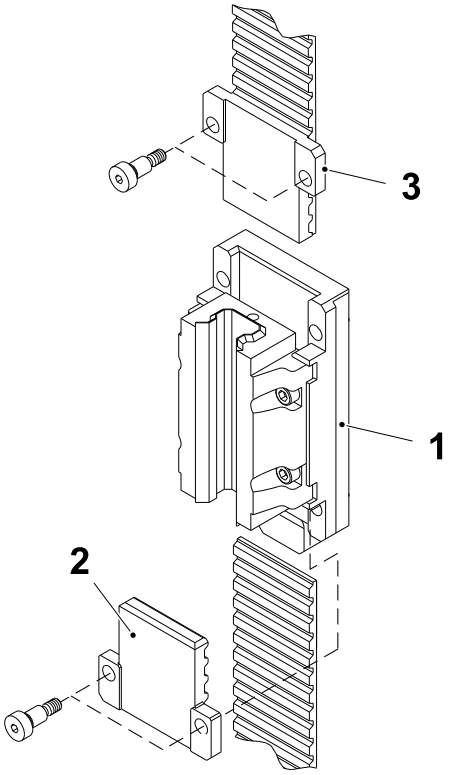

1 Runner block unit
2 Lower belt holder
3 Upper belt holder

(Cont'd)

(Cont'd)

Install the Drive Belt

a) Move the runner block (1) to the top of the guide (2) and insert a screwdriver (or similar tool) through the hole (3) in the support frame to lock the position of the runner block (1).

b) Thread the new drive belt around the motor pulley (4) and over the wheel (5).

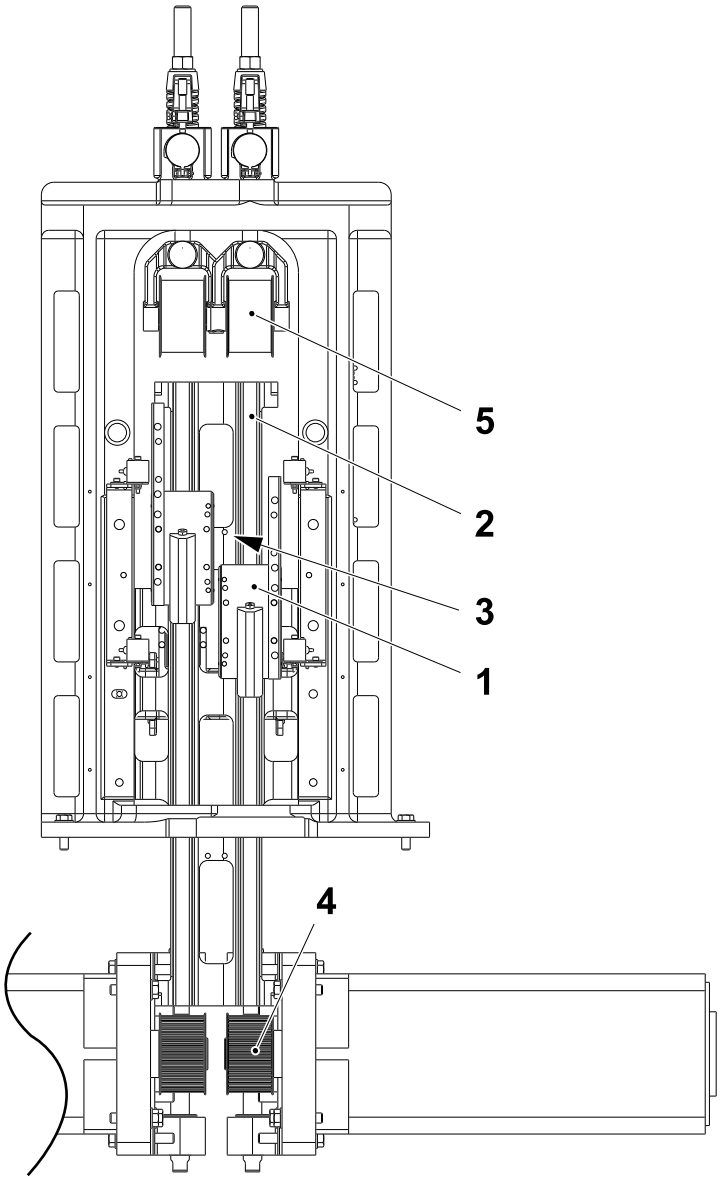

1 Runner block
2 Guide
3 Hole
4 Motor pulley
5 Wheel

(Cont'd)

(Cont'd)

CAUTION
Risk of damage to the equipment.
Make sure that the teeth of the drive belt are correctly engaged in the drive belt holder and correctly seated in the two pulleys.

Note! Fit new screws (6) each time the drive belt (7) is changed and tighten the screws (6) to a torque of 16 Nm.

c) Position the lower belt holder (8) on the new drive belt (7).

d) Insert the lower belt holder (8) into the gap between the plate (9) and the runner block (1).

e) Tighten the lower belt holder (8) using the two screws (6).

Note! Make sure the drive belt (7) is seated correctly.

f) Position the upper drive belt holder (10) on the new drive belt (7).

g) Insert the upper belt holder (10) into the gap between the plate (9) and the runner block (1).

h) Tighten the upper belt holder (10) using the two screws (6).

i) Remove the screwdriver.

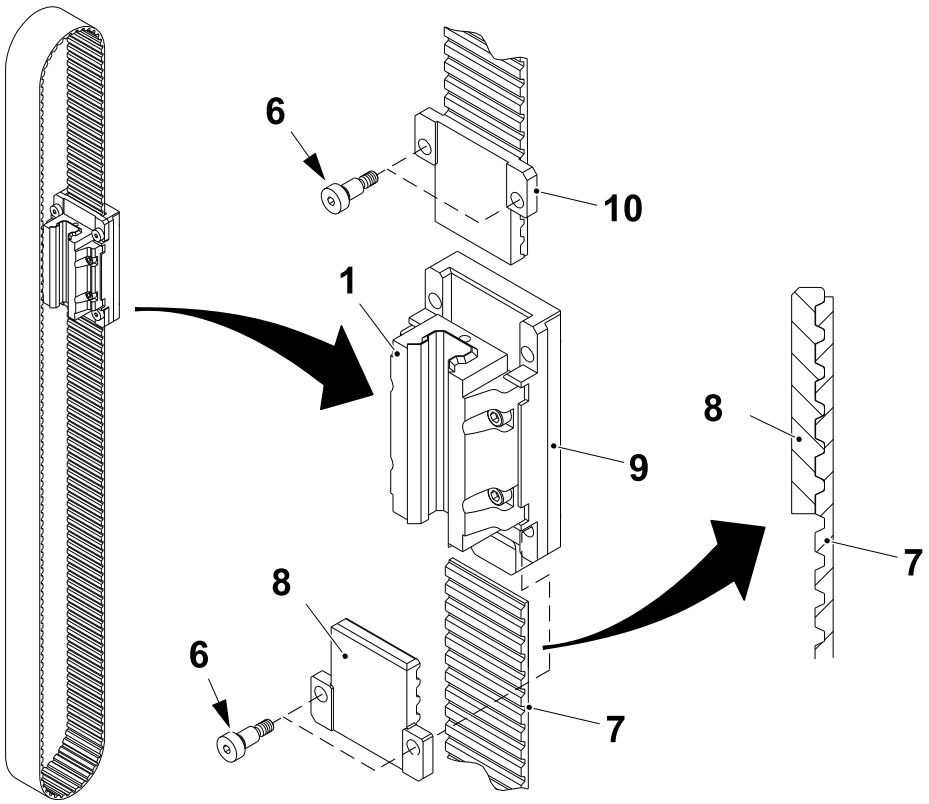

1 Runner block
6 Screw
7 Drive belt
8 Lower belt holder
9 Plate
10 Upper belt holder

(Cont'd)

(Cont'd)

j) Tension the drive belt (7), see 3-6 Drive Unit - Set Drive Belt Tension.

k) Reference the drive unit, see 3-4 Drive Unit - Referencing.

l) Connect the yoke link and the jaw link, see 3.2-2 Link - Change.

m) Fit back all machine covers.

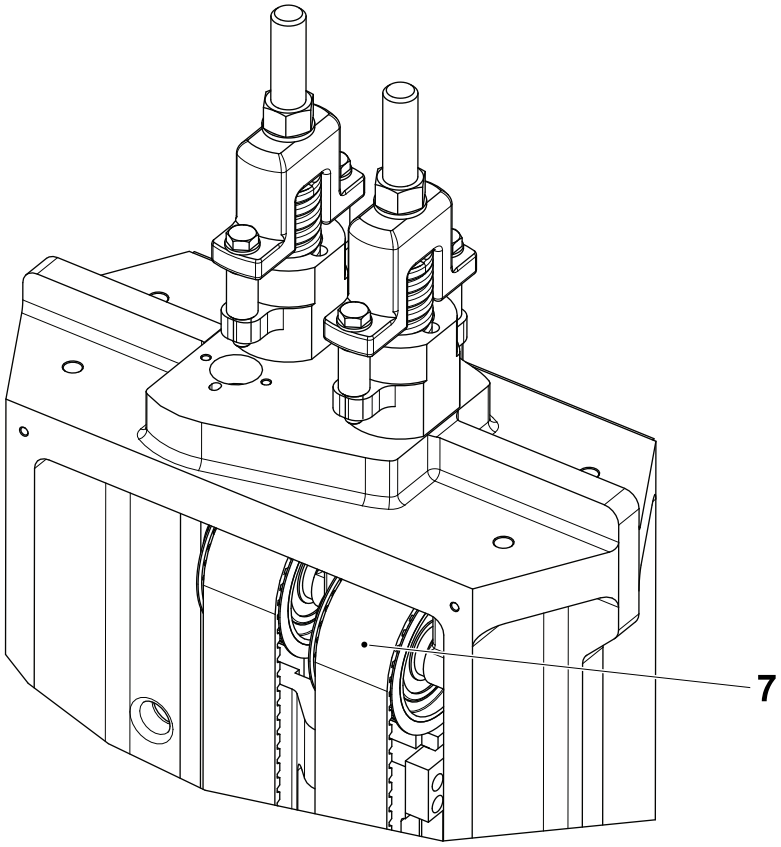

7 Drive belt

3.1.1 Belt Tensioner

3.1.1-1 Belt Tensioner - Remove

Machine Status	Electrical supply disconnecting device in position O (OFF) Main air valve OFF Main steam valve ON Main water valve OFF
Consumables	Grease, Klubersynth UH1 64-62 Tp No. 344408-0000
SPC Reference	2931514-0200

a) Remove the drive belt (1) from the pulley assembly (2) under the drive belt tensioner (3) to be changed, see 3.1-1 Support - Change Drive Belts.

b) Remove the two screws (4) and the shaft (5) securing the pulley assembly (2) to the shaft (6).

c) Remove the pulley assembly (2).

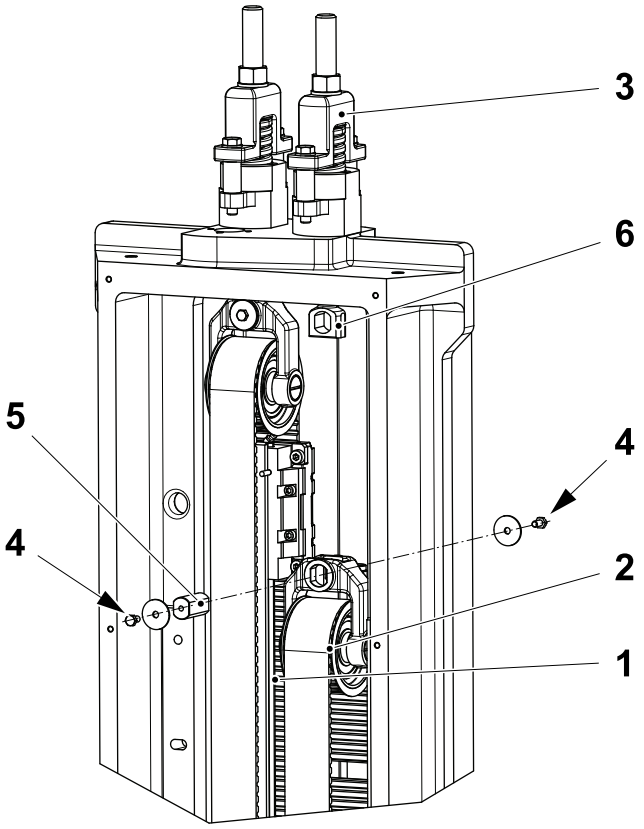

1 Drive belt
2 Pulley assembly
3 Drive belt tensioner
4 Screw
5 Shaft
6 Shaft

(Cont'd)

(Cont'd)

d) Remove the nut (7), the screws (8), the rocker (9), the spring (10), the shaft (6) and the key (11) from the bushing (12).

e) Remove the two screws (13) securing the bushing (12) to the frame (14).

f) Remove the pin (15) from the frame (14).

Note! Apply a layer of grease to the pin (15).

g) Assemble in the reverse order.

h) Set the drive belt tension, see 3-6 Drive Unit - Set Drive Belt Tension.

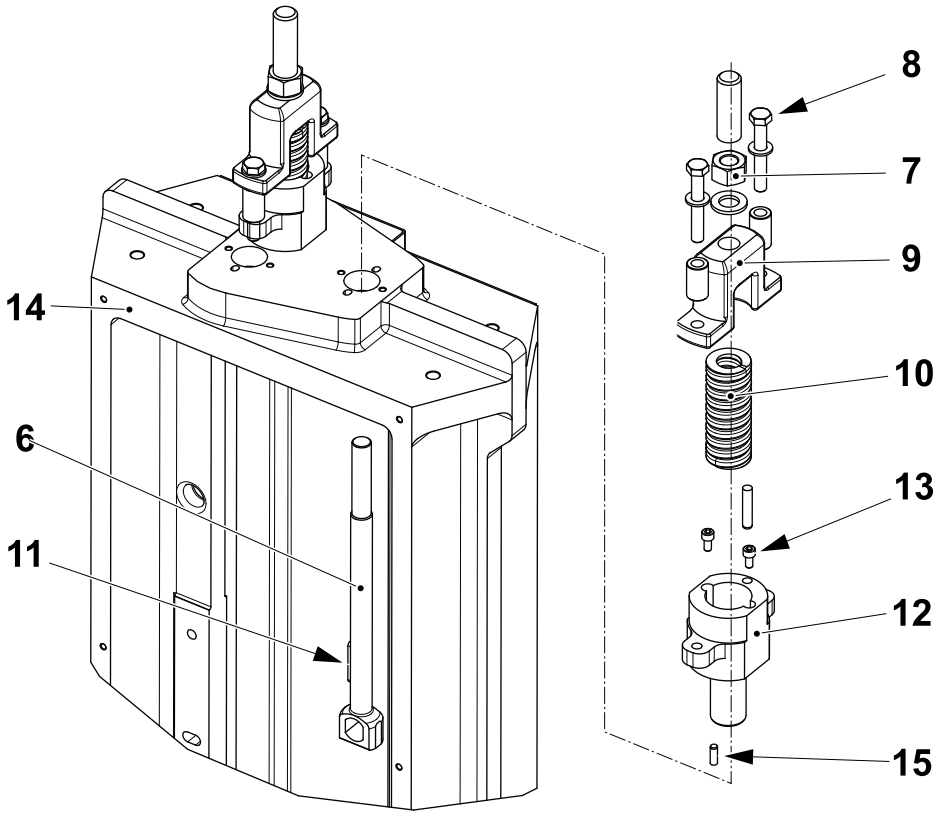

6 Shaft
7 Nut
8 Screw
9 Rocker
10 Spring
11 Key
12 Bushing
13 Screw
14 Frame
15 Pin

3.1.1-2 Belt Tensioner - Overhaul

Machine Status	Electrical supply disconnecting device in position O (OFF) Main air valve OFF Main steam valve ON Main water valve OFF
SPC Reference	2931514-0200

a) Remove the drive belt tensioner from the support frame, see 3.1.1-1 Belt Tensioner - Remove.

b) Check that the nut (1), the rocker (2), the spring (3), the bushing (4), the key (5), the pin (6), the shaft (7) and the screws (8) are free from visible wear or damage. If necessary change any damaged or worn parts.

c) Assemble in the reverse order, see 3.1.1-1 Belt Tensioner - Remove.

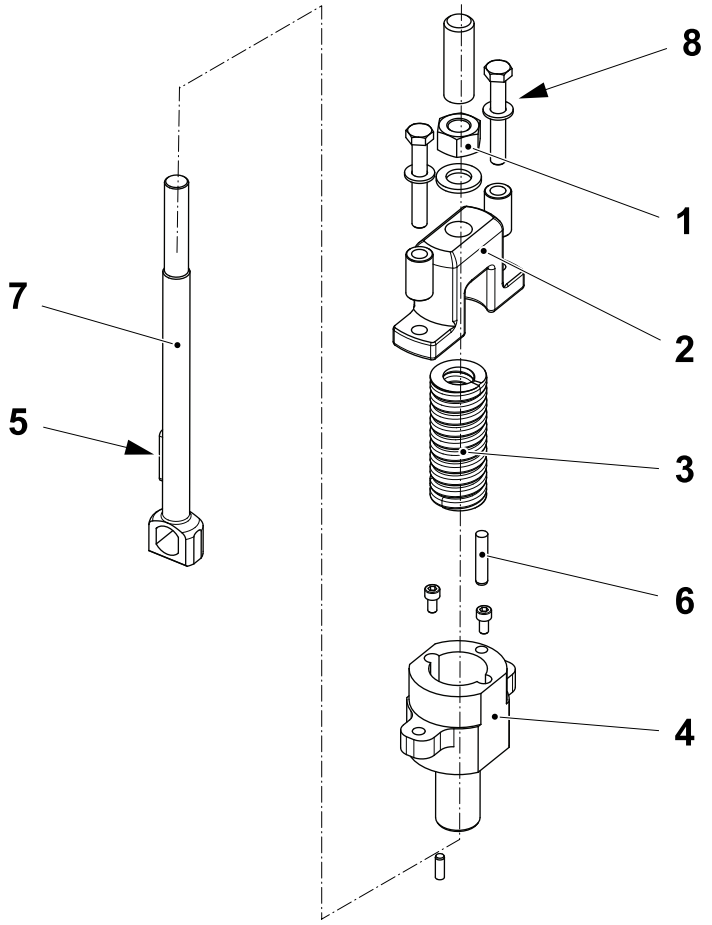

1 Nut
2 Rocker
3 Spring
4 Bushing
5 Key
6 Pin
7 Shaft
8 Screw

3.1.2 Pulley Unit

3.1.2-1 Pulley Unit - Change Wheel and Bearings

Machine Status	Electrical supply disconnecting device in position O (OFF) Main air valve OFF Main steam valve ON Main water valve OFF
SPC Reference	2803072-0200

a) Remove the drive belt from the tensioner wheel to be changed, see 3.1-1 Support - Change Drive Belts.

b) Remove the screws (1) and the shaft (2) securing the pulley (3) to the shaft of the drive belt tensioner.

c) Remove the pulley (3).

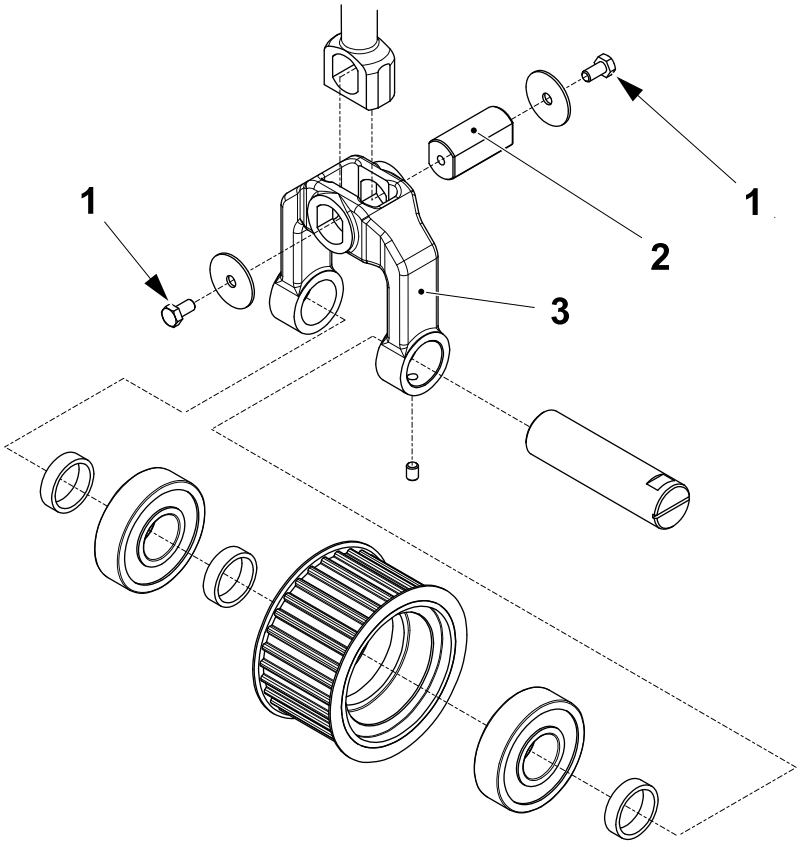

1 Screw
2 Shaft
3 Pulley

(Cont'd)

(Cont'd)

d) Check that the wheel (4) rotates freely.

e) Remove the grub screw (5) securing the shaft (6) to the pulley (3).

f) Remove the shaft (6) and the wheel (4).

g) Remove the spacers (7), the ball bearing (8) and the inner spacer (9) from the wheel (4).

h) Change the wheel (4), the ball bearing (8) and the grub screw (5).

i) Assemble in the reverse order.

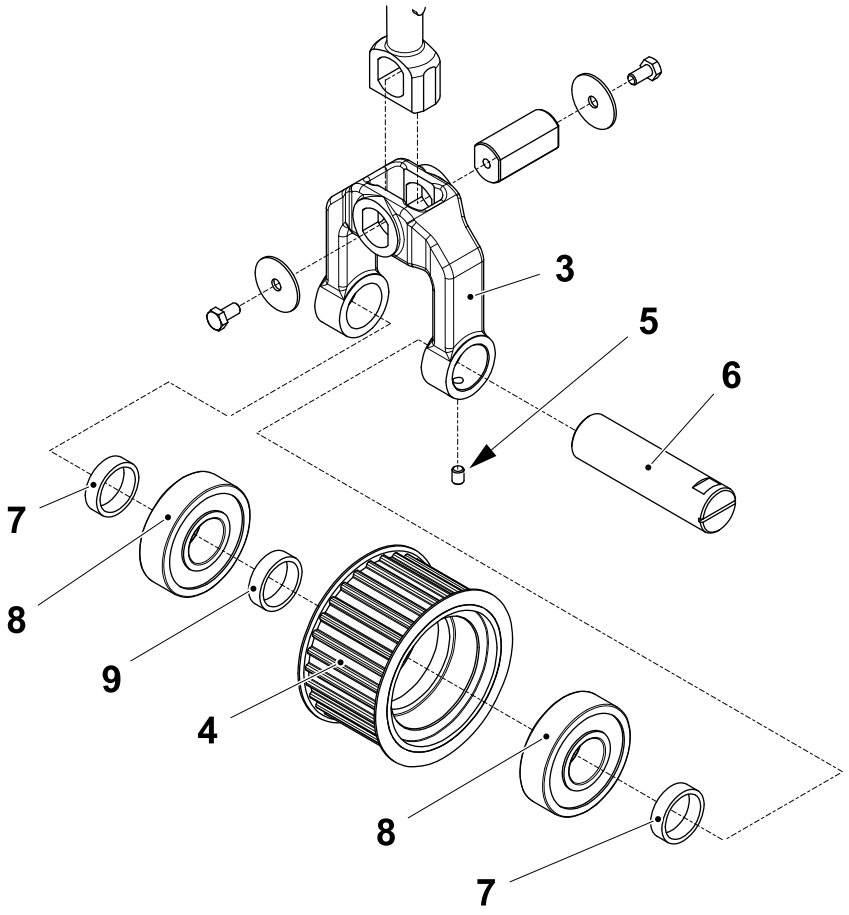

3 Pulley
4 Wheel
5 Grub screw
6 Shaft
7 Spacer
8 Ball bearing
9 Inner spacer

3.1.3 Support Guide

3.1.3-1 Support Guide - Grease Runner Block

Machine Status	Electrical supply disconnecting device in position O (OFF) Main air valve OFF Main steam valve ON Main water valve OFF
Special Equipment	Grease Gun TP No. 3219553-0100
Consumables	Grease, Klubersynth UH1 64-62 TP No. 344408-0000
SPC Reference	2890411-0100 2890413-0100

Fill the runner block (1) with 2.5 cc (is equal to five strokes of the grease gun) of grease through the nipple (2). Repeat the procedure for the other runner blocks.

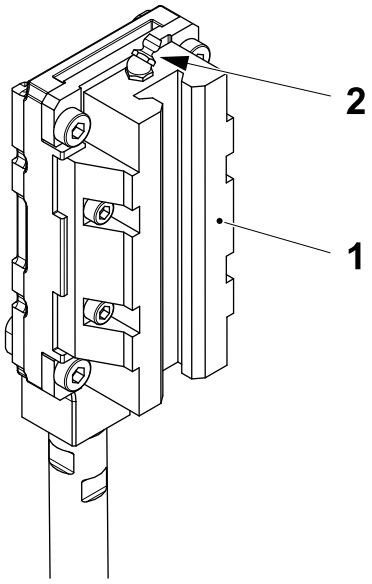

1 Runner block
2 Nipple

3.1.3-2 Support Guide - Check Linear Units and Runner Blocks

Machine Status	Electrical supply disconnecting device in position O (OFF) Main air valve OFF Main steam valve ON Main water valve OFF
SPC Reference	2890411-0100 2890413-0100

a) Check the surface of the guides (1) for visible wear or damage.

b) Make sure that the runner blocks (2) move freely on the guides (1).

c) Make sure that the runner blocks (2) is securely mounted on the plate (3).

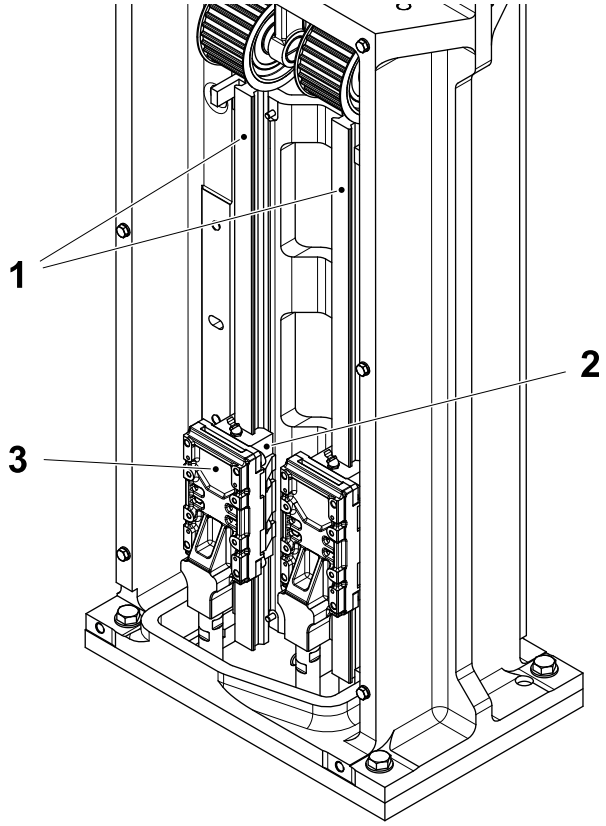

1 Guide
2 Runner block
3 Plate

3.1.3-3 Support Guide - Overhaul

Machine Status	Electrical supply disconnecting device in position O (OFF) Main air valve OFF Main steam valve ON Main water valve OFF
SPC Reference	2890411-0100 2890413-0100

a) Remove the drive belt, see 3.1-1 Support - Change Drive Belts.

b) Remove the ten screws (1) securing the linear unit (2) and the runner block (3) to the holder (4).

c) Remove the screws (5) securing the four stops (6), check the stops (6) for visible wear or damage and change them if necessary.

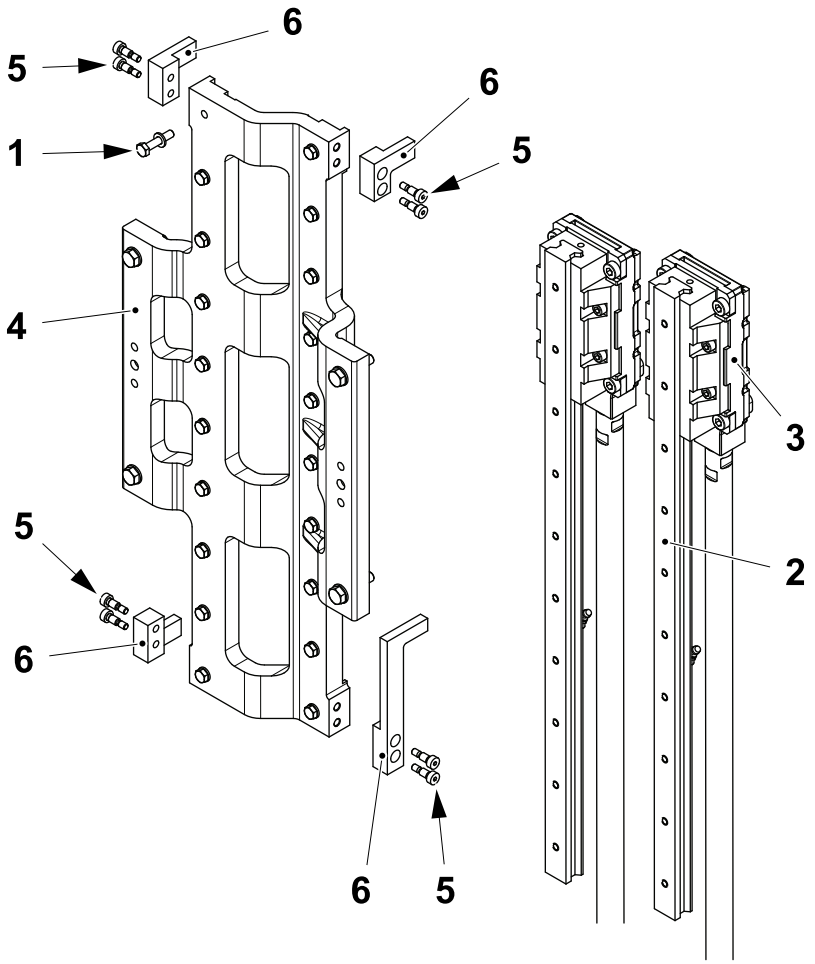

1 Screw
2 Linear unit
3 Runner block
4 Holder
5 Screw
6 Stop

(Cont'd)

(Cont'd)

d) Remove the runner block (3) from the linear unit (2).

e) Remove the screws (7) and separate the runner block (3) from the plate (8).

f) Remove the nipple (9) from the runner block (3).

g) Change the runner block (3) and the linear unit (2) and assemble in the reverse order.

h) Fill the runner block (3) with grease, see 3.1.3-1 Support Guide - Grease Runner Block.

i) Assemble in the reverse order and repeat item from to for the other link.

j) Repeat the procedure for the other drive unit.

k) Reference the drive units, see 3-4 Drive Unit - Referencing.

l) Connect the links, see Connect Links on page 3-52.

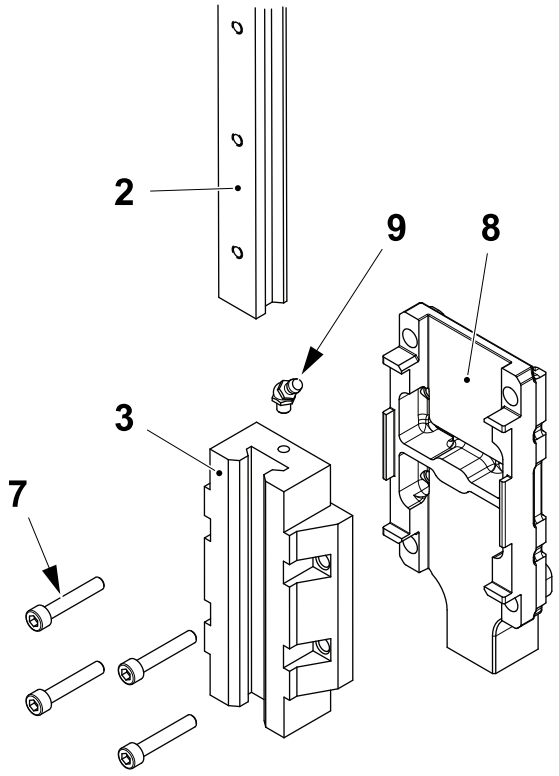

2 Linear unit
3 Runner block
7 Screw
8 Plate
9 Nipple

3.1.4 Motor Bracket

3.1.4-1 Motor Bracket - Check Servomotor

Machine Status	Electrical supply disconnecting device in position I (ON) Main air valve OFF Main steam valve ON Main water valve OFF
SPC Reference	2836488-0200 2836489-0200

During production, check the four drive unit servo motors for any abnormal noise. If necessary change the drive unit servo motor(s), see 3.1.4-2 Motor Bracket - Change Servomotor and 3.1.4-3 Motor Bracket - Overhaul Servomotor.

3.1.4-2 Motor Bracket - Change Servomotor

Machine Status	Electrical supply disconnecting device in position I (ON) Main air valve OFF Main steam valve ON Main water valve OFF
Special Equipment	Lifting Unit TP No. 3335677-0100 Key TP No. 90459-4166 Key TP No. 90600-3567
Consumables	Cable Ties
SPC Reference	2836488-0200 2836489-0200

Preparation

This procedure describes how to change one of the drive unit servo motors:

- LH yoke, rear servo M730 (1) or RH yoke, rear servo M740 (2)
- LH jaw, front servo M720 (3) or RH jaw, front servo M750 (4).

Lower the jaw system, see 3-2 Drive Unit - Lower Jaw System so that the weight is supported and no further movement is possible.

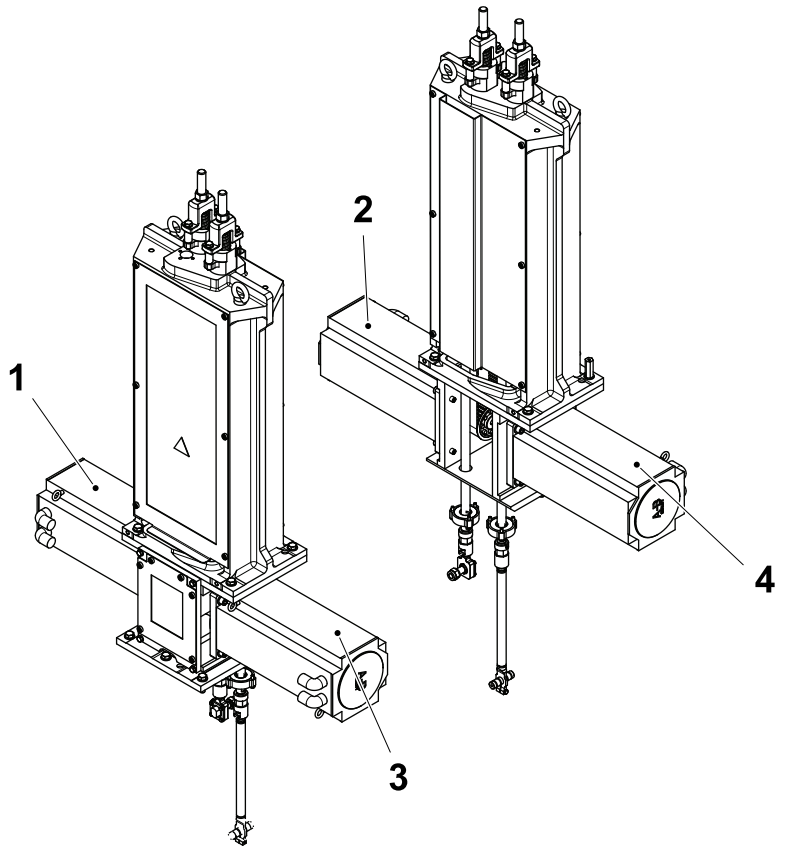

1 Rear servo M730
2 Rear servo M740
3 Front servo M720
4 Front servo M750

(Cont'd)

(Cont'd)

Remove the Electrical Connections

DANGER

Hazardous voltage.
Follow the lockout procedure before removing the electrical connections as described below. See the Safety Precautions.

Disconnect the air hose (1) and the electrical cables (2) from the servo motor (3).

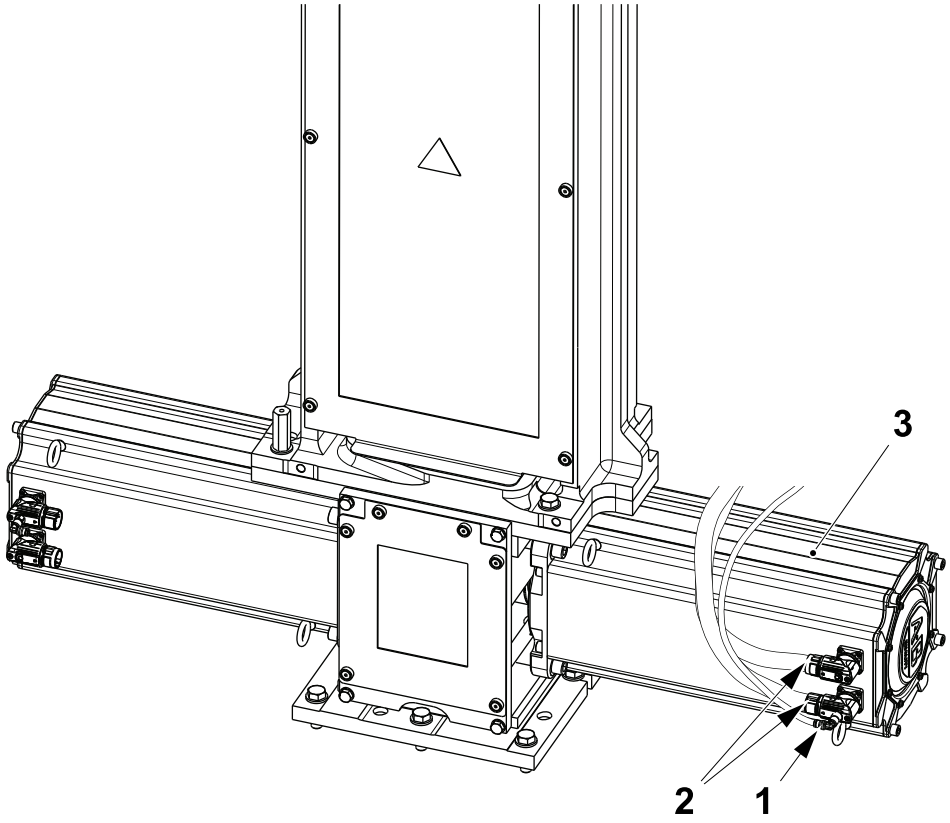

1 Hose
2 Cable
3 Servo motor

(Cont'd)

(Cont'd)

Release the Drive Belt Tension

a) Loosen the screws (1).

b) Loosen the hexagonal nut (2) on the top of the belt tensioner (3) to release the tension on the drive belts (4).

c) Loosen the hexagonal nut (2) until it is levelled with the top of the shaft (5) on the belt tensioner (3).

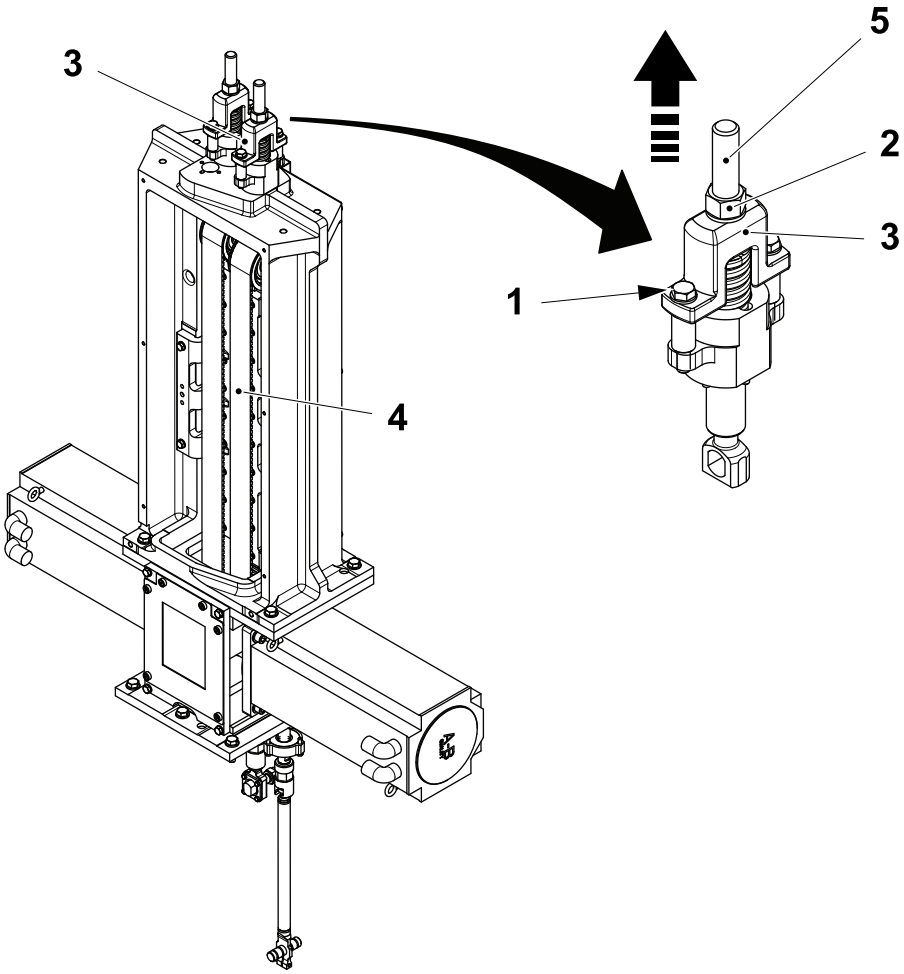

1 Screw
2 Hexagonal nut
3 Belt tensioner
4 Drive belt
5 Shaft

(Cont'd)

(Cont'd)

d) Remove the screws (6) and the cover (7).

e) Remove the screws (8) and the frame (9).

Note! Make sure that the drive belts (4) are free from the pulleys (10).

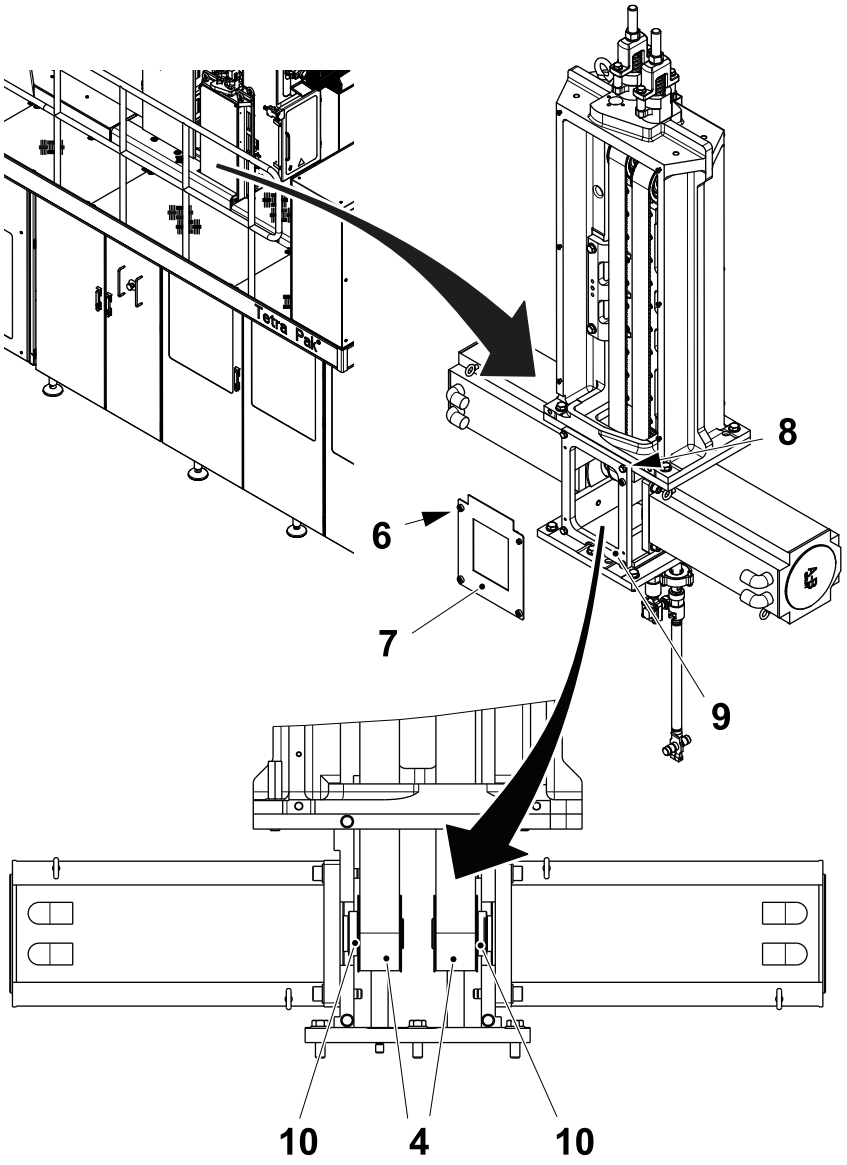

4 Drive belt
6 Screw
7 Cover
8 Screw
9 Frame
10 Pulley

(Cont'd)

(Cont'd)

Prepare the Machine

WARNING

Risk of personal injury

Be careful when removing the screws (2) because the rail (4) could fall off the filling machine.

a) Remove the screws (1) and the screws (2).

b) Remove the toe plate (3) and fit back the screws (2) in order to secure the rail (4).

c) Remove the doors (5).

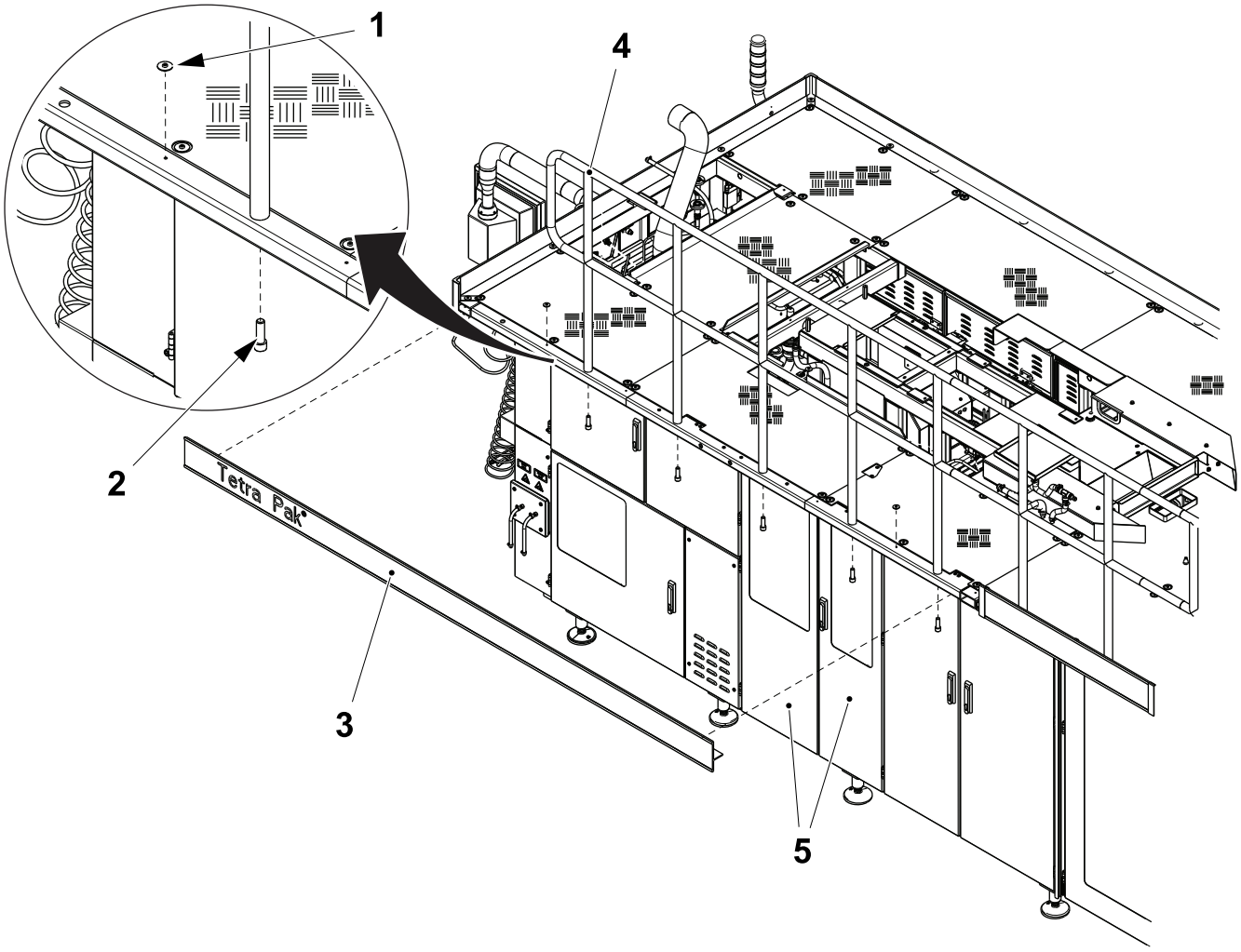

1 Screw
2 Screw
3 Toe plate
4 Rail
5 Door

(Cont'd)

(Cont'd)

d) Remove the sensor assemblies (6) with the special keys TP No. 90459-4166 and TP No. 90600-3567.

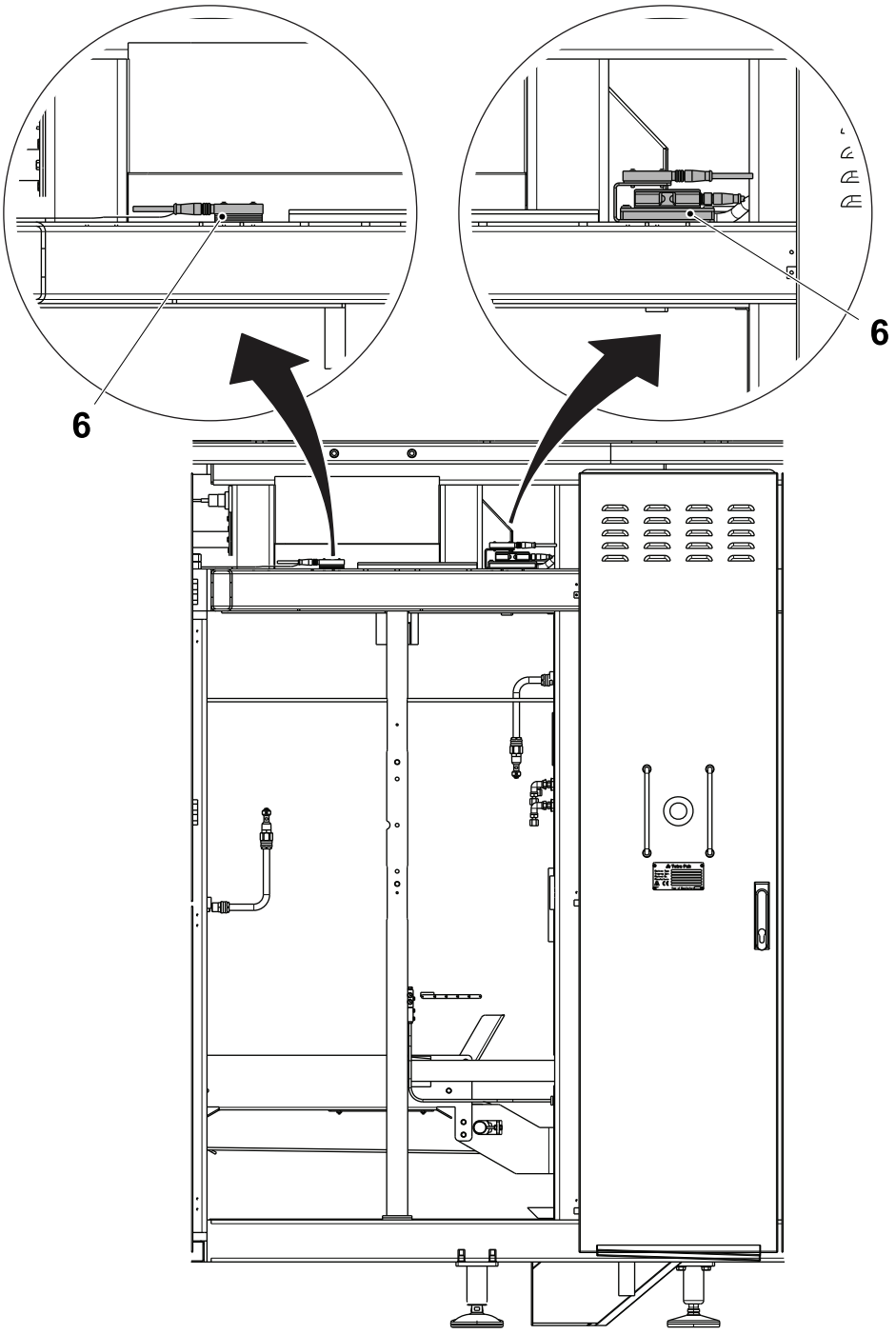

6 Sensor

(Cont'd)

(Cont'd)

e) Fit the arm (7) and the support (8) to the left or right of the support (9) with the screw (10) accordingly to the side of the motor that must be changed.

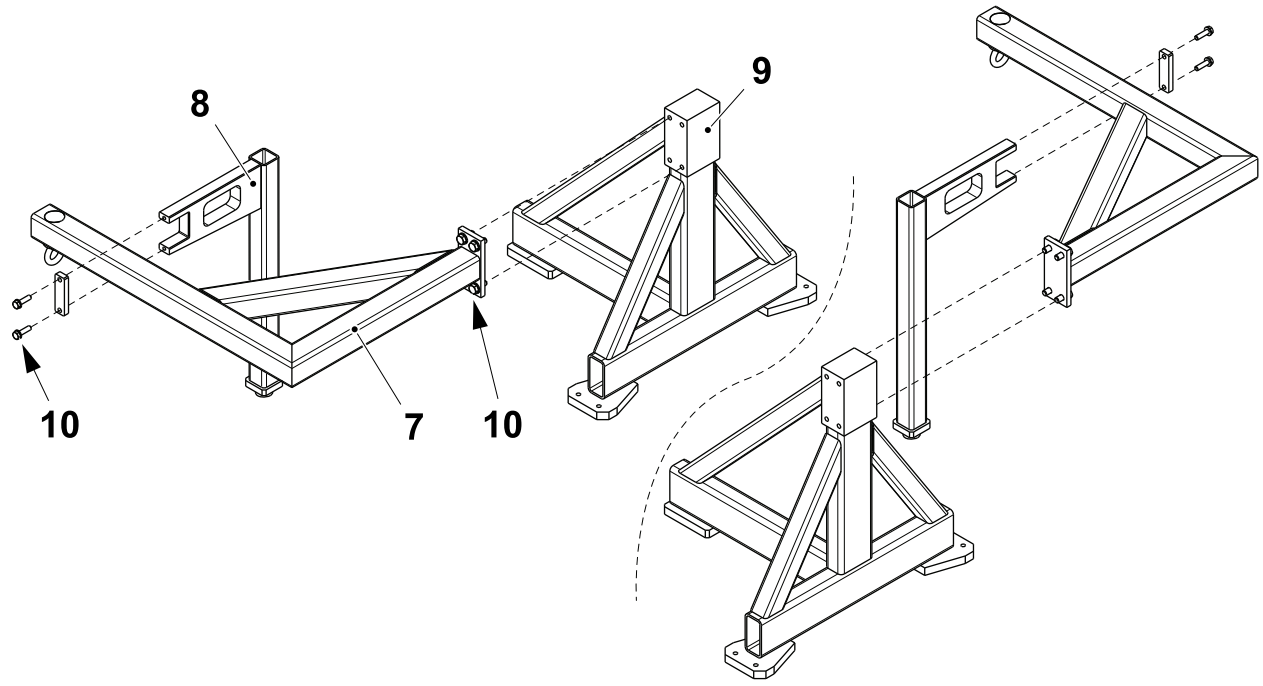

7 Arm
8 Support
9 Support
10 Screw

(Cont'd)

(Cont'd)

WARNING
Risk of Personal Injury
Do not step in the hole under the cover (11).

Note! The lifting tool (14) can be assembled on the left or right platform accordingly to the side of the motor that must be changed.

f) Remove the cover (11).

g) Remove the screws (12) from the platform (13).

h) Fit the lifting tool (14) to the platform (13) using the holes of the screws (12) to secure the lifting tool (14).

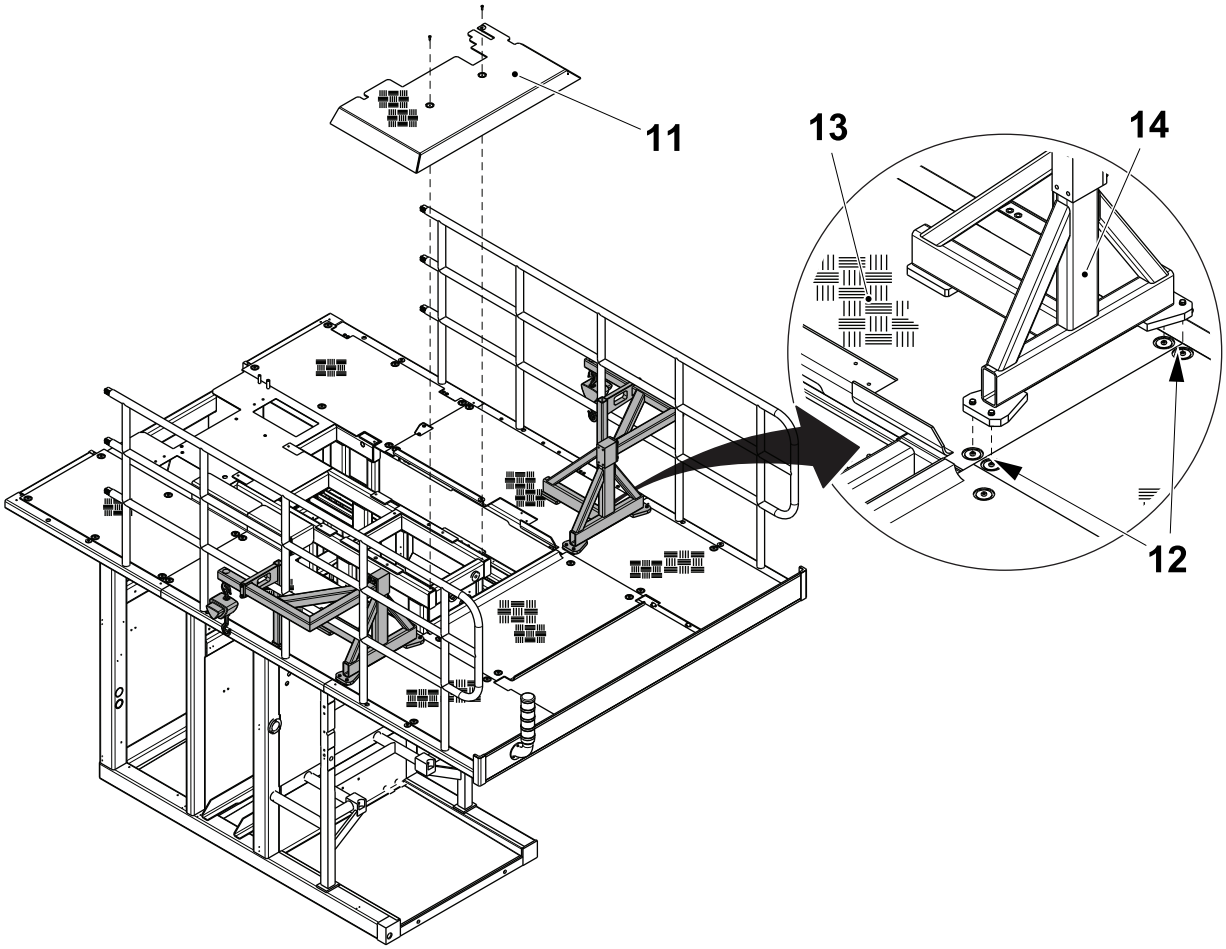

11 Cover
12 Screw
13 Platform
14 Lifting tool

(Cont'd)

(Cont'd)

Remove Servo Motor

WARNING

Risk of personal injury

The support (1) weight approx. 25 kg, and the motor (5) weights approx. 50 kg.

a) Lift the support (1) with the lifting tackle (2).

Note! Tighten the screws (4) with a torque of 25 Nm.

b) Secure the support (1) to the drive unit (3) with the screws (4).

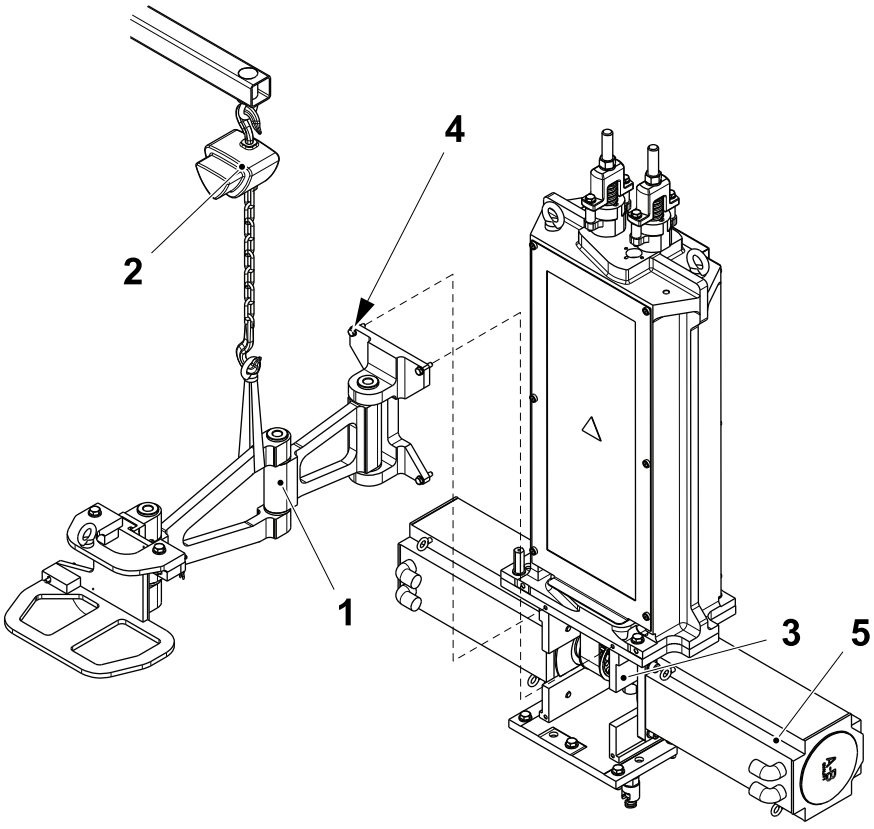

1 Support
2 Lifting tackle
3 Drive unit
4 Screw
5 Motor

(Cont'd)

(Cont'd)

Note! See the section Preparation to check the position of the Motors.

c) Remove the eye bolts (6).

d) Remove the screws (7) using the tool (8) when needed.

e) Fit the support (1) under the motor (5).

f) Use the setting screw (9) to lift the plate of the support (1) so it touches the motor (5) and secure it with the screws (10).

g) Remove the screws (11) on the motor (5).

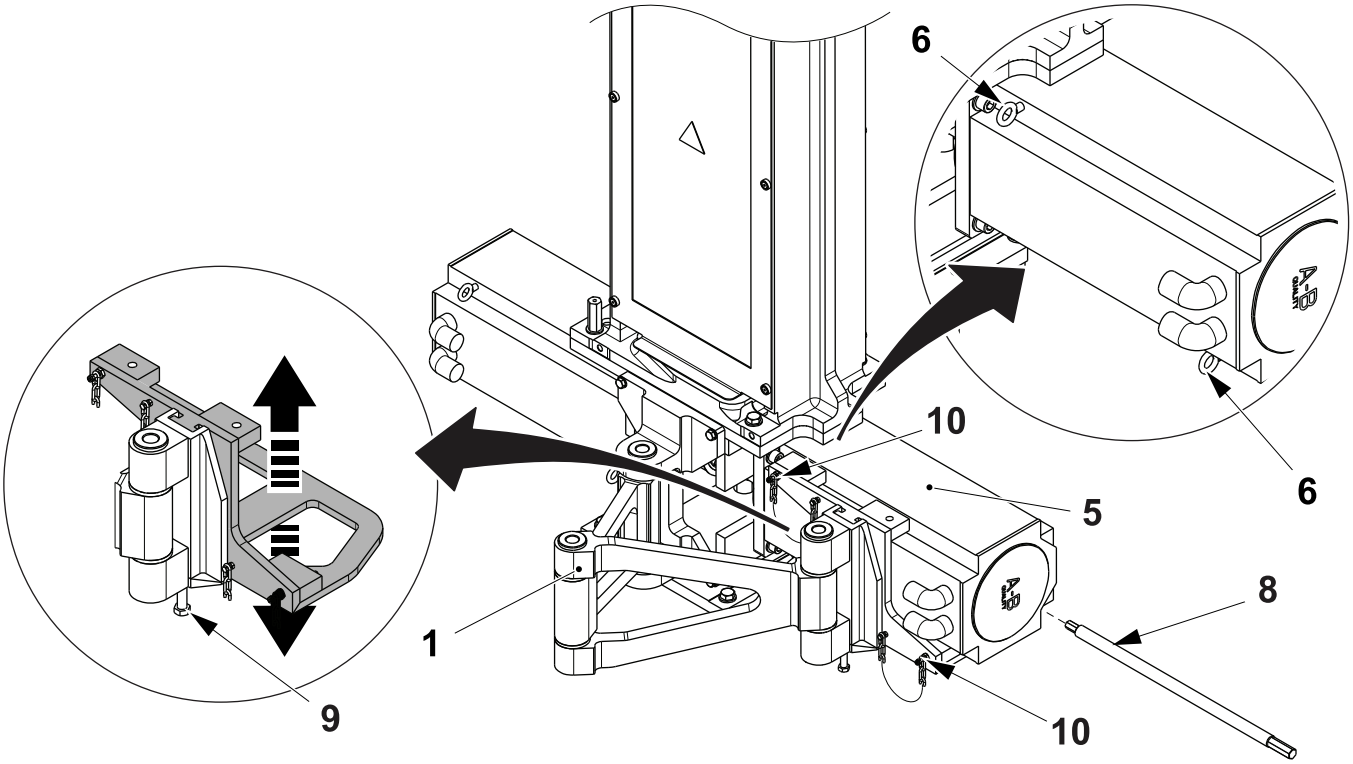

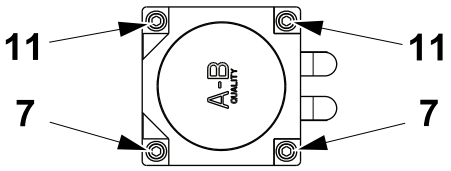

Rear servo M730 or front servo M750

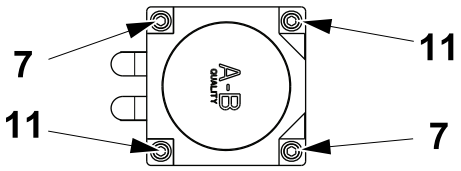

Rear servo M740 or front servo M720

1 Support
5 Motor
6 Eye bolt
7 Screw
8 Tool
9 Setting screw
10 Screw
11 Screw

(Cont'd)

(Cont'd)

h) Fasten the motor (5) to the lifting tackle (2).

i) Lift the motor (5) and put it on a workbench.

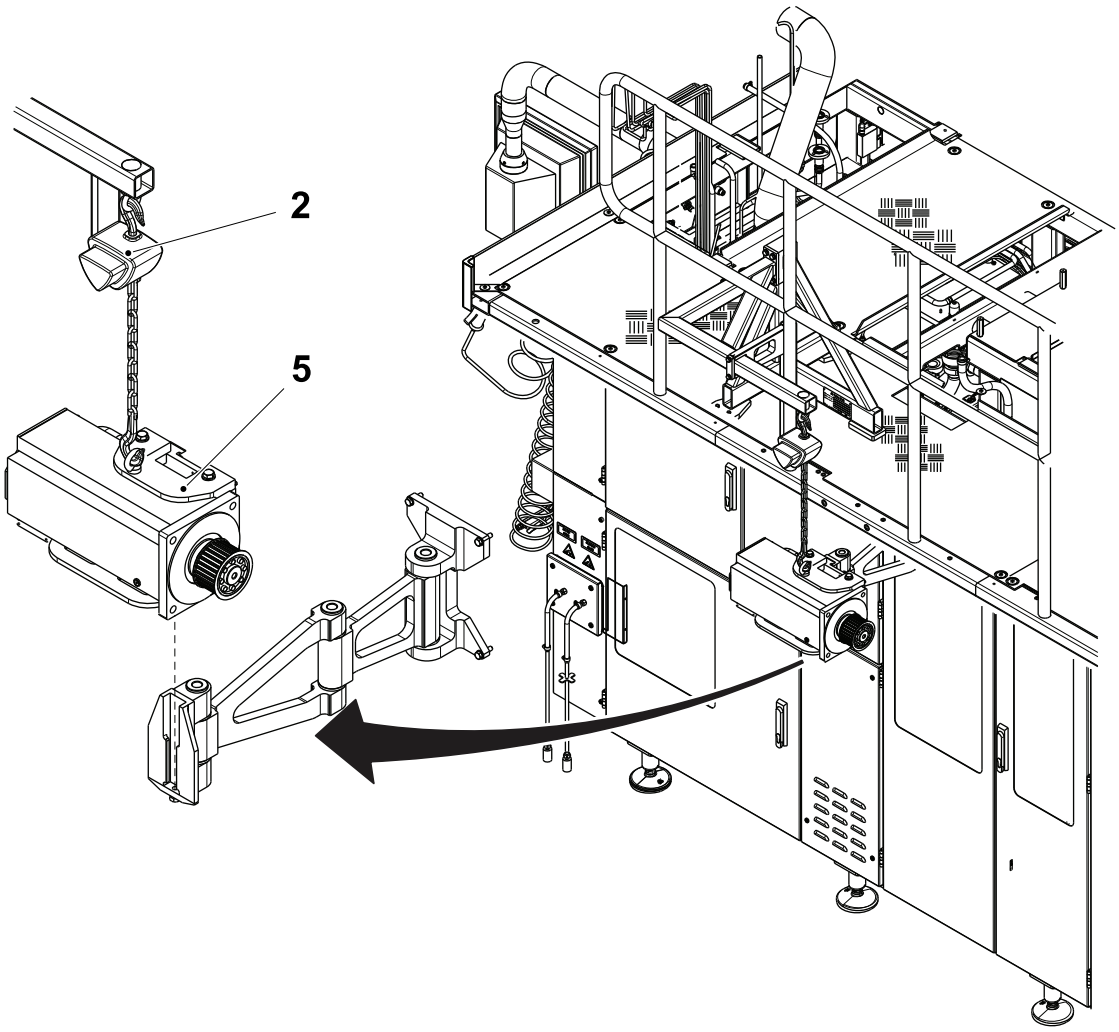

2 Lifting tackle

5 Motor

(Cont'd)

(Cont'd)

j) Loosen the shaft coupling (12) by means of the eight screws (13).

k) The shaft coupling (12) can be loosened by installing four of the eight screws (13) into the four pusher holes (14) to disengage the two coupling cones.

l) Remove the shaft coupling (12) from the drive pulley (15).

m) Remove the drive pulley (15) and the spacer (16) from the old motor (5).

Note! Clean the conical surface of the shaft coupling (12) and the drive shaft (17) before assembly.

n) Fit the spacer (16) on the drive shaft (17) of the new motor.

o) Insert the shaft coupling (12) into the drive pulley (15).

p) Fit the shaft coupling (12) and the drive pulley (15) on the drive shaft (17).

Note! Torque the eight coupling screws (13) on the shaft coupling (12) to **17 Nm** on assembly.

q) Tighten the eight screws (13) in sequence to secure the shaft coupling (12) on the drive shaft (17).

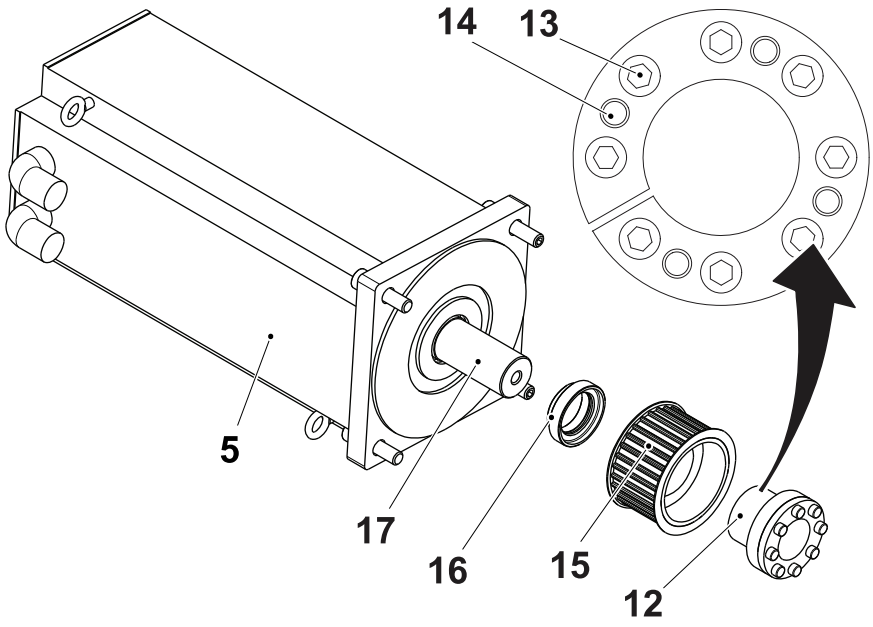

5 Motor
12 Shaft coupling
13 Screw
14 Pusher hole
15 Drive pulley
16 Spacer
17 Drive shaft

(Cont'd)

(Cont'd)

Fitting the New Servo Motor

CAUTION

Risk of injury or equipment damage.
The servo motor (1) weighs approx. 50 kg.

a) Remove all the protective covers and the caps from the new servo motor (1).

b) Make sure that the raised mounting surface and the shaft of the servo motor (1) and the flange (2) are clean.

c) Assemble the new servomotor, follow the instruction Remove Servo Motor in the reverse order.

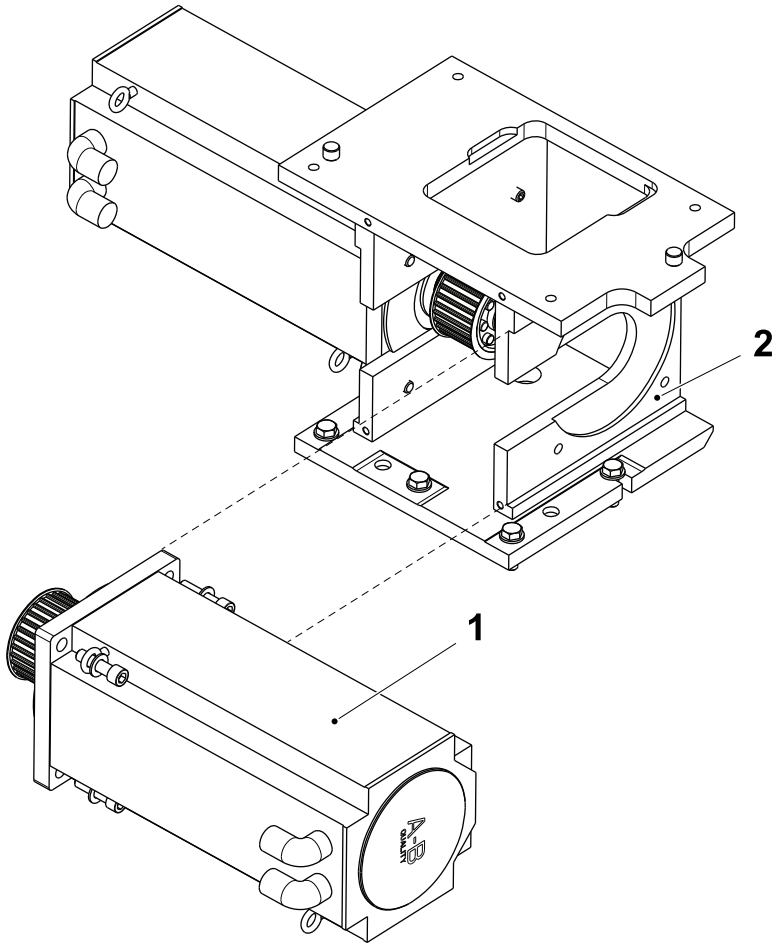

1 Servo motor
2 Flange

(Cont'd)

(Cont'd)

Commission the Servo Motor

a) Fit the three electrical cables to the connection box.

b) Turn ON the main power and step up the filling machine to PREPARATION.

c) Touch the MAINTENANCE CONTROL button (1).

d) Log on to access the MAINTENANCE CONTROL window, see 8.6.3-2 HMI - User Management Log On.

e) Touch the JAW SYSTEM button (2), to display the JAW SYSTEM window.

f) Touch the appropriate SERVO MOTOR TEST icon (3) for the motor that has been changed.

g) Touch the POWER button (4).

h) Touch the OK button (5).

i) Check that the POWER button (4) turns green.

- if the POWER button (4) turns green the servo motor test is complete
- if the POWER button (4) does not turn green, continue with item j) to check the feedback connection.

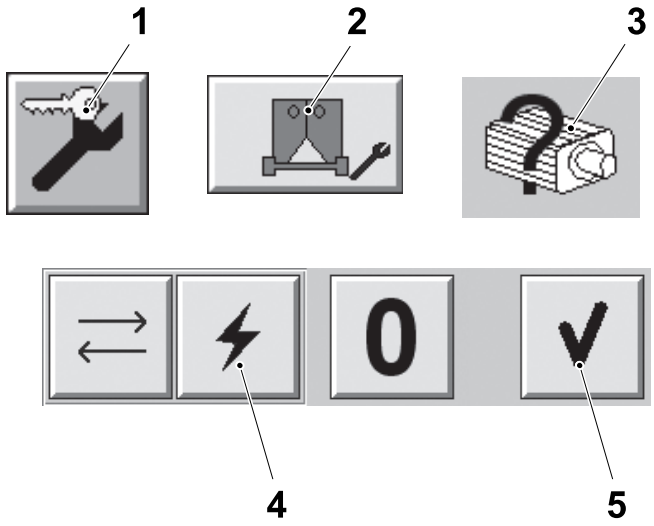

1 MAINTENANCE CONTROL button
2 JAW SYSTEM button
3 SERVO MOTOR TEST icon
4 POWER button
5 OK button

(Cont'd)

(Cont'd)

j) Touch the FEEDBACK button (6).

k) Touch the OK button (5).

l) Wait for the FEEDBACK button (6) to turn green.
- if the FEEDBACK button (6) turns green the power cables are inverted, check the cable connections
- if the FEEDBACK button (6) does not turn green, check the feedback cable connection.

m) Touch the ZERO button (7) and then touch the OK button (5) to return to the SERVO SETTINGS window.

n) Touch the EXIT button (8) to exit from the SERVO SETTINGS window.

o) Set the drive belt tension, see 3-6 Drive Unit - Set Drive Belt Tension.

p) Fit back all machine covers.

q) Reference the drive unit, see 3-4 Drive Unit - Referencing.

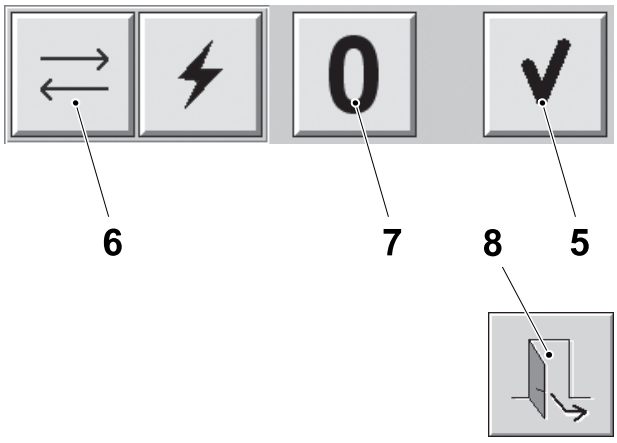

5 OK button
6 FEEDBACK button
7 Zero button
8 EXIT button

3.1.4-3 Motor Bracket - Overhaul Servomotor

Machine Status	Electrical supply disconnecting device in position O (OFF) Main air valve OFF Main steam valve ON Main water valve OFF
SPC Reference	2836488-0200 2836489-0200

Disassemble Servo Motor

a) Remove the servo motor, see 3.1.4-2 Motor Bracket - Change Servomotor.

(Cont'd)

(Cont'd)

b) Loosen the shaft coupling (3) by means of the eight screws (2).

c) The shaft coupling (3) can be loosened by installing four of the eight screws (2) into the four pusher holes (4) to disengage the two coupling cones.

d) Remove the shaft coupling (3) from the drive pulley (5).

e) Remove the drive pulley (5) and the spacer (6) and check for visible wear and damage. Change if necessary.

f) Check the inner surface of the shaft coupling (3).

g) On the servo motor (1) check:

- the surface of the drive shaft (7).
- that the raised flange on the servo motor (1) is not damaged
- the electrical connectors on the servo motor (1) for signs of corrosion or damage. Change them if necessary.

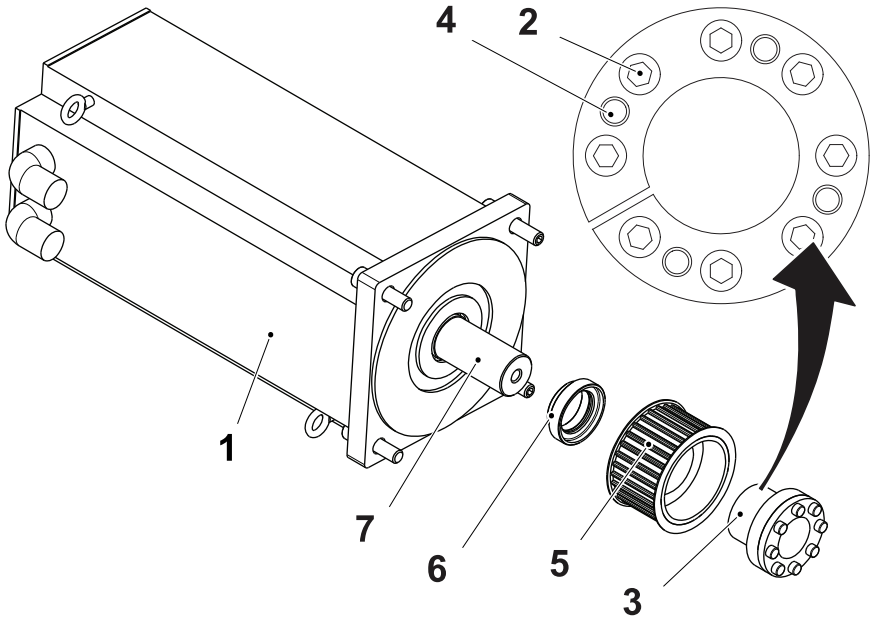

1 Servo motor
2 Screw
3 Shaft coupling
4 Pusher hole
5 Drive pulley
6 Spacer
7 Shaft

(Cont'd)

(Cont'd)

Servo Motor Assembly

CAUTION
Risk of damage to the equipment.
Never use a hammer or any other tool to force the shaft coupling (3) onto the drive shaft (7). Any amount of force or shock used to assemble the shaft coupling (3) onto the drive shaft (7) will result in damage to the brake and bearings in the servo motor (1).

Note! Clean the conical surface of the shaft coupling (3) and the drive shaft (7) before assembly.

a) Fit the spacer (6) on the drive shaft (7).

b) Insert the shaft coupling (3) into the drive pulley (5).

c) Fit the shaft coupling (3) and the drive pulley (5) on the drive shaft (7).

Note! Torque the eight coupling screws (2) on the shaft coupling (3) to **17 Nm** on assembly.

d) Tighten the eight screws (2) in sequence to secure the shaft coupling (3) on the drive shaft (7).

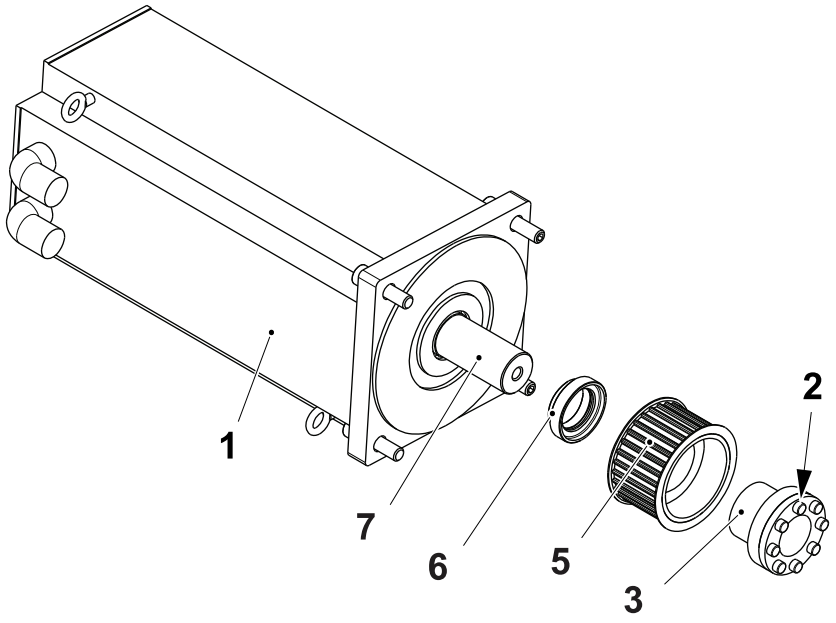

1 Servo motor
2 Screw
3 Shaft coupling
5 Drive pulley
6 Spacer
7 Shaft

3.2 Link

3.2-1 Link - Check

Machine Status	Electrical supply disconnecting device in position O (OFF) Main air valve OFF Main steam valve ON Main water valve OFF
SPC Reference	2890414-0100 2890415-0100

Check the link rods (1) and (2) for wear or damage, check that:

- the connection clamps (3) are secure
- the link rods (1) and (2) are securely tightened to the runner blocks (4)
- the link rods (1) and (2) are securely tightened to the yoke or scissor arm
- the gaskets (5) are not worn or damaged
- the nuts (6) are tightened to a torque of **60** Nm, adjust if necessary and apply locking fluid after tightening.

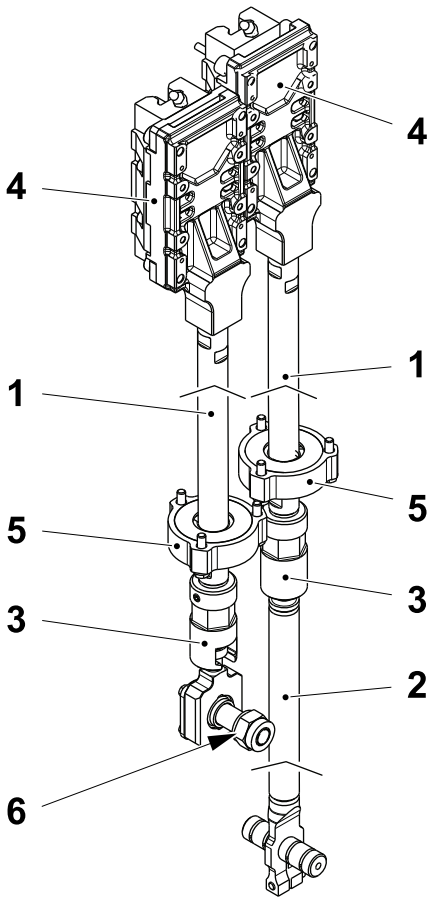

1 Link rod
2 Link rod
3 Connection clamp
4 Runner block
5 Gasket
6 Nut

3.2-2 Link - Change

Machine Status	Electrical supply disconnecting device in position O (OFF) Main air valve OFF Main steam valve ON Main water valve OFF
Special Equipment	Tool TP No. 3319605-0000
SPC Reference	2890414-0100 2890415-0100

a) Lower the jaw system, see 3-2 Drive Unit - Lower Jaw System so that the weight is supported and no further movement is possible.

b) Release the brakes, see 3-3 Drive Unit - Release Brakes.

Note! If it is necessary to change all four links, the jaw link from the first jaw pair lowered must be disconnected before lowering the second jaw pair.

c) Loosen the screws (1) and remove the cover (2).

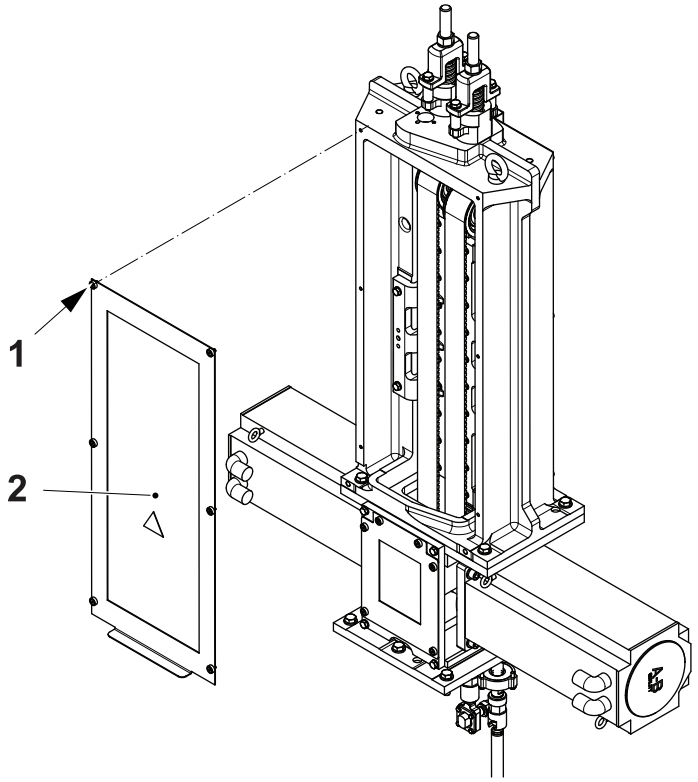

1 Screw
2 Cover

(Cont'd)

(Cont'd)

Change Yoke Link

a) Loosen the grub screw (1).

b) Loosen the connection clamp (2) until there is enough space for the link rod (3) to be removed.

c) Disconnect the link rod (3).

d) Remove link rod (3) from the runner block (4).

e) Remove the screw (5), the washer (6) and the nut (7) securing the link (8) to the yoke (9).

f) If necessary remove the connection clamp (2) from the link rod (3).

Note! Tighten the nut (7) to a torque of 60 Nm.

g) Assemble in the reverse order.

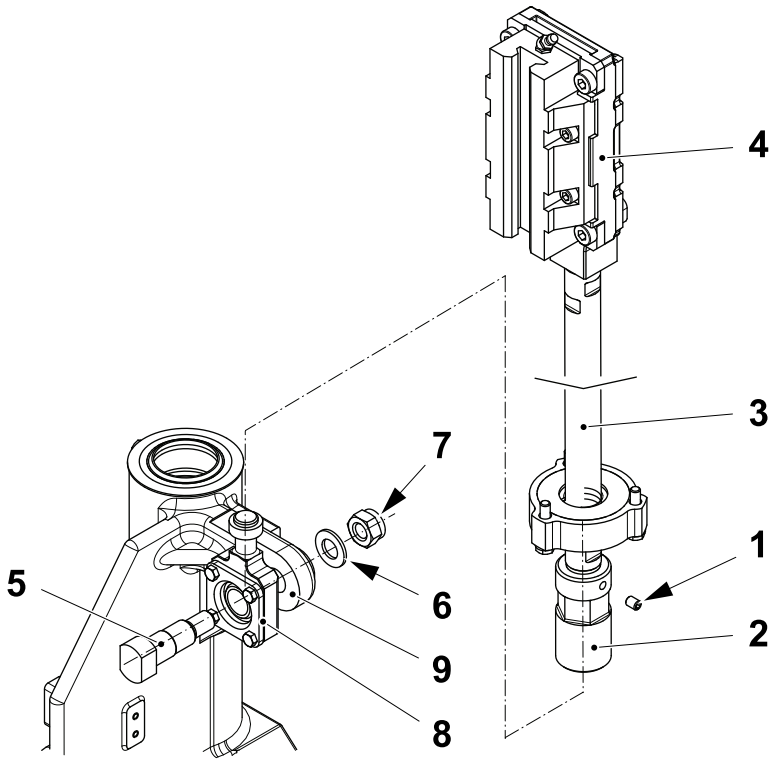

1 Grub screw
2 Connection clamp
3 Link rod
4 Runner block
5 Screw
6 Washer
7 Nut
8 Link
9 Yoke

(Cont'd)

(Cont'd)

Change Jaw Link

a) Loosen the grub screw (1).

b) Loosen the connection clamp (2) until there is enough space for the link rod (3) to be removed.

c) Disconnect the link rod (3).

d) Remove link rod (3) from the runner block (4).

e) If necessary remove the connection clamp (2) from the link rod (3).

f) Remove the screw (5), the shaft (6) and the link rod (7).

g) Assemble in the reverse order.

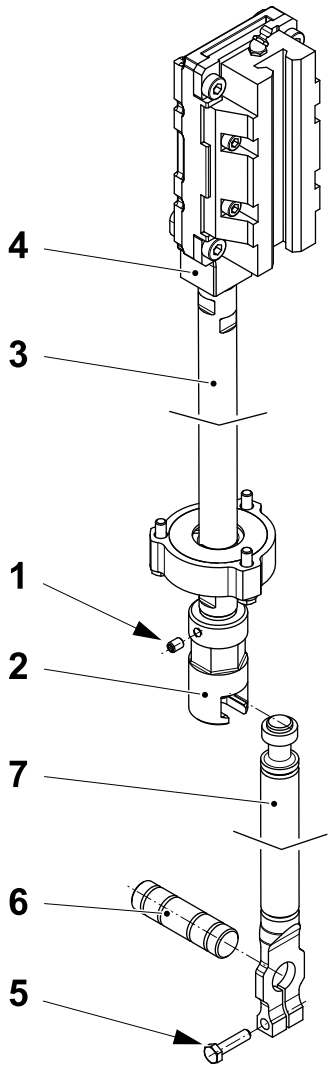

1 Grub screw
2 Connection clamp
3 Link rod
4 Runner block
5 Screw
6 Shaft
7 Link rod

(Cont'd)

(Cont'd)

Connect Links

a) Make sure that the brakes are released, see 3-3 Drive Unit - Release Brakes.

b) Pass the link rods (1) through the seal (2) above the jaw system and screw the link rods (1) into the runner block (3).

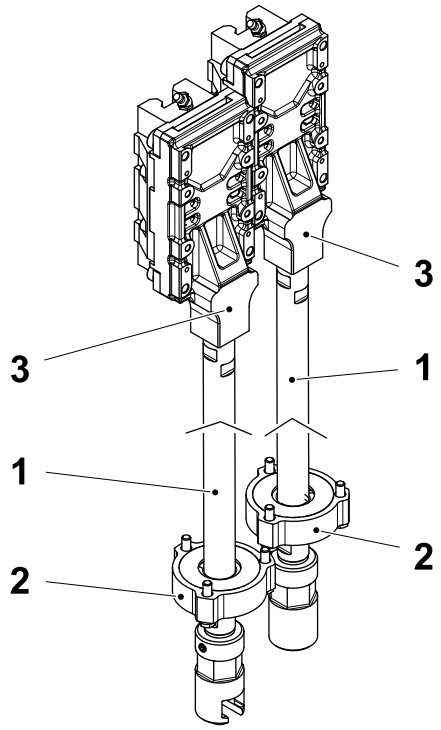

1 Link rod
2 Seal
3 Runner block

(Cont'd)

(Cont'd)

Note! If the links have only been disconnected the referencing procedure is not necessary.

c) Reference the drive system, see 3-4 Drive Unit - Referencing.

Note! In order to facilitate the fastening of the connection clamps (8) it might be necessary to release the brakes for individual link rods and perform the Manual operation procedure, see Manual Operation on page 4-12.

d) Insert the tool (4) between the links (5) and the joke (6).

e) Fit the link rods (1) to the links (5) and (7) and tighten the connection clamps (8).

f) Tighten the grub screws (9).

g) Remove the tool (4).

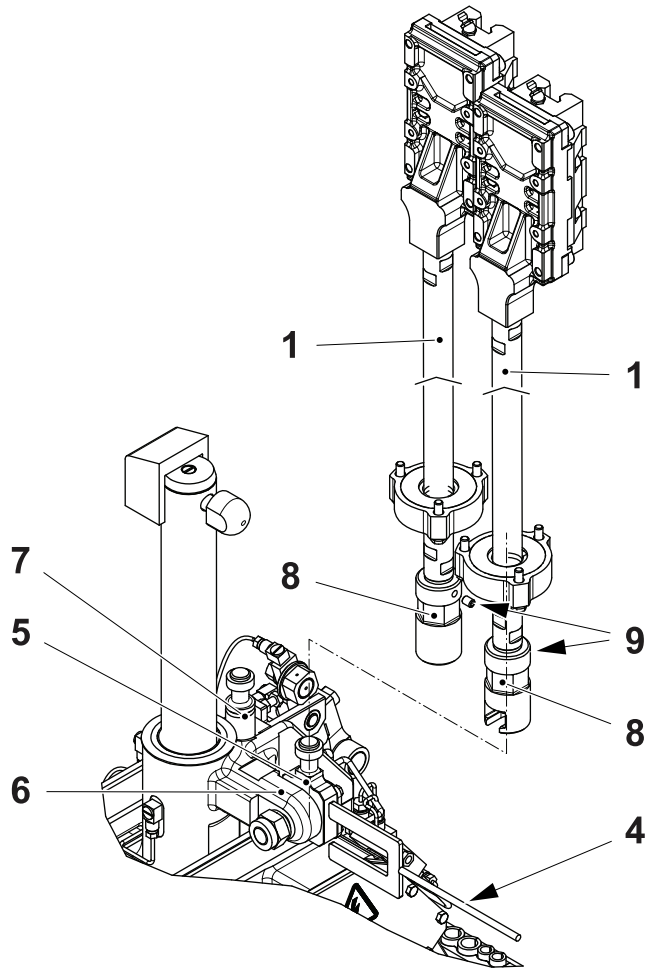

1 Link rod
4 Tool
5 Link
6 Joke
7 Link
8 Connection clamp
9 Grub screw

(Cont'd)

(Cont'd)

Note! If all four links have been disconnected, the jaw link from the first jaw pair connected must be raised before connecting the second jaw pair.

Note! Make sure that the machine movement can be performed safely and without any mechanical interference.

h) Touch the `LH SIDE` button (10) or `RH SIDE` button (11).

i) Touch the `RAISE JAW` button (12) to raise the jaw pair connected.

j) Press the `JAW SYSTEM INCHING` button (13) to start the machine movement and release the button when necessary.

k) Connect the second jaw pair, see Connect Links.

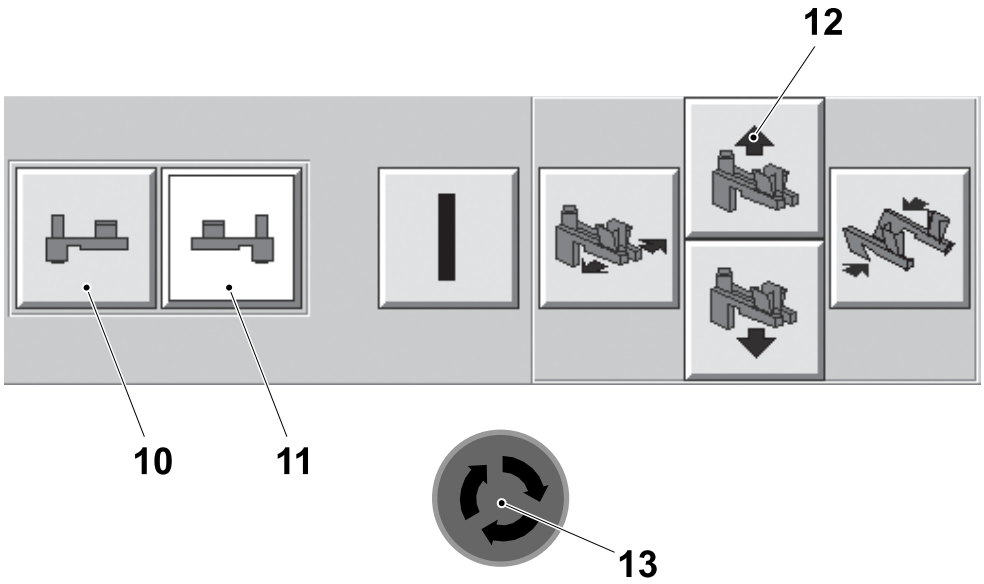

10 `LH SIDE` button
11 `RH SIDE` button
12 `RAISE JAW` button
13 `JAW SYSTEM INCHING` button

4 Jaw System

Jaw System - Description

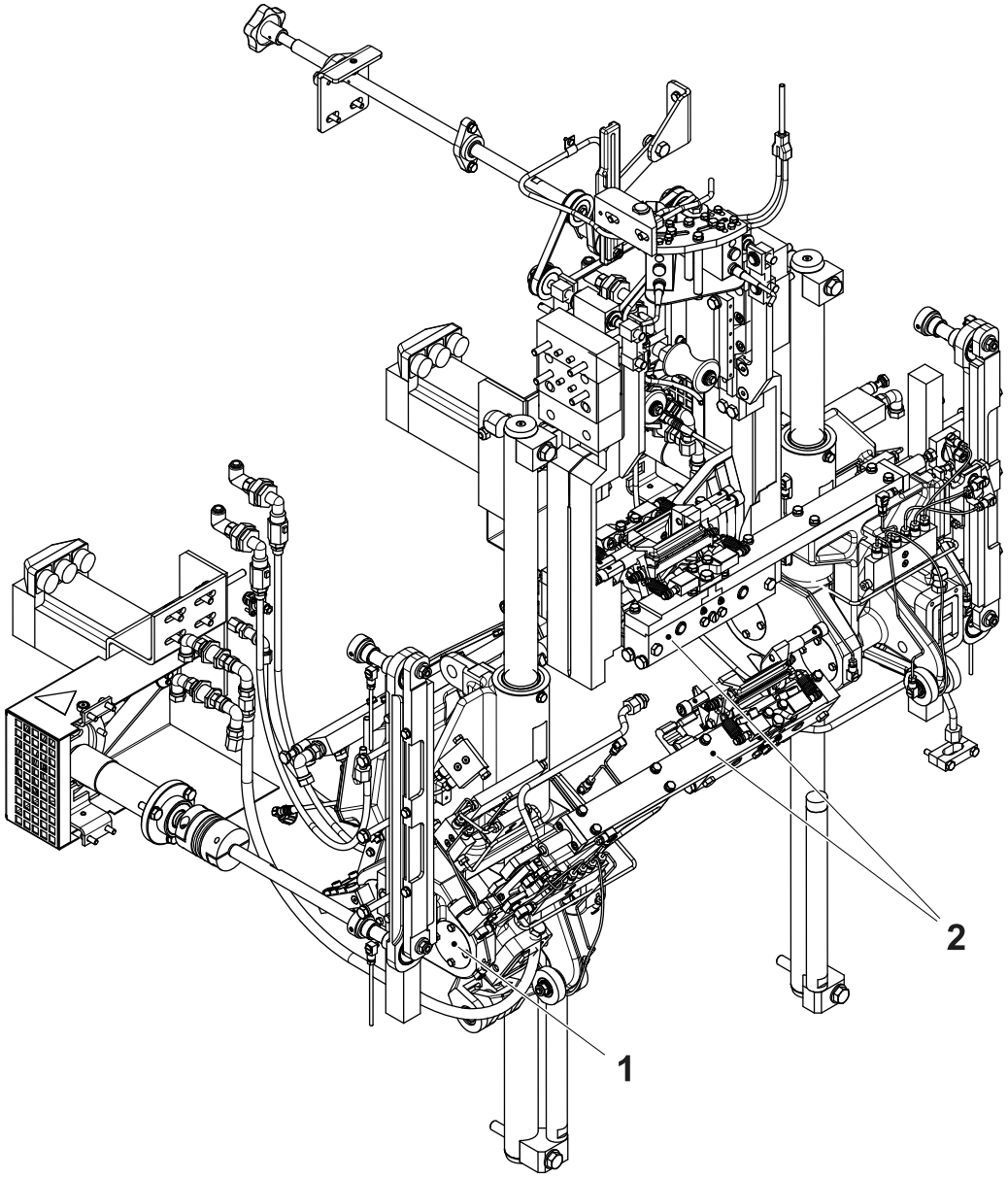

1 Base Unit
2 Forming Unit

Jaw System - Description 4-2
4-1 Jaw System - Setting Sequence 4-7
4-2 Jaw System - Inching, Go To Position and Manual Operation 4-8
4-3 Jaw System - Move Drop Chute Position 4-15
4-4 Jaw System - Set Stroke 4-16
4-5 Jaw System - Set Volume Adjuster 4-19
4-6 Jaw System - Set Symmetry. 4-21
4-7 Jaw System - Set Volume Flaps Centring 4-23
4-8 Jaw System - Set Support Rollers 4-30
4-9 Jaw System - Remove Cutting Jaw Volume Flaps 4-34
4-10 Jaw System - Set Jaw Gap 4-35
4-11 Jaw System - Set Cutting Alignment 4-40
4-12 Jaw System - Set Jaw Over Jaw 4-43
4-13 Jaw System - Set Folding Flaps Mechanism 4-49
4-14 Jaw System - Set Folding Flaps 4-50
4-15 Jaw System - Check T-gap 4-60
4-16 Jaw System - Install Cutting Jaw Volume Flaps 4-62
4-17 Jaw System - Set Play 4-63
4-18 Jaw System - Set Package Volume 4-64

4.1 Base Unit 4-71

4.1.1 Yoke 4-71

4.1.1-1 Yoke - Check bearings 4-71
4.1.1-2 Yoke - Check Plunger and Locating Pieces 4-72
4.1.1-3 Yoke - Change Bushings and Scraper 4-74
4.1.1-4 Yoke - Change Bearings 4-75

4.1.2 Pressure Arm 4-76

4.1.2-1 Pressure Arm - Check 4-76
4.1.2-2 Pressure Arm - Set Play 4-77

4.1.3 Cutting Arm 4-78

4.1.3-1 Cutting Arm - Check 4-78

4.1.3-2 Cutting Arm - Change Bearings and Shaft 4-80
4.1.3-3 Cutting Arm - Set Play 4-83
4.1.3-4 Cutting Arm - Check Clearance 4-84
4.1.4 Scissor Arm Link 4-85
4.1.4-1 Scissor Arm Link - Check 4-85
4.1.4-2 Scissor Arm Link - Change Shafts and Links 4-86
4.1.5 Design Correction 4-88
4.1.5.1 Drive Unit 4-88
4.1.5.1-1 Drive Unit - Check 4-88
4.1.5.1-2 Drive Unit - Change Timing Belt 4-90
4.1.5.1-3 Drive Unit - Change Bearings and Seal Ring 4-91
4.1.5.1-4 Drive Unit - Set Timing Belt Tension 4-93
4.1.5.1-5 Drive Unit - Set Proximity Switch 4-96
4.1.5.2 Design Correction Device 4-97
4.1.5.2-1 Design Correction Device - Check 4-97
4.1.5.2-2 Design Correction Device - Change Plain Bearings 4-98
4.1.6 Cable Connection 4-99
4.1.6-1 Cable Connection - Check 4-99
4.1.7 Volume Adjuster 4-100
4.1.7-1 Volume Adjuster - Check Belt 4-100
4.1.7-2 Volume Adjuster - Set Belt 4-101
4.1.7-3 Volume Adjuster - Overhaul 4-102
4.1.7-4 Volume Adjuster - Check Bushing 4-103
4.1.7-5 Volume Adjuster - Set 4-104
4.2 Forming Unit 4-105
4.2.1 Pressure Jaw 4-105
4.2.1-1 Pressure Jaw - Check 4-105
4.2.1-2 Pressure Jaw - Remove 4-110
4.2.1-3 Pressure Jaw - Remove Volume Flaps 4-111
4.2.1-4 Pressure Jaw - Install Volume Flaps 4-112
4.2.1-5 Pressure Jaw - Assemble 4-113

4.2.1-6 Pressure Jaw - Overhaul 4-114
4.2.1-7 Pressure Jaw - Check Inductor 4-118
4.2.1-8 Pressure Jaw - Change Inductor 4-122
4.2.1-9 Pressure Jaw - Change O-rings 4-126
4.2.1-10 Pressure Jaw - Change Transformer 4-127
4.2.1-11 Pressure Jaw - Check Catches and Clearance 4-130

4.2.2 Cutting Jaw 4-132

4.2.2-1 Cutting Jaw - Check 4-132
4.2.2-2 Cutting Jaw - Remove 4-135
4.2.2-3 Cutting Jaw - Assemble 4-136
4.2.2-4 Cutting Jaw - Overhaul. 4-137
4.2.2-5 Cutting Jaw - Change Cutting Rail 4-145
4.2.2-6 Cutting Jaw - Change Oil. 4-146

4.2.3 Knife Holder 4-148

4.2.3-1 Knife Holder - Check Knife 4-148
4.2.3-2 Knife Holder - Change Knife 4-149

4.2.4 Volume Flaps 4-151

4.2.4-1 Volume Flaps - Check 4-151
4.2.4-2 Volume Flaps - Change Bushings, Curve Rollers and Shims 4-152
4.2.4-3 Volume Flaps - Grease 4-157

4.2.5 Volume Curve Piece. 4-158

4.2.5-1 Volume Curve Piece - Check Curve Unit 4-158
4.2.5-2 Volume Curve Piece - Change Cam. 4-159

4.2.6 Support Roller 4-160

4.2.6-1 Support Rollers - Check. 4-160
4.2.6-2 Support Rollers - Change Flange Bushings 4-161

4.2.7 Photocell Unit 4-162

4.2.7-1 Photocell Unit - Set 4-162
4.2.7-2 Photocell Unit - Check Alignment 4-167

4.2.8 Tube Flushing 4-169

4.2.8-1 Tube Flushing - Check 4-169

This page intentionally left blank

4-1 Jaw System - Setting Sequence

SPC Reference	641504-0300

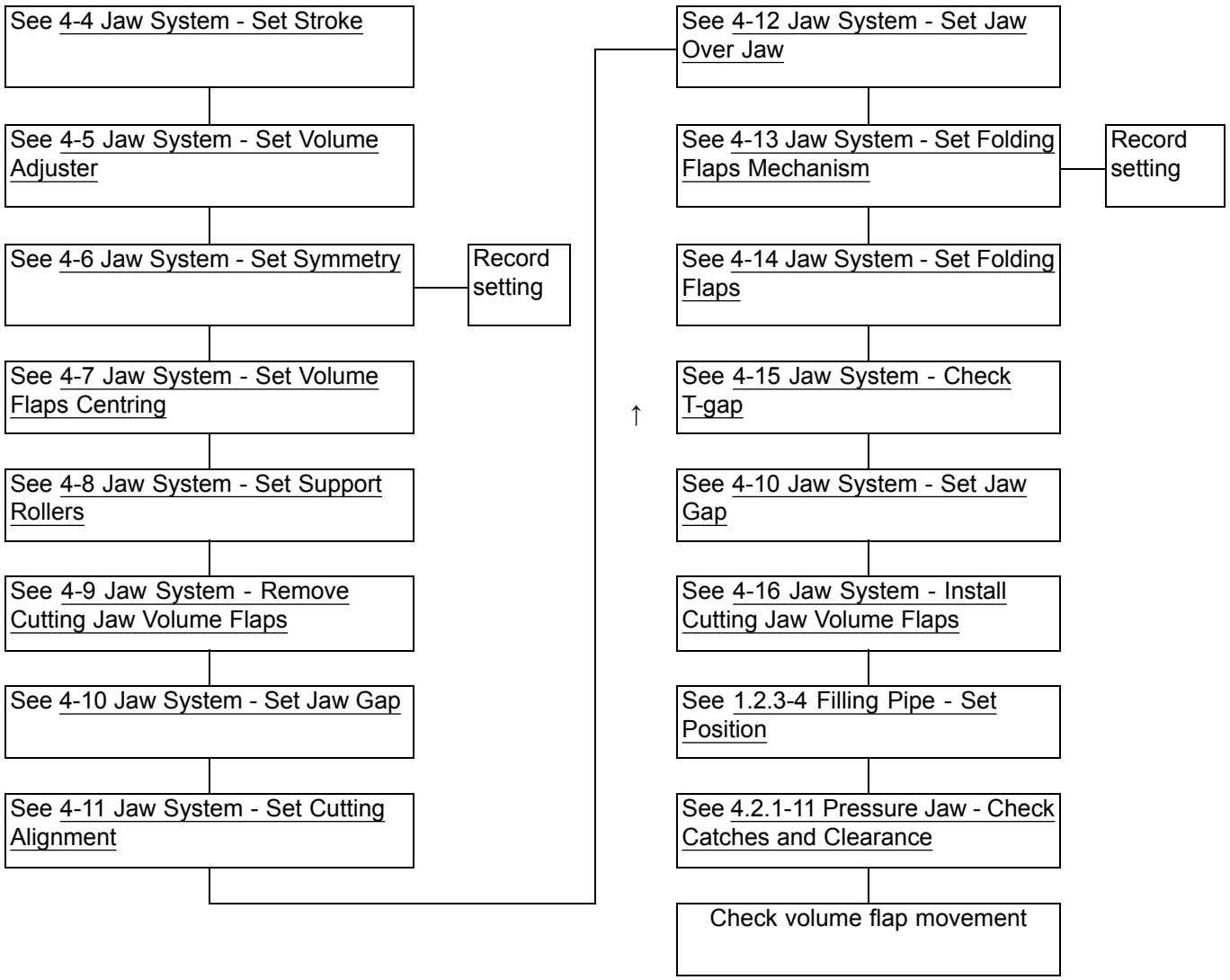

4-2 Jaw System - Inching, Go To Position and Manual Operation

Machine Status	Step ZERO
SPC Reference	641504-0300

Inching (catches and knives ON)

a) Step up the machine to PREPARATION.

b) Touch the PRODUCTION CONTROL button (1).

c) Touch the PACKAGE FORMING UNIT button (2) to display the PACKAGE FORMING UNIT window.

d) Touch the JAW INCHING icon (3) and the JAW INCHING window (4) is displayed.

e) Touch one of the following buttons:

- the SLOW INCHING button (5), to slow inch the jaw system to check the machine movement or to reach an approximate position
- the FAST INCHING button (6) to fast inch the jaw system to check the machine movement.

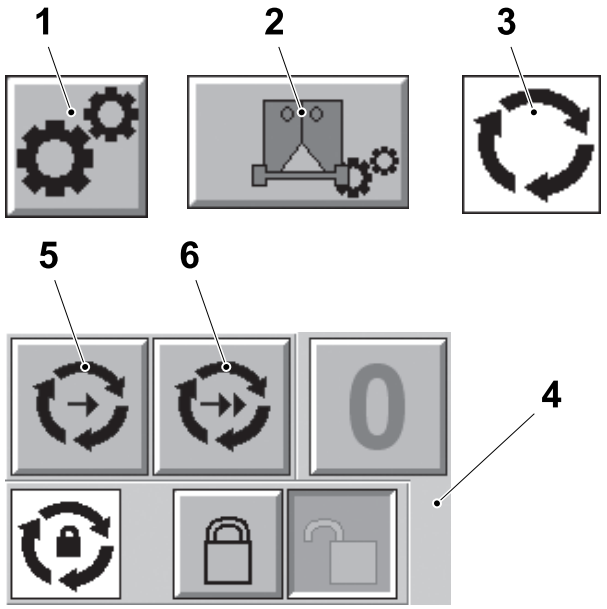

1 PRODUCTION CONTROL button
2 PACKAGE FORMING UNIT button
3 JAW INCHING icon
4 JAW INCHING window
5 SLOW INCHING button
6 FAST INCHING button

(Cont'd)

(Cont'd)

Note! The INCHING LOCK button (7) permits the physical JAW SYSTEM INCHING button (8) to be released once the machine movement has started. The machine movement is stopped by pressing the SHORT STOP button (9). The INCHING LOCK button (7) is only available when logged on to the TPOP as a "tptechnician".

f) If necessary, touch the INCHING LOCK button (7).

g) Press and hold the JAW SYSTEM INCHING button (8) to slow inch the machine. If the INCHING LOCK button (7) has been enabled, release the JAW SYSTEM INCHING button (8) when the machine movement has started.

h) If the INCHING LOCK button (7) has been enabled, press the SHORT STOP button (9) to stop the machine movement.

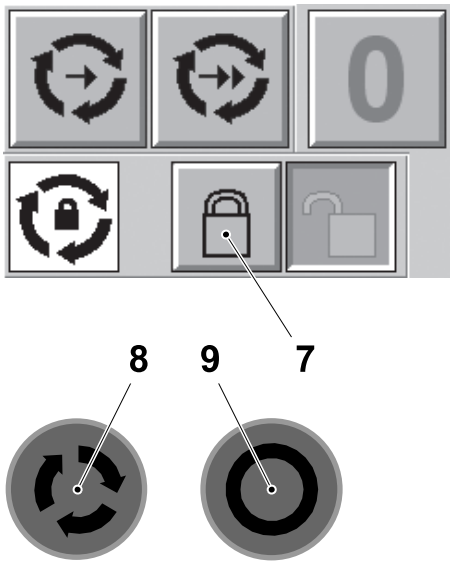

7 INCHING LOCK button
8 JAW SYSTEM INCHING button
9 SHORT STOP button

(Cont'd)

(Cont'd)

START and STOP Button Description

The START button (1), STOP button (2) and OK button (3) are used in the activation of the jaw system movement, the buttons use colours to indicate the status of the selected function. The colours have the following meaning:

- LIGHT GREY, the function is not enabled
- GREY, the function is enabled
- FLASHING WHITE, the function request has been accepted and the system is waiting for the command to start (e.g. pressing the OK button)
- WHITE, the function is active
- FLASHING GREEN, the function step has complete and the system is ready to receive new input parameters
- GREEN, the function is complete and a new instance of the function can be started.

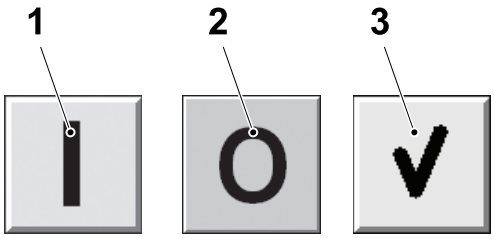

1 START button
2 STOP button
3 OK button

(Cont'd)

(Cont'd)

Go To Position (catches and knives OFF)

Moves the jaw system to a specified position.

a) Touch the PRODUCTION CONTROL button (1).

b) Touch the PACKAGE FORMING UNIT button (2) to display the JAW SYSTEM window.

c) Touch the JAW POSITION icon (3) and the ANGLE SELECTOR window (4) is displayed.

d) Use the ARROW button (5) to select the required angle.

e) Touch the START button (6).

f) Touch the OK button (7) to start the machine movement.

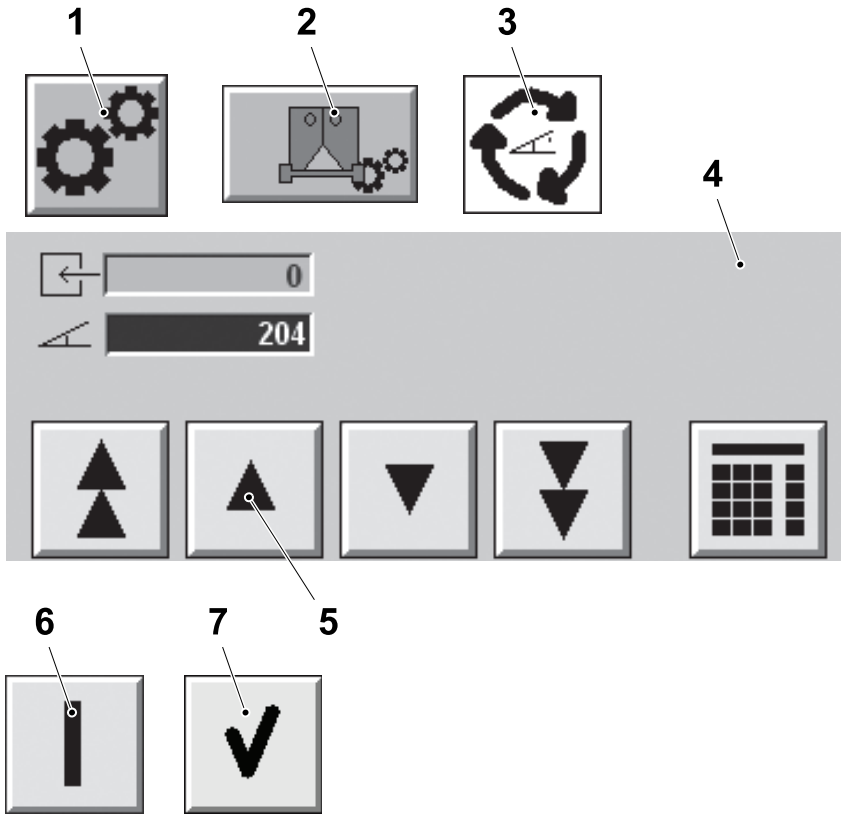

1 PRODUCTION CONTROL button
2 PACKAGE FORMING UNIT button
3 JAW POSITION icon
4 ANGLE SELECTOR window
5 ARROW button
6 START button
7 OK button

(Cont'd)

(Cont'd)

Manual Operation

Moves the LH or RH side of the jaw system to a maintenance position.

a) Touch the MAINTENANCE CONTROL button (1).

b) Log on to access the MAINTENANCE CONTROL window, see 8.6.3-2 HMI - User Management Log On.

c) Touch the JAW SYSTEM button (2) to display the JAW SYSTEM window.

d) Touch the MANUAL OPERATION icon (3) to display the MANUAL OPERATION window (4).

e) Touch the START button (5).

f) Touch the OK button (6) to enable the manual operation mode.

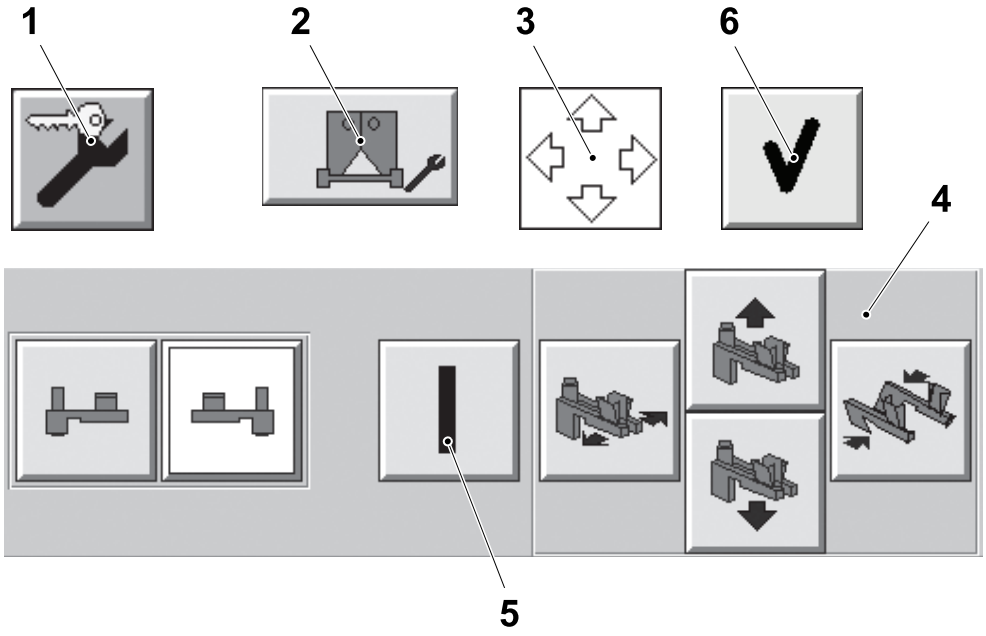

1 MAINTENANCE CONTROL button
2 JAW SYSTEM button
3 MANUAL OPERATION icon
4 MANUAL OPERATION window
5 START button
6 OK button

(Cont'd)

(Cont'd)

Note! Make sure that the machine movement can be performed safely and without any mechanical interference.

g) Touch the LH SIDE button (7) or RH SIDE button (8).

h) Touch one of the following buttons to activate the required action:

- OPEN JAW button (9), CLOSE JAW button (10).
- RAISE JAW button (11), LOWER JAW button (12).

i) Press theJAW SYSTEM INCHING button (13) to start the machine movement and release the button when necessary.

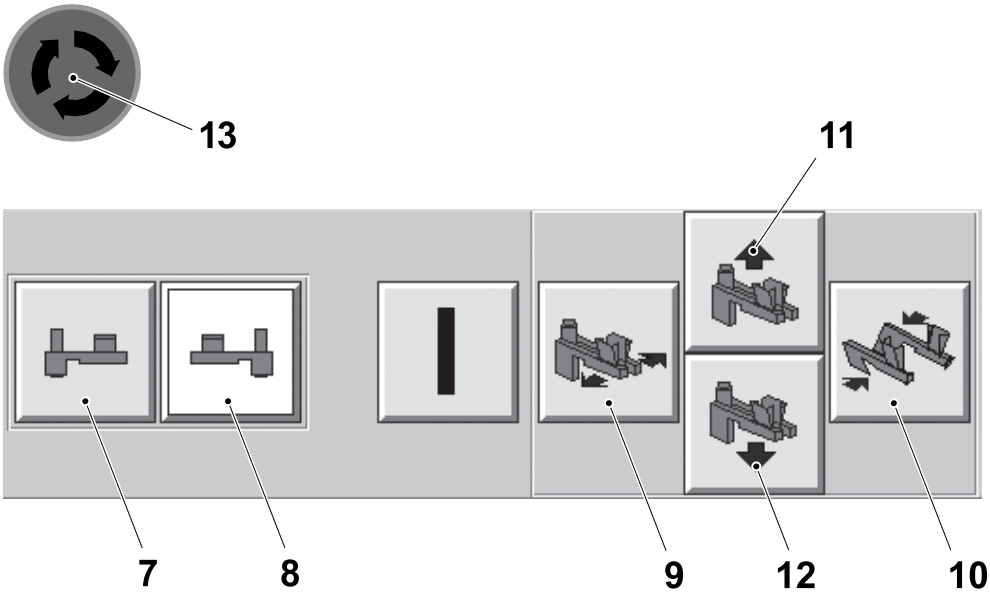

7 LH SIDE button
8 RH SIDE button
9 OPEN JAW button
10 CLOSE JAW button
11 RAISE JAW button
12 LOWER JAW button
13 JAW SYSTEM INCHING button

(Cont'd)

(Cont'd)

j) To deactivate the action, touch the selected button:
   - OPEN JAW button (9), CLOSE JAW button (10).
   - RAISE JAW button (11), LOWER JAW button (12).

k) Touch the STOP button (14).

l) Touch the OK button (6) to disable the manual operation mode.

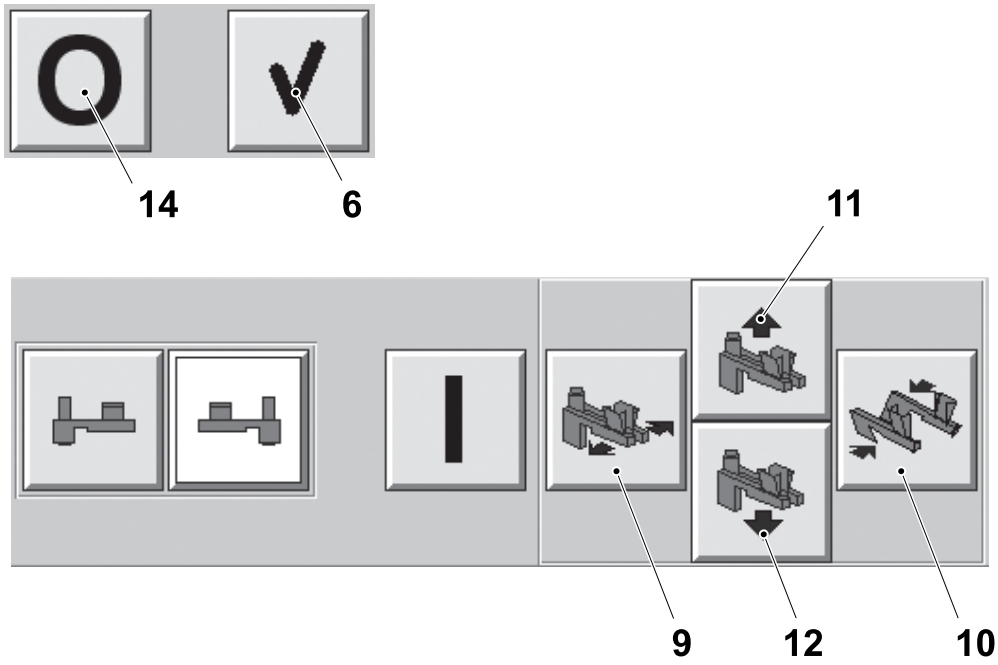

6 OK button
9 OPEN JAW button
10 CLOSE JAW button
11 RAISE JAW button
12 LOWER JAW button
14 STOP button

4-3 Jaw System - Move Drop Chute Position

Machine Status	PREPARATION
SPC Reference	641504-0300

Note! This procedure describes how to force the drop chute in waste position or in production position. It can be performed in step PREPARATION or higher.

a) On the TPOP, touch the MAINTENANCE CONTROL button (1) and enter the password required, see 8.6.3-2 HMI - User Management Log On.

b) Touch the PACKAGE FORMING UNIT button (2).

c) Touch the FORCE DROP CHUTE POSITION icon (3). The ON/OFF buttons are displayed.

d) Touch the ON button (4) to enable the control of the drop chute.

e) Touch the WASTE button (5) or the PRODUCTION button (6) to move the drop chute in the position selected.

f) Touch the WASTE button (5) to disable the control.

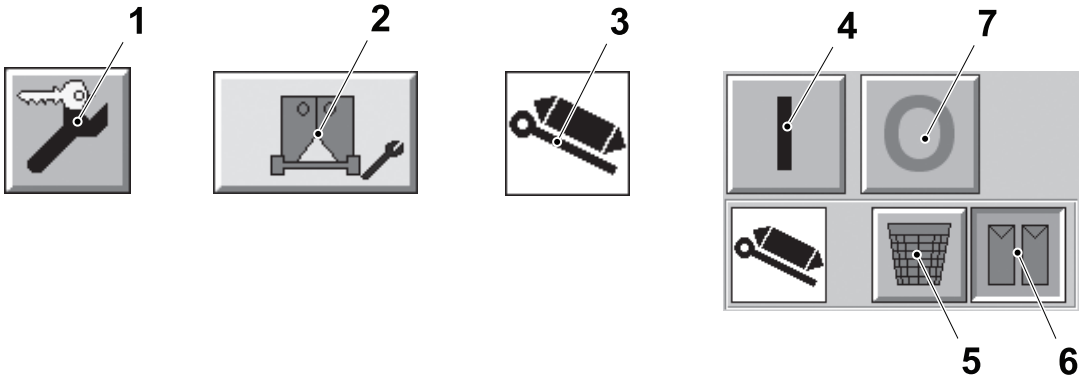

1 MAINTENANCE CONTROL button
2 PACKAGE FORMING UNIT button
3 FORCE DROP CHUTE POSITION icon
4 ON button
5 WASTE button
6 PRODUCTION button
7 OFF button

4-4 Jaw System - Set Stroke

Machine Status	PREPARATION
Special Equipment	Measuring Clamp TP No. 2843695-0100
SPC Reference	641504-0300

a) Log on to access the MAINTENANCE CONTROL window, see 8.6.3-2 HMI - User Management Log On.

b) Touch the JAW SYSTEM button (1) to display the JAW SYSTEM window.

c) Touch the LH SIDE CHANGE STROKE icon (2) to display the CHANGE STROKE window (3).

d) Touch the GO TO UPPER POSITION window (4).

e) Touch the OK button (5) to start the machine movement.

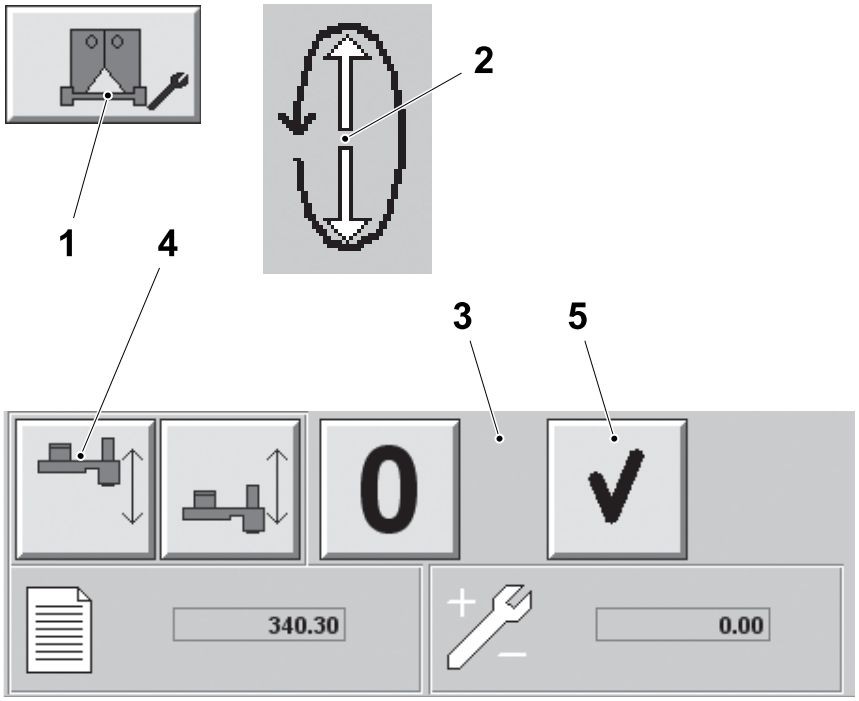

1 JAW SYSTEM button
2 LH SIDE CHANGE STROKE icon
3 CHANGE STROKE window
4 GO TO UPPER POSITION window
5 OK button

(Cont'd)

(Cont'd)

f) Fit the point measuring clamp (6) on the LH side guide (7).

g) Push down the pin (8) until it touches the surface of the yoke.

h) Touch the GO TO LOWER POSITION button (9).

i) Touch the OK button (5) to start the machine movement.

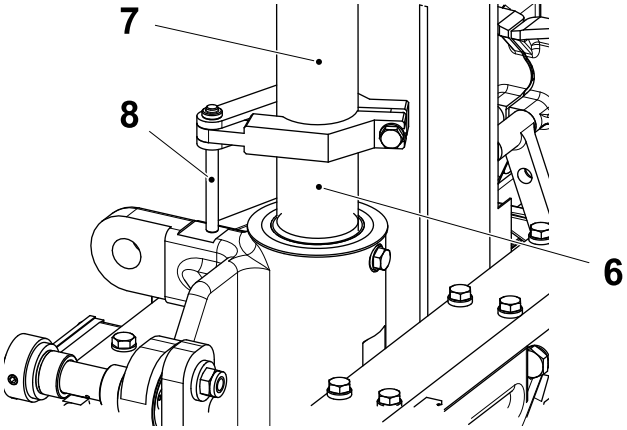

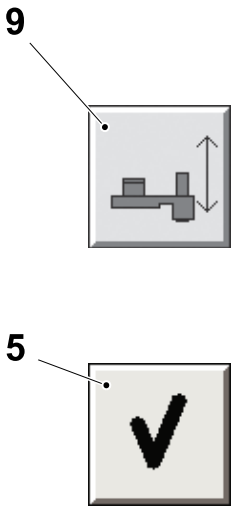

5 OK button
6 Point measuring clamp
7 Guide
8 Pin
9 GO TO LOWER POSITION button

j) With the aid of a micrometer, measure the distance **A** (the stroke) between the measuring clamp pin (8) and the yoke (10).

k) Repeat items a) to j) for RH side guide.

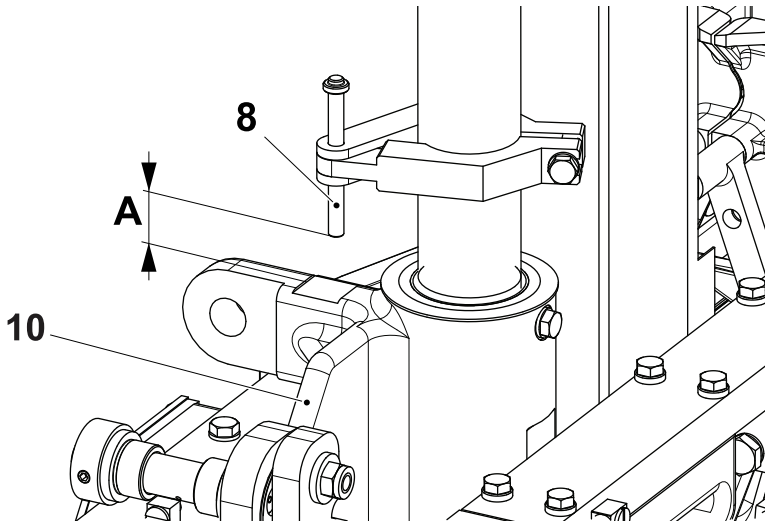

8 Pin
10 Yoke

(Cont'd)

(Cont'd)

l) Check the distance **A** (the stroke) with the nominal stroke value (11) displayed in the CHANGE STROKE window (3).

m) If the difference between the two values exceeds 0.1 mm, touch the ADJUSTMENT button (12) and then use the ARROW button (13) to input the stroke correction value in the ADJUSTMENT box (14).

n) Touch the OK button (15) for two seconds to enter the new stroke correction value.

Note! After entering the stroke correction, always re-check the stroke measurement with the point measuring clamp.

o) Touch the EXIT button (16) to exit the SERVO SETTINGS window.

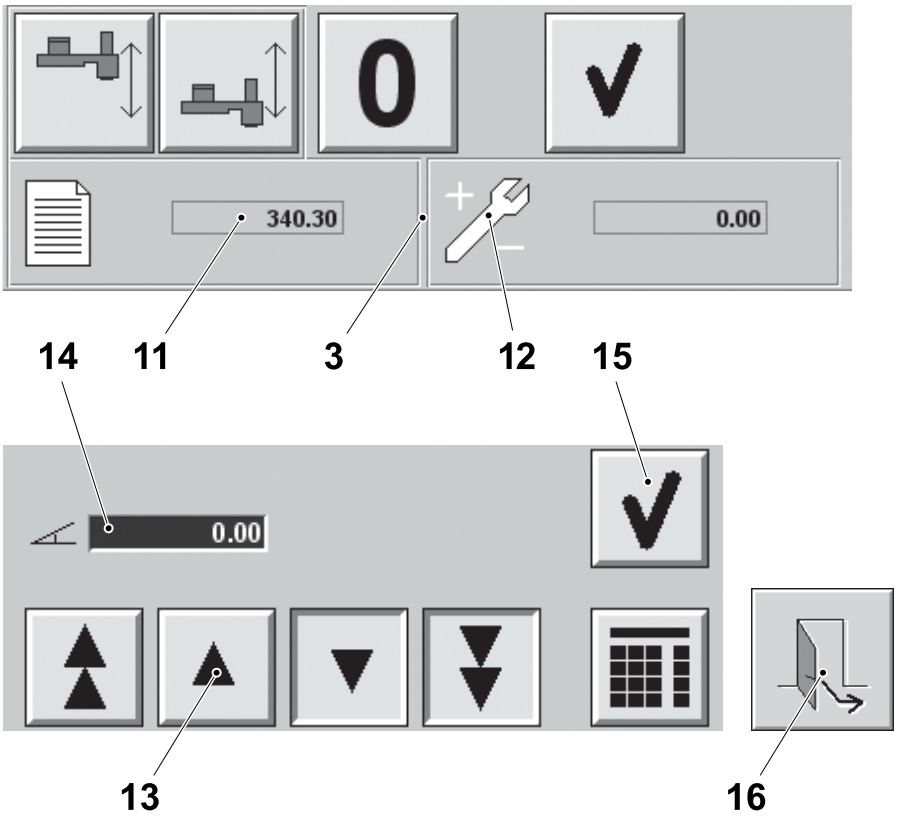

3 CHANGE STROKE window
11 Nominal stroke value
12 ADJUSTMENT button
13 ARROW button
14 ADJUSTMENT box
15 OK button
16 EXIT button

4-5 Jaw System - Set Volume Adjuster

Machine Status	Electrical supply disconnecting device in position O (OFF) Main air valve OFF Main steam valve ON Main water valve OFF
SPC Reference	641504-0300

a) Check that the distance **A** between the bracket (1) and the arms (2) is the same on both sides.

b) If required, adjust the distance **A** by removing the circlips (3) and the screws (4) and turning the joints (5).

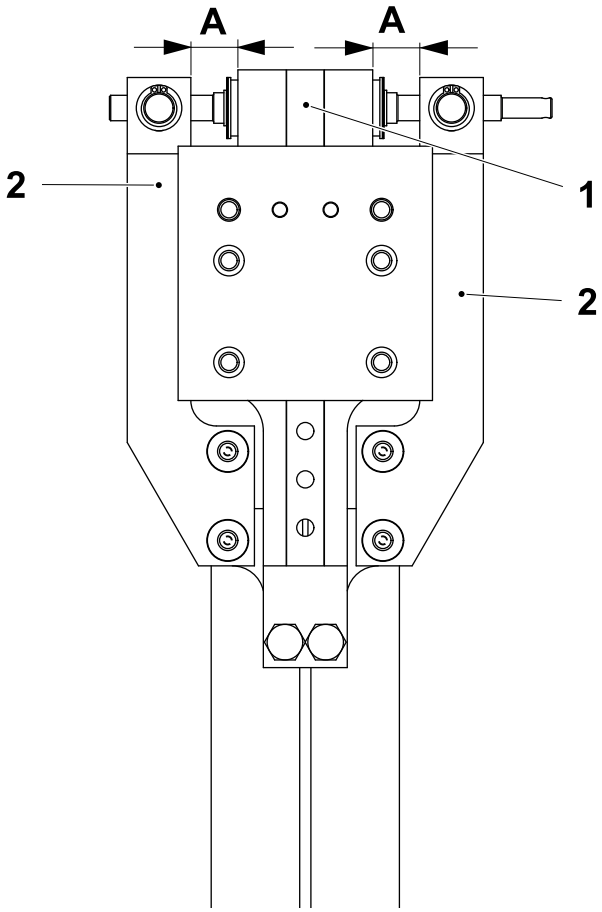

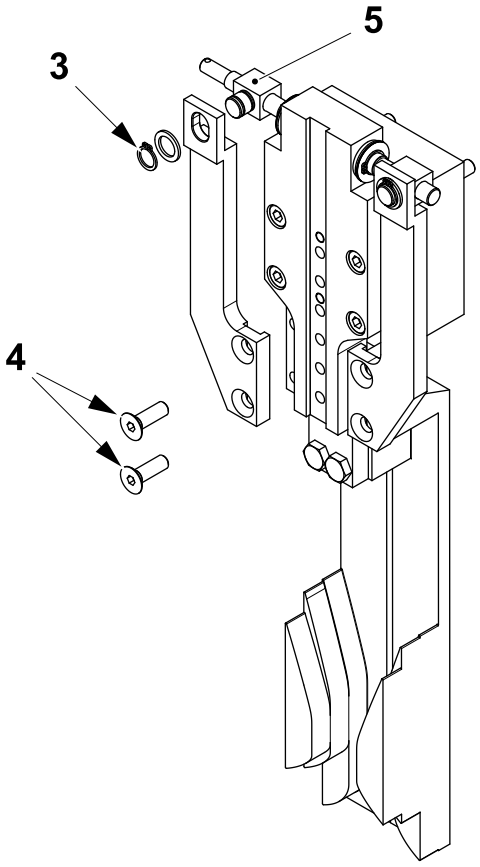

1 Bracket
2 Arm
3 Circlip
4 Screw
5 Joint

(Cont'd)

(Cont'd)

c) Loosen the nut (6) to release the belt tension.

d) Measure distance **B** on the top of the volumes cams (7) and make sure that the distance C is equal to distance **B**. If required set the distance **C** by turning the shafts (8).

e) Repeat on other volume cams.

f) Set the belt tension, see 4.1.7-2 Volume Adjuster - Set Belt.

g) Set the correct package volume 4-18 Jaw System - Set Package Volume.

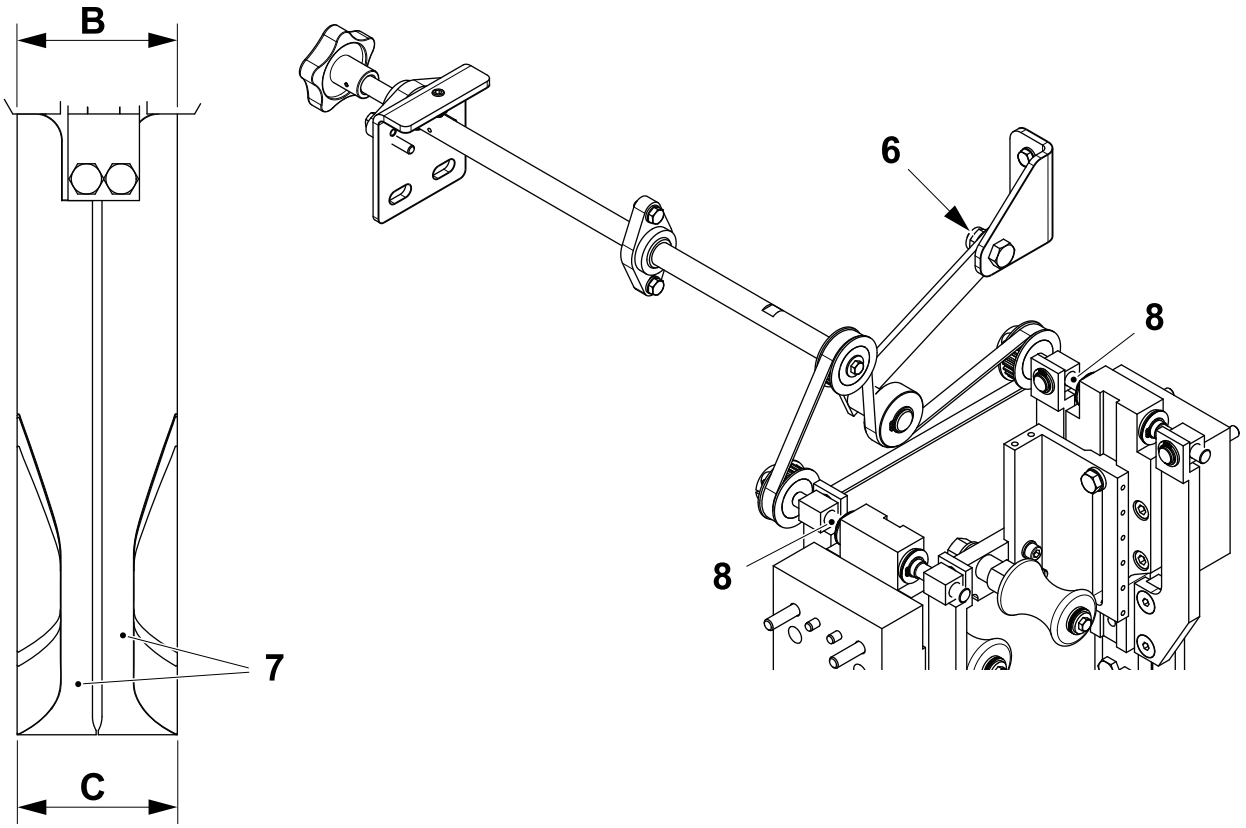

B = C ±0.1 mm
6 Nut
7 Volume cam
8 Shaft

4-6 Jaw System - Set Symmetry

Machine Status	Step ZERO
Special Equipment	Compression Spring (Optional Accessories) TP No. 76304-0100
SPC Reference	641504-0300

a) Set the volume curve piece, see 4-5 Jaw System - Set Volume Adjuster.

b) Turn the handle (1) to close the volume cams.

c) Use the JAW OVER JAW function to set the position of the jaws, see 4-12 Jaw System - Set Jaw Over Jaw.

d) Fit the compression spring (2) between the carriers.

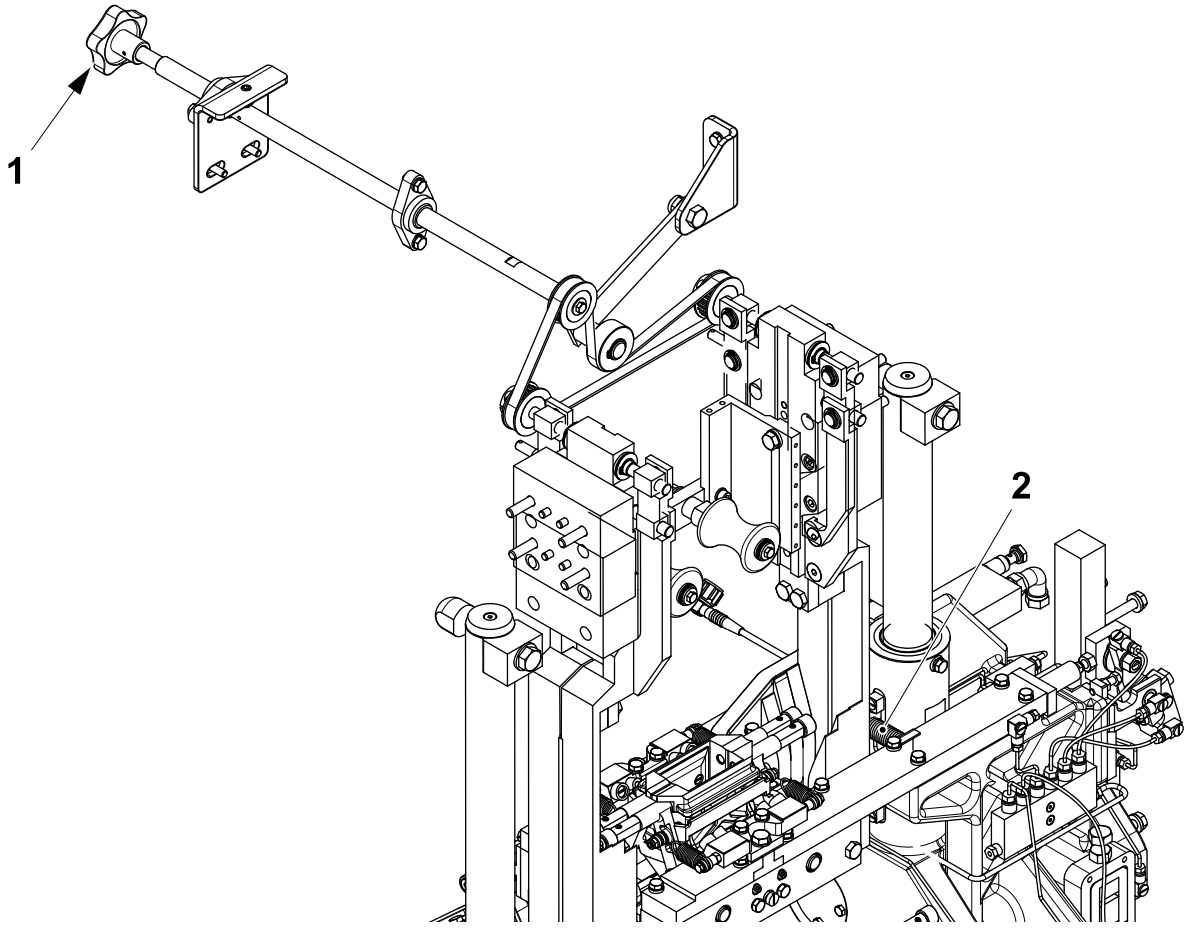

1 Handle
2 Compression spring

(Cont'd)

(Cont'd)

e) Measure the distances **A** and **B** between the volume cams (3) and the carrier (4) with a feeler gauge. To set the distances **A** and **B** proceed as follows:

- loosen the screw (7)
- loosen the nuts (5) and (9).
- turn the screws (6) and (8) until **A** is equal to **B**
- tighten the nuts (5) and (9).
- make sure that distances **A** and **B** are still equal, if necessary repeat the sequence.
- tighten the screw (7).

f) Repeat from c) to e) for the other jaw pair.

g) Set the volume cam distance, see 4-5 Jaw System - Set Volume Adjuster.

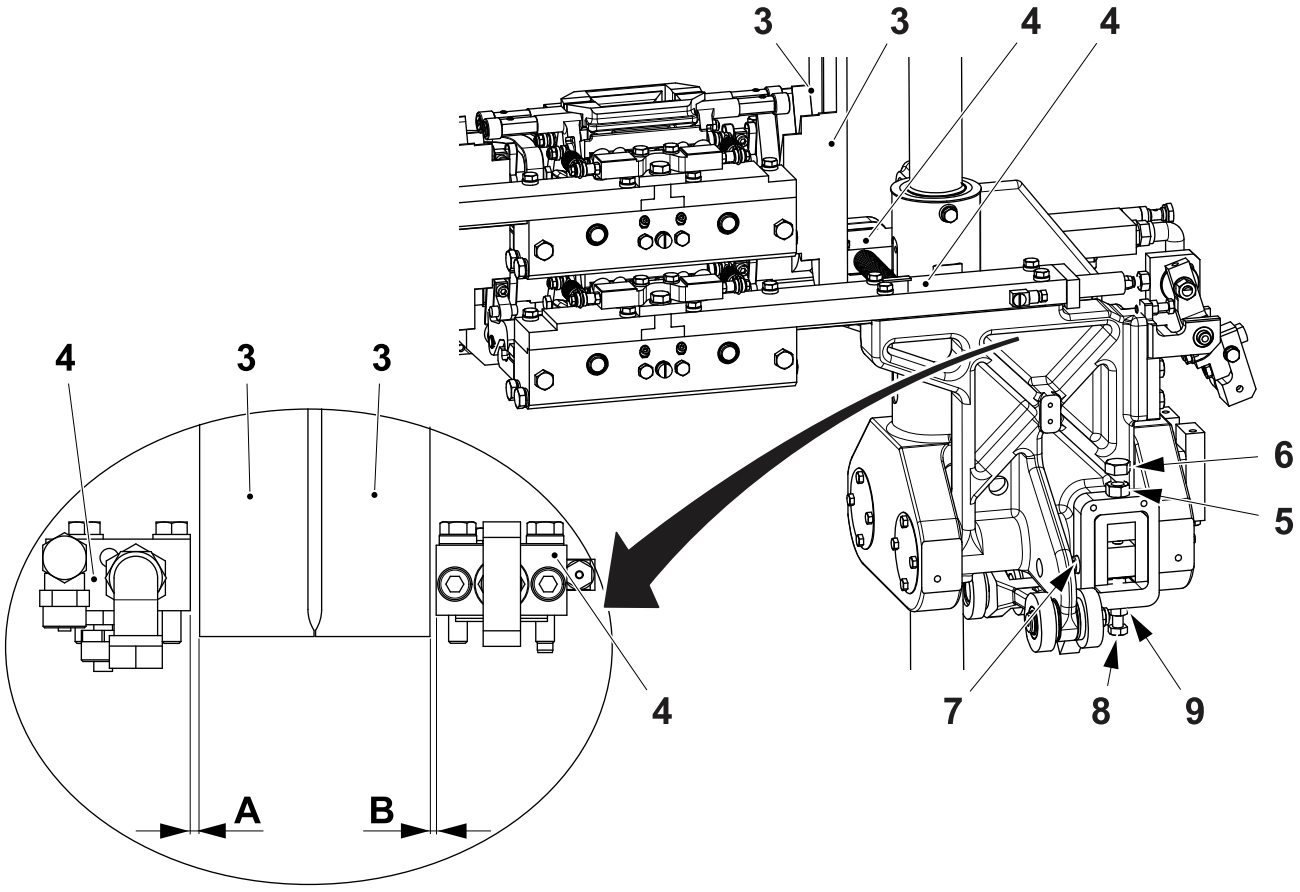

A = B

3 Volume cam
4 Carrier
5 Nut
6 Screw
7 Screw
8 Screw
9 Nut

4-7 Jaw System - Set Volume Flaps Centring

Machine Status	Step ZERO
Special Equipment	Setting Template
SPC Reference	641504-0300

Note! For package dependent template and tool codes, see 9.2 Templates and Tools.

Note! Valid for all volumes except TBA 200 E, TBA 250 E, TPA 125 Sq, TPA 200 Sq, TPA 250 Sq and TPA 330 Sq.

a) Use the GO TO POSITION function to slow inch the machine until the rollers (1) have just passed the cam (2) and the front and rear volume flaps (3) are parallel, see Go To Position (catches and knives OFF) on page 4-11.

b) Open the other jaw pair until it is possible to fit the templates.

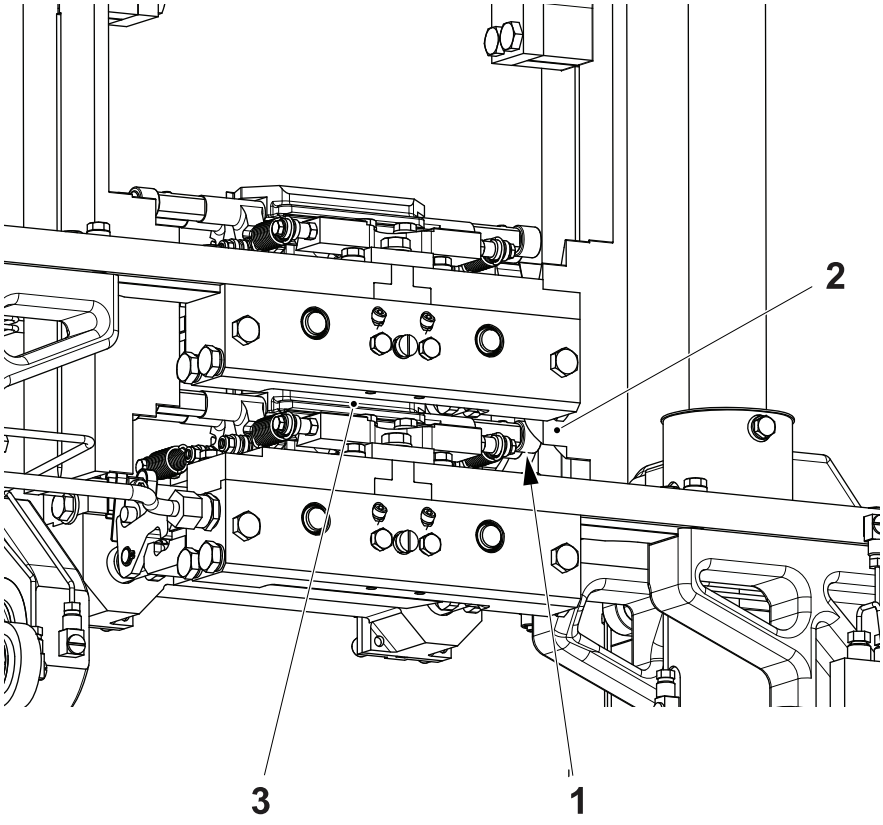

1 Roller
2 Cam
3 Volume flap

(Cont'd)

(Cont'd)

Note! If the holes for the screws (4) are behind the bracket (5) loosen the screws (6) and lift up the support roller bracket (5).

c) Fit the template (7) and tighten the screws (4).

d) Fit the ruler tool (8) to the template (7) by means of the knob (9).

e) Place the template (10) on the ruler tool (8) and slide it into the inner volume flap. Move the template (10) as required.

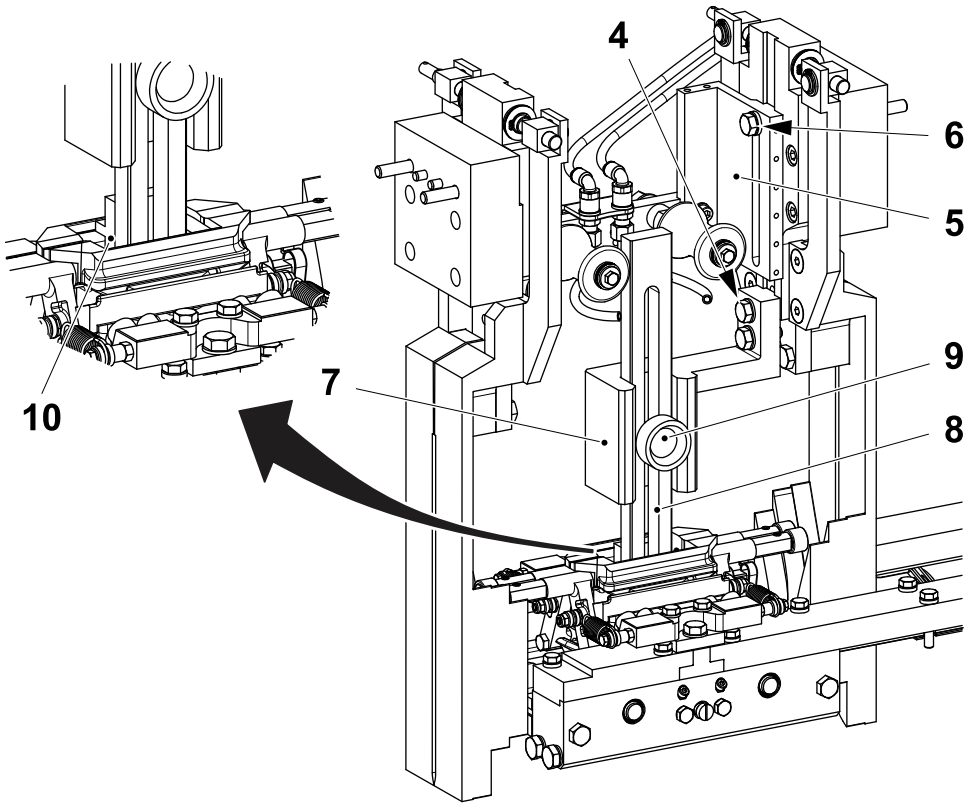

4 Screw
5 Bracket
6 Screw
7 Template
8 Ruler tool
9 Knob
10 Template

(Cont'd)

(Cont'd)

f) Loosen the screws (11) on the pressure jaw carrier (12).

g) Adjust the inner volume flap so that the template (10) can be inserted to a depth of approx. 5-10 mm by moving the pressure jaw carrier (12).

h) Tighten the screws (11) and remove the template (10) from the ruler tool (8).

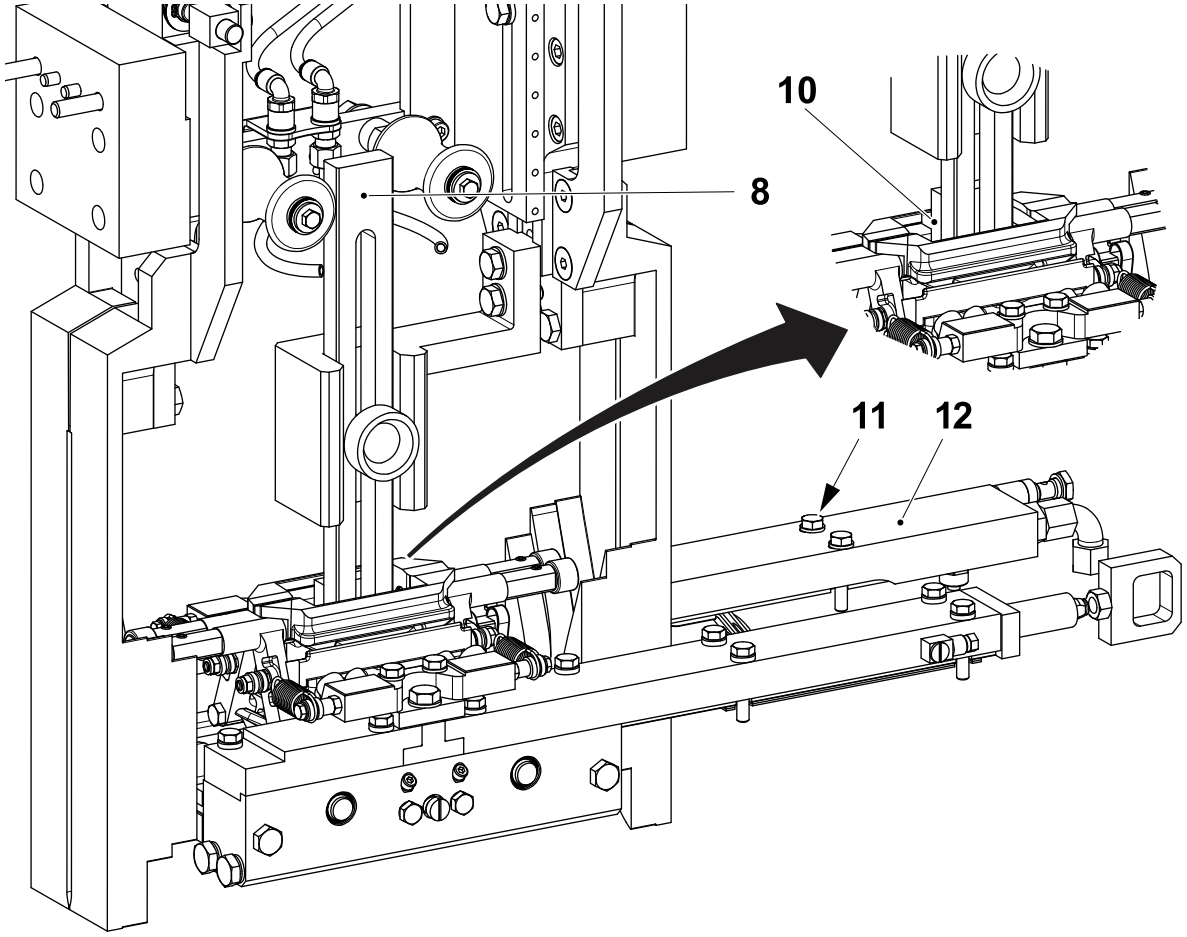

8 Ruler tool
10 Template
11 Screw
12 Pressure jaw carrier

(Cont'd)

(Cont'd)

i) Loosen the screws (13) on the cutting jaw carrier (14).

j) Align the outer volume flap with the inner volume flap.

k) Tighten the screws (13) on the cutting jaw carrier (14).

l) Remove the ruler tool (8) and the template (7).

m) Repeat the setting on the RH side.

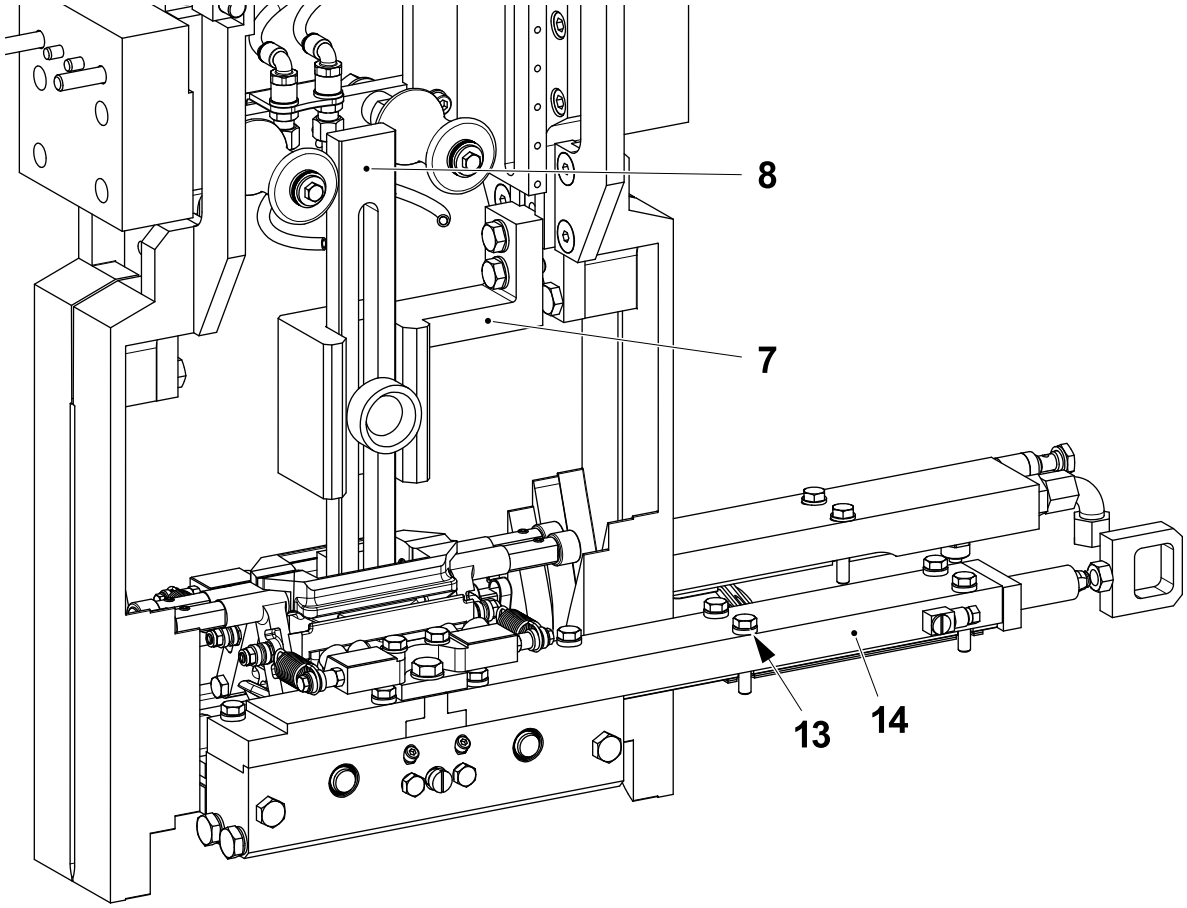

7 Template
8 Ruler tool
13 Screw
14 Cutting jaw carrier

(Cont'd)

(Cont'd)

Note! Valid for TBA 200 E, TBA 250 E, TPA 125 Sq, TPA 200 Sq, TPA 250 Sq and TPA 330 Sq volumes only.

n) Remove the screw (1) and the front volume flap (2).

o) Use the GO TO POSITION function to slow inch the machine to 160° for the LH Jaw pair and 340° for the RH side jaw pair, see 4-2 Jaw System - Inching, Go To Position and Manual Operation.

Note! If the holes for the screws (3) are behind the bracket (4) loosen the screws (5) and lift up the support roller bracket (4).

p) Fit the template (6) and tighten the screws (3).

q) Fit the ruler (7) to the template (6) by means of the knob (8).

r) Place the template (9) on the ruler (7).

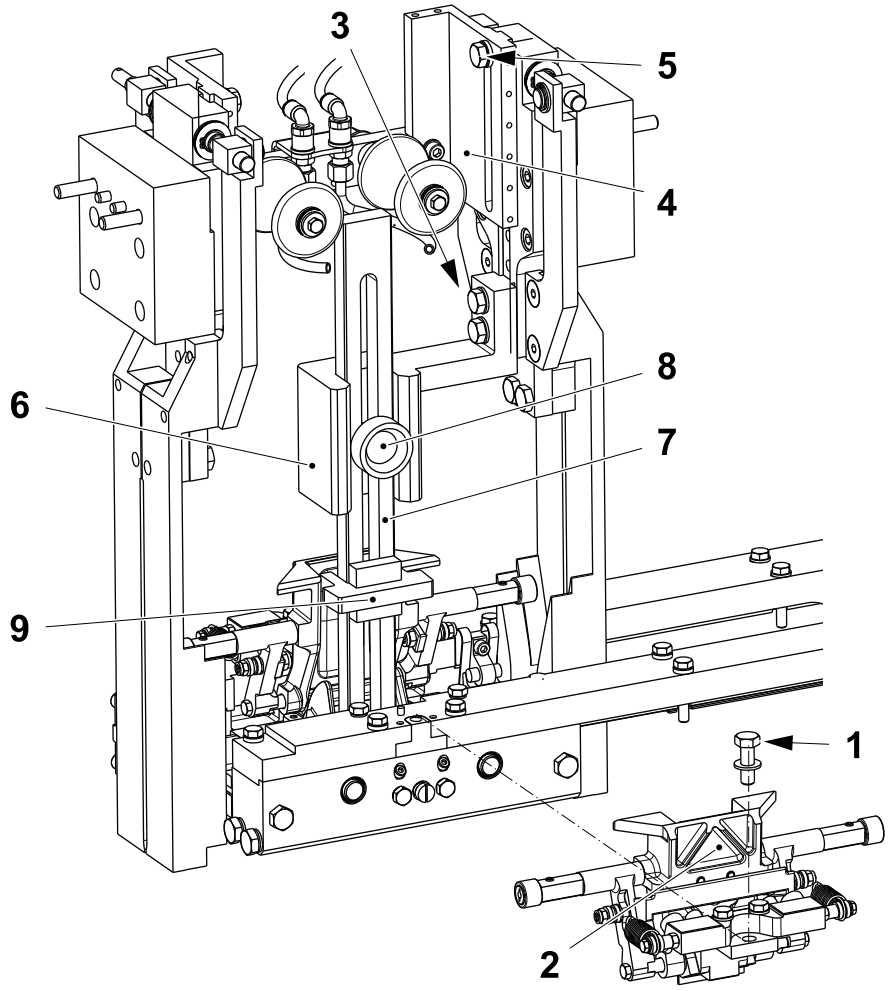

1 Screw
2 Volume flap
3 Screw
4 Bracket
5 Screw
6 Template
7 Ruler
8 Knob
9 Template

(Cont'd)

(Cont'd)

s) Loosen the screws (10) on the pressure jaw carrier (11).

t) Adjust the **rear** volume flap (12) so that the template (9) is touching the volume flap (12) in both positions **A** and **B**. If required move the pressure jaw carrier (11).

u) Tighten the screws (10) and remove the template (9) from the ruler (7).

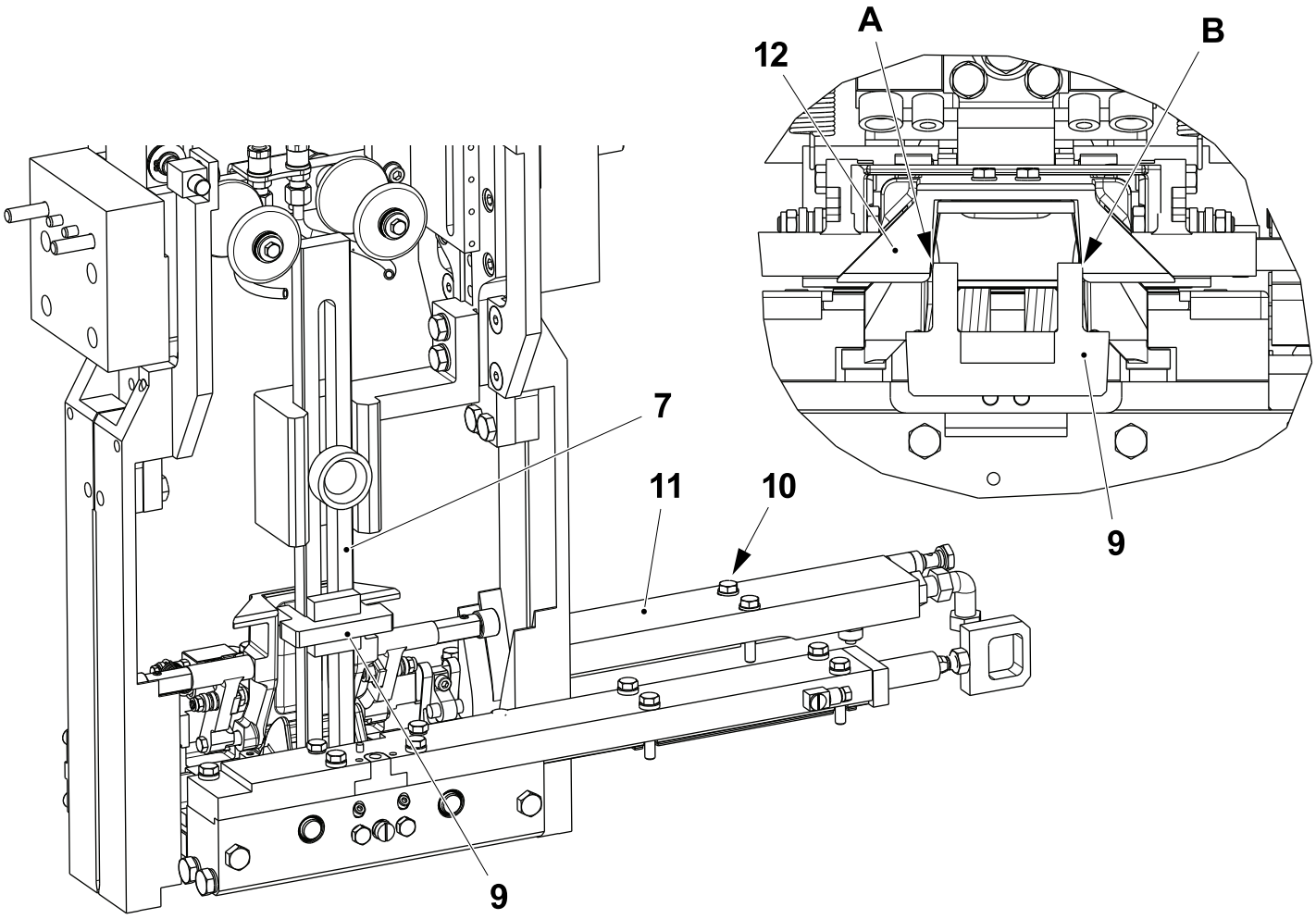

7 Ruler
9 Template
10 Screw
11 Pressure jaw carrier
12 Volume flap

(Cont'd)

(Cont'd)

v) Fit the front volume flap (2) and remove the rear volume flap.

w) Loosen the screws (13) on the cutting jaw carrier (14).

x) Adjust the **front** volume flap (2) so that the template (15) is touching the volume flap (2) in both positions **A** and **B**. If required move the cutting jaw carrier (14).

y) Tighten the screws (13) on the cutting jaw carrier (14).

z) Remove the ruler (7) and the template (6).

aa) Repeat the setting on the other jaw pair.

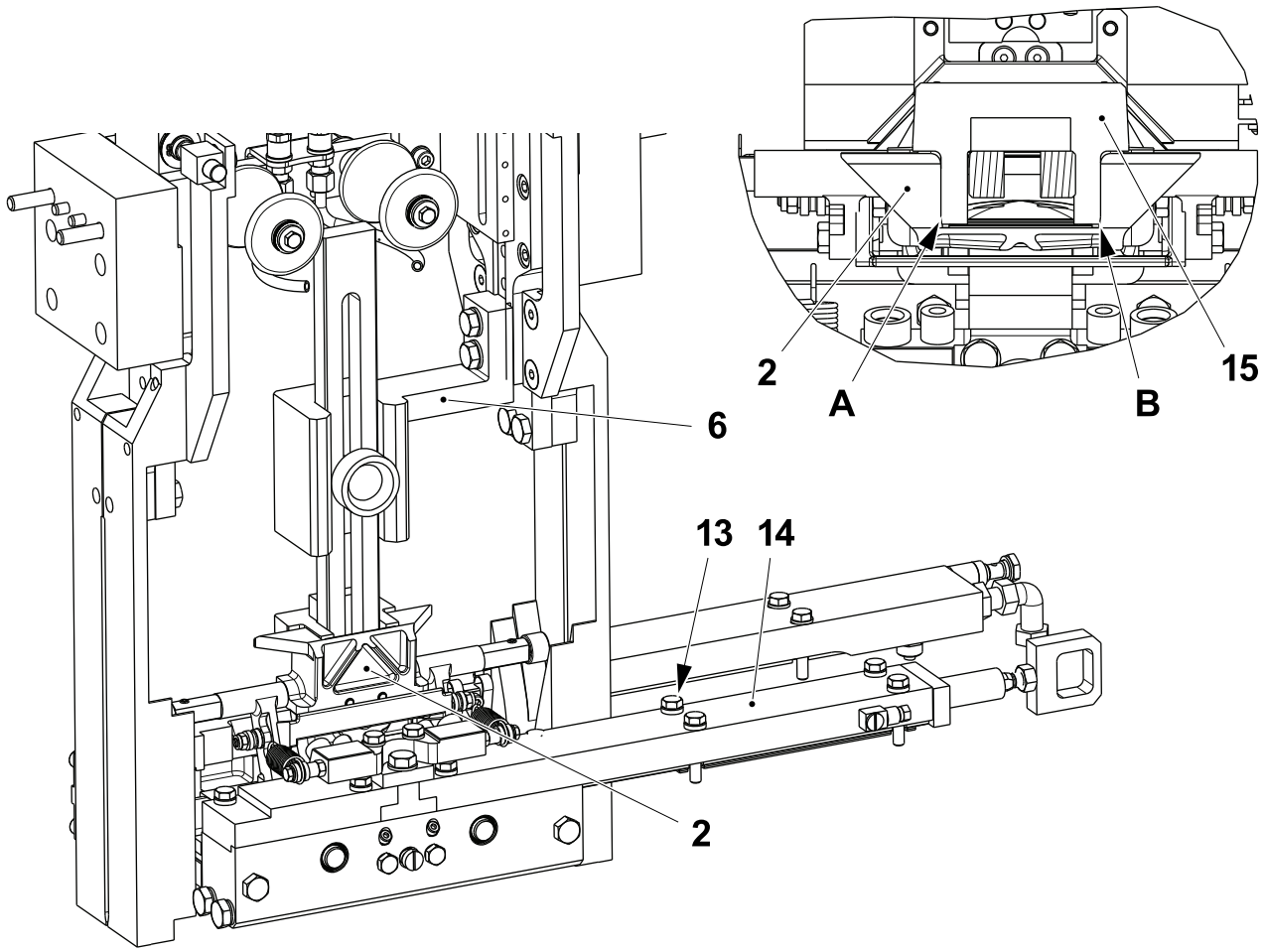

2 Volume flap
6 Template
7 Ruler
13 Screw
14 Cutting jaw carrier
15 Template

4-8 Jaw System - Set Support Rollers

Machine Status	Step ZERO
Special Equipment	Template TP No. 2843012-0100 Template TP No. 76176-0000
SPC Reference	641504-0300

Alignment and Vertical Position - Basic Setting

a) Loosen the screws (1) on both sides and set the distance **A** between the bracket (2) and the edge of the volume curve piece (3).

b) Use the GO TO POSITION function to slow inch the machine to 330°, see 4-2 Jaw System - Inching, Go To Position and Manual Operation.

Package	A ±1 (mm)	Package	A ±1 (mm)
TBA 80 S	165	TBA 375 S	48
TBA 100 B TBA 125 S	100	TBA 200 Sq, TBA 250 Sq	80
TBA 200 M, TBA 250 S	68	TPA 125 Sq	96
TBA 160 S, TBA 200 S	85	TPA 330 Sq	68
TBA 200 B, TBA 250 B, TBA 330 S	68	TPA 200 Sq, TPA 250 Sq	70
TBA 284 B, TBA 300 S	68	TBA 200 E, TBA 250 E	75
TBA 180 S	105		

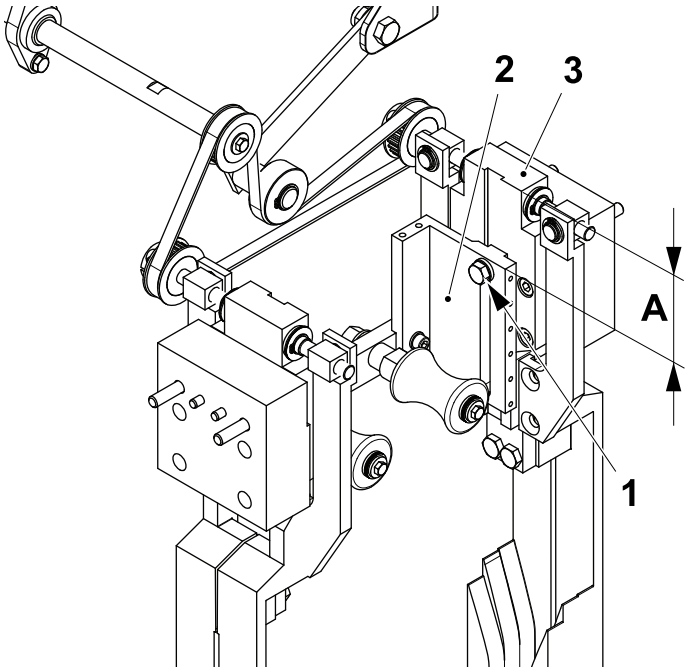

1 Screw
2 Bracket
3 Volume curve piece

(Cont'd)

(Cont'd)

c) Fit the template (4) and tighten the screws (5).

d) Fit the ruler (6) to the template (4) with the knob (7).

e) Place the template (8) on the ruler (6).

f) Place two pieces of packaging material (9): one between the template (8) and the RH tube support roller (10) and the other one between the template (8) and the LH tube support roller (11).

g) Loosen the screws (12).

h) Turn the screw (13) until the LH tube support roller (11) touch the template (8).

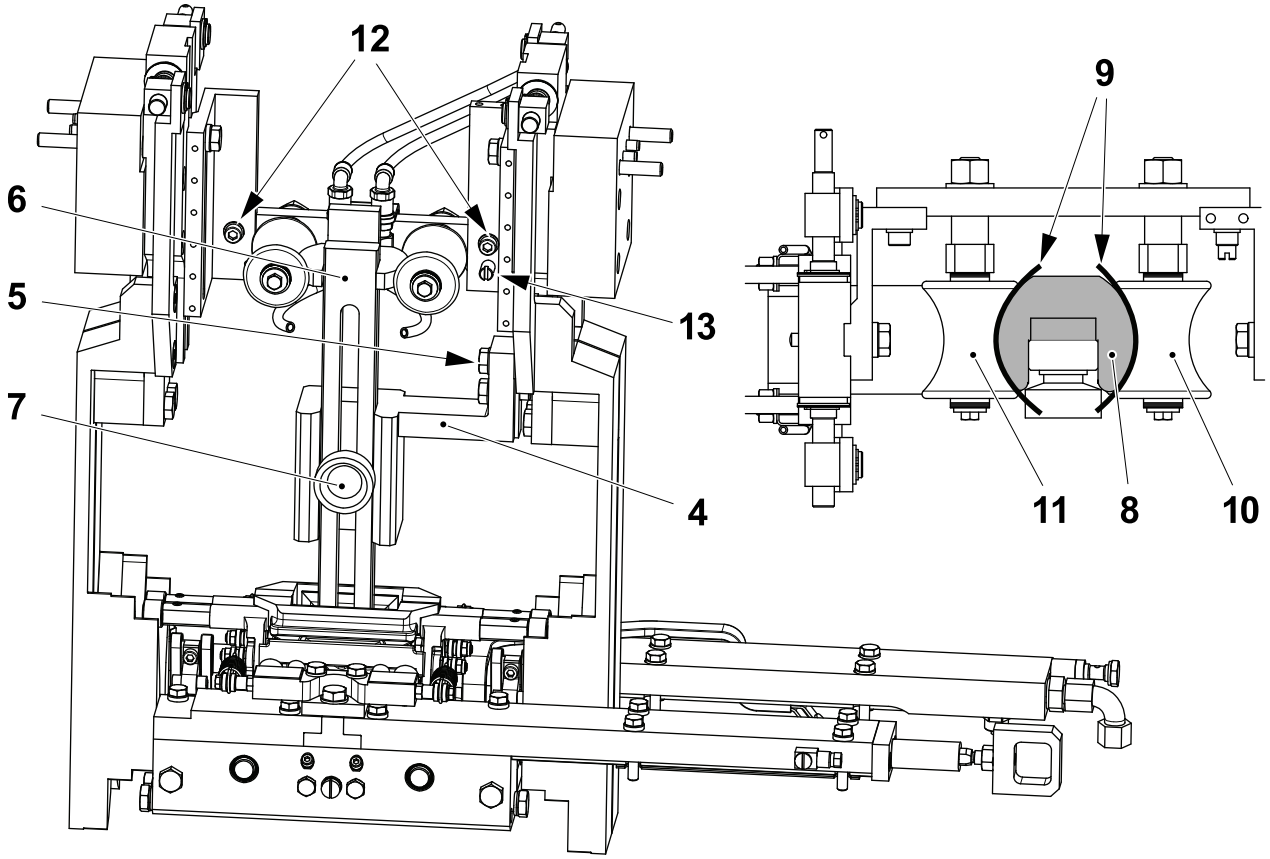

4 Template
5 Screw
6 Ruler
7 Knob
8 Template
9 Packaging material
10 RH tube support roller
11 LH tube support roller
12 Screw
13 Screw

(Cont'd)

(Cont'd)

Fine Setting

Note! Valid for all volumes except TBA 200 E and TBA 250 E.

a) Adjust the LH tube support roller (1) with the shims (2) so that it bears evenly against the template (3).

b) Check that the LH tube support roller (1) rotates freely (axial play **0.2÷0.3** mm).

c) Tighten the screws (4).

d) Loosen the nut (5) and slide the RH tube support roller (6) until it touches the template (3). Tighten the nut (5).

e) Adjust the RH tube support roller (6) with the shims (7) so that it bears evenly against the template.

f) Check that the roller (6) rotate freely (axial play **0.2÷0.3** mm).

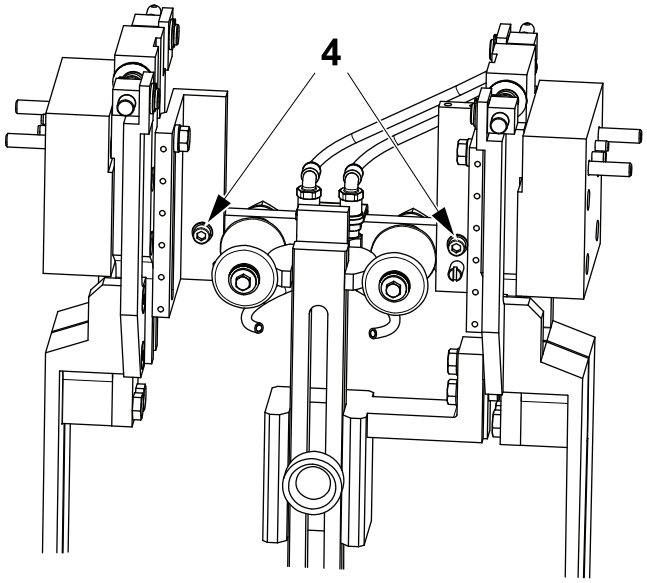

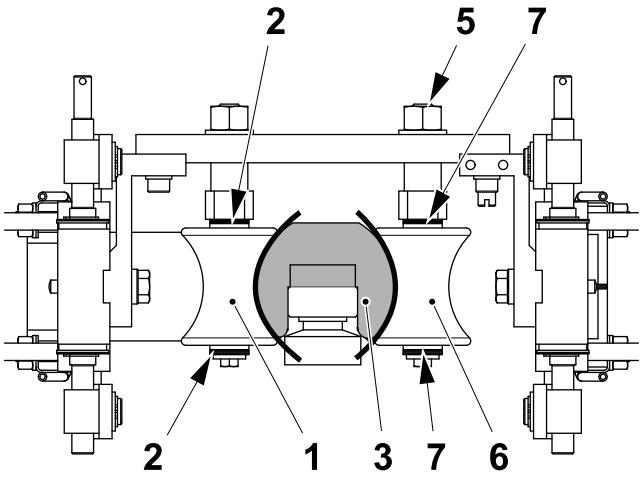

1 LH tube support roller
2 Shim
3 Template
4 Screw
5 Nut
6 RH tube support roller
7 Shim

(Cont'd)

(Cont'd)

Fine Setting

Note! Valid for TBA 200 E and TBA 250 E volumes only.

a) Loosen the nut (1) and slide the RH tube support roller (2) until it touches the template (3). Tighten the nut (1).

b) Adjust the LH tube support roller (4) wth the shims (5) so that it bears evenly against the template (3).

c) Check that the LH tube support roller (4) rotates freely and that there is distance **A** between the nut (6) and the LH tube support roller (4).

Note! Do not add any shims (5) between the nut (6) and the LH tube support roller (4).

d) Repeat from b) to c) for the RH tube support roller (2).

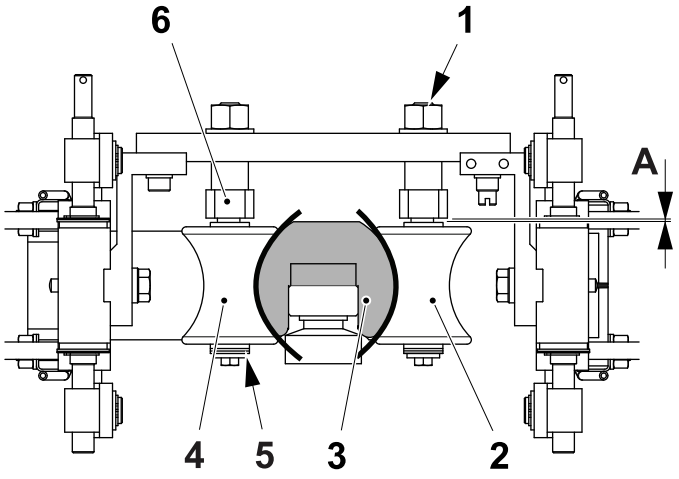

A = 2 ±0.3 mm

1 Nut
2 RH tube support roller
3 Template
4 LH tube support roller
5 Shim
6 Nut

4-9 Jaw System - Remove Cutting Jaw Volume Flaps

Machine Status	Step ZERO
SPC Reference	641504-0300

a) Use the GO TO POSITION function to slow inch the machine to 0° LH side (180° RH side), see 4-2 Jaw System - Inching, Go To Position and Manual Operation.

b) Remove the screw (1) and the volume flap (2).

c) Repeat the procedure for the other side.

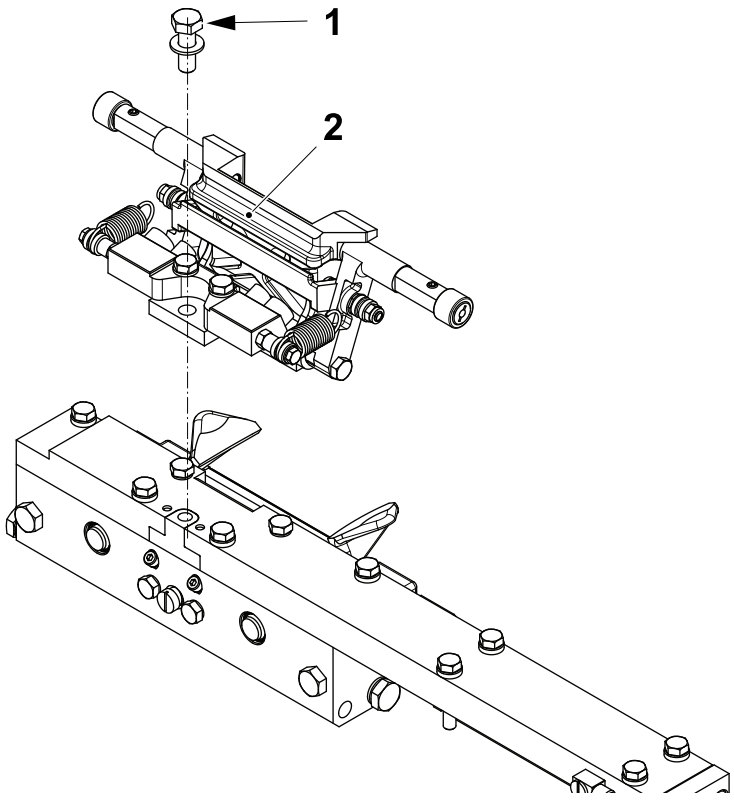

1 Screw
2 Volume flap

4-10 Jaw System - Set Jaw Gap

Machine Status	Step ZERO
Special Equipment	Compression Spring TP No.76305-0100 Feeler Gauge
SPC Reference	641504-0300

a) Log on to access the MAINTENANCE CONTROL window, see 8.6.3-2 HMI - User Management Log On.

b) Touch the JAW SYSTEM button (1) to display the JAW SYSTEM window.

c) Touch the LH SIDE JAW GAP icon (2) to display the JAW GAP window (3).

d) Touch the START button (4).

e) Touch the OK button (5) to start the machine movement.

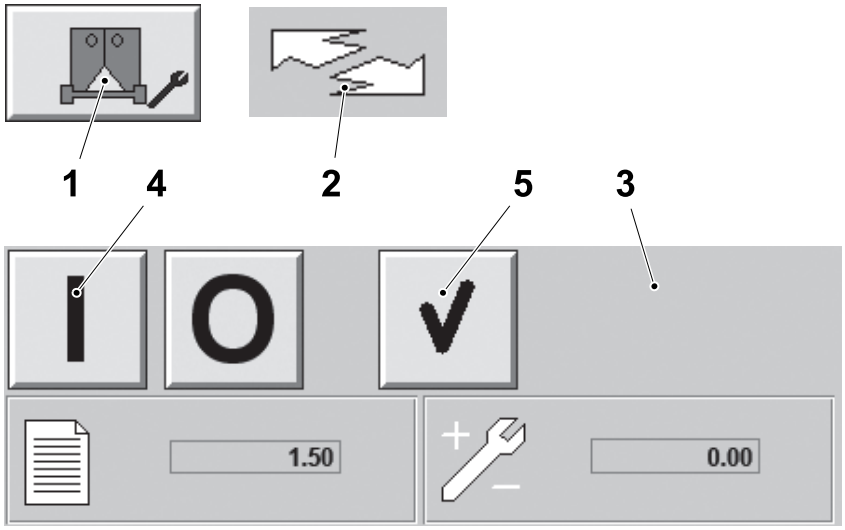

1 JAW SYSTEM button
2 LH SIDE JAW GAP icon
3 JAW GAP window
4 START button
5 OK button

(Cont'd)

(Cont'd)

f) Open the LH jaw system doors.

g) Fit the compression spring (6) between the two carriers.

h) Measure and note the distance **A** between the inductor (7) and the dolly (8) using a feeler gauge.

i) Remove the compression spring (6).

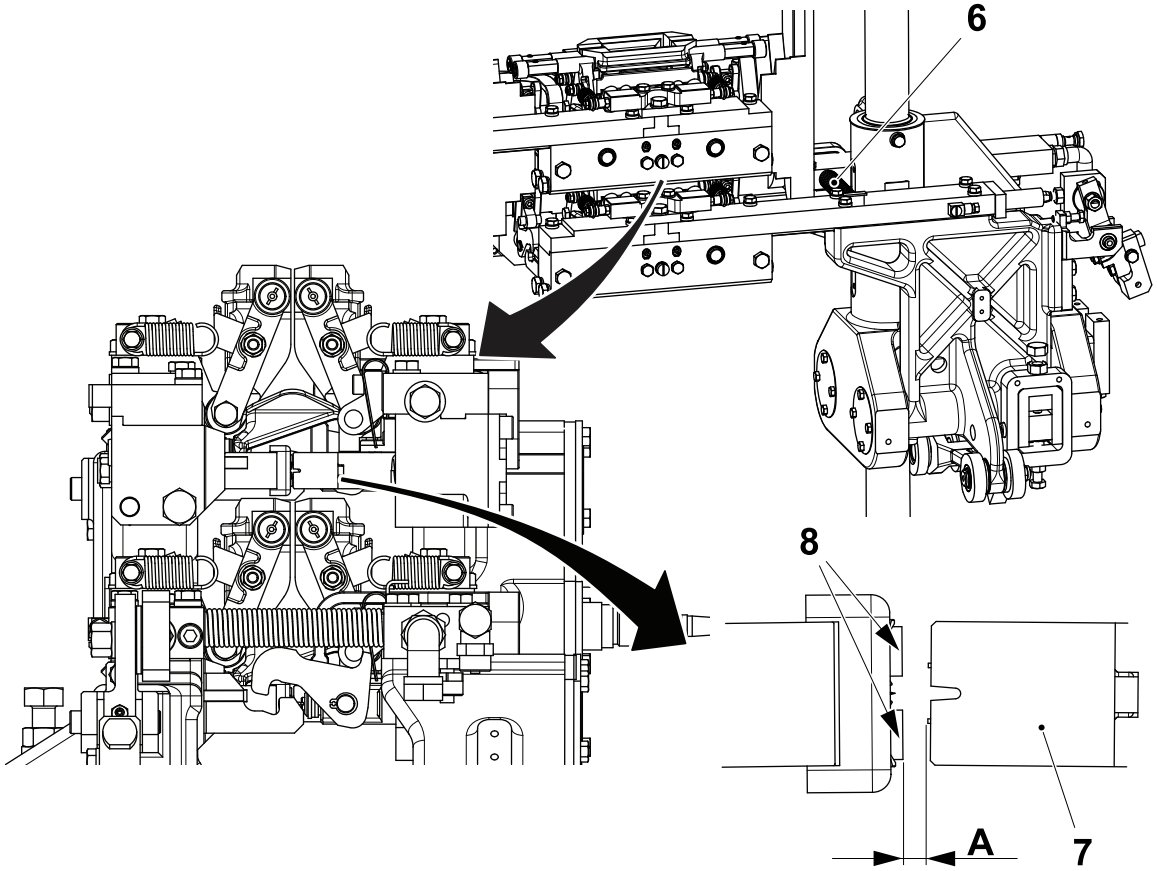

A = 1.5 mm
6 Compression spring
7 Inductor
8 Dolly

(Cont'd)

(Cont'd)

j) Using 1.5 mm as the nominal distance (9), calculate the correction value for the jaw gap, see the table of examples:

Measured distance A mm	Jaw gap variation (1.5-A) mm
1.30	0.20
1.35	0.15
1.40	0.10
1.45	0.05
1.50	0
1.55	-0.05
1.60	-0.10
1.65	-0.15
1.70	-0.20

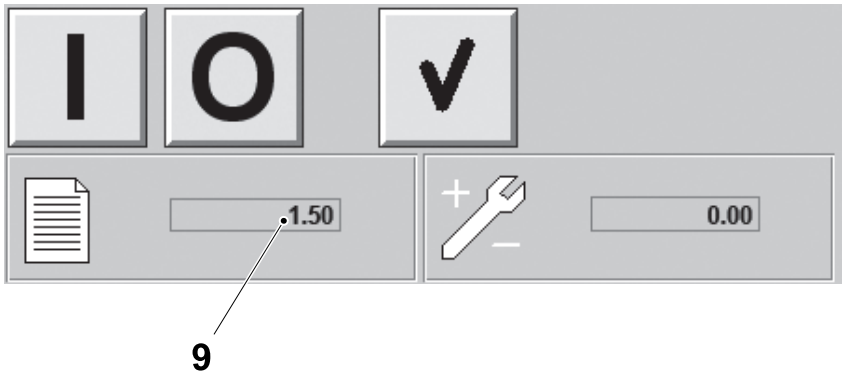

9 Nominal distance

(Cont'd)

(Cont'd)

Note! The correction value is expressed in millimeters.

k) Touch the ADJUSTMENT button (10).

l) Use the ARROW button (11) to enter the new value in the ADJUSTMENT box (12). Example:

Current value	=	0.80
Correction value		-0.15
New value	=	0.65

m) Touch the OK button (13) to enter the new correction value.

n) Touch the START button (4) and the OK button (5) to start the machine movement.

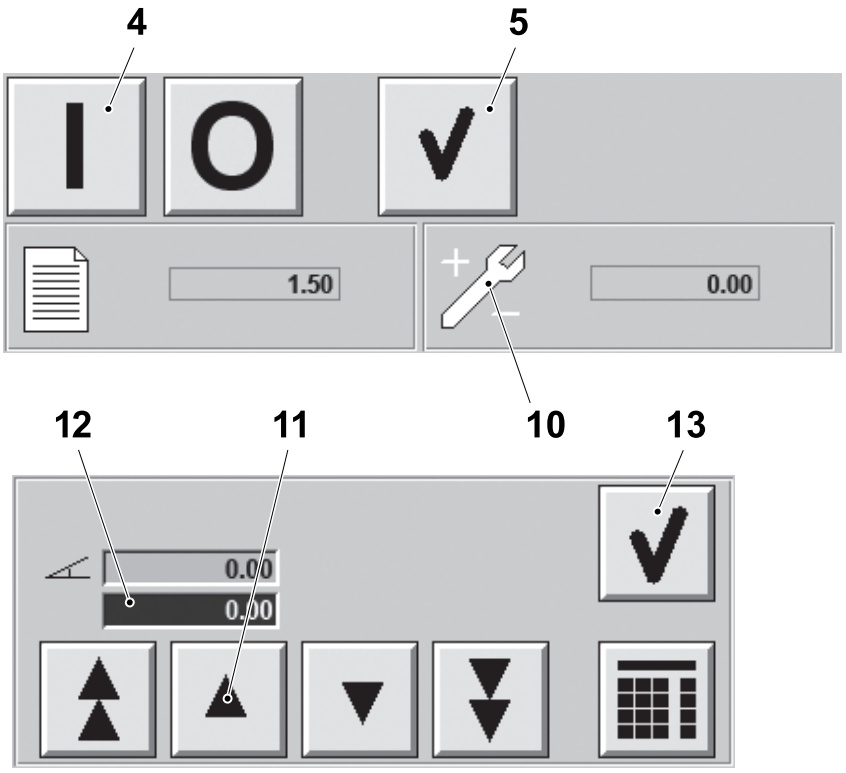

4 START button
5 OK button
10 ADJUSTMENT button
11 ARROW button
12 ADJUSTMENT box
13 OK button

(Cont'd)

(Cont'd)

o) Measure the new jaw gap. If required, repeat steps l) to n).

p) Touch the `RH SIDE JAW GAP` icon (14) and repeat steps a) to l) for the RH side.

q) Touch the `EXIT` button (15) to exit the `SERVO SETTINGS` window.

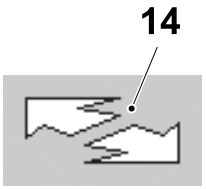

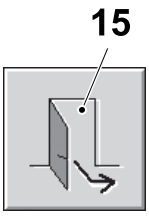

14 `RH SIDE JAW GAP` icon

15 `EXIT` button

4-11 Jaw System - Set Cutting Alignment

Machine Status	Step ZERO
SPC Reference	641504-0300

Preliminary Check

a) Use the MANUAL OPERATION function to open the LH side jaw, see 4-2 Jaw System - Inching, Go To Position and Manual Operation.

b) Attach two pieces of tape (2) to the inductor (1).

c) Log on to access the MAINTENANCE CONTROL window, see 8.6.3-2 HMI - User Management Log On.

d) Touch the JAW SYSTEM button (3) to display the JAW SYSTEM window.

e) Touch the HYDRAULIC SYSTEM icon (4) and the START button (5).

f) Touch the OK button (6) and wait for the machine movement to complete.

g) Touch the CATCH CLOSE button (7), the catches engages to secure a correct cutting.

h) Touch the KNIFE button (8), the knife cuts through the tape (2).

i) Touch the CATCH OPEN button (9) to release the catches.

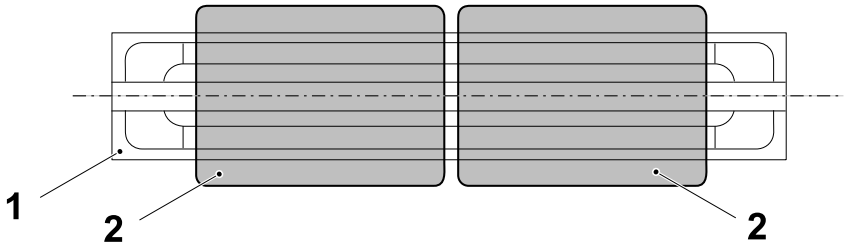

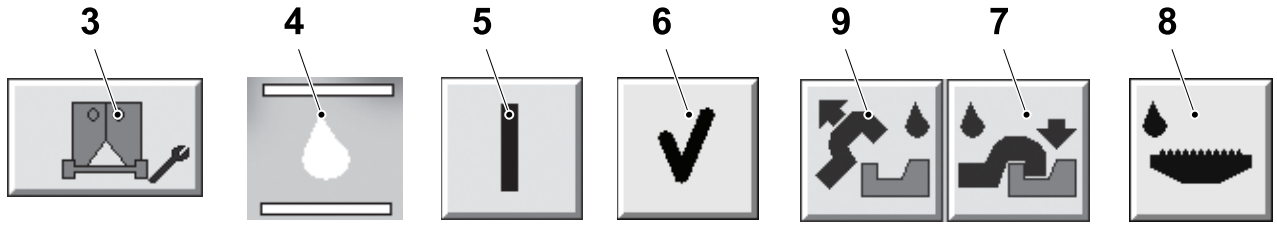

1 Inductor
2 Tape
3 JAW SYSTEM button
4 HYDRAULIC SYSTEM icon
5 START button
6 OK button
7 CATCH CLOSE button
8 KNIFE button
9 CATCH OPEN button

(Cont'd)

(Cont'd)

j) Use the MANUAL OPERATION function to open the jaw system. Remove the upper RH and the lower LH pieces of tape.

k) Make sure that the cutting position is exactly horizontal and that the knife does not cut into the inductor, see Fig 1.

l) Use the MANUAL OPERATION function to open the LH side jaw, see 4-2 Jaw System - Inching, Go To Position and Manual Operation, and repeat the procedure to set the RH jaw.

m) If the cutting is out of alignment, see Fig 2, check the knife, see 4.2.3-1 Knife Holder - Check Knife and then perform the basic setting, see Basic Setting.

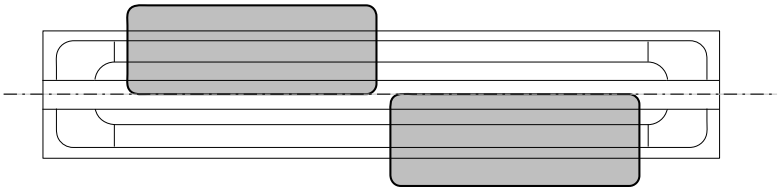

Figure 1 Correct cutting position

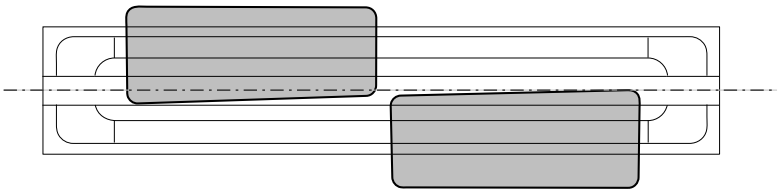

Figure 2 Out of Alignment

(Cont'd)

(Cont'd)

Basic Setting

a) Use the GO TO POSITION function to slow inch the machine to 0° LH side, see 4-2 Jaw System - Inching, Go To Position and Manual Operation.

b) Loosen the screws (1), lift the carrier (2) on the cutting side.

c) Add or remove shims (3) and tighten the screws (1).

d) Repeat the Preliminary Check and add or remove shims until the cutting is aligned.

Note! When adding or removing shims the setting 4-7 Jaw System - Set Volume Flaps Centring must be repeated.

e) Check the T-gap, see 4-15 Jaw System - Check T-gap.

f) Use the GO TO POSITION function to slow inch the machine to 180° RH side, see 4-2 Jaw System - Inching, Go To Position and Manual Operation, and repeat the procedure to set the RH jaw.

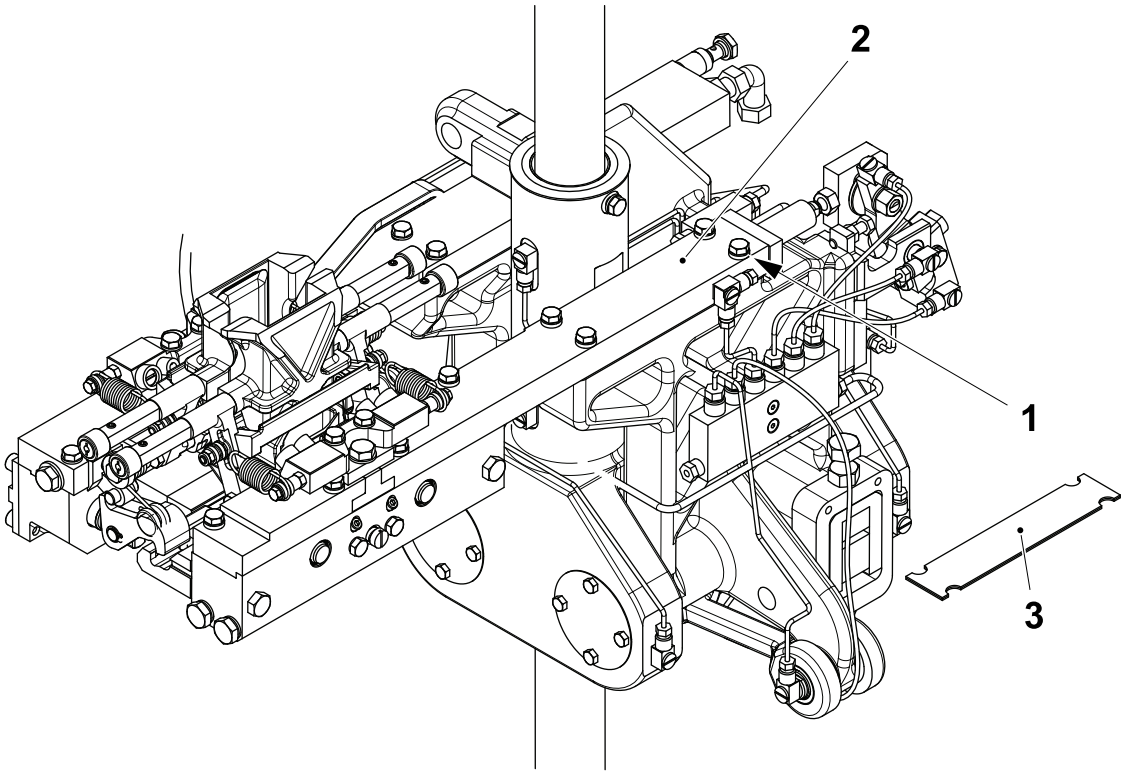

1 Screw
2 Carrier
3 Shim

4-12 Jaw System - Set Jaw Over Jaw

Machine Status	Step ZERO
Special Equipment	Rod Micrometer
SPC Reference	641504-0300

Equalize Jaw Over Jaw

The following procedure describes how to adjust the jaw system so that the position of the LH and RH sides of the jaw system are equal and correctly balanced and compensate for the mechanical tolerances.

a) Remove the LH and RH front volume flaps, see 4-9 Jaw System - Remove Cutting Jaw Volume Flaps.

Note! Item from b) to c) are valid for TBA 200 E and TBA 250 E volumes only.

b) Remove the screws (1) and the bulge (2) from the pressure jaw arm (3).

c) Remove the screws (4) and the bulge (5) from the pressure jaw arm (3).

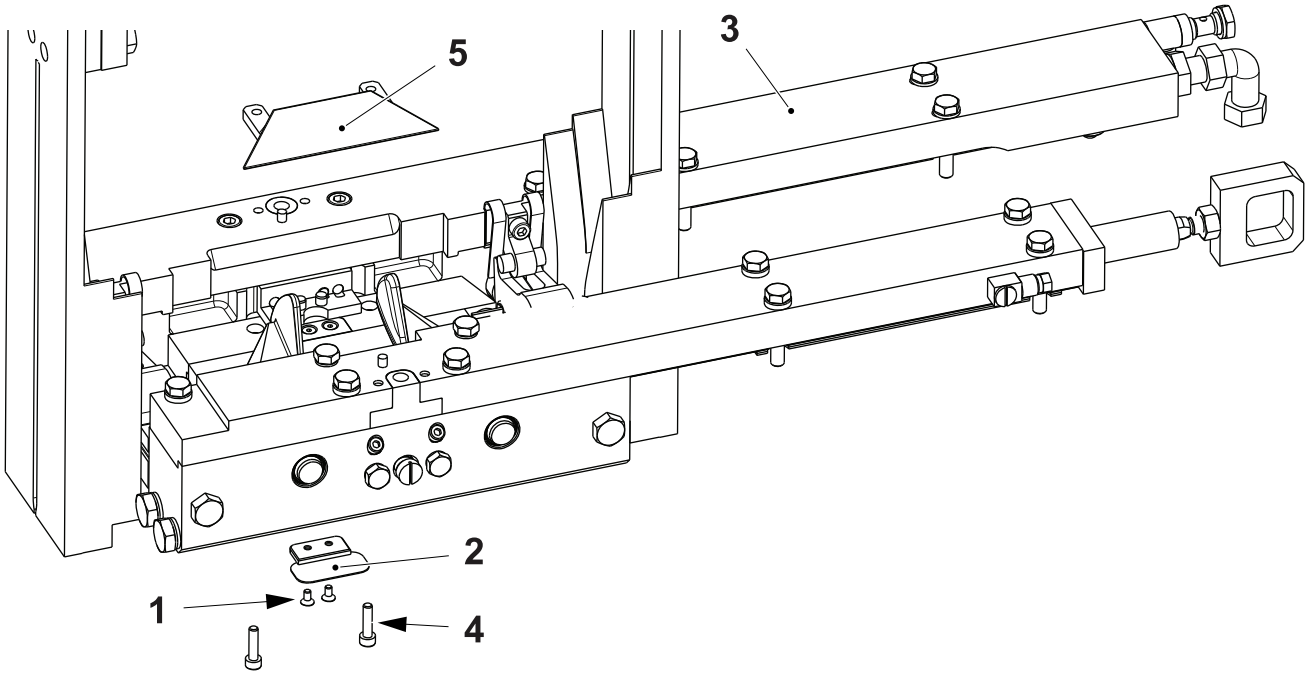

1 Screw
2 Bulge
3 Pressure jaw arm
4 Screw
5 Bulge

(Cont'd)

(Cont'd)

d) Log on to access the MAINTENANCE CONTROL window, see 8.6.3-2 HMI - User Management Log On.

e) Touch the JAW SYSTEM button (6) to display the JAW SYSTEM window.

f) Touch the JAW OVER JAW icon (7) to display the JAW OVER JAW window (8).

g) Touch the LEFT JAW OVER RIGHT JAW button (9).

h) Touch the OK button (10) to start the machine movement.

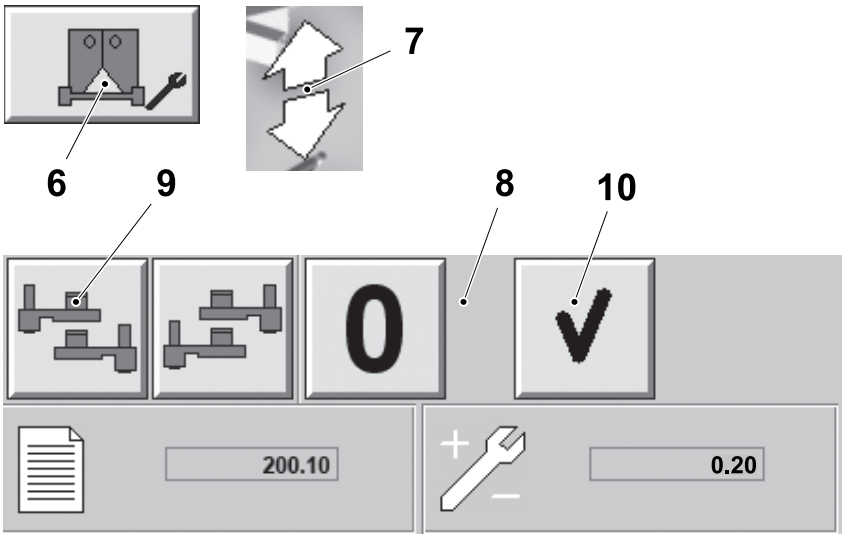

6 JAW SYSTEM button
7 JAW OVER JAW icon
8 JAW OVER JAW window
9 LEFT JAW OVER RIGHT JAW button
10 OK button

(Cont'd)

(Cont'd)

i) Open the LH side jaw system doors and use a rod micrometer to measure and record the distance **A** between the inductors (11).

j) Close the LH jaw system doors and reset any alarms on the TPOP.

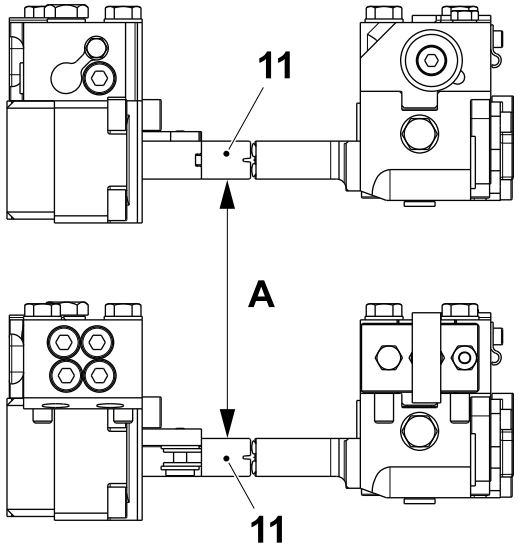

11 Inductor

(Cont'd)

(Cont'd)

k) Touch the RIGHT JAW OVER LEFT JAW button (12).

l) Press the OK button (10) to start the machine movement.

m) Open the RH side jaw system doors and use a rod micrometer to measure and record the distance **B** between the inductors (11).

n) Close the LH jaw system doors and reset any alarms on the TPOP.

If the difference between the distances **A** and **B** exceeds 0.1 mm, adjust the setting as described on the following page.

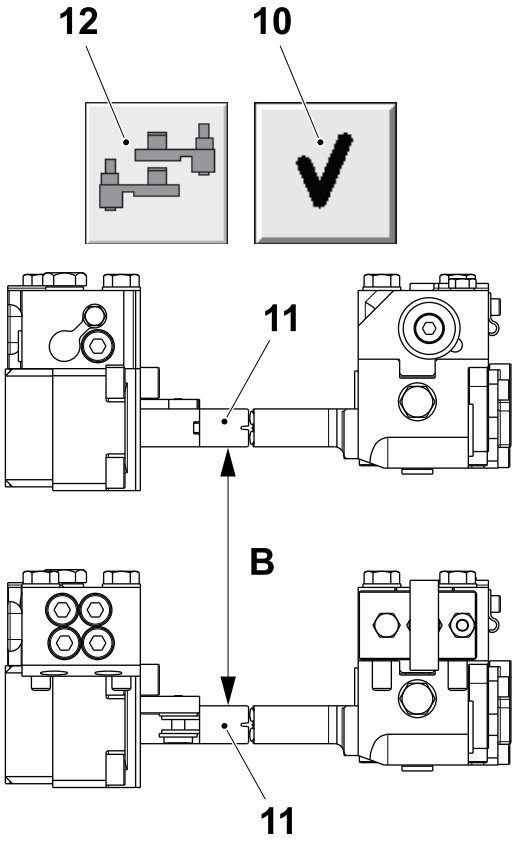

10 OK button
11 Inductor
12 RIGHT JAW OVER LEFT JAW button

(Cont'd)

(Cont'd)

o) Calculate the correction value for the jaw over jaw by means of the following formula:

CurrentValue + [A-B]/2 = NewValue

For example: If distance **A** equals 250.00 mm and distance **B** equals 250.10 mm and the value in the SETTING box (13) is currently 0.20 mm, then the new value to be entered is calculated as follows:

0.2 + [250.0–250.10]/2 = 0.15

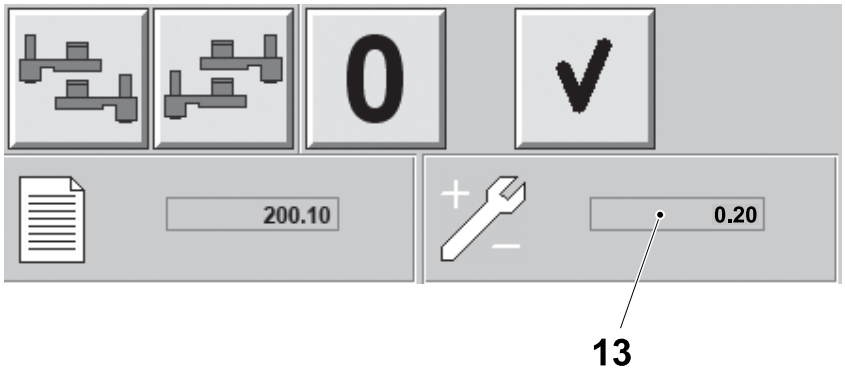

13 SETTING box

(Cont'd)

(Cont'd)

p) Touch the ADJUSTMENT button (14).

q) Use the ARROW button (15) to enter the new value in the ADJUSTMENT box (16).

r) Touch the OK button (17) for two seconds to enter the new correction value.

s) Touch the EXIT button (18) to exit the SERVO SETTING window.

t) Fit the front volume flaps, see 4-16 Jaw System - Install Cutting Jaw Volume Flaps.

Note! Item u) is valid for TBA 200 E and TBA 250 E volumes only.

u) Fit the bulges to the pressure jaw arm.

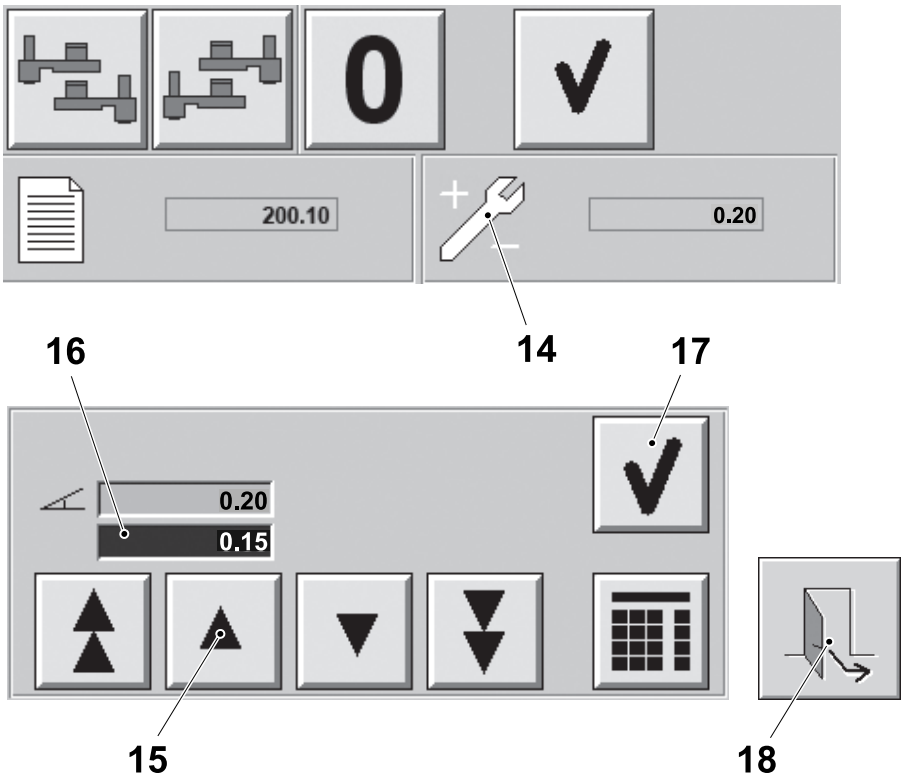

14 ADJUSTMENT button
15 ARROW button
16 ADJUSTMENT box
17 OK button
18 EXIT button

4-13 Jaw System - Set Folding Flaps Mechanism

Machine Status	Step ZERO
Special Equipment	Force Gauge TP No. 90459-1467
SPC Reference	641504-0300

WARNING
Risk of crushing.
The pulley (1) may move unexpectedly.

a) Set the belt tension on both the LH and RH side drive units, see 4.1.5.1-4 Drive Unit - Set Timing Belt Tension.

b) Step up the machine to PREPARATION.

c) Remove the screws (2) and the cover (3).

d) Follow the procedure from b) to f) on page 4-50.

e) Loosen the nut (4) and align the position of the sensor (5) with the screw (6) on the pulley (1).

f) Set the distance **A** between the sensor (5) and the screw (6).

g) Tighten the nut (4).

h) Repeat the procedure for the RH side servo motor.

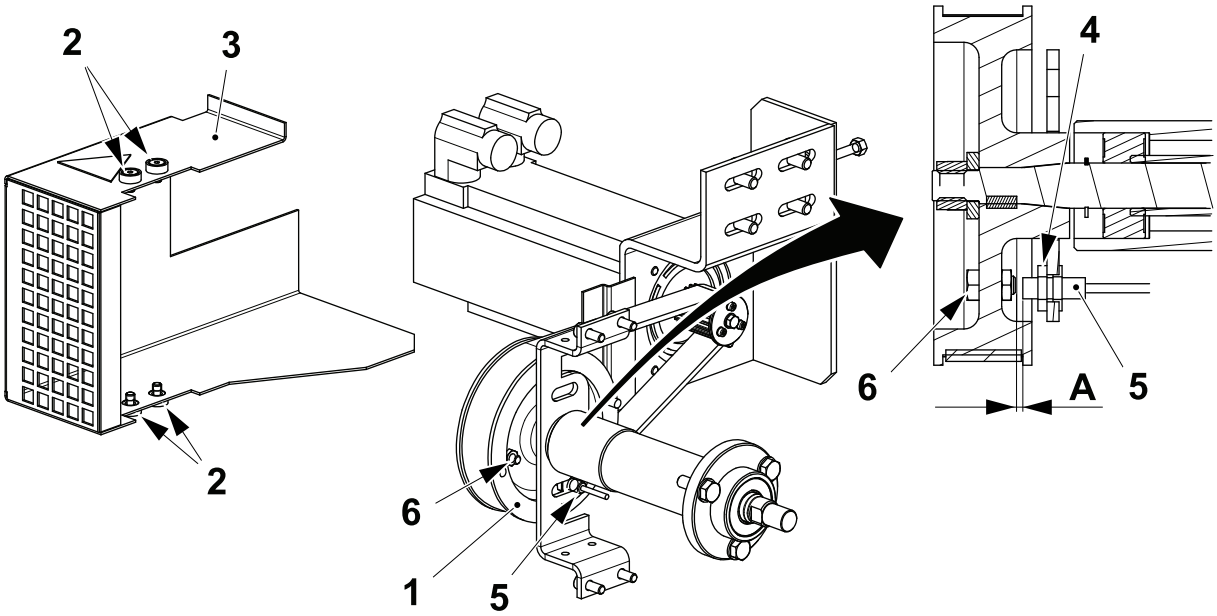

A = 0.5 +0.2/-0.0 mm

1 Pulley
2 Screw
3 Cover
4 Nut
5 Sensor
6 Screw

4-14 Jaw System - Set Folding Flaps

Machine Status	Step ZERO
Special Equipment	Dynamometer TP No. 90459-7315 Template TP No. 3222720
SPC Reference	641504-0300

Set Home Position

a) Set the belt tension on both the LH and RH side drive units, see 4.1.5.1-4 Drive Unit - Set Timing Belt Tension.

b) Log on to access the MAINTENANCE CONTROL window, see 8.6.3-2 HMI - User Management Log On.

c) Touch the JAW SYSTEM button (1) to display the JAW SYSTEM window.

d) Touch the FOLDING FLAPS icon (2) to display the FOLDING FLAPS window (3).

e) Touch the LEFT button (4) and then touch the OPEN button (5).

f) Touch the OK button (6) and wait for the jaw movement to complete.

g) Set the folding flap mechanism, see 4-13 Jaw System - Set Folding Flaps Mechanism.

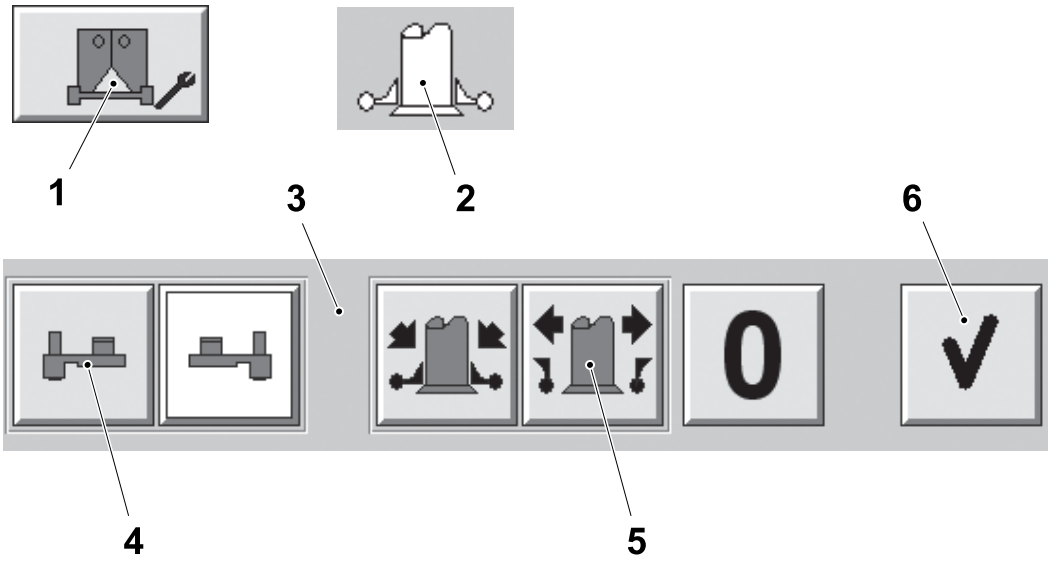

1 JAW SYSTEM button
2 FOLDING FLAPS icon
3 FOLDING FLAPS window
4 LEFT button
5 OPEN button
6 OK button

(Cont'd)

(Cont'd)

h) Open the jaw system doors and loosen the two screws (7) on the clutch (8).

Note! Set the distance **A** (see table in the next page) on the outer side of the beam (12). For the RH the distance **A** is set at the top of the design correction device and for the LH side the distance **A** is set at the bottom of the design correction device.

i) Rotate the shaft (9) and set the distance **A** between the surface of the bar (10) and the surface of the strut (11).

LH side

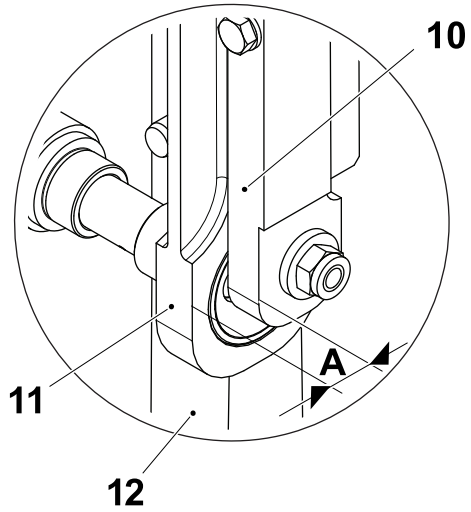

RH side

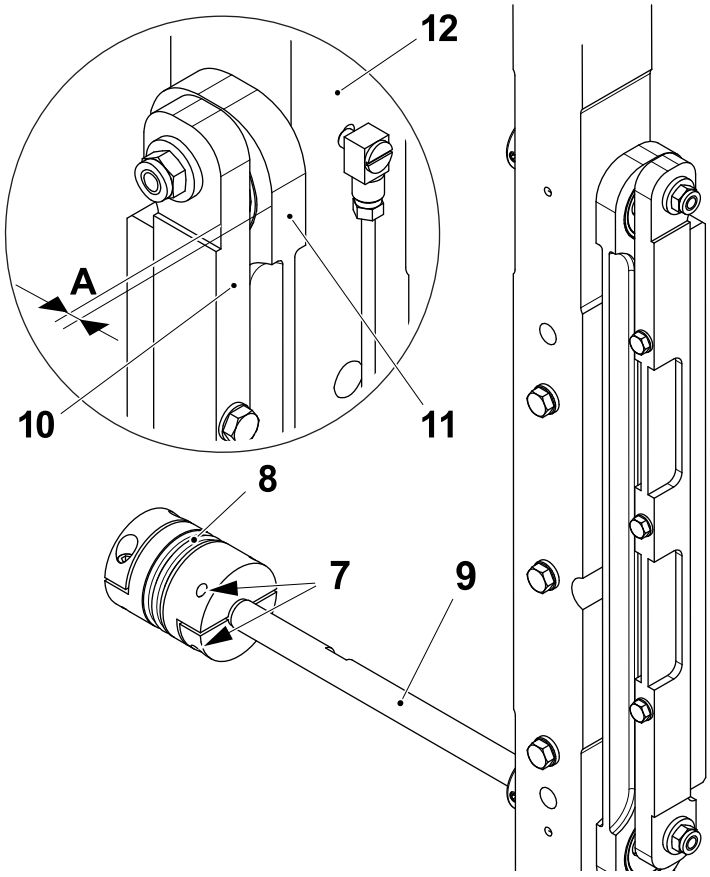

7 Screw
8 Clutch
9 Shaft
10 Bar
11 Strut
12 Beam

(Cont'd)

(Cont'd)

j) Tighten the screws (7).

k) Repeat the procedure for the RH side from point e), touching the right button where appropriate.

Package	A ±0.1 mm	Package	A ±0.1 mm
TBA 80 S	1.0	TBA 200 B, TBA 250 B, TBA 330 S	5.0
TBA 100 B, TBA 125 S	0.0	TBA 160 S, TBA 180 S, TBA 200 S	0.0
TBA 200 M, TBA 250 S	6.0	TBA 200 Sq, TBA 250 Sq	3.0
TBA 284 B, TBA 300 S	5.0	TPA 125 Sq	0.0
TPA 200 Sq, TPA 250 Sq	2.0	TPA 330 Sq	1.0
TBA 375 S	5.0	TBA 200 E, TBA 250 E	8.0

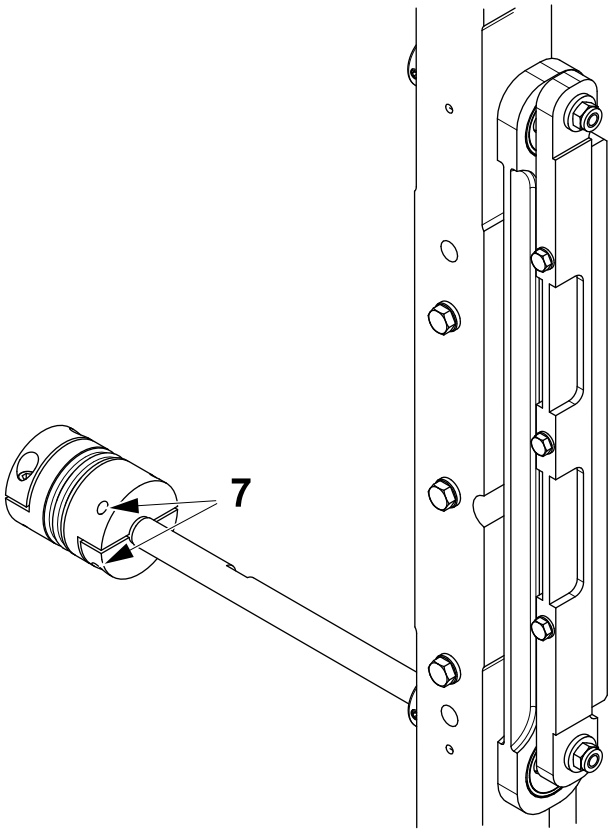

7 Screw

(Cont'd)

(Cont'd)

Set Folding Flap Position (Valid for all volumes except TBA 200 E and TBA 250 E)

a) If not already done, log on to the MAINTENANCE CONTROL window, see 8.6.3-2 HMI - User Management Log On.

b) Touch the JAW SYSTEM button (1) to display the JAW SYSTEM window.

c) Touch the FOLDING FLAPS icon (2) to display the FOLDING FLAPS window (3).

d) Touch the LEFT button (4) and then touch the OPEN button (5).

e) Touch the OK button (6) and wait for the jaw movement to complete.

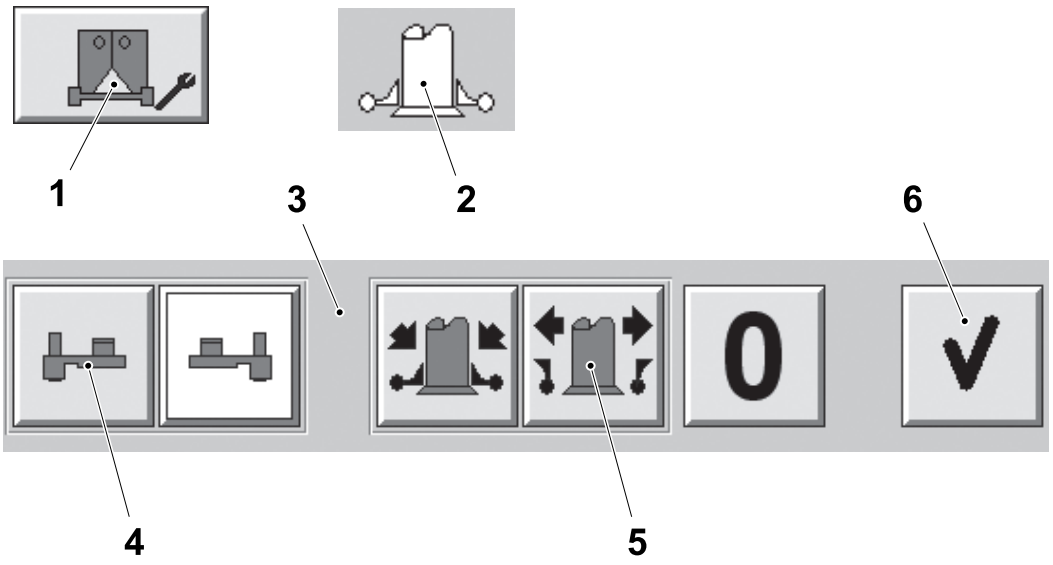

1 JAW SYSTEM button
2 FOLDING FLAPS icon
3 FOLDING FLAPS window
4 LEFT button
5 OPEN button
6 OK button

(Cont'd)

(Cont'd)

f) Set the distance **B** between the LH side folding flap cam (7) and the roller (8) using the screw (9).

g) Release the joint (10) and move the roller from the folding flap cam (7).

h) Push the dynamometer (11) against the roller (12) to check the release force of the joint (10).

i) Use the spring loaded screw (13) to set the correct force. Leave the joint (10) in released position.

j) Close the jaw system doors and reset the alarms.

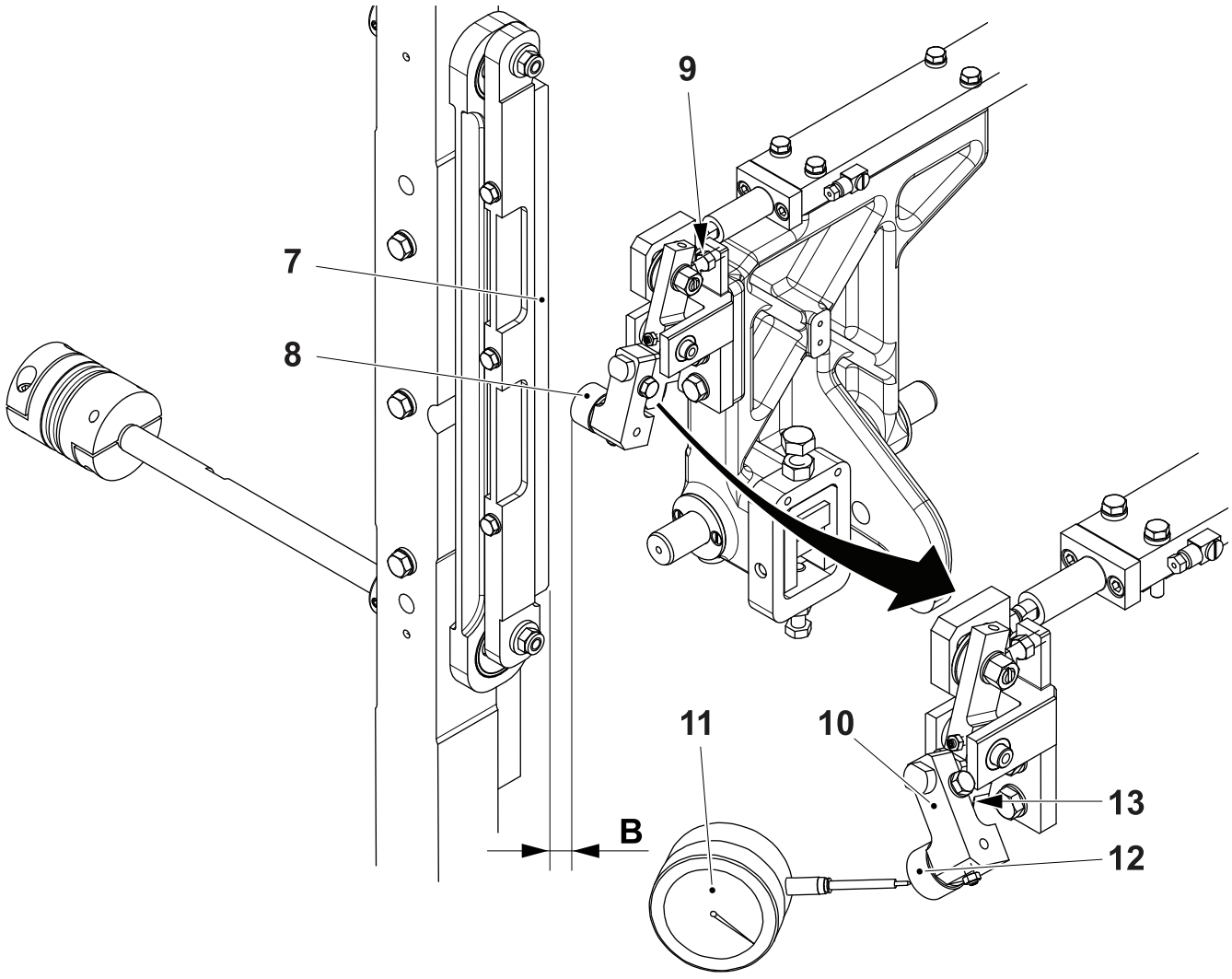

B = 0.5 ±0.2 mm
Force = 10 to 15 N

7 Folding flap cam
8 Roller
9 Screw
10 Joint
11 Dynamometer
12 Roller
13 Spring loaded screw

(Cont'd)

(Cont'd)

k) Touch the LEFT button (4) and then touch the CLOSE button (14).

l) Touch the OK button (6) and wait for the jaw movement to complete.

m) Put the joint (10) and the roller in the working position next to the cam.

n) Set the distance **C** between the folding flap (15) and the cutting jaw (16) using the screw (17).

o) Repeat the procedure for the RH side from point d), touching the RIGHT button where appropriate.

Package	C ±0.05 mm	Package	C ±0.05 mm
TBA 80 S	0.7	TBA 284 B, TBA 300 S	0.7
TBA 100 B, TBA 125 S	0.7	TBA 375 S	0.9
TBA 160 S, TBA 180 S, TBA 200 S	0.7	TPA 125 Sq	0.7
TBA 200 M, TBA 250 S	0.7	TPA 200 Sq, TPA 250 Sq	0.9
TBA 200 Sq, TBA 250 Sq	0.7	TPA 330 Sq	0.9
TBA 200 B, TBA 250 B, TBA 330 S	0.7		

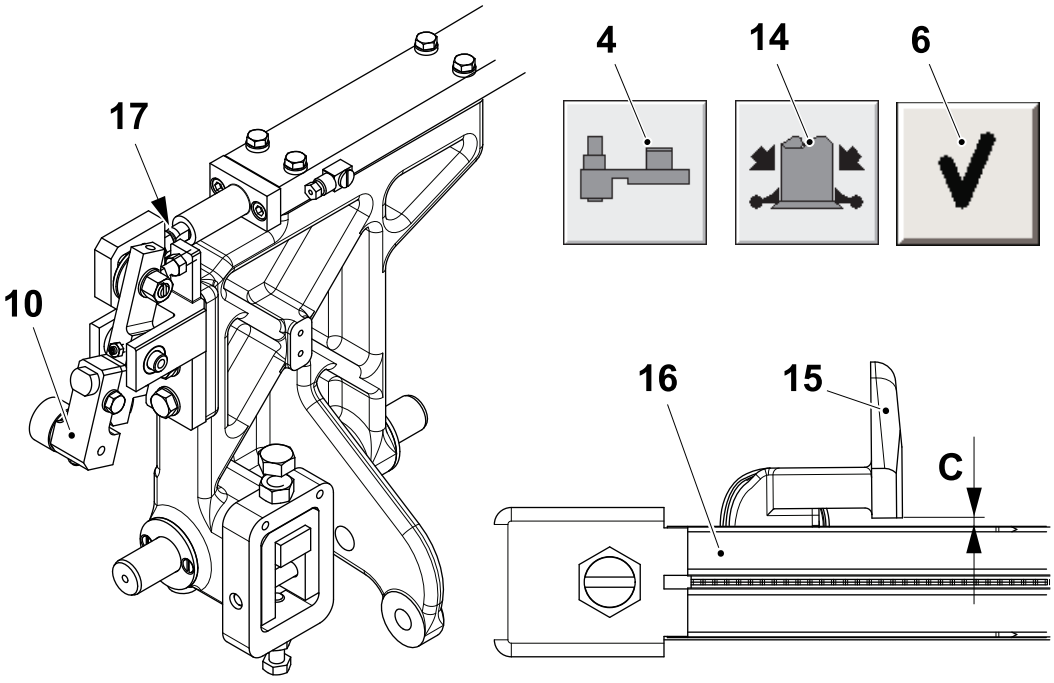

4 LEFT button
6 OK button
10 Joint
14 CLOSE button
15 Folding flap
16 Cutting jaw
17 Screw

(Cont'd)

(Cont'd)

Set Folding Flap Position (For Volumes TBA 200 E and TBA 250 E only)

a) If not already done, log on to the MAINTENANCE CONTROL window, see 8.6.3-2 HMI - User Management Log On.

b) Touch the JAW SYSTEM button (1) to display the PACKAGE FORMING UNIT window.

c) Touch the FOLDING FLAPS icon (2) to display the FOLDING FLAPS window (3).

d) Touch the LEFT button (4) and then touch the OPEN button (5).

e) Touch the OK button (6) and wait for the jaw movement to complete.

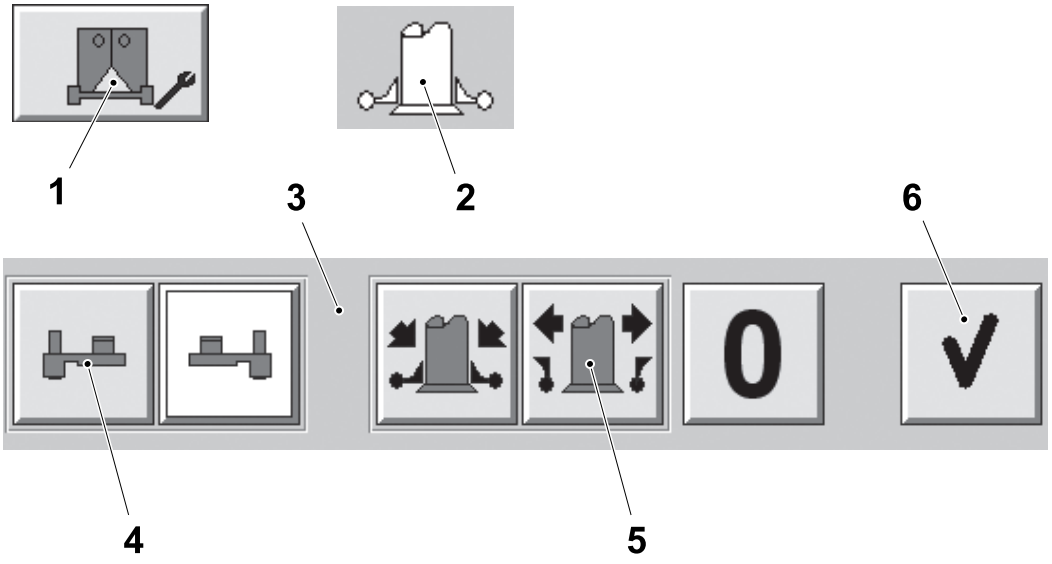

1 JAW SYSTEM button
2 FOLDING FLAPS icon
3 FOLDING FLAPS window
4 LEFT button
5 OPEN button
6 OK button

(Cont'd)

(Cont'd)

f) Set the distance **B** between the LH side folding flap cam (7) and the roller (8) using the screw (9).

g) Release the joint (10) and move the roller (12) from the folding flap cam (7).

h) Push the dynamometer (11) against the roller (12).

i) Use the spring loaded screw (13) to set the release force of the joint (10).

j) Leave the joint (10) in released position.

k) Close the jaw system doors and reset the alarms.

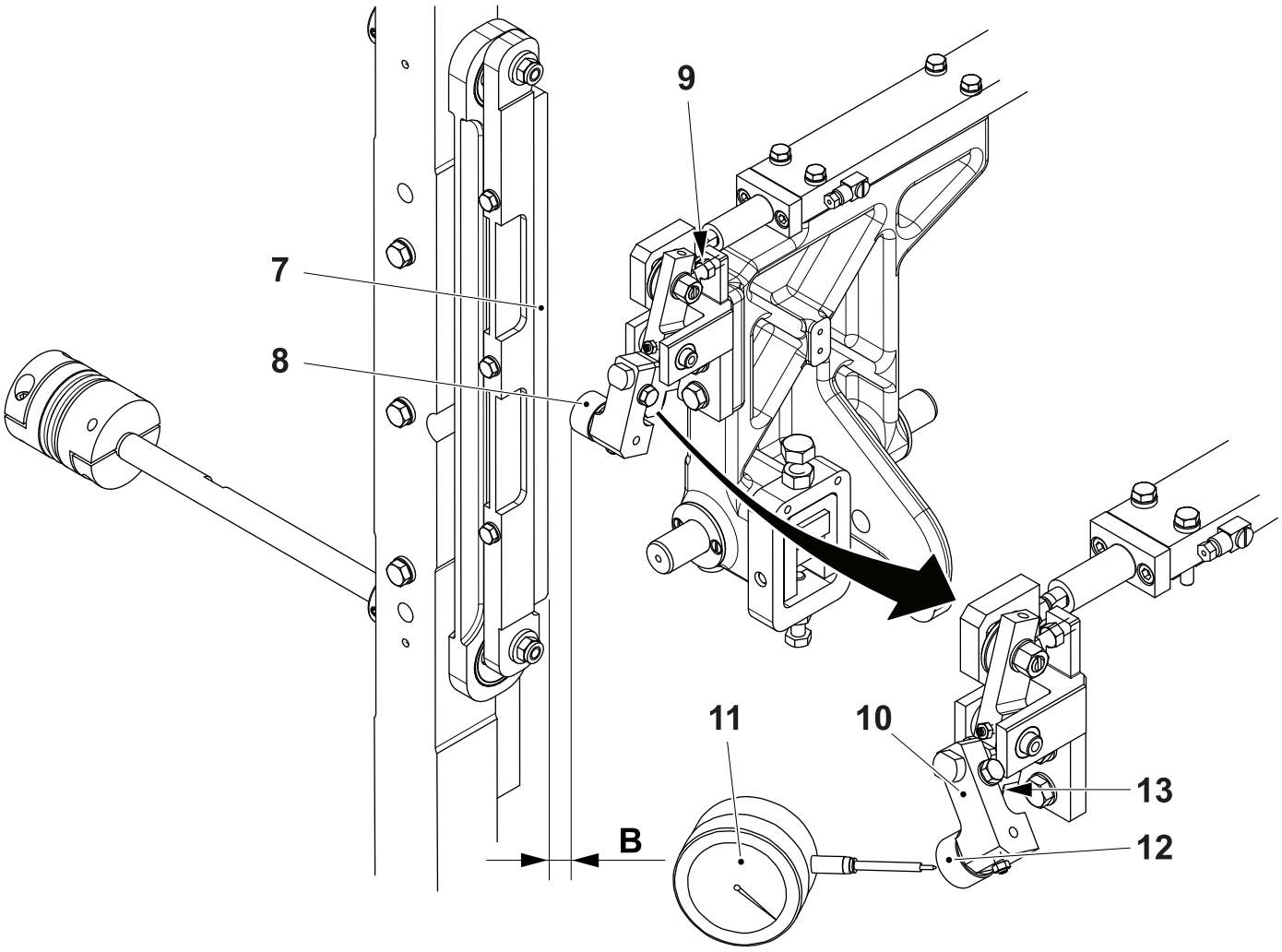

B = 0.5 ±0.2 mm
Force = 10 to 15 N

7 Folding flap cam
8 Roller
9 Screw
10 Joint
11 Dynamometer
12 Roller
13 Spring loaded screw

(Cont'd)

(Cont'd)

l) Touch the LEFT button (4) and then touch the CLOSE button (14).

m) Touch the OK button (6) and wait for the jaw movement to complete.

n) Remove the screws (15) and the volume flaps (16).

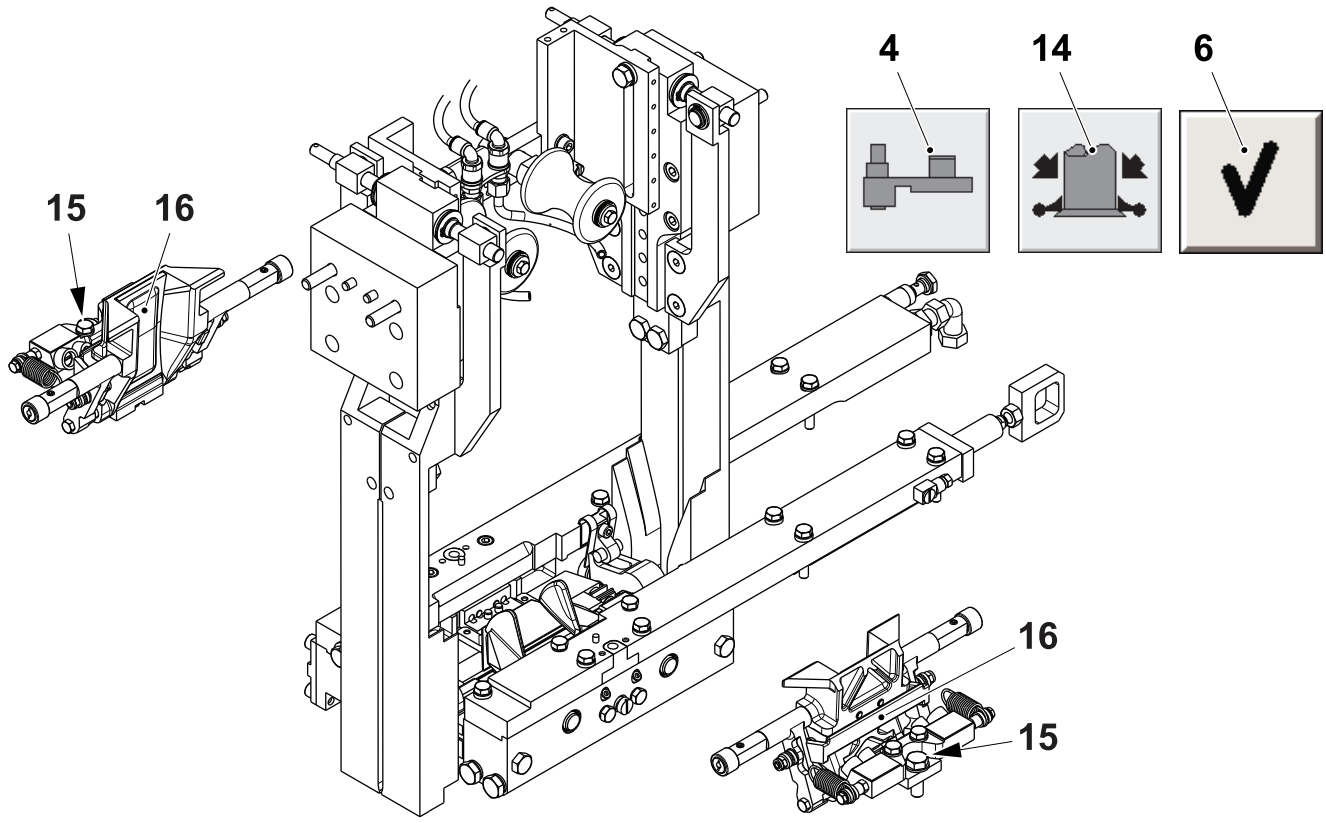

4 LEFT button
6 OK button
14 CLOSE button
15 Screw
16 Volume flap

(Cont'd)

(Cont'd)

o) Put the joint (10) and the roller in the working position next to the cam.

p) Insert the template (17) into the pin (18) and tighten the screw (19).

q) Make sure that the template (17) is touching **both** folding flaps (20). If required turn the screw (21) to change the position of the folding flaps (20).

r) Repeat the procedure for the RH side from point d), touching the `RIGHT` button where appropriate.

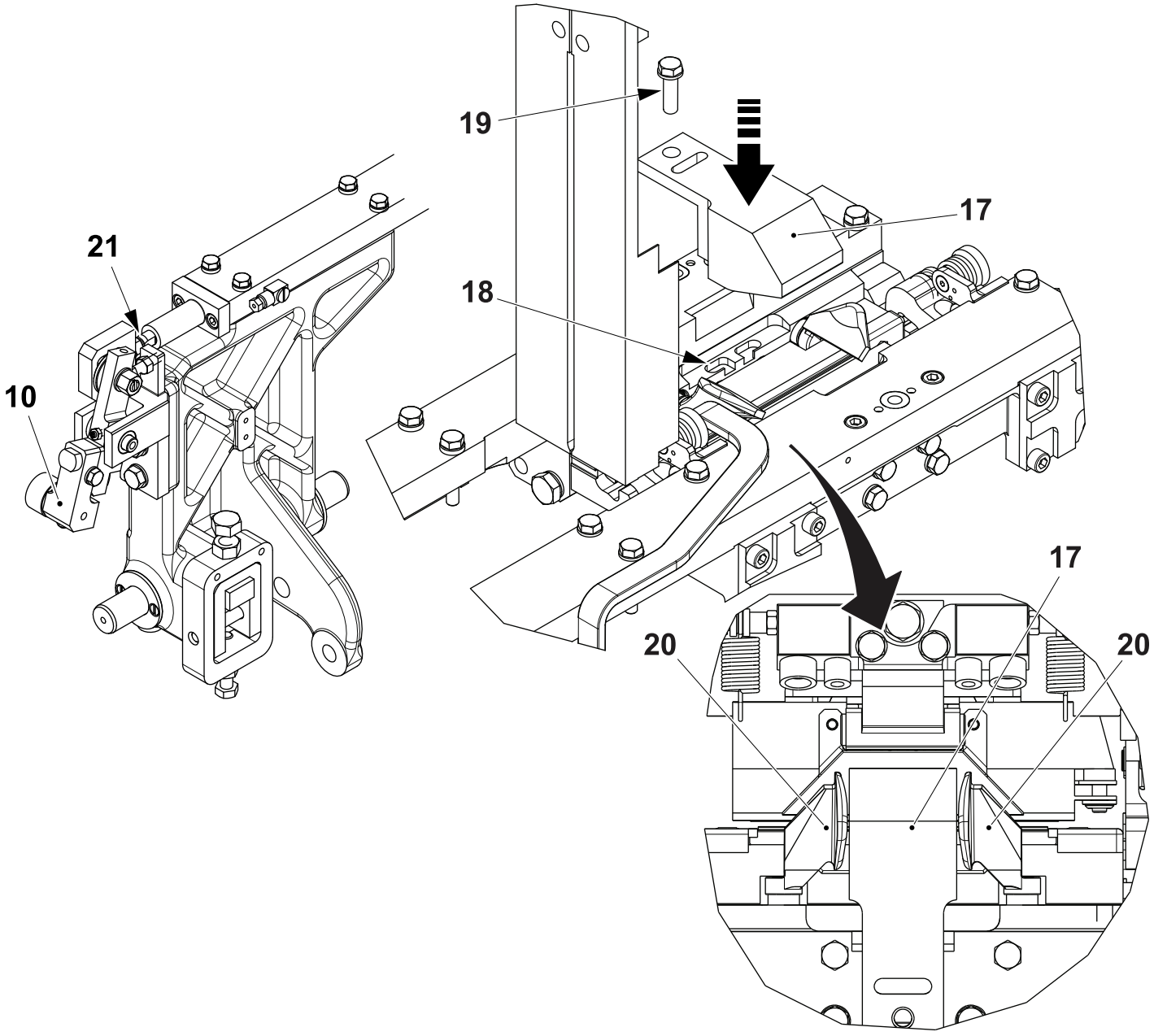

10 Joint
17 Template
18 Pin
19 Screw
20 Folding flap
21 Screw

4-15 Jaw System - Check T-gap

Machine Status	Step ZERO
SPC Reference	641504-0300

a) Log on to access the MAINTENANCE CONTROL window, see 8.6.3-2 HMI - User Management Log On.

b) Touch the JAW SYSTEM button (1) to display the JAW SYSTEM window.

c) Touch the JAW OVER JAW icon (2) to display the JAW OVER JAW window (3).

d) Touch the LEFT JAW OVER RIGHT JAW button (4).

e) Touch the OK button (5) and wait for the jaw movement to complete.

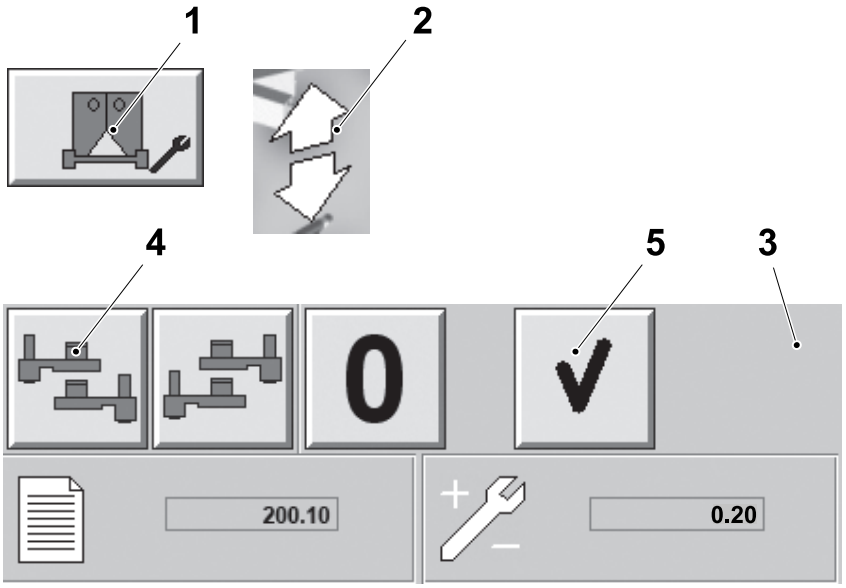

1 JAW SYSTEM button
2 JAW OVER JAW icon
3 JAW OVER JAW window
4 LEFT JAW OVER RIGHT JAW button
5 OK button

(Cont'd)

(Cont'd)

f) Make sure that the volume flaps (6) are exactly perpendicular to the carriers (7).

Note! Always check the distance **A** on both the volume flaps as the shims on the cutting jaw could cause a slight difference.

g) Use a feeler gauge to measure the distance **A** between the top of the volume flaps (6) and the bottom of the inductor (8).

h) Check the T-gap for the RH over LH jaws. Repeat the procedure detailed in items b) to g), touching the `RIGHT JAW OVER LEFT JAW` button (9) where appropriate.

i) If either of the distances **A** (T-gap) are incorrect repeat the basic setting, see 4-1 Jaw System - Setting Sequence.

Package	A = min. (mm)	Package	A = min. (mm)
TBA 80 S	0.9	TBA 160 S, TBA 200 S	0.8
TBA 100 B	2.0	TBA 250 B	0.7
TBA 125 S	1.5	TBA 250 S	1.9
TBA 200 B	1.2	TBA 330 S	1.2
TBA 200 M	1.9	TPA 125 Sq	0.8
TPA 200 Sq, TPA 250 Sq	0.7	TBA 200 Sq, TBA 250 Sq	1.1
TPA 330 Sq	1.0	TBA 284 B, TBA 300 S	1.0
TBA 375 S	1.3	TBA 200 E, TBA 250 E	1.0
TBA 180 S	1.0		

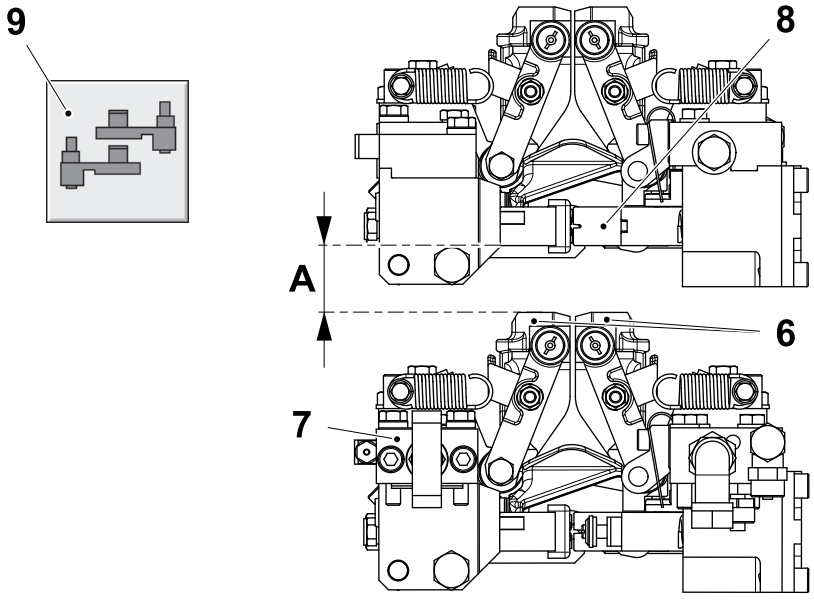

6 Volume flap
7 Carrier
8 Inductor
9 `RIGHT JAW OVER LEFT JAW` button

4-16 Jaw System - Install Cutting Jaw Volume Flaps

Machine Status	Step ZERO
SPC Reference	641504-0300

a) Use the GO TO POSITION function to slow inch the machine to 0° LH side (180° RH side), see 4-2 Jaw System - Inching, Go To Position and Manual Operation.

b) Align the slots (3) of the carrier (2) to the pins (1) of the volume flap (4).

c) Fit the screw (5).

d) Repeat the procedure for the other side.

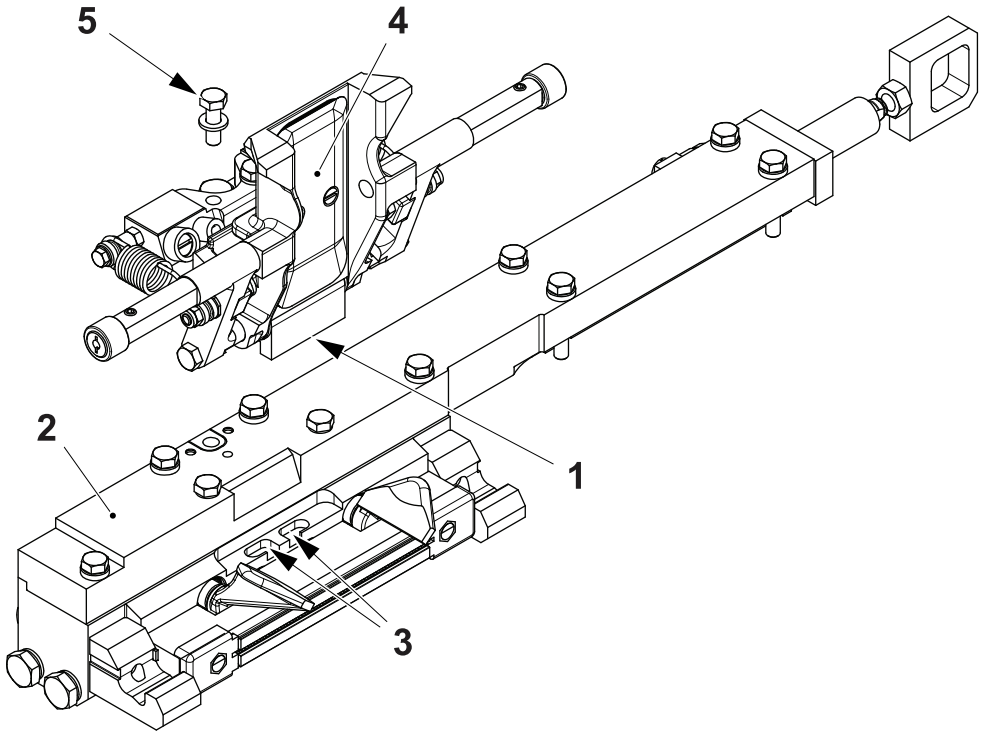

1 Pin
2 Carrier
3 Slot
4 Volume flap
5 Screw

4-17 Jaw System - Set Play

Machine Status	Electrical supply disconnecting device in position O (OFF) Main air valve OFF Main steam valve ON Main water valve OFF
SPC Reference	641504-0300

Note! Perform the following procedure on the two pressure arms.

a) Remove the scissor arm, see 4.1.4-2 Scissor Arm Link - Change Shafts and Links.

b) Adjust until the movement is easy and the teeth play is as limited as possible throughout the movement.

c) Loosen the nut (2) and the screw (3) and set the play using the setting screw (1).

d) Tighten the screw (3) and the nut (2).

e) After any changes check the jaw symmetry, see 4-6 Jaw System - Set Symmetry.

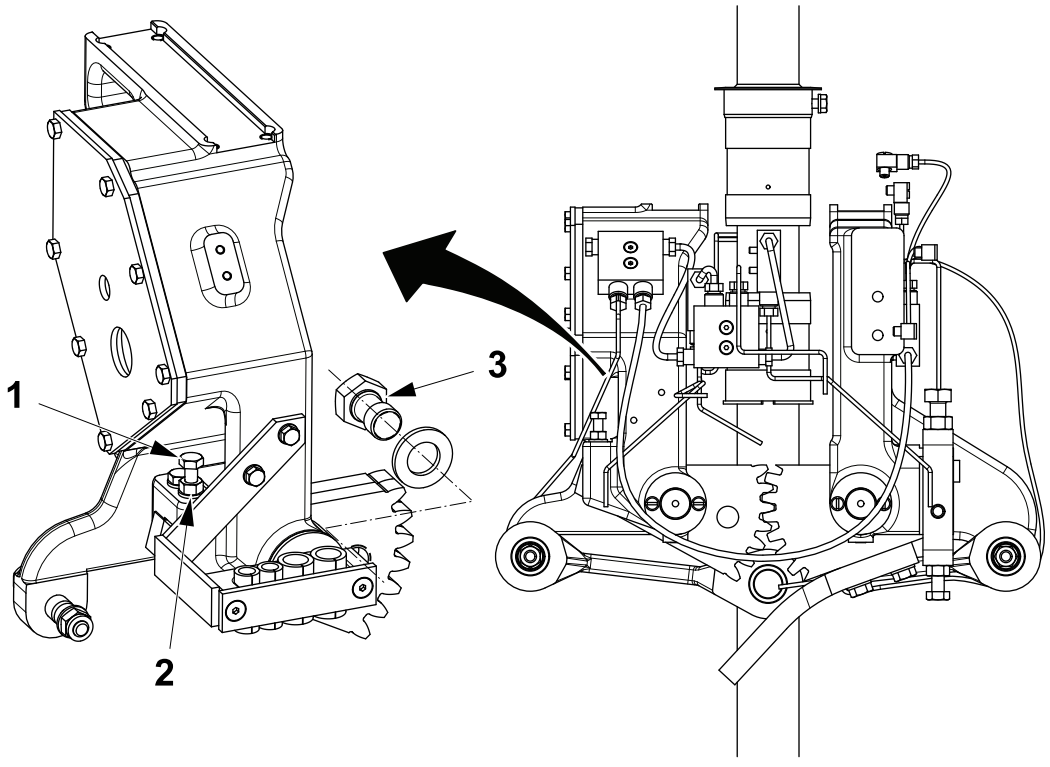

1 Screw
2 Nut
3 Screw

4-18 Jaw System - Set Package Volume

Machine Status	Electrical supply disconnecting device in position I (ON) Main air valve ON Main steam valve ON Main water valve ON
SPC Reference	641504-0300

Valid for machines not equipped with HI

Note! To obtain a correct package forming perform the following instruction.

a) Set the volume cam (1) parallel to each other, see 4-5 Jaw System - Set Volume Adjuster

Note! For volumes TBA 200 E and TBA 250 E only: do not fit any shims in the pressure jaw volume flaps. Shims are allowed only in the cutting jaw volume flaps.

b) Make sure that the volume bulges (2) and the shims (3) installed in to the volume flap (4) are the correct one for PRODUCTION **without** HI, see the SPC for the correct part number.

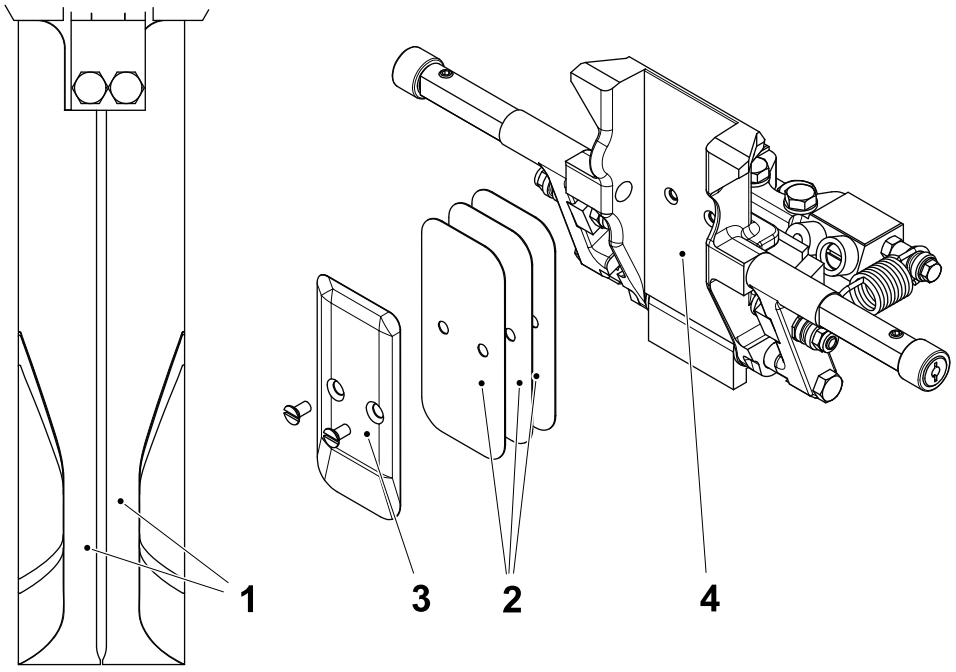

1 Volume cam
2 Volume bulge
3 Shim
4 Volume flap

(Cont'd)

(Cont'd)

c) Turn the service switch (5) on the electrical cabinet door to the SERVICE position.

Note! Packages should be filled with water to measure the fully filled volume of the package.

d) Force the drop chute in waste position, see 4-3 Jaw System - Move Drop Chute Position

e) Step up the machine to PRODUCTION.

f) Take some package samples from the conveyor and weight them, if the weight is not according to the **Nominal Volume** in the table on page 4-69, add or remove shims (3) until the correct volume is obtained.

g) Force the drop chute in PRODUCTION position, see 4-3 Jaw System - Move Drop Chute Position

h) Turn the service switch (5) on the electrical cabinet door to the PRODUCTION position.

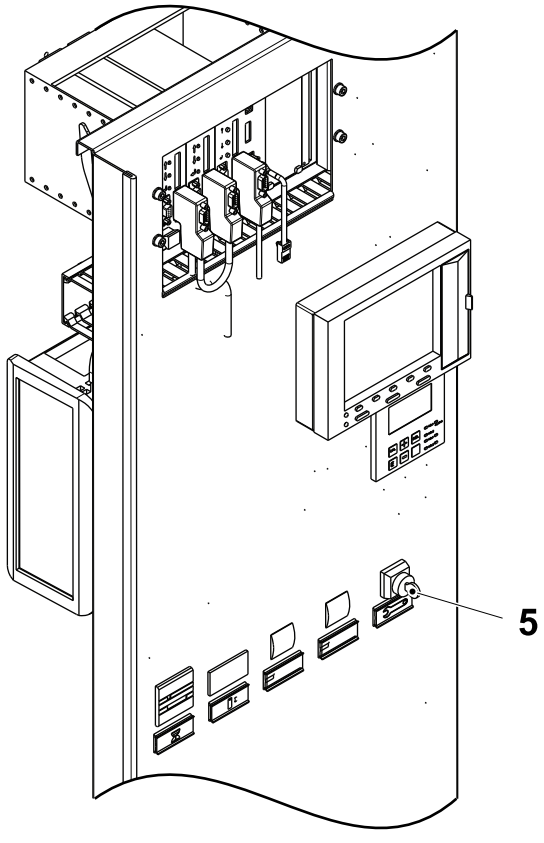

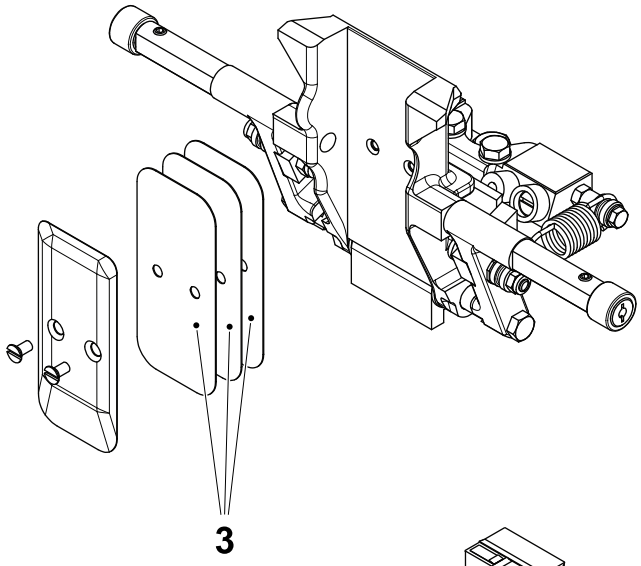

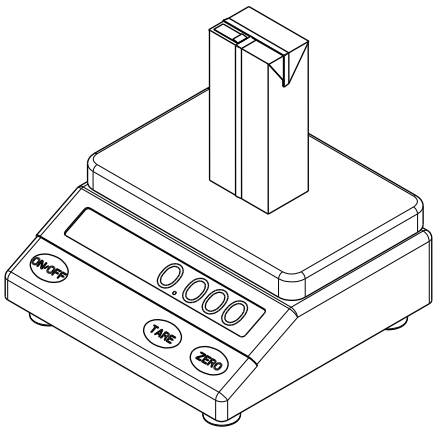

3 Shim
5 Service switch

(Cont'd)

(Cont'd)

Valid for machines equipped with HI

Note! To obtain a correct package forming perform the following instruction.

a) Set the volume cam (1) parallel to each other, see 4-5 Jaw System - Set Volume Adjuster

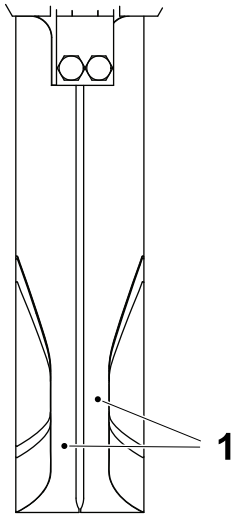

1 Volume cam

(Cont'd)

(Cont'd)

Note! For volumes TBA 200 E and TBA 250 E only: do not fit any shims in the pressure jaw volume flaps. Shims are allowed only in the cutting jaw volume flaps.

Note! For volumes TPA 125 Sq only: the volume bulges (2) are different from the volume bulges (3) and must be assembled as indicated in the illustration with the extended profile (4) facing downward.

b) Make sure that the volume bulges (2) and the shims (5) installed in to the volume flap (6) are the correct one for PRODUCTION **with** HI, see the SPC for the correct part number.

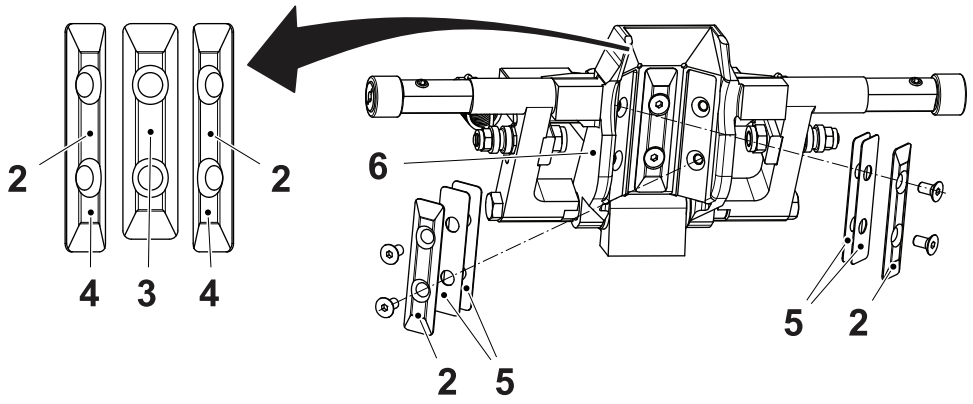

TPA 125 Sq volume only

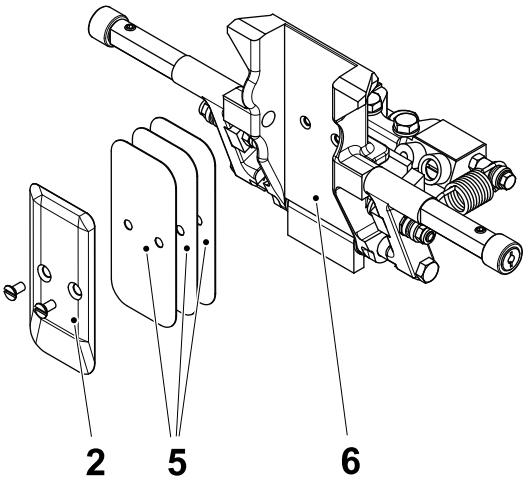

All other volumes

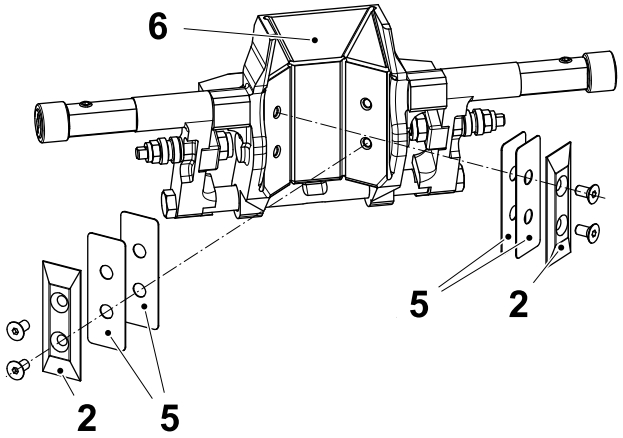

All other TPA volumes

2 Volume bulge
3 Volume bulge
4 Extended profile
5 Shim
6 Volume flap

(Cont'd)

(Cont'd)

c) Turn the service switch (7) on the electrical cabinet door to the SERVICE position.

d) On the TPOP panel, touch the PRODUCTION CONTROL button (8).

e) Touch the HEADSPACE BY INJECTION button (9).

f) Touch the HI PRESSURE AND FLOW icon (10).

g) Touch the HI PRESSURE SET POINT icon (11) to display the HI PRESSURE REGULATOR dialogue box (12).

h) In the HI PRESSURE REGULATOR dialogue box (12), use the ARROW buttons (13) to adjust the pressure value to **zero**.

Note! Packages should be filled with water to measure the fully filled volume of the package.

i) Touch the OK button (14).

j) Force the drop chute in waste position, see 4-3 Jaw System - Move Drop Chute Position

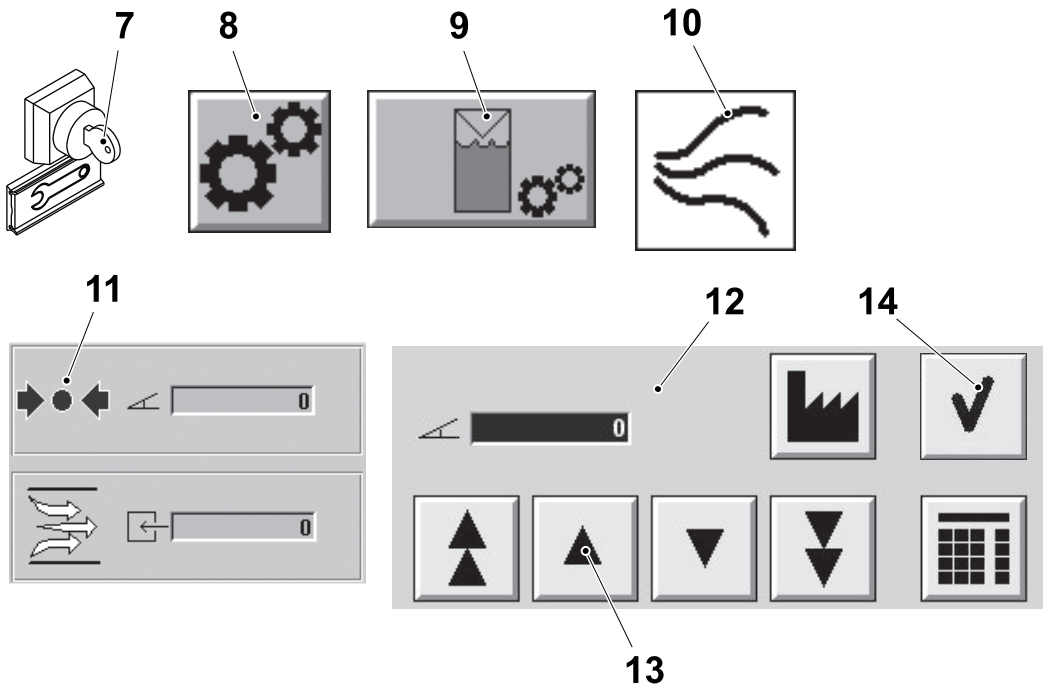

7 Service switch
8 PRODUCTION CONTROL button
9 HEADSPACE BY INJECTION button
10 HI PRESSURE AND FLOW icon
11 HI PRESSURE SET POINT icon
12 HI PRESSURE REGULATOR dialogue box
13 ARROW button
14 OK button

(Cont'd)

(Cont'd)

k) Step up the machine to PRODUCTION.

l) Take some package samples from the conveyor and weight them, if the weight is not according to the **Nominal Fully filled Volume Pre HI** in the table below, add or remove shims (5) until the correct volume is obtained.

Package	Nominal Fully Filled Volume Pre HI (cc)	Nominal Volume (cc)	Package	Nominal Fully Filled Volume Pre HI (cc)	Nominal Volume (cc)
TBA 80 S	84	80	TBA 200 Sq	206	200
TBA 100 B	104	100	TBA 250 Sq	258	250
TBA 125 S	129	125	TBA 284 B	295	284
TBA 160 S	165	160	TBA 300 S	308	300
TBA 180 S	186	180	TBA 375 S	386	375
TBA 200 S	206	200	TBA 200 E	208	200
TBA 200 M	206	200	TBA 250 E	260	250
TBA 250 S	258	250	TPA 125 Sq	130	125
TBA 200 B	206	200	TPA 200 Sq	208	200
TBA 250 B	258	250	TPA 250 Sq	262	250
TBA 330 S	340	330	TPA 330 Sq	347	330

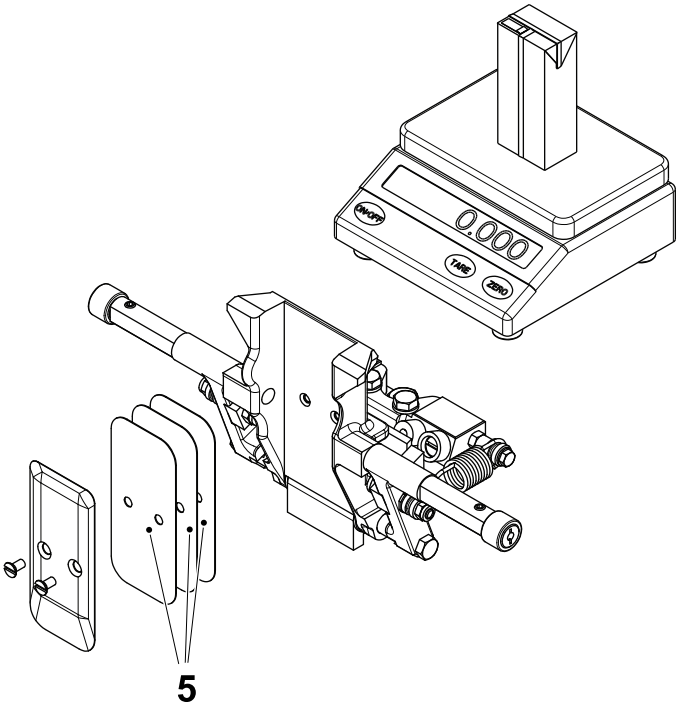

All other volumes

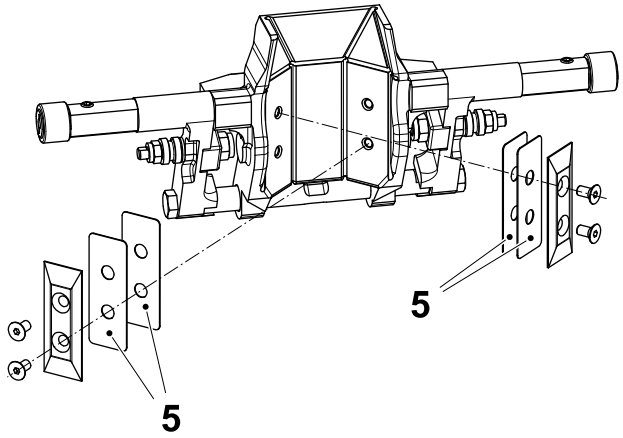

TPA volumes only

5 Shim

(Cont'd)

(Cont'd)

m) In the HI PRESSURE REGULATOR dialogue box (12), use the ARROW buttons (13) to set the package volume according the **Nominal Volume** in the table on page 4-69.

n) Touch the OK button (14).

o) Step up the machine to PRODUCTION.

p) Take some package samples from the conveyor and check the package volume. If necessary use the ARROW buttons (13) in the HI PRESSURE REGULATOR dialogue box (12) to obtain the correct package weight.

q) Touch the OK button (14).

r) Force the drop chute in PRODUCTION position, see 4-3 Jaw System - Move Drop Chute Position

s) Turn the service switch (7) on the electrical cabinet door to the PRODUCTION position.

Note! Packages should be filled with product to measure the correct package weight.

t) Repeat the procedure from item o) to check the correct package weight filled with the product.

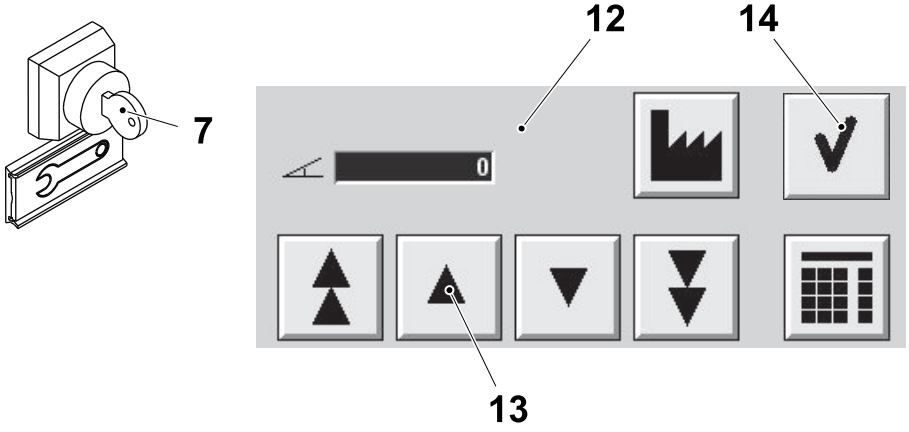

7 Service switch

12 HI PRESSURE REGULATOR dialogue box

13 ARROW button

14 OK button

4.1 Base Unit

4.1.1 Yoke

4.1.1-1 Yoke - Check bearings

Machine Status	Electrical supply disconnecting device in position O (OFF) Main air valve OFF Main steam valve ON Main water valve OFF
SPC Reference	2818090-0100 2818106-0100

Check the following parts for visual wear or damage:

- the bearings (1) for excessive play between the yoke (2) and the pressure and cutting arms (3)
- the hydraulic oil hoses and that there are no oil leaks.

Change the parts if necessary.

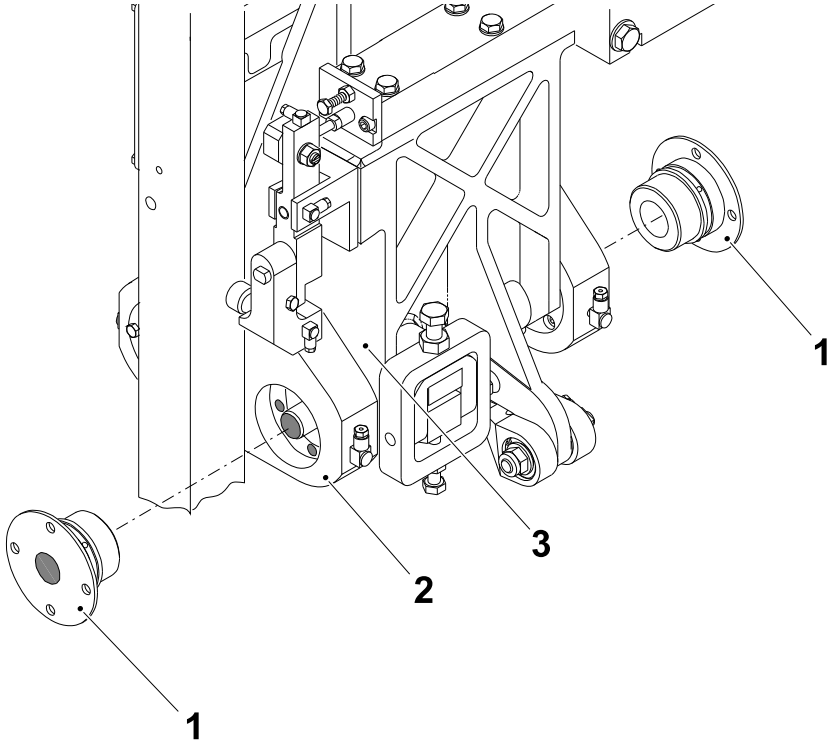

1 Bearing
2 Yoke
3 Arm

4.1.1-2 Yoke - Check Plunger and Locating Pieces

Machine Status	Electrical supply disconnecting device in position I (ON) Main air valve OFF Main steam valve ON Main water valve OFF
SPC Reference	2818090-0100 2818106-0100

Plunger

a) Use the GO TO POSITION function to slow inch the machine to 125° LH side (305° RH side), see 4-2 Jaw System - Inching, Go To Position and Manual Operation.

b) Remove the screw (1), the oil connection and the spring housing (2).

c) Remove the springs (3) and check for wear or damage. Change if necessary.

d) Check the plungers (4) for wear or damage, check the distance **A**. Change if necessary.

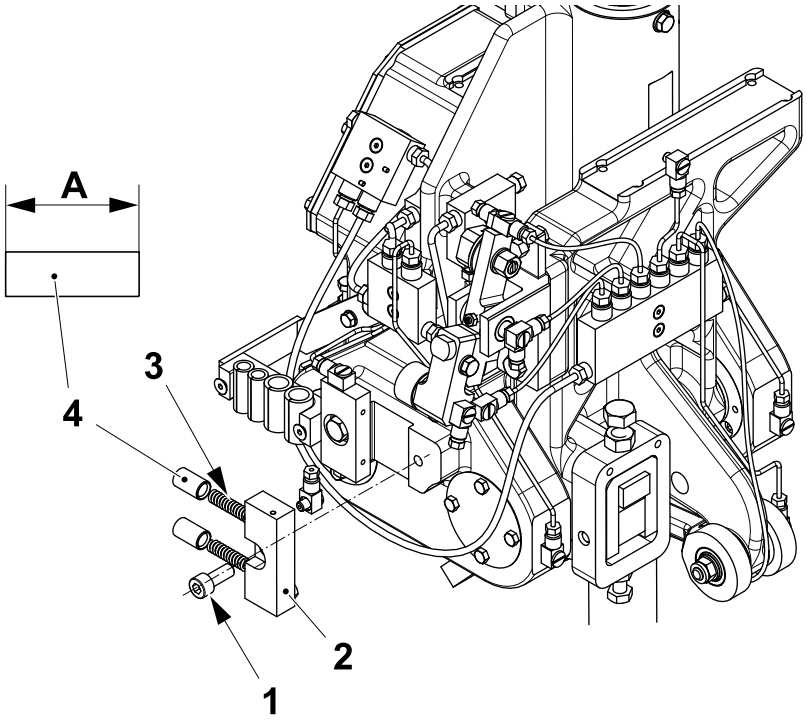

A = min. 19.0 mm

1 Screw
2 Spring housing
3 Spring
4 Plunger

(Cont'd)

(Cont'd)

Locating Piece

a) Use the GO TO POSITION function to slow inch the machine to 125° LH side (305° RH side), see 4-2 Jaw System - Inching, Go To Position and Manual Operation.

b) Loosen the lock nuts (1) and move aside the cam (2) and the strut (3).

c) Remove the screw (4) and the oil connection (5).

d) Pull out the locating piece (6) and the sleeve (7).

e) Check the locating piece (6) for wear or damage, check the distance **B**. Change if necessary.

f) Assemble in the reverse order.

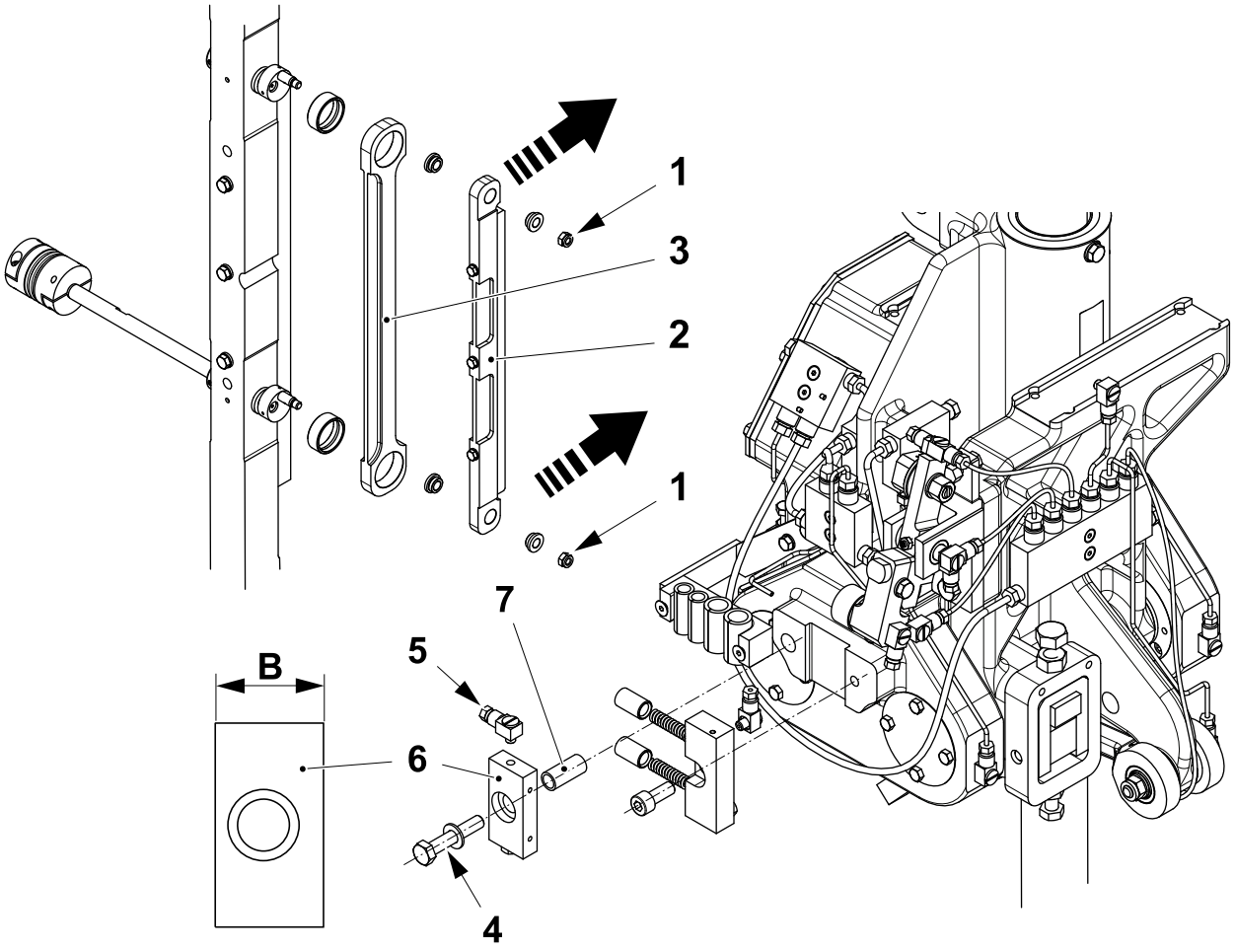

B = min. 28.7 mm

1 Lock nut
2 Cam
3 Strut
4 Screw
5 Oil connection
6 Locating piece
7 Sleeve

4.1.1-3 Yoke - Change Bushings and Scraper

Machine Status	Electrical supply disconnecting device in position O (OFF) Main air valve OFF Main steam valve ON Main water valve OFF
SPC Reference	2818090-0100 2818106-0100

a) Remove the guide and the yoke.

b) Loosen the screw (1) and remove the lid (2).

c) Remove and change the bushing (3) and the scraper (4).

d) Remove the clip (5).

e) Remove and change the bushing (6) and the scraper (7).

f) Assemble in the reverse order.

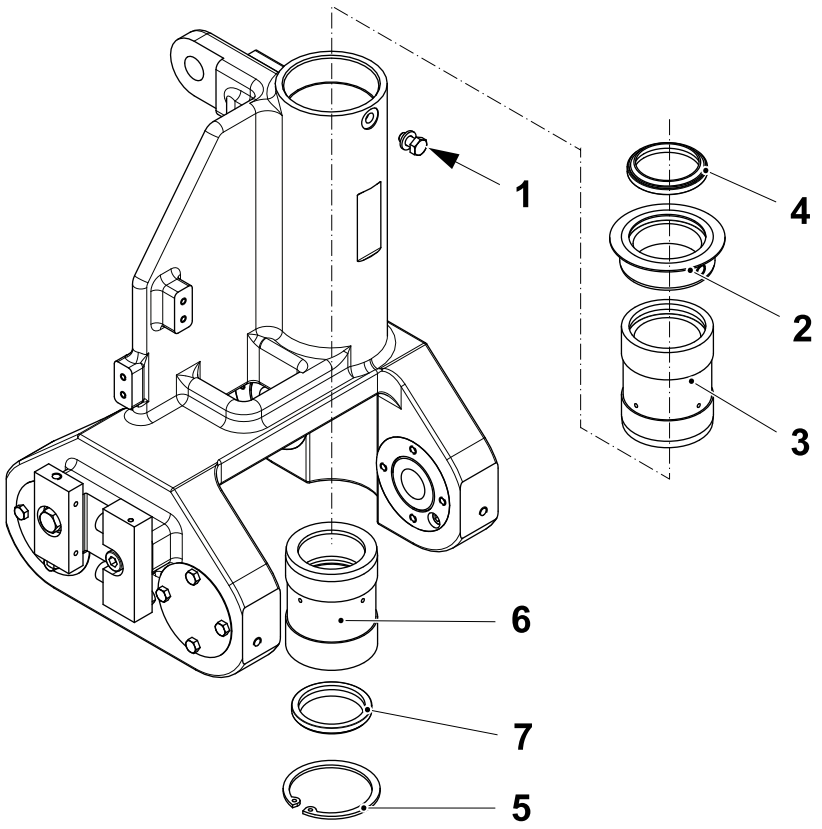

1 Screw
2 Lid
3 Bushing
4 Scraper
5 Clip
6 Bushing
7 Scraper

4.1.1-4 Yoke - Change Bearings

Machine Status	Electrical supply disconnecting device in position O (OFF) Main air valve OFF Main steam valve ON Main water valve OFF
SPC Reference	2818090-0100 2818106-0100

a) Lower the jaw system, see 3-2 Drive Unit - Lower Jaw System.

b) Remove the spring housing and the locating piece, see 4.1.1-2 Yoke - Check Plunger and Locating Pieces.

c) Remove the four screws (1) and the lid (2).

d) Remove the bearing (3) and change it.

e) Assemble in the reverse order.

Note! Make sure that the arrow (4) marked on the bearing (3) is pointing downwards.

f) Repeat from item c) for the other three bearings.

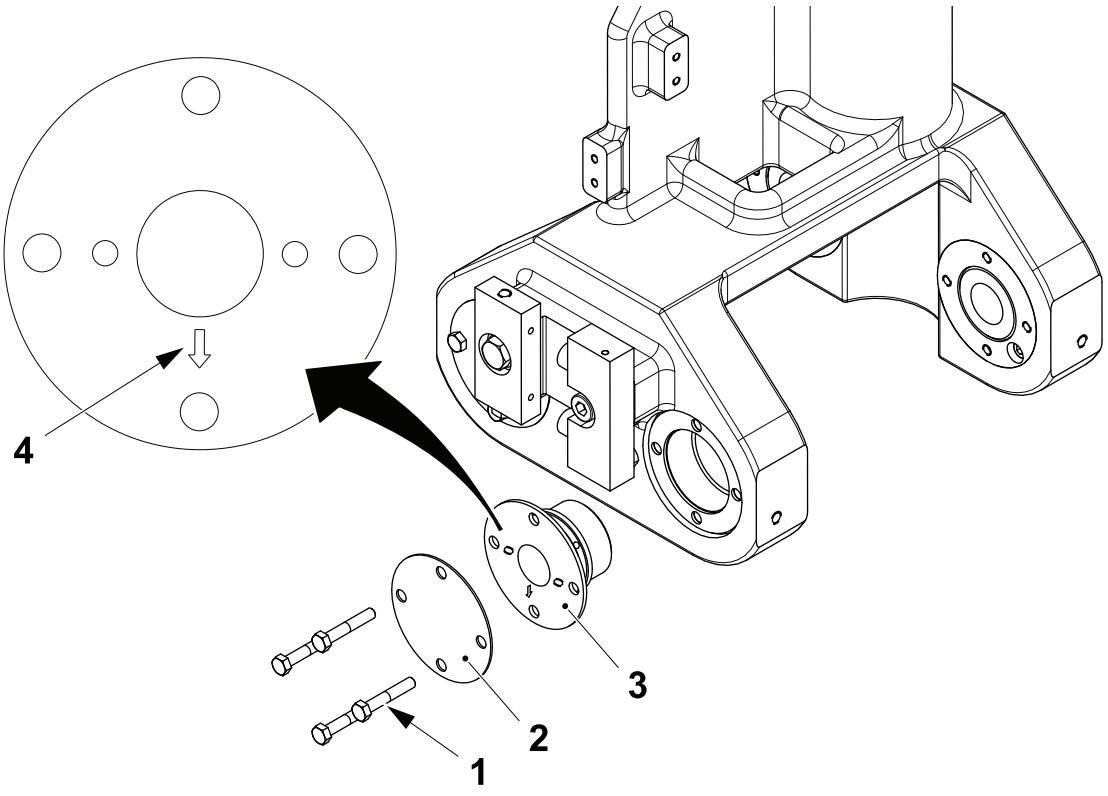

1 Screw
2 Lid
3 Bearing
4 Arrow

4.1.2 Pressure Arm

4.1.2-1 Pressure Arm - Check

Machine Status	Electrical supply disconnecting device in position O (OFF) Main air valve OFF Main steam valve ON Main water valve OFF
SPC Reference	2818102-0100 2818108-0100

Note! Perform the following procedure on the two pressure arms.

a) Check the toothed segments (1) for wear and for cracks on the teeth.

b) Check for excessive play between the two toothed segments (1) on the pressure arm (2) and on the cutting arm (3). If excessive, adjust with the toothed segments (1), see 4-17 Jaw System - Set Play.

c) Check the oil block (4) for leaks.

Change the parts if necessary.

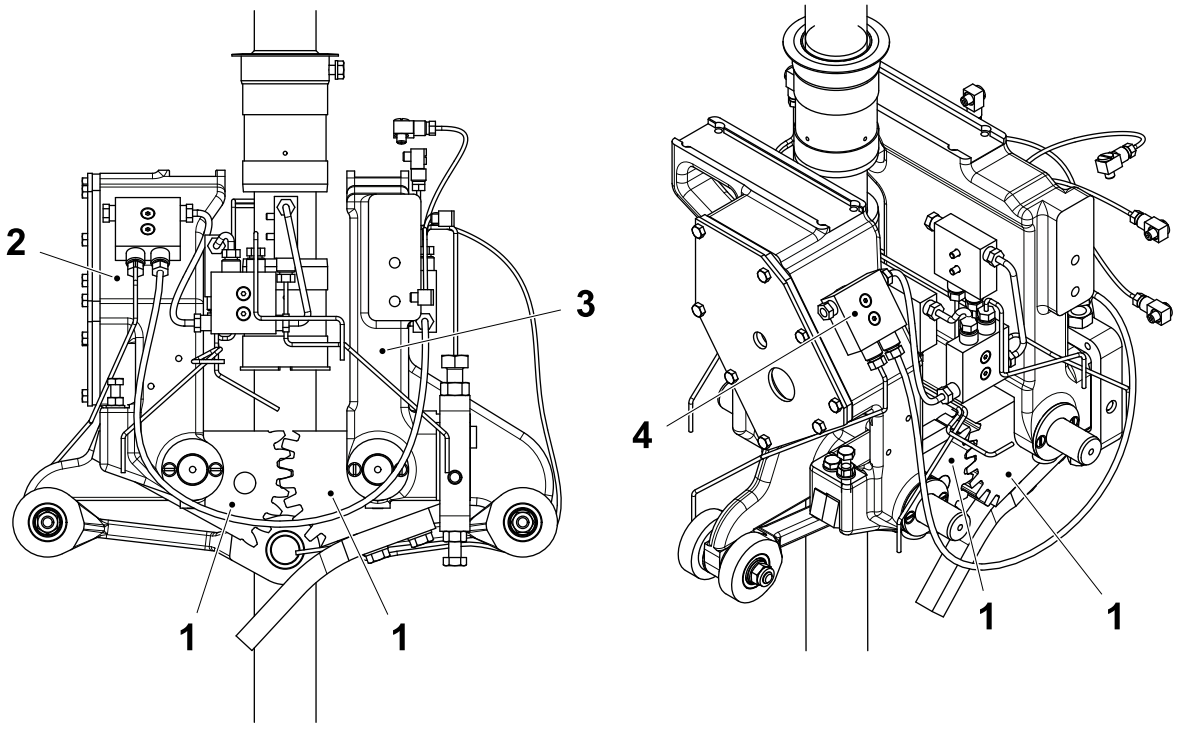

1 Toothed segment
2 Pressure arm
3 Cutting arm
4 Oil block

4.1.2-2 Pressure Arm - Set Play

Machine Status	Electrical supply disconnecting device in position O (OFF) Main air valve OFF Main steam valve ON Main water valve OFF
Special Equipment	Feeler Gauge
SPC Reference	2818102-0100 2818108-0100

Note! Perform the following instruction on the two pressure arms.

a) Apply light pressure to the pressure arm (1) in the direction of the arrow, see the illustration below.

b) Measure the play between the yoke (2) and the pressure arm (1) using a feeler gauge.

c) Adjust the shim (3), located on the bearings (4) so that the play between the yoke (2) and the washer (5), distance **A**, is between 0.05 and 0.1 mm.

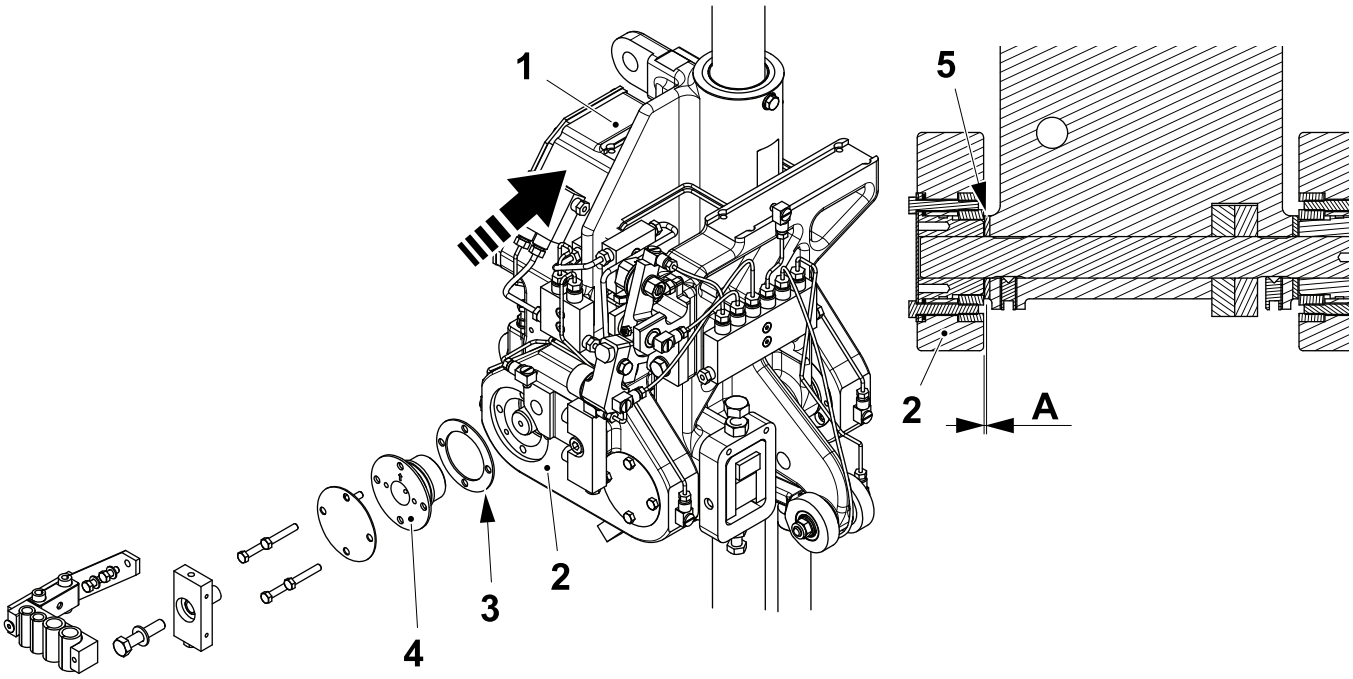

1 Pressure arm
2 Yoke
3 Shim
4 Bearing
5 Washer

4.1.3 Cutting Arm

4.1.3-1 Cutting Arm - Check

Machine Status	Electrical supply disconnecting device in position O (OFF) Main air valve OFF Main steam valve ON Main water valve OFF
SPC Reference	2818101-0100 2818110-0100

Note! Perform the following procedure on the two cutting arms.

(Cont'd)

(Cont'd)

Check the following parts for visual wear or damage:

a) the toothed segments (1) for cracks on the teeth

b) the oil block (2) for any oil leaks

c) the shaft (3) and the roller (4).

d) the joint (5) that it moves backward freely

e) the flanges (6) and the shaft (7)

f) the piece (8) and the shaft (9).

Change the parts if necessary.

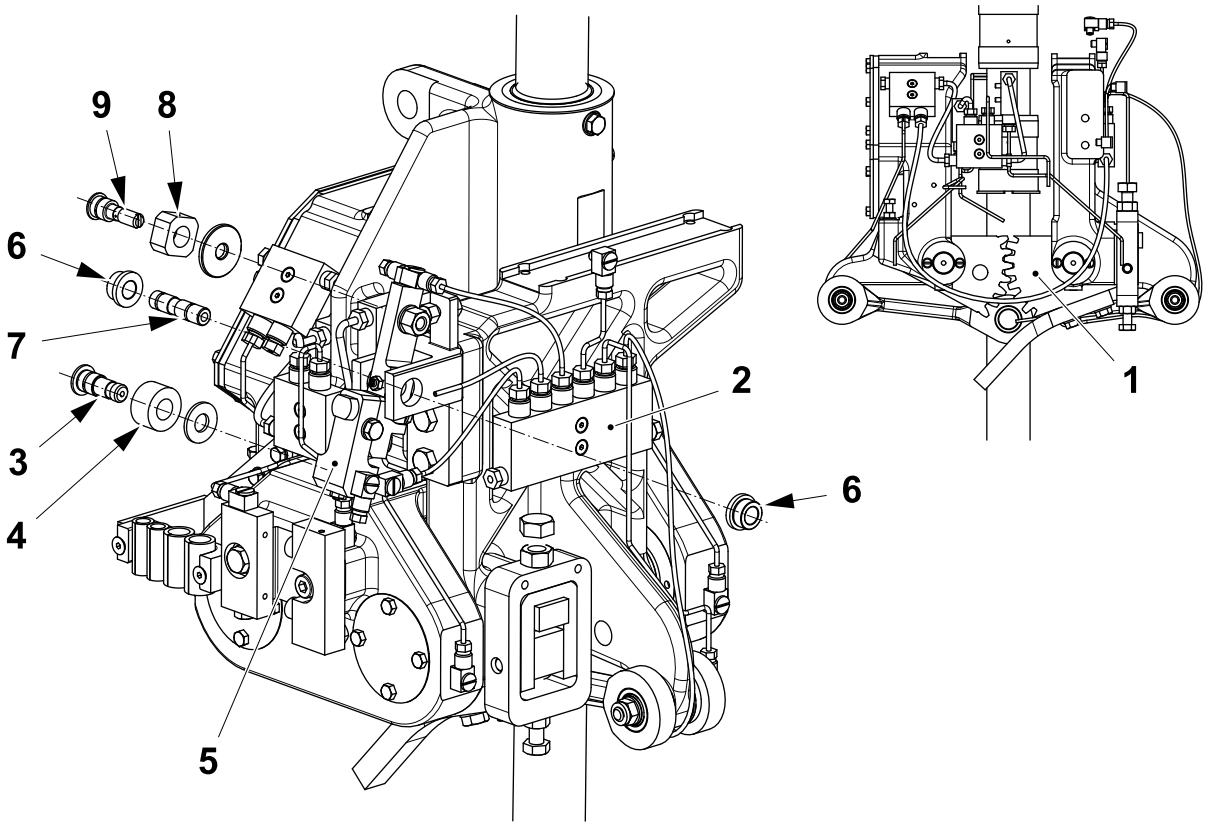

1 Toothed segment
2 Oil block
3 Shaft
4 Roller
5 Joint
6 Flange
7 Shaft
8 Piece
9 Shaft

4.1.3-2 Cutting Arm - Change Bearings and Shaft

Machine Status	Electrical supply disconnecting device in position O (OFF) Main air valve OFF Main steam valve ON Main water valve OFF
SPC Reference	2818101-0100 2818110-0100

CAUTION

Risk of personal injury.

The tooth part (9) could drop down unexpectedly.

Note! Perform the following procedure on the two cutting arms.

(Cont'd)

(Cont'd)

a) Remove the spring housing (1), see 4.1.1-2 Yoke - Check Plunger and Locating Pieces.

b) On both sides, remove the four screws (2) and the lids (3).

c) Remove and change the bearings (4).

d) Remove the shim (5) and the washer (6).

e) Remove the stop screws (7).

f) Remove and change the shaft (8).

g) Remove the screws (10) and if necessary the washers (11).

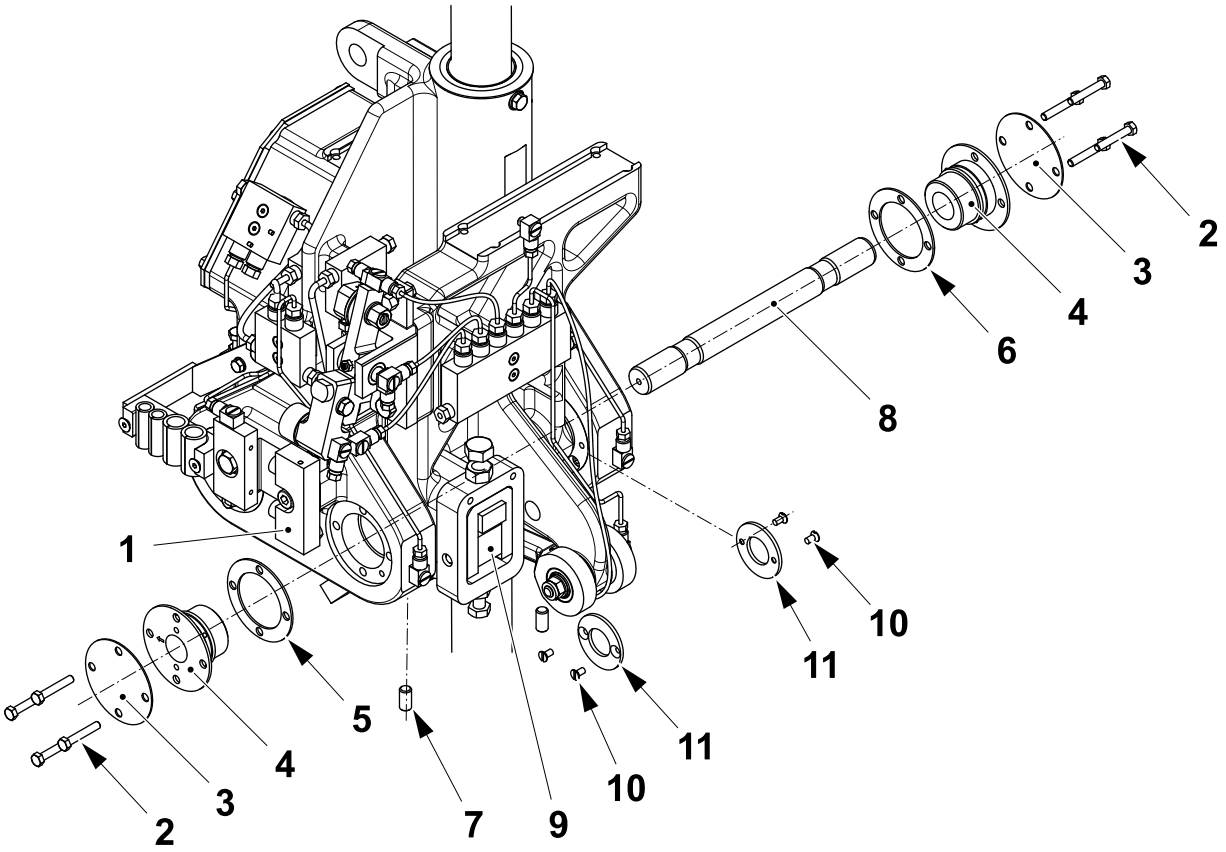

1 Spring housing
2 Screw
3 Lid
4 Bearing
5 Shim
6 Washer
7 Stop screw
8 Shaft
9 Tooth part
10 Screw
11 Washer

(Cont'd)

(Cont'd)

h) Assemble in the following order:

- the washer (11) and the screws (10)
- the shim (5)
- the washer (6)
- the bearings (4)

  Note! Make sure that the arrow marked on the bearings (4) is pointing upwards.

- the tooth part (9)
- the shaft (8)

  Note! Make sure that the shaft (8) is centred in the middle of the bearings (4).

- the stop screw (7)
- the lids (3) and secure using the four screws (2)
- the spring housing (1).

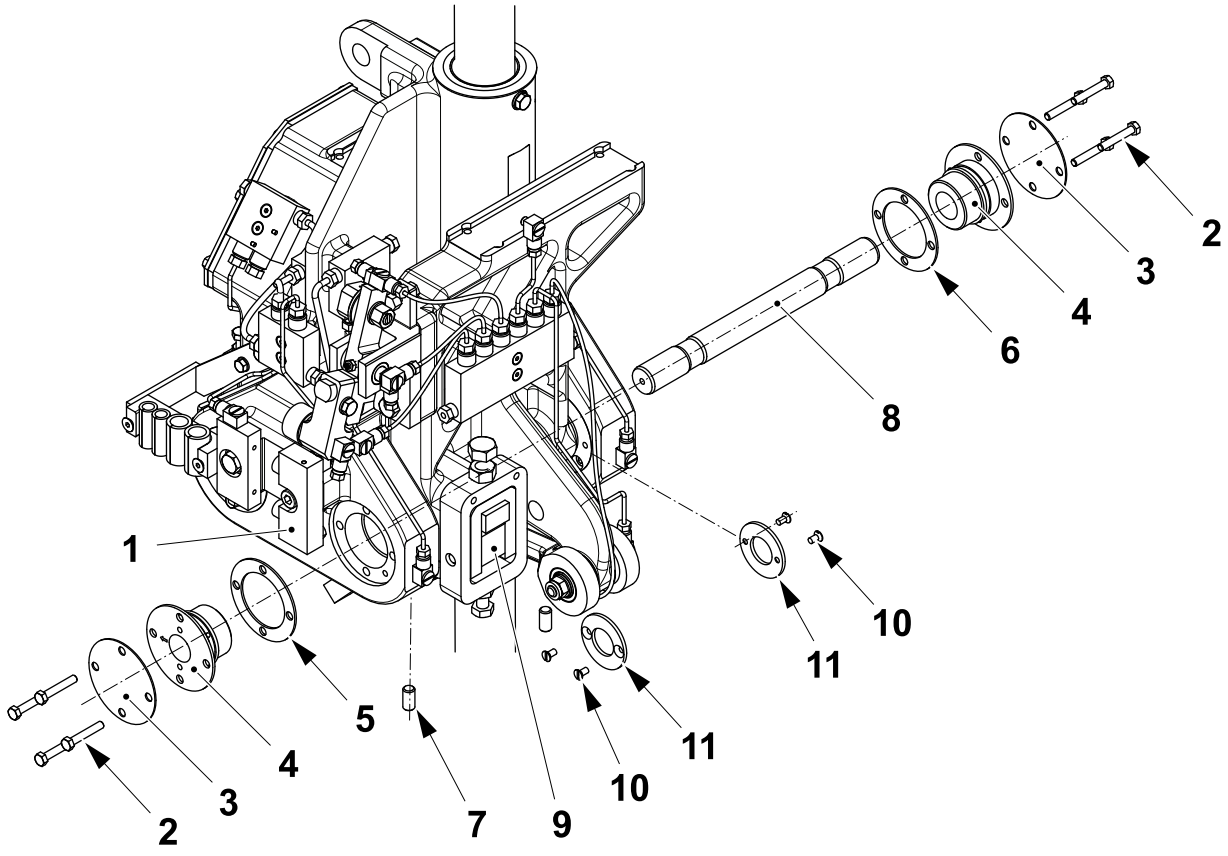

1 Spring housing
2 Screw
3 Lid
4 Bearing
5 Shim
6 Washer
7 Stop screw
8 Shaft
9 Tooth part
10 Screw
11 Washer

4.1.3-3 Cutting Arm - Set Play

Machine Status	Electrical supply disconnecting device in position O (OFF) Main air valve OFF Main steam valve ON Main water valve OFF
Special Equipment	Feeler Gauge
SPC Reference	2818101-0100 2818110-0100

Note! Perform the following instruction on the two cutting arms.

a) Apply light pressure to the cutting arm (1) in the direction of the arrow, see the illustration below.

b) Measure the play between the yoke (2) and the cutting arm (1) using a feeler gauge.

c) Adjust the shim (3), located on the bearings (4) so that the play between the yoke (2) and the washer (5) is according to distance **A**.

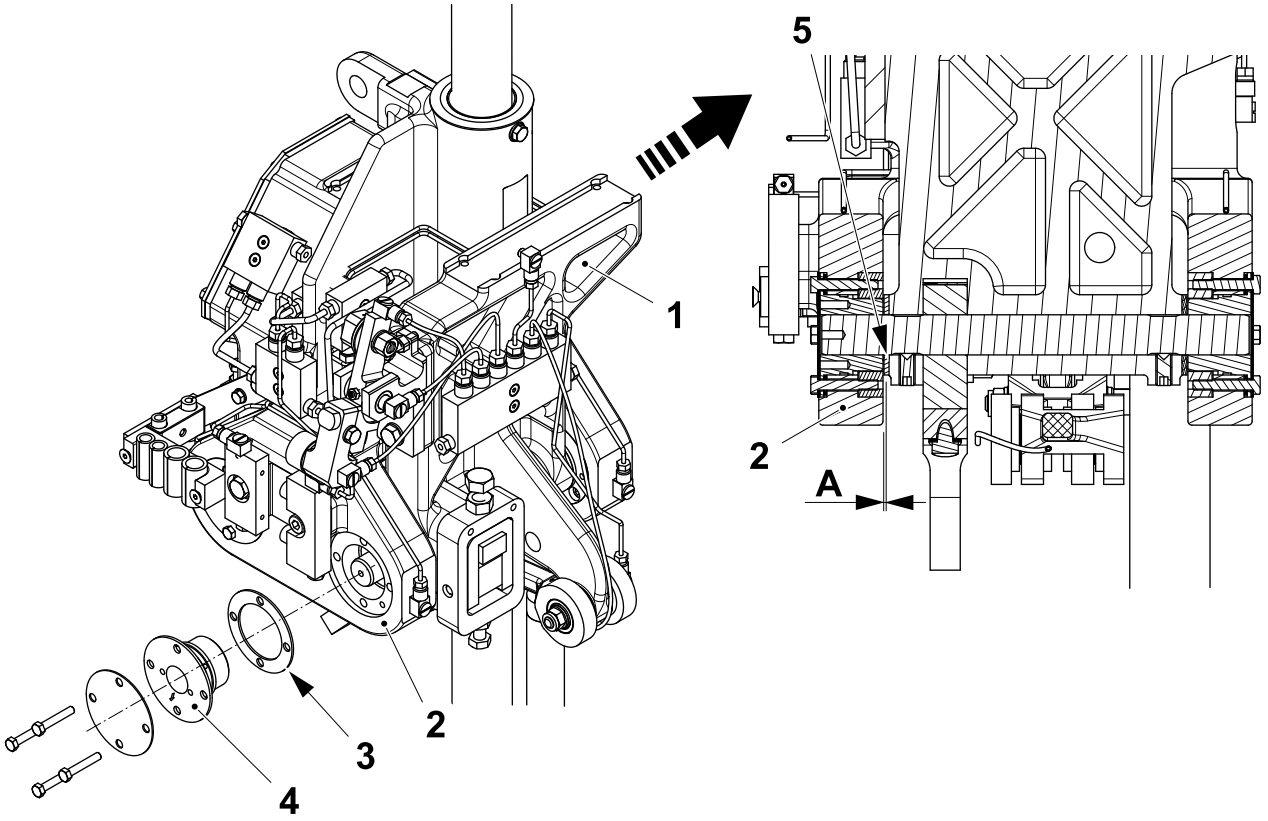

A = 0.05 - 0.1 mm

1 Cutting arm
2 Yoke
3 Shim
4 Bearing
5 Washer

4.1.3-4 Cutting Arm - Check Clearance

Machine Status	Electrical supply disconnecting device in position O (OFF) Main air valve OFF Main steam valve ON Main water valve OFF
SPC Reference	2818101-0100 2818110-0100

Note! Perform the following procedure on the two cutting arms.

a) Use a feeler gauge to check the distance **A** between the washer (1) and the cutting jaw ear (2).

b) Check that the bracket (4) and the arm (5) are parallel to the cam (3).

c) If necessary, adjust the bracket (4) position using the screws (6).

d) Check the distance **A** after that any adjustment is made.

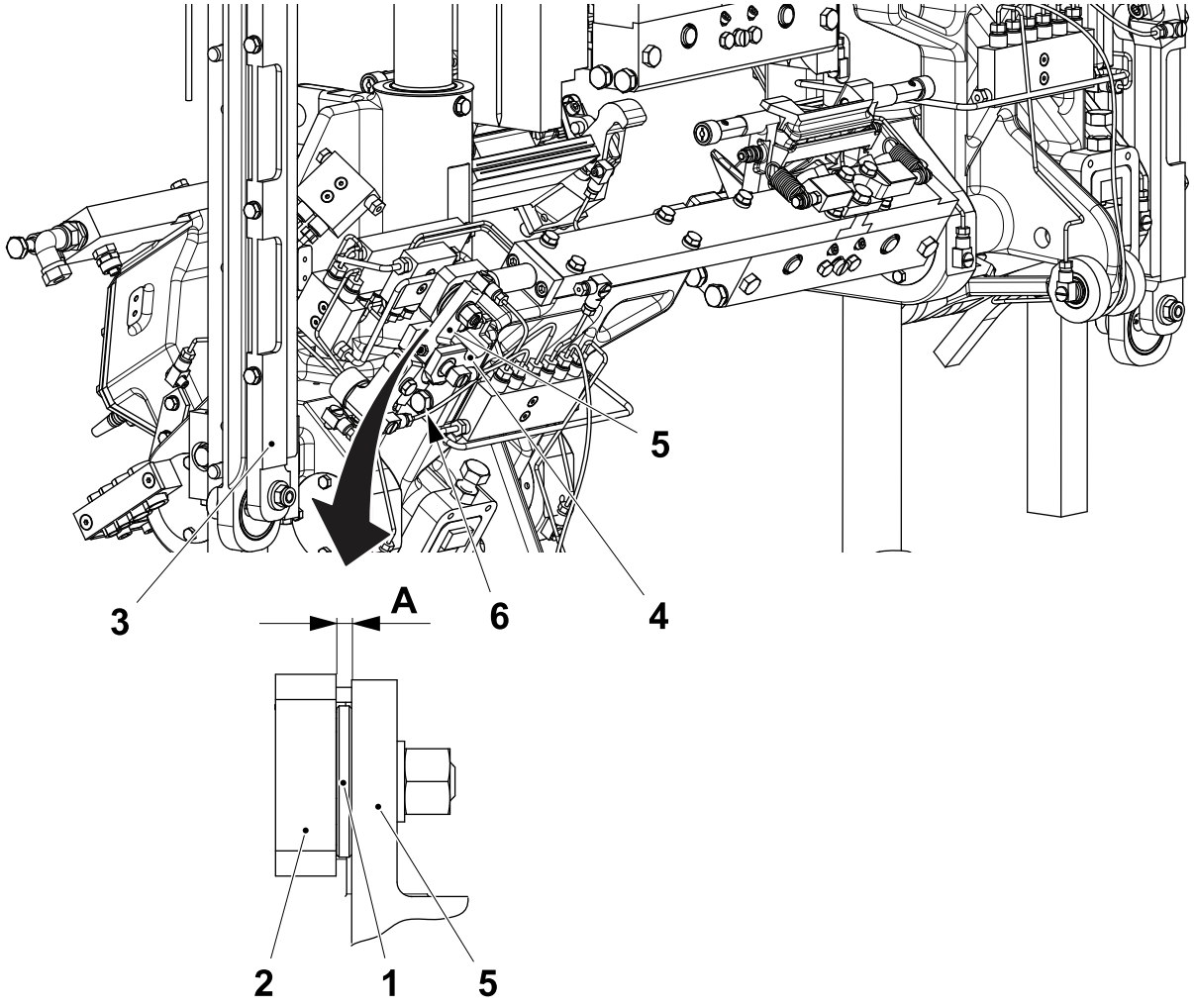

A = 0.5 mm

1 Washer
2 Ear
3 Cam
4 Bracket
5 Arm
6 Screw

4.1.4 Scissor Arm Link

4.1.4-1 Scissor Arm Link - Check

Machine Status	Electrical supply disconnecting device in position O (OFF) Main air valve OFF Main steam valve ON Main water valve OFF
SPC Reference	2997957-0100

Note! Perform the following procedure on both scissor arms.

a) Lower the jaw system, see 3-2 Drive Unit - Lower Jaw System.

b) Check the following parts for visual wear or damage:

c) the jaw link (1)

d) the shafts (2) and (3)

Use a feeler gauge to check that the play on the shafts does not exceed 0.1 mm. Change the parts if necessary.

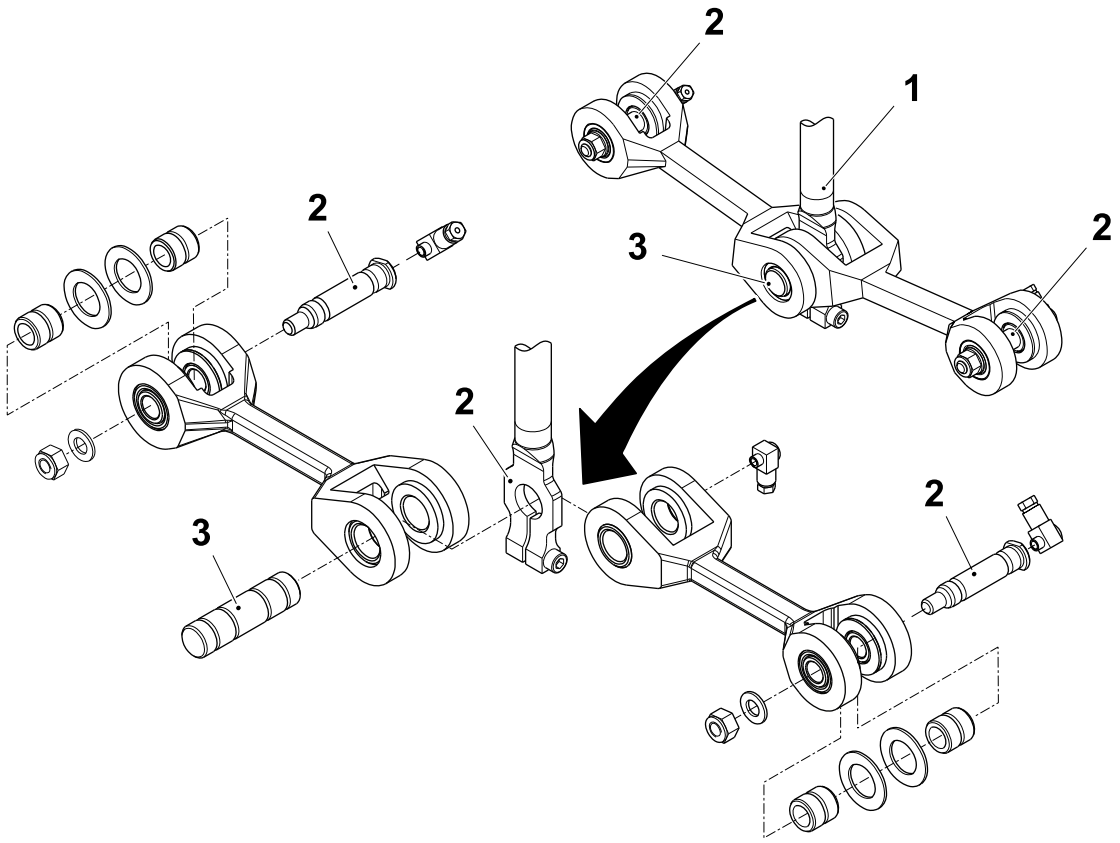

1 Jaw link
2 Shaft
3 Shaft

4.1.4-2 Scissor Arm Link - Change Shafts and Links

Machine Status	Electrical supply disconnecting device in position O (OFF) Main air valve OFF Main steam valve ON Main water valve OFF
SPC Reference	2997957-0100

Note! Perform the following procedure on both scissor arms.

a) Lower the jaw system, see 3-2 Drive Unit - Lower Jaw System.

b) Disconnect the jaw link (1) at the connection clamp, see 3.2-2 Link - Change.

c) Remove the nuts (3) and the washers (4) from each side of the scissor arm (7).

d) Remove the oil connections (5) and the shafts (6) from both sides.

e) Remove the scissor arm (7) and lower the lower jaw link (2) from the yoke.

f) Change the two shafts (6).

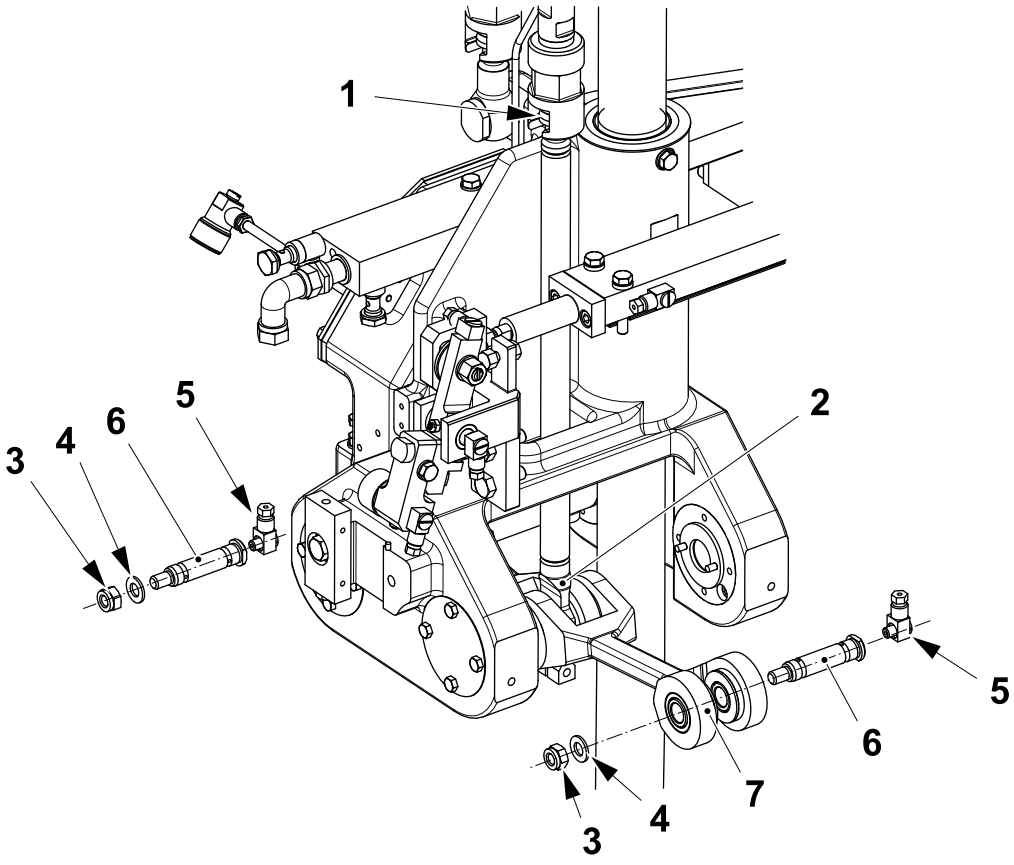

1 Jaw link
2 Lower jaw link
3 Nut
4 Washer
5 Oil connection
6 Shaft
7 Scissor arm

(Cont'd)

(Cont'd)

g) Remove the sleeves (8) and change them.

h) Remove the oil connection (10).

i) Loosen the screw (9) and remove the shaft (11) to separate the two halves of the scissor arm.

j) Check the shaft (11) for visual wear or damage and change if necessary.

k) Remove the links (12) together with the bushings (13) and change if necessary.

l) Assemble in the reverse order.

Note! During the assembly make sure that the shaft (11) is centred in the middle of the two scissor arm halves.

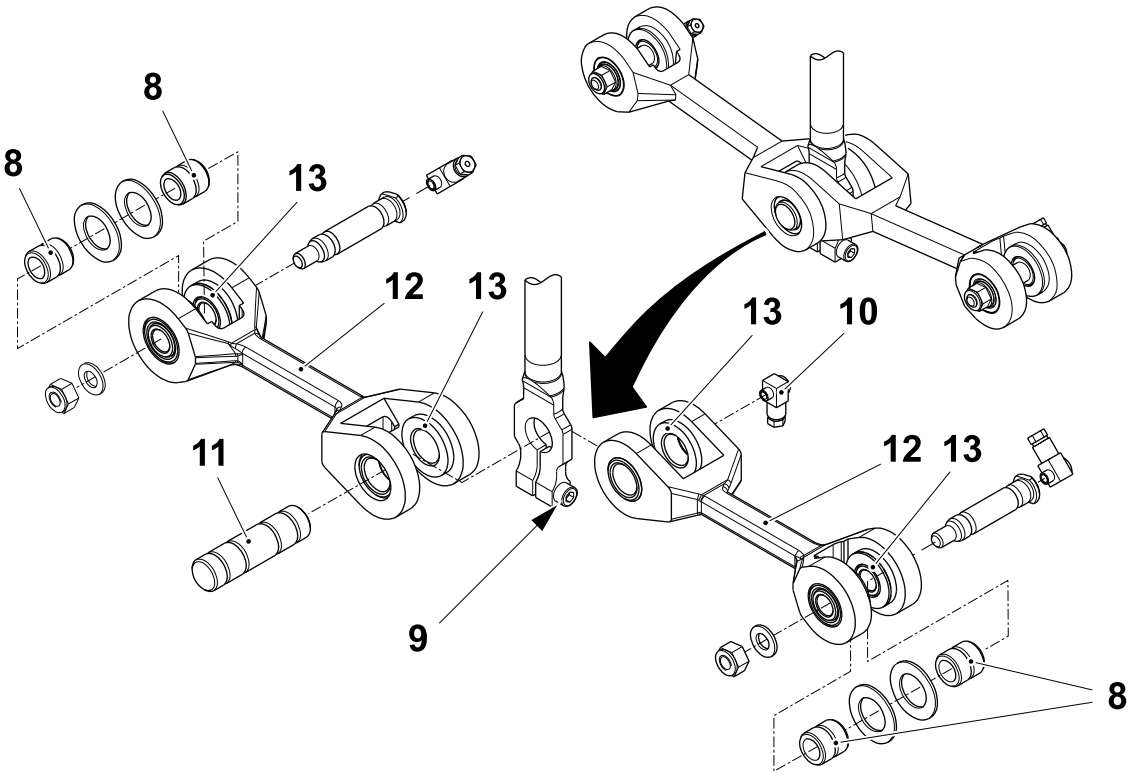

8 Sleeve	11 Shaft
9 Screw	12 Link
10 Oil connection	13 Bushing

4.1.5 Design Correction

4.1.5.1 Drive Unit

4.1.5.1-1 Drive Unit - Check

Machine Status	Electrical supply disconnecting device in position I (ON) Main air valve OFF Main steam valve ON Main water valve OFF
SPC Reference	2854320-0400 2854326-0400

WARNING

Risk of crushing.
The pulley may move unexpectedly.

a) Remove the screws (1) and the cover (2).

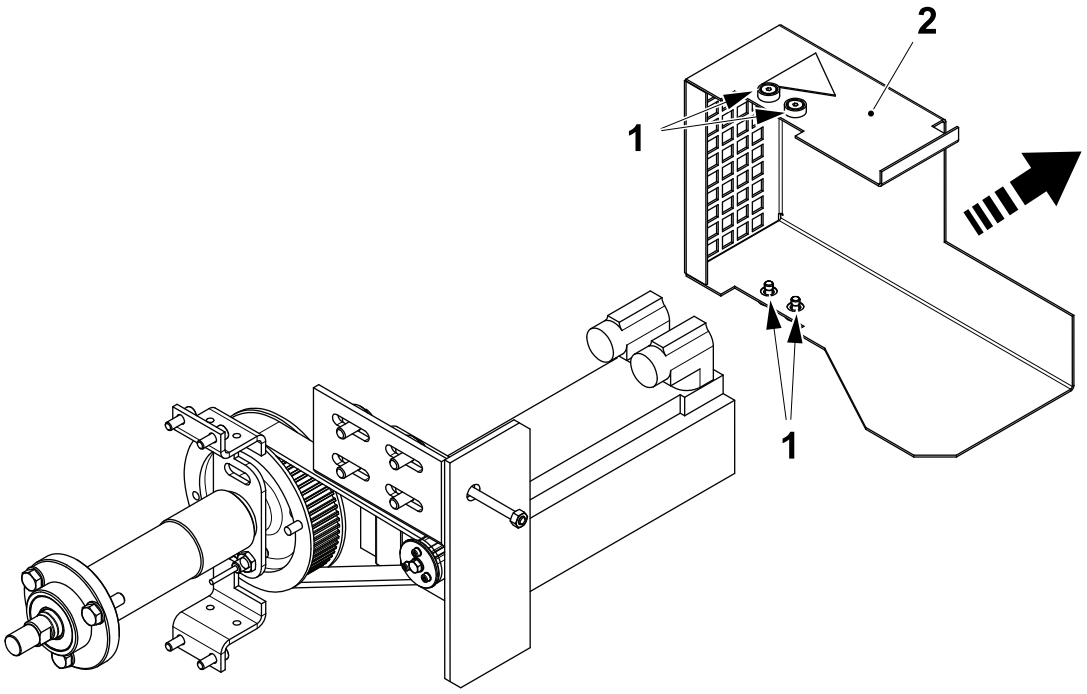

1 Screw
2 Cover

(Cont'd)

(Cont'd)

b) Check:

- that the timing belt (3) is seated correctly on the wheel and the pulley
- the timing belt (3) for visual wear or damage. Change if necessary, see 4.1.5.1-2 Drive Unit - Change Timing Belt
- the timing belt tension. Set if necessary, see 4.1.5.1-4 Drive Unit - Set Timing Belt Tension
- that the proximity switch (4) can read properly, see 4-13 Jaw System - Set Folding Flaps Mechanism.

c) Fit back the cover (2) with the screws (1).

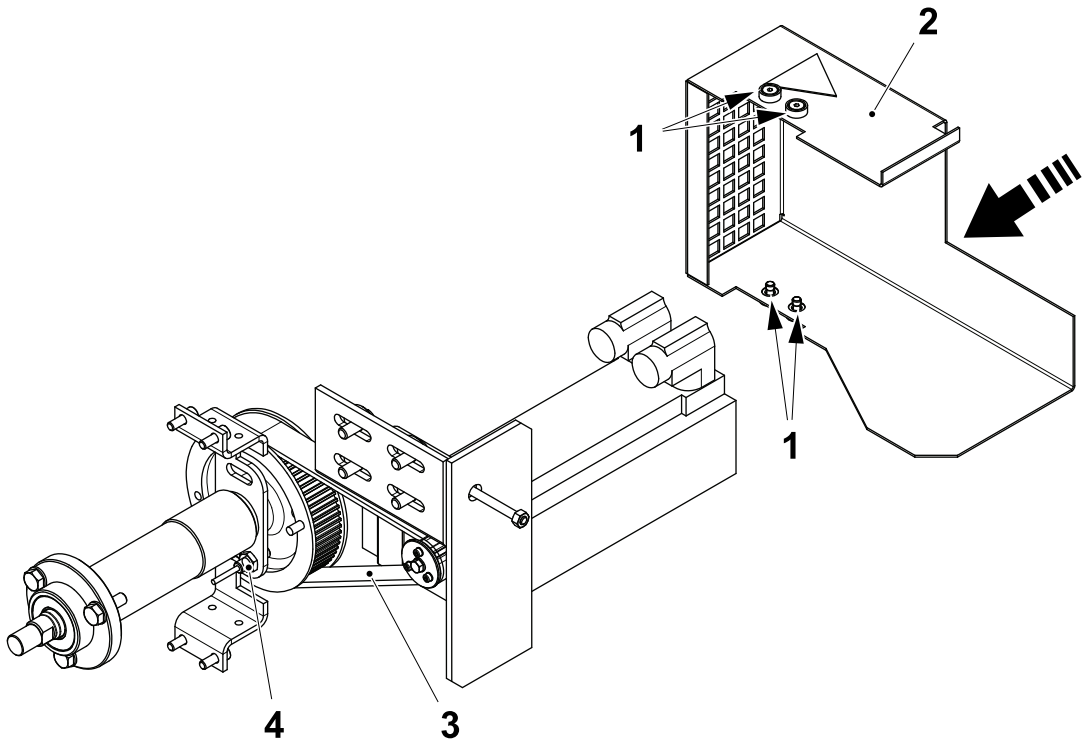

1 Screw
2 Cover
3 Timing belt
4 Proximity switch

4.1.5.1-2 Drive Unit - Change Timing Belt

Machine Status	Electrical supply disconnecting device in position O (OFF) Main air valve OFF Main steam valve ON Main water valve OFF
SPC Reference	2854320-0400 2854326-0400

a) Remove the screws (1) and the cover (2).

b) Loosen the screw (3) and the four screws (4)

c) Move the plate (5), using the slotted holes, to remove the tension on the timing belt (6).

d) Remove the timing belt (6) and check for visible wear or damage. Change if necessary.

e) Assemble in the reverse order.

f) Set the timing belt (6) tension, see 4.1.5.1-4 Drive Unit - Set Timing Belt Tension.

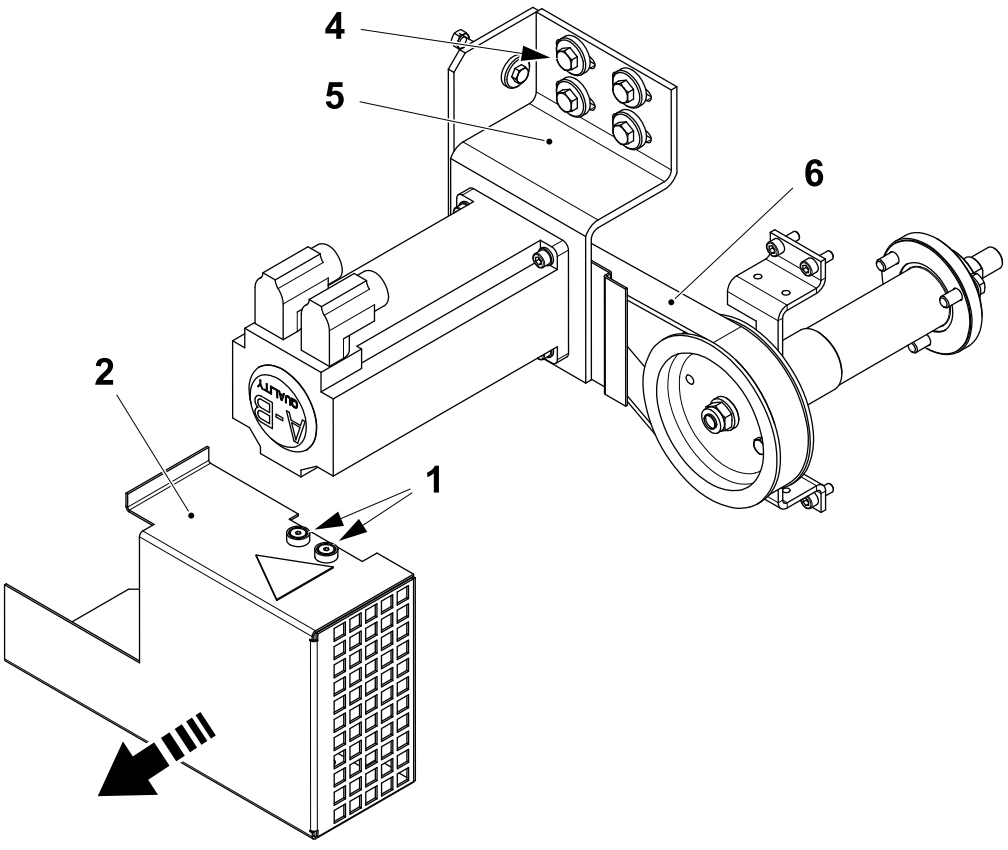

1 Screw
2 Cover
3 Screw
4 Screw
5 Plate
6 Timing belt

4.1.5.1-3 Drive Unit - Change Bearings and Seal Ring

Machine Status	Electrical supply disconnecting device in position O (OFF) Main air valve OFF Main steam valve ON Main water valve OFF
SPC Reference	2854320-0400 2854326-0400

a) Remove the screws (1) and the cover (2).

b) Remove the timing belt (3), see 4.1.5.1-2 Drive Unit - Change Timing Belt.

c) Remove the nut (4). and the pulley (5).

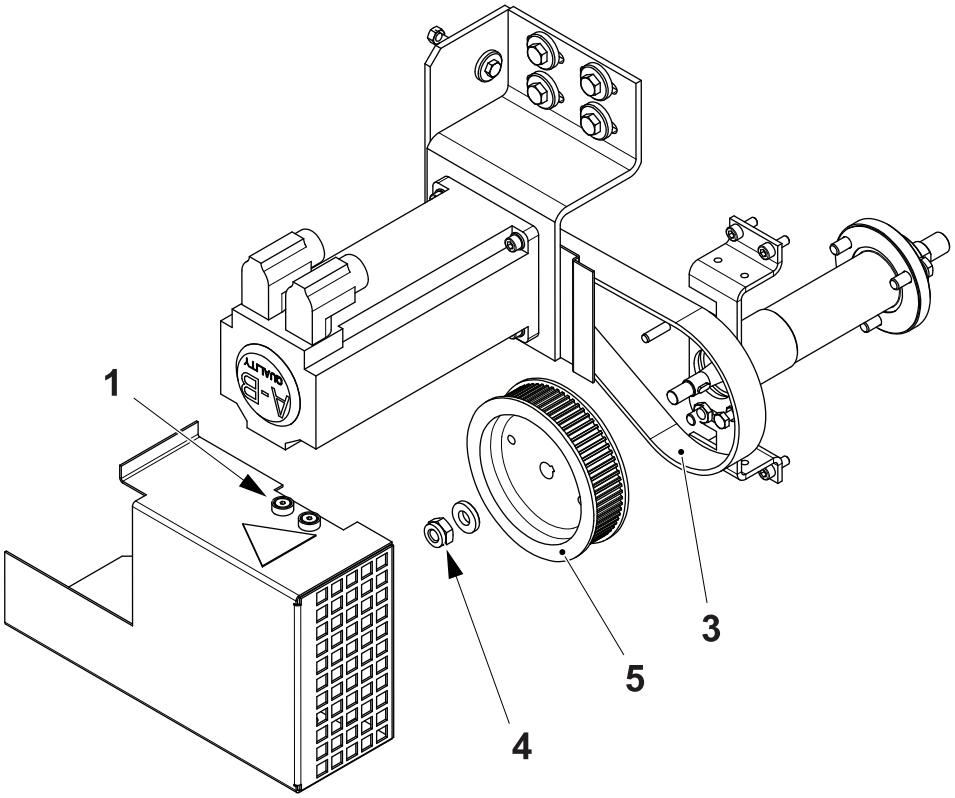

1 Screw
2 Cover
3 Belt
4 Nut
5 Pulley

(Cont'd)

(Cont'd)

d) Loosen the screws (6) on the coupling (7).

e) Remove the screws (8) and the support (9).

f) Remove the seal (10).

g) Remove the retaining rings (11) and (12).

Note! Take care not to loosen the key (13).

h) Remove the shaft (14), the ball bearings (15) and (16).

i) Change the ball bearings (15) and (16). Check the seal (10) and the gasket (17). Change the parts if necessary.

j) Assemble in the reverse order.

k) Set the timing belt tension, see 4.1.5.1-4 Drive Unit - Set Timing Belt Tension.

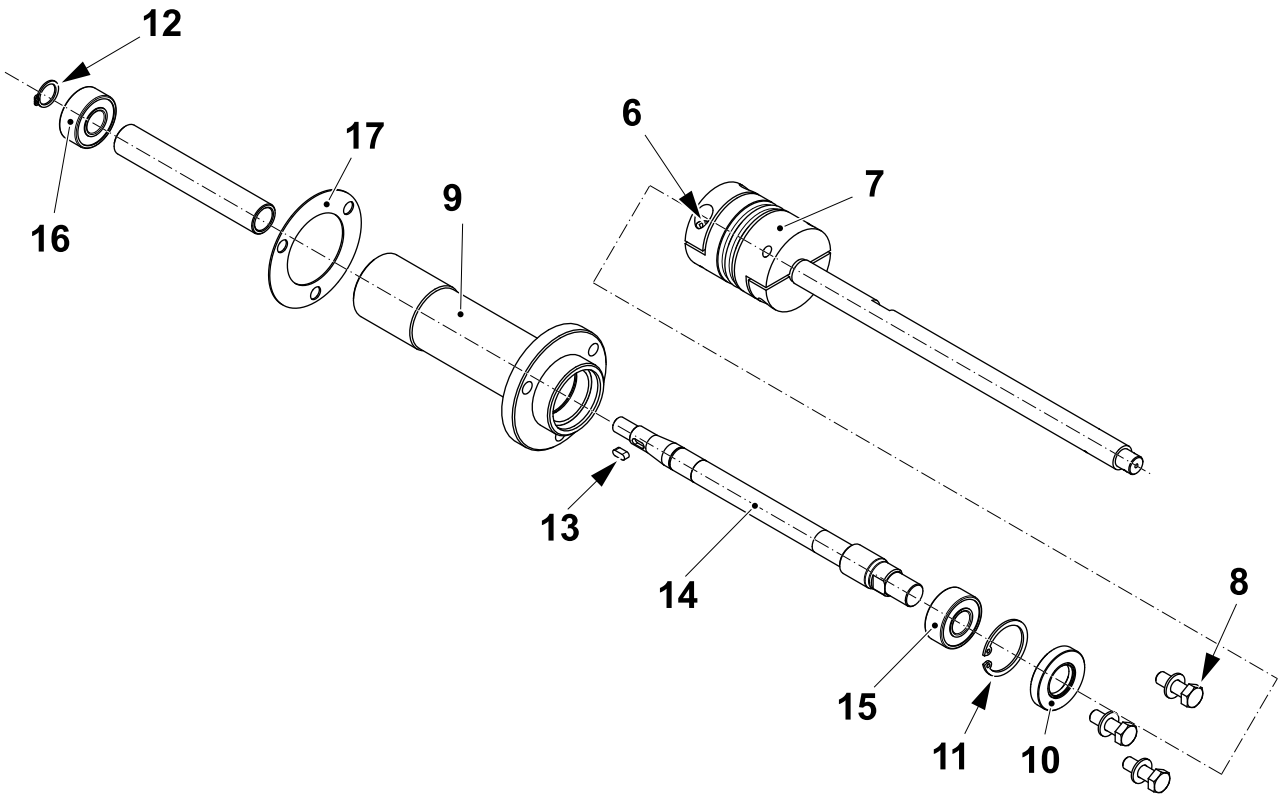

6 Screw	9 Support	12 Retaining ring	15 Ball bearing
7 Coupling	10 Seal	13 Key	16 Ball bearing
8 Screw	11 Retaining ring	14 Shaft	17 Gasket

4.1.5.1-4 Drive Unit - Set Timing Belt Tension

Machine Status	Electrical supply disconnecting device in position O (OFF) Main air valve OFF Main steam valve ON Main water valve OFF
Special Equipment	Dynamometer TP No. 90459-7315 Tensiometer TP No. 90600-3415
SPC Reference	2854320-0400 2854326-0400

Setting with Tensiometer

Note! It is recommended to use the ultrasonic tensiometer to set the drive belt tension. If an ultrasonic tensiometer is not available, follow the procedure Setting with Dynamometer.

(Cont'd)

(Cont'd)

a) Remove the screws (1) and the cover (2).

b) Loosen the four screws (3) securing the plate (4).

c) Adjust the tension on the timing belt (5) by means of the screw (6) and check the tension with the tensiometer as follows:

- position the tensiometer sensor (7) against the surface (8) of the bracket (9) and with the end of the sensor positioned centrally over the timing belt (5).
- use a 5.0 mm allen key (10) to set the end of the tensiometer sensor (7) at a distance of 5.0 ±0.25 mm from the timing belt (5)
- press the reset icon on the tensiometer
- tap the timing belt (5) with the allen key (10).

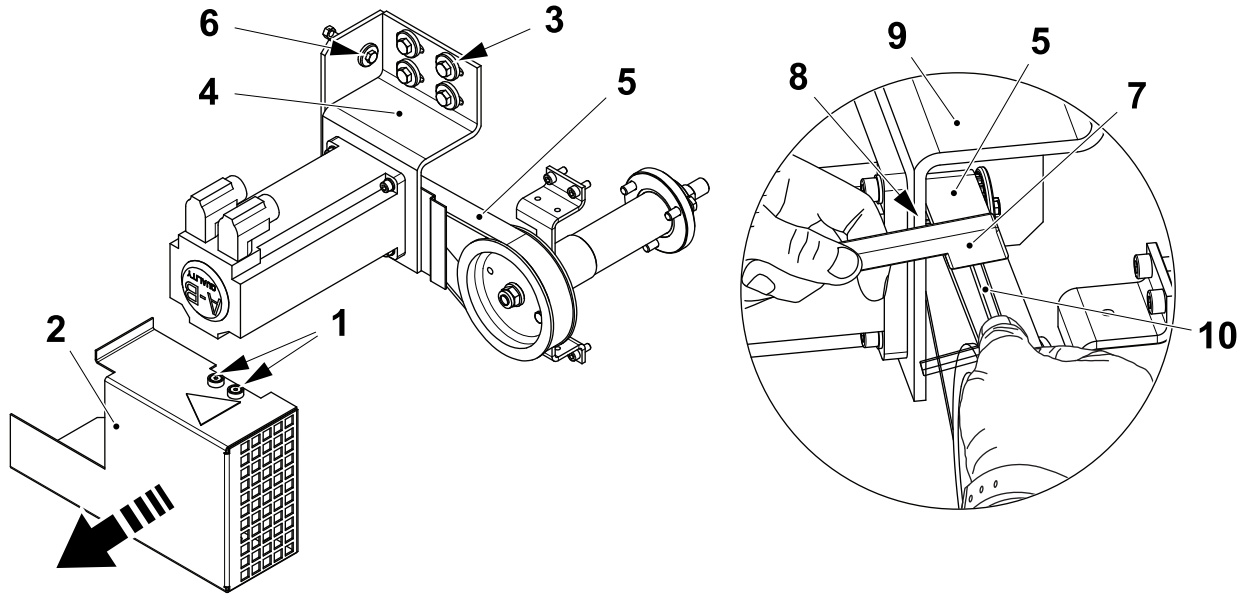

1 Screw
2 Cover
3 Screw
4 Plate
5 Timing belt
6 Screw
7 Tensiometer sensor
8 Surface
9 Bracket
10 Allen key

(Cont'd)

(Cont'd)

d) The required tension is **100 ±5Hz**, if necessary adjust the setting by loosening or tightening the screw (6) by small increments:
   - loosening the screw decreases the drive belt tension
   - tightening the screw increases the drive belt tension.

e) When the required tension is achieved tighten the four screws (3) to secure the plate (4).

f) Use the tensiometer to check that the tension has not altered after tightening the screws.

g) Fit the cover (2) with the screws (1).

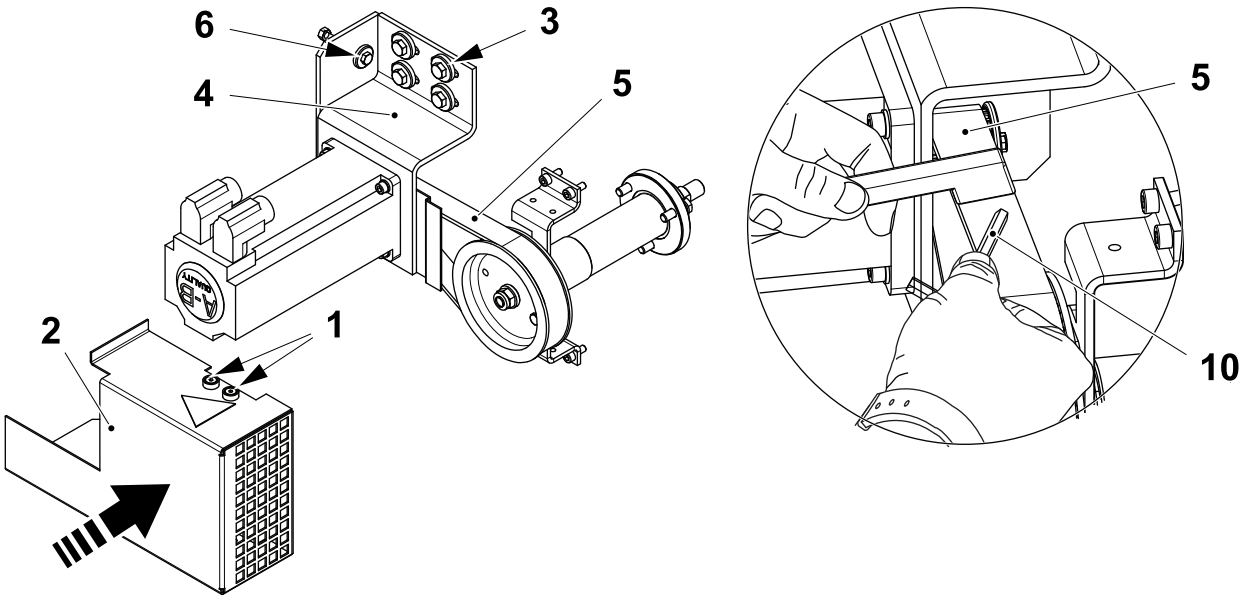

1 Screw
2 Cover
3 Screw
4 Plate
5 Timing belt
6 Screw
10 Allen key

(Cont'd)

(Cont'd)

Setting with Dynamometer

a) Remove the screws (1) and the cover (2).

b) Loosen the four screws (3) securing the plate (4).

c) Adjust the tension on the timing belt (5) by means of the screw (6).

d) Set the timing belt (5) so that it can be flexed by 4.0 ± 1.0 mm with a force of 10 Nm at point **A**.

e) Tighten the four screws (3) to secure the plate (4).

f) Use the dynamometer to check that the tension has not altered after tightening the screws.

g) Fit the cover (2) with the screws (1).

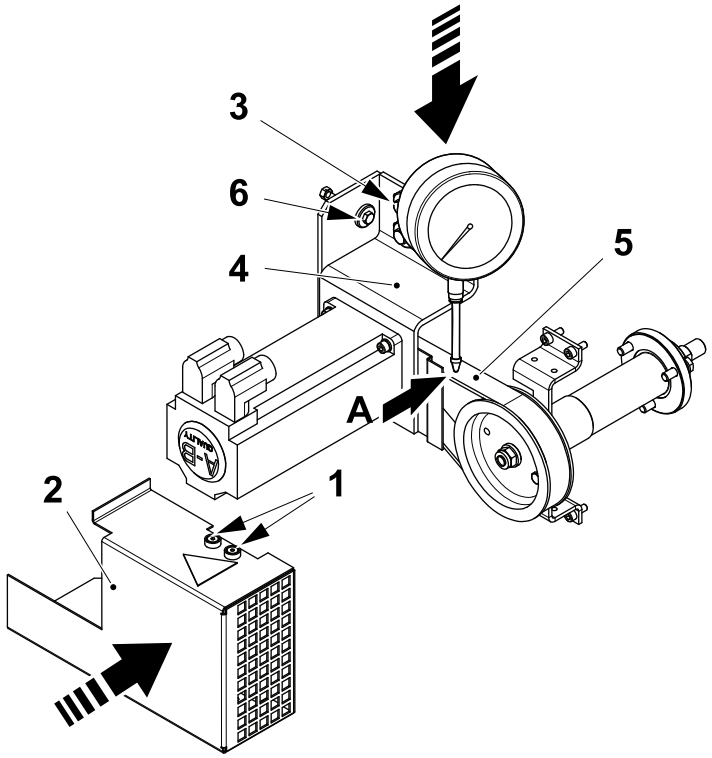

1 Screw
2 Cover
3 Screw
4 Plate
5 Timing belt
6 Screw

4.1.5.1-5 Drive Unit - Set Proximity Switch

Machine Status	Step ZERO
SPC Reference	2854320-0400 2854326-0400

Set the proximity switch, see 4-13 Jaw System - Set Folding Flaps Mechanism.

4.1.5.2 Design Correction Device

4.1.5.2-1 Design Correction Device - Check

Machine Status	Electrical supply disconnecting device in position O (OFF) Main air valve OFF Main steam valve ON Main water valve OFF
SPC Reference	2792160-0100 2792161-0100

Check the following details for visual wear or damage:

- the folding flap cam (1) surface for marks and that the cam moves easily
- the flange bushings (2) and (3) for excessive play
- the oil connections (4) for oil leakage
- the plain bearings (5)
- the eccentric shafts (6) make sure that they are not bent or cracked and that they turn freely.

Change the parts if necessary.

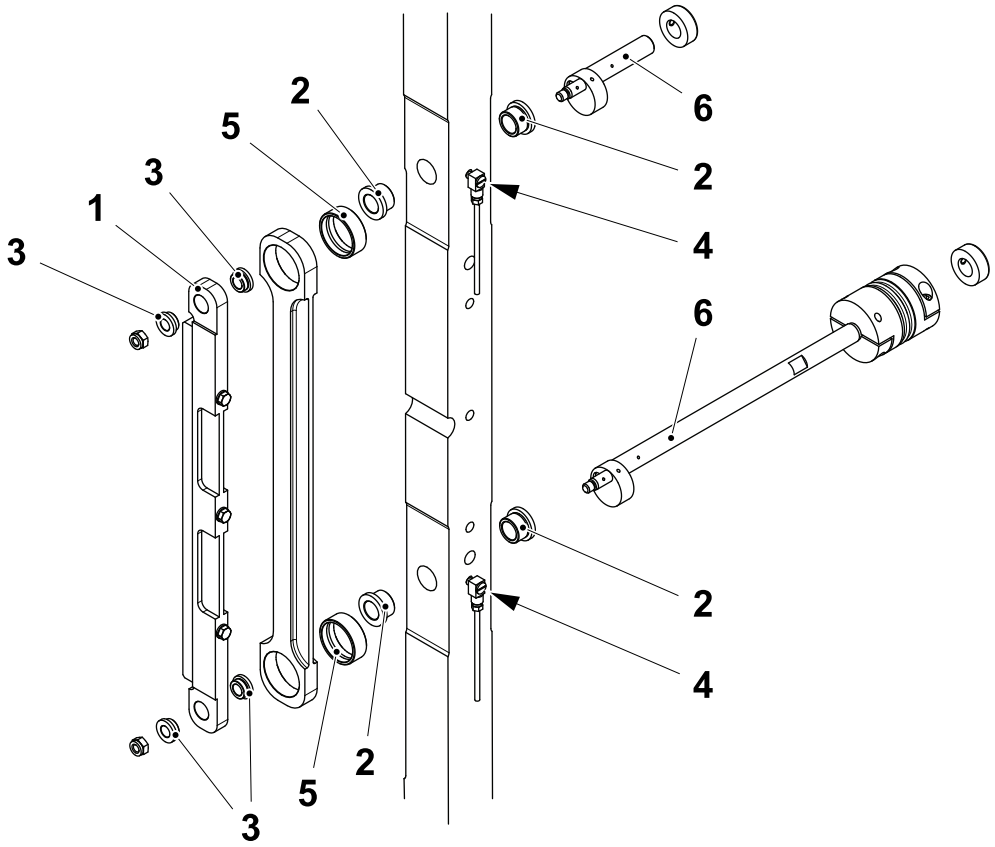

1 Folding flap cam
2 Flange bushing
3 Flange bushing
4 Oil connection
5 Plain bearing
6 Eccentric shaft

4.1.5.2-2 Design Correction Device - Change Plain Bearings

Machine Status	Electrical supply disconnecting device in position O (OFF) Main air valve OFF Main steam valve ON Main water valve OFF
SPC Reference	2792160-0100 2792161-0100

a) Remove the oil connections (1).

b) Remove the nuts (2).

c) Remove the folding flap cam (3) and the strut (4).

d) Remove the pins (5) and the retainers (6).

e) Remove the eccentric shafts (7).

f) Remove the flange bushings (8) and (9) the plain bearings (10) and change them if necessary.

g) Assemble in the reverse order.

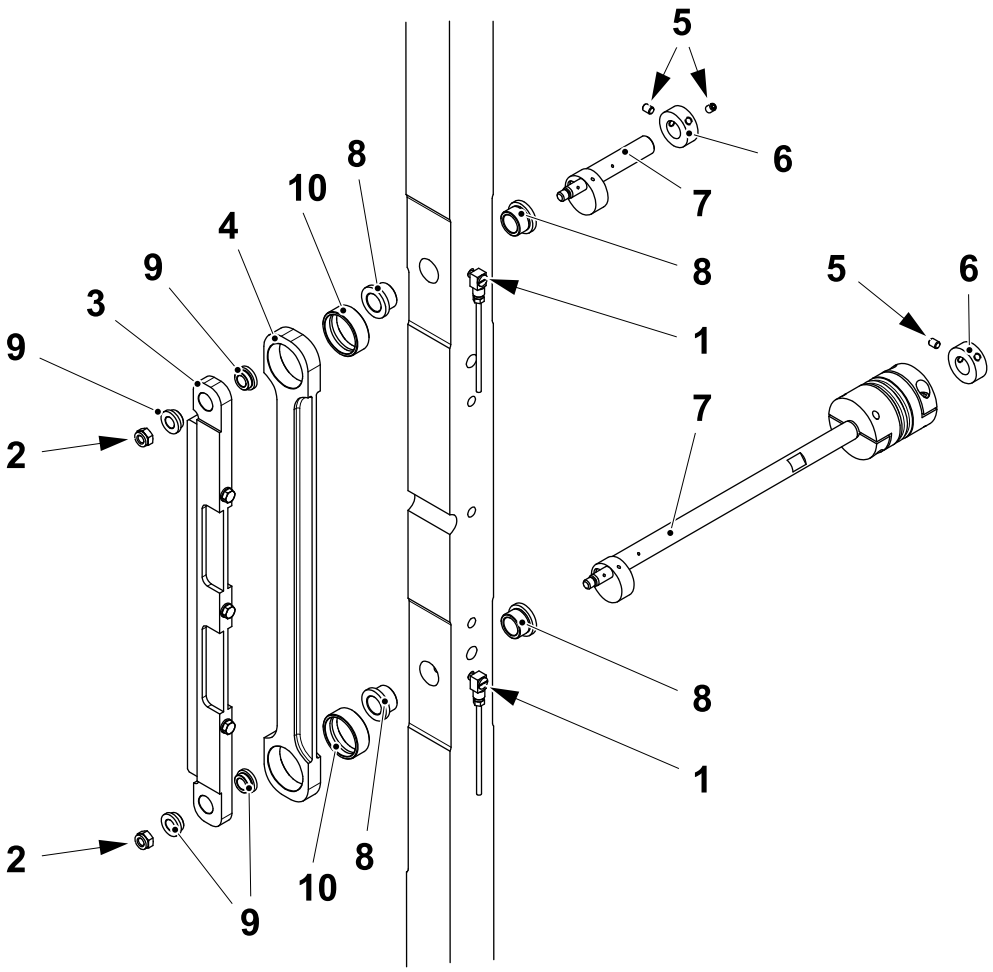

1 Oil connection
2 Nut
3 Folding flap cam
4 Strut
5 Pin
6 Retainer
7 Eccentric shaft
8 Flange bushing
9 Flange bushing
10 Plain bearing

4.1.6 Cable Connection

4.1.6-1 Cable Connection - Check

Machine Status	Electrical supply disconnecting device in position O (OFF) Main air valve OFF Main steam valve ON Main water valve OFF
Special Equipment	Brass Brush
SPC Reference	2841496-0200

Check on both the RH and LH sides that:

a) the water coolant hoses (1), the hydraulic oil hoses (2) and the central lubrication pipes (3) do not leak

b) the hoses and pipes are intact and their connections are secure

c) all the hoses and cables are clamped securely

d) the insulation of the coaxial cables (4) and their connections (5) are not damaged and that the electrical conductors are not oxidized. If necessary clean them with a brass wire brush.

Change the parts if necessary.

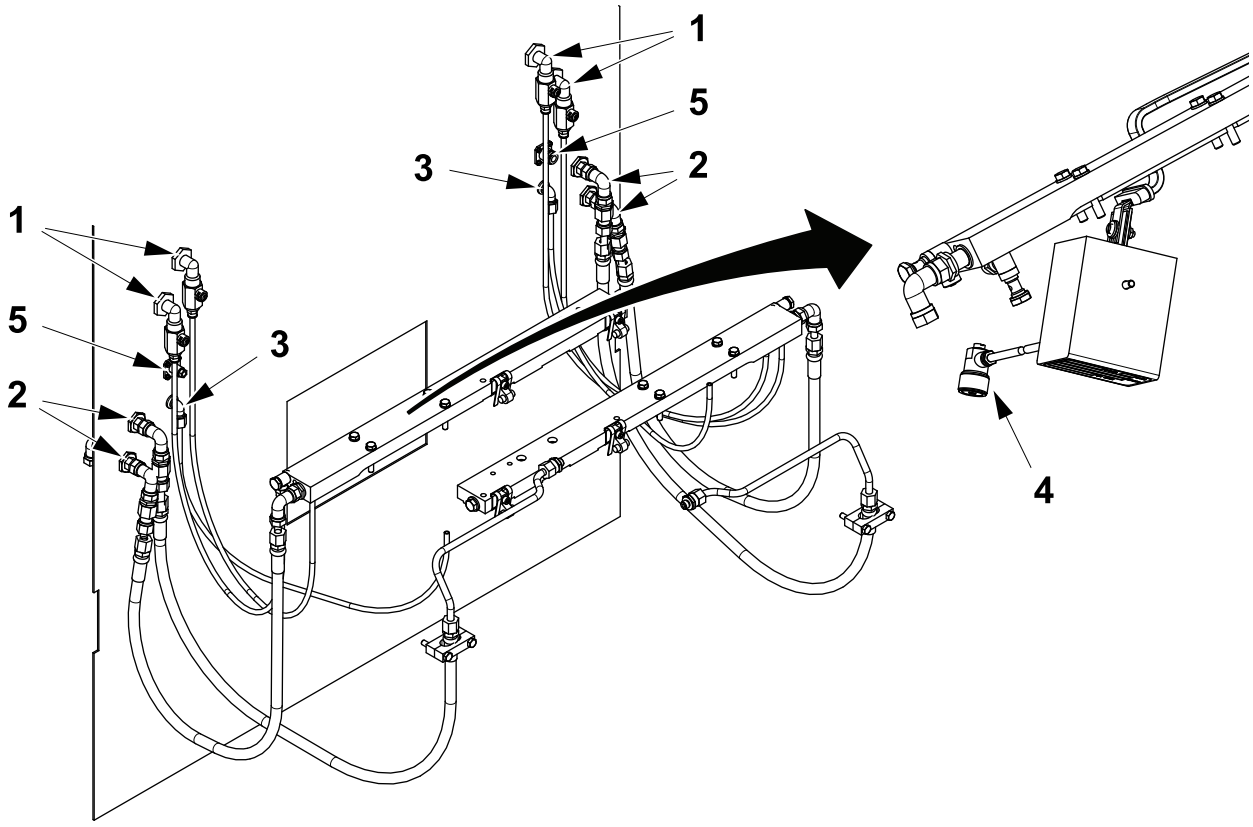

1 Water coolant hose
2 Hydraulic oil hose
3 Lubrication pipe
4 Coaxial cable
5 Connection

4.1.7 Volume Adjuster

4.1.7-1 Volume Adjuster - Check Belt

Machine Status	Electrical supply disconnecting device in position O (OFF) Main air valve OFF Main steam valve ON Main water valve OFF
SPC Reference	2867520-0200

Check the belt (1) for wear or damage. Change the belt (1) if required.

Set the belt tension, see 4.1.7-2 Volume Adjuster - Set Belt.

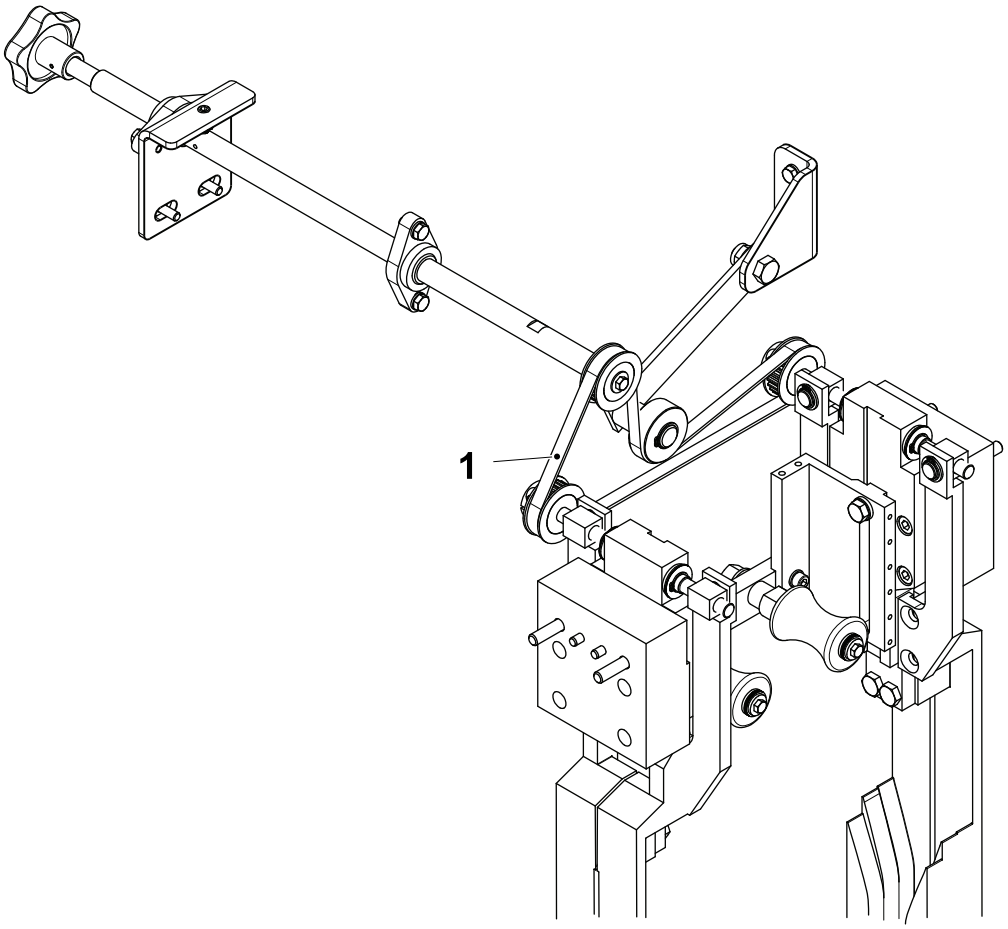

1 Belt

4.1.7-2 Volume Adjuster - Set Belt

Machine Status	Electrical supply disconnecting device in position O (OFF) Main air valve OFF Main steam valve ON Main water valve OFF
SPC Reference	2867520-0200

The belt deflection at the point **A** should be 5.0 ±1.0 mm when a force of 10 N is applied. To adjust the tension of the belt (3):

a) Loosen the nut (1) and move up or down the tensioner (2).

b) Tighten the nut (1).

c) Check the tension of the belt (3).

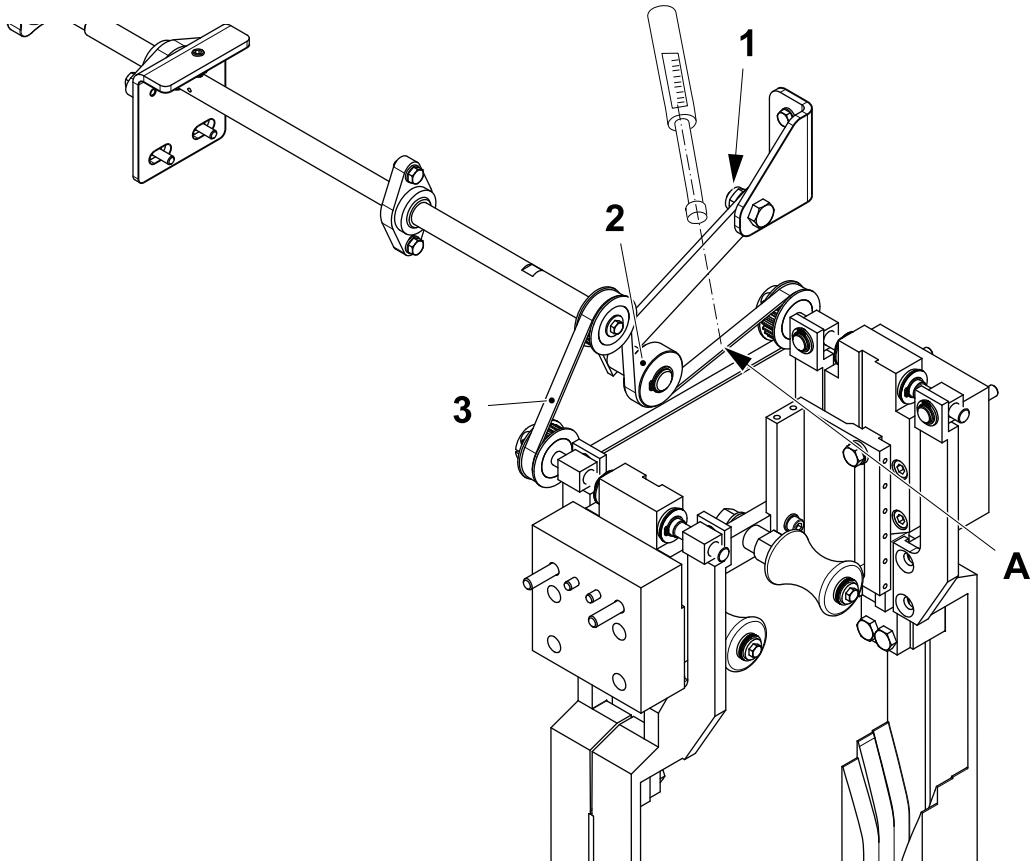

1 Nut
2 Tensioner
3 Belt

4.1.7-3 Volume Adjuster - Overhaul

Machine Status	Electrical supply disconnecting device in position O (OFF) Main air valve OFF Main steam valve ON Main water valve OFF
SPC Reference	2867520-0200

Check the bushings (1), (2) and the pulleys (3) for wear or damage. Change them if required.

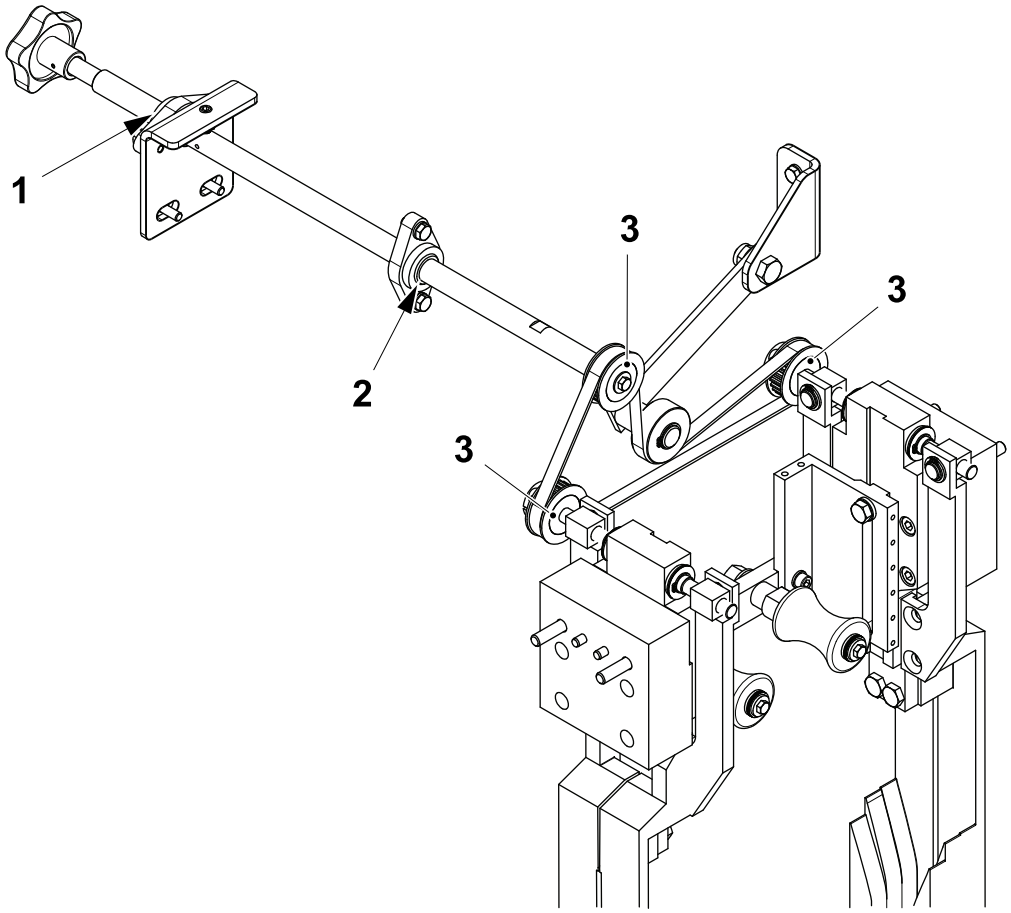

1 Bushing
2 Bushing
3 Pulley

4.1.7-4 Volume Adjuster - Check Bushing

Machine Status	Electrical supply disconnecting device in position I (ON) Main air valve OFF Main steam valve ON Main water valve OFF
SPC Reference	2867520-0200

a) Loosen the nut (1) to release the tension of the belt (2).

b) Remove the retaining rings (3) and pull out the shaft (4).

c) Remove and check the bushings (5) for wear or damage. Change them if required.

d) Assemble in the reverse order.

e) Set the belt tension, see 4.1.7-2 Volume Adjuster - Set Belt.

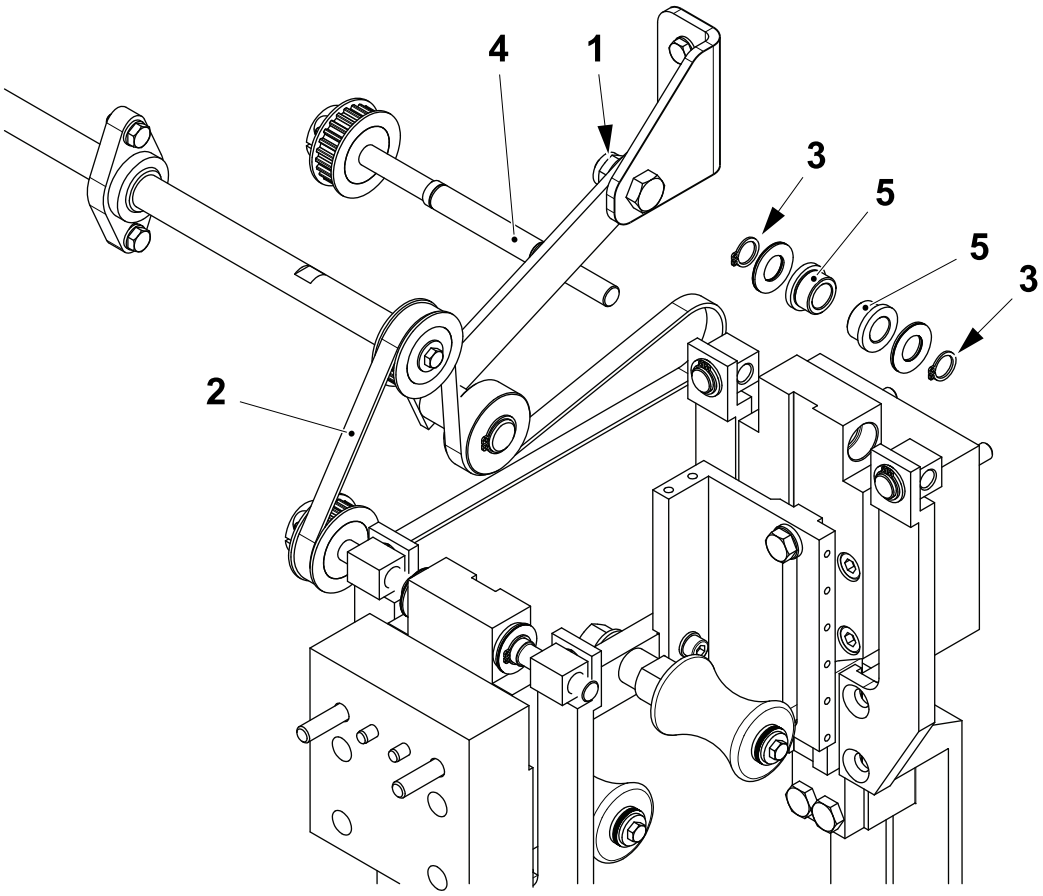

1 Nut
2 Belt
3 Retaining ring
4 Shaft
5 Bushing

4.1.7-5 Volume Adjuster - Set

Machine Status	Electrical supply disconnecting device in position O (OFF) Main air valve OFF Main steam valve ON Main water valve OFF
SPC Reference	2867520-0200

Set the volume adjuster, see 4-5 Jaw System - Set Volume Adjuster.

4.2 Forming Unit

4.2.1 Pressure Jaw

4.2.1-1 Pressure Jaw - Check

Machine Status	Electrical supply disconnecting device in position O (OFF) Main air valve OFF Main steam valve ON Main water valve OFF
SPC Reference	2869015-0200 2869016-0200

Check the following parts for visual wear or damage:

- the oil hoses and the oil connections and also for any oil leakage
- the cooling water hoses, and connections and also for any leakage
- the catchs (1) and also for any oil leakage
- the shafts (2)
- the inductor (3) for any marks on the surface of the inductor
- the venting screws (4)

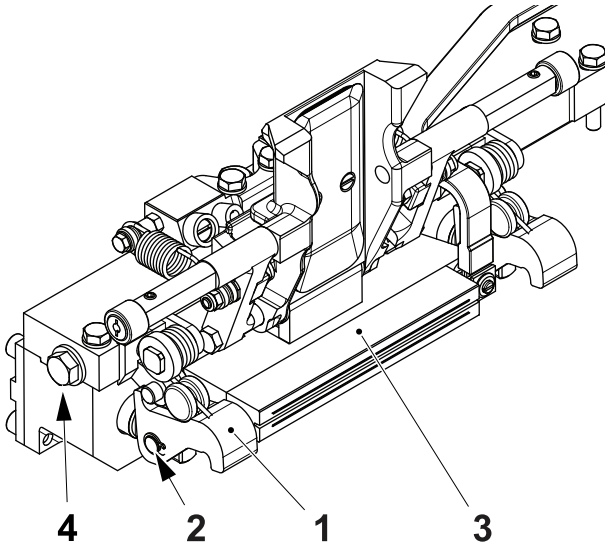

1 Catch
2 Shaft
3 Inductor
4 Screw

(Cont'd)

(Cont'd)

- the lids (5), the water connections (6), and the oil connection (7). Check these carefully for oil and cooling water leakage

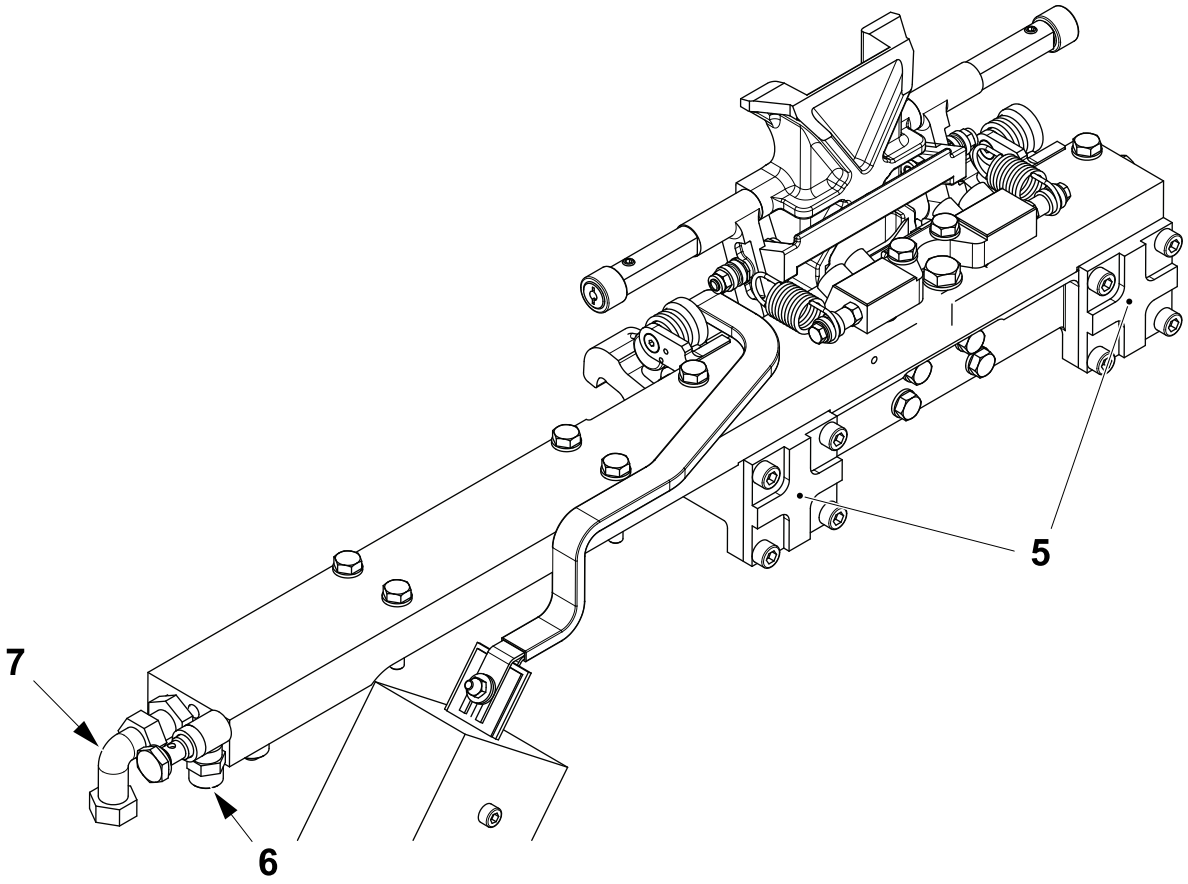

5 Lid
6 Water connection
7 Oil connection

(Cont'd)

(Cont'd)

- the brackets (8)
- the springs (9)
- the rollers (10)

Change the parts if necessary.

Check the correct flows on the transversal sealing flow meters located in the service unit. Set if necessary, see 6.1.2-2 Flow Meter - Set Flows .

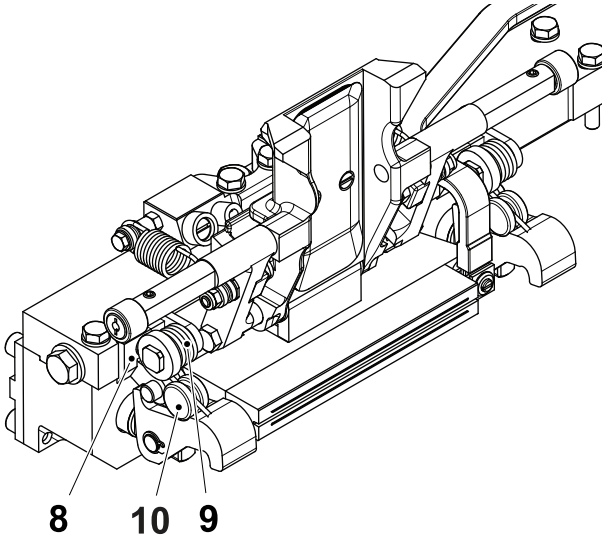

8 Bracket
9 Spring
10 Roller

(Cont'd)

(Cont'd)

Note! Valid for volumes TBA 200 Sq and TBA 250 Sq only.

- Check the volume bulge (11) for visual wear or damage.

  If required remove the screws (12) and change the volume bulge (11).

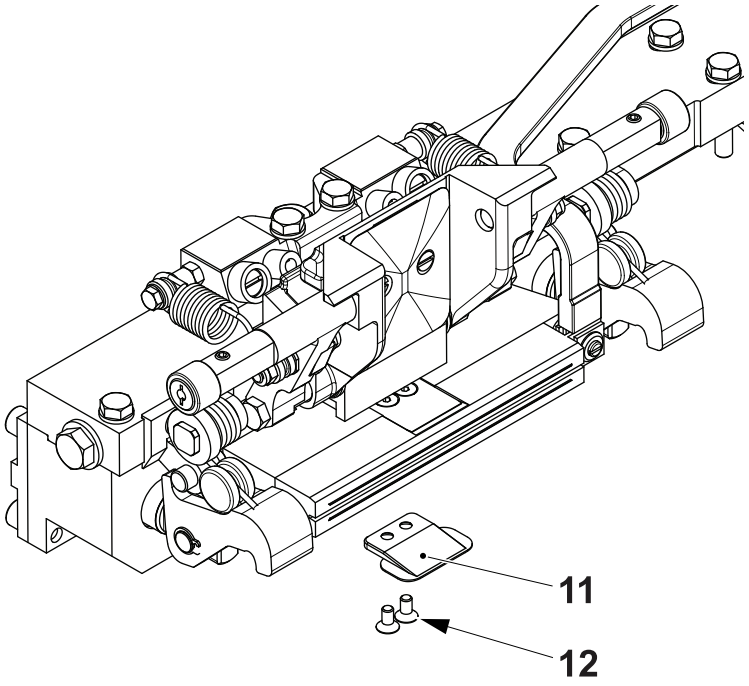

11 Volume bulge
12 Screw

(Cont'd)

(Cont'd)

Note! Valid for volumes TBA 200 E and TBA 250 E only.

- Check the volume bulge (13) for visual wear or damage, if required remove the screws (14) and change the volume bulge (13).
- Check the wedge (15) for visual wear or damage, if required remove the screws (16) and change the wedge (15).

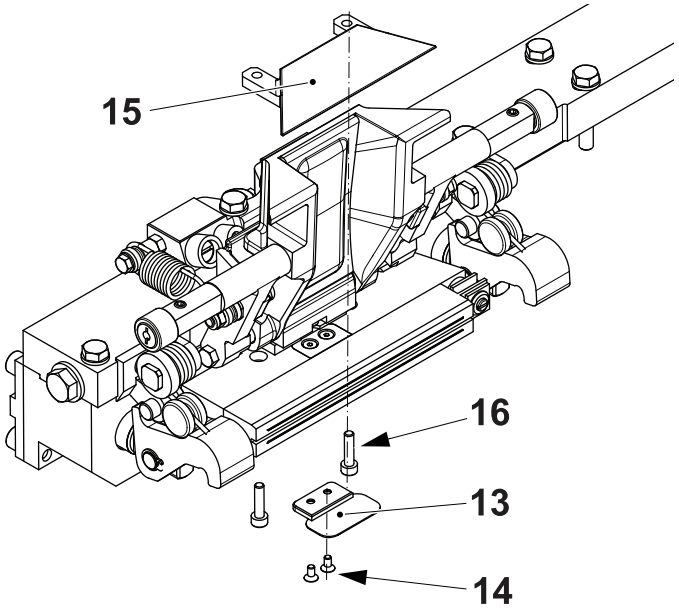

13 Volume bulge
14 Screw
15 Wedge
16 Screw

4.2.1-2 Pressure Jaw - Remove

Machine Status	Electrical supply disconnecting device in position O (OFF) Main air valve OFF Main steam valve ON Main water valve OFF
SPC Reference	2869015-0200 2869016-0200

a) Remove the hydraulic hose (1).

b) Remove the cooling hoses (2).

c) Remove the screw (4) and disconnect the busbar (3) from the transformer (5).

d) Remove the pressure jaw group together with the carrier (6) by means of the four screws (7).

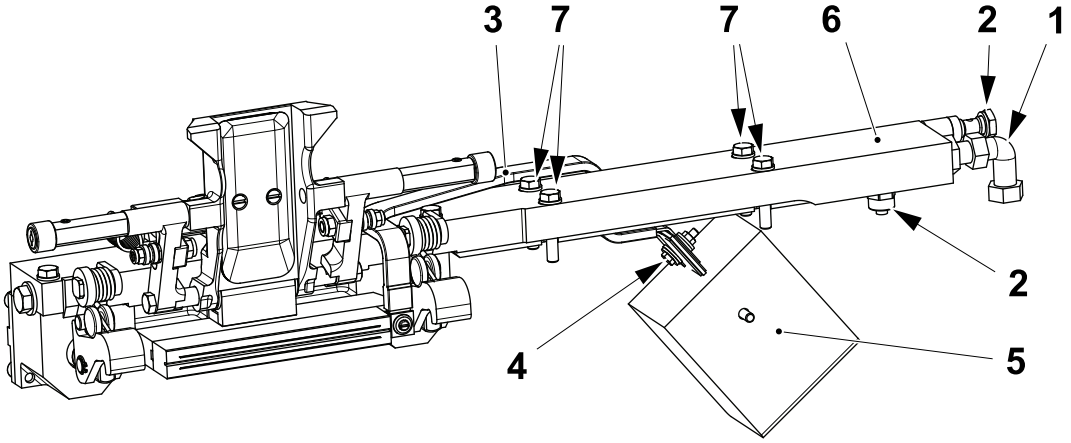

1 Hose
2 Hose
3 Busbar
4 Screw
5 Transformer
6 Carrier
7 Screw

4.2.1-3 Pressure Jaw - Remove Volume Flaps

Machine Status	Electrical supply disconnecting device in position I (ON) Main air valve OFF Main steam valve ON Main water valve OFF
SPC Reference	3248382-0100 3248383-0100

a) Use the GO TO POSITION function to slow inch the machine to 0° LH side (180° RH side), see 4-2 Jaw System - Inching, Go To Position and Manual Operation.

b) Remove the screw (1) and the volume flap (2).

c) Repeat the procedure for the other side.

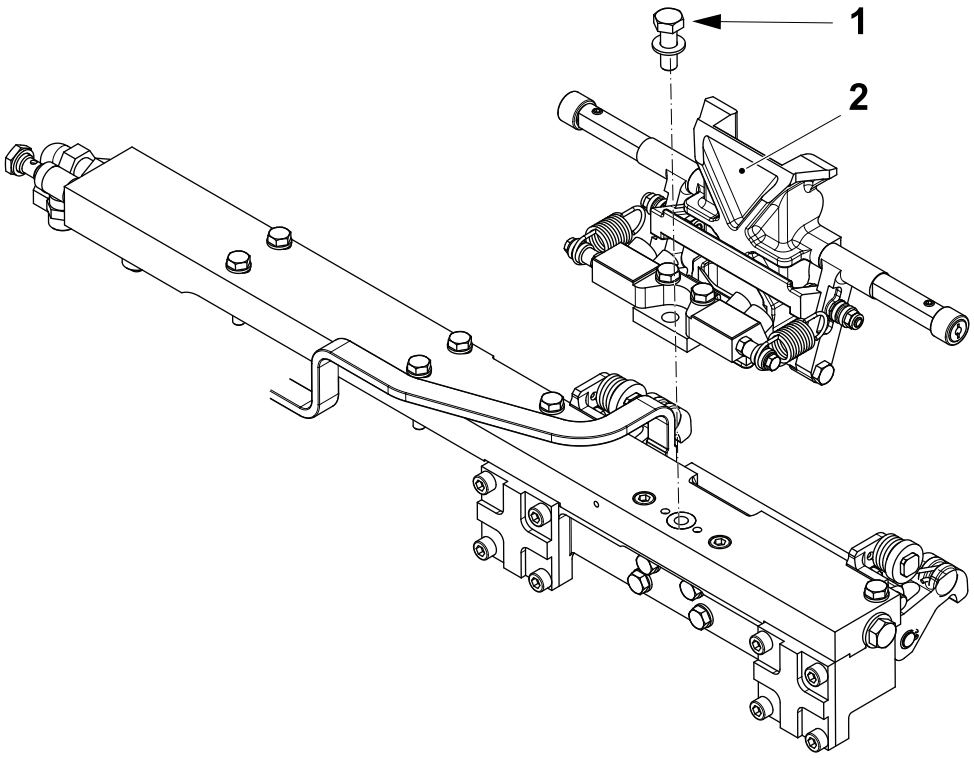

1 Screw
2 Volume flap

4.2.1-4 Pressure Jaw - Install Volume Flaps

Machine Status	Electrical supply disconnecting device in position I (ON) Main air valve OFF Main steam valve ON Main water valve OFF
SPC Reference	3248382-0100 3248383-0100

a) Use the GO TO POSITION function to slow inch the machine to 0° LH side (180° RH side), see 4-2 Jaw System - Inching, Go To Position and Manual Operation.

Note! Only for TPA volumes: always fit the male volume flap (1) to the cutting jaw (2) and the female volume flap (3) to the pressure jaw (4).

b) Align the pins (5) of the pressure jaw (4) to the holes (6) of the female volume flap (3).

c) Fit the screw (7).

d) Repeat the procedure for the other side.

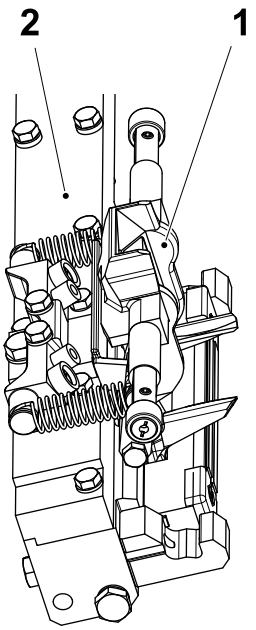

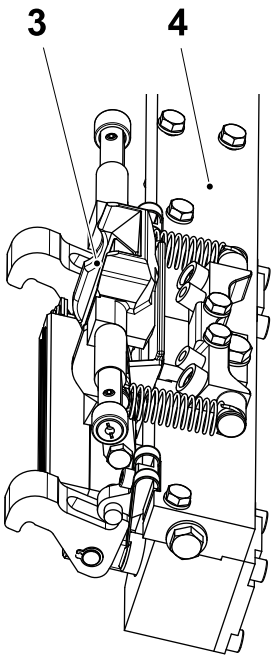

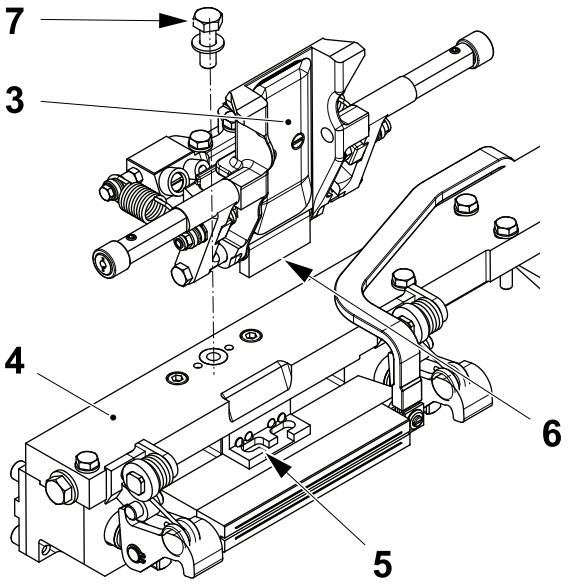

1 Male volume flap
2 Cutting jaw
3 Female volume flap
4 Pressure jaw
5 Pin
6 Hole
7 Screw

4.2.1-5 Pressure Jaw - Assemble

Machine Status	Electrical supply disconnecting device in position O (OFF) Main air valve OFF Main steam valve ON Main water valve OFF
SPC Reference	2869015-0200 2869016-0200

a) Fit the pressure jaw group together with the carrier (1) by means of the four screws (2).

b) Fit the busbar (3) with the screw (4).

c) Fit the cooling hoses (5).

d) Fit the hydraulic hose (6).

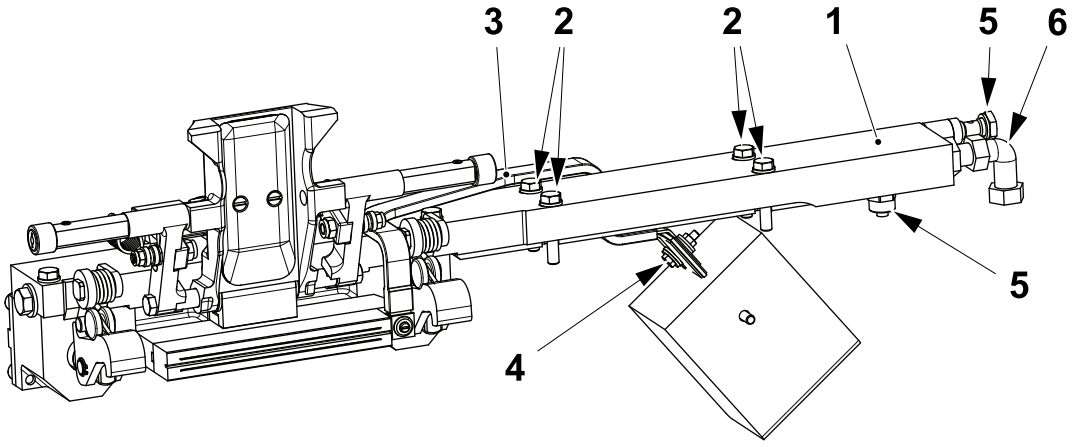

1 Carrier
2 Screw
3 Busbar
4 Screw
5 Hose
6 Hose

4.2.1-6 Pressure Jaw - Overhaul

Machine Status	Electrical supply disconnecting device in position O (OFF) Main air valve OFF Main steam valve ON Main water valve OFF
Special Equipment	Assembly Tool TP No. 90091-387
SPC Reference	2869015-0200 2869016-0200

a) Remove the volume flap see 4.2.1-3 Pressure Jaw - Remove Volume Flaps.

b) Remove the pressure jaw, see 4.2.1-2 Pressure Jaw - Remove.

c) Loosen the screw (1) and disconnect the busbar (2) from the inductor (3).

d) Remove the screws (4) and the inductor (3).

e) Remove the screws (5) and the support (6). Remove the screws (7) and the bearing housing (8).

f) Remove the circlips (9) and pull out the shafts (10).

g) Remove the catches (11) from the bearing housing. Change the catches if required.

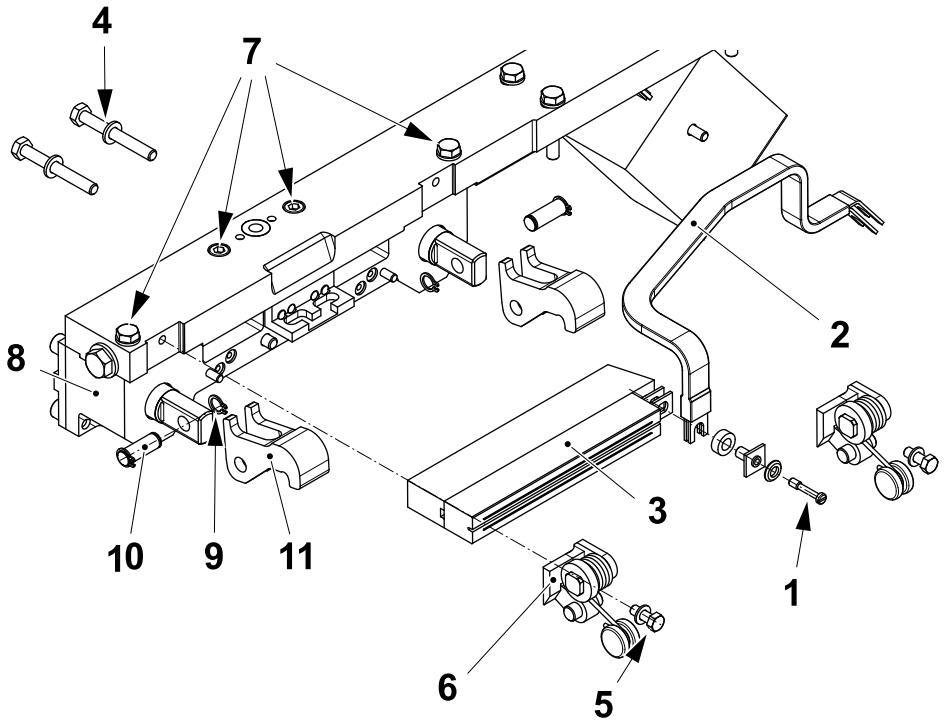

1 Screw
2 Busbar
3 Inductor
4 Screw
5 Screw
6 Support
7 Screw
8 Bearing housing
9 Circlip
10 Shaft
11 Catch

(Cont'd)

(Cont'd)

Bearing housing

WARNING

Risk of personal injury!

Spring force. Wear protective goggles.

a) Remove the screws (1) and the lids (2).

b) Pull out and check the spring (3) and the pistons (4). Change if required.

c) Change the seal (5) andseal (6).

d) Pull out and check the sleeves (7), change if required.

e) Change the ring (8) and the seals (9),seal (10) and (13).

f) Change the spacer (11) and the ring (12).

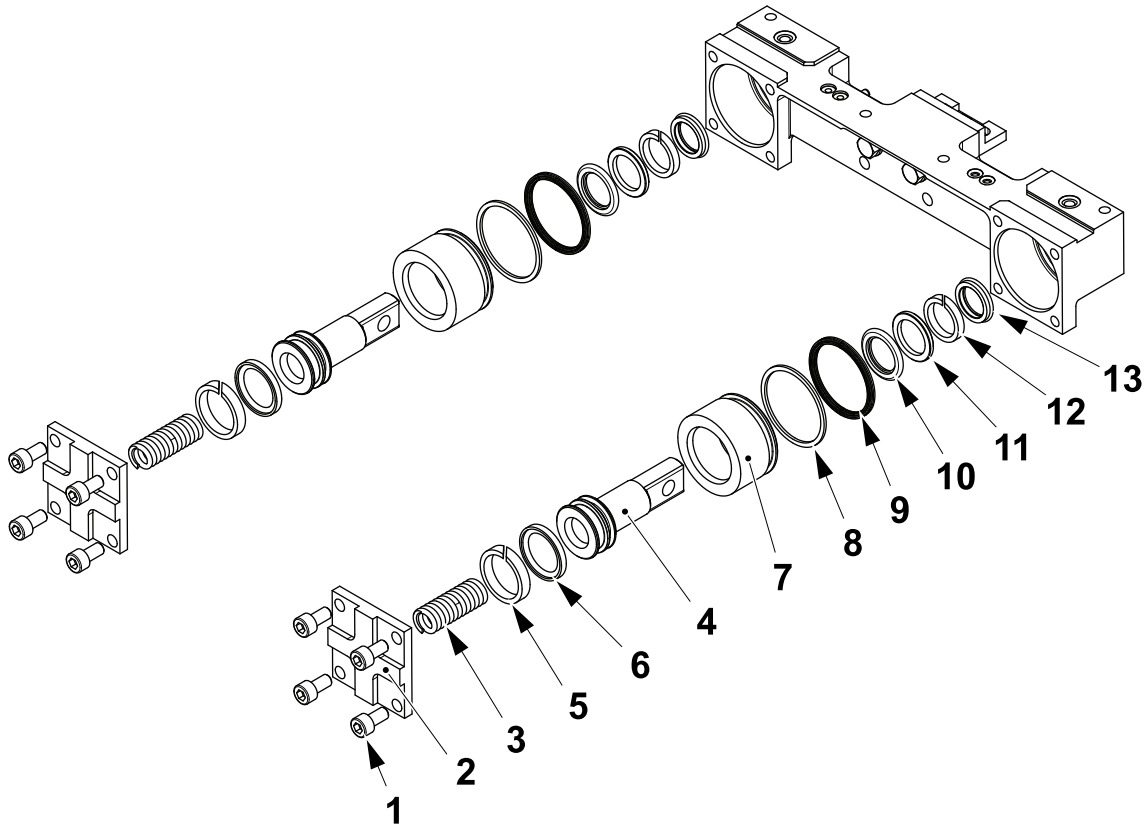

1 Screw
2 Lid
3 Spring
4 Piston
5 Seal
6 Seal
7 Sleeve
8 Ring
9 Seal
10 Seal
11 Spacer
12 Ring
13 Seal

(Cont'd)

(Cont'd)

g) Fit into the bearing housing (14), the (13), the ring (12), the spacer (11) and the seal (10) according to the illustration below.

h) Fit into the sleeves (7), the ring (8) and the seals (9) according to the illustration below.

i) Fit back the sleeves (7) into the bearing housing (14).

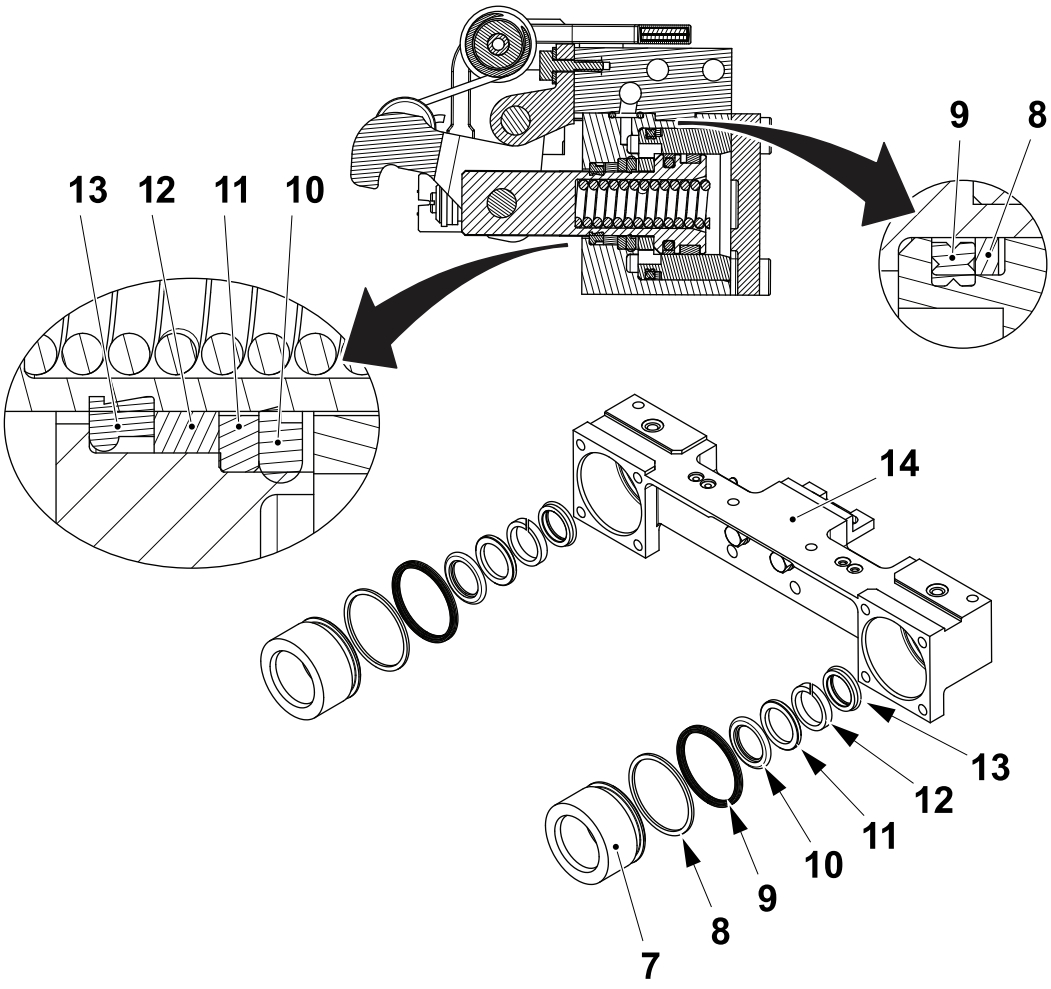

7 Sleeve	10 Seal	13 Seal
8 Ring	11 Spacer	14 Bearing housing
9 Seal	12 Ring	

(Cont'd)

(Cont'd)

j) Slide the guide cone tool (15) onto the pistons (4).

Note! The seal (6) must be heated with boiling water before shaping.

k) Slide the seal (6) over the cone tool (15). Move the seal (6) onto the piston groove with the aid of the assembly tool (16), see figure 1.

l) Calibrate the seal (6) by forcing the pistons (4) through the calibration tool (17), see figure 2.

m) Fit the seal (5) into their grooves, see figure 4. The seal (5) shaping must be done with boiling water.

n) Put the pistons (4) into the bearing housing (14).

o) Fit the spring (3), the lids (2) and tighten the screws (1).

p) Assemble in the reverse order, see 4.2.1-6 Pressure Jaw - Overhaul.

Fig. 1

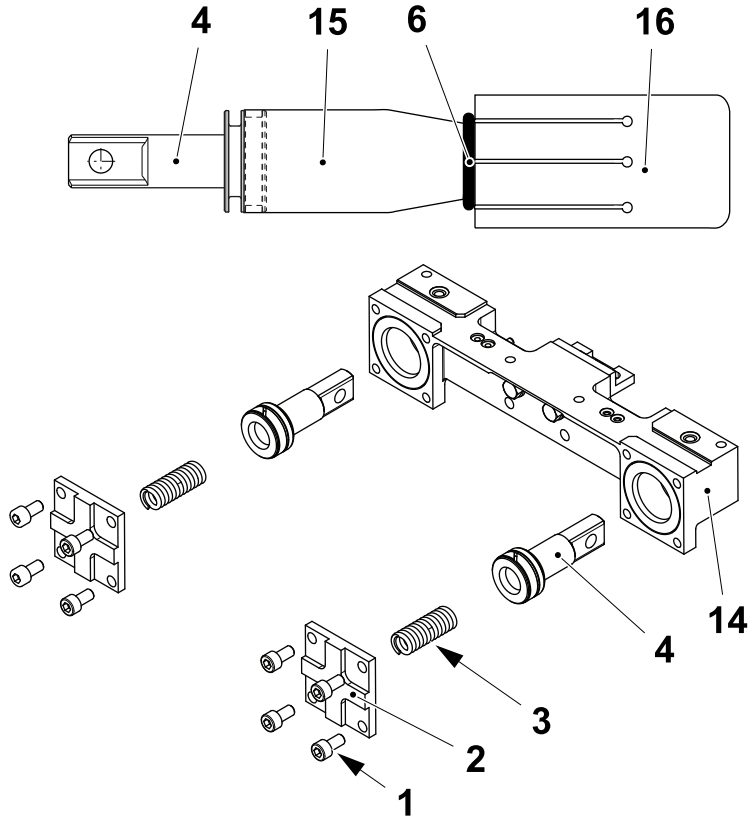

Fig. 2

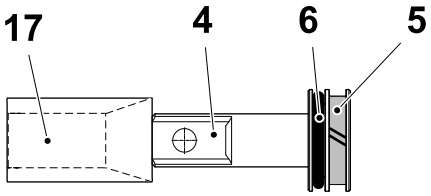

1 Screw
2 Lid
3 Spring
4 Piston
14 Bearing housing
5 Seal
15 Tool
16 Tool
17 Tool

4.2.1-7 Pressure Jaw - Check Inductor

Machine Status	Electrical supply disconnecting device in position O (OFF) Main air valve OFF Main steam valve ON Main water valve OFF
Special Equipment	Tool TP No. 2908997-0100
SPC Reference	2869015-0200 2869016-0200

Check the quality of the TS, see the OM. If necessary, perform the following checks on the inductor (1).

Check the following parts for wear or damage:

- the inductor (1), carefully check that the slot (2) in the inductor (1) is not blocked and that the edges are not deformed. Clean the inductor (1) with a brass wire brush if necessary
- the electrical conductors (3), make sure that they are free from oxidation. Clean them with a brass wire brush if necessary

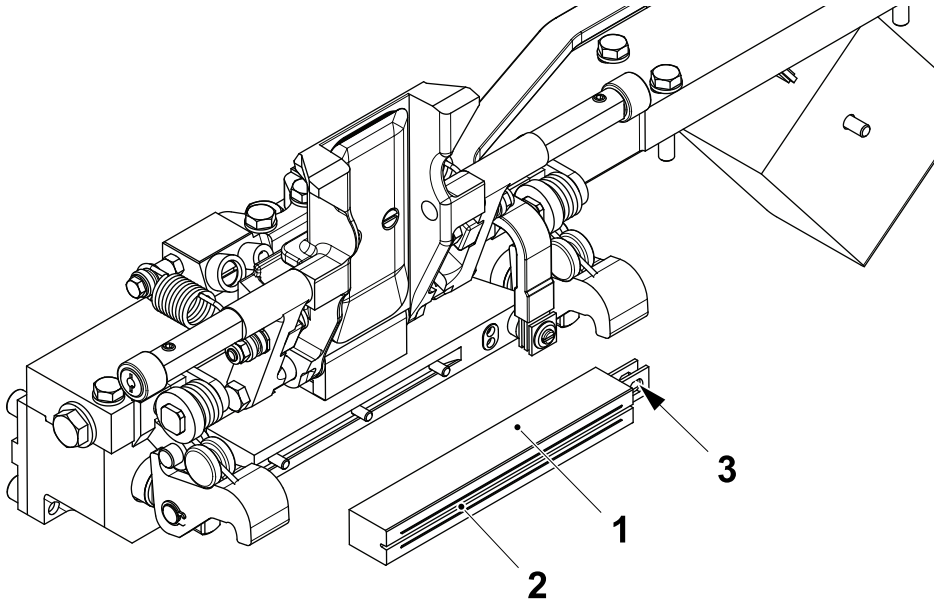

1 Inductor
2 Slot
3 Conductor

(Cont'd)

(Cont'd)

- the flow through the cooling water pipes, make sure that the cooling water pipes are not blocked by limescale deposit
- the rail (4), make sure that the rail (4) is not damaged. Clean the rail (4) with a brass wire brush if necessary
- the busbar (5), make sure that the busbar (5) is not damaged and is free from oxidation.

Change the inductor if necessary, see 4.2.1-8 Pressure Jaw - Change Inductor.

Set the transversal sealing if necessary, see 8.9.2-7 IH Equipment - Set Sealing.

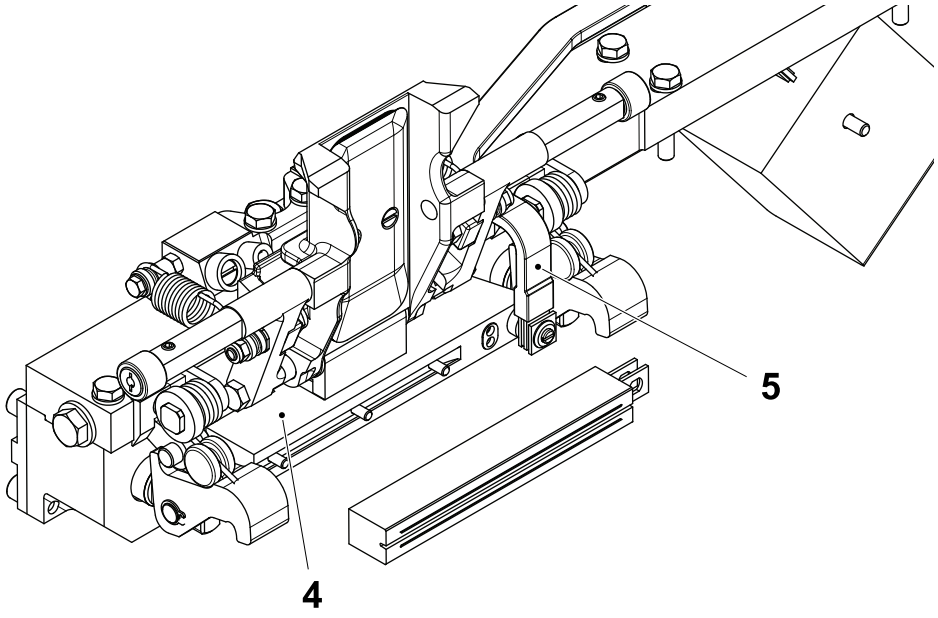

4 Rail
5 Busbar

(Cont'd)

(Cont'd)

Micrometer Check

a) Reset the tool (1) by fitting the template (2) under the slide (3).

b) Remove the template (2).

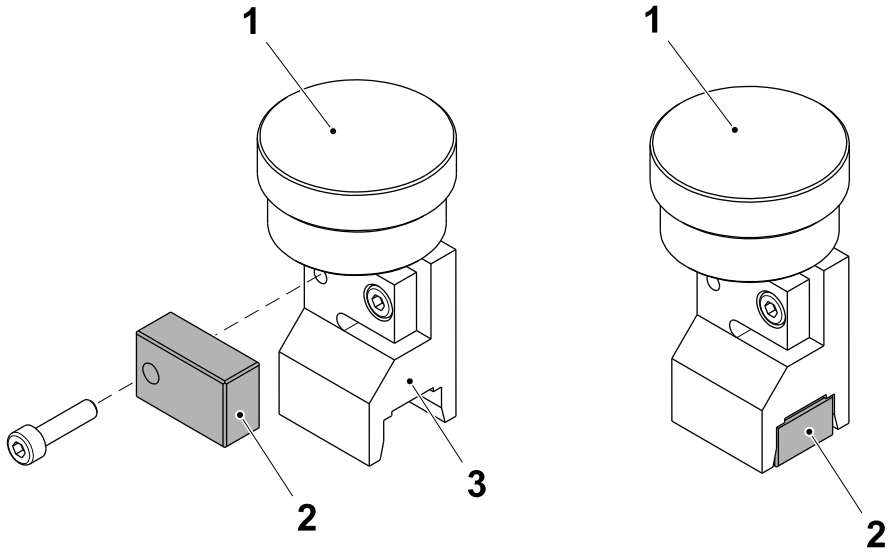

1 Tool
2 Template
3 Slide

(Cont'd)

(Cont'd)

c) Fit the tool (1) above the inductor (4) and move it on the inductor (4) to check that the thickness of the ridge (5) is **A** throughout the inductor length.

d) Remove the tool (1), rotate it by 180º and fit it back on the inductor (4) to check the same distance in the second ridge (6).

e) If the ridge thickness in some part is lower than 0.2 mm, change the inductor (4).

f) Repeat the procedure for the other inductor.

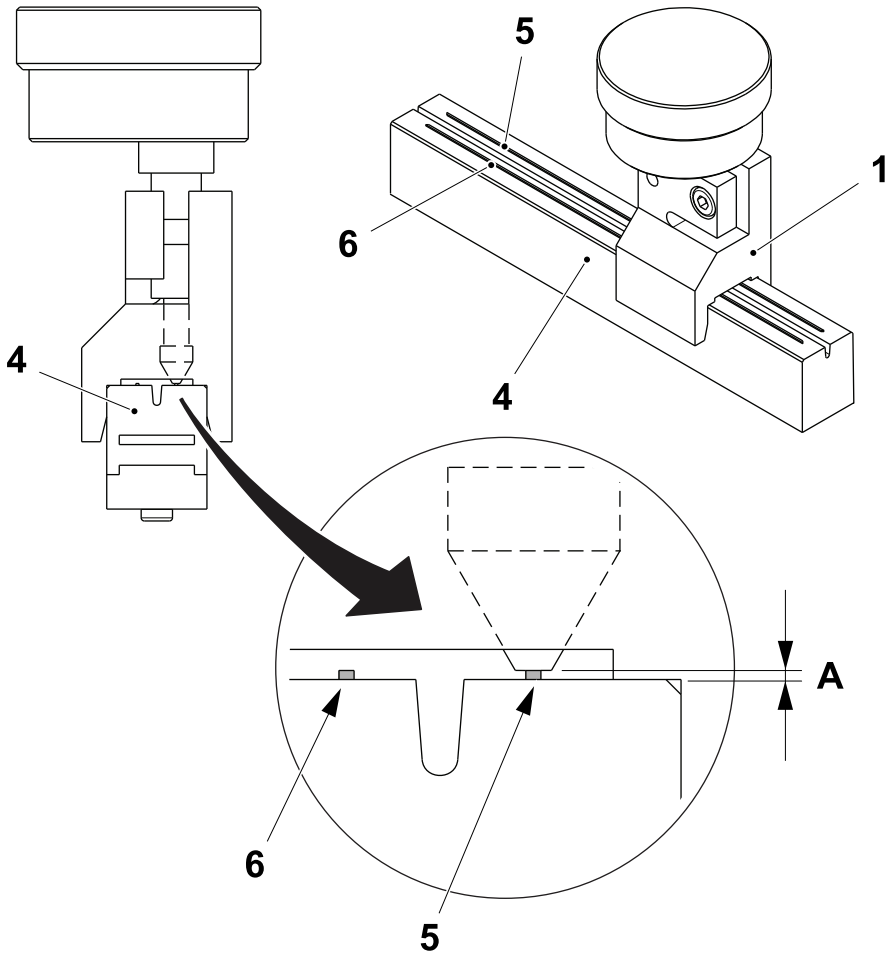

A = 0.2-0.3 mm

1 Tool
4 Inductor
5 Ridge
6 Ridge

4.2.1-8 Pressure Jaw - Change Inductor

Machine Status	PREPARATION or PRODUCTION
Special Equipment	Brass Wire Brush
SPC Reference	2869015-0200 2869016-0200

Note! If the inductors are changed during PREPARATION it is sufficient to slow inch the machine to any position where the jaws are open and the inductors can be accessed. When the inductors have been changed, check the cutting alignment, see 4-11 Jaw System - Set Cutting Alignment.

Preparation

a) With the machine in PRODUCTION touch the PRODUCTION CONTROL button (1) on the TPOP display.

b) Touch the PACKAGE FORMING UNIT button (2).

c) Touch the INDUCTOR icon (3).

d) Touch the LH JAW button (4) to change the inductor in the LH pressure jaw or touch the RH JAW button (5) to change the inductor in the RH pressure jaw.

e) Touch the START button (6) to confirm the stop position.

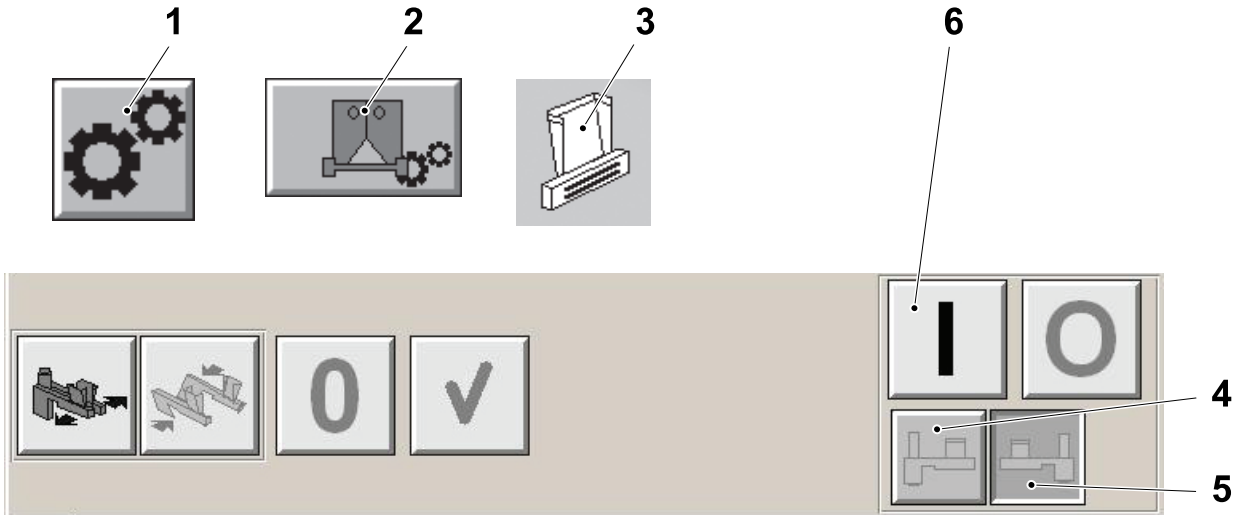

1 PRODUCTION CONTROL button
2 PACKAGE FORMING UNIT button
3 INDUCTOR icon
4 LH JAW button
5 RH JAW button
6 START button

(Cont'd)

(Cont'd)

f) Press the SHORT STOP button (7) or the STEP DOWN button (8).

g) Touch the OPEN button (9) and wait until the OK button (10) starts flashing.

h) Touch the OK button (10). The jaw system moves to a position where the jaws are open and the inductors are easily accessible.

i) Close the two cooling water circulation valves on the machine body wall.

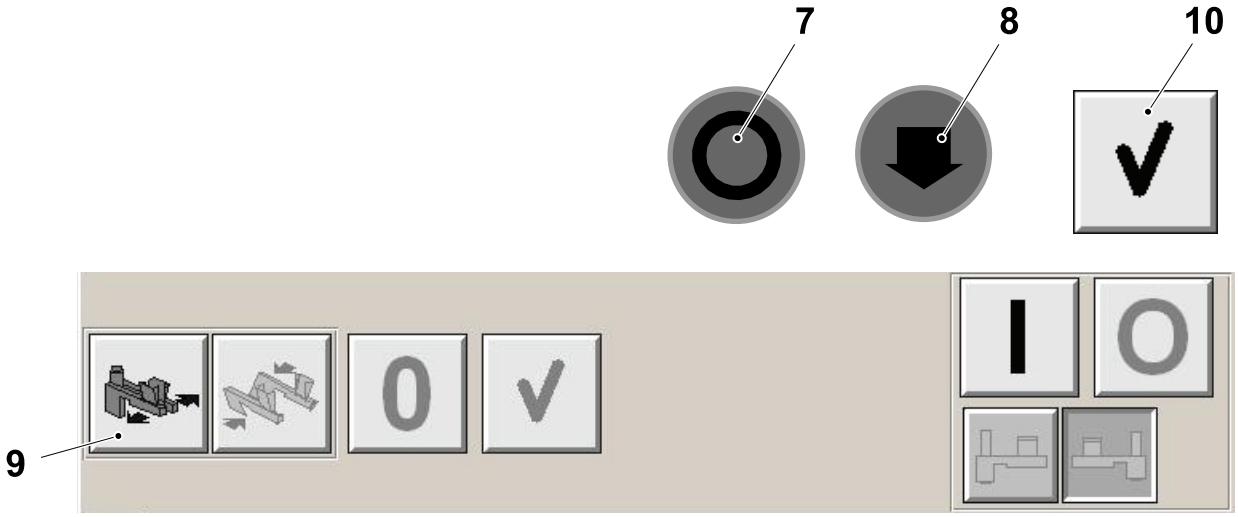

7 SHORT STOP button
8 STEP DOWN button
9 OPEN button
10 OK button

(Cont'd)

(Cont'd)

Remove Inductor

a) Remove the screws (1) from the bearing housing (2).

b) Remove the screws (3) and the washers (4) and disconnect the busbar (5) from the inductor (6).

c) Remove the rail (7) together with the inductor (6).

d) Remove the screws (8) from the rail (7) and separate the rail from the inductor (6).

e) Change the inductor (6).

f) Change the O-rings (9) if necessary.

g) Assemble in the reverse order.

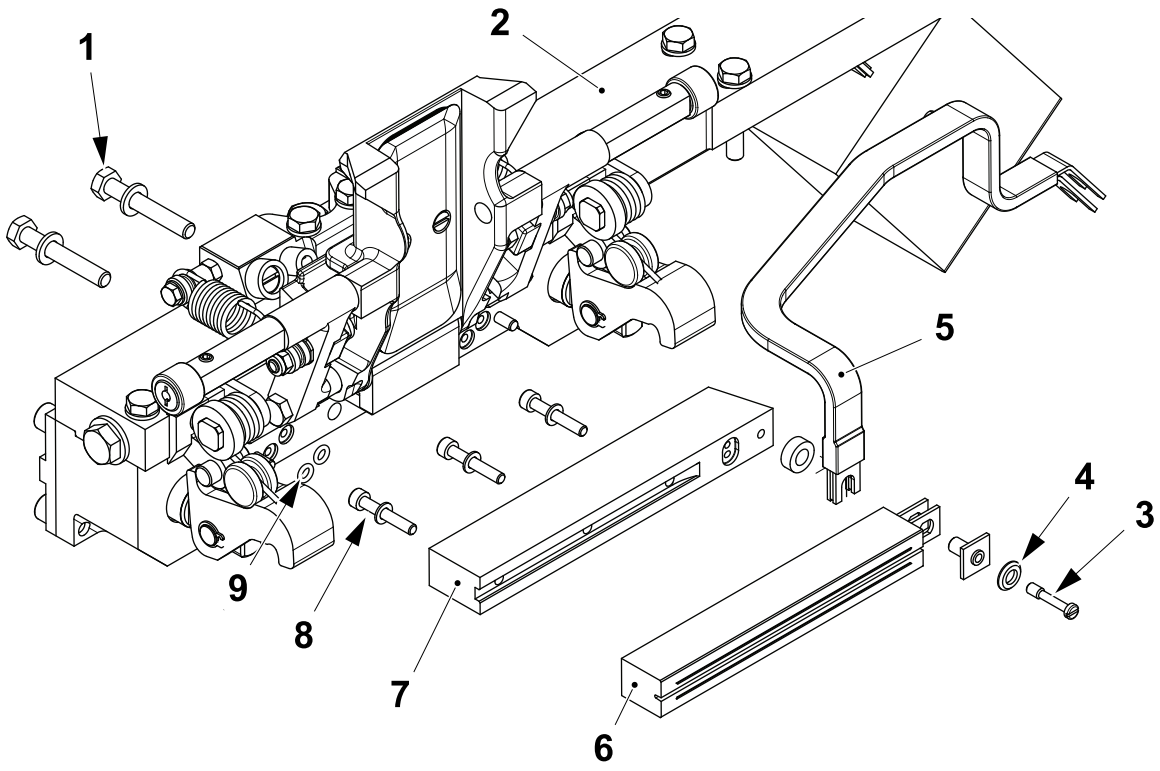

1 Screw
2 Bearing housing
3 Screw
4 Washer
5 Busbar
6 Inductor
7 Rail
8 Screw
9 O-ring

(Cont'd)

(Cont'd)

Completion

Note! When the inductors have been changed, check the cutting alignment, see 4-11 Jaw System - Set Cutting Alignment.

a) Close the doors and reset all the alarms.

b) Touch the CLOSE button (1).

c) Touch the OK button (2).

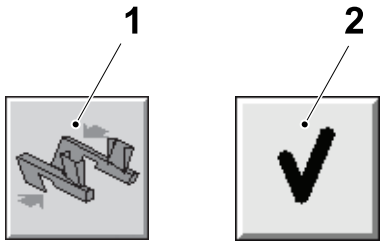

1 CLOSE button
2 OK button

4.2.1-9 Pressure Jaw - Change O-rings

Machine Status	Electrical supply disconnecting device in position O (OFF) Main air valve OFF Main steam valve ON Main water valve OFF
SPC Reference	2869015-0200 2869016-0200

a) Remove the screws (1) from the bearing housing (2).

b) Disconnect the busbar (3) from the inductor (5).

c) Remove the rail (4) together with the inductor (5).

d) Remove the screws (6) on the rail (4).

e) Separate the rail (4) from the inductor (5).

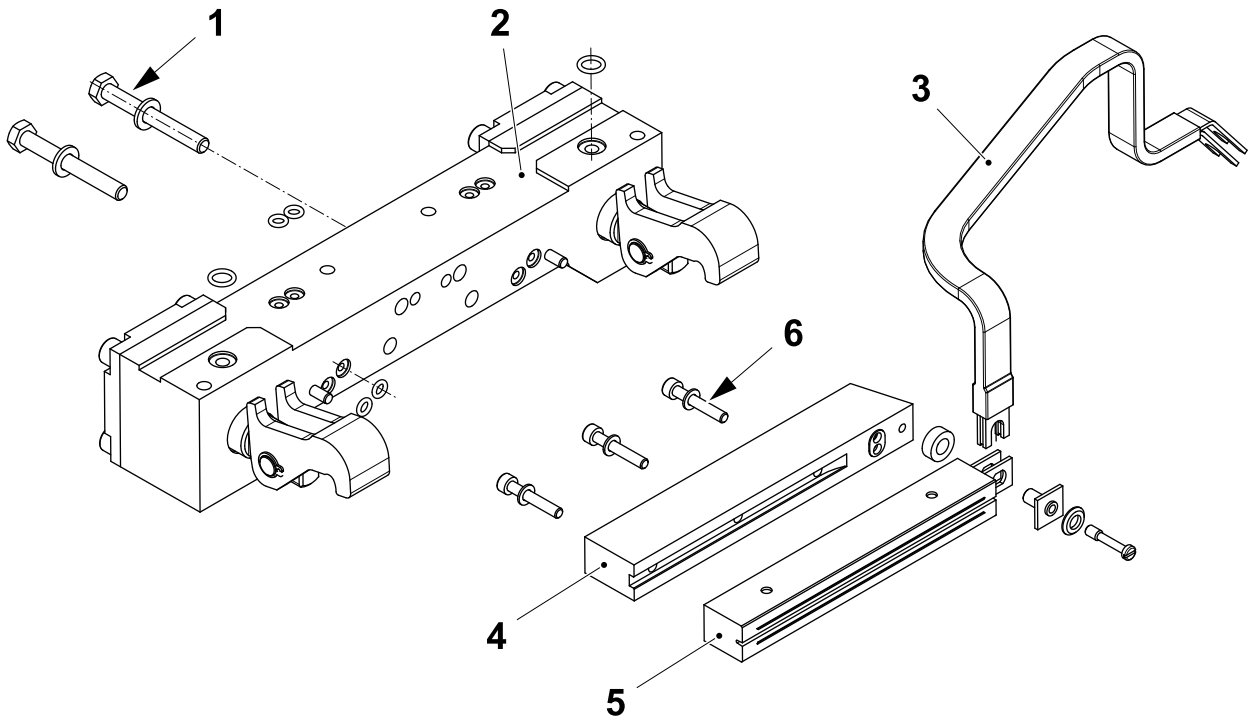

1 Screw
2 Bearing housing
3 Busbar
4 Rail
5 Inductor
6 Screw

(Cont'd)

(Cont'd)

f) Remove the inductor (5) and change it if damaged or worn out.

g) Change the O-rings (7).

h) Assemble in the reverse order.

Note! If the inductors have been changed, check the cutting alignment, see 4-11 Jaw System - Set Cutting Alignment.

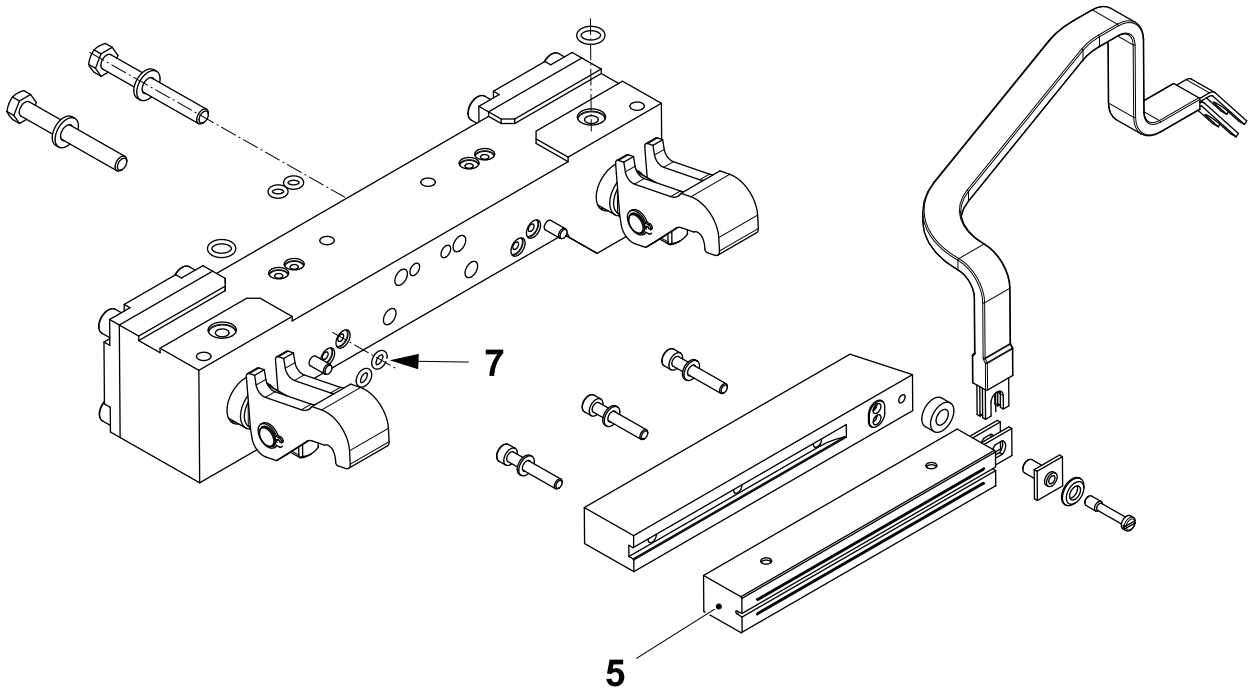

5 Inductor
7 O-ring

4.2.1-10 Pressure Jaw - Change Transformer

Machine Status	Electrical supply disconnecting device in position O (OFF) Main air valve OFF Main steam valve ON Main water valve OFF
SPC Reference	2869015-0200 2869016-0200

Note! Perform the following procedure on both pressure arms.

(Cont'd)

(Cont'd)

a) Disconnect the IH cable (1) from the transformer (2).

b) Loosen the screws (3) and remove the covering plate (4).

c) Remove the gasket (5).

d) Loosen the screw (6) and the nut (7) and remove the busbar (8) from the transformer (2).

e) Loosen the screws (9).

f) Change the transformer (2).

g) Assemble in the reverse order.

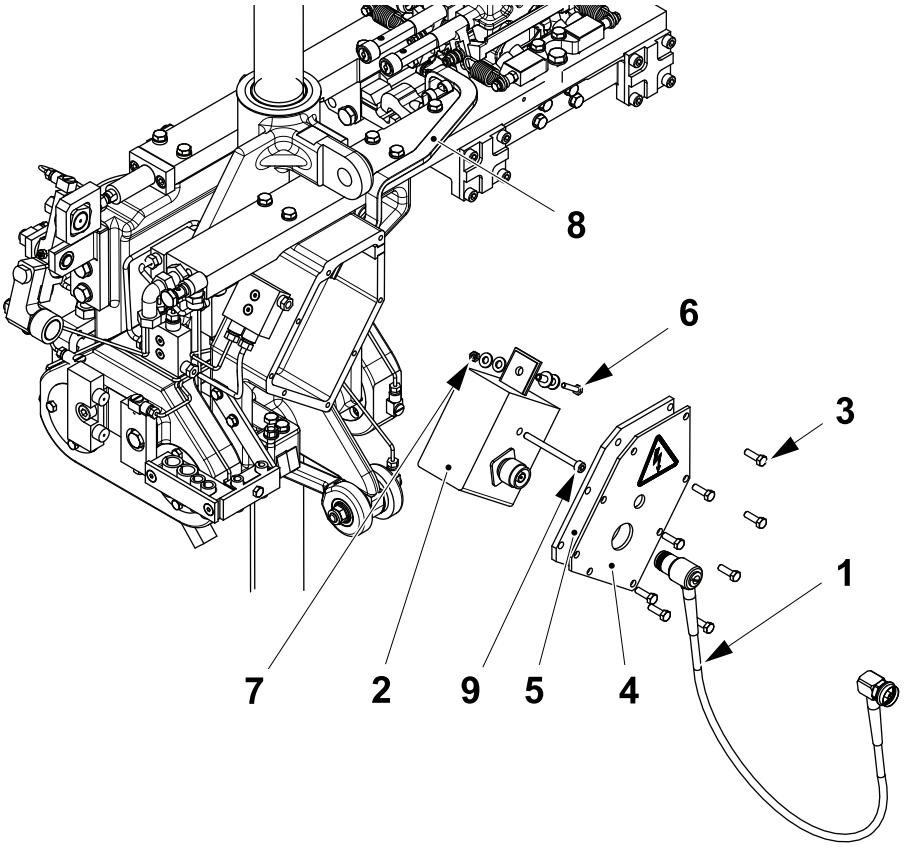

1 IH cable
2 Transformer
3 Screw
4 Covering plate
5 Gasket
6 Screw
7 Nut
8 Busbar
9 Screw

(Cont'd)

(Cont'd)

h) If the IH cable (1) is assembled or if it is changed, make sure that the IH cable (1) is fitted as indicated in the illustration and that:

- the connections on both ends of the IH cable (1) and the connections on the transformer and machine body wall are clean and dry, if necessary use compressed air to dry the connections.
- the connector (10) is rotated and angled approximately 20° to the outside of the filling machine
- the IH cable (1) is secured to adjacent tubes with one plastic tie (11) to avoid any possible interference with the movement of the scissor arm (12). Use one plastic tie (11) to secure the IH cable (1) in the position shown in the illustration below.

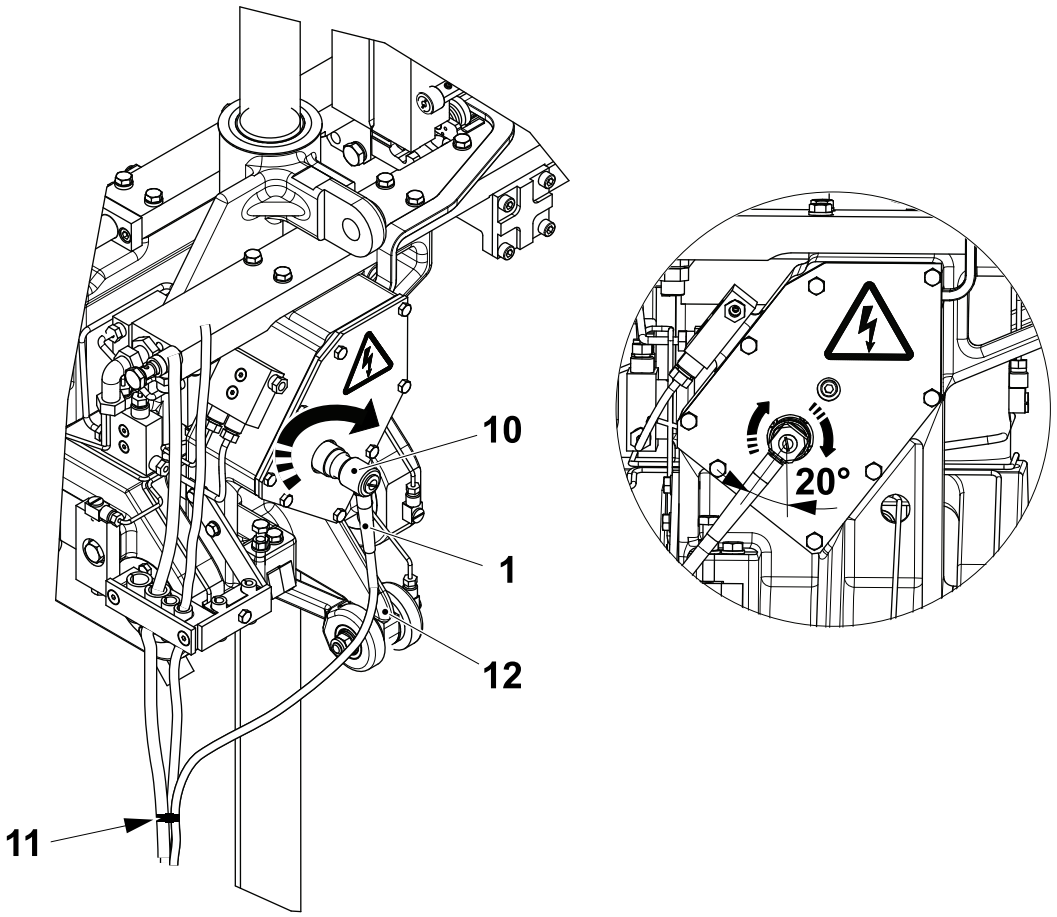

1 IH cable
10 Connector
11 Plastic tie
12 Scissor arm

4.2.1-11 Pressure Jaw - Check Catches and Clearance

Machine Status	Electrical supply disconnecting device in position I (ON) Main air valve ON Main steam valve ON Main water valve ON
SPC Reference	2869015-0200 2869016-0200 3248383-0100

Check the catches for any hydraulic oil leakage.

Check the distance **A** as follows:

a) Make sure that the packaging material tube is pulled down and in a position to be grabbed by the jaw system.

b) Slow inch the machine to pull the packaging material through the jaw system.

c) Close the catches, see 2.8.1-4 Hydraulic Unit - Bleed.

d) Measure the distance **A**, if it is less than **5.4** mm check and if necessary change the following parts:
   - the dollies
   - the inductors
   - the catches and the pistons.

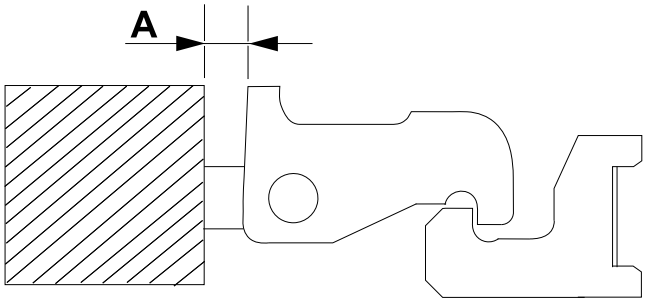

(Cont'd)

(Cont'd)

Catch Clearance

Check the distance **B** as follows:

a) Make sure that there are no active alarms on the TPOP display.

b) Use the GO TO POSITION function to slow inch the machine to 324° LH side (144° RH side), see 4-2 Jaw System - Inching, Go To Position and Manual Operation.

c) Check the distance **B** between the catches during the disengagement movement. To increase the distance **B** remove the shims (1) below the cutting jaw (2) until distance **B** is obtained, see 4-11 Jaw System - Set Cutting Alignment.

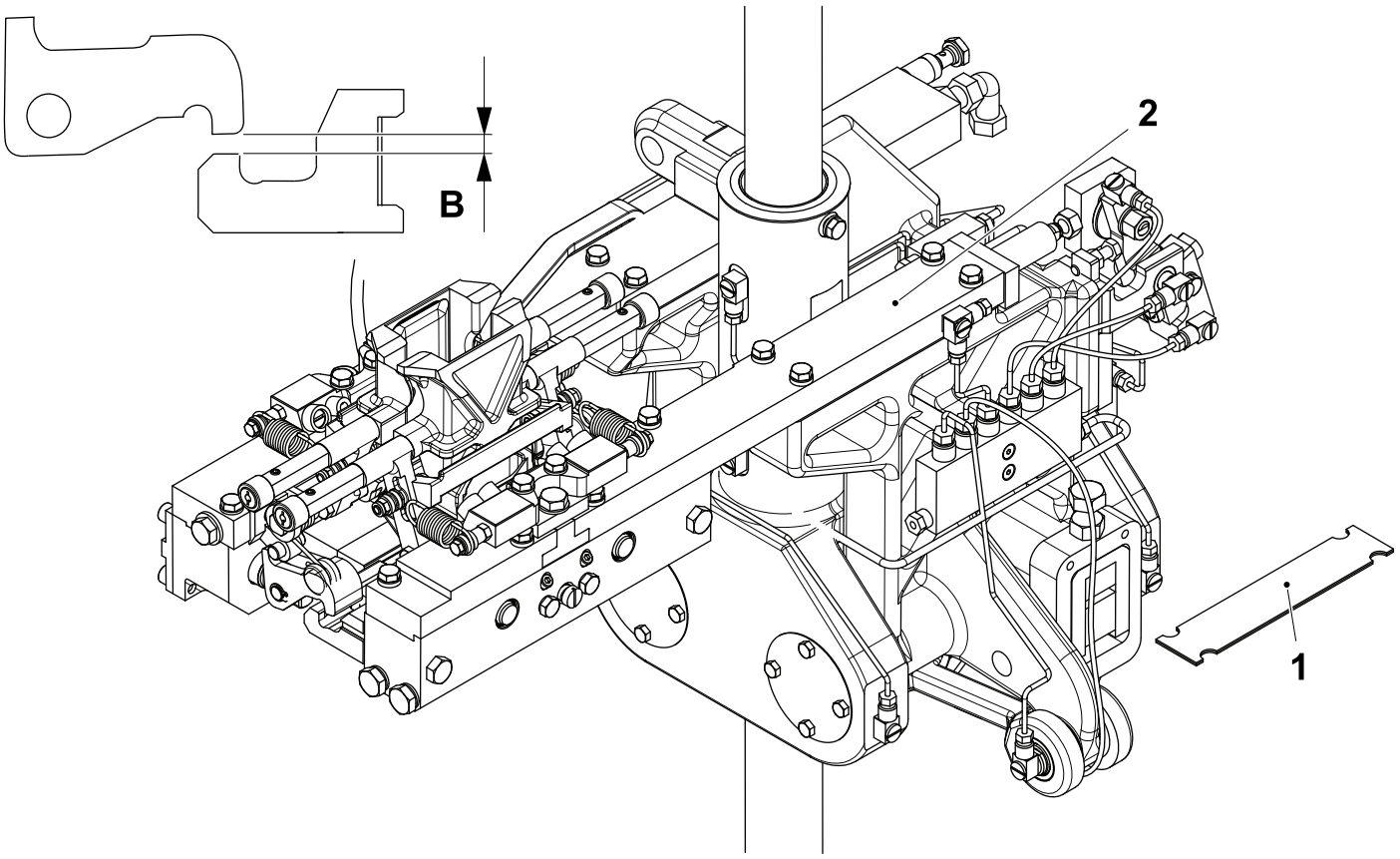

B = min. 0.7 mm
1 Shim
2 Cutting jaw

4.2.2 Cutting Jaw

4.2.2-1 Cutting Jaw - Check

Machine Status	Electrical supply disconnecting device in position O (OFF) Main air valve OFF Main steam valve ON Main water valve OFF
SPC Reference	2869017-0200 2869018-0200

Check:

- the oil hoses and connections for visual wear or damage
- for oil leakage
- the catches (1) for visual wear or damage
- that the engagements of the catches (1) are not worn
- the clearance, see 4.2.1-11 Pressure Jaw - Check Catches and Clearance.
- that the folding flaps (2) turn easily
- the folding flaps (2) for excessive radial play and for any oil leakage.

Change the parts if necessary.

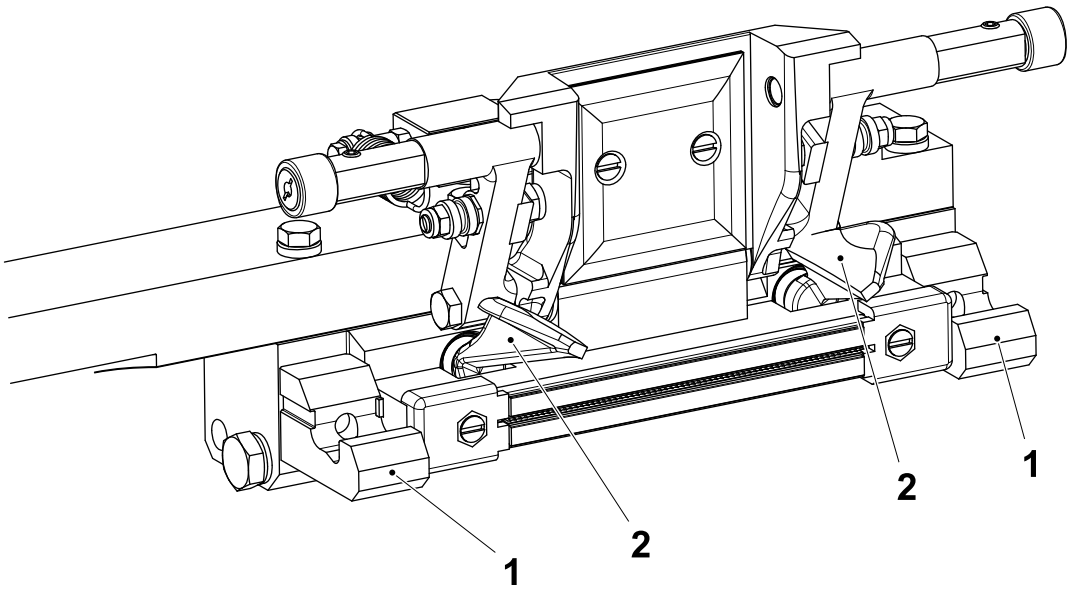

1 Catch
2 Folding flap

(Cont'd)

(Cont'd)

- for oil leakage at the points indicated by the arrows in the illustration
- pull the tie rod (3) and check that the folding flaps mechanism is moving and working correctly.

Change the part if necessary.

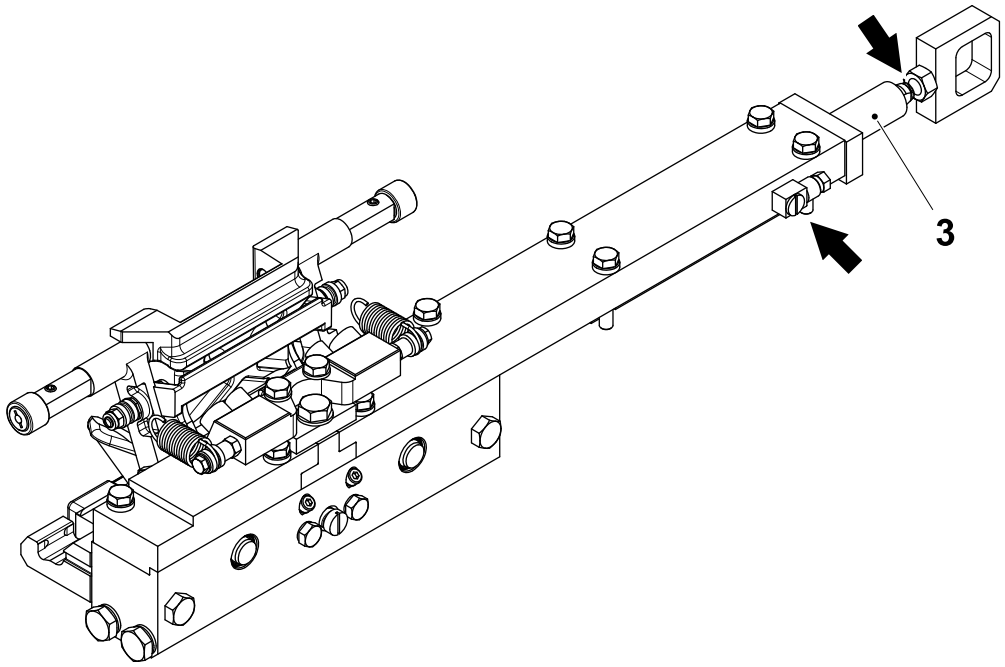

3 Tie rod

(Cont'd)

(Cont'd)

Note! Valid for volumes TBA 200 Sq, TBA 250 Sq, TBA 200 E and TBA 250 E only.

- Check the volume bulge (4) for visual wear or damage.

If required remove the screws (5) and change the volume bulge (4).

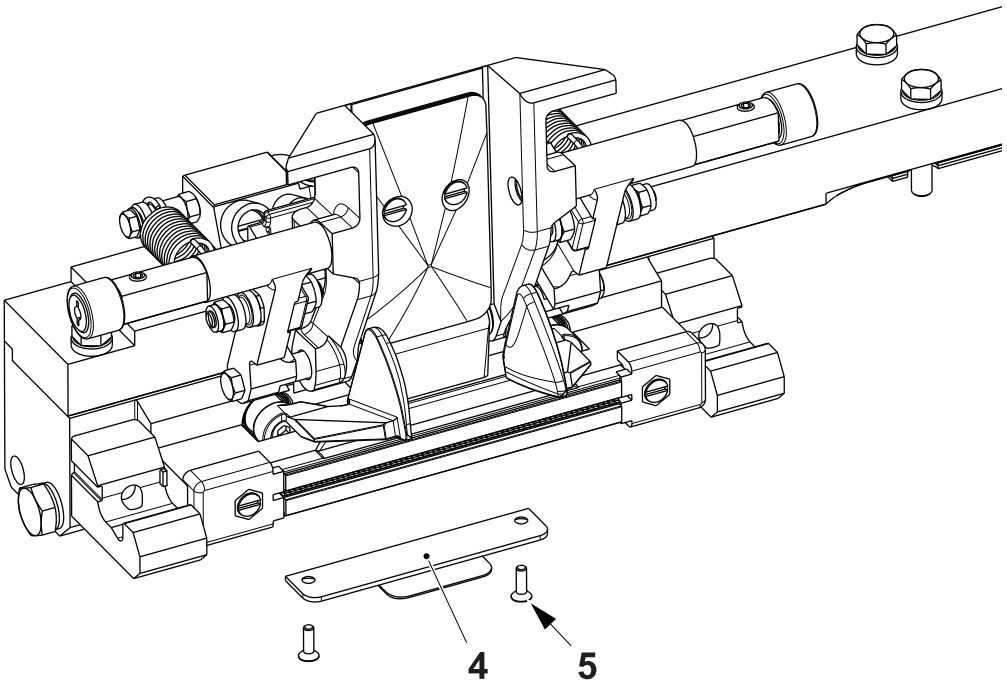

4 Volume bulge
5 Screw

4.2.2-2 Cutting Jaw - Remove

Machine Status	Electrical supply disconnecting device in position O (OFF) Main air valve OFF Main steam valve ON Main water valve OFF
SPC Reference	2869017-0200 2869018-0200

a) Loosen the screw (1) and remove the lubrication hose.

b) Loosen the nut (2) and disconnect the oil pipe.

c) Remove the screws (3) and the cutting jaw (4).

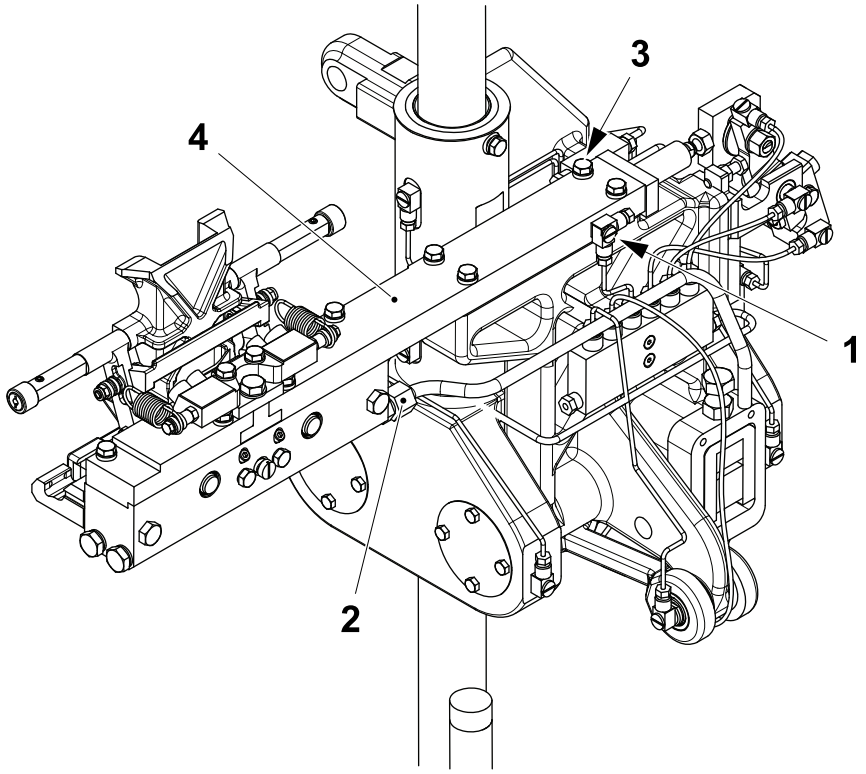

1 Screw
2 Nut
3 Screw
4 Cutting jaw

4.2.2-3 Cutting Jaw - Assemble

Machine Status	Electrical supply disconnecting device in position O (OFF) Main air valve OFF Main steam valve ON Main water valve OFF
SPC Reference	2869017-0200 2869018-0200

a) Fit the cutting jaw (1) with the screws (2).

b) Fit the lubrication hose with the screw (3).

c) If not already present, fit the pipe connection (4) to the cutting jaw (1).

d) Connect the lubrication pipe (5) to the cutting jaw (1).

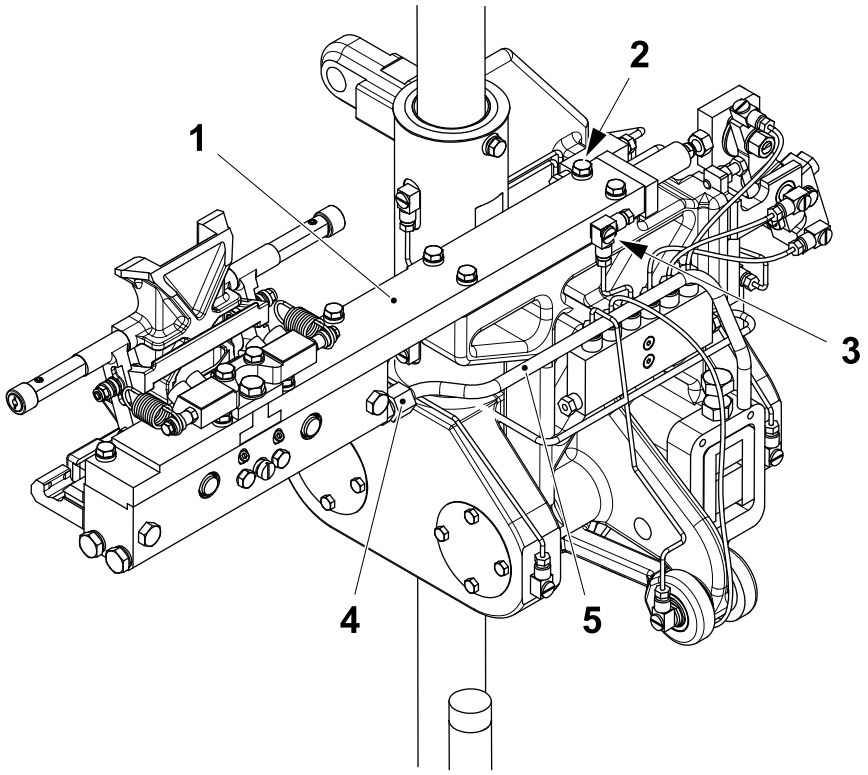

1 Cutting jaw
2 Screw
3 Screw
4 Pipe connection
5 Lubrication pipe

4.2.2-4 Cutting Jaw - Overhaul

Machine Status	Electrical supply disconnecting device in position O (OFF) Main air valve OFF Main steam valve ON Main water valve OFF
Special Equipment	Assembly cone TP No. 76131 Assembly tool TP No. 76132 Calibration tool TP No. 78801
SPC Reference	2869017-0200 2869018-0200

a) Drain the oil from the bearing housing (1).

b) Remove the volume flaps from the cutting jaw. See 4-9 Jaw System - Remove Cutting Jaw Volume Flaps.

c) Remove the screws (2) and the bearing housing (1).

d) Remove the screws (3), the brackets (4) and the screws (5).

e) Remove the knife holder (6).

f) Remove and check the dollies (7). Change if required.

g) Remove the knife (8).

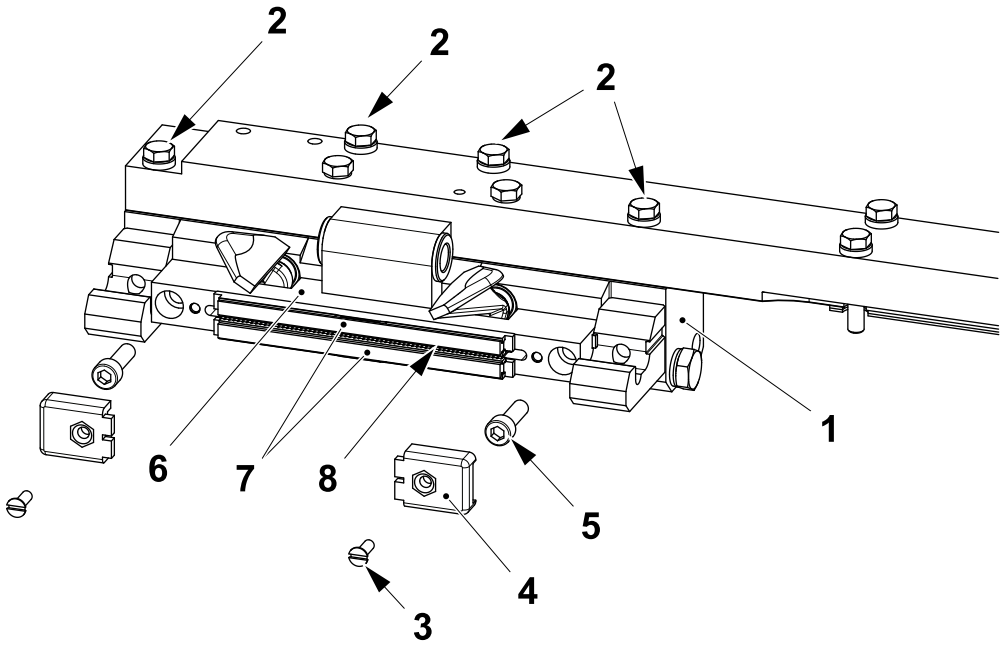

1 Bearing housing
2 Screw
3 Screw
4 Bracket
5 Screw
6 Knife holder
7 Dolly
8 Knife

(Cont'd)

(Cont'd)

h) Remove the screws (9) and check the following component for wear or damage:
- the O-ring (10)
- the guide rings (11), the seal ring (12), the plungers (13), and the guide ring (14)
- the sleeve (15) and the O-ring (16).
- Change them if required.

i) Fit the O-ring (16) and the sleeve (15) into the bearing housing (1).

j) Fit the O-ring (10) into the bearing housing (1) using adhesive Loctite IS 496/Cyanolot 303.

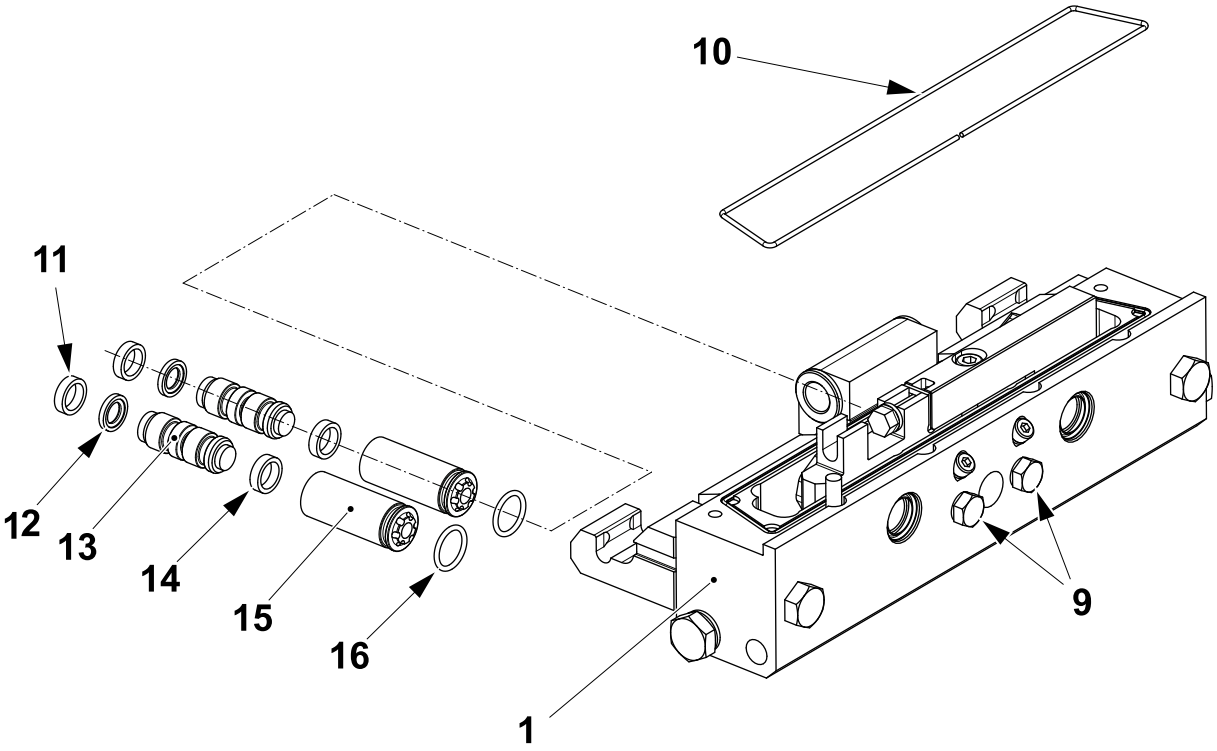

1 Bearing housing
9 Screw
10 O-ring
11 Guide ring
12 Seal ring
13 Plunger
14 Guide ring
15 Sleeve
16 O-ring

(Cont'd)

(Cont'd)

k) Slide the assembly cone (17) onto the plungers (13).

l) Slide the seal ring (12) over the assembly cone (17).

m) Move the seal ring (12) into the groove (18) using the assembly tool (19), see figure 1.

n) Calibrate the seal ring (12) by forcing the plungers (13) through the calibration tool (20), see figure 2.

Note! The guide rings (11) and guide ring (14) shaping must be done with boiling water.

o) Fit the guide rings (11) and guide ring (14) into their grooves, see figure 3.

p) Insert the plungers (13) into the bearing housing (1).

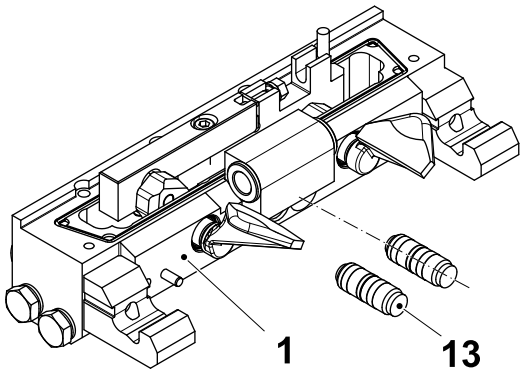

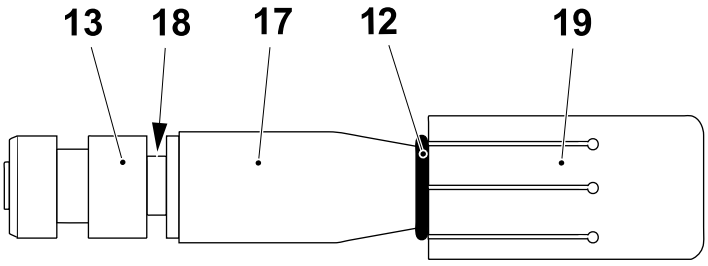

Fig. 1

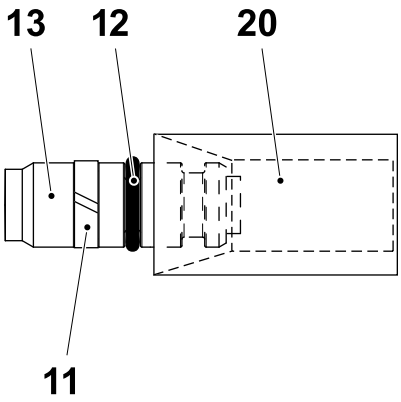

Fig. 2

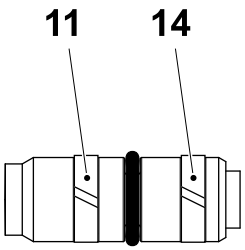

Fig. 3

1 Bearing housing
11 Guide ring
12 Seal ring
13 Plunger
14 Guide ring
17 Assembly cone
18 Groove
19 Assembly tool
20 Calibration tool

(Cont'd)

(Cont'd)

WARNING

Risk of personal injury.

Compressed springs! Take care when removing/assembling components.

q) Remove the ear (21) and the nut (22).

r) Loosen the screws (23). Remove the bearing plate (24).

s) Remove and check the following components for wear or damage:

- the O-ring (25)
- the seal ring (26)
- the compression spring (27).
- Change the components if required.

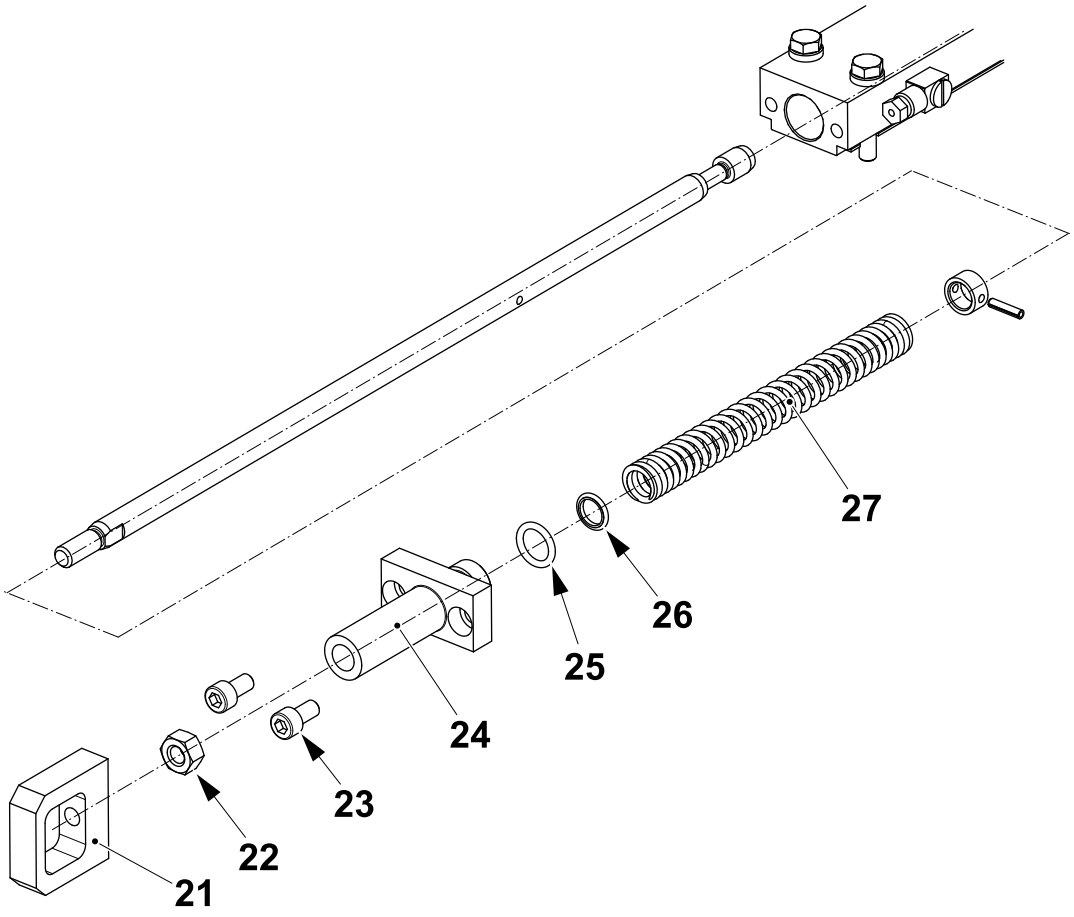

21 Ear
22 Nut
23 Screw
24 Bearing plate
25 O-ring
26 Seal ring
27 Compression spring

(Cont'd)

(Cont'd)

t) Remove the pin (28) and the retaining ring (29). Check the retaining ring (29) for wear or damage. Change if required.

u) Remove and check the operation rod (30) for wear or damage. Change if required.

v) Clean the inside of the ear (21) and the rod site in the carrier (31) with compressed air.

w) Assemble in the reverse order.

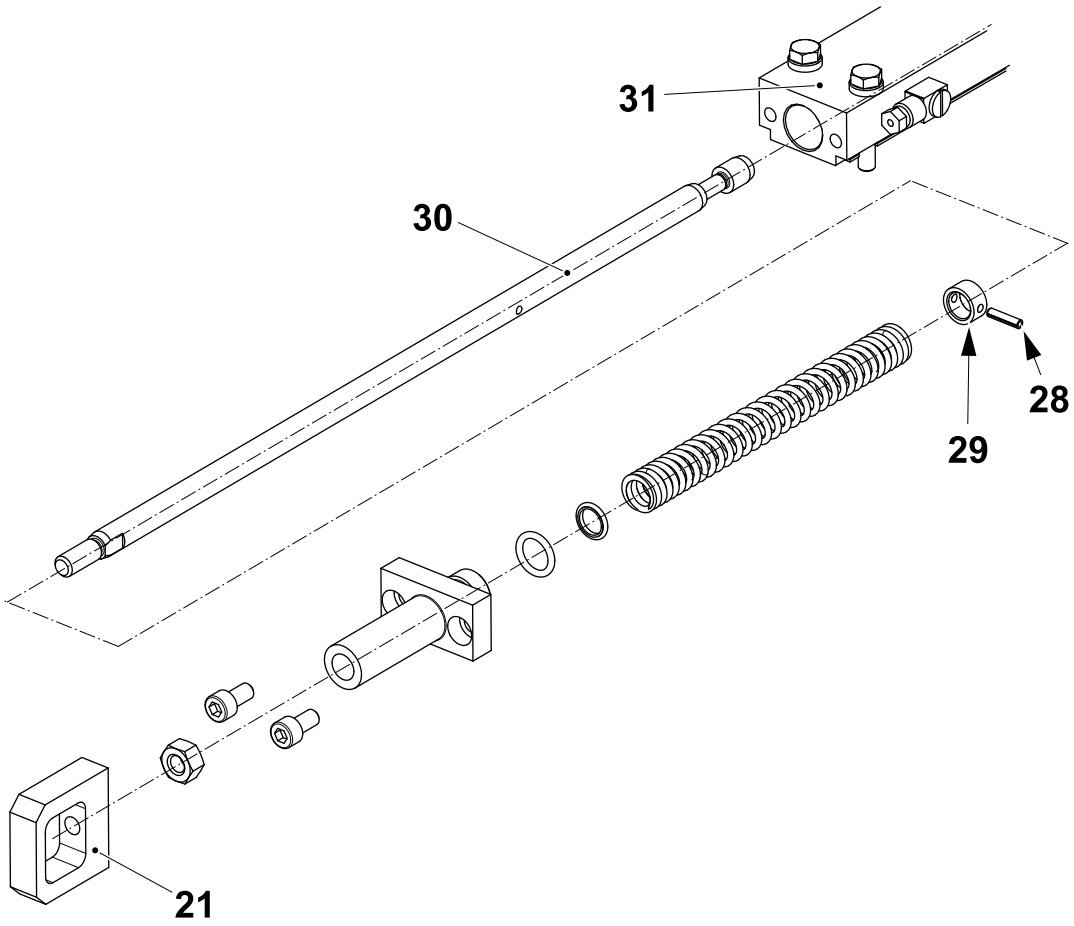

21 Ear
28 Pin
29 Retaining ring
30 Operation rod
31 Carrier

(Cont'd)

(Cont'd)

Note! Valid for all volumes except TBA 200 E and TBA 250 E.

x) Remove the pins (32) and the folding flaps (33). Check the folding flaps for wear or damage, change if required.

Note! Valid for volumes TBA 200 E and TBA 250 E only.

y) Remove the pins (32) and the folding flaps (33). Check the shaft (35) for wear or damage, if required remove the screw (34) and change the shaft (35).

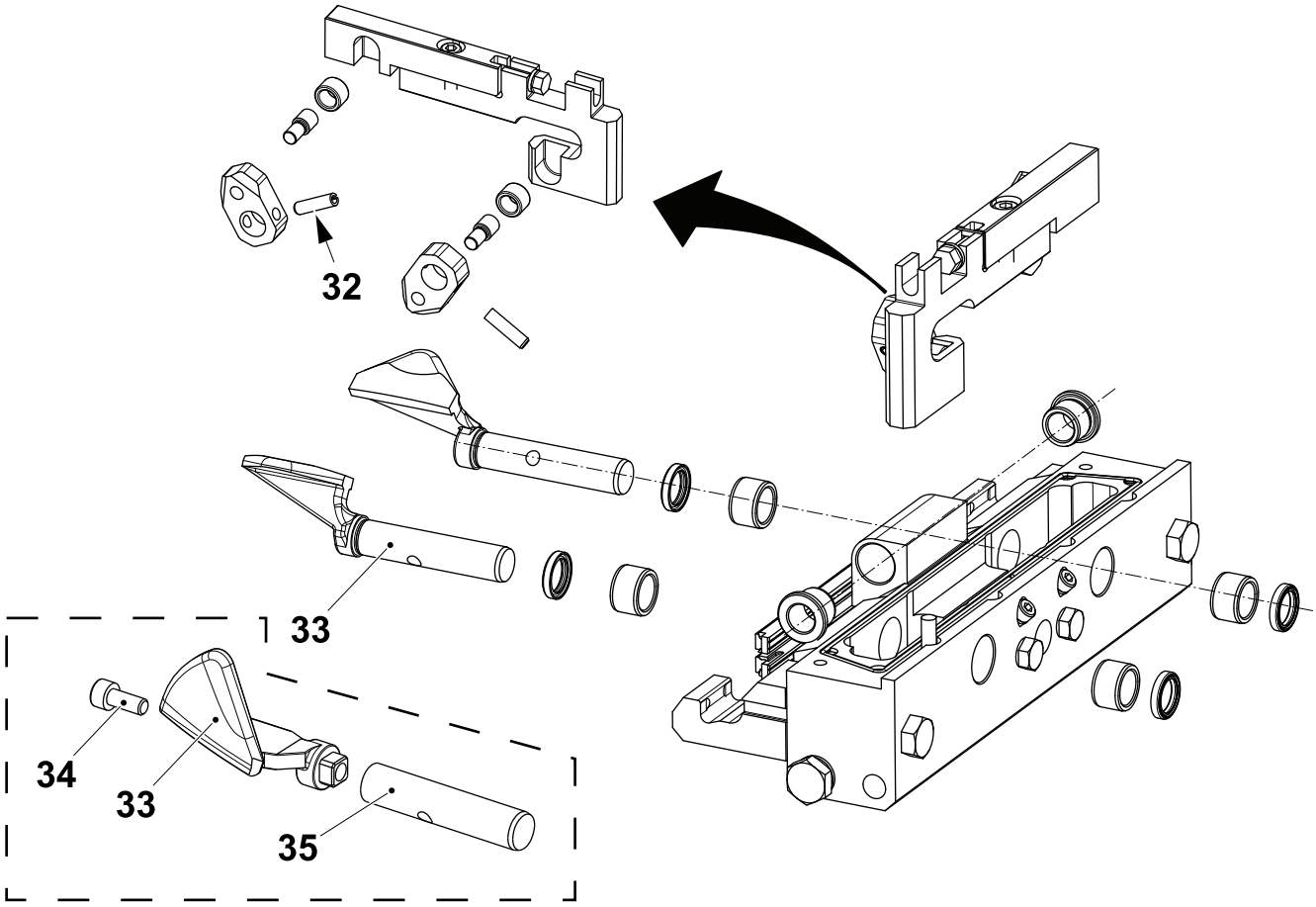

Detail of volumes TBA Edge is shown

32 Pin	34 Screw
33 Folding flap	35 Shaft

(Cont'd)

(Cont'd)

Note! Valid for all volumes.

z) Remove and check the following component for wear or damage:

- the seal rings (1)
- the bearings (2)
- the flange bushings (3).
- the axle pins (4)
- the rollers (5).
- Change them if required.

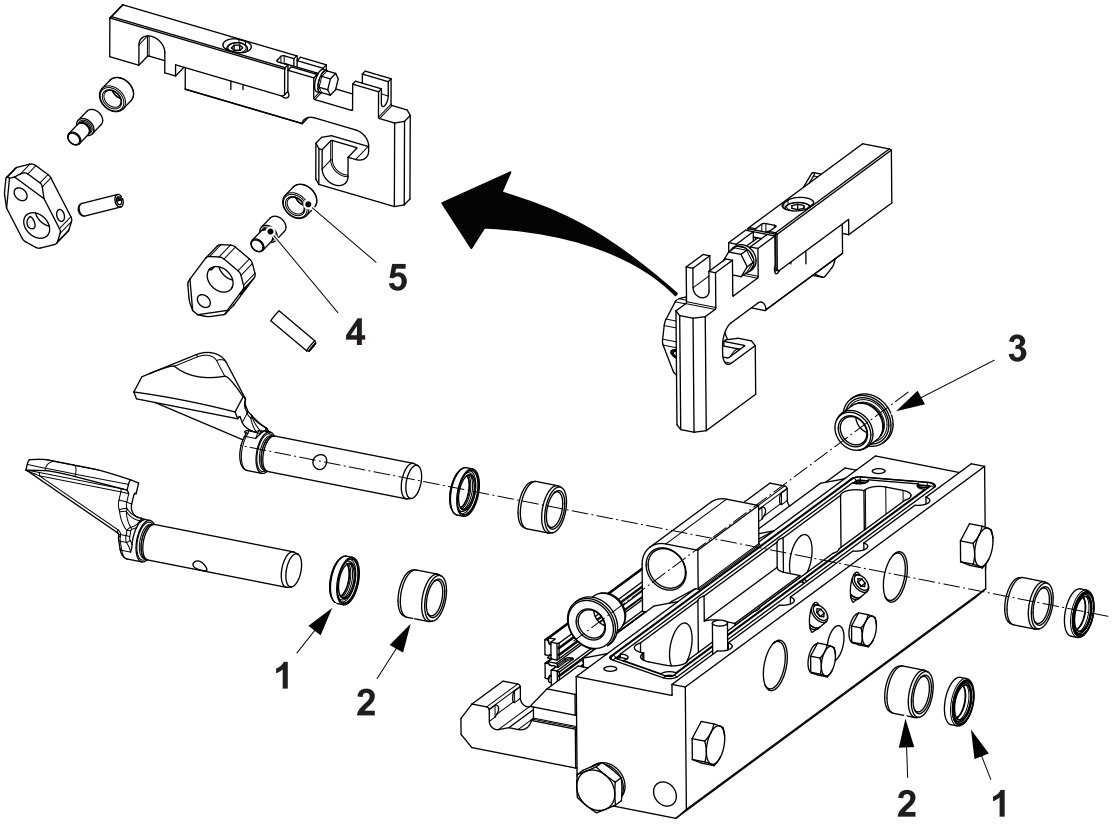

1 Seal ring
2 Bearing
3 Flange bushing
4 Axle pin
5 Roller

(Cont'd)

(Cont'd)

aa) Remove the screws (6) and the ruler parts (7). Check the rulers parts for wear or damage, change if required.

Note! For volumes TBA 100 B and TBA 125 S the carriers (8) are not symmetrical and have to be fitted according to the illustration below.

ab) Assemble in the reverse order.

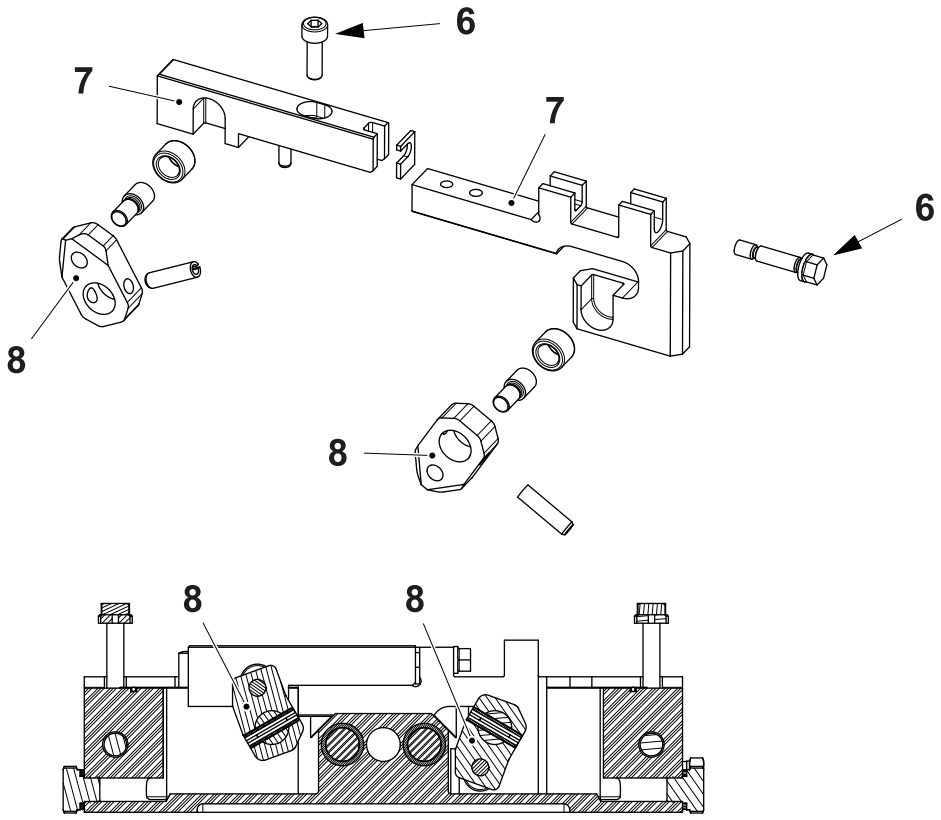

TBA 100 B and TBA 125 S only

6 Screw
7 Ruler part
8 Carrier

4.2.2-5 Cutting Jaw - Change Cutting Rail

Machine Status	Electrical supply disconnecting device in position O (OFF) Main air valve OFF Main steam valve ON Main water valve OFF
SPC Reference	2869017-0200 2869018-0200

a) Remove the screws (1), the brackets (2) and the cutting rails (3).

b) Remove the dollies (4) from the cutting rails (3).

c) Change the cutting rails (3) and assemble in the reverse order.

d) Note the orientation of the cutting rails (3) and the dollies (4) when assemble in the reverse order, see illustration below.

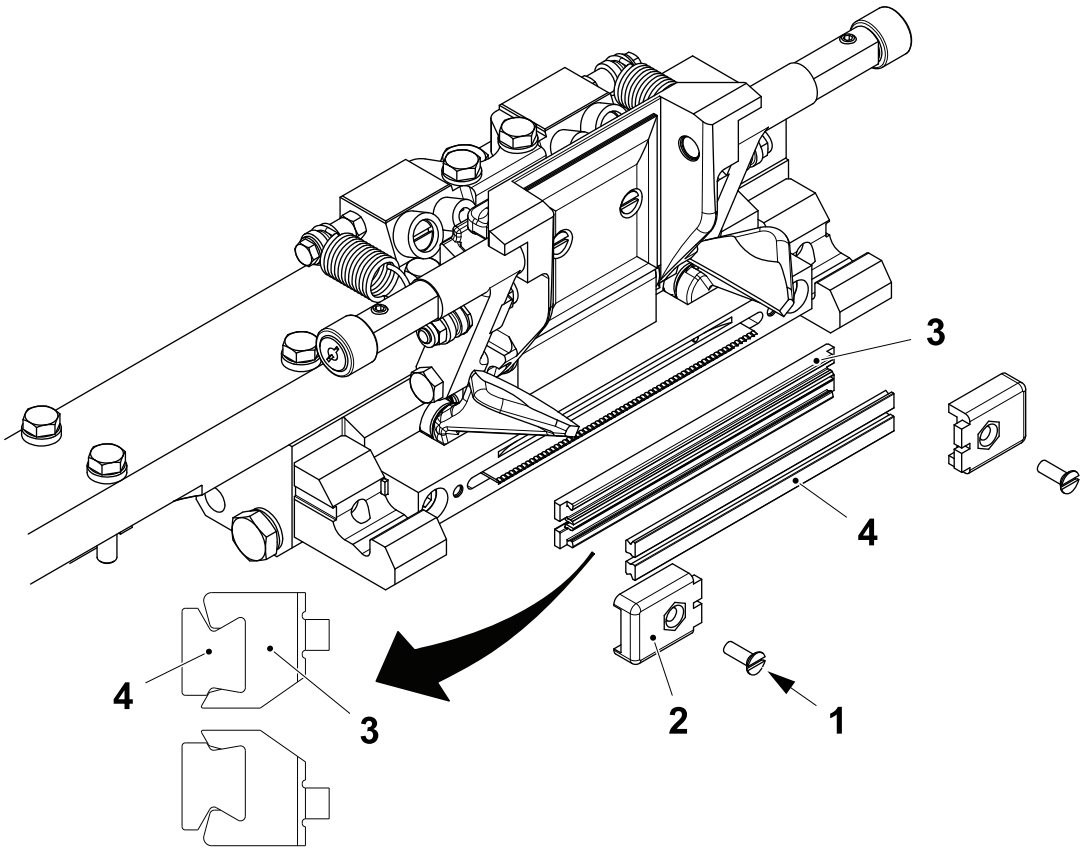

1 Screw
2 Bracket
3 Cutting rail
4 Dolly

4.2.2-6 Cutting Jaw - Change Oil

Machine Status	Electrical supply disconnecting device in position I (ON) Main air valve OFF Main steam valve ON Main water valve OFF
Consumables	Lubricant, Kluberoil 4 UH1 320-N TP No. 344414-0000
SPC Reference	2869017-0200 2869018-0200

Perform the following procedure on both the LH and RH side cutting jaws.

CAUTION
Risk of damage to the equipment.
Mixing lubricants with no compatible bases will lead to severe loss of lubrication and probable damage to the equipment. Use only recommended consumables, see section 9.3.1 Lubricants.

a) Remove the volume flap (1), see 4-9 Jaw System - Remove Cutting Jaw Volume Flaps.

b) Use the `GO TO POSITION` function to slow inch the machine until the LH or RH side cutting jaw is in the open position, see 4-2 Jaw System - Inching, Go To Position and Manual Operation.

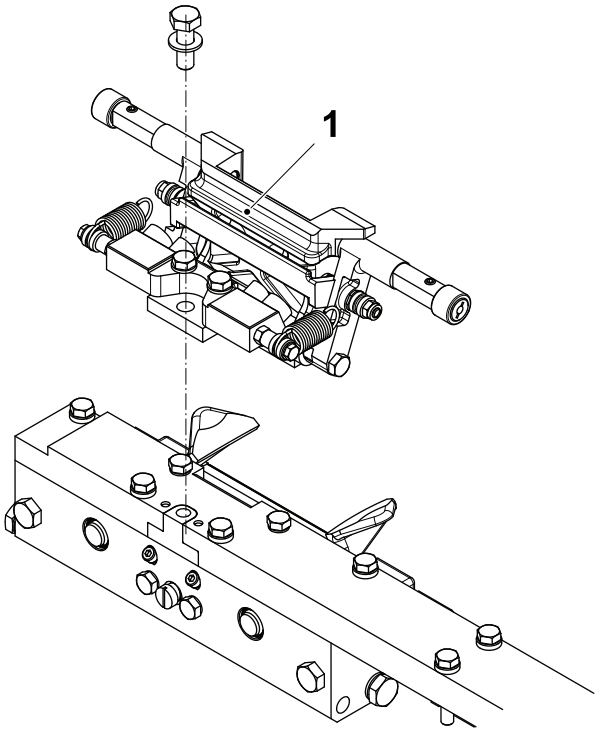

1 Volume flap

(Cont'd)

(Cont'd)

CAUTION
Risk of damage to the equipment.
To ensure that the cutting jaws are filled with the correct quantity of oil the cutting jaws must be positioned in the horizontal position during the filling procedure.

c) Drain the oil from the bearing housing (2) by removing the drain plugs (3) and the filling plugs (4).

d) Use the GO TO POSITION function to slow inch the machine until the LH or RH side cutting jaw is in the horizontal position, see 4-2 Jaw System - Inching, Go To Position and Manual Operation.

e) Fill with oil through the filling plugs holes (5).

f) Manually move the ear (6) to ensure that both the internal chambers of the bearing housing (2) are filled with the oil.

g) Continue to fill with oil through the filling plugs holes (5) until oil comes out from the holes of the drain plugs (3).

h) Fit and tighten the drain plugs (3) and the filling plugs (4).

i) Repeat the procedure for the other cutting jaw.

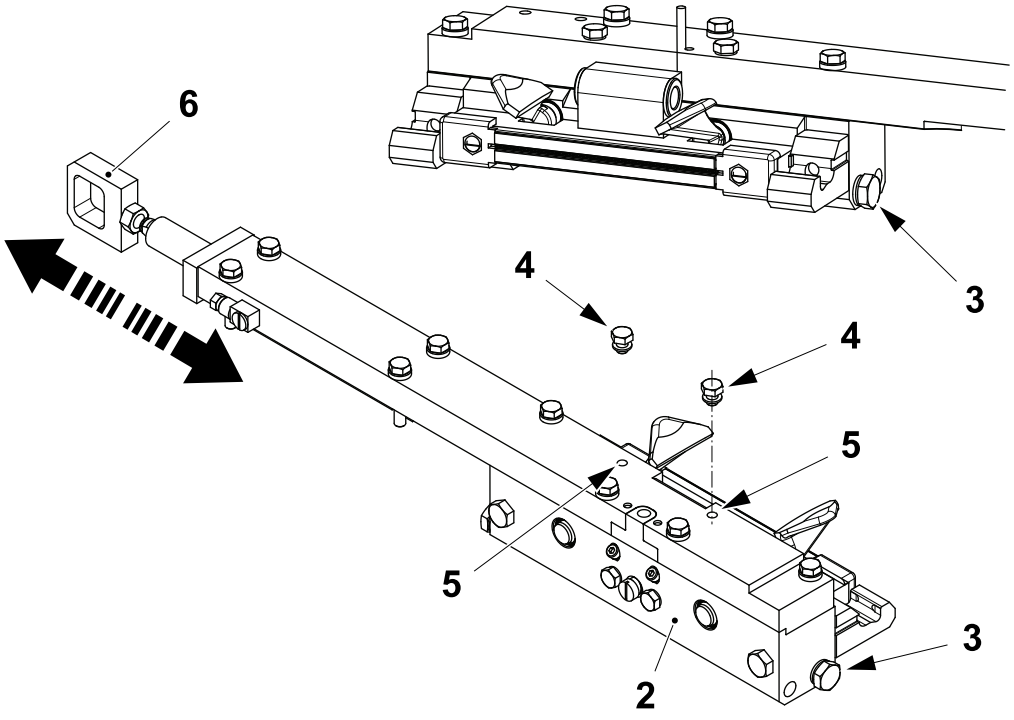

2 Bearing housing
3 Drain plug
4 Filling plug
5 Filling plug hole
6 Ear

4.2.3 Knife Holder

4.2.3-1 Knife Holder - Check Knife

Machine Status	Electrical supply disconnecting device in position O (OFF) Main air valve OFF Main steam valve ON Main water valve OFF
Consumables	Silicone Grease TP No. 90296-0009
SPC Reference	256208-0400

WARNING

Risk of cutting injury.

The knife is sharp and may be hot. Wear personal protective equipment.

Check the following parts for visual wear or damage:

- the knife (1), change the knife as required, see 4.2.3-2 Knife Holder - Change Knife.
- the steering (2), lubricate it with silicon grease TP No. 90296-0009 before assembly
- the link (3)
- the spring (4)
- the nut (5).

Note! When assembling make sure the nut (5) is tight.

Change the parts as required.

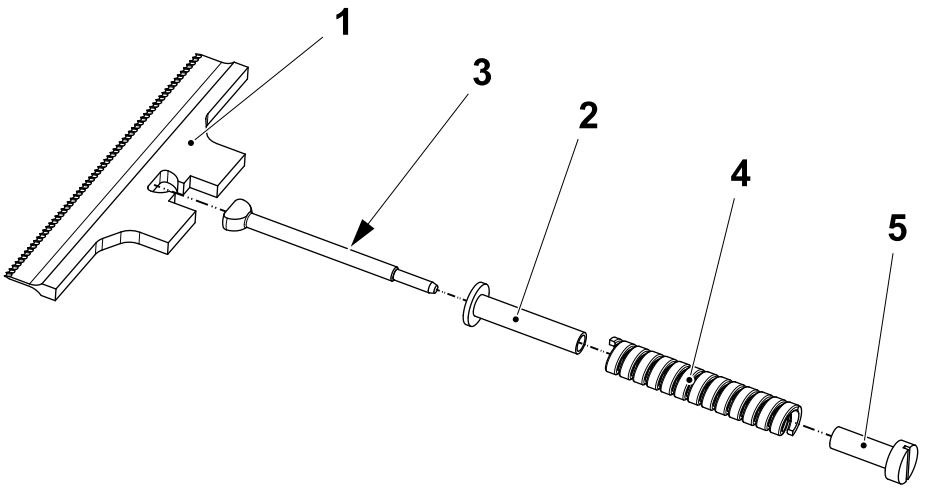

1 Knife
2 Steering
3 Link
4 Spring
5 Nut

4.2.3-2 Knife Holder - Change Knife

Machine Status	Electrical supply disconnecting device in position I (ON) Main air valve OFF Main steam valve ON Main water valve OFF
Consumables	Silicone Grease TP No. 90296-0009
SPC Reference	256208-0400

WARNING

Risk of cutting injury.

The knife is sharp and may be hot. Wear personal protective equipment.

a) Slow inch the jaw pair to the open position, see 4-2 Jaw System - Inching, Go To Position and Manual Operation.

(Cont'd)

(Cont'd)

b) Remove the screw (1) and the spring (2).

c) Remove the screws (3) and the brackets (4).

d) Remove the cutting rails (5).

e) Pull out the knife (6) and the link (7) together.

Note! Apply a layer of silicone grease TP No. 90296-0009 to the link (7) when assembling.

f) Clean any packaging material and product residue from the knife (6) with a brass brush.

g) Change the knife (6) if necessary.

h) Assemble in the reverse order.

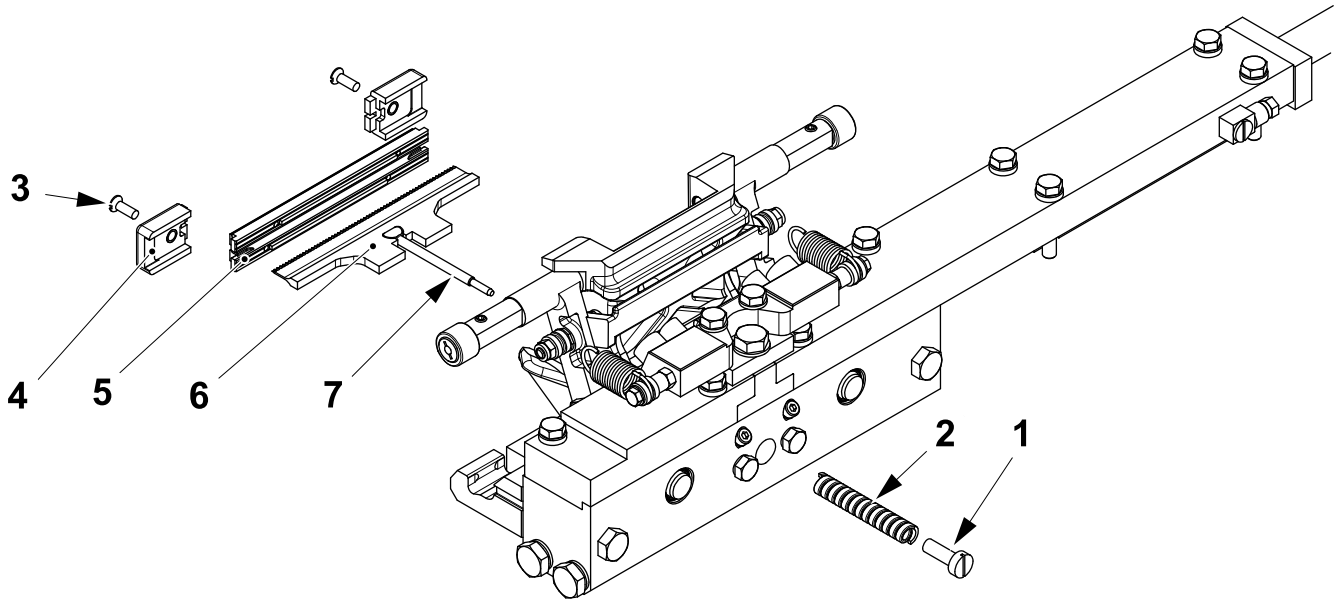

1 Screw
2 Spring
3 Screw
4 Bracket
5 Cutting rail
6 Knife
7 Link

4.2.4 Volume Flaps

4.2.4-1 Volume Flaps - Check

Machine Status	Electrical supply disconnecting device in position O (OFF) Main air valve OFF Main steam valve ON Main water valve OFF
SPC Reference	2869019-0300 2966465-0300 2907729-0300 2966467-0300

Check the following parts for visual wear or damage:

- the curve roller (1) and that the radial play on the curve roller (1) does not exceed 0.5 mm
- the springs (2) and the holders (3)
- the stops (4)
- the volume bulge (5)
- the bushings (6) and that the radial play on the bushings (6) does not exceed 0.5 mm
- the holders (7).

Change the parts if necessary.

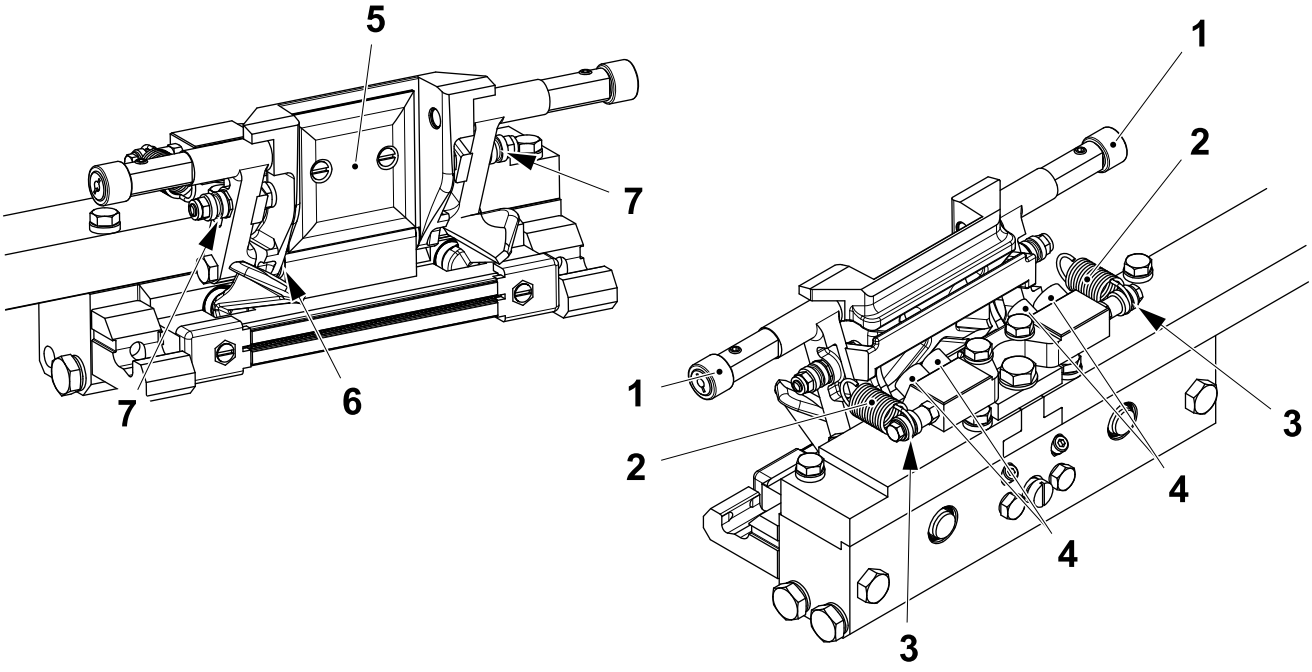

1 Curve roller
2 Spring
3 Holder
4 Stop
5 Volume bulge
6 Bushing
7 Holder

4.2.4-2 Volume Flaps - Change Bushings, Curve Rollers and Shims

Machine Status	Electrical supply disconnecting device in position O (OFF) Main air valve OFF Main steam valve ON Main water valve OFF
SPC Reference	2869019-0300 2966465-0300 2907729-0300 2966467-0300

Remove Volume Flaps

Follow the instructions in 4-9 Jaw System - Remove Cutting Jaw Volume Flaps.

Change Bushings

a) Remove the screws (1) and (2), and the nuts (3).

b) Remove the axles (4) and the screw (5) from the holder (6).

c) Pull out the shaft (7).

d) Remove and change the bushings (8).

e) Assemble in the reverse order.

f) Repeat for the other side.

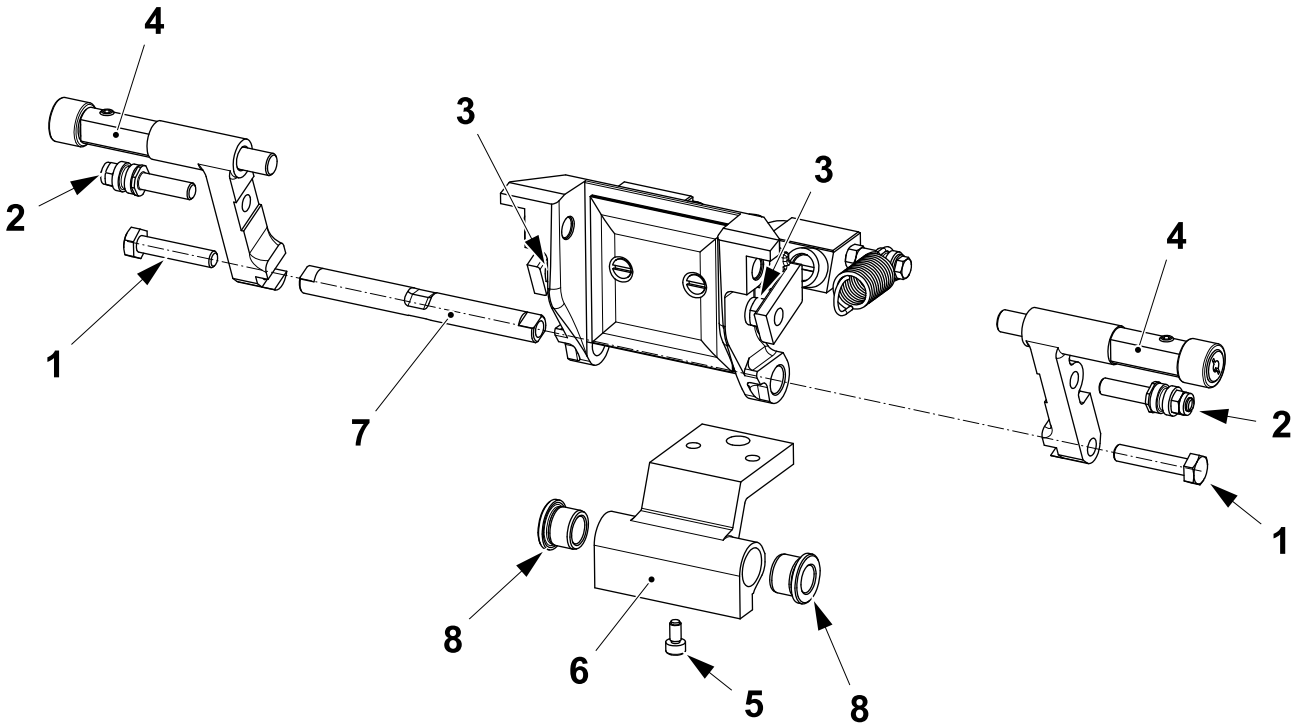

1 Screw
2 Screw
3 Nut
4 Axle
5 Screw
6 Holder
7 Shaft
8 Bushing

(Cont'd)

(Cont'd)

Change Curve Rollers

a) Remove the stop screw (1) and the curve roller (2).

b) Change the curve roller (2) if damaged or worn out and assemble in the reverse order.

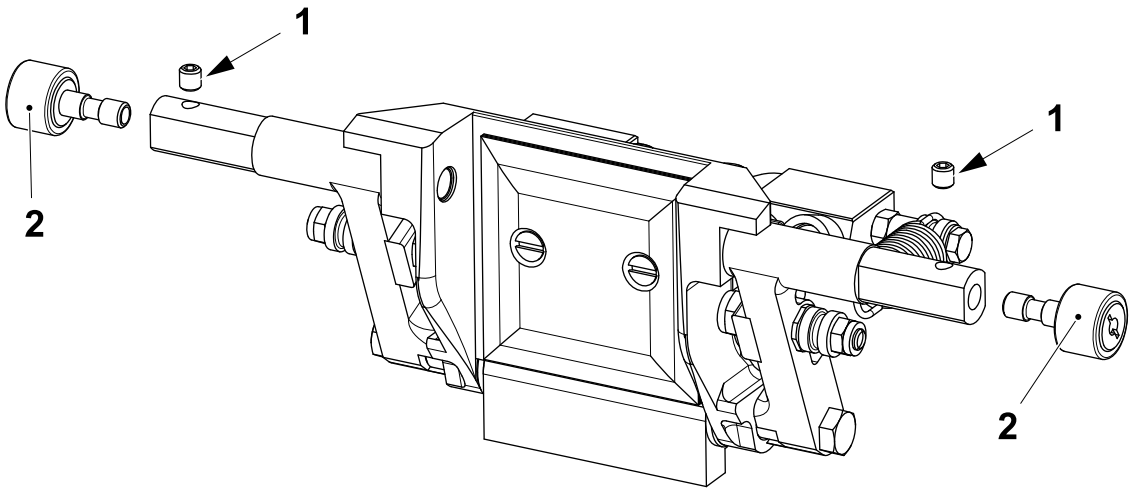

1 Stop screw
2 Roller

(Cont'd)

(Cont'd)

Change Volume Shims (Valid for all TBA volumes)

Note! For volumes TBA 200 E and TBA 250 E only: do not fit any shims in the pressure jaw volume flaps. Shims are allowed only in the cutting jaw volume flaps.

a) Remove the screws (1), the volume bulge (2) and the volume shims (3).

b) Change the damaged or worn parts.

c) Assemble in the reverse order.

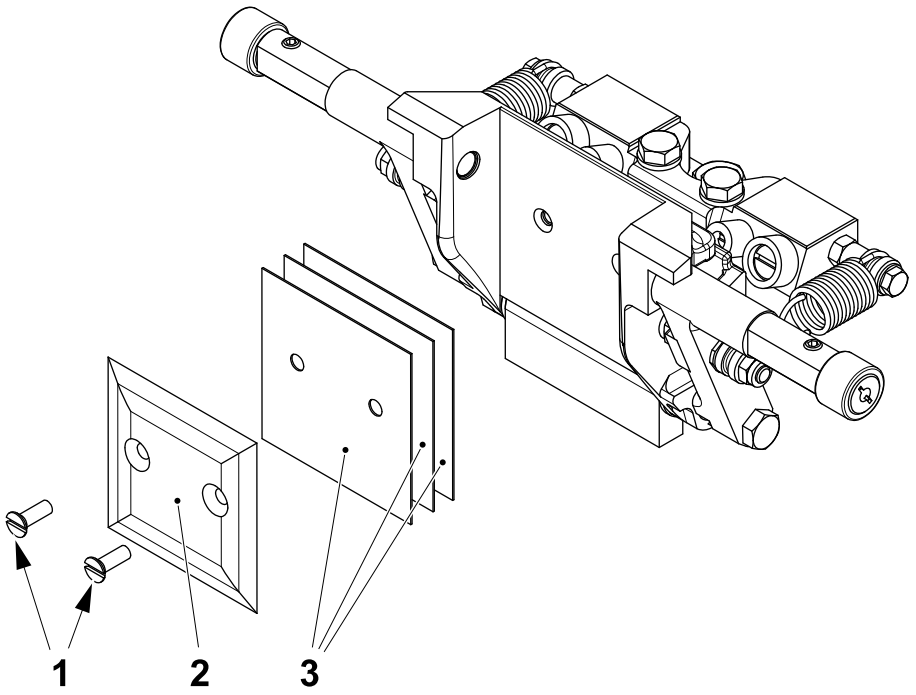

1 Screw
2 Volume bulge
3 Volume shim

(Cont'd)

(Cont'd)

Change Volume Shims (Valid for TPA 125 Sq Volume Only)

a) Remove the screws (1), the volume shims (2) and the volume bulges (3).

b) Change the damaged or worn parts.

Note! The volume bulges (3) are different from volume bulge (4) and must be assembled as indicated in the illustration with the extended profile (5) facing downward.

c) Assemble in the reverse order.

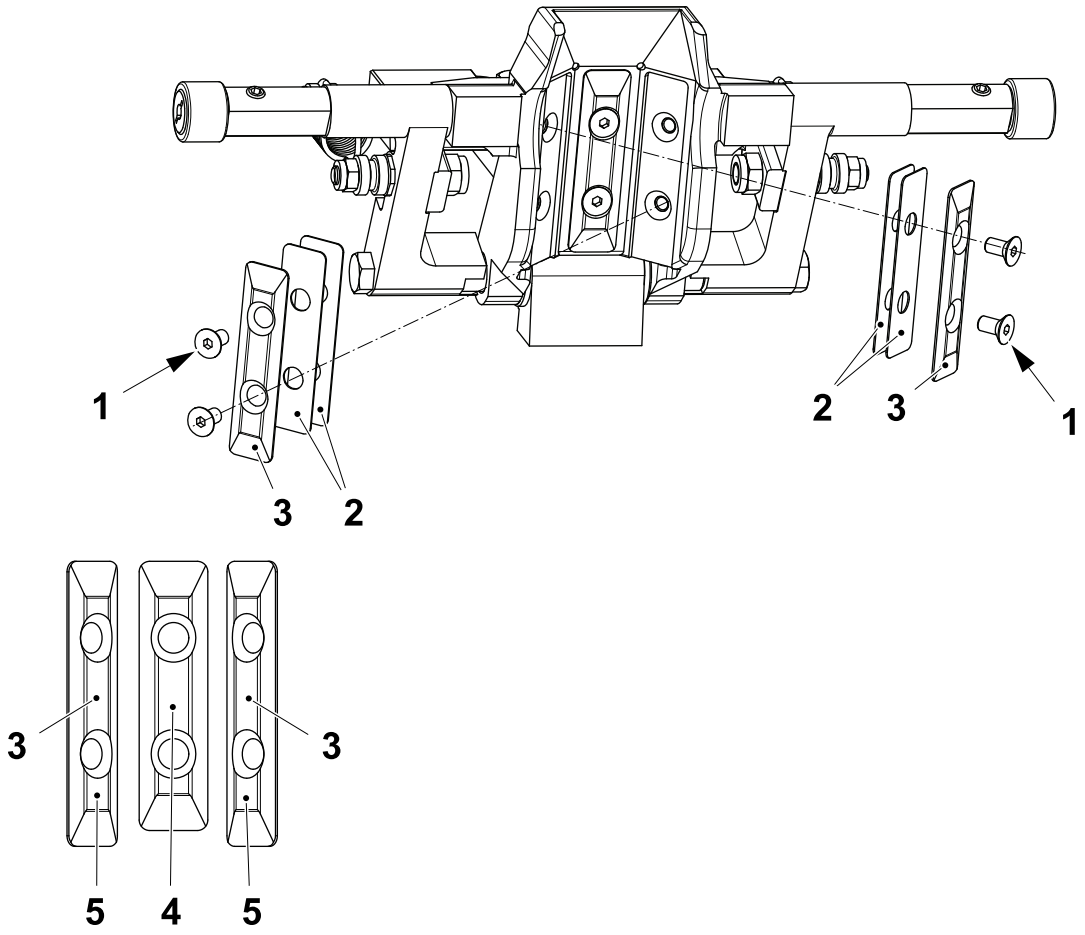

1 Screw
2 Volume shim
3 Volume bulge
4 Volume bulge
5 Profile

(Cont'd)

(Cont'd)

Change Volume Shims (Valid for TPA 200 Sq, TPA 250 Sq and TPA 330 Sq Volumes Only)

a) Remove the screws (1), the volume bulges (2) and the volume shims (3).

b) Change the damaged or worn parts.

c) Assemble in the reverse order.

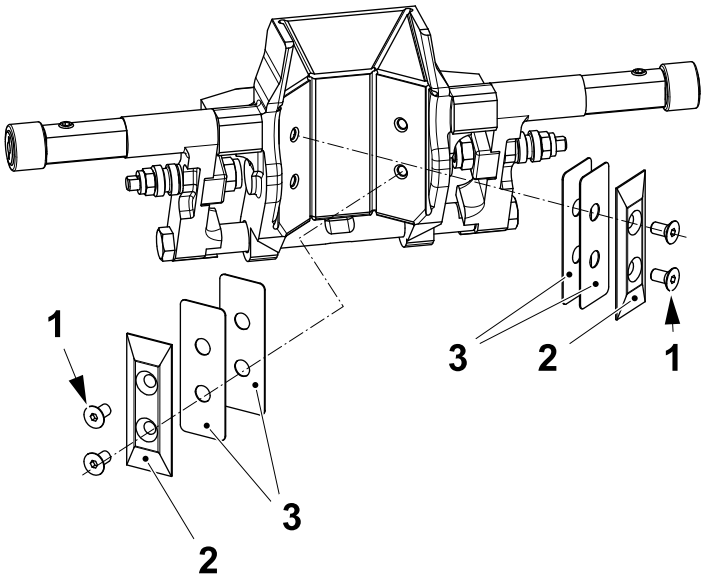

Volumes TPA 200 Sq and TPA 250 Sq

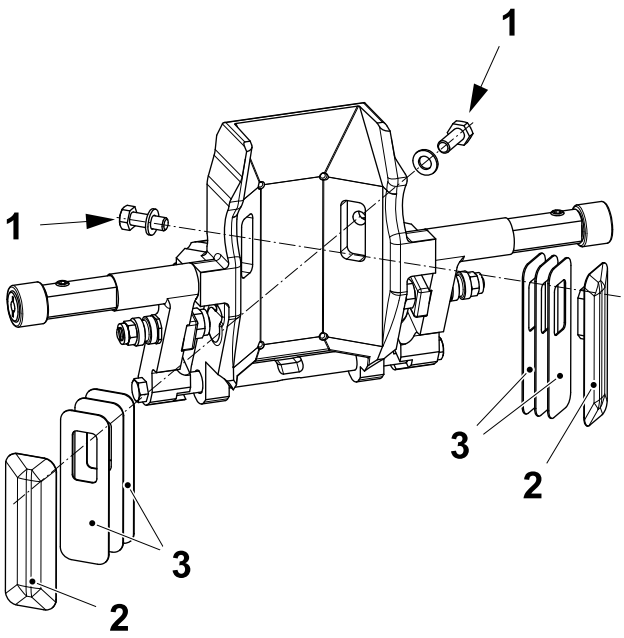

Volume TPA 330 Sq

1 Screw
2 Volume bulge
3 Volume shim

Fit Volume Flaps

Follow the instructions in 4-16 Jaw System - Install Cutting Jaw Volume Flaps to fit the volume flaps.

4.2.4-3 Volume Flaps - Grease

Machine Status	Electrical supply disconnecting device in position O (OFF) Main air valve OFF Main steam valve ON Main water valve OFF
Consumables	Grease, Klubersynth UH1 64-62 TP No. 344408-0000
SPC Reference	2869019-0300 2966465-0300 2907729-0300 2966467-0300

Remove the plug (1) and grease the curve roller (2) of the volume flap (3).

Fit back the plug (1).

Repeat the procedure for the other volume flaps.

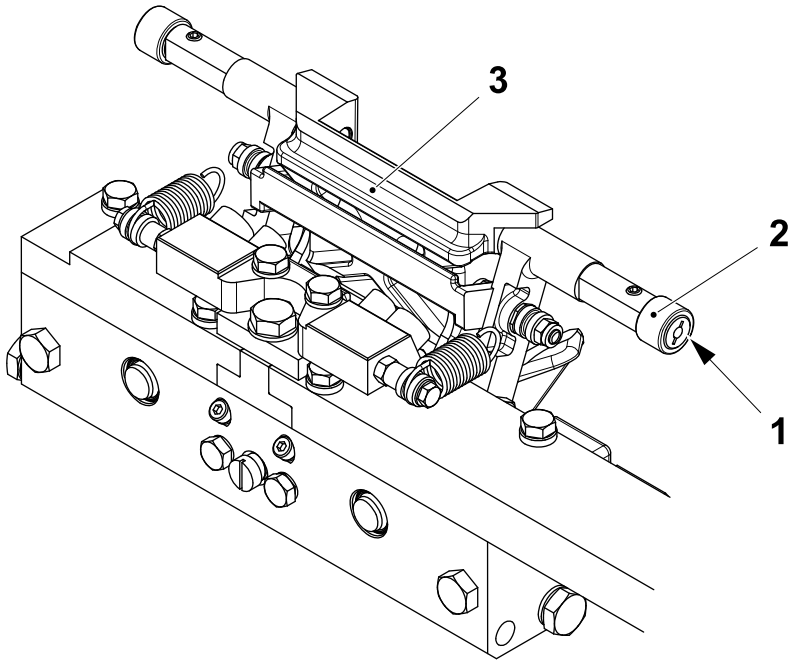

1 Plug
2 Curve roller
3 Volume flap

4.2.5 Volume Curve Piece

4.2.5-1 Volume Curve Piece - Check Curve Unit

Machine Status	Electrical supply disconnecting device in position O (OFF) Main air valve OFF Main steam valve ON Main water valve OFF
SPC Reference	2835504-0200

Check the volume cams (1) for wear or damage.

Change the volume cams if necessary, see 4.2.5-2 Volume Curve Piece - Change Cam.

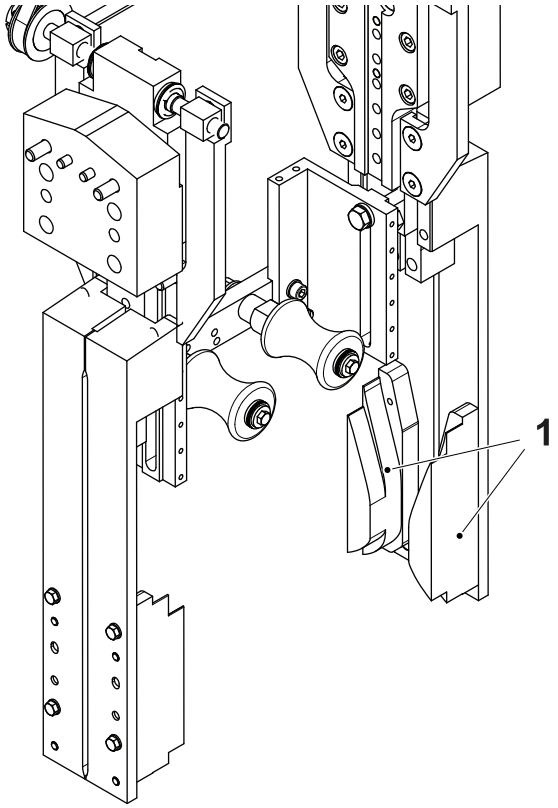

1 Volume cam

4.2.5-2 Volume Curve Piece - Change Cam

Machine Status	Electrical supply disconnecting device in position I (ON) Main air valve OFF Main steam valve ON Main water valve OFF
SPC Reference	2835504-0200

a) Remove the screws (1) and the volume cams (2) from the plates (3).

Note! For the TBA 200 E and TBA 250 E volumes only: the four volume cams (2) are not simmetrical and must be fitted in the correct LH and RH position, see the SPC.

b) Fit the new volume cams (2) to the plates (3) with the screws (1).

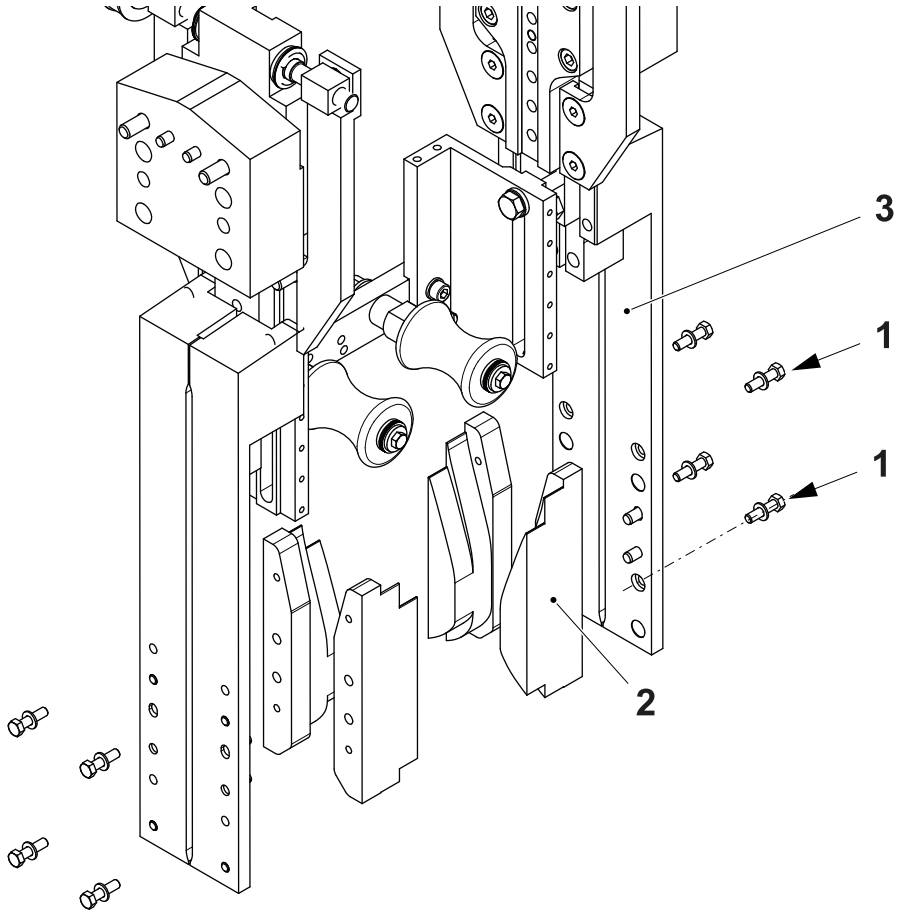

1 Screw
2 Volume cam
3 Plate

4.2.6 Support Roller

4.2.6-1 Support Rollers - Check

Machine Status	Electrical supply disconnecting device in position O (OFF) Main air valve OFF Main steam valve ON Main water valve OFF
SPC Reference	2901092-0200

Check the following parts for visual wear or damage:

- the support rollers (1), make sure that they rotate easily. If necessary clean the support rollers (1)
- the shafts (2), make sure that they are not bent
- the bushings (3), make sure that the play of the bushings (3) is not excessive.

Change the parts if necessary.

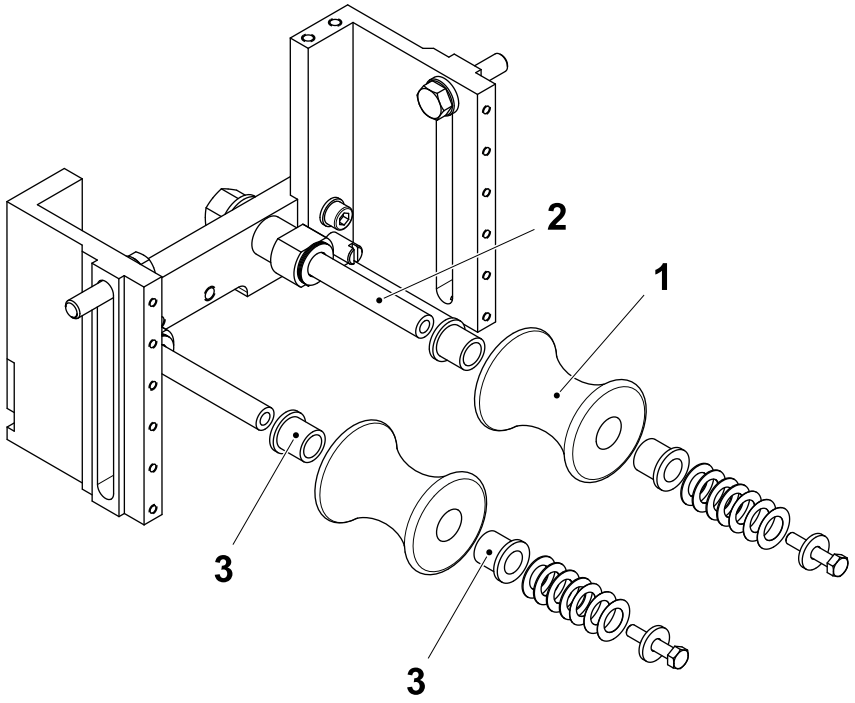

1 Support roller
2 Shaft
3 Bushing

4.2.6-2 Support Rollers - Change Flange Bushings

Machine Status	Electrical supply disconnecting device in position O (OFF) Main air valve OFF Main steam valve ON Main water valve OFF
SPC Reference	2901092-0100

a) Remove the screws (1) with the washers (2).

b) Remove the support rollers (3).

c) Remove the flange bushings (4) and change them.

d) Assemble in the reverse order.

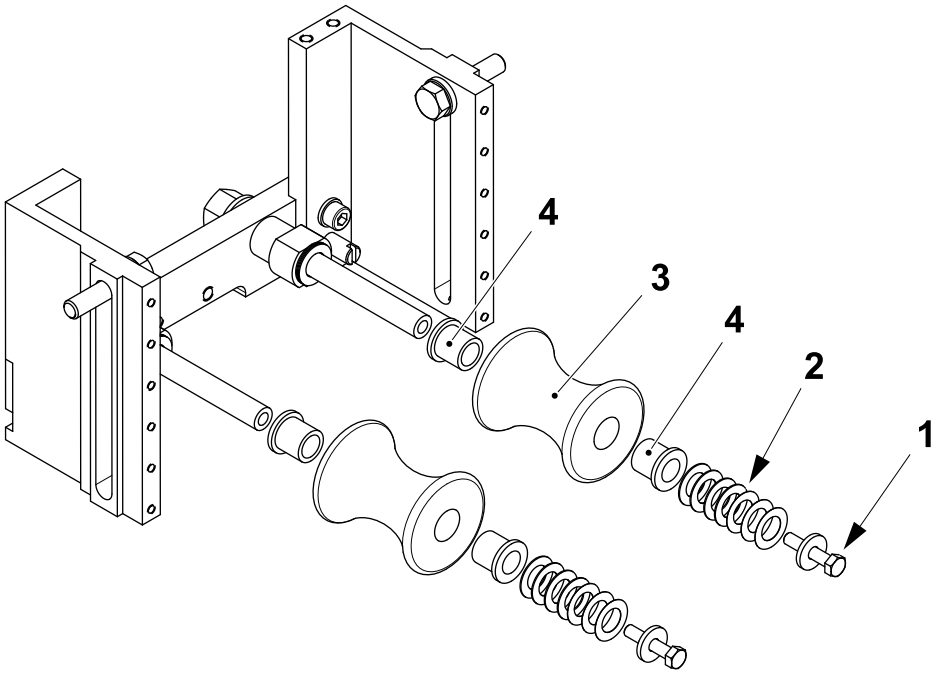

1 Screw
2 Washer
3 Support roller
4 Flange bushing

4.2.7 Photocell Unit

4.2.7-1 Photocell Unit - Set

Machine Status	Electrical supply disconnecting device in position I (ON) Main air valve ON Main steam valve ON Main water valve OFF
SPC Reference	2862751-0200

Photocells Position

a) Set the limit screw (1) so that it bears against the bracket (2) in the production position. Eliminate any play.

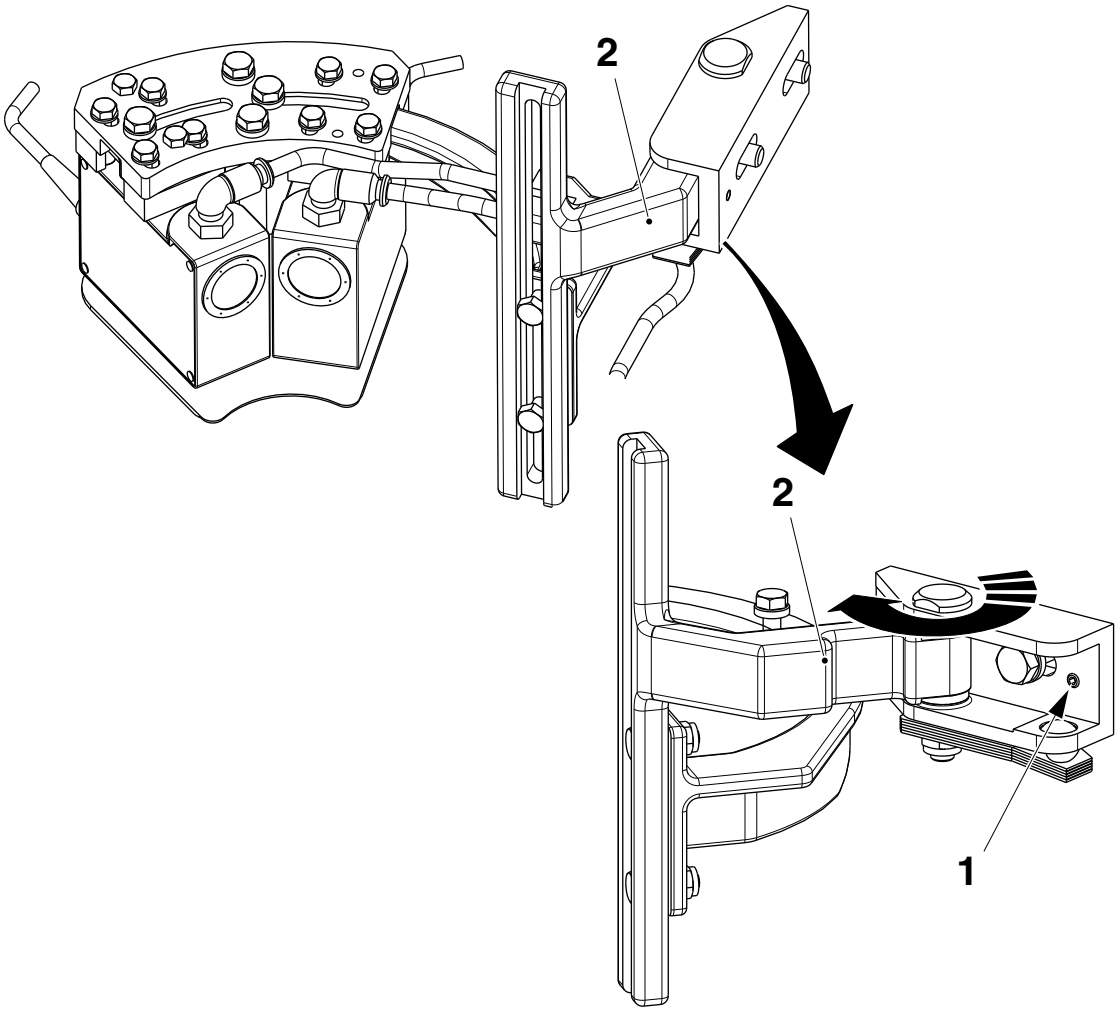

1 Limit screw
2 Bracket

(Cont'd)

(Cont'd)

b) Touch the MAINTENANCE CONTROL button (3).

c) Log on to access the MAINTENANCE CONTROL window, see 8.6.3-2 HMI - User Management Log On.

d) Touch the JAW SYSTEM button (4) to display the JAW SYSTEM window.

e) Touch the PHOTOCELL HEIGHT icon (5) to display the PHOTOCELL HEIGHT window (6).

f) Touch the START button (7).

g) Touch the OK button (8) and wait for the jaw movement to complete.

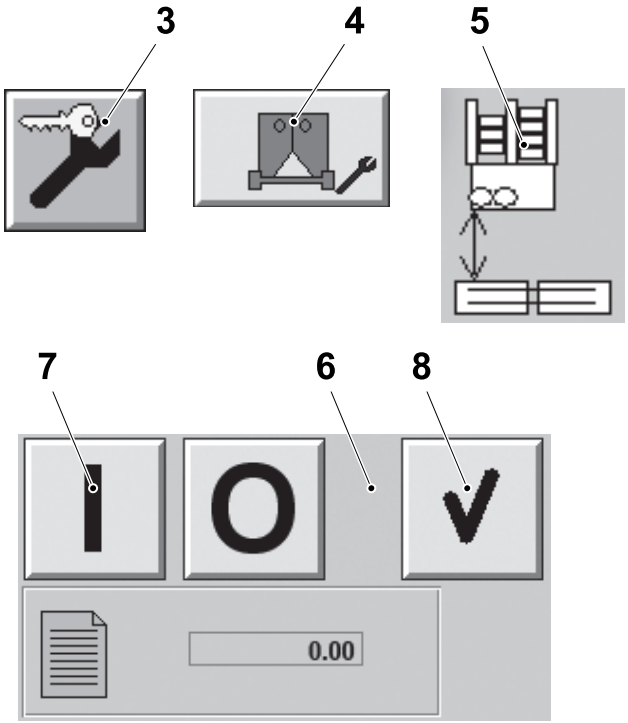

3 MAINTENANCE CONTROL button
4 JAW SYSTEM button
5 PHOTOCELL HEIGHT icon
6 PHOTOCELL HEIGHT window
7 START button
8 OK button

(Cont'd)

(Cont'd)

h) Loosen the screws (9) and set the nominal distance A (10) as displayed in the PHOTOCELL HEIGHT window (6) between the centre of the lens of the photocells (11) and the top surface of the knife holder (12).

i) Tighten the screws (9).

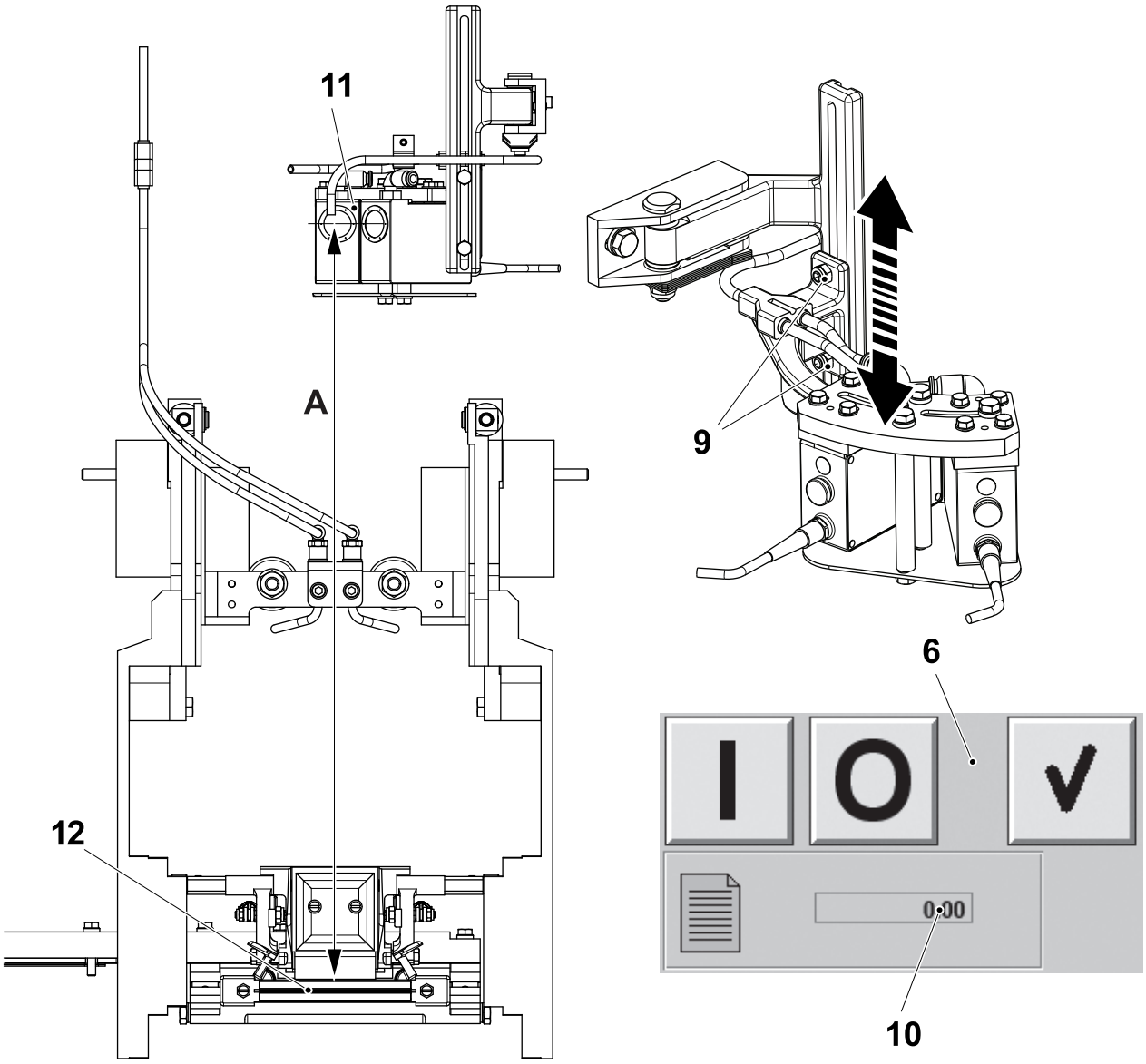

6 PHOTOCELL HEIGHT window
9 Screw
10 Nominal distance A
11 Photocell
12 Knife holder

(Cont'd)

(Cont'd)

Photocells Trigger Marks Reading

a) Set the distance **B** between the photocells (1) and the sealed tube (2) using the screws (3) for each photocell.

b) Set the photocells (1) so that the lights spot (4) are centred on the photocell trigger marks on the packaging material tube. Adjust with the screws (3) and (5).

c) Check the distance **B** again.

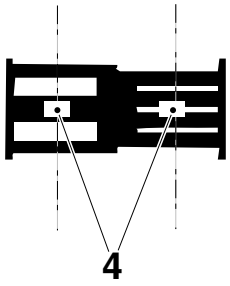

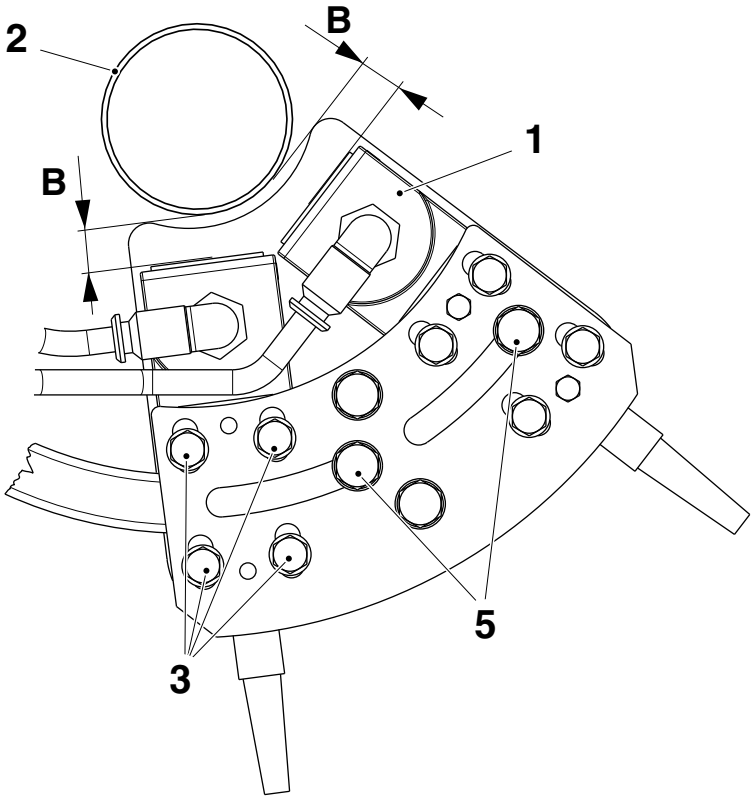

B = 11.5 ±1 mm

1 Photocell
2 Sealed tube
3 Screw
4 Light spot
5 Screw

(Cont'd)

(Cont'd)

Photocell Sensitivity

For information on how to set the photocell sensitivity, see 8.8.2-3 TMCC2 Controller - Photocells Manual Setting.

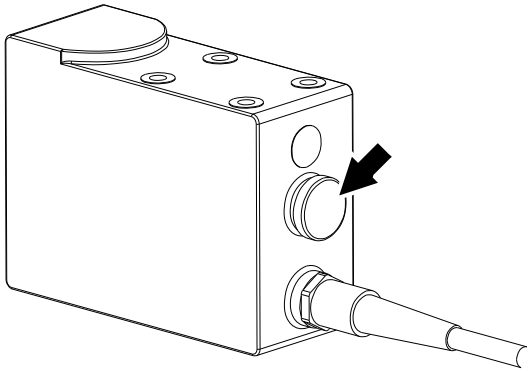

Design Correction Fine Setting

Check that the bottom creases are correctly positioned on the packages. To fine adjust the position of the bottom creases proceed as follows:

a) On the TPOP display touch the PRODUCTION CONTROL button (1).

b) Touch the PACKAGE FORMING UNIT button (2).

c) Touch the DESIGN CORRECTION icon (3).

d) Use the ARROW button (4) on the DESIGN CORRECTION window to fine set the position of the bottom creases.

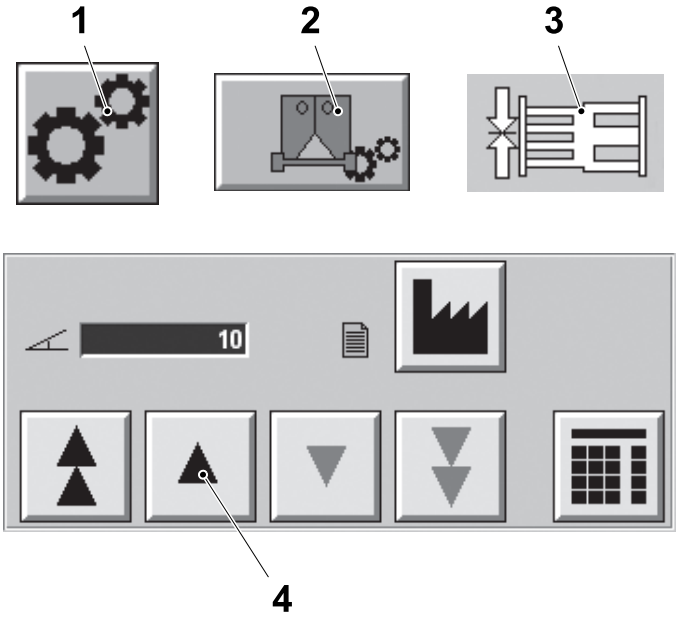

1 PRODUCTION CONTROL button
2 PACKAGE FORMING UNIT button
3 DESIGN CORRECTION icon
4 ARROW button

4.2.7-2 Photocell Unit - Check Alignment

Machine Status	PRODUCTION
Special Equipment	RS 232-C Communication Cable Laptop PC
SPC Reference	2862751-0200

a) Connect the communication cable between the PC and the front panel connector (1) of the TMCC2 card A01K0100 (Photocells Decoder).

b) Start hyperterminal.

c) Type **H** and press the ENTER key.

d) Type **D1** and press the ENTER key.

Note! The value on the PC is equal to the mechanical offset of the reading points of the clock photocell and the data photocell.

e) Check the value displayed on the PC. The value must be 1.0 ±0.20, if the value displayed on the PC is within the range the alignment is correct.

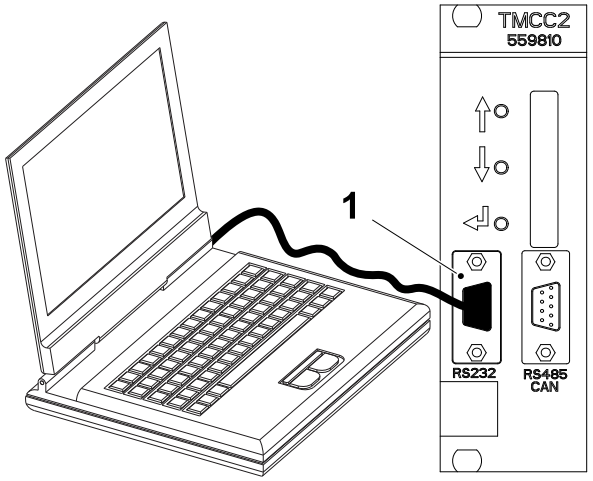

1 TMCC2 connector

(Cont'd)

(Cont'd)

f) If the value displayed in the PC is outside of the permitted range proceed as follows:

- Considering the value on the PC as **A** calculate the correction value **S** (mm) as follows, **S** = (**1** - **A**) x **K**
- For values less than **0.8** adjust the data photocell upwards or adjust the clock photocell downward.
- For values above **1.2** adjust the data photocell downward or adjust the clock photocell upward.

K	Volumes
0.6	TBA 125 S, TBA 160 S, TBA 180 S, TBA 200 B, TBA 200 S, TBA 200 M, TBA 200 Sq, TBA 200 E, TBA 250 B, TBA 250 S, TBA 250 E, TPA 125 Sq, TPA 200 Sq, TPA 250 Sq, TPA 330 Sq
0.89	TBA 80 S,TBA 100 B, TBA 284 B, TBA 300 S, TBA 330 S, TBA 375 S

g) Remove the screws (6) then add or remove the layers from the peelable shims (7) until the value **S** (mm) is obtained.

h) Repeat until the TMCC2 card displays the correct alignment value.

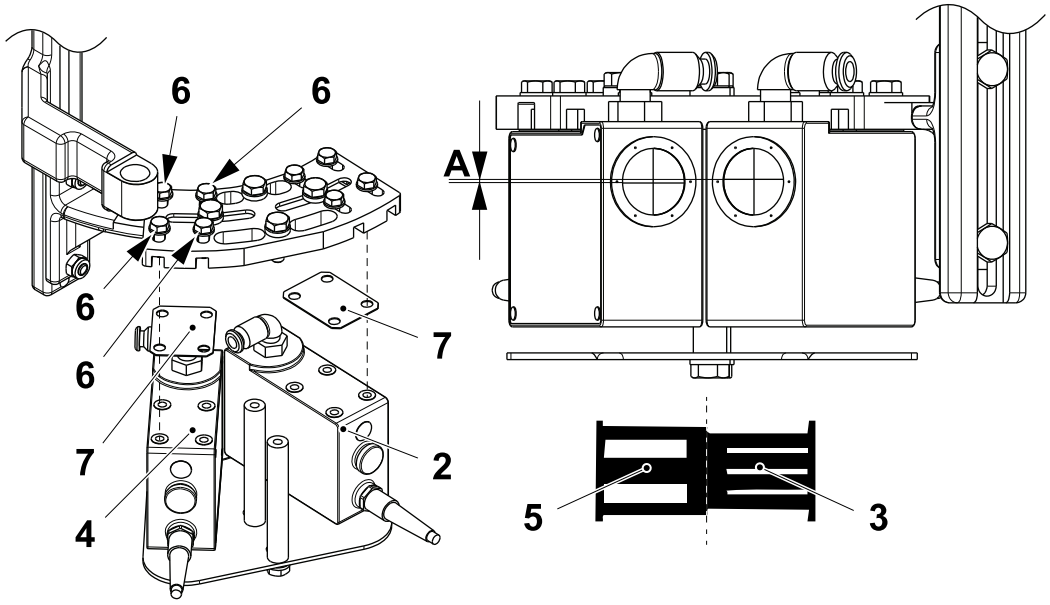

2 Clock photocell
3 Clock photocell barcode
4 Data photocell
5 Data photocell barcode
6 Screw
7 Shim

4.2.8 Tube Flushing

4.2.8-1 Tube Flushing - Check

Machine Status	Electrical supply disconnecting device in position O (OFF) Main air valve OFF Main steam valve ON Main water valve OFF
SPC Reference	2961522-0200

Check the following parts for visual wear or damage:

- the tube flushing devices (1), make sure that water passes through the two holes (2)
- the hose (3), check for any water leaks.

Change the parts if necessary.

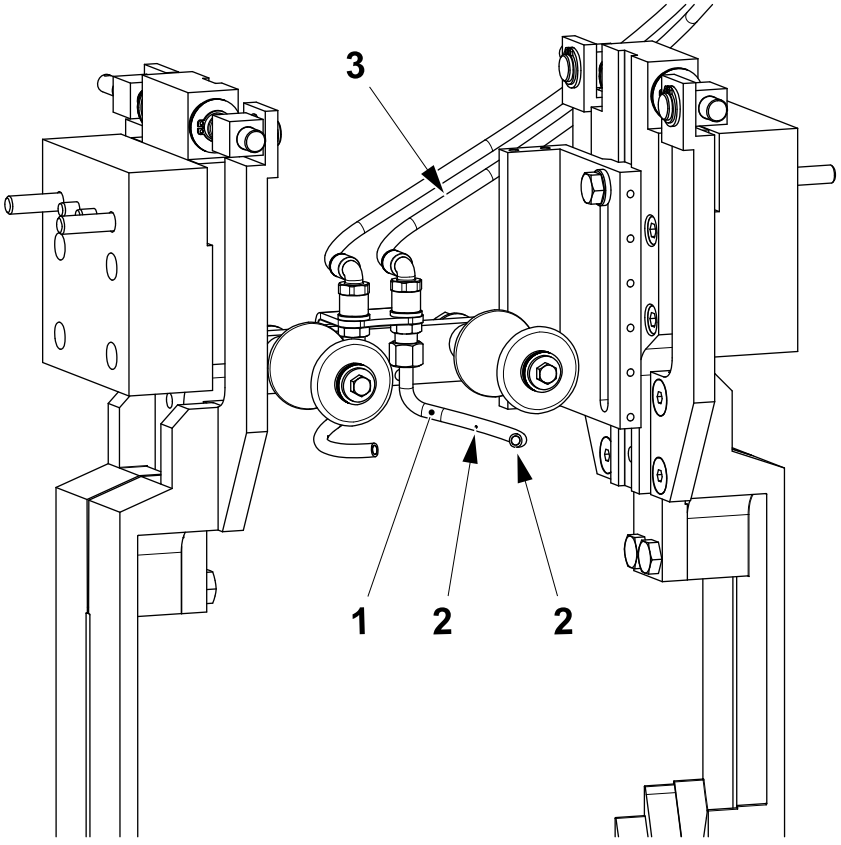

1 Flushing device
2 Hole
3 Hose

This page intentionally left blank

5 Final Folder

Final Folder - Description

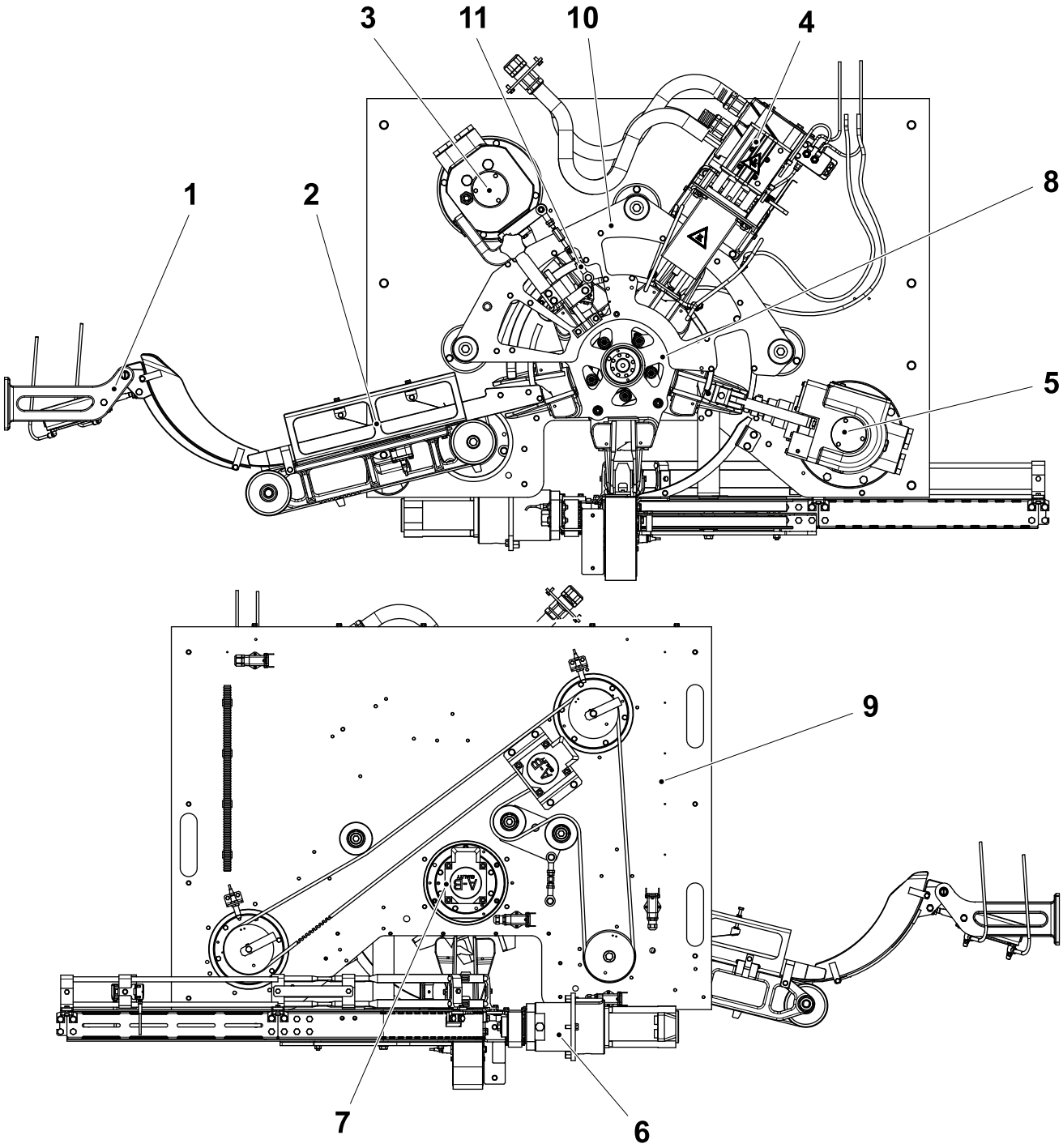

1 Drop Chute
2 Infeed Conveyor
3 Pull Down Device
4 Flap Heaters
5 Pressure Device
6 Outfeed
7 Wheel Axis
8 Wheel
9 Assembly Plate
10 Folding Bar
11 Fin Folder

Final Folder - Description 5-2
5-1 Final Folder - Setting Sequence 5-7
5-2 Final Folder - Synchronization 5-8
5-3 Final Folder - Set External Conveyor Motor Speed 5-14

5.1 Drop Chute 5-15
5.1-1 Drop Chute - Check 5-15
5.1-2 Drop Chute - Set Position 5-17

5.2 Infeed Conveyor 5-19
5.2-1 Infeed Conveyor - Referencing 5-19
5.2-2 Infeed Conveyor - Set Belt 5-22
5.2-3 Infeed Conveyor - Check Belt 5-23
5.2-4 Infeed Conveyor - Change Belt 5-24
5.2-5 Infeed Conveyor - Overhaul 5-26
5.2-6 Infeed Conveyor - Set Sensor 5-28
5.2-7 Infeed Conveyor - Check Bearings 5-30
5.2-8 Infeed Conveyor - Set Spring 5-31

5.3 Pull Down Device 5-33
5.3-1 Pull Down Device - Check Oil Level 5-33
5.3-2 Pull Down Device - Remove Oil 5-34
5.3-3 Pull Down Device - Change Bushing and Rod Seal 5-35
5.3-4 Pull Down Device - Change Ball Bearing and O-Ring 5-38
5.3-5 Pull Down Device - Set Pusher 5-40
5.3-6 Pull Down Device- Change Filter 5-42

5.4 Flap Heaters 5-43
5.4-1 Flap Heater - Overhaul 5-43
5.4-2 Flap Heater - Set Nozzles 5-45
5.4-3 Flap Heater - Set Pressures 5-49
5.4-4 Flap Heater - Set Folding Part 5-50

5.5 Pressure Device 5-52
5.5-1 Pressure Device - Check Oil Level 5-52

5.5-2 Pressure Device - Remove Oil 5-53
5.5-3 Pressure Device - Change Bushing and Seal Ring 5-54
5.5-4 Pressure Device - Change Rod Seal and Bushing 5-58
5.5-5 Pressure Device - Change O-ring and Ball Bearing 5-60
5.5-6 Pressure Device - Check Package Pressure 5-62
5.5-7 Pressure Device - Grease 5-67
5.5-8 Pressure Device - Change Filter 5-68

5.6 Outfeed 5-69

5.6-1 Outfeed - Change Belt 5-69
5.6-2 Outfeed - Set Belt Tension 5-70
5.6-3 Outfeed - Change Carrier 5-71
5.6-4 Outfeed - Change Ball Bearing and Seal 5-72
5.6-5 Outfeed - Check Oil Level 5-75
5.6-6 Outfeed - Change Drive Axis Bellow Coupling 5-76
5.6-7 Outfeed - Check Proximity Switch 5-77
5.6-8 Outfeed - Set Proximity Switch 5-78
5.6-9 Outfeed - Referencing 5-79
5.6-10 Outfeed - Set Counting and Queue Photocells 5-82
5.6-11 Outfeed - Grease Carrier 5-83
5.6-12 Outfeed - Set Pusher Support 5-84

5.7 Wheel Axis 5-85

5.7-1 Wheel Axis - Check Oil level 5-85
5.7-2 Wheel Axis - Change Servomotor 5-86
5.7-3 Wheel Axis - Change Gearbox 5-87
5.7-4 Wheel Axis - Change Seal and Ball Bearing 5-88

5.8 Wheel 5-92

5.8-1 Wheel - Change Rollers and Bushings 5-92
5.8-2 Wheel - Remove 5-94
5.8-3 Wheel - Fit 5-97

5.8-4 Wheel - Referencing 5-101
5.8-5 Wheel - Grease 5-106

5.9 Assembly Plate 5-107
5.9-1 Assembly Plate - Set Belt Tension 5-107
5.9-2 Assembly Plate - Change Belt 5-109
5.9-3 Assembly Plate - Change Ball Bearing 5-110
5.9-4 Assembly Plate - Set Proximity Switch 5-111

5.10 Folding Bar 5-112
5.10-1 Folding Bar - Set Proximity Switch 5-112
5.10-2 Folding Bar - Set Air Nozzle Pressure 5-113

5.11 Fin Folder 5-114
5.11-1 Fin Folder - Set 5-114
5.11-2 Fin Folder - Change Bushing 5-116
5.11-3 Fin Folder - Grease 5-117

This page intentionally left blank

5-1 Final Folder - Setting Sequence

SPC Reference	641505-0300

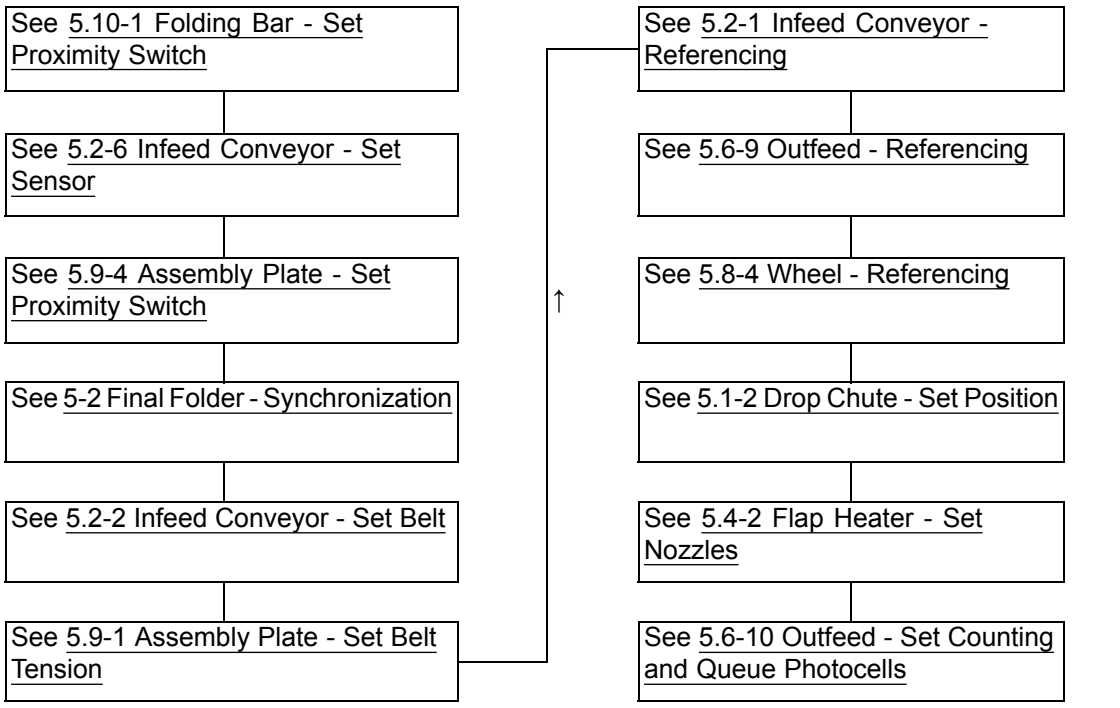

5-2 Final Folder - Synchronization

Machine Status	Electrical supply disconnecting device in position I (ON) Main air valve OFF Main steam valve ON Main water valve OFF
SPC Reference	641505-0300

Pull Down Device and Pressure Device

a) Perform the wheel referencing, see 5.8-4 Wheel - Referencing.

(Cont'd)

(Cont'd)

b) Loosen the tension of the belt (1) by means of the screw (2).

c) Turn the pulleys (3) until the hole (4) is aligned with the hole on the flange (5). Insert the tool (6) in the hole (4).

d) Turn the pulley (7) until the hole (8) is aligned with the hole on the flange (9). Insert the tool (6) in the hole (8).

Note! Make sure that the marks (10) on the pulleys (3) and pulley (7) remain aligned with the mark (11) on the flange (5) and flange (9).

e) Remove both tool (6).

f) Set the belt tension, see 5.9-1 Assembly Plate - Set Belt Tension.

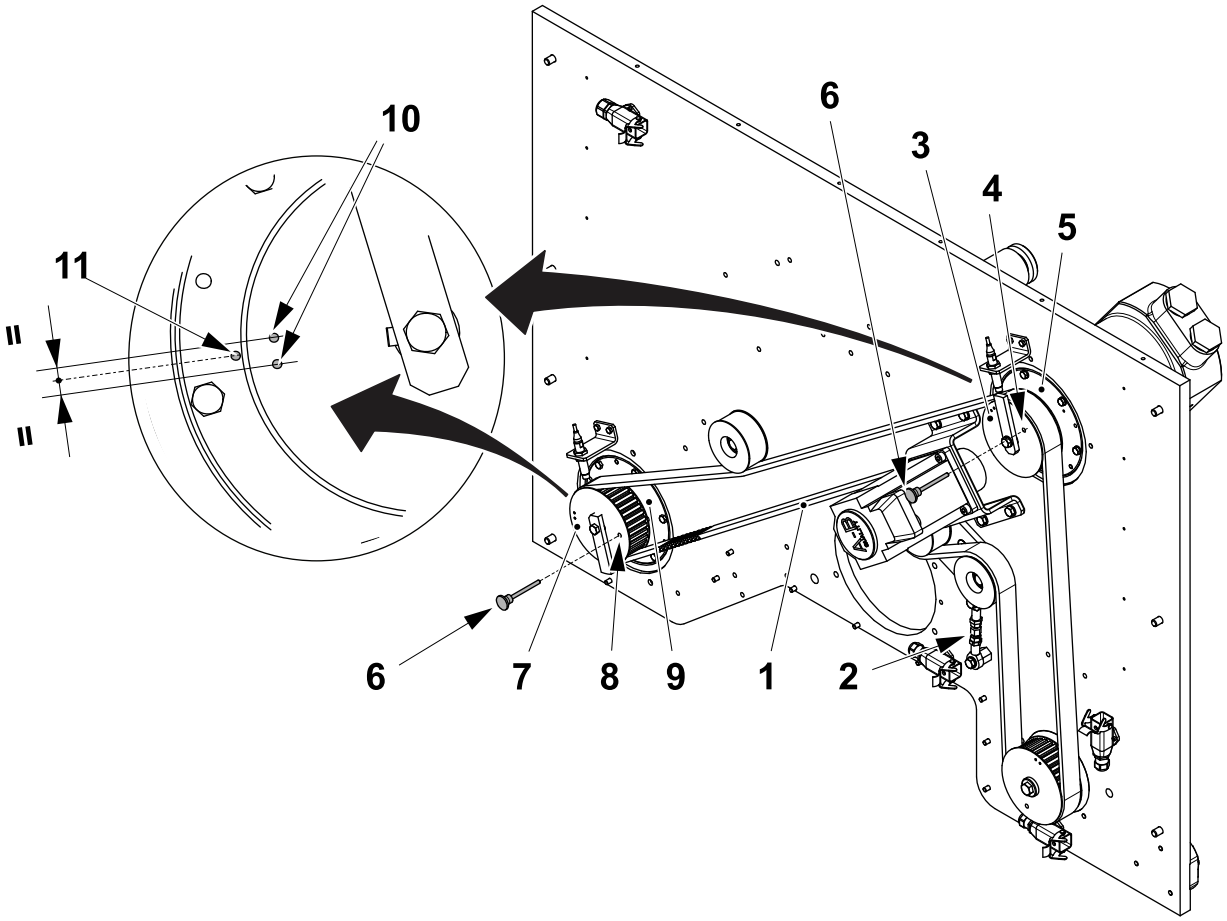

1 Belt
2 Screw
3 Pulley
4 Hole
5 Flange
6 Tool
7 Pulley
8 Hole
9 Flange
10 Mark
11 Mark

(Cont'd)

(Cont'd)

Infeed Conveyor

a) Turn the pulley (1) until the hole (2) is aligned with the hole on the flange (3).

b) Insert the tool (4) in the hole (2).

c) Loosen the nut (5) and turn the eccentric (6) to loosen the tension of the belt (7).

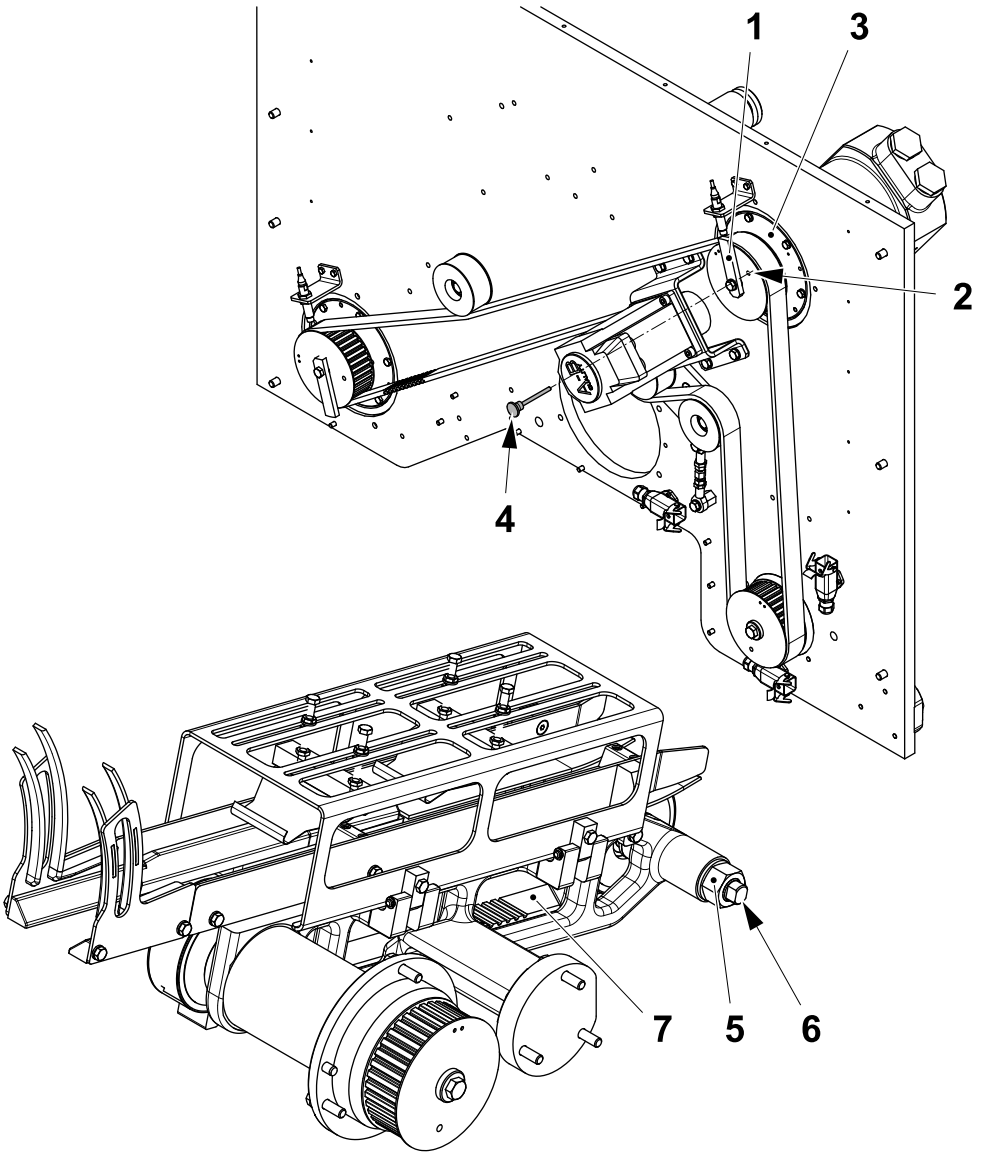

1 Pulley
2 Hole
3 Flange
4 Tool
5 Nut
6 Eccentric
7 Belt

(Cont'd)

(Cont'd)

d) Set the distance **A**, see table below, between the pusher (8) and the bottom (9).

Package	A ±2 (mm)	Package	A ±2 (mm)
TBA 80 S	320	TBA 250 Sq	380
TBA 100 B	345	TBA 284 B	395
TBA 125 S	357	TBA 300 S	400
TBA 160 S	355	TBA 330 S	435
TBA 200 B	380	TBA 375 S	430
TBA 200 M	430	TPA 125 Sq	355
TBA 200 S	430	TPA 200 Sq	410
TBA 200 Sq	360	TPA 250 Sq	435
TBA 250 B	405	TPA 330 Sq	430
TBA 250 S	445	TBA 200 E	415
TBA 180 S	418	TBA 250 E	435

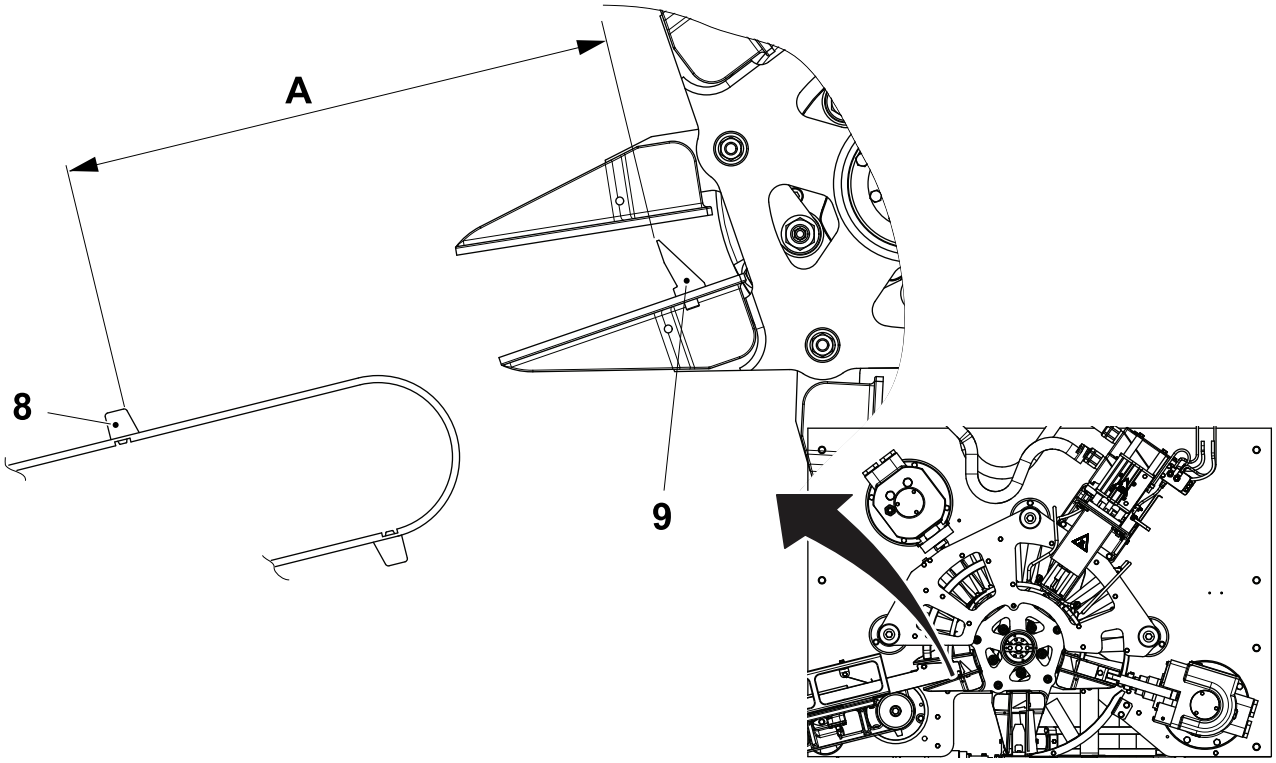

8 Pusher
9 Bottom

(Cont'd)

(Cont'd)

e) Set the belt tension, see 5.2-2 Infeed Conveyor - Set Belt.

f) Remove the tool (4).

g) Perform the infeed referencing, see 5.2-1 Infeed Conveyor - Referencing.

h) If necessary, perform the outfeed referencing, see 5.6-9 Outfeed - Referencing.

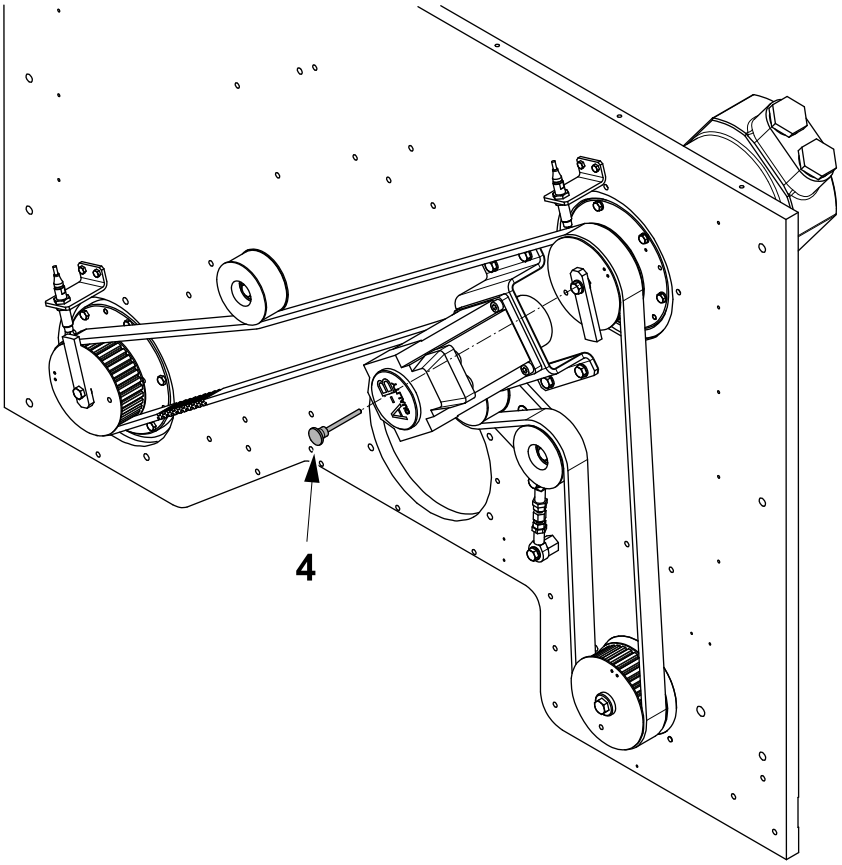

4 Tool

(Cont'd)

(Cont'd)

Production Setting

During PRODUCTION, make sure that the packages transfer smoothly from the infeed conveyor to the final folder. To fine adjust the synchronisation proceed as follows:

a) Touch the PRODUCTION CONTROL button (1) on the TPOP.

b) Touch the FINAL FOLDER button (2).

c) In the FINAL FOLDER window, touch the FINAL FOLDER SYNCHRONISATION icon (3).

d) Use the ARROW buttons (4) to increase or decrease the position of the packages on the conveyor entering the final folder wheel.

e) Touch the EXIT button (5).

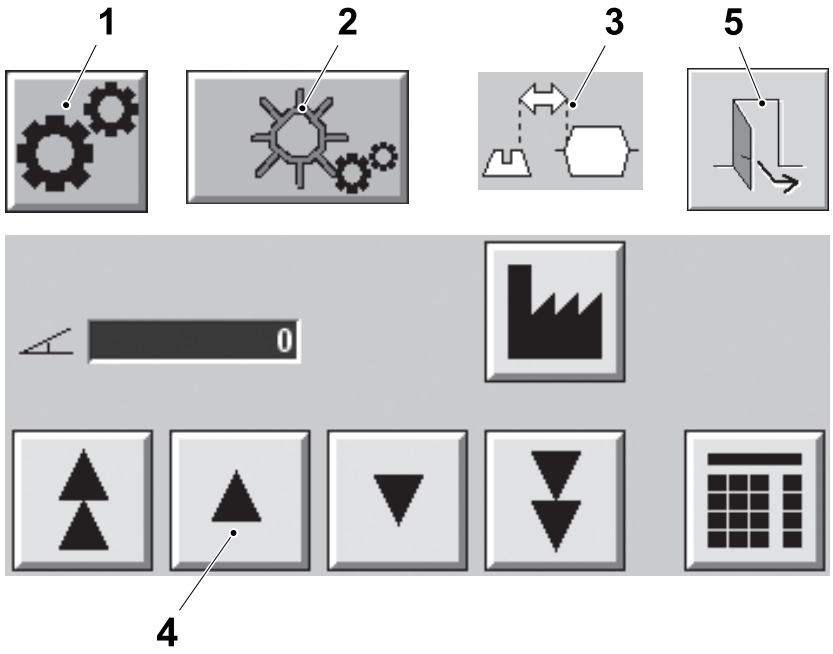

1 PRODUCTION CONTROL button
2 FINAL FOLDER button
3 FINAL FOLDER SYNCHRONISATION icon
4 ARROW button
5 EXIT button

5-3 Final Folder - Set External Conveyor Motor Speed

Machine Status	Electrical supply disconnecting device in position I (ON) Main air valve OFF Main steam valve ON Main water valve OFF
SPC Reference	641505-0300

a) On the TPOP display touch the SETTING SYSTEM button (1).

b) Touch the DOWNSTREAM button (2).

c) Touch the EXTERNAL CONVEYOR MOTOR SPEED icon (3).

d) Set the external conveyor motor speed by means of the ARROW buttons (4).

e) Touch the EXIT button (5).

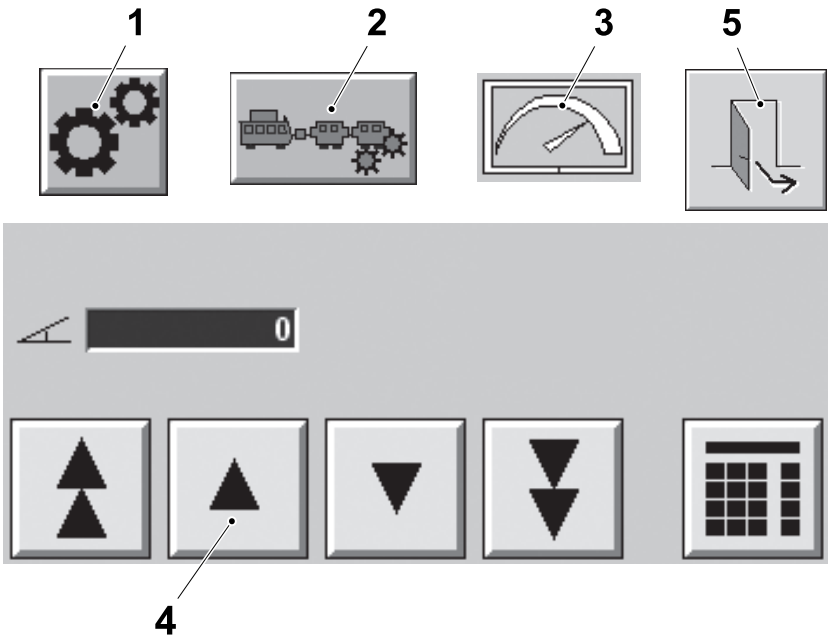

1 SETTING SYSTEM button
2 DOWNSTREAM button
3 EXTERNAL CONVEYOR MOTOR SPEED icon
4 ARROW button
5 EXIT button

5.1 Drop Chute

5.1-1 Drop Chute - Check

Machine Status	PREPARATION
SPC Reference	2805988-0100 2871929-0100

a) Close completely the throttle valves (1) and (2), on the drop chute cylinder (3) then open the throttle valves (1) and (2) one turn.

b) Unscrew completely the regulating screw (4) for the pneumatic shock absorber.

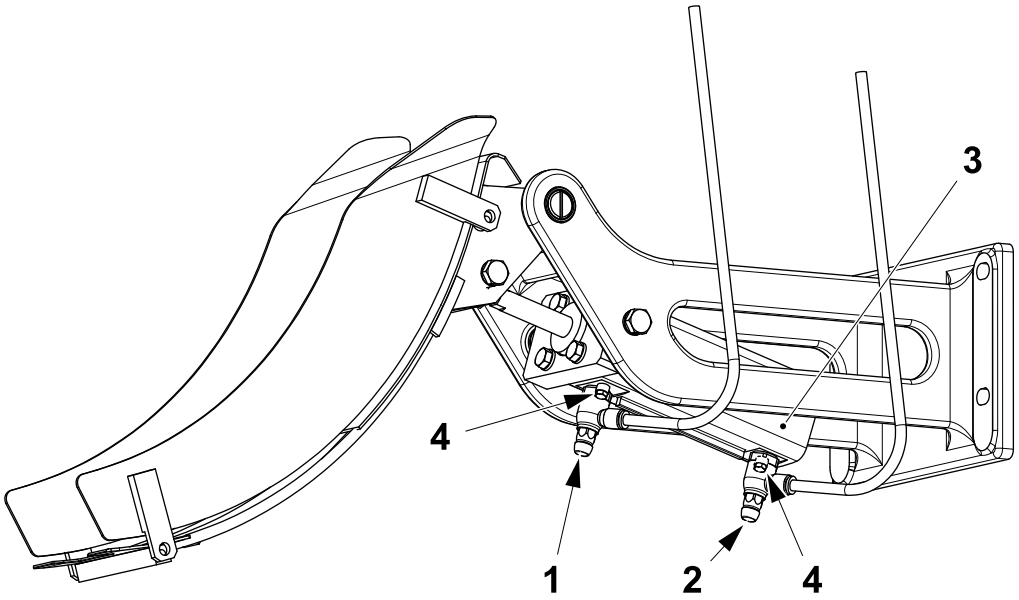

1 Throttle valve
2 Throttle valve
3 Cylinder
4 Regulating screws

(Cont'd)

(Cont'd)

Note! This procedure must be performed with the jaw system doors closed.

c) Push the PACKAGE EJECTOR button (5) and check that the drop chute (6) moves in a controlled and satisfactory manner, the movement should be smooth and precise.

d) Adjust the drop chute movement by means of the throttle valves (1) and (2) until the drop chute (6) moves quickly but smoothly.

e) If required, adjust the drop chute pneumatic shock absorber with the regulating screw (4).

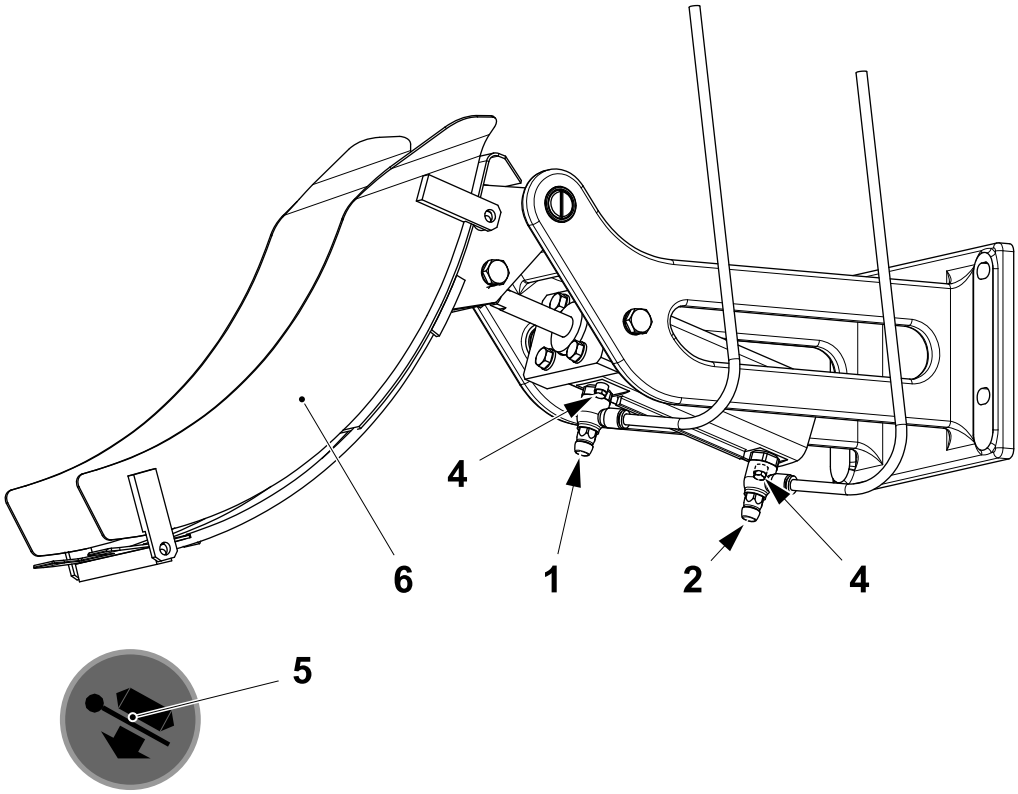

1 Throttle valve
2 Throttle valve
4 Regulating screws
5 PACKAGE EJECTOR button
6 Drop chute

5.1-2 Drop Chute - Set Position

Machine Status	Electrical supply disconnecting device in position O (OFF) Main air valve OFF Main steam valve ON Main water valve OFF
SPC Reference	2805988-0100 2871929-0100

Valid for the volumes listed in the table below

a) Move the cradle (1) by hand into the production position.

b) Loosen the nut (2) and set the distance **A** between the cradle (1) and the package guides (3) by means of the cylinder piston head (4).

c) Tighten the nut (2).

d) Check the drop chute functionality, see 5.1-1 Drop Chute - Check.

Package	**A ±0.5 (mm)**
TBA 100 B, TBA 125 S, TBA 160 S, TBA 180 S, TBA 200 B, TBA 200 M, TBA 200 S, TBA 200 Sq, TBA 250 B, TBA 250 S, TBA 250 Sq, TBA 284 B, TBA 300 S, TBA 330 S, TBA 375 S	5.0

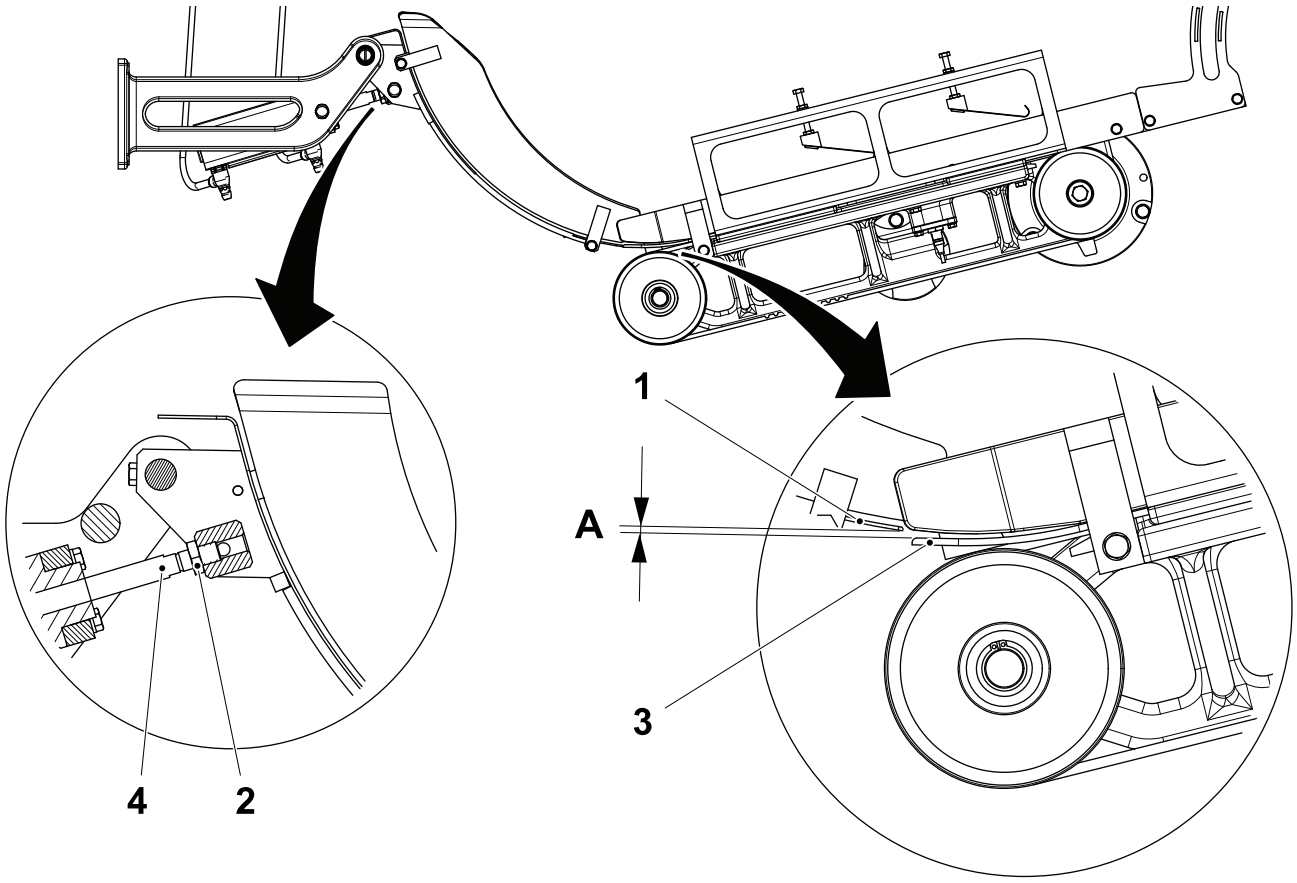

1 Cradle 2 Nut 3 Package guide 4 Piston head

(Cont'd)

(Cont'd)

Valid for the volumes listed in the table below

a) Move the cradle (1) by hand into the production position.

b) Loosen the nut (2) and set the distance **B** between the cradle (1) and the package guides (3) by means of the cylinder piston head (4).

c) Tighten the nut (2).

d) Check the drop chute functionality, see 5.1-1 Drop Chute - Check.

Package	B ±0.5 (mm)
TBA 80 S, TPA 125 Sq, TPA 200 Sq, TPA 250 Sq, TPA 330 Sq, TBA 200 E, TBA 250 E	0.0

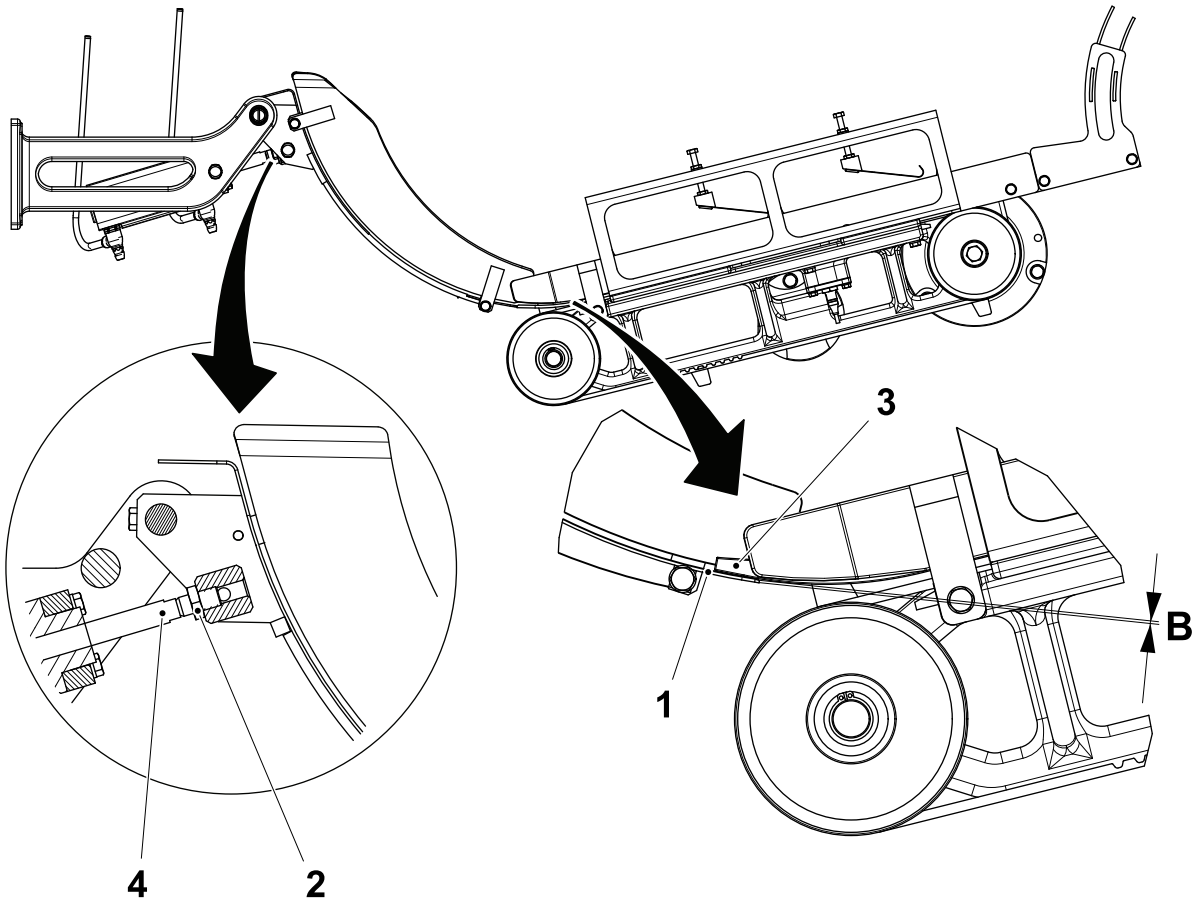

1 Cradle
2 Nut
3 Package guide
4 Piston head

5.2 Infeed Conveyor

5.2-1 Infeed Conveyor - Referencing

Machine Status	PREPARATION
SPC Reference	2805989-0300 2819312-0200

CAUTION
Risk of damage to the equipment.
Never reference the servo motor without first checking that there is no possible mechanical interference.

Note! The referencing procedure must be completed if any mechanical change has been made to the system.

(Cont'd)

(Cont'd)

a) Turn the belt (1) until the hole (2) in the pulley (3) is aligned with the hole in the flange (4).

b) Close all doors and clear all alarms on the TPOP display.

c) Touch the `MAINTENANCE CONTROL` button (5).

d) Log on to access the `MAINTENANCE CONTROL` window, see 8.6.3-2 HMI - User Management Log On.

e) Touch the `FINAL FOLDER` button (6).

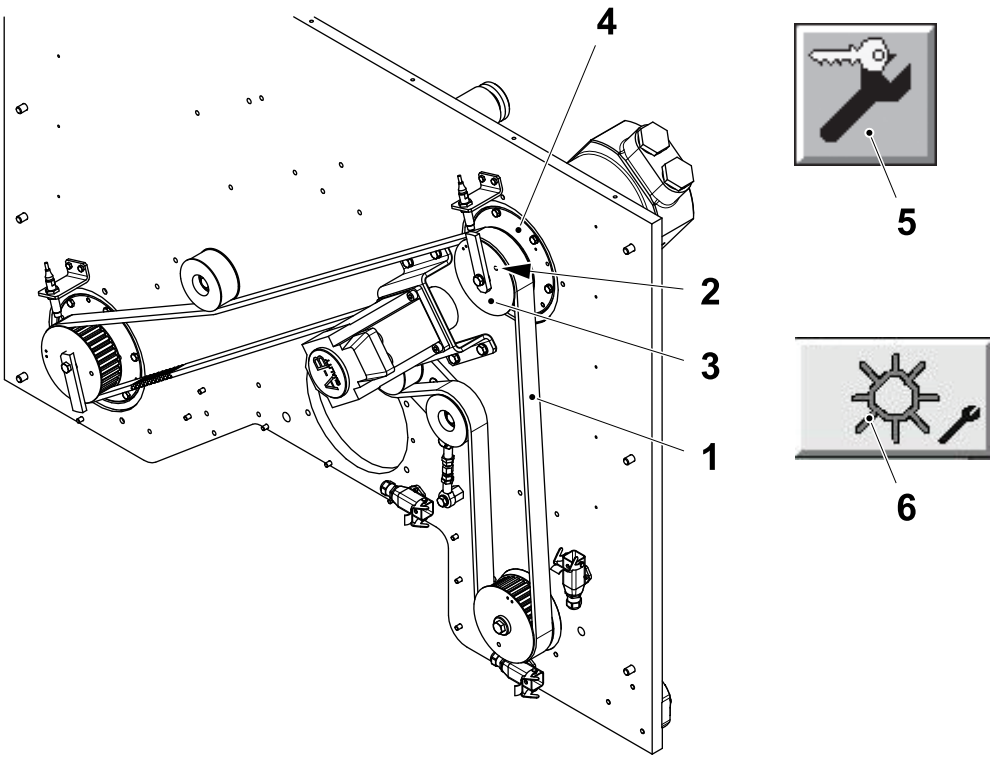

1 Belt
2 Hole
3 Pulley
4 Flange
5 `MAINTENANCE CONTROL` button
6 `FINAL FOLDER` button

(Cont'd)

(Cont'd)

f) Touch the INFEED REFERENCING button (7).

g) Touch the ON button (8).

h) The OK button (9) begins to flash. Press the OK button (9) to start the referencing and wait for the ON button (8) to become green.

i) Touch the EXIT button (10) to record the value and exit from the SERVO SETTINGS window.

j) Perform the outfeed referencing, see 5.6-9 Outfeed - Referencing.

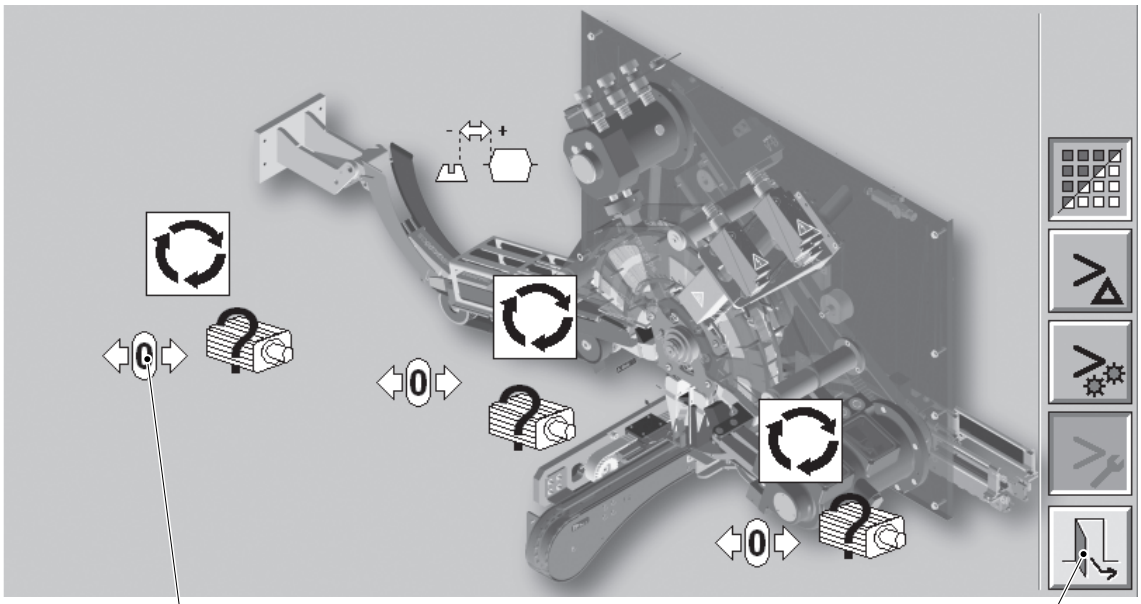

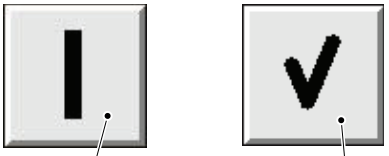

7 INFEED REFERENCING button
8 ON button
9 OK button
10 EXIT button

5.2-2 Infeed Conveyor - Set Belt

Machine Status	Electrical supply disconnecting device in position O (OFF) Main air valve OFF Main steam valve ON Main water valve OFF
SPC Reference	2805989-0300 2819312-0200

Note! When tensioning the belt (1), always turn the eccentric shaft (2) so that the belt (1) stays below the chutes (3) .

To set the belt (1) tension loosen the nut (4) and tighten the eccentric shaft (2) to **25** Nm with a torque wrench.

Tighten the nut (4).

Yes

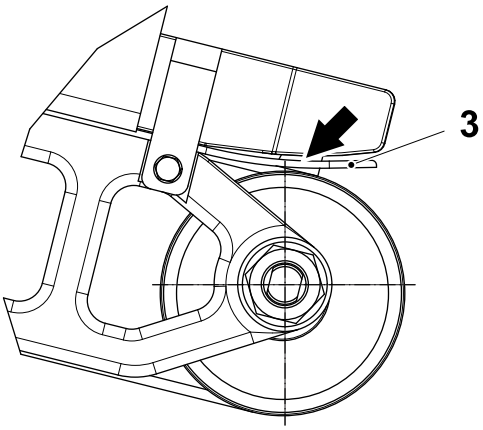

No

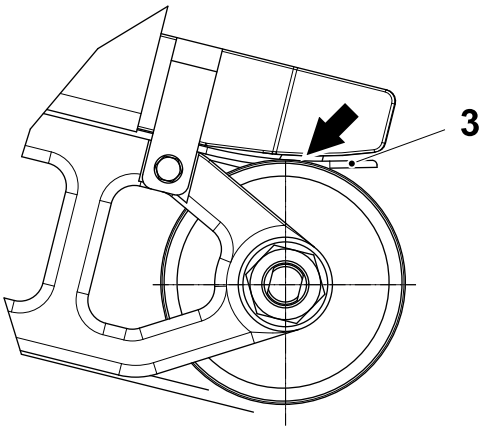

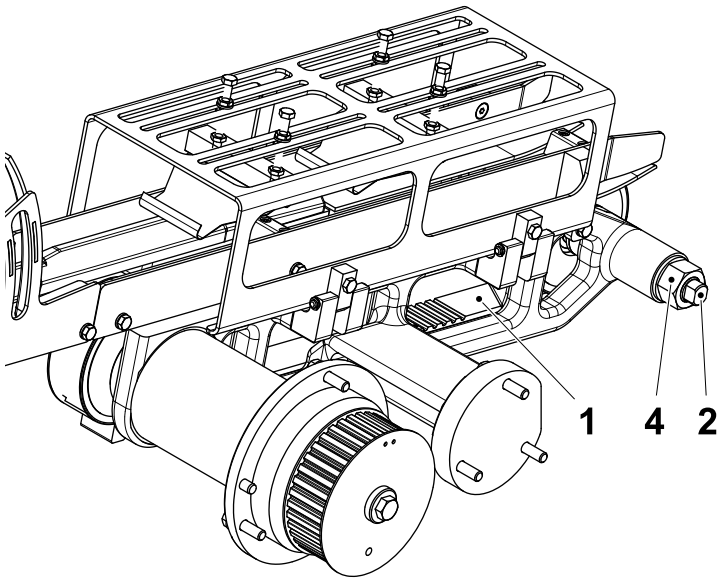

1 Belt
2 Eccentric shaft
3 Chute
4 Nut

5.2-3 Infeed Conveyor - Check Belt

Machine Status	Electrical supply disconnecting device in position O (OFF) Main air valve OFF Main steam valve ON Main water valve OFF
SPC Reference	2805989-0300 2819312-0200

Check the belt for visible wear or damage.

Change the belt if necessary, see 5.2-4 Infeed Conveyor - Change Belt.

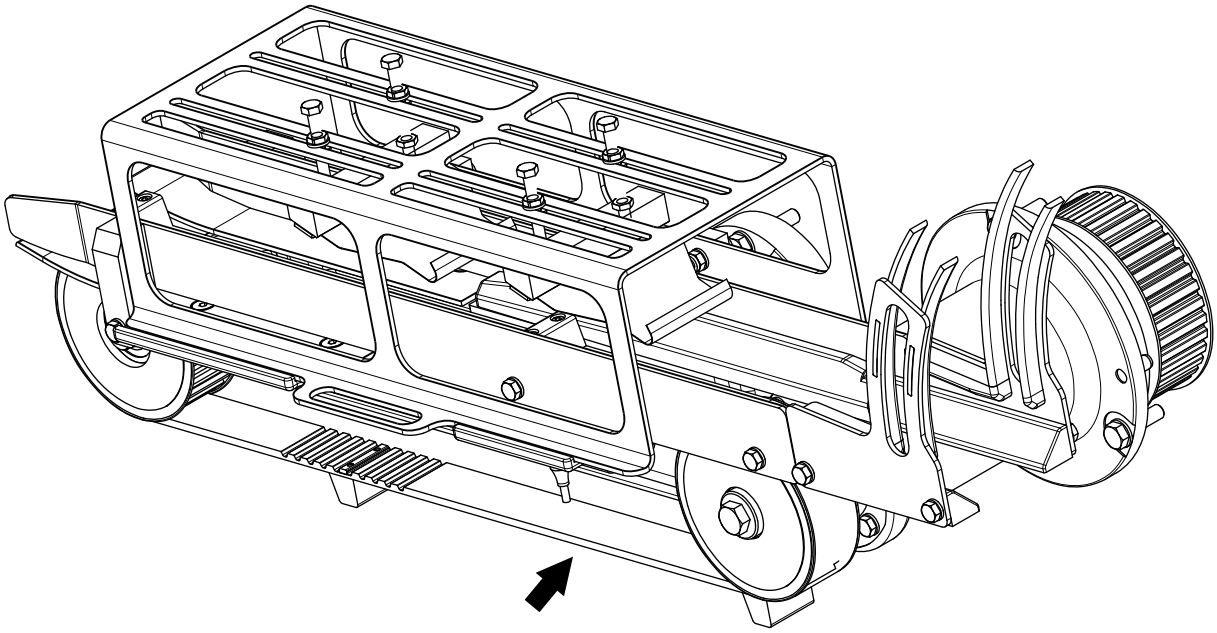

5.2-4 Infeed Conveyor - Change Belt

Machine Status	Electrical supply disconnecting device in position O (OFF) Main air valve OFF Main steam valve ON Main water valve OFF
Special Equipment	Torque wrench min. 25 Nm
SPC Reference	2805989-0300 2819312-0200

a) Open the cover (1).

b) Reduce the belt tension by loosening the nut (2) and then turning the eccentric shaft (3).

c) Remove the screw (4) and (5).

d) Remove the guide (6).

e) Remove the belt (7).

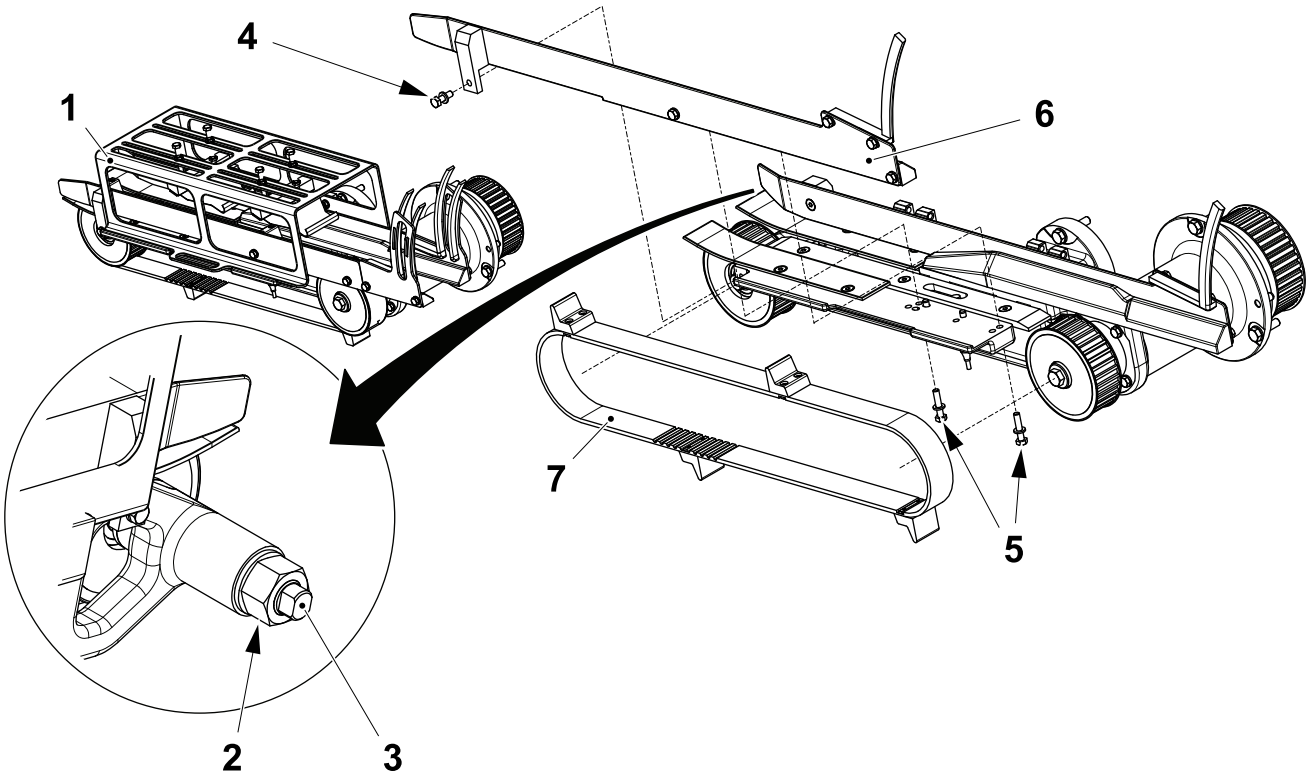

1 Cover
2 Nut
3 Shaft
4 Screw
5 Screw
6 Guide
7 Belt

(Cont'd)

(Cont'd)

f) Remove the screws (8), the pushers (9) and the plate (10) from the old belt (7).

Note! Tighten the screws (8) to 2 Nm.

g) Fit the plate (10) and the pushers (9) to the new belt with the screws (8).

h) Assemble in the reverse order.

i) Set the belt tension, see 5.2-2 Infeed Conveyor - Set Belt.

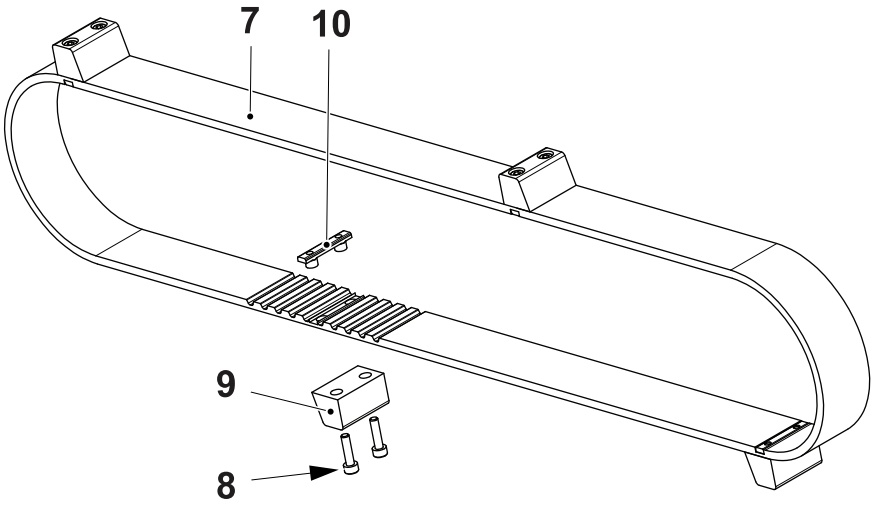

7 Belt
8 Screw
9 Pusher
10 Plate

5.2-5 Infeed Conveyor - Overhaul

Machine Status	Electrical supply disconnecting device in position O (OFF) Main air valve OFF Main steam valve ON Main water valve OFF
Special Equipment	Torque wrench min. 25 Nm
SPC Reference	2805989-0300 2819312-0200

a) Remove the belt, see 5.2-4 Infeed Conveyor - Change Belt.

b) Remove the nut (1) and the retaining ring (2).

c) Remove the pulley (3) and the shaft (4).

d) Remove and change the ball bearings (5) and (6).

e) Remove the screw (7), the pulley (8) and the key (9).

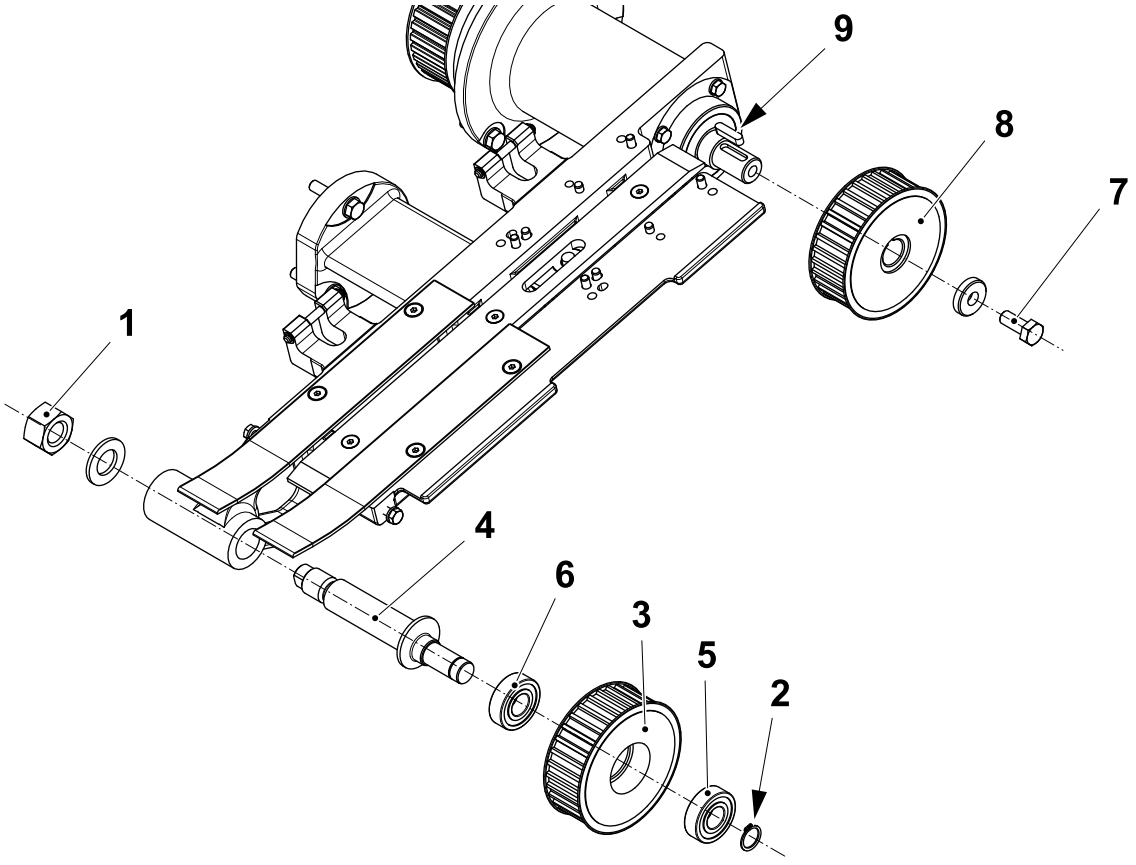

1 Nut
2 Retaining ring
3 Pulley
4 Shaft
5 Ball bearing
6 Ball bearing
7 Screw
8 Pulley
9 Key

(Cont'd)

(Cont'd)

f) Remove and change the seal ring (10).
g) Remove the retaining rings (11) and (12).
h) Remove and change the ball bearing (13).
i) Remove the screw (14) and the pulley (15)
j) Remove the key (16).
k) Remove and change the seal ring (17).
l) Remove the retaining ring (18).
m) Remove and change the ball bearing (19).
n) Remove the shaft (20).
o) Assemble in the reverse order.
p) Set the belt tension, see 5.2-2 Infeed Conveyor - Set Belt.

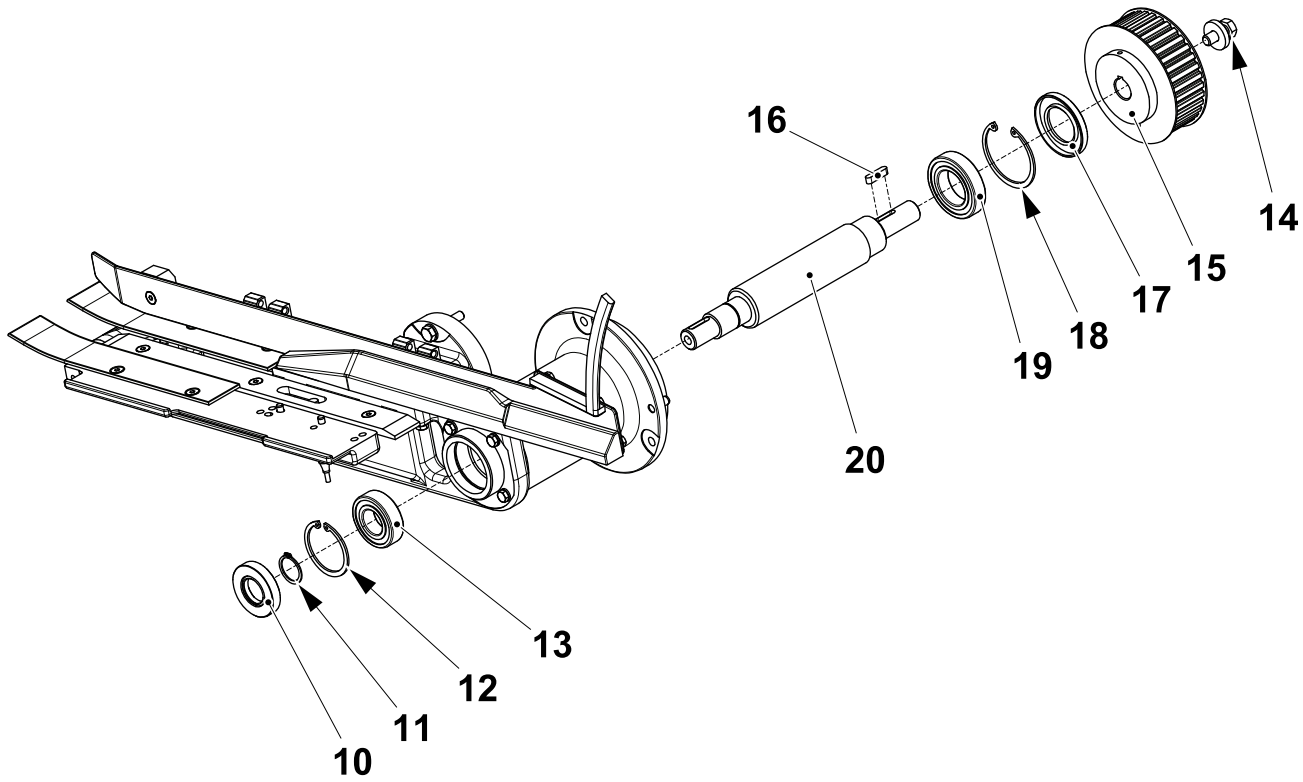

10 Seal ring
11 Retaining ring
12 Retaining ring
13 Ball bearing
14 Screw
15 Pulley
16 Key
17 Seal ring
18 Retaining ring
19 Ball bearing
20 Shaft

5.2-6 Infeed Conveyor - Set Sensor

Machine Status	Electrical supply disconnecting device in position O (OFF) Main air valve OFF Main steam valve ON Main water valve OFF
SPC Reference	2805989-0300 2819312-0200

a) Remove the screws (1) and the guide (2).

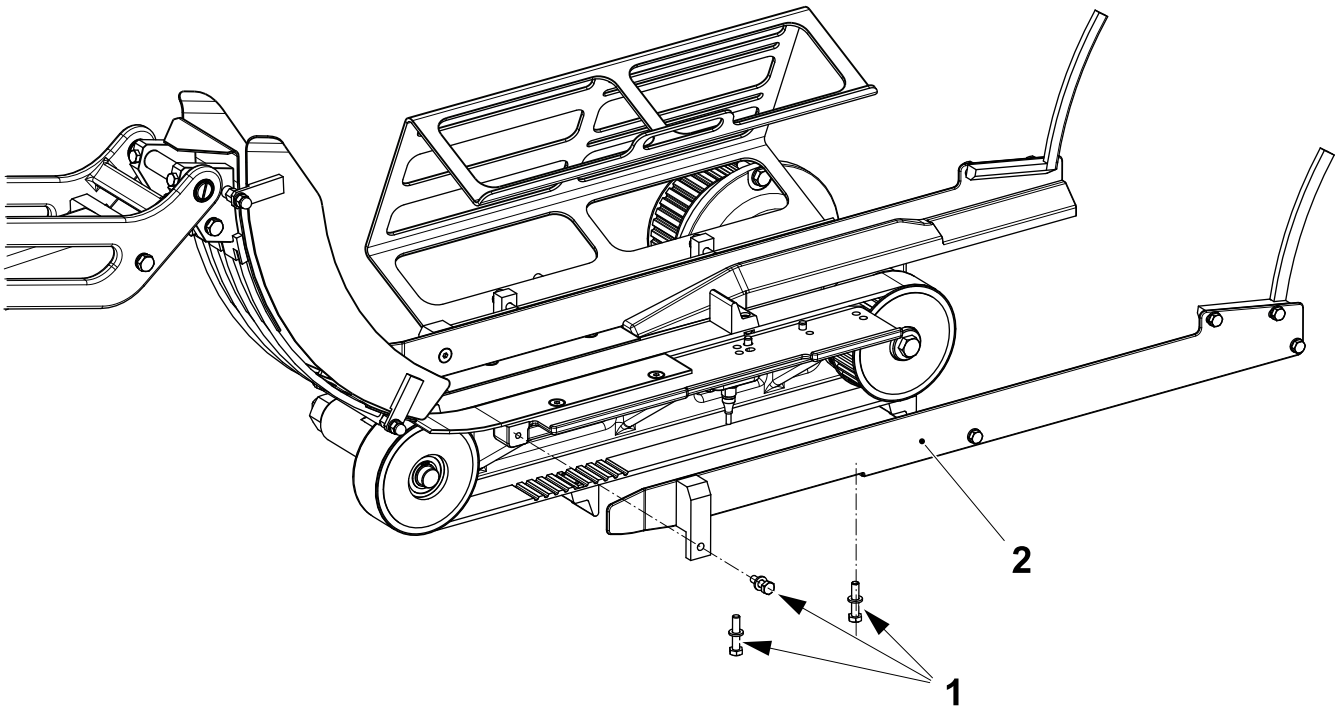

1 Screw
2 Guide

(Cont'd)

(Cont'd)

b) Disconnect the connector (3) from the sensor (4).

c) Remove the screws (5) and the bushing (6) toghter with the sensor (4).

d) On a bench, loosen the nut (7) and set the distance **A** between the sensor (4) and the bushing (6).

e) Tighten the nut (7) and assemble in the reverse order.

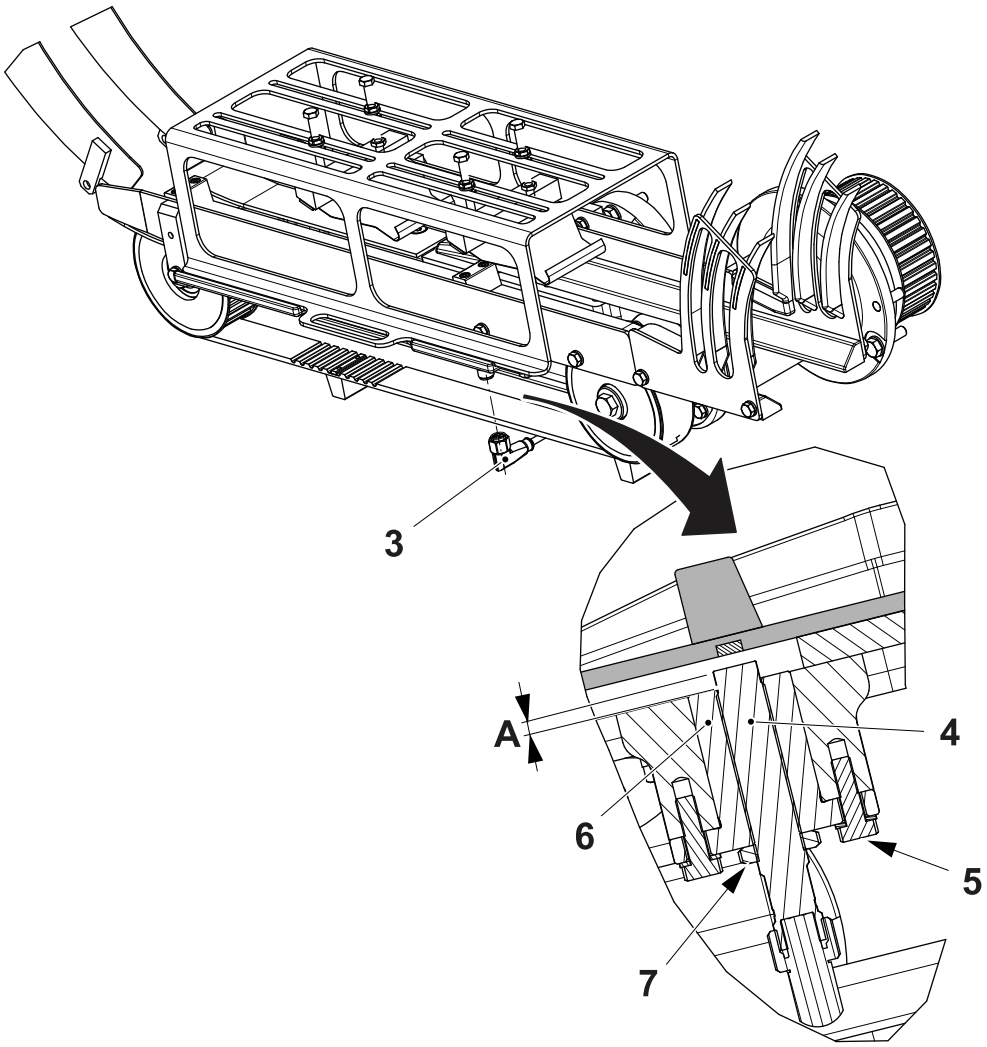

A = 4.8 / $^{-0.5}$ mm

3 Connector
4 Sensor
5 Screw
6 Bushing
7 Nut

5.2-7 Infeed Conveyor - Check Bearings

Machine Status	Electrical supply disconnecting device in position O (OFF) Main air valve OFF Main steam valve ON Main water valve OFF
SPC Reference	2805989-0300 2819312-0200

a) Reduce the belt tension by loosening the nut (1) and then turning the eccentric shaft (2).

b) Check that the bearings (3) and (4) rotate smoothly in both directions.

c) Set the belt tension, see 5.2-2 Infeed Conveyor - Set Belt.

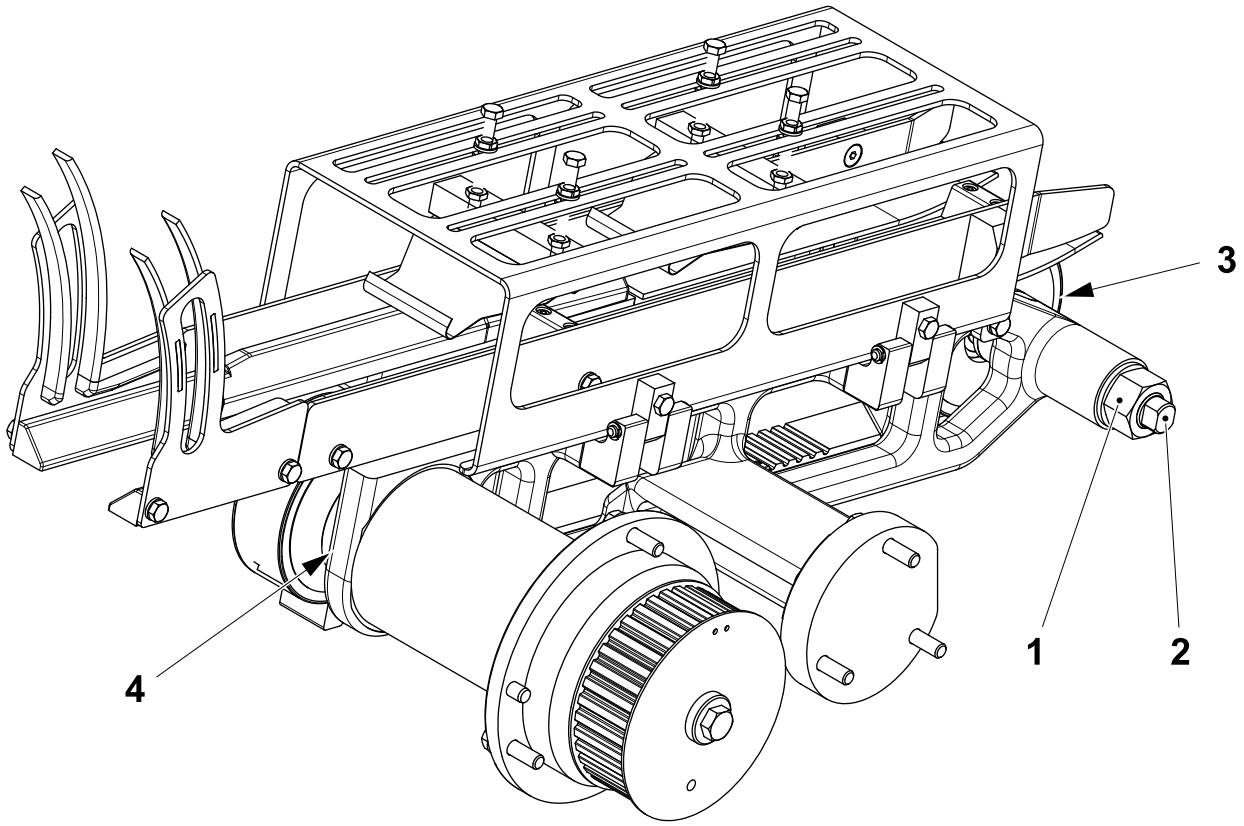

1 Nut
2 Eccentric shaft
3 Bearing
4 Bearing

5.2-8 Infeed Conveyor - Set Spring

Machine Status	Electrical supply disconnecting device in position O (OFF) Main air valve OFF Main steam valve ON Main water valve OFF
SPC Reference	2805989-0300 2819312-0200

a) Loosen the screws (1) and set the position of the spring (2) from the surface (3) of the cover (4), (distance **A**, see table on the next page).

b) Loosen the cap nuts (5) and set height of the spring (2) (distance **B** see table on the next page).

c) Loosen the screws (7) and set the position of the spring (6) from the surface (3) of the cover (4), (distance **C**, see table on the next page).

d) Loosen the cap nuts (8) and set height of the spring (6) (distance **D**, see table on the next page).

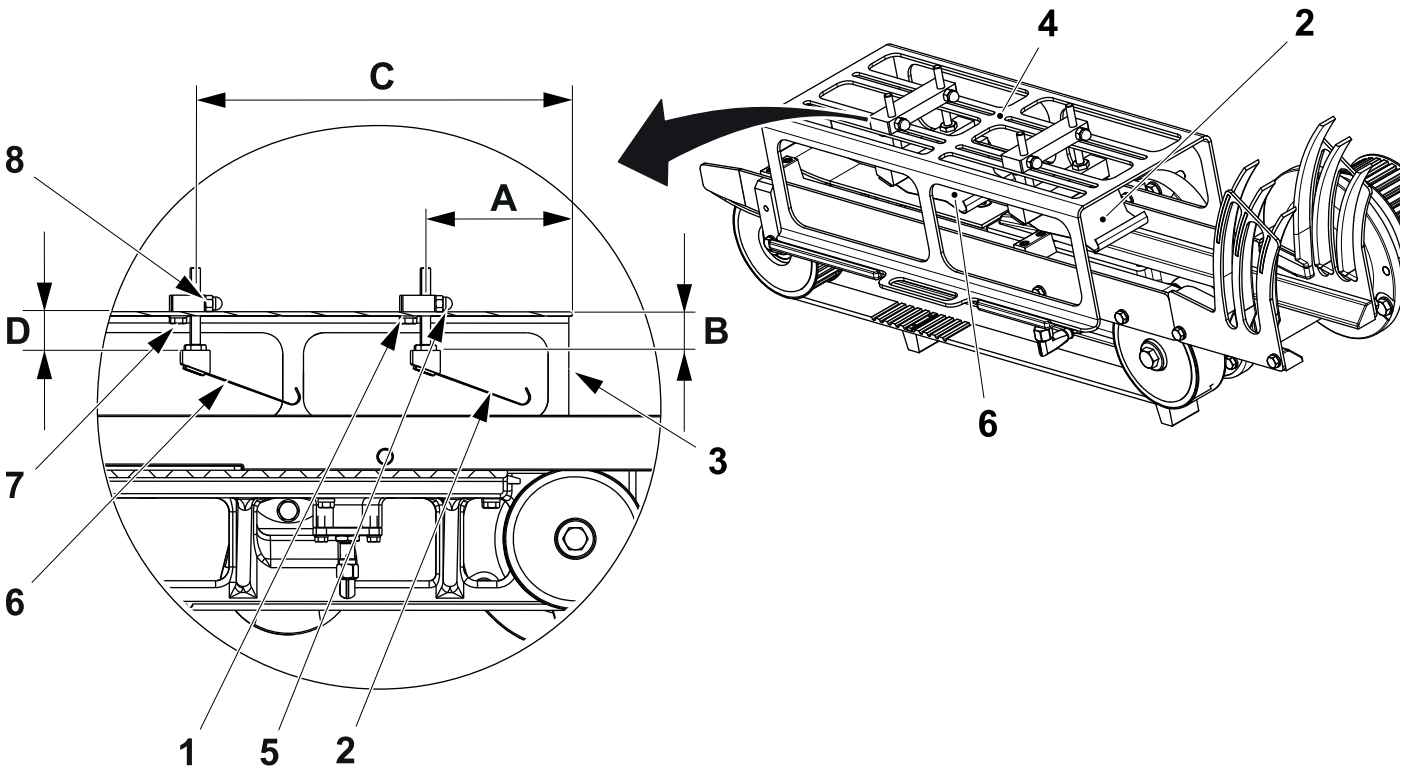

1 Screw
2 Spring
3 Surface
4 Cover
5 Cap nut
6 Spring
7 Screw
8 Cap nut

(Cont'd)

(Cont'd)

Note! Valid for TBA 80 S volume only.

e) Loosen the screws (9) and set the position of the spring (10) from the surface (3) of the cover (4), (distance **E**).

f) Loosen the cap nuts (11) and set the height of the spring (10) (distance **F**).

Note! Valid for all package volumes.

g) If distances **B** and **D** is not indicated, set the position of the spring so that it push **2 or 3 mm** on the package.

Package	A ±5 (mm)	B ±1 (mm)	C ±5 (mm)	D ±1 (mm)	E ±1 (mm)	F ±1 (mm)
TBA 80 S	65	35	155	36	245	38
TBA 100 B, TBA 125 S	65	40	350	45	-	-
TBA 200 B, TBA 250 B, TBA 330 S	65	32	275	43	-	-
TBA 200 M, TBA 250 S	65	35	275	40	-	-
TBA 160 S, TBA 200 S	65	34	275	40	-	-
TBA 200 Sq, TBA 250 Sq	65		275		-	-
TBA 284 B, TBA 300 S	80	31	320	38	-	-
TBA 375 S	80		275		-	-
TPA 125 Sq	65	32	350	42	-	-
TPA 200 Sq, TPA 250 Sq	65	26	275	33	-	-
TPA 330 Sq	65	16	275	25	-	-
TBA 200 E, TBA 250 E	65	30	320	35	-	-
TBA 180 S	65	30	290	30	-	-

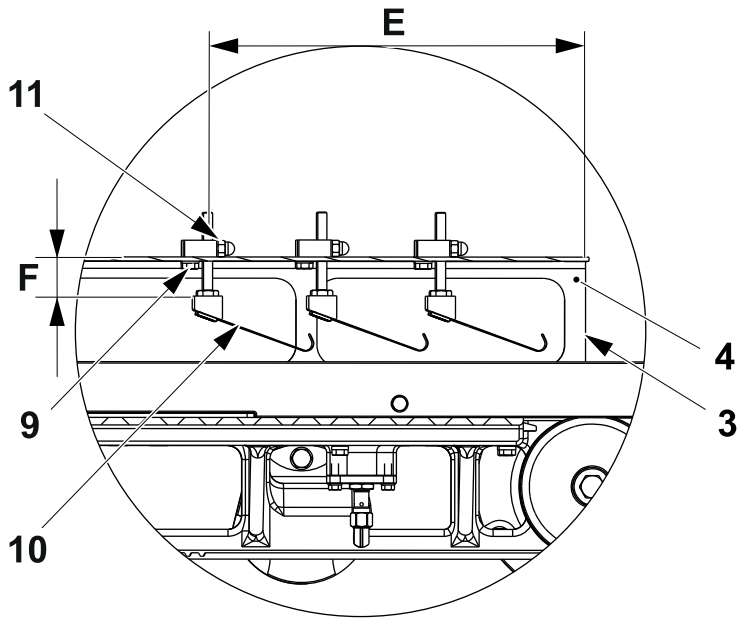

3 Surface
4 Cover
9 Screw
10 Spring
11 Cap nut

5.3 Pull Down Device

5.3-1 Pull Down Device - Check Oil Level

Machine Status	Electrical supply disconnecting device in position O (OFF) Main air valve OFF Main steam valve ON Main water valve OFF
Consumables	Lubricant, Kluberoil 4 UH1 150-N TP No. 344412-0000
SPC Reference	2805990-0200 2819313-0100

CAUTION
Risk of damage to the equipment.
Mixing lubricants with no compatible bases will lead to severe loss of lubrication and probable damage to the equipment. Use only recommended consumables, see section 9.3.1 Lubricants.

a) Check the oil level in the sight glass (1).

b) If the oil level is below the middle point (2), remove the plug (3) and (4), and add oil into the hole (5).

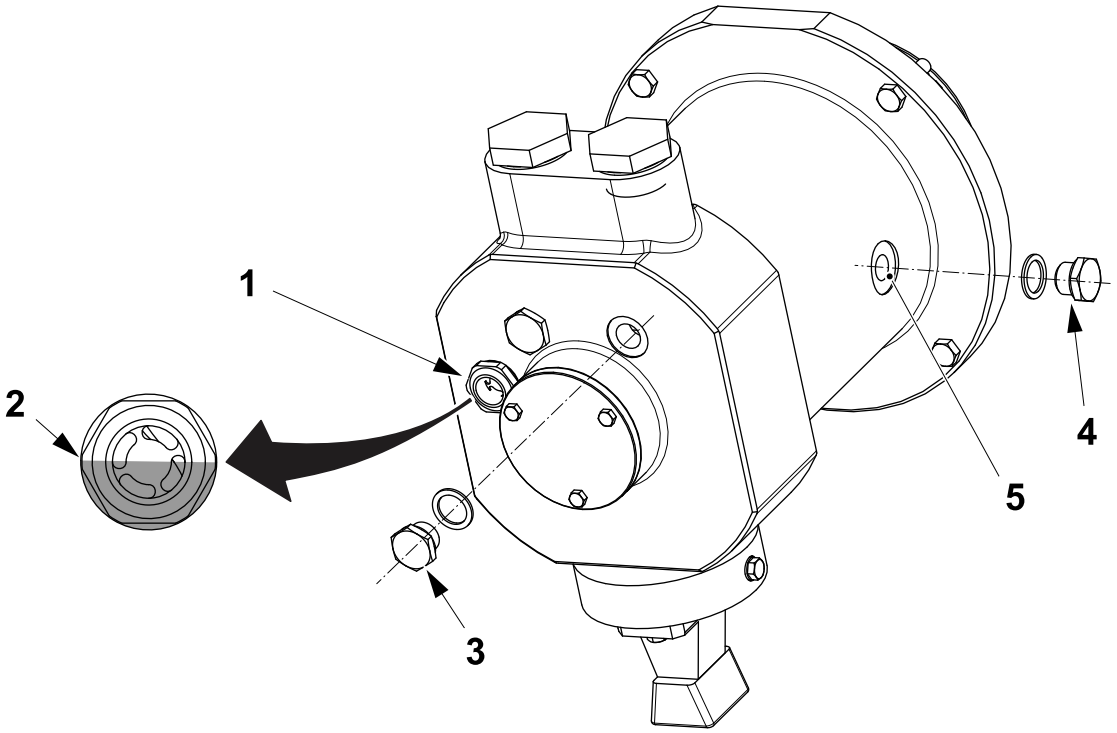

1 Sight glass
2 Middle point
3 Plug
4 Plug
5 Hole

5.3-2 Pull Down Device - Remove Oil

Machine Status	Electrical supply disconnecting device in position O (OFF) Main air valve OFF Main steam valve ON Main water valve OFF
Consumables	Lubricant, Kluberoil 4 UH1 150-N TP No. 344412-0000
SPC Reference	2805990-0200 2819313-0100

WARNING

High Pressure Oil

Wear personal protective equipment.

a) Place an empty container under the draining screw (1).

b) Remove the screw (1) and drain the box (2).

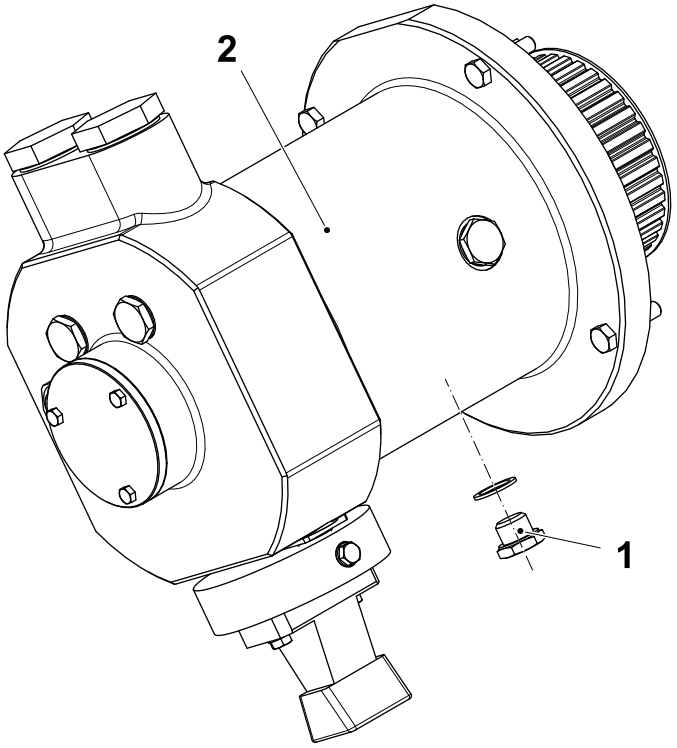

1 Screw
2 Box

5.3-3 Pull Down Device - Change Bushing and Rod Seal

Machine Status	Electrical supply disconnecting device in position O (OFF) Main air valve OFF Main steam valve ON Main water valve OFF
SPC Reference	2805990-0200 2819313-0100

Note! Valid for all volumes except TPA 125 Sq.

a) Drain the oil from the box in a suitable container, see 5.3-2 Pull Down Device - Remove Oil.

b) Remove the screws (1), (2) and (3).

c) Loosen the screws (4) and remove the plate (5).

d) Remove the screws (6) and the plate (7).

e) Remove the shafts (8).

f) Remove and change the bushings (9) and the rod seals (10).

g) Assemble in the reverse order and refill the box with oil see, 5.3-1 Pull Down Device - Check Oil Level.

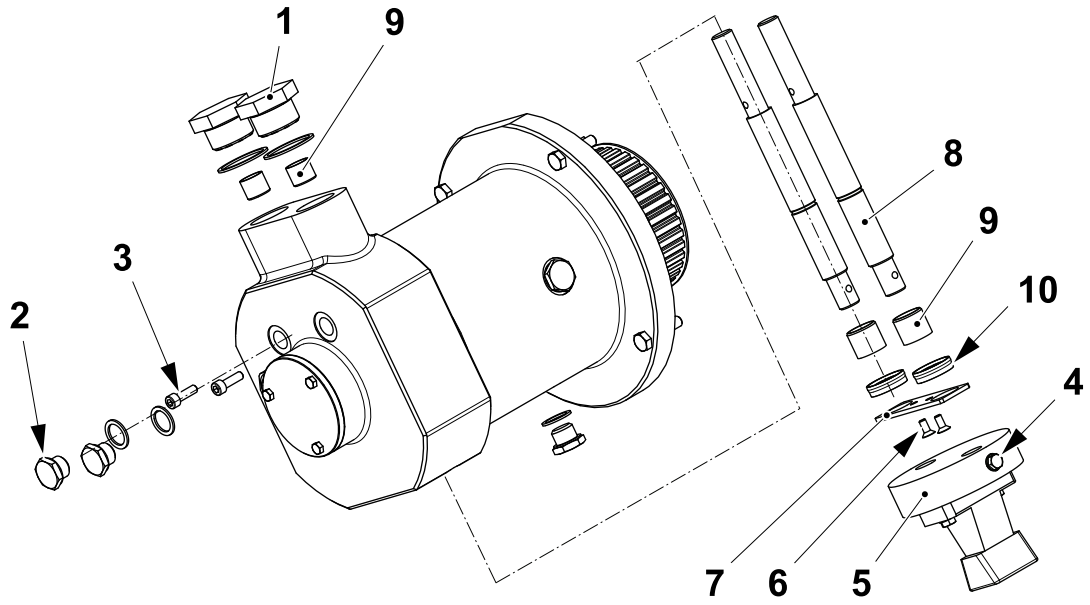

1 Screw
2 Screw
3 Screw
4 Screw
5 Plate
6 Screw
7 Plate
8 Shaft
9 Bushing
10 Rod seal

(Cont'd)

(Cont'd)

Valid for TPA 125 Sq only

a) Drain the oil from the box in a suitable container, see 5.3-2 Pull Down Device - Remove Oil.

b) Remove the screws (1), (2) and (3).

c) Remove the screws (4) and (5) and remove the arms (6).

d) Remove the grub screw (7) and the retaining ring (8).

e) Remove the shaft (9).

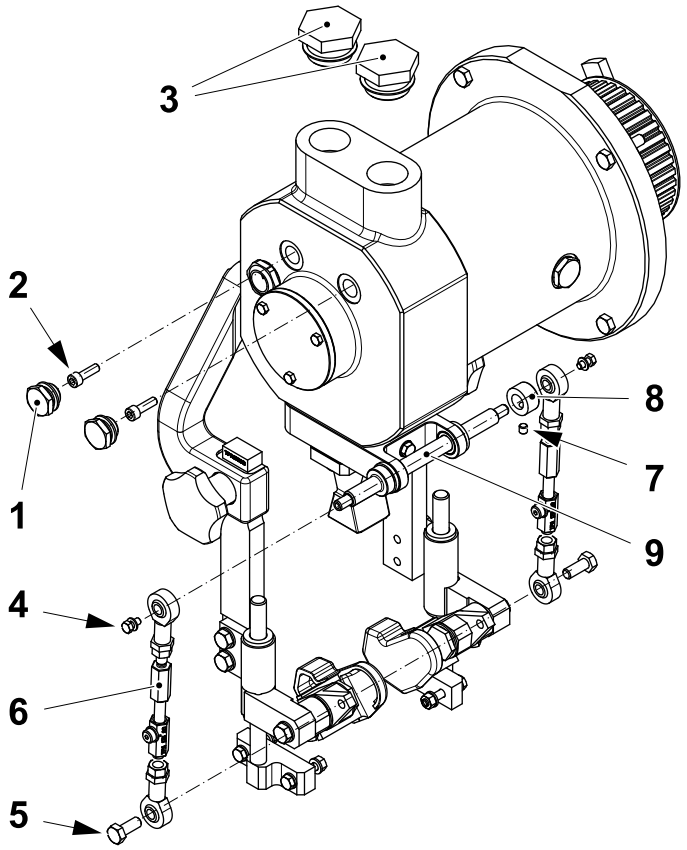

1 Screw
2 Screw
3 Screw
4 Screw
5 Screw
6 Arm
7 Grub screw
8 Retaining ring
9 Shaft

(Cont'd)

(Cont'd)

f) Remove the screws (10) and the plate (11).

g) Remove the screws (12) and the plate (13).

h) Remove the rod seals (14), the shafts (15) and the bushings (16) and (17).

i) Change the bushings (16) and (17) and assemble in the reverse order.

j) Refill the box with oil see, 5.3-1 Pull Down Device - Check Oil Level.

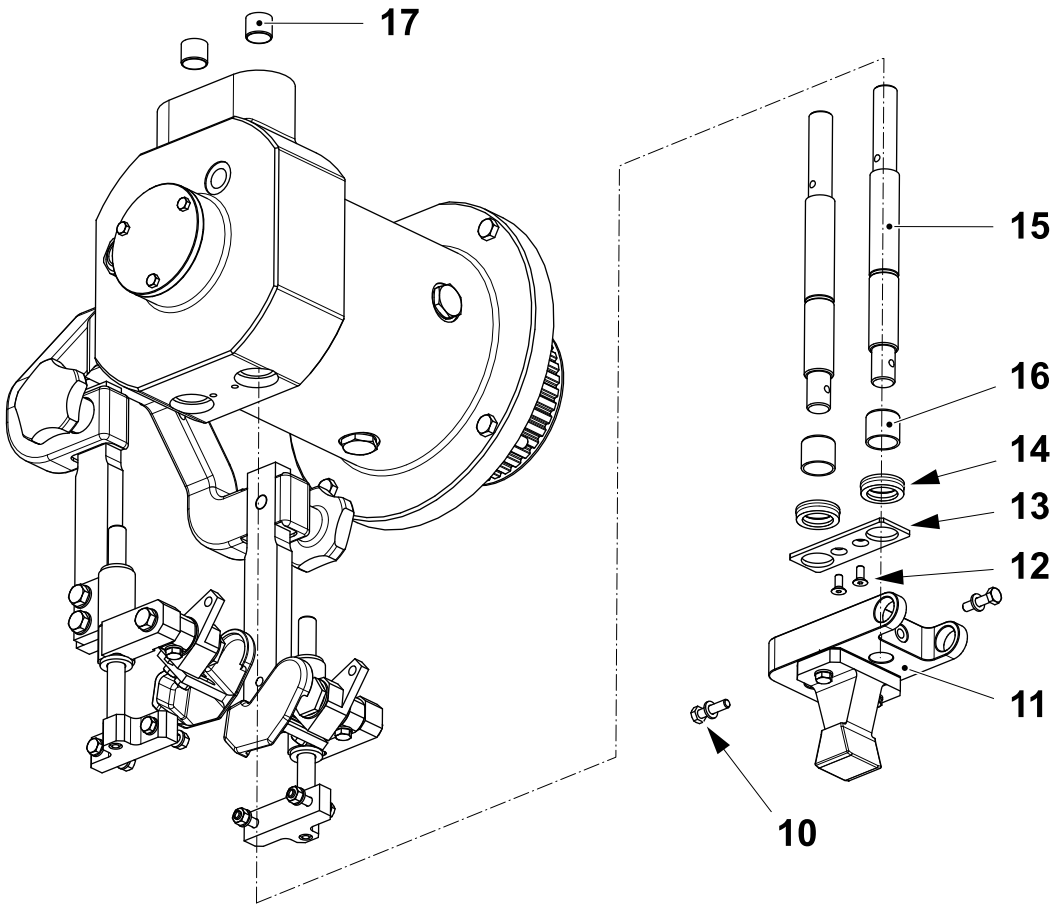

10 Screw
11 Plate
12 Screw
13 Plate
14 Rod seal
15 Shaft
16 Bushing
17 Bushing

5.3-4 Pull Down Device - Change Ball Bearing and O-Ring

Machine Status	Electrical supply disconnecting device in position O (OFF) Main air valve OFF Main steam valve ON Main water valve OFF
SPC Reference	2805990-0200 2819313-0100

a) Drain the oil from the box in a suitable container, see 5.3-2 Pull Down Device - Remove Oil.

b) Remove the screws (1).

c) Remove the plate (2).

d) Remove the screw (3) and the washer (4)

e) Remove and change the ball bearing (5) and the O-ring (6).

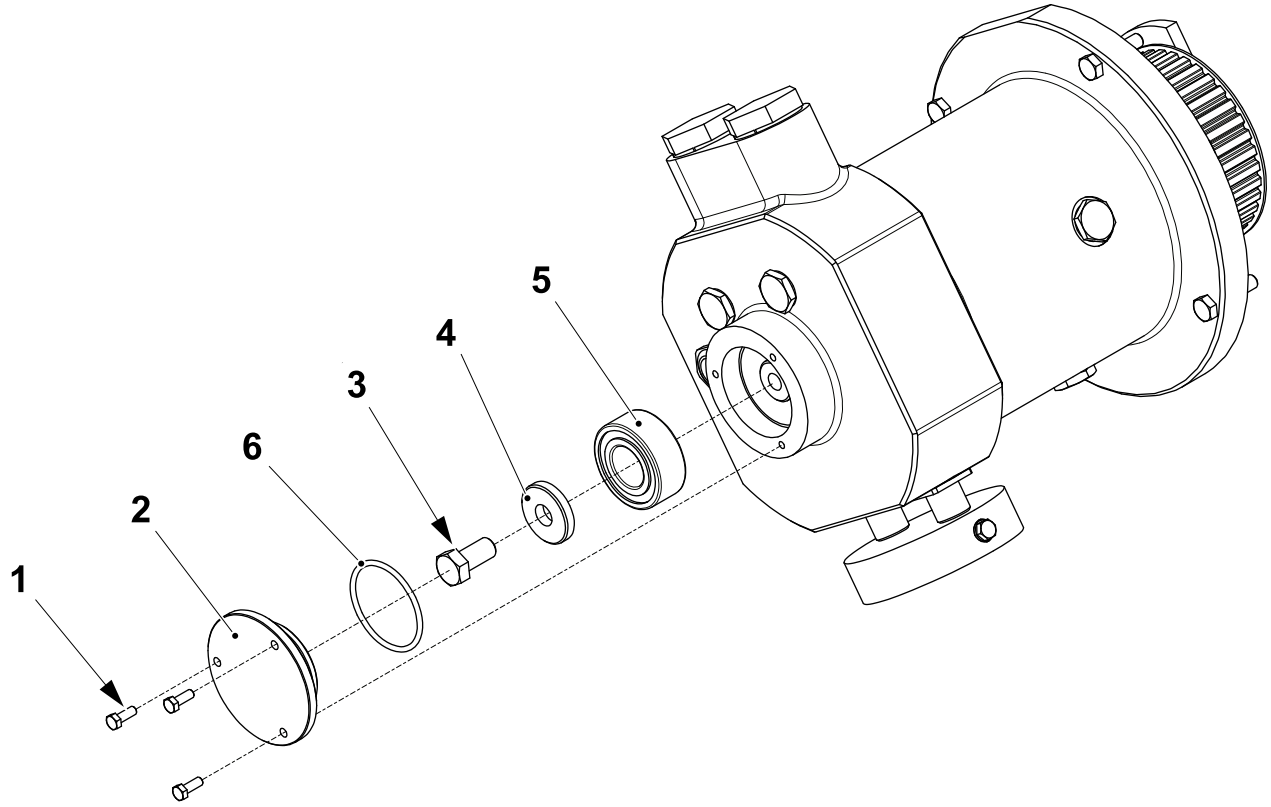

1 Screw
2 Plate
3 Screw
4 Washer
5 Ball bearing
6 O-ring

(Cont'd)

(Cont'd)

f) Remove the screw (7) and the activator (8).

g) Remove the toothed pulley (9) and the screws (10).

h) Remove the flange (11) and the seal ring (12).

i) Remove the retaining ring (13).

j) Remove and change the ball bearing (14) and the O-ring (15).

k) Assemble in the reverse order and refill the box (16) with oil see, 5.3-1 Pull Down Device - Check Oil Level.

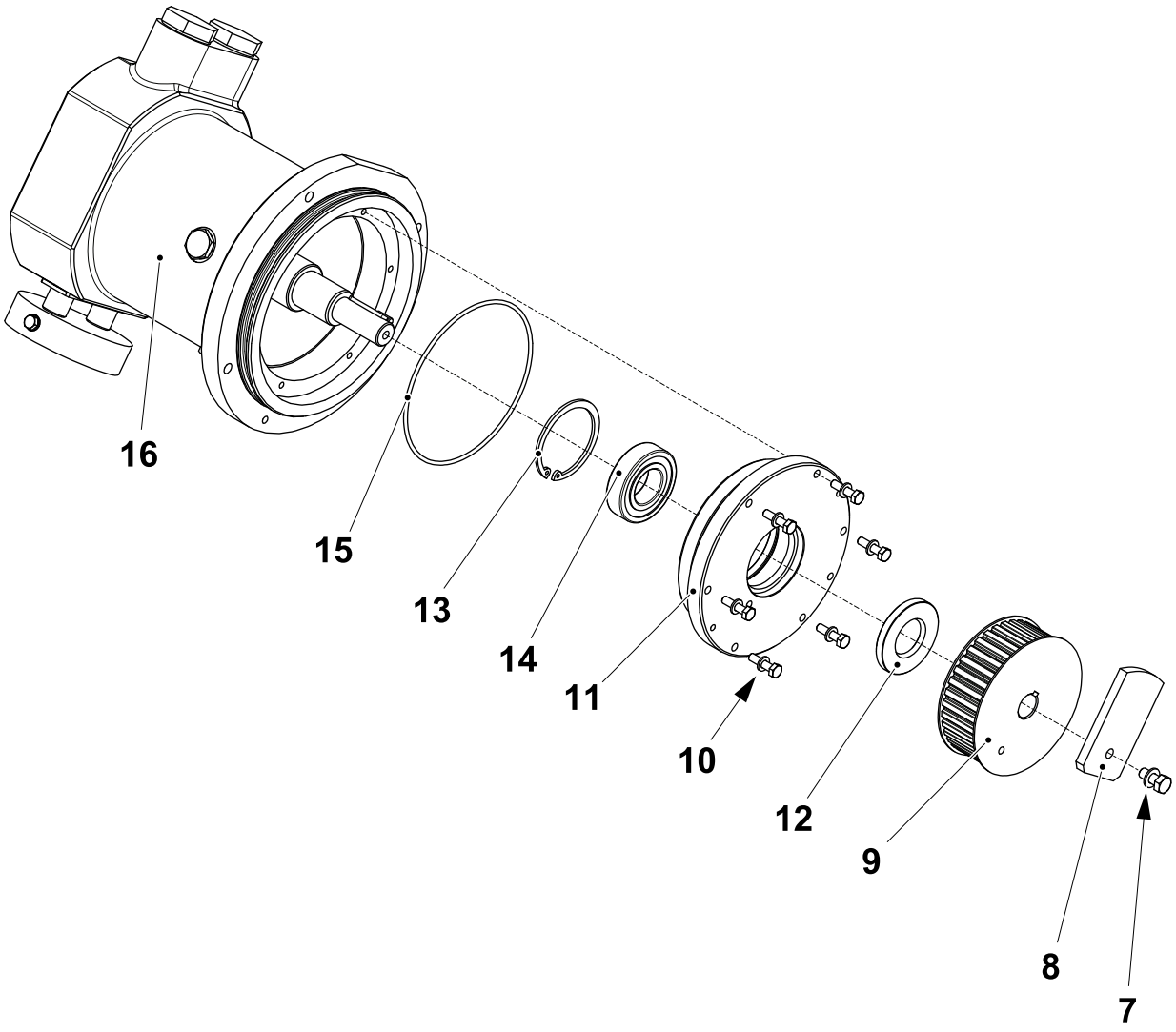

7 Screw
8 Activator
9 Toothed pulley
10 Screw
11 Flange
12 Seal ring
13 Retaining ring
14 Ball bearing
15 O-ring
16 Box

5.3-5 Pull Down Device - Set Pusher

Machine Status	Electrical supply disconnecting device in position O (OFF) Main air valve OFF Main steam valve ON Main water valve OFF
SPC Reference	2805990-0200 2819313-0100

a) Check the distance **A** between the block (1) and the flaps (2) of the wheel. If required:

- remove the screws (3) and the block (1),
- add or remove shims (4) until distance **A** is obtained.

Package	**A ±0.5 (mm)**
TBA 80 S, TBA 100 B, TBA 125 S, TBA 160 S, TBA 180 S, TBA 200 S, TBA 200 B, TBA 200 M, TBA 200 Sq, TBA 250 B, TBA 250 S, TBA 250 Sq, TBA 284 B, TBA 300 S, TBA 330 S, TBA 375 S, TBA 200 E, TBA 250 E	+0.5
TPA 125 Sq, TPA 200 Sq, TPA 250 Sq, TPA 330 Sq	-0.5

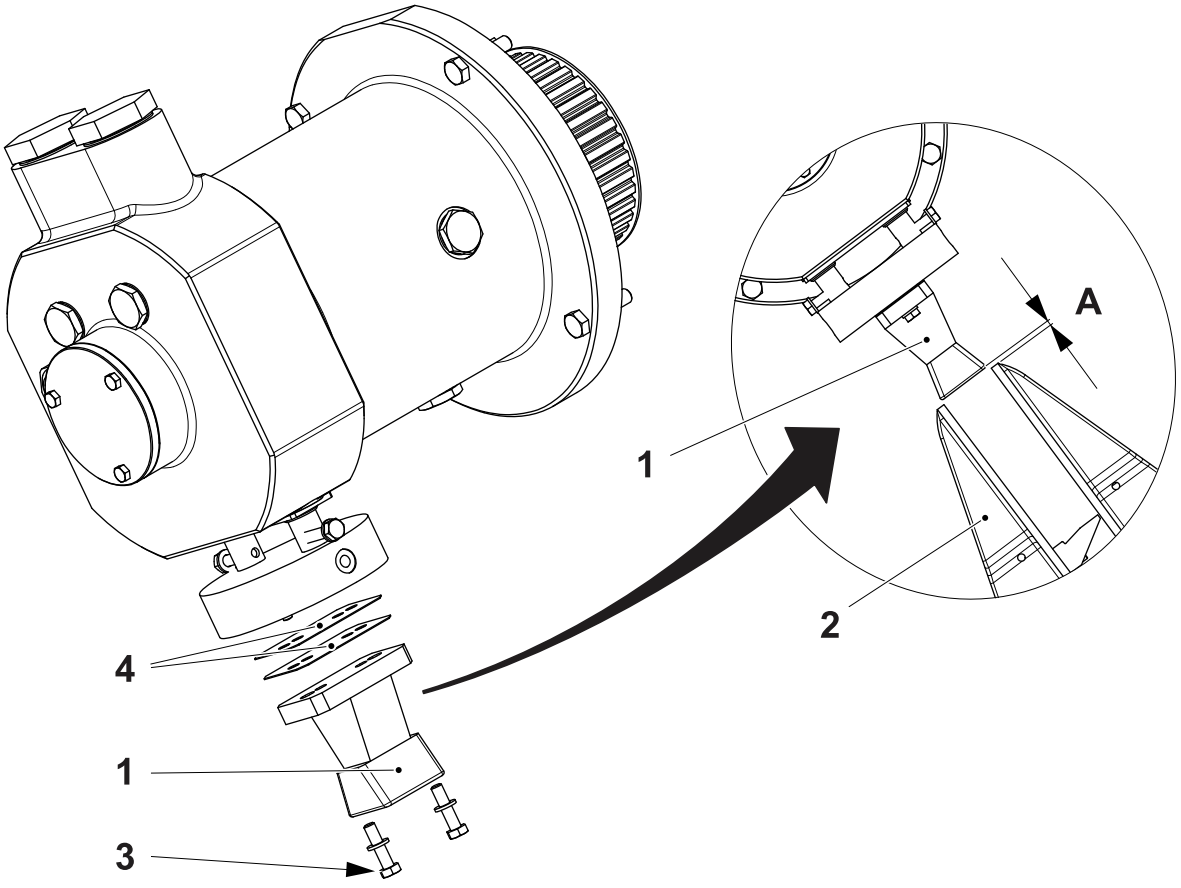

1 Block
2 Flap
3 Screw
4 Shim

(Cont'd)

(Cont'd)

b) Loosen the screws (3) and centre the block (1) (distance **B**), transversely in relation to the flaps (2).

c) Tighten the screws (3).

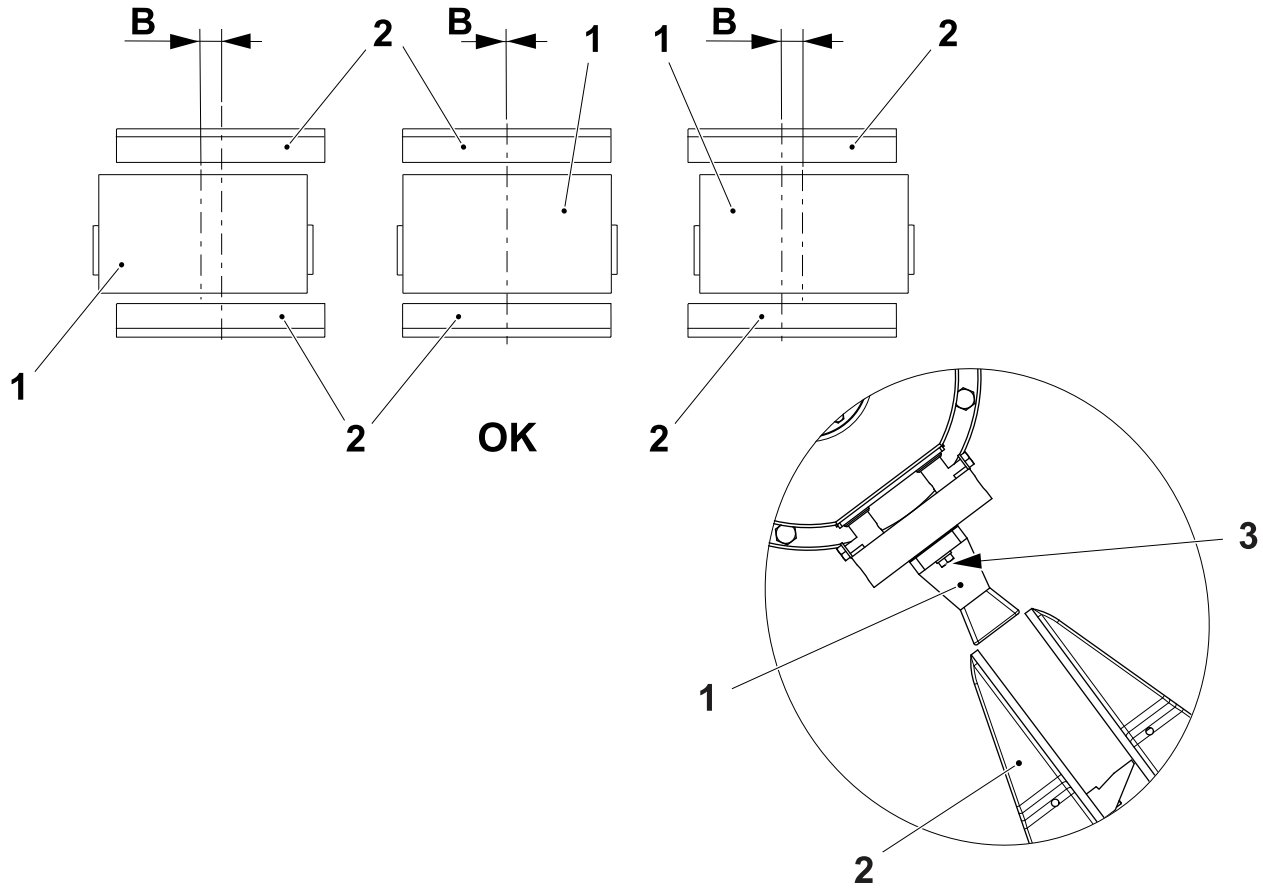

B = 0 mm
1 Block
2 Flap
3 Screw

5.3-6 Pull Down Device- Change Filter

Machine Status	Electrical supply disconnecting device in position I (ON) Main air valve ON Main steam valve ON Main water valve ON
SPC Reference	2805990-0200 2819313-0100

a) Remove and change the filter (1).

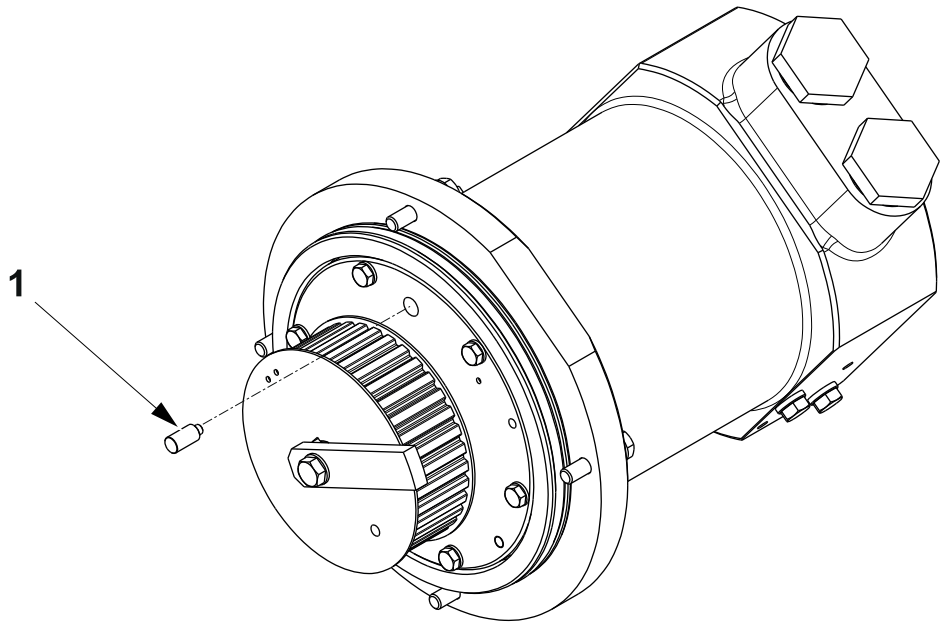

1 Filter

5.4 Flap Heaters

5.4-1 Flap Heater - Overhaul

Machine Status	Electrical supply disconnecting device in position O (OFF) Main air valve OFF Main steam valve ON Main water valve OFF
SPC Reference	2805991-0300 2819314-0100

WARNING

Risk of burns.

The flap heater and other parts nearby may be hot. Wear personal protective equipment.

WARNING

Risk of crushing.

The cylinder may move unexpectedly.

a) Check the nozzles (1) for wear or damage, change if required.

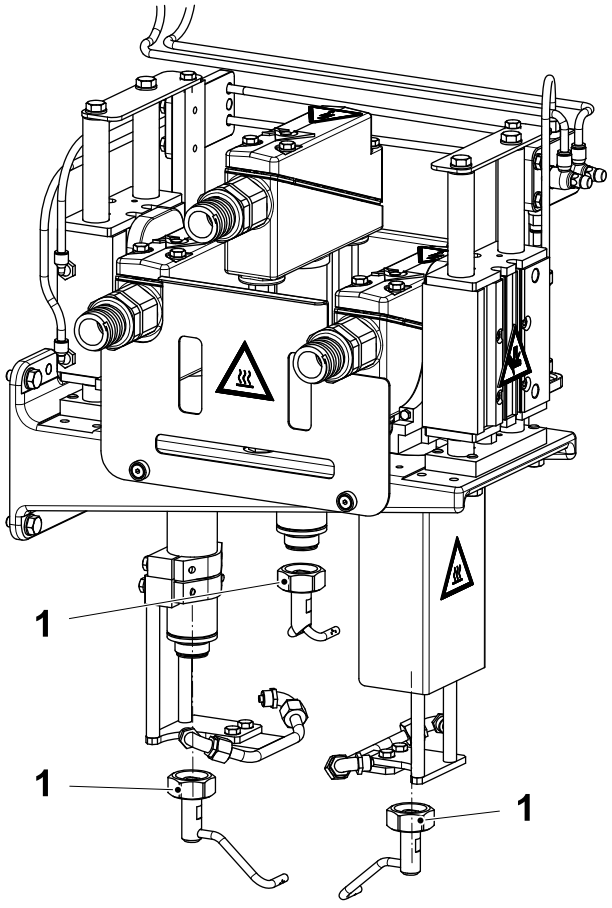

1 Nozzle

(Cont'd)

(Cont'd)

b) Remove the screws (2) and the covers (3).

c) Remove the gasket (4) and check for damage. Change if necessary.

d) Remove the screw (5) and the plate (6).

e) Remove the pneumatic connection (7) from the heater element (8).

f) Record and disconnect the heater element (8) electrical wires from the connection block (9).

g) Remove the screw (10) and the heater element (8).

h) Change the heater element (8) if required.

i) Assemble in the reverse order.

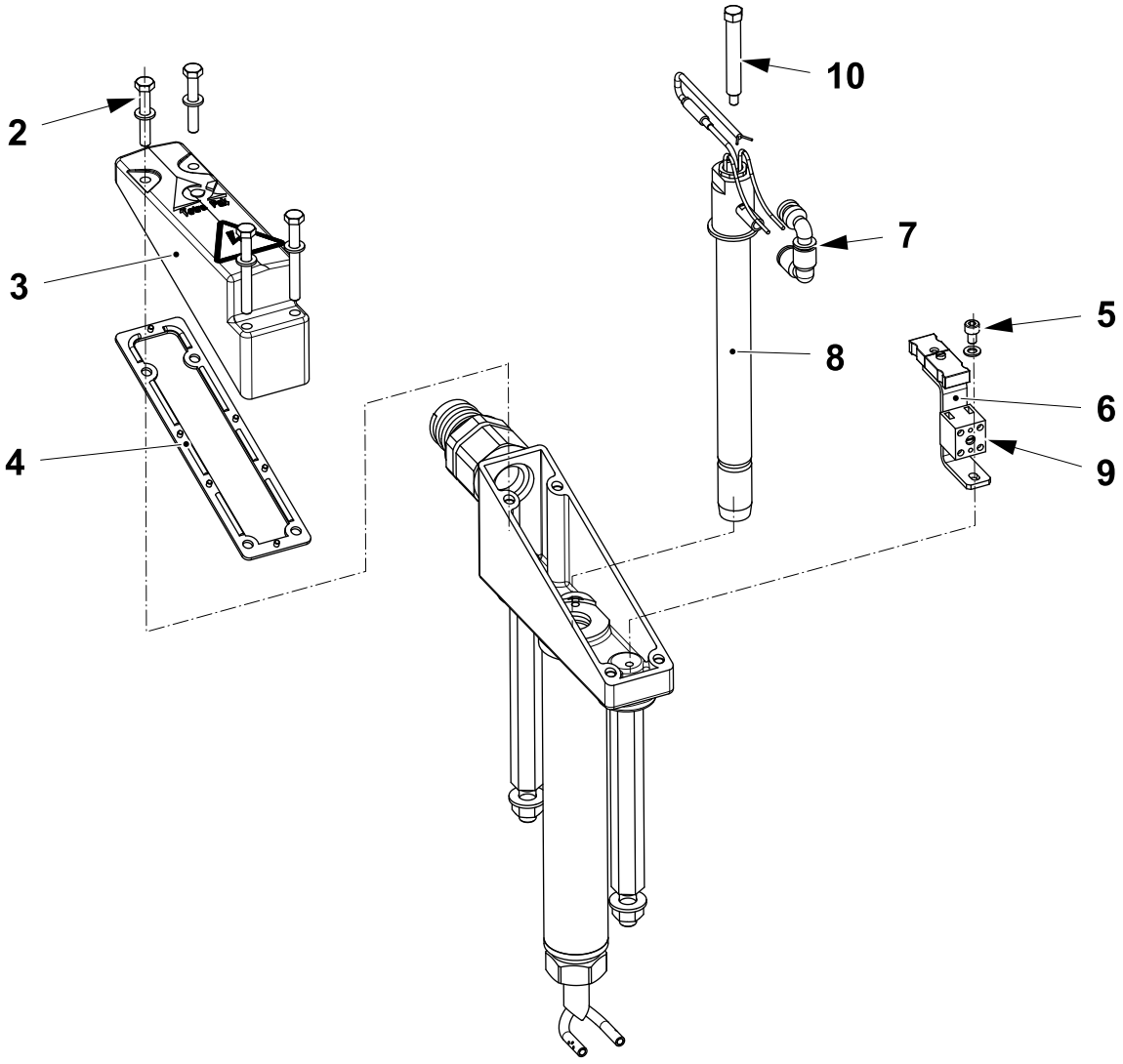

2 Screw
3 Cover
4 Gasket
5 Screw
6 Plate
7 Pneumatic connection
8 Heater element
9 Connection block
10 Screw

5.4-2 Flap Heater - Set Nozzles

Machine Status	PREPARATION
Special Equipment	Needle Pressure Gauge TP No. 1478583-0100
SPC Reference	2805992-0300 2819315-0100

WARNING

Risk of burns.

The nozzles and other parts nearby may be hot. Wear personal protective equipment.

WARNING

Risk of crushing.

The cylinder may move unexpectedly.

a) Centre the upper nozzle (1) in relation to the flap (2) using the nut (3).

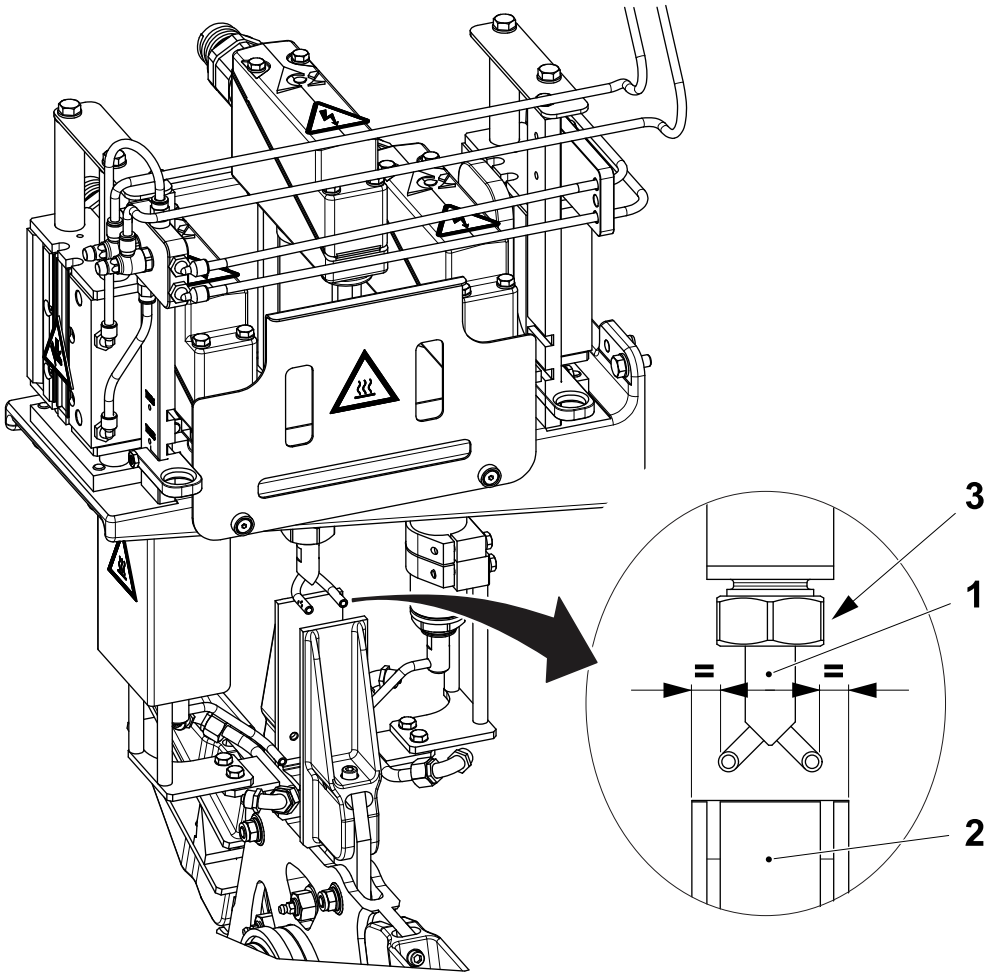

1 Upper nozzle
2 Flap
3 Nut

(Cont'd)

(Cont'd)

b) Centre the lower nozzles (4) in relation to the flap (2) to obtain the distance **A** using the nuts (5), see the table below.

Package	A ±0.5 mm
TBA 80 S, TBA 100 B, TBA 125 S, TBA 160 S, TBA 180 S, TBA 200 S	2.0
TBA 200 B, TBA 200 M, TBA 250 B, TBA 250 S, TBA 330 S, TBA 375 S	2.0
TBA 200 Sq, TBA 250 Sq	3.0
TBA 284 B, TBA 300 S	4.0
TPA 125 Sq, TPA 200 Sq, TPA 250 Sq	6.0
TPA 330 Sq	6.0
TBA 200 E, TBA 250 E	2.5

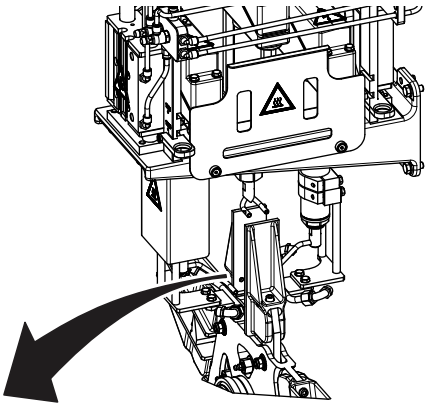

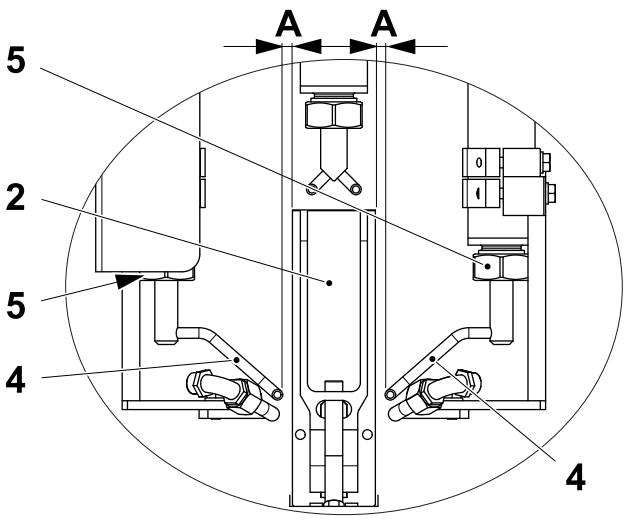

All other volumes shown

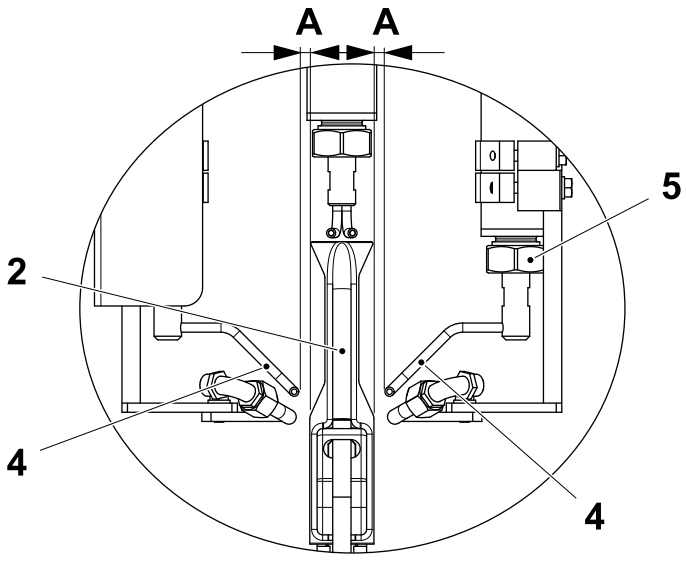

TPA 125 Sq volume shown

2 Flap

4 Lower nozzle

5 Nut

(Cont'd)

(Cont'd)

The following procedure describes how to adjust the temperature of the individual nozzles for flap sealing.

Note! The flap heater temperature is a parameter set in the recipe and depends on the packaging material being used in PRODUCTION. This procedure must be performed after analysis of the sealing and then saved to the package recipe via the TPOP.

c) Touch the PRODUCTION CONTROL button (6) on the TPOP.

d) Touch the FINAL FOLDER button (7).

e) In the FINAL FOLDER window, touch the TEMPERATURE icon (8).

f) Touch one of the four regulator panels:

- the lower LH NOZZLE icon (9)
- the lower RH NOZZLE icon (10)
- the UPPER NOZZLES icon (11)

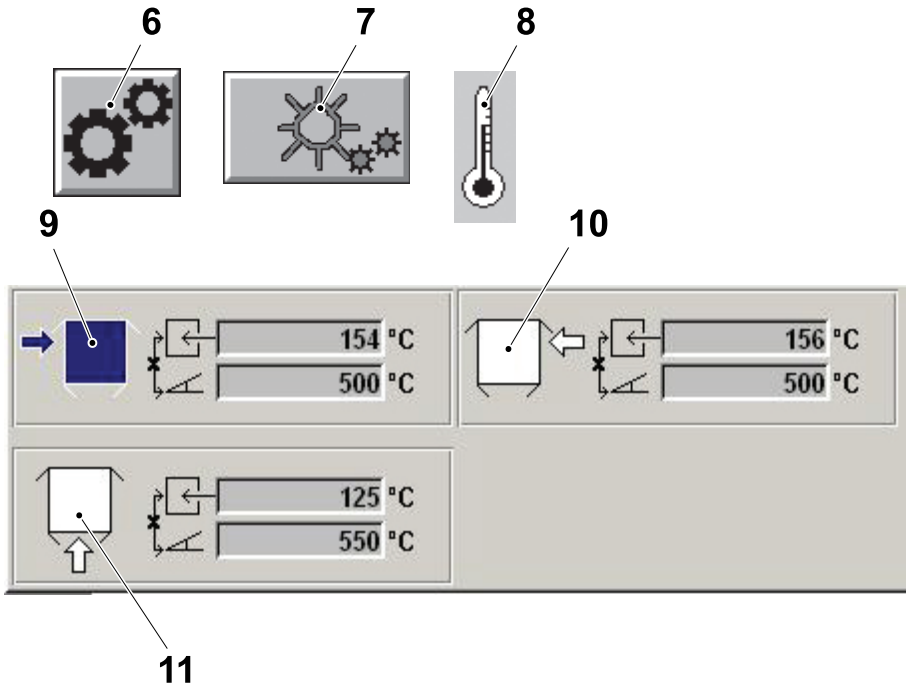

6 PRODUCTION CONTROL button
7 FINAL FOLDER button
8 TEMPERATURE icon
9 LH NOZZLE icon
10 RH NOZZLE icon
11 UPPER NOZZLES icon

(Cont'd)

(Cont'd)

g) Use the ARROW buttons (12) to adjust the temperature setting.

h) Press the EXIT button (13).

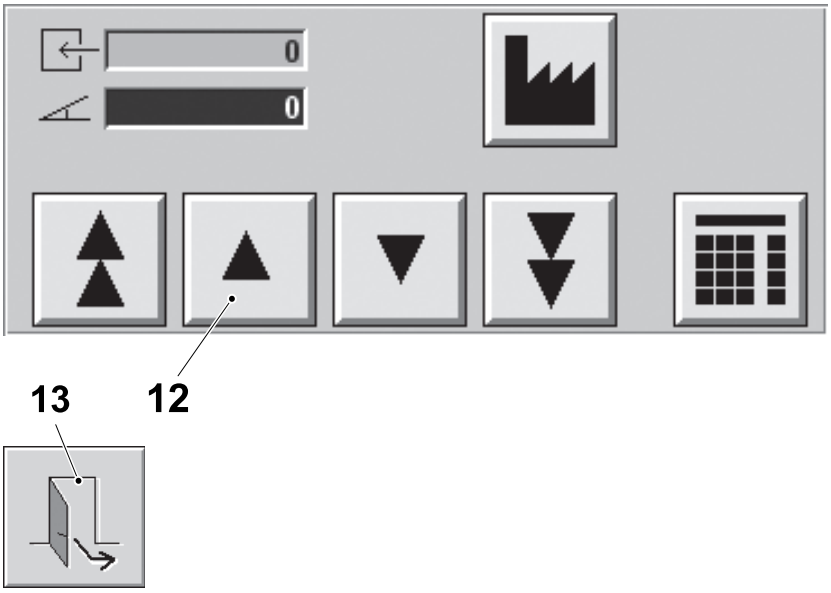

12 ARROW button
13 EXIT button

5.4-3 Flap Heater - Set Pressures

Machine Status	Electrical supply disconnecting device in position O (OFF) Main air valve ON Main steam valve ON Main water valve OFF
SPC Reference	2805991-0300 2819314-0100

WARNING

Risk of burns.

The nozzles and other parts nearby may be hot. Wear personal protective equipment.

Set the top flap sealing air pressure according to 9.1 Technical Data, by means of the pressure regulator (1), located on the machine body pneumatic panel (2).

Set the bottom flap sealing air pressure according to 9.1 Technical Data, by means of the pressure regulator (3), located on the machine body pneumatic panel (2).

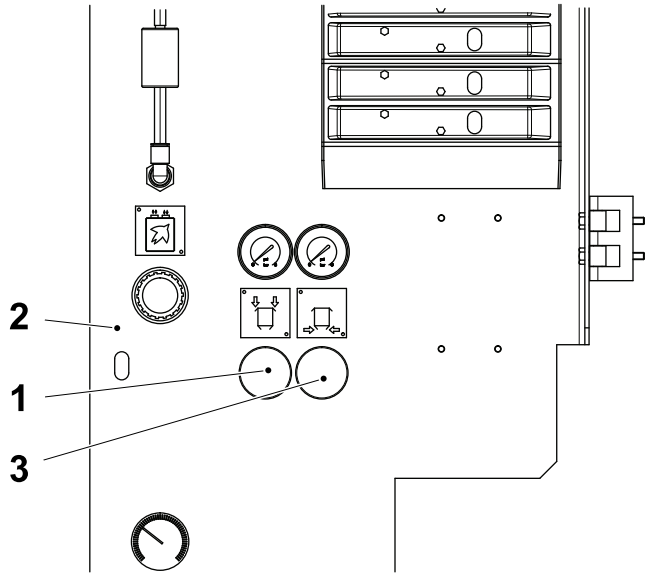

1 Pressure regulator
2 Pneumatic panel
3 Pressure regulator

5.4-4 Flap Heater - Set Folding Part

Machine Status	Electrical supply disconnecting device in position O (OFF) Main air valve OFF Main steam valve ON Main water valve OFF
SPC Reference	2805991-0300 2819314-0100

a) On both sides of the final folder, set the distance **A** (see table on page 5-51) between the cooling rail (1) and the mounting plate (2) of the flap heaters.

b) Loosen the screws (3) on the reference bracket (4) and the screws (5) on the bracket (6).

c) Adjust the position of the bracket (6) to set the distance **A** and tighten the screws (5).

d) Move the reference bracket (4) accordingly and tighten the screws (3).

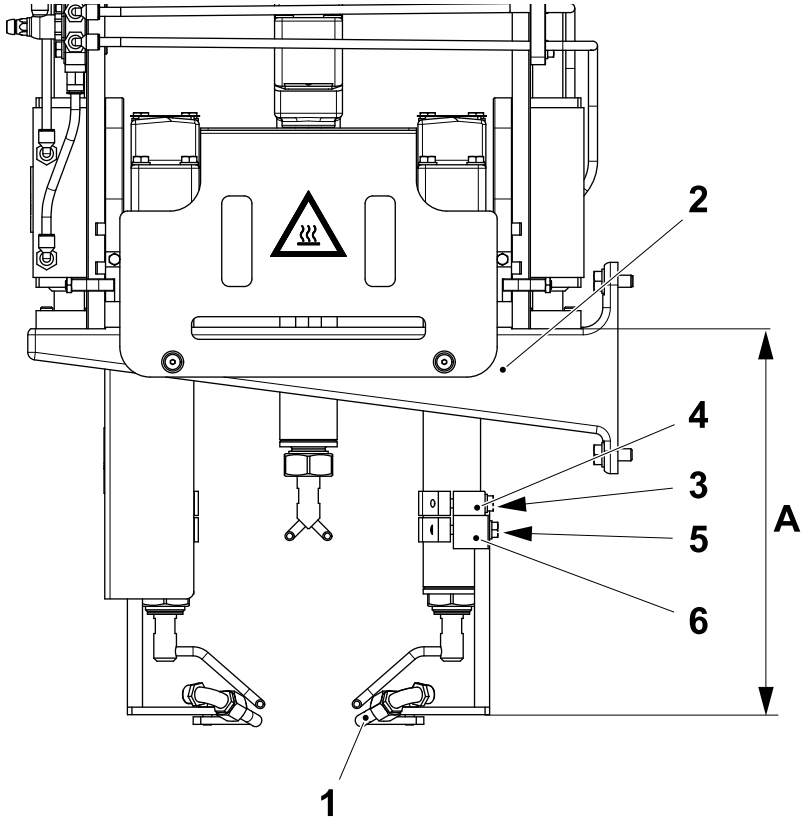

1 Cooling rail
2 Mounting plate
3 Screw
4 Bracket
5 Screw
6 Bracket

(Cont'd)

(Cont'd)

e) Table for distance **A**.

Package	A ±0.5 (mm)	Package	A ±0.5 (mm)
TBA 80 S	208	TBA 250 Sq	235
TBA 100 B	210	TBA 284 B	257
TBA 125 S	227	TBA 300 S	257
TBA 160 S	235	TBA 330 S	270
TBA 200 B	221	TBA 375 S	270
TBA 200 M	245	TPA 125 Sq	229
TBA 200 S	260	TPA 200 Sq	239
TBA 200 Sq	215	TPA 250 Sq	264
TBA 250 B	245	TPA 330 Sq	263
TBA 250 S	270	TBA 200 E	242
TBA 180 S	248	TBA 250 E	265

f) Loosen the screws (3) and screws (5) and set the parallelism between the folding bars (7) and the bottom plate (8).

g) Tighten the screws (3) and screws (5).

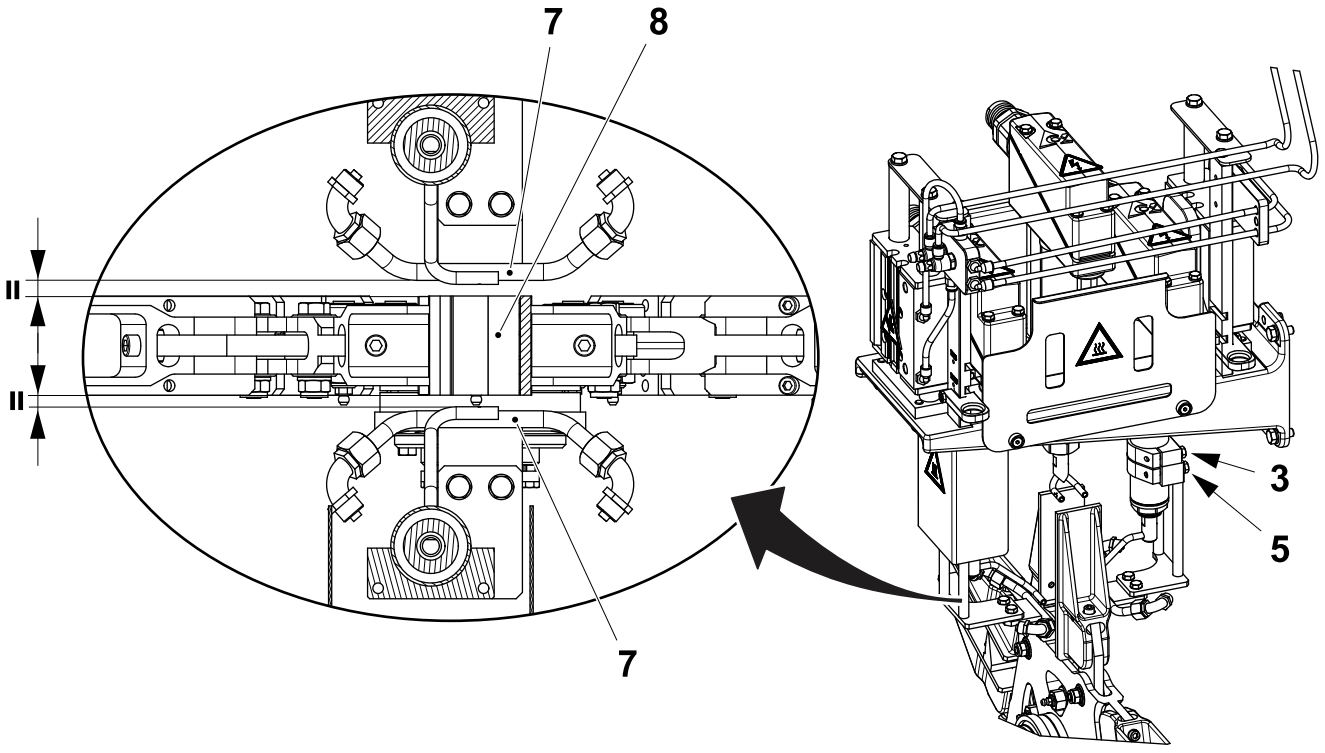

3 Screw
5 Screw
7 Folding bar
8 Bottom plate

5.5 Pressure Device

5.5-1 Pressure Device - Check Oil Level

Machine Status	Electrical supply disconnecting device in position O (OFF) Main air valve OFF Main steam valve ON Main water valve OFF
Consumables	Lubricant, Kluberoil 4 UH1 150-N TP No. 344412-0000
SPC Reference	2805992-0300 2819315-0100

CAUTION
Risk of damage to the equipment.
Mixing lubricants with no compatible bases will lead to severe loss of lubrication and probable damage to the equipment. Use only recommended consumables, see section 9.3.1 Lubricants.

a) Check the oil level in the sight glass (1).

b) If the oil level is below the middle point (2), remove the covers (3) and add oil.

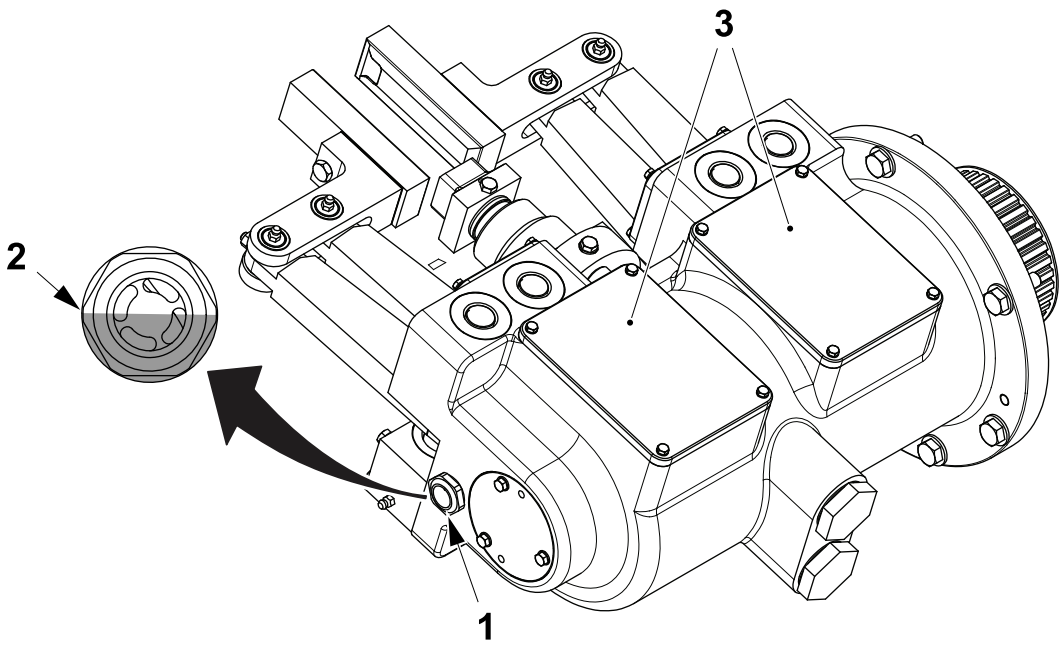

1 Sight glass
2 Middle point
3 Cover

5.5-2 Pressure Device - Remove Oil

Machine Status	Electrical supply disconnecting device in position O (OFF) Main air valve OFF Main steam valve ON Main water valve OFF
Consumables	Lubricant, Kluberoil 4 UH1 150 TP No. 344412-0000
SPC Reference	2805992-0300 2819315-0100

WARNING
High Pressure Oil
Wear personal protective equipment.

a) Place an empty container under the draining screw (1).

b) Remove the screw (1) and remove the oil from the box (2).

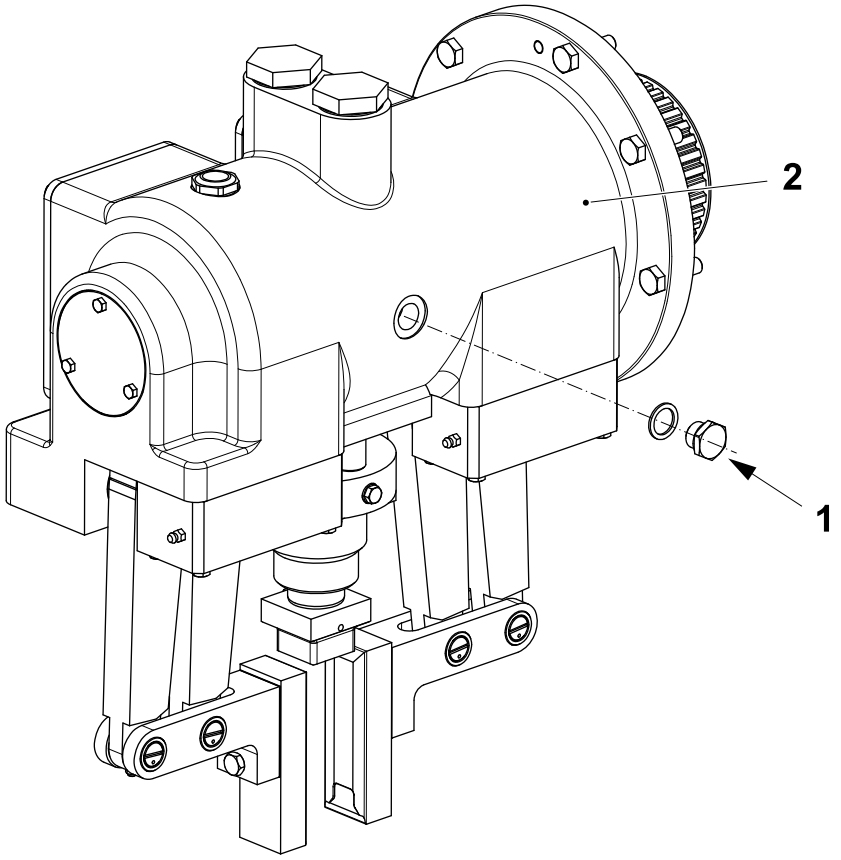

1 Screw
2 Box

5.5-3 Pressure Device - Change Bushing and Seal Ring

Machine Status	Electrical supply disconnecting device in position O (OFF) Main air valve OFF Main steam valve ON Main water valve OFF
SPC Reference	2805992-0300 2819315-0100

a) Remove the oil from the box (1) in a suitable container, see 5.5-2 Pressure Device - Remove Oil.

b) Loosen the nuts (2) and the stop screws (3) and extract the shafts (4).

c) Remove the supports (5).

d) Remove and change the bushings (6).

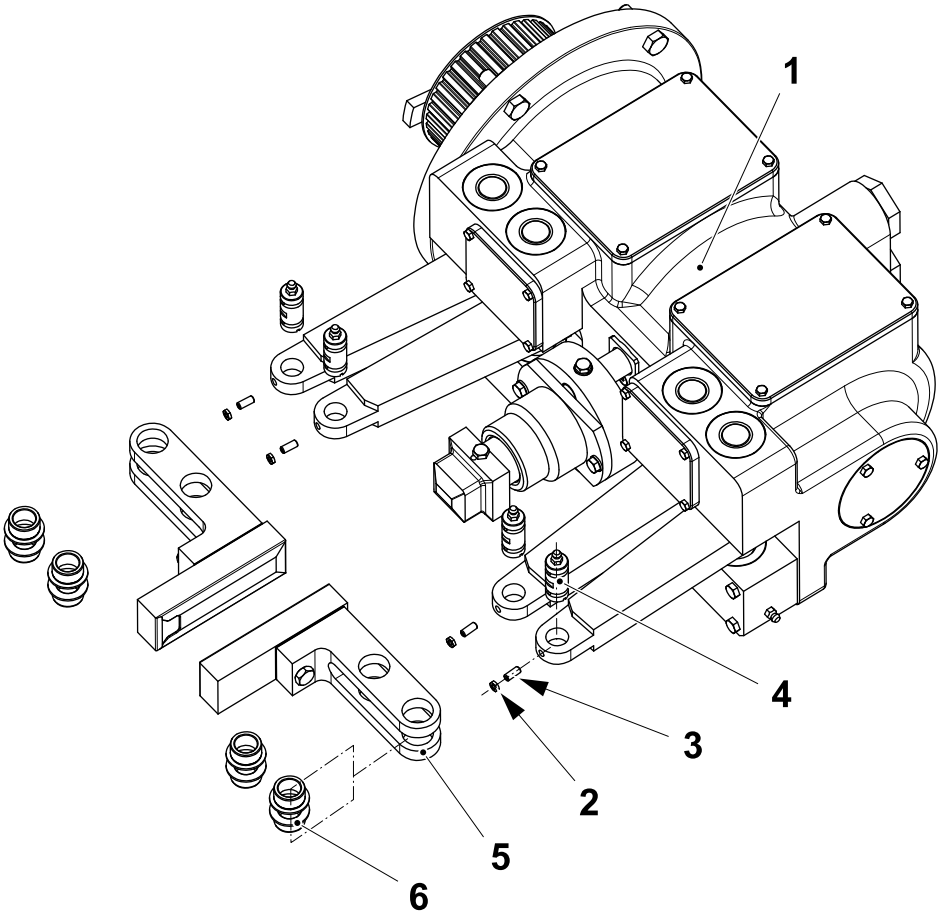

1 Box
2 Nut
3 Stop screw
4 Shaft
5 Support
6 Bushing

(Cont'd)

(Cont'd)

e) Remove the screws (7) and the cap (8).

f) Remove the screws (9) and the clamp (10).

g) Remove the screws (11) and the cap (12).

h) Pull the lever (13) in the arrow direction to release the shaft (14).

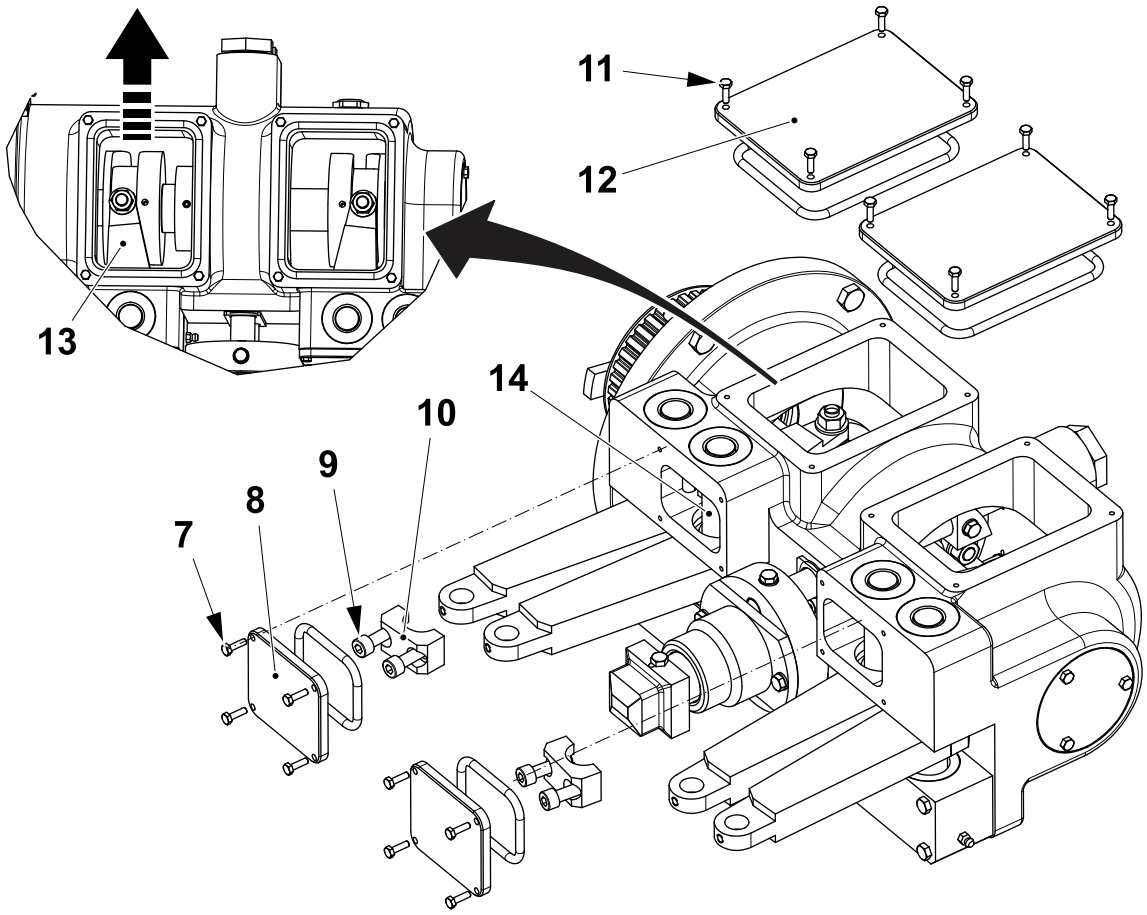

7 Screw
8 Cap
9 Screw
10 Clamp
11 Screw
12 Cap
13 Lever
14 Shaft

(Cont'd)

(Cont'd)

i) Remove the screws (15) and pull out the box assembly (16).

Note! The pins (19) of the box assembly (16) is sliding into the groove (20).

j) Remove and change the seal rings (17) and the bushings (18).

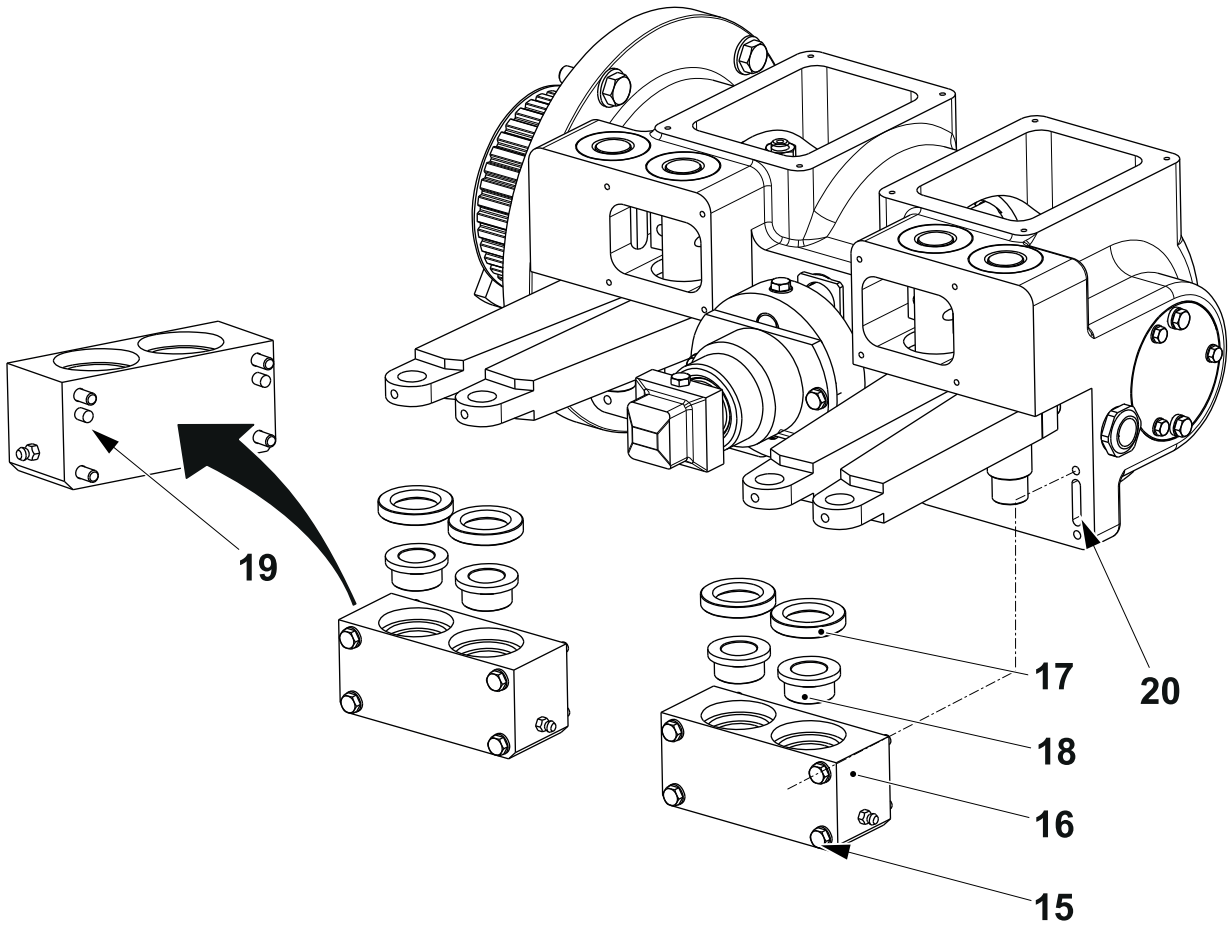

15 Screw
16 Box assembly
17 Seal ring
18 Bushing
19 Pin
20 Groove

(Cont'd)

(Cont'd)

k) Pull out the shaft (14).

l) Remove and change the seal rings (17) and the bushings (18).

m) Repeat the procedure for the other side.

n) Assemble in the reverse order and refill the box with oil see, 5.5-1 Pressure Device - Check Oil Level.

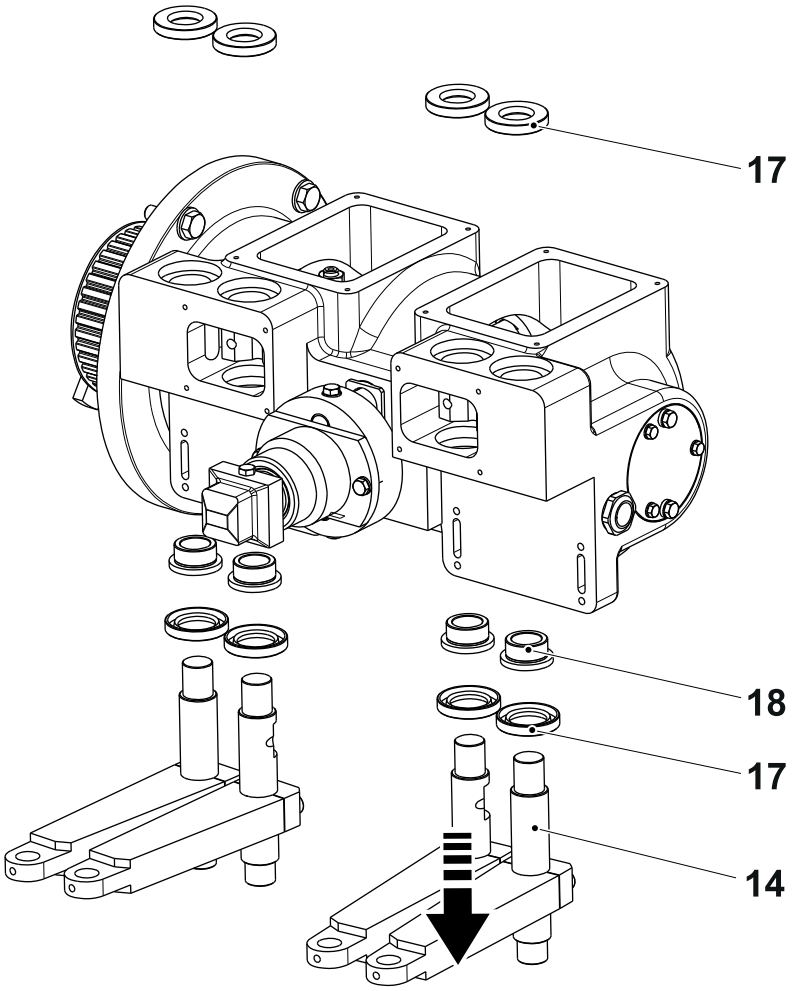

14 Shaft
17 Seal ring
18 Bushing

5.5-4 Pressure Device - Change Rod Seal and Bushing

Machine Status	Electrical supply disconnecting device in position O (OFF) Main air valve OFF Main steam valve ON Main water valve OFF
SPC Reference	2805992-0300 2819315-0100

a) Drain the oil from the box in a suitable container, see 5.5-2 Pressure Device - Remove Oil.

(Cont'd)

(Cont'd)

b) Remove the screws (1) and cap (2).

c) Remove the screws (3), (4) and plate assembly (5).

d) Remove the screws (6) and plate (7).

e) Remove the shaft (8) and screw (9).

f) Remove and change the rod seal (10) and bushings (11).

g) Assemble in the reverse order and refill the box with oil, see 5.5-1 Pressure Device - Check Oil Level.

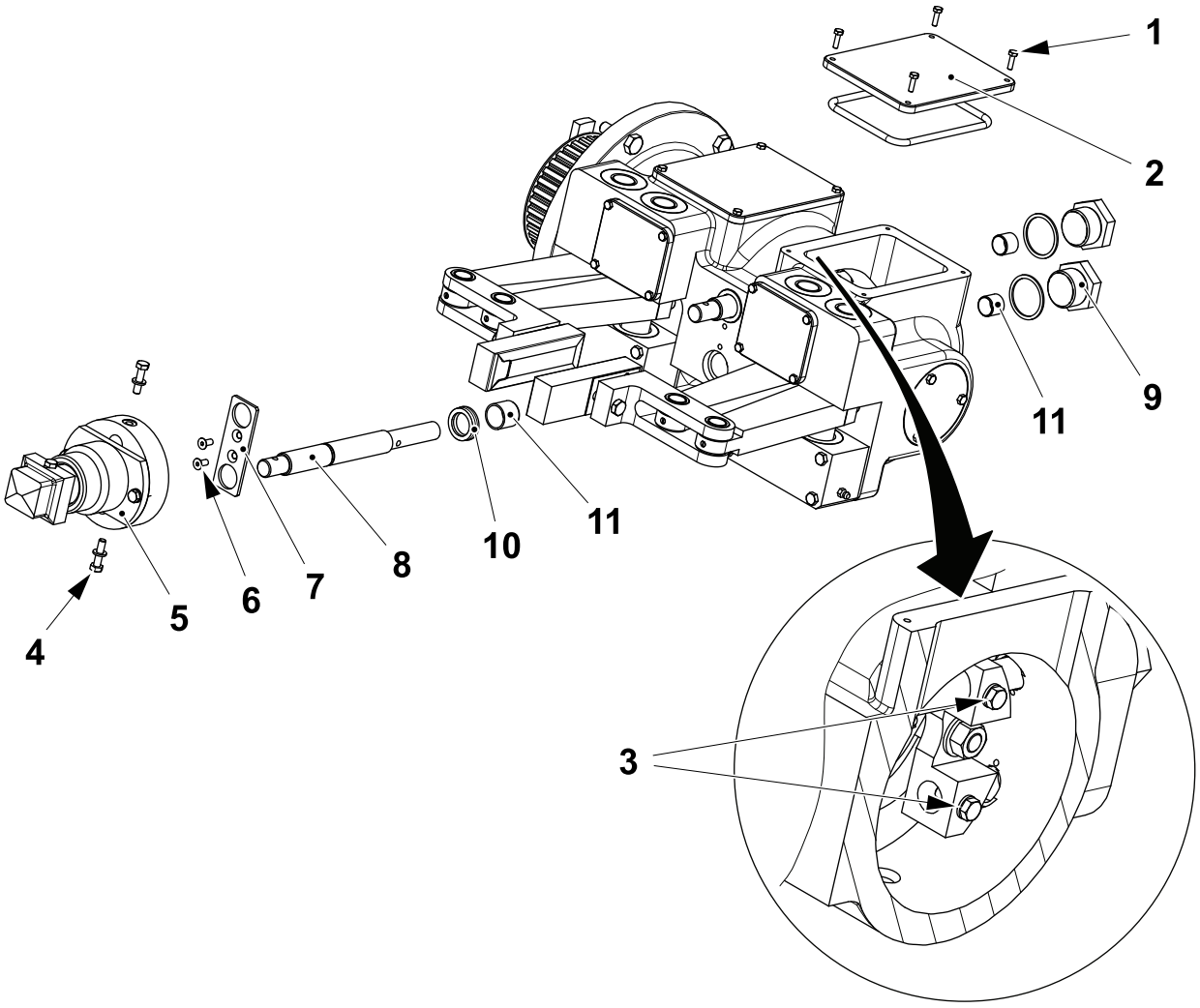

1 Screw
2 Cap
3 Screw
4 Screw
5 Plate assembly
6 Screw
7 Plate
8 Shaft
9 Screw
10 Rod seal
11 Bushing

5.5-5 Pressure Device - Change O-ring and Ball Bearing

Machine Status	Electrical supply disconnecting device in position O (OFF) Main air valve OFF Main steam valve ON Main water valve OFF
SPC Reference	2805992-0300 2819315-0100

a) Drain the oil from the box in a suitable container, see 5.5-2 Pressure Device - Remove Oil.

b) Remove the screws (1) and the plate (2).

c) Remove the screw (3) and the washer (4).

d) Remove and change the ball bearing (5) and the O-ring (6).

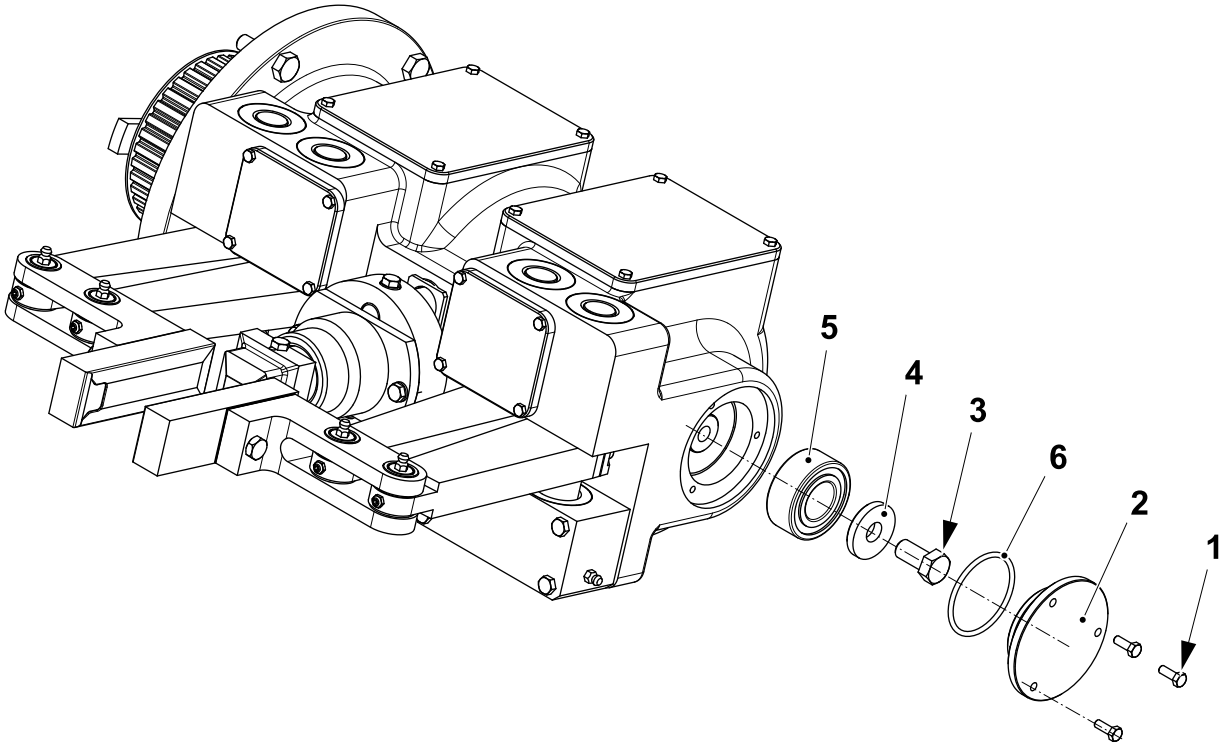

1 Screw
2 Plate
3 Screw
4 Washer
5 Ball bearing
6 O-ring

(Cont'd)

(Cont'd)

e) Remove and change the O-ring (7).

f) Remove the screw (8) and the activator (9).

g) Remove the toothed pulley (10) and the screws (11).

h) Remove the flange (12) and the seal ring (13).

i) Remove the retaining ring (14).

j) Remove and change the ball bearing (15) and the O-ring (16).

k) Assemble in the reverse order and refill the box with oil, see 5.5-1 Pressure Device - Check Oil Level.

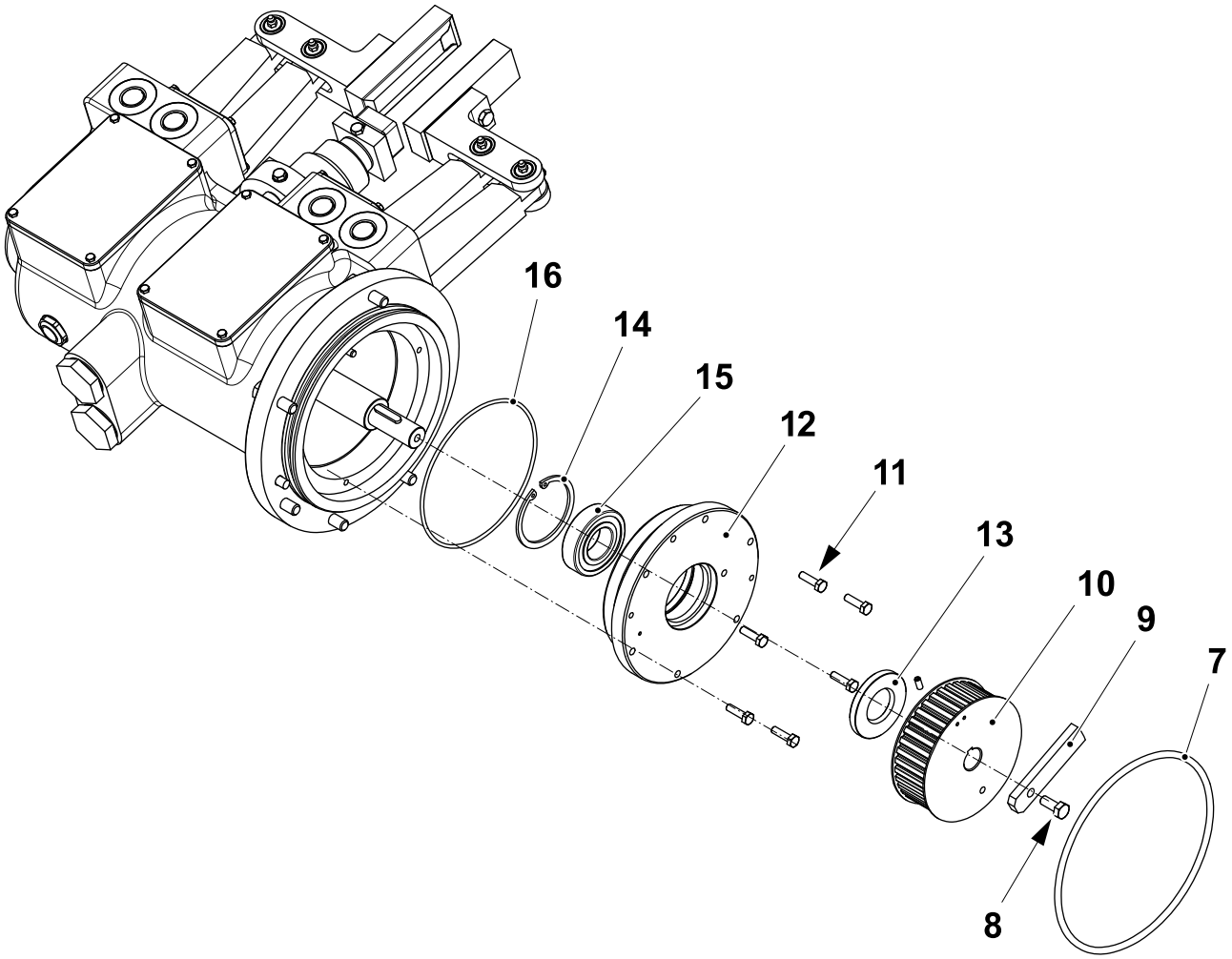

7 O-ring
8 Screw
9 Activator
10 Toothed pulley
11 Screw
12 Flange
13 Seal ring
14 Retaining ring
15 Ball bearing
16 O-ring

5.5-6 Pressure Device - Check Package Pressure

Machine Status	PREPARATION
Special Equipment	Needle Pressure Gauge TP No. 1478583-0100
SPC Reference	2805992-0300 2819315-0100

a) Touch the PRODUCTION CONTROL button (1).

b) Touch the FINAL FOLDER button (2) to display the FINAL FOLDER window.

c) Touch the FINAL FOLDER icon (3).

d) Touch the FINAL FOLDER POSITION icon (4) and the ANGLE SELECTOR window (5) is displayed.

e) Use the ARROW button (6) to set the angle to **90°**.

f) Touch the START button (7).

g) Touch the OK button (8) to start the machine movement.

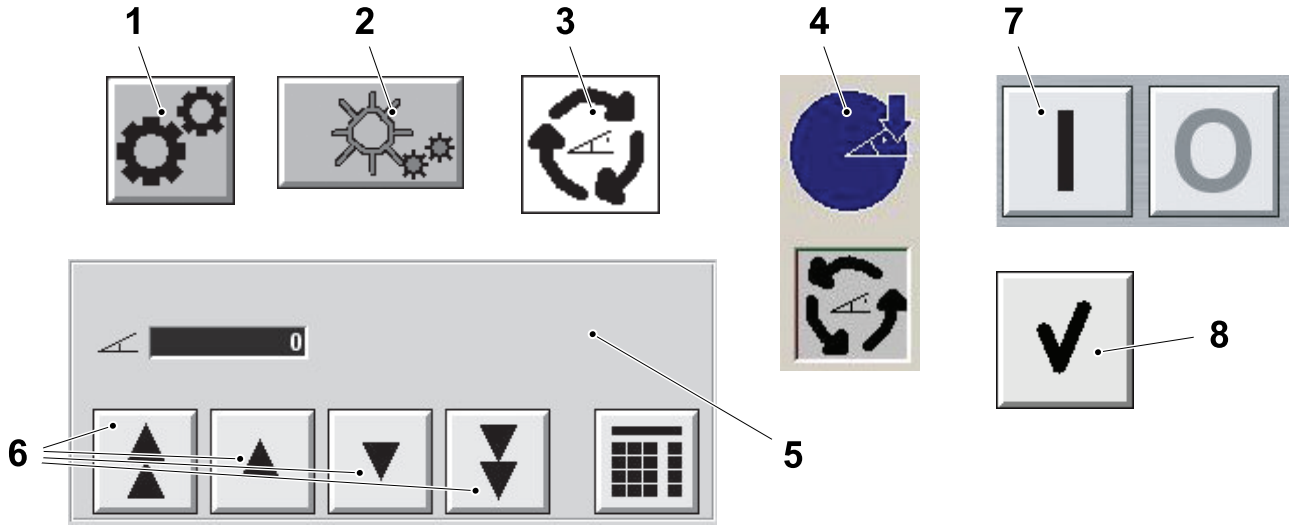

1 PRODUCTION CONTROL button
2 FINAL FOLDER button
3 FINAL FOLDER icon
4 FINAL FOLDER POSITION icon
5 ANGLE SELECTOR window
6 ARROW button
7 START button
8 OK button

(Cont'd)

(Cont'd)

Note! The package must be well shaped and must have the correct weight.

h) Place a filled package (9) between the flaps (10).

i) Touch the `FINAL FOLDER ROTATION` icon (11) to change the rotation of the Final Folder unit.

j) Set the angle to **300°**, the pusher (12) reach its bottom position.

k) Insert the needle of the pressure gauge (13) in the space between the flaps (10) and the pusher (14) of the pressure device so that the needle enters the package (9).

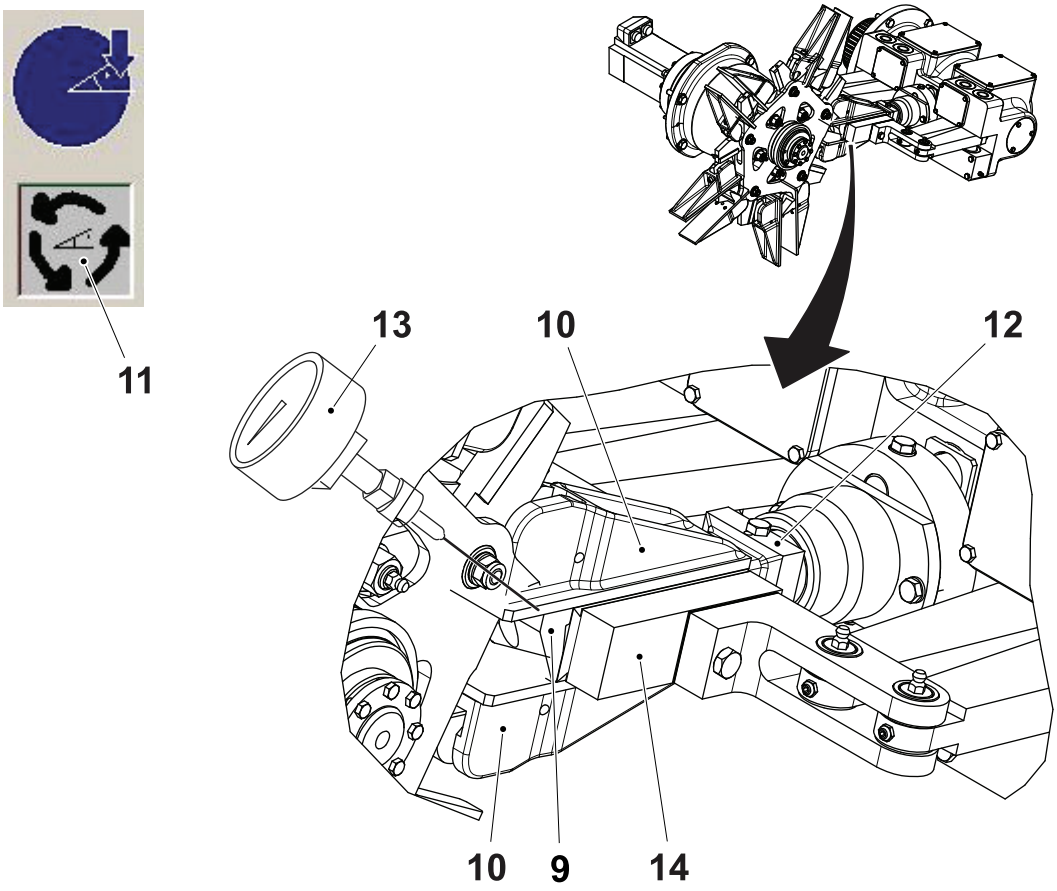

9 Package
10 Flap
11 `FINAL FOLDER ROTATION` icon
12 Pusher
13 Pressure gauge
14 Pusher

(Cont'd)

(Cont'd)

CAUTION
Risk of damage to the equipment.
Too much pressure can cause serious damage to the pressure device and the final folder clutch.

l) Check the pressure on the pressure gauge. The pressure must be within the range in the table below.

Package	Packaging Material	Pressure (bar)
TBA 80 S, TBA 100 B, TBA 125 S, TBA 160 S, TBA 180 S, TBA 200 B, TBA 200 M, TBA 200 S, TBA 200 Sq, TBA 250 B, TBA 250 S, TBA 250 Sq, TBA 284 B, TBA 300 S	Not applicable	0.6 - 0.8
TBA 375 S	TPA jL CB*	0.8 - 1.0
TPA 125 Sq, TPA 200 Sq	Not applicable	0.8 - 1.0
TPA 250 Sq, TPA 330 Sq	TPA jL CD*	0.9 - 1.1
TPA 250 Sq, TPA 330 Sq	TPA jL CB*	1.1 - 1.3
TBA 200 E, TBA 250 E	Not applicable	0.8 - 1.0

* (CD = Cardboard Duplex)

* (CB = Cardboard Bleached).

(Cont'd)

(Cont'd)

m) If the pressure is too low:
- Loosen the knob (15) and remove the pusher (14).
- Add the shims (16) between the pusher (14) and the support (17) until the correct pressure is reached (add the same number of shims (16) on both pusher (14).

n) If the pressure is too high:
- Loosen the knob (15) and remove the pusher (14).
- Remove the shims (16) between the pusher (14) and the support (17) until the correct pressure is reached, remove the same number of shims (16) on both pusher (14).

o) Assemble in the reverse order.

Note! For TPA and TBA Edge volumes only make sure that both pusher (14) are fitted oriented according to the illustration below.

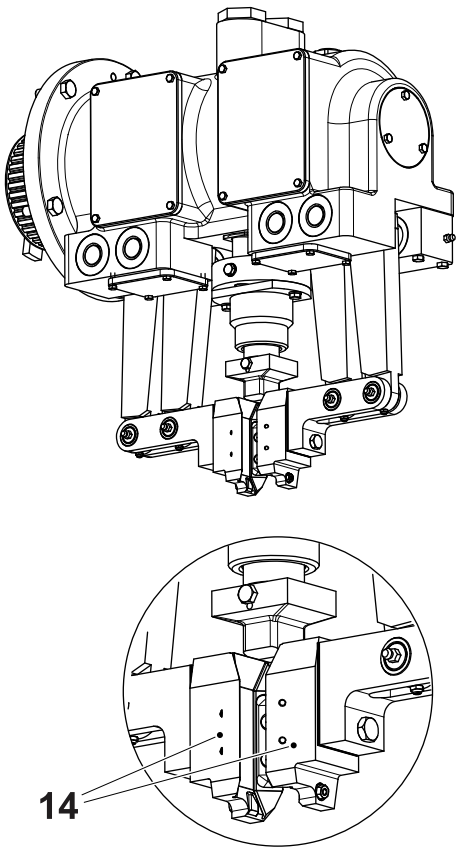

Valid for TPA volumes only

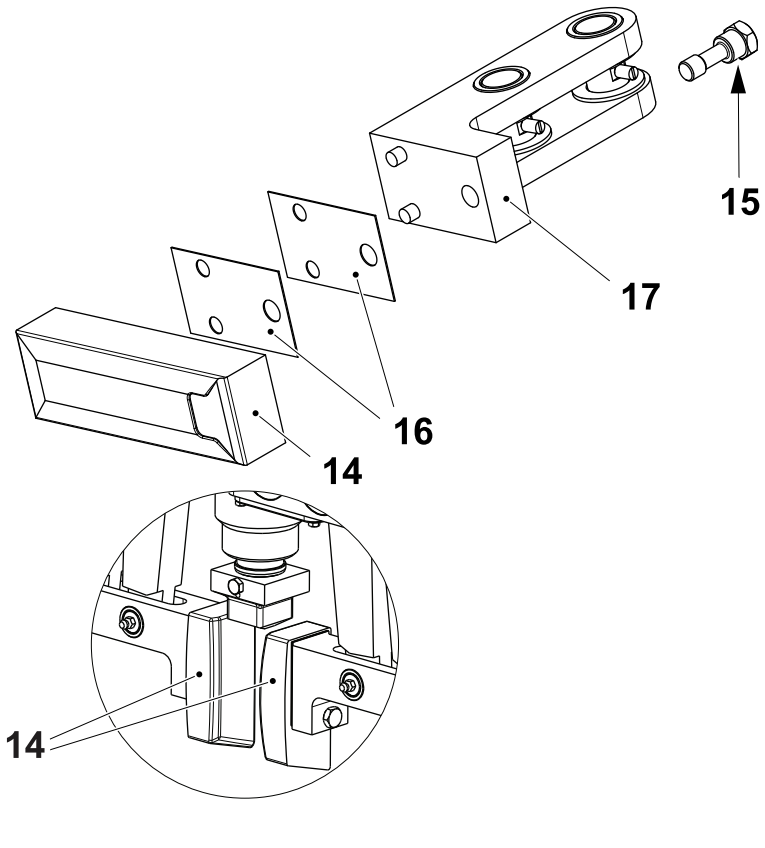

Valid for TBA Edge volumes only

14 Pusher
15 Knob
16 Shim
17 Support

(Cont'd)

(Cont'd)

Set Nail

Note! Valid for TPA 200 Sq, TPA 250 Sq and TPA 330 Sq volumes only.

a) Remove the screws (1) and add or remove shims (2) under the nails (3) according to the table below.

b) Tighten the screws (1).

Note! an insufficient amount of shims might result that the top package flaps remains too open, a too high amount of shims might result in marks below the top package flaps.

Package	Packaging Material	No. of Shims x Nail
TPA 200 Sq, TPA 250 Sq, TPA 330 Sq	TPA jL CD*	0-1
TPA 200 Sq, TPA 250 Sq, TPA 330 Sq	TPA jL CB*	2

* (CD = Cardboard Duplex)

* (CB = Cardboard Bleached).

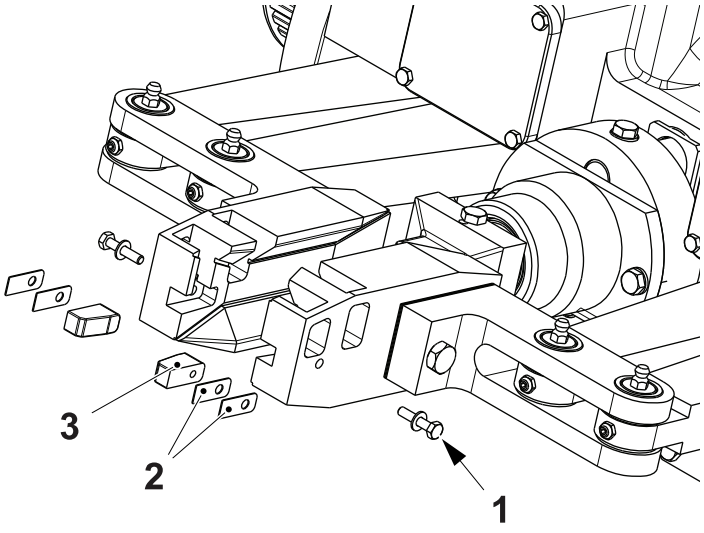

1 Screw
2 Shim
3 Nail

5.5-7 Pressure Device - Grease

Machine Status	Electrical supply disconnecting device in position O (OFF) Main air valve OFF Main steam valve ON Main water valve OFF
Consumables	Grease, Klubersynth UH1 64-62 TP No. 344408-0000
SPC Reference	2805992-0300 2819315-0100

Lubricate the pressure device with **2.5 cc** of grease through each grease nipples (1) using a grease gun.

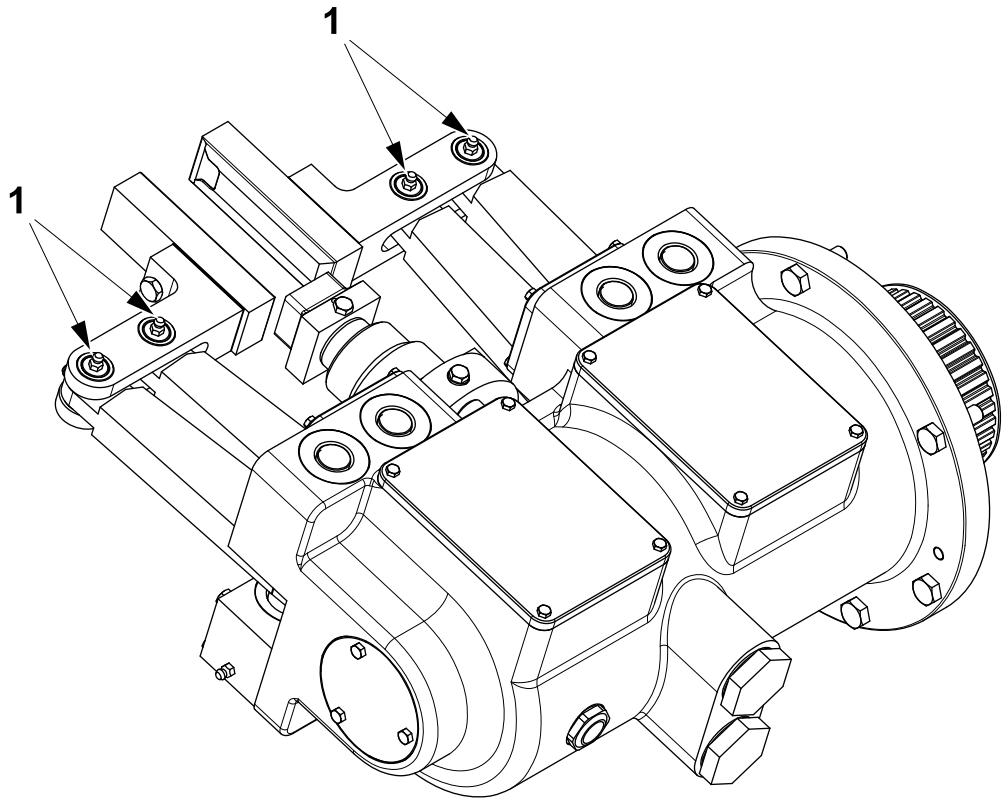

1 Grease nipple

5.5-8 Pressure Device - Change Filter

Machine Status	Electrical supply disconnecting device in position I (ON) Main air valve ON Main steam valve ON Main water valve ON
SPC Reference	2805992-0300 2819315-0100

a) Remove and change the filter (1).

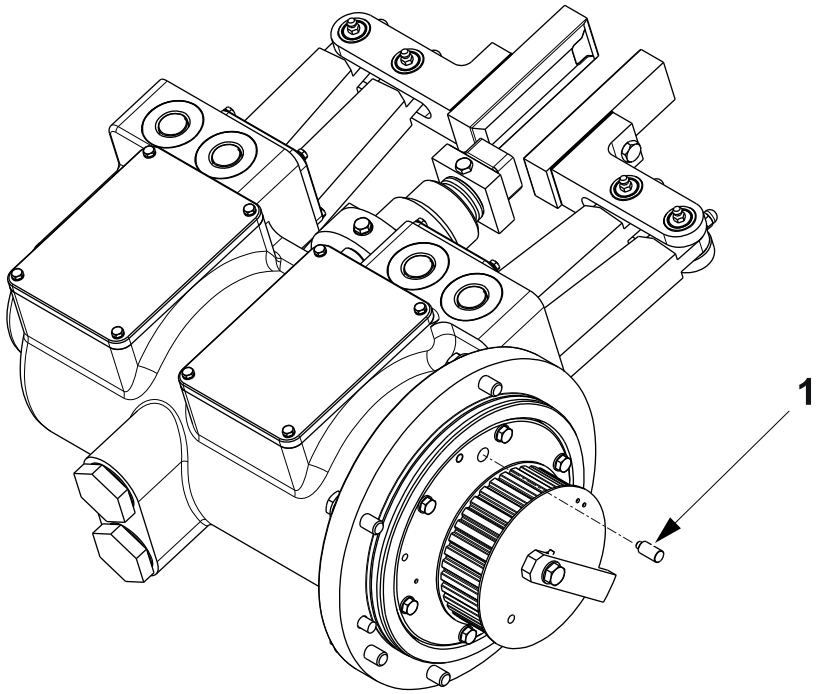

1 Filter

5.6 Outfeed

5.6-1 Outfeed - Change Belt

Machine Status	Electrical supply disconnecting device in position O (OFF) Main air valve OFF Main steam valve ON Main water valve OFF
SPC Reference	2805993-0400 2819316-0200

a) Loosen the belt tension with the screw (1).

b) Remove the screws (2) and the plate (3).

c) Remove and change the belt (4).

d) Assemble in the reverse order.

e) Set the belt tension, see 5.6-2 Outfeed - Set Belt Tension.

f) Perform the outfeed referencing, see 5.6-9 Outfeed - Referencing.

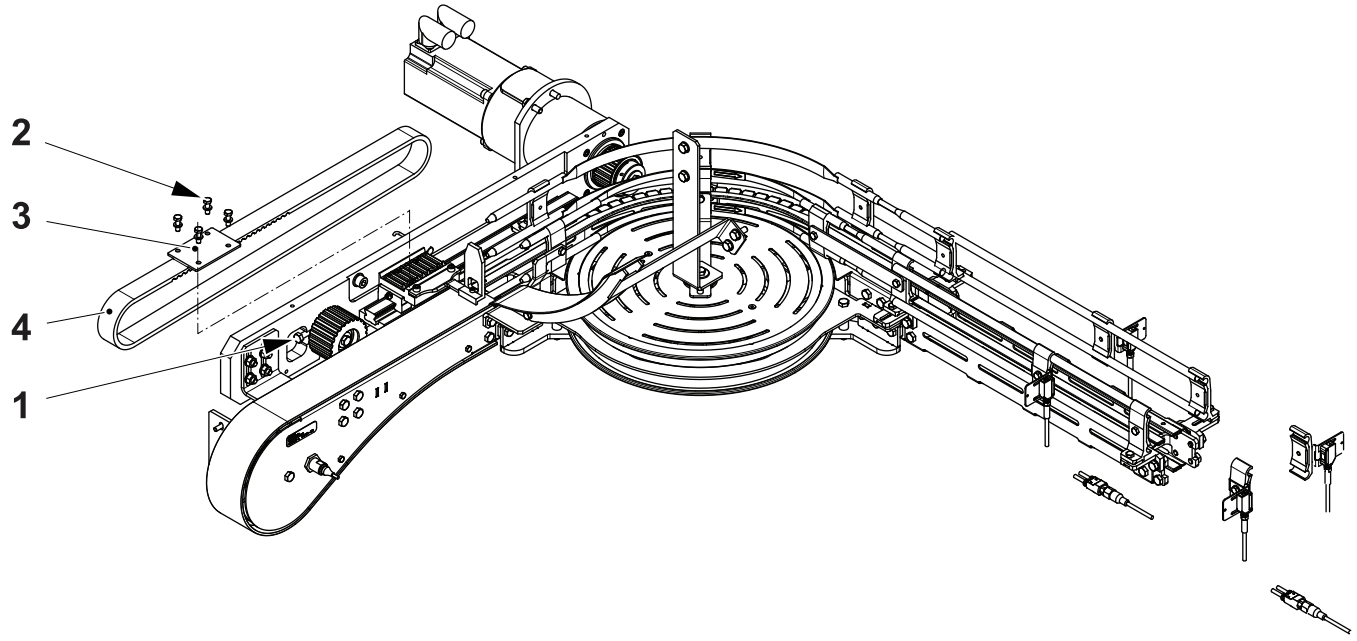

1 Screw
2 Screw
3 Plate
4 Belt

5.6-2 Outfeed - Set Belt Tension

Machine Status	Electrical supply disconnecting device in position O (OFF) Main air valve OFF Main steam valve ON Main water valve OFF
SPC Reference	2805993-0400 2819316-0200

a) Measure the distance **A** from the groove (1) to the center of the nut (2).

b) If required set the tension of the belt (3) as follow:

- loosen the nut (2).
- adjust with the screw (4) until distance **A** is obtained.
- tighten the nut (2).

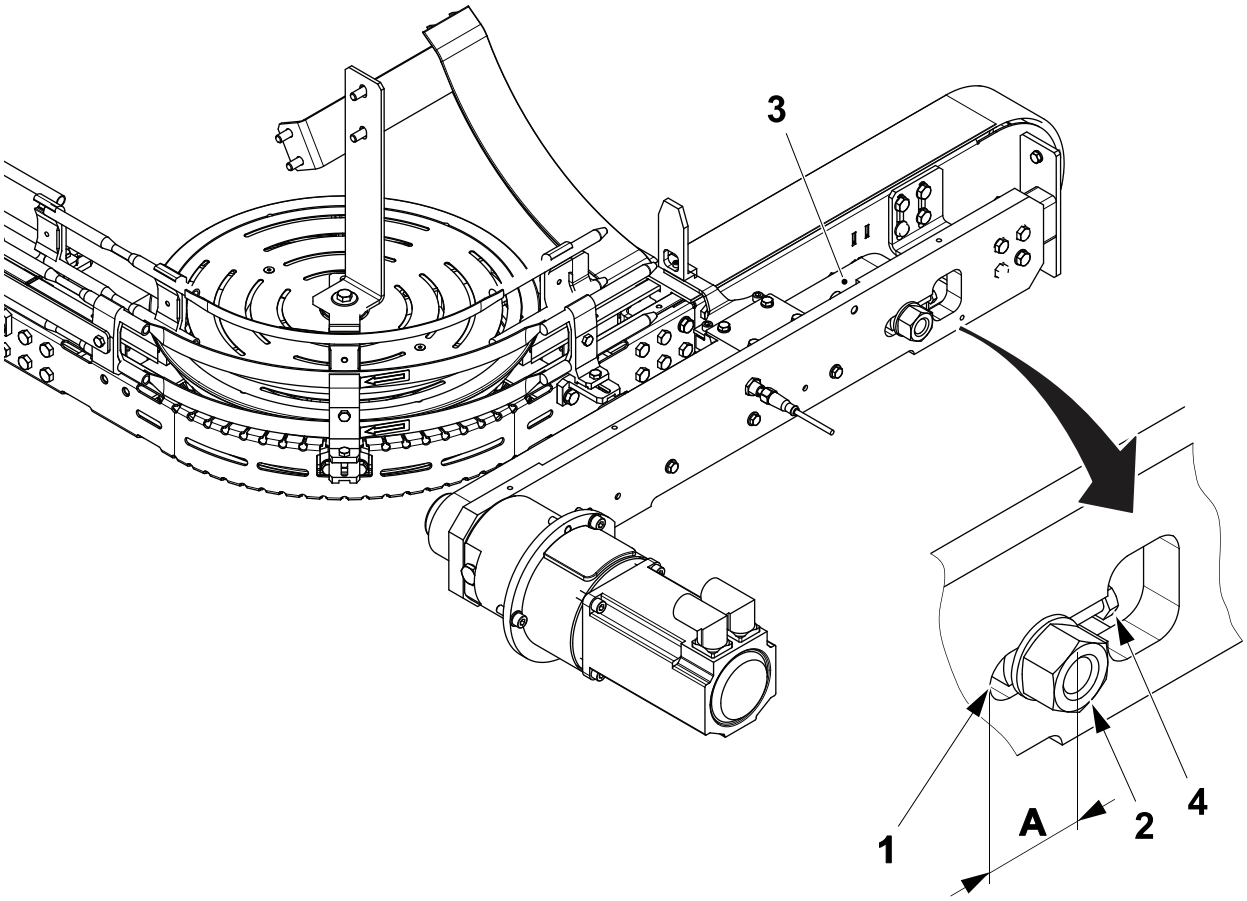

A = 32 ±2 mm

1 Groove
2 Nut
3 Belt
4 Screw

5.6-3 Outfeed - Change Carrier

Machine Status	Electrical supply disconnecting device in position O (OFF) Main air valve OFF Main steam valve ON Main water valve OFF
SPC Reference	2805993-0400 2819316-0200

a) Remove the screws (1) and the plate (2).

b) Remove the belt (3), see 5.6-1 Outfeed - Change Belt.

c) Remove the nut (4) and the toothed pulley (5).

d) Remove the screws (6) and the plate (7).

e) Remove and change the carrier (8).

f) Set the belt tension, see 5.6-2 Outfeed - Set Belt Tension.

g) Perform the outfeed referencing, see 5.6-9 Outfeed - Referencing.

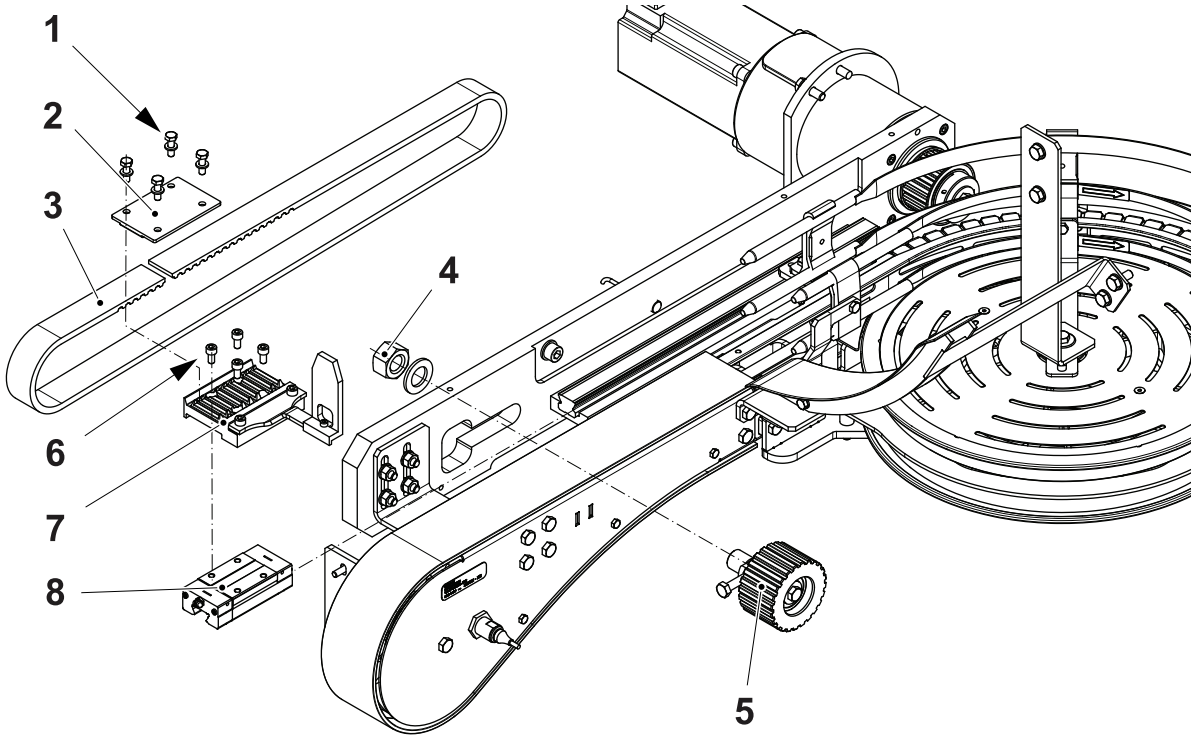

1 Screw
2 Plate
3 Belt
4 Nut
5 Toothed pulley
6 Screw
7 Plate
8 Carrier

5.6-4 Outfeed - Change Ball Bearing and Seal

Machine Status	Electrical supply disconnecting device in position O (OFF) Main air valve OFF Main steam valve ON Main water valve OFF
SPC Reference	2805993-0400 2819316-0200

a) Loosen the belt tension by means the screw (1).

b) Remove the nut (2) and the washer (3).

c) Remove the screw (4) and pull out the toothed pulley (5).

d) Remove and change the ball bearings (6) and (7).

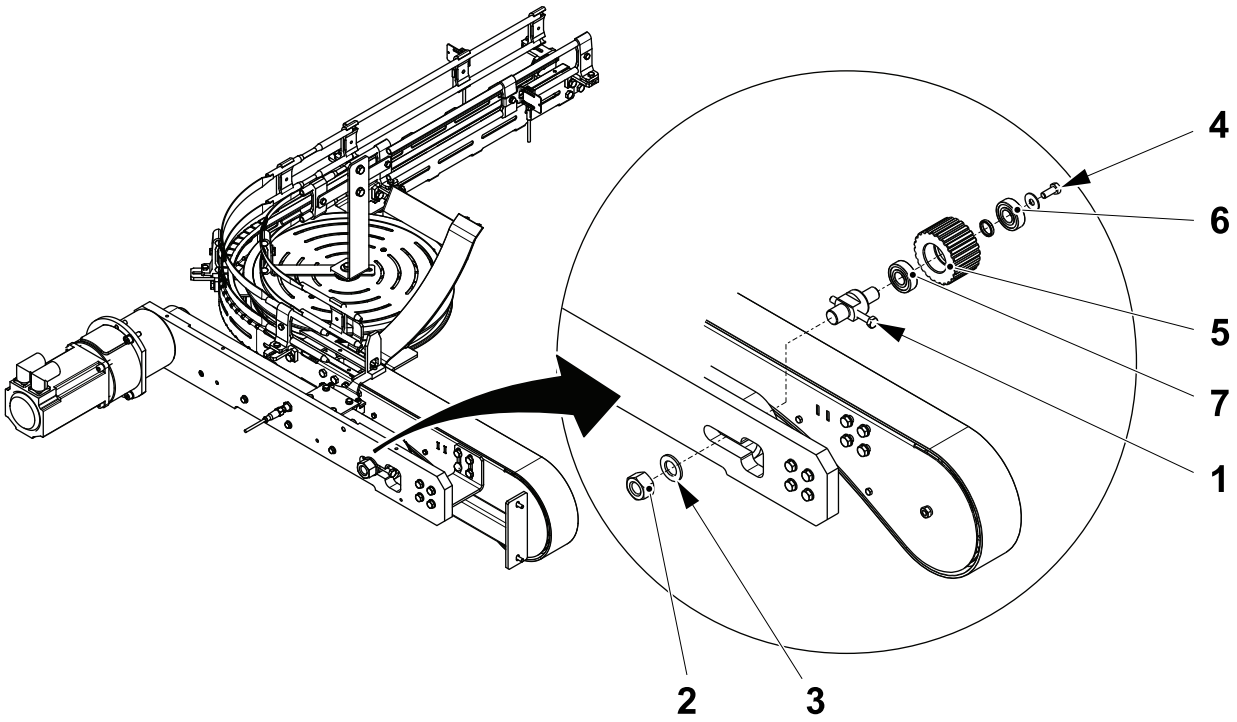

1 Screw
2 Nut
3 Washer
4 Screw
5 Toothed pulley
6 Ball bearing
7 Ball bearing

(Cont'd)

(Cont'd)

e) Remove the screws (8) and (9), and remove the pulley (10).

f) Remove and change the seal (11).

g) Remove and change the O-ring (12).

h) Remove the spacer (13) and the retaining ring (14).

i) Disconnect the electrical connectors from the servo motor (15).

j) Remove the screws (16) and the servo motor (15).

k) Remove the cover (17) and loosen the screws of the coupling (18).

l) Remove the coupling (18).

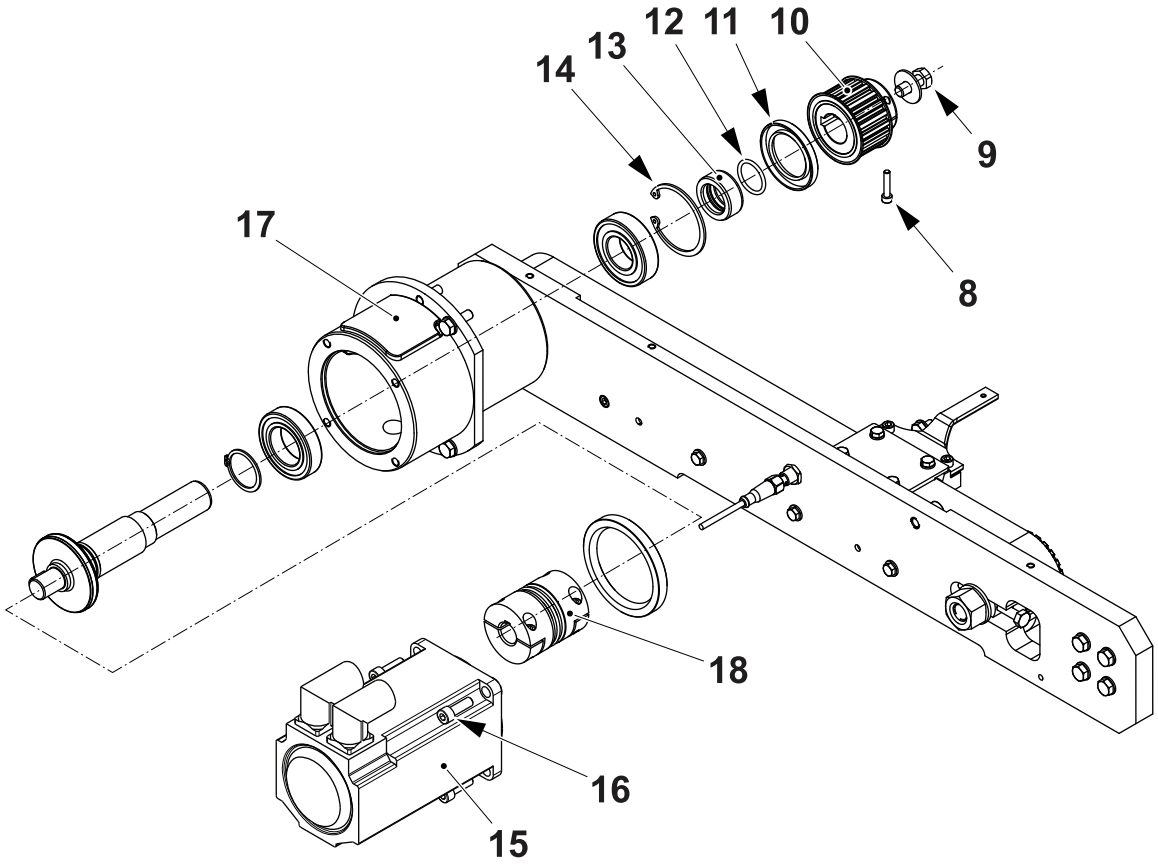

8 Screw
9 Screw
10 Pulley
11 Seal
12 O-ring
13 Spacer
14 Retaining ring
15 Servo motor
16 Screw
17 Cover
18 Coupling

(Cont'd)

(Cont'd)

m) Remove and change the seal (19).

n) Remove the shaft (20).

o) Remove the retaining ring (21) and the ball bearing (22).

p) Change the ball bearing (22).

q) Remove and change the ball bearing (23).

r) Assemble in the reverse order.

s) Set the belt tension, see 5.6-2 Outfeed - Set Belt Tension.

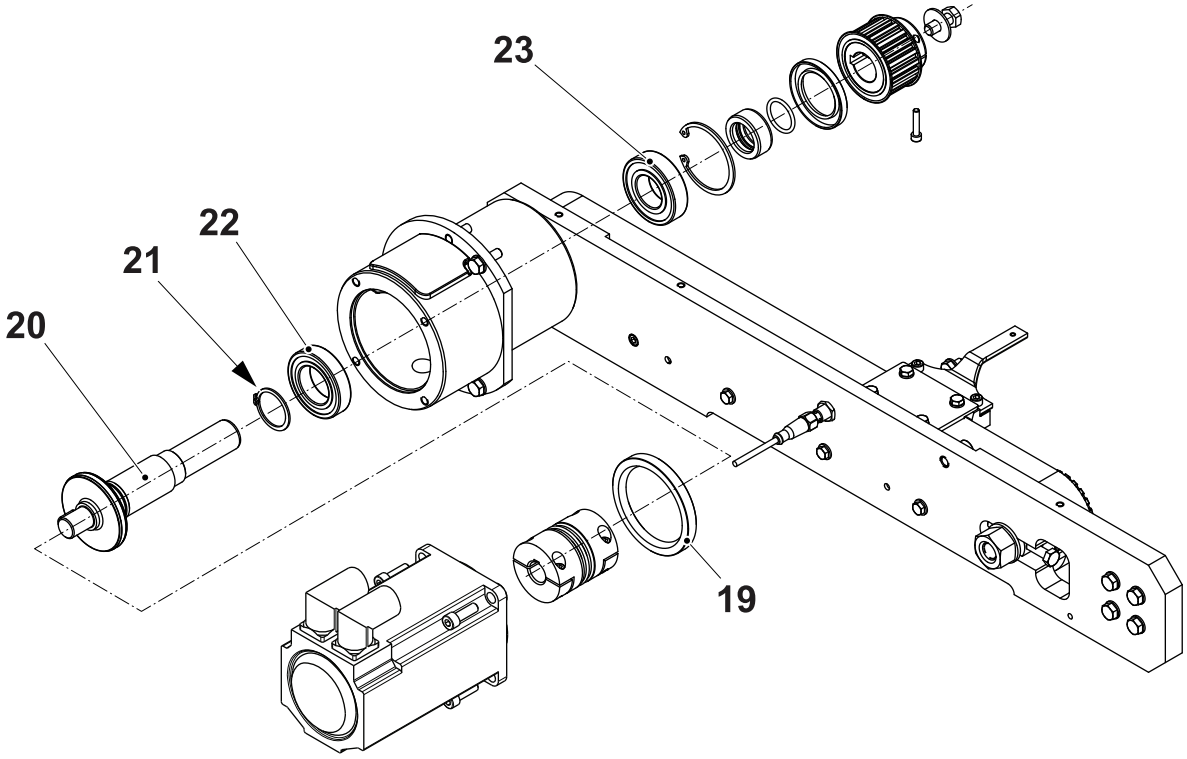

19 Seal
20 Shaft
21 Retaining ring
22 Ball bearing
23 Ball bearing

5.6-5 Outfeed - Check Oil Level

Machine Status	Electrical supply disconnecting device in position O (OFF) Main air valve OFF Main steam valve ON Main water valve OFF
Consumables	Lubricant, Kluberoil 4 UH1 150-N TP No. 344412-0000
SPC Reference	2805993-0400 2819316-0200

CAUTION
Risk of damage to the equipment.
Mixing lubricants with no compatible bases will lead to severe loss of lubrication and probable damage to the equipment. Use only recommended consumables, see section 9.3.1 Lubricants.

a) Remove the screw (1) and check the oil level.

b) If required add oil until it comes out from the hole (2).

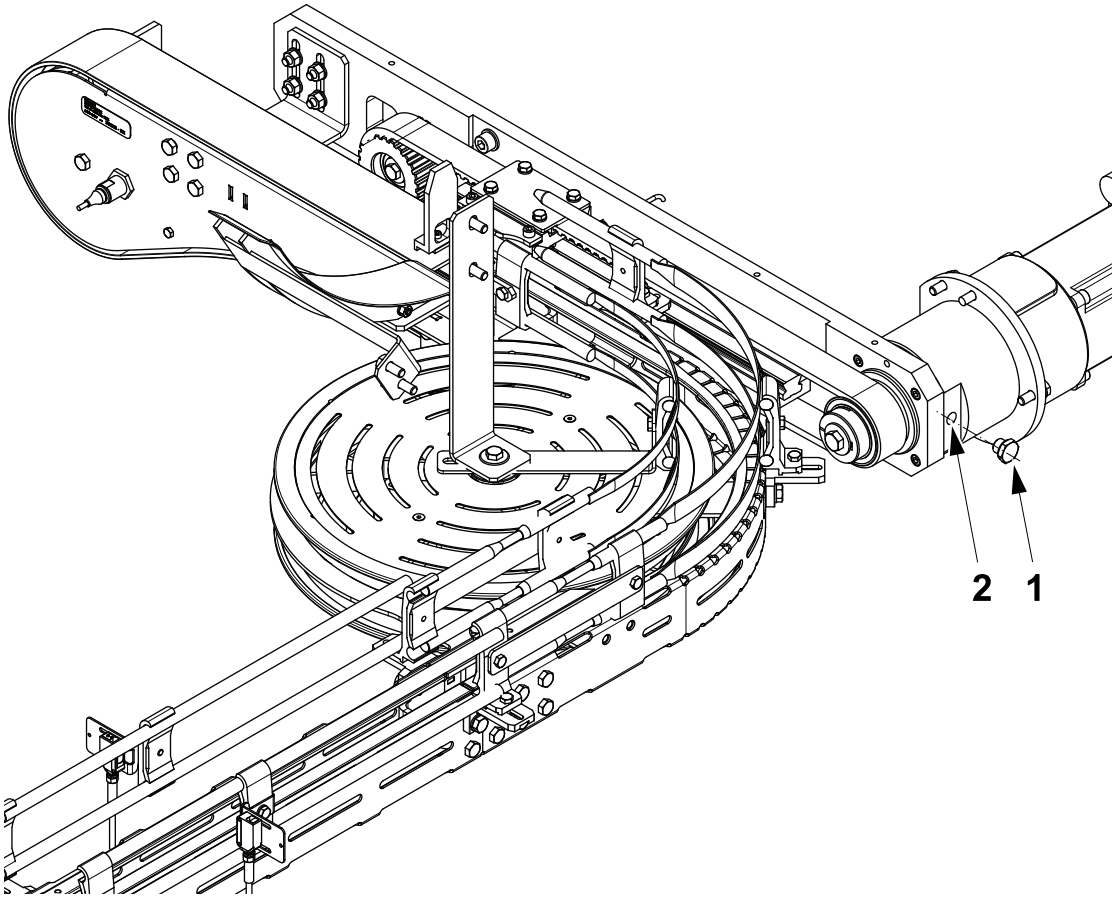

1 Screw
2 Hole

5.6-6 Outfeed - Change Drive Axis Bellow Coupling

Machine Status	Electrical supply disconnecting device in position O (OFF) Main air valve OFF Main steam valve ON Main water valve OFF
SPC Reference	2805993-0400 2819316-0100

a) Disconnect the two electrical connectors from the motor unit (1).

b) Move the idler pulley (2) to access the screws (3).

c) Loosen the screws (3) and remove the motor unit (1).

d) Loosen the screws (4) and remove the bellow coupling (5) from the motor unit (1).

e) Change the bellow coupling (5) and assemble in the reverse order.

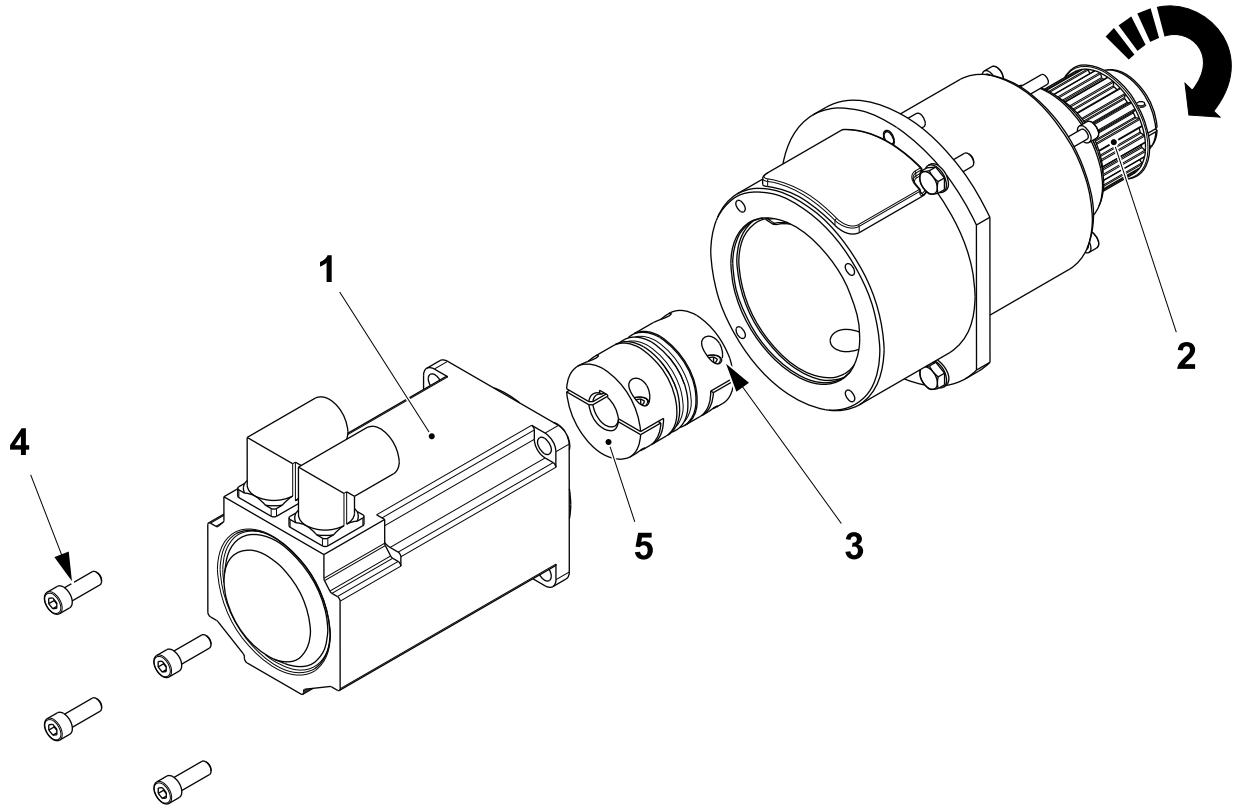

1 Motor unit
2 Idler pulley
3 Screw
4 Screw
5 Bellow coupling

5.6-7 Outfeed - Check Proximity Switch

Machine Status	Electrical supply disconnecting device in position O (OFF) Main air valve OFF Main steam valve ON Main water valve OFF
SPC Reference	2805993-0400 2819316-0200

Check:

- the distance **A** between the plate (1) and the proximity switch (2).
- the function of the proximity switch (2). Move up and down the plate (1) and check that the proximity switch LED lit when the plate (1) passes over the proximity switch (2).

Set the proximity switch if necessary, see 5.6-8 Outfeed - Set Proximity Switch.

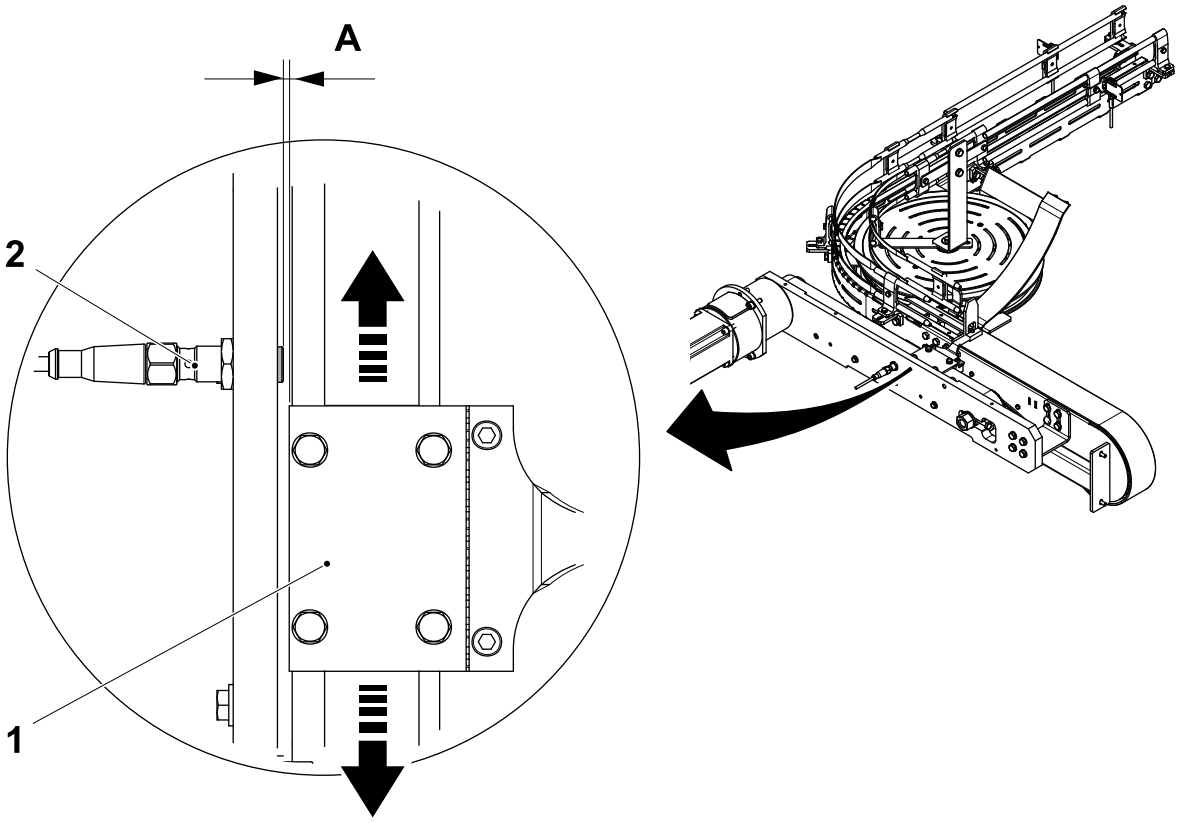

A = 1.0 ± 0.2 mm
1 Plate
2 Proximity switch

5.6-8 Outfeed - Set Proximity Switch

Machine Status	Electrical supply disconnecting device in position O (OFF) Main air valve OFF Main steam valve ON Main water valve OFF
SPC Reference	2805993-0400 2819316-0200

a) Loosen the nut (1).

b) Set the distance **A** between the head of the proximity switch (2) and the plate (3) by moving the proximity switch (2).

c) Tighten the nut (1).

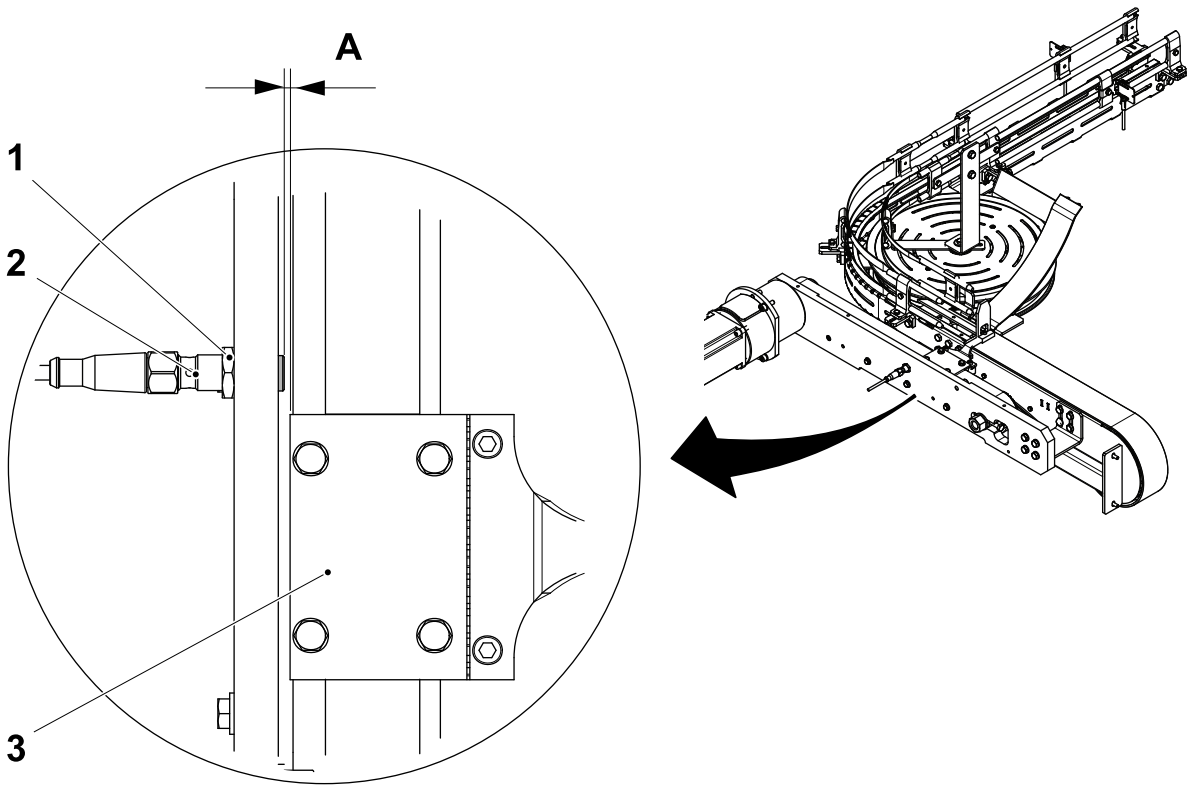

A = 1.0 ± 0.2 mm
1 Nut
2 Proximity switch
3 Plate

5.6-9 Outfeed - Referencing

Machine Status	PREPARATION
SPC Reference	2805993-0400 2819316-0200

CAUTION
Risk of damage to the equipment.
Never reference the servo motor without first checking that there is no possible mechanical interference.

Note! The referencing procedure must be completed if any mechanical change has been made to the system.

a) Push the carrier (1) on the left side until it reaches the mechanical stop (2).

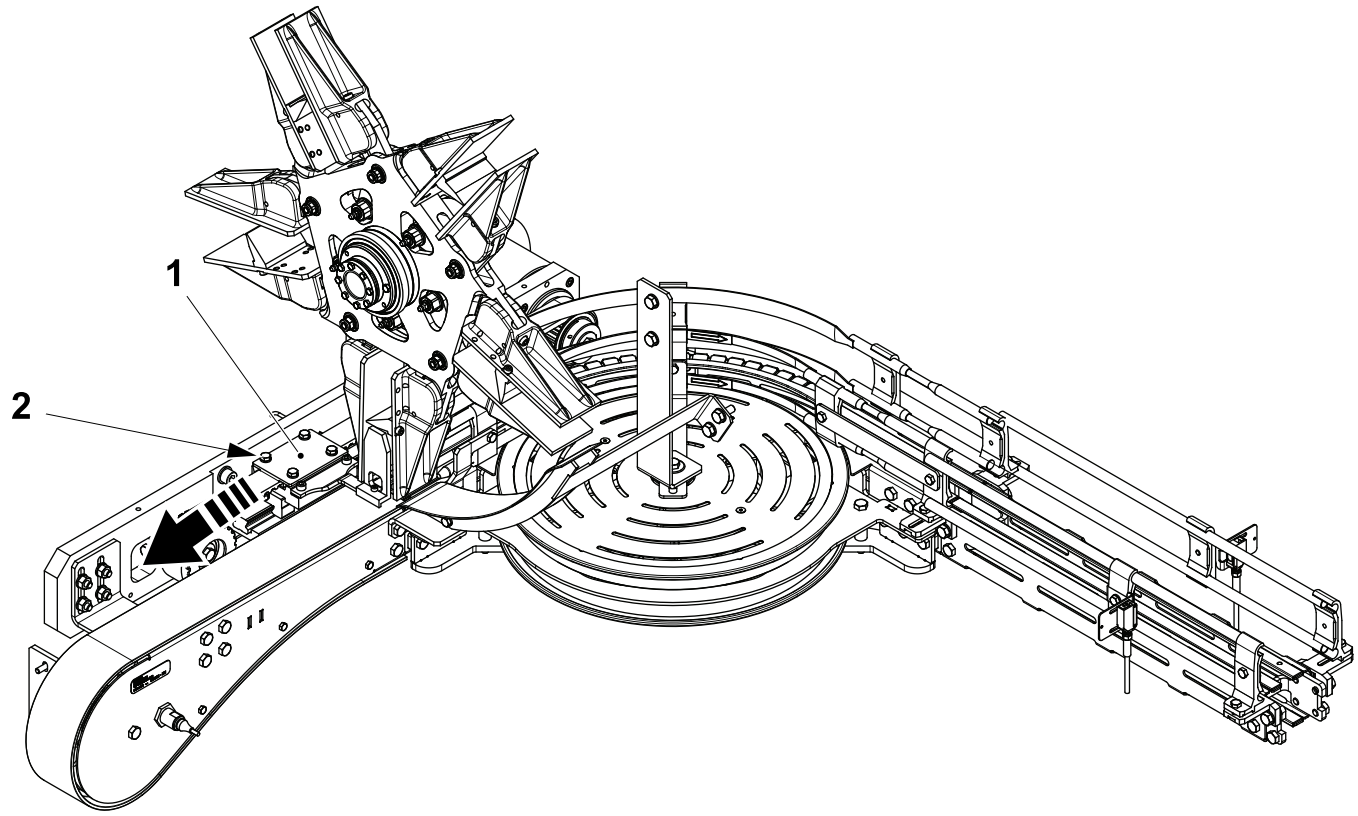

1 Carrier
2 Mechanical stop

(Cont'd)

(Cont'd)

b) Close all doors and clear all alarms on the TPOP display.

c) Touch the `MAINTENANCE CONTROL` button (3).

d) Log on to access the `MAINTENANCE CONTROL` window, see 8.6.3-2 HMI - User Management Log On.

e) Touch the `FINAL FOLDER` button (4).

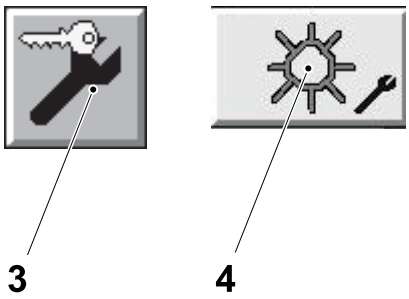

3 `MAINTENANCE CONTROL` button
4 `FINAL FOLDER` button

(Cont'd)

(Cont'd)

f) Touch the OUTFEED REFERENCING button (5).

g) Touch the ON button (6).

h) The OK button (7) begins to flash. Press the OK button (7) to start the referencing and wait for the ON button (6) to become green.

i) Touch the EXIT button (8) to record the value and exit from the SERVO SETTINGS window.

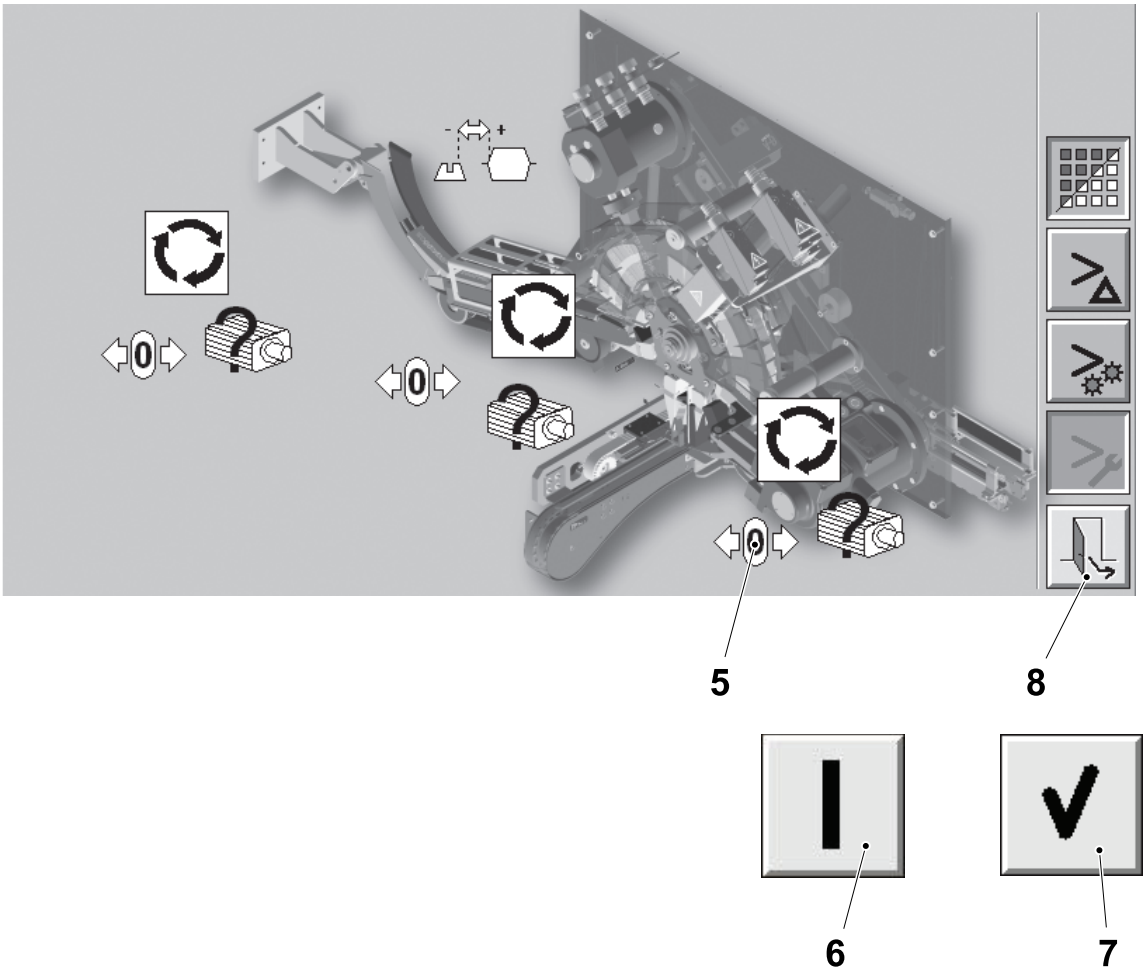

5 OUTFEED REFERENCING button
6 ON button
7 OK button
8 EXIT button

5.6-10 Outfeed - Set Counting and Queue Photocells

Machine Status	Electrical supply disconnecting device in position I (ON) Main air valve OFF Main steam valve ON Main water valve OFF
SPC Reference	2805993-0400 2819316-0200

a) The photocell transmitter (1) and receiver (2) must be positioned opposite each other as indicated in the illustration.

b) On the photocell receiver (2):

- set the potentiometer (4) to the **L** position,
- set the sensitivity potentiometer (3) to the middle position,
- the green LED (5) indicate that the power is ON.

c) Place the package to be detected between the photocells and check that the red LED (6) goes OFF.

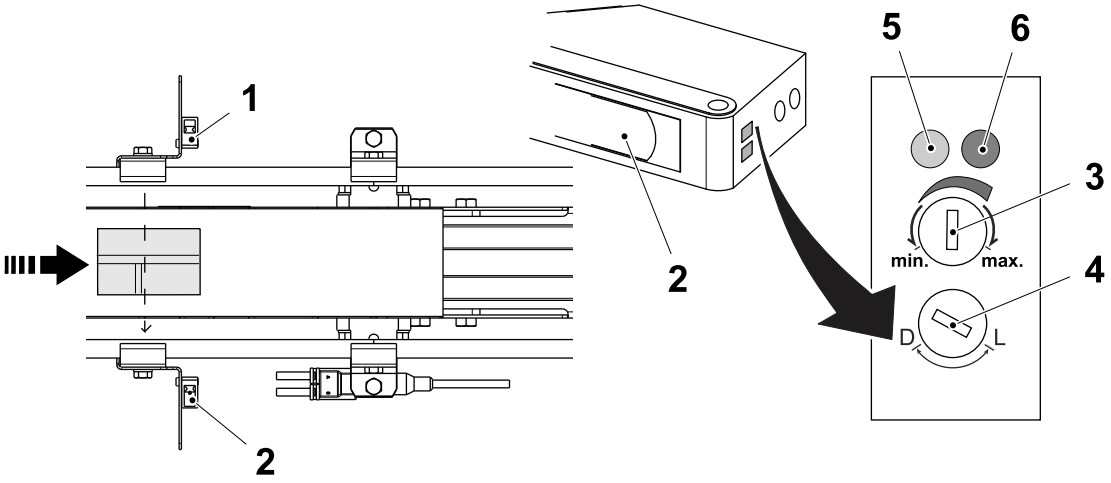

1 Transmitter
2 Receiver
3 Potentiometer
4 Potentiometer
5 Green LED
6 Red LED

5.6-11 Outfeed - Grease Carrier

Machine Status	Electrical supply disconnecting device in position O (OFF) Main air valve OFF Main steam valve ON Main water valve OFF
Consumables	Grease, Klubersynth UH 1 64-62 TP No. 344408-0000
SPC Reference	2805993-0400 2819316-0200

Lubricate the carrier (1) with **2.5 cc** of grease through the nipples (2) using a grease gun.

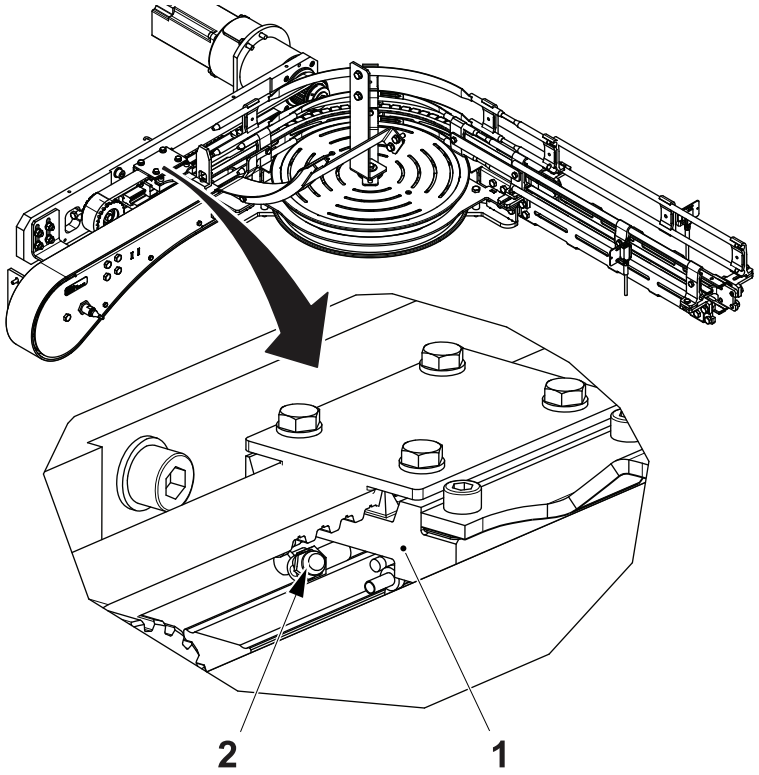

1 Carrier
2 Nipple

5.6-12 Outfeed - Set Pusher Support

Machine Status	Electrical supply disconnecting device in position O (OFF) Main air valve OFF Main steam valve ON Main water valve OFF
SPC Reference	2805993-0400 2819316-0200

Set the position of the support (1) so that it is at a distance **A** from the flap (2) and at a distance **B** from the belt (3). If required, remove the screws (4) and add or remove shims (5).

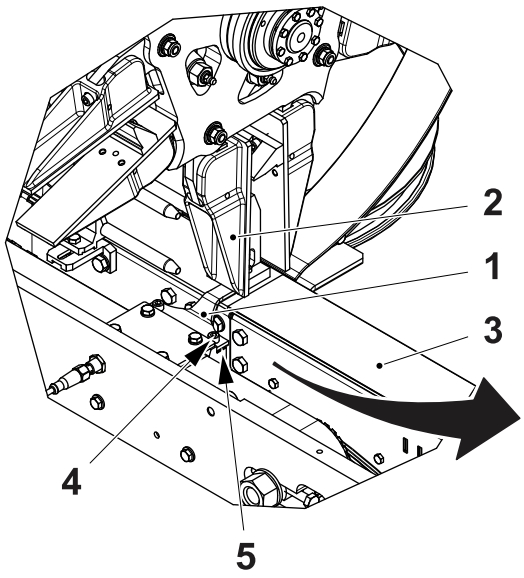

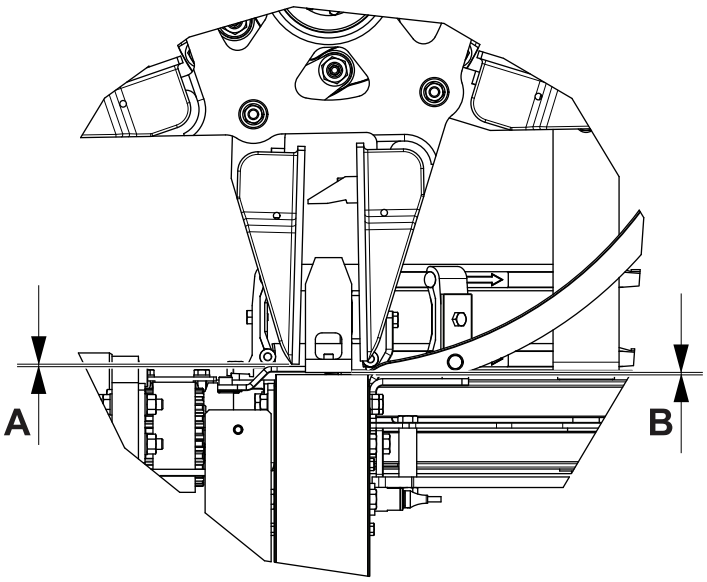

A = B

1 Support
2 Flap
3 Belt
4 Screw
5 Shim

5.7 Wheel Axis

5.7-1 Wheel Axis - Check Oil level

Machine Status	Electrical supply disconnecting device in position O (OFF) Main air valve OFF Main steam valve ON Main water valve OFF
Consumables	Lubricant, Kluberoil 4 UH1 150-N TP No. 344412-0000
SPC Reference	2805995-0300

CAUTION
Risk of damage to the equipment.
Mixing lubricants with no compatible bases will lead to severe loss of lubrication and probable damage to the equipment. Use only recommended consumables, see section 9.3.1 Lubricants.

a) Remove the screw (1) and check the oil level in the wheel.

b) If required, remove the screw (2) and add oil until it comes out from the hole (3).

c) Tighten the screw (1) and the screw (2).

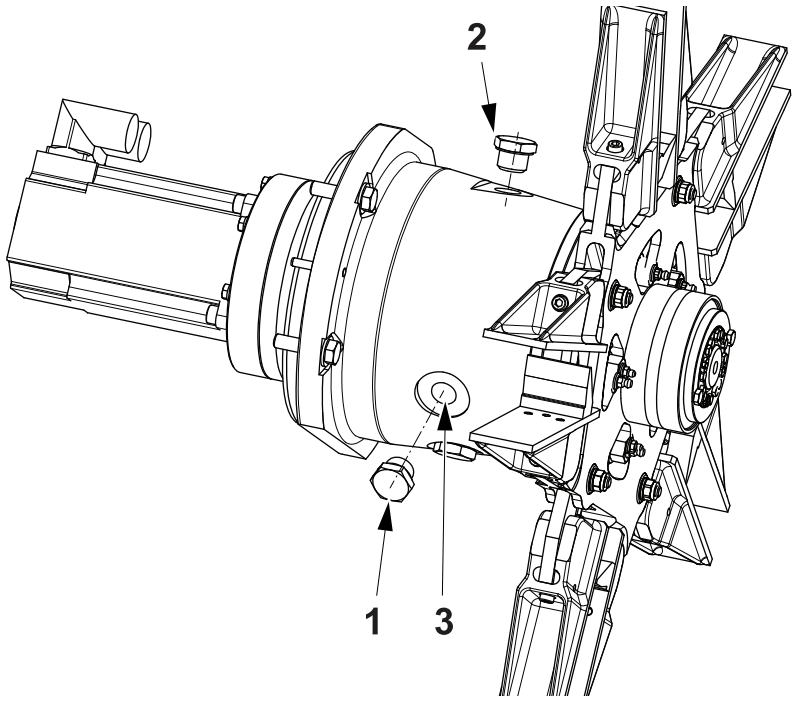

1 Screw 2 Screw 3 Hole

5.7-2 Wheel Axis - Change Servomotor

Machine Status	Electrical supply disconnecting device in position O (OFF) Main air valve OFF Main steam valve ON Main water valve OFF
SPC Reference	2805995-0300

a) Disconnect the cables from the servomotor (1).

b) Remove the screws (2) and the servomotor (1).

c) Change the servomotor (1) and assemble in the reverse order.

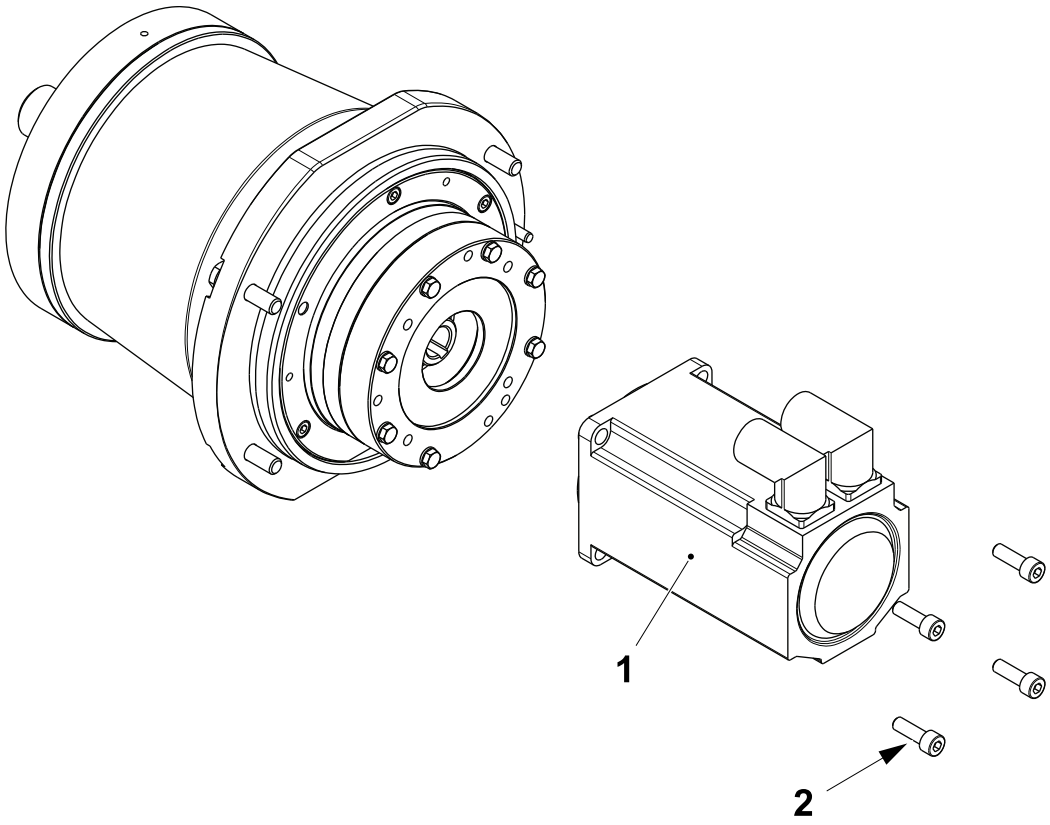

1 Servomotor
2 Screw

5.7-3 Wheel Axis - Change Gearbox

Machine Status	Electrical supply disconnecting device in position O (OFF) Main air valve OFF Main steam valve ON Main water valve OFF
SPC Reference	2805995-0300

a) Remove the screws (1) and the servomotor (2).

b) Remove the screws (3).

c) Use three screws on the free holes as extractor and remove the flange (4).

d) Remove the reduction gear first part (5).

e) Remove the screws (6) and the reduction gear (7).

f) Change the reduction gear first part (5) and reduction gear (7).

Note! When assembling tighten the screws (3) and screws (6) to 10 Nm.

g) Assemble in the reverse order.

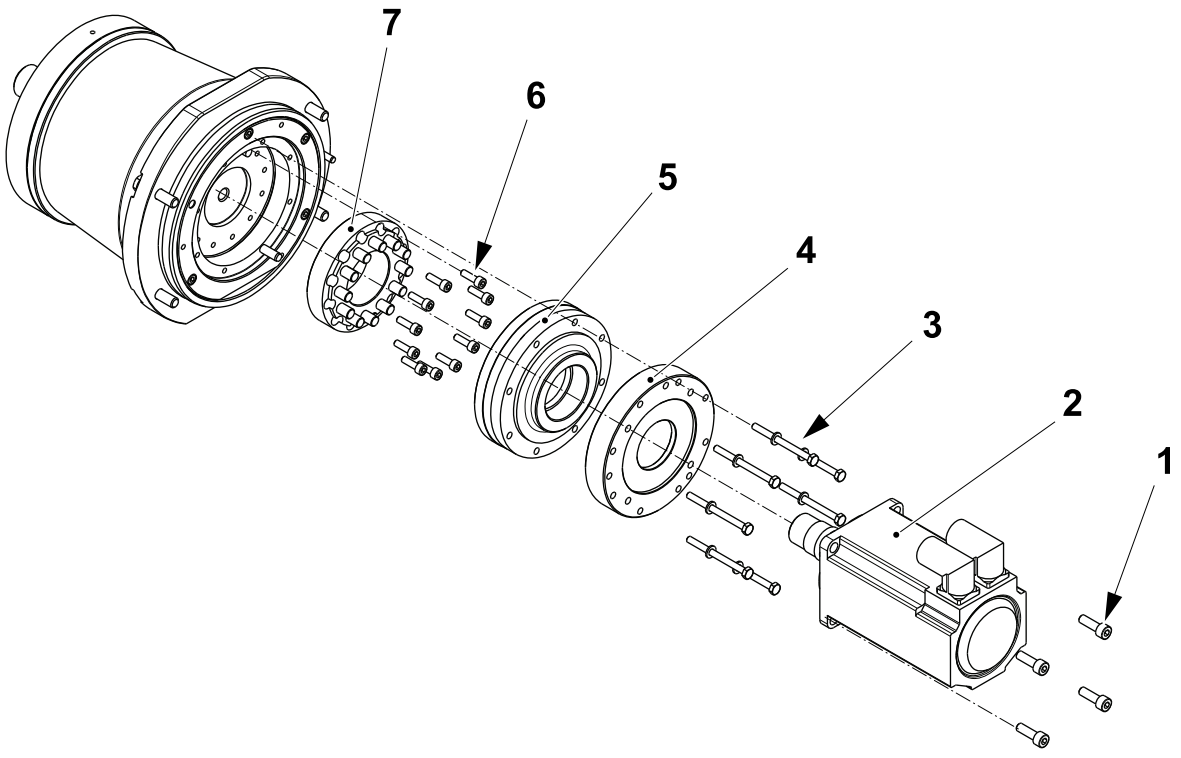

1 Screw
2 Servomotor
3 Screw
4 Flange
5 Reduction gear first part
6 Screw
7 Reduction gear

5.7-4 Wheel Axis - Change Seal and Ball Bearing

Machine Status	Electrical supply disconnecting device in position O (OFF) Main air valve OFF Main steam valve ON Main water valve OFF
SPC Reference	2805995-0300

a) Remove the wheel (1), see 5.8-2 Wheel - Remove.

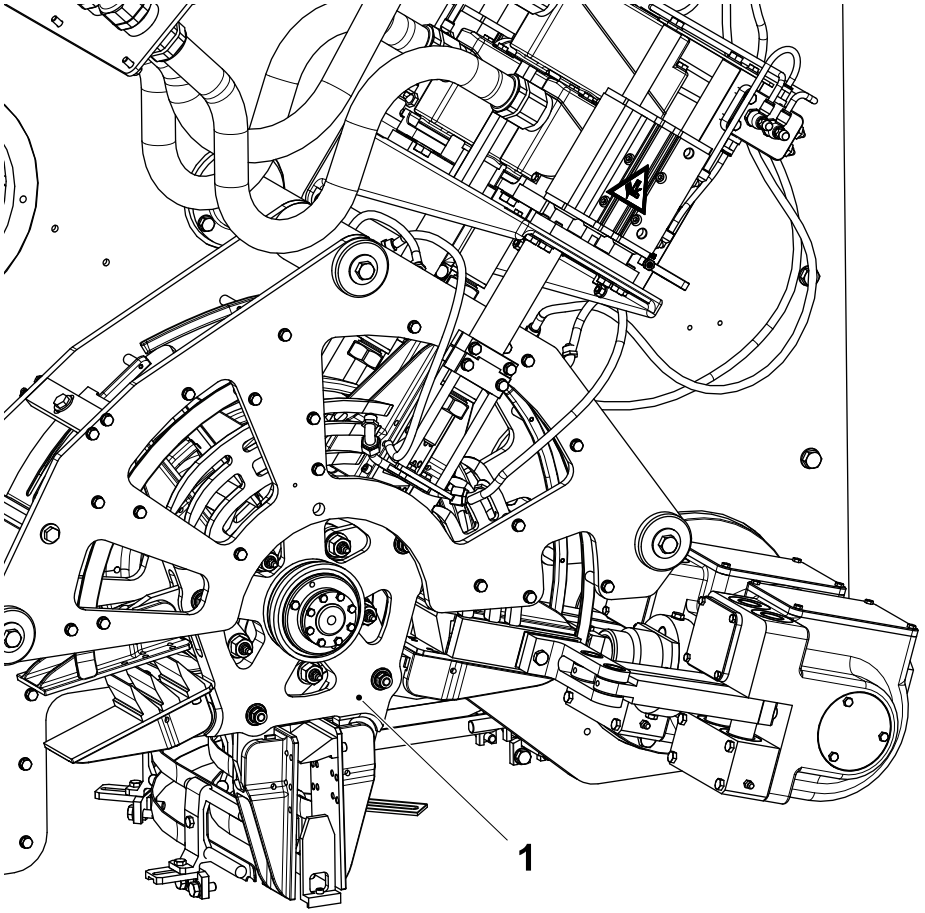

1 Wheel

(Cont'd)

(Cont'd)

b) Remove the screws (2) and the cam (3).

Note! If necessary use the holes (6) and the screws (4) as an extractor to remove the flange (5).

c) Remove the screws (4) and the flange (5).

d) Remove the seal (7) and O-ring (8) from the flange (5). Change the seal (7) and O-ring (8).

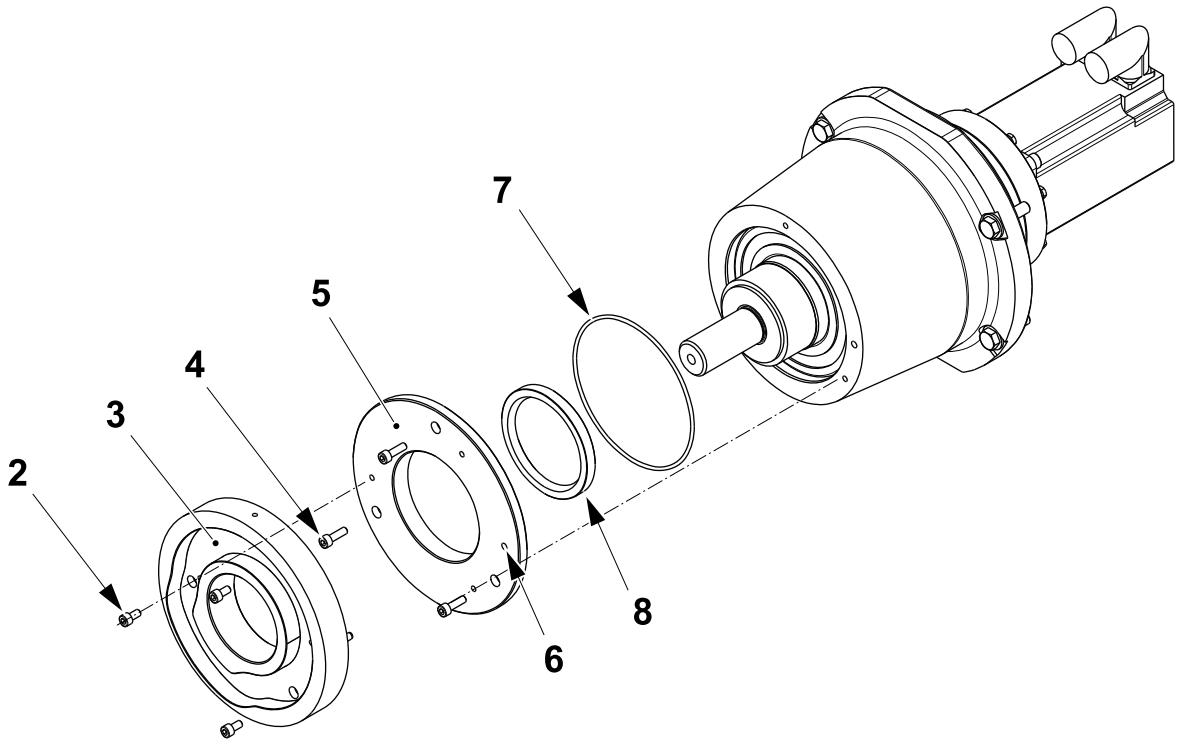

2 Screw
3 Cam
4 Screw
5 Flange
6 Hole
7 Seal
8 O-ring

(Cont'd)

(Cont'd)

e) Remove and change the O-ring (9).

f) Remove the screws (10) and the servomotor (11).

g) Remove the gears (12).

Note! If required use two screws M8 in the threaded holes of the reduction gear (13) to remove it from the flange (14).

h) Remove the screws (15) and the reduction gear (13).

Note! If necessary use the holes (16) and the screws (17) as an extractor to remove the flange (14).

i) Remove the screws (17) and the flange (14).

j) Remove and change the O-ring (18) and the seal (19).

Note! When assembling tighten the screws (10) and screws (15) to 10 Nm.

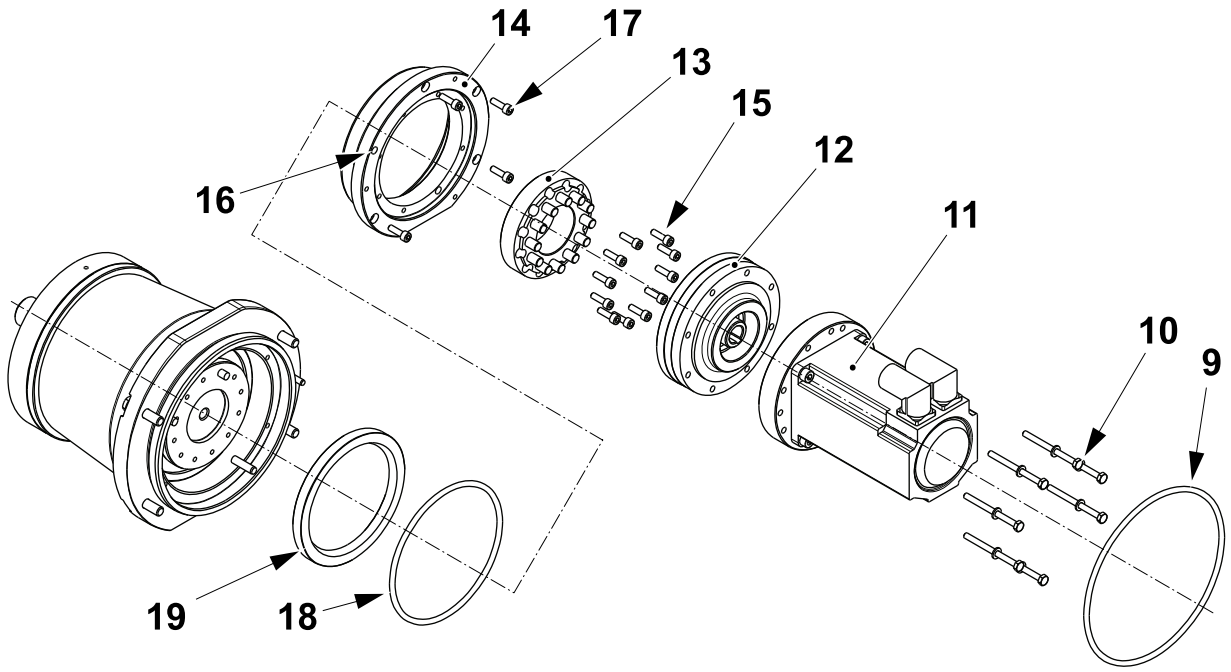

9 O-ring	12 Gear	15 Screw	18 O-ring
10 Screw	13 Reduction gear	16 Hole	19 Seal
11 Servomotor	14 Flange	17 Screw	

(Cont'd)

(Cont'd)

k) Remove the shaft (20) from the hub (21).

l) Remove and change the ball bearing (22).

m) Remove the nut (23) and the locking washer (24).

n) Remove and change the ball bearing (25).

o) Assemble in the reverse order. To fit the wheel, follow the instruction in 5.8-3 Wheel - Fit.

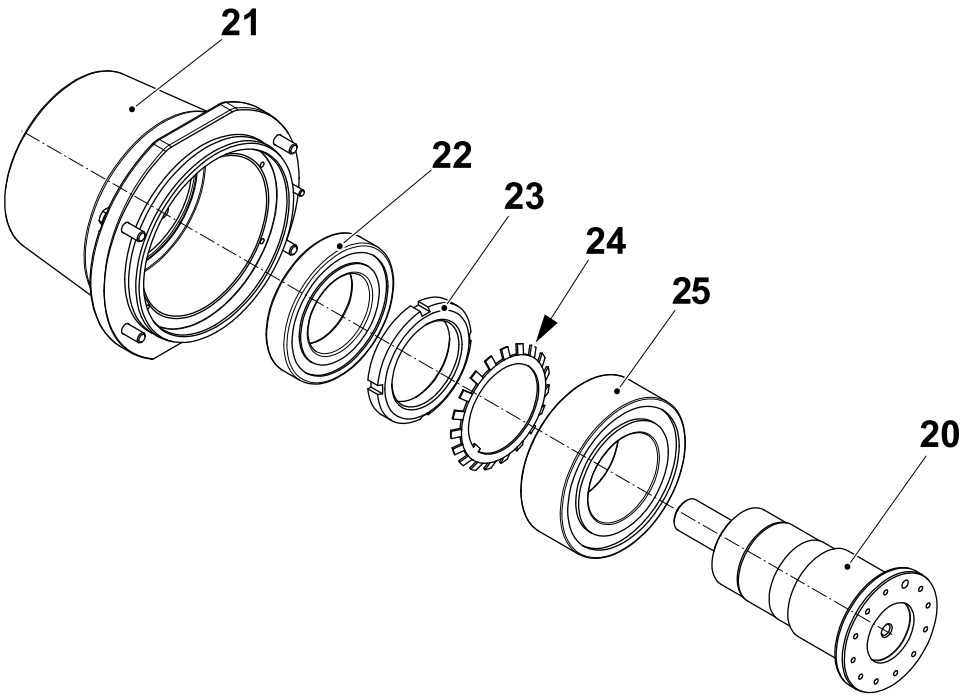

20 Shaft
21 Hub
22 Ball bearing
23 Nut
24 Locking washer
25 Ball bearing

5.8 Wheel

5.8-1 Wheel - Change Rollers and Bushings

Machine Status	Electrical supply disconnecting device in position O (OFF) Main air valve OFF Main steam valve ON Main water valve OFF
SPC Reference	2805994-0300 2819317-0200

a) Remove the screw (1) and the flap (2).

b) Remove the nipple (3).

c) Remove the nuts (4) and (5).

d) Remove the cam (6) and the screw (7).

e) Remove the pins (8).

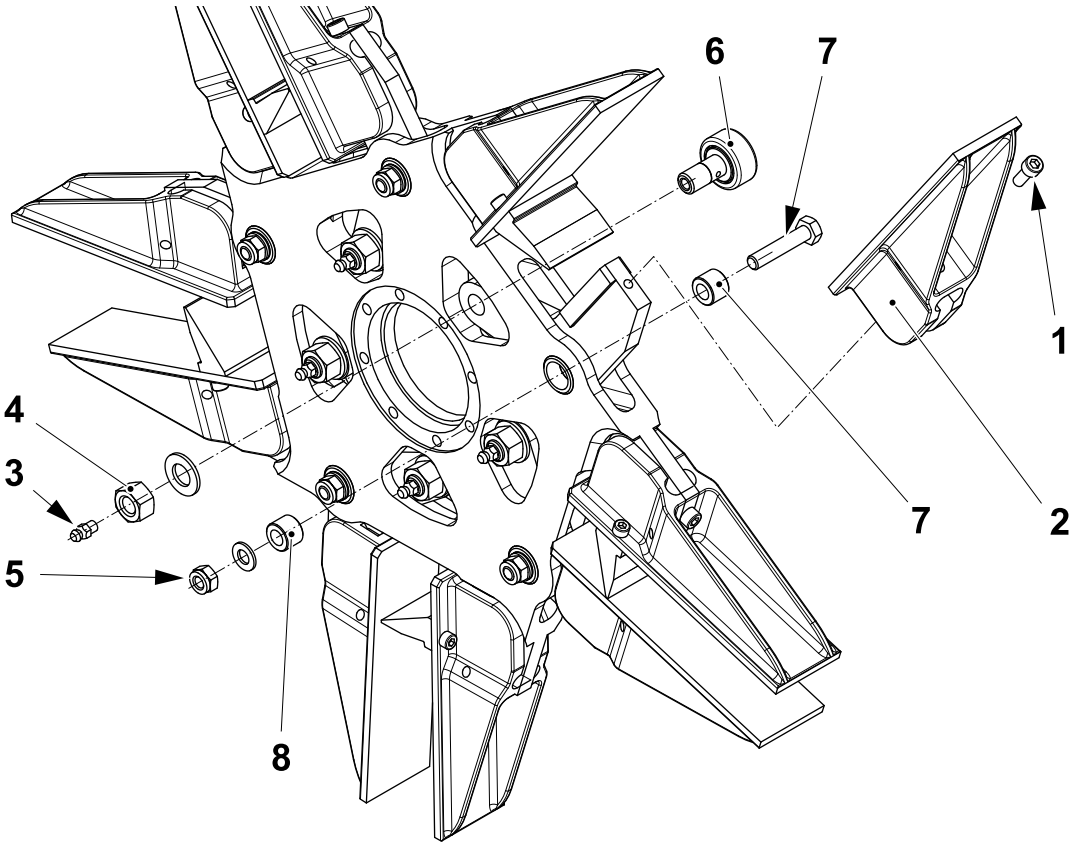

1 Screw
2 Flap
3 Nipple
4 Nut
5 Nut
6 Cam
7 Screw
8 Pin

(Cont'd)

(Cont'd)

f) Remove the arm (9).

g) Remove and change the bushings (10).

h) Repeat the procedure for the other bushings from item a) to item f).

i) Assemble in the reverse order.

j) Fit the wheel, see 5.8-3 Wheel - Fit.

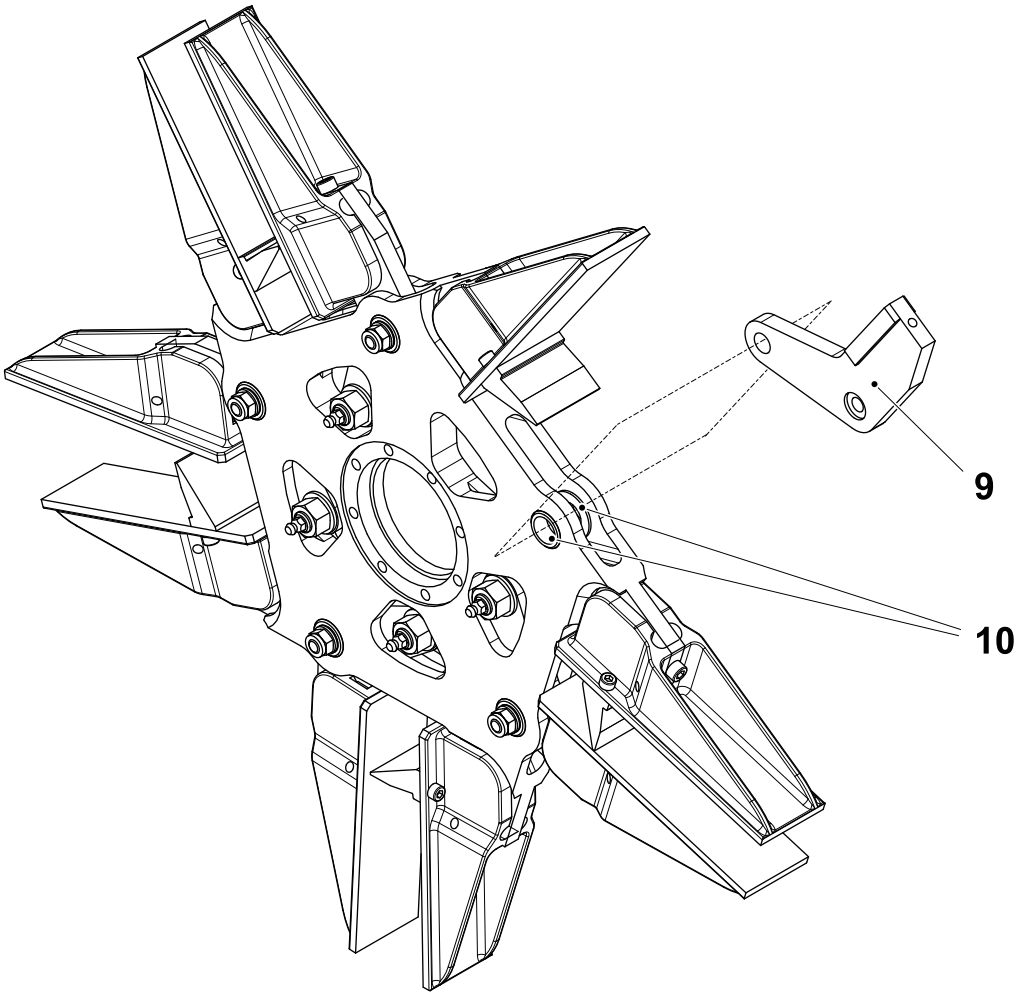

9 Arm
10 Bushing

5.8-2 Wheel - Remove

Machine Status	Electrical supply disconnecting device in position O (OFF) Main air valve OFF Main steam valve ON Main water valve OFF
SPC Reference	2805994-0300 2819317-0200

a) Remove the nuts (1) and the cover (2).

b) Loosen the screws (3) and move aside the cooling water assembly (4).

c) Remove the screws (5) and (6), and remove the heating element assembly (7).

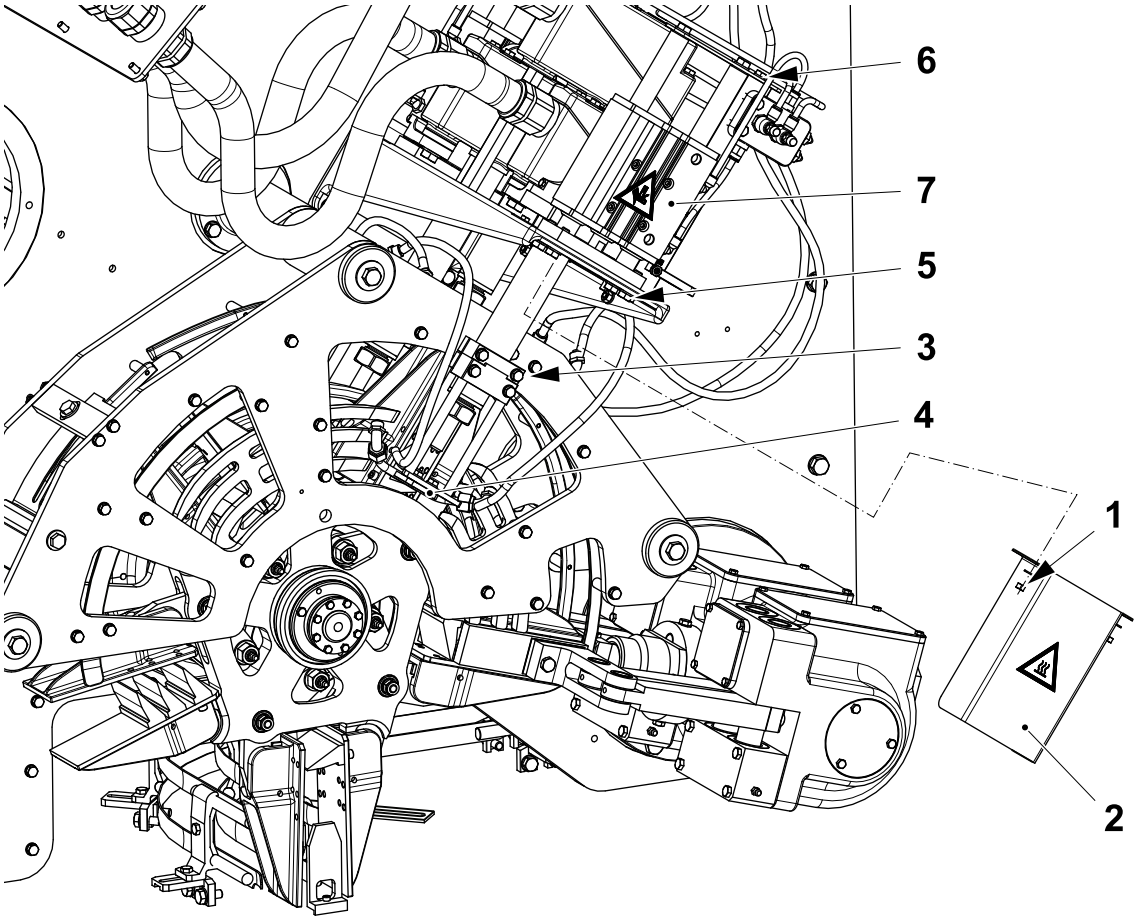

1 Nut
2 Cover
3 Screw
4 Cooling water assembly
5 Screw
6 Screw
7 Heating element assembly

(Cont'd)

(Cont'd)

d) Remove the screws (8), (9), (10) and (11).

e) Remove the plate (12).

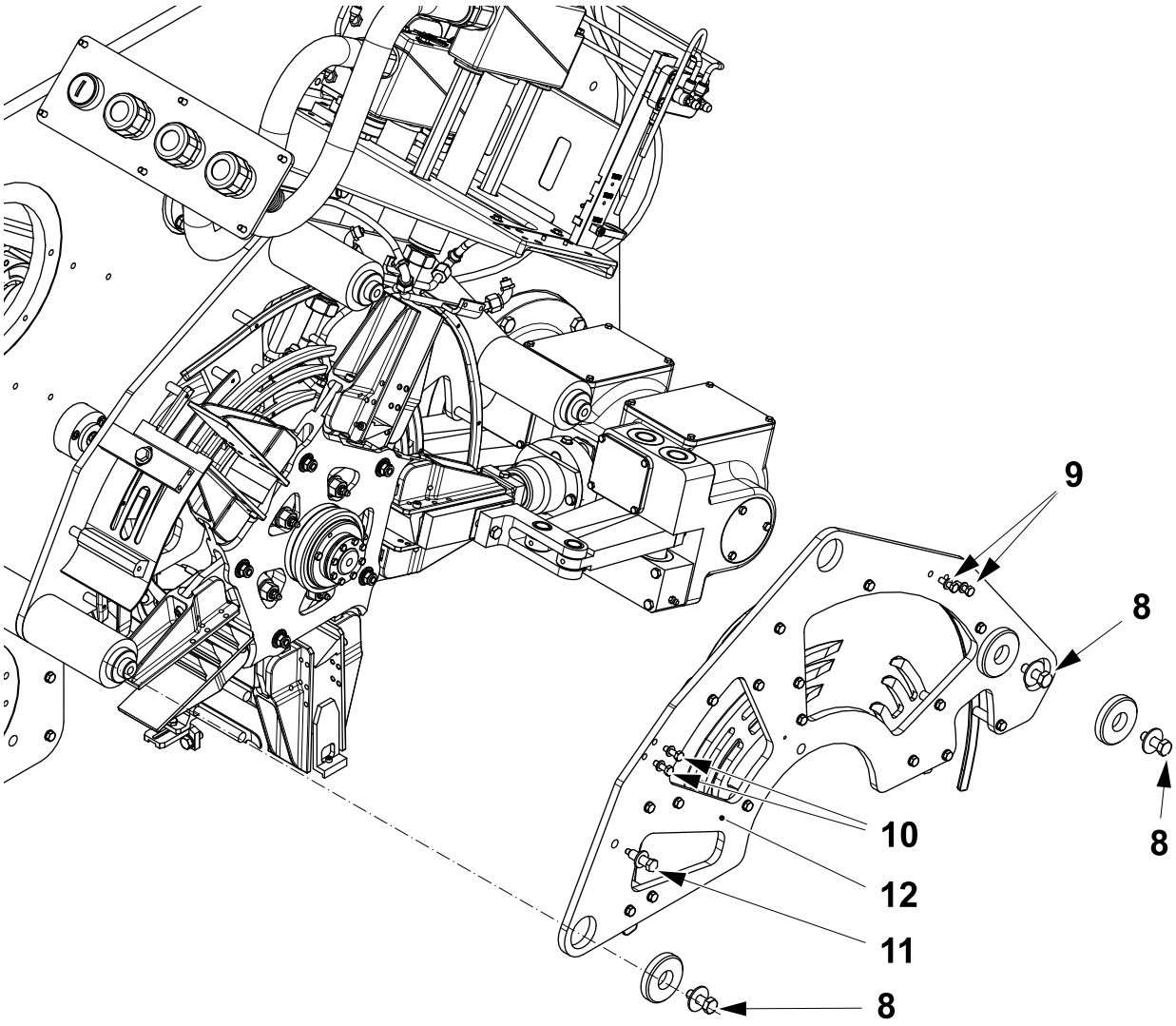

8 Screw
9 Screw
10 Screw
11 Screw
12 Plate

(Cont'd)

(Cont'd)

f) Remove the screws (13) and the guide (14).

g) Remove the eight screws (15) and the four screws (16).

h) Fit four of the eight screws (15) in the holes of the screws (16).

i) Tighten the four screws (15) progressively clockwise until the safety clutch (17) is free.

j) Remove the wheel (18).

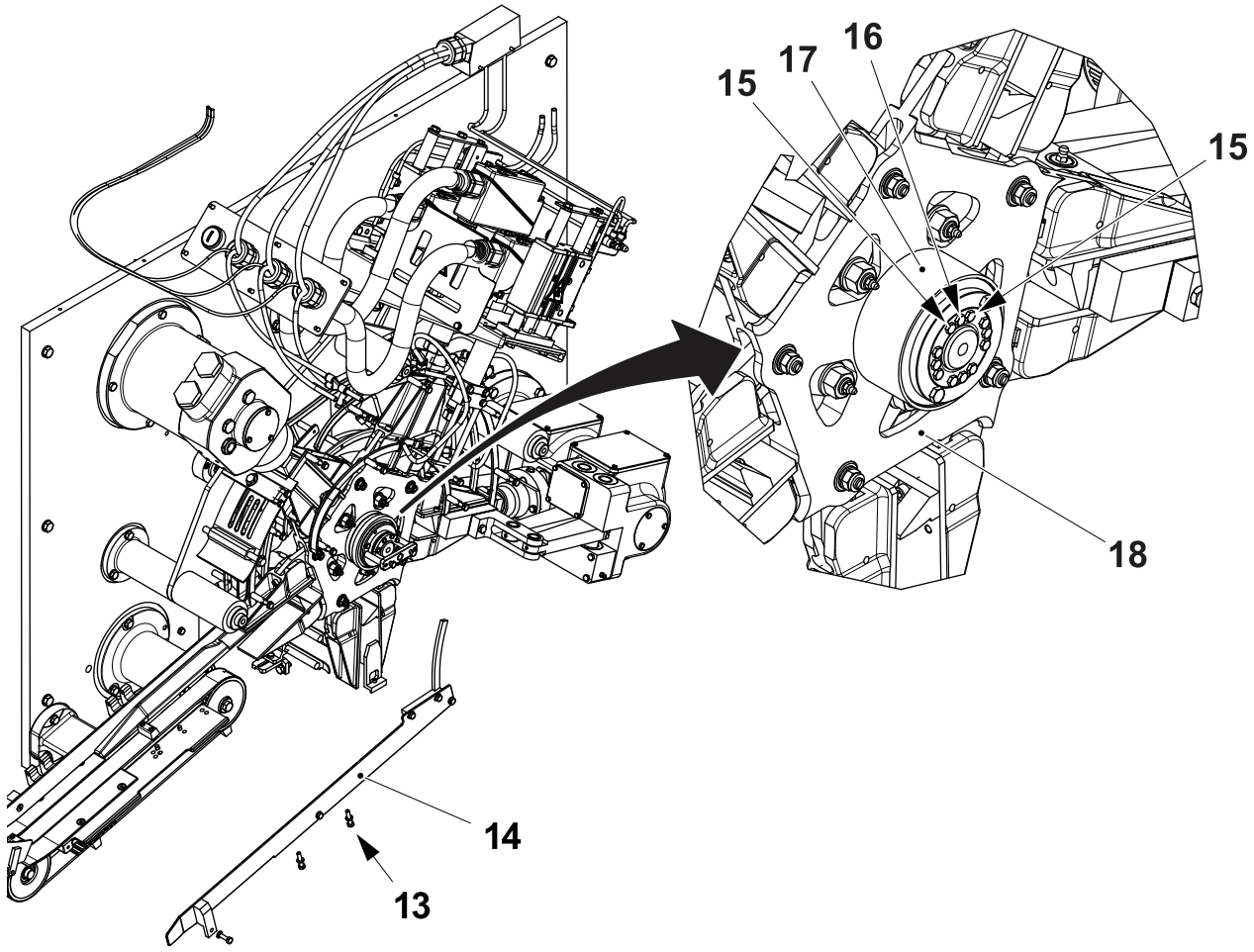

13 Screw
14 Guide
15 Screw
16 Screw
17 Safety clutch
18 Wheel

5.8-3 Wheel - Fit

Machine Status	Electrical supply disconnecting device in position O (OFF) Main air valve OFF Main steam valve ON Main water valve OFF
Special Equipment	Assembly Tool TP No.3279940-0100
SPC Reference	2805994-0300 2819317-0200

a) Fit the wheel (1) on the wheel axis (2).

b) Fit the guide (3) by means the screws (4).

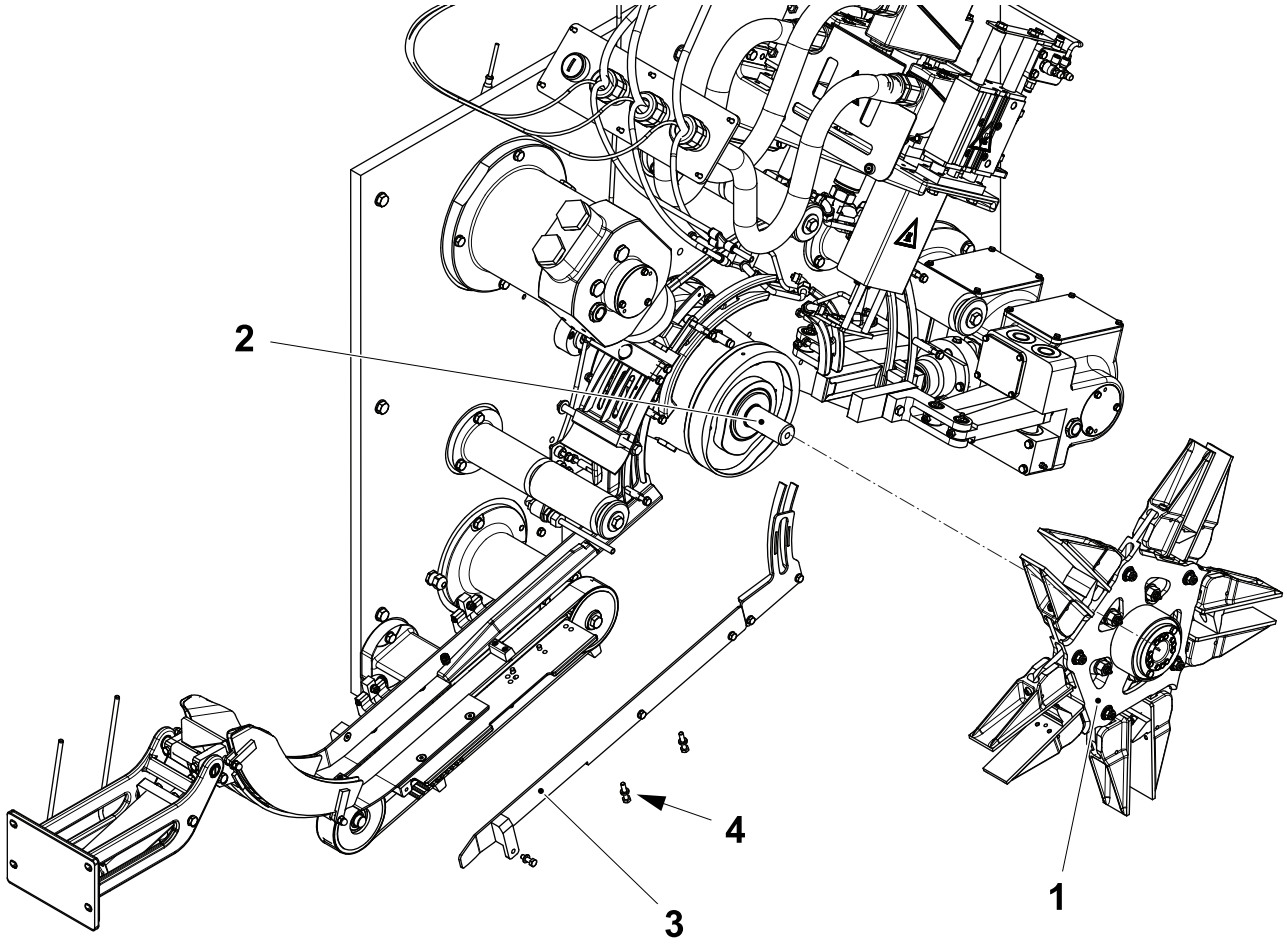

1 Wheel
2 Wheel axis
3 Guide
4 Screw

(Cont'd)

(Cont'd)

c) Fit the assembly tool (5) so that the surfaces (6) are fully in contact with the wheel (1) and do not falls in the holes (7).

d) Tighten the screw (8) to **18** Nm to lock in position the wheel (1).

e) Tighten the screws (9) crosswise to **4** Nm.

f) Remove the assembly tool (5).

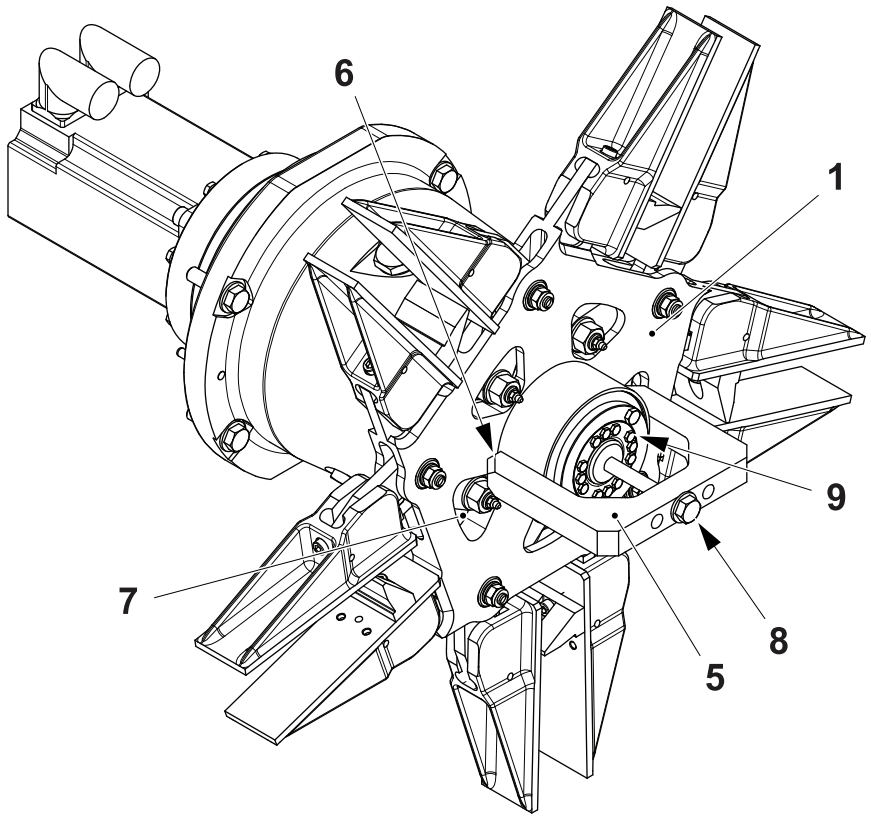

1 Wheel
5 Assembly tool
6 Surface
7 Hole
8 Screw
9 Screw

(Cont'd)

(Cont'd)

g) Fit the plate (10) and tighten the screws (11), (12), (13) and (14).

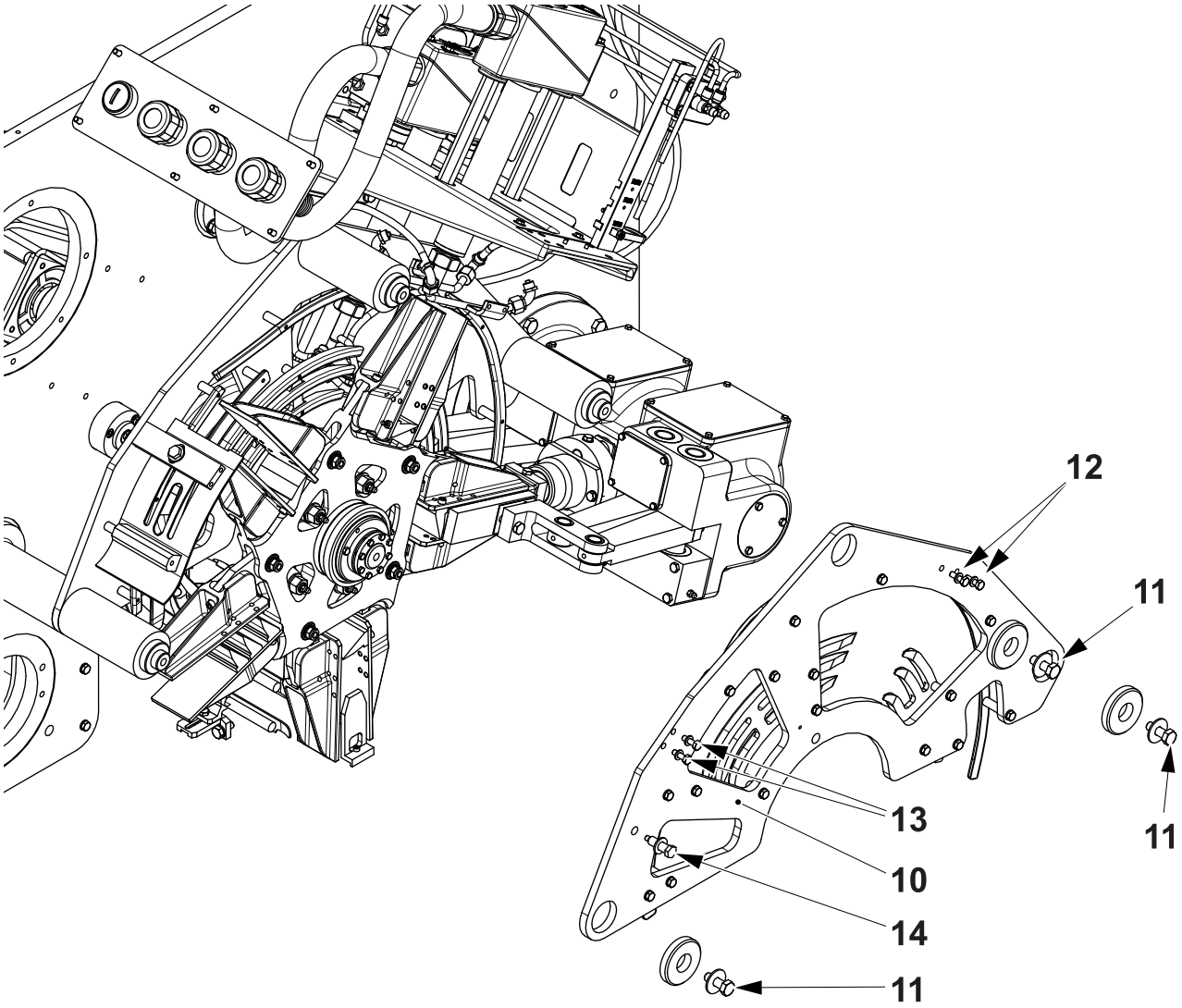

10 Plate
11 Screw
12 Screw
13 Screw
14 Screw

(Cont'd)

(Cont'd)

h) Fit the heating element assembly (15) with the screws (16) and (17).

Note! For volumes TBA 200 E and TBA 250 E the cooling water assembly (18) are not identical and must be fitted as indicated on the parts.

i) Fit the cooling water assembly (18) with the screws (19).

j) Fit the cover (20) with the nuts (21).

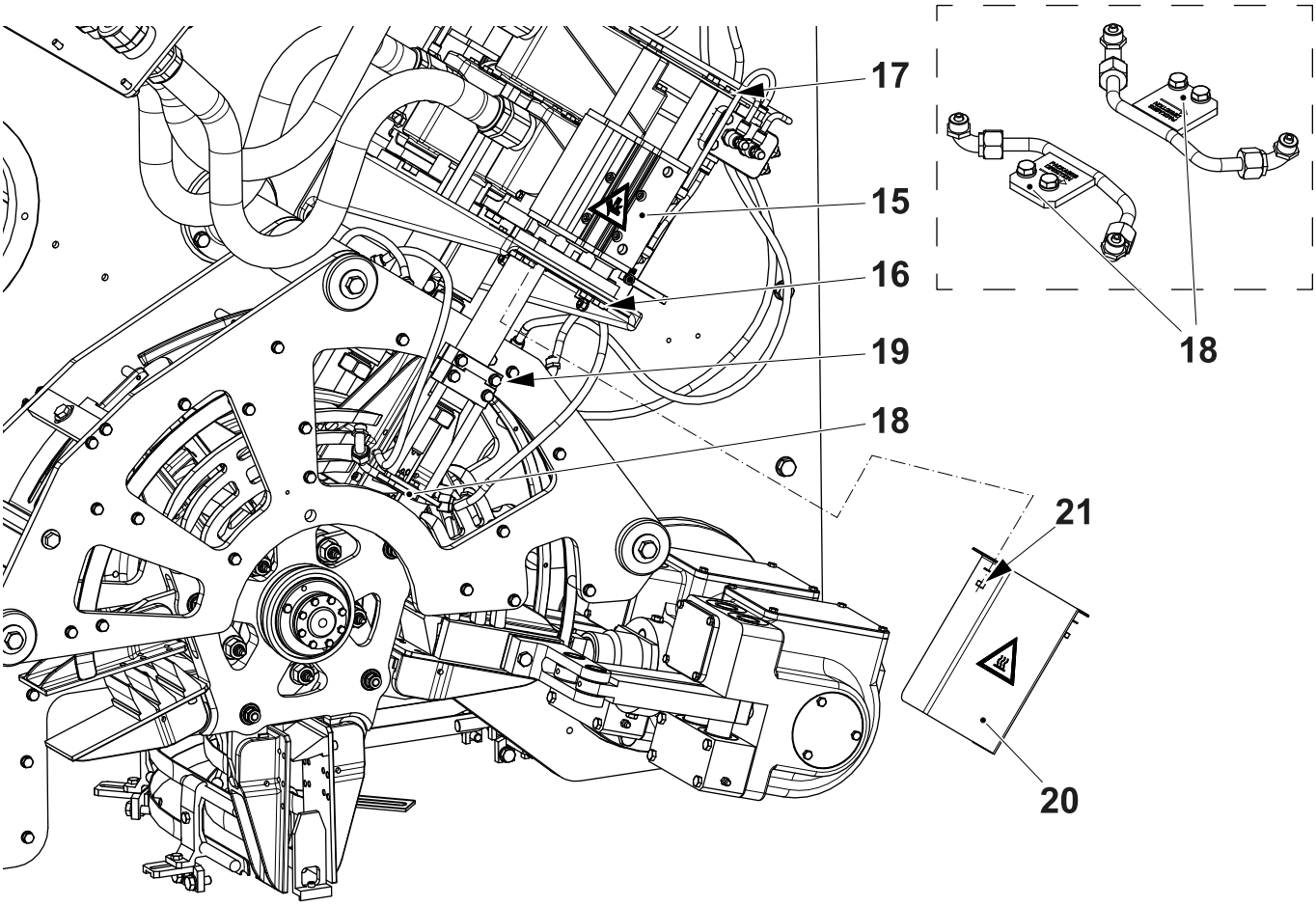

15 Heating element assembly
16 Screw
17 Screw
18 Cooling water assembly
19 Screw
20 Cover
21 Nut

5.8-4 Wheel - Referencing

Machine Status	PREPARATION
SPC Reference	2805994-0300 2819317-0200

CAUTION
Risk of damage to the equipment.
Never reference the servo motor without first checking that there is no possible mechanical interference.

Note! The referencing procedure must be completed if any mechanical change has been made to the system.

a) Manually turn the belt (1) counter clockwise until the pushers (2) are as near as possible to the flaps (3) of the wheel (4).

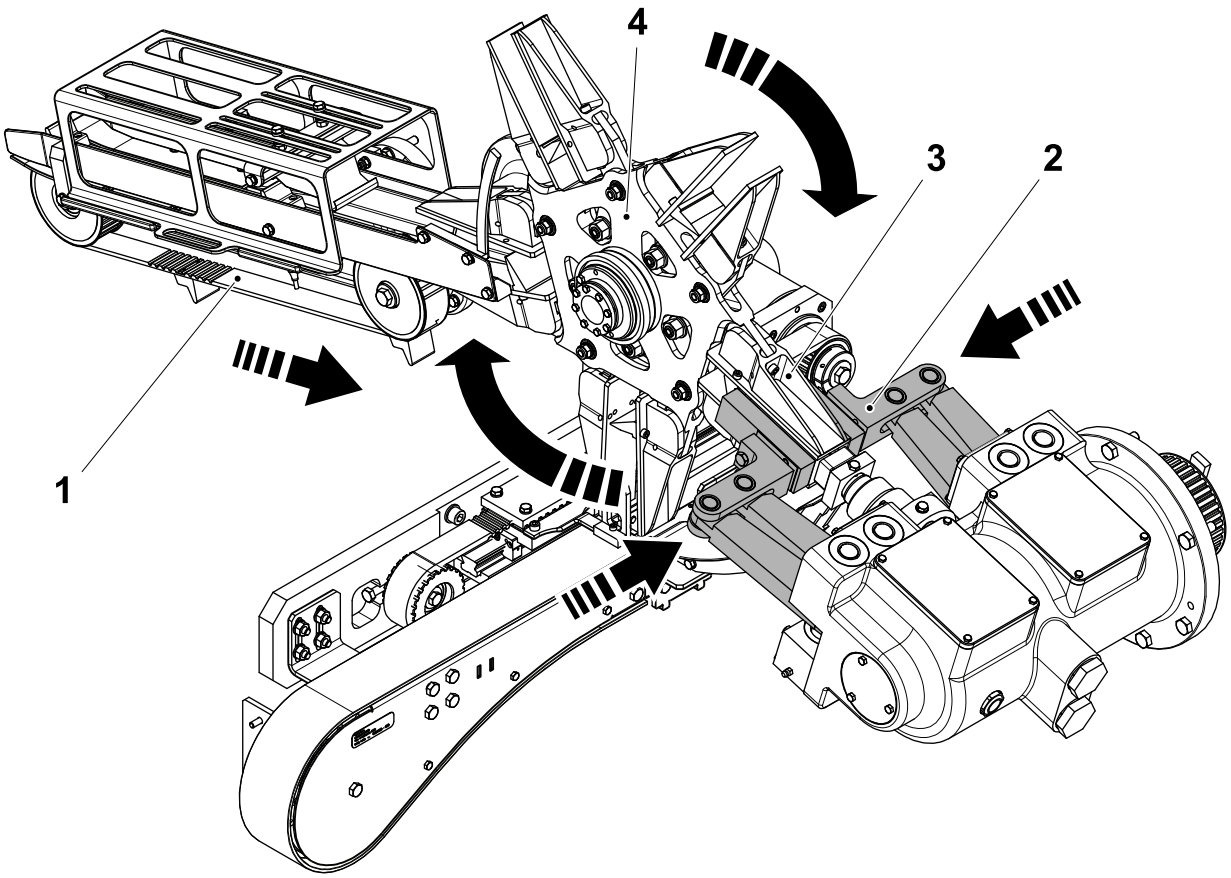

1 Belt
2 Pusher
3 Flap
4 Wheel

(Cont'd)

(Cont'd)

Valid for all TBA packages

a) Manually turn the Wheel (1) until the flaps (2) are perfectly centered with the pushers (3) .

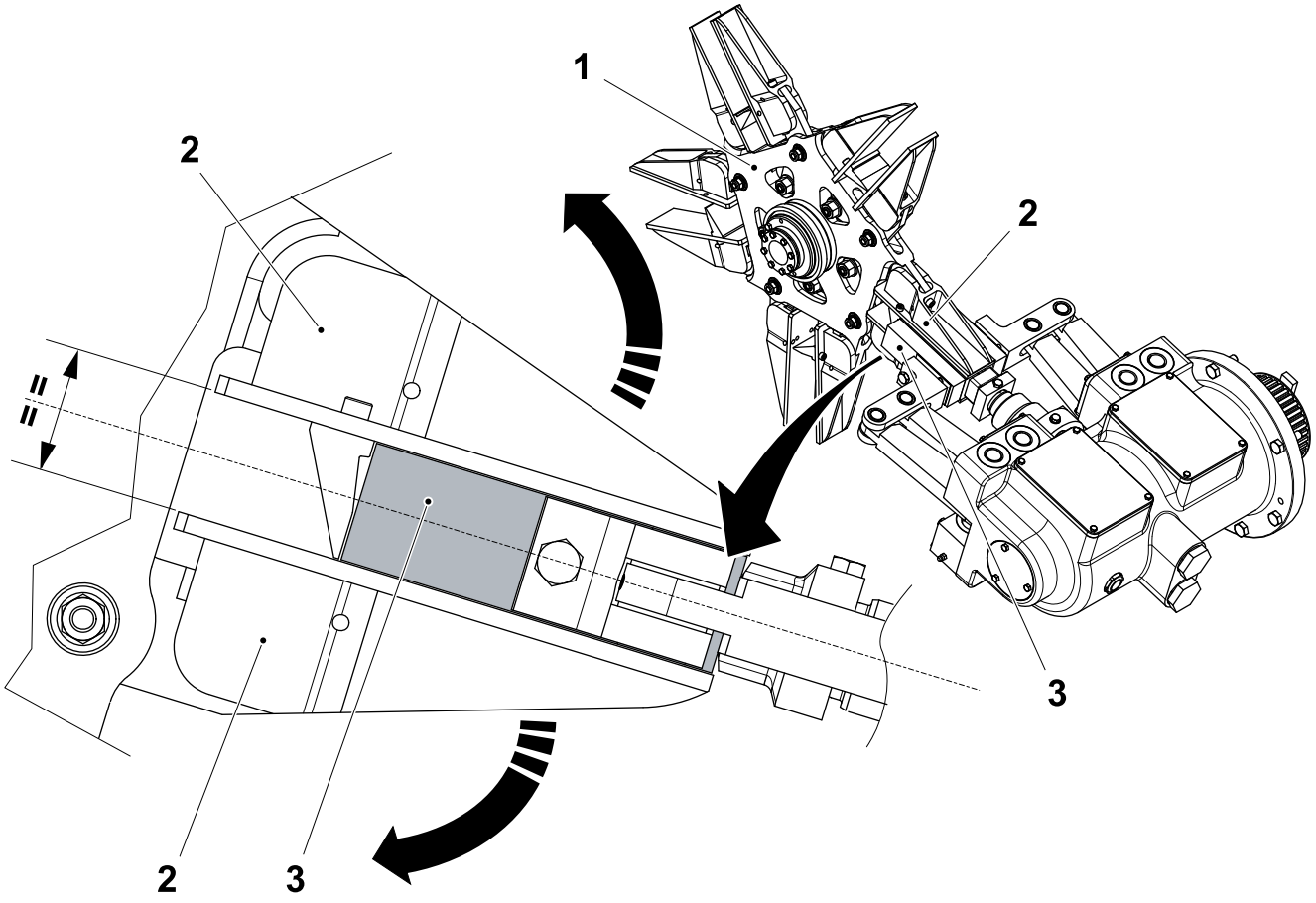

1 Wheel
2 Flap
3 Pusher

(Cont'd)

(Cont'd)

Valid for all TPA packages

a) Loosen the knob (1) and remove the pusher (2).

b) Manually turn the wheel (3) until the flaps (4) are perfectly centered with the pusher (2). The distances **A** between edge (5) and the flaps (4) must be equal on both sides.

c) Fit the pusher (2) with the knob (1).

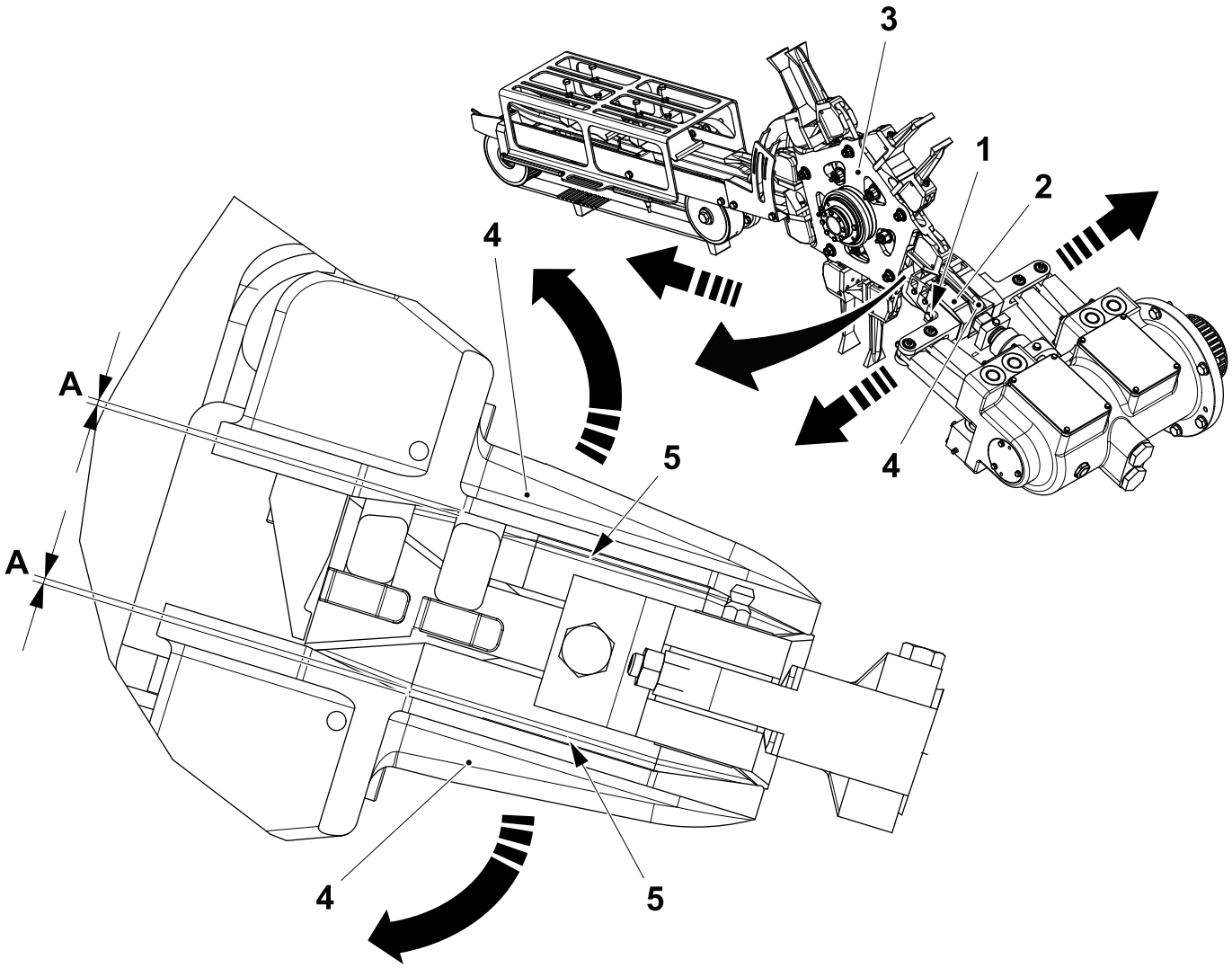

1 Knob
2 Pusher
3 Wheel
4 Flap
5 Edge

(Cont'd)

(Cont'd)

Valid for all volumes

a) Manually turn the belt (1) clockwise until the pushers (2) are open.

b) Close all doors and clear all alarms on the TPOP display.

c) Touch the MAINTENANCE CONTROL button (3).

d) Log on to access the MAINTENANCE CONTROL window, see 8.6.3-2 HMI - User Management Log On.

e) Touch the FINAL FOLDER button (4).

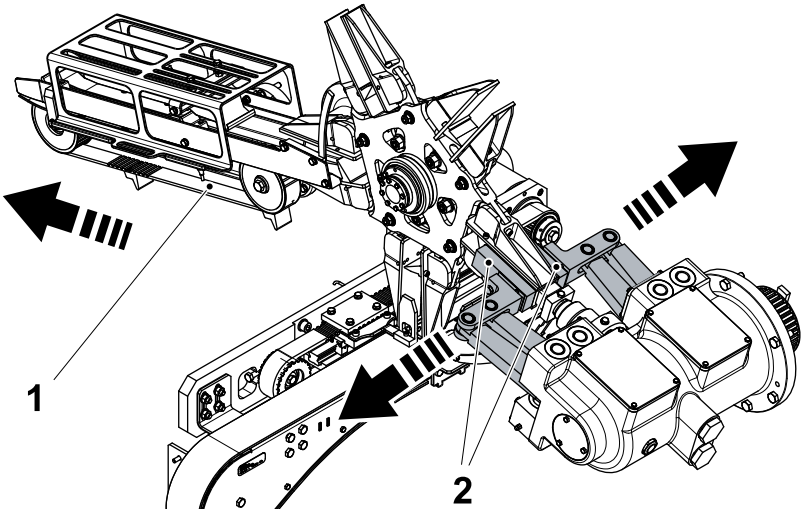

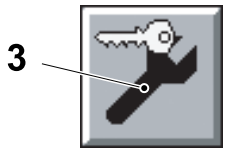

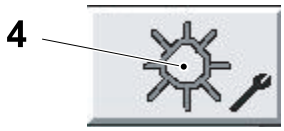

1 Belt
2 Pusher

3 MAINTENANCE CONTROL button
4 FINAL FOLDER button

(Cont'd)

(Cont'd)

f) Touch the WHEEL REFERENCING button (5).

g) Touch the ON button (6).

h) The OK button (7) begins to flash.Press the OK button (7) to start the referencing and wait for the ON button (6) to become green.

i) Touch the EXIT button (8) to exit from the SERVO SETTINGS window.

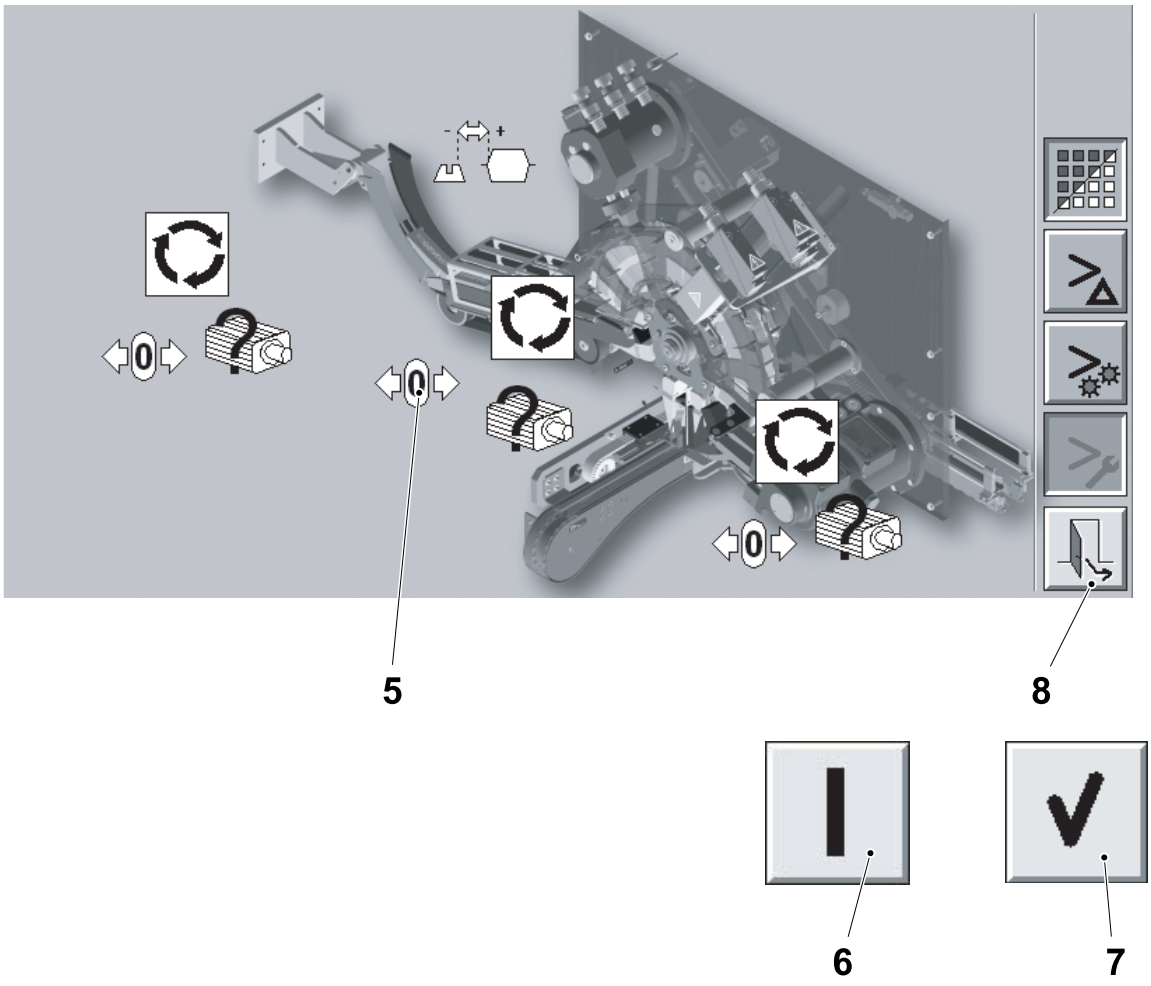

5 WHEEL REFERENCING button
6 ON button
7 OK button
8 EXIT button

5.8-5 Wheel - Grease

Machine Status	Electrical supply disconnecting device in position O (OFF) Main air valve OFF Main steam valve ON Main water valve OFF
Consumables	Grease, Klubersynth UH1 64-62 TP No. 344408-0000
SPC Reference	2805994-0300 2819317-0200

Lubricate the wheel with **2.5 cc** of grease through each grease nipples (1) using a grease gun.

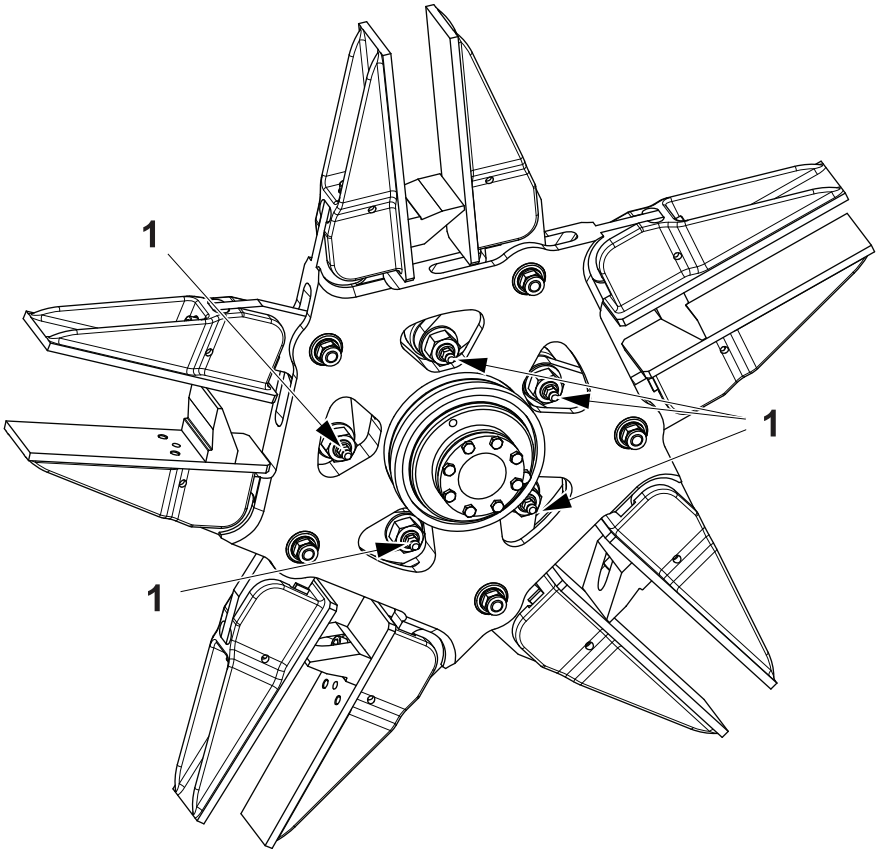

1 Grease nipple

5.9 Assembly Plate

5.9-1 Assembly Plate - Set Belt Tension

Machine Status	Electrical supply disconnecting device in position O (OFF) Main air valve OFF Main steam valve ON Main water valve OFF
SPC Reference	2805996-0400

a) To set the belt tension loosen the nuts (1) and turn the screw (2) until the distance **A** is obtained.

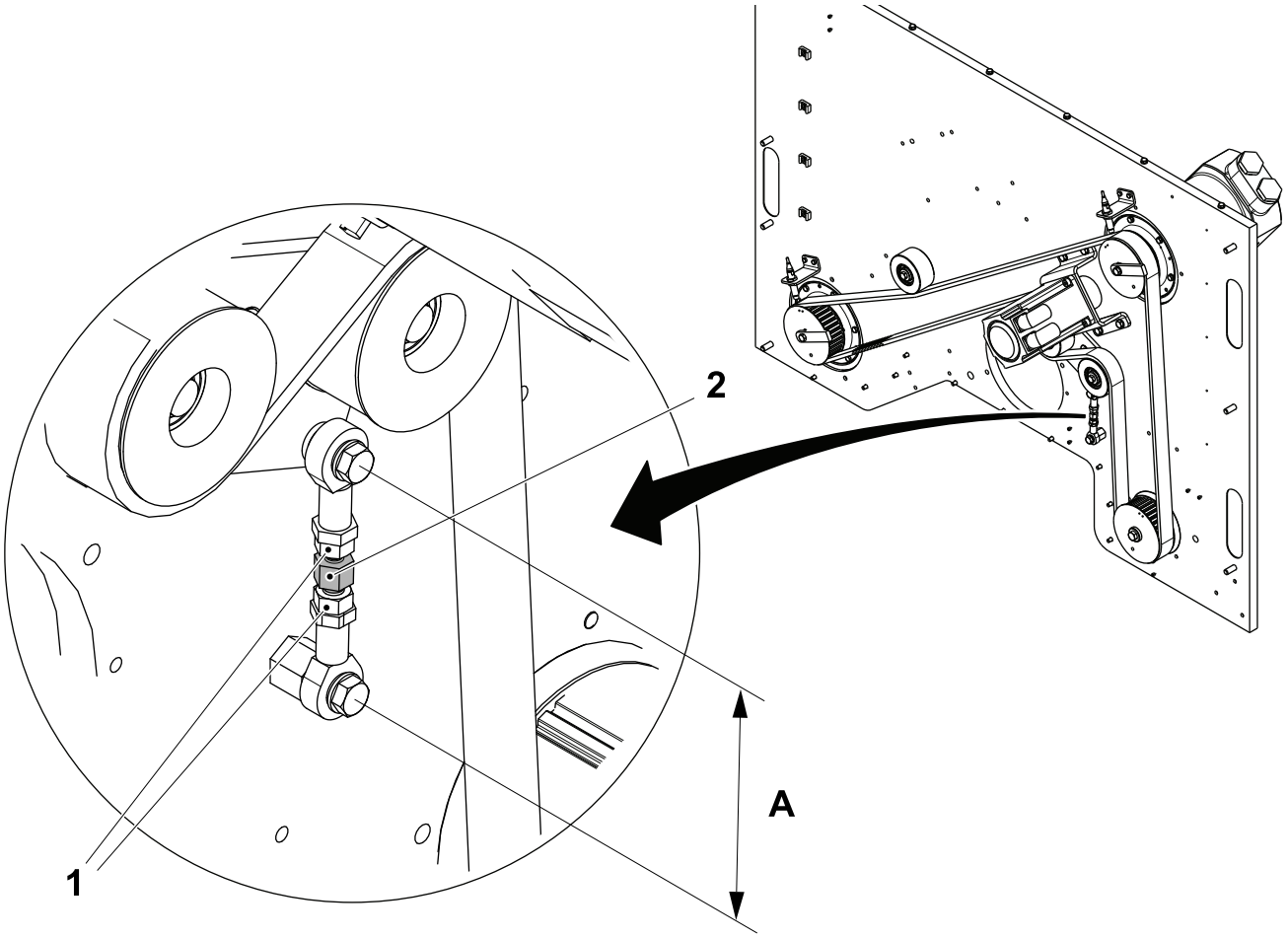

A = 107 ±2 mm
1 Nut
2 Screw

(Cont'd)

(Cont'd)

b) Loosen the screw (3) and turn the activator (4) until it is in front of the proximity switch (5).

c) Loosen the screw (6) and turn the activator (7) until it is opposite to the proximity switch (8).

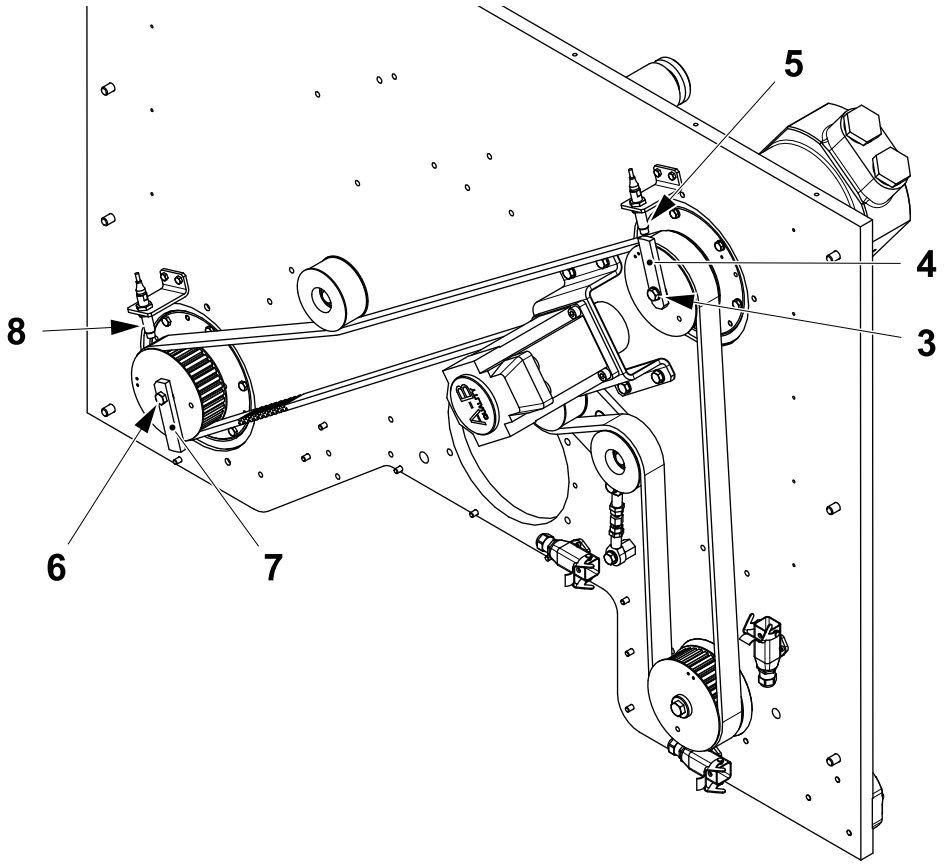

3 Screw
4 Activator
5 Proximity switch
6 Screw
7 Activator
8 Proximity switch

5.9-2 Assembly Plate - Change Belt

Machine Status	Electrical supply disconnecting device in position O (OFF) Main air valve OFF Main steam valve ON Main water valve OFF
Special Equipment	Assembly Tool No.2805999-0100
SPC Reference	2805996-0400

a) Loosen the tension of the belt (1) by means of the screw (2).

b) Remove the screw (3) and the motor assembly (4).

c) Remove the belt (1).

d) Change the belt (1) and assemble in the reverse order.

e) Synchronize the Final folder unit, see 5-2 Final Folder - Synchronization.

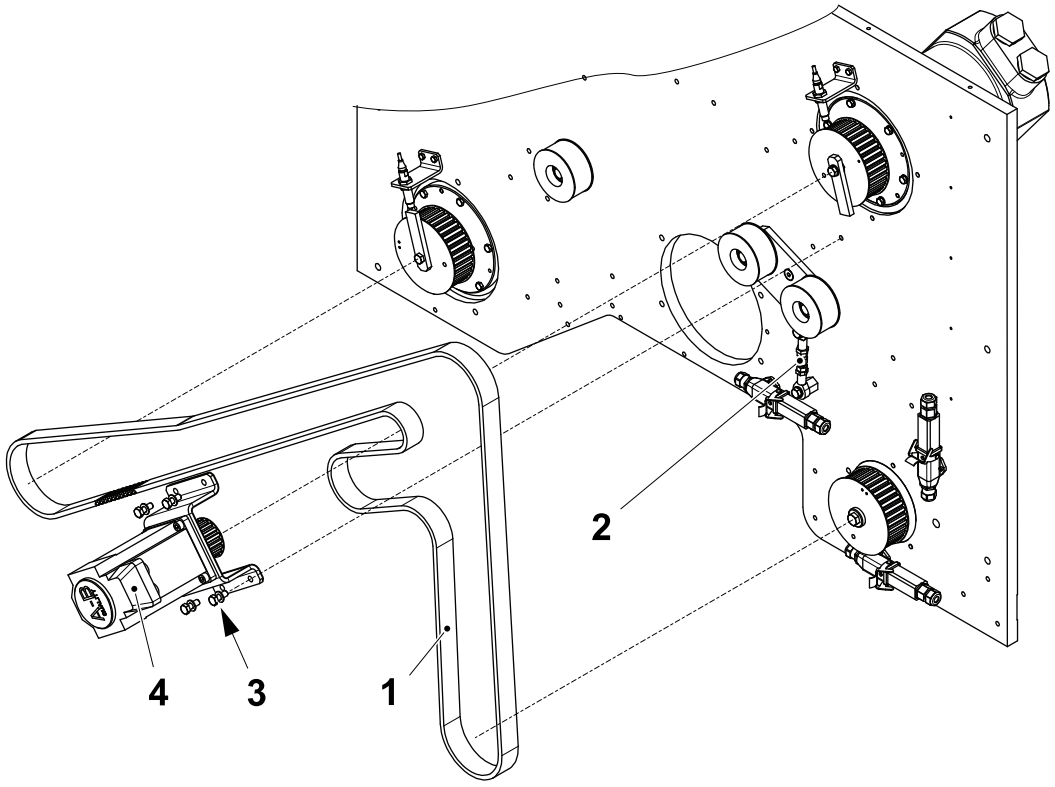

1 Belt
2 Screw
3 Screw
4 Motor assembly

5.9-3 Assembly Plate - Change Ball Bearing

Machine Status	Electrical supply disconnecting device in position O (OFF) Main air valve OFF Main steam valve ON Main water valve OFF
SPC Reference	2805996-0400

a) Loosen the belt tension by means the screw (1).

b) Remove the screw (2) and the washer (3).

c) Remove the retaining ring (4) and the ball bearing (5) from the roller (6).

d) Remove the retaining ring (7) and the ball bearing (8) from the roller (6).

e) Repeat the procedure for the other rollers.

Note! The spacer (9) must be fitted between the ball bearing (5) and ball bearing (8).

f) Assemble in the reverse order.

g) Set the tension of the belt, see 5.9-1 Assembly Plate - Set Belt Tension.

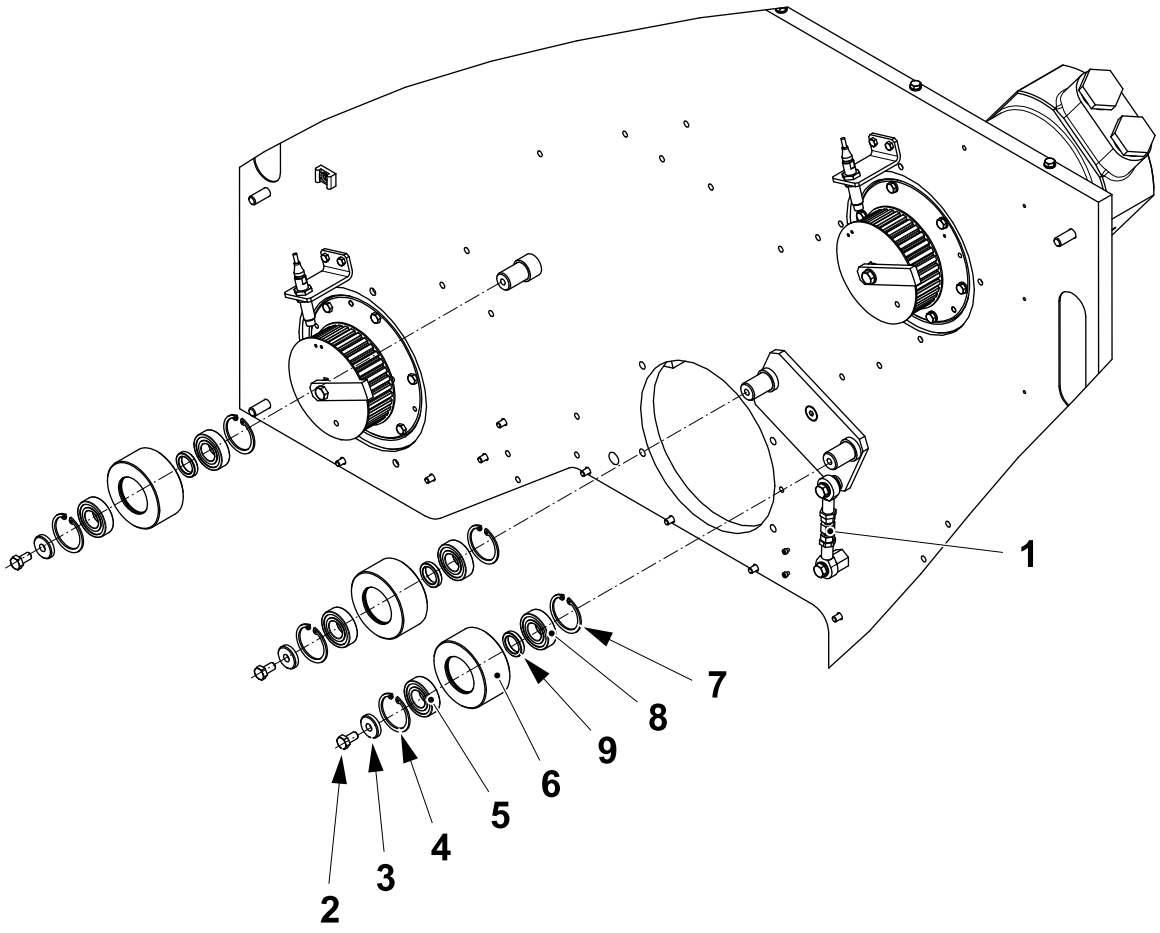

1 Screw
2 Screw
3 Washer
4 Retaining ring
5 Ball bearing
6 Roller
7 Retaining ring
8 Ball bearing
9 Spacer

5.9-4 Assembly Plate - Set Proximity Switch

Machine Status	Electrical supply disconnecting device in position O (OFF) Main air valve OFF Main steam valve ON Main water valve OFF
SPC Reference	2805996-0400

a) Turn the belt (1) until the activator (2) is in front of the proximity switch (3).

b) Loosen the nuts (4) and set the distance **A** between the activator (2) and theproximity switch (3). Tighten the nuts (4).

c) Repeat for the other proximity switch.

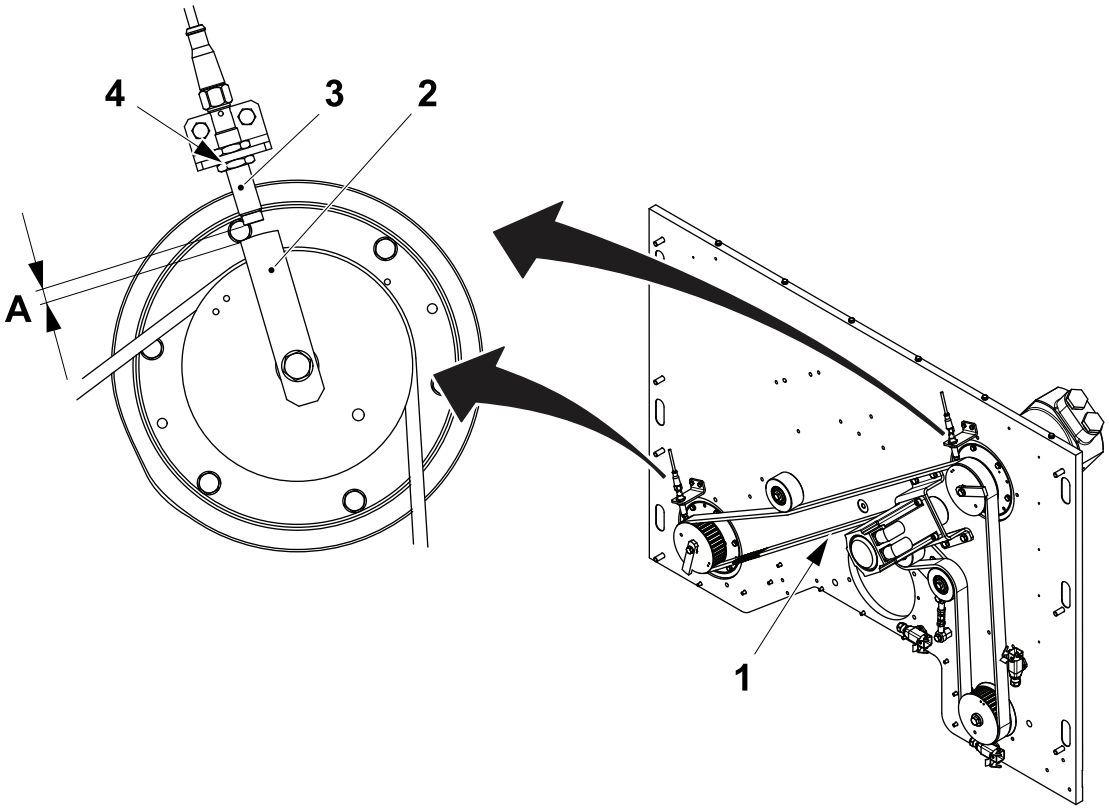

A =1.5 ±0.2 mm

1 Belt
2 Activator
3 Proximity switch
4 Nut

5.10 Folding Bar

5.10-1 Folding Bar - Set Proximity Switch

Machine Status	Electrical supply disconnecting device in position O (OFF) Main air valve OFF Main steam valve ON Main water valve OFF
SPC Reference	2805997-0300 2819318-0200

a) Loosen the nuts (1) and (2). Set the distance **A** between the head of the proximity switch (3) and the screw (4) by moving the proximity switch (3).

b) Tighten the nuts (1) and (2).

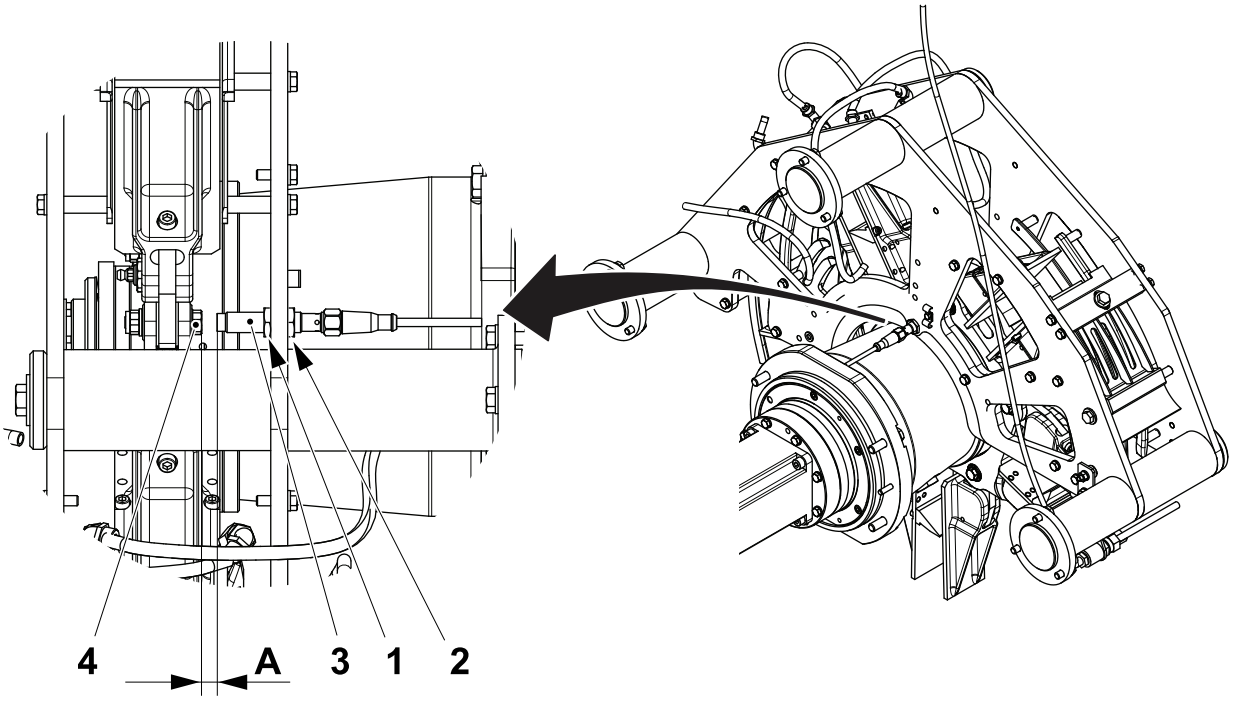

A = 1.5 ±0.2 mm

1 Nut
2 Nut
3 Proximity switch
4 Screw

5.10-2 Folding Bar - Set Air Nozzle Pressure

Machine Status	Electrical supply disconnecting device in position O (OFF) Main air valve OFF Main steam valve ON Main water valve OFF
SPC Reference	2805997-0300 2819318-0200

a) Loosen the nut (1) and turn the nozzle (2) so that the air flow (3) is hitting the bottom (4) of the package.

b) Tighten the nut (1).

c) Set the air pressure on the pressure regulator (5) in the machine body valve panel to **3.5 - 4.0** bar.

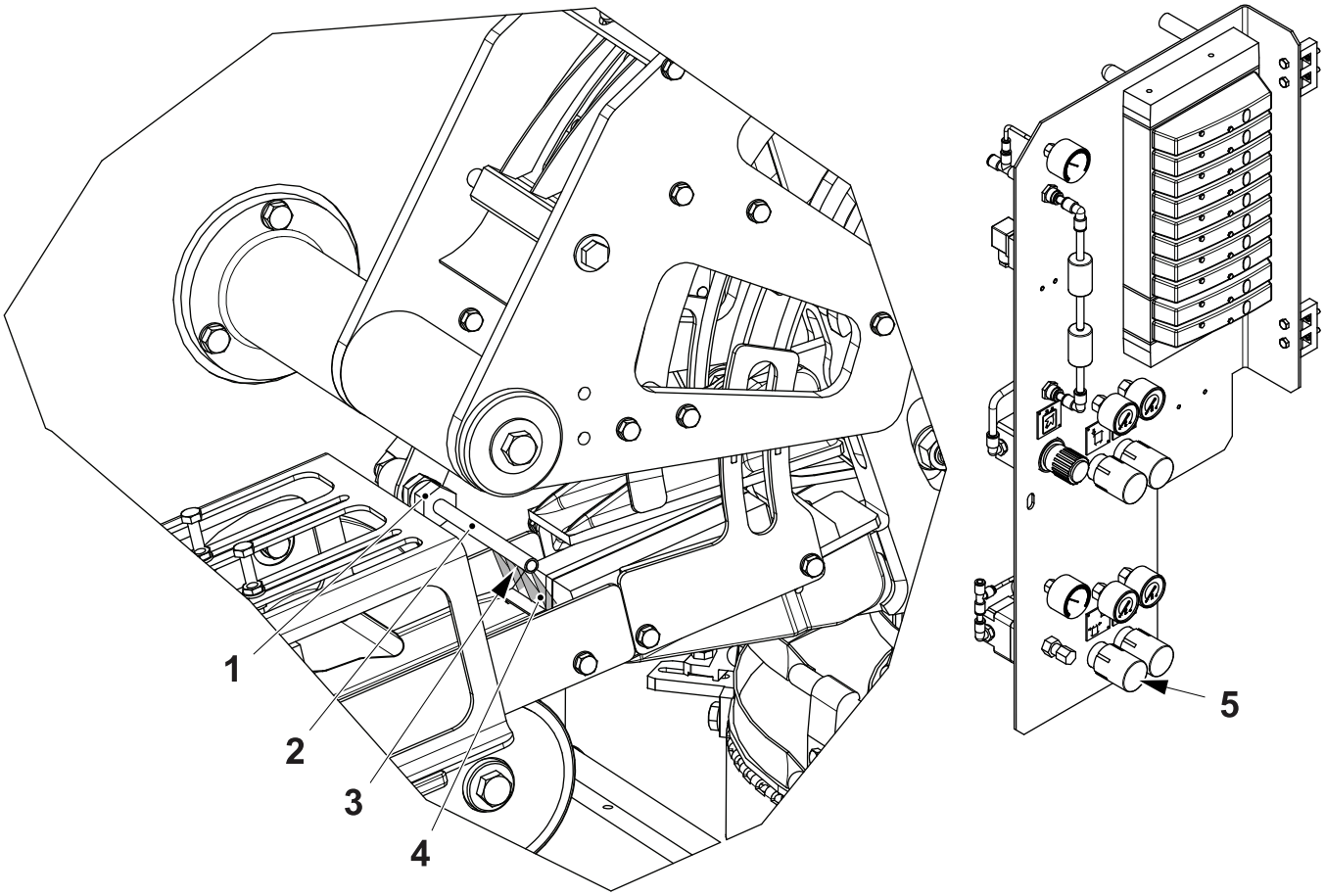

1 Nut
2 Nozzle
3 Air flow
4 Bottom
5 Pressure regulator

5.11 Fin Folder

5.11-1 Fin Folder - Set

Machine Status	Electrical supply disconnecting device in position O (OFF) Main air valve OFF Main steam valve ON Main water valve OFF
SPC Reference	2852382-0100

Note! Valid for RF package only.

a) Loosen the nut (1) and turn the spacer (2) until distance **A** is obtained.

Package	A ±0.5 mm	Package	A ±0.5 mm
TBA 200 Sq	188	TPA 250 Sq	240
TBA 250 Sq	208	TPA 330 Sq	240
TPA 125 Sq	188	TBA 200 E	223
TPA 200 Sq	215	TBA 250 E	248

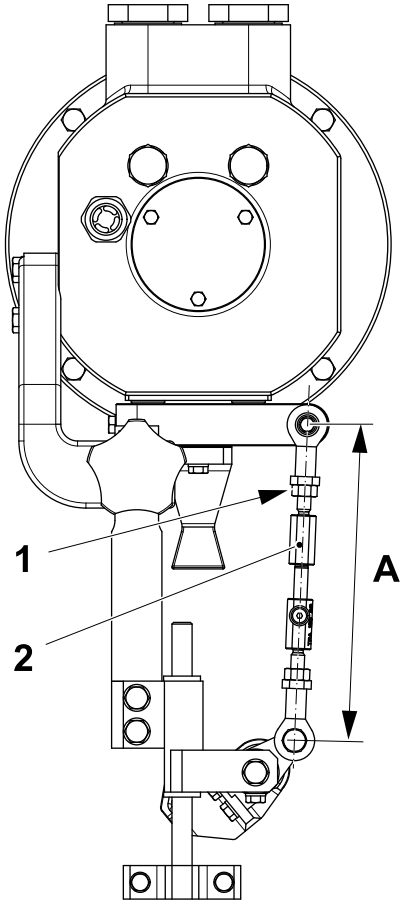

1 Nut
2 Spacer

(Cont'd)

(Cont'd)

b) Loosen the screws (3) and move the folding device (4) until distance **B** is obtained.

Package	B ±0.5 mm	Package	B ±0.5 mm
TBA 200 Sq	8.0	TPA 250 Sq	6.0
TBA 250 Sq	8.0	TPA 330 Sq	6.5
TPA 125 Sq	6.0	TBA 200 E	6.0
TPA 200 Sq	6.0	TBA 250 E	6.0

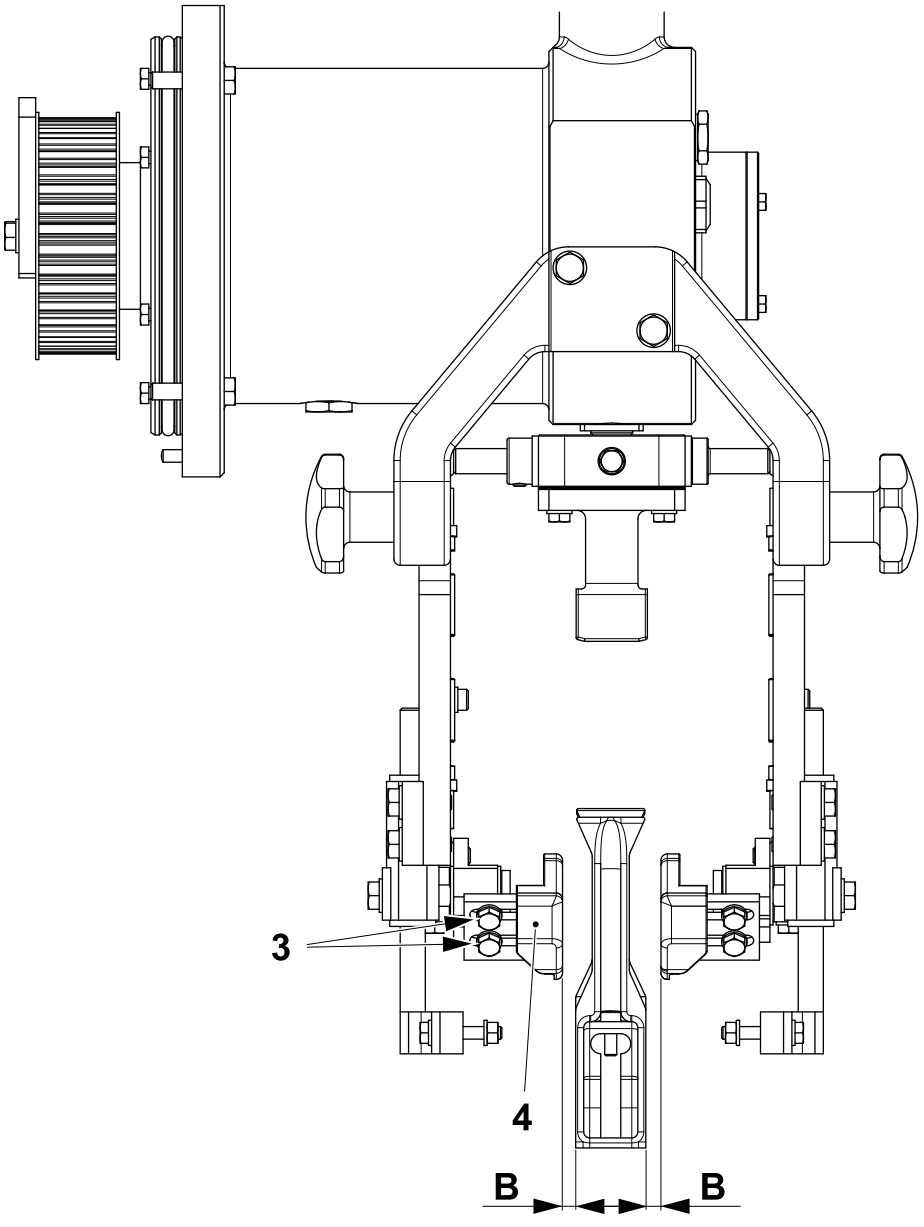

3 Screw
4 Folding device

5.11-2 Fin Folder - Change Bushing

Machine Status	Electrical supply disconnecting device in position O (OFF) Main air valve OFF Main steam valve ON Main water valve OFF
SPC Reference	2852382-0100

a) Remove the screws (1) and the folding device (2)

b) Remove the screw (3) and disconnect the rod (4) from the lever (5).

c) Remove the screw (6) and the lever (5).

d) Remove the screw (6) and the bushings (7) from the axle pin (8). Change the bushings (7).

e) Assemble in the reverse order.

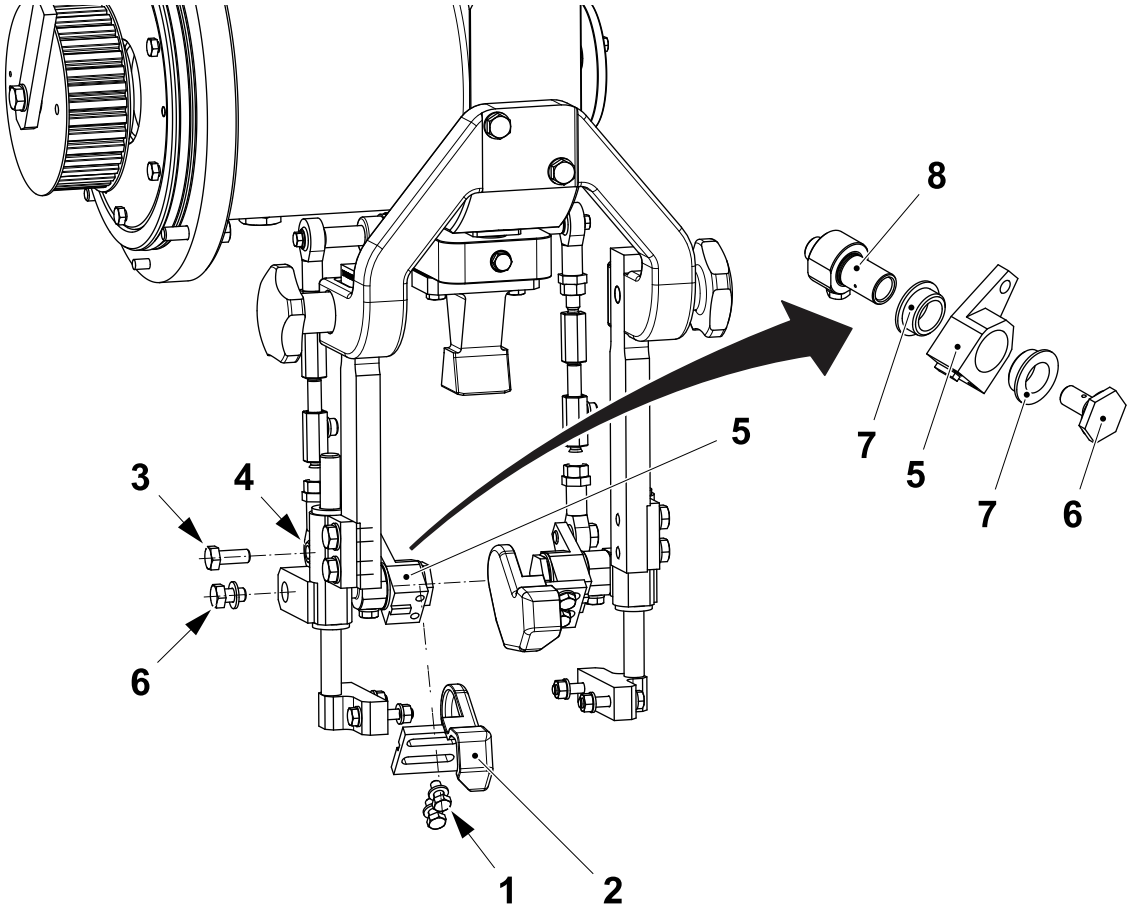

1 Screw
2 Folding device
3 Screw
4 Rod
5 Lever
6 Screw
7 Bushing
8 Axle pin

5.11-3 Fin Folder - Grease

Machine Status	Electrical supply disconnecting device in position O (OFF) Main air valve OFF Main steam valve ON Main water valve OFF
Consumables	Grease, Klubersynth UH1 64-62 TP No. 344408-0000
SPC Reference	2852382-0100

Lubricate the fin folder with **2.5 cc** of grease through each nipples (1) using a grease gun.

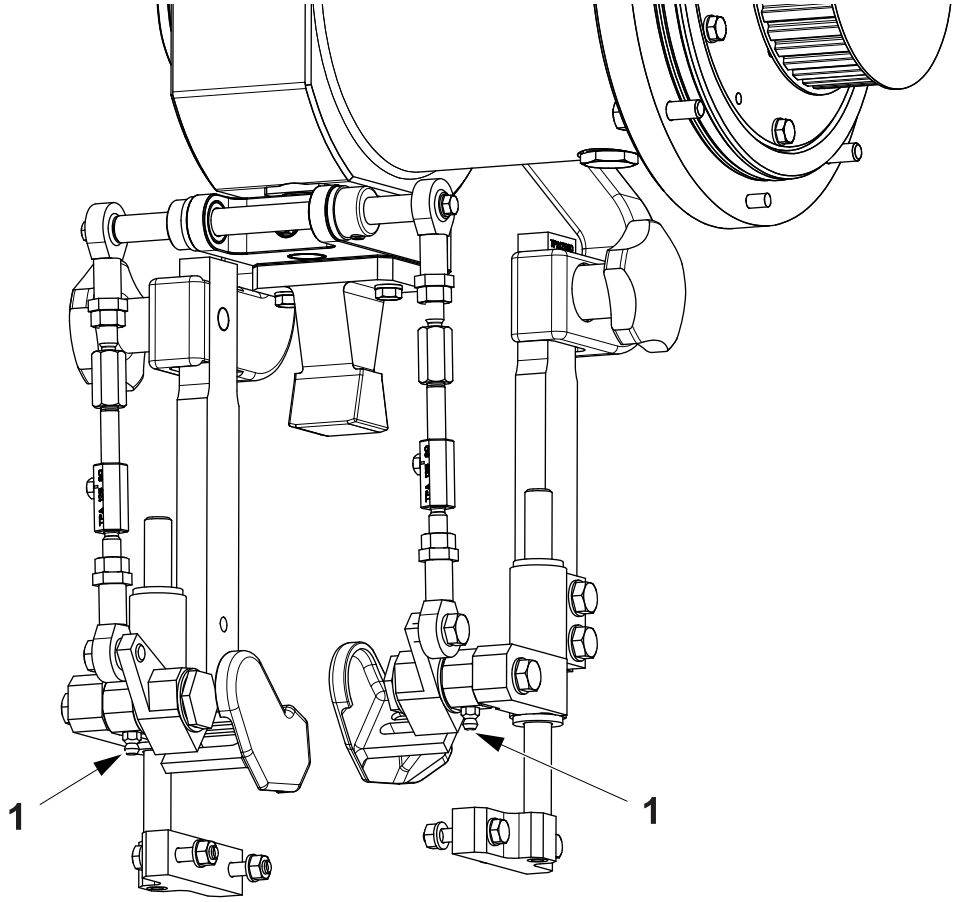

1 Nipple

This page intentionally left blank

6 Service Unit

Service Unit - Description

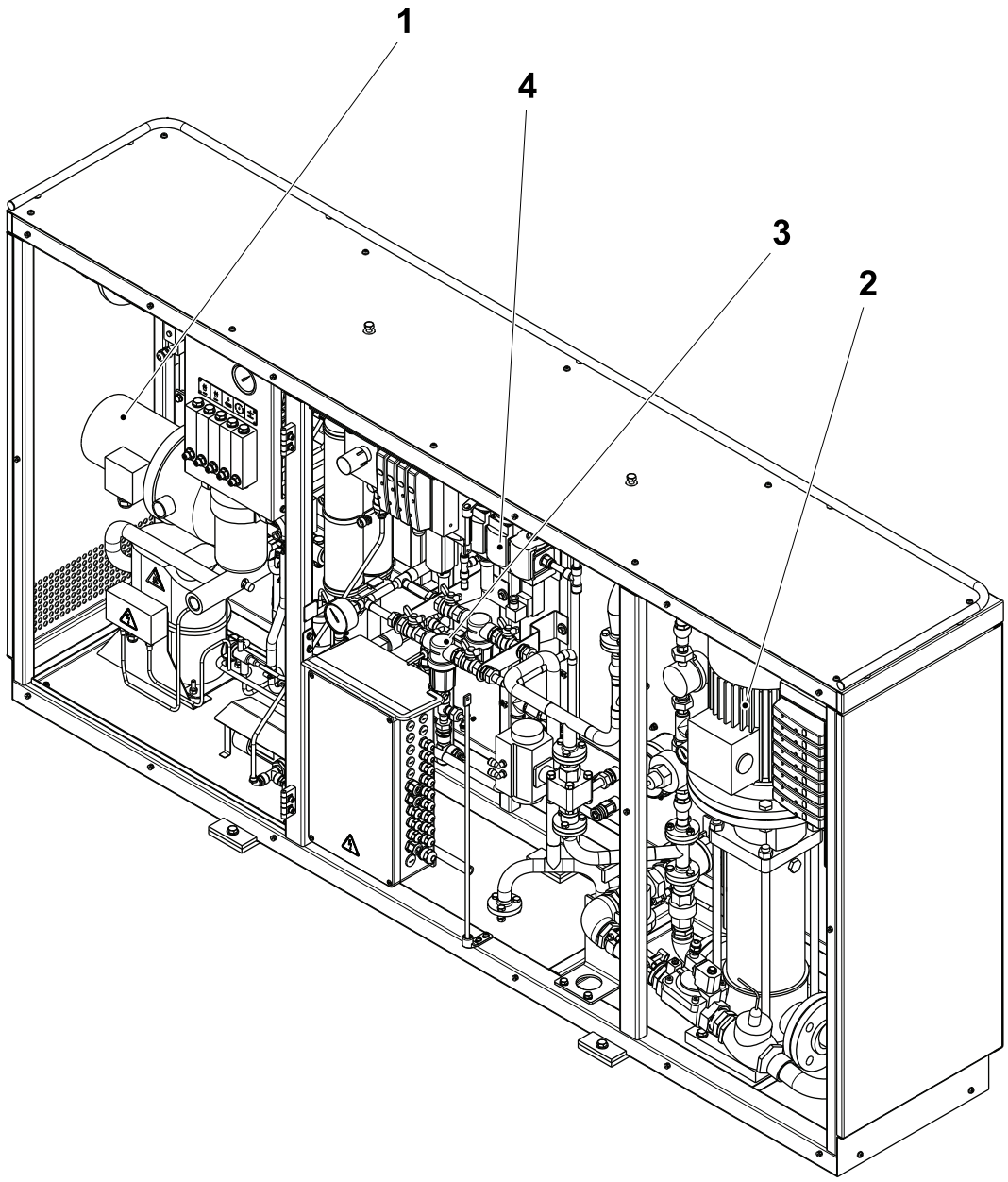

1 Cooling Water System
2 Cleaning System
3 Water Panel
4 Supply System

Service Unit - Description 6-2

6.1 Cooling Water System 6-5

6.1-1 Cooling Water System - Check 6-5

6.1-2 Cooling Water System - Fill 6-6

6.1.1 Compressor Unit 6-7

6.1.1-1 Compressor Unit - Check Sight Glass 6-7

6.1.1-2 Compressor Unit - Check 6-8

6.1.1-3 Compressor Unit - Set Thermostatic Valve 6-9

6.1.2 Flow Meter 6-10

6.1.2-1 Flow Meter - Change Filter 6-10

6.1.2-2 Flow Meter - Set Flows 6-12

6.1.2-3 Flow Meter - Change Filter Insert 6-13

6.2 Cleaning System 6-15

6.2-1 Cleaning System - Check Connections 6-15

6.2-2 Cleaning System - Set Pressures 6-16

6.2.1 Pipe 6-17

6.2.1-1 Pipe - Change Filter 6-17

6.2.2 Cleaning Pump 6-18

6.2.2-1 Cleaning Pump - Change Gaskets 6-18

6.3 Water Panel 6-19

6.3-1 Water Panel - Check Pressure Switch 6-19

6.3-2 Water Panel - Clean Filters 6-20

6.4 Supply System 6-22

6.4.1 Air Panel 6-22

6.4.1-1 Air Panel - Check 6-22

6.4.1-2 Air Panel - Set Pressure 6-24

6.4.1-3 Air Panel - Set Pressure Switch 6-25

6.4.1-4 Air Panel - Clean Filter Insert 6-26

This page intentionally left blank

6.1 Cooling Water System

6.1-1 Cooling Water System - Check

Machine Status	PRODUCTION
SPC Reference	2864024-0200

WARNING

Refrigerant gas.
Cooling media R134A, follow the Safety Precautions.

Check that:

- there are no water leaks at the connections
- the pump (1) runs smoothly without excessive noise or vibrations
- the water pressure gauge (2) shows the correct water pressure in the circuit, see 9.1 Technical Data.
- the values of the flow meters (3) are correct. Set the flows if necessary, see 6.1.2-2 Flow Meter - Set Flows .

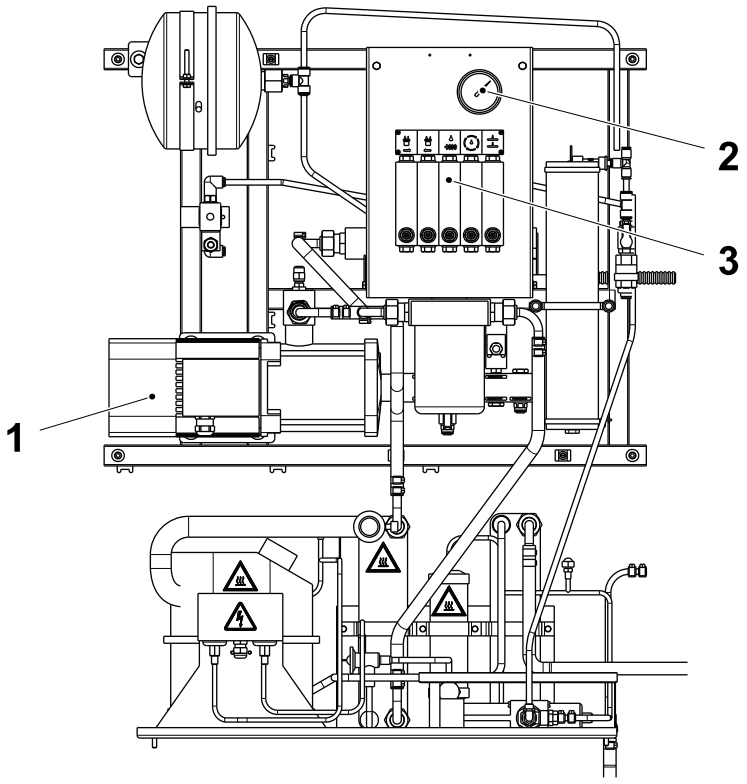

1 Pump
2 Pressure gauge
3 Flow meters

6.1-2 Cooling Water System - Fill

Machine Status	Electrical supply disconnecting device in position I (ON) Main air valve ON Main steam valve ON Main water valve ON
SPC Reference	2864024-0200

WARNING

Refrigerant gas.

Cooling media R134A, follow the Safety Precautions.

Note! Make sure that the circuit is correctly connected and that the valves located in the final folder chamber are open.

a) Open the water valve (1) to fill the cooling water circuit.

b) Leave the pump (2) running for approximately one minute.

c) When the water pressure gauge (3) reaches 2 bar, close the valve (1).

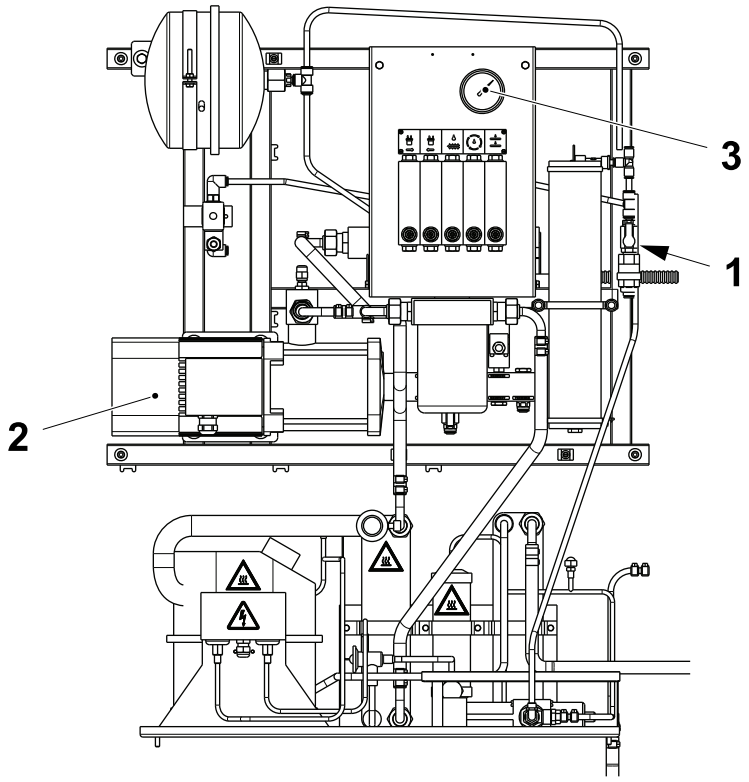

1 Valve
2 Pump
3 Pressure gauge

6.1.1 Compressor Unit

6.1.1-1 Compressor Unit - Check Sight Glass

Machine Status	Electrical supply disconnecting device in position I (ON) Main air valve ON Main steam valve ON Main water valve ON
SPC Reference	2864031-0200

WARNING

Refrigerant gas.
Cooling media R134A, follow the Safety Precautions.

Note! The compressor unit must only be serviced or repaired by a company authorised in the repair and service of refrigeration units. See the SPC for the compressor's internal serviceable spare part codes.

Check that:

- there are not gas bubbles in the sight glass (1). If air bubbles are present call the local Tetra Pak Service
- the pin inside the sight glass (1) is GREEN. If the pin is YELLOW call a local authorised service for refrigerating units.

  Note! The illustration below shows the position of the low pressure gas valve (2) and the high pressure gas valve (3) to allow the gas to be changed or recharged.

  Note! The gas specifications are listed on the plate (4).

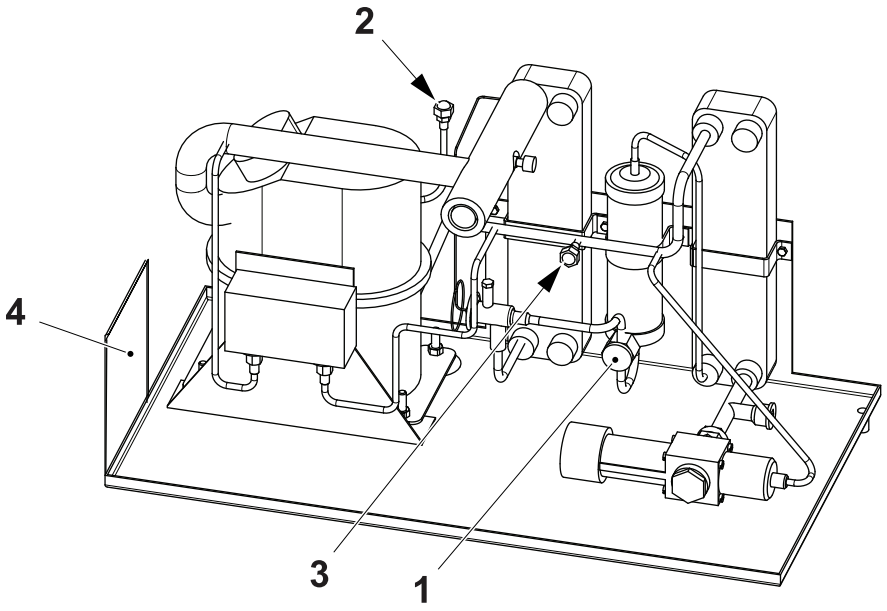

1 Sight glass
2 Low pressure gas valve
3 high pressure gas valve
4 Plate

6.1.1-2 Compressor Unit - Check

Machine Status	PRODUCTION
Special Equipment	Thermometer min. 40°C
SPC Reference	2864031-0200

WARNING

Refrigerant gas.

Cooling media R134A, follow the Safety Precautions.

Use a thermometer to check the temperature of the water from the hose (1). The temperature must not exceed 30°C when the compressor (2) is running.

If the above temperature is exceeded call the local Tetra Pak Service.

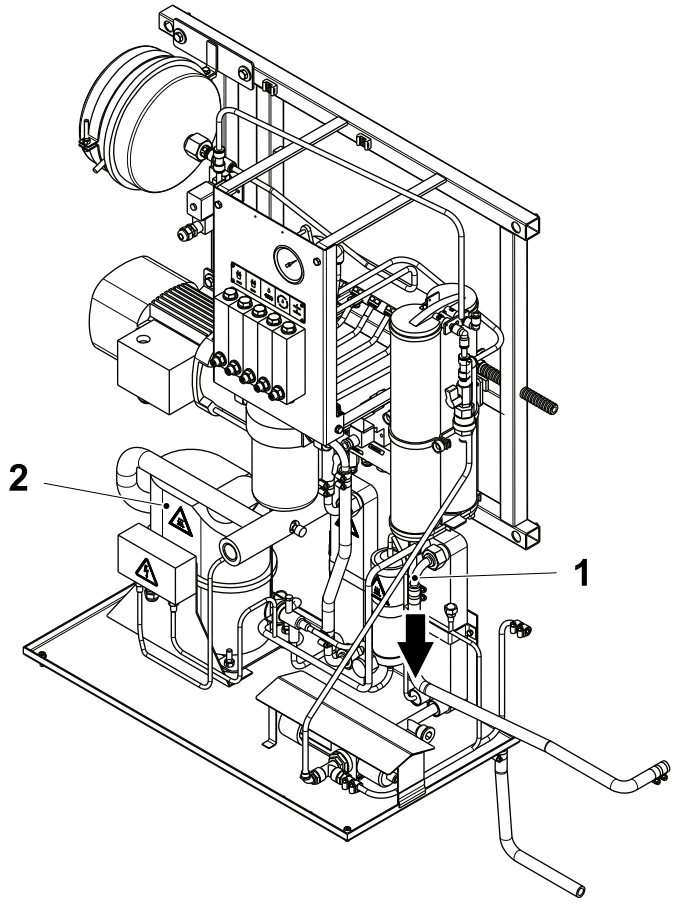

1 Hose
2 Compressor

6.1.1-3 Compressor Unit - Set Thermostatic Valve

Machine Status	Electrical supply disconnecting device in position I (ON) Main air valve ON Main steam valve ON Main water valve ON
SPC Reference	2864031-0200

Turn the knob (1) to set the thermostatic valve (2) to position **3**.

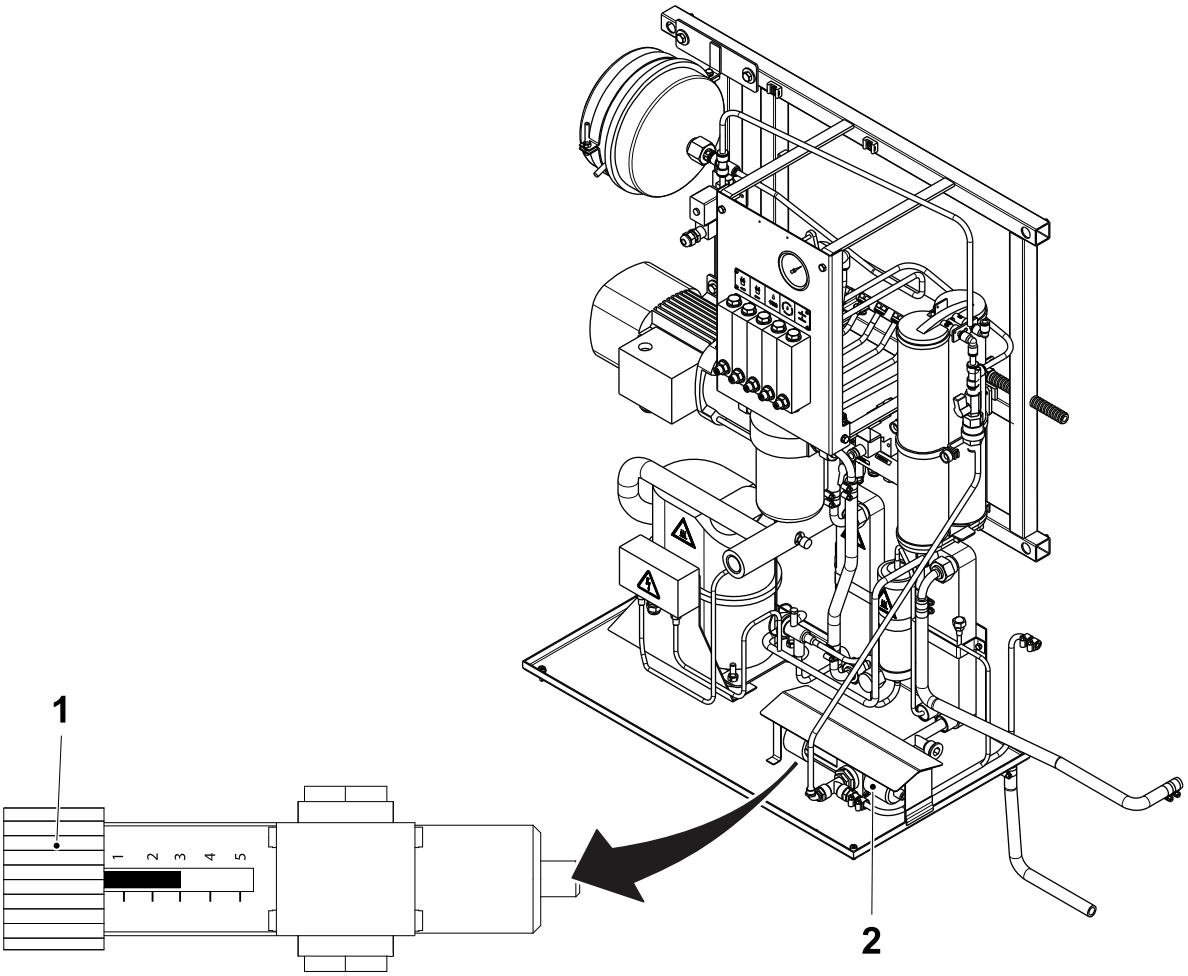

1 Knob
2 Thermostatic valve

6.1.2 Flow Meter

6.1.2-1 Flow Meter - Change Filter

Machine Status	Electrical supply disconnecting device in position O (OFF) Main air valve OFF Main steam valve ON Main water valve OFF
SPC Reference	2864023-0200

WARNING

Refrigerant gas.
Cooling media R134A, follow the Safety Precautions.

a) Close the valve (1).

b) Remove the two knobs (2) to release the support (3).

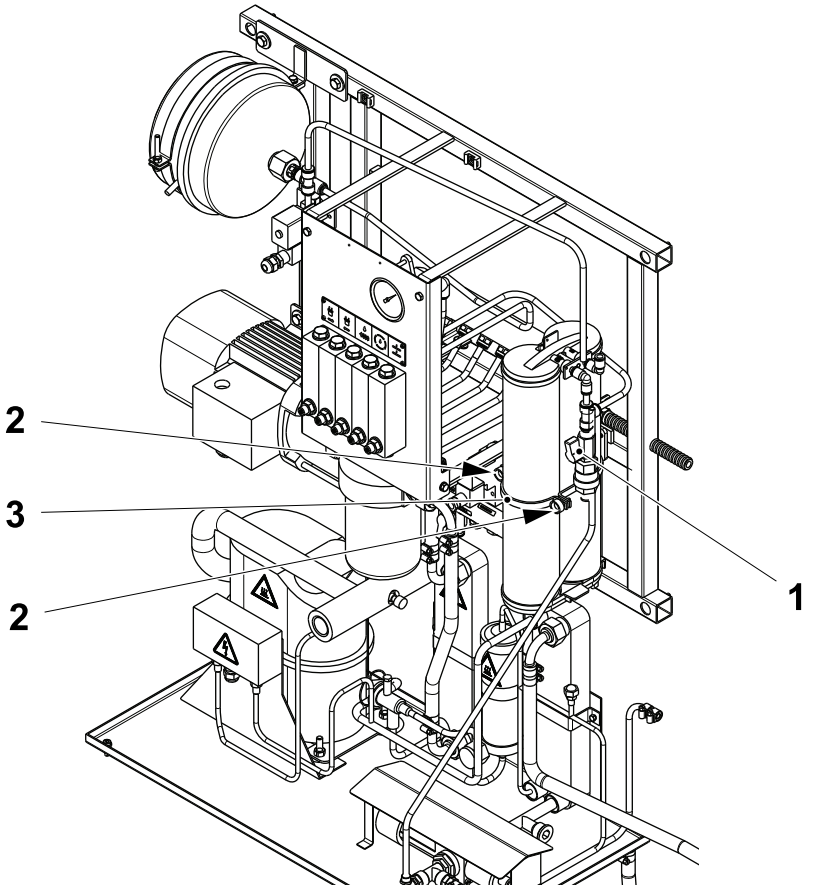

1 Valve
2 Knob
3 Support

(Cont'd)

(Cont'd)

c) Remove the fastening plate (4) and pull out the connection block (5).

d) Remove the filter cartridge (6).

e) Fit the new filter cartridge and assemble in the reverse order.

f) Open the valve (1).

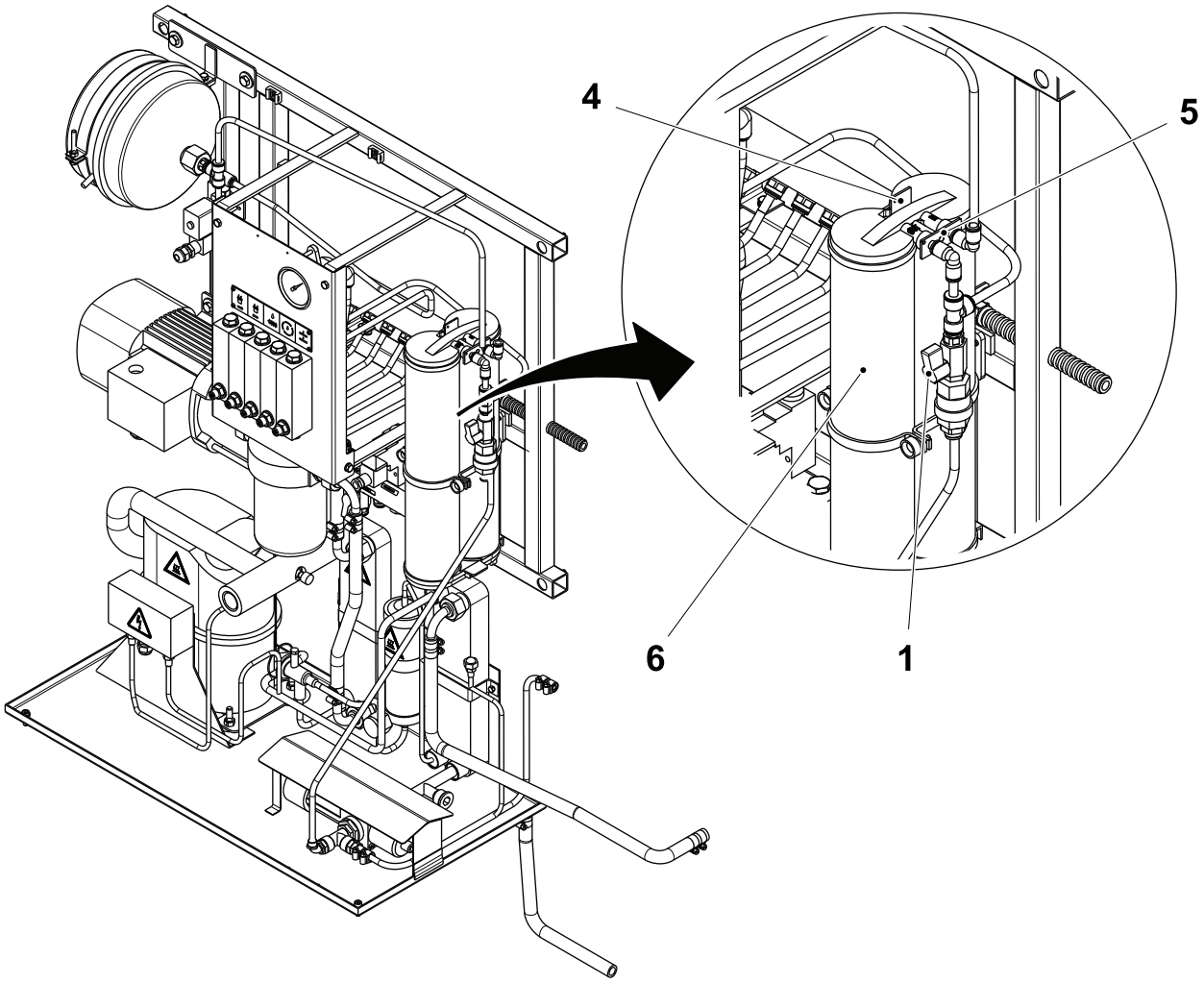

1 Valve
4 Fastening plate
5 Connection block
6 Filter cartridge

6.1.2-2 Flow Meter - Set Flows

Machine Status	PRODUCTION
SPC Reference	2864023-0200

Set the flows by turning the setting screw (6) for each of the flow meters (1), (2), (3), (4), and (5) as indicated in the following table:

Flow meters	**Flow rate (l/min.)**
TS right (jaw system)	See 9.1 Technical Data
TS left (jaw system)	
Final folder	
De-ionizer (DI) circuit	
Hydraulic system	

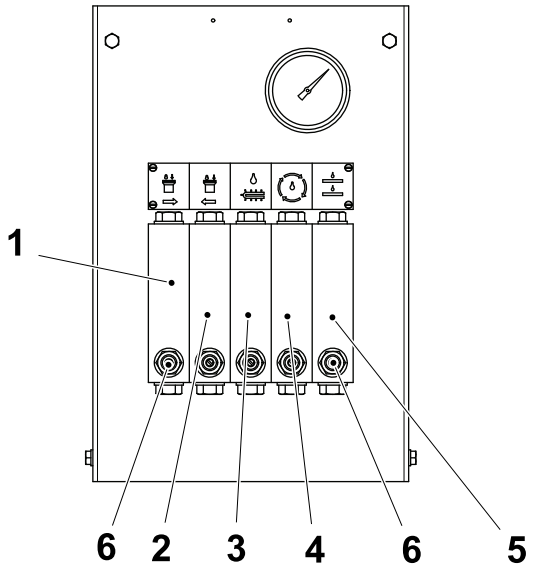

1 Flow meter TS right (jaw system)
2 Flow meter TS left (jaw system)
3 Flow meter Final folder
4 Flow meter DI-circuit
5 Flow meter Hydraulic system
6 Setting screw

6.1.2-3 Flow Meter - Change Filter Insert

Machine Status	Electrical supply disconnecting device in position O (OFF) Main air valve OFF Main steam valve ON Main water valve OFF
SPC Reference	2864023-0200

a) Drain the water from the circuit by disconnecting the hose (1) in the final folder (2). Approximately one litre of water must be discarded.

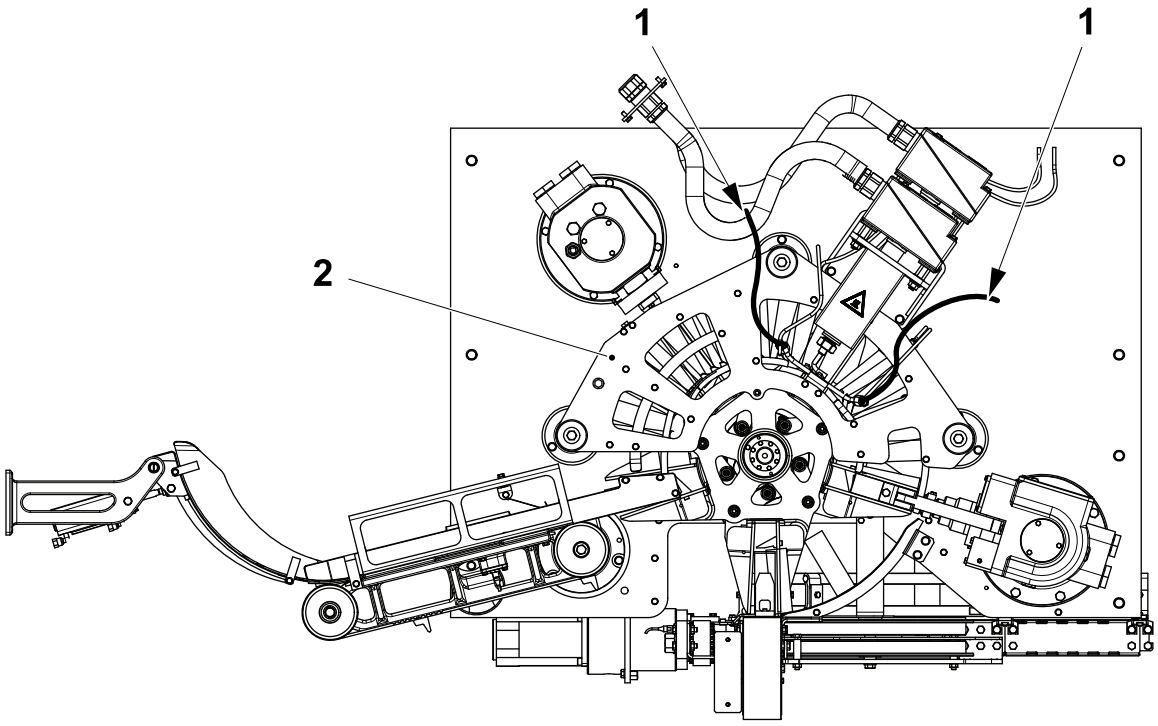

1 Hose
2 Final folder

(Cont'd)

(Cont'd)

CAUTION
Risk of damage to the equipment.
Do not use tools to remove the filter housing (3). Tighten or loosen the filter housing (3) by hand to avoid damaging the equipment.

b) Loosen by hand the filter housing (3) and remove the filter insert (4). Clean the filter insert with compressed air or change if necessary.

c) Check the O-ring (5) for damage. Change if necessary.

d) Fit back the filter insert (4), the O-ring (5) and tighten by hand the filter housing (3).

e) Fill the cooling water system, see 6.1-2 Cooling Water System - Fill .

Note! Check during PRODUCTION that there are no leaks.

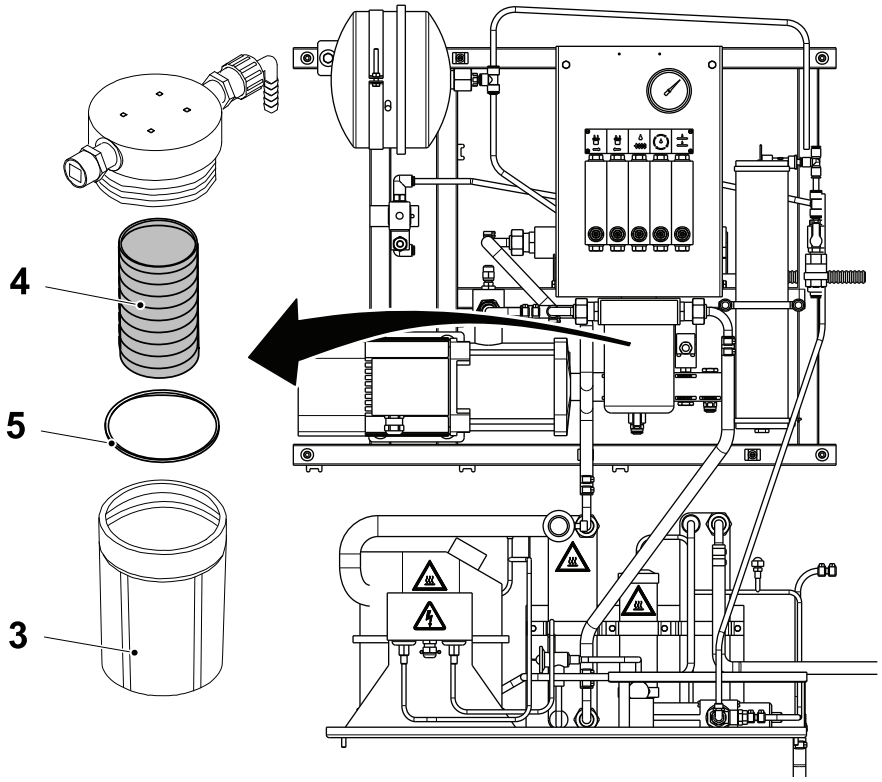

3 Filter housing
4 Filter insert
5 O-ring

6.2 Cleaning System

6.2-1 Cleaning System - Check Connections

Machine Status	Electrical supply disconnecting device in position O (OFF) Main air valve ON Main steam valve ON Main water valve OFF
SPC Reference	2864025-0200

Check:

- for leakages in the pipe connections, see arrows. Change the seals if necessary
- for leakages in the cleaning pump connections, see arrows. Change the seals if necessary.

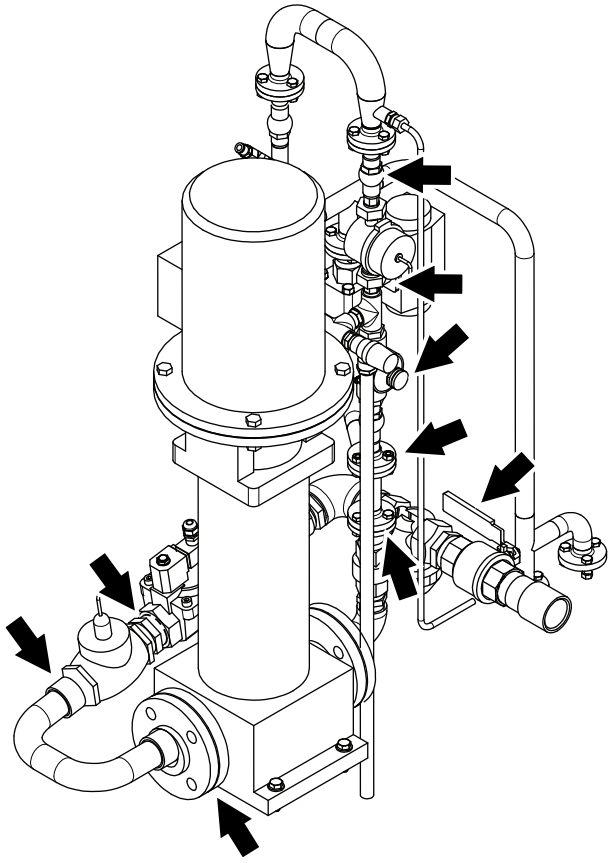

6.2-2 Cleaning System - Set Pressures

Machine Status	Electrical supply disconnecting device in position O (OFF) Main air valve OFF Main steam valve ON Main water valve OFF
SPC Reference	2864025-0200

Cleaning Pressure

Step up the machine to EXTERNAL CLEANING.

Check the pressure gauge (1) and set the cleaning pressure by means of the adjustment screw (2) on the pressure regulator (3), see 9.1 Technical Data.

Foam Pressure

Set the foam pressure by means of the pressure regulator (4), see 9.1 Technical Data.

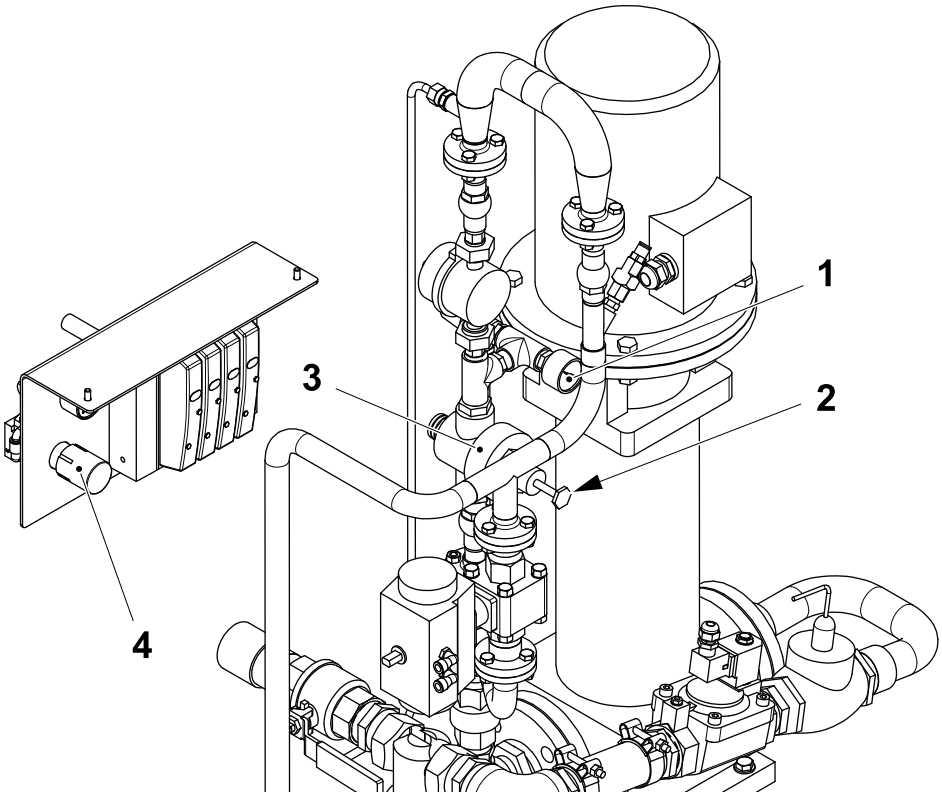

1 Pressure gauge
2 Adjustment screw
3 Pressure regulator
4 Pressure regulator

6.2.1 Pipe

6.2.1-1 Pipe - Change Filter

Machine Status	Electrical supply disconnecting device in position O (OFF) Main air valve OFF Main steam valve ON Main water valve OFF
SPC Reference	2868114-0200

a) Close the valve (1).

b) Remove the filter housing (2) and pull out the filter insert (3). Clean or change the filter insert.

c) Check the O-ring (4) for damage. Change if necessary.

d) Install the filter insert (3), the O-ring (4) and the filter housing (2).

e) Open the valve (1).

f) Make sure during PRODUCTION that there are no leaks at the filter housing (2).

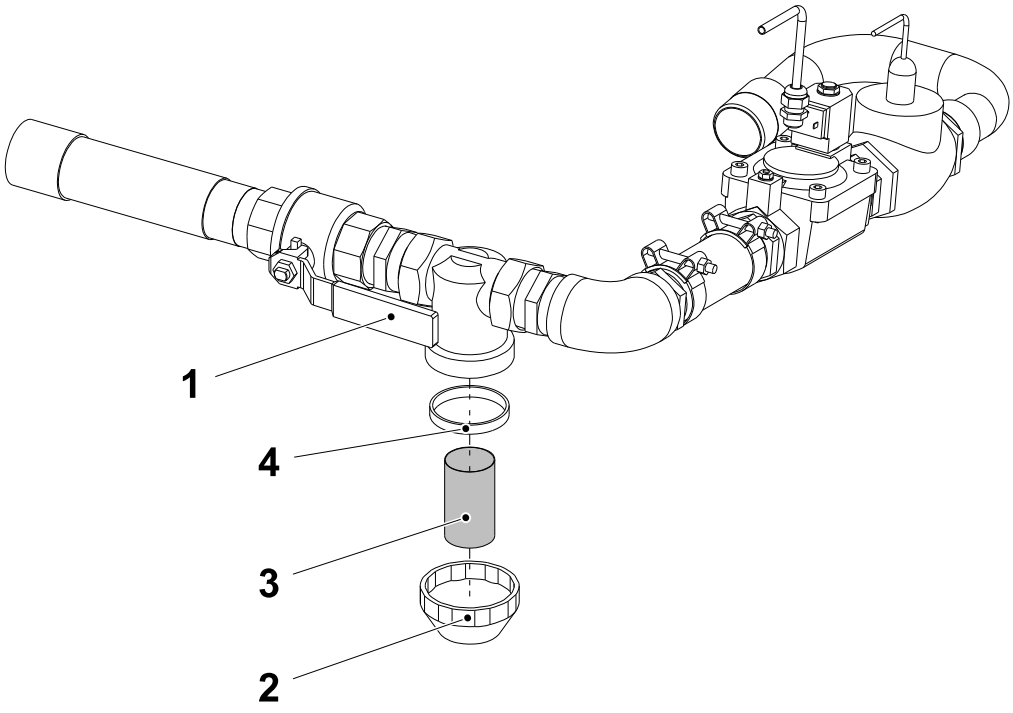

1 Valve
2 Filter housing
3 Filter insert
4 O-ring

6.2.2 Cleaning Pump

6.2.2-1 Cleaning Pump - Change Gaskets

Machine Status	Electrical supply disconnecting device in position O (OFF) Main air valve OFF Main steam valve ON Main water valve OFF
SPC Reference	2868113-0100

a) Remove the screws (1) and the pipe (2).

b) Change the gaskets (3).

c) Fit the pipe (2) by means of the screws (1).

d) Remove the screws (4) and the pipe (5).

e) Change the gaskets (6).

f) Fit the pipe (5) by means of the screws (4).

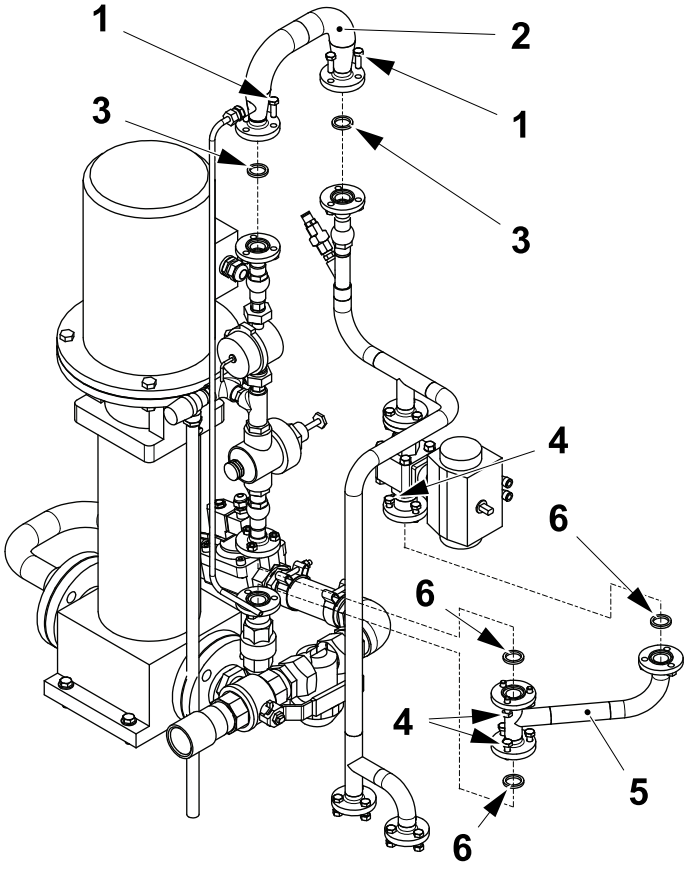

1 Screw
2 Pipe
3 Gasket
4 Screw
5 Pipe
6 Gasket

6.3 Water Panel

6.3-1 Water Panel - Check Pressure Switch

Machine Status	Electrical supply disconnecting device in position I (ON) Main air valve ON Main steam valve ON Main water valve ON
SPC Reference	2864022-0300

a) Slowly close the valve (1) on the open line and make sure that the WATER SUPPLY alarm on the TPOP display comes ON when the pressure gauge (2) drops below 2 bar.

b) If not, change the pressure switch (3).

c) Open the valve (1).

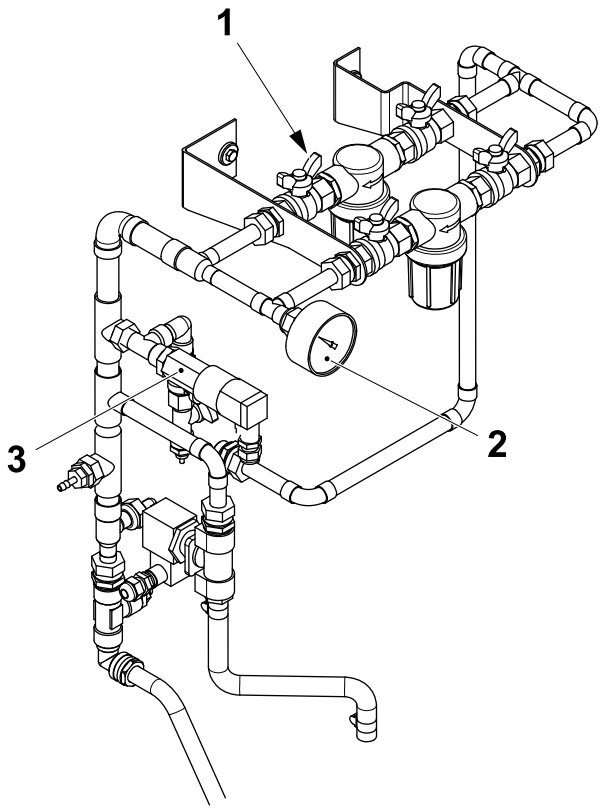

1 Valve
2 Pressure gauge
3 Pressure switch

6.3-2 Water Panel - Clean Filters

Machine Status	Electrical supply disconnecting device in position O (OFF) Main air valve OFF Main steam valve ON Main water valve OFF
SPC Reference	2864022-0300

Cold Water

a) Close the four cold water supply valves (1).

b) Remove the filter housings (2) and pull out the filter insert (3). Clean the filter insert with compressed air or change if necessary.

c) Check the O-ring (4) for damage. Change if necessary.

d) Install the filter insert (3), the O-ring (4) and the filter housings (2).

e) Repeat items b) to d) on the other filter.

f) Open both water supply valves on one filtering line.

g) Make sure that during PRODUCTION there are no leaks from the filter housings (2).

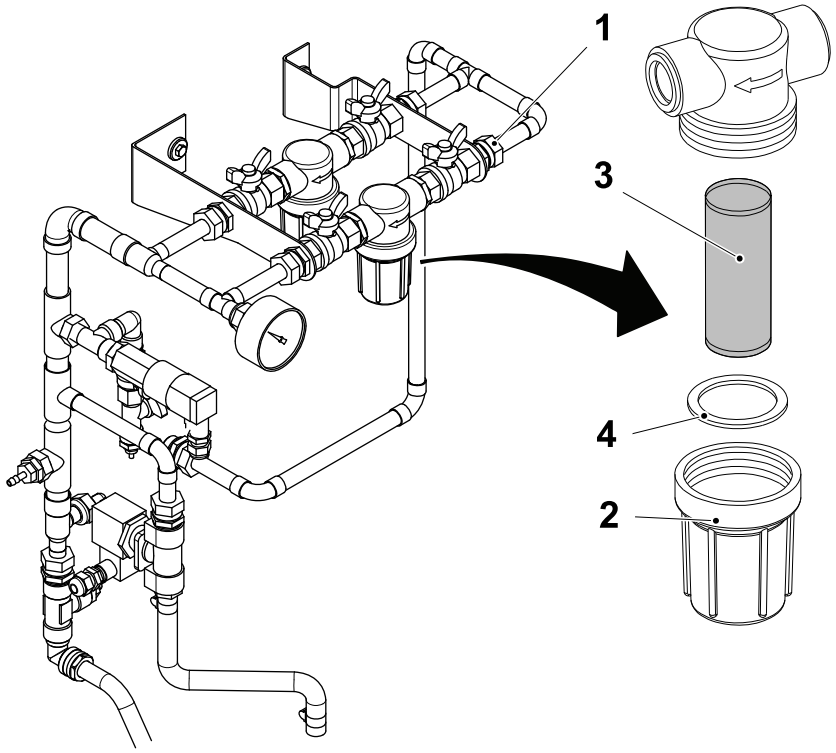

1 Valve
2 Filter housing
3 Filter insert
4 O-ring

(Cont'd)

(Cont'd)

During PRODUCTION

Note! During PRODUCTION only one filtering line should be open at any time.

Clean the filter insert on the closed line. Then open both valves on the closed line, close both valves on the other line and clean the other filter insert.

6.4 Supply System

6.4.1 Air Panel

6.4.1-1 Air Panel - Check

Machine Status	Electrical supply disconnecting device in position I (ON) Main air valve ON Main steam valve ON Main water valve OFF
SPC Reference	2846102-0200

a) Make sure that there are no leaks at the air panel.

(Cont'd)

(Cont'd)

b) Record the pressure on the air pressure gauge (4).

c) Lower the pressure to 5.5 bar using the pressure regulator (2) and make sure that the air supply alarm starts to flash on the TPOP. If not, set the pressure switch (1), see 6.4.1-3 Air Panel - Set Pressure Switch

d) Set the pressure to the previously recorded value.

e) Close the shut-off valve (3) and make sure that the pressure gauge (4) indicates zero. If not change the shut-off valve (3) or the pressure gauge (4).

f) Open the shut-off valve (3).

g) Check the filter insert (5). If the pressure is too low, clean or change it, see 6.4.1-4 Air Panel - Clean Filter Insert.

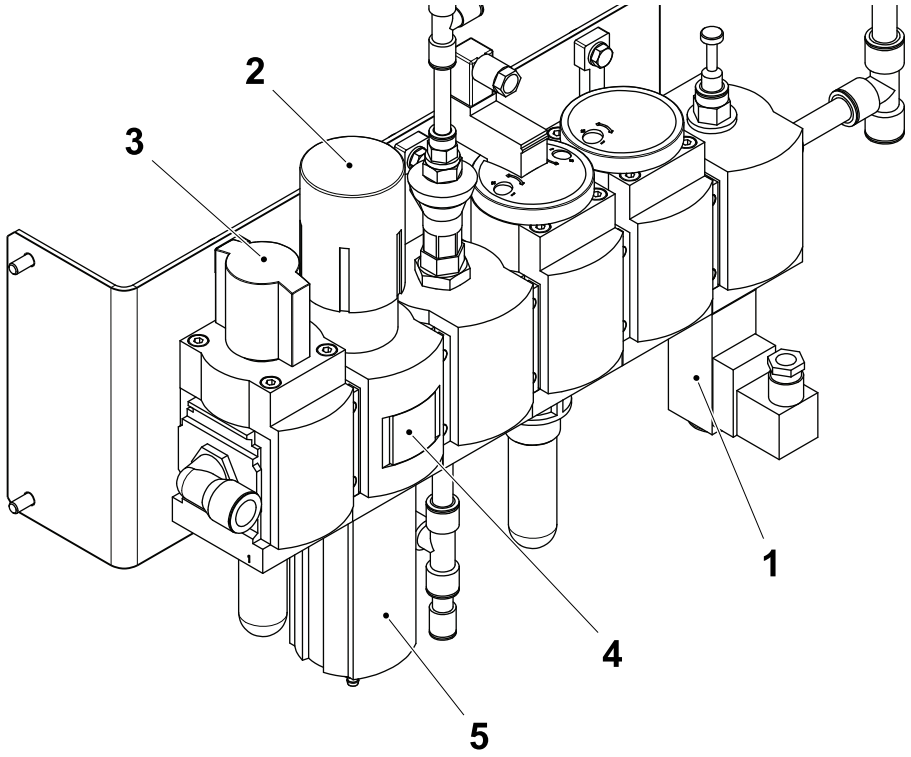

1 Pressure switch
2 Pressure regulator
3 Shut-off valve
4 Pressure gauge
5 Filter insert

6.4.1-2 Air Panel - Set Pressure

Machine Status	Electrical supply disconnecting device in position I (ON) Main air valve ON Main steam valve ON Main water valve OFF
SPC Reference	2846102-0200

Set the pressure regulator (1) so that the air pressure gauge (2) shows the correct pressure as stated in 9.1 Technical Data.

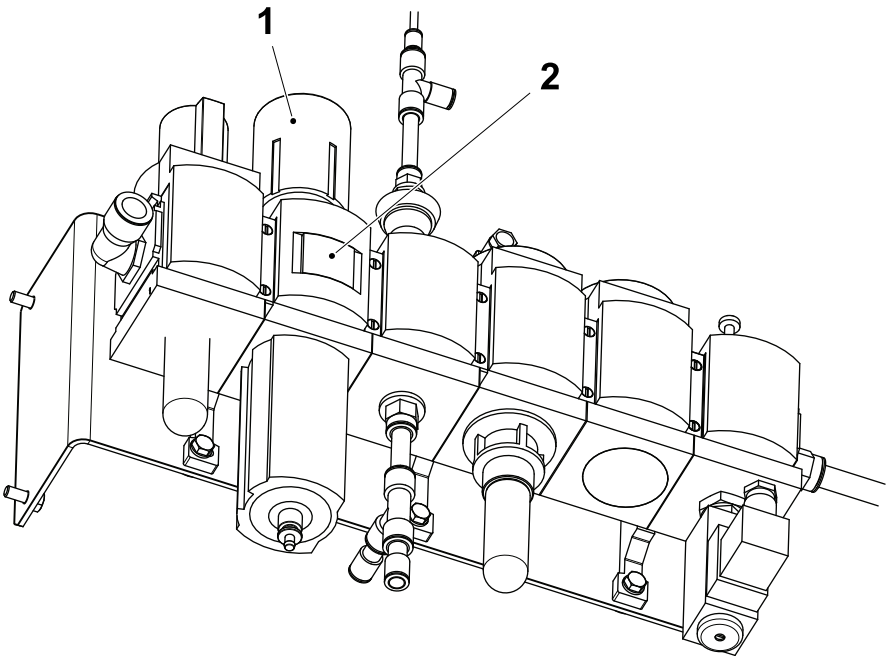

1 Pressure regulator
2 Air pressure gauge

6.4.1-3 Air Panel - Set Pressure Switch

Machine Status	Electrical supply disconnecting device in position I (ON) Main air valve ON Main steam valve ON Main water valve OFF
SPC Reference	2846102-0200

a) Turn the adjuster screw (3) on the top of the pressure switch (4) fully anti-clockwise.

b) Use the pressure regulator (1) to set the main input air pressure so that **5.5** bar is shown on the air pressure gauge (2).

c) Slowly turn the adjuster screw (3) clockwise until the filling machine main air supply alarm starts flashing on the TPOP display.

d) Use the pressure regulator (1) to reset the main input air pressure so that the air pressure gauge (2) shows the air pressure according to 9.1 Technical Data.

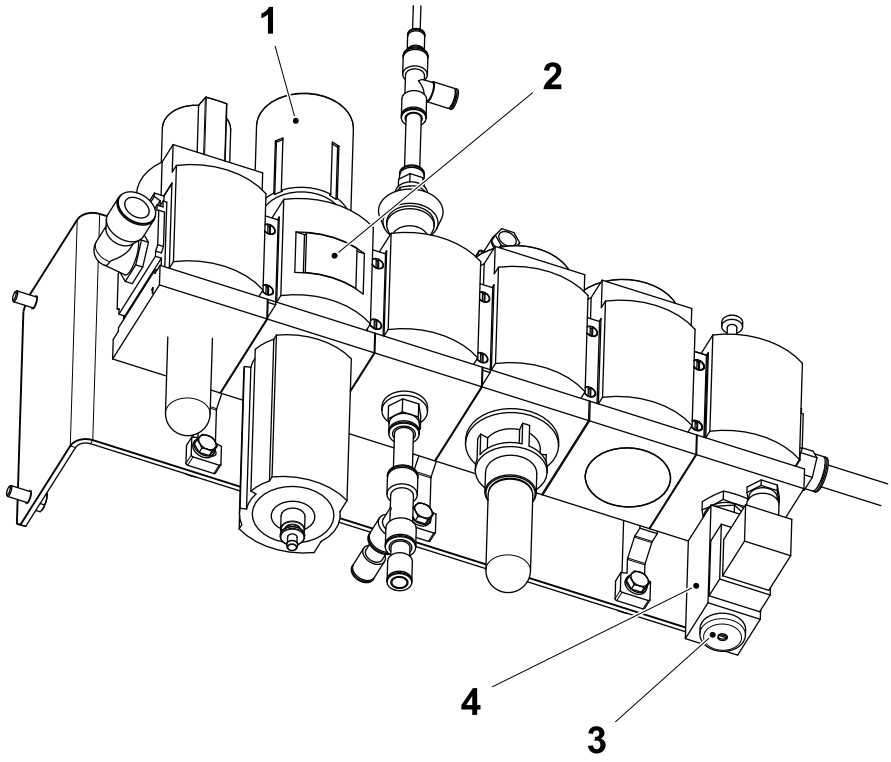

1 Pressure regulator
2 Air pressure gauge
3 Adjuster screw
4 Pressure switch

6.4.1-4 Air Panel - Clean Filter Insert

Machine Status	Electrical supply disconnecting device in position I (ON) Main air valve ON Main steam valve ON Main water valve OFF
Consumables	Soap
SPC Reference	2846102-0200

a) Turn off the main air supply using the shut-off valve (1).

b) Remove the reservoir (2) and change the O-ring if necessary.

c) Clean the reservoir (2) with soapy water and rinse with plenty of clean water.

d) Remove and clean the filter insert inside the reservoir (2). Change if necessary.

e) Install the reservoir and make sure that the O-ring is correctly fitted.

f) Open the air inlet valve and make sure there are no leaks from the reservoir.

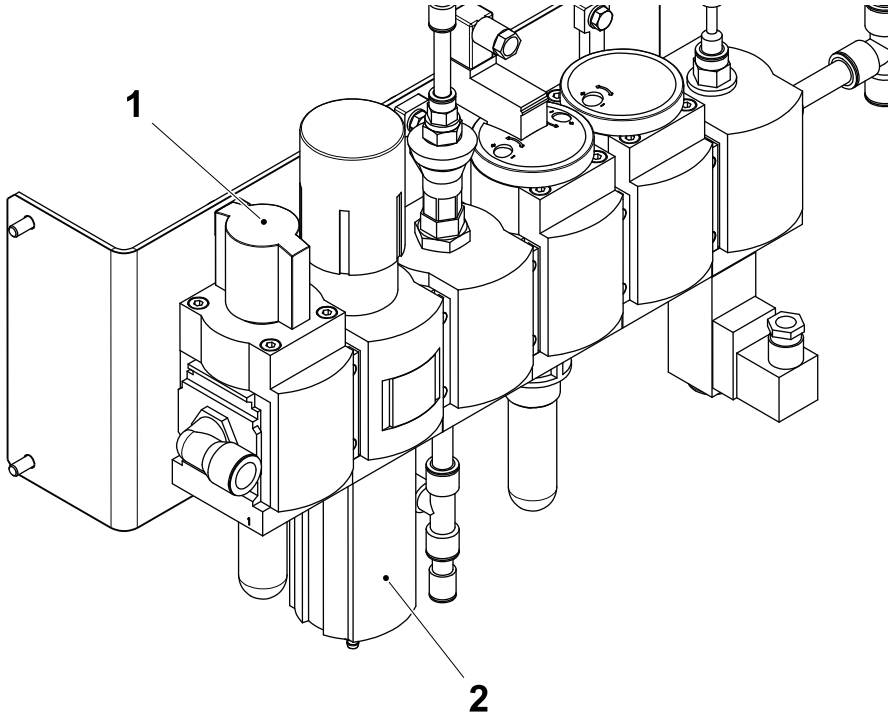

1 Shut-off valve
2 Reservoir

7 Automatic Splicing Unit

Automatic Splicing Unit - Description

Note! The instructions that are valid only for ASU iLine XT version (OE) are in the section 7.12 Automatic Splicing Unit LGV

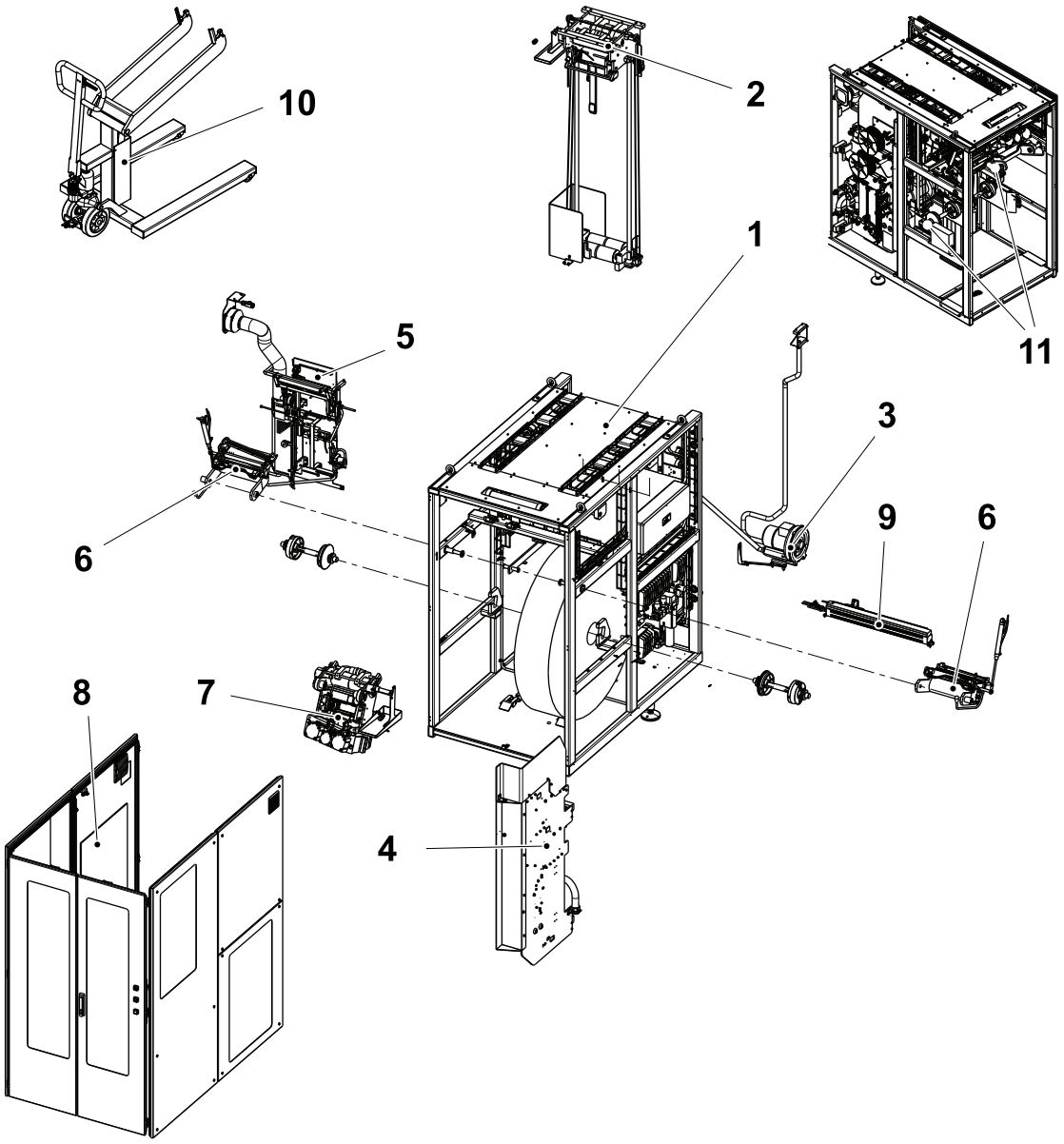

1 Machine Body
2 Paper Magazine
3 Fan System
4 Strip Magazine
5 Strip Applicator
6 Material Holder
7 Splicing Device
8 Covering Panel
9 Side Feeder
10 Reel Trolley
11 Automatic Splicing Unit LGV

Automatic Splicing Unit - Description 7-2

7.1 ASU 7-9

7.1-1 ASU - Setting Sequence 7-9

7.1-2 ASU - Check Function 7-10

7.2 Machine Body 7-16

7.2-1 Machine Body - Check Bearing Blocks 7-16

7.2-2 Machine Body - Change Bearing Blocks 7-17

7.2-3 Machine Body - Check Bending Roller 7-18

7.2-4 Machine Body - Overhaul Bending Roller 7-19

7.2-5 Machine Body - Set Photocell Position 7-21

7.2-6 Machine Body - Set Photocell Sensitivity 7-23

7.2.1 Pneumatic Panel 7-26

7.2.1-1 Pneumatic Panel - Set Pressure 7-26

7.2.1-2 Pneumatic Panel - Check Filters 7-29

7.2.1-3 Pneumatic Panel - Set Safety Valve 7-30

7.3 Paper Magazine 7-33

7.3-1 Paper Magazine - Change Roller Bearings 7-33

7.3-2 Paper Magazine - Check 7-35

7.3-3 Paper Magazine - Change Bearings 7-36

7.3-4 Paper Magazine - Set 7-37

7.3-5 Paper Magazine - Change Ropes 7-38

7.3.1 Web Guide 7-40

7.3.1-1 Web Guide - Check 7-40

7.3.1-2 Web Guide - Change 7-41

7.3.1-3 Web Guide - Set Position 7-42

7.3.2 Counter Roller 7-44

7.3.2-1 Counter Roller - Check 7-44

7.3.2-2 Counter Roller - Change Bearings 7-46

7.3.2-3 Counter Roller - Set 7-53

7.4 Fan System 7-56

7.4-1 Fan System - Check Air Pressure 7-56

7.4-2 Fan System - Change Fan 7-57

7.5 Strip Magazine 7-58

7.5-1 Strip Magazine - Check Rotation Monitor 7-58
7.5-2 Strip Magazine - Check Rollers 7-59
7.5-3 Strip Magazine - Set Sensor and Spring 7-60
7.5-4 Strip Magazine - Set Position 7-61

7.5.1 Heating Device 7-62

7.5.1-1 Heating Device - Check 7-62
7.5.1-2 Heating Device - Set Position 7-64
7.5.1-3 Heating Device - Change Plunger 7-67

7.5.2 Bobbin Holder 7-68

7.5.2-1 Bobbin Holder- Set Spring Loaded Screw 7-68

7.5.3 Brake Arm 7-69

7.5.3-1 Brake Arm - Set 7-69
7.5.3-2 Brake Arm - Check Function 7-70

7.5.4 Cutting Table 7-71

7.5.4-1 Cutting Table - Check 7-71
7.5.4-2 Cutting Table - Change Pads and Finger 7-72
7.5.4-3 Cutting Table - Set 7-74

7.6 Strip Applicator 7-75

7.6-1 Strip Applicator - Set 7-75

7.6.1 Short Stop Element 7-79

7.6.1-1 Short Stop Element - Check Function 7-79
7.6.1-2 Short Stop Element - Check Rollers 7-81
7.6.1-3 Short Stop Element - Change Rollers 7-83
7.6.1-4 Short Stop Element - Change Bushings 7-84
7.6.1-5 Short Stop Element - Check Air Nozzle 7-86
7.6.1-6 Short Stop Element - Change Air Nozzle Bushing 7-87
7.6.1-7 Short Stop Element - Set 7-89

7.6.2 Strip Guide 7-95

7.6.2-1 Strip Guide - Check 7-95
7.6.2-2 Strip Guide - Set 7-97

7.6.2-3 Strip Guide - Change Guide Wheel Ball Bearing 7-100

7.6.3 Air Nozzle 7-101

7.6.3-1 Air Nozzle - Check. 7-101

7.6.3-2 Air Nozzle - Change Nozzle 7-103

7.6.3-3 Air Nozzle - Change Linear Control Unit 7-105

7.6.3-4 Air Nozzle - Set 7-107

7.6.4 Hot Air Element SS. 7-117

7.6.4-1 Hot Air Element SS - Change. 7-117

7.6.5 Hot Air Element. 7-120

7.6.5-1 Hot Air Element - Change 7-120

7.7 Material Holder 7-121

7.7-1 Material Holder - Check 7-121

7.7-2 Material Holder - Cutting Table Overhaul 7-123

7.7-4 Material Holder - Set Cutting Table. 7-124

7.7-5 Material Holder - Overhaul 7-130

7.7-6 Material Holder - Set Alignment. 7-131

7.7-7 Material Holder - Check Proximity Switch 7-136

7.7-8 Material Holder - Set Proximity Switch. 7-138

7.7-9 Material Holder - Set Speed 7-139

7.8 Splicing Device. 7-141

7.8-1 Splicing Device - Check Drive Unit 7-141

7.8-2 Splicing Device - Drive Unit Overhaul 7-142

7.8-3 Splicing Device - Change Photocell 7-145

7.8-4 Splicing Device - Set Photocell Position 7-146

7.8-5 Splicing Device - Set Photocell Sensitivity 7-148

7.8-6 Splicing Device - Set Photocell Alignment 7-148

7.8-7 Splicing Device - Set Mechanical Stop 7-150

7.8-8 Splicing Device - Check Shock Absorbers 7-153

7.8.1 Web Guide 7-154

7.8.1-1 Web Guide - Check. 7-154

7.8.1-2 Web Guide - Change Rollers And Bearings 7-155
7.8.1-3 Web Guide - Set 7-156

7.8.2 Paper Guide 7-158
7.8.2-1 Paper Guide - Check 7-158
7.8.2-2 Paper Guide - Change Rollers and Bearings 7-159

7.8.3 Pressure Jaw 7-160
7.8.3-1 Pressure Jaw - Check Knife 7-160
7.8.3-2 Pressure Jaw - Change Dolly 7-162
7.8.3-3 Pressure Jaw - Change Knife 7-166
7.8.3-4 Pressure Jaw - Change Cylinders 7-169

7.8.4 Heating Unit 7-174
7.8.4-1 Heating Unit - Check Constant Heat Device 7-174
7.8.4-2 Heating Unit - Change Constant Heat Device 7-176
7.8.4-3 Heating Unit - Set Constant Heat Device 7-179

7.8.5 Counter Roller 7-181
7.8.5-1 Counter Roller - Check 7-181
7.8.5-2 Counter Roller - Overhaul 7-183
7.8.5-3 Counter Roller - Set Cylinder 7-189

7.9 Covering Panel 7-192
7.9-1 Covering Panel - Check 7-192
7.9-2 Covering Panel - Set Safety Switch 7-194

7.10 Side Feeder 7-195
7.10-1 Side Feeder - Change 7-195
7.10-2 Side Feeder - Set Sensor Position 7-198
7.10-3 Side Feeder - Set Cylinder 7-200

7.11 Paper Trolley 7-201
7.11-1 Paper Trolley - Check 7-201
7.11-2 Paper Trolley - Change Pump Cylinder 7-204
7.11-3 Paper Trolley - Set Regulating Valve 7-209
7.11-4 Paper Trolley - Set Maximum Lift Height 7-210

7.11-5 Paper Trolley - Change Cylinder 7-211
7.11-6 Paper Trolley - Change Fork Wheel 7-213
7.11-7 Paper Trolley - Change Wheel and Brake 7-214
7.11-8 Paper Trolley - Set Brake 7-216
7.11-9 Paper Trolley - Set Lifting Arm Handle. 7-217
7.11-10 Paper Trolley - Check Oil Level 7-218

7.12 Automatic Splicing Unit LGV 7-219

7.12.1 Machine Body 7-219

7.12.1-1 Machine Body - Check Reel Holder 7-219
7.12.1-2 Machine Body - Change Reel Holder. 7-220
7.12.1-3 Machine Body - Set Cylinder Reel Holder 7-221
7.12.1-4 Machine Body - Check Safety Mat 7-224

7.12.2 Covering Panel 7-226

7.12.2-1 Covering Panel - Set Pneumatic Cylinder 7-226
7.12.2-2 Pneumatic Cylinder - Set Sensors 7-227

7.12.3 Material Holder (iLine XT Semi-automatic Version - OE). 7-228

7.12.3-1 Material Holder - Check 7-228
7.12.3-2 Material Holder - Cutting Table Overhaul 7-231
7.12.3-4 Material Holder - Set Cutting Table. 7-232
7.12.3-5 Material Holder - Overhaul 7-238
7.12.3-6 Material Holder - Set Alignment. 7-239
7.12.3-7 Material Holder - Check Proximity Switch 7-244
7.12.3-8 Material Holder - Set Proximity Switch. 7-246
7.12.3-9 Material Holder - Set Speed 7-247

7.12.4 Material Holder (iLine XT Automatic Version OE). 7-249

7.12.4-1 Material Holder - Set Proximity Sensor 7-249
7.12.4-2 Pneumatic Cylinder - Set Sensors 7-250

7.12.5 Sensor. 7-252

7.12.5-1 Sensor - Set 7-252

This page intentionally left blank

7.1 ASU

7.1-1 ASU - Setting Sequence

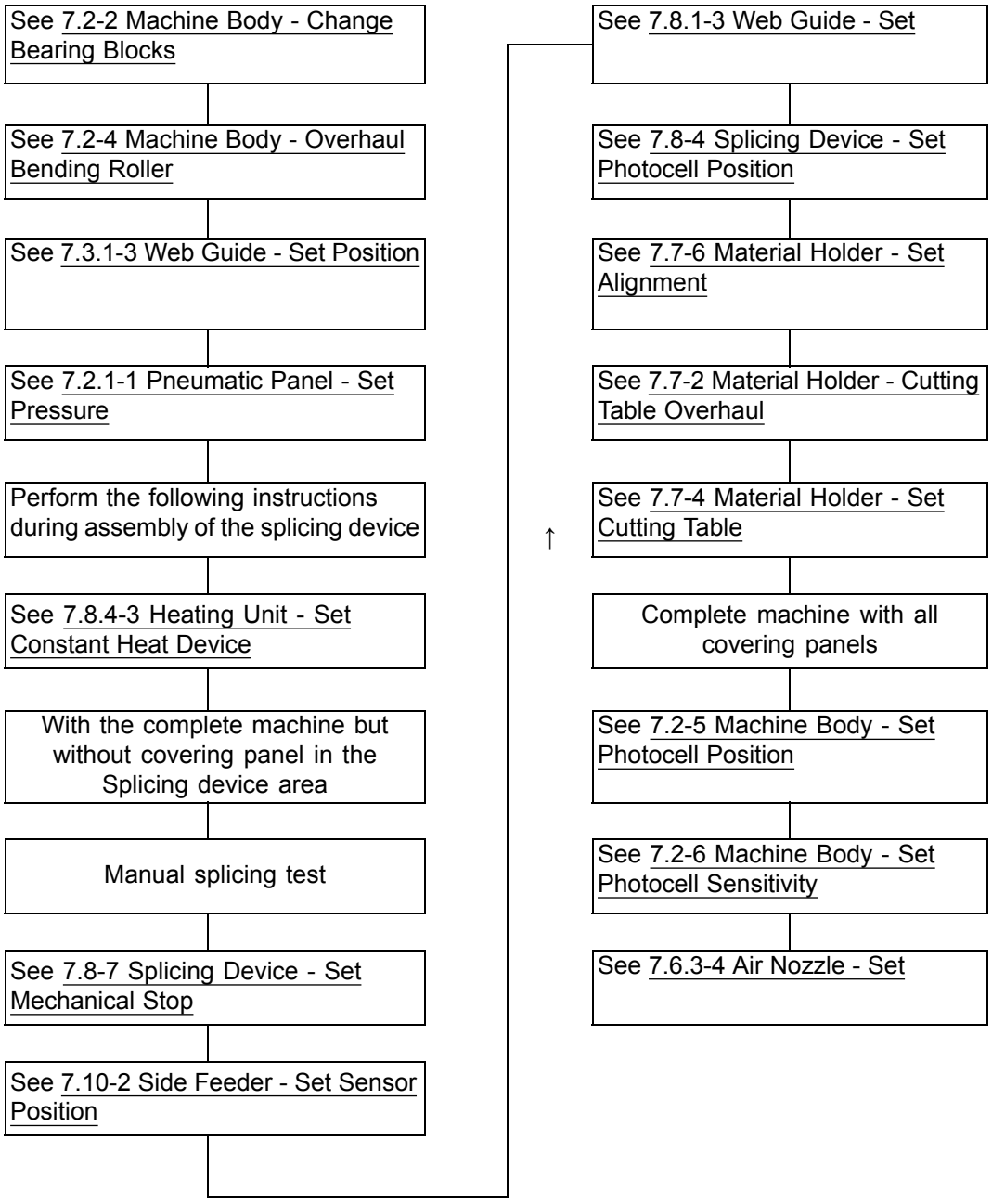

(Cont'd)

(Cont'd)

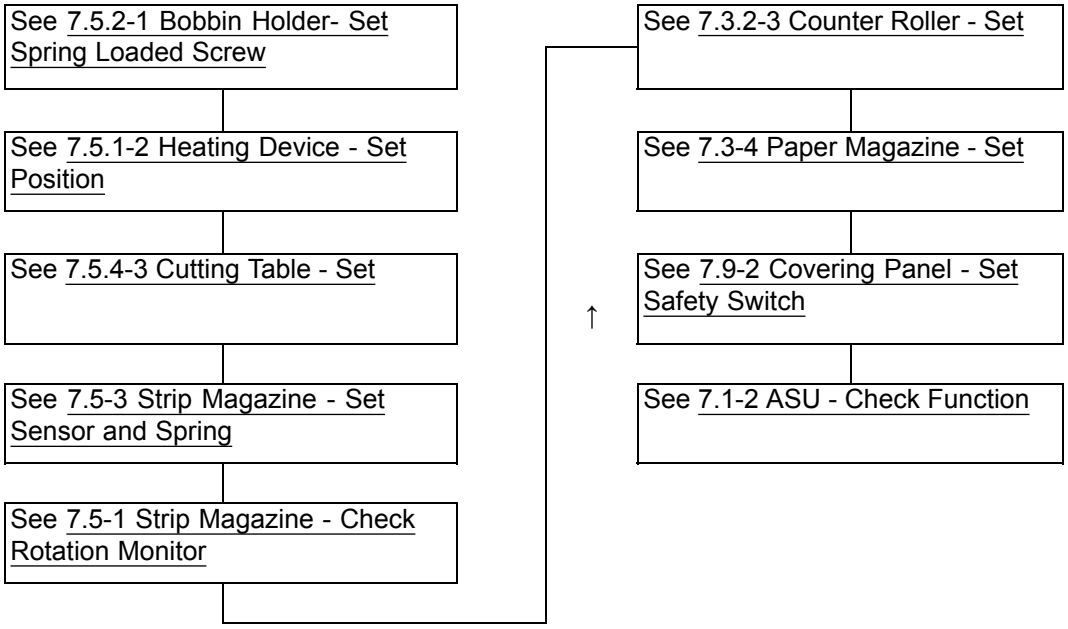

7.1-2 ASU - Check Function

Machine Status	PRODUCTION
SPC Reference	641508-0300

Note! This instruction is also valid for the semi-automatic version of the iLine XT version of the ASU. For the automatic version of the iLine XT version of the ASU is the adjustment done outside the ASU module.

a) Raise the empty material holder and thread the packaging material through the material holder. Push the MATERIAL LOCKING button and check that the packaging material is correctly locked.

b) Perform a manual splice for each reel of packaging material, and check the following:
   - Sealing alignment
   - Sealing parallelism
   - Overlap
   - Spliced package length
   - Cutting
   - Sealing.

(Cont'd)

(Cont'd)

Sideways Sealing Alignment

a) Check that the new and old pieces of packaging material on the two packages with a splice are aligned within the tolerance (distance **B**).

b) If necessary, set the sealing alignment, see 7.8.1-3 Web Guide - Set and 7.7-4 Material Holder - Set Cutting Table.

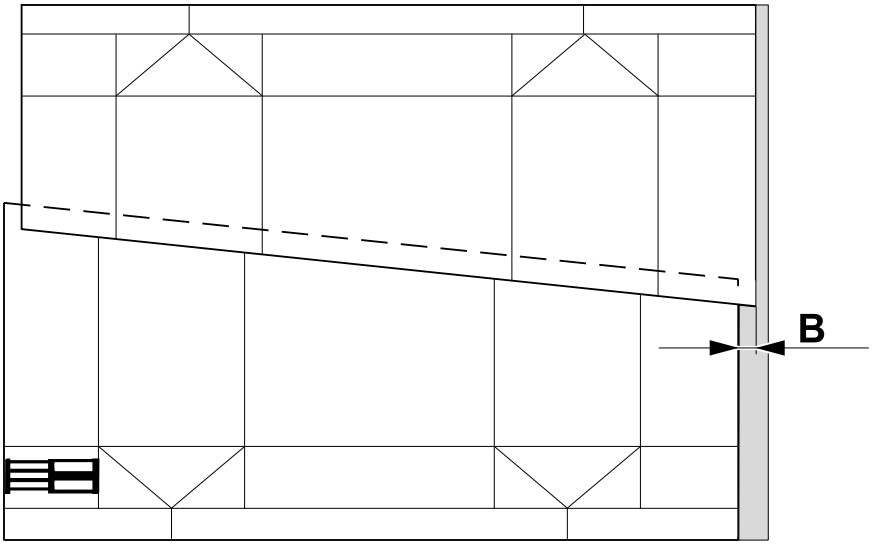

B = 0 ±0.5 mm

(Cont'd)

(Cont'd)

Sealing Parallelism

a) Check the parallelism, distance **A**, between the new and the old packaging material web.

b) With the aid of a straight edge (1) check that the new packaging material web diverges by not more than the distance **A** in 1 metre from the splice. Measure the distance **A** two times, directly after the splice and one meter from the splice. If necessary set the sealing parallelism, see 7.7-6 Material Holder - Set Alignment.

Note! The strip edge of the old packaging material web is against the straight edge (1).

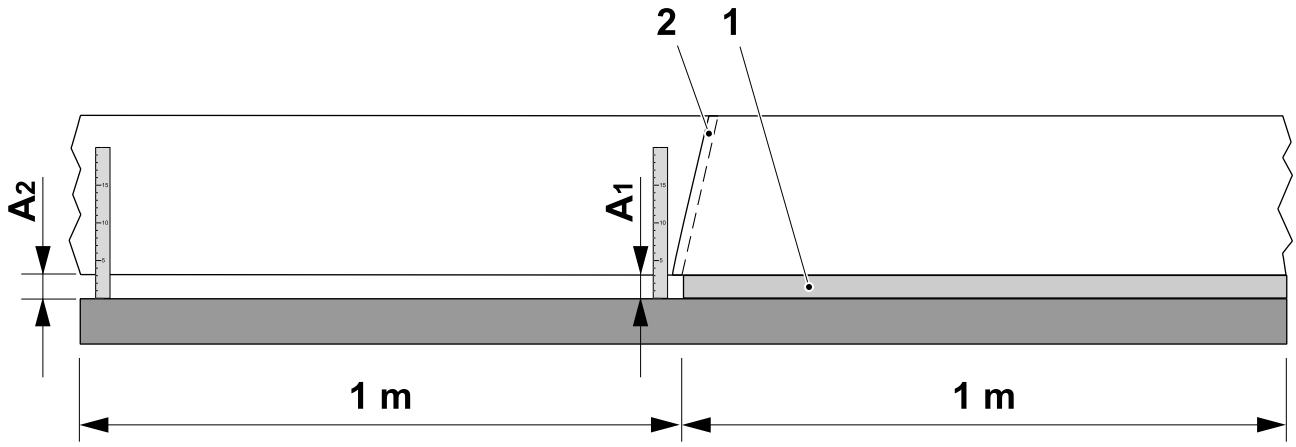

new packaging material web

old packaging material web

$A_1 - A_2 = 0 \pm 1.0$ mm

1 Edge
2 Splice

(Cont'd)

(Cont'd)

Overlap

a) Check that the overlap is correct. The over lap is the distance **C** between the edge manual cut (3) and the edge cut by the splicing device cut (4).

b) If necessary, set the material holder position. See Overlap - Fine Adjustment on page 7-135.

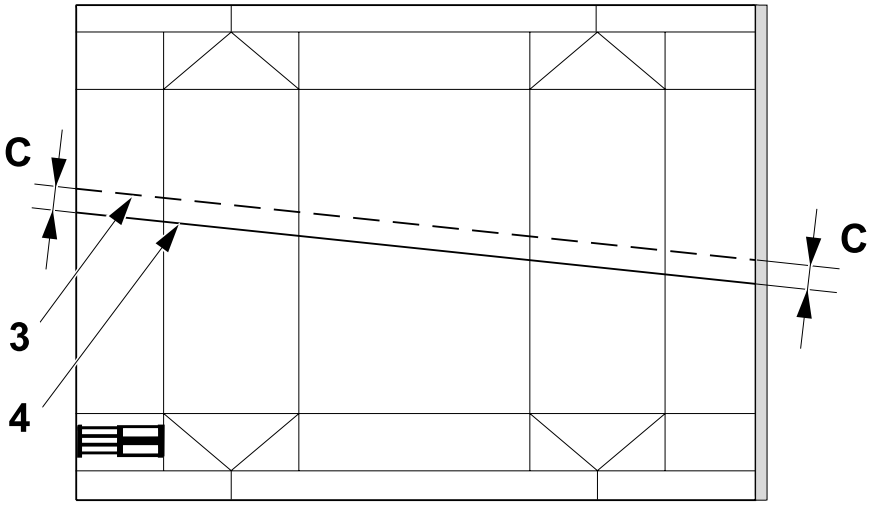

C = 16.5 ±0.5 mm
3 Manual cut
4 Splicing device cut

Spliced Package Length

a) Measure that the distance **D** between the top and the bottom creases of the package spliced by the ASU and compare it with a normal package.

b) If the distance **D** diverges by 1.5 mm from the normal package length, see the Production Control section of the Control Panels chapter in the OM.

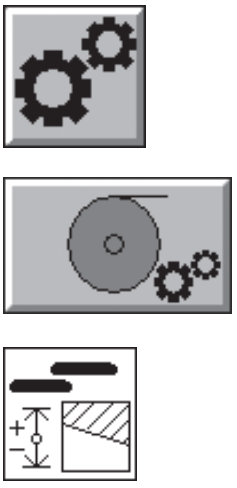

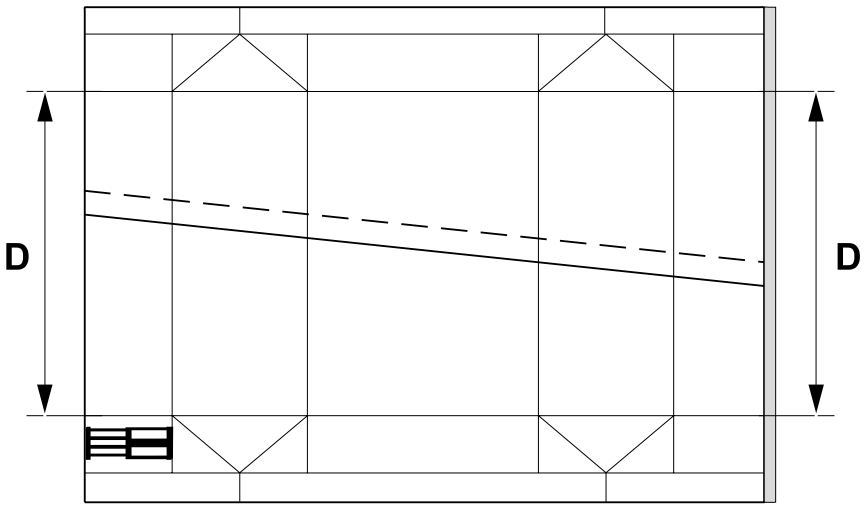

D = D ±1.5 mm

(Cont'd)

(Cont'd)

Cutting

a) Check that the manually cut paper edge is OK. If not change the material holder knife, see 7.7-2 Material Holder - Cutting Table Overhaul.

b) Check that the automatically cut paper edge is OK. If not change the splicing device knife, see 7.8.3-1 Pressure Jaw - Check Knife.

Splice

a) Pull apart and examine the splice (5).

b) The splice is acceptable if it remains intact and:
   - a delamination between the two inner coating takes place
   - a rupture takes place in the printed paper board layer.

c) The splice is defective if:
   - the splice is so weak the two plastic layers separate without rupturing.

d) If the splice is defective, check the heating device, see 7.8.4-1 Heating Unit - Check Constant Heat Device.

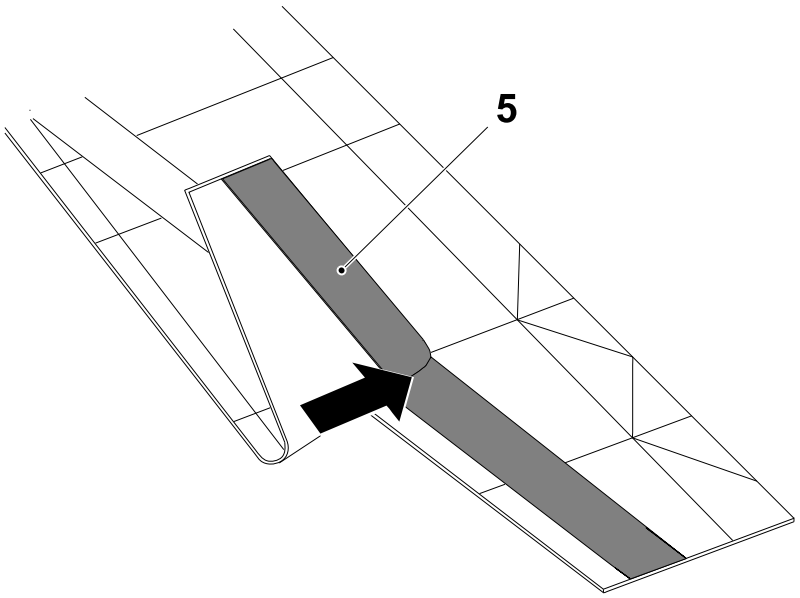

5 Splice

(Cont'd)

(Cont'd)

e) If necessary, change the current value, follow the step below:

- Touch the PRODUCTION CONTROL button (6)
- Touch the ASU button (7) to display the ASU window.
- Touch the CONSTANT HEAT BAR TEMPERATURE icon (8) and the CONSTANT HEAT BAR TEMPERATURE window (9) is displayed.
- change the CONSTANT HEAT BAR TEMPERATURE value with the ARROW buttons (10) and (11), or reset to the factory value by means of the FACTORY button (12).

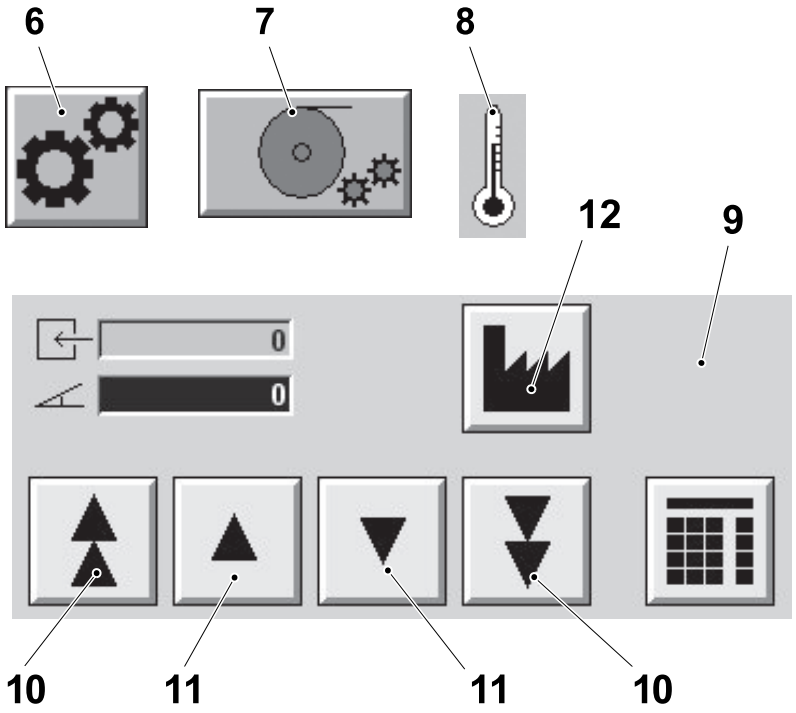

6 PRODUCTION CONTROL button
7 ASU button
8 CONSTANT HEAT BAR TEMPERATURE icon
9 CONSTANT HEAT BAR TEMPERATURE window
10 ARROW button
11 ARROW button
12 FACTORY button

7.2 Machine Body

7.2-1 Machine Body - Check Bearing Blocks

Machine Status	Main steam valve ON
SPC Reference	2844180-0300

Check if the bearing block (1) are worn or damaged.

If the distance **A** is less than the value given below, change the bearing block, see 7.2-2 Machine Body - Change Bearing Blocks on page 7-17.

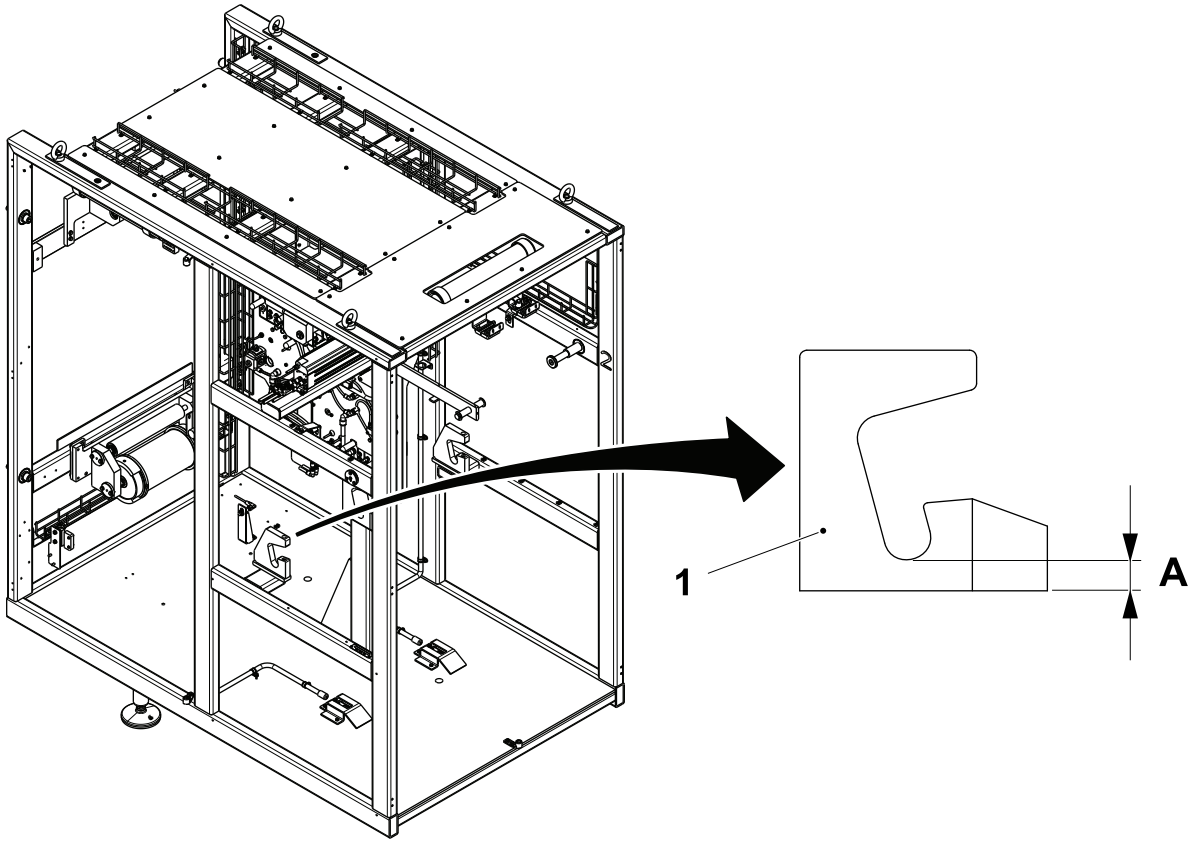

A = 17.5 ±0.2 mm

1 Bearing block

7.2-2 Machine Body - Change Bearing Blocks

Machine Status	Electrical supply disconnecting device in position O (OFF) Main air valve OFF Main steam valve ON Main water valve OFF
Special Equipment	Shim TP No. 3315653-0000
SPC Reference	2844180-0300

a) Remove the screws (1), the bearing blocks (2) and the shims (3).

Note! The shims (3) are introduced for Tetra Pak A3/CompactFlex from T-order 21220/00290.

b) Fit the new bearing blocks (2) with the same number of shims (3) and secure in position with the screws (1).

c) Check the top of the bearing blocks are level in height. Add or remove shims (3) if necessary.

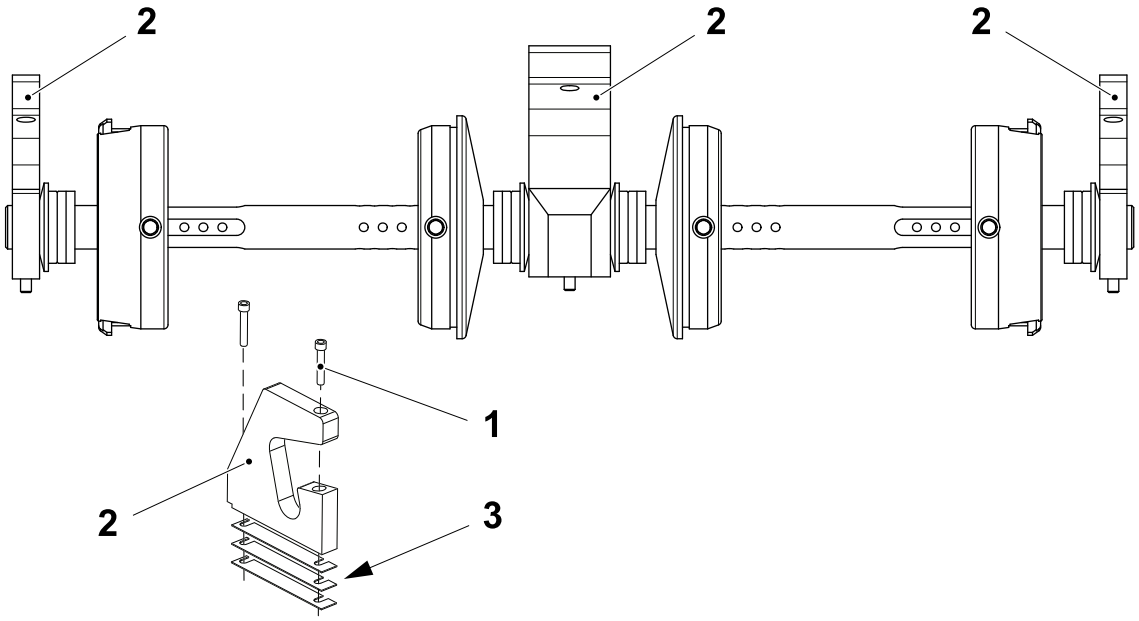

1 Screw
2 Bearing block
3 Shim

7.2-3 Machine Body - Check Bending Roller

Machine Status	Main steam valve ON
SPC Reference	2844180-0300

Check that:

- the bending roller (1) rotates freely without play
- the surface of the bending roller (1) is not worn or damaged.

If necessary, change the ball bearings and the bending roller (1), see 7.2-4 Machine Body - Overhaul Bending Roller .

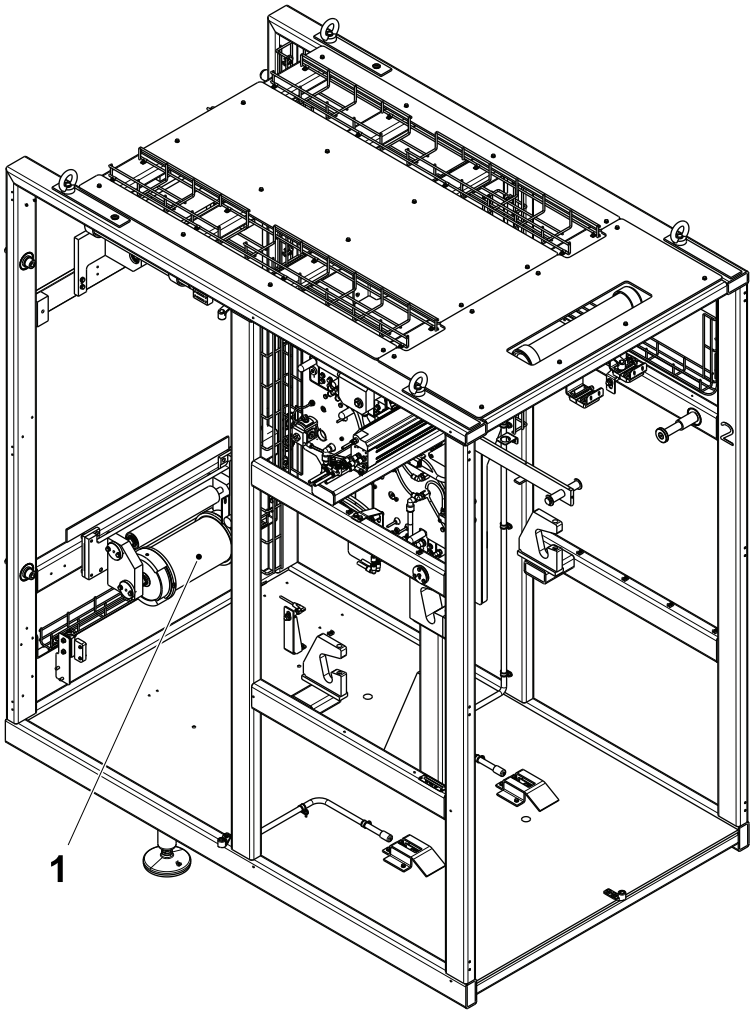

1 Bending roller

7.2-4 Machine Body - Overhaul Bending Roller

Machine Status	Electrical supply disconnecting device in position O (OFF) Main air valve OFF Main steam valve ON Main water valve OFF
SPC Reference	2844180-0300

a) Remove the grub screws (1).

b) Remove the screws (2) and the axle stopper (3).

c) Remove the roller (4).

d) Remove the retaining ring (5) and the ball bearing (6).

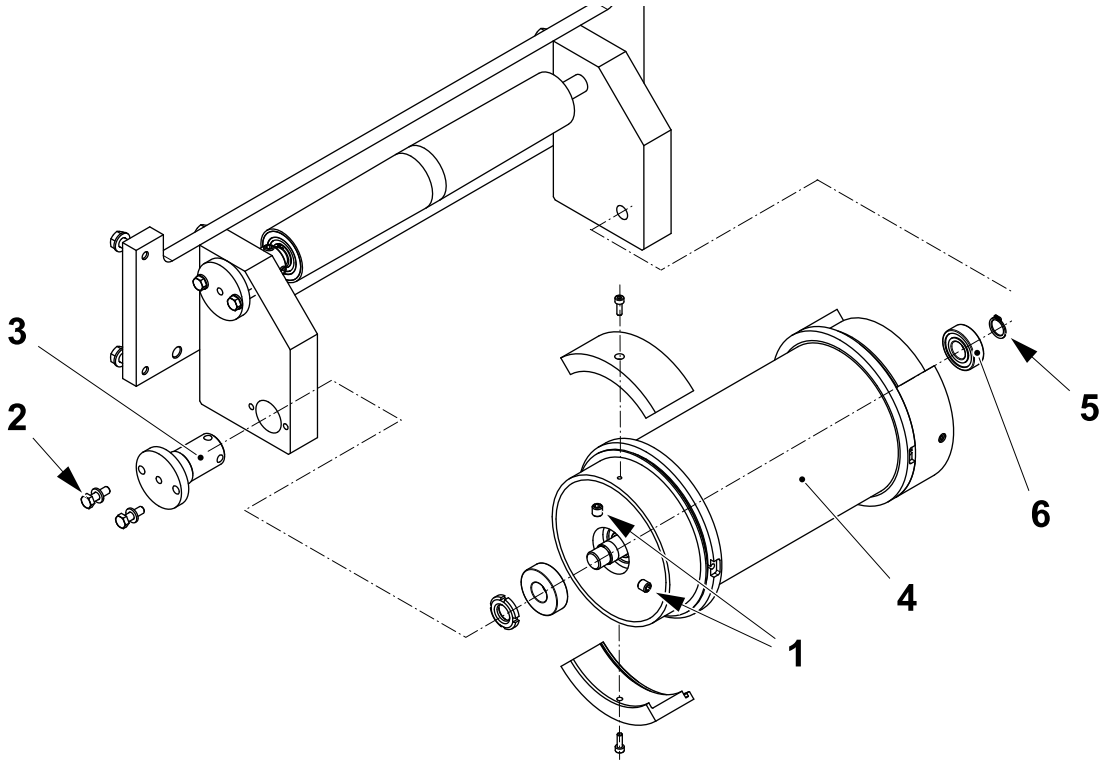

1 Grub screw
2 Screw
3 Axle stopper
4 Roller
5 Retaining ring
6 Ball bearing

(Cont'd)

(Cont'd)

e) Remove the round nut (7) and the ball bearings (8).

f) Change the roller (4) and the ball bearing (6) and ball bearings (8).

g) Remove the screws (9), the brackets (10) and change the flanges (11).

h) Assemble in the reverse order.

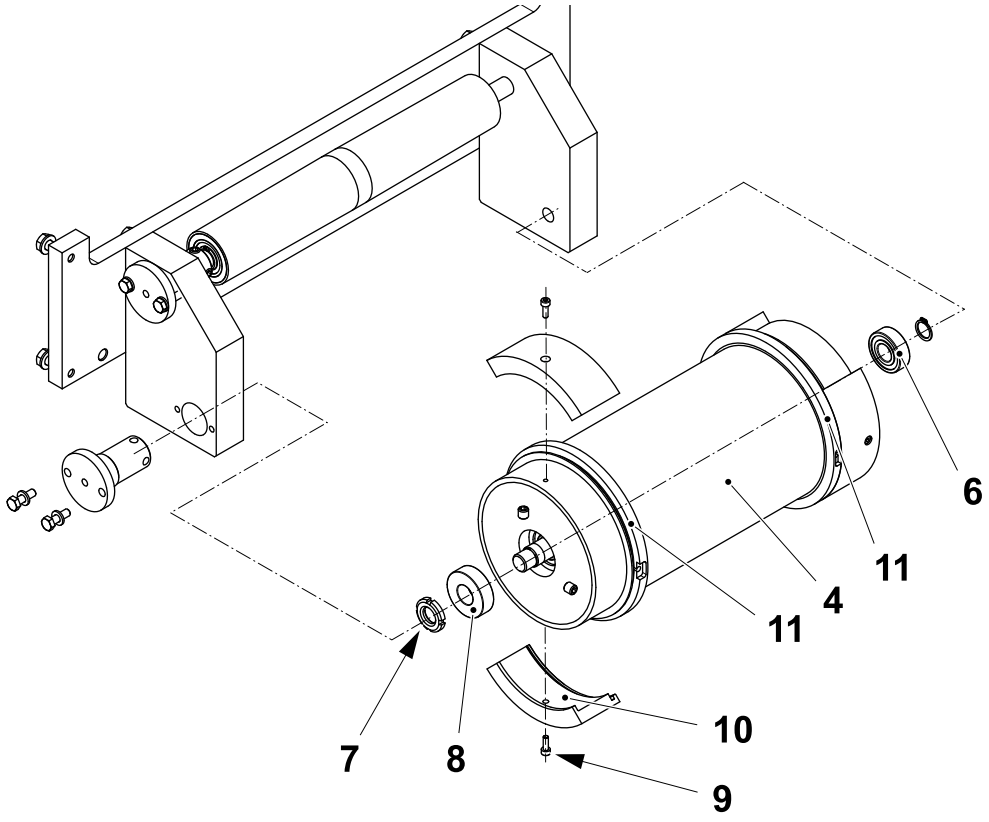

4 Roller
6 Ball bearing
7 Round nut
8 Ball bearing
9 Screw
10 Bracket
11 Flange

7.2-5 Machine Body - Set Photocell Position

Machine Status	Electrical supply disconnecting device in position I (ON) Main air valve OFF Main steam valve ON Main water valve OFF
SPC Reference	2844180-0300

Empty Loop - Full Loop Photocells

Adjust the position of the photocell (1) until it is levelled in height with the reflector (2) and the green LED (3) is lit on the photocell (1); when the packaging material loop is present, also the red LED (4) is lit.

Repeat the procedure for the photocell (5) and the reflector (6). Both the LED (3) and LED (4) must be lit on the photocell (5) when there is not any packaging material in between.

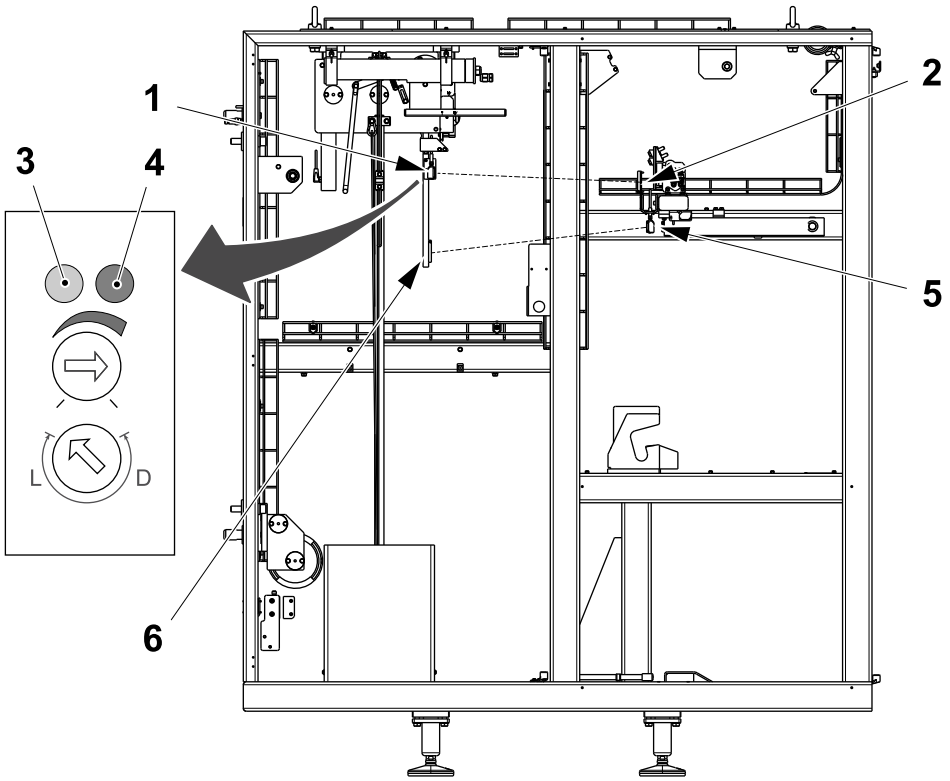

1 Photocell
2 Reflector
3 LED
4 LED
5 Photocell
6 Reflector

(Cont'd)

(Cont'd)

Empty Bobbin Reel Photocells

a) The photocell transmitter (1) and receiver (2) must be positioned opposite each other as indicated in the illustration and both the green LED (3) and red LED (4) are lit.

b) Place the packaging material reel in position between the photocells. Check that the green LED (3) goes ON and the red LED (4) is OFF.

c) Repeat the procedure for the other photocell.

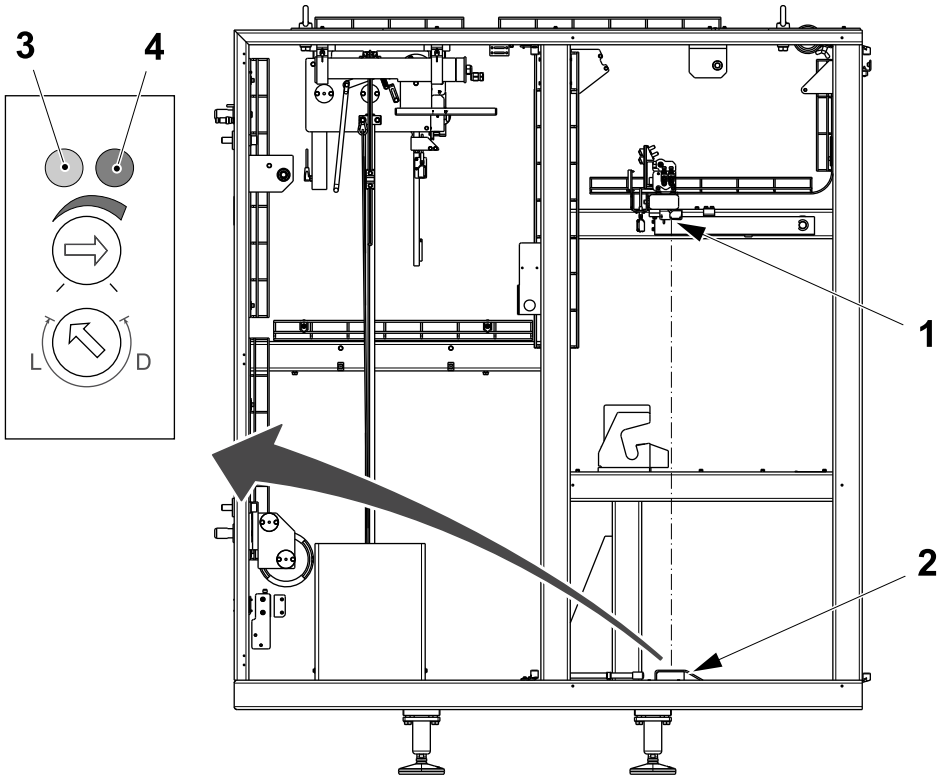

1 Transmitter
2 Receiver
3 Green LED
4 Red LED

7.2-6 Machine Body - Set Photocell Sensitivity

Machine Status	Electrical supply disconnecting device in position I (ON) Main steam valve ON
SPC Reference	2844180-0300

Set the Photocell (1) for Empty Loop Detection

Turn the switch (2) so that the arrow points to D. Turn the switch (3) so that the arrow points to the maximum of the signal intensity.

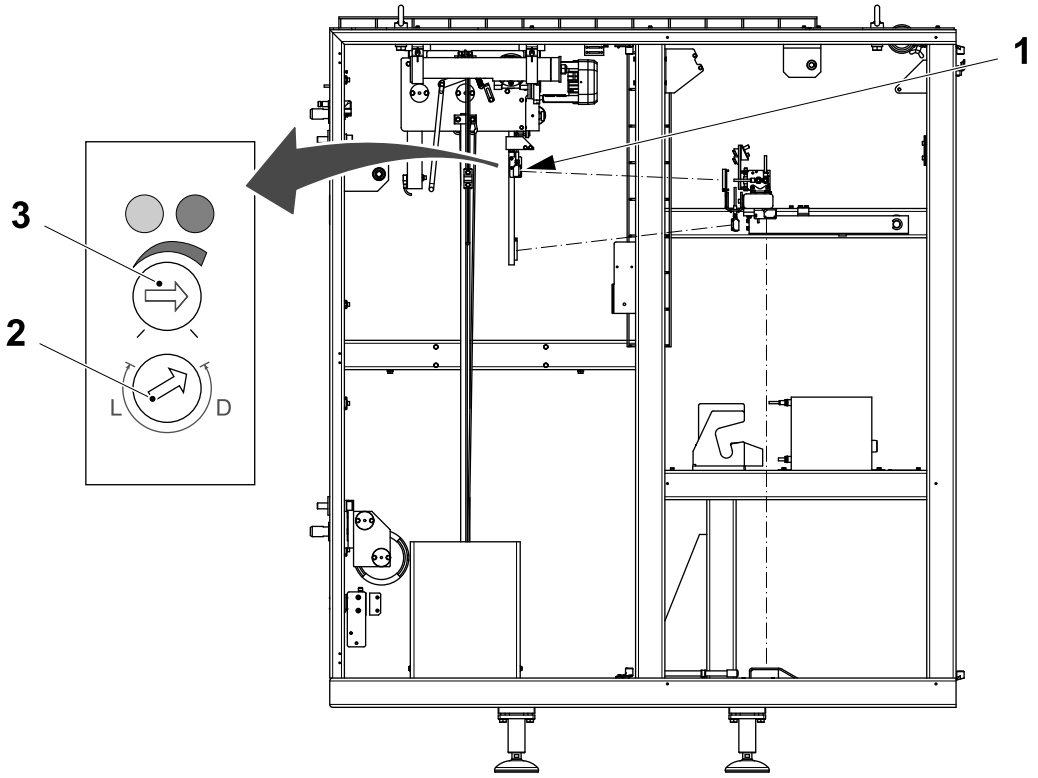

1 Photocell
2 Switch
3 Switch

(Cont'd)

(Cont'd)

Set the Photocell (4) for Empty Bobbin Reel Detection on Both Lines

Turn the switch (2) so that the arrow points to D. Turn the switch (3) so that the arrow points to the maximum of the signal intensity.

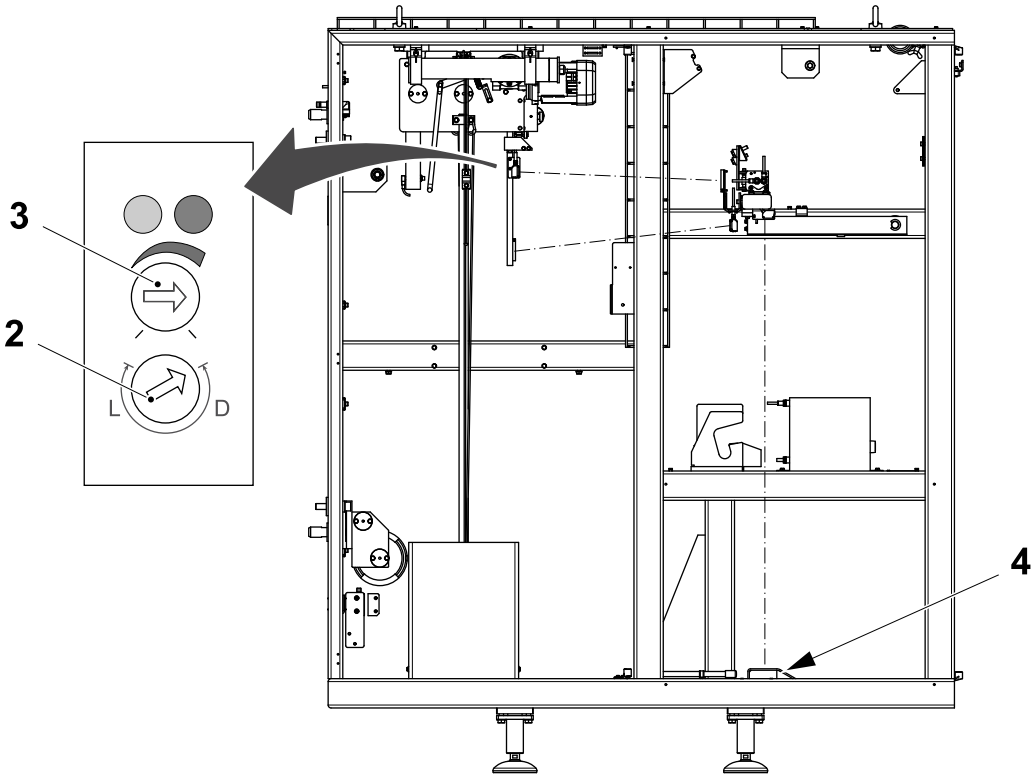

2 Switch
3 Switch
4 Photocell

(Cont'd)

(Cont'd)

Set the Photocell (5) for Full Loop Detection

Turn the switch (2) so that the arrow points to L. Turn the switch (3) so that the arrow points to the maximum of the signal intensity.

The green LED (6) indicates that the power is ON. The red LED (7) indicates that the signal is received from the reflector.

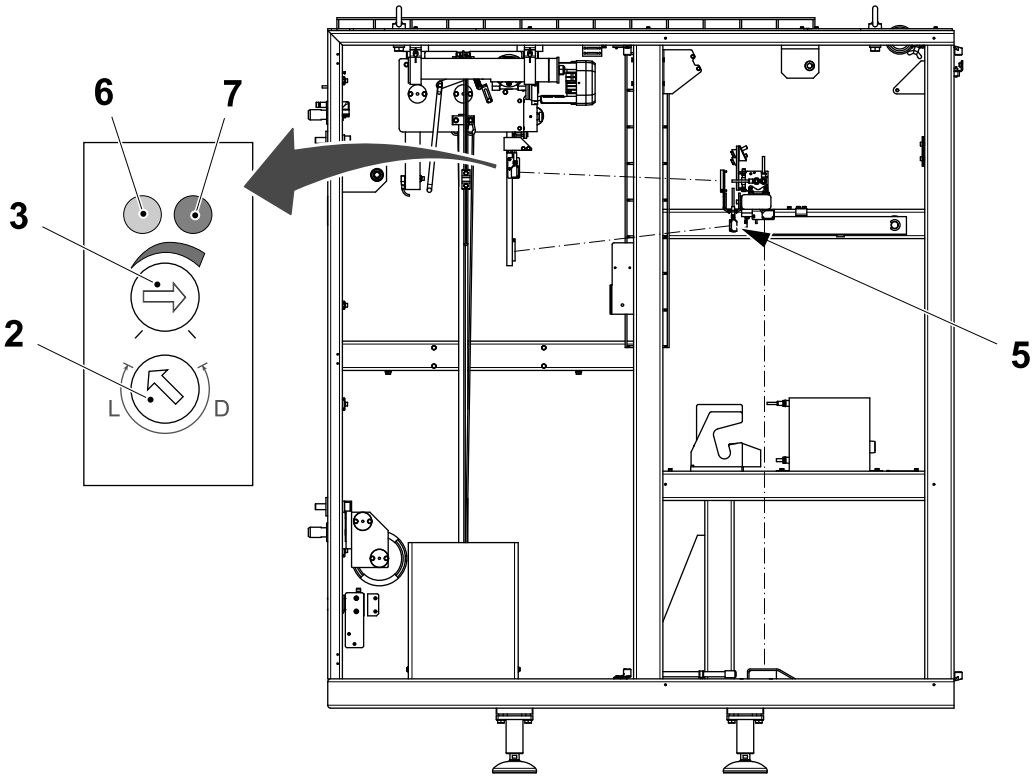

2 Switch
3 Switch
5 Photocell
6 Green LED
7 Red LED

7.2.1 Pneumatic Panel

7.2.1-1 Pneumatic Panel - Set Pressure

Machine Status	Electrical supply disconnecting device in position I (ON) Main air valve ON Main steam valve ON Main water valve OFF
SPC Reference	2832309-0300

a) Rotate the regulator knob (1) until the pressure gauge (2) shows a minimum of **6** bar for the main air.

b) Rotate the regulator knob (3) and check the pressure on the pressure gauge (4) to set the web tension, see 9.1 Technical Data.

c) Rotate the regulator knob (5) and check the pressure on the pressure gauge (6) to set the cooling strip applicator, see 9.1 Technical Data.

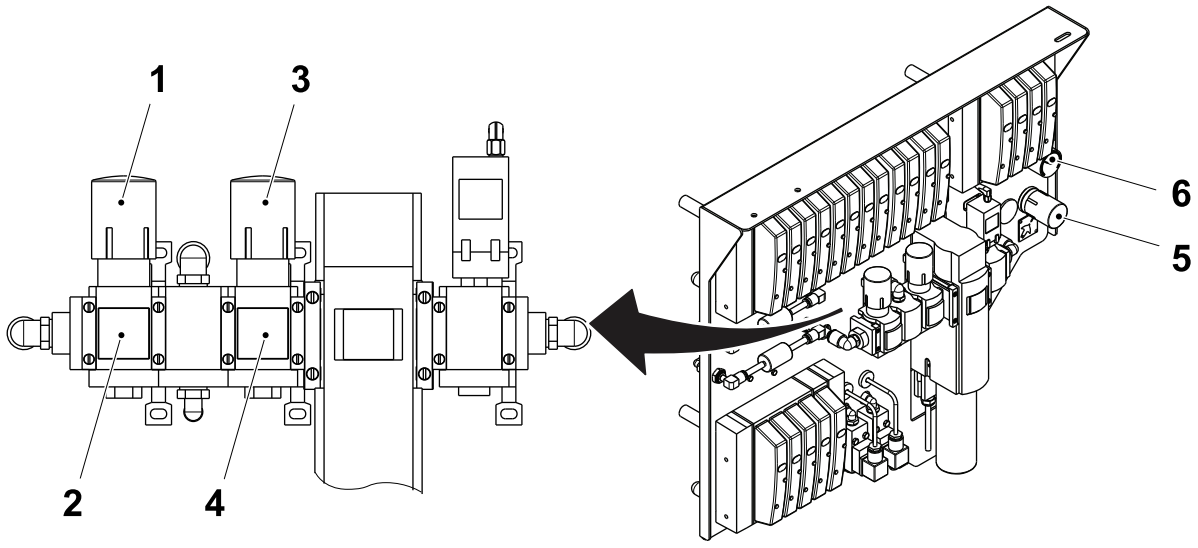

1 Knob
2 Pressure gauge
3 Knob
4 Pressure gauge
5 Knob
6 Pressure gauge

(Cont'd)

(Cont'd)

Set Minimum Pressure

a) Press the EDIT button (1) and select "A" with the UP button (2) or the DOWN button (3) .

b) Press the EDIT button (1) and select "threshold comparator" with the UP button (2) or the DOWN button (3) .

c) Press the EDIT button (1) and set "SP", Switching Pressure, to 5.5 bar (0.55 MPa) with the UP button (2) or the DOWN button (3) .

d) Press the EDIT button (1) and set "HY", Hysteresis, to 0 with the UP button (2) or the DOWN button (3) .

e) Press the EDIT button (1) and select "NO", Normally Open contact, with the UP button (2) or the DOWN button (3) .

f) Press the EDIT button (1) .

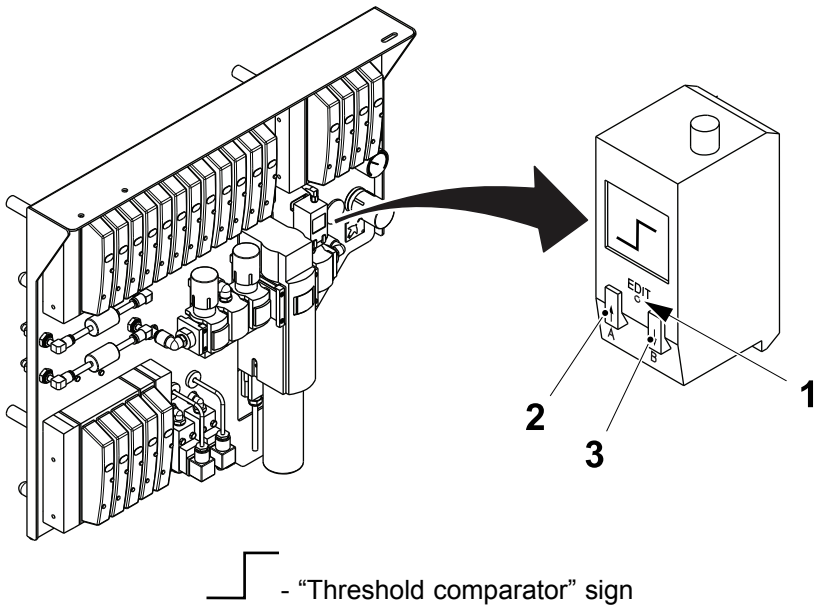

- "Threshold comparator" sign

1 EDIT button
2 UP button
3 DOWN button

(Cont'd)

(Cont'd)

Set Pressure Switch

a) Turn the screw (1) on the pressure switches (2) to the left all the way.

b) Turn the screw (1) on the pressure switches (2) to the right three and one quarter revolutions.

Note! The pressure switches (2) are to be set between 0.8 to 1.0 Bar.

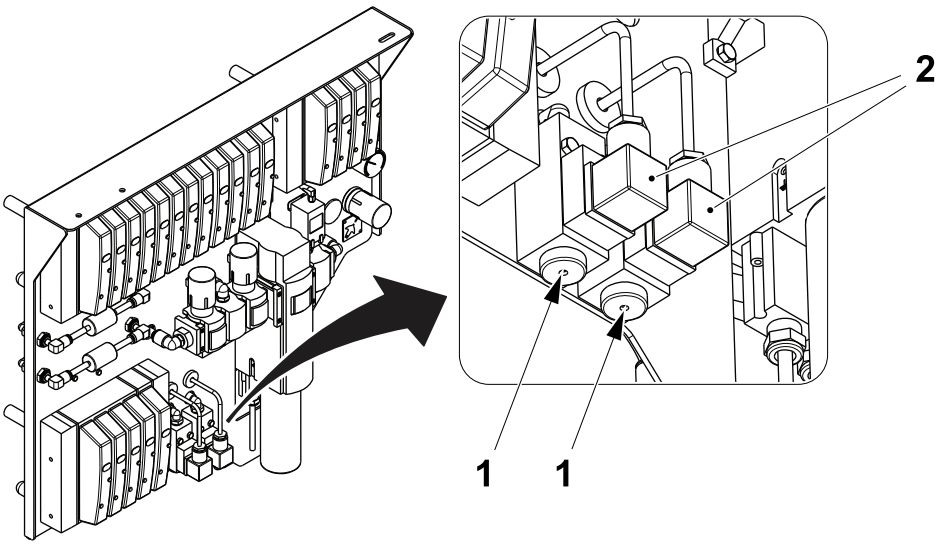

1 Screw
2 Pressure switch

7.2.1-2 Pneumatic Panel - Check Filters

Machine Status	Electrical supply disconnecting device in position I (ON) Main air valve ON Main steam valve ON Main water valve OFF
SPC Reference	2832309-0300

Check the filters (1) for wear or damage: the filters (1) normally have the white colour. If it is different, change them.

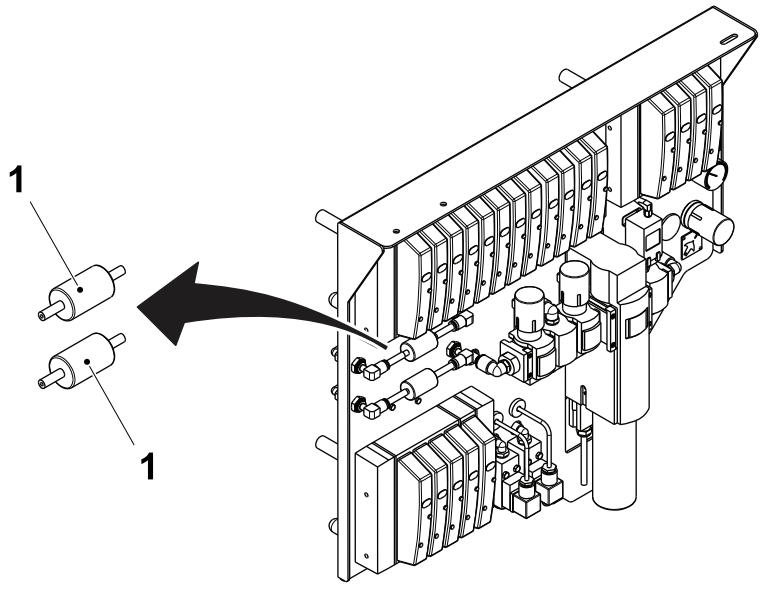

1 Filter

7.2.1-3 Pneumatic Panel - Set Safety Valve

Machine Status	Electrical supply disconnecting device in position I (ON) Main air valve ON Main steam valve ON Main water valve OFF
SPC Reference	2832309-0300

Set Valve

Turn the screw (1) on the safety valve (2) to the left, plus sign, until the end position is reached.

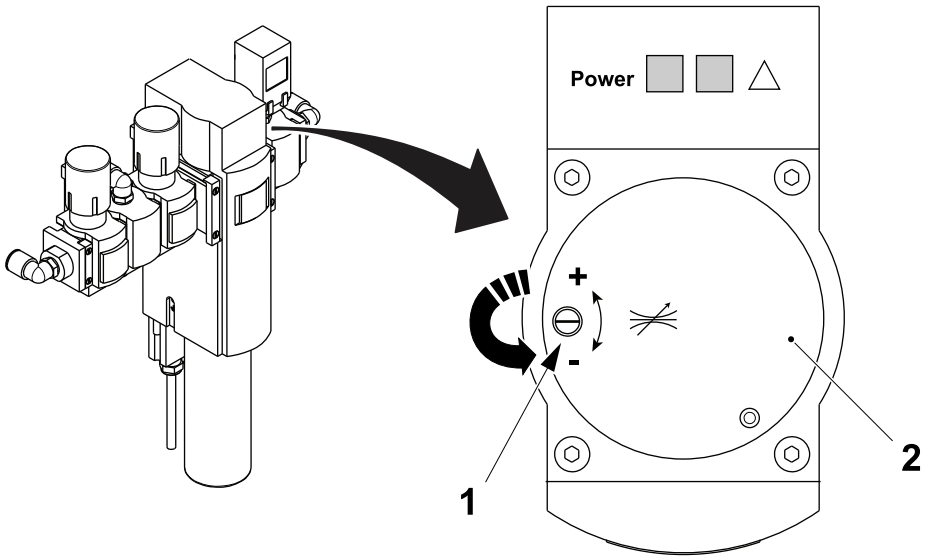

1 Screw
2 Safety valve

(Cont'd)

(Cont'd)

Valve Fault

Operating statuses and faults are indicated by a green power LED (1) and a red error LED (2) on the safety valve (3).

Green power LED (1)	Red error LED (2)	Description
OFF	OFF	Operating voltage not applied
Lights up for approximately 6 seconds after switching on	Lights up for approximately 6 seconds after switching on	Safety valve runs through all tests
When started up flashes with 1 second intervals	OFF	Safety valve is in the exhaust state
Permanently illuminated	OFF	Safety valve is in the pressurise state
4 x briefly flashes at 1 second intervals	Intervals	Safety valve fault

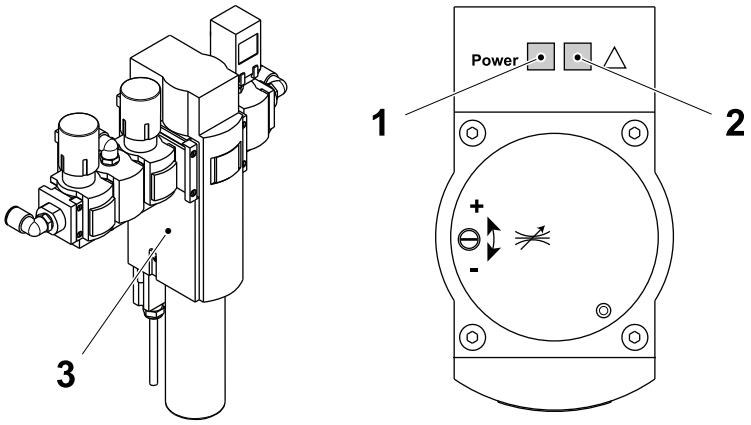

1 LED
2 LED
3 Safety valve

(Cont'd)

(Cont'd)

The fault code is indicated by 4 brief flashes of the green power LED (1). Then the red error LED (2) displays the fault code as number of flash pulses equals to the fault code. The flash pulses for both LEDs repeat continuously. The LEDs only stop flashing when the operating voltage is switched off in order to eliminate the fault.

To remove the safety valve (3) fault code 6 or 8 then:

- check the compressed air supply to the safety valve (3)
- check the voltage supply to the safety valve (3)
- check the installation of the signal lines
- set the safety valve (3) into operation
- replace the safety valve (3) if the fault occurs again.

Note! An example of the valve fault code 6 is shown below.

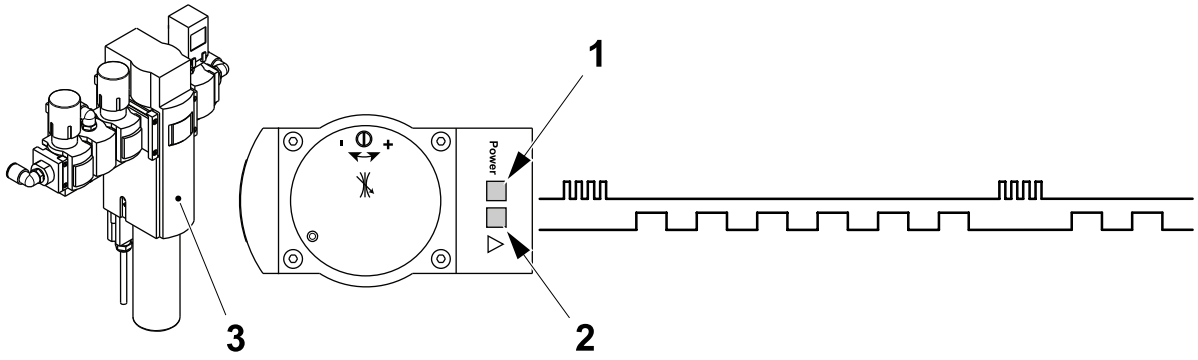

1 LED
2 LED
3 Safety valve

7.3 Paper Magazine

7.3-1 Paper Magazine - Change Roller Bearings

Machine Status	Electrical supply disconnecting device in position O (OFF) Main air valve OFF Main steam valve ON Main water valve OFF
Special Equipment	Rope 2.5 m
SPC Reference	2800180-0300

Driven Unit

a) Use the handle (1) to release the pressure from the pressure roller.

b) Remove the screws (2), (3) and the motor (4).

c) Secure the motor (4) to the side of the ASU using a rope.

d) Remove the screws (5) and the plate (6).

e) Remove the retaining rings (7).

f) Remove and change the ball bearing (8).

g) Assemble in the reverse order.

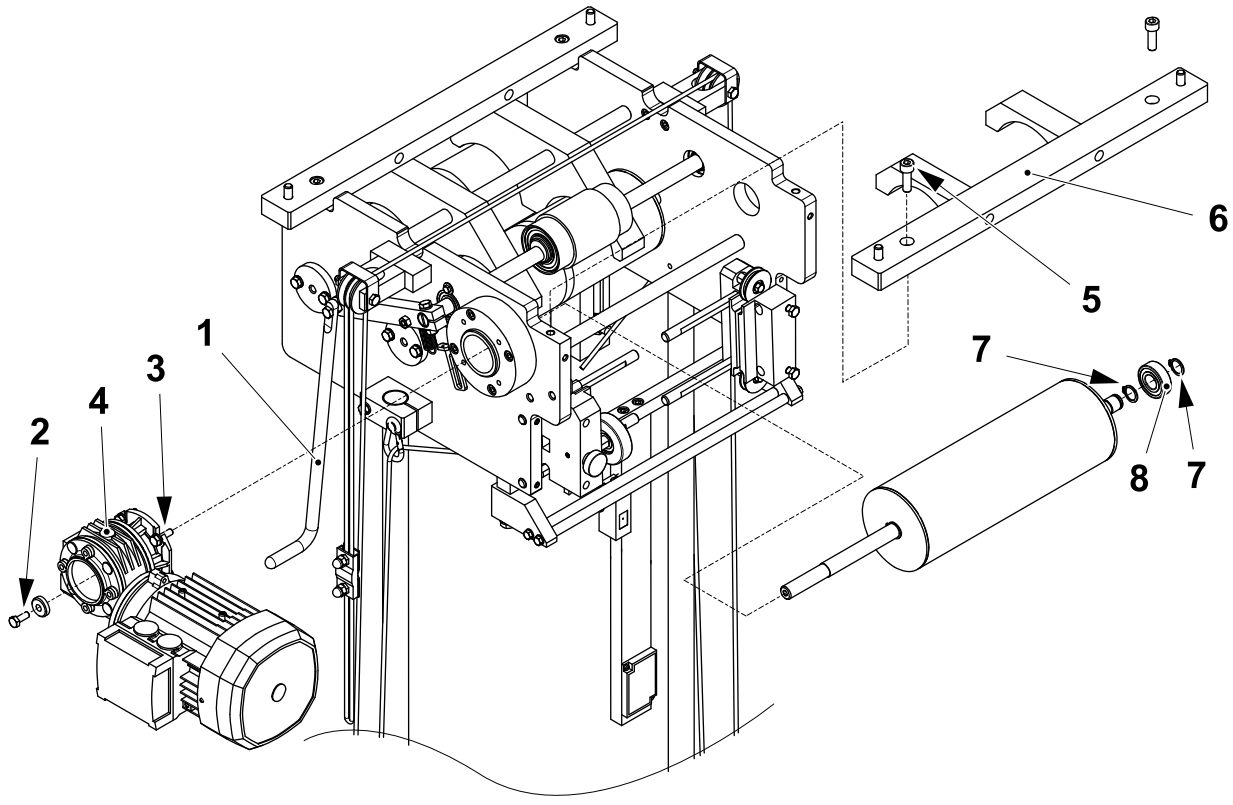

1 Handle
2 Screw
3 Screw
4 Motor
5 Screw
6 Plate
7 Retaining ring
8 Ball bearing

(Cont'd)

(Cont'd)

Bending Rollers

a) Remove the screws (1), the plate (2).

b) Remove the four screws (3) and the guide assembly (4).

c) Remove the screws (5) and the stoppers (6).

d) Remove the retaining rings (7) and the rollers assembly (8).

e) Remove and change the ball bearings (9).

f) Assemble in the reverse order.

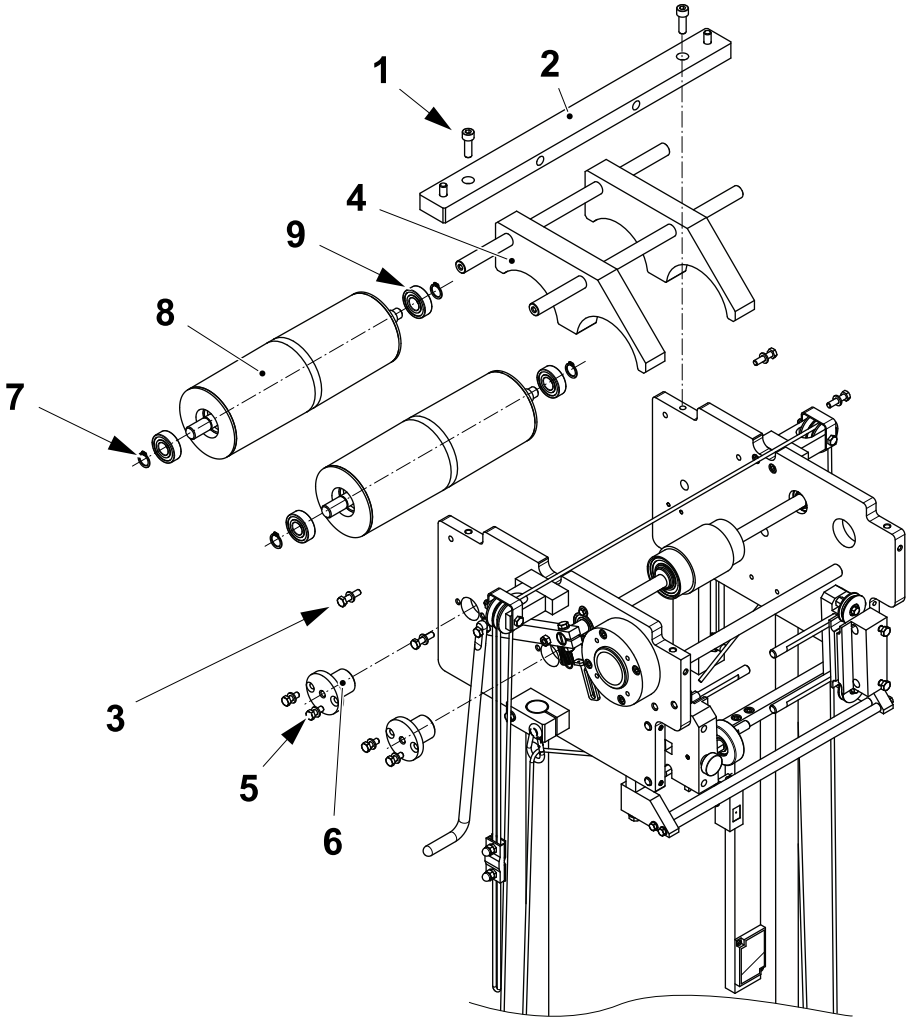

1 Screw
2 Plate
3 Screw
4 Guide assembly
5 Screw
6 Stopper
7 Retaining ring
8 Roller assembly
9 Ball bearing

7.3-2 Paper Magazine - Check

Machine Status	Electrical supply disconnecting device in position I (ON) Main air valve OFF Main steam valve ON Main water valve OFF
SPC Reference	2800180-0300

Check that:

- the rollers (1) rotate freely without play and that the surfaces of the rollers are not worn or damaged. If necessary change the rollers, see 7.3-3 Paper Magazine - Change Bearings.
- the rollers rise and fall smoothly when they are moved by the rope (2).
- the LED of the proximity switch (3) is ON when the bracket is moved to its upper or lower position. If not set the proximity switches, see 7.3-4 Paper Magazine - Set.

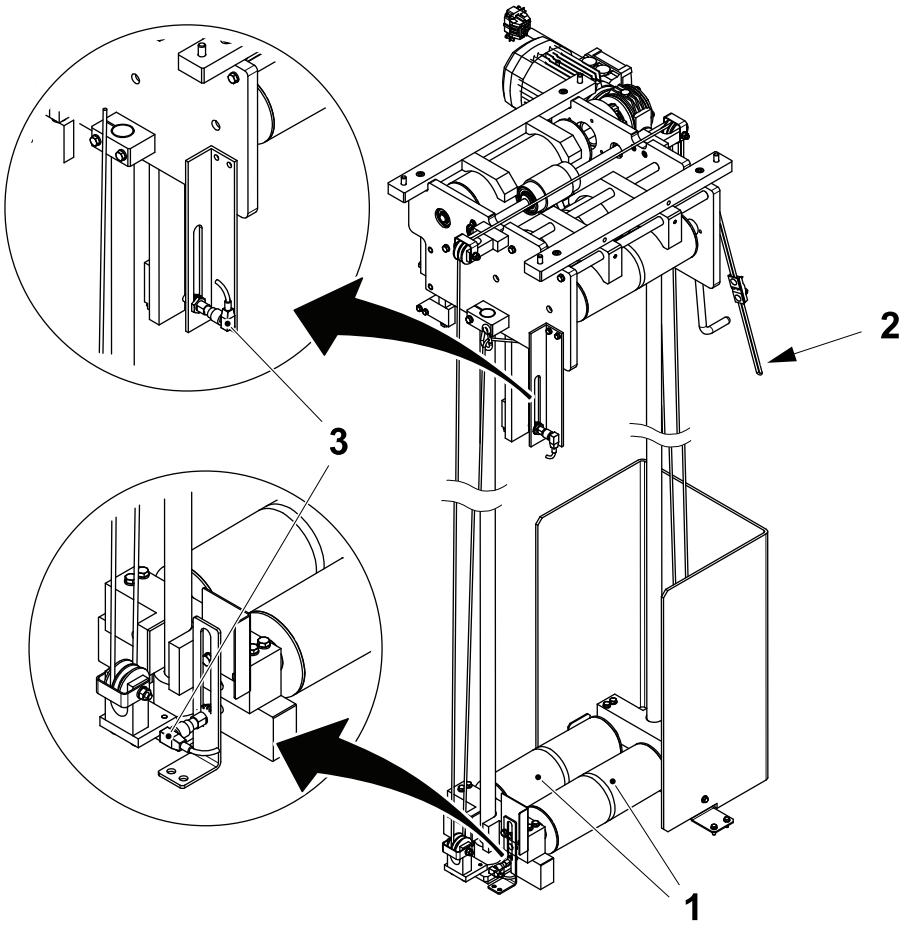

1 Roller 2 Rope 3 Proximity switch

7.3-3 Paper Magazine - Change Bearings

Machine Status	Electrical supply disconnecting device in position O (OFF) Main air valve OFF Main steam valve ON Main water valve OFF
SPC Reference	2800180-0300

a) Remove the cover (1) and the screws (2).

b) Remove the retaining rings (3) and lift out the roller (4).

c) Remove and change the bearings (5).

d) Repeat the procedure for the other roller.

e) Assemble in the reverse order.

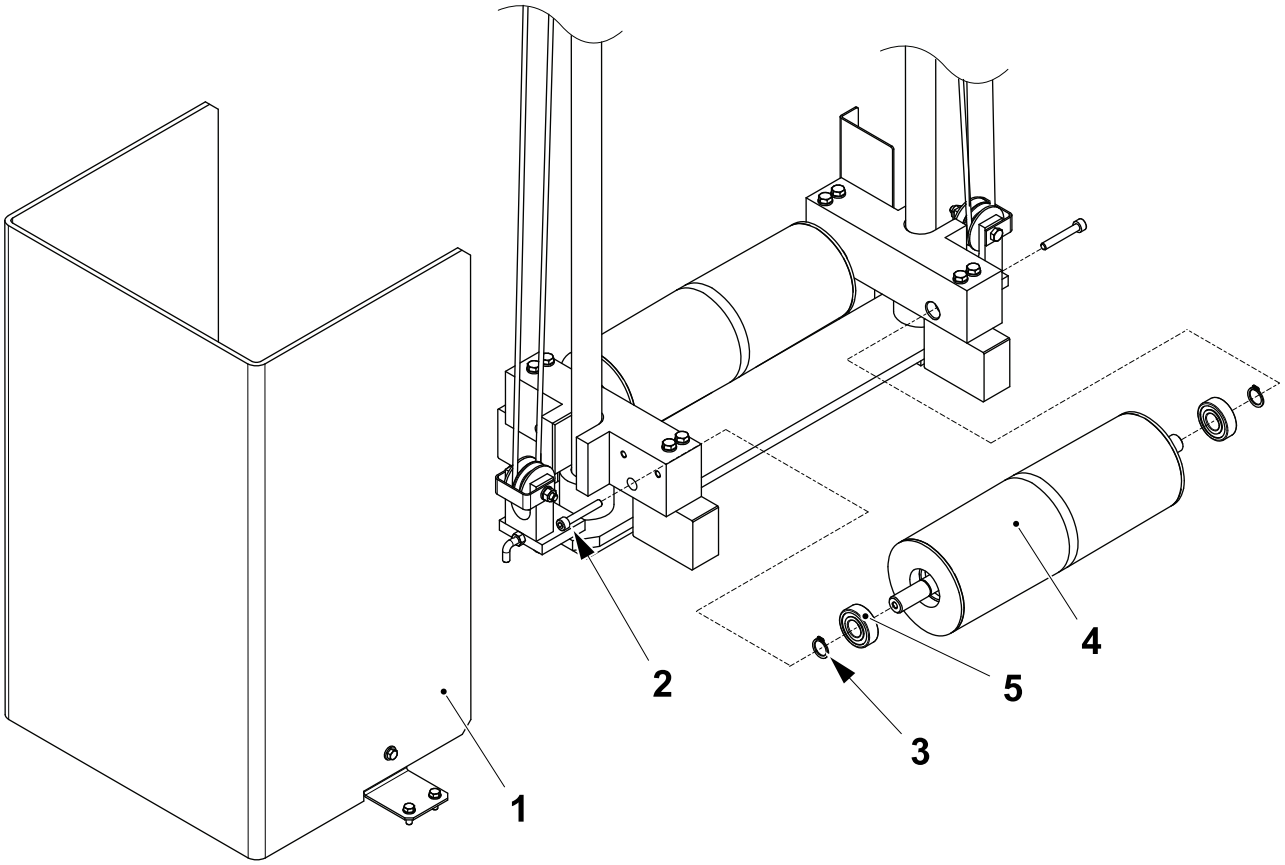

1 Cover
2 Screw
3 Retaining ring
4 Roller
5 Bearing

7.3-4 Paper Magazine - Set

Machine Status	Electrical supply disconnecting device in position I (ON) Main air valve OFF Main steam valve ON Main water valve OFF
SPC Reference	2800180-0300

a) Make sure that the single roller (1) is in the lower position.

b) Loosen the nut (2) and move the proximity switch (3) to set the distance **A** between the bracket (4) and the proximity switch (3).

c) Check that the LED of the proximity switch (3) is ON. If not, repeat point b).

d) Repeat the procedure for the upper proximity switch (5).

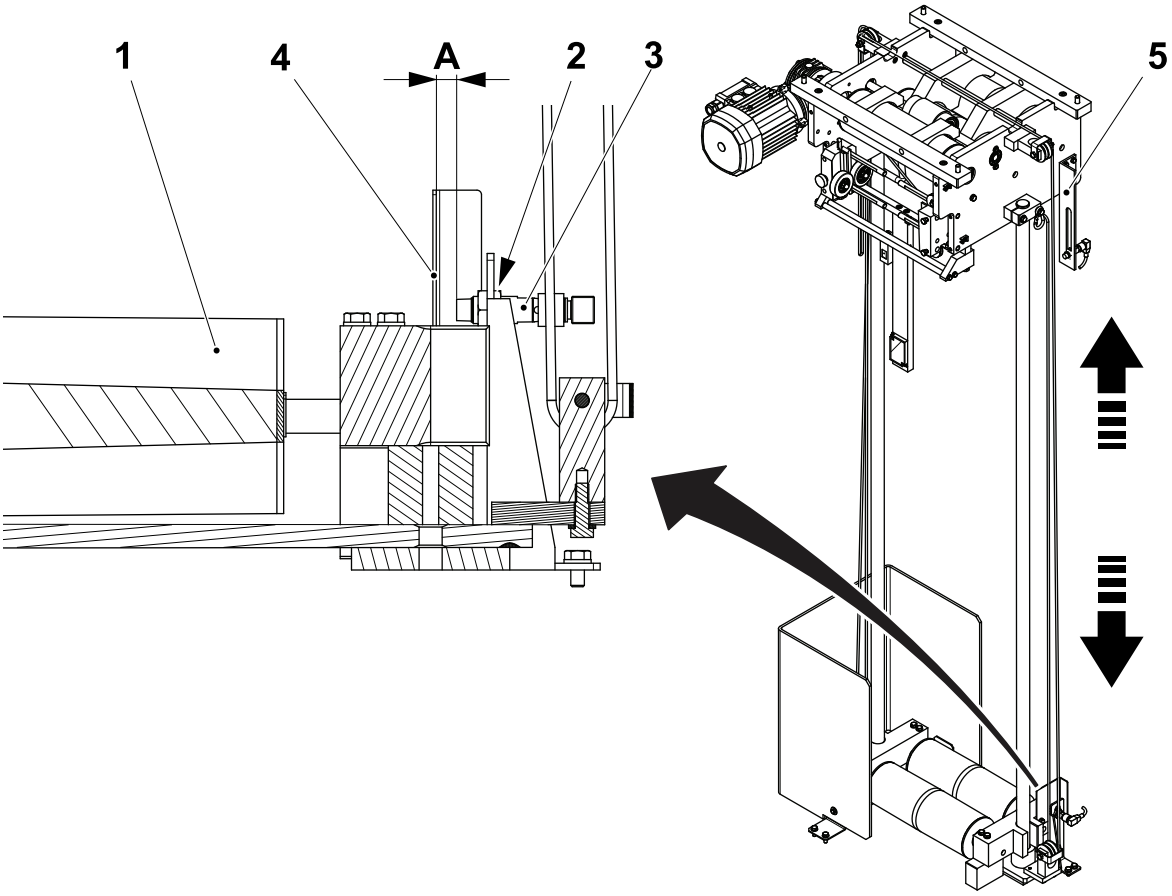

A = 2.0 ±0.5 mm

1 Single roller
2 Nut
3 Proximity switch
4 Bracket
5 Proximity switch

7.3-5 Paper Magazine - Change Ropes

Machine Status	Electrical supply disconnecting device in position O (OFF) Main air valve OFF Main steam valve ON Main water valve OFF
SPC Reference	2800180-0300

WARNING

Risk of crushing.

Make sure that the rollers are in their lower position.

a) Untie and remove the old rope (1) from the two wire locks (2).

b) Remove the screws and the wire lock (3) from the old rope (1).

c) Tighten the new rope (1) to the wire locks (2).

d) Thread the new rope (1) down under the roller (4), up over the roller (5) and to the other side of the paper magazine.

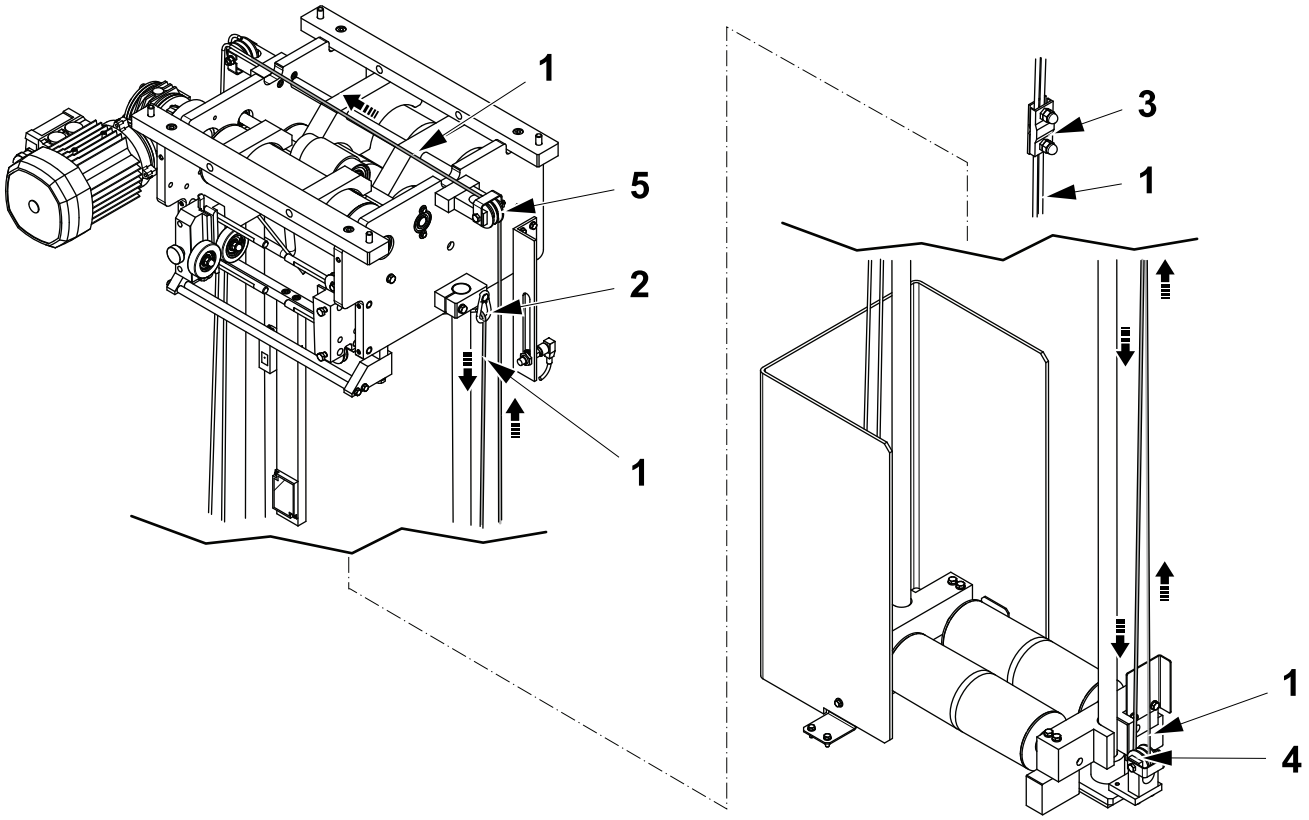

1 Rope
2 Wire lock
3 Wire lock
4 Roller
5 Roller

(Cont'd)

(Cont'd)

e) Thread the new rope (1) over the roller (6) and fit the wire lock (3) to obtain a loop.

f) Thread the new rope (1) over the roller (6), down under the roller (7) and up to the wire lock (8).

Note! Make sure that the length of the loop (distance **B**) and the position of the wire lock (distance **A**) are according to the illustration below.

g) Tighten the new rope (1) to the wire lock (8).

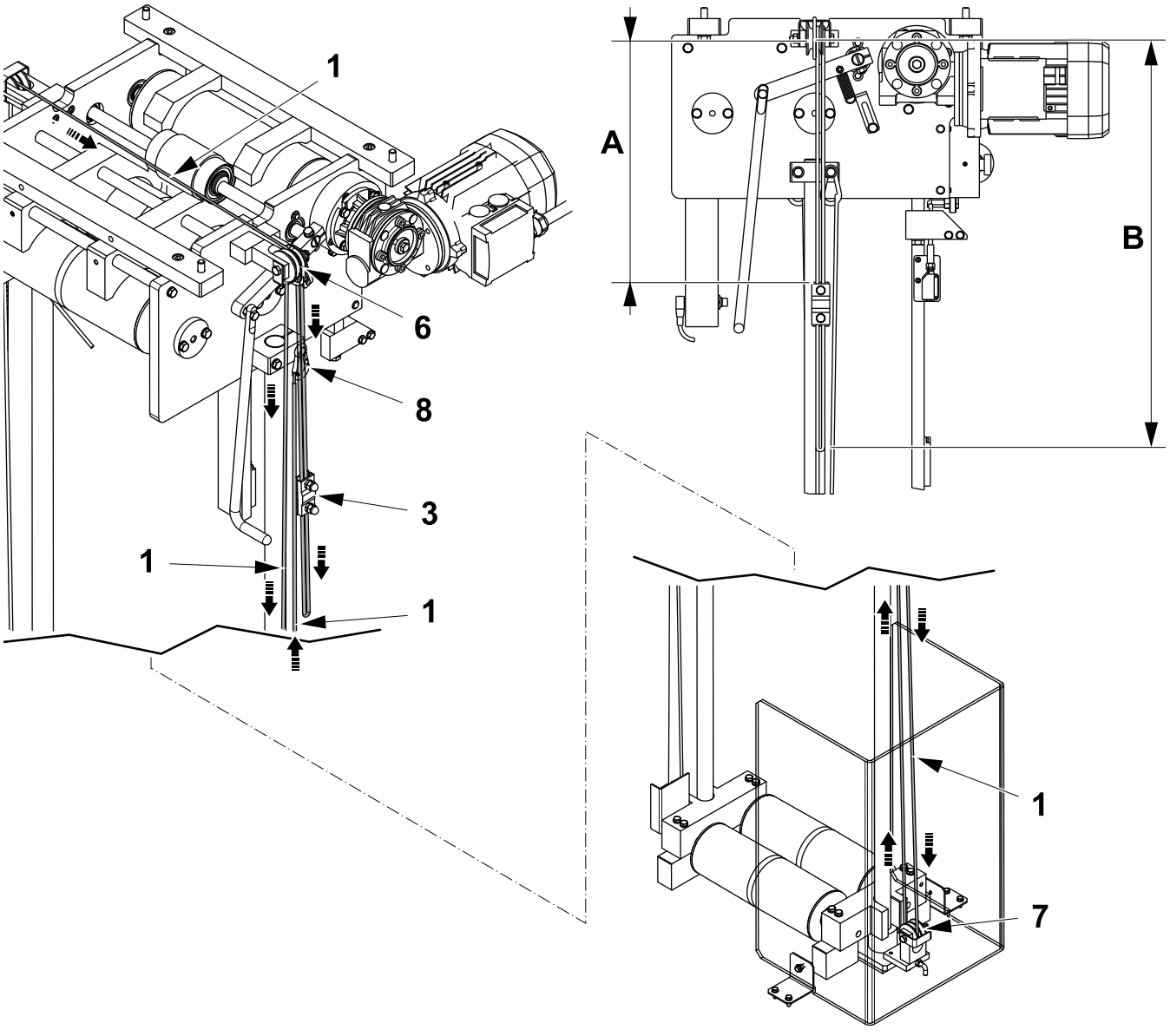

A = 300 mm
B = 500 mm
1 Rope
3 Wire lock
6 Roller
7 Roller
8 Wire lock

7.3.1 Web Guide

7.3.1-1 Web Guide - Check

Machine Status	Electrical supply disconnecting device in position O (OFF) Main air valve OFF Main steam valve ON Main water valve OFF
SPC Reference	1484745-0200

Check that:

- the surfaces of the rollers (1) and (2) are undamaged. If not, change the rollers, see 7.3.1-2 Web Guide - Change.
- the rollers (1) and (2) rotate freely. If not, change the roller bearings, see 7.3.1-2 Web Guide - Change.
- the guide (3) is clean. If not, loosen the stop screw (4), pull out the guide and clean it.

  Note! The guide (3) must be fitted so the packaging material web enters the guide from the chamfer (5).

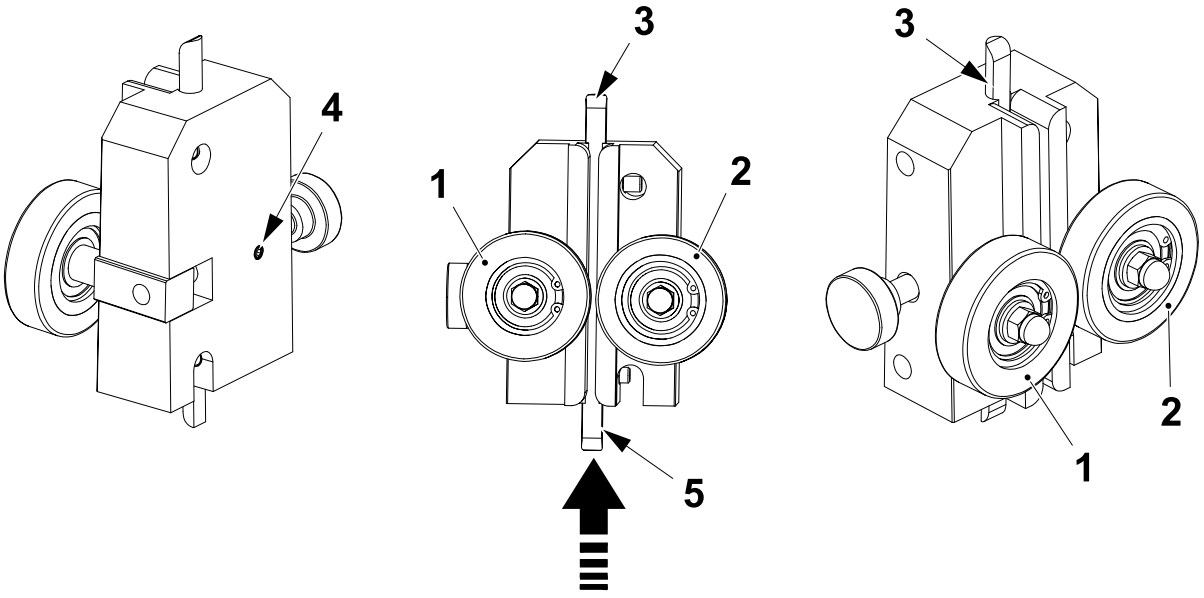

1 Roller
2 Roller
3 Guide
4 Stop screw
5 Chamfer

7.3.1-2 Web Guide - Change

Machine Status	Electrical supply disconnecting device in position O (OFF) Main air valve OFF Main steam valve ON Main water valve OFF
SPC Reference	1484745-0200

Note! The rubber rollers (5) must be fitted on the printed side of the packaging material web.

a) Remove the nuts (1), the washers (2) and the retaining rings (3).

b) Remove and change the bearings (4) and the rubber rollers (5) and roller (6).

c) Assemble in the reverse order. After assembly, check that the rubber rollers (5) rotates when the roller (6) is turned by hand. If not, set the rollers, see 7.3.1-3 Web Guide - Set Position.

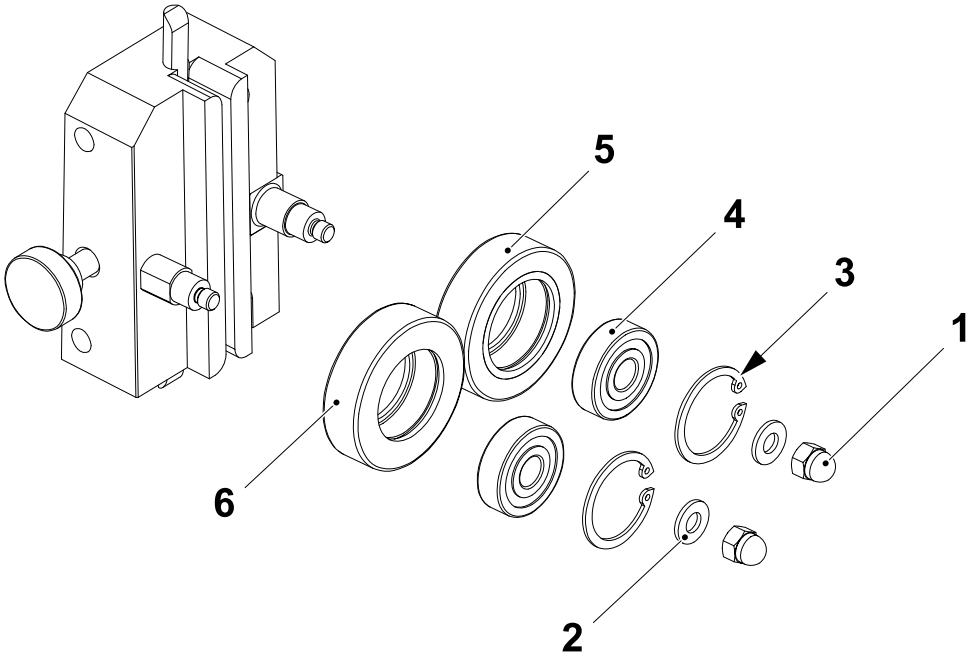

1 Nut
2 Washer
3 Retaining ring
4 Bearing
5 Rubber roller
6 Roller

7.3.1-3 Web Guide - Set Position

Machine Status	Electrical supply disconnecting device in position O (OFF) Main air valve OFF Main steam valve ON Main water valve OFF
SPC Reference	1484745-0200

a) Loosen the stop screws (1).

b) Centre the packaging material (2) in the middle of the roller (3) by moving the web guide (4) sideways.

c) Tighten the stop screws (1)

d) Loosen the stop screws (5) and position the paper guide (6) 1 mm from the edge of the packaging material (2).

e) Tighten the stop screws (5).

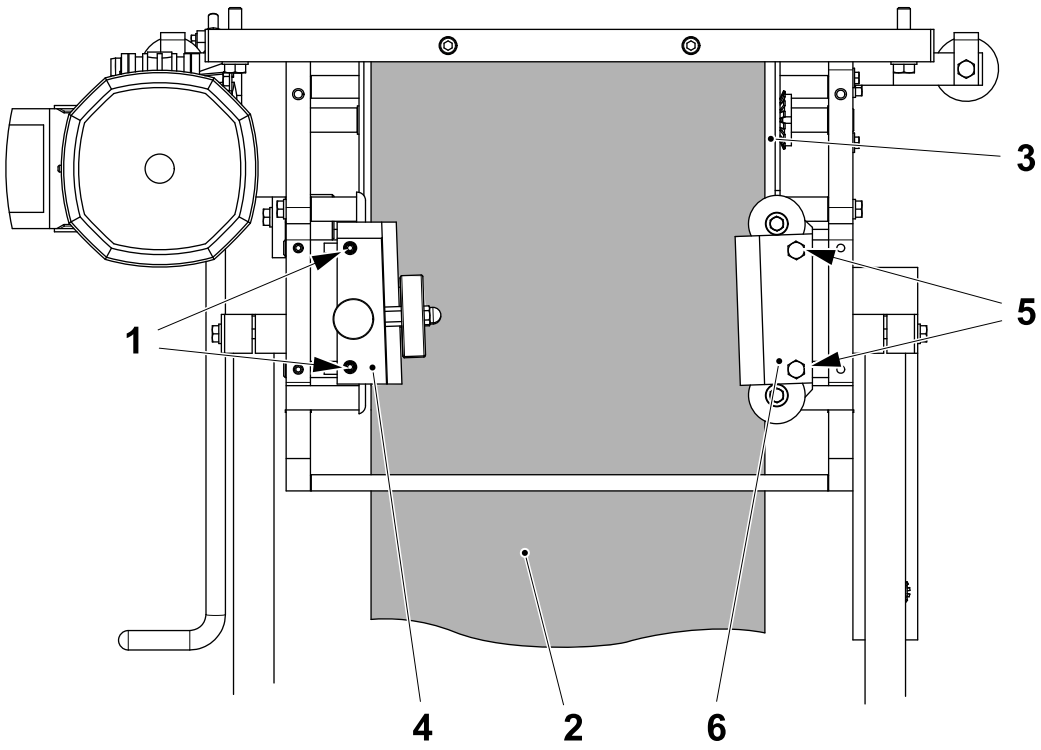

1 Stop screw
2 Packaging material
3 Roller
4 Web guide
5 Stop screw
6 Paper guide

(Cont'd)

(Cont'd)

Note! Only the roller (8) is mounted on an eccentric shaft.

f) Check that the rubber roller (7) rotates when the roller (8) is turned by hand. If not, loosen the screw (9) and turn the eccentric shaft (10). Tighten the screw (9).

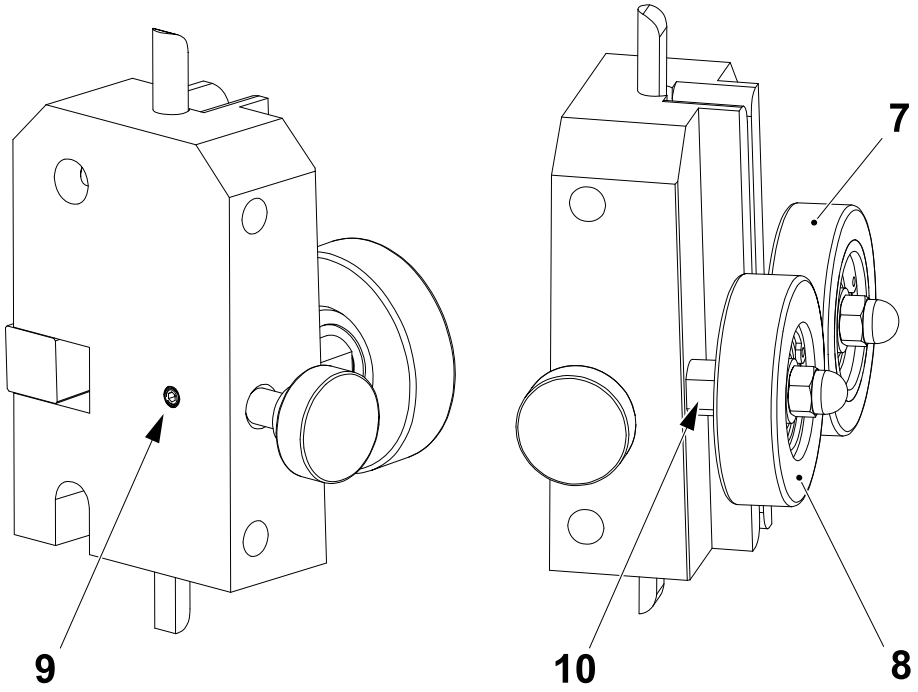

7 Rubber roller
8 Roller
9 Screw
10 Eccentric shaft

7.3.2 Counter Roller

7.3.2-1 Counter Roller - Check

Machine Status	Electrical supply disconnecting device in position O (OFF) Main air valve OFF Main steam valve ON Main water valve OFF
SPC Reference	2802879-0200 3313983-0100

Counter Roller TP No. 3313983-0100

Check that:

- the cylinder (1), the shaft (2) and the rollers (3) work correctly. If not, change the parts and clean the shafts attachment points, see 7.3.2-2 Counter Roller - Change Bearings.
- the surface of the rollers (3) is not worn or damaged and the ball bearings rotate freely. If not, change any worn parts, see 7.3.2-2 Counter Roller - Change Bearings.

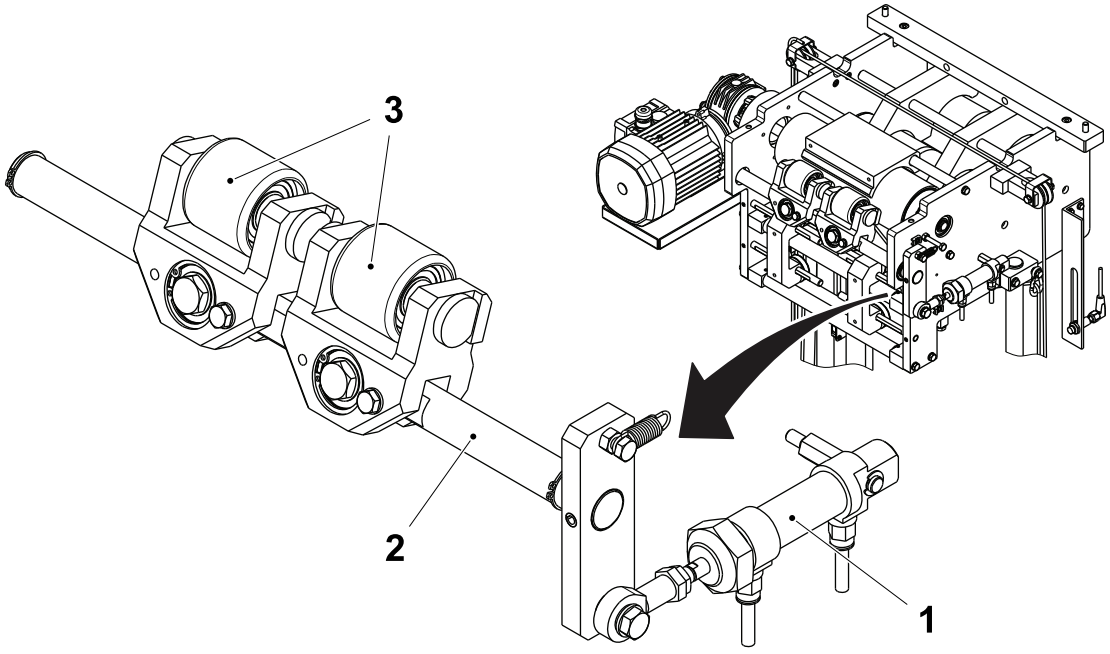

1 Cylinder
2 Shaft
3 Roller

(Cont'd)

(Cont'd)

Counter Roller TP No. 2802879-0200

Check that:

- the handle (1) moves freely and that it returns to its rest position when it is released. If not, change the spring (2)
- the roller (3) rotates freely and that it is not worn or damaged. Change if necessary, see 7.3.2-2 Counter Roller - Change Bearings.

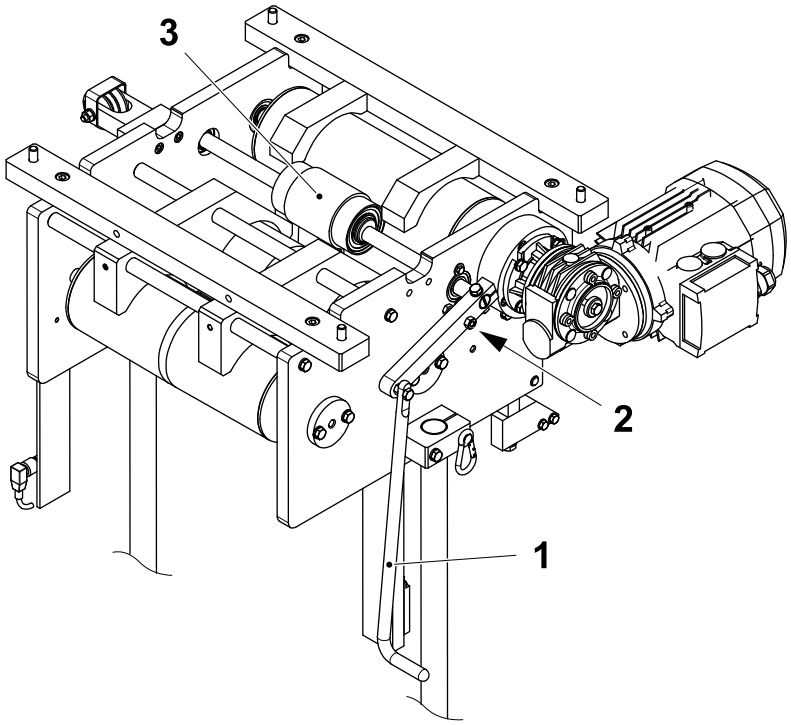

1 Handle
2 Spring
3 Roller

7.3.2-2 Counter Roller - Change Bearings

Machine Status	Electrical supply disconnecting device in position O (OFF) Main air valve OFF Main steam valve ON Main water valve OFF
SPC Reference	2802879-0200 3313983-0100

Counter Roller TP No. 3313983-0100

a) Separate the cylinder (1) from the lever (2) by means of the screw (3).

b) Remove the spring pin (4), the lever (2) and the spring (5).

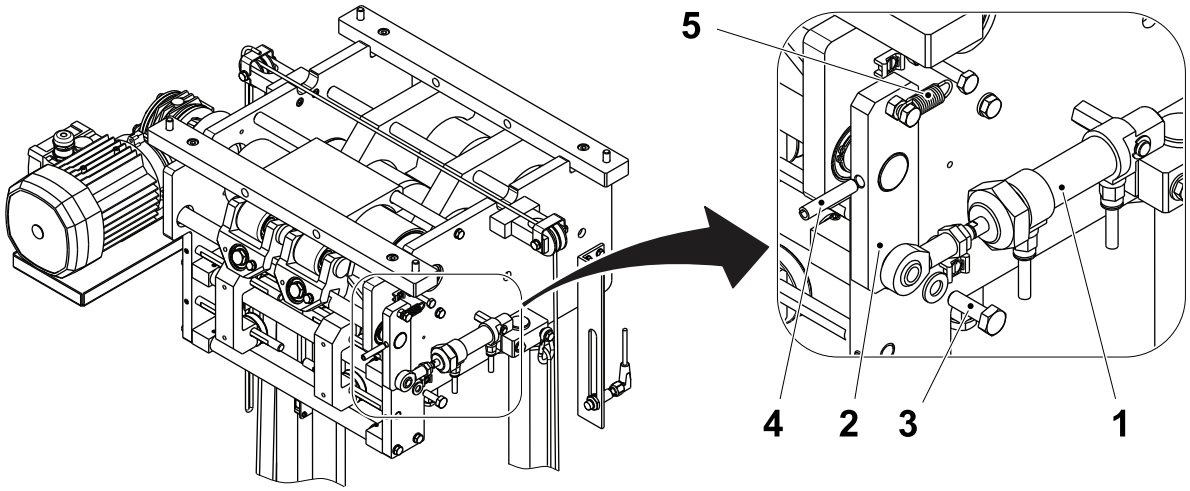

1 Cylinder
2 Lever
3 Screw
4 Spring pin
5 Spring

(Cont'd)

(Cont'd)

c) Remove the retaining rings (6) and the ball bearings (7) from the shaft (8). If necessary, change the ball bearings.

d) Remove the screws (9), the screws (10), the nuts (11) and the counter roller brackets (12).

e) Remove the screw (13), the nut (14), the ball bearings (15) and the roller (16). If necessary, change the ball bearings (15) and the roller (16).

f) Remove the retaining rings (17) and the ball bearings (18). If necessary, change the ball bearings (18).

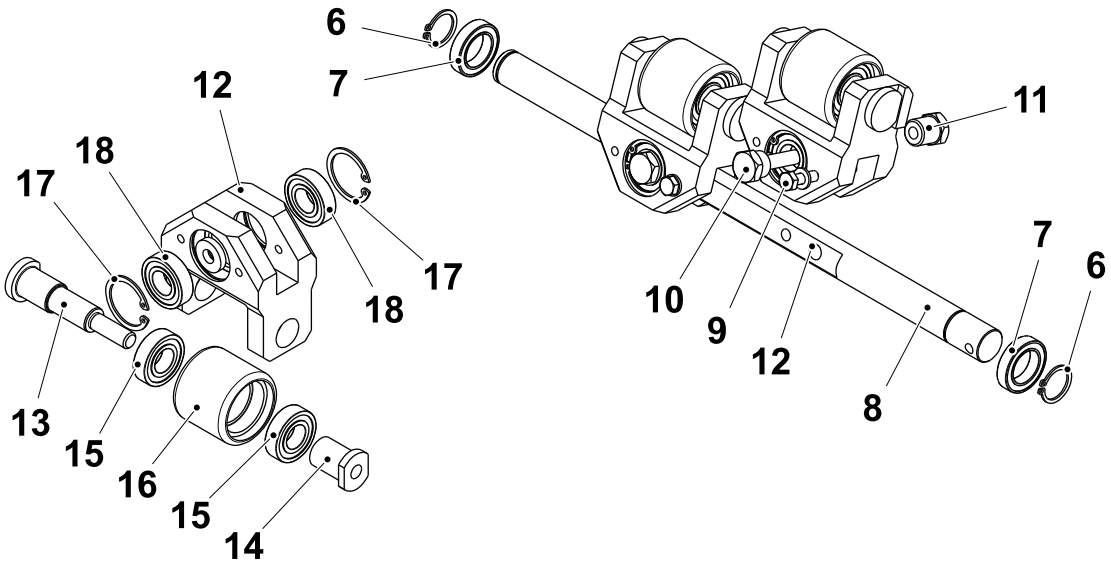

6 Retaining ring
7 Ball bearing
8 Shaft
9 Screw
10 Screw
11 Nut
12 Bracket
13 Screw
14 Nut
15 Ball bearing
16 Roller
17 Retaining ring
18 Ball bearing

(Cont'd)

(Cont'd)

g) Fit the retaining rings (17) and the ball bearings (18) to the counter roller brackets (12).

h) Fit the screw (13), the nut (14), the ball bearings (15) and the roller (16) to the counter roller brackets (12).

i) Fit the screws (9), the screws (10), the nuts (11) and the counter roller brackets (12) to the shaft (8).

j) Fit the retaining rings (6) and the ball bearings (7) to the shaft (8).

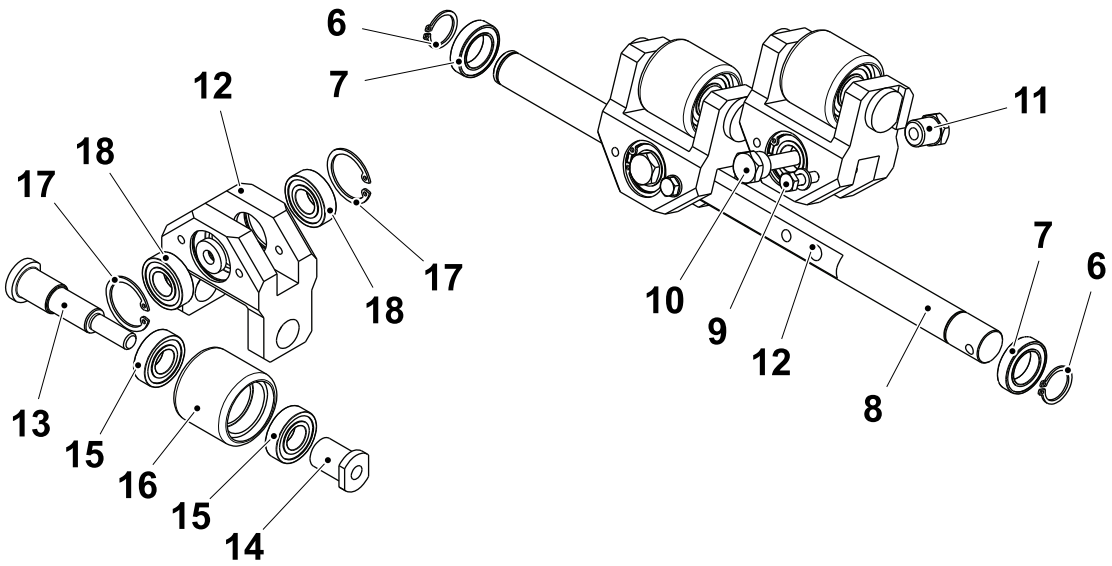

6 Retaining ring
7 Ball bearing
8 Shaft
9 Screw
10 Screw
11 Nut
12 Bracket
13 Screw
14 Nut
15 Ball bearing
16 Roller
17 Retaining ring
18 Ball bearing

(Cont'd)

(Cont'd)

k) Fit the lever (2) with the spring pin (4) and the spring (5).

l) Turn the lever (2) to make sure that the counter rollers (19) are against the drive wheel (20). Rotate the drive wheel (20) to make sure that the counter rollers (19) are in the vertical position.

m) Check the distance between the counter rollers (19) and the drive wheel (20) with a **0.1 mm** thick feeler gauge. The distance between the counter rollers (19) and the drive wheel (20) should be less than **0.1 mm**. If necessary:

- remove the shims (21) from the counter rollers (19)
- repeat item m) and add shims (21) under the opposite counter roller until the distance between the counter rollers (19) and the drive wheel (20) is less than **0.1 mm**.

n) Fit the cylinder (1) to the lever (2) with the screw (3).

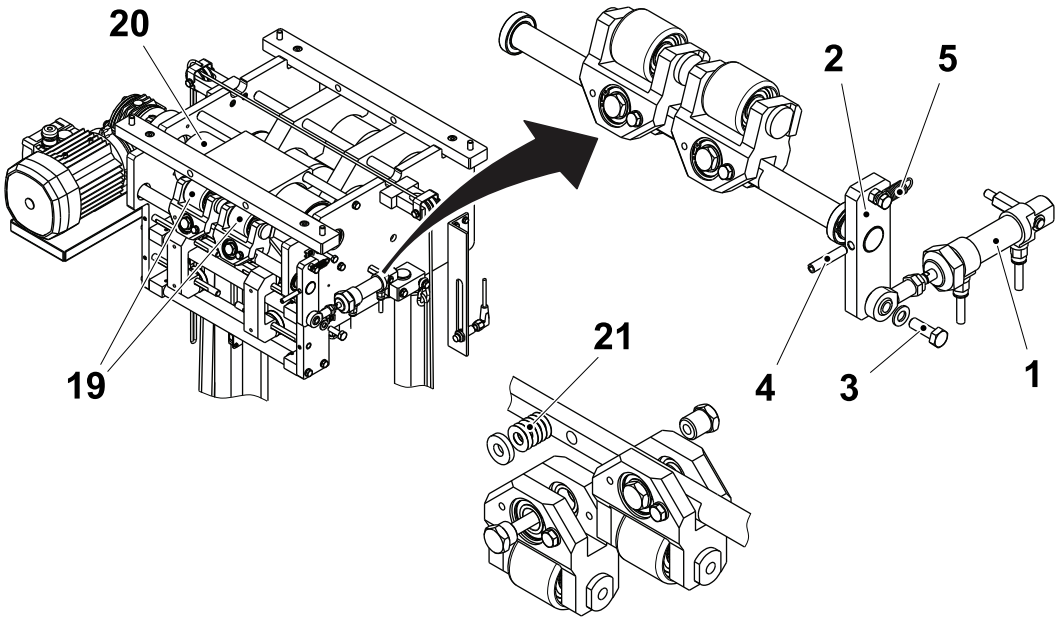

1 Cylinder
2 Lever
3 Screw
4 Spring pin
5 Spring
19 Counter roller
20 Wheel
21 Shim

(Cont'd)

(Cont'd)

Counter Roller TP No. 2802879-0200

a) Loosen the spring tension by means the screw (1).

b) Remove the screw (2) and the nut (3).

c) Remove the rocker arm (4).

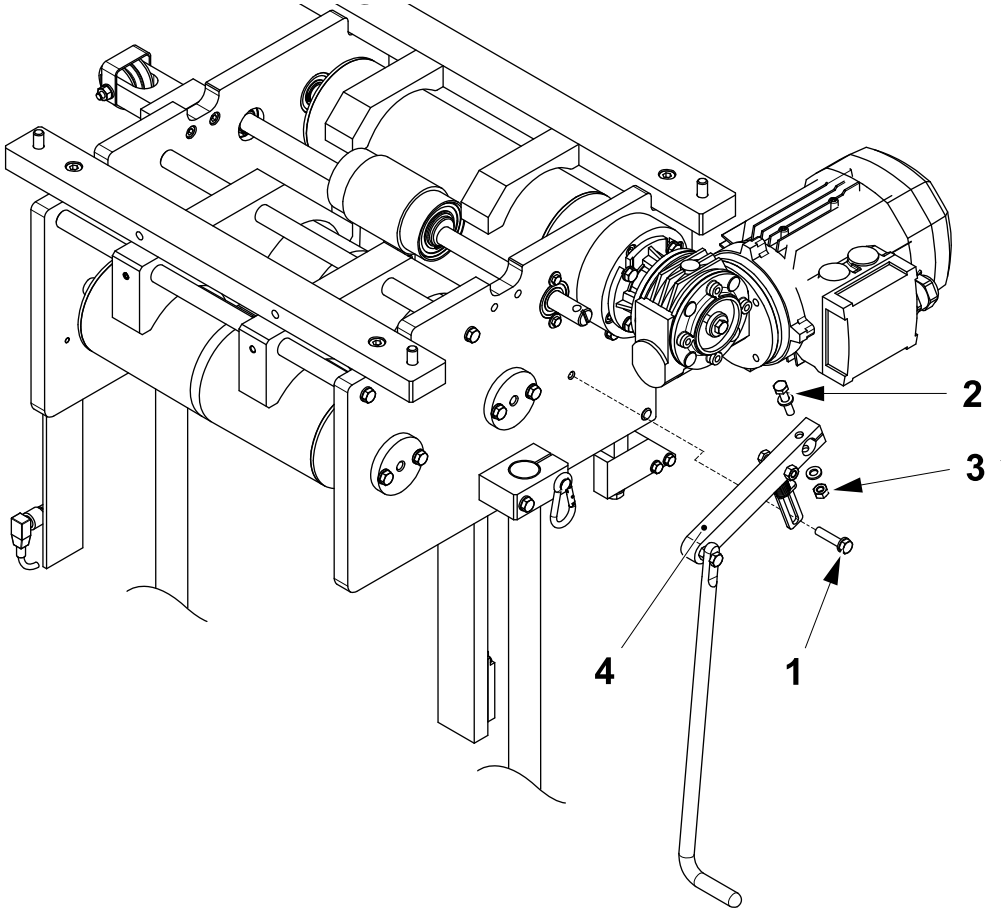

1 Screw
2 Screw
3 Nut
4 Rocker arm

(Cont'd)

(Cont'd)

d) Remove the screws (5).

e) Remove the retaining rings (6) from both ends of the shaft (7).

f) Remove the retaining ring (8) and pull the counter roller (9) and its internal components off the shaft (7) in the direction shown.

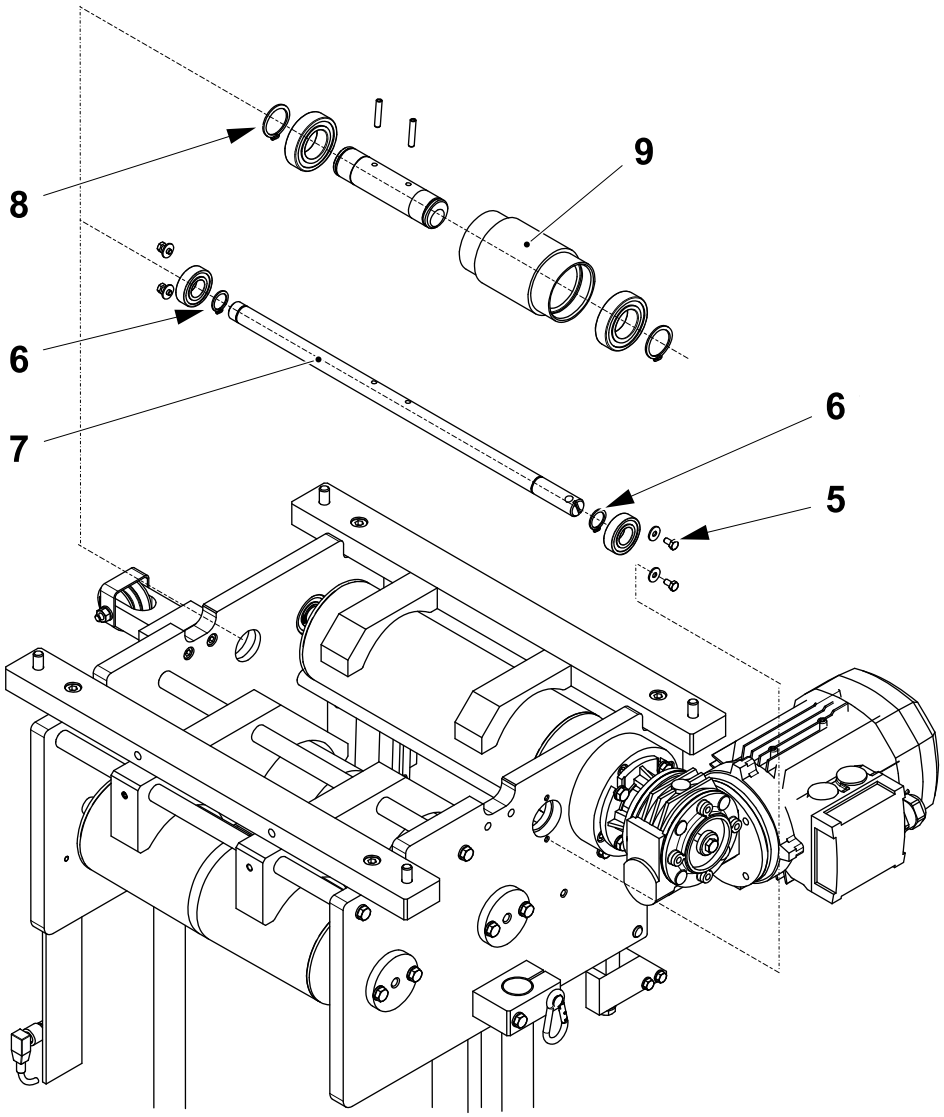

5 Screw
6 Retaining ring
7 Shaft
8 Retaining ring
9 Counter roller

(Cont'd)

(Cont'd)

g) Remove the retaining ring (10) and the ball bearings (11) andball bearing (12) from the counter roller (9). Change the ball bearings (11) andball bearing (12). If necessary, remove the pins (13) from the eccentric bushing (14) and change the eccentric bushing (14).

h) Remove and change the ball bearings (15).

i) Assemble in the reverse order.

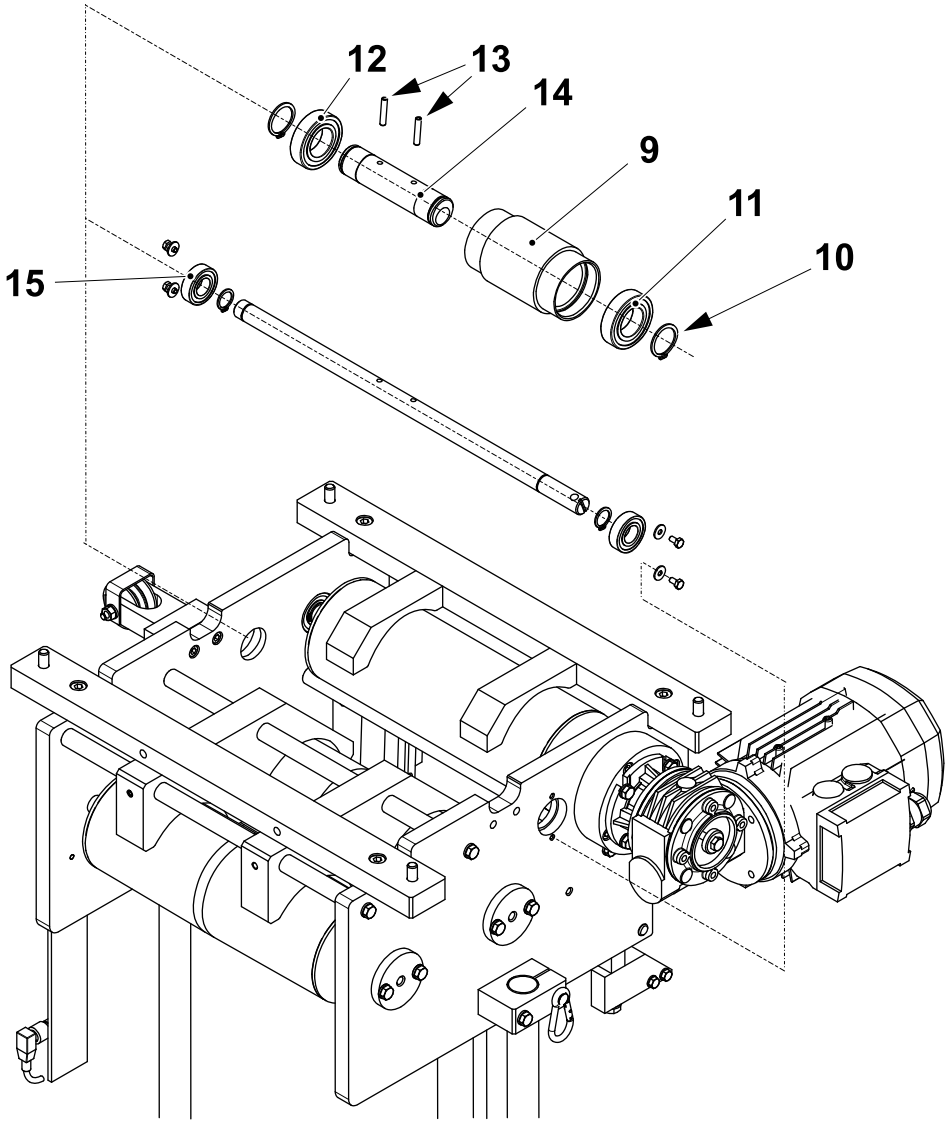

9 Counter roller
10 Retaining ring
11 Ball bearing
12 Ball bearing
13 Pin
14 Eccentric bushing
15 Ball bearing

7.3.2-3 Counter Roller - Set

Machine Status	Electrical supply disconnecting device in position O (OFF) Main air valve OFF Main steam valve ON Main water valve OFF
SPC Reference	2802879-0200 3313983-0100

Counter Roller TP No. 3313983-0100

a) Set the distance **A** between the rollers (1) and the drive roller (2) when the piston rod (3) is fully retracted. If required adjust by means of the nut (4).

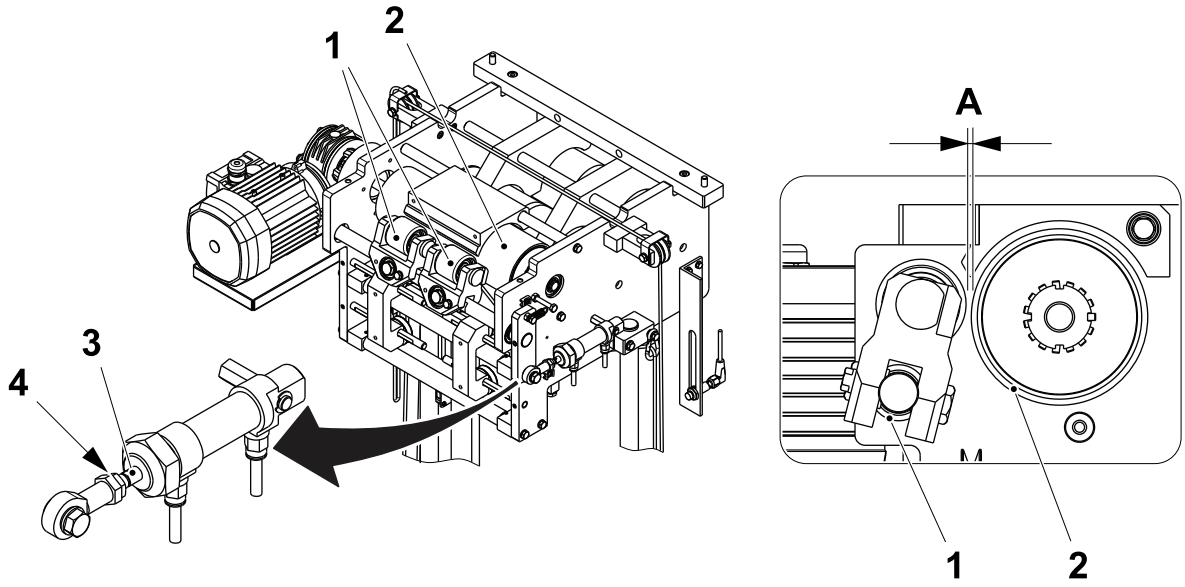

A = 3.0 ±0.2 mm

1 Roller
2 Roller
3 Piston rod
4 Nut

(Cont'd)

(Cont'd)

b) Remove the screw (5) and the cylinder (6) from the lever (7).

c) Turn the lever (7) to make sure that the counter rollers (1) are against the drive roller (2). Rotate the drive roller (2) to make sure that the counter rollers (1) are in the vertical position.

d) Check the distance between the counter rollers (1) and the drive roller (2) with a **0.1 mm** thick feeler gauge. The distance between the counter rollers (1) and the drive roller (2) should be less than **0.1 mm**. If necessary:

- remove the shims (8) from the counter rollers (1)
- repeat item d) and add shims (8) under the opposite counter roller until the distance between the counter rollers (1) and the drive roller (2) is less than **0.1 mm**.

e) Fit the cylinder (6) and the screw (5) to the lever (7).

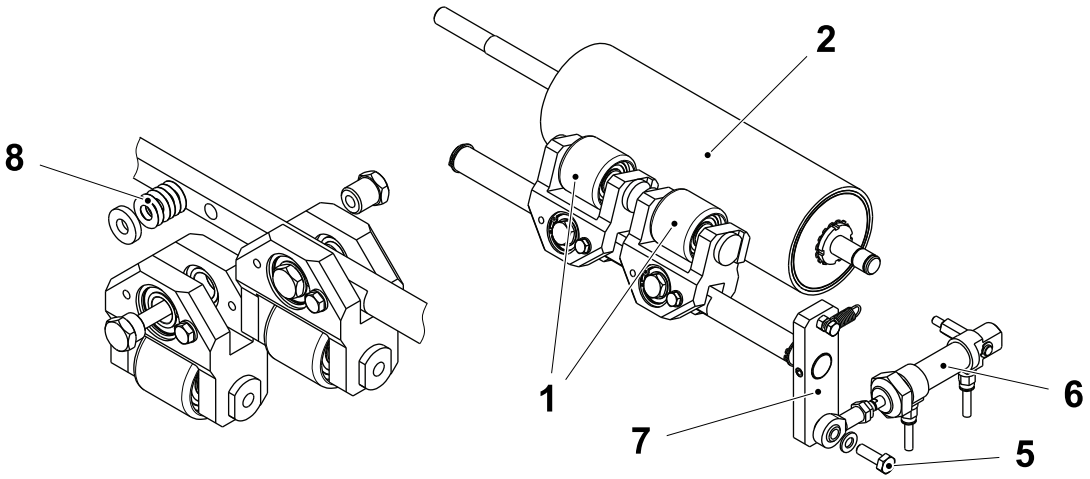

1 Roller
2 Roller
5 Screw
6 Cylinder
7 Lever
8 Shim

(Cont'd)

(Cont'd)

Counter Roller TP No. 2802879-0200

a) Loosen the screw (1).

b) Tension the spring (2) and tighten the screw (1).

c) Check that the counter roller (3) is in constant contact with the roller (4) while the handle (5) is in its lowest position. If not loosen the screw (1) and increase the spring tension until the correct result is obtained.

d) Tighten the screw (1).

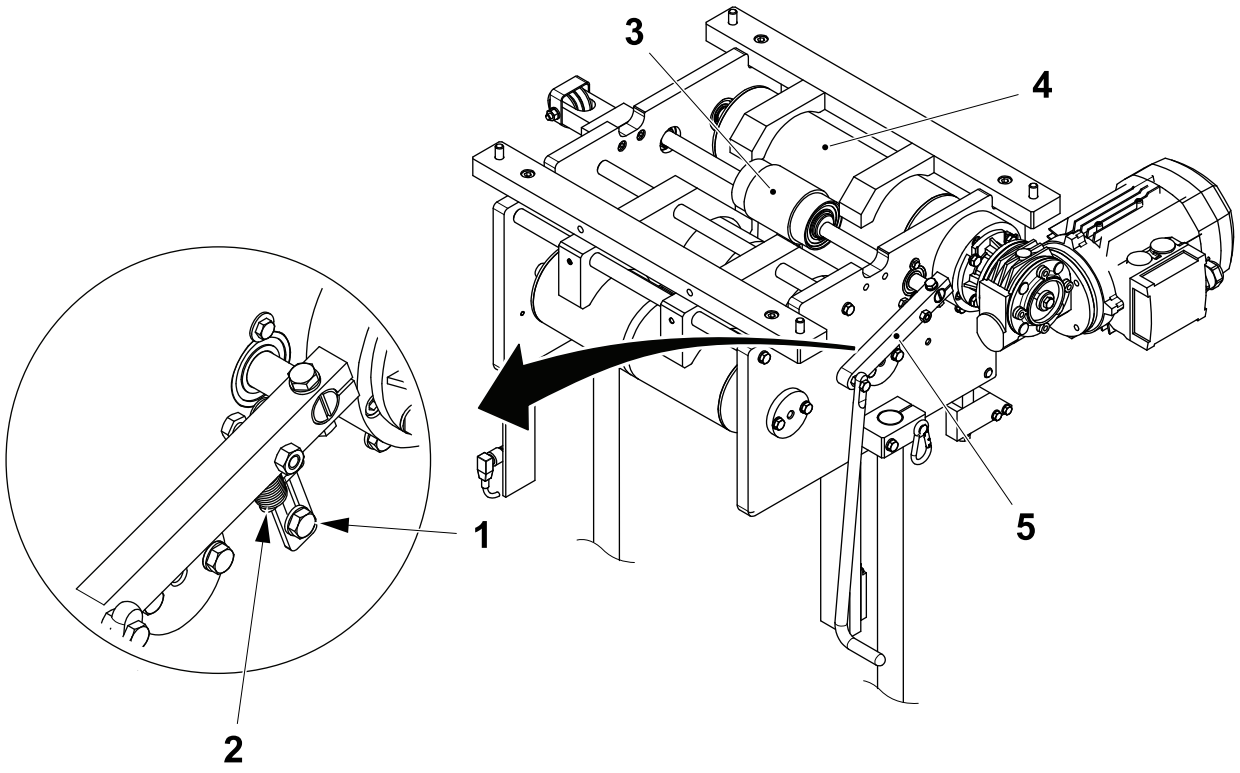

1 Screw
2 Spring
3 Counter roller
4 Roller
5 Handle

7.4 Fan System

7.4-1 Fan System - Check Air Pressure

Machine Status	PREPARATION
SPC Reference	2807529-0200

a) Check the pressure on the SA pressure gauge (1) and the SA SS pressure gauge (4), see section 9.1 Technical Data for correct values.

b) If necessary set the:

- SA sealing pressure by using the SA throttle screw (2) and SA pressure gauge (1).
- SA Short Stop sealing pressure by using the SA SS throttle screw (3) and SA SS pressure gauge (4) when its activated. Manually activate the solenoid valve T10K7300 to check the SA Short Stop sealing pressure.

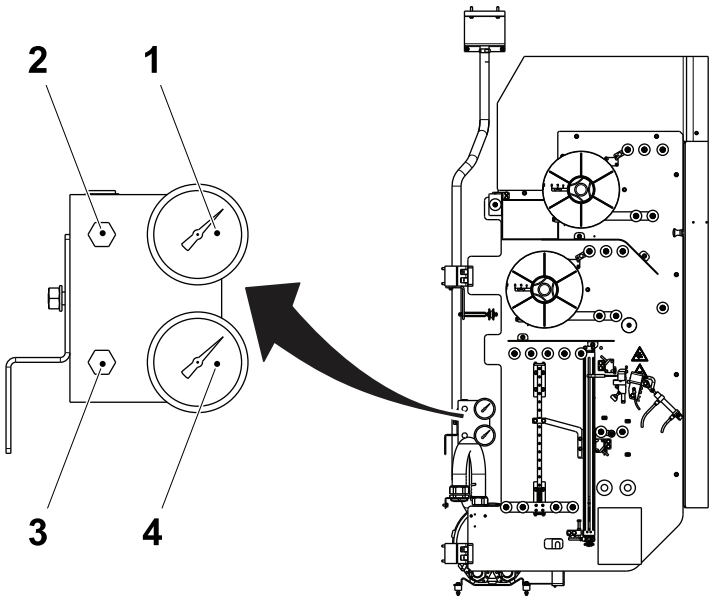

1 SA pressure gauge
2 SA throttle screw
3 SA SS throttle screw
4 SA SS pressure gauge

7.4-2 Fan System - Change Fan

Machine Status	Electrical supply disconnecting device in position O (OFF) Main air valve OFF Main steam valve ON Main water valve OFF
SPC Reference	2807529-0200

a) Remove the hoses (1) by means the screws (2).

b) Remove the gaskets (3) and disconnect the cable (4) from the fan (5).

c) Remove the screws (6) and change the fan (5).

d) Assemble in the reverse order.

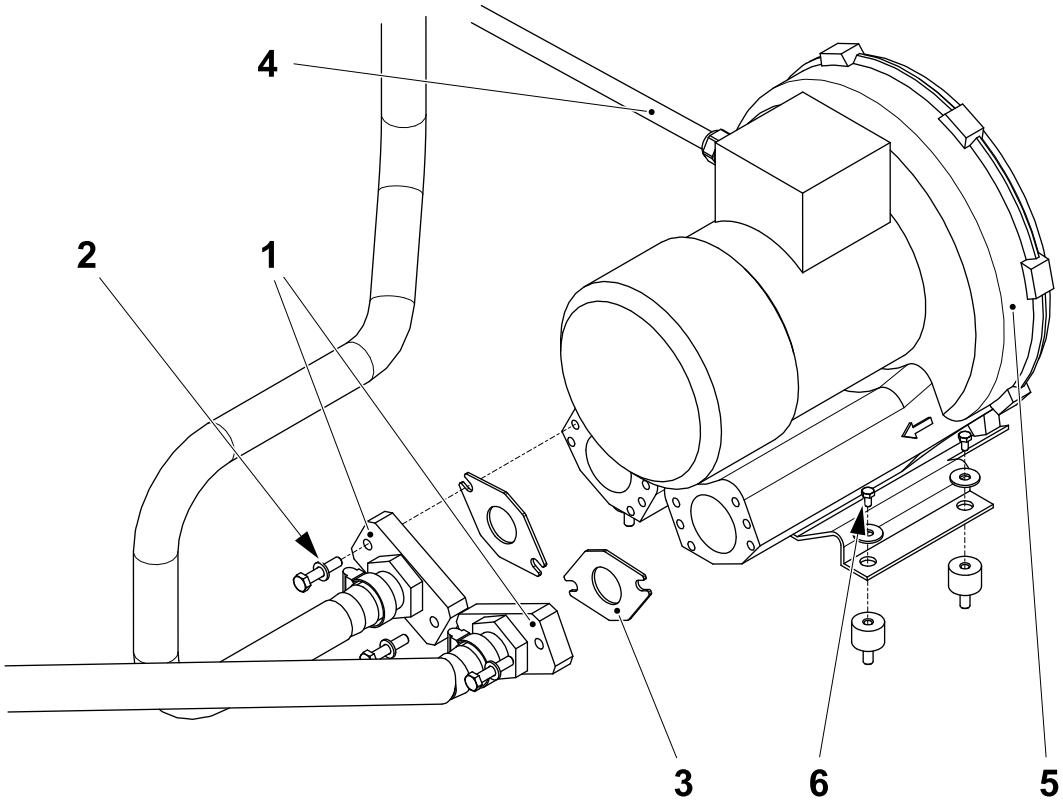

1 Hose
2 Screw
3 Gasket
4 Cable
5 Fan
6 Screw

7.5 Strip Magazine

7.5-1 Strip Magazine - Check Rotation Monitor

Machine Status	Electrical supply disconnecting device in position I (ON) Main air valve OFF Main steam valve ON Main water valve OFF
SPC Reference	2807492-0400

Rotate the flag (1) and check that the LED of the proximity switch (2) is ON.

If not, loosen the nuts (3) and (4). Move the proximity switch (2) until the distance **A** is obtained. Lock the nuts (3) and (4) making sure that the proximity switch (2) does not move.

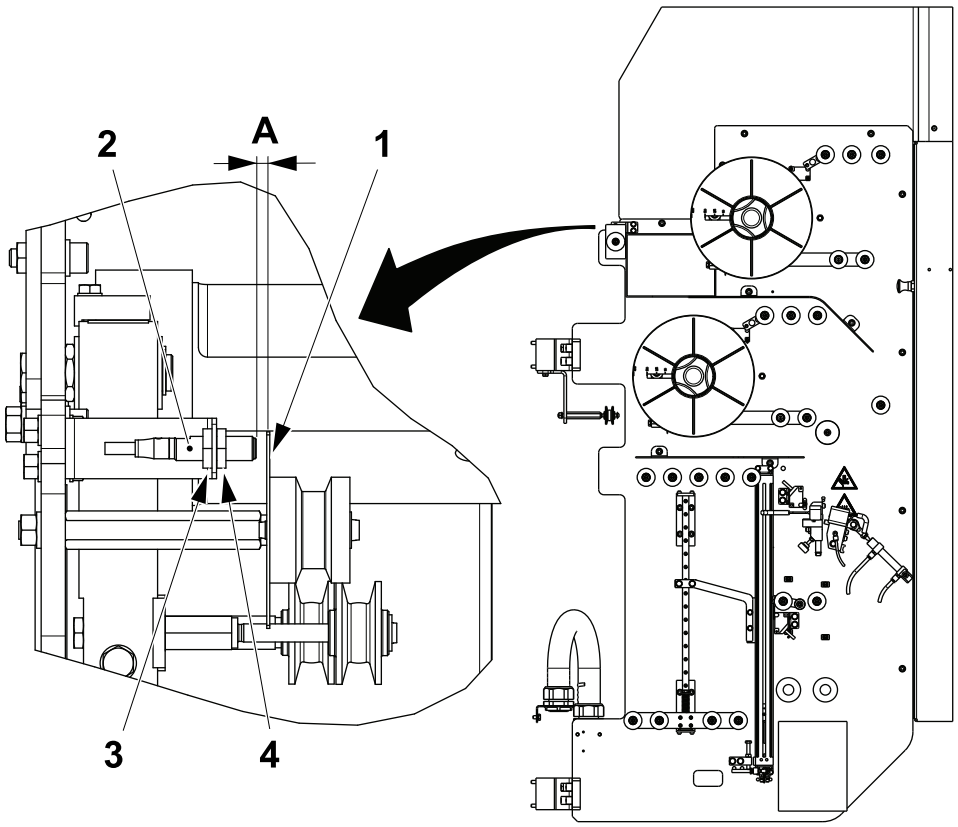

A = 1.0 ±0.5 mm

1 Flag
2 Proximity switch
3 Nut
4 Nut

7.5-2 Strip Magazine - Check Rollers

Machine Status	Main steam valve ON
SPC Reference	2807492-0400

Check that:

- all the rollers in the strip magazine are intact and rotate freely. If necessary, remove the screw (1) and change the ball bearings (2) and the roller (3)
- the rollers are free from strip material. Clean the rollers if necessary.

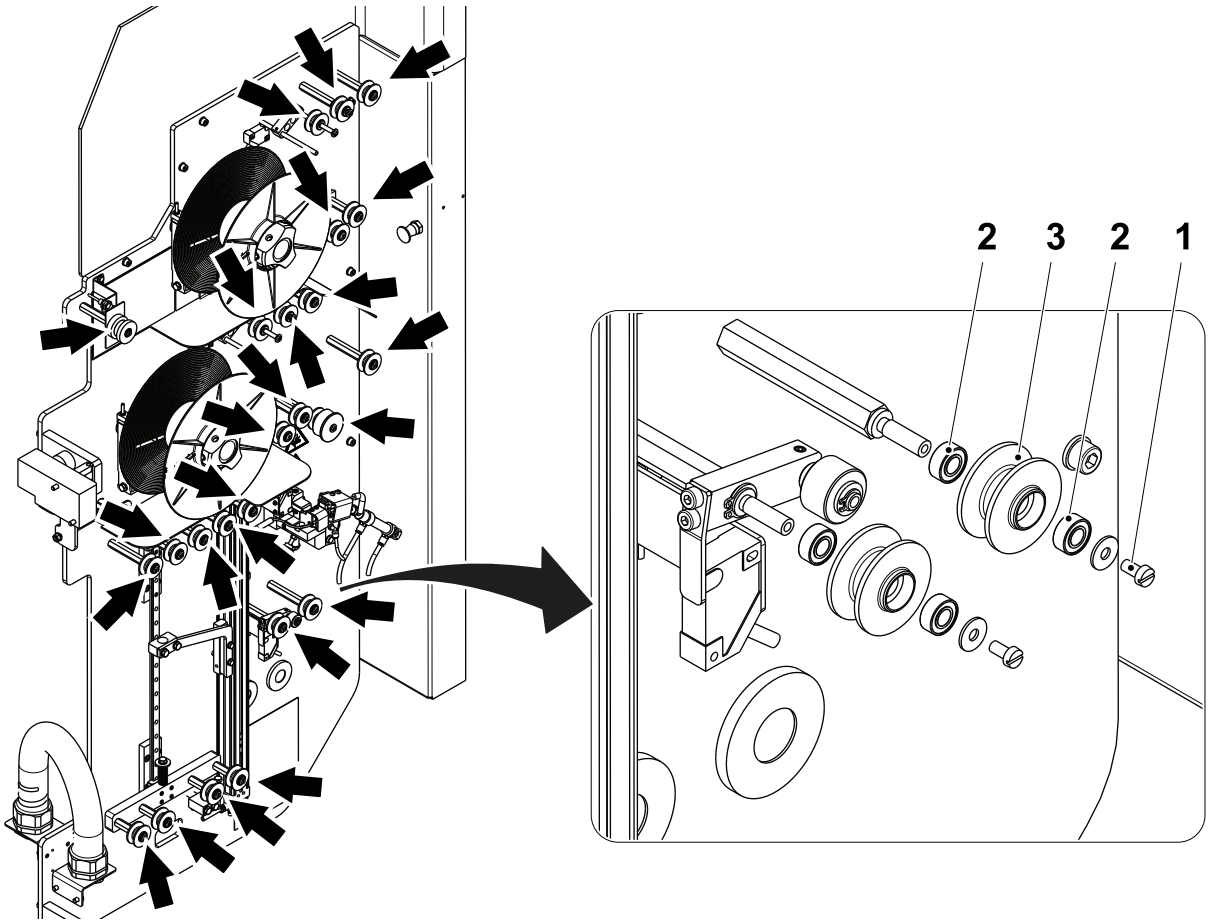

1 Screw
2 Ball bearing
3 Roller

7.5-3 Strip Magazine - Set Sensor and Spring

Machine Status	Electrical supply disconnecting device in position I (ON) Main air valve OFF Main steam valve ON Main water valve OFF
SPC Reference	2807492-0400

Set the spring (1) in front of the symbol (2) on the sensor (3). If required, loosen the nut (4) and move the spring (1).

If the LED on the sensor is ON, when the strip is prepared, adjust the spring by turning it.

Note! The sensor (3) must be in contact with the spring (1) pushing slightly on it. This will prevent reading problems due to the vibrations of the spring (1).

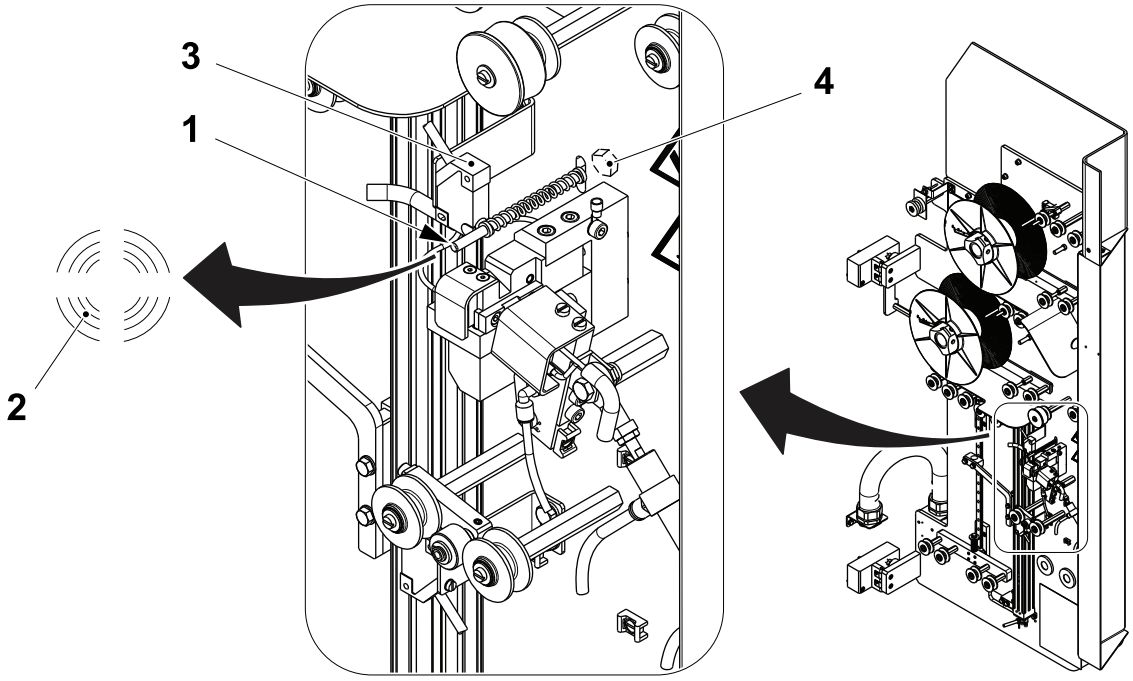

1 Spring
2 Symbol
3 Sensor
4 Nut

7.5-4 Strip Magazine - Set Position

Machine Status	Electrical supply disconnecting device in position O (OFF) Main air valve OFF Main steam valve ON Main water valve OFF
SPC Reference	2807492-0400

Adjust the cylinder restrictor valve (1) and restrictor valve (2) as described below to set the correct speed of movement for the strip magazine (3).

a) Close the restrictor valve (1) and restrictor valve (2).

b) Open the restrictor valve (1) **1.5** turns.

c) Open the restrictor valve (2) **7** turns.

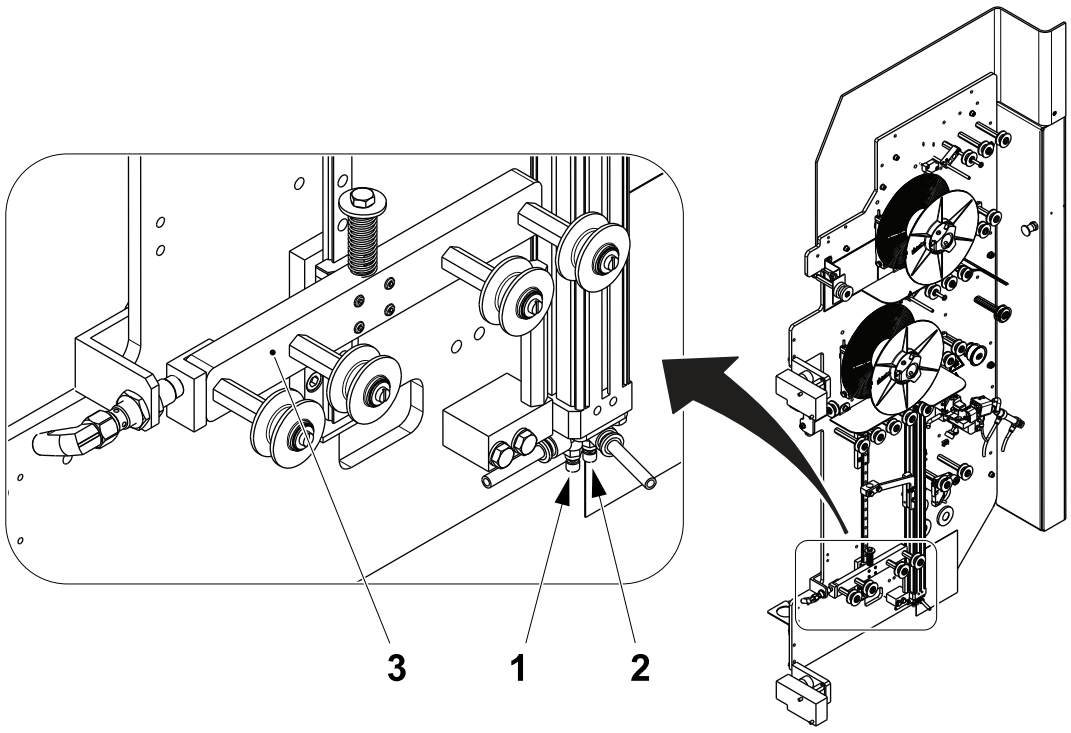

1 Restrictor valve
2 Restrictor valve
3 Strip magazine

(Cont'd)

(Cont'd)

d) Loosen the nuts (4) and set the distance **A** between the bracket (5) and the sensor (6). Tighten the nuts (4).

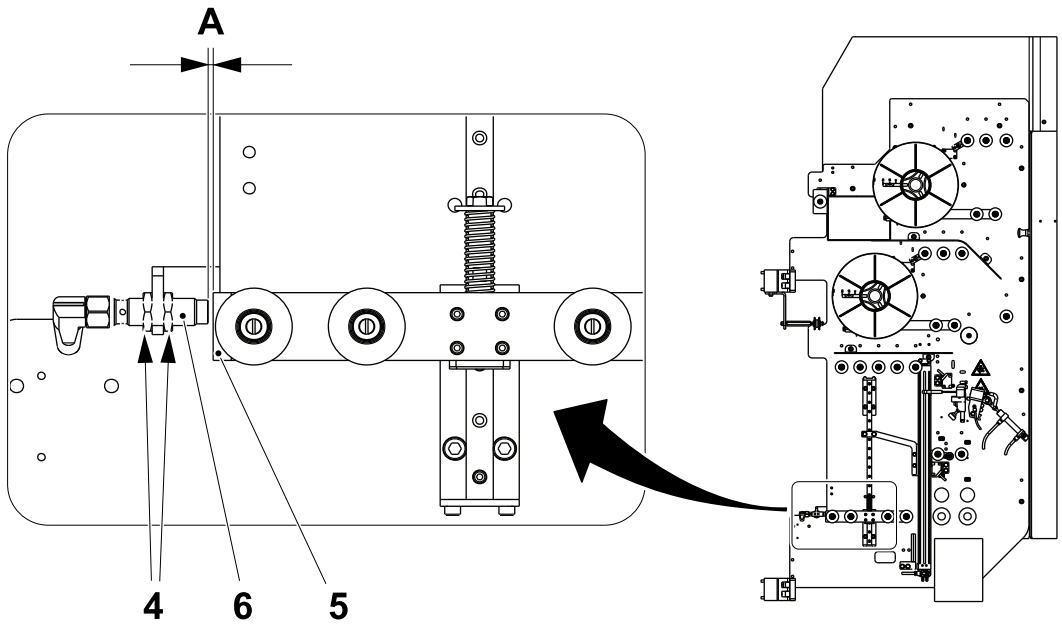

A = 2.0 ±0.5 mm
4 Nut
5 Bracket
6 Sensor

7.5.1 Heating Device

7.5.1-1 Heating Device - Check

Machine Status	Electrical supply disconnecting device in position O (OFF) Main air valve OFF Main steam valve ON Main water valve OFF
SPC Reference	2807507-0200

WARNING
Burn hazard.
Some parts may be hot. Wear personal protective equipment.

(Cont'd)

(Cont'd)

CAUTION
Risk of damage to the equipment.
Do not clean the sealing block (1).

Check that:

- the sealing block (1) is intact. If necessary, remove the screws (2) and change the sealing block (1), see 7.5.1-2 Heating Device - Set Position.

  Note! When fitting the sealing block (1) make sure that it is correctly positioned, see 7.5.1-2 Heating Device - Set Position.
- the cylinder piston (3) moves freely and smoothly
- there are no air leaks in the air connections (4) and (5).

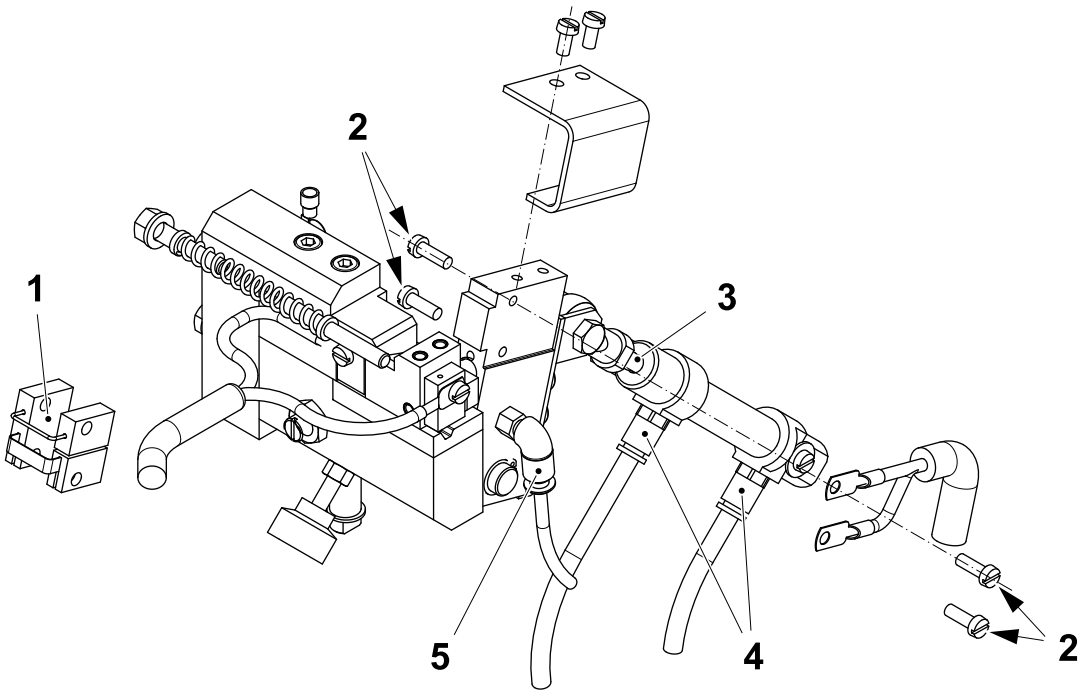

1 Sealing block
2 Screw
3 Cylinder piston
4 Air connection
5 Air connection

7.5.1-2 Heating Device - Set Position

Machine Status	Electrical supply disconnecting device in position O (OFF) Main air valve OFF Main steam valve ON Main water valve ON
SPC Reference	2807507-0200

WARNING

Burn hazard.

Some parts may be hot. Wear personal protective equipment.

a) Loosen the screw (1).

b) Push the strip sealing (2) up and then to the left so the RH side of the strip sealing (2) is aligned with the edge of the holder (3).

c) Tighten the screw (1).

d) Make sure that the connector block (4) does not touch the connector block (5). If necessary, loosen the screw (6) and move the connector block (5) away from the connector block (4) until there is a gap between the blocks.

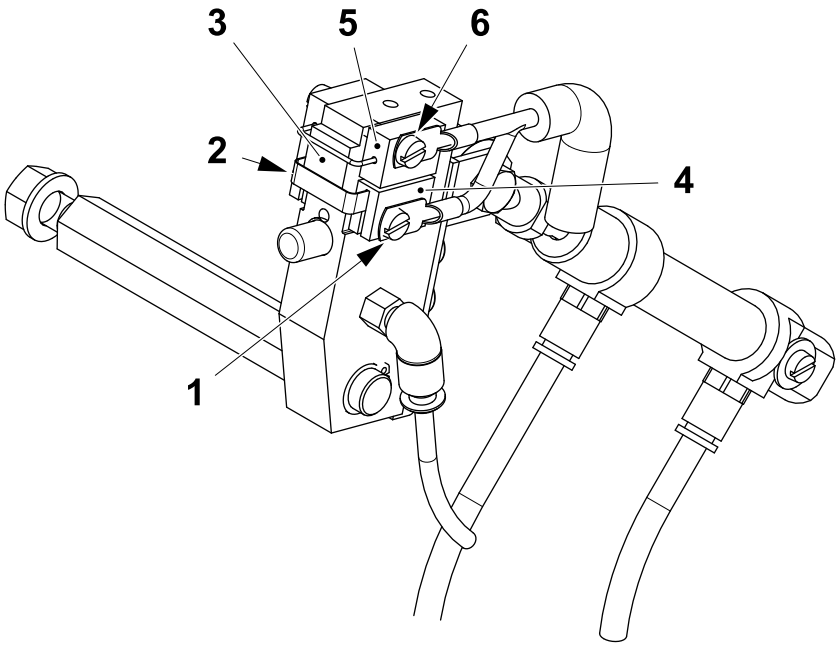

1 Screw
2 Strip sealing
3 Holder
4 Connector block
5 Connector block
6 Screw

(Cont'd)

(Cont'd)

e) Set the parallelism between the holder (3) and the pad (7) by means of the screws (8) at the rear of the plate (9).

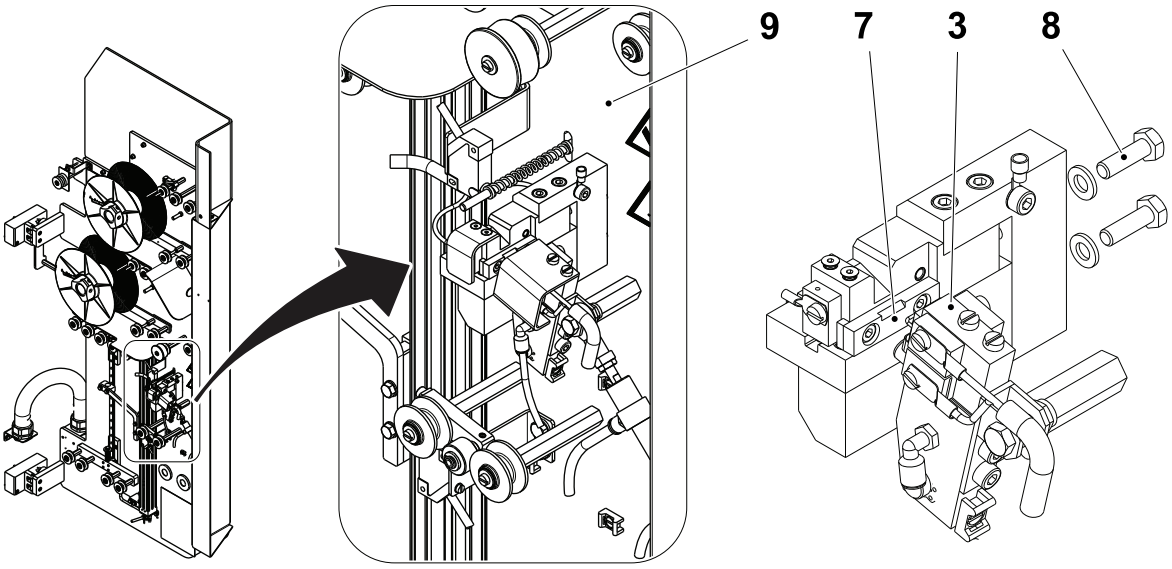

3 Holder
7 Pad
8 Screw
9 Plate

(Cont'd)

(Cont'd)

f) Push the piston rod of the cylinder (10) fully in by hand.

g) Loosen the nut (11).

h) Set the distance **A** between the plunger (12) and the block (13) by turning the piston rod (14).

i) Tighten the nut (11).

A = 4.5 ±0.5 mm

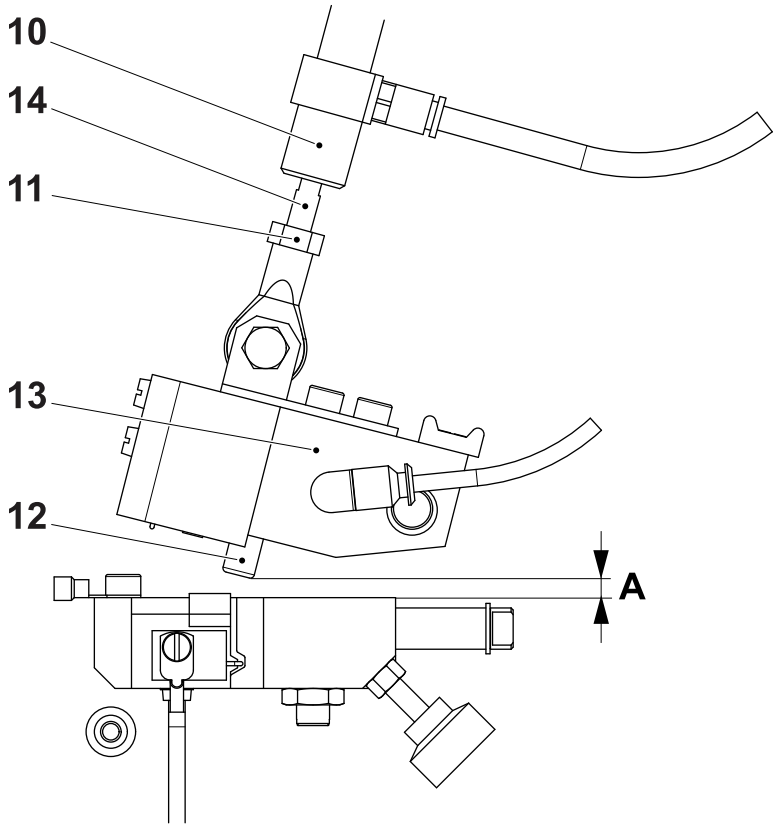

10 Cylinder
11 Nut
12 Plunger
13 Block
14 Piston rod

7.5.1-3 Heating Device - Change Plunger

Machine Status	Electrical supply disconnecting device in position O (OFF) Main air valve OFF Main steam valve ON
SPC Reference	2807507-0200

WARNING

Burn hazard.

Some parts may be hot. Wear personal protective equipment.

a) Remove the screws (1).

b) Remove the spring (2).

c) Remove and change the plunger (3).

d) Assemble in the reverse order.

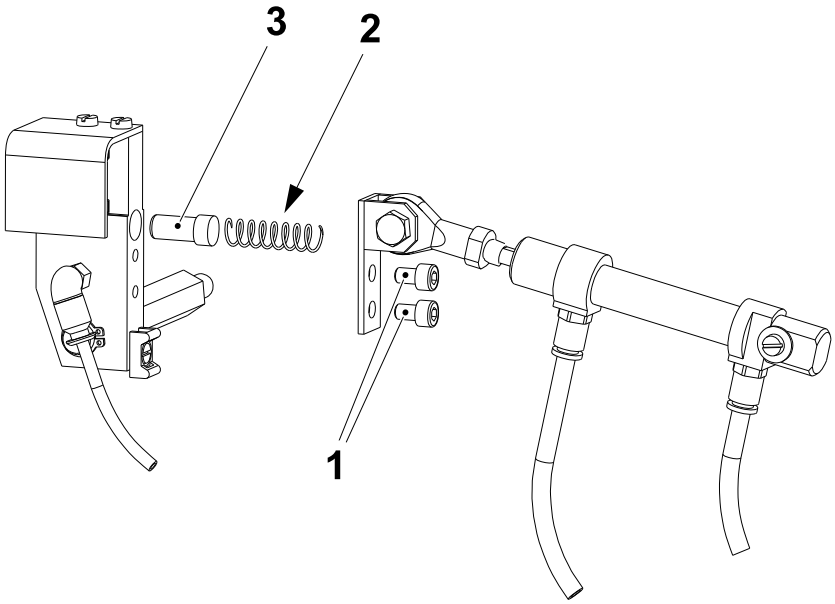

1 Screw
2 Spring
3 Plunger

7.5.2 Bobbin Holder

7.5.2-1 Bobbin Holder- Set Spring Loaded Screw

Machine Status	Electrical supply disconnecting device in position O (OFF) Main air valve OFF Main steam valve ON Main water valve OFF
Consumables	Locking Fluid TP No. 344431-0050
SPC Reference	580042-0200

a) Remove the old spring-loaded screw (1) from the hub (2) and clean the thread.

b) Apply locking fluid to the thread and fit the spring-loaded screw to the hub (2).

c) Turn the spring-loaded screw (1) to set the distance **A** between the top of the screw and the surface of the hub (2).

d) Repeat steps a) to c) for the other spring-loaded screws on the two hubs.

e) Fit a bobbin on the hub. If the bobbin is too tight or too loose, adjust the spring loaded screws.

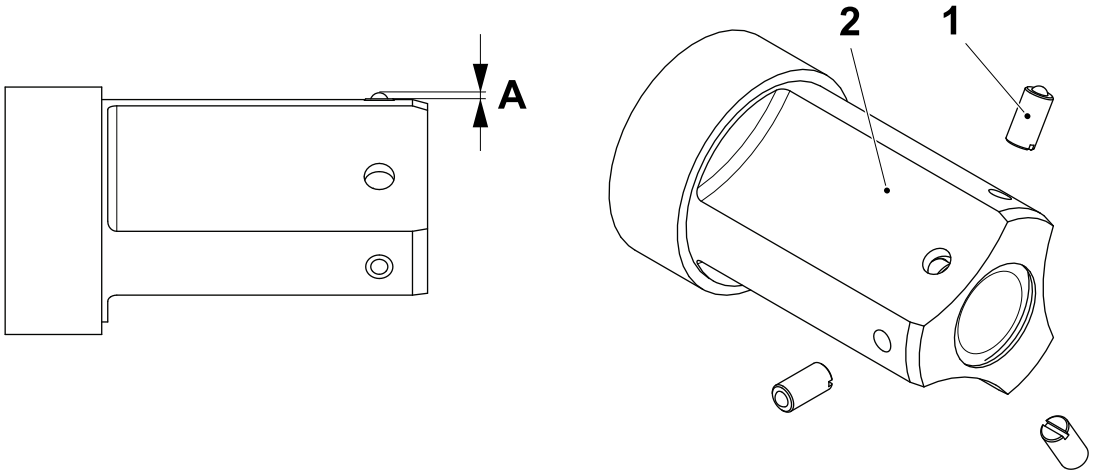

A = 1.9 ±0.1 mm

1 Spring-loaded screw

2 Hub

7.5.3 Brake Arm

7.5.3-1 Brake Arm - Set

Machine Status	Electrical supply disconnecting device in position O (OFF) Main air valve OFF Main steam valve ON Main water valve OFF
SPC Reference	2947979-0100

a) On both brake arms set the distance **A**, vertical, between the arm (1) and the stop (2). The arm (1) is in the lower position.

b) To set the distance **A** loosen the screw (3) and lock the belt (4) in a shorter or longer position. Tighten the screw (3).

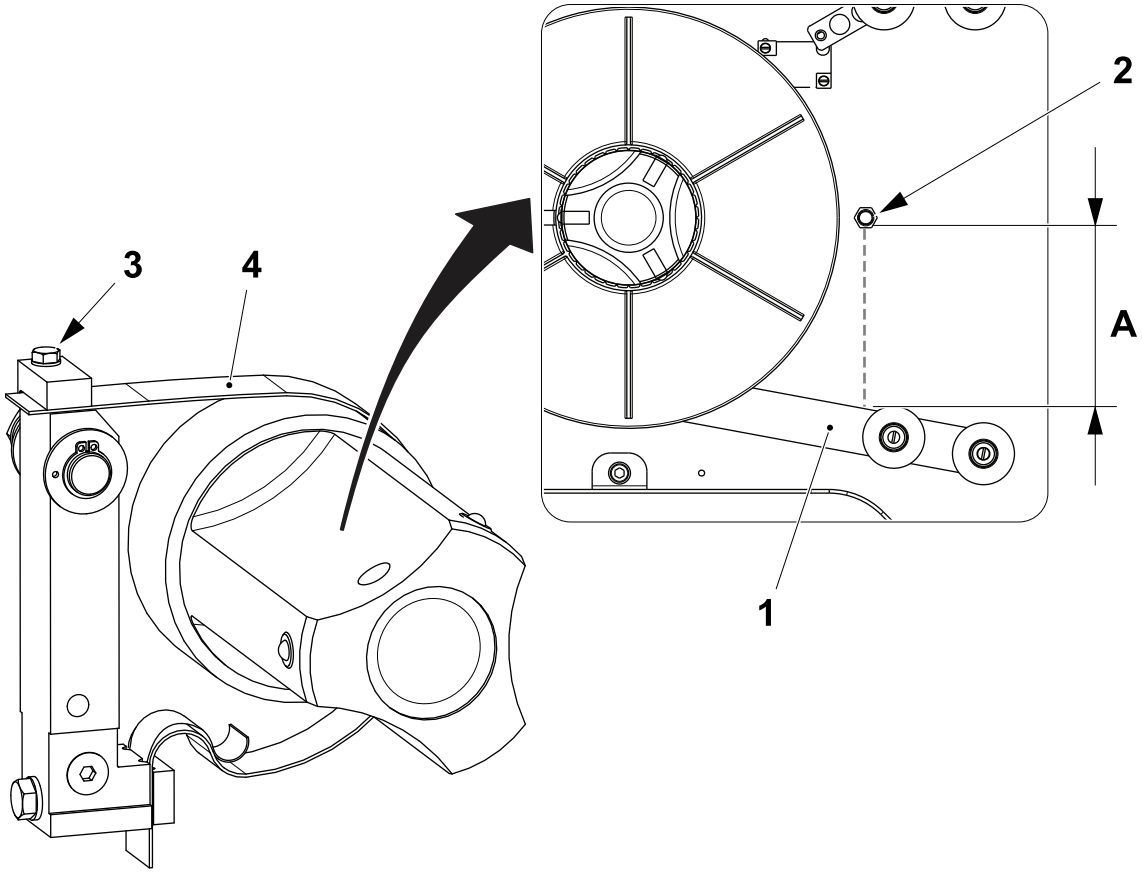

A = 100 ±1 mm

1 Arm
2 Stop
3 Screw
4 Belt

7.5.3-2 Brake Arm - Check Function

Machine Status	Electrical supply disconnecting device in position O (OFF) Main air valve OFF Main steam valve ON Main water valve OFF
SPC Reference	2947979-0100

a) On both brake arms, check that the belt (1) is intact and that it brakes the hub (3) when the arm is lowered. Change it, if necessary.

b) Make sure that the arm follows the strip tension.

c) Make sure that the rollers (4) and (5) are intact and that rotate and slide smoothly. Change or clean the rollers (4) and (5) if necessary.

d) Make sure that the brake arm is easy to move up and down. If not, remove the circlip (2) and the washer. Remove the arm and press out the bushing from the arm. Change the bushing and assemble in the reverse order.

e) If necessary, set the brake arm, see 7.5.3-1 Brake Arm - Set.

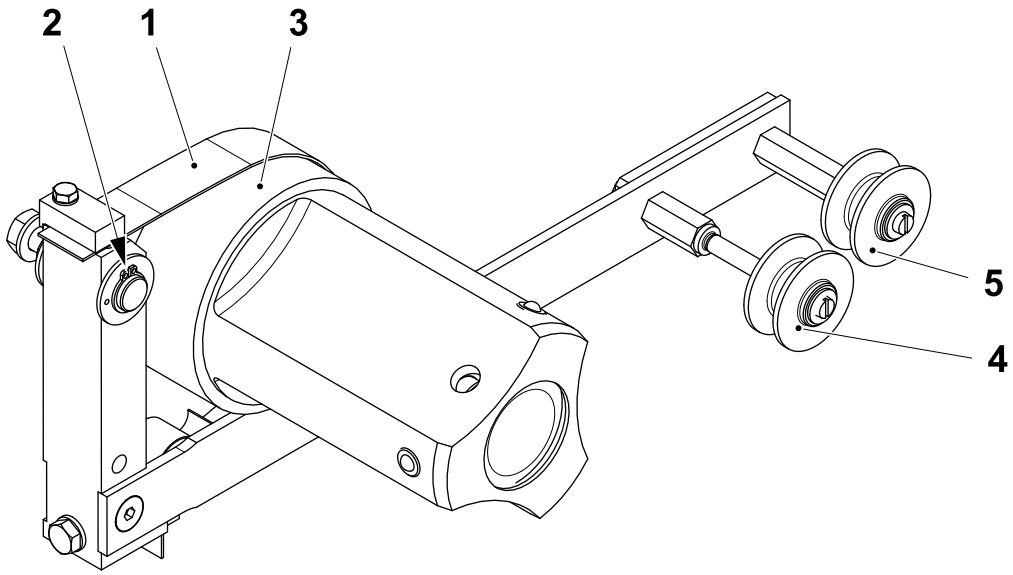

1 Belt
2 Circlip
3 Hub
4 Roller
5 Roller

7.5.4 Cutting Table

7.5.4-1 Cutting Table - Check

Machine Status	Main steam valve ON
SPC Reference	2807508-0200

Lift the knob (1) up and down and check that the slider (2) moves easily. If not, clean the slider (2), the shaft (3) and the splicing table (4).

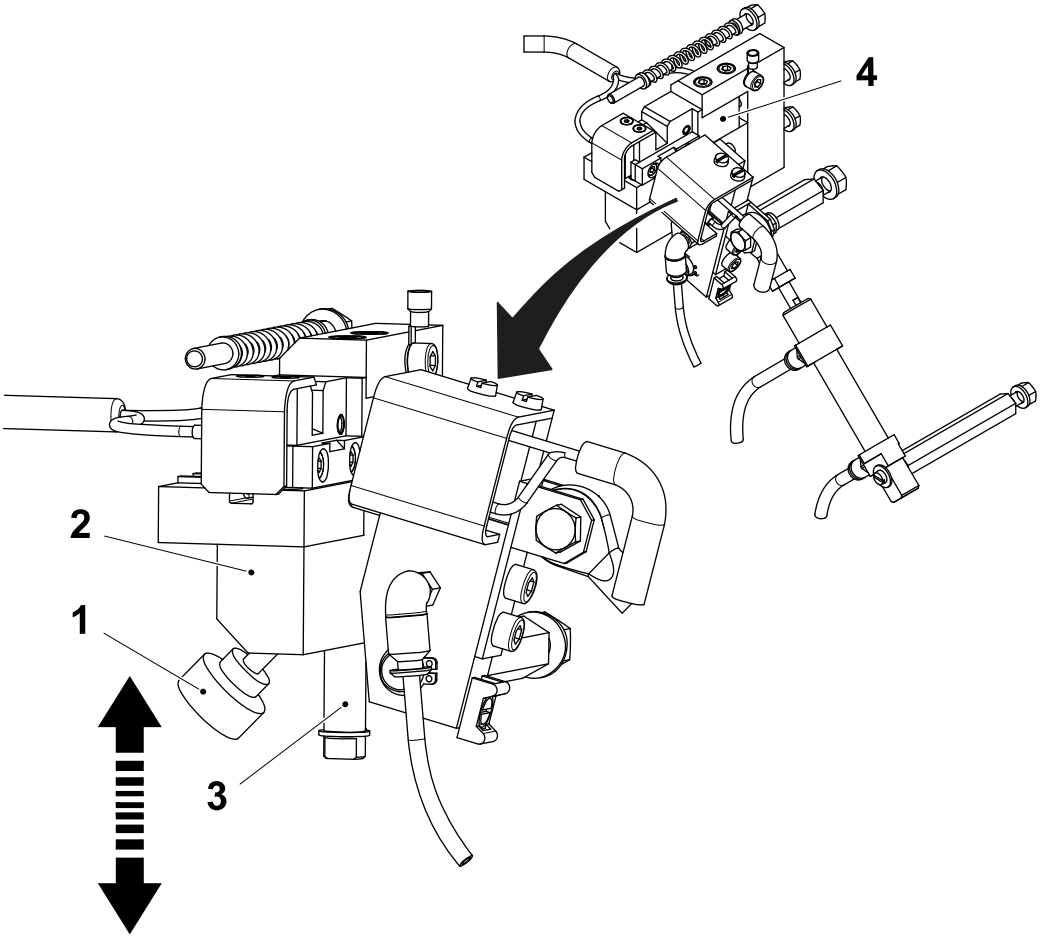

1 Knob
2 Slider
3 Shaft
4 Splicing table

7.5.4-2 Cutting Table - Change Pads and Finger

Machine Status	Electrical supply disconnecting device in position O (OFF) Main air valve OFF Main steam valve ON Main water valve ON
SPC Reference	2807508-0200

a) Remove the nut (1) and change the finger (2).

b) Remove the screws (3) and change the pad (4).

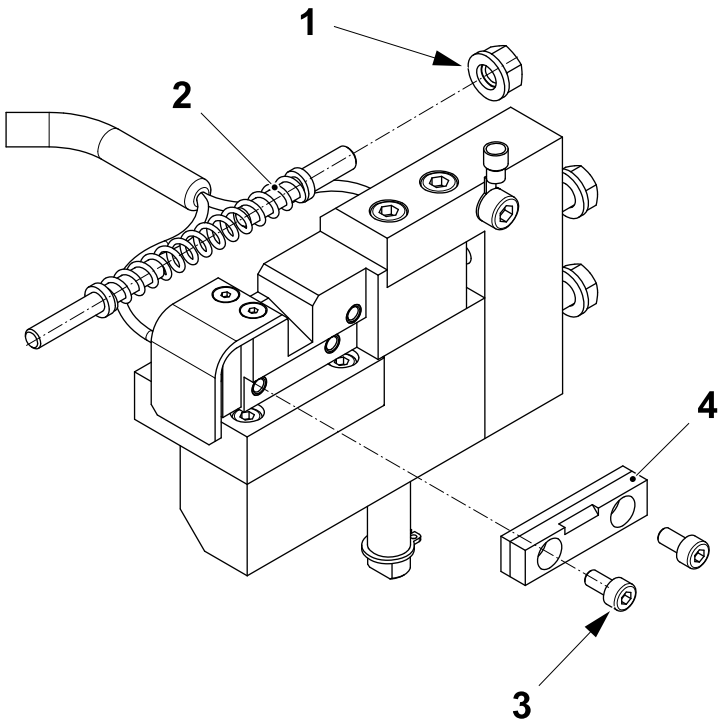

1 Nut
2 Finger
3 Screw
4 Pad

(Cont'd)

(Cont'd)

c) Loosen the nut (5) and the screw (6).

d) Pull down the slider (7) by means of the handle (8).

e) Remove the screws (9) and change the pad (10).

f) Assemble in the reverse order.

g) Set the cutting table, see 7.5.4-3 Cutting Table - Set.

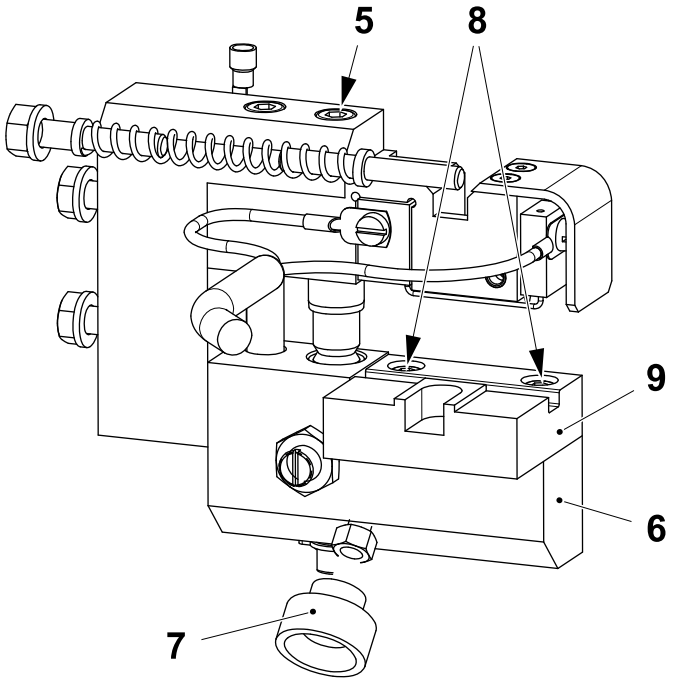

5 Nut
6 Screw
7 Slider
8 Handle
9 Screw
10 Pad

7.5.4-3 Cutting Table - Set

Machine Status	Electrical supply disconnecting device in position O (OFF) Main air valve OFF Main steam valve ON Main water valve ON
SPC Reference	2807508-0200

a) Loosen the nut (1) and the screw (2).

b) Move the slider (3) up and down.

c) Adjust the screw (2) until the slider (3) clicks into place.

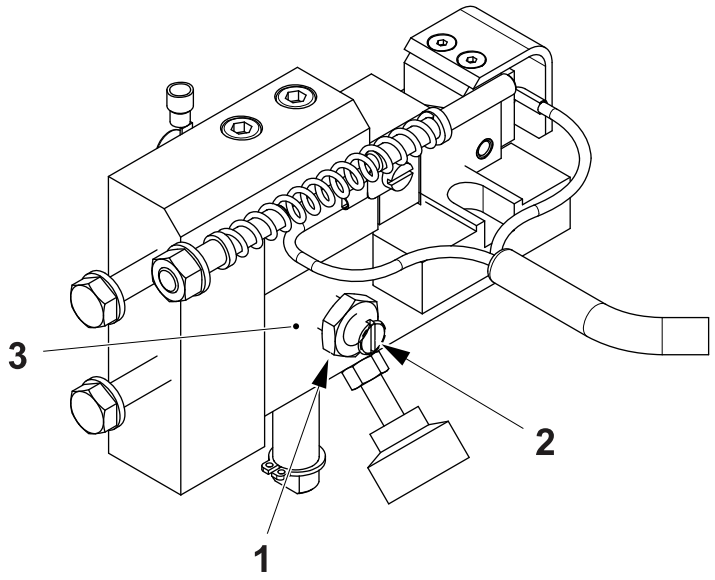

1 Nut
2 Screw
3 Slider

7.6 Strip Applicator

7.6-1 Strip Applicator - Set

Machine Status	Electrical supply disconnecting device in position I (ON) Main air valve OFF Main steam valve ON Main water valve OFF
SPC Reference	2807512-0300

WARNING

Risk of burns.

The air nozzle and other nearby parts may be hot. If necessary, wear heat-resistant protective gloves.

a) Remove the protection cover, see 7.6.3-1 Air Nozzle - Check.

b) Check that the strip applicator plate (1) is aligned with the machine body frame (2) with a set-square (3). If necessary,
   - loosen the screws (4) and the screws (5)
   - align the plate (1) with the set-square (3)
   - tighten the screws (4) and the screws (5).

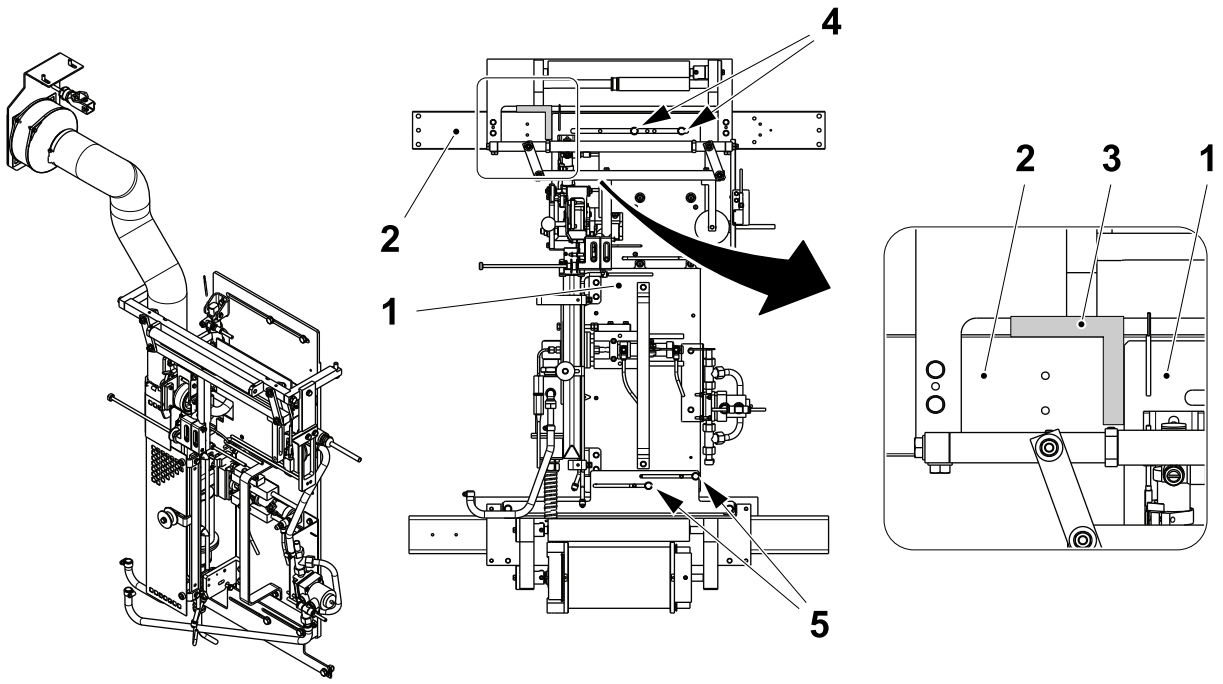

1 Plate
2 Frame
3 Set-square
4 Screw
5 Screw

(Cont'd)

(Cont'd)

c) Place a plumb line (6) over the roller (7) and the roller (8).

d) Align the plumb line (6) with the flange (9) on the roller (10).

e) Measure the distance **A** between the bracket (11) and the plumb line (6). Mark the distance **A** on the roller (8).

f) Measure the distance **B** from the edge to the mark on the roller (8).

g) Measure the distance **C** from the edge to plumb line (6) on the roller (7).

h) Make sure that the distance **B** and the distance **C** are equal within ±0.5 mm.

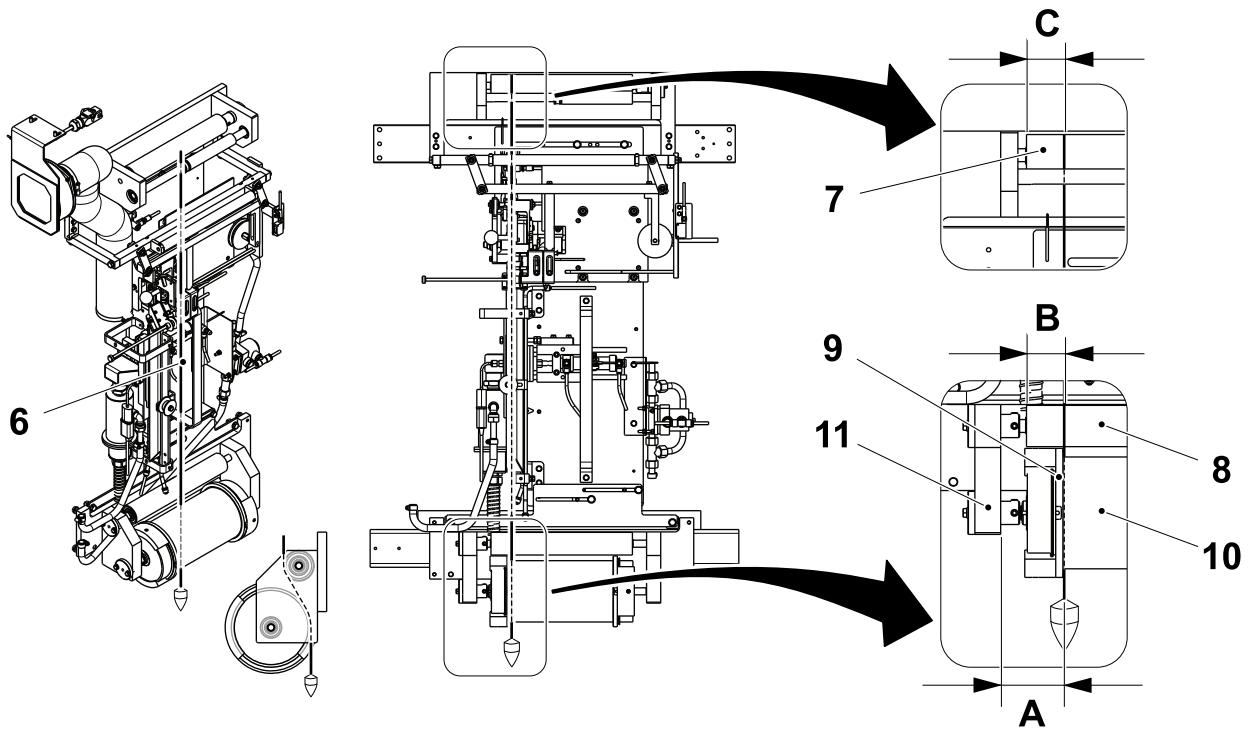

6 Plumb line
7 Roller
8 Roller
9 Flange
10 Roller
11 Bracket

(Cont'd)

(Cont'd)

i) Set the distance **D** between the plumb line (6) and the outer paper support (12) with the screws (4) and the screws (5).

Note! Check the distance **D** at the top and at the bottom of the air nozzle (13).

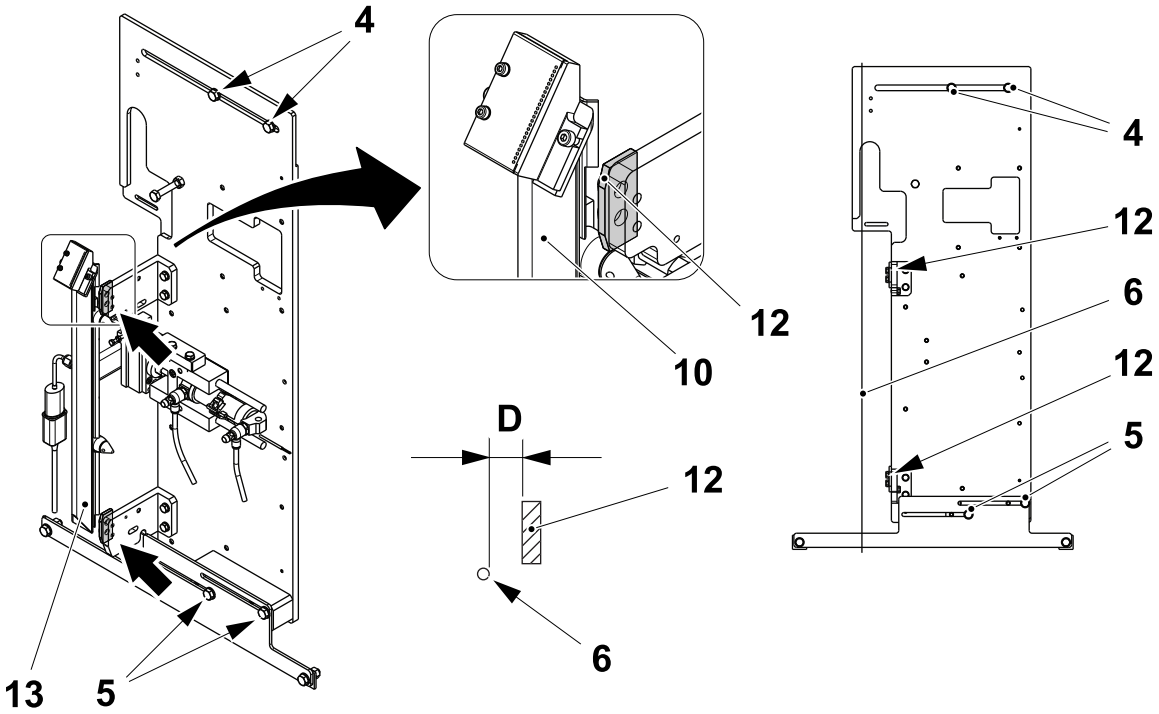

11.0 ±1.0 mm

4 Screw

5 Screw

6 Plumb line

12 Outer paper support

13 Air nozzle

(Cont'd)

(Cont'd)

Set Sensor

a) Align the sensor (1) and the reflector (2) with the screws (3).

b) Turn the screw (4) on the sensor (1) to the maximum.

c) Turn the screw (5) on the sensor (1) to the position **L**.

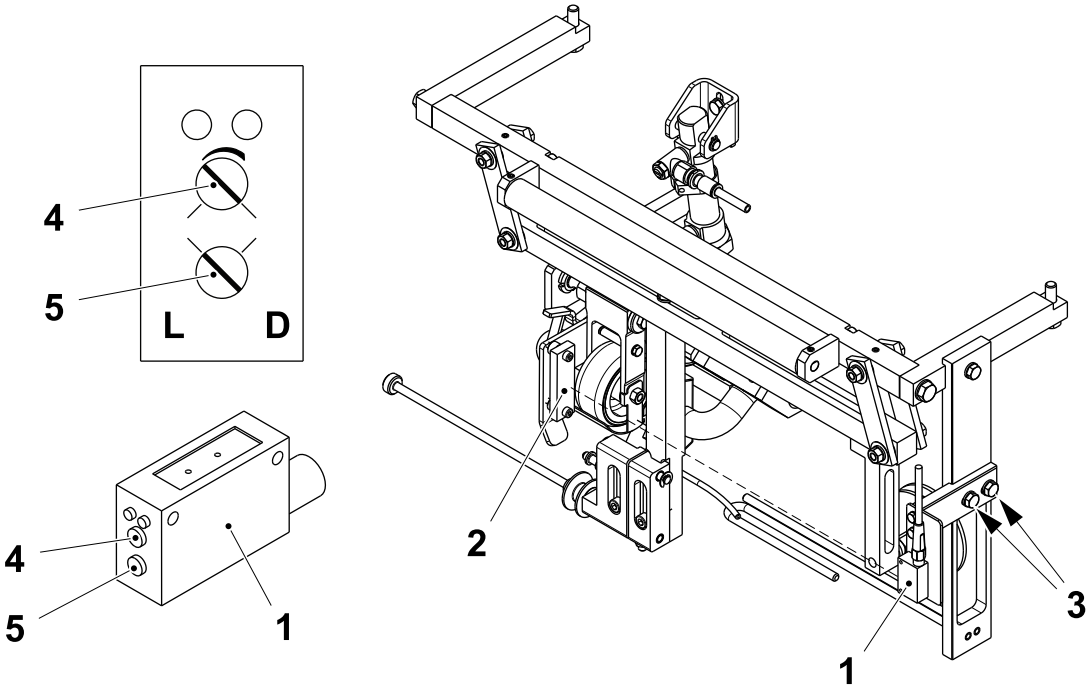

1 Sensor
2 Reflector
3 Screw
4 Screw
5 Screw

7.6.1 Short Stop Element

7.6.1-1 Short Stop Element - Check Function

Machine Status	PRODUCTION
SPC Reference	2887853-0300

a) Make a SHORT STOP.

b) Mark with a pen on the packaging material web the short stop nozzle position (arrow).

c) Start the machine again.

d) Collect the packages discarded from the machine.

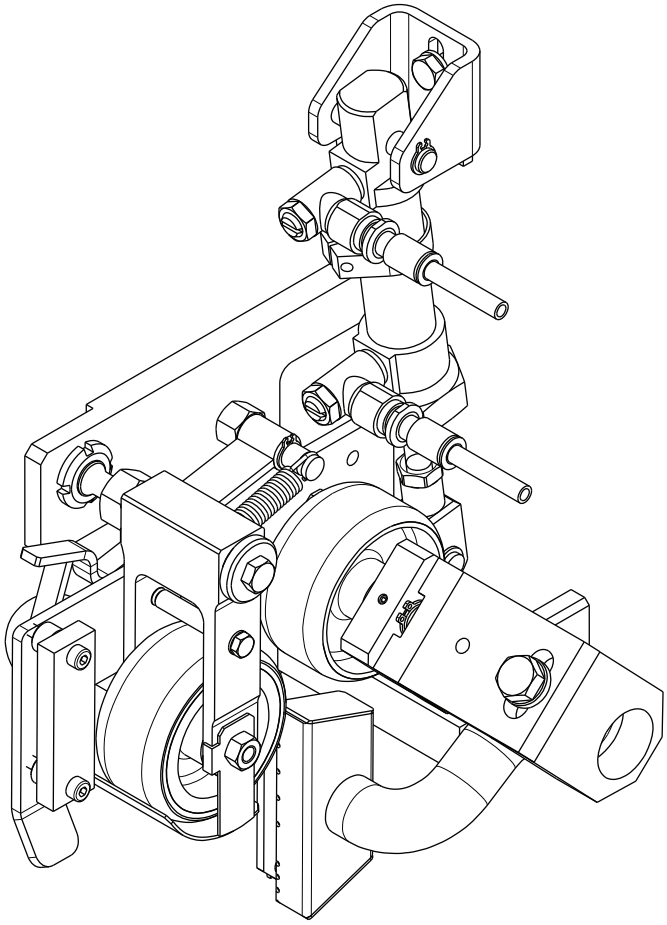

(Cont'd)

(Cont'd)

e) Check the packages to ensure that the strip is sealed to the package, especially at the mark of the pen.

f) If the sealing is not satisfactory, check:

- the SA SS air pressure. See 9.1 Technical Data.
- 7.6.1-5 Short Stop Element - Check Air Nozzle.
- 7.6.1-7 Short Stop Element - Set.

g) Step the machine down to OFF position and turn off all supplies.

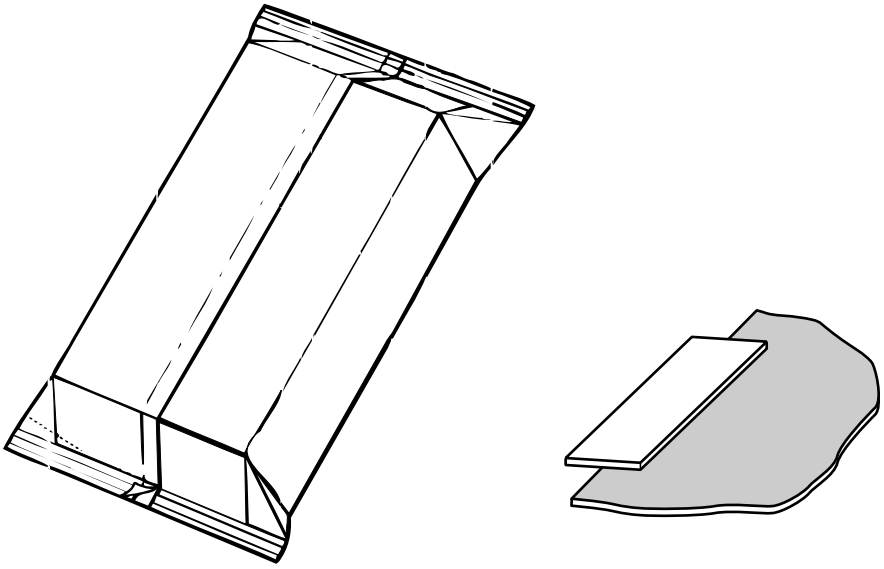

7.6.1-2 Short Stop Element - Check Rollers

Machine Status	Electrical supply disconnecting device in position O (OFF) Main air valve ON Main water valve OFF
Special Equipment	Dynamometer minimum 25 N
SPC Reference	2887853-0300

Check that:

- the roller (1) and the roller (2) rotate smoothly (the bearing play must not exceed 0.5 mm). Change the bushings, if necessary. See 7.6.1-4 Short Stop Element - Change Bushings.
- the teflon sleeves (3) and (4) are clean and intact. Clean or change the roller, if necessary. See 7.6.1-3 Short Stop Element - Change Rollers.
- the spring (5) is intact. Change the spring, if necessary

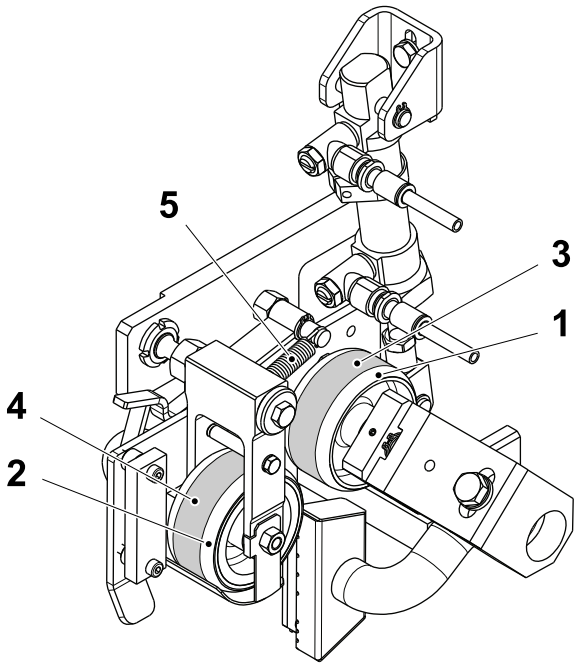

1 Roller
2 Roller
3 Teflon sleeve
4 Teflon sleeve
5 Spring

(Cont'd)

(Cont'd)

- the gap between the screw (6) and the pin (7) is at least the distance **A** when there is packaging material between the rollers. If necessary, loosen the stop screw (8) and adjust with the screw (6). Tighten the stop screw.
- the spring (5) force using the dynamometer (9). The spring force should be between 15 to 25 N where the roller (2) lifts from the roller (1). Change the spring (5), if necessary.

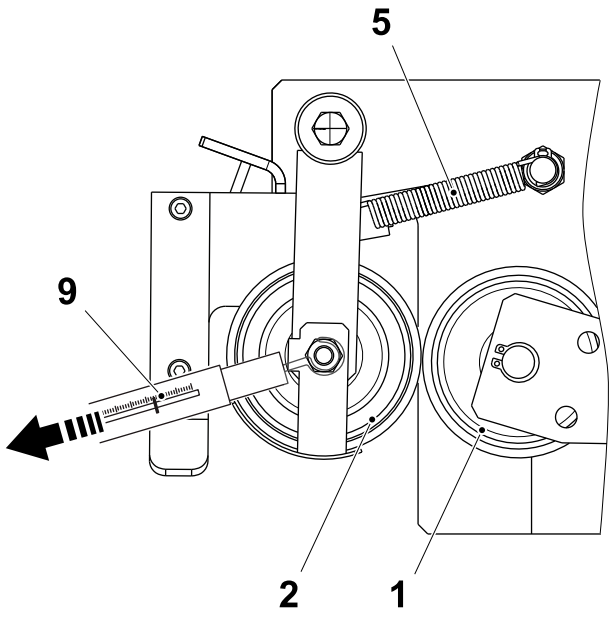

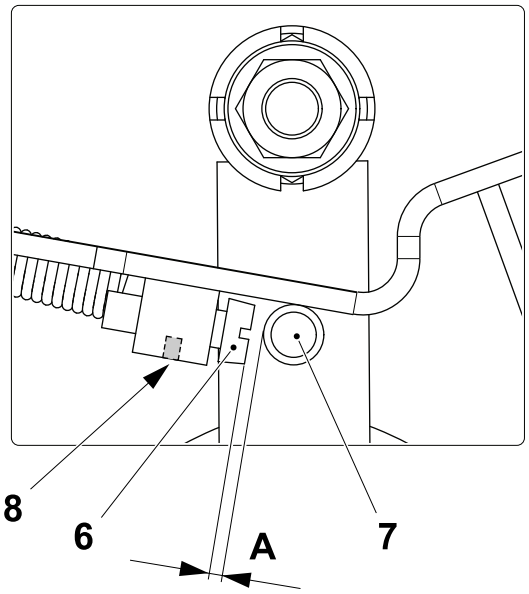

A > 0.4 mm

1 Roller
2 Roller
5 Spring
6 Screw
7 Pin
8 Stop screw
9 Dynamometer

7.6.1-3 Short Stop Element - Change Rollers

Machine Status	Electrical supply disconnecting device in position O (OFF) Main air valve OFF Main steam valve ON Main water valve OFF
SPC Reference	2887853-0300

a) Remove the retaining rings (1), the grub screw (2) and the nut (3).

b) Remove the shafts (4) and (5).

c) Remove the cover (6).

d) Remove and change the rollers (7) and (8).

e) Assemble in the reverse order.

Note! The rollers (7) and (8) must be put back with the magnetic (blue) side facing away from the handle ball (9).

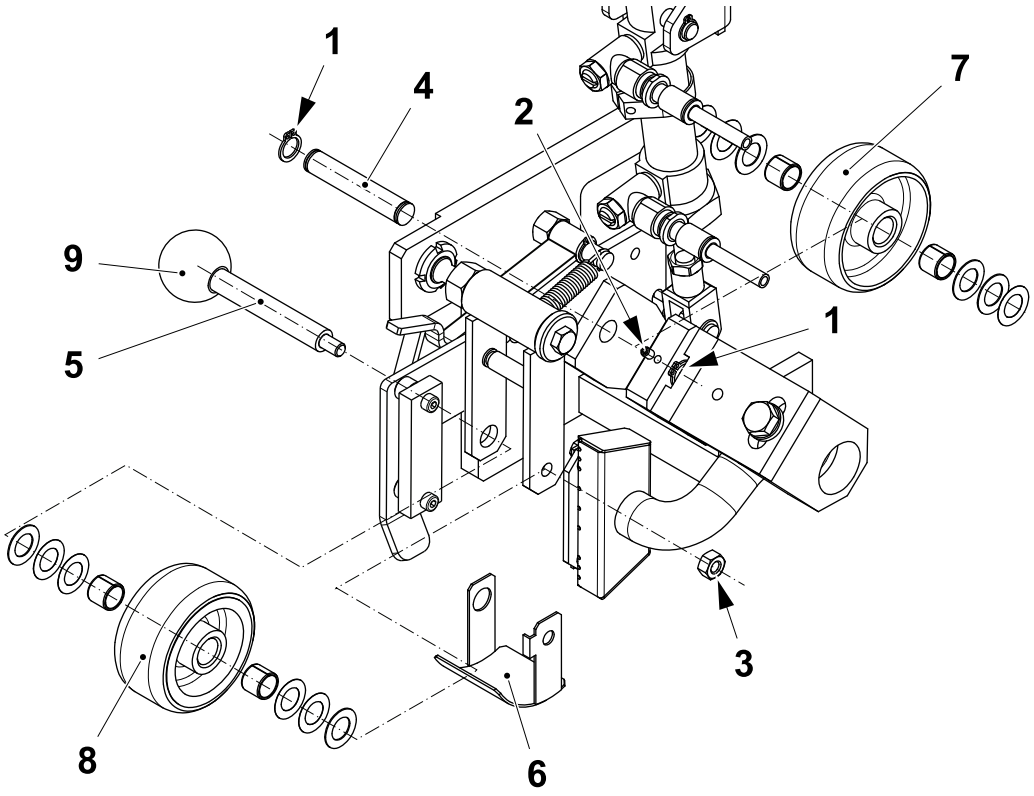

1 Retaining ring
2 Grub screw
3 Nut
4 Shaft
5 Shaft
6 Cover
7 Roller
8 Roller
9 Handle ball

7.6.1-4 Short Stop Element - Change Bushings

Machine Status	Electrical supply disconnecting device in position O (OFF) Main air valve OFF Main water valve OFF
SPC Reference	2887853-0300

a) Remove the screw (1) and unhook the spring (2).

b) Remove the nut (3) and pull out the shaft (4).

c) Remove the heat guard (5).

d) Change the bushings (6) and the shims (7).

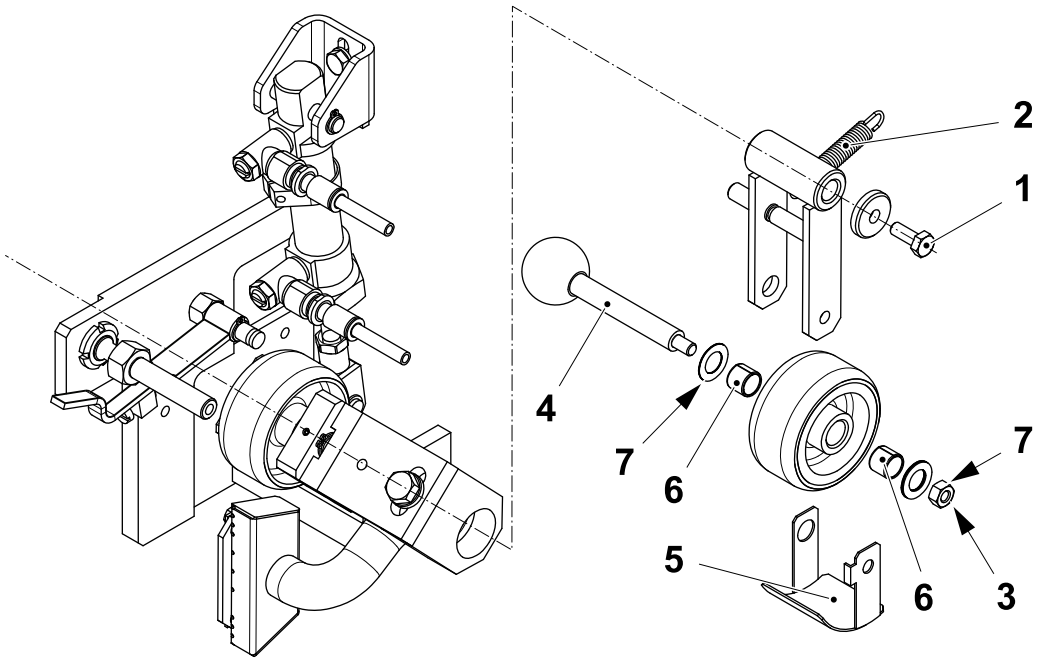

1 Screw
2 Spring
3 Nut
4 Shaft
5 Heat guard
6 Bushing
7 Shim

(Cont'd)

(Cont'd)

e) Remove the screws (8) and the nozzle assembly (9).

f) Remove the stop screw (10) and the circlip (11).

g) Pull out the shaft (12) and the roller assembly (13).

h) Change the bushings (14) and the shims (15).

i) Assemble in the reverse order.

j) Set the short stop element. See 7.6.1-7 Short Stop Element - Set.

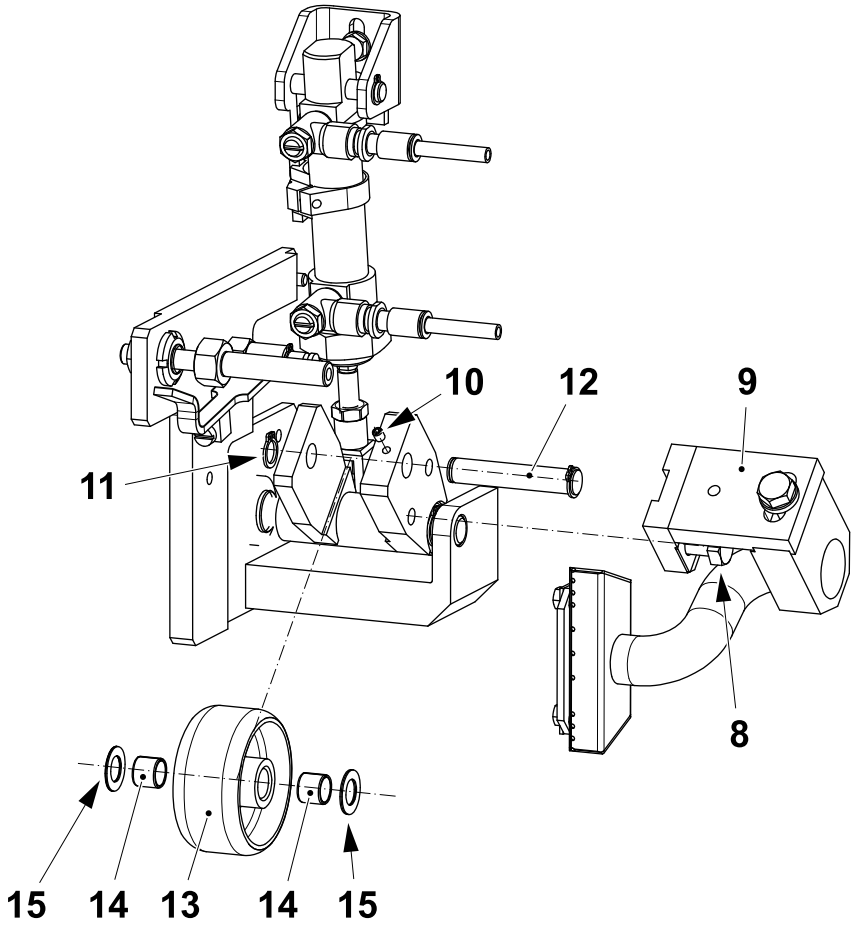

8 Screw
9 Nozzle assembly
10 Stop screw
11 Circlip
12 Shaft
13 Roller assembly
14 Bushing
15 Shim

7.6.1-5 Short Stop Element - Check Air Nozzle

Machine Status	Electrical supply disconnecting device in position O (OFF) Main air valve OFF Main water valve OFF
Special Equipment	Protective gloves TP No. 90303-12
SPC Reference	2887853-0300

WARNING

Risk of burns.

The air nozzle and other nearby parts may be hot. If necessary, wear heat-resistant protective gloves.

Check that:

- the air holes (2) of the nozzle are not blocked. Clean them, if necessary
- the plate (1) is not damaged. Change the plate, if necessary, and set it. See 7.6.1-7 Short Stop Element - Set
- the nozzle (3) turns smoothly. Change the bushing, if necessary. See 7.6.1-6 Short Stop Element - Change Air Nozzle Bushing
- the cylinder piston (4) moves smoothly. Change the cylinder, if necessary.

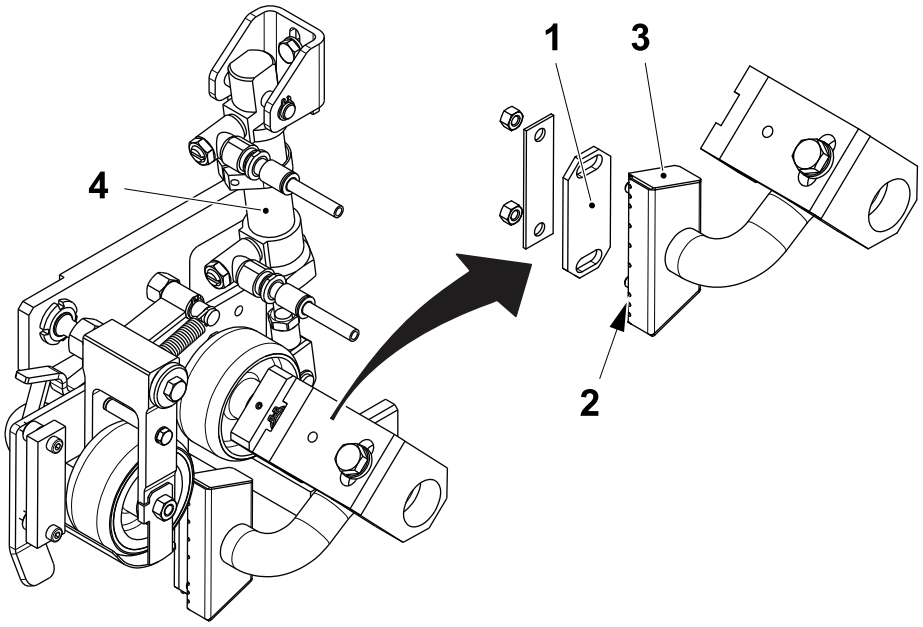

1 Plate
2 Air hole
3 Nozzle
4 Cylinder piston

7.6.1-6 Short Stop Element - Change Air Nozzle Bushing

Machine Status	Electrical supply disconnecting device in position O (OFF) Main air valve OFF Main water valve OFF
Special Equipment	Protective gloves TP No. 90303-12
SPC Reference	2887853-0300

WARNING

Risk of burns.

The air nozzle and other nearby parts may be hot. If necessary, wear heat-resistant protective gloves.

a) Disconnect the air hoses (1).

b) Remove the screw (2) and the nozzle assembly (3).

c) Remove the circlip (4) and the axle (5).

d) Remove the screw (6) and the bracket (7).

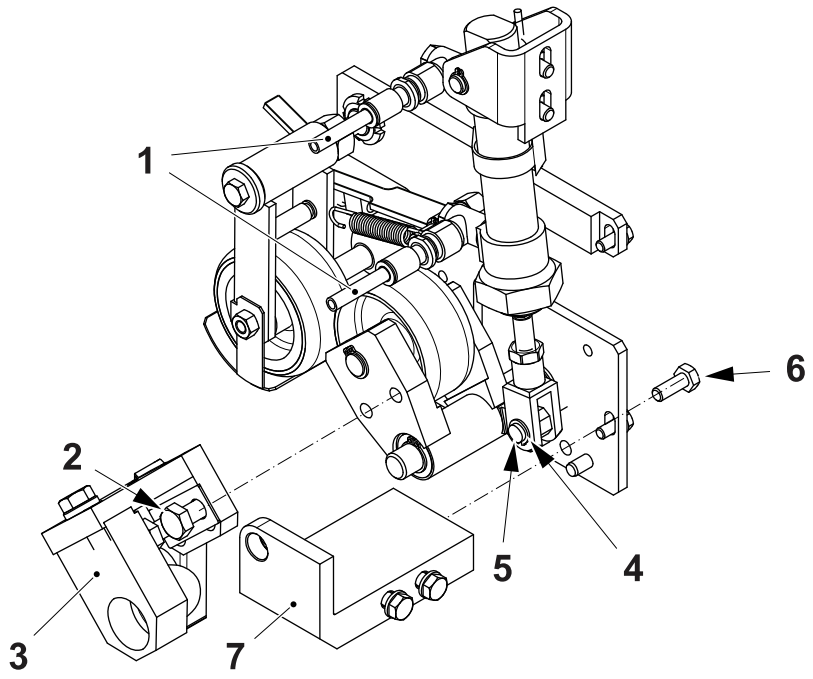

1 Hose
2 Screw
3 Nozzle assembly
4 Circlip
5 Axle
6 Screw
7 Bracket

(Cont'd)

(Cont'd)

e) Remove the circlip (8) and the shims (9).

f) Remove the roller assembly (10).

g) Remove and change the bushings (11).

h) Assemble in the reverse order.

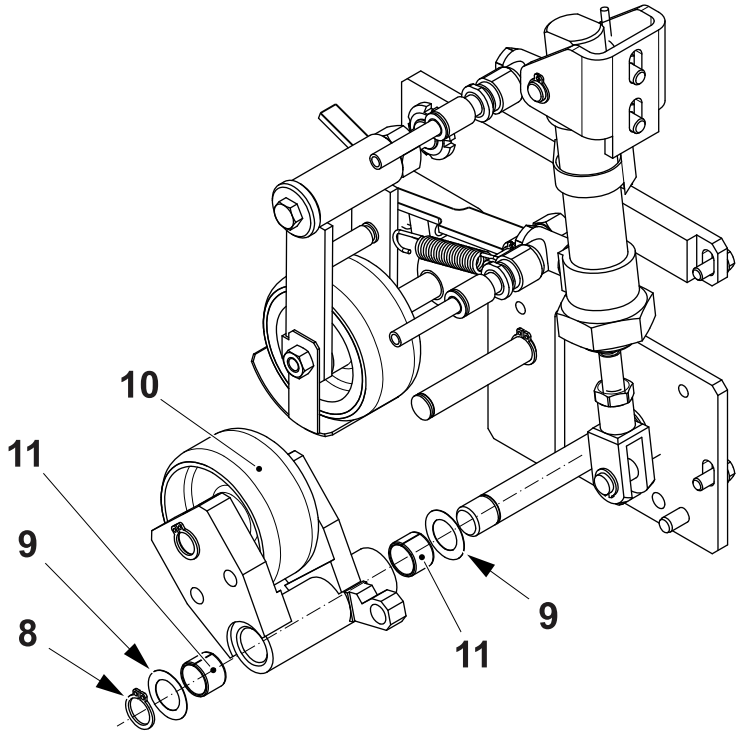

8 Circlip
9 Shim
10 Roller assembly
11 Bushing

7.6.1-7 Short Stop Element - Set

Machine Status	PREPARATION Packaging material threaded
Special Equipment	Protective gloves TP No. 90303-12
SPC Reference	2887853-0300

Cylinder

WARNING

Risk of burns.

The air nozzle and other nearby parts may be hot. If necessary, wear heat-resistant protective gloves.

a) Adjust the cylinder (1) by loosening the nut (2) and turning the piston rod until the two rollers are aligned with each other. Tighten the nut.

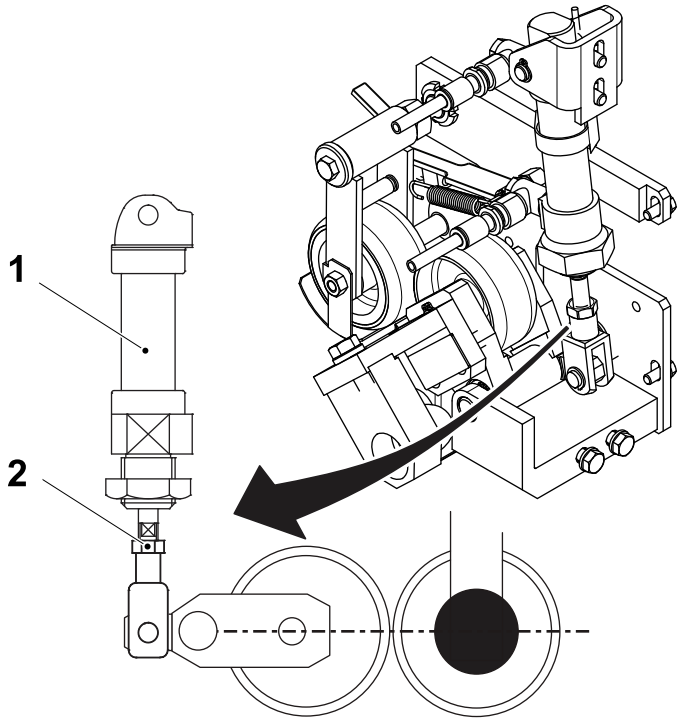

1 Cylinder
2 Nut

(Cont'd)

(Cont'd)

b) Screw in the screws on the throttle check valve (3) and throttle check valve (4) to the bottom position.

c) Set the piston back movement by opening the screw on the throttle check valve (4) gradually until the back movement is fast but smooth (0.5 sec). Manually activate the solenoid valve T10K7300 on the valve panel.

d) Set the piston forward movement by opening the screw on the throttle check valve (3) gradually until the forward movement is slow but distinct. Manually activate the solenoid valve T10K7300 on the valve panel.

e) Turn off the air valve.

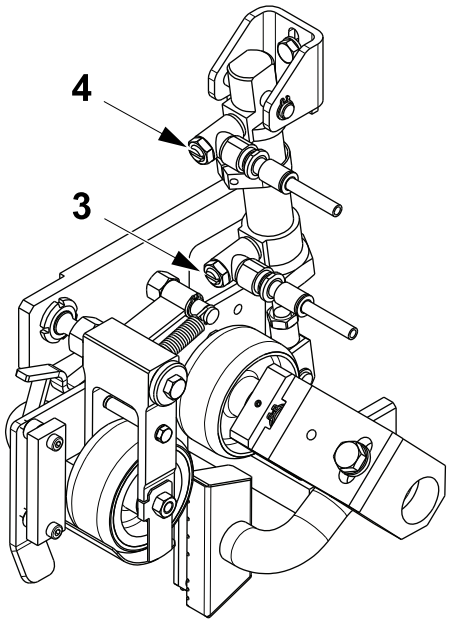

3 Throttle check valve
4 Throttle check valve

(Cont'd)

(Cont'd)

Align Rollers

a) Fit a plumb line (1) to the roller (2).

b) Align the roller (3) and the roller (4).

c) Make sure that the roller (3) touch the plumb line (1). If necessary,
- loosen the screws (5)
- add or remove shims (6)
- tighten the screws (5).

d) Remove the plumb line (1).

e) Set the distance **A** between the roller (3) and the roller (4) with the screw (7).

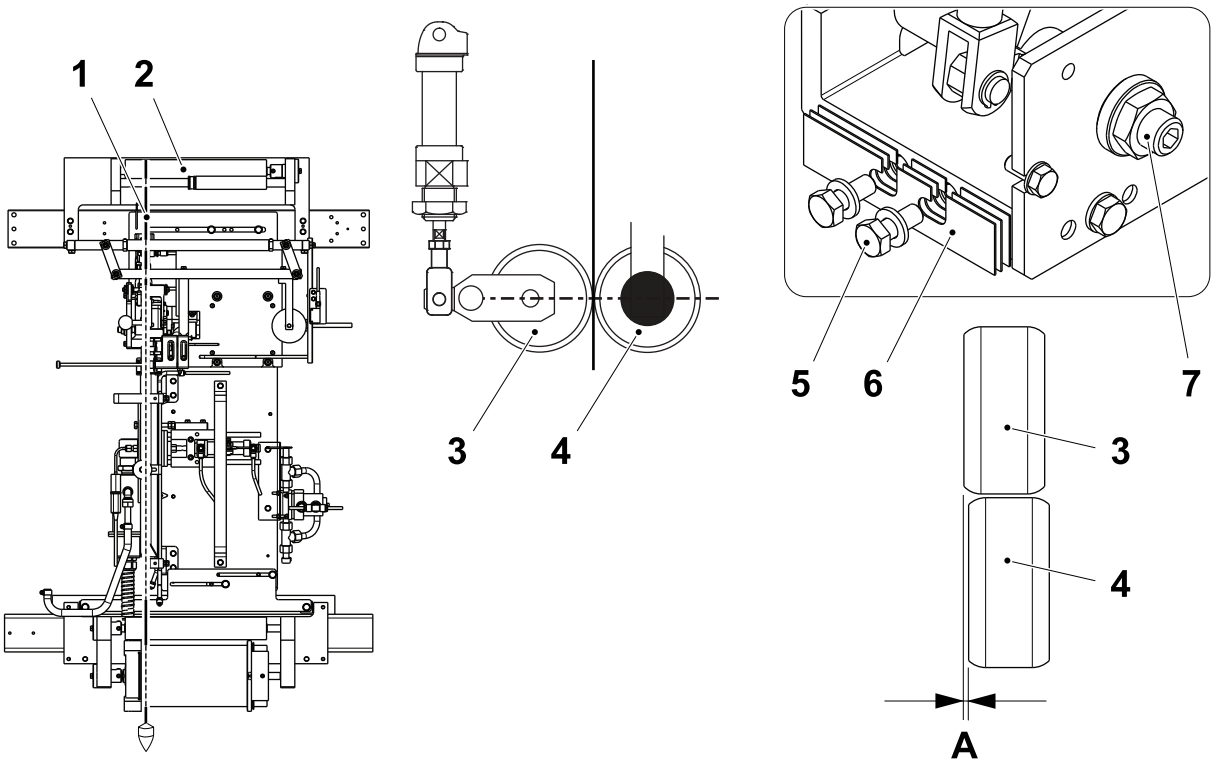

A = 0 ±0.5 mm

1 Plumb line
2 Roller
3 Roller
4 Roller
5 Screw
6 Shim
7 Screw

(Cont'd)

(Cont'd)

Air Nozzle

a) Use the nuts (1) to set the distance **A** between the top edge of the plate (2) and the air nozzle (3).

b) Use the screw (4) to set the air nozzle (3) parallel to the packaging material (5).

c) Set the distance **D** between the air nozzle (3) and the packaging material (5) by loosening the screws (6) and moving the air nozzle (3) up or down.

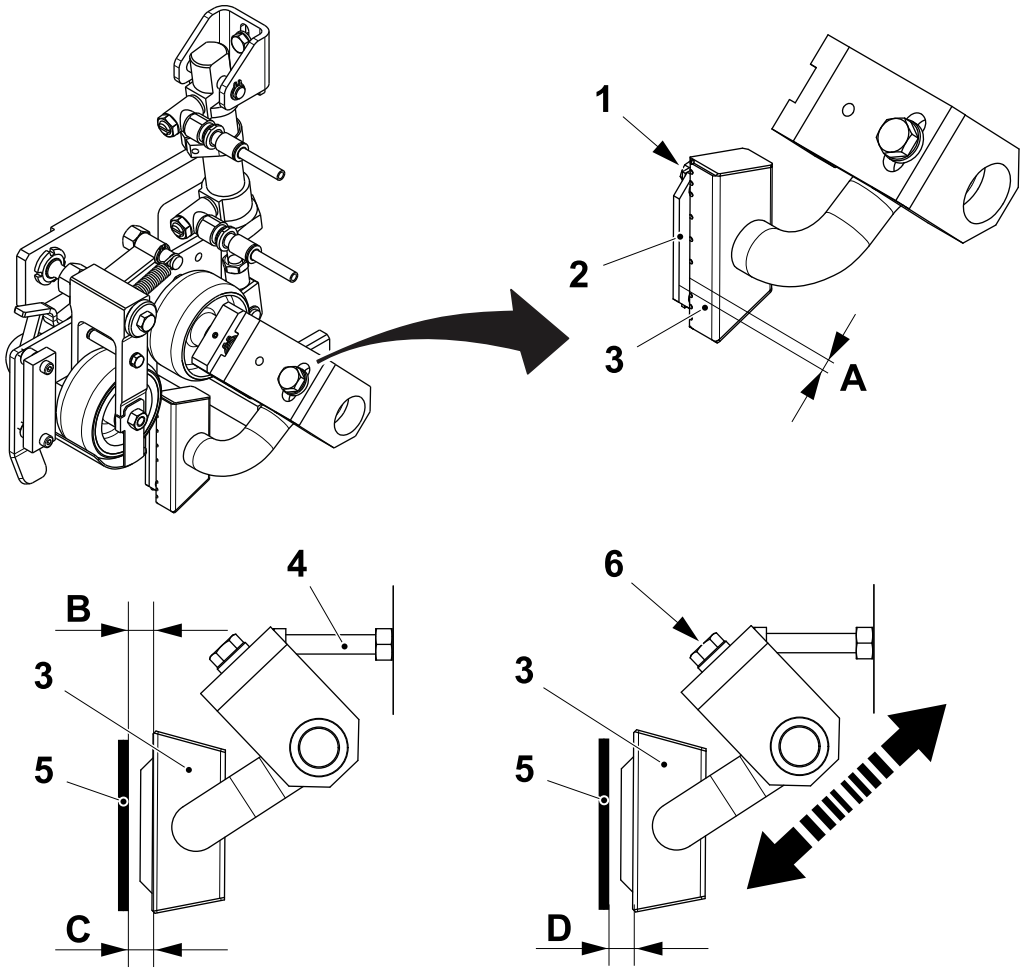

A = 3 ±0.5 mm
B = C ±0.5 mm
D = 5 ±0.5 mm

1 Nut
2 Plate
3 Air nozzle
4 Screw
5 Packaging material
6 Screw

(Cont'd)

(Cont'd)

d) Loosen the nut (7).

e) Set the distance **E** between the packaging material (5) edge and the plate (2) with the screw (8).

f) Make sure that the nozzle pipe (9) is not in contact with the bracket surface (10) during the nozzle movement, no forced movement.

g) Tighten the nut (7).

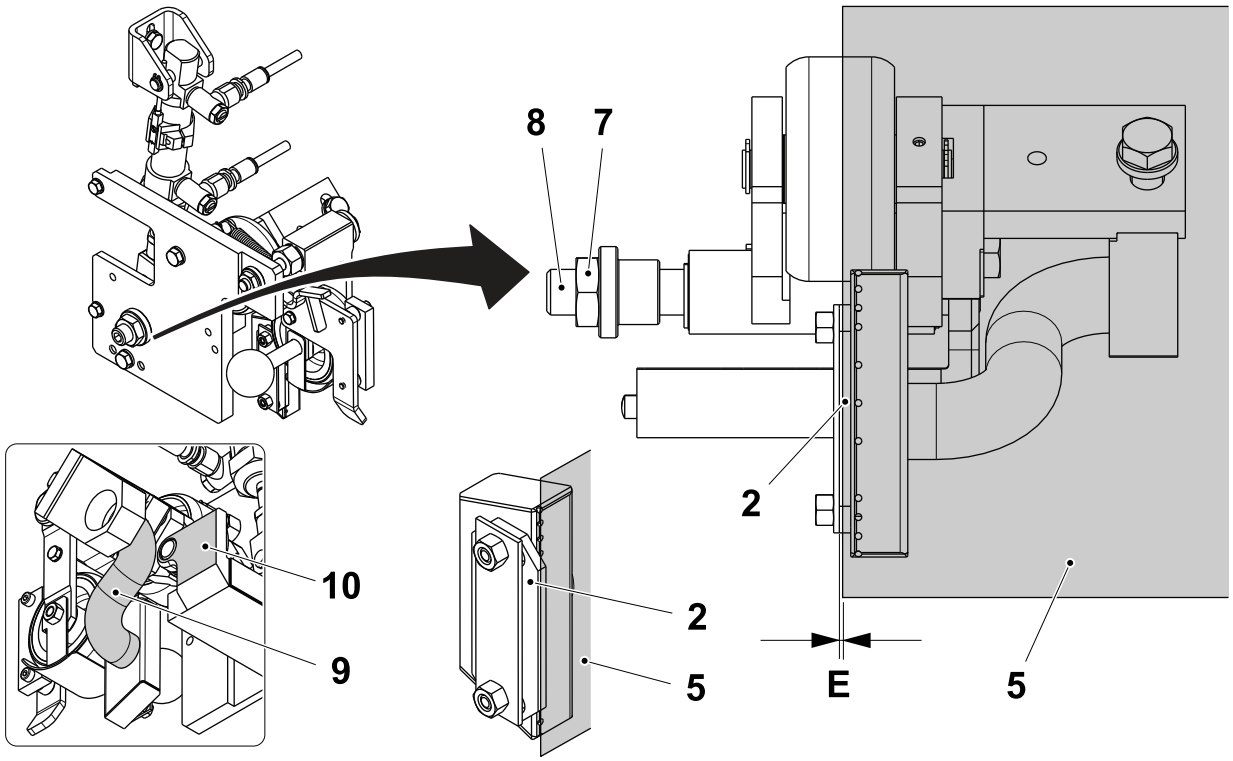

E = 0 ±0.5 mm

2 Plate
5 Packaging material
7 Nut
8 Screw
9 Pipe
10 Surface

(Cont'd)

(Cont'd)

Catch

With packaging material between the rollers, check that the gap between the screw (1) and the pin (2) is at least the distance **F**. To adjust, loosen the stop screw (3) and adjust the screw (1). Tighten the stop screw.

Note! For the correct air pressure setting, see 7.4-1 Fan System - Check Air Pressure. For the correct temperature setting, see the OM.

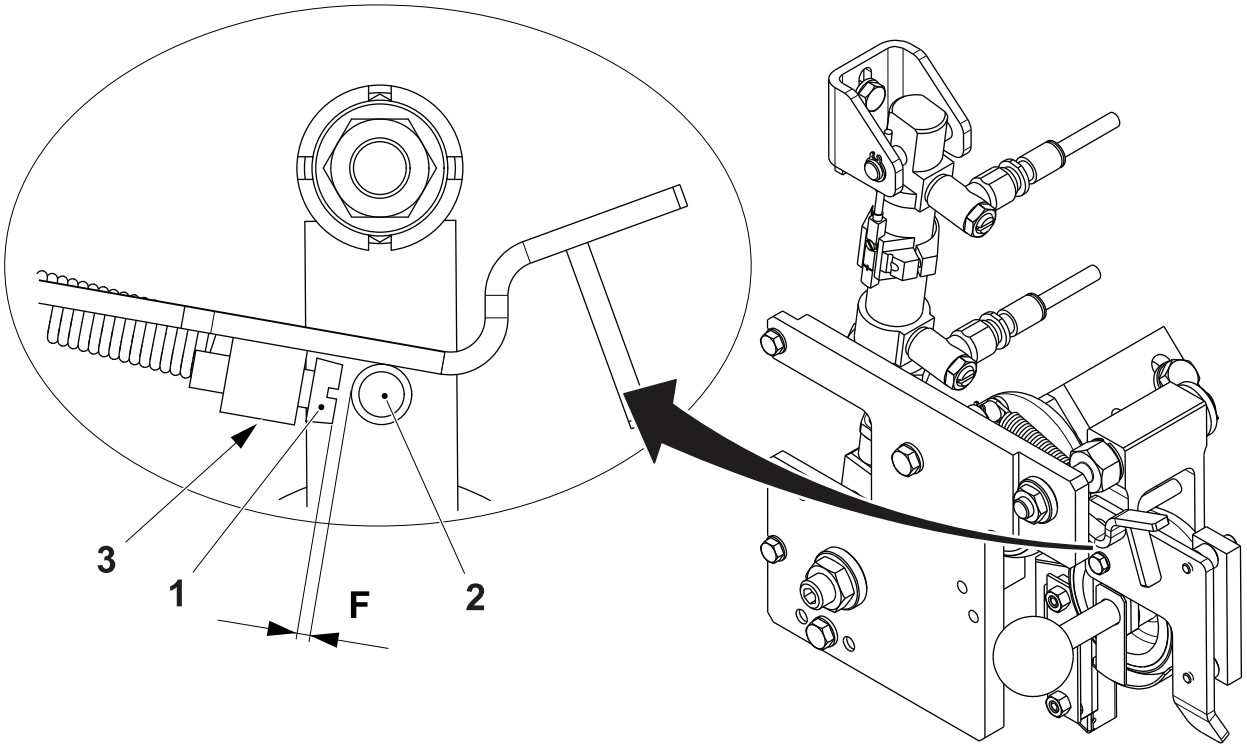

F > 0.4 mm
1 Screw
2 Pin
3 Stop screw

7.6.2 Strip Guide

7.6.2-1 Strip Guide - Check

Machine Status	Electrical supply disconnecting device in position O (OFF) Main air valve OFF Main steam valve ON Main water valve OFF
SPC Reference	2860213-0300

Check

- that the guide wheel (1) rotates smoothly and is not worn (max 1.0 mm radial play and max 0.5 mm axial play). Change the guide wheel (1), if necessary
- that the guide wheel (2) rotates smoothly and is not worn. Change the guide wheel (2), if necessary. If the guide wheel (1) and guide wheel (2) are changed, see 7.6.2-2 Strip Guide - Set
- that the rollers (3) rotate smoothly and are not worn. Change the rollers (3), if necessary
- that the roller (4) rotate smoothly and are not worn. Change the roller (4), if necessary.

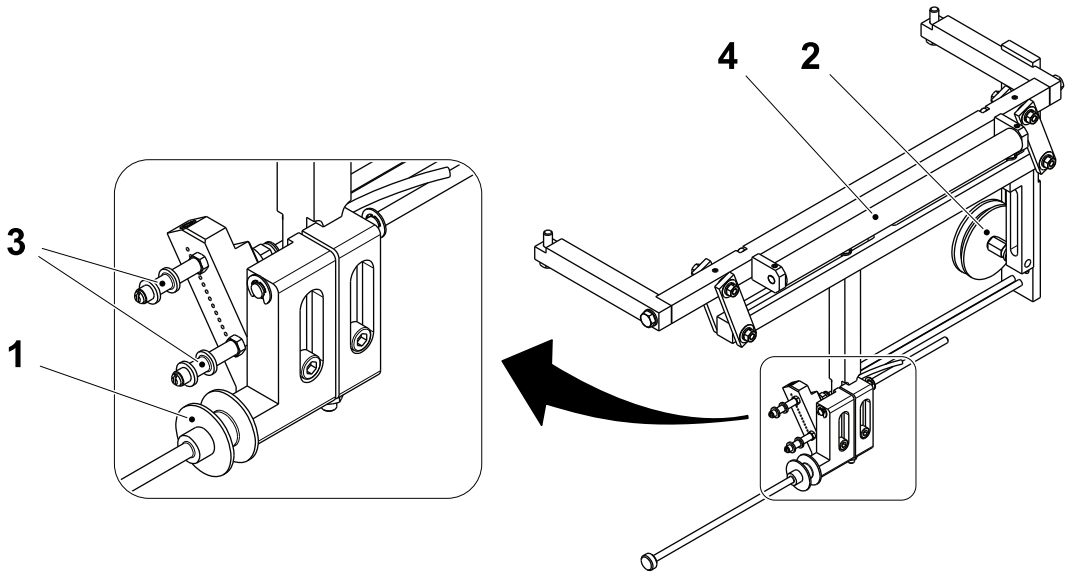

1 Guide wheel
2 Guide wheel
3 Roller
4 Roller

(Cont'd)

(Cont'd)

- fit a **0.1 mm** feeler gauge between the rollers (3) and the nuts (5) to check the distance **A**. Loosen the nuts (5) to adjust the distance **A** with the screws (6).

  Note! If necessary, fit a 0.8 mm thick washer, TP No. 315105-0136, between the rollers (3) and the nuts (5) to adjust the distance **A**.

- during PRODUCTION that the strip (7) is positioned symmetrically over the edge of the packaging material (8). Use the adjusting screw (9) to adjust the strip position, if necessary.

  Note! The ideal case is to position the strip (7) symmetrically over the edge of the packaging material (8) but if necessary can up to 60% of the strip (7) be positioned on the packaging material, the distance **C**.

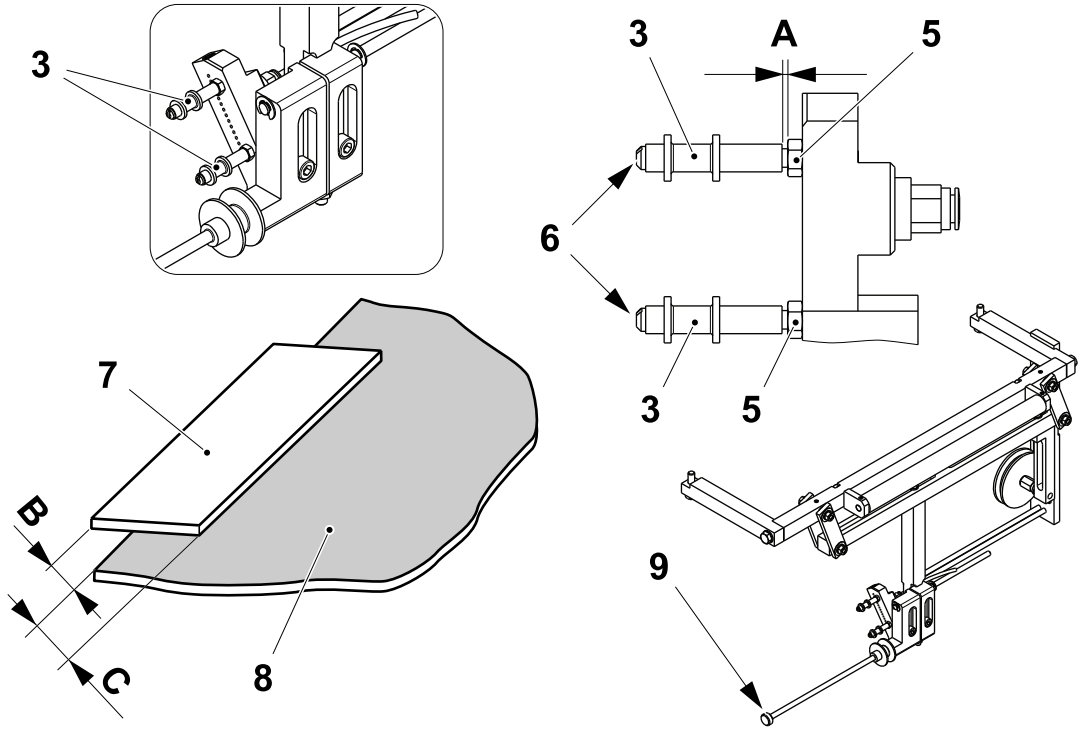

A = 0.1 mm
B = 40%
C = 60%

3 Roller
5 Nut
6 Screw
7 Strip
8 Packaging material
9 Adjusting screw

7.6.2-2 Strip Guide - Set

Machine Status	Electrical supply disconnecting device in position O (OFF) Main air valve OFF Main steam valve ON Main water valve OFF
SPC Reference	2860213-0300

a) Set the distance **A** (see the following table) between the bracket (1) and bracket (3) by using the screw (2).

b) Set the distance **B** (see the following table) between the bracket (1) and bracket (4) by using the screw (5).

c) Set the distance **C** (see the following table) between the bracket (3) and bracket (6) by using the screw (7).

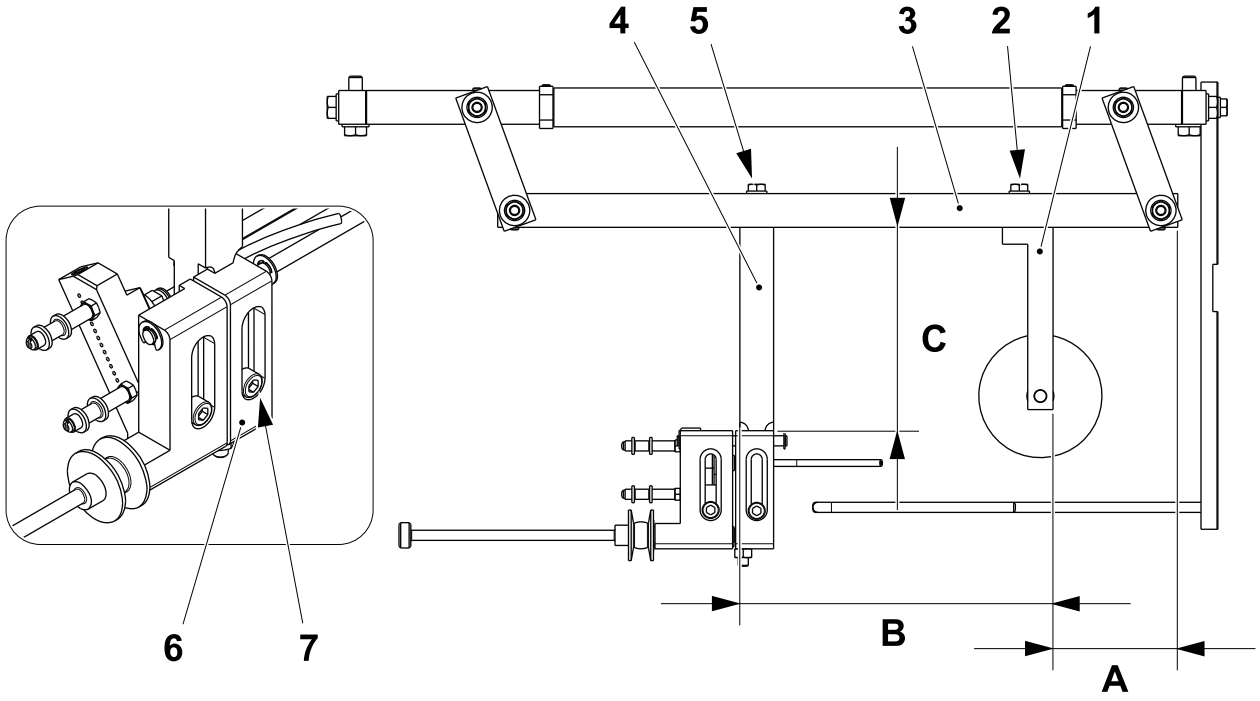

1 Bracket
2 Screw
3 Bracket
4 Bracket
5 Screw
6 Bracket
7 Screw

(Cont'd)

(Cont'd)

d) Set the LS strip nozzle (8) position, see table on page 7-112.

e) If necessary, adjust the strip position during PRODUCTION by using the adjustment screw (9).

Package	A ±1 mm	B ±1 mm	C ±1 mm
TBA 80 S	122	113	140
TBA 100 B, TBA 125 S	115	127	137
TBA 160 S, TBA 180 S, TBA 200 S, TPA 200 Sq, TPA 250 Sq	107	140	144
TBA 200 B, TBA 250 B, TBA 330 S	81	181	141
TBA 200 M, TBA 250 S, TBA 200 E, TBA 250 E	96	154	140
TBA 200 Sq, TBA 250 Sq	81	181	130
TBA 284 B, TBA 300 S	80	178	130
TBA 375 S	94	189	128
TPA 125 Sq	133	107	143
TPA 330 Sq	95	167	138

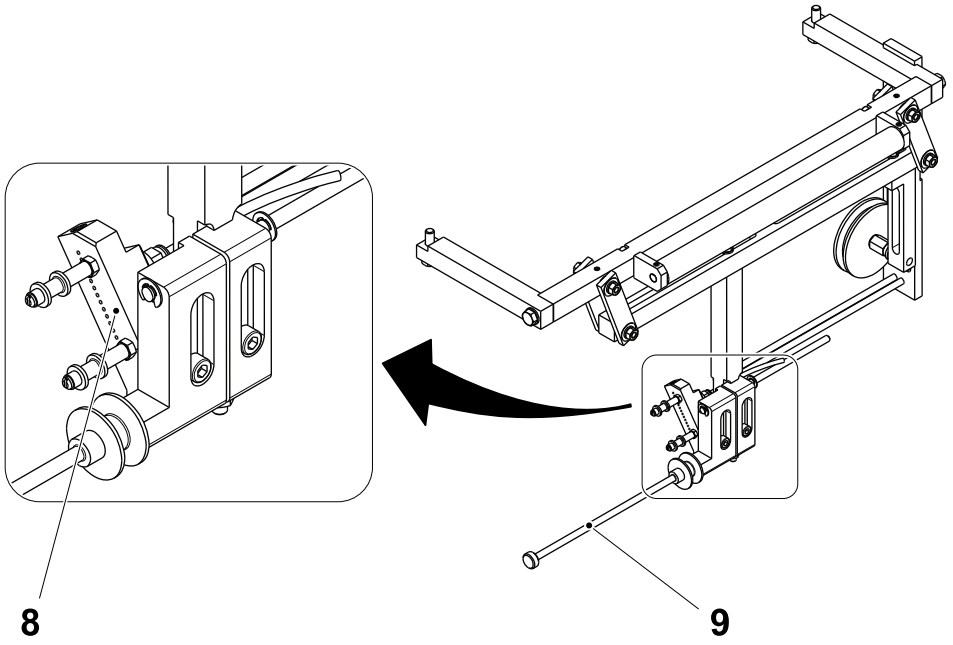

8 Nozzle
9 Adjustment screw

(Cont'd)

(Cont'd)

Align Roller

a) Check that the roller (1) is aligned to the roller (2) with a plumb line (3). The plumb line (3) is to touch the centre of the roller (1) and the roller (2).

b) If necessary,
   - loosen the nut (4)
   - align the roller (2) to the roller (1) with the plumb line (3)
   - tighten the nut (4).

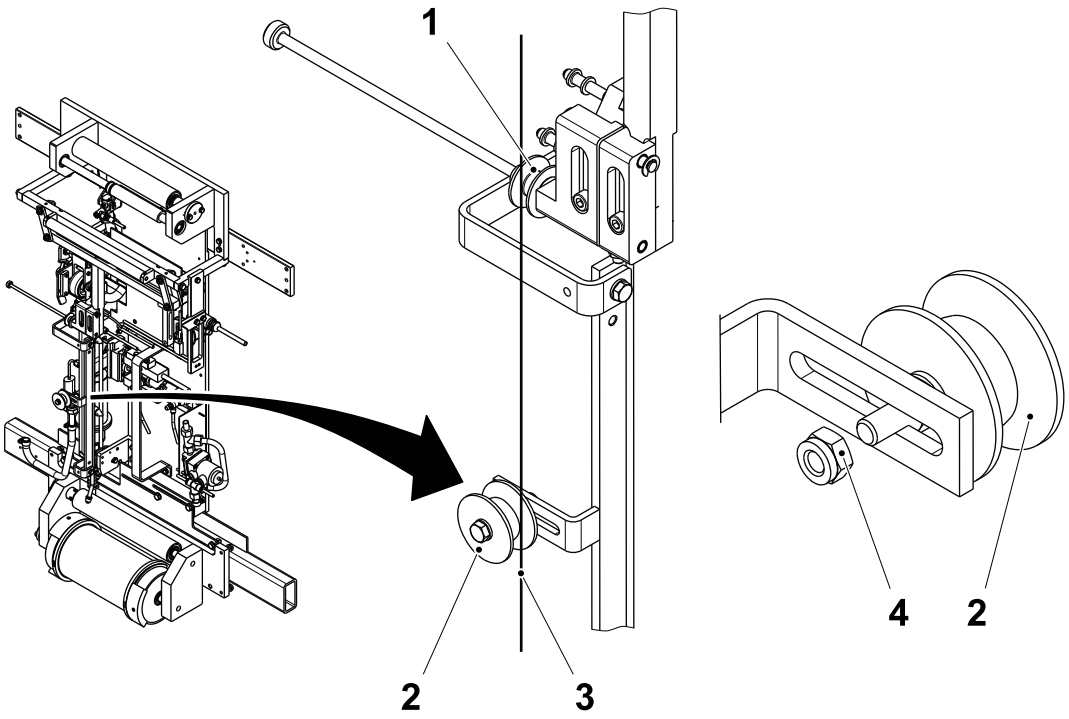

1 Roller
2 Roller
3 Plumb line
4 Nut

7.6.2-3 Strip Guide - Change Guide Wheel Ball Bearing

Machine Status	Electrical supply disconnecting device in position O (OFF) Main air valve OFF Main steam valve ON Main water valve OFF
SPC Reference	2860213-0300

a) Remove the nut (1), the washer (2) and extract the guide wheel (3).

b) Remove the retaining ring (4) and change the ball bearing (5).

c) Assemble in the reverse order.

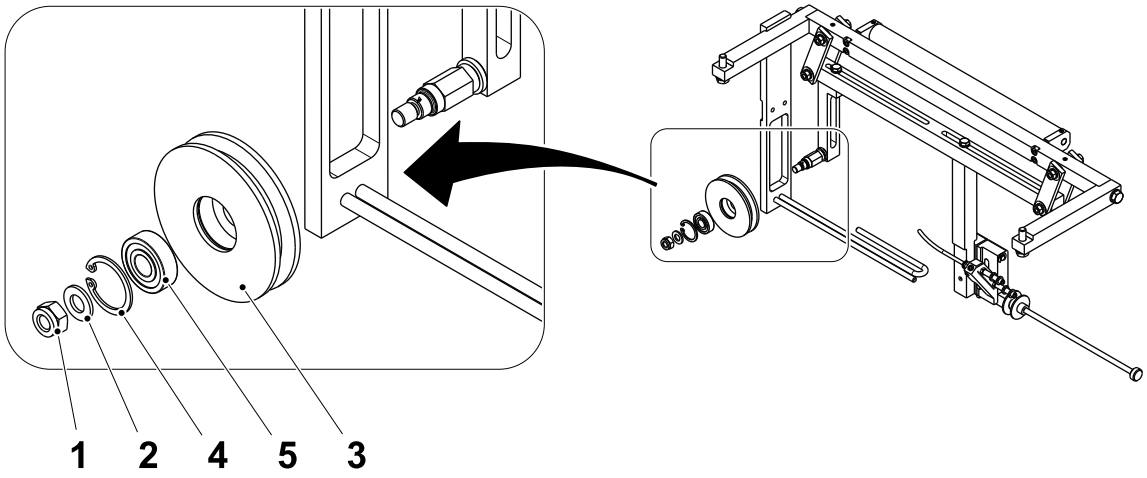

1 Nut
2 Washer
3 Guide wheel
4 Retaining ring
5 Ball bearing

7.6.3 Air Nozzle

7.6.3-1 Air Nozzle - Check

Machine Status	Electrical supply disconnecting device in position O (OFF) Main air valve OFF Main steam valve ON Main water valve OFF
Special Equipment	Protective gloves TP No. 90303-12 Ruler
SPC Reference	2868278-0300

WARNING

Risk of burns.

The air nozzle and other nearby parts may be hot. If necessary, wear heat-resistant protective gloves.

a) Remove the screws (1) and the cover (2).

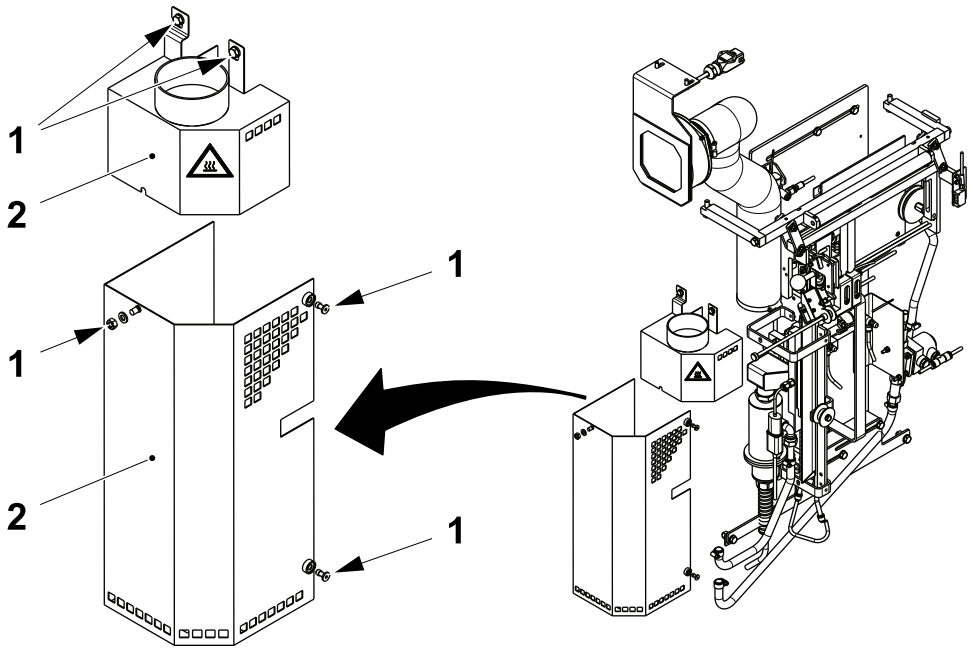

1 Screw
2 Cover

(Cont'd)

(Cont'd)

b) Check that:

- the air nozzle (4) is clean and that the air holes (5) and (6) are not blocked
- the air nozzle is straight (not warped by heat). Use a ruler to check. Change the air nozzle, if necessary. See 7.6.3-2 Air Nozzle - Change Nozzle
- the rollers (7) are not worn or damaged and that they rotate smoothly. Change the rollers, if necessary
- the air nozzle assembly slides smoothly back and forth in the linear control unit (3). Change the linear control unit, if necessary. See 7.6.3-3 Air Nozzle - Change Linear Control Unit

c) Assemble in the reverse order.

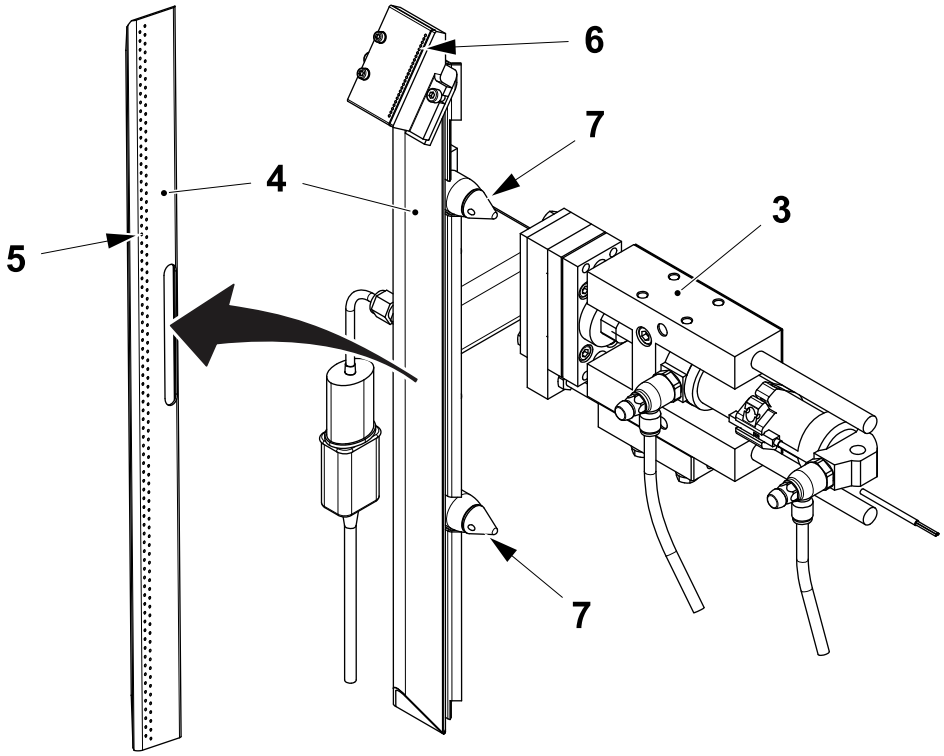

3 Linear control unit
4 Air nozzle
5 Air hole
6 Air hole
7 Roller

7.6.3-2 Air Nozzle - Change Nozzle

Machine Status	Electrical supply disconnecting device in position O (OFF) Main air valve OFF Main steam valve ON Main water valve OFF
Special Equipment	Protective gloves TP No. 90303-12
SPC Reference	2868278-0300

WARNING

Risk of burns.

The air nozzle and other nearby parts may be hot. If necessary, wear heat-resistant protective gloves.

(Cont'd)

(Cont'd)

a) Remove the protection cover, see 7.6.3-1 Air Nozzle - Check.
b) Remove the screws (1) and the air nozzle (2).
c) Change the air nozzle (2).
d) Check the gasket (3) for damage. Change the gasket, if necessary.
e) Remove the screws (4) and the valve housing (5).
f) Remove the screws (6) and the air nozzle (7).
g) Change the air nozzle (7).
h) Assemble in the reverse order.
i) Set the position of the air nozzle. See 7.6.3-4 Air Nozzle - Set.

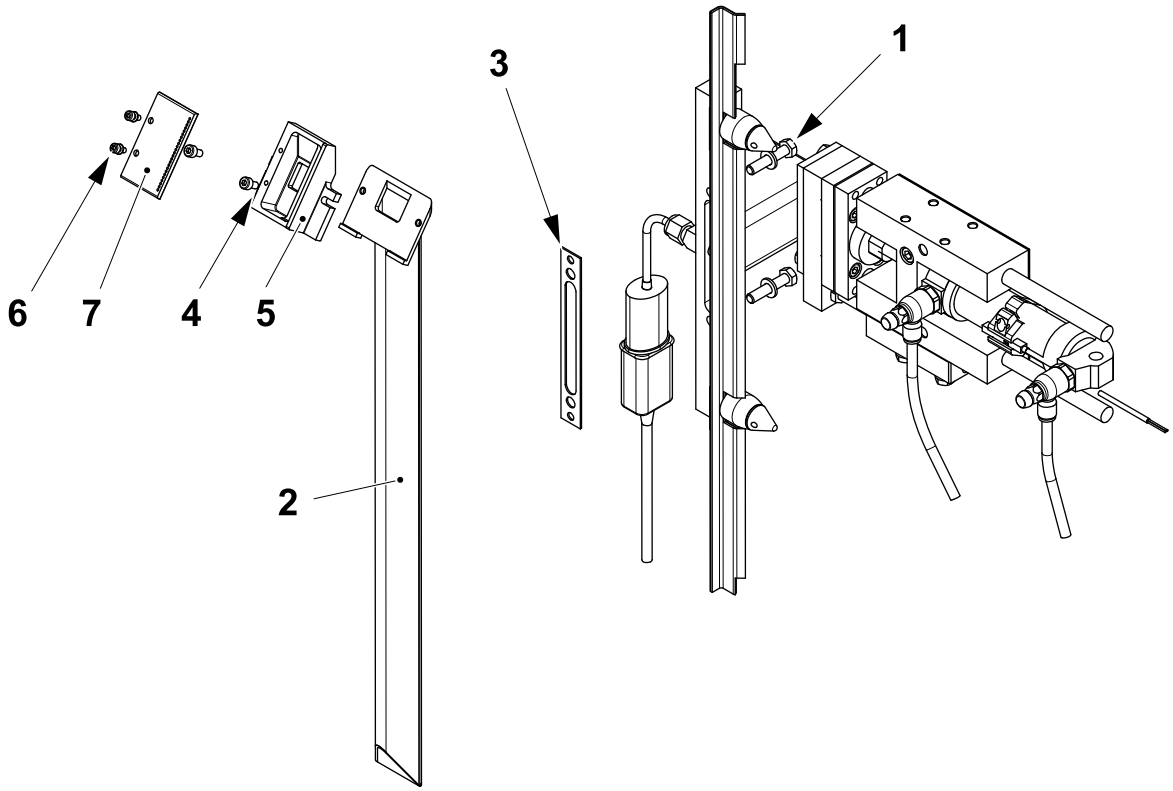

1 Screw
2 Air nozzle
3 Gasket
4 Screw
5 Valve housing
6 Screw
7 Air nozzle

7.6.3-3 Air Nozzle - Change Linear Control Unit

Machine Status	Electrical supply disconnecting device in position I (ON) Main air valve ON Main steam valve ON Main water valve OFF
Special Equipment	Protective gloves TP No. 90303-12
SPC Reference	2868278-0300

WARNING

Risk of burns.

The air nozzle and other nearby parts may be hot. If necessary, wear heat-resistant protective gloves.

(Cont'd)

(Cont'd)

a) Remove the protection cover, see 7.6.3-1 Air Nozzle - Check.

b) Disconnect the air hoses (1) from the cylinder (2).

c) Remove the sensor (3) from the cylinder (2).

d) Disconnect the cylinder Piston (4) from the linear control unit (5).

e) Remove the screws (6) and the linear control unit (5) from the strip applicator.

Note! Do not lose the shims (7).

f) Remove the screws (8) and the block (9) from the linear control unit (5).

g) Change the linear control unit (5) and assemble in the reverse order.

h) Set the air nozzle, see 7.6.3-4 Air Nozzle - Set.

i) Set the sensor (3), see Set Sensor on page 7-115.

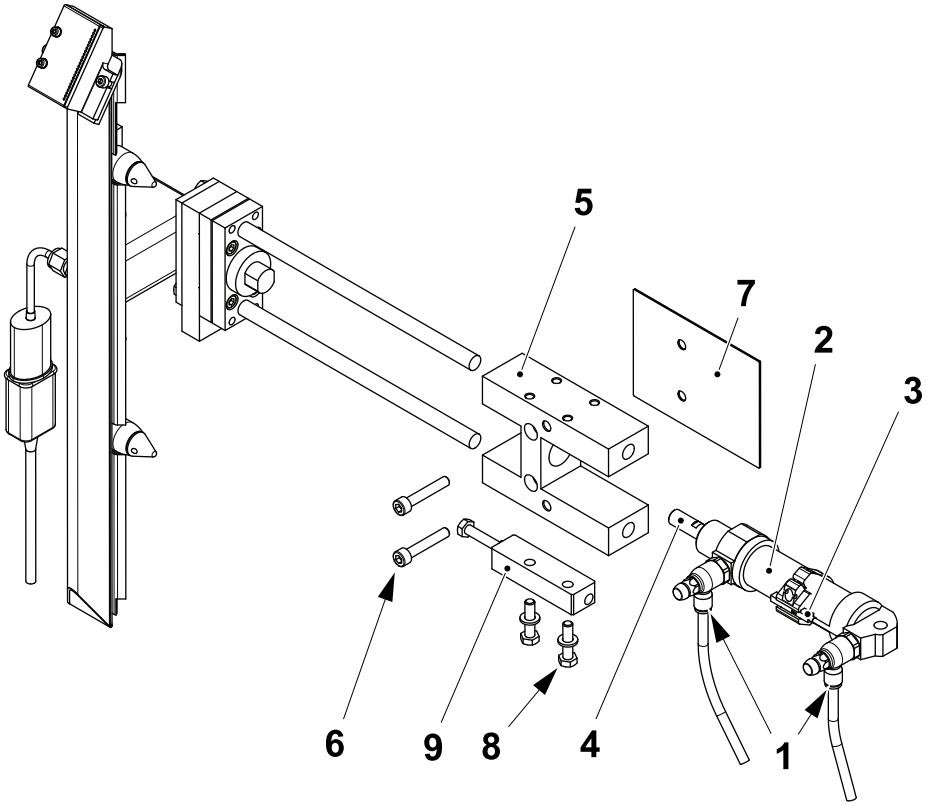

1 Air hose
2 Cylinder
3 Sensor
4 Cylinder Piston
5 Control unit
6 Screw
7 Shim
8 Screw
9 Block

7.6.3-4 Air Nozzle - Set

Machine Status	Electrical supply disconnecting device in position I (ON) Main air valve ON Main steam valve ON Main water valve OFF
Special Equipment	Protective gloves TP No. 90303-12
SPC Reference	2868278-0300

WARNING

Risk of burns.

The air nozzle and other nearby parts may be hot. If necessary, wear heat-resistant protective gloves.

(Cont'd)

(Cont'd)

a) Remove the protection cover, see 7.6.3-1 Air Nozzle - Check.

b) Check for paper dust around the strip applicator. If paper dust is found then check the mounting plate alignment, see Check Mounting Plate Alignment on page 7-116.

c) Set the movement of the air nozzle as follow:

- fully close the non-return valves (1) and (2), on the cylinder (3)
- Step up to PREPARATION. The valve T10K7400 activates and the cylinder (3) moves.

  Note! If the cylinder complete the movement in more than 0.5 sec, the machine stops and an alarm appear on the TPOP.
- set the cylinder movement so that the time required to complete the movement is below 0.5 sec by gradually opening the non-return valves (1) and (2) respectively.

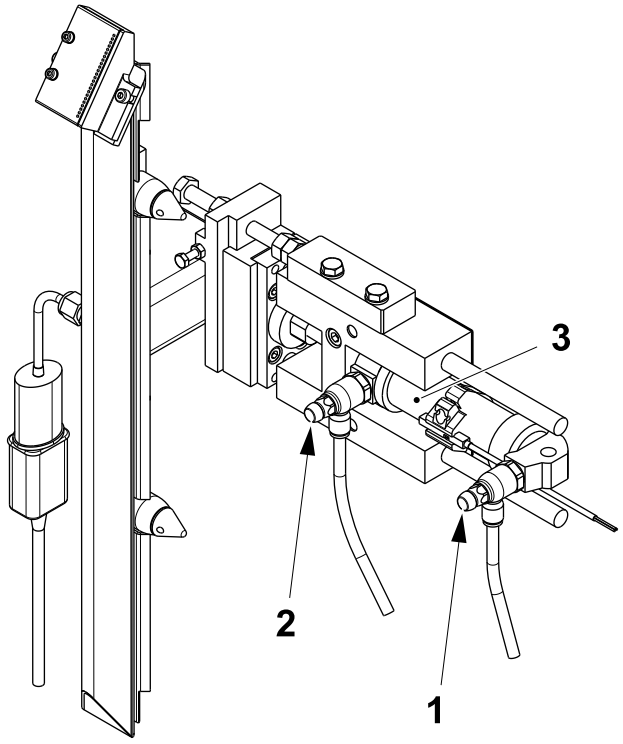

1 Non-return valve
2 Non-return valve
3 Cylinder

(Cont'd)

(Cont'd)

d) Make sure the air nozzle (4) is aligned with the inner paper support (5) beneath the outer paper support (6).

Note! The air nozzle (4) and inner paper support (5) must be aligned with the plumb line, see next page.

e) Set the SA and SA SS air pressures, see 7.4-1 Fan System - Check Air Pressure.

f) Set the SA and SA SS temperature, see the 9.1 Technical Data.

g) Step down the machine to step ZERO.

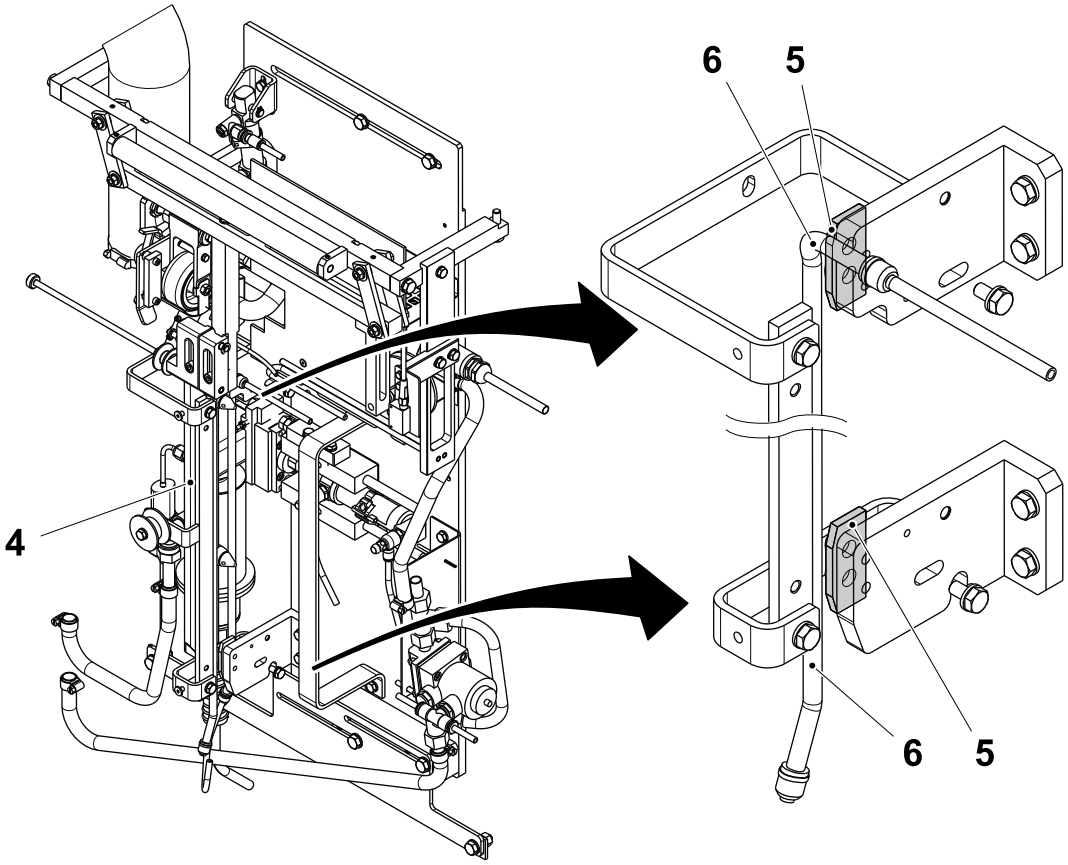

4 Air nozzle
5 Inner paper support
6 Outer paper support

(Cont'd)

(Cont'd)

h) Place a plumb line (7) over the rollers (8) and (9).

i) Push the air nozzle assembly (10) in by hands and make sure that the flat surface (11) of the roller (12) slightly touch the plumb line (7).

j) If required, remove the screws (13) and add or remove shims (14) under the linear motion system (15).

k) Check that the air nozzle (4) is aligned with the plumb line (7). If necessary,
- loosen the screws (16) and the nut (17)
- adjust air nozzle (4) with the screw (18)
- tighten the screws (16) and the nut (17).

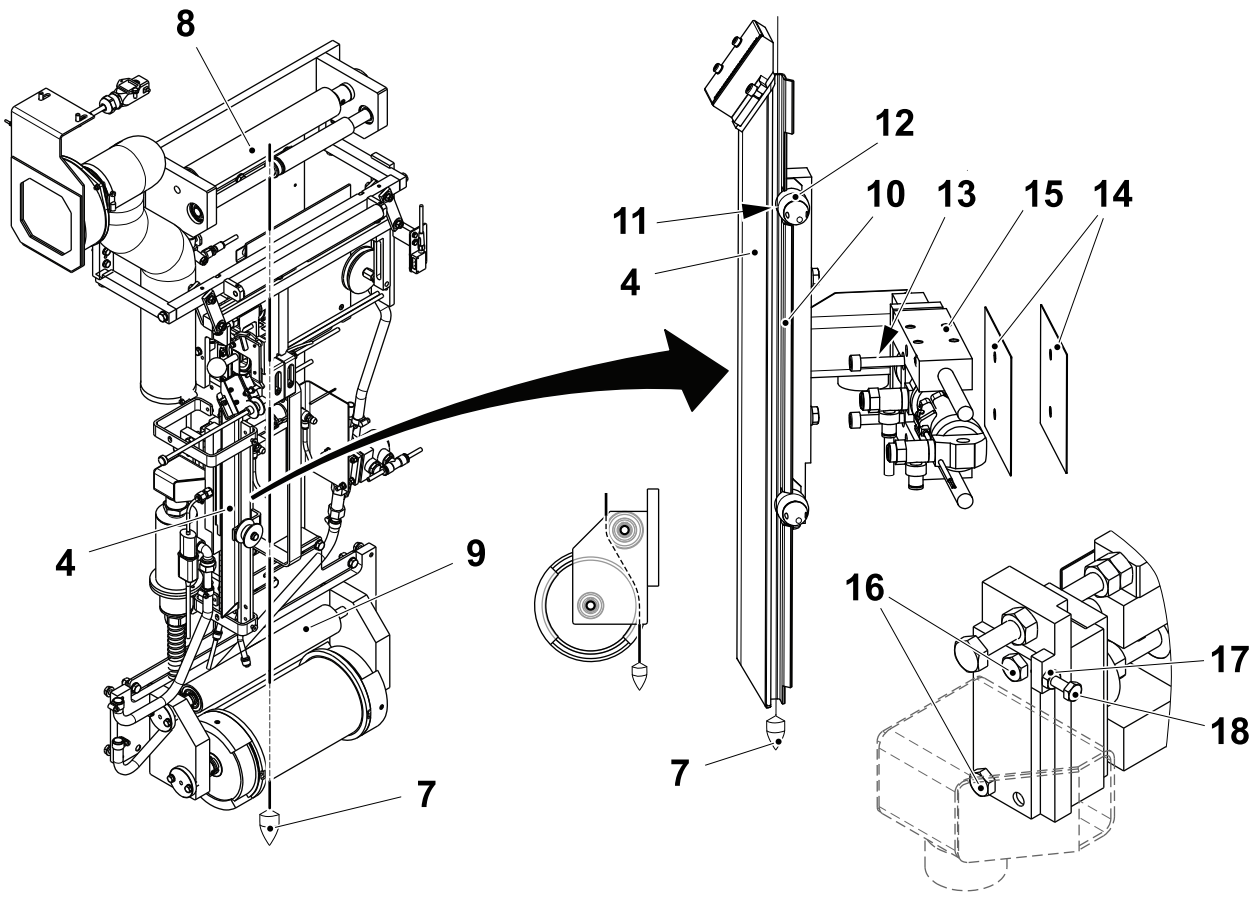

4 Air nozzle
7 Plumb line
8 Roller
9 Roller
10 Air nozzle assembly
11 Flat surface
12 Roller
13 Screw
14 Shim
15 Linear motion system
16 Screw
17 Nut
18 Screw

(Cont'd)

(Cont'd)

l) Set the distance **A** between the air nozzle (4) and the packaging material (19). To adjust the distance **A** loosen the nuts (20) and turn the screw (21).

m) Tighten the nuts (20) after setting.

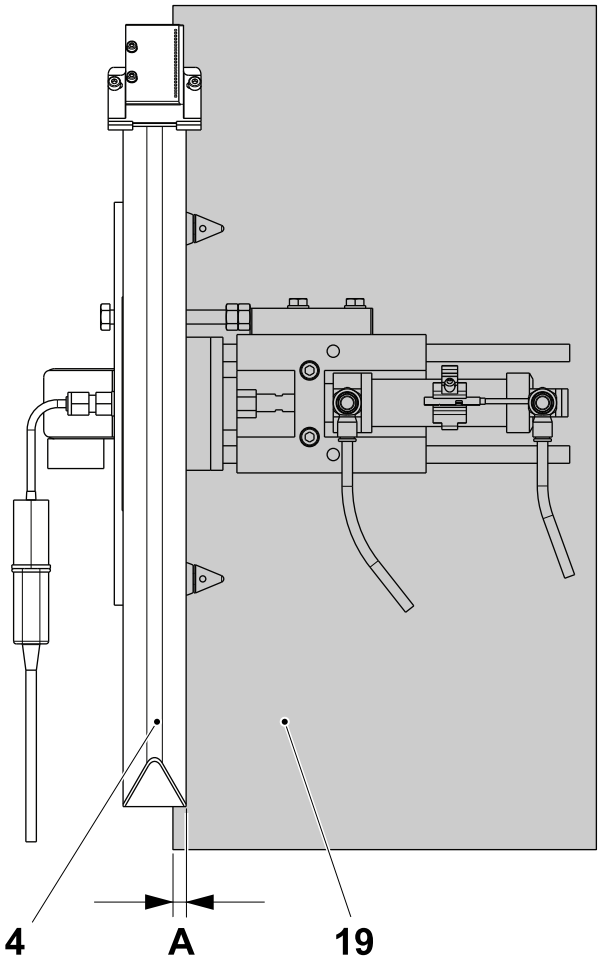

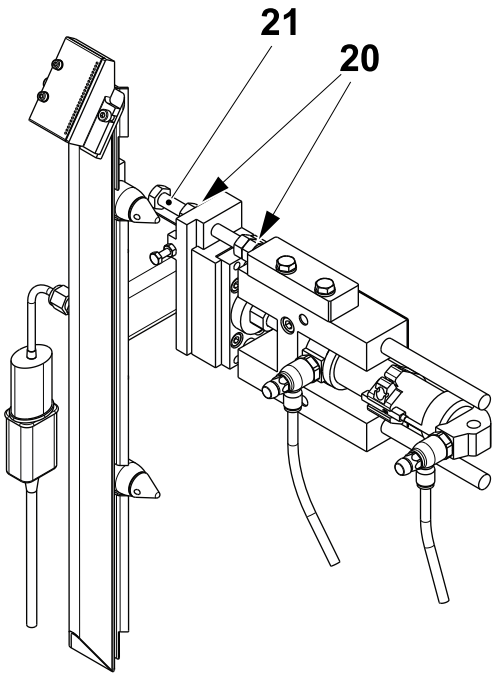

A = 8.5 $^{+0.5/-0.0}$ mm

4 Air nozzle
19 Packaging material
20 Nut
21 Screw

(Cont'd)

(Cont'd)

Note! The distance **B** may vary depending on the LS strip type.

n) Loosen the screw (22) and set the distance **B** between the preheating nozzle (23) and the fingers (24).

LS strip type	Distance B
MPM	15 ±1.0 mm
MSE	10 ±1.0 mm

o) Tighten the screw (22).

p) Loosen the screws (26).

q) Set the distance **C** between the holes of the preheating nozzle (23) and the edge of the strip (25).

r) Tighten the screws (26).

s) Put back the protection cover.

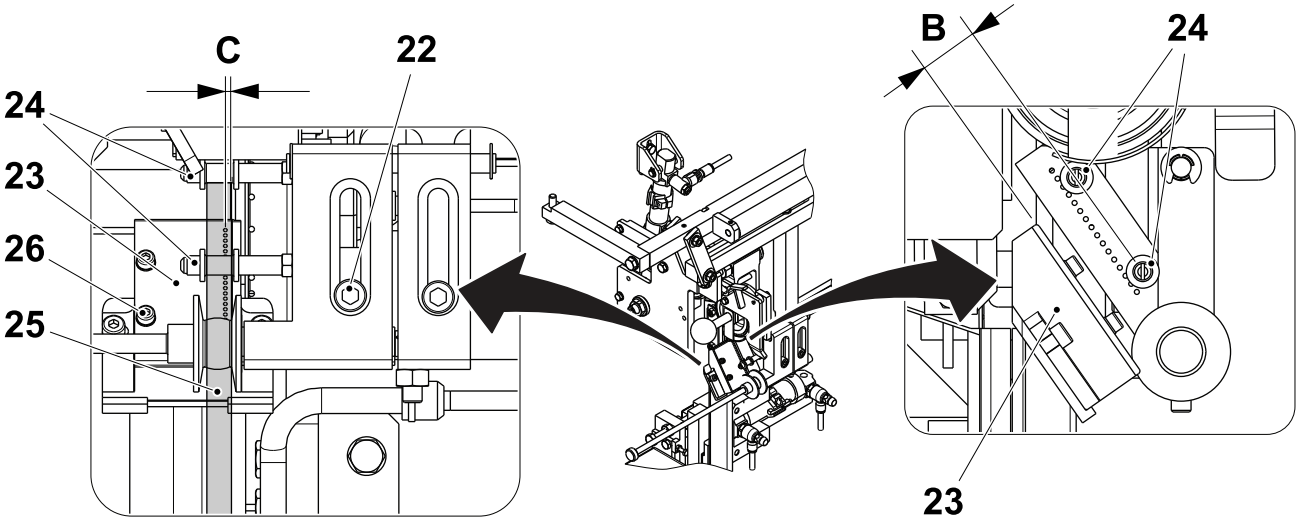

C = approximately 2 mm
22 Screw
23 Preheating nozzle
24 Finger
25 Strip
26 Screw

(Cont'd)

(Cont'd)

Align Air Nozzle

a) Fit a plumb line (1) to the roller (2).

b) Remove the screws (3) and the valve housing (4).

c) Align the plumb line (1) with the mark (5).

d) Check that the mark (6) is aligned with the plumb line (1). If necessary,
   - loosen the screw (7)
   - rotate the air nozzle assembly to align the mark (5) and the mark (6) with the plumb line (1)
   - tighten the screw (7).

e) Fit the valve housing (4) and the screws (3).

f) Remove the plumb line (1).

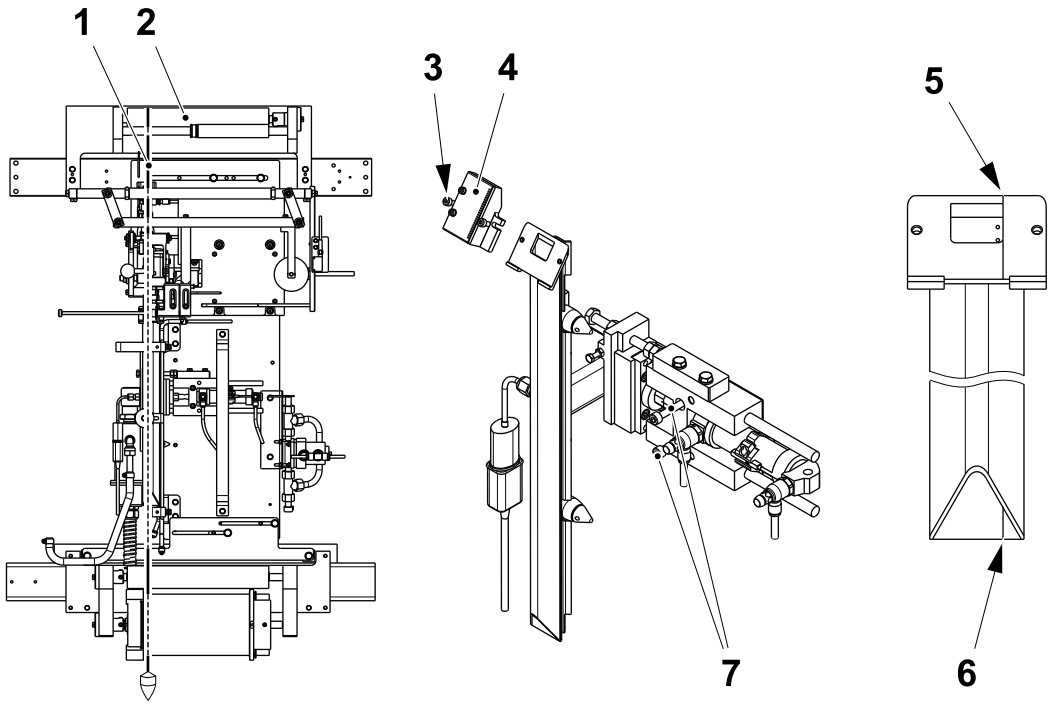

1 Plumb line
2 Roller
3 Screw
4 Valve housing
5 Mark
6 Mark
7 Screw

(Cont'd)

(Cont'd)

Set Paper Support

a) Fit a plumb line (1) to the roller (2).

b) Loosen the screw (3) and move the inner paper support (4) to touch the plumb line (1).

c) Tighten the screw (3).

d) Loosen the screw (5) and set the distance **A** between the inner paper support (4) and the outer paper support (6).

e) Tighten the screw (5).

f) Remove the plumb line (1).

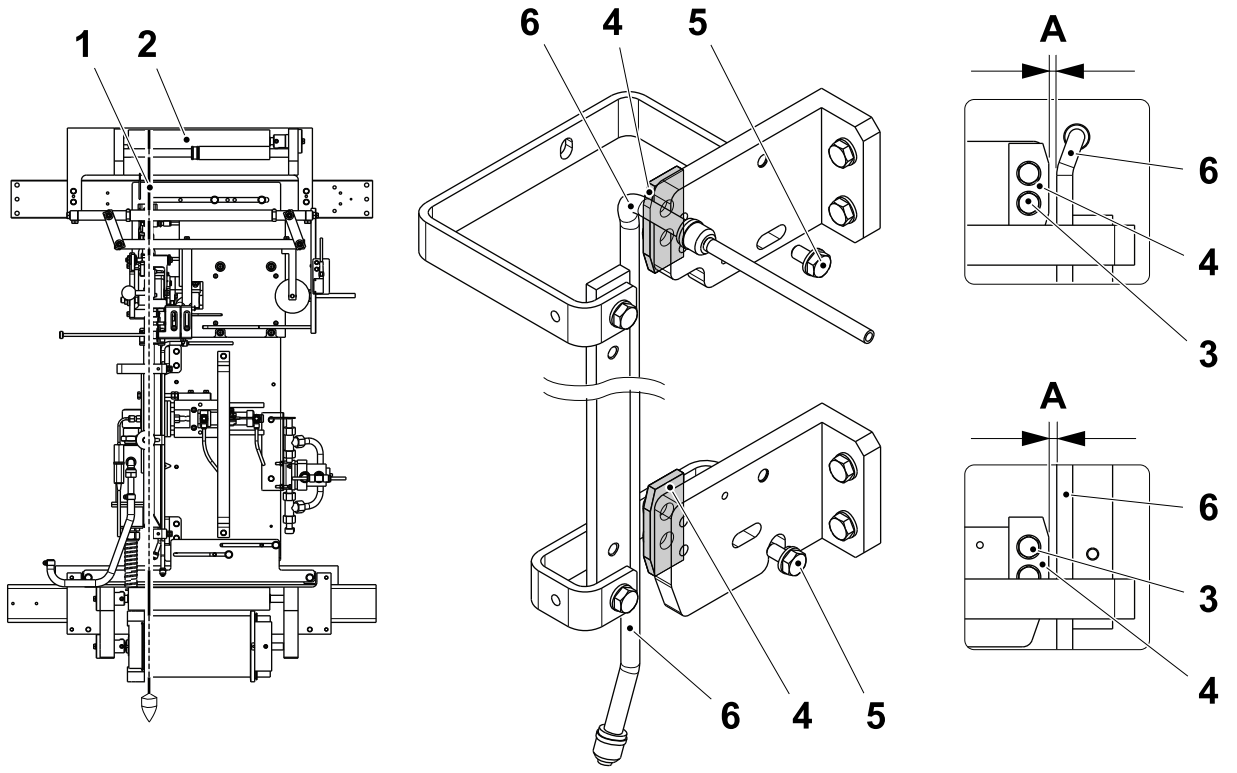

A = 2.0 $^{+0.5/-0.0}$ mm

1 Plumb line
2 Roller
3 Screw
4 Inner paper support
5 Screw
6 Outer paper support

(Cont'd)

(Cont'd)

Set Sensor

WARNING

Risk of burns.

The air nozzle and other nearby parts may be hot. If necessary, wear heat-resistant protective gloves.

a) Pull the air nozzle (1) in the arrow direction until the cylinder (2) is fully retracted.

b) Loosen the screw (3) and move the sensor (4) in the direction of the air nozzle (1) until the LED (5) is lit.

c) Tighten the screw (3).

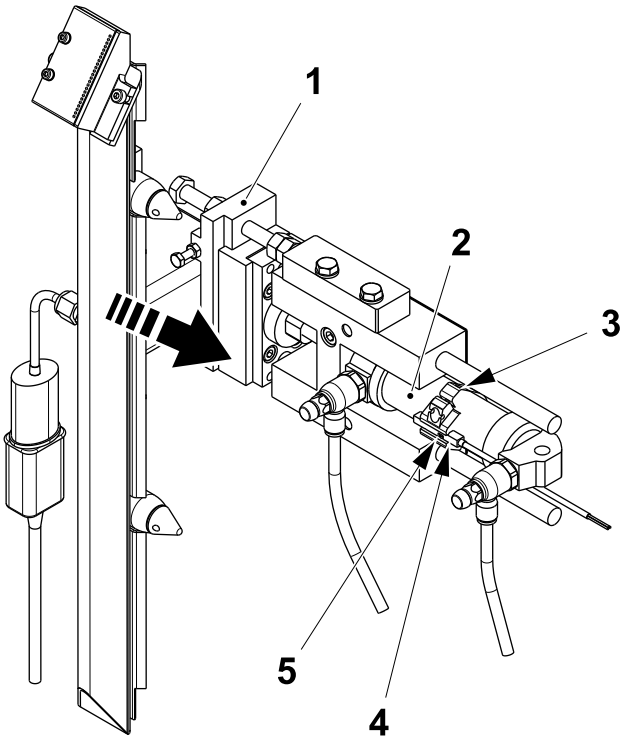

1 Air nozzle
2 Cylinder
3 Screw
4 Sensor
5 LED

(Cont'd)

(Cont'd)

Check Mounting Plate Alignment

a) Fit a plumb line (1) from the roller (2) to the roller (3).

b) Check the distance between the plumb line (1) and the two brackets (4) on the mounting plate (5). The brackets (4) must have the same distance to the plumb line (1), if necessary:

- remove the screws (6)
- adjust the distance between the plumb line (1) and the two brackets (4) with the shims (7) underneath the plate (8)
- fit the screws (6).

c) Remove the plumb line (1).

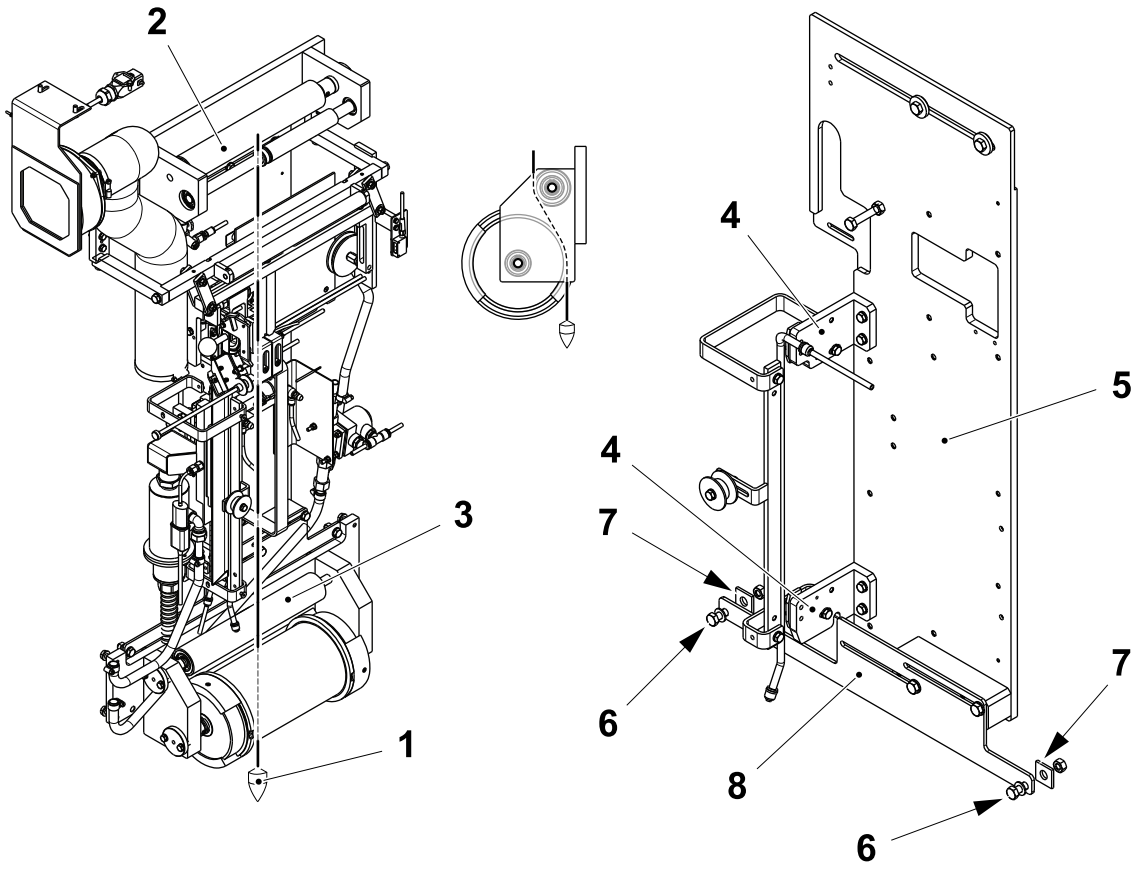

A = 2.0 $^{+0.5/-0.0}$ mm

1 Plumb line
2 Roller
3 Roller
4 Bracket
5 Mounting plate
6 Screw
7 Shim
8 Plate

7.6.4 Hot Air Element SS

7.6.4-1 Hot Air Element SS - Change

Machine Status	Electrical supply disconnecting device in position O (OFF) Main air valve OFF Main steam valve ON Main water valve OFF
Special Equipment	Protective gloves TP No. 90303-12
Consumables	Heat transfer paste TP No. 90296-0051
SPC Reference	2868280-0100

WARNING

Risk of burns.

The air nozzle and other nearby parts may be hot. If necessary, wear heat-resistant protective gloves.

a) Remove the screws (1) and the covers (2).

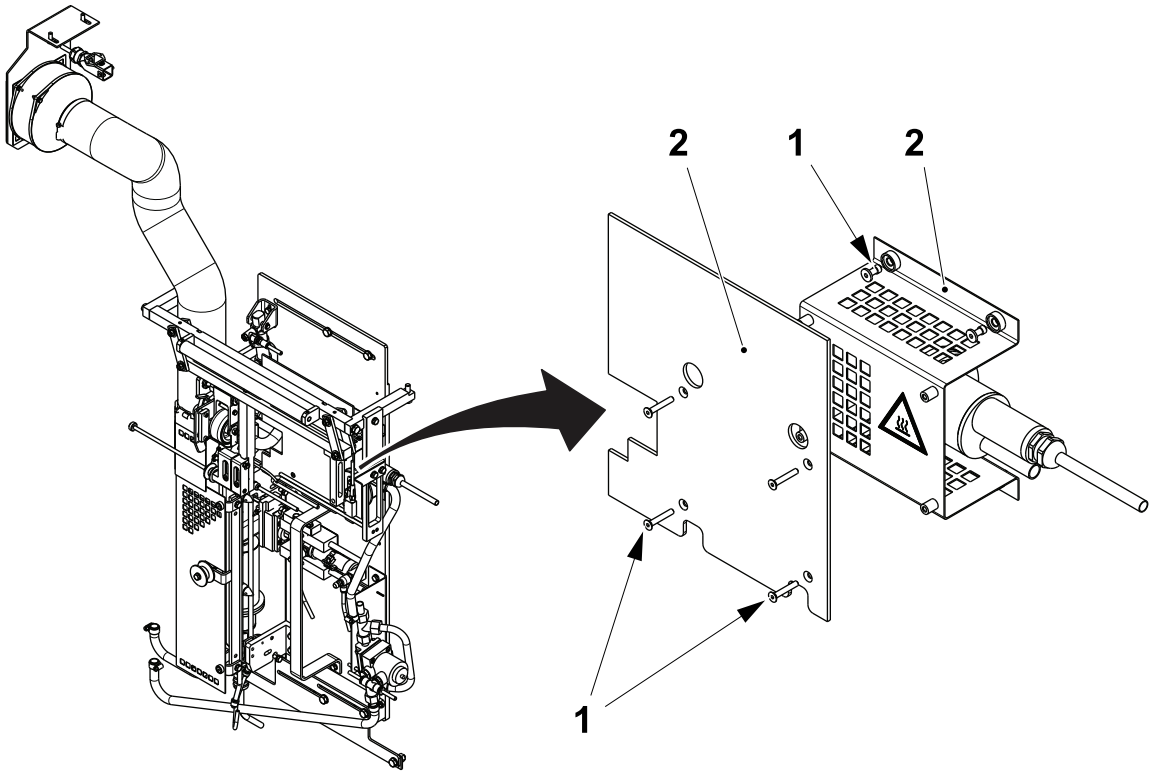

1 Screw
2 Cover

(Cont'd)

(Cont'd)

b) Remove the screws (3).

c) Remove the spacers (4), the heat sink (5), the washer (6) and the isolation (7).

d) Disconnect the cables (8) of the heating element (9) from the connection box (10).

e) Loosen the nut (11) to remove the heating element (9).

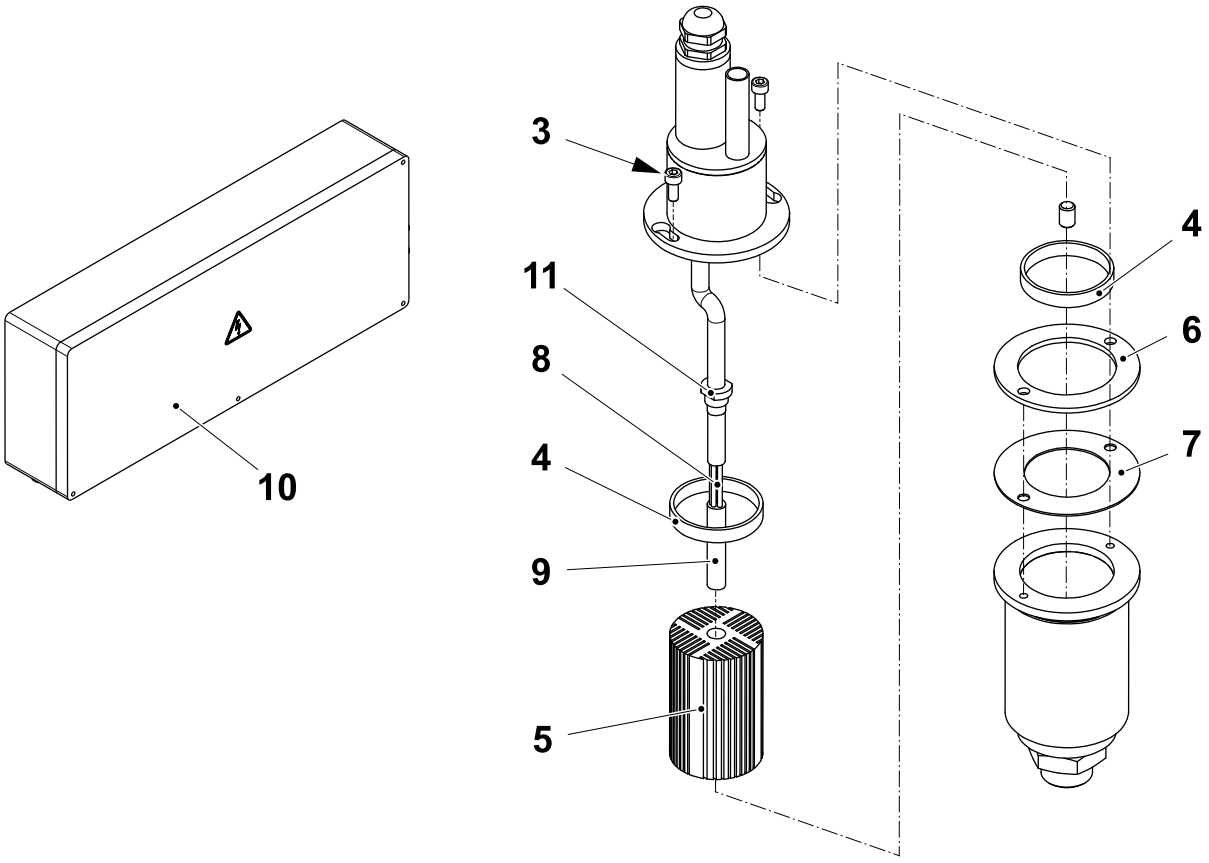

3 Screw	6 Washer	9 Heating element
4 Spacer	7 Isolation	10 Connection box
5 Heat sink	8 cable	11 Nut

(Cont'd)

(Cont'd)

f) Change the heating element (9).

Note! Put some heat transfer paste on the new heating element before assembly.

g) Assemble in the reverse order.

h) Ground the protection of the cables (8) to earth with the cable (12).

i) Refer to the EM to connect the cables of the new heating element (9) to the connection box (10).

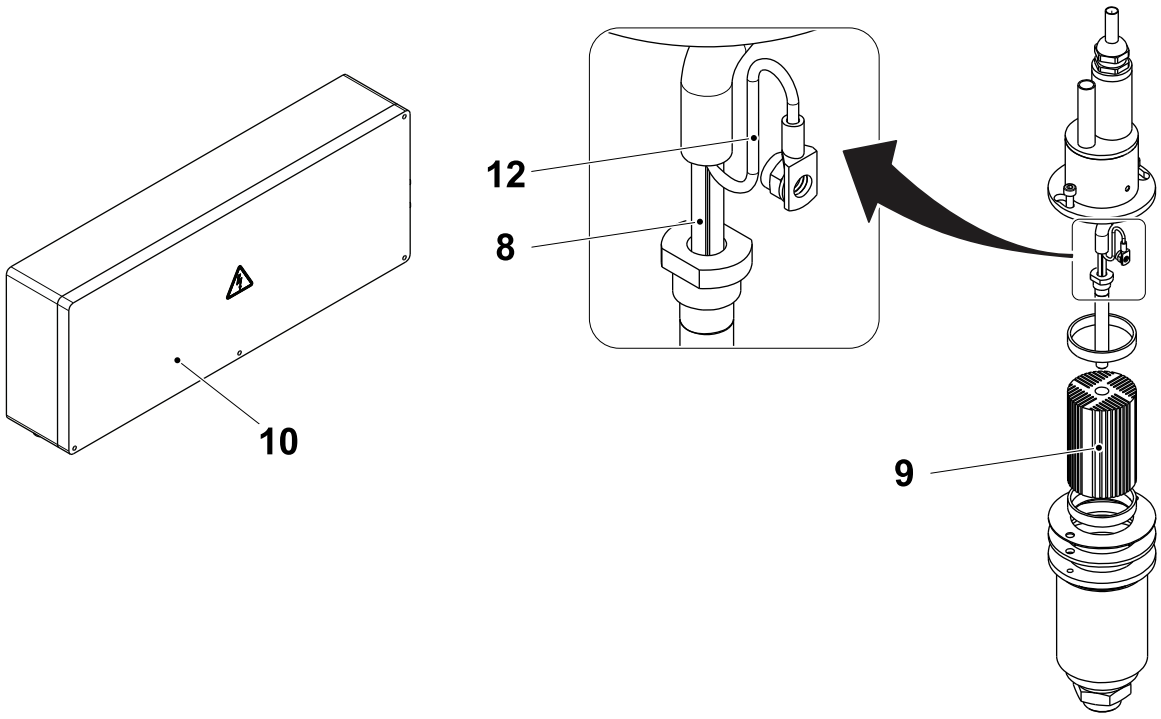

8 cable
9 Heating element
10 Connection box
12 Cable

7.6.5 Hot Air Element

7.6.5-1 Hot Air Element - Change

Machine Status	Electrical supply disconnecting device in position O (OFF) Main air valve OFF Main steam valve ON Main water valve OFF
Special Equipment	Protective gloves TP No. 90303-12
SPC Reference	2868281-0100

WARNING

Risk of burns.

The air nozzle and other nearby parts may be hot. If necessary, wear heat-resistant protective gloves.

a) Remove the protection cover. Follow the instructions in 7.6.3-1 Air Nozzle - Check.

b) Open the casing by removing the screws (1).

c) Pull out the heating element (2) from the casing.

d) Separate the heating element from the connector assembly (3).

e) Change the heating element and assemble in the reverse order.

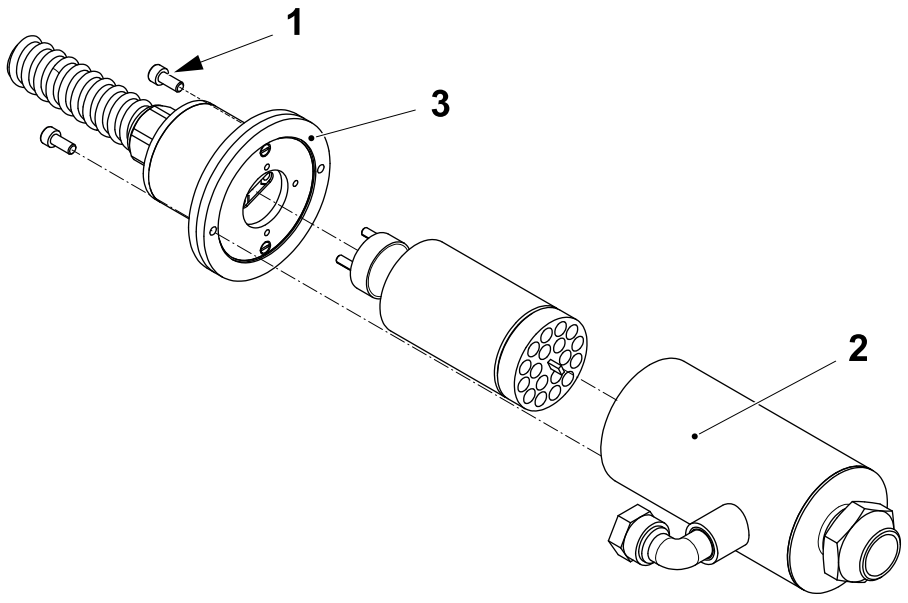

1 Screw
2 Heating element
3 Connector assembly

7.7 Material Holder

7.7-1 Material Holder - Check

Machine Status	Electrical supply disconnecting device in position I (ON) Main air valve ON Main steam valve ON Main water valve OFF
SPC Reference	2842953-0300 2842962-0300

WARNING

Risk of crushing.

If the splicing device is moved out of position it will return **rapidly** to its former position when the doors are closed.

a) Activate and de-activate the cylinder (1) and check its function. If necessary, replace it.

b) Lower the material holder and check the rests against the frame and that the bending roller (2) is level. If not, set the holder, see 7.7-6 Material Holder - Set Alignment.

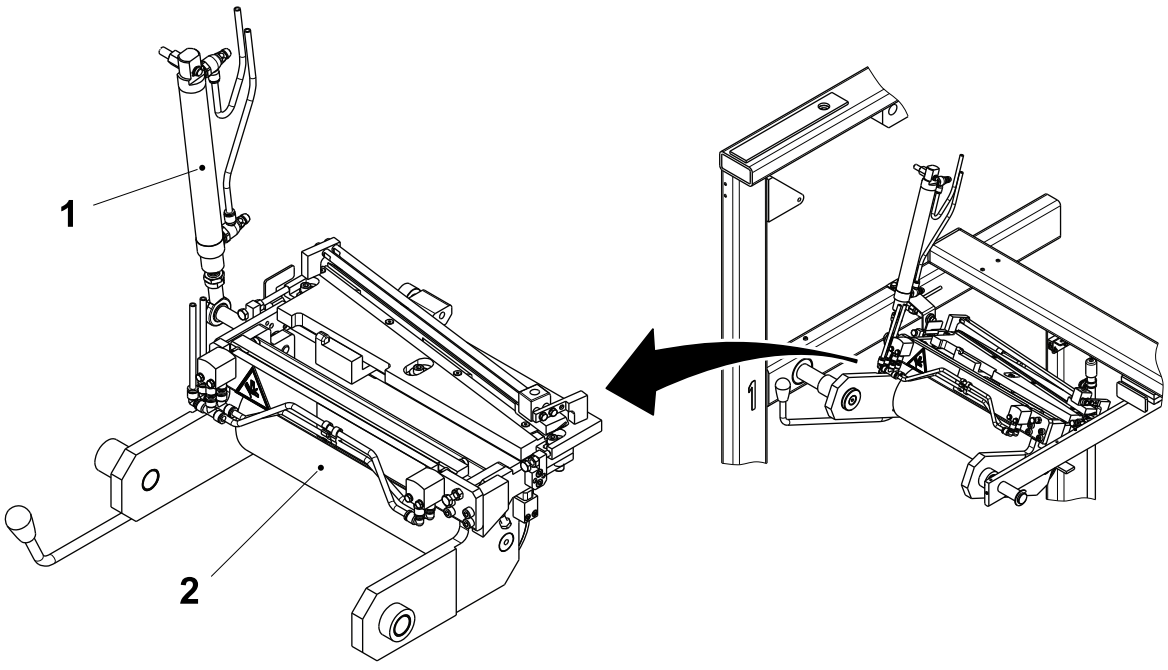

1 Cylinder
2 Bending roller

(Cont'd)

(Cont'd)

c) Make sure that the material holder (3) is parallel with the splicing device (4) and verify the distance **A**. If the parts are not parallel, see 7.7-6 Material Holder - Set Alignment.

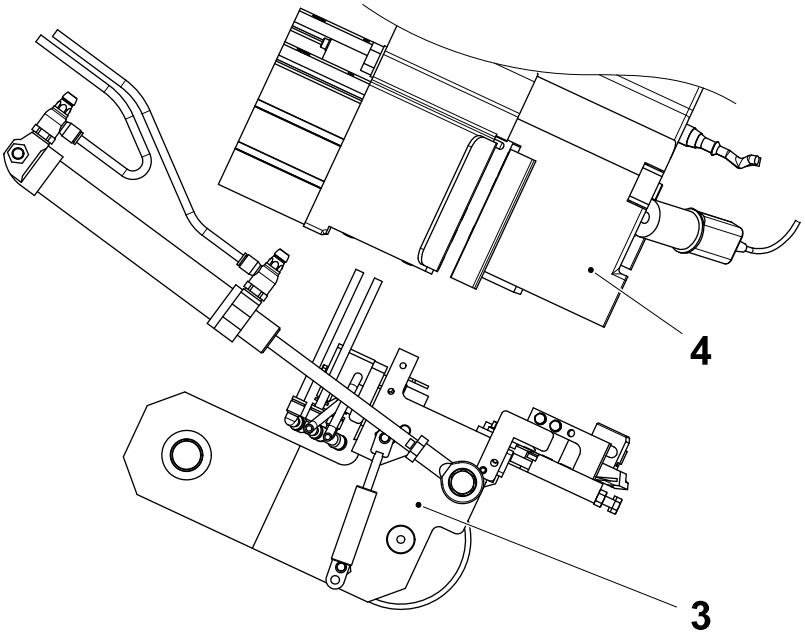

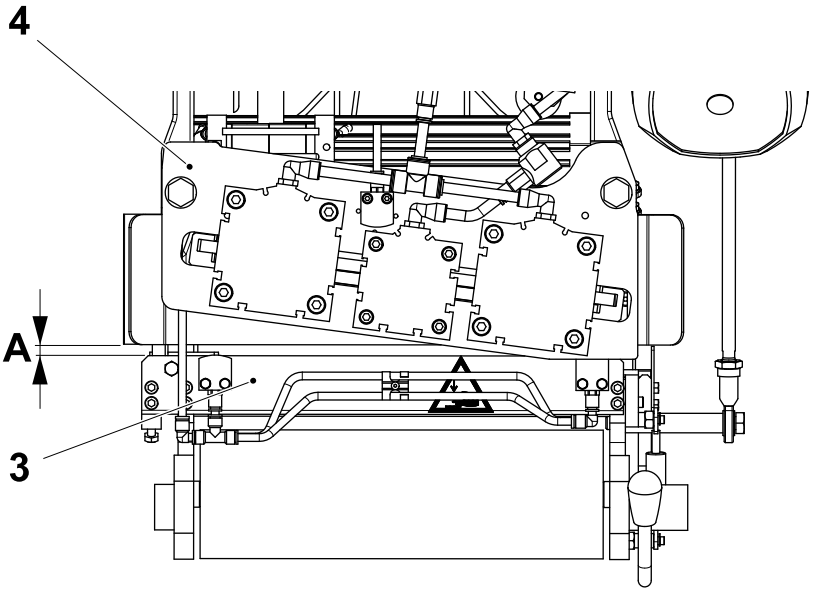

A = 15.0 ±0.5 mm
3 Material holder
4 Splicing device

7.7-2 Material Holder - Cutting Table Overhaul

Machine Status	Electrical supply disconnecting device in position O (OFF) Main air valve OFF Main steam valve ON Main water valve OFF
SPC Reference	2842953-0200 2842962-0200

WARNING

Risk of crushing.

If the splicing device is moved out of position it will return **rapidly** to its former position when the doors are closed.

a) Check the sharpness of the knife (1) by moving the knife holder in both directions over a piece of packaging material. If necessary, change the knife:
   - remove the screws (2), the screw (3) and the bracket (4)
   - slide the knife holder (5) off the shafts (6)
   - remove the screw (7) and slide out and change the knife (1)
   - assemble in the reverse order.

b) Check that the knife holder (5) slides easily. If necessary, clean the knife holder (5), the counter knife (8) and the shafts (6).

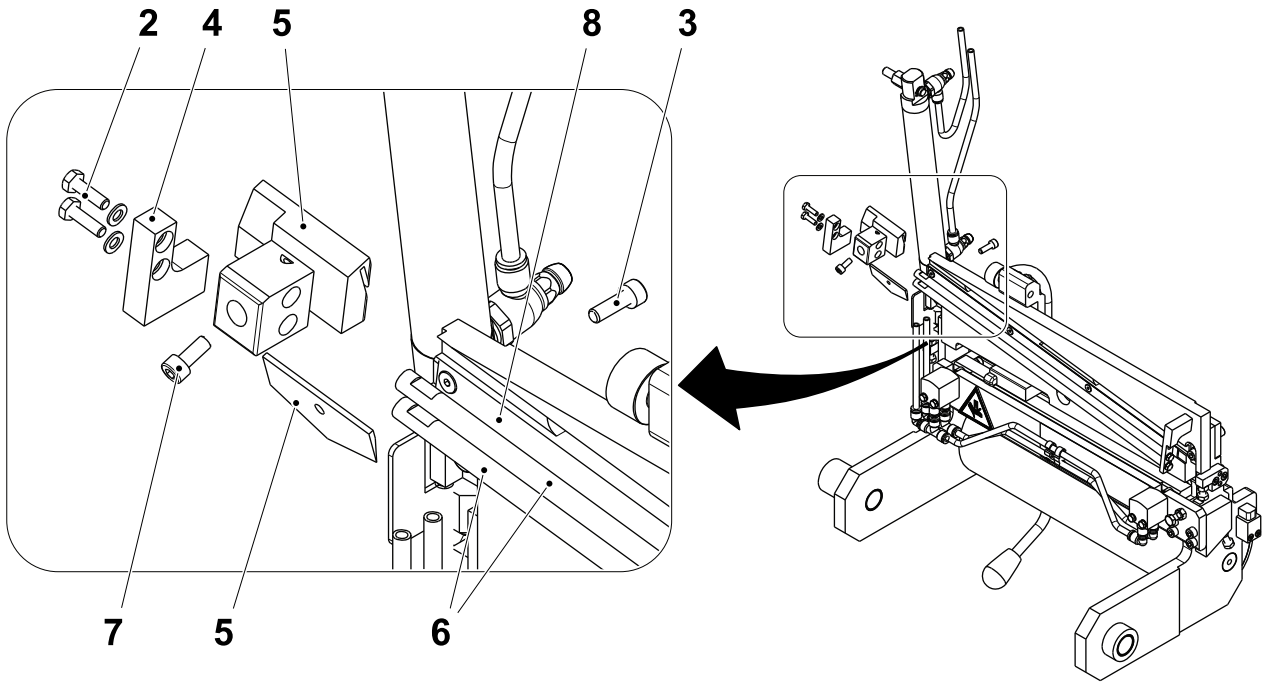

1 Knife
2 Screw
3 Screw
4 Bracket
5 Knife holder
6 Shaft
7 Screw
8 Counter knife

7.7-4 Material Holder - Set Cutting Table

Machine Status	PREPARATION
SPC Reference	2842953-0300 2842962-0300

Sideways Alignment - Basic Setting

a) Set the paper guide (3), see 7.8.1-3 Web Guide - Set.

b) Thread the packaging material through the material holder (1), the splicing device (4) up to the drive roller of the magazine.

c) Prepare the material holder (2) for the splice without threading the packaging material through.

d) Perform a new splice; the splicing device (4) moves on the material holder (2).

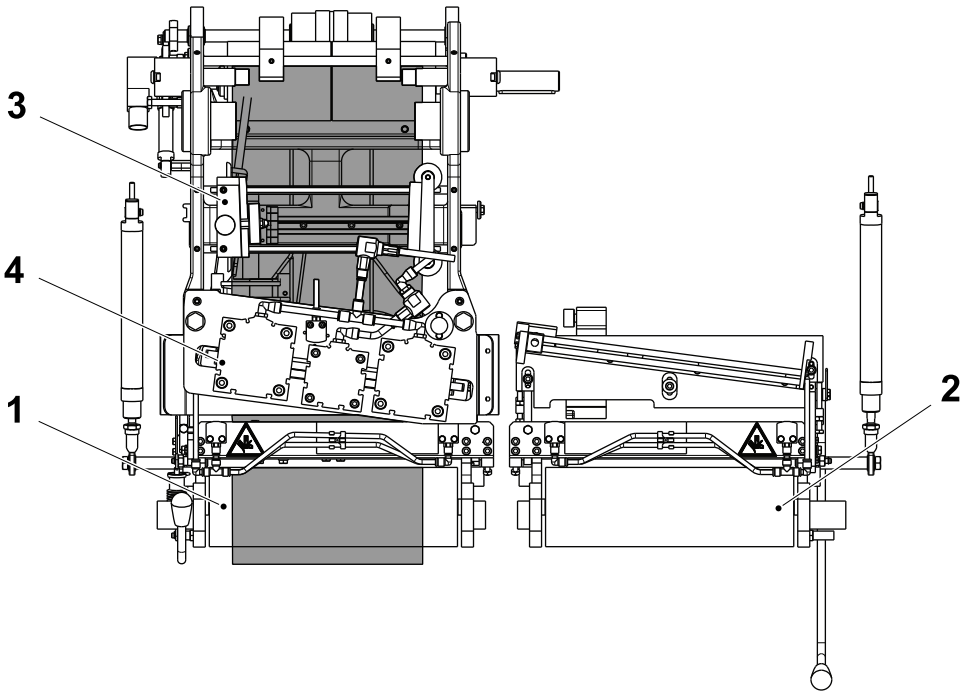

1 Material holder
2 Material holder
3 Paper guide
4 Splicing device

(Cont'd)

(Cont'd)

e) Lift the cutting table (5) of the material holder (1).

f) Loosen the screws (6) and move the guide (7) so that the tooth (8) and touch the packaging material edge.

g) Tighten the screws (6).

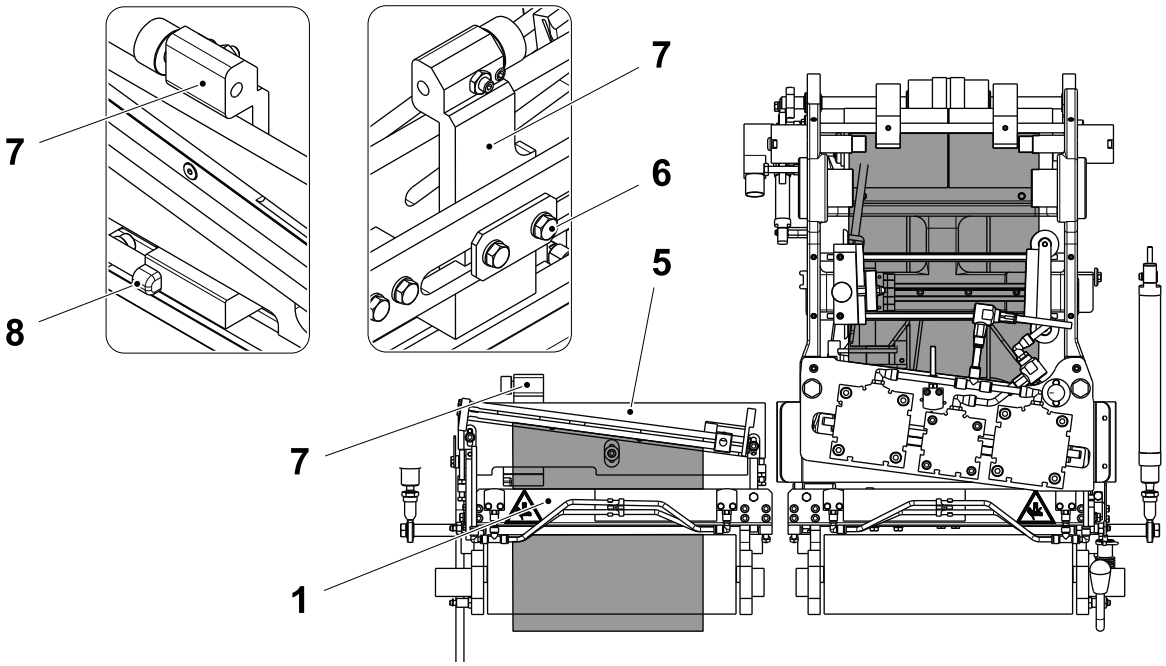

1 Material holder
5 Cutting table
6 Screw
7 Guide
8 Tooth

(Cont'd)

(Cont'd)

Sideways Alignment - Fine Adjustment

a) Loosen the screws (1) and move slightly the guide (2) to set the sideways alignment within the tolerance (distance **A**).

b) Tighten the screws (1).

c) Perform a new splice and check the new sideways alignment is correct.

Note! Check the alignment on the strip application side of the packaging material.

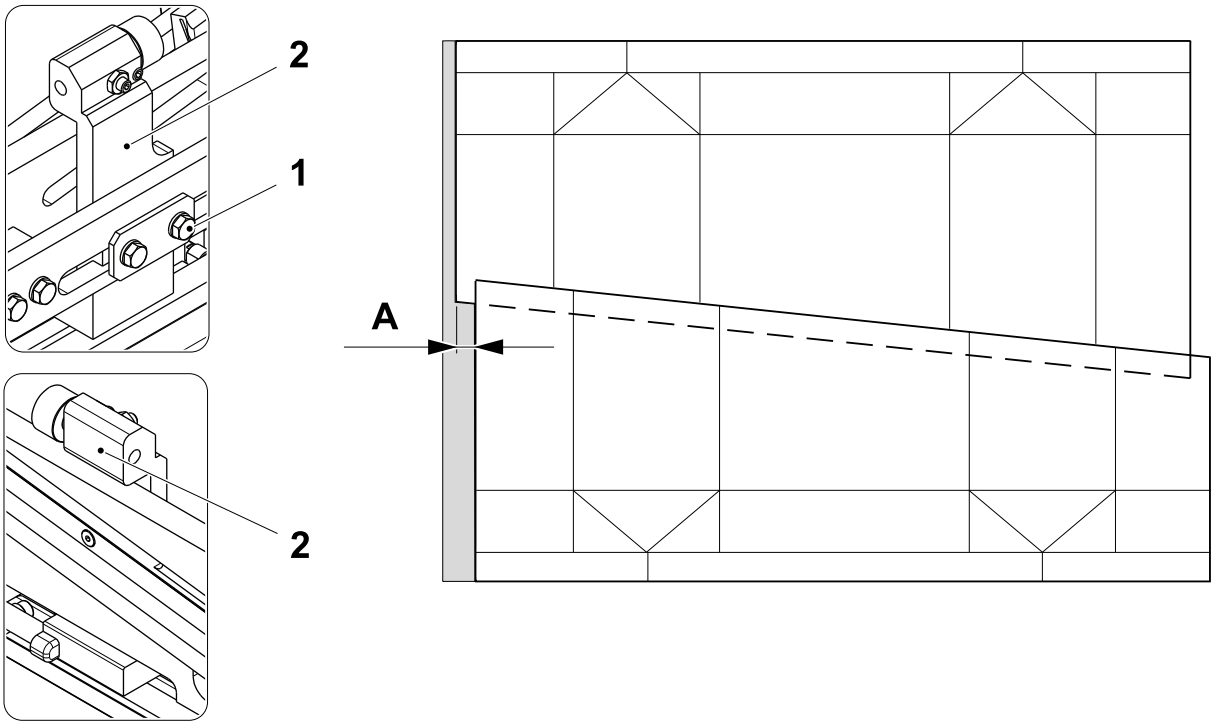

A = 0 ±0.5 mm
1 Screw
2 Guide

(Cont'd)

(Cont'd)

Overlap - Fine Adjustment

a) Loosen the shoulder screw (1) and the screw (2).

b) Adjust the position of the cutting table (3) by means of the screws (4).

c) Tighten the shoulder shoulder screw (1) and the screw (2).

d) Tighten the nuts (5).

e) Perform a new splice and check that the new splice overlap is correct (distance **B**).

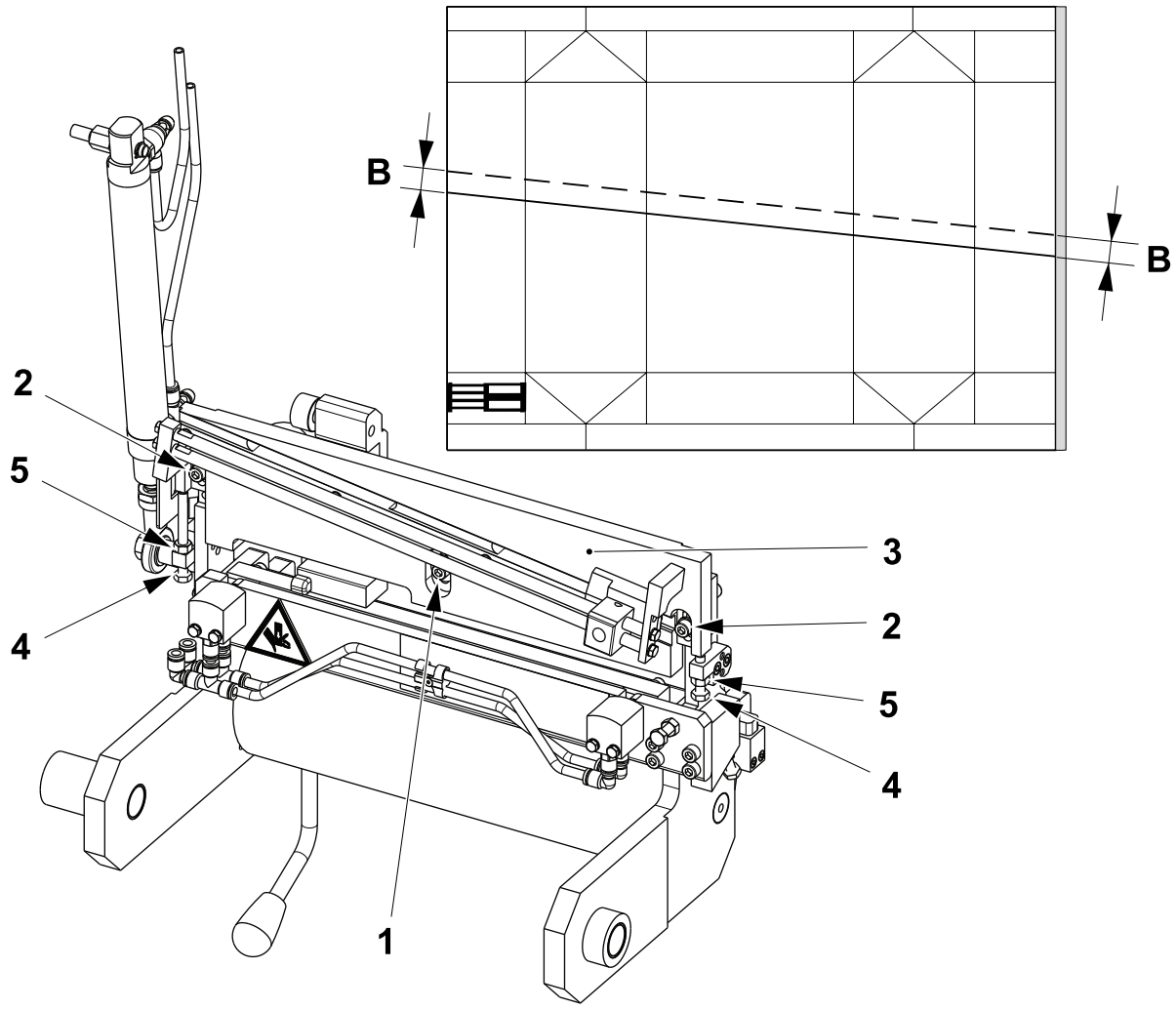

B = 16.5 ±0.5 mm

1 Shoulder screw
2 Screw
3 Cutting table
4 Screw
5 Nut

(Cont'd)

(Cont'd)

Sealing Parallelism

a) Modify the parallelism as follows: loosen the grub screw (1) and turn the adjusting screw (2) click by click to move the surface that has to be in contact with the packaging material, then tighten the grub screw (1).

b) Perform a new splice and check that the new packaging material web diverges by not more than the distance **C** in 1 metre from the splice. With the aid of a straight edge measure the distance **C** two times, directly after the splice and one meter from the splice.

Note! The packaging material edge (3) is shown as a dashed line. One click of the adjusting screw (2) corresponds to a movement of 1 mm.

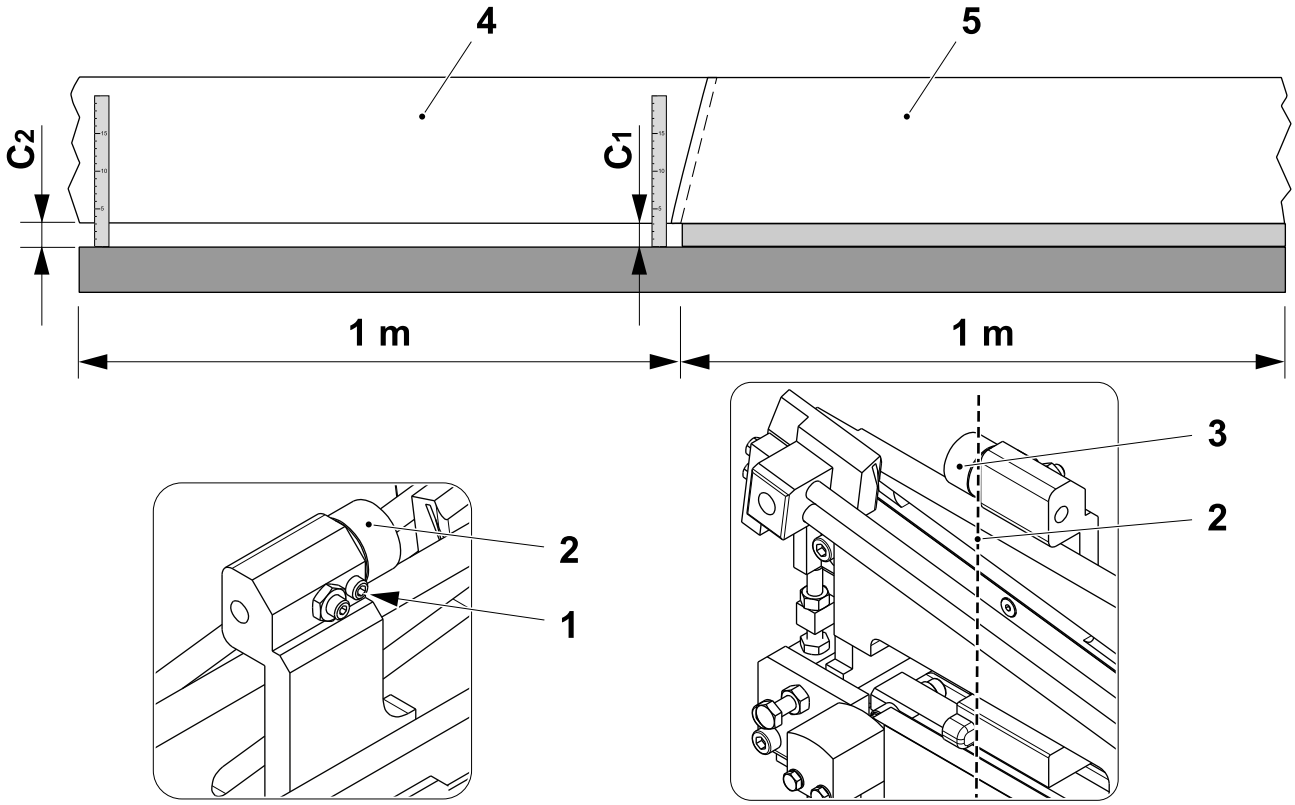

$C_1 - C_2 = 0 \pm 1.0$ mm

1 Grub screw
2 Adjusting screw
3 Packaging material edge
4 New packaging material web
5 Old packaging material web

(Cont'd)

(Cont'd)

Set Cutting Table Position

a) Press the MATERIAL LOCKING button (1) to release the material holder to fit the ruler (2).

b) Raise the cutting table (3) by means of the handle (4).

c) Check that the ruler (2) almost touch the surface of the guide (5). If necessary, loosen the nut (6) and adjust with the screw (7).

d) Lower the cutting table (3) by means of the handle (4).

e) Press the MATERIAL LOCKING button (1) to remove the ruler (2).

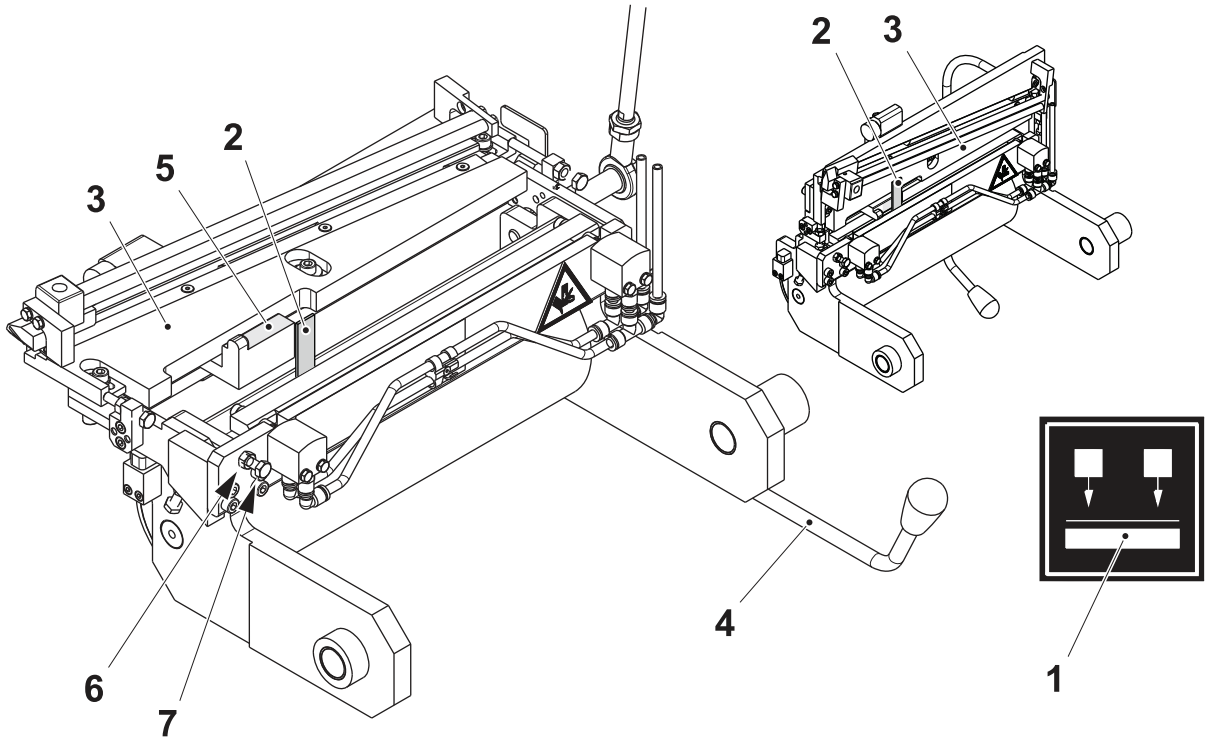

1 Material locking button
2 Ruler
3 Cutting table
4 Handle
5 Guide
6 Nut
7 Screw

7.7-5 Material Holder - Overhaul

Machine Status	Electrical supply disconnecting device in position O (OFF) Main air valve OFF Main steam valve ON Main water valve OFF
SPC Reference	2842953-0300 2842962-0300

WARNING

Risk of crushing.

If the splicing device is moved out of position it will return **rapidly** to its former position when the doors are closed.

a) Remove the screws (1) and the axle pins (2).

b) Remove and change the ball bearings (3). If necessary, change the bending roller (4).

c) Assemble in the reverse order. Set the material holder, see 7.7-6 Material Holder - Set Alignment.

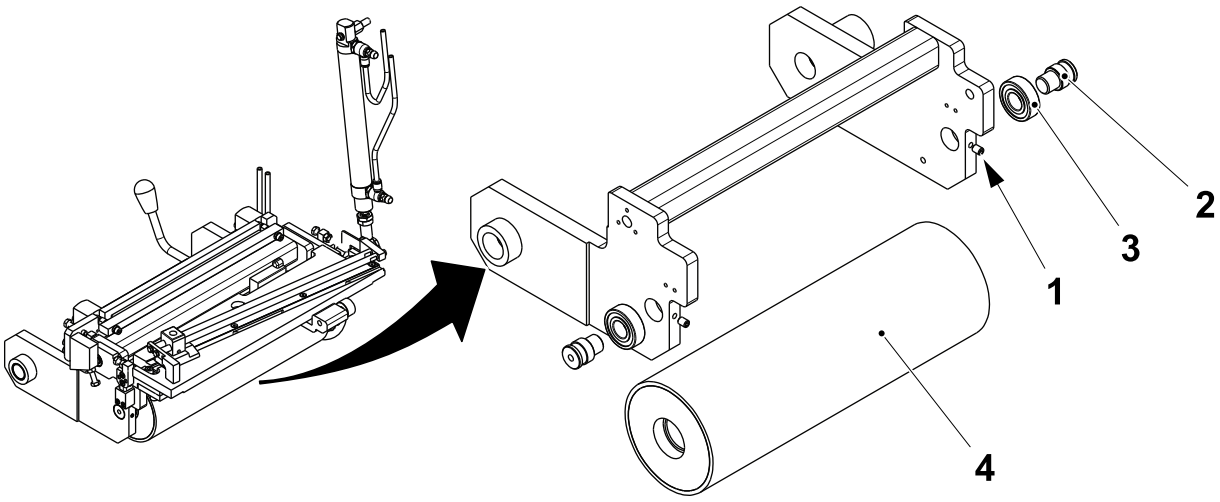

1 Screw
2 Axle pin
3 Ball bearing
4 Bending roller

7.7-6 Material Holder - Set Alignment

Machine Status	PREPARATION
SPC Reference	2842962-0300 2842953-0300

WARNING

Risk of crushing.

If the splicing device is moved out of position it will return **rapidly** to its former position when the doors are closed.

(Cont'd)

(Cont'd)

Set Alignment

a) Place a plumb line (1) over the rollers (2) and (3).

b) Loosen the screws (4).

c) Set the splicing device (5) parallel to the plumb line (1) by adding or removing shims (6).

d) Tighten the screws (4).

e) Repeat for the other material holder.

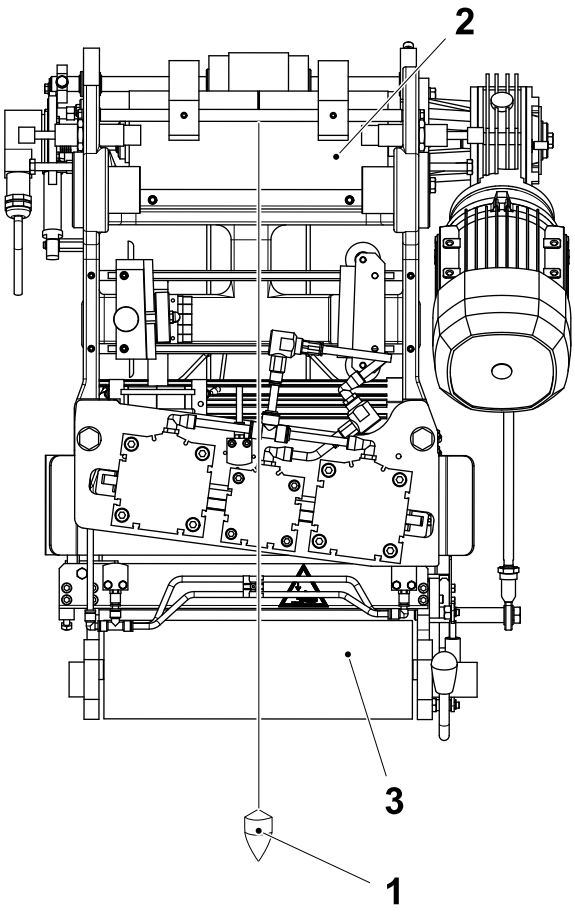

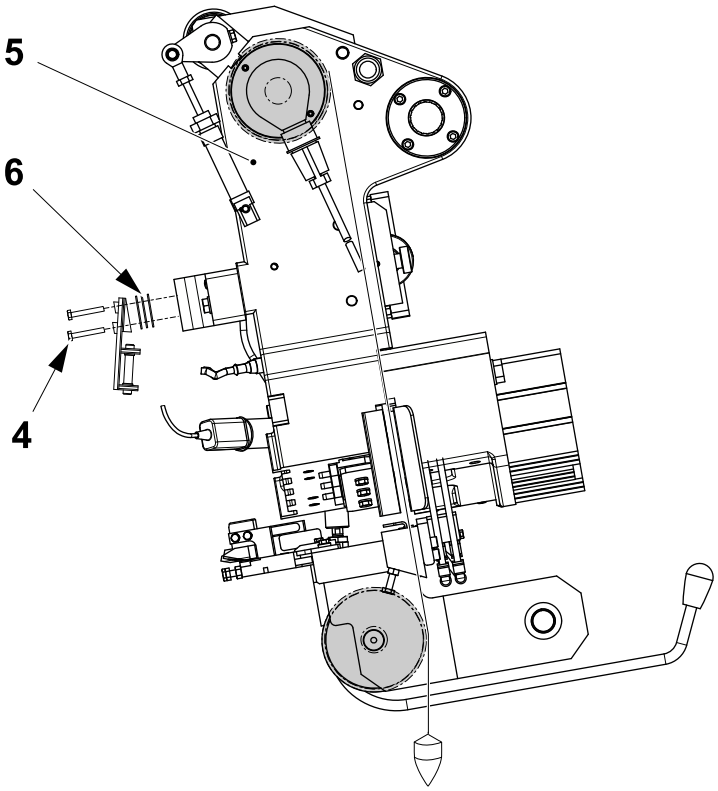

1 Plumb line
2 Roller
3 Roller
4 Screw
5 Splicing device
6 Shim

(Cont'd)

(Cont'd)

f) Loosen the nut (7).

g) Turn the screw (8).

h) Set distance **A**.

i) Check that the proximity switch (9) is activated by the flag (10).

j) Lock the screw (8) with the nut (7). If the parts are not aligned, repeat steps f) to h).

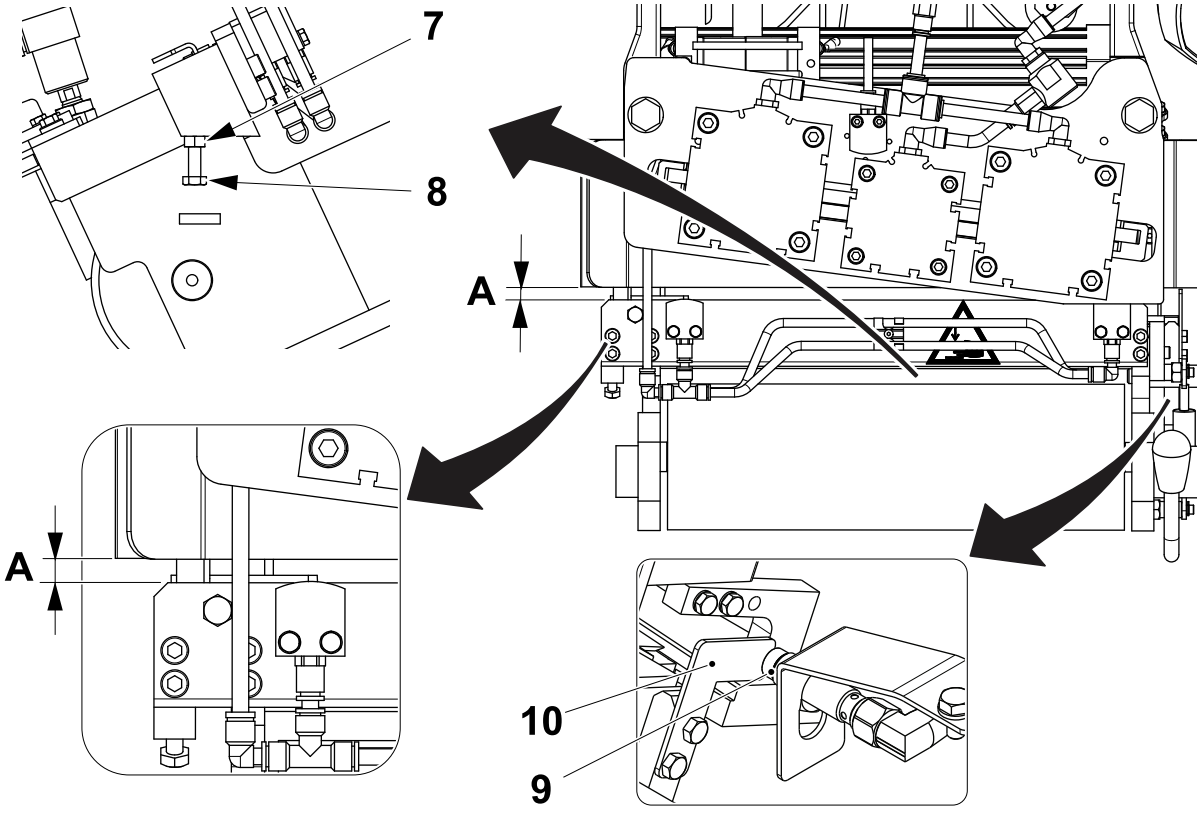

A = 15.0 ±0.5 mm
7 Nut
8 Screw
9 Proximity switch
10 Flag

(Cont'd)

(Cont'd)

k) Step up the machine to PREPARATION.

l) Prepare the packaging material in the material holder on the opposite line from the splicing device.

Note! To move the splicing device, see 7.10-2 Side Feeder - Set Sensor Position

m) Move the splicing device (5) over the prepared packaging material until the splicing device hits the mechanical stop.

n) Remove tie rods (11). Remove the pressure jaw (12).

o) Push the packaging material (13) against the sealing plate (14) and check that the cut edge of the packaging material is parallel to the upper sealing plate edge (15).

p) Check the distances **B** and **C** between the upper sealing plate edge (15) and the packaging material. If the distances **B** and **C** are incorrect set the overlap, see Overlap - Fine Adjustment.

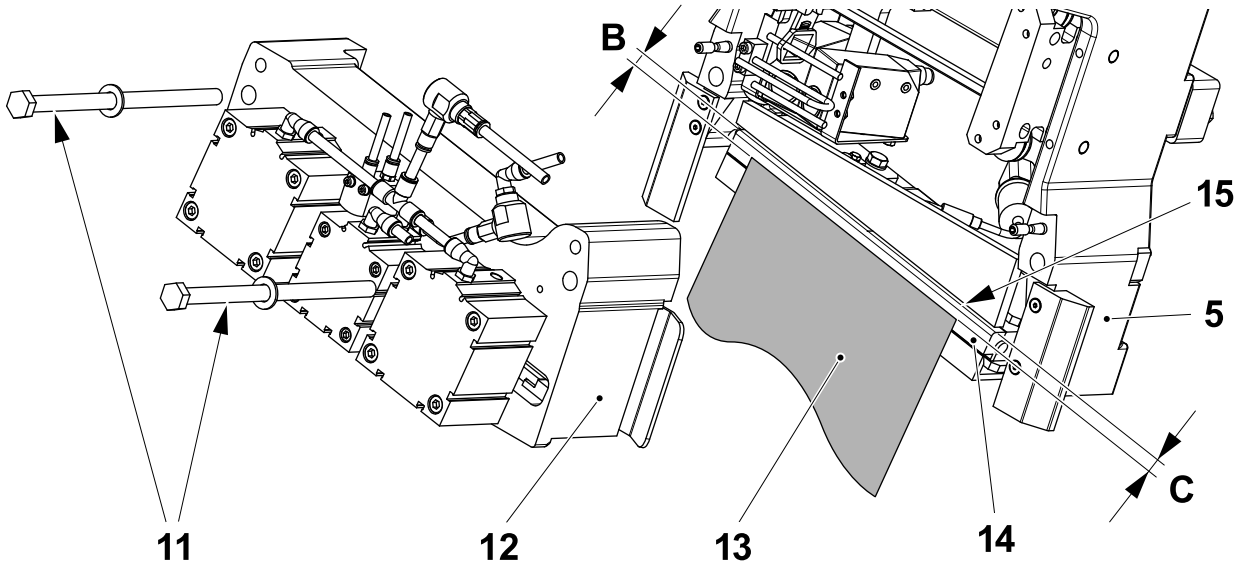

B = C = 2.0 ±0.5 mm

5 Splicing device
11 Tie rod
12 Pressure jaw
13 Packaging material
14 Sealing plate
15 Upper sealing plate edge

(Cont'd)

(Cont'd)

Overlap - Fine Adjustment

Note! If necessary, this procedure is done in the end of the 7.1-1 ASU - Setting Sequence.

a) Loosen the shoulder screw (1) and the screw (2).

b) Adjust the position of the cutting table (3) by means of the screws (4).

c) Tighten the shoulder shoulder screw (1) and the screw (2).

d) Tighten the nuts (5).

e) Perform a new splice and check that the new splice overlap is correct (distance **C**).

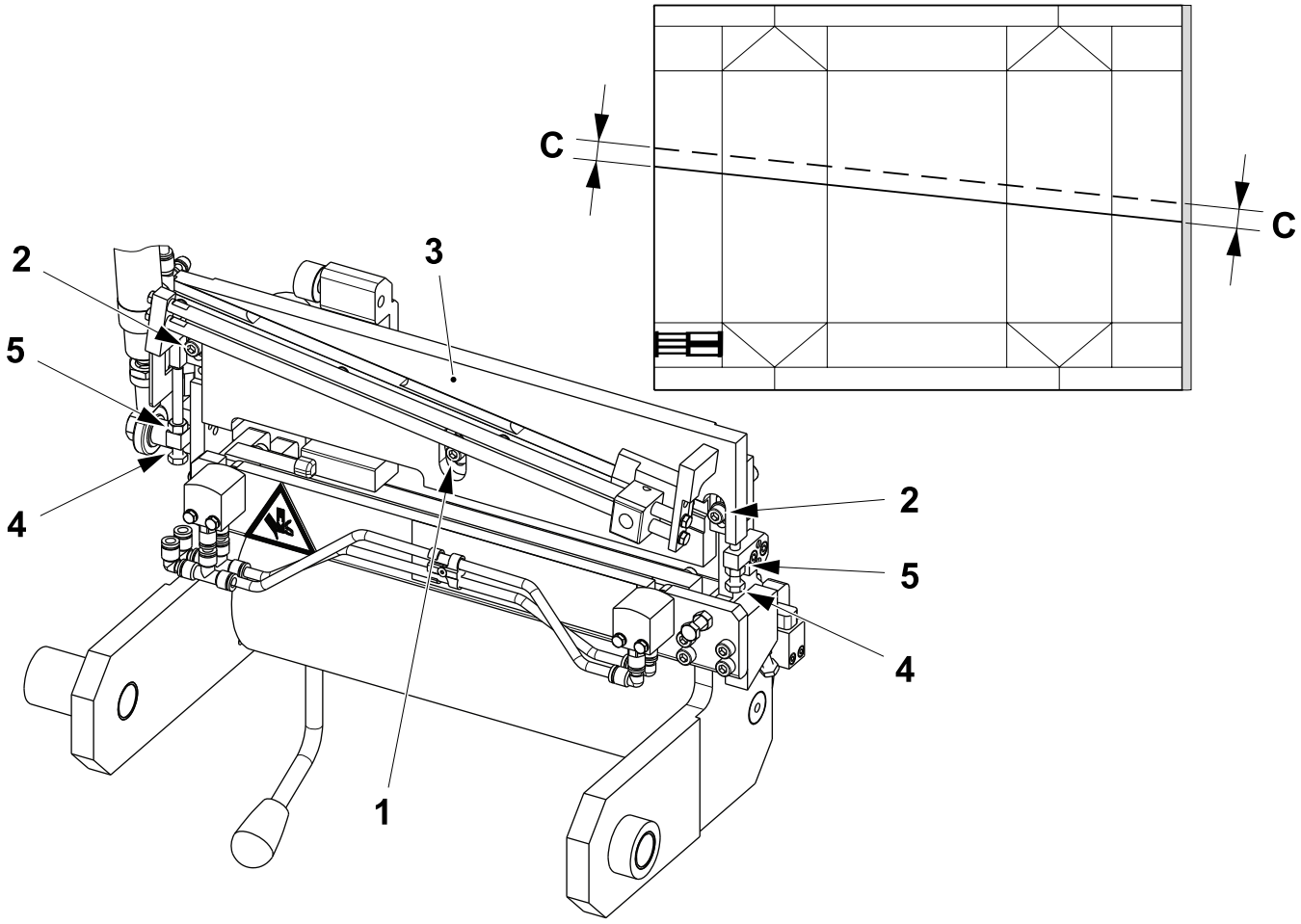

C = 16.5 ±0.5 mm

1 Shoulder screw
2 Screw
3 Cutting table
4 Screw
5 Nut

7.7-7 Material Holder - Check Proximity Switch

Machine Status	Electrical supply disconnecting device in position I (ON) Main air valve OFF Main steam valve ON Main water valve OFF
SPC Reference	2842953-0300 2842962-0300

WARNING

Risk of crushing.

If the splicing device is moved out of position it will return **rapidly** to its former position when the doors are closed.

(Cont'd)

(Cont'd)

Check:

- the distance **A** between the proximity switch (1) and the plate (2).
- the function of the proximity switch (1). With the material holder (3) lowered check that the proximity switch LED is ON.
- repeat the check for the other proximity switch.

Set the proximity switch if necessary, see 7.7-8 Material Holder - Set Proximity Switch.

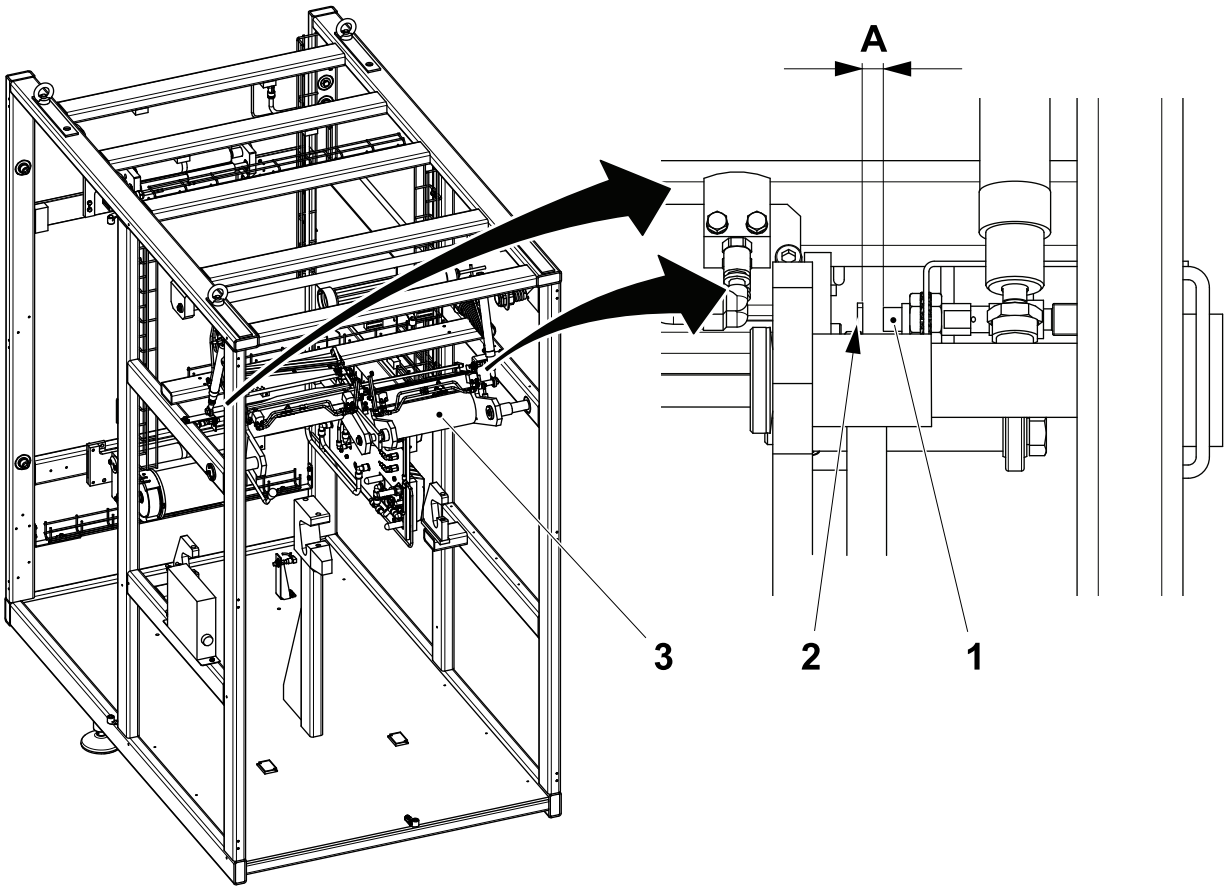

A = 2.0 ±0.5 mm
1 Proximity switch
2 Plate
3 Material holder

7.7-8 Material Holder - Set Proximity Switch

Machine Status	Electrical supply disconnecting device in position O (OFF) Main air valve OFF Main steam valve ON Main water valve OFF
SPC Reference	2842953-0300 2842962-0300

WARNING

Risk of crushing.

If the splicing device is moved out of position it will return **rapidly** to its former position when the doors are closed.

a) Loosen the nuts (1).

b) Set the distance **A** between the proximity switch (2) and plate (3).

c) Tighten the nuts (1).

d) Repeat the set for the other proximity switch.

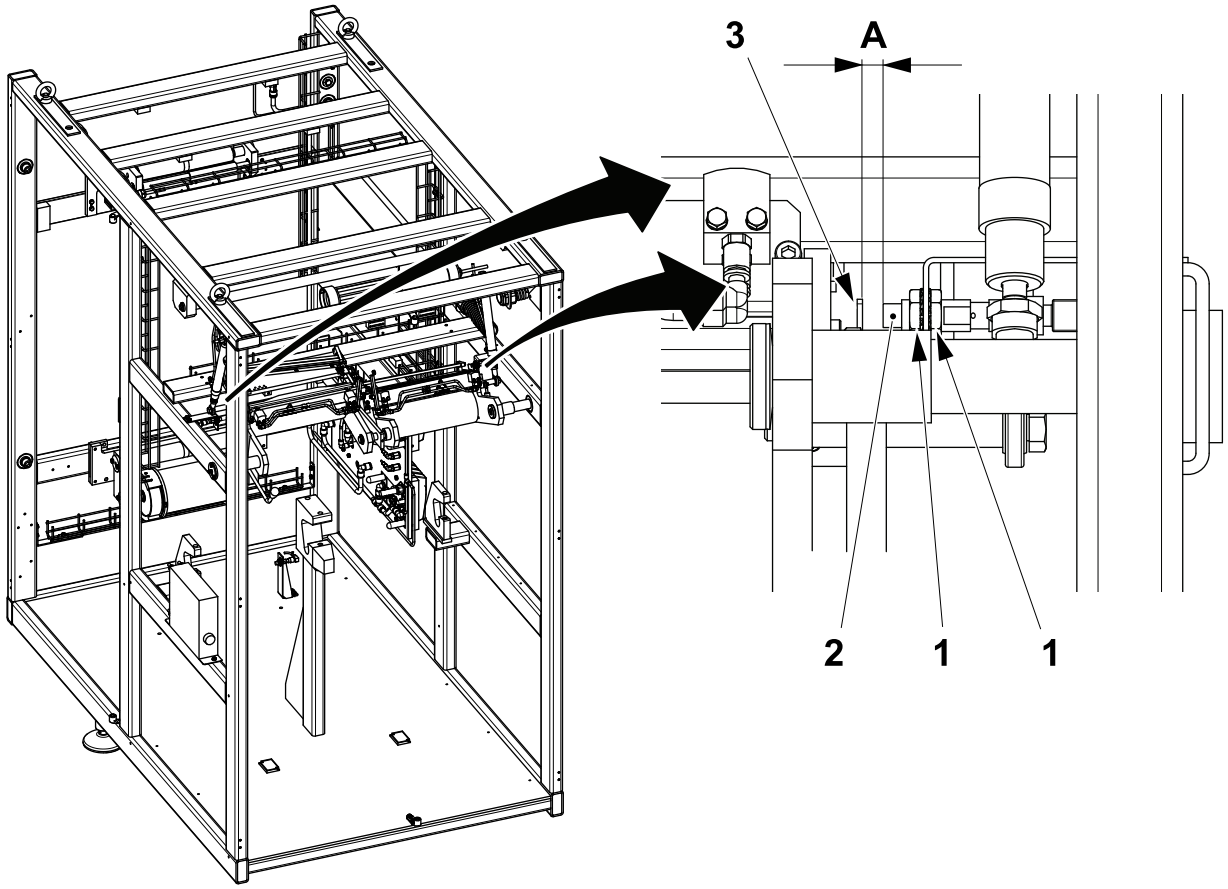

A = 2.0 ±0.5 mm

1 Nut

2 Proximity switch

3 Plate

7.7-9 Material Holder - Set Speed

Machine Status	PREPARATION
SPC Reference	2842953-0300 2842962-0300

WARNING

Risk of crushing.

If the splicing device is moved out of position it will return **rapidly** to its former position when the doors are closed.

a) Press the PACKAGING MATERIAL HOLDER button to raise the material holder opposite to the splicing device.

b) Press the PACKAGING MATERIAL HOLDER button again and measure the time between the button is pressed and the material holder has reached its **lower** position. The time must be **one second**.

c) If required, loosen the nut (1) and turn the throttle valve (2) to increase or decrease the speed.

d) Check again until the correct speed of the material holder is obtained.

e) Tighten the nut (1).

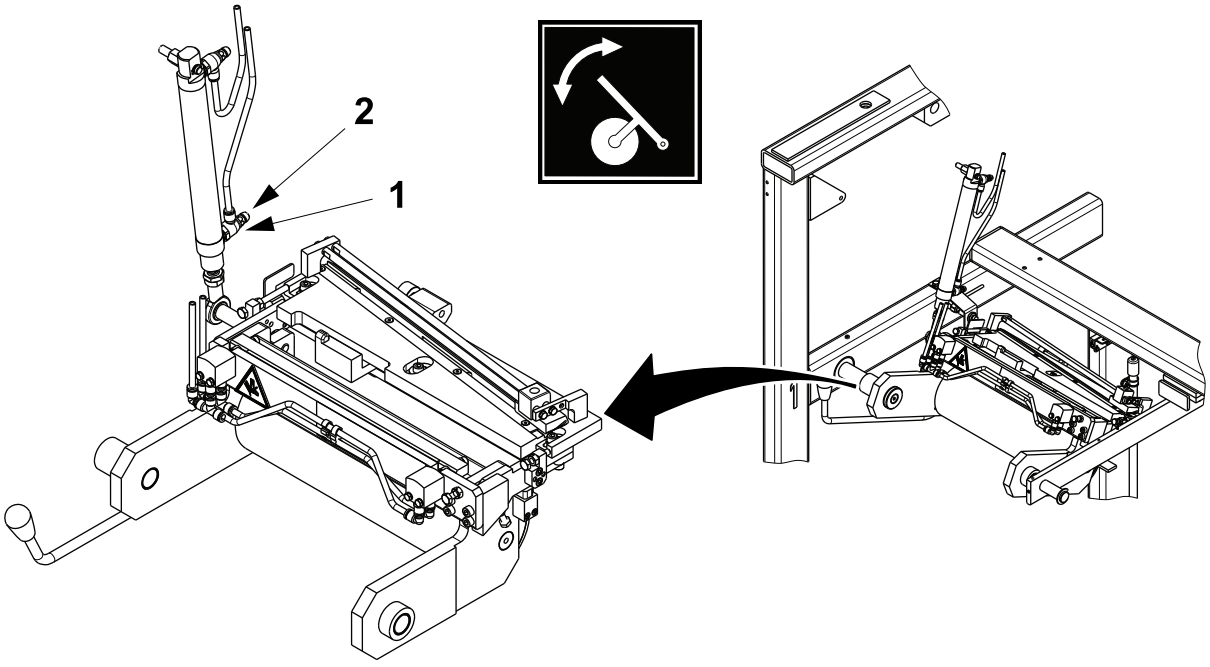

1 Nut
2 Throttle valve

(Cont'd)

(Cont'd)

f) Press the PACKAGING MATERIAL HOLDER button and measure the time between the button is pressed and the material holder has reached its **upper** position. The time must be **two seconds**.

g) If required, loosen the nut (3) and turn the throttle valve (4) to increase or decrease the speed.

h) Check again until the correct speed of the material holder is obtained.

i) Tighten the nut (3).

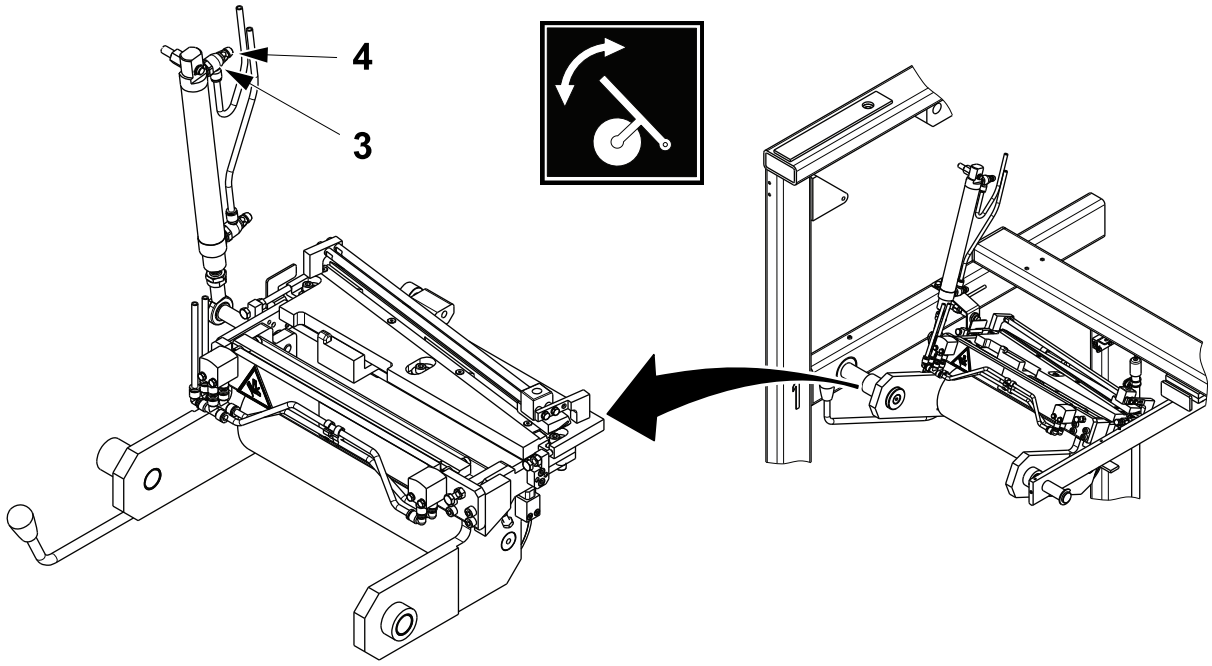

3 Nut
4 Throttle valve

7.8 Splicing Device

7.8-1 Splicing Device - Check Drive Unit

Machine Status	Electrical supply disconnecting device in position O (OFF) Main air valve OFF Main steam valve ON Main water valve OFF
SPC Reference	2832322-0200 2832322-0300

Check:

- the worm gear motor (1) for wear or damage
- the ball bearings (2) for wear, damage or excessive radial play.

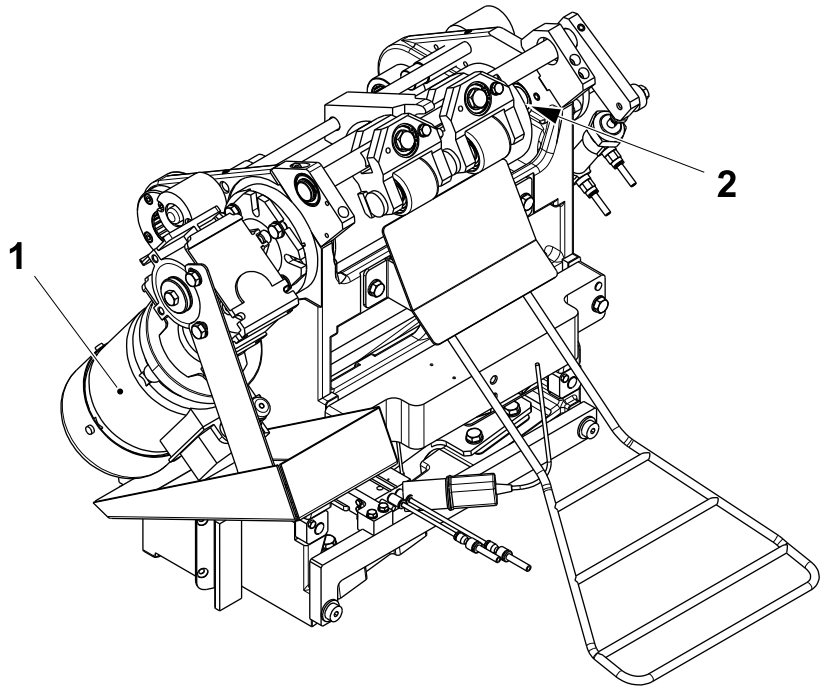

1 Gear motor
2 Ball bearing

7.8-2 Splicing Device - Drive Unit Overhaul

Machine Status	Electrical supply disconnecting device in position O (OFF) Main air valve OFF Main steam valve ON Main water valve OFF
SPC Reference	2832322-0200 2832322-0300

a) Remove the screws (1) and the worm gear (2).

b) Remove the screws (3) and the flange (4).

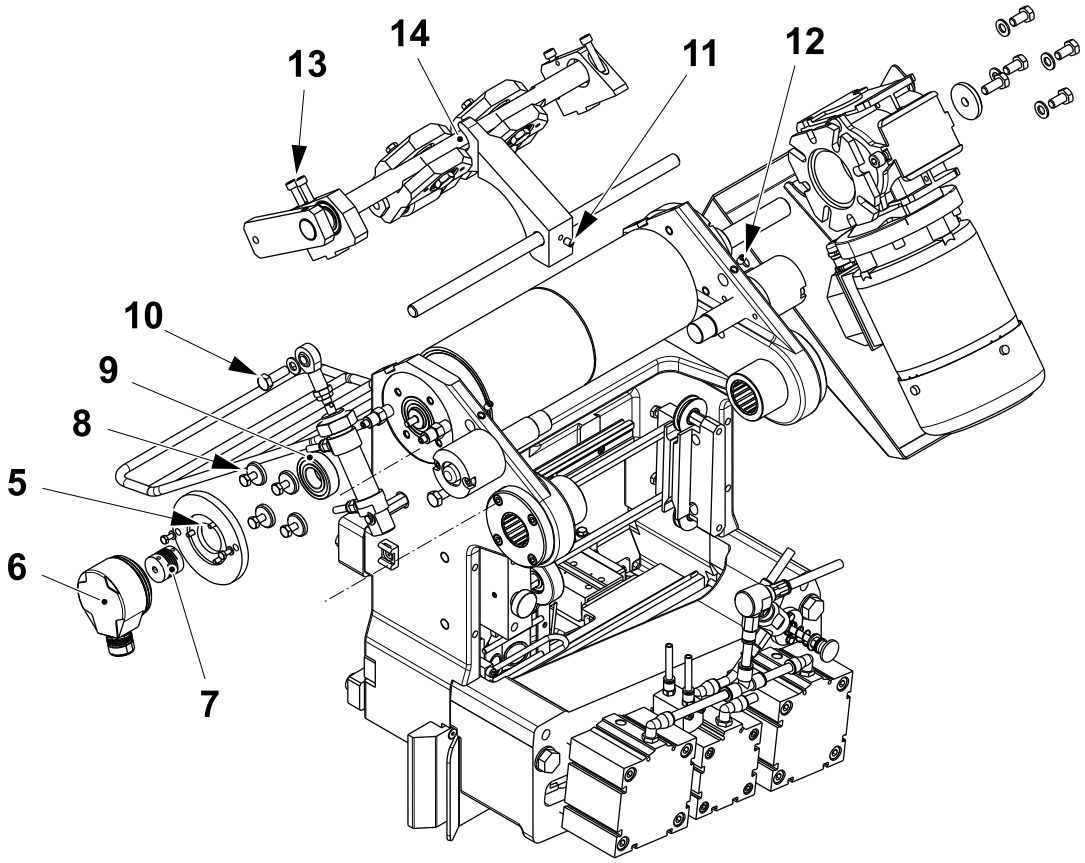

1 Screw
2 Worm gear
3 Screw
4 Flange

(Cont'd)

(Cont'd)

c) Remove the screws (5), the encoder (6) and the joint (7). Change the joint.

d) Remove the screws (8) and the bushing (9).

e) Remove the screw (10), the stop screw (11) and the screws (12) and the screws (13).

f) Remove the counter roller (14).

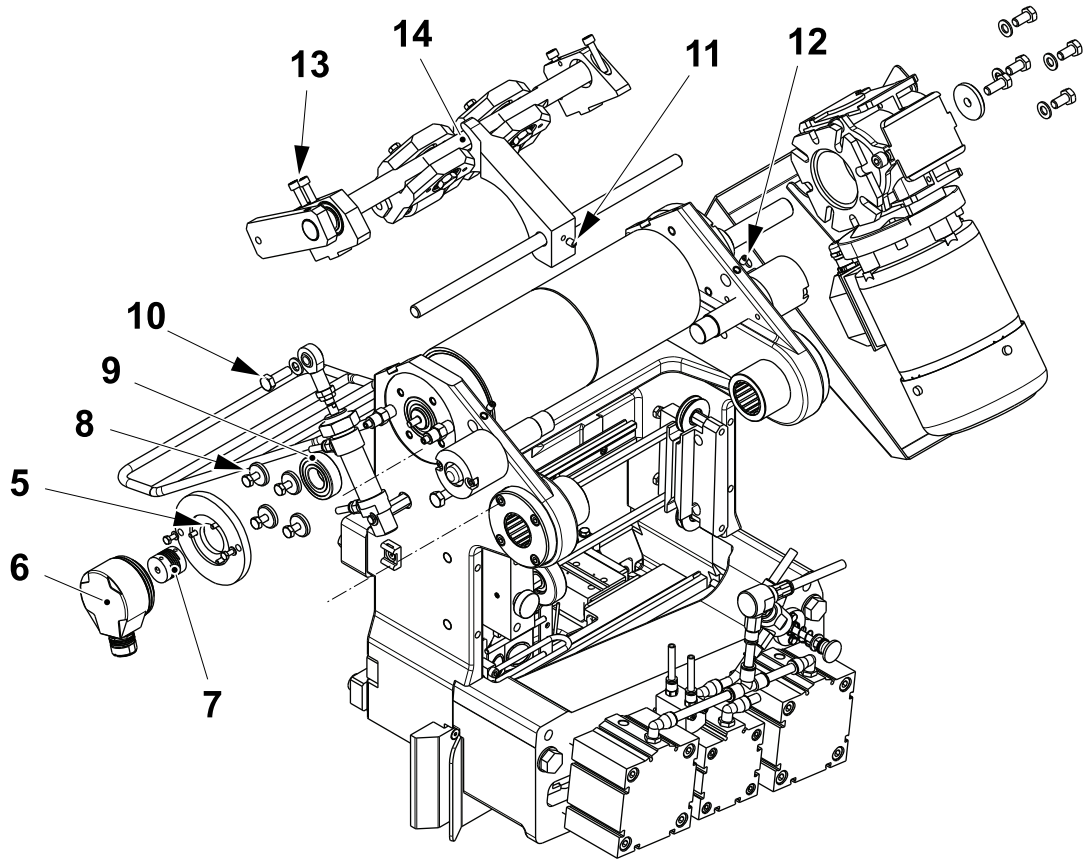

5 Screw
6 Encoder
7 Joint
8 Screw
9 Bushing
10 Screw
11 Stop screw
12 Screw
13 Screw
14 Counter roller

(Cont'd)

(Cont'd)

g) Loosen the round nut (15) and the washer (16) from the shaft (17).

h) Remove the shaft (17) with the key (18).

i) Remove the bending roller (19).

j) Assemble in the reverse order.

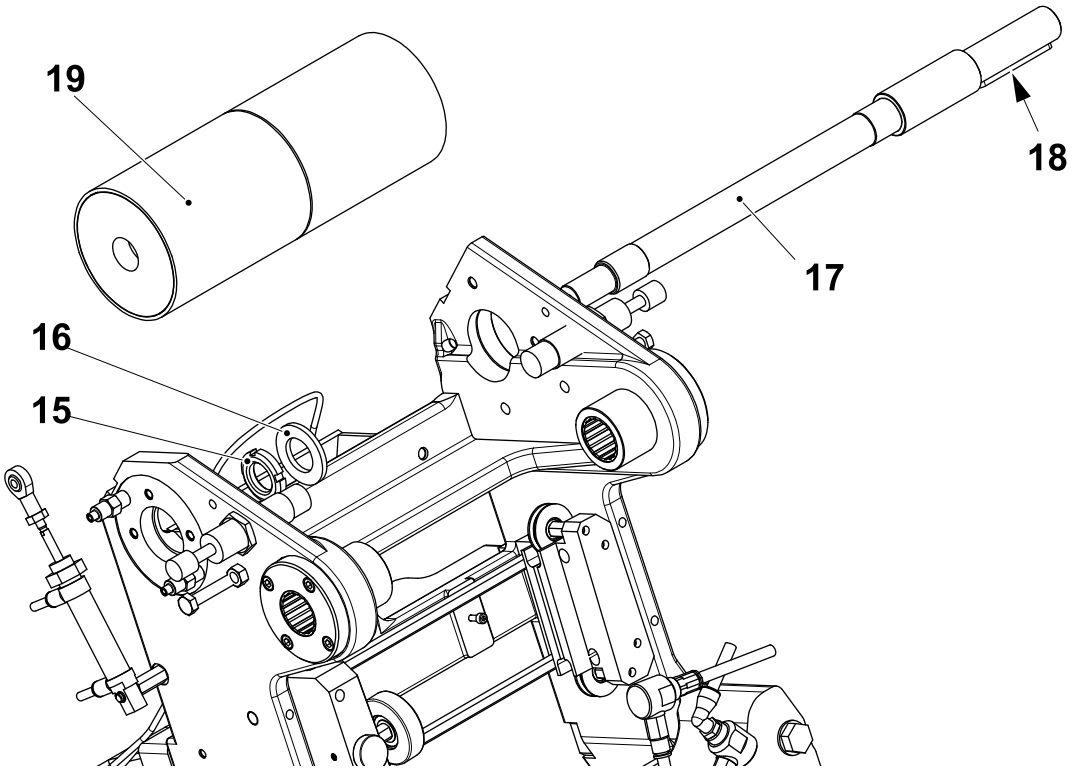

15 Round nut
16 Washer
17 Shaft
18 Key
19 Bending roller

7.8-3 Splicing Device - Change Photocell

Machine Status	Electrical supply disconnecting device in position O (OFF) Main air valve OFF Main steam valve ON Main water valve OFF
SPC Reference	2832322-0200 2832322-0300

WARNING

Risk of crushing.

If the splicing device is moved out of position it will return **rapidly** to its former position when the doors are closed.

a) Disconnect the cable from the rear of the photocell.

b) Remove the screws (1) and change the photocell (2).

c) Fit the screws (1).

d) Set the photocell, see 7.8-5 Splicing Device - Set Photocell Sensitivity .

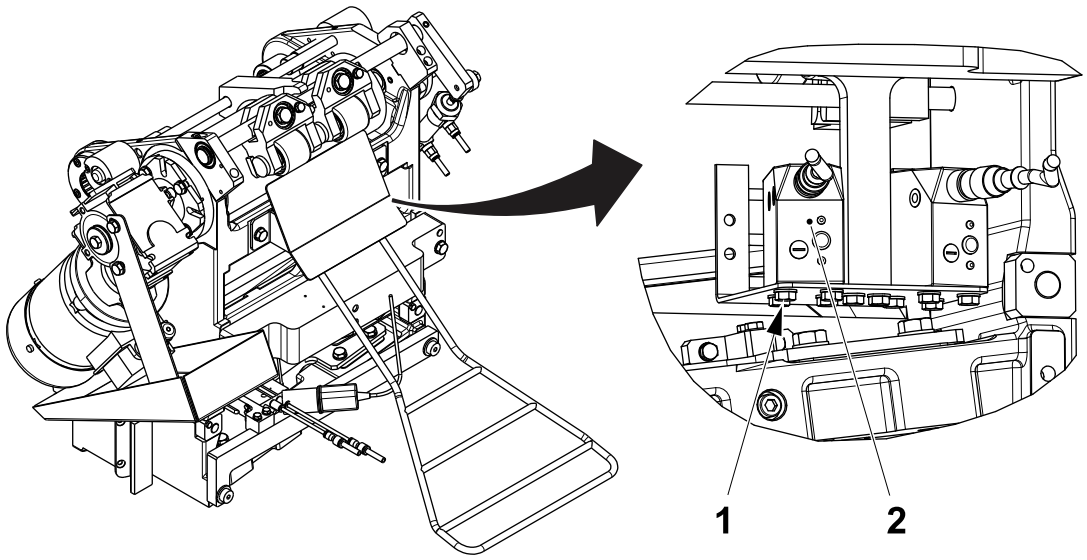

1 Screw
2 Photocell

7.8-4 Splicing Device - Set Photocell Position

Machine Status	Electrical supply disconnecting device in position O (OFF) Main air valve OFF Main steam valve ON Main water valve OFF
SPC Reference	2832322-0200 2832322-0300

WARNING

Risk of crushing.

If the splicing device is moved out of position it will return **rapidly** to its former position when the doors are closed.

(Cont'd)

(Cont'd)

a) To set the horizontal position of the photocell, loosen the knob (1) and set the distance **A**.

b) Tighten the knob (1).

Package	**A ±0.5 (mm)**
TBA 80 S	55.0
TBA 100 B, TBA 125 S	44.0
TBA 200 M, TBA 250 S, TBA 200 E, TBA 250 E	30.0
TBA 200 B, TBA 250 B, TBA 330 S	192.0
TBA 160 S, TBA 180 S, TBA 200 S	38.0
TBA 200 Sq, TBA 250 Sq	212.0
TBA 284 B, TBA 300 S	189.0
TBA 375 S	20.0
TPA 125 Sq	55.0
TPA 200 Sq, TPA 250 Sq	40.0
TPA 330 Sq	24.0

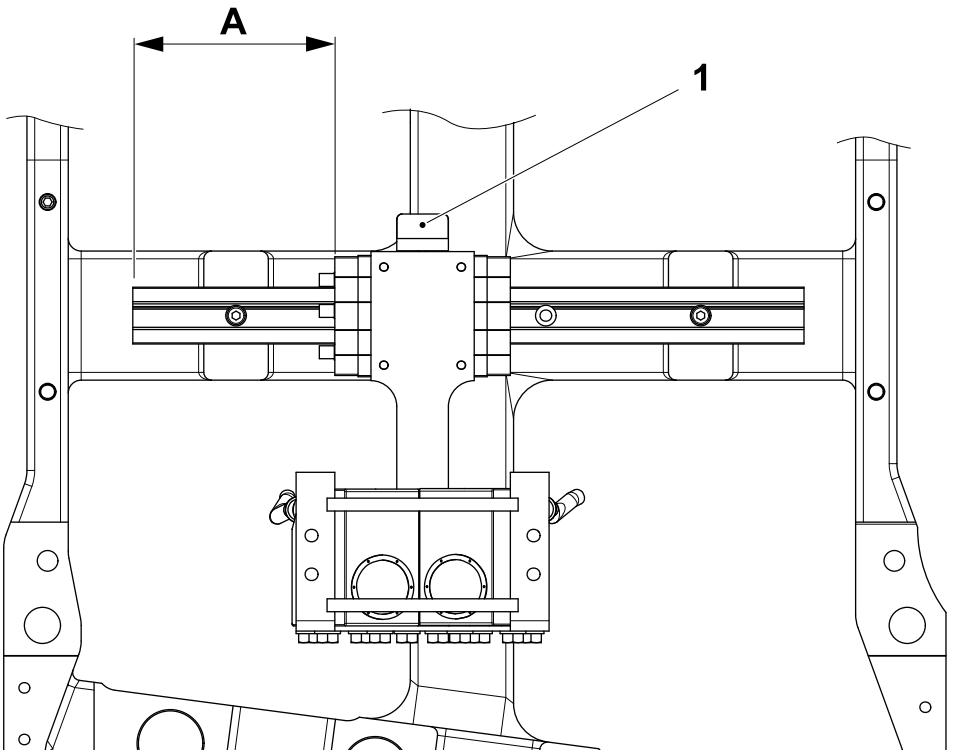

1 Knob

7.8-5 Splicing Device - Set Photocell Sensitivity

Machine Status	PREPARATION
SPC Reference	2832322-0200 2832322-0300

Set the photocells, see 8.8.2-3 TMCC2 Controller - Photocells Manual Setting.

7.8-6 Splicing Device - Set Photocell Alignment

Machine Status	PRODUCTION
Special Equipment	PC and RS 232-C Communication Cable
SPC Reference	2832322-0200 2832322-0300

Check Alignment

a) Configure a PC to be used as a hyperterminal and connect it to the TMCC2, see 8.8.2-1 TMCC2 Controller - Set Communication.

b) Connect the communication cable between the PC and the TMCC2 front panel connector (1) of the TMCC2 card A01K0100 (Photocells Decoder).

c) Type `H` and press the ENTER key.

d) Type `A1` and press the ENTER key.

e) Check that the value displayed is 1 ±0.20. This means that the spot light alignment is correct.

f) If necessary, stop the machine in NORMAL STOP and modify the photocells alignment as described in Set Alignment.

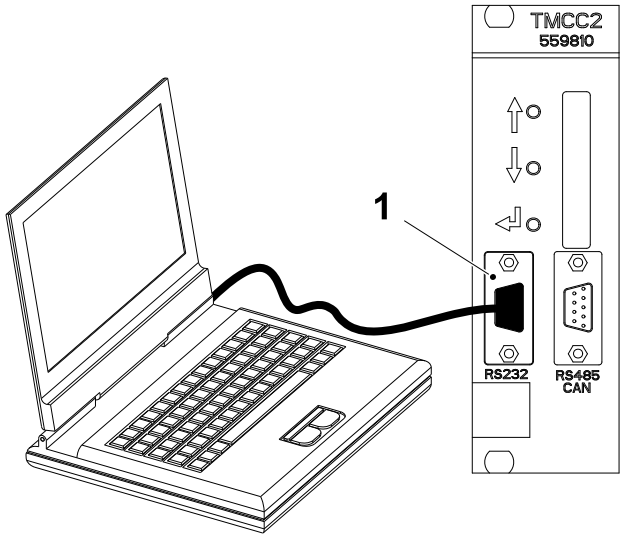

1 TMCC2 connector

(Cont'd)

(Cont'd)

Set Alignment

a) Remove the screws (1) and the guide rail (2).

b) Modify the alignment of the photocell support (3) with the screws (4).

Note! If the value displayed is less than 0.8 the photocell (5) pointing the bar code with 3 bars has to be moved upwards, if the value is more than 1.2 the photocell (5) pointing the bar code with 3 bars has to be moved downwards.

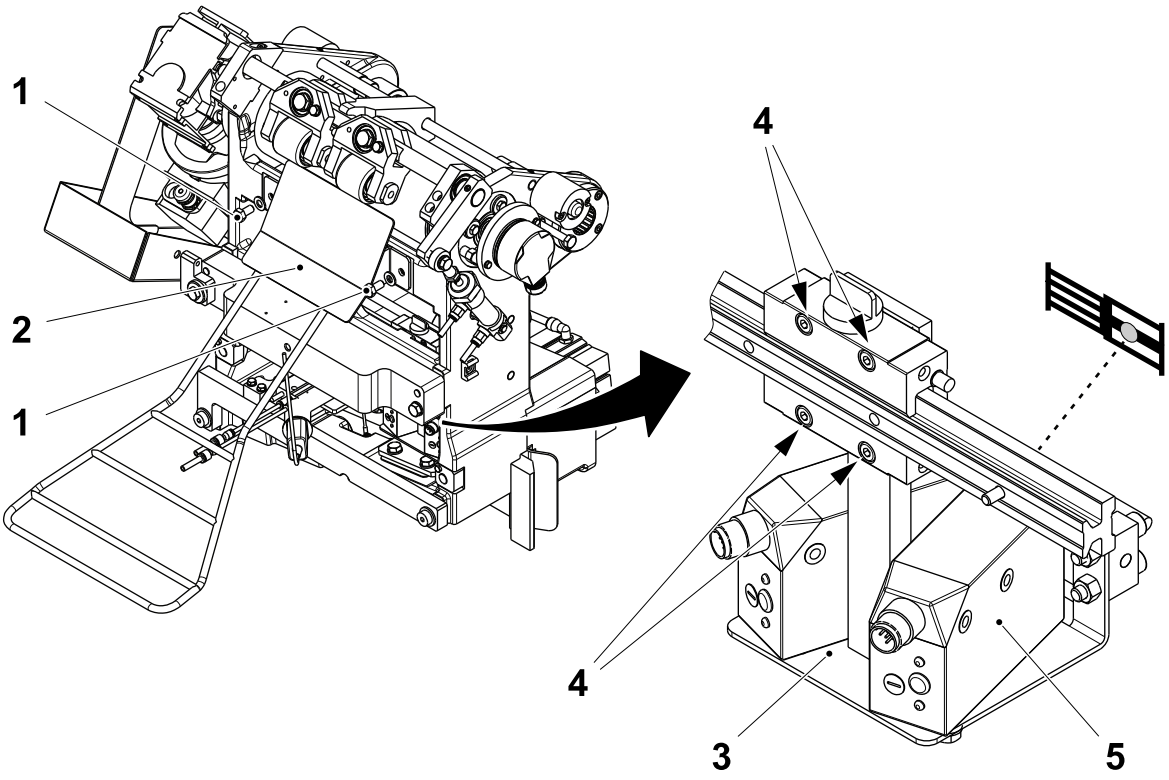

1 Screw
2 Guide rail
3 Support
4 Screw
5 Photocell

c) Assemble in the reverse order and check again the alignment, see Check Alignment.

d) Repeat until the TMCC2 card displays the correct alignment value.

7.8-7 Splicing Device - Set Mechanical Stop

Machine Status	Electrical supply disconnecting device in position O (OFF) Main air valve OFF Main steam valve ON Main water valve OFF
SPC Reference	2832322-0200 2832322-0300

WARNING

Risk of crushing.

If the splicing device is moved out of position it will return **rapidly** to its former position when the doors are closed.

(Cont'd)

(Cont'd)

a) Place the plumb line (1) over the splicing device (2) in line with the mark (3) on the drive roller (4) and down to the packaging material reel (5).

b) The plumb line (1) must be in the middle of the packaging material reel (5), distance **A** must be equal to the distance **B**. To set proceed as follows.

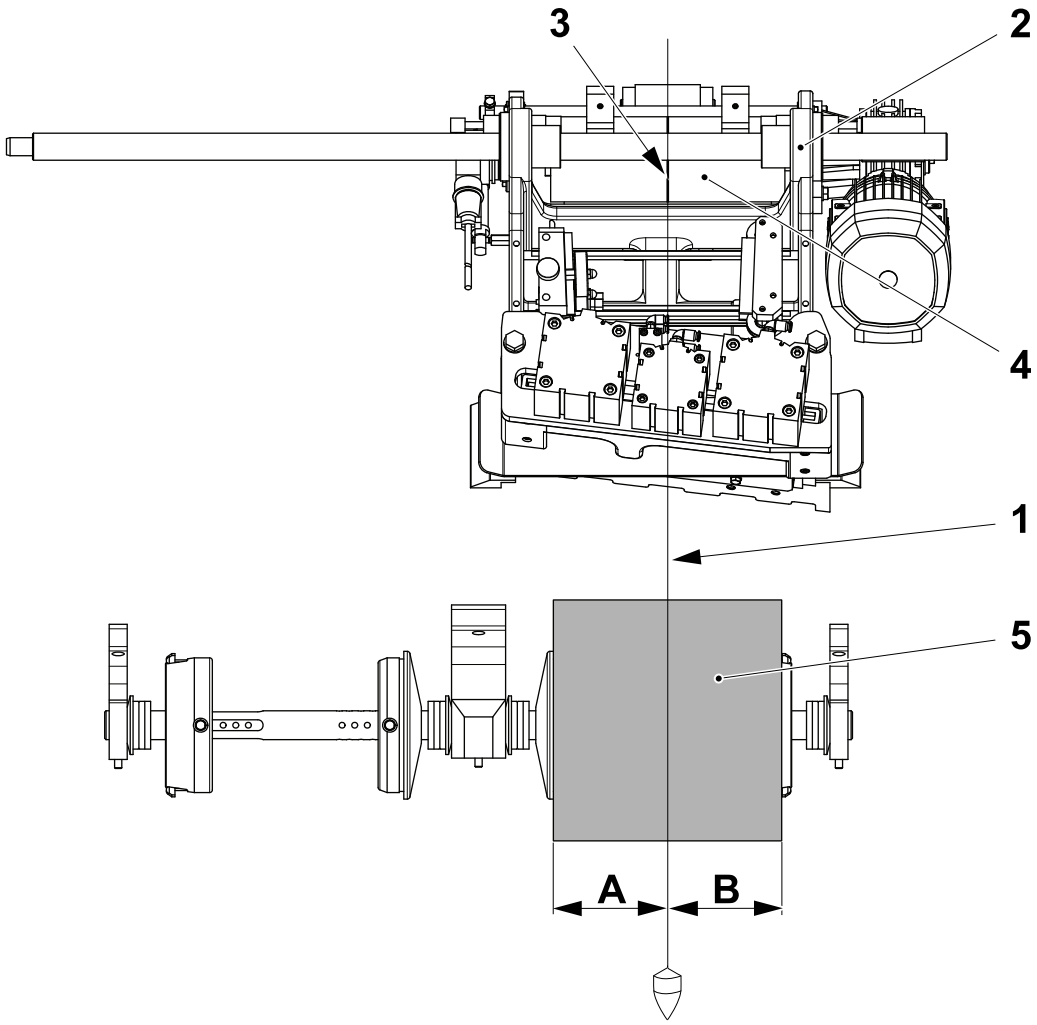

A = B ±0.5 mm

1 Plumb line
2 Splicing device
3 Mark
4 Drive roller
5 Packaging material reel

(Cont'd)

(Cont'd)

c) Loosen the nut (6) and turn the screw (7) until distance **A** is equal to distance **B**, see previous page.

d) Loosen the nut (8) and set the distance **C** between the front end of the shock absorber (9) and the head of the piston (10).

e) Repeat the procedure for the other mechanical stop.

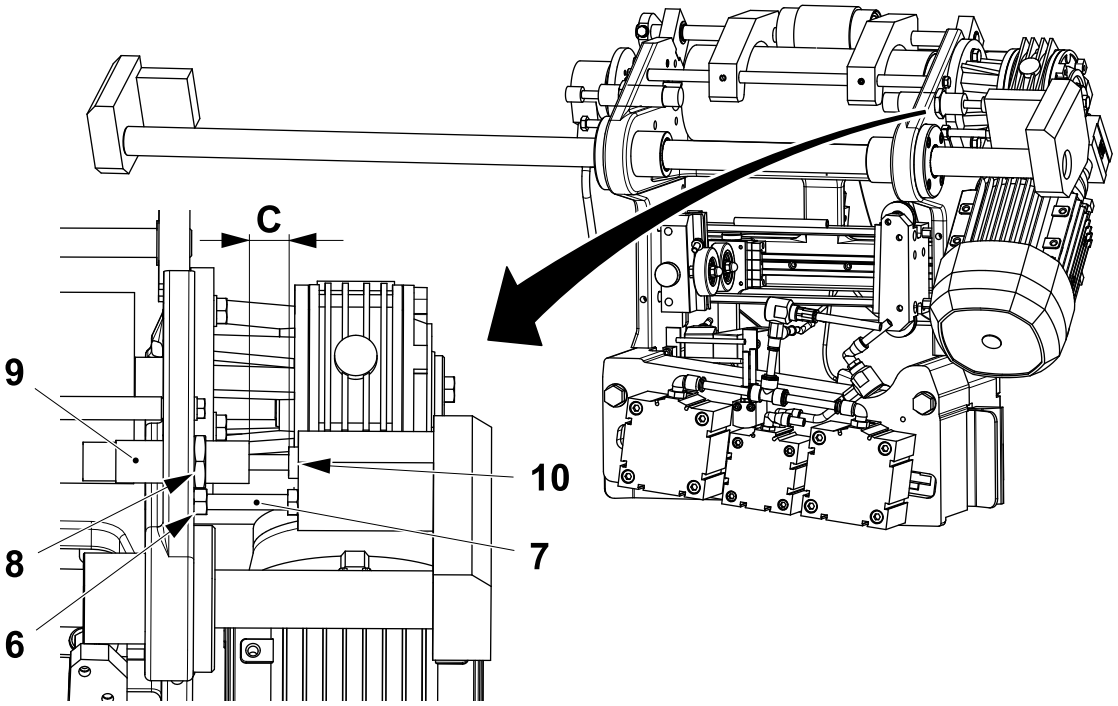

C = 5.0 ±0.5 mm

6 Nut
7 Screw
8 Nut
9 Shock absorber
10 Piston

7.8-8 Splicing Device - Check Shock Absorbers

Machine Status	Electrical supply disconnecting device in position O (OFF) Main air valve OFF Main steam valve ON Main water valve OFF
SPC Reference	2832322-0200 2832322-0300

WARNING

Risk of crushing.

If the splicing device is moved out of position it will return **rapidly** to its former position when the doors are closed.

Check the shock absorbers (1) for wear or damage. If necessary, change the shock absorbers.

Set the shock absorbers (1), see 7.8-7 Splicing Device - Set Mechanical Stop.

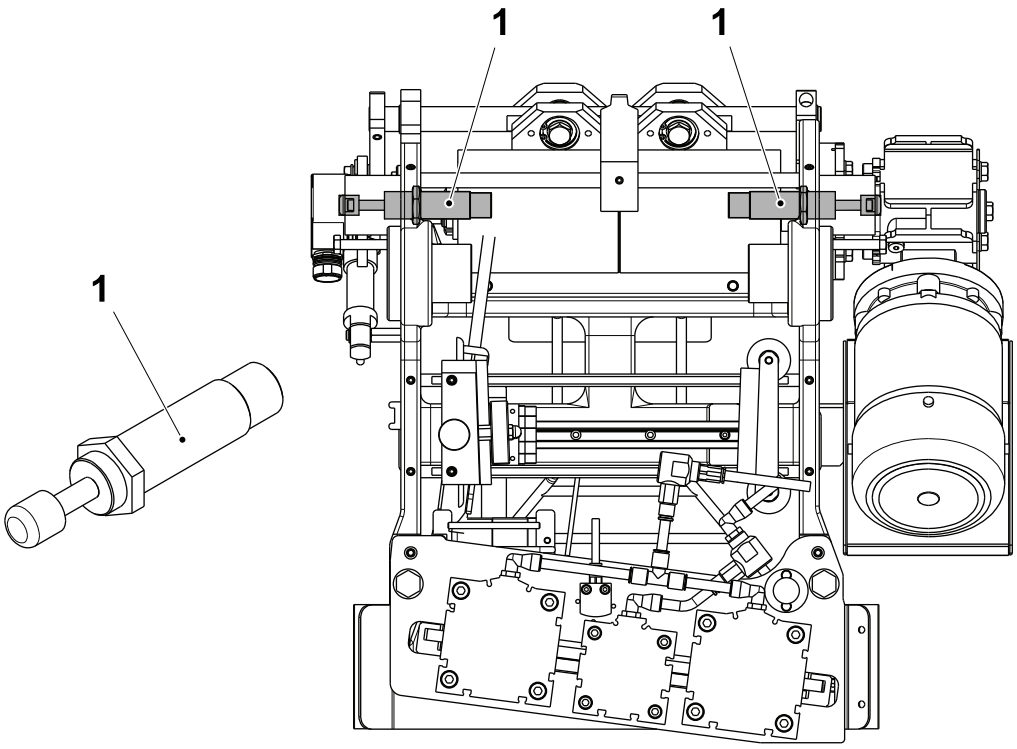

1 Shock absorber

7.8.1 Web Guide

7.8.1-1 Web Guide - Check

Machine Status	Electrical supply disconnecting device in position O (OFF) Main air valve OFF Main steam valve ON Main water valve OFF
SPC Reference	1484745-0200

Check that:

- the surfaces of the guide rollers (1) and (2) are undamaged. If damaged, change the guide rollers, see 7.3.1-2 Web Guide - Change
- the guide rollers (1) and (2) rotate freely. If not, change the bearings, see 7.3.1-2 Web Guide - Change
- the guide (3) is clean. If not, loosen the stop screw (4) and screw the knob (5) out of the shaft (6). Remove the guide (3) and clean it. After cleaning, fit theguide (3) and screw the knob (5) into the shaft (6). Do not tighten. Set the web guide tension, see 7.8.1-3 Web Guide - Set.

  Note! The guide (3) must be fitted so the packaging material web enters the guide from the chamfered side (7).

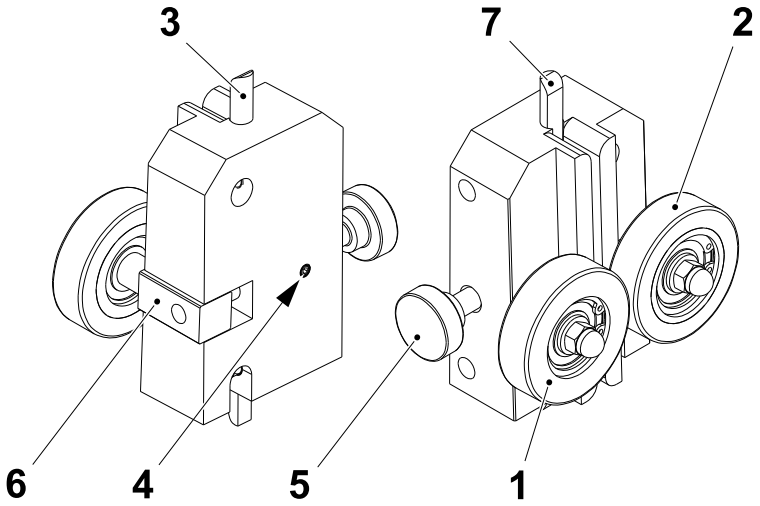

1 Guide roller
2 Guide roller
3 Guide
4 Stop screw
5 Knob
6 Shaft
7 Chamfered side

7.8.1-2 Web Guide - Change Rollers And Bearings

Machine Status	Electrical supply disconnecting device in position O (OFF) Main air valve OFF Main steam valve ON Main water valve OFF
SPC Reference	1484745-0200

Note! The rubber coated rubber coated guide roller (4) must be fitted on the printed side of the packaging material web.

a) Remove the nuts (1) and the retaining rings (2).

b) Remove and change the ball bearings (3) and rubber coated guide roller (4), and guide roller (5).

c) Assemble in the reverse order.

d) After assembly, check that the rubber coated guide roller (4) rotates when the guide roller (5) is turned by hand. If not, set the guide rollers, see 7.8.1-3 Web Guide - Set.

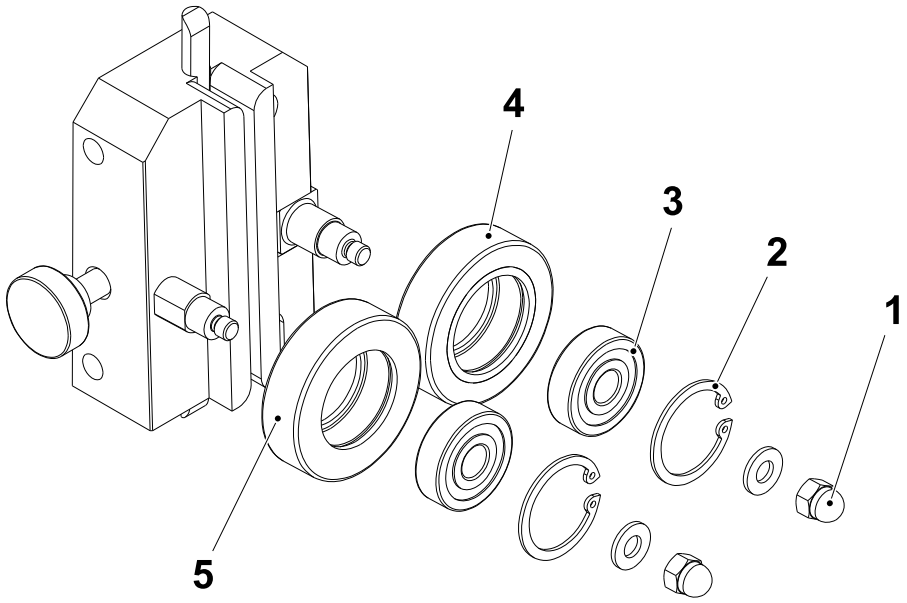

1 Nut
2 Retaining ring
3 Bearing
4 Rubber coated guide roller
5 Guide roller

7.8.1-3 Web Guide - Set

Machine Status	Electrical supply disconnecting device in position O (OFF) Main air valve OFF Main steam valve ON Main water valve OFF
SPC Reference	1484745-0200

a) Loosen the two stop screws (1).

b) Centre the packaging material (2) over the roller (3) by moving the web guide (4) sideways.

c) Tighten the two stop screws (1).

d) Loosen the two screws (5) and position the paper guide (6) 1 mm from the edge of the packaging material (2).

e) Tighten the screws (5).

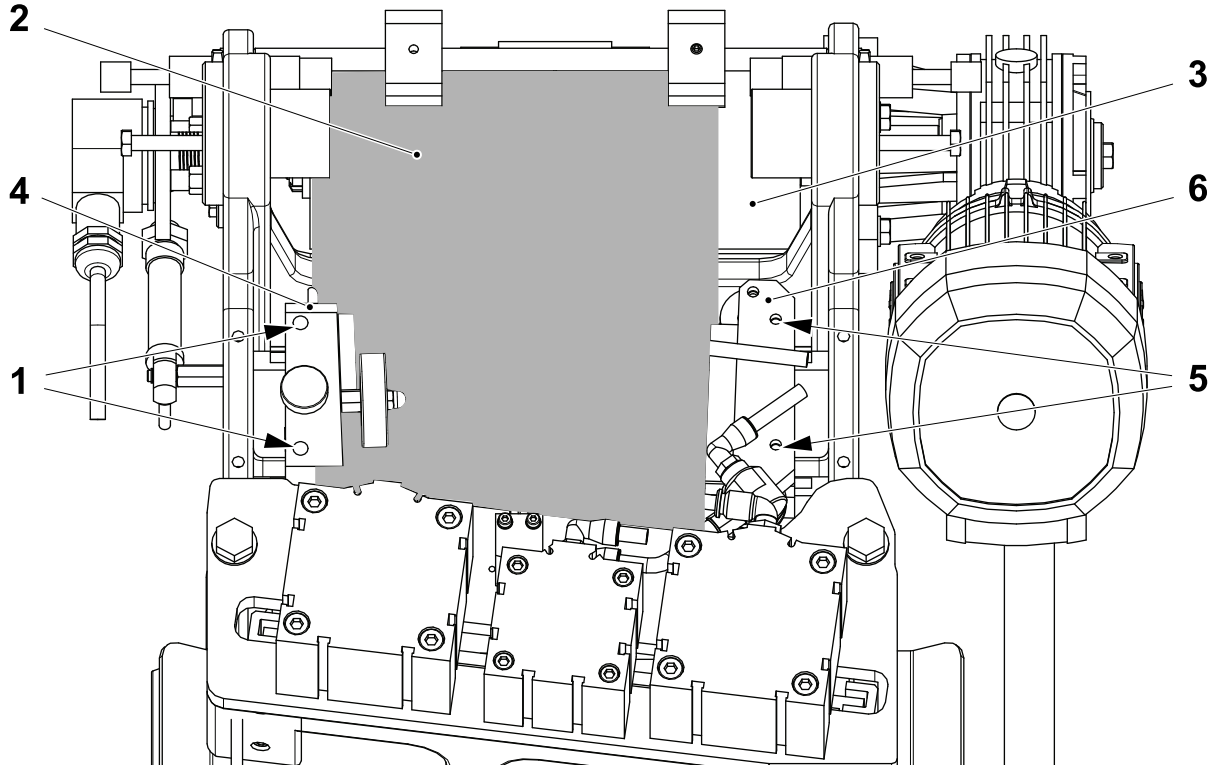

1 Stop screw
2 Packaging material
3 Roller
4 Web guide
5 Screw
6 Paper guide

(Cont'd)

(Cont'd)

CAUTION
Risk of damage to the packaging material.
If the roller applies too much pressure when set, the packaging material will be damaged. If it applies too little pressure, the packaging material may slip out of the guide.

f) Loosen the stop screw (7) and unscrew the knob (8) a few turns.

g) Turn the knob (8) clockwise until the rollers (9) and (10) grip the packaging material. The ideal setting has been found when the packaging material can be moved up and down causing the rollers to rotate without marking the packaging material.

h) When the ideal setting has been found, tighten the stop screw (7).

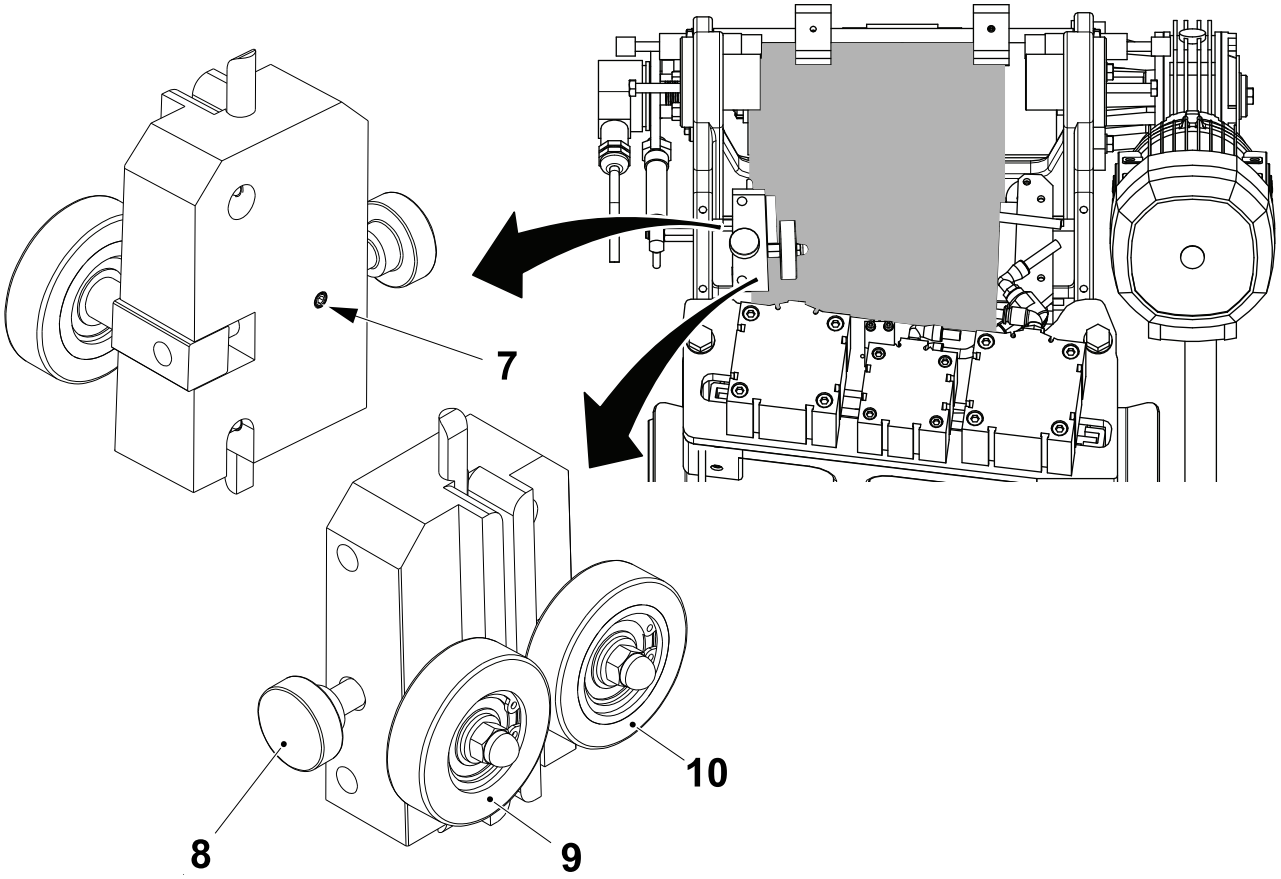

7 Stop screw
8 Knob
9 Roller
10 Roller

7.8.2 Paper Guide

7.8.2-1 Paper Guide - Check

Machine Status	Electrical supply disconnecting device in position O (OFF) Main air valve OFF Main steam valve ON Main water valve OFF
SPC Reference	2529547-0200

Check that the rollers (1) and (2) rotate freely and the surfaces of the rollers are undamaged. If necessary, change the roller bearings, see 7.8.2-2 Paper Guide - Change Rollers and Bearings.

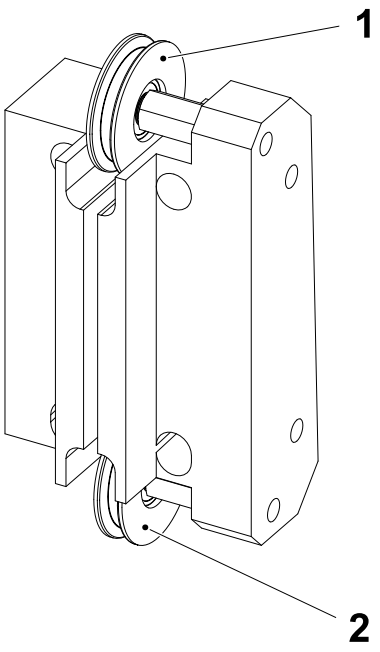

1 Roller
2 Roller

7.8.2-2 Paper Guide - Change Rollers and Bearings

Machine Status	Electrical supply disconnecting device in position O (OFF) Main air valve OFF Main steam valve ON Main water valve OFF
SPC Reference	2529547-0200

a) Remove the screws (1).

b) Remove and change the rollers (2) and the ball bearings (3).

c) Assemble in the reverse order.

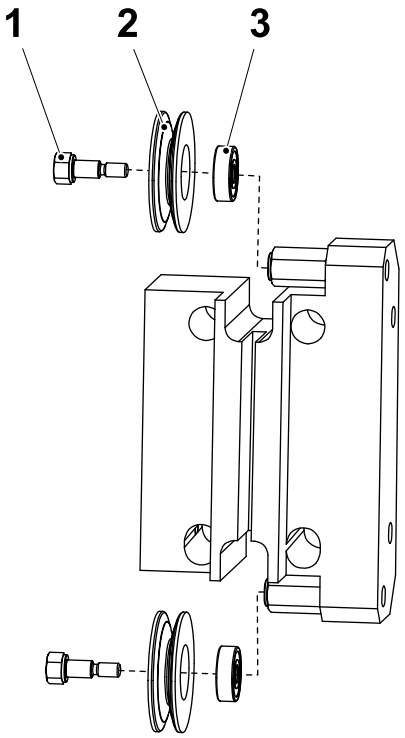

1 Screw
2 Roller
3 Ball bearing

7.8.3 Pressure Jaw

7.8.3-1 Pressure Jaw - Check Knife

Machine Status	Electrical supply disconnecting device in position O (OFF) Main air valve OFF Main steam valve ON Main water valve OFF
SPC Reference	2842975-0200

WARNING

Risk of crushing.

If the splicing device is moved out of position it will return **rapidly** to its former position when the doors are closed.

CAUTION

Blade hazard.

The knife is sharp.

Wear personal protective equipment.

(Cont'd)

(Cont'd)

a) Loosen the tie rods (1).

b) Fit an alley key in the holes (2) and tighten the grub screws (3) to remove the pressure jaw (4).

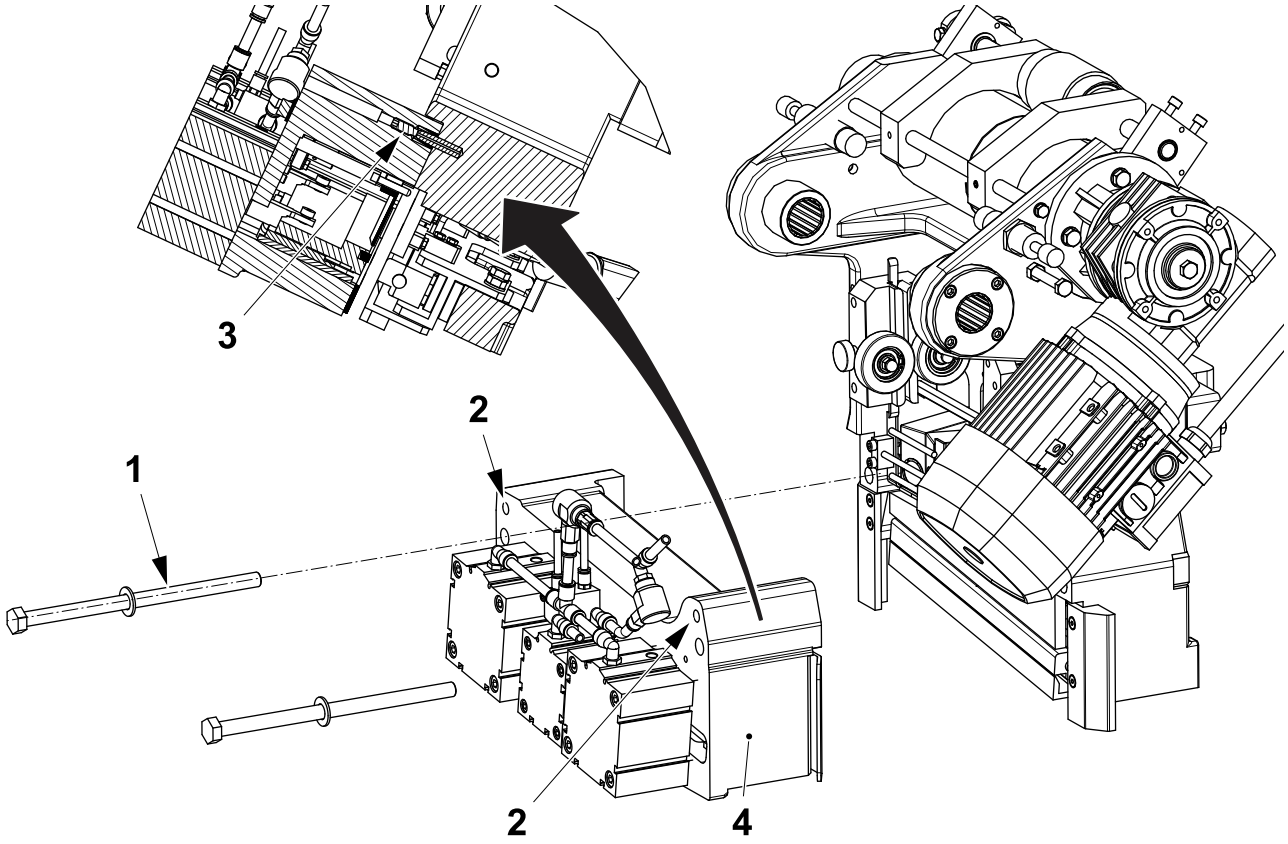

1 Tie rod
2 Hole
3 Grub screw
4 Pressure jaw

(Cont'd)

(Cont'd)

c) Check:

- the knife (5) for wear or damage. If necessary, change it, see 7.8.3-3 Pressure Jaw - Change Knife .
- the dolly (6) for wear or damage. If necessary, change it, see 7.8.3-2 Pressure Jaw - Change Dolly.

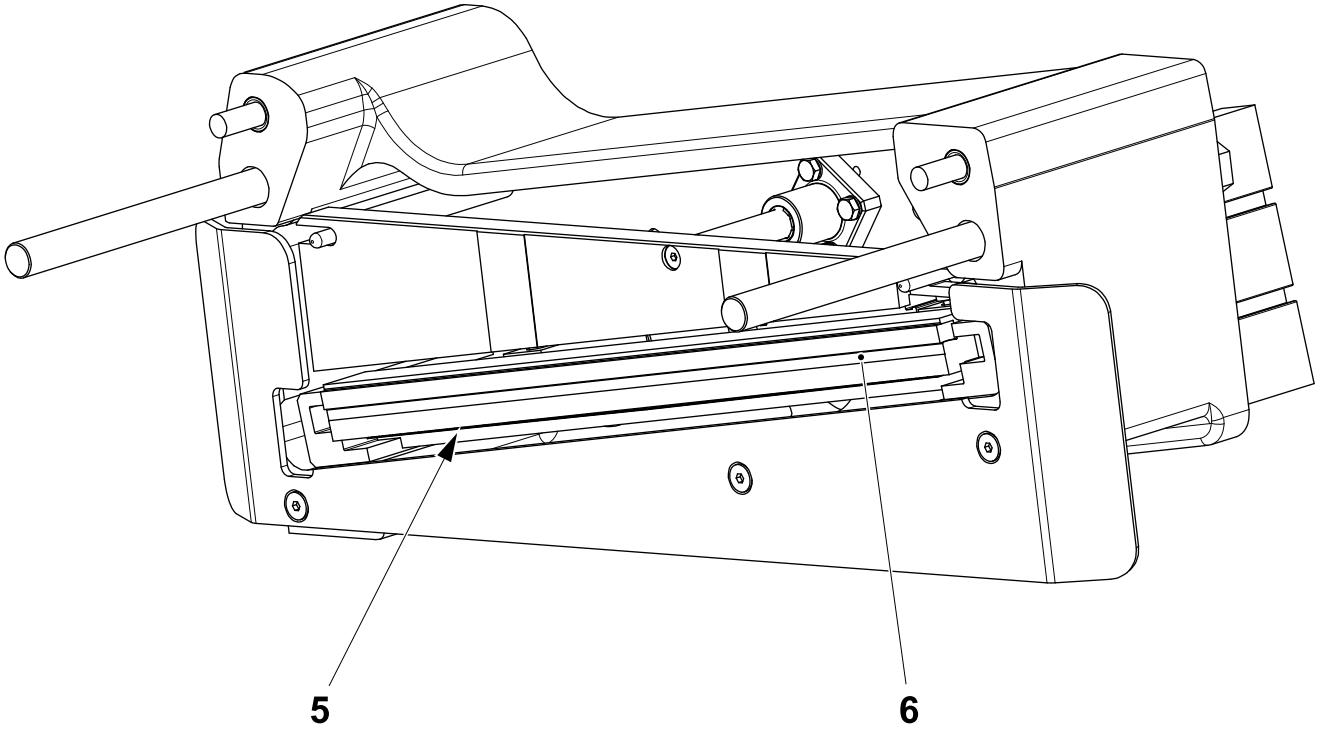

5 Knife
6 Dolly

7.8.3-2 Pressure Jaw - Change Dolly

Machine Status	Electrical supply disconnecting device in position O (OFF) Main air valve OFF Main steam valve ON Main water valve OFF
SPC Reference	2842975-0200

WARNING

Risk of crushing.

If the splicing device is moved out of position it will return **rapidly** to its former position when the doors are closed.

(Cont'd)

(Cont'd)

CAUTION
Blade hazard.
The knife is sharp.
Wear personal protective equipment.

a) Loosen the tie rods (1).

b) Fit an alley key in the holes (2) and tighten the grub screws (3) to remove the pressure jaw (4).

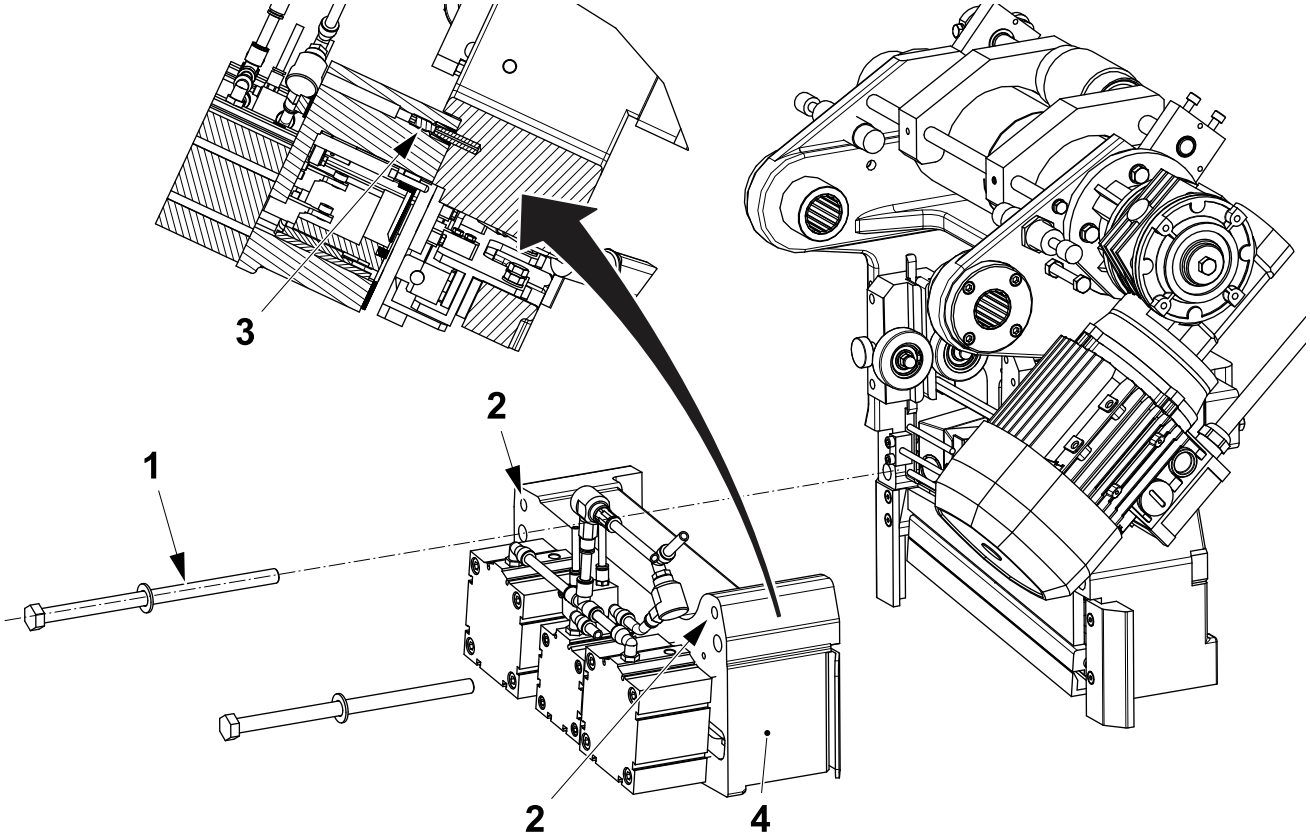

1 Tie rod
2 Hole
3 Grub screw
4 Pressure jaw

(Cont'd)

(Cont'd)

c) Remove the screw (5) and therail (6).

d) Loosen the screws (7) and remove the pressure rail (8).

e) Remove the old dolly (9).

f) Fit the new dolly (9). See Fit Dolly.

g) Assemble in the reverse order.

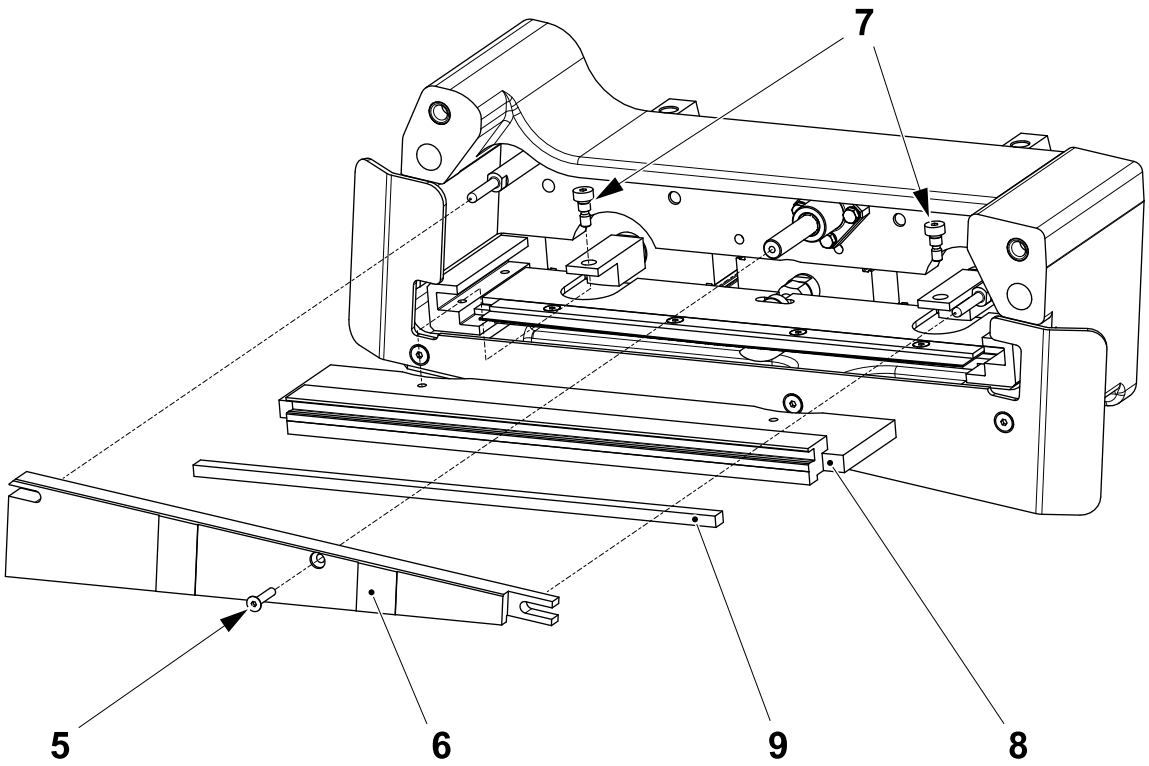

5 Screw
6 Rail
7 Screw
8 Pressure rail
9 Dolly

(Cont'd)

(Cont'd)

Fit Dolly

a) Make sure that the new dolly (1) has the correct length for the groove (2). If necessary, cut the new dolly (1) to the correct length.

b) Fit the new dolly (1) in the groove (2) in steps.
   - Fit the new dolly (1) 10 - 20 mm from the ends in the groove (2).
   - Press down the dolly (1) in the centre of the groove (2), 20 -30 mm wide area.
   - Continue to press down the dolly (1) in the groove (2) in halves.

c) Make sure that the dolly (1) is in the groove (2) with a round edge (3).

d) Check the distance **A** between the dolly (1) and the surface (4) with a feeler gauge.

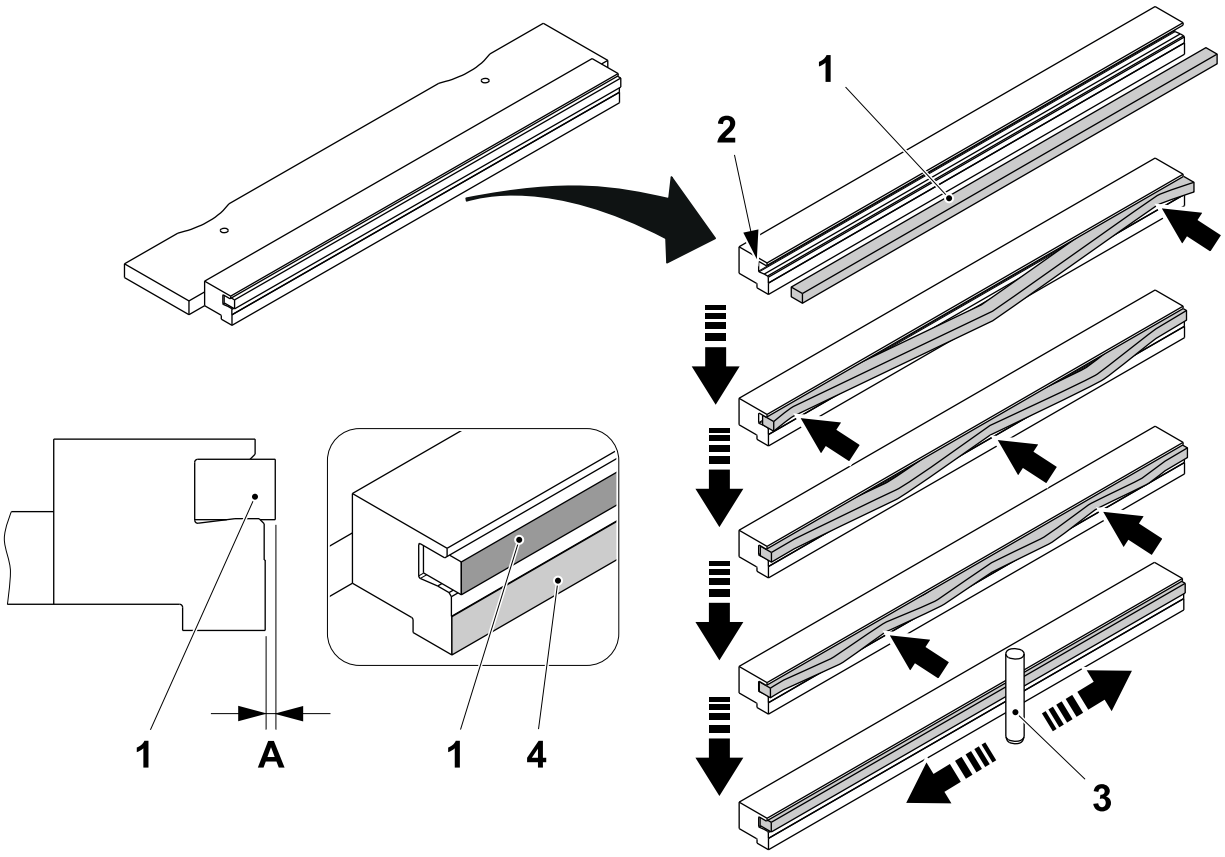

A = 1.0 $^{+0.0/-0.5}$

1 Dolly
2 Groove
3 Round edge
4 Surface

7.8.3-3 Pressure Jaw - Change Knife

Machine Status	Electrical supply disconnecting device in position O (OFF) Main air valve OFF Main steam valve ON Main water valve OFF
SPC Reference	2842975-0200

WARNING

Risk of crushing.

If the splicing device is moved out of position it will return **rapidly** to its former position when the doors are closed.

a) Loosen the tie rods (1).

b) Fit an alley key in the holes (2) and tighten the grub screws (3) to remove the pressure jaw (4).

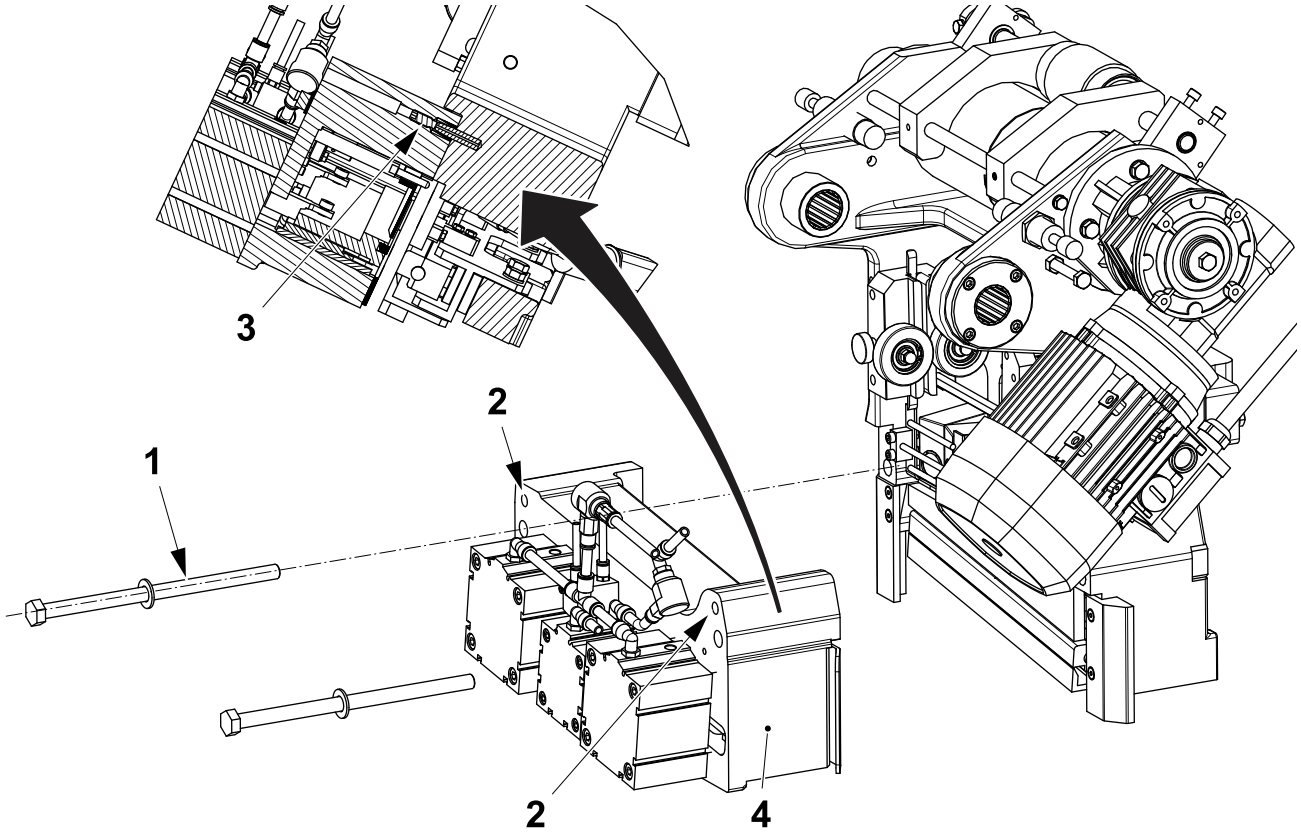

1 Tie rod
2 Hole
3 Grub screw
4 Pressure jaw

(Cont'd)

(Cont'd)

CAUTION

Blade hazard.

Make sure that the knife does not fall. When the pressure rail is removed the knife is no longer secured. Wear personal protective equipment.

c) Remove the screw (5) and the rail (6).

d) Loosen the screws (7) and remove the pressure rail (8).

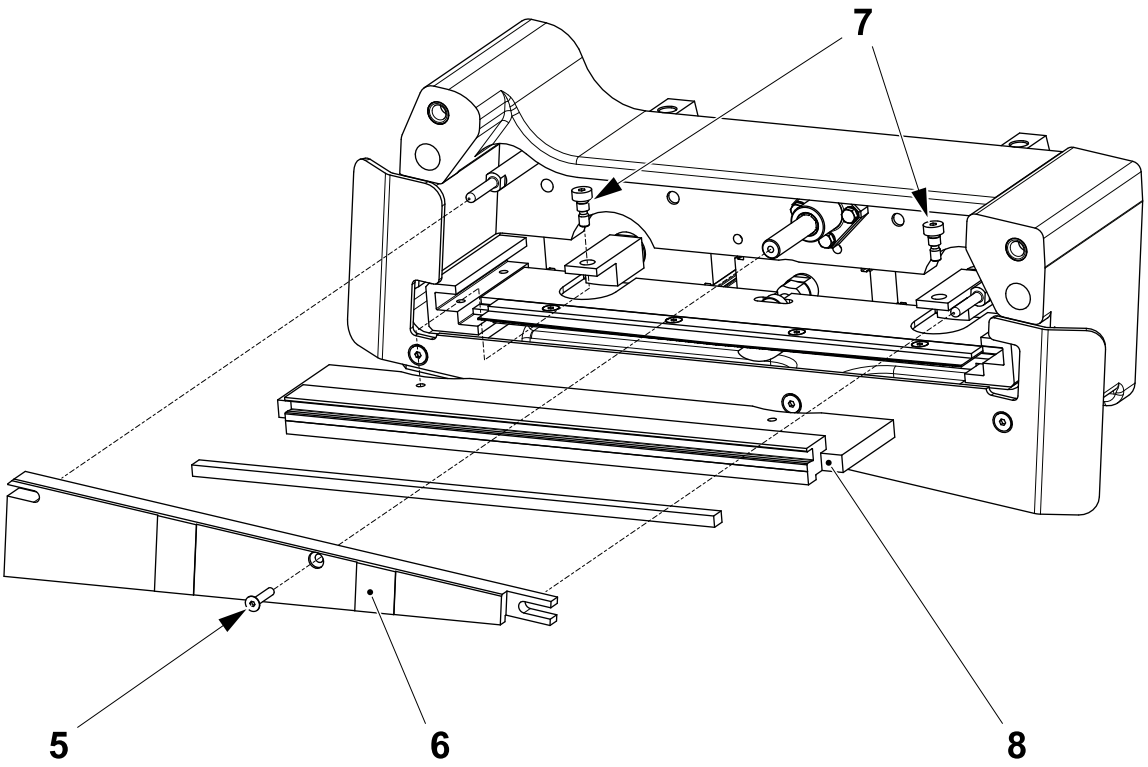

5 Screw
6 Rail
7 Screw
8 Pressure rail

(Cont'd)

(Cont'd)

CAUTION
Blade hazard.
The knife is sharp.
Wear personal protective equipment.

e) Remove the knife holder (9) from the cylinder rod (10).

f) Remove the screws (11) and the clamp (12).

g) Change the knife (13).

h) Assemble in the reverse order.

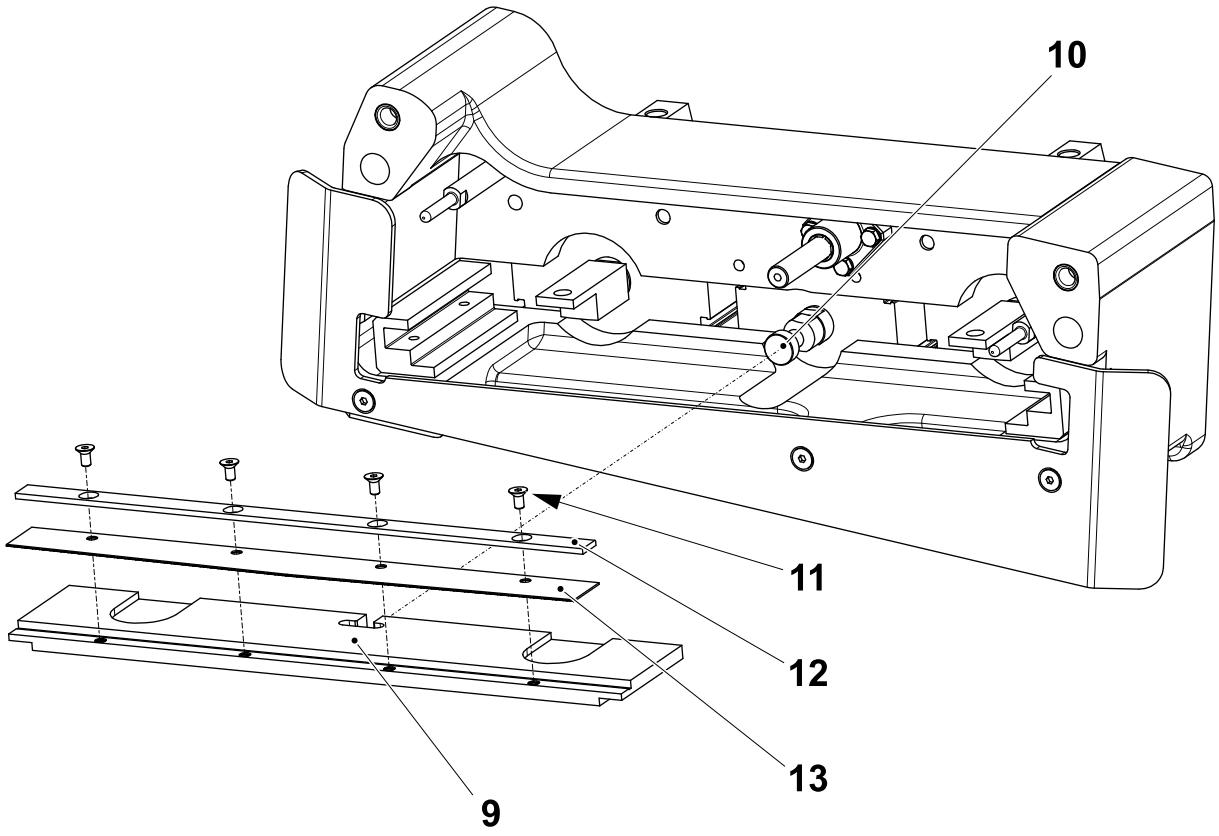

9	Knife holder	12	Clamp
10	Cylinder rod	13	Knife
11	Screws		

7.8.3-4 Pressure Jaw - Change Cylinders

Machine Status	Electrical supply disconnecting device in position O (OFF) Main air valve OFF Main steam valve ON Main water valve OFF
Special Equipment	Locking Fluid TP No. 90157-0016
SPC Reference	2842975-0200

WARNING

Risk of crushing.

If the splicing device is moved out of position it will return **rapidly** to its former position when the doors are closed.

Remove the tie rods and lift the pressure jaw and lock it in the cleaning position with the catch, see 7.8.3-3 Pressure Jaw - Change Knife .

(Cont'd)

(Cont'd)

Pressure Cylinders

Note! Overhaul one cylinder completely before starting on the next. The pressure rail (6) and the knife holder (7) are connected to the pressure cylinder by the spacer (5).

a) Disconnect the hose and remove the hose coupling (1).

b) Remove the screw (2).

c) Remove the screws (3)

d) Remove the pressure cylinder (4).

e) Remove the spacer (5) from the old cylinder.

f) Apply locking fluid to the threads of the spacer (5) and fit it in the new cylinder.

g) Assemble in the reverse order.

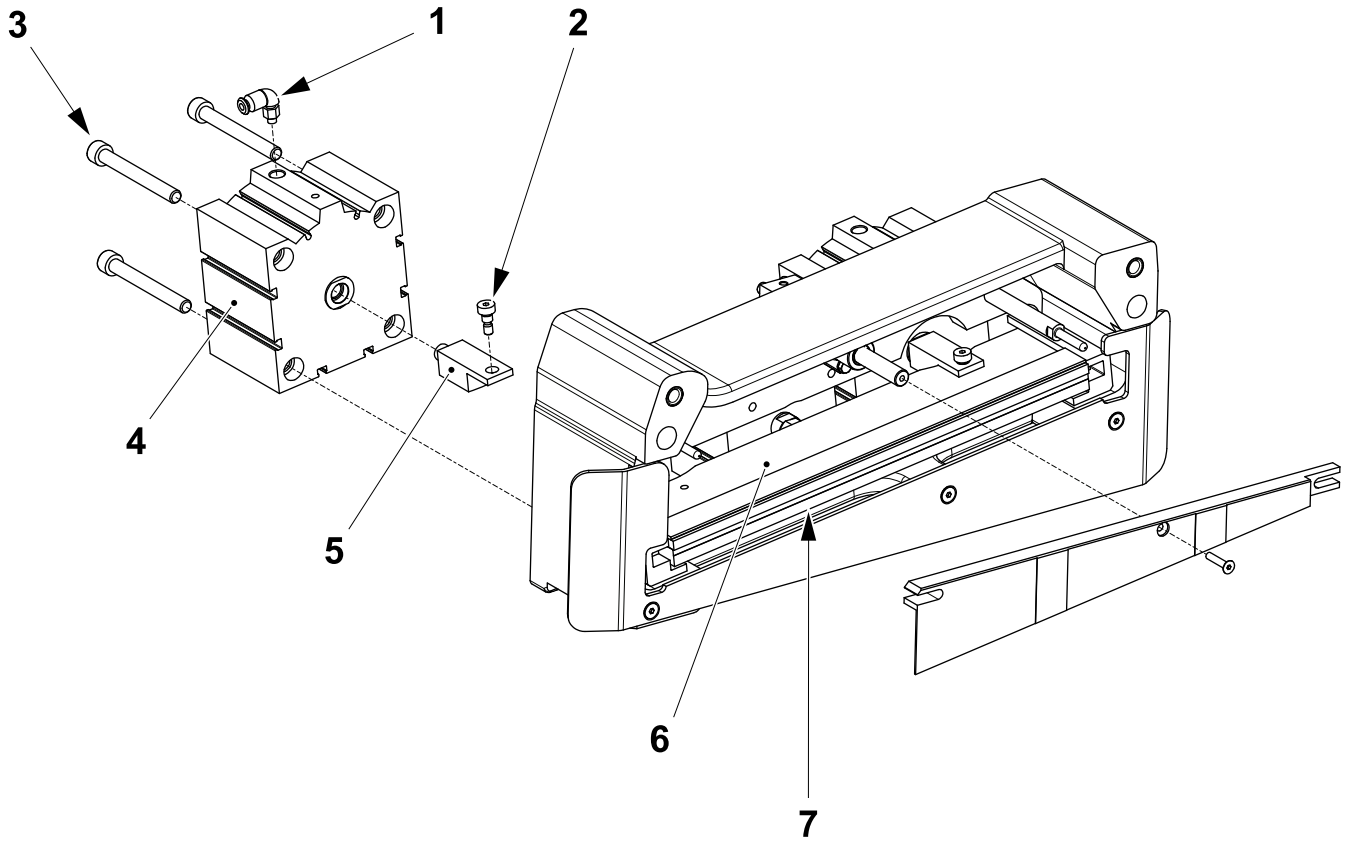

1 Hose coupling
2 Screw
3 Screw
4 Pressure cylinder
5 Spacer
6 Pressure rail
7 Knife holder

(Cont'd)

(Cont'd)

Cutting Cylinder

Note! The pressure rail (5) and the knife holder (6) are connected to the cutting cylinder by the coupling bolt (4).

a) Disconnect the air hose and remove the hose connection (1).

b) Remove the screws (2).

c) Un-hook the cutting cylinder (3) and remove it.

d) Remove the coupling bolt (4) from the old cylinder.

e) Apply the locking fluid to the threads of the coupling bolt (4) and fit it in the new cylinder.

f) Assemble in the reverse order.

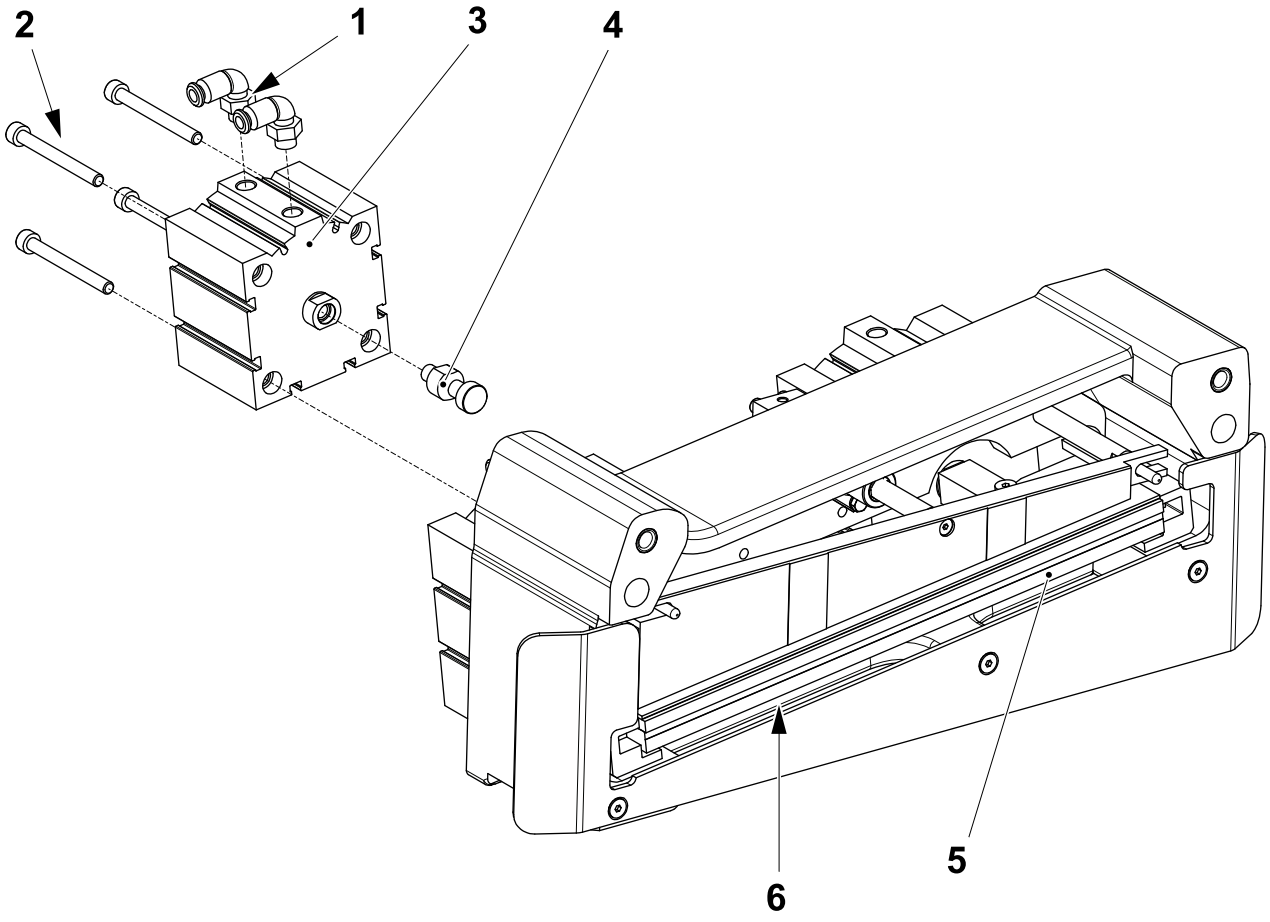

1 Hose connection
2 Screw
3 Cutting cylinder
4 Coupling bolt
5 Pressure rail
6 Knife holder

(Cont'd)

(Cont'd)

Web Tension Cylinder

a) Remove the screw (1) and the rail (2).

b) Remove the screws (3) and pull out the cylinder (4) as far as possible.

c) Hold the cylinder piston (5) with the spanner and turn the compression rods (6) to remove the cylinder (4).

Note! When assembling, make sure that all the components are tight.

d) Assemble in the reverse order.

e) Check that the compression rods (6) move smoothly.

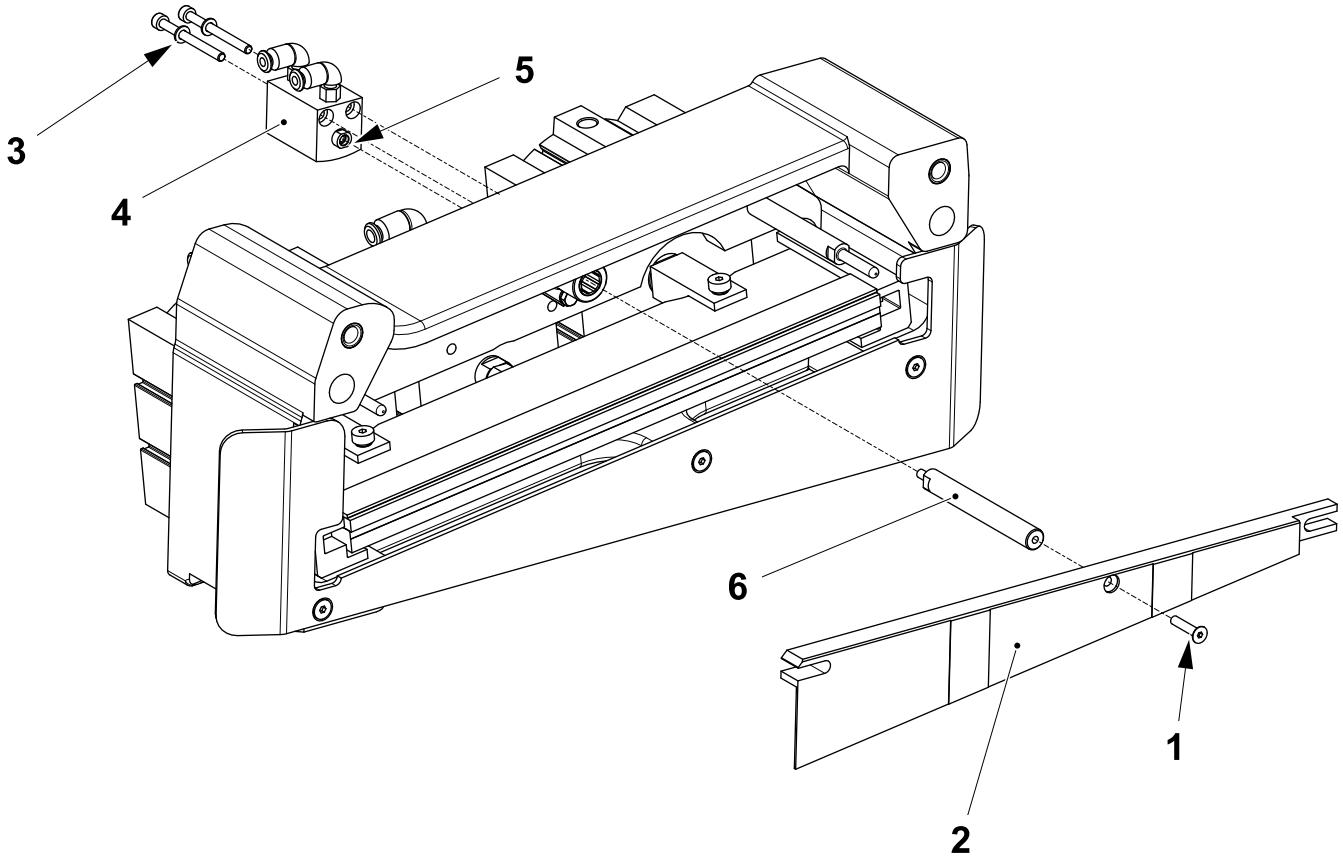

1 Screw
2 Rail
3 Screw
4 Cylinder
5 Cylinder piston
6 Compression rod

(Cont'd)

(Cont'd)

f) Check that the web tension is set to the correct pressure, see 9.1 Technical Data. If the pressure is wrong, turn the control knob (7) until the pressure gauge (8) indicates the correct pressure.

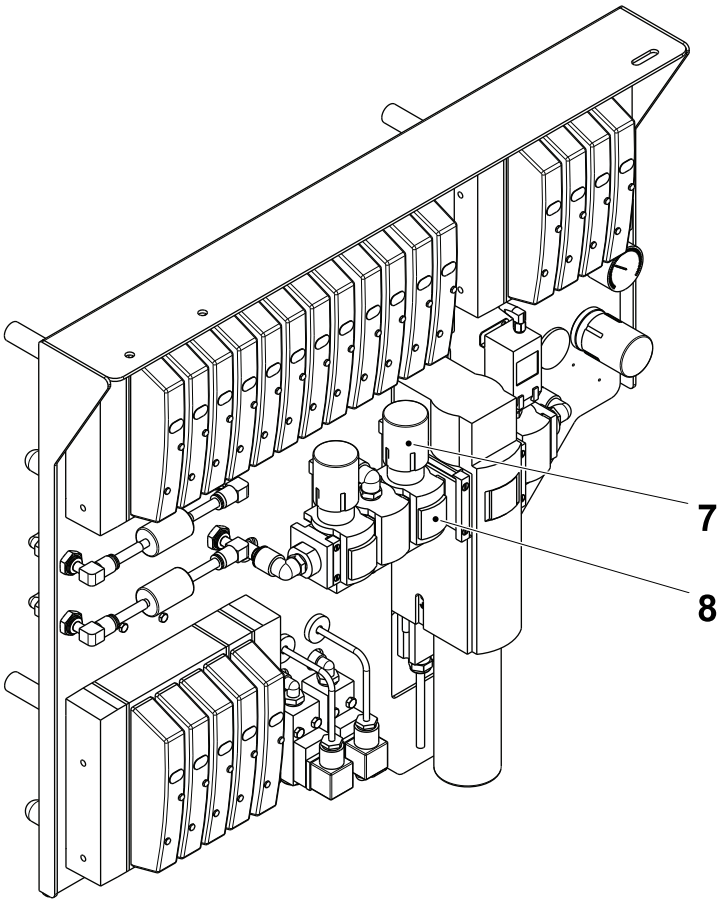

7 Control knob
8 Pressure gauge

7.8.4 Heating Unit

7.8.4-1 Heating Unit - Check Constant Heat Device

Machine Status	Electrical supply disconnecting device in position O (OFF) Main air valve OFF Main steam valve ON Main water valve OFF
Special Equipment	Teflon spatula
SPC Reference	2850475-0200

WARNING
Risk of crushing.
If the splicing device is moved out of position it will return **rapidly** to its former position when the doors are closed.

WARNING
Risk of burns.
The sealing plate is hot after use. Nearby parts may also be hot.
Wear heat resistant protective gloves.

a) Remove the tie rods (1) and the pressure jaw (2).

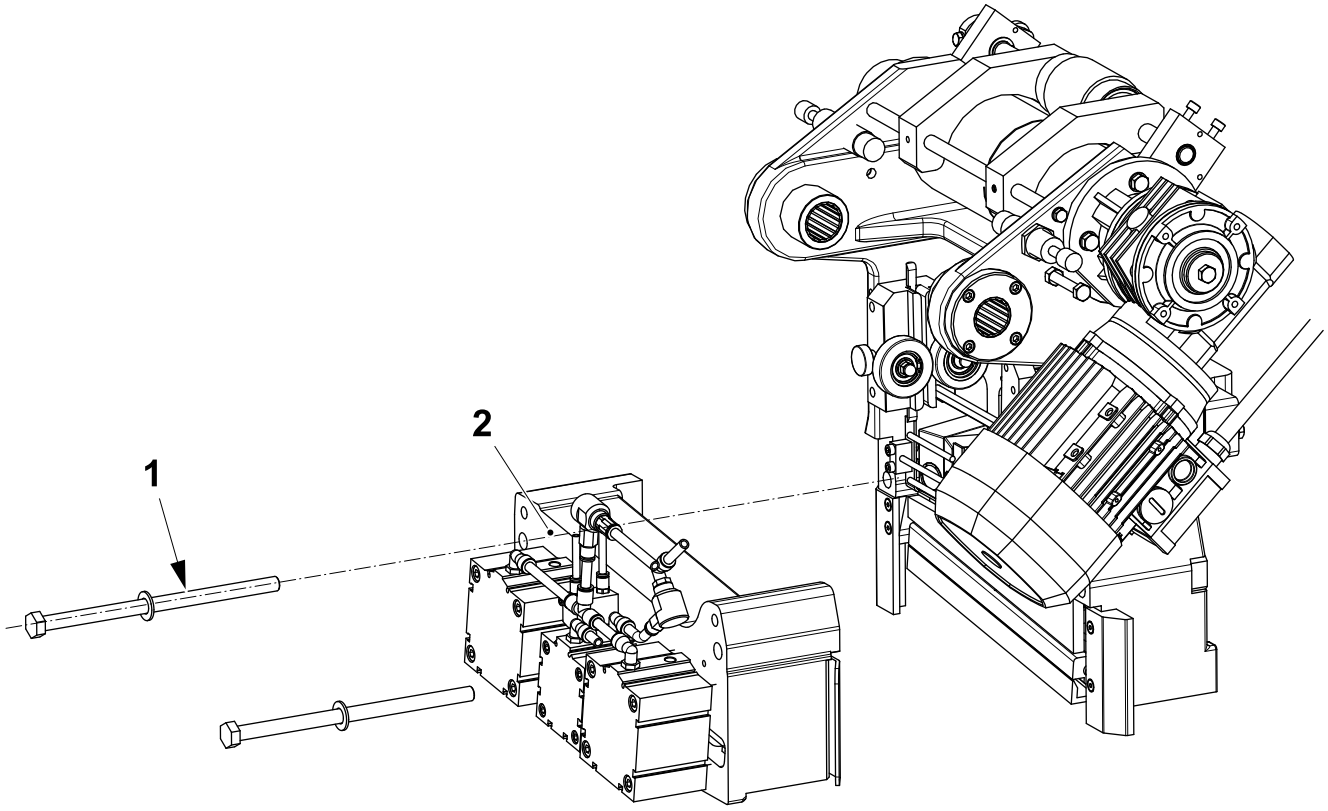

1 Tie rod
2 Pressure jaw

(Cont'd)

(Cont'd)

CAUTION
Risk of damage to the equipment.
Do not use metallic or abrasive tools for cleaning. The surface treatment on the sealing plate is easily damaged.

b) Check the sealing plate (3) for wear or damage. Change if necessary, see 7.8.4-2 Heating Unit - Change Constant Heat Device.

Note! Perform the cleaning when the sealing plate is still warm.

c) Check that the sealing plate (3) is free from packaging material deposits. Clean if necessary with a teflon spatula.

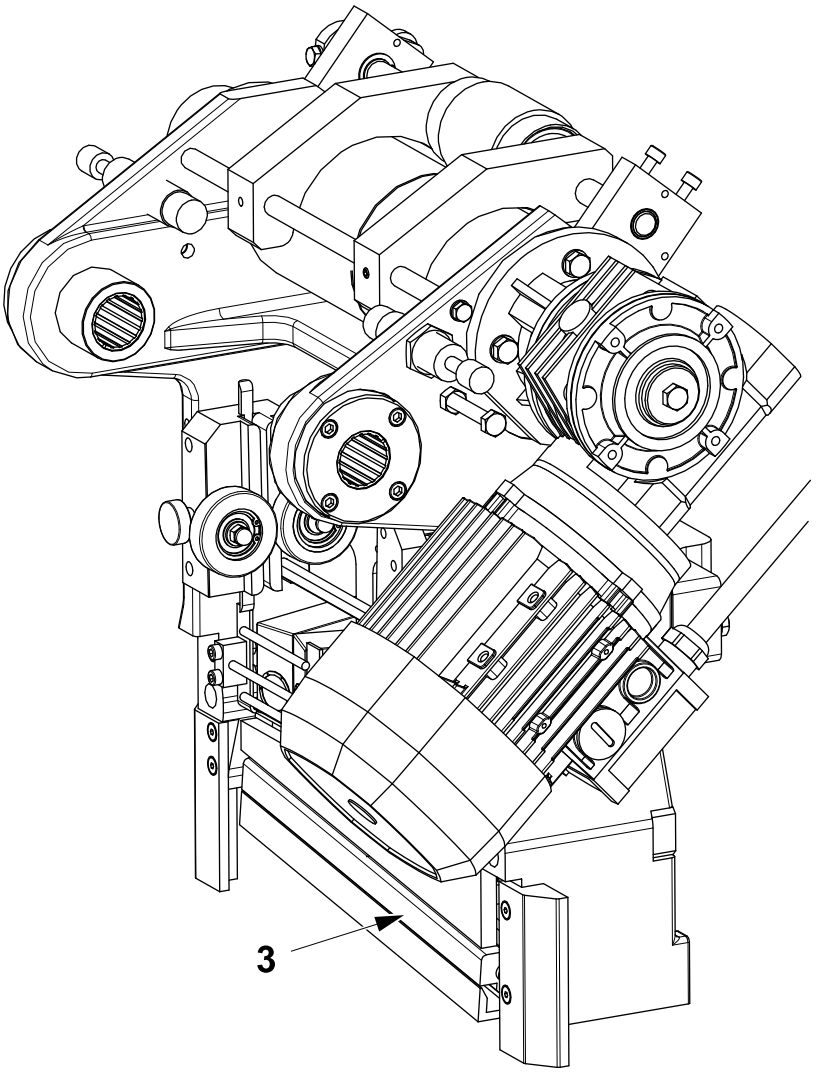

3 Sealing plate

7.8.4-2 Heating Unit - Change Constant Heat Device

Machine Status	Electrical supply disconnecting device in position O (OFF) Main air valve OFF Main steam valve ON Main water valve OFF
Consumables	Silicone Paste TP No. 90296-0051
SPC Reference	2850475-0200

WARNING

Risk of crushing.

If the splicing device is moved out of position it will return **rapidly** to its former position when the doors are closed.

WARNING

Risk of burns.

The sealing plate is hot after use. Nearby parts may also be hot.
Wear heat resistant protective gloves.

(Cont'd)

(Cont'd)

a) Loosen the tie rods and lift the pressure jaw, see 7.8.3-3 Pressure Jaw - Change Knife .

b) Remove the screws (1) and the electrical connection (2).

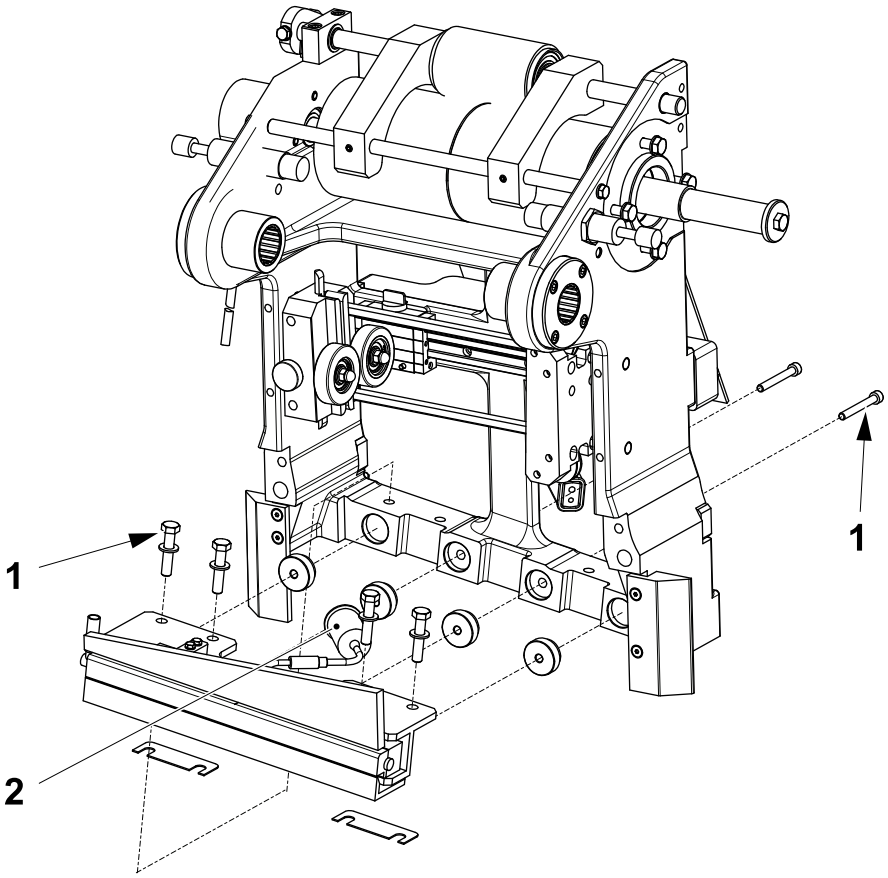

1 Screw
2 Electrical connection

(Cont'd)

(Cont'd)

Note! Apply the silicone paste on the new heating bar (11).

c) Remove the screws (3) and the slider (4).

d) Remove the screws (5) and the bracket (6).

e) Remove the screws (7) and the sealing plate assembly (8).

f) Remove the screws (9) and open the heating plate (10) and the heating bar (11).

g) Change the heating bar (11) if necessary, applying on it the silicone paste.

h) Assemble in the reverse order.

Note! When assembling make sure the distance **A** is obtained.

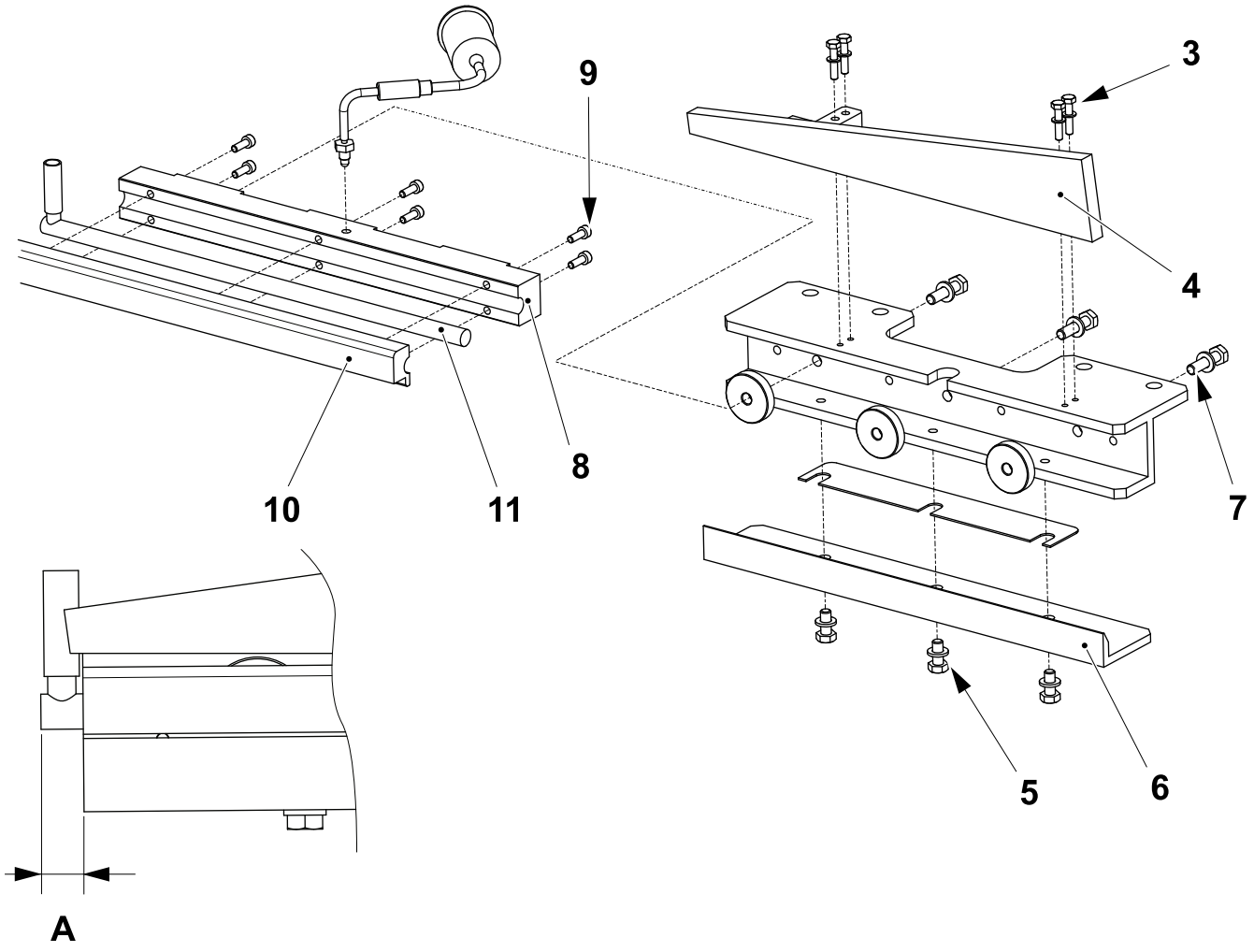

A = 12.0 ±1.0 mm

3 Screw	6 Bracket	9 Screw
4 Slider	7 Screw	10 Heating plate
5 Screw	8 Sealing plate assembly	11 Heating bar

7.8.4-3 Heating Unit - Set Constant Heat Device

Machine Status	Electrical supply disconnecting device in position O (OFF) Main air valve OFF Main steam valve ON Main water valve OFF
Special Equipment	Shim TP No. 2860199-0000 Shim TP No.2860200-0000
SPC Reference	2850475-0200

WARNING

Risk of crushing.

If the splicing device is moved out of position it will return **rapidly** to its former position when the doors are closed.

(Cont'd)

(Cont'd)

a) Set the distance **A** between the heating plate (1) and the bracket (2) by inserting the shims (3) during assembly of the heating device, see 7.8.4-2 Heating Unit - Change Constant Heat Device.

b) Fit the heating device in the splicing device.

c) Lower the pressure jaw and fit the tie rods.

d) Move the knife (4) in the pressure jaw using low pneumatic pressure. Make sure that the knife moves without colliding with any parts. If a collision occurs, add or remove shims (5) see 7.8.4-2 Heating Unit - Change Constant Heat Device.

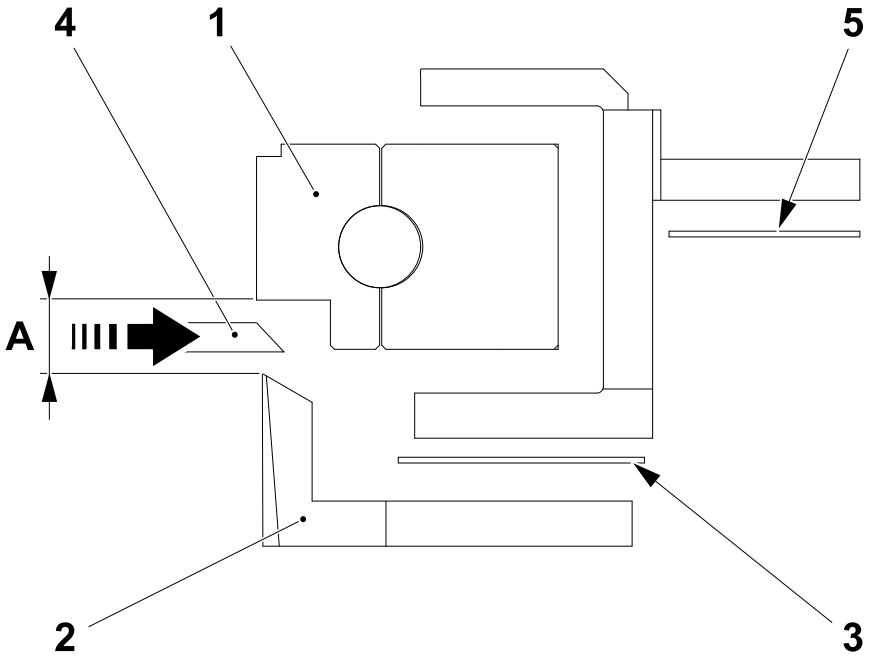

A = 1.2 ±0.1 mm

1 Heating plate
2 Bracket
3 Shim
4 Knife
5 Shim

7.8.5 Counter Roller

7.8.5-1 Counter Roller - Check

Machine Status	Electrical supply disconnecting device in position O (OFF) Main air valve OFF Main steam valve ON Main water valve OFF
SPC Reference	2832340-0200 3313858-0100

Counter Roller TP No. 3313858-0100

Check that:

- the cylinder (1), the shaft (2) and the rollers (3) work correctly. If not, change the parts and clean the shafts attachment points, see 7.8.5-2 Counter Roller - Overhaul .
- the surface of the rollers (3) is not worn or damaged and the ball bearings rotate freely. If not, change any worn parts, see 7.8.5-2 Counter Roller - Overhaul .

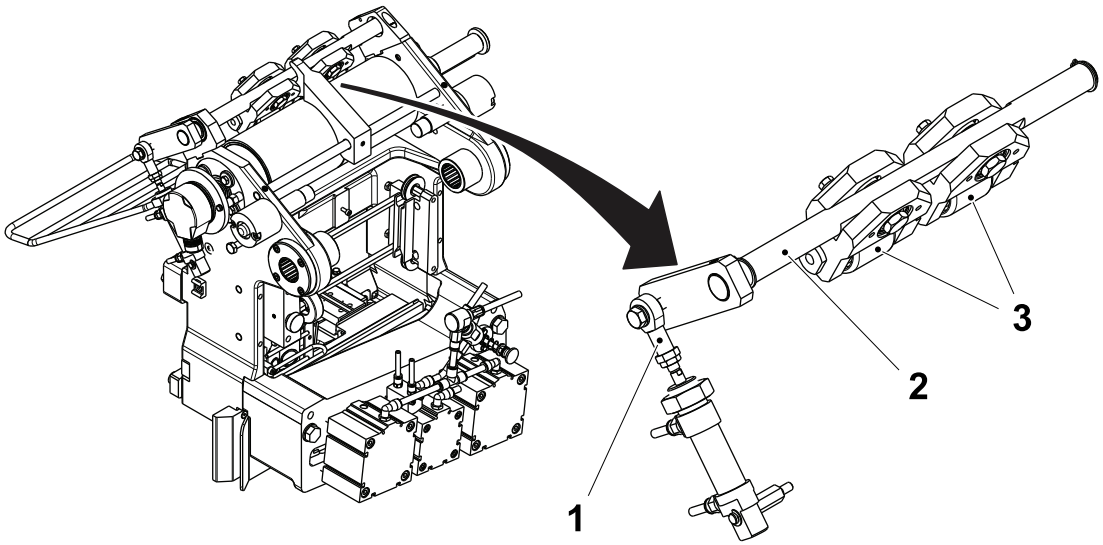

1 Cylinder
2 Shaft
3 Roller

(Cont'd)

(Cont'd)

Counter Roller TP No. 2832340-0200

Check that:

- the cylinder (1), the shaft (2) and the roller (3) work correctly. If not, change the parts and clean the shafts attachment points, see 7.8.5-2 Counter Roller - Overhaul .
- the surface of the roller (3) is not worn or damaged and the ball bearings rotate freely. If not, change any worn parts, see 7.8.5-2 Counter Roller - Overhaul .

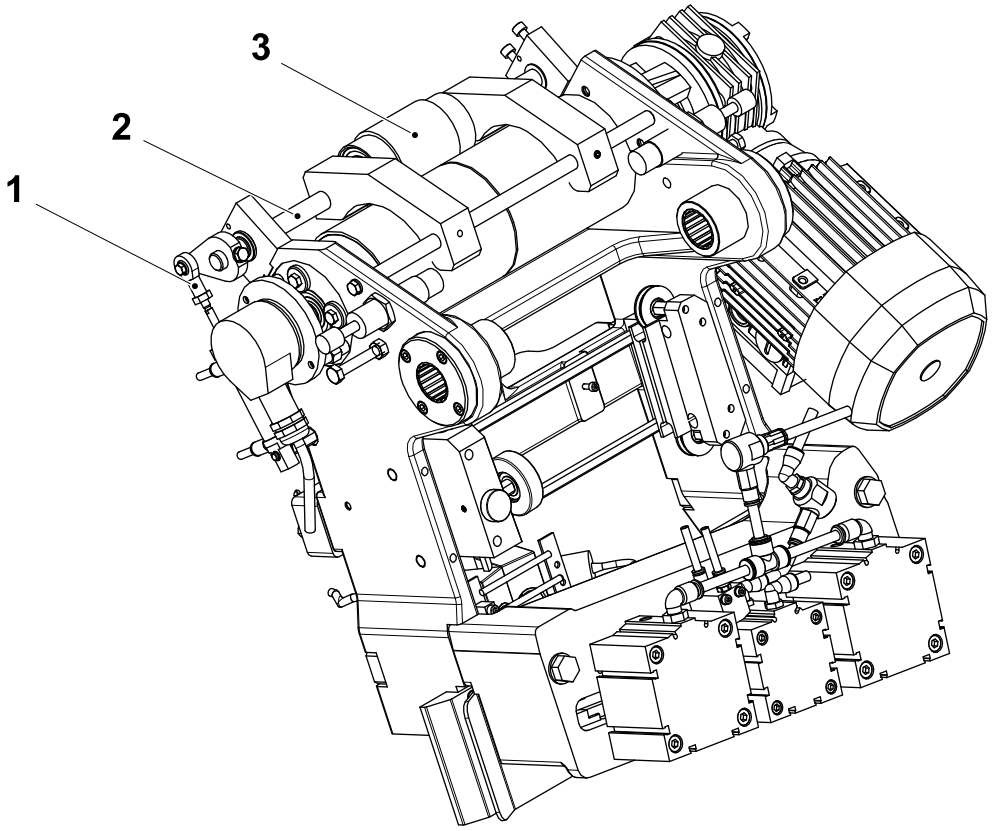

1 Cylinder
2 Shaft
3 Roller

7.8.5-2 Counter Roller - Overhaul

Machine Status	Electrical supply disconnecting device in position O (OFF) Main air valve OFF Main steam valve ON Main water valve OFF
SPC Reference	2832340-0200 3313858-0100

Counter Roller TP No. 3313858-0100

a) Separate the cylinder (1) from the lever (2) by means of the screw (3).

b) Remove the screws (4), the holders (5) and the complete roller assembly.

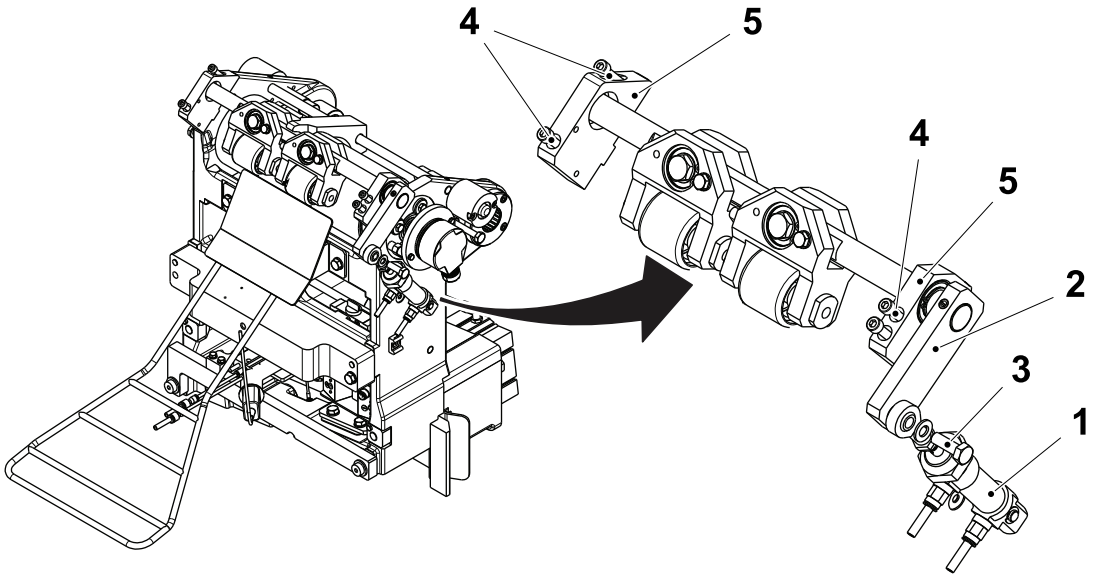

1 Cylinder
2 Lever
3 Screw
4 Screw
5 Holder

(Cont'd)

(Cont'd)

c) Remove the spring pin (6) and the lever (2) from the shaft (7).

d) Remove the retaining rings (8) and the ball bearings (9) from the holders (5). If necessary, change the ball bearings (9).

e) Remove the screws (10), the screws (11), the nuts (12) and the counter roller brackets (13).

f) Remove the screw (14), the nut (15), the ball bearings (16) and the roller (17). If necessary, change the ball bearings (16) and the roller (17).

g) Remove the retaining rings (18) and the ball bearings (19). If necessary, change the ball bearings (19).

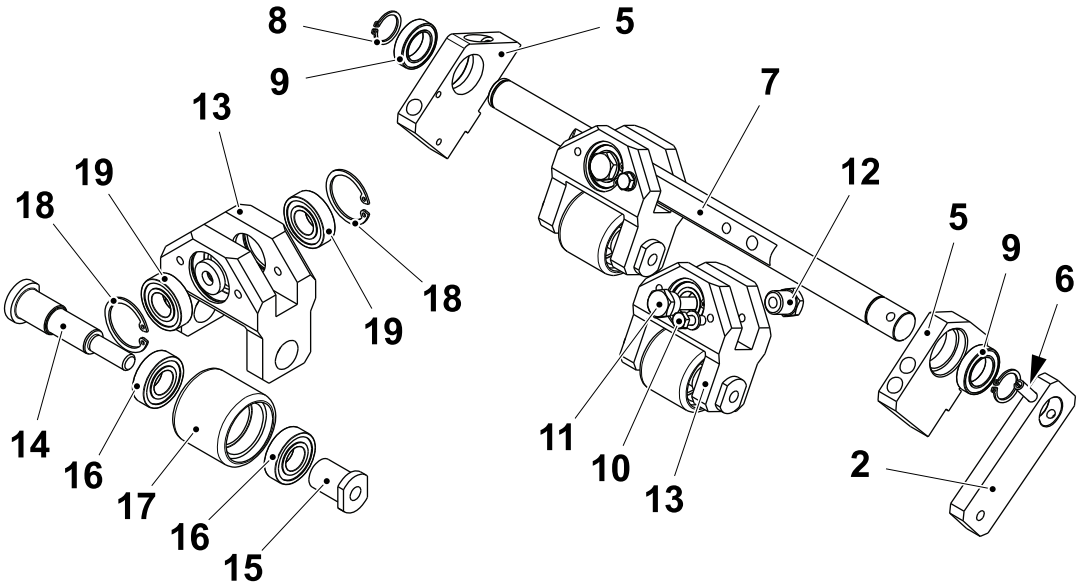

2 Lever
5 Holder
6 Spring pin
7 Shaft
8 Retaining ring
9 Ball bearing
10 Screw
11 Screw
12 Nut
13 Bracket
14 Screw
15 Nut
16 Ball bearing
17 Roller
18 Retaining ring
19 Ball bearing

(Cont'd)

(Cont'd)

h) Fit the retaining rings (18) and the ball bearings (19) to the counter roller brackets (13).

i) Fit the screw (14), the nut (15), the ball bearings (16) and the roller (17) to the counter roller brackets (13).

j) Fit the screws (10), the screws (11), the nuts (12) and the counter roller brackets (13) to the shaft (7).

k) Fit the retaining rings (8) and the ball bearings (9) to the holders (5).

l) Fit the lever (2) to the shaft (7) with the spring pin (6).

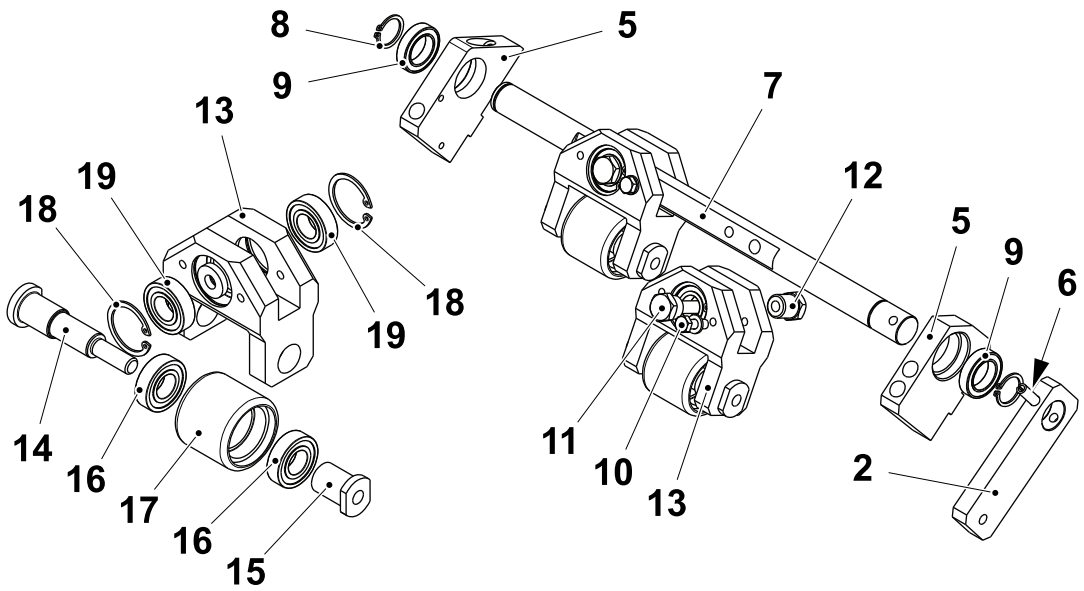

2 Lever
5 Holder
6 Spring pin
7 Shaft
8 Retaining ring
9 Ball bearing
10 Screw
11 Screw
12 Nut
13 Bracket
14 Screw
15 Nut
16 Ball bearing
17 Roller
18 Retaining ring
19 Ball bearing

(Cont'd)

(Cont'd)

m) Fit the holders (5) with the screws (4).

n) Turn the lever (2) to make sure that the counter rollers (20) are against the drive wheel (21). Rotate the drive wheel (21) to make sure that the counter rollers (20) are in the vertical position.

o) Check the distance between the counter rollers (20) and the drive wheel (21) with a **0.1 mm** thick feeler gauge. The distance between the counter rollers (20) and the drive wheel (21) should be less than **0.1 mm**. If necessary:

- remove the shims (22) from the counter rollers (20)
- repeat item o) and add shims (22) under the opposite counter roller until the distance between the counter rollers (20) and the drive wheel (21) is less than **0.1 mm**.

p) Fit the cylinder (1) to the lever (2) with the screw (3).

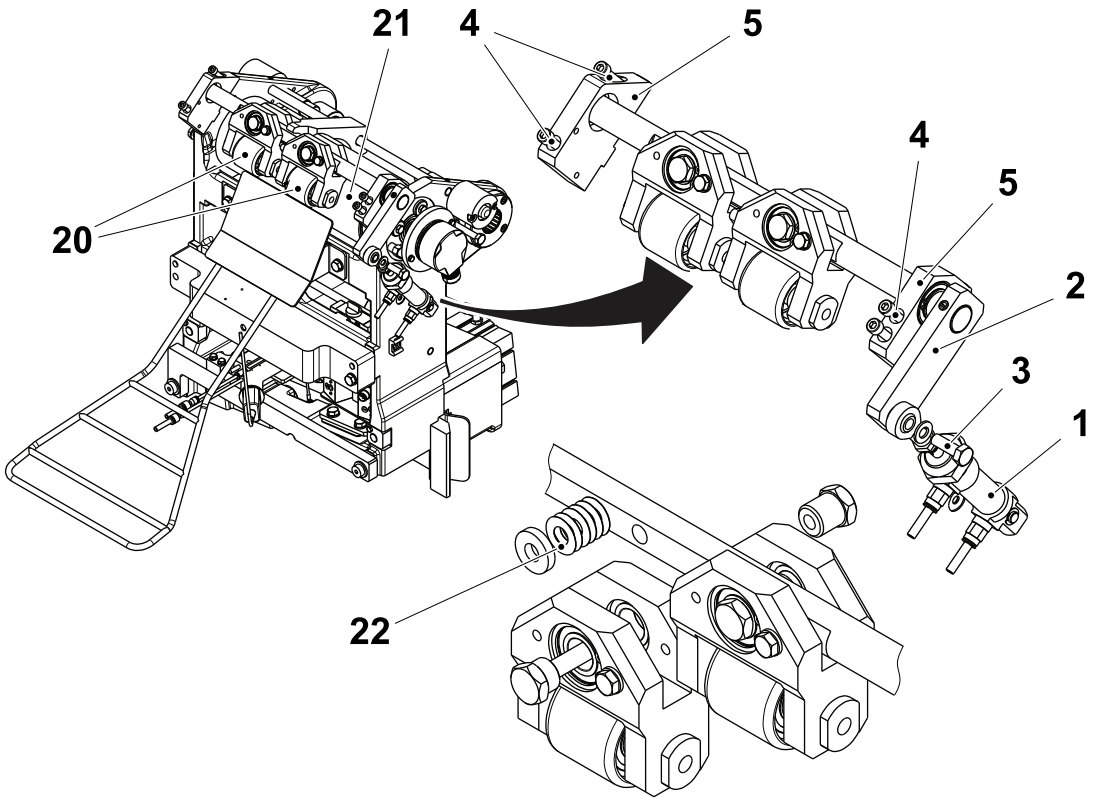

1 Cylinder
2 Lever
3 Screw
4 Screw
5 Holder
20 Counter roller
21 Wheel
22 Shim

(Cont'd)

(Cont'd)

Counter Roller TP No. 2832340-0200

a) Separate the cylinder (1) from the lever (2) by means the screw (3).

b) Pull out the spring pin (4) and remove the lever (2).

c) Remove the screw (5) and the complete roller assembly.

d) Remove the retaining rings (6), the washer (7) and pull the bracket (8) from the shaft.

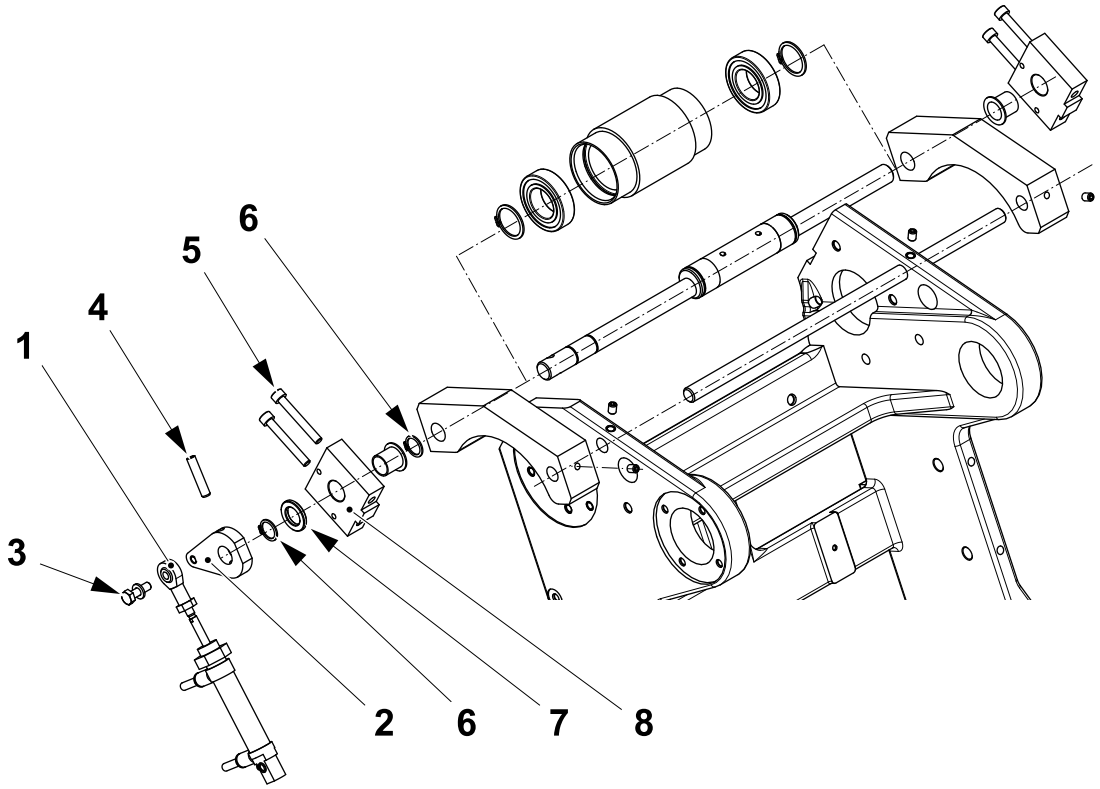

1 Cylinder
2 Lever
3 Screw
4 Spring pin
5 Screw
6 Retaining ring
7 Washer
8 Bracket

(Cont'd)

(Cont'd)

e) Loosen the stop screws (9) andscrew (10), and remove the paper guides (11).

f) Remove the retaining rings (12).

g) Remove and change the ball bearings (13)

h) Remove and change the roller (14). If necessary, remove the spring pins (15) and change the eccentric bushing (16).

i) Assemble in the reverse order.

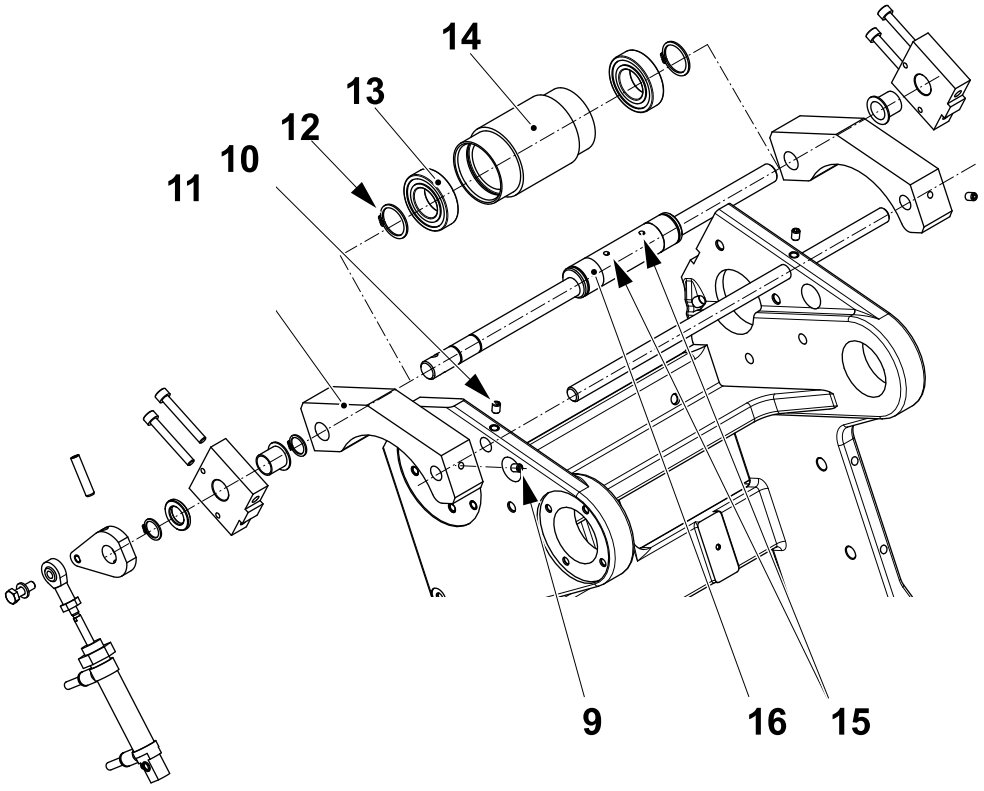

9 Screw	12 Retaining ring	15 Spring pin
10 Screw	13 Ball bearing	16 Eccentric bushing
11 Paper guide	14 Roller	

7.8.5-3 Counter Roller - Set Cylinder

Machine Status	Electrical supply disconnecting device in position O (OFF) Main air valve OFF Main steam valve ON Main water valve OFF
SPC Reference	2832340-0200 3313858-0100

Counter Roller TP No. 3313858-0100

a) Set the distance **A** between the rollers (1) and the drive roller (2) when the piston rod (3) is fully retracted. If required adjust by means of the nut (4).

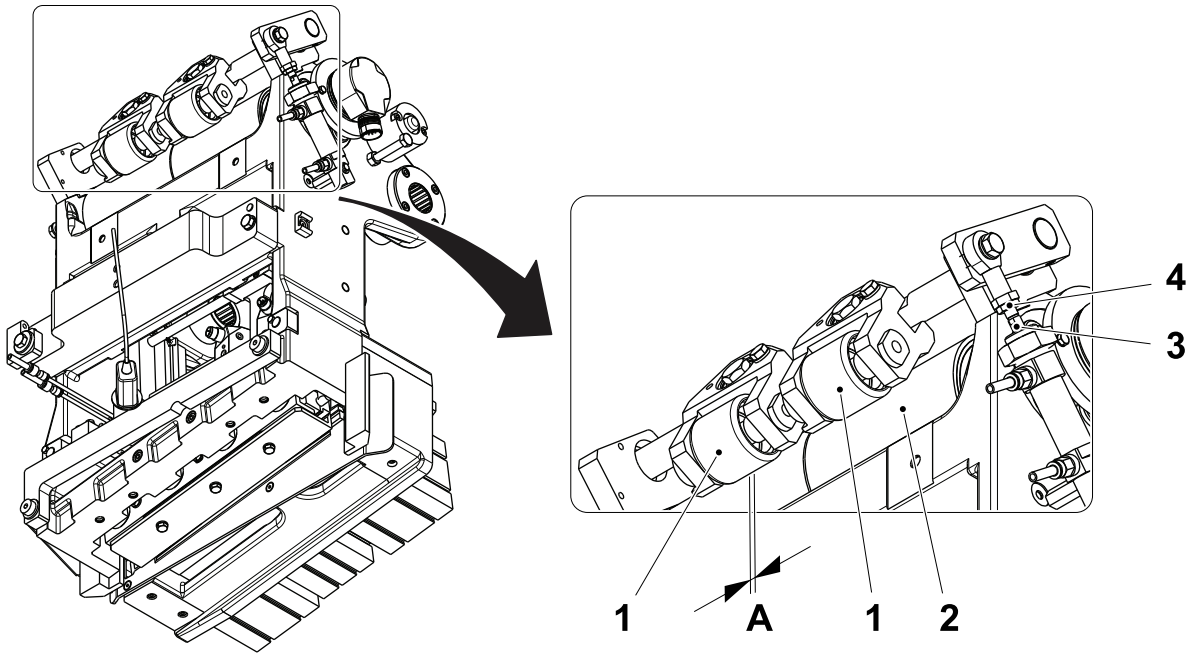

A = 3.0 ±0.2 mm

1 Roller
2 Roller
3 Piston rod
4 Nut

(Cont'd)

(Cont'd)

b) Remove the screw (5) and the cylinder (6) from the lever (7).

c) Turn the lever (7) to make sure that the counter rollers (1) are against the drive roller (2). Rotate the drive roller (2) to make sure that the counter rollers (1) are in the vertical position.

d) Check the distance between the counter rollers (1) and the drive roller (2) with a **0.1 mm** thick feeler gauge. The distance between the counter rollers (1) and the drive roller (2) should be less than **0.1 mm**. If necessary:

- remove the shims (8) from the counter rollers (1)
- repeat item d) and add shims (8) under the opposite counter roller until the distance between the counter rollers (1) and the drive roller (2) is less than **0.1 mm**.

e) Fit the cylinder (6) and the screw (5) to the lever (7).

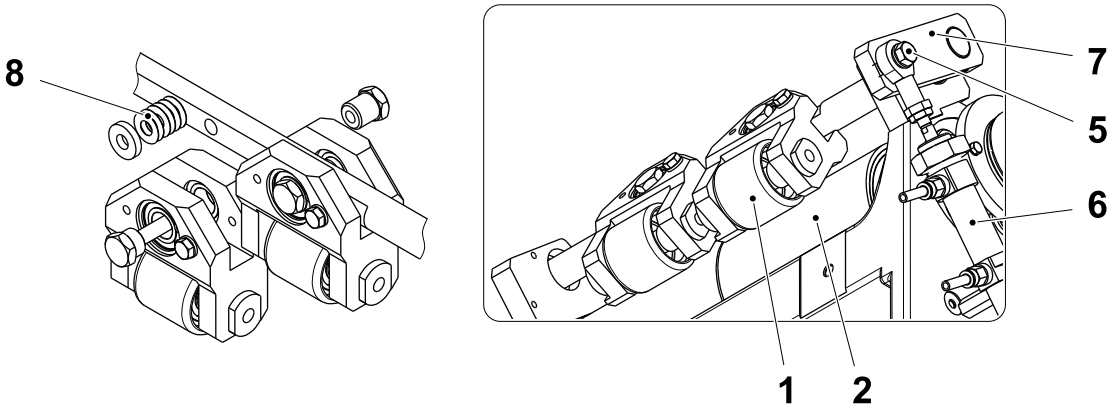

1 Roller
2 Roller
5 Screw
6 Cylinder
7 Lever
8 Shim

(Cont'd)

(Cont'd)

Counter Roller TP No. 2832340-0200

Set the distance **A** between the roller (1) and the drive roller (2) when the piston rod (3) is fully retracted. If required adjust by means of the nut (4).

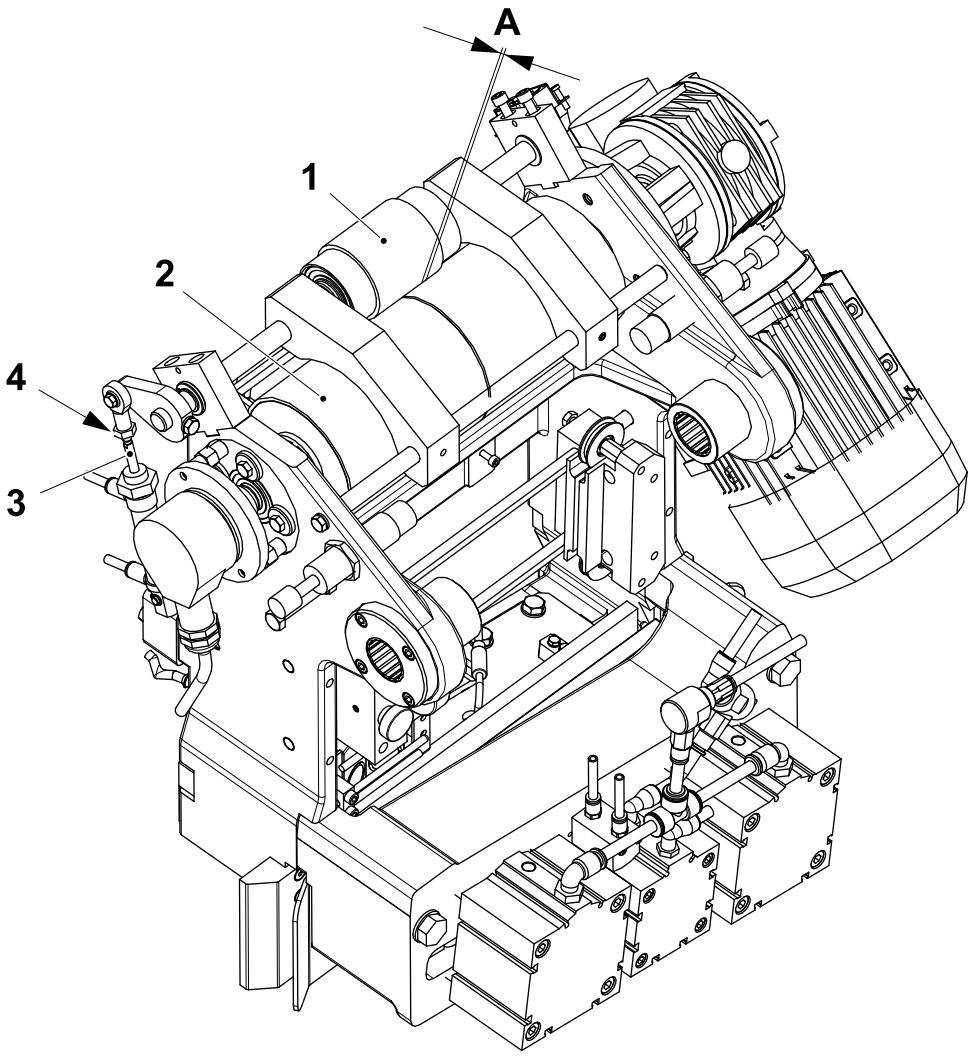

A = 1.0 ±0.2 mm

1 Roller
2 Roller
3 Piston rod
4 Nut

7.9 Covering Panel

7.9-1 Covering Panel - Check

Machine Status	Electrical supply disconnecting device in position I (ON) Main air valve OFF Main steam valve ON Main water valve OFF
SPC Reference	2842972-0300

Check that:

- the rear doors safety switches (1) and (2) operate when the doors are opened. If not, change the defective switch.
- the side door safety switch (3) operate when the door is opened. If not, change the switch and set it, see 7.9-2 Covering Panel - Set Safety Switch.

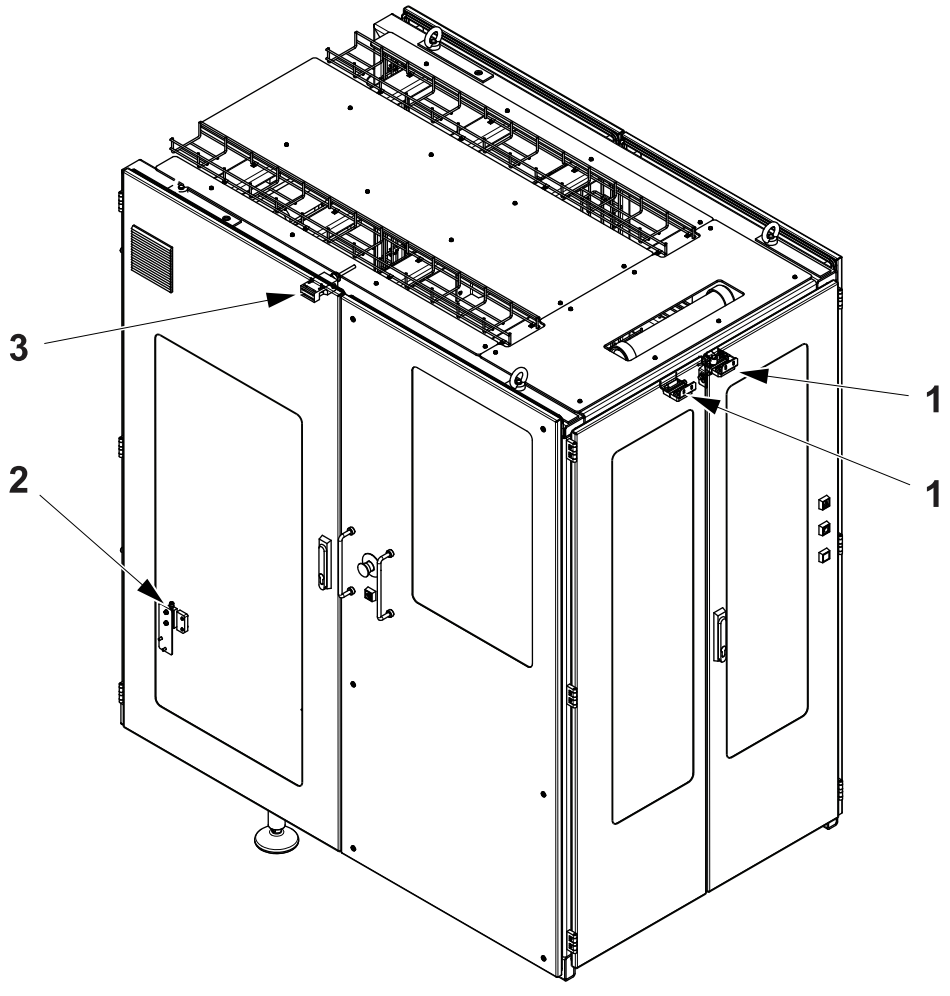

1 Rear doors safety switch
2 Strip magazine safety switch
3 Side door safety switch

(Cont'd)

(Cont'd)

- the rubber strip (4) is not worn or damaged. If necessary, change the rubber strip (4)
- the rubber strip (4) is fitted correctly. If necessary, adjust the rubber strip (4)
- the locking arms (5) run smoothly in the guide lugs (6)
- the locking arms (5) engage with the locking plates (7) and (8) when the door is closed
- the locking arms (5) are free from the locking plates (7) and (8) when the door is opened
- the latch (9) locks when the door is closed

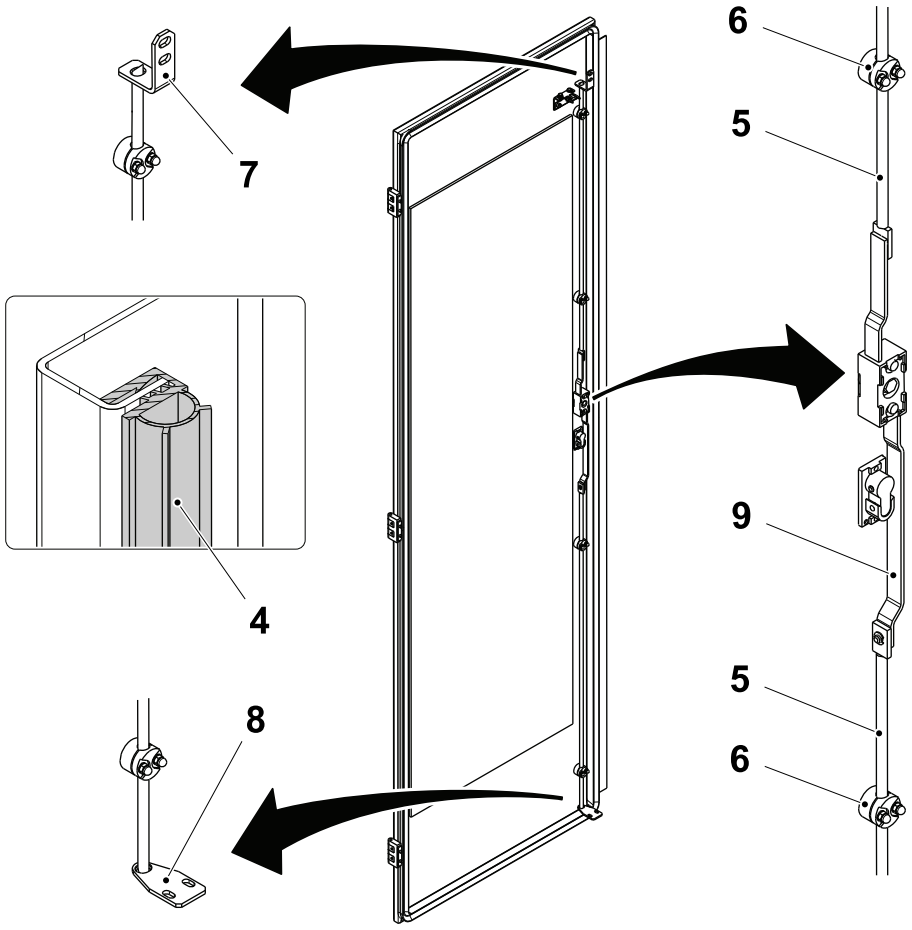

4 Rubber strip
5 Locking arm
6 Guide lug
7 Locking plate
8 Locking plate
9 Latch

7.9-2 Covering Panel - Set Safety Switch

Machine Status	Electrical supply disconnecting device in position I (ON) Main air valve OFF Main steam valve ON Main water valve OFF
SPC Reference	2842972-0300

a) Loosen the screws (1) and set the distance **A** between the switch (2) and the key (3).

b) Close the door.

c) Check if the DOOR OPEN alarm on the TPOP is still ON. If the alarm is ON, repeat the procedure until the door can be closed without any alarm.

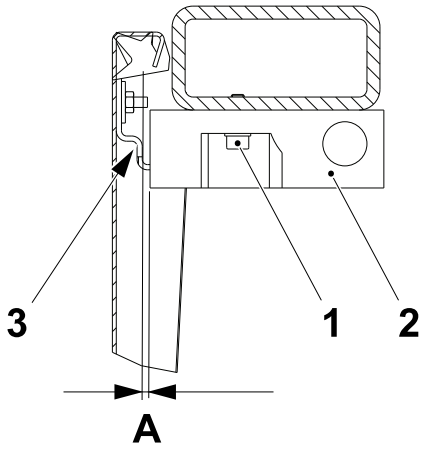

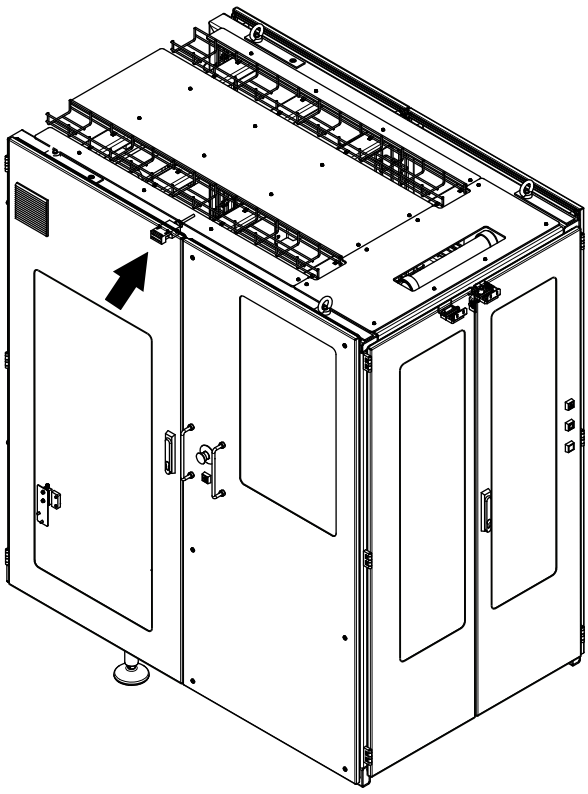

A = 1.0 ±0.5 mm
1 Screw
2 Switch
3 Key

7.10 Side Feeder

7.10-1 Side Feeder - Change

Machine Status	Electrical supply disconnecting device in position O (OFF) Main air valve OFF Main steam valve ON Main water valve OFF
Special Equipment	Rope 2.5 m
SPC Reference	2842977-0200

a) Attach a rope to the lower part of the splicing device (1) so it can be swung upwards when it is disconnected from the side feeder (2).

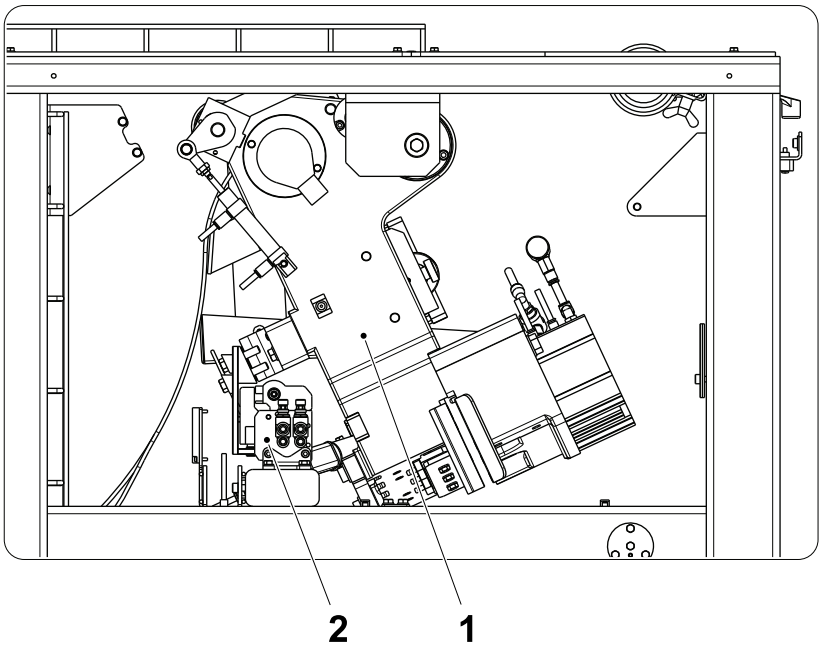

1 Splicing device
2 Side feeder

(Cont'd)

(Cont'd)

b) Remove the plate (3) and the reflector (4).

c) Using the rope, swing the splicing device (1) away from the side feeder (2) on the shaft (5).

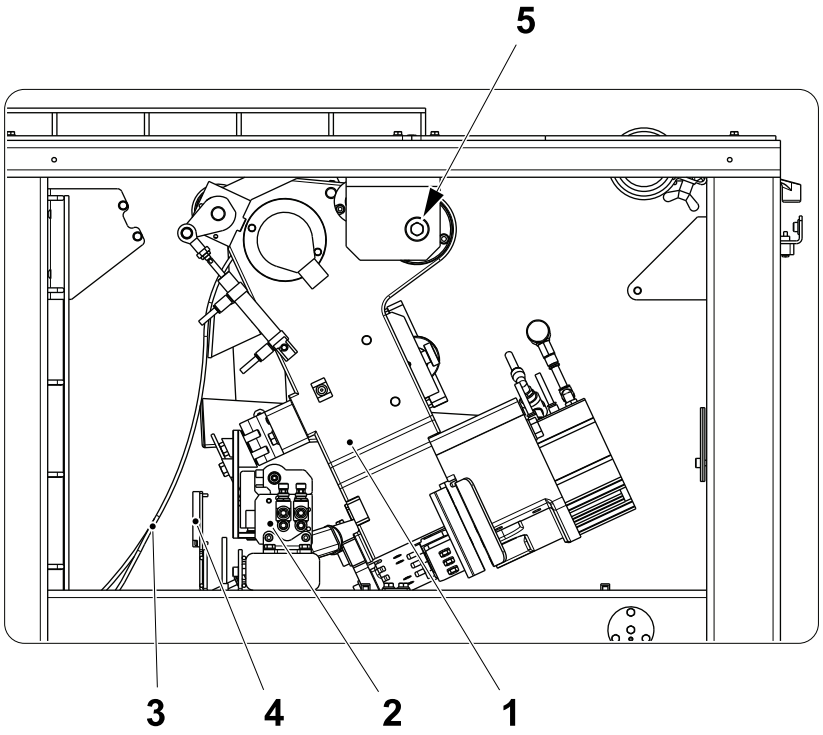

1 Splicing device
2 Side feeder
3 Plate
4 Reflector
5 Shaft

(Cont'd)

(Cont'd)

d) Remove the restrictor valves (6).

e) Remove and change the end position sensors (7).

f) At both ends, remove the screws (8) securing the cylinder (9) to the brackets (10) and manoeuvre the cylinder (9) out of the ASU.

g) Assemble in the reverse order.

h) Set the end position sensors (7), see 7.10-2 Side Feeder - Set Sensor Position.

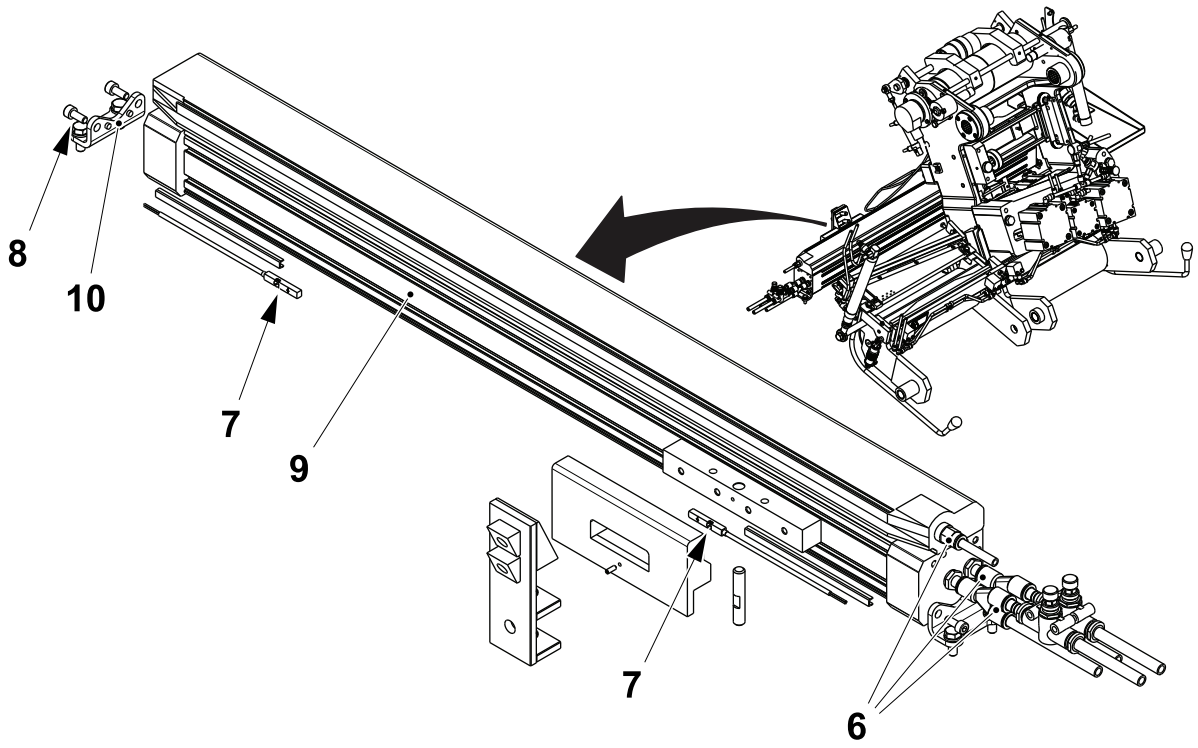

6 Restrictor valve
7 Sensor
8 Screw
9 Cylinder
10 Bracket

7.10-2 Side Feeder - Set Sensor Position

Machine Status	Electrical supply disconnecting device in position I (ON) Main air valve OFF Main steam valve ON Main water valve OFF
SPC Reference	2842977-0200

a) Use the RELEASE BRAKE icon (1) to release the brake for the splicing device (2).

- Touch the MAINTENANCE CONTROL button (3).
- Touch the ASU Window (4).
- Touch the RELEASE BRAKE icon (1).
- Touch the ON button (5).
- Touch the OK button (6).
- Press the MANUAL WEB SPLICE button (7).

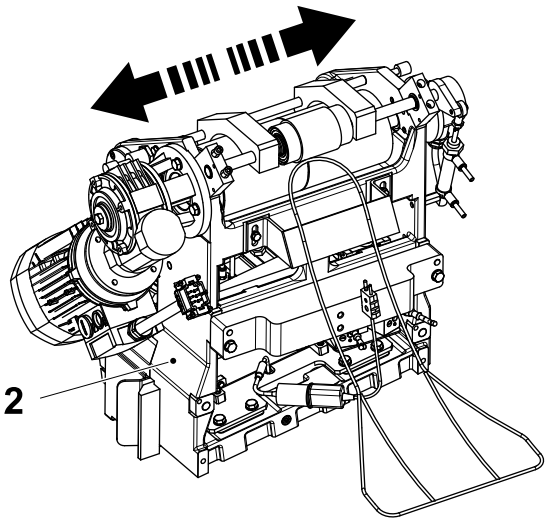

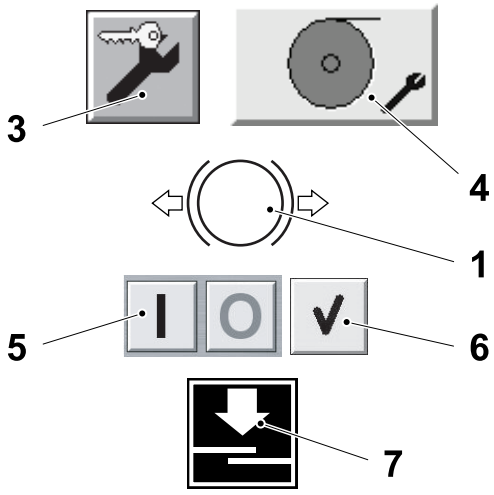

1 RELEASE BRAKE icon
2 Splicing device
3 MAINTENANCE CONTROL button
4 ASU Window
5 ON button
6 OK button
7 MANUAL WEB SPLICE button

(Cont'd)

(Cont'd)

b) Move manually the splicing device (2) to its left end position.

c) Loosen the screw (8) on the LH sensor (9) and push the sensor to the left, see arrow.

d) Move the LH sensor (9) towards the centre of the side feeder (10) until the LED (11) is lit and then a maximum of 1 mm more and tighten the screw (8).

e) Repeat the procedure at the opposite end of the side feeder (10) for the other sensor (12).

Note! Make sure to always move the sensor (9) and the sensor (12) first to the end of the side feeder (10) and then towards the centre of the side feeder (10).

f) Turn the screw (13) and the screw (14) fully to the left and then turn both screws half a turn to the right.

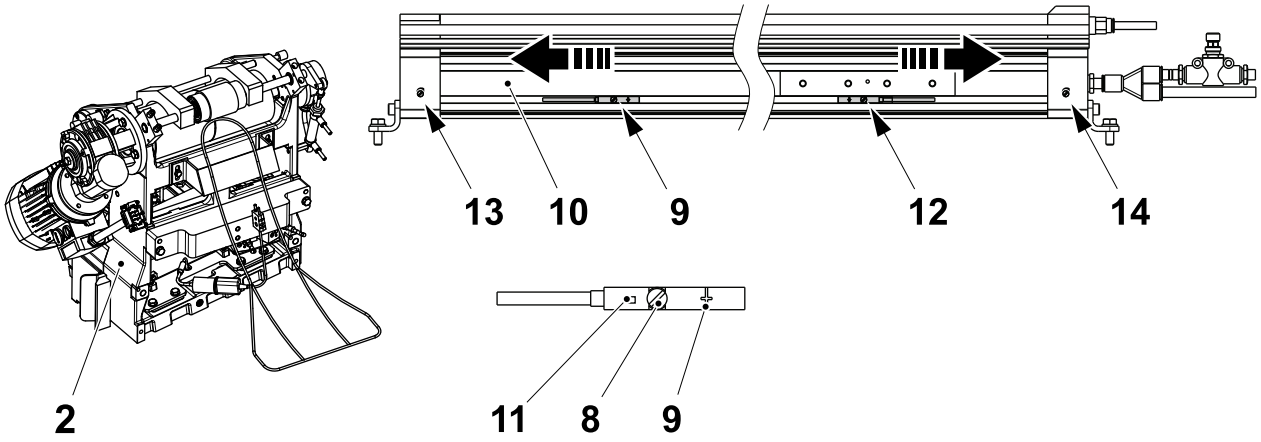

2 Splicing device
8 Screw
9 Sensor
10 Side feeder
11 LED
12 Sensor
13 Screw
14 Screw

7.10-3 Side Feeder - Set Cylinder

Machine Status	Electrical supply disconnecting device in position I (ON) Main air valve OFF Main steam valve ON Main water valve OFF
SPC Reference	2842977-0200

Adjust the cylinder restrictor valve (1) and restrictor valve (2) as described below to set the correct speed of movement for the splicing device.

a) Fully open the restrictor valve (1) and the restrictor valve (2).

b) Close the restrictor valve (1) **1** turn.

c) Close the restrictor valve (2) **1** turn.

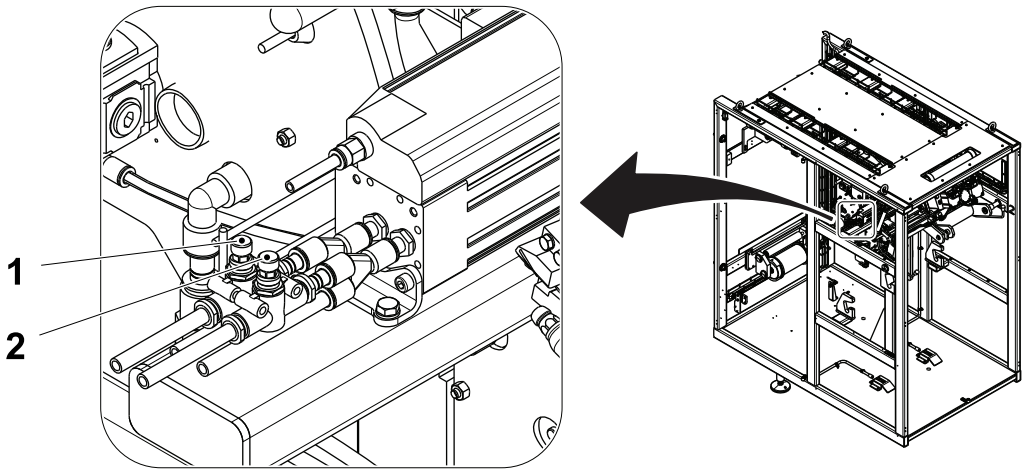

1 Restrictor valve
2 Restrictor valve

7.11 Paper Trolley

7.11-1 Paper Trolley - Check

SPC Reference	90603-3401

a) Pull the brake handle (1) and check that the brake releases. If necessary, adjust the brake wire on the brakes (2), see 7.11-8 Paper Trolley - Set Brake.

b) Check that all connections are free from oil. Clean if necessary.

c) Pump up the arms to their highest position and check that the cylinder piston (3) is dry. Clean if necessary.

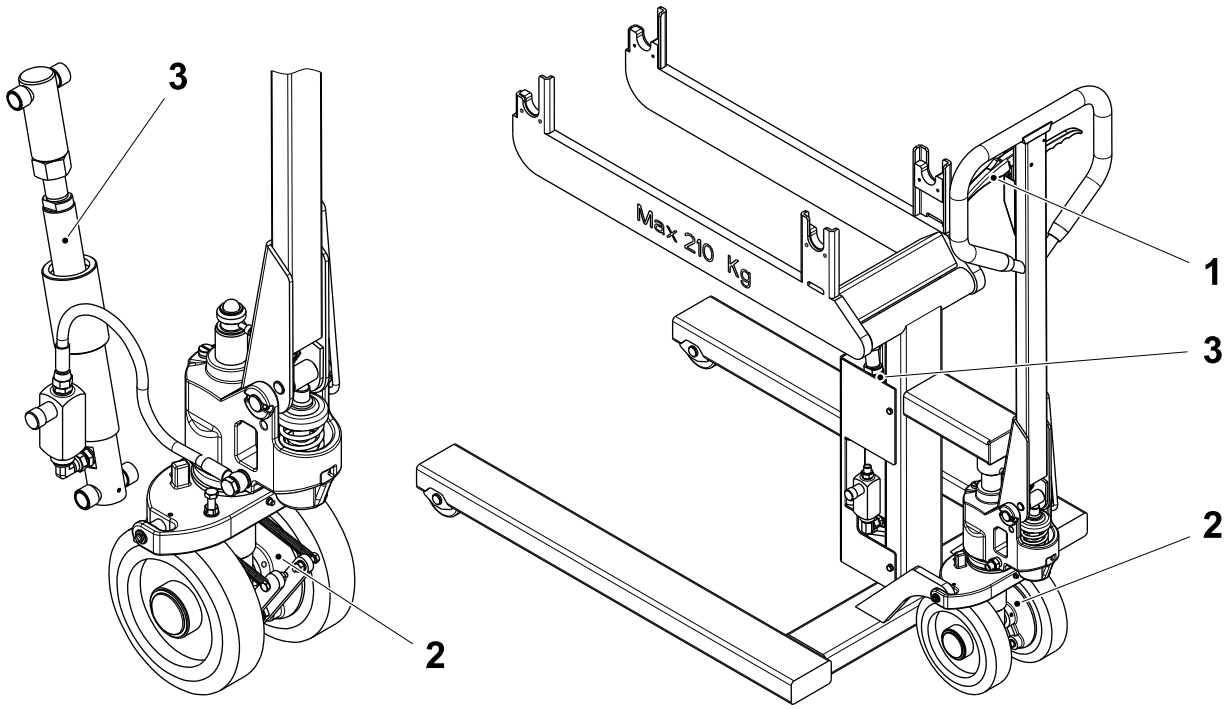

1 Brake handle
2 Brake
3 Cylinder piston

(Cont'd)

(Cont'd)

d) On the lifting arm handle (4) check that:

- the arms (5) sinks when in the top position (6)
- the arms (5) stay in same position when pumping the handle (7) when in the middle position (8). The normal position when handling the reel trolley
- the arms (5) are raised when pumping the handle (7) when in the bottom position (9).
- If necessary, adjust the wire, see 7.11-9 Paper Trolley - Set Lifting Arm Handle.

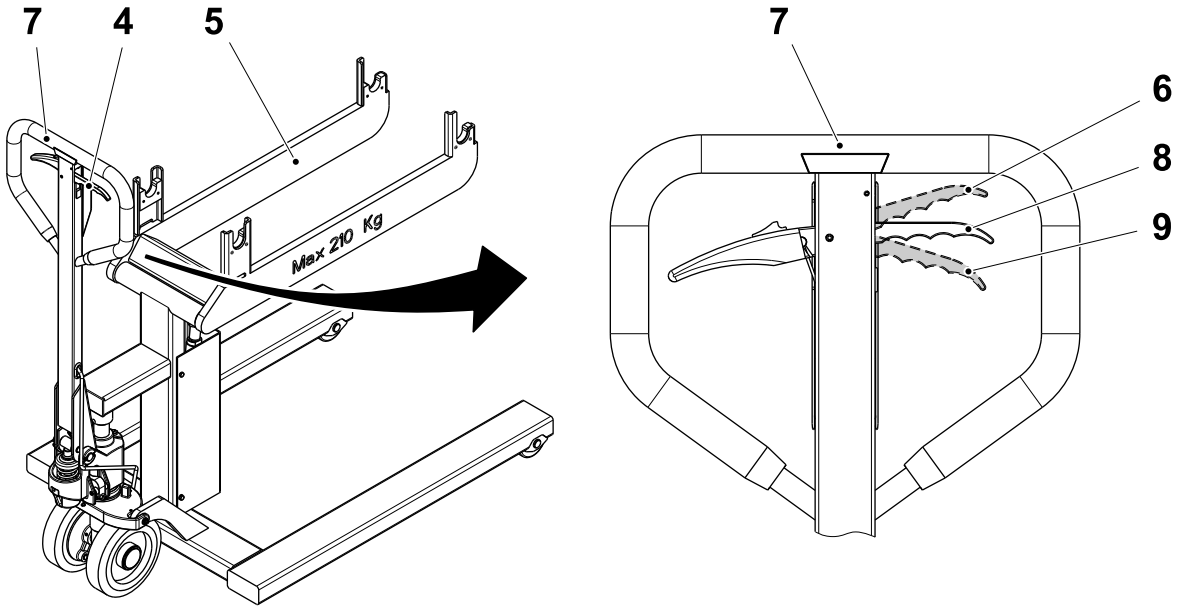

4 Lifting arm handle
5 Arm
6 Top position
7 Handle
8 Middle position
9 Bottom position

(Cont'd)

(Cont'd)

e) Put a packaging material reel in the trolley and pump up the arms (5) until the reel lifts from the floor. Wait for 10 minutes.

f) Make sure that the reel does not sink, sinking can be caused by a broken pump cylinder (10) or a leakage.

g) Pump up the arms again until the reel lifts from the floor and then let it down while pulling the lifting arm handle (4). If the arms (5) sink very quickly, set the regulating valve (11), see 7.11-3 Paper Trolley - Set Regulating Valve.

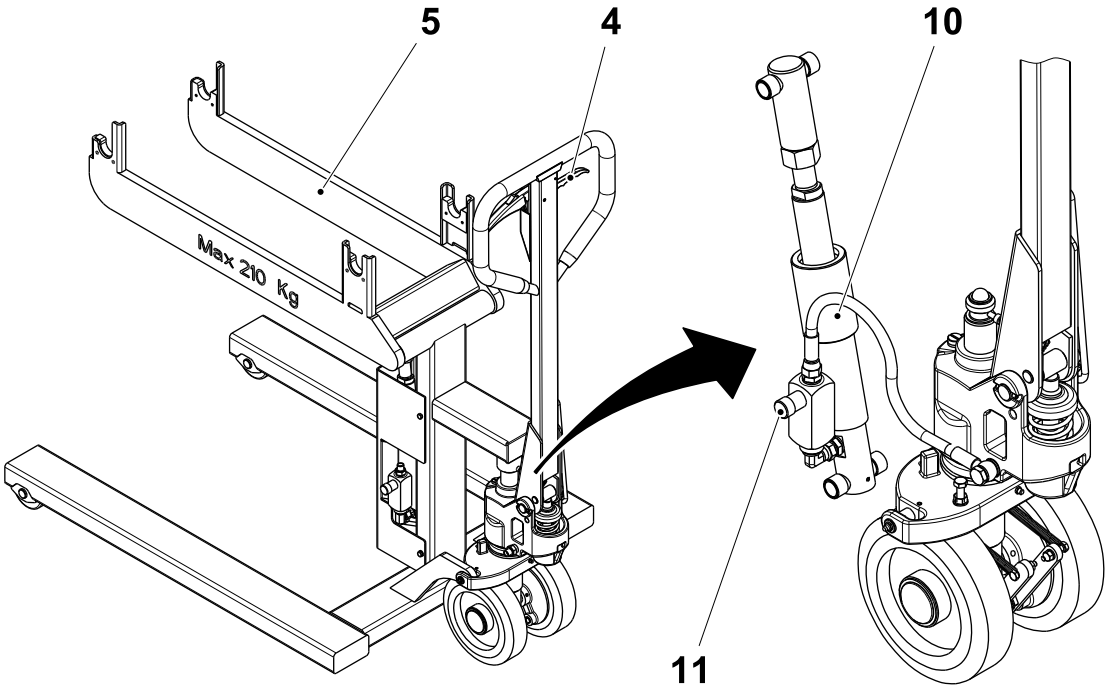

4 Lifting arm handle
5 Arm
10 Pump cylinder
11 Regulating valve

7.11-2 Paper Trolley - Change Pump Cylinder

Consumables	Lubricant, Kluberfood 4 NH1-32 TP No. 344390-0000
SPC Reference	90603-3401

CAUTION
Risk of damage to the equipment.
Mixing lubricants with no compatible bases will lead to severe loss of lubrication and probable damage to the equipment. Use only recommended consumables, see section 9.3.1 Lubricants.

The complete pump assembly (1) is changed as one unit.

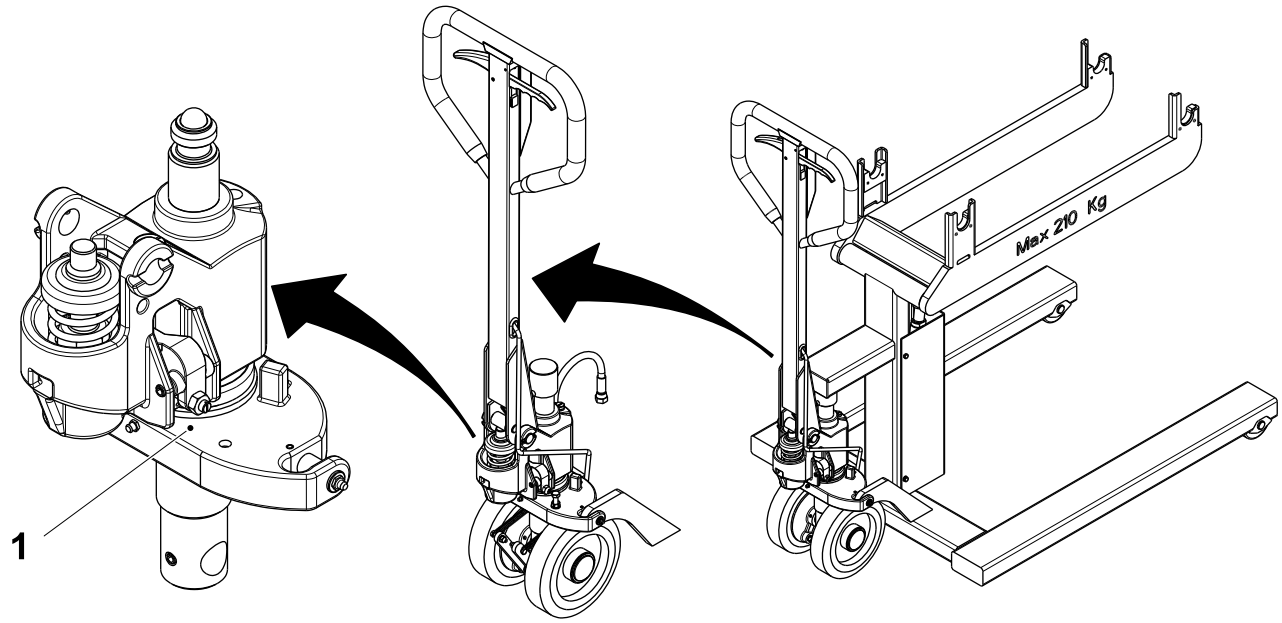

1 Pump assembly

(Cont'd)

(Cont'd)

a) Position the trolley on its side.

b) Remove the wheels (2) and the brakes, follow the procedure in 7.11-7 Paper Trolley - Change Wheel and Brake.

c) Remove the stop (3) and the brake wire (4) from the shafts (5).

d) Remove the nut (6) from the lifting arm wire (7).

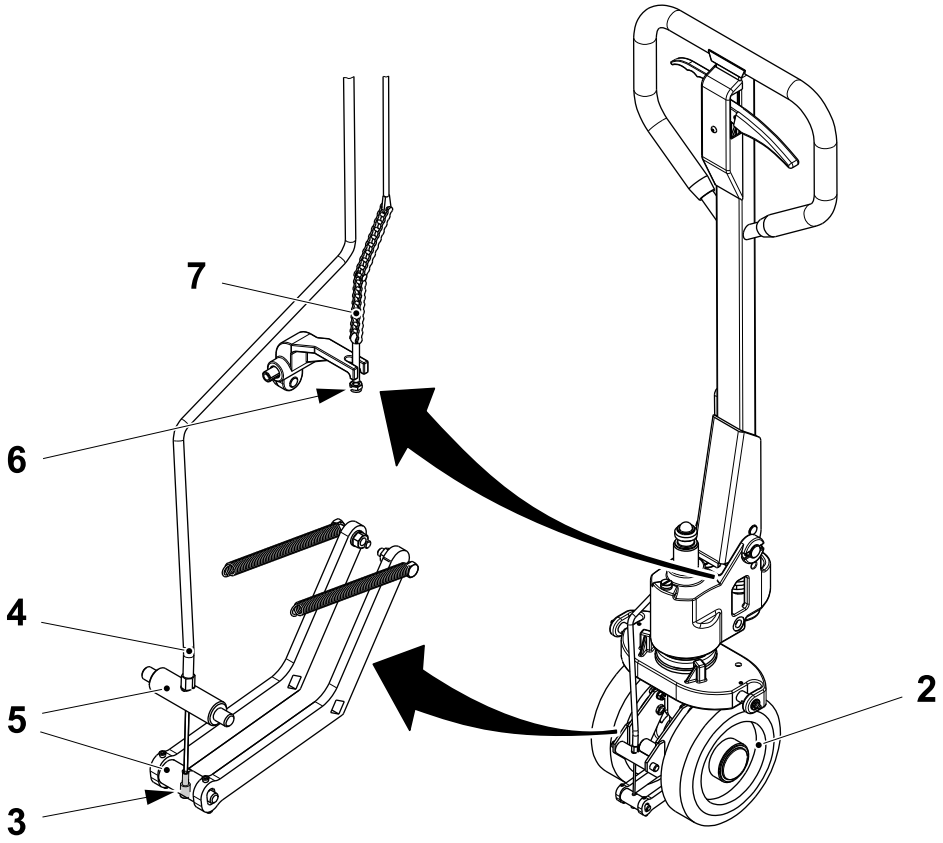

2 Wheel
3 Stop
4 Brake wire
5 Shaft
6 Nut
7 Lifting arm wire

(Cont'd)

(Cont'd)

e) Remove the pin (8) and the shaft (9).

f) Remove the pins (10), the shaft (11) and the rudder (12).

g) Remove the screw (13) and the hydraulic hose (14) from the pump assembly (1).

h) Remove the two screws (15).

i) Remove the screw (16) from the holder (17).

j) Remove the pins (18) and the shafts (19) from the holders (20).

k) Change the pump assembly (1).

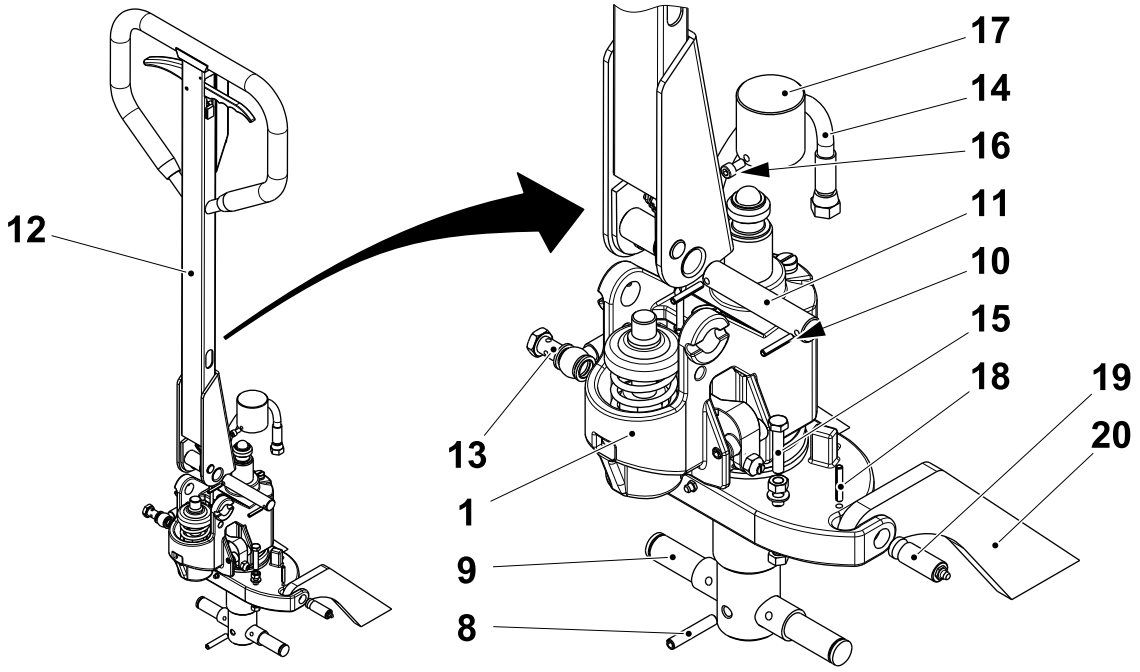

1 Pump assembly
8 Pin
9 Shaft
10 Pin
11 Shaft
12 Rudder
13 Screw
14 Hydraulic hose
15 Screw
16 Screw
17 Holder
18 Pin
19 Shaft
20 Holder

(Cont'd)

(Cont'd)

l) Fit the pump assembly (1) to the holders (20) with the pins (18) and the shafts (19).

m) Fit the screw (16) to the holder (17).

n) Fit the two screws (15) to the pump assembly (1).

o) Fit the hydraulic hose (14) and the screw (13) to the pump assembly (1).

p) Fit the rudder (12) to the pump assembly (1) with the shaft (11) and the pins (10).

q) Fit the shaft (9) with the pin (8).

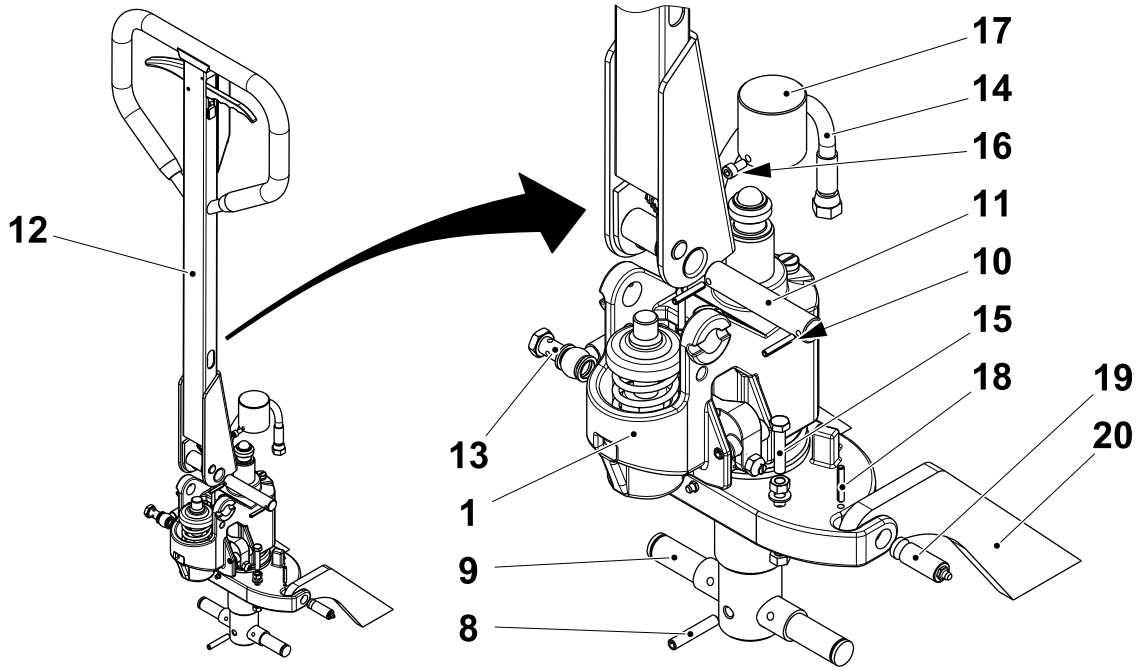

1 Pump assembly	11 Shaft	15 Screw	18 Pin
8 Pin	12 Rudder	16 Screw	19 Shaft
9 Shaft	13 Screw	17 Holder	20 Holder
10 Pin	14 Hydraulic hose		

(Cont'd)

(Cont'd)

r) Fit the lifting arm wire (7) with the nut (6).

s) Fit the stop (3) and the brake wire (4) to the shafts (5).

t) Fit the wheels (2) and the brakes, follow the procedure in 7.11-7 Paper Trolley - Change Wheel and Brake.

u) Set the brake wire (4), see 7.11-8 Paper Trolley - Set Brake.

v) Set the lifting arm wire (7), see 7.11-9 Paper Trolley - Set Lifting Arm Handle.

w) Remove the oil checker (21) and fill the pump assembly (1) with oil through the hole (22). Fit the oil checker (21).

x) Use the paper trolley to lift some paper reels and then check the oil level, see 7.11-10 Paper Trolley - Check Oil Level.

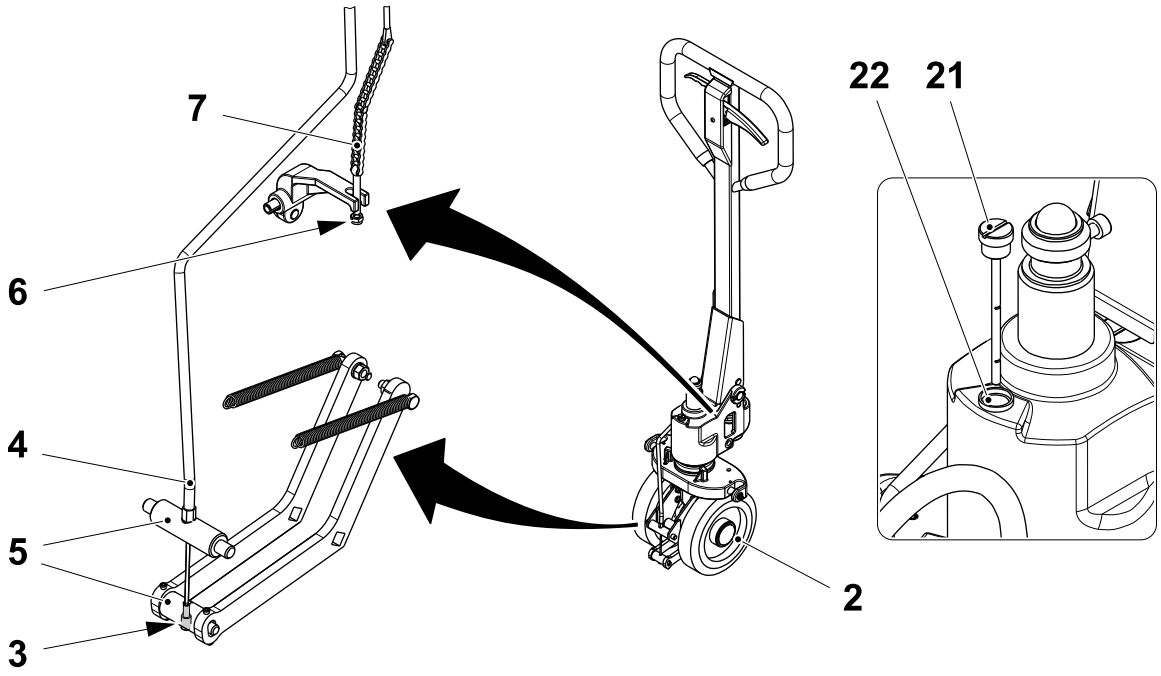

1 Pump assembly
2 Wheel
3 Stop
4 Brake wire
5 Shaft
6 Nut
7 Lifting arm wire
21 Oil checker
22 Hole

7.11-3 Paper Trolley - Set Regulating Valve

SPC Reference	90603-3401

a) Pump up the handle (1) to lift the arms (2) to their highest position.

b) Pull in the handle (3) to lower the arms (2). Set the knob (4) so that the arms reach the lowest position in 8 or 9 seconds.

c) If it is not possible to set the correct value then change the sink valve.

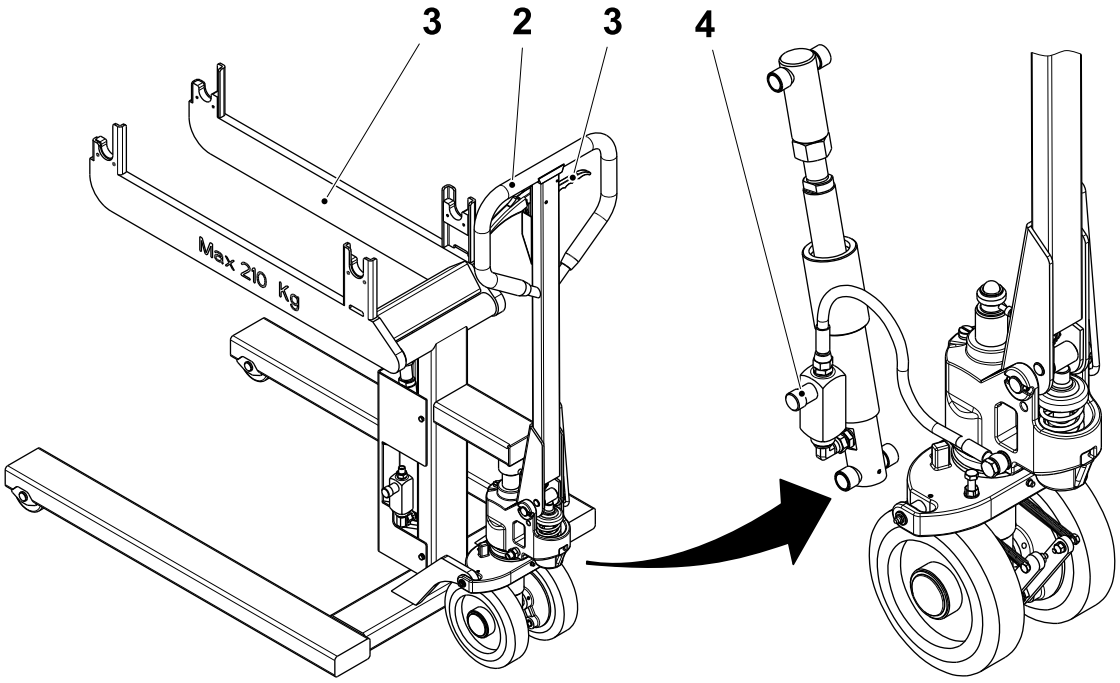

1 Handle
2 Arm
3 Handle
4 Knob

7.11-4 Paper Trolley - Set Maximum Lift Height

SPC Reference	90603-3401

CAUTION
Risk of damage to equipment.
Do not damage the piston (1) surface.

a) Remove the cover (2).

b) Loosen the nut (3).

c) Rotate the piston nut (4) to increase or decrease the distance **A** between the piston (5) and the piston (1). Make sure that the distance **A** is less than 50 mm.

Note! The height that the paper reel is lifted can be set within the range of 900 - 1100 mm. The height is measured from the ground to the centre of the paper reel.

d) Tighten the nut (3) and fit the cover (2).

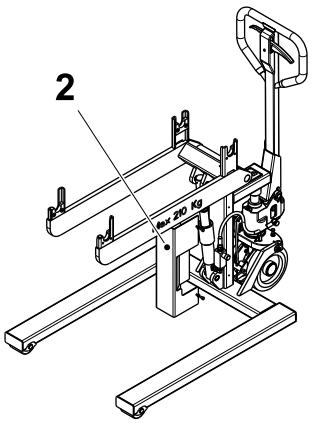

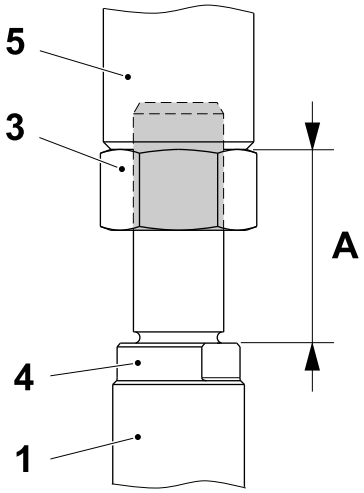

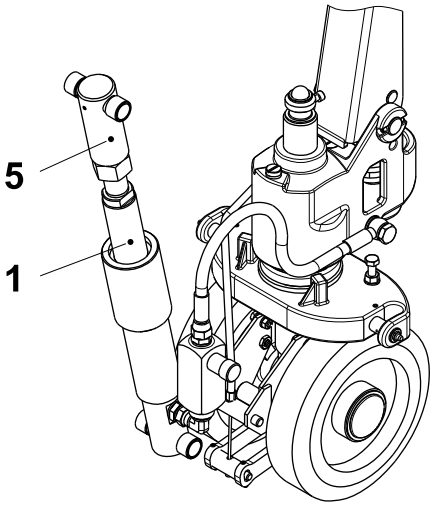

1 Piston
2 Cover
3 Nut
4 Piston nut
5 Piston

7.11-5 Paper Trolley - Change Cylinder

Consumables	Lubricant - Kluberfood 4 NH1-32 TP No. 90603-5338
SPC Reference	90603-3401

a) Position the trolley on its side and raise the arms (1) to the highest position.

b) Remove the cover (2).

c) Loosen the nut (3).

d) Rotate the piston nut (4) to remove the piston (5) from the piston (6).

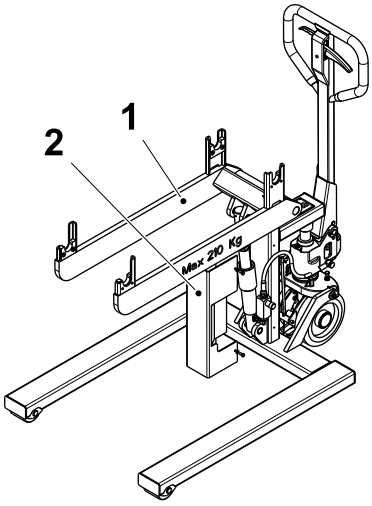

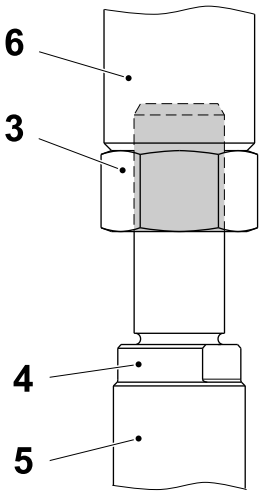

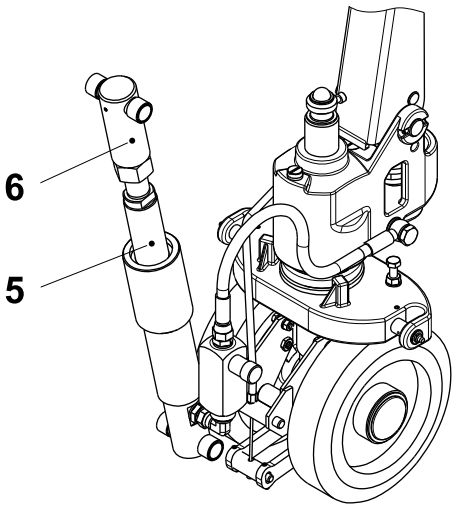

1 Arm
2 Cover
3 Nut
4 Piston nut
5 Piston
6 Piston

(Cont'd)

(Cont'd)

e) Remove the screw (7) and the hydraulic hose (8).

f) Remove the pin (9) from the cylinder (10) by pushing the pin (9) into the shaft (11).

g) Remove the shaft (11).

h) Change the cylinder (10).

i) Fit the cylinder (10) with the shaft (11) and the pin (9).

j) Fit the hydraulic hose (8) and the screw (7).

k) Fit the piston (5) from the piston (6) with the nut (3) and the piston nut (4).

l) Fit the cover (2).

m) Remove the oil checker (12) and check the oil level, see 7.11-10 Paper Trolley - Check Oil Level.

n) Set the maximum lift height, see 7.11-4 Paper Trolley - Set Maximum Lift Height.

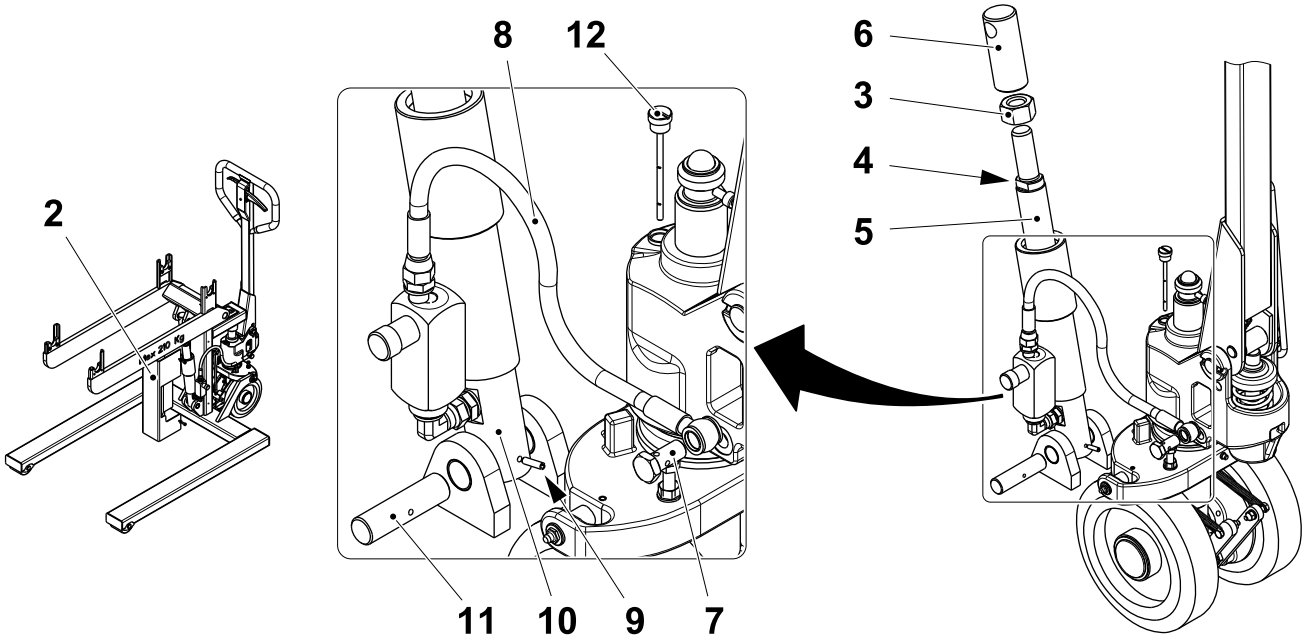

2 Cover
3 Nut
4 Piston nut
5 Piston
6 Piston
7 Screw
8 Hydraulic hose
9 Pin
10 Cylinder
11 Shaft
12 Oil checker

7.11-6 Paper Trolley - Change Fork Wheel

SPC Reference	90603-3401

a) Remove the pin (1) from the bracket (2).

b) Remove the shaft (3), the washer (4), the ball bearing (5) and the wheel (6).

c) Change the shaft (3), the washer (4), the ball bearing (5) and the wheel (6).

d) Assemble in the reverse order.

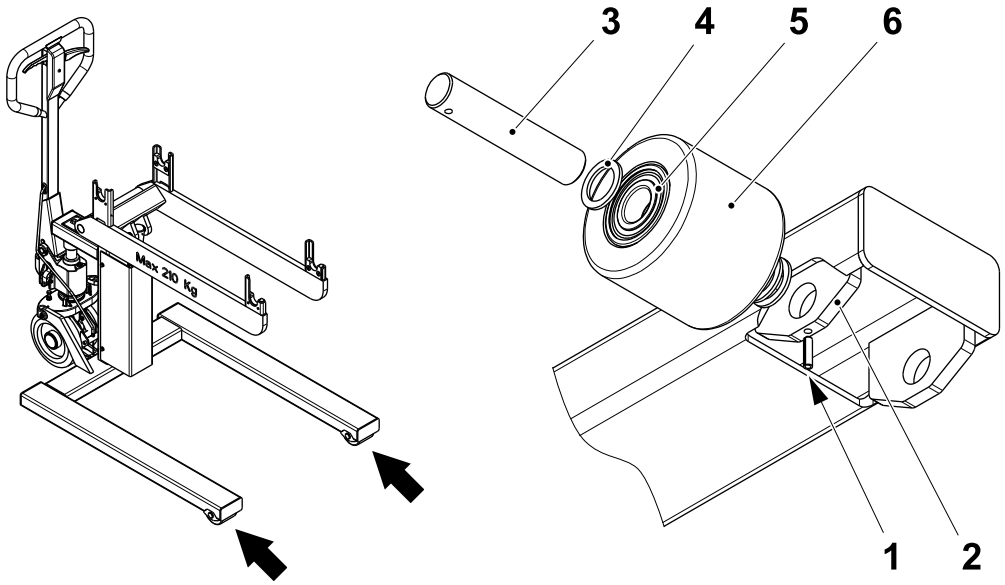

1 Pin
2 Bracket
3 Shaft
4 Washer
5 Ball bearing
6 Wheel

7.11-7 Paper Trolley - Change Wheel and Brake

SPC Reference	90603-3401

a) Position the trolley on its side.

b) Remove the plastic plug (1), the retaining ring (2) and the wheel (3). If necessary, change the wheel (3) with ball bearings (4).

c) Remove the springs (5).

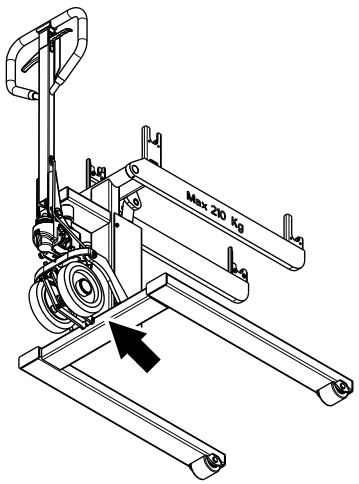

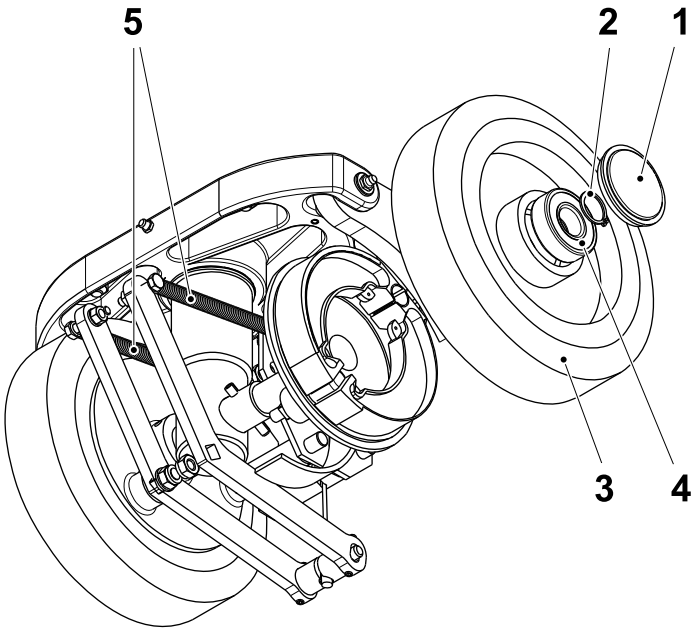

1 Plastic plug
2 Retaining ring
3 Wheel
4 Ball bearing
5 Spring

(Cont'd)

(Cont'd)

d) Remove the nut (6), the nut (7), the pin (8) and the brake unit (9). If necessary, change the brake unit (9).

e) Fit the brake unit (9) to the shaft (10) with the nut (6), the nut (7) and the pin (8).

f) Fit the springs (5).

g) Fit the wheel (3) to the shaft (10) with the retaining ring (2).

h) Fit the plastic plug (1).

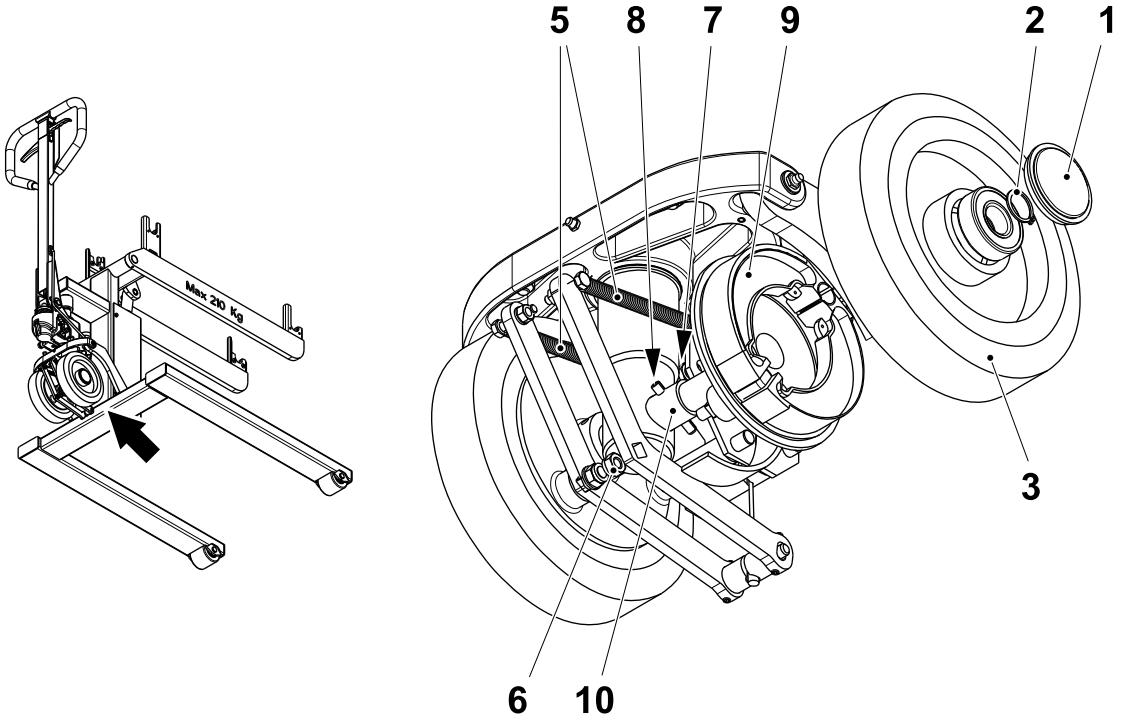

1 Plastic plug
2 Retaining ring
3 Wheel
5 Spring
6 Nut
7 Nut
8 Pin
9 Brake unit
10 Shaft

7.11-8 Paper Trolley - Set Brake

SPC Reference	90603-3401

Pull the brake handle (1) and check that the brake releases. If necessary, adjust:

- the brake wire (2), at the brakes (3), with the grub screw (4)
- the brake wire (2), under the cover (5) with the nuts (6).

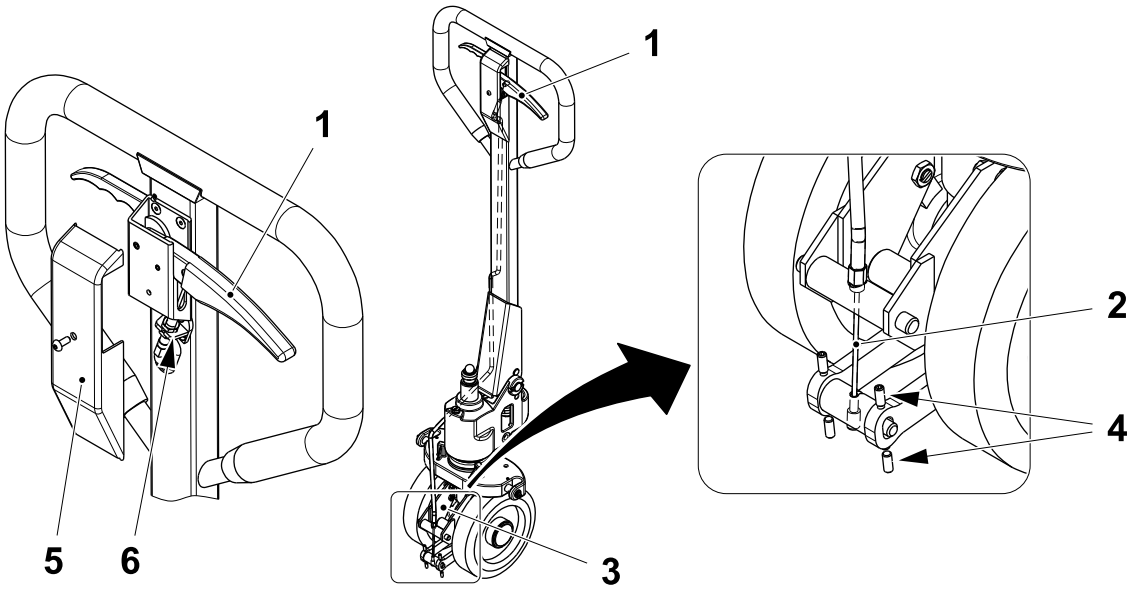

1 Brake handle
2 Brake wire
3 Brake
4 Grub screw
5 Cover
6 Nut

7.11-9 Paper Trolley - Set Lifting Arm Handle

SPC Reference	90603-3401

a) Check on the lifting arm handle (1) that:
- the arms (2) sinks when the lever is in the top position (3)
- the arms (2) stay in same position when pumping the handle (4) with the lever in the middle position (5)
- the arms (2) raises when pumping the handle (4) with the lever in the bottom position (6).

b) Adjust the lifting arm handle (1) function with the nut (7) on the wire (8).

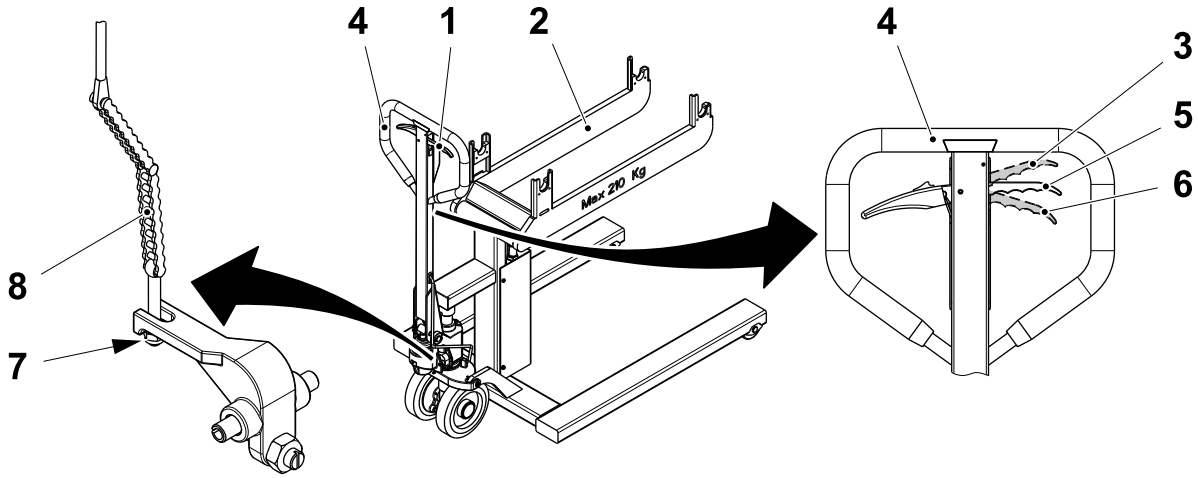

1 Lifting arm handle
2 Arm
3 Top position
4 Handle
5 Middle position
6 bottom position
7 Nut
8 Wire

7.11-10 Paper Trolley - Check Oil Level

Consumables	Lubricant, Kluberfood 4 NH1-32 TP No. 344390-0000
SPC Reference	90603-3401

CAUTION
Risk of damage to the equipment.
Mixing lubricants with no compatible bases will lead to severe loss of lubrication and probable damage to the equipment. Use only recommended consumables, see section 9.3.1 Lubricants.

a) Pull the handle (1) to lower the arms (2) to the lowest position.

b) Remove the oil checker (3).

c) Make sure that the oil level on the oil checker (3) is between the two marks, see arrows. If necessary, add oil through the hole (4).

d) Fit the oil checker (3).

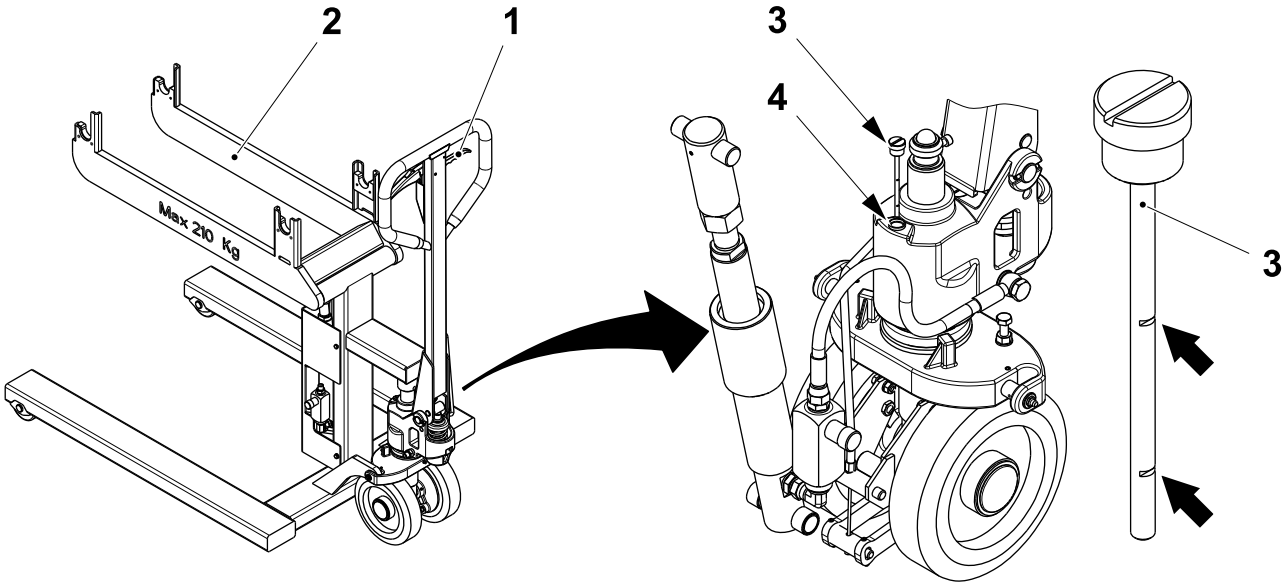

1 Handle
2 Arm
3 Oil checker
4 Hole

7.12 Automatic Splicing Unit LGV

7.12.1 Machine Body

7.12.1-1 Machine Body - Check Reel Holder

Machine Status	Electrical supply disconnecting device in position I (ON) Main air valve ON Main steam valve ON Main water valve ON
SPC Reference	3090750-0200

Check if the external reel holders (1) and the central reel holders (2) are worn or damaged.

Check the distance **A**. If the distance **A** is less than the stated value then change the reel holders, see 7.12.1-2 Machine Body - Change Reel Holder.

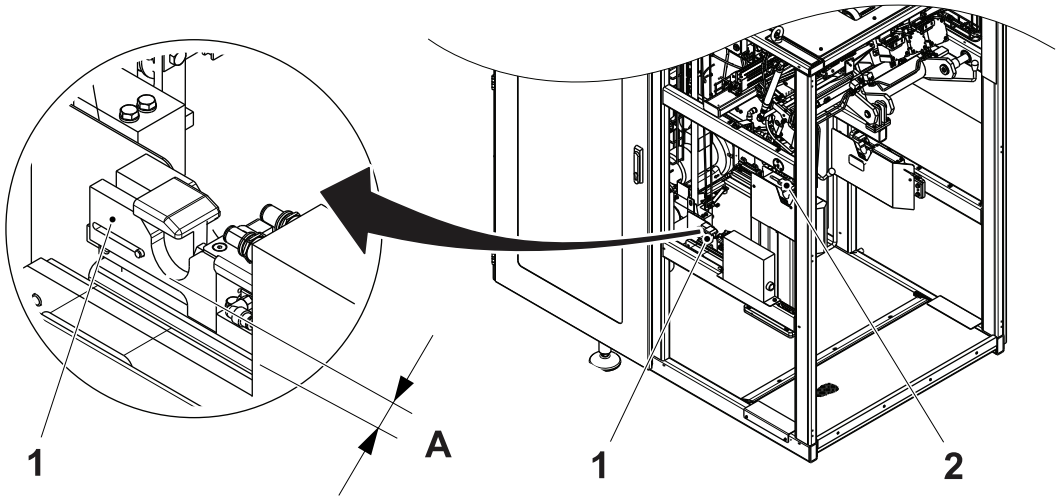

A = 21.5 ±2 mm
1 External reel holder
2 Central reel holder

7.12.1-2 Machine Body - Change Reel Holder

Machine Status	Electrical supply disconnecting device in position I (ON) Main air valve ON Main steam valve ON Main water valve ON
SPC Reference	3090750-0200

a) Remove the two shaft assemblies (1) from the reel holders (2).

b) Unscrew the axle pin (3) from the lock (4) and the pneumatic cylinder (5).

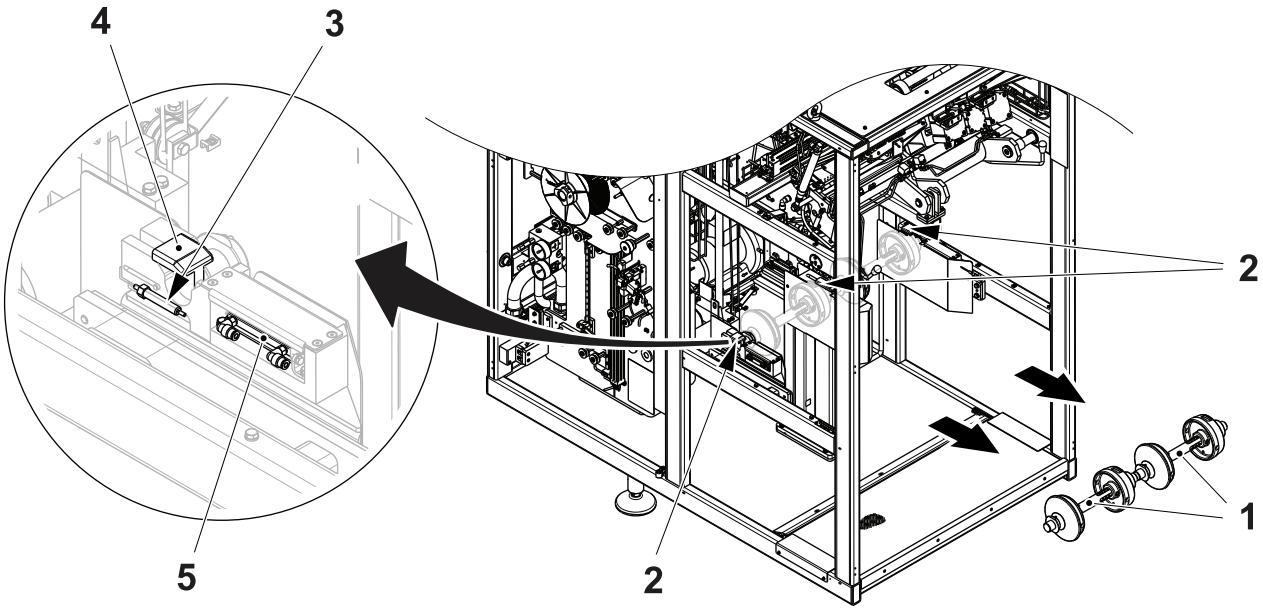

1 Shaft assembly
2 Reel holder
3 Axle pin
4 Lock
5 Pneumatic cylinder

(Cont'd)

(Cont'd)

c) Remove the screws (6). If necessary move the lock (4) to access the screws (6).

d) Remove the reel holder (7) from the frame.

e) Assemble the new reel holder (7) in the reverse order.

f) Repeat the operation for the others reel holders.

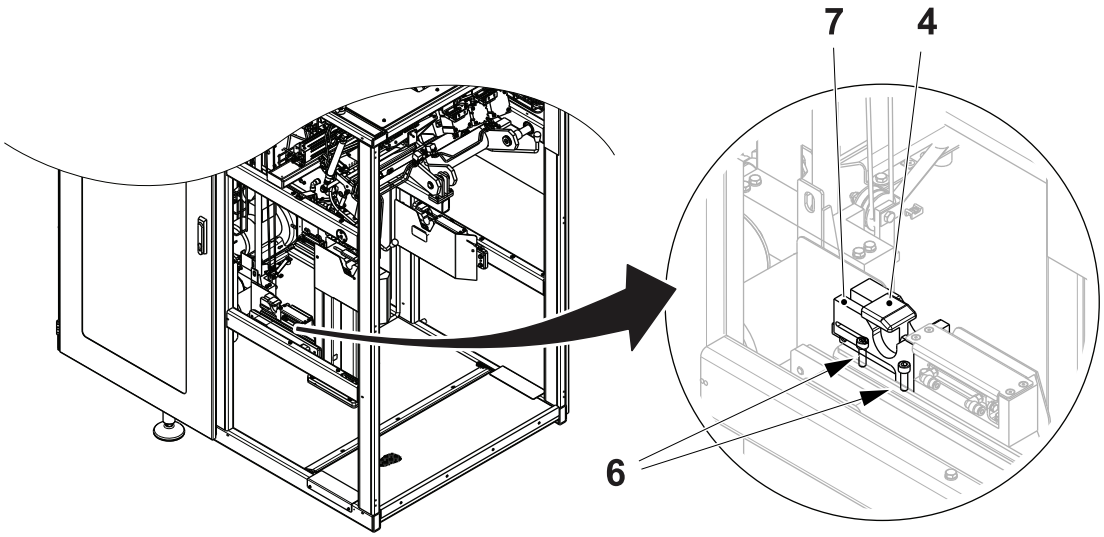

4 Lock
6 Screw
7 Reel holder

7.12.1-3 Machine Body - Set Cylinder Reel Holder

Machine Status	Electrical supply disconnecting device in position I (ON) Main air valve ON Main steam valve ON Main water valve ON
SPC Reference	3090750-0200

CAUTION
Risk of personal injury.
Moving parts can crush or cut.

(Cont'd)

(Cont'd)

a) Set the pneumatic cylinder (1) to the open position.

b) Fit the open position sensor (2) to the upper part of the pneumatic cylinder (1) then slide it to the centre until open position sensor (2) reads the magnetic band inside the pneumatic cylinder (1).

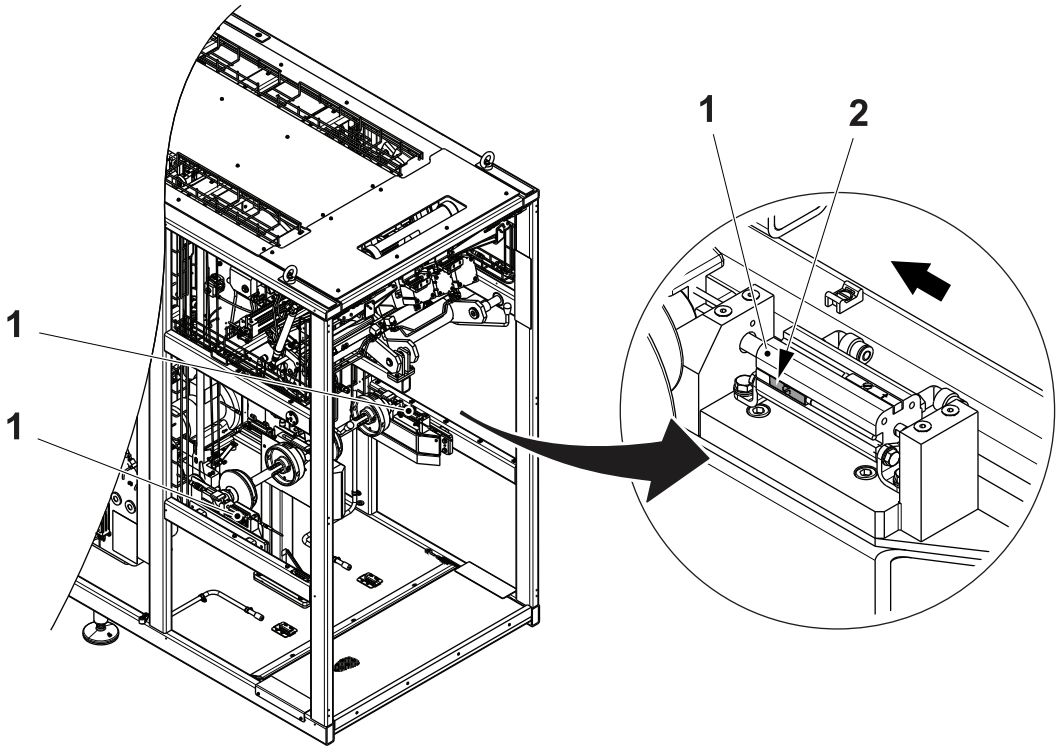

1 Pneumatic cylinder
2 Open position sensor

(Cont'd)

(Cont'd)

c) Set the pneumatic cylinder (1) to the closed position.

d) Fit the closed position sensor (3) to the lower part of the pneumatic cylinder (1) then slide it to the centre until the closed position sensor (3) reads the magnetic band inside the pneumatic cylinder (1).

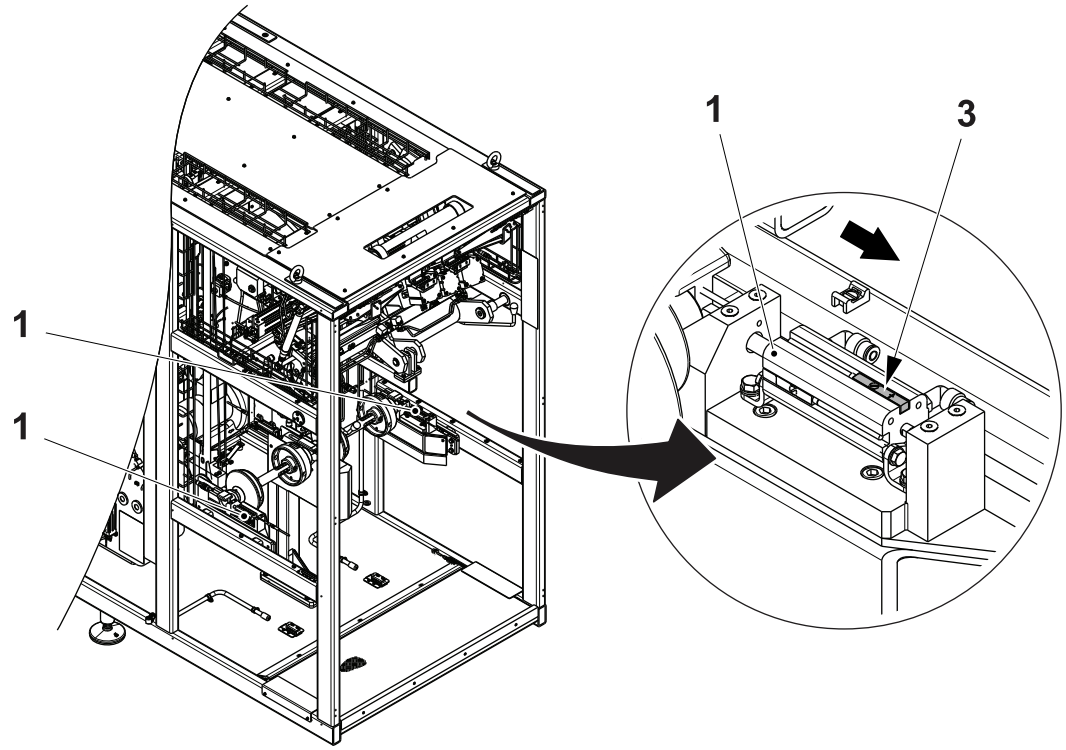

1 Pneumatic cylinder
3 Closed position sensor

7.12.1-4 Machine Body - Check Safety Mat

Machine Status	Electrical supply disconnecting device in position I (ON) Main air valve ON Main steam valve ON Main water valve ON
SPC Reference	3090750-0200

a) Press or apply a pressure on the surface of the safety mat (1) as for example a person standing on the safety mat (1).

Note! The safety mat (1) is a safety device that disable the pneumatic for the ASU automatic doors and the signal to the LGV when activated.

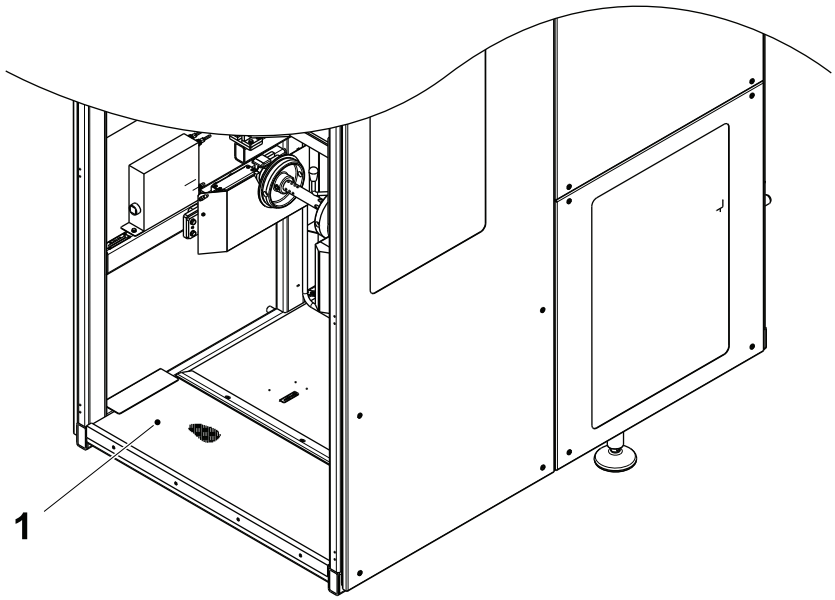

1 Safety mat

(Cont'd)

(Cont'd)

b) Close the ASU doors.

c) Press the `ASU RESET ALARM` button (2) on the right door.

d) On the TPOP, press the reset button.

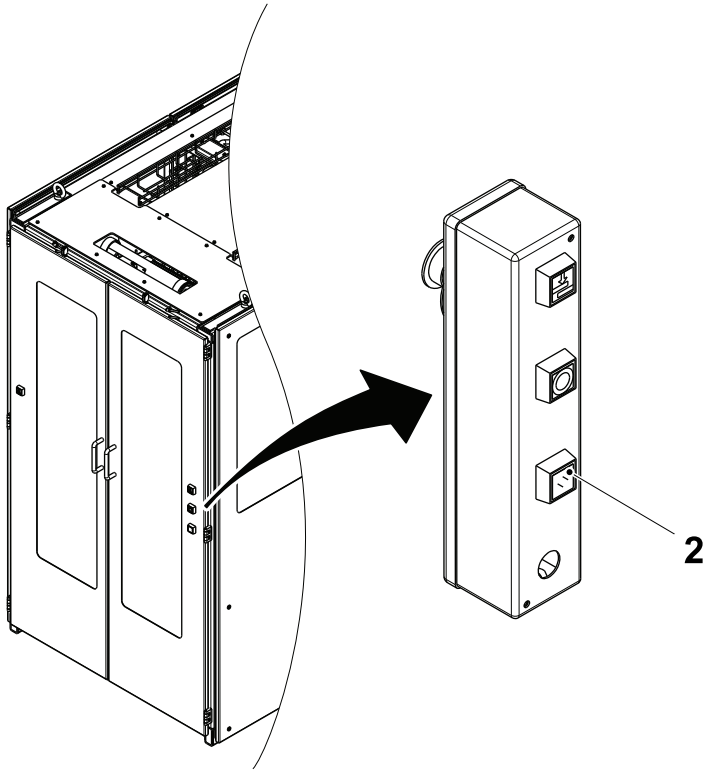

2 ASU reset alarm button

7.12.2 Covering Panel

7.12.2-1 Covering Panel - Set Pneumatic Cylinder

Machine Status	Electrical supply disconnecting device in position I (ON) Main air valve ON Main steam valve ON Main water valve ON
SPC Reference	3089277-0200

a) Set both the pressure regulators (1) on the 5 value.

b) Set the door width regulators (2) to the desired door width.

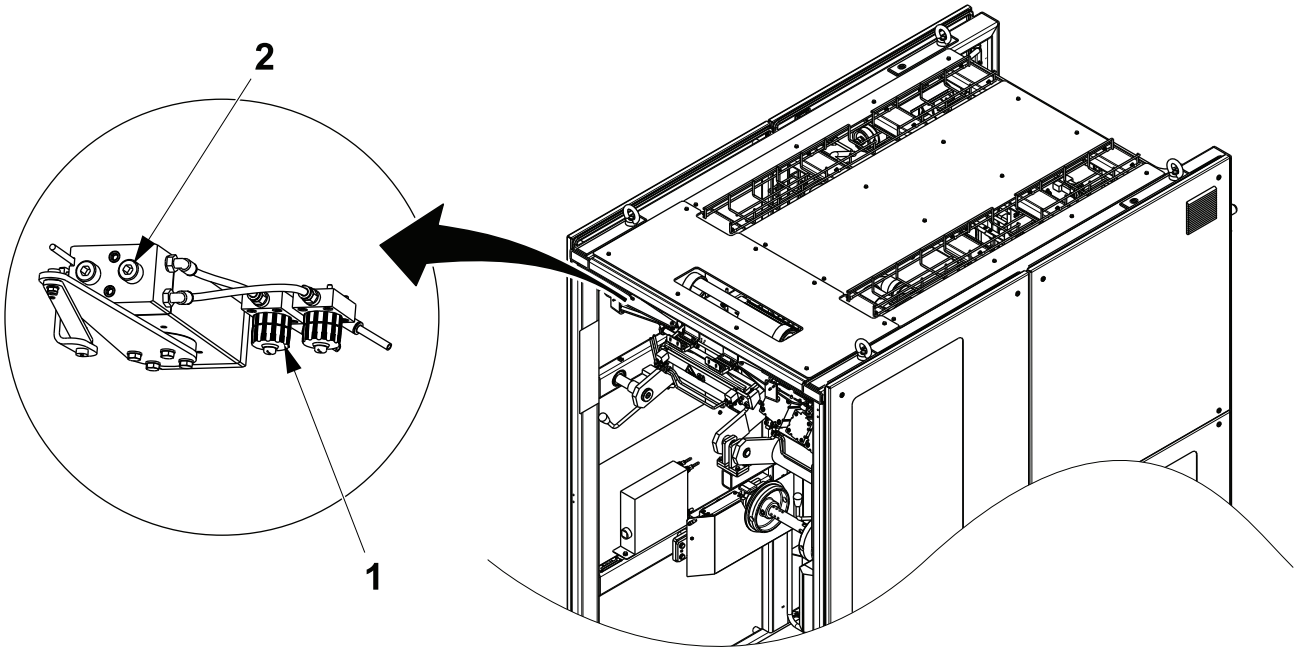

1 Pressure regulator
2 Door width regulator

7.12.2-2 Pneumatic Cylinder - Set Sensors

Machine Status	Electrical supply disconnecting device in position I (ON) Main air valve ON Main steam valve ON Main water valve ON
SPC Reference	3089277-0200

CAUTION

Risk of personal injury.
Moving parts can crush or cut.

a) Set the pneumatic cylinder (1) to the closed position.

b) Fit the open position sensor (2) to the upper part of the pneumatic cylinder 1 then slide it to the centre until the open position sensor (2) reads the magnetic band inside the pneumatic cylinder (1).

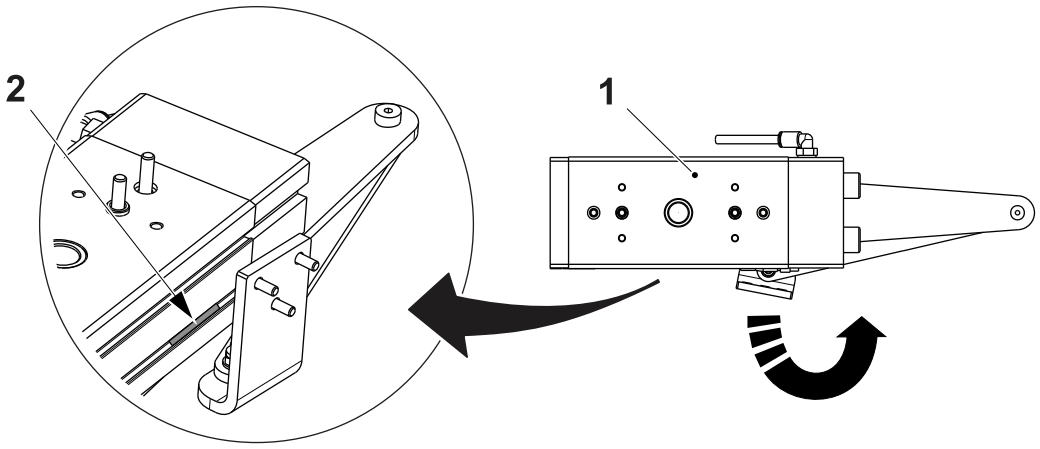

1 Pneumatic cylinder
2 Open position sensor

(Cont'd)

(Cont'd)

c) Set the pneumatic cylinder (1) to the open position.

d) Fit the closed position sensor (3) to the lower part of the pneumatic cylinder 1 then slide it to the centre until the closed position sensor (3) reads the magnetic band inside the pneumatic cylinder (1).

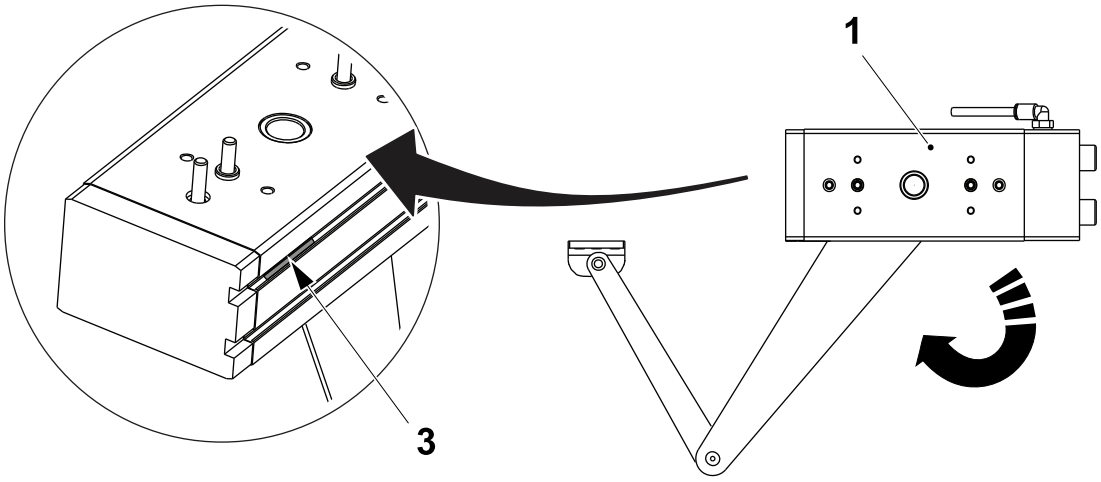

1 Pneumatic cylinder

3 Closed position sensor

7.12.3 Material Holder (iLine XT Semi-automatic Version - OE)

7.12.3-1 Material Holder - Check

Machine Status	Electrical supply disconnecting device in position I (ON) Main air valve ON Main steam valve ON Main water valve OFF
SPC Reference	2842953-0300 2842962-0300

WARNING

Risk of crushing.

If the splicing device is moved out of position it will return **rapidly** to its former position when the doors are closed.

(Cont'd)

(Cont'd)

a) Activate and de-activate the cylinder (1) and check its function. If necessary, replace it.

b) Lower the material holder and check the rests against the frame and that the bending roller (2) is level. If not, set the holder, see 7.7-6 Material Holder - Set Alignment.

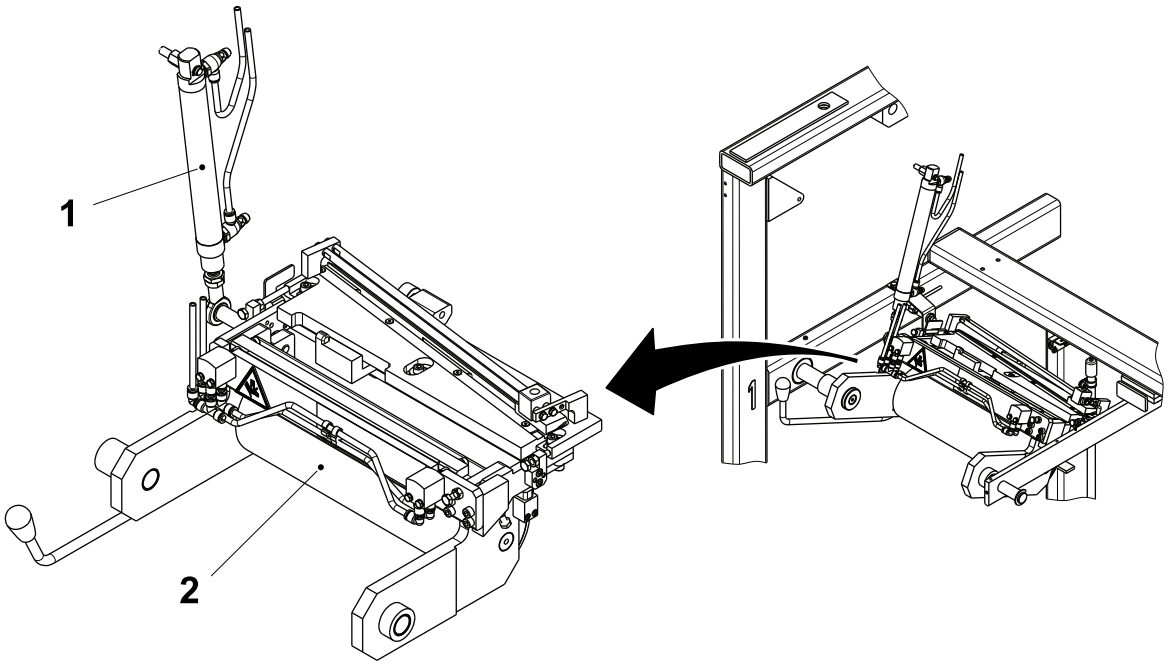

1 Cylinder
2 Bending roller

(Cont'd)

(Cont'd)

c) Make sure that the material holder (3) is parallel with the splicing device (4) and verify the distance **A**. If the parts are not parallel, see 7.7-6 Material Holder - Set Alignment.

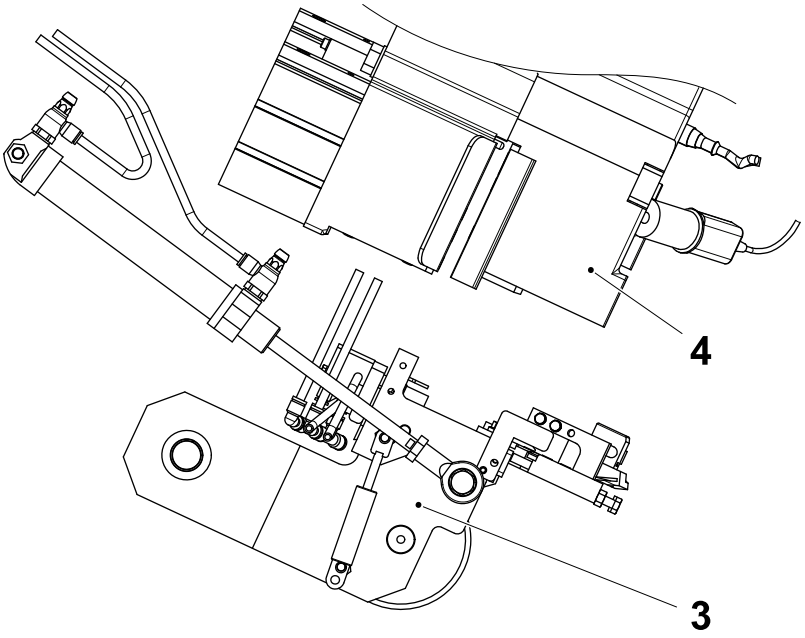

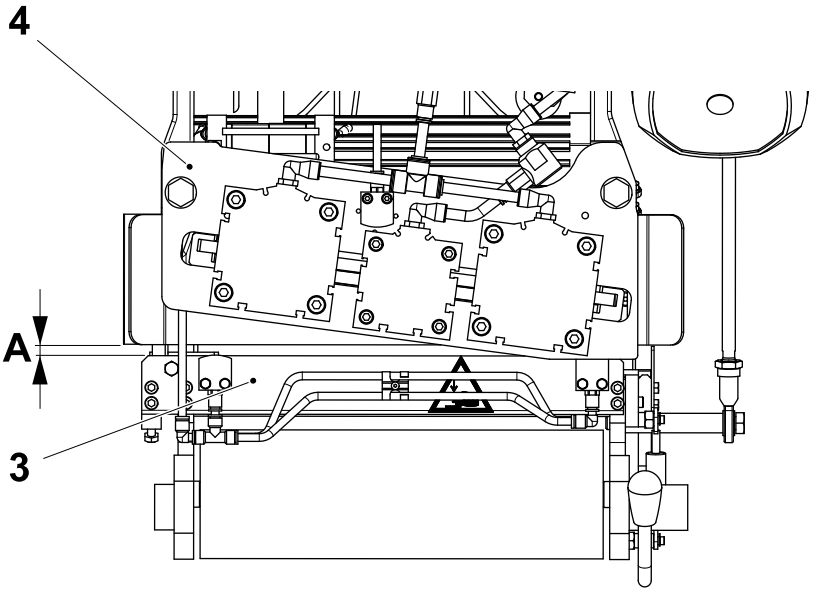

A = 15.0 ±0.5 mm
3 Material holder
4 Splicing device

7.12.3-2 Material Holder - Cutting Table Overhaul

Machine Status	Electrical supply disconnecting device in position O (OFF) Main air valve OFF Main steam valve ON Main water valve OFF
SPC Reference	2842953-0200 2842962-0200

WARNING

Risk of crushing.

If the splicing device is moved out of position it will return **rapidly** to its former position when the doors are closed.

a) Check the sharpness of the knife (1) by moving the knife holder in both directions over a piece of packaging material. If necessary, change the knife:
   - remove the screws (2), the screw (3) and the bracket (4)
   - slide the knife holder (5) off the shafts (6)
   - remove the screw (7) and slide out and change the knife (1)
   - assemble in the reverse order.

b) Check that the knife holder (5) slides easily. If necessary, clean the knife holder (5), the counter knife (8) and the shafts (6).

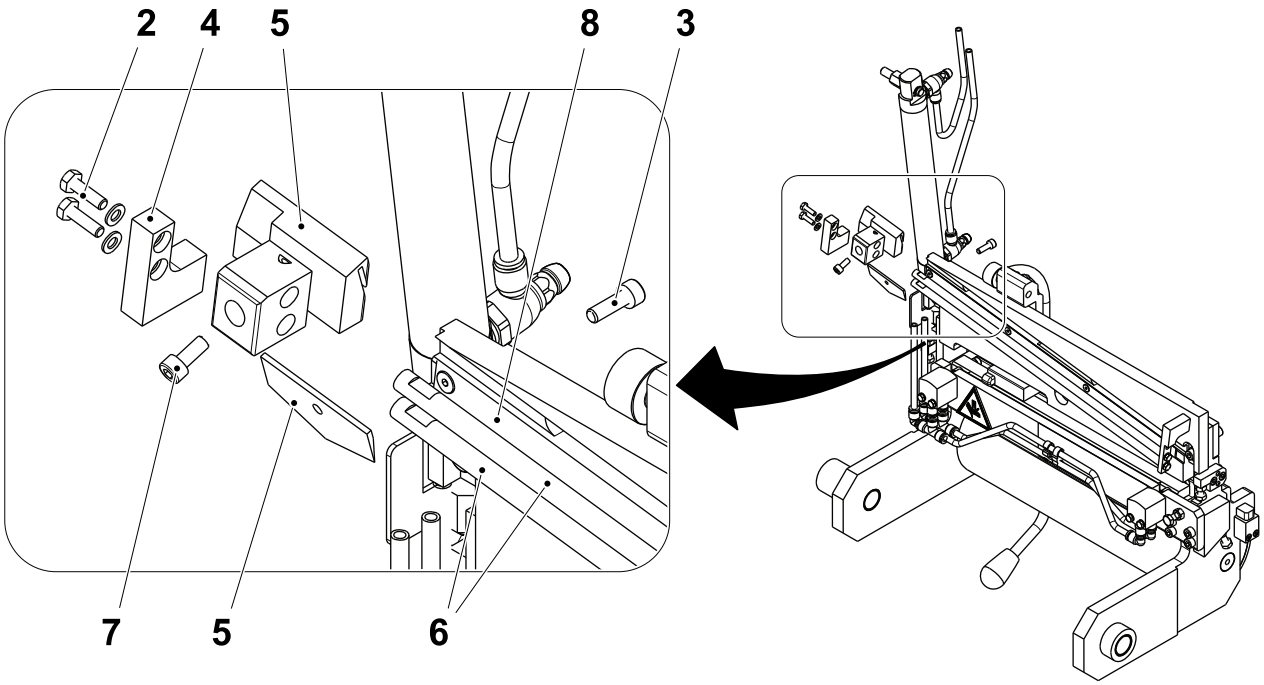

1 Knife
2 Screw
3 Screw
4 Bracket
5 Knife holder
6 Shaft
7 Screw
8 Counter knife

7.12.3-4 Material Holder - Set Cutting Table

Machine Status	PREPARATION
SPC Reference	2842953-0300 2842962-0300

Sideways Alignment - Basic Setting

a) Set the paper guide (3), see 7.8.1-3 Web Guide - Set.

b) Thread the packaging material through the material holder (1), the splicing device (4) up to the drive roller of the magazine.

c) Prepare the material holder (2) for the splice without threading the packaging material through.

d) Perform a new splice; the splicing device (4) moves on the material holder (2).

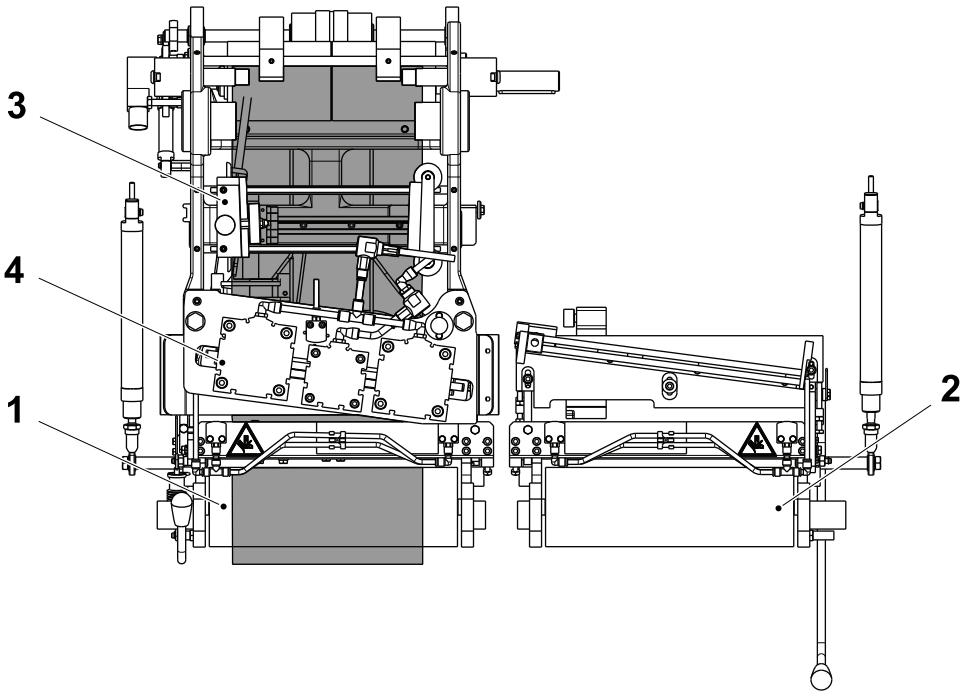

1 Material holder
2 Material holder
3 Paper guide
4 Splicing device

(Cont'd)

(Cont'd)

e) Lift the cutting table (5) of the material holder (1).

f) Loosen the screws (6) and move the guide (7) so that the tooth (8) and touch the packaging material edge.

g) Tighten the screws (6).

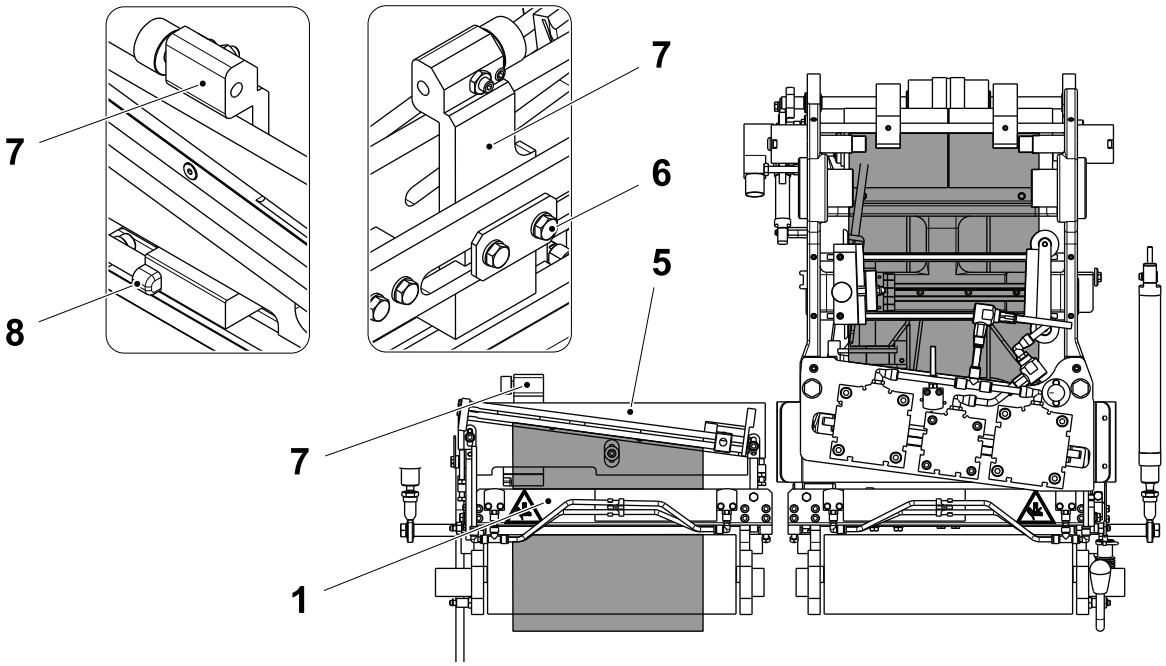

1 Material holder
5 Cutting table
6 Screw
7 Guide
8 Tooth

(Cont'd)

(Cont'd)

Sideways Alignment - Fine Adjustment

a) Loosen the screws (1) and move slightly the guide (2) to set the sideways alignment within the tolerance (distance **A**).

b) Tighten the screws (1).

c) Perform a new splice and check the new sideways alignment is correct.

Note! Check the alignment on the strip application side of the packaging material.

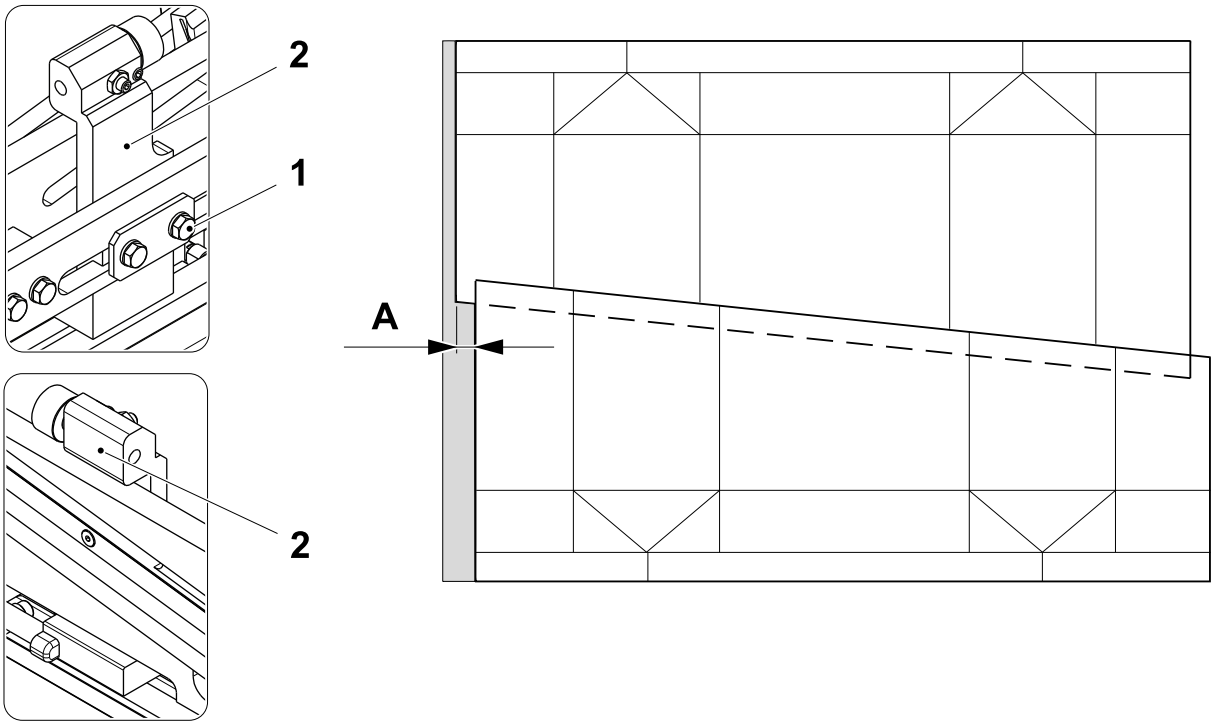

A = 0 ±0.5 mm
1 Screw
2 Guide

(Cont'd)

(Cont'd)

Overlap - Fine Adjustment

a) Loosen the shoulder screw (1) and the screw (2).

b) Adjust the position of the cutting table (3) by means of the screws (4).

c) Tighten the shoulder shoulder screw (1) and the screw (2).

d) Tighten the nuts (5).

e) Perform a new splice and check that the new splice overlap is correct (distance **B**).

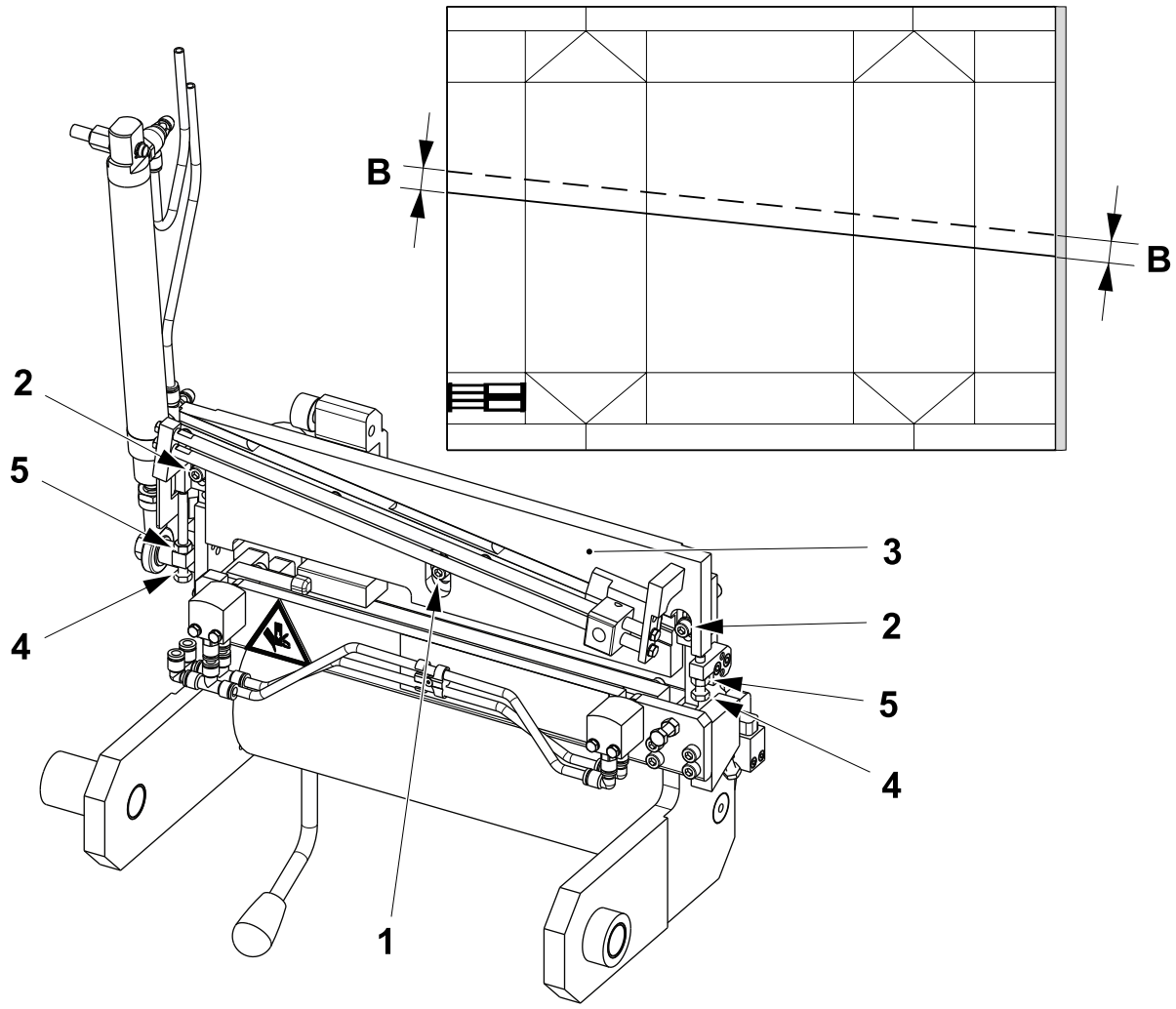

B = 16.5 ±0.5 mm

1 Shoulder screw
2 Screw
3 Cutting table
4 Screw
5 Nut

(Cont'd)

(Cont'd)

Sealing Parallelism

a) Modify the parallelism as follows: loosen the grub screw (1) and turn the adjusting screw (2) click by click to move the surface that has to be in contact with the packaging material, then tighten the grub screw (1).

b) Perform a new splice and check that the new packaging material web diverges by not more than the distance **C** in 1 metre from the splice. With the aid of a straight edge measure the distance **C** two times, directly after the splice and one meter from the splice.

Note! The packaging material edge (3) is shown as a dashed line. One click of the adjusting screw (2) corresponds to a movement of 1 mm.

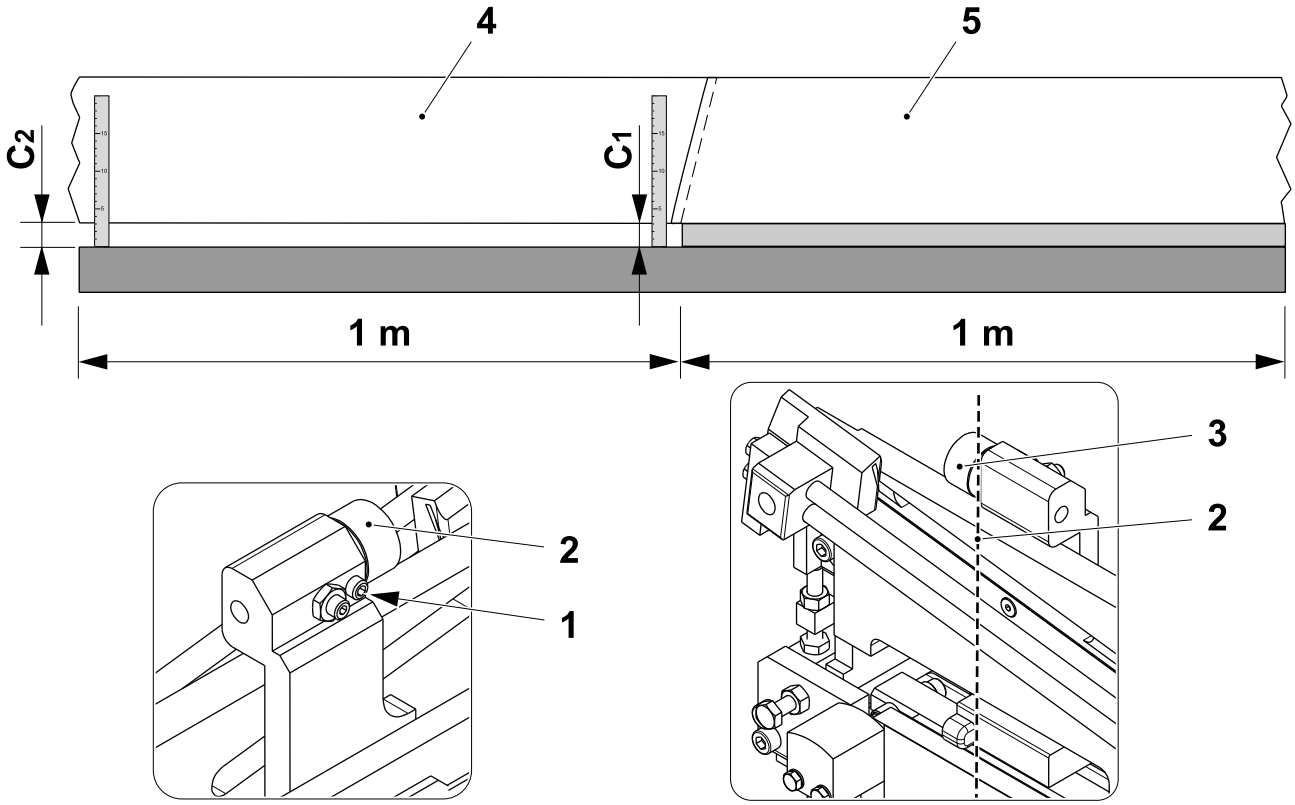

$C_1 - C_2 = 0 \pm 1.0$ mm

1 Grub screw
2 Adjusting screw
3 Packaging material edge
4 New packaging material web
5 Old packaging material web

(Cont'd)

(Cont'd)

Set Cutting Table Position

a) Press the MATERIAL LOCKING button (1) to release the material holder to fit the ruler (2).

b) Raise the cutting table (3) by means of the handle (4).

c) Check that the ruler (2) almost touch the surface of the guide (5). If necessary, loosen the nut (6) and adjust with the screw (7).

d) Lower the cutting table (3) by means of the handle (4).

e) Press the MATERIAL LOCKING button (1) to remove the ruler (2).

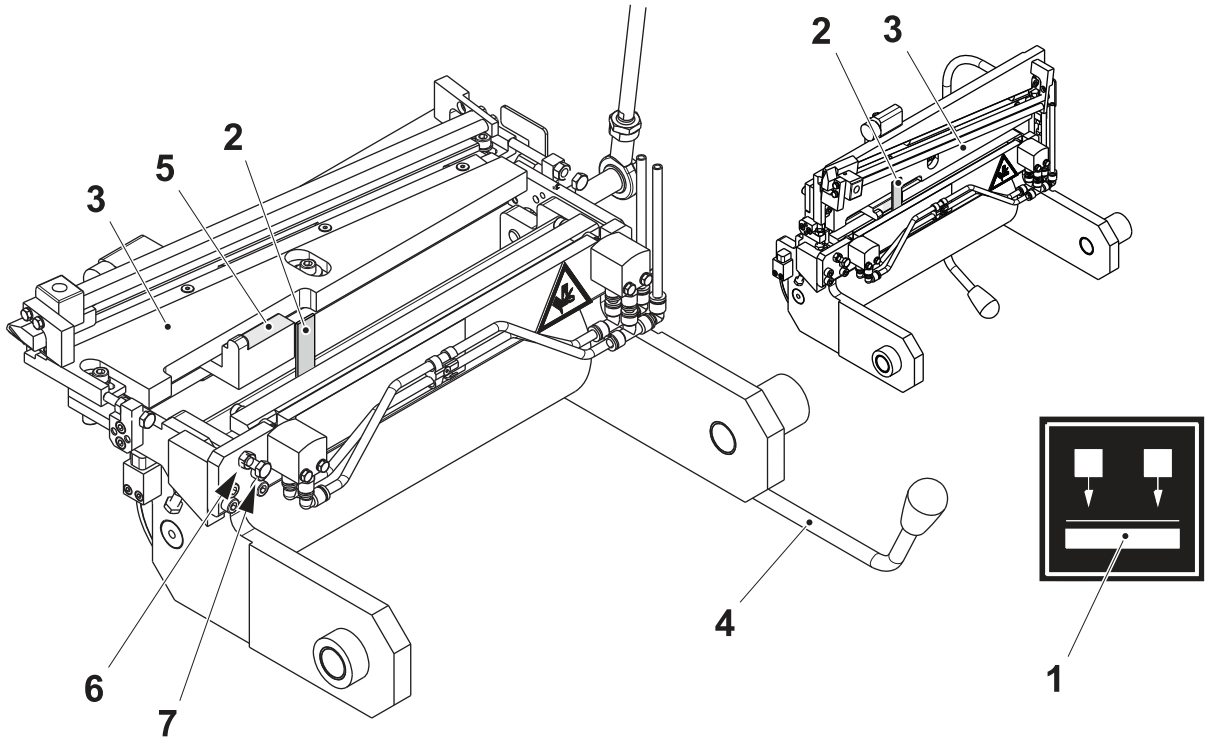

1 Material locking button
2 Ruler
3 Cutting table
4 Handle
5 Guide
6 Nut
7 Screw

7.12.3-5 Material Holder - Overhaul

Machine Status	Electrical supply disconnecting device in position O (OFF) Main air valve OFF Main steam valve ON Main water valve OFF
SPC Reference	2842953-0300 2842962-0300

WARNING

Risk of crushing.

If the splicing device is moved out of position it will return **rapidly** to its former position when the doors are closed.

a) Remove the screws (1) and the axle pins (2).

b) Remove and change the ball bearings (3). If necessary, change the bending roller (4).

c) Assemble in the reverse order. Set the material holder, see 7.7-6 Material Holder - Set Alignment.

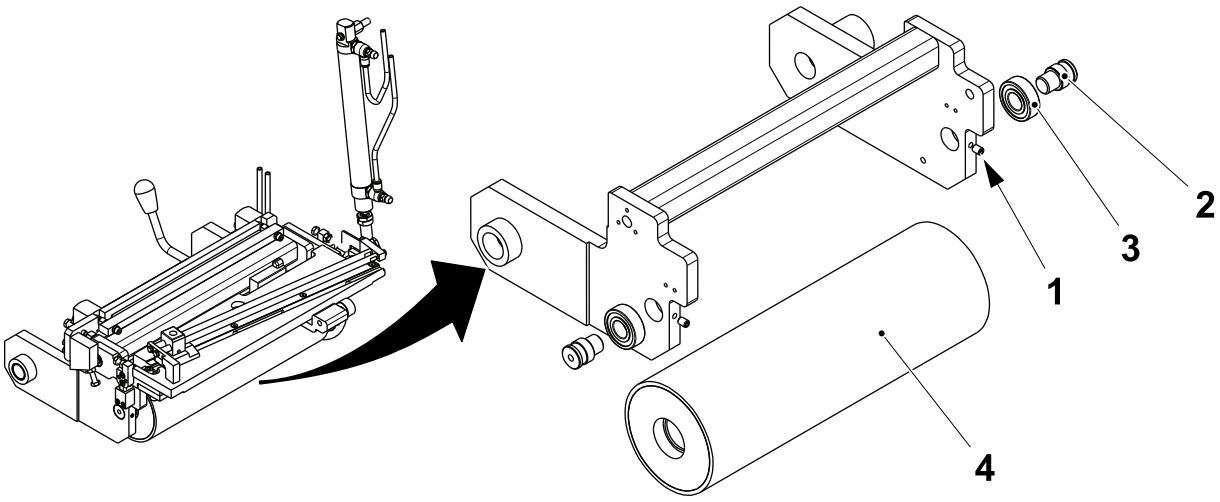

1 Screw
2 Axle pin
3 Ball bearing
4 Bending roller

7.12.3-6 Material Holder - Set Alignment

Machine Status	PREPARATION
SPC Reference	2842962-0300 2842953-0300

WARNING

Risk of crushing.

If the splicing device is moved out of position it will return **rapidly** to its former position when the doors are closed.

(Cont'd)

(Cont'd)

Set Alignment

a) Place a plumb line (1) over the rollers (2) and (3).

b) Loosen the screws (4).

c) Set the splicing device (5) parallel to the plumb line (1) by adding or removing shims (6).

d) Tighten the screws (4).

e) Repeat for the other material holder.

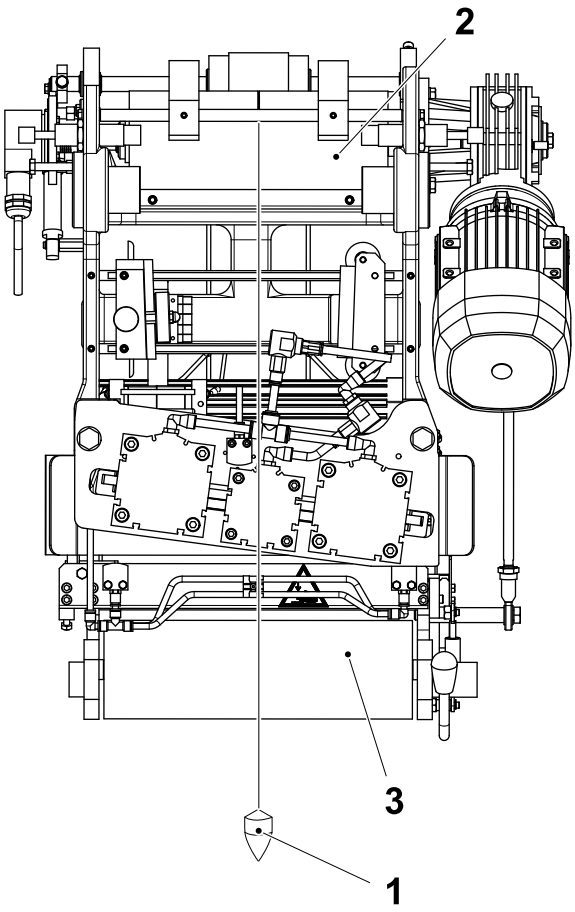

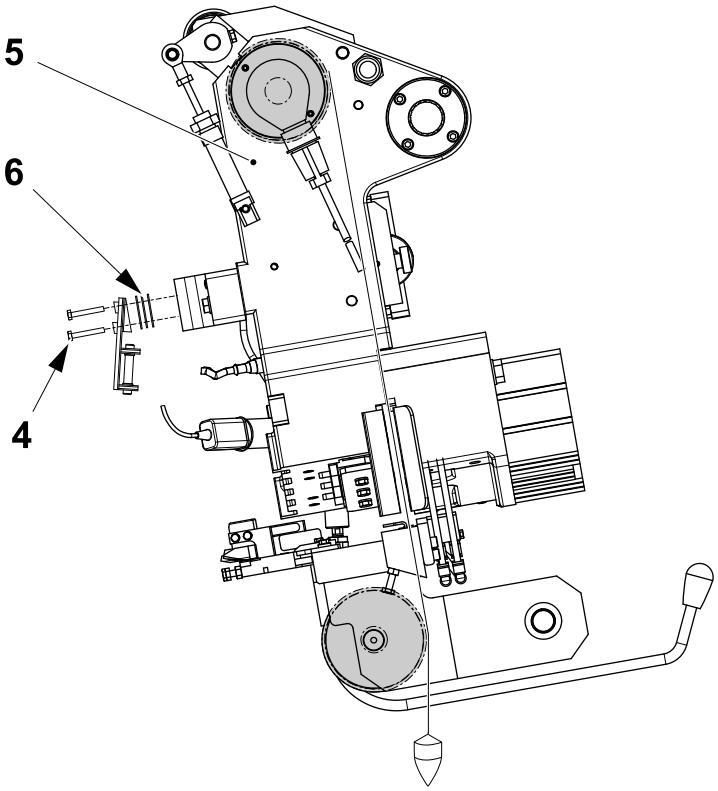

1 Plumb line
2 Roller
3 Roller
4 Screw
5 Splicing device
6 Shim

(Cont'd)

(Cont'd)

f) Loosen the nut (7).

g) Turn the screw (8).

h) Set distance **A**.

i) Check that the proximity switch (9) is activated by the flag (10).

j) Lock the screw (8) with the nut (7). If the parts are not aligned, repeat steps f) to h).

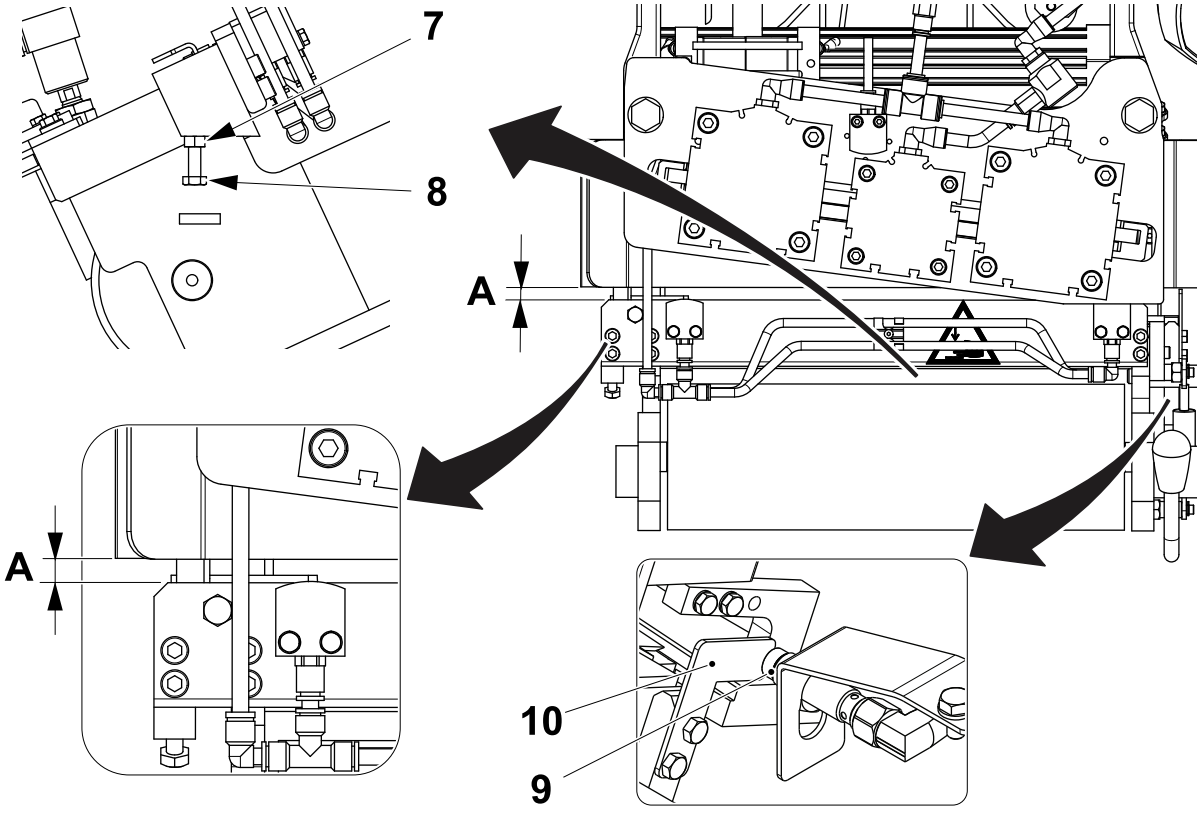

A = 15.0 ±0.5 mm
7 Nut
8 Screw
9 Proximity switch
10 Flag

(Cont'd)

(Cont'd)

k) Step up the machine to PREPARATION.

l) Prepare the packaging material in the material holder on the opposite line from the splicing device.

Note! To move the splicing device, see 7.10-2 Side Feeder - Set Sensor Position

m) Move the splicing device (5) over the prepared packaging material until the splicing device hits the mechanical stop.

n) Remove tie rods (11). Remove the pressure jaw (12).

o) Push the packaging material (13) against the sealing plate (14) and check that the cut edge of the packaging material is parallel to the upper sealing plate edge (15).

p) Check the distances **B** and **C** between the upper sealing plate edge (15) and the packaging material. If the distances **B** and **C** are incorrect set the overlap, see Overlap - Fine Adjustment.

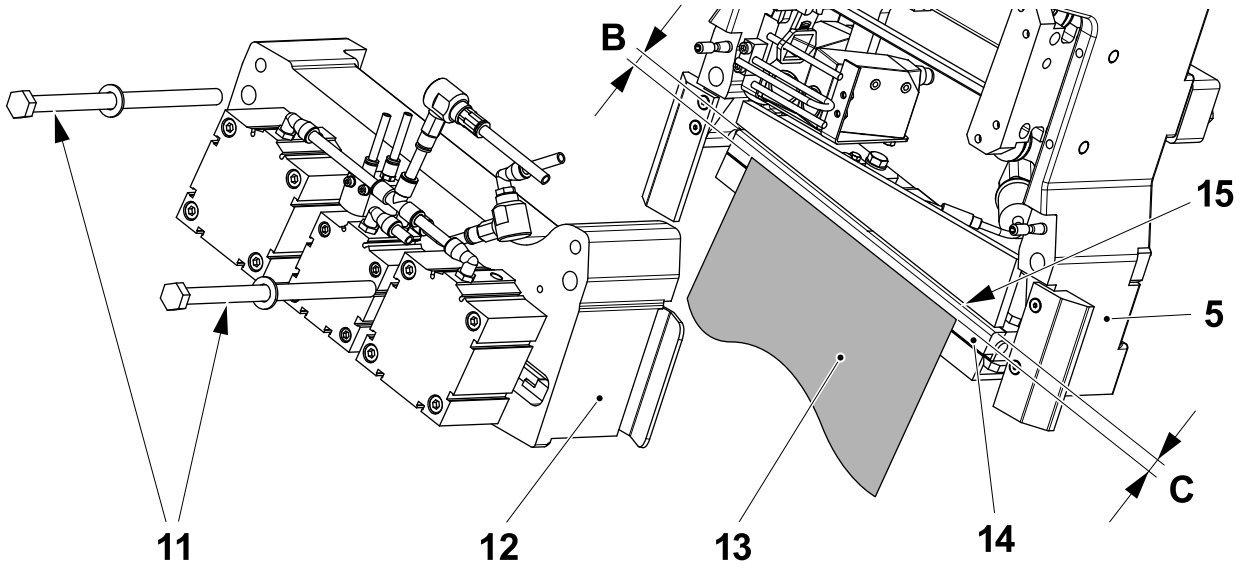

B = C = 2.0 ±0.5 mm

5 Splicing device
11 Tie rod
12 Pressure jaw
13 Packaging material
14 Sealing plate
15 Upper sealing plate edge

(Cont'd)

(Cont'd)

Overlap - Fine Adjustment

Note! If necessary, this procedure is done in the end of the 7.1-1 ASU - Setting Sequence.

a) Loosen the shoulder screw (1) and the screw (2).

b) Adjust the position of the cutting table (3) by means of the screws (4).

c) Tighten the shoulder shoulder screw (1) and the screw (2).

d) Tighten the nuts (5).

e) Perform a new splice and check that the new splice overlap is correct (distance **C**).

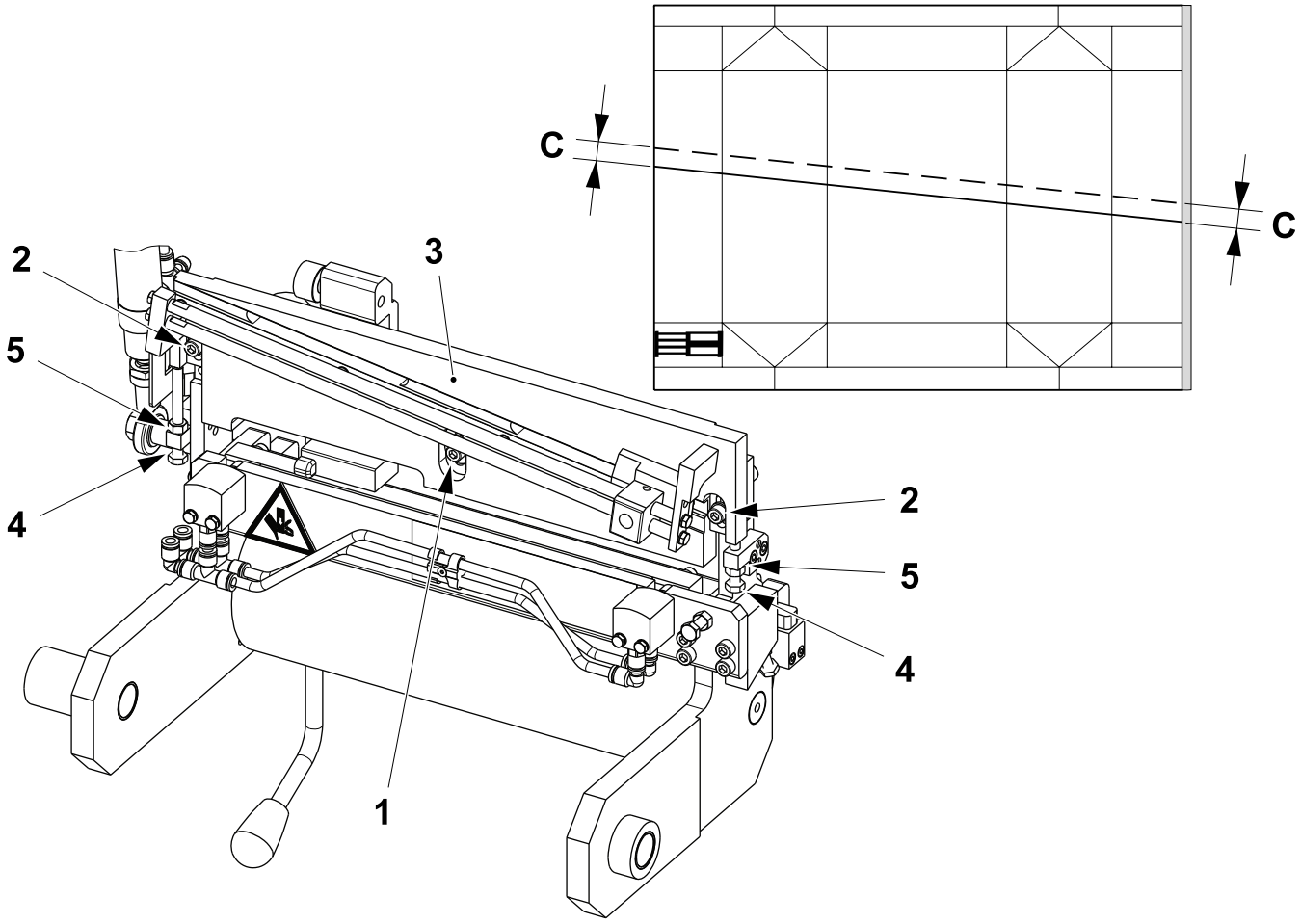

C = 16.5 ±0.5 mm

1 Shoulder screw
2 Screw
3 Cutting table
4 Screw
5 Nut

7.12.3-7 Material Holder - Check Proximity Switch

Machine Status	Electrical supply disconnecting device in position I (ON) Main air valve OFF Main steam valve ON Main water valve OFF
SPC Reference	2842953-0300 2842962-0300

WARNING

Risk of crushing.

If the splicing device is moved out of position it will return **rapidly** to its former position when the doors are closed.

(Cont'd)

(Cont'd)

Check:

- the distance **A** between the proximity switch (1) and the plate (2).
- the function of the proximity switch (1). With the material holder (3) lowered check that the proximity switch LED is ON.
- repeat the check for the other proximity switch.

Set the proximity switch if necessary, see 7.7-8 Material Holder - Set Proximity Switch.

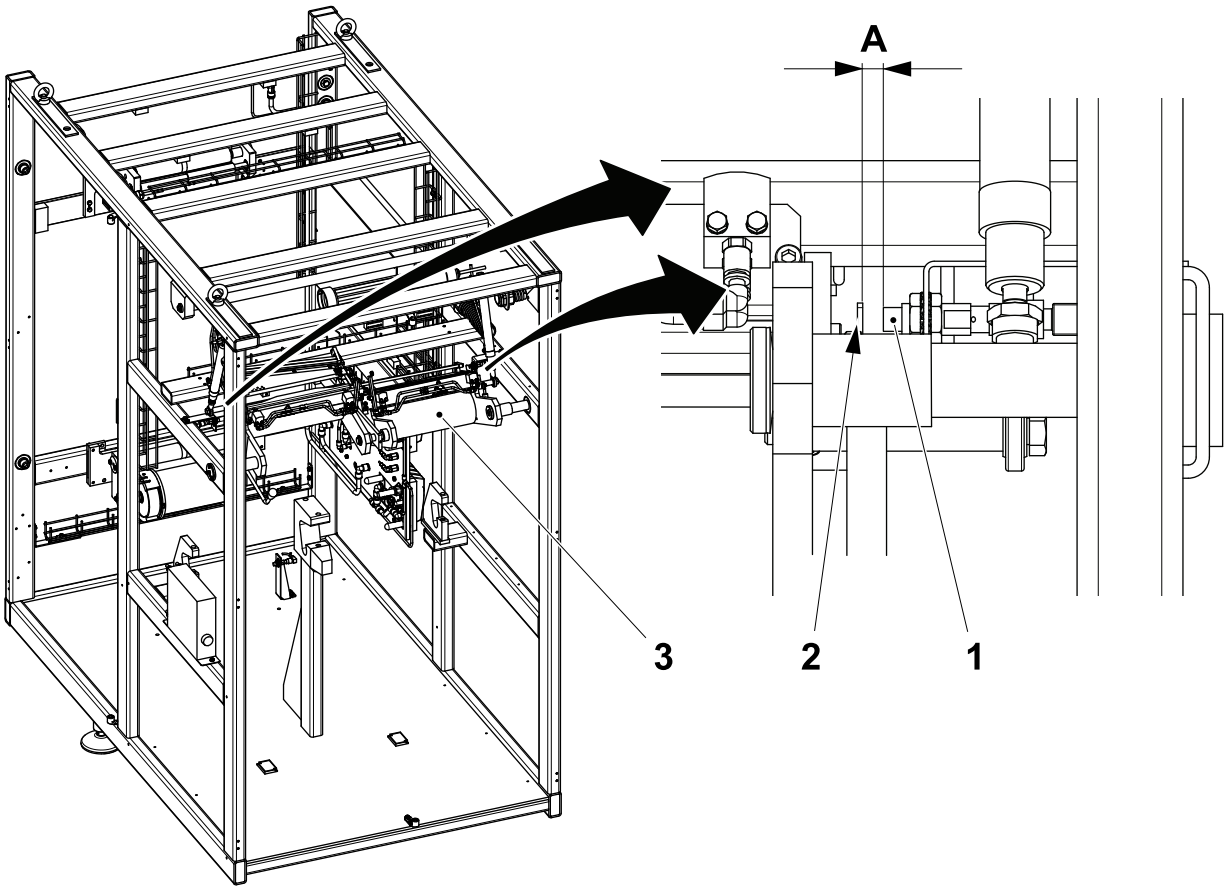

A = 2.0 ±0.5 mm
1 Proximity switch
2 Plate
3 Material holder

7.12.3-8 Material Holder - Set Proximity Switch

Machine Status	Electrical supply disconnecting device in position O (OFF) Main air valve OFF Main steam valve ON Main water valve OFF
SPC Reference	2842953-0300 2842962-0300

WARNING

Risk of crushing.

If the splicing device is moved out of position it will return **rapidly** to its former position when the doors are closed.

a) Loosen the nuts (1).

b) Set the distance **A** between the proximity switch (2) and plate (3).

c) Tighten the nuts (1).

d) Repeat the set for the other proximity switch.

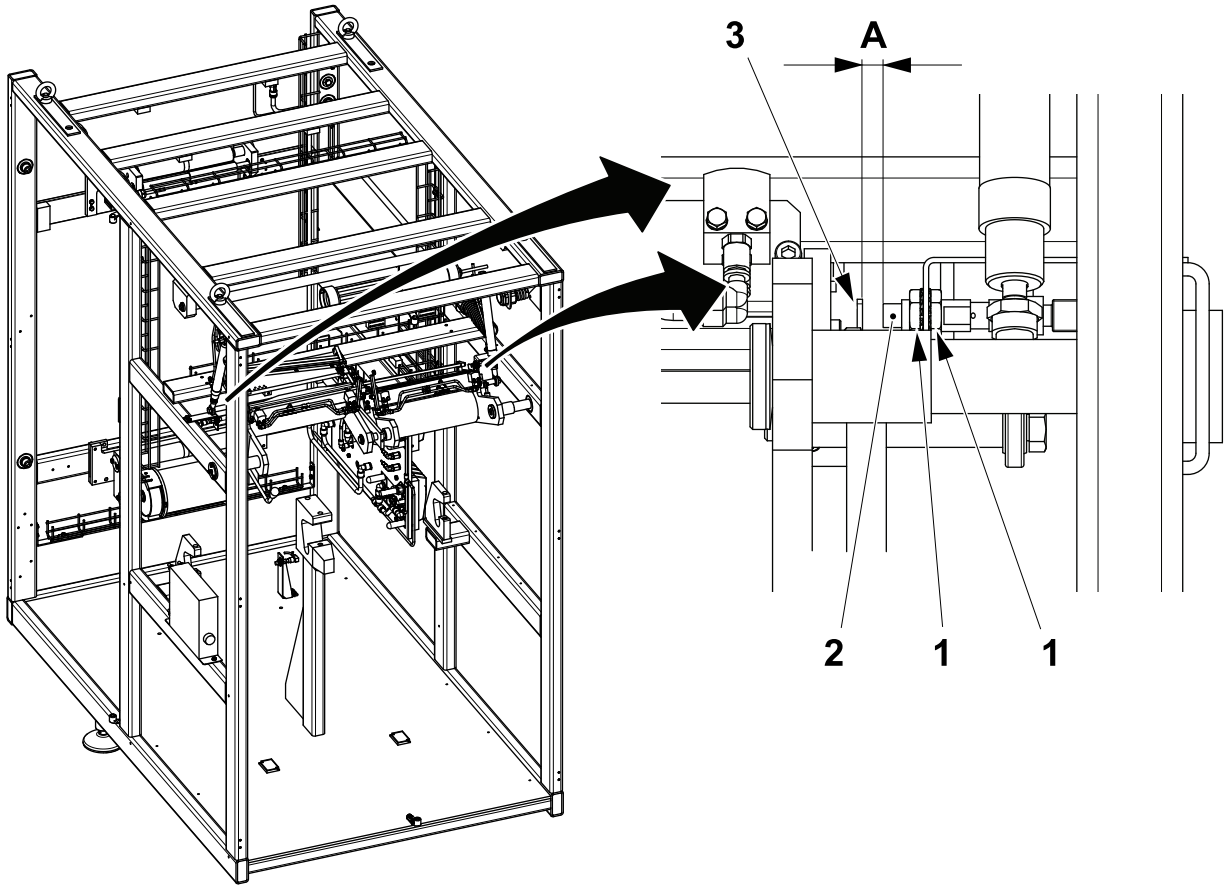

A = 2.0 ±0.5 mm

1 Nut

2 Proximity switch

3 Plate

7.12.3-9 Material Holder - Set Speed

Machine Status	PREPARATION
SPC Reference	2842953-0300 2842962-0300

WARNING

Risk of crushing.

If the splicing device is moved out of position it will return **rapidly** to its former position when the doors are closed.

a) Press the PACKAGING MATERIAL HOLDER button to raise the material holder opposite to the splicing device.

b) Press the PACKAGING MATERIAL HOLDER button again and measure the time between the button is pressed and the material holder has reached its **lower** position. The time must be **one second**.

c) If required, loosen the nut (1) and turn the throttle valve (2) to increase or decrease the speed.

d) Check again until the correct speed of the material holder is obtained.

e) Tighten the nut (1).

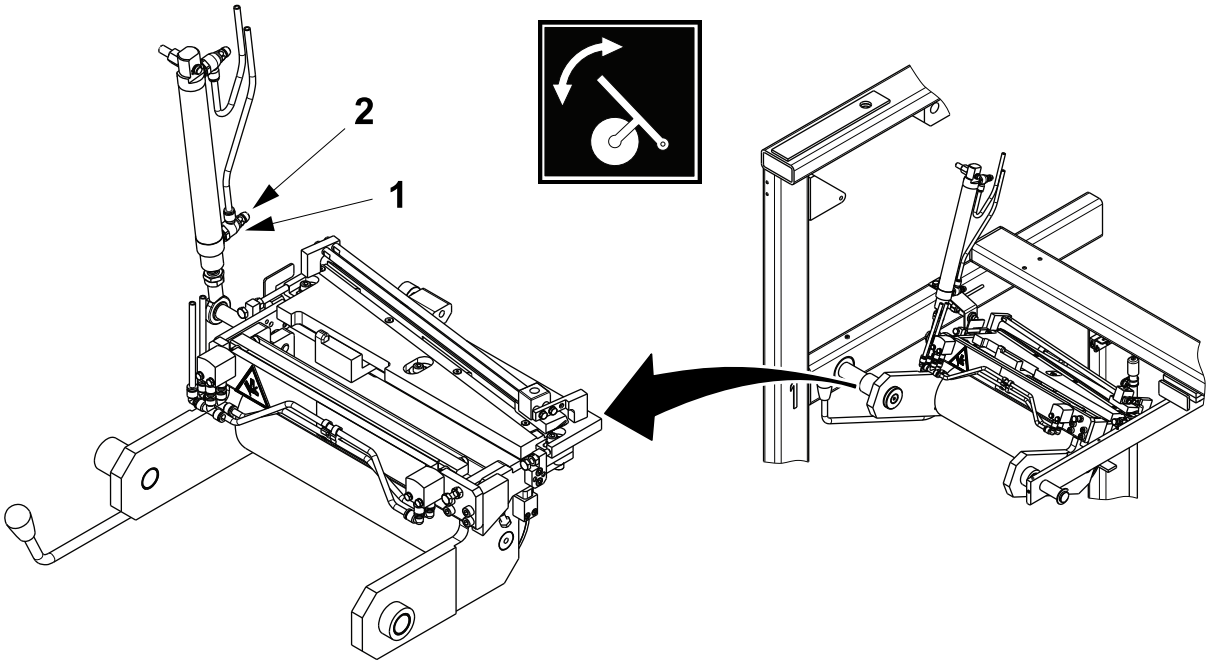

1 Nut
2 Throttle valve

(Cont'd)

(Cont'd)

f) Press the PACKAGING MATERIAL HOLDER button and measure the time between the button is pressed and the material holder has reached its **upper** position. The time must be **two seconds**.

g) If required, loosen the nut (3) and turn the throttle valve (4) to increase or decrease the speed.

h) Check again until the correct speed of the material holder is obtained.

i) Tighten the nut (3).

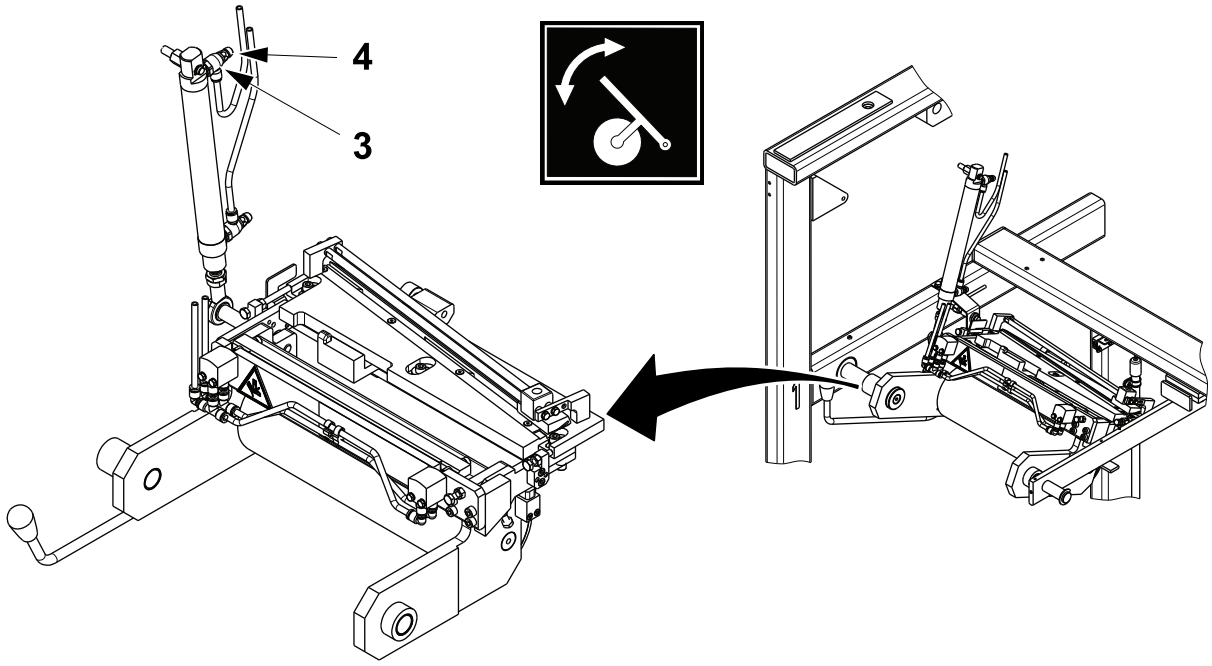

3 Nut
4 Throttle valve

7.12.4 Material Holder (iLine XT Automatic Version OE)

7.12.4-1 Material Holder - Set Proximity Sensor

Machine Status	Electrical supply disconnecting device in position I (ON) Main air valve ON Main steam valve ON Main water valve ON
SPC Reference	3020495-0200 3022299-0200

a) Loosen the nuts (1).

b) Set the distance **A** between the proximity sensors (2) and the pins (3).

c) Tighten the nuts (1).

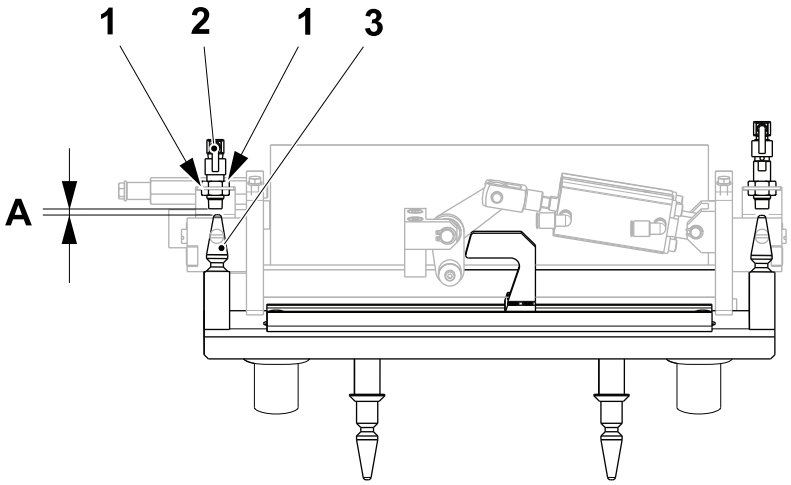

A = 1±0.5 mm

1 Nut

2 Proximity sensor

3 Pin

7.12.4-2 Pneumatic Cylinder - Set Sensors

Machine Status	Electrical supply disconnecting device in position I (ON) Main air valve ON Main steam valve ON Main water valve ON
SPC Reference	3020495-0200 3022299-0200

CAUTION

Risk of personal injury.

Moving parts can crush or cut.

a) Set the pneumatic cylinder (1) to the open position.

b) Fit the open position sensor (2) to the upper part of the pneumatic cylinder (1) then slide it to the centre until the open position sensor (2) reads the magnetic band inside the pneumatic cylinder (1).

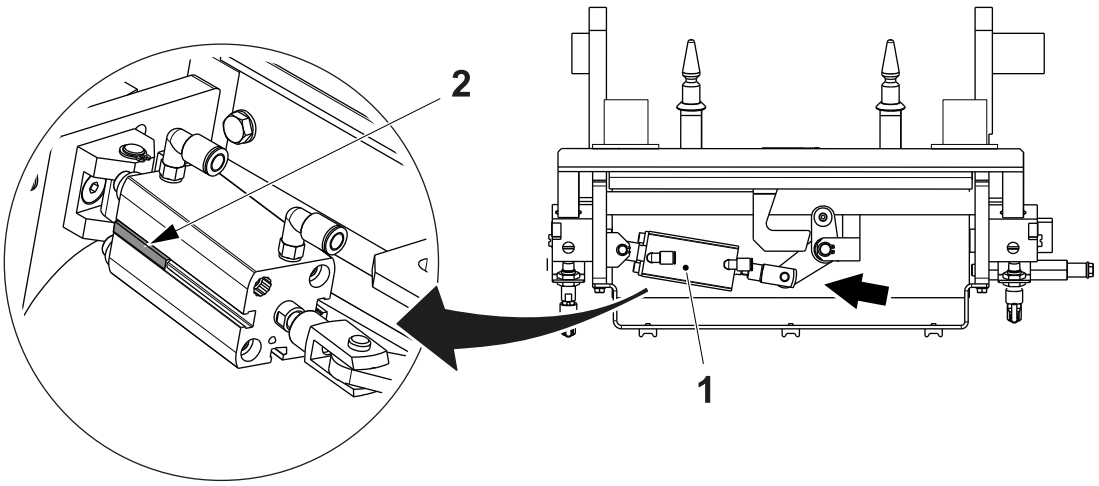

1 Pneumatic cylinder
2 Open position sensor

(Cont'd)

(Cont'd)

c) Set the pneumatic cylinder (1) to the closed position.

d) Fit the closed position sensor (3) to the lower part of the pneumatic cylinder (1) then slide it to the centre until the closed position sensor (3) reads the magnetic band inside the pneumatic cylinder (1).

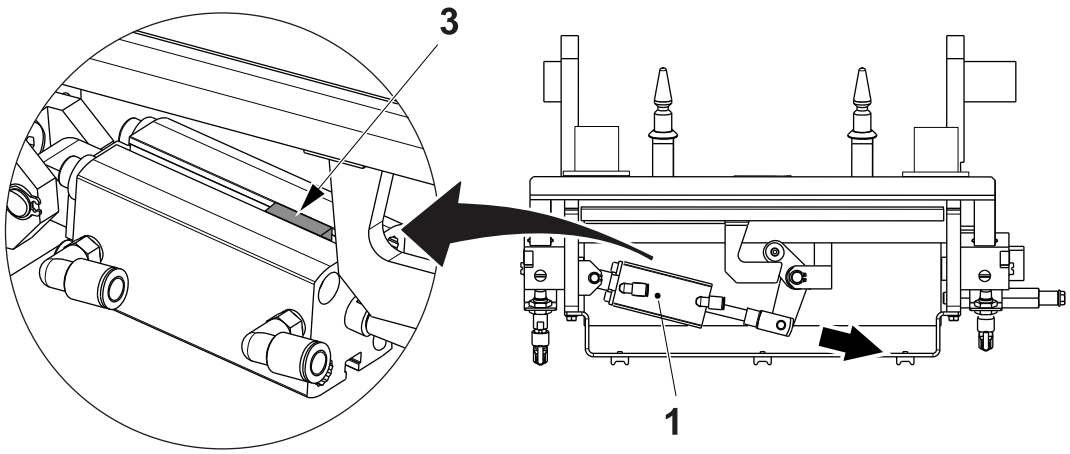

1 Pneumatic cylinder
3 Closed position sensor

7.12.5 Sensor

7.12.5-1 Sensor - Set

Machine Status	Electrical supply disconnecting device in position I (ON) Main air valve ON Main steam valve ON Main water valve ON
SPC Reference	3103658-0200

Set the two sensors (1).

a) Turn the switch (2) to **Max**.

b) Turn the switch (3) to **L**.

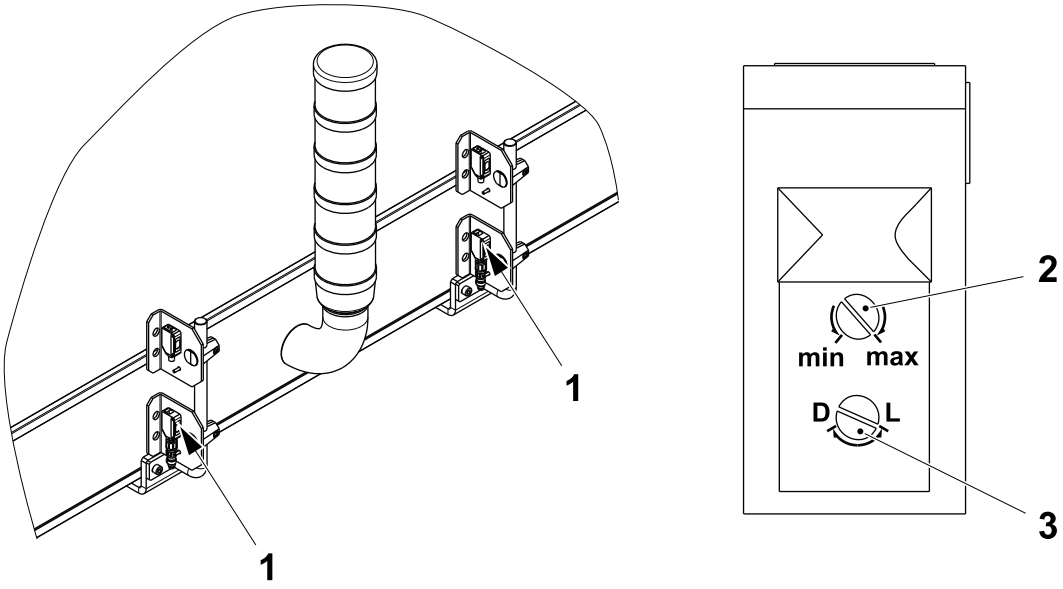

1 Sensor
2 Switch
3 Switch

8 Electrical System

Electrical System Description

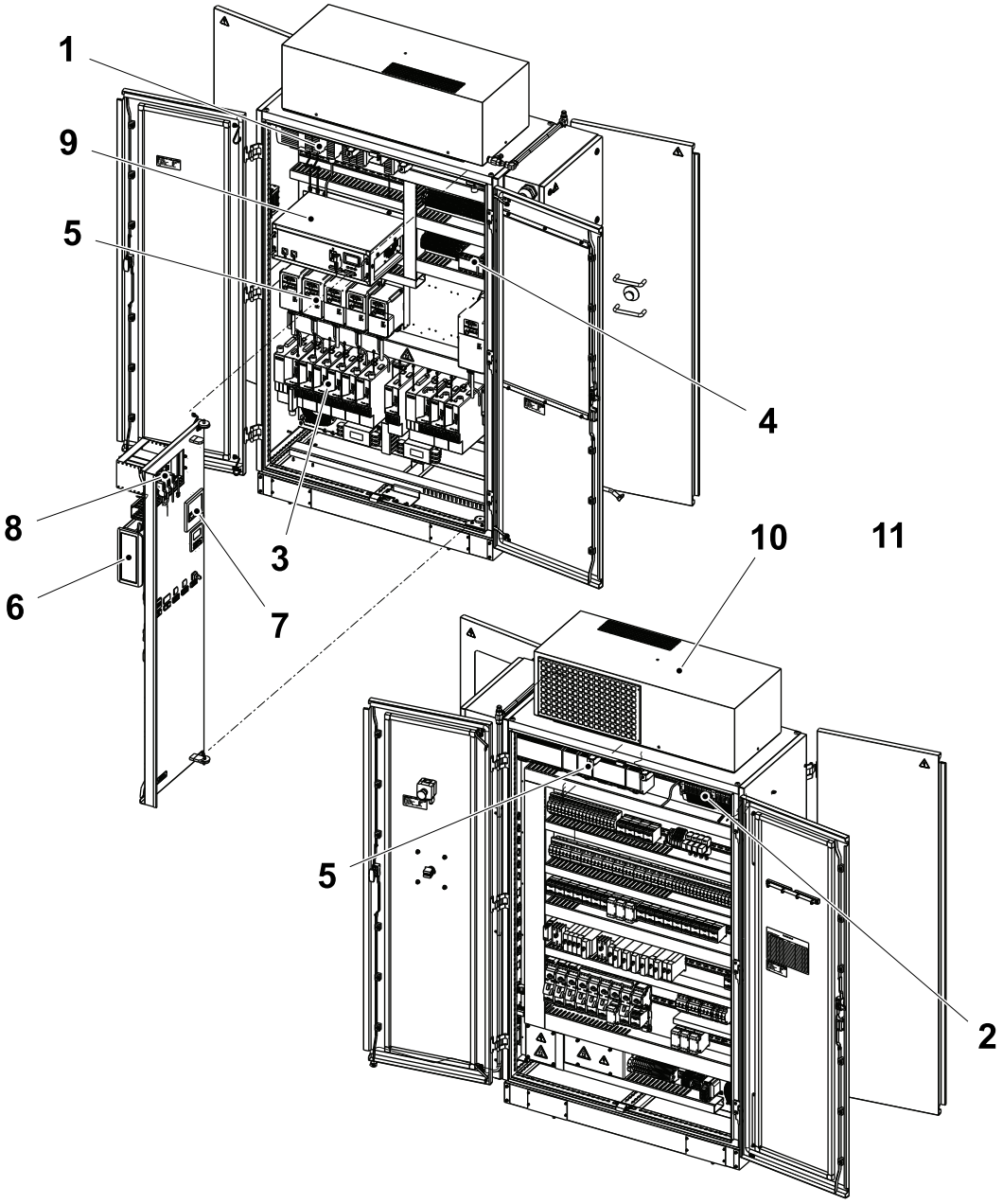

1 PLC
2 Distributed I/O
3 Servo System
4 Safety System
5 Power Supply
6 HMI and PLMS
7 Control Devices and Sensors
8 TMCC2 Controller
9 TPIH
10 Cooling System
11 Signal Exchange

Electrical System Description 8-2
8-1 Electrical System - Clean Cabinet. 8-11

8.1 PLC 8-12

8.1.1 Preparation for PLC Communication 8-12

8.1.1-1 Preparation for PLC Communication - Configure PC Network Communications 8-12
8.1.1-2 Preparations for PLC Communication - Configure RSLinx 8-19

8.1.2 CPU Module. 8-22

8.1.2-1 CPU Module - Change 8-22
8.1.2-2 CPU Module - Download Program 8-27
8.1.2-3 CPU Module - Load Firmware 8-38
8.1.2-4 CPU Module - Troubleshoot 8-49
8.1.2-5 CPU Module - Change Energy Storage Module (ESM). 8-56

8.1.3 EtherNet/IP Module 8-58

8.1.3-1 EtherNet/IP Module - Change 8-58
8.1.3-2 EtherNet/IP Module - Set IP Address. 8-63
8.1.3-3 EtherNet/IP Module - Load Firmware. 8-67
8.1.3-4 EtherNet/IP Module - LED Description 8-68
8.1.3-5 EtherNet/IP Module - Change IP Address 8-70

8.1.4 Digital I/O Modules 8-74

8.1.4-1 Digital I/O Modules - Change 8-74
8.1.4-2 Digital I/O Modules - LED Description 8-80

8.2 Distributed I/O 8-82

8.2-1 Distributed I/O - Description 8-82

8.2.1 DeviceNet Scanner Module 8-83

8.2.1-1 DeviceNet Scanner Module - Change 8-83
8.2.1-2 DeviceNet Scanner Module - Set Node Address and Baud Rate 8-88
8.2.1-3 DeviceNet Scanner Module - Load Firmware 8-88
8.2.1-4 DeviceNet Scanner Module - Download Program 8-89

8.2.1-5 DeviceNet Scanner Module - LED Description 8-92
8.2.1-6 DeviceNet Scanner Module - Error Codes 8-94
8.2.1-7 DeviceNet Scanner Module - Register EDS File(s) 8-97

8.2.2 DeviceNet Point I/O 8-106

8.2.2.1 DeviceNet Point I/O Adapter 8-106

8.2.2.1-1 DeviceNet Point I/O Adapter - Change 8-106
8.2.2.1-2 DeviceNet Point I/O Adapter - Set Node Address 8-111
8.2.2.1-3 DeviceNet Point I/O Adapter - Download Program 8-112
8.2.2.1-4 DeviceNet Point I/O Adapter - LED Description 8-115

8.2.2.2 DeviceNet Point I/O Module 8-119

8.2.2.2-1 DeviceNet Point I/O Module - Change 8-119
8.2.2.2-2 DeviceNet Point I/O Module - LED Description 8-123

8.2.2.3 DeviceNet PowerFlex 8-135

8.2.2.3-1 DeviceNet PowerFlex Adapter - Change 8-135
8.2.2.3-2 DeviceNet PowerFlex Adapter - Set Node Address and Baud Rate 8-138
8.2.2.3-3 DeviceNet PowerFlex Adapter - Download Program 8-140
8.2.2.3-4 DeviceNet PowerFlex Adapter - LED Description 8-143

8.3 Servo System 8-149

8.3-1 Servo System - Description 8-149

8.3.1 Sercos Module 8-153

8.3.1-1 Sercos Module - Change 8-153
8.3.1-2 Sercos Module - Load Firmware 8-155
8.3.1-3 Sercos Module - LED Description 8-156

8.3.2 Servo Drive 8-159

8.3.2-1 Servo Drive - Change 8-159
8.3.2-2 Servo Drive - Set Baud Rate 8-165
8.3.2-3 Servo Drive - Load Firmware 8-166
8.3.2-4 Servo Drive - LED Description 8-167

8.3.2-5 Servo Drive - Error Codes 8-169

8.4 Safety System 8-176

8.4.1 Safety System Description 8-176

8.4.2 Safety System Checks 8-176

8.4.2-1 Reset Button - Check 8-178

8.4.2-2 Emergency Stop Push Button - Check Safety Expansion Relay 8-179

8.4.2-3 Machine Body Door Guards - Check Safety Expansion Relays 8-181

8.4.2-4 Drive Unit Brakes - Safety Expansion Relays. 8-183

8.4.2-5 Main Air ASU - Safety Valve Relays 8-184

8.4.3 Safety System Troubleshooting 8-185

8.4.4 Pluto Module. 8-186

8.4.4-1 Pluto Module - Load Program 8-186

8.4.4-2 Pluto Module - LED Description. 8-192

8.4.4-4 Pluto Module - Set ID-FIX Address after Replacing an ID-FIX 8-195

8.5 Power Supply 8-202

8.5.1 Frequency Converter 8-202

8.5.1-1 Frequency Converter - Display Parameters 8-202

8.5.1-2 Frequency Converters - Error Codes 8-206

8.5.2 Overload Protection 8-208

8.5.2-1 Overload Protection - Set 8-208

8.5.2-2 Overload Protection - Set Base Unit(s) 8-209

8.5.3 Residual Current Device. 8-209

8.5.3-1 Residual Current Device - Check 8-210

8.5.4 Power Failure Relay. 8-211

8.5.4-1 Power Failure Relay - Set 8-211

8.5.5 Power Supply Unit 8-213

8.5.5-1 Power Supply Unit - Set. 8-213

8.6 HMI and PLMS 8-215

8.6-1 HMI and PLMS - Description 8-215
8.6-2 HMI and PLMS - Log On Procedure. 8-216
8.6-3 HMI and PLMS - Install Software 8-219
8.6-4 HMI and PLMS - Install DE Config Files 8-231
8.6-5 HMI and PLMS - Restore TPOP Local Files. 8-233
8.6-6 HMI and PLMS - Create Software USB Key from ISO Image 8-237

8.6.1 PLMS NRG Configurator 8-240

8.6.1.1 PLMS NRG Configurator Description 8-240

8.6.1-1 PLMS NRG Configurator - Set Machine ID 8-241
8.6.1-2 PLMS NRG Configurator - Select Allowed Languages. 8-242
8.6.1-3 PLMS NRG Configurator - Export/Import Configuration 8-243
8.6.1-4 PLMS NRG Configurator - Translate Non-Tetra Pak DE Event Codes 8-247
8.6.1-5 PLMS NRG Configurator - Distribution Equipment Setup 8-249
8.6.1-6 PLMS NRG Configurator - Defragment the IPC Hard Disk 8-257
8.6.1-7 PLMS NRG Configurator - Set Date and Time 8-258
8.6.1-8 PLMS NRG Configurator - Configure User Interface 8-261
8.6.1-9 PLMS NRG Configurator - Configure IP Settings for External Network 8-269

8.6.2 PLMS NRG 8-273

8.6.2-1 PLMS NRG - Copy Performance and Process Data. 8-273

8.6.3 HMI 8-282

8.6.3-1 HMI - User Management Description 8-282
8.6.3-2 HMI - User Management Log On 8-284
8.6.3-3 HMI - User Management Change Password 8-287
8.6.3-4 HMI - Utility Window 8-293

8.6.4 Ink Jet Printer. 8-301

8.6.4-1 Ink Jet Printer - Configure 8-301
8.6.4-2 Ink Jet Printer - Configure Printer Interface 8-303

8.6.5 Traceability 8-305
8.6.5-1 Traceability - Configure JEID 8-305
8.6.5-2 Traceability - Configure Printer Interface Layout 8-310
8.6.5-3 Traceability - Load Printer Interface Layout 8-315
8.6.5-4 Traceability - Load JEID Configuration 8-317
8.6.5-5 Traceability - Set Jaw Event Lot ID Printing 8-319

8.7 Control Devices and Sensors 8-320
8.7.1 Industrial PC 8-320
8.7.1.1 IPC (APC620) - Description 8-320
8.7.1.1-1 IPC - Change CompactFlash Memory Card 8-322
8.7.1.1-2 IPC - Change Battery 8-322
8.7.1.1-3 IPC - Change Fan Kit 8-324
8.7.1.1-4 IPC - Change Fan Filter 8-329
8.7.1.1-5 IPC - Change DVD ROM 8-331
8.7.1.2 IPC (APC910) - Description 8-332
8.7.1.2-1 IPC - Change Battery 8-334
8.7.1.2-2 IPC - Change CFast Card 8-337
8.7.1.2-3 IPC - Change Solid State Drive 8-338
8.7.1.2-4 IPC - Change Auxiliary Serial Port 8-343
8.7.1.2-5 IPC - Change Ethernet Card Level 5 8-348
8.7.1.2-6 IPC - Change Fan Kit 8-351
8.7.2 Level Control 8-355
8.7.2.1 Level Control Description 8-355
8.7.2-1 Level Control - Set 8-357
8.7.3 Conductivity Meter 8-358
8.7.3-1 Conductivity Meter - Description 8-358
8.7.3-2 Conductivity Meter - Identify Conductivity Sensor Cell Constant 8-363

8.7.3-3 Conductivity Meter - Check 8-366
8.7.3-4 Conductivity Meter - Set 8-369
8.7.3-5 Conductivity Meter - Calibrate 8-374
8.7.3-6 Conductivity Meter - Error Codes 8-380
8.7.3-7 Conductivity Meter - Change Conductivity Sensor 8-383
8.7.3-8 Conductivity Meter - Change Fuse 8-385

8.7.4 Recorder 8-386

8.7.4.1 Recorder Logoscreen ES 8-386

8.7.4.1-1 Recorder - Description 8-386
8.7.4.1-2 Recorder - Set Date, Time and Language 8-394
8.7.4.1-3 Recorder - Load Configuration Data 8-398
8.7.4.1-4 Recorder - Calibrate 8-404
8.7.4.1-5 Recorder - Log In and Log Off 8-408
8.7.4.1-6 Recorder - Change CompactFlash Card 8-411
8.7.4.1-7 Recorder - Configure Archived Data for Colour Printing 8-412

8.7.4.2 Recorder Logoscreen FD 8-419

8.7.4.2-1 Recorder - Description 8-419
8.7.4.2-2 Recorder - Set Date, Time and Language 8-429
8.7.4.2-3 Recorder - Load Configuration Data 8-436
8.7.4.2-4 Recorder - Calibrate 8-448
8.7.4.2-5 Recorder - Log In and Log Out 8-452
8.7.4.2-6 Recorder - Change CompactFlash Card 8-456
8.7.4.2-7 Recorder - Configure Archived Data for Colour Printing 8-459

8.7.5 Temperature Regulators 8-466

8.7.5-1 Temperature Regulators - Calibrate 8-466

8.7.5.1 Calibrator 8-483

8.7.5.1-1 Calibrator - Set Fluke 714 8-483
8.7.5.1-2 Calibrator - Set Micromite II 8-485

8.7.6 Thermocouples 8-487

8.7.6-1 Thermocouples - Check 8-487

8.8 TMCC2 Controller 8-488

8.8.1 TMCC2 Controller(s) Description 8-488

8.8.1-1 TMCC2 Card for ASU and DCS Register or Magnetic Mark Detection 8-488
8.8.1-2 TMCC2 Card for Filling System 8-493
8.8.1-3 TMCC2 card for Sealing Monitoring 8-497

8.8.2 TMCC Controller Communication 8-498

8.8.2-1 TMCC2 Controller - Set Communication 8-498
8.8.2-2 TMCC2 Controller - Load Program 8-499
8.8.2-3 TMCC2 Controller - Photocells Manual Setting 8-501
8.8.2-4 TMCC2 Controller - Set Filling Window 8-503
8.8.2-5 TMCC2 Controller - Display Report 8-504
8.8.2-6 TMCC2 Controller - Upgrade Firmware 8-509

8.9 TPIH 8-513

8.9.1 TPIH - Description 8-513

8.9.2 IH Equipment 8-516

8.9.2-1 IH Equipment - LCD Display 8-516
8.9.2-2 IH Equipment - LED Description 8-519
8.9.2-3 IH Equipment - Error Handling 8-521
8.9.2-4 IH Equipment - Check Function 8-526
8.9.2-5 IH Equipment - Check Cables 8-530
8.9.2-6 IH Equipment - Change Generator 8-531
8.9.2-7 IH Equipment - Set Sealing 8-533
8.9.2-8 IH Equipment - Set CAN Communication 8-534
8.9.2-9 IH Equipment - Load Firmware 8-535
8.9.2-10 IH Equipment - Set Display Contrast 8-542

8.10 Cooling System 8-543

8.10.1 Cooling Unit 8-543

8.10.1-1 Cooling Unit - Troubleshooting 8-543

8.11 Signal Exchange 8-544

8.11-1 Signal Exchange - Configuration 8-544

This page intentionally left blank

8-1 Electrical System - Clean Cabinet

Machine Status	Electrical supply disconnecting device in position O (OFF)
SPC Reference	641509-0300

CAUTION
Risk of damage to the equipment.
Pay attention when cleaning the electrical components with the vacuum cleaner.

Periodically clean the electrical cabinet to avoid dust accumulation.

Proceed as follows: open the electrical cabinet doors and vacuum clean from dust the cabinet and the components inside the cabinet.

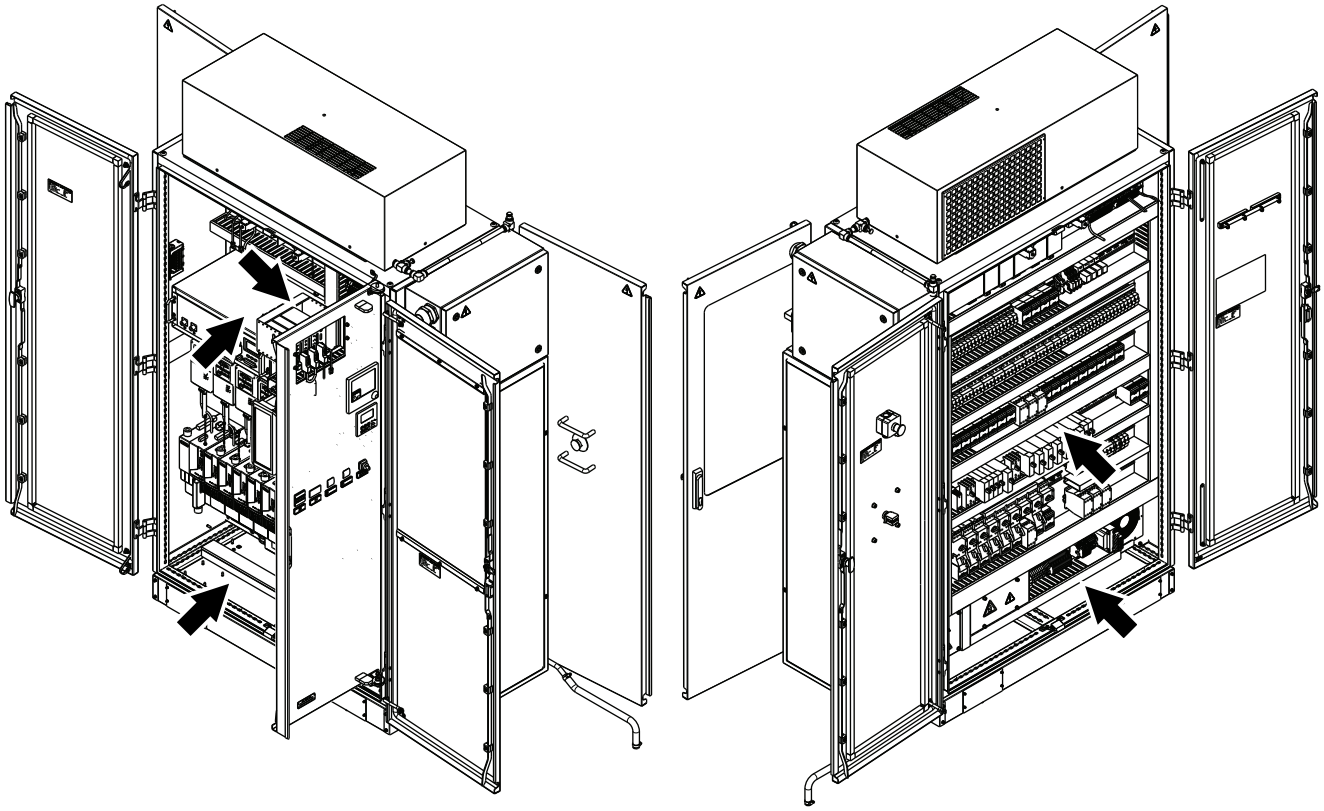

8.1 PLC

8.1.1 Preparation for PLC Communication

8.1.1-1 Preparation for PLC Communication - Configure PC Network Communications

Special Equipment	Laptop PC

Before sending data to the PLC from the PC via an ethernet cable, first configure the PC network settings. The following procedure describes how to configure the PC network communications.

Note! If after configuring the PC network communications it is not possible to connect to the PLC, temporarily disable the PC firewall protection. Contact the local IT administrator for assistance in disabling the PC firewall protection.

(Cont'd)

(Cont'd)

Disable Wireless Network Connection

a) Open the START MENU (1) on the PC and select SETTINGS (2) and then NETWORK CONNECTIONS (3) to open the NETWORK CONNECTIONS window (4).

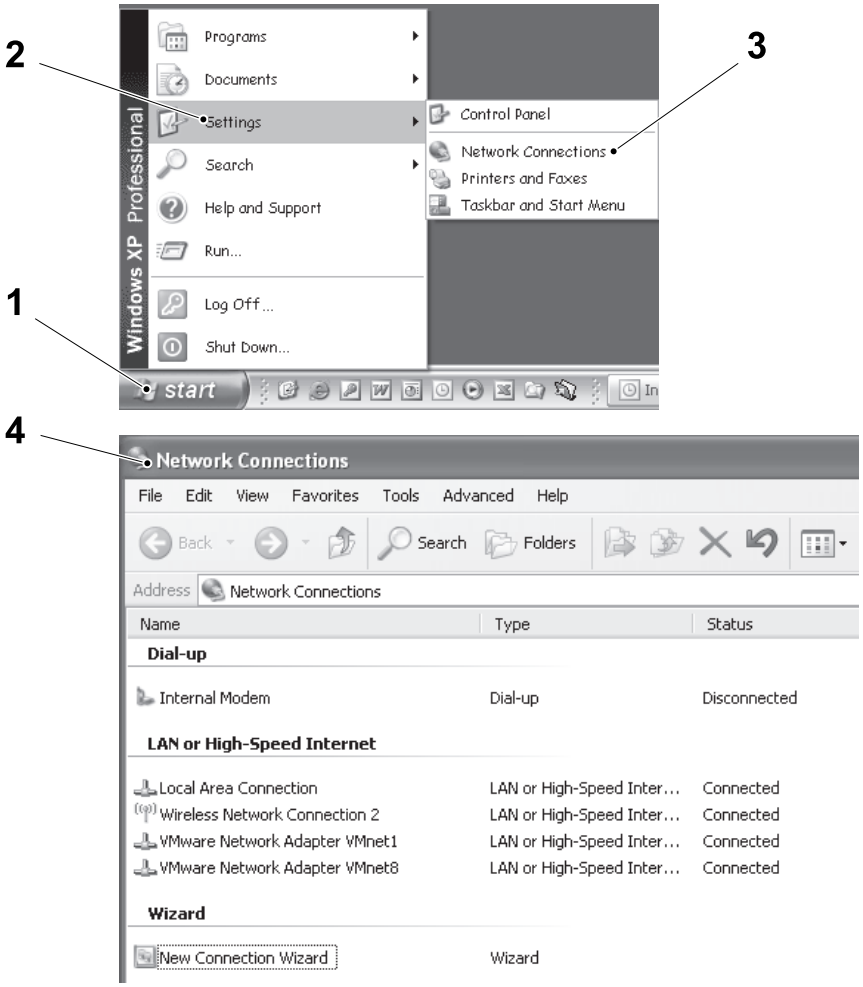

1 Start menu
2 Settings
3 Network connections
4 Network connections window

(Cont'd)

(Cont'd)

b) In the NETWORK CONNECTIONS window (4) select the WIRELESS NETWORK CONNECTION (5).

c) Right click the PC mouse and select DISABLE (6).

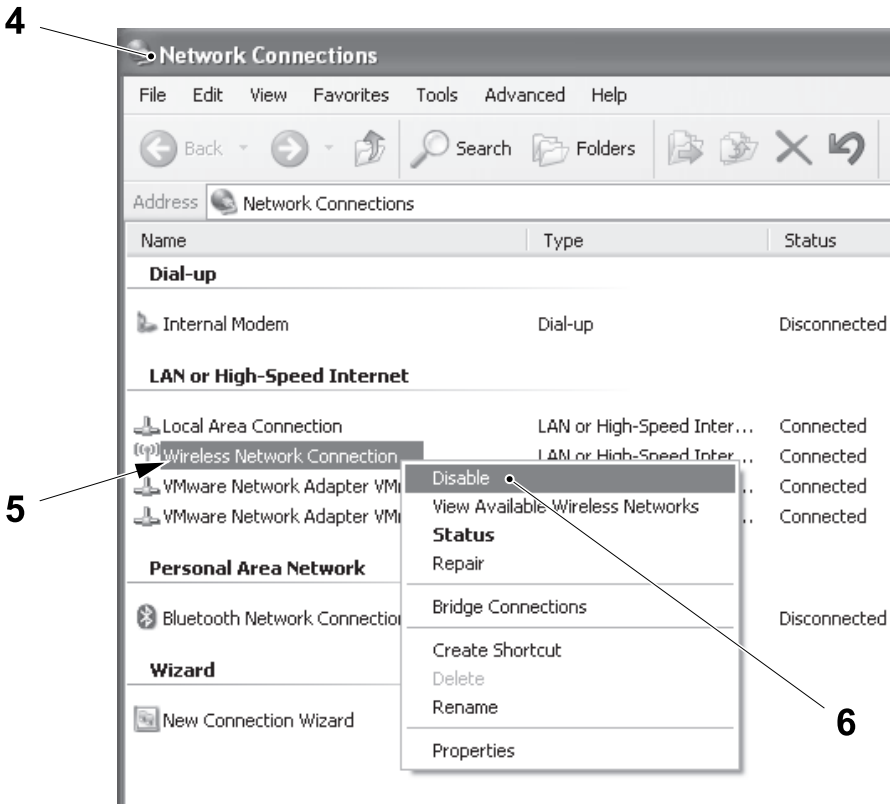

4 Network connections window

5 Wireless network connection

6 Disable

(Cont'd)

(Cont'd)

Configure PC IP Address

a) Open the START MENU (1) on the PC and select SETTINGS (2) and then NETWORK CONNECTIONS (3) to open the NETWORK CONNECTIONS window (4).

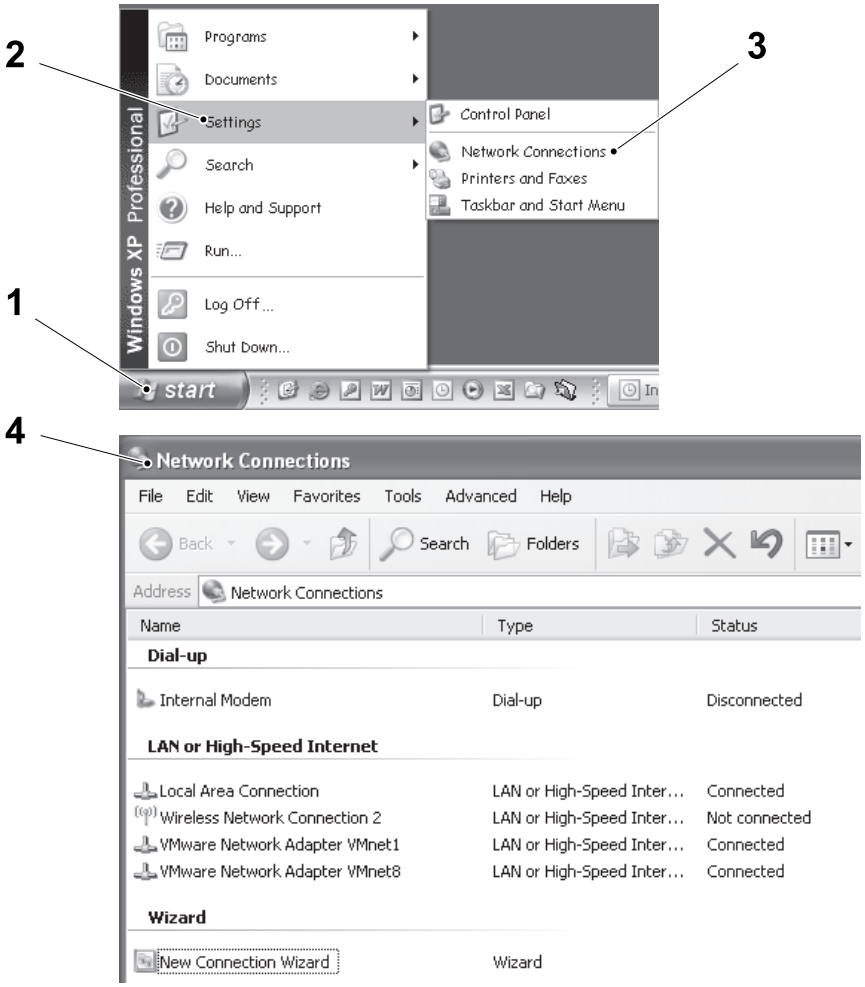

1 Start menu
2 Settings
3 Network connections
4 Network connections window

(Cont'd)

(Cont'd)

Note! The LOCAL AREA CONNECTION (5) is an example only, if the NETWORK CONNECTIONS window (4), lists multiple connections, select the required network connection.

b) In the NETWORK CONNECTIONS window (4) select the LOCAL AREA CONNECTION (5) and right click the PC mouse to select PROPERTIES window (6).

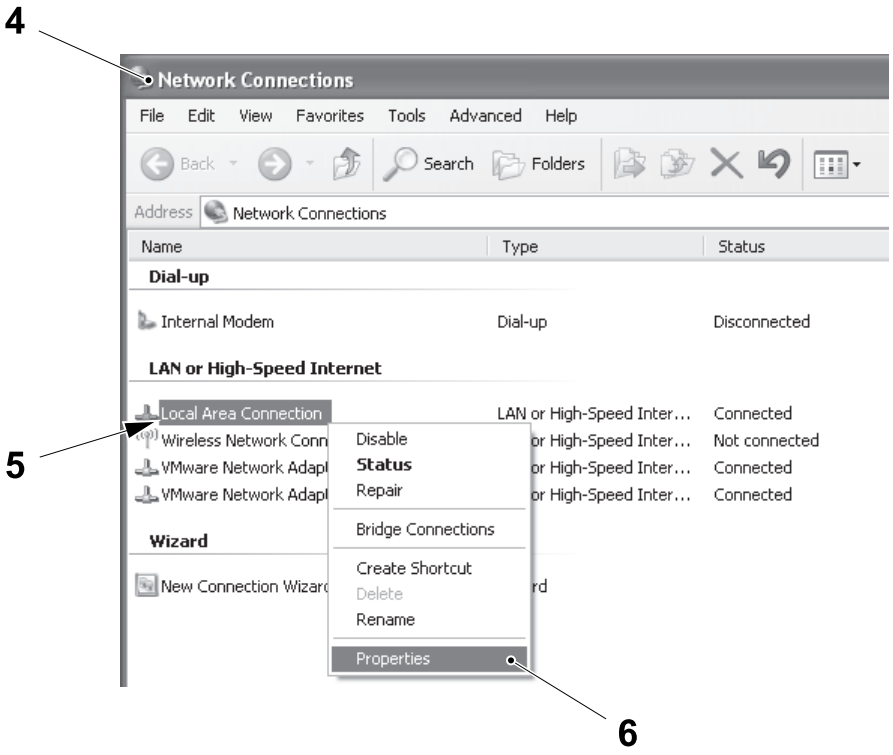

4 Network connections window
5 Local area connection
6 Properties window

(Cont'd)

(Cont'd)

c) In the LOCAL AREA CONNECTION PROPERTIES window (7) select INTERNET PROTOCOL (TCP/IP) (8) and then select PROPERTIES (9).

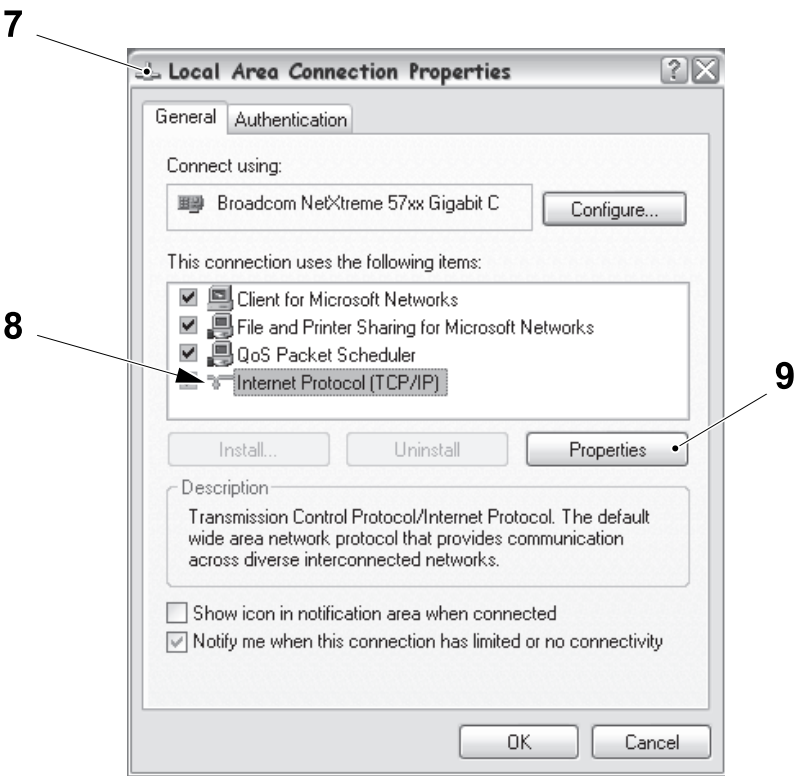

7 Local area connection properties window
8 Internet protocol (TCP/IP)
9 Properties

(Cont'd)

(Cont'd)

Note! The unique number "XX" must be within the range of the permitted IP addresses if the PC firewall protection is configured to allow a range of IP addresses and higher than the number 30 to avoid possible conflicts with machine device IP addresses, see the Table of Assigned IP Addresses .

d) Select the USE THE FOLLOWING IP ADDRESS button (10) and the USE THE FOLLOWING DNS SERVER ADDRESSES button (11).

e) In the IP ADDRESS box (12) enter an IP address using the following format: 10.255.1.XX, where XX is a unique number not already assigned to any PC or PLC connected to the same network.

f) In the SUBNET MASK box (13) enter the subnet mask as indicated in the illustration.

g) Select the OK button (14) to confirm the setting and close the window.

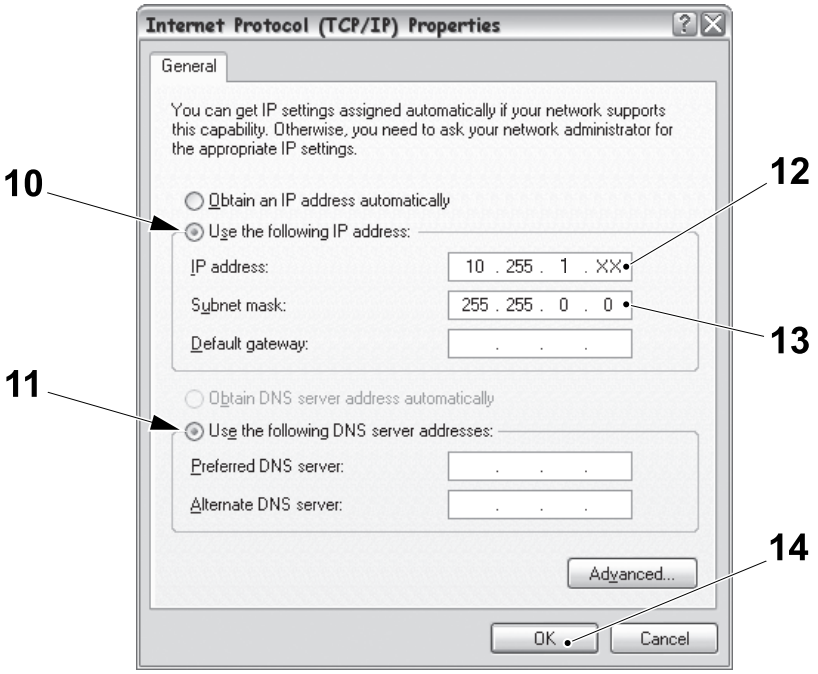

10 Use the following IP address button
11 Use the following DNS server addresses button
12 IP address box
13 Subnet mask box
14 OK button

Table of Assigned IP Addresses

Device	IP address	Subnet mask
TPOP	10.255.1.0	255.255.0.0
PLC FM	10.255.1.21	255.255.0.0
PLC PT CompactFlex	10.255.1.22	255.255.0.0

8.1.1-2 Preparations for PLC Communication - Configure RSLinx

Special Equipment	Laptop PC Ethernet communication cable

The RSLinx software enables seamless communication between the PC and the PLC and its components over different networks such as ethernet and DeviceNet. Before communication is possible, set the network and IP addresses for the PC and PLC in RSLinx as follows:

a) Open the START menu on the PC and select PROGRAMS (1) ROCKWELL SOFTWARE (2), RSLINX (3) and then RSLINX CLASSIC (4).

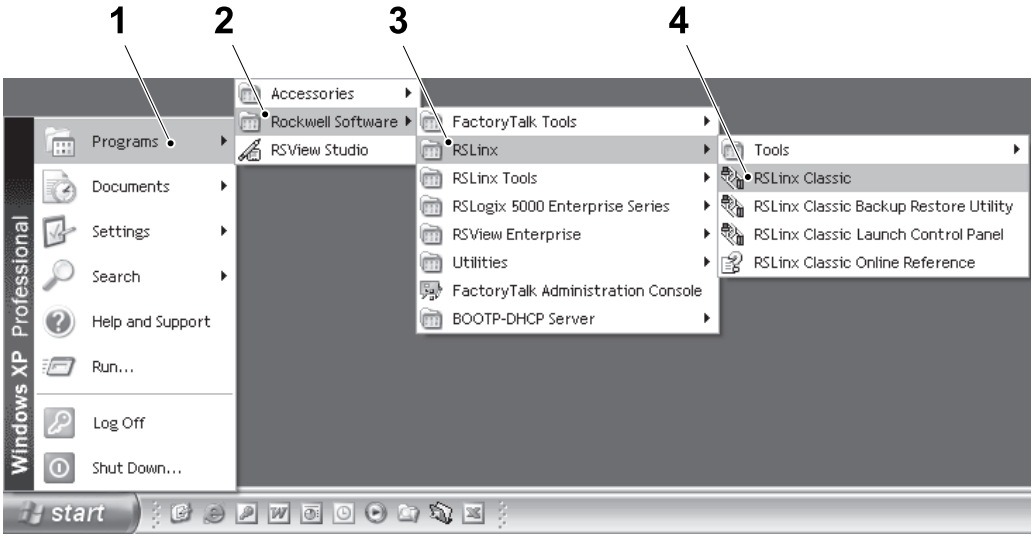

1 Programs
2 Rockwell software
3 RSLinx
4 RSLinx Classic

(Cont'd)

(Cont'd)

b) The RSLINX CLASSIC PROFESSIONAL window (5) opens, select the CONFIGURE DRIVERS button (6).

c) In the CONFIGURE DRIVERS window (7), select ETHERNET DEVICES (8) from the drop down menu.

d) Select the ADD NEW button (9).

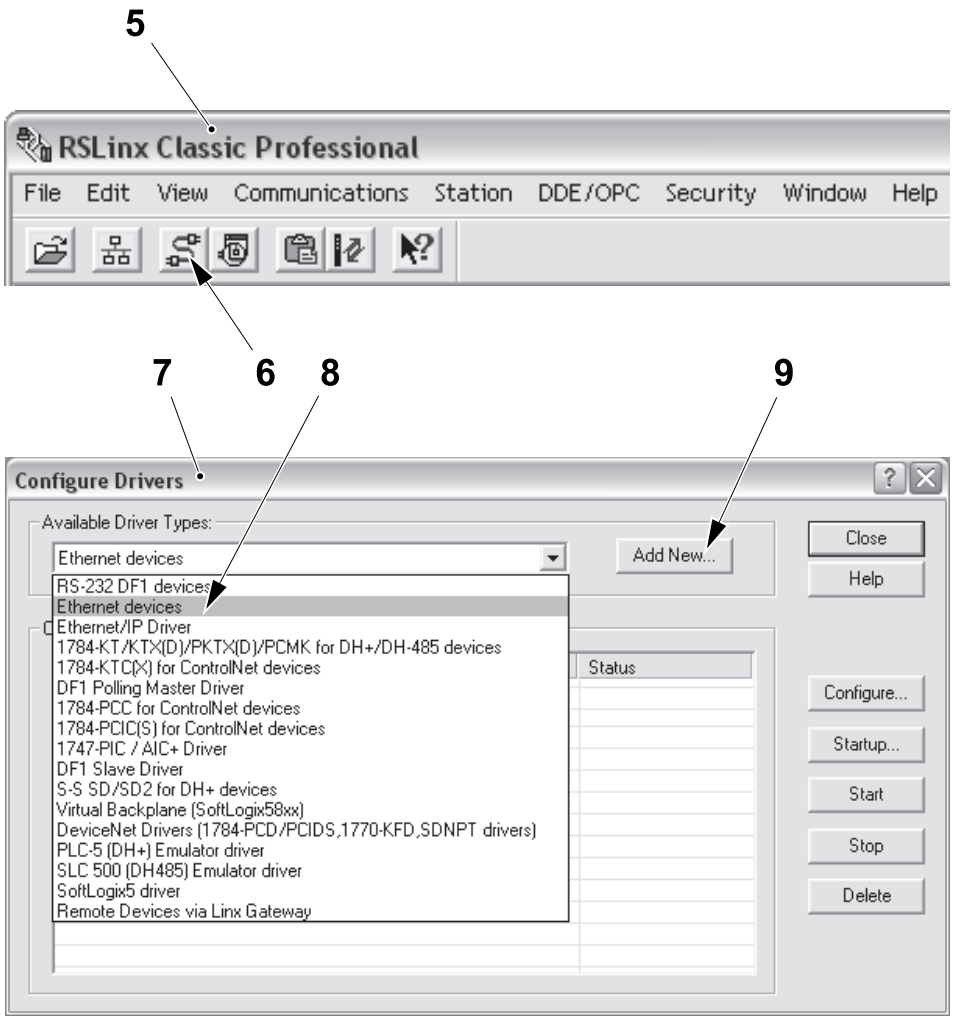

5 RSLinx classic professional window
6 Configure drivers button
7 Configure drivers window
8 Ethernet devices
9 Add new button

(Cont'd)

(Cont'd)

e) Select the OK button (10) to accept the default driver.

f) Enter the IP address in the HOST NAME field (11), see the table on page 8-22 and then select the ADD NEW button (12).

g) Select the OK button (13) to save the configuration.

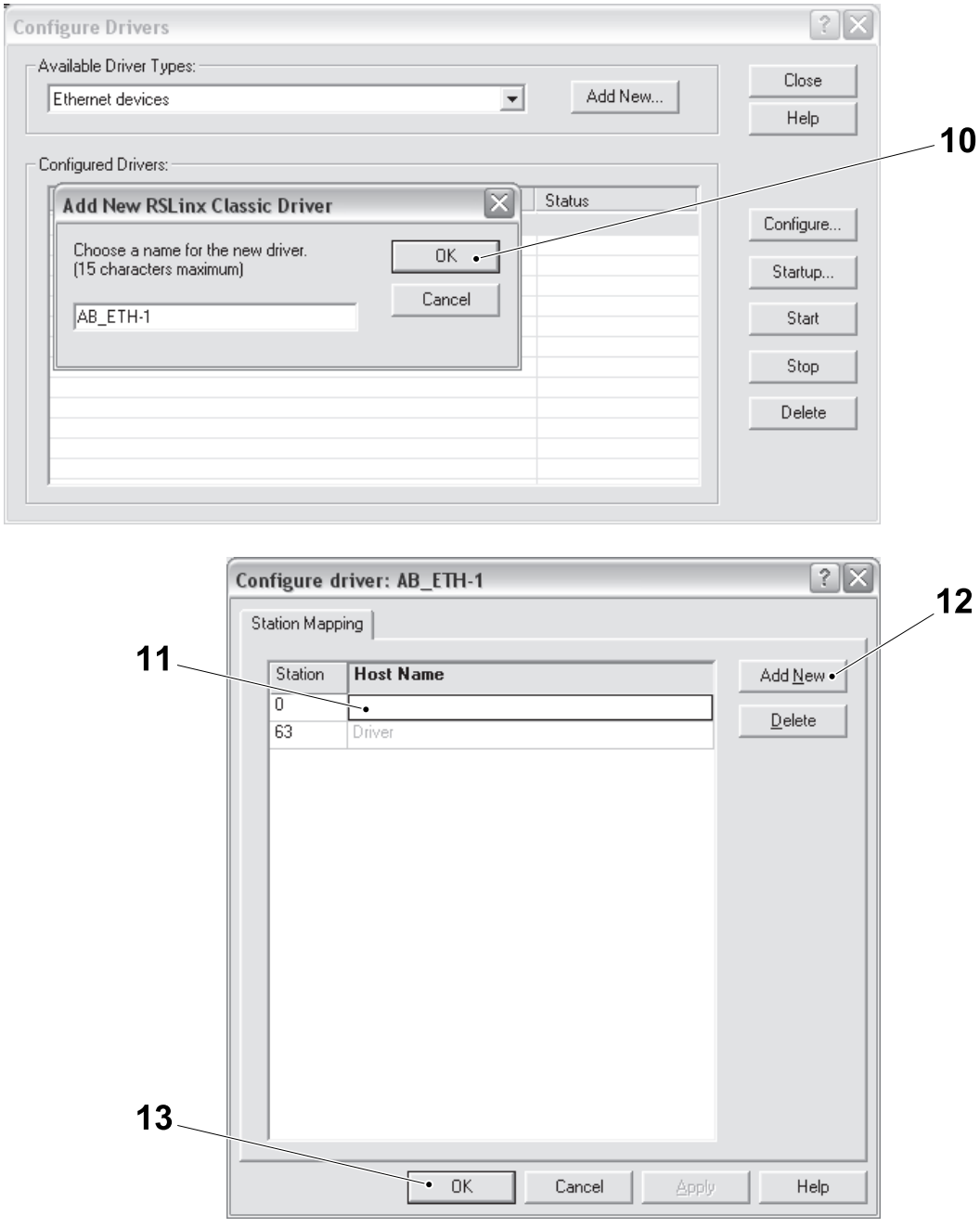

10 OK button 11 Host name field 12 Add new button 13 OK button

(Cont'd)

(Cont'd)

Table of Assigned IP Addresses

Device	IP address	Subnet mask
TPOP	10.255.1.0	255.255.0.0
PLC FM	10.255.1.21	255.255.0.0
PLC PT CompactFlex	10.255.1.22	255.255.0.0

8.1.2 CPU Module

8.1.2-1 CPU Module - Change

Machine Status	Electrical supply disconnecting device in position O (OFF) Main air valve ON Main steam valve ON Main water valve ON
SPC Reference	90603-5368 90605-2746

Note! New CPU modules are supplied with basic firmware. The correct firmware revision must be installed before the PLC program can be downloaded to the CPU module.

Preparation

Before changing the CPU module:

- Use the RSLinx Classic program to verify and record the firmware version of the PLC program.
- Use the Flow Chart of Procedures for Changing the CPU Module on the next page to determine which procedures must be performed and their correct sequence.

  Note! It is recommended that the electrical supply disconnecting device is turned to the position "O" (OFF) before the PLC is removed or installed. The PLC may be removed or installed with the chassis power ON and the system operating, but doing this repeatedly may cause excessive wear to the contacts on the module and its mating connector. Worn contacts can create electrical resistance that may effect the operation of the module.

  Note! If the CPU module is removed with the power turned ON, all the devices connected to CPU module will go to their configured default state.

  Note! An SD card fitted inside the CPU module is used to store the line configuration and recipe parameters. When the CPU module is changed, the SD card must be transferred from the old CPU module to the new CPU module.

(Cont'd)

(Cont'd)

Flow Chart of Procedures for Changing the CPU Module

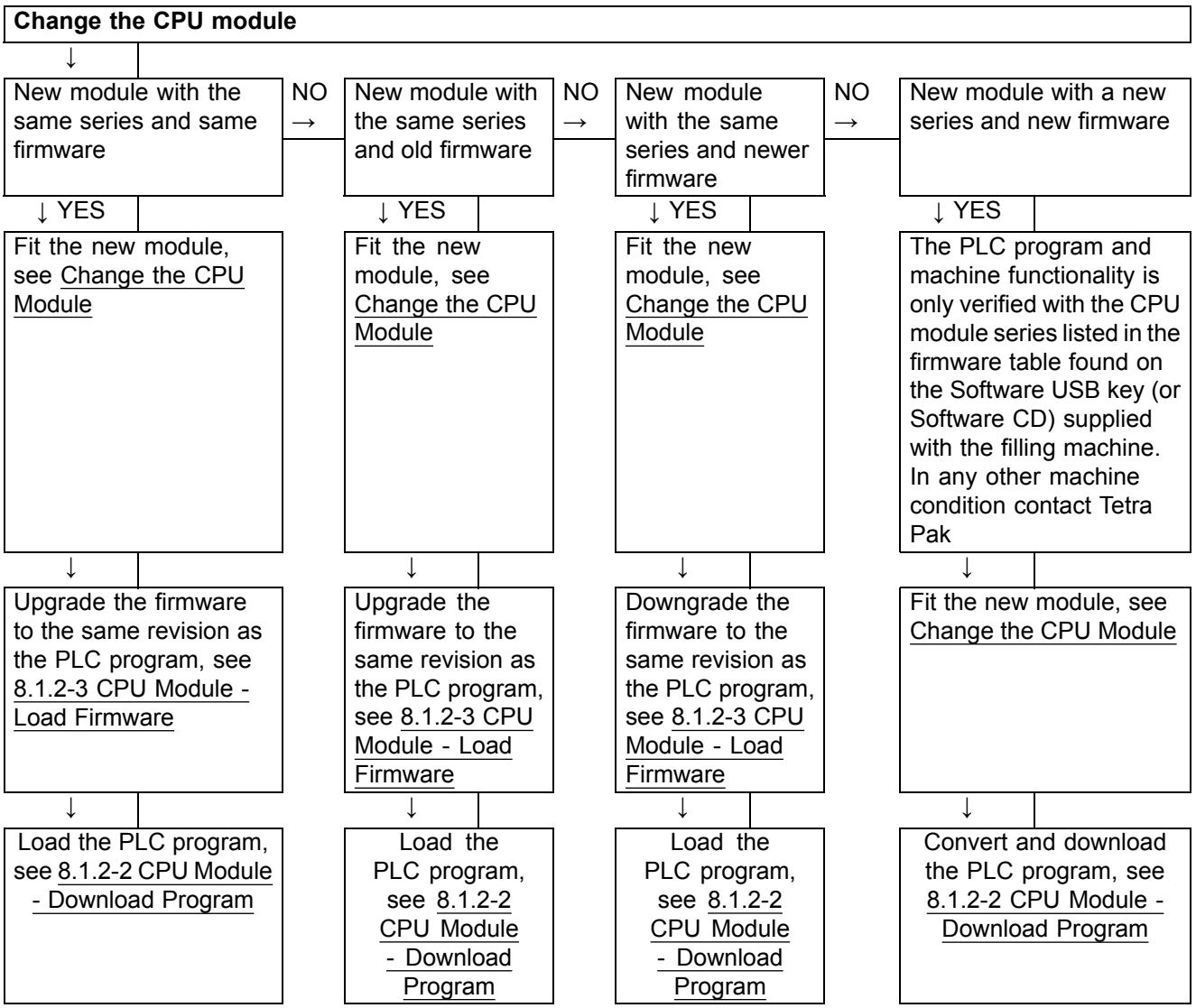

(Cont'd)

(Cont'd)

Change the CPU Module

a) Verify that the SD card is not in use by checking that the indicator is off.

b) Open the door (1) to access the SD card (2).

c) Press and release the SD card (2) to eject it.

d) Store the SD card (2) in a safe and clean place.

e) Press the locking tabs on the top and the bottom of the PLC.

f) Slide the CPU module out of the chassis.

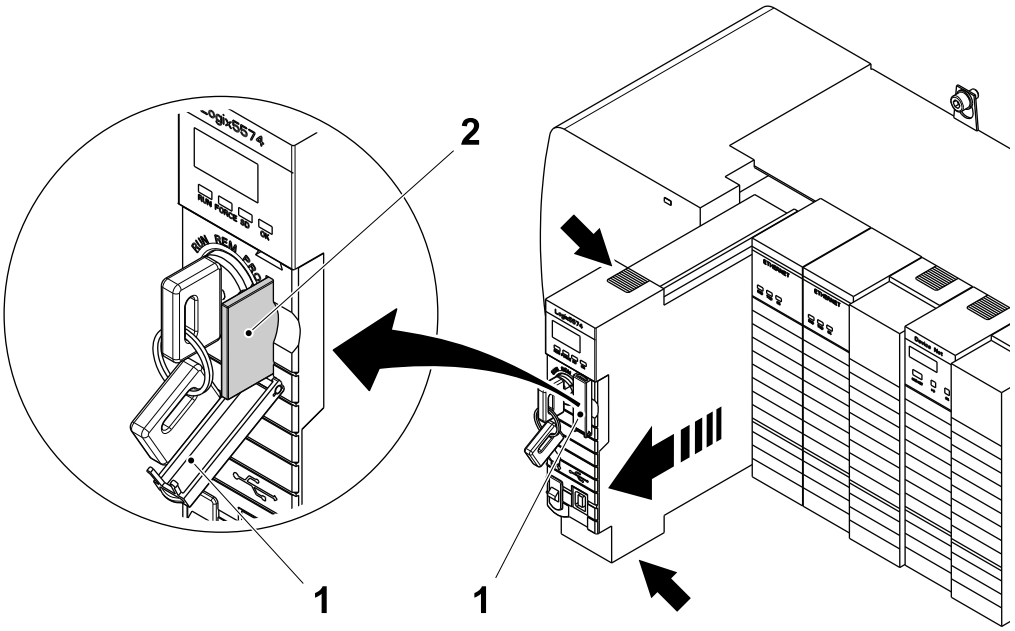

1 Door
2 SD card

(Cont'd)

(Cont'd)

g) Align the new CPU module with the top and the bottom guides in the chassis.

h) Slide the CPU module into the chassis. Make sure it is flush with the power supply or the other modules and the top and bottom latches are engaged.

i) Insert the key (3) into the new CPU module.

j) Turn the key (3) to the REM position.

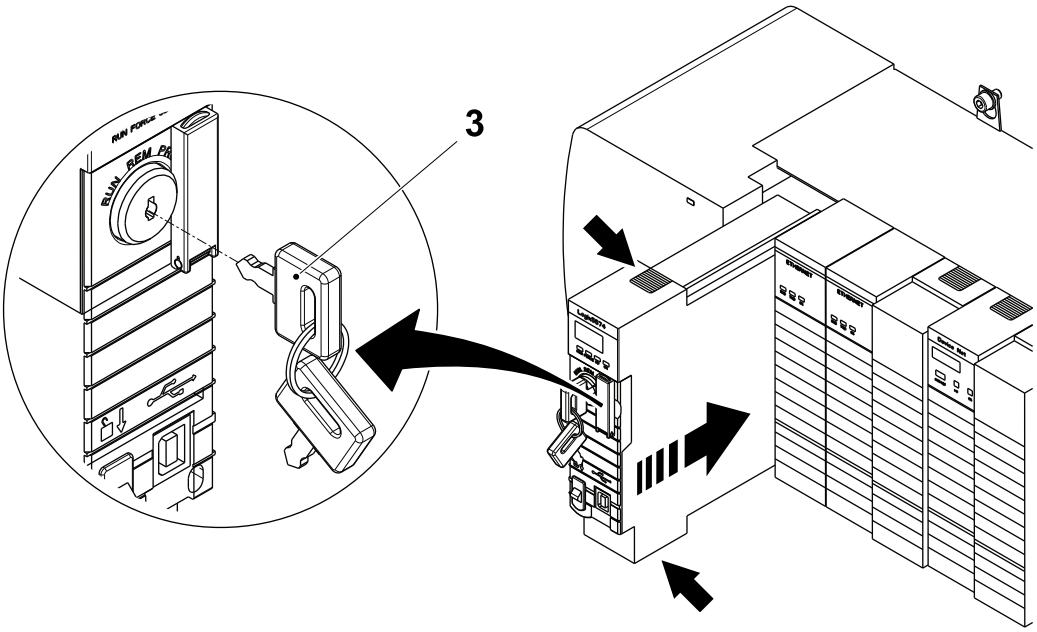

3 Key

(Cont'd)

(Cont'd)

k) Open the door (1) for the SD card.

l) Insert the SD card (2) into the slot.

m) Press gently the SD card (2) until it clicks into place.

n) Close the door (1).

o) Turn the electrical supply disconnecting device to the position | (ON).

p) Check the status of the CPU module according to the LED table in section 8.1.2-4 CPU Module - Troubleshoot.

q) If necessary, install the correct version of the firmware into the CPU module, see 8.1.2-3 CPU Module - Load Firmware.

r) Load the PLC program into the CPU module, see 8.1.2-2 CPU Module - Download Program.

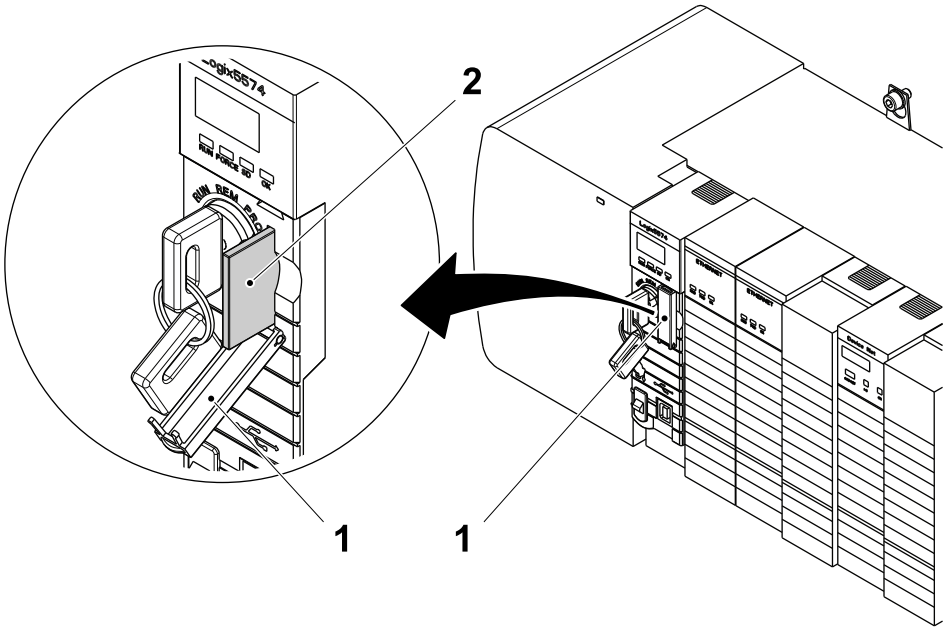

1 Door
2 SD card

8.1.2-2 CPU Module - Download Program

Machine Status	Electrical supply disconnecting device in position I (ON) Main air valve ON Main steam valve ON Main water valve ON
Special Equipment	Ethernet communication cable Laptop PC
SPC Reference	90603-5368 90605-2746

Note! If possible, save the current recipe, from the operator panel, in order to record the setting parameters before the download.

Note! To connect to the CPU module using an ethernet communication cable, the laptop PC must first be configured for this type of communication. See 8.1.1-1 Preparation for PLC Communication - Configure PC Network Communications and 8.1.1-2 Preparations for PLC Communication - Configure RSLinx for more details.

a) Connect the Ethernet communication cable between a vacant connection port on the Ethernet switch (1) and the laptop PC (2).

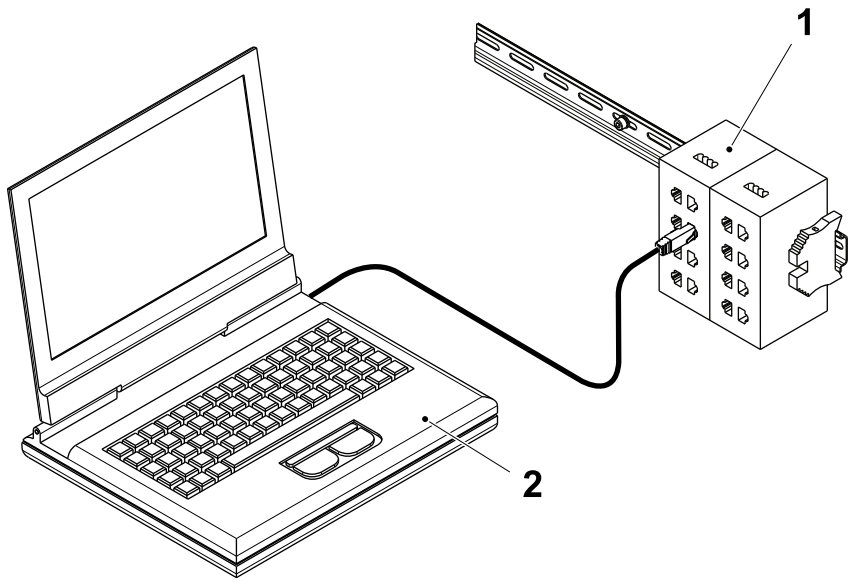

1 Ethernet switch
2 Laptop PC

(Cont'd)

(Cont'd)

b) Insert the software USB key into a laptop PC USB port.

Note! If a software CD has been supplied, insert the software CD into the laptop PC CD drive.

c) Browse to the drive and copy the compressed program folder to the PC desktop and extract the program file.

d) Double click on the program file to automatically start the RSLogix program and open the program file.

e) Select the COMMUNICATION menu (3) and then select GO ONLINE (4) .

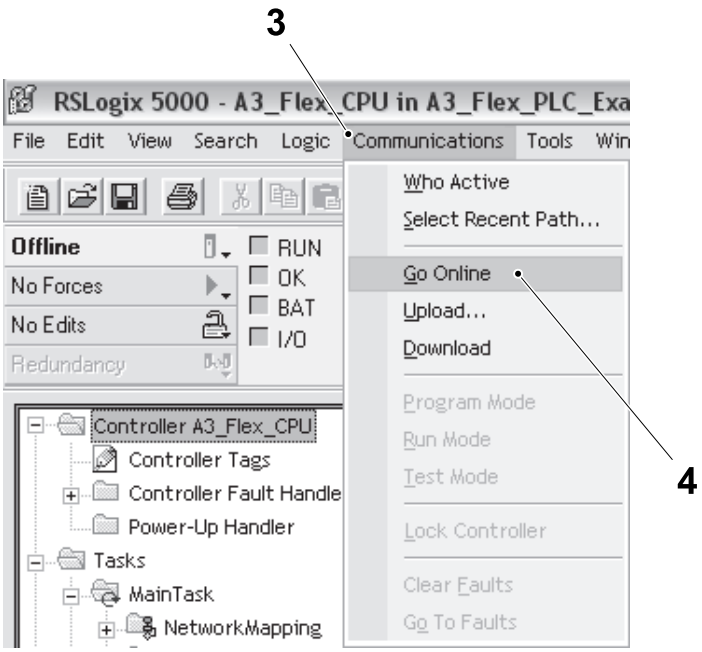

3 Communication menu
4 Go online

(Cont'd)

(Cont'd)

Note! If the program matches the program in the CPU module, an online connection will be established without any further messages. A download of the program is not necessary.

f) The CONNECTED TO GO ONLINE window (5) appears.

g) Select the DOWNLOAD button (6).

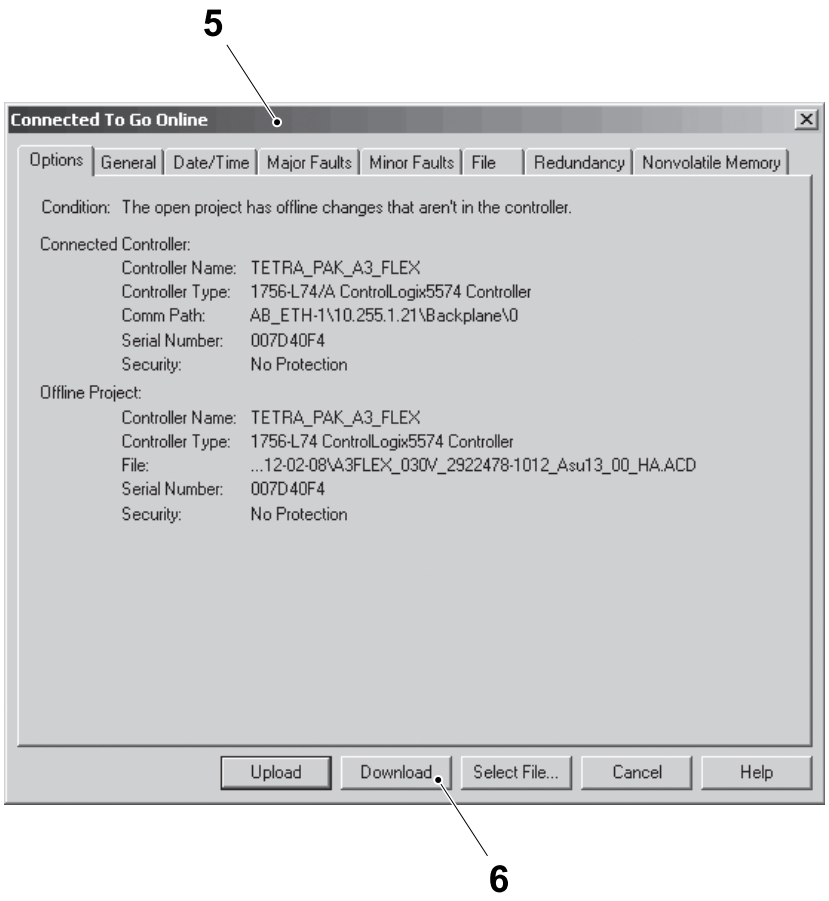

5 Connected to go online window

6 Download button

(Cont'd)

(Cont'd)

Note! All the values and settings in the CPU module will be replaced with those from the downloaded program.

h) Select the DOWNLOAD button (7) in the DOWNLOAD window (8).

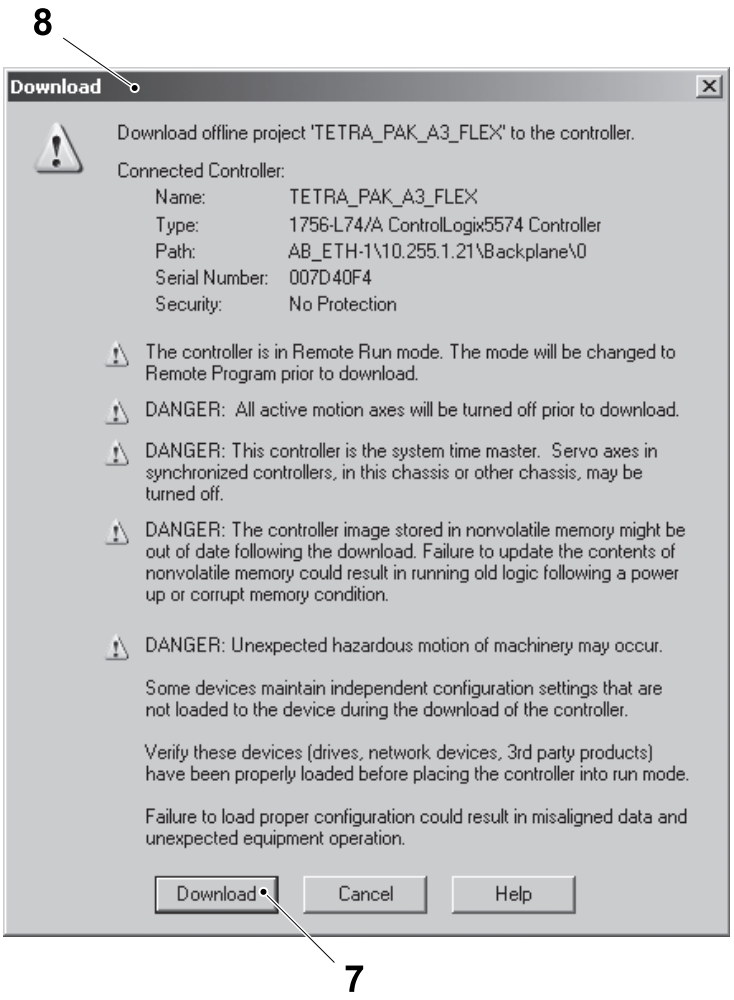

7 Download button
8 Download window

(Cont'd)

(Cont'd)

i) When the download is complete the dialogue box (9) appears, select the YES button (10) to put the PLC in RUN MODE.

j) Continue with the procedure Set Nonvolatile Memory to set the nonvolatile memory.

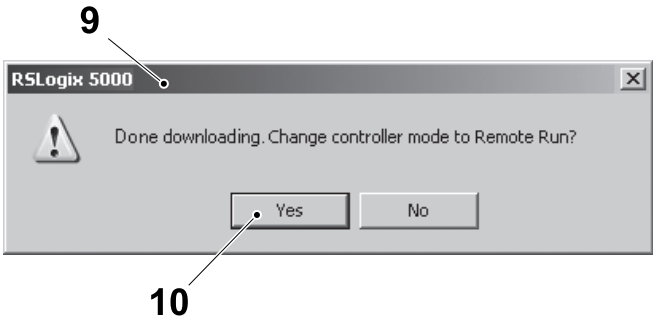

9 Dialogue box
10 Yes button

Set Nonvolatile Memory

a) Select the COMMUNICATION menu (1) and then select GO ONLINE (2).

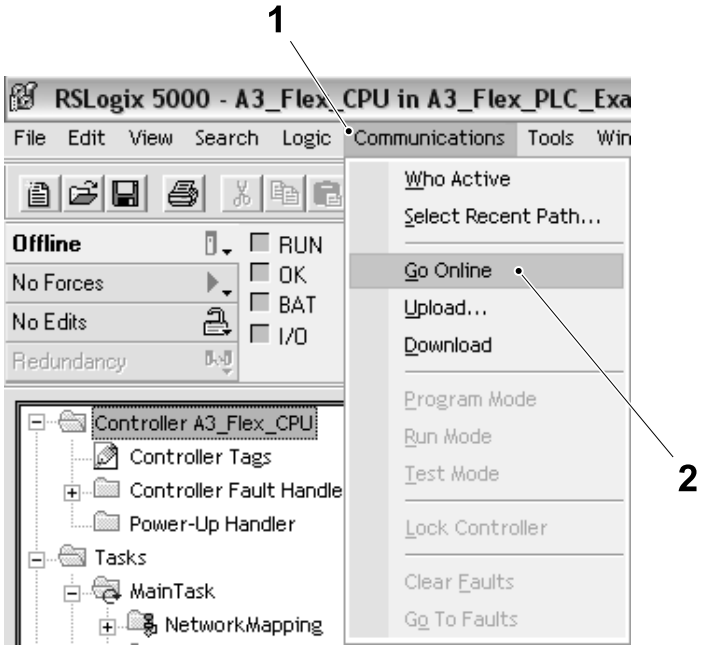

1 Communication menu
2 Go online

(Cont'd)

(Cont'd)

b) Select the COMMUNICATION menu (1), then select PROGRAM MODE (3).

c) When the dialogue box (4) appears, select the YES button (5) to put the PLC in PROGRAM MODE.

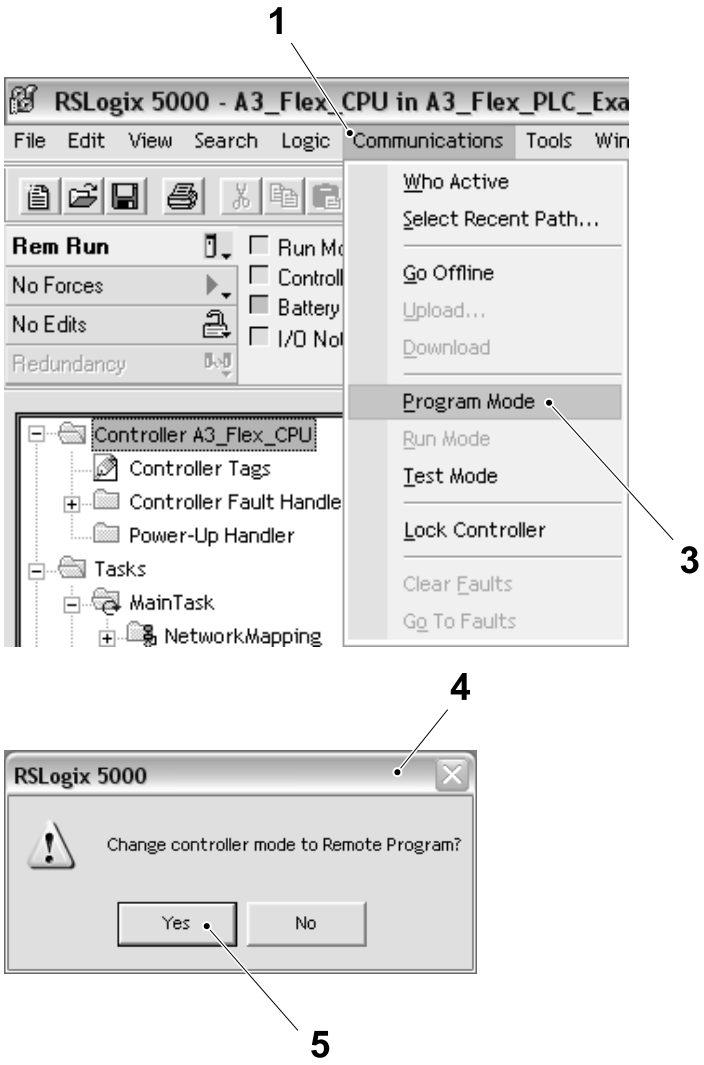

1 Communication menu
3 Program mode
4 Dialogue box
5 Yes button

(Cont'd)

(Cont'd)

d) On the ONLINE tool bar, select the CONTROLLER PROPERTIES button (6).

e) Select the NONVOLATILE MEMORY tab (7).

f) Select the LOAD/STORE button (8).

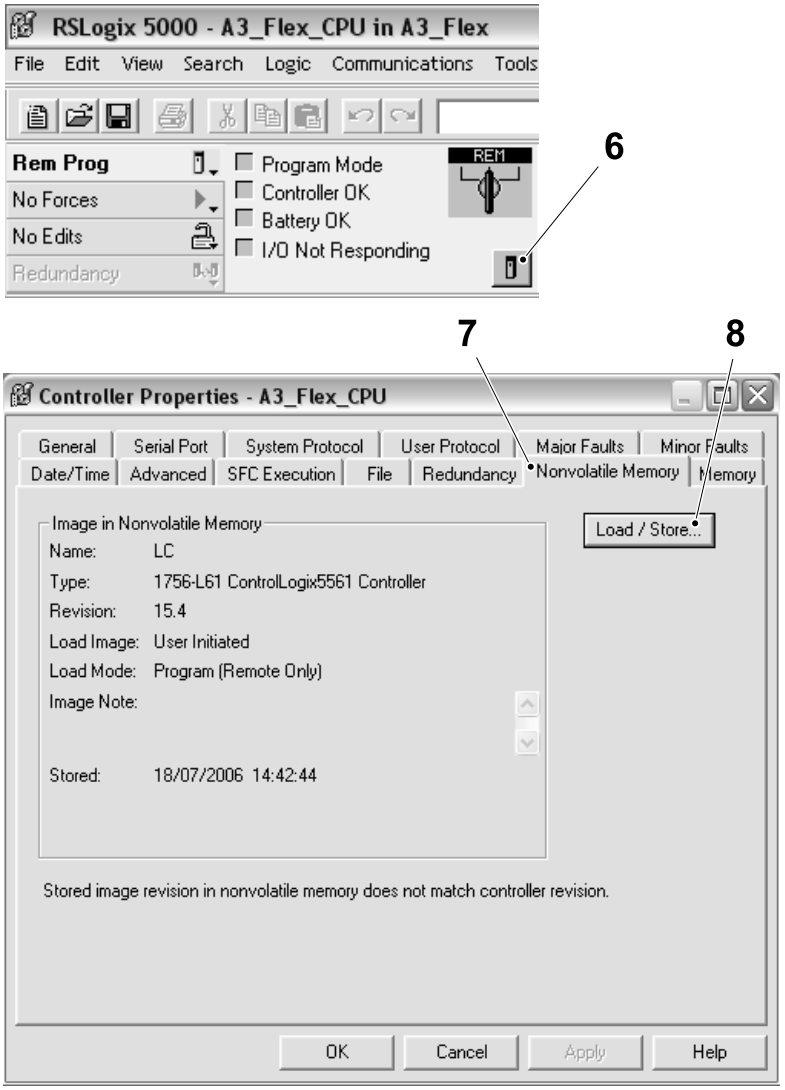

6 Controller properties button

7 Nonvolatile memory tab

8 Load/store button

(Cont'd)

(Cont'd)

g) In the NONVOLATILE MEMORY LOAD/STORE window (9), select ON CORRUPT MEMORY from the drop down list of the LOAD IMAGE option (10).

h) In the NONVOLATILE MEMORY LOAD/STORE window (9), select RUN (REMOTE ONLY) from the drop down list of the LOAD MODE option (11).

i) Select the STORE button (12).

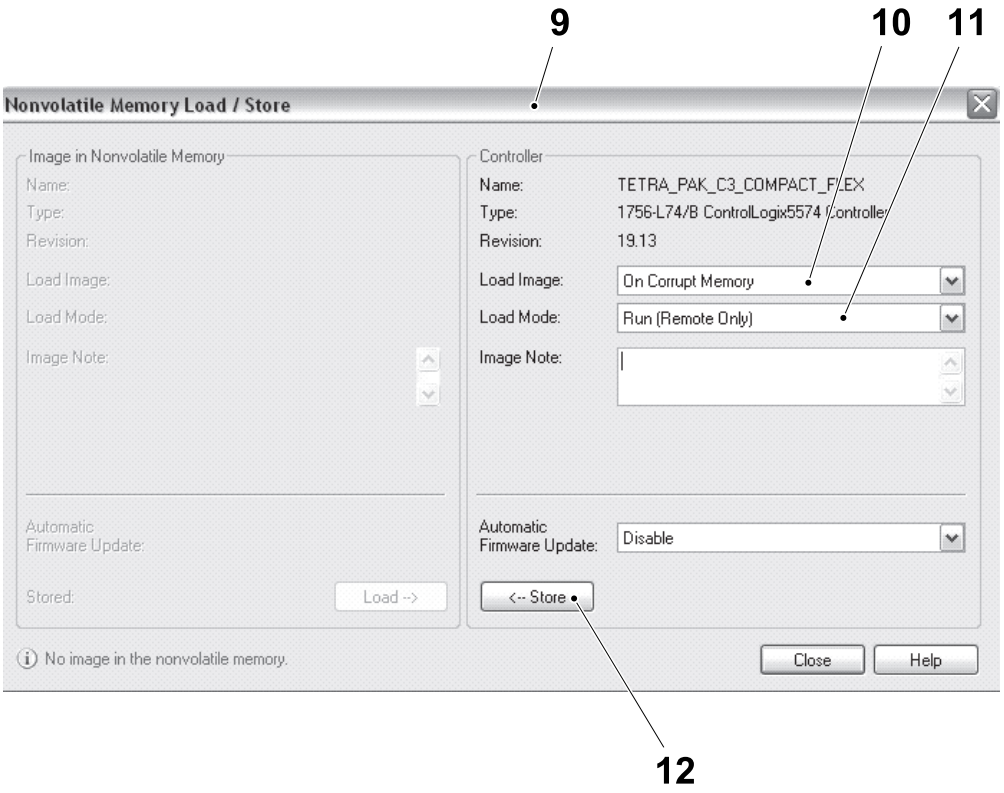

9 Nonvolatile memory load/store window
10 Load image option
11 Load mode option
12 Store button

(Cont'd)

(Cont'd)

j) Select the YES button (13) to confirm the store.

k) During the process a dialogue box indicates that the store is in progress, select the OK button (14).

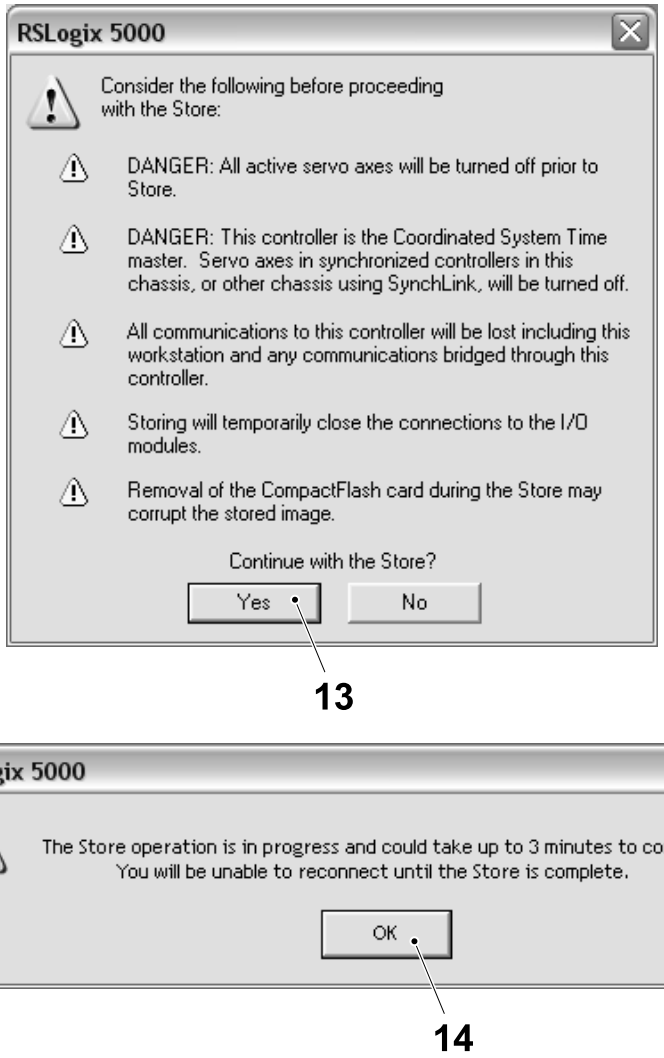

13 Yes button
14 OK button

(Cont'd)

(Cont'd)

l) Select the OK button (15) to close the CONTROLLER PROPERTIES window.

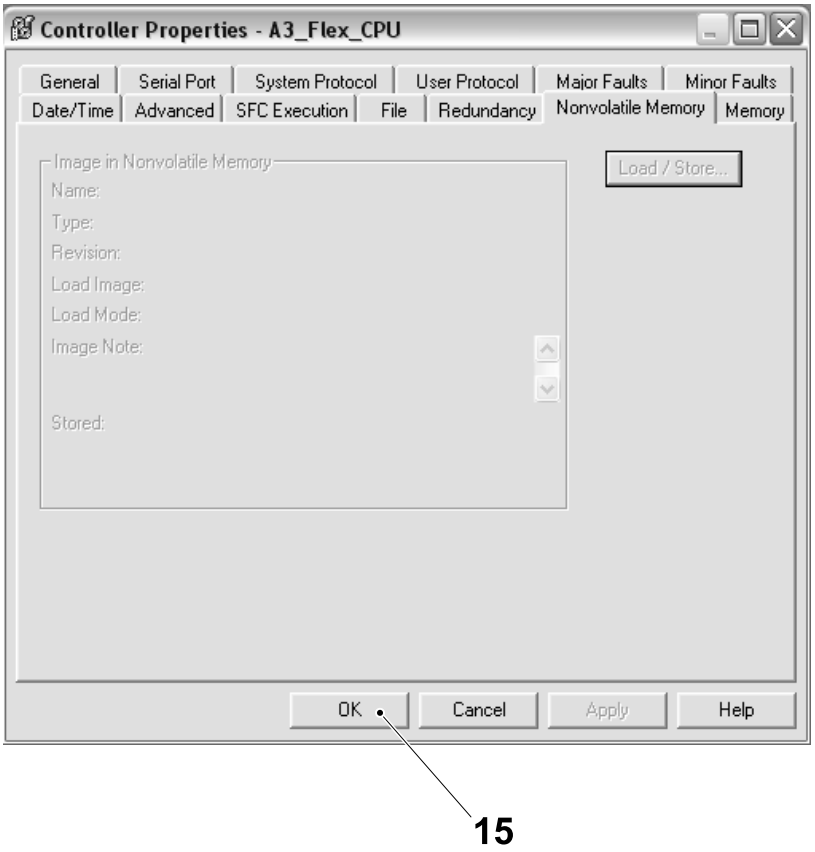

15 OK button

(Cont'd)

(Cont'd)

m) Select the COMMUNICATION menu (1) and then select GO ONLINE (2).

n) Select the COMMUNICATION menu (1) and then select RUN MODE (16) to put the PLC in RUN MODE.

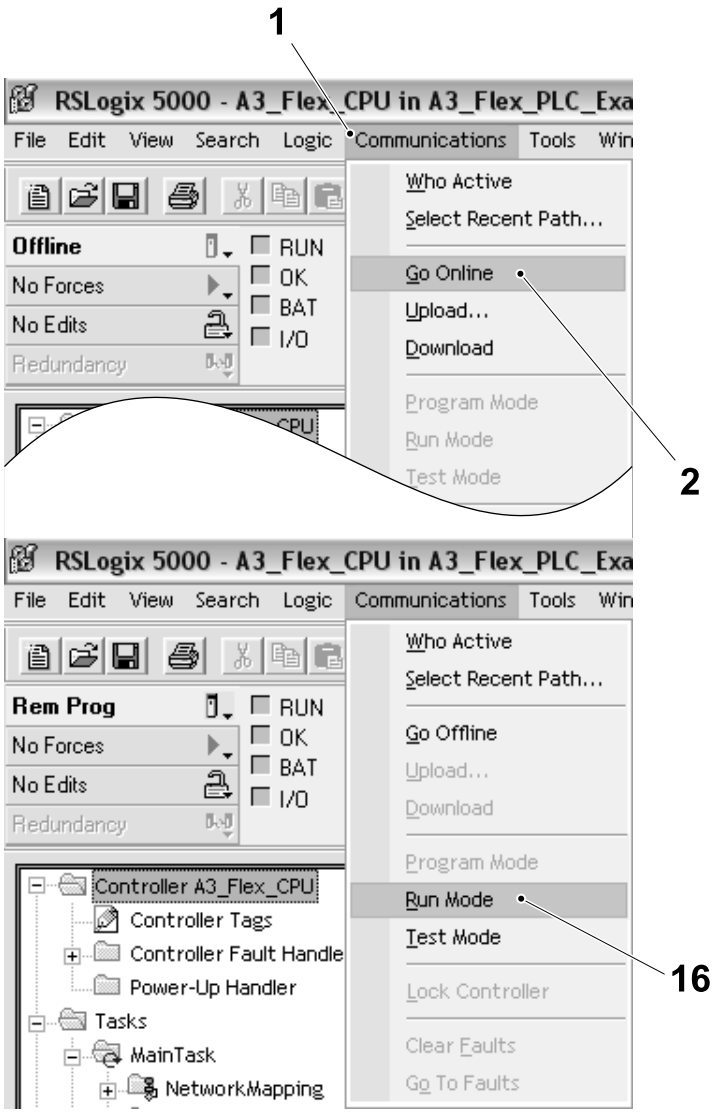

1 Communication menu
2 Go online
16 Run mode

8.1.2-3 CPU Module - Load Firmware

Machine Status	Electrical supply disconnecting device in position I (ON) Main air valve ON Main steam valve ON Main water valve ON
Special Equipment	Laptop PC Ethernet communication cable
SPC Reference	90603-5368 90605-2746

CAUTION
Risk of damage to the equipment.
If a firmware download is interrupted, for example by a loss of power or if the communication fails between the module and the PC, the module will be corrupted.

Use the firmware setup table on the software USB key (or software CD) to identify the correct firmware revision for the module to be flashed.

The firmware setup table is in PDF-format and located in `E:\FIRMWARE & MOTION DB\FIRMWARE_SETUP`.

Note! The table lists the required firmware versions for all rack mounted or distributed devices. Do not upgrade or downgrade the device firmware unnecessarily.

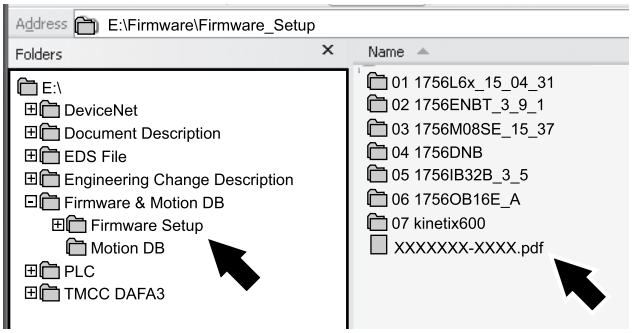

(Cont'd)

(Cont'd)

a) Make sure that the PC is configured as described in 8.1.1-1 Preparation for PLC Communication - Configure PC Network Communications and in 8.1.1-2 Preparations for PLC Communication - Configure RSLinx.

b) Open the `START` menu on the PC and select `PROGRAMS` (1), `FLASH PROGRAMMING TOOLS` (2), and `CONTROL FLASH` (3).

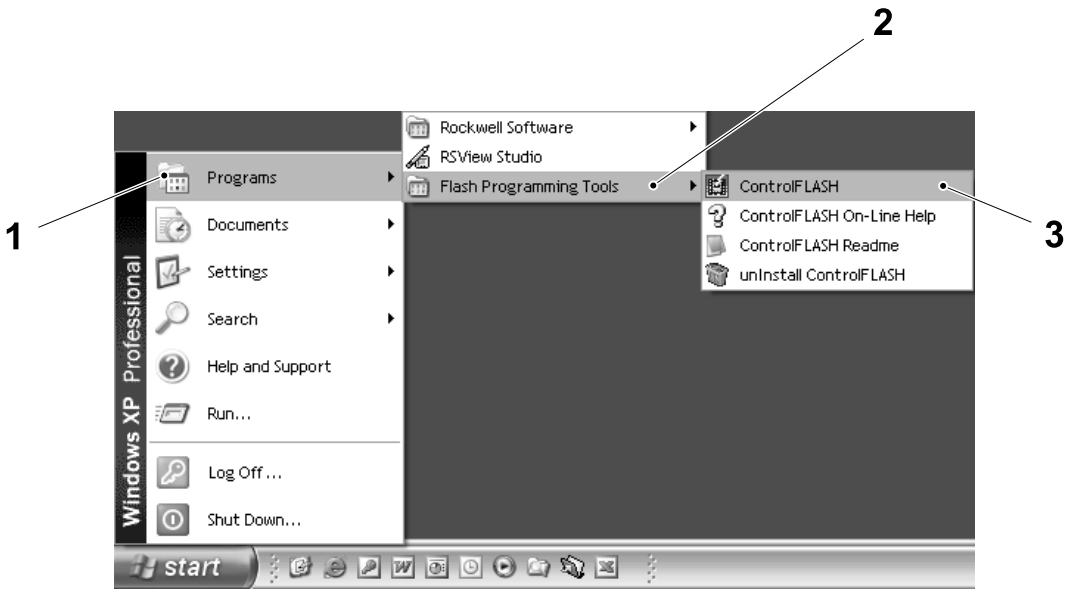

1 Programs
2 Flash programming tools
3 Control flash

(Cont'd)

(Cont'd)

c) Follow the instructions in the CONTROL FLASH PROGRAM WINDOW (4) to load the firmware.

Note! If the control FLASH program is not updated with the required firmware catalogue then continue with Update Control FLASH Catalogue on page 8-46 and repeat 8.1.2-3 CPU Module - Load Firmware one more time.



4 Control Flash program window

(Cont'd)

(Cont'd)

Note! The firmware must be verified and if necessary upgraded for all Rockwell devices. Use the firmware setup table on the software USB key (or software CD) to determine the catalogue number of the first device to be upgraded.

d) In the CATALOGUE NUMBER dialogue window, select and highlight the first device to be upgraded in the CATALOGUE LIST (5) as indicated in the illustration.

e) Select the NEXT button (6).

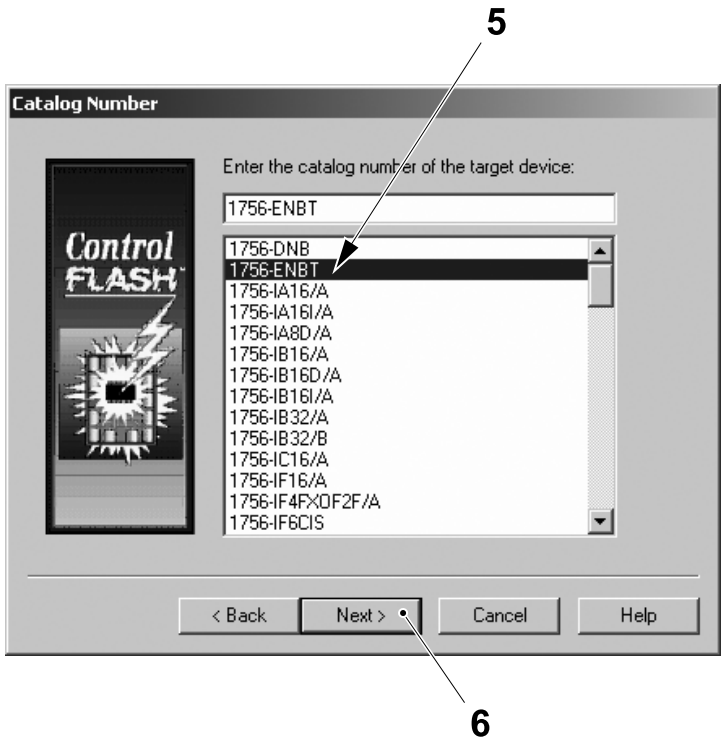

An ethernet device is shown as example

5 Catalogue list
6 Next button

(Cont'd)

(Cont'd)

Note! For the device 1756-ENBT/A only, select and highlight the backplane 1756-A7/A to verify the firmware. For all other devices select the appropriate icon as indicated in the illustration.

Note! To locate and verify the motion firmware(s), of the Kinetix servo drives click on the plus icon next to the 1756-M08SE, 8 Axis SERCOS interface to display the Sercos network and then click on the plus icon next to the Sercos network to fully expand and display all the devices.

f) In the dialogue window, browse the device tree and select and highlight the first device (7) to be upgraded as indicated in the illustration.

g) Select the OK button (8).

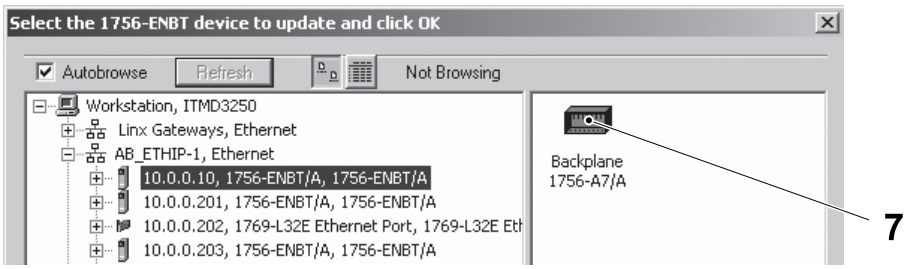

Ethernet Device

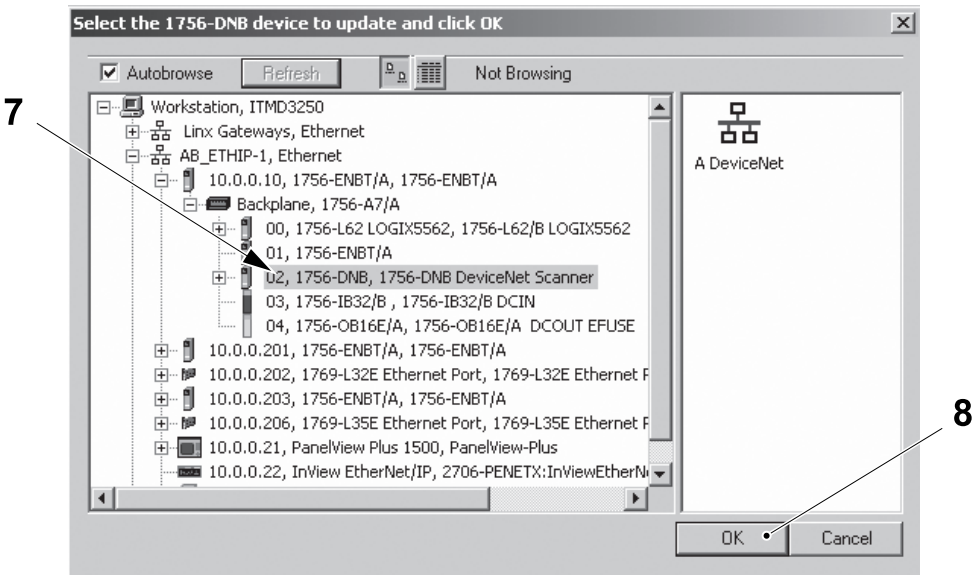

Other Devices

7 Device
8 Ok button

(Cont'd)

(Cont'd)

h) In the FIRMWARE REVISION dialogue window, check the current firmware revision number (9) with the firmware revision number indicated in the firmware setup table.

i) If the firmware revision number (9) is:

- equal to or greater than the number indicated in the firmware setup table, select the BACK button (10) and select the next device from the catalogue dialogue window as indicated in item d)
- a lower revision number than the number indicated in the firmware setup table, select the NEXT button (11) to continue with the firmware upgrade.

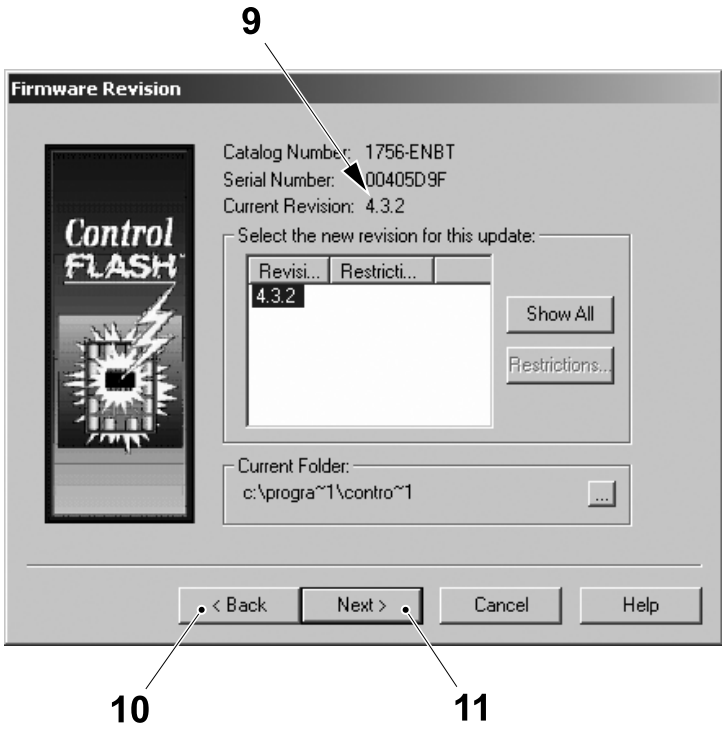

Ethernet device dialog is shown as example

9 Firmware revision number
10 Back button
11 Next button

(Cont'd)

(Cont'd)

j) In the SUMMARY dialogue window, select the FINISH button (12) to upgrade the device firmware.

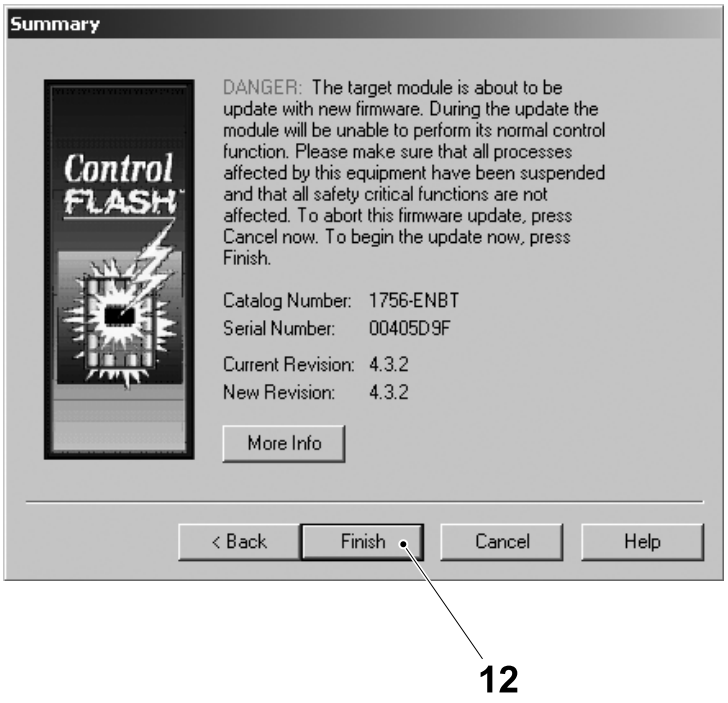

Ethernet device dialog is shown as example

12 Finish button

(Cont'd)

(Cont'd)

CAUTION
Risk of damage to the equipment.
If a firmware download is interrupted, for example by a loss of power or if the communication fails between the device and the PC, the PLC card will be corrupted.

k) In the confirmation window, select YES button (13).

l) At the end of the download, the UPDATE STATUS window opens, and shows the current revision number is equal to the new revision number.

m) Click the OK button (14).

n) Repeat the procedure for all the other Rockwell devices listed in the firmware setup table.

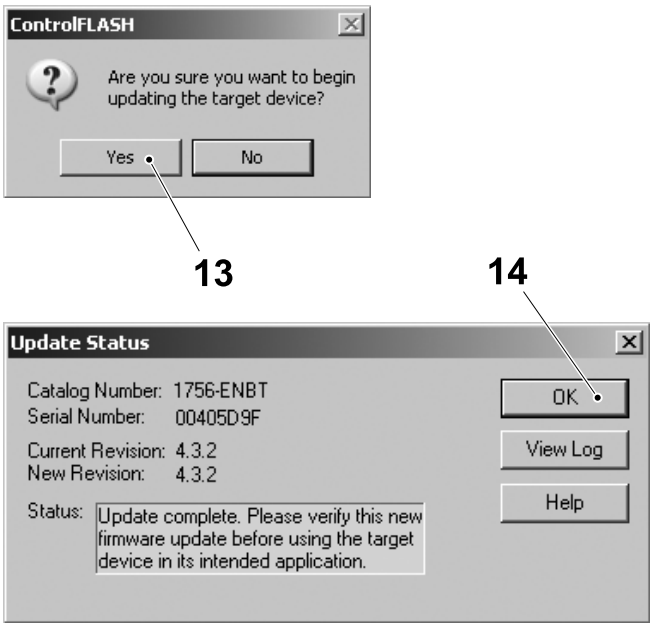

Ethernet device dialog is shown as example

13 YES button
14 OK button

(Cont'd)

(Cont'd)

Update Control FLASH Catalogue

Note! Only use the following procedure if the required firmware catalogue was not loaded.

a) Insert the software USB key in the laptop PC USB port.

Note! If a software CD has been supplied, insert the software CD into the laptop PC CD drive.

b) Browse the drive to find the `FIRMWARE SETUP` folder (1) in the directory; `E:\FIRMWARE & MOTION DB\`.

c) Copy the entire `FIRMWARE SETUP` folder (1) to the PC desktop.

Note! The `FIRMWARE SETUP` folder (1) contains all the ControlFLASH firmware upgrade kits for the filling machine PLC cards.

d) Open the `FIRMWARE SETUP` folder (1), in the first sub folder, double-click on the `SETUP.EXE` file (2) or the `CONTROLFLASH.MSI` to start the ControlFLASH program.

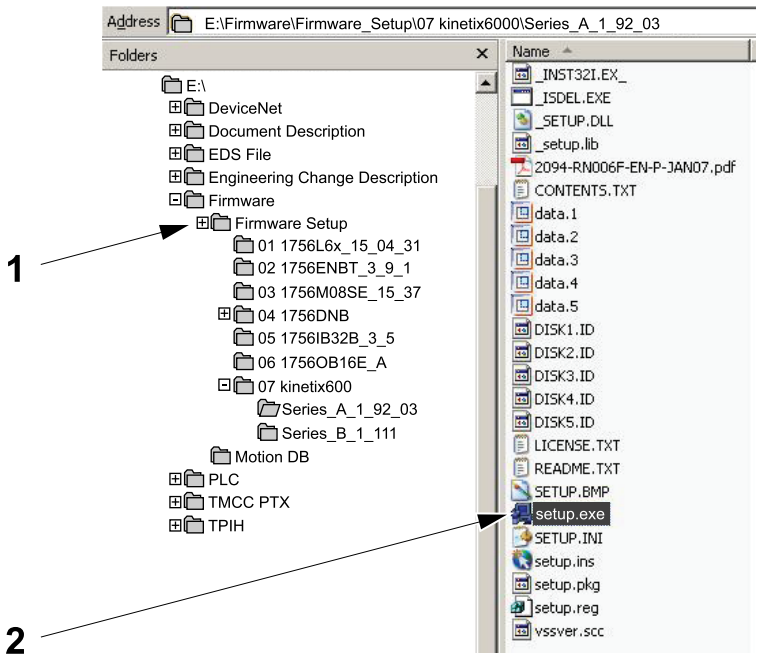

1 Firmware setup folder
2 Setup.exe file

(Cont'd)

(Cont'd)

Note! The following procedure describes the use of the ControlFLASH program version 4.00. Different versions of the ControlFLASH program may be included in the software USB key (or software CD), always follow the on-screen instructions provided by the ControlFLASH program.

e) In the `WELCOME` dialogue window, select the `NEXT` button (3).

f) In the `SOFTWARE LICENSE AGREEMENT` dialogue window, select the `YES` button (4).

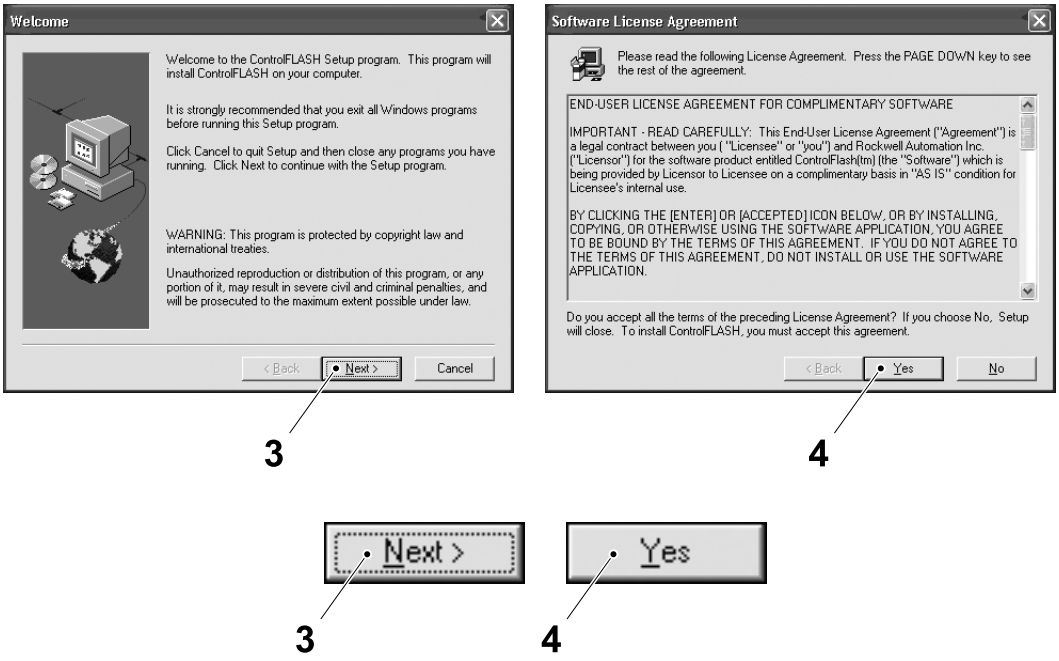

3 Next button
4 Yes button

(Cont'd)

(Cont'd)

g) In the CHOOSE DESTINATION LOCATION dialogue window, select the NEXT button (5) to start the installation.

h) In the SETUP COMPLETE dialogue window, deselect the two preselected check boxes (6).

i) Select the FINISH button (7).

j) Repeat the procedure to install the firmware catalogue updates in each of the other sub folders in the FIRMWARE SETUP folder.

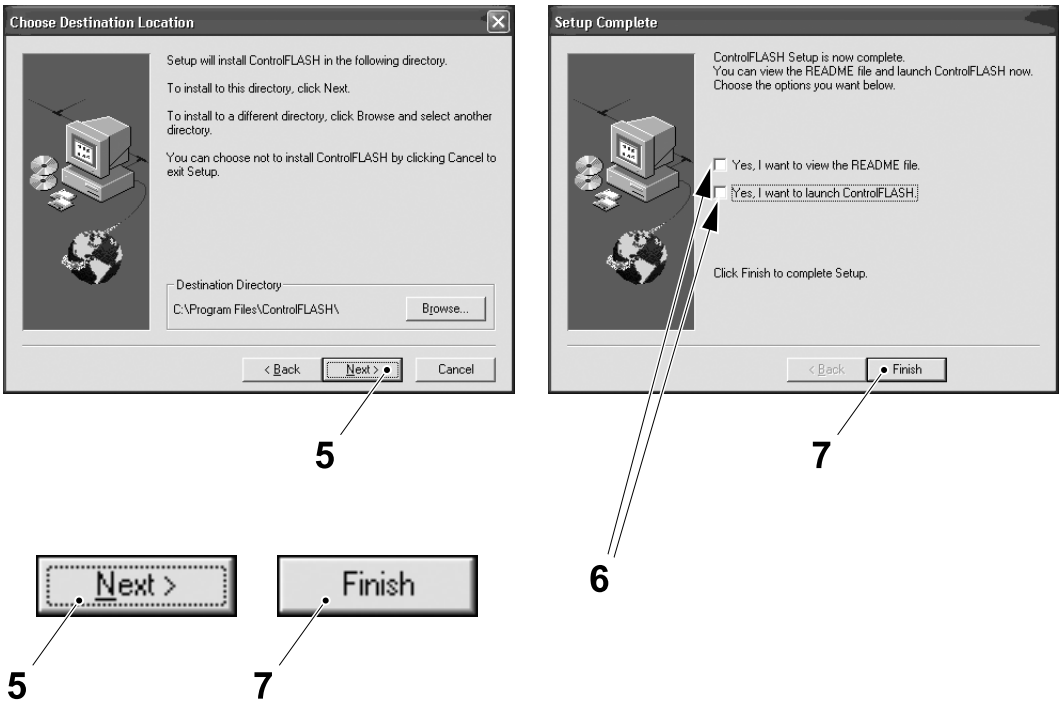

5 Next button
6 Check box
7 Finish button

8.1.2-4 CPU Module - Troubleshoot

Machine Status	Electrical supply disconnecting device in position I (ON)
SPC Reference	90603-5368 90605-2746

The CPU Module has a four-character scrolling status display (1) and four status indicators (2).

- the status display (1) scrolls messages that provide information about the firmware revision, Energy Storage Module (ESM) status, project status, and major faults.
- the status indicators (2) indicate the status of the controller.

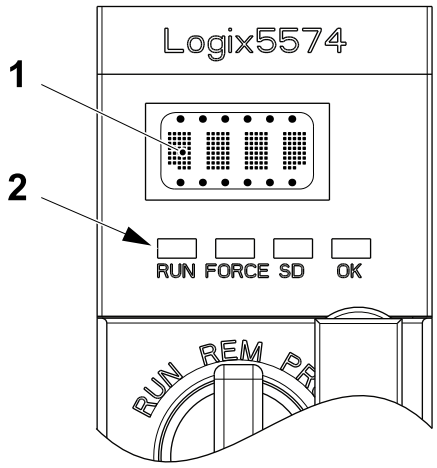

1 Status display
2 Status indicators

General Status Messages

Message	Description	Action
No message is indicated	The controller is off. A major non recoverable fault (MNRF) has occurred.	Check the OK indicator to determine if the controller is powered and determine the state of the controller
test	Power-up tests are being conducted by the controller	
pass	PASS Power-up tests have been successfully completed.	
SAVE	A project is being saved to the SD card at power down.	Allow the save to complete before removing the SD card or disconnecting the power.
load	A project is being loaded from the SD card at controller power up.	Allow the load to complete before removing the SD card or disconnecting power or removing the ESM module.

(Cont'd)

(Cont'd)

Message	Description	Action
updt	A firmware upgrade is being conducted from the SD card upon power up.	If the firmware to update upon power up is not desired, change the controller's Load Image property.
CHRG	The capacitor-based ESM is being charged.	
1756-L7x/X	The controller catalogue number and series.	
Rev XX.xxx	The major and minor revision of the controller's firmware.	
no project	No project is loaded on the controller.	Download the project to the controller or use a SD card to load a project to the controller
Project name	The name of the project that is currently loaded on the controller. The name indicated is based on the project name specified in RSLogix 5000 software.	
busy	The I/O modules associated with the controller are not yet fully-powered.	Allow time for power up and I/O module self-testing.
Corrupt Certificate Received	The security certificate associated with the firmware is corrupted.	Replace the firmware revision.
Corrupt Image Received	The firmware file is corrupted.	Replace the firmware revision.
ESM Not Present	An ESM is not present and the controller cannot save the application at power down.	Insert a compatible ESM, and, if using a capacitor-based ESM, do not remove power until the ESM is charged.
ESM Incompatible	The ESM is incompatible with the memory size of the controller.	Replace the incompatible ESM with a compatible ESM.
ESM Hardware Failure	A failure with the ESM has occurred and the controller is incapable of saving of the program in the event of a power down.	Replace the ESM before removing power to the controller so the controller program is saved.
ESM Energy Low	The capacitor-based ESM does not have sufficient energy to enable the controller to save the program in the event of a power down.	Replace the ESM.
ESM Charging	The capacitor-based ESM is charging.	Do not remove power until charging is complete.
Flash in Progress	A firmware upgrade initiated via ControlFLASH or AutoFlash utilities is in progress.	Allow the firmware upgrade to complete without interruption.

(Cont'd)

(Cont'd)

Message	Description	Action
Firmware Installation Required	The controller is using boot firmware and requires a firmware upgrade.	Upgrade controller firmware.
SD Card Locked	An SD card that is locked is installed.	

Major Recoverable Fault Messages

Major recoverable faults are indicated by the message `MAJOR FAULT TXX:CXX` on the controller status display. This table lists specific fault types, codes, and the associated messages as they are shown on the status display.

Note! For detailed descriptions and suggested recovery methods for major recoverable faults, see the Logix5000 Major, Minor, and I/O Fault Codes Programming Manual supplied by Rockwell Automation.

Type	Code	Message
1	1	Run Mode Powerup
1	60	Non-recoverable
1	61	Non-recoverable - Diagnostics Saved
1	62	Non-recoverable - Program Saved
3	16	I/O Connection Failure
3	20	Chassis Failure
3	23	Connection Failure
4	16	Unknown Instruction
4	20	Invalid Array Subscript
4	21	Control Structure LEN or POS < 0
4	31	Invalid JSR Parameter
4	34	Timer Failure
4	42	Invalid JMP Target
4	82	SFC Jump Back Failure
4	83	Value Out of Range
4	84	Stack Overflow
4	89	Invalid Target Step
4	90	Invalid Instruction
4	91	Invalid Context
4	92	Invalid Action
6	1	Task Watchdog Expired
7	40	Save Failure
7	41	Bad Restore Type
7	42	Bad Restore Revision
7	43	Bad Restore Checksum
8	1	Keyswitch Change Ignored

(Cont'd)

(Cont'd)

I/O Fault Codes

I/O faults indicated by the controller are shown in the status display in one of these formats; `I/O FAULT LOCAL:X #XXXX MESSAGE` or `I/O FAULT MODULENAME #XXXX MESSAGE` or `I/O FAULT MODULEPARENT:X #XXXX MESSAGE`.

The first part of the format is used to indicate the location of the faulted module. How the location is indicated depends on the I/O configuration and the module properties specified in RSLogix 5000 software.

The latter part of the format, #XXXX message, can be used to diagnose the type of I/O fault and potential corrective actions.

Take corrective action specific to the type of fault indicated.

Note! The status display shows `X I/O FAULTS` if multiple I/O faults are present: X is the number of I/O faults present. As each I/O fault is resolved, the number of faults indicated decreases and the next fault reported is indicated by the I/O Fault message.

Note! For details about each I/O fault code, see the Logix5000 Major, Minor, and I/O Fault Codes Programming Manual supplied by Rockwell Automation.

Code	Message	Code	Message
#0001	Connection Failure	#0110	Module Not Configured
#0002	Insufficient Resource	#0111	RPI Out of Range
#0003	Invalid Value	#0113	Out of Connections
#0004	IOI Syntax	#0114	Wrong Module
#0005	Destination Unknown	#0115	Wrong Device Type
#0006	Partial Data Transferred	#0116	Wrong Revision
#0007	Connection Lost	#0117	Invalid Connection Point
#0008	Service Unsupported	#0118	Invalid Configuration Format
#0009	Invalid Attribute Value	#0119	Module Not Owned
#000A	Attribute List Error	#011A	Out of Connection Resources
#000B	State Already Exists	#0203	Connection Timeout
#000C	Object Mode Conflict	#0204	Unconnected Message Timeout
#000D	Object Already Exists	#0205	Invalid Parameter
#000E	Attribute Not Settable	#0206	Message Too Large
#000F	Permission Denied	#0301	No Buffer Memory
#0010	Device State Conflict	#0302	Bandwidth Not Available
#0011	Reply Too Large	#0303	No Bridge Available
#0012	Fragment Primitive	#0304	ControlNet Schedule Error
#0013	Insufficient Command Data	#0305	Signature Mismatch
#0014	Attribute Not Supported	#0306	CCM Not Available
#0015	Data Too Large	#0311	Invalid Port
#0100	Connection In Use	#0312	Invalid Link Address

(Cont'd)

(Cont'd)

Code	Message	Code	Message
#0103	Transport Not Supported	#0315	Invalid Segment Type
#0106	Ownership Conflict	#0317	Connection Not Scheduled
#0107	Connection Not Found	#0318	Invalid Link Address
#0108	Invalid Connection Type	#0319	No Secondary Resources Available
#0109	Invalid Connection Size	#031E	No Available Resources
#031F	No Available Resources	#FE07	Invalid Output Connection
#0800	Network Link Offline	#FE08	Invalid Output Data Pointer
#0801	Incompatible Multicast RPI	#FE09	Invalid Output Data Size
#0814	Data Type Mismatch	#FE0A	Invalid Output Force Pointer
#FD01	Bad Backplane EEPROM	#FE0B	Invalid Symbol String
#FD02	No Error Code	#FE0C	Invalid Scheduled P/C Instance
#FD03	Missing Required Connection	#FE0D	Invalid Symbol Instance
#FD04	No CST Master	#FE0E	Module Firmware Updating
#FD05	Axis or GRP Not Assigned	#FE0F	Invalid Firmware File Revision
#FD06	SERCOS Transition Fault	#FE10	Firmware File Not Found
#FD07	SERCOS Init Ring Fault	#FE11	Firmware File Invalid
#FD08	SERCOS Comm Fault	#FE12	Automatic Firmware Update Failed
#FD09	SERCOS Init Node Fault	#FE13	Update Failed - Active Connection
#FD0A	Axis Attribute Reject	#FE14	Searching Firmware File
#FD1F	Safety I/O	#FE22	Invalid Connection Type
#FD20	No Safety Task	#FE23	Invalid Unicast Allowed
#FE01	Invalid Connection Type	#FF00	No Connection Instance
#FE02	Invalid Update Rate	#FF01	Path Too Long
#FE03	Invalid Input Connection	#FF04	Invalid State
#FE04	Invalid Input Data Pointer	#FF08	Invalid Path
#FE05	Invalid Input Data Size	#FF0B	Invalid Config
#FE06	Invalid Input Force Pointer	#FF0E	No Connection Allowed

(Cont'd)

(Cont'd)

Status Indicators

LED	Colour	Description
RUN (1)	Off	The controller is in Program or Test mode.
	Steady green	The controller is in Run mode.
FORCE (2)	Off	No tags contain I/O force values. I/O forces are inactive (disabled).
	Solid amber	I/O forces are active (enabled) though I/O force values may or may not be configured.
	Flashing amber	One or more input or output addresses have been forced to an On or Off state, but the forces have not been enabled.
SD (3)	Off	There is no activity.
	Flashing green	The controller is reading from or writing to the SD card. Do not remove the SD card while the controller is reading or writing.
	Solid green	
	Flashing red	The SD card does not have a valid file system.
	Solid red	The SD card is not recognized by the controller.

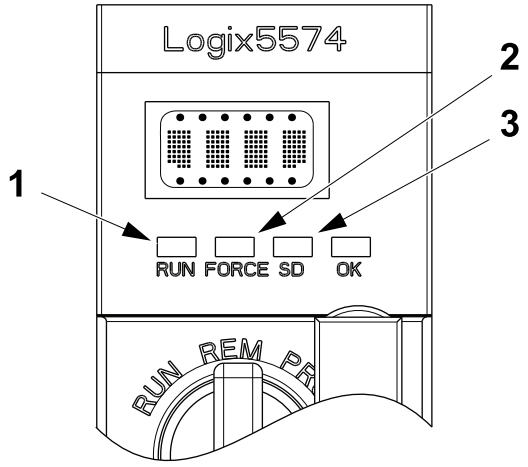

1 Run LED
2 Force LED
3 SD LED

(Cont'd)

(Cont'd)

LED	Colour	Description
OK (4)	Off	No power is applied.
	Flashing red	If the controller is new, then the controller requires a firmware update. Thestatus display (5) indicates `FIRMWARE INSTALLATION REQUIRED`. If the controller is **not** new, then a board major fault has occurred. For details about major recoverable faults, see the Logix5000 Major, Minor, and I/O Fault Codes Programming Manual, distributed by Rockwell Automation.
	Solid red	The controller is completing power-up diagnostics or The controller detected a non-recoverable fault, so it cleared the project from memory. or The charge of the capacitor in the ESM is being discharged upon power down. or The controller is powered, but is inoperable. or The controller is loading a project to nonvolatile memory.
	Solid green	The controller is ok.

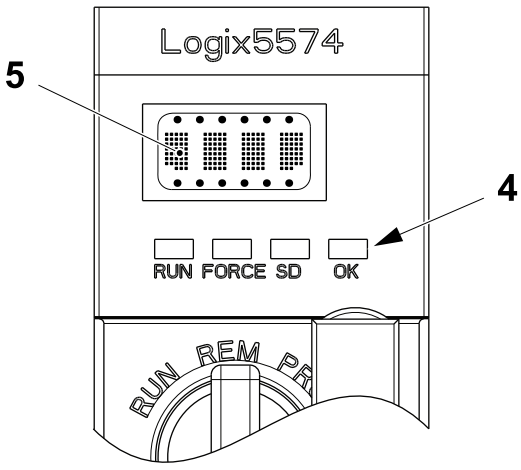

4 OK LED
5 Status display

8.1.2-5 CPU Module - Change Energy Storage Module (ESM)

Machine Status	Electrical supply disconnecting device in position I (ON)
SPC Reference	90603-5368 90605-2746

CAUTION
Loss of data
Make sure that the electrical supply disconnecting device s turned to the ON position. Failure to do this may result in the data stored in the PLC being lost.

Note! Even if the power is turned off or the CPU module has been removed from the chassis, do not remove the Energy Storage Module (ESM) immediately. Wait until the OK status indicator changes from green to solid red to OFF before removing the ESM.

a) Remove the key (1).

b) Press down the lock (2) and pull out the energy storage module (3) from the CPU module.

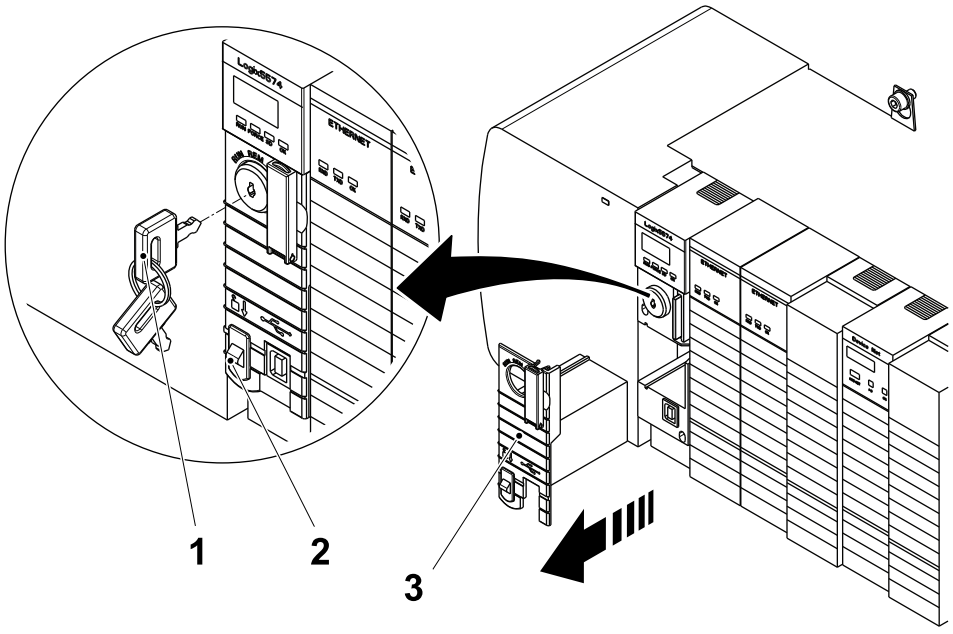

1 Key
2 Lock
3 Energy Storage Module

(Cont'd)

(Cont'd)

c) Align the guide (4) of the energy storage module (3) with the groove (5) on the CPU module.

d) Slide theenergy storage module (3) back until it snaps into place.

e) The energy storage module (3) begins charging after installation. The status is indicated by the message `ESM CHARGING` or `CHRG`.

Note! The messages `ESM CHARGING` or `CHRG` may take up to 15 seconds to be displayed.

Note! Allow the ESM to finish charging. To check that the ESM is fully charged, check that the messages `ESM CHARGING` or `CHRG` are no longer indicated.

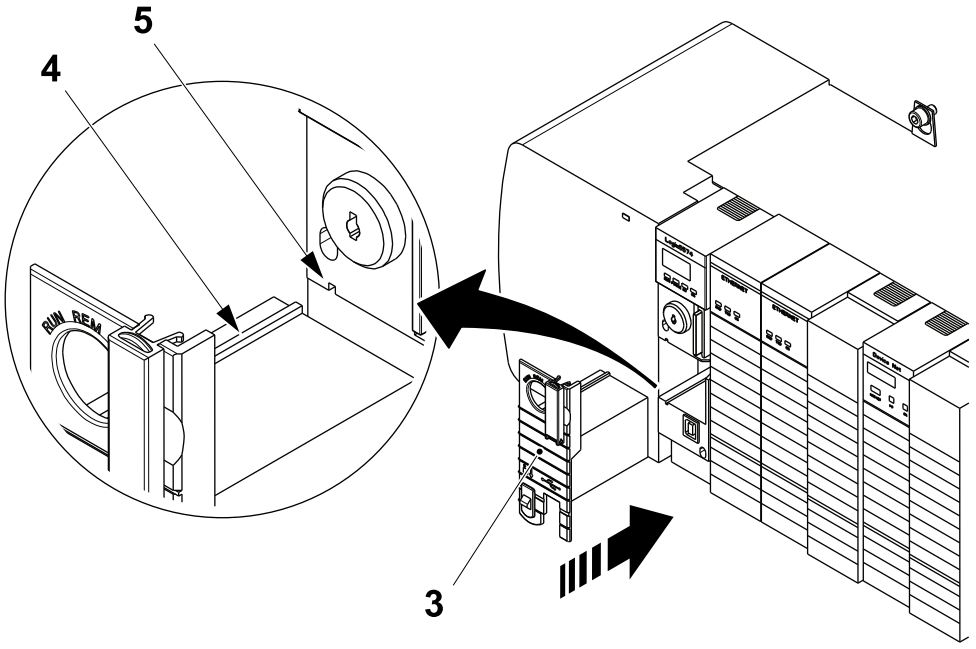

3 Energy Storage Module
4 Guide
5 Groove

8.1.3 EtherNet/IP Module

8.1.3-1 EtherNet/IP Module - Change

Machine Status	Electrical supply disconnecting device in position O (OFF) Main air valve OFF Main steam valve ON Main water valve OFF

Note! The firmware revision of the new EtherNet/IP module maybe equal to, or newer than the firmware revision of the old EtherNet/IP module. A newer firmware revision may create errors when going online, such as unrecognized device or device mismatch if the PC does not contain the latest EDS files.

Preparation

Before changing the EtherNet/IP module:

- Use the RSLinx Classic program to verify and record the firmware version of the EtherNet/IP module.
- Use the Flow Chart of Procedures for Changing the EtherNet/IP Module to determine which procedures to perform and their correct sequence.

(Cont'd)

(Cont'd)

Flow Chart of Procedures for Changing the EtherNet/IP Module

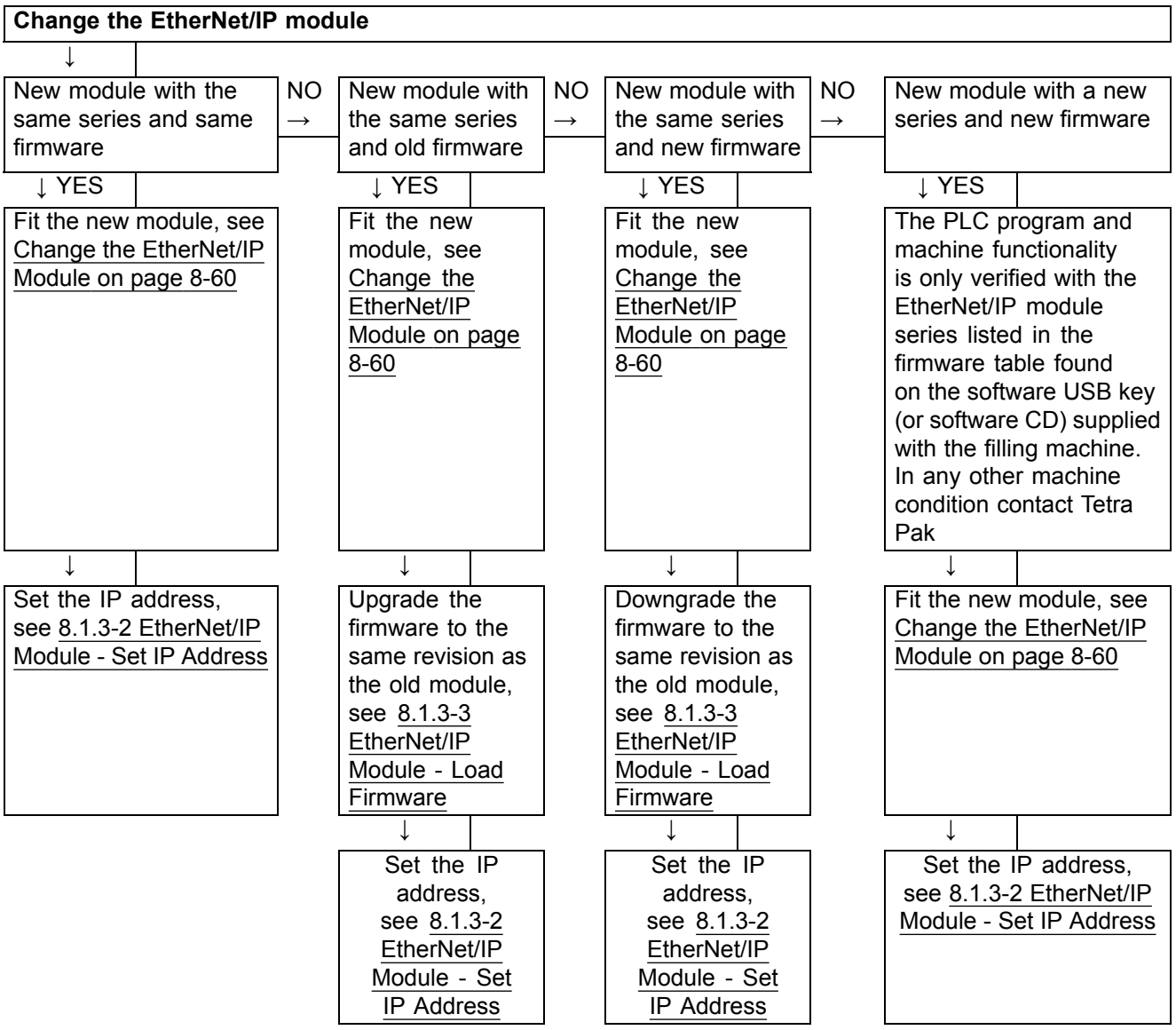

(Cont'd)

(Cont'd)

Change the EtherNet/IP Module

a) Remove the cable connection (1) from the EtherNet/IP module.

b) Press the locking tabs on the top and the bottom of the EtherNet/IP module.

c) Slide the EtherNet/IP module out of the chassis.

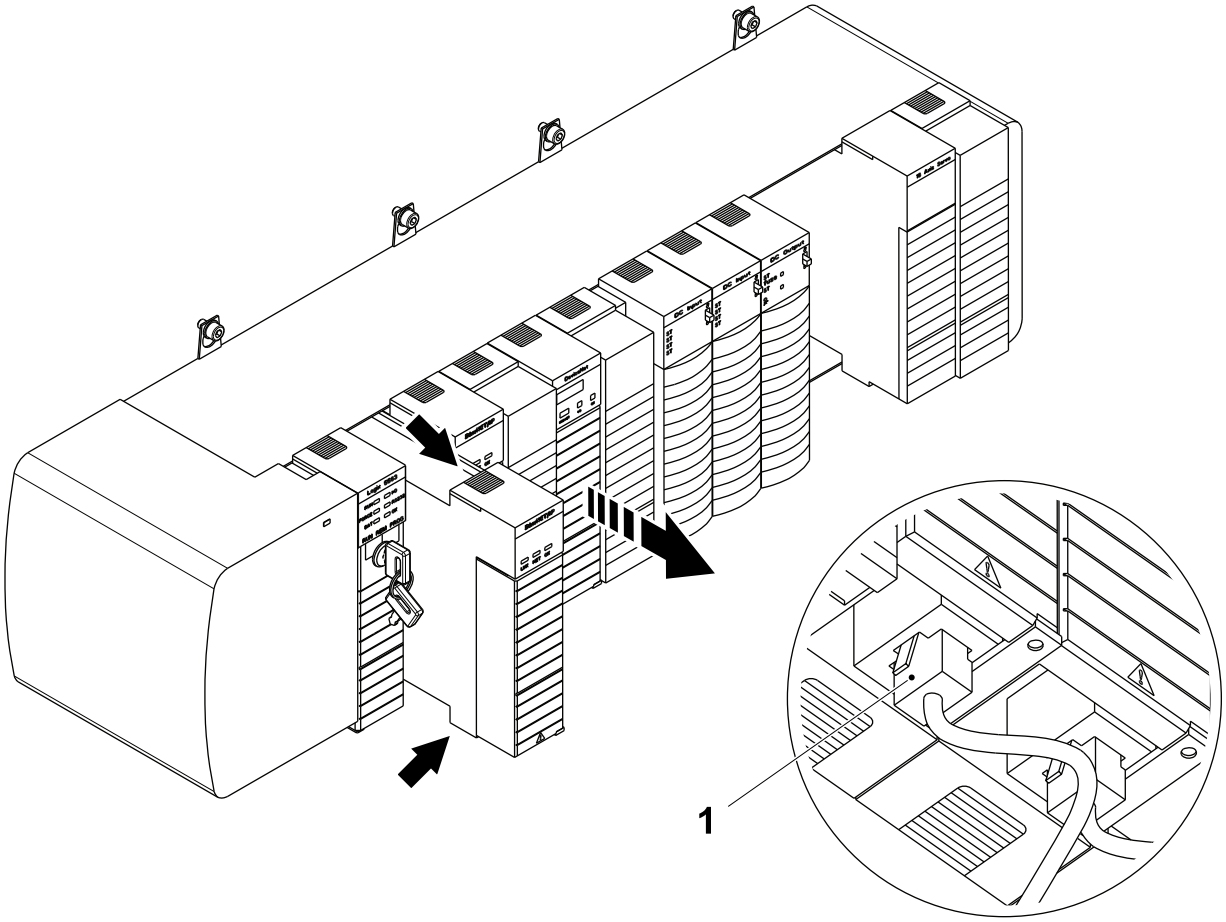

1 Cable connection

(Cont'd)

(Cont'd)

d) Verify and record the MAC address (2) of the new EtherNet/IP module printed in the position indicated in the illustration.

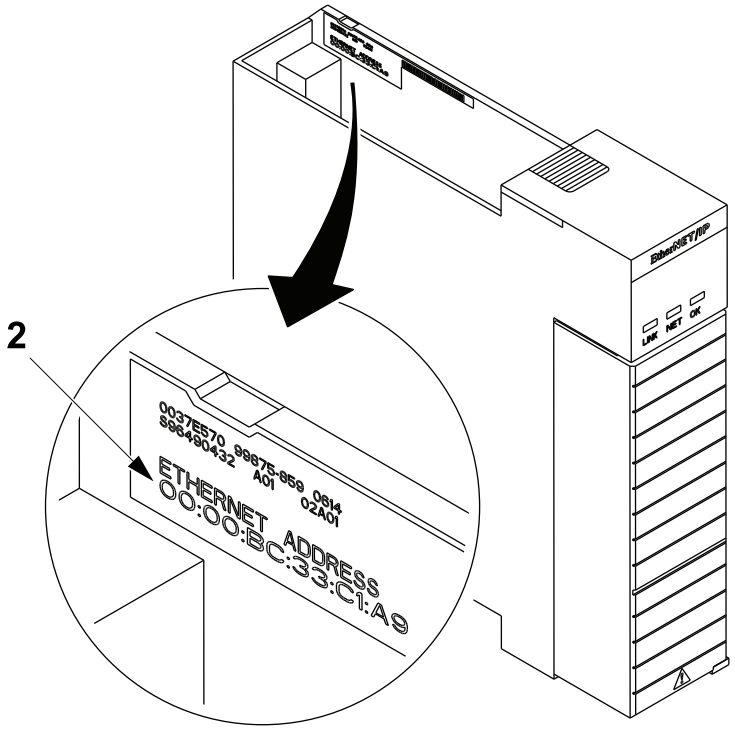

2 MAC address

(Cont'd)

(Cont'd)

e) Align the new EtherNet/IP module with the top and the bottom guides in the chassis.

f) Slide the EtherNet/IP module into the chassis. Make sure the EtherNet/IP module is flush with the other modules and that the latches on the top and bottom engage.

g) Fit the cable connection (1) to the EtherNet/IP module.

h) Turn the electrical supply disconnecting device to the position | (ON).

i) Check the status of the EtherNet/IP module LED's according to the table in section 8.1.3-4 EtherNet/IP Module - LED Description.

j) Continue with the necessary procedures as described in Flow Chart of Procedures for Changing the EtherNet/IP Module on page 8-59.

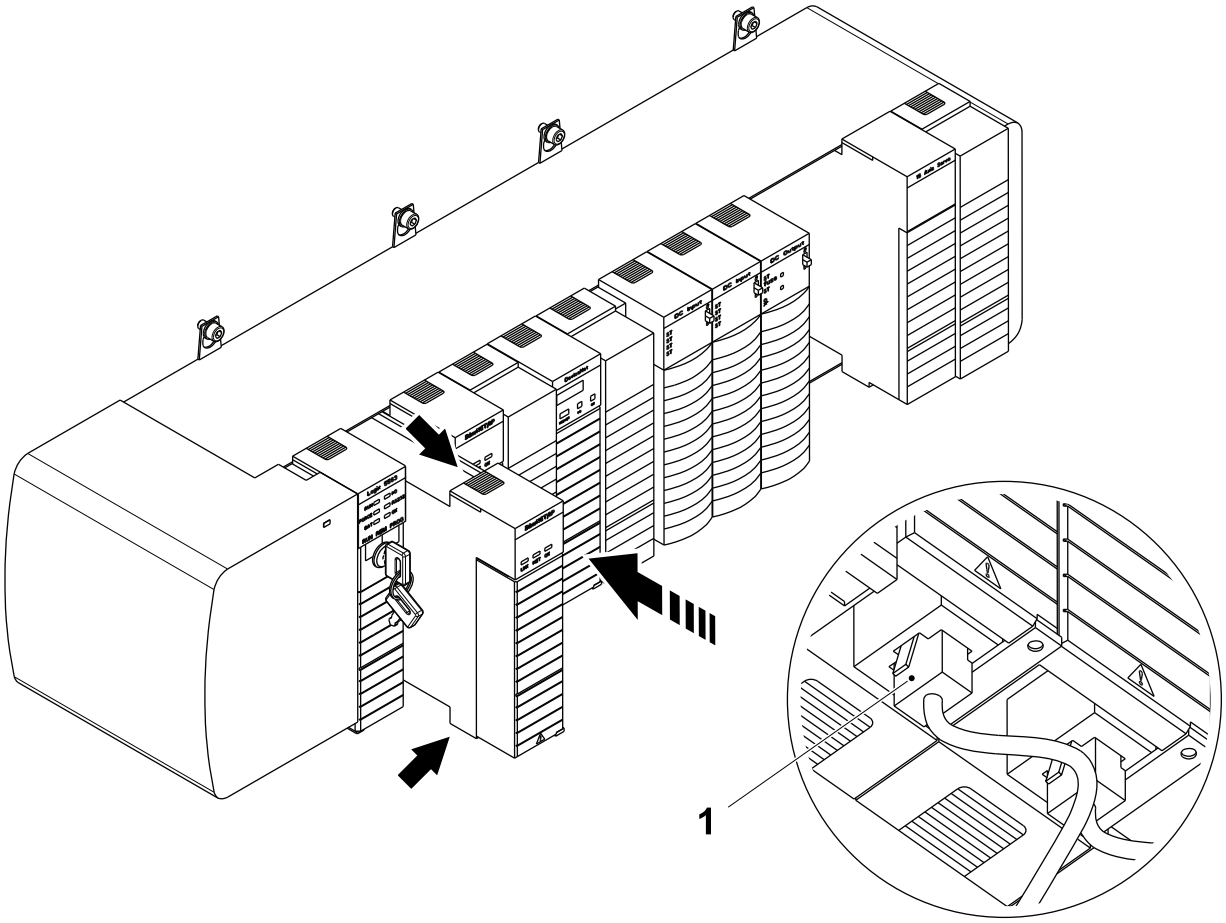

1 Cable connection

8.1.3-2 EtherNet/IP Module - Set IP Address

Machine Status	Electrical supply disconnecting device in position I (ON)
Special Equipment	Laptop PC Ethernet communication cable

New EtherNet/IP modules have a MAC address programmed as a factory setting. The MAC address must be changed to an IP address as described below:

a) Connect the Ethernet communication cable between a vacant connection port on the Ethernet switch (1) and the laptop PC (2).

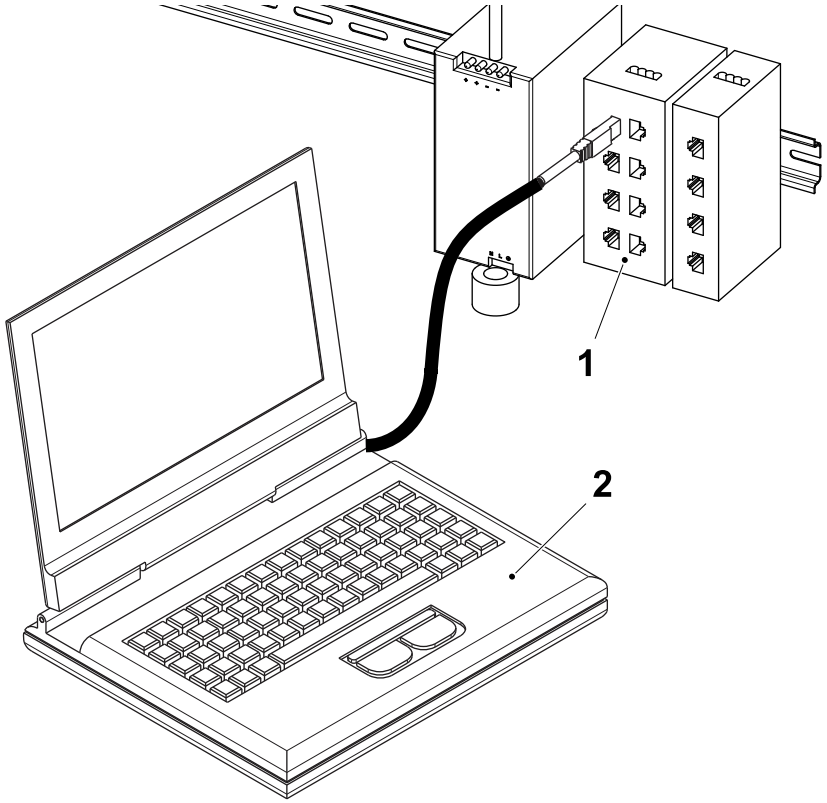

1 Ethernet switch
2 Laptop PC

(Cont'd)

(Cont'd)

b) Make sure that the network cable between the Ethernet switch and the EtherNet/IP module is connected.

c) Open the RSLINX CLASSIC PROFESSIONAL program and select EXIT AND SHUTDOWN (1).

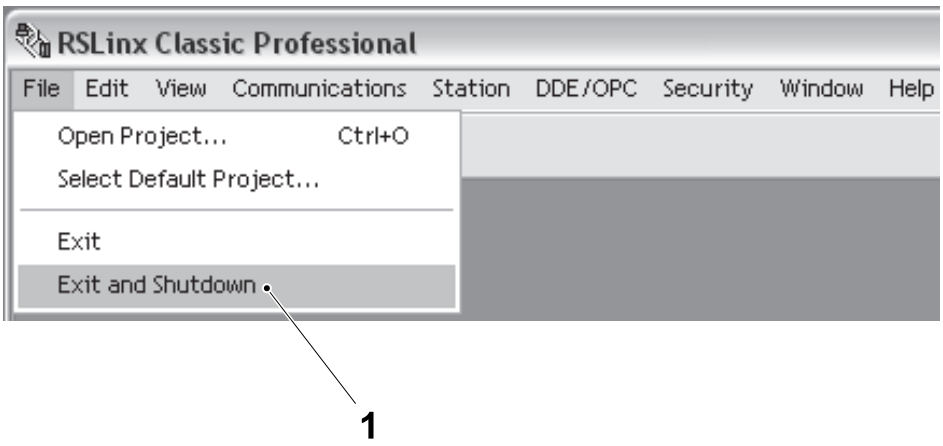

1 Exit and shutdown

d) Open the START menu on the laptop PC and select PROGRAMS (2), ROCKWELL SOFTWARE (3), BOOTP DHCP SERVER (4) and then BOOTP DHCP SERVER (5).

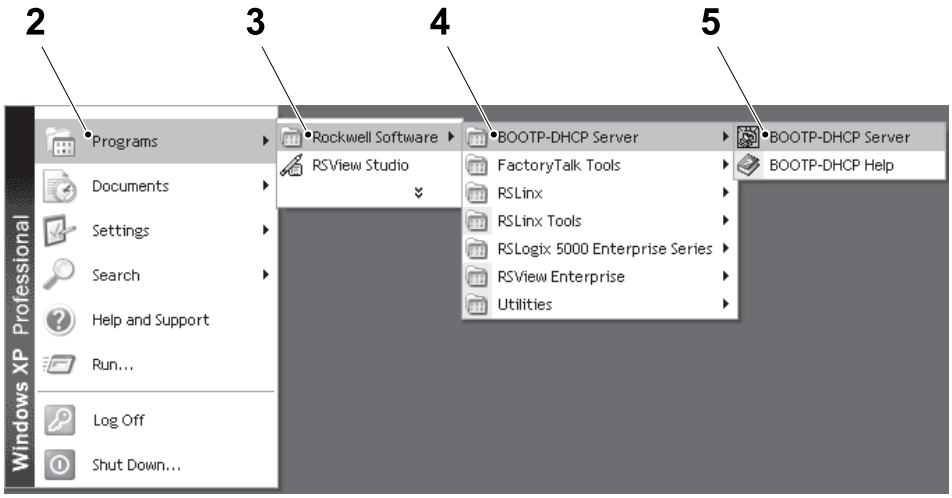

2 Program
3 Rockwell software
4 BOOTP DHCP server
5 BOOTP DHCP server

(Cont'd)

(Cont'd)

Note! When opening the BOOT DHCP SERVER program for the first time, make the following network setting. Otherwise continue with step g).

e) Enter 255.255.0.0 as the SUBNET MASK (6). Set all the other settings to zero.

f) Select the OK button (7).

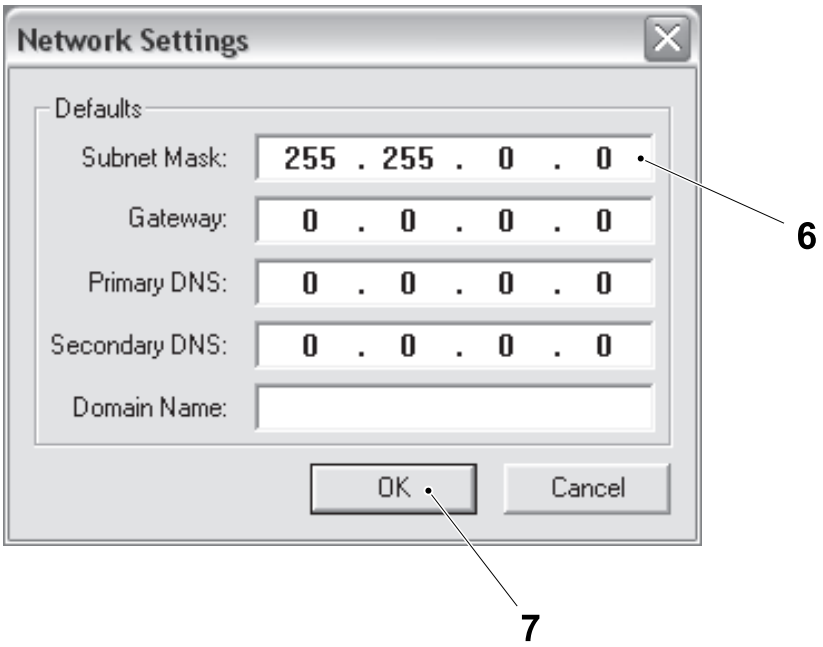

6 Subnet Mask
7 OK button

(Cont'd)

(Cont'd)

g) When the MAC address displays in the REQUEST HISTORY window (8) of the BOOT DHCP SERVER window (9), check that the same address displays on the EtherNet module and select the NEW button (10) to begin the conversion from the MAC address to an IP address.

h) When the MAC address displays in the RELATION LIST window (11), select the MAC address.

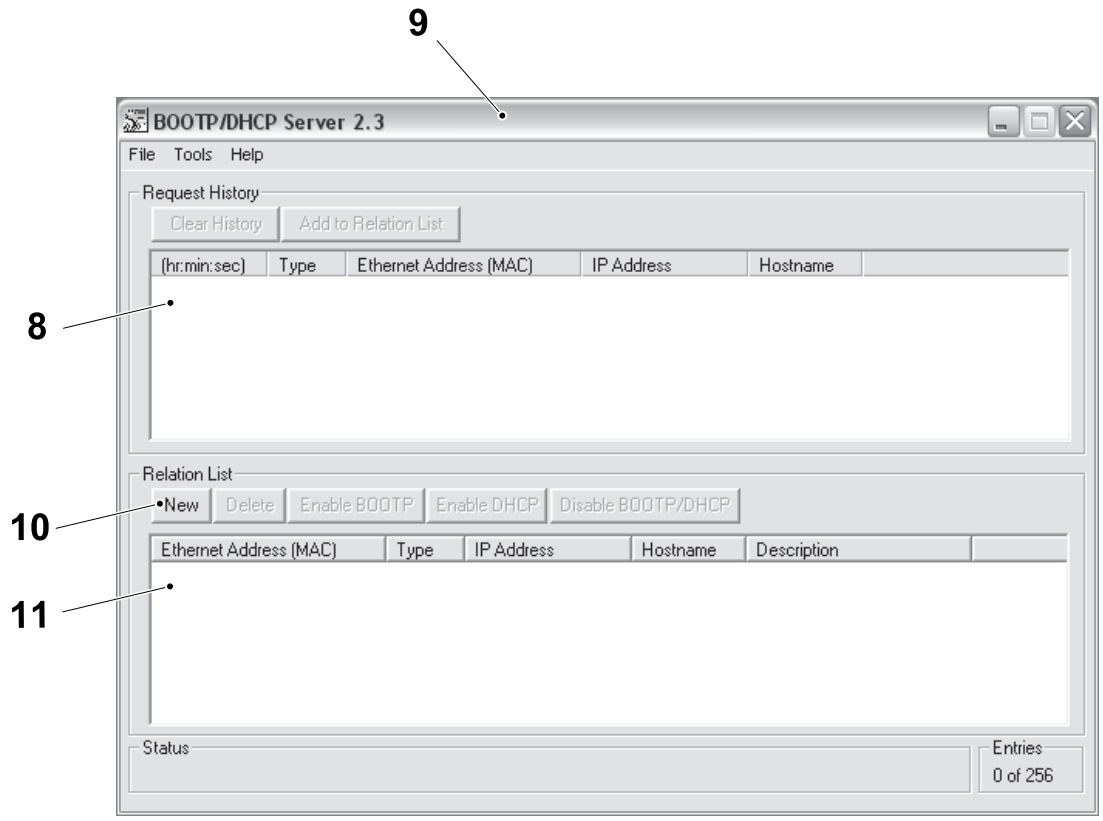

8 Request history window
9 BOOT DHCP server window
10 New button
11 Relation list window

(Cont'd)

(Cont'd)

i) Enter the MAC address in the MAC ADDRESS field (12) and the new IP address (see the table) in the IP ADDRESS field (13) of the NEW ENTRY window (14).

j) Select the OK button (15). The new IP address will appear in the REQUEST HISTORY window (8).

k) Select the EtherNet/IP module in the RELATION LIST window (11) and then select the DISABLE BOOTP/DHCP button (16).

l) After configuring the EtherNet/IP module, check that the correct IP address displays on the EtherNet/IP module.

m) Disconnect the PC from the Ethernet switch.

EtherNet/IP Module			
PLC Slot No.	**Pos. No.**	**Module type**	**IP address**
1	A01K2010	1756-ENBT	10.255.1.21
2	A01K2020	1756-ENBT	10.0.0.201

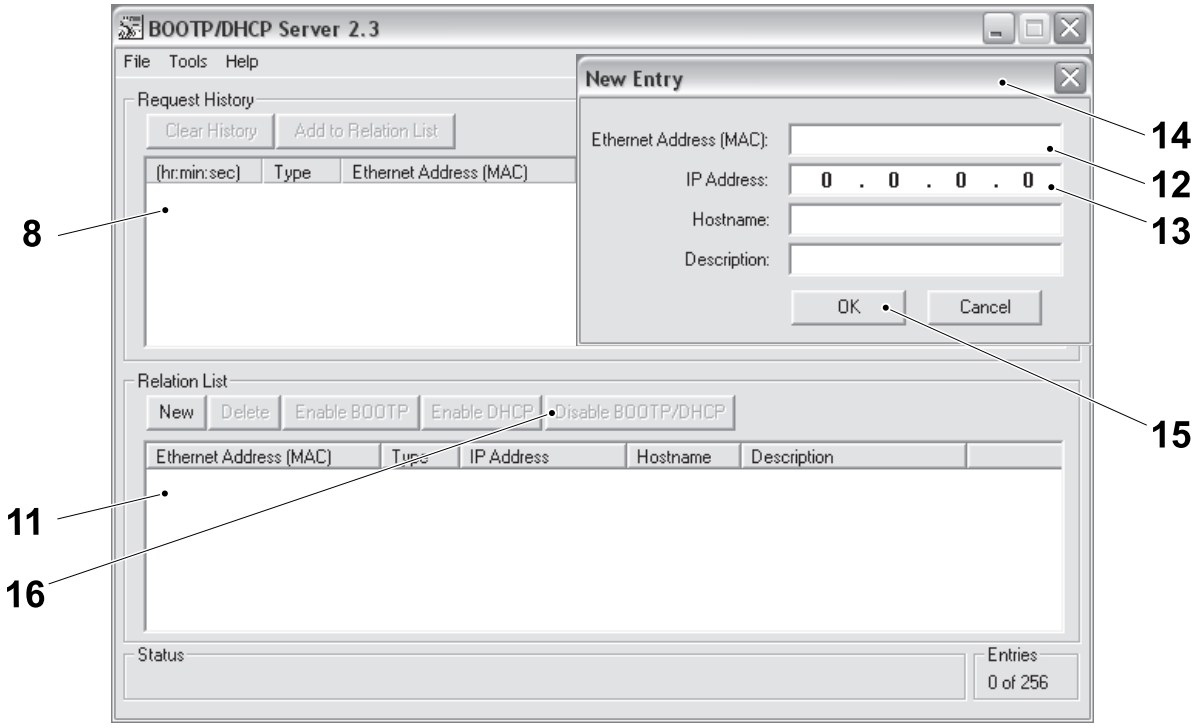

8 Request history window
11 Relation list window
12 MAC address field
13 IP address field
14 New entry window
15 OK button
16 Disable BOOTP/DHCP button

8.1.3-3 EtherNet/IP Module - Load Firmware

Follow the procedure described in 8.1.2-3 CPU Module - Load Firmware to load the firmware for the EtherNet/IP module.

8.1.3-4 EtherNet/IP Module - LED Description

Machine Status	Electrical supply disconnecting device in position I (ON)

LED	Colour	Description
LINK LED (1)	Off	No data transmission. Module is not ready for transmission
	Solid green	Ready. Module is ready to communicate.
	Flashing green	Module is communicating over the network.
NET LED (2)	Off	Module is not powered or does not have an IP address. Verify there is chassis power and make sure the module has been configured.
	Solid green	Module has an IP address and has established at least one connection.
	Flashing green	Module has an IP address and but has no established connections.
	Solid red	A duplicate IP address has been detected. Make sure that the IP address assigned to this module is not the same as that for any other device already on the network.
	Flashing red	A connection has timed out. One or more of the connections targeting the module has timed out.

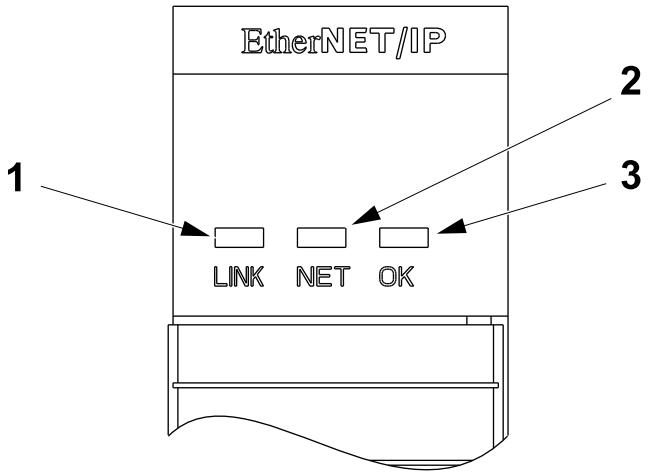

1 LINK LED
2 NET LED
3 OK LED

(Cont'd)

(Cont'd)

LED	Colour	Description
OK LED (6)	Off	The module does not have 24 V DC power. Verify there is chassis power and make sure the module has been correctly inserted in the chassis.
	Solid green	Module is operating correctly.
	Flashing green	Module is not configured.
	Solid red	Major fault. An non-recoverable fault has been detected, cycle the power to the module. If the fault remains replace the module.
	Flashing red	A duplicate IP address has been detected. Make sure that the IP address assigned to this module is not the same as that for any other device already on the network. Or A recoverable fault has been detected. This could be caused by an error in the configuration.
	Flashing red/green	The module is performing the self-test on power up.

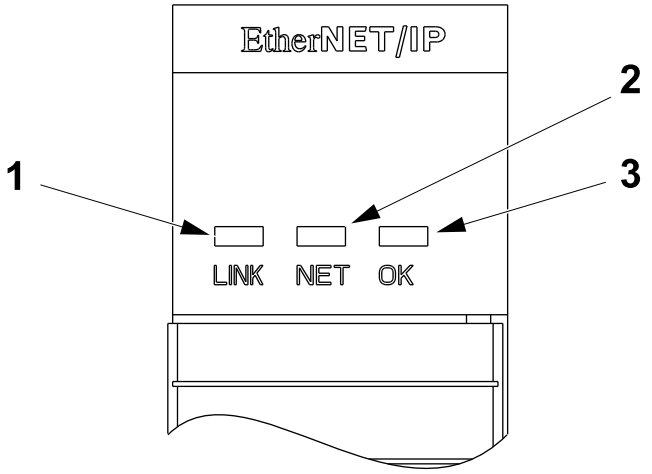

4 LINK LED
5 NET LED
6 OK LED

8.1.3-5 EtherNet/IP Module - Change IP Address

Machine Status	Electrical supply disconnecting device in position I (ON) Main air valve OFF Main steam valve ON Main water valve OFF

If two different filling machine are managed inthe iLine by the same Tetra Pak LC30 Plus, the IP address of one of them must be changed to avoid conflicts. Proceed as follows:

a) On the TPOP, log on as a TPTECHNICIAN, see 8.6.3-2 HMI - User Management Log On.

b) Touch the MACHINE CONFIGURATION button (1).

c) Touch the ETHERNET IP ADDRESS LEVEL 6 icon (2). The dialogue window (3) is displayed.

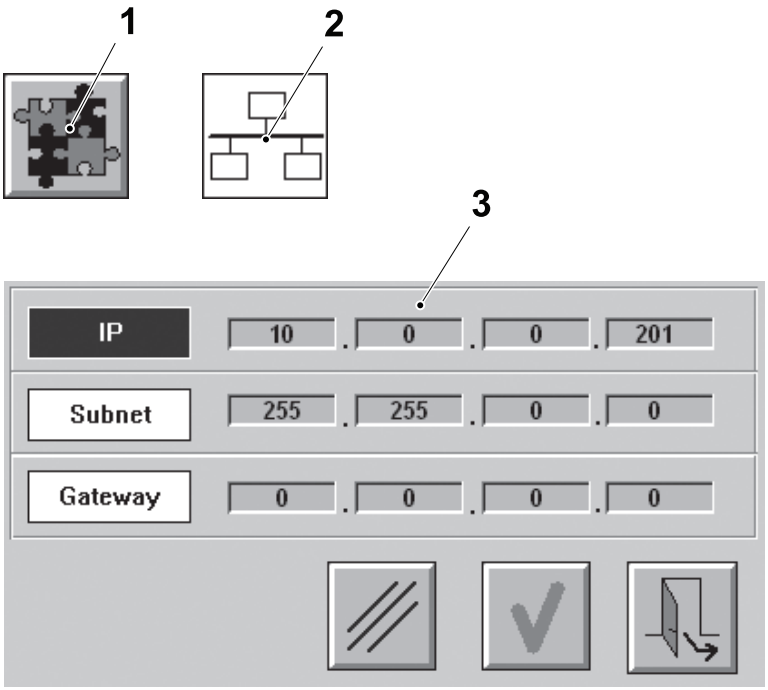

1 MACHINE CONFIGURATION button
2 ETHERNET IP ADDRESS LEVEL 6 icon
3 Dialogue window

(Cont'd)

(Cont'd)

d) Touch the IP field (4) to set the IP address.

e) Touch the firsts number field icon (5) and set the proper number by the keypad (6).

f) Set in the same way the other IP fields.

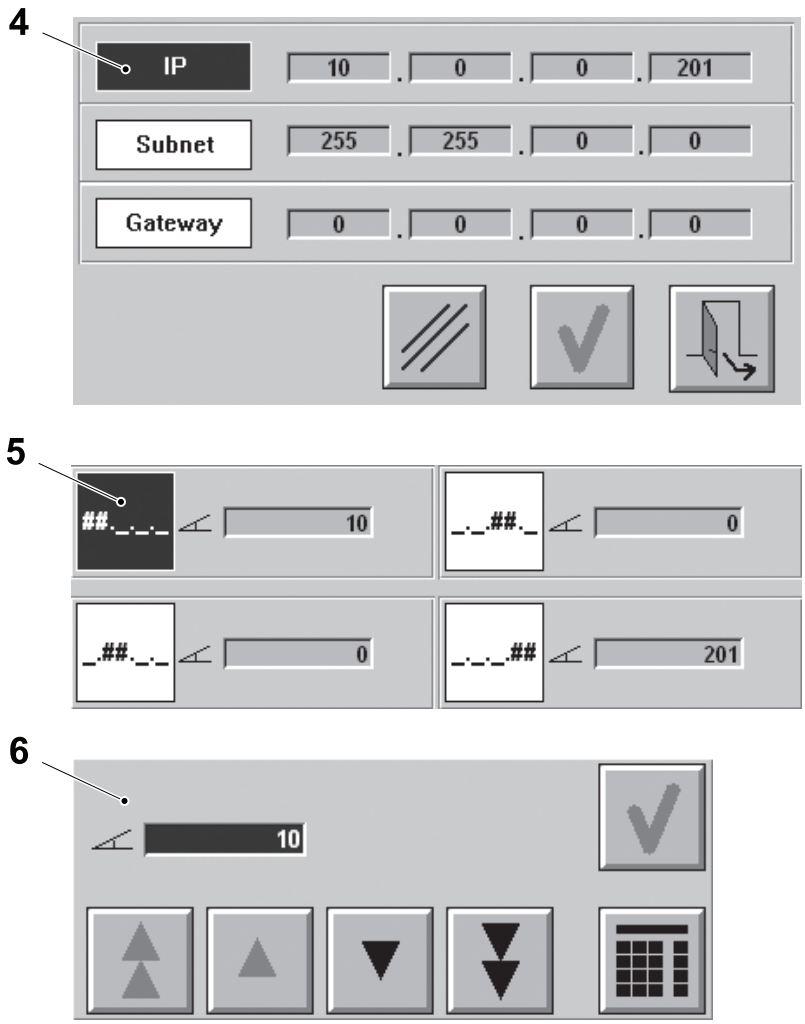

4 IP field
5 First number field icon
6 Keypad

(Cont'd)

(Cont'd)

g) Touch the SUBNET field (7) to set the subnet mask.

h) Touch the firsts number field icon (5) and set the proper number by the keypad (6).

i) Set in the same way the other subnet mask fields.

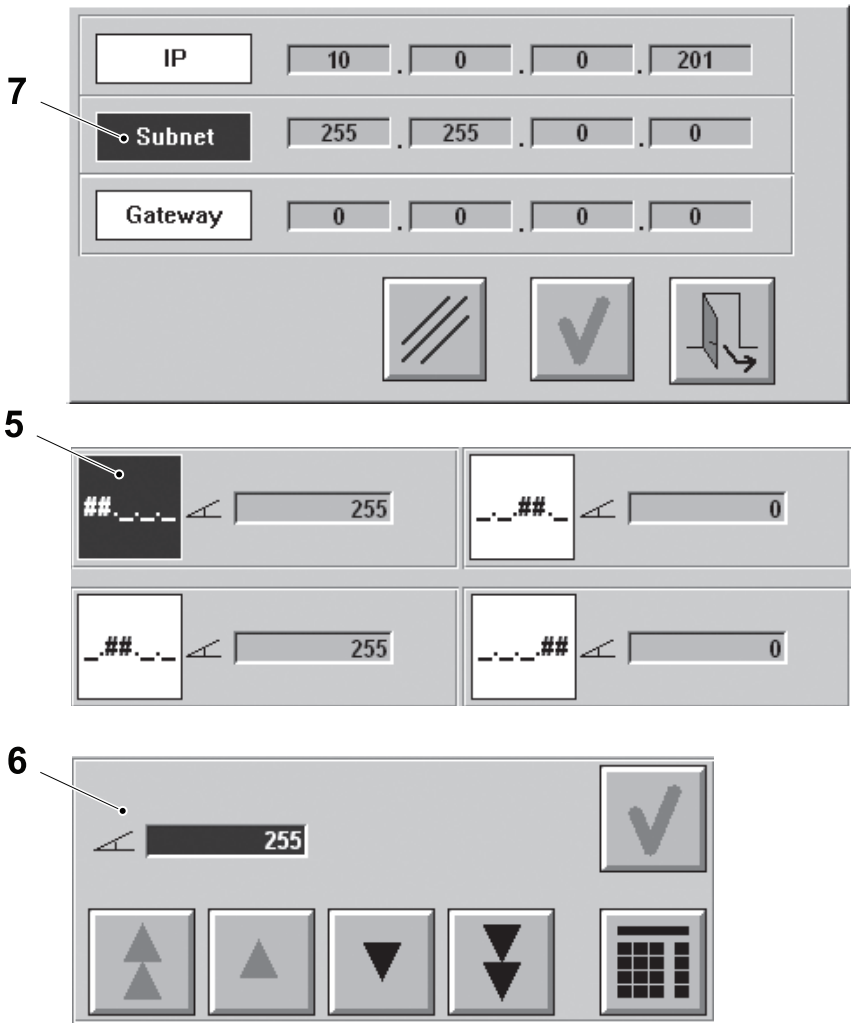

5 First number field icon
6 Keypad
7 SUBNET field

(Cont'd)

(Cont'd)

j) Touch the GATEWAY field (8) to set the gateway.

k) Touch the firsts number field icon (5) and set the proper number by the keypad (6).

l) Set in the same way the other gateway fields.

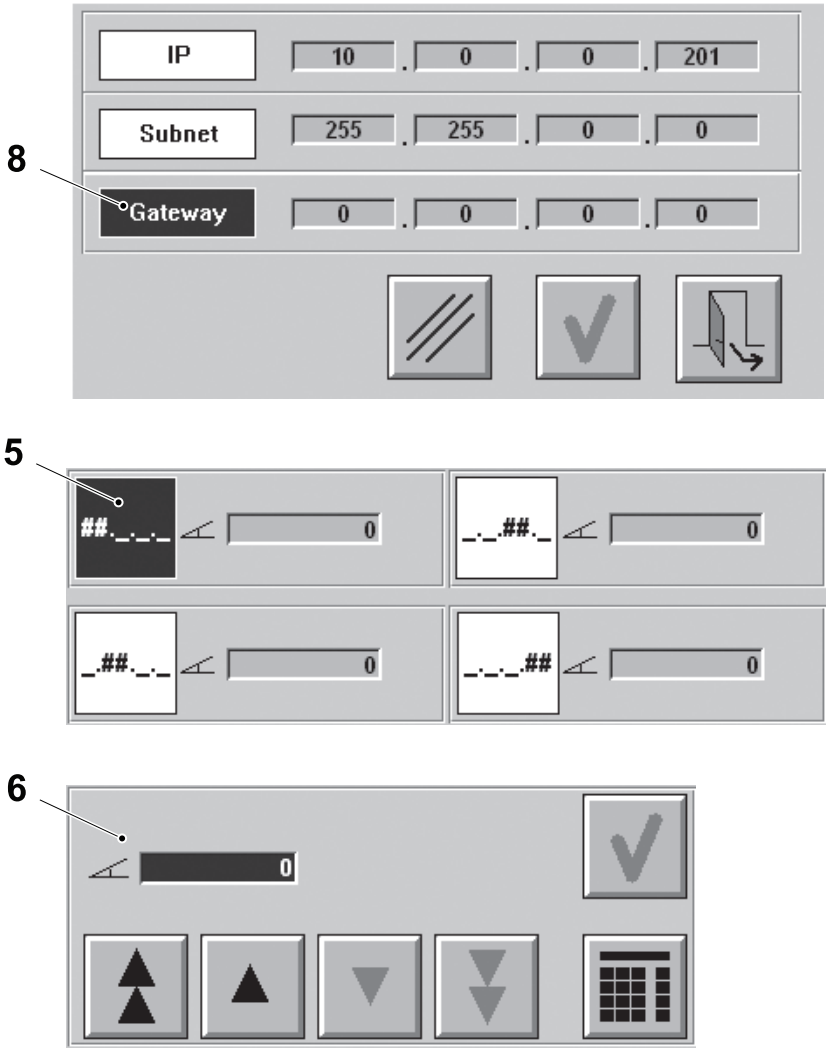

5 First number field icon

6 Keypad

8 GATEWAY field

(Cont'd)

(Cont'd)

m) Once the IP address, the subnet mask and the gateway are entered, the PLC checks if the values entered are compatible. If yes, the OK button (9) becomes active.

n) Touch the OK button (9) for three seconds to confirm or the CANCEL button (10) to change the entered values.

o) Touch the EXIT button (11).

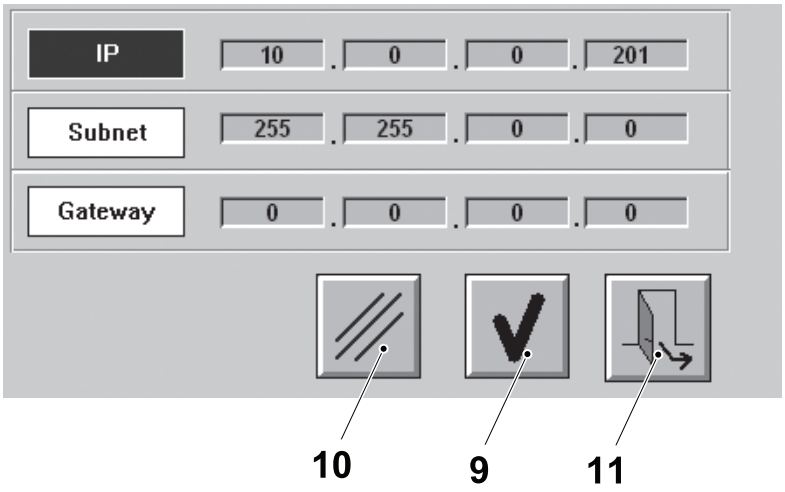

9 OK button
10 CANCEL button
11 EXIT button

8.1.4 Digital I/O Modules

8.1.4-1 Digital I/O Modules - Change

Machine Status	Electrical supply disconnecting device in position O (OFF)
SPC Reference	90459-6556 90459-2474 90600-4033

Note! Before removing the module from the chassis, it is necessary to remove the removable terminal block (1) from the module.

(Cont'd)

(Cont'd)

a) Unlock the locking tab (2) at the top of the module.

b) Open the door of the removable terminal block (1) and pull the removable terminal block (1) off the module.

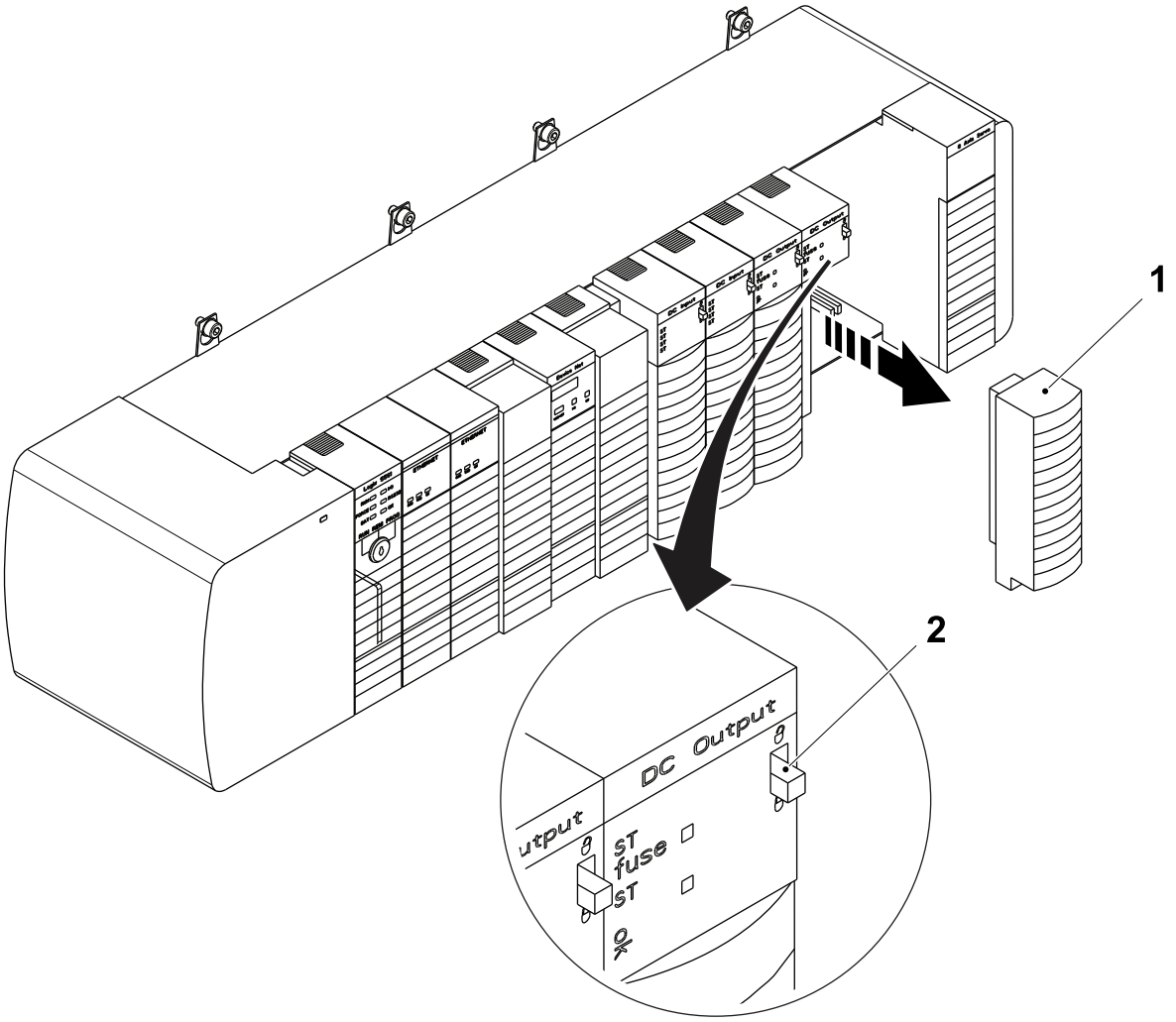

1 Removable terminal block
2 Locking tab

(Cont'd)

(Cont'd)

c) Press the locking tabs on the top and the bottom of the digital I/O module (3).

d) Slide the digital I/O module (3) out of the chassis.

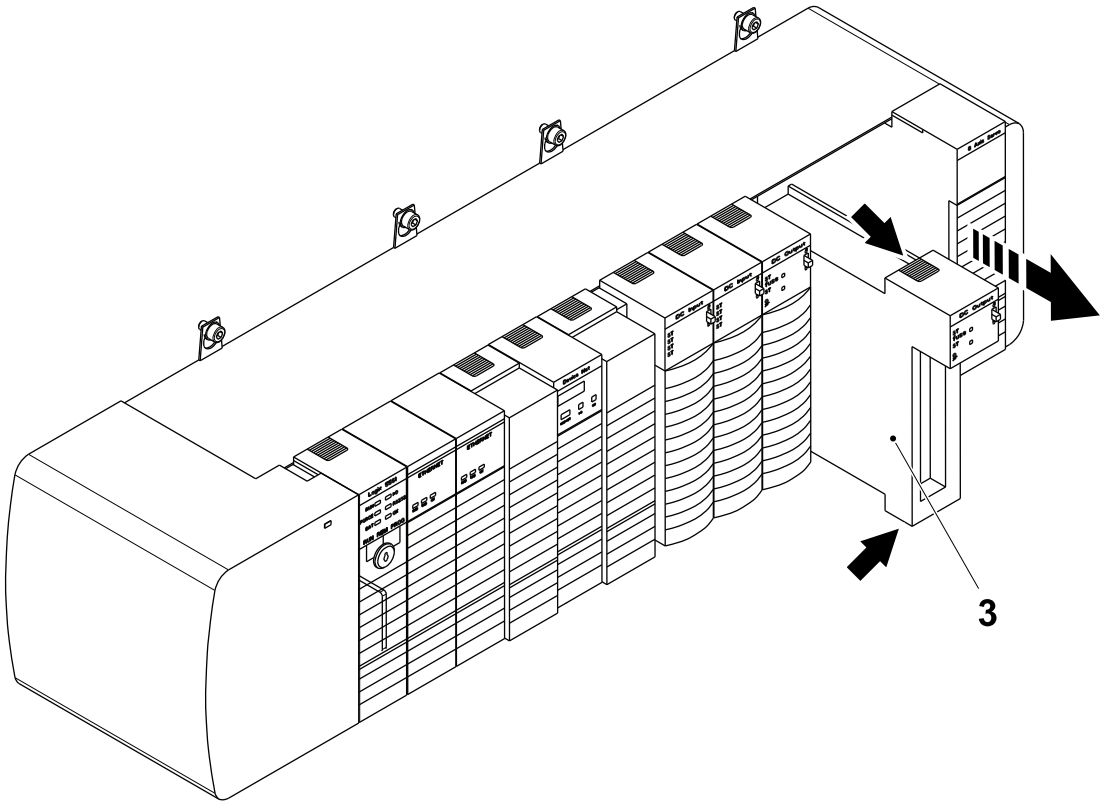

3 Digital I/O module

(Cont'd)

(Cont'd)

e) Align the new digital I/O module (3) with the top and the bottom guides in the chassis.

f) Slide the digital I/O module (3) into the chassis. Make sure it is flush with the other modules and the top and bottom latches are engaged.

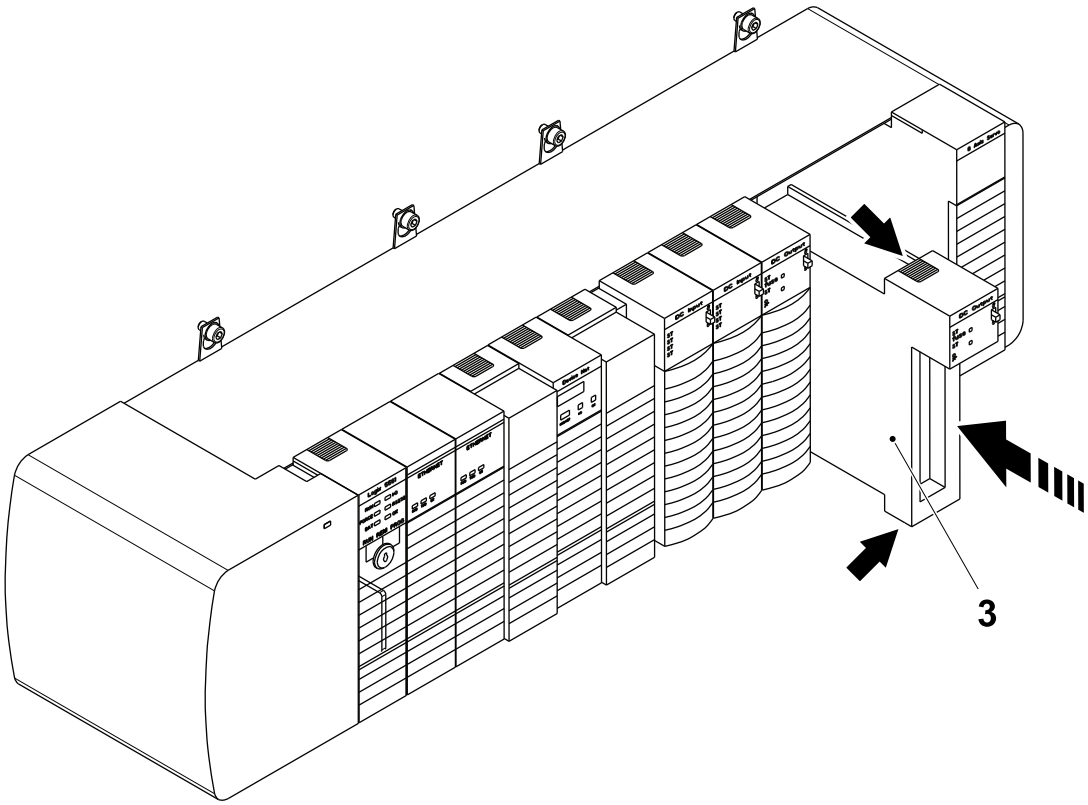

3 Digital I/O module

(Cont'd)

(Cont'd)

g) If necessary, change the removable terminal block (1) as follows:

- Wire the terminal plate (4) according to the EM.
- Align the grooves at the bottom of each side of the housing (5) with the side edges of the terminal plate (4).
- Slide the terminal plate (4) into the housing (5) until it snaps into place.

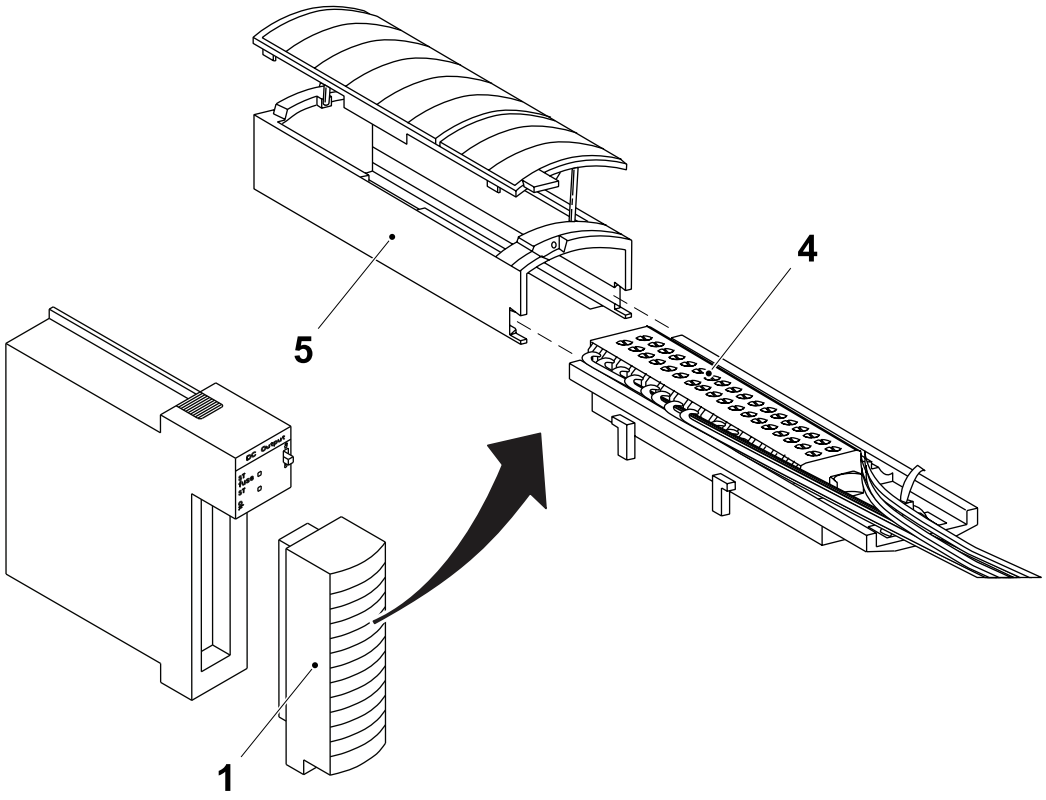

1 Removable terminal block
4 Terminal plate
5 Housing

(Cont'd)

(Cont'd)

h) Align the top, bottom and left side guides of the removable terminal block (1) with the guides on the digital I/O module (3).

i) Press quickly and evenly to seat the removable terminal block (1) on the digital I/O module (3) until the latches snap into place.

j) Slide the locking tab (2) down to lock the removable terminal block (1) onto the digital I/O module (3).

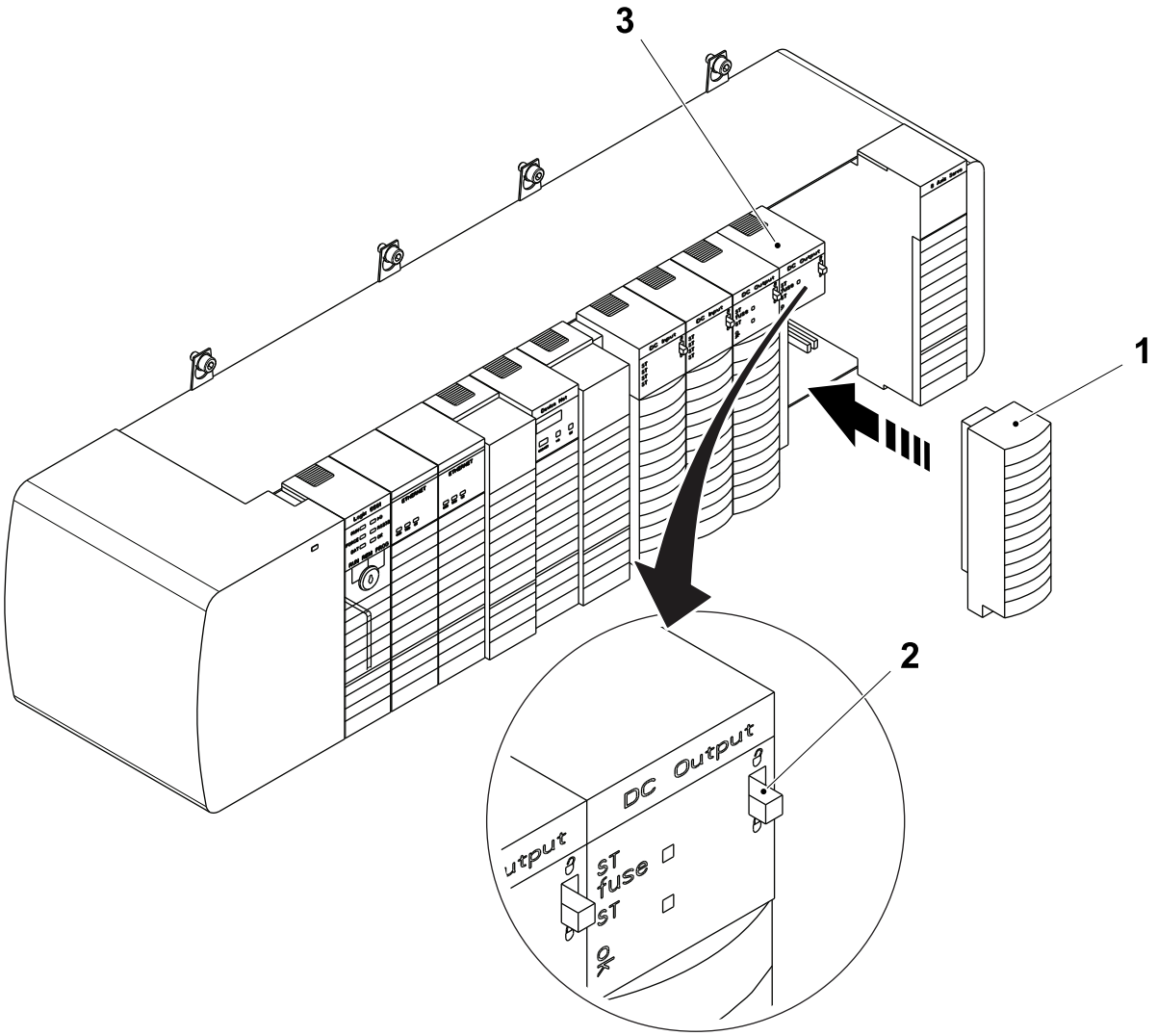

1 Removable terminal block
2 Locking tab
3 Digital I/O module

8.1.4-2 Digital I/O Modules - LED Description

Machine Status	Electrical supply disconnecting device in position I (ON)
SPC Reference	90459-6556 90459-2474 90600-4033

Each ControlLogix diagnostic digital I/O module has a LED indicator on the front of the module that allows you to check the operational status of the module. The LED displays vary for each module.

The following status can be checked with the LED indicators:

- **I/O status** - indicates the ON/OFF state of the field device
- **Module status** - indicates the module communication status
- **Fuse status** - indicates the state of the module fuse (only found on electronically fused modules).

Input Module 1756-IB/32 LED Description

LED indicators	Colour	Description
OK (1)	Green light	The inputs are being multicast and in normal operating state.
	Flashing green light	The module has passed internal diagnostics but is not multicasting inputs or it is inhibited.
	Flashing red light	Previously established communication has timed out. Check controller and chassis communication.
	Red light	The module must be replaced.
I/O (2)	Yellow	The input is active.

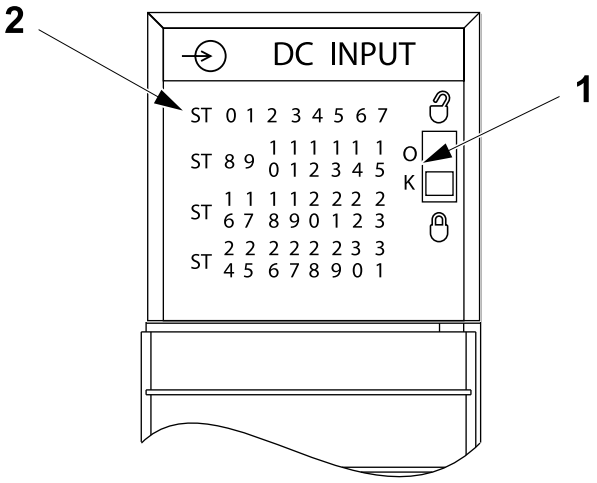

1 Module status
2 I/O status

(Cont'd)

(Cont'd)

Input Module 1756-OB16E and 1756-OB16IS LED Description

LED indicators	Colour	Description
OK (1)	Steady green light	The outputs are actively being controlled by a system processor.
	Flashing green light	The module has passed internal diagnostics but is not multicasting inputs or it is inhibited.
	Flashing red light	Previously established communication has timed out. Check controller and chassis communication.
	Steady red light	The module must be replaced.
I/O (2)	Yellow	The output is active.
I/O Fuse (3)	Red	A short overload fault has occurred for a point in this group. Check wiring for short overload. Check the module properties in RSLogix 5000 and reset the fuse.

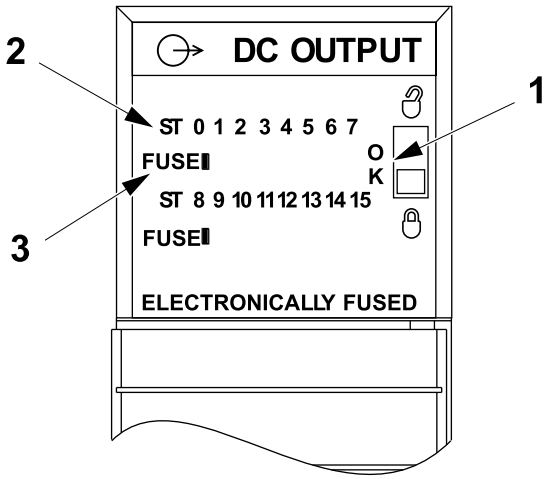

Output module 1756-OB16E

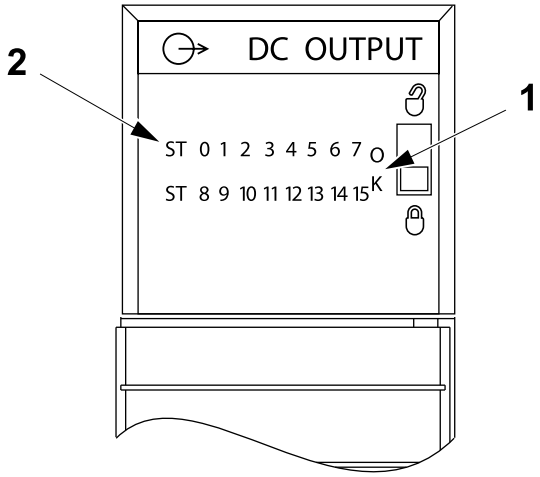

Output module 1756-OB16IS

1 Module status
2 I/O status
3 Fuse status

8.2 Distributed I/O

8.2-1 Distributed I/O - Description

Communication between all the distributed I/O devices in the filling machine is provided through a DeviceNet network. DeviceNet is a bi-directional communications network which allows communication between the PLC module and distributed I/O devices such as sensors and actuators.

The DeviceNet network on the filling machine utilizes a master and slave architecture and the physical network composition is of a trunk line (1) with multiple drops (2). Each drop terminates with a slave node (3) and each sensor or actuator in the filling machine is connected to a node. The DeviceNet master (4) in the PLC rack serves as a intermediary allowing direct communication with the CPU module. For filling machines fitted with a pre-applicator unit, the DeviceNet master in the PLC rack of the pre-applicator electrical cabinet acts as both a slave node to the DeviceNet master located in the filling machine PLC rack and also as a DeviceNet master to the slave nodes in the pre-applicator unit.

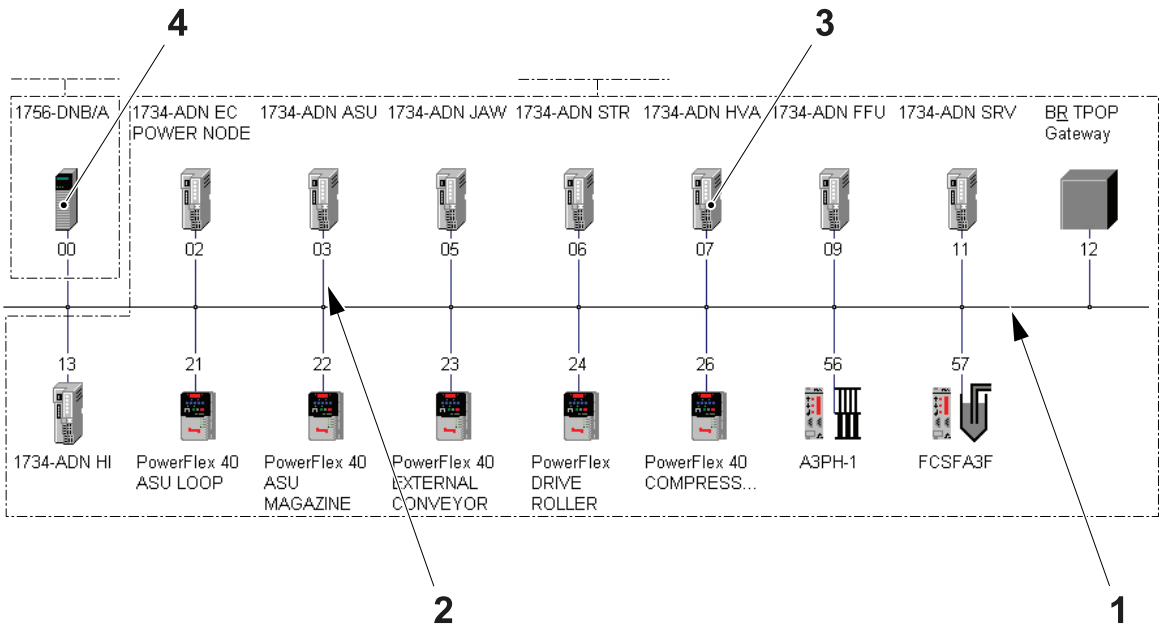

1 Trunk line
2 Drop line
3 Slave node
4 DeviceNet master

8.2.1 DeviceNet Scanner Module

8.2.1-1 DeviceNet Scanner Module - Change

Machine Status	Electrical supply disconnecting device in position O (OFF) Main air valve OFF Main steam valve ON Main water valve OFF

Note! The firmware revision of the new DeviceNet scanner module maybe equal to, or newer than the firmware revision of the old DeviceNet scanner module. A newer firmware revision may create errors when going online, such as unrecognized device or device mismatch if the PC does not contain the latest EDS files.

Preparation

Before changing the DeviceNet scanner module:

- Use the RSLinx Classic program to verify and record the firmware version of the DeviceNet scanner module.
- Use the RSLogix program to select `PROGRAM MODE` from the `COMMUNICATION` menu.
- Use the Flow Chart of Procedures for Changing the DeviceNet Scanner Module to determine which procedures to perform and their correct sequence.

(Cont'd)

(Cont'd)

Flow Chart of Procedures for Changing the DeviceNet Scanner Module

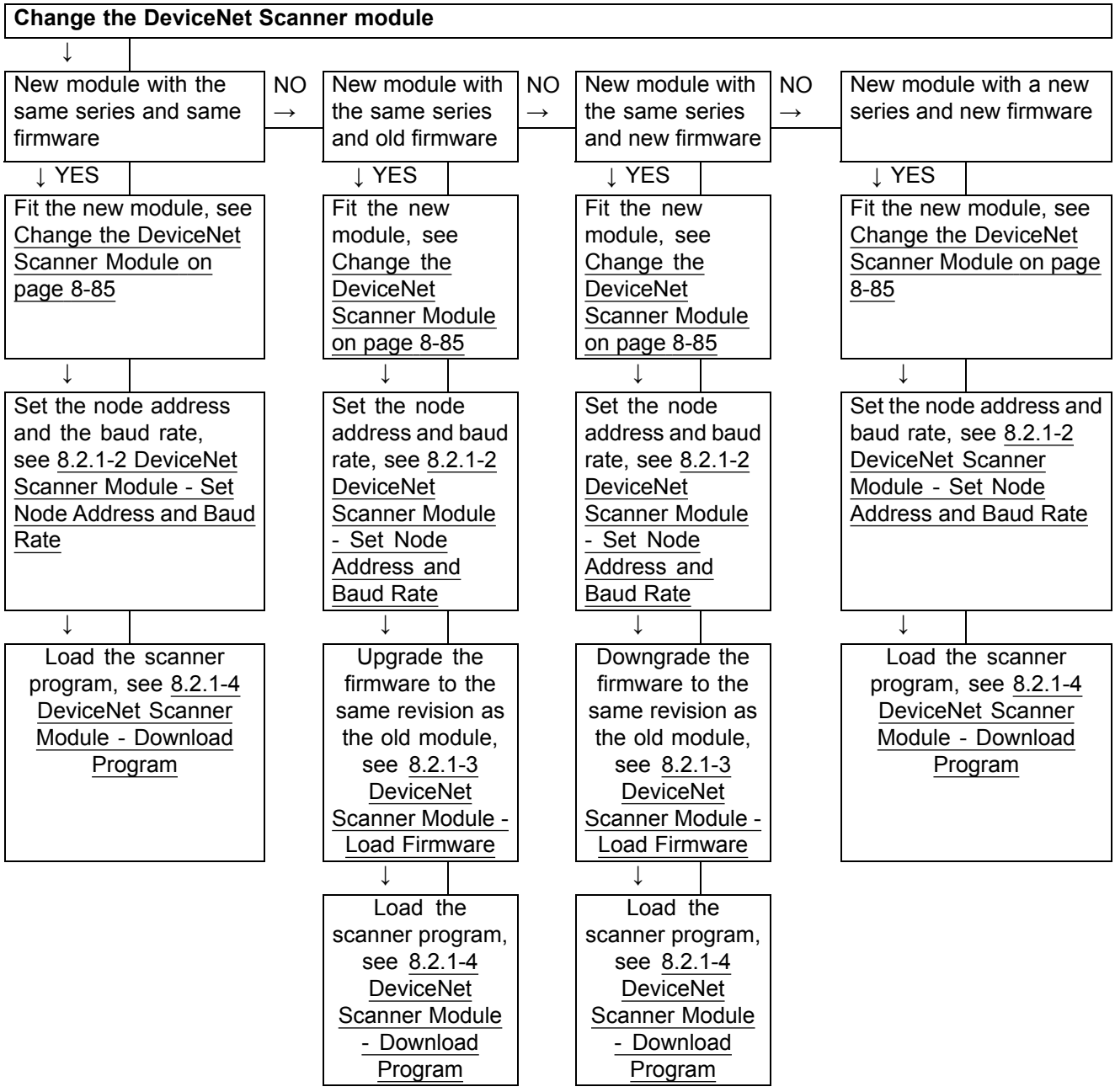

(Cont'd)

(Cont'd)

Change the DeviceNet Scanner Module

a) Remove the cable connection (1) from the DeviceNet scanner module.

b) Press the locking tabs on the top and the bottom of the DeviceNet scanner module.

c) Slide the DeviceNet scanner module out of the chassis.

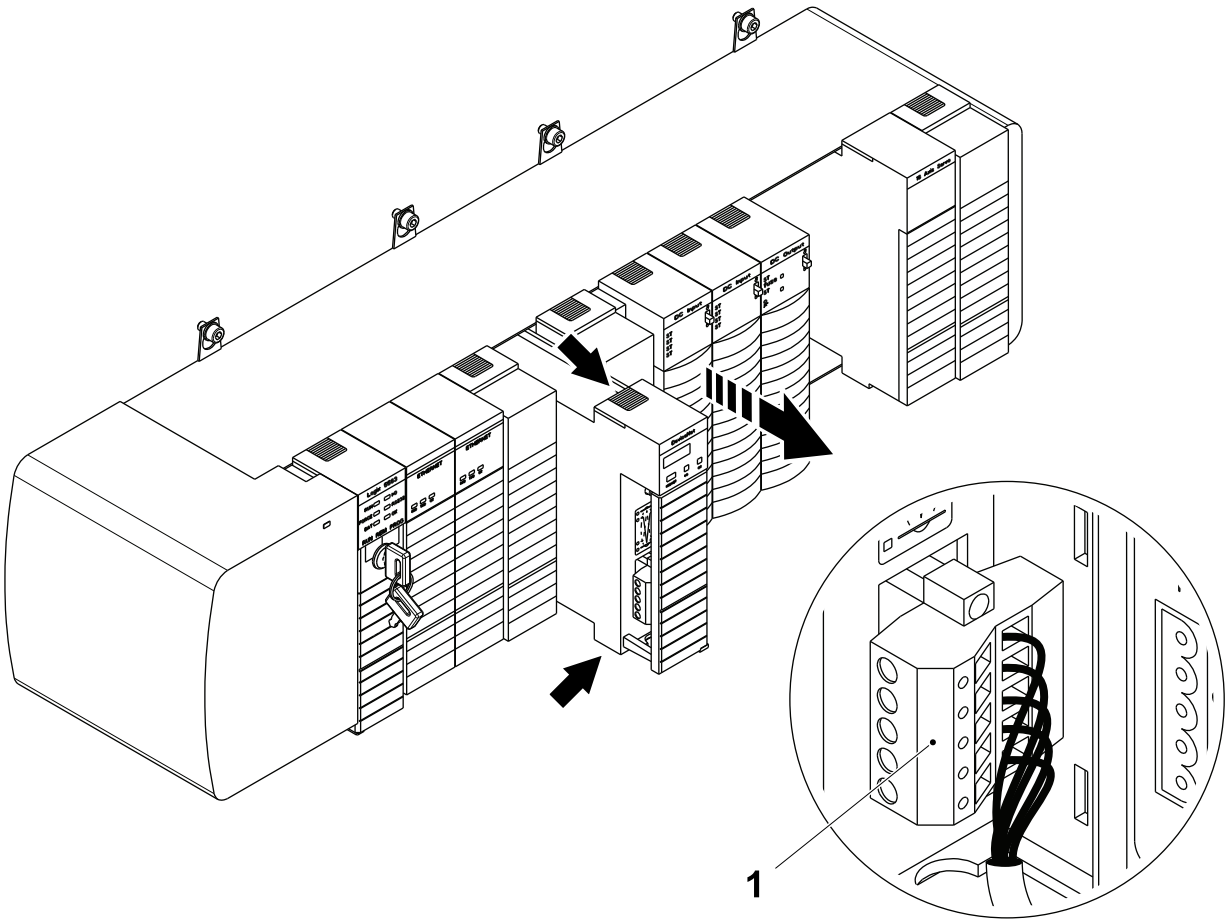

1 Cable connection

(Cont'd)

(Cont'd)

Note! For DeviceNet scanner module series C and above, set the node address and baud rate before fitting the module, see 8.2.1-2 DeviceNet Scanner Module - Set Node Address and Baud Rate

d) Align the new DeviceNet scanner module with the top and the bottom guides in the chassis.

e) Slide the DeviceNet scanner module into the chassis. Make sure it is flush with the other modules and the latches on the top and bottom engage.

f) Fit the cable connection (1) to the DeviceNet scanner module. If necessary, see the illustration or the EM for wiring of the cable connection (1).

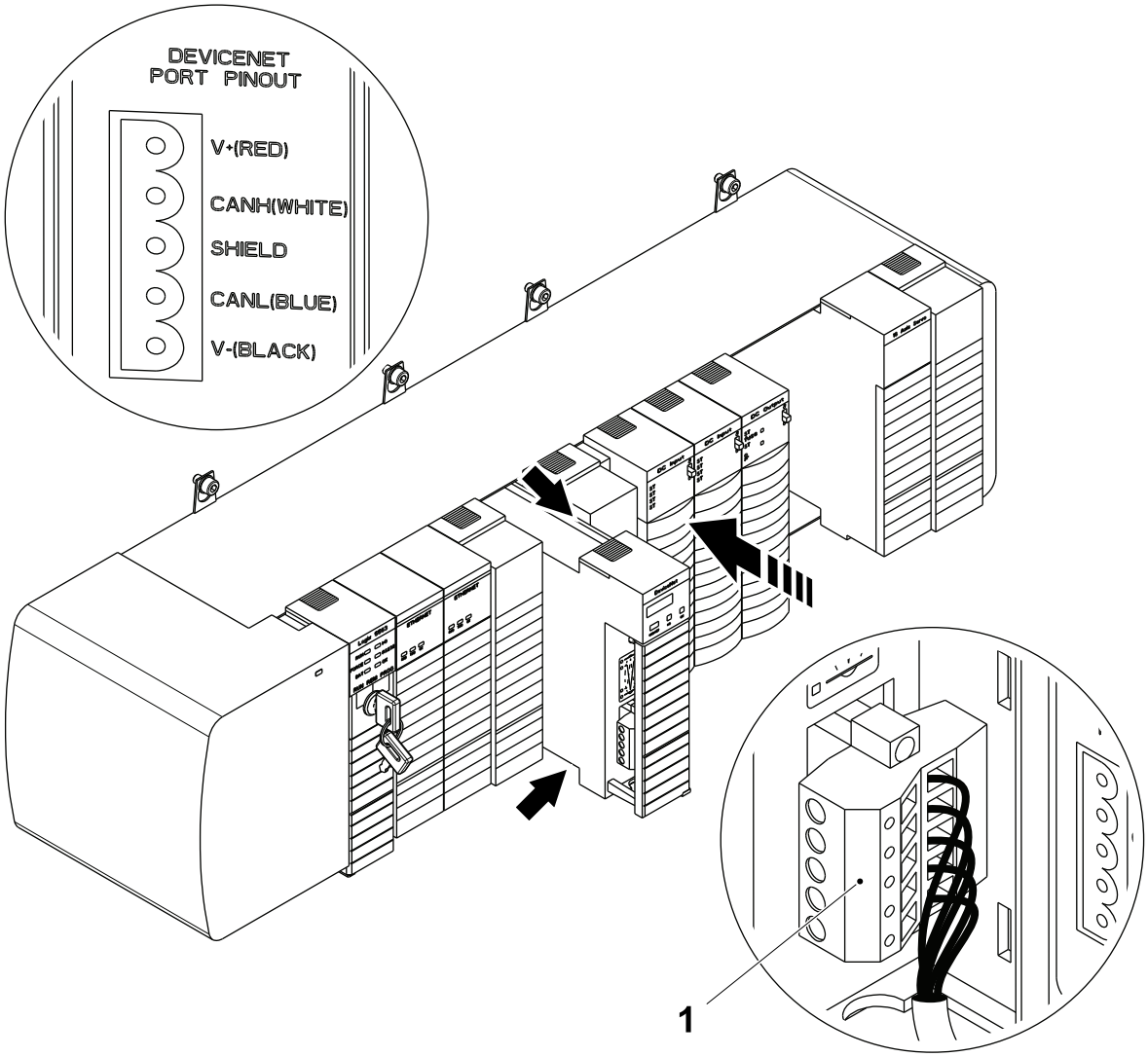

1 Cable connection

(Cont'd)

(Cont'd)

g) Turn the electrical supply disconnecting device to the position | (ON).

h) Check the status of the DeviceNet scanner module LED's according to the table in section 8.2.1-5 DeviceNet Scanner Module - LED Description.

i) Continue with the necessary procedures as described in Flow Chart of Procedures for Changing the DeviceNet Scanner Module on page 8-84.

8.2.1-2 DeviceNet Scanner Module - Set Node Address and Baud Rate

Machine Status	Electrical supply disconnecting device in position I (ON)

Set the switches (1), (2) and (3) according to the table.

Switch Number	Setting Position	Note
(1)	2	Sets the baud rate to 500 Kbps
(2)	0	Sets the first digit of the node address
(3)	0	Sets the second digit of the node address

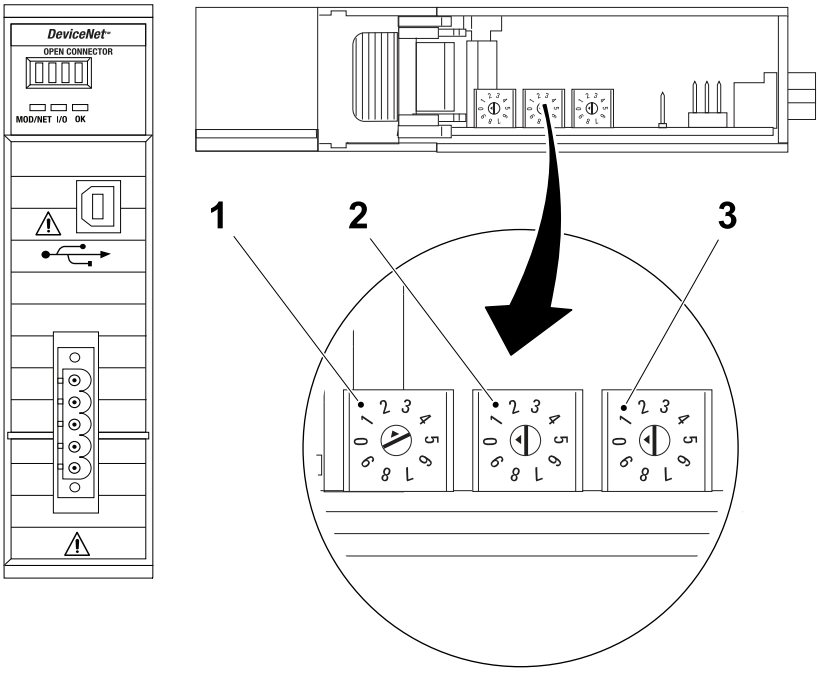

Front of module

Top of module

1 Switch for baud rate
2 Switch for first node digit
3 Switch for second node digit

8.2.1-3 DeviceNet Scanner Module - Load Firmware

Follow the procedure described in 8.1.2-3 CPU Module - Load Firmware to load the firmware for the DeviceNet scanner module.

8.2.1-4 DeviceNet Scanner Module - Download Program

Machine Status	Electrical supply disconnecting device in position I (ON)
Special Equipment	Laptop PC Ethernet communication cable

Note! To connect to the CPU module with an ethernet communication cable, first configure the laptop PC for this type of communication. See 8.1.1-1 Preparation for PLC Communication - Configure PC Network Communications and 8.1.1-2 Preparations for PLC Communication - Configure RSLinx for more details.

a) Set the address and the baud rate for the DeviceNet scanner module, see 8.2.1-2 DeviceNet Scanner Module - Set Node Address and Baud Rate.

b) Connect the Ethernet communication cable between a vacant connection port on the Ethernet switch (1) and the laptop PC (2).

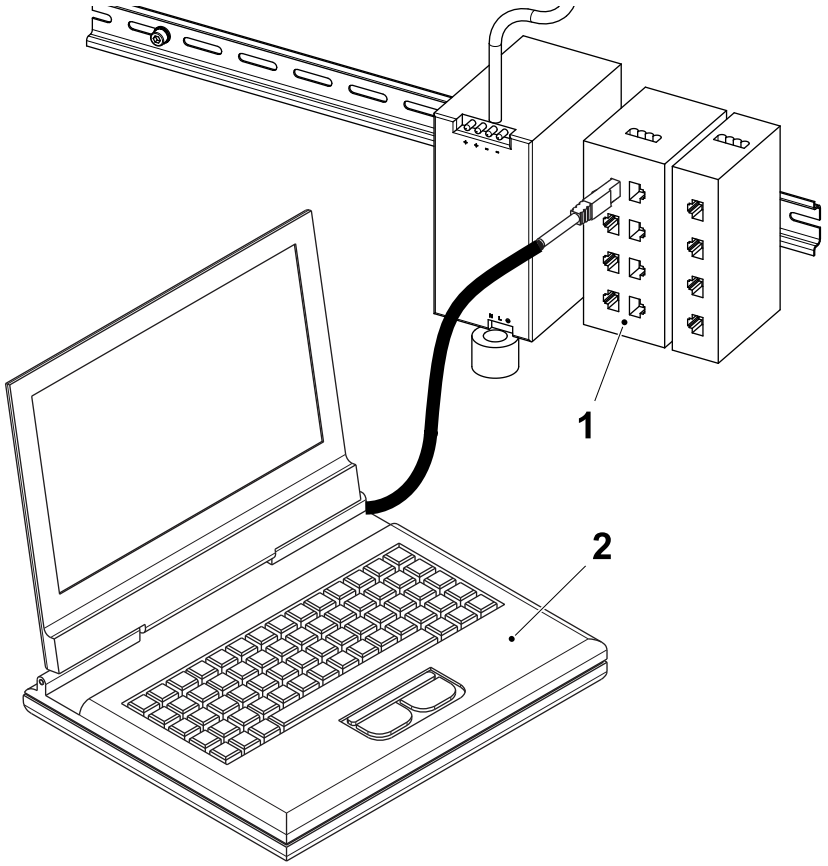

1 Ethernet switch
2 Laptop PC

(Cont'd)

(Cont'd)

Note! The CPU module must not be in RUN position for the program load.

c) Turn the key on the CPU module to the PROG mode position.

d) Insert the software USB key into a laptop PC USB port.

Note! If a software CD has been supplied, insert the software CD into the laptop PC CD drive.

e) Browse to the drive and copy the compressed program folder to the laptop PC desktop and extract the program file.

Note! Check the `UTILITY WINDOW` on the TPOP to select the correct program file for the DeviceNet nodes with multiple configuration, see 8.6.3-4 HMI - Utility Window.

f) Double click on the program file to automatically start the RSNetWorx program and to open the program file.

g) Select the `NETWORK` menu (3) and then select `ONLINE` (4).

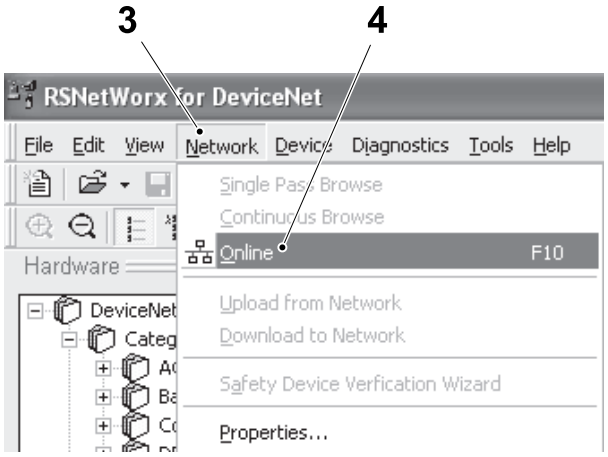

3 Network menu
4 Online

(Cont'd)

(Cont'd)

h) Highlight the DeviceNet scanner (5) and right click the laptop PC mouse, select `DOWNLOAD TO DEVICE` (6) to start the download.

i) When the dialogue box (7) opens, select the `YES` button (8) to continue.

j) When the download is complete, close the RSNetWorx program and turn the key on the CPU module to the REM mode position.

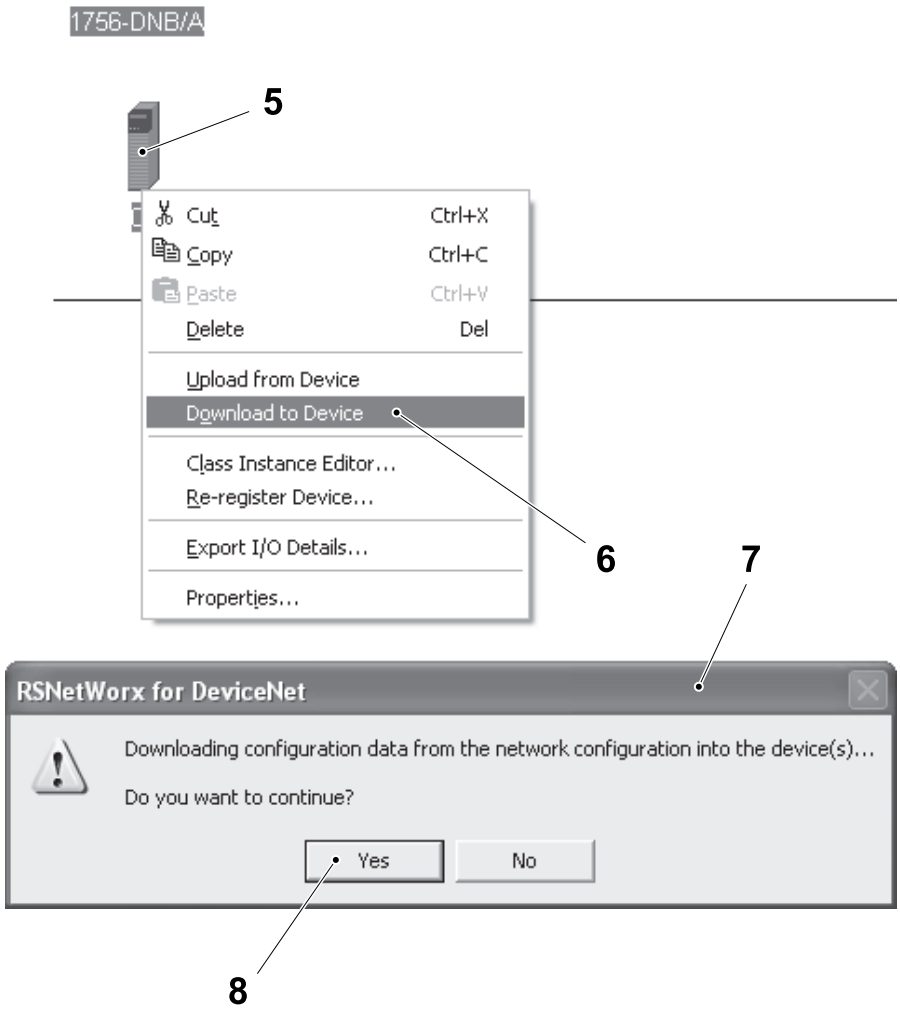

5 DeviceNet scanner
6 Download to device
7 Dialogue box
8 Yes button

8.2.1-5 DeviceNet Scanner Module - LED Description

Machine Status	Electrical supply disconnecting device in position I (ON)

LED	Colour	Description
MOD/NET LED (1)	Off	Scanner is not online. The scanner has not completed the Dup_MAC_ID test or the device is not powered
	Solid green	Scanner is operating normally and is online with connections established
	Flashing green	Scanner is operating normally and is online, but with NO connections established. The Scanner has passed the Dup_MAC_ID test, but has NO established connections to other Nodes
	Flashing red	Recoverable fault and/or one or more I/O connection in timed out state
	Solid red	Scanner has an unrecoverable fault and made need to be changed. Failed communication device. The Scanner has detected an error (duplicate MAC ID or bus-off) that has rendered it incapable of communicating on the network

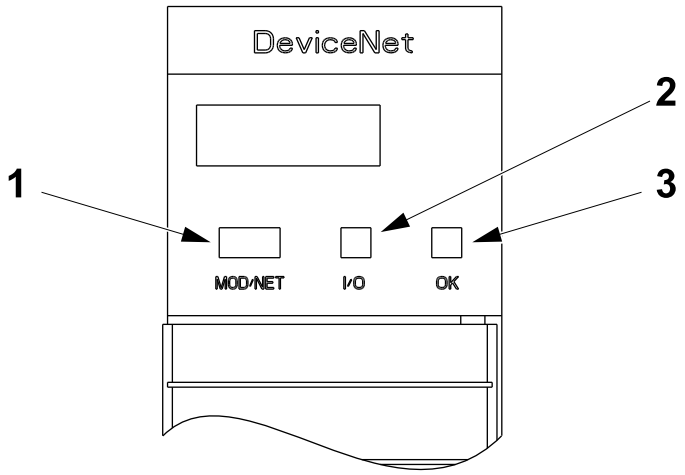

1 MOD/NET LED
2 I/O LED
3 OK LED

(Cont'd)

(Cont'd)

LED	Colour	Description
I/O LED (2)	Off	Scanner is not online
	Solid green	Scanner is in RUN mode, outputs are under control and inputs are being consumed
	Flashing green	Scanner is in IDLE mode, outputs are not under control and inputs are being consumed
OK LED (3)	Off	No power applied to the scanner. Apply chassis power. Verify module is completely inserted into chassis and backplane
	Solid green	Scanner is operating normally. The scanner is connected to at least one CPU module
	Flashing green	Stand-by mode. The scanner is operating correctly, however no CPU module is controlling the scanner. Verify the scanner is correctly configured in the CPU module I/O configuration
	Solid red	The scanner has an unrecoverable fault; change the device or the scanner is in self test during power up; wait until self test has finished

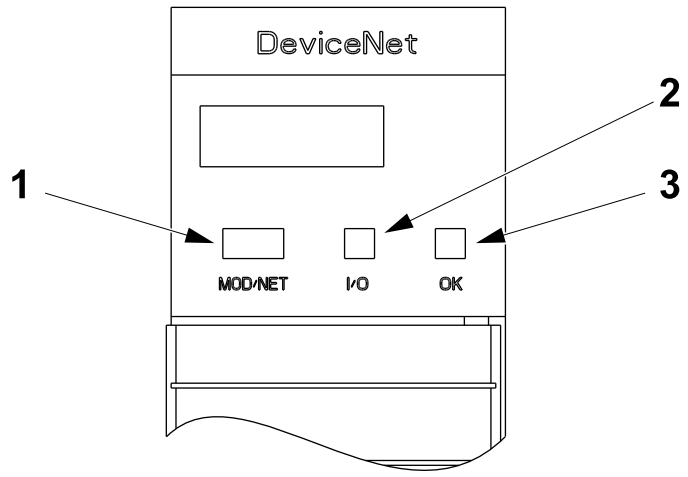

1 MOD/NET LED
2 I/O LED
3 OK LED

8.2.1-6 DeviceNet Scanner Module - Error Codes

Machine Status	Electrical supply disconnecting device in position I (ON)

During normal operation the display (1) toggles between displaying the node address of the DeviceNet scanner module and the current operating mode.

When an error occurs, the display (1) toggles between displaying the node address of the DeviceNet scanner module followed by the node address of the device from where the error originated and finally the error code.

Refer to the table to identify error codes and the corrective actions.

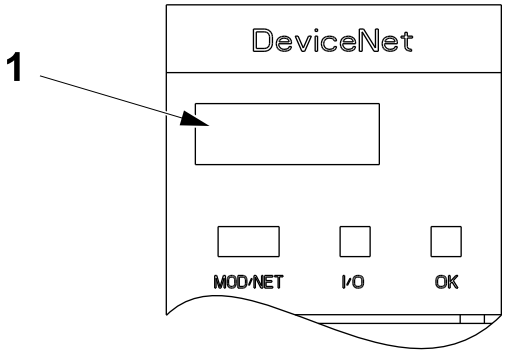

1 Display

Error code	Description	Action
70	Scanner failed Duplicate Node Address check. The display shows the message “Duplicate Node Address”	Change the scanner address to the correct node address A#00
71	Illegal data in scan list table (node number alternately flashes)	Reconfigure the scan list table and remove any illegal data
72	Slave device stopped communicating (node number alternately flashes)	Inspect the slave devices and verify the connections
73	Device’s identity information does not match electronic key in scan list table entry (node number alternately flashes)	Verify that the correct device is at this node number. Make sure that the device at the scrolling node address matches the desired electronic key (vendor, product code, product type, etc.)
74	Data overrun on port detected	Modify your configuration and check for invalid data. Check network communication traffic
75	No traffic detected on network	Check the network configuration
76	No direct network traffic for scanner detected	None. The scanner hears other network communication but none for itself

(Cont’d)

(Cont'd)

Error code	Description	Action
77	Data size expected by the device does not match scan list entry (node number alternately flashes)	Reconfigure the module for the correct transmit and receive data sizes
78	Slave device in scan list table does not exist (node number alternately flashes)	Add the device to the network or delete the scan list entry for that device
79	Scanner has failed to transmit a message	Make sure the module is connected to the network. Check for disconnected cables
80	Scanner is in IDLE mode	Put the module in run mode. Enable RUN bit in Module Command Register
81	Scanner is in FAULT mode	Check Module Command Register for FAULT bit set
82	Error detected in sequence of fragmented I/O messages from device (node number alternately flashes)	Check scan list table entry for slave device
83	Slave device is returning error responses when scanner attempts to communicate with it (node number alternately flashes)	Check accuracy of scan list table entry. Check slave device configuration. Slave device may be in another master's scan list. Reboot slave device
84	Scanner is initializing the DeviceNet network.	None. This code clears itself once scanner attempts to initialize all devices on the network
85	Data size was incorrect for this device at runtime.	Slave device is transmitting incorrect length data. Try replacing slave device
86	Device is producing zero length data (idle state) while scanner is in RUN mode.	Check device configuration and slave node status
90	User has disabled communication port.	Check Module Command Register for DISABLE bit set
91	Bus-off condition detected con comm. port. Scanner is detecting communication errors.	Check DeviceNet connections and physical media integrity. Check system for failed slave devices or other possible sources of network interference
92	No network power detected on communication port.	Provide network power. Make sure that module drop cable is proving network power to scanner communication port

(Cont'd)

(Cont'd)

Error code	Description	Action
95	Application FLASH update in progress.	None. Do not disconnect the module while application flash is in progress. If this is done existing data in the scanner's memory will be lost.
97	Scanner halted by user command.	Check Module Command Register for HALT bit set
98	General firmware error.	Replace module
A#00 to A#63	Normal operation. The numeric display matches the scanners node address on the DeviceNet network.	No action
IDLE	Scanner is in IDLE mode.	Put the CPU module in RUN mode. Enable RUN bit in Module Command Register
Network Disabled	User has disabled communication port.	Reconfigure the module. Check Module Command Register
No Network Power	No network power detected on communication port.	Provide network power. Make sure that module drop cable is proving network power to scanner communication port
NoRX	No scan list is active in the module or no messages have been received by the scanner.	Enter a scan list. Check DeviceNet connection on front of module
NoTX	No direct network traffic for scanner device.	None. The scanner hears other network communication

8.2.1-7 DeviceNet Scanner Module - Register EDS File(s)

Machine Status	Electrical supply disconnecting device in position I (ON)
Special Equipment	Laptop PC Ethernet communication cable

Note! If a distributed I/O device displays as a question mark and not with the correct icon, update the EDS file registered in RSNetWorx for the DeviceNet program.

a) Insert the software USB key into a laptop PC USB port.

Note! If a software CD has been supplied, insert the software CD into the laptop PC CD drive.

b) Start the `RSNETWORX FOR DEVICENET` program.

c) Select the `TOOLS` menu (1) and then select the `EDS WIZARD` (2).

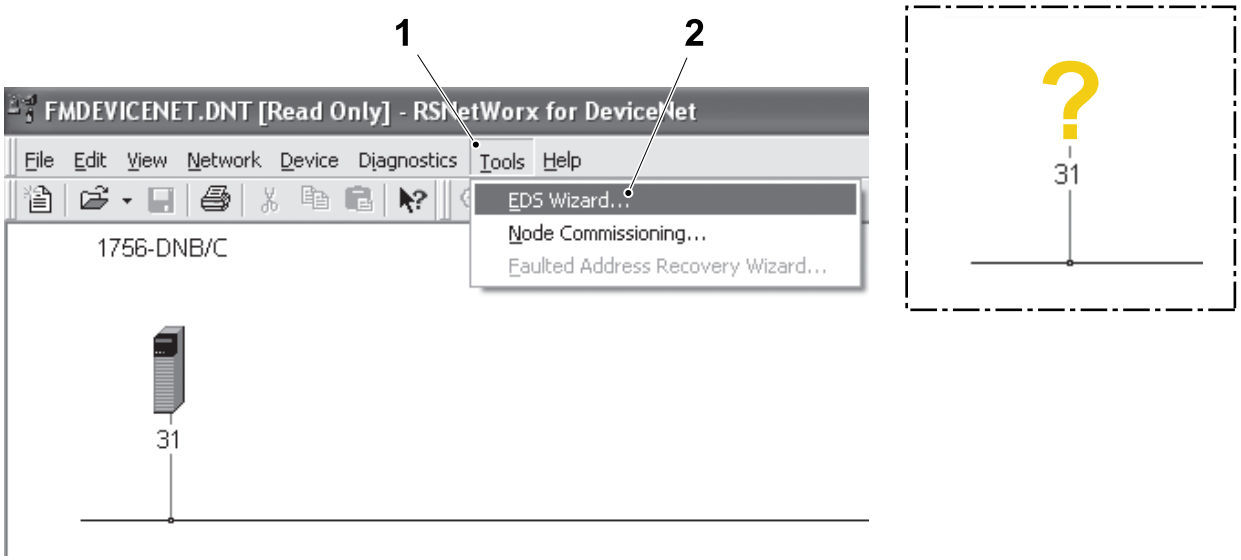

Example of I/O device with a question mark

1 Tools menu
2 EDS wizard

(Cont'd)

(Cont'd)

d) Select the NEXT button (3) in the EDS WIZARD dialogue window.

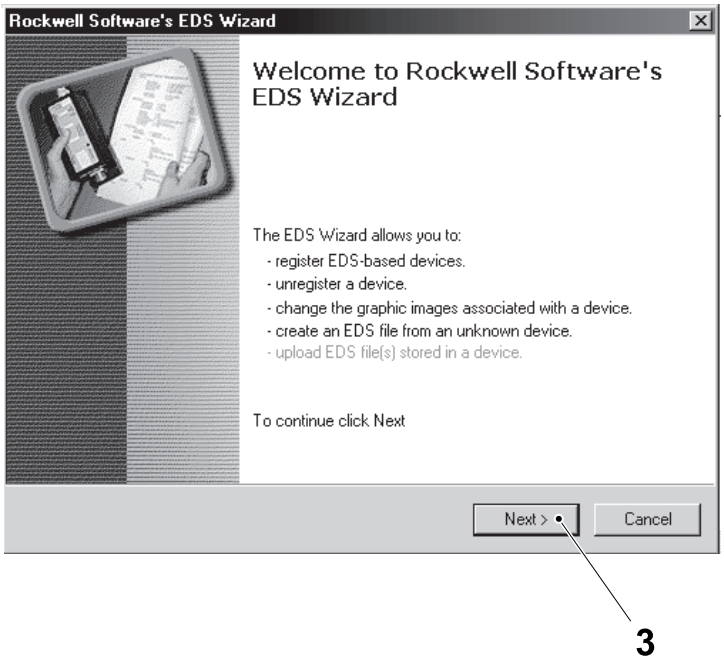

3 Next button

(Cont'd)

(Cont'd)

e) In the OPTIONS dialogue window, select the REGISTER AN EDS FILE(S) option (4) and then select the NEXT button (5).

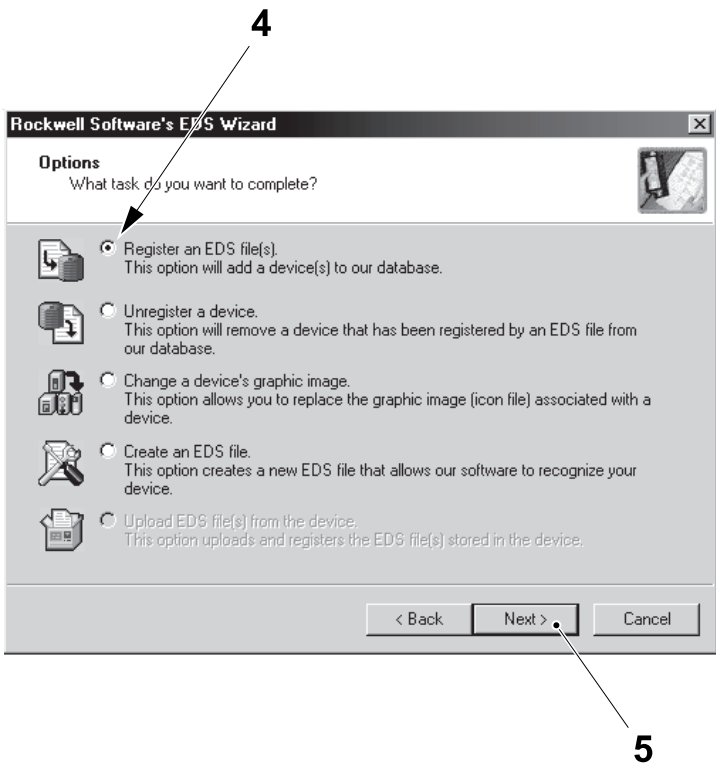

4 Register an EDS file(s) option
5 Next button

(Cont'd)

(Cont'd)

f) In the REGISTRATION dialogue window, select the REGISTER A DIRECTORY OF EDS FILES option (6) and then select the BROWSE button (7).

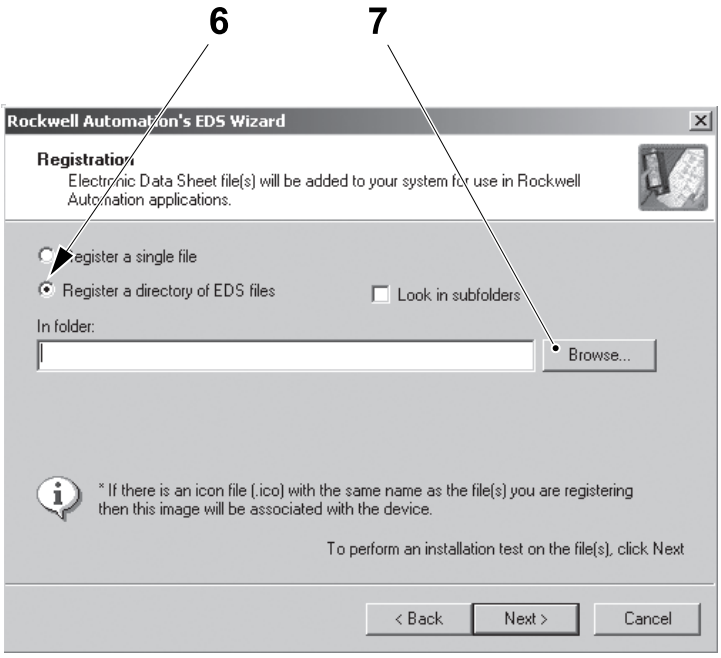

6 Register a directory of EDS files option
7 Browse button

(Cont'd)

(Cont'd)

g) Browse to the CD and select the `EDS FILE` directory (8) and then select the `OK` button (9).

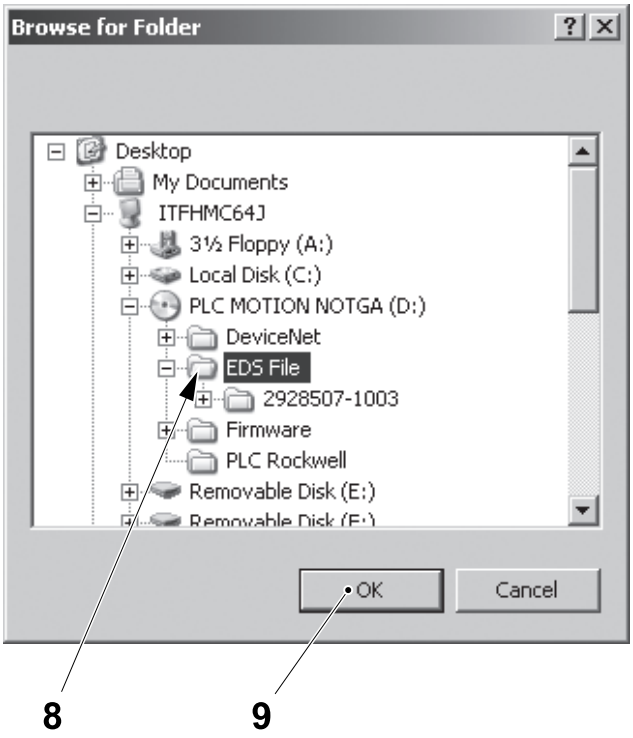

8 EDS file directory
9 OK button

(Cont'd)

(Cont'd)

h) In the REGISTRATION dialogue window select the LOOK IN THE SUBFOLDERS check box (10) and then select the NEXT button (11).

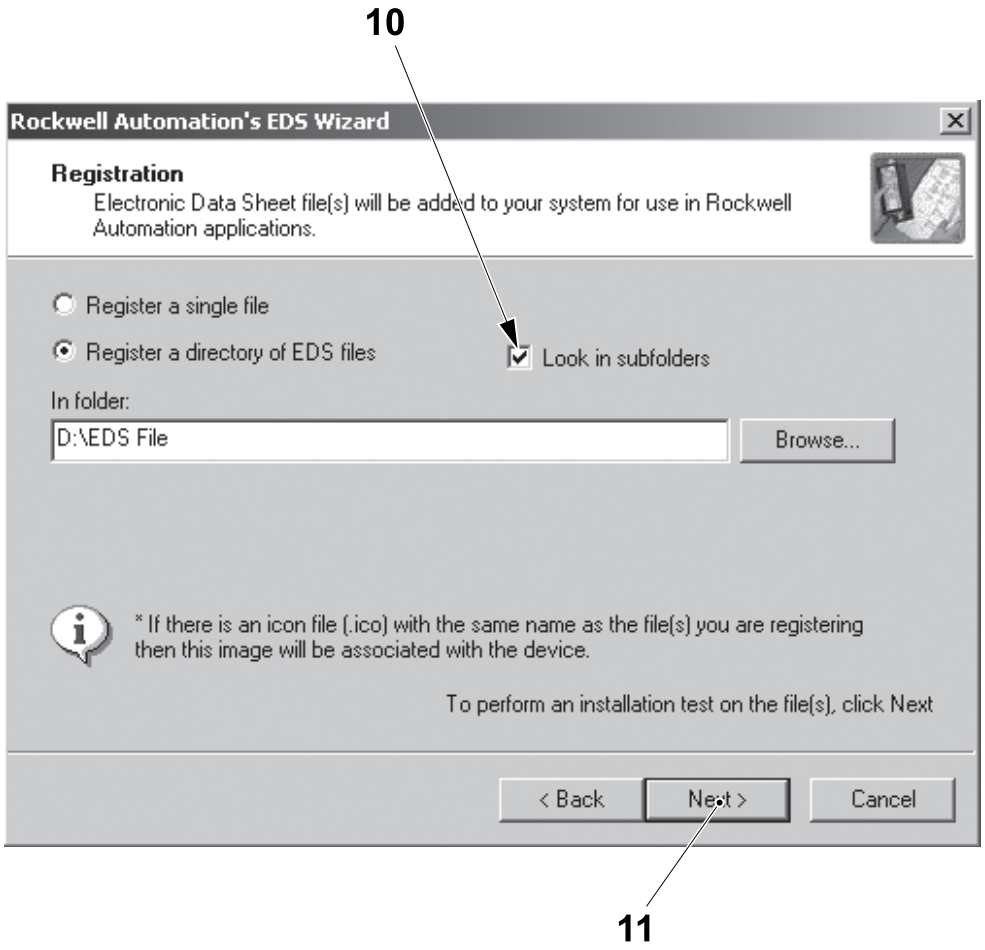

10 Look in the subfolders check box
11 Next button

(Cont'd)

(Cont'd)

i) In the EDS FILE INSTALLATION TEST RESULTS dialogue window, select the NEXT button (12).

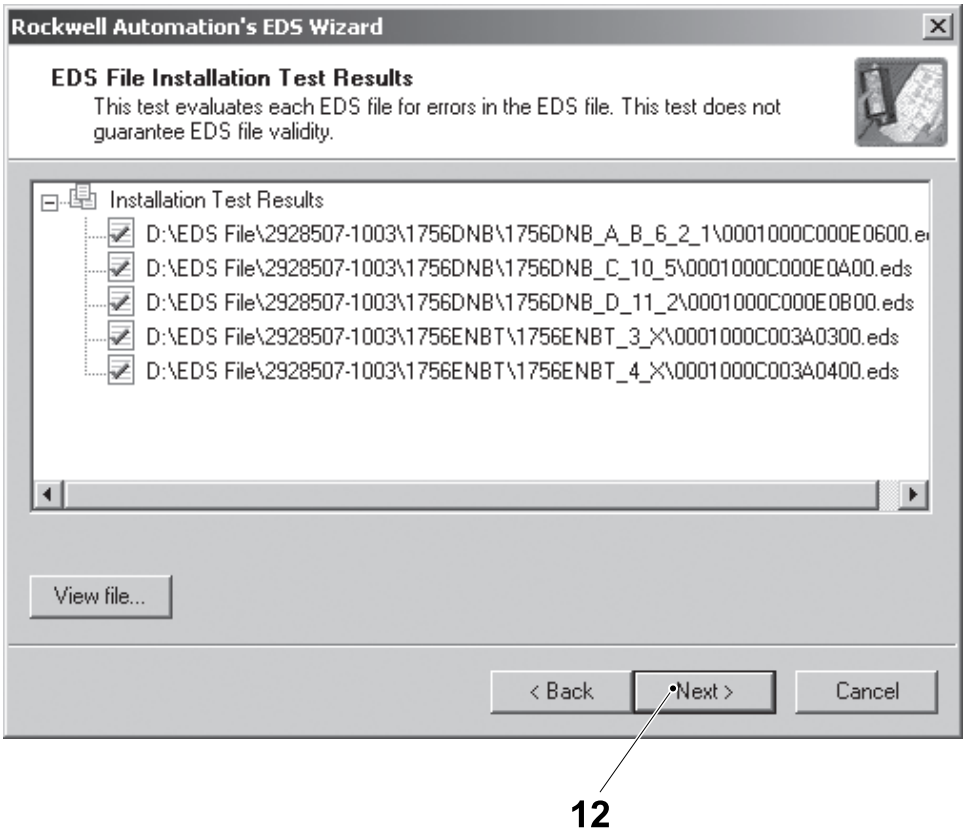

12 Next button

(Cont'd)

(Cont'd)

j) In the CHANGE GRAPHIC IMAGE dialogue window, select the NEXT button (13).

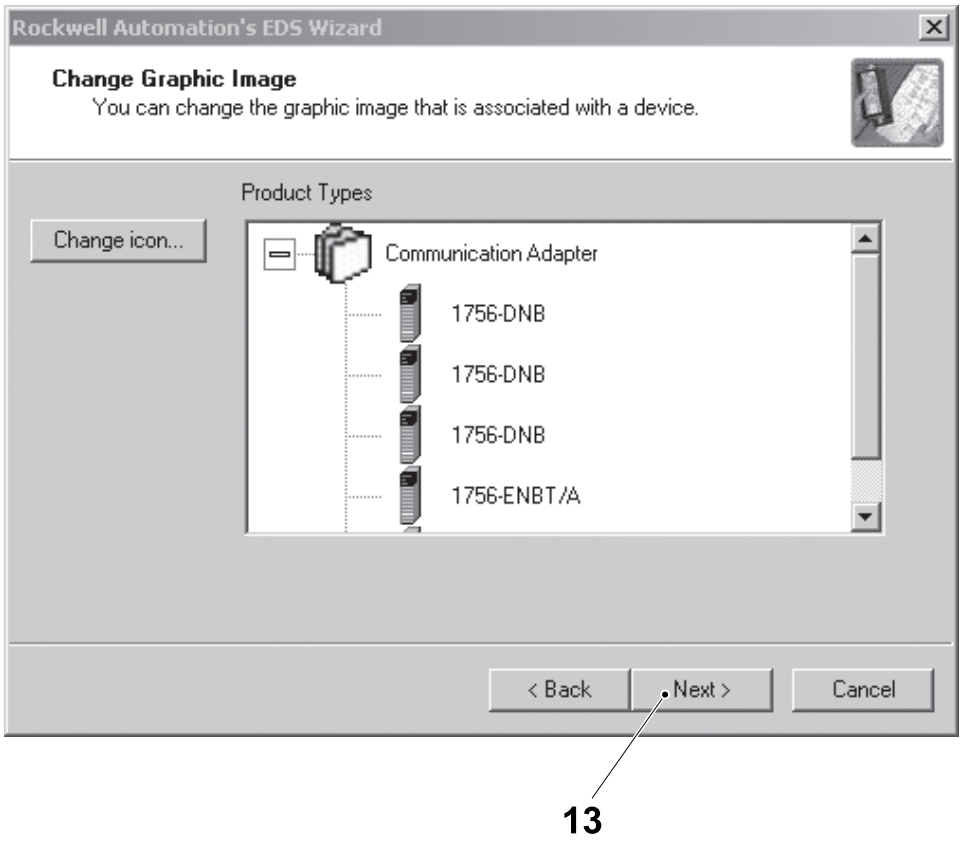

13 Next button

(Cont'd)

(Cont'd)

k) In the FINAL TASK SUMMARY dialogue window, select the NEXT button (14).

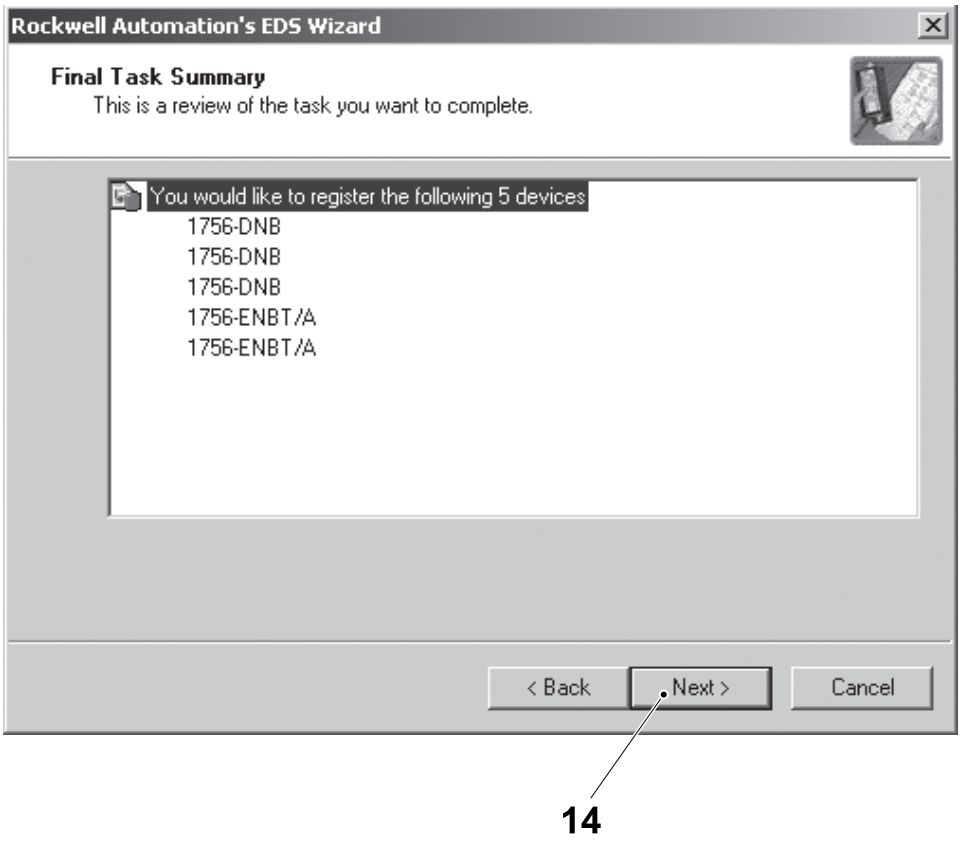

14 Next button

(Cont'd)

(Cont'd)

l) In the final dialogue window, select the FINISH button (15).

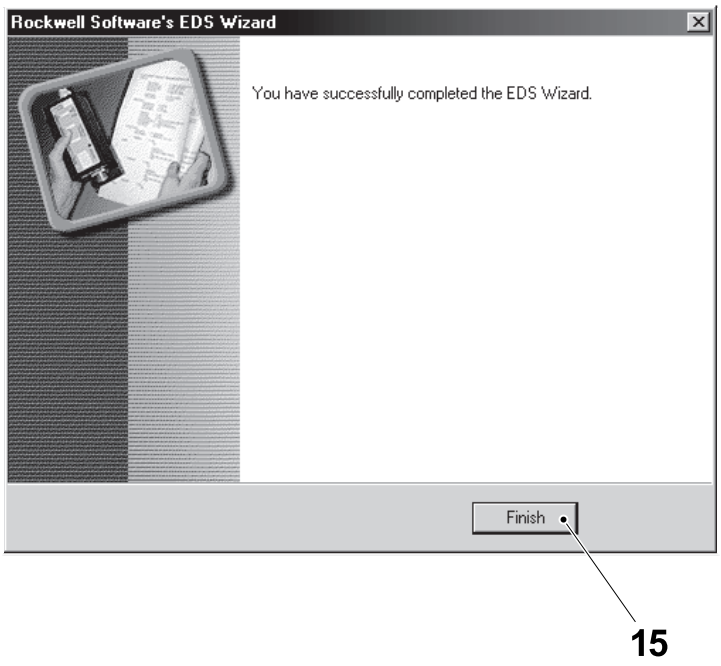

15 Finish button

8.2.2 DeviceNet Point I/O

8.2.2.1 DeviceNet Point I/O Adapter

8.2.2.1-1 DeviceNet Point I/O Adapter - Change

Machine Status	Electrical supply disconnecting device in position O (OFF) Main air valve OFF Main steam valve ON Main water valve OFF
Special Equipment	Laptop PC Ethernet communication cable

Note! The firmware revision of the new DeviceNet Point I/O adapter maybe equal to, or newer than the firmware revision of the old DeviceNet Point I/O adapter. A newer firmware revision may create errors when going online, such as unrecognized device or device mismatch if the PC does not contain the latest EDS files.

(Cont'd)

(Cont'd)

Preparation

Before changing the DeviceNet Point I/O adapter:

- Use the RSLinx Classic program to verify and record the firmware version of the DeviceNet Point I/O adapter.
- Verify and record the node address of the DeviceNet Point I/O adapter.
- Use the Flow Chart of Procedures for Changing the DeviceNet Point I/O Adapter to determine which procedures to perform and their correct sequence.

(Cont'd)

(Cont'd)

Flow Chart of Procedures for Changing the DeviceNet Point I/O Adapter

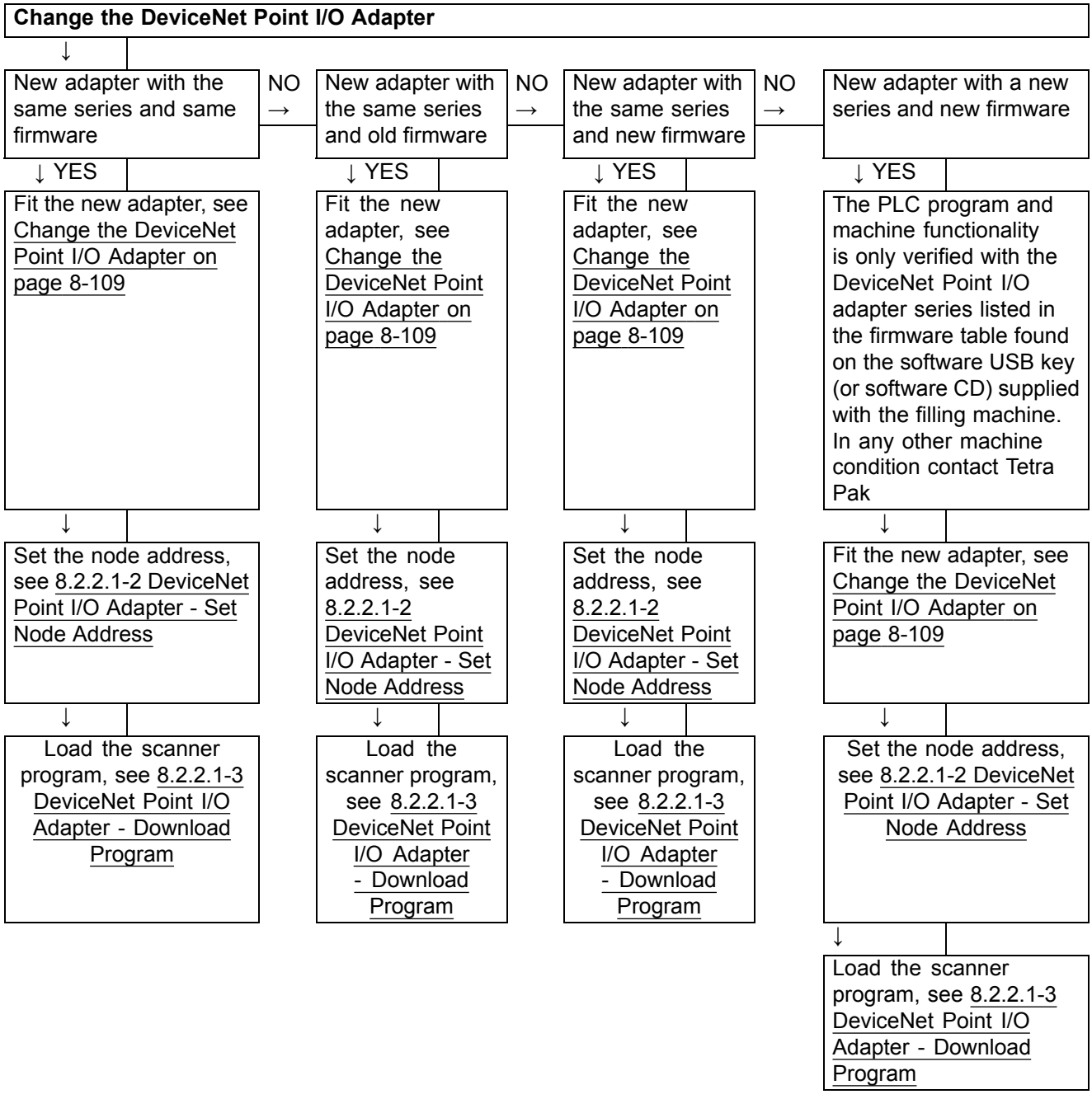

(Cont'd)

(Cont'd)

Change the DeviceNet Point I/O Adapter

a) Remove the power connection (1).

b) Remove the cable connection (2).

c) Remove the first I/O module (3).

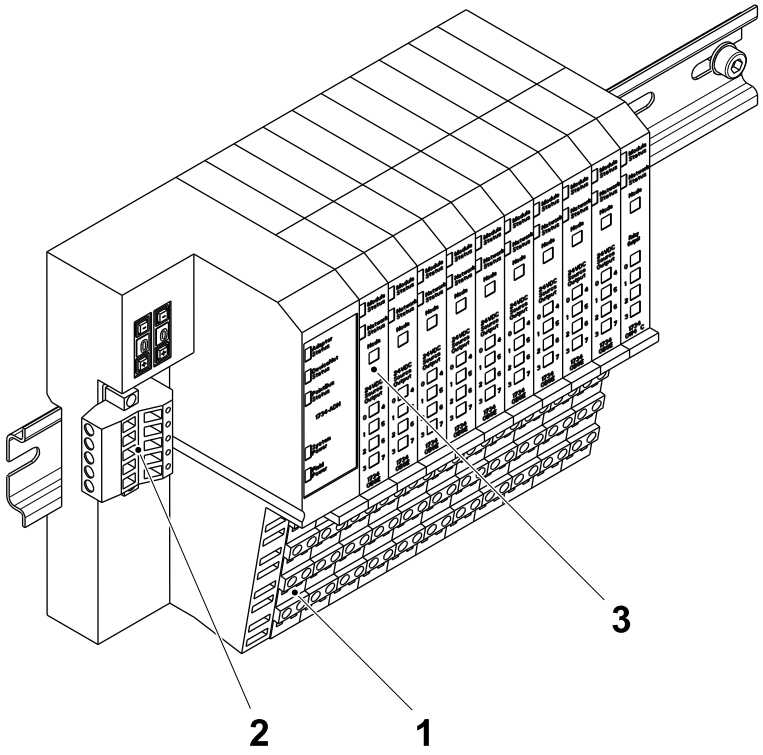

1 Power connection
2 Cable connection
3 I/O module

(Cont'd)

(Cont'd)

d) Turn the screw (4) to release the point I/O adapter (5) and slide out the adapter.

e) Remove the blank connectors and the cover plate from the new adapter.

f) Fit the new adapter and turn the screw (4).

g) Fit the I/O module (3).

h) Fit the cable connection (2).

i) Fit the power connection (1).

j) Continue with the necessary procedures as described in Flow Chart of Procedures for Changing the DeviceNet Point I/O Adapter on page 8-108.

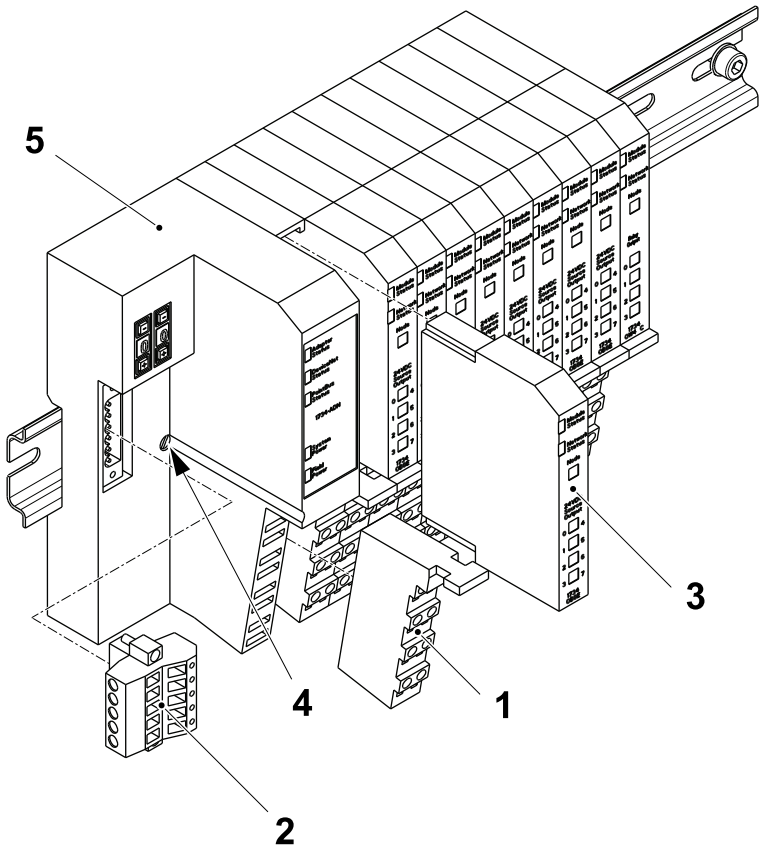

1 Power connection
2 Cable connection
3 I/O module
4 Screw
5 Point I/O adapter

8.2.2.1-2 DeviceNet Point I/O Adapter - Set Node Address

Machine Status	Electrical supply disconnecting device in position I (ON)

Note! For this type of adapter the baud rate is set automatically.

Note! Check the EM for the filling machine if the node address is unknown.

Use the PUSH button (1) to set the node address for the point I/O adapter.

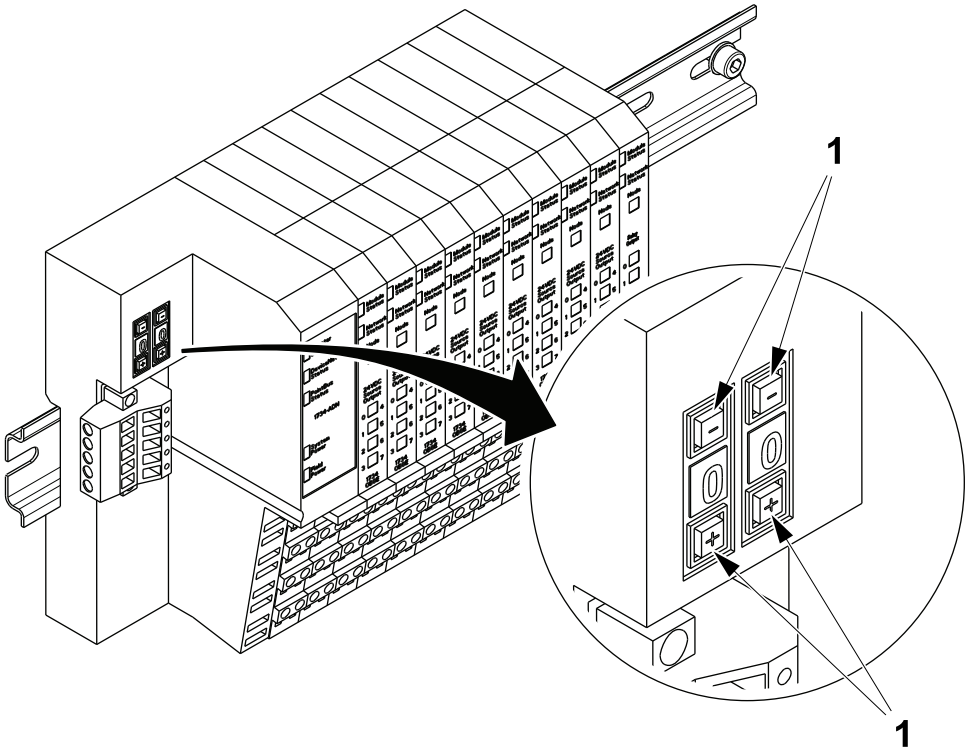

1 Push button

8.2.2.1-3 DeviceNet Point I/O Adapter - Download Program

Machine Status	Electrical supply disconnecting device in position I (ON)
Special Equipment	Laptop PC Ethernet communication cable

Note! To connect to the CPU module with an ethernet communication cable, first configure the laptop PC for this type of communication. See 8.1.1-1 Preparation for PLC Communication - Configure PC Network Communications and 8.1.1-2 Preparations for PLC Communication - Configure RSLinx for more details.

a) Set the node address for the DeviceNet Point I/O adapter, see 8.2.2.1-2 DeviceNet Point I/O Adapter - Set Node Address.

b) Connect the Ethernet communication cable between a vacant connection port on the Ethernet switch (1) and the laptop PC (2).

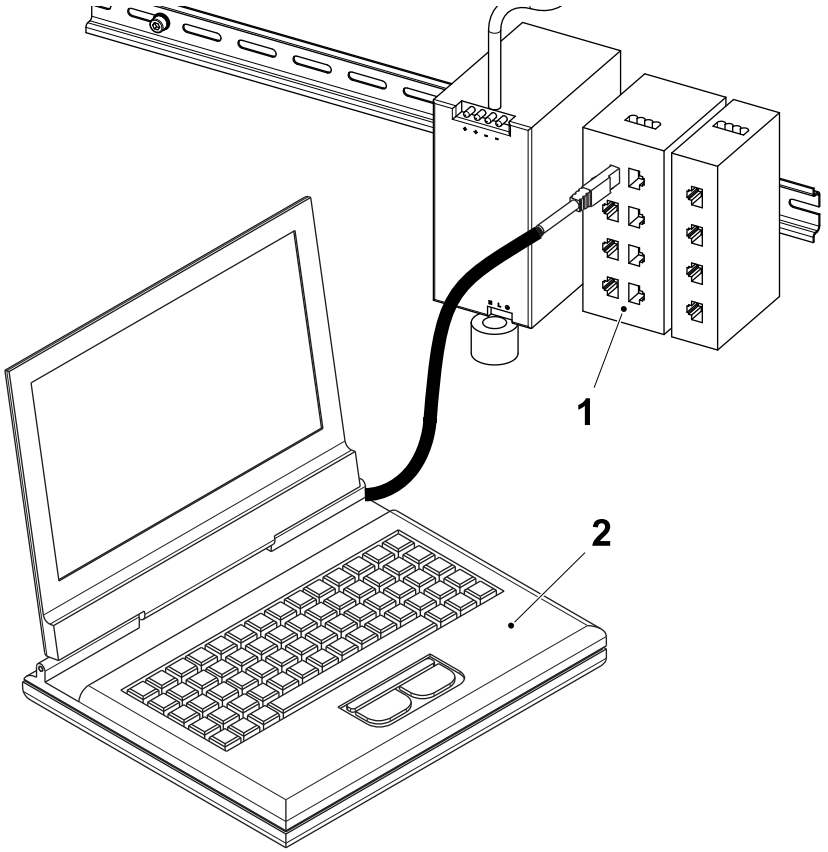

1 Ethernet switch
2 Laptop PC

(Cont'd)

(Cont'd)

Note! The CPU module must not be in RUN position for the program load.

c) Turn the key on the CPU module to the PROG mode position.

d) Insert the software USB key into a laptop PC USB port.

Note! If a software CD has been supplied, insert the software CD into the laptop PC CD drive.

e) Browse to the drive and copy the compressed program folder to the PC desktop and extract the program file.

f) Double click on the program file to automatically start the RSNetWorx program and to open the program file.

g) Select the `NETWORK` menu (3) and then select `ONLINE` (4).

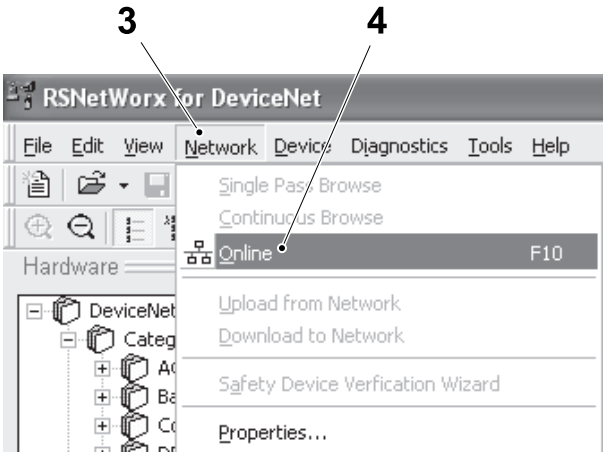

3 Network menu
4 Online

(Cont'd)

(Cont'd)

h) Highlight the DEVICENET POINT I/O ADAPTER (5) and right click the PC mouse, select DOWNLOAD TO DEVICE (6) to start the download.

i) When the dialogue box (7) opens, select the YES button (8) to continue.

j) When the download is complete, close the RSNetWorx program and turn the key on the CPU module to the REM mode position.

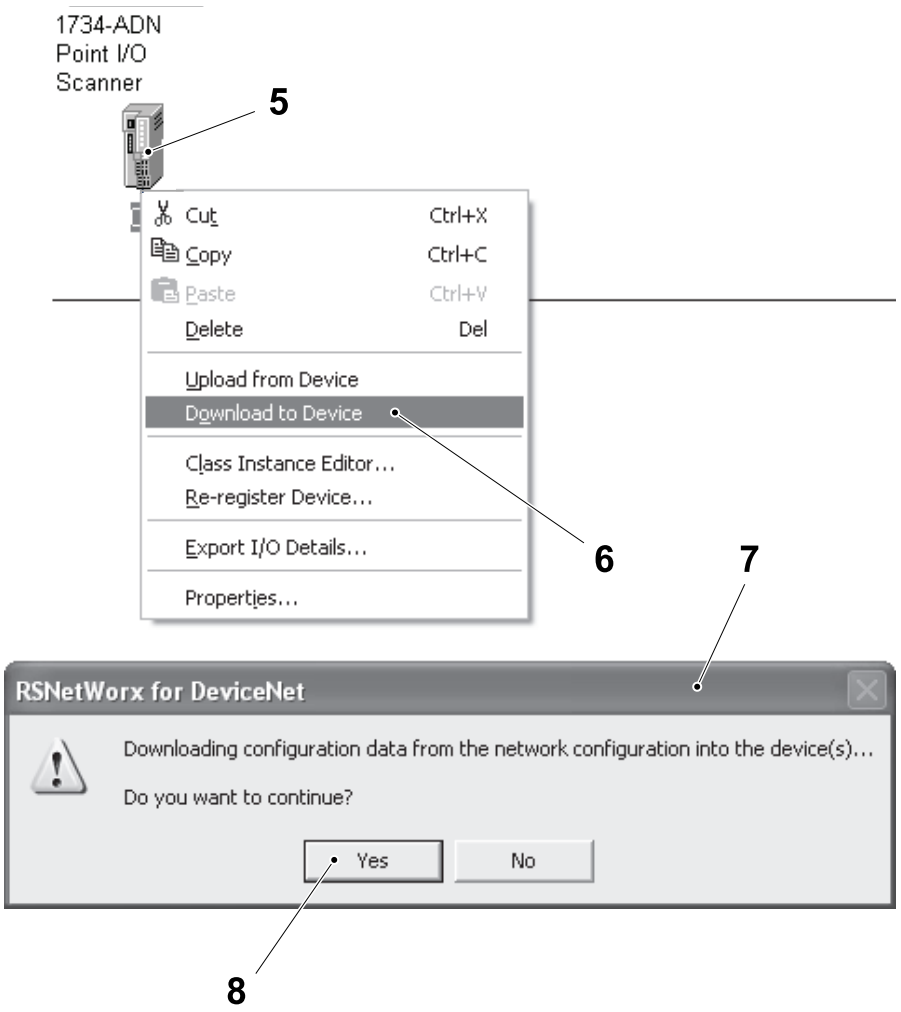

5 DeviceNet Point I/O adapter
6 Download to device
7 Dialogue box
8 Yes button

8.2.2.1-4 DeviceNet Point I/O Adapter - LED Description

Machine Status	Electrical supply disconnecting device in position I (ON)

LED	Colour	Description
Adapter status (1)	Off	No power is applied to the device.
	Solid green	Device is operating normally.
	Flashing green	Device needs to be commissioned because configuration is missing, incomplete or incorrect.
	Flashing red	Recoverable fault is present.
	Solid red	Unrecoverable fault may require the adapter to be changed.
	Flashing red/green	Device is in self-test

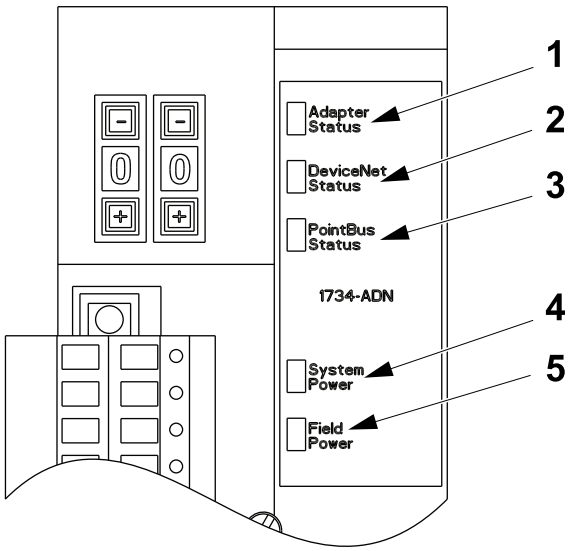

1 Adapter status LED
2 DeviceNet status LED
3 PointBus status LED
4 System power
5 Field power

(Cont'd)

(Cont'd)

LED	Colour	Description
DeviceNet status (2)	Off	Device is not online: - the device is autobauding. - the device has not completed the dup_MAC_id test. Check the adapter status indicator to determine if more time is required to complete the dup_MAC_id test or if power is required at the module.
	Solid green	Device is online and has connections in the established state
	Flashing green	Device is online, but has no connections in the established state
	Flashing red	1 or more I/O connections are in a timed-out state. Determine the cause of the time-out. An increase in packet rate may be required.
	Solid red	Critical link failure - communication device failed. Device detected error that prevents it from communicating on the network. Make sure the device is using the correct MAC ID and baud rate.

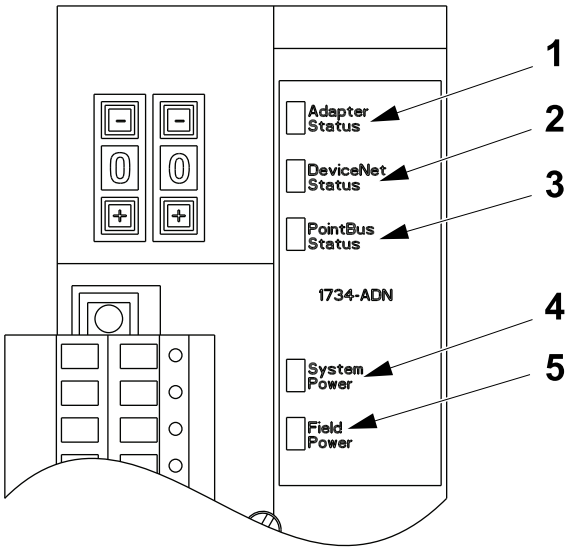

1 Adapter status LED
2 DeviceNet status LED
3 PointBus status LED
4 System power
6 Field power

(Cont'd)

(Cont'd)

LED	Colour	Description
PointBus status (3)	Off	Device is not online: - the device is autobauding. - the device has not completed the dup_MAC_id test. Check the adapter status indicator to determine if more time is required to complete the dup_MAC_id test or if power is required at the module.
	Solid green	Device is online and has connections in the established state
	Flashing green	Device is online, but has no connections in the established state
	Flashing red	No scan list is available. I/O module is missing. Make sure all I/O modules are connecting and using the correct MAC ID's. Check the "Cycling Node Status" parameter in RSNetWorx for DeviceNet.
	Solid red	Critical link failure - communication device failed. Device detected error that prevents it from communicating on the network. Make sure an I/O module is not using the MAC ID = 0. Make sure all backplane modules are connecting at the correct baud rate.

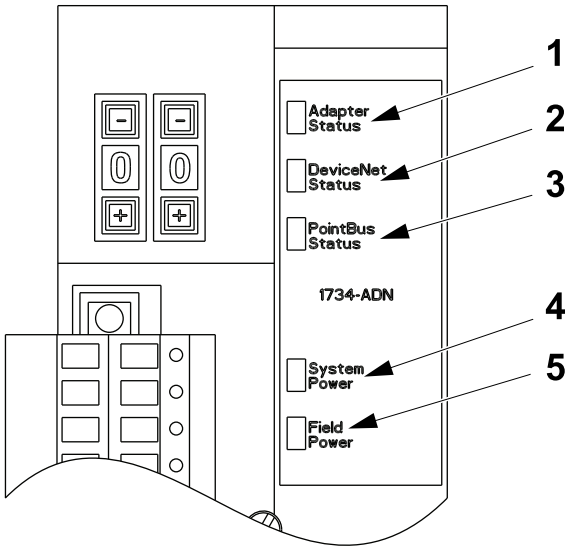

1 Adapter status LED
2 DeviceNet status LED
3 PointBus status LED
4 System power
7 Field power

(Cont'd)

(Cont'd)

LED	Colour	Description
System power (4)	Off	Field power is OFF. DC-DC converter problem. Check adapter configuration. Turn the Field power ON.
	Solid green	System power is ON. DC-DC converter is active (5V)
Field power (5)	Off	Check adapter configuration. Turn the Field power ON.
	Solid green	Power is ON with 24V present.

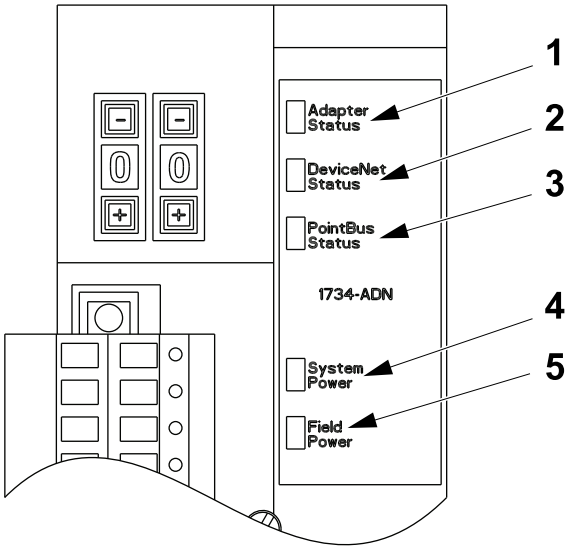

1 Adapter status LED
2 DeviceNet status LED
3 PointBus status LED
4 System power
5 Field power

8.2.2.2 DeviceNet Point I/O Module

8.2.2.2-1 DeviceNet Point I/O Module - Change

Machine Status	Electrical supply disconnecting device in position I (ON)
Special Equipment	Laptop PC Ethernet communication cable

Preparation

Before changing the DeviceNet Point I/O module:

- Use the RSLinx Classic program to verify and record the firmware version of the DeviceNet Point I/O module.
- Use the Flow Chart of Procedures for Changing a DeviceNet Point I/O Module to determine which procedures to perform and their correct sequence.

  Note! The Point I/O Adapter stores the configuration parameter set for the Point I/O module. Each time power is applied to a Point I/O module, the configuration is restored. If problems occur, download the program to the Point I/O Adapter, see 8.2.2.1-3 DeviceNet Point I/O Adapter - Download Program for more details.

(Cont'd)

(Cont'd)

Flow Chart of Procedures for Changing a DeviceNet Point I/O Module

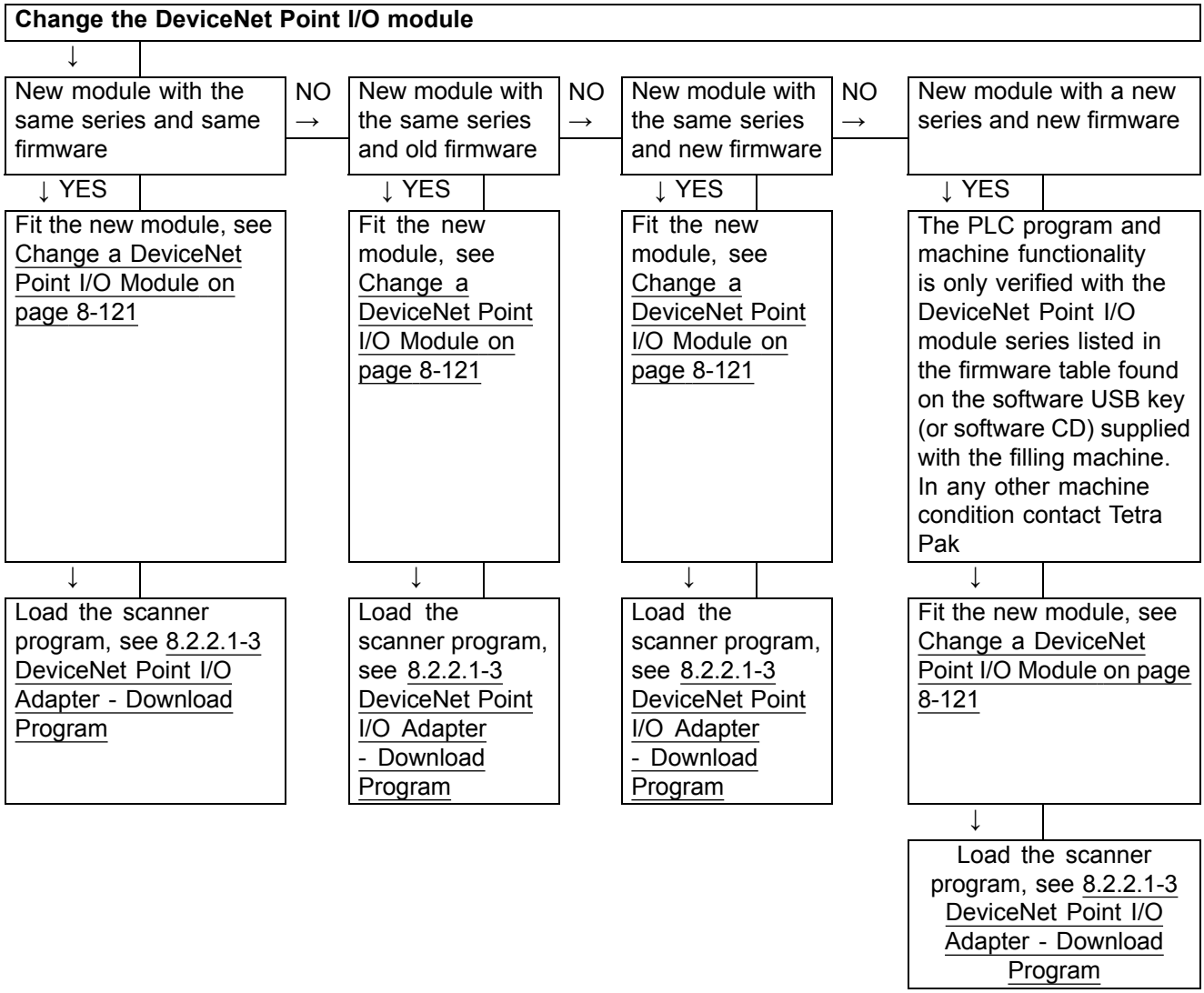

(Cont'd)

(Cont'd)

Change a DeviceNet Point I/O Module

a) Remove the power connection (1).

b) Remove the cable connection (2).

c) Remove the I/O module (3).

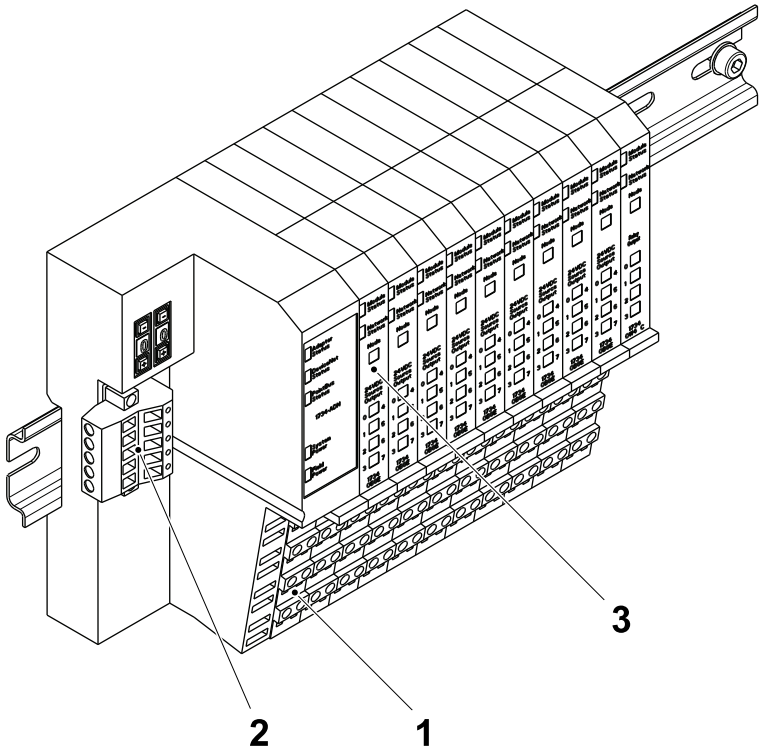

1 Power connection
2 Cable connection
3 I/O module

(Cont'd)

(Cont'd)

d) Fit the new I/O module (4).

e) Fit the cable connection (2).

f) Fit the power connection (1).

g) Continue with the necessary procedures as described in Flow Chart of Procedures for Changing a DeviceNet Point I/O Module.

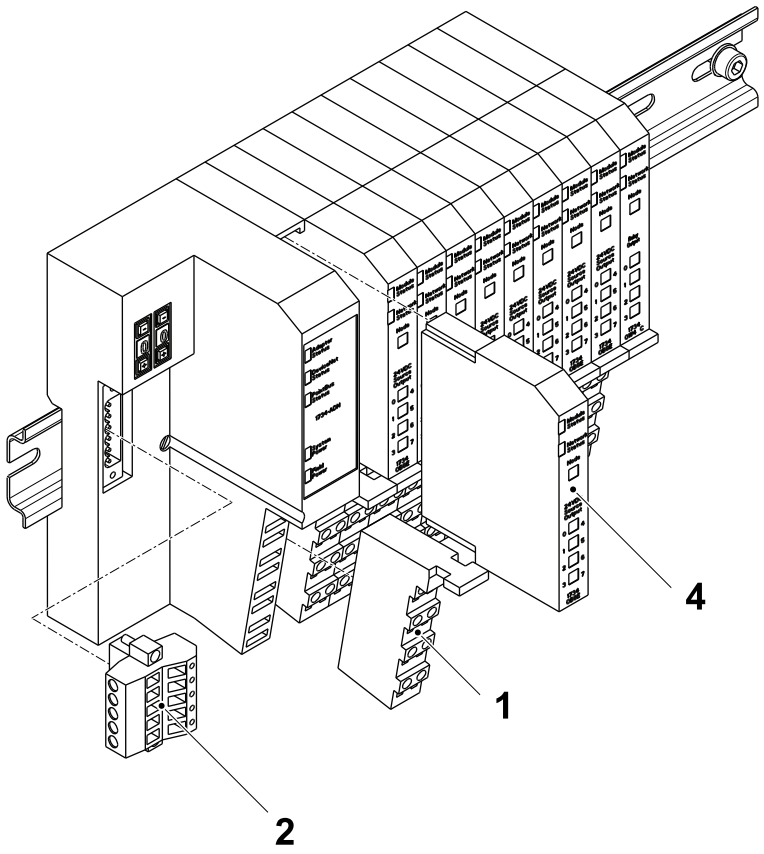

1 Power connection
2 Cable connection
4 I/O module

8.2.2.2-2 DeviceNet Point I/O Module - LED Description

Machine Status	Electrical supply disconnecting device in position I (ON) Main air valve OFF Main steam valve ON Main water valve OFF
SPC Reference	2887527-0100 2888718-0100

Note! The module and network status LED descriptions are the same for all types of DeviceNet Point I/O modules, see the following pages for module specific LED descriptions.

Module Status LEDS

LED	Colour	Description
Module status LED (1)	Green	Device operating normally
	Flashing Green	Device needs commissioning due to configuration missing, incomplete or incorrect
	Flashing Red	Recoverable fault
	Red	Unrecoverable fault may require device replacement
	Flashing Red/Green	Device is in self-test

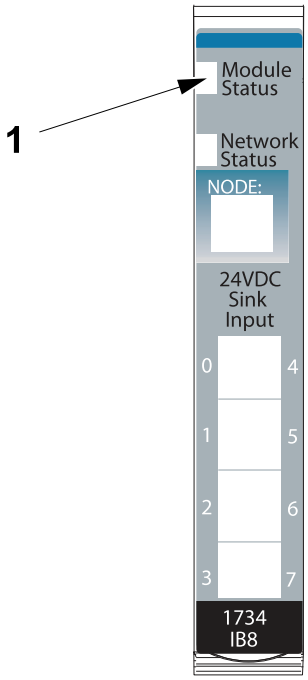

1 Module status LED

(Cont'd)

(Cont'd)

Network Status LEDS

LED	Colour	Description
Network status LED (1)	Off	Device is not on-line • Device has not completed dup_MAC_id test. • Device not powered - check module status indicator
	Flashing Green	Device is on-line but has no connections in the established state
	Green	Device on-line and has connections in the established state
	Flashing Red	One or more I/O connections in timed-out state
	Red	Critical link failure - failed communication device. Device detected error that prevents it communicating on the network
	Flashing Red/Green	Communication faulted device - the device has detected a network access error and is in communication faulted state. Device has received and accepted an Identify Communication Faulted Request - long protocol message

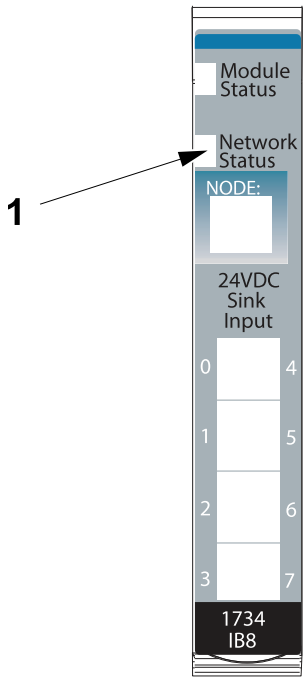

1 Network status LED

(Cont'd)

(Cont'd)

I/O Status LEDS

LED	Colour	Description
Input status LED (1)	Off	Input is in the off-state
	Yellow	Input is in the on-state

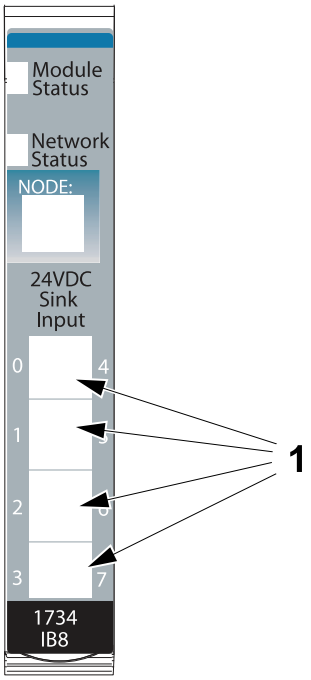

1 Input status LED

(Cont'd)

(Cont'd)

Digital Output Module

LED	Colour	Description
Output Status LED (1)	Off	All outputs are inactive
	Yellow	One or more output is active and under control
	Flashing red	Open circuit detected - no load (Off-state only). Connect load or disable no load detection
	Solid Red	Short circuit detected (On-state only). Remove short or overloaded circuit

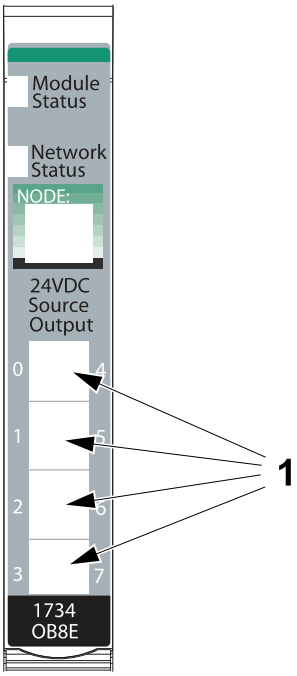

1 Output Status LED

(Cont'd)

(Cont'd)

Thermocouple Module

LED	Colour	Description
Thermocouple input status LED (1)	Off	Module in CAL mode
	Solid Green	Normal (channel scanning inputs)
	Flashing Green	Channel being calibrated
	Solid Red	Major channel fault
	Flashing Red	Channel at end of range (over or under)

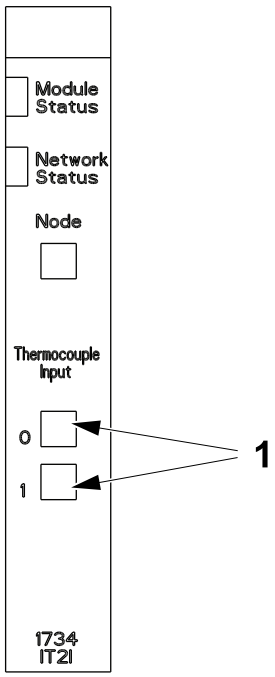

1 Thermocouple input status LED

(Cont'd)

(Cont'd)

Analog Output Module

LED	Colour	Description
Analog output status LED (1)	Off	Module in CAL mode
	Solid Green	Normal operation present with channel actively controlling outputs
	Flashing Green	Channel being calibrated
	Flashing Red	No field power is present. Apply field power
	Solid Red	A Low or High Clamp alarm is present. Operate within normal range

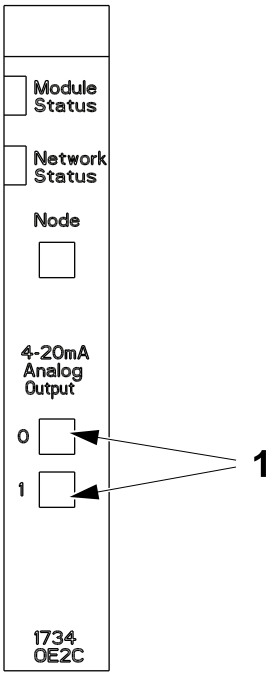

1 Analog output status LED

(Cont'd)

(Cont'd)

Analog Input Module - Module Status LEDS

LED	Colour	Description
Module status LED (1)	Green	Device operating normally
	Flashing Green	Device needs commissioning due to configuration missing, incomplete or incorrect
	Flashing Red	Recoverable fault
	Red	Unrecoverable fault may require device replacement
	Flashing Red/Green	Device is in self-test

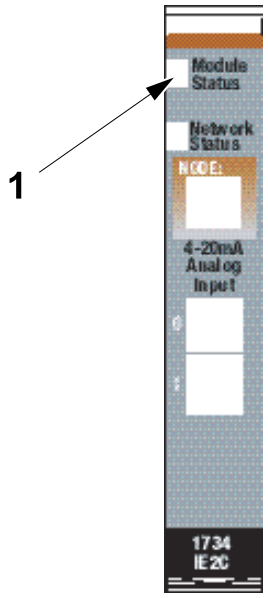

1 Module status LED

(Cont'd)

(Cont'd)

Analog Input Module - Network Status LEDS

LED	Colour	Description
Network status LED (1)	Off	Device is not on-line • Device has not completed dup_MAC_id test. • Device not powered - check module status indicator
	Flashing Green	Device is on-line but has no connections in the established state
	Green	Device on-line and has connections in the established state
	Flashing Red	One or more I/O connections in timed-out state
	Red	Critical link failure - failed communication device. Device detected error that prevents it communicating on the network
	Flashing Red/Green	Communication faulted device - the device has detected a network access error and is in communication faulted state. Device has received and accepted an Identify Communication Faulted Request - long protocol message

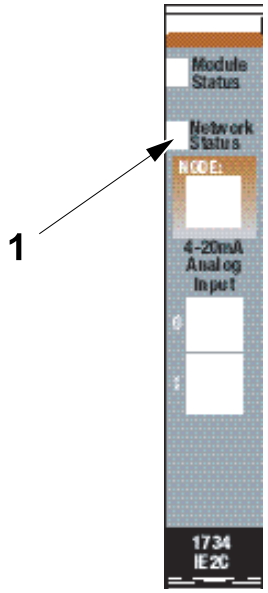

1 Network status LED

(Cont'd)

(Cont'd)

Analog Input Module - Channel Status LEDS

LED	Colour	Description
Channel status	Off	Module in CAL mode
	Solid Green	Normal (channel scanning inputs)
	Flashing Green	Channel being calibrated
	Solid Red	No power or major channel fault
	Flashing Red	Channel at end of range (0mA or 21mA) for 1734-IEC2C Channel at end of range (over or under) for 1734-IEC2V

Analog Output Module - Module Status LEDS

LED	Colour	Description
Module status LED (1)	Green	Device operating normally
	Flashing Green	Device needs commissioning due to configuration missing, incomplete or incorrect
	Flashing Red	Recoverable fault
	Red	Unrecoverable fault may require device replacement
	Flashing Red/Green	Device is in self-test

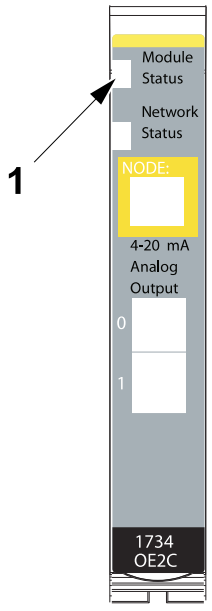

1 Module status LED

(Cont'd)

(Cont'd)

Analog Output Module - Network Status LEDS

LED	Colour	Description
Network status LED (1)	Off	Device is not on-line • Device has not completed dup_MAC_id test. • Device not powered - check module status indicator
	Flashing Green	Device is on-line but has no connections in the established state
	Green	Device on-line and has connections in the established state
	Flashing Red	One or more I/O connections in timed-out state
	Red	Critical link failure - failed communication device. Device detected error that prevents it communicating on the network
	Flashing Red/Green	Communication faulted device - the device has detected a network access error and is in communication faulted state. Device has received and accepted an Identify Communication Faulted Request - long protocol message

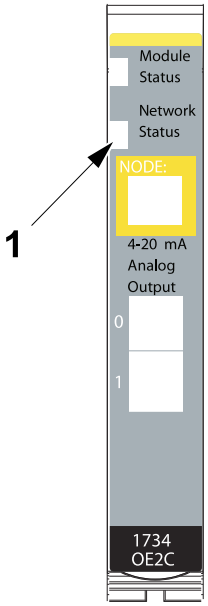

1 Network status LED

(Cont'd)

(Cont'd)

Analog Output Module - Channel Status LEDS

LED	Colour	Description
Channel status	Off	Module in CAL mode
	Green	Normal operation is present with channel actively controlling outputs
	Flashing Green	Channel being calibrated
	Flashing Red	For 1734-OEC2C: open wire or no field power is present For 1734-OEC2V: a low or high clamp is present
	Red	For 1734-OEC2C: - For 1734-OEC2V: no field power is present

RTD Module - Module Status LEDS

LED	Colour	Description
module status LED (1)	Green	Device operating normally
	Flashing Green	Device needs commissioning due to configuration missing, incomplete or incorrect
	Flashing Red	Recoverable fault
	Red	Unrecoverable fault may require device replacement
	Flashing Red/Green	Device is in self-test

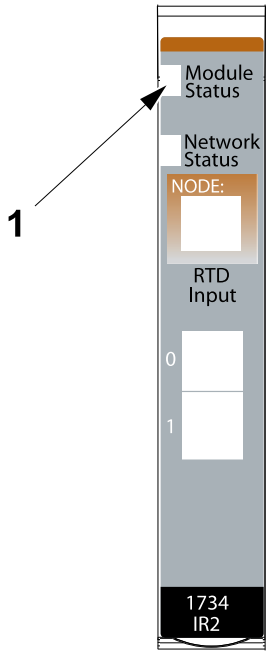

1 Module status LED

(Cont'd)

(Cont'd)

RTD Module - Network Status LEDS

LED	Colour	Description
Network status LED (1)	Off	Device is not on-line • Device has not completed dup_MAC_id test. • Device not powered - check module status indicator
	Flashing Green	Device is on-line but has no connections in the established state
	Green	Device on-line and has connections in the established state
	Flashing Red	One or more I/O connections in timed-out state
	Red	Critical link failure - failed communication device. Device detected error that prevents it communicating on the network
	Flashing Red/Green	Communication faulted device - the device has detected a network access error and is in communication faulted state. Device has received and accepted an Identify Communication Faulted Request - long protocol message

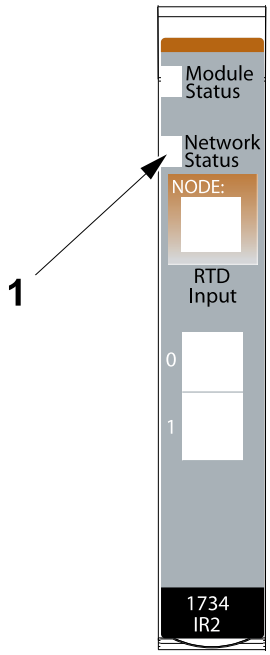

1 Network status LED

(Cont'd)

(Cont'd)

RTD Module - Channel Status LEDS

LED	Colour	Description
Channel status	Off	Module in CAL mode
	Solid green	Normal state is present with channel scanning inputs
	Flashing green	Channel being calibrated
	Flashing red	Channel is at end of range (over or under)
	Solid red	Major channel fault is present

8.2.2.3 DeviceNet PowerFlex

8.2.2.3-1 DeviceNet PowerFlex Adapter - Change

Machine Status	Electrical supply disconnecting device in position O (OFF) Main air valve OFF Main steam valve ON Main water valve OFF
Special Equipment	Laptop PC Ethernet communication cable

Note! The firmware revision of the new DeviceNet PowerFlex adapter maybe equal to, or newer than the firmware revision of the old DeviceNet PowerFlex adapter. A newer firmware revision may create errors when going online, such as unrecognized device or device mismatch if the PC does not contain the latest EDS files.

Preparation

Before changing the DeviceNet PowerFlex adapter:

- Use the RSLinx Classic program to verify and record the firmware version of the DeviceNet PowerFlex adapter.
- Verify and record the node address of the DeviceNet PowerFlex adapter.
- Use the Flow Chart of Procedures for Changing the DeviceNet PowerFlex Adapter to determine which procedures to perform and their correct sequence.

(Cont'd)

(Cont'd)

Flow Chart of Procedures for Changing the DeviceNet PowerFlex Adapter

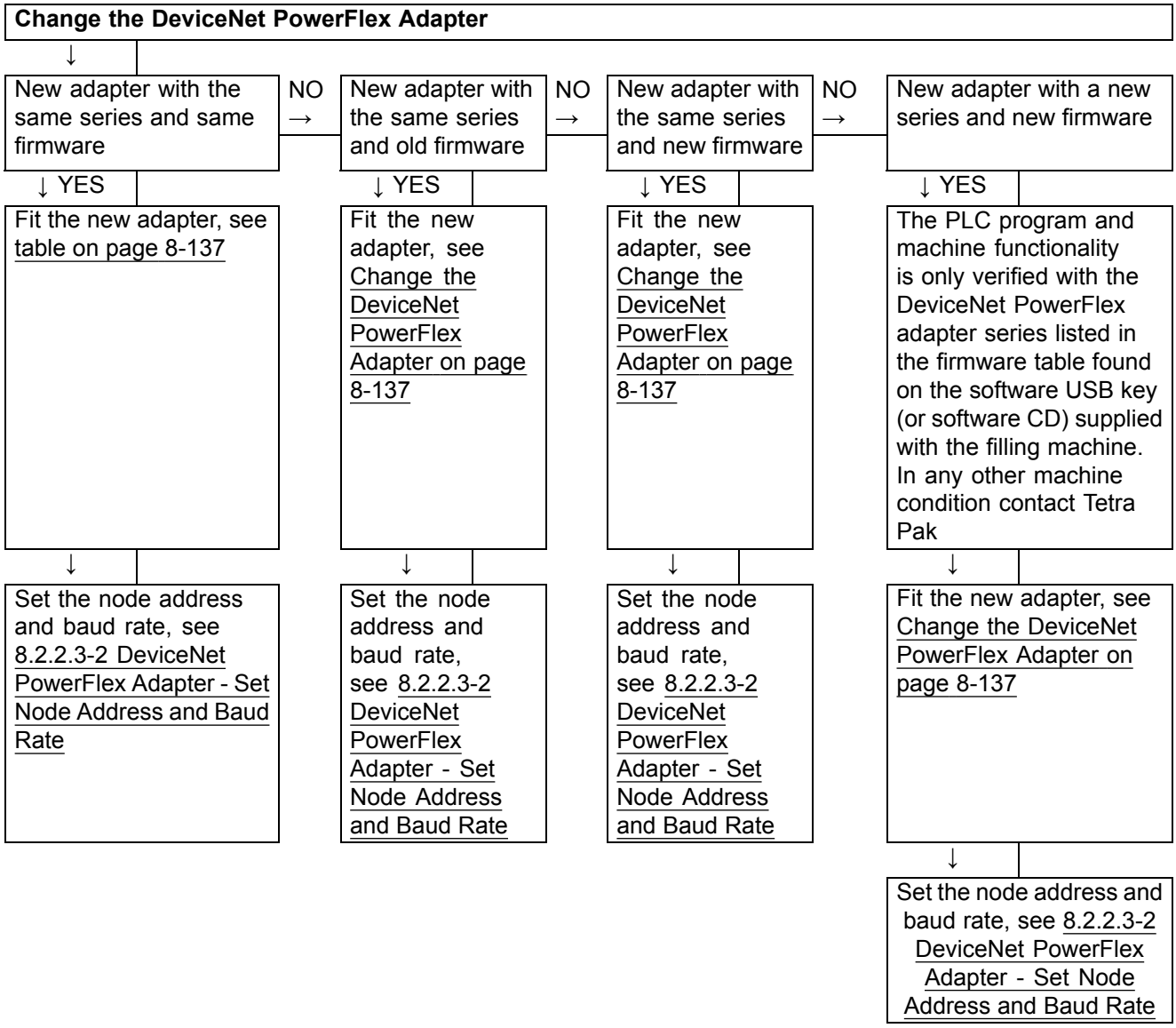

(Cont'd)

(Cont'd)

Change the DeviceNet PowerFlex Adapter

a) Remove the cover (1) from the front of the PowerFlex 40 drive (2).

b) Disconnect the DeviceNet cable (3) and the internal interface cable (4) from the adapter (5).

c) Press the clips (6) and remove the adapter (5) from the cover (1).

d) Fit the new adapter and assemble in the reverse order.

e) Continue with the necessary procedures as described in Flow Chart of Procedures for Changing the DeviceNet PowerFlex Adapter on page 8-136.

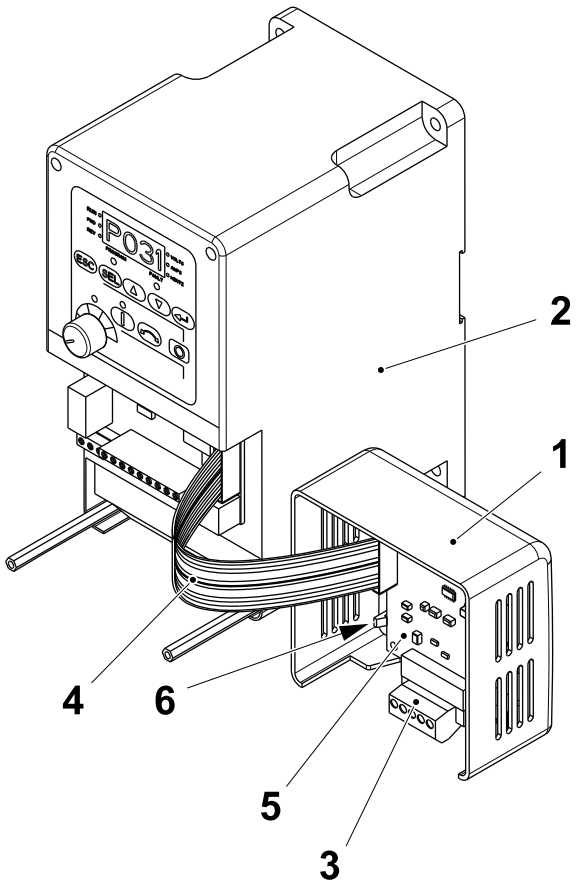

1 Cover
2 PowerFlex 40 drive
3 DeviceNet cable
4 Internal interface cable
5 Adapter
6 Clip

8.2.2.3-2 DeviceNet PowerFlex Adapter - Set Node Address and Baud Rate

Machine Status	Electrical supply disconnecting device in position I (ON)

Note! Check the frequency converter in the filling machine Electrical Manual for the correct node address and baud rate settings.

The DIP switches (1) under the frequency converter front cover (2) are used to set the baud rate and node number of the DeviceNet PowerFlex adapter.

The DIP switches 1-6 determine the node address and the F/C switches 7 and 8 determine the baud rate. Set the DIP switches (1) according to the table.

Note! The baud rate determined by the position of the switches 7 and 8, as indicated in the table, corresponds to 500 kbps.

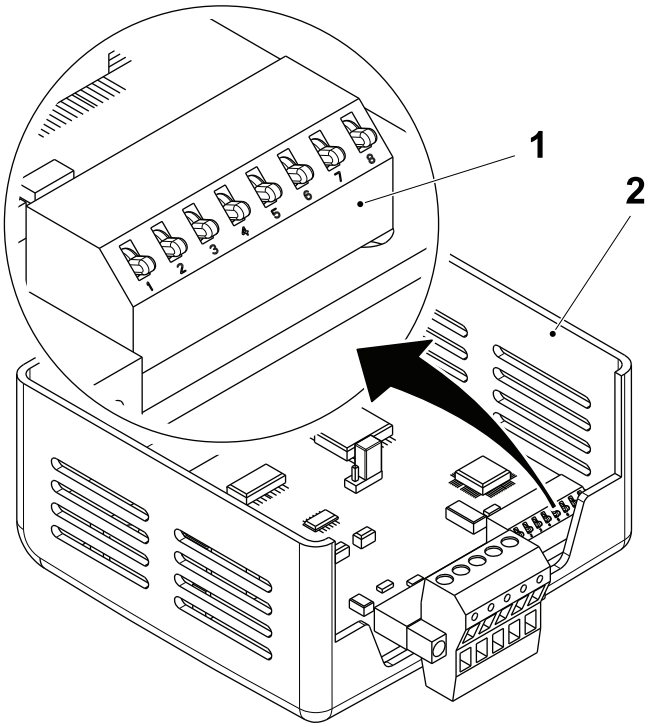

1 DIP switch
2 Front cover

(Cont'd)

(Cont'd)

DNet Power Flex Adaptor	Node No.	Switch No.							
		1	2	3	4	5	6	7	8
T10T0020 ASU Loop	**21**	UP	DOWN	UP	DOWN	UP	DOWN	DOWN	UP
T10T0040 ASU Magazine	**22**	DOWN	UP	UP	DOWN	UP	DOWN	DOWN	UP
T50T0070 Ext. Conv.	**23**	UP	UP	UP	DOWN	UP	DOWN	DOWN	UP
U70T0160 Drive Roller	**24**	DOWN	DOWN	DOWN	UP	UP	DOWN	DOWN	UP
U70T0190 Compressor	**26**	DOWN	UP	DOWN	UP	UP	DOWN	DOWN	UP
V70T0320 ICU Pump	**27**	UP	UP	DOWN	UP	UP	DOWN	DOWN	UP

The jumper (3) on the connector (4) determines the operating mode of the adapter. Set the jumper (3) to the right as shown in the illustration to select the SINGLE DRIVE mode.

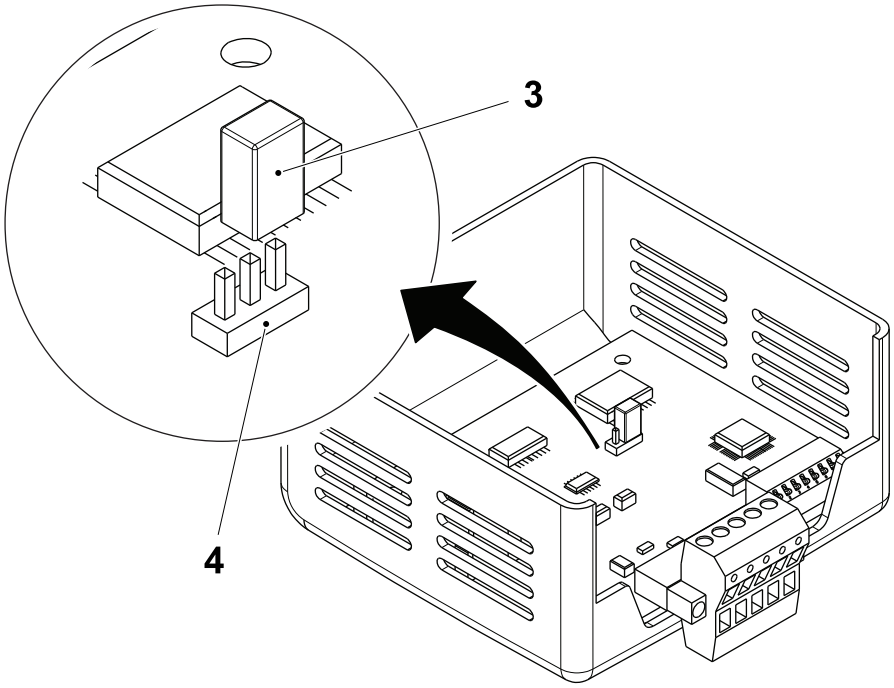

3 Jumper
4 Connector

8.2.2.3-3 DeviceNet PowerFlex Adapter - Download Program

Machine Status	Electrical supply disconnecting device in position I (ON)
Special Equipment	Laptop PC Ethernet communication cable

Note! To connect to the CPU module with an ethernet communication cable, first configure the laptop PC for this type of communication. See 8.1.1-1 Preparation for PLC Communication - Configure PC Network Communications and 8.1.1-2 Preparations for PLC Communication - Configure RSLinx for more details.

a) Set the node address for the DeviceNet PowerFlex adapter, see 8.2.2.3-2 DeviceNet PowerFlex Adapter - Set Node Address and Baud Rate.

b) Connect the Ethernet communication cable between a vacant connection port on the Ethernet switch (1) and the laptop PC (2).

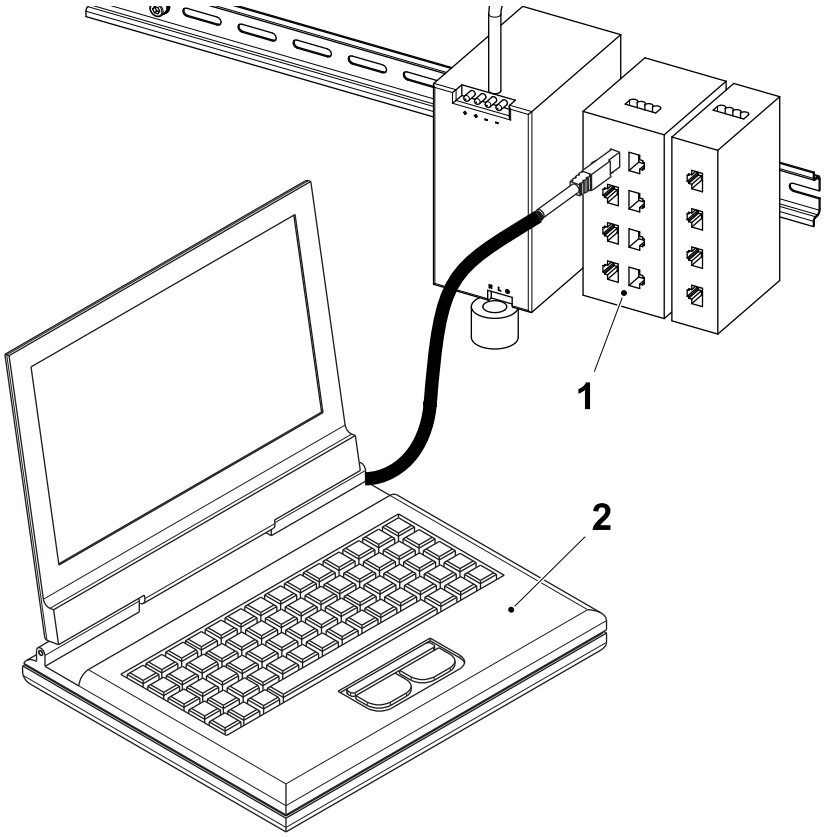

1 Ethernet switch
2 Laptop PC

(Cont'd)

(Cont'd)

Note! The CPU module must not be in RUN position for the program load.

c) Turn the key on the CPU module to the PROG mode position.

d) Insert the software USB key into a laptop PC USB port.

Note! If a software CD has been supplied, insert the software CD into the laptop PC CD drive.

e) Browse to the drive and copy the compressed program folder to the PC desktop and extract the program file.

f) Double click on the program file to automatically start the RSNetWorx program and to open the program file.

g) Select the `NETWORK` menu (3) and then select `ONLINE` (4).

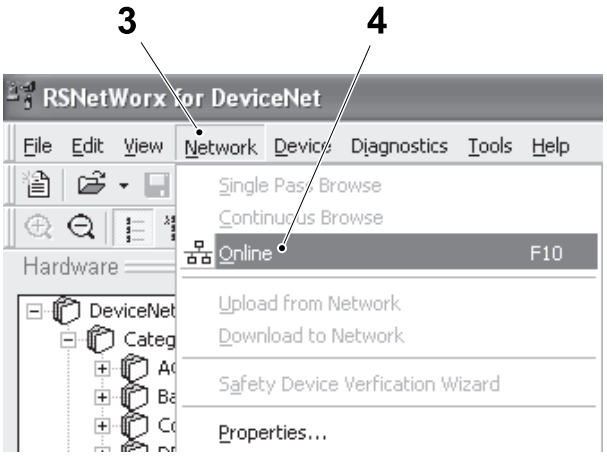

3 Network menu
4 Online

(Cont'd)

(Cont'd)

h) Highlight the DEVICENET POWERFLEX ADAPTER (5) and right click the PC mouse, select DOWNLOAD TO DEVICE (6) to start the download.

i) When the dialogue box (7) appears, select the YES button (8) to continue.

j) When the download is complete, close the RSNetWorx program and turn the key on the CPU module to the REM mode position.

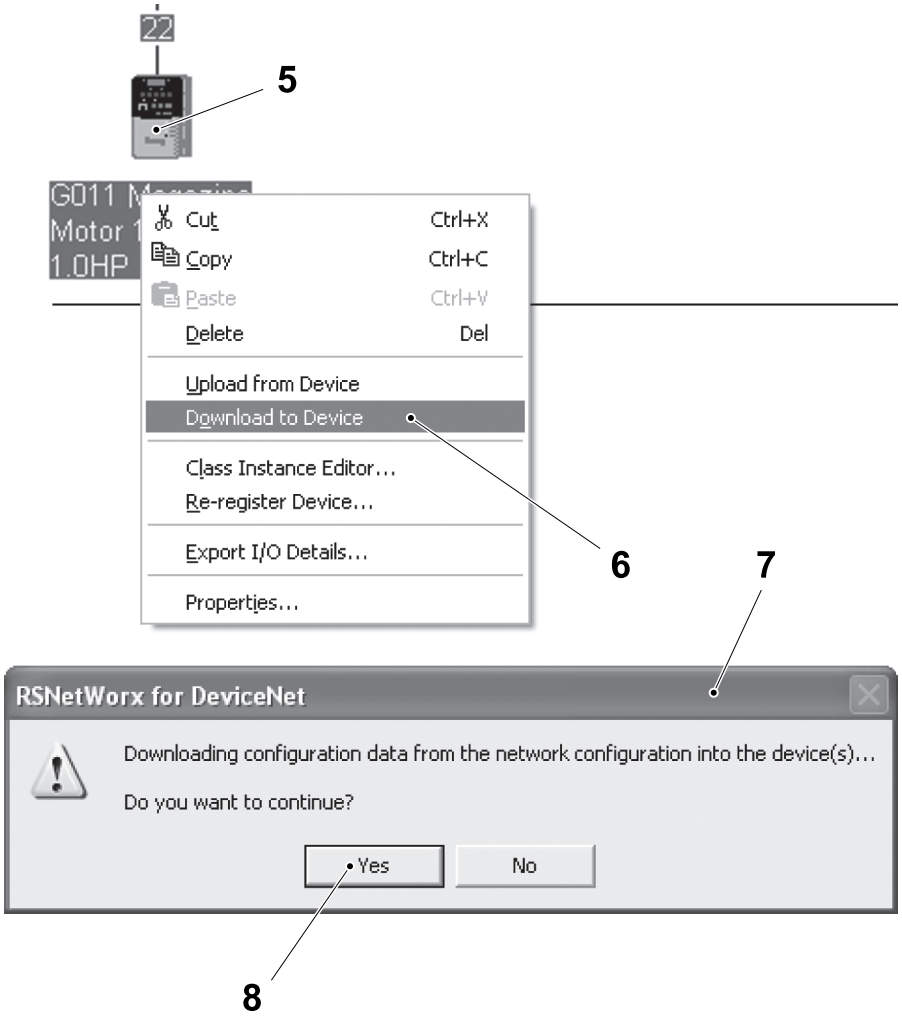

5 DeviceNet PowerFlex adapter
6 Download to device
7 Dialogue box
8 Yes button

8.2.2.3-4 DeviceNet PowerFlex Adapter - LED Description

Machine Status	Electrical supply disconnecting device in position I (ON)

LED	Colour	Description
PORT (1)	Off	The adapter is not powered or connected correctly to the drive. Check the ribbon cable connecting the adapter is securely fitted to the drive. Apply power to the adapter.
	Solid green	The adapter is properly connected and is communicating with the drive.
	Flashing green	The adapter is establishing an I/O connection to the drive or (DSI I/O Config) is configured for all I/O disabled. The LED will turn GREEN or RED. Check the setting of parameter 15 (DSI I/O Config). The adapter is operating normally if no DSI I/O is enabled.

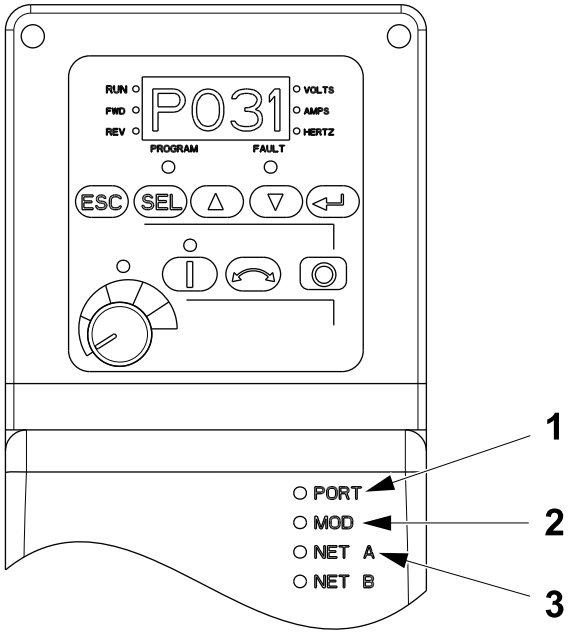

1 PORT LED
2 MOD LED
3 NET A LED

(Cont'd)

(Cont'd)

LED	Colour	Description
PORT (1)	Flashing red	The adapter is not receiving communications from a drive, a connected drive has failed or a drive is missing. Clear any drive faults, Check that all cables are securely connected. Cycle power to the drive.
	Solid red	The drive has refused an I/O connection from the adapter. Another DSI peripheral is using the same DSI port as the adapter. Check that all DSI cables are securely connected and undamaged. If necessary, replace any damaged cable.
	Solid orange	Daisy-chained devices in the Multi-Drive mode are not of the correct type. Install the correct modules.

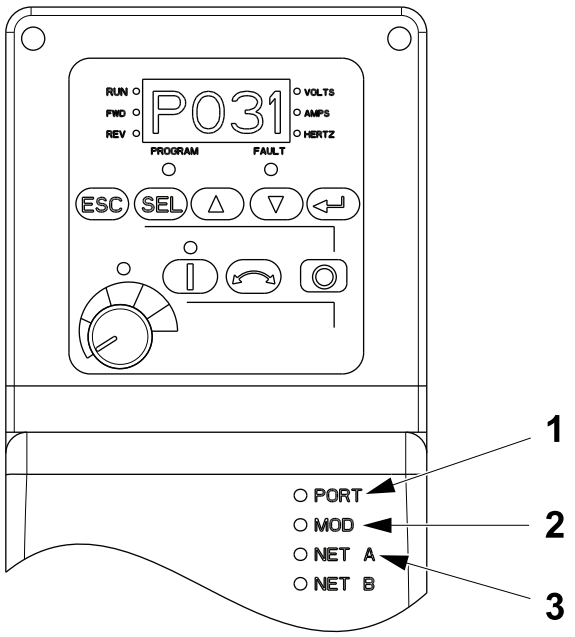

1 PORT LED
2 MOD LED
3 NET A LED

(Cont'd)

(Cont'd)

LED	Colour	Description
MOD (2)	Off	The adapter is not powered or connected correctly to the drive. Check the ribbon cable connecting the adapter is securely fitted to the drive. Apply power to the adapter.
	Solid green	The adapter is operational and transferring I/O data.
	Flashing green	The adapter is operational, but is not transferring I/O data. Put the scanner in the RUN mode. Program the controller to recognize and transmit I/O data to the adapter. Configure the adapter for the program in the controller. The adapter is operating normally if no DSI I/O is enabled.

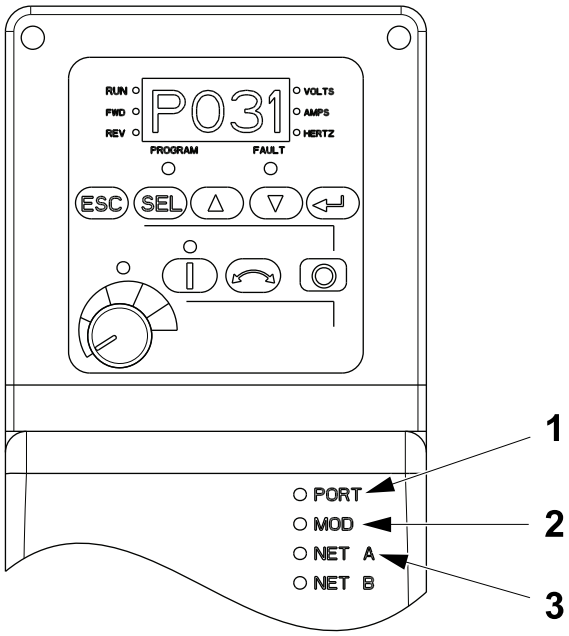

1 PORT LED
2 MOD LED
3 NET A LED

(Cont'd)

(Cont'd)

LED	Colour	Description
MOD (2)	Flashing red	The adapter has failed the firmware test, a connected drive has failed or a drive is missing. Clear any drive faults. Cycle power to the drive. If cycling power does not correct the problem, the parameter settings may have been corrupted. Restore default values reconfigure the adapter. If restoring default values does not correct the problem, flash the adapter with the latest firmware release. Determine which drive is missing or has failed. Check cabling and configuration settings.
	Solid red	The adapter has failed the hardware test Cycle power to the drive. Replace the adapter.

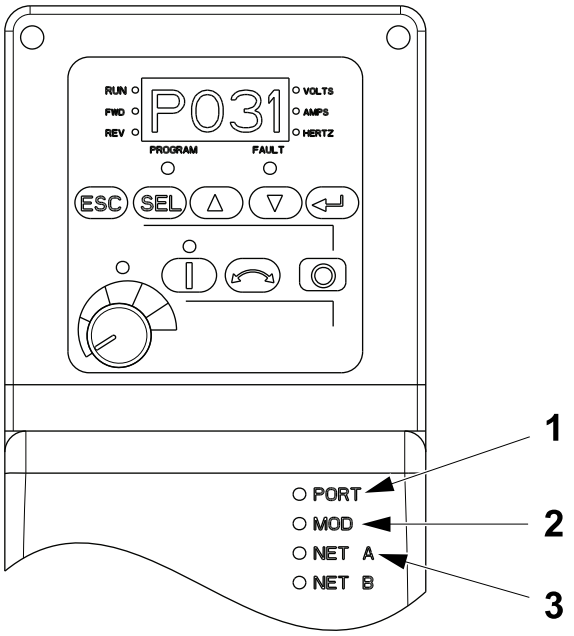

1 PORT LED
2 MOD LED
3 NET A LED

(Cont'd)

(Cont'd)

LED	Colour	Description
NET A (3)	Off	The adapter and/or the network is not powered or the adapter is not connected correctly to the network. Check that the ribbon cable is securely connected to the adapter and to the drive. Check that the DeviceNet cable is correctly connected. Apply power to the adapter and the network.
	Solid green	The adapter is properly connected and is communicating with devices on the network.
	Flashing green	The adapter is properly connected but is not communicating with any devices on the network. Put the scanner in the RUN mode, or apply power to the peer device that will send I/O data. Configure a controller or peer device to recognize and transmit I/O to the adapter. Configure the adapter for the program in the controller or the I/O from the peer device.

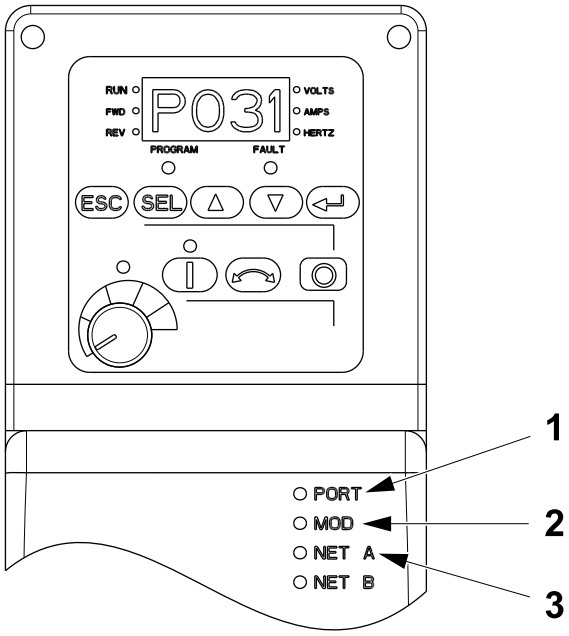

1 PORT LED
2 MOD LED
3 NET A LED

(Cont'd)

(Cont'd)

LED	Colour	Description
NET A (3)	Flashing red	A DeviceNet I/O connection has timed out. Put the scanner in the RUN mode, or apply power to the peer device that will send I/O data. Check the amount of traffic on the network.
	Solid red	Failed duplicate node detection test or bus off condition exists.

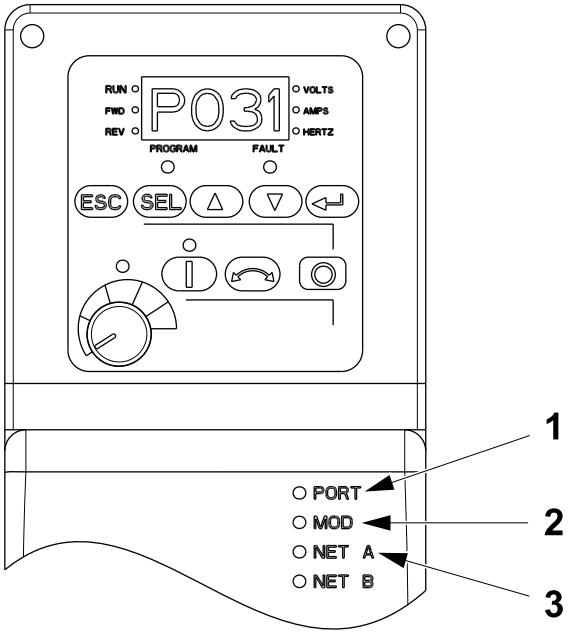

1 PORT LED
2 MOD LED
3 NET A LED

8.3 Servo System

8.3-1 Servo System - Description

The CPU module (1) manages the servo system and communicates with the Sercos module (2) through the backplane of the PLC rack (3). The Sercos module (2) communicates through an optical fiber network (4) with the two servo racks (5) containing the IAM (Integrated Axis Modules) (6) and the AM (Axis Module) servo drives (7).

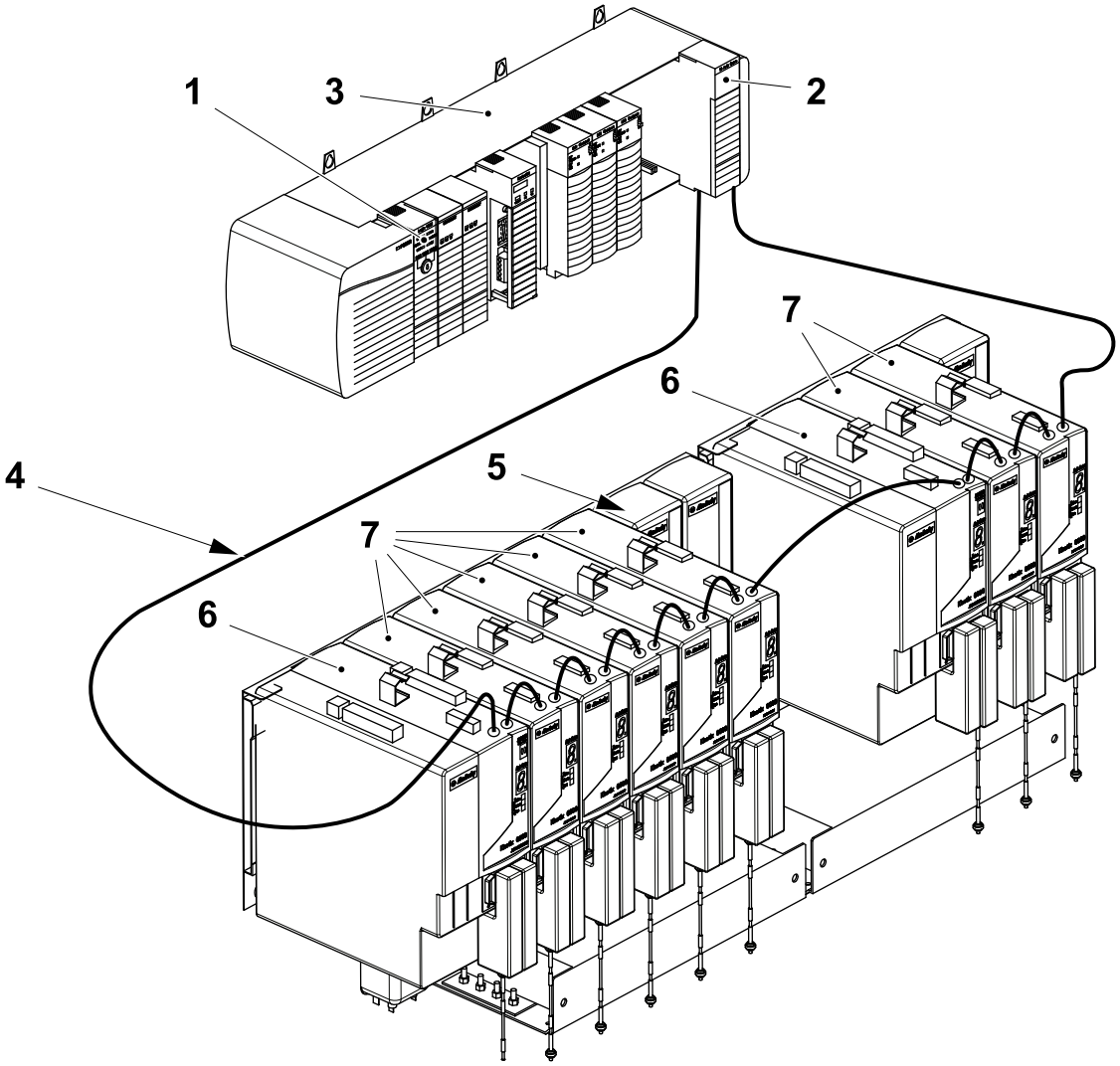

1 CPU module
2 Sercos module
3 PLC rack
4 Optical fiber network
5 Servo rack
6 Integrated axis module
7 Axis module

(Cont'd)

(Cont'd)

The servo drive racks each contain an IAM drive and the AM servo drives.

400 V/AC powers each servo drive rack via the power connector (1) on the top of the IAM and control power 240V/AC to the AM drives is supplied through the control power connector (2) on top of the IAM. A DC bus through the servo drive rack backplane provides the drives with DC power.

The IAM (3) provides power to the AM servo drives (4) in the servo drive rack (5) and also functions as a servo drive for one servo motor. Each rack has a base node number, which is set by the plus and minus switches (6) on the IAM (3).

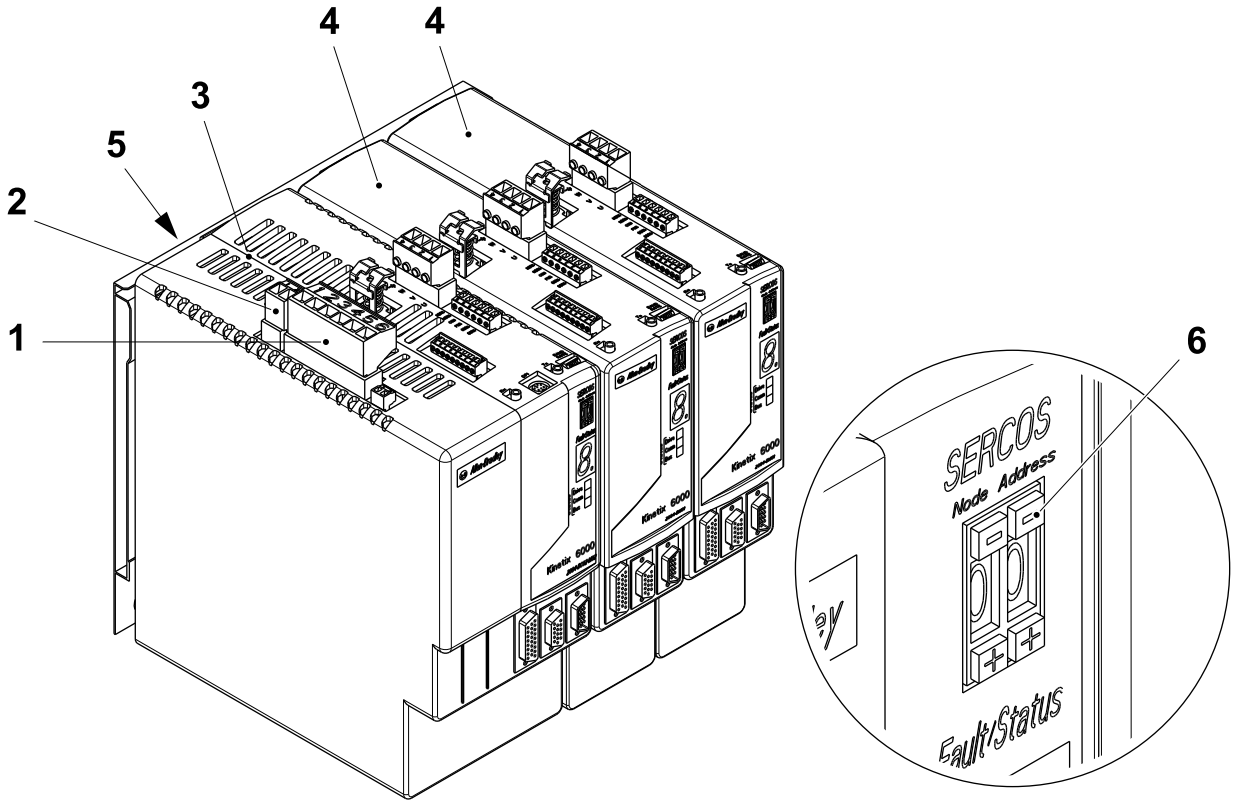

1 Power connector
2 Control power connector
3 IAM servo drive
4 AM servo drive
5 Servo Rack
6 Switch

(Cont'd)

(Cont'd)

The AM servo drives each have a node number which is determined by the base node number setting on the IAM and by the location of the drive in the rack.

The fault/status display (7) on the AM servo drive indicates the current system status, when the:

- LED segments display alternatively in a rotating pattern, this indicates the system is checking for a closed optical ring
- digit "1" displays, this indicates that the optical ring has been checked and that the physical communication is in place. The system is now checking for active nodes
- digit "2" displays, this indicates that all nodes in the optical ring are active. The system is now checking the configuration of the nodes
- digit "3" displays, this indicates that all nodes are configured according to the application software. The system is now checking for motor types
- digit "4" displays, this indicates that the motor type matching for all axis is complete and the system is running
- letter "E" displays, this indicate an error, see section 8.3.2-5 Servo Drive - Error Codes.

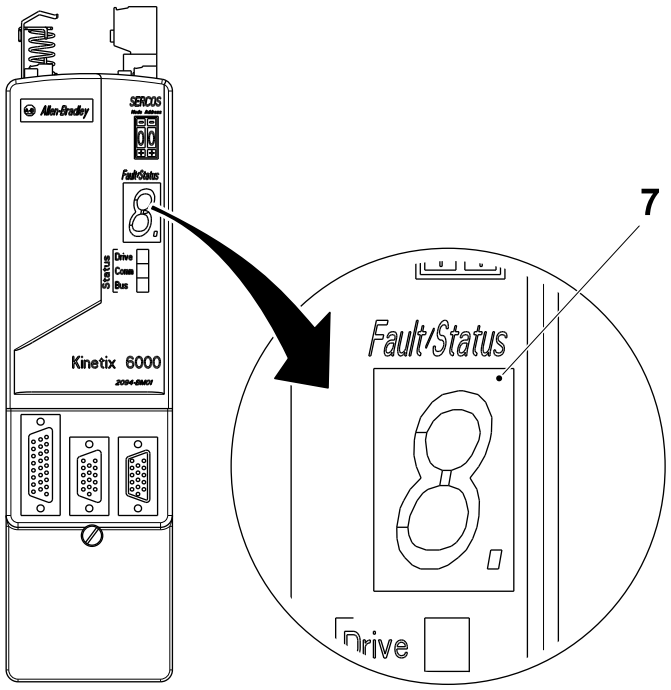

7 Fault/status display

(Cont'd)

(Cont'd)

On the front of each AM servo drive are three D-sub connectors:

- connector (8) is for I/O communications
- connector (9) is for position feedback from the servo motor
- connector (10) is for auxiliary position feedback.

The AM servo drives (4) connect to the servo motors with uninterrupted cabling which allows:

- supply power to the servo motors
- to receive signals with position indicator feedback
- to activate and deactivate if fitted, the servo motors mechanical brake.

The connectors for servo motor power (11) and power to the mechanical brake of the motor (12) are on the top of the drive.

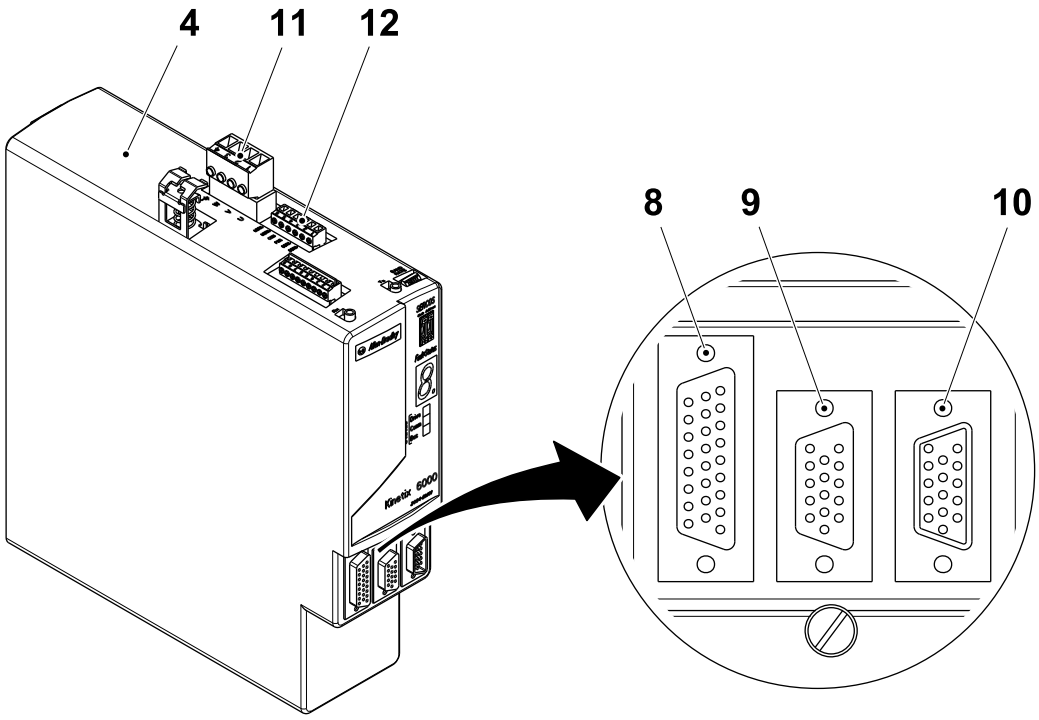

4 AM servo drive
8 Connector for I/O communication
9 Connector for position feedback
10 Connector
11 Motor power
12 Brake power

8.3.1 Sercos Module

8.3.1-1 Sercos Module - Change

Machine Status	Electrical supply disconnecting device in position O (OFF) Main air valve OFF Main steam valve ON Main water valve OFF

Preparation

Before changing the Sercos module:

- Use the RSLinx Classic program to verify and record the firmware version of the existing Sercos module.
- Use the Flow Chart of Procedures for Changing the Sercos Module to determine which procedures to perform and their correct sequence.

Flow Chart of Procedures for Changing the Sercos Module

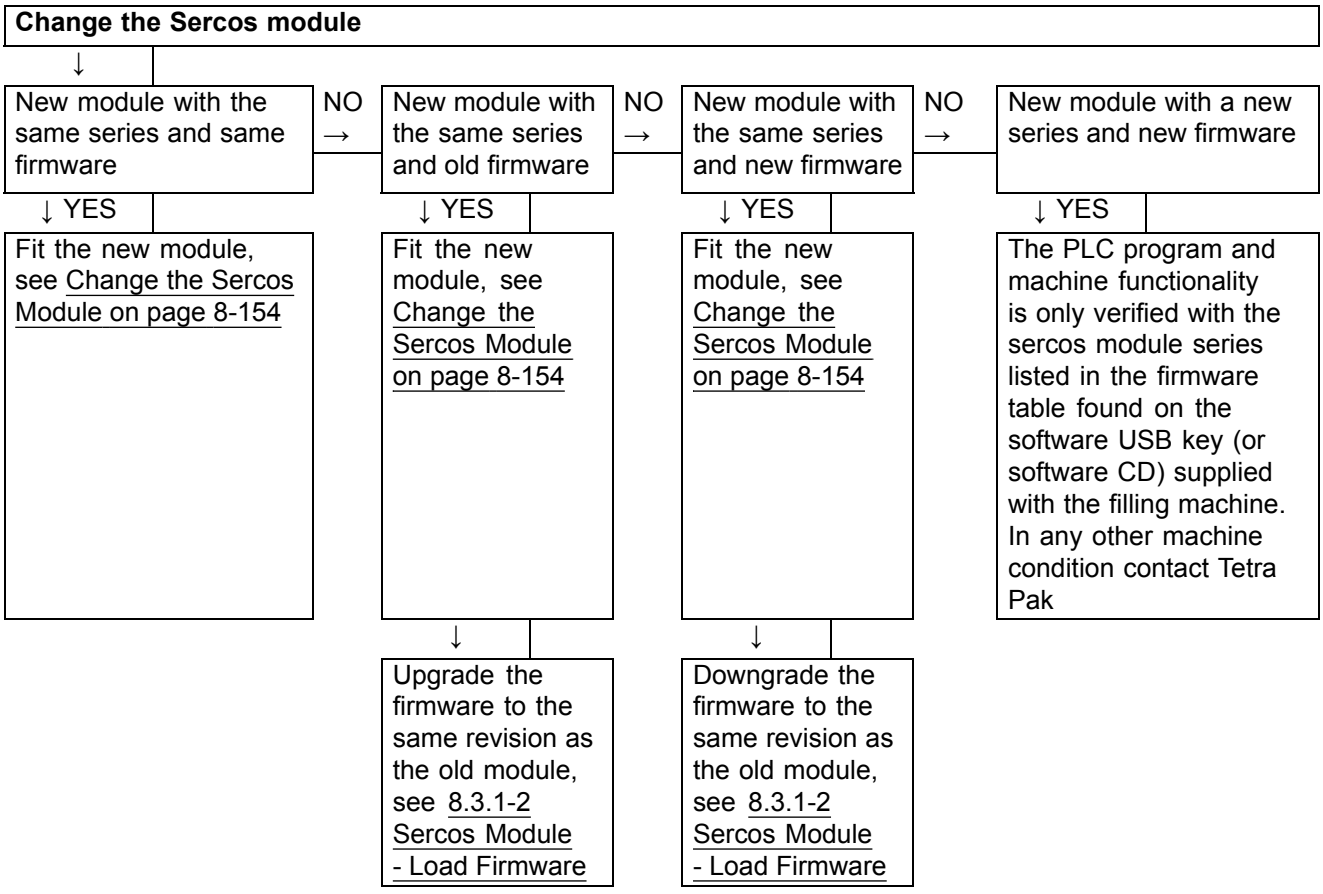

(Cont'd)

(Cont'd)

Change the Sercos Module

a) Mark the receive connector (1) and the transmit connector (2) and remove the connectors from the Sercos module (3).

b) Push in and hold the top and bottom locking tabs (4) on the Sercos module (3).

c) Pull the Sercos module (3) out of the chassis (5).

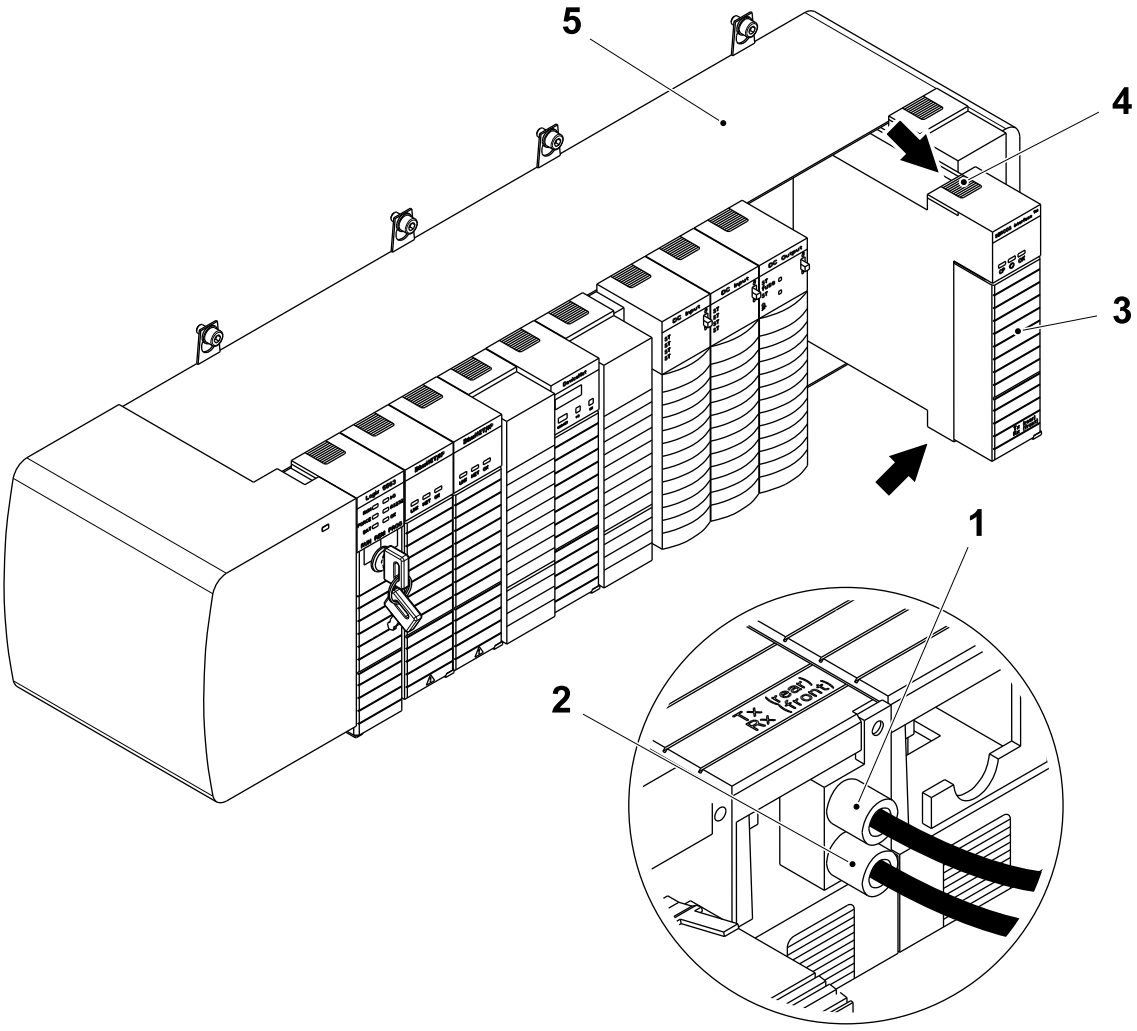

1 Receive connector, Rx
2 Transmit connector, Tx
3 Sercos module
4 Locking tab
5 Chassis

(Cont'd)

(Cont'd)

d) Align the new Sercos module (3) with the top and the bottom guides in the chassis.

e) Slide the Sercos module (3) into the chassis. Make sure the Sercos module (3) is flush with the other modules and the latches on the top and the bottom engage.

f) Connect the receive connector (1) and the transmit connector (2) to the Sercos module (3).

g) Continue with the necessary procedures as described in Flow Chart of Procedures for Changing the Sercos Module on page 8-153.

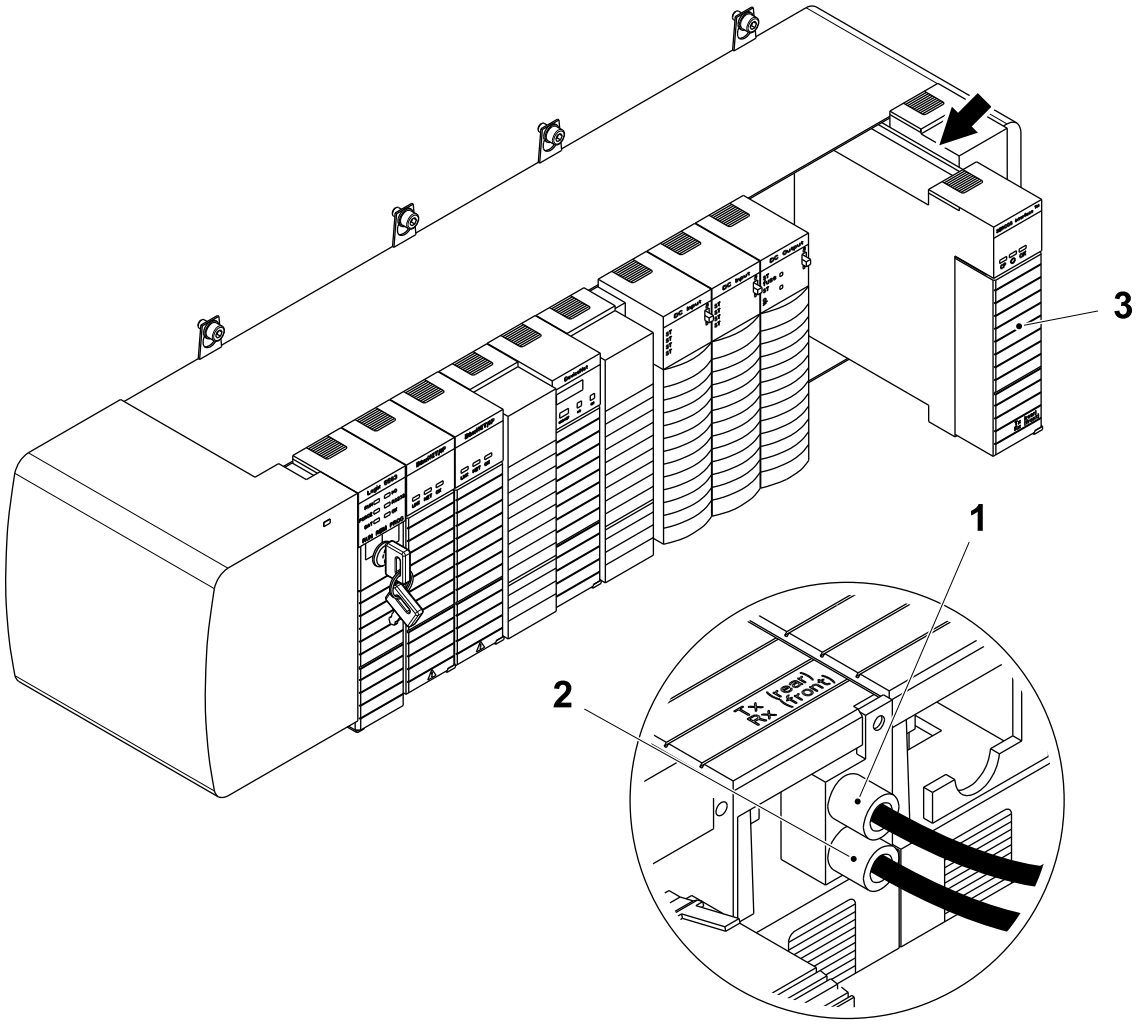

1 Receive connector, Rx
2 Transmit connector, Tx
3 Sercos module

8.3.1-2 Sercos Module - Load Firmware

Follow the procedure described in 8.1.2-3 CPU Module - Load Firmware to load the firmware for the Sercos module.

8.3.1-3 Sercos Module - LED Description

Machine Status	Electrical supply disconnecting device in position I (ON)

The Sercos module has three LED's indicating the state of the system. The CP Sercos communication LED (1) displays the status of the communication phases. The Sercos ring LED (2) displays the status of the Sercos network. The OK LED (3) indicates the status of the module and the communication.

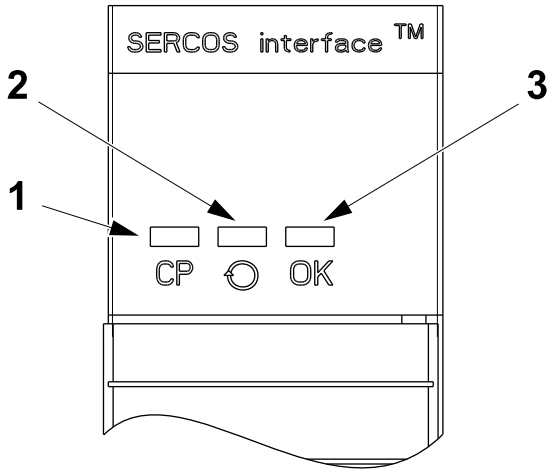

1 Sercos communication LED
2 Sercos ring LED
3 OK LED

(Cont'd)

(Cont'd)

During power up, the module completes a self test that includes an indicator test. All the LED's go red for one second, green for one second and OFF for one second.

LED	Colour	Description
CP (1)	Solid Orange	In Phase -1: Autobaud detection in progress.
	Off	In Phase 0: looking for a closed ring.
	Flashing Red	In Phase 1: looking for active nodes.
	Alternating Red/Green	In Phase 2: configuration of nodes for communication.
	Flashing Green	In Phase 3: configuration of device specific parameters
	Solid Green	In Phase 4: configured and active.
Sercos ring (2)	Solid Green	The ring, drive, and axes are configured and are actively communicating through to the nodes on the ring.
	Flashing Red	The module has detected a setup or configuration fault with the ring. Check the configuration as follows: • Ensure drive and axes addresses are correct • Remove excess axes from ring • Make sure application program has selected the proper ring cycle period and baud rate.

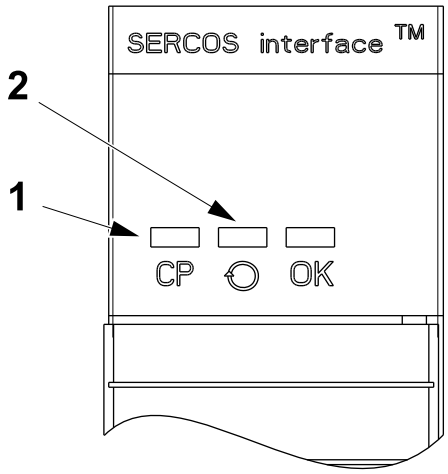

1 Sercos communication LED
2 Sercos ring LED

(Cont'd)

(Cont'd)

LED	Colour	Description
Sercos ring (2)	Solid Red	The module has detected a hardware or installation fault with the ring. Check as follows: • Make sure all cables are properly installed • Make sure the cable is of the correct type and length • Make sure application program has configured the ring transmit level of the module to high when using specified cables • Make sure the transmit levels of the drive are set appropriately • Inspect cables for damage • Inspect the drives for any faults.
	Off	The module has detected no ring data on its receiver or has not successfully completed phase 2. Check as follows: • Make sure all cables are properly installed • Inspect cable for wear and damage • Inspect drives for faults.
	Flashing Green	The ring, drive, or axes are not configured but, at least one has been identified. Not a problem if the system has not been configured. If you are having configuration problems with the ring, drive, and axes, make sure that the application program is setup properly for the equipment in use.

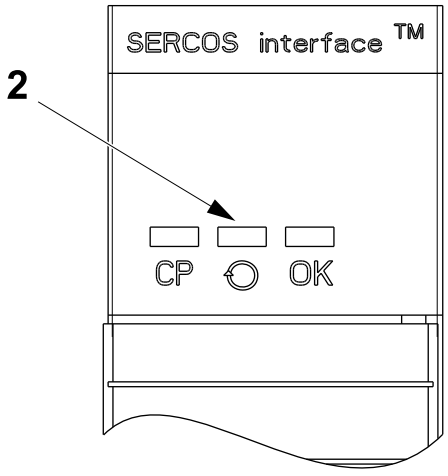

2 Sercos ring LED

(Cont'd)

(Cont'd)

LED	Colour	Description
OK (3)	Off	The module is not operating. Apply chassis power. Verify the module is completely inserted into the chassis and backplane.
	Flashing Green	The module has passed internal diagnostics, but has not established active communications.
	Steady Green	Data is being exchanged and the module is in the normal operating state.
	Flashing Red	A major recoverable failure has occurred or an firmware upgrade is in progress. If an firmware upgrade is in progress, complete the upgrade. If a firmware upgrade is not in progress, cycle the power.
	Solid Red	A potential non-recoverable fault has occurred. Cycle the power to the module. If the solid red persists, replace the module.

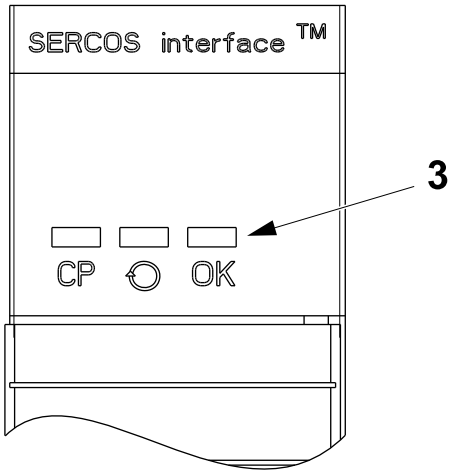

3 OK LED

8.3.2 Servo Drive

8.3.2-1 Servo Drive - Change

Machine Status	Electrical supply disconnecting device in position O (OFF) Main air valve OFF Main steam valve ON Main water valve OFF

Note! The PLC program and machine functionality is only verified to work with servo drive series listed in the table in the section 8.1.2-3 CPU Module - Load Firmware.

(Cont'd)

(Cont'd)

Preparation

Before changing the servo drive:

- Use the RSLinx Classic program to verify and record the firmware version of the servo drive.
- Use the Flow Chart of Procedures for Changing an IAM or AM Drive to determine which procedures to perform and their correct sequence.

Flow Chart of Procedures for Changing an IAM or AM Drive

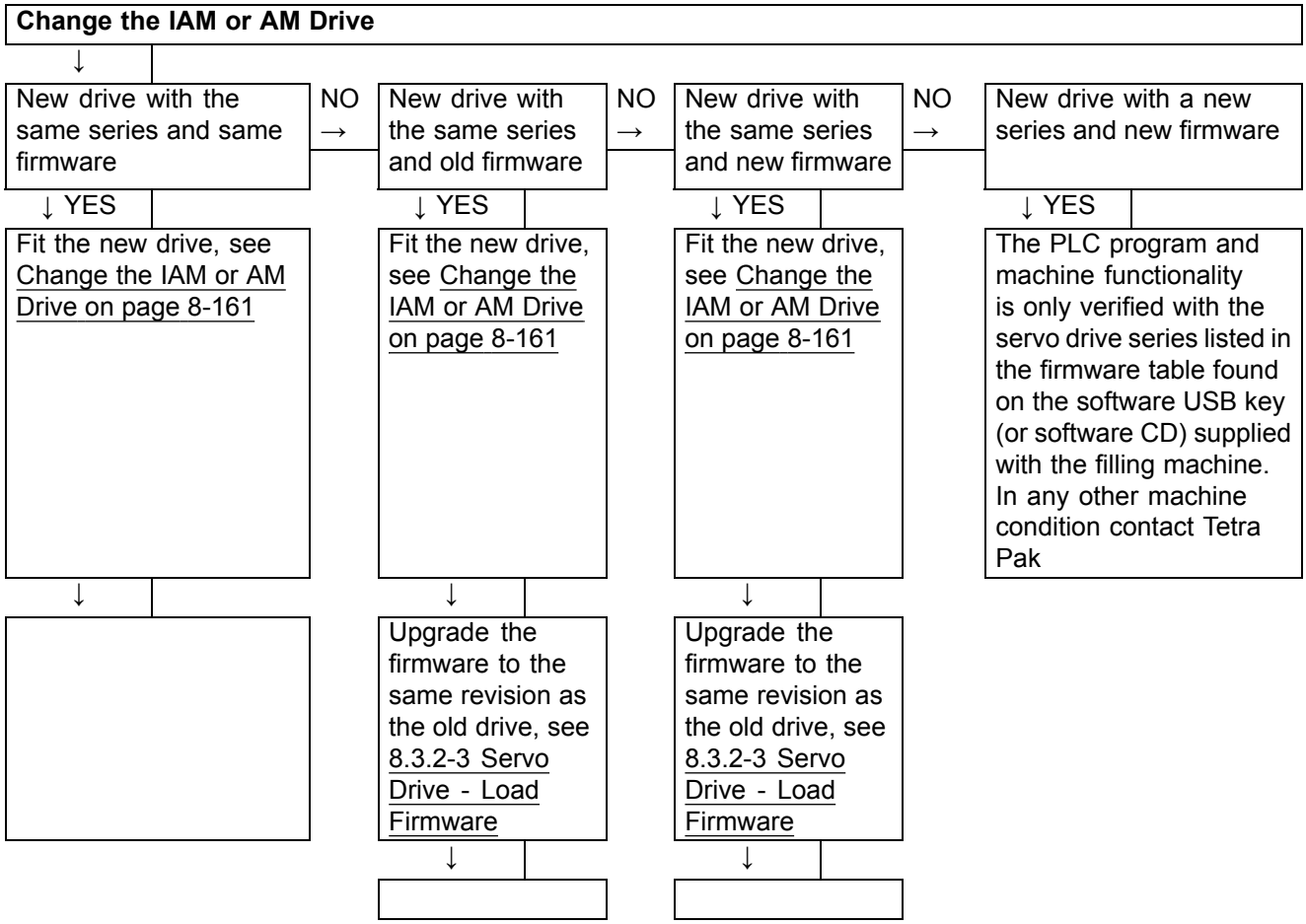

(Cont'd)

(Cont'd)

Change the IAM or AM Drive

WARNING

Hazardous voltage.

Make sure that the control and the input power has been removed from the servo system. Wait five minutes for the DC bus to completely discharge before proceeding.

a) Mark and record the position of all connectors from the servo drive and then remove the connectors.

b) Use a screwdriver to remove the motor cable (1) from the cable shield clamp (2).

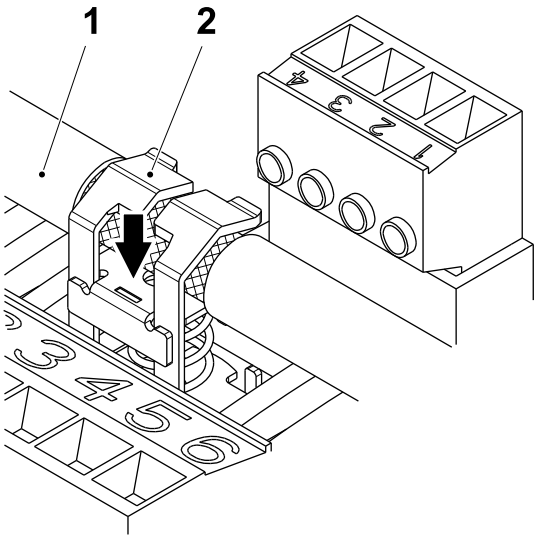

1 Motor cable
2 Cable shield clamp

(Cont'd)

(Cont'd)

c) Loosen the screw (3).

d) Grip the top and bottom of the servo drive (4) and gently pull the servo drive (4) away from the connectors enough to clear the guide pins (5) (the servo drive (4) will pivot on the top bracket). Lift the bracket out of the power rail slot (6) and remove the servo drive (4) from the power rail.

e) If the servo drive (4) to be changed is an IAM module, record the node address (7) and baud rate (8).

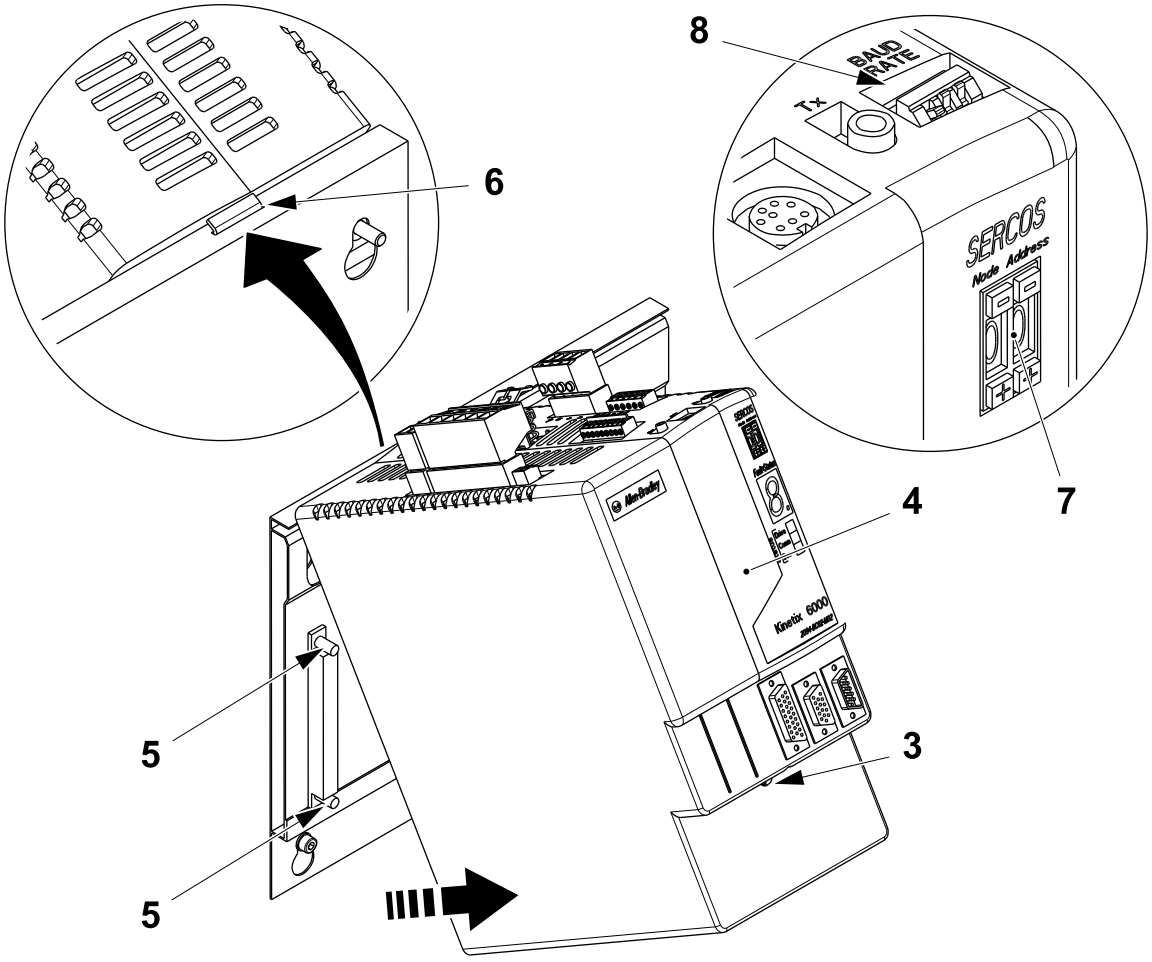

3 Screw
4 Servo drive
5 Guide pin
6 Power rail slot
7 Node address
8 Baud rate

(Cont'd)

(Cont'd)

CAUTION
Risk of damage to the equipment.
Make sure the guide pins (5) fit correctly.

f) Attach the new servo drive (4) with the mounting bracket (9) to the slot (10) in the power rail (11).

Note! The IAM has two power rail connectors and guide pins (5), all other servo drives have only one connector and one guide pins (5).

g) Align the guide pins (5) on the power rail with the guide pin holes in the back of the servo drive (4).

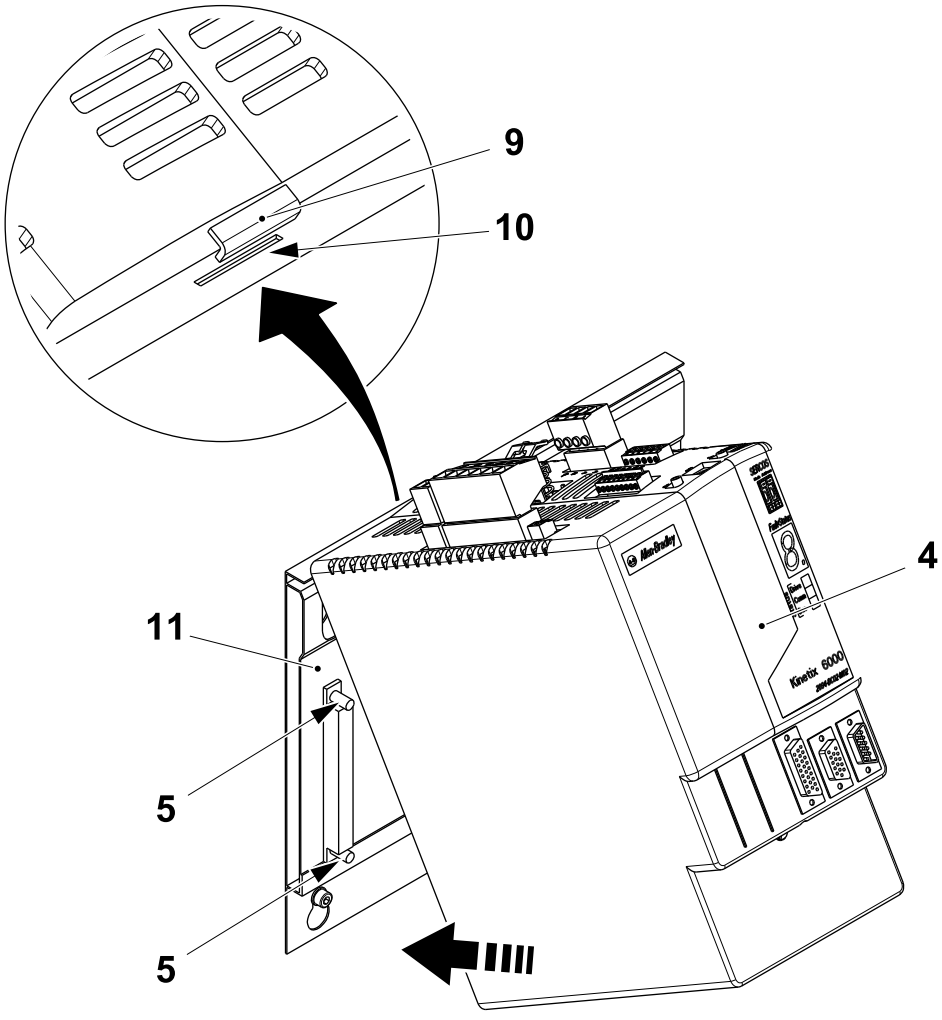

4 Servo drive
5 Guide pin
9 Mounting bracket
10 Slot
11 Power rail

(Cont'd)

(Cont'd)

h) Tighten the screw (3) to a torque of 2.26 Nm.

i) If the servo drive is an IAM, set the node address (7) and the baud rate (8) according to the setting recorded previously.

j) Connect the servo drive connectors and apply power to the system.

k) Check that the system is operating properly, see 8.3.2-4 Servo Drive - LED Description.

l) Continue with the necessary procedures as described in Flow Chart of Procedures for Changing an IAM or AM Drive.

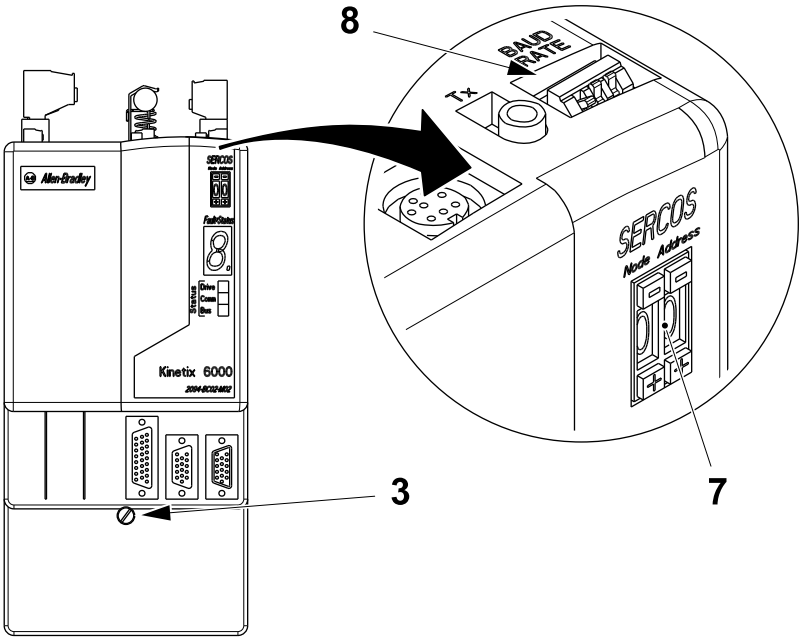

3 Screw
7 Node address
8 Baud rate

8.3.2-2 Servo Drive - Set Baud Rate

Machine Status	Electrical supply disconnecting device in position O (OFF)
SPC Reference	2840936-0200

Set the DIP switches for the IAM and AM drives according to the table and the illustration below.

Optical power (1)	On
Baud rate LSB (2)	On
Baud rate MSB (3)	Off

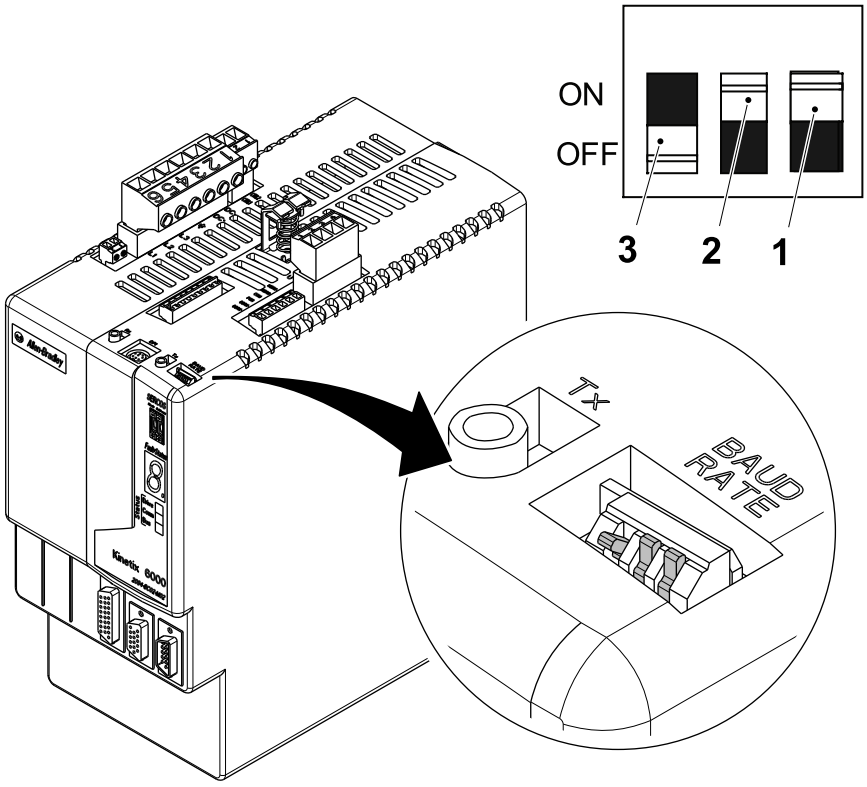

The illustration shows an Integrated Axis Module

1 DIP switch optical power
2 DIP switch baud rate LSB
3 DIP switch baud rate MSB

8.3.2-3 Servo Drive - Load Firmware

CAUTION
Risk of damage to the equipment.
To avoid injury or damage to the equipment due to unpredictable motor activity, do not apply AC input power or establish communications with the SERCOS module.

Follow the procedure described in 8.1.2-3 CPU Module - Load Firmware to load the firmware for the servo drive.

8.3.2-4 Servo Drive - LED Description

Machine Status	Electrical supply disconnecting device in position I (ON)
SPC Reference	2840936-0200

LED	Colour	Status	Action
Drive status (1)	Off	Normal, no faults	
	Solid red	Drive faulted	Read the error code in the Fault status display and see the section Error codes
Comm status (2)	Off	No communication	Check for loose fiber optic connection or damaged fiber optic cable. Check that the fiber optic cables are not cross-connected.
	Flashing green	Establishing communication	System is still in the process of establishing SERCOS communication.
	Solid green	Communication ready	No faults or failures

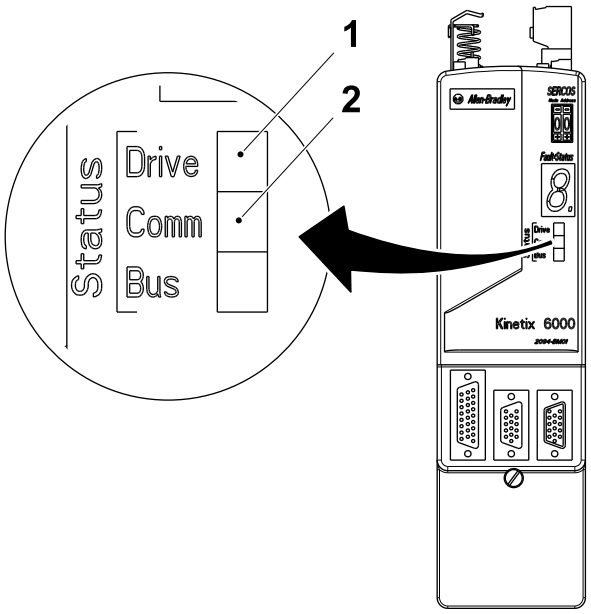

1 Drive status LED
2 Comm status LED

(Cont'd)

(Cont'd)

LED	Colour	Status	Action
Bus status (3)	Off	Bus power not present	
	Flashing green	Power is present, axis enabled. No faults or failures.	Normal when: 24V is **not** applied to Hardware Enable Input (IOD-2). or MSO instruction is **not** commanded in RSLogix 5000 software.
	Solid green	Power is present, axis enabled. No faults or failures.	Normal when: 24V is applied to Hardware Enable Input (IOD-2). or MSO instruction is commanded in RSLogix 5000 software.

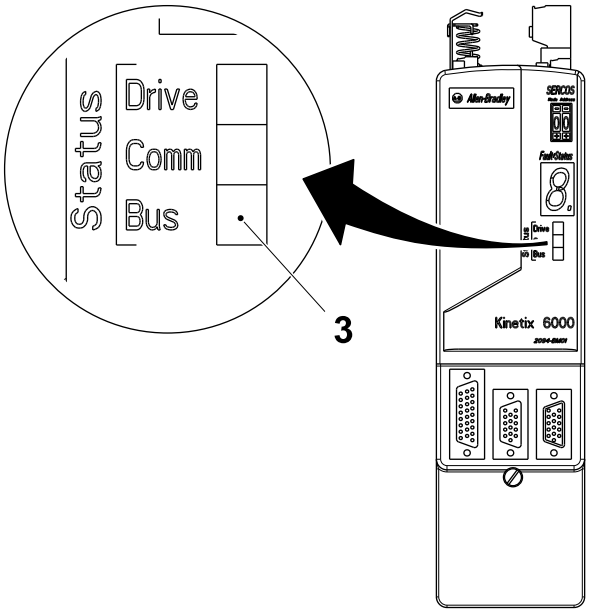

3 Bus status LED

8.3.2-5 Servo Drive - Error Codes

Machine Status	Electrical supply disconnecting device in position I (ON)
SPC Reference	2840936-0200

When an error occurs, the fault/status LED on the front of the servo drive will display the letter E followed by a two-digit error code, one digit at a time. Use the error code table to identify error codes and the corrective actions.

Error code	Fault message RSLogix (HIM)	Problem	Description	Action
		Power indicator not ON	No AC power or auxiliary logic power	Verify AC control power is applied to the Kinetix 6000.
			Internal power supply malfunction	Change the module
		Motor jumps when first enabled.	Motor wiring error	Check motor wiring. Run Hookup test in RSLogix 5000
			Incorrect motor chosen	Verify the proper motor is selected
		Digital I/O not working correctly	I/O power supply disconnected	Verify connections and I/O power source
E00	**BusUndervoltageFault** (Blown fuse)	A blown fuse was detected on the inverter PCB	Blown fuse	Change the module
E04	**MotorOvertempFault** (Motor Overtemp)	Motor thermal switch tripped	High motor ambient temperature and/or excessive current	Operate within (not above) the continuous torque rating for the ambient temperature (40°C maximum). Lower ambient temperature, increase motor cooling
			Motor wiring error	Check motor wiring at MF connector on the IAM/AM
			Incorrect motor selection	Verify the proper motor has been selected

(Cont'd)

(Cont'd)

Error code	Fault message RSLogix (HIM)	Problem	Description	Action
E05	**DriveOvercurrent Fault** (Power Fault)	Self-protection of the Intelligent Power Module (IPM) is indicating a major power related fault condition	Motor cables short circuit	Verify continuity of motor power cable and connector
			Motor winding internal short circuit internally	Disconnect motor power cables from the motor. If the motor is difficult to turn by hand, it may need to be replaced
			Kinetix 6000 temperature too high	Check for clogged vents or defective fan. - Make sure cooling is not restricted by insufficient space around the unit.
			Operation above continuous power rating and/or product environmental ratings	Verify ambient temperature is not too high. Operate within the continuous power rating. Reduce acceleration rates
			Kinetix 6000 has a short circuit, over current, or failed component	Remove all power and motor connections, and perform a continuity check from the DC bus to the U, V, and W motor outputs. If a continuity exists, check for wire fibers between terminals, or send drive in for repair
E06	**HardOvertravelFault** (+/- Hard Overtravel)	Axis moved beyond the physical travel limits in the positive/negative direction	Dedicated over travel input is inactive	Check wiring. Verify motion profile. Verify axis configuration in software
E07	**MotFeedbackFault** (Motor Feedback Loss)	The feedback wiring is open, has a short circuit, or missing		Check motor encoder wiring. Run Hookup test in RSLogix 5000
E09	**BusUndervoltageFault** (Bus Under Voltage)	With three-phase power present, the DC bus voltage is below limits	DC bus voltage for 460V system is below 275V DC bus voltage for 230V system is below 137V	Verify voltage level of the incoming AC power. Check AC power source for glitches or line drop. Install an uninterrupted power supply (UPS) on your AC input
		DC bus voltage fell below the undervoltage limit while an axis on the follower power rail was enabled		Disable follower axis before removing the power

(Cont'd)

(Cont'd)

Error code	Fault message RSLogix (HIM)	Problem	Description	Action
E10	**DriveOvervoltageFault** (Bus Overvoltage)	The DC bus voltage is above limits	Excessive regeneration of power. When the motor is driven by an external mechanical power source, it may regenerate too much peak energy through the Kinetix 6000's power supply. The system faults to save itself from an overload	Contact Tetra Pak
			DC bus voltage for 460V system is over 820V DC bus voltage for 230V system is over 410V	Verify input is within specifications
E11	**MotFeedbackFault** (Illegal Hall State)	State of Hall feedback inputs is incorrect	Bad connections	Verify the Hall wiring at the MF connector on the IAM/AM. Verify 5V power supply to the encoder
E16	**SoftovertravelFault** (+/- Software Overtravel)	Axis position exceeded maximum software setting		Verify motion profile. Verify over-travel settings are appropriate
E18	**OverSpeedFault** (Overspeed Fault)	Motor speed has exceeded 150% of maximum rated speed. The 100% trip point is dictated by the lesser of the user velocity limits or the motor rated base speed		Check cables for noise. Check tuning
E19	**PositionErrorFault** (Follow Error)	Position error limit was exceeded		Verify sizing of system. Verify mechanical integrity of system within specification limits
E20	**MotFeedbackFault** (Mtr Fdbk AQB)	Motor Encoder State Error	The motor encoder encountered an illegal transition	Use shielded cables with twisted pair wires. Route the feedback away from potential noise sources. Check the system grounds. Replace the motor/encoder
E21	**AuxFeedbackFault** (Aux Feedback Comm)	Communication was not established with an intelligent encoder.		Verify auxiliary encoder wiring
E30	**MotFeedbackFault** (Motor Feedback Comm)	Communication was not established with an intelligent encoder		Verify motor selection. Verify the motor supports automatic identification. Verify motor encoder wiring

(Cont'd)

(Cont'd)

Error code	Fault message RSLogix (HIM)	Problem	Description	Action
E34	**GroundShortFault** (Ground Fault)	Excessive ground current in the converter was detected	Wiring error	Check motor power wiring. Check input power wiring (refer to Kinetix 6000 Installation Manual, publication 2094-IN001x-EN-P, regarding use of isolation transformer)
			Motor internal ground short	Replace motor
			Internal malfunction	Disconnect motor power cable from drive and enable drive with current limit set to 0. If fault clears, then a wiring error or motor internal problem exists. If fault remains, call your A-B representative
			Grounded control power terminal (applies to 230V systems only)	Remove ground from control power input. Source control power from three phase input power. Add isolation transformer for control power.
E35	**DriveUndervoltageFault** (Precharge Fault)	Converter pre-charge cycle failed.	Low AC input voltage	Check input AC voltage on all phases
			Internal malfunction	Call your A-B representative
E36	**DriveOvertempFault** (System Overtemperature)	Converter thermal switch tripped	Excessive heat exists in the power circuitry	Check for clogged vents or defective fan. Ensure cooling is not restricted by insufficient space around the unit
E37	**PowerPhaseLoss** Fault	One or more phases of the input AC power is missing. Axis was enabled when main (3-phase) power was removed. Common bus follower axis was enabled when DC bus power was removed.		Check input AC voltage on all phases. Disable axis before removing power. Clear fault
E38	**SERCOSFault** (SERCOS Ring Flt)	The SERCOS ring is not active after being active and operational	Cable disconnected	Check that the fiber optic cable is present and connected properly.
E39	**DriveHardFault** (Self Sense Flt)	Control hardware fault detected	Motion required for self-sensing start-up commutation was obstructed	Verify that there are no impediments to motion at startup, such as hard limits. Check motor or encoder wiring using wiring diagnostics

(Cont'd)

(Cont'd)

Error code	Fault message RSLogix (HIM)	Problem	Description	Action
E43	**DriveEnableInput** (Drive Enable Flt)	Missing Drive Enable Input Signal	An attempt was made to enable the axis through software while the Drive Enable hardware input was inactive. The Drive Enable input transitioned from active to inactive while the axis was enabled	Disable the Drive Enable Input fault. Verify that Drive Enable hardware input is active whenever the drive is enabled through software
E49	**DriveHardFault** (Safe-off HW Flt)	Safe-off function mismatch. Drive will not allow motion.	Loose wiring at SO connector. Cable/header not seated properly in SO connector. Safe-off circuit missing +24V DC.	Verify wire terminations, cable/header connections, and +24V. Reset error and run proof test. If error persists, return the drive to Allen-Bradley.
E50	**SERCOSFault** (Sercos Same ADDR)	Duplicate node address detected on SERCOS ring		Verify that each SERCOS drive is assigned an unique node address
E54	**DriveHardFault** (Ifbk HW Fault)	Current feedback hardware fault detected.		Replace the module
E60	**DriveHardFault** (Unknown Axis)	Illegal ID bits detected		Replace the module
E61	**AuxFeedbackFault** (Aux Fdbk AQB)	Auxiliary Encoder State Error	The auxiliary encoder encountered an illegal transition	Use shielded cables with twisted pair wires. Route the feedback away from potential noise sources. Check the system grounds. Replace the motor/encoder
E62	**AuxFeedbackFault** (Aux Fdbk Loss)	The feedback wiring is open, has a short circuit, or missing		Check the motor feedback cable connectors/wiring to the IAM/AM and motor
E63	**AuxFeedbackNoise** (Aux Fdbk Noise)	Noise on auxiliary feedback cable.	Recommended grounding, per installation instructions, has not been followed.	Verify grounding. Route feedback cable away from noise sources. Refer to System Design for Control of Electrical Noise Reference Manual, publication GMC-RM001.
E64	**MotorFeedbackNoise** (Mtr Fdbk Noise)	Noise on motor feedback cable.		
E65	**No Fault Message** (condition indicated by on-screen message) (Hookup Fault)	Hookup procedure failed	Motor or feedback device malfunction	Check motor power/feedback wiring. Refer to on-screen message for resolution

(Cont'd)

(Cont'd)

Error code	Fault message RSLogix (HIM)	Problem	Description	Action
E66	**No Fault Message** (condition indicated by on-screen message) (Atune Flt)	Autotune procedure failed	Motor or feedback device malfunction	Check motor power/feedback wiring. Refer to on-screen message solution. Perform Hookup in RSLogix 5000. Consult RSLogix 5000 for help screen
E67	**DriveHardFault** (Task init)	Operation system failed.	Software initalization fault detected due to hardware failure.	Cycle power. If fault persists, replace module.
E68	**DriveHardFault** (SCANport™Comm)	DPI communication failed	The DPI device or cable is faulty	Check DPI connections
E69	**HardDriveFault** (Objects init)	Non-volatile memory is corrupt due to control board hardware failure		Load default parameters, save to non-volatile memory, and recycle power or reset the drive
E70	**DriveHardFault** (NV Mem Init)	Non-volatile memory is corrupt due to control board software error		Load default parameters, save to non-volatile memory, and recycle power or reset the drive
E71	**DriveHardFault** (Memory Init)	RAM or flash memory validation failure		Cycle power. If fault persists, replace module
E72	**DriveOvertempFault** (Drive Overtemp)	Inverter thermal switch tripped	The fan on the IAM or an AM failed	Replace the failed module
			The cabinet ambient temperature is above rating.	Check the cabinet temperature
			The machine duty cycle requires an RMS current exceeding the continuous rating of the module	Contact Tetra Pak
			The airflow access to the Kinetix 6000 is limited or blocked	Check airflow and re-route cables away from the Kinetix 6000 system
E73	**Communicate** (Backplane Comm)	Power rail CAN communications failed		Check module for proper mount
		Power rail connection has a short circuit or is open		Check power rail and module for foreign objects
E74	**DriveOvercurrentFault** (BusOverCurrent)	DC link current exceeds rating	Motor or transmission malfunction	Check for proper motor sizing. Check/replace transmission device. Check/replace motor
			IAM not properly sized	Contact Tetra Pak

(Cont'd)

(Cont'd)

Error code	Fault message RSLogix (HIM)	Problem	Description	Action
E75	**DriveOvervoltageFault** (Shunt Time Out)	The IAM or AM has exceeded its shunt resistor continuous rating		Use properly sized shunt or modify duty cycle of the application. System uses internal shunt and requires external shunt for additional capacity.
E76	**DriveHardFault** (Can Init)	DPI hardware initialization fault detected	Control board hardware failure	Reset system. If fault persists, replace the module
E77	**DriveHardFault** (Module Mismatch)	Either 230V AM is installed on power rail with 460V IAM, or 460V AM is installed on power rail with 230V IAM		Replace mismatched module
E78	**DriveHardFault** (SERCOS Init)	Control hardware fault detected		Cycle power. If fault persists, replace module
E79	**DriveOvervoltageFault** (Shunt Module Flt)	SM Temperature Fault LED status is solid Red		Refer to Temperature Fault LED description
		SM Shunt Fault LED status is solid Red		Refer to Shunt Fault LED description
		Module missing from power rail		Install missing module on power rail. Fill empty slot with slot filler module
E80	**HardwareFault** (CPLD FLT)	Control hardware fault detected		Replace module
E81	**DriveHardFault** (Common Bus Flt)	Follower IAM detected ac input power being applied.		Remove ac input power connections from follower IAM.
E90	**DriveHardFault** (Pre-charge Timeout Flt)	Pre-charge resistor power exceeds the resistor rating.		Allow resistor to cool.

8.4 Safety System

8.4.1 Safety System Description

The safety system of the filling machine is managed by one Pluto Safety PLC modules F01K5000. To increase the number of input and output possibilities, the modules are assisted by four expansion relays (F01K5001, F01K5020, F01K5021 and F01K5032).

The pluto system monitors the:

- emergency stop buttons
- door safety switches
- machine covers fitted with a safety switch
- contactors for AC motor driven units
- modules for the servo controlled units
- contactors for units using AC power.

When an emergency stop button is pushed, a door is opened or a cover is removed, an emergency stop signal is sent to the CPU module which then takes the necessary actions to stop the machine.

When the emergency stop button is released, the door is closed or the cover is replaced, a reset signal is generated by the CPU module when the alarm is reset.

8.4.2 Safety System Checks

Note! It is mandatory to perform a manual check of all the emergency stop push buttons, safeguards and doors and covers fitted with interlocking devices on a regularly monthly basis. The manual check is to ensure that all the emergency stop buttons and the safeguards are in place and operational. See the Safety Precautions chapter for the location of the emergency stop buttons and the safeguards.

(Cont'd)

(Cont'd)

To verify the functionality of the safety expansion relays, check that the safety outputs are ON when no alarms are active and that they switch OFF when an alarm is active through opening a door or pushing an emergency stop push button.

Follow the procedures to check the functionality of a specific safety expansion relay. Check the reference designation on the label to locate the specific safety relay in the electrical cabinet.

Safety Relay	**Safety Line**
F01K5001	Emergency Stop Push Buttons
F01K5020	Jaw System/Final Folder doors
F01K5021	Jaw System Motor Brakes
T10F5032	Main Air ASU Safety Valve

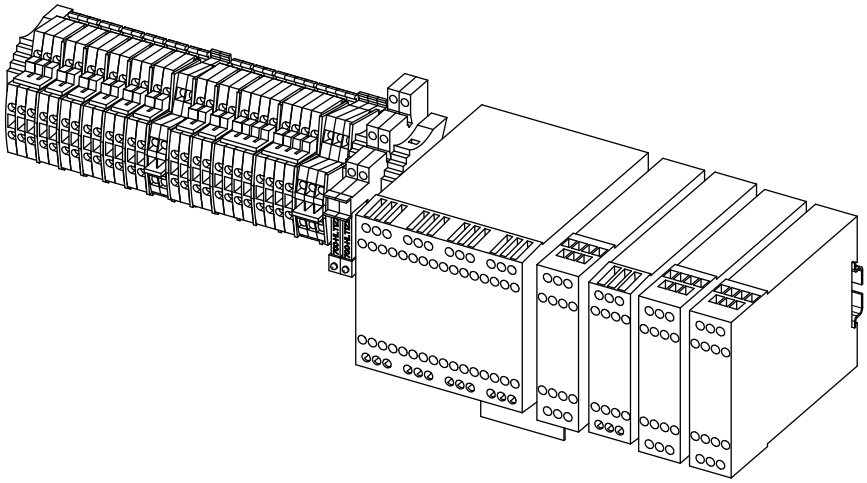

8.4.2-1 Reset Button - Check

Machine Status	PREPARATION

The RESET buttons on the ASU and Machine Body doors tell the operator when a machine body or ASU door is open and it is necessary to reset the safety system.

The light of the RESET button flashes when a door is open and after closing the door, will remain ON until the RESET button has been pressed and the safety system completes the system reset.

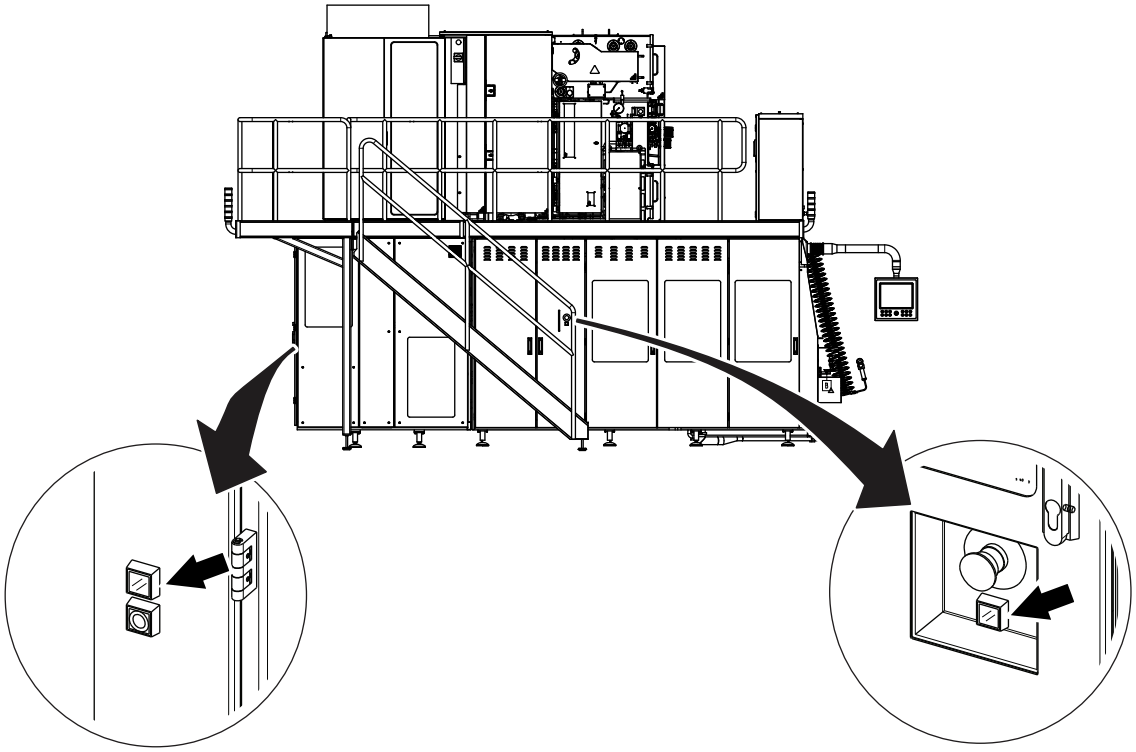

8.4.2-2 Emergency Stop Push Button - Check Safety Expansion Relay

Machine Status	PREPARATION

a) Identify the safety relay F01K5001 in the electrical cabinet.

b) Make sure that none of the EMERGENCY STOP PUSH buttons are active and reset any alarms by touching the alarm ACKNOWLEDGE button on the TPOP panel.

Check in the electrical cabinet that the safety output F01K5001 is ON.

c) Press the first selected EMERGENCY STOP PUSH button and then make sure that the safety relay is tripped (the LED switches OFF).

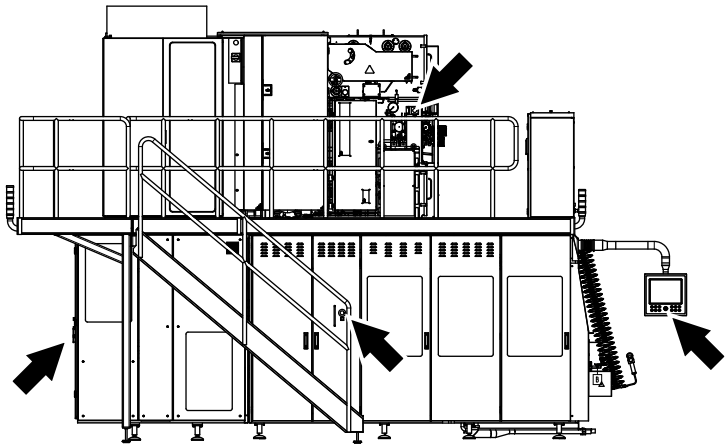

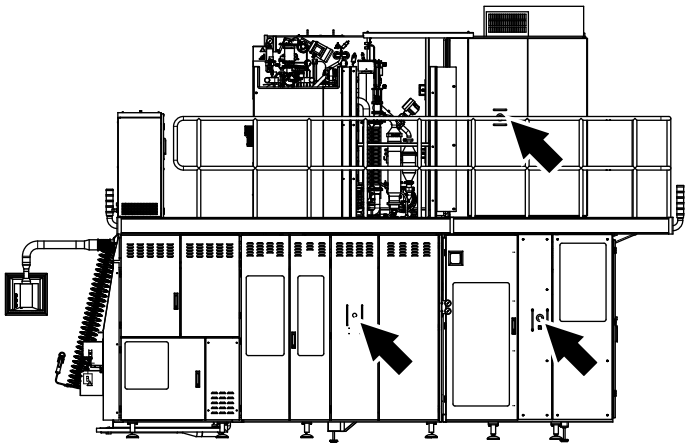

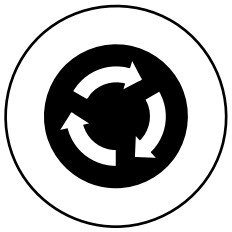

(Cont'd)

(Cont'd)

d) With the EMERGENCY STOP PUSH button still activated, attempt to start the machine by pressing the PROGRAM UP button. Check that the machine does not start and that the safety relay remains tripped.

e) Deactivate (pull-out) the EMERGENCY STOP PUSH button, attempt to start the machine by pressing the PROGRAM UP button. Check that the machine does not start and that the safety relay remains tripped.

f) Repeat items b) to e) for the other selected emergency stop devices.

g) Release the EMERGENCY STOP PUSH button and reset any alarms by touching the alarm ACKNOWLEDGE button on the TPOP panel.

Check in the electrical cabinet that the safety output F01K5001 is ON.

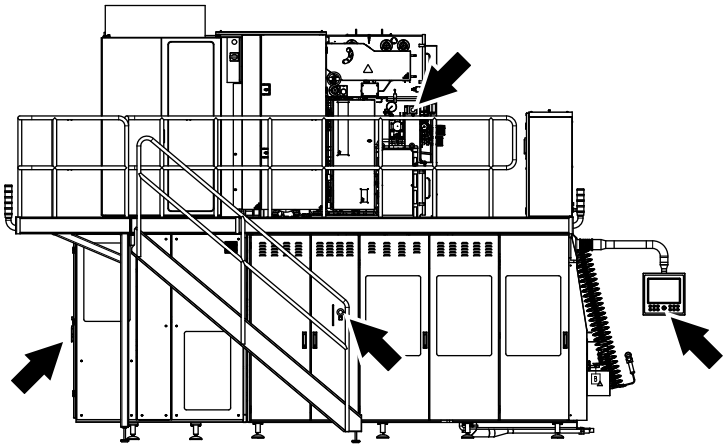

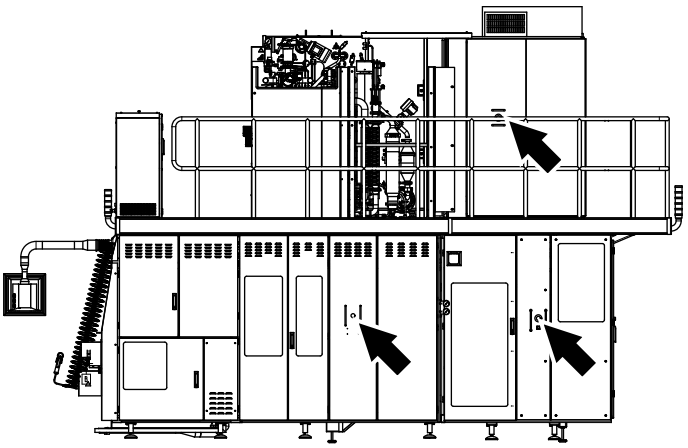

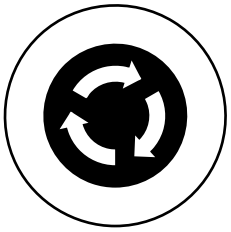

8.4.2-3 Machine Body Door Guards - Check Safety Expansion Relays

Machine Status	PREPARATION

a) Identify the safety relay F01K5020 in the electrical cabinet.

b) Close all the machine body doors and reset any alarms by touching the alarm ACKNOWLEDGE button and by pressing the RESET button on the machine body.

Check in the electrical cabinet that the safety output F01K5020 is ON.

c) Open the first door and then make sure that the safety relays trip (the LED switches OFF).

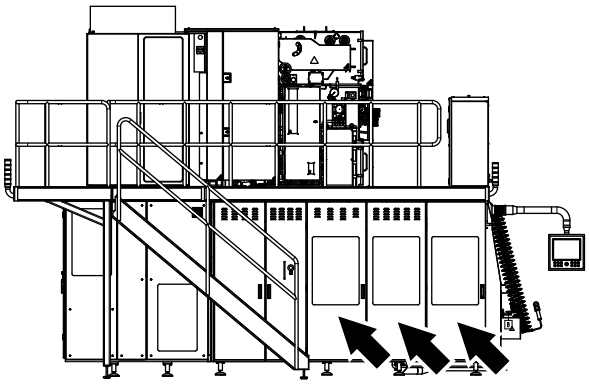

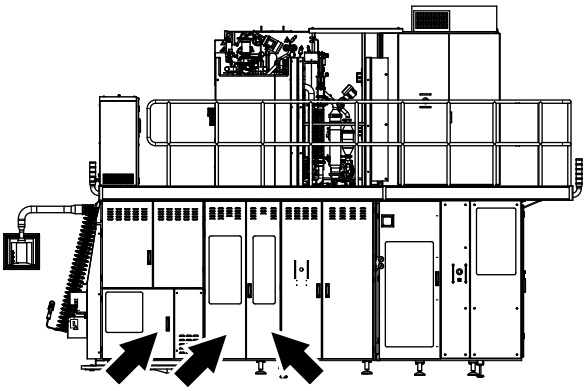

(Cont'd)

(Cont'd)

d) With the door still open, attempt to start the machine by pressing the PROGRAM UP button. Check that the machine does not start and that the safety relay remains tripped.

e) Close the door and press the RESET button on the TPOP panel to reset the safety system. Touch the alarm ACKNOWLEDGE button to clear any alarms on the TPOP.

f) Repeat items c) to e) for the other doors in the final folder unit and the jaw system.

g) Close the doors and reset the alarm after the test by touching the alarm ACKNOWLEDGE button and by pressing the RESET button on machine body.

Check in the electrical cabinet that the safety output F01K5020 is ON.

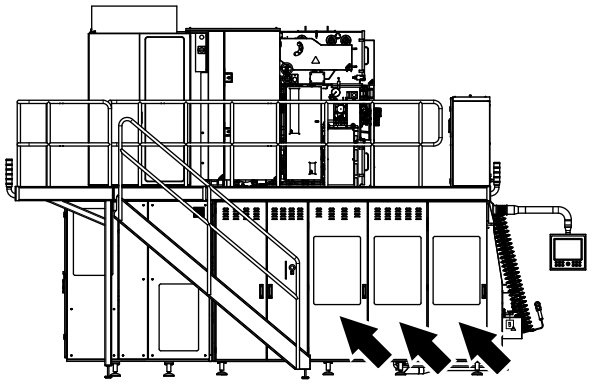

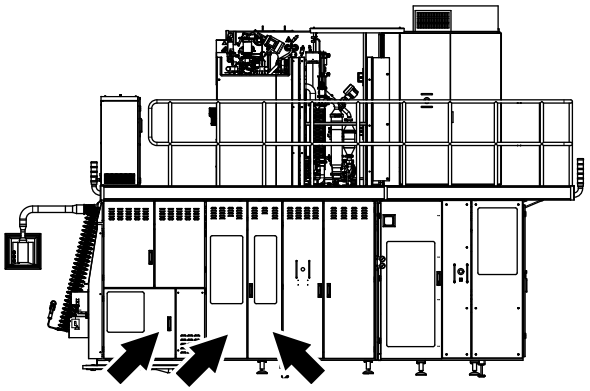

8.4.2-4 Drive Unit Brakes - Safety Expansion Relays

Machine Status	PREPARATION

a) Make sure that all doors at the machine body are closed and any alarm is reset.
Check in the electrical cabinet that the safety output F01K5021 is ON.

b) Open a machine body door and check that the alarm is displayed on the TPOP.
Check that the safety output F01K5021 switch OFF.

c) Close the door and reset the alarm after the test.

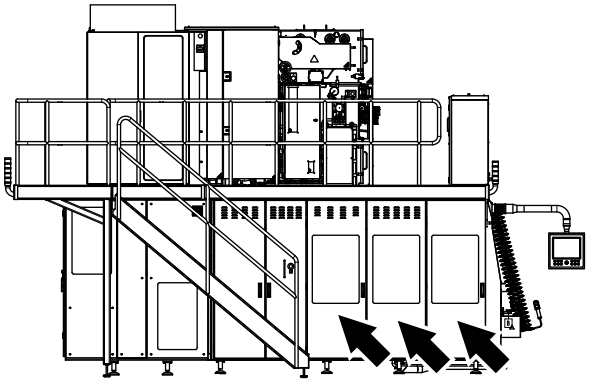

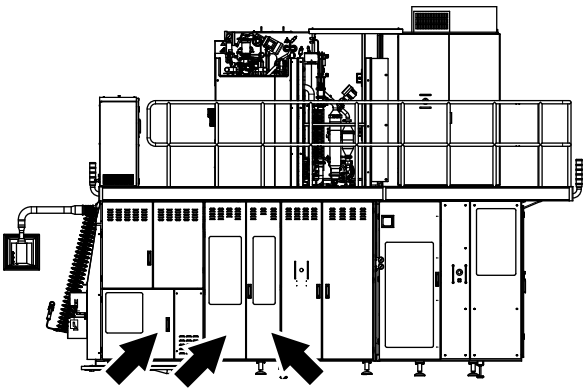

8.4.2-5 Main Air ASU - Safety Valve Relays

Machine Status	PREPARATION
SPC Reference	2832845-0300

a) Make sure that all doors at the ASU are closed and any alarm is reset.

Check in the electrical cabinet that the safety output F10K5032 is ON and the green LED (1) on the safety valve T10K1740 (2) is **lit**.

b) Open an ASU door and check that the alarm is displayed on the TPOP.

Check that the safety output F10K5032 switch OFF and the green LED (1) on the safety valve T10K1740 (2) is **flashing**.

c) Close the door and reset the alarm after the test.

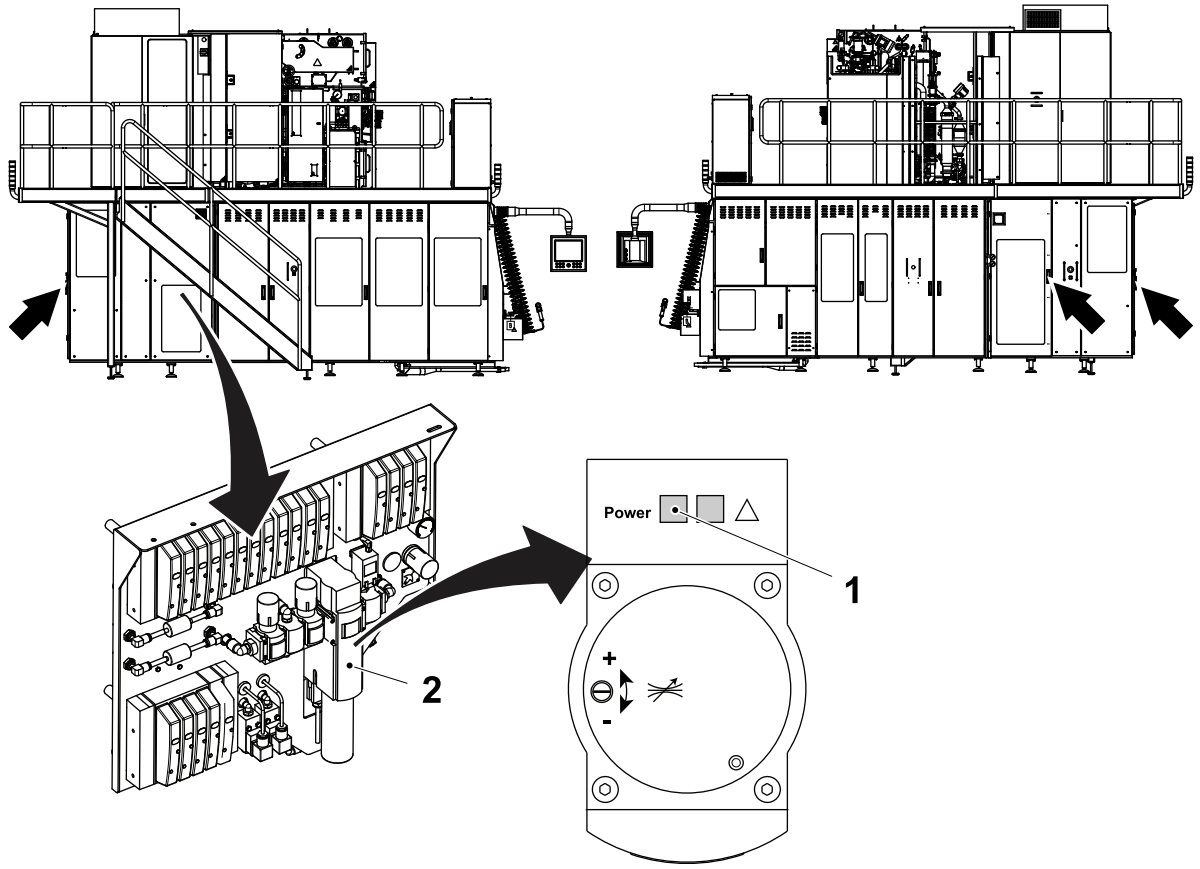

1 Green LED
2 Safety valve

8.4.3 Safety System Troubleshooting

Note! The PLC only monitors the channel with constant +24V DC.

Note! For User Errors diagnostic, see the Electrical Manual.

When the safety system alarm symbol (1) appears on the TPOP, this indicates that the PLC has received an input that all the door safety switches and the emergency stop buttons are in the OK condition, but that the safety system needs to be reset.

Two types of fault may cause this condition, two channel faults and feedback faults, see the table on the following page to identify the fault type and the relevant actions to take.

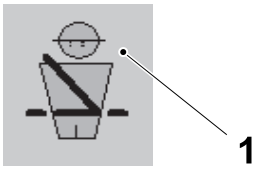

1 Safety system alarm symbol

Two Channel Fault		
Problem	**Description**	**Action**
The system will trip but it will not automatically reset when the input is OK again.	One of the channels (inputs) may have been temporarily interrupted but is now OK. The LED associated with the faulty input will flash as will the information output to the PLC.	Open and close both channels (for example by opening and closing a door in the affected circuit) and reset the alarm.
The system will trip and cannot be reset.	One or both channels are permanently off. The LED associated with the faulty input is OFF.	Repair the faulty circuit, open and close both channels (for example by opening and closing a door in the affected circuit) and reset the alarm.
Feedback Fault		
Problem	**Description**	**Action**
The system cannot be reset.	One of the feedback circuits has not been closed when the output has tripped. The LED associated with the faulty input (feedback circuit) is OFF and the information output to the PLC will be ON.	Repair the faulty circuit or contactor and reset the alarm.

8.4.4 Pluto Module

8.4.4-1 Pluto Module - Load Program

Machine Status	Electrical supply disconnecting device in position I (ON)
Special Equipment	PC with Pluto Manager Pluto Communication Cable TP No. 90459-6033

Note! Pluto Manager software version 1.25 or above is necessary to load the program. A registration code is required to run the Pluto Manager software, when prompted for a registration code type MUTE in the dialogue box.

a) Connect the PC (1) to the Pluto module (2).

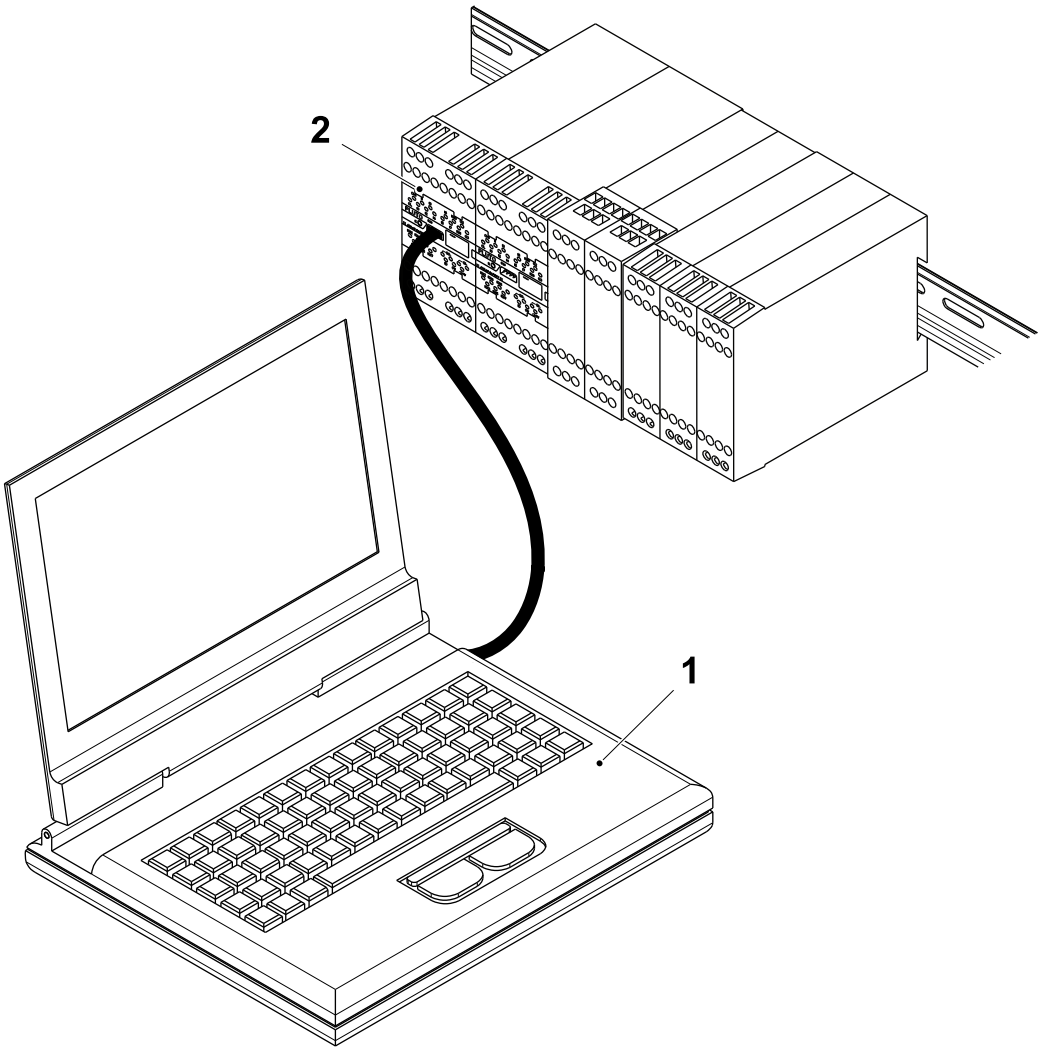

1 PC
2 Pluto module

(Cont'd)

(Cont'd)

b) Open the Pluto Manager by double clicking the PLUTO MANAGER icon (3) on the PC desktop.

c) In the PLUTO MANAGER window, select PROJECTS (4) and then select OPEN (5).

Note! Make sure that the files *.spe and *.hps are available and stored in the same directory before beginning the download procedure.

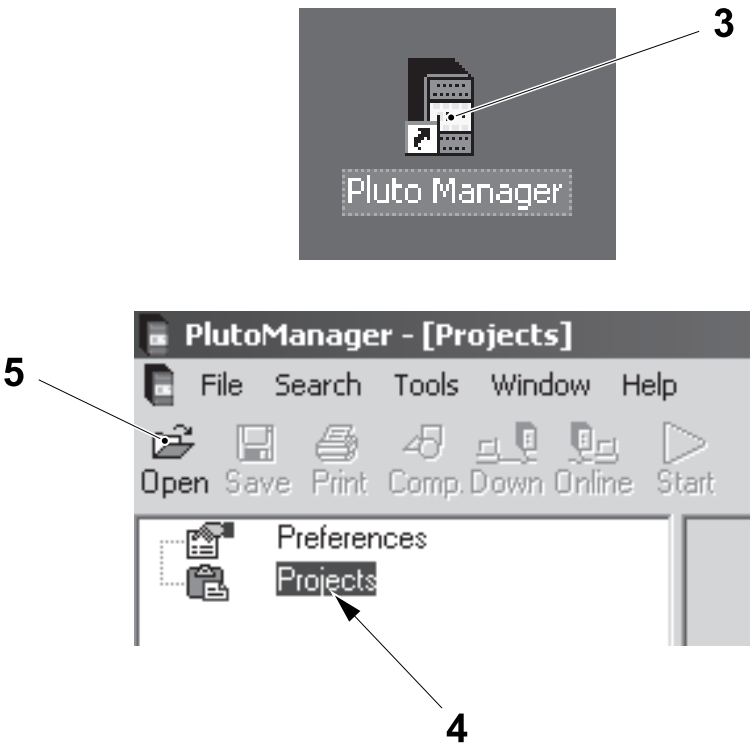

3 Pluto manager icon
4 Projects
5 Open

(Cont'd)

(Cont'd)

Note! The project number shown in the illustration is an example.

d) Select the required `PROJECT FILE*.SPE` (6) and then select `OPEN` (7).

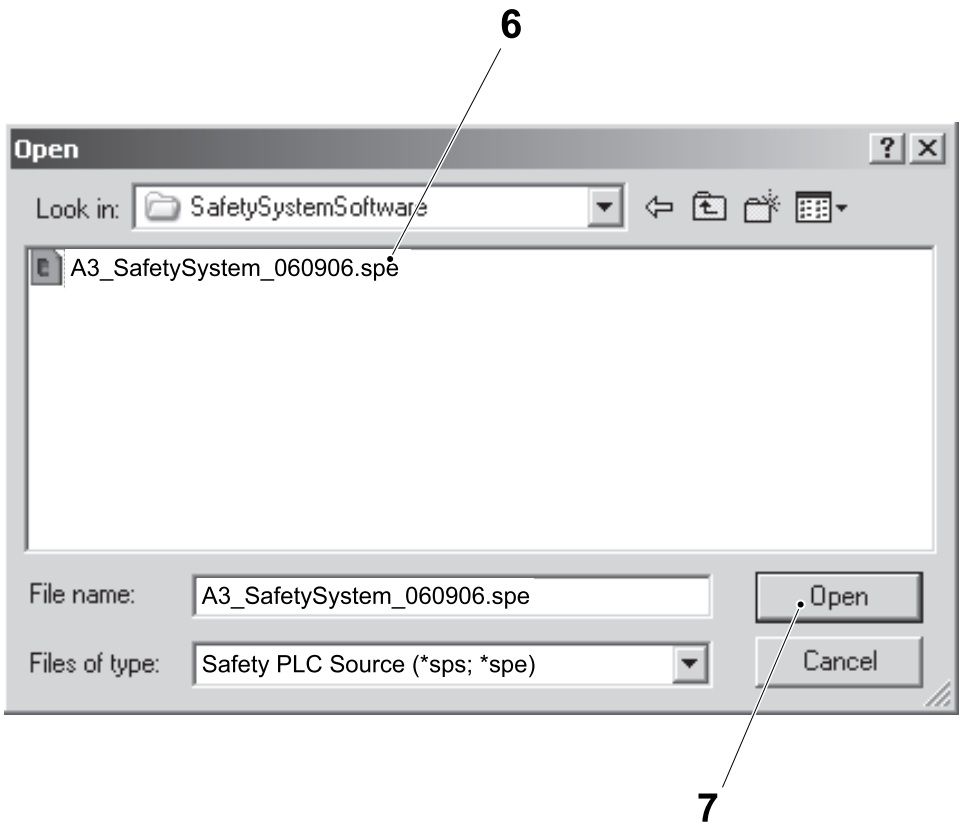

6 Project
7 Open

(Cont'd)

(Cont'd)

e) Select the DOWN button (8).

f) If the Pluto module is not assigned with a password, a dialogue window appears asking for a new password. Enter the password **abc80** in the PASSWORD field (9).

g) Repeat the password in the CONFIRM PASSWORD field (10) and then select the OK button (11).

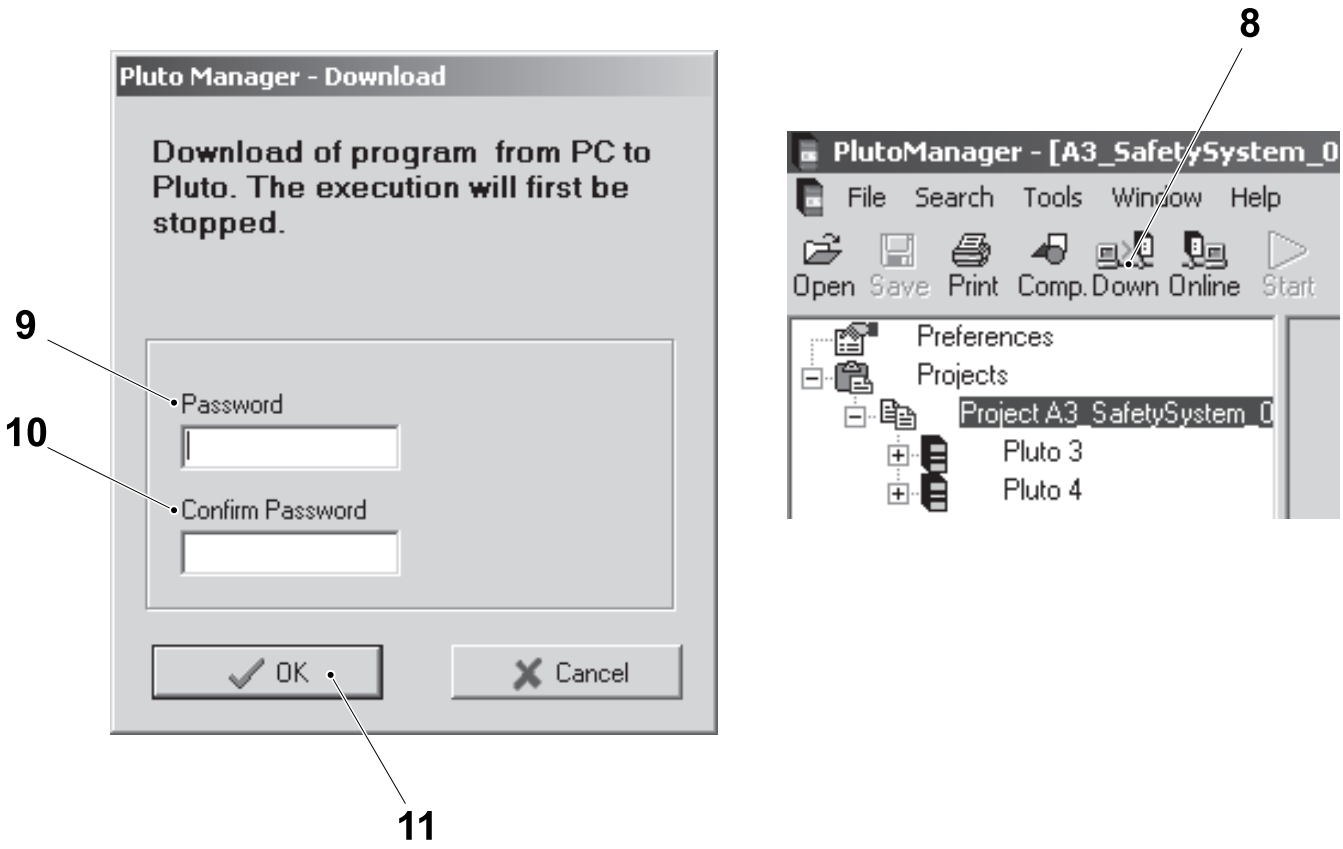

8 Down button
9 Password field
10 Confirm Password field
11 OK button

(Cont'd)

(Cont'd)

h) If the Pluto module is assigned with a password, a dialogue box appears asking for the password.

i) Type the password **abc80** in the PASSWORD field (12).

j) Select the OK button (13).

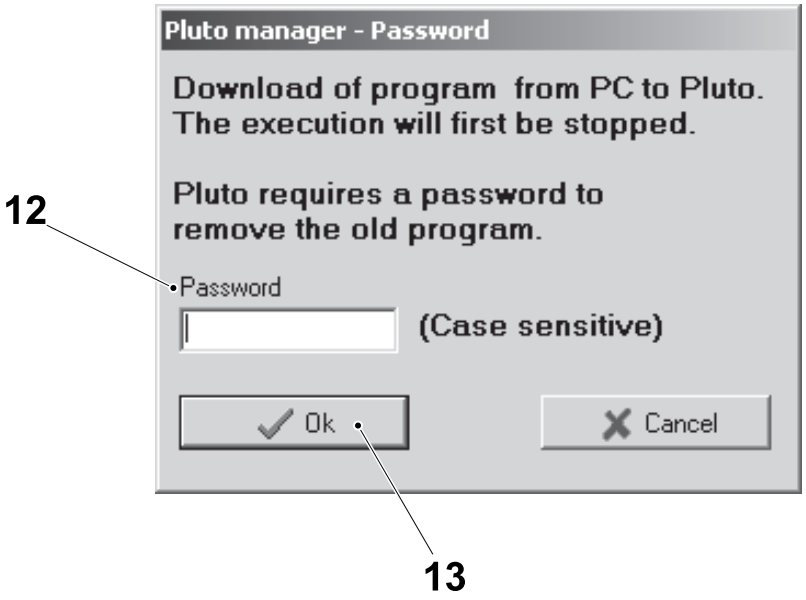

12 Password field
13 OK button

(Cont'd)

(Cont'd)

Note! If the fault message COULDN'T ESTABLISH CONNECTION appears there is no connection with the Pluto module. Check the communication cable is correctly connected.

Note! If there is an interruption of the communication the fault message CONNECTION TIME out appears. Check the communication cable is correctly connected.

k) When the download is complete the dialogue box appears, select the YES button (14).

Note! A warning is given if the program project is for several Pluto modules and all the modules are not connected to the bus.

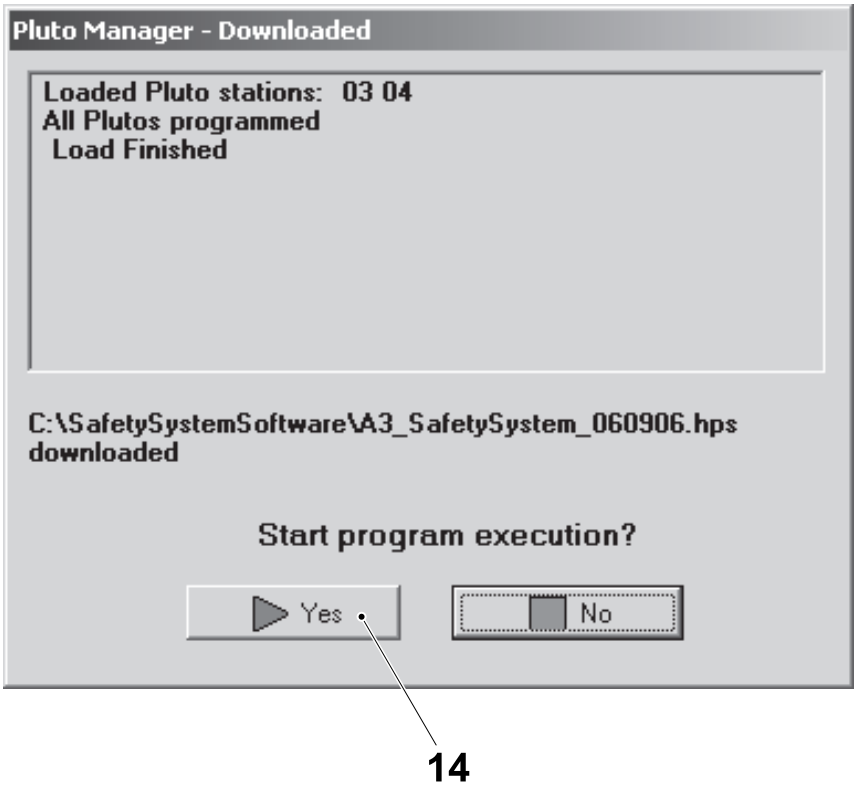

14 Yes button

8.4.4-2 Pluto Module - LED Description

Machine Status	Electrical supply disconnecting device in position I (ON) Main air valve OFF Main steam valve ON Main water valve OFF
Special Equipment	PC with Pluto Manager Pluto Communication Cable TP No. 90459-6033

Pluto Module F01K5000

LED	Description
I0	Emergency stop input chain +24V
I1	Emergency stop input chain DYN
I2	Superstructure doors input chain
I3	Jaw System and Final Folder input chain
I4	ASU rear doors chain
I5	ASSU internal door
I6	Not used
I7	Not used
I30	Jaw right brake release
I31	Yoke right brake release
I32	Yoke left brake release
I33	Jaw left brake release
I34	Emergency stop feedback
I35	Superstructure doors feedback
I36	Rack 1 Servo feedback

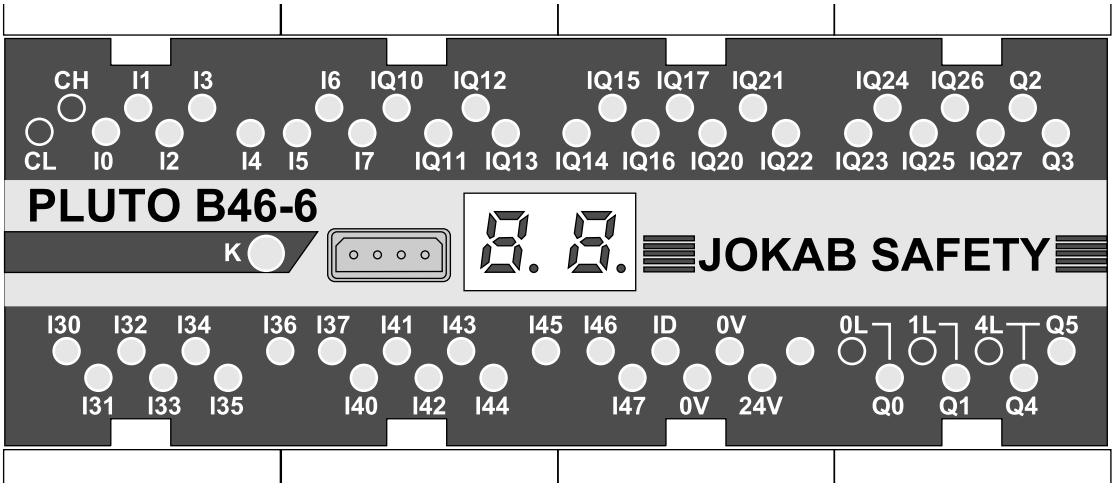

(Cont'd)

(Cont'd)

LED	Description
I37	Rack 2 Servo and contactors feedback
I40	Pressure switch drop chute shut off feedback
I41	ASU pressure switch feedback
I42	ASSU internal door feedback
I43	Brakes feedback
I44	Jaw right brake release
I45	Yoke right brake release
I46	Yoke left brake release
I47	Jaw left brake release
IQ10	Dynamic output signal
IQ11	Emergency reset
IQ12	Jaw system and final folder chain reset
IQ13	ASU doors reset
IQ14	Not used
IQ15	Not used
IQ16	Not used
IQ17	Safety system OK
IQ20	Not used
IQ21	Not used
IQ22	Not used
IQ23	Not used

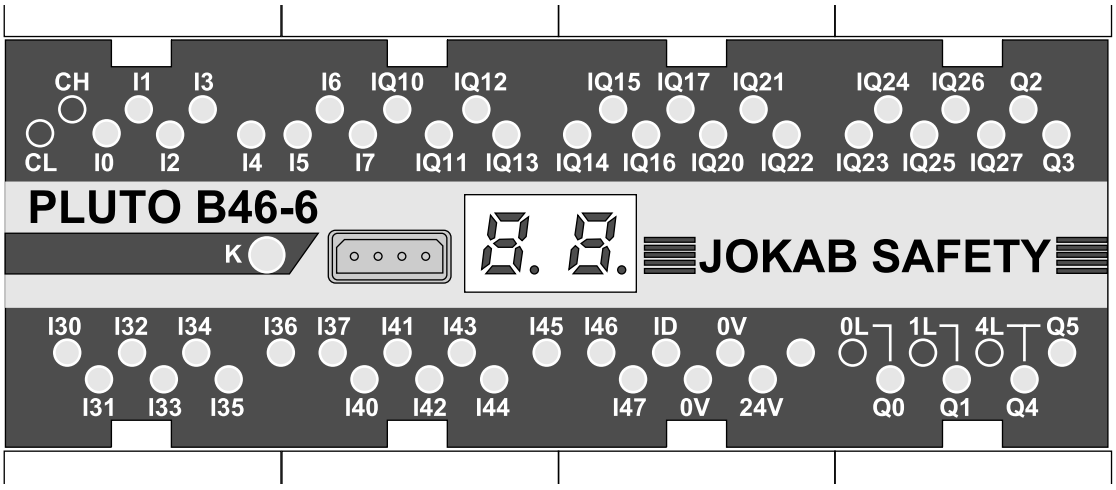

(Cont'd)

(Cont'd)

IQ24	Jaw right motor brake
IQ25	Yoke right motor brake
IQ26	Yoke left motor brake
IQ27	Jaw left motor brake
Q0	Superstructure doors safety output
Q1	Jaw System and Final Folder doors safety output
Q2	Emergency stop safety output
Q3	Brakes safety output
Q4	ASU rear doors safety output
Q5	ASSU internal door safety output
ID	Identifier on the CAN bus
0V	0V
+24V	+24V DC (L12)

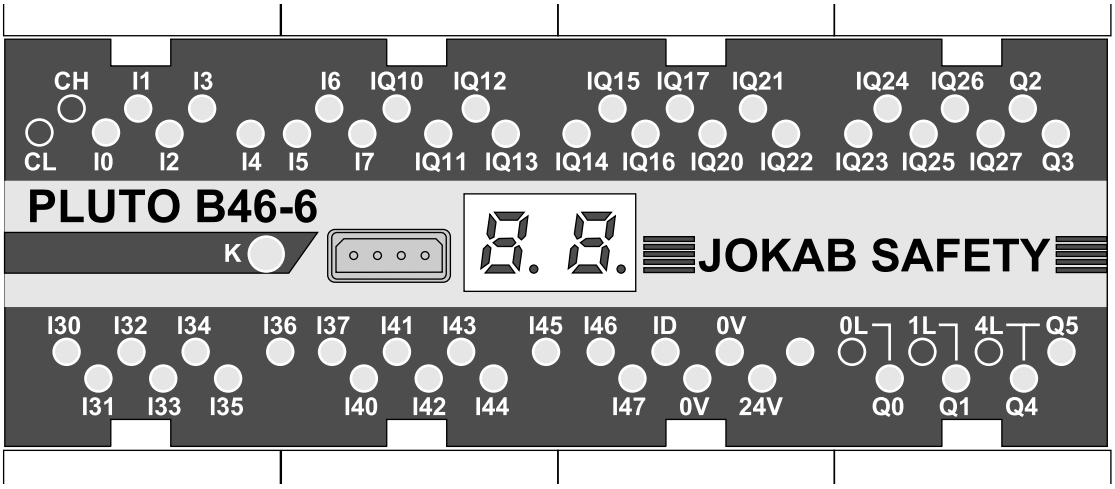

8.4.4-4 Pluto Module - Set ID-FIX Address after Replacing an ID-FIX

Machine Status	Electrical supply disconnecting device in position I (ON) Main air valve OFF Main steam valve ON Main water valve OFF
Special Equipment	PC with Pluto Manager Pluto Communication Cable TP No. 90459-6033

To enable the PLC to identify a Pluto module, an ID code must be given to the module. This is done by connecting an ID-FIX (1), between the ID terminal (2) and the 0 V terminal (3) at the front of the Pluto module (4). The unique code associated with the ID-FIX (1) must then be entered in PLC program.

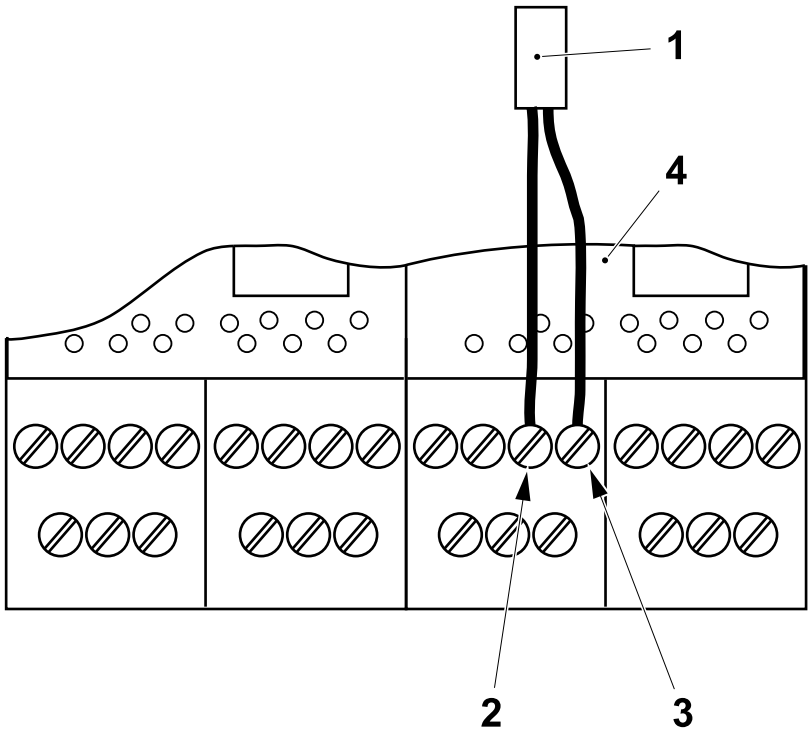

1 ID-FIX
2 ID terminal
3 0 V terminal
4 Pluto module

(Cont'd)

(Cont'd)

a) Connect the PC (1) to the Pluto module (2).

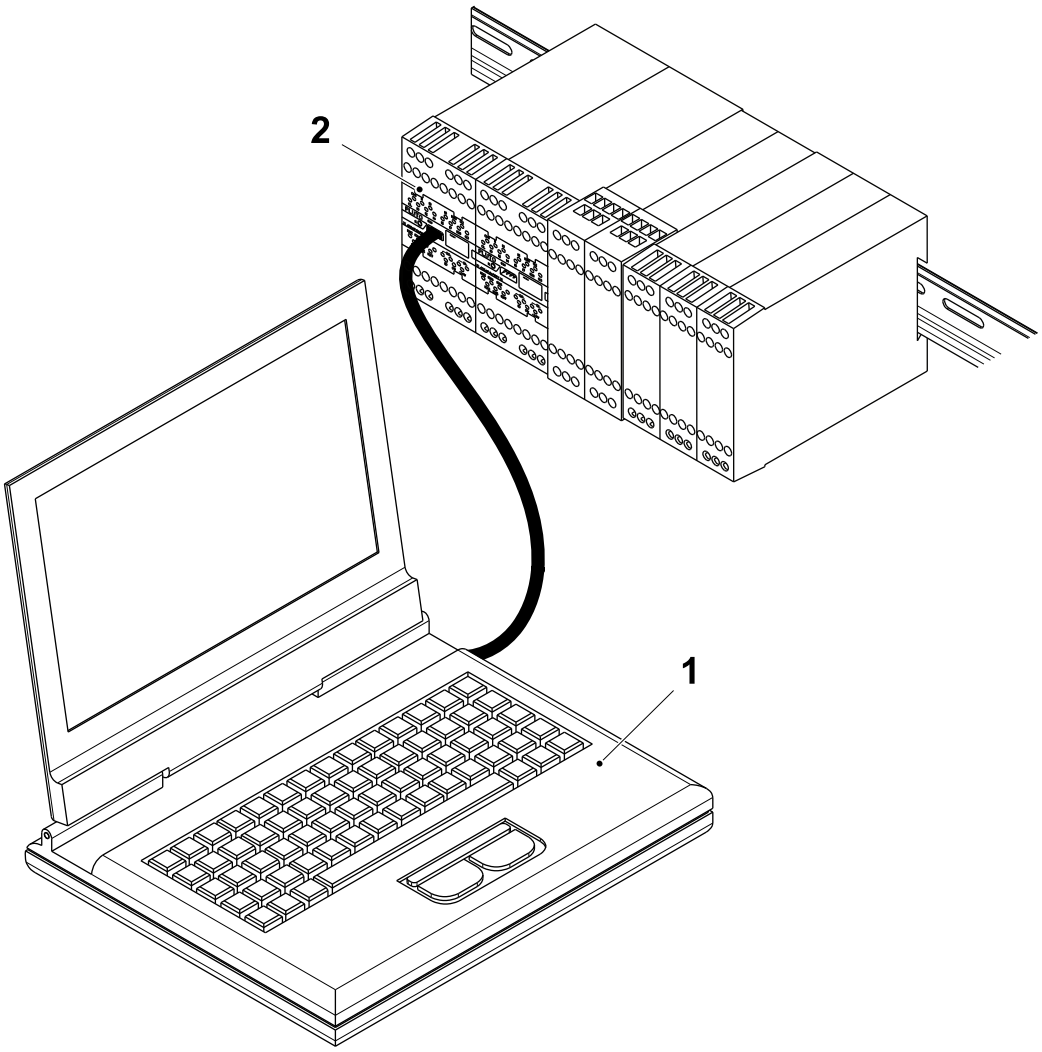

1 PC
2 Pluto module

(Cont'd)

(Cont'd)

b) Open the Pluto Manager by double clicking the PLUTO MANAGER icon (3) on the PC desktop.

c) In the PLUTO MANAGER window, select PROJECTS (4) and then select OPEN (5).

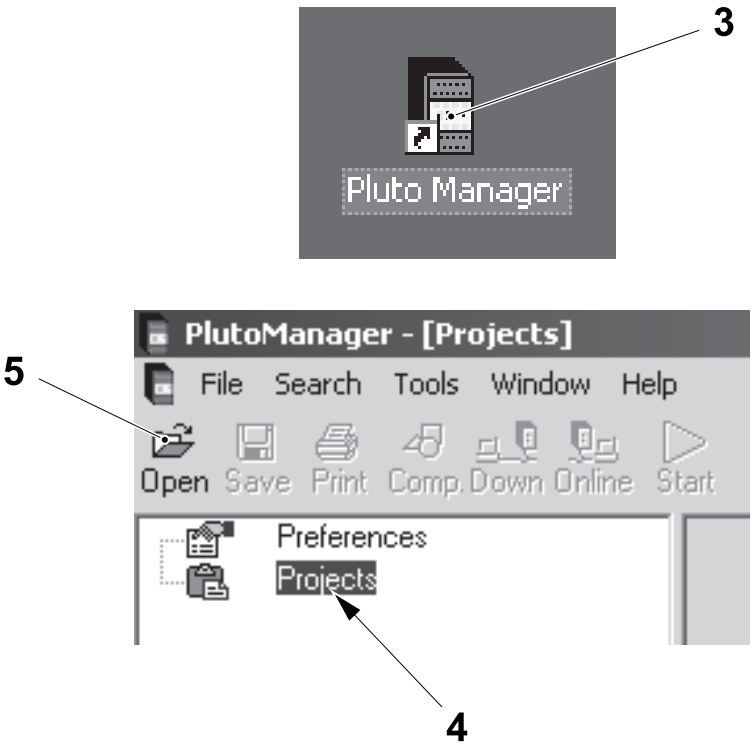

3 Pluto manager icon
4 Projects
5 Open

(Cont'd)

(Cont'd)

Note! The project number shown in the illustration is an example.

d) Select the required PROJECT (6) and then select OPEN (7).

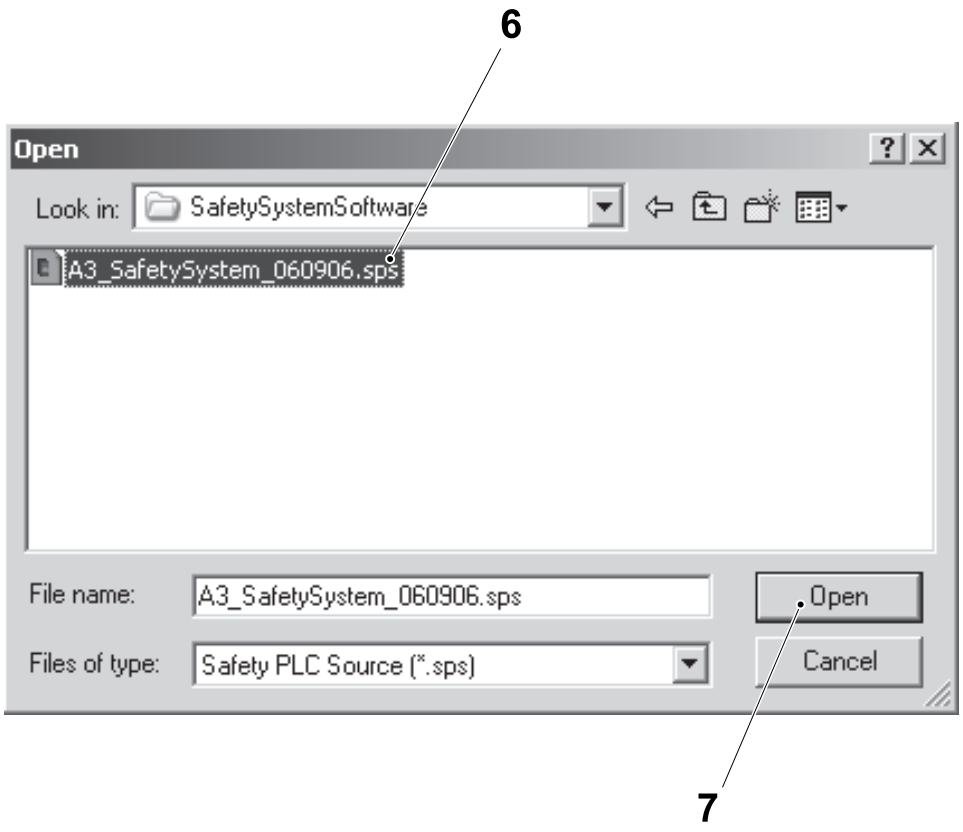

6 Project
7 Open

(Cont'd)

(Cont'd)

e) In the window that opens, click on the `PLUTO 14` icon (8).

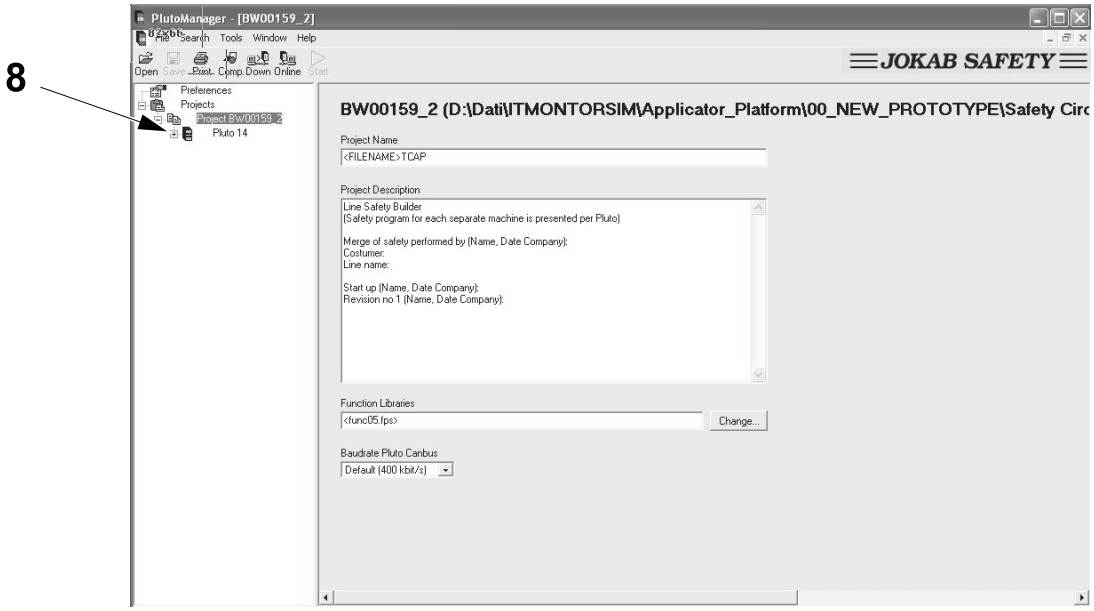

8 Pluto 14 icon

f) The IDFIX number (14000009F000) appears in the `IDFIX` window (9).

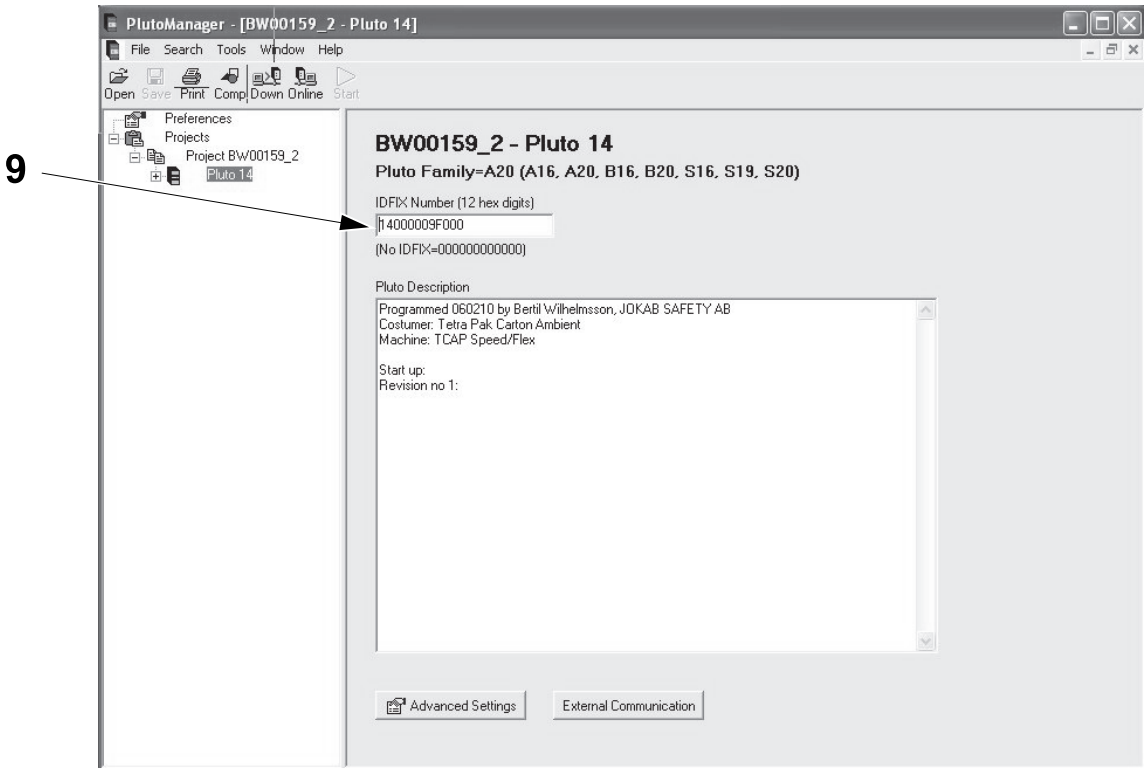

9 IDFIX window

(Cont'd)

(Cont'd)

g) Select the `TOOLS` menu (10) and then select `WRITE IDFIX` (11).

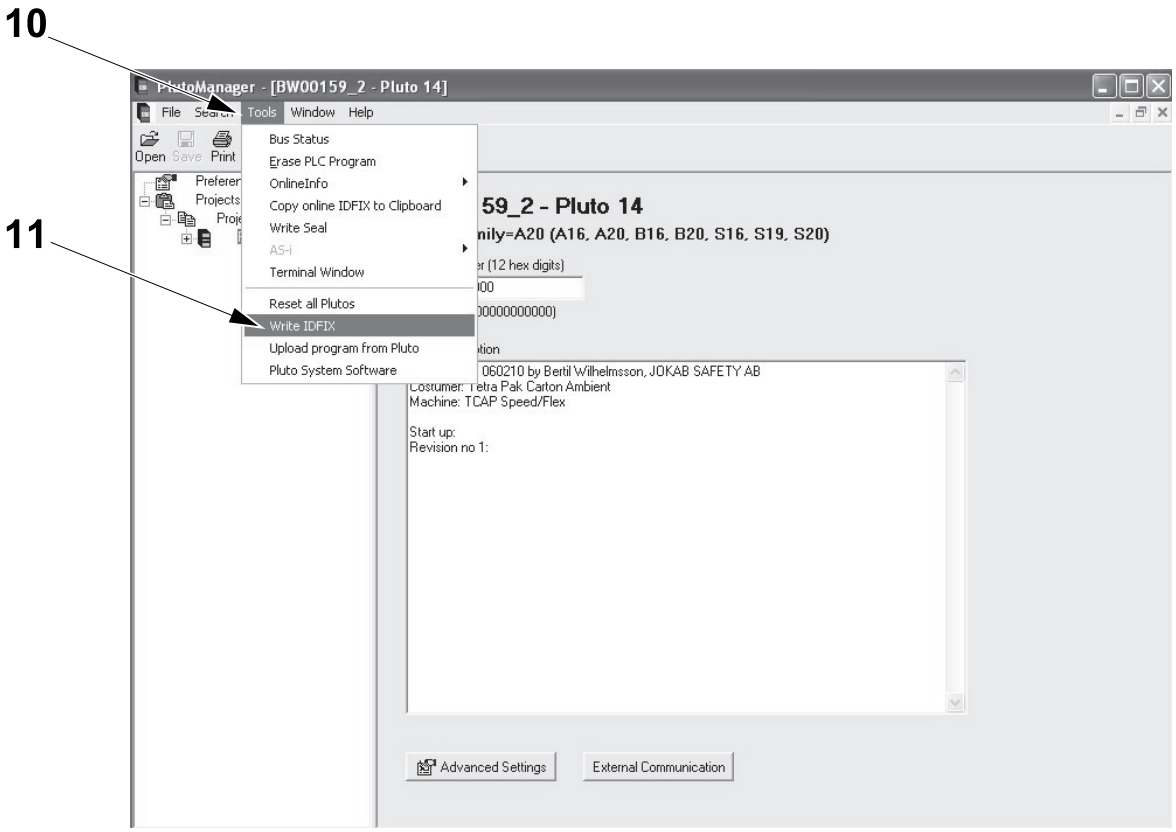

10 Tools menu
11 Write IDFIX

(Cont'd)

(Cont'd)

CAUTION
Risk of damage to the equipment.
Do not select the `ERASE PROTECT ID` check box (12). Doing so will prevent any further IDFIX changes being made. Do not select the `SUGGEST UNIQUE ID` button (13).

h) Write the `IDFIX` code, displayed in the `IDFIX` window (9), in the `ID NUMBER` field (14) and select `WRITE ID CIRCUIT` (15).

i) Select `CLOSE` (16).

Note! The ID-FIX code for the Pluto module is shown below.

Unit	ID number
09F000	14000009F000

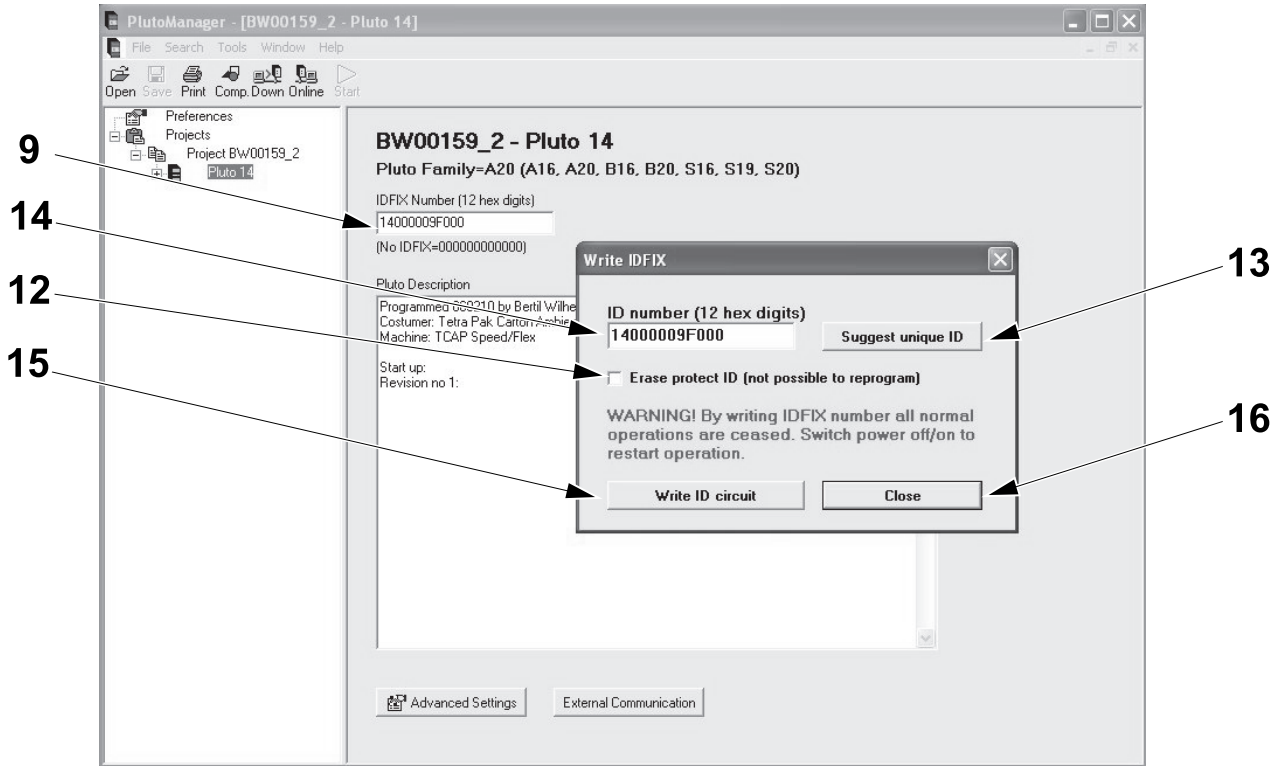

9 IDFIX window
12 erase protect id
13 suggest unique id
14 ID number field
15 write id circuit
16 close

8.5 Power Supply

8.5.1 Frequency Converter

8.5.1-1 Frequency Converter - Display Parameters

Machine Status	Electrical supply disconnecting device in position I (ON) Main air valve OFF Main steam valve ON Main water valve OFF

The frequency converter parameter sets are stored in the program loaded in the DeviceNet scanner module. Each time power is applied to a frequency converter and communication is established with the DeviceNet scanner module, the parameter set is written into the frequency converter either from the DeviceNet scanner module or from the PLC program running on the controller.

As a consequence, changes to the parameter set should be made via the DeviceNet scanner program. It is not recommended to make manual changes to the parameter set directly on the frequency converter.

(Cont'd)

(Cont'd)

Note! The numbering in the illustration may not correspond to the location in the electrical cabinet. Check the reference designation in the label above the frequency converters to locate a specific frequency converter.

Frequency Converter	Function
T10T0020 (1)	ASU loop
T10T0040 (2)	ASU magazine
T50T0070 (3)	External conveyor DE
U70T0160 (4)	Drive roller
U30T0010 (5)	Hydrogen peroxide pump
U70T0320 (6)	ICU pump (OE)
U70T0190 (7)	Sterile air compressor

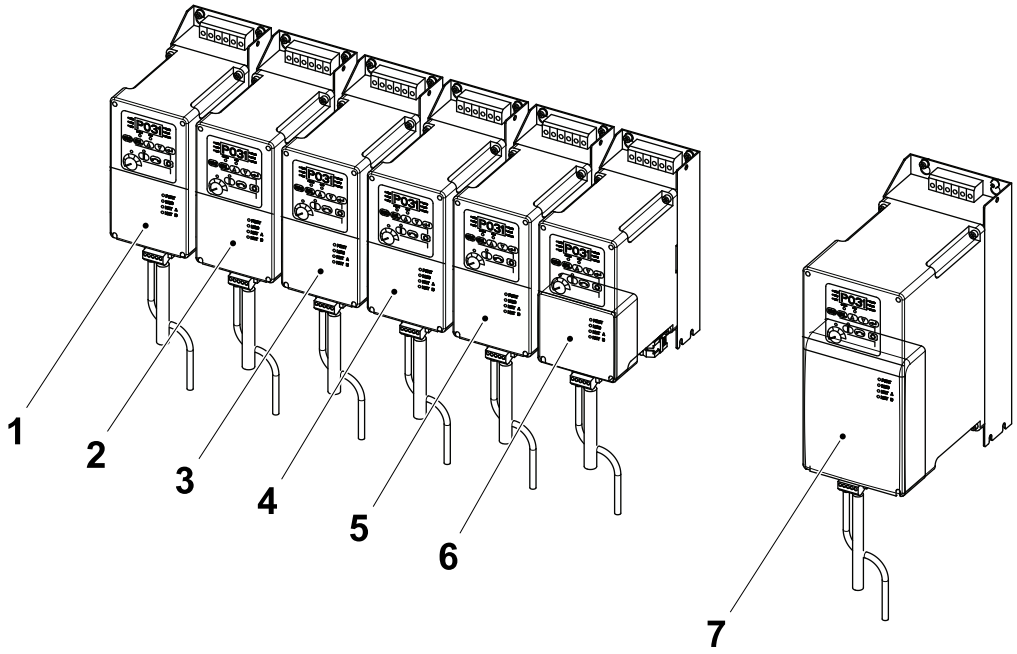

1 Frequency converter ASU loop
2 Frequency converter ASU magazine
3 Frequency converter external conveyor
4 Frequency converter drive roller
5 Frequency converter hydrogen peroxide pump
6 Frequency converter ICU (OE)
7 Frequency converter compressor

(Cont'd)

(Cont'd)

Note! Before setting the converter, make sure that the sink/source switch is set to the SRC position.

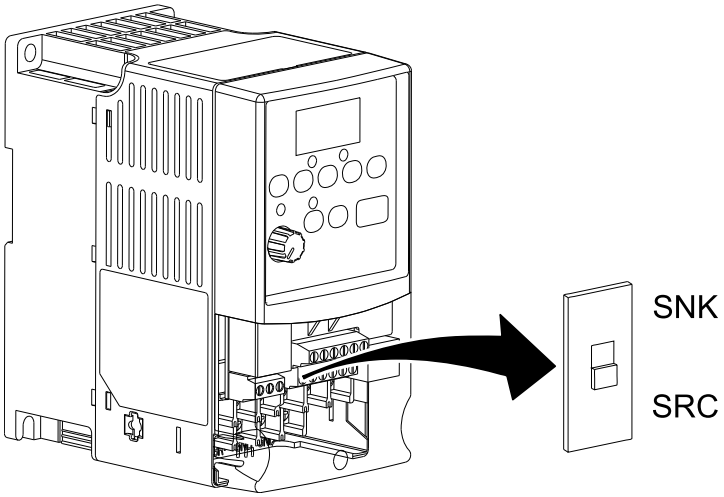

(Cont'd)

(Cont'd)

a) Press the ESC button (1) twice. The letter d, P, or A flashes.

b) Press the UP button (2) or the DOWN button (3) to scroll through the group menu (d, P or A).

c) Press the ENTER button (4) or the SEL button (5) to enter a group. The digit on the right of the 3 digit parameter, in the example below 031, flashes.

d) Press the UP button (2) or the DOWN button (3) to scroll through the parameters that are in the group.

e) Press the ENTER button (4) or the SEL button (5) to view the value of a parameter. To return to the parameter number without editing, press the ESC button (1).

f) To edit a parameter value, press the ENTER button (4) or the SEL button (5) to enter the program mode. The digit on the right flashes and the Program LED (6) turns red when the value can be edited.

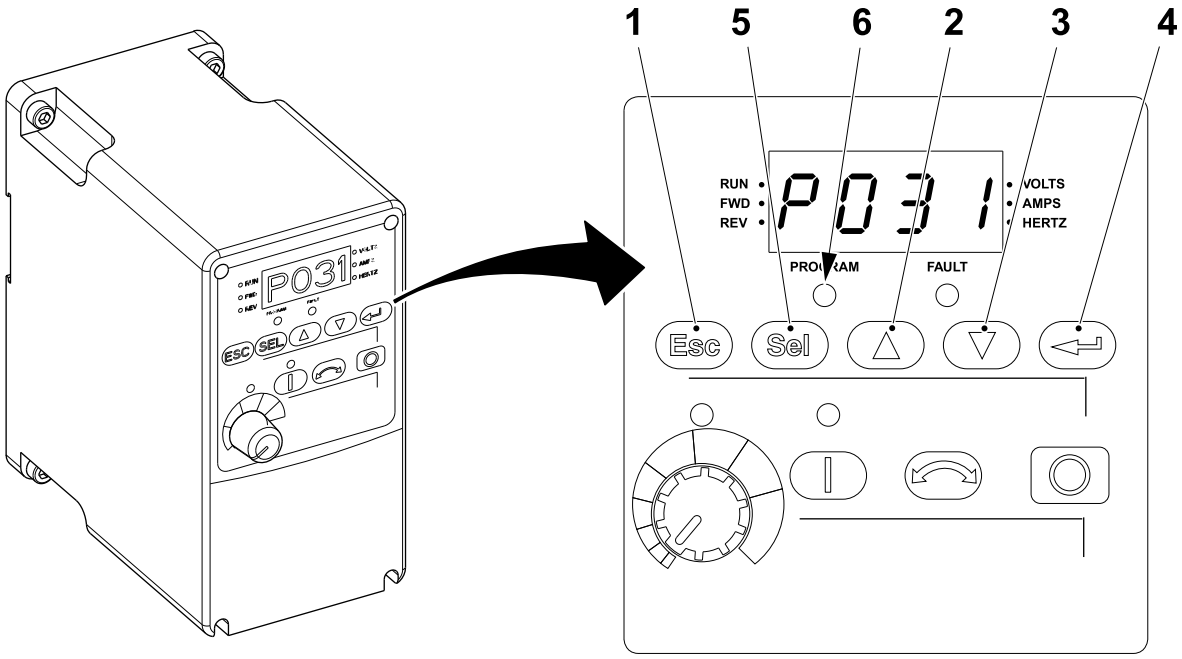

1 ESCAPE button
2 UP button
3 Down button
4 Enter button
5 SELECT button
6 Program LED

(Cont'd)

(Cont'd)

g) Press the UP button (2) or the DOWN button (3) to change the parameter value. Press the SEL button (5) to move from digit to digit or from bit to bit. When a digit or bit flashes, it can be changed.

Press either the:

- ESC button (1) to cancel a change. The digit or bit stops flashing, the previous is restored and the Program LED (6) turns OFF
- ENTER button (4) to save a change. The digit or bit stops flashing and the Program LED (6) turns OFF.

h) Press the ESC button (1) to return to the parameter list.

i) Continue to press ESC button (1) to leave the programming menu. When pressing the ESC button (1), d001 (output frequency) is displayed.

j) Press the ENTER button (4) or the SEL button (5) to enter the group menu.

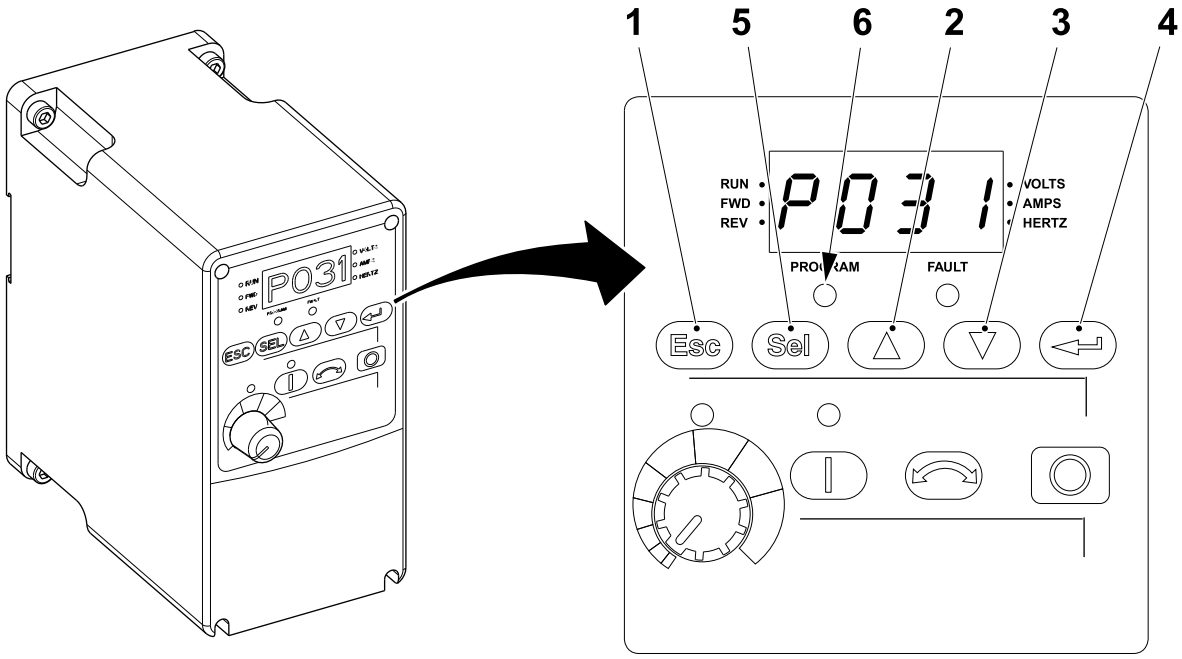

1 ESCAPE button
2 UP button
3 Down button
4 Enter button
5 SELECT button
6 Program LED

8.5.1-2 Frequency Converters - Error Codes

Machine Status	Electrical supply disconnecting device in position I (ON)

To clear a fault, press the Stop key, cycle power or set A100 (Fault clear) to 1 or 2.

Faults with indicated with the "*" character are Auto-Reset/Run type faults. Configure with parameters A092 and A093.

(Cont'd)

(Cont'd)

No.	Fault	Action
F2	Auxiliary Input*	Check remote wiring.
F3	Power Loss	Monitor the incoming AC line for low voltage or line power interruption.
F4	UnderVoltage*	Monitor the incoming AC line for low voltage or line power interruption.
F5	OverVoltage*	Monitor the AC line for high voltage or transient conditions. Bus overvoltage can also be caused by motor regeneration. Extend the decel time or install dynamic brake option.
F6	Motor Stalled*	Increase [Accel Time x] or reduce load so drive output current does not exceed the current set by parameter A089 [Current Limit].
F7	Motor Overload*	An excessive motor load exists. Reduce load so drive output current does not exceed the current set by parameter P033 [Motor OL Current].
F8	Heatsink OvrTmp*	Check for blocked or dirty heat sink fins. Verify that ambient temperature has not exceeded 40ºC (140ºF) for IP 30/NEMA 1/UL Type 1 installations or 50ºC (122ºF) for Open type installations. Check fan.
F12	HW OverCurrent*	Check programming. Check for excess load, improper DC boost setting, DC brake volts set too high or other causes of excess current.
F13	Ground Fault	Check the motor and external wiring to the drive output terminals for a grounded conditions.
F33	Auto Rstrt Tries	Correct the cause of the fault and manually clear.
F38	Phase U to Gnd	Check the wiring between the drive and motor. Check motor for grounded phase. Replace drive if fault cannot be cleared.
F39	Phase V to Gnd	
F40	Phase W to Gnd	
F41	Phase UV Short	Check the motor and drive output terminal wiring for a shorter condition. Replace drive if fault cannot be cleared.
F42	Phase UW Short	
F43	Phase VW Short	
F48	Params Defaulted	The drive was commanded to write default values to EEPROM. Clear the fault or cycle power to the drive. Program the drive parameters as needed.
F63	SW OverCurrent*	Check load requirements and A098 [SW Current Trip] setting.
F64	Drive Overload*	Reduce load or extend Accel Time.
F70	Power Unit	Cycle Power. Replace drive if fault cannot be cleared.
F71	Net Loss	The communication network has faulted.
F80	SVC Autotune	The autotune function was either cancelled by the user or failed.

(Cont'd)

(Cont'd)

No.	Fault	Action
F81	Comm Loss	If adapter was not intentionally disconnected, check wiring to the port. Replace wiring, port expander, adapters or complete drive as required. Check connection. An adapter was intentionally disconnected. Turn off using A105 [Comm Loss Action].
F100	Parameter Checksum	Restore factory defaults
F122	I/O Board Fail	Cycle Power. Replace drive if fault cannot be cleared.

8.5.2 Overload Protection

8.5.2-1 Overload Protection - Set

Machine Status	Electrical supply disconnecting device in position O (OFF) Main air valve OFF Main steam valve ON Main water valve OFF

Set the current rating of each overload protection according to the fuse panel label located in the door of the electrical cabinet or according to the EM.

8.5.2-2 Overload Protection - Set Base Unit(s)

Machine Status	Electrical supply disconnecting device in position O (OFF) Main air valve OFF Main steam valve ON Main water valve OFF

Set the distances **A** and **B** on the base unit (1) by means of the screws (2) and (3).

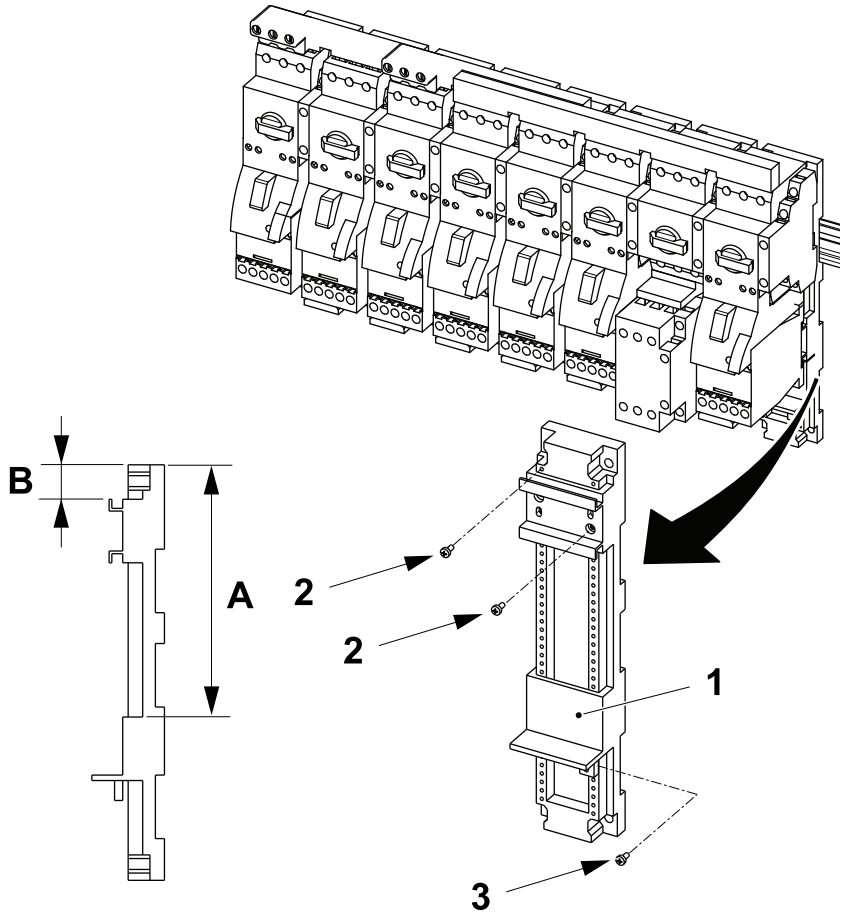

A = 139.0 mm
B = 19.0 mm
1 Base unit
2 Screw
3 Screw

8.5.3 Residual Current Device

Note! The residual current device is not fitted and not valid for filling machines in compliance with the UL or CSA requirements.

8.5.3-1 Residual Current Device - Check

Machine Status	Electrical supply disconnecting device in position I (ON) Main air valve OFF Main steam valve ON Main water valve OFF

DANGER

Hazardous voltage.
Can shock, burn or cause death. Change the RCD (1) if it does not trip immediately.

The RCD (1) must always be tested before using the socket outlet (2).

a) Make sure that the switch (3) is in the ON position.

b) Press the test button (4).

c) The RCD (1) must trip immediately and the switch (3) must jump to the OFF position. If the switch (3) does not jump to the OFF position, change the RCD (1) .

d) Set the switch (3) to the ON position.

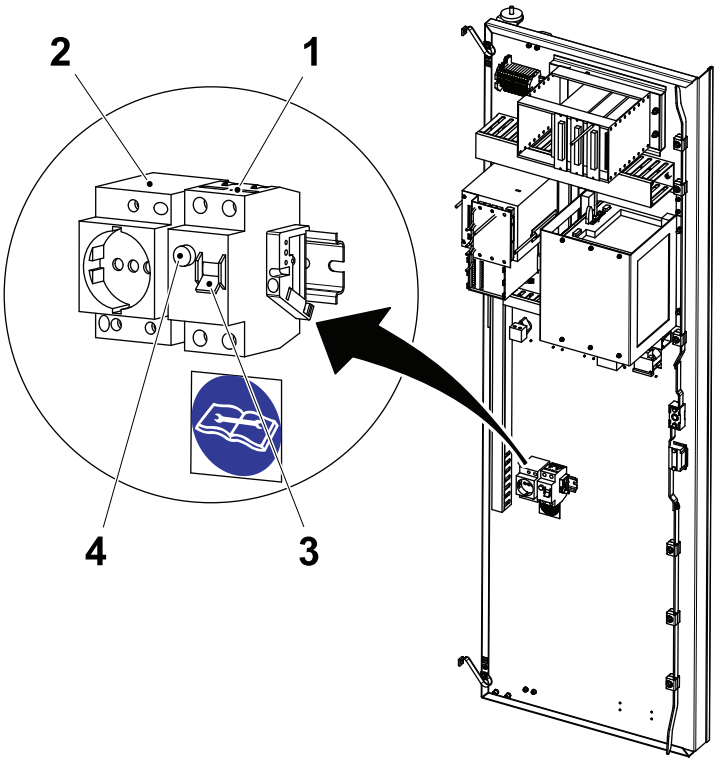

1 RCD (residual current device)
2 Socket outlet
3 Switch
4 Test button

8.5.4 Power Failure Relay

8.5.4-1 Power Failure Relay - Set

Machine Status	Electrical supply disconnecting device in position I (ON) Main air valve OFF Main steam valve ON Main water valve OFF

a) On the power failure relay (1) set the overvoltage trimmer (2) to 250 V.

b) Set the undervoltage trimmer (3) to 200 V.

c) Set the phase unbalance trimmer (4) to 15%.

d) Set the delay time trimmer (5) to 0.

e) Open the cover cover (6) and set:

- the switchover delay (7) to ON-delay
- the switchover phase sequence monitoring (8) to OFF (activated).

f) Close the cover (6).

switchover delay (7)	**switchover phase sequence monitoring (8)**	**Pos.**
⊘	⊠	↑ ON
↻	■	OFF

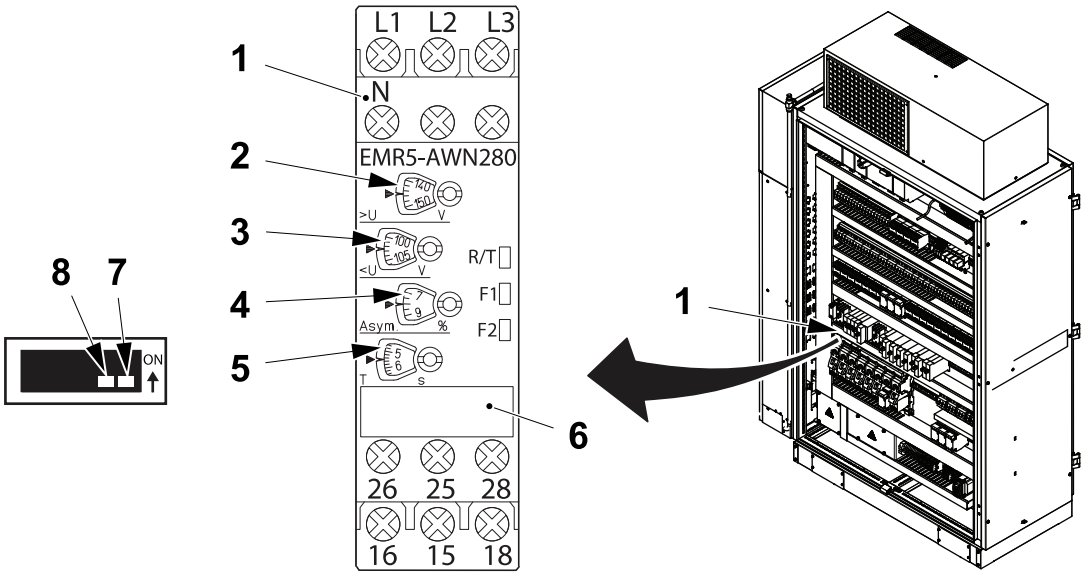

1 Power failure relay
2 Overvoltage trimmer
3 Undervoltage trimmer
4 Phase unbalance trimmer
5 Delay time trimmer
6 Cover
7 Switchover delay
8 Switchover phase sequence monitoring

(Cont'd)

(Cont'd)

Power Failure Relay LED Description

LED	Colour/Status	Description
R/T (1)	Solid yellow	Supply voltage ON
	Flashing yellow	Output relay energized
F1 (2)	Solid red	Overvoltage
	Solid red with F2 (3) flashing red	Phase failure
	Flashing red with F2 (3) also flashing red	Phase sequence error
F2 (3)	Solid red	Undervoltage

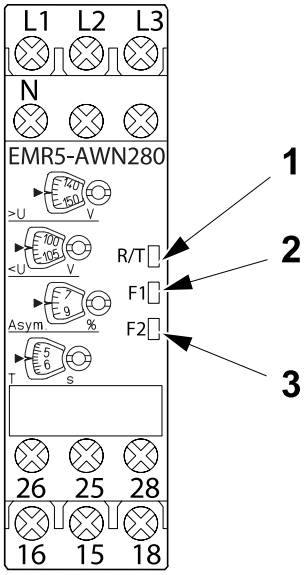

1 R/T LED
2 F1 LED
3 F2 LED

8.5.5 Power Supply Unit

8.5.5-1 Power Supply Unit - Set

Machine Status	Electrical supply disconnecting device in position I (ON) Main air valve ON Main steam valve OFF Main water valve ON
Special Equipment	Multimeter
SPC Reference	2840938-0300

Using a screwdriver, adjust the potentiometer (1) until the voltage output of the power supply unit (2) displayed on the multimeter is 24.00 volts.

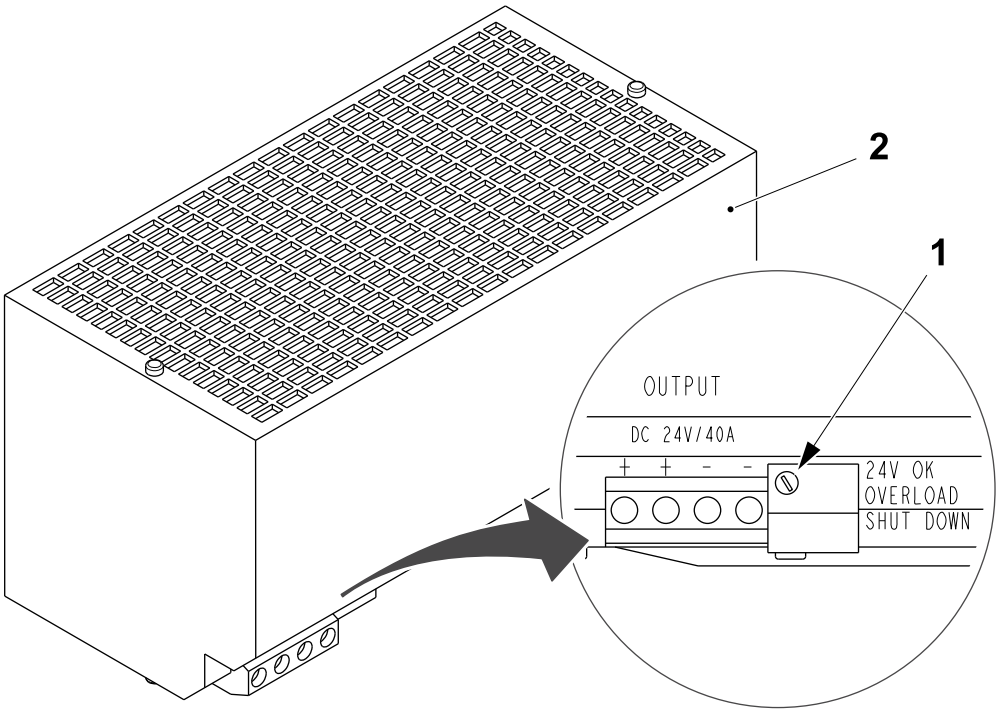

1 Potentiometer
2 Power supply unit

(Cont'd)

(Cont'd)

Make sure that the DIP switches (3) for the power supply unit (2) are as indicated in the table below.

DIP switch	Position	Description
A	OFF	For sharing the loads in parallel operation, the units can be switched from individual operation (OFF switch position) to parallel operation (ON switch position). The ON switch position causes the output characteristic curve to slope.
B	OFF	In the OFF switch position (constant-current mode) the unit supplies a constant current of approx. 1.15 x rated current in the event of overload/short-circuit. In the ON position (shutdown mode) the unit is shut down if overloading occurs for longer than approx. 100 ms. The unit can be reset by OFF mains supply for at least 5 seconds

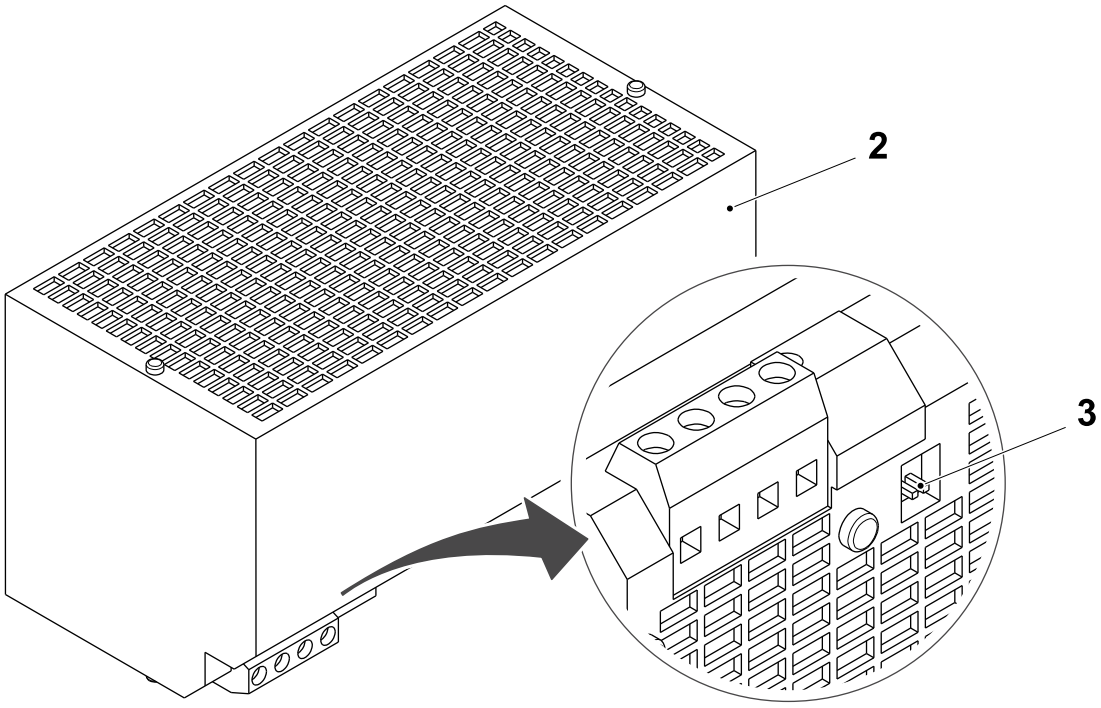

2 Power supply unit
3 DIP switch

8.6 HMI and PLMS

8.6-1 HMI and PLMS - Description

The HMI (Human Machine Interface) is the control software that is graphically represented on the touch screen as an interface for operating and controlling filling machines.

PLMS (Packaging Line Monitoring System) is the data management system for collecting, analysing and monitoring the operational performance of filling machines and packaging lines.

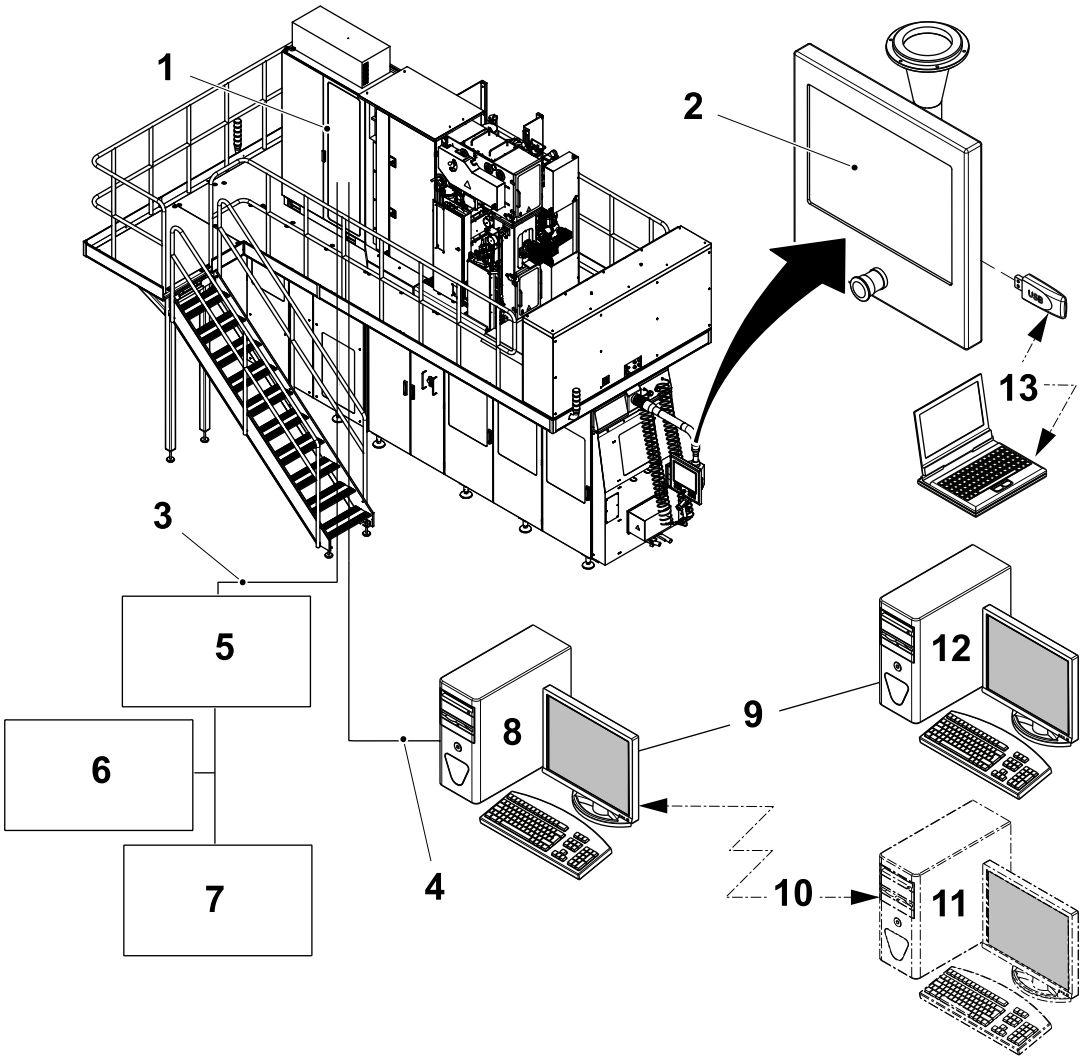

1 PLC
2 Touch screen
3 Line communication
4 External communication
5 Distribution Equipment
6 Line controller
7 Distribution Equipment
8 PLMS Master PC
9 Network connection
10 Telephone connection
11 Remote PC
12 Remote PC
13 CopyLog, manual copying of data

8.6-2 HMI and PLMS - Log On Procedure

Machine Status	Electrical supply disconnecting device in position I (ON)
Special Equipment	Keyboard with USB connector

When the machine is switched on, the system automatically logs on as an operator. This allows for the daily use of the machine. For some purposes it may be necessary to log off as an operator and log on as an installer.

The installer has higher privileges and is allowed to:

- install software
- change the PLMS configuration
- change the date and time.

(Cont'd)

(Cont'd)

Log On as an Installer

a) Remove the plug of a USB port (1) on the control panel (2) and connect a USB keyboard.

b) Press CTRL + ESC and choose `LOG OFF OPERATOR` from the `START` menu (3).

c) Select the `OK` button or press the ENTER key.

d) Log on with the following identity:

- User name: installer
- Password: installer

After logging on as an installer, the `START` menu (3) can be used to perform the necessary tasks.

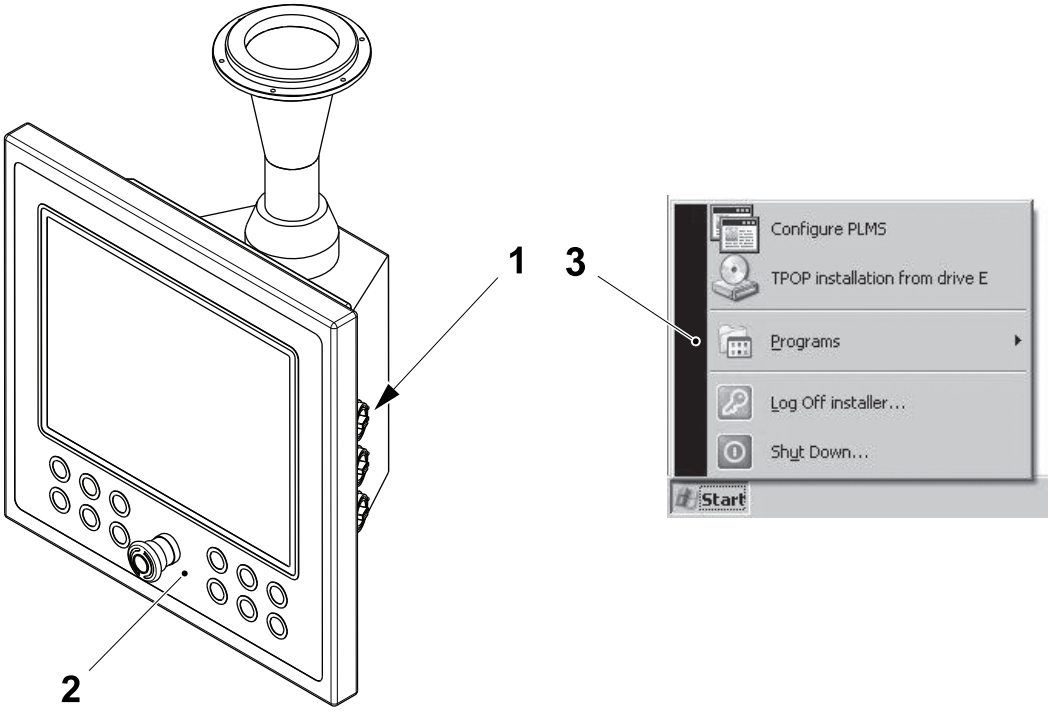

1 USB port
2 Control panel
3 Start menu

(Cont'd)

(Cont'd)

Restart and Log On as an Operator

Note! Logging on as an operator must always be done by a Windows restart.

a) Press CTRL + ESC and choose SHUT DOWN from the START menu (3).

b) Select RESTART from the list and select the OK button or the press the ENTER key.

c) Remove the keyboard from the control panel (2) and fit back the plug on the USB port (1).

d) The system is now restarted in normal operating mode.

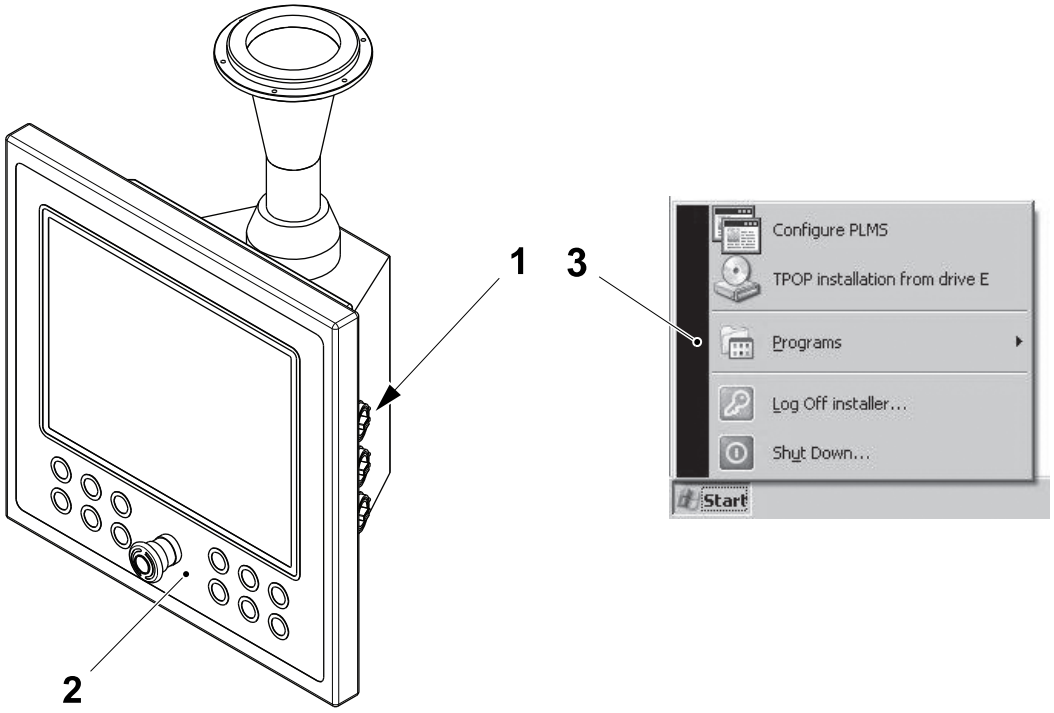

1 USB port
2 Control panel
3 Start menu

8.6-3 HMI and PLMS - Install Software

Machine Status	Electrical supply disconnecting device in position I (ON)
Special Equipment	Keyboard with USB connector

Required Material for Machines with Industrial PC APC620

For machines with T-order: 21220/00001 to 21220/00239:

- TPOP Basic DVD
- Software CD.

Required Material for Machines with Industrial PC APC910

For machines with T-order 21220/00240 and above:

- TPOP Basic USB key
- Software USB key

Installation Order

You must always follow the order below when installing software. If you are only updating one or more of the programs then jump directly to the specific software sections.

For machines with T-order: 21220/00001 to 21220/00239:

- TPOP Basic DVD on page 8-221
- Easy Suite for TPOP and PLMS Installation, including:
  a) PLMS Logger
  b) PLMS Logger Config
  c) TPOP HMI

For machines with T-order 21220/00240 and above:

- TPOP Basic USB Key
- Easy Suite for TPOP and PLMS Installation including:
  a) PLMS Logger
  b) PLMS Logger Config
  c) TPOP HMI

(Cont'd)

(Cont'd)

Connect the Keyboard

Remove the plug of the USB port (1) from the control panel (2) and connect a keyboard (3).

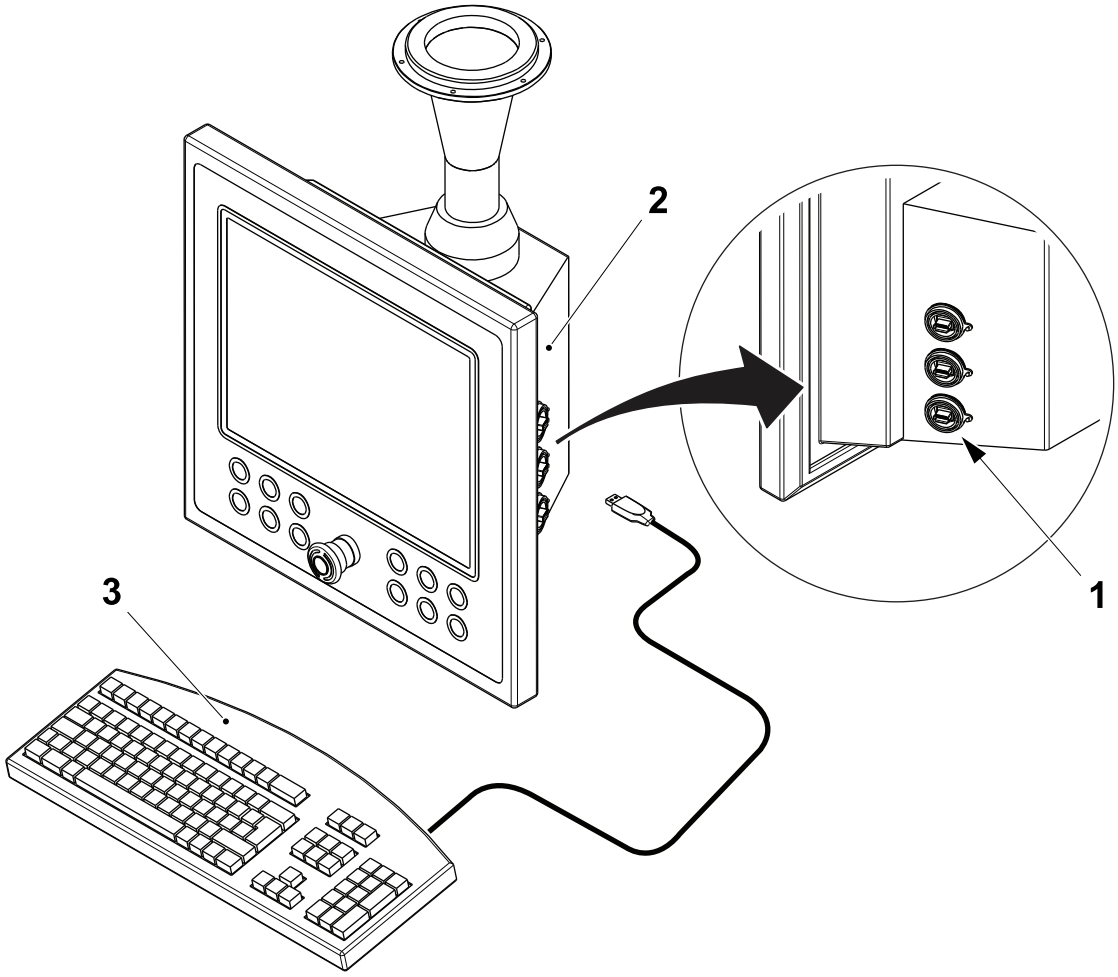

1 USB port
2 Control panel
3 Keyboard

(Cont'd)

(Cont'd)

TPOP Basic DVD

Note! Valid only for machines with T-order: 21220/00001 to 21220/00239.

a) Insert the TPOP Basic DVD in the DVD/CD-drive of the Industrial PC (1).

b) Turn the electrical supply disconnecting device to the position "O" (OFF).

c) Turn the electrical supply disconnecting device to the position "|" (ON).

d) Press any key when the text `PRESS ANY KEY TO BOOT FROM CD OR DVD...` is displayed on the TPOP.

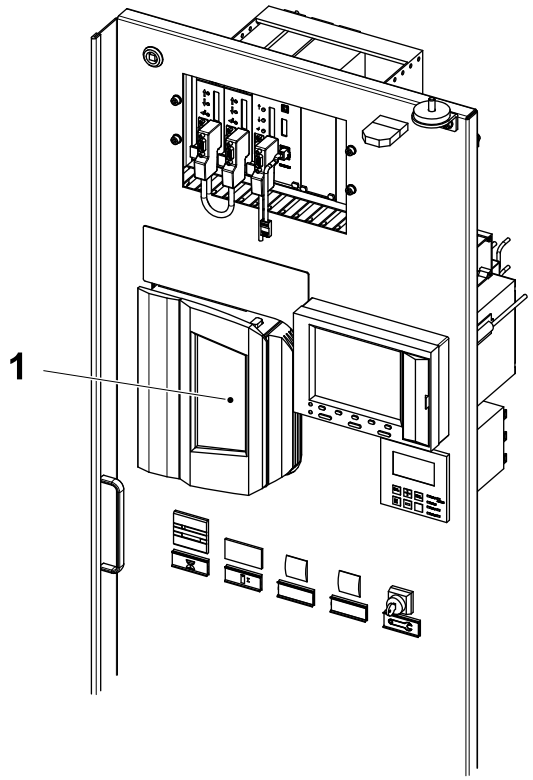

1 Industrial PC (IPC)

(Cont'd)

(Cont'd)

e) The Windows XP SP2 and the TPOP Basic software is now loaded and the system is configured. At the end of the installation, the DVD is automatically ejected.

Note! The installation process will take approximately 35 minutes.

f) When prompted, enter the current date and time.

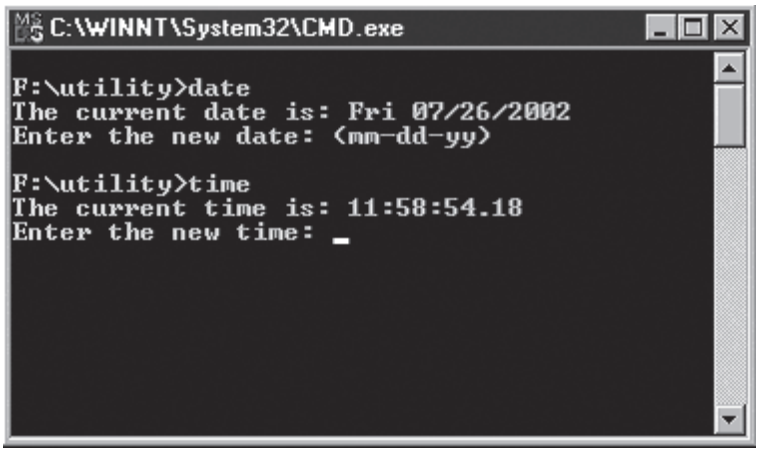

g) Click on the FINISH button in the dialogue box.

h) Continue to install the PLMS NRG 310, HMI, PLMS Logger Config and other software, see the section Easy Suite for TPOP and PLMS Installation.



(Cont'd)

(Cont'd)

TPOP Basic USB Key

Note! Valid for machines with T-order: 21220/00240 and above.

a) Turn the electrical supply disconnecting device to the position "O" (OFF).

b) Remove all USB storage media from the control panel (1).

c) Insert the USB key with the program for TPOP Basic in a USB port of the Industrial PC (1).

d) Turn the electrical supply disconnecting device to the position "|" (ON).

e) Keep pressed the TPOP RESET button (3) to reboot.

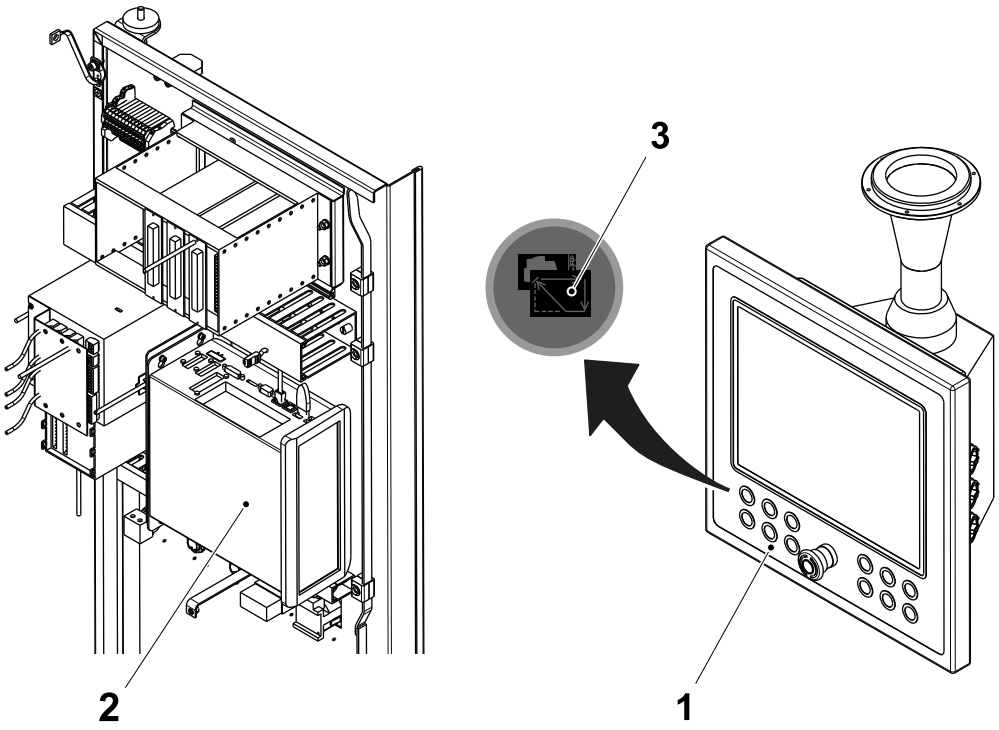

1 Control panel
2 Industrial PC (IPC)
3 TPOP reset button

(Cont'd)

(Cont'd)

f) Immediately at the boot, as soon as the IPC shows the BIOS screen, press F11 to select the Boot device and press ENTER.

g) Locate in the list the USB media and select it using the ARROW keys (in the picture the USB media is identified as `GENERIC FLASH DISK`), then press ENTER on the keyboard to continue.

Note! The USB media could show different names depending on manufacturer.



h) The Windows XP environment starts and the installation proceeds.

Note! The installation process will take approximately 35 minutes in total. The HMI will be restarted a couple of times.

i) When prompted, enter the current date and time and press `ENTER`.

j) Remove the TPOP Basic software USB key from the IPC.

Note! If the TPOP Basic software USB key is not removed, it will not be possible to install the PLMS NRG 200, HMI, PLMS Logger Config as an installer.

k) Press the `FINISH` button to complete the installation.

l) Continue to install the PLMS NRG 200, HMI, PLMS Logger Config and other software, see the section Easy Suite for TPOP and PLMS Installation.

(Cont'd)

(Cont'd)

Easy Suite for TPOP and PLMS Installation

The software USB key (or the software CD) includes the installation software for PLMS NRG 310, TPOP HMI and PLMS Logger Config.

a) Log on as an installer, see 8.6-2 HMI and PLMS - Log On Procedure.

b) Insert the software drive:
   - the software CD into the IPC CD reader (for APC620 with CD drive)
   - the software USB key in the TPOP USB port (for APC910)

c) From the `START` menu choose `TPOP INSTALLATION FROM DRIVE E:\`

d) The `INSTALLATION SCREEN` (1) appears.

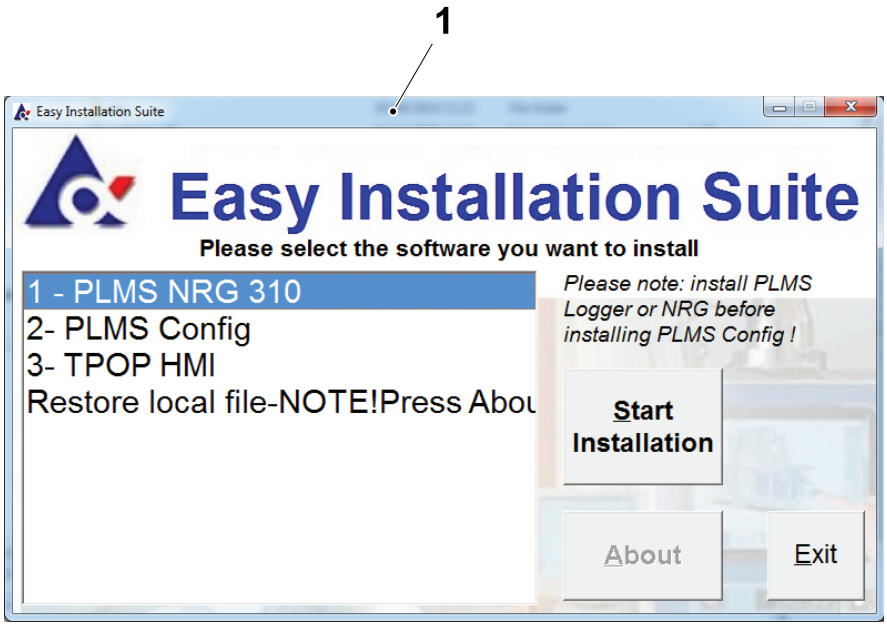

1 Installation screen

(Cont'd)

(Cont'd)

Note! If both PLMS NRG 310 and PLMS Logger Config are to be installed, PLMS NRG 310 must always be installed before PLMS Logger Config.

e) Select the software to be installed and touch the START INSTALLATION button (2).

f) Follow the instructions on the screen, and when prompted accept the default values.

g) Repeat the items e) and f) to install more software.

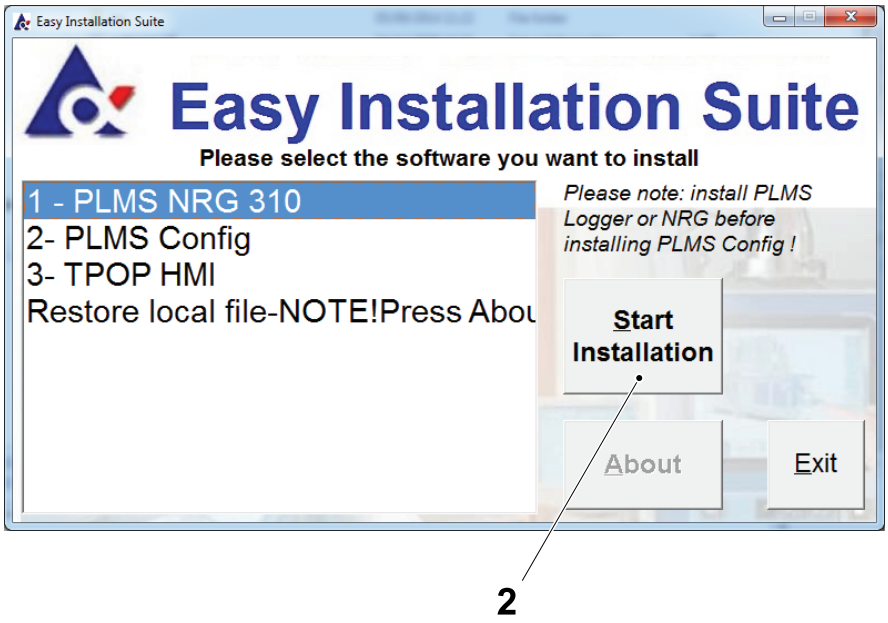

2 Start installation button

(Cont'd)

(Cont'd)

Note! For PLMS Config and TPOP HMI software, the system checks if the installed version is older or newer than the one to be installed.

h) If the installed version is older than the one to be installed the dialogue box (3) is displayed; click on OK (4) to continue the installation.

i) If the installed version is newer the dialogue box (5) is displayed; click on YES (6) to install the software anyway or click on NO (7) to abort.

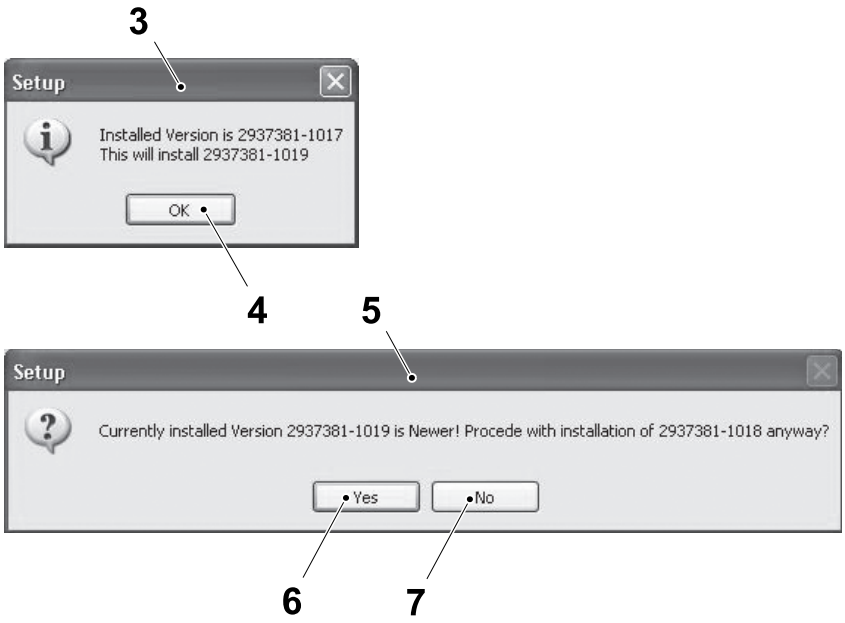

3 Dialogue box
4 OK button
5 Dialogue box
6 YES button
7 NO button

(Cont'd)

(Cont'd)

j) The SETUP window (8) is displayed. Click on NEXT (9).

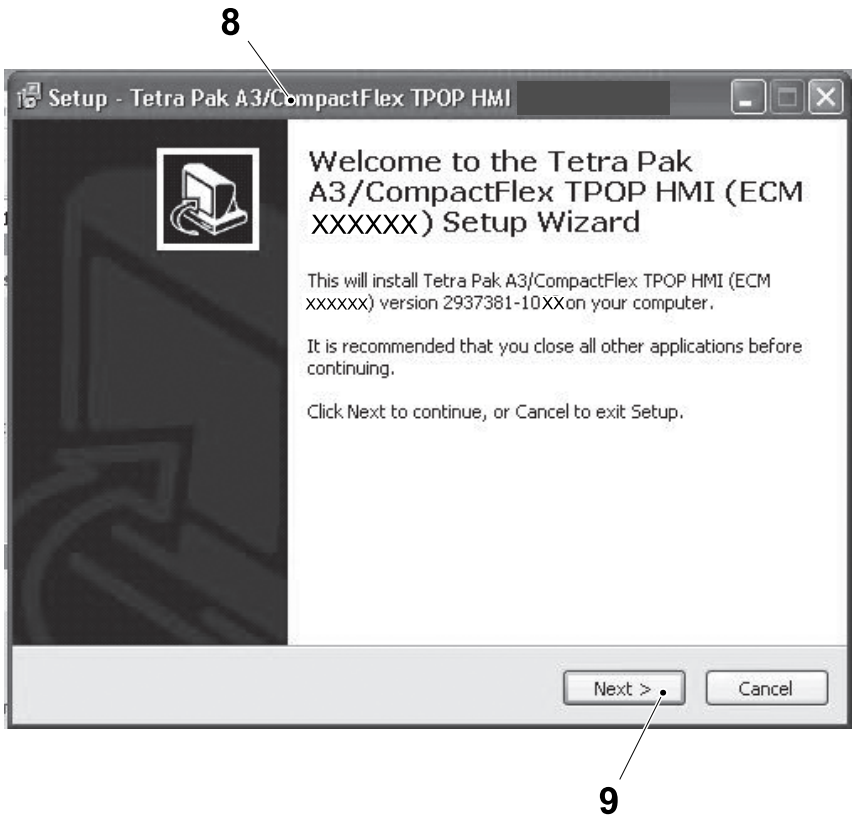

8 Setup window
9 Next button

(Cont'd)

(Cont'd)

k) If the Line Controller 30 or the Line Controller 30 Plus is included in the line, click on YES (10) in the dialogue box (11).

Note! Clicking on NO (12) the TPOP HMI does not load the configuration for the Line Controller 30 Plus. If the Line Controller 30 Plus is installed after, the TPOP HMI program must be reinstalled clicking on YES (10) when the dialogue box (11) appears.

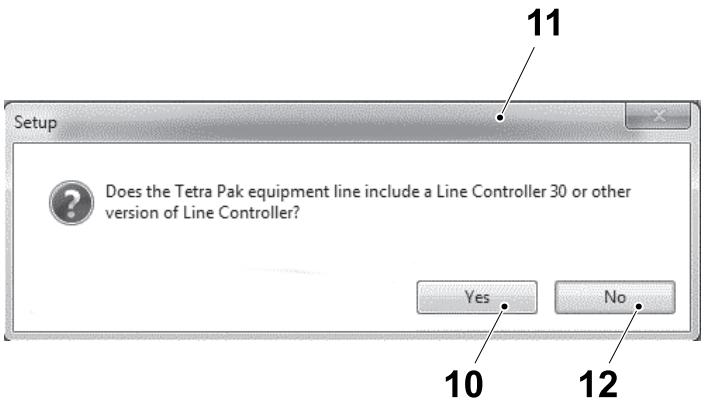

10 YES button
11 Dialogue box
12 NO button

(Cont'd)

(Cont'd)

CAUTION
Loss of data
Do not start the RESTORE LOCAL FILE software (13) unless the TPOP Basic has been reinstalled. Touch the ABOUT button (14) to read the warning message. If the RESTORE LOCAL FILE software (13) has to be installed, see 8.6-5 HMI and PLMS - Restore TPOP Local Files

l) Touch the EXIT button (15) when all the necessary software has been installed.

m) Remove the software USB key (or the software CD) when the installation is finished.

n) From the START menu choose CONFIGURE PLMS.

o) Configure the available options in the PLMS NRG CONFIGURATOR window, see section 8.6.1 PLMS NRG Configurator for details of the settings that can be made.

p) If all settings have been made, restart and log on as an operator, see 8.6-2 HMI and PLMS - Log On Procedure.

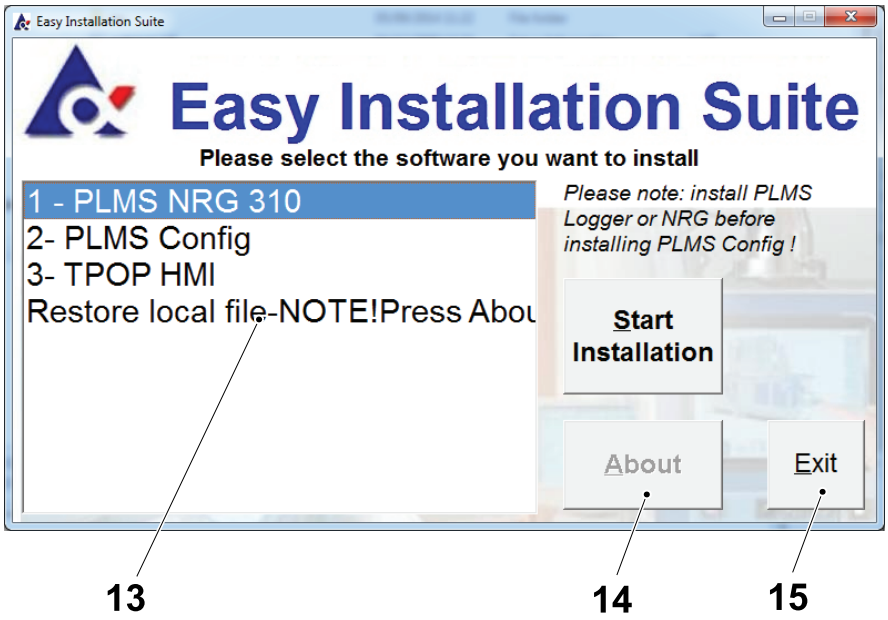

13 Restore local file software
14 About button
15 Exit button

8.6-4 HMI and PLMS - Install DE Config Files

Machine Status	Electrical supply disconnecting device in position I (ON)
Special Equipment	Keyboard with USB connector Laptop PC

The CONFIG file of each DE (and Line Controller 30) must be installed on the filling machine IPC. Proceed as follows:

a) Connect a keyboard to a USB port on the control panel and log on as an installer, see 8.6-2 HMI and PLMS - Log On Procedure.

b) Insert the software CD of the DE in the laptop PC CD drive and copy the config file SETUP.EXE into a USB key.

c) Remove the USB key from the laptop PC and insert it in a USB port of the TPOP.

d) From the START MENU choose TPOP INSTALLATION FROM DRIVE F:\

e) The following dialogue box appears. Select the YES button (1).

Note! The name of the DE (2) being installed is displayed in the dialogue box.



1 Yes button
2 DE name

(Cont'd)

(Cont'd)

f) When the installation is completed, a dialogue box appears.

g) Select the OK button (3).

h) Repeat the same procedure to install the CONFIG files of all the DE of the line.

i) When all the DE CONFIG files have been installed, restart and log on as an operator, see .8.6-2 HMI and PLMS - Log On Procedure.

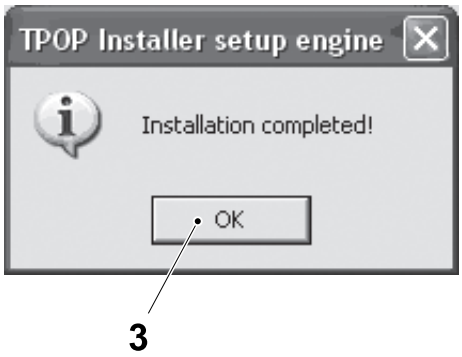

3 OK button

8.6-5 HMI and PLMS - Restore TPOP Local Files

Machine Status	Electrical supply disconnecting device in position I (ON)

a) Connect the keyboard to a USB port on the control panel and log on as an installer, see 8.6-2 HMI and PLMS - Log On Procedure.

b) Insert the software USB key into a USB port of the IPC.

Note! If a software CD has been supplied, insert the software CD into the DVD/CD drive of the IPC.

c) From the start menu select `TPOP INSTALLATION FROM DRIVE...`.

d) The `INSTALLATION SCREEN` (1) appears.

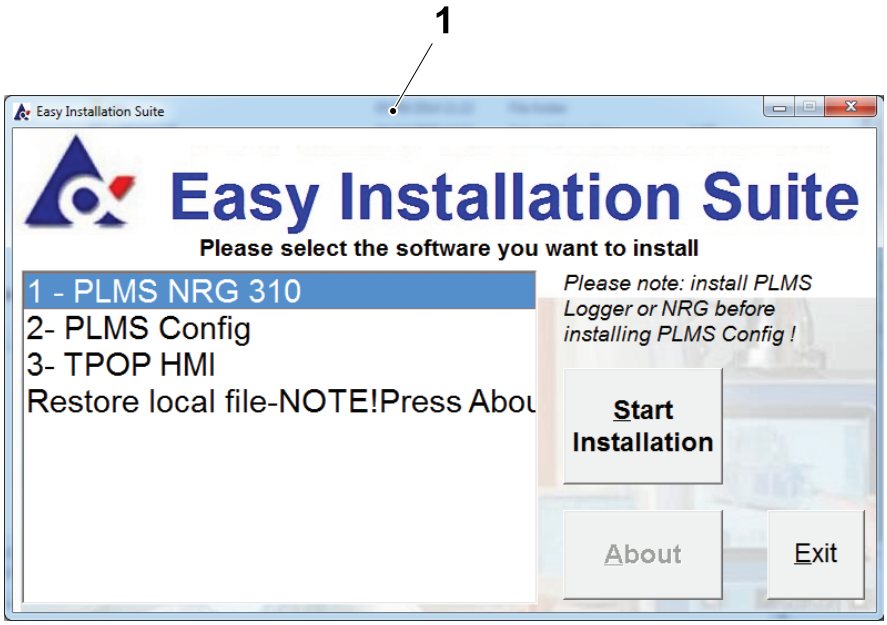

1 Installation screen

(Cont'd)

(Cont'd)

CAUTION
Loss of data
Do not start RESTORE LOCAL FILE (2) unless the TPOP Basic has been reinstalled.

e) Select RESTORE LOCAL FILE (2) and touch the ABOUT button (3).

f) The warning dialog (4) appears informing that the program restore the TPOP local configuration and the machine counters stored in the drive D:\ and that it is to be used only after the reinstallation of the TPOP Basic program.

g) Touch the START INSTALLATION button (5).

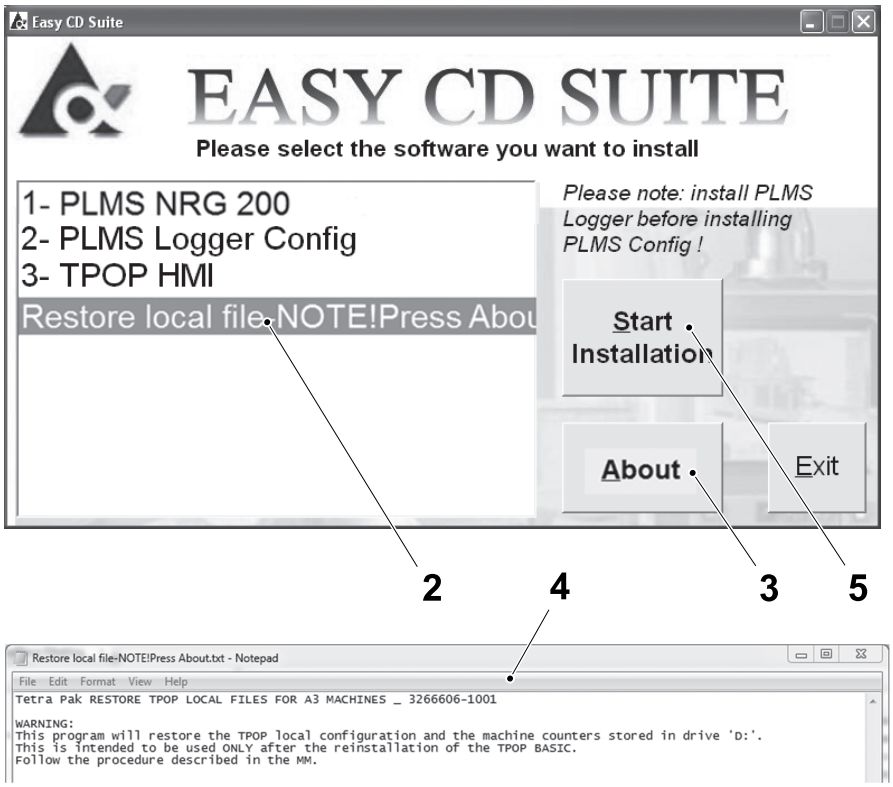

2 Restore local file
3 About button
4 Warning dialog
5 Start installation button

(Cont'd)

(Cont'd)

h) A dialogue box appears asking for confirmation. Click on the `YES` button (6) to confirm and continue the restoration procedure.

Note! If the folder backup does not exist in the drive D:\, the `DIALOGUE` box (7) appears and the installation is aborted.

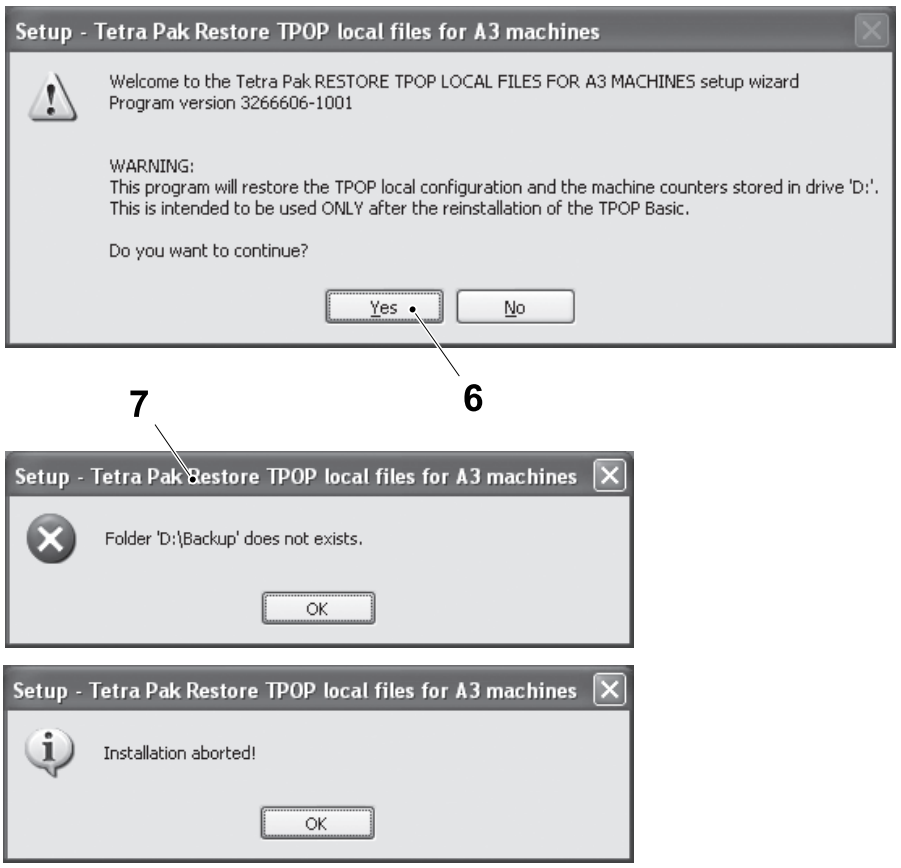

6 Yes button
7 Dialogue box

(Cont'd)

(Cont'd)

i) Two different dialogue windows may be displayed:

- If the TPOP local files are already present in the drive C:\, the dialogue box (8) warns about this and it asks to overwrite the present local configuration and machine counters with the last backup files. Click on the YES button (9) to confirm.
- If no configuration is present in the drive C:\, the dialogue box (10) appears and asks to confirm the restoration at the last backup. Click on the YES button (11) to confirm.

Note! Clicking on the NO button, the installation is aborted.

j) When the installation is completed successfully, the dialogue box (12) appears. Click on the OK button (13).

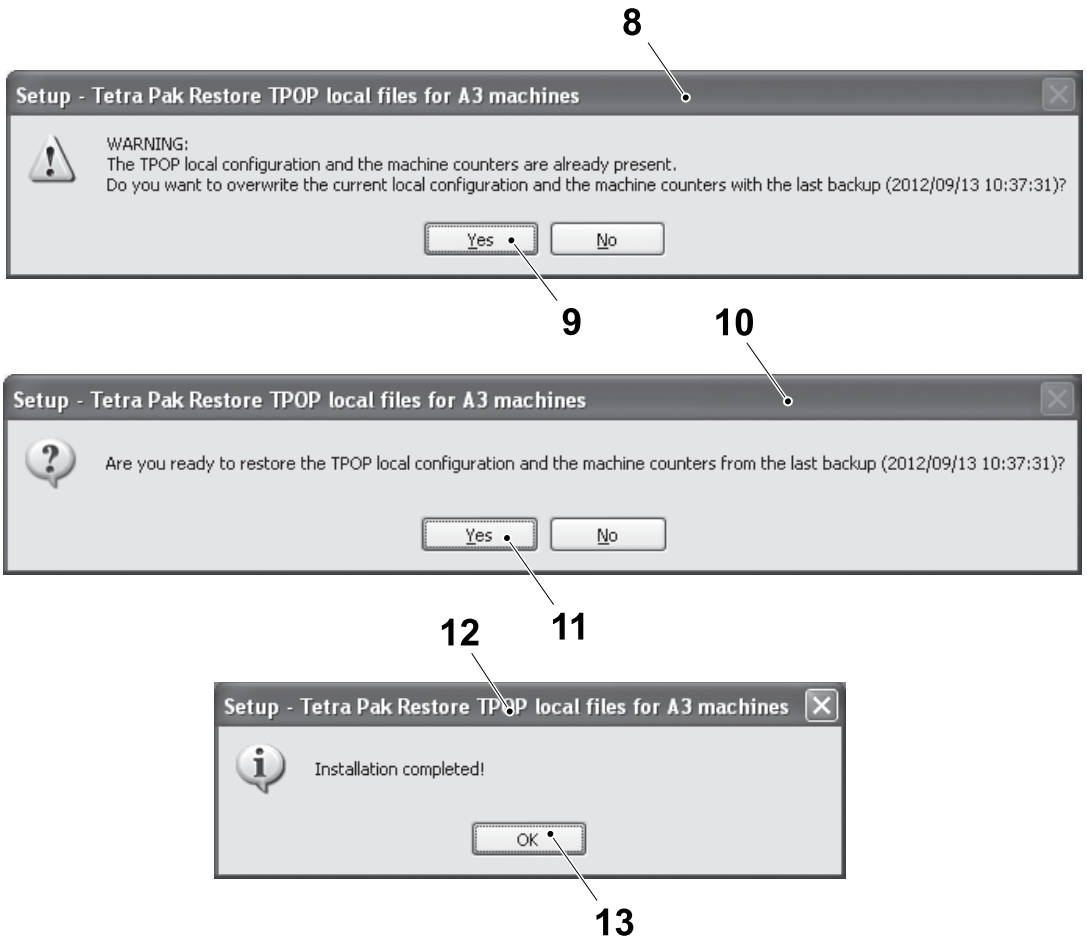

8 Dialogue box
9 Yes button
10 Dialogue box
11 Yes button
12 Dialogue box
13 Ok button

8.6-6 HMI and PLMS - Create Software USB Key from ISO Image

Special Equipment	Laptop PC Empty USB key 1 Gb

Note! Valid only for machines equipped with Industrial PC APC910 TP No. 90605-7102.

Note! Industrial PC APC910 is installed on machines with T-order: 21220/00240 and above.

Note! Use an empty USB key with a minimum capacity of 1 Gb (TP 90600-0187 or equivalent). Do not use the software USB key where original TPOP Basic or HMI program files are stored. Original software USB key must be kept in case of operating system reinstallation or in case of troubles with the IPC.

It is possible to create a software USB key from ISO image using the software `ISO TO USB`. Download the software from the `SOFTWARE UPGRADE DISTRIBUTION WEB TOOL` (1), in the section `UTILITIES` (2).

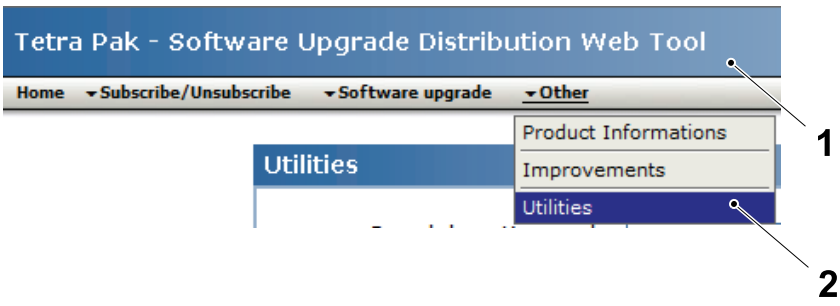

1 Software Upgrade Distribution Web Tool
2 Utilities

(Cont'd)

(Cont'd)

a) Install the `ISO TO USB` software with a double click on the `.exe` file.

b) In the `WELCOME` window, click on the `NEXT` button (3) and accept the default values.

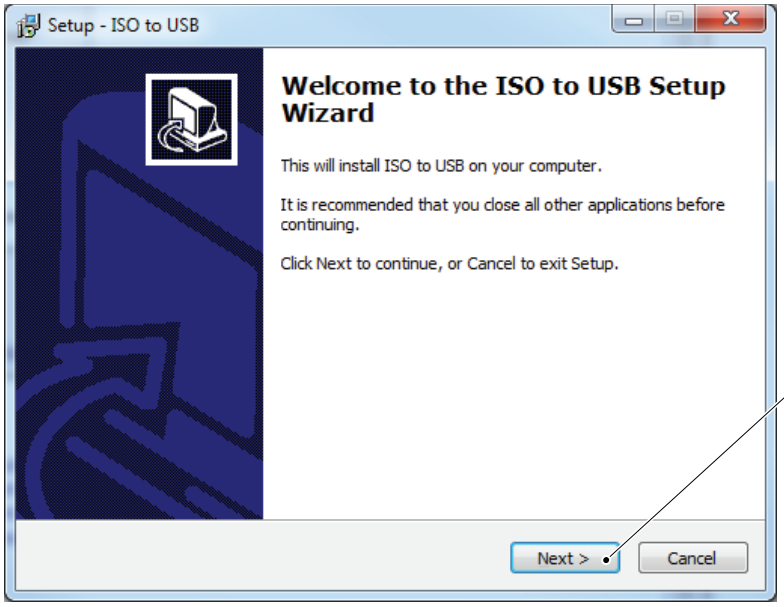

3 Next button

(Cont'd)

(Cont'd)

c) Click on the BROWSE button (4) to locate the .iso file to be moved to the USB key.

d) Select the USB drive to be used in the DRIVE drop down list (5).

e) Select FAT32 in the FILE SYSTEM drop down list (6).

f) Enter a name for the USB key in the VOLUME LABEL field (7).

g) Click on the BURN button (8) to move the image to the USB key. The USB key is ready to start the installation of the HMI and PLMS on the IPC.

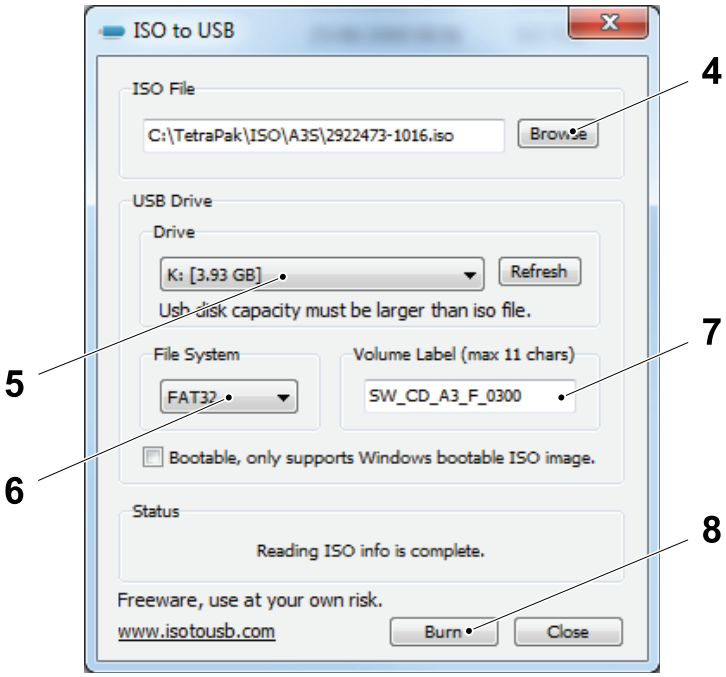

4 Browse button
5 Drive drop down list
6 File system drop down list
7 Volume label field
8 Burn button

8.6.1 PLMS NRG Configurator

8.6.1.1 PLMS NRG Configurator Description

PLMS NRG is used to access the PLMS components that can be enabled and configured when logged on as an installer.

The illustration shows the PLMS NRG main window (1) and the four PLMS component category buttons:

- `PLMS NRG CONFIGURATION` button (2)
- `DISTRIBUTION EQUIPMENT SETUP` button (3)
- `USER INTERFACE CONFIGURATION` button (4)
- `HARDWARE AND NETWORK` button (5).

Touch the `EXIT NRG CONFIGURATION` button (6) to save any changes done and exit from the program.

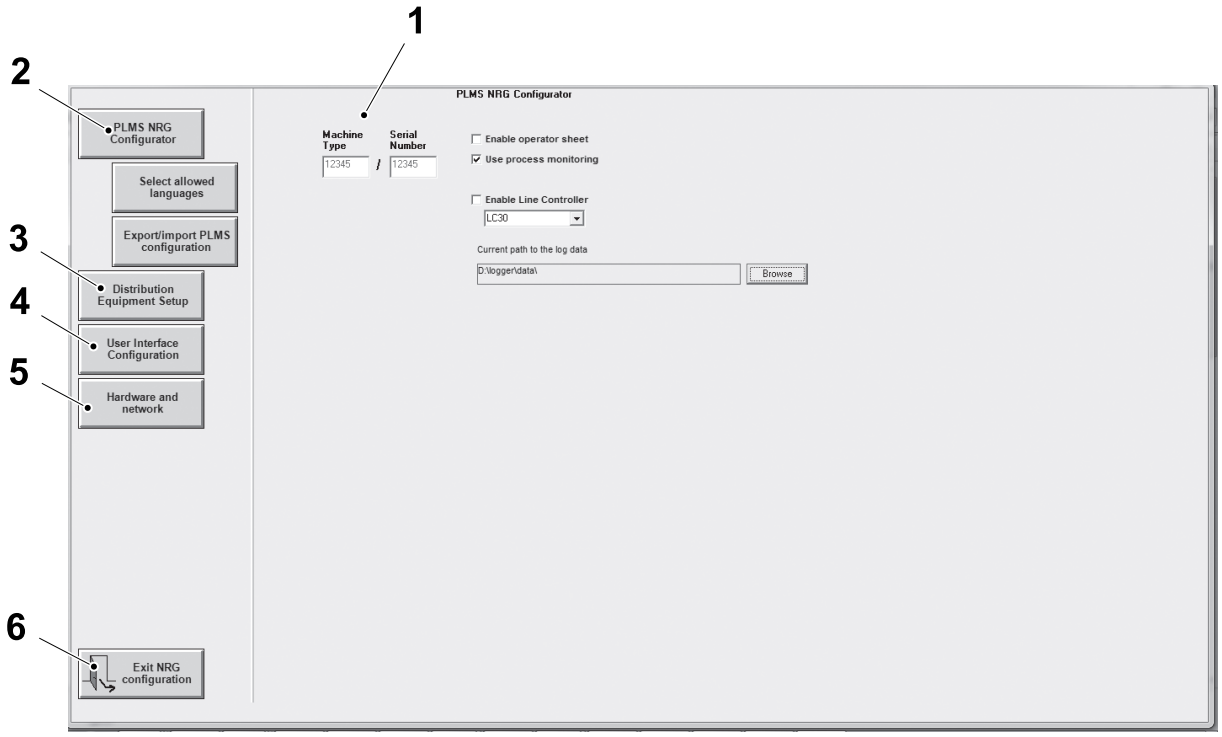

1 PLMS NRG main window
2 PLMS NRG configuration button
3 Distribution equipment setup button
4 User interface configuration button
5 Hardware and network button
6 Exit NRG configuration button

8.6.1-1 PLMS NRG Configurator - Set Machine ID

Machine Status	Electrical supply disconnecting device in position I (ON)
Special Equipment	Keyboard with USB connector

CAUTION
Risk of machine program fault.
The PLC program is associated to the machine serial number. Make sure to set the correct serial number to load the correct PLC program version.

a) Log on as an installer, see 8.6-2 HMI and PLMS - Log On Procedure.

b) From the START menu choose CONFIGURE PLMS.

c) In the PLMS NRG CONFIGURATOR window, touch the MACHINE TYPE field (1) to activate it, then use the keyboard to type the machine number.

Note! The MACHINE TYPE field (1) identifies the machine type and the relative development step.

d) Touch the SERIAL NUMBER field (2) to activate it, then use the keyboard to type the serial number.

Note! The machine serial number is found on the LH side of the machine on the machine plate.

Restart and log on as an operator, see 8.6-2 HMI and PLMS - Log On Procedure.

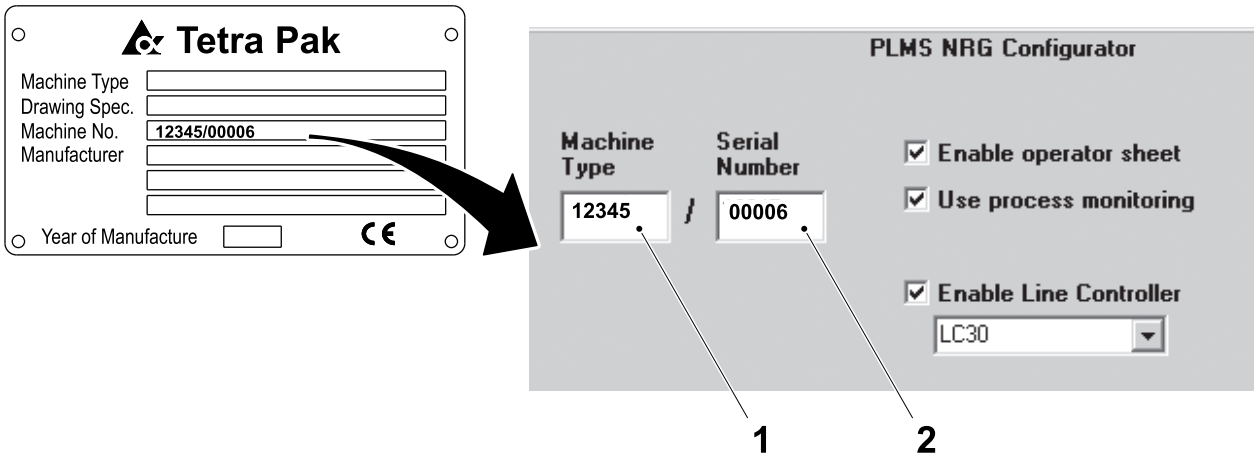

1 Machine type field
2 Serial number field

8.6.1-2 PLMS NRG Configurator - Select Allowed Languages

Machine Status	Electrical supply disconnecting device in position I (ON)
Special Equipment	Keyboard with USB connector

Note! This procedure is to import the selected languages in the PLMS Centre.

a) Log on as an installer, see 8.6-2 HMI and PLMS - Log On Procedure

b) From the START menu choose CONFIGURE PLMS.

c) In the PLMS NRG CONFIGURATOR window, touch the SELECT ALLOWED LANGUAGES button (1).

d) Choose the required language by selecting the corresponding check box (2). If necessary, touch the CHANGE FLAG button (3) to select an alternative flag icon.

Restart and log on as an operator, see 8.6-2 HMI and PLMS - Log On Procedure.

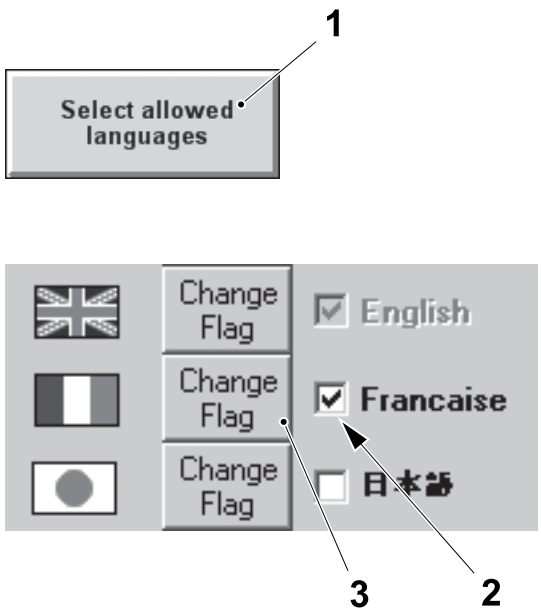

1 Select allowed languages button
2 Check box
3 Change flag button

8.6.1-3 PLMS NRG Configurator - Export/Import Configuration

Machine Status	Electrical supply disconnecting device in position I (ON)
Special Equipment	Keyboard with USB connector

This section describes how to import and export the PLMS NRG Configurator setup so that it can be used on several machines without having to repeat the settings on each machine individually.

a) Log on as an installer, see 8.6-2 HMI and PLMS - Log On Procedure.

b) From the START menu choose CONFIGURE PLMS.

c) In the PLMS NRG CONFIGURATOR window, touch the EXPORT/IMPORT PLMS CONFIGURATION button (1).

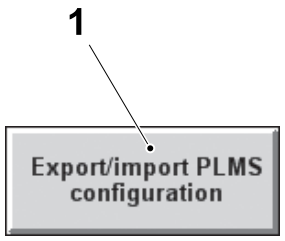

1 Export/import PLMS configuration button

(Cont'd)

(Cont'd)

Importing from a USB Key

a) Remove the plug of a USB port (1) in the control panel (2) and insert the USB key.

b) Choose the items to be imported by selecting the check box (3) next to each item.

c) Touch the `IMPORT PLMS CONFIGURATION FROM DISKETTE` button (4).

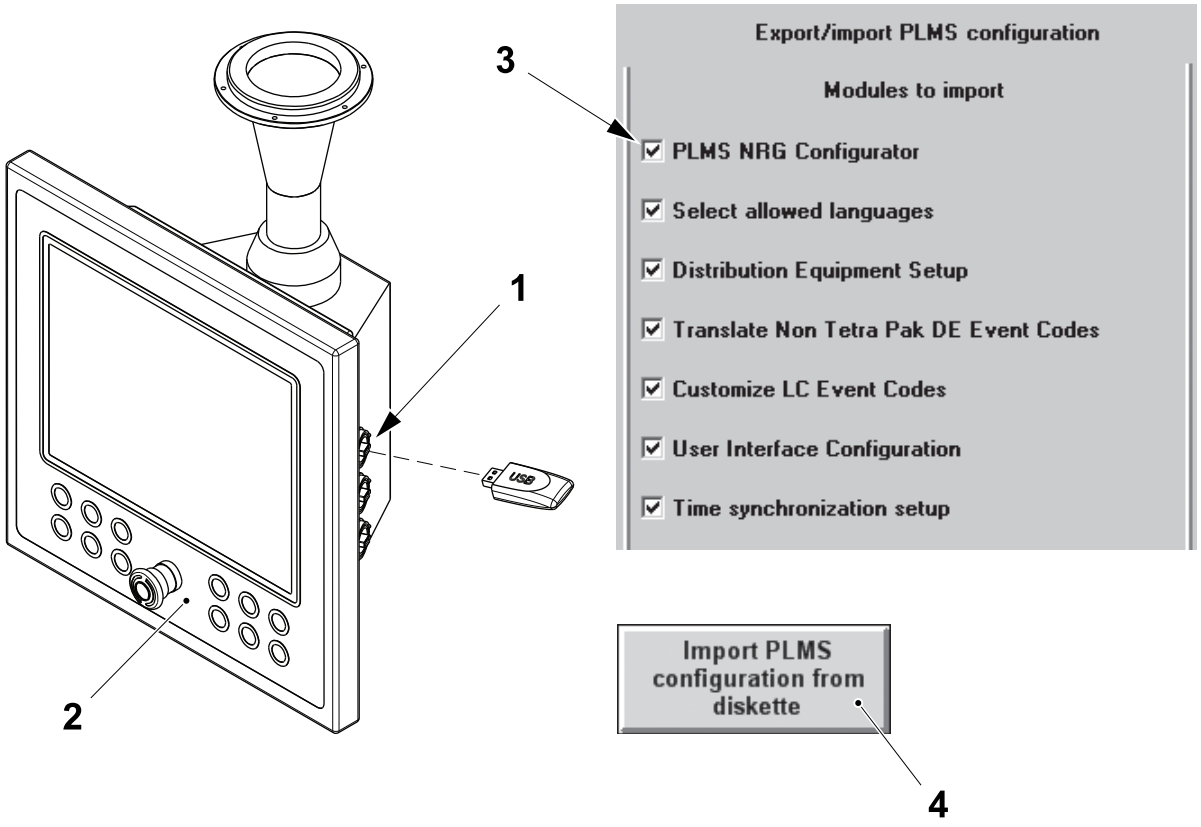

1 USB port
2 Control panel
3 Check box
4 Import PLMS configuration from diskette button

(Cont'd)

(Cont'd)

d) When the dialogue box appears, touch the YES button (5) to continue or the NO button (6) to stop the import action.

e) Restart and log on as an operator, see 8.6-2 HMI and PLMS - Log On Procedure.

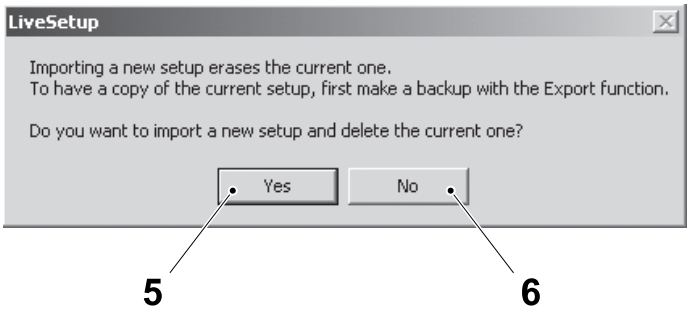

5 Yes button
6 No button

(Cont'd)

(Cont'd)

Exporting to a USB Key

a) Remove the plug of a USB port (1) in the control panel (2) and insert the USB key.

b) Choose the items to be exported by selecting the check box (3) next to each item.

c) Touch the `EXPORT PLMS CONFIGURATION TO DISKETTE` button (4).

d) Restart and log on as an operator, see 8.6-2 HMI and PLMS - Log On Procedure.

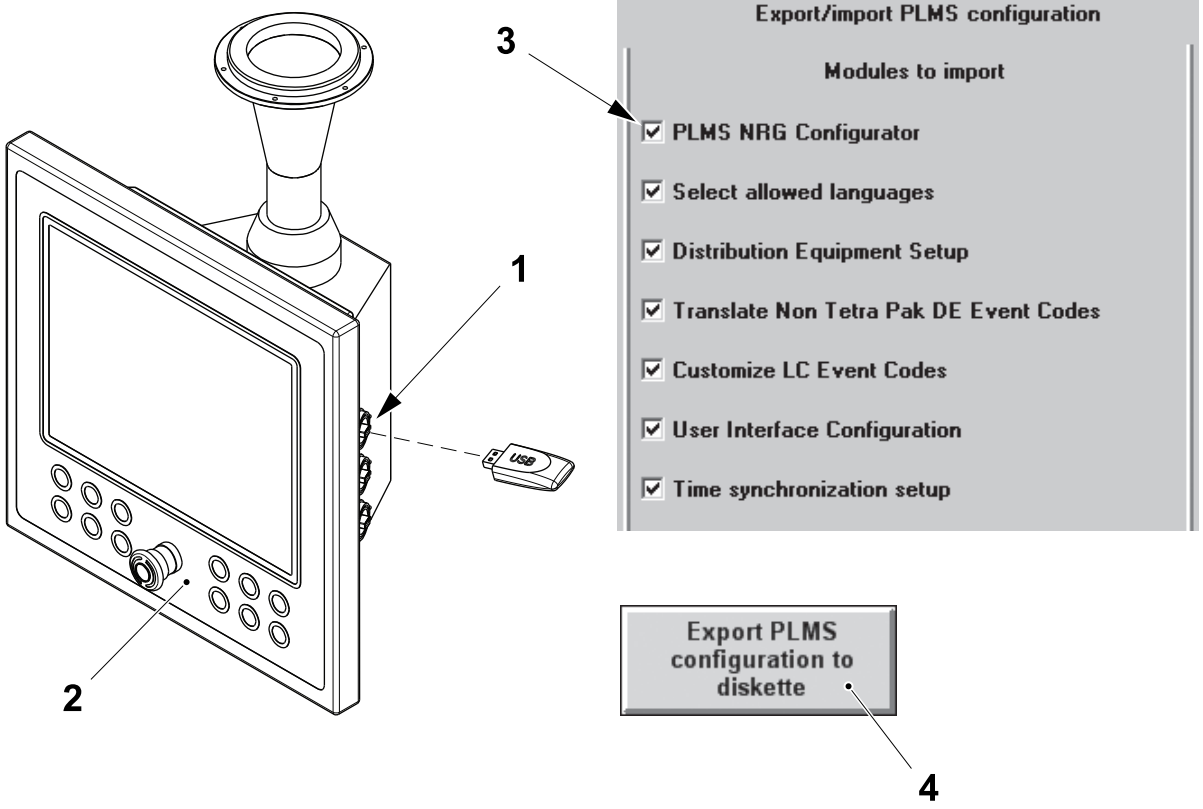

1 USB port
2 Control panel
3 Check box
4 Export PLMS configuration to diskette button

8.6.1-4 PLMS NRG Configurator - Translate Non-Tetra Pak DE Event Codes

Machine Status	Electrical supply disconnecting device in position I (ON)
Special Equipment	Keyboard with USB connector

The following describes how to rename non-Tetra Pak event codes to the names of actual equipment that are in the packaging line.

a) Log on as an installer, see 8.6-2 HMI and PLMS - Log On Procedure.

b) From the START menu choose CONFIGURE PLMS.

c) Touch the DISTRIBUTION EQUIPMENT SETUP button (1) in the PLMS NRG window.

d) Touch the TRANSLATE NON-TETRA PAK DE EVENT CODES button (2) .

e) The TRANSLATE NON-TETRA PAK DE EVENT CODES window appears.

f) Use the ARROW buttons (3) to select an event from the LIST box (4).

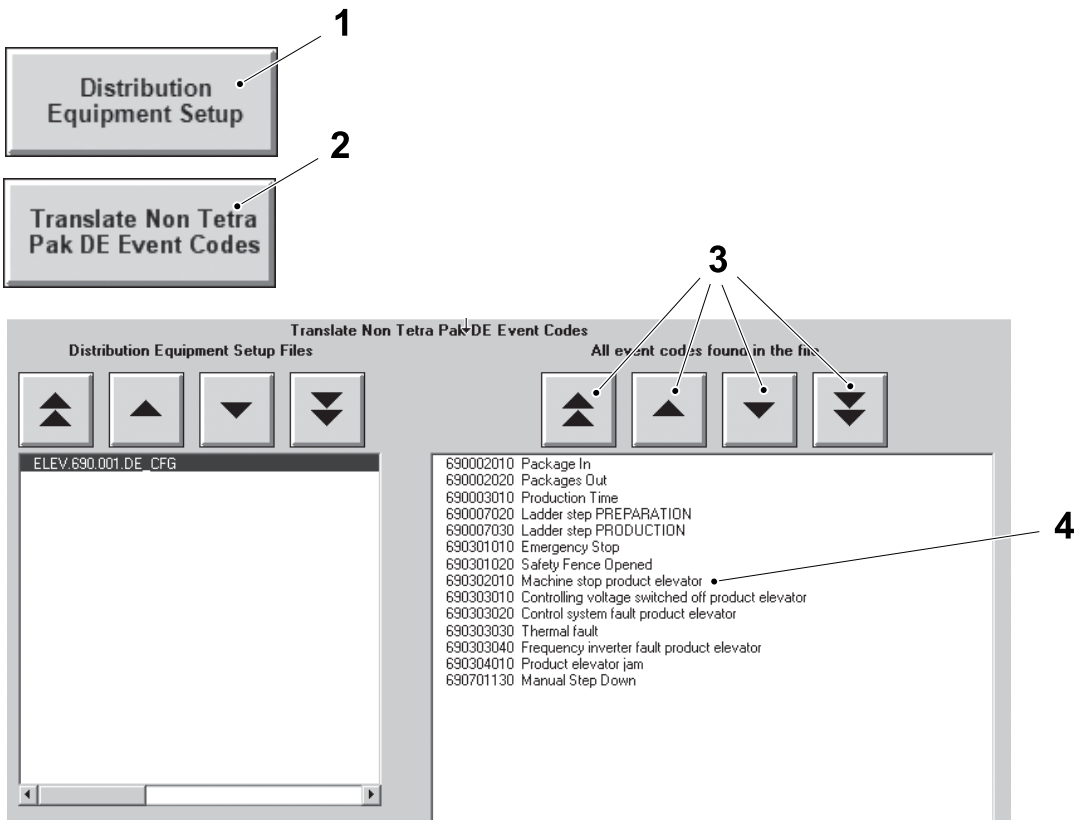

1 Distribution equipment setup button
2 Translate non-Tetra Pak DE event codes button
3 Arrow button
4 List box

(Cont'd)

(Cont'd)

g) Input the desired text for the event in the EVENT CODE DESCRIPTION box (5) and touch the UPDATE button (6).

h) Touch the SHOW KEYBOARD button (7) to display the on-screen keyboard.

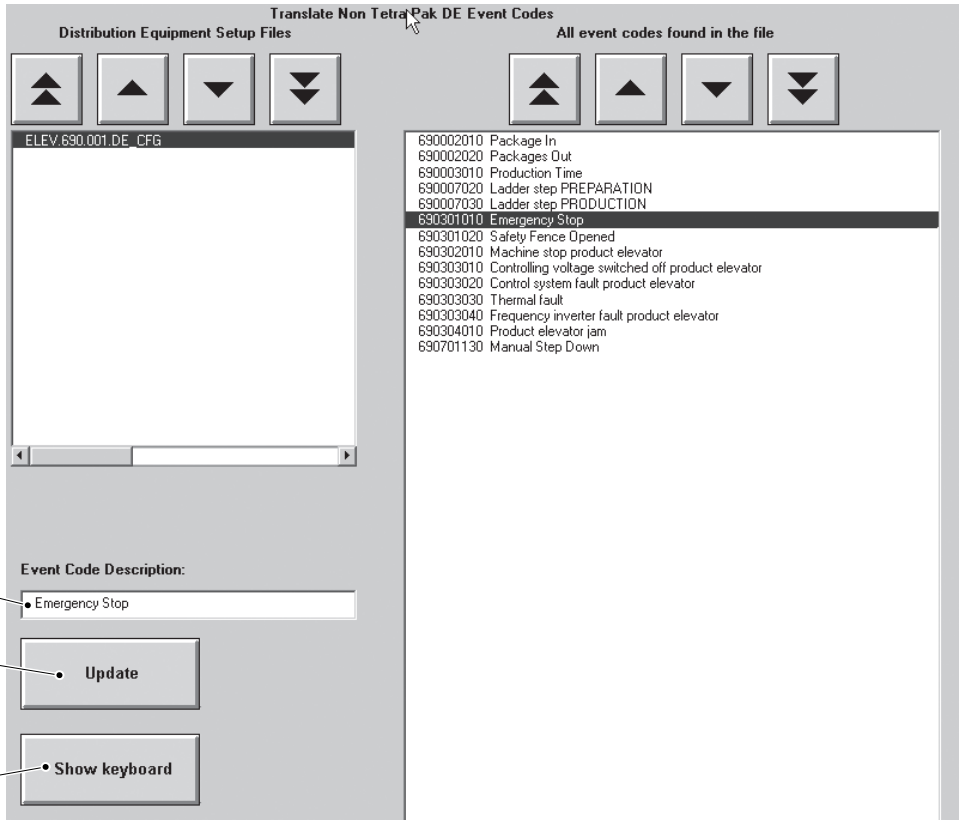

5 Event code description box
6 Update button
7 Show keyboard button

8.6.1-5 PLMS NRG Configurator - Distribution Equipment Setup

Machine Status	Electrical supply disconnecting device in position I (ON)
Special Equipment	Keyboard with USB connector

Note! The following procedure is only necessary if the Tetra Pak Line Controller is not to be used in the packaging line configuration.

a) Log on as an installer, see 8.6-2 HMI and PLMS - Log On Procedure.

b) From the START menu choose CONFIGURE PLMS.

c) Touch the DISTRIBUTION EQUIPMENT SETUP button (1) in the PLMS NRG window.



1 Distribution equipment setup button

(Cont'd)

(Cont'd)

d) The DISTRIBUTION EQUIPMENT SETUP window (2) appears.

e) If the complete line is equipped with Rockwell and Ethernet check the ENABLE ETHERNET SCANNING box (3). If not uncheck the ENABLE ETHERNET SCANNING box (3), see Manual Line Configuration on page 8-252.

Note! When a multi-switch is used, DE stop reasons can not be automatically assigned to the filling machine conveyor congestion stop. Unchecking the ENABLE CATCH DE BOX (4) disables automatic the detection of any DE stop.

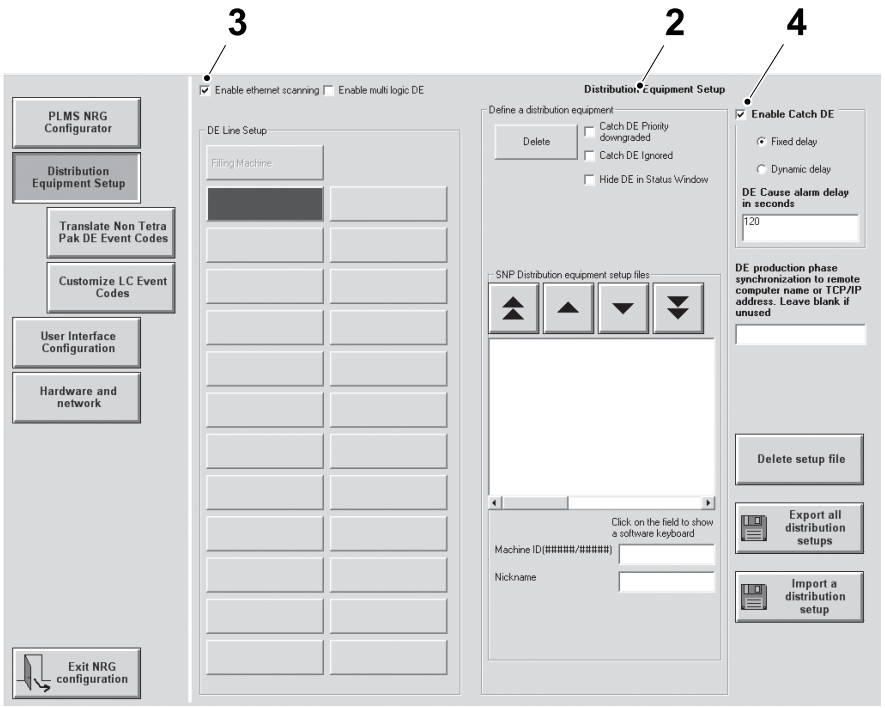

2 Distribution equipment setup window
3 Enable ethernet scanning box
4 Enable catch DE box

(Cont'd)

(Cont'd)

f) The DE CAUSE ALARM DELAY IN SECONDS check box (5) has the following meaning in case:

- FIXED DELAY OPTION button (6) has been selected. Determines how long after an alarm in the distribution equipment is cleared, it will be held responsible for a stop in the filling machine when a conveyor congestion occurs.
- DYNAMIC DELAY OPTION button (7) has been selected. The maximum time in seconds that an alarm in the distribution equipment is cleared must be defined for every single DE in the line, for this amount of time the DE is held responsible for a stop in the filling machine when a conveyor congestion occurs. If selected the see Advanced Manual Line Configuration on page 8-255.

Note! The above check boxes are not available if the Enable catch DE box (4) is unchecked.

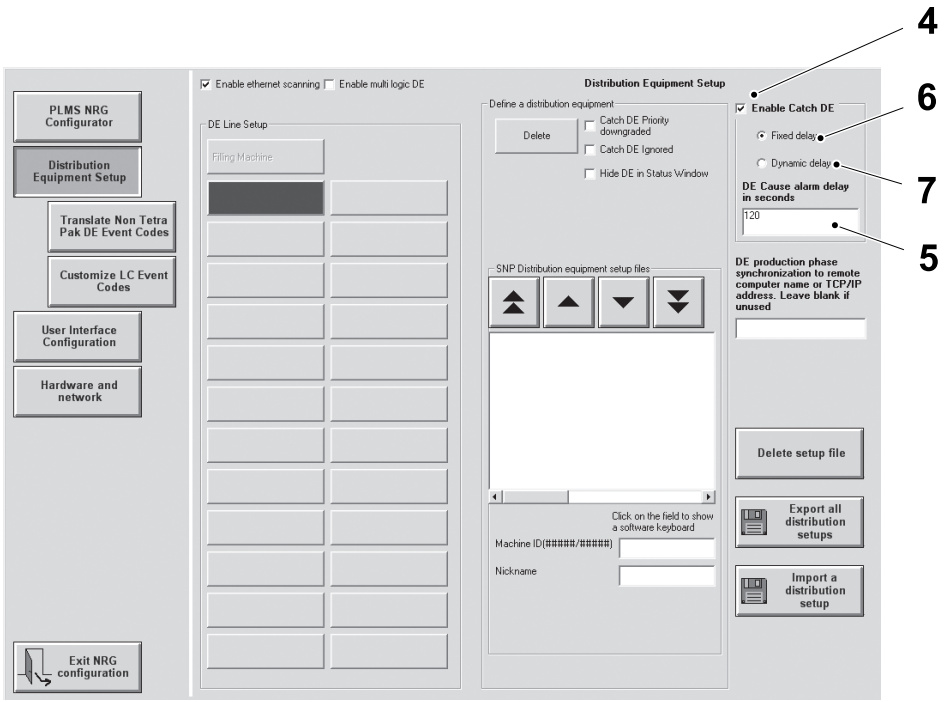

4 Enable catch DE box
5 DE cause alarm delay in seconds box
6 Fixed delay option button
7 Dynamic delay option button

(Cont'd)

(Cont'd)

Manual Line Configuration

a) Every DE equipment in the line must be manually configured.

b) Select a `POSITION` button (1) that represents the position of the chosen DE in the packaging line configuration.

c) Specify the `DE TYPE`.

- `SNP OPTION` button (2): valid for DE equipment equipped with GE Fanuc and SNP Connection. Then select the configuration file from the `SNP DE` List (3). Input the serial number (4) and the nickname (5).
- `ETHERNET MANUAL SETUP` (6): valid for DE equipment equipped with Rockwell and Ethernet. Input the last four digits of IP address (7) and the nickname (8). For special customization only: in case the Rockwell PLC include the PLMS logic to manage several DE equipment, input the Sub DE number (9).

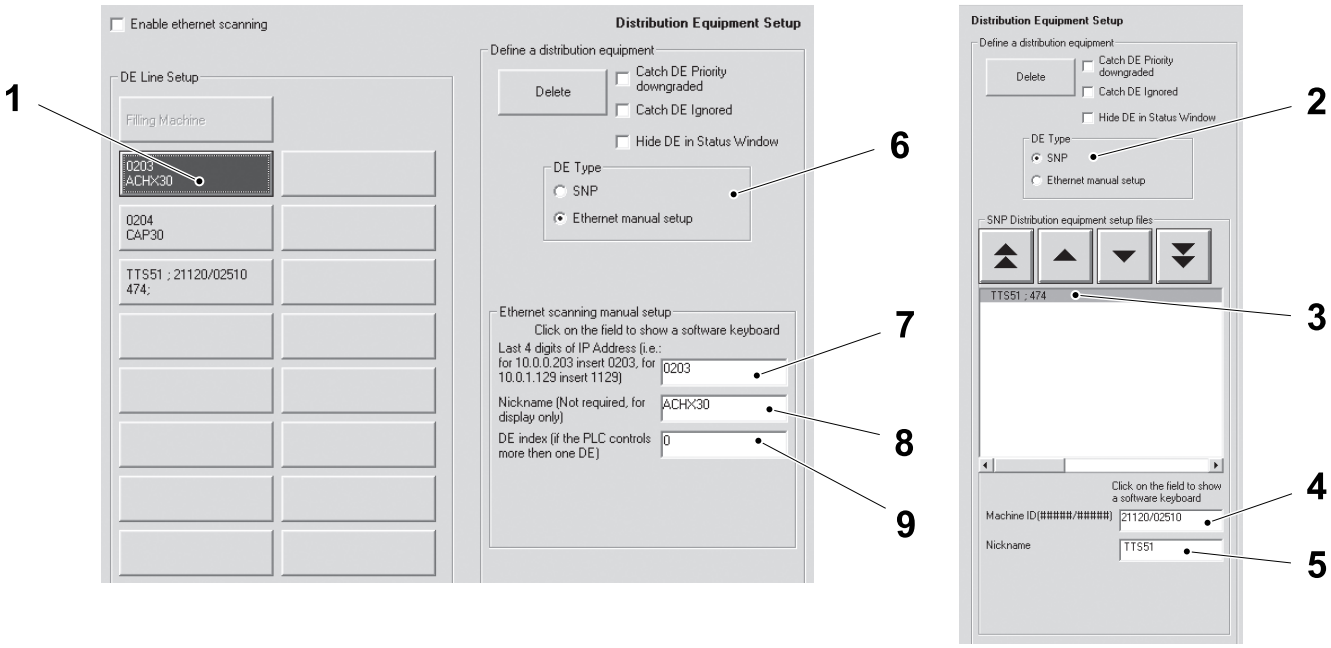

1 Position button
2 SNP option button
3 SNP DE List
4 Serial number
5 Nickname
6 Ethernet manual setup
7 IP address
8 Nickname
9 Sub DE number

(Cont'd)

(Cont'd)

d) Touch the DELETE button (10) to remove the DE from the POSITION button (1).

e) Enable the CATCH DE PRIORITY DOWNGRADED check box (11) to lower the alarm priority of the selected DE.

f) Enable CATCH DE IGNORED check box (12) to ignore the selected DE as a cause of Stop

g) Enable HIDE DE IN STATUS WINDOW check box (13) to hide it from the list of available DE in the HMI.

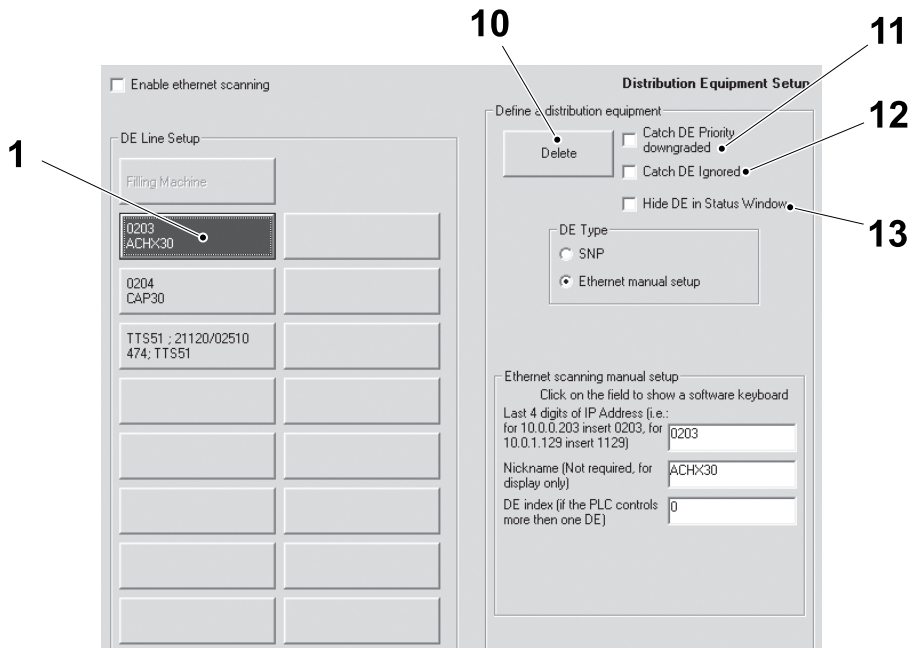

1 Position button
10 Delete button
11 Catch DE priority downgraded Check box
12 Catch DE Ignored check box
13 Hide DE in Status Window check box

(Cont'd)

(Cont'd)

h) Touch the DELETE SETUP FILE button (14) to delete a DE configuration.

i) Touch the EXPORT ALL DISTRIBUTION SETUPS button (15) to export a DE configuration.

j) Touch the IMPORT A DISTRIBUTION SETUP button (16) to import a DE configuration.

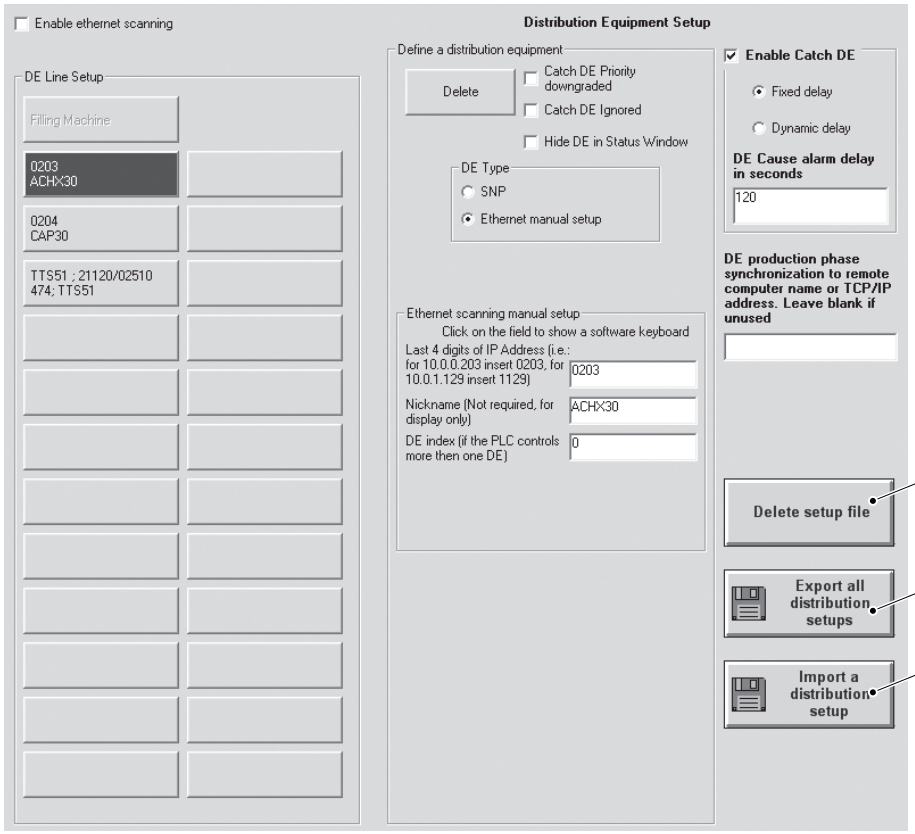

14 Delete setup file button
15 Export all distribution setups button
16 Import a distribution setup button

(Cont'd)

(Cont'd)

Advanced Manual Line Configuration

After the manual line configuration is completed, if necessary, it is possible to enable the dynamic delay to activate the following advanced functions.

- The `DE ALARM PRIORITY` check box (1) define the priority of the alarms generated by the different DE in the line to identify the most important stop reason of the filling machine.

  Input a value from 0 to 10 where 0 is the highest priority.

- The `DE CAUSE ALARM DELAY IN SECONDS` (2) define the maximum time that an alarm in the distribution equipment is cleared, for this amount of time the DE is held responsible for a stop in the filling machine when a conveyor congestion occurs.

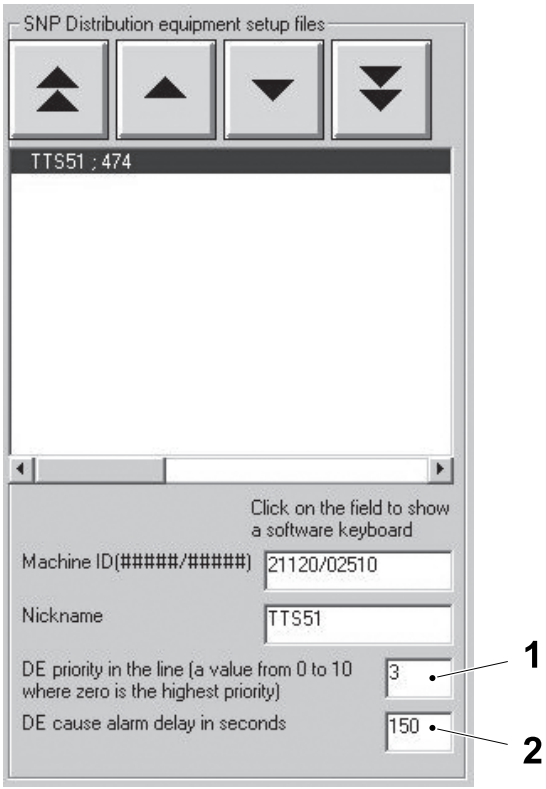

SNP DE Setup window

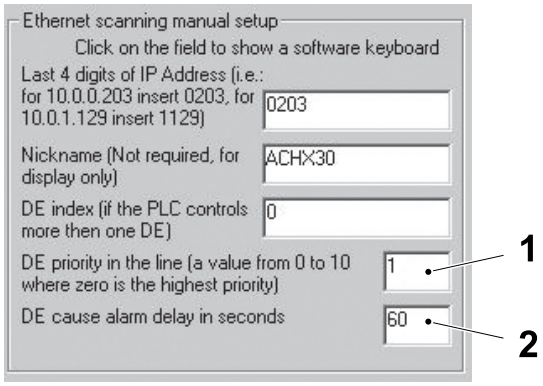

Ethernet Manual Setup window

1 DE alarm priority check box
2 DE cause alarm delay in seconds

(Cont'd)

(Cont'd)

Customize LC Event Codes

Note! This function must be used only if the Line Controller is available.

This function is used to rename the alarms description defined in the Line Controller. To proceed follow the procedure below.

a) Select the local language in the LOCAL LANGUAGE list (1).

b) Select the Alarm (2) to be changed.

c) Input the new alarm description in the ENGLISH TEXT field (3) and in the LANGUAGE TEXT field (4).

d) If required touch the EXPORT TO REMOVABLE MEDIA button (5) to create a file LCcustomtrans.xml that can be edited using a text editor on a PC.

e) If required touch the IMPORT FROM REMOVABLE MEDIA button (6) to import an LCcustomtrans.xml file.

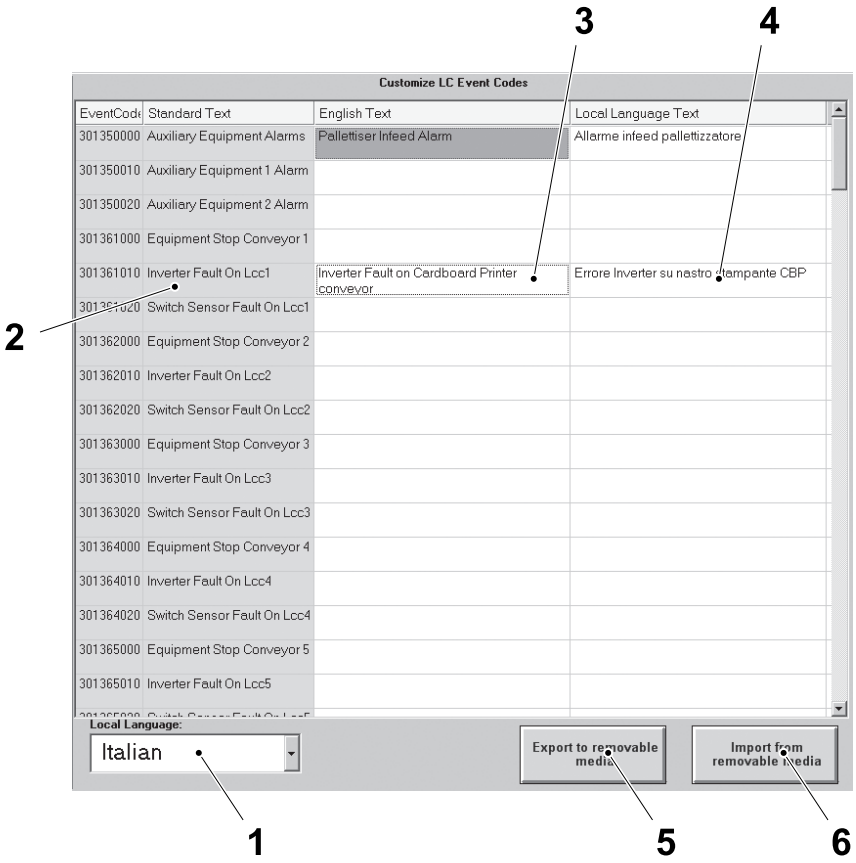

1 Local language list
2 Alarm
3 English text field
4 Language text field
5 Export to removable media button
6 Import from removable media button

8.6.1-6 PLMS NRG Configurator - Defragment the IPC Hard Disk

Machine Status	Electrical supply disconnecting device in position I (ON)
Special Equipment	Keyboard with USB connector

If the boot sequence for TPOP takes more time than can normally be expected, there is a possibility that the IPC hard disk requires defragmenting. To start the disk defragmenter perform the following:

a) Log on as an installer, see 8.6-2 HMI and PLMS - Log On Procedure.

b) From the START menu choose CONFIGURE PLMS.

c) Touch the HARDWARE AND NETWORK button (1) .

d) Touch the DEFRAGMENT THE HARD DISK button (2)

e) The following WARNING MESSAGE window (3) appears.

f) Select YES button (4) the to start the disk defragmenter.

The disk defragmenter is a system tool of Microsoft Windows, see the disk defragmenter help menu for more details on using the disk defragmenter.

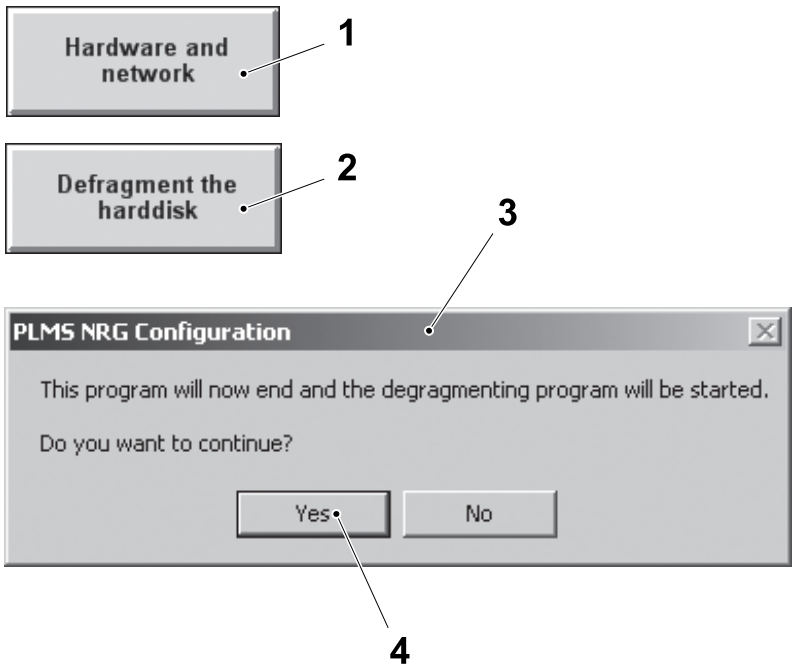

1 Hardware and Network button
2 Defragment the hard disk button
3 Warning message window
4 Yes button

8.6.1-7 PLMS NRG Configurator - Set Date and Time

Machine Status	Electrical supply disconnecting device in position I (ON)
Special Equipment	Keyboard with USB connector

a) Log on as an installer, see 8.6-2 HMI and PLMS - Log On Procedure.

b) From the START menu choose CONFIGURE PLMS.

c) Touch the HARDWARE AND NETWORK button (1), then touch the TIME OR DATE button (2) in the PLMS LIVE window.

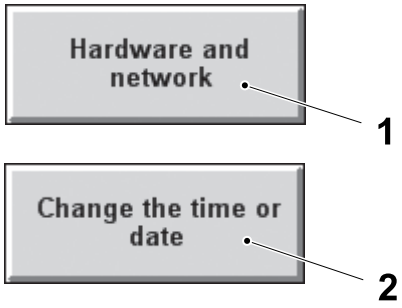

1 Hardware and network
2 Time or date button

(Cont'd)

(Cont'd)

d) Use the ARROW buttons (3) to change the time in steps of one hour, the ARROW buttons (4) to change the time in steps of ten minutes, the ARROW buttons (5) to change the time in steps of one minute, the ARROW buttons (6) to change the time in steps of one second.

e) Touch the OK button (7) to save the new date and time.

f) If all work with the PLMS is finished, restart and log on as an operator, see 8.6-2 HMI and PLMS - Log On Procedure.

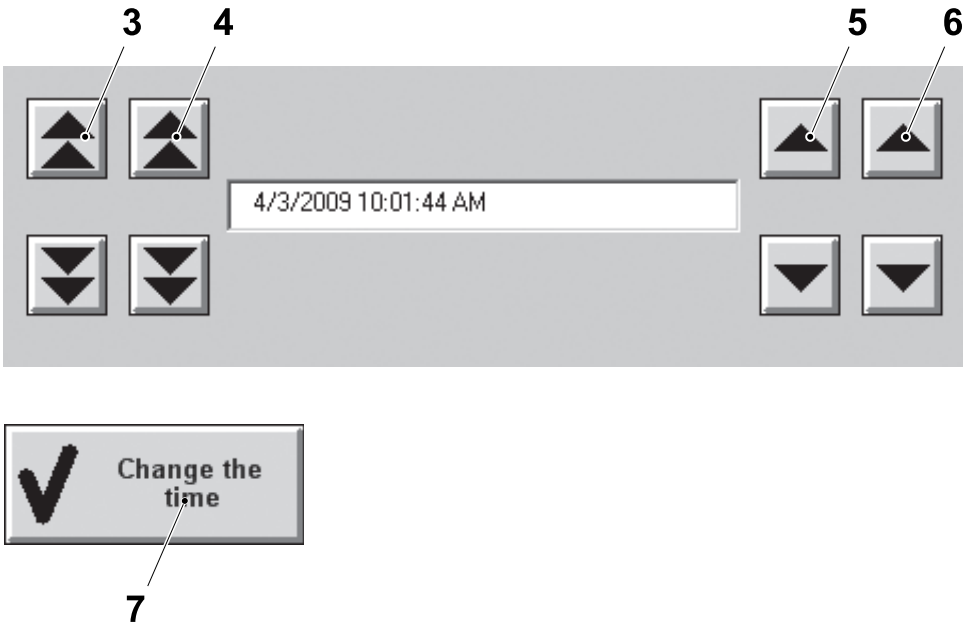

3 Arrow button
4 Arrow button
5 Arrow button
6 Arrow button
7 OK button

(Cont'd)

(Cont'd)

g) Touch the TIME SYNCRONIZATION SETUP button (8) to select the time zone and the daylight saving time option. The TIME SYNCRONIZATION SETUP window appears.

h) Enable the ATTEMPT TO SYNCHRONIZE TIME OVER A NETWORK check box (9) to enable automatic date and time syncronization with the PLMS master PC.

i) Select the country from the list (10) and select the check box (11) if the daylight savings time should be adjusted automatically.

j) If all work with the PLMS is finished, restart and log on as an operator, see 8.6-2 HMI and PLMS - Log On Procedure.



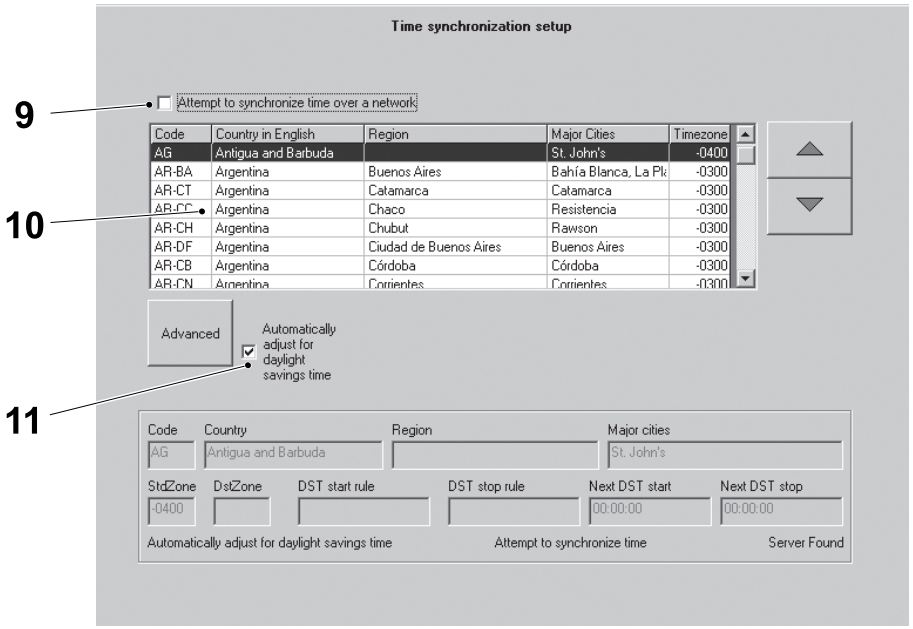

8 Time syncronization setup

9 Attempt to synchronize time over a network check box

10 Country list

11 Check box

8.6.1-8 PLMS NRG Configurator - Configure User Interface

Machine Status	Electrical supply disconnecting device in position I (ON)
Special Equipment	Keyboard with USB connector

a) Log on as an installer, see 8.6-2 HMI and PLMS - Log On Procedure.

b) From the START menu choose CONFIGURE PLMS.

c) In the PLMS NRG CONFIGURATOR window touch the USER INTERFACE CONFIGURATION button (1) to configure the automatic operator sheet and/or the other types of operator sheet.

d) Touch the CUSTOM EVENT CODE button (2) to configure the operator sheet with additional event codes that are customer specific. See Configure Custom Event Codes

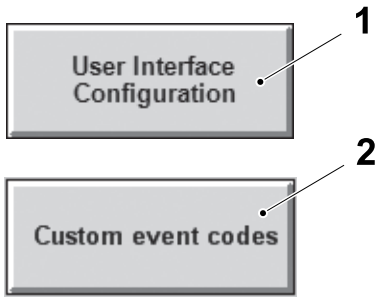

1 User interface configuration button
2 Custom event code button

e) If not already done, select the ENABLE OPERATOR SHEET check box (3) in the PLMS NRG Configurator main window.

f) Restart and log on as an operator, see 8.6-2 HMI and PLMS - Log On Procedure.

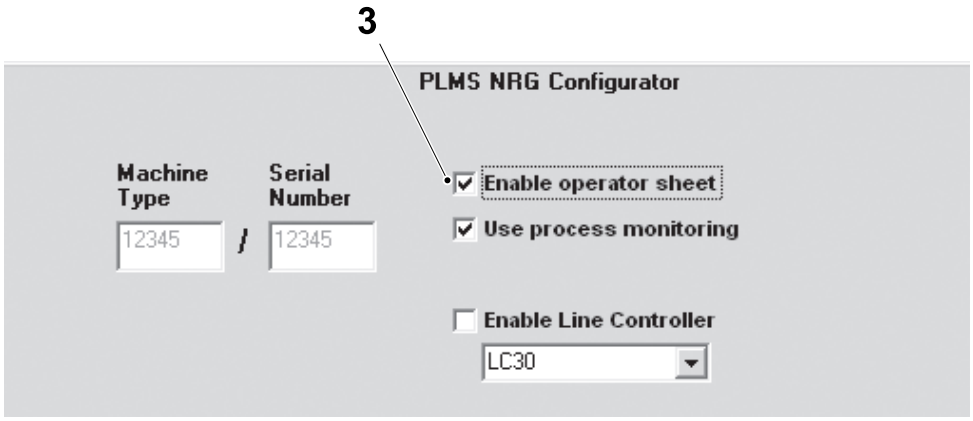

3 Enable operator sheet check box

(Cont'd)

(Cont'd)

User Interface Configuration

To configure the operator sheet using pre-defined event codes, proceed as follows:

a) Touch the USER INTERFACE CONFIGURATION button (1)..

b) If necessary modify the PRESENT SETUP list (2):

- use the SCROLL buttons (3) to scroll the list and to select an item. Touch the DELETE button (4) to delete the selected item.
- if an item is missing from the PRESENT SETUP list (2) , select the item in ORIGINAL SETUP AND UNUSED CODES list (5). Use the SCROLL buttons (6) to scroll the list and to select the item. Touch the COPY TO HERE button (7) to move it to the PRESENT SETUP list (2).

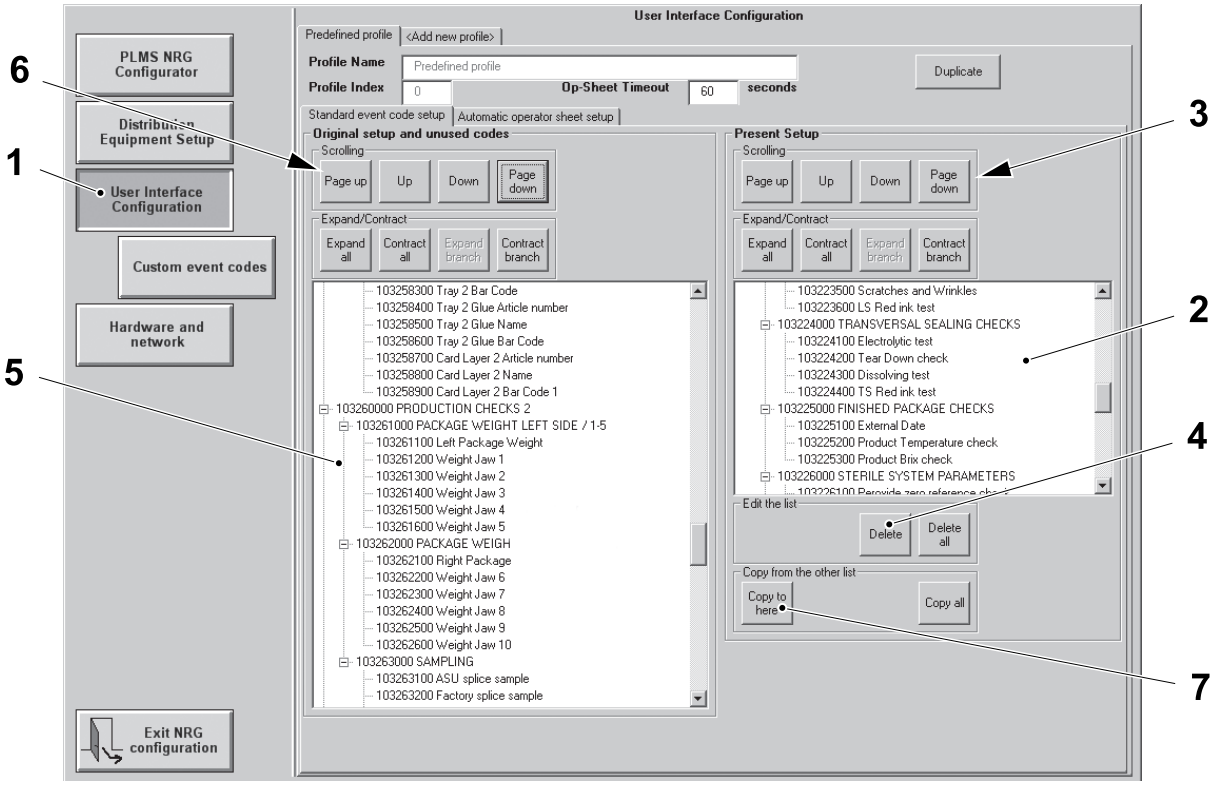

1 User interface configuration button
2 Present setup list
3 Scroll button
4 Delete button
5 Original setup and unused codes list
6 Scroll button
7 Copy to here button

(Cont'd)

(Cont'd)

c) In the OPERATOR SHEET TIME OUT IN SECONDS field (8) , set the time of how long inactivity from the operator is tolerated before the TPOP returns to the normal view.

d) If necessary, in the STANDARD VALUE field (9), set a standard value for selected event codes in the PRESENT SETUP list (2), this is an optional input. Save the value with the CHANGE STANDARD VALUE button (10).

e) If the EVENT CODE must or should cause a break in the log for later data analysis, enable the check box (11). Normally the check box (11) should be disabled.

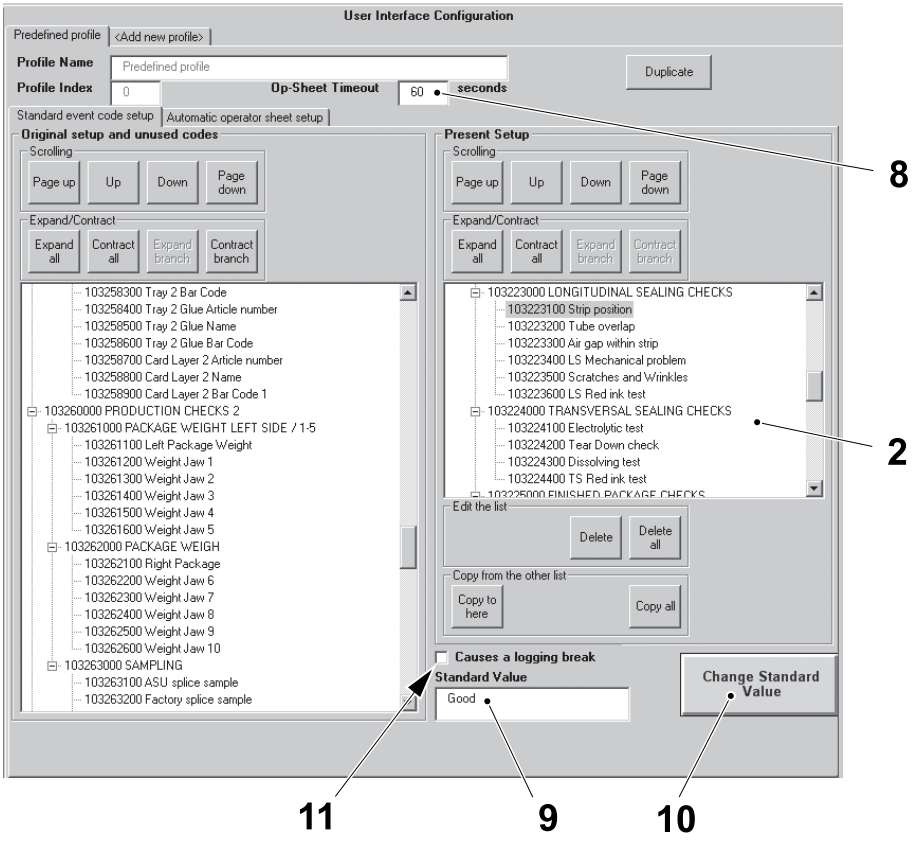

2 Present setup list
8 Operator sheet time out in seconds field
9 Standard value field
10 Change standard value button
11 Check box

(Cont'd)

(Cont'd)

Configure Custom Event Codes

To configure the operator sheet using customer specific event codes, proceed as follows:

The CUSTOM EVENT CODES list (1) is composed of an EVENT CODE DESCRIPTION, associated to an EVENT CODE between 103 **2800** 00 and 103 **2999** 00. Where 103 indicates the filler type and can not be changed, and 00 is reserved for PLMS and can not be changed.

The CUSTOM EVENT CODES list (1) must be structured in:

- main groups (2) - 2800 or 2900

- sub groups (3) - 2810, 2910 and 2920 in this example

- details (4) - 2811, 2812, 2911, 2912 and 2921 in this example.

Navigate in the CUSTOM EVENT CODES list (1) with the SCROLL buttons (5).

To remove an EVENT CODE from the CUSTOM EVENT CODES list (1), touch the DELETE button (6).

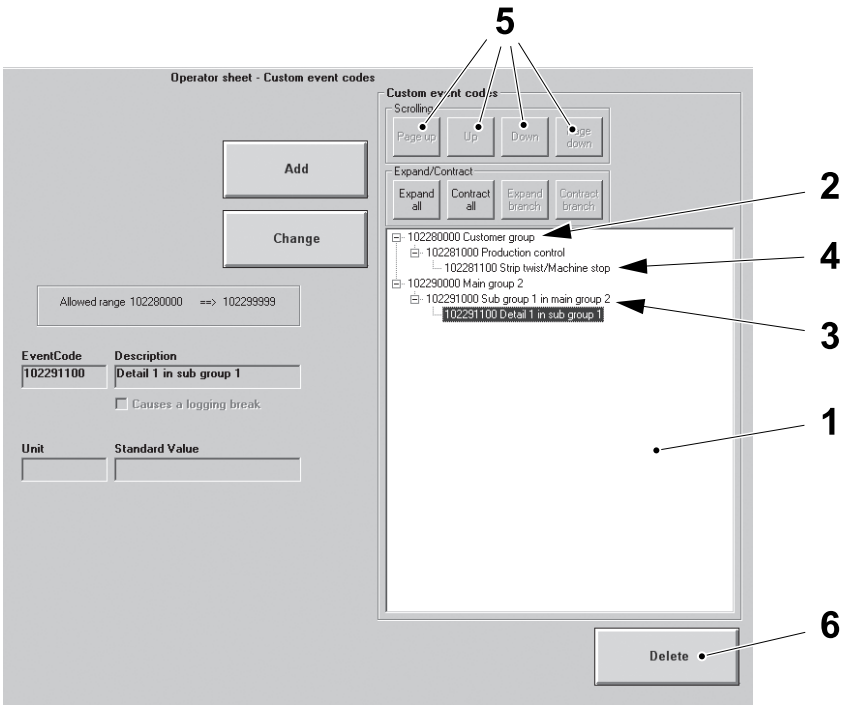

1 Custom event codes list
2 Main group
3 Sub group
4 Detail
5 Scroll button
6 Delete button

(Cont'd)

(Cont'd)

To configure the operator sheet with customer specific event codes and add EVENT CODES to the CUSTOM EVENT CODES list (1), proceed as follows:

a) Touch the ADD button (7).

b) Write the EVENT CODE in the EVENT CODE field (8).

c) Write the EVENT CODE DESCRIPTION in the EVENT CODE DESCRIPTION field (9).

d) If the EVENT CODE must or should cause a break in the log for later data analysis, enable the check box (10). Normally the check box (10) should be disabled.

e) If necessary, write a value for the STANDARD VALUE field (11) and the UNIT field (12) for this EVENT CODE. This is optional.

f) Touch the OK ADD button (13).

g) Touch the CHANGE button (14) to modify the existing record.

h) Repeat items a) to g) until all EVENT CODES are created.

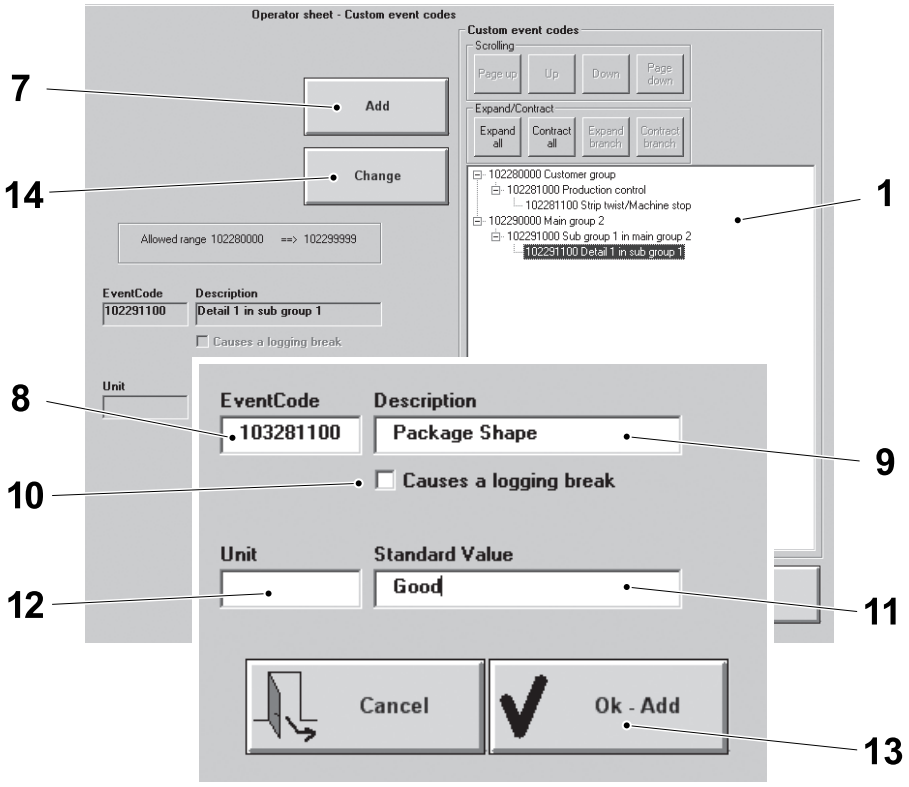

1 Custom event codes list
7 ADD button
8 Event code field
9 Event code description field
10 Check box
11 Standard value field
12 Unit field
13 Ok Add button
14 Change button

(Cont'd)

(Cont'd)

Configure Automatic Operator Sheet

The information needed to produce the automatic pop up windows is stored in records. To configure these records with either PLC specified event codes or operator triggered event codes, proceed as follows:

a) Touch the `USER INTERFACE CONFIGURATION` button (1).

b) Select the `AUTOMATIC OPERATOR SHEET SETUP` tab (2).

c) Touch the `CREATE NEW SHEET` button (3) to create a new operator sheet or the `CREATE A NEW ROW IN THE SELECTED SHEET` button (4) to add records in the selected operator sheet.

d) Assign a name to the operator sheets in the `TEXT TO SHOW IN TITLE BAR` field (5).

e) Assign a delay in seconds to when the operator sheets will appear in the `DELAY SHOWS SECONDS` field (6).

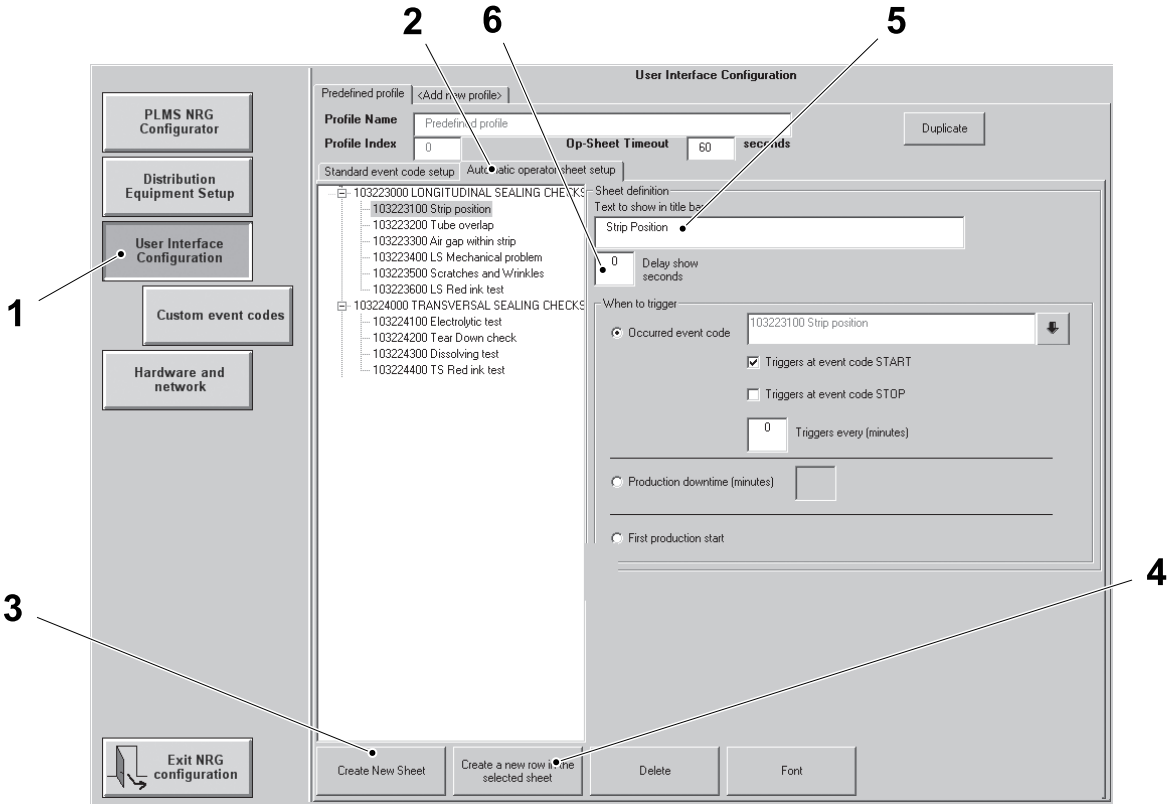

1 User interface configuration button
2 Automatic operator sheet setup tab
3 Create new sheet button
4 Create a new row in the selected sheet button
5 Text to show in title bar field
6 Delay shows seconds field

(Cont'd)

(Cont'd)

f) Select how and when this operator sheet (7) should be triggered:

- option one, select OCCURRED EVENT CODE (8) - the operator sheet dialogue window will appear when the specified EVENT CODE occurs. Touch the ARROW button (9) to select the occurred event code from the pre-defined EVENT CODE window (10). Choose when to trigger the EVENT CODE by selecting the check boxes (11). If necessary, set the delay time, in the field (12), before the EVENT CODE can be activated again.
- option two, select PRODUCTION DOWNTIME (13) - the operator sheet dialogue window will appear after production start but only if the machine has been at production stop for the defined number of minutes
- option three, select FIRST PRODUCTION START (14) - the operator sheet dialogue window will appear when the production starts for the first time.

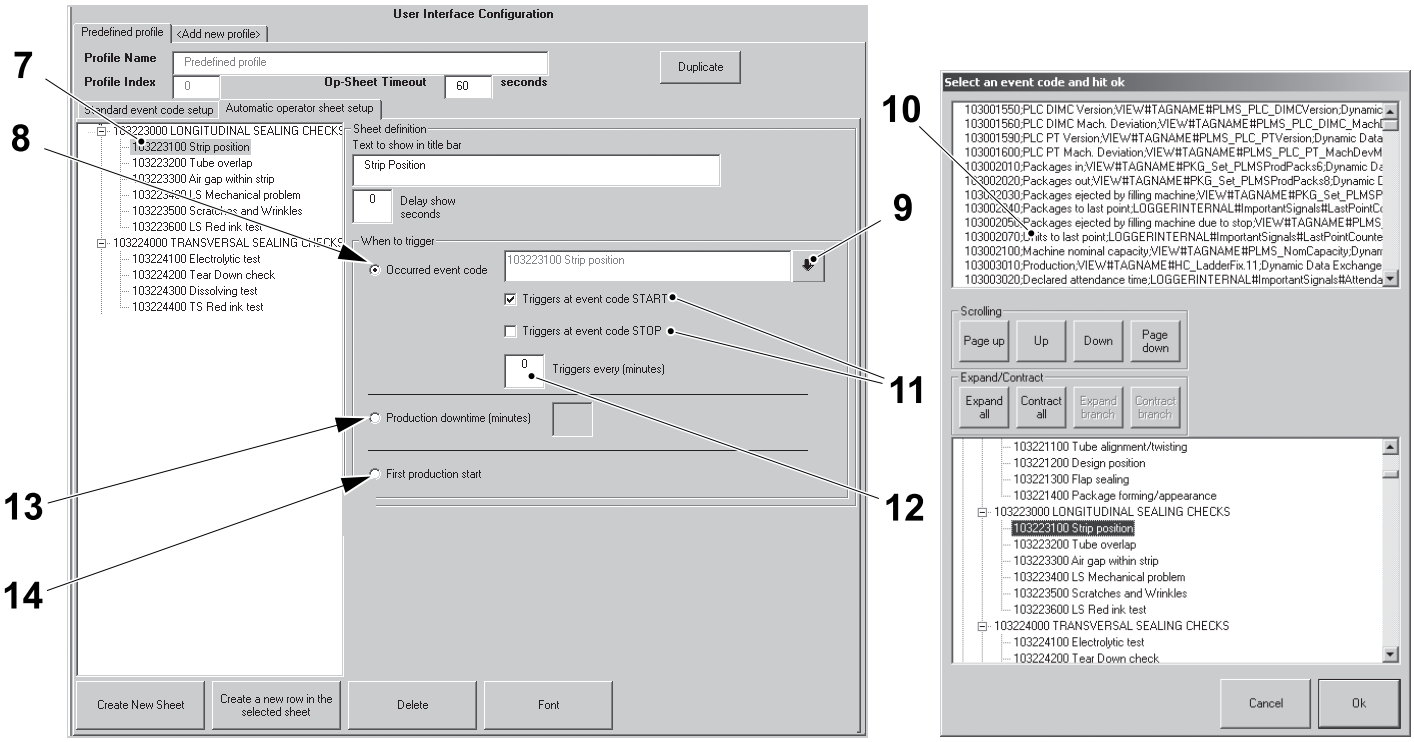

7 Operator sheet
8 Occurred event code
9 Arrow button
10 Event code window
11 Check box
12 Delay time field
13 Production downtime
14 First production start

(Cont'd)

(Cont'd)

g) To enable the default value for an event code (15) select it and enable the check box (16) if the default input is "GOOD" for this EVENT CODE in the operator sheet. If it is not enabled, the operator must write the input for this EVENT CODE each time it occurs.

h) To add an event code (15) touch the CREATE A NEW ROW IN THE SELECTED SHEET button (4) and select the required event code from the EVENT CODE list (17).

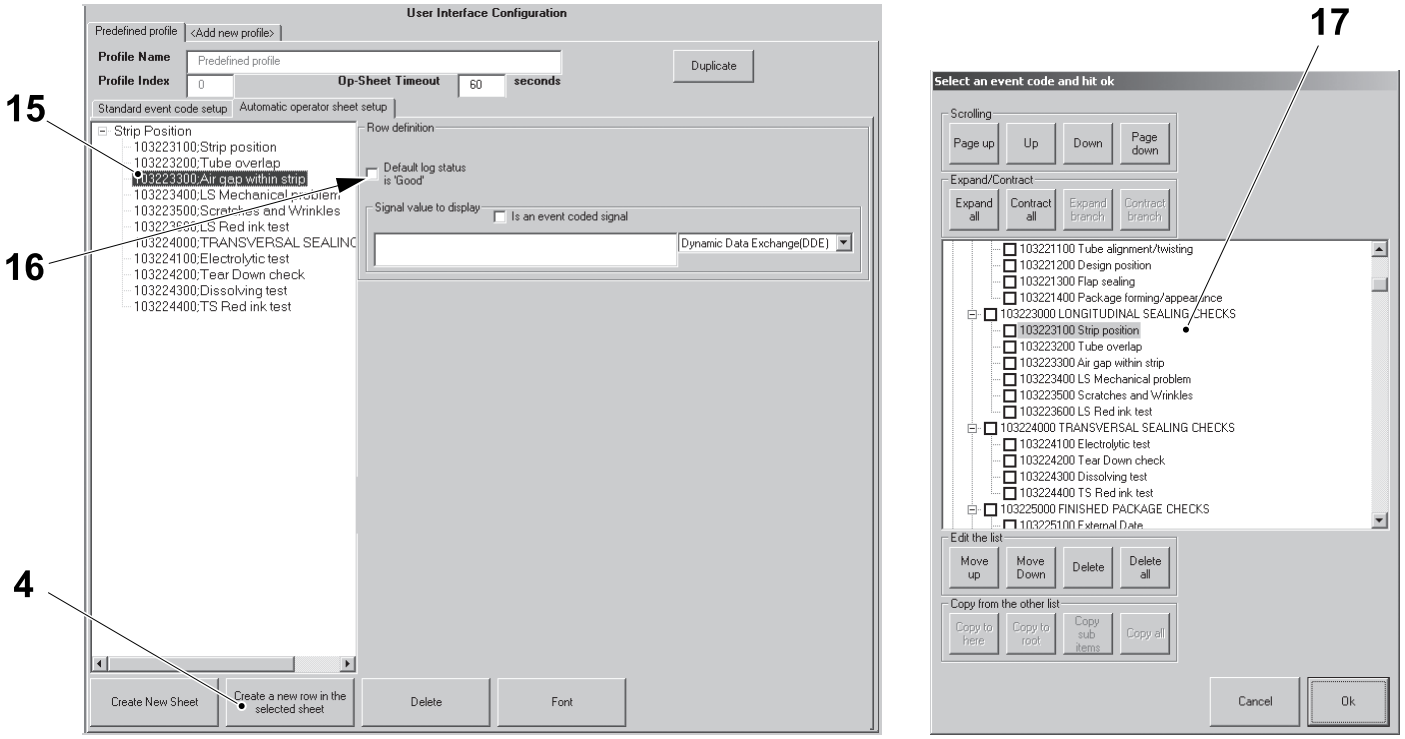

4 Create a new row in the selected sheet button

15 Event code
16 Check box
17 Event code list

8.6.1-9 PLMS NRG Configurator - Configure IP Settings for External Network

Machine Status	Electrical supply disconnecting device in position I (ON)
Special Equipment	Keyboard with PS/2 connector

Configuration of the IPC IP settings allows the possibility to communicate between Tetra Pak filling machines and a PLMS master PC using a new or existing local area network. LAN communication provides a much faster method of retrieving PLMS data and requires a much simpler hardware setup than serial communication.

The PLMS Send and PLMS Receive software are no longer needed for communication between the PLMS master PC and filling machines connected to the LAN, but can be retained as a means of communication between PLMS master PCs and remote locations and offline automation.

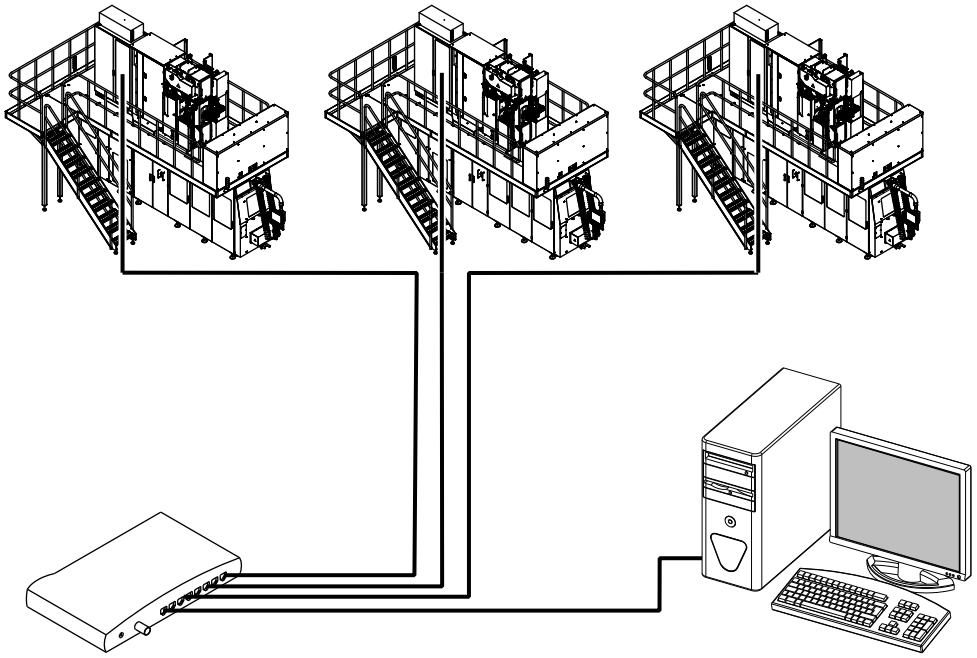

Ethernet switch Network cables PLMS Master PC

(Cont'd)

(Cont'd)

Requirements

- The PLMS centre NETCOM module software must be installed on the PLMS master PC, see the PLMS centre NETCOM module software documentation for more details
- The ETH3 (external network) connector on each filling machine must be connected to the network cable T50W2010
- The network cable T50W2010 must be correctly wired to the terminal T50X1000, see the EM for details
- The filling machines are all connected between the terminal T50X1000 and a suitable ethernet switch using shielded pair (STP) ethernet category 5 network cable
- The PLMS master PC must be connected to the ethernet switch using shielded pair (STP) ethernet category 5 network cable.

Configuration

a) Log on as an installer, see 8.6-2 HMI and PLMS - Log On Procedure.

b) From the `START` menu choose `CONFIGURE PLMS`.

c) In the `PLMS NRG CONFIGURATOR` window touch the `HARDWARE AND NETWORK` button (1) and the `IP SETTINGS EXTERNAL NETWORK` (2).

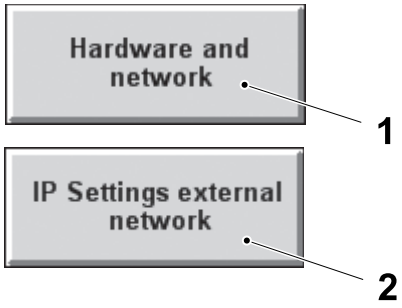

1 Hardware and network button
2 IP Settings external network

(Cont'd)

(Cont'd)

d) The IP SETTINGS EXTERNAL NETWORK window (3) appears.

e) Select the LVL 5 EXTERNAL NETWORK (4) with the ARROW buttons (5).

f) Touch the PROPERTIES button (6).

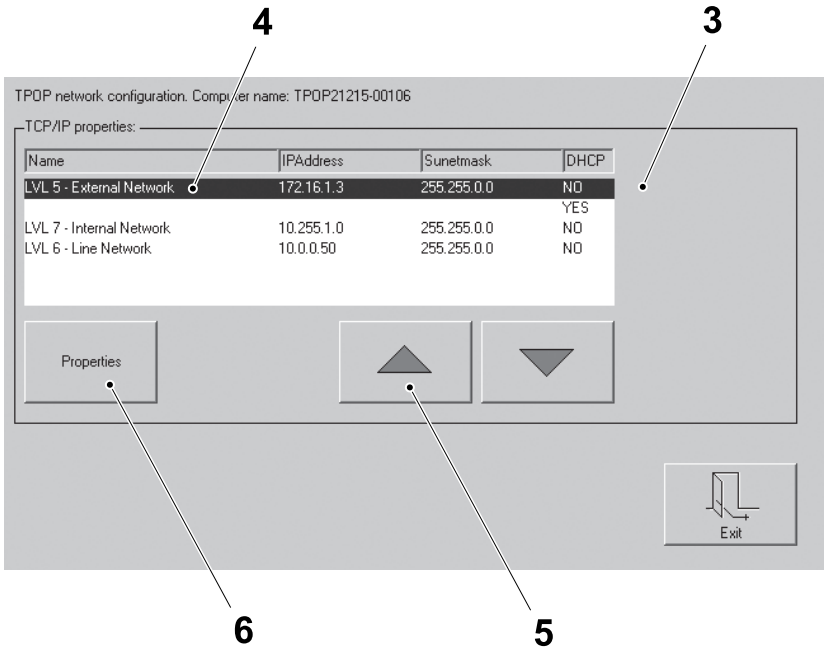

3 IP settings external network window
4 LVL 5 External network
5 Arrow button
6 Properties button

(Cont'd)

(Cont'd)

g) In the PROPERTIES window, perform one of the following:

- Select the OBTAIN IP ADDRESS AUTOMATICALLY check box (7), this will enable the network adaptor to retrieve an IP address from a DHCP server. If no DHCP is found, the network adaptor will randomly create an IP address
- deselect the OBTAIN IP ADDRESS AUTOMATICALLY check box (7), and use the ARROW buttons (8) to enter an IP address (from 1 to 90). As the IP address is selected the network is checked to find if the address is already in use

  Note! Do not change the IP ADDRESS field (9) unless specifically requested by the customer: conflict with an existing network may occur. Available network are 172.16.X.3, 172.17.X.3, 172.18.X3. This function is available from TPOP Basic V3.2.

h) Touch the OK button (10) to confirm the selection.

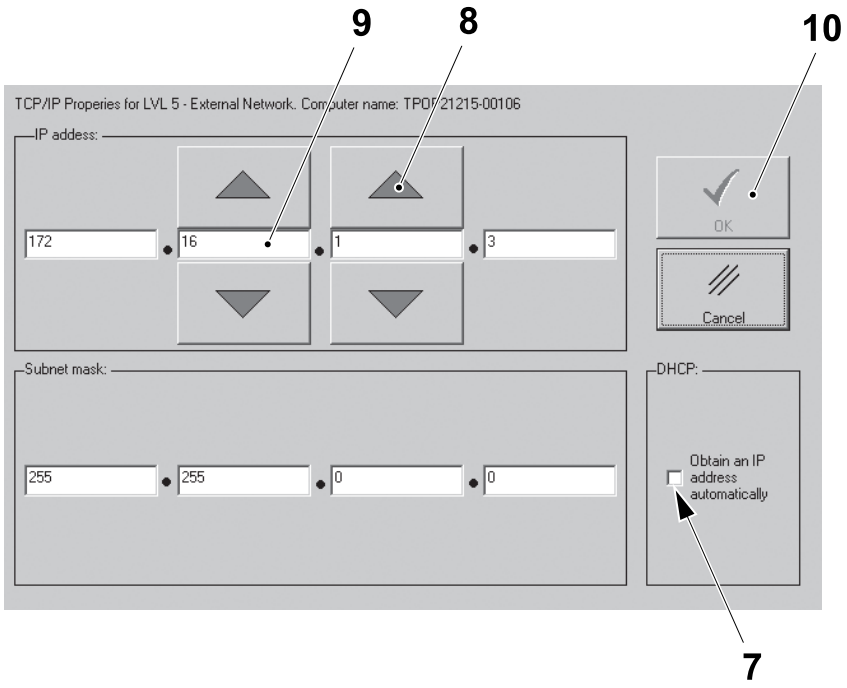

7 Obtain IP address automatically check box
8 Arrow button
9 IP address field
10 OK button

(Cont'd)

(Cont'd)

i) The `IP SETTINGS EXTERNAL NETWORK` window (3) is displayed.

j) Touch the `EXIT` button (11) to return to the `PLMS NRG CONFIGURATOR` window

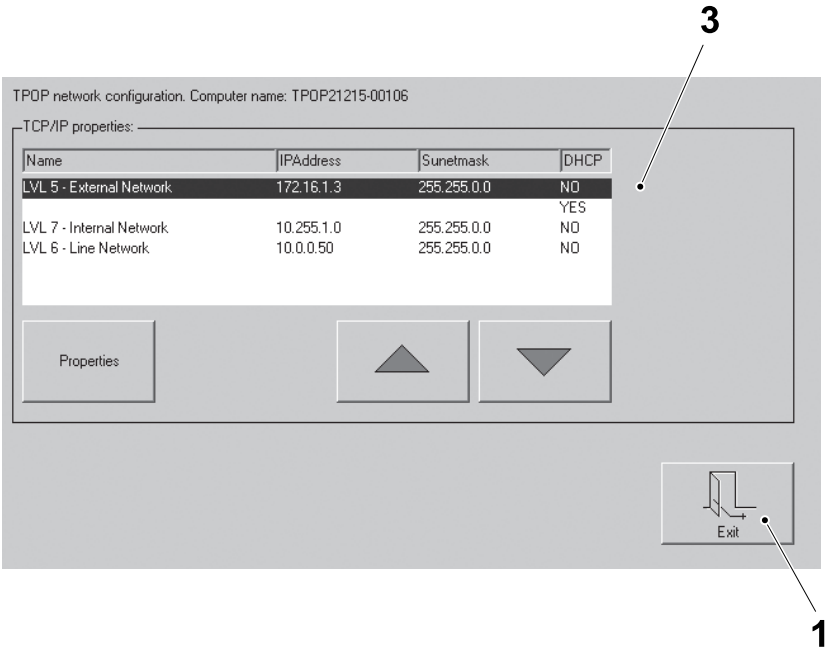

3 IP settings external network window

11 Exit button

8.6.2 PLMS NRG

8.6.2-1 PLMS NRG - Copy Performance and Process Data

Machine Status	Electrical supply disconnecting device in position I (ON)

To analyse data collected by the system, the data must first be copied to an office PC. There are two possible methods:

- direct communication between the filling machine and an office PC by means of the external network connection (level 5). See the PLMS Centre User Manual for the communication configuration using the Netcom module
- manual copying by means of a USB key.

(Cont'd)

(Cont'd)

This section describes how to manually copy the data only.

The copied data can be analysed in an office PC utilising the PLMS Centre analysis program. For more information, see PLMS Centre User Manual.

It is possible to copy performance data and process data for different kinds of analyse:

- performance data files, to be analysed with the PLMS Centre analysis program using the Performance Analysis module
- process event and parameter data files, to be analysed with the PLMS Centre analysis program using the Process Analysis module

  Note! The data files are in the *.xml file format and are compressed into a ***.zip folder** which can be extracted with the program WinZip.

(Cont'd)

(Cont'd)

Copy Performance Data Files

a) Remove the plug of a USB port (1) in the control panel (2) and insert a USB memory key into the USB slot.

b) Touch the PLMS SETUP button (3).

c) Touch the COPY LOGGED DATA button (4).

d) Touch the PERFORMANCE DATA button (5).

Note! The PERFORMANCE DATA button (5) is pre-selected by default.

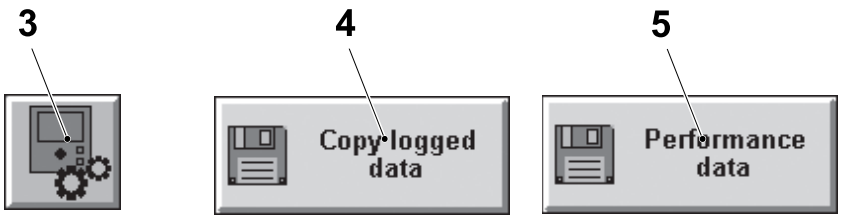

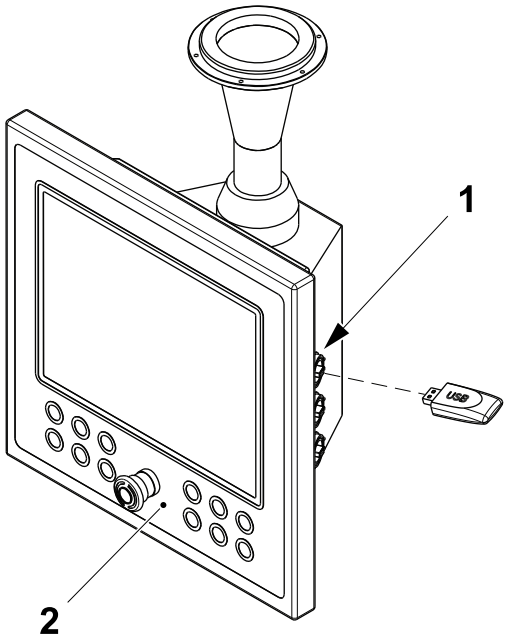

1 USB port
2 Control panel
3 PLMS setup button
4 Copy logged data button
5 Performance data button

(Cont'd)

(Cont'd)

Note! The COPYLOG STARTING DATE button (6) is set by default to the last downloading date. The COPYLOG ENDING DATE button (7) is set by default to the date of yesterday. To download the data files from a different period of time follow the procedure Change the Copylog Start/End Date on page 8-281.

e) Touch the OK button (8) to download the performance data files.

Note! Do not press the TPOP RESET button (9) on the control panel during the copying procedure, if flashing! The starting date is automatically updated every time the data log is copied.

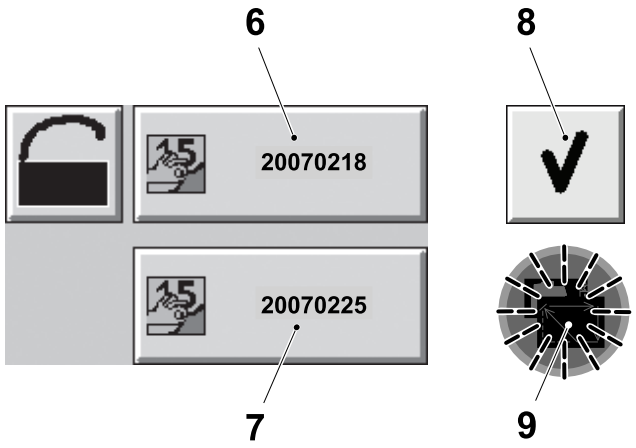

6 Copylog starting date button
7 Copylog ending date button
8 OK button
9 TPOP reset button

(Cont'd)

(Cont'd)

Note! If the Icon (13) is displayed, read the accompanying help text on the TPOP and perform the necessary action(s).

f) When the download is complete the icon (10) is displayed.

g) If necessary, touch the `EJECT DRIVE` button (11).

h) Touch the `EXIT` button (12).

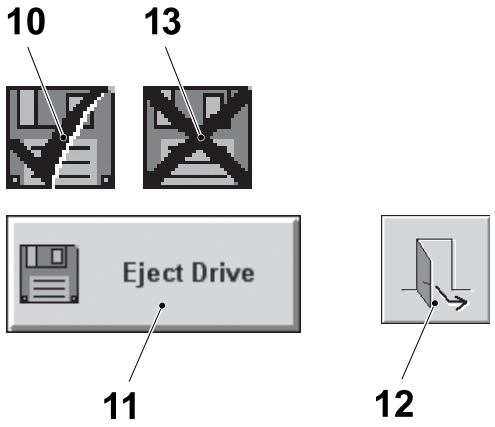

10 Icon
11 Eject drive button
12 Exit button
13 Icon

(Cont'd)

(Cont'd)

Copy Process Data Files

a) Remove the plug of a USB port (1) in the control panel (2) and insert a USB memory key into the USB slot.

b) Touch the `PLMS SETUP` button (3).

c) Touch the `COPY LOGGED DATA` button (4).

d) Touch the `PROCESS DATA` button (5).

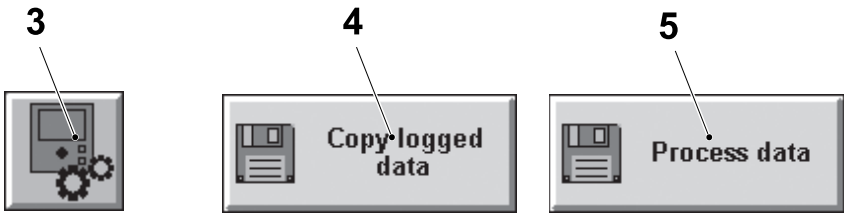

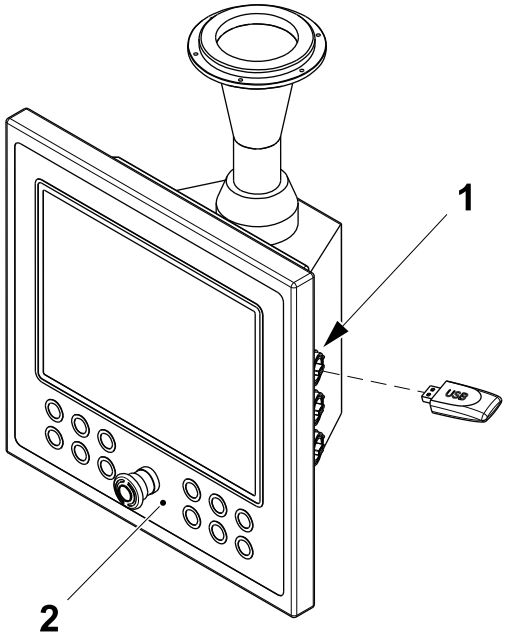

1 USB port
2 Control panel
3 PLMS setup button
4 Copy logged data button
5 Process data button

(Cont'd)

(Cont'd)

Note! The COPYLOG STARTING DATE button (6) is set by default to the last downloading date. The COPYLOG ENDING DATE button (7) is set by default to the date of yesterday. To download the data files from a different period of time follow the procedure Change the Copylog Start/End Date on page 8-281.

e) Touch the OK button (8) to download the process data files.

Note! Do not press the TPOP RESET button (9) on the control panel during the copying procedure, if flashing! The starting date is automatically updated every time the data log is copied.

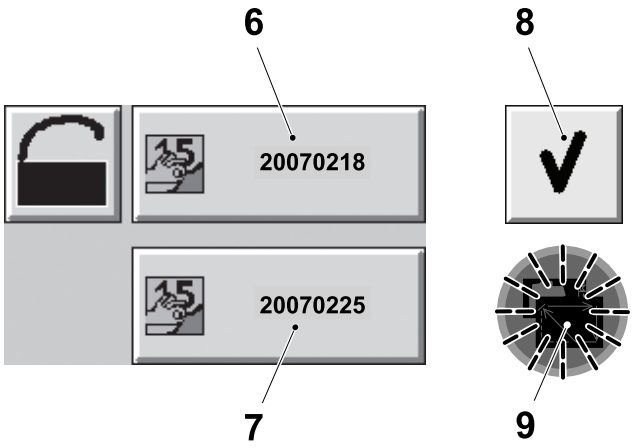

6 Copylog starting date button
7 Copylog ending date button
8 OK button
9 TPOP reset button

(Cont'd)

(Cont'd)

Note! If the icon (13) is displayed, read the accompanying help text on the TPOP and perform the necessary action(s).

f) When the download is complete the icon (10) is displayed.

g) If necessary, touch the `EJECT DRIVE` button (11).

h) Touch the `EXIT` button (12).

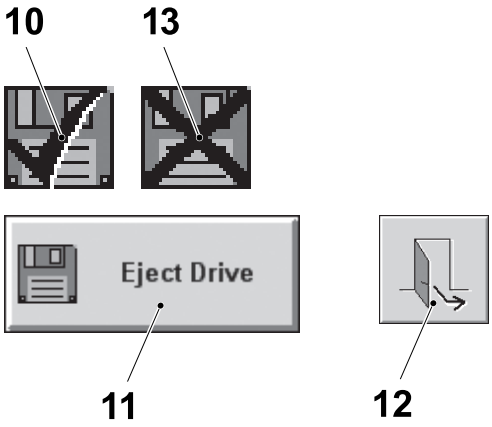

10 Icon
11 Eject drive button
12 Exit button
13 Icon

(Cont'd)

(Cont'd)

Change the Copylog Start/End Date

To download the data files from a different period of time follow the procedure below.

a) Touch the LOCK button (1).

b) Touch the COPY LOG START DATE button (2) and select a date from the date selection window (3).

Note! The ARROW buttons (4) change the date in step of 10 days, the ARROW buttons (5) change the date in step of 1 day.

c) Touch the COPY LOG END DATE button (6) and select a date from the from the date selection window (3).

d) Touch the OK button (7) to download the files.

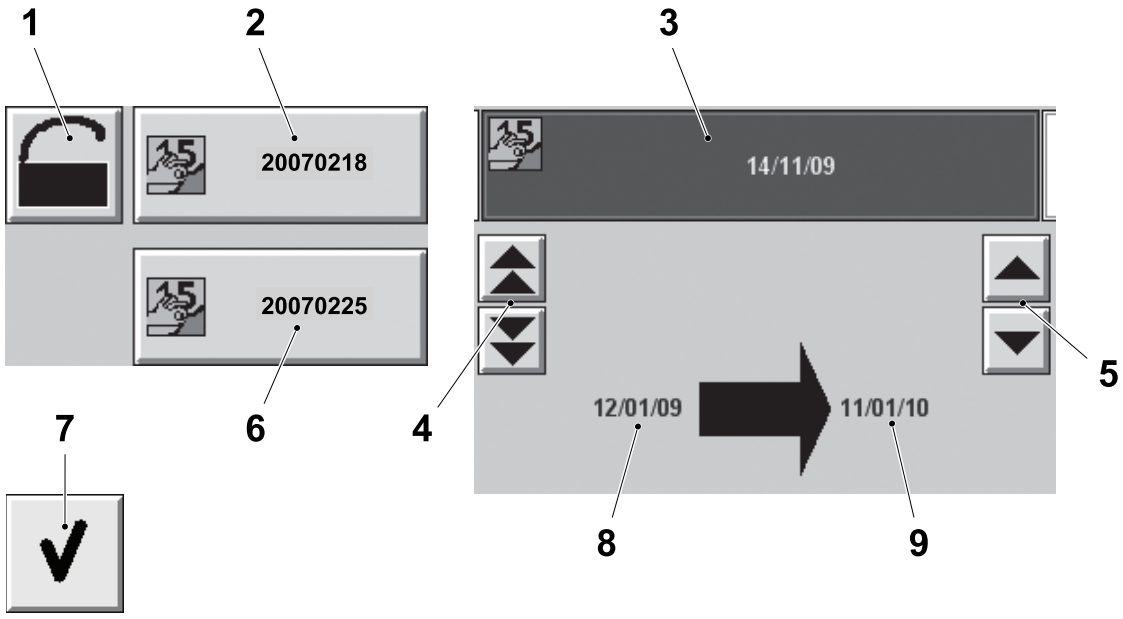

1 Lock button
2 Copy log start date button
3 Selection window
4 Arrow button
5 Arrow button
6 Copy log end date button
7 OK button
8 Earlier date available
9 Latest date available

8.6.3 HMI

8.6.3-1 HMI - User Management Description

The HMI includes certain sections which have restricted access and are password protected. Access is permitted and defined by the user profile and the password used to log on, see the table below for a description of each of the available user profiles and the corresponding level of access.

Note! The default machine operator has no user log on profile or access to the restricted areas of the HMI.

User Profile	User Name	Password	Access Description
TP service technician	tptechnician	not provided	Access to: • user administration • shifts definition • supervisor reserved settings • TP reserved production control settings and functions • production control settings and functions • TP reserved maintenance control settings and functions • maintenance control settings and functions • create and delete recipes • software installation and configuration • shutdown • diagnostic • full access to the configuration window • alarm management • basic recipe management

(Cont'd)

(Cont'd)

User Profile	User Name	Password	Access Description
Supervisor	supervisor	shiftsup	Access to: • user administration • shifts definition • supervisor reserved settings • production control settings and functions • maintenance control settings and functions • create and delete recipes • software installation and configuration • partial access to the configuration window • alarm management • basic recipe management
Service technician	technician	custtech	Access to: • production control settings and functions • maintenance control settings and functions • create and delete recipes • software installation and configuration • partial access to the configuration window • alarm management • basic recipe management
Power operator	pwroperator	expertop	Access to: • power operator reserved production control settings and functions • alarm management • basic recipe management
Operator (default user without log on)	-	-	Access to: • production control settings and functions • alarm management • basic recipe management

8.6.3-2 HMI - User Management Log On

Machine Status	Electrical supply disconnecting device in position I (ON)

This procedure describes how to log on to the HMI and to access the restricted password protected sections of the HMI. The level of access permitted is defined by the user profile, see 8.6.3-1 HMI - User Management Description.

Note! After 15 minutes of HMI inactivity the user is automatically logged out.

To log on to the HMI proceed as described below:

a) On the TPOP, touch the `SYSTEM SETUP` button (1).

b) In the `SYSTEM SETUP` window, touch the `USER MANAGEMENT` button (2).

c) Touch the `LOG ON` button (3) to display the `LOG ON` window (4).

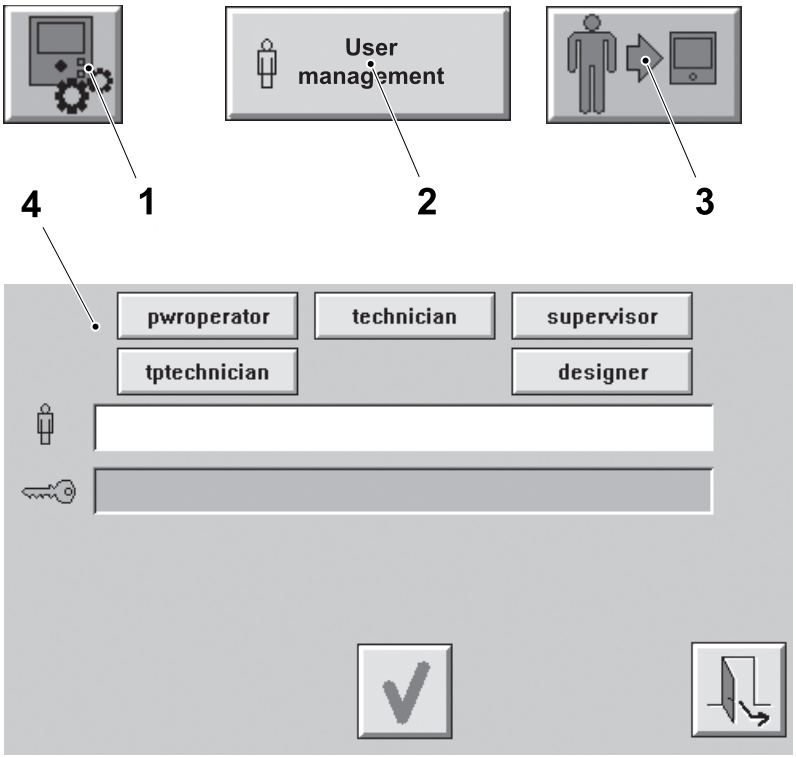

1 System setup button
2 User management button
3 Log on button
4 Log On window

(Cont'd)

(Cont'd)

Note! Pwroperator is used as an example in the illustration.

d) Touch the appropriate `USER` button (5) corresponding to your user profile.

e) Touch the `PASSWORD` box (6) to display the keyboard (7).

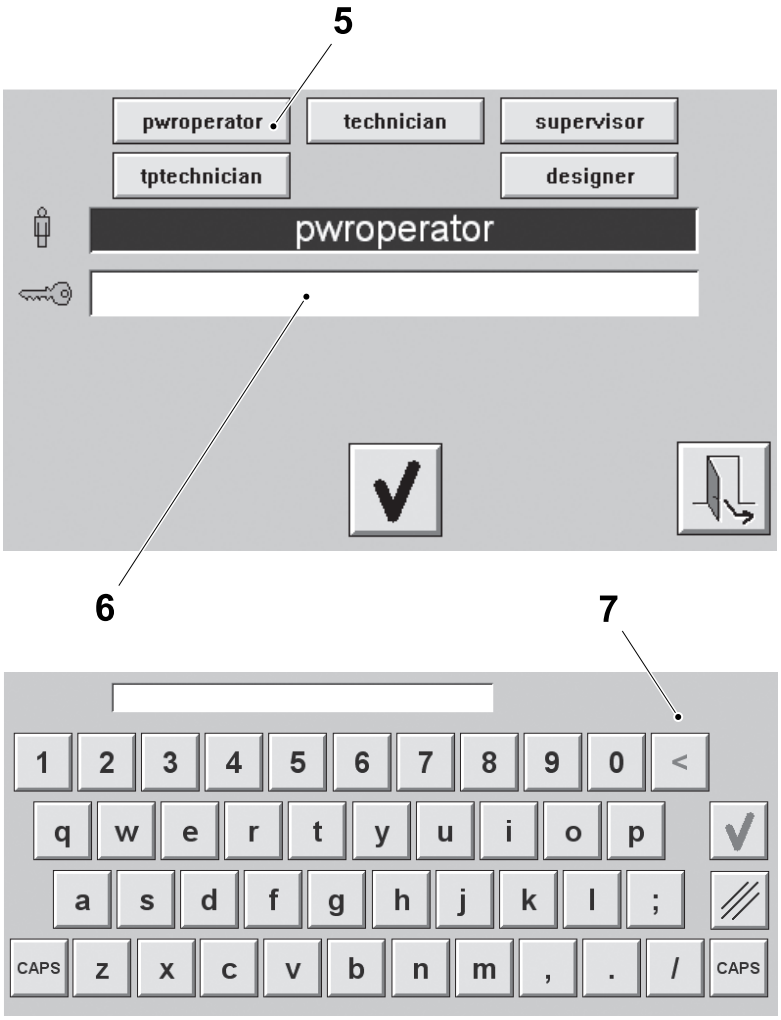

5 User button
6 Password box
7 Keyboard

(Cont'd)

(Cont'd)

f) Use the keyboard (7) to enter the password and then touch the OK button (8).

g) Touch the OK button (9) in the LOG ON window (4).

The user is now logged on to the HMI with the corresponding level of access. All changes to the system are recorded along with the user ID information.

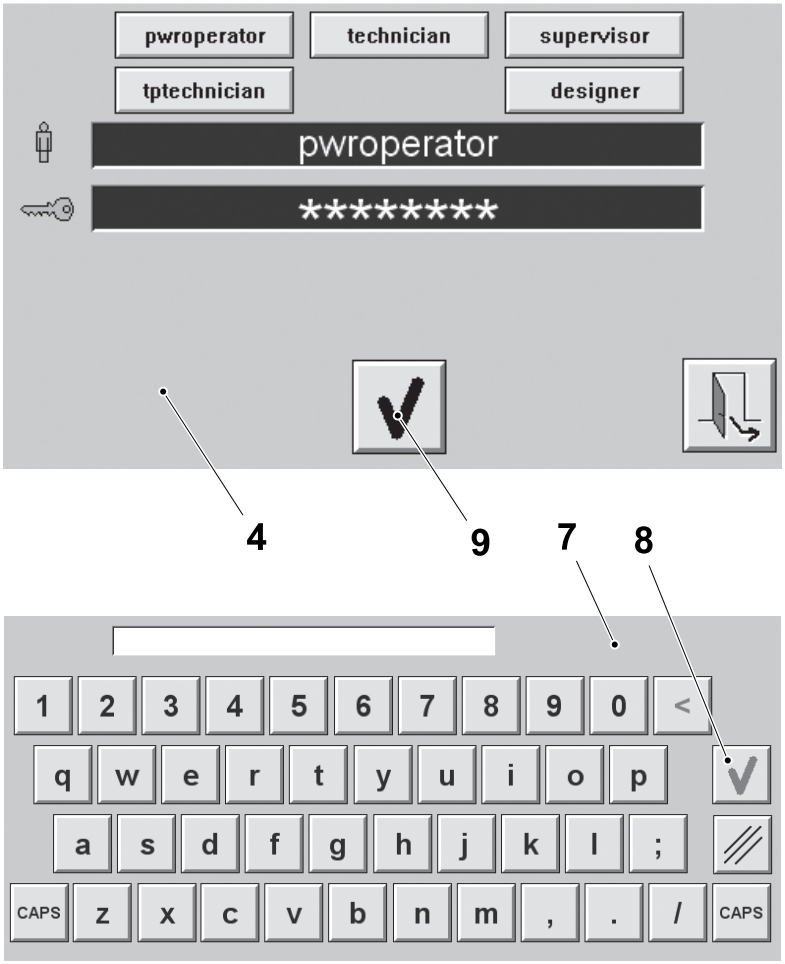

4 Log On window
7 Keyboard
8 OK button
9 OK button

8.6.3-3 HMI - User Management Change Password

Machine Status	Electrical supply disconnecting device in position I (ON)

CAUTION
Risk of unplanned machine stoppage.
If the default passwords are changed and subsequently forgotten, the HMI software must be reinstalled before access to the restricted sections of the HMI is restored.

The user with the profile “supervisor” has the authority to set and change the passwords for the user profiles of “technician” and “pwroperator”. To change the password of either the user profiles proceed as follows:

a) Log on to the HMI as the user profile “supervisor”, see 8.6.3-2 HMI - User Management Log On.

b) In the `USER MANAGEMENT` window, touch either the:

- `ENABLE PWROPERATOR CHANGE PASSWORD` button (1) for the user profile "pwroperator"
- `ENABLE TECHNICIAN CHANGE PASSWORD` button (2) for the user profile "technician".

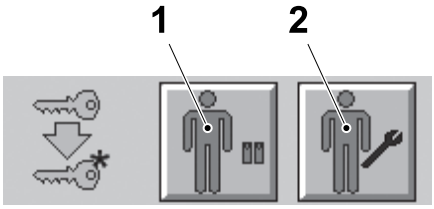

1 Enable pwroperator change password button

2 Enable technician change password button

(Cont’d)

(Cont'd)

c) Touch the LOG OFF button (3).

d) Log on to the HMI using the user profile chosen in item b), see 8.6.3-2 HMI - User Management Log On.

e) The CHANGE PASSWORD button (4) is now visible in the USER MANAGEMENT window, touch the CHANGE PASSWORD button (4) to display the CHANGE PASSWORD dialogue box (5).

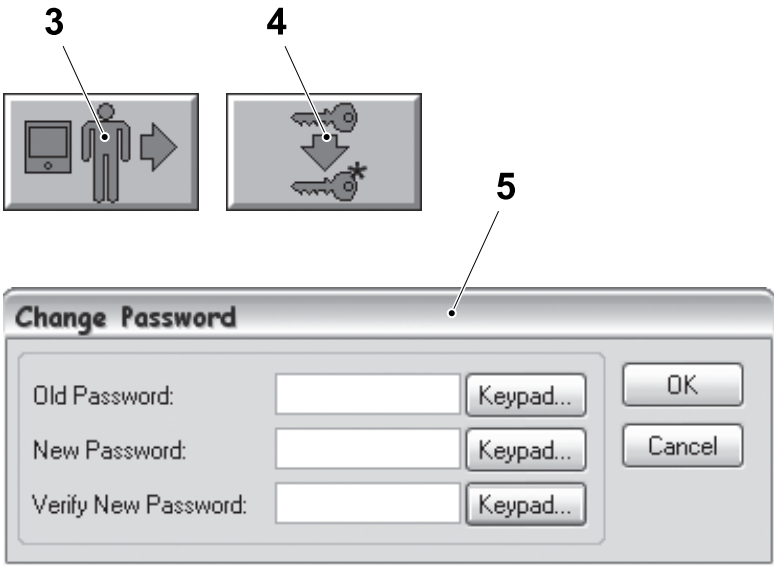

3 Log off button

4 Change password button

5 Change password dialogue box

(Cont'd)

(Cont'd)

f) Touch the KEYPAD button (6) to display the keypad (7).

g) Use the keypad (7) to enter the current password then touch the ENTER button (8).

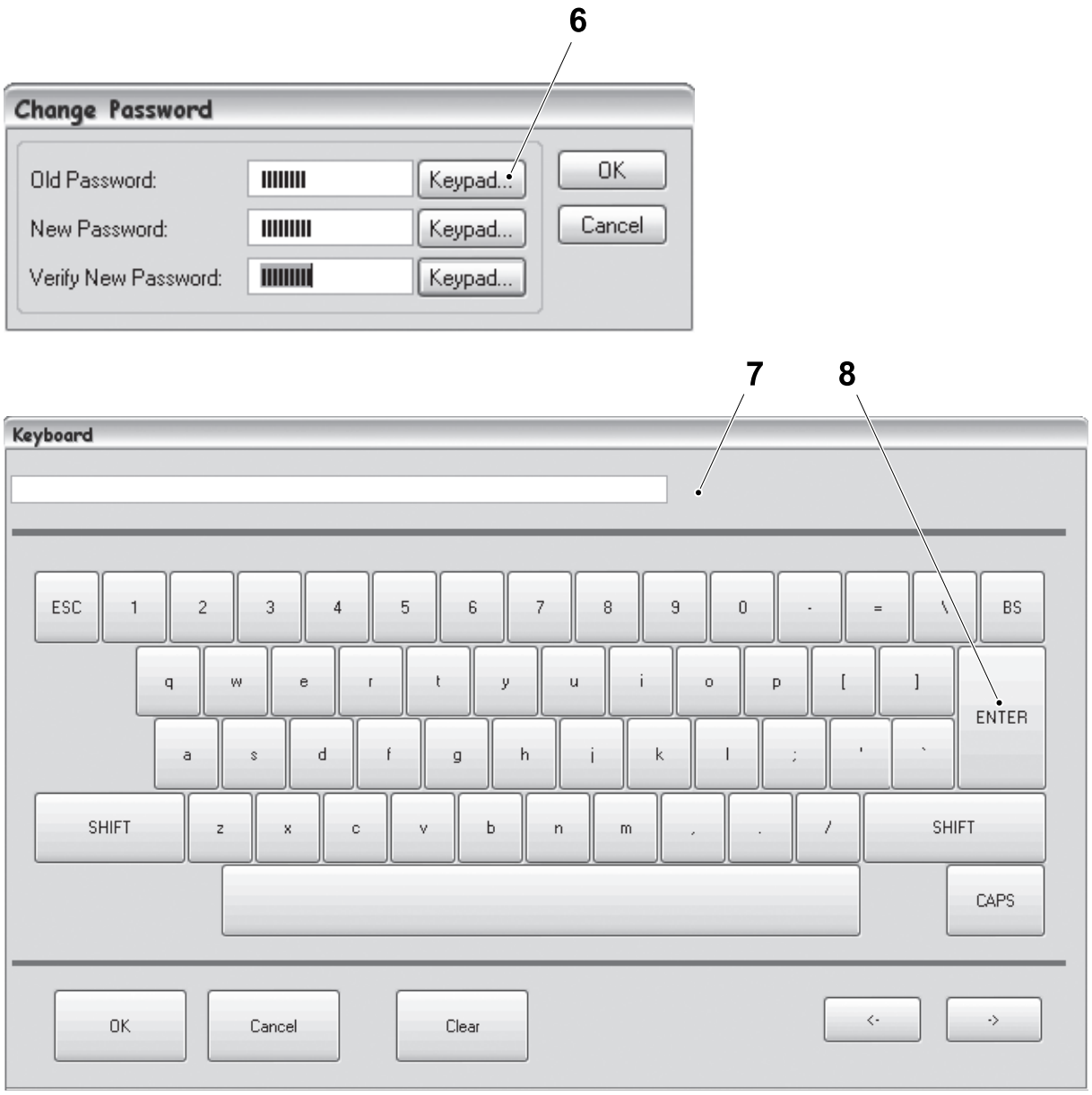

6 Keypad button
7 Keypad
8 Enter button

(Cont'd)

(Cont'd)

h) Touch the KEYPAD button (9) to display the keypad (7).

i) Use the keypad (7) to enter the new password then touch the ENTER button (8).

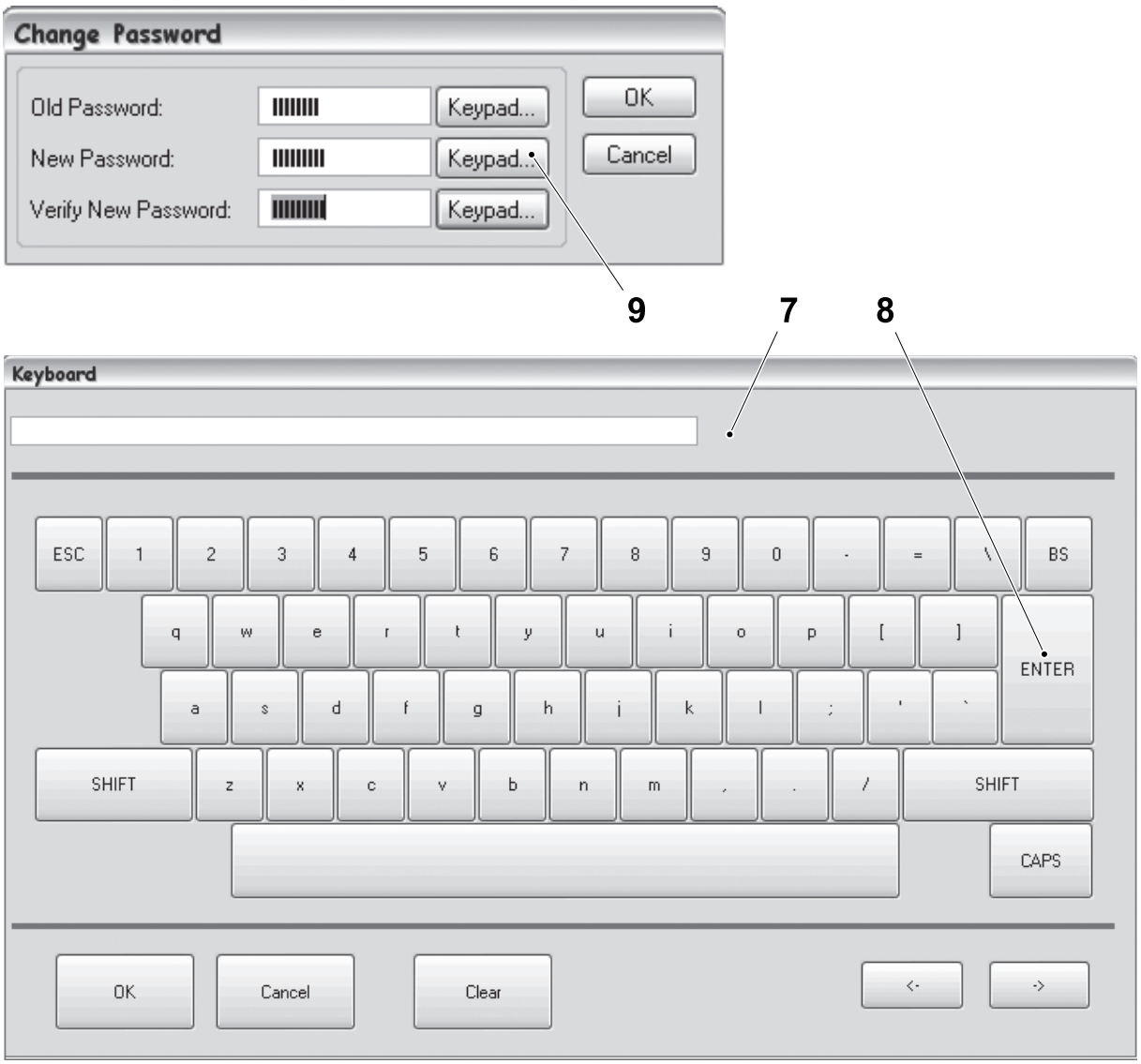

7 Keypad
8 Enter button
9 Keypad button

(Cont'd)

(Cont'd)

j) Touch the KEYPAD button (10) to display the keypad (7).

k) Use the keypad (7) to repeat the new password then touch the ENTER button (8).

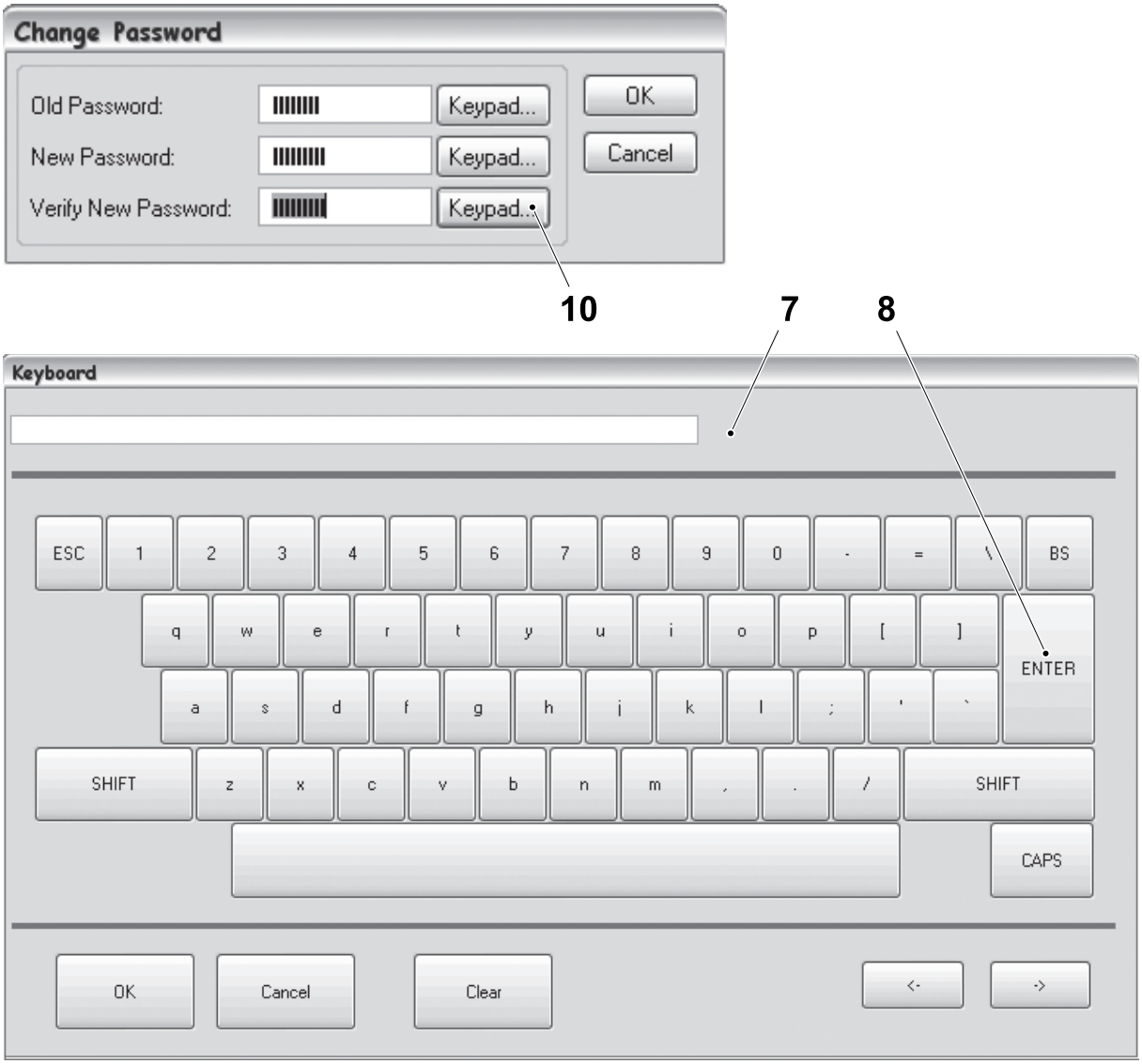

7 Keypad
8 Enter button
10 Keypad button

(Cont'd)

(Cont'd)

l) Touch the OK button (11).

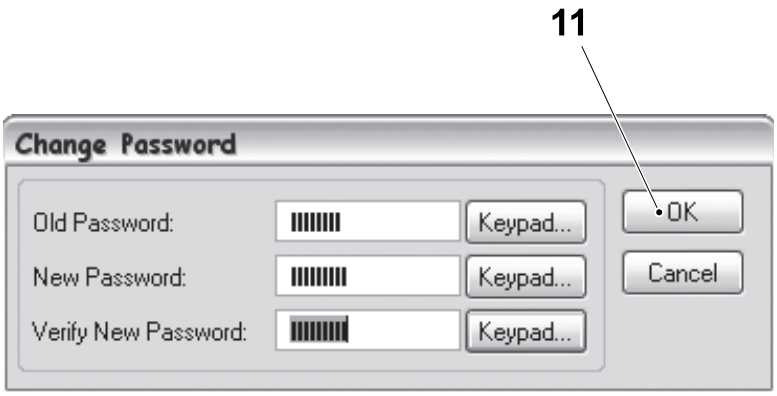

11 OK button

Note! If the ENABLE CHANGE PASSWORD buttons are not deselected by the "supervisor" profile, the CHANGE PASSWORD button remains visible and accessible in the profiles for the "pwroperator" and "technician".

m) Touch the LOG OFF button (3).

n) Log on to the HMI as the user profile "supervisor", see 8.6.3-2 HMI - User Management Log On.

o) In the USER MANAGEMENT window, depending on which button was selected in item b) deselect the:

- ENABLE PWROPERATOR CHANGE PASSWORD button (1) for the user profile "pwroperator"
- ENABLE TECHNICIAN CHANGE PASSWORD button (2) for the user profile "technician".

If necessary repeat the procedure to change the password for the other user profile. The password for the user profile "supervisor" can be changed by logging on as the "supervisor" and selecting the CHANGE PASSWORD button in the USER MANAGEMENT window.

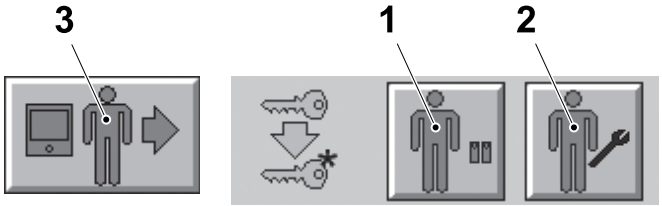

1 Enable pwroperator change password button

2 Enable technician change password button

3 Log off button

8.6.3-4 HMI - Utility Window

Machine Status	Electrical supply disconnecting device in position I (ON)

a) Touch the PRODUCTION CONTROL button (1).

b) Touch the UTILITY button (2) . The UTILITY window (3) is displayed.

Note! The access to some button is restricted and only users with a valid password can access the utility. The key symbol (4) indicates the group of buttons that may be activated by logging on with the required password, see 8.6.3-2 HMI - User Management Log On.

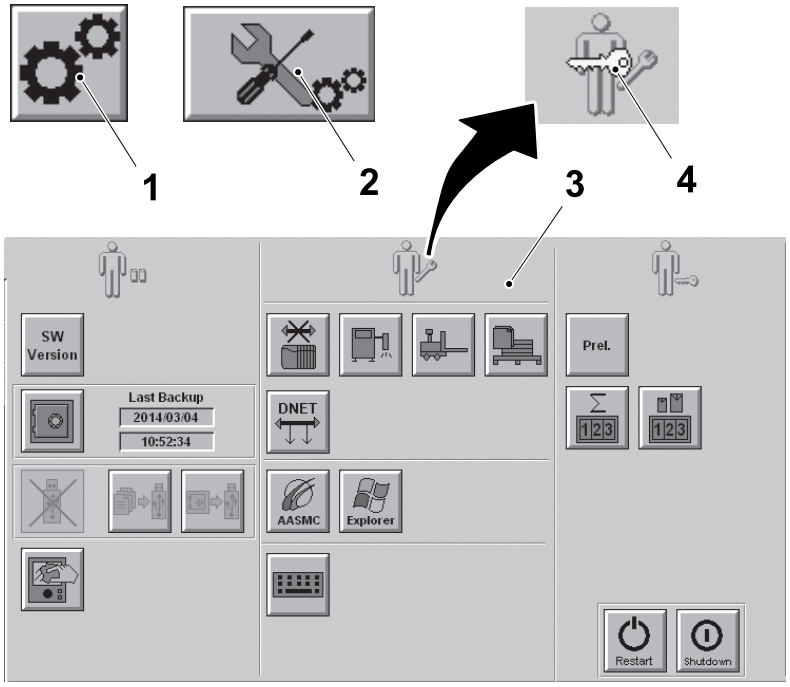

1 Production control button
2 Utility button
3 Utility window
4 Key simbol

(Cont'd)

(Cont'd)

Software Version

Touch the SOFTWARE VERSION button (1). The SOFTWARE VERSION window (2) is displayed, showing the numbers of the software currently installed.

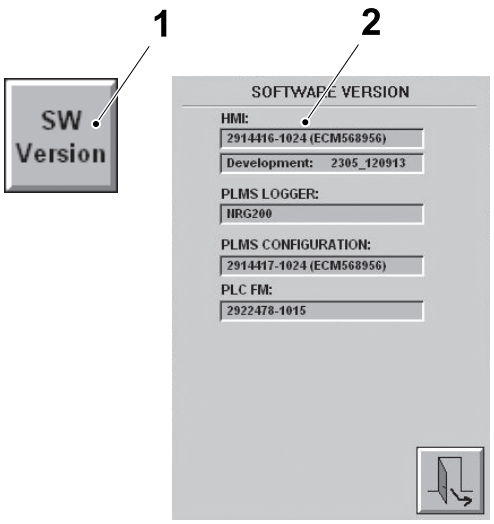

1 Software version button
2 Software version window

Backup

a) Touch the BACKUP button (1) to do a backup copy in the drive D:\ of the following files:

- the config files of the DE
- the PLMS NRG local setup
- the primary printer layout
- the counters
- the TMCC JEID configuration
- the printer interface message configuration for the primary printer

Note! The IP address are not included in the backup.

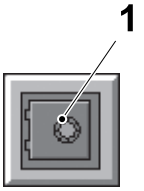

1 Backup button

(Cont'd)

(Cont'd)

CAUTION
Loss of data.
Do not switch off the panel while the BACKUP icon (2) is displayed on the status bar. The BACKUP icon (2) indicates that the backup is ongoing.

b) The backup icon BACKUP icon (2) appear on the status bar during the backup.

Note! An automatic backup starts every 12 hours and every time the TPOP is restarted. The BACKUP icon (2) appear also during the automatic backup.

c) When the backup is completed, the BACKUP icon (2) disappears and the date and time are shown next to the backup button BACKUP button (1).

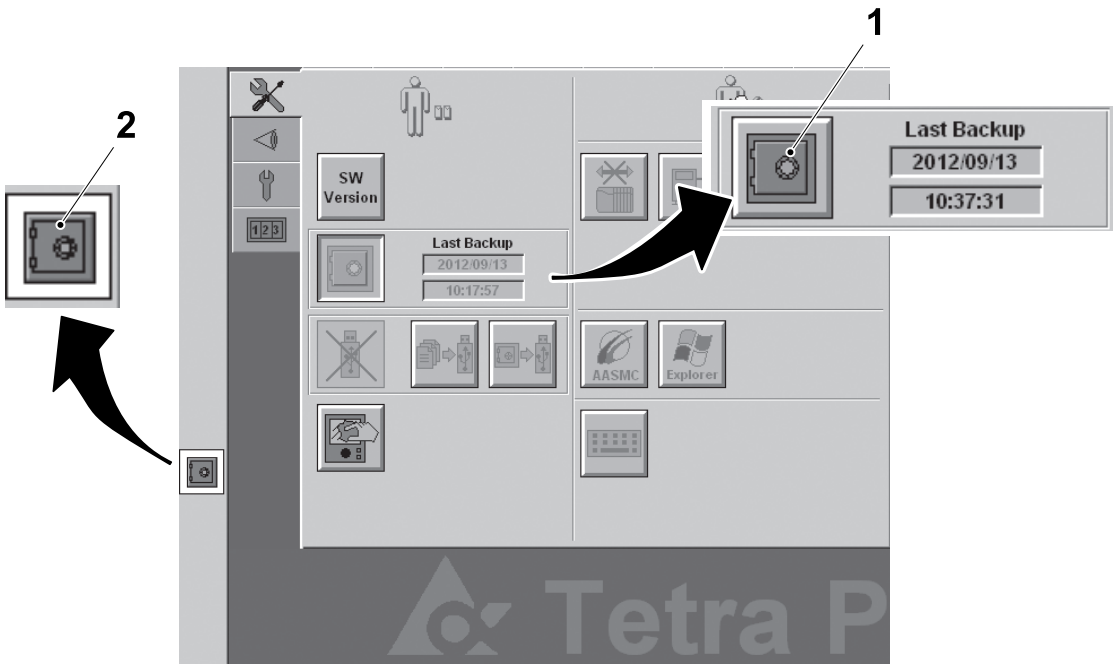

1 Backup button
2 Backup icon

(Cont'd)

(Cont'd)

Copy Files in a USB Key

a) Insert a USB key in a USB port of the TPOP.

b) Touch the `COPY LOCAL FILES` button (1) to copy the folder `C:\PLMS\DATA` containing the local files (counters, servo motor faults...) in a USB key.

c) Touch the `COPY BACKUP FILES` button (2) to copy the machine data files (stored in the CompactFlash memory card) in a USB key.

d) Touch the `EJECT KEY` button (3) to safely remove the USB key.

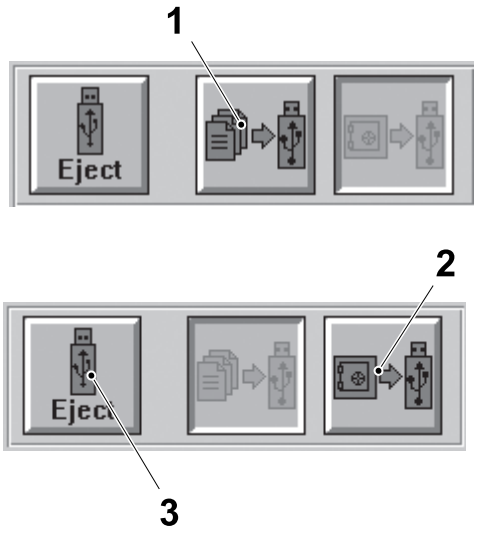

1 Copy local files button
2 Copy backup files button
3 Eject key button

(Cont'd)

(Cont'd)

Clean Panel

Touch the CLEAN PANEL button (1). The panel is locked for 30 seconds: during this time it is possible to clean the screen.

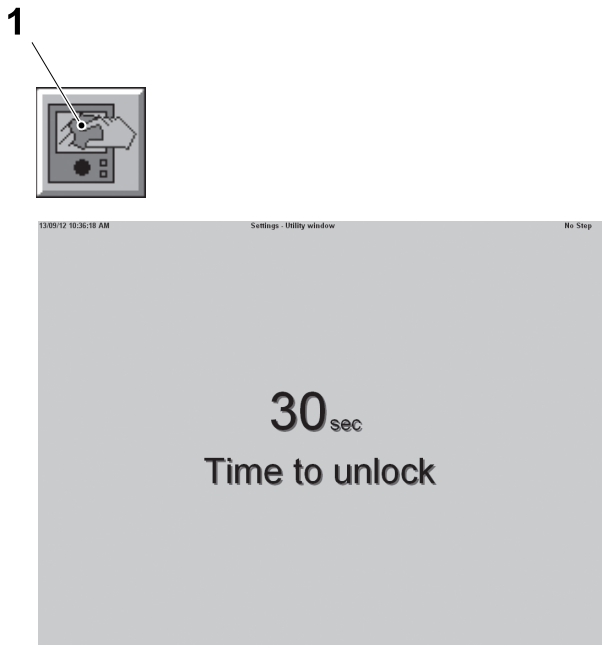

1 Clean panel button

Restart Panel

Touch the RESTART PANEL button for 5 seconds to reboot the TPOP.



(Cont'd)

(Cont'd)

Technician Utilities

Log on as a technician, see 8.6.3-2 HMI - User Management Log On. The following utilities are enabled:

Note! The access to these buttons is restricted and only users with a valid password can access the utility.

- the WATCHDOG button (1), to check for connection problems.
- the PRINTER button (2), to check the connection of the printer.
- the LGV button (3), to check the signals from the LGV.
- the MATERIALS button (4), to check the printer interface for the materials for iLine XT.

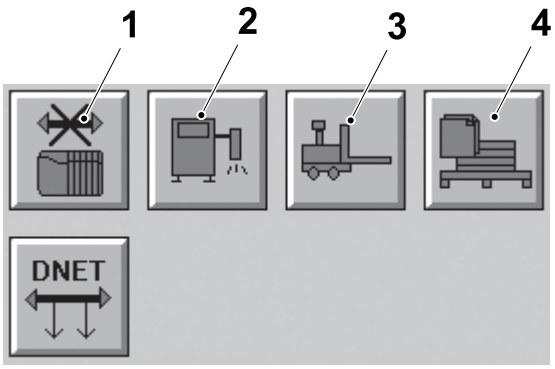

1 Watchdog button
2 Printer button
3 LGV button
4 Materials button

(Cont'd)

(Cont'd)

- the DEVICENET NODE CONFIGURATION button (5) to check the installed configuration of the DeviceNet nodes, identified by a number in the CONFIGURATION NUMBER column (6): when a new software is installed, select from the software USB key the DeviceNet program corresponding to the installed configuration.

  Note! The configuration shown is an example.

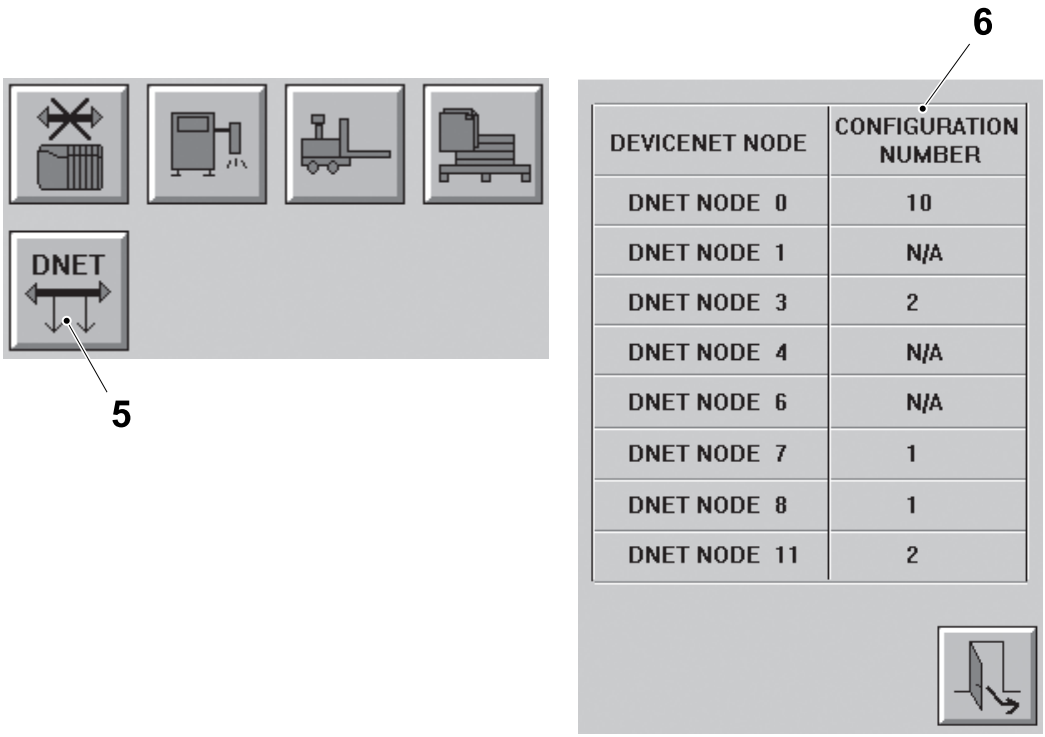

5 DeviceNet node configuration button
6 Configuration number column

(Cont'd)

(Cont'd)

- the SERVER STATUS button (7), to enable/disasble the server.
- the EXPLORER button (8), to navigate the files.
- the KEYBOARD button (9), to display the touch screen keyboard on the panel.

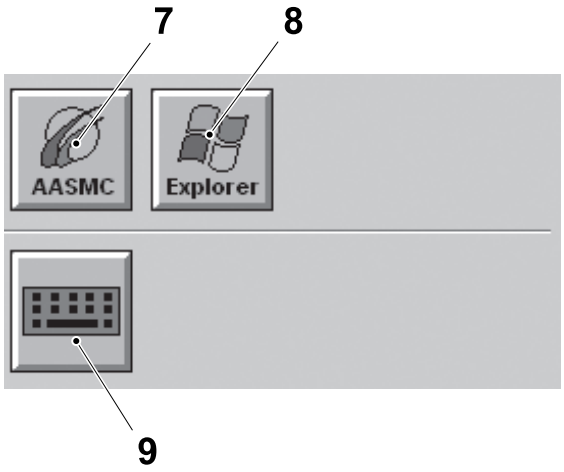

7 Server status button
8 Explorer button
9 Keyboard button

8.6.4 Ink Jet Printer

8.6.4-1 Ink Jet Printer - Configure

Machine Status	Electrical supply disconnecting device in position I (ON) Main air valve OFF Main steam valve ON Main water valve OFF
SPC Reference	3005198-0100

a) On the TPOP, log on as a TPTECHNICIAN, see 8.6.3-2 HMI - User Management Log On.

b) Touch the MACHINE CONFIGURATION button (1).

c) Touch the DATE UNIT button (2). The ARROW buttons (3) are displayed.

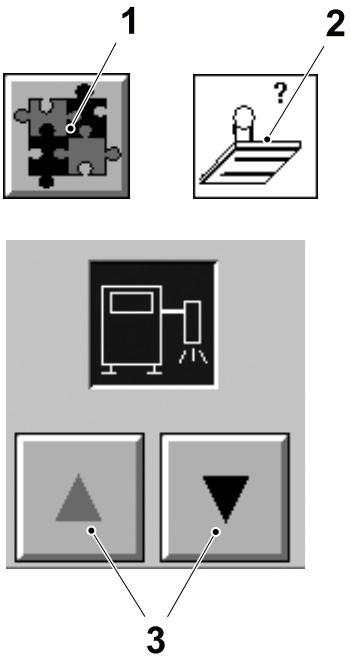

1 MACHINE CONFIGURATION button
2 DATE UNIT button
3 ARROW button

(Cont'd)

(Cont'd)

d) Touch the ARROW buttons (3) to select one of the available date unit option:

- TP DATE UNIT (4): a TP printer connected by two wires, signals and alarms
- NO TP DATE UNIT (5): a third-party printer connected by two wires, signals and alarms
- PRINTER INTERFACE (6): Domino A300 Plus connected by an Ethernet cable for communication and alarms
- PRINTER INTERFACE WIRED (7): TP date unit with an Ethernet communication and separate alarm cable
- NO TP PRINTER INTERFACE WIRED (8): a third-party date unit with an Ethernet communication and separate alarm cable

Note! Select the OPTION DISABLED icon (9) to uninstall the option.

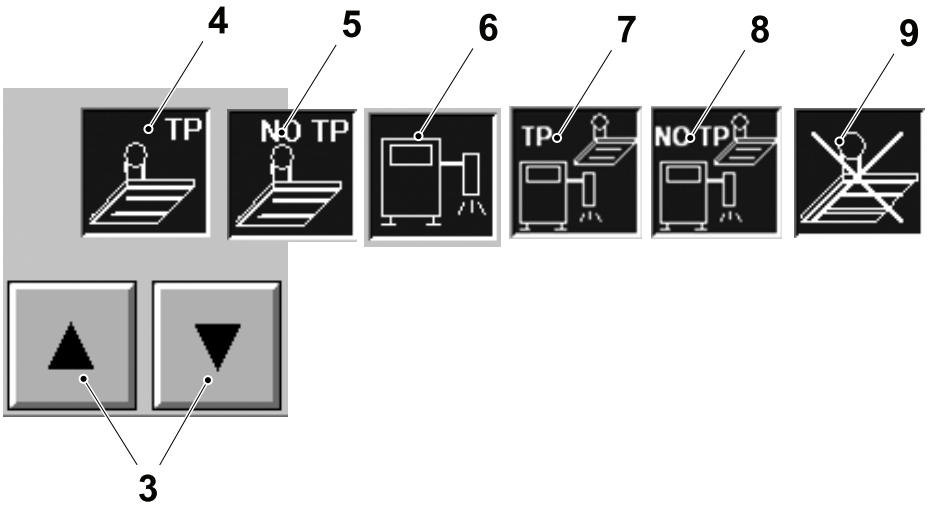

3 ARROW button
4 TP DATE UNIT icon
5 NO TP DATE UNIT icon
6 PRINTER INTERFACE icon
7 PRINTER INTERFACE WIRED icon
8 NO TP PRINTER INTERFACE WIRED icon
9 OPTION DISABLED icon

8.6.4-2 Ink Jet Printer - Configure Printer Interface

Machine Status	Electrical supply disconnecting device in position I (ON) Main air valve OFF Main steam valve ON Main water valve OFF
SPC Reference	3005198-0100

a) On the TPOP, log on as a `TPTECHNICIAN`, see 8.6.3-2 HMI - User Management Log On.

b) Touch the `PRODUCTION CONTROL` button (1).

c) Touch the `DOWNSTREAM` button (2).

d) Touch the `PRINTER INTERFACE` icon (3).

e) Touch the `LAYOUT SELECTION` icon (4) to load the print layout.

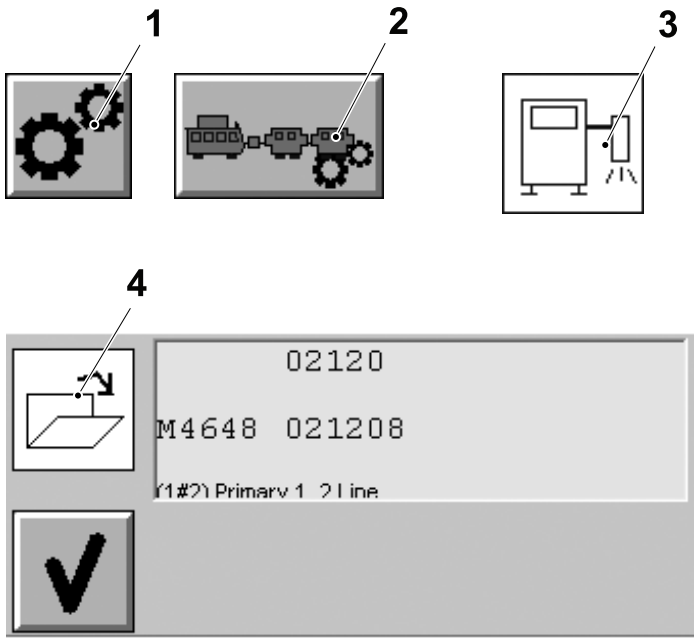

1 `PRODUCTION CONTROL` button
2 `DOWNSTREAM` button
3 `PRINTER INTERFACE` icon
4 `LAYOUT SELECTION` icon

(Cont'd)

(Cont'd)

f) Information may be entered by touching the following icons:

- FACTORY (5)
- LINE (6)
- PRODUCT (7)
- BATCH (8)
- SHIFT (9)
- GENERIC FIELDS (10) and (11)
- BEST BEFORE DATE (12)

  Note! It is possible to lock the best before date by touching the LOCK button (14) (for example in case of production between two days).
- REVERSE PRINTING (13).

g) Touch the OK button (15) for 5 seconds to load the configuration.

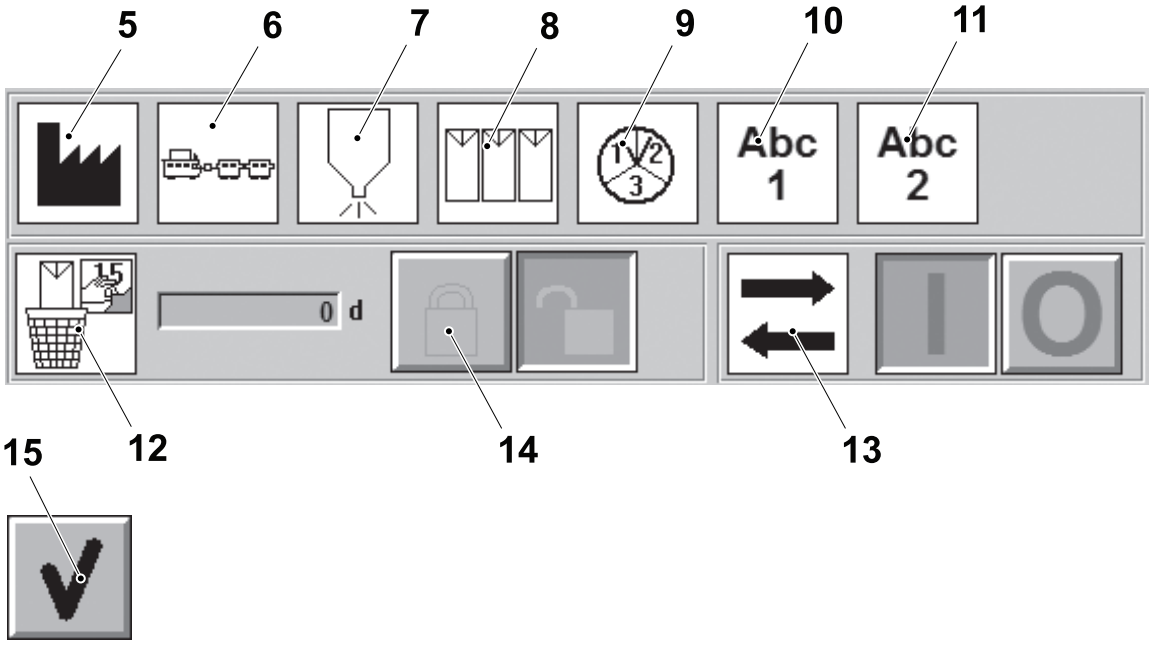

5 FACTORY icon
6 LINE icon
7 PRODUCT icon
8 BATCH icon
9 SHIFT icon
10 GENERIC FIELD icon
11 GENERIC FIELD icon
12 BEST BEFORE DATE icon
13 REVERSE printing
14 LOCK button
15 OK button

8.6.5 Traceability

8.6.5-1 Traceability - Configure JEID

Machine Status	Electrical supply disconnecting device in position I (ON) Main air valve OFF Main steam valve ON Main water valve OFF
Special Equipment	Laptop PC

a) Browse to the proper drive and copy the compressed file `PROGRAMS\EID CONFIGURATION TOOL\3012054-100X` from the software USB key (or software CD) to the laptop PC desktop.

b) Create a new folder for the EID configuration tool.

c) Open the file `3012054-0100X` and copy the files `EIDCOM.INI` and `EIDCONFIG.EXE` in the new folder.

d) Connect the USB key to the USB port of the PC (1).

e) Double click on the `EID CONFIGURATION.EXE` (2) to start the EID configuration tool.

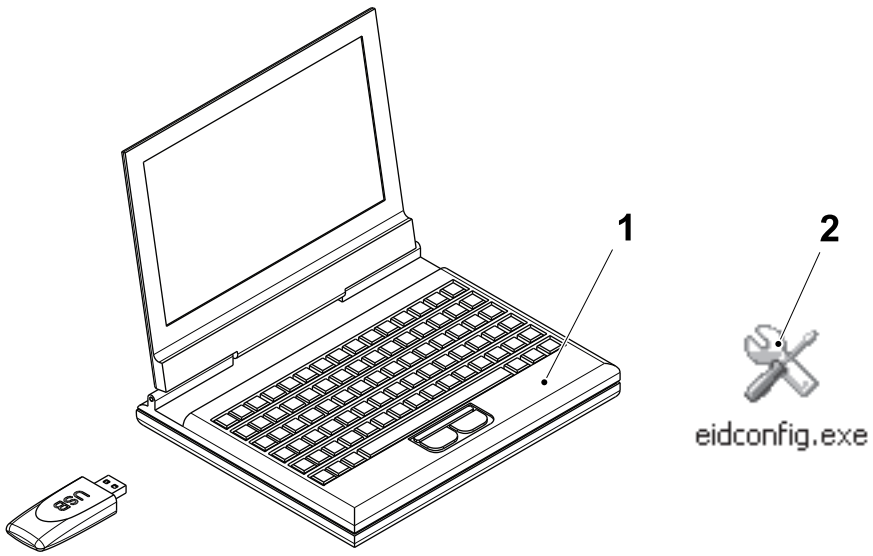

1 PC
2 `EID CONFIGURATION.EXE`

(Cont'd)

(Cont'd)

f) Touch the LOAD button (3) to load the configuration from the file TMCC.CSV.

g) Edit the name in the CONFIGURATION DESCRIPTION box (4) with an appropriate name that represents the product and production shift to which the configuration file with be utilized.

h) Select an EVENT MODE type (5):

- SINGLE EVENT MODE; prints two letters on the package to represent an event
- DOUBLE EVENT MODE; prints one letter on the package to represent an event.

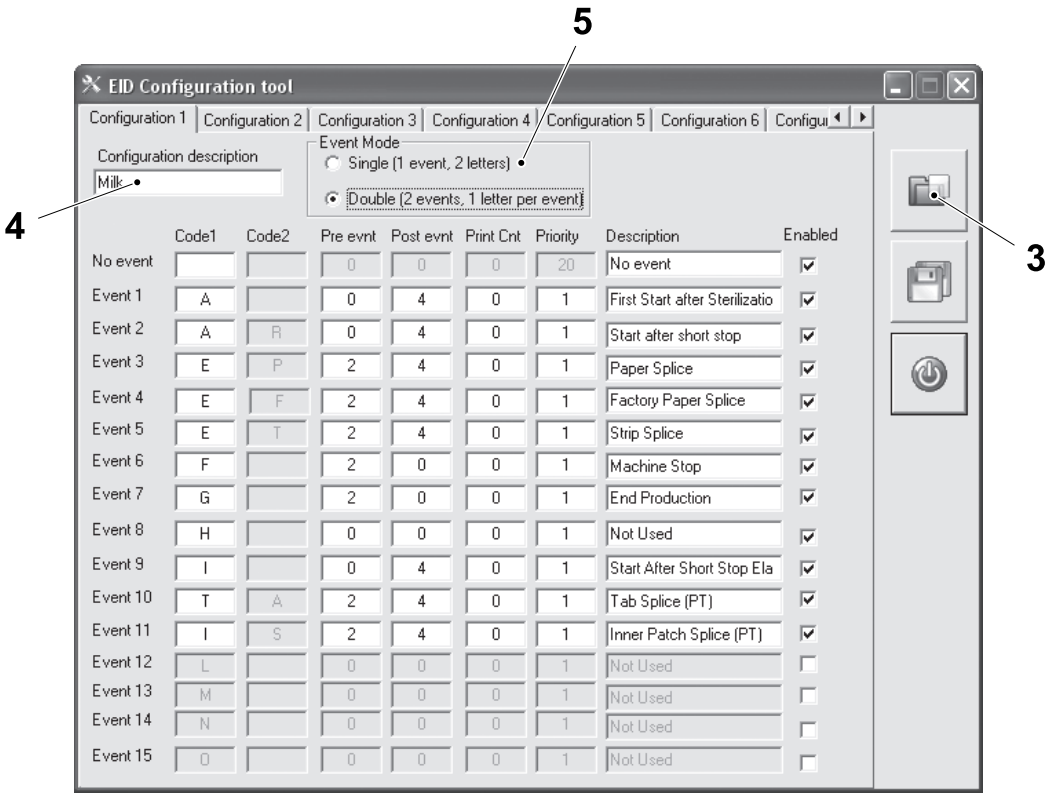

3 LOAD button
4 CONFIGURATION DESCRIPTION box
5 EVENT MODE type

(Cont'd)

(Cont'd)

Note! Only the eight predefined events can be used. The events can only be enabled or disabled depending on the requirements of the configuration file. Custom events must be created and added to the PLC program.

Note! If double event mode has been chosen only the column `CODE 1` is modifiable.

i) Enter the assigned letters into the `CODE 1` column (6) and `CODE 2` column (7) for the eight predefined events.

j) In the `PRE EVENT` column (8) enter the number of packages to be marked before the event.

k) In the `POST EVENT` column (9) enter the number of packages to be marked after the event.

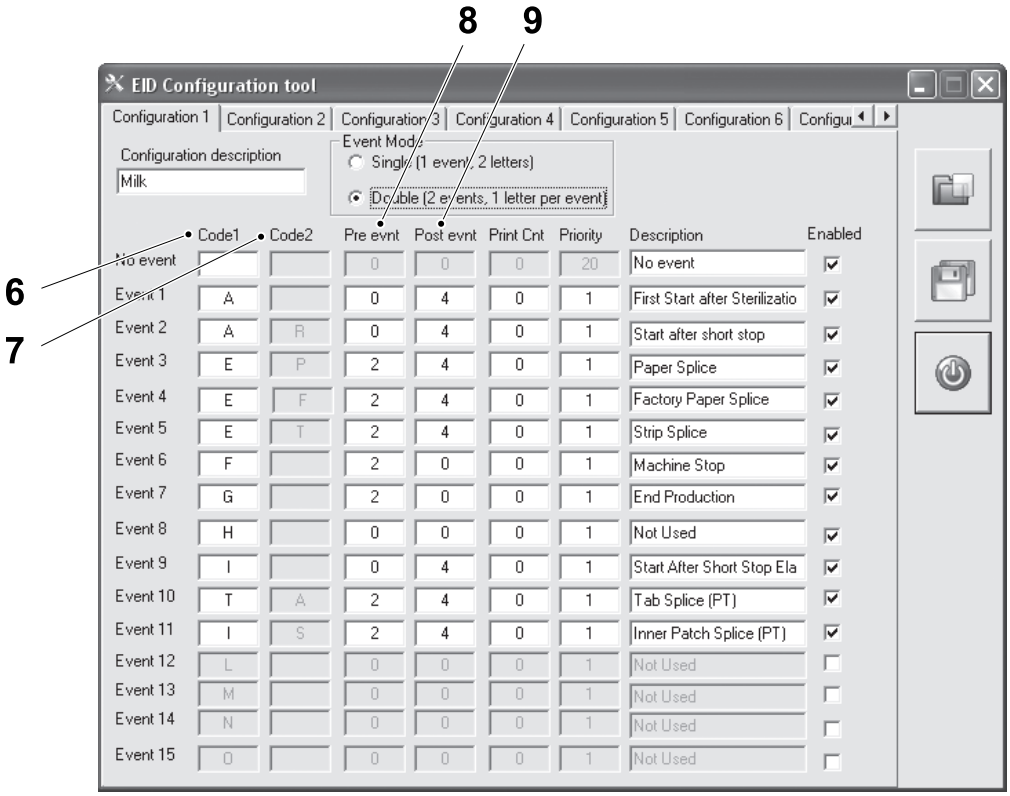

6 `CODE 1` column
7 `CODE 2` column
8 `PRE EVENT` column
9 `POST EVENT` column

(Cont'd)

(Cont'd)

l) In the PRINT CNT column (10) enter the number of packages to be counted after the event. The number can not exceed the total number of packages entered in the POST EVENT column (9).

m) In the PRIORITY column (11) enter the priority of the event, the number one being the highest priority.

n) Select the CONFIGURATION tab (12) and repeat the procedure to create a second product/production configuration file. Continue to create up to a maximum of eight custom configurations.

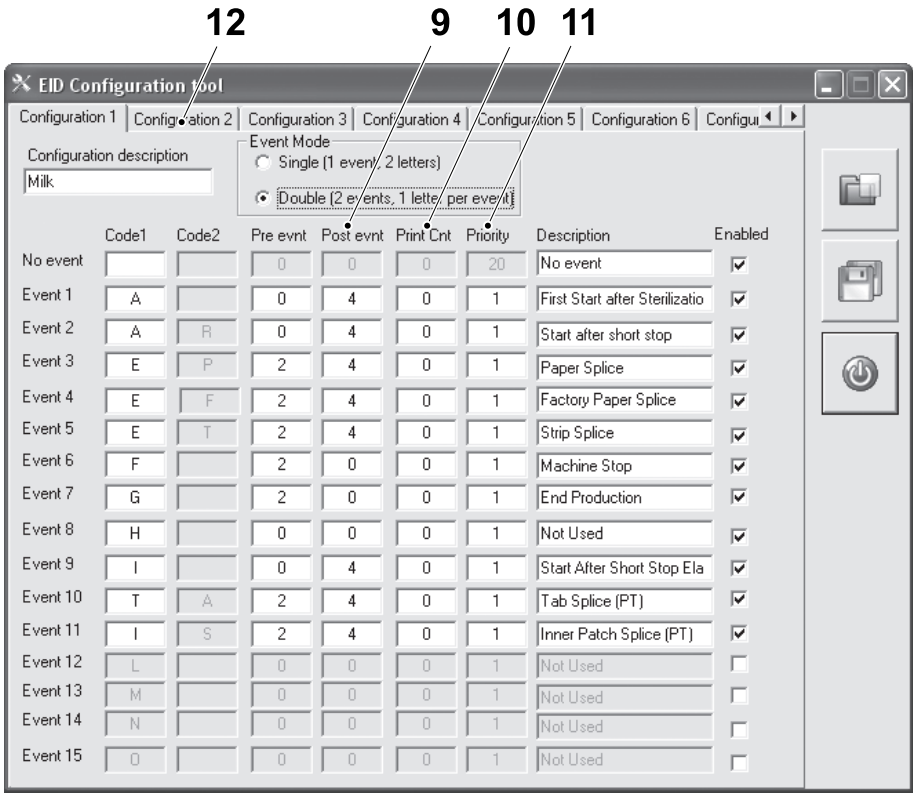

9 POST EVENT column
10 PRINT CNT column
11 PRIORITY column
12 CONFIGURATION tab

(Cont'd)

(Cont'd)

o) Select the SAVE button (13) to save the configuration file in a USB key.

p) Save the file with the name TMCC.CSV.

Note! Always save the configuration file with the name TMCC.CSV.

q) Select the CLOSE button (14) to exit from the EID configuration tool.

Note! The event ID configuration is only activated and printed on the packages after it has been loaded into the IPC.

r) Load the configuration file into the IPC, see 8.6.5-4 Traceability - Load JEID Configuration.

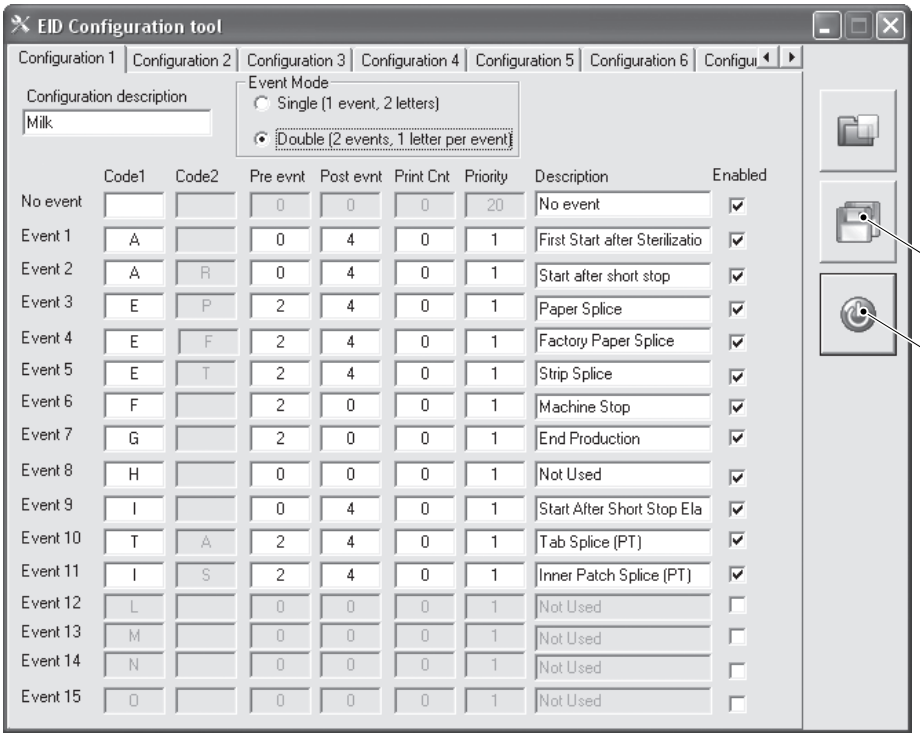

13 SAVE button
14 CLOSE button

8.6.5-2 Traceability - Configure Printer Interface Layout

Machine Status	Electrical supply disconnecting device in position I (ON) Main air valve OFF Main steam valve ON Main water valve OFF
Special Equipment	Laptop PC

Note! In order to use the TPPLE (Tetra Pak Printer Layout Editor) the screen resolution must be 1024x768.

a) Browse to the correct drive and copy the compressed file `PROGRAMS\TP PRINTER LAYOUT EDITOR\3012052-100X` from the software USB key (or software CD) to the laptop PC desktop.

b) Create a new folder for the TPPLE tool.

c) Open the file `3012054-0100X` and copy `TPPLE.EXE` in the new folder.

d) Connect the USB key to the USB port of the PC (1).

e) Double click on the `TPPL.EXE` (2) to start the TPPLE tool.

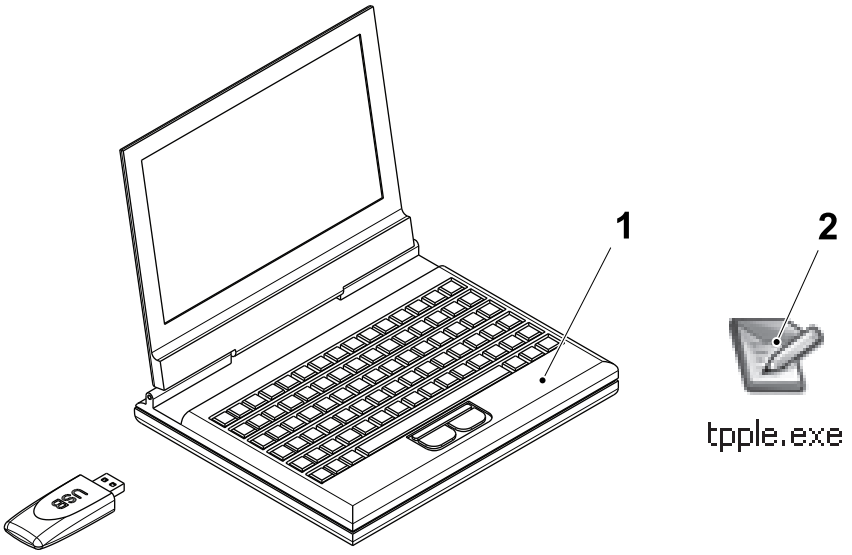

1 PC
2 `TPPLE.EXE`

(Cont'd)

(Cont'd)

f) From the FILE menu, select NEW button (3) to create a new layout or OPEN button (4) to edit an existing layout.

g) When creating a new layout file, an empty layout, print area (5) is created. The layout has some default properties that can be changed through the layout property window (6).

Note! Even thought that it is possible to set a font size, it is not possible to change the font size in the printer (Domino A300 series). For the Domino A300 series printers the font size is related to the number of rows, assuming that the distance between the printing head and the print surface is constant.

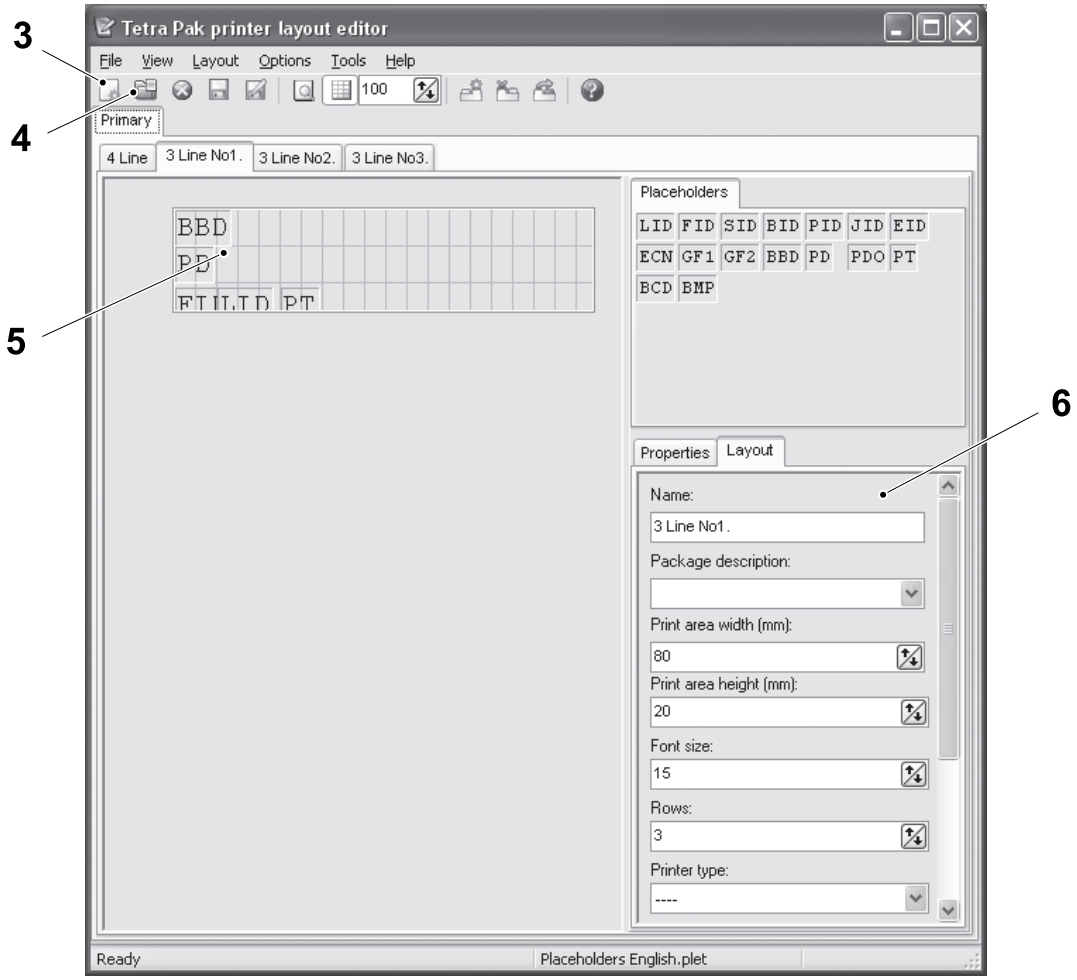

3 NEW button
4 OPEN button
5 Empty layout, print area
6 Layout property window

(Cont'd)

(Cont'd)

h) To change the layout properties enter the following informations in the layout property window (6):

- NAME: select the name to identify the layout (it will be displayed in the TPOP)
- PRINT AREA WIDTH (MM): select the layout length
- PRINT AREA HEIGHT (MM): select the layout height
- FONT SIZE: select the font dimension so that the placeholder is not higher than the height of the row
- ROWS: select according to the printer capability (3 rows with Domino)
- PRINTER TYPE: select the printer installed
- IP ADDRESS: compiled automatically according to the printer selected
- PORT: enter the port number (usually 3001)
- DDE TOPIC: enter the topic (usually prt_pri)
- DDE ALARMS ITEM: enter the DDE alarm group name (usually alarms).

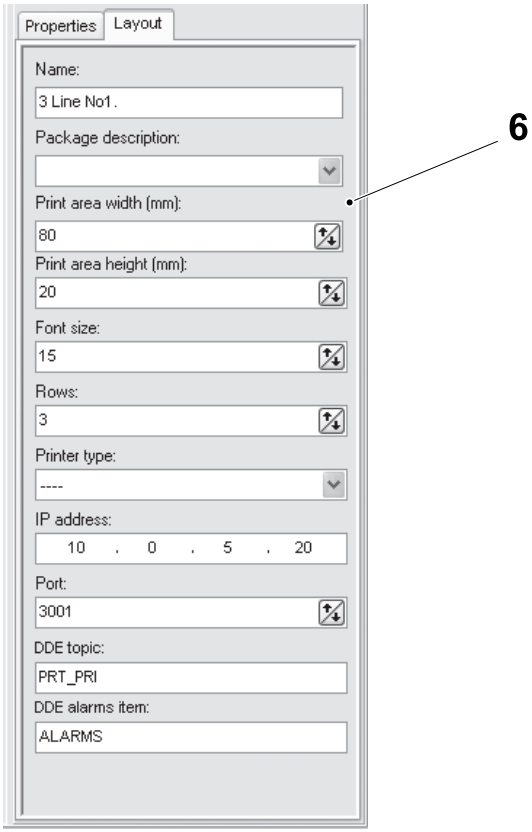

6 Layout property window

(Cont'd)

(Cont'd)

i) To add a placeholder to the print area (7) simply drag and drop it on it. The placeholders are located in the Placeholders palette (8). See the list of the placeholders in the next page.

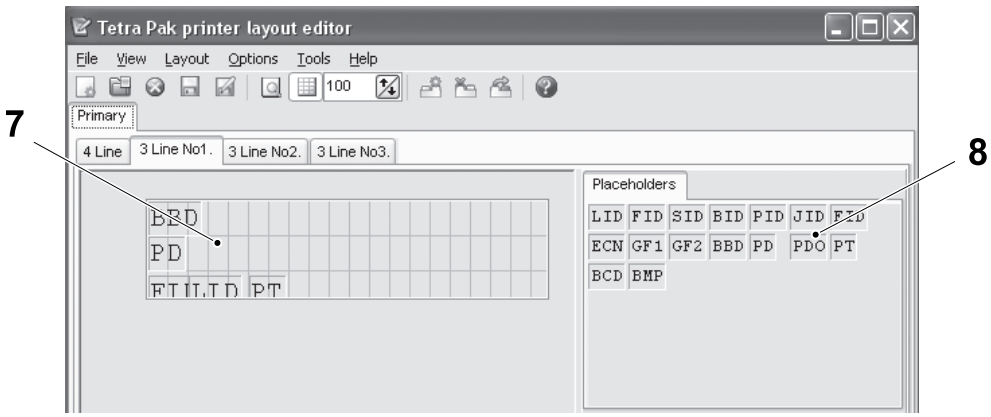

7 Print area
8 Placeholders palette

j) Complete list of the placeholders.

LID	Line ID, the ID of the filling line connected to the printer
FID	Factory ID, the ID of the factory where the filling line is located
SID	Shift ID, the ID of the shift operating the filling line
BID	Batch ID, the ID of the batch in use
PID	Product ID, the ID of the product in use
JID	Jaw ID, the ID of the jaw that made the package
EID	Event ID, the ID of the event occurred
ECN	Event counter, the package counter related to the EID
GF1	Generic field 1, free text
GF2	Generic field 2, free text
CN1	Counter 1, reserved for future use
CN2	Counter 2, reserved for future use
BBD	Best before date, the expire date of the product
PD	Production date, the production date of the package. Can be different from the actual production date if the offset is used.
PDO	Production date offset, the number of days before or after the actual production date. A negative value will set a PD prior the actual one while a positive value will set a PD after the actual one.
PT	Production time, the production time of the package. Not affected by the offset
BCD	Barcode, various type of barcode (1d and 2d). Note that different kind of barcodes support different kind of characters
BMP	Bitmap, not supported by the Domino A300 series

(Cont'd)

(Cont'd)

k) Select the SAVE button (9) to save the printer interface layout file in a USB key.

l) Save the file with the name PRIMARY.PLE.

Note! Always save the primary printer interface layout file with the name PRIMARY.PLE.

m) Select the CLOSE button (10) to exit from the TPPLE tool.

n) Load the printer interface layout file into the IPC, see 8.6.5-3 Traceability - Load Printer Interface Layout.

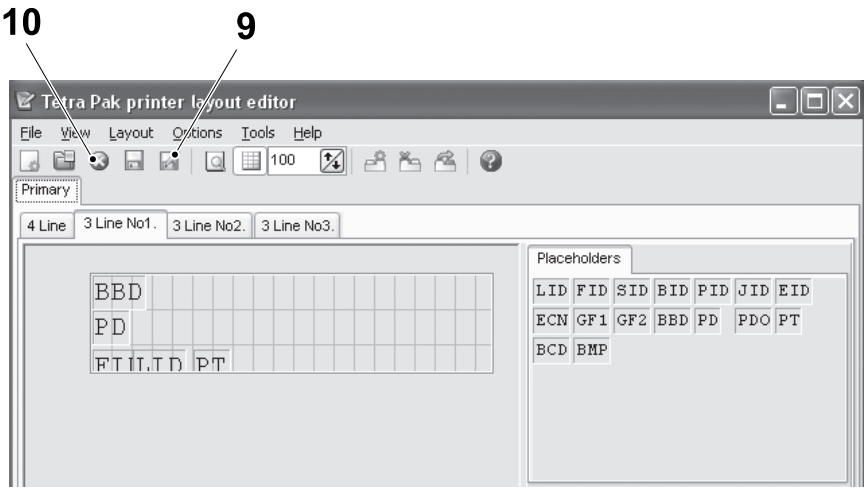

9 SAVE button
10 CLOSE button

8.6.5-3 Traceability - Load Printer Interface Layout

Machine Status	Electrical supply disconnecting device in position I (ON) Main air valve OFF Main steam valve ON Main water valve OFF
Special Equipment	USB key

a) Remove the plug from a USB port (1) on the control panel (2) and connect the USB key containing the file `PRIMARY.PLE`.

b) Touch the `MAINTENANCE CONTROL` button (3) and enter the password required, see 8.6.3-2 HMI - User Management Log On.

c) Touch the `DOWN STREAM` button (4).

d) Touch the `COPY PRINTER INTERFACE LAYOUT FILE` icon (5).

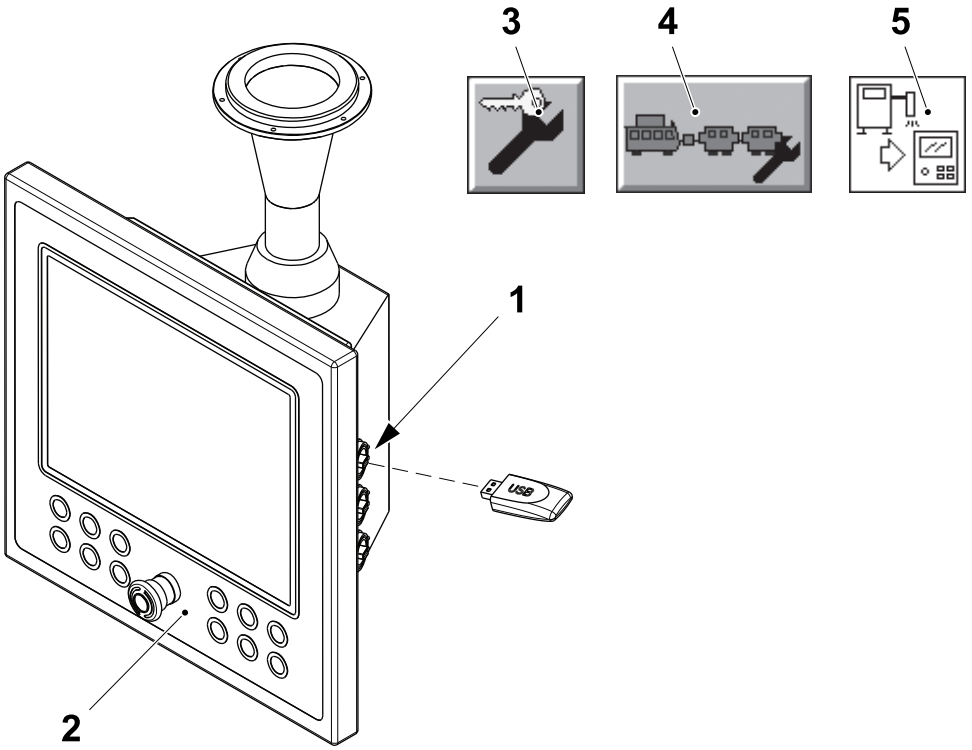

1 USB port
2 Control panel
3 `MAINTENANCE CONTROL` button
4 `DOWN STREAM` button
5 `COPY PRINTER INTERFACE LAYOUT FILE` icon

(Cont'd)

(Cont'd)

Note! The COPY FILE TO IPC button (6) is displayed as disabled if the USB has not been inserted, or if the file PRIMARY.PLE is not present, or else if the machine status does not allow to modify the configuration.

e) Touch the COPY FILE TO IPC button (6). The printer interface layout file is copied into the IPC.

f) When the copying operation is completed, touch the RESET button (7).

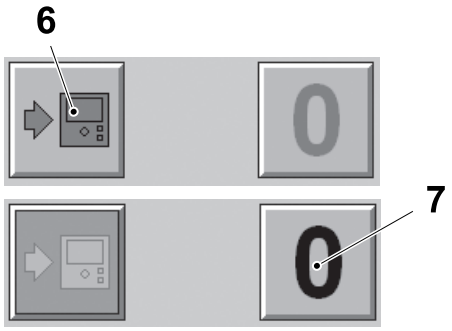

6 COPY FILE TO IPC button
7 RESET button

8.6.5-4 Traceability - Load JEID Configuration

Machine Status	Electrical supply disconnecting device in position I (ON) Main air valve OFF Main steam valve ON Main water valve OFF
Special Equipment	USB key

a) Remove the plug from a USB port (1) on the control panel (2) and connect the USB key containing the file `TMCC.CSV`.

b) Touch the `MAINTENANCE CONTROL` button (3) and enter the password required, see 8.6.3-2 HMI - User Management Log On.

c) Touch the `DOWN STREAM` button (4).

d) Touch the `IMPORT JEID CONFIGURATION FILE` icon (5).

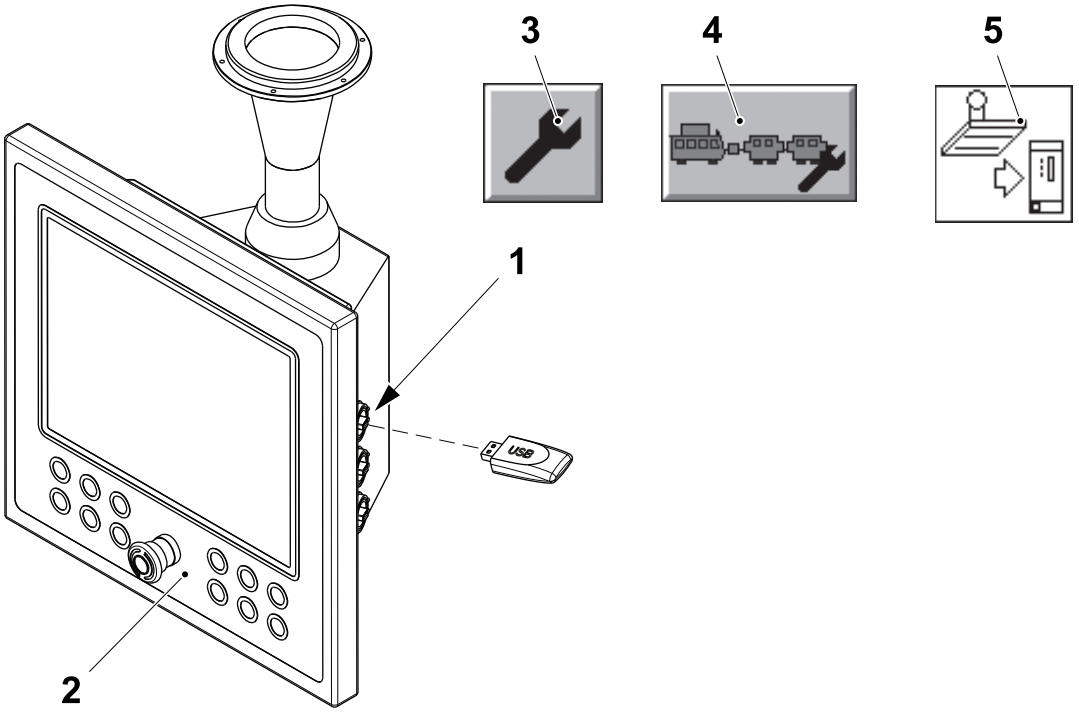

1 USB port
2 Control panel
3 `MAINTENANCE CONTROL` button
4 Down stream button
5 `IMPORT JEID CONFIGURATION FILE` icon

(Cont'd)

(Cont'd)

Note! The CONFIGURATION FILE TO IPC button (6) is displayed as disabled if the USB has not been inserted, or if the file TMCC.CSV is not present, or else if the machine status does not allow to modify the configuration.

e) Touch the CONFIGURATION FILE TO IPC button (6). The configuration file is copied into the IPC.

f) When the copying operation is completed, touch the RESET button (7).

g) Remove the USB key.

Note! When the button (6) appear as disabled or when it does not stop to flash it means that the copying operation is failed: touch the RESET button (7) and try again.

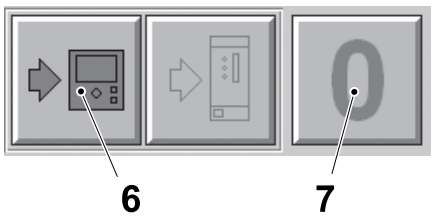

6 CONFIGURATION FILE TO IPC button
7 RESET button

8.6.5-5 Traceability - Set Jaw Event Lot ID Printing

Machine Status	STEP ZERO

Note! The JELID printing can be enabled only if: the JEID and iLine XT machine options are enabled, a Tetra Pak printer is configured and when the machine is not running.

a) On the TPOP, touch the MAINTENANCE CONTROL button (1) and enter the password required, see 8.6.3-2 HMI - User Management Log On.

b) Touch the DOWNSTREAM button (2).

c) Touch the LOT ID ENABLE buttons (3). The ON/OFF buttons appear.

d) Touch the ON button (4) to enable the JELID printing.

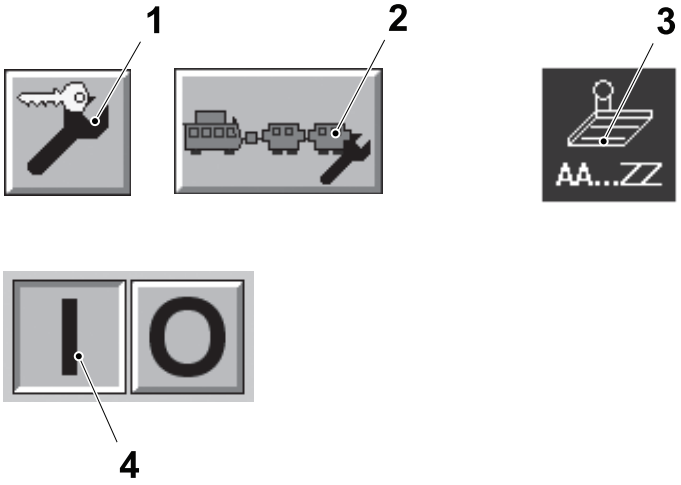

1 Maintenance control button
2 Downstream button
3 Lot ID enable button
4 On button

8.7 Control Devices and Sensors

8.7.1 Industrial PC

8.7.1.1 IPC (APC620) - Description

Note! Valid only for machines equipped with Industrial PC APC620, TP No. 90604-5446.

Note! Industrial PC APC620 is installed on machines with T-order: 21220/00001 to 21220/00239.

The IPC (Industrial PC) is the core component of the TPOP system and consists of a computer with the TPOP and PLMS software and all the physical connections needed for communicating with the rest of the system.

- RS232/422/485 port (1)
- SDL/DVI port (2): connects the TPOP to the IPC
- 24 V power (3)
- two USB ports (4)
- Line Network level 6 (5): used for communication with DE
- Int. network level 7 (6): used for communication with the PLC (connected to the ethernet switch)
- two COM RS232 ports (7)
- Ext. network level 5 (8): external network

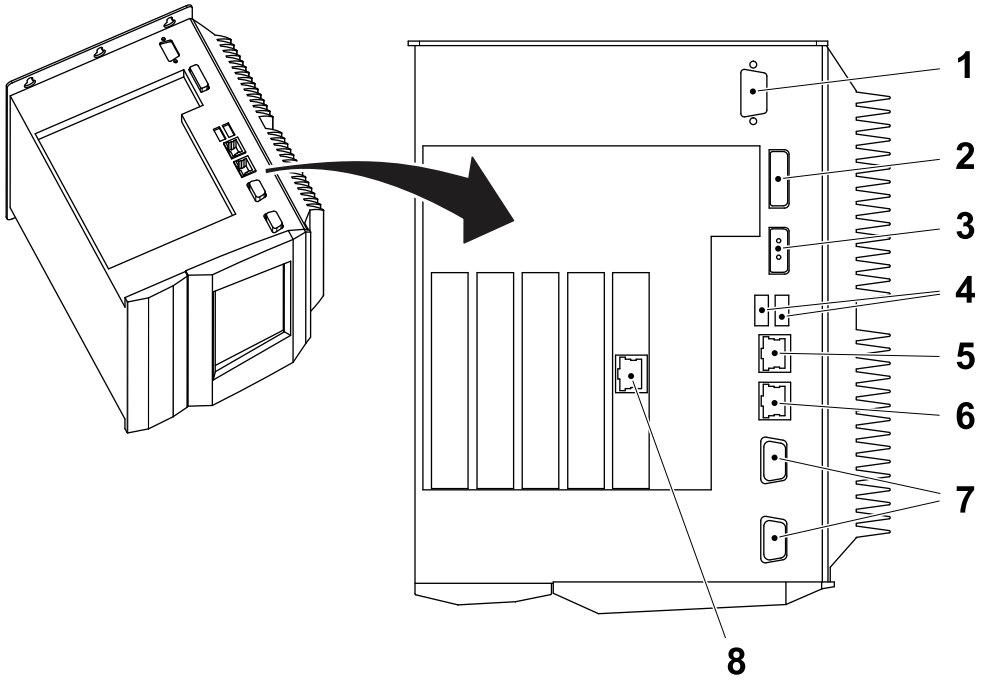

1 RS232/422/485 port	5 LVL6
2 SDL/DVI port	6 LVL7
3 24V power	7 RS232
4 USB port	8 LVL5

(Cont'd)

(Cont'd)

- Cover (9)
- CompactFlash1 (10): 4Gb for operating system
- CompactFlash2 (11): 8Gb for logger data
- DVD drive (12)
- PS2 port (13): connects a PS2 mouse or keyboard to the IPC.

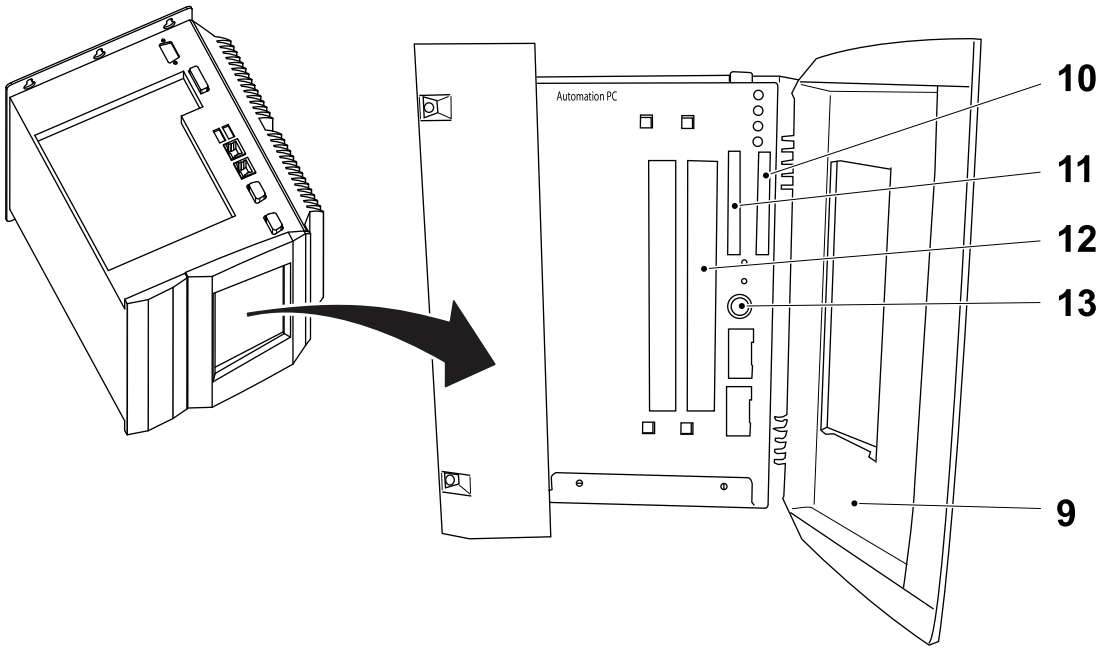

9 Cover
10 CompactFlash1 4Gb
11 CompactFlash2 8Gb
12 DVD drive
13 PS2 port

8.7.1.1-1 IPC - Change CompactFlash Memory Card

Machine Status	Electrical supply disconnecting device in position O (OFF)

a) Open the door of the electrical cabinet.

b) Open the cover (1) of the IPC (2).

Note! The CompactFlash memory card (3) contains the operating system. In case of replacement, re-install the software, see 8.6-3 HMI and PLMS - Install Software.

c) Press the button to eject the CompactFlash memory card (3) or (4).

d) Fit the new CompactFlash memory card (3) or (4).

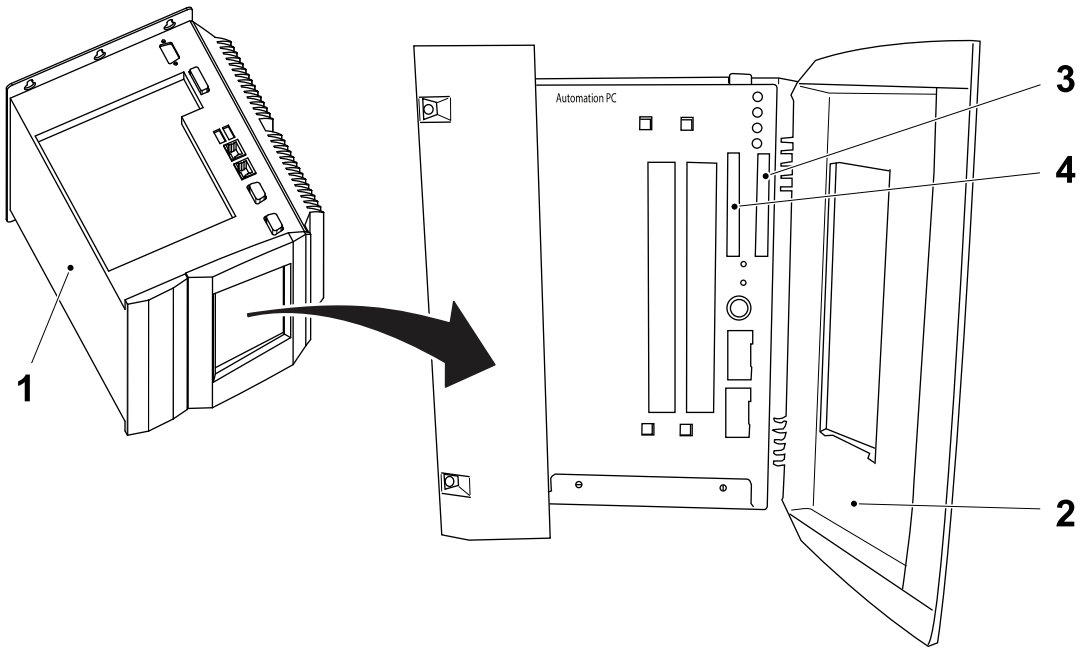

1 Cover
2 IPC
3 CompactFlash memory card
4 CompactFlash memory card

8.7.1.1-2 IPC - Change Battery

Machine Status	Electrical supply disconnecting device in position O (OFF)

WARNING
Hazardous voltage.
Can shock, burn, or cause death. The main power supply connector must be switched off and secured with a lock before starting any work on the IPC.

Any BIOS settings that have been made will remain when the battery is changed with the power turned off (the settings are stored in non-volatile EEPROM). The date and time must be reset later because this data is lost when the battery is changed.

(Cont'd)

(Cont'd)

a) Disconnect the IPC power supply.

b) Touch the housing or earth connection (not the power supply) in order to discharge any electrostatic charge from your body.

c) Remove the black plastic cover (1) from the battery compartment and carefully pull out battery (2) using removal strips (3).

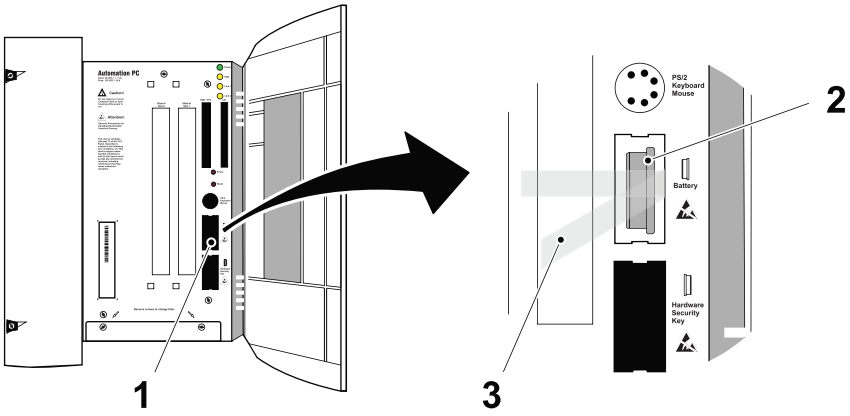

1 Cover
2 Battery
3 Removal strips

(Cont'd)

(Cont'd)

CAUTION
Hazardous substances.
Lithium batteries are considered hazardous waste. Handle and dispose of used batteries in compliance with local regulations.

d) Insert the new battery with correct polarity. The battery must not be held by its edges. Insulated tweezers may also be used for inserting the battery.

Note! To make the next battery charge easier, make sure the removal strip is in place when inserting the battery.

e) Reconnect the power supply to the IPC by connecting the power cable and pressing the power button.

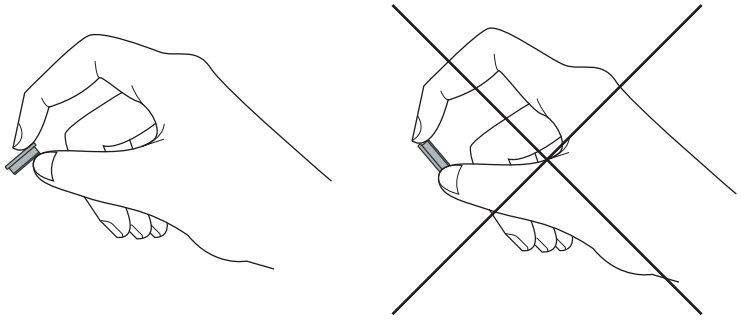

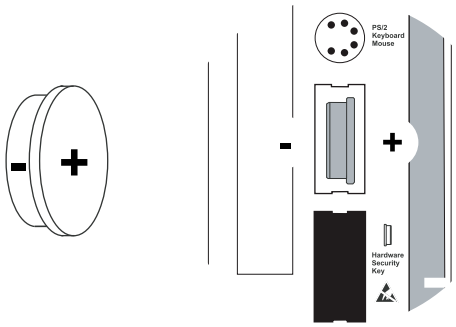

8.7.1.1-3 IPC - Change Fan Kit

Machine Status	Electrical supply disconnecting device in position O (OFF)

WARNING
Hazardous voltage.
Can shock, burn, or cause death.
The main power supply connector must be switched off and secured with a lock before starting any work on the IPC.

(Cont'd)

(Cont'd)

a) Disconnect the IPC power supply.

b) Touch the housing or ground connection (not the power supply) in order to discharge any electrostatic charge from your body.

c) Open the orange front cover (3) and remove the seven screws (2).

d) Remove the side cover (1) and the fan filter cover (4).

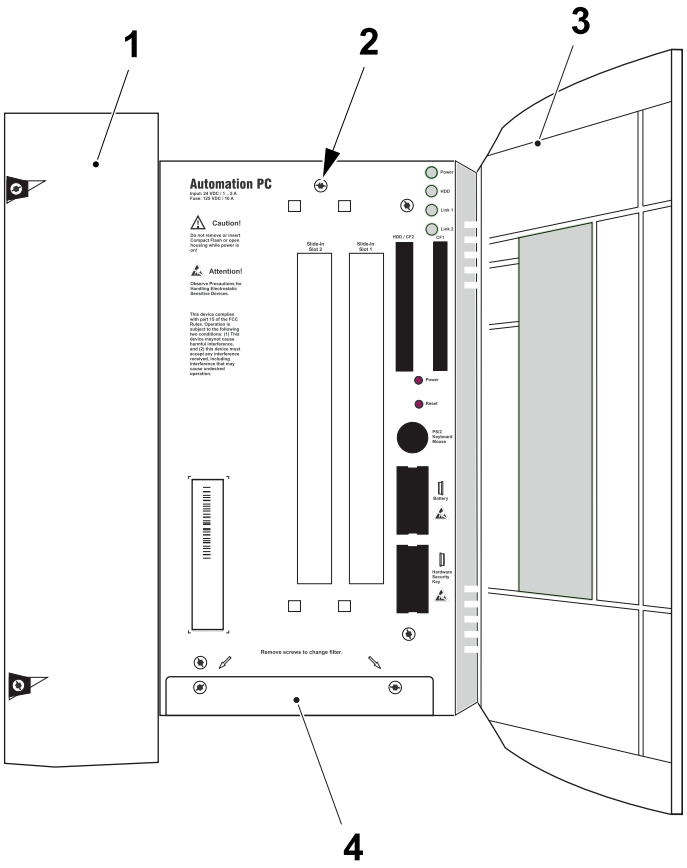

1 Side cover
2 Screw
3 Front cover
4 Fan filter cover

(Cont'd)

(Cont'd)

e) Remove the securing screw (5) and pull out the EtherNet PCB (6).

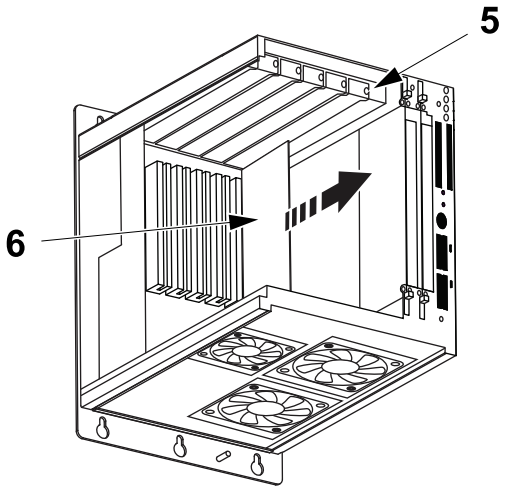

5 Securing screw
6 EtherNet PCB

f) Remove the slide-in cover (7) and CD-ROM drive (8) by releasing the slide-in mechanism (9).

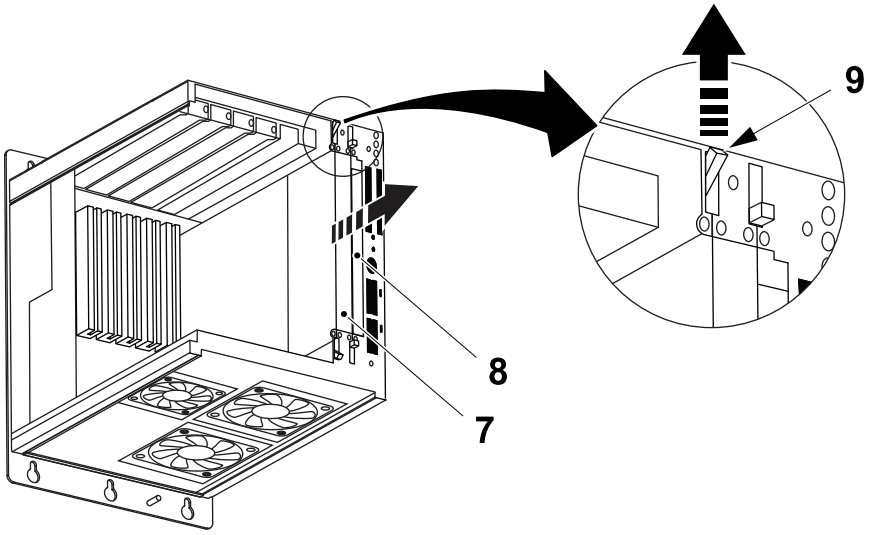

7 Cover
8 CD-ROM drive
9 Slide-in mechanism

(Cont'd)

(Cont'd)

g) Disconnect the fan connection cables (10) from the circuit board.

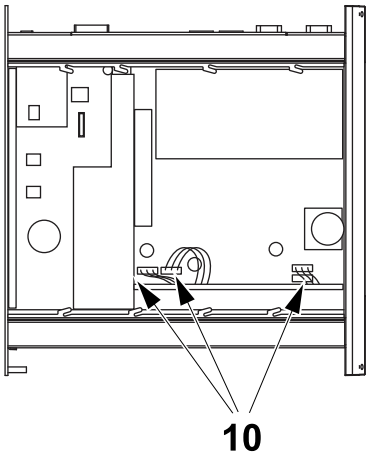

10 Fan connection cable

h) Remove the six screws (11) securing the fans and remove the three fans (12).

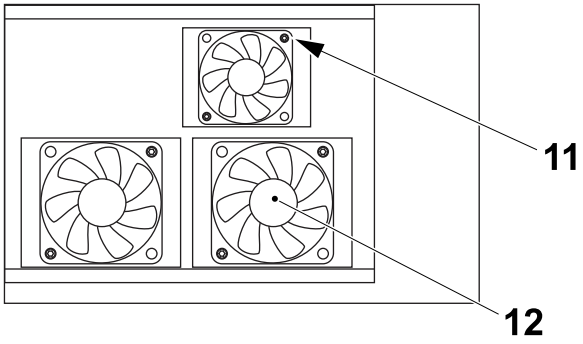

11 Screw
12 Fan

(Cont'd)

(Cont'd)

CAUTION

Risk of damage to the equipment.

The fans must be inserted so that the air flows toward the inside of the housing.

i) The arrow (13) indicate the direction of the air flow and the arrow (14) indicate the direction of the fan rotation.

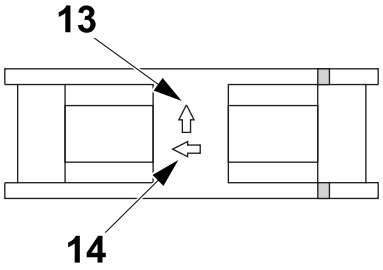

13 Air flow arrow
14 Fan rotation arrow

j) Align the new fans over the fastening bolts (15).

k) Feed the cables through the openings (18) in the housing into the main board of the IPC box. The fan connector cable for the fan (16) must be placed in the cable fasteners (17).

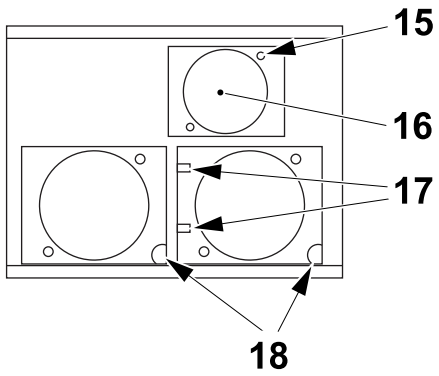

15 Fastening bolt
16 40 mm fan
17 Cable fastener
18 Opening

(Cont'd)

(Cont'd)

l) Secure the three fans with the screws (11).

m) Connect the fan connection cables to the circuit board according to the illustration below.

n) Assemble in reverse order.

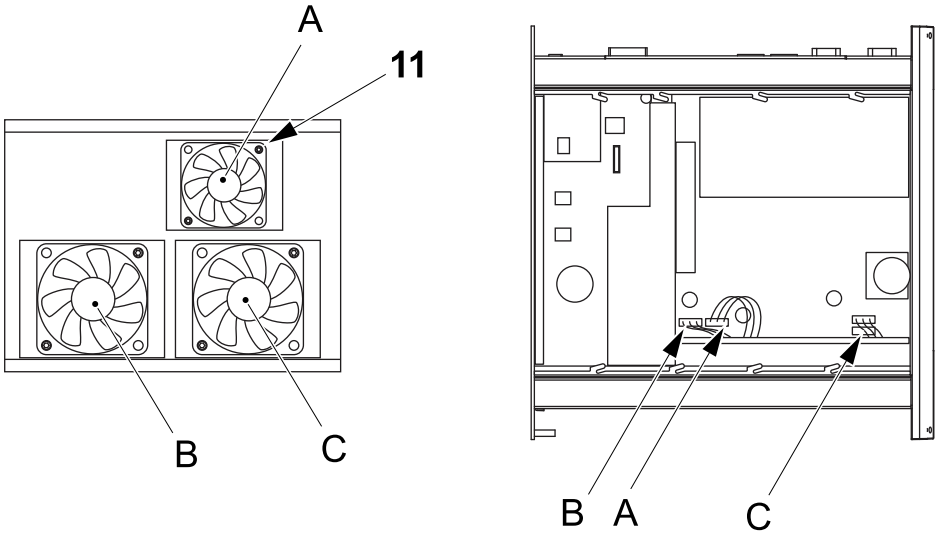

11 Screw

8.7.1.1-4 IPC - Change Fan Filter

Machine Status	Electrical supply disconnecting device in position O (OFF)

WARNING
Hazardous voltage.
Can shock, burn, or cause death.
The main power supply connector must be switched off and secured with a lock before starting any work on the IPC.

Note! Check for contamination at regular intervals.

(Cont'd)

(Cont'd)

a) Disconnect the IPC power supply.

b) Touch the housing or ground connection (not the power supply) in order to discharge any electrostatic charge from your body.

c) Open the orange front cover (3) and remove the seven screws (2).

d) Remove the side cover (1) and the fan kit cover (4).

e) Change the filter (5) and attach the new filter with the filter clasp (6).

f) Assemble in reverse order.

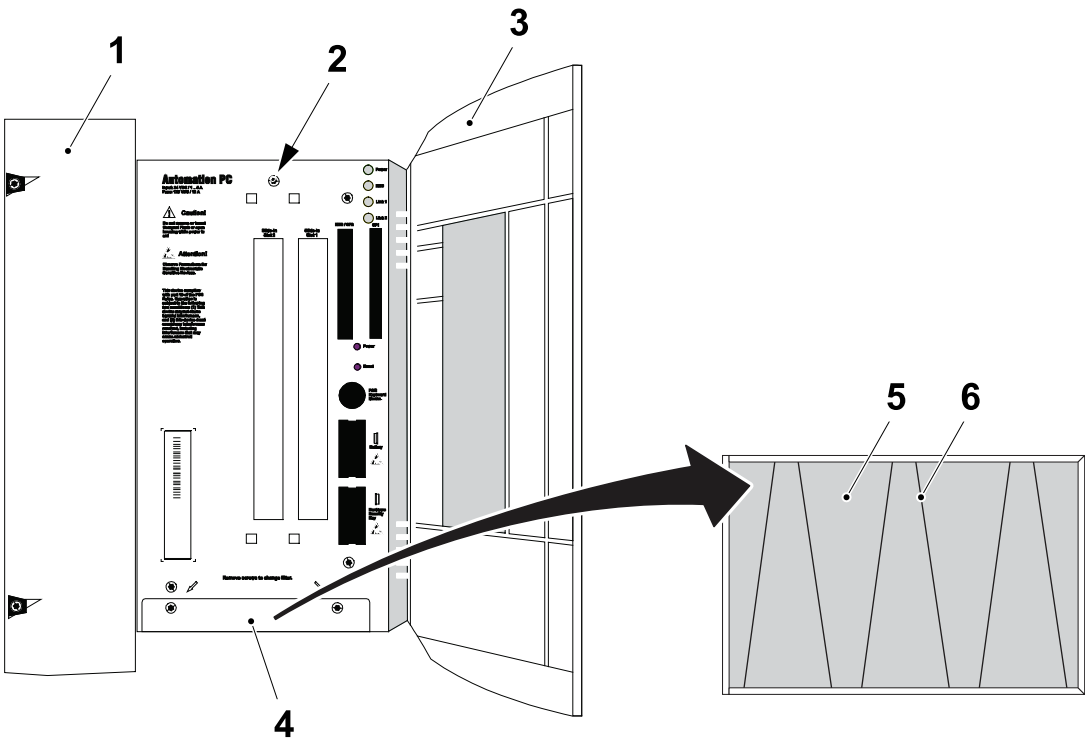

1 Cover
2 Screw
3 Cover
4 Cover
5 Filter
6 Clasp

8.7.1.1-5 IPC - Change DVD ROM

Machine Status	Electrical supply disconnecting device in position O (OFF)
SPC Reference	90604-5446

WARNING

Hazardous voltage.

Can shock, burn, or cause death.

The main power supply connector must be switched off and secured with a lock before starting any work on the IPC.

a) Disconnect the IPC power supply.

b) Touch the housing or ground connection (not the power supply) in order to discharge any electrostatic charge from your body.

c) Open the orange front cover (3) and remove the seven screws (2).

d) Remove the side cover (1).

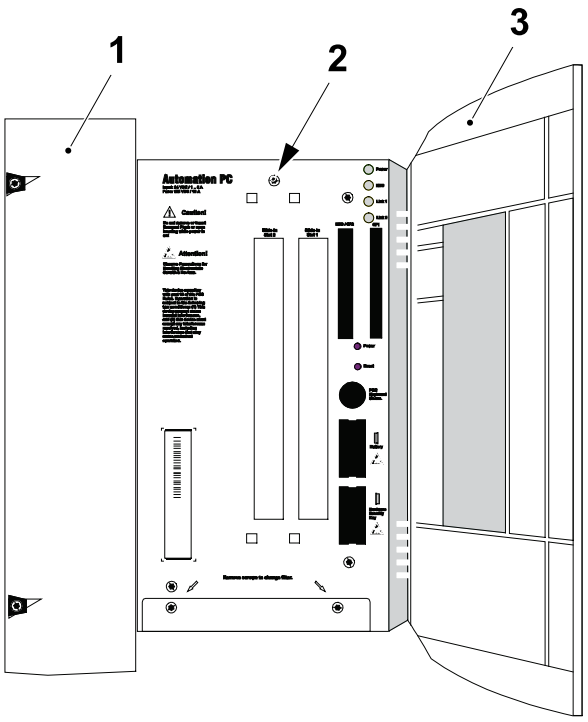

1 Cover
2 Screw
3 Cover

(Cont'd)

(Cont'd)

e) Remove the slide-in CD-ROM drive (4) by releasing the slide-in mechanism (5).

f) Assemble in reverse order.

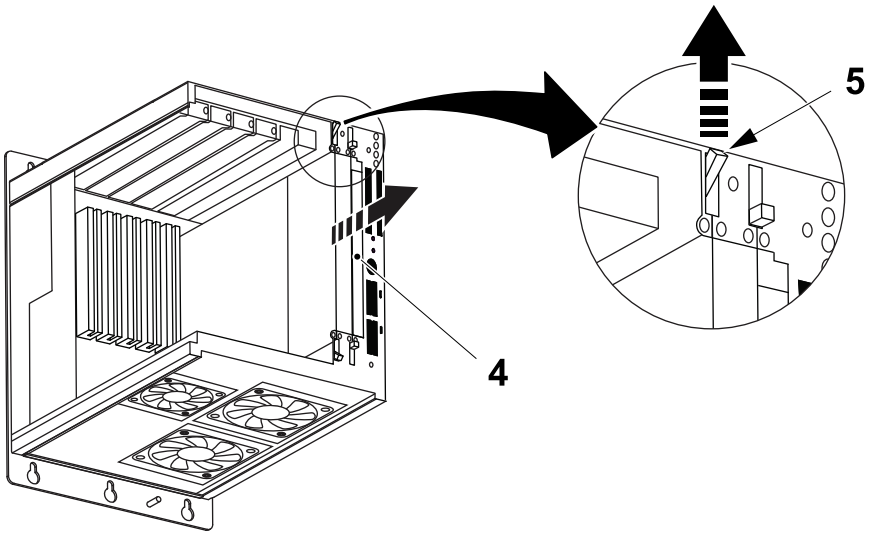

4 CD-ROM drive
5 Slide-in mechanism

8.7.1.2 IPC (APC910) - Description

Note! Valid only for machines equipped with Industrial PC APC910, TP No. 90605-7102.

Note! Industrial PC APC910 is installed on machines with T-order: 21220/00240 and above.

(Cont'd)

(Cont'd)

The IPC (1) (Industrial PC) is the core component of the TPOP system and consists of a computer with the TPOP and PLMS software and all the physical connections needed for communicating with the rest of the system.

- USB port (x4) (2)
- Ethernet port (3)
- Ethernet port (4) Level 7: used for communication with the PLC (connected to the Ethernet switch)
- RS 232/485 port (5)
- SDL/DVI port (6): connects the TPOP to the IPC
- 24VDC power (7)
- Ethernet port (8) Level 5: external network.

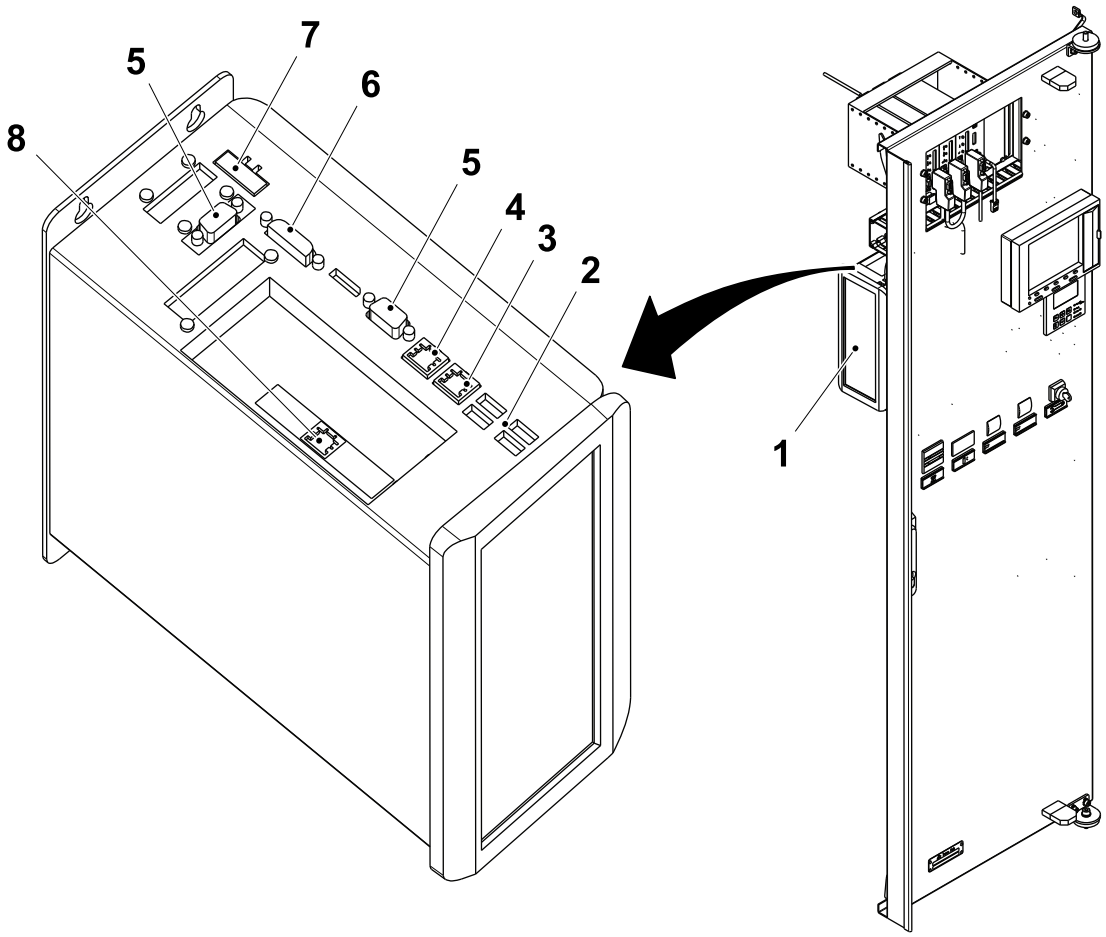

1 IPC
2 USB port
3 Ethernet port
4 Ethernet port
5 RS 232/485 port
6 SDL/DVI port
7 24VDC power
8 Ethernet port

(Cont'd)

(Cont'd)

- cover (9)
- CFast slot (10)
- USB port (11)
- Battery (12).

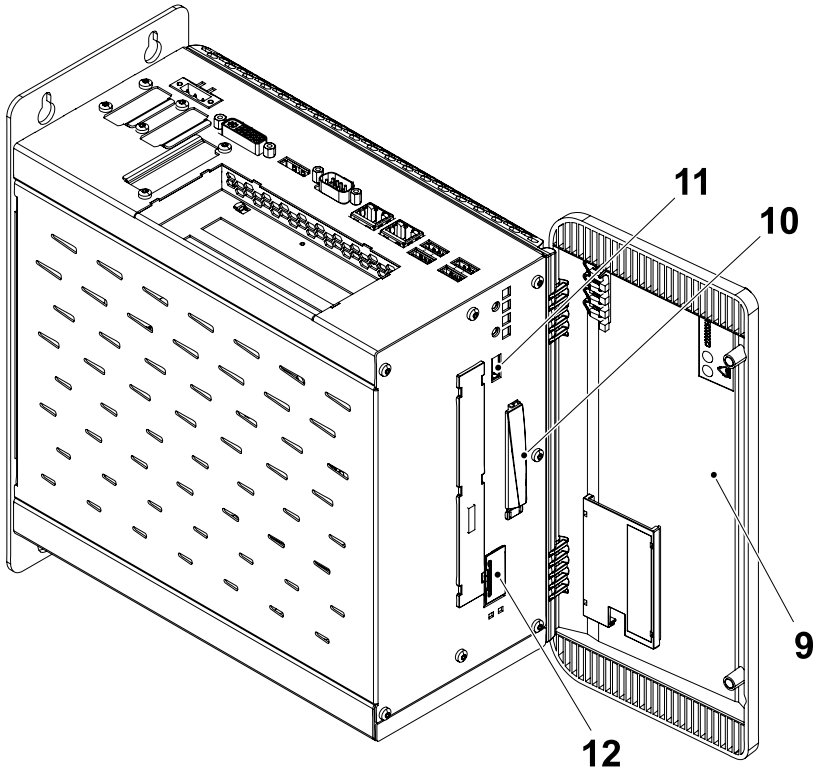

9 Cover
10 CFast slot
11 USB port
12 Battery

8.7.1.2-1 IPC - Change Battery

Machine Status	Electrical supply disconnecting device in position O (OFF)
SPC Reference	90605-7102

WARNING
Hazardous voltage.
Can shock, burn, or cause death. The main power supply connector must be switched off and secured with a lock before starting any work on the IPC.

Any BIOS settings that have been made will remain when the battery is changed with the power turned off (the settings are stored in non-volatile EEPROM). The date and time must be reset later because this data is lost when the battery is changed.

(Cont'd)

(Cont'd)

a) Disconnect the IPC power supply.

b) Touch the housing or earth connection (not the power supply) in order to discharge any electrostatic charge from your body.

c) Remove the black plastic cover (1) from the battery compartment and carefully pull out battery (2) using removal strips (3).

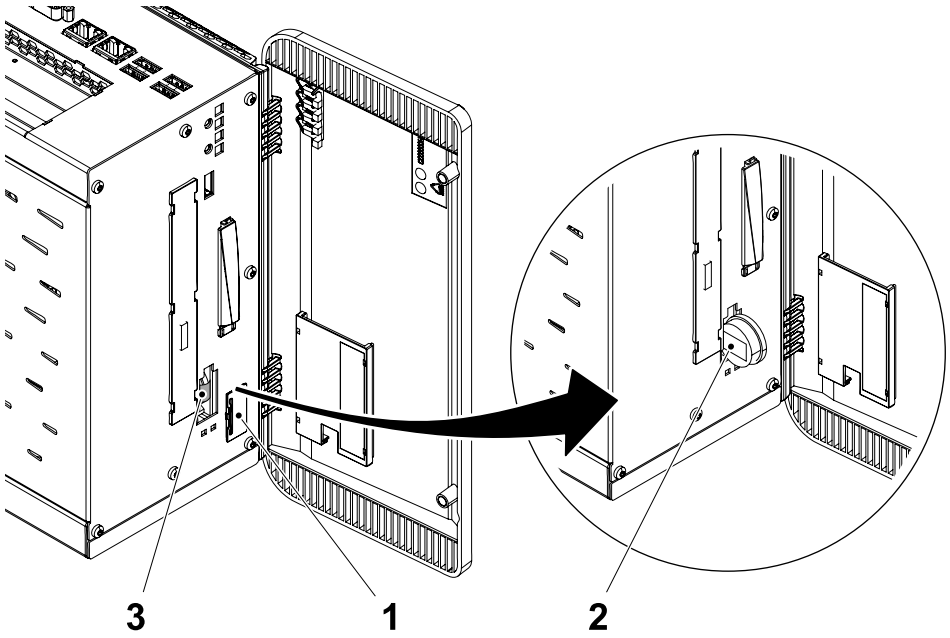

1 Cover
2 Battery
3 Removal strips

(Cont'd)

(Cont'd)

CAUTION
Hazardous substances.
Lithium batteries are considered hazardous waste. Handle and dispose of used batteries in compliance with local regulations.

d) Insert the new battery with correct polarity. The battery must not be held by its edges. Insulated tweezers may also be used for inserting the battery.

Note! To make the next battery charge easier, make sure the removal strip is in place when inserting the battery.

e) Reconnect the power supply to the IPC by connecting the power cable and pressing the power button.

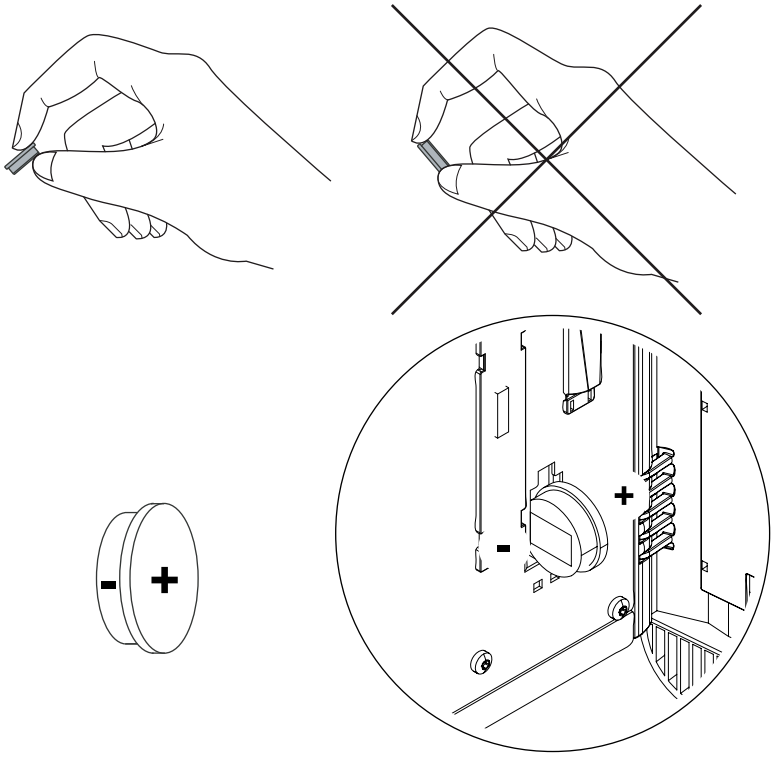

8.7.1.2-2 IPC - Change CFast Card

Machine Status	Electrical supply disconnecting device in position O (OFF)
Special Equipment	CFast 16 GB TP No. 90606-354
SPC Reference	90605-7102

a) Open the door of the electrical cabinet.

b) Open the front cover (1) of the IPC .

Note! TheCFast card (4) contains the operating system. In case of replacement, re-install the TPOP Basic and the TPOP HMI software, see 8.6-3 HMI and PLMS - Install Software.

c) Open the door (2) and press the ejector button (3) to eject the CFast card (4).

d) Fit the new CFast card (4) until it locks in position and close the door (2).

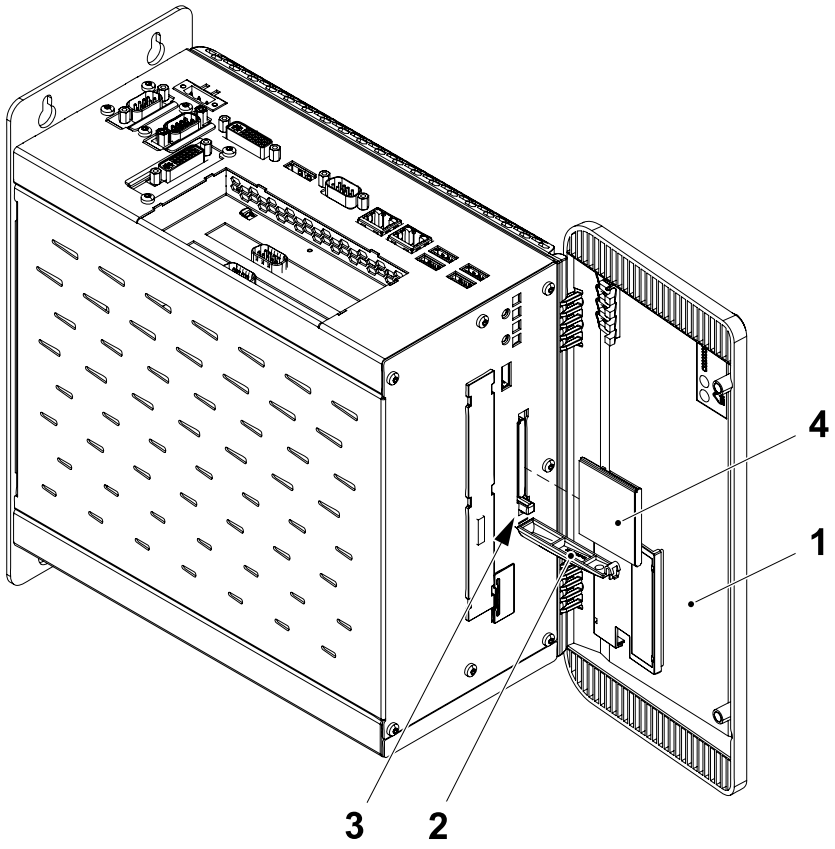

1 Front cover
2 Door
3 Ejector button
4 CFast card

8.7.1.2-3 IPC - Change Solid State Drive

Machine Status	Electrical supply disconnecting device in position O (OFF)
Special Equipment	Solid State Drive 60 GB TP No. 90606-355
SPC Reference	90605-7102

Note! The Solid State Drive (SSD) contains all the data and configuration files (performance, process, operator sheet, etc).

a) Disconnect the IPC power supply.

b) Touch the housing or ground connection (not the power supply) in order to discharge any electrostatic charge from your body.

c) Open the front cover (1) of the IPC .

d) Remove the screws (2).

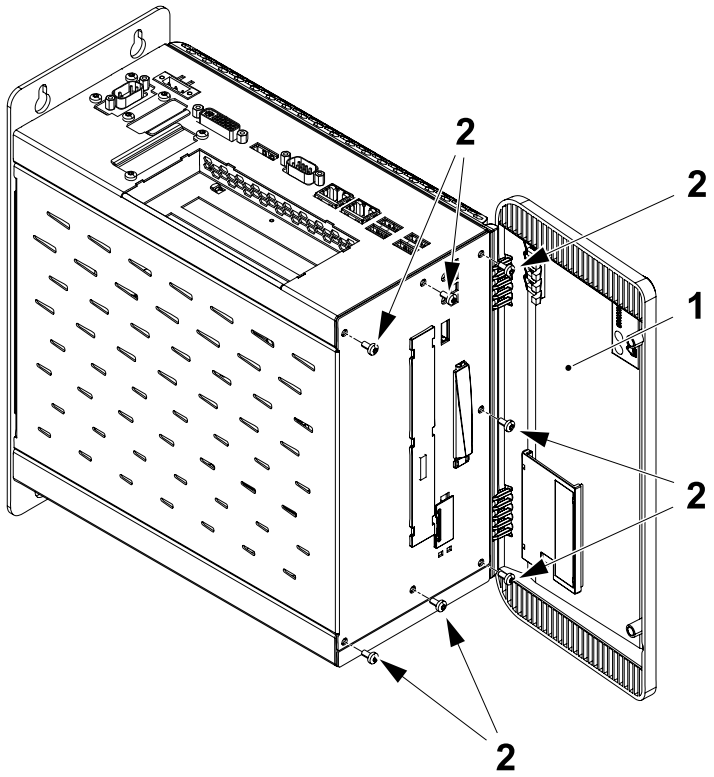

1 Front cover
2 Screw

(Cont'd)

(Cont'd)

e) Remove the side cover (3) sliding it first toward the front and then to the side.

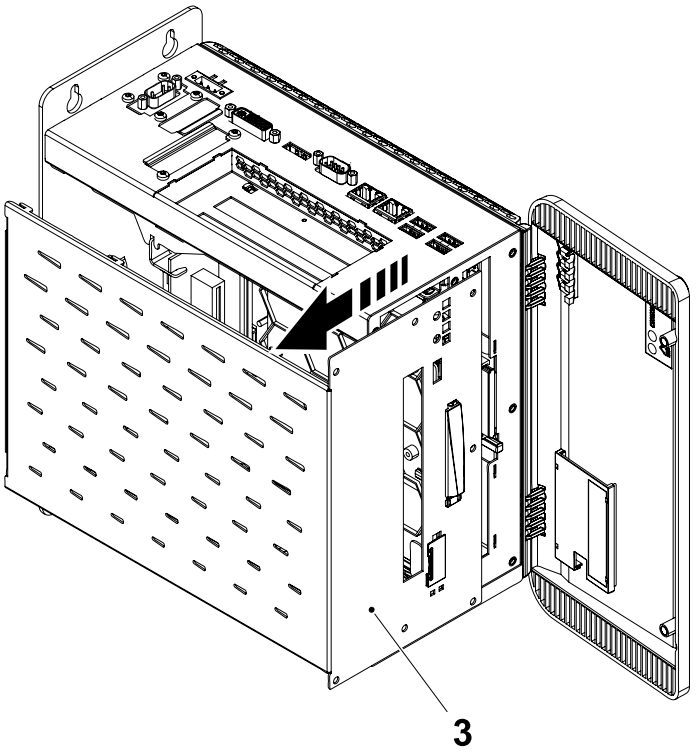

3 Side cover

(Cont'd)

(Cont'd)

f) Free the removal strip (4) fastened to the side of the solid state drive (5).

g) Pull firmly the removal strip (4) and remove the solid state drive (5) from the IPC.

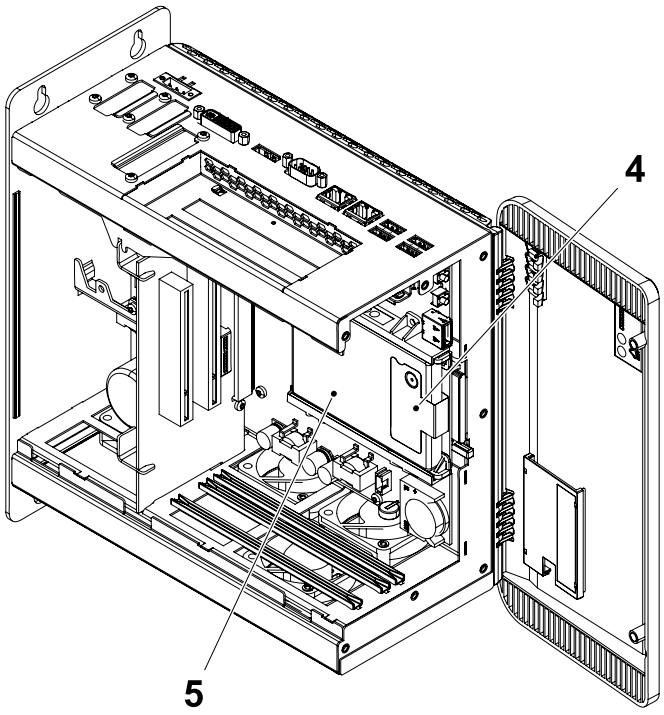

4 Removal strip
5 Solid state drive

(Cont'd)

(Cont'd)

h) Slide-in the new solid state drive (5) making sure to align it with the guide rails (6).

i) Tuck the removal strip (4) back between the drive and the frame.

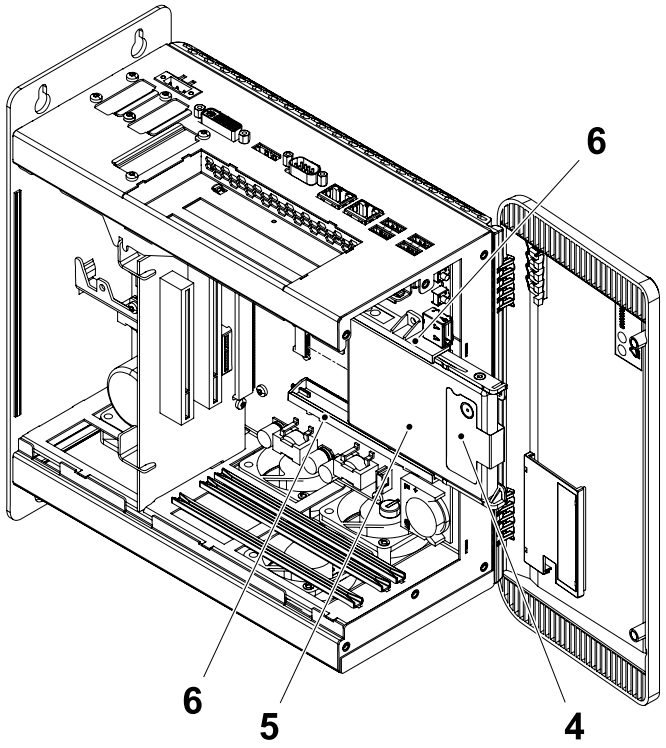

4 Removal strip
5 Solid state drive
6 Guide rail

(Cont'd)

(Cont'd)

j) Fit back the side cover (3) with the same screws (2).

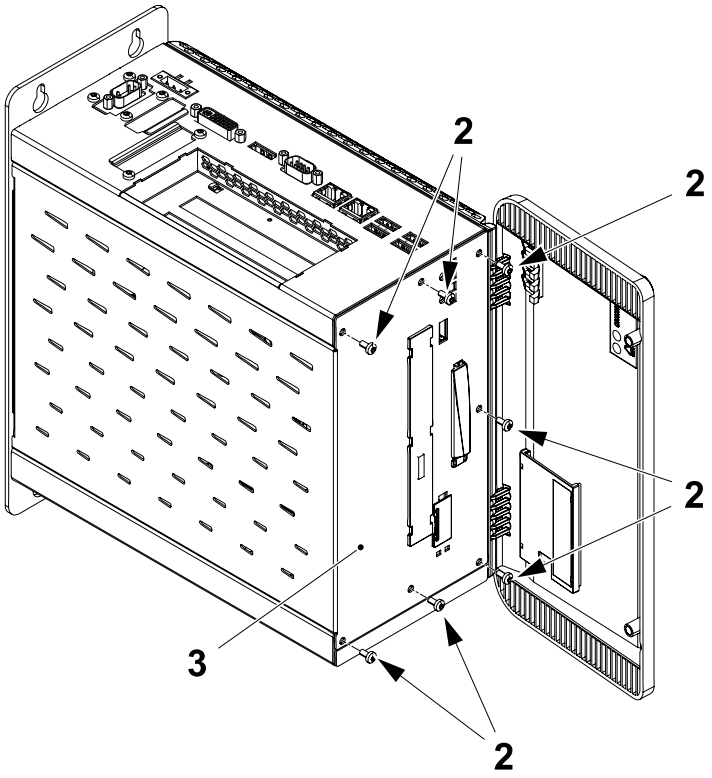

2 Screw
3 Side cover

8.7.1.2-4 IPC - Change Auxiliary Serial Port

Machine Status	Electrical supply disconnecting device in position O (OFF)
Special Equipment	RS485 Aux. COM board TP No.90606-356
SPC Reference	90605-7102

a) Disconnect the IPC power supply.

b) Touch the housing or ground connection (not the power supply) in order to discharge any electrostatic charge from your body.

c) Open the front cover (1) of the IPC .

d) Remove the screws (2).

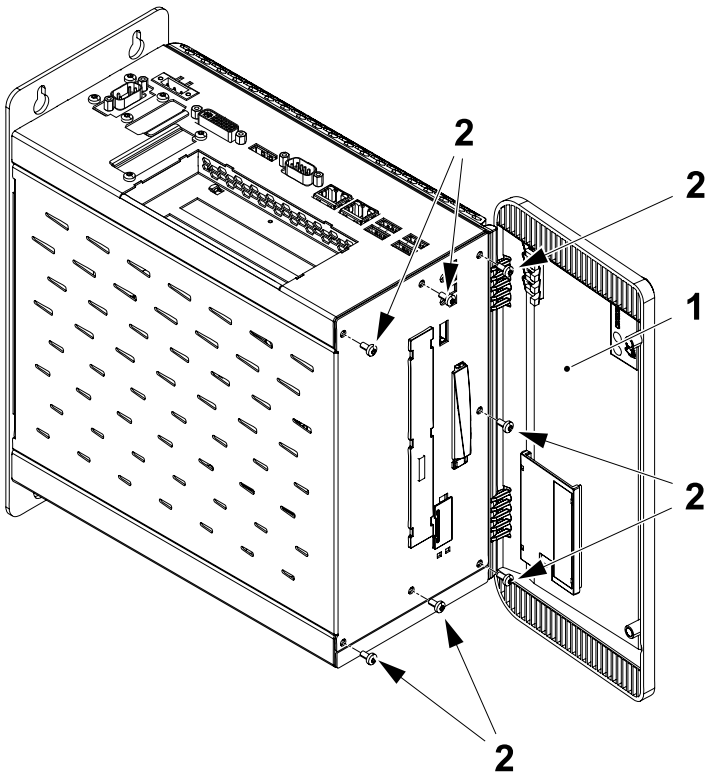

1 Front cover
2 Screw

(Cont'd)

(Cont'd)

e) Remove the side cover (3) sliding it first toward the front and then to the side.

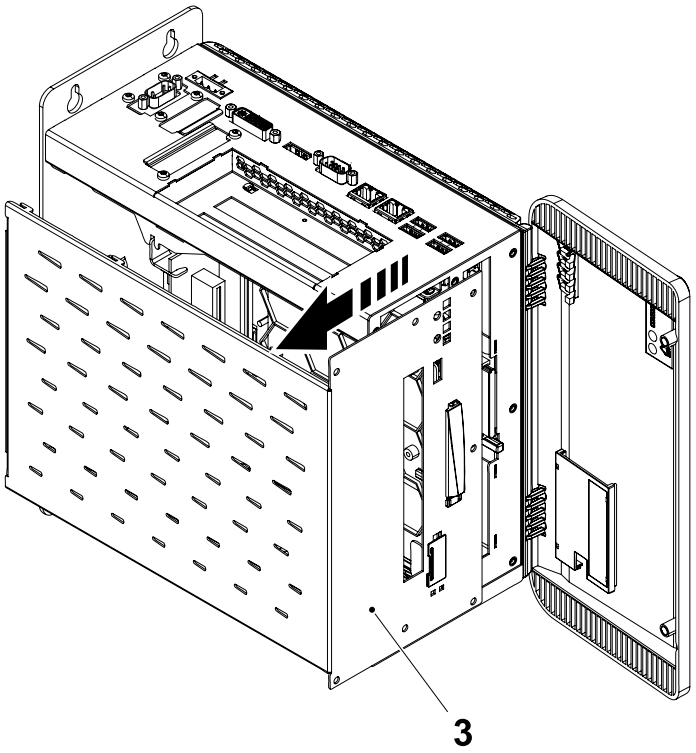

3 Side cover

(Cont'd)

(Cont'd)

f) Remove the screws (4).

g) Disconnect and remove the auxiliary serial port (5) .

h) Fit the new auxiliary serial port (5) into the slot (6).

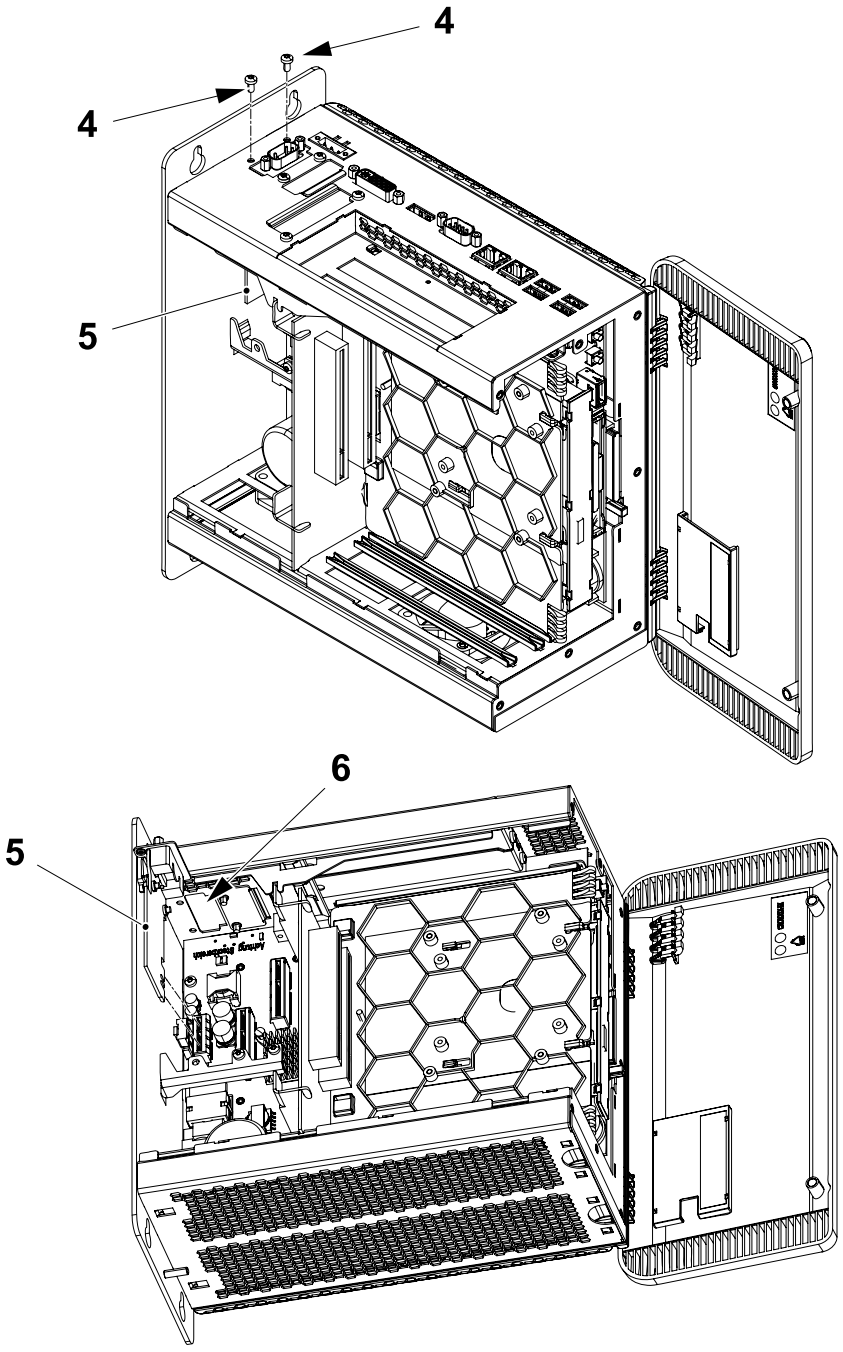

4 Screw
5 Auxiliary serial port
6 Slot

(Cont'd)

(Cont'd)

i) Secure the auxiliary serial port (5) by the screws (4).

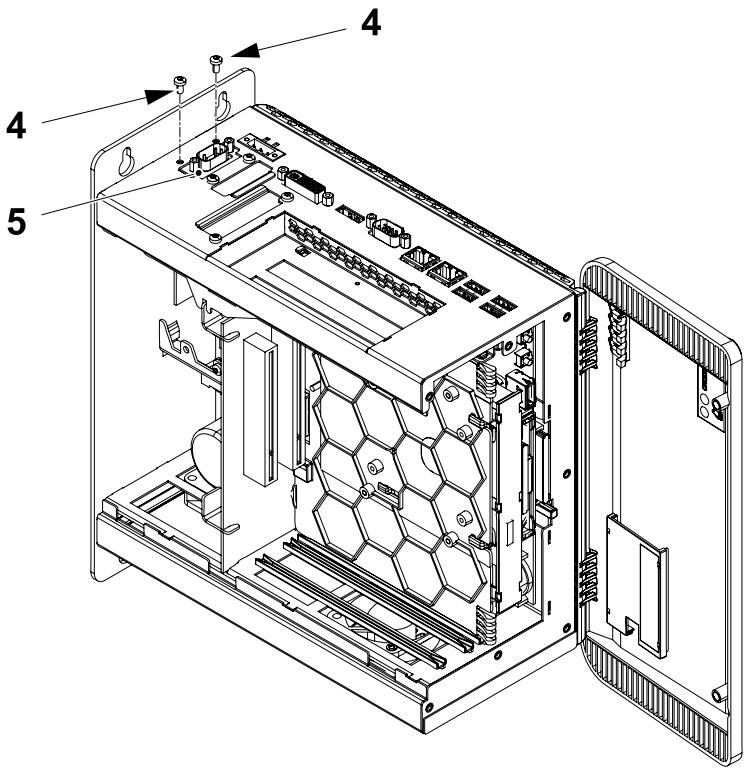

4 Screw
5 Auxiliary serial port

(Cont'd)

(Cont'd)

j) Fit back the side cover (3) using the same screws (2).

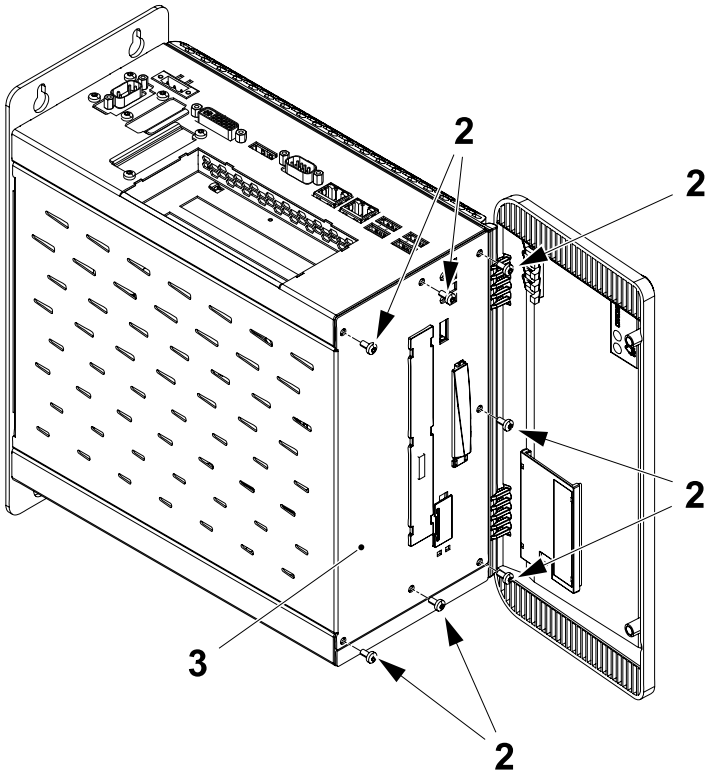

2 Screw
3 Side cover

8.7.1.2-5 IPC - Change Ethernet Card Level 5

Machine Status	Electrical supply disconnecting device in position O (OFF)
SPC Reference	90605-7102

a) Disconnect the IPC power supply.

b) Touch the housing or ground connection (not the power supply) in order to discharge any electrostatic charge from your body.

c) Open the front cover (1) of the IPC .

d) Remove the screws (2).

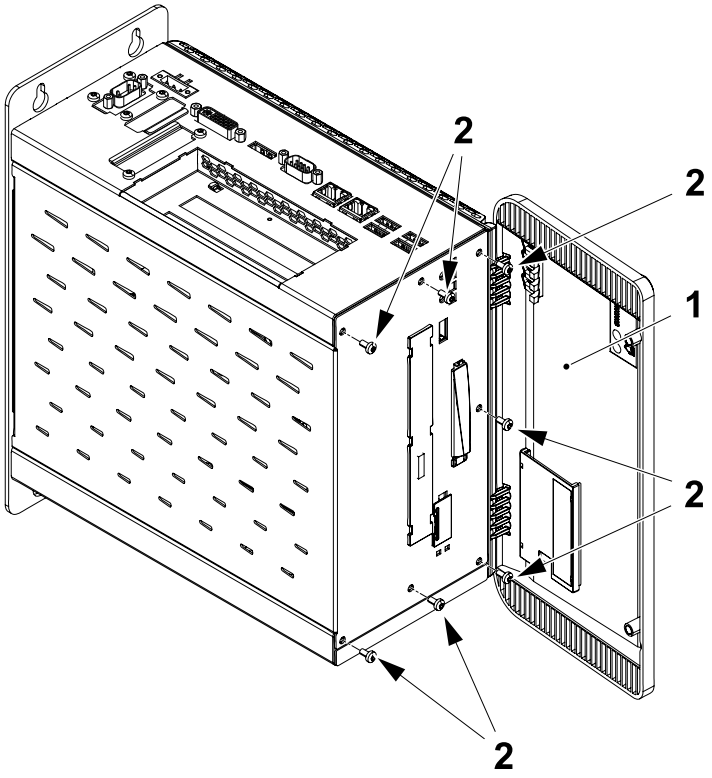

1 Front cover
2 Screw

(Cont'd)

(Cont'd)

e) Remove the side cover (3) sliding it first toward the front and then to the side.

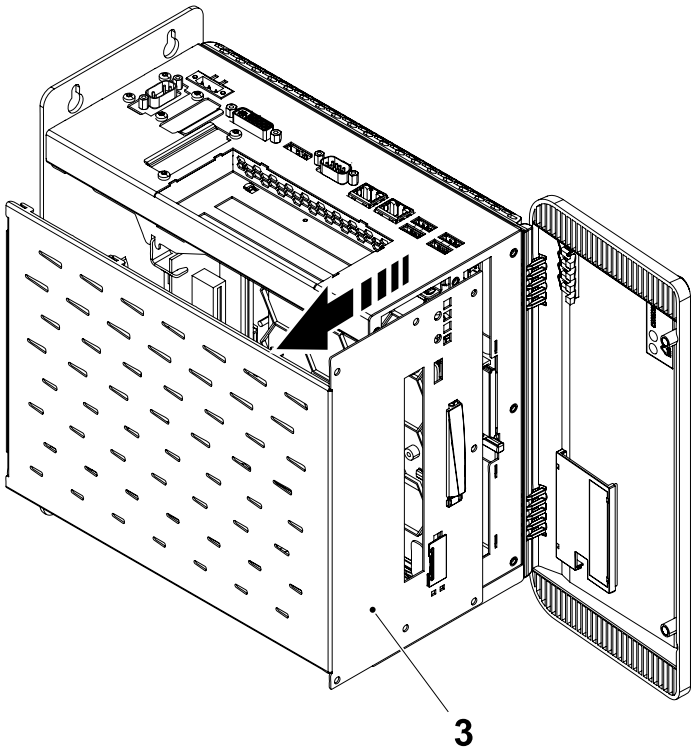

3 Side cover

(Cont'd)

(Cont'd)

f) Remove the screw (4) and the Ethernet card (5).

g) Insert the new Ethernet card (5) in the guide rail (6) and connect it to the plug (7).

h) Secure the Ethernet card (5) by the screw (4).

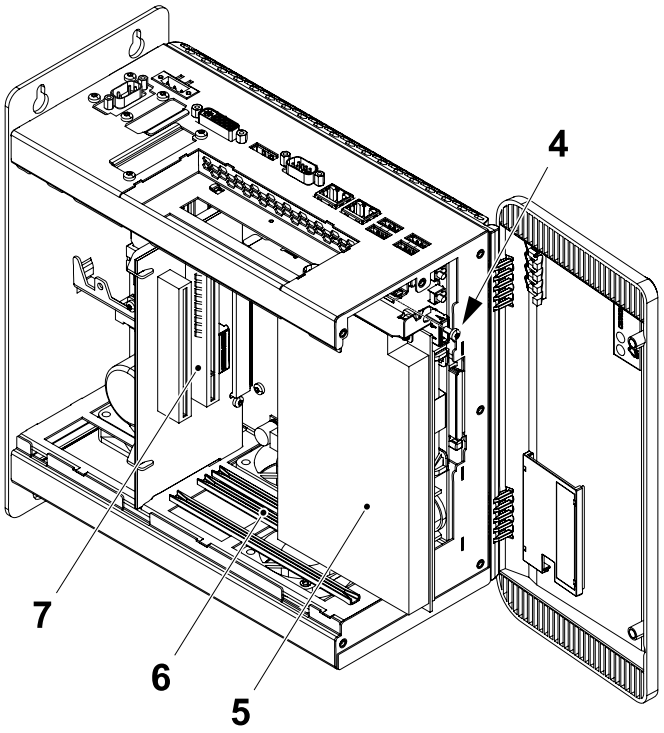

4 Screw
5 Ethernet card level 5
6 Guide rail
7 Plug

(Cont'd)

(Cont'd)

i) Fit back the side cover (3) using the same screws (2).

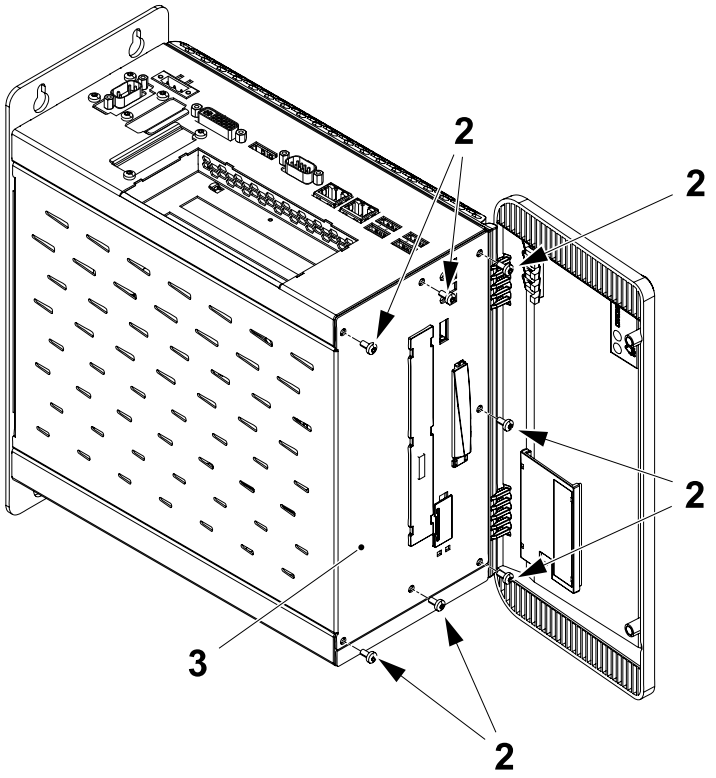

2 Screw
3 Side cover

8.7.1.2-6 IPC - Change Fan Kit

Machine Status	Electrical supply disconnecting device in position O (OFF)
Special Equipment	Fan kit TP no. 90606-357
SPC Reference	90605-7102

WARNING
Hazardous voltage.
Can shock, burn, or cause death.
The main power supply connector must be switched off and secured with a lock before starting any work on the IPC.

(Cont'd)

(Cont'd)

a) Disconnect the IPC power supply.

b) Touch the housing or ground connection (not the power supply) in order to discharge any electrostatic charge from your body.

c) Disconnect all the connections on the IPC top side (1).

d) Loosen the screws (2).

e) Remove the IPC (3) and move it on the work bench.

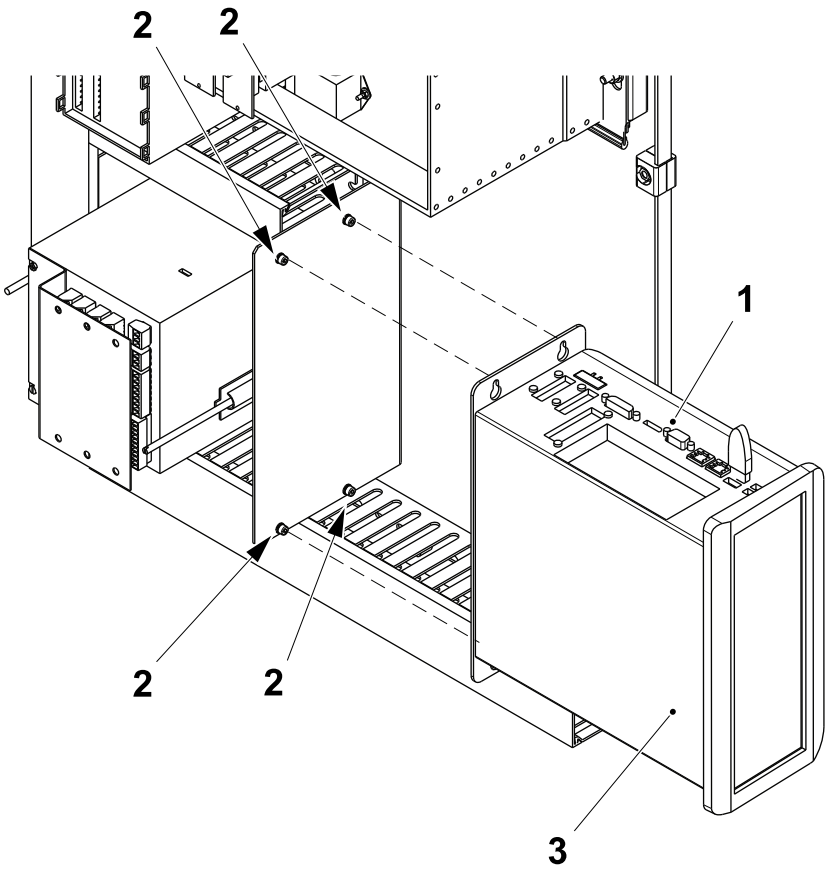

1 IPC top side
2 Screw
3 IPC

(Cont'd)

(Cont'd)

f) Open and remove the orange front cover (4).

g) Remove the screws (5) and the heat sink cover (6).

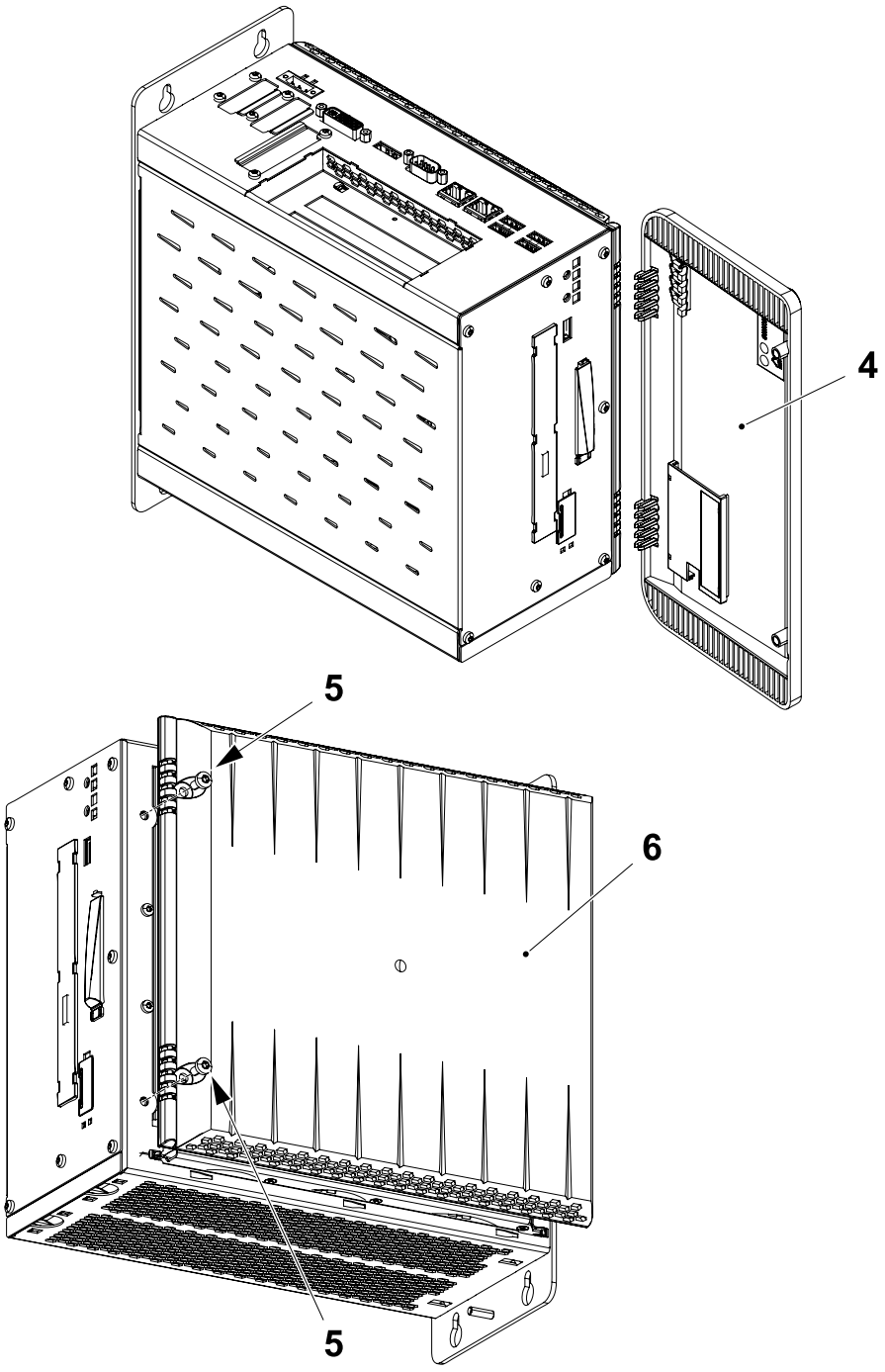

4 Front cover
5 Screw
6 Heat sink cover

(Cont'd)

(Cont'd)

h) Remove the screws (7) and disconnect the out the fan kit cable (8) from the mainboard.

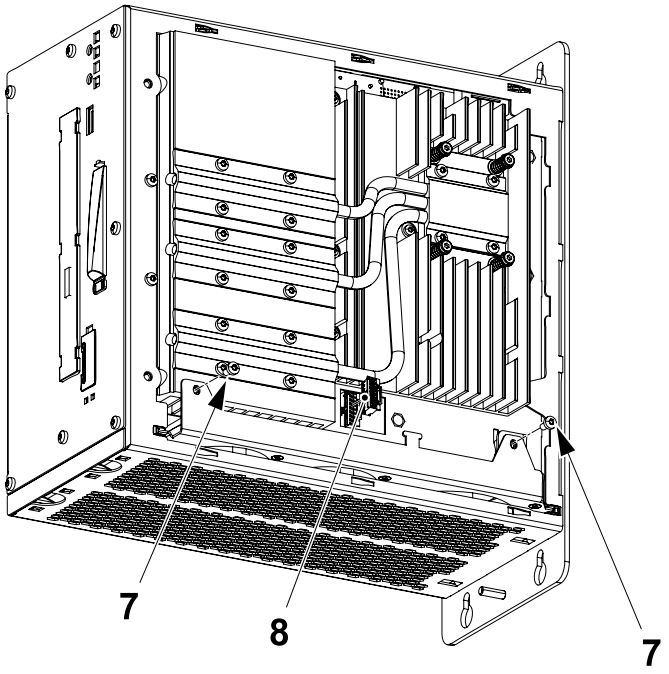

7 Screw
8 Fan kit cable

i) Remove the fan kit (9).

j) Change the fan kit (9) and assemble in the reverse order.

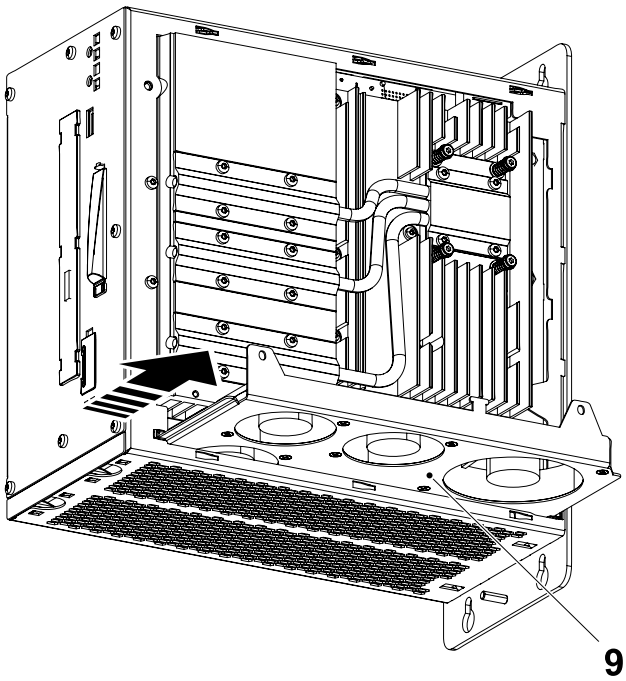

9 Fan kit

8.7.2 Level Control

8.7.2.1 Level Control Description

The level regulator relays (RM4-LA) monitor fluid levels by measuring the change in resistance of immersed and non immersed electrodes. The relay sensitivity must be set according to the conductivity of the fluid.

The level regulator parameters are set using the potentiometer and selectors shown in the illustration below:

a) The selector (1) sets the filling/empty functionality:

- in the empty function the output relay is activated when the high level electrode is immersed and deactivated when the low level electrode is “dry”
- in the fill function the output relay is activated when the low level electrode is “dry” and deactivated when the high level electrode is immersed.

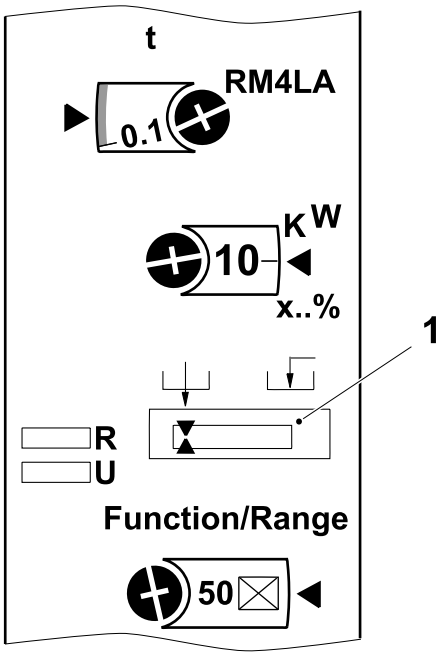



Empty function Fill function

1 Functionality selector

(Cont’d)

(Cont'd)

a) The potentiometer (2) gives a fine adjustment of the sensitivity as a percentage (%) of the sensitivity range.

b) The potentiometer (3) sets the delay.

c) The selector (6) sets the sensitivity range of the relay and the energisation time delay option.

d) The yellow LED (4) is lit when the relay is CLOSED.

e) The green LED (5) is lit when the power is ON.

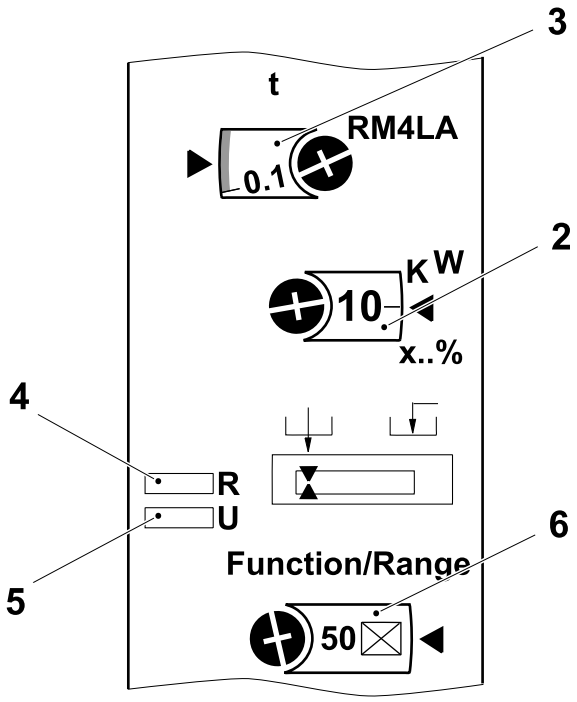

2 Fine adjustment potentiometer
3 Adjustment of timing
4 Yellow LED
5 Green LED
6 Function mode selector and sensitivity

8.7.2-1 Level Control - Set

Machine Status	Electrical supply disconnecting device in position I (ON) Main air valve ON Main steam valve ON Main water valve ON

Set the display functions with a screwdriver, see the table:

Description		Time value (1)	R-value potentiometer (2)	Functionality selector (3)	Function/range selector (4)
Hydrogen peroxide spray tank	U70K2700	0	20	⊔	50 ⊠
Regulating valve leakage	U70K3700	0	60	⊔	500 ⊠
HI	U70B4061	0	20	⊔	50 ⊠

Note! It is recommended that the Functionality selector (3) is always set according to the table to avoid problems.

When necessary make fine adjustments by means of the R-value potentiometer (2).

Make sure that the yellow LED is lit when the level is obtained.

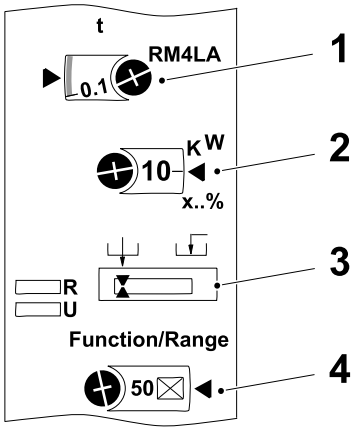

1 Time value
2 R-value potentiometer
3 Functionality selector
4 Function/range selector

8.7.3 Conductivity Meter

8.7.3-1 Conductivity Meter - Description

SPC Reference	90459-5187

Conductivity is calculated by measuring the current flowing through a fluid at a known reference voltage. The signal is converted into digital information and thereafter processed according to temperature and calibration values.

The conductivity meter (1) supplies the PLC with two analogue signals: one conductivity signal and one temperature signal.

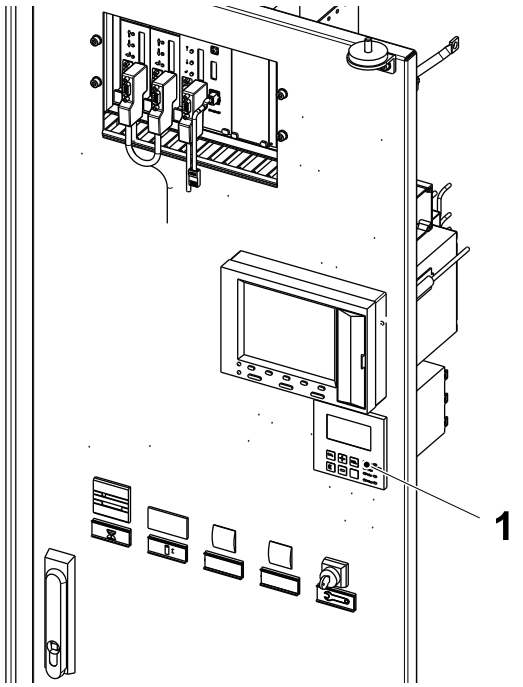

1 Conductivity meter

(Cont'd)

(Cont'd)

Conductivity Meter Front Panel

The components of the conductivity meter front panel used to manage the conductivity and temperature of the CIP cleaning fluid include the:

- LC display (1)
- alarm LED (2)

  Note! Pressing the CAL button (4) or the ENTER button (3) will display a prompt for the access code; 22. Entering 0 or any other number will display the calibration and setup data in read only mode.
- ENTER button (3). The ENTER button (3) is used to save entered data and to move between the setup parameters within the setup menu groups
- CAL button (4). The CAL button is used to accept calibration data and to move between the fields of the calibration menu

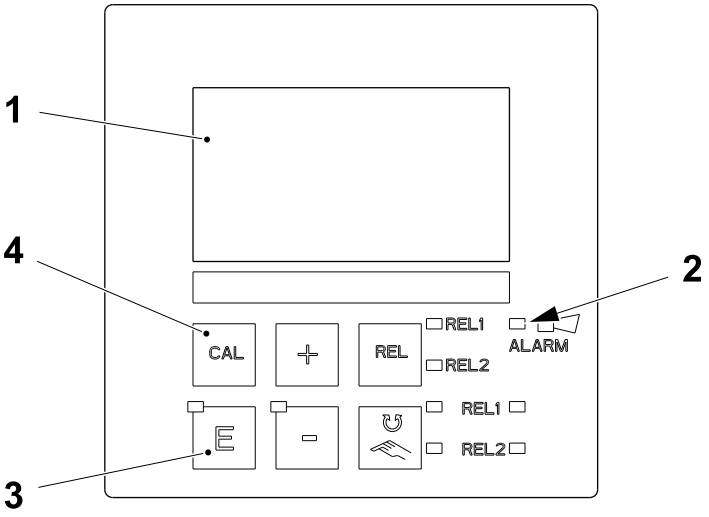

1 LC display
2 Alarm LED
3 Enter button
4 Cal button

(Cont'd)

(Cont'd)

- the PLUS button (5) and the MINUS button (6). The PLUS button (5) or the MINUS button (6) are used to select setup menu levels and to input setup parameters and numerical values. Pressing the PLUS button (5) during normal operation changes the LC display mode of the conductivity and temperature. Pressing the MINUS button (6) during normal operation displays the last error code and error message. Pressing the PLUS button (5) and the MINUS button (6) together in the setup mode exits the current level of the setup menu. To lock the front panel buttons press the PLUS button (5) and ENTER buttons together for three seconds, the code prompt will display "9999". To unlock the front panel buttons press the MINUS button (6) and the CAL buttons together for three seconds, the code prompt will display "0".

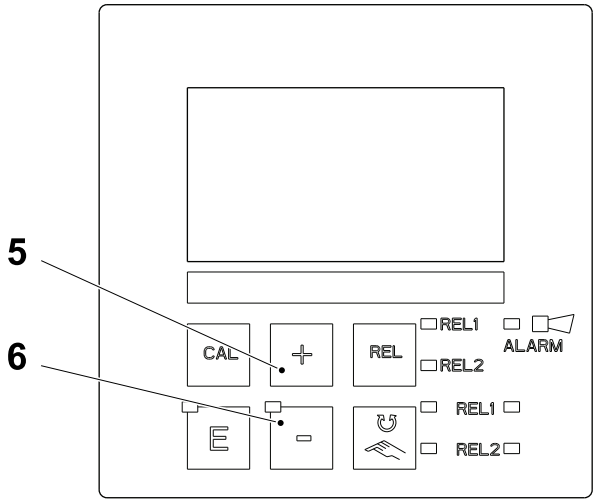

5 Plus button
6 Minus button

(Cont'd)

(Cont'd)

Conductivity Meter Front Panel LC Display

The LC display shows the measured and configured parameters in the setup, configuration and operational modes of the conductivity meter. The elements within the LC display used in the management of the conductivity and temperature of the CIP cleaning fluid include the following:

- MEAS (1), indicates that the conductivity meter is in the normal operational mode
- CAL (2), indicates that the conductivity meter is in the calibration mode
- SETUP (3), indicates that the conductivity meter is in the setup mode
- MS/CM (example) (4), indicates the unit of measurement for the currently displayed value

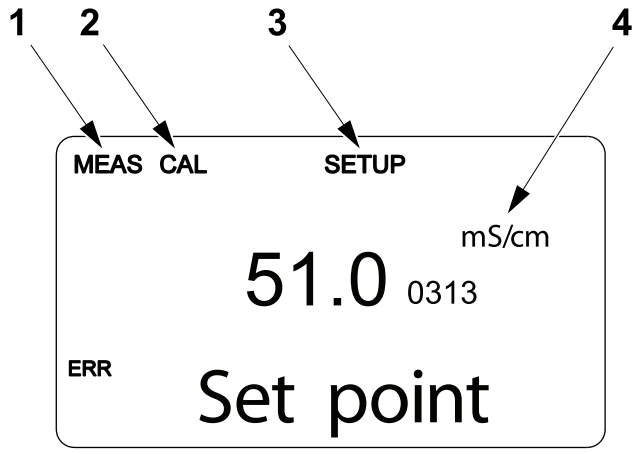

1 Meas indicator
2 Cal indicator
3 Setup indicator
4 Unit of measurement indicator

(Cont'd)

(Cont'd)

- `0313` (example) (5), indicates the number of the currently displayed function in the setup and calibration modes.
- `SET POINT` (example) (6), in setup or calibration modes this indicates the name of the currently displayed function. In normal operational mode this indicates the secondary measured value (temperature).
- `ERR` (7), indicates that an error has occurred.

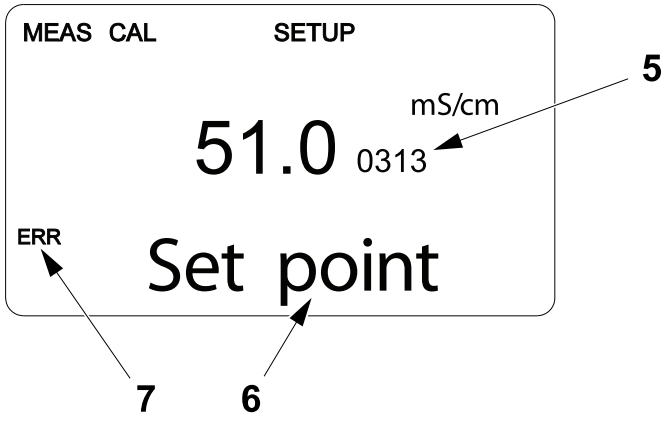

5 Function number indicator
6 Function name/secondary measured value indicator
7 Error indicator

8.7.3-2 Conductivity Meter - Identify Conductivity Sensor Cell Constant

Machine Status	STEP ZERO
Special Equipment	Resistor, TP No. 3031848-0000
SPC Reference	90459-5187

Remove the conductivity sensor, see 1.1.7-2 Cleaning System - Check Conductivity Sensor.

The cell constant value (k) (1) for the conductivity sensor is indicated on the label (2) attached to the conductivity sensor cable (near to the connection in the electrical cabinet) or on the sensor body.

If the label is defaced, missing or does not include the cell constant value (k), this value can be determined through the procedure described afterwards, see Cell Constant Identification.

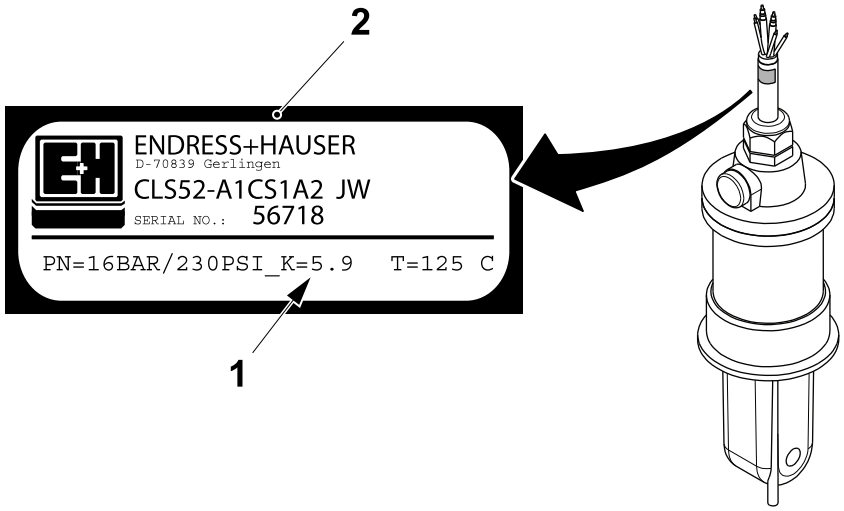

1 Cell constant value (k)
2 Label

(Cont'd)

(Cont'd)

Cell Constant Identification

a) Press the ENTER button (1).

b) Press the PLUS button (2) or the MINUS button (3) to input `22` in the LC display (4).

c) Press the ENTER button (1) to enter the setup menu level `A SETUP1`.

d) Press the ENTER button (1) until the parameter `A5 CELL CONSTANT` appears, carefully record the value for the parameter `A5 CELL CONSTANT`.

e) Press the PLUS button (2) or the MINUS button (3) to input the value 5.200 1/cm or 6.300 1/cm for the parameter `A5 CELL CONSTANT` and press the ENTER button (1) twice.

f) Press the PLUS button (2) and the MINUS button (3) simultaneously to exit the `SETTING MODE` menu.

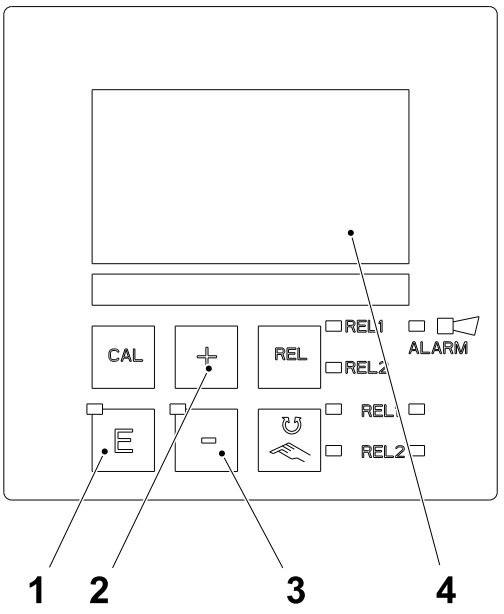

1 Enter button
2 Plus button
3 Minus button
4 LC display

(Cont'd)

(Cont'd)

g) Thread the resistor (5) through the conductivity sensor (6) and connect the two ends of the resistor (5) to as indicated in the illustration below.

h) Press repeatedly the PLUS button (2) until the uncompensated conductivity value `UNCOMPVAL` is displayed.

i) Compare the conductivity value in the LC display (4) with the values in the table below to determine the cell constant for the conductivity sensor. If the displayed conductivity value is outside of the tolerance of ±2.0 mS/cm, repeat the procedure from item a) entering the alternative value for the parameter `A5 CELL CONSTANT`.

Note! If the cell constant value can not be determined, change the conductivity sensor, see 8.7.3-7 Conductivity Meter - Change Conductivity Sensor.

j) Perform the setting of the conductivity sensor, see 8.7.3-4 Conductivity Meter - Set.

Input Value for Parameter `A5 CELL CONSTANT`	**Displayed Conductivity Value**	**Cell Constant [k] 1/cm**	**Notes**
5.200 l/cm	52.0 ±2.0 mS/cm	5.2	
6.300 l/cm	52.0 ±2.0 mS/cm	6.3	

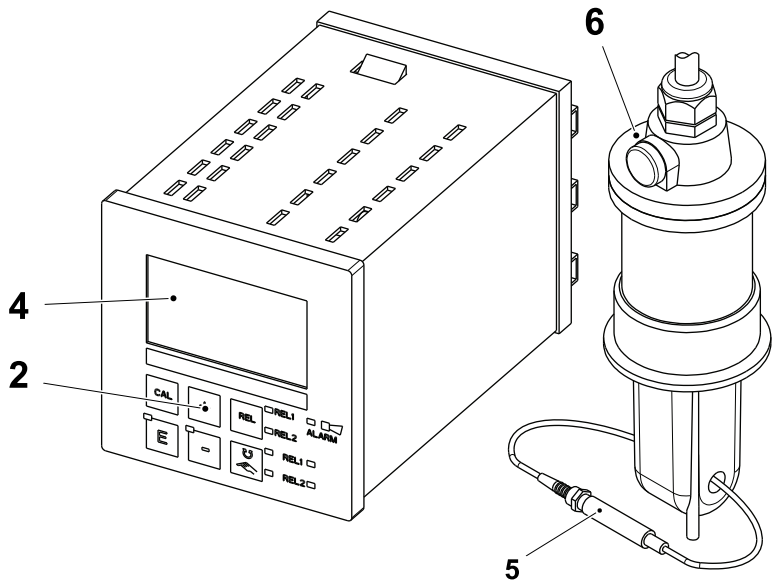

2 Plus button
4 LC display
5 Resistor
6 Conductivity sensor

8.7.3-3 Conductivity Meter - Check

Machine Status	STEP ZERO
Special Equipment	Resistance, TP No. 3031848-0000

Note! The conductivity sensor must not be in contact with any stainless steel surface during the check procedure. Make sure the conductivity sensor is clean and dry before performing the check procedure.

Before performing the conductivity meter check, first determine the cell constant value (k) for the conductivity sensor, see 8.7.3-2 Conductivity Meter - Identify Conductivity Sensor Cell Constant.

a) Remove the conductivity sensor, see 1.1.7-2 Cleaning System - Check Conductivity Sensor.

b) Press repeatedly the PLUS button (1) until the uncompensated conductivity value `UNCOMPVAL` is displayed.

c) Check the conductivity value in the display (2).

   If the conductivity value is:

   - within the tolerance of 0 ±300 µS/cm, continue with item d)
   - outside the tolerance of 0 ±300 µS/cm, perform the calibration of the conductivity meter, see 8.7.3-5 Conductivity Meter - Calibrate and then repeat the check of the conductivity meter.

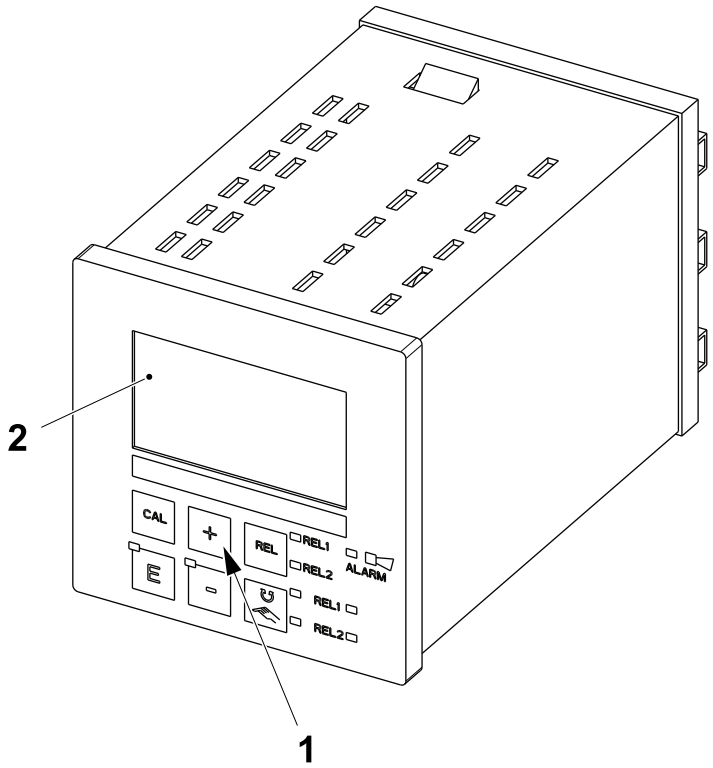

1 Plus button
2 Display

(Cont'd)

(Cont'd)

d) Thread the resistor (3) through the conductivity sensor (4) and connect the two ends of the resistor (3) to as indicated in the illustration below.

e) Verify that the conductivity value in the display (2) corresponds to the conductivity value in the table below.

If the conductivity value is:

- within the tolerance of ±2 mS/cm, continue with item f)
- outside the tolerance of ±2 mS/cm, perform the calibration of the conductivity meter, see 8.7.3-5 Conductivity Meter - Calibrate and then repeat the check of the conductivity meter.

Cell Constant [k] 1/cm	Conductivity Value mS/cm	Note
5.2	52.0	
5.9	59.0	
6.3	52.0	

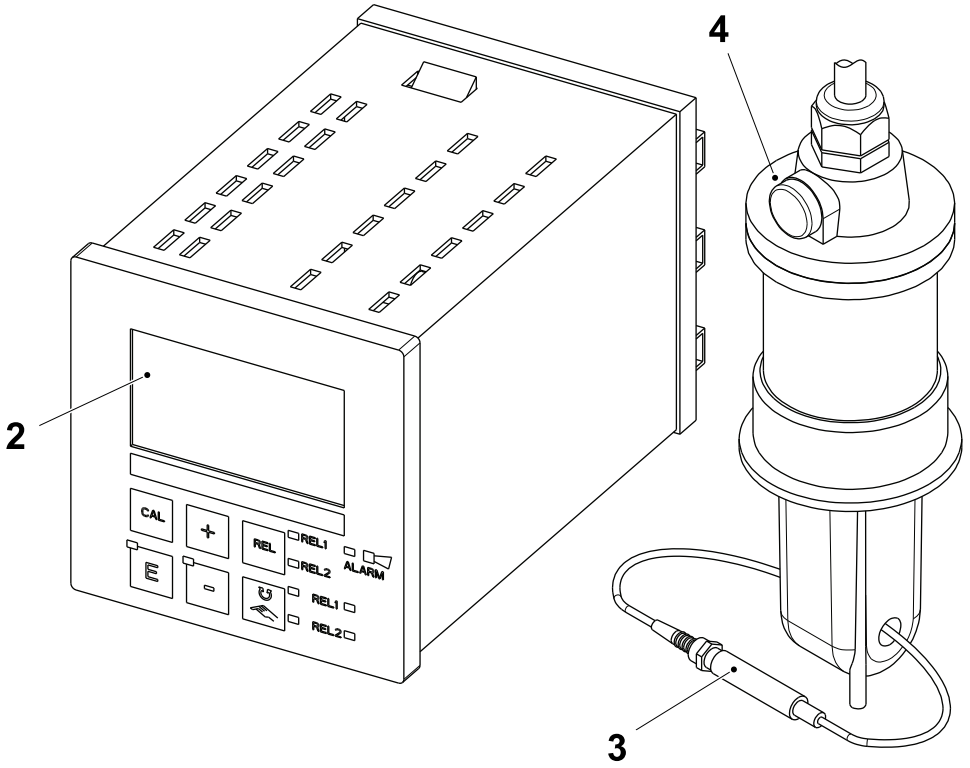

2 Display
3 Resistor
4 Conductivity sensor

(Cont'd)

(Cont'd)

f) Press the PLUS button (1) to exit from the uncompensated conductivity value display.

g) Remove the resistor (3).

h) Fit the conductivity sensor (4), see 1.1.7-2 Cleaning System - Check Conductivity Sensor.

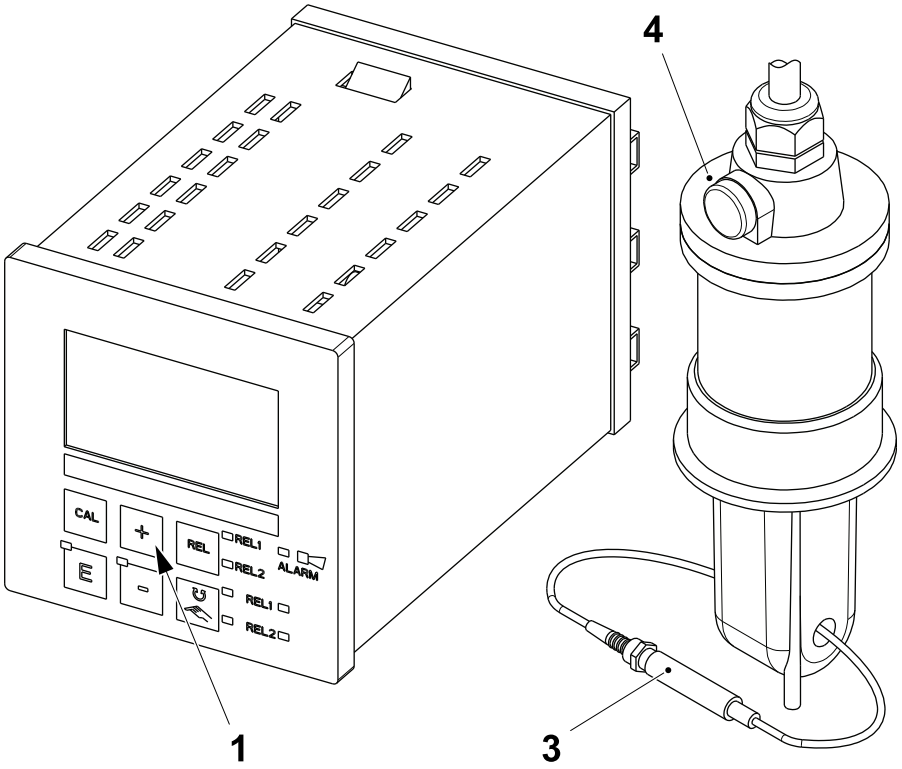

1 Plus button
3 Resistor
4 Conductivity sensor

8.7.3-4 Conductivity Meter - Set

Machine Status	STEP ZERO

Before performing the conductivity meter setting, first determine the cell constant value (k) for the conductivity sensor, see 8.7.3-2 Conductivity Meter - Identify Conductivity Sensor Cell Constant.

a) Press the ENTER button (1).

b) Press the PLUS or MINUS buttons (2) to input 22 in the LC display (3).

c) Press the ENTER button (1) to enter the SETTING MODE menu

d) Set the conductivity meter according to the Setting Table on page 8-370. Use the PLUS or MINUS buttons (2) to select the setup menu levels and to input setup parameters and numerical values. Use the ENTER button (1) to save input data and to move between the setup parameters within the setup menu levels.

Note! Pressing the PLUS or MINUS buttons (2) together in the setup mode exits the current level of the setup menu.

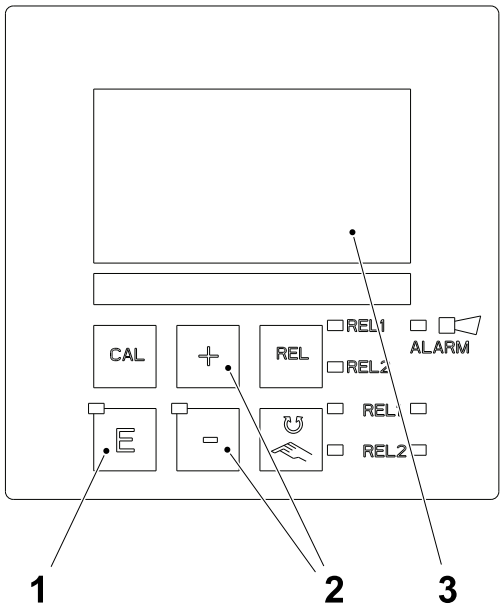

1 Enter button
2 Plus/minus button
3 LC display

(Cont'd)

(Cont'd)

Setting Table

Note! The Label (example) (1) on the conductivity sensor cable or sensor body indicates the value (2) for the parameter A5 (cell constant value).

Setting Mode Menu			
Level	**A SETUP 1**		
Parameter Code	**Default**	**Input**	**Description**
A1	ind		selects operating mode
A4	auto	mS/cm	selects unit displayed
A5	1.980 1/cm	See value indicated on the sensor cable (near the connection in the electrical cabinet) or on the sensor body	sets cell constant value
A7	1		sets measured value damping

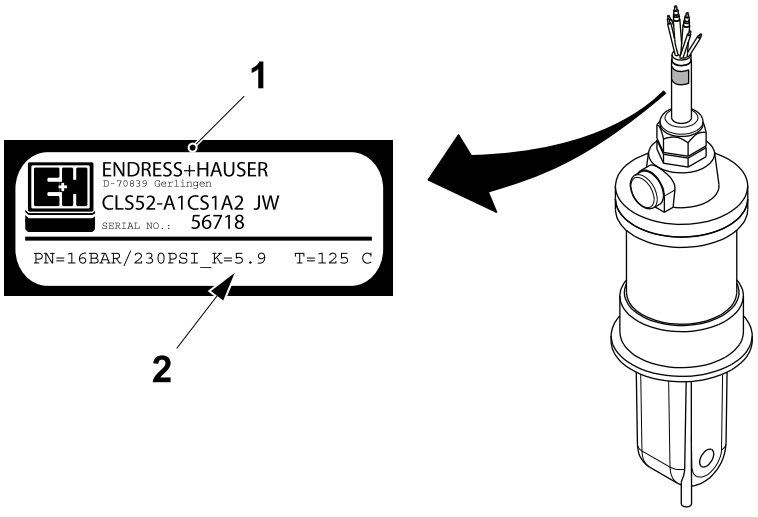

1 Label (example)
2 Parameter A5

(Cont'd)

(Cont'd)

Note! For OUT 1, make sure that the scale displayed for the parameter 0313 is mS/cm.

Level	B SETUP 2		
Parameter Code	**Default**	**Input**	**Description**
B1	Pt100	Pt1k	selects temperature measurement type
B2	lin		selects temperature compensation type
B3	2.10 %/K	1.80 %/K	sets temperature coefficient
B5	xx.x °C		temperature display of actual value
B6	0.0 °C		sets temperature difference
B7	25.0°C		sets reference temperature
Level	O OUTPUT		
Sub Level	OUT 1		
Parameter Code	**Default**	**Input**	**Description**
O3	lin		selects characteristic
O311	4-20		sets current range
O312	0 µS/cm		sets min. measured value
O313	2000 mS/cm	100.0 mS/cm	sets max. measured value

(Cont'd)

(Cont'd)

Note! For OUT 2, make sure that the scale displayed for the parameter 0313 is °C.

Sub Level	OUT 2		
Parameter Code	**Default**	**Input**	**Description**
O2	°C		selects measured variable for 2nd output
O3	lin		selects characteristic
O311	4-20		sets current range
O312	0.0 °C		sets min. measured value
O313	150.0 °C	100.0 °C	sets max. measured value
Level	F ALARM		
Parameter Code	**Default**	**Input**	**Description**
F1	Latch		selects contact type
F2	S		select time unit
F3	0		enter alarm delay
F4	22mA		select error current
F5	1	55	select error code*
F6	yes	no	set alarm contact to be effective
F7	no		set error current to be effective
F9	< R		select return to menu
Level	S SERVICE		
Parameter Code	**Default**	**Input**	**Description**
FUNCTION NOT USED			
Level	E E+H SERV		
Parameter Code	**Default**	**Input**	**Description**
FUNCTION NOT USED			

* If necessary, check that the error codes have been correctly set, see Check Entered Alarm Error Codes.

After setting the conductivity meter perform the calibration procedure, see 8.7.3-5 Conductivity Meter - Calibrate.

(Cont'd)

(Cont'd)

Check Entered Alarm Error Codes

To make sure that the alarm error codes have been correctly set, follow this procedure:

a) Press the ENTER button (1).

b) Press the PLUS or MINUS buttons (2) to input `22` in the LC display (3).

c) Press the ENTER button (1) to enter the `SETTING MODE` menu.

d) Use the PLUS or MINUS buttons (2) to select the setup menu level `ALARM` and press the ENTER button (1).

e) Press the ENTER button (1) until the parameter `F5` appears.

f) Use the PLUS or MINUS buttons (2) to select the error code to be checked.

g) Use the ENTER button (1) to check the parameters `F6` and `F7`.

Note! For all the error codes shown in the paragraph 8.7.3-6 Conductivity Meter - Error Codes the parameter `F6` must be set to "`YES`" and the parameter `F7` must be set to "`NO`". Only for the error code `E055` both the parameters `F6` and `F7` must be set to "`NO`", see the Setting Table on page 8-370.

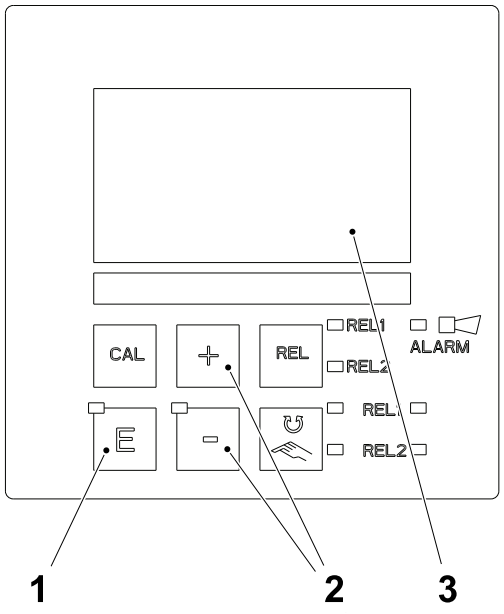

1 Enter button
2 Plus/minus button
3 LC display

(Cont'd)

(Cont'd)

h) Press the ENTER button (1) to display the parameter F9.

i) Use the PLUS or MINUS buttons (2) to select NEXT and press the ENTER button (1).

j) Repeat the procedure from step f).

k) When the check is finished, select <R in the parameter F9 with the PLUS or MINUS buttons (2).

l) Press the ENTER button (1) to return to the SETTING MODE menu.

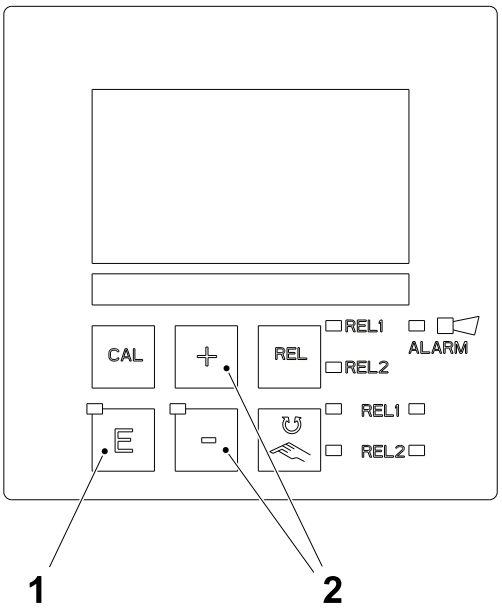

1 Enter button
2 Plus/minus button

8.7.3-5 Conductivity Meter - Calibrate

Machine Status	STEP ZERO
Special Equipment	Resistor TP No. 3031848-0000

Note! If the conductivity sensor or conductivity meter have been changed, the conductivity meter must been set according to 8.7.3-4 Conductivity Meter - Set before performing the calibration procedure.

Note! The conductivity sensor must not be in contact with any stainless steel surface during the calibration procedure.

(Cont'd)

(Cont'd)

Air Calibration

Remove the conductivity sensor from the pipe work, see 1.1.7-2 Cleaning System - Check Conductivity Sensor. Make sure the conductivity sensor is clean and dry before performing the calibration procedure.

a) Press the CAL button (1).

b) Press the PLUS or MINUS buttons (2) to input `22` in the display (3).

c) Press the CAL button (1) to enter the `CALIBRATION MODE` menu.

d) Perform the calibration through the conductivity meter according to the following tables, refer to the functional description in 8.7.3 Conductivity Meter to access the calibration mode menu.

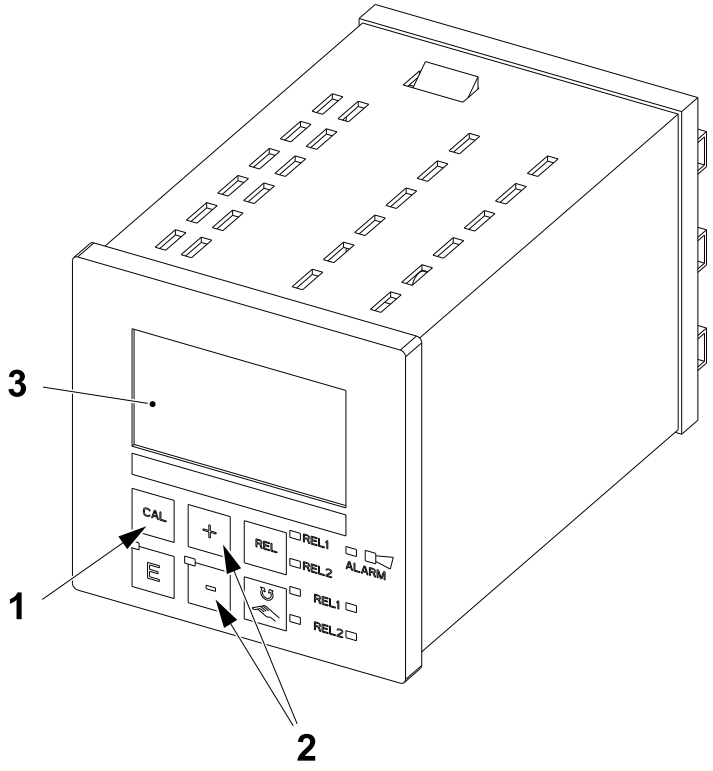

1 CAL button
2 Plus/minus button
3 LC display

(Cont'd)

(Cont'd)

Table for Air Calibration

Calibration Mode Menu			
Level	C CALIBRAT		
Sub Level	AIRS		
Parameter Code	**Default**	**Description**	**Action**
C111	xx µS/cm	starts air calibration	press the CAL button
C112	xxx µS/cm	displays the currently measured value	press the CAL button
C113	o.k.	displays the status of the calibration	press the CAL button
C114	yes	stores the current calibration result	press the CAL button

(Cont'd)

(Cont'd)

Cell Calibration

Note! The illustration shows one type of conductivity sensor, follow the same procedure to calibrate all conductivity sensor types.

a) Thread the resistor (1) through the conductivity sensor (2) and connect the two ends of the resistor (1) to as indicated in the illustration below.

b) Press the CAL button (3) on the conductivity meter.

c) Press the PLUS or MINUS buttons (4) to select `22` in the display (5).

d) Press the CAL button (3) to enter the `CALIBRATION` mode.

e) Press the CAL button (3) and use the PLUS or MINUS buttons (4) to access the `CELLC` sub menu.

f) Perform the cell calibration according to the Table for Cell Calibration on page 8-378.

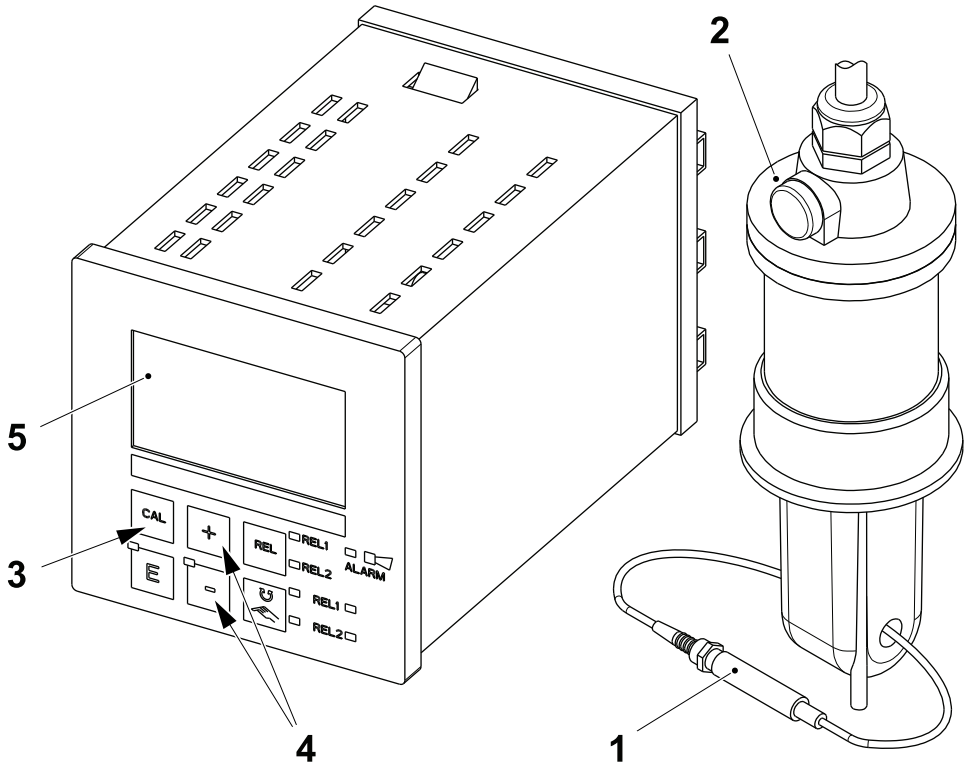

1 Resistor
2 Conductivity sensor
3 CAL button
4 Plus/minus button
5 Display

(Cont'd)

(Cont'd)

Table for Cell Calibration

Calibration Mode Menu			
Level	C CALIBRAT		
Sub Level	CELLC		
Parameter Code	**Display**	**Description**	**Action**
C122	xxx %/K	temperature coefficient α	use the PLUS and MINUS buttons to enter 0.00 and then press the CAL button
C123	xxxx mS/cm	conductivity value*	use the PLUS and MINUS buttons to enter the conductivity value* and then press the CAL button
C124	xxxx 1/cm	constant cell value	press the CAL button
C125	O.K	displays status of the calibration	press the CAL button
C126	YES	stores the current calibration	press the CAL button

* First determine the constant cell value, as indicated on the label fitted to the conductivity sensor cable or sensor body (see 8.7.3-2 Conductivity Meter - Identify Conductivity Sensor Cell Constant), then use the table below to select the correct conductivity value to be entered in the `PARAMETER C123`.

Table for Parameter C123

Cell Constant [k] 1/cm	**Conductivity Value mS/cm (Parameter C123)**
5.2	52.0
5.9	59.0
6.3	52.0

(Cont'd)

(Cont'd)

a) Perform the check of the conductivity meter, see 8.7.3-3 Conductivity Meter - Check.

b) Remove the resistor (1).

c) Fit the conductivity sensor (2), see 1.1.7-2 Cleaning System - Check Conductivity Sensor.

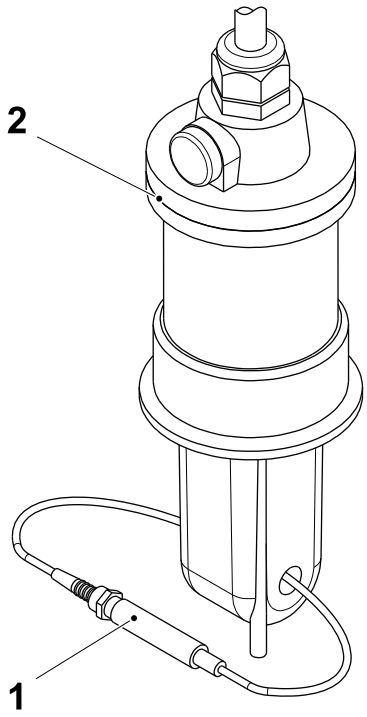

1 Resistor
2 Conductivity sensor

8.7.3-6 Conductivity Meter - Error Codes

Machine Status	Electrical supply disconnecting device in position I (ON)

If an error occurs with the conductivity meter the alarm LED (1) is ON and the letters ERR appear in the display (2). Press the MINUS button (3) to display the error code and message, see the following table for a list of the error codes and corrective actions.

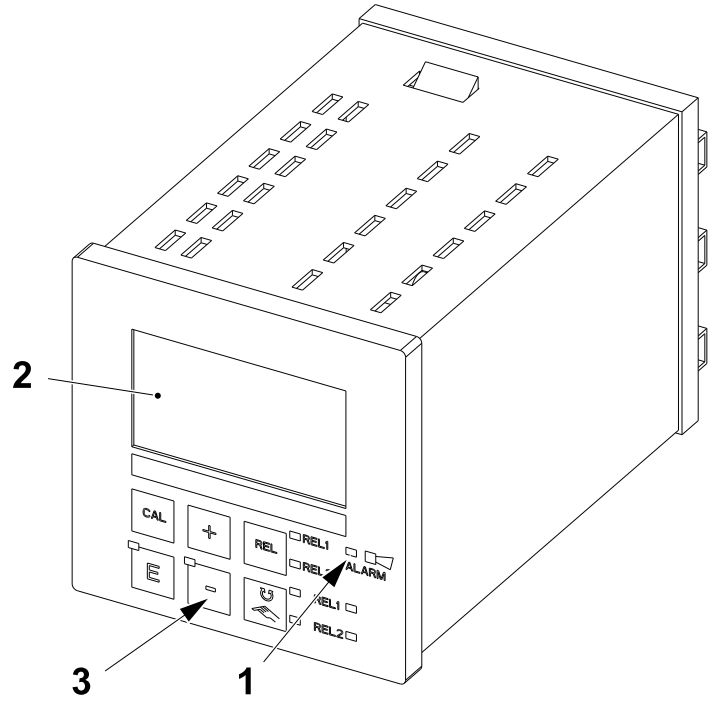

1 Alarm LED
2 LC display
3 Minus button

Error Code	Display Message	Action
E001	EEPROM memory error	Switch the conductivity meter OFF and then ON again. If the error continues change the conductivity meter
E002	Instrument not calibrated, calibration data invalid, user data invalid (EEPROM error), instrument software not compatible to hardware (controller)	
E003	Download error	
E004	Transmitter software version not compatible with module hardware version	
E007	Transmitter malfunction, conductivity meter software not compatible with transmitter version	

(Cont'd)

(Cont'd)

Error Code	Display Message	Action
E008	Sensor or sensor connection faulty	Check the conductivity sensor and conductivity sensor connections
E010	Temperature sensor defective, not connected or short-circuit (measurement continues with 25 °C)	Check the temperature sensor and connections. Check the correct option has been chosen in the setup parameter B1
E025	Limit for Air Set offset exceeded	Make sure the sensor is dry and repeat the air set calibration procedure. If the error continues change the sensor
E036	Calibration range of sensor exceeded	Check the conductivity sensor and connections. Clean the conductivity sensor and perform the calibration procedure
E037	Below calibration range of sensor	
E045	Calibration aborted	Perform the calibration procedure
E049	Calibration range of installation factor exceeded	Check/clean the conductivity sensor and perform the calibration procedure
E050	Below calibration range of installation factor	
E055	Below main parameter measuring range	Immerse sensor in conductive medium or perform the Air Set
E057	Main parameter measuring range exceeded	Check measurement and connections
E059	Below temperature measuring range	
E061	Temperature measuring range exceeded	
E063	Below current output range 1	Check setup configuration. If this error occurs after the calibration procedure the setup parameter S9 in setup menu level S SERVICE must be set to FACTY to reset the factory values and the setup procedure described in 8.7.3-4 Conductivity Meter - Set must be repeated.
E064	Current output range 1 exceeded	Check measured value and current assignment
E065	Below current output range 2	
E066	Current output range 2 exceeded	
E077	Temperature outside value table range	Check/clean the conductivity sensor. Check the conductivity meter configuration.
E078	Temperature outside concentration table	
E079	Conductivity outside concentration table	

(Cont'd)

(Cont'd)

Error Code	Display Message	Action
E154	Below lower alarm threshold for period exceeding alarm delay	Check/clean the conductivity sensor and perform the calibration procedure
E155	Above upper alarm threshold for period exceeding alarm delay	
E156	Actual value below alarm threshold (set point) for longer than the set permissible period	
E157	Actual value exceeds alarm threshold (set point) for longer than the set permissible period	
E162	Dosage stop	Check the settings in the CURRENT INPUT and CHECK function groups.
E171	Flow in main stream to low or zero	Restore flow
E172	Switch-OFF limit for current input exceeded	Check process variables at sending measuring instrument. Change range assignment if necessary
E173	Current input < 4 mA	Check process variables at sending measuring instrument
E174	Current input > 20 mA	Check process variables at sending measuring instrument. Change range assignment if necessary

8.7.3-7 Conductivity Meter - Change Conductivity Sensor

Machine Status	Electrical supply disconnecting device in position O (OFF)

a) Make sure that the electrical supply disconnecting device is in position O (OFF).

b) Remove the conductivity sensor (1), see1.1.7-2 Cleaning System - Check Conductivity Sensor.

c) Remove the clip (2) and disconnect the old conductivity sensor (1) from the conductivity meter (3).

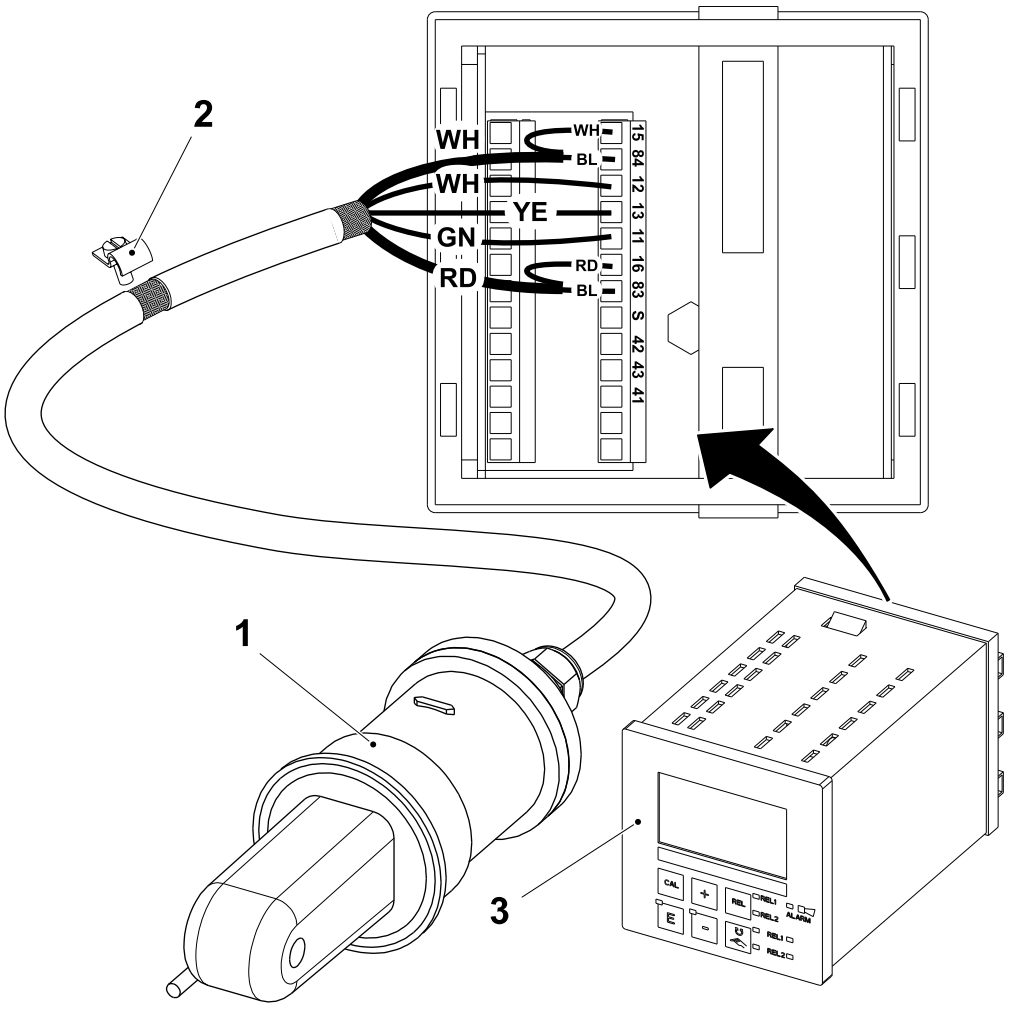

1 Conductivity sensor
2 Clip
3 Conductivity meter

(Cont'd)

(Cont'd)

Note! Do not cut the conductivity sensor cable. The label (4) attached to the conductivity sensor cable contains data required for setting and calibration of the sensor.

d) Connect the new conductivity sensor (1) to the conductivity meter (3). For the wiring of the individual connections, see the illustration.

e) Turn the electrical supply disconnecting device to the position | (ON).

f) Set the conductivity sensor (1), see 8.7.3-4 Conductivity Meter - Set.

g) Calibrate the conductivity sensor (1), see 8.7.3-5 Conductivity Meter - Calibrate.

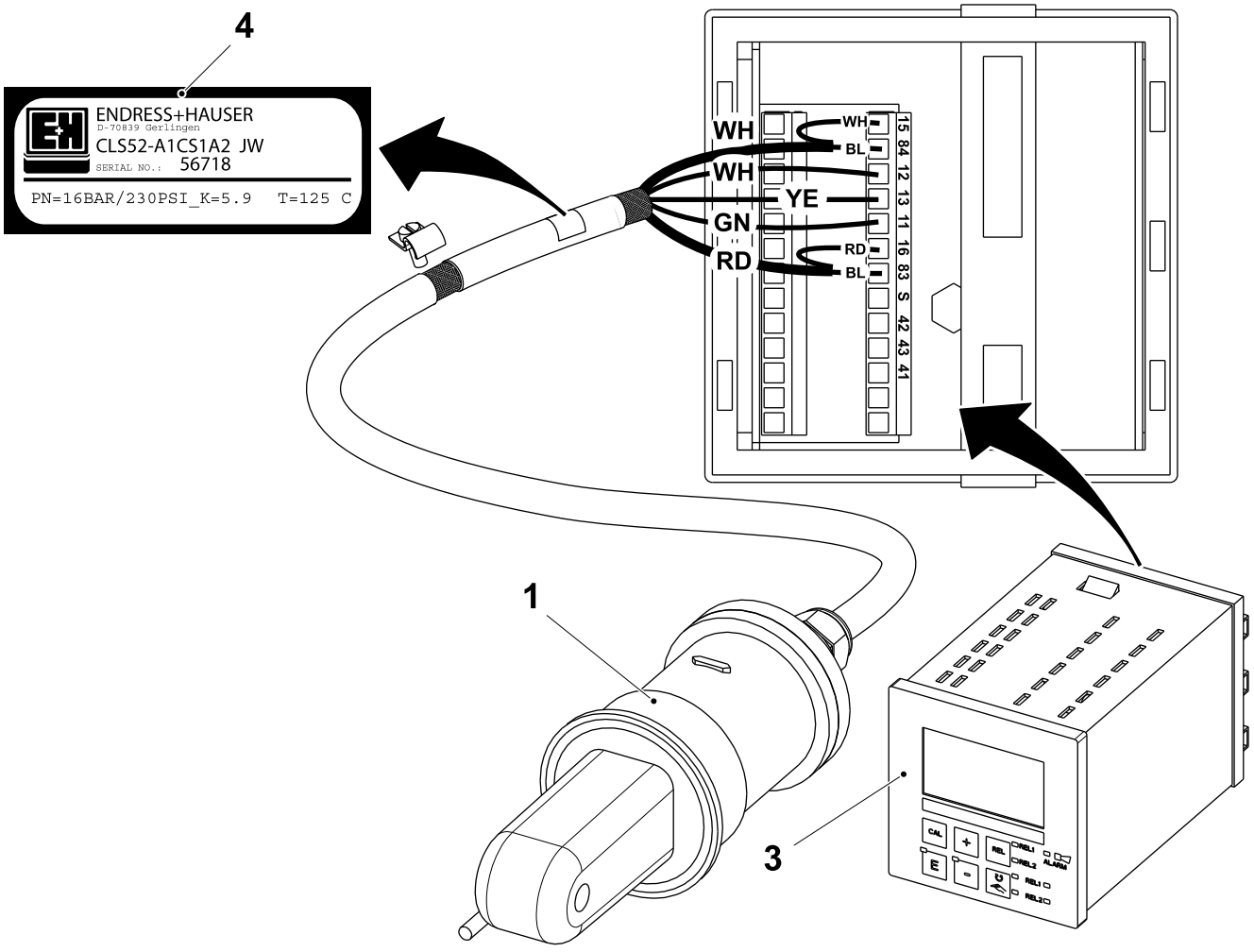

1 Conductivity sensor
3 Conductivity meter
4 Label

8.7.3-8 Conductivity Meter - Change Fuse

Machine Status	Electrical supply disconnecting device in position O (OFF)

a) Make sure that the electrical supply disconnecting device is in position O (OFF).

b) Disconnect the cable connection (1) from the rear of the conductivity meter (2).

c) Remove the end frame (3) from the rear of the conductivity meter (2).

d) Remove the screw (4) and pull out the Component frame (5).

e) Remove the lid (6) from the fuse compartment (7) and change the fuse.

f) Assemble in the reverse order.

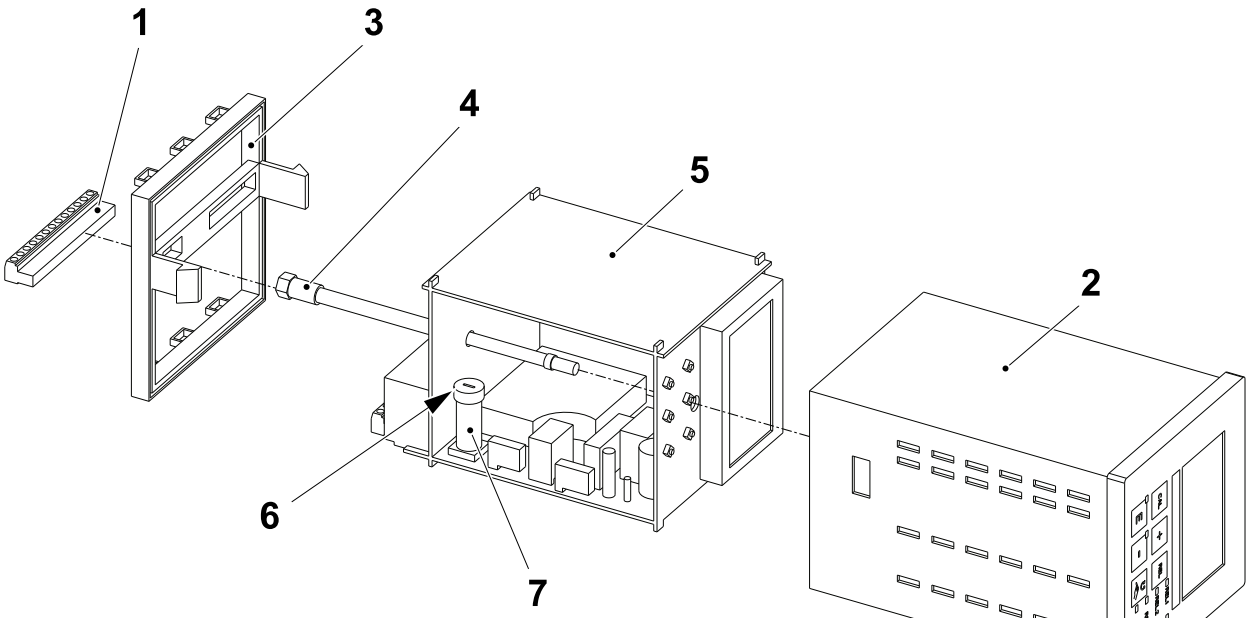

1 Cable connection
2 Conductivity meter
3 End frame
4 Screw
5 component frame
6 Lid
7 Fuse compartment

8.7.4 Recorder

8.7.4.1 Recorder Logoscreen ES

Note! Valid for recorder Jumo Logoscreen *es* TP No. 90459-4033.

Note! Jumo Logoscreen *es* TP No. 90459-4033 is installed on machines with T-order: 21219/00001 to 21220/00379.

8.7.4.1-1 Recorder - Description

SPC Reference	90459-4033

Analog Parameters

The recorder registers the following analog Production and CIP parameters:

Record type	Channel No.	Type	Channel name	Description
Production data	AN1	Analog	H2O2 Bh	**Hydrogen peroxide temperature** If the temperature of the sterile bath exceeds its upper or lower limit the machine stops. This event is recorded by the digital **Sterile parameter 2**. The sterile bath temperature is measured in °C.
Production data	AN2	Analog	Air Knif	**Air knife temperature** If the temperature of the air knife exceeds its upper or lower limit during **Production**, the machine stops. This event is recorded by the digital **Sterile parameter 2**. The air knife temperature is measured in °C.
Production data	AN3	Analog	Ster Air	**Air sterilization (incineration) temperature** If the temperature of the incinerated air exceeds its upper or lower limit the machine steps down to **Zero** position. This event is recorded by the digital **Sterile parameter 1**. The temperature of the incinerated air is measured in °C.
Production data	AN4	Analog	H2O2 Con	**Hydrogen peroxide concentration** If the concentration of the hydrogen peroxide exceeds its upper or lower limit the machine stops. This event is recorded by the digital **Sterile parameter2**. The peroxide concentration is measured in % p/p.

(Cont'd)

(Cont'd)

Record type	Channel No.	Type	Channel name	Description
-	AN5	Analog		Not used
Production data	AN6	Analog	HI Air	**HI air temperature (OE)** If the temperature of the HI air exceeds its upper or lower limit the machine stops. This event is recorded by the digital **Sterile parameter 2**. The HI air temperature is measured in °C.
CIP data	AN7	Analog	CIP Cond	**CIP conductivity** It measures the conductivity of the cleaning liquid during CIP. The signal is sent from the conductivity meter. The conductivity is measured in mS/cm.
CIP data	AN8	Analog	CIP Flow	**CIP Flow rate** It measures the flow of the cleaning liquid during CIP. The signal comes from the flow meter. The flow rate is measured in litres/h.
CIP data	AN9	Analog	CIP Temp	**CIP Temperature** It measures the temperature of the cleaning liquid during CIP. The signal comes from the conductivity meter. The CIP temperature is measured in °C.
-	AN10	Analog		Not used
-	AN11	Analog		Not used
-	AN12	Analog		Not used

Digital Parameters

The recorder registers the following digital Production and CIP parameters:

(Cont'd)

(Cont'd)

Record type	Channel No.	Type	Channel name	Description
Production data	DI1	Digital	Ster.1	**Sterile parameter 1** It records sterile parameter events that have caused the machine to shutdown. The event is recorded with a pulse from the zero reference lasting for the duration of the event and continuing for a further 5 minutes after the event has ended. After a sterile parameter event, the machine must be re-sterilised. On completion of filling machine sterilisation (drying finished), a pulse is recorded for 30 seconds.
Production data	DI2	Digital	Ster.2	**Sterile parameter 2** It records operational parameter events that have caused the machine to stop. The event is recorded with a pulse from the zero reference lasting for the duration of the event and continuing for a further 5 minutes after the event has ended. If a hydrogen peroxide concentration event occurs prior to the start of the **Production** phase, the event is recorded with a pulse from the zero reference lasting for the duration of the event and continuing for a further 30 seconds after the event has ended.
Production data	DI3	Digital	Main Mo	**Main motor operating** It records when the main motor is **ON**.

(Cont'd)

(Cont'd)

Record type	Channel No.	Type	Channel name	Description
Production data	DI4	Digital	PR/CIP	**Filling machine in production** It records when the filling machine is producing filled packages. This signal also records when the machine is in **Intermediate cleaning** and **Final cleaning**. **Intermediate cleaning** is indicated by a pulse at 1 minute intervals from the zero reference lasting for the duration of the cleaning phase. **Final cleaning** is indicated by a pulse at 2.5 minute intervals from the zero reference lasting for the duration of the cleaning phase.
CIP data	DI7	Digital	HVA/CIP	It records the cleaning time of the HVA circuit pump

(Cont'd)

(Cont'd)

Note! The analog signal AN6 records data for the HI optional equipment (OE).

The illustration shows a sample screen shot of the PRODUCTION DATA record.

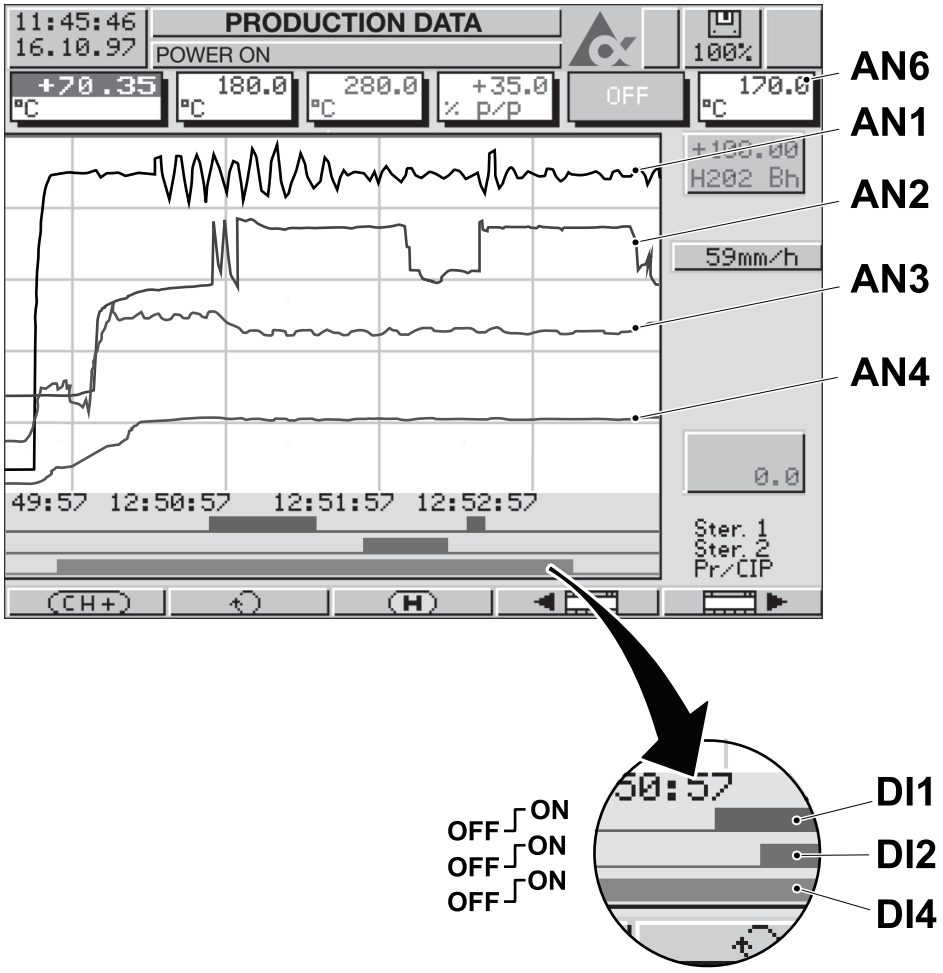

(Cont'd)

(Cont'd)

The illustration shows a sample screen shot of the `CIP DATA` record.

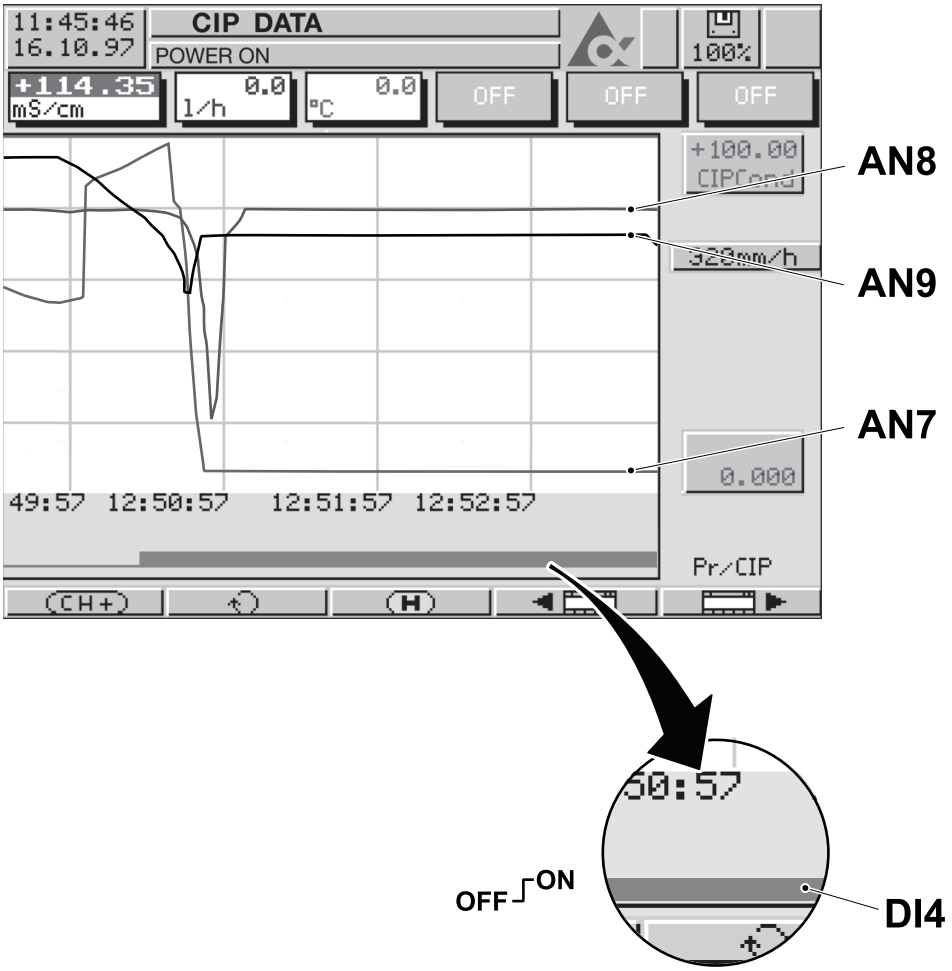

(Cont'd)

(Cont'd)

The illustration shows a sample screen shot of the MAIN MOTOR data record.

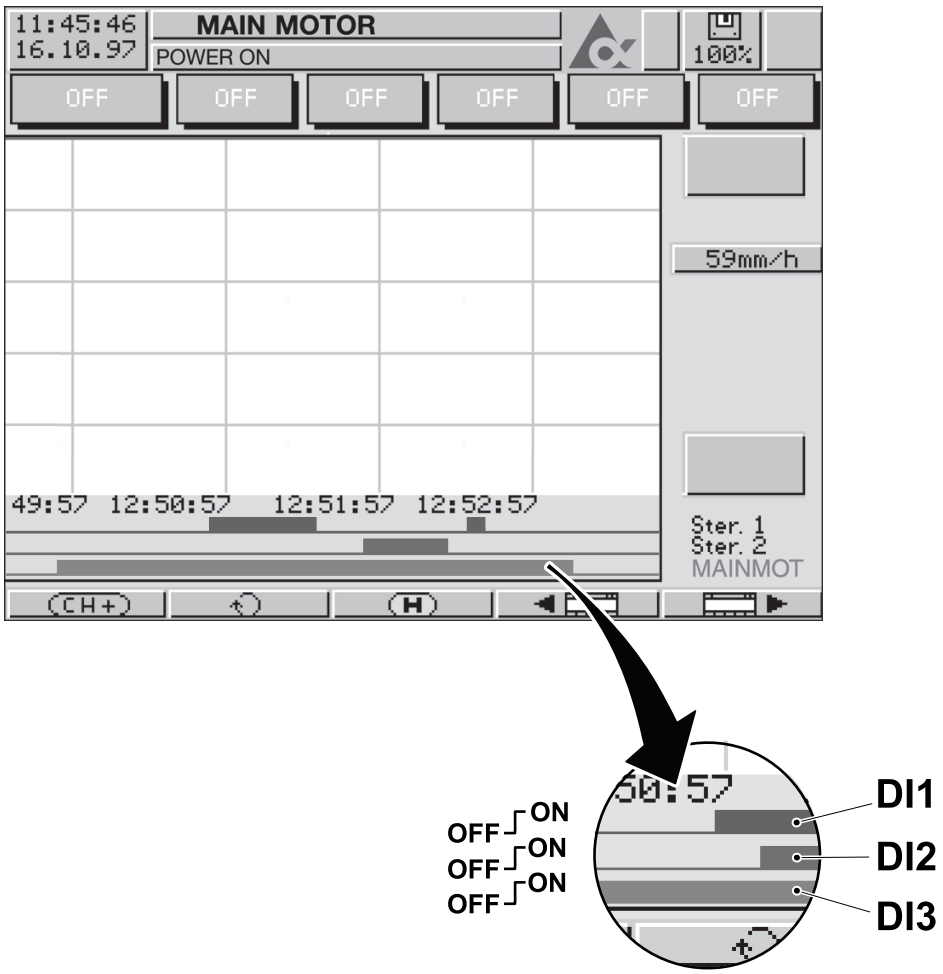

Power Supply

Note! For detailed information, see the manual supplied on the JUMO installation disk.

The power supply to the recorder is always switched ON. The recorder starts to record production data from the PREPARATION phase and continues to record for five minutes after the PRODUCTION ENDED phase has finished. The recorder starts to record CIP data at the start of the cleaning cycle and continues to record for five minutes after the cleaning cycle has finished.

CompactFlash Memory Card

The data is automatically saved in the CompactFlash memory card at regular intervals. If the CompactFlash memory card alarm function is enabled on the PLC program, when 31Mb of the CompactFlash memory is used an alarm is activated on the TPOP and the filling machine performs a SHORT STOP. Eject the CompactFlash memory card and download the recorded data, see 8.7.4.1-6 Recorder - Change CompactFlash Card.

(Cont'd)

(Cont'd)

The Jumo recorder can continue recording data in its internal memory. Erase the data stored on the CompactFlash memory card and fit CompactFlash memory card into the recorder as soon as possible.

Batch Report

Each time the recorder starts to record production data, an incremental batch report is created. The operator has the possibility to input the serial number of the filling machine and information about the current batch. Batch report data is only saved to the CompactFlash memory card if the report END; UPDATE CF C. function is used, see 8.7.4.1-6 Recorder - Change CompactFlash Card.

Password

Note! For filling machines compliant with the FDA 21 CFR Part 11 regulations for electronic signatures, individual passwords and user rights are assigned to users of the recorder and to users of the PC Evaluation program. If necessary contact the administrator of the recorder for access. For all other filling machines see the standard password configuration below.

The recorder has two standard user ID and password configurations allowing different access rights to the recorder:

- The user ID `MASTER` and the password `9200`. Logon as the `MASTER` to have full access to all the configuration parameters and to all the functions of the CompactFlash memory card.
- The user ID `USER` and the password `0`. Logon as the `USER` allows access to download the recorded data in the CompactFlash memory card without any privileges to access configuration parameters.

PC Evaluation Program (PCA3000)

The recorder is supplied with a software programme for archiving and reviewing the data recorded by the recorder. For detailed information on the PC Evaluation program, see the manual supplied on the JUMO installation disk.

PC Security Management Program

The recorder is supplied with a software programme for the administration of user rights to access the recorder, the use of the PC evaluation software and for the issue of electronic signatures to recorded data. The PC Security management software is utilized for filling machines required to operate in compliance with the FDA 21 CFR Part 11 regulation, see the manual supplied on the JUMO installation disk.

8.7.4.1-2 Recorder - Set Date, Time and Language

Machine Status	STEP ZERO

Note! For detailed information, see the manual supplied on the JUMO installation disk.

a) Perform the log in as “Master” to access the configuration functions, see 8.7.4.1-5 Recorder - Log In and Log Off.

b) Press the MENU button (1).

c) Use the ARROW buttons (2) to select the PARAMETER window (3) and press the ENTER button (4).

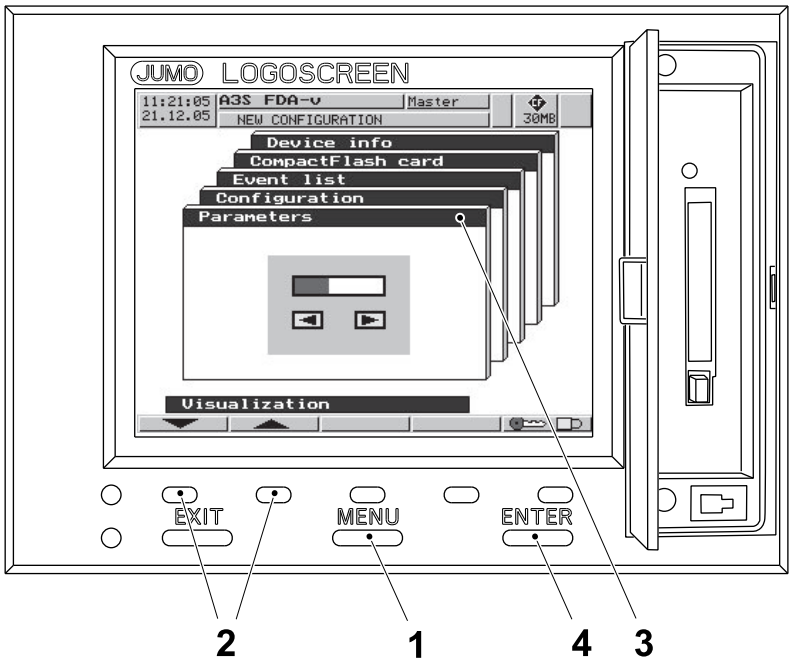

1 Menu button
2 Arrow button
3 Parameter window
4 Enter button

(Cont’d)

(Cont'd)

d) Select DATE AND TIME and press the ENTER button (4).

e) In the DATE AND TIME window, select DATE and press the ENTER button (4).

f) Use theARROW buttons (2) and (5) to set the date and press the ENTER button (4).

g) Repeat item f) to select and set the time.

h) Press the EXIT button (6) to exit from the PARAMETER window. The record performs an automatic reset.

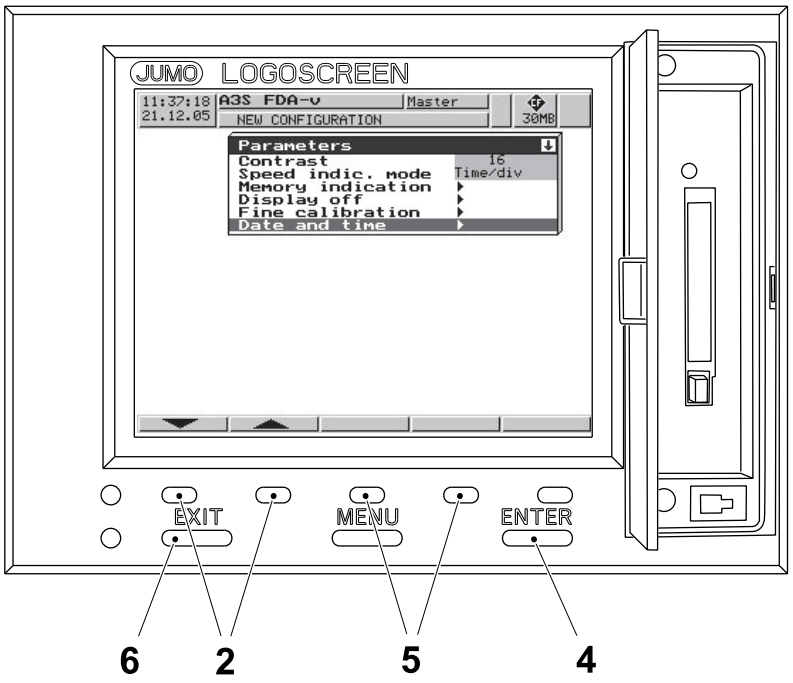

2 Arrow button
4 Enter button
5 Arrow button
6 Exit button

(Cont'd)

(Cont'd)

i) Use the ARROW buttons (2) to select the CONFIGURATION window (7) and press the ENTER button (4).

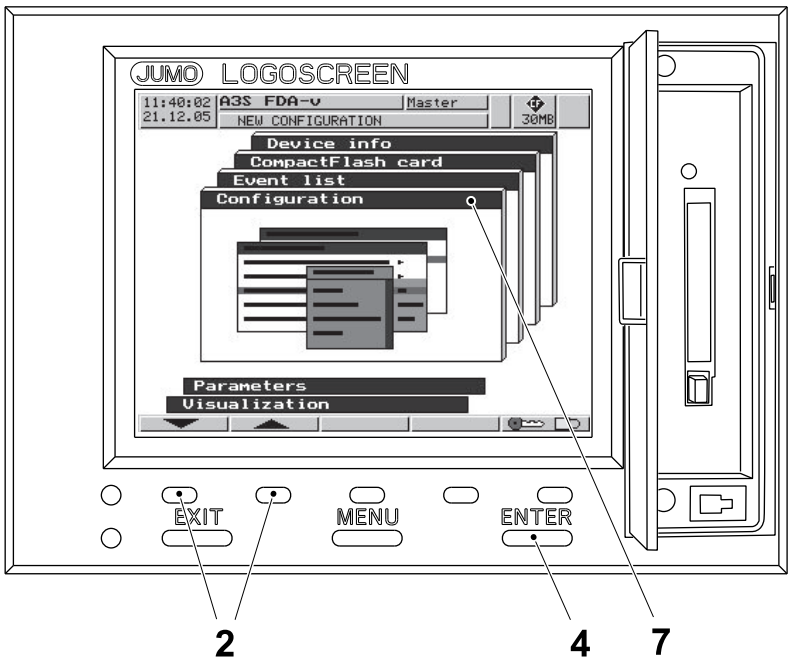

2 Arrow button
4 Enter button
7 Configuration window

(Cont'd)

(Cont'd)

j) Select DEVICE DATA and press the ENTER button (4).

k) In thedevice data window (8) select LANGUAGE and press the ENTER button (4).

l) Use the ARROW buttons (2) to set the desired language and press the ENTER button (4).

m) Press the EXIT button (6) twice to exit from the CONFIGURATION window. The record performs an automatic reset.

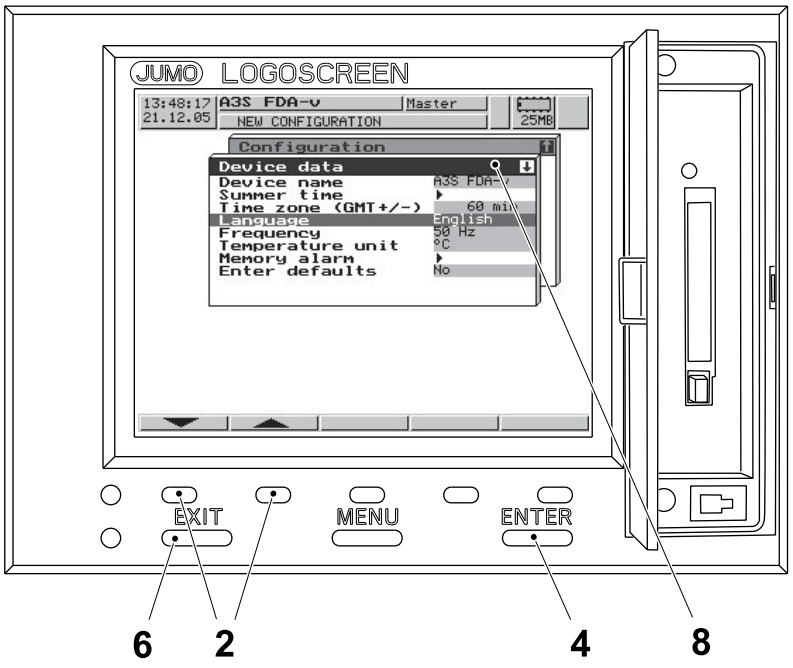

2 Arrow button
4 Enter button
6 Exit button
8 Device data window

8.7.4.1-3 Recorder - Load Configuration Data

Machine Status	STEP ZERO
Special Equipment	Laptop PC Communication Cable RS 232-C CompactFlash reader

Loading via Serial Interface

Note! For detailed information, see the manual supplied on the JUMO installation disk.

a) Connect the serial communication cable supplied with the recorder between the laptop PC (1) and the setup plug (2) on the front of the recorder.

b) Start the setup program `LOGOSCREEN CF`.

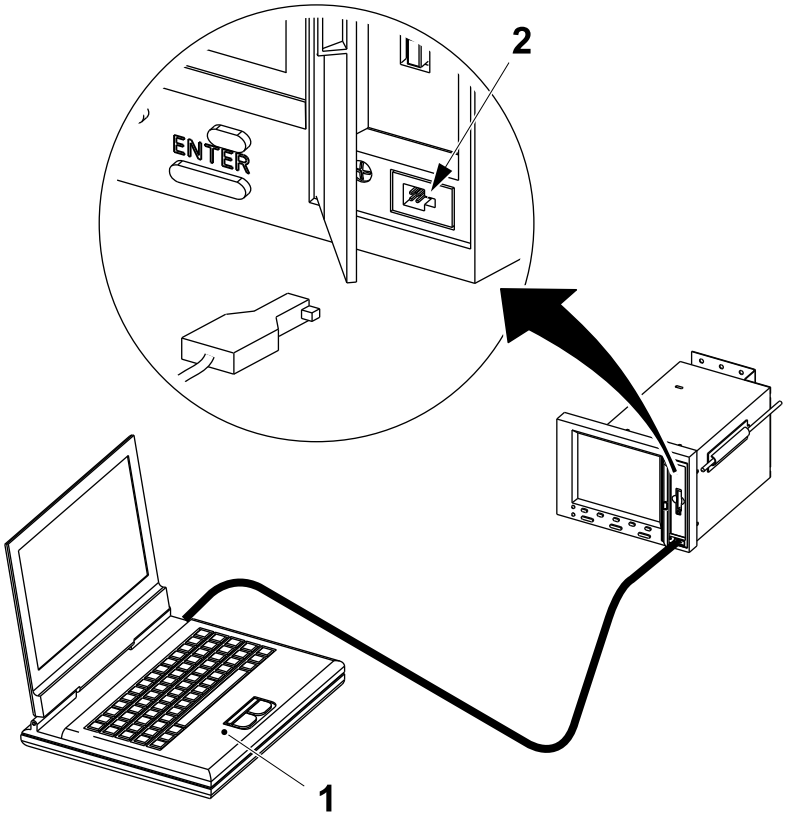

1 Laptop PC
2 Setup plug

(Cont'd)

(Cont'd)

Note! If there has never been any previous communication with a device, the "Assistant for Device Settings" will automatically be started when the first attempt at communication is made.

c) Insert the software USB key into a laptop PC USB port.

Note! If a software CD has been supplied, insert the software CD into the laptop PC CD drive.

d) Locate the folder `PROCESS RECORDER` and copy the configuration file to the PC desktop.

e) Establish a connection between the laptop PC and the recorder by clicking on the `ESTABLISH CONNECTION` button (3).

f) Select the recorder in the device list and click the `CONNECTION` button (4).

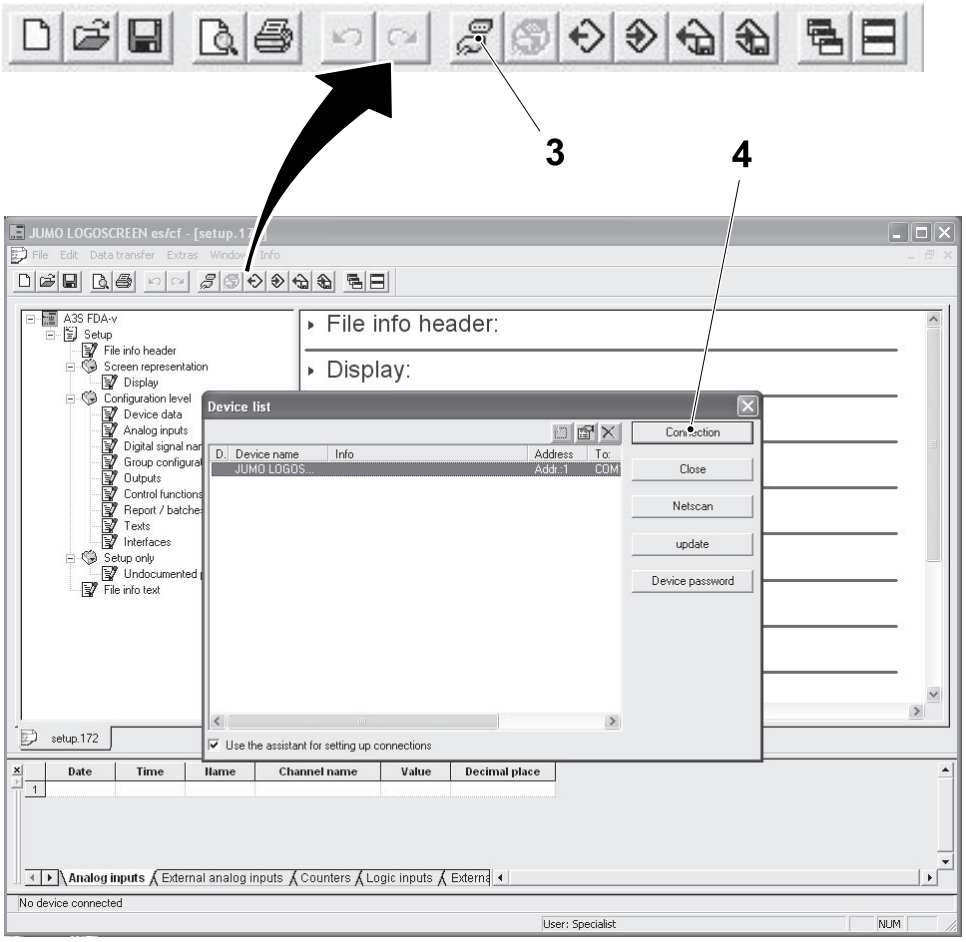

3 Establish connection button

4 Connection button

(Cont'd)

(Cont'd)

g) Click on the OPEN button (5) and locate the configuration file and then open the file.

h) Click on the DATA TRANSFER TO DEVICE button (6) to upload the new recorder configuration settings.

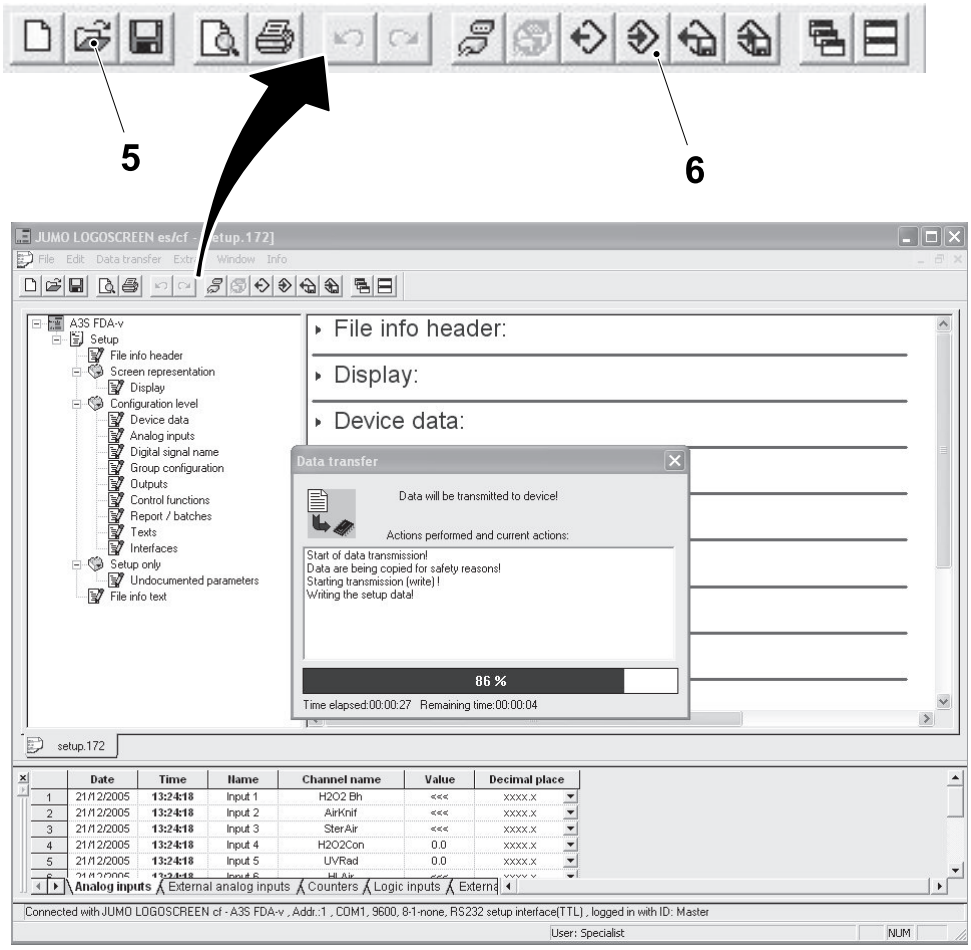

5 Open button
6 Data transfer to device button

(Cont'd)

(Cont'd)

i) When the new recorder configuration settings have been uploaded the recorder performs an automatic reset. The name of the new configuration appears on the top of the display.

j) Close the setup program `LOGOSCREEN CF` and disconnect the communication cable.

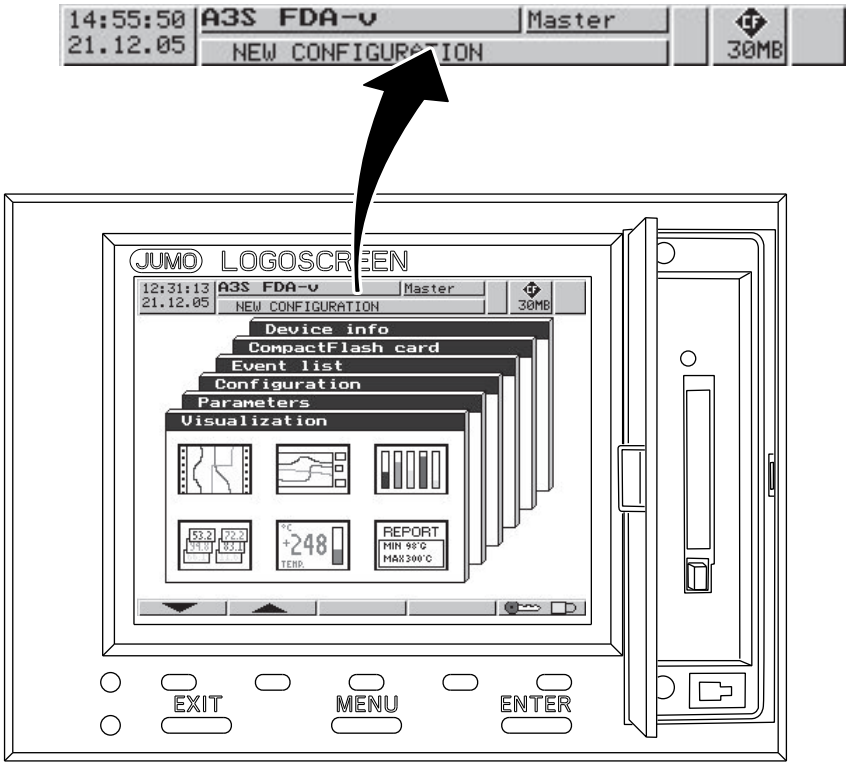

(Cont'd)

(Cont'd)

Loading from CompactFlash Card

Note! For detailed information, see the manual supplied on the JUMO installation disk.

a) From the software USB key (or software CD), copy the configuration files `JUMO RECORDER\XXXXXX-100X\K17201.SET` and `K17202.SET` into the CompactFlash memory card (using a CompactFlash reader/writer, not supplied).

b) Open the recorder door (1) and insert the CompactFlash memory card with the configuration data into the CompactFlash slot (2).

c) Perform the log in as "Master" to access the CompactFlash Card functions, see 8.7.4.1-5 Recorder - Log In and Log Off.

d) Press the MENU button (3).

e) Use the ARROW buttons (4) to select the `COMPACTFLASH CARD` window (5) and press the ENTER button (6).

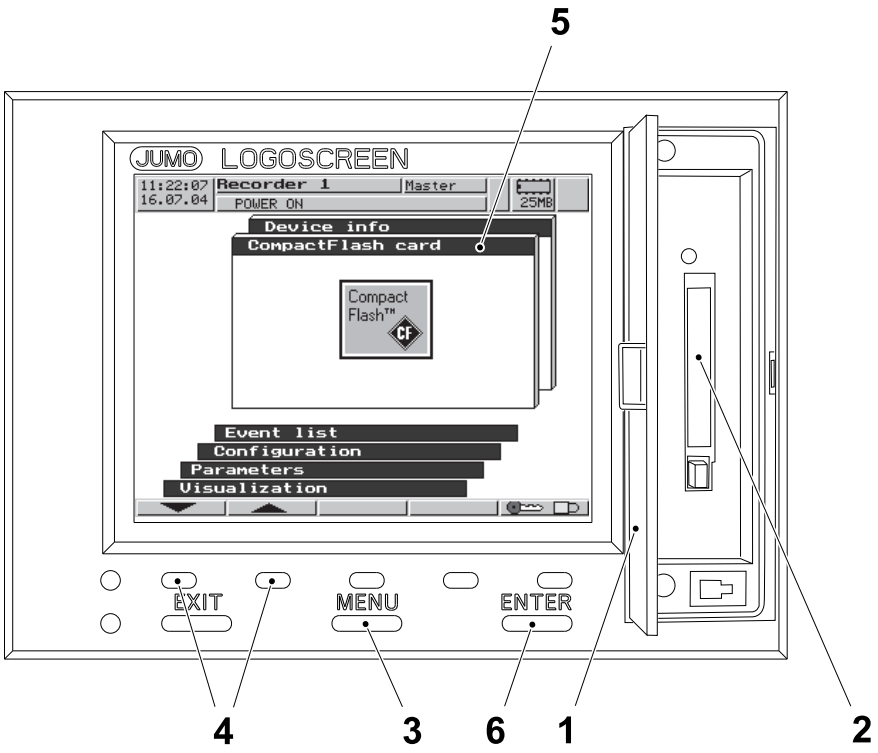

1 Door
2 CompactFlash slot
3 Menu button
4 Arrow button
5 CompactFlash card window
6 Enter button

(Cont'd)

(Cont'd)

f) Use the ARROW buttons (4) to select the CF CARD TO CONFIG DATA window (7) and press the START button (8).

g) Press the START button (8) to upload the new recorder configuration settings.

h) When the new recorder configuration settings have been uploaded the recorder performs an automatic reset. The name of the new configuration appears on the top of the display.

Note! Do not remove the CompactFlash memory card while the signal LED (9) is ON.

i) Eject the CompactFlash memory card from the CompactFlash slot (2).

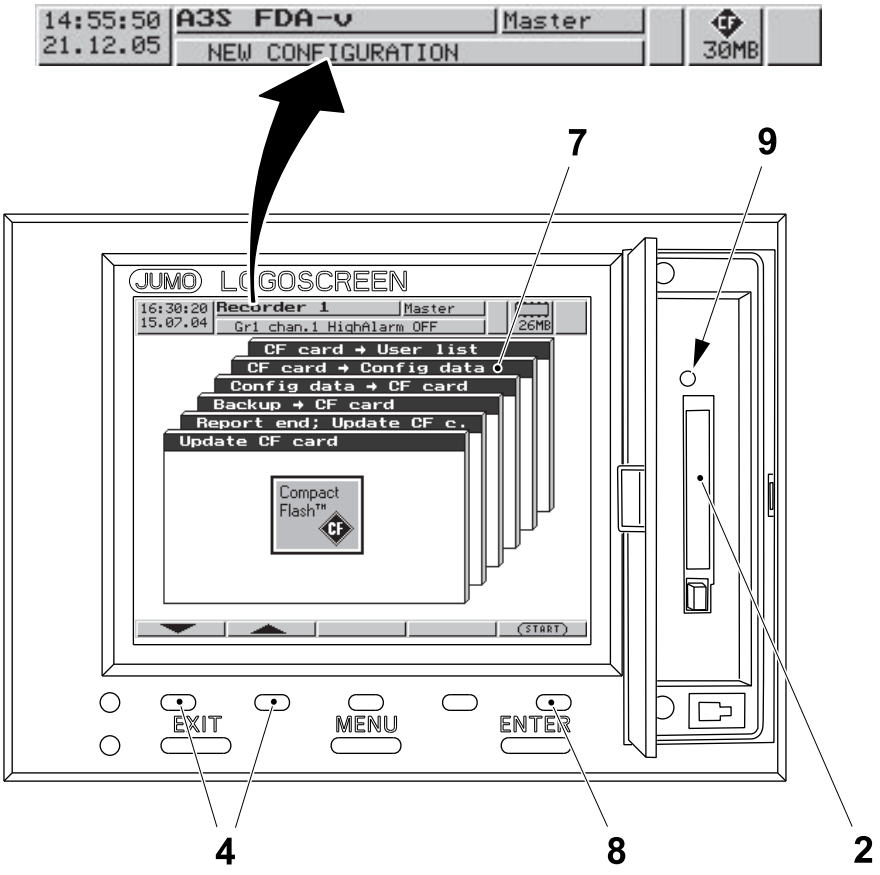

2 CompactFlash slot
4 Arrow button
7 CF card to config data window
8 Start button
9 Signal LED

8.7.4.1-4 Recorder - Calibrate

Machine Status	STEP ZERO

Note! For detailed information, see the manual supplied on the JUMO installation disk.

It is possible to compensate for false signals received by the recorder, such as systematic errors in the signals sent from thermocouples.

For example, if a thermocouple indicates a temperature value which is consistently 5 °C less than the true temperature at the lower end of its reading range and 10 °C less, at the higher end of its reading range, this can be corrected by the recorder.

To fine calibrate the signals received by the recorder proceed as follows:

a) Perform the log in as “Master” to access the configuration functions, see 8.7.4.1-5 Recorder - Log In and Log Off.

b) Press the MENU button (1).

c) Use the ARROW buttons (2) to select the PARAMETER window (3) and press the ENTER button (4).

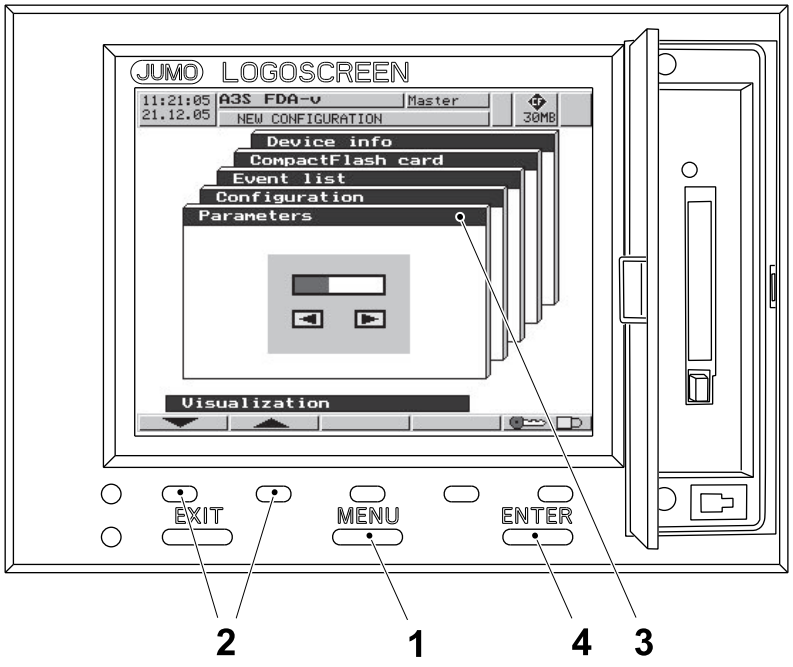

1 Menu button
2 Arrow button
3 Parameter window
4 Enter button

(Cont’d)

(Cont'd)

d) Use the ARROW buttons (2) to select `FINE CALIBRATION` (5) and press the ENTER button (4).

e) In the `FINE CALIBRATION` window select the desired Analogue input to be corrected (AN1-9) and press the ENTER button (4) .

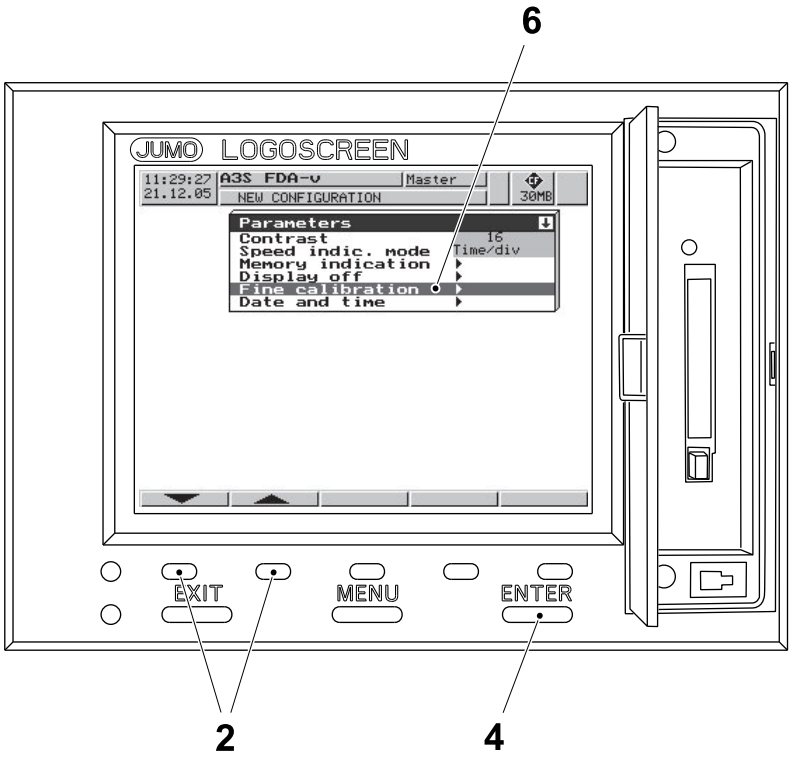

2 Arrow button
4 Enter button
5 Fine calibration

(Cont'd)

(Cont'd)

f) Use the ARROW buttons (2) to select ACTUAL START VALUE and press the ENTER button (4).

g) Use the ARROW buttons (2) and (6) to set the ACTUAL START VALUE of the reading range (e.g. 200 °C) and press the ENTER button (4).

h) Use the ARROW buttons (2) to select SET START VALUE and press the ENTER button (4).

i) Use the ARROW buttons (2) and (6) to set the TARGET START VALUE of the range (the true starting value of the signal range received from the thermocouple, e.g. 205 °C) and press the ENTER button (4).

j) Use the ARROW buttons (2) to select ACTUAL END VALUE and press the ENTER button (4).

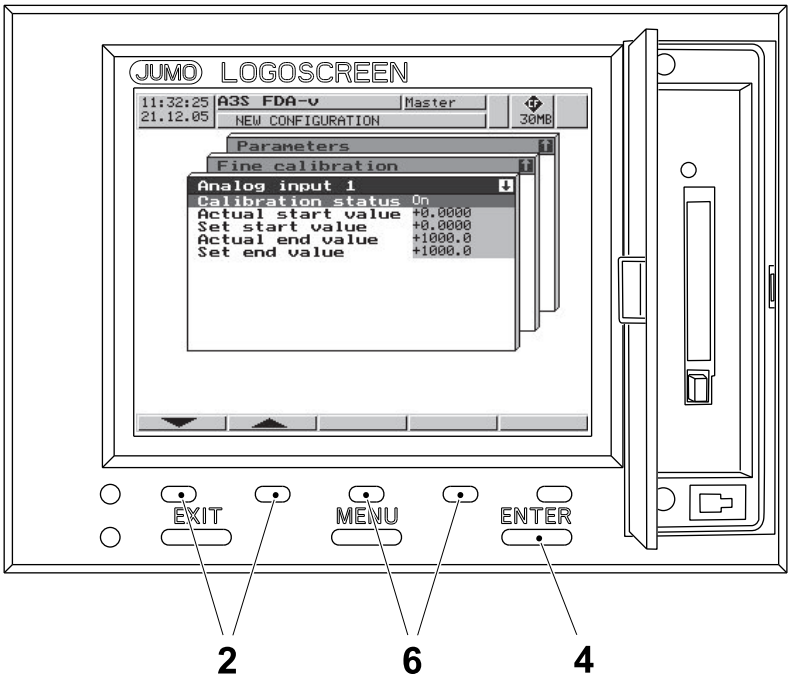

2 Arrow button
4 Enter button
6 Arrow button

(Cont'd)

(Cont'd)

k) Use the ARROW buttons (2) and (6) to set the ACTUAL END VALUE of the reading range (e.g. 300 °C) and press the ENTER button (4).

l) Use the ARROW buttons (2) and (6) to set the TARGET END VALUE of the range (the true ending value of the signal range received from the thermocouple, e.g. 310 °C) and press the ENTER button (4).

m) Use the ARROW buttons (2) to select ACTUAL START VALUE and press the ENTER button (4).

n) Press the EXIT button (7) twice to exit from the PARAMETER window and automatically reset the recorder.

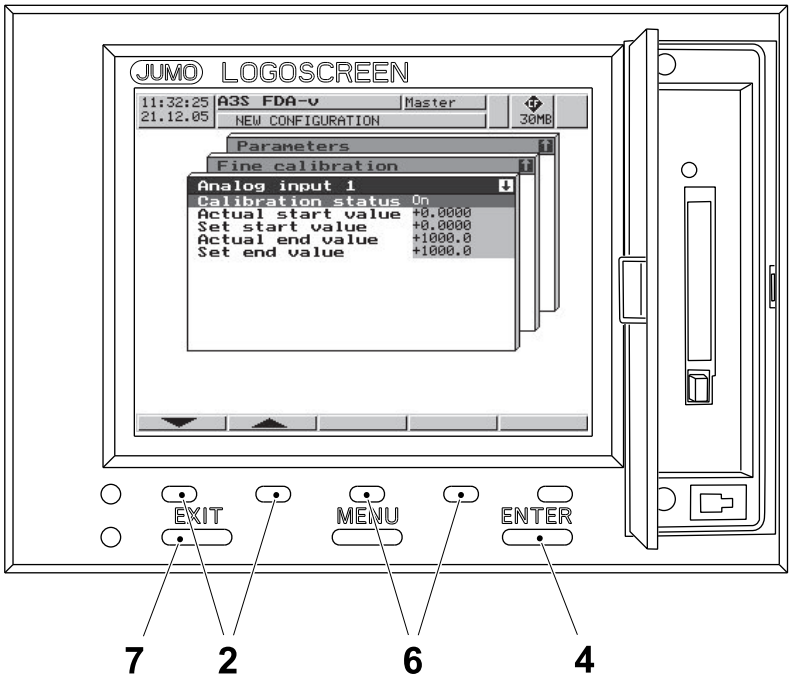

2 Arrow button
4 Enter button
6 Arrow button
7 Exit button

8.7.4.1-5 Recorder - Log In and Log Off

Machine Status	STEP ZERO

Log In Procedure

Note! For detailed information, see the manual supplied on the JUMO installation disk.

Note! To access the CONFIGURATION menu and the COMPACTFLASH CARD menu, it is necessary to login to the recorder.

a) Press the MENU button (1). The functions COMPACTFLASH CARD and CONFIGURATION are disabled.

b) Press the LOG IN AND LOG OFF button (2).

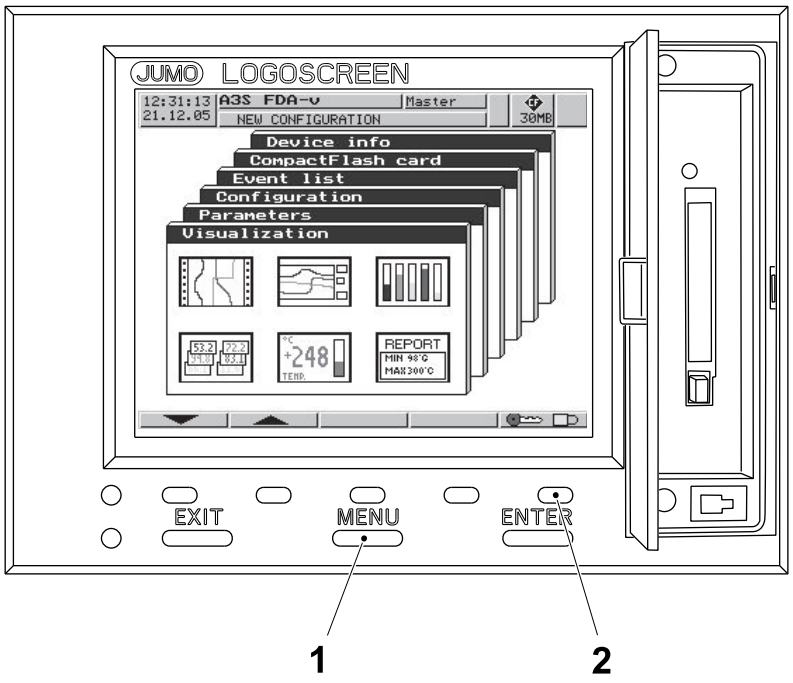

1 Menu button
2 Log in and log off button

(Cont'd)

(Cont'd)

c) Use the ARROW buttons (3) to select the LOG-IN window and press the ENTER button (4).

Note! The recorder is delivered by default with an internal user list which comprises two user ID's. The user ID named MASTER allows full access to all the configuration parameters and the password is 9200. The user ID named USER allows the download of the recorded data only and the password is 0.

Note! If the recorder has been configured with individual user ID's, contact the administrator of the equipment for access to the recorder.

d) Select the user name and press the ENTER button (4).

e) Enter the password and press the ENTER button (4). The functions COMPACTFLASH CARD and CONFIGURATION menus are now enabled and the name of the logged-in user appears on the top of the display.

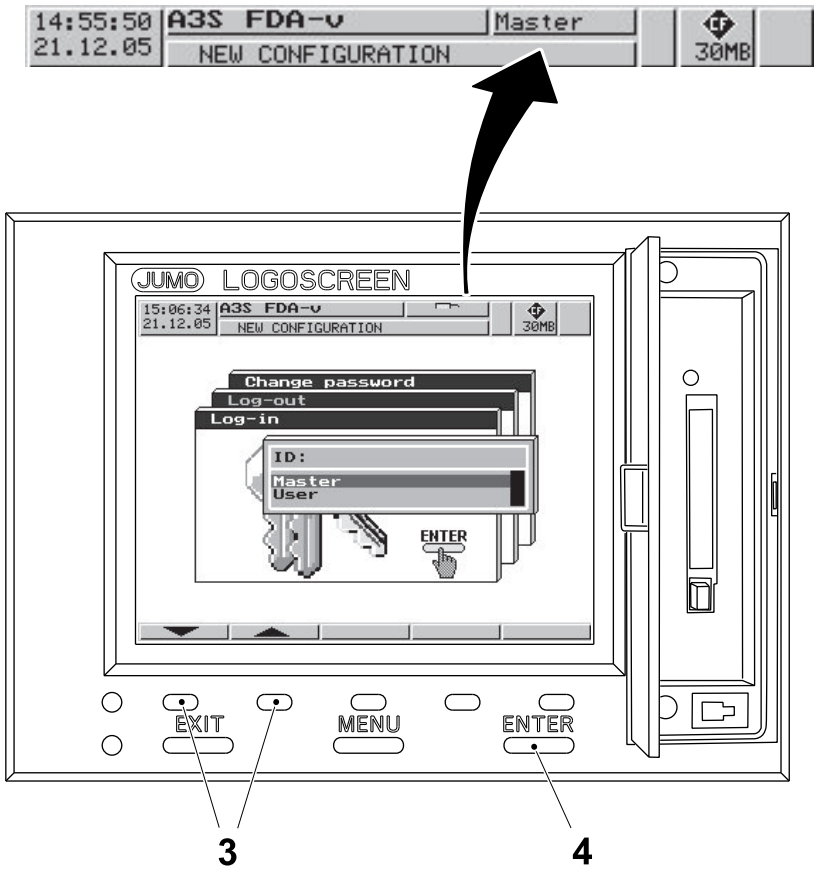

3 Arrow button
4 Enter button

(Cont'd)

(Cont'd)

Log Out Procedure

a) Use the ARROW buttons (3) to select the `LOG-OFF` window. The user currently logged in is shown on the top of the display.

b) Press the ENTER button (4).

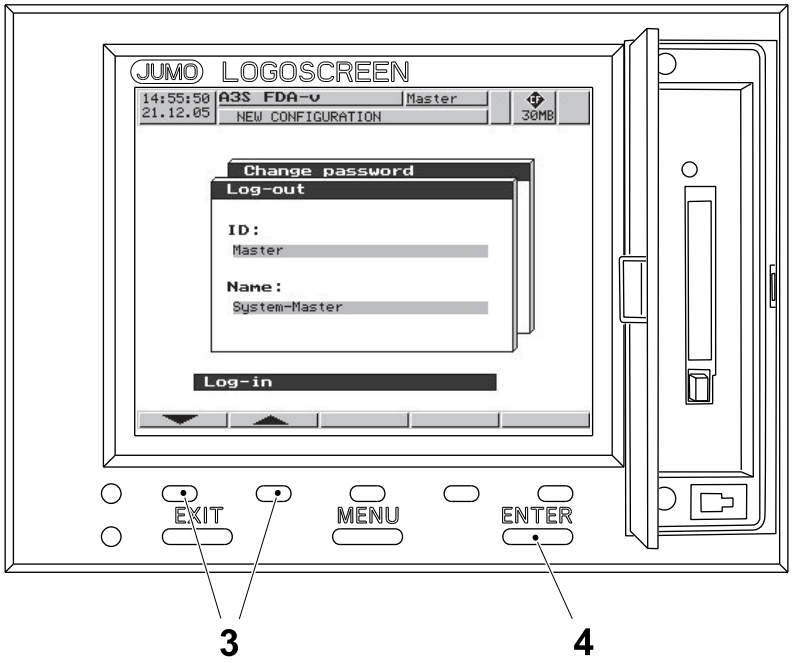

3 Arrow button
4 Enter button

8.7.4.1-6 Recorder - Change CompactFlash Card

Machine Status	STEP ZERO

Note! For detailed information, see the manual supplied on the JUMO installation disk.

a) Perform the log in to access the CompactFlash Card functions, see 8.7.4.1-5 Recorder - Log In and Log Off.

b) Press the MENU button (1).

c) Use the ARROW buttons (2) to select the `COMPACTFLASH CARD` window (3) and press the ENTER button (4).

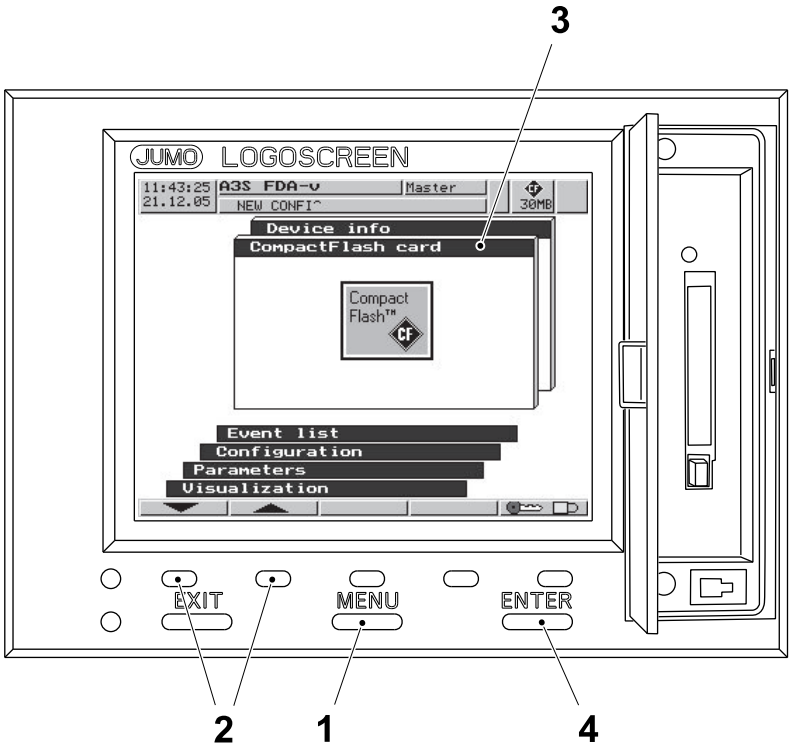

1 Menu button
2 Arrow button
3 CompactFlash card window
4 Enter button

(Cont'd)

(Cont'd)

Note! If the batch reports are also to be downloaded to the diskette, select the `REPORT END; UPDATE CF CARD` window (5).

d) Use the ARROW buttons (2) to select the `UPDATE CF CARD` window (6) and press the START button (7).

e) Any remaining PRODUCTION and CIP record data is saved to the CompactFlash card. When the operation is completed, open the door (8) and eject the CompactFlash card from the CompactFlash slot (9).

f) Insert the new CompactFlash card into the CompactFlash slot (9) and close the door (8).

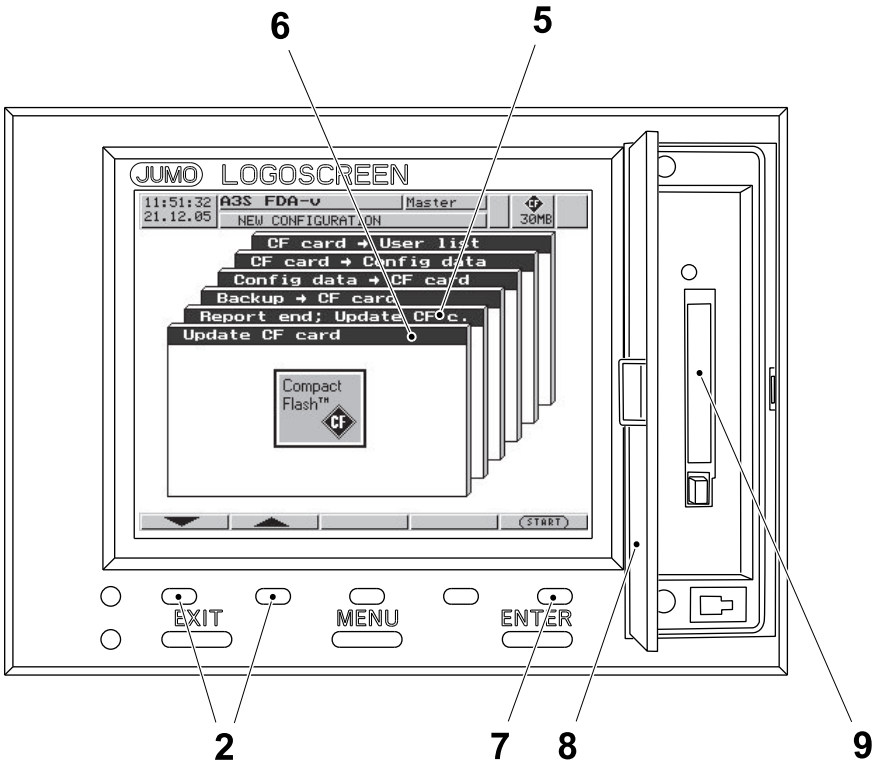

2 Arrow button
5 Report end; update CF card window
6 Update CF card window
7 Start button
8 Door
9 CompactFlash slot

8.7.4.1-7 Recorder - Configure Archived Data for Colour Printing

Special Equipment	PC with CompactFlash card reader and JUMO PCA 3000

Note! For detailed information on the PCA 3000 application, see the manual supplied on the JUMO installation disk.

(Cont'd)

(Cont'd)

If there is a requirement to print production data recorded by the Jumo recorder, for an internal quality control process or in order to comply with country legislation, the following procedure must first be performed to correctly print the production data.

a) Download the production data to the CompactFlash card, see 8.7.4.1-6 Recorder - Change CompactFlash Card.

b) Use a card reader to connect the CompactFlash card to the PC.

c) Open the START menu on the PC and select PROGRAMS, JUMO INSTRUMENTS and then JUMO PCA3000.

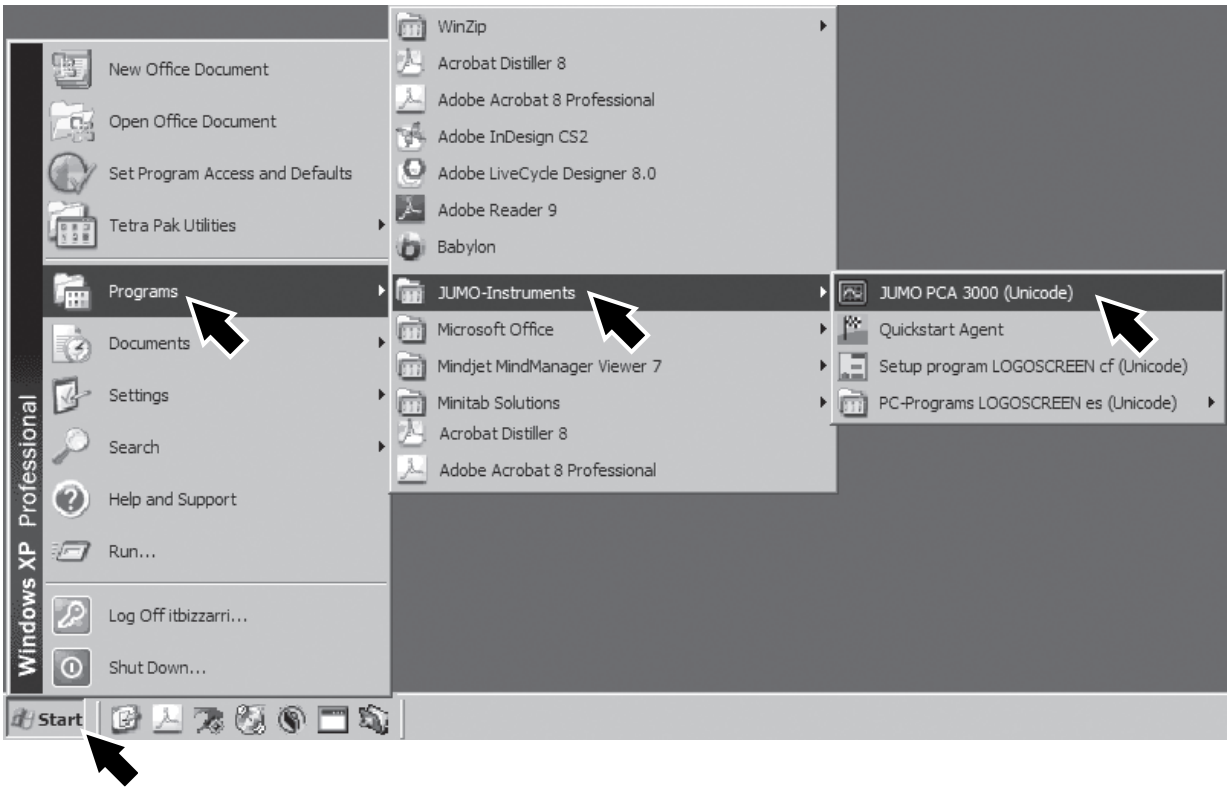

(Cont'd)

(Cont'd)

d) Select ARCHIVE and then select READ IN DATA.

e) In the READ IN DATA window, select the BROWSE button.

f) In the BROWSE FOR FOLDER window, browse to the CompactFlash card and select the OK button.

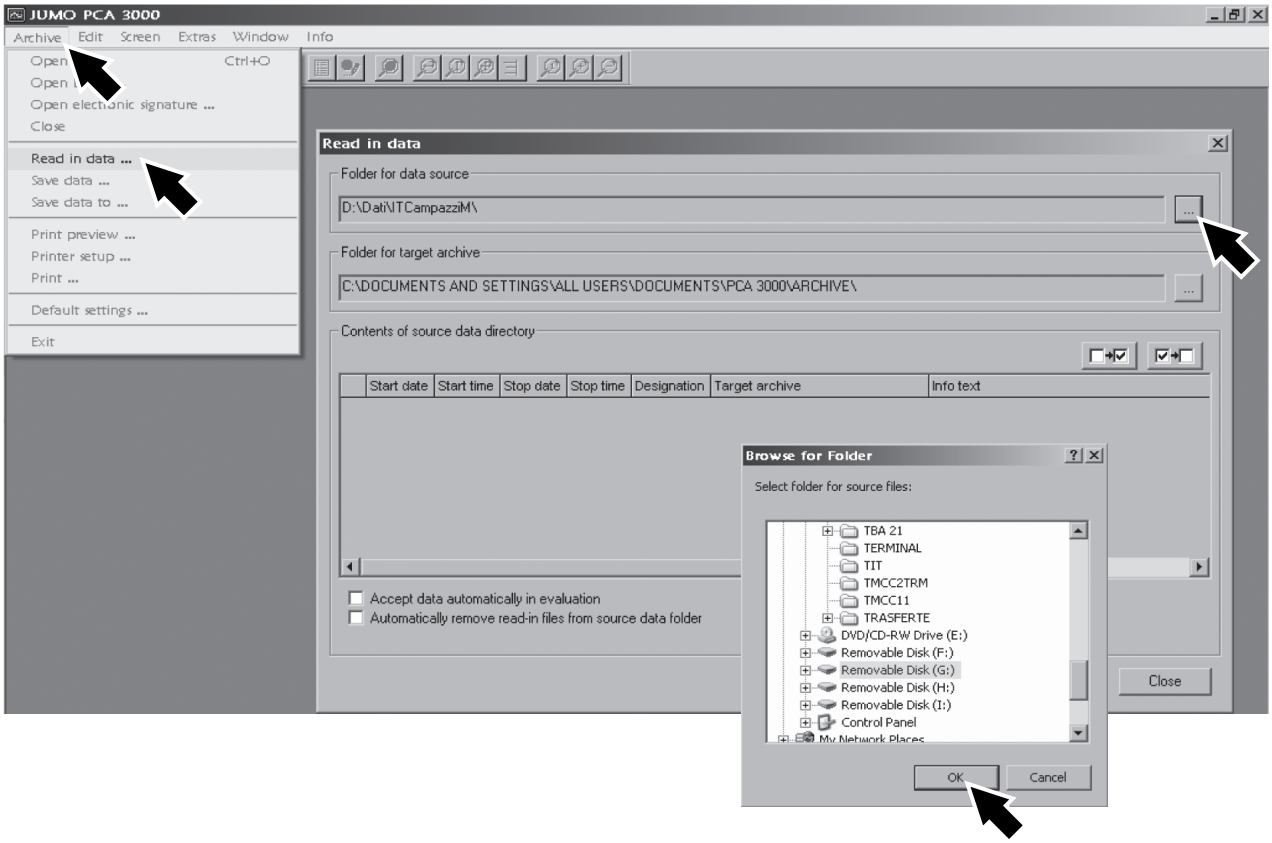

(Cont'd)

(Cont'd)

g) Select the check box next to the required data batch and then select the READING button.

h) If this is the first time data has been downloaded for the recorder, the CREATE NEW ARCHIVE window is displayed. Enter a suitable name for the archive and select the OK button.

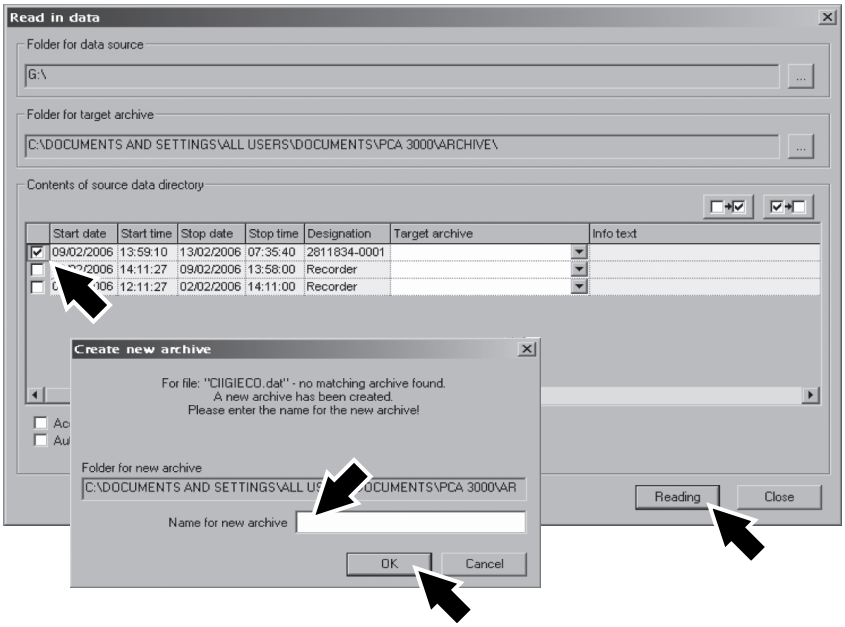

i) When the dialogue window appears with the message DATA HAVE BEEN READ IN SUCCESSFULLY, select the OK button and then select the CLOSE button.

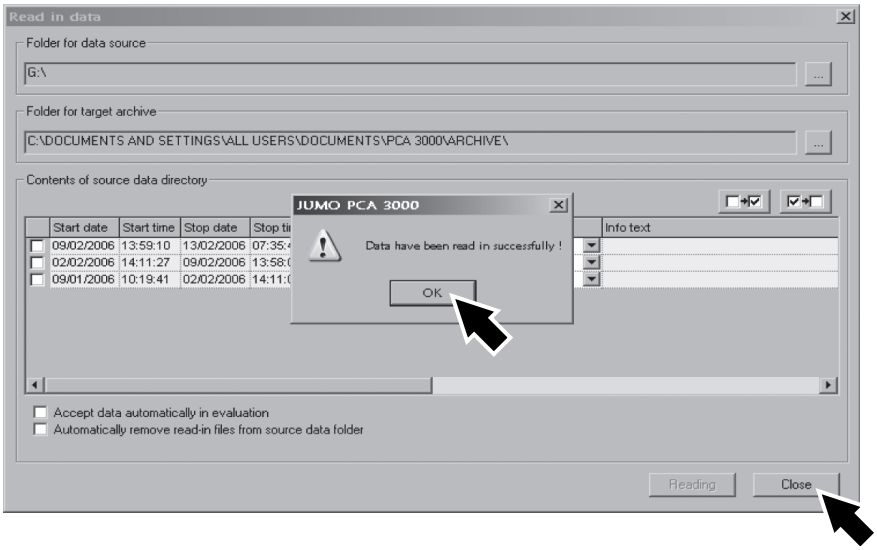

(Cont'd)

(Cont'd)

j) Select ARCHIVE and then select OPEN ARCHIVE.

k) In the OPEN ARCHIVE window, select the archive file and then select the OPEN button.

l) The ARCHIVE OVERVIEW window appears, select the production batch and use the arrows to select the time period to print and then select the OPEN button.

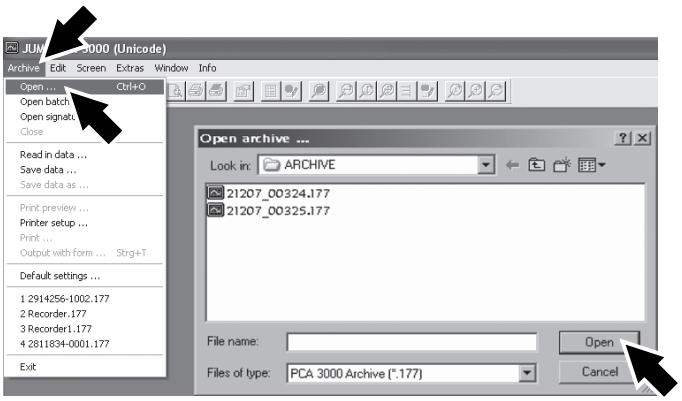

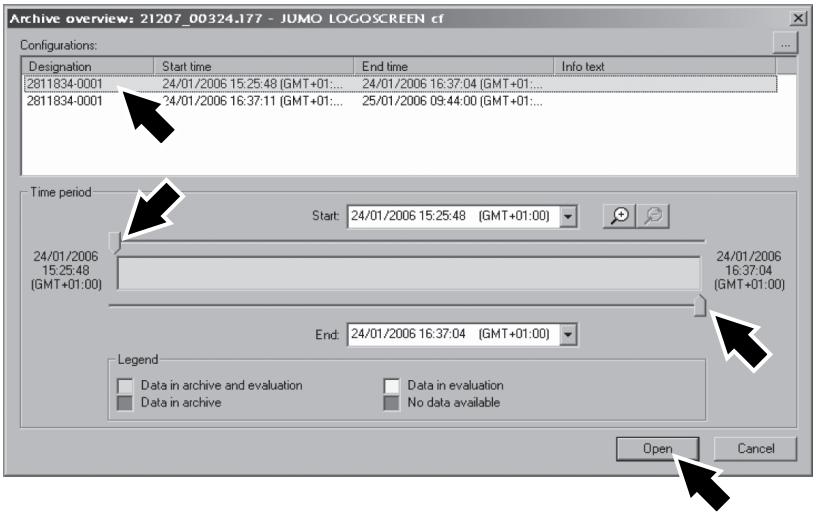

(Cont'd)

(Cont'd)

m) The GROUP SELECTION FOR window appears, select PRODUCTION DATA and then select the OPEN button.

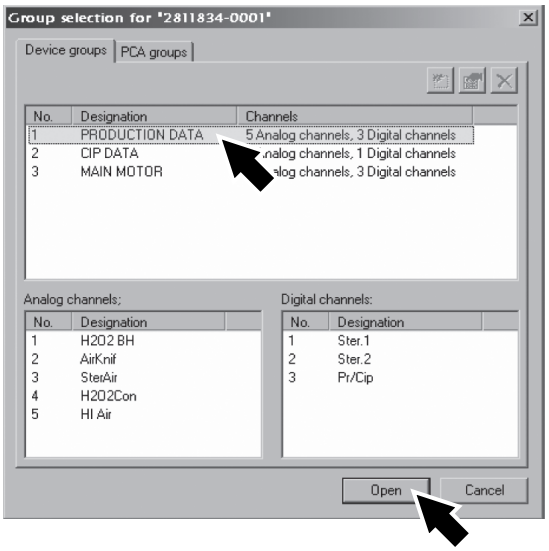

(Cont'd)

(Cont'd)

n) A graphic of the selected production batch and time period is displayed. Select the CHANNELS tab and locate the digital input PR/CIP.

o) Select the ARROW button next to the coloured box for the digital input PR/CIP to display the colour palette selection.

p) Select the colour black for the digital input PR/CIP.

The production data can now be printed data according to the desired printing preferences. The colour black for the digital input PR/CIP is memorised by the PCA 3000 application only for the current archive and the procedure must be repeated if production data for other archives will be printed.

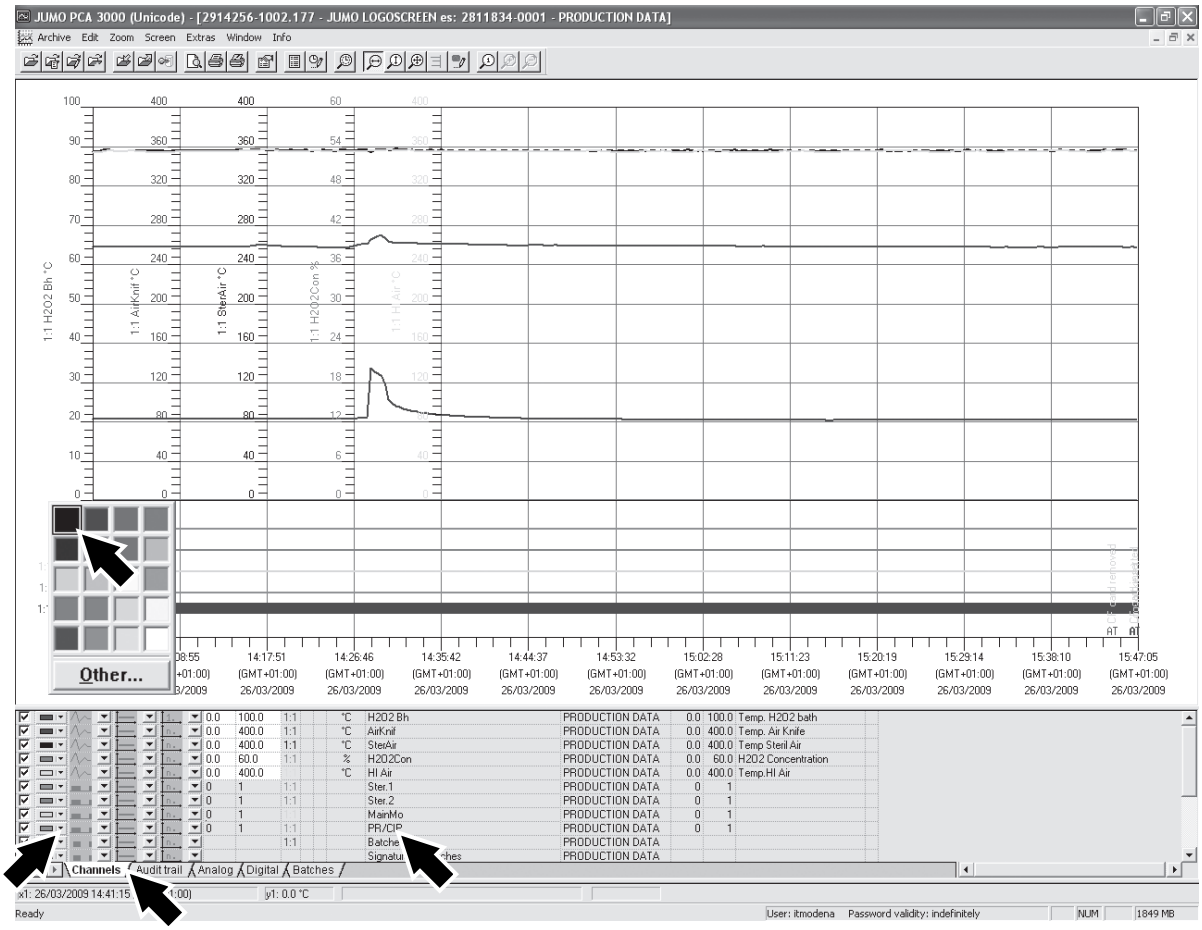

8.7.4.2 Recorder Logoscreen FD

Note! Valid for recorder Jumo Logoscreen *fd* TP No. 90606-4690.

Note! Jumo Logoscreen *fd* TP No. 90606-4690 is installed on machines with T-order: 21220/00380 and above.

8.7.4.2-1 Recorder - Description

SPC Reference	90606-4690

Analog Parameters

The recorder registers the following analog Production and CIP parameters:

Record type	Channel No.	Type	Channel name	Description
Production data	AN1	Analog	H2O2 Bh	**Hydrogen peroxide temperature** If the temperature of the sterile bath exceeds its upper or lower limit the machine stops. This event is recorded by the digital **Sterile parameter 2**. The sterile bath temperature is measured in °C.
Production data	AN2	Analog	Air Knif	**Air knife temperature** If the temperature of the air knife exceeds its upper or lower limit during **Production**, the machine stops. This event is recorded by the digital **Sterile parameter 2**. The air knife temperature is measured in °C.
Production data	AN3	Analog	Ster Air	**Air sterilization (incineration) temperature** If the temperature of the incinerated air exceeds its upper or lower limit the machine steps down to **Zero** position. This event is recorded by the digital **Sterile parameter 1**. The temperature of the incinerated air is measured in °C.
Production data	AN7	Analog	H2O2 Con	**Hydrogen peroxide concentration** If the concentration of the hydrogen peroxide exceeds its upper or lower limit the machine stops. This event is recorded by the digital **Sterile parameter2**. The peroxide concentration is measured in % p/p.
-	AN8	Analog		Not used

(Cont'd)

(Cont'd)

Record type	Channel No.	Type	Channel name	Description
Production data	AN9	Analog	HI Air	**HI air temperature (OE)** If the temperature of the HI air exceeds its upper or lower limit the machine stops. This event is recorded by the digital **Sterile parameter 2**. The HI air temperature is measured in °C.
CIP data	AN10	Analog	CIP Cond	**CIP conductivity** It measures the conductivity of the cleaning liquid during CIP. The signal is sent from the conductivity meter. The conductivity is measured in mS/cm.
CIP data	AN11	Analog	CIP Flow	**CIP Flow rate** It measures the flow of the cleaning liquid during CIP. The signal comes from the flow meter. The flow rate is measured in litres/h.
CIP data	AN12	Analog	CIP Temp	**CIP Temperature** It measures the temperature of the cleaning liquid during CIP. The signal comes from the conductivity meter. The CIP temperature is measured in °C.
-	AN13	Analog		Not used
-	AN14	Analog		Not used
-	AN15	Analog		Not used
-	AN16	Analog		Not used
-	AN17	Analog		Not used
-	AN18	Analog		Not used

Digital Parameters

The recorder registers the following digital Production and CIP parameters:

(Cont'd)

(Cont'd)

Record type	Channel No.	Type	Channel name	Description
Production data	DI1	Digital	Ster.1	**Sterile parameter 1** It records sterile parameter events that have caused the machine to shutdown. The event is recorded with a pulse from the zero reference lasting for the duration of the event and continuing for a further 5 minutes after the event has ended. After a sterile parameter event, the machine must be re-sterilised. On completion of filling machine sterilisation (drying finished), a pulse is recorded for 30 seconds.
Production data	DI2	Digital	Ster.2	**Sterile parameter 2** It records operational parameter events that have caused the machine to stop. The event is recorded with a pulse from the zero reference lasting for the duration of the event and continuing for a further 5 minutes after the event has ended. If a hydrogen peroxide concentration event occurs prior to the start of the **Production** phase, the event is recorded with a pulse from the zero reference lasting for the duration of the event and continuing for a further 30 seconds after the event has ended.
Production data	DI3	Digital	Main Mo	**Main motor operating** It records when the main motor is **ON**.

(Cont'd)

(Cont'd)

Record type	Channel No.	Type	Channel name	Description
Production data	DI4	Digital	PR/CIP	**Filling machine in production** It records when the filling machine is producing filled packages. This signal also records when the machine is in **Intermediate cleaning** and **Final cleaning**. **Intermediate cleaning** is indicated by a pulse at 1 minute intervals from the zero reference lasting for the duration of the cleaning phase. **Final cleaning** is indicated by a pulse at 2.5 minute intervals from the zero reference lasting for the duration of the cleaning phase.
CIP data	DI7	Digital	HVA/CIP	It records the cleaning time of the HVA circuit pump

(Cont'd)

(Cont'd)

Display and Controls

The CONTROL KNOB (1) is used to configure and operate the recorder. It can be rotated in both clockwise and counterclockwise directions to select functions in the color display (2), and it is pressed to activate the functions selected.

The Status LED (3) (red) is on continuously if an alarm is present. The Power LED (4) (green) is on continuously as soon as power is applied.

The cover (5) can be open to access the CompactFlash card and the other slots.

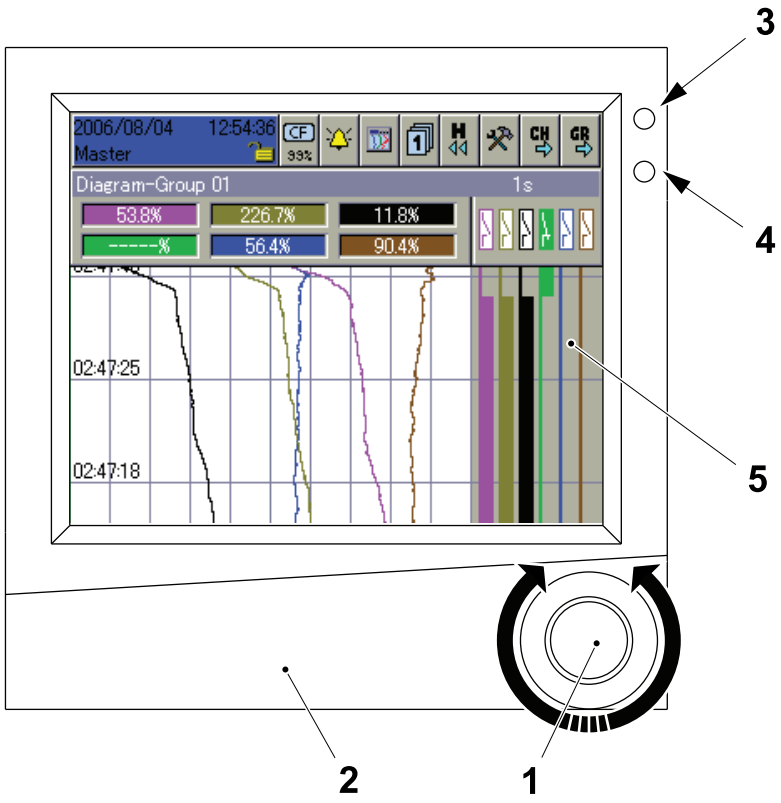

1 Control knob
2 Color display
3 Status LED
4 Power LED
5 Cover

(Cont'd)

(Cont'd)

The USB host (6) and the CompactFlash slot (7) are used for data exchange (measurement data, configuration data, user lists) between the recorder and the PC

The Signal LED (8) is on during access to the CompactFlash memory card.

The USB device (9) for communication with the setup program or PCC (PCA Communication Software).

Note! The USB interfaces are not designed for continuous use.

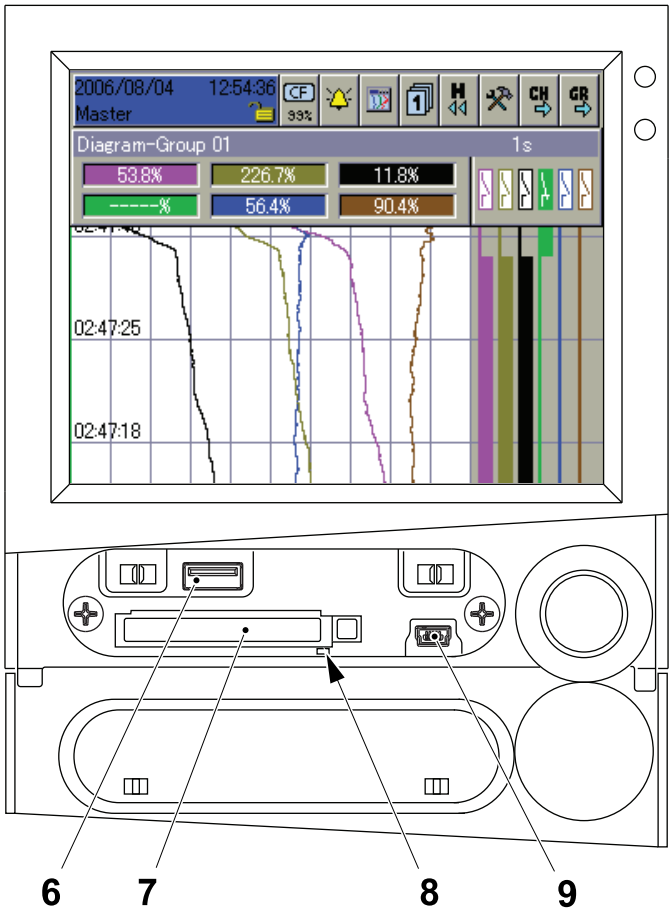

6 USB host
7 CompactFlash slot
8 Signal LED
9 USB device

(Cont'd)

(Cont'd)

The functions of the recorder are selected in the header (10). The selected function is indicated by a blue background. The fixed functions are:

- Device manager (11), to set the user and other device settings
- Memory manager (12), shows the available memory in the CompactFlash
- Alarm and event list (13), shows the alarms and errors currently present
- Operator level (14) shows the type of visualization of current data.

The status and title bar (15) shows alarm messages as well as general informations and it can be automatically blanked by the system. If the text is shown in red, this indicates an error message.

The numerical measurement display (16) shows the measurement data in numerical form.

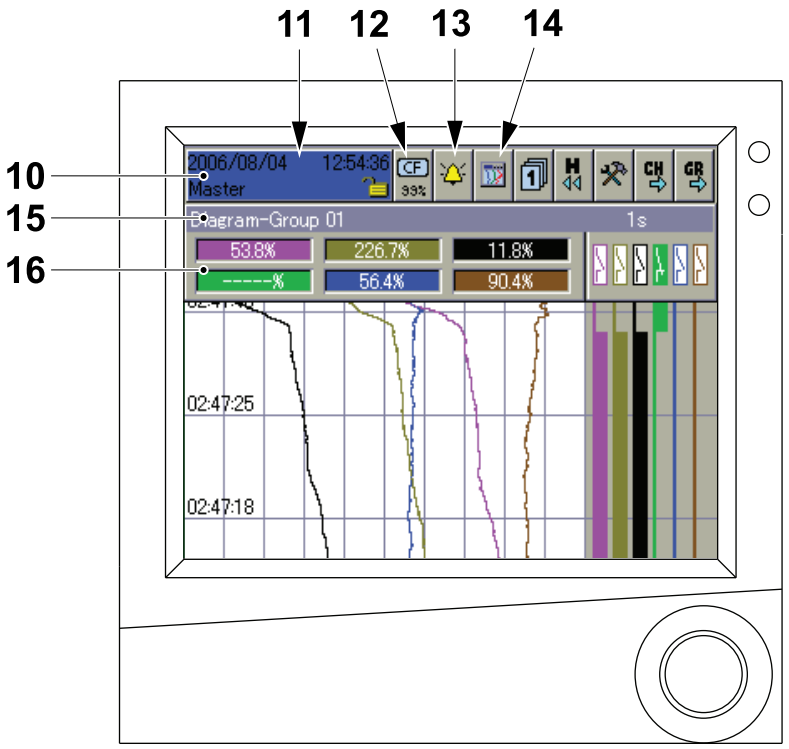

10 Header
11 Device manager
12 Memory manager
13 Alarm and event list
14 Operator level
15 Status and title bar
16 Numerical measurement display

(Cont'd)

(Cont'd)

Operating Example

a) With the normal display active, rotate the CONTROL KNOB (1) to select the OPERATOR LEVEL (2).

b) Press the CONTROL KNOB (1) to activate the OPERATOR LEVEL (2). The VISUALIZATION window (3) is displayed.

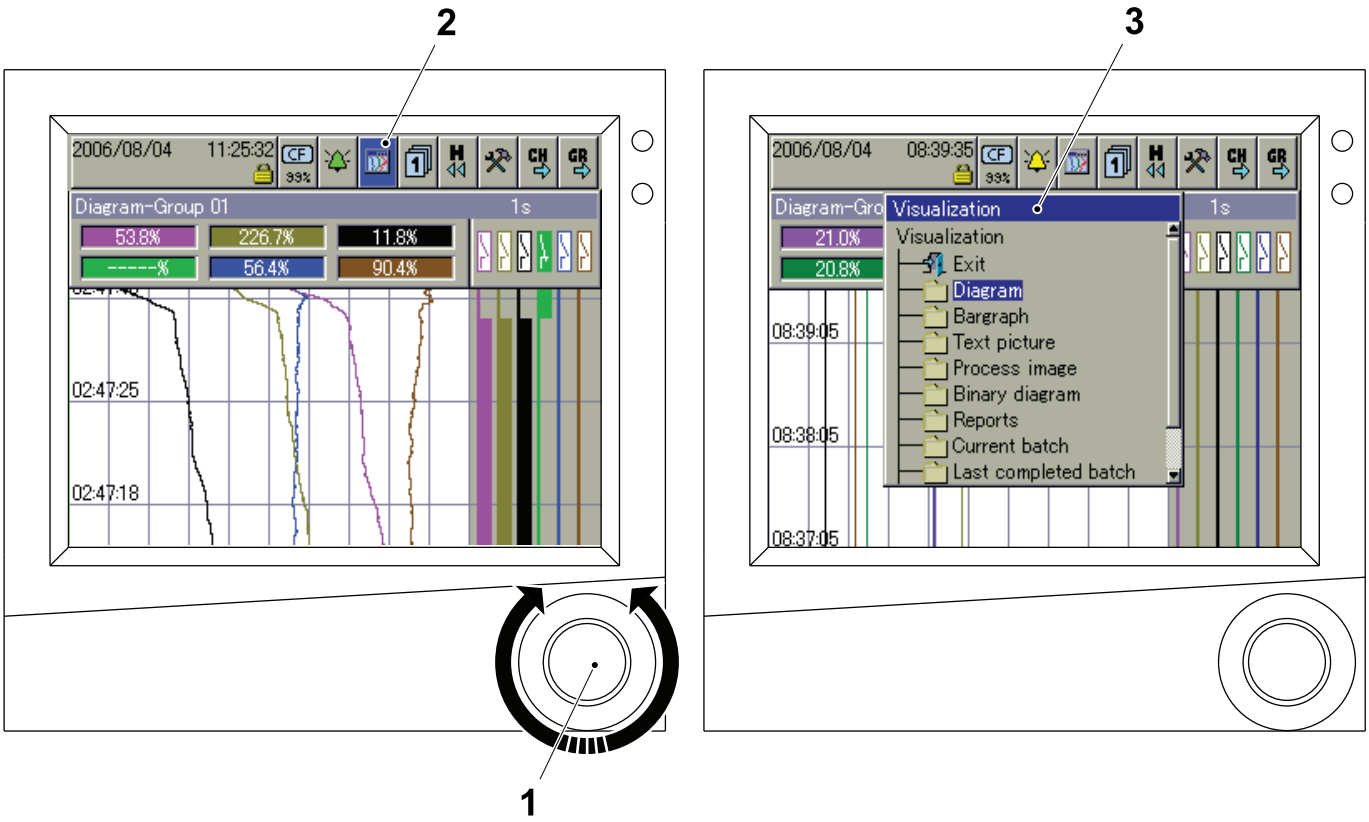

1 Control knob
2 Operator level
3 Visualization window

(Cont'd)

(Cont'd)

c) Rotate the CONTROL KNOB (1) to select the BARGRAPH folder (4).

d) Press the CONTROL KNOB (1) to activate the bar graph presentation.

e) The BAR GRAPH presentation (5) starts.

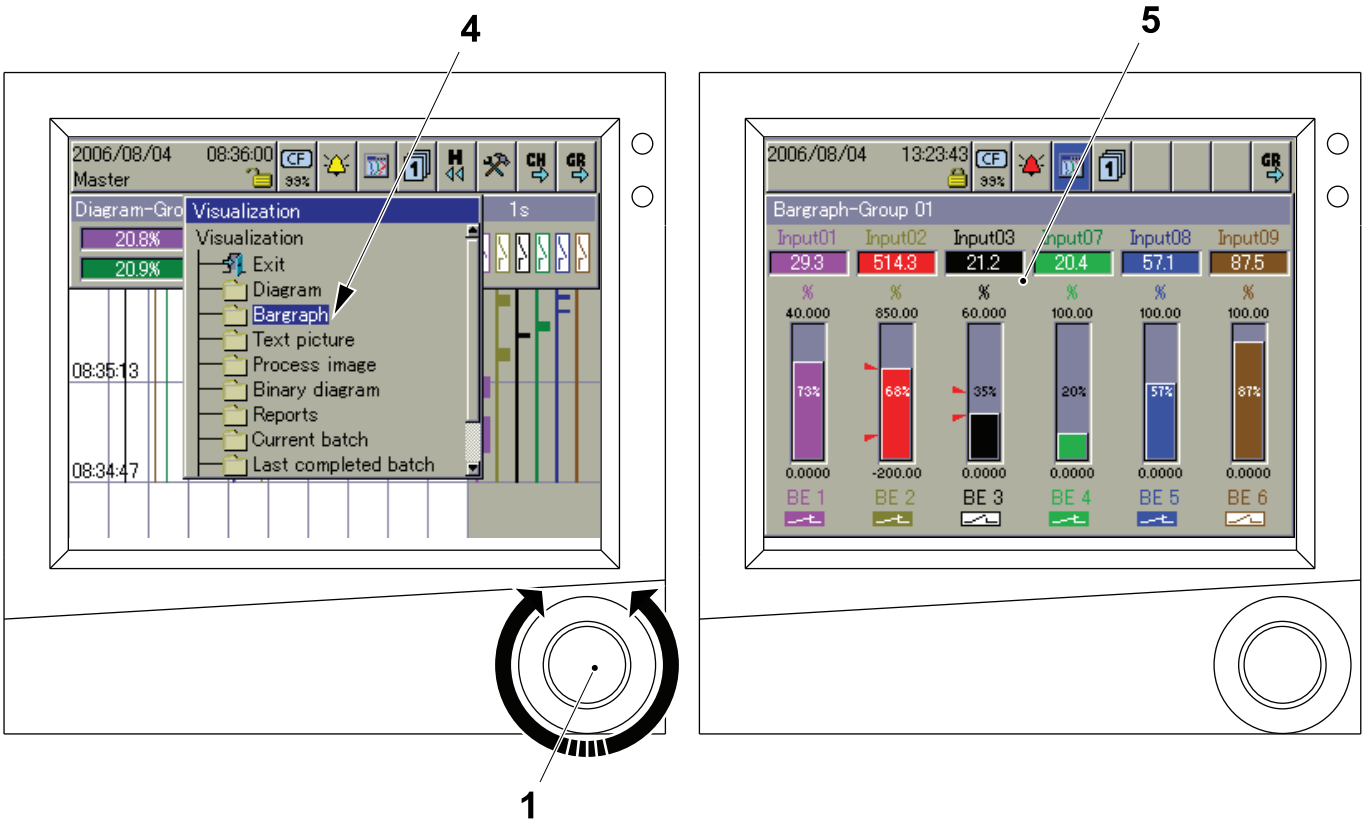

1 Control knob
4 Bargraph folder
5 Bar graph presentation

Power Supply

Note! For detailed information, see the manual supplied on the JUMO installation disk.

The power supply to the recorder is always switched ON. The recorder starts to record production data from the PREPARATION phase and continues to record for five minutes after the PRODUCTION ENDED phase has finished. The recorder starts to record CIP data at the start of the cleaning cycle and continues to record for five minutes after the cleaning cycle has finished.

(Cont'd)

(Cont'd)

CompactFlash Memory Card

The data is automatically saved in the CompactFlash memory card at regular intervals. If the CompactFlash memory card alarm function is enabled on the PLC program, when 31Mb of the CompactFlash memory is used an alarm is activated on the TPOP and the filling machine performs a SHORT STOP. Eject the CompactFlash memory card and download the recorded data, see 8.7.4.2-6 Recorder - Change CompactFlash Card.

The Jumo recorder can continue recording data in its internal memory. Internal memory has a capacity of 256 Mb: when the memory is full, the oldest data will automatically be overwritten by new data.

Erase the data stored on the CompactFlash memory card and fit CompactFlash memory card into the recorder as soon as possible.

Batch Report

Each time the recorder starts to record production data, an incremental batch report is created. The operator has the possibility to input the serial number of the filling machine and information about the current batch. Batch report data is only saved to the CompactFlash memory card if the report `STORE ALL + UPDATE CF CARD` function is used, see 8.7.4.2-6 Recorder - Change CompactFlash Card.

Password

Note! For filling machines compliant with the FDA 21 CFR Part 11 regulations for electronic signatures, individual passwords and user rights are assigned to users of the recorder and to users of the PC Evaluation program. If necessary contact the administrator of the recorder for access. For all other filling machines see the standard password configuration below.

The recorder has two standard user ID and password configurations allowing different access rights to the recorder:

- The user ID `MASTER` and the password `9200`. Logon as the `MASTER` to have full access to all the configuration parameters and to all the functions of the CompactFlash memory card.
- The user ID `USER` and the password `0`. Logon as the `USER` allows access to download the recorded data in the CompactFlash memory card without any privileges to access configuration parameters.

PC Evaluation Program (PCA3000)

The recorder is supplied with a software programme for archiving and reviewing the data recorded by the recorder. For detailed information on the PC Evaluation program, see the manual supplied on the JUMO installation disk.

PC Security Management Program

The recorder is supplied with a software programme for the administration of user rights to access the recorder, the use of the PC evaluation software and for the issue of electronic signatures to recorded data. The PC Security management software is utilized for filling machines required to operate in compliance with the FDA 21 CFR Part 11 regulation, see the manual supplied on the JUMO installation disk.

8.7.4.2-2 Recorder - Set Date, Time and Language

Machine Status	STEP ZERO
SPC Reference	90606-4690

Set Date and Time

Note! For detailed information, see the manual supplied on the JUMO installation disk.

a) Perform the log in as “Master” to access the configuration functions, see 8.7.4.2-5 Recorder - Log In and Log Out.

b) Rotate the CONTROL KNOB (1) to access the DEVICE MANAGER (2) and press the CONTROL KNOB (1) to activate it.

c) In the INSTRUMENT MENU window select PARAMETERIZATION (3) by rotating the CONTROL KNOB (1) and press the CONTROL KNOB (1).

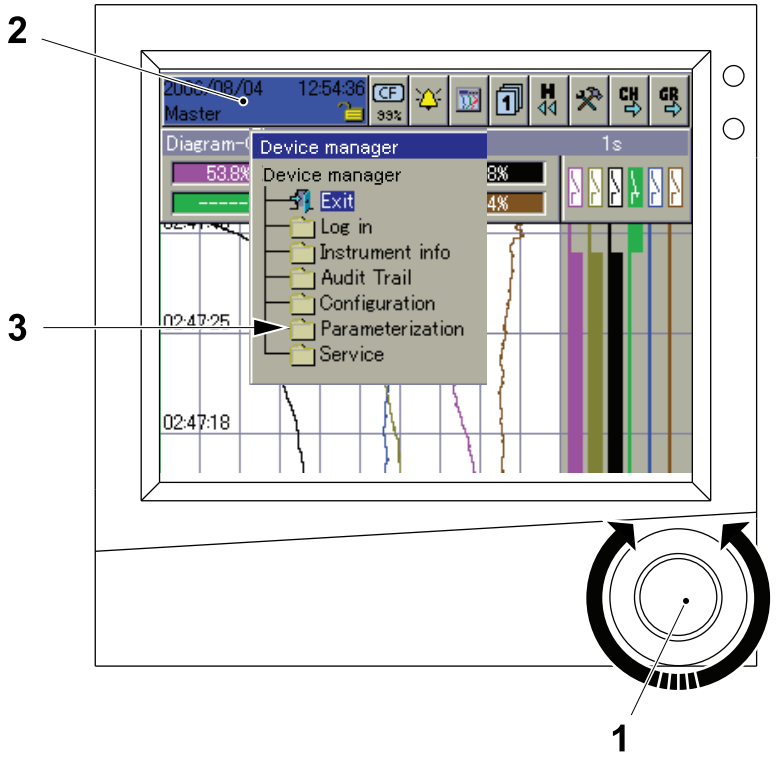

1 Control knob
2 Device manager
3 Parameterization

(Cont’d)

(Cont'd)

d) In the PARAMETERIZATION window rotate the CONTROL KNOB (1) to select DATE AND TIME (4) and press the CONTROL KNOB (1).

e) Rotate the CONTROL KNOB (1) to select the DATE field (5) or the TIME field (6) and press the CONTROL KNOB (1).

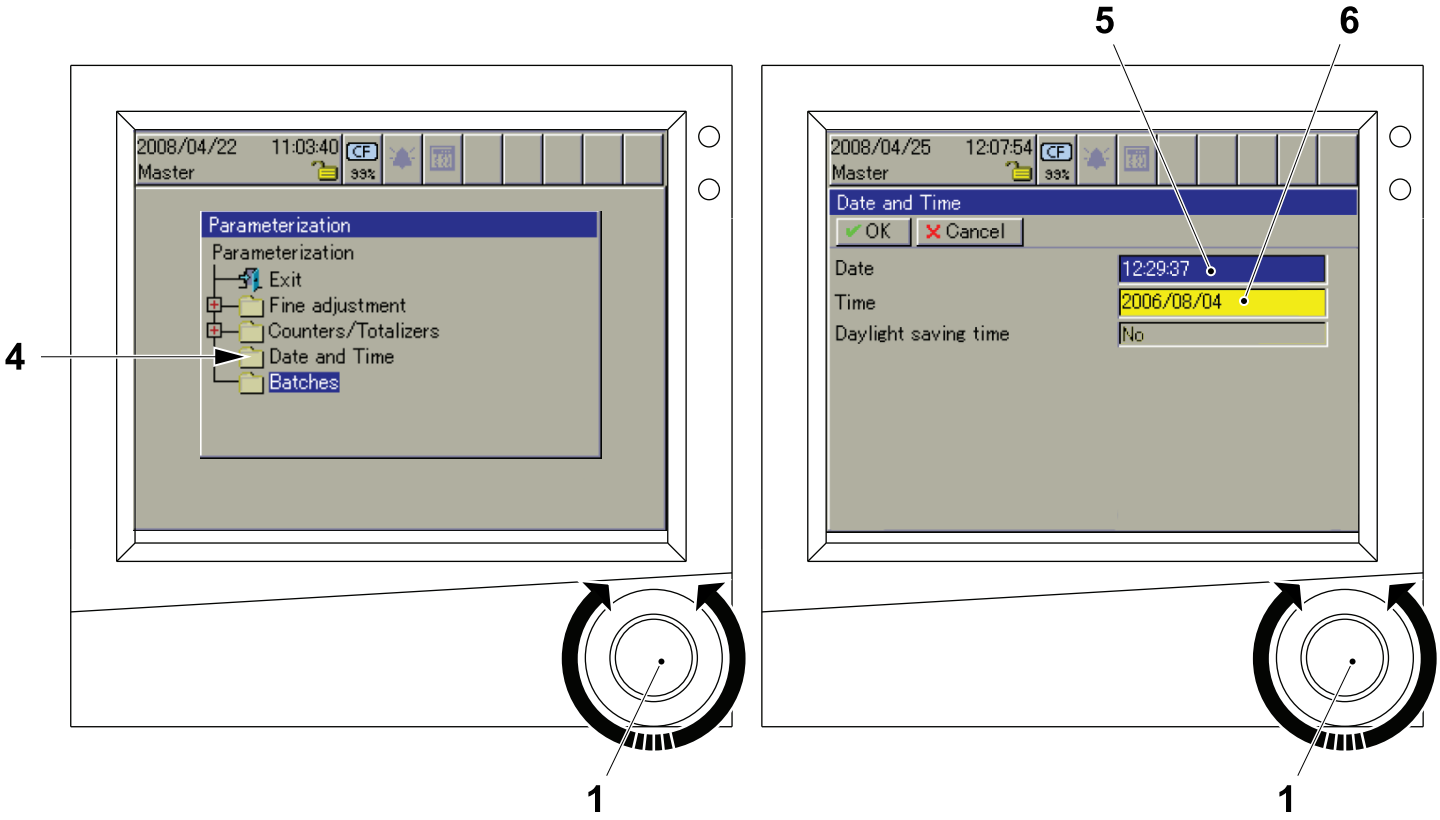

1 Control knob
2 Device manager
4 Date and Time
5 Date field
6 Time field

(Cont'd)

(Cont'd)

f) Rotate the CONTROL KNOB (1) to select the field (7) to be changed (e.g. hours) and press the CONTROL KNOB (1). The number in the field in shown in red, to indicate that it can now be changed.

g) Rotate the CONTROL KNOB (1) to change the number (incrementing or decrementing by 1) and press the CONTROL KNOB (1) to enter the value. The number in the field is shown again in blue.

h) Repeat the same procedure for the other fields (e.g. minutes and seconds).

i) When the setting is completed, select the OK button (8) by rotating the CONTROL KNOB (1) and press the CONTROL KNOB (1) to accept the new values.

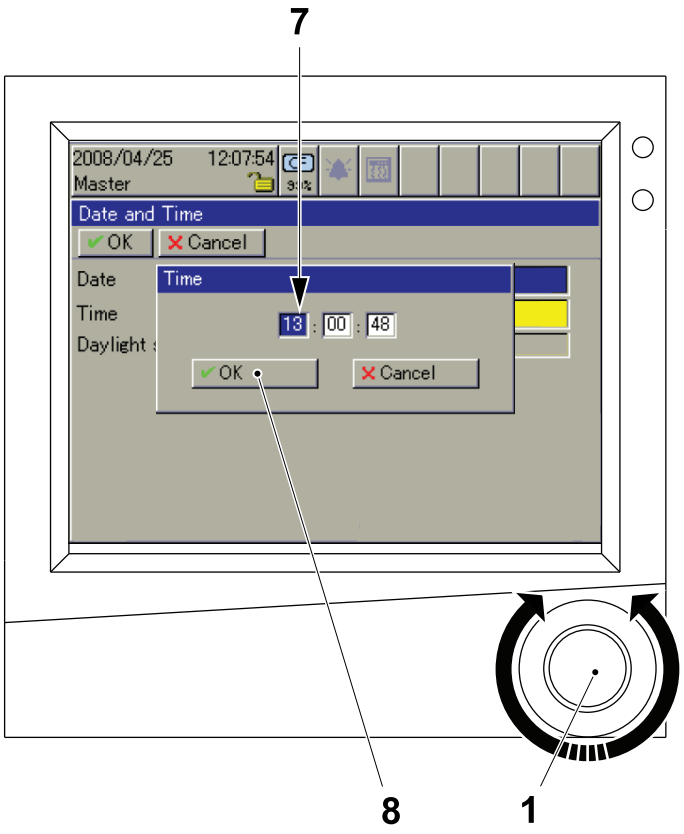

1 Control knob
7 Field
8 Ok button

(Cont'd)

(Cont'd)

j) When both DATE and TIME are set, rotate the CONTROL KNOB (1) to select the OK button (9) and press the CONTROL KNOB (1) to accept the changes and to exit from the PARAMETERIZATION menu. The recorder performs an automatic reset.

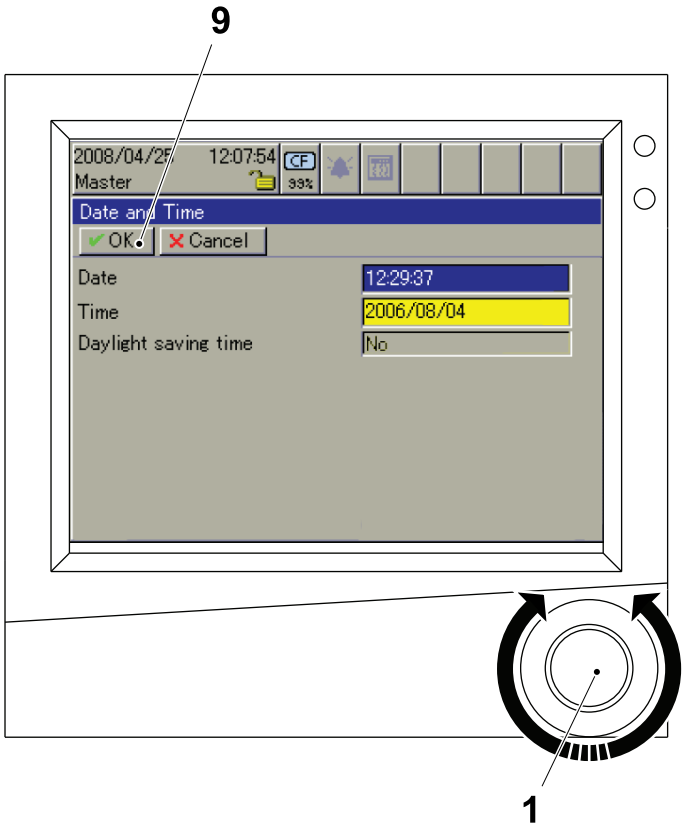

1 Control knob
9 Ok button

(Cont'd)

(Cont'd)

Set Language

a) Perform the log in as "Master" to access the configuration functions, see 8.7.4.2-5 Recorder - Log In and Log Out.

b) Rotate the CONTROL KNOB (1) to access the DEVICE MANAGER (2) and press the CONTROL KNOB (1) to activate it.

c) In the INSTRUMENT MENU window select CONFIGURATION (3) by rotating the CONTROL KNOB (1) and press the CONTROL KNOB (1).

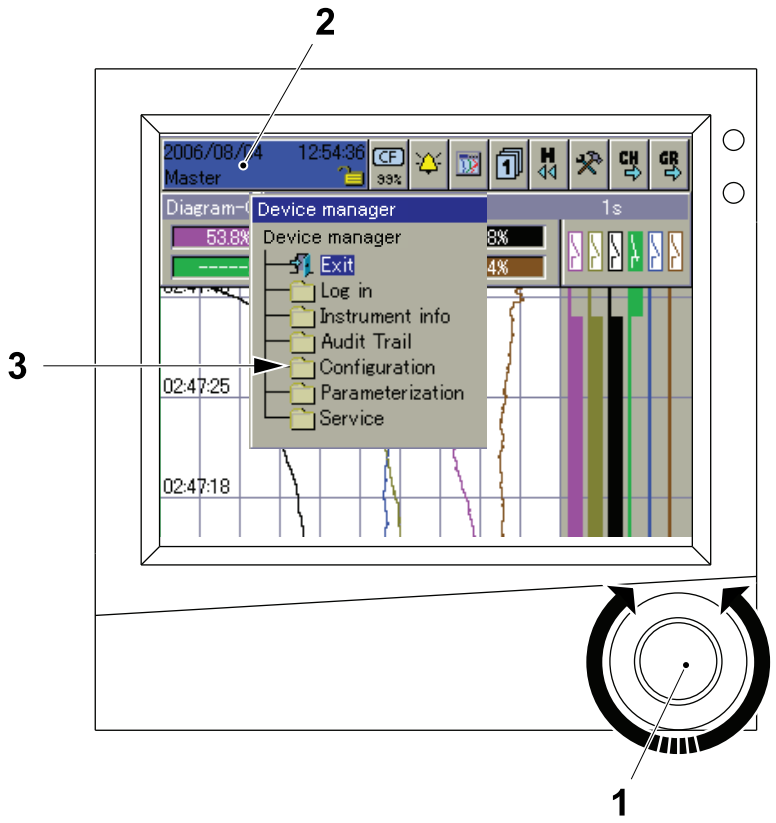

1 Control knob
2 Device manager
3 Configuration

(Cont'd)

(Cont'd)

d) In the CONFIGURATION window rotate the CONTROL KNOB (1) to select DEVICE DATA (4) and press the CONTROL KNOB (1).

e) Rotate the CONTROL KNOB (1) to select the LANGUAGE field (5) and press the CONTROL KNOB (1) to open the drop down menu with the available languages.

f) Select the desired language by rotating the CONTROL KNOB (1) and press the CONTROL KNOB (1).

g) Rotate the CONTROL KNOB (1) to select the OK button (6) and press the CONTROL KNOB (1).

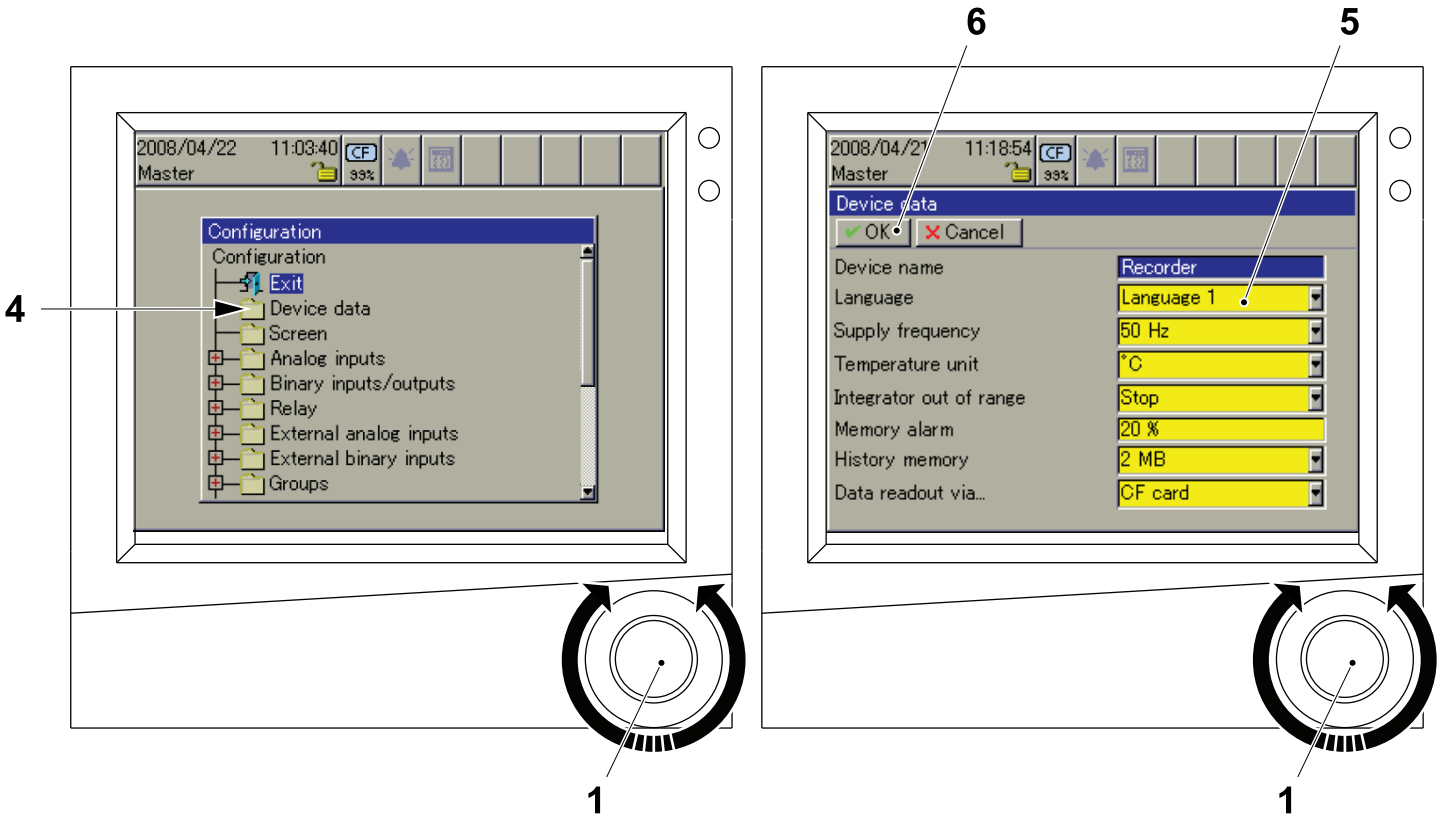

1 Control knob
4 Device data
5 Language field
6 Ok button

(Cont'd)

(Cont'd)

h) In the CONFIGURATION window, Rotate the CONTROL KNOB (1) to select EXIT (7) and press the CONTROL KNOB (1) to exit from the CONFIGURATION menu. The recorder performs an automatic reset.

Note! The new language is displayed after the automatic reset.

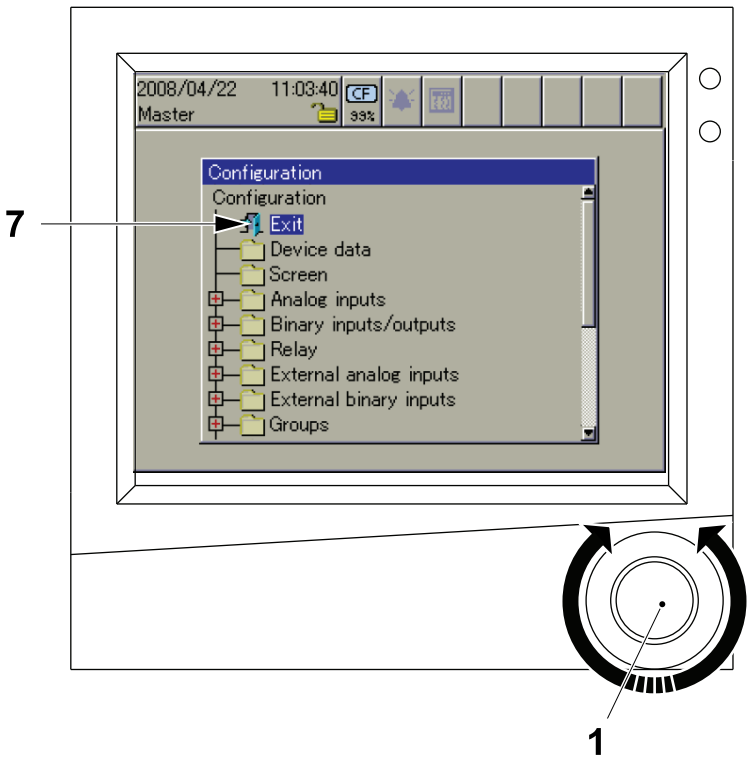

1 Control knob
7 Exit

8.7.4.2-3 Recorder - Load Configuration Data

Machine Status	STEP ZERO
Special Equipment	Laptop PC Communication Cable RS 232-C CompactFlash reader
SPC Reference	90606-4690

Loading via Serial Interface

Note! For detailed information, see the manual supplied on the JUMO installation disk.

a) Open the cover (1) and connect the serial communication cable supplied with the recorder between the laptop PC and the setup plug (2) on the front of the recorder.

b) Start the setup program `LOGOSCREEN CF`.

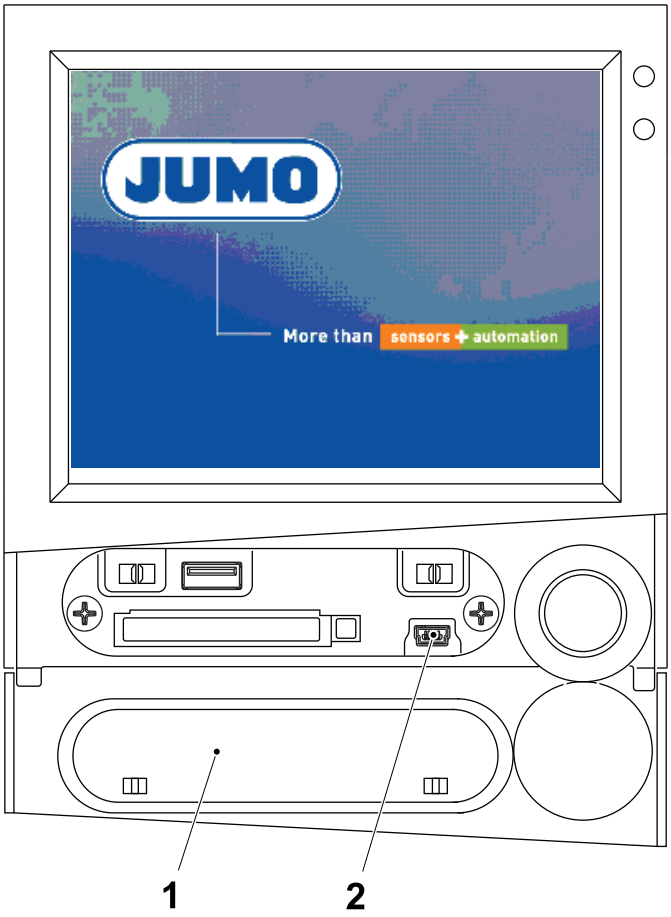

1 Cover
2 Setup plug

(Cont'd)

(Cont'd)

Note! If there has never been any previous communication with a device, the "Assistant for Device Settings" will automatically be started when the first attempt at communication is made.

c) Insert the software USB key into a laptop PC USB port.

Note! If a software CD has been supplied, insert the software CD into the laptop PC CD drive.

d) Locate the folder `PROCESS RECORDER` and copy the configuration file to the PC desktop.

e) Establish a connection between the laptop PC and the recorder by clicking on the `ESTABLISH CONNECTION` button (3).

f) Select the recorder in the device list and click the `CONNECTION` button (4).

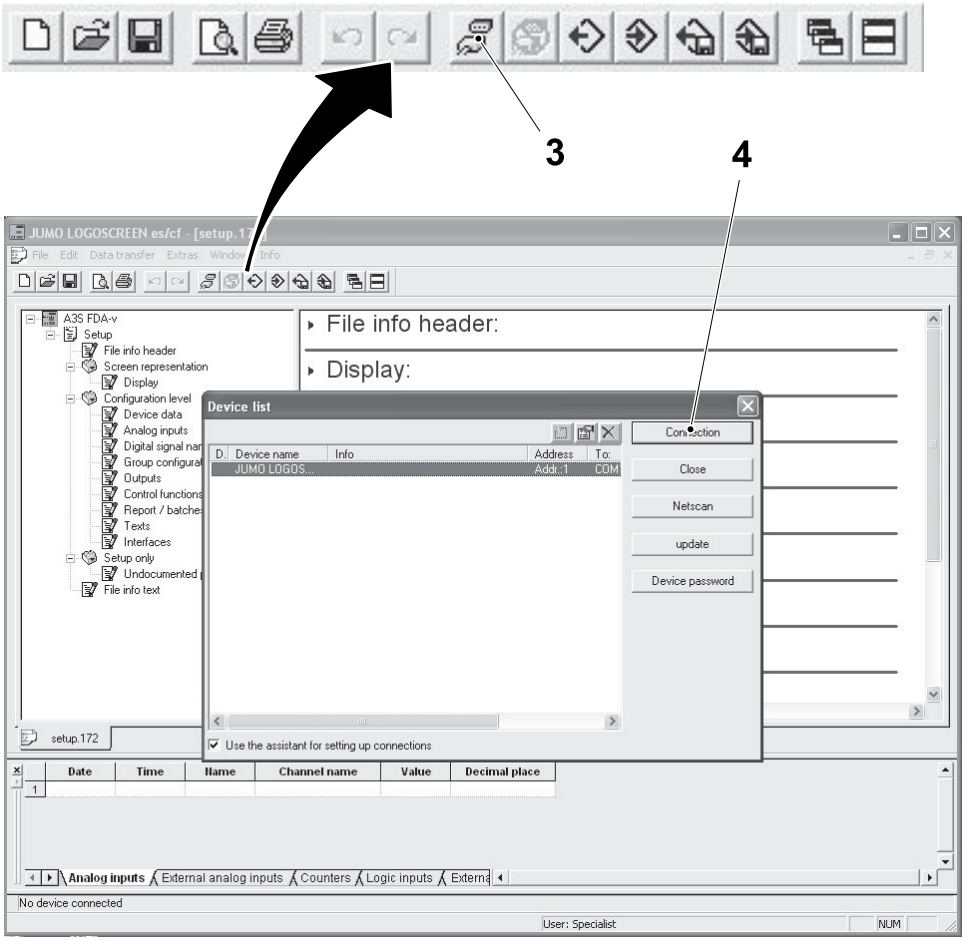

3 Establish connection button

4 Connection button

(Cont'd)

(Cont'd)

g) Click on the OPEN button (5) and locate the configuration file and then open the file.

h) Click on the DATA TRANSFER TO DEVICE button (6) to upload the new recorder configuration settings.

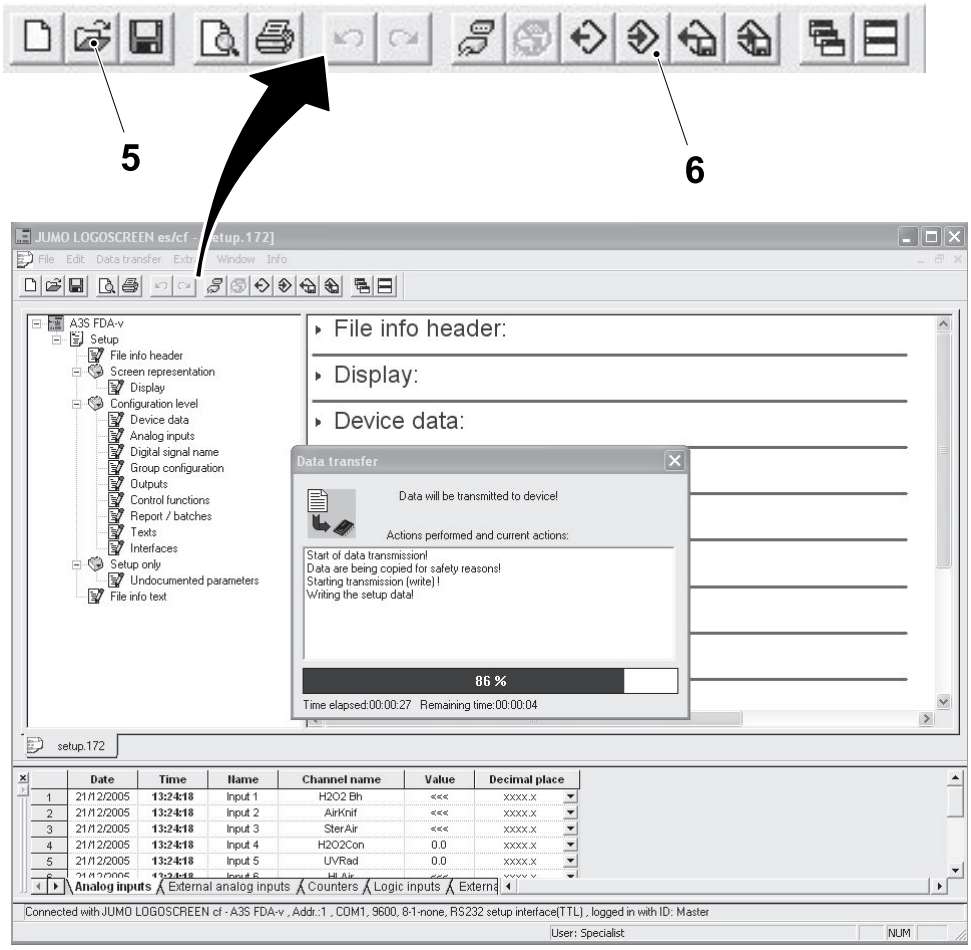

5 Open button
6 Data transfer to device button

(Cont'd)

(Cont'd)

i) Rotate the CONTROL KNOB (7) to access the DEVICE MANAGER (8) and press the CONTROL KNOB (7).

j) Select AUDIT TRAIL (9) by rotating and pressing the CONTROL KNOB (7)

k) Check that the new configuration (10) is reported on the log of all the user actions.

l) Close the setup program LOGOSCREEN CF and disconnect the communication cable.

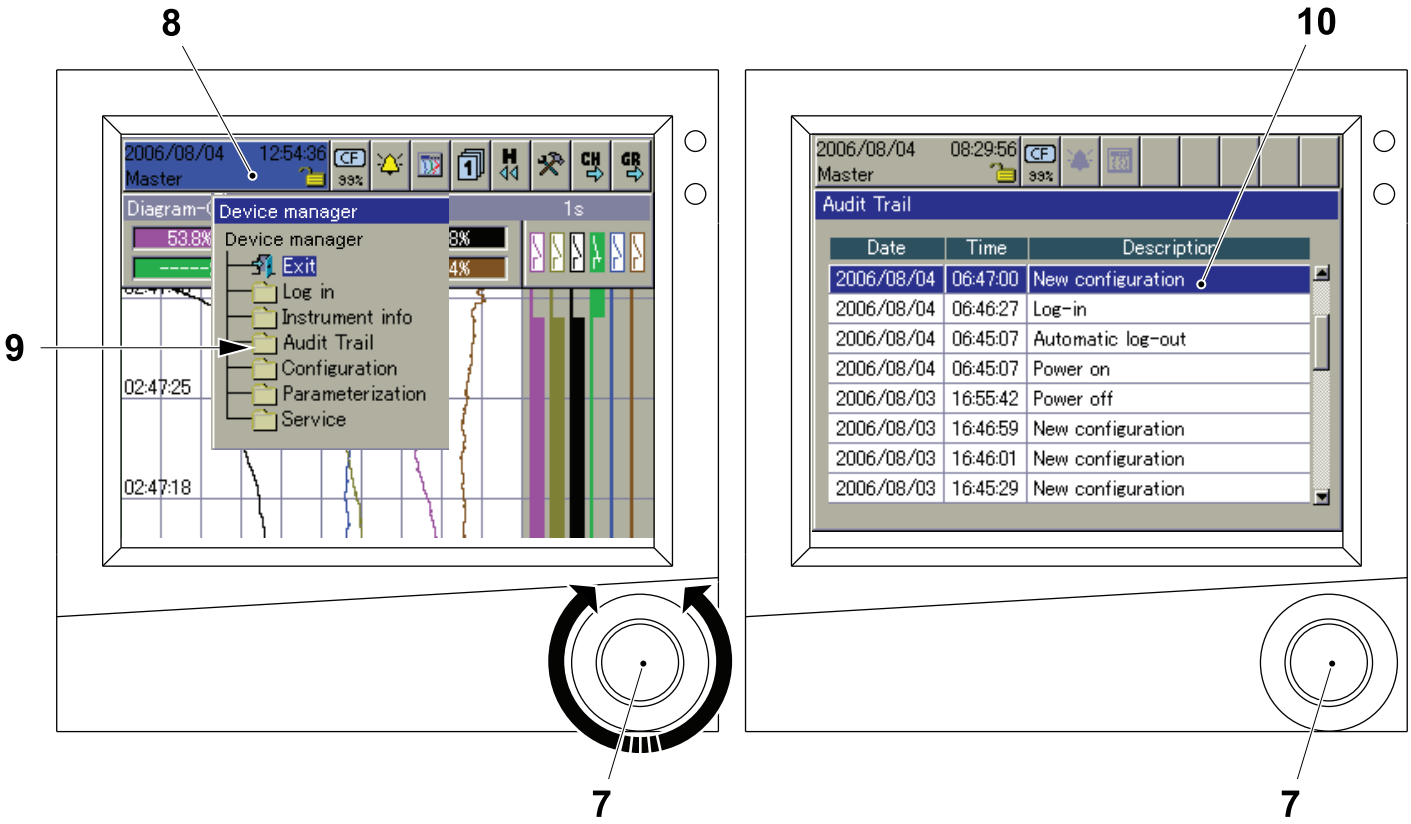

7 Control knob
8 Device manager
9 Audit trail
10 New configuration

(Cont'd)

(Cont'd)

Loading from CompactFlash Card

Note! For detailed information, see the manual supplied on the JUMO installation disk.

a) From the software USB key, copy the configuration file `Konf187.set` into the CompactFlash memory card (using a CompactFlash reader/writer, not supplied).

b) Perform the log in as "Master" to access the CompactFlash Card functions, see 8.7.4.2-5 Recorder - Log In and Log Out.

c) Open the cover (1) and insert the CompactFlash memory card with the configuration data into the CompactFlash slot (2). The `MEMORY MANAGER` window (3) is displayed.

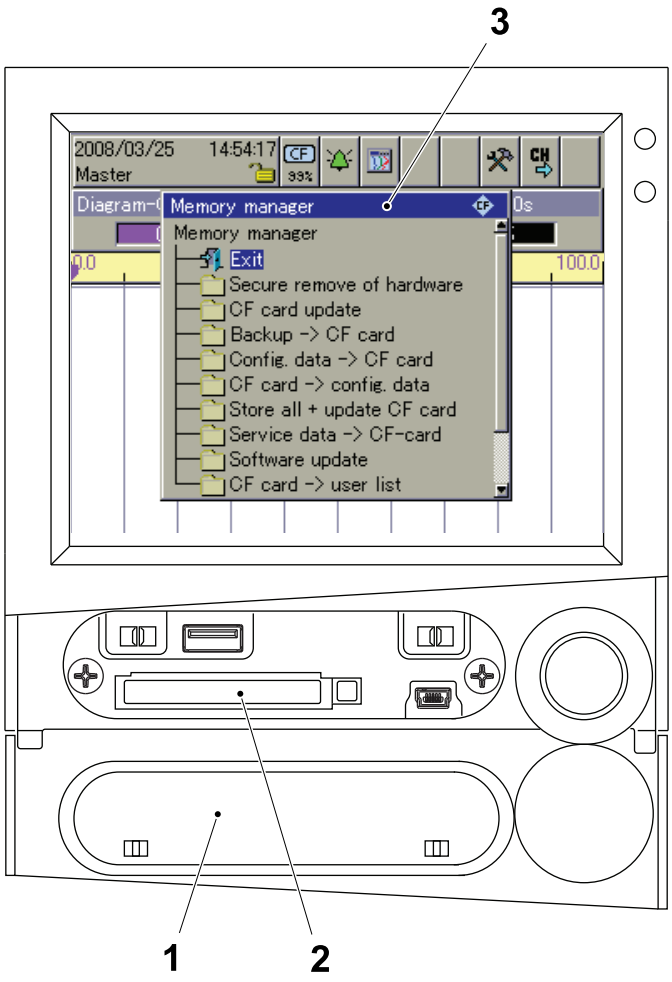

1 Cover
2 CompactFlash slot
3 Memory manager window

(Cont'd)

(Cont'd)

d) Rotate the CONTROL KNOB (4) to select `CF CARD-> CONFIG DATA` (5).

e) Press the CONTROL KNOB (4) to upload the new recorder configuration settings.

f) When the new recorder configuration settings have been uploaded the recorder performs an automatic reset.

Note! Do not remove the CompactFlash memory card while the upload is in progress.

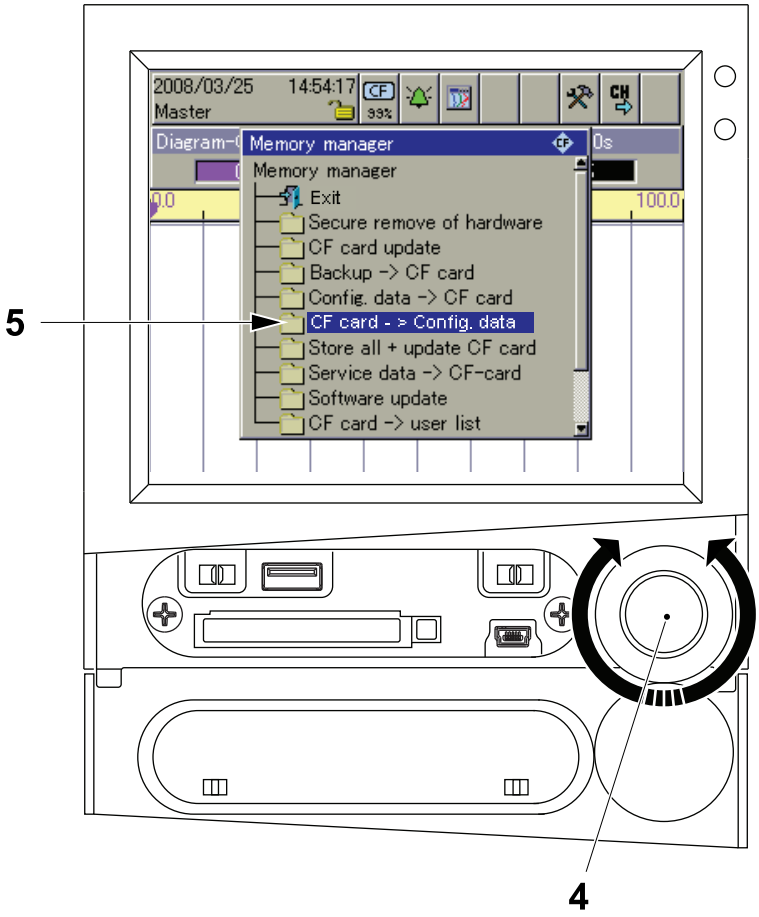

4 Control knob
5 CF card -> Config data

(Cont'd)

(Cont'd)

g) Rotate the CONTROL KNOB (4) to select SECURE REMOVE OF HARDWARE (6) and press the CONTROL KNOB (4). When the HARDWARE CAN BE REMOVED (7) message appears, the CompactFlash memory card can be ejected.

h) Close the cover (1).

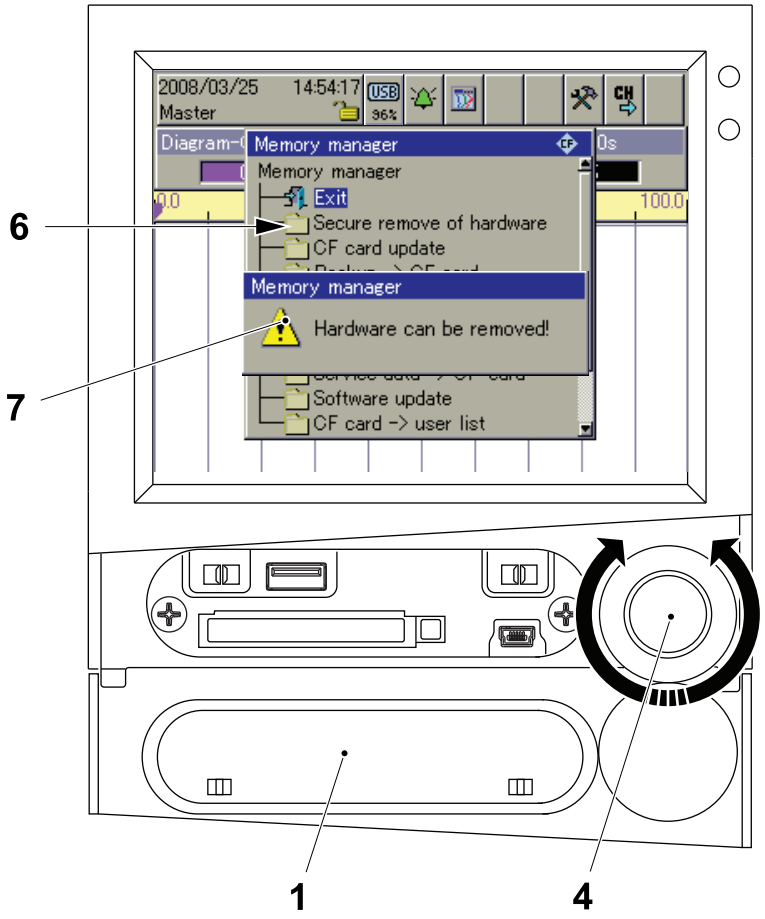

1 Cover
4 Control knob
6 Secure remove of hardware
7 Hardware can be removed

(Cont'd)

(Cont'd)

i) Rotate the CONTROL KNOB (4) to access the DEVICE MANAGER (8) and press the CONTROL KNOB (4).

j) Select AUDIT TRAIL (9) by rotating and pressing the CONTROL KNOB (4)

k) Check that the new configuration (10) is reported on the log of all the user actions.

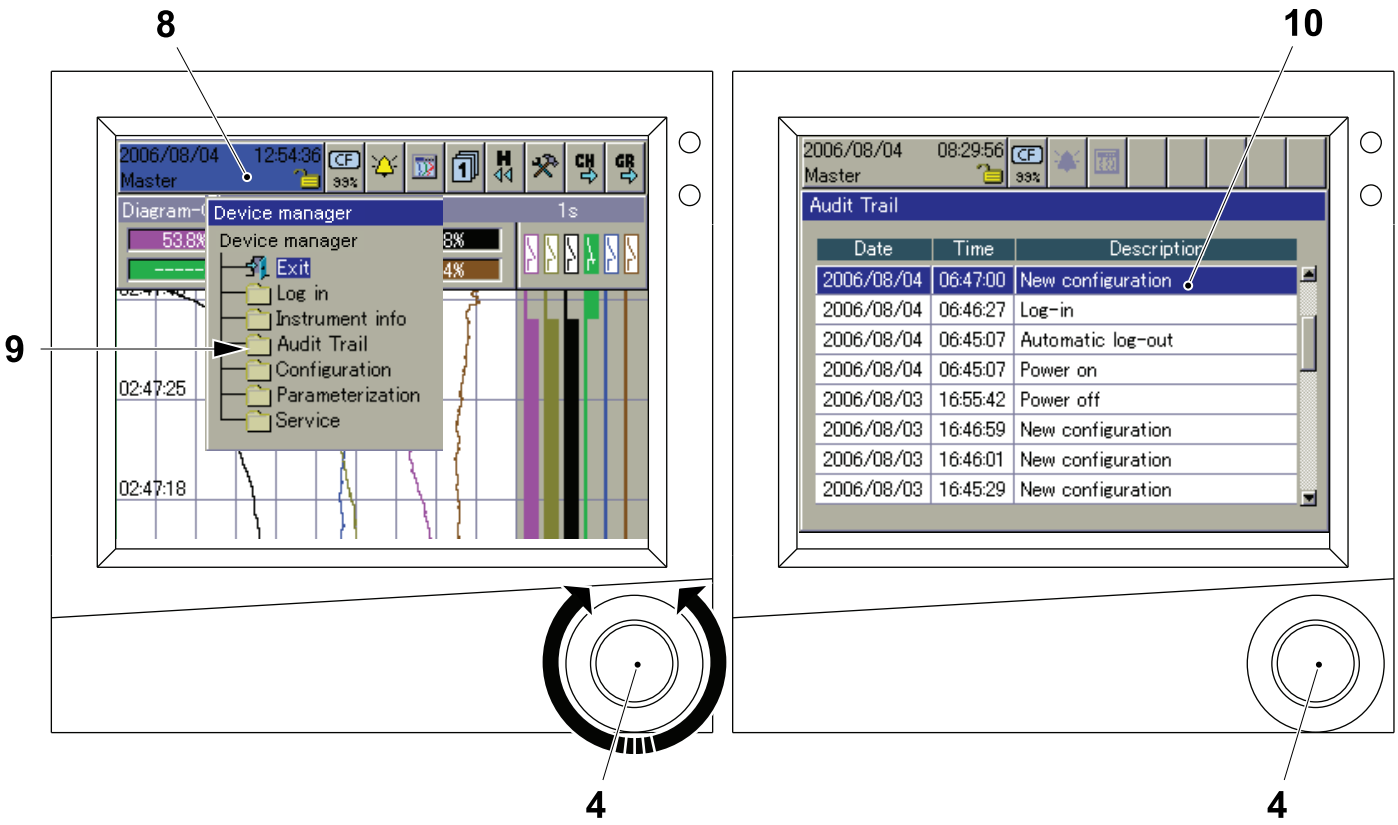

4 Control knob
8 Device manager
9 Audit trail
10 New configuration

(Cont'd)

(Cont'd)

Loading from USB Pen Drive

Note! For detailed information, see the manual supplied on the JUMO installation disk.

a) From the software USB key, copy the configuration files `JUMO RECORDER\XXXXXX-100X\K17201.SET` and `K17202.SET` into another USB pen drive.

b) Perform the log in as "Master" to access the CompactFlash Card functions, see 8.7.4.2-5 Recorder - Log In and Log Out.

c) Open the cover (1) and insert the USB pen drive in the USB host (2). The `MEMORY MANAGER` window (3) is displayed.

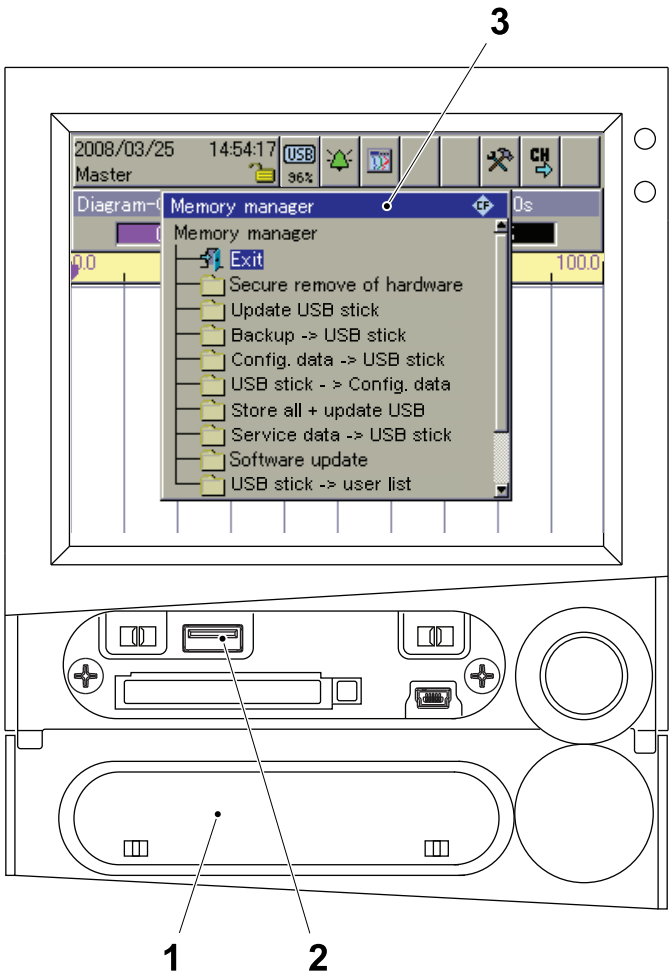

1 Cover
2 USB host
3 Memory manager window

(Cont'd)

(Cont'd)

d) Rotate the CONTROL KNOB (4) to select `USB STICK -> CONFIG DATA` (5).

e) Press the CONTROL KNOB (4) to upload the new recorder configuration settings.

f) When the new recorder configuration settings have been uploaded the recorder performs an automatic reset.

Note! Do not remove the USB pen drive while the upload is in progress.

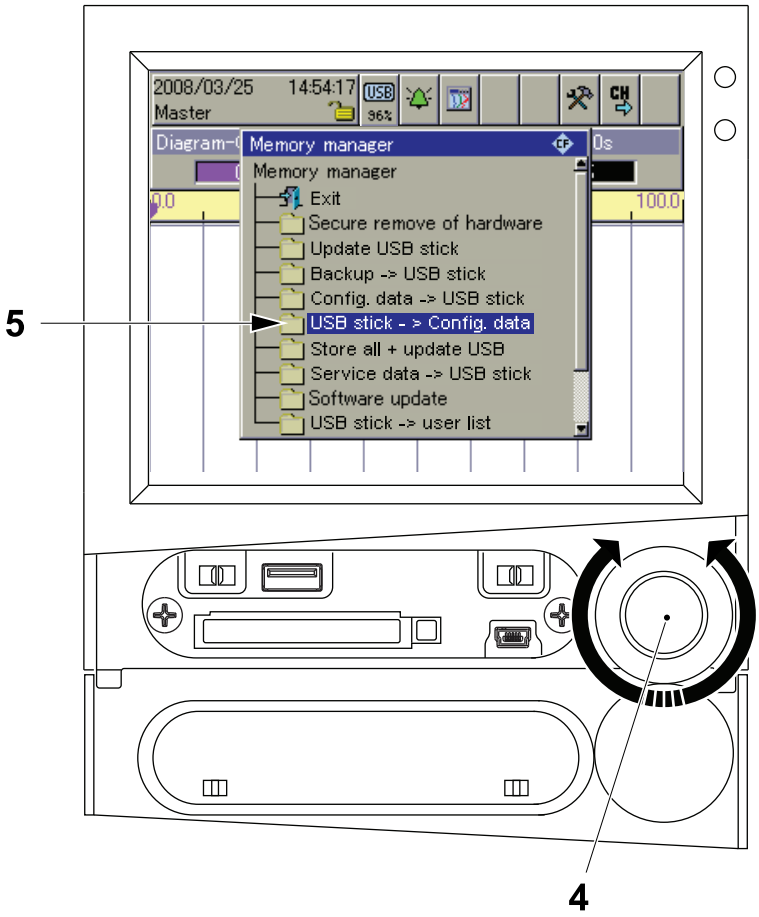

4 Control knob
5 USB stick -> Config data

(Cont'd)

(Cont'd)

g) Rotate the CONTROL KNOB (4) to select SECURE REMOVE OF HARDWARE (6) and press the CONTROL KNOB (4). When the HARDWARE CAN BE REMOVED (7) message appears, the USB pen drive can be removed.

h) Close the cover (1).

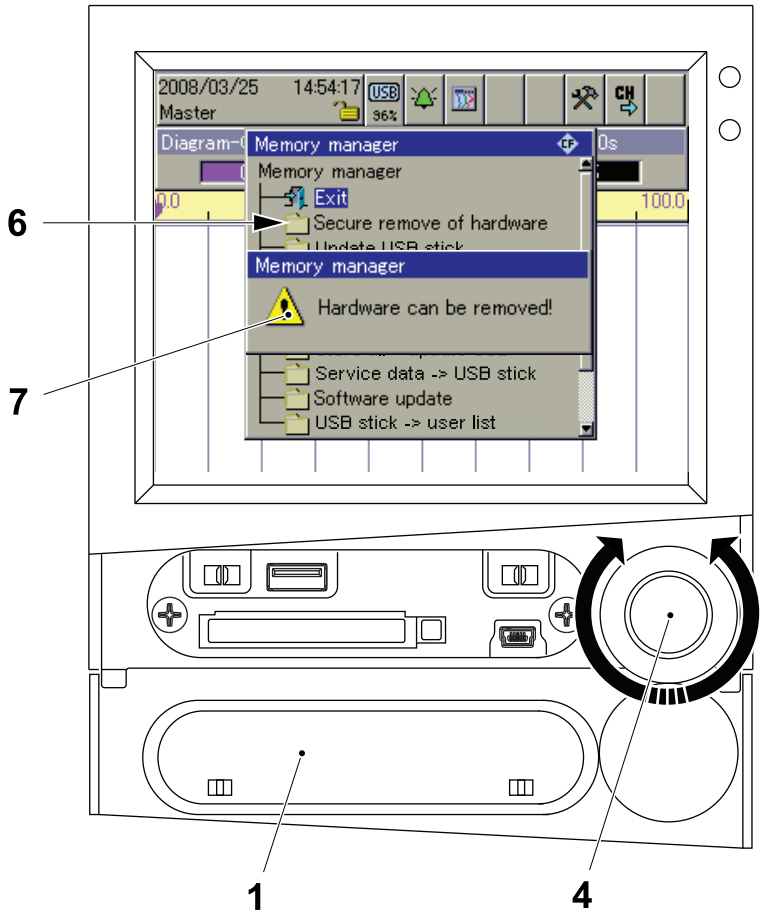

1 Cover
4 Control knob
6 Secure remove of hardware
7 Hardware can be removed

(Cont'd)

(Cont'd)

i) Rotate the CONTROL KNOB (4) to access the `DEVICE MANAGER` (8) and press the CONTROL KNOB (4).

j) Select `AUDIT TRAIL` (9) by rotating and pressing the CONTROL KNOB (4)

k) Check that the new configuration (10) is reported on the log of all the user actions.

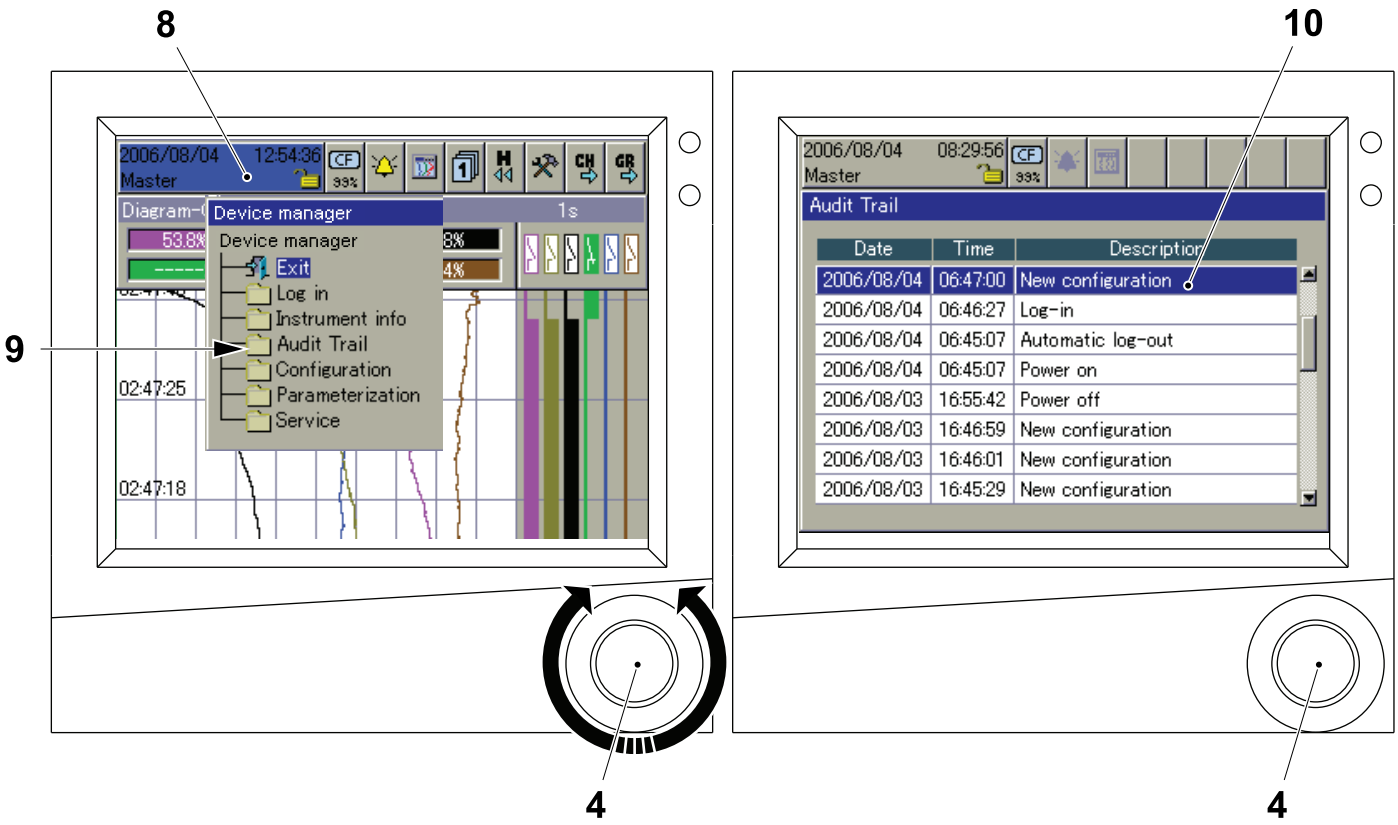

4 Control knob
8 Device manager
9 Audit trail
10 New configuration

8.7.4.2-4 Recorder - Calibrate

Machine Status	STEP ZERO
SPC Reference	90606-4690

Note! For detailed information, see the manual supplied on the JUMO installation disk.

It is possible to compensate for false signals received by the recorder, such as systematic errors in the signals sent from thermocouples.

For example, if a thermocouple indicates a temperature value which is consistently 5 °C less than the true temperature at the lower end of its reading range and 10 °C less, at the higher end of its reading range, this can be corrected by the recorder.

To fine calibrate the signals received by the recorder proceed as follows:

a) Perform the log in as “Master” to access the configuration functions, see 8.7.4.2-5 Recorder - Log In and Log Out.

b) Press the CONTROL KNOB (1) on the `DEVICE MANAGER` (2).

c) Rotate the CONTROL KNOB (1) to select `PARAMETERIZATION` (3) and press the CONTROL KNOB (1).

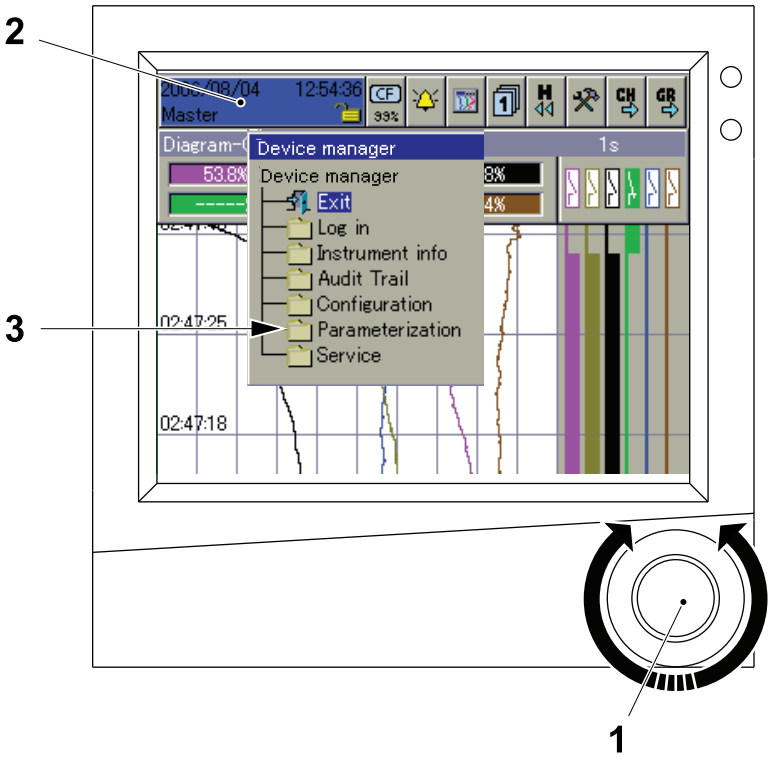

1 Control knob 2 Device manager 3 Parameterization

(Cont’d)

(Cont'd)

d) Rotate the CONTROL KNOB (1) to select `FINE CALIBRATION` (4) and press the CONTROL KNOB (1).

e) In the `FINE CALIBRATION` window select the desired `ANALOG INPUT` (5) to be corrected (e.g. `ANALOG INPUT 1`) and press the CONTROL KNOB (1).

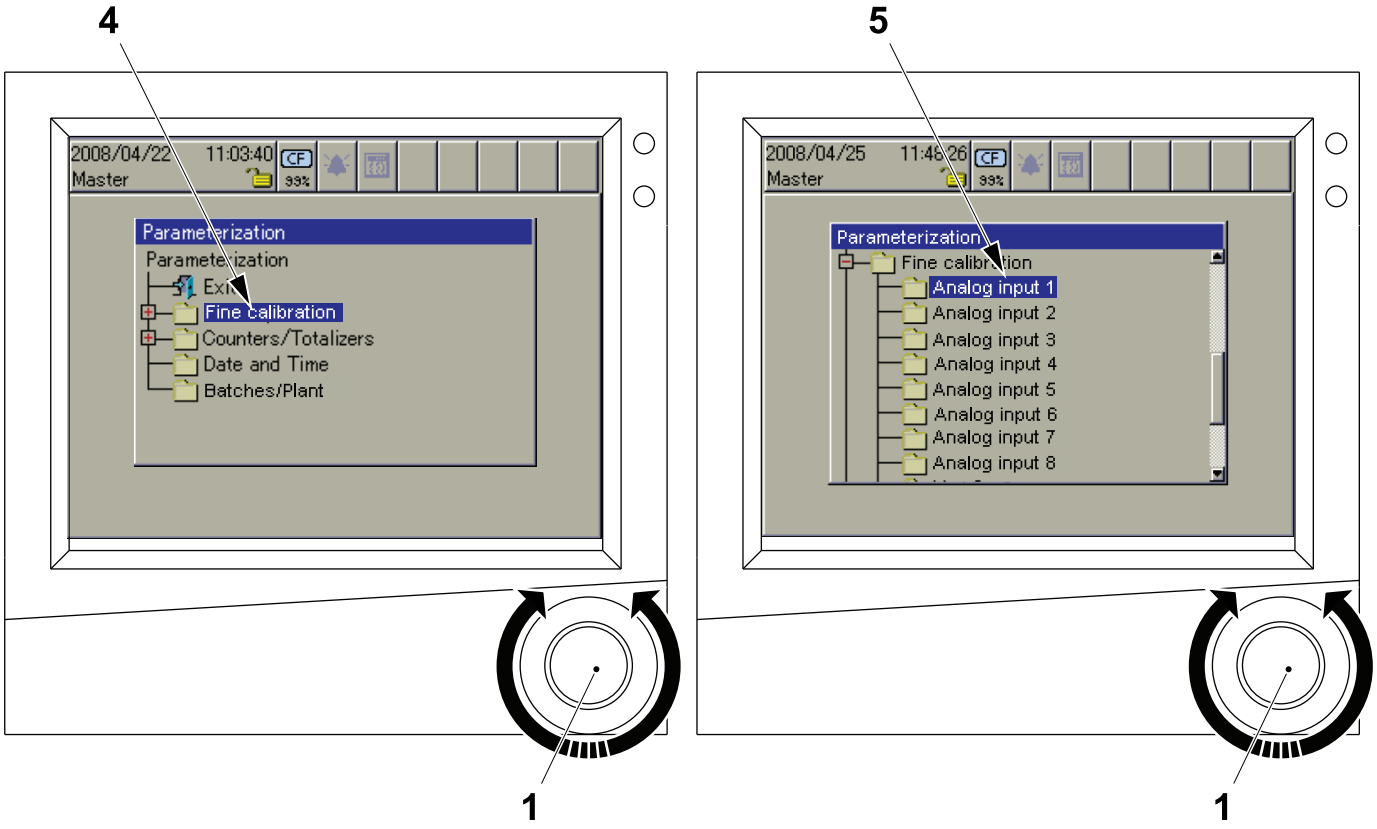

1 Control knob
4 Fine calibration
5 Analog input

(Cont'd)

(Cont'd)

f) Rotate the CONTROL KNOB (1) to select the REAL START VALUE and press the CONTROL KNOB (1). The floating point dialogue box (6) is displayed.

g) Enter the REAL START VALUE of the reading range (e.g. 200 °C) by rotating and pressing the CONTROL KNOB (1).

h) When the value is set rotate the CONTROL KNOB (1) to select the OK button (7) and press the CONTROL KNOB (1).

i) Rotate the CONTROL KNOB (1) to select SETPOINT START VALUE and press the CONTROL KNOB (1).

j) Enter the SETPOINT START VALUE of the range (the true starting value of the signal range received from the thermocouple, e.g. 205 °C), see steps g) to h).

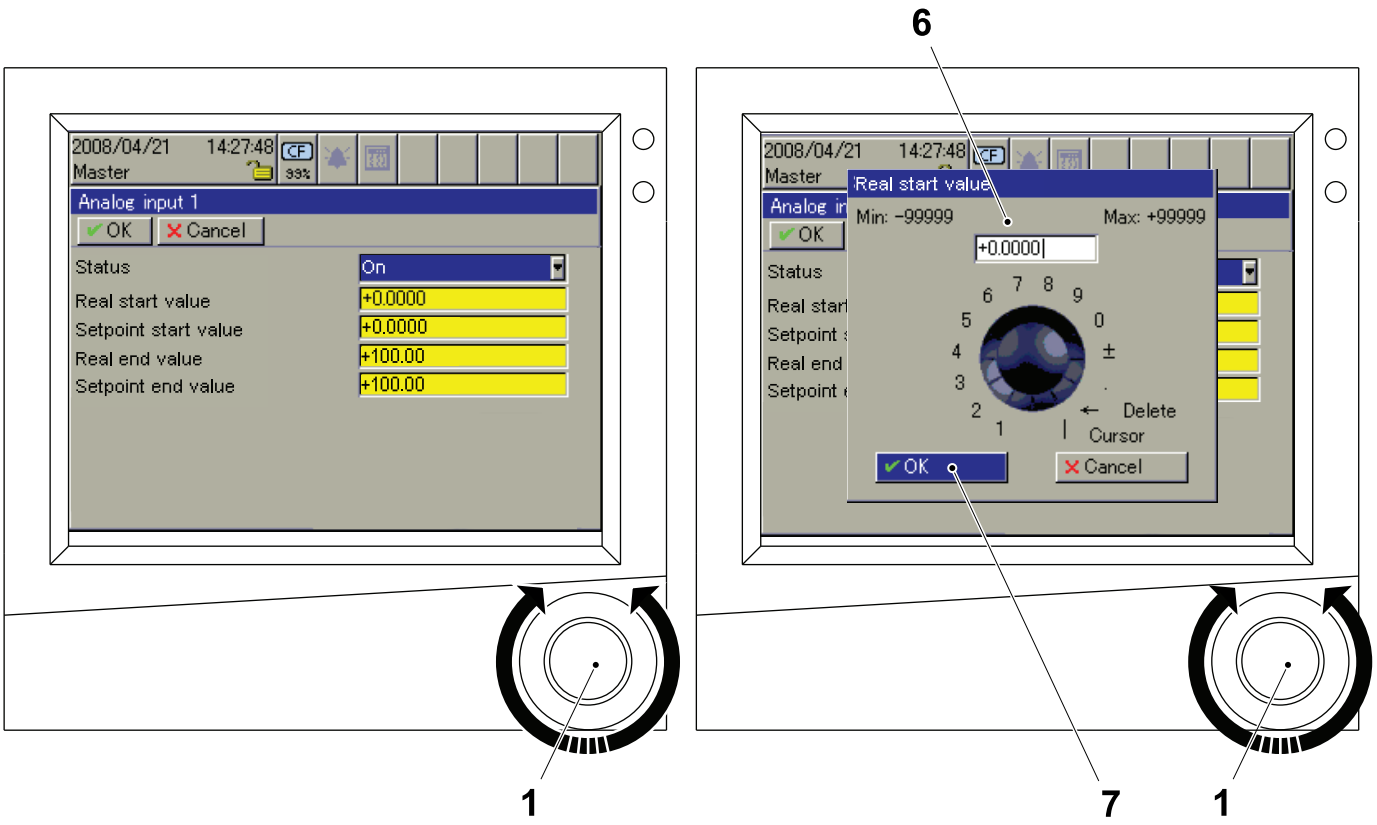

1 Control knob
6 Floating point dialogue box
7 OK button

(Cont'd)

(Cont'd)

k) Rotate the CONTROL KNOB (1) to select `REAL END VALUE` and press the CONTROL KNOB (1).

l) Enter the `REAL END VALUE` of the reading range (e.g. 300 °C).

m) Use the CONTROL KNOB (1) to enter the `SETPOINT END VALUE` of the range (the true ending value of the signal range received from the thermocouple, e.g. 310 °C).

n) When all the values have been entered, rotate the CONTROL KNOB (1) to select the `OK` button (8) and press the CONTROL KNOB (1).

o) Use the CONTROL KNOB (1) to select `EXIT` (9) to exit from the `PARAMETERIZATION` window and automatically reset the recorder.

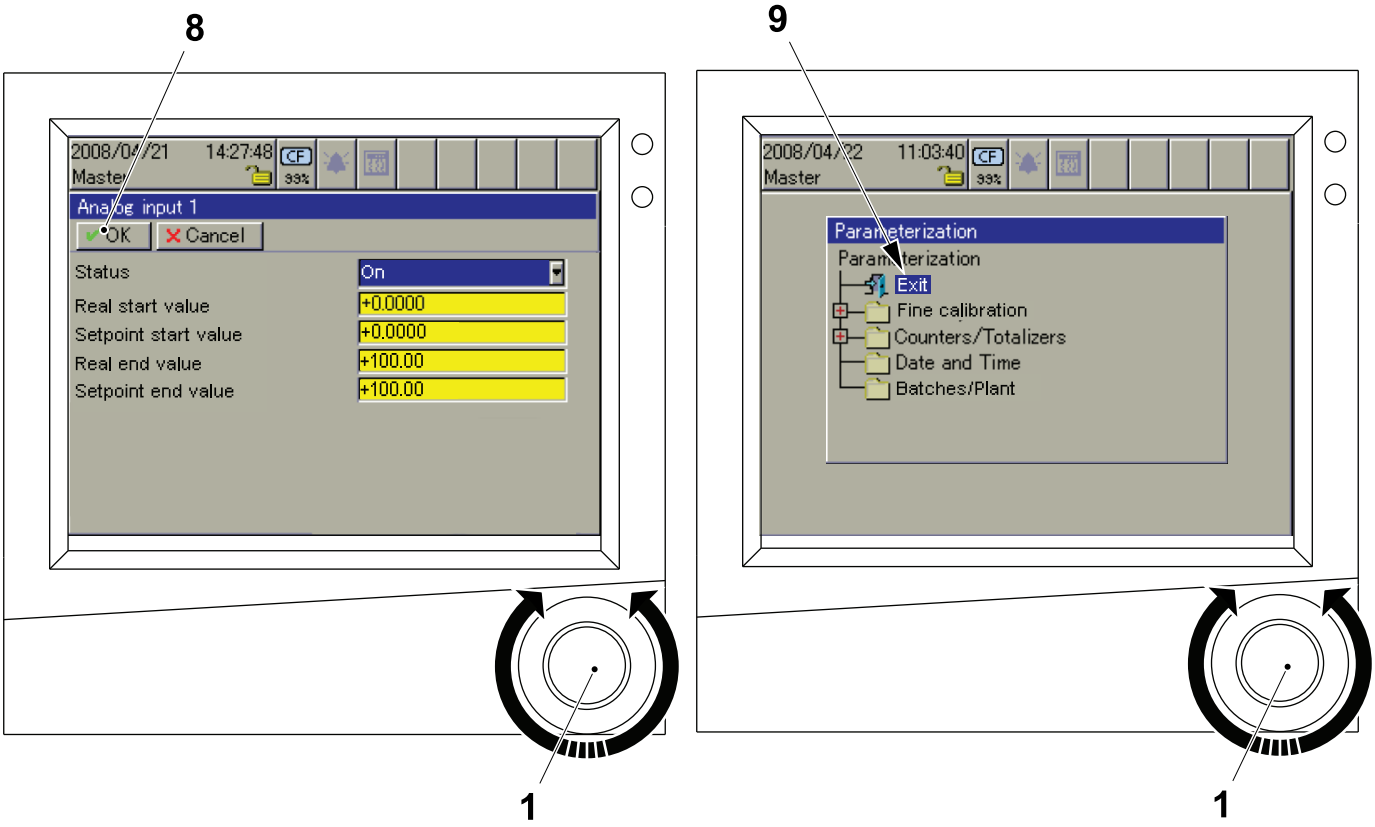

1 Control knob

8 OK button

9 Exit

8.7.4.2-5 Recorder - Log In and Log Out

Machine Status	STEP ZERO
SPC Reference	90606-4690

Note! For detailed information, see the manual supplied on the JUMO installation disk.

Note! To access the CONFIGURATION menu and the COMPACTFLASH CARD menu, it is necessary to login to the recorder.

a) Rotate the CONTROL KNOB (1) to access the DEVICE MANAGER (2) in the header.

b) Press the CONTROL KNOB (1) to activate the DEVICE MANAGER (2). The INSTRUMENT MENU window is displayed.

c) Rotate the CONTROL KNOB (1) to select LOG IN folder (3) and press the CONTROL KNOB (1) to activate it.

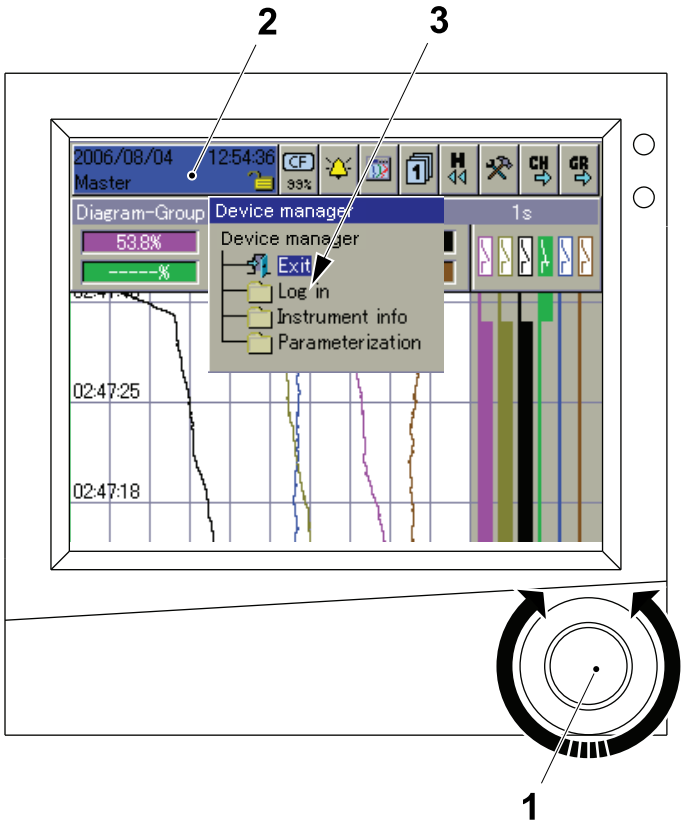

1 Control knob
2 Device manager
3 Log in and log out

(Cont'd)

(Cont'd)

d) Rotate the CONTROL KNOB (1) to select the LOG-IN function (4) and press the CONTROL KNOB (1) to activate it.

Note! The recorder is delivered by default with an internal user list which comprises two user ID's. The user ID named MASTER allows full access to all the configuration parameters and the password is 9200. The user ID named USER allows the download of the recorded data only and the password is 0.

Note! If the recorder has been configured with individual user ID's, contact the administrator of the equipment for access to the recorder.

e) Rotate the CONTROL KNOB (1) to select the user field (5) and press the CONTROL KNOB (1).

f) Select the user by the CONTROL KNOB (1) and press the CONTROL KNOB (1).

g) Rotate the CONTROL KNOB (1) to select the OK button (6) and press the CONTROL KNOB (1).

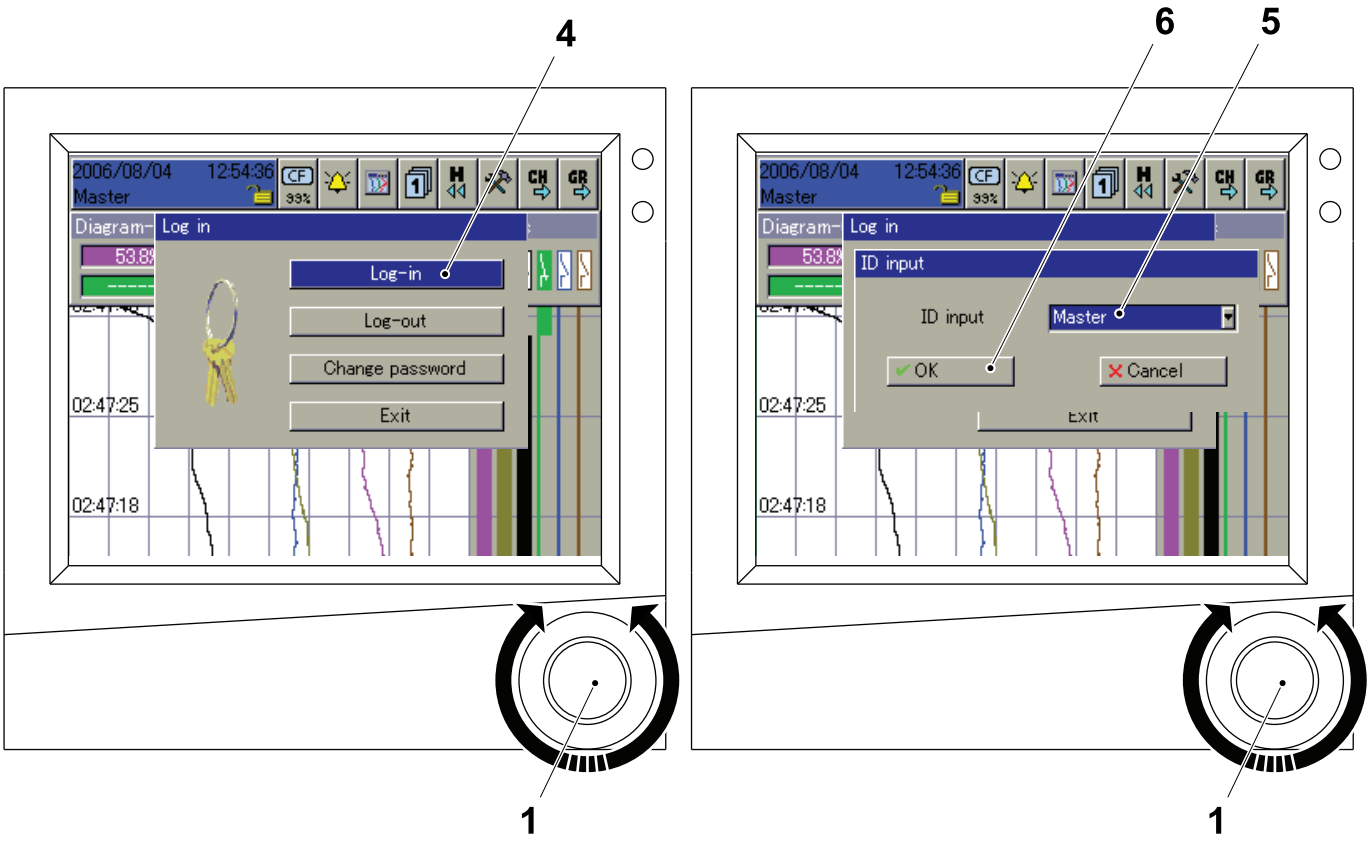

1 Control knob
4 Log-in function
5 User field
6 Ok button

(Cont'd)

(Cont'd)

h) Enter the password by rotating and pressing the CONTROL KNOB (1).

i) Select the OK button (7) by rotating the CONTROL KNOB (1) and press the CONTROL KNOB (1).

j) The user ID (8) logged on is displayed in the DEVICE MANAGER (2).

Note! The user ID MASTER all the configuration parameters may be selected in the instrument menu.

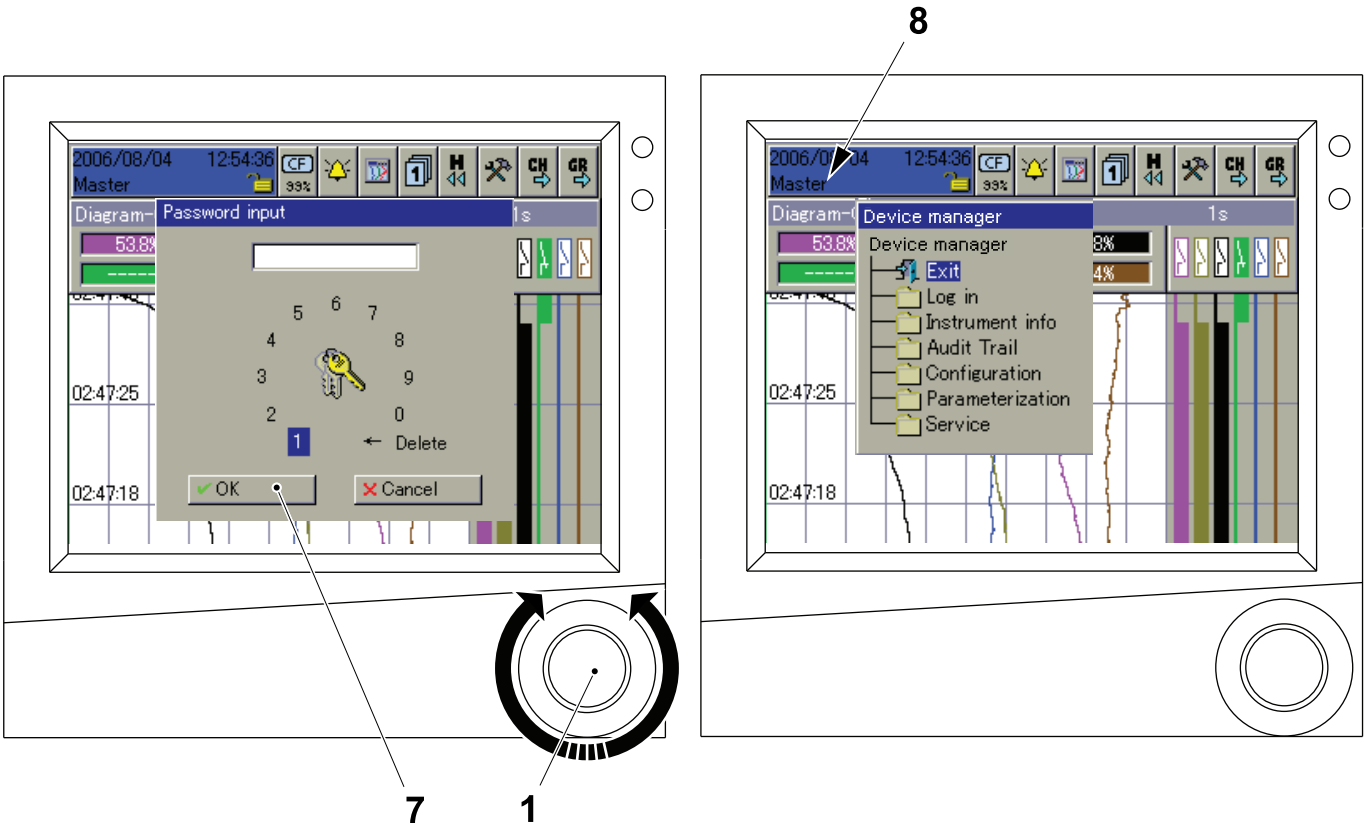

1 Control knob
2 Device manager
7 Ok button
8 User ID

(Cont'd)

(Cont'd)

k) To log out, select the LOG-OUT function (9) in the LOG IN window by the CONTROL KNOB (1).

l) Press the CONTROL KNOB (1) to log out.

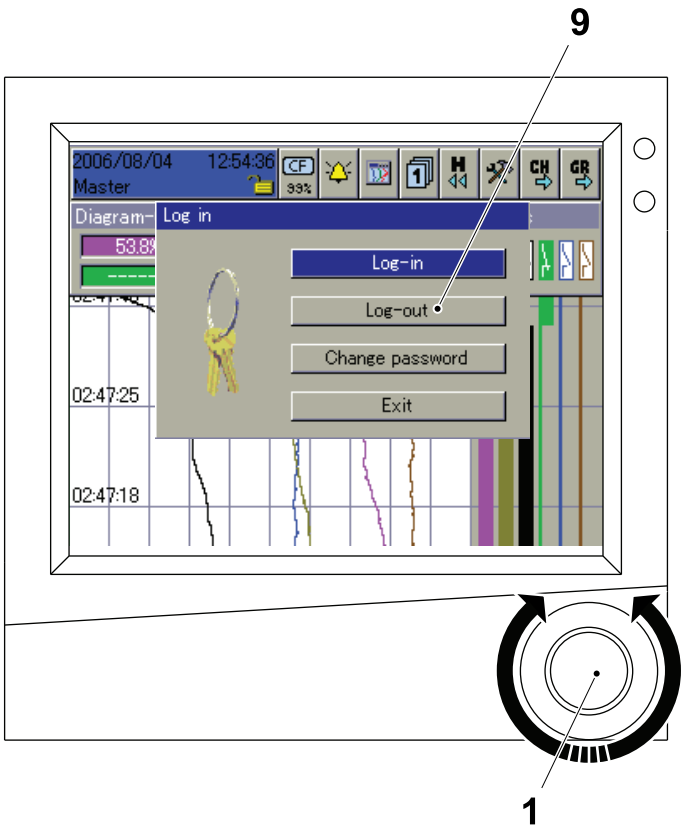

1 Control knob
9 Log-out function

8.7.4.2-6 Recorder - Change CompactFlash Card

Machine Status	STEP ZERO
SPC Reference	90606-4690

Note! For detailed information, see the manual supplied on the JUMO installation disk.

Note! Access to the memory manager menu via the header is only possible if a CF card is inserted in the recorder.

a) Perform the log in to access the CompactFlash Card functions, see 8.7.4.2-5 Recorder - Log In and Log Out.

b) Rotate the CONTROL KNOB (1) to access the MEMORY MANAGER (2) in the header and press the CONTROL KNOB (1) to activate it. The MEMORY MANAGER menu (3) is displayed.

Note! The MEMORY MANAGER menu (3) contains functions for data exchange between the recorder and CompactFlash memory cards or USB memory sticks.

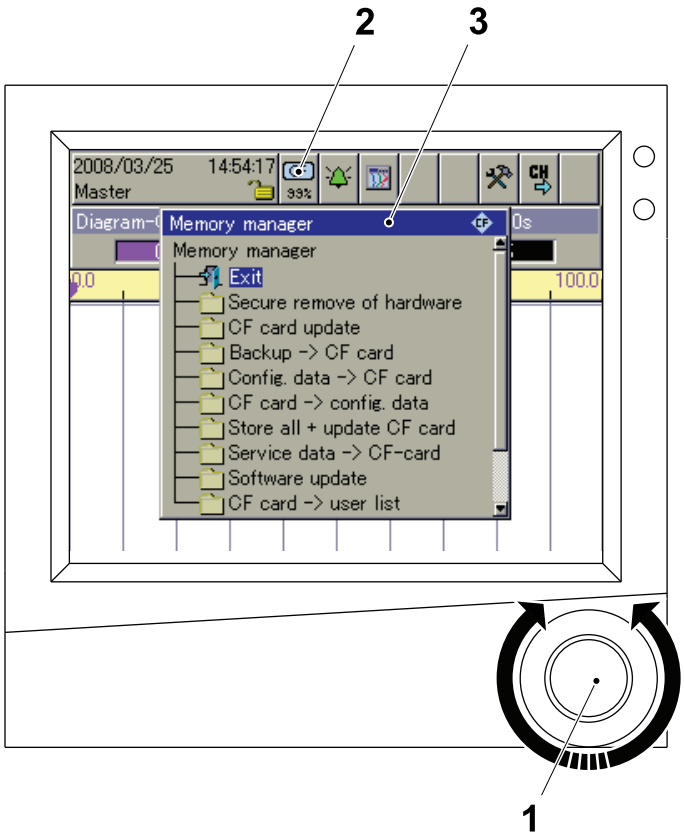

1 Control knob
2 Memory manager
3 Memory manager menu

(Cont'd)

(Cont'd)

c) Rotate the CONTROL KNOB (1) to select the `CF CARD UPDATE` (4) and press the CONTROL KNOB (1). Any remaining PRODUCTION and CIP record data is saved to the CompactFlash card. If the batch reports are also to be downloaded to the CompactFlash card, select the `STORE ALL + UPDATE CF CARD` (5).

Note! The CompactFlash card must not be removed while a data transfer to or from the card is in progress. The symbol (6) in the status and title bar (7) indicates that the transfer is in progress.

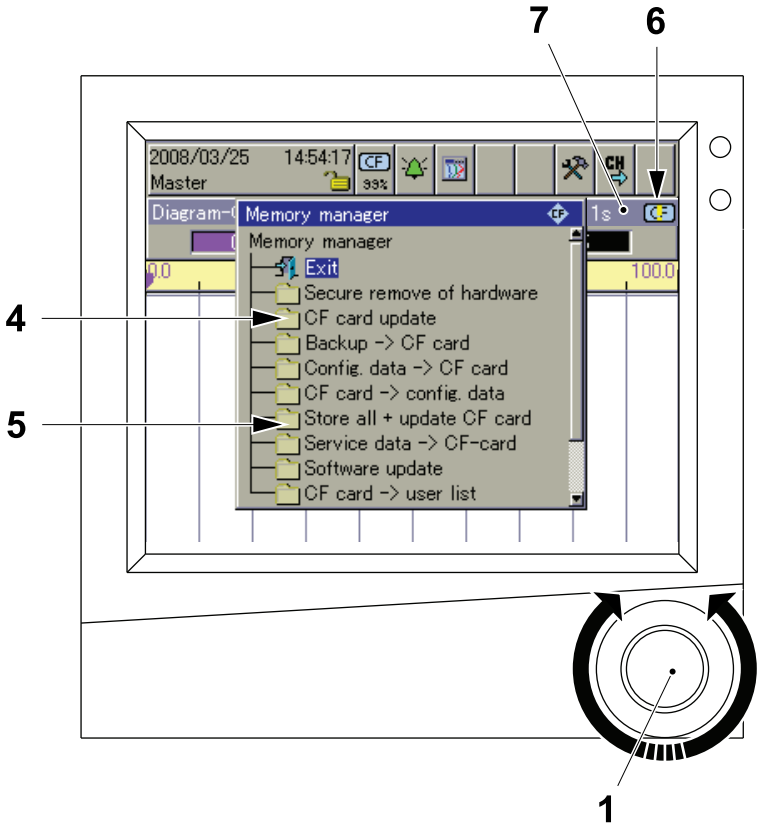

1 Control knob
4 CF card Update
5 Store all + update CF card
6 Symbol
7 Status and title bar

(Cont'd)

(Cont'd)

d) When the operation is completed, rotate the CONTROL KNOB (1) to select SECURE REMOVE OF HARDWARE (8). When the HARDWARE CAN BE REMOVED (9) message appears, the CompactFlash card can be removed.

e) Open the cover (10) and press the eject the CompactFlash card from the CompactFlash slot (11).

f) Insert the new CompactFlash card into the CompactFlash slot (11) and close the cover (10).

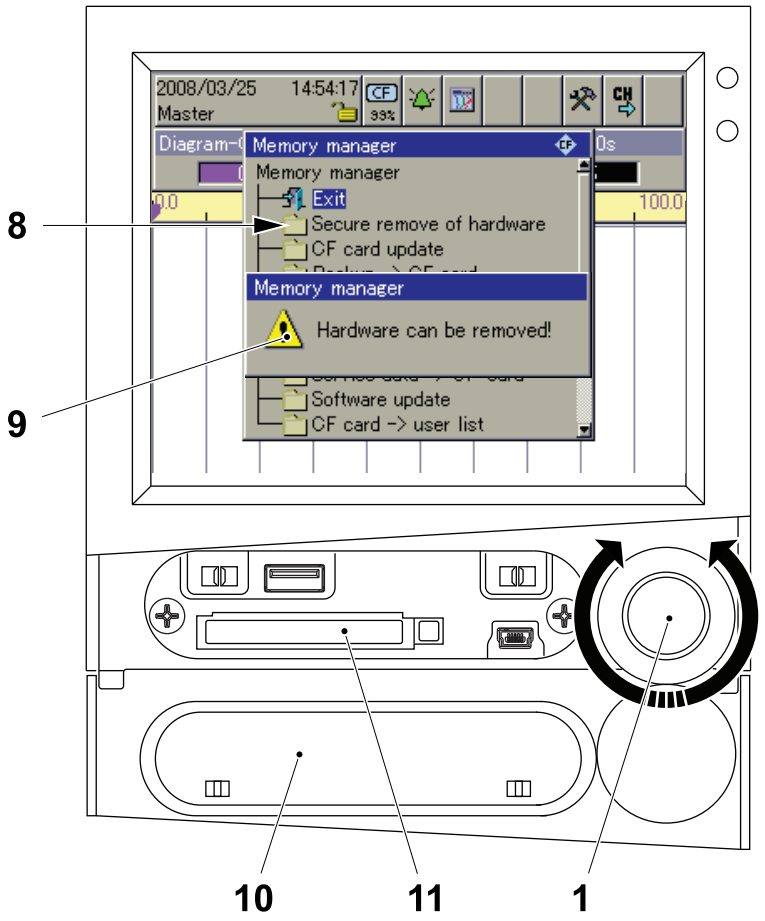

8 Secure remove of hardware
9 Hardware can be removed
10 Cover
11 CompactFlash slot

8.7.4.2-7 Recorder - Configure Archived Data for Colour Printing

Special Equipment	PC with CompactFlash card reader and JUMO PCA 3000

Note! For detailed information on the PCA 3000 application, see the manual supplied on the JUMO installation disk.

If there is a requirement to print production data recorded by the Jumo recorder, for an internal quality control process or in order to comply with country legislation, the following procedure must first be performed to correctly print the production data.

a) Download the production data to the CompactFlash card, see 8.7.4.2-6 Recorder - Change CompactFlash Card.

b) Use a card reader to connect the CompactFlash to the PC. The `JUMO PCA3000` program starts automatically.

c) Enter username and password and click on the `OK` button (1).

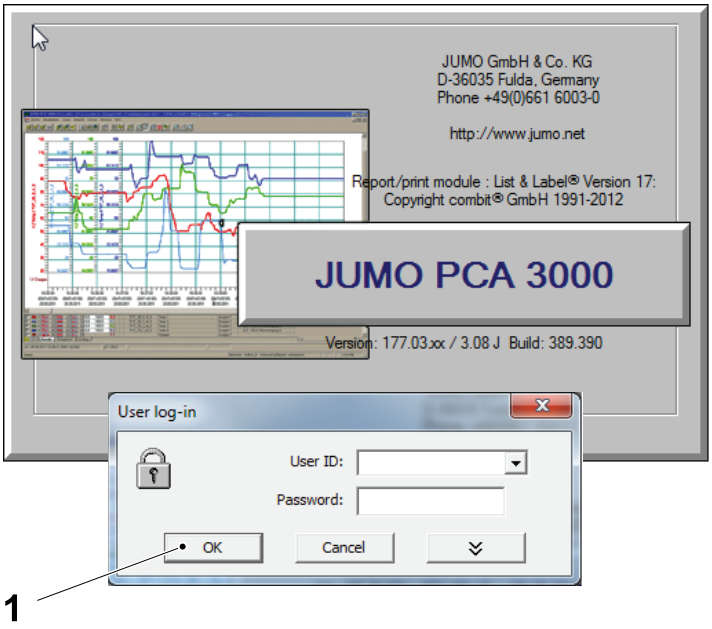

1 Ok button

(Cont'd)

(Cont'd)

d) Select ARCHIVE (2) and then select READ IN DATA (3).

e) In the READ IN DATA window, select the BROWSE button (4) and browse to the CompactFlash card.

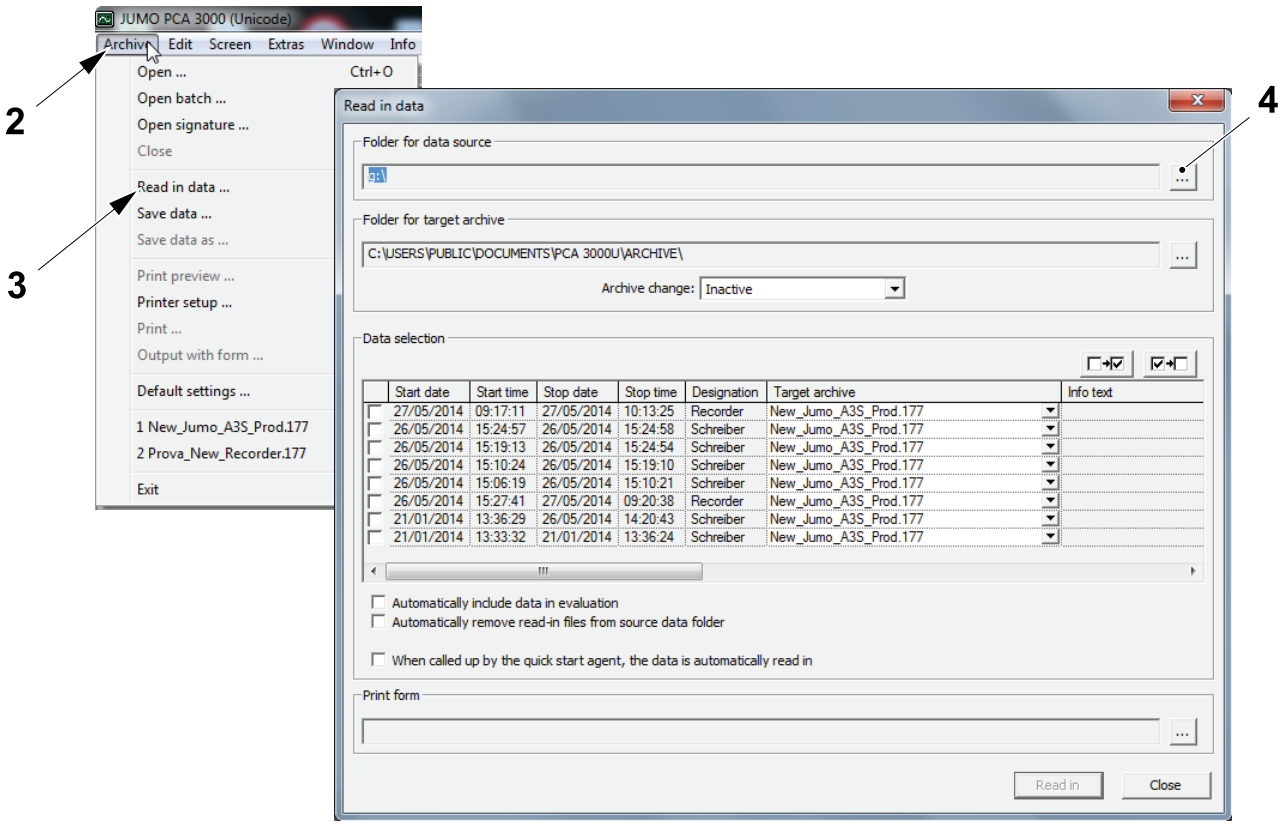

2 Archive
3 Read in data
4 Browse button

(Cont'd)

(Cont'd)

f) Select the check box (5) next to the required data batch and then select the READ IN button (6).

Note! If this is the first time data has been downloaded for the recorder, the CREATE NEW ARCHIVE window is displayed. Enter a suitable NAME FOR THE ARCHIVE (7) and select the OK button (8).

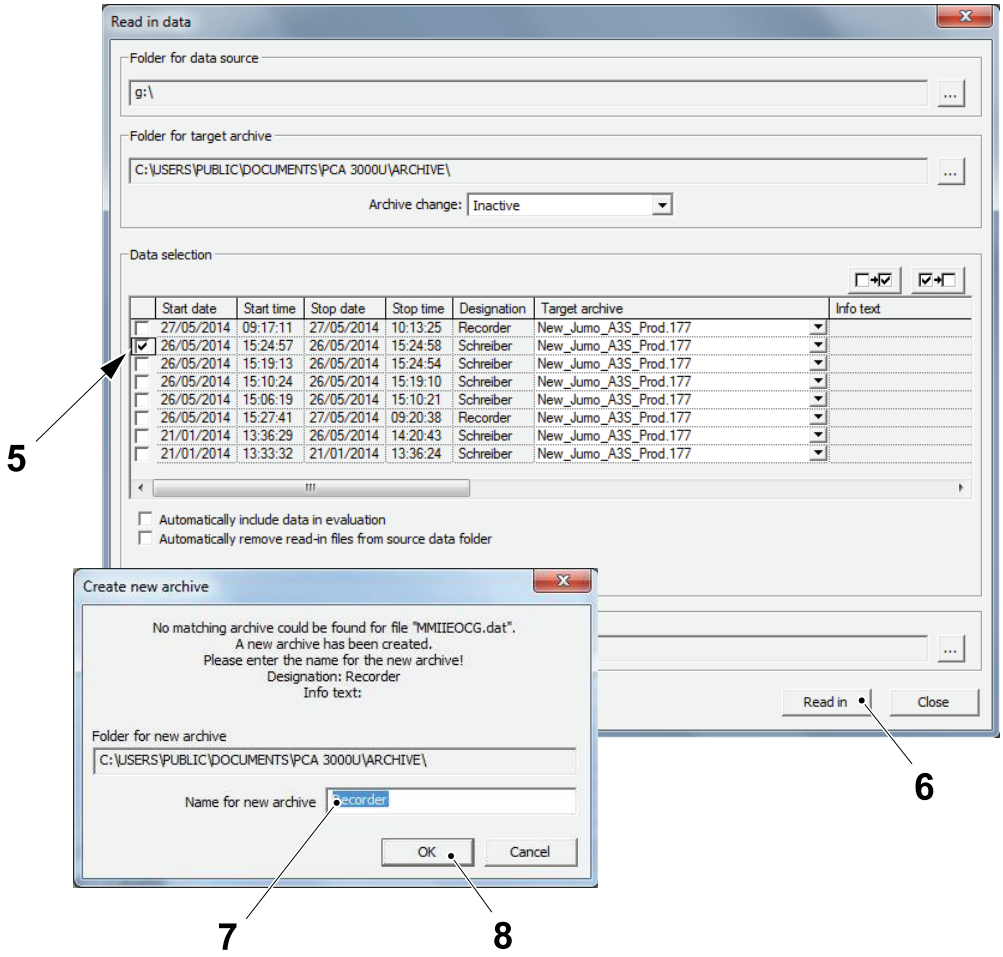

5 Check box
6 Read in button
7 Name for the archive
8 Ok button

(Cont'd)

(Cont'd)

g) When the dialogue window appears with the message DATA HAVE BEEN READ IN SUCCESSFULLY (9), select the CLOSE button (10).

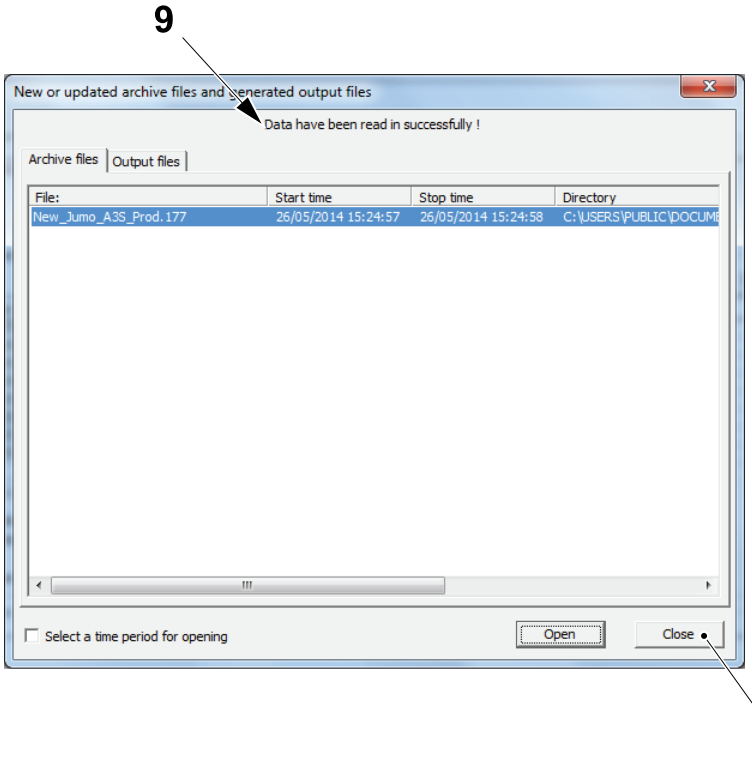

9 Data have been read in successfully
10 Close button

(Cont'd)

(Cont'd)

h) Select the OPEN button (11).

i) In the OPEN ARCHIVE window, select the archive file (12) and then select the OPEN button (13).

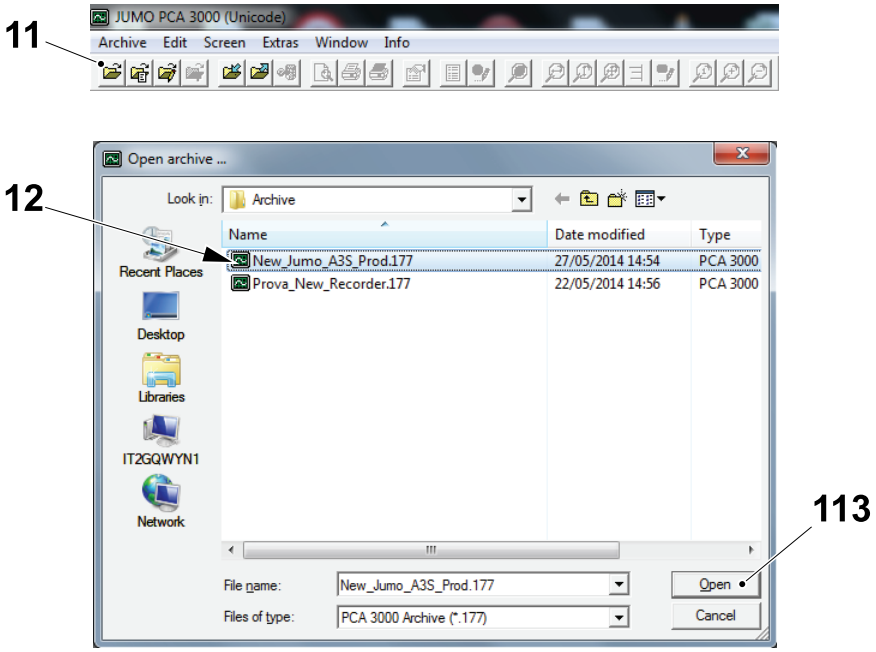

11 Open button 12 Archive file 13 Open button

(Cont'd)

(Cont'd)

j) The ARCHIVE OVERVIEW window appears, select the production batch (14) and use the arrows (15) to select the time period to print and then select the OPEN button (16).

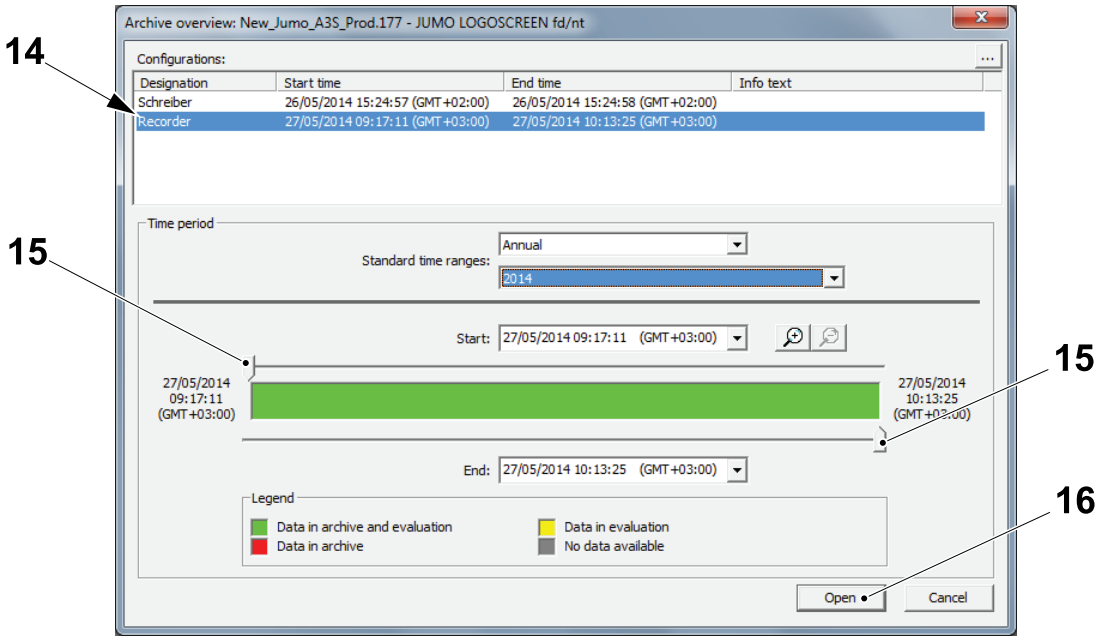

14 Production batch 15 Arrows 16 Open button

k) The GROUP SELECTION FOR window appears, select PRODUCTION DATA (17) and then select the OPEN button (18).

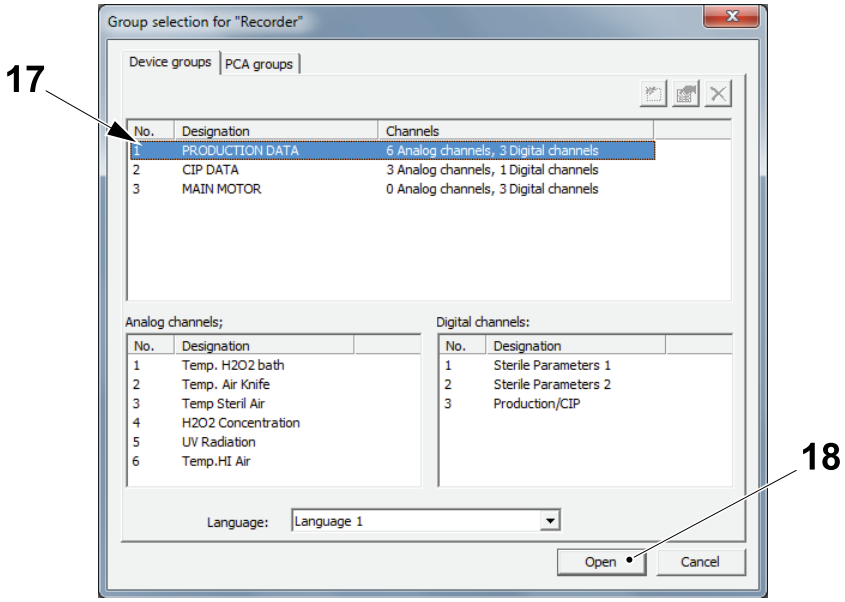

17 Production data 18 Open button

(Cont'd)

(Cont'd)

l) A graphic of the selected production batch and time period is displayed. Select the CHANNELS tab (19) and locate the digital input Pr/Cip (20).

m) Select theARROW button (21) next to the coloured box for the digital input Pr/Cip (20) to display the colour palette selection (22).

n) Select the colour black for the digital input Pr/Cip (20).

The production data can now be printed data according to the desired printing preferences. The colour black for the digital input Pr/Cip (20) is memorised by the PCA 3000 application only for the current archive and the procedure must be repeated if production data for other archives will be printed.

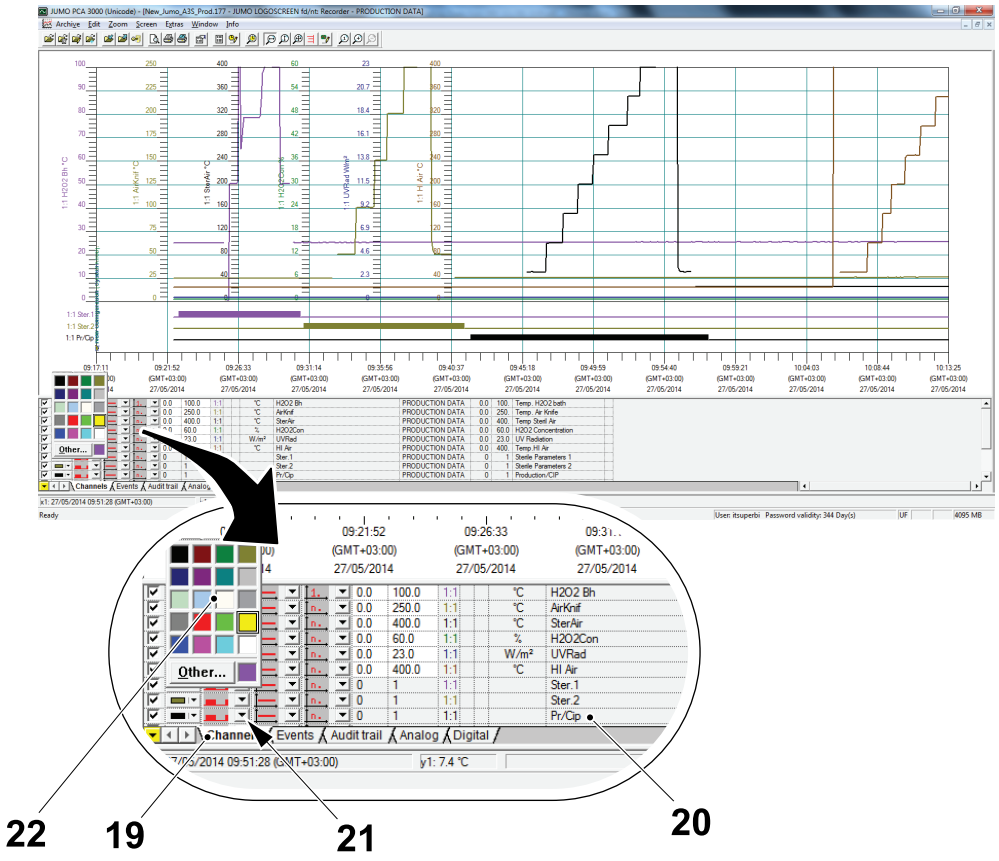

19 Channels tab
20 Digital input Pr/Cip
21 Arrow button
22 Colour palette selection

8.7.5 Temperature Regulators

8.7.5-1 Temperature Regulators - Calibrate

Machine Status	Electrical supply disconnecting device in position I (ON) Main air valve OFF Main steam valve ON Main water valve OFF
Special Equipment	Laptop PC Adhesive Label, TP No. 90194-0113 FLUKE 714 Calibrator, TP No. 90458-0914 FLUKE 714 Thermocouple Cable, TP No. 90458-0915 Precision Resistor, High Precision Resistor - 1000 ohm, 0.05% ppm/oC 3000 ohm, 0.05% ppm/oC Calibrated Resistor Decade Box, 0,05% Precision Voltage Source (+100 mV, 1mV resolution - accuracy =3 µV or better)
SPC Reference	648539-0400

Note! Before calibration, make sure that the calibrator has already been set, see 8.7.5.1-1 Calibrator - Set Fluke 714.

Note! Energise the module at least ten minutes before calibration.

Calibration must be performed when a thermocouple module is changed or at least once a year.

(Cont'd)

(Cont'd)

Note! To connect to the CPU module using an ethernet communication cable, the laptop PC must first be configured for this type of communication. See 8.1.1-1 Preparation for PLC Communication - Configure PC Network Communications and 8.1.1-2 Preparations for PLC Communication - Configure RSLinx for more details.

a) Connect the Ethernet communication cable between a vacant connection port on the Ethernet switch (1) and the laptop PC (2).

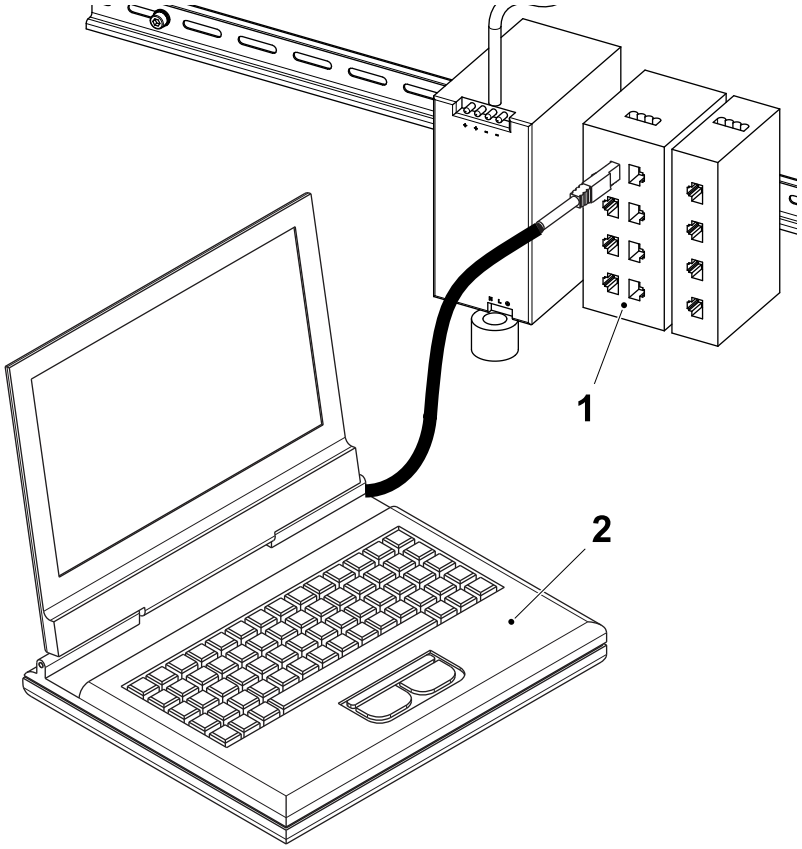

1 Ethernet switch
2 Laptop PC

(Cont'd)

(Cont'd)

b) Start the RSNETWORX program and select the NETWORK menu (3) and then select ONLINE (4).

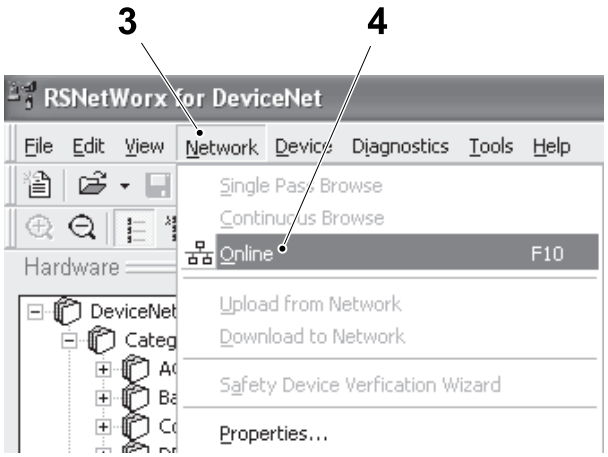

3 Network menu
4 Online

(Cont'd)

(Cont'd)

c) Navigate to the required DeviceNet Point I/O adapter and then double click on the icon to display the sub-network.

d) Double click on the `DEVICENET THERMOCOUPLE` module (5) to open the `PARAMETER` window (6).

e) If the `EDS EDITOR` window (7) appears, select the `UPLOAD` button (8) to continue.

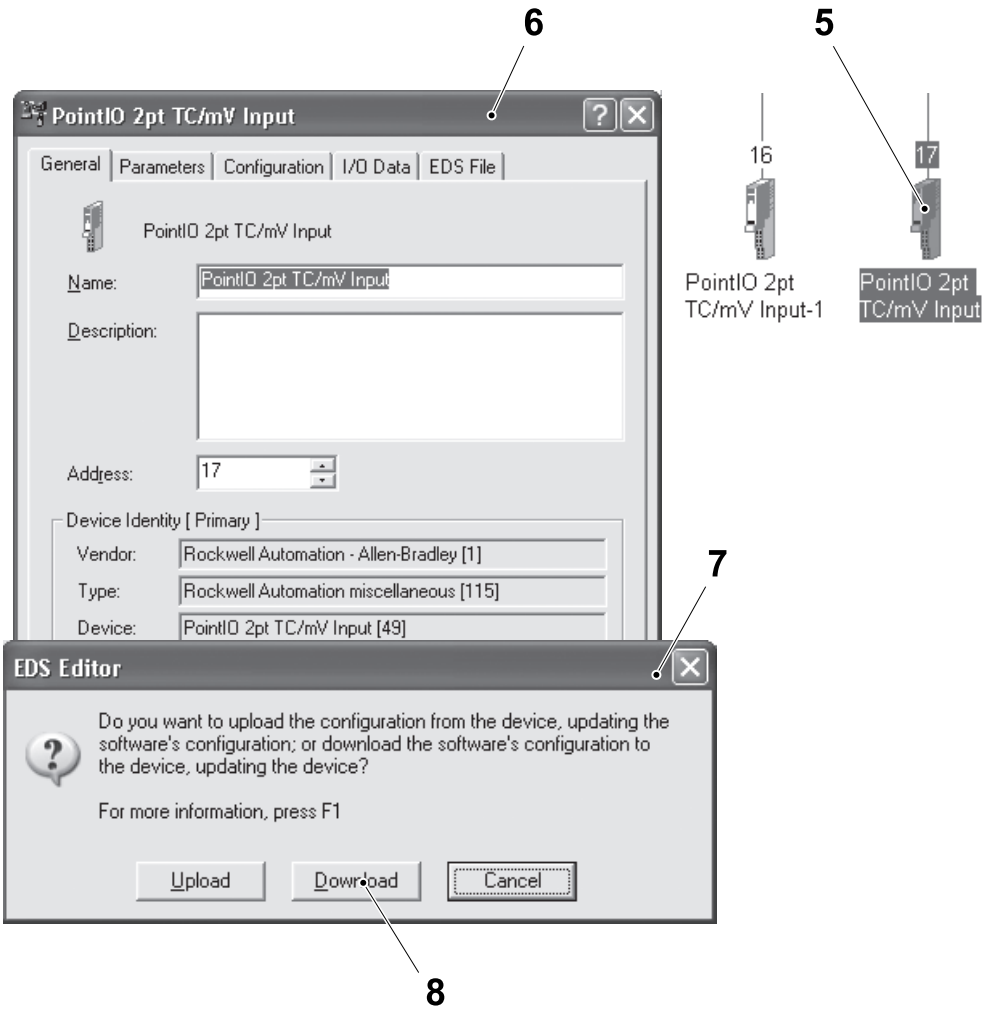

5 DeviceNet thermocouple module
6 Parameter window
7 EDS editor window
8 Upload button

(Cont'd)

(Cont'd)

f) From the PARAMETER window check the GROUPS box (9) and select CALIBRATION (10).

Note! The calibration procedure consists of two phases: first the calibration of the Input, see Input (mV) Calibration and after that the calibration of the Cold Junction Compensation, see Cold Junction Compensation (CJC) Calibration.

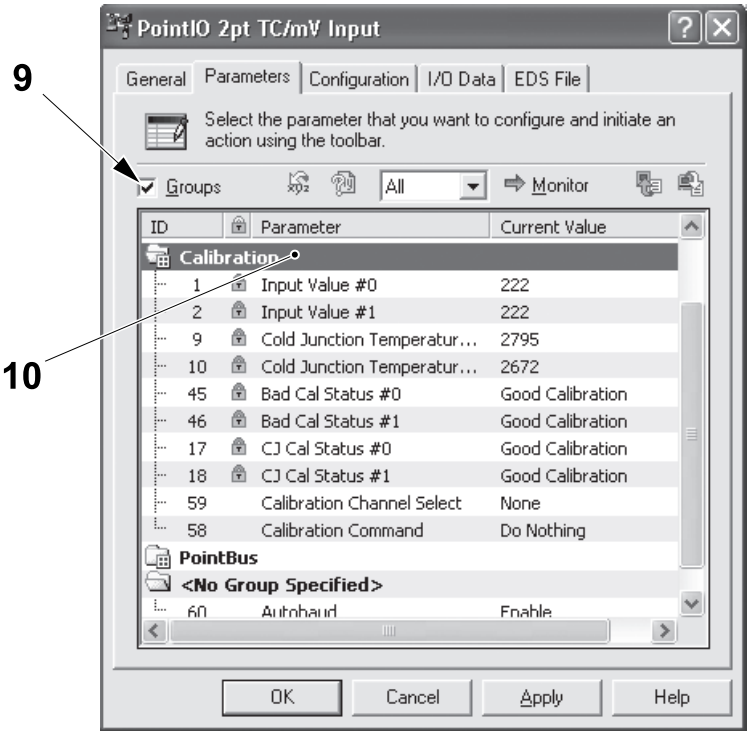

9 Groups box
10 Calibration

(Cont'd)

(Cont'd)

Input (mV) Calibration

a) Connect the precision voltage source to the 1734-RTBCJC module (1) using the copper wire, according to the illustration.

Note! It is also possible to connect only one channel in order to calibrate one channel at a time.

Note! Make sure that the module is updated to the firmware Rev. 3.004, see the label (2).

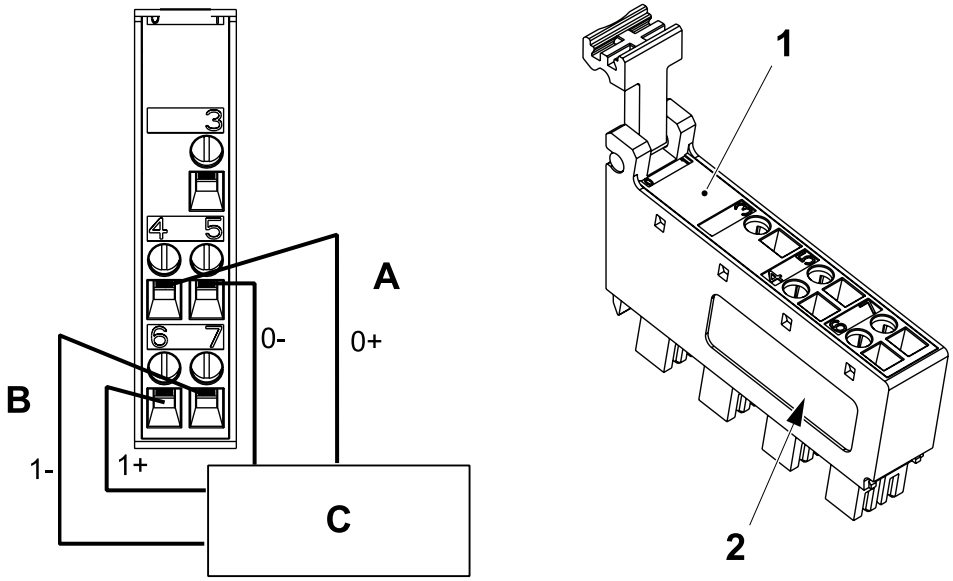

A = Thermocouple 0

B = Thermocouple 1

C = Precision Voltage Source

1 Module 1734-RTBCJC
2 Label

(Cont'd)

(Cont'd)

b) In the CONFIGURATION dialogue window select the parameter NO.7 THERMOCOUPLE TYPE (3) and select mV from the drop down list (4).

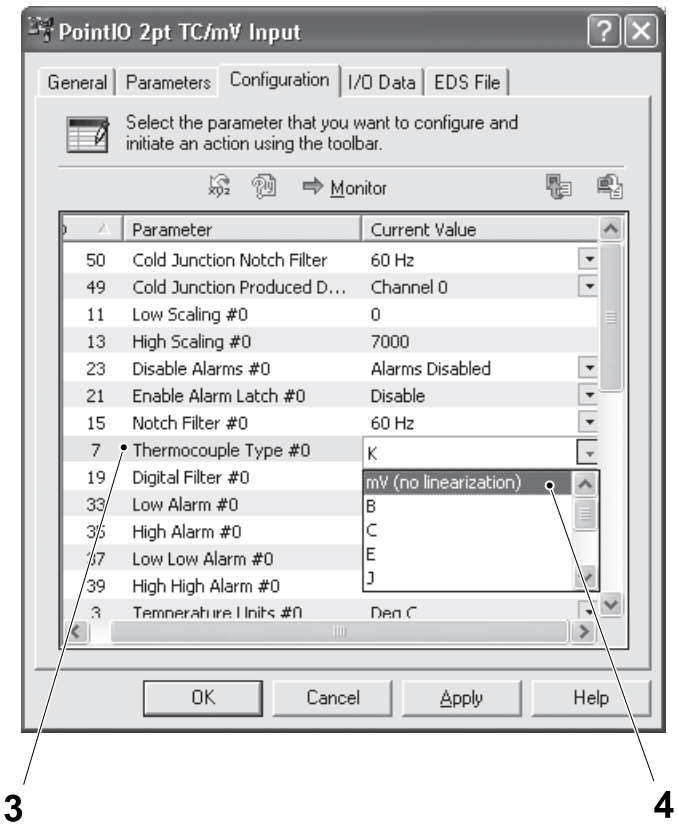

3 Thermocouple type
4 Drop down list

(Cont'd)

(Cont'd)

c) Return to the PARAMETER dialogue window and click on the parameter NO. 59 CALIBRATION CHANNEL SELECT (5) to enable the CHANNEL SELECTION drop down list (6).

d) Select either INPUT CHANNEL 0 or INPUT CHANNEL 1 (or BOTH CHANNELS) from the CHANNEL SELECTION drop down list (6).

e) Click the DOWNLOAD TO DEVICE icon (7) or the APPLY button (8). The LED status indicators on the input module turn off.

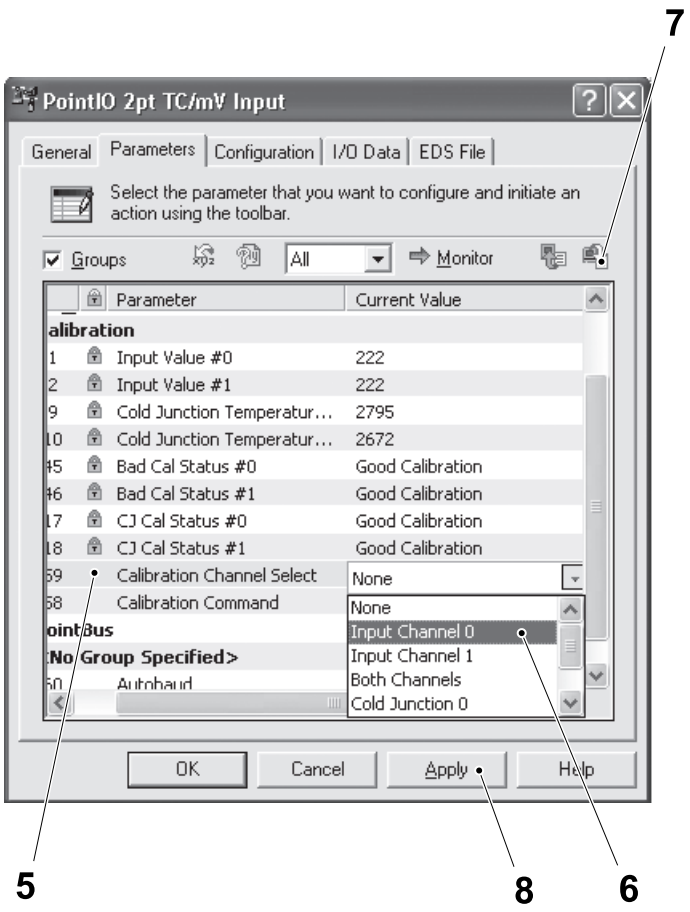

5 Calibration channel select

6 Channel select drop down list

7 Download to device icon

8 Apply button

(Cont'd)

(Cont'd)

f) Click on the parameter NO. 58 CALIBRATION COMMAND (9) and select BEGIN INPUT CALIBRATION from the CALIBRATION COMMAND drop down list (10).

g) Click the DOWNLOAD TO DEVICE icon (7) or the APPLY button (8).

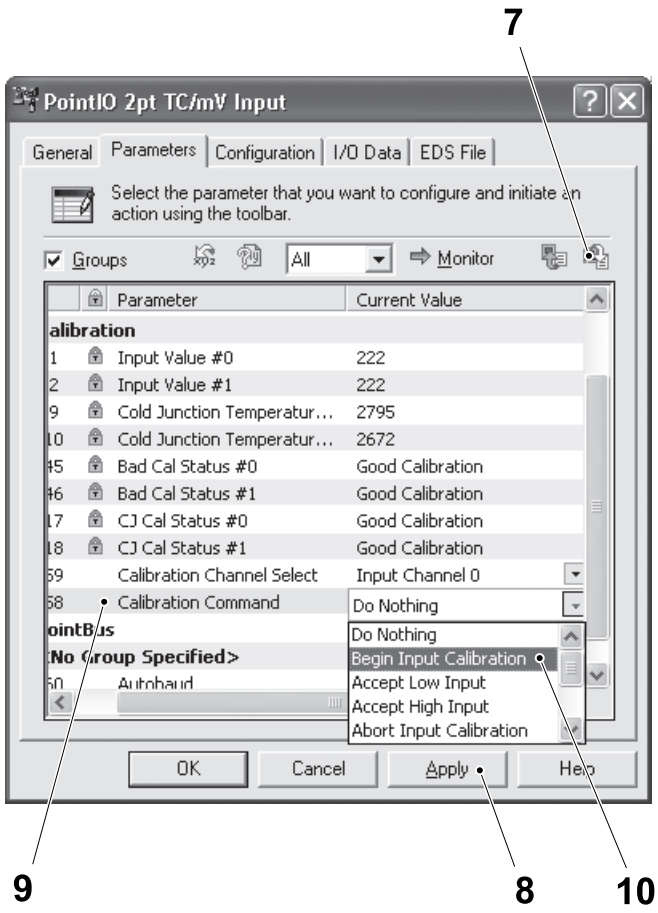

7 Download to device icon

8 Apply button

9 Calibration command

10 Drop down list

(Cont'd)

(Cont'd)

h) Use the precision voltage source to apply 0.00 mV to the input module for the channels being calibrated.

i) Select ACCEPT LOW INPUT from the CALIBRATION COMMAND drop down list (10).

j) Click the DOWNLOAD TO DEVICE icon (7) or the APPLY button (8). The LED status indicators for the channels being calibrated blink green.

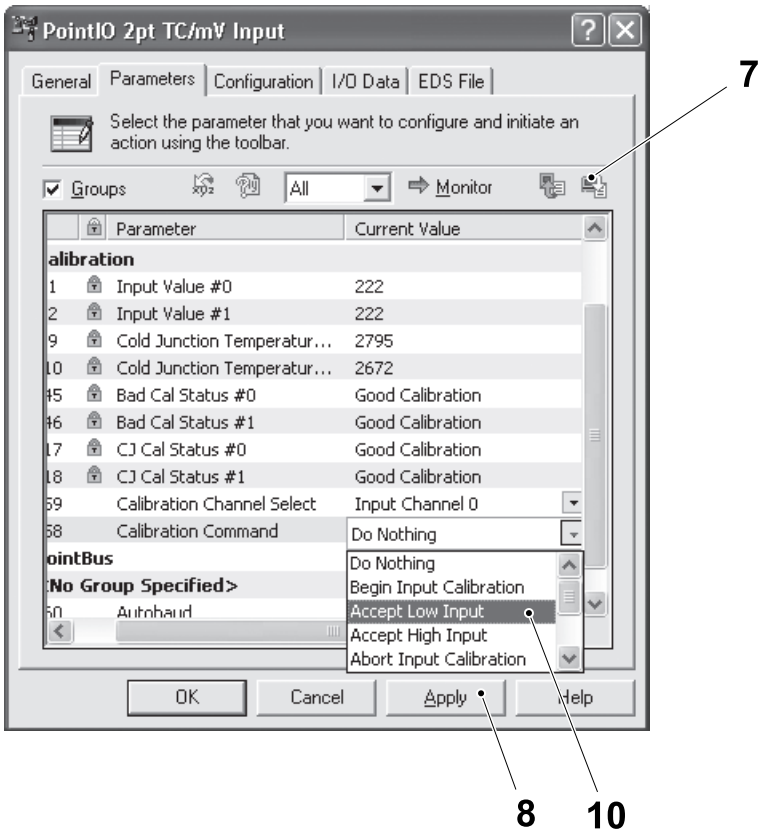

7 Download to device icon

8 Apply button

11 Drop down list

(Cont'd)

(Cont'd)

k) Use the precision voltage source to apply 70.0 mV to the input module for the channels being calibrated.

l) Select ACCEPT HIGH INPUT from the CALIBRATION COMMAND drop down list (10).

m) Click the DOWNLOAD TO DEVICE icon (7) or the APPLY button (8).

n) Repeat steps above to calibrate the other channel if has been chosen to calibrate one channel at a time.

o) The calibration is now complete. The LED status indicators on the thermocouple module should be green or flashing red if no load is present.

Note! If an error has occurred during the calibration procedure select ABORT INPUT CALIBRATION from the CALIBRATION COMMAND drop down list (10) to restore the previous calibration values.

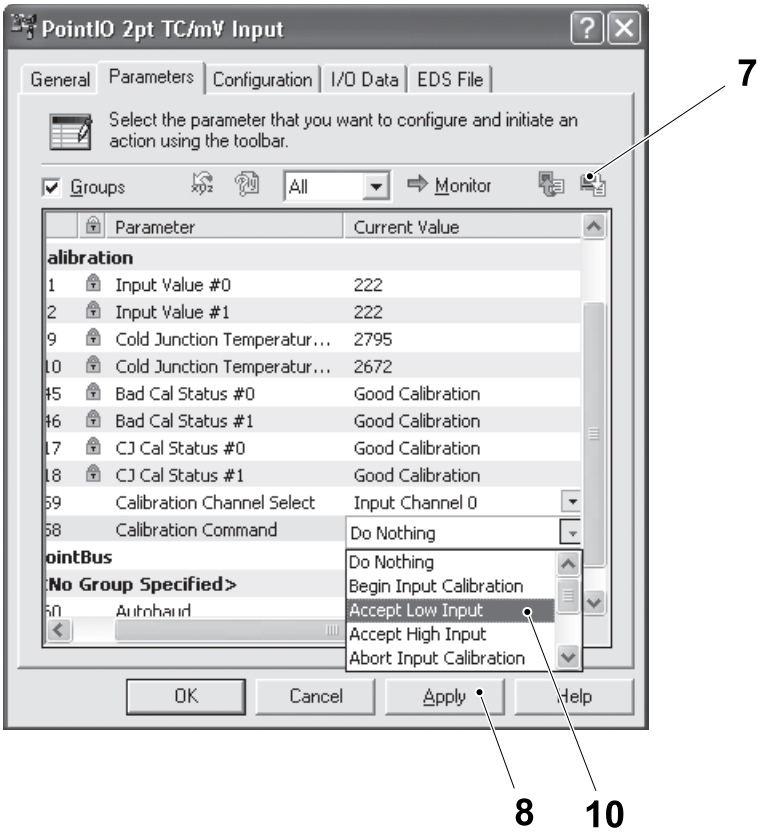

7 Download to device icon

8 Apply button

10 Drop down list

(Cont'd)

(Cont'd)

Cold Junction Compensation (CJC) Calibration

a) Connect the precision resistor to the module 1734-RTB module (1) according to the illustration.

Note! It is also possible to connect only one channel in order to calibrate one channel at a time.

Note! Make sure that the module is updated to the firmware Rev. 3.004, see the label (2).

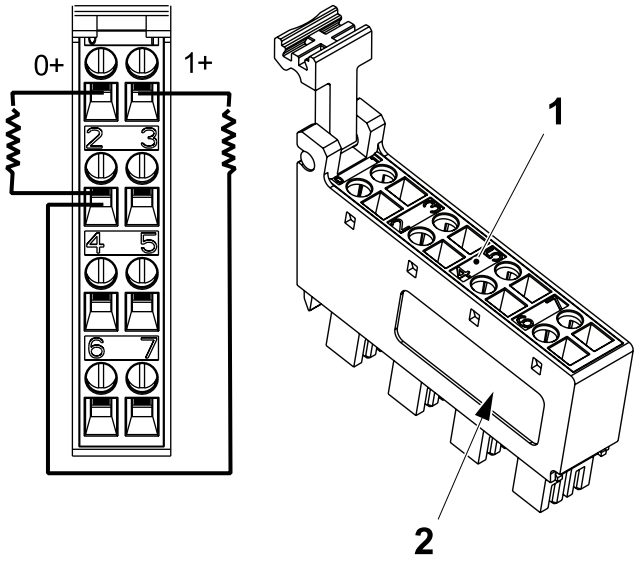

Precision resistor

1 1734-RTB Module
2 Label

(Cont'd)

(Cont'd)

b) In the CONFIGURATION dialogue window select the parameter NO.7 THERMOCOUPLE TYPE (3) and select K from the drop down list (4).

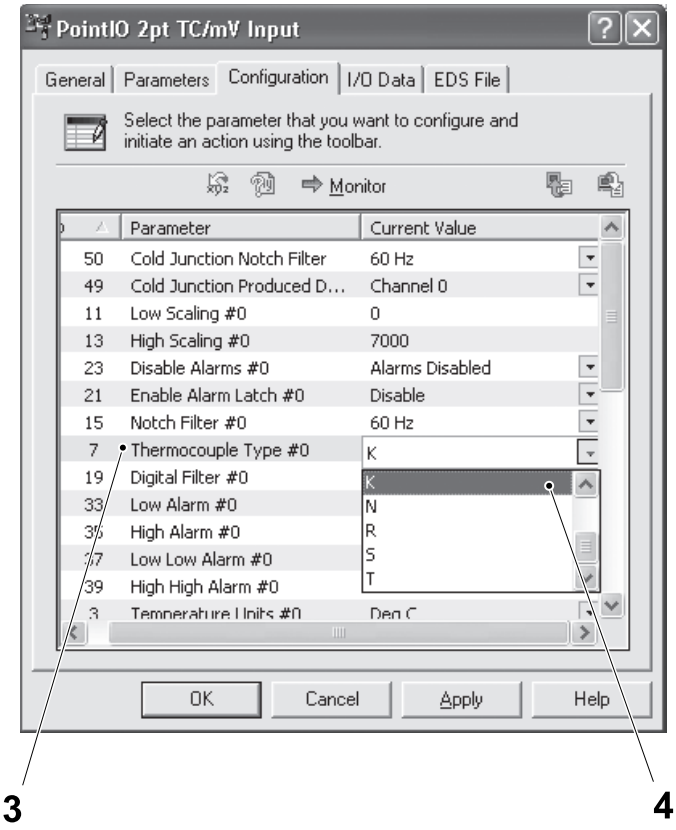

3 Thermocouple type
4 Drop down list

(Cont'd)

(Cont'd)

c) Return to the PARAMETER dialogue window and click on the parameter NO.59 CALIBRATION CHANNEL SELECT (5) to enable the CHANNEL SELECTION drop down list (6).

d) Select COLD JUNCTION 0, COLD JUNCTION 1 or BOTH COLD JUNCTIONS at once from the CHANNEL SELECTION drop down list (6).

e) Click the DOWNLOAD TO DEVICE icon (7) or the APPLY button (8).

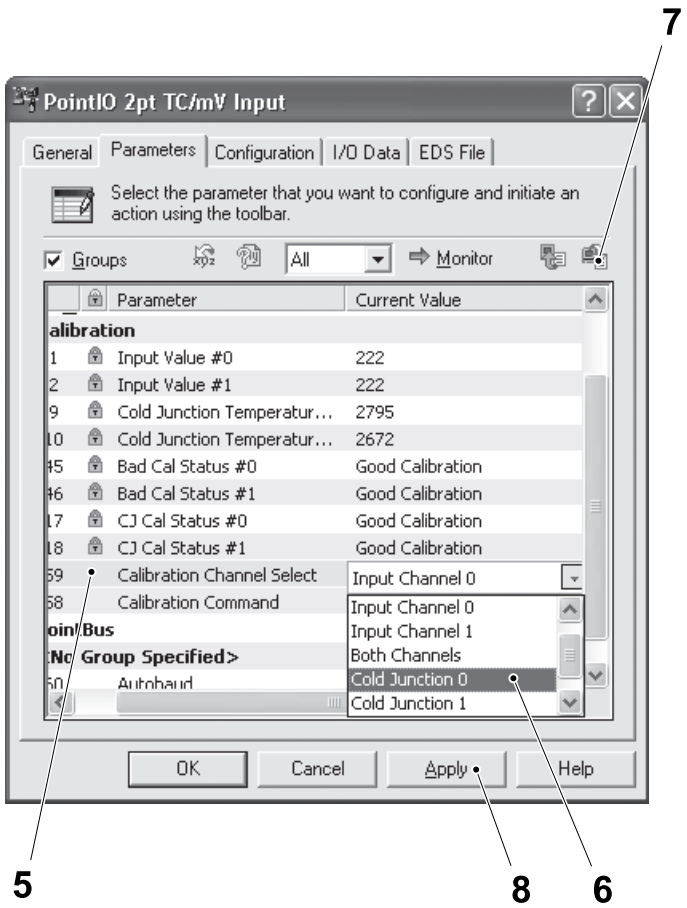

5 Calibration channel select

6 Channel select drop down list

7 Download to device icon

8 Apply button

(Cont'd)

(Cont'd)

f) Click on the parameter NO. 58 CALIBRATION COMMAND (9) and select BEGIN CJC CALIBRATION from the CALIBRATION COMMAND drop down list (10).

g) Click the DOWNLOAD TO DEVICE icon (7) or the APPLY button (8).

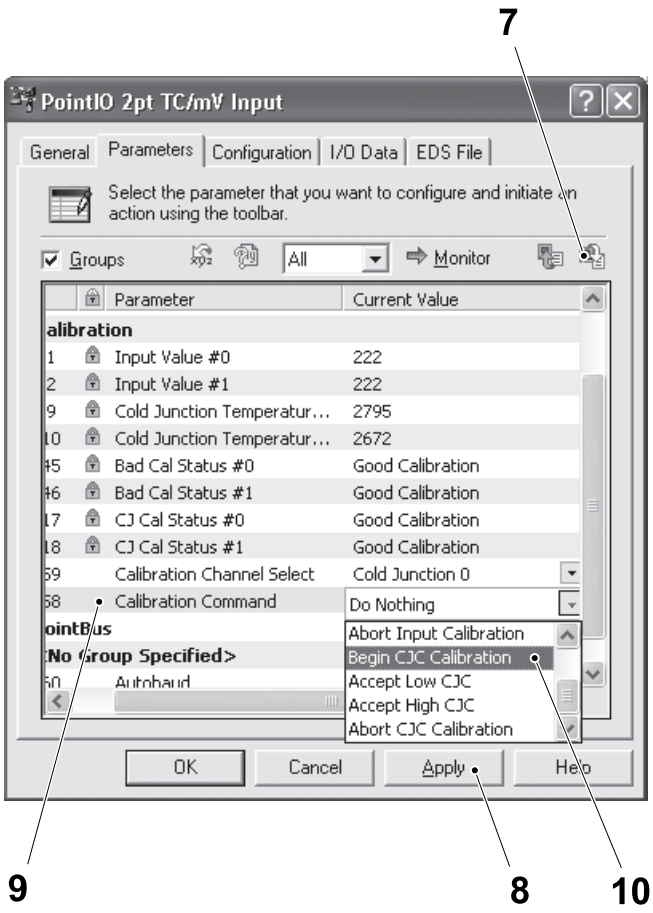

7 Download to device icon

8 Apply button

9 Calibration command

10 Drop down list

(Cont'd)

(Cont'd)

h) Use the precision resistor to apply 1000 ohm to the CJC channels being calibrated.

i) Select `ACCEPT LOW CJC` from the `CALIBRATION COMMAND` drop down list (10).

j) Click the `DOWNLOAD TO DEVICE` icon (7) or the `APPLY` button (8).

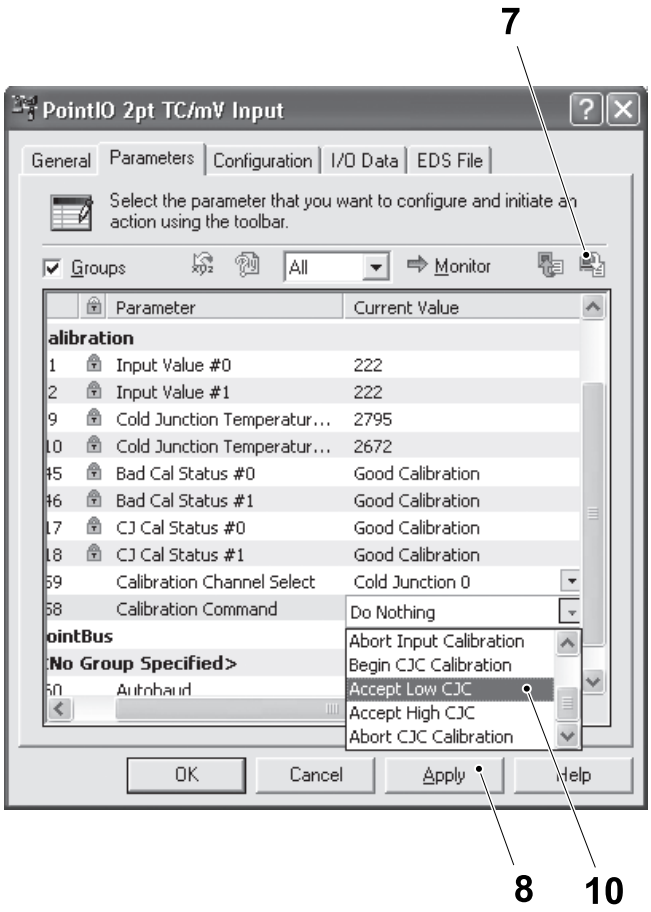

7 Download to device icon

8 Apply button

10 Drop down list

(Cont'd)

(Cont'd)

k) Use the precision resistor to apply 3000 ohm to the CJC channels being calibrated.

l) Select ACCEPT HIGH CJC from the CALIBRATION COMMAND drop down list (10).

m) Click the DOWNLOAD TO DEVICE icon (7) or the APPLY button (8).

n) Repeat steps above to calibrate the other channel if has been chosen to calibrate one channel at a time. The calibration is complete when both high and low inputs have been accepted for both channels.

Note! If an error has occurred during the calibration procedure select ABORT CJC CALIBRATION from CALIBRATION COMMAND drop down list (10) to restore the previous calibration values.

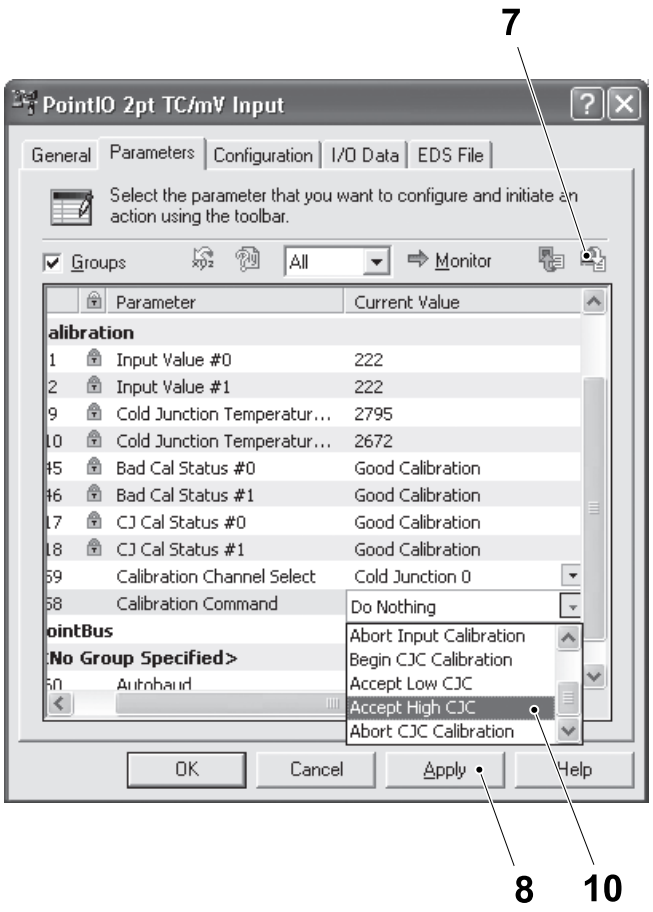

7 Download to device icon

8 Apply button

10 Drop down list

8.7.5.1 Calibrator

8.7.5.1-1 Calibrator - Set Fluke 714

Special Equipment	FLUKE 714 Calibrator TP No. 90458-0914

DANGER

Hazardous voltage.
Follow the safety information in the “Instruction Sheet” delivered with the calibrator.

Note! Turn ON the mains power at least 15 minutes before setting.

To Set the mV Output Value

a) Press the ON/OFF button (1) to switch on the calibrator.

b) Press the TC TYPE button (2) to show the indication mV (3) on the display.

c) Connect the calibrator to the thermocouple module through the connector (4) and a type K thermocouple cable.

d) Press the INPUT-OUTPUT button (5) to show OUTPUT (6) on the display.

e) Set the output voltage (7) with the buttons (8) and (9).

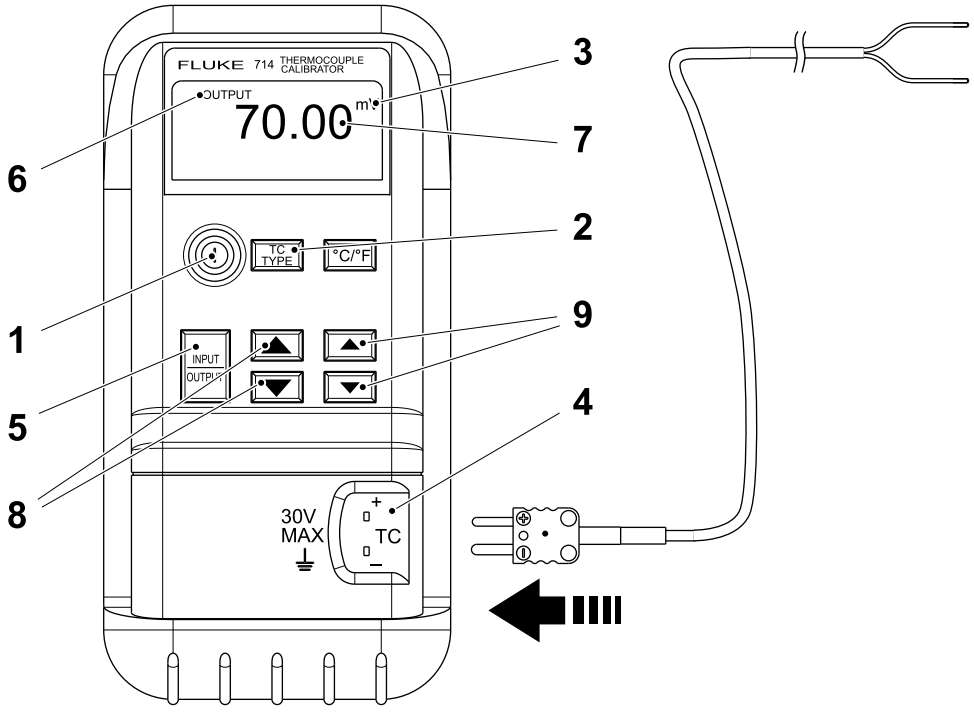

1 On/Off button
2 TC TYPE button
3 mV indicator
4 Calibrator connection
5 INPUT-OUTPUT button
6 INPUT-OUTPUT indicator
7 Voltage indicator
8 Step up/down buttons 10 mV steps
9 Step up/down buttons 0.01 mV steps

(Cont’d)

(Cont'd)

To Read a Temperature Value

a) Press the ON/OFF button (1) to switch on the calibrator.

b) Press the button (2) to toggle the indication °F or °C (3) on the display.

c) Press the TC TYPE button (4) to show the thermocouple TYPE K (5).

d) Connect the calibrator to the thermocouple TYPE K through the connector (6) and a type K thermocouple cable.

Note! Connect the red wire of the thermocouple to the plus side and the yellow wire to the minus side of the connector (6).

e) Press the INPUT-OUTPUT button (7) to show INPUT (8) on the display. Actual temperature (9) is shown.

For further information on the calibrator, see the "Instruction Sheet" delivered with the calibrator.

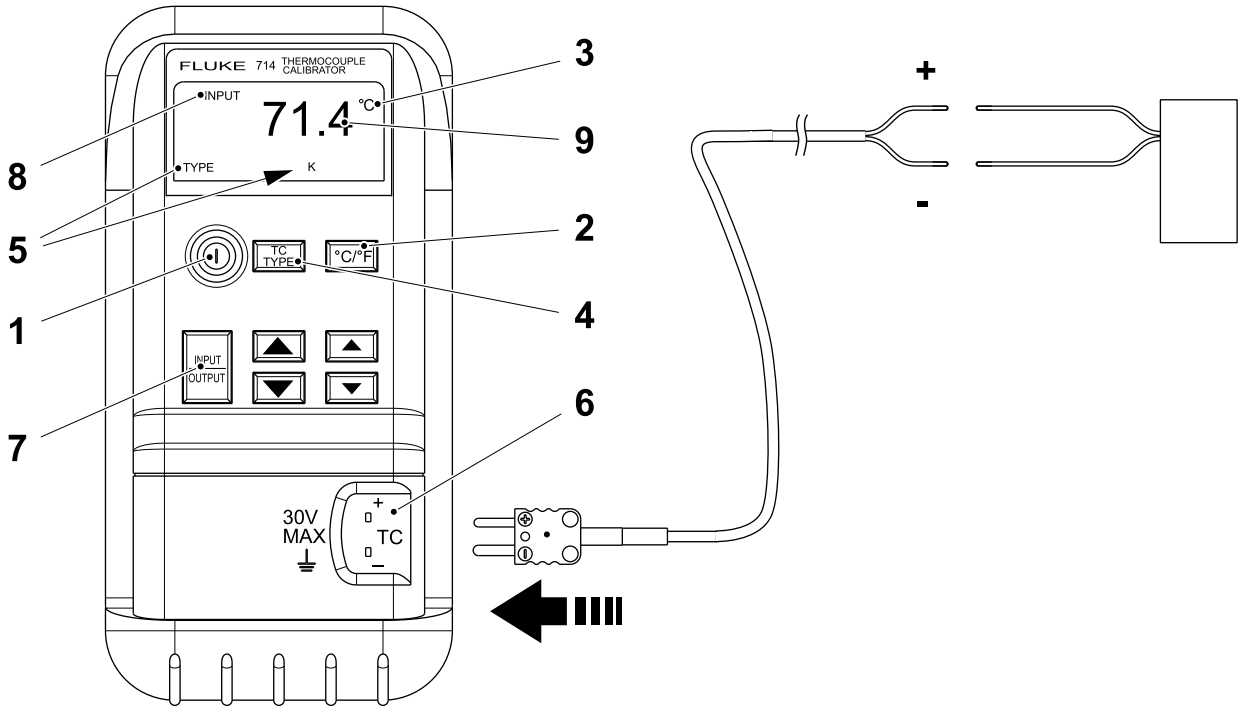

1 On/Off button
2 °F or °C button
3 °F or °C indicator
4 TC TYPE button
5 Thermocouple type
6 Calibrator connection
7 INPUT-OUTPUT button
8 INPUT-OUTPUT indicator
9 Temperature indicator

8.7.5.1-2 Calibrator - Set Micromite II

Machine Status	Electrical supply disconnecting device in position O (OFF) Main air valve OFF Main steam valve ON Main water valve OFF
Special Equipment	Micromite II Calibrator TP No. 90410-0338

Note! Make sure that the Micromite II is switched OFF before disconnecting the AC-adapter or removing the batteries. Failure to do so will cause the instrument to lose the set-up information.

Note! Turn ON the mains power at least 15 minutes before setting.

To Set a mV Output Value

a) Turn ON the mains power.

b) Connect the + input (yellow lead) (1) and the - input (red lead) (2) of the calibrator to the thermocouple module through a type K thermocouple cable.

c) Press the ON/OFF button (3) to switch ON the instrument.

d) Press the SELECT button (4) and the SENSOR button (5).

e) Move the flashing cursor to the right or to the left by pressing the UP button (6) or the DOWN button (7) to select the mV option.

f) Press the ENTER button (8) when the cursor is indicating mV.

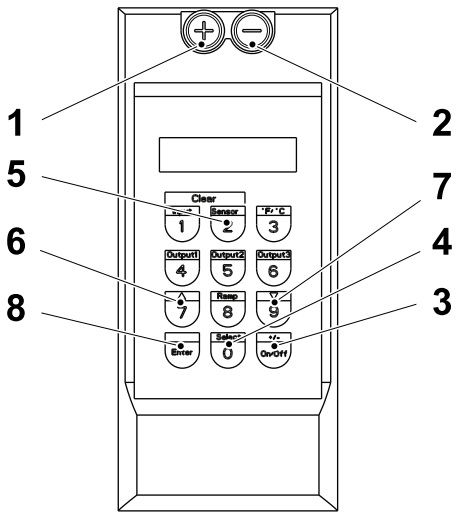

1 Input (+)
2 Input (-)
3 On/Off button
4 Select button
5 Sensor button
6 Up button
7 Down button
8 Enter button

(Cont'd)

(Cont'd)

g) Press theSELECT button (4) and the OUTPUT 1 button (9) to set the output voltage.

h) Use the numeric keys to type the voltage value and press the ENTER button (8).

i) To clear an output value, simultaneously press the INPUT button (10) and the SENSOR button (5).

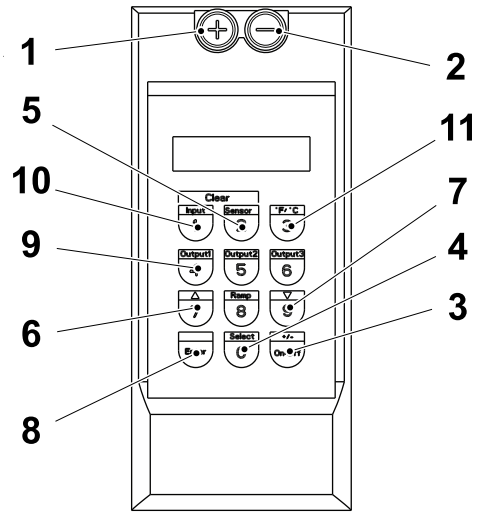

1 Input (+)
2 Input (-)
3 On/Off button
4 Select button
5 Sensor button
6 Up button
7 Down button
8 Enter button
9 Output 1 button
10 Input button

(Cont'd)

(Cont'd)

To Read a Temperature Value

a) Turn ON the mains power.

b) Connect the type K thermocouple to the + input (yellow lead) (1) and to the - input (red lead) (2).

c) Press the ON/OFF button (3) to switch ON the instrument.

d) Press the F/C button (11) to select "centigrade".

e) Press the SELECT button (4) and the SENSOR button (5).

f) Move the flashing cursor to the right or to the left by pressing the UP button (6) or the DOWN button (7) to select the thermocouple type.

g) Press the ENTER button (8) when the cursor is indicating TYPE K.

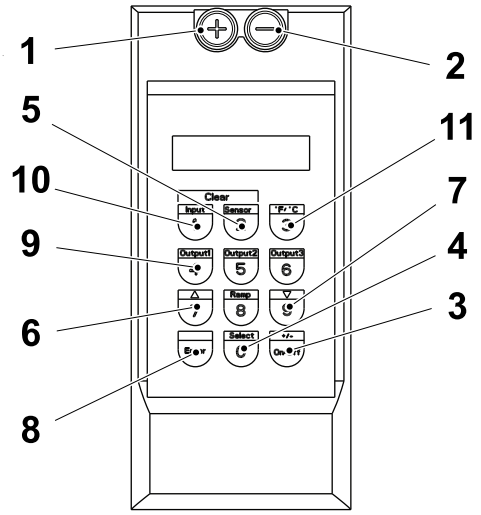

1 Input (+)
2 Input (-)
3 On/Off button
4 Select button
5 Sensor button
6 Up button
7 Down button
8 Enter button
9 Output 1 button
10 Input button
11 F/C button

8.7.6 Thermocouples

8.7.6-1 Thermocouples - Check

Note! This check must be performed at least once a year.

Perform the calibration of the thermocouples according to the procedures described in the Aseptic Qualification Manual indicated below.

Doc No.	Note
AQM-3246694-01xx	English language only

Contact Tetra Pak® for this document.

8.8 TMCC2 Controller

The Tetra Pak Multi-purpose Compact Controllers (TMCC2) in the electrical cabinet are used to control and monitor the photocells, that are part of the packaging material positioning system and to monitor the sealing process.

8.8.1 TMCC2 Controller(s) Description

8.8.1-1 TMCC2 Card for ASU and DCS Register or Magnetic Mark Detection

Register or Magnetic Mark Program Overview

The TMCC2 card A01K0100 is a microprocessor card that has the following functions:

- reads the ASU and DCS magnetic or register marks and provides a signal to the PLC for controlling the position of the packaging material
- reads up to four fast input signals (like paper splice sensor) converting it to a longer pulse readable by the PLC
- implements a DeviceNet communication protocol for connectivity and data transfer with the machine communication network.

The program parameterization and some of the I/O signals (non-time critical) are performed using the DeviceNet communication protocol.

(Cont'd)

(Cont'd)

Buttons and Display

The buttons (1) and the display (2) located on the front panel of the TMCC2 card A01K0100 are used to select one of several program functions.

The display (2) is used for the following purposes:

- when the TMCC2 is idle the display (2) shows program information
- when the TMCC2 is working the display (2) is used as LED's to display the operation of the TMCC2
- push the buttons (1) to navigate through a menu structure in the display (2) allowing the setting of the TMCC2.

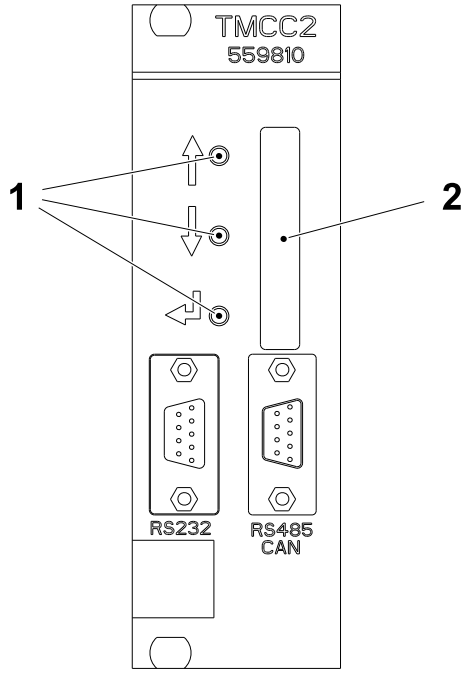

1 Button
2 Display

(Cont'd)

(Cont'd)

Error Messages

When the communication with the photocells fails an error message is displayed as follows:

Error Message	Description
ASU 3 Bars Ph. failure	Photocells fault
ASU 4 Bars Ph. failure	Photocells fault
ASU 3 Bars and ASU 4 Bars Ph. failure	Photocells fault
DCS 3 Bars Ph. failure	Photocells fault
DCS 3 Bars and ASU 3 Bars Ph. failure	Photocells fault
DCS 3 Bars and ASU 4 Bars Ph. failure	Photocells fault
DCS 3 Bars, ASU 3 Bars and ASU 4 Bars Ph. failure	Photocells fault
DCS 4 Bars Ph. failure	Photocells fault
DCS 4 Bars and ASU 3 Bars Ph. failure	Photocells fault
DCS 4 Bars and ASU 4 Bars Ph. failure	Photocells fault
DCS 4 Bars, ASU 3 Bars and ASU 4 Bars Ph. failure	Photocells fault
DCS 3 Bars and DCS 4 Bars Ph. failure	Photocells fault
DCS 3 Bars, DCS 4 Bars and ASU 3 Bars Ph. failure	Photocells fault
DCS 3 Bars, DCS 4 Bars and ASU 4 Bars Ph. failure	Photocells fault
All photocells failure	Photocells fault
On Line, but no connections in the unstablished state	DeviceNet communication fault
One or more I/O connections are in Timed-Out state	DeviceNet communication fault
A3PH program incapable of communicating on the network	DeviceNet communication fault
A3PH not On Line	DeviceNet communication fault

(Cont'd)

(Cont'd)

LED Display

The display, used as LED's, provides the following information when the machine is in the normal PRODUCTION mode.

Card A01K0100		
LED	**Function**	**Description**
1	Register mark ASU	ASU register mark signal, the flash is approx. 40 ms
2	Register mark DCS	DCS register mark signal, the flash is approx. 40 ms
3	ASU photocells fault	
4	DCS photocells fault	
5	Splice detector ASU	Flashes when latch 1 pulse is activated
6	Splice detector SS	Flashes when latch 2 pulse is activated
7	Not used	
8	Not used	

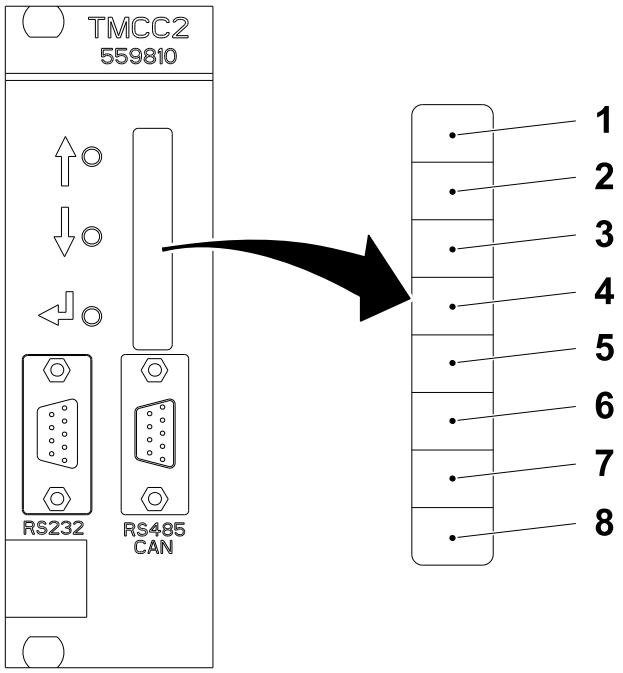

1 Register mark ASU
2 Register mark DCS
3 ASU photocells fault
4 DCS photocells fault
5 Splice detector ASU
6 Splice detector SS
7 Not used
8 Not used

Menu System

Pushing any button on the TMCC2 card A01K0100 enters the first level of the menu. The ARROW buttons are then used to select an item and the ENTER button to access the submenus of that item.

(Cont'd)

(Cont'd)

Card A01K0100				
Menu level				
1	**2**	**3**	**4**	**Description**
SPOT COL				Spot color menu
	GREEN			Select green spot color
	BLUE			Select blue spot color
	RED			Select red spot color
	BACK			Exit from spot color menu
DYN.TH.				Dynamic threshold menu
	PTH=xxh			Change dynamic threshold setting
CALIB.				Manual calibration menu
	USE CAL.			Use manual calibration
	RUN CAL.			Run manual calibration
	BACK			Exit manual calibration menu
ASU PLS				ASU pulse length menu
	PL=xx			Change ASU pulse length
LATCH 1				Latch 1 input menu
	CONFIG			Config. Latch 1 input
		xxxxxxxx		Change Latch 1 configuration
	PLS LEN			Latch 1 pulse length
		PL=xx		Change Latch 1 pulse length
	BACK			Exit from Latch 1 input menu
LATCH 2				Latch 2 input menu
	CONFIG			Config. Latch 2 input
		xxxxxxxx		Change Latch 2 configuration
	PLS LEN			Latch 2 pulse length
		PL=xx		Change Latch 2 pulse length
	BACK			Exit from Latch 2 input menu
LATCH 3				Latch 3 input menu
	CONFIG			Config. Latch 3 input
		xxxxxxxx		Change Latch 3 configuration
	PLS LEN			Latch 3 pulse length
		PL=xx		Change Latch 3 pulse length
	BACK			Exit from Latch 3 input menu
LATCH 4				Latch 4 input menu
	CONFIG			Config. Latch 4 input
		xxxxxxxx		Change Latch 4 configuration
	PLS LEN			Latch 4 pulse length
		PL=xx		Change Latch 4 pulse length
	BACK			Exit from Latch 4 input menu
MAC ID				MAC ID menu

(Cont'd)

(Cont'd)

Card A01K0100				
Menu level				
1	**2**	**3**	**4**	**Description**
	MACID=xx			Change Nod MAC ID
BACK				Exit from menu structure

System Data

A PC can be used to enter commands and parameters in the A3PH program and read data from the TMCC2, see 8.8.2-5 TMCC2 Controller - Display Report.

8.8.1-2 TMCC2 Card for Filling System

Filling Control System Overview

The TMCC2 card U70K0380 is a microprocessor card that reads the product flow and the product level inside the paper tube and calculates the output via a double PID-algorithm.

The output value drives the actuator composed of an I/P transducer and a regulating valve. Process specific parameters are sent from the PLC.

(Cont'd)

(Cont'd)

Buttons and Display

The buttons (1) and the display (2) located on the front panel of the TMCC2 card U70K0380 are used to select one of several program functions.

The display (2) is used for the following purposes:

- when the TMCC2 is idle the display (2) shows program information
- when the TMCC2 is working the display (2) is used as LED's to display the operation of the TMCC2
- push the buttons (1) to navigate through a menu structure in the display (2) allowing the setting of the TMCC2.

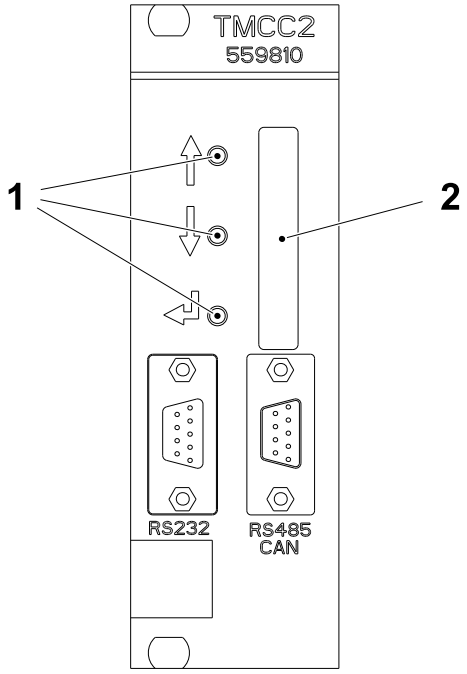

1 Button
2 Display

(Cont'd)

(Cont'd)

LED Display

The display, used as LED's, provides the following information when the machine is in the normal PRODUCTION mode.

Card U70K0380		
LED	**Function**	**Description**
1	Production	Always ON during PRODUCTION.
2	Cleaning	Always ON during CLEANING.
3	Sterilization	Always ON during STERILISATION.
4	Fixed char	"V"
5	Level	*
6	Level	*
7	Level	*
8	Level	*

*) The level is shown on the display by using four display characters. Every character is divided into five rows, making the total number of rows 20. Every row therefore shows 5% of the level.

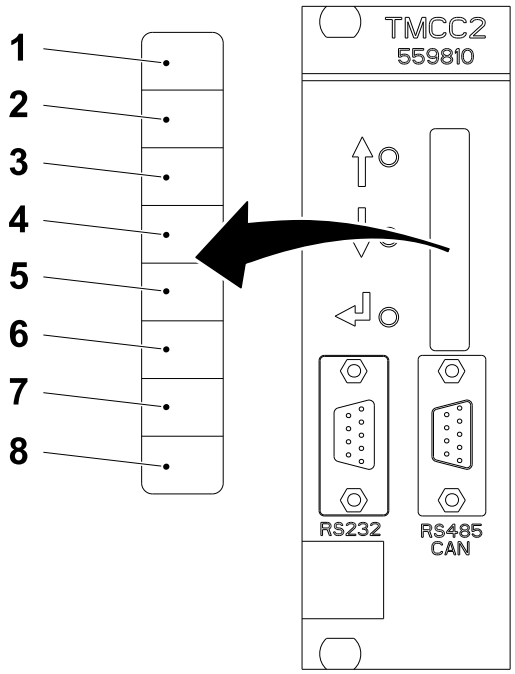

1 Production
2 Cleaning
3 Sterilisation
4 Fixed Char "V"
5 Level
6 Level
7 Level
8 Level

Menu System

Pushing any button on the TMCC2 card U70K0380 enters the first level of the menu. The ARROW buttons are then used to select an item and the ENTER button to access the submenus of that item.

(Cont'd)

(Cont'd)

Card U70K0380				
Menu Level				
1	**2**	**3**	**4**	**Description**
MONITOR				Monitoring menu
	LEVEL			Monitoring of the level
	FILT LEV			Monitoring of the filtered level
	FLOW			Monitoring of the flow
	OUTPUT			Monitoring of the output
	BACK			Back from monitoring menu
SETTING				Setting Menu
	FILL OK			Filling OK window menu
		WND=±XX%		Set the filling window*
	FLOW PID			Setting of the flow P.I.D.
		P CONST		Flow P.I.D. proportional constant
			P=XX	Sets the P value
		I CONST		Flow P.I.D. integral constant
			I=XX	Sets the I value
		D CONST		Flow P.I.D. derivative constant
			D=XX	Sets the D value
		BACK		Back from flow P.I.D. menu
	LEV PID			Setting of the level P.I.D.
		P CONST		Level P.I.D. proportional constant
			P=XX	Sets the P value
		BACK		Back from level P.I.D. menu
	BACK			Back from setting menu
FORCE				Forcing menu
	OUTPUT			Forcing of the output value to I/P
		O=XX		Sets the forced output value
	BACK			Back from forcing the output
FLOWMET.				Flowmeter menu
	E.P.DET.			Turn ON/OFF the Empty pipe detector
		EPD= XX		XX can be set to ON or to OFF
	E.P. TH			Sets the E.Pipe detector threshold
		T=XXXXHz		The maximum value is 3000Hz.**
	BACK			Back from the empty pipe detector menu
FLM DET.				Menu for flowmeter detection

(Cont'd)

(Cont'd)

Card U70K0380				
Menu Level				
	D=XX			XX = AUTO, COPAXF, PROMAG
BACK				Exit from the menu structure

*) This value can be changed by using the up and down arrow keys on the TMCC2 front panel.

**) This menu item exists only when the flow meter TP No. 90458-0806 is detected. The default Empty pipe detector threshold is 2300Hz. The maximum value is 3000Hz, which corresponds to the minimum fluid conductivity. If the flow meter TP No. 90606-2725 is detected the threshold setting is not available and the empty pipe detection = OFF and is not necessary.

System Data

A PC can be used to enter commands and parameters in the FCSFA3 program and read data from the TMCC2, see 8.8.2-5 TMCC2 Controller - Display Report.

8.8.1-3 TMCC2 card for Sealing Monitoring

Monitoring System Overview

The TMCC2 card P60K4030 is a microprocessor card that monitors the sealing processes.

These processes are Transversal Sealing (TS) and Pull-Tab application (PT).

The system detects incorrect sealing conditions and warns the operator. The TMCC2 communicates with the TPIH2500 generator via the CAN bus. Before the CAN communication can be used it must be set up, see 8.9.2-8 IH Equipment - Set CAN Communication.

The SM is executed on the TMCC2 board and the parameters acquired are:

- voltage, current and phase angle from the TPIH generators
- power setting and status/errors from the TPIH generators
- product temperature and inductors cooling water flow status (Ethernet IP)
- hydraulic pressure during TS
- status and synchronization signals of the filling machine (Ethernet IP)

Communication between the TMCC2 and the PLC are implemented trough the Ethernet IP connection. Digital outputs of the TMCC2 are available to communicate the error conditions to PLC but normally not used.

Various information regarding the sealing process are available during production and off-line on the TMCCs RS232 port.

System Data

A PC can be used to enter commands and parameters in the SM program and read data from the TMCC2, see 8.8.2-5 TMCC2 Controller - Display Report.

8.8.2 TMCC Controller Communication

8.8.2-1 TMCC2 Controller - Set Communication

Machine Status	PRODUCTION
Special Equipment	RS 232-C Communication Cable Laptop PC

Note! The following procedure should be used to communicate with a TMCC2 card.

Connect the TMCC2 to a laptop PC with the connection cable (1). The connections required are:

PC 9-pin female	TMCC2 9-pinmale
2	3
3	2
5	5

Note! Do not connect any other pin.

Set up the program to use, e.g. Windows Hyper Terminal as follows:

Baud rate	9600
Parity	None
Bits	8
Stop bits	1
Flow control	None

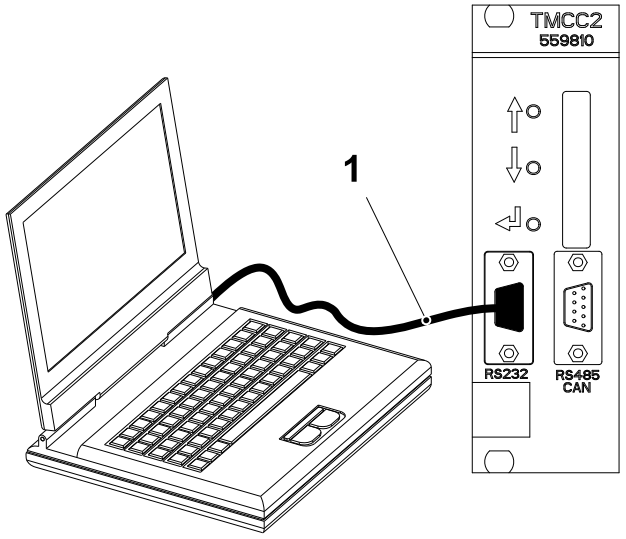

1 Connection cable

8.8.2-2 TMCC2 Controller - Load Program

Machine Status	PREPARATION
Special Equipment	RS 232-C Communication Cable Laptop PC

CAUTION
Risk of damage to the equipment.
Do not swap the TMCC2 cards because they contain different programs!

a) Locate the appropriate TMCC2 card in the electrical cabinet:
   - the card A01K0100 (1) is for the barcode readers in the ASU and DCS
   - the card U70K0380 (2) is for the filling system
   - the card P60K4030 (3) is for the LSM

b) Configure a laptop PC to be used as a hyperterminal and connect it to the TMCC2, see 8.8.2-1 TMCC2 Controller - Set Communication.

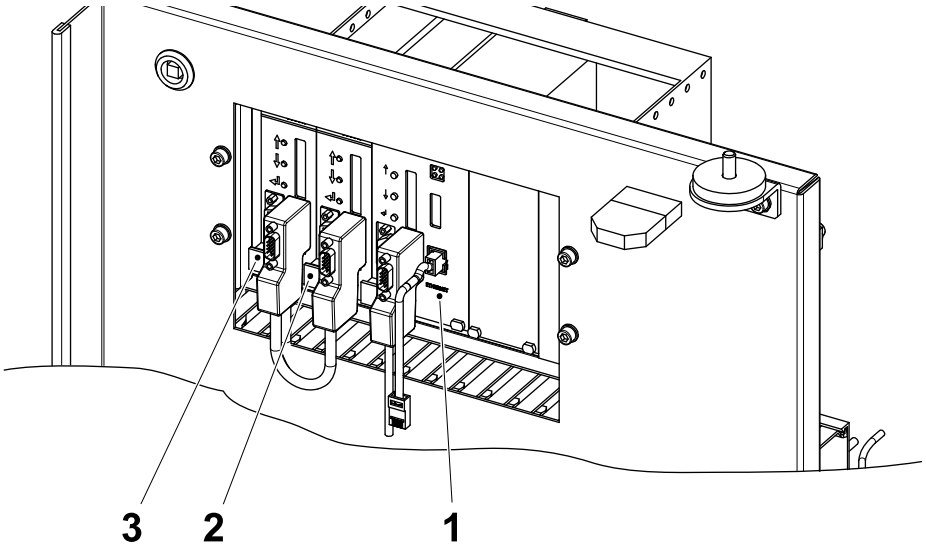

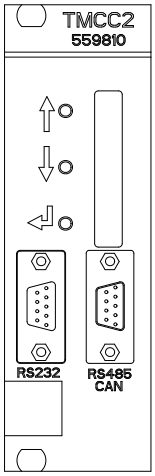

1 Card A01K0100
2 Card U70K0380
3 Card P60K4030

(Cont'd)

(Cont'd)

c) Connect the communication cable between the laptop PC and the TMCC2 front panel connector.

d) Insert the software USB key in a laptop PC USB port.

Note! If a software CD has been supplied, insert the software CD into the laptop PC CD drive.

e) In Hyperterminal, type `STOP` and press the ENTER key.

f) Type `E FLASH` and press the ENTER key.

g) When the TMCC2 prompt appears ("TMCC2->"), type `D` and press the ENTER key.

h) Select the menu `TRANSFERS` and the menu item `SEND TEXT FILE`.

i) Browse to the software USB key (or the software CD) and locate the file to be downloaded:

- for the card A01K0100, locate the file TMCC DCS\xxxxxxx.100x.mhx
- for the card U70K0380, locate the file TMCC DCS\xxxxxxx.100x.mhx
- for the card P60K4030, locate the file TMCC DCS\xxxxxxx.100x.mhx

j) The download progress is displayed with dots on the screen.

k) At the TMCC2 prompt type `RUN` and press the ENTER key.

l) Press the S key to verify the downloaded programs status.

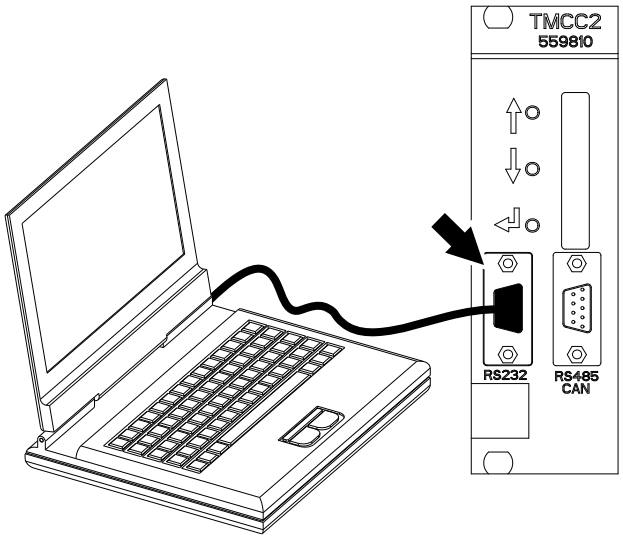

8.8.2-3 TMCC2 Controller - Photocells Manual Setting

Machine Status	Electrical supply disconnecting device in position I (ON) Main air valve OFF Main steam valve ON Main water valve OFF

DCS Photocells

If errors occur after the photocell colour and sensitivity setting, set the photocells manually as described below:

a) Press any of the buttons on the TMCC2 card.

b) Use the ARROW buttons to select `CONF? Y` and press the ENTER button.

c) Use the ARROW buttons to select `CALIB.` and press the ENTER button.

d) Use the ARROW buttons to select `RUN CAL.` and press the ENTER button. This sets the photocells to teaching mode.

e) Move the packaging material until the photocell light spot is focused on a white part of the packaging material.

f) Press and hold the TEACH button (1).

g) Move the packaging material until the complete barcode has passed in front of the photocell and then release the TEACH button (1). The cell automatically calibrates itself.

Note! The LED (2) is ON when the photocell light spot is focused on a dark area of the packaging material.

h) Repeat the items e), f) and g) for the other photocell.

i) Use the ARROW buttons to select `USE CAL.` to send the taught values to all photocells.

j) Exit the menu on the TMCC2.

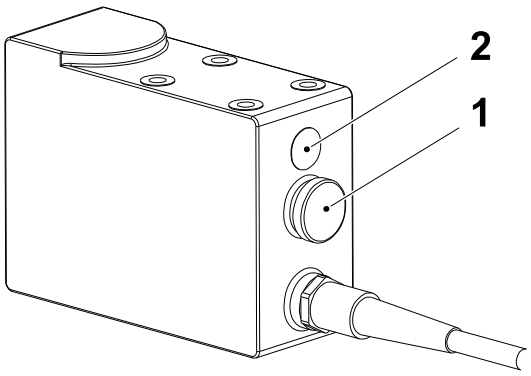

1 Teach button
2 LED

(Cont'd)

(Cont'd)

ASU Photocells

If errors occur after the photocell colour setting, set the photocells manually as described below:

a) Press any of the buttons on the TMCC2 card.

b) Use the ARROW buttons to select `CONF? Y` and press the ENTER button.

c) Use the ARROW buttons to select `CALIB.` and press the ENTER button.

d) Use the ARROW buttons to select `RUN CAL.` and press the ENTER button. This sets the photocells to teaching mode.

e) Make sure that the switch (1) is set to the position Q1.

f) Move the packaging material until the photocell spot is focused on a white part of the packaging material.

g) Push and hold the TEACH button (2).

h) Move the packaging material until the complete barcode has passed in front of the photocell and then release the TEACH button (2). The photocell automatically calibrates itself.

Note! TheON LED (3) is lit when power is supplied to the photocell. The Q/OK LED (4) is ON when the photocell spot is focused on a dark area of the packaging material.

i) Repeat the steps from e) to h) for the other photocell.

j) Use the ARROW buttons to select `USE CAL.` and press the ENTER button.

k) Exit the menu on the TMCC2 card.

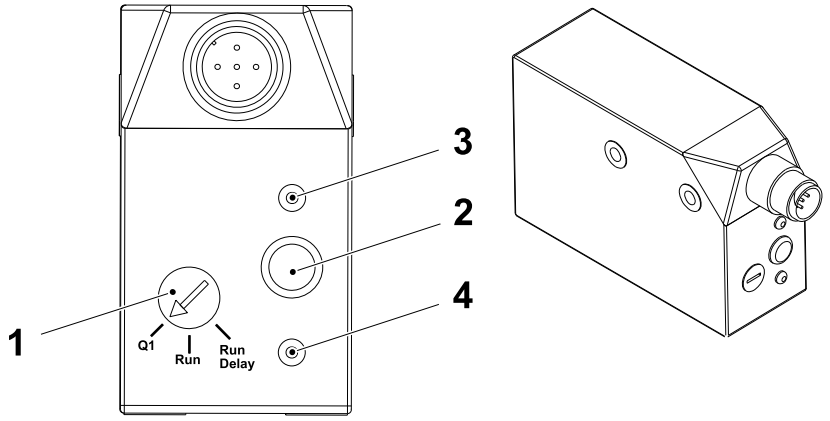

1 Switch
2 Teach button
3 ON LED
4 Q/OK LED

8.8.2-4 TMCC2 Controller - Set Filling Window

Machine Status	Electrical supply disconnecting device in position I (ON) Main air valve OFF Main steam valve ON Main water valve OFF

TMCC2 for Filling System

The suggested filling window amplitude is 30%.

a) Press any of the buttons on the TMCC2 U70K0380 (Filling system) card.

b) Use the arrow buttons (1) to select `SETTING` and press the ENTER button (2).

c) Use the arrow buttons (1) to select `FILL OK` and press the ENTER button (2).

d) Use the arrow buttons (1) to set a filling window amplitude and store the value by pressing the ENTER button (2).

e) Exit the menu on the TMCC2 (Filling system) card.

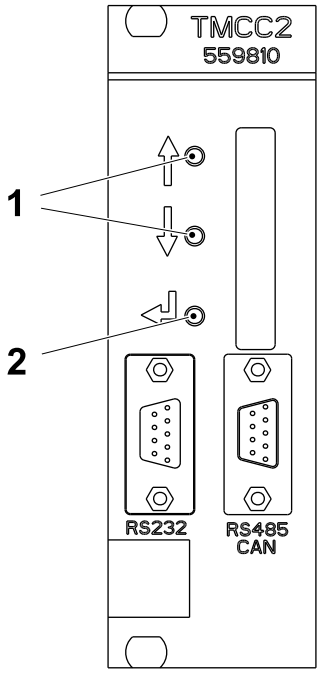

1 Arrow button
2 Enter button

8.8.2-5 TMCC2 Controller - Display Report

Machine Status	PRODUCTION
Special Equipment	TMCC2 Communication Cable AT Compatible PC

TMCC2 Card A01K0100 (Barcode Detection)

Configure Windows Hyper Terminal on the PC and connect the PC to the TMCC2, see 8.8.2-3 TMCC2 Controller - Photocells Manual Setting.

Enter the commands and parameters into the A3PH program via the keyboard and execute them by pressing the ENTER key. (The commands and parameters are not replicated on the terminal). The functions described below are available:

H Help Menu: displays the commands available.

L Description of the function of the display on the front panel.

S Shows the program status and if there is a failure of the photocells.

V Shows the program number and version

STOP Stops the A3PH program and enters the firmware. It is used when the application should be upgraded or in case a reset is necessary.

Ax ASU photocells alignment test (x=1 start test; x=0 stop test)

Dx DCS photocells alignment test (x=1 start test; x=0 stop test)

Y Displays a detailed status of the photocells for test and service purposes:

Status	**Description**
Commands OK:	Total number of commands executed by the photocells
Commands failed:	Total number of commands failed
Barcode decoded:	Total number of barcodes decoded by the TMCC2
Dynamic Threshold:	Photocell threshold
Light Spot:	Colour of the light spot used by the photocells
Output:	Logic of the photocell outputs (Light/Dark switching)
Photoswitch Working Hours	Number of hours that every LED of the photocell has been working
Photocell Software ver. / S.N.:	Software version of the photocell firmware and serial number

PTH=xx Changes the dynamic threshold value of the photocells. The value is a hexadecimal value ranging from 20_{16} to $F2_{16}$ stored in the EEPROM. High dynamic threshold values result in a lower photocell sensitivity.

(Cont'd)

(Cont'd)

TMCC2 card U70K0380 (Filling System)

Configure a PC to be used as Windows terminal and connect it to the TMCC2 (FCSFA3F), see 8.8.2-1 TMCC2 Controller - Set Communication.

Enter the commands and parameters into the FCSFA3 program via the keyboard and execute them by pressing the ENTER key. (The commands and parameters are not replicated on the terminal). The functions described below are available:

H Help Menu: displays the commands available.

S Shows the filling system status.

P <val> Changes the flow PID proportional parameter.

I <val> Changes the flow PID integral parameter.

D <val> Changes the flow PID derivative parameter.

U <val> Changes the level PID proportional parameter.

V <val> Changes the level PID integral parameter.

W <val> Changes the level PID derivative parameter.

L <val> Changes the level setpoint. The value introduced is in the range 0-1000 that corresponds to 0-100%. It is restored to 60% at power or after a reset.

T <val> Changes the start up ramp time.

F <val> Force the analogue output value:

val=0 disables forcing

val=1..1000 forced value (0–10V)

R <val> Reporting ON/OFF. This command enables and disables the automatic reporting of the level, filtered level, flow set point, flow measure and output.

val=0 disable reporting

val=1 enable reporting in form of three columns on the screen of the terminal.

(Cont'd)

(Cont'd)

B <val> Changes the start flow percentage.

G <val> Changes the virtual level trigger.

Z Displays the flow meter parameters.

SERVICE Displays the extra service commands help.

VER Displays the program number and version.

STOP Stops the application program and enters the firmware.

The extra service commands are:

FCLEAR restores the default flow meter configuration.

The extra service commands valid only for the flow meter TP No. 90606-2725 are:

FF Changes the flow filter time constant. The value can be changed in the range 0…999. If changed, it will be restore to its default after power off..

RS show the status of a custom Modbus register. A register is composed by three terms: the address, the value and the type. The value represent the container of the register value when read, or the value to be written.

RT<value> Changes the register data type. RT=I sets the register as 16 bit integer type. RT=F sets the register as a floating point type.

RV<value> Changes the value of the register. The value will contain the read value of the register in case of register read or will contain the value to be written.

RA<value> Changes the register address.

RR Executes the custom register read command.

RW Executes the custom register write command.

The extra service commands valid only for the flow meter TP No. 90458-0806 are:

EPIPE <val> ON = Empty pipe detection activated, OFF = Empty pipe detection deactivated.

EPIPETH <val> Sets the empty pipe detection threshold, the default value is 2300 Hz and the maximum threshold is 3000 Hz which corresponds to the minimum conductivity level of the liquid.

(Cont'd)

(Cont'd)

TMCC2 Card P60K4030 (Sealing Monitoring)

Configure a PC to be used as Windows terminal and connect it to the TMCC2 (SM), see 8.8.2-1 TMCC2 Controller - Set Communication.

Enter the commands and parameters into the SM program via the keyboard and execute them by pressing the ENTER key. (The commands and parameters are not replicated on the terminal). The functions described below are available:

H Help Menu: displays the commands available.

A Shows one message over two on LS and SA reporting.

B <val> Set the max. power deviation allowed (20-200 W).

C Shows comments on data output.

D Toggle display report on RS232: ON/OFF.

E Shows last error condition.

J Send the jaw average values.

L Toggles display from TS, LS, SA or PT.

P <val> Set max. phase deviation (4-40 deg.).

R <val> Recall waveform: 0 last, 1 stored. This function could be used to retrieve the last samples of voltage, current and phase angle. The values are given already scaled in the right units (V, A, degree) and could be used to prepare chart and analyse trends.

S Shows the errors list.

T Test method values (average values)

V Force write EEPROM.

W Working mode TPIH 2500

X Configuration and SM status.

Z <val> Set max. Z deviation (2-20 ohm).

(Cont'd)

(Cont'd)

For TS, at each sealing pulse a message containing the sealing values is sent to the terminal through the RS232 port.

The fields of the message have the following meaning:

TS
Sealing time
Hydraulic pressure (bar)
Product temperature (ºC)
Side (0=left, 1=right)
Voltage (V)
Current (A)
Phase angle (degrees)
Power delivered (W)
Power requested (W)
Impedance (ohm)
Phase angle during pulse (degrees)
Error code

8.8.2-6 TMCC2 Controller - Upgrade Firmware

Machine Status	PREPARATION
Special Equipment	Ethernet Communication Cable Laptop PC

The TMCC2 card P60K4030 (1) used for the sealing monitoring application is equipped with an Anybus EtherNet/IP board. The firmware version of this EtherNet/IP board must be checked and upgraded if necessary to avoid communication problems.

a) Locate the TMCC2 card P60K4030 (1) in the electrical cabinet.

b) Connect the laptop PC Ethernet port to the TMCC2 front panel Ethernet switch.

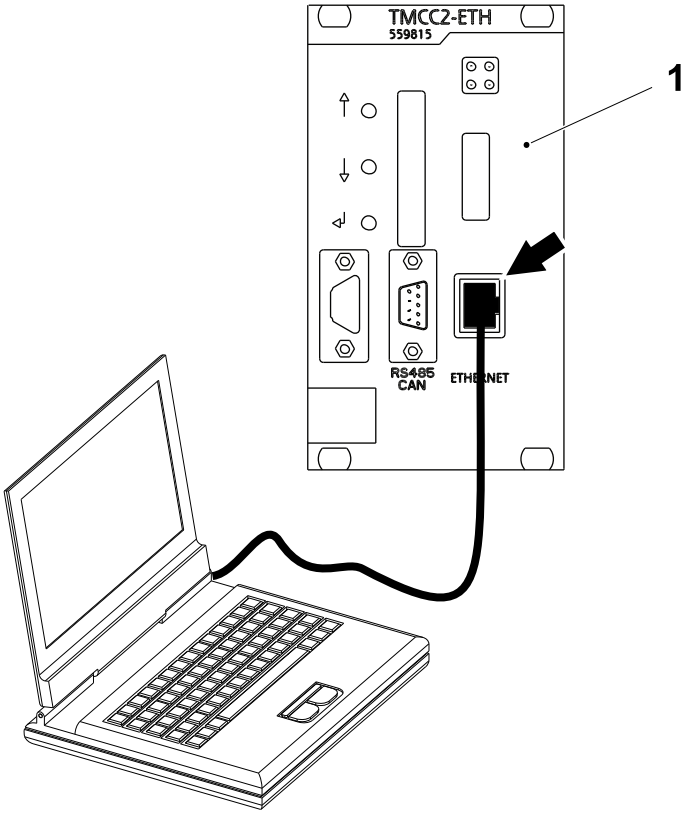

1 TMCC2 card P60K4330

(Cont'd)

(Cont'd)

c) From the START menu open the COMMAND PROMPT window and type TELNET.

d) Type OPEN 10.255.10.100 to establish the connection to the EtherNet board.

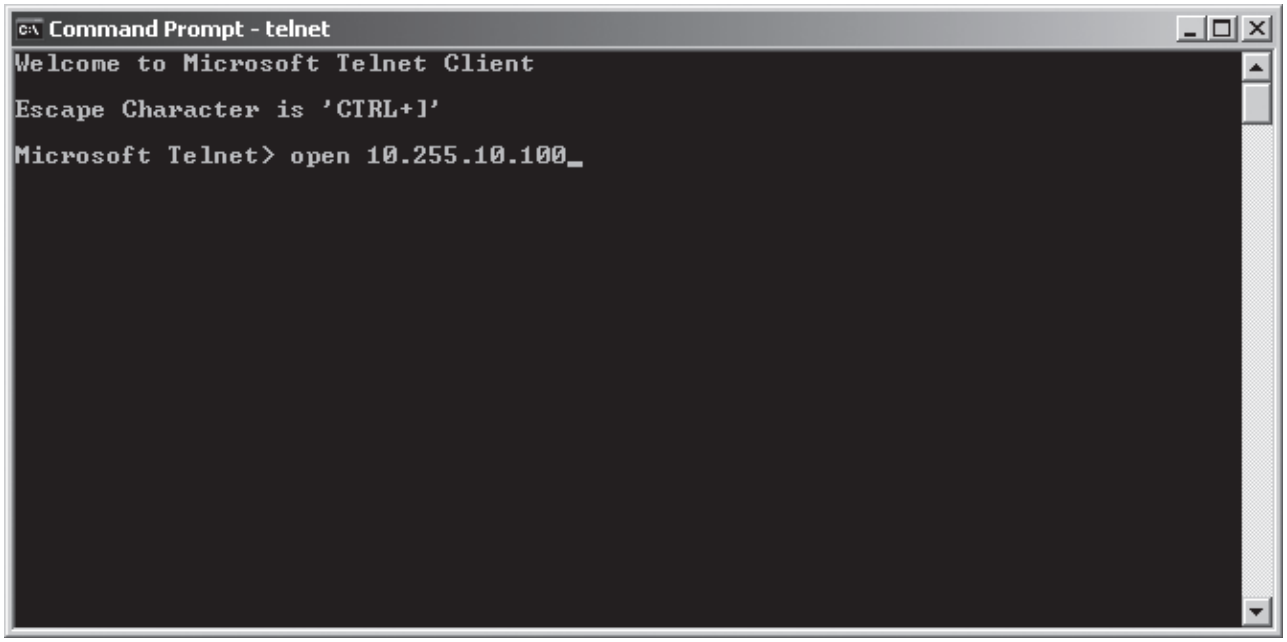

(Cont'd)

(Cont'd)

e) When connected type `VERSION` to check the firmware version:

if the version is:

- 1.35.01 or newer, no action is required
- older than 1.35.01, proceed to upgrade the firmware.

f) Type `QUIT` to exit the `TELNET` application.

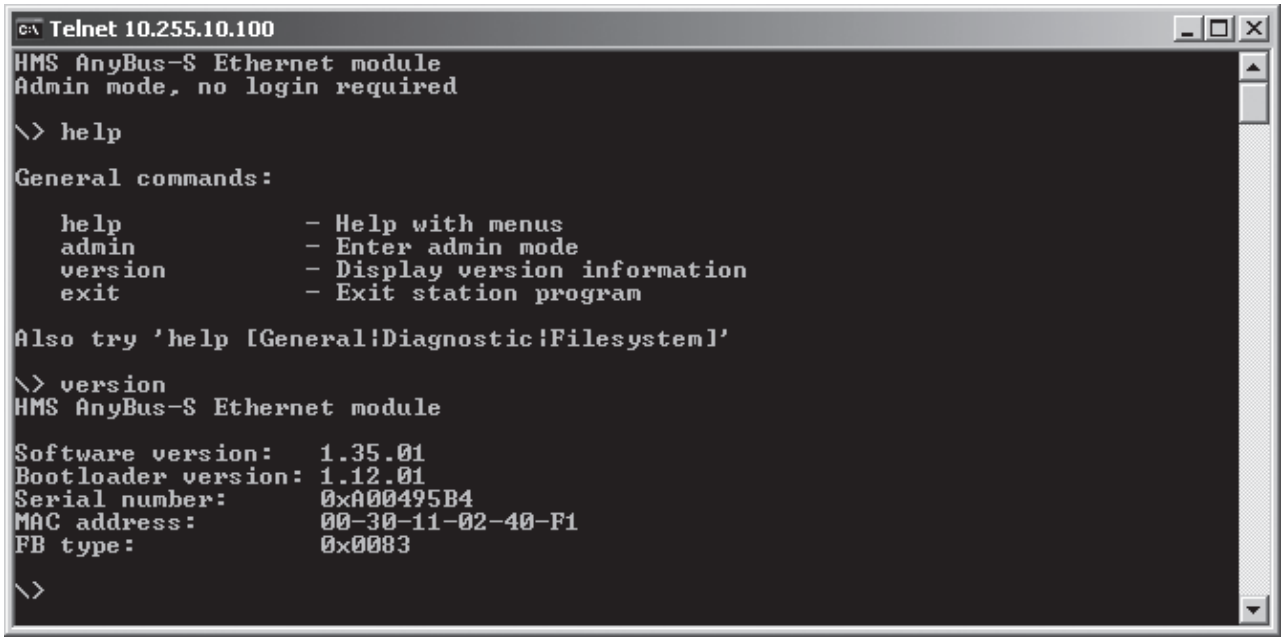

(Cont'd)

(Cont'd)

g) Copy the firmware file `APP_ABS_ETN100_DMP_V_1_35_01.HMS` from the software USB key (or software CD) to the root directory of the drive `C:\`.

h) In the `COMMAND PROMPT` window, type `FTP` (File Transfer Protocol).

i) Type `OPEN 10.255.10.100` to establish the connection to the EtherNet board.

j) When prompted for a user name press ENTER key.

k) Type `SEND C:\APP_ABS_ETN100_DMP_V_1_35_01.HMS`.

l) After the file has been transferred, type `CLOSE` to quit the `FTP` window.

m) Switch off the TMCC2 card. At next power up the firmware upgrade will be automatically executed.

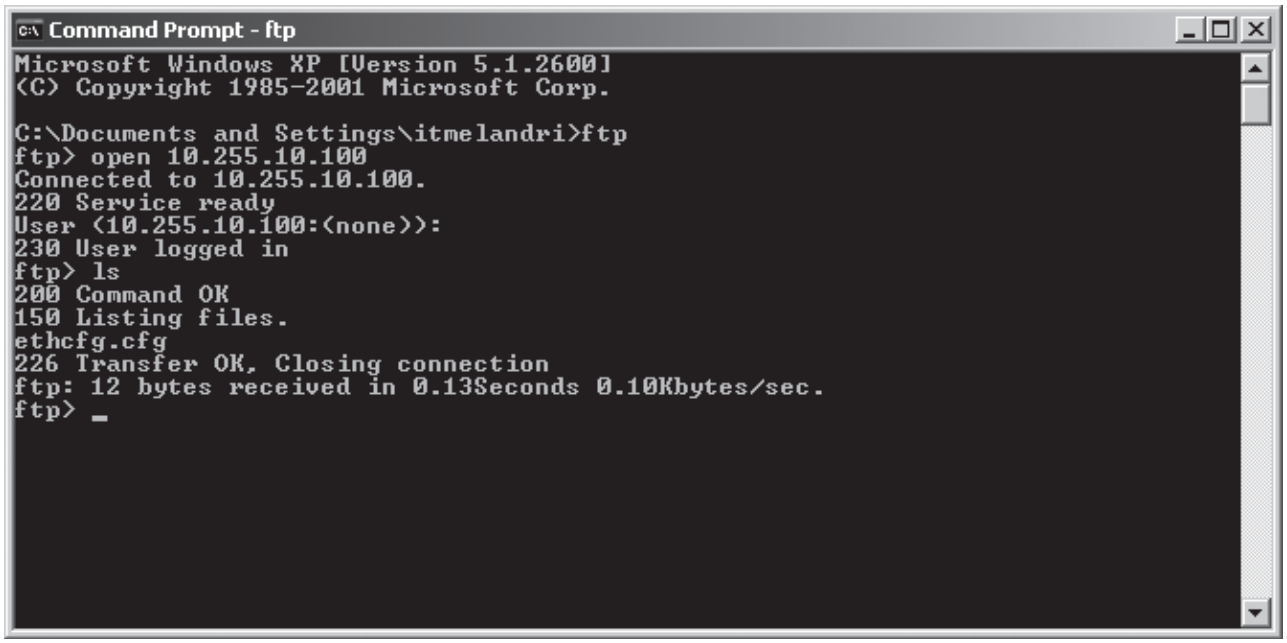

8.9 TPIH

8.9.1 TPIH - Description

The TPIH 2500 generators are used for:

- TS - transversal sealing (T40G0010)

The pulse duration is controlled by the PLC program. The power level is set via the HMI on the TPOP display. The generator is supplied with three phase, 400 V AC and 24 V DC.

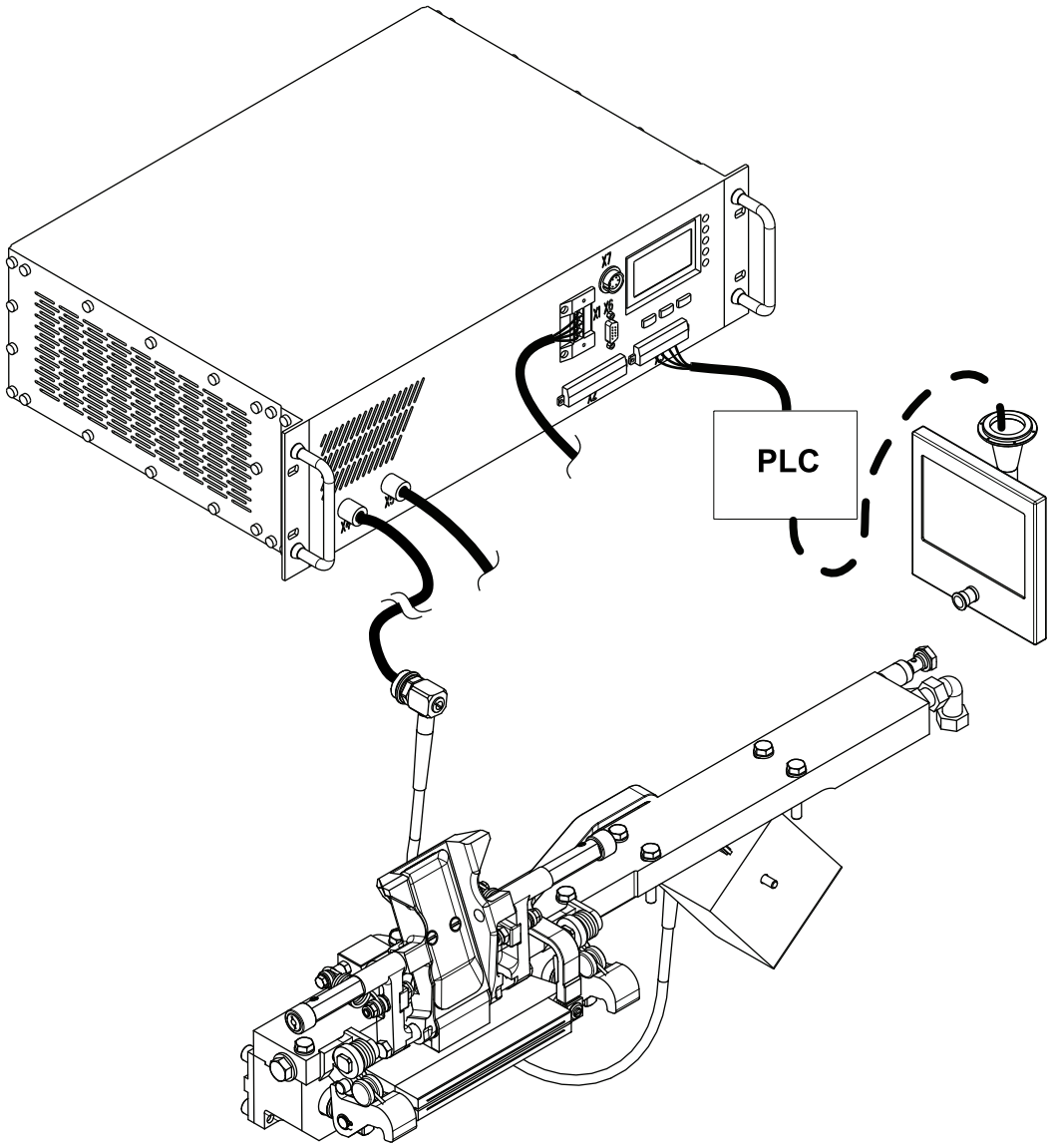

(Cont'd)

(Cont'd)

Each TPIH-2500 system comprises:

- TPOP (1)
- TPIH 2500 generator (2)
- coaxial cable (3)
- impedance transformer (4).

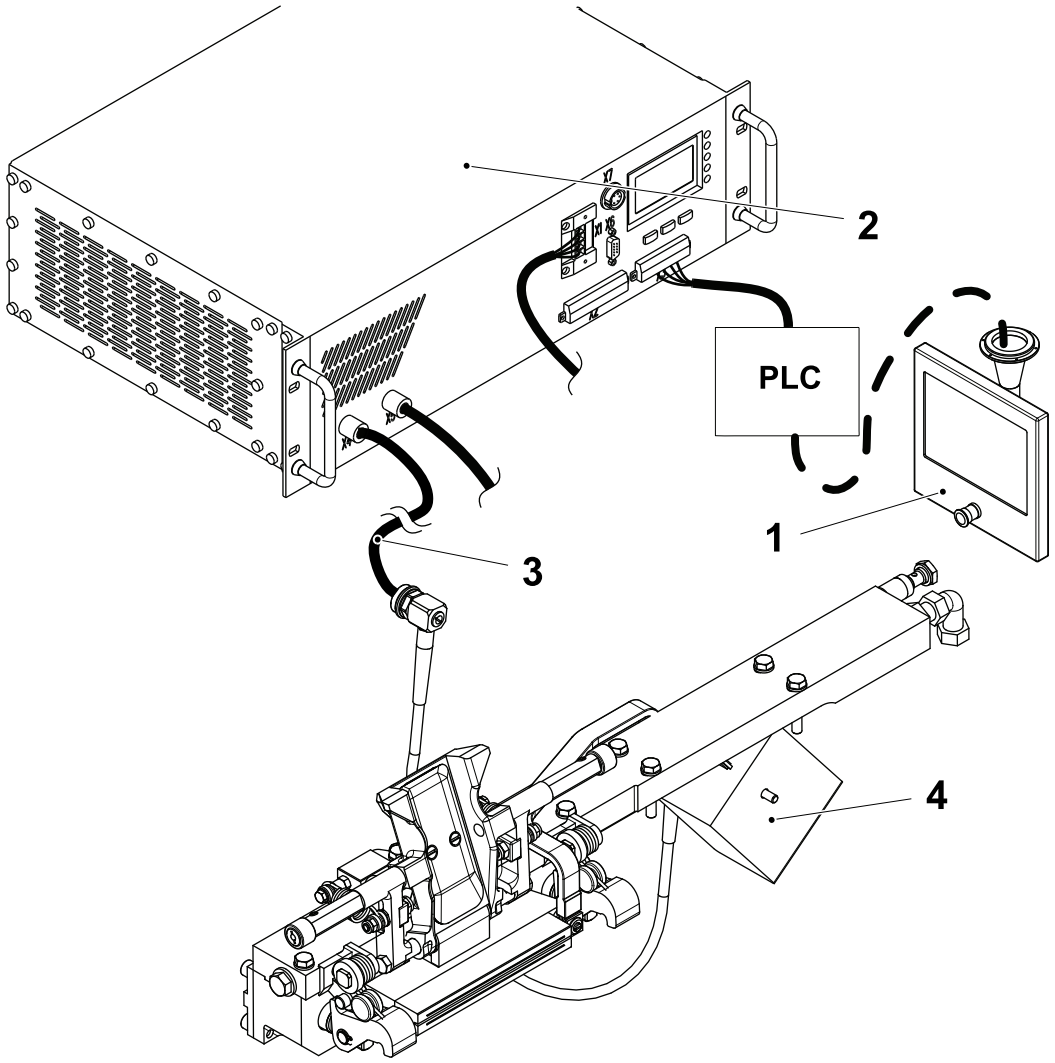

1 TPOP
2 TPIH 2500 generator
3 Coaxial cable
4 Impedance transformer

(Cont'd)

(Cont'd)

The TPIH 2500 generator comprises:

- output 1 X4 (5)
- output 2 X5 (6)
- serial connection X6 (7)
- 24 V connection X3 (8)
- 400 V connection X1 (9)
- multi functional buttons (10)
- status LED's (11)
- LCD display (12)

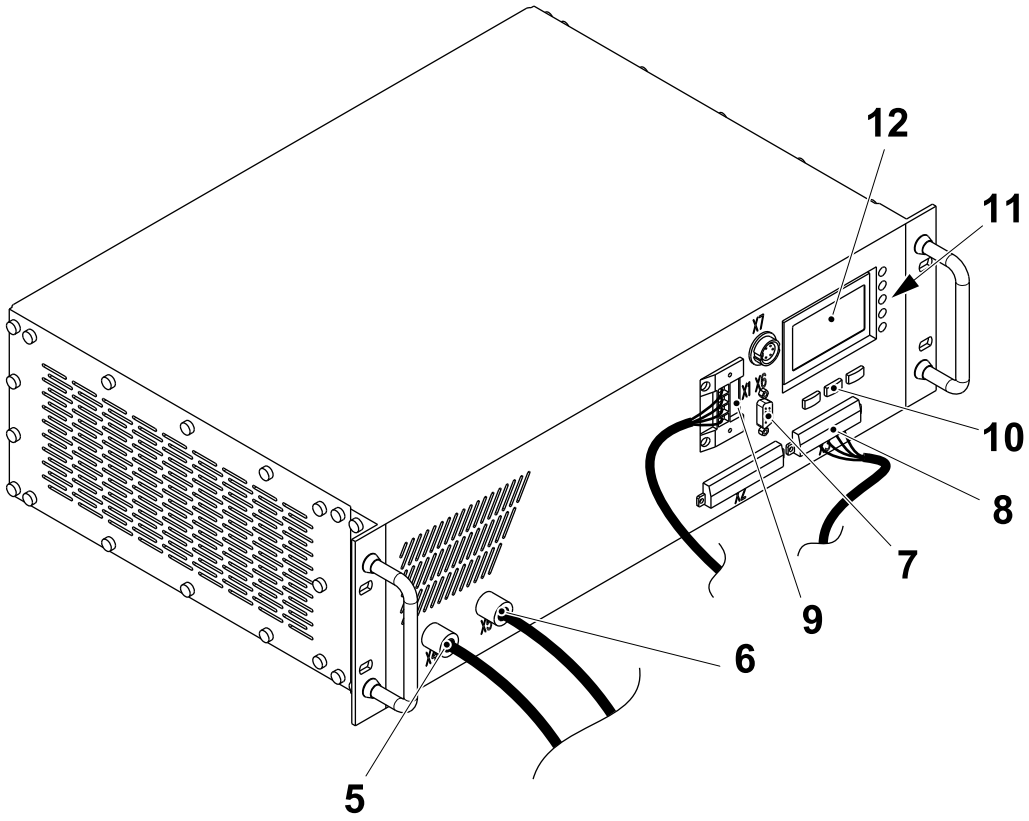

5 Output 1 X4	9 400 V connection X1
6 Output 2 X5	10 Multi functional button
7 Serial connection X6	11 LED
8 24 V connection X3	12 LCD display

8.9.2 IH Equipment

8.9.2-1 IH Equipment - LCD Display

User Menu

The TPIH 2500 provides the user with an easy way of accessing information and making settings via a menu that appears on the display.

A generic page normally consists of three parts:

- the top row that shows the page title
- the following six rows that show either commands or information
- the bottom row that shows the actions performed by the buttons. The symbol or word above each button explains which action is performed when that button is pressed.

The page on the left has a list of possible commands. The currently selected command is displayed in the reverse mode (white on black).

Pressing the left ARROW button selects the command below the current selection (in this case `SEALING VALUES`), whereas pressing the right ARROW button selects the command above the tomorrow current selection.

When the OK button is pressed, the command selected at that moment is executed.

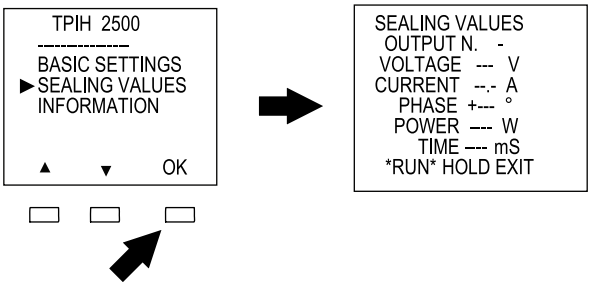

To access the page with the sealing values, do the following:

- on the main page, press the left ARROW button to select the command `SEALING VALUES`
- then press the OK button to execute the command.

The requested page is shown on the screen.

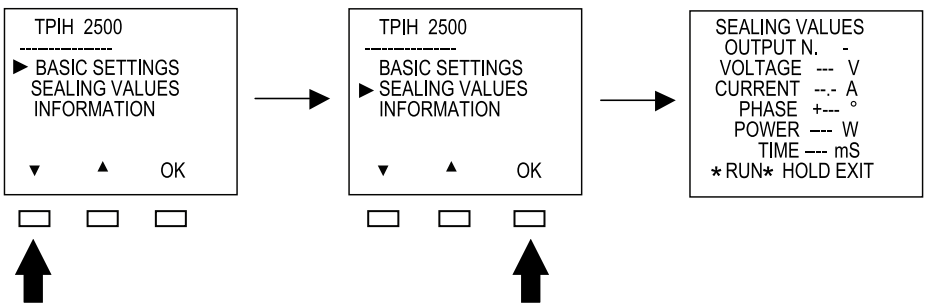

(Cont'd)

(Cont'd)

The page SEALING VALUES is an example of a page that shows information instead of commands.

It is always possible to see what the buttons will do by reading the bottom line. Every time a button is pressed the LCD back light turns on and, when no other button is pressed, turns off after approximately ten seconds.

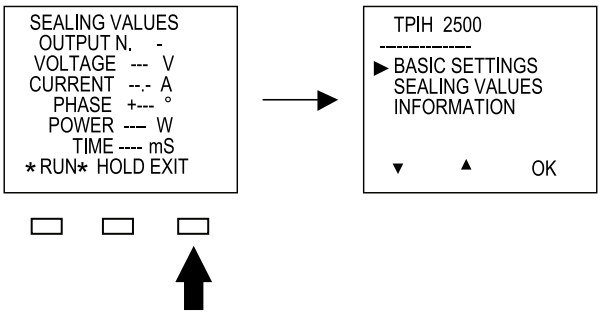

(Cont'd)

(Cont'd)

Menu Structure

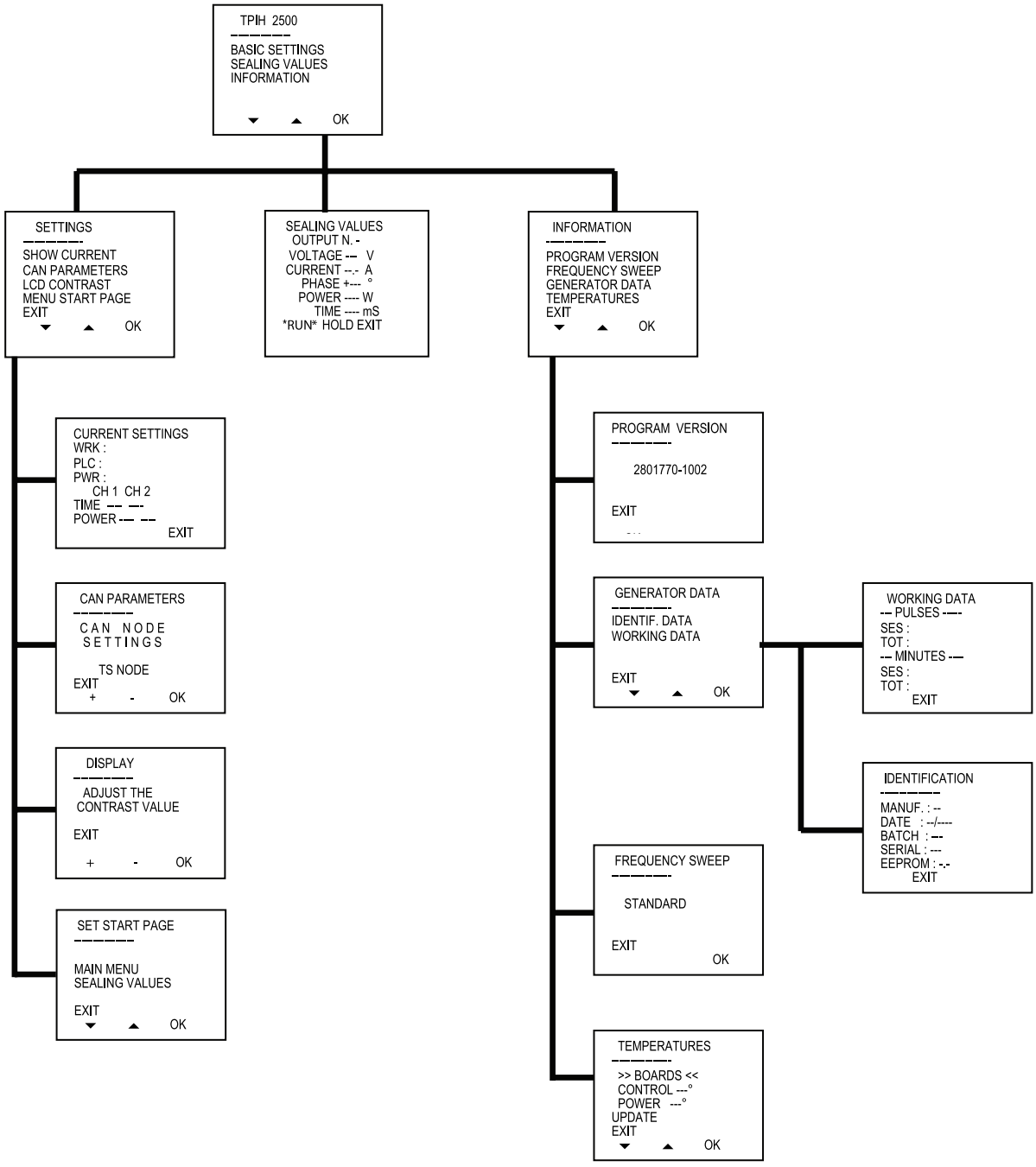

(Cont'd)

(Cont'd)

Basic Setting

From this page it is possible to access all basic settings of the generator.

SHOW CURRENT shows the current settings related to working mode, PLC mode and power setting mode.

CAN PARAMETERS allows the user to select the CAN node of the generator for field bus communication.

LCD CONTRAST allows the user to regulate the display contrast to increase the readability.

MENU START PAGE defines which page has to be used as the start page when the generator is powered on. It is possible to choose between the main menu page and the "Sealing Values".

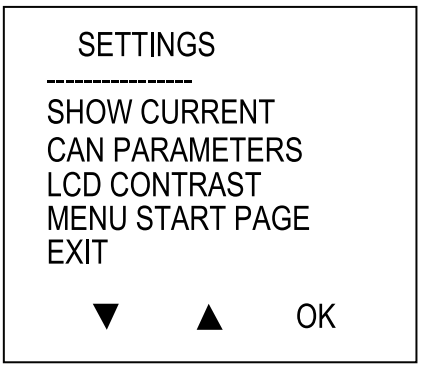

8.9.2-2 IH Equipment - LED Description

Machine Status	Electrical supply disconnecting device in position I (ON)

DANGER

Hazardous voltage.
When the 400 V AC (2) green LED is OFF there can be still one or two phases present on the connector X1.

(Cont'd)

(Cont'd)

LED	Colour	Description
+24 V DC (1)	Green	It is ON when the 24 V supply is present. It is OFF when there is no 24 V.
400 V AC (2)	Green	It is ON when ALL three phases are present. It is OFF when AT LEAST one of the three phases is missing.
Error (3)	Red	It is ON when one or more errors have occurred. When this is case, the technician can read which errors have occurred on the LCD display. It is OFF when there are no error conditions.
Out 1 (4)	Green	It is ON when the generator is sending power through output 1 It is OFF when output 1 is inactive.
Out 2 (5)	Green	It is ON when the generator is sending power through output 2 It is OFF when output 2 is inactive.

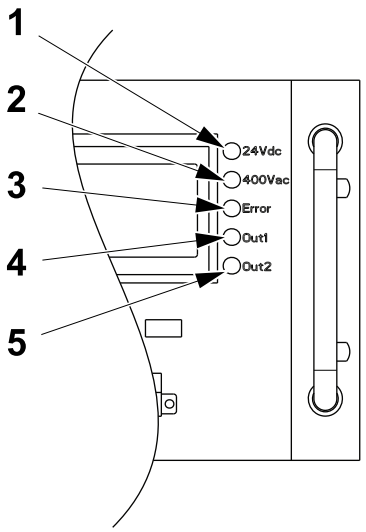

1 +24 V DC LED
2 400 V AC LED
3 Error LED
4 Out 1 LED
5 Out 2 LED

8.9.2-3 IH Equipment - Error Handling

Machine Status	PRODUCTION
Special Equipment	Test Instrument, TP No. 68462-0101

DANGER

Hazardous voltage.
The TPIH generator **must not** be opened. Doing so may cause shock, burns or even death. In case of an accident, immediately call for medical advice.

When the generator is producing power, it controls and monitors many parameters. When an error occurs, it stops the pulse and shows the cause of the error on the LCD display. The red LED on the front panel also turns ON.

An error can be reset by pressing one of the multi-functional buttons.

Power Setting Too Low

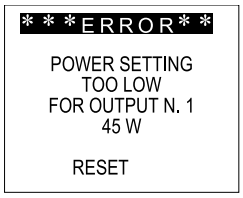

This error occurs when the generator is required to produce less power than the minimum level.

On the display the user can see on which channel the problem has occurred (in this case n. 1). The display also shows what was the power level read by the generator (in this case 45 W that is below the minimum level which is 200 W).

Usually, when this error occurs, the problem is related to the power setting potentiometer of the channel shown in the error message.

It is possible that the potentiometer is not supplied with 10 V DC by the generator on pin 8 of connector X3 or the voltage from the central contact of the potentiometer does not reach pins 1 or 2 (depending on the channel) of connector X3. This means that:

- the generator is faulty and must be replaced, or
- the +10 V DC to the potentiometer is missing, or
- the potentiometer setting is below the minimum value of 100W, or
- the potentiometer is broken (the output voltage from the potentiometer does not follow the movement of the potentiometer slider).

(Cont'd)

(Cont'd)

One or More Phases Are Missing

DANGER

Hazardous voltage.
When this error occurs there can be still at least one ACTIVE phase present on the connector X1.



This error occurs when 1 or more phases are either not present at all or are absent for at least 100 milliseconds (power supply hole).

When this error occurs, check that the connector X1 is plugged correctly into the generator and, when that is the case, check that the fuses for the 400 V AC of the generator are OK.

Temperature Too High

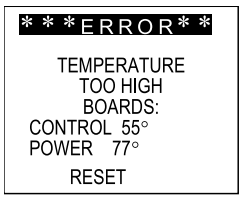

This error occurs when the temperatures inside the generator become too high.

The limits are:

- 60° for the control board
- 70° for the power board.

On the display the user can see the temperature of the two boards. The error can occur when:

- the cooling fan inside the generator is not working
- the ambient temperature is above 50°C.

Change the generator if the fan does not operate.

(Cont'd)

(Cont'd)

The Load Impedance Is Too High

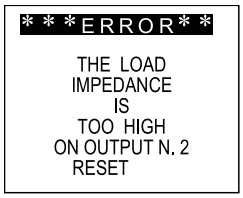

This error occurs when the generator is not able to deliver the required power because the load impedance is too high (tends to be an open circuit).

In this case the suggestion is to check all of the connections from the generator to the inductor looking for bad contacts, loosened connectors or broken cables.

When a single output is used, make sure that the load is connected to the correct output.

When both outputs are used make sure that they have not been swapped by mistake. The error can occur when:

- there is an open circuit in the coaxial cable, a busbar, an inductor or the impedance transformer
- no pressure is applied to the inductor
- the wrong type of impedance transformer is installed
- the wrong type of inductor is installed.

See 8.9.2-4 IH Equipment - Check Function.

The Load Impedance Is Too Low

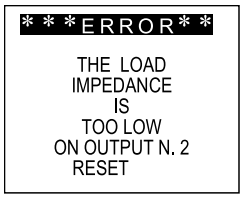

This error occurs when the generator is not able to deliver the required power because the load impedance is too low (tends to be a short circuit).

In this case the suggestion is to check all of the connections from the generator to the inductor looking for a short circuit in the connectors or in the cables. The error can occurs when:

- there is a short circuit in the coaxial cable, a busbar, an inductor or the impedance transformer.

See, 8.9.2-4 IH Equipment - Check Function.

(Cont'd)

(Cont'd)

Phase Shift Too Big

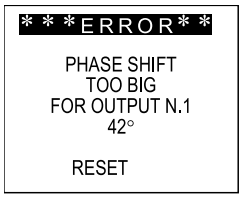

This error occurs when the load has a phase shift >+60° or <-60°.

On the display the user can see on which channel the problem has occurred (in this case n. 1). The display also shows the degree of phase shift read by the generator (in this case 42°).

Typical causes are:

- a damaged inductor
- a damaged transformer
- the incorrect positioning of the inductor with respect to the packaging material.

See, 8.9.2-4 IH Equipment - Check Function.

Over Voltage

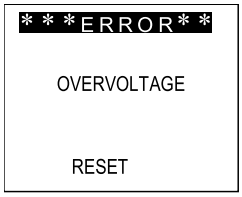

This error occurs when the voltage becomes too high between the two main power stages of the generator.

A possible cause is the failure of the generator.

If the error persists change the TPIH generator.

Error for Power on the Load Too Low

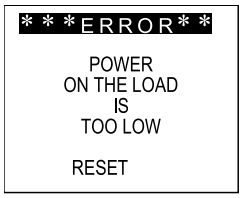

This error occurs when the output power on the load is too low. A possible cause is the failure of the generator.

(Cont'd)

(Cont'd)

Not Initialized EPROM



This error occurs when the generator is turned ON there is a failure in the test of EEPROM.

In this case all the default values and parameters are set:

- PLC mode: Driving
- power set: External.

The generator will work in these conditions. When others settings are needed they must be entered from the display or from the PC through the serial communications link.

When the error persists change the TPIH generator.

Watchdog Reset



This error occurs when the generator is reset by itself because of internal problems. When this happens, the generator keeps the previous parameter settings and can continue to work, after it has been reset, provided that the problem no longer exists.

When the error persists change the TPIH generator.

8.9.2-4 IH Equipment - Check Function

Machine Status	PRODUCTION
Special Equipment	Test Instrument, TP No. 68462-0101

When a load error occurs the Error LED (1) is ON and the IH generator is unable to transmit the correct pulse due to a faulty load caused by one of the following:

- short circuit in a coaxial cable, busbar inductor or impedance transformer
- open circuit in a coaxial cable, busbar, inductor or impedance transformer
- no pressure applied to the inductor
- wrong type of impedance transformer installed
- wrong type of inductor installed.

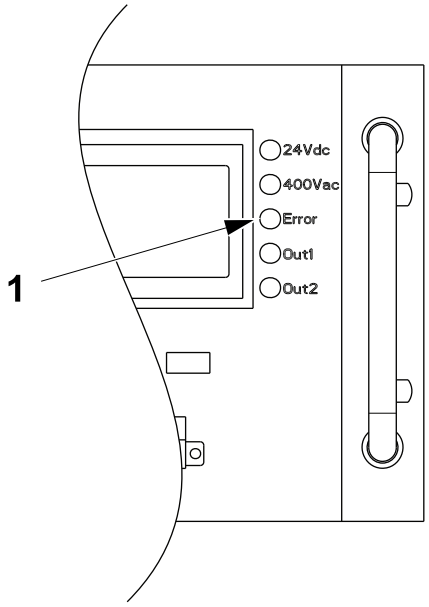

1 Error LED

(Cont'd)

(Cont'd)

Check IH Equipment

The origin of load errors maybe located with the aid of the test instrument (2). To check the IH equipment, proceed as follows:

a) Perform a SHORT STOP.

b) Connect the test instrument (2) between the IH generator (3) and the transformer (4) as indicated in the illustration.

c) Step up the machine to step PRODUCTION.

d) Measure and record the values for the; voltage, current, phase angle and pulse time within the same pulse. Use the switch (5) to select the different parameters.

Note! With a load problem only short pulses are delivered by the generator. During the entire pulse the sample LED (6) is ON, while the pulse LED (7) is OFF.

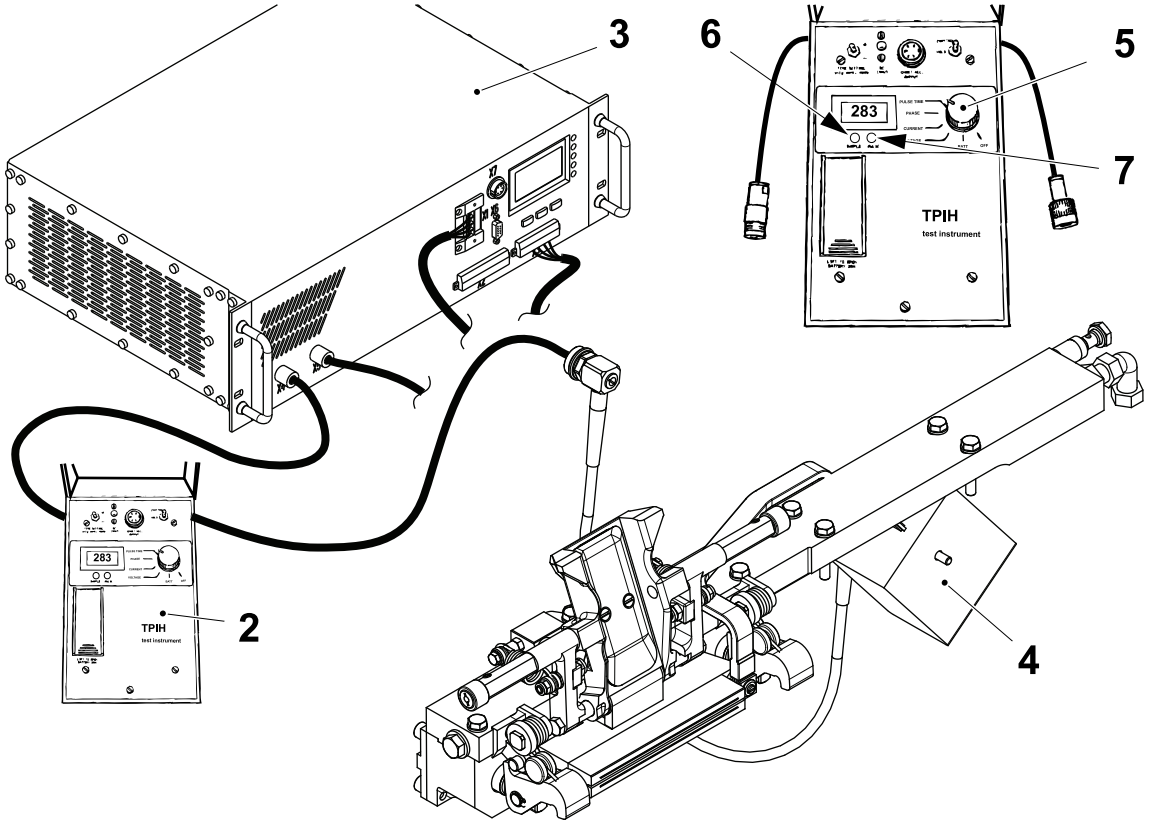

2 Test instrument
3 IH generator
4 Transformer
5 Switch
6 Sample LED
7 Pulse LED

(Cont'd)

(Cont'd)

e) Compare the values recorded with values in the table.

Repeat the procedure for the other inductors.

Load examples	Phase angle	Voltage/Current
Optimal load	0°	50 Ω
Normal load	±15°	40 to 65 Ω
Short circuit in the coaxial cable, contacts or primary of the IH transformer	pos (3)	1 to 10 Ω (1)
Open circuit in the coaxial cable, contacts or primary of the IH transformer	neg (3)	200 to 2000 Ω (2)
Short circuit in the inductor, current rail or secondary of the IH transformer	pos	10 to 20 Ω
Open circuit in the inductor, current rail or secondary of the IH transformer	neg	2 to 5 Ω
No packaging material on the inductor	neg	5 to 15 Ω

Note! 1) Greater value = greater distance between the problem and the instrument.

Note! 2) Greater value = shorter distance between the problem and the instrument.

Note! 3) Greater phase difference = greater distance between the problem and the instrument.

Test Instrument TP No. 68462-0101

The TPIH test instrument is used to check the available output power from the IH generator as well as the condition of the coaxial cable, the impedance transformer, the current rail and the inductor. The test instrument is connected in series with the coaxial cable from the generator.

Note! Use the SHORT STOP procedure to prevent the generator from pulsing when the instrument is connected or disconnected. announcement

(Cont'd)

(Cont'd)

The instrument can be used for the measurement of the following parameters:

- HF voltage (V)
- HF current (A)
- phase shift voltage/current (degrees)
- pulse duration.

The results of these measurements can be used to calculate the available HF power. The instrument simplifies the work involved when trying to locate the source of a problem.

One 9 V battery is used for the instrument and an automatic power-off function is provided to minimize battery consumption. A test outlet is provided for the connection of a printing device such as a Gould recorder.

A print-out showing the HF voltage, the HF current and the phase shift as a function of time can be produced. The instrument kit contains complete operating instructions as well as a printer cable and a battery eliminator (mains adapter).

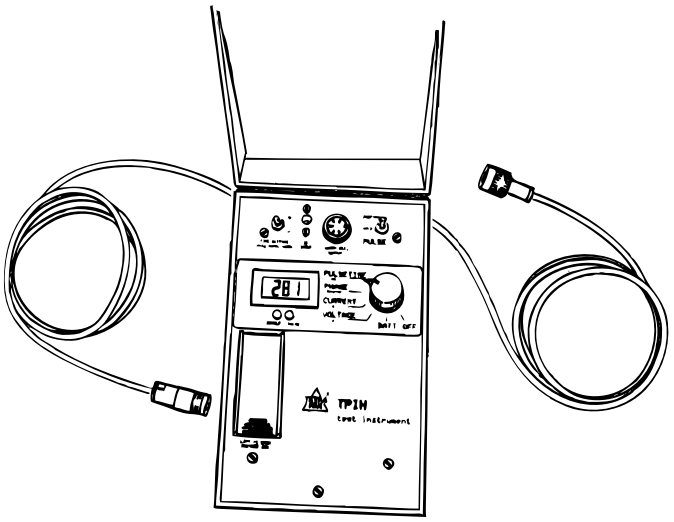

8.9.2-5 IH Equipment - Check Cables

Machine Status	Electrical supply disconnecting device in position O (OFF) Main air valve OFF Main steam valve ON Main water valve OFF
SPC Reference	2840935-0200

Check for wear and damage that can affect machine efficiency in the following:

- the coaxial connectors (1), make sure that there is no moisture between the male connector and the female connector
- the rubber gasket in the impedance transformer (2), make sure that it seals properly
- the coaxial cables (3), make sure that the cables are flexible and that there are no cracks where they bend
- the busbar (4), check the rubber seal and the flat seal. Make sure that there are no signs of damage
- the impedance transformer (2). Make sure that there is no water/product residue inside the impedance transformer (2).

Clean or change if necessary.

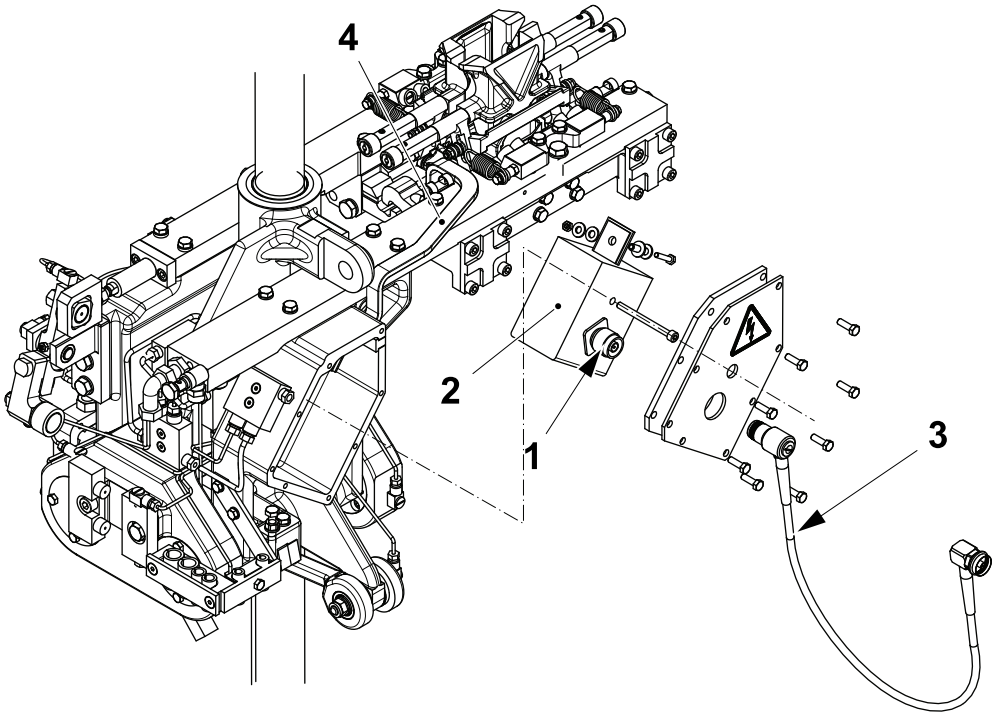

1 Coaxial connector
2 Impedance transformer
3 Coaxial cable
4 Busbar

8.9.2-6 IH Equipment - Change Generator

Machine Status	Electrical supply disconnecting device in position O (OFF) Main air valve OFF Main steam valve ON Main water valve OFF

DANGER

Hazardous voltage.
Will cause shock, burns or even death.
Do not open the generator. Perform the lockout procedure before starting any work.

(Cont'd)

(Cont'd)

a) Make sure that the electrical supply disconnecting device is in the position "O" (OFF) and that it has been padlocked.

b) Remove the connectors X1 (1) and X3 (2).

c) Remove the coaxial connector X4 (3). For the generator A500, also remove the coaxial connector X5 (4).

d) Change the generator (5).

e) Assemble in the reverse order.

f) Set the CAN settings, see 8.9.2-8 IH Equipment - Set CAN Communication.

Note! Send the generator (5) to the nearest Tetra Pak service station for cleaning or service.

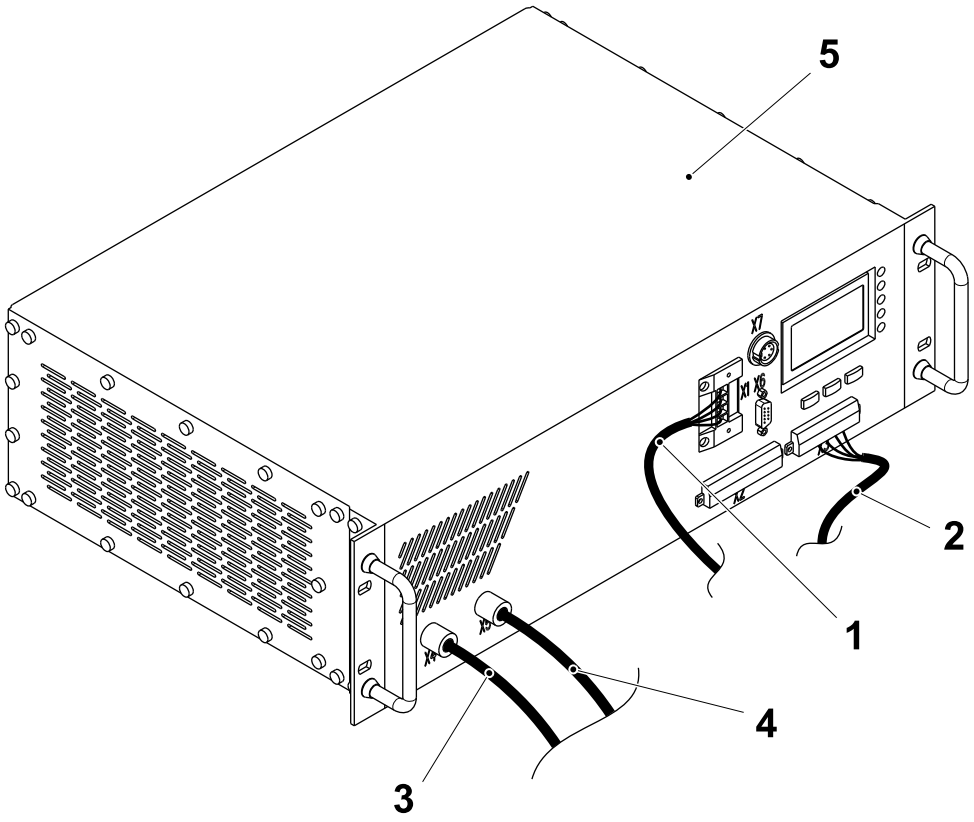

1 Connector X1
2 Connector X3
3 Coaxial connector X4
4 Coaxial connector X5
5 Generator

8.9.2-7 IH Equipment - Set Sealing

Local conditions such as packaging material being used in production, the environmental temperature of the filling room and other factors can influence the TS sealing and can result in the need for power adjustment.

The correct power settings can only be determined through evaluating the TS sealing as described in the checks section in the filling machine's Operator Manual.

Transversal Sealing

a) On the TPOP display touch the `PRODUCTION CONTROL` button (1).

b) Touch the `PACKAGE FORMING UNIT` button (2).

c) Touch the `SEALING POWER` icon (3).

d) Change the `SEALING VALUE` (4) with the `ARROW` buttons (5).

e) Touch the `OK` button (6).

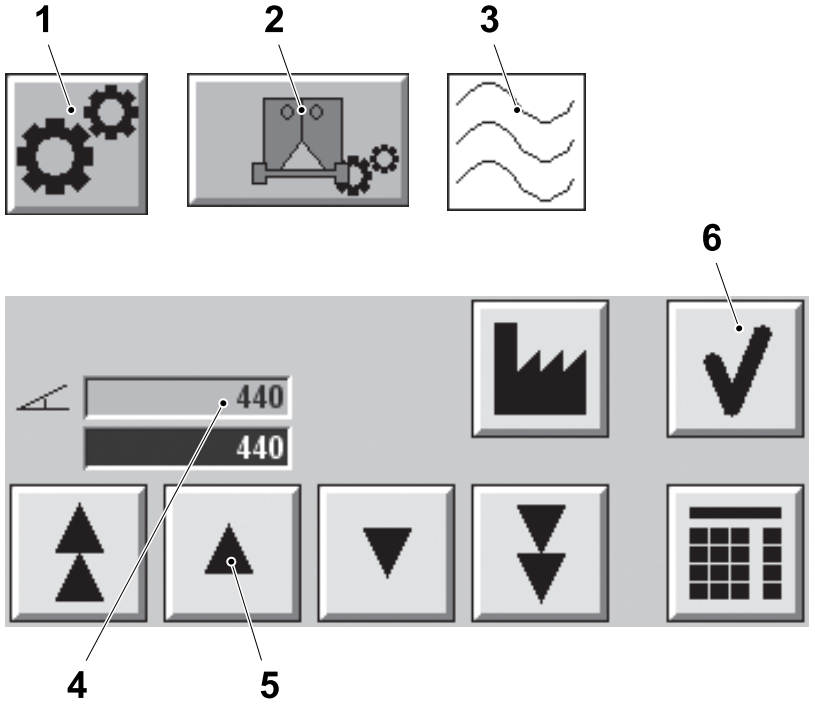

1 Production control button
2 Package forming unit button
3 Sealing power icon
4 Sealing value
5 Arrow button
6 OK button

8.9.2-8 IH Equipment - Set CAN Communication

Machine Status	Electrical supply disconnecting device in position I (ON) Main air valve OFF Main steam valve ON Main water valve OFF

The TPIH 2500 generators are connected to a CAN bus together with the two TMCC2 cards U70K0380 and P60K4030. This network is used to monitor the sealing quality. See section 8.8 TMCC2 Controller for details on the sealing monitoring.

Each TPIH 2500 generator should be assigned a unique node name. Recognized node names are: TS and PT.

Select the appropriate node name for the generators by means of the TPIH 2500 display keyboard.

a) Use the ARROW buttons (1) to select BASIC SETTINGS and press the OK button (2).

b) Select CAN PARAMETERS and press the OK button (2).

c) Select the appropriate node name with the +/- buttons (3) and press the OK button (2) to store the selected name.

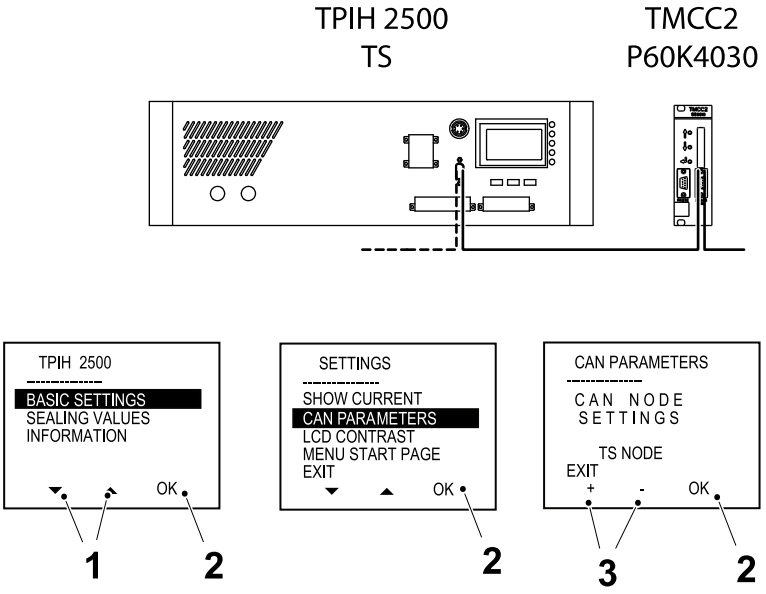

1 ARROW button
2 OK button
3 +/- button

8.9.2-9 IH Equipment - Load Firmware

Machine Status	Electrical supply disconnecting device in position I (ON) Main air valve OFF Main steam valve ON Main water valve OFF
Special Equipment	Communication Cable RS 232-C Laptop PC

CAUTION
Internal memory damage.
Disconnecting the 24 V auxiliary voltage during download can damage the internal memory.

CAUTION
Possible CAN BUS error.
Remember to set the CAN BUS node of each TPIH 2500 unit after the firmware has been downloaded.

Checking the Firmware Version

The latest release of the firmware for the TPIH 2500 is:

- 3018844-1001.128 for TPIH generator TP No. 1499642-0301.

(Cont'd)

(Cont'd)

The version of the firmware in the TPIH 2500 can be checked as follows:

- by scrolling through the menus (`MAIN MENU→INFORMATION→PROGRAM VERSION`) on the TPIH 2500 with the button (1) and reading the firmware version on the display (2).

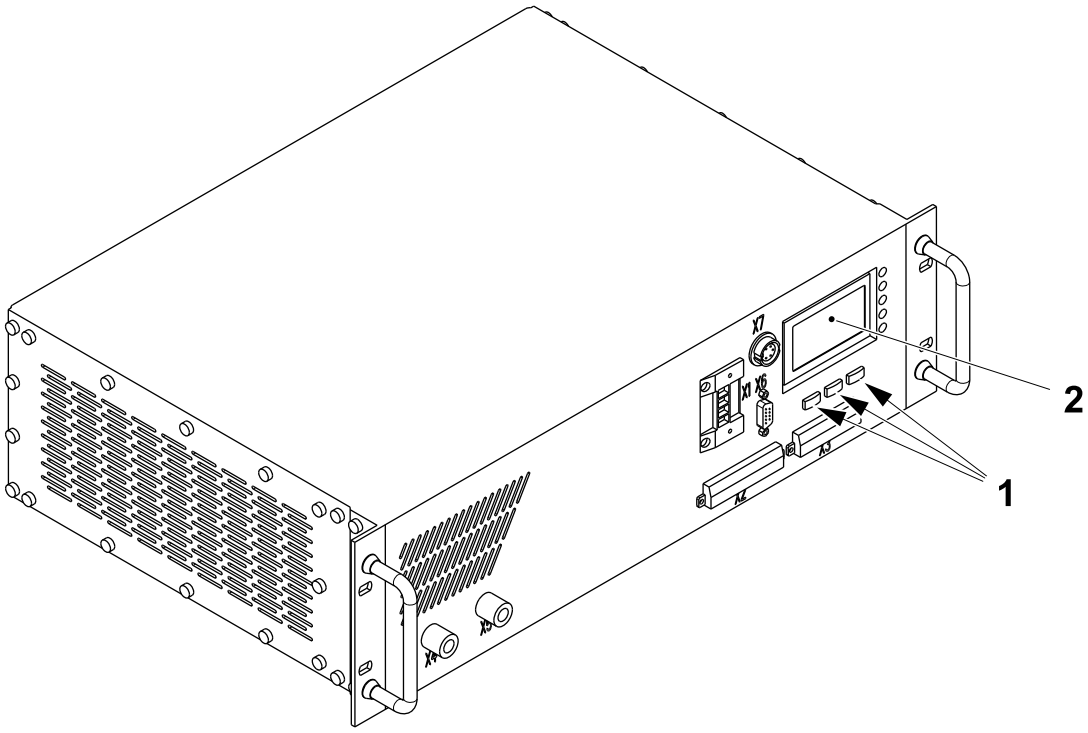

1 Button
2 Display

(Cont'd)

(Cont'd)

- by connecting the PC to the serial connection (3) and using the TERMINAL.EXE program as follows:
  a) open the configuration `TERMINAL.TRM`
  b) from the menu select `FILE` then `OPEN` then select `TERMINAL.TRM`
  c) type `H` and the press ENTER.
  d) The main menu of the terminal program appears with the version of the firmware displayed.

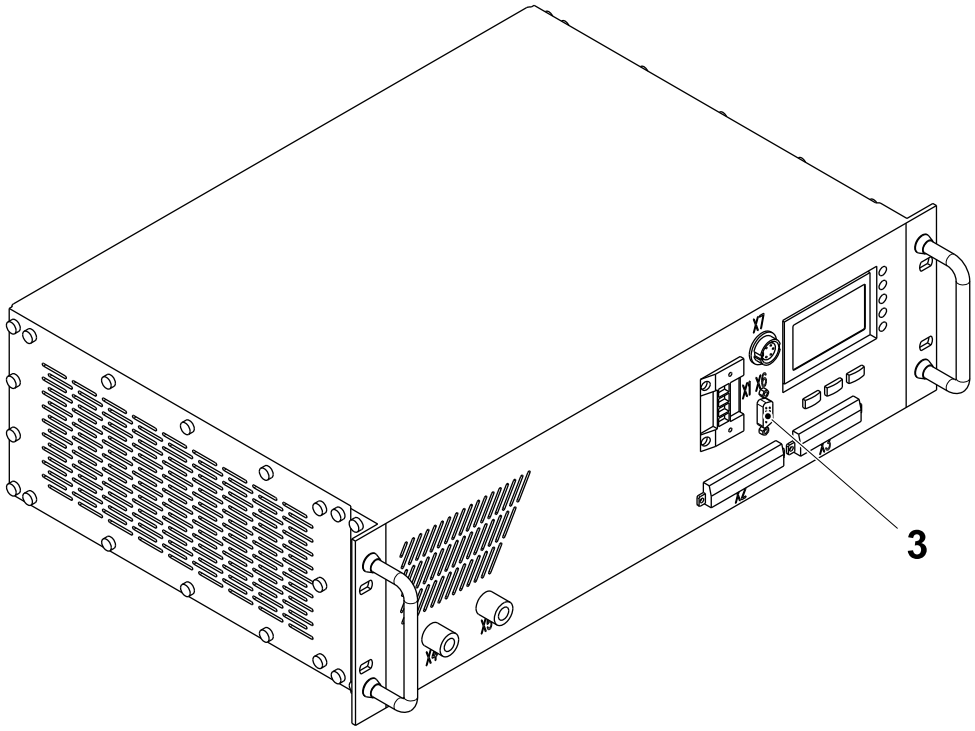

3 Serial connection

Downloading the Firmware

Note! Windows Hyper Terminal is not suitable for downloading the firmware.

The firmware can be downloaded using `TERMINAL.EXE` or the `TMCC2TRM.EXE` programs.

(Cont'd)

(Cont'd)

Preparation

Before starting to download the firmware:

a) Turn the electrical supply disconnecting device to the position O (OFF).

b) Disconnect the 440 V supply connector (1) from TPIH 2500.

c) Connect the laptop PC to the TPIH 2500 with the serial link (2).

d) Turn the electrical supply disconnecting device to the position | (ON), this provides the TPIH 2500 with the 24 V DC it needs to download the firmware.

e) Press simultaneously the three buttons (3) under the display (4) on the front panel (Tetra Pak logo will appear).

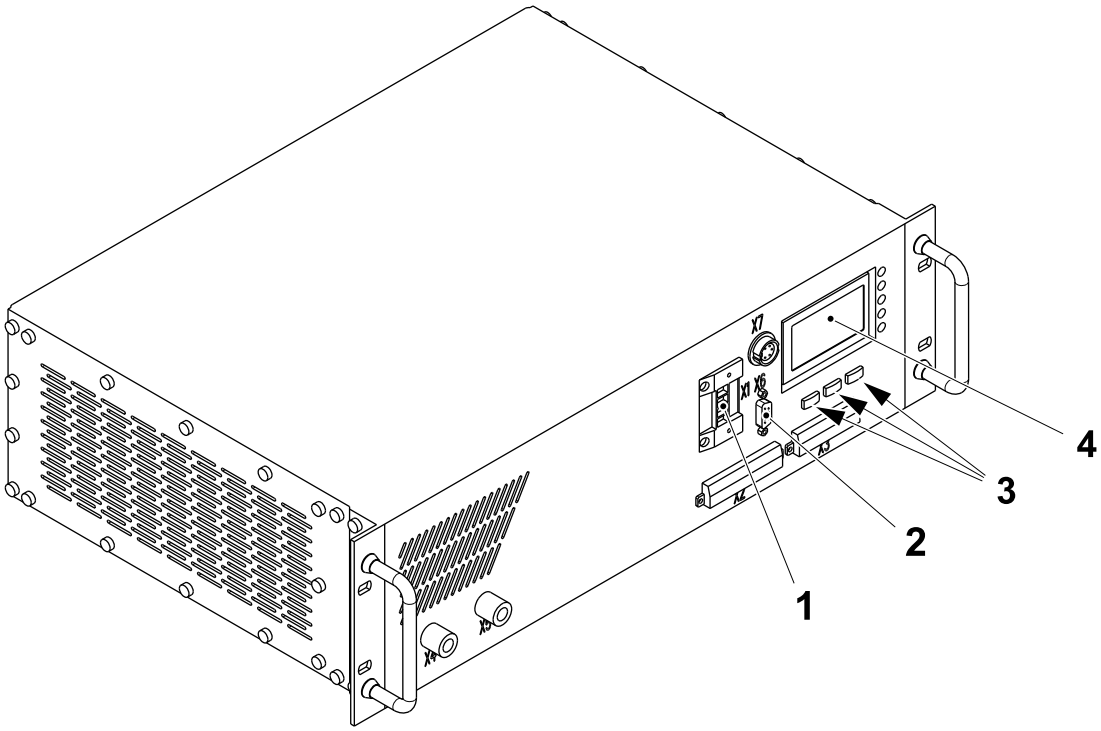

1 Supply connector
2 Serial link
3 Button
4 Display

(Cont'd)

(Cont'd)

Using TERMINAL.EXE

a) Start TERMINAL.TRM:
   - from the menu select FILE then OPEN and then select TERMINAL.TRM.

b) Verify the communication:
   - press ENTER., the FIRMWARE prompt must appear.

c) Enable the program mode:
   - press PROGRAM MODE on the terminal window.

d) Erase the memory:
   - press ERASE FLASH on the terminal window
   - wait until DONE appears.

e) Download the firmware:
   - Insert the software USB key containing the firmware into a laptop PC USB port

     Note! If a software CD has been supplied, insert the software CD into the laptop PC CD drive.
   - from the TERMINAL.TRM menu select TRANSFER and then SEND TEXT FILE; select the ALL FILE *.* option from the LIST FILES OF TYPE menu
   - browse the drive and select the file 3018844.XXXX.128 (for TPIH generator TP No. 1499642-0301) in the folder "TPIH", then press OK (XXXX represents the firmware version number)
   - wait until the download is finished (5-6 minutes).

f) Restart the generator:
   - enter the digit G and press ENTER to restart the generator.

g) Turn the electrical supply disconnecting device to the position O (OFF).

h) Disconnect the PC from the TPIH 2500.

i) Connect the 440 V supply connector to the TPIH 2500.

(Cont'd)

(Cont'd)

Using TMCC2TRM.EXE

a) Start the TMCC2 TRM.

b) Select the SET COMM button (1).

c) Set the baud rate to 9600 and the communication port to Com1.

d) Select the OK button (2).

e) Press ENTER and make sure that the TPIH generator is in the firmware mode.

f) Insert the software USB key containing the firmware into a laptop PC USB port.

Note! If a software CD has been supplied, insert the software CD into the laptop PC CD drive.

g) From the TMCC2 TRM window select the DOWNLOAD button (3).

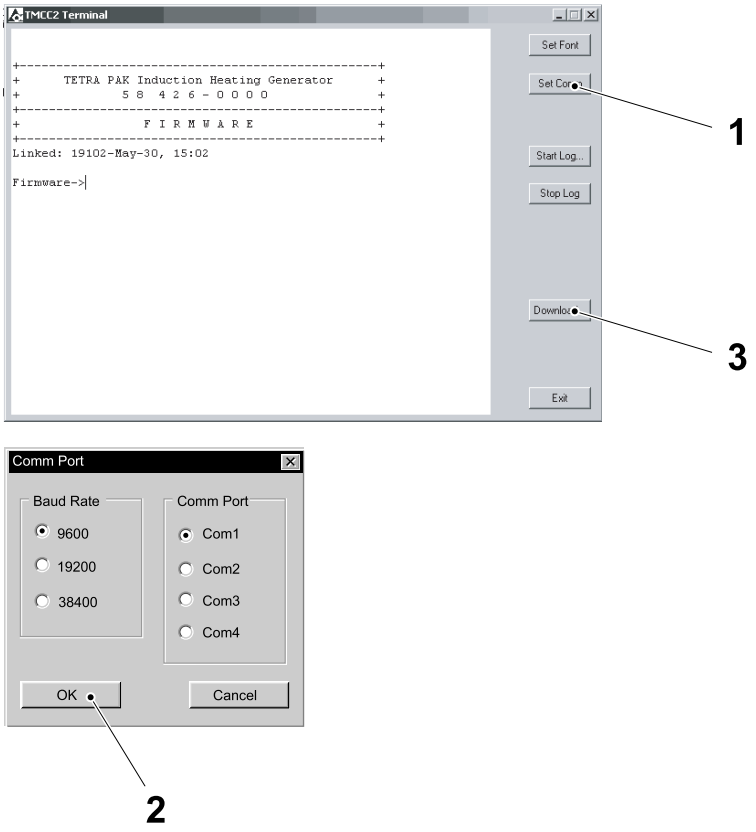

1 Set Comm button
2 OK button
3 Download button

(Cont'd)

(Cont'd)

h) Select the BROWSE button (4). Navigate to the drive and select the file:
   - 3018844.XXXX.128, for TPIH generator TP No. 1499642-0301 in the folder "TPIH" and then press OK (XXX represents the firmware version number).

i) Select the OPEN button (5).

j) Select theDOWNLOAD button (6) to erase the memory and to download the application.

k) Wait until the download is finished and then select the CLOSE button (7) to close the download window.

l) Enter the digit G and press ENTER to restart the TPIH generator.

m) Turn the electrical supply disconnecting device to the position O (OFF).

n) Disconnect the laptop PC from the TPIH 2500.

o) Connect the 440 V supply connector to the TPIH 2500.

Note! Downloading the firmware application can affect the contrast regulation of the LCD display on the TPIH front panel. See 8.9.2-10 IH Equipment - Set Display Contrast.



4 Browse button
5 Open button
6 Download button
7 Close button

8.9.2-10 IH Equipment - Set Display Contrast

Machine Status	Electrical supply disconnecting device in position I (ON) Main air valve OFF Main steam valve ON Main water valve OFF
Special Equipment	Communication Cable RS 232-C Laptop PC

a) Connect a laptop PC to the TPIH 2500 serial link connection and start the `TERMINAL.EXE` program.

b) Press the ENTER key on the PC to display the `HELP` menu and the list of available commands.

Note! "`XXX`" represents a number between 1 to 100. A high number corresponds to a darker display and a low number corresponds to a lighter display. Therefore if the display appears very dark, enter a low number. If the display is very light enter a high number.

c) Type `DC XXX` where "`XXX`" represents a number between 1 to 100. The recommended initial setting values are:

- 27 for generators with serial number 0317810139 or higher
- 95 for generators with serial number 0317810138 or lower.

8.10 Cooling System

8.10.1 Cooling Unit

8.10.1-1 Cooling Unit - Troubleshooting

Machine Status	Electrical supply disconnecting device in position I (ON) Main air valve ON Main steam valve ON Main water valve ON

CAUTION
Risk of damage to the equipment.
Only the procedures described may be performed by Tetra Pak or Tetra Pak trained customer technicians. In all other cases contact Tetra Pak.

If the cooling unit fails to operate or is operating insufficiently use the table below to determine the possible cause and actions to be taken.

Description	Possible Cause	Action
The cooling unit will not start.	No mains power supply to the cooling unit.	Check the circuit breaker and connections to the mains power supply.
Only the inside fan runs. Practically no electric consumption	The electrical cabinet internal thermostat has tripped or is wrongly set. The freeze thermostat has tripped.	Check the electrical cabinet internal thermostat and if necessary set to 35°C.
Normal operation. Insufficient cooling. High electric consumption	Condenser coil or filter dirty. Faulty condenser fan. Electric panel not properly sealed.	Check coil and air filter. Check the fans. Remove any obstacles. Close the cabinet doors.
The fan runs but the compressor does not run. Low electric consumption	Compressor internal protection has tripped probably due to too many frequent start ups or insufficient refrigerant gas	Contact Tetra Pak.
Normal operation. Low electric consumption and compressor very hot.	Insufficient or complete lack of refrigerant gas.	Contact Tetra Pak.
Compressor never stops.	Check that the thermostat contacts or any switch contacts are not stuck.	Replace the necessary faulty part.
During operation a lot of condensation forms and is drained off.	Cabinet not sealed sufficiently. Cabinet doors open. Holes in cabinet walls.	Improve the cabinet sealing. Close the cabinet doors. Fill any holes in the cabinet.

8.11 Signal Exchange

8.11-1 Signal Exchange - Configuration

Machine Status	Electrical supply disconnecting device in position O (OFF) Main air valve OFF Main steam valve ON Main water valve OFF

For instructions on how to configure the signal exchange, see the Installation Manual.

9 General

General Description

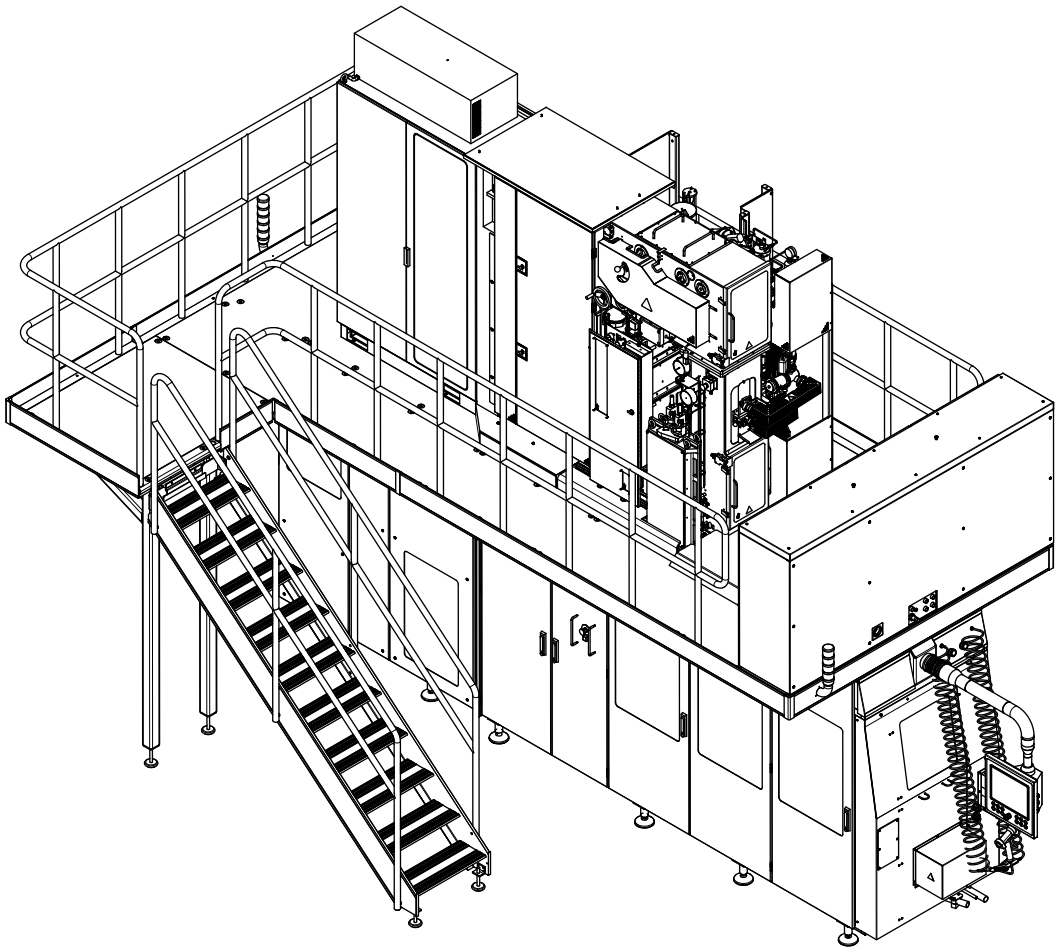

1 Technical Data
2 Template and Tools
3 Consumables
4 Safety Functions

General Description 9-2

9.1 Technical Data 9-5

9.2 Templates and Tools 9-9

9.3 Consumables 9-19

9.3.1 Lubricants 9-19

9.3.2 Cleaning Compounds 9-21

9.3.2.1 Cleaning Compound Table 9-21

9.4 Safety Functions 9-24

9.4-1 Safety Functions - Check 9-24

9.5 Protective Devices 9-25

9.5-1 Protective Devices - Check 9-25

This page intentionally left blank

9.1 Technical Data

Pressures	Unit	Value
Central lubrication oil	Bar	30
Hydraulic unit, pressure jaw	Bar	
TBA 80 S		80
TBA 100 B, TBA 125 S		85
TBA 160 S, TBA 180 S, TBA 200 S, TBA 200 M, TBA 250 S		90
TBA 200 B, TBA 250 B, TBA 330 S		100
TBA 284 B, TBA 300 S		100
TBA 200 Sq, TBA 250 Sq		100
TBA 375 S		100
TPA 125 Sq		100
TPA 200 Sq, TPA 250 Sq		90
TPA 330 Sq		100
TBA 200 E, TBA 250 E		90
Hydraulic unit, cutting jaw	Bar	
TBA 80 S		75
TBA 100 B, TBA 125 S, TBA 160 S, TBA 180 S, TBA 200 S		80
TBA 200 M, TBA 250 S		80
TBA 200 B, TBA 250 B, TBA 330 S		90
TBA 200 Sq, TBA 250 Sq		90
TBA 284 B, TBA 300 S		90
TBA 375 S		90
TPA 125 Sq		90
TPA 200 Sq, TPA 250 Sq		80
TPA 330 Sq		90
TBA 200 E, TBA 250 E		80
Flap sealing top left and right	Bar	1.0 to 2.0
Flap sealing bottom left and right	Bar	1.0 to 2.0
Air-peroxide spray container	Bar	2.5
Peroxide tank filling	Bar	0.2
Photocells jaw system (pre-set)	Bar	0.25
Pendulum roller	Bar	
TBA 80 S		1.0
TBA 160 S, TBA 180 S, TBA 200 S		2.0
TBA 100 B, TBA 125 S		2.0
TBA 200 M, TBA 250 S		2.0
TBA 200 B, TBA 250 B, TBA 330 S		3.0
TBA 200 Sq, TBA 250 Sq		2.0
TBA 284 B, TBA 300 S		2.0
TBA 375 S		2.0
TPA 125 Sq		1.0

(Cont'd)

(Cont'd)

Pressures	Unit	Value
TPA 200 Sq, TPA 250 Sq		3.0
TPA 330 Sq		2.0
TBA 200 E, TBA 250 E		2.0
Calender roller	Bar	2.0
Cooling water system	Bar	2.0
Foaming	Bar	5.0
Cleaning pump	Bar	4.0
Air	Bar	5 - 7
Warm water (red)	Bar	3 to 4.5
Cold water (blue)	Bar	3 to 5
Minimum steam supply pressure TCSB	Bar	2.0
Minimum steam supply pressure ICU (OE)	Bar	2.0
Product pressure, permitted variation during PRODUCTION	Bar	0.5 to 2.5 ± 0.1
Main air, ASU	Bar	6.0 ± 0.5
Web tension, ASU	Bar	2.0
Cooling Strip Applicator, ASU	Bar	0.6
Temperature control steam barrier	Bar	4.0
Product level regulation,anti-condensation	Bar	0.2
LS Short Stop	Bar	0.020
LS	Bar	0.028
SA Short Stop	Bar	0.08 - 0.10
SA during PRODUCTION	Bar	0.04 - 0.05
Incoming air	Bar	5.5
Incoming cooling water	Bar	1.0 to 2.0
Sterile air	Bar	0.14
Incoming water alarm	Bar	2.0
FFU Package air blower	Bar	3.5 - 4
Compressor water flow	l/min	see 1.1.2.6-3 Scrubber - Set Pressure Regulator

Temperature	Unit	Lower Limit	Process Value	Upper Limit
Heat sterilization	°C	-	280	-
Peroxide tank - Production	°C	-	79	86
Top aseptic chamber - Production	°C	70	78	110
Cooling water (compressor) - Production	°C	10	10 to 16	16
Electrical cabinet	°C	18	30 - 34	38
Flap sealing air nozzles (LH and RH top)	°C	15 less than process value		15 more than process value

(Cont'd)

(Cont'd)

Temperature		Unit	Lower Limit	Process Value	Upper Limit
Flap sealing air nozzles (LH and RH bottom)		°C	15 less than process value		15 more than process value
Steam, TCSB	Sterilization	°C	125	130	200
	Production	°C	105	110	200
	Machine OFF, Preheating, Waiting for first production, End of production and Intermediate cleaning	°C	105	110	200
Air superheater		°C	330	360	450
Cooling water (blue)		°C	NA	2 to 5	NA
Warm water (red)		°C	NA	25 - 40	NA
Air knife		°C	-	150	-

Temperature	Unit	Value
LS short stop	°C	(the parameter is set in the recipe and depends on the product and the packaging material being produced)
LS	°C	(the parameter is set in the recipe and depends on the product and the packaging material being produced)
SA during Production	°C	(the parameter is set in the recipe and depends on the product and the packaging material being produced)
SA during Slow Inching	°C	230
SA Short Stop	°C	(the parameter is set in the recipe and depends on the product and the packaging material being produced)

(Cont'd)

(Cont'd)

Incoming Media	Unit	Value
Electric voltage	V	400 to 230 ± 10%
Electric frequency	Hz	50 or 60 ± 2%

Flows	Unit	Value
Cooling water, RH jaw pair	l/min.	min. 0.8
Cooling water, LH jaw pair	l/min.	min. 0.8
Cooling water, final folder	l/min.	2.0
Cooling water, hydraulic system	l/min.	2.0
Cooling water, deionizing circuit	l/min.	1.5
Cooling water, main flow	l/min.	12 to 13
Compressor water flow	l/min.	1.1.2.6-3 Scrubber - Set Pressure Regulator

Miscellaneous	Unit	Value
Hydrogen peroxide	% w/w	35
Leak detection fluid (red ink)	TP No.	90298-26
Noise declaration	dB	see IM

Consumption	Unit	Value
Steam - Production	Kg/h	2.4
Steam - ICU Cycle	Kg/h	3.5 - 4
Hydrogen peroxide (% w/w 35)	l/h	0.7 - 1.2
Detergent, external cleaning	l/cycle	1.8
Acid (50% NHO3), ICU cleaning	l/cycle	0.45
Alkali (30% NaOH) ICU cleaning	l/cycle	1.0

9.2 Templates and Tools

Illustration	Description
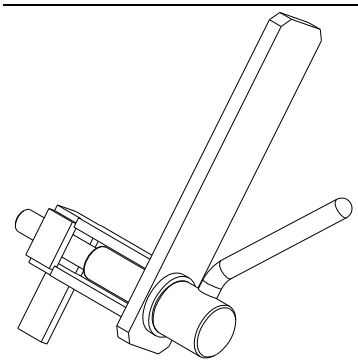	Tool Dismounting (Optional Accessories) TP No. 449969-0101 **1 Superstructure**
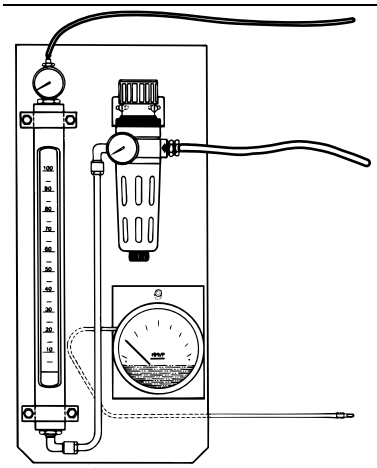	Leak Finding Equipment TP No. 533014-0200 **1 Superstructure**
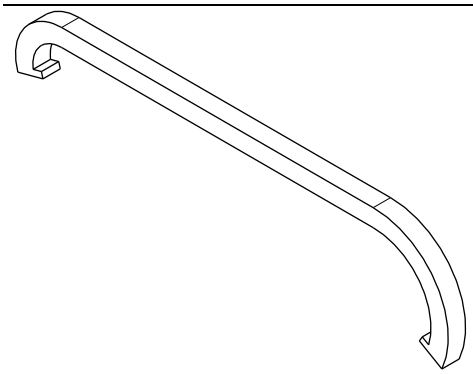	Pipe Wrench TP No. 777200-0101 **1 Superstructure**
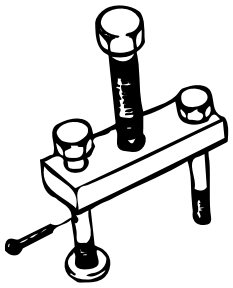	Puller (Optional Accessories) TP No. 74305-0101 **1 Superstructure**

(Cont'd)

(Cont'd)

Illustration	Description
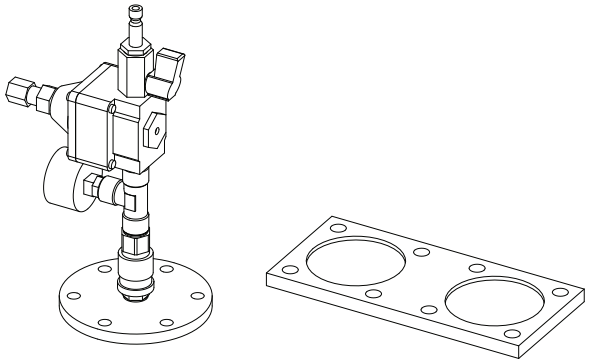	Pressure Test Equipment (Optional Accessories) TP No. 565536-0100 **1 Superstructure**
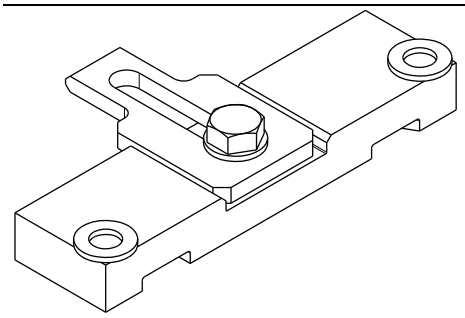	Template (Regular Accessories) TP No. 2906135-0201 TBA 80 S TP No. 2906135-0202 TPA 125 Sq TP No. 2906135-0203 TBA 100 B TP No. 2906135-0204 TBA 125 S TP No. 2906135-0205 TBA 160 S TP No. 2906135-0206 TBA 180 S TP No. 2906135-0206 TBA 200 S TP No. 2906135-0207 TPA 200 Sq TP No. 2906135-0208 TPA 250 Sq TP No. 2906135-0209 TBA 200 B TP No. 2906135-0210 TBA 200 Sq TP No. 2906135-0211 TBA 250 B TP No. 2906135-0212 TBA 250 Sq TP No. 2906135-0213 TBA 284 B TP No. 2906135-0214 TBA 300 S TP No. 2906135-0215 TBA 330 S TP No. 2906135-0216 TPA 330 Sq TP No. 2906135-0217 TBA 200 E TP No. 2906135-0218 TBA 200 M TP No. 2906135-0219 TBA 250 S TP No. 2906135-0220 TBA 375 S TP No. 2906135-0221 TBA 250 E **1 Superstructure**
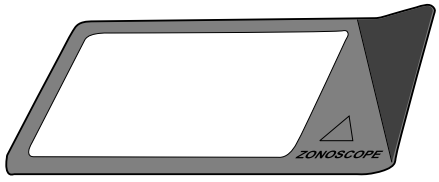	Measuring Instrument (Optional Accessories) TP No. 90243-0203 **1 Superstructure**

(Cont'd)

(Cont'd)

Illustration	Description
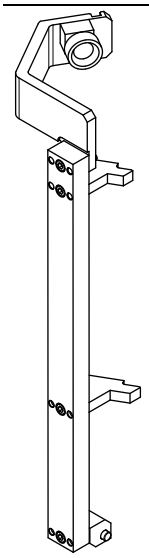	LS Element Template (Optional Accessories) TP No. 2871510-0201 TBA 80 S TP No. 2871510-0202 TBA 100 B TP No. 2871510-0203 TBA 125 S TP No. 2871510-0204 TBA 160 S TP No. 2871510-0205 TBA 180 S TP No. 2871510-0205 TBA 200 S TP No. 2871510-0206 TPA 200 Sq TP No. 2871510-0207 TPA 250 Sq TP No. 2871510-0208 TBA 200 B TP No. 2871510-0209 TBA 200 Sq TP No. 2871510-0210 TBA 250 B TP No. 2871510-0211 TBA 250 Sq TP No. 2871510-0212 TBA 284 B TP No. 2871510-0213 TBA 300 S TP No. 2871510-0214 TBA 330 S TP No. 2871510-0215 TBA 200 E TP No. 2871510-0216 TBA 200 M TP No. 2871510-0217 TBA 250 S TP No. 2871510-0218 TBA 375 S TP No. 2871510-0219 TPA 125 Sq TP No. 2871510-0220 TPA 330 Sq TP No. 2871510-0222 TBA 250 E **1 Superstructure**
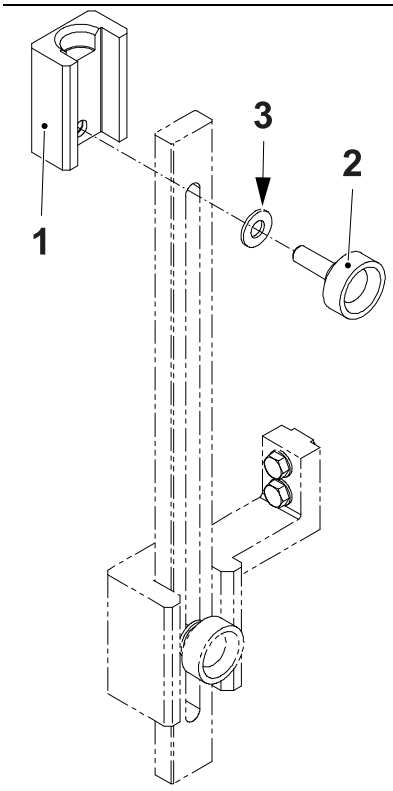	Upper Filling Pipe Template (Optional Accessories) TP No.3107113-0101 Including: Template (1) TP No. 3093440-0000 Knob (2): TP No. 318856-0109 Washer (3): TP No. 315105-0173 **1 Superstructure**

(Cont'd)

(Cont'd)

Illustration	Description
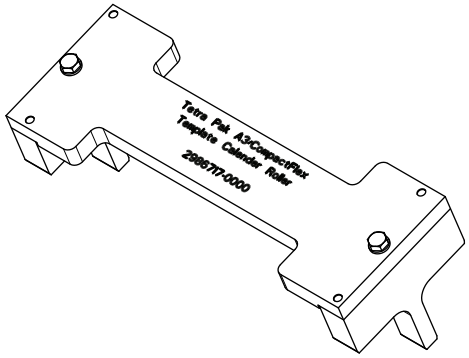	Calender Roller Template (Optional Accessories) TP No. 2986717-0000 **1 Superstructure**
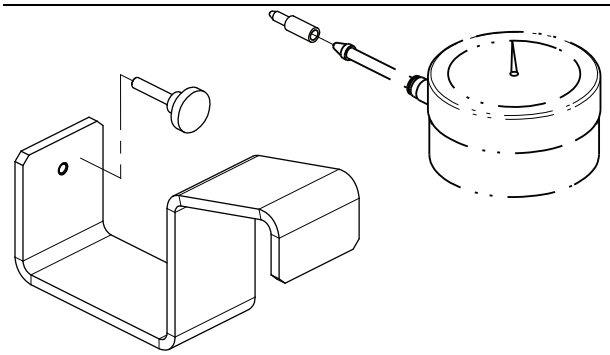	Tool (Optional Accessories) TP No. 3224551-0100
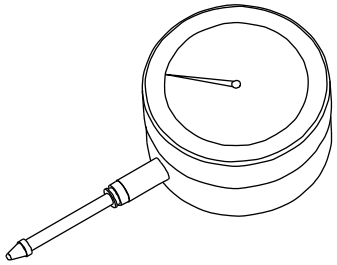	Dynamometer Tp No. 90459-7315 **1 Superstructure** **4 Jaw System**
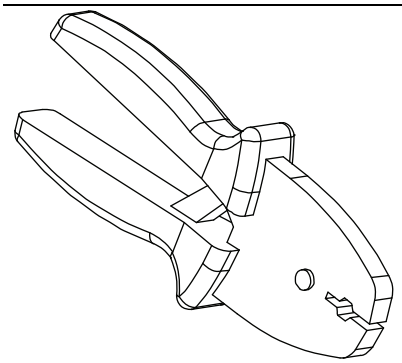	Crimp Tool TP No. 90459-1037 **2 Machine Body**
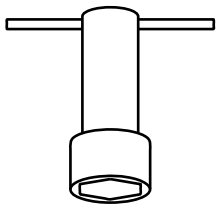	Socket Wrench TP No. 90206-0330 **2 Machine Body**

(Cont'd)

(Cont'd)

Illustration	Description
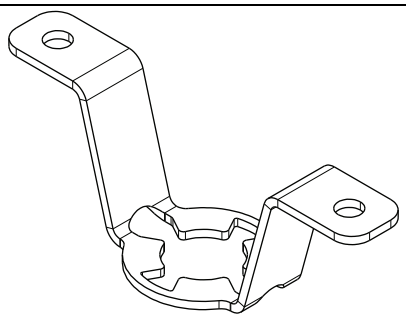	Dismounting tool (Optional Accessories) TP No. 3047678-0000 (Hydraulic Unit TP No. 3215132-0100) TP No. 3347709-0000 (Hydraulic Unit TP No. 3327773-0100) **2 Machine Body**
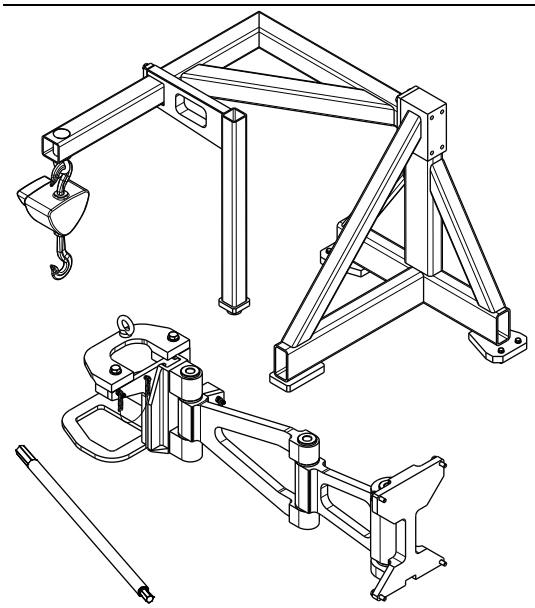	Lifting Unit (Optional Accessories) TP No. 3335677-0100 **3 Drive Unit**
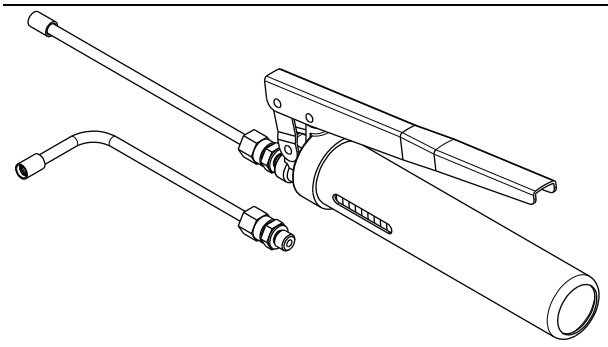	Grease Gun (Optional Accessories) TP No. 3219553-0101 **3 Drive Unit**
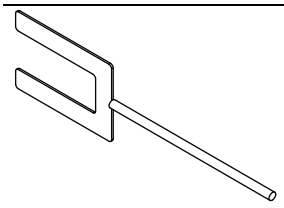	Tool (Optional Accessories) TP No. 3319605-0000 **3 Drive Unit**

(Cont'd)

(Cont'd)

Illustration	Description
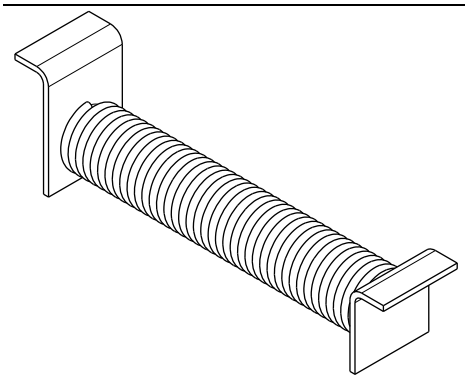	Compression Spring (Optional Accessories) TP No. 76304-0100 **4 Jaw System**
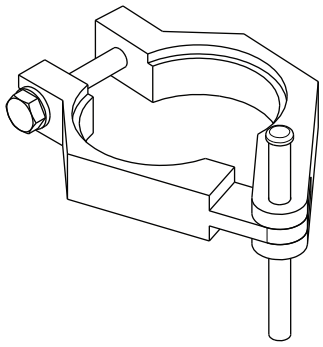	Measuring Clamp (Optional Accessories) TP No. 2843695-0101 **4 Jaw System**
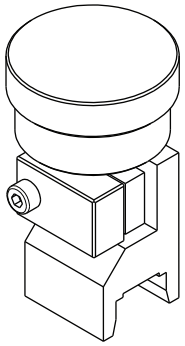	Micrometer Tool (Optional Accessories) TP No. 2908997-0132 TBA 80 S TP No. 2908997-0101 TBA 100 B TP No. 2908997-0102 TBA 125 S TP No. 2908997-0133 TBA 160 S TP No. 2908997-0105 TBA 180 S TP No. 2908997-0103 TBA 200 B TP No. 2908997-0104 TBA 200 M TP No. 2908997-0105 TBA 200 S TP No. 2908997-0107 TBA 250 B TP No. 2908997-0108 TBA 250 S TP No. 2908997-0111 TBA 330 S TP No. 2908997-0106 TBA 200 Sq TP No. 2908997-0109 TBA 250 Sq TP No. 2908997-0134 TBA 284 B TP No. 2908997-0110 TBA 300 S TP No. 2908997-0137 TBA 375 S TP No. 2908997-0131 TPA 125 Sq TP No. 2908997-0125 TPA 200 Sq TP No. 2908997-0126 TPA 250 Sq TP No. 2908997-0127 TPA 330 Sq TP No. 2908997-0138 TBA 200 E TP No. 2908997-0140 TBA 250 E **4 Jaw System**

(Cont'd)

(Cont'd)

Illustration	Description
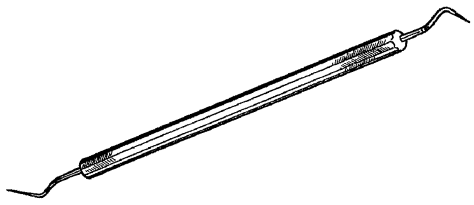	Tool TP No. 90243-0146 **4 Jaw System**
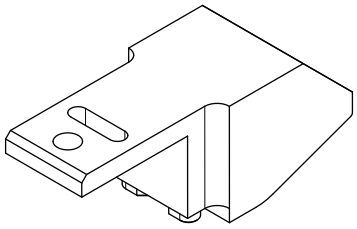	Template (Optional Accessories) TP No. 3222720 (for TBA 200 E, TBA 250 E) **4 Jaw System**
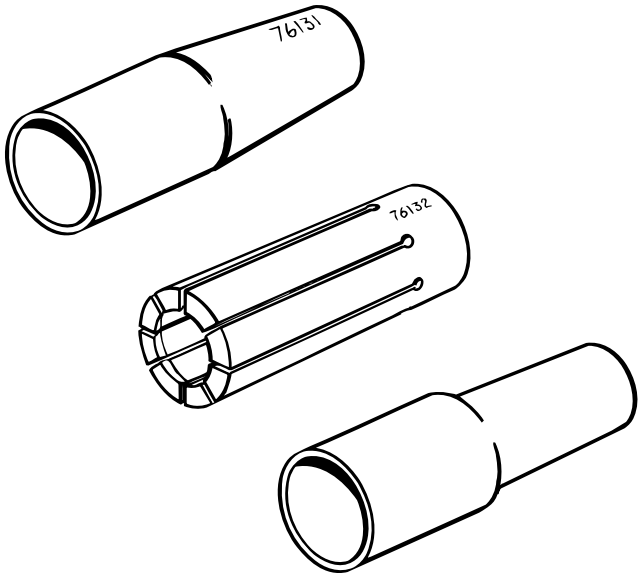	Assembly cone Cutting Jaw (Optional Accessories) TP No. 76131 Assembly tool Cutting Jaw TP No. 76132 Calibration tool Cutting Jaw TP No. 78801 **4 Jaw System**
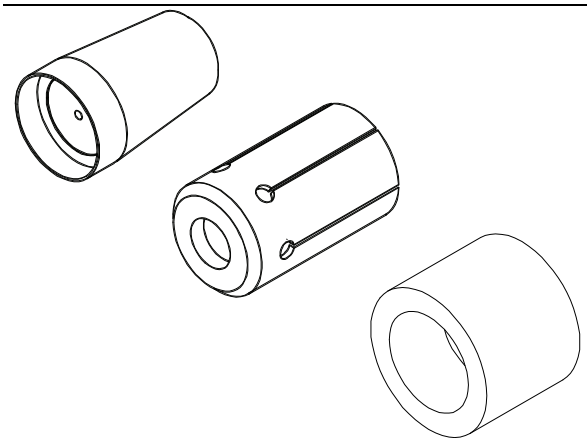	Assembly cone Pressure Jaw (Optional Accessories) Assembly tool Pressure Jaw Calibration tool Pressure Jaw TP No. 90091-387 (for TBA 160 S, TBA 180 S, TBA 200 B, TBA 200 M, TBA 200 S, TBA 200 Sq, TBA 250 B, TBA 250 S, TBA 250 Sq, TBA 284 B, TBA 330 S, TBA 375 S, TPA 200 Sq, TPA 250 Sq, TPA 330 Sq, TBA 200 E, TBA 250 E) TP No. 2984255 (for TBA 80 S, TBA 100 B, TBA 125 S, TPA 125 Sq) **4 Jaw System**

(Cont'd)

(Cont'd)

Illustration	Description
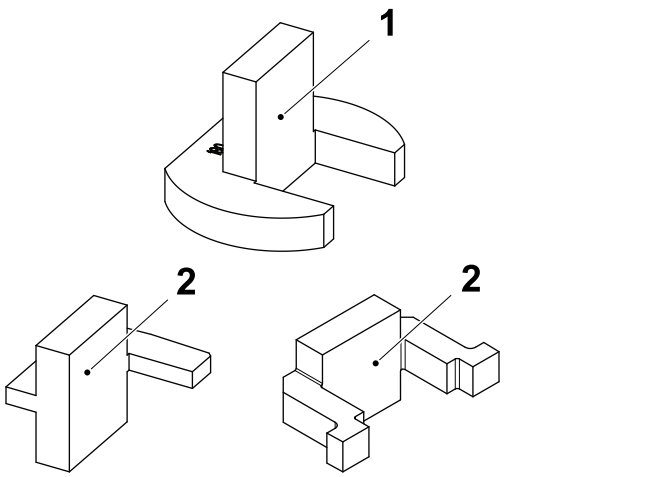 Template for TBA volumes Template for TPA volumes 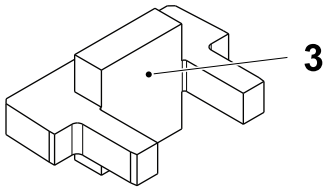 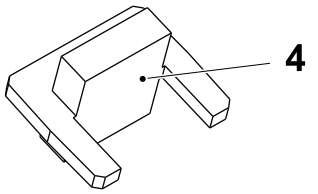	Setting tool (Optional Accessories) TP No. 2889628-0100 Template (1): TP No. 2960530-0000 (for TBA 80 S) TP No. 75937-0000 (for TBA 100 B, TBA 125 S) TP No. 76176-0000 (for TBA 160 S, TBA 180 S, TBA 200 S, TPA 200 Sq, TPA 250 Sq) TP No. 75936-0000 (for TBA 200 B, TBA 250 B, TBA 284 B, TBA 300 S, TBA 330 S, TBA 200 Sq, TBA 250 Sq) TP No. 574454-0000 (for TBA 200 M, TBA 250 S) TP No. 3072777-0000 (for TBA 375 S) TP No. 2909729-0000 (for TPA 125 Sq) TP No. 929328-0000 (for TPA 330 Sq) TP No. 3180559-0000 (for TBA 200 E, TBA 250 E) Template (2): TP No. 2960531-0000 (for TBA 80 S) TP No. 75943-0000 (for TBA 100 B, TBA 125 S) TP No. 75944-0000 (for TBA 160 S, TBA 200 S) TP No. 3272071-0000 (for TBA 180 S) TP No. 574455-0000 (for TBA 200 M, TBA 250 S) TP No. 75939-0000 (for TBA 200 B, TBA 250 B, TBA 284 B, TBA 300 S, TBA 330 S) TP No. 1538757-0000 (for TBA 200 Sq, TBA 250 Sq) TP No. 3073526-0000 (for TBA 375 S) TP No. 2909730-0000 (for TPA 125 Sq) TP No. 1539893-0000 (for TPA 200 Sq, TPA 250 Sq) TP No. 1539892-0000 (for TPA 330 Sq) Template (3): TP No. 3122501-0000 (for TBA 200 E, TBA 250 E) Volume flap pressure side Template (4): TP No. 3137764-0000 (for TBA 200 E, TBA 250 E) Volume flap cutting side **4 Jaw System**
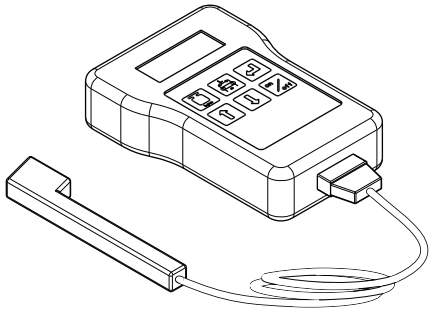	Belt Tension Meter (Optional Accessories) TP No. 90600-3415 **4 Jaw System**

(Cont'd)

(Cont'd)

Illustration	Description
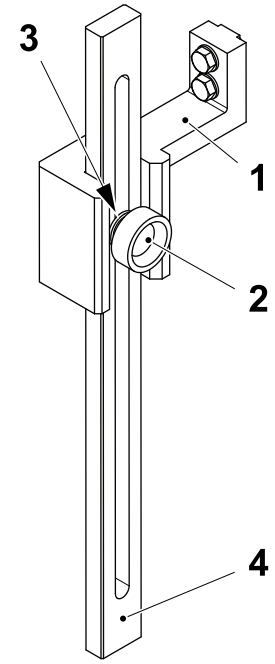	(Optional Accessories) Including: Tool (1) TP No. 3047996-0000 Knob (2): TP No. 318856-0109 Washer (3): TP No. 315105-0173 Ruler (4) TP No. 2640814-0000 **4 Jaw System**
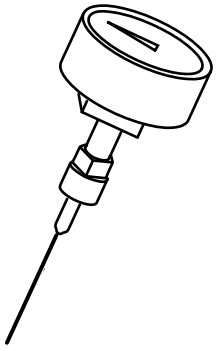	Needle Pressure Gauge (Optional Accessories) TP No. 1478583-0101 **5 Final Folder**
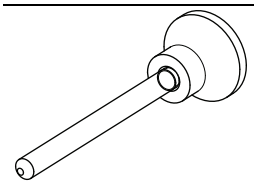	Pin (Optional Accessories) TP No. 2852318-0000 **5 Final Folder**
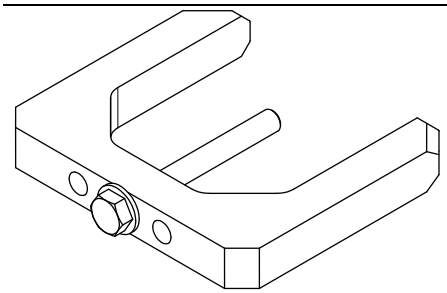	Assembly Tool (Optional Accessories) TP No. 3279940-0101 **5 Final Folder**

(Cont'd)

(Cont'd)

Illustration	Description
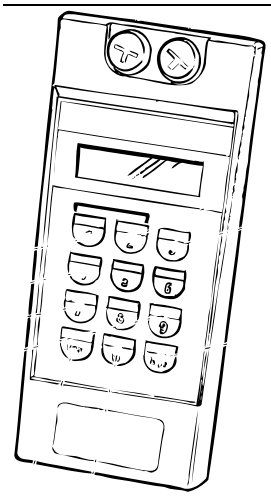	Calibration Equipment TP No. 2559112-0100 Including: Temperature Calibrator (Micromite instrument) TP No. 90410-0338 Calibrated Thermocouple Type K TP No. 90326-0310 **9 Electrical Cabinet**
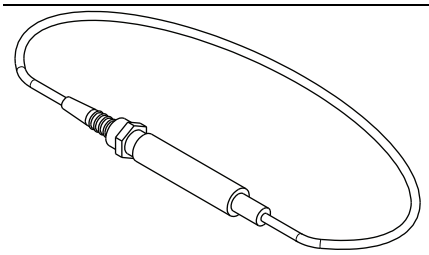	Resistance (Optional Accessories) TP No. 3031848-0000 **9 Electrical Cabinet**
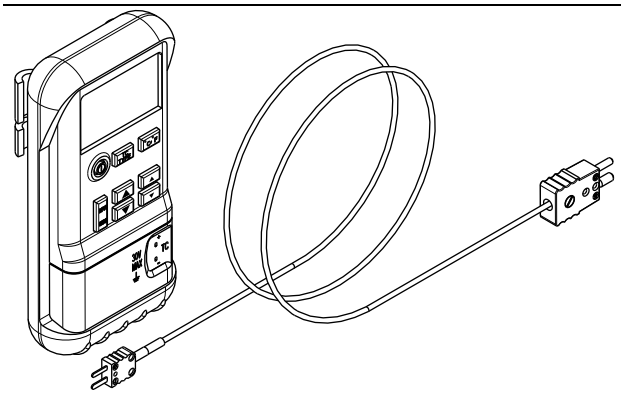	Temperature Calibrator (FLUKE 714) TP No. 90458-0914 Thermocouple Cable Male TP No. 90458-0915 **9 Electrical Cabinet**

9.3 Consumables

9.3.1 Lubricants

WARNING

Risk of personal injury!

Certain lubricants can cause injury if they come into contact with the eyes, skin, mucous membranes, or clothing. Always follow the manufacturer's instructions for handling chemical products.

The table below lists the lubricants that can be used for this equipment with their respective designations.

Lubricant specifications may be ordered from:

Tetra Pak Technical Service - Parts Supply Chain, Ruben Rausings gata, SE-221 86 LUND, Sweden

Lubricant Description	Tetra Pak Part No.	Supplier	Product Designation	Lube Type
Gear oil	344413-0000 Reference for purchasing: 344413-0766 (20 l) 344413-0335 (200 l)	Klüber	Klüberoil 4 UH1 220-N	H1 PAO base
	344402-0000 Reference for purchasing: 344402-0766 (20 l) 344402-0335 (200 l)	Klüber	Klübersynth UH1 6-220	H1 PAG base
	344412-0000 Reference for purchasing: 344412-0766 (20 l) 344412-0335 (200 l)	Klüber	Klüberoil 4 UH1 150-N	H1 PAO base
	344401-0000 Reference for purchasing: 344401-0766 (20 l) 344401-0335 (200 l)	Klüber	Klübersynth UH1 6-150	H1 PAG base
Hydraulic oil	344390-0000 Reference for purchasing: 344390-0766 (20 l) 344390-0335 (200 l)	Klüber	Klüberfood 4 NH1-32	H1 PAO base
Grease	344408-0000 Reference for purchasing: 344408-0221 (50 g) 344408-0591 (400 g) 344408-0037 (1 Kg) 344408-0177 (25 Kg)	Klüber	Klübersynth UH1 64-62	H1
Central lubrication oil	344414-0000 Reference for purchasing: 344414-0764 (5 l) 344414-0766 (20 l) 344414-0335 (200 l)	Klüber	Klüberoil 4 UH1 320-N	H1 PAO base

(Cont'd)

(Cont'd)

Lubricant Description	Tetra Pak Part No.	Supplier	Product Designation	Lube Type
Gearbox oil	344403-0000 Reference for purchasing: 344403-0766 (20 l) 344403-0335 (200 l)	Klüber	Klübersynth UH1 6-320	H1 PAG base
Silicone grease	90296-0009	Dow Corning	Dow Corning 7	H1
PTFE grease	90296-0091	PINCO	Fluolub 210	H1
Synthetic grease	344406-0000 Reference for purchasing: 344406-0037 (1 kg) 344406-0177 (25 kg)	Klüber	Klübersynth UH1 14-1600	H1
Synthetic lubricating grease	344469-7277	Shell	Cassida HDS2	H1
Hydraulic fluid	344463-3201	Shell	Cassida Fluid HF32	H1 PAO base
Lubrication oil	344415-0000 Reference for purchasing: 344415-0766 (20 l) 344415-0335 (200 l)	Klüber	Klüberoil 4 UH1 460-N	H1 PAO base
	344404-0000 Reference for purchasing: 344404-0764 (5 l) 344404-0766 (20 l) 344404-0335 (200 l)	Klüber	Klübersynth UH1 6-460	H1 PAG base
Grease	344417-0000 Reference for purchasing: 344417-0213 (60 g) 344417-0594 (500 g)	Klüber	Klüberpaste UH1 84-201	H1
Food grade grease	90600-8108	OKS	Grease OKS 1110 NSF H1	H1
Grease	344397-0000 Reference for purchasing: 344397-0287 (100 g) 344397-0037 (1 Kg)	Klüber	Grease Barrierta L55/2 NSF H1	H1
Synthetic lubricating grease	344460-0000 Reference for purchasing: 344460-0101 (100 g) 344460-0702 (700 g) 344460-1003 (1 Kg)	Rocol	Shappire Endure	H1
Grease	344407-0000 Reference for purchasing: 344407-0285 (45 g) 344407-0591 (400 g) 344407-0037 (1 Kg) 344407-0177 (25 Kg)	Klüber	Klübersynth UH1 14-151	H1

9.3.2 Cleaning Compounds

WARNING

Risk of explosion.

Cleaning with not recommended cleaning agents, for example agents including alcohol, could cause explosion. Use only Tetra Pak recommended cleaning agents when cleaning or disinfecting parts that can come into contact with hydrogen peroxide.

It is strongly recommended, in order to optimize the cleaning efficiency, to use water characterised by the following physicochemical parameters:

- water quality; chlorine free, drinkable water
- pH; between 7 and 8 pH units
- water hardness; between 5 and 10 °f French degrees of hardness (between 3 and 6 German degrees of hardness)
- chlorides; lower than 50 ppm
- silicates; lower than 10 ppm (in order to reduce the formation of solid deposits difficult to be removed)

9.3.2.1 Cleaning Compound Table

Comparable qualities from other suppliers may be selected in compliance with the technical requirements listed in the table. All cleaning compounds must comply with local legal requirements.

The supplier recommendations for concentration and temperature should be followed. When dosing the products automatically, the concentration should be checked.

(Cont'd)

(Cont'd)

Cleaning Type	TP Code		Detergent Type	Example 20101223									
				Raw Material				Formulated Products					
				Name	Max Conc w/w	Use Conc w/w	Use Temp °C (*)	Ecolab	Use Conc. w/w	Use Temp. °C (*)	Johnson Diversey	Use Conc vol/vol.	Use Temp. °C (*)
CIP	A	1	Alkali	NaOH	30%	1.50%	80	Mip CA	1.5%	80	VC 11	2.0%	80
	B	1	Acid	HNO_3	50%	1.00%	60	P3-horolith FL	1.0%	60	VA 5	1.0%	60
External Cleaning (automatic)	C	1	Alkali foam (**)					P3-Topactive LA	2.0%	20 - 40	VF 9	3.0%	20 - 40
		2	Alkali solution (***)					P3-mip FPC	2.0%	55	VK 12	1.0%	55
		3	Acid foam (****)					P3-Topax 56	2.0%	25	VF 11	2.0%	25
		4	Disinfection foam (****)					P3-Topax 990	2.0%	25	VS 1	1.0%	25
Manual Cleaning (wiping)	D	1	Alkali					P3-mip FPC	2.0%	25	VK 12	1.0%	25
Manual Disinfection (immersion)	F	3	Acid solution	Peracetic acid solution	15%	200ppm	25	Oxonia Active	0.50%	25	VT 6	0.15%	25
Manual Disinfection (spraying)	G	1	Alcoholic solution	Isopropanol			25	Spitaderm	Pure	25	VT 29	pure	25
		2	Alcoholic solution	Ethanol			25	Alcodes	Pure	25	VT 29	pure	25
		3	Acid solution	Peracetic acid solution	15%	200ppm	25	Oxonia Active	0.50%	25	VT 6	0.15%	25
Hand Disinfection	H	1						P3-Manodes gel	pure	25	H34	pure	25
PullTab Patch Sealing Plate Manual Cleaning	J	1	Solvent	Acetone CAS No 67-64-1 Technical Grade (*****)	Pure	25							

(Cont'd)

(Cont'd)

* 25 °C to the optimal ambient temperature.

** To be used on TBA/21, TBA/22, TP A3/Flex, TP A3/CompactFlex, TP A3/Speed, TB/21, TP C3/Flex.

*** To be used on TBA/8, TBA/9, TBA/19, TB/8, TB/9, TB/19.

**** To be used on TP C3/Flex

***** Acetone is a flammable solvent and the grade has to fulfil requirements for pharmaceutical use or food processing operations according to USO or NF or FCC.

9.4 Safety Functions

9.4-1 Safety Functions - Check

Machine Status	preparation

a) Make sure that the machine can not be inched if:
   - any of the doors or covers are open
   - any EMERGENCY STOP is pushed.

b) For the location of safety components, see the sections Safeguards and Emergency Stop in the Safety Precautions.

c) Make sure that when any EMERGENCY STOP is pushed the machine resets to step ZERO.

d) Check that the warning sign labels are present and readable. Replace any missing and /or illegible signs, see Location of Safety Signs in the Safety Precautions.

e) Also see the Optional Equipment MM's.

9.5 Protective Devices

9.5-1 Protective Devices - Check

The illustration shows where the protective devices are located. Make sure that the protective devices shown below are fitted on the machine.

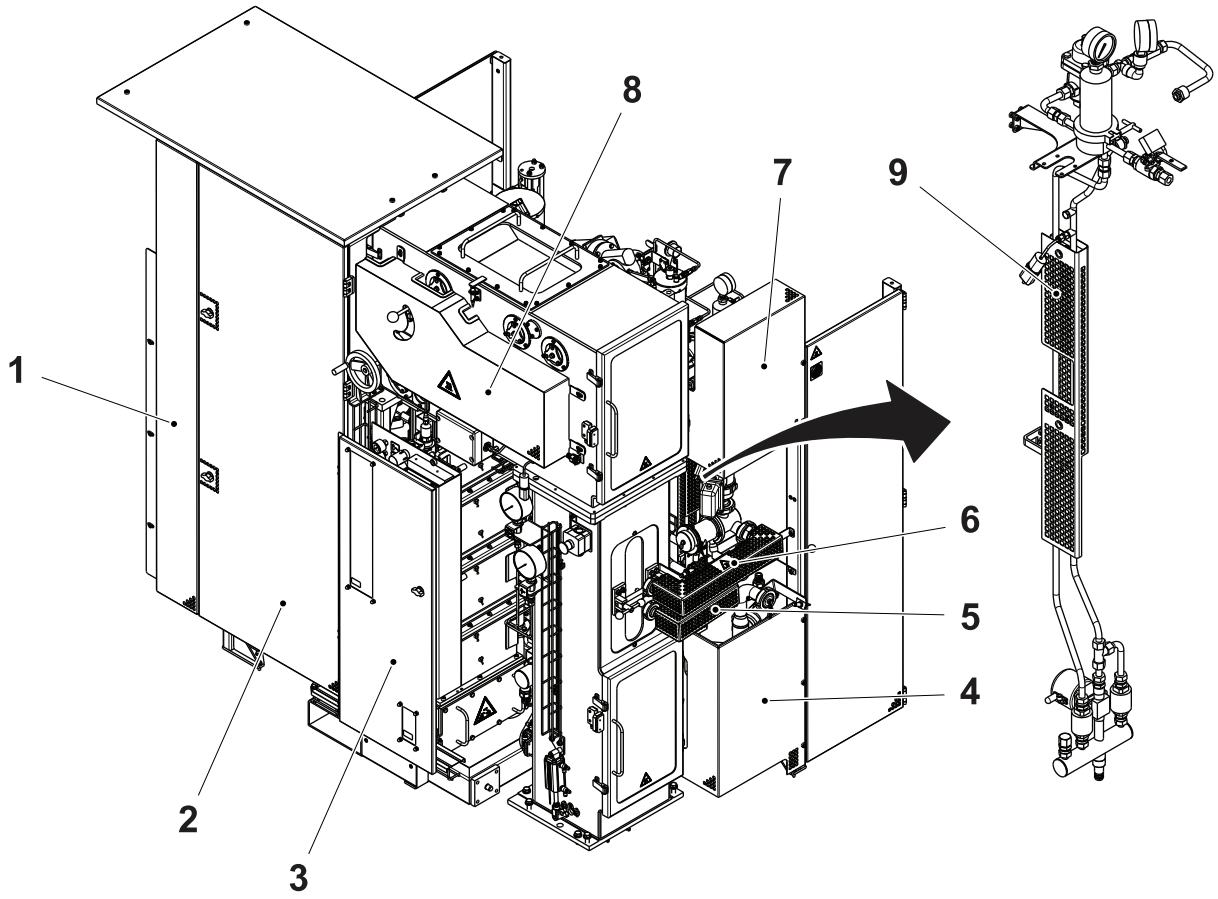

1 Touch guard
2 Door
3 Door, valve panel
4 Touch guard
5 Touch guard
6 Touch guard
7 Touch guard
8 Touch guard
9 Touch guard

(Cont'd)

(Cont'd)

The illustration shows where the protective devices are located. Make sure that the protective devices shown below are fitted on the machine.

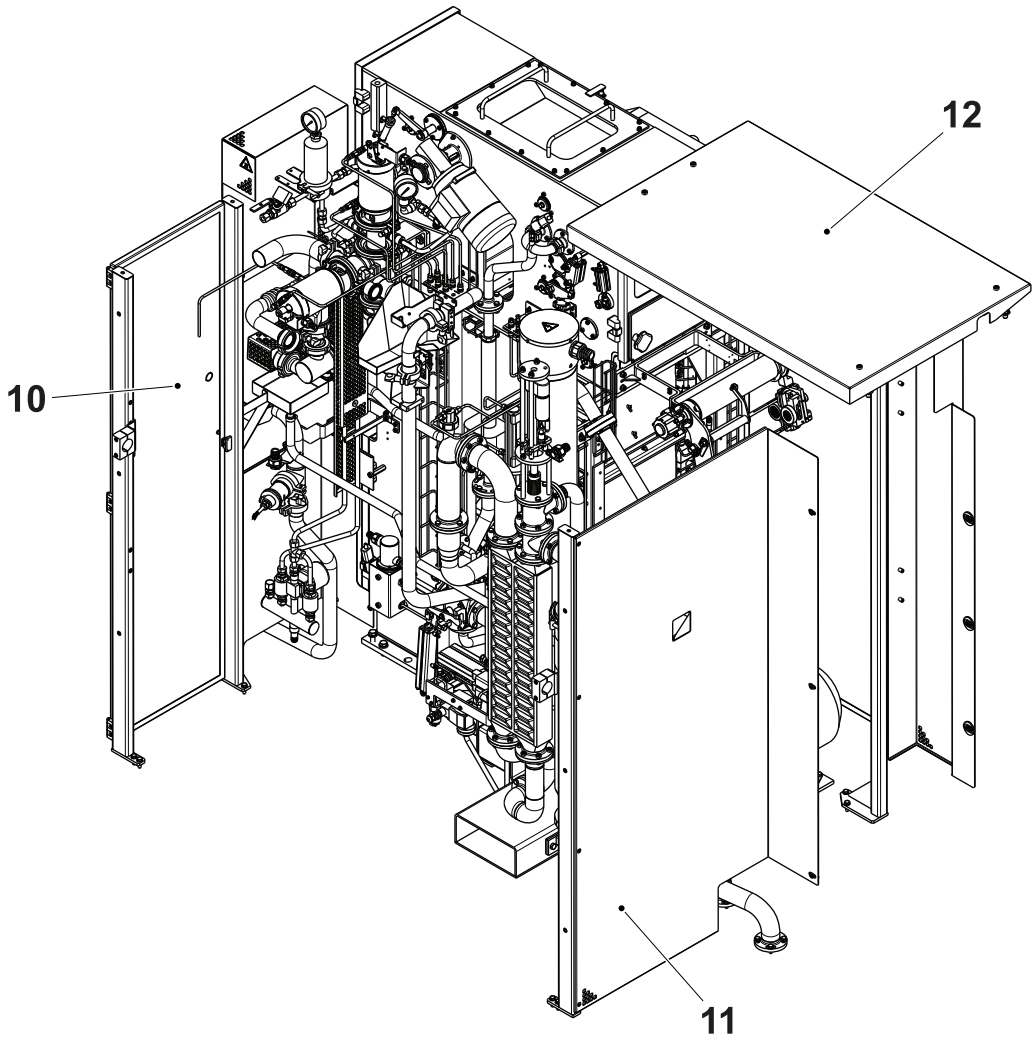

10 Door
11 Touch guard
12 Cover

(Cont'd)

(Cont'd)

The illustration shows where the protective devices are located. Make sure that the protective devices shown below are fitted on the machine.

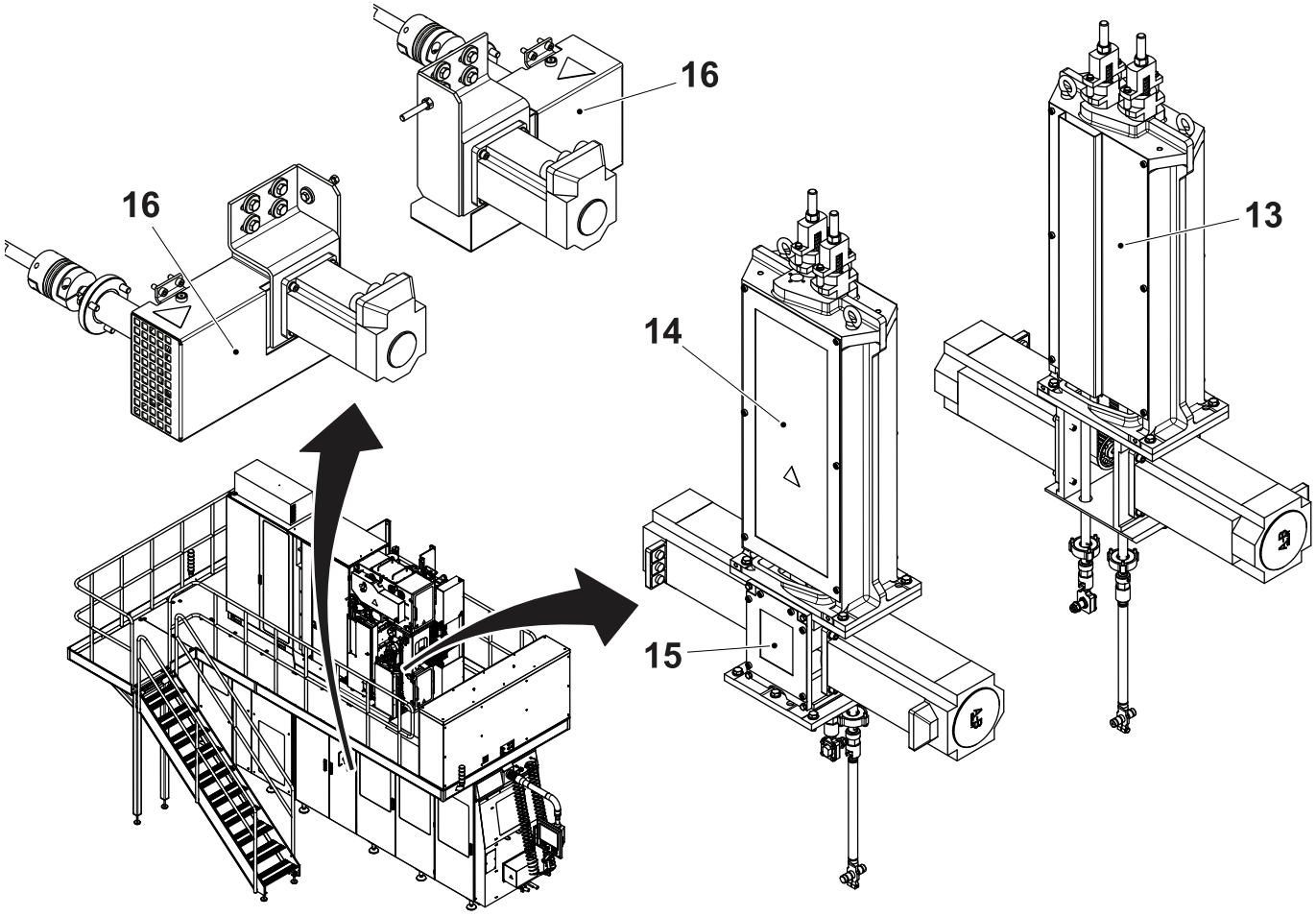

13 Cover, drive unit
14 Cover, drive unit
15 Cover, drive unit
16 Cover, design correction

(Cont'd)

(Cont'd)

The illustration shows where the protective devices are located. Make sure that the protective devices shown below are fitted on the machine.

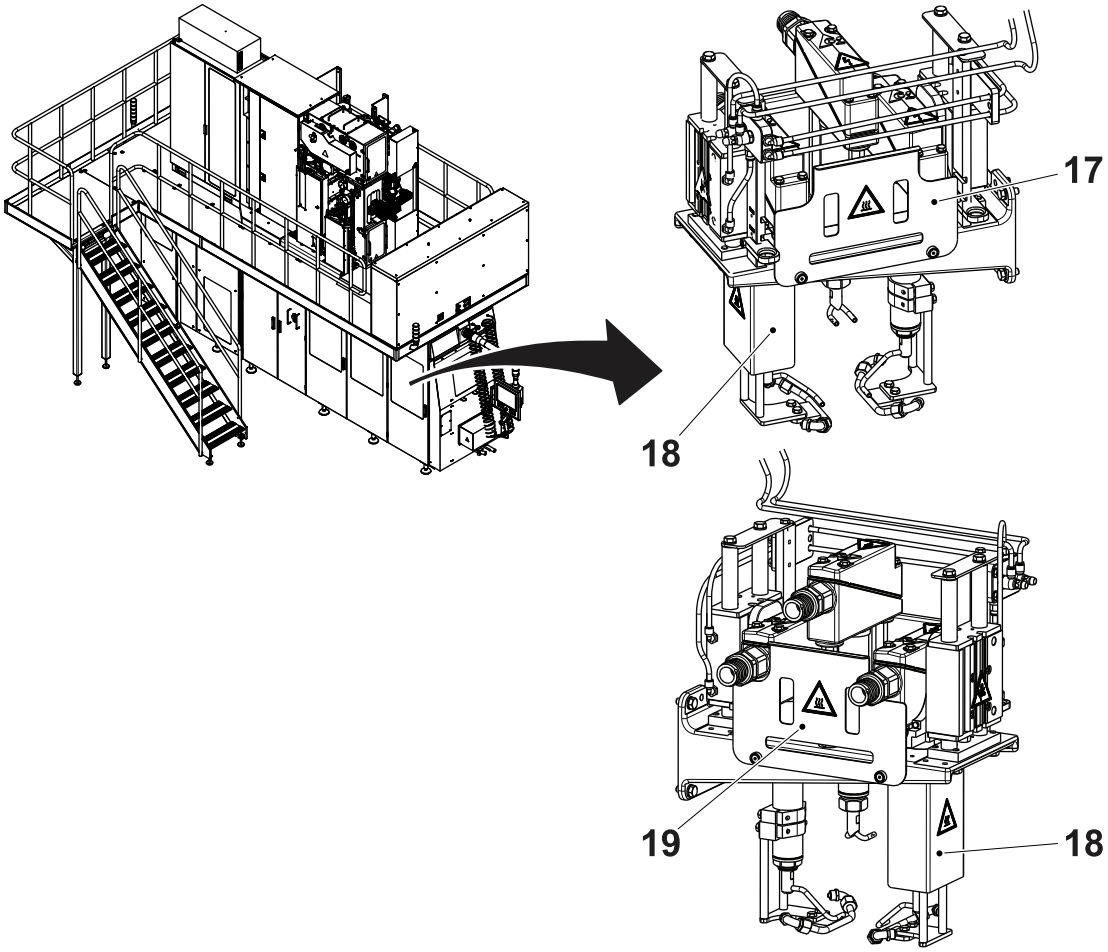

17 Cover, flap heater
18 Cover, flap heater
19 Cover, flap heater

(Cont'd)

(Cont'd)

The illustration shows where the protective devices are located. Make sure that the protective devices shown below are fitted on the machine.

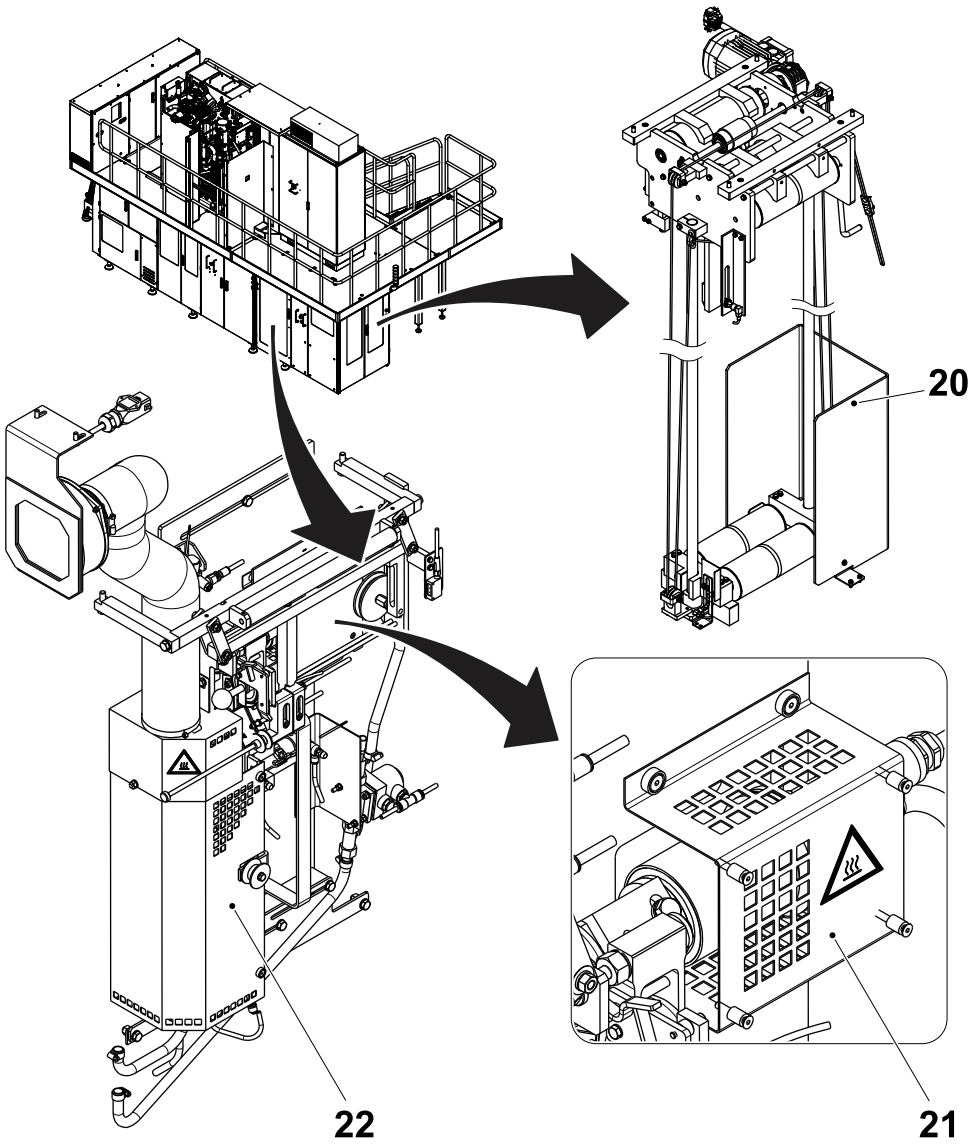

20 Protection, paper magazine

21 Touch guard, hot air element

22 Touch guard, fan system

This page intentionally left blank

A

Air Knife - Check and Clean 1-65
Air Knife - Set Proximity Sensor 1-67
Air Nozzle - Change Linear Control Unit 7-105
Air Nozzle - Change Nozzle 7-103
Air Nozzle - Check 7-101
Air Nozzle - Set 7-107
Air Nozzle (LS SS) - Check Packages 1-318
Air Nozzle (LS SS) - Set 1-319
Air Nozzle (LS) - Check Pressures 1-317
Air Nozzle (LS) - Set 1-311
Air Panel - Check 6-22
Air Panel - Clean Filter Insert 6-26
Air Panel - Set Pressure 6-24
Air Panel - Set Pressure Switch 6-25
Air Pipe-Line - Change Gasket and Non Return Valve 2-85
Air Pipe-Line - Change Hoses 2-88
Air Pipe-Line - Check 2-83
Air Pipe-Line - Clean Filter 2-87
Air Super Heater - Check 1-146
Air Super Heater - Check Heat Exchanger 1-147
Air Valve - Overhaul 1-130
Air Valve - Set 1-127
Air Valve - Set Proximity Switch 1-133
Assembly Plate - Change Ball Bearing 5-110
Assembly Plate - Change Belt 5-109
Assembly Plate - Set Belt Tension 5-107
Assembly Plate - Set Proximity Switch 5-111
ASU - Check Function 7-10
ASU - Setting Sequence 7-9

B

Bar Code Scanner - Change Cable 2-49
Bar Code Scanner - Configure and Test 2-40
Bath - Change Heating Elements 1-226
Bath - Change Roller Bushings 1-224
Bath - Check Roller 1-222
Bath - Set Micro Switches 1-228
Belt Tensioner - Overhaul 3-23
Belt Tensioner - Remove 3-21
Bending Roller - Change 1-62
Bending Roller - Change Ball Bearings 2-15
Bending Roller - Check 2-14
Bending Roller - Check Paper Guide 1-239
Bending Roller - Check Proximity Switch 1-248
Bending Roller - Check Splice Detector 1-235
Bending Roller - Overhaul 1-40, 1-85
Bending Roller - Overhaul 1-233
Bending Roller - Set 2-16
Bending Roller - Set Brake Unit 1-250
Bending Roller - Set Paper Guide Position 1-237
Bending Roller - Set Paper Guide Pressure 1-247
Bending Roller - Set Proximity Switch 1-249
Bending Roller - Set Splice Detector 1-236
Bending Roller - Set Web Width 1-245
Bending Roller - Set Width 1-44, 1-90
Bobbin Holder- Set Spring Loaded Screw 7-68
Brake Arm - Check Function 7-70
Brake Arm - Set 7-69

C

Cable Connection - Check 4-99
Calender Roller - Change 1-33
Calender Roller - Check 1-31
Calender Roller - Set Distance 1-36
Calender Roller - Set Proximity Switch 1-38
Calibrator - Set Fluke 714 8-483
Calibrator - Set Micromite II 8-485
Cap Guide - Set Position 1-261
Chemicals - Check 2-108
Cleaning Cup - Check Gaskets 1-325
Cleaning Cup - Set Sensor 1-326
Cleaning Pump - Change Gaskets 6-18
Cleaning System - Check 1-253
Cleaning System - Check Conductivity Sensor 1-254
Cleaning System - Check Connections 6-15
Cleaning System - Check Nozzles 2-51
Cleaning System - Set Pressures 6-16
Compressor Unit - Change Gaskets 1-106
Compressor Unit - Check 6-8
Compressor Unit - Check Pressure 1-104
Compressor Unit - Check Sight Glass 6-7
Compressor Unit - Clean Impeller 1-107
Compressor Unit - Set Thermostatic Valve 6-9
Conductivity Meter - Calibrate 8-374
Conductivity Meter - Change Conductivity Sensor 8-383
Conductivity Meter - Change Fuse 8-385
Conductivity Meter - Check 8-366
Conductivity Meter - Description 8-358
Conductivity Meter - Error Codes 8-380
Conductivity Meter - Identify Conductivity Sensor Cell Constant 8-363
Conductivity Meter - Set 8-369
Cooling Unit - Troubleshooting 8-543
Cooling Water System - Check 6-5
Cooling Water System - Fill 6-6

Counter Roller - Change Bearings 7-46
Counter Roller - Check..... 7-44
Counter Roller - Check 7-181
Counter Roller - Overhaul 7-183
Counter Roller - Set 7-53
Counter Roller - Set Cylinder.....7-189
Covering Panel - Check 7-192
Covering Panel - Set Pneumatic Cylinder.....7-226
Covering Panel - Set Safety Switch.....7-194
CPU Module - Change 8-22
CPU Module - Change Energy Storage Module (ESM)..... 8-56
CPU Module - Download Program 8-27
CPU Module - Load Firmware 8-38
CPU Module - Troubleshoot 8-49
Crank - Check Chain 1-82
Cutting Arm - Change Bearings and Shaft..... 4-80
Cutting Arm - Check 4-78
Cutting Arm - Check Clearance 4-84
Cutting Arm - Set Play..... 4-83
Cutting Jaw - Assemble 4-136
Cutting Jaw - Change Cutting Rail 4-145
Cutting Jaw - Change Oil 4-146
Cutting Jaw - Check.....4-132
Cutting Jaw - Overhaul.....4-137
Cutting Jaw - Remove.....4-135
Cutting Table - Change Pads and Finger 7-72
Cutting Table - Check..... 7-71
Cutting Table - Set 7-74

D

Design Correction Device - Change Plain Bearings..... 4-98
Design Correction Device - Check 4-97
DeviceNet Point I/O Adapter - Change 8-106
DeviceNet Point I/O Adapter - Download Program 8-112
DeviceNet Point I/O Adapter - LED Description 8-115
DeviceNet Point I/O Adapter - Set Node Address..... 8-111
DeviceNet Point I/O Module - Change.....8-119
DeviceNet Point I/O Module - LED Description 8-123
DeviceNet PowerFlex Adapter - Change 8-135
DeviceNet PowerFlex Adapter - Download Program 8-140
DeviceNet PowerFlex Adapter - LED Description 8-143
DeviceNet PowerFlex Adapter - Set Node Address and Baud Rate.....8-138
DeviceNet Scanner Module - Change 8-83
DeviceNet Scanner Module - Download Program 8-89
DeviceNet Scanner Module - Error Codes 8-94
DeviceNet Scanner Module - LED Description 8-92
DeviceNet Scanner Module - Load Firmware..... 8-88
DeviceNet Scanner Module - Register EDS File(s)..... 8-97
DeviceNet Scanner Module - Set Node Address and Baud Rate..... 8-88
Digital I/O Modules - Change..... 8-74
Digital I/O Modules - LED Description 8-80
Dilution Tank - Check 2-61
Distributed I/O - Description..... 8-82
Doors and Covers - Change Door Locking Unit 2-24
Doors and Covers - Grease Locking Devices..... 2-23
Doors and Covers - Locking Unit LED Description 2-29
Doors and Covers - Remove 2-21
Doors and Covers - Set Locking Unit 2-26
Drive Roller - Check..... 1-74
Drive Roller - Overhaul..... 1-75
Drive Roller - Set Width..... 1-78
Drive Unit - Change Bearings and Seal Ring..... 4-91
Drive Unit - Change Timing Belt..... 4-90
Drive Unit - Check 4-88
Drive Unit - Check Drive Belt 3-12
Drive Unit - Lower Jaw System 3-6
Drive Unit - Referencing..... 3-10
Drive Unit - Release Brakes 3-8
Drive Unit - Set Drive Belt Tension 3-13
Drive Unit - Set Proximity Switch..... 4-96
Drive Unit - Set Timing Belt Tension 4-93
Drive Unit - Setting Sequence..... 3-5
Drive Unit Brakes - Safety Expansion Relays.....8-183
Drop Chute - Check 5-15
Drop Chute - Set Position..... 5-17
Drying Chamber - Change Seal and Gasket Housing..... 1-29
Drying Chamber - Check Overpressure 1-24
Drying Chamber - Check Rollers 1-14
Drying Chamber - Check Seal and Gasket Housing..... 1-28
Drying Chamber - Leakage Detection 1-16
Drying Chamber - Set Inductive Switch 1-30
Drying Chamber - Set Overpressure 1-26

E

Edge Roller - Set 1-309
Electrical System - Clean Cabinet 8-11
Emergency Stop Push Button - Check Safety Expansion Relay 8-179
EtherNet/IP Module - Change 8-58
EtherNet/IP Module - Change IP Address 8-70
EtherNet/IP Module - LED Description 8-68
EtherNet/IP Module - Load Firmware 8-67
EtherNet/IP Module - Set IP Address 8-63

F

Fan System - Change Fan 7-57
Fan System - Check Air Pressure 7-56
Filling Pipe - Change Locking Pin 1-355
Filling Pipe - Check 1-327
Filling Pipe - Check Level Detector Function 1-352
Filling Pipe - Check Lower Filling Pipe 1-353
Filling Pipe - Fit 1-332
Filling Pipe - Remove 1-328
Filling Pipe - Set Level Detector Position 1-347
Filling Pipe - Set Position 1-337
Filling Pipe - Set Pressure Roller 1-345
Filling System - Description 1-152
Filling System - Fit Pipes 1-155
Filling System - Set Regulating Valve U/P Transducer 1-154
Fin Folder - Change Bushing 5-116
Fin Folder - Grease 5-117
Fin Folder - Set 5-114
Final Folder - Set External Conveyor Motor Speed 5-14
Final Folder - Setting Sequence 5-7
Final Folder - Synchronization 5-8
Flap Heater - Overhaul 5-43
Flap Heater - Set Folding Part 5-50
Flap Heater - Set Nozzles 5-45
Flap Heater - Set Pressures 5-49
Flow Meter - Change Filter 6-10
Flow Meter - Change Filter Insert 6-13
Flow Meter - Set Flows 6-12
Folding Bar - Set Air Nozzle Pressure 5-113
Folding Bar - Set Proximity Switch 5-112
Forming Section - Change Forming Ring Bushings 1-286
Forming Section - Check Forming Rings 1-283
Forming Section - Forming Ring Positioning 1-287
Frequency Converter - Display Parameters 8-202
Frequency Converters - Error Codes 8-206

G

Guide Roller - Change Bushings 1-323

H

H_2O_2 Concentration Meter - Change O-ring 2-100
H_2O_2 Concentration Meter - Change Pt100 Sensor 2-105
H_2O_2 Concentration Meter - Check Desiccant Cartridge 2-99
H_2O_2 Concentration Meter - Check Prism and Led 2-106
H_2O_2 Concentration Meter - Check Pt100 Sensor 2-104
H_2O_2 Concentration Meter - Remove 2-102
Heat Exchanger Valve - Change Linear Actuator 1-118
Heat Exchanger Valve - Overhaul 1-110
Heat Exchanger Valve - Set 1-115
Heating Device - Change Plunger 7-67
Heating Device - Check 7-62
Heating Device - Set Position 7-64
Heating Unit - Change Constant Heat Device 7-176
Heating Unit - Change Heat Exchanger 2-70
Heating Unit - Change Heating Elements 2-68
Heating Unit - Change Venting Valve 2-74
Heating Unit - Check Constant Heat Device 7-174
Heating Unit - Check Pump 2-73
Heating Unit - Check Venting Valve Floater 2-76
Heating Unit - Drain U-bend 2-72
Heating Unit - Set Constant Heat Device 7-179
HMI - User Management Change Password 8-287
HMI - User Management Description 8-282
HMI - User Management Log On 8-284
HMI - Utility Window 8-293
HMI and PLMS - Create Software USB Key from ISO Image 8-237
HMI and PLMS - Description 8-215
HMI and PLMS - Install DE Config Files 8-231
HMI and PLMS - Install Software 8-219
HMI and PLMS - Log On Procedure 8-216
HMI and PLMS - Restore TPOP Local Files 8-233
Hot Air Element - Change 7-120
Hot Air Element LS - Check 1-258
Hot Air Element LS - Set Proximity Switch 1-259
Hot Air Element LS SS - Check 1-260
Hot Air Element SS - Change 7-117
Hydraulic Unit - Bleed 2-143

Hydraulic Unit - Change Accumulator 2-157, 2-184
Hydraulic Unit - Change Air Filter..... 2-154, 2-180
Hydraulic Unit - Change Bi-stable Valve, Directional Valve and Solenoid.....2-159
Hydraulic Unit - Change Check Valves 2-161, 2-189
Hydraulic Unit - Change Directional Valves and Solenoid.....2-187
Hydraulic Unit - Change Electrical Motor 2-171
Hydraulic Unit - Change Filter Element.....2-166
Hydraulic Unit - Change Motor.....2-200
Hydraulic Unit - Change Oil 2-134
Hydraulic Unit - Change Pressure Reducing Valve..... 2-163, 2-191
Hydraulic unit - Change Pressure Relief Valve.....2-165
Hydraulic Unit - Change Pressure Relief Valve.....2-193
Hydraulic Unit - Change Pump 2-169, 2-197
Hydraulic Unit - Change Pump Filter Element.....2-195
Hydraulic Unit - Check 2-148, 2-173
Hydraulic Unit - Check Accumulator..... 2-156, 2-182
Hydraulic Unit - Check Level Probe..... 2-152, 2-178
Hydraulic Unit - Clean Tank 2-139
Hydraulic Unit - Drain Collection Tray.....2-181
Hydraulic Unit - Drain Water 2-155
Hydraulic Unit - Functional Description.....2-132
Hydraulic Unit - Set Pressure..... 2-150, 2-175
Hydrogen Peroxide - Check Leakages 2-56
Hydrogen Peroxide - Check Leaks.....1-220
Hydrogen Peroxide - Check Pump 2-57
Hydrogen Peroxide - Set Pressure 2-58

I

ICU - Change Diaphragm.....2-123
ICU - Change Pump 2-119
ICU - Check Float Function 2-116
ICU - Check Floats 2-112
ICU - Check for Leakage.....2-109
ICU - Drain.....2-112
ICU - Set Proximity Sensor.....2-118
ICU (OE) - Change Pump Seals 1-269
ICU (OE) - Check Leakages 1-266
ICU (OE) - Check Pump.....1-267
ICU (OE) - Sample Cleaning Liquid.....1-280
ICU (OE) - Set Pump Shaft 1-277
IH Equipment - Change Generator.....8-531
IH Equipment - Check Cables.....8-530
IH Equipment - Check Function 8-526
IH Equipment - Error Handling.....8-521
IH Equipment - LCD Display.....8-516
IH Equipment - LED Description 8-519
IH Equipment - Load Firmware 8-535
IH Equipment - Set CAN Communication 8-534
IH Equipment - Set Display Contrast.....8-542
IH Equipment - Set Sealing 8-533
Infeed Conveyor - Change Belt..... 5-24
Infeed Conveyor - Check Bearings..... 5-30
Infeed Conveyor - Check Belt..... 5-23
Infeed Conveyor - Overhaul..... 5-26
Infeed Conveyor - Referencing 5-19
Infeed Conveyor - Set Belt 5-22
Infeed Conveyor - Set Sensor..... 5-28
Infeed Conveyor - Set Spring..... 5-31
Ink Jet Printer - Configure.....8-301
Ink Jet Printer - Configure Printer Interface.....8-303
Integrated Cleaning Unit - Rinse Chemical Pumps 2-127
IPC - Change Auxiliary Serial Port 8-343
IPC - Change Battery..... 8-322, 8-334
IPC - Change CFast Card 8-337
IPC - Change CompactFlash Memory Card 8-322
IPC - Change DVD ROM.....8-331
IPC - Change Ethernet Card Level 5.....8-348
IPC - Change Fan Filter 8-329
IPC - Change Fan Kit..... 8-324, 8-351
IPC - Change Solid State Drive.....8-338

J

Jaw System - Check T-gap..... 4-60
Jaw System - Inching, Go To Position and Manual Operation 4-8
Jaw System - Install Cutting Jaw Volume Flaps..... 4-62
Jaw System - Move Drop Chute Position..... 4-15
Jaw System - Remove Cutting Jaw Volume Flaps..... 4-34
Jaw System - Set Cutting Alignment 4-40
Jaw System - Set Folding Flaps..... 4-50
Jaw System - Set Folding Flaps Mechanism..... 4-49
Jaw System - Set Jaw Gap 4-35
Jaw System - Set Jaw Over Jaw..... 4-43
Jaw System - Set Package Volume..... 4-64
Jaw System - Set Play 4-63
Jaw System - Set Stroke 4-16
Jaw System - Set Support Rollers..... 4-30
Jaw System - Set Symmetry..... 4-21
Jaw System - Set Volume Adjuster 4-19

Jaw System - Set Volume Flaps Centring 4-23
Jaw System - Setting Sequence 4-7

K

Knife Holder - Change Knife 4-149
Knife Holder - Check Knife 4-148

L

Level Control - Set 8-357
Link - Change 3-49
Link - Check 3-48
Lower Forming Ring - Check 1-303
Lower Forming Ring - Set Clearance 1-294
Lower Forming Ring - Set Cylinder 1-302
Lower Forming Ring - Set Finger 1-304
Lower Forming Ring - Set Overlap 1-299
Lower Forming Ring - Set Position 1-295
Lower Support Roller - Set Clearance 1-308
Lubrication Unit - Bleed 2-206
Lubrication Unit - Change Filter Insert 2-209
Lubrication Unit - Change Oil Pump 2-210
Lubrication Unit - Check Oil Feed 2-204
Lubrication Unit - Check Oil Pressure 2-203
Lubrication Unit - Check Pressure Guard 2-202
Lubrication Unit - Clean Oil Tank 2-205
Lubrication Unit - Fill Oil 2-208

M

Machine Body - Change Bearing Blocks..... 7-17
Machine Body - Change Reel Holder 7-220
Machine Body - Check Bearing Blocks..... 7-16
Machine Body - Check Bending Roller 7-18
Machine Body - Check Reel Holder 7-219
Machine Body - Check Safety Mat 7-224
Machine Body - Overhaul Bending Roller 7-19
Machine Body - Set Cylinder Reel Holder.....7-221
Machine Body - Set Photocell Position 7-21
Machine Body - Set Photocell Sensitivity..... 7-23
Machine Body Door Guards - Check Safety Expansion Relays 8-181
Main Air ASU - Safety Valve Relays 8-184
Material Holder - Check 7-121, 7-228
Material Holder - Check Proximity Switch 7-136, 7-244
Material Holder - Cutting Table Overhaul 7-123, 7-231
Material Holder - Overhaul 7-130, 7-238
Material Holder - Set Alignment 7-131, 7-239
Material Holder - Set Cutting Table..... 7-124, 7-232
Material Holder - Set Proximity Sensor.....7-249
Material Holder - Set Proximity Switch 7-138, 7-246
Material Holder - Set Speed 7-139, 7-247
Motor Bracket - Change Servomotor 3-31
Motor Bracket - Check Servomotor 3-30
Motor Bracket - Overhaul Servomotor 3-45

O

Outfeed - Change Ball Bearing and Seal 5-72
Outfeed - Change Belt 5-69
Outfeed - Change Carrier 5-71
Outfeed - Change Drive Axis Bellow Coupling..... 5-76
Outfeed - Check Oil Level 5-75
Outfeed - Check Proximity Switch 5-77
Outfeed - Grease Carrier..... 5-83
Outfeed - Referencing..... 5-79
Outfeed - Set Belt Tension..... 5-70
Outfeed - Set Counting and Queue Photocells 5-82
Outfeed - Set Proximity Switch 5-78
Outfeed - Set Pusher Support..... 5-84
Overload Protection - Set 8-208
Overload Protection - Set Base Unit(s).....8-209

P

Paper Guide - Change Rollers and Bearings.....7-159
Paper Guide - Check 7-158
Paper Magazine - Change Bearings..... 7-36
Paper Magazine - Change Roller Bearings..... 7-33
Paper Magazine - Change Ropes 7-38
Paper Magazine - Check..... 7-35
Paper Magazine - Set 7-37
Paper Trolley - Change Cylinder 7-211
Paper Trolley - Change Fork Wheel 7-213
Paper Trolley - Change Pump Cylinder 7-204
Paper Trolley - Change Wheel and Brake.....7-214
Paper Trolley - Check 7-201
Paper Trolley - Check Oil Level 7-218
Paper Trolley - Set Brake 7-216
Paper Trolley - Set Lifting Arm Handle 7-217
Paper Trolley - Set Maximum Lift Height.....7-210
Paper Trolley - Set Regulating Valve 7-209
Pendulum Roller - Change Bushings..... 1-50

Index of Procedures

Pendulum Roller - Check 1-48
Pendulum Roller - Check Parallelism 1-59
Pendulum Roller - Referencing 1-58
Pendulum Roller - Set Cylinder 1-56
Pendulum Roller - Set Lever Position 1-57
Pendulum Roller - Set U/P Transducer 1-53
Peroxide Container - Change 2-96
Peroxide Container - Check 2-95
Peroxide Pipe - Check 2-62
Peroxide Pipe - Clean Strainer 2-64
Peroxide Pipe - Replace Valves 2-65
Peroxide Pump - Change Pump 2-90
Peroxide Pump - Overhaul Pump 2-91
Peroxide Pump - Set Impeller 2-94
Peroxide Tank - Check 2-59
Photocell Unit - Check Alignment 4-167
Photocell Unit - Set 4-162
Pipe - Change Filter 6-17
Pipe Work - Check 1-281
Pipe Work Air - Check Change Over Valve 1-99
Pipe Work Air - Clean Balls 1-97
Pipe Work Air - Overhaul Change Over Valve 1-100
Pipe Work Air - Set Change Over Valve Sensors 1-103
Pipe Work Water- Check 2-19
PLMS NRG - Copy Performance and Process Data 8-273
PLMS NRG Configurator - Configure IP Settings for External Network 8-269
PLMS NRG Configurator - Configure User Interface 8-261
PLMS NRG Configurator - Defragment the IPC Hard Disk 8-257
PLMS NRG Configurator - Distribution Equipment Setup 8-249
PLMS NRG Configurator - Export/Import Configuration 8-243
PLMS NRG Configurator - Select Allowed Languages 8-242
PLMS NRG Configurator - Set Date and Time 8-258
PLMS NRG Configurator - Set Machine ID 8-241
PLMS NRG Configurator - Translate Non-Tetra Pak DE Event Codes 8-247
Pluto Module - LED Description 8-192
Pluto Module - Load Program 8-186
Pluto Module - Set ID-FIX Address after Replacing an ID-FIX 8-195
Pneumatic Cylinder - Set Sensors 7-227, 7-250
Pneumatic Panel - Check Filters 7-29
Pneumatic Panel - Set Pressure 7-26
Pneumatic Panel - Set Safety Valve 7-30
Pneumatic System - Change filter 1-252
Pneumatic System - Check 1-251
Power Failure Relay - Set 8-211
Power Supply Unit - Set 8-213
Preparation for PLC Communication - Configure PC Network Communications 8-12
Preparations for PLC Communication - Configure RSLinx 8-19
Pressure Arm - Check 4-76
Pressure Arm - Set Play 4-77
Pressure Device - Change Bushing and Seal Ring 5-54
Pressure Device - Change Filter 5-68
Pressure Device - Change O-ring and Ball Bearing 5-60
Pressure Device - Change Rod Seal and Bushing 5-58
Pressure Device - Check Oil Level 5-52
Pressure Device - Check Package Pressure 5-62
Pressure Device - Grease 5-67
Pressure Device - Remove Oil 5-53
Pressure Jaw - Assemble 4-113
Pressure Jaw - Change Cylinders 7-169
Pressure Jaw - Change Dolly 7-162
Pressure Jaw - Change Inductor 4-122
Pressure Jaw - Change Knife 7-166
Pressure Jaw - Change O-rings 4-126
Pressure Jaw - Change Transformer 4-127
Pressure Jaw - Check 4-105
Pressure Jaw - Check Catches and Clearance 4-130
Pressure Jaw - Check Inductor 4-118
Pressure Jaw - Check Knife 7-160
Pressure Jaw - Install Volume Flaps 4-112
Pressure Jaw - Overhaul 4-114
Pressure Jaw - Remove 4-110
Pressure Jaw - Remove Volume Flaps 4-111
Pressure Roller - Change 1-71
Pressure Roller - Check 1-69
Pressure Roller - Set 1-73
Pressure Switch - Check Pressure Sensor 1-255
Pressure Unit - Check Leaks 2-77
Pressure Unit - Fill 2-79
Pressure Unit - Set Pressure 2-81
Product Line - Overhaul Regulating Valve 1-197
Product Line - Set Regulating Valve Proximity Switch 1-209
Product Lines - Check Leakages 1-210
Product Lines - Check Tester 1-218

Product Valve - Change Flow Meter Gaskets....1-186
Product Valve - Change O-Rings....1-178
Product Valve - Change Seals and Membranes....1-172
Product Valve - Remove Cylinders....1-169
Product Valve - Set Proximity Switches....1-185
Protective Devices - Check....9-25
Pull Down Device - Change Ball Bearing and O-Ring....5-38
Pull Down Device - Change Bushing and Rod Seal....5-35
Pull Down Device - Check Oil Level....5-33
Pull Down Device - Remove Oil....5-34
Pull Down Device - Set Pusher....5-40
Pull Down Device- Change Filter....5-42
Pulley Unit - Change Wheel and Bearings....3-24

R

Recorder - Calibrate....8-404, 8-448
Recorder - Change CompactFlash Card....8-411, 8-456
Recorder - Configure Archived Data for Colour Printing....8-412, 8-459
Recorder - Description....8-386, 8-419
Recorder - Load Configuration Data....8-398, 8-436
Recorder - Log In and Log Off....8-408
Recorder - Log In and Log Out....8-452
Recorder - Set Date, Time and Language....8-394, 8-429
Refilling - Change Filter....2-131
Refilling - Check....2-130
Reset Button - Check....8-178
Residual Current Device - Check....8-210
Reverse Bending Roller - Overhaul....1-322

S

Safety Functions - Check....9-24
Scissor Arm Link - Change Shafts and Links....4-86
Scissor Arm Link - Check....4-85
Scrubber - Check Flow Meter....1-137
Scrubber - Clean Filters....1-134
Scrubber - Set Pressure Regulator....1-138
Seal Ring - Change....1-290
Seal Ring - Check....1-289
Seal Ring - Set....1-292
Seal Ring - Set Clearance....1-293
Sensor - Set....7-252
Separator - Change Valve and Valve Seat....1-142
Separator - Check Pressure Gauge....1-145
Separator - Clean Filter and Floater....1-139
Separator - Set Float Unit....1-144
Sercos Module - Change....8-153
Sercos Module - LED Description....8-156
Sercos Module - Load Firmware....8-155
Servo Drive - Change....8-159
Servo Drive - Error Codes....8-169
Servo Drive - LED Description....8-167
Servo Drive - Load Firmware....8-166
Servo Drive - Set Baud Rate....8-165
Servo System - Description....8-149
Short Stop Element - Change Air Nozzle Bushing....7-87
Short Stop Element - Change Bushings....7-84
Short Stop Element - Change Rollers....7-83
Short Stop Element - Check Air Nozzle....7-86
Short Stop Element - Check Function....7-79
Short Stop Element - Check Rollers....7-81
Short Stop Element - Set....7-89
Side Feeder - Change....7-195
Side Feeder - Set Cylinder....7-200
Side Feeder - Set Sensor Position....7-198
Signal Exchange - Configuration....8-544
Signal Lamp - Set....2-20
Splicing Device - Change Photocell....7-145
Splicing Device - Check Drive Unit....7-141
Splicing Device - Check Shock Absorbers....7-153
Splicing Device - Drive Unit Overhaul....7-142
Splicing Device - Set Mechanical Stop....7-150
Splicing Device - Set Photocell Alignment....7-148
Splicing Device - Set Photocell Position....7-146
Splicing Device - Set Photocell Sensitivity....7-148
Spray Nozzle - Check....1-120
Spray Nozzle - Clean....1-124
Spray System - Check....1-229
Spray System - Clean Filter....1-232
Spray System - Clean Peroxide Filter....1-230
Spray System - Set Pressure....1-231
Squee-gee Roller - Change....1-39
Steam System - Change Pressure Regulator....1-194
Steam System - Check Membrane....1-193
Steam System - Clean Filter....1-190
Steam System - Clean Steam Trap....1-188
Steam System - Set Pressure Regulator....1-196
Sterile Air Pipe - Change Nozzle....1-263
Sterile Air Pipe - Set Nozzle Position....1-262
Sterile Air System - Check for Leaks....1-94
Strip Applicator - Set....7-75

Strip Guide - Change Guide Wheel Ball Bearing 7-100
Strip Guide - Check 7-95
Strip Guide - Set 7-97
Strip Magazine - Check Rollers 7-59
Strip Magazine - Check Rotation Monitor 7-58
Strip Magazine - Set Position 7-61
Strip Magazine - Set Sensor and Spring 7-60
Superstructure - Setting Sequence, Type I 1-11
Superstructure - Setting Sequence, Type II 1-12
Superstructure - Settings, Type III 1-13
Support - Change Drive Belts 3-14
Support Guide - Check Linear Units and Runner Blocks 3-27
Support Guide - Grease Runner Block 3-26
Support Guide - Overhaul 3-28
Support Rollers - Change Flange Bushings 4-161
Support Rollers - Check 4-160

T

Temperature Regulators - Calibrate 8-466
Thermocouples - Check 8-487
TMCC2 Card for ASU and DCS Register or Magnetic Mark Detection 8-488
TMCC2 Card for Filling System 8-493
TMCC2 card for Sealing Monitoring 8-497
TMCC2 Controller - Display Report 8-504
TMCC2 Controller - Load Program 8-499
TMCC2 Controller - Photocells Manual Setting 8-501
TMCC2 Controller - Set Communication 8-498
TMCC2 Controller - Set Filling Window 8-503
TMCC2 Controller - Upgrade Firmware 8-509
TPOP - Change AP Link SDL Receiver 2-37
TPOP - Change Gateway PCB 2-39
TPOP - Change Push Button Module 2-33
TPOP - Open Front Panel 2-32
Traceability - Configure JEID 8-305
Traceability - Configure Printer Interface Layout 8-310
Traceability - Load JEID Configuration 8-317
Traceability - Load Printer Interface Layout 8-315
Traceability - Set Jaw Event Lot ID Printing 8-319
Tube Flushing - Check 4-169

U

Upper Forming Ring - Set Clearance 1-306
Upper Forming Ring - Set Finger 1-307

V

Valve - Check 1-84
Valve Panel - Check Photocell Filters 2-9
Valve Panel - Set Pressure Switch 2-10
Volume Adjuster - Check Belt 4-100
Volume Adjuster - Check Bushing 4-103
Volume Adjuster - Overhaul 4-102
Volume Adjuster - Set 4-104
Volume Adjuster - Set Belt 4-101
Volume Curve Piece - Change Cam 4-159
Volume Curve Piece - Check Curve Unit 4-158
Volume Flaps - Change Bushings, Curve Rollers and Shims 4-152
Volume Flaps - Check 4-151
Volume Flaps - Grease 4-157

W

Waste Conveyor - Change Conveyor Belt 2-55
Waste Conveyor - Change Coupling 2-53
Waste Conveyor - Check 2-52
Water Panel - Check Pressure Switch 6-19
Water Panel - Clean Filters 6-20
Web Guide - Change 7-41
Web Guide - Change Rollers And Bearings 7-155
Web Guide - Check 7-154
Web Guide - Check 7-40
Web Guide - Set 7-156
Web Guide - Set Position 7-42
Wheel - Change Rollers and Bushings 5-92
Wheel - Fit 5-97
Wheel - Grease 5-106
Wheel - Referencing 5-101
Wheel - Remove 5-94
Wheel Axis - Change Gearbox 5-87
Wheel Axis - Change Seal and Ball Bearing 5-88
Wheel Axis - Change Servomotor 5-86
Wheel Axis - Check Oil level 5-85

Y

Yoke - Change Bearings 4-75
Yoke - Change Bushings and Scraper 4-74
Yoke - Check bearings 4-71
Yoke - Check Plunger and Locating Pieces 4-72

Tetra Pak®

Label for 40 mm binder ***Note!*** *This page is generated* ***automatically.***

Tetra Pak® A3/CompactFlex
641550-0300 Issue 2014-09
Doc. No. MM-3212175-0111

Tetra Pak® A3/CompactFlex
641550-0300 Issue 2014-09
Doc. No. MM-3212175-0111

Tetra Pak® A3/CompactFlex 1(2)
641550-0300 Issue 2014-09
Doc. No. MM-3212175-0111

Tetra Pak® A3/CompactFlex 2(2)
641550-0300 Issue 2014-09
Doc. No. MM-3212175-0111

Tetra Pak® A3/CompactFlex 1(2)
641550-0300 Issue 2014-09
Doc. No. MM-3212175-0111

Tetra Pak® A3/CompactFlex 2(2)
641550-0300 Issue 2014-09
Doc. No. MM-3212175-0111

Tetra Pak® A3/CompactFlex1(3)
641550-0300 Issue 2014-09
Doc. No. MM-3212175-0111

Tetra Pak® A3/CompactFlex 2(3)
641550-0300 Issue 2014-09
Doc. No. MM-3212175-0111

Tetra Pak® A3/CompactFlex 3(3)
641550-0300 Issue 2014-09
Doc. No. MM-3212175-0111

Tetra Pak® A3/CompactFlex3(3)
641550-0300 Issue 2014-09
Doc. No. MM-3212175-0111

Label for 55 mm binder ***Note!*** *This page is generated* ***automatically.***

Tetra Pak® A3/CompactFlex
641550-0300 Issue 2014-09
Doc. No. MM-3212175-0111

Tetra Pak® A3/CompactFlex
641550-0300 Issue 2014-09
Doc. No. MM-3212175-0111

Tetra Pak® A3/CompactFlex
641550-0300 Issue 2014-09
Doc. No. MM-3212175-0111

Tetra Pak® A3/CompactFlex
641550-0300 Issue 2014-09
Doc. No. MM-3212175-0111

Tetra Pak® A3/CompactFlex
641550-0300 Issue 2014-09
Doc. No. MM-3212175-0111

Tetra Pak® A3/CompactFlex
641550-0300 Issue 2014-09
Doc. No. MM-3212175-0111

Tetra Pak® A3/CompactFlex 1(2)
641550-0300 Issue 2014-09
Doc. No. MM-3212175-0111

Tetra Pak® A3/CompactFlex 2(2)
641550-0300 Issue 2014-09
Doc. No. MM-3212175-0111

Tetra Pak® A3/CompactFlex 1(3)
641550-0300 Issue 2014-09
Doc. No. MM-3212175-0111

Tetra Pak® A3/CompactFlex 2(3)
641550-0300 Issue 2014-09
Doc. No. MM-3212175-0111

Tetra Pak® A3/CompactFlex 3(3)
641550-0300 Issue 2014-09
Doc. No. MM-3212175-0111

Tetra Pak® A3/CompactFlex 3(3)
641550-0300 Issue 2014-09
Doc. No. MM-3212175-0111

Label for 80 mm binder ***Note!*** *This page is generated* ***automatically.***

Tetra Pak® A3/CompactFlex
641550-0300 Issue 2014-09
Doc. No. MM-3212175-0111

Tetra Pak® A3/CompactFlex
641550-0300 Issue 2014-09
Doc. No. MM-3212175-0111

Tetra Pak® A3/CompactFlex
641550-0300 Issue 2014-09
Doc. No. MM-3212175-0111

Tetra Pak® A3/CompactFlex 1(3)
641550-0300 Issue 2014-09
Doc. No. MM-3212175-0111

Tetra Pak® A3/CompactFlex 1(2)
641550-0300 Issue 2014-09
Doc. No. MM-3212175-0111

Tetra Pak® A3/CompactFlex 2(3)
641550-0300 Issue 2014-09
Doc. No. MM-3212175-0111

Tetra Pak® A3/CompactFlex 2(2)

641550-0300 Issue 2014-09

Doc. No. MM-3212175-0111

Tetra Pak® A3/CompactFlex 3(3)

641550-0300 Issue 2014-09

Doc. No. MM-3212175-0111