OM

Operation Manual

Tetra Pak® A3/CompactFlex

641550-0300

HVA

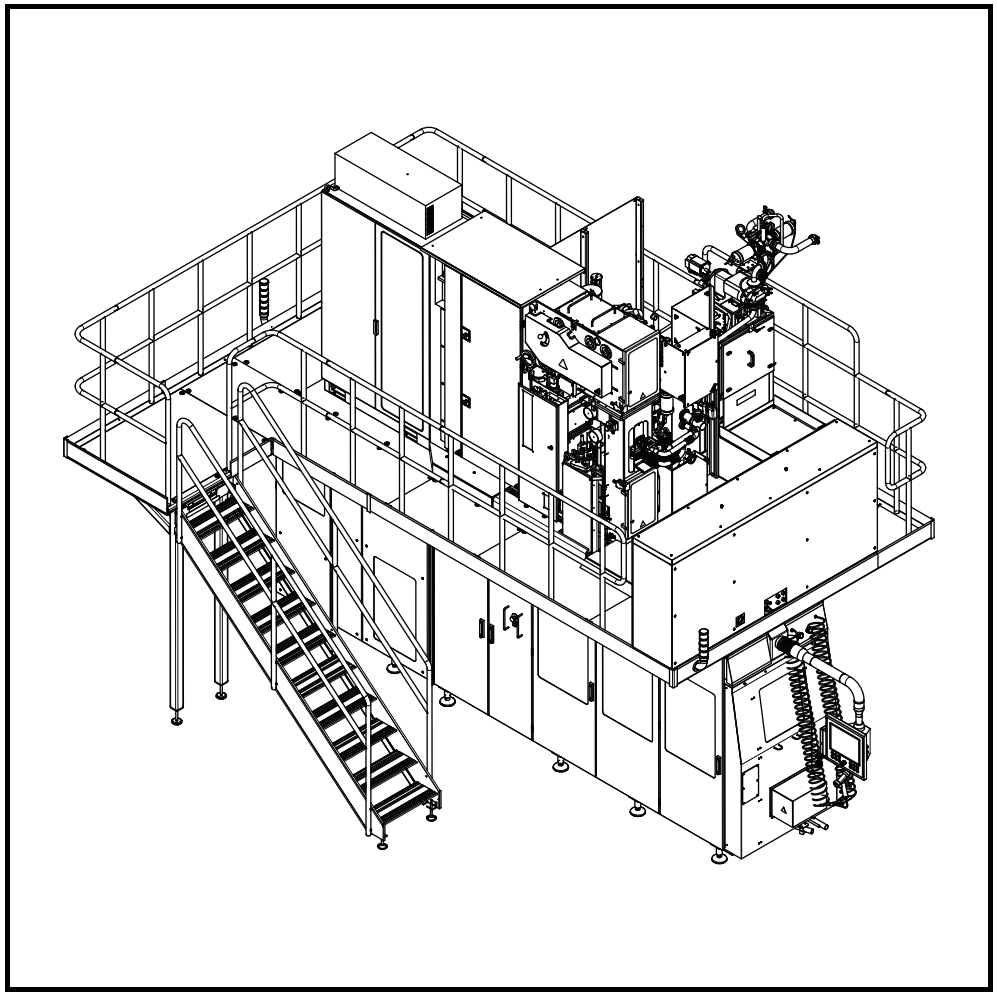

WARNING

Read and follow all safety precaution instructions throughout this manual and on safety signs attached to this equipment.

Failure to follow all safety precaution instructions could result in death or serious injury.

Tetra Pak®

Doc. No. OM-3212179-0110

Copyright © 2014 Tetra Pak International S.A.

All rights reserved. No part of this document may be reproduced or copied in any form or by any means without written permission from Tetra Pak Packaging Solutions.

, Tetra Pak, and all other trademarks displayed in this document are the property of the Tetra Pak International SA. Tetra Pak Packaging Solutions together with Tetra Pak International SA form part of ‘the Tetra Pak Group’. The content of this manual is in accordance with the design and construction of the machine or equipment at the time of publishing. The Tetra Pak Group reserves the right to introduce design modifications without prior notice.

The English language version of this document contains the original instructions. All other language versions are translations of the original instructions.

This document was produced and printed by:

Tetra Pak Packaging Solutions
Via Delfini 1
41123 Modena
Italy

Doc. No. OM-3212179-0110

Issue 2014-09

This manual is valid for:

Series No. / Machine No.
Year of Manufacture Sign.

OM
Operation Manual

Tetra Pak®
A3/CompactFlex
641550-0300

i Introduction
ii Safety Precautions
1 General Description
2 Control Panels
3 Preparation
4 Start
5 Checks
6 Supply of Materials
7 Conversion
8 Stop
9 Care and Cleaning
10 Sterilization Liquid
11 Technical Data

Machine or equipment configurations that this manual is valid for are described on the next page.

Doc. No. OM-3212179-0110
Issue 2014-09

Tetra Pak®
Tetra Pak Packaging Solutions

Valid for:

Name	Drawing Specification and Development Step	Additional Information
Tetra Pak A3/CompactFlex	641550-0300	Optional Equipment: Integrated Cleaning Unit HVA - High Viscosity Aseptic

i Introduction

About the Introduction Chapter

This chapter contains basic information about this manual and the related Tetra Pak equipment.

About the Introduction Chapter i-2

Abbreviations and Terminology i-5

Manual Information i-7

Delivered Manuals i-7

CM i-7

EM i-7

IM i-7

MM i-7

OM i-7

SPC i-7

TeM i-8

Page Layout i-9

Page Numbering i-10

Typographical Conventions i-10

Symbols i-10

Machine Introduction i-11

Intended Use of the Equipment i-11

Manufacturer i-11

Assistance and Inquiries i-11

Declaration of Conformity i-11

Identification i-12

CE Classification i-12

3-A Compliance i-12

Machine Plate i-12

Food Grade Lubricated Machine Plate i-13

Delivered Design Label i-13

Orientation i-14

Hygiene i-15

Packaging Material i-15
Steam Barrier in the Product Valve i-15
How to Use This OM i-16
Purpose of the OM i-16
Operator Workflow i-16

Abbreviations and Terminology

Abbreviation/Terminology	Meaning	Translation
ASU	Automatic Splicing Unit	Automatic Splicing Unit
B	Base (package shape)	Base (package shape)
CE	Communautés Européennes/European Communities	Communautés Européennes/European Communities
CF	CompactFlex	CompactFlex
CIP	Cleaning In Place	Cleaning In Place
DE	Distribution Equipment	Distribution Equipment
E	Edge (package shape)	Edge (package shape)
ECM	Engineering Change Management	Engineering Change Management
EM	Electrical Manual	Electrical Manual
HI	Headspace by gas Injection	Headspace by gas Injection
HVA	High Viscosity Aseptic	High Viscosity Aseptic
ICU	Integrated Cleaning Unit	Integrated Cleaning Unit
IM	Installation Manual	Installation Manual
LED	Light Emitted Diode	Light Emitted Diode
LH	Left Hand	Left Hand
LS	Longitudinal Seal(ing)	Longitudinal Seal(ing)
min	Minimum	Minimum
max	Maximum	Maximum
MKC	Mandatory Kit Corrective	Mandatory Kit Corrective
MKS	Mandatory Kit Human and Product Safety	Mandatory Kit Human and Product Safety
MM	Maintenance Manual	Maintenance Manual
OE	Optional Equipment	Optional Equipment
OK	Optional Kit	Optional Kit
OM	Operation Manual	Operation Manual
PE	Polyethylene	Polyethylene
PM	Packaging Material	Packaging Material
PT	PullTab	PullTab
RH	Right Hand	Right Hand
RK	Rebuilding Kit	Rebuilding Kit
RM	Rebuilding Manual	Rebuilding Manual
S	Slim (package shape)	Slim (package shape)
SA	Strip Applicator	Strip Applicator
SPC	Spare Parts Catalogue	Spare Parts Catalogue
Sq	Square (package shape)	Square (package shape)
TBA	Tetra Brik® Aseptic	Tetra Brik® Aseptic

Abbreviation/Terminology	Meaning	Translation
TeM	Technical Manual	Technical Manual
TMCC	Tetra Multi-purpose Compact Controller	Tetra Multi-purpose Compact Controller
TPMS	Tetra Pak Maintenance System	Tetra Pak Maintenance System
TPOP	Tetra Pak Operator Panel	Tetra Pak Operator Panel
TS	Transversal Sealing	Transversal Sealing
UK	Upgrade Kit	Upgrade Kit
UP	Update Pages	Update Pages

Manual Information

The Tetra Pak Group recommends reading all delivered manuals carefully. Make sure that the delivered manuals are available to personnel who operate or maintain the equipment.

It is important to keep this manual for the lifetime of the equipment and to pass the manual on to any subsequent holder or user.

Any item that is named specifically in this manual is to be considered a designated item for the equipment. Designated items are verified by the Tetra Pak Group for use with the equipment.

The Tetra Pak Group will not be held responsible for any damage, loss, injury, or death caused by not following the instructions in the manuals that accompany this equipment, or by a failure to use designated items specified in the manuals that accompany this equipment.

Delivered Manuals

Manuals delivered with this equipment:

CM

The Conversion Manual provides technicians with information on converting the equipment between different production modes.

EM

The Electrical Manual provides technicians with information about the equipment's electrical system.

IM

The Installation Manual provides technicians with information required to safely install the equipment.

MM

The Maintenance Manual provides technicians with information on maintaining the equipment.

OM

The Operation Manual provides the operator with information on handling and operating the equipment before, during, and after production.

SPC

The Spare Parts Catalogue provides the information necessary to order spare parts from the Tetra Pak Group.

TeM

The Technical Manual provides technicians with information which can be:

- information required to safely install the equipment
- information required to maintaining the equipment
- information about the machine's/equipment's electrical system
- information necessary to order spare parts from the Tetra Pak Group
- other technical information

Page Layout

Every main page in a manual contains a header and a footer. The page header contains the chapter name (1) and the section name (2). The page footer contains the page number (3), and the document number (4). See also the Page Numbering section.

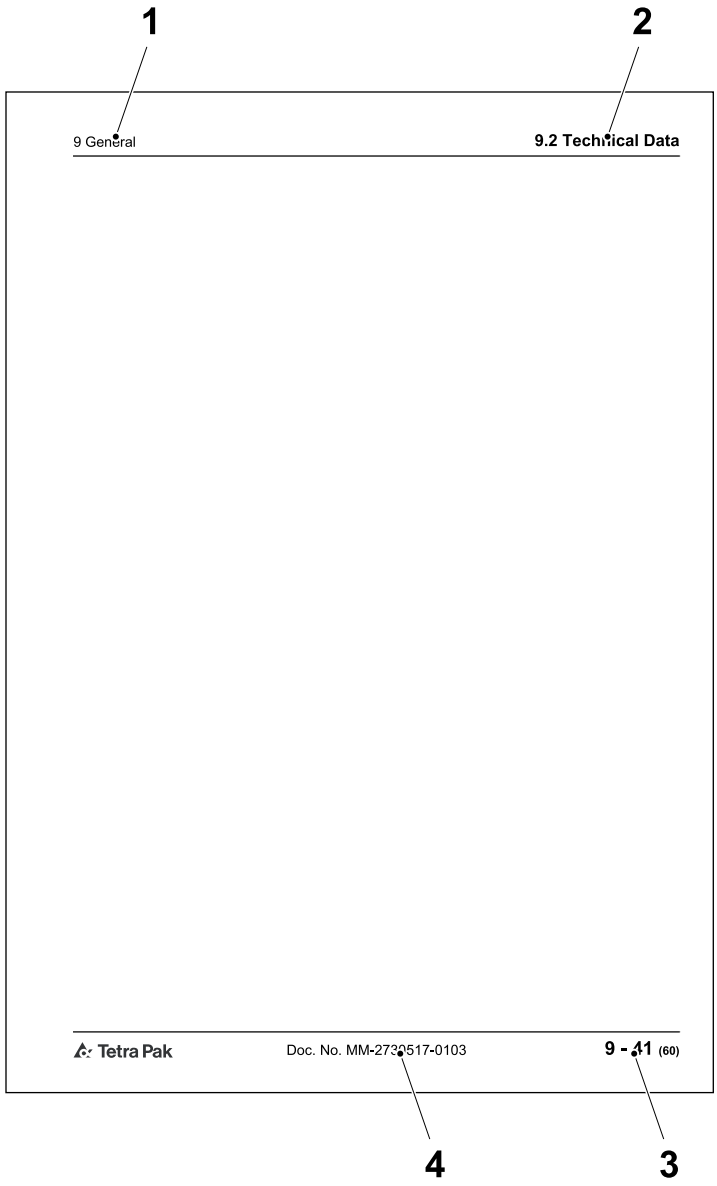

1 Chapter name
2 Section name
3 Page number
4 Document number

Page Numbering

A page number has three parts:

- chapter number (1)
- consecutive page number (2) within the chapter
- total number of pages (3) in the chapter

Note! The letters UP may replace the chapter number (1) if the manual includes update pages. The consecutive page number (2) and the total number of pages (3) of update pages do not follow the existing sequential page numbering of the chapter.

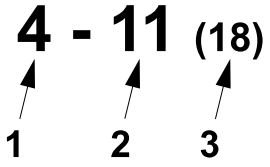

1 Chapter number
2 Consecutive page number
3 Total number of pages

Typographical Conventions

Controls on the operator panel, emergency stop devices, and program steps are printed in CAPITAL LETTERS.

Menu names, button names and other text displayed in software are printed in COURIER.

Cross-references are underlined.

Symbols

Symbols used in illustrations.

	A pointer arrow indicates the position of an object.
	A zoom arrow indicates that an object view is enlarged. The arrow points towards the enlarged view of the object.
	A rotation movement arrow indicates rotational movement of an object. The arrow points in the direction of rotation.
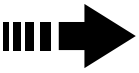	A straight movement arrow indicates movement of an object. The arrow points in the direction of movement.

Machine Introduction

Intended Use of the Equipment

The intended use of this Tetra Pak® equipment is to pack liquid food products.

All other use is strictly prohibited. The Tetra Pak Group will not be held responsible for injury or damage if the equipment is used for any other purpose than the intended use described above.

Manufacturer

This Tetra Pak equipment has been manufactured by

Tetra Pak Packaging Solutions
Via Delfini 1
41123 Modena
Italy

Assistance and Inquiries

For assistance when operating this equipment, or other inquiries, comments, or suggestions, submit the questions or give feedback by using the QuTI-P tool. Type QuTI-P in the address field of your browser. If access to QuTI-P is not available, request access by contacting the Global Service Desk.

If access to the Tetra Pak® intranet is not available, contact the nearest Tetra Pak representative.

Declaration of Conformity

A copy of the Declaration of Conformity can be found in the Installation Manual. The signed Declaration of Conformity is delivered separately with the equipment.

Identification

CE Classification

This equipment complies with the basic health and safety regulations of the European Economic Area (EEA).

3-A Compliance

This equipment complies with the 3-A Sanitary Standards for Formers, Fillers, and Sealers of Containers for Fluid Milk and Fluid Milk Products, Number 17-11.

Machine Plate

The illustration below shows an example of the machine plate and its location on the equipment. The machine plate carries data needed when contacting Tetra Pak® concerning this specific equipment.

Make sure that the equipment data in the front pages of this manual corresponds to the machine plate data and the machine specification.

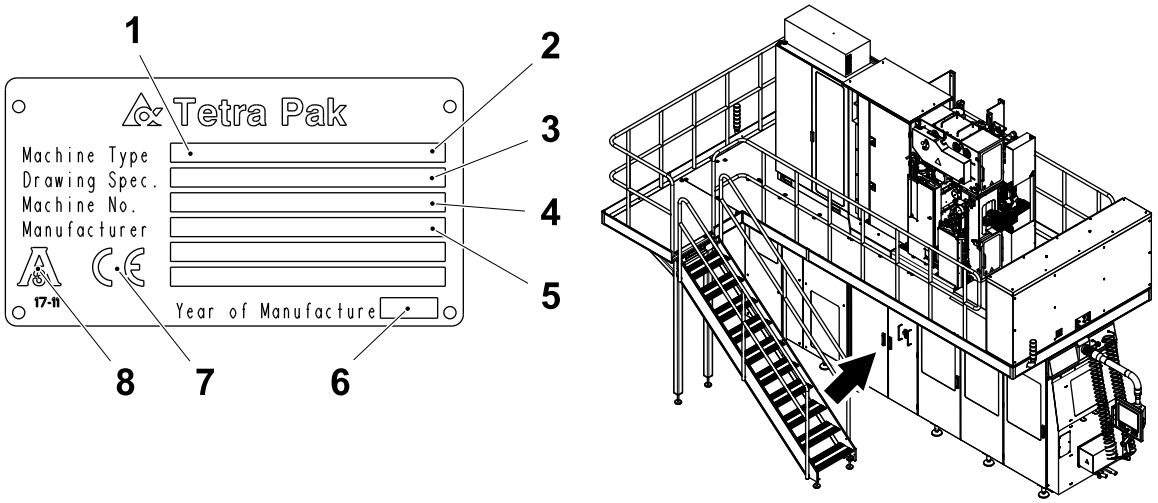

1 Machine type
2 Volume
3 Drawing specifications
4 Machine serial number
5 Manufacturer
6 Year of manufacture
7 CE mark
8 3-A mark (if applicable)

Food Grade Lubricated Machine Plate

The illustration below shows an example of the Food Grade Lubricated Machine plate and its location on the equipment. The Food Grade Lubricated Machine plate indicates that lubricants used in this equipment are of food grade quality.

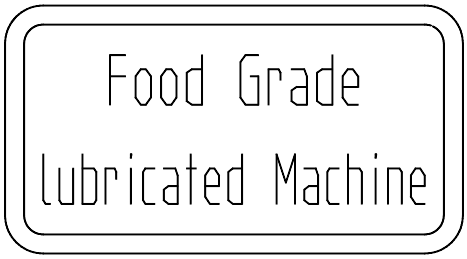

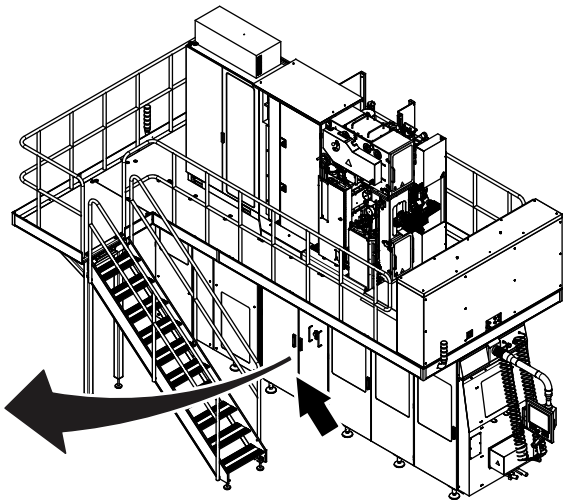

Delivered Design Label

The illustration below shows an example of the delivered design label and its location on the equipment. The delivered design label lists information tracking any rebuilding done to the electrical design, and any alterations done in the electrical cabinet and to related electrical components.

The delivered design label is filled in by the person performing the rebuilding or alteration.

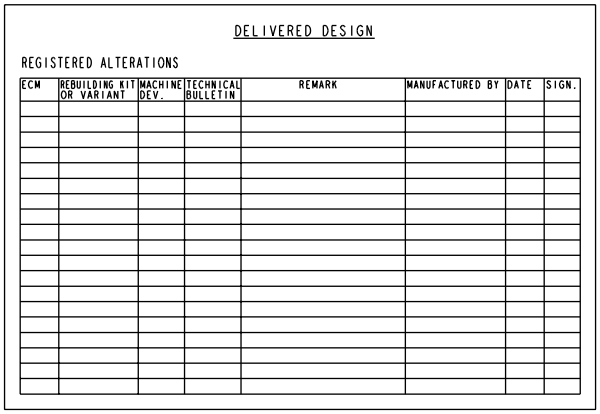

DELIVERED DESIGN

REGISTERED ALTERATIONS

ECM	REBUILDING KIT OR VARIANT	MACHINE DEV.	TECHNICAL BULLETIN	REMARK	MANUFACTURED BY	DATE	SIGN.

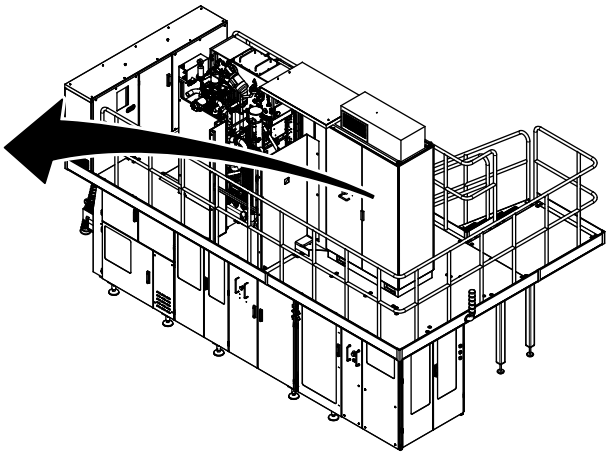

Orientation

The illustration below shows the orientation of the equipment. This orientation information will be used throughout this manual. The arrows indicate the flow of material.

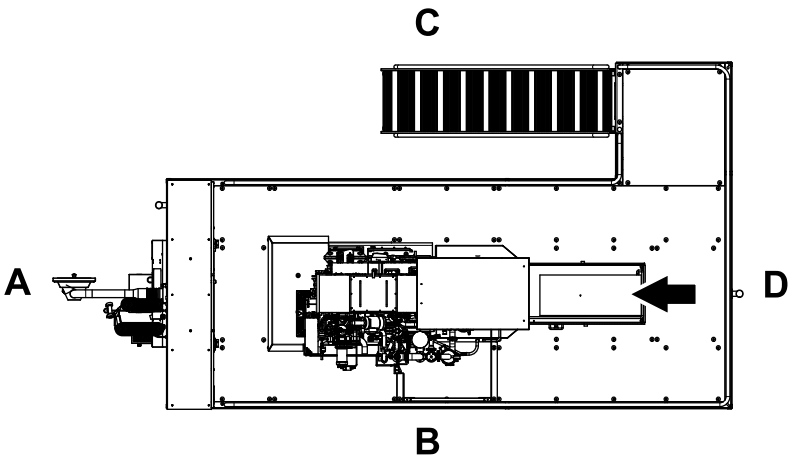

A Front
B Right-hand side
C Left-hand side
D Back

Hygiene

Packaging Material

Avoid microbiological contamination of the packaging material:

- Always protect your packaging material against contamination.
- Always keep the doors to the filling room (area) closed. To prevent contamination via air streams, never open a window when the machine is in production.
- Never clean the floors or the machine in the filling room (area) when the machine is in production.
- Compressed air used for cleaning purposes is to be used only for cleaning filters and should only be used outside of the filling room (area) or in the final folder compartment of the filling machine.
- Prepare the splicing of the packaging material as late as possible.
- Disinfect your hands before touching anything that may come into contact with the product. Use code H disinfectant. See the Technical Data chapter of the Maintenance Manual.
- Keep your hands clean.
- Always wear some type of hair protection (cap or hairnet) and clean clothes (preferably white).
- Do not wear a watch, ring, necklace, earrings, or any other exposed jewellery.

Steam Barrier in the Product Valve

The filling machine's product valve employs a steam barrier to separate the product supply line from the filling machine. The steam barrier allows the machine and the product supply line to be independently sterilised to commercial sterility conditions.

- Never disengage the steam barrier, and never interrupt the steam supply when the filling machine or the product supply line is being brought to the pre-sterilization phase, or when the machine is already in the production phase.
- If any maintenance activity requires disengagement of the steam barrier or the interruption of the steam supply to the machine, make sure that the product supply line is idle and empty of product.

How to Use This OM

Purpose of the OM

The Operation Manual provides operators with information on handling and operating the equipment before, during, and after production.

Operator Workflow

Beginning with Chapter 3, the content is structured to follow the operator workflow, as described below.

Preparation Cycle

a) Preparation

Production Cycle

b) Start

c) Checks

d) Supply of Materials

e) Conversion

f) Change of Product

g) Stop

Care Cycle

h) Care and Cleaning

ii Safety Precautions

Description

Safety Precaution Instructions

WARNING

Read and understand this manual before using the machine.
Failure to follow safety precautions and instructions can result in death or serious injury.

Definition of Lockout Procedure

A lockout procedure is a procedure to put each necessary energy isolating device in its safe position to prevent the energisation of the equipment, such as when a maintenance procedure should be carried out.

A lockout is the use of a device, for example, a padlock, to make sure that an energy isolating device cannot be operated.

An energy isolating device is a mechanical device that physically prevents transmission or release of energy, such as an electrical supply disconnecting device.

Description ii-2

Safety Messages Description..... ii-7

Personnel Requirements ii-8

Skilled Person ii-8

Instructed Person ii-8

Safety Signs..... ii-9

Location of Safety Signs ii-11

Location of Safety Signs - ICU (OE) ii-20

Location of Safety Signs - HVA (OE) ii-21

ASU iLine XT Version (OE) ii-23

Protective Devices ii-24

Emergency Stop..... ii-24

Emergency Stop Push-Buttons ii-25

Safeguards..... ii-25

Safety Mat ii-28

Indicating Tower..... ii-29

Audible Alarm ii-30

Safe Manual Handling ii-31

Personal Protection ii-32

Noise ii-32

Entanglement..... ii-32

Hazardous Substances..... ii-33

Disposal of Chemical Substances..... ii-33

Hydrogen Peroxide (H_2O_2)..... ii-33

Emergency Procedures ii-33

Eyes ii-34

Skin..... ii-34

Inhalation ii-34

Ingestion **ii-34**
Personal Protective Equipment **ii-34**
Handling of Hydrogen Peroxide **ii-35**
Storage of Hydrogen Peroxide **ii-36**
Disposal of Hydrogen Peroxide **ii-37**
Caustic Soda/Sodium Hydroxide (NaOH) **ii-37**
Emergency Procedures **ii-37**
Inhalation **ii-37**
Ingestion **ii-37**
Skin Contact **ii-37**
Eye Contact **ii-37**
Accidental Release, Spillage or Splashing **ii-37**
Personal Protective Equipment **ii-38**
Handling and Storage of Caustic Soda/Sodium Hydroxide **ii-38**
Disposal of Caustic Soda/Sodium Hydroxide **ii-38**
Estinguishing Media **ii-38**
Specific Hazards **ii-38**
Protective Measures in Fire **ii-39**
Nitric Acid (HNO_3) **ii-39**
Emergency Procedures **ii-39**
Inhalation **ii-39**
Ingestion **ii-39**
Skin Contact **ii-39**
Eye Contact **ii-39**
Accidental Release, Spillage or Splashing **ii-40**
Personal Protective Equipment **ii-40**
Handling and Storage of Nitric Acid **ii-40**
Disposal of Nitric Acid **ii-41**
Fire **ii-41**
Explosion **ii-41**
Estinguishing Media **ii-41**
Special Information **ii-41**
Protective Measures In Fire **ii-41**

Supply Systems **ii-42**

Electrical Supply **ii-42**

Residual Voltage **ii-43**

Electrical Cabinet **ii-43**

Socket Outlet **ii-44**

Air Supply **ii-45**

Steam Supply **ii-46**

Water Supply **ii-47**

This page intentionally left blank

Safety Messages Description

A safety message is always accompanied by a safety alert symbol and a signal word.

The safety alert symbol is used to alert about potential personal injury hazards. To avoid hazards, obey all safety messages that follow this symbol.

The following safety alert symbols and signal words are used in this manual to inform the user of hazards.

DANGER	Danger indicates an imminently hazardous situation which, if not avoided, **will** result in **death or serious injury**.
WARNING	Warning indicates a potentially hazardous situation which, if not avoided, **could** result in **death or serious injury**.
CAUTION	Caution indicates a potentially hazardous situation which, if not avoided, **may** result in **minor or moderate injury.** It may also be used to alert against unsafe practices.
CAUTION	Caution without the safety alert symbol indicates a potentially hazardous situation which, if not avoided, **may** result in **property damage**.

Personnel Requirements

Note! Personnel includes all persons working on or near this equipment.

Only skilled or instructed persons are allowed to work with this equipment.

Skilled Person

A skilled person must have relevant education and experience to enable him or her to identify hazards, analyse risks, and avoid hazards which electricity, machinery, chemicals, other energies, and supply systems on this equipment can create.

Skilled persons must meet local regulations, such as certifications and qualifications for working with these energies and systems.

Instructed Person

An instructed person must be adequately advised or supervised by a skilled person. The skilled person enables the instructed person to identify hazards, analyse risks, and avoid hazards which electricity, machinery, chemicals, other energies, and supply systems on this equipment can create.

Safety Signs

WARNING

Damaged or missing safety signs.
Safety signs are used to indicate safety hazards. If the signs are missing or damaged, they can not fulfil this function. Replace all missing or damaged safety signs immediately.

Safety signs are attached to the equipment. The table below lists all the signs that are used, and illustrations show their locations on the equipment. Each position number refers to two standards of a safety sign in the table, but only one is used on the equipment.

- Make sure that each safety sign is legible and in its correct position after installation and maintenance.
- Replace all missing or damaged safety signs immediately.

Pos	ISO Standard	ANSI Standard
1	 **Moving part can crush and cut.** Do not operate with guard removed. Follow lockout procedure before maintenance.	
2	 **Hazardous voltage.** Will shock, burn, or cause death. Follow lockout procedure before maintenance.	
3	 **Chemical burn hazard.** Wear personal protective equipment.	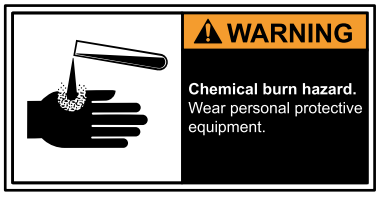

(Cont'd)

(Cont'd)

Pos	ISO Standard	ANSI Standard
4	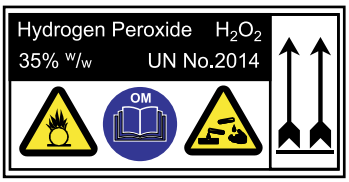	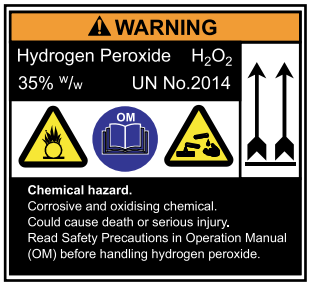
	Chemical hazard. Corrosive and oxidising chemical. Could cause death or serious injury. Read Safety Precautions in Operation Manual (OM) before handling hydrogen peroxide.	
5		
	Risk of eye injury. Wear eye protection.	
6		
	Hot surface. Do not touch. Follow lockout procedure before maintenance.	
7		
	Hazardous voltage. Can shock, burn, or cause death. Read Maintenance Manual (MM) before using this socket outlet.	
8		
	Hazardous rotating shafts and belts. Can crush and cut. Keep hands clear while the machine is operating.	

(Cont'd)

(Cont'd)

Pos	ISO Standard	ANSI Standard
9		
	Hot oil. Wear protective gloves.	

Location of Safety Signs

The illustration shows where the safety signs are located. The position numbers refer to the table in the Safety Signs section.

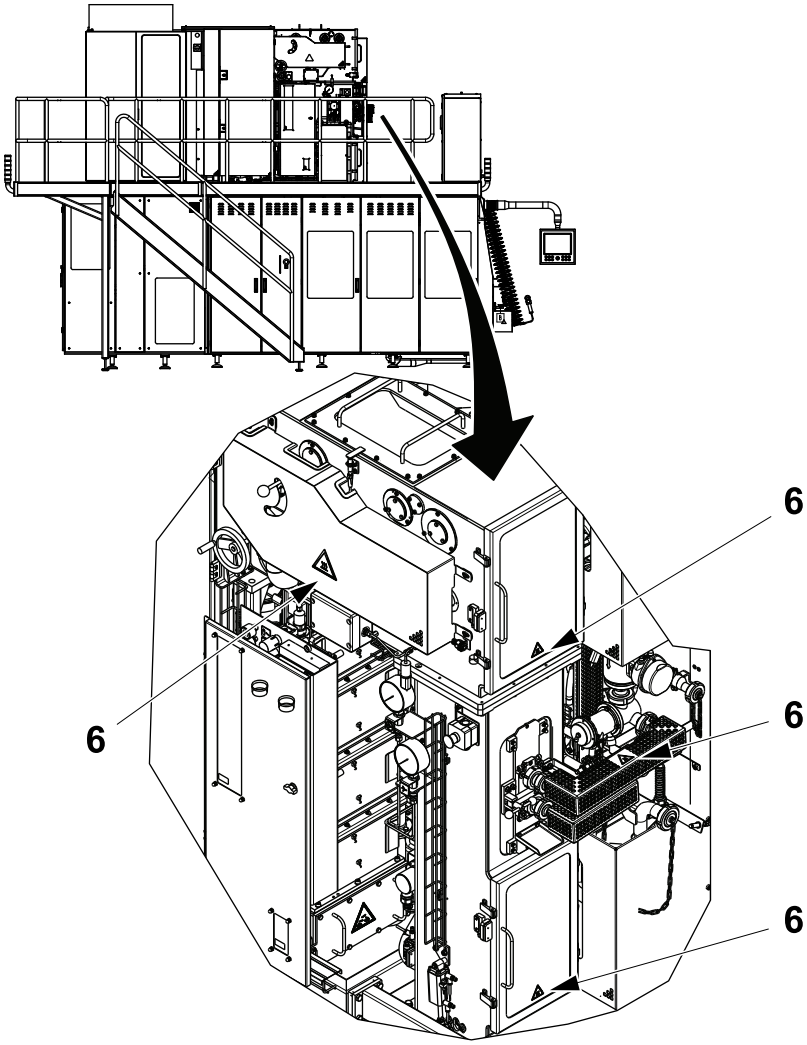

(Cont'd)

(Cont'd)

The illustration shows where the safety signs are located. The position numbers refer to the table in the Safety Signs section.

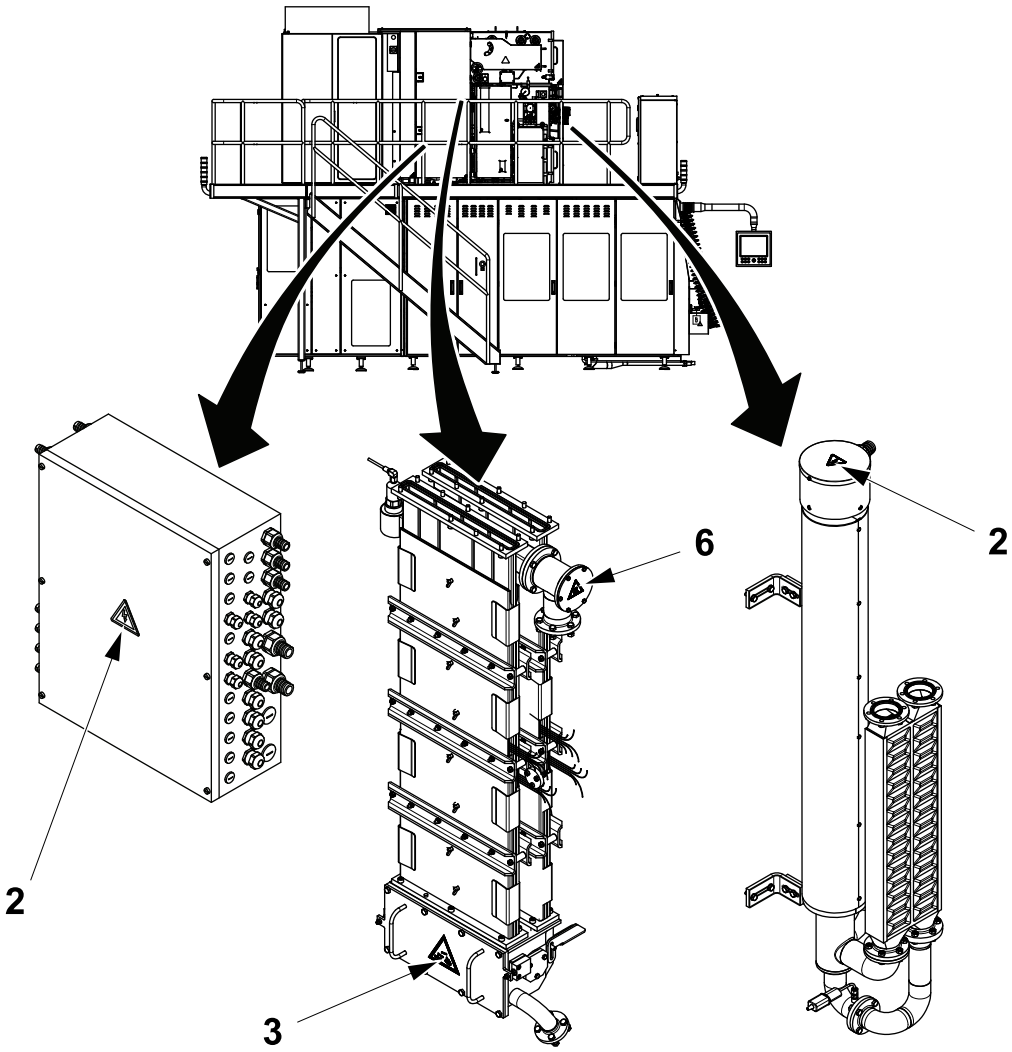

(Cont'd)

(Cont'd)

The illustration shows where the safety signs are located. The position numbers refer to the table in the Safety Signs section.

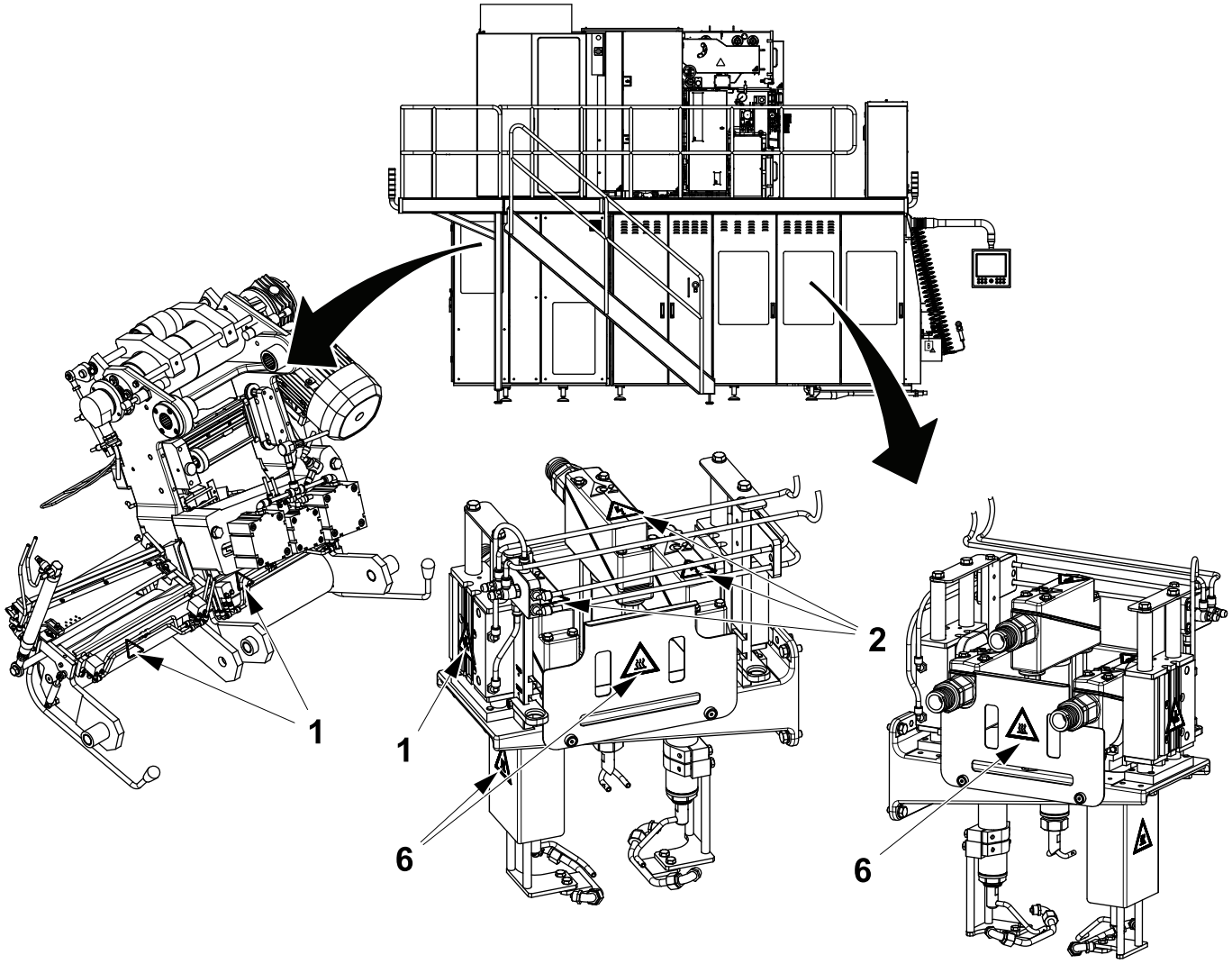

(Cont'd)

(Cont'd)

The illustration shows where the safety signs are located. The position numbers refer to the table in the Safety Signs section.

Note! The sign (6), on the outer plate of the hot air element SS, in the ASU is introduced for Tetra Pak A3/CompactFlex from T-order 21220/00290.

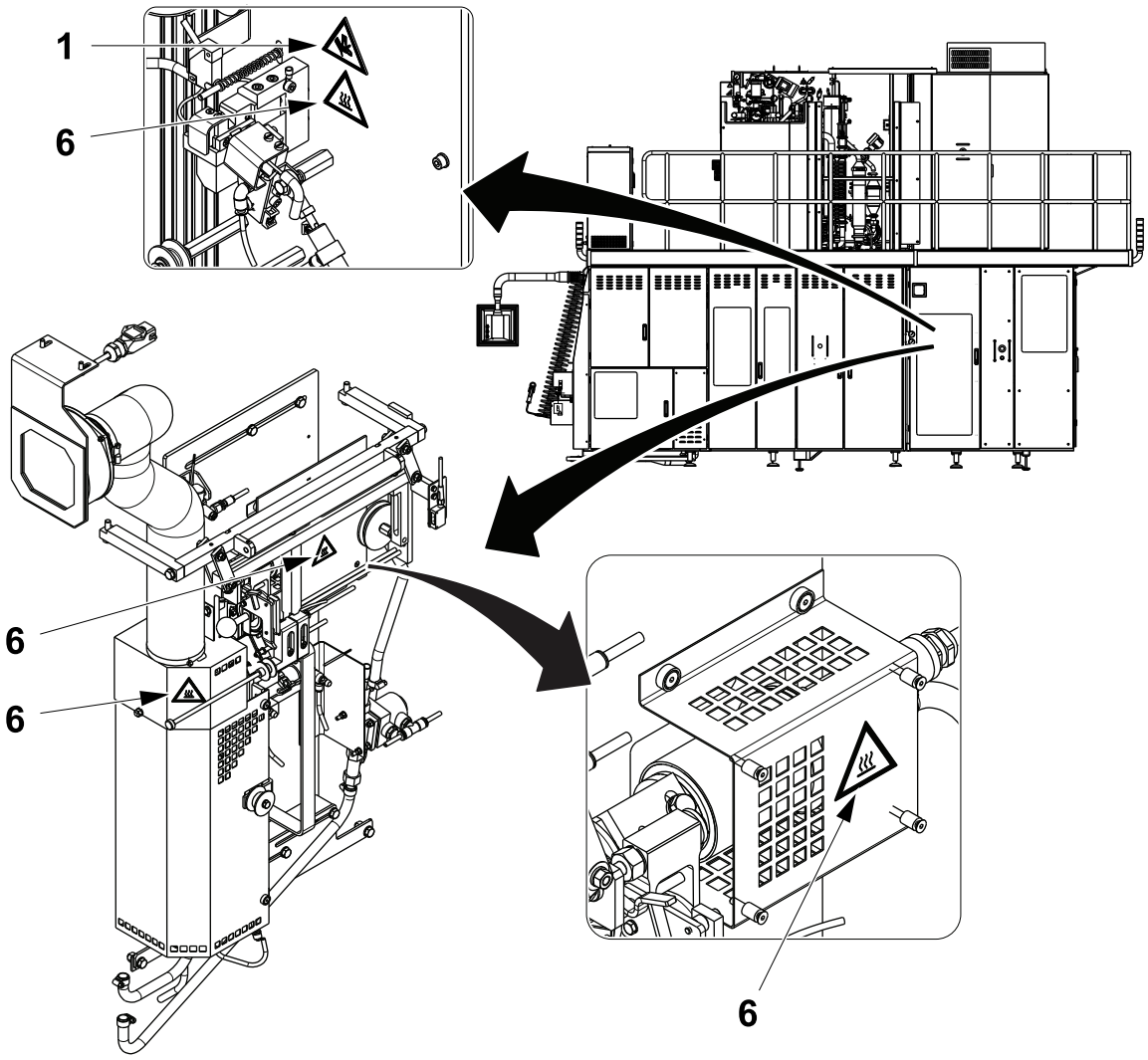

(Cont'd)

(Cont'd)

The illustration shows where the safety signs are located. The position numbers refer to the table in the Safety Signs section.

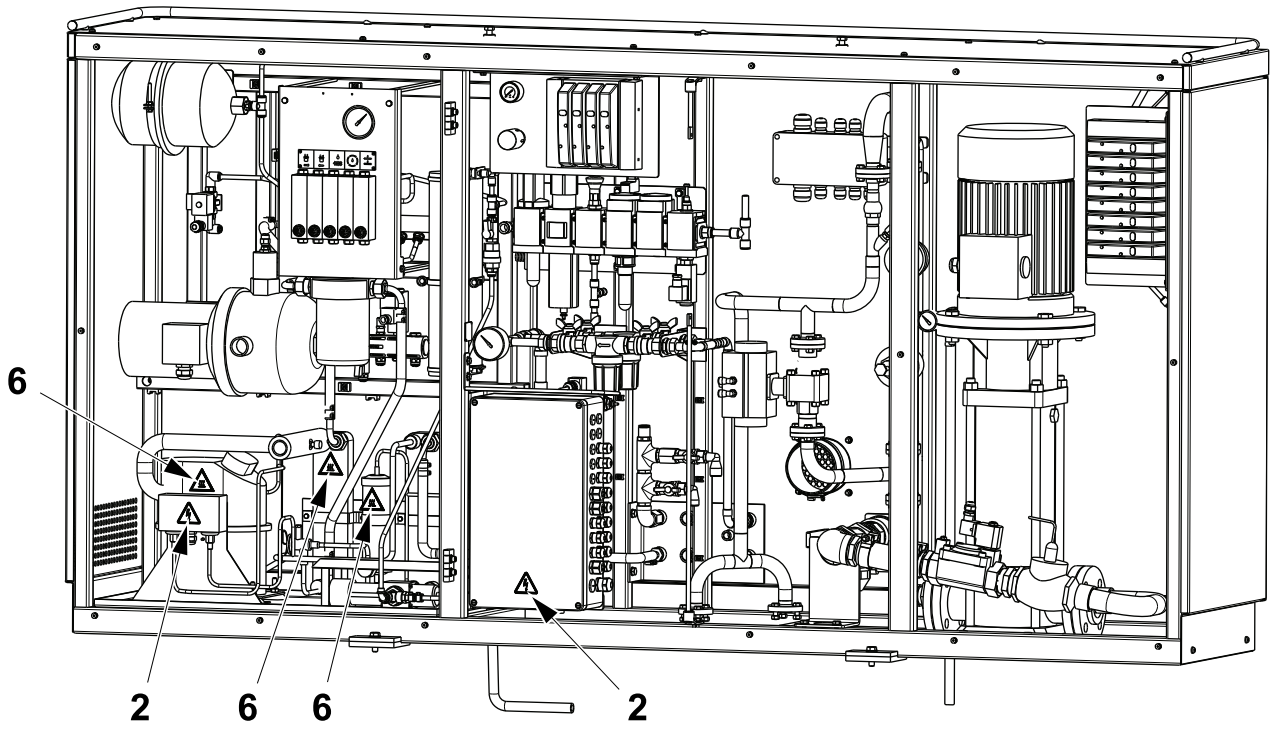

(Cont'd)

(Cont'd)

The illustration shows where the safety signs are located. The position numbers refer to the table in the Safety Signs section.

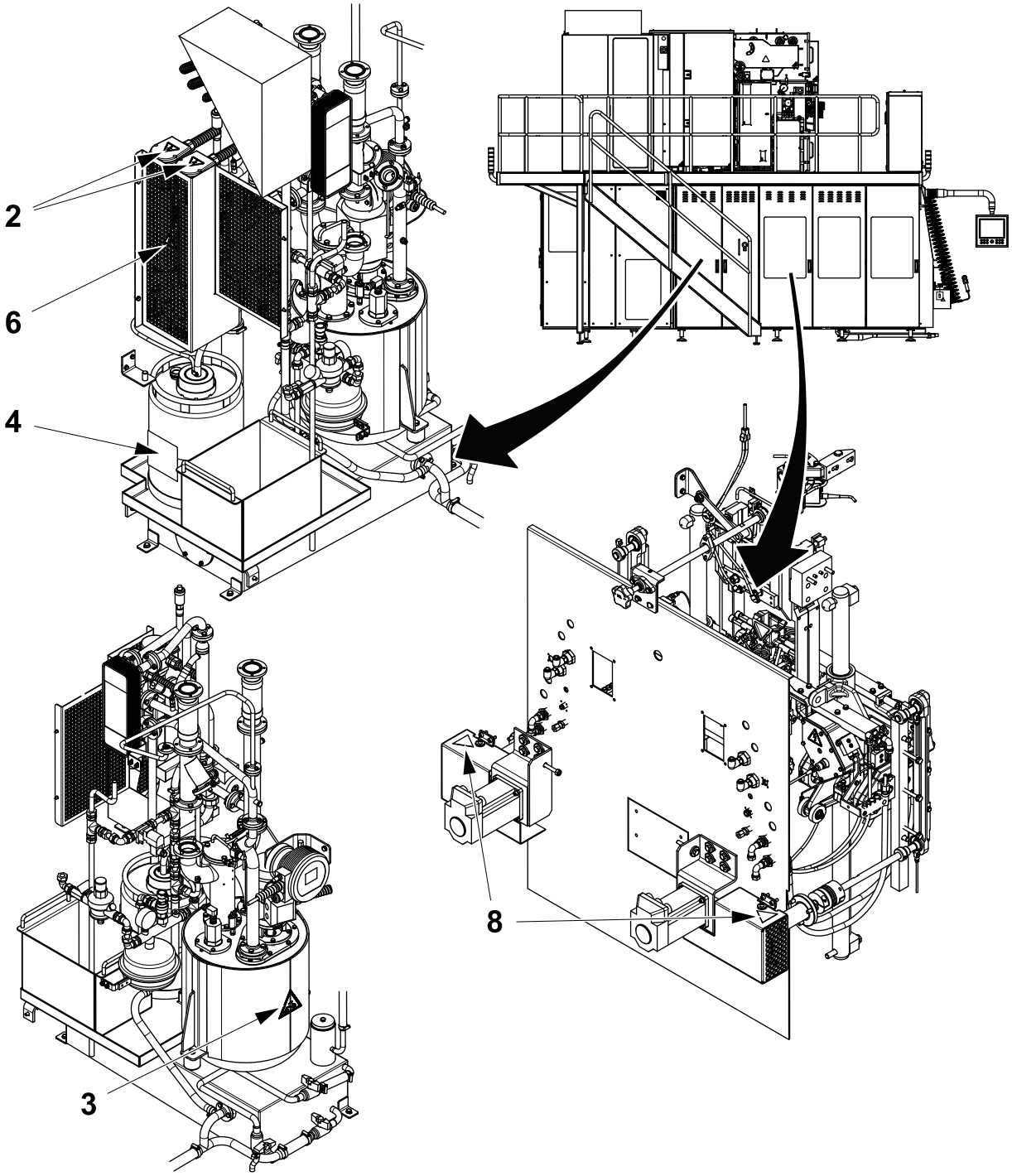

(Cont'd)

(Cont'd)

The illustration shows where the safety signs are located. The position numbers refer to the table in the Safety Signs section.

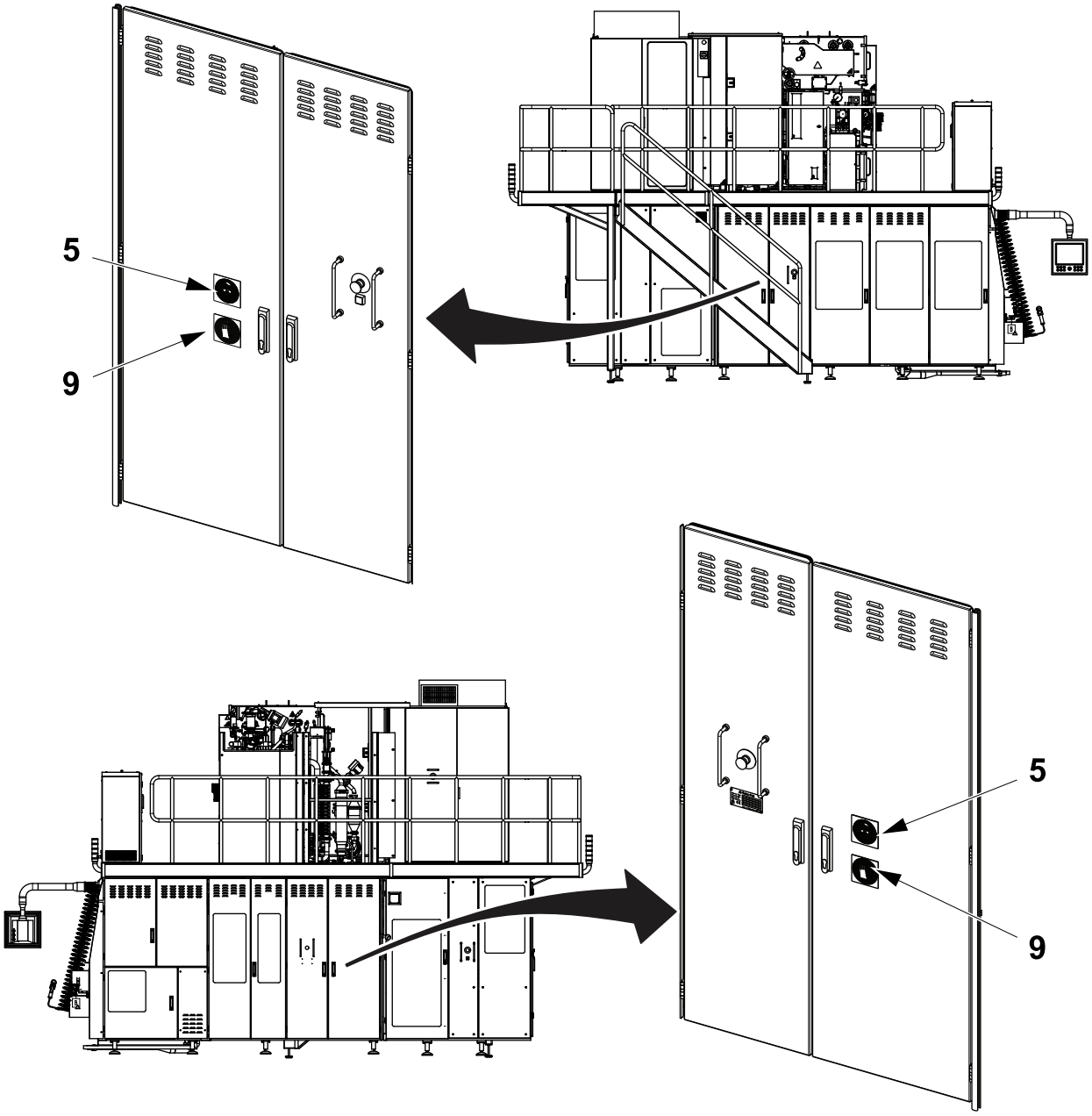

(Cont'd)

(Cont'd)

The illustration shows where the safety signs are located. The position numbers refer to the table in the Safety Signs section.

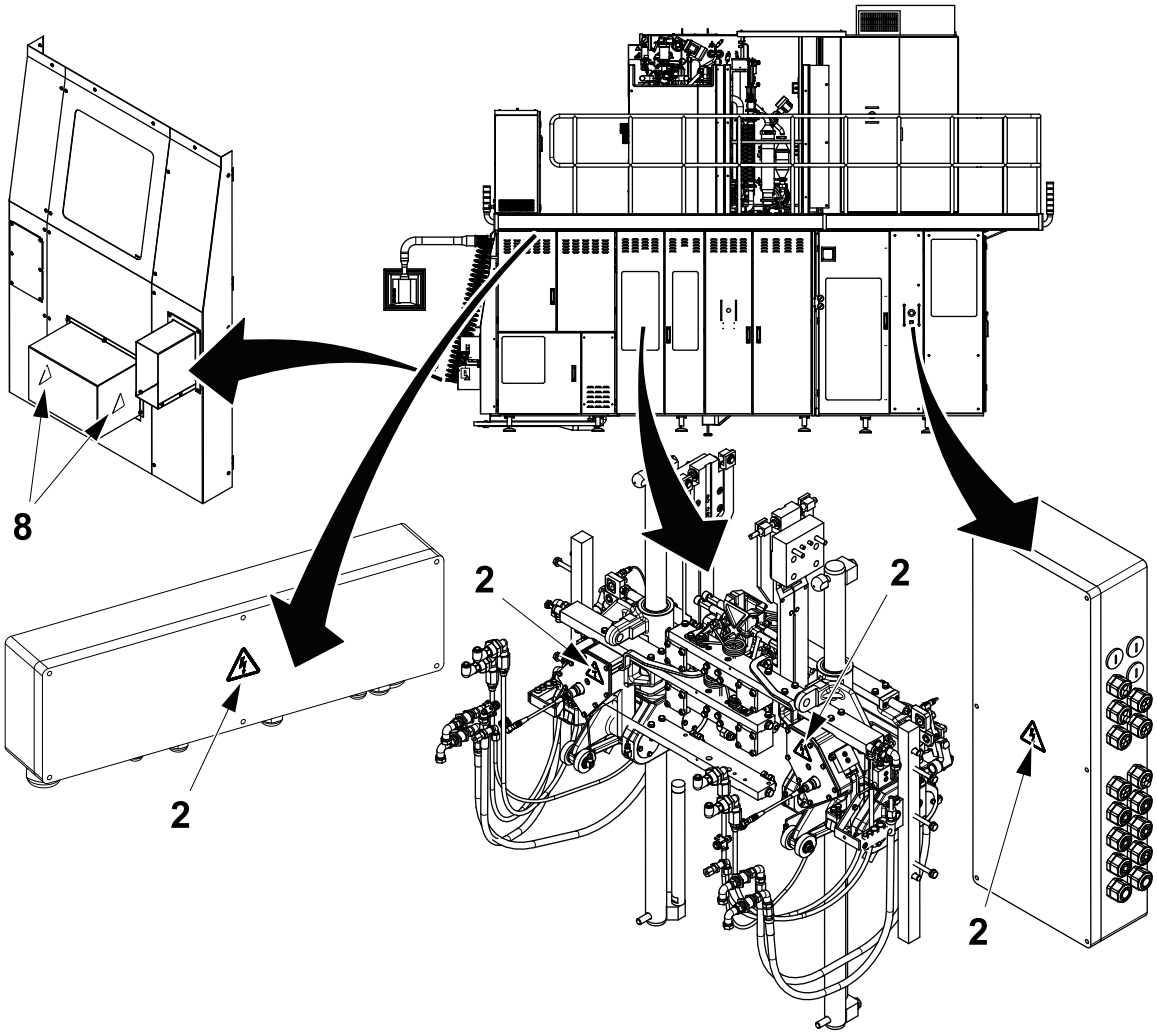

(Cont'd)

(Cont'd)

The illustration shows where the safety signs are located. The position numbers refer to the table in the Safety Signs section.

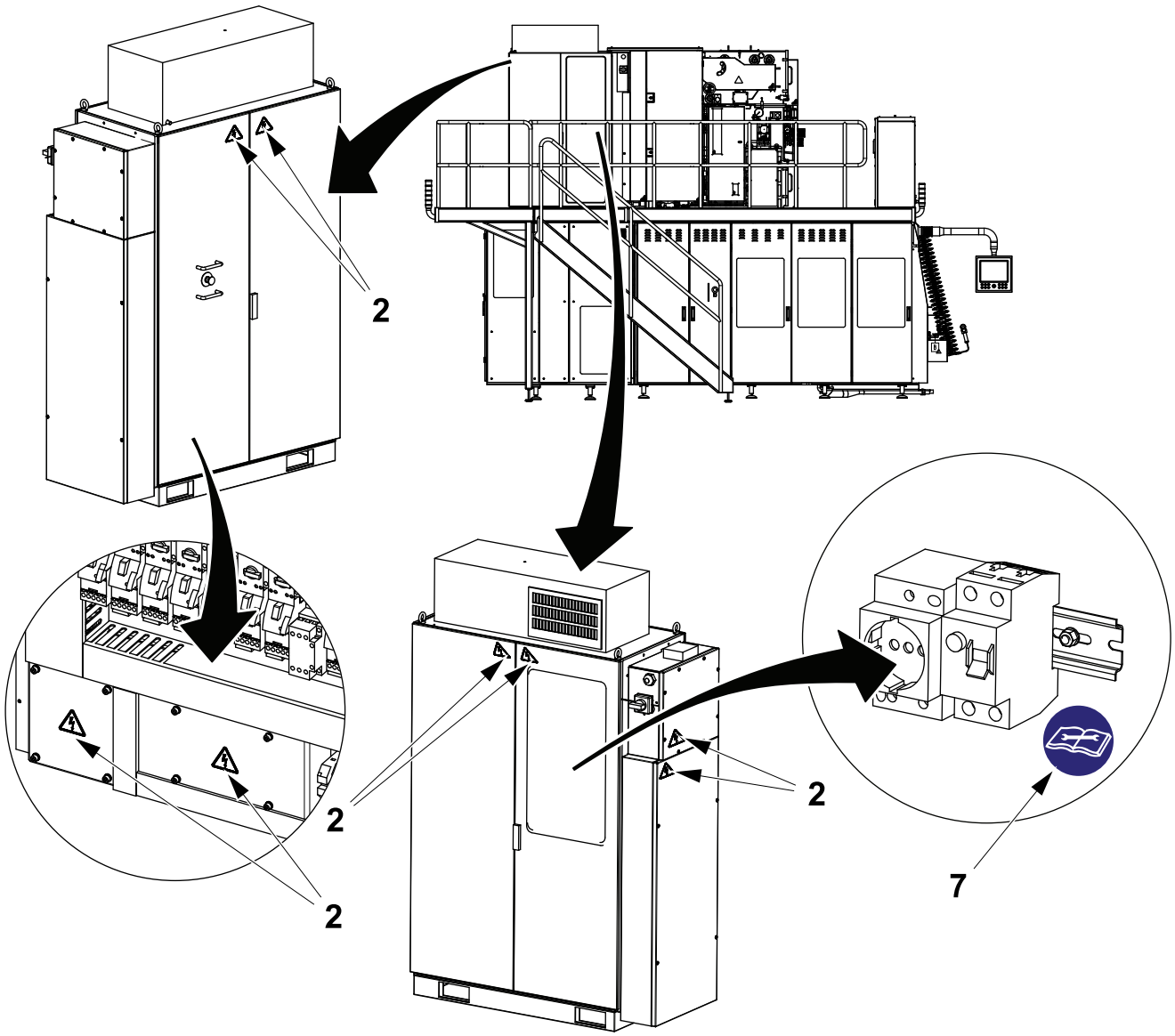

Location of Safety Signs - ICU (OE)

The illustration shows where the safety signs are located. The position numbers refer to the table in the Safety Signs section.

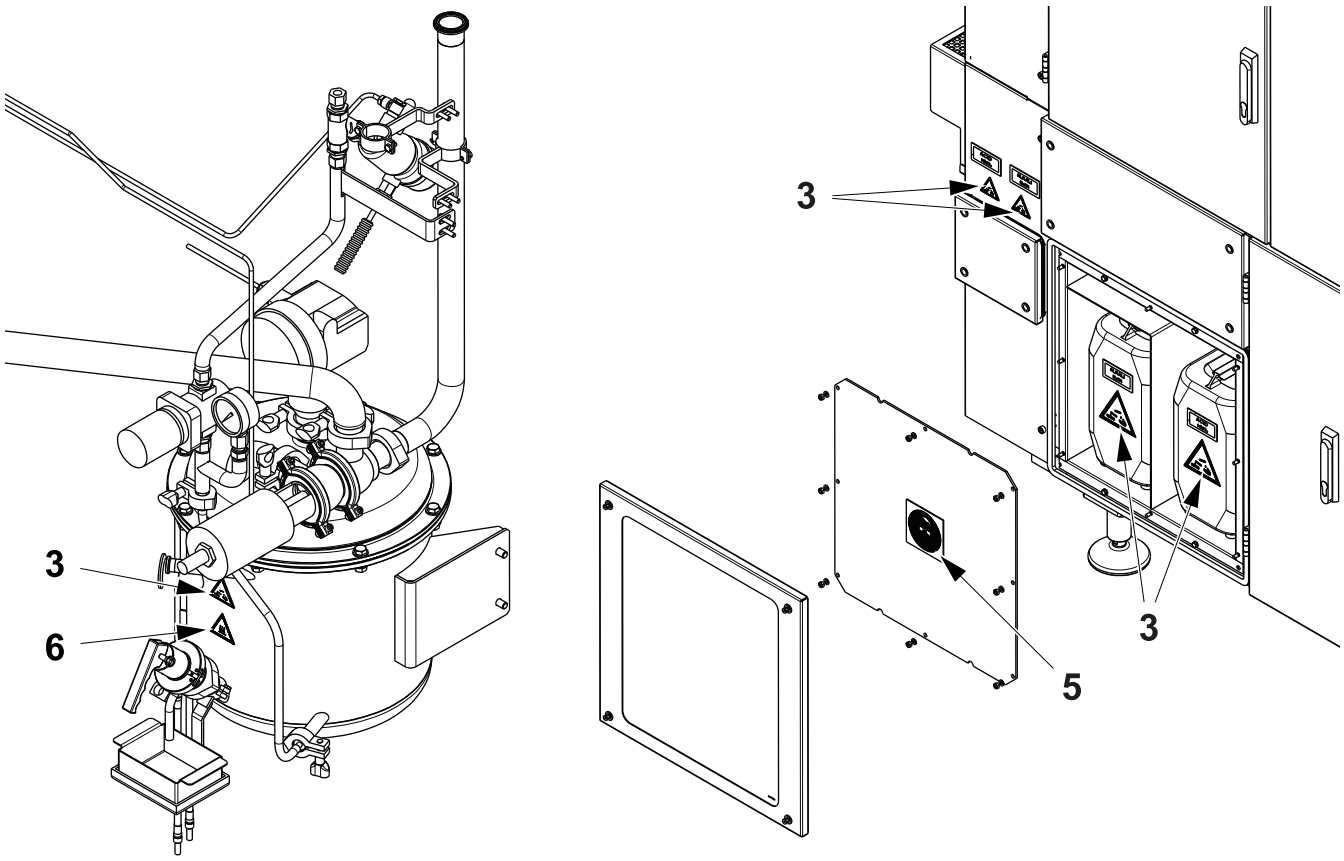

Location of Safety Signs - HVA (OE)

The illustration shows where the safety signs are located. The position numbers refer to the table in the Safety Signs section.

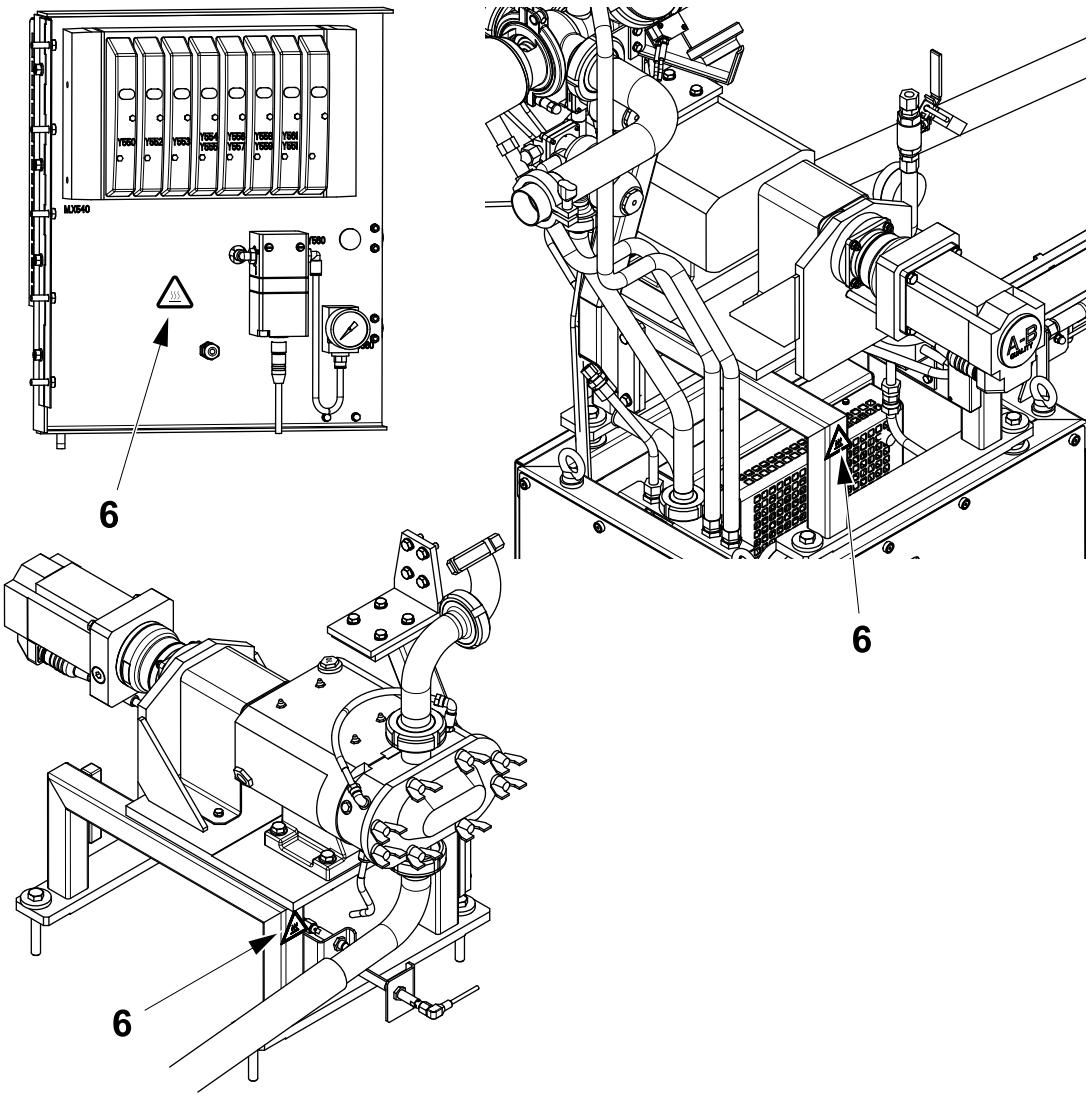

(Cont'd)

(Cont'd)

The illustration shows where the safety signs are located. The position numbers refer to the table in the Safety Signs section.

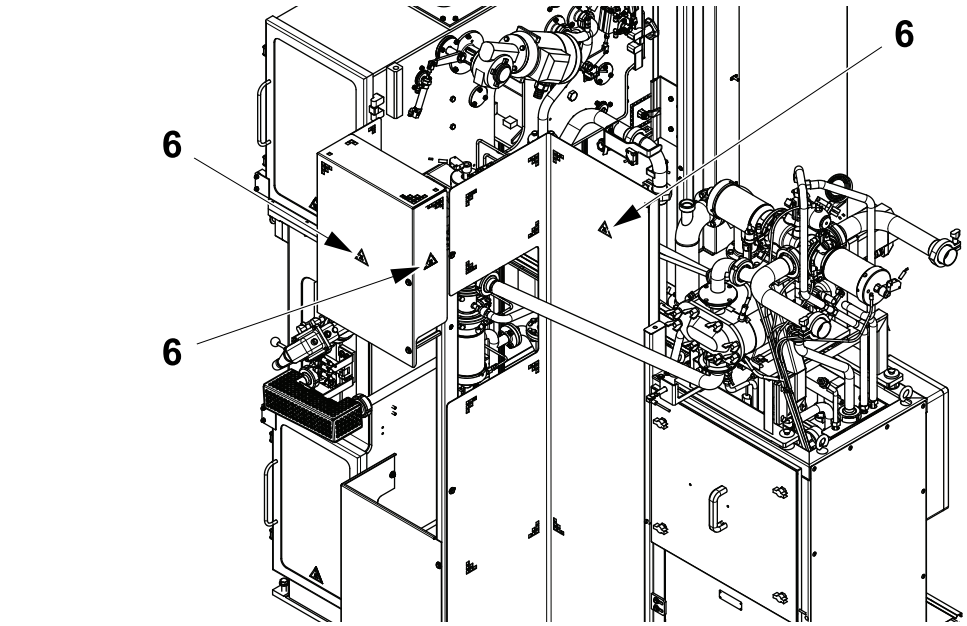

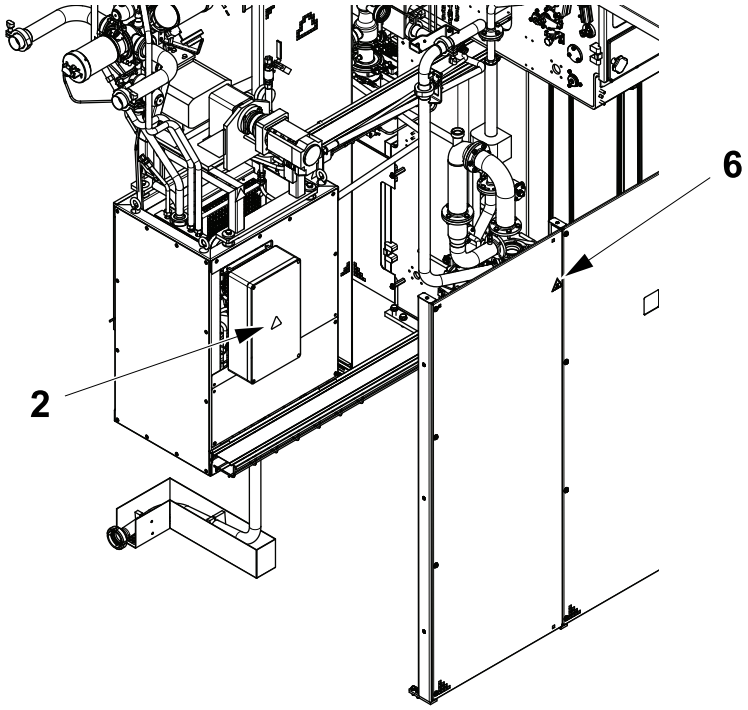

ASU iLine XT Version (OE)

The illustration shows where the safety signs are located. The position numbers refer to the table in the Safety Signs section.

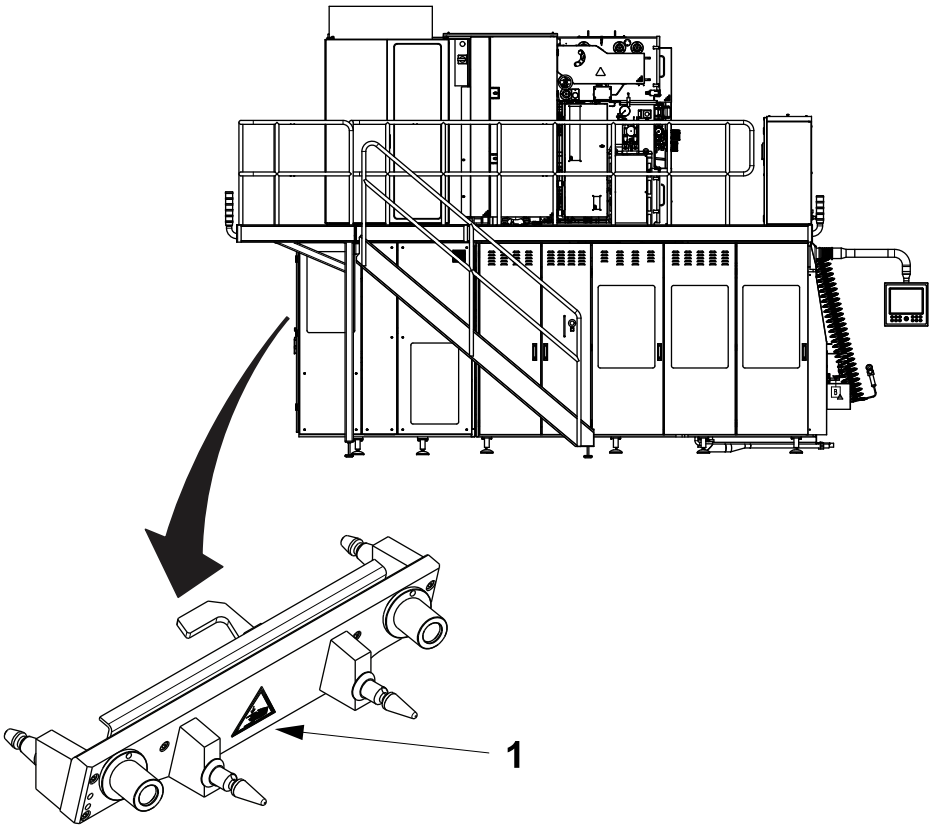

Protective Devices

There are different kinds of protective device designed to ensure safe use of the equipment. See the sections below.

WARNING

Hazardous zones.

Hazardous zones are safeguarded and provided with protective devices. Do not inch or run this equipment if any protective device is inoperative.

Change inoperative components of the safety system immediately.

For the locations of safeguards and/or other protective devices not mentioned in this section, see the Maintenance Manual.

Emergency Stop

DANGER

Hazardous voltage.

Will shock, burn, or cause death.

Hazardous voltage remains ON after activating an EMERGENCY STOP.

Emergency stop devices are used to stop this equipment immediately in a hazardous situation. Learn the positions of all emergency stop devices and how to use them.

Instructions for a normal production stop are included in the Stop chapter of the Operation Manual.

Emergency Stop Push-Buttons

Push one of the EMERGENCY STOP push-buttons to stop this equipment immediately.

The location of each EMERGENCY STOP push-button for the filling machine is shown by an arrow.

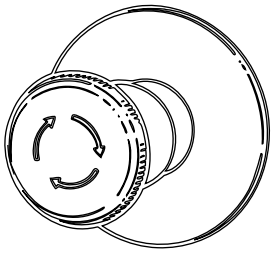

(behind door)

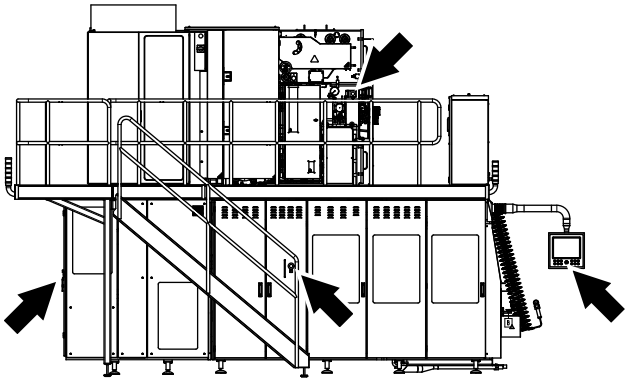

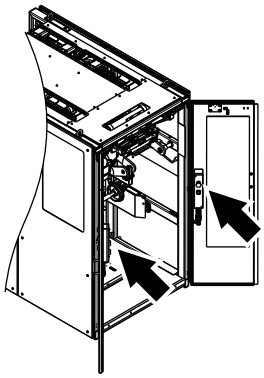

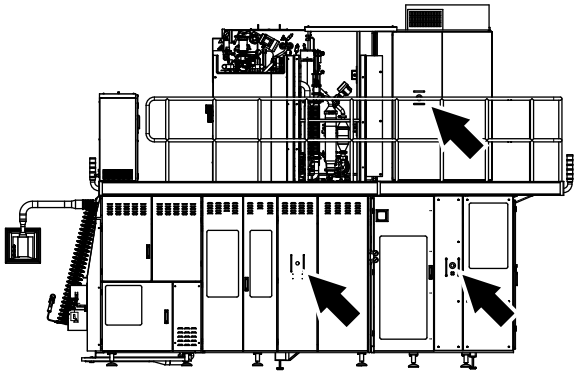

ASU iLine XT Version
(behind door)

Safeguards

WARNING

Moving machinery parts.

Never defeat or bypass the interlocking devices.

Movable guards, for example, doors and covers leading to hazardous zones, are fitted with interlocking devices where required. These devices are usually electric safety switches that are parts of the safety system and must never be defeated, bypassed, or otherwise made inoperative.

Where movable guards (doors) are equipped with means to be locked in a nonclosed position, any person with the intention to preside, for any reason, behind such a guard must lock the guard in the nonclosed position by use of a padlock.

(Cont'd)

(Cont'd)

Note! For work on the electrical equipment, the electrical power must also be disconnected.

CAUTION
Corners and edges.
Close the doors, guards, or parts of the equipment unless they must be open during work.

CAUTION
Burn hazard.
Parts of the equipment protected by guards may be hot after operation. Allow components to cool down or use personal protective equipment.

After installation and maintenance, and before this equipment is inched or run, check that all safeguards are in place and that they operate correctly.

CAUTION
Equipment damage.
The equipment can be damaged if it is not stopped in the correct way. Never stop this equipment by opening a movable guard, for example, a door or cover, equipped with an interlocking device.

(Cont'd)

(Cont'd)

The location of each interlocking device for filling machine is shown by an arrow.

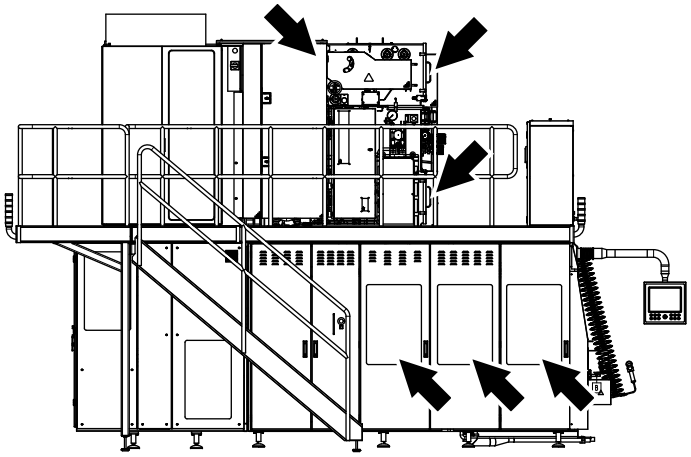

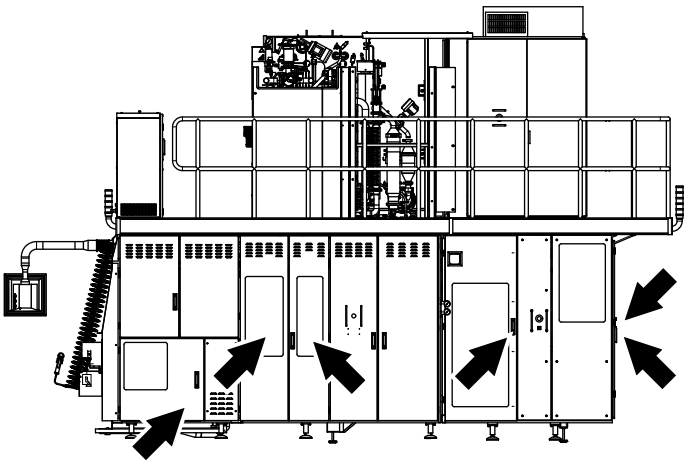

Safety Mat

Note! Valid only for ASU iLine XT Version (OE).

The safety mat is a safety device that disables the pneumatic system for the ASU automatic doors and the signal to the LGV (Laser Guide Vehicle) when activated.

The safety device is activated when a pressure is applied on the surface of the safety mat as for example a person standing on it.

The location of the safety mat is shown by the arrows.

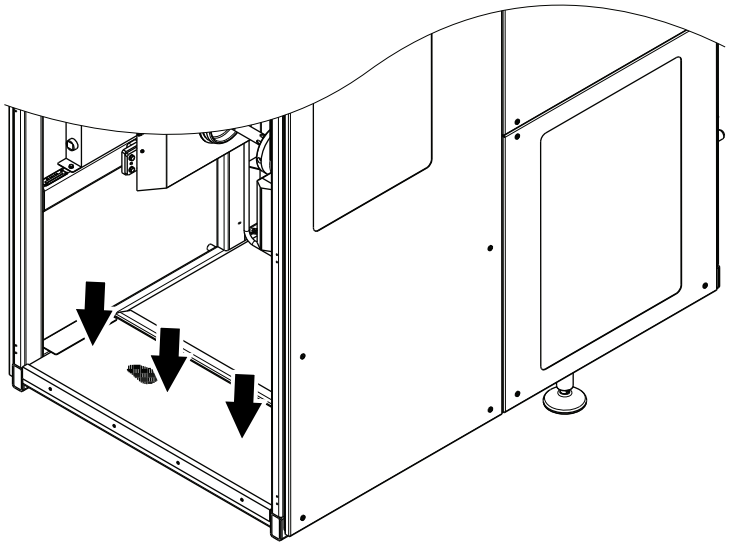

Indicating Tower

An indicating tower is a column of warning lights:

- A red light (1) indicates a hazardous condition. This is a situation that requires immediate action.
- A yellow light (2) indicates an abnormal or impending critical condition. This is a condition calling for action by the operator.
- A blue light (3) indicates that operator action is required.
- A green light (4) indicates a normal condition.

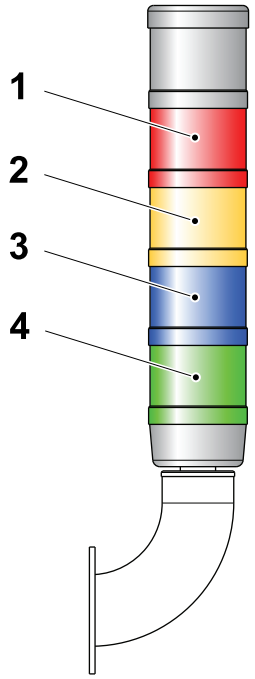

1 Red light
2 Yellow light
3 Blue light
4 Green light

Audible Alarm

The audible alarm (1) produces a warning signal every time this equipment is about to start. The warning signal sounds for approximately three seconds prior to starting to alert personnel.

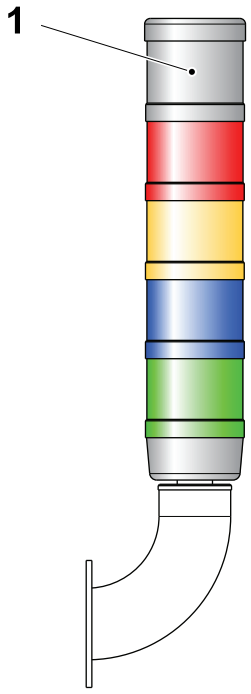

1 Audible alarm

Safe Manual Handling

Use mechanical lifting aids whenever possible. If mechanical lifting aids are not available, do not attempt to lift loads over 23 kg without the assistance of a colleague. Avoid lifting below knee height and above shoulder height. If it is necessary to lift from the floor, follow the instructions below to reduce the risk of back and disc injuries.

- Use safety shoes and be sure that the surface of the floor is not slippery.
- Get close to the load.
- Take a wide stance and find the best positions for your feet.
- Bend your hips and knees, and use your leg muscles.
- Keep the load close to your body.
- Do not twist your body while moving the load.
- Take small steps when turning.

In order to reduce the risk of injury to discs and back muscles, be careful to not bend or twist your back when lifting. Keep the load close to your body to reduce the strain on your back.

To reduce the ergonomic risks to each individual operator, job rotation is recommended, so that recovery and variety are provided.

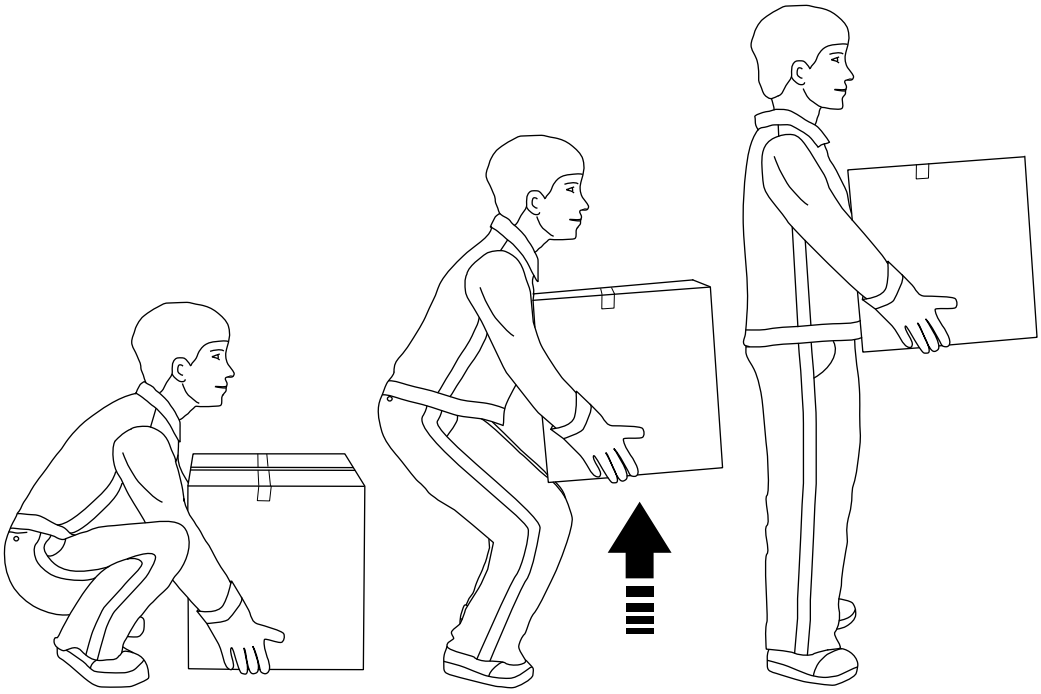

Personal Protection

This section applies to all personnel at all times when this equipment is in operation. For special personal protective equipment required when handling hazardous substances, see the Hazardous Substances section.

Noise

WARNING

Hazardous noise.
Can cause impaired hearing.
Wear hearing protection whenever this equipment is in operation.

CAUTION

Hazardous noise.
May cause impaired hearing.
Hearing protection is recommended whenever this equipment is in operation.

Entanglement

WARNING

Risk of entanglement.
Do not wear jewellery or loose clothing when working on or near this equipment.
Restrain long hair with, for example, clips or rubber bands.

Hazardous Substances

WARNING

Contact with chemicals can cause death, serious injury, or illness.
Always read and follow the instructions in the safety data sheet supplied by the manufacturer or local supplier, when handling chemicals.

Make sure that

- the safety data sheet is available
- preparations have been done to ensure that the stated safety measures in the safety data sheet can be followed
- the locations of the first aid equipment are learned in order to act immediately in case of an accident

Disposal of Chemical Substances

Always read and follow the disposal instructions in the safety data sheet supplied by the manufacturer or local supplier.

It is strongly recommended that used chemical containers are

- disposed of according to the instructions immediately after use
- not used as disposal containers for other chemicals in order to avoid uncontrolled chemical reactions within the container

Hydrogen Peroxide (H_2O_2)

WARNING

Corrosive chemical.
Wear personal protective equipment.

In both liquid and gas states, hydrogen peroxide may cause irritation or damage if it comes into contact with skin, mucous membranes, eyes, or clothes. Call for medical attention immediately if there is an accident.

Liquid hydrogen peroxide in concentrations of less than 1% is generally considered harmless to humans.

Consult the instructions on the label of the tank or container.

Emergency Procedures

If there is an accident involving hydrogen peroxide, rinse the affected area as soon as possible with large amounts of water.

Eyes

If splashes or vapour from hydrogen peroxide come in contact with the eyes

- wash the eyes thoroughly with lukewarm water for 15 minutes (keep eyelids wide apart)
- call for medical attention immediately

Skin

If hydrogen peroxide comes into contact with skin or clothes

- rinse immediately with plenty of water
- call for medical attention immediately if skin burns appear
- thoroughly wash the clothes before wearing them again

Inhalation

If irritation or pain is experienced due to having **inhaled** hydrogen peroxide vapour

- leave the affected area and get some fresh air
- call for medical attention if the symptoms get worse

Ingestion

If hydrogen peroxide is swallowed

- do not attempt to cause vomiting
- drink large amounts of lukewarm water to dilute the peroxide
- call for medical attention immediately

Personal Protective Equipment

The personal protective equipment for hydrogen peroxide is

- protective goggles (for instance, TP No. 90303-11), tight fitting
  If there is a risk of splashes, a visor is a suitable complement
- protective gloves made of neoprene (for instance, TP No. 90303-12), nitrile, or butyl rubber
- protective apron (for instance, TP No. 90303-13), or protective suit when handling larger amounts
- protective shoes or boots made of PVC, PE plastic, or rubber
- proper respiratory equipment, if ventilation is insufficient

Handling of Hydrogen Peroxide

WARNING

Sudden and violent chemical reaction.

Avoid any contamination of hydrogen peroxide.

Hydrogen peroxide can react very suddenly and violently in combination with many compounds, or if it is contaminated. Never pour surplus hydrogen peroxide back into the original container. There is a risk of a violent decomposition liberating oxygen and heat, with a big increase in volume due to the oxygen generated by the peroxide decomposition. This will cause a large overpressure if the contaminated hydrogen peroxide is in a closed container. If the integrity of the container fails, this could result in a dangerous hazard.

Ensure that equipment used for handling and diluting hydrogen peroxide is clean before it comes in contact with hydrogen peroxide. Pumps or other equipment used for handling hydrogen peroxide must be **used for this purpose only** and must be manufactured from appropriate materials, such as stainless steel 316 L, glass, polyethylene, or teflon. After use, make sure that all peroxide residue is rinsed away.

If hydrogen peroxide is spilled, dilute it with large amounts of water. Dispose of the diluted hydrogen peroxide according to local regulations.

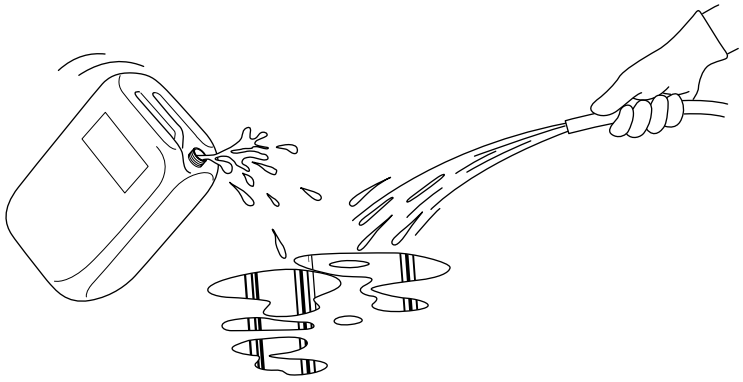

WARNING

Self-ignition.

Never wipe up hydrogen peroxide with materials such as rags or paper as these may self-ignite several hours after contact. If there is a fire, spray with large quantities of water.

Storage of Hydrogen Peroxide

WARNING

Containers may become overpressurised if they are not properly ventilated. If the integrity of a container fails, this could result in a dangerous hazard.
Keep the container upright and fitted with its proper ventilation cap. If there is a fire, cool all containers by spraying them with large quantities of water.

Hydrogen peroxide decomposes much faster with increasing temperature. There is a risk of a container becoming overpressurised at high temperatures, since the ventilation cap cannot release the gases produced quickly enough. If the integrity of the container fails, this could result in a dangerous hazard.

Hydrogen peroxide **must** be stored in the **original container** delivered by the supplier. Keep the container upright and fitted with its proper ventilation cap, which allows oxygen to escape. Otherwise there is a risk of overpressurisation of the container due to violent decomposition of the peroxide. If the integrity of the container fails, this could result in a dangerous hazard.

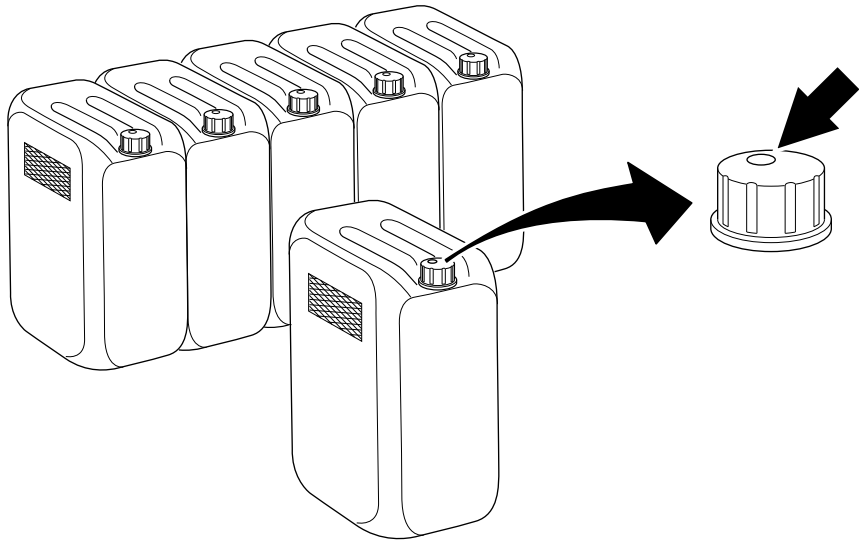

Make sure that the container is always properly closed.

Commercial food-grade hydrogen peroxide has been stabilized to inhibit the catalytic decomposition effects of metals and other impurities, but it can decompose into oxygen and water if it is exposed to heat or contaminated.

Make sure that the area used for storage of hydrogen peroxide is

- cool, clean, and well ventilated
- shielded from direct sunlight
- kept free from combustible materials

Disposal of Hydrogen Peroxide

Always read and follow the disposal instructions in the safety data sheet supplied by the manufacturer or local supplier.

Caustic Soda/Sodium Hydroxide (NaOH)

WARNING
Corrosive chemical.
Wear personal protective equipment.

Caustic soda/sodium hydroxide is highly corrosive in all forms and can cause serious burns on contact with skin and eyes.

Emergency Procedures

Inhalation

Remove victim immediately from source of exposure, provide rest, warmth and fresh air, get medical attention if any discomfort continues.

Ingestion

Do not induce vomiting, immediately rinse mouth and drink plenty of water (200 - 300 ml) and get medical attention immediately!

Skin Contact

Immediately remove contaminated clothing, rinse the skin with lots of water and get medical attention.

Eye Contact

May cause permanent damage if eye is not immediately irrigated. Make sure to remove any contact lenses from eyes before rinsing. Promptly wash eyes with plenty of water while lifting the eyelids, get immediately medical attention and continue to rinse.

Accidental Release, Spillage or Splashing

WARNING
Corrosive chemical.
Wear personal protective equipment.

In case of accidental release, spillage or splashing

- wash contaminated area with water. Alternatively, absorb in vermiculite, dry sand or earth, place into containers and wash the affected area
- in case of contact with eyes or skin wash with plenty of water
- remove any contaminated clothing immediately

Personal Protective Equipment

The personal protective equipment for caustic soda/sodium hydroxide is

- protective goggles (TP No. 90303-11)
- protective gloves made of neoprene (TP No. 90303-12)
- protective apron (TP No. 90303-13)
- protective shoes made of PVC, PE plastic, or rubber

Handling and Storage of Caustic Soda/Sodium Hydroxide

WARNING

Sudden and violent chemical reaction.

Avoid any contamination of caustic soda/sodium hydroxide. Never store or mix caustic soda together with hydrogen peroxide.

Ensure that

- containers are kept tightly closed
- containers are stored in a cool dry place away from direct sunlight or sources of heat
- designated storage and handling areas are adequately ventilated and that emergency shower and eye wash facilities are available nearby
- handle containers carefully during transport
- avoid spilling, skin and eye contact
- use dedicated equipment when sampling, pouring or decanting
- never store or mix caustic soda together with hydrogen peroxide

Disposal of Caustic Soda/Sodium Hydroxide

Dispose of waste and residues in accordance with local authority requirements. Used caustic soda should be sent to an approved facility for destruction. Never allow caustic soda to be disposed into the drain.

Estinguishing Media

CAUTION

Fire-Fighting Measures

Always apply the following measures.

The product is non-combustible, use fire extinguishing media appropriate for surrounding materials.

Specific Hazards

Corrosive liquid.

Protective Measures in Fire

Self-contained breathing apparatus and full-protective clothing must be worn in case of fire.

Note! Always refer to your supplier's Material Safety Data Sheet (MSDS) for caustic soda.

Nitric Acid (HNO_3)

WARNING
Corrosive chemical.
Wear personal protective equipment.

Nitric acid is extremely hazardous; it is corrosive, reactive, a strong oxidizer and a poison. Liquid and mist can cause serious burns on contact with skin and eyes; contact with other material may cause fire; liquid and mist cause severe burns to skin and eyes; inhalation may cause lung and tooth damage.

Emergency Procedures

Inhalation

Remove victim immediately from source of exposure, provide rest, warmth and fresh air. If not breathing, give artificial respiration; if breathing is difficult give oxigen. Get medical attention immediately.

Ingestion

Do not induce vomiting, immediately rinse mouth and drink plenty of water or milk if available. Never give anything by mouth to an unconscious person. Get medical attention immediately.

Skin Contact

Immediately remove contaminated clothing, rinse the skin with lots of water and get medical attention.

Eye Contact

May cause permanent damage if eye is not immediately irrigated. Make sure to remove any contact lenses from eyes before rinsing. Promptly wash eyes with plenty of water while lifting the eyelids, get immediately medical attention and continue to rinse. Get medical attention if any discomfort continues.

Accidental Release, Spillage or Splashing

WARNING
Corrosive chemical.
Wear personal protective equipment.

In case of accidental release, spillage or splashing

- ventilate area of leak or spill, isolate hazard area, keep unnecessary and unprotected personnel from entering, contain and recover liquid when possible, neutralise with alkaline material (soda ash, lime) then absorb with an inert material (e.g. ,vermiculite, dry sand or earth), place in a chemical waste container; do not use combustible materials, such as saw dust, rags, paper, wood
- in case of contact with eyes or skin wash with plenty of water
- remove any contaminated clothing immediately; see the Fire-fighting (fire) measures section on page ii-41

Personal Protective Equipment

The personal protective equipment for nitric acid is

- protective goggles (TP No. 90303-11)
- protective gloves made of neoprene (TP No. 90303-12)
- protective apron (TP No. 90303-13)
- protective shoes made of PVC, PE plastic, or rubber

Handling and Storage of Nitric Acid

WARNING
Sudden and violent chemical reaction.
Avoid any contamination of nitric acid.

Ensure that

- containers are kept tightly closed
- containers are stored in a cool dry place away from direct sunlight or sources of heat, water and incompatible materials and that emergency shower and eye wash facilities are available nearby
- designated storage and handling areas are adequately ventilated and have acid-resistant floors
- handle containers carefully during transport
- avoid spilling, skin and eye contact
- use dedicated equipment when sampling, pouring or decanting
- do not wash out container and use it for other purposes. Containers of this material may be hazardous when empty since they retain product residues (vapours, liquid)

Disposal of Nitric Acid

Dispose of waste and residue in accordance with local authority requirements. Used nitric acid should be sent to an approved facility for destruction. Never allow nitric acid to be disposed into the drain.

Fire

The product is non-combustible, but it is a strong oxidiser and its heat of reaction with reducing agents or combustibles may cause ignition. Can react with metals to release flammable hydrogen gas.

Explosion

Reacts explosively with combustible organic or readily oxidizable materials such as alcohols, turpentine, charcoal, organic refuse, metal powder, hydrogen sulphide, etc. Reacts with most metals to release hydrogen gas which can form explosive mixtures with air.

Estinguishing Media

CAUTION
Fire-Fighting Measures
Always apply the following measures.

The product is non-combustible, use fire extinguishing media appropriate for surrounding materials.

Special Information

Increases the flammability of combustible, organic and readily oxidizable materials.

Protective Measures In Fire

Self-contained breathing apparatus and full-protective clothing must be worn in case of fire.

Note! Always refer to your supplier's Material Safety Data Sheet (MSDS) for nitric acid.

Supply Systems

Electrical Supply

DANGER

Hazardous voltage and moving machinery.
The electrical supply disconnecting device must be in position O (OFF) and secured with a lock before any work with the equipment that requires the electrical supply to be disconnected. See the Machine Status section of the MM Procedure Start Table.

Note! The key to the lock must be removed by the technician and retained in his/her possession until all work is completed.

DANGER

Hazardous voltage can be present with the electrical supply disconnecting device in position O (OFF).
Circuits identified by orange-coloured conductors are not disconnected by the main electrical supply disconnecting device. The location of the electrical supply disconnecting device of these circuits is described in the Maintenance Manual procedures that include work on these types of circuit.

Certain procedures may require that the electrical supply disconnecting device is in position I (ON). These exceptions are clearly stated in the manuals.

The illustrations show the electrical supply disconnecting device and its location.

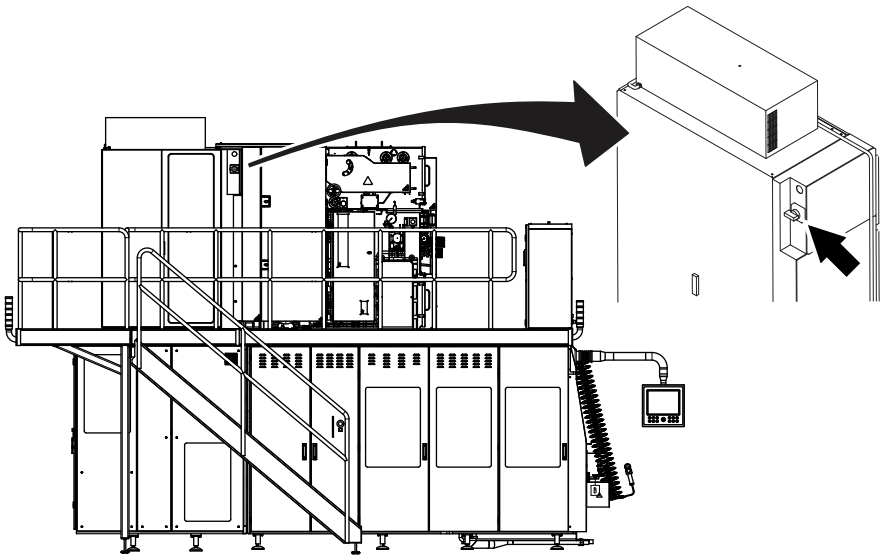

Residual Voltage

DANGER

Hazardous voltage.
Will shock, burn, or cause death.
After the electrical supply disconnecting device is turned to position O (OFF), residual voltage remains in the capacitor circuits. Wait five minutes before opening the enclosure containing these circuits. Ensure that no residual voltage remains on the capacitors before touching them.

Electrical Cabinet

DANGER

Hazardous voltage
Will shock, burn, or cause death.
Parts behind doors to electrical enclosures may be live. The electrical supply disconnecting device must be turned to position O (OFF) and secured with a lock before maintenance inside the electrical cabinet.

Note! The key to the lock must be removed by the technician and retained in his/her possession until all work is completed.

Make sure that the electrical cabinet doors are closed after working inside the electrical cabinet. Doors with locks must be locked.

The location of each electrical cabinet for filling machine is shown by an arrow.

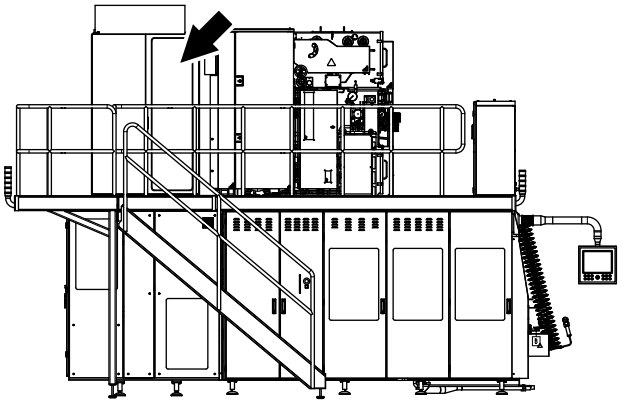

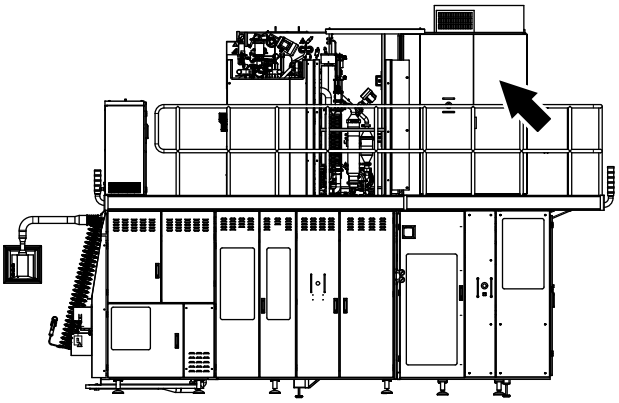

Socket Outlet

WARNING

Hazardous voltage.
Can shock, burn, or cause death.
Read the Maintenance Manual before using this socket outlet.

The socket outlet (1) is connected to a residual current device (2) to protect users against electrical shock if there is an earth fault in the connected equipment. The residual current device must be tested each time before the socket outlet is being used. See the MM for test procedure.

The illustrations show the socket outlet, the residual current device, and their locations.

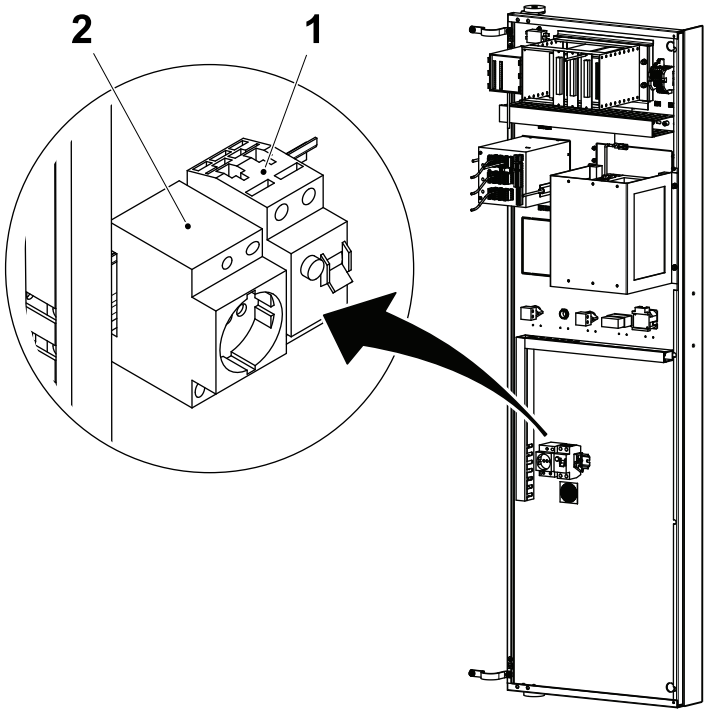

1 Socket outlet
2 Residual current device

Air Supply

WARNING

Compressed air and moving machinery.
Close the main air valve and lock it, and safely release compressed air from the air system before any work with the equipment that requires the air supply to be closed. See the Machine Status section of the Procedure Start Table.

Note! The key to the lock must be removed by the technician and retained in his/her possession until all work is completed.

Certain maintenance procedures may require the air supply systems to be on. These exceptions are clearly stated in the manuals.

The illustrations show the main air valve (1) and its location.

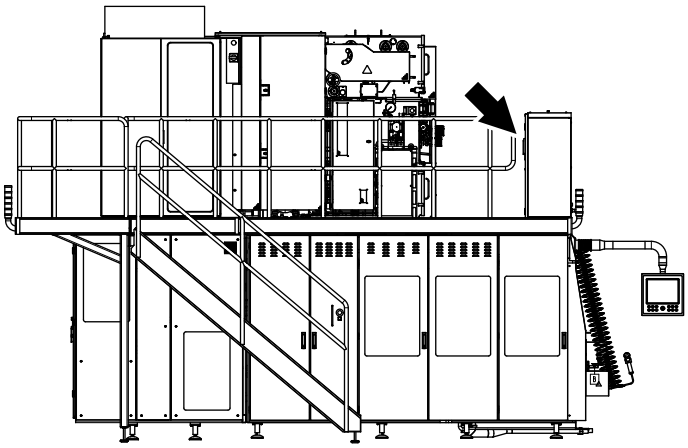

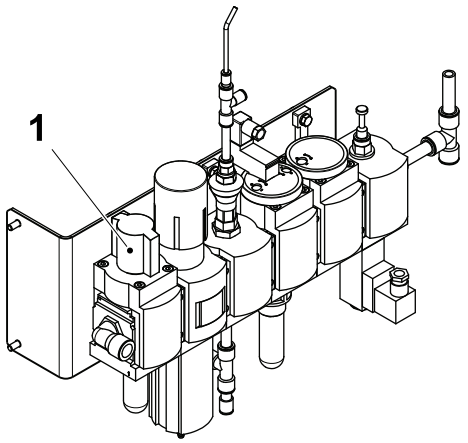

1 Main air valve

Steam Supply

WARNING

Hot steam can cause scalds.

Pressurised steam can be discharged unexpectedly.

Close the steam supply valve and lock it, and safely vent all steam pressure from the steam system before any work on parts with steam, such as pipes and valves, that requires the steam supply to be closed. See the Machine Status section of the Procedure Start Table.

Note! The key to the lock must be removed by the technician and retained in his/her possession until all work is completed.

Certain procedures may require the steam supply systems to be on. These exceptions are clearly stated in the manuals.

The illustrations show the steam supply valve (1), and its location.

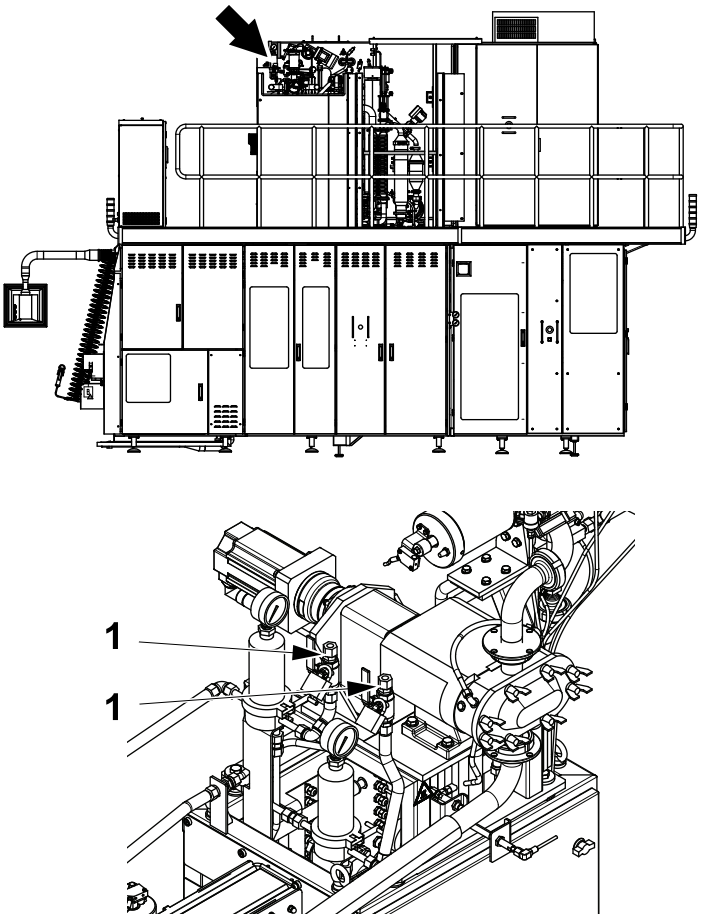

Machine equipped with HVA

Machine not equipped with HVA

Water Supply

CAUTION

Water under pressure.

Close the water supply valves before any work with the equipment that requires the water supply to be closed. See the Machine Status section of the Procedure Start Table.

Certain maintenance procedures may require the water supply systems to be on. These exceptions are clearly stated in the manuals.

The illustration shows the water supply valve (1) and the water supply valve (2), and their location.

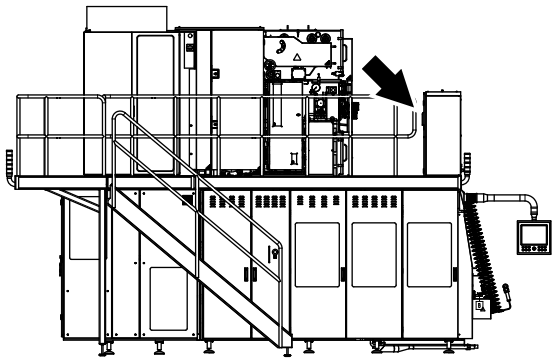

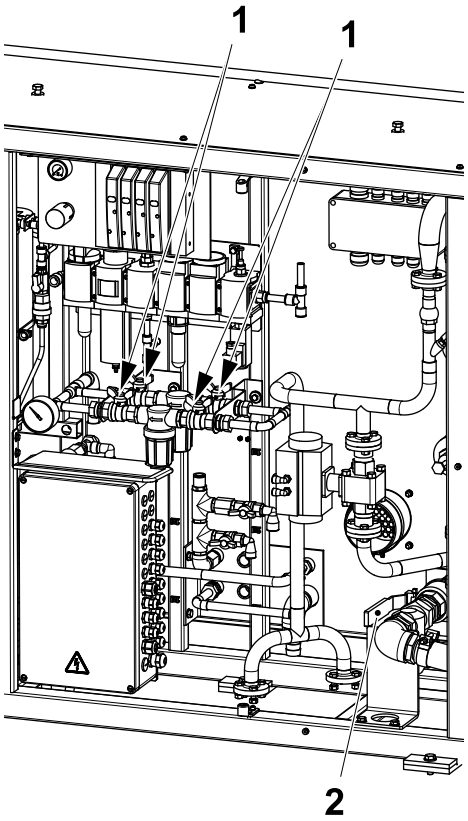

1 Valve, circulating cooling water
2 Valve, hot water external cleaning

This page intentionally left blank

1 General Description

Description

This chapter describes the main parts of the machine and the terminology.

CAUTION

Risk of personal injury or damage to the equipment.
To ensure maximum safety, always read this section and the Safety Precautions carefully before doing any work on the equipment or making any adjustments.

Description 1-2

1.1 Functional Description 1-5

1.2 ASU iLine XT Version (OE) 1-11

1.3 Main Groups of the Equipment..... 1-12

1.3.1 Filling Machine, LH Side..... 1-12

1.3.2 Service Unit..... 1-14

1.3.3 Valve Panel, Machine Body LH Side..... 1-15

1.3.4 Valve Panel, ASU LH Side 1-16

1.3.5 Valve Panel, Superstructure LH Side..... 1-17

1.3.6 Electrical Cabinet, Filling Machine LH Side 1-18

1.3.7 Filling Machine, RH Side 1-19

1.3.8 Filling Machine, RH Side Rear, No Covers..... 1-20

1.3.9 Valve Panel, HVA RH Side..... 1-21

1.3.10 Control Panel..... 1-22

1.4 Machine Symbols..... 1-23

1.4.1 Valve Panels, Symbols 1-23

1.4.2 Service Unit, Symbols 1-24

1.4.3 ASU, Symbols 1-24

1.4.4 Electrical Cabinet, Symbols..... 1-25

1.5 Packaging Material Web Path 1-26

This page intentionally left blank

1.1 Functional Description

The filling machine is used to package liquid food products such as milk, juices or wine. To create the filled packages the filling machine needs a supply of packaging material.

Reels of packaging material are loaded into the ASU (Automatic Splicing Unit) at the rear of the filling machine. The packaging material reel is then threaded through the ASU and along a route through the machine referred to as the packaging material web path.

After the ASU, the first part of the machine to be threaded with the packaging material is the strip applicator. The strip applicator is used to apply a special strip of polyethylene to one edge of the packaging material. To keep the supply and movement of the packaging material constant whilst the strip is being applied, the packaging material is threaded through a series of “dancing” rollers. The strip will be used later to seal the two edges of the packaging material together.

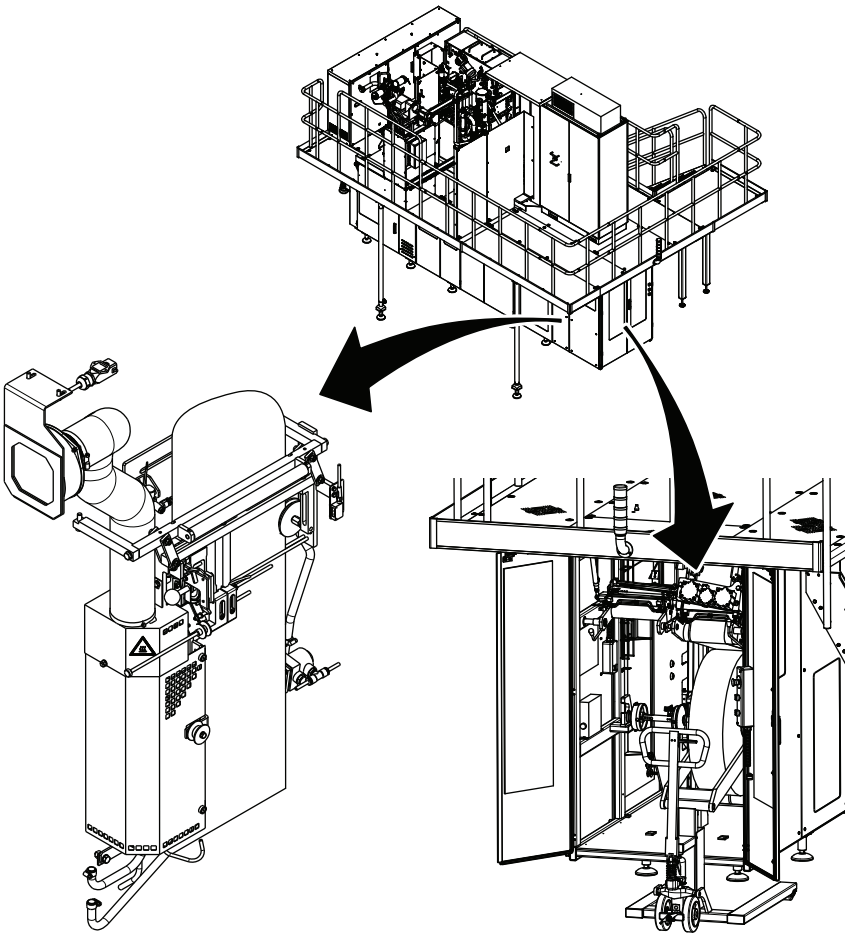

(Cont’d)

(Cont'd)

The packaging material is then fed up through an opening in the filling machine platform, around a bending roller and then enters the peroxide bath. The peroxide bath contains a quantity of diluted peroxide which is heated by electric heating elements attached to the outside of the bath. The peroxide sterilizes the packaging material and eliminates any bacteria that could contaminate the product. As the packaging material exits the peroxide bath, it passes between a pair of rubber coated rollers which squeeze the packaging material to remove any residual peroxide.

The packaging material then enters the drying chamber and passes through the air knife. The air knife is a narrow enclosure where extremely hot and clean air is blown down the surfaces of the packaging material. This removes any remaining traces of the peroxide from the surface of the packaging material.

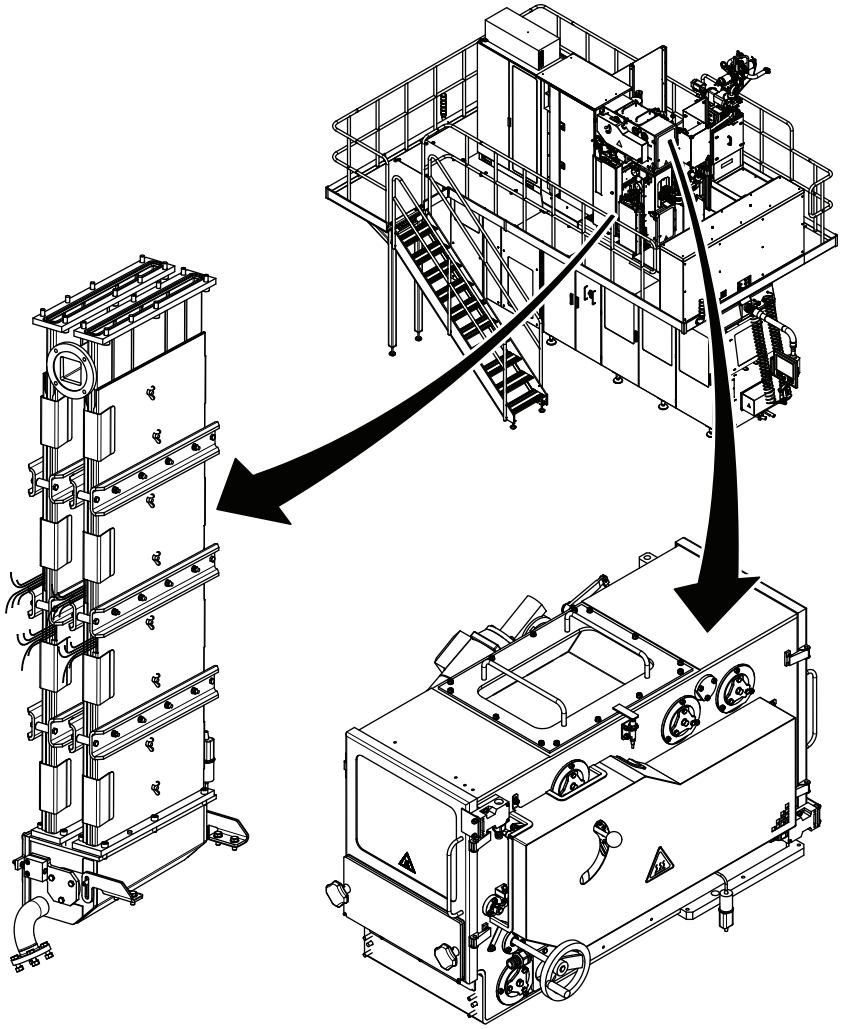

(Cont'd)

(Cont'd)

The packaging material is now ready to be formed and filled with product.

The forming section of the filling machine consists of a series of "forming rings" positioned at intervals inside the aseptic tower. The forming rings use rollers to progressively form the packaging material into a tube shape. As the packaging material forms a near complete tube in shape, the polyethylene strip is heated and pressed onto the other edge of the packaging material to seal the tube.

The packaging material tube is filled with product by means of a filling pipe. The filling pipe is divided into two parts, the upper filling pipe is fitted inside the aseptic chamber and positioned inside the last two forming rings and continues down into the roof of jaw system compartment below. The lower part of the filling pipe is fitted to the upper filling pipe by a locking pin in the jaw system compartment.

The filling pipe fills the sealed tube with product and the volume of product in the tube is maintained at a constant level to ensure each package is filled with the correct amount of product.

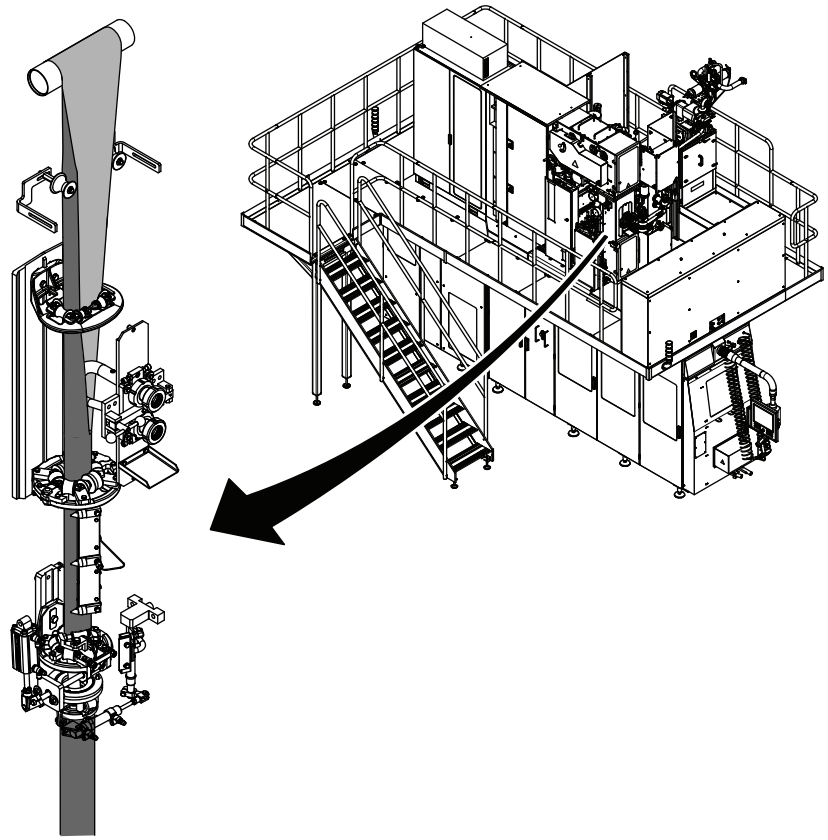

(Cont'd)

(Cont'd)

The packaging material tube then passes down into the jaw system.

The jaw system is the principal component of the filling machine, as the jaw system drives the movement of all the other filling machine components.

The jaw system needs to cut the packaging material at a specific point along the packaging material tube. This point is at the centre of where the printed design of an individual package ends and the printed design of another package begins.

To do this the filling machine needs to understand where the packaging material tube is positioned, and depending on the filling machine configuration uses either a pair of photocell units to read a bar code printed on the packaging material or a magnetic design reader that senses either a static magnetic mark or in some cases a continuous magnetic mark embedded in the packaging material.

With this information, the jaw system then cuts and seals an individual package.

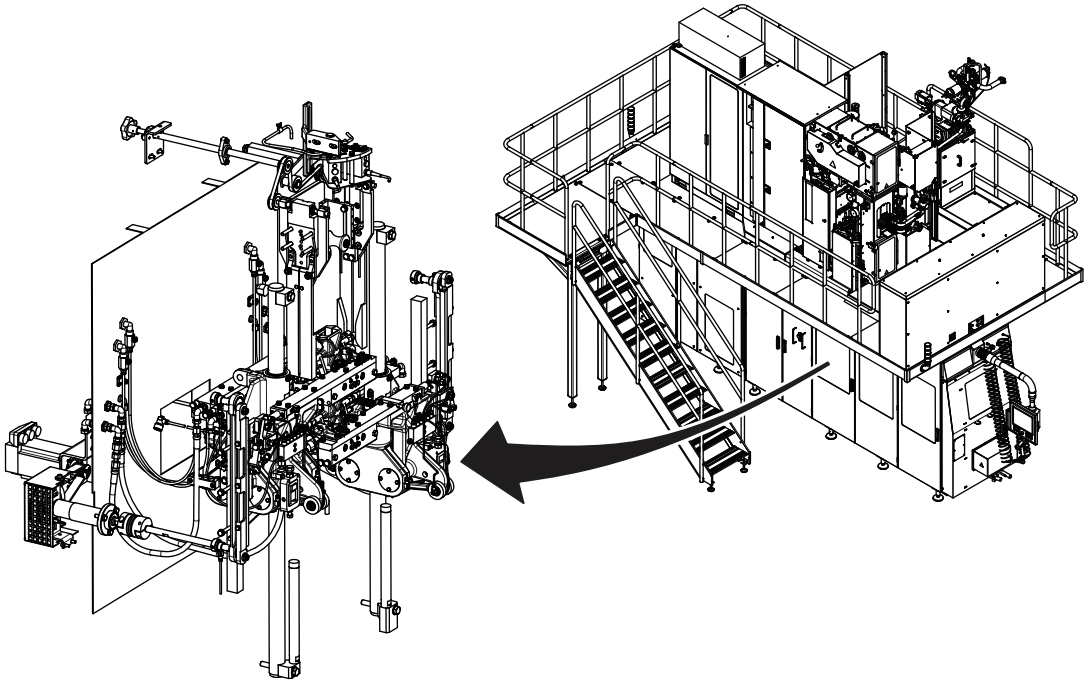

(Cont'd)

(Cont'd)

The last component of the filling machine is the final folder unit.

Once the individual package has been cut from the packaging material tube it slides down a drop chute and is carried along a short conveyor to the final folder unit. The final folder is where the package is pressed into shape.

As the package moves through the final folder, folding flaps press the package along predefined creases on the packaging material which forms the package into shape. At the same time, folding bars bend the corners (or flaps) of the package which are then heated with extremely hot air projected at spots on the corners. The hot air melts the polyethylene outer coating of the packaging material and the corners are then pressed and sealed respectively to the bottom and to the sides of the package.

The package exits the final folder unit, is carried along a conveyor and exits the filling machine.

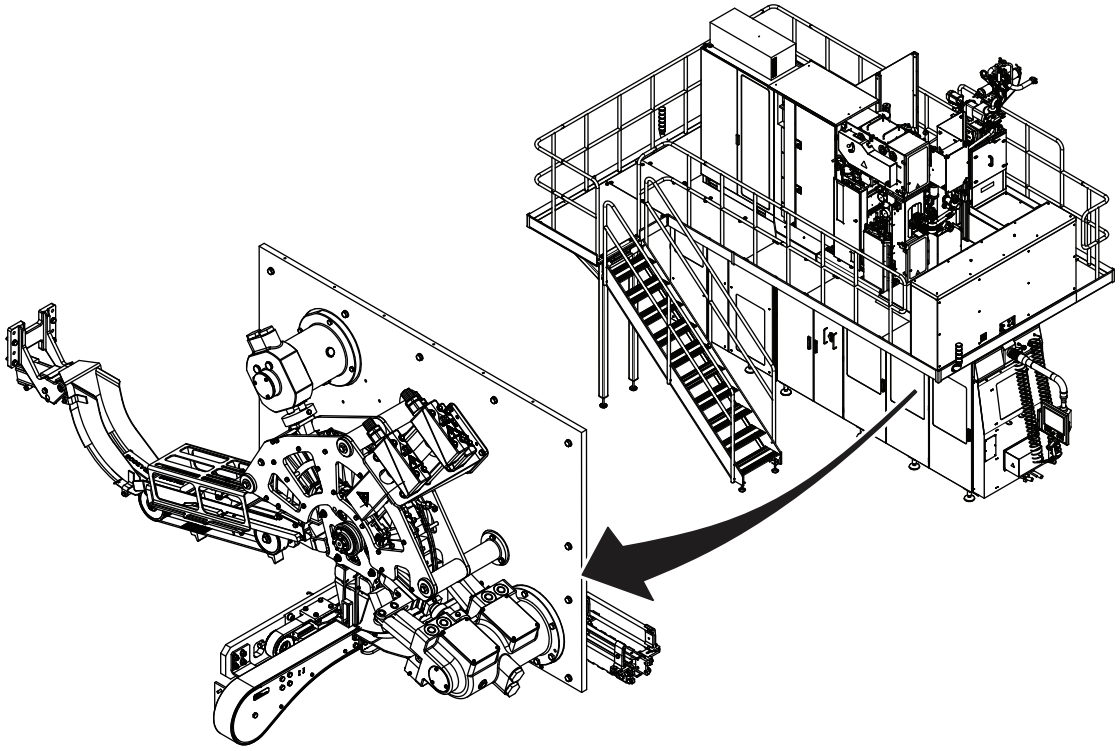

(Cont'd)

(Cont'd)

The high viscosity aseptic equipment is a modification of the filling system of a standard A3/CompactFlex to pack those pumpable products that, because of their high viscosity, cannot be filled with standard equipment.

The group consist mainly of an aseptic lobe pump, enclosed between two groups of valves; this section of the filling system is steam sterilized.

The pump is driven by a servomotor and the speed is regulated in order to maintain a constant level inside the paper tube using the signal from the standard level sensor and flowmeter.

When packing liquid products, the pump, due to the increased slip stream, can control with difficulty the flow through the filling pipe: for this reason, if necessary, the pump can be bypassed by means of a pipe included in the equipment and the flow is controlled in this case by the original regulating valve.

Please remember that high viscosity products have often a specific gravity significantly higher than one and this fact will end up in an unusual weight of the packages.

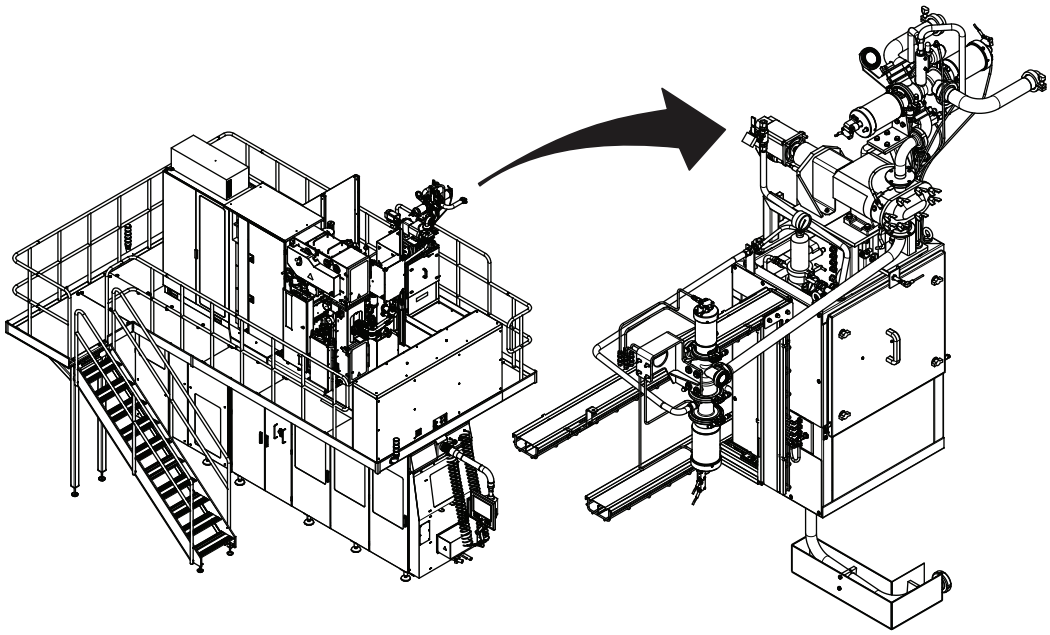

1.2 ASU iLine XT Version (OE)

This configuration contains the following components:

- the ASU Automatic/Semiautomatic version: these new versions of the ASU are equipped with automatic doors that opens when the LGV, Laser Guide Vehicle approaches the reel loading area.
- the RPS, Reel Preparation Stand, helps to reduce the time and work to load the reel of paper in the ASU.
- the LGV, Laser Guide Vehicle, is an automatic reel lifter vehicle that move the paper reel from the RPS to the ASU loading area ready for the splice.

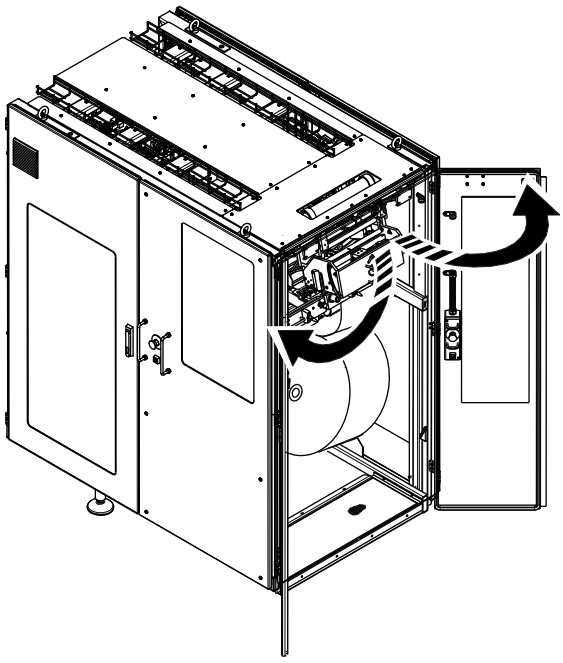

ASU

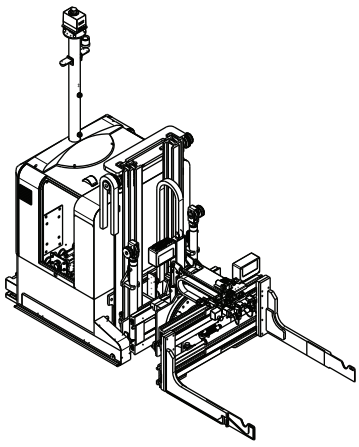

LGV (Laser Guided Vehicle)

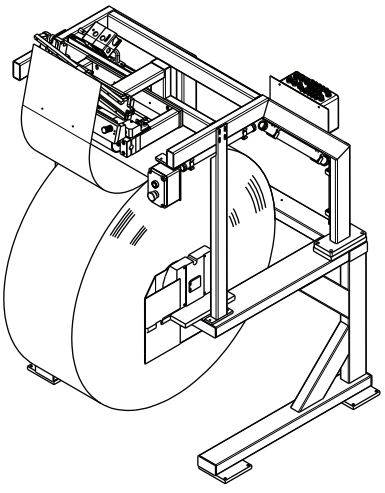

RPS (Reel Preparation Stand)

1.3 Main Groups of the Equipment

1.3.1 Filling Machine, LH Side

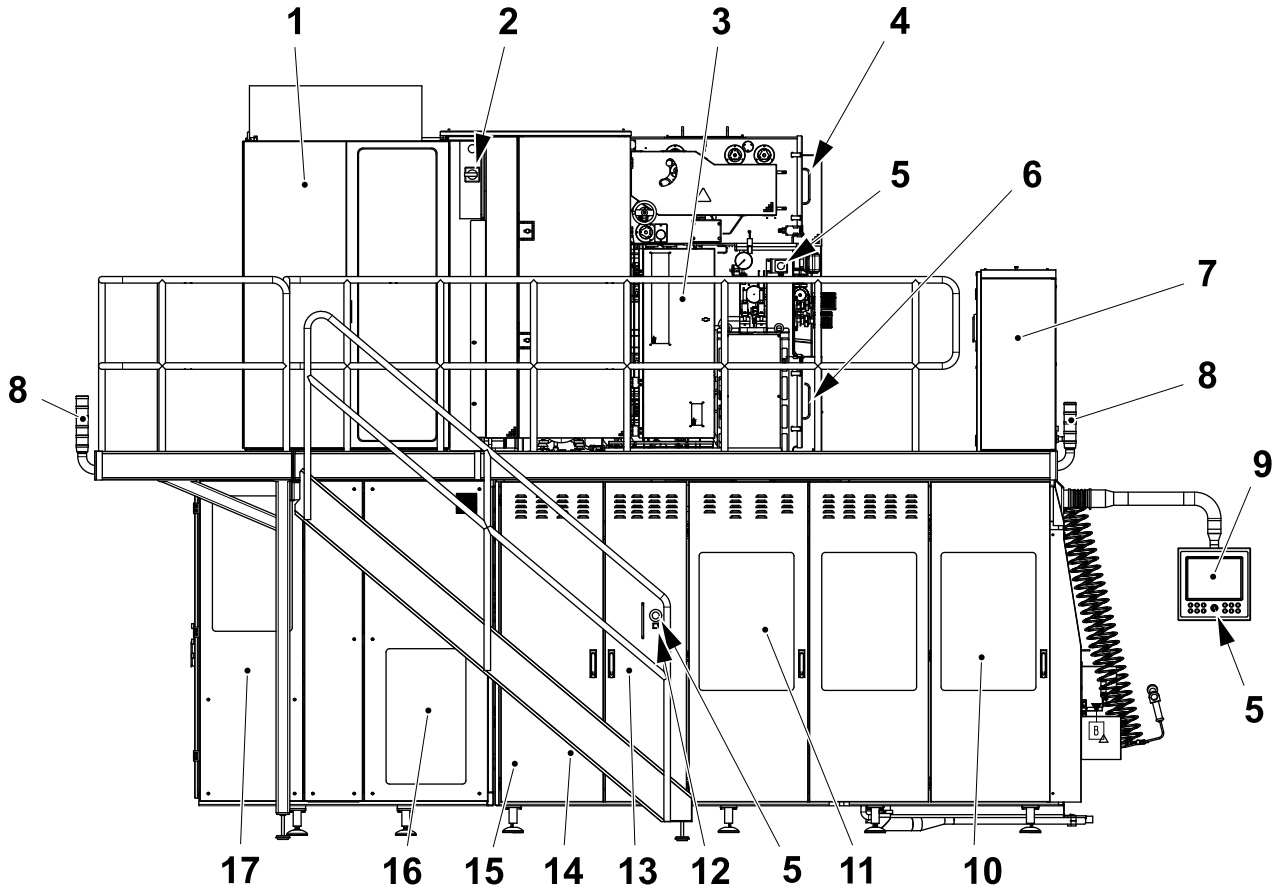

1 Electrical cabinet, filling machine
2 Mains power switch
3 Valve panel, filling system
4 Upper, aseptic chamber door
5 EMERGENCY STOP button
6 Lower, aseptic chamber door
7 Service unit
8 Warning beacon
9 TPOP panel
10 Final folder
11 Jaw system
12 Machine Body doors reset button
13 Valve panel, machine body
14 Hydrogen peroxide container
15 External cleaning container
16 Valve panel, ASU
17 ASU (Automatic Splicing Unit)

(Cont'd)

(Cont'd)

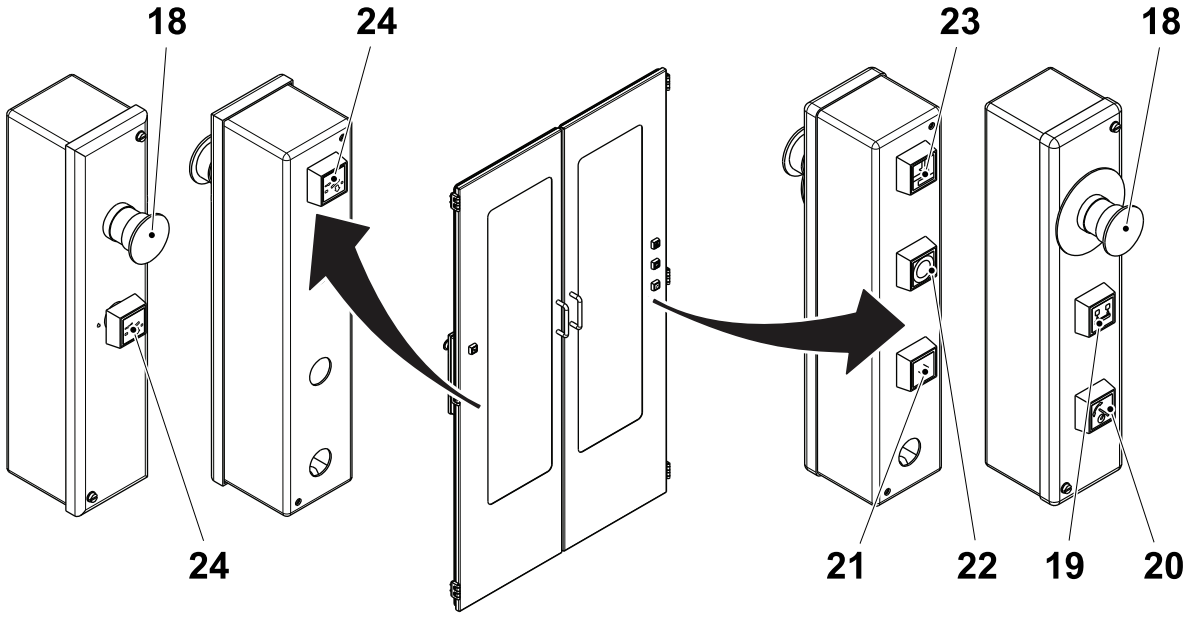

The EMERGENCY STOP button (18) and the OPEN/CLOSE DOOR buttons (24) on the RH side of the machine are available with the ASU iLine XT version (OE).

18 EMERGENCY STOP button
19 MATERIAL LOCKING button
20 PACKAGING MATERIAL HOLDER button
21 ASU DOORS RESET button
22 SHORT STOP button
23 MANUAL WEB SPLICE button
24 OPEN/CLOSE DOOR button

1.3.2 Service Unit

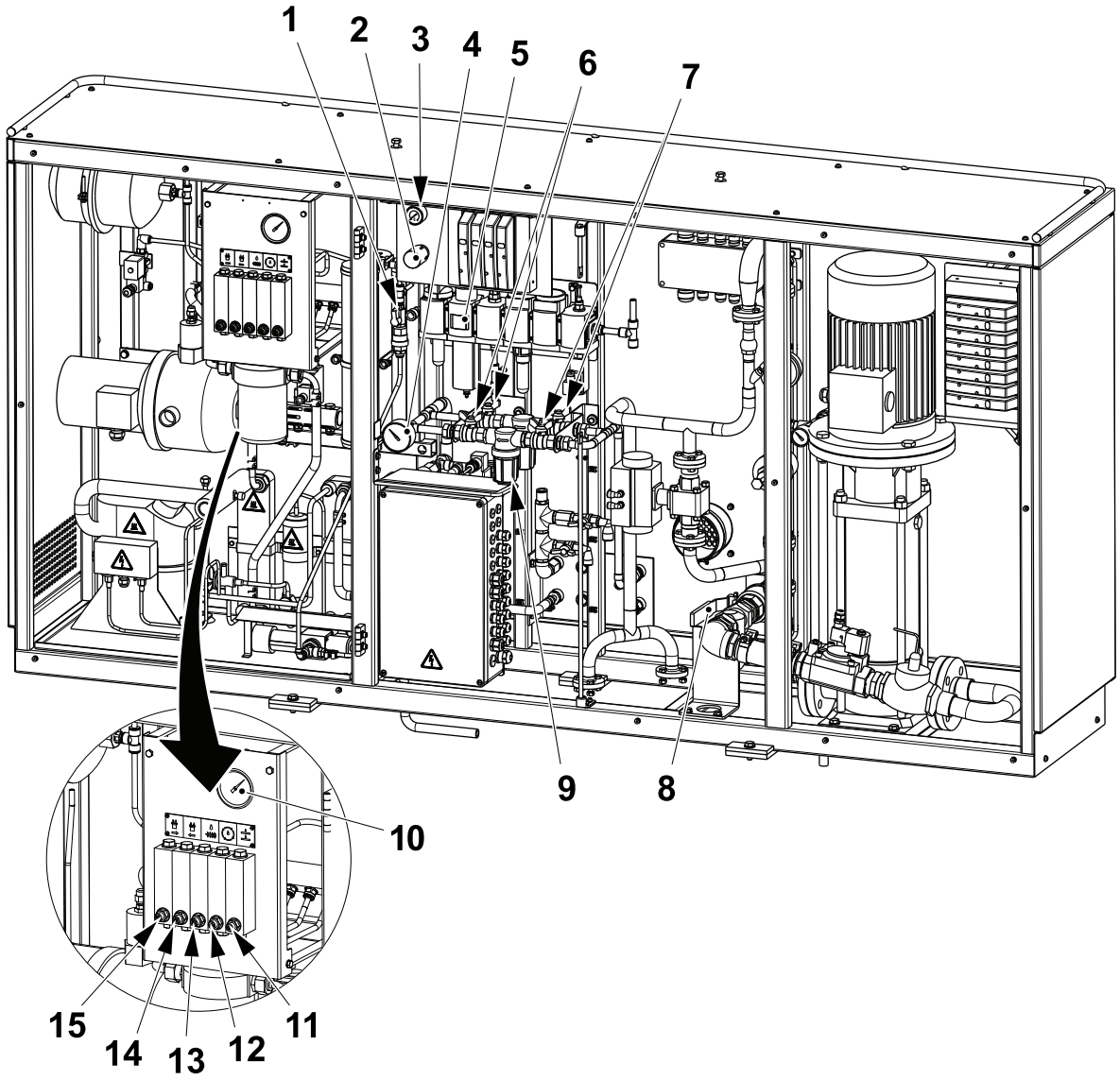

1 Cooling water refilling valve
2 Foaming pressure regulator external cleaning
3 Foaming pressure gauge
4 Mains water pressure gauge
5 Air pressure gauge
6 Mains water supply valve(s)
7 Mains water supply valve (s)
8 External cleaning handle
9 Filter, mains water supply
10 Cooling water pressure gauge
11 Cooling water flow meter, hydraulic system
12 De-ionizing circuit flow meter
13 Cooling water flow meter, final folder
14 Cooling water flow meter, jaw system, TS left
15 Cooling water flow meter, jaw system, TS right

1.3.3 Valve Panel, Machine Body LH Side

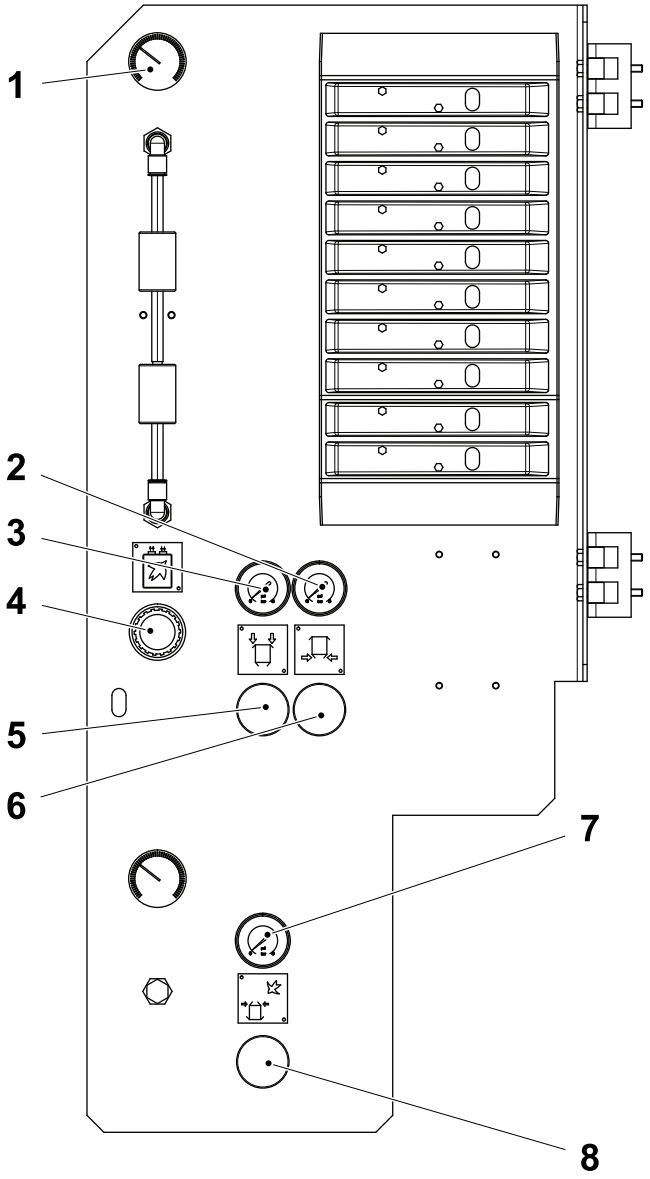

1 Air pressure gauge, design correction photocells
2 Air pressure gauge, flap heating bottom left and right
3 Air pressure gauge, flap heating top left and right
4 Air pressure regulator, design correction photocells
5 Air pressure regulator, flap heating top left and right
6 Air pressure regulator, flap heating bottom left and right
7 Air pressure gauge, bottom flap blowing
8 Air pressure regulator, bottom flap blowing

1.3.4 Valve Panel, ASU LH Side

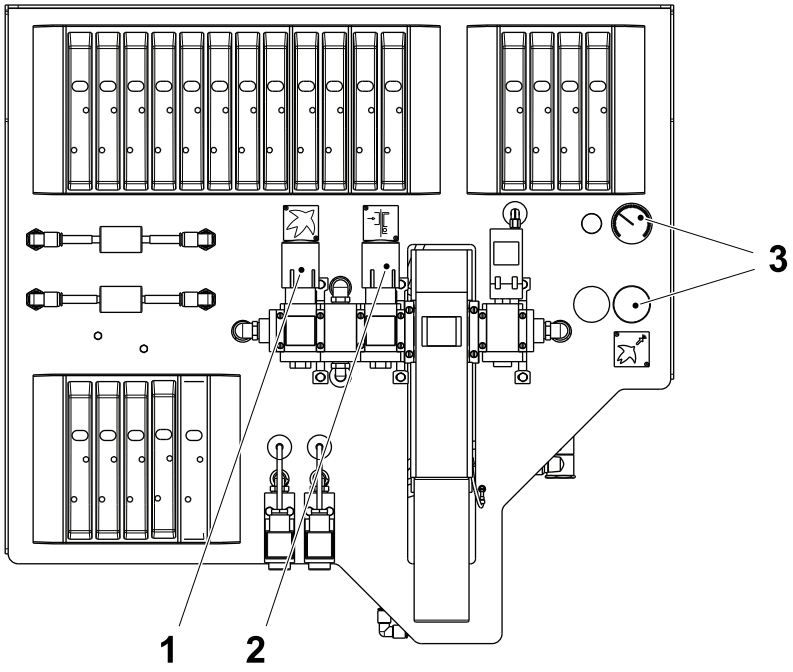

1 Air pressure gauge and regulator, main air ASU

2 Air pressure gauge and regulator, web tension

3 Air pressure gauge and regulator, SA cooling

1.3.5 Valve Panel, Superstructure LH Side

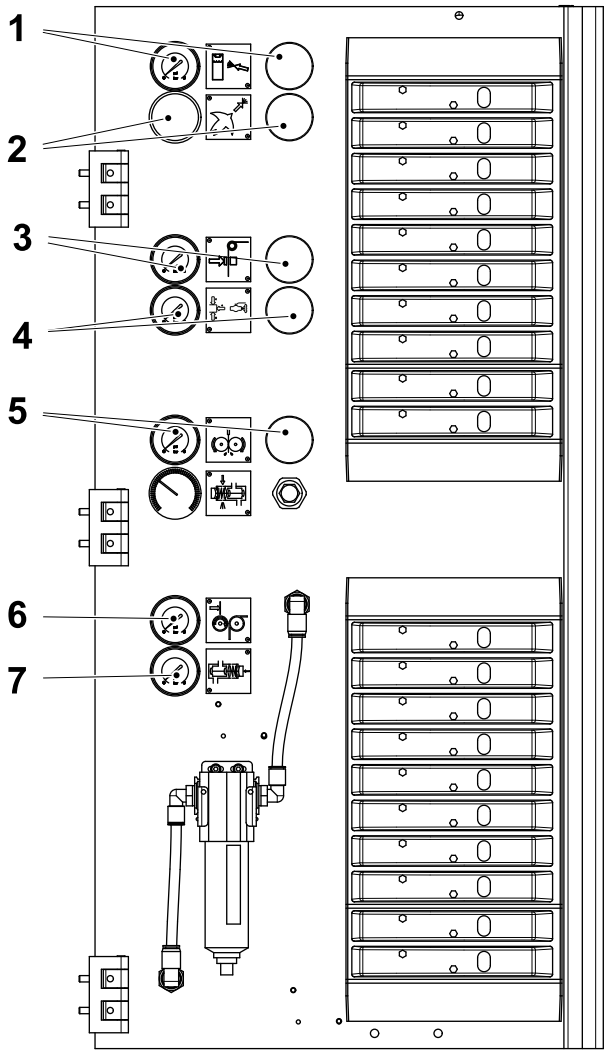

1 Air pressure gauge and regulator, HI peroxide spray (OE)
2 Air pressure gauge and regulator, peroxide spray
3 Air pressure gauge, counter roller drive motor
4 Air pressure gauge and regulator, TCSB
5 Air pressure gauge and regulator, calender rollers
6 Air pressure gauge, pendulum roller
7 Air pressure gauge, regulating valve

1.3.6 Electrical Cabinet, Filling Machine LH Side

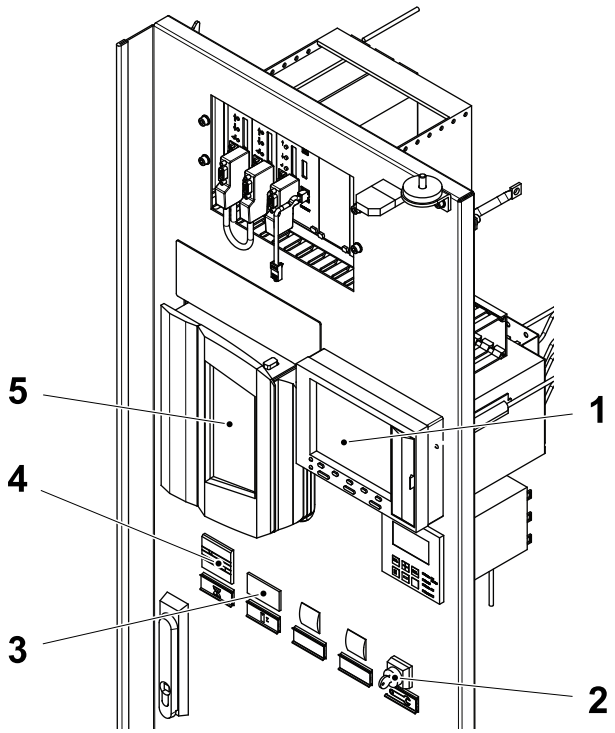

Machines with T-order: 21220/00001 to 21220/00239

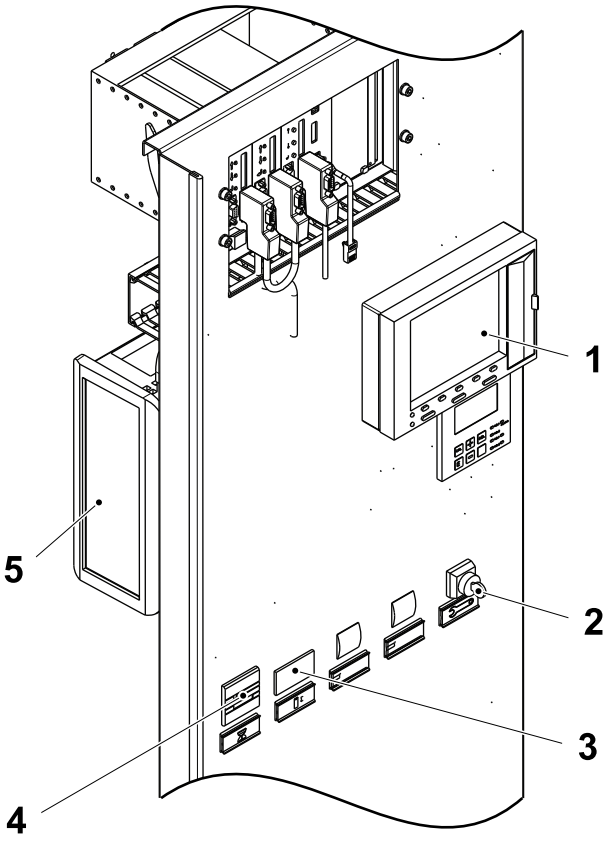

Machines with T-order: 21220/00240 and above

1 Recorder
2 Service switch
3 Package counter
4 Time recorder
5 IPC

1.3.7 Filling Machine, RH Side

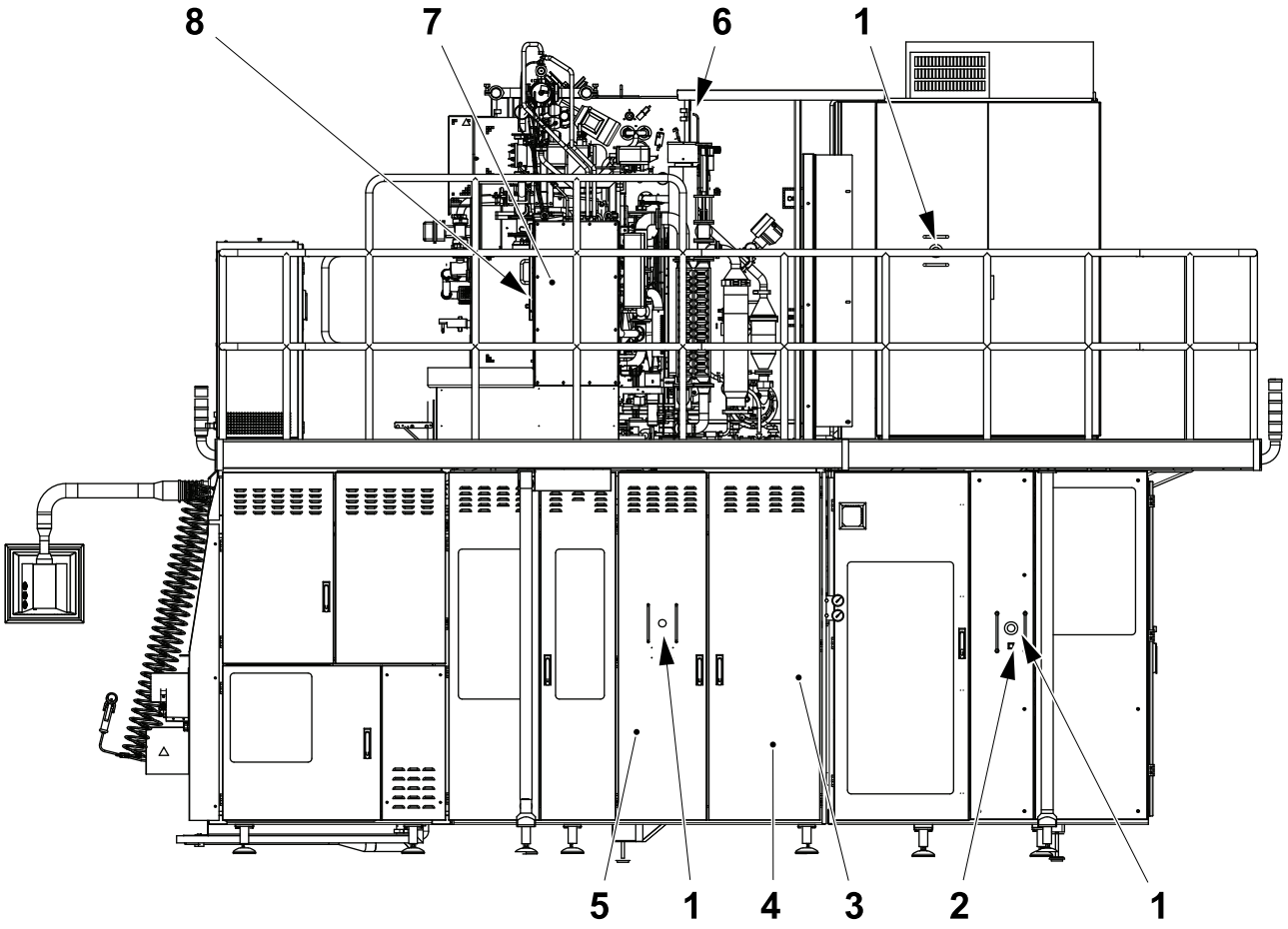

1 EMERGENCY STOP button
2 MANUAL STRIP SPLICE button
3 Hydrogen peroxide concentration meter
4 Hydrogen peroxide tank and dilution tank
5 Jaw system lubrication tank
6 Rear aseptic chamber door
7 HVA (OE)
8 HVA valve panel

1.3.8 Filling Machine, RH Side Rear, No Covers

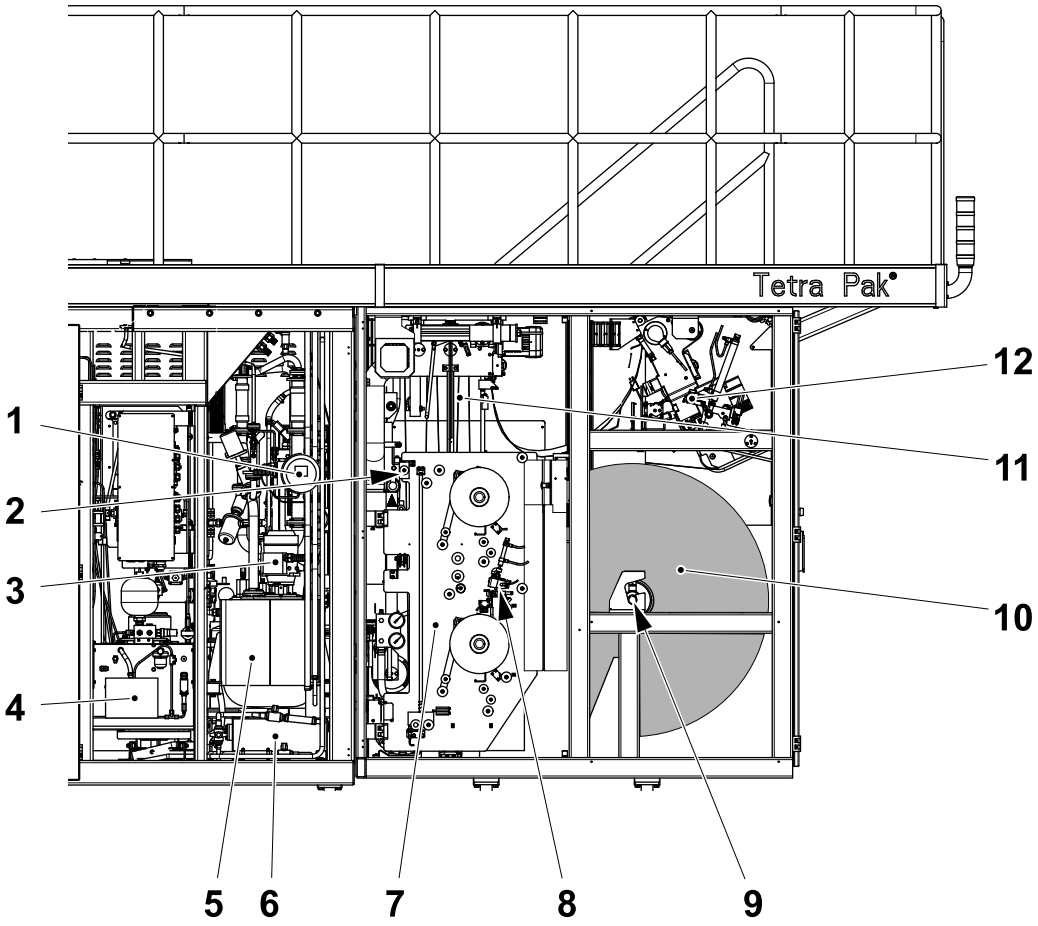

1 Hydrogen peroxide concentration meter
2 Strip applicator (SA)
3 Hydrogen peroxide pump
4 Oil tank
5 Hydrogen peroxide tank
6 Dilution tank and draining valves
7 Strip magazine
8 Strip splice
9 Packaging material reel holder
10 Packaging material reel
11 Packaging material web magazine
12 Packaging material web splice

1.3.9 Valve Panel, HVA RH Side

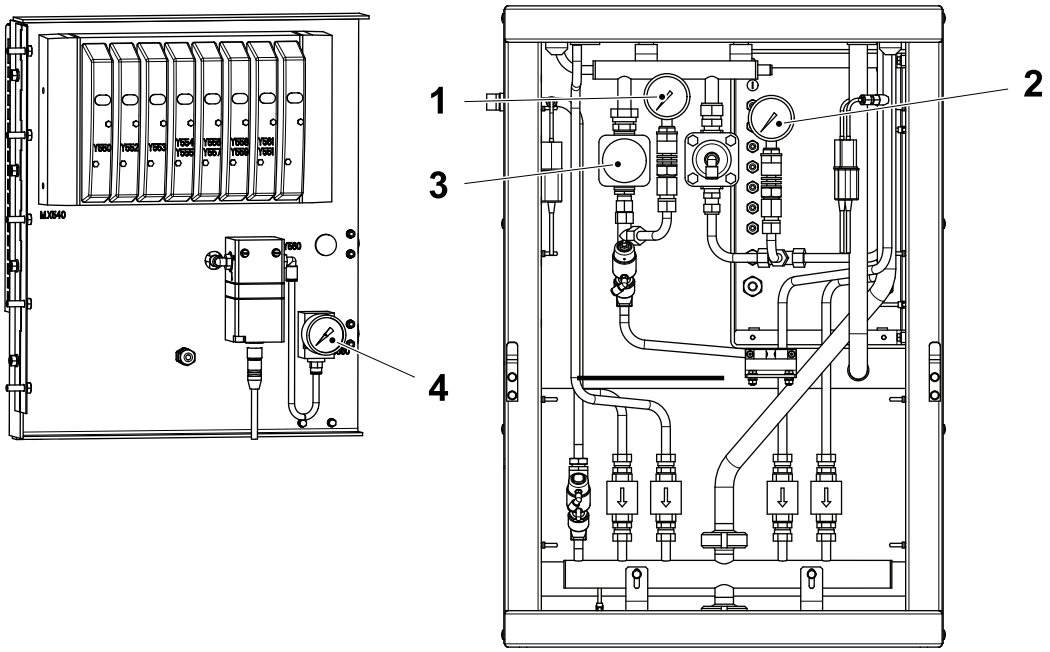

1 Steam pressure gauge, HVA pump
2 Steam pressure gauge, external product valve
3 Steam pressure regulator, HVA pump
4 Air pressure gauge, external product valve

1.3.10 Control Panel

The FINAL FOLDER INCHING button (1) button flashes when inching is possible.

The JAW SYSTEM INCHING button (9) button flashes when inching is possible.

The TPOP display (10) is the interface between the operator/technician and the machine.

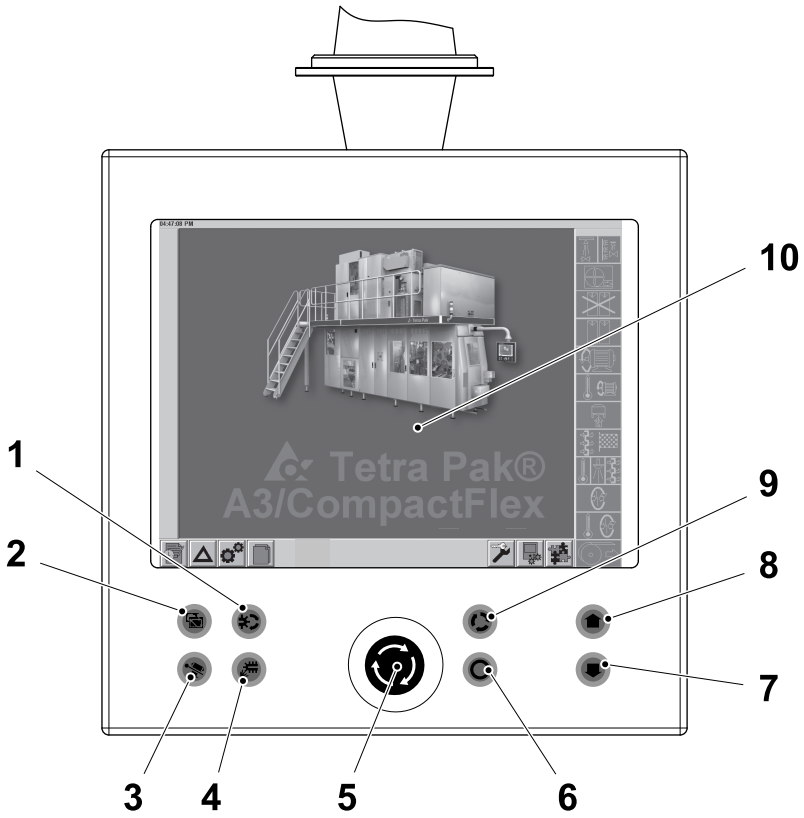

1 FINAL FOLDER INCHING
2 TPOP RESET
3 PACKAGE EJECTOR/WASTE CONVEYOR
4 FINAL FOLDER MANUAL FLUSHING
5 EMERGENCY STOP
6 SHORT STOP
7 PROGRAM DOWN
8 PROGRAM UP
9 JAW SYSTEM INCHING
10 TPOP display

1.4 Machine Symbols

1.4.1 Valve Panels, Symbols

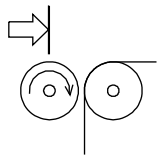	Counter rollers	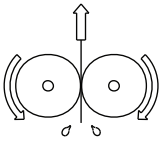	Calender rollers
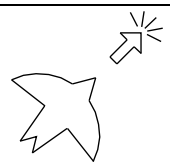	Air pressure, peroxide spray	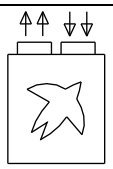	Over pressure, design correction photocells
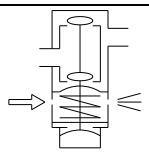	Regulating valve anti-condensation	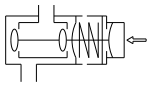	Regulating valve cooling
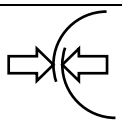	LS	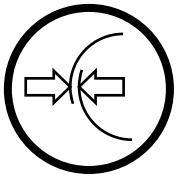	LS short stop
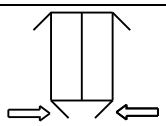	Flap sealing bottom left and right	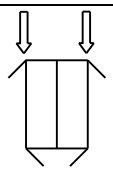	Flap sealing top left and right
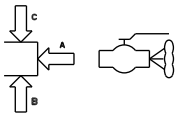	Temperature control steam barrier	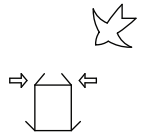	Bottom flap blowing
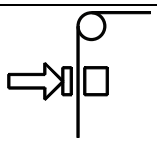	Pressure roller, drying chamber	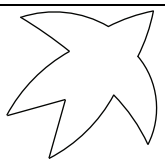	Main air, ASU
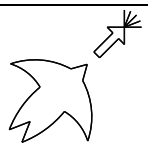	SA cooling, ASU	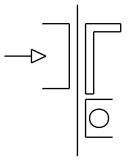	Web tension, ASU

1.4.2 Service Unit, Symbols

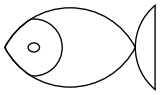	Cold water (blue)	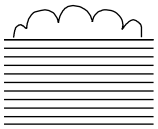	Foaming
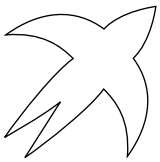	Main Air	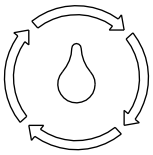	De-ionizing circuit
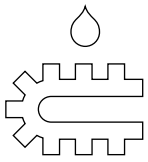	Cold water flow, final folder	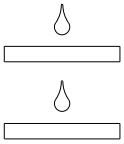	Cold water flow, hydraulic cooler
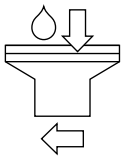	Cold water flow, TS left	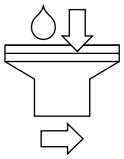	Cold water flow, TS right

1.4.3 ASU, Symbols

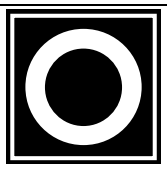	Short stop	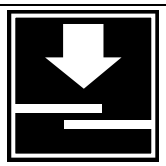	Manual web splice
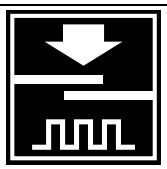	Manual strip splice	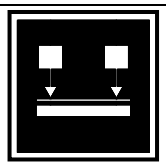	Material locking
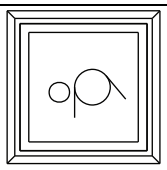	Counter pressure roller	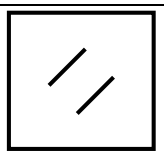	Reset (ASU and Machine body doors alarm)
	Open/close doors ASU iLine XT version (OE)		Packaging material holder

1.4.4 Electrical Cabinet, Symbols

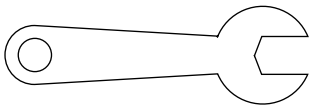 Service switch	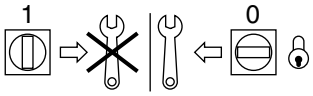 Main switch (on/off)
 Hour counter	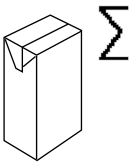 Package counter

1.5 Packaging Material Web Path

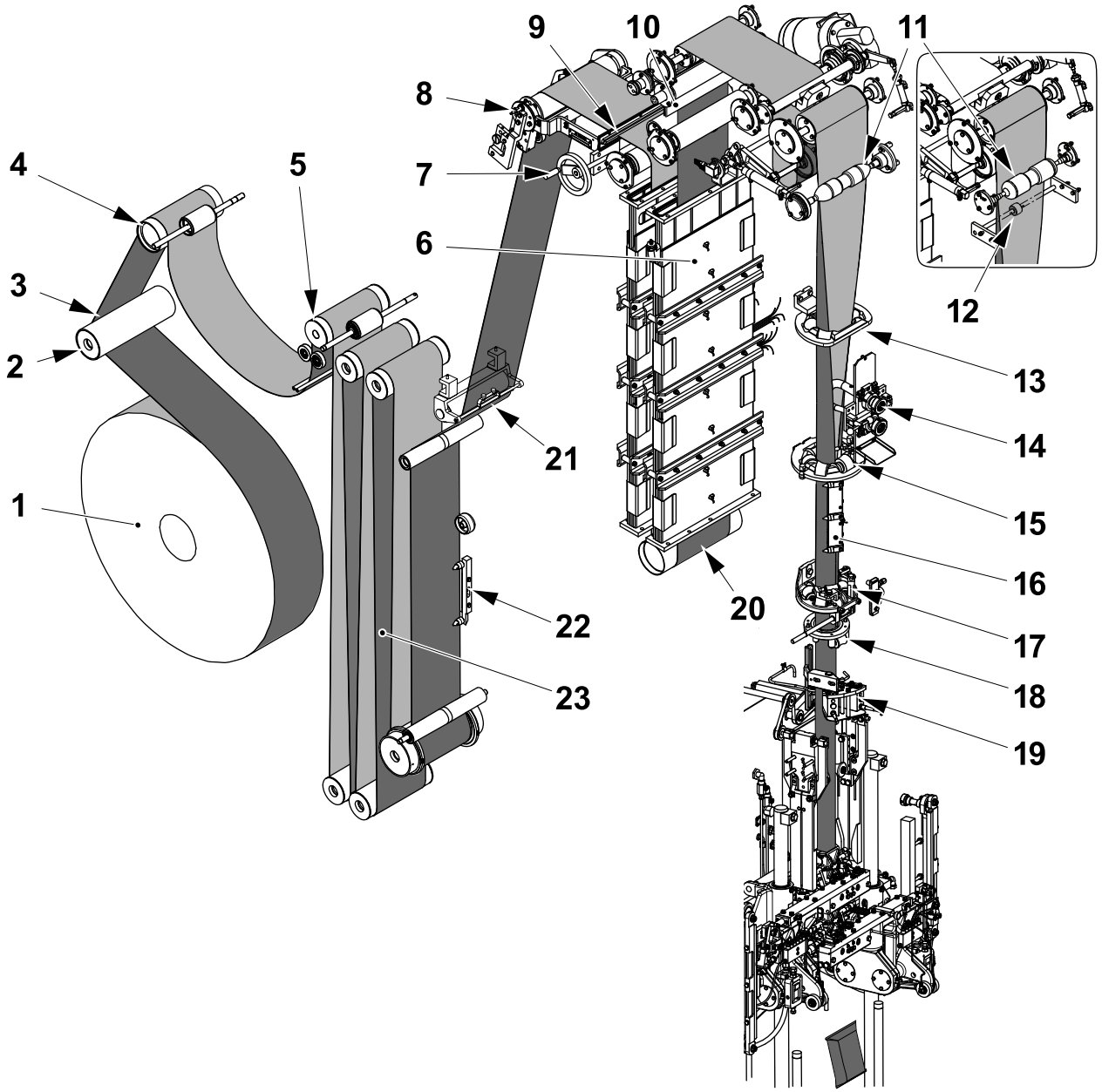

1 Packaging material reel
2 Material holder
3 Movable splicing device
4 Drive unit, rear
5 Drive unit, front
6 Hydrogen peroxide bath
7 Crank handle peroxide bath
8 Bending roller
9 Inlet seal, drying chamber
10 Air knife
11 Reverse bending roller
12 Guide roller (for TBA 375 S only)
13 Support rollers
14 Filling pipe
15 Upper forming ring
16 Hot air element LS
17 Lower forming ring
18 Seal, aseptic chamber
19 Photocells, design correction
20 Bath roller
21 Material lock
22 Strip applicator
23 Web magazine

2 Control Panels

Description

This chapter describes how to navigate through the TPOP, what to do when alarms occur and how to make machine settings.

CAUTION

Risk of damage to the equipment.

This chapter contains instructions for making machine settings. These settings must only be performed by a trained operator.

Description 2-2

2.1 TPOP Home Window 2-9

2.1.1 Button Bar 2-10

Production Control Button 2-10

Maintenance Control Button 2-11

System Setup Button 2-11

Alarm Button 2-11

Machine Configuration Button 2-11

Collect System Button 2-12

Recipes Button 2-12

2.1.2 Title Bar 2-13

2.1.3 Status Bar 2-14

2.1.4 Program Steps 2-15

Before and During Production 2-15

After Production 2-16

During Cleaning CIP ICU 2-16

After Cleaning CIP ICU 2-16

CIP Bypass at Start 2-17

2.1.5 Basic TPOP Navigation and Procedures 2-18

Buttons 2-18

Tabs 2-21

Symbols 2-21

Icons 2-22

Procedures 2-24

Selecting the Cause of an Event 2-25

Monitoring and Regulating System Setting Parameters 2-25

2.2 Cleaning Procedures 2-28

CIP Cleaning / CIP Drying 2-28

CIP Cleaning 2-29
CIP Drying 2-30
CIP Cleaning ICU (OE) 2-31
External Cleaning 2-35

2.3 Alarms 2-37
Alarm Modules 2-37
2.3.1 Alarm Indication 2-38
Alarm Colour Codes 2-38
Navigating Alarms 2-39
Managing Alarms 2-40
System Communication Fault 2-41
Alarm History 2-41

2.4 Collect System 2-43
Collect System Events 2-43
2.4.1 Manually Registering an Event During Preparation 2-44
Delay in the Preparation Phase 2-44
Jump to Step Zero During the Preparation Phase 2-46
2.4.2 Manually Registering an Event During Production 2-47
Manual Recording of a Production Stop Cause 2-47
Check or Change a Production Stop Cause 2-50
Jump to Step ZERO During the PRODUCTION Phase 2-52
Jump to Step VENTING During the PRODUCTION Phase 2-53
2.4.3 Generic Collect System Tasks 2-54
Recording Package Waste for Quality Checks 2-54
Recording Maintenance Time 2-56

Copying Recorded Data 2-58

2.5 Machine Configuration 2-59

Configuration Window 2-59

Belt Brake 2-60

2.6 Production Control 2-61

Production Control Modules 2-61

2.6.1 ASU Window 2-62

Spliced Package Repeat Length Offset 2-63

Constant Heat Bar Temperature 2-64

Force Manual Splice 2-64

Move Splicing Head 2-65

Preparation Device 2-66

Splice Preparation Operator Feedback 2-66

LGV Sensor Status Control 2-67

2.6.2 Peroxide System Window 2-68

Peroxide Concentration Monitor 2-69

Peroxide Tank Level 2-69

2.6.3 SA Magazine Window 2-71

Heating Element Temperature 2-72

Strip Sealing Time 2-73

Short Stop Element Temperature 2-73

2.6.4 Sterile Air System Window 2-75

Longitudinal Sealing Short Stop Nozzle Temperature 2-76

Longitudinal Sealing Heating Nozzle Temperature 2-77

2.6.5 Package Forming Unit Window 2-79

Change Inductor 2-80

Jaw Lubrication 2-82

TS Power 2-83
TS Fault History 2-83
Folding Flaps Production Position 2-84
Design Correction Offset 2-84
Photocell Unit 2-85
Jaw Inching Selection 2-86
Jaw System Target Position 2-87
Sample Package 2-88
2.6.6 Tube Forming Unit Window 2-89
Pendulum Roller 2-90
2.6.7 Filling System Window 2-91
Product Level and Flow Graph 2-92
Starting Flow 2-93
2.6.8 Service Unit Window 2-94
2.6.9 Final Folder Unit Window 2-96
Final Folder Synchronization 2-97
Flap Heater Temperature 2-97
Final Folder Target Position 2-98
Jog Final Folder 2-99
2.6.10 Down Stream 2-101
Outfeed Conveyor Speed 2-102
Option Date Unit 2-102
Jaw and Event ID Configuration Selection 2-104
2.6.11 Package and Time Counters Window 2-107
Partial Package Counters 2-108
Waste Counters 2-109
Technical Waste 2-109
Production Time Counters 2-109
Actual Speed 2-110

Production Graphic 2-110
2.6.12 Utility Window 2-112
Software Version 2-113
Backup 2-113
Clean Panel 2-114
Copy Local Files 2-115
Copy Backup Files 2-115
Restart Panel 2-115
2.6.13 Temperature Overview Window 2-116
2.6.14 LGV/Raw Material Request Window 2-119
Request Material for Pallet Delivery at Delivery Area 1 or 2 2-120
Request for Reel Delivery at ASU Side 1 or 2 2-124
LGV Enable Photocells Force 2-126
LGV Automatic Mission Disable 2-127
2.6.15 Raw Materials Data Input Window 2-128
Raw Material Data 2-129
Mismatching Materials 2-130
2.7 Recipes 2-132
Recipes Window 2-132
Load Recipe 2-133
Mismatching Parameters 2-134
Save Recipe 2-136
Create New Recipe 2-137
Delete Recipe 2-142
2.8 System Setup 2-144
User Log On 2-144
Language Setting 2-145
Time Setting 2-146

Production Shift Setting 2-147
Last Package Point Selection 2-148
DE Overview 2-149
2.9 Recorder Navigation 2-151
Login 2-151
Log Off 2-153
Change CompactFlash Card 2-155
2.10 Recorder Navigation 2-157
Login 2-157
Log Out 2-160
Change CompactFlash Card 2-161

2.1 TPOP Home Window

The TPOP display is a touch sensitive screen which allows the operator to manage and communicate with the filling machine control system.

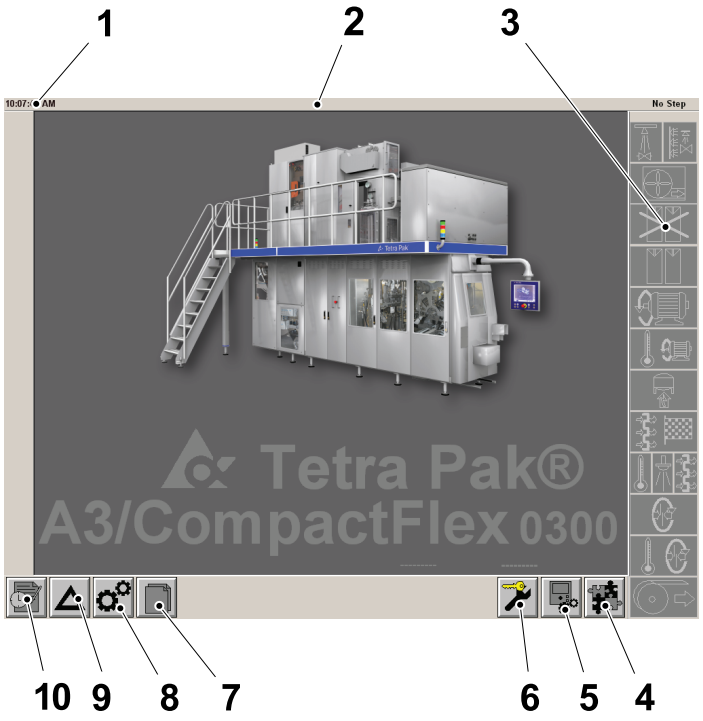

1 `STATUS` bar
2 `TITLE` bar
3 `PROGRAM STEP` icons
4 `MACHINE CONFIGURATION` button
5 `SETTING SYSTEM` button
6 `MAINTENANCE CONTROL` button
7 `RECIPES` button
8 `PRODUCTION CONTROL` button
9 `ALARMS` button
10 `COLLECT SYSTEM` button

The TPOP home window displays the buttons and icons used to identify the status of the machine and to access the different menus of the filling machine control system.

2.1.1 Button Bar

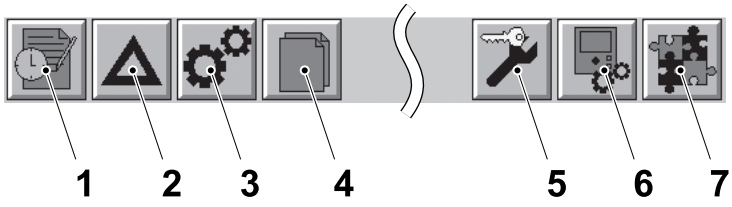

The button bar contains the following buttons used to access the TPOP menus:

- COLLECT SYSTEM button (1)
- ALARMS button (2)
- PRODUCTION CONTROL button (3)
- RECIPES button (4)
- MAINTENANCE CONTROL button (5)
- SYSTEM SETUP button (6)
- MACHINE CONFIGURATION button (7)



Production Control Button

The PRODUCTION CONTROL button is used to access the PRODUCTION CONTROL window.

All the machine production settings are accessible through this window, see 2.6 Production Control.

A green dot in the PRODUCTION CONTROL button indicate that a production setting has been activated. The green dot is also visible on the module button and the function icon.



Maintenance Control Button

The MAINTENANCE CONTROL button is used to access the MAINTENANCE CONTROL window.

The key symbol in the MAINTENANCE CONTROL button indicated that access to the MAINTENANCE CONTROL window is restricted and only users with a valid password can access the window.

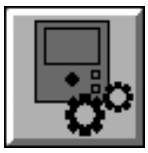

System Setup Button

The SYSTEM SETUP button is used to access the SYSTEM SETUP window.

The user log on, production shift setting, language and time setting are all accessible through this window, see 2.8 System Setup.



Alarm Button

The ALARMS button is used to access the ALARMS window.

All the alarm modules are accessible through this button, see 2.3 Alarms.

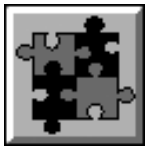

Machine Configuration Button

The MACHINE CONFIGURATION button is used to access the MACHINE CONFIGURATION window.

All the machine options which may be enable or disabled are accessible through this button, see 2.5 Machine Configuration.



Collect System Button

The COLLECT SYSTEM button is used to access the COLLECT SYSTEM window.

The COLLECT SYSTEM is used to register events, see 2.4 Collect System.

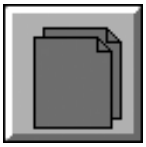

Recipes Button

The RECIPES button is used to access the RECIPES window.

The management of production recipes is accessible through this button, see 2.7 Recipes.

2.1.2 Title Bar

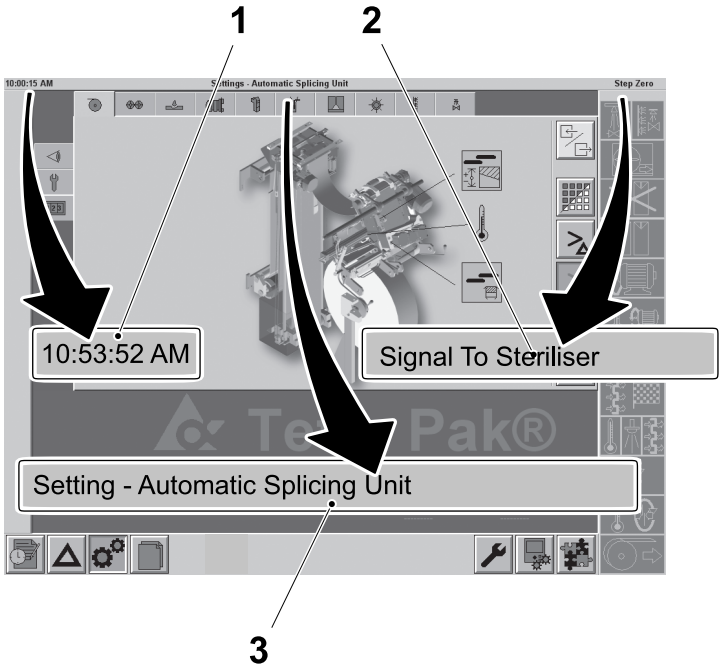

The title bar indicates:

- the current time (1)
- the current machine step (2)
- the name of the current module window (3).

2.1.3 Status Bar

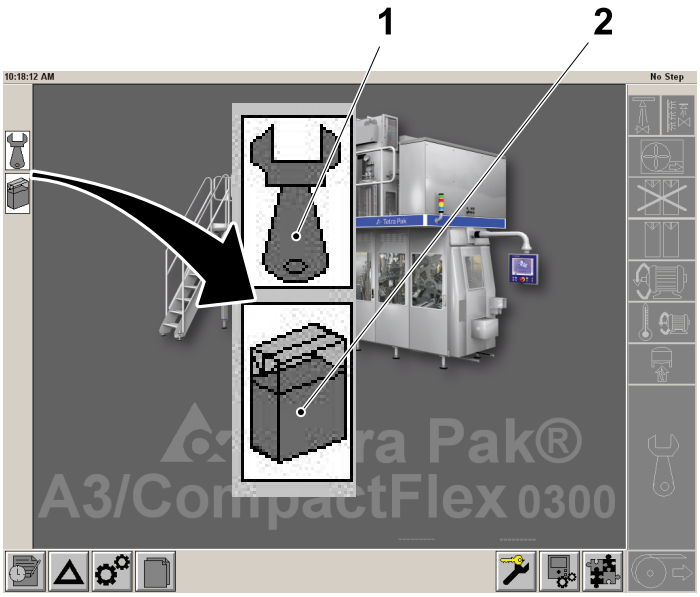

The status bar can indicate the status of:

- the service key (1)
- the HI (2) (OE)

2.1.4 Program Steps

This section describes the program steps displayed on the TPOP to indicate the machine status before, during and after PRODUCTION and during and after CIP.

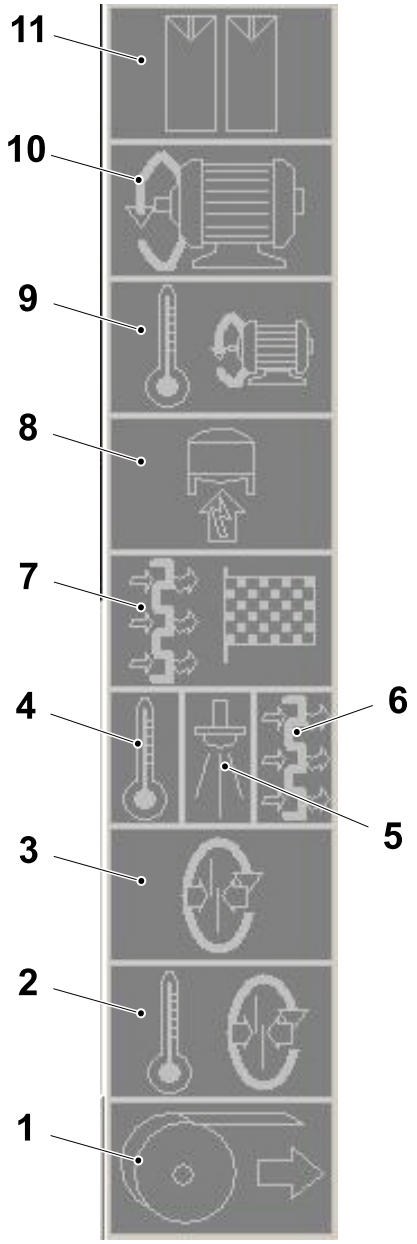

Before and During Production

1) NO LIGHT = STEP ZERO

LIGHT = PREPARATION

2) PREPARE TO TUBE SEALING

3) TUBE SEALING

4) HEAT STERILIZATION

5) SPRAYING

6) DRYING

7) STERILIZATION DONE

8) SIGNAL TO STERILIZER

9) PREPARE TO PRODUCTION

10) MOTOR START

11) PRODUCTION

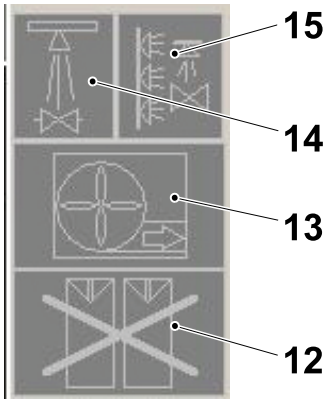

After Production

12) END PRODUCTION

13) VENTING

14) INTERNAL CLEANING

15) EXTERNAL CLEANING

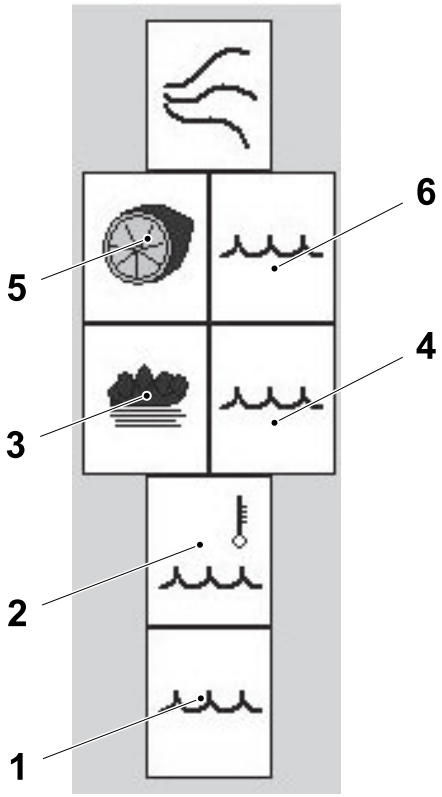

During Cleaning CIP ICU

Note! ICU is an Optional Equipment.

1) COLD WATER RINSE

2) HOT WATER RINSE

3) ALKALI CLEANING

4) ALKALI RINSE

5) ACID CLEANING

6) ACID RINSE

Note! Steps 1 to 4 are performed when ALKALI cleaning is selected. Steps 1 to 6 are performed when ALKALI AND ACID cleaning is selected.

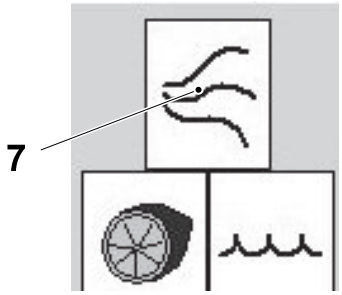

After Cleaning CIP ICU

Note! ICU is an Optional Equipment.

7) DRYING

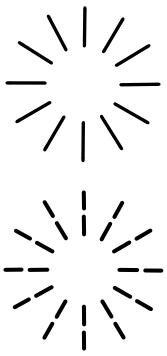

A fixed light indicates the current program step.

A flashing light indicates the machine is ready to begin a program step.

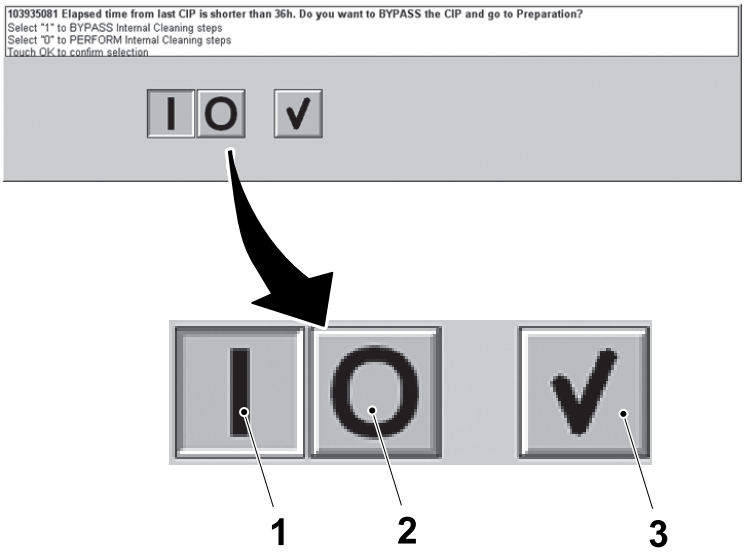

CIP Bypass at Start

If the machine is not stepped up to PRODUCTION within 36 hours after the end of the CIP drying, the CIP cleaning must be repeated.

If the machine has been shut down (for example for maintenance reasons) and then it has been restarted **within 36 hours** after the end of the CIP drying, the TPOP prompts the question:

ELAPSED TIME FROM LAST CIP IS SHORTER THAN 36 HOURS. DO YOU WANT TO BYPASS THE CIP AND GO TO PREPARATION?

Select:

- the ON button (1) to bypass the CIP
- the OFF button (2) to perform the CIP.

Press the OK button for 5 seconds to confirm.

2.1.5 Basic TPOP Navigation and Procedures

This section describes the buttons and TPOP components that are used to navigate the TPOP windows and to perform procedures.

Buttons

The following buttons are common to the TPOP windows.



The OK button.

Touch the OK button to confirm a data entry as:

- function start
- function stop
- value input
- recipe selection.



The CANCEL button.

Touch the CANCEL button to close an active window without recording any data.



The CLEAR button.

Touch the CLEAR button to clear an incorrect entry.



The ON and OFF buttons.

Touch the ON button to enable or the OFF button disable a function.

Note! It may be necessary to touch the OK button to confirm the selection of the ON and OFF buttons and initiate the function.



The FACTORY button.

Touch the FACTORY button to display the default value.

The reset to the default value is confirmed by touching the OK button.

Note! Some settings have more than one factory value (such as the setting for the tab sealing pad heater that changes with the hole type). For these settings, the factory button only provides an approximate value.

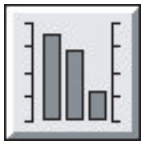

The TREND button.

Touch the TREND button to display graphical statistical information.

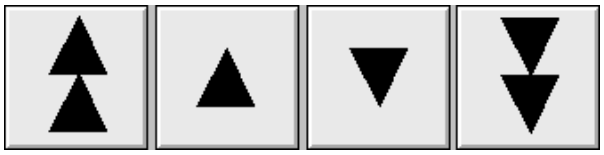

The SINGLE ARROW and DOUBLE ARROW buttons.

Touch the SINGLE ARROW buttons to increase or decrease a value by the minimum allowed step depending on the specific setting.

Touch the DOUBLE ARROW buttons to increase or decrease a value by increments of 10 times the value.

Note! When a SINGLE ARROW button is touched continuously for 10 increments, the increment value will then change by a value 10 times the initial increment value.



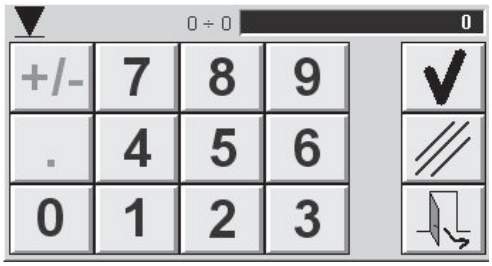

The KEYBOARD button.

Touch the KEYBOARD button to activate the keyboard and enter a value.



The ENABLE ICONS button.

Touch the ENABLE ICONS button to enable the grey icons in the module window.

The icons in the MODULE window become white.



The CHANGE WINDOW buttons.

Touch one of the CHANGE WINDOW buttons to navigate among the ALARMS/PRODUCTION CONTROL/MAINTENANCE CONTROL windows within the same module.



The EXIT button.

Touch the EXIT button to close an active window.

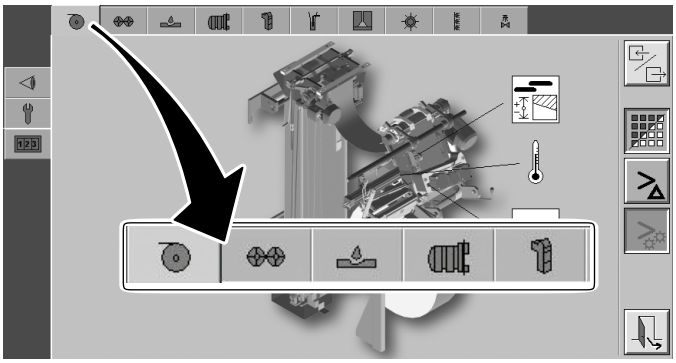

Tabs

When a PRODUCTION CONTROL MODULE window or an ALARMS MODULE window is displayed the tabs at the top and at the LH side of the window allow easy navigation to the other module windows without returning to the main window.

Symbols

The following symbols are common to the TPOP windows.

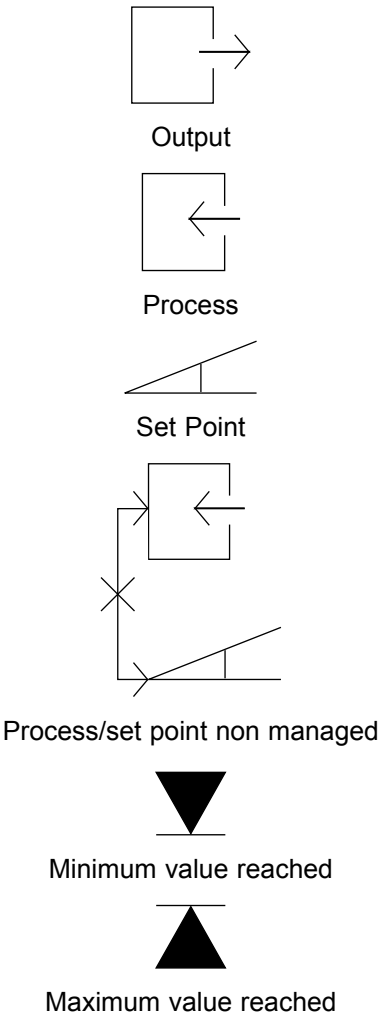

- OUTPUT- percentage of intervention of the control variable within its working range
- PROCESS - current value
- SET POINT - value that has been set for the particular operation
- PROCESS/SET POINT NON MANAGED - values are currently not being managed and regulated by the machine
- MINIMUM VALUE REACHED - the value entered in the dialogue window is below the allowed minimum limit
- MAXIMUM VALUE REACHED - the value entered in the dialogue window is above the allowed maximum limit.

Icons

The following selectable icons are common to the TPOP SETTING windows.

Selectable icons are white, when an icon is selected the colour of the icon changes to blue.



The INDUCTOR icon.

Touch the INDUCTOR icon to display the current power value(s) for an inductor.



The SEALING MONITORING icon.

Touch the SEALING MONITORING icon to display the current impedance values and phase values for each inductor.

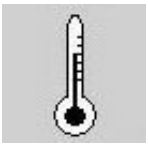

The TEMPERATURE icon.

Touch the TEMPERATURE icon to display the current temperature value(s) dialogue window.

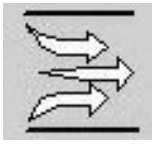

The FLOW icon.

Touch the FLOW icon to display the current flow value(s).

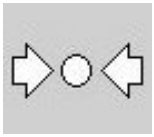

The PRESSURE icon.

Touch the PRESSURE icon to display the current pressure value(s).

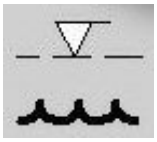

The LEVEL INDICATOR icon.

Touch the LEVEL INDICATOR icon to display the current level value(s).

Procedures

The following are common procedures used to input data and use a common and repeatable logic.

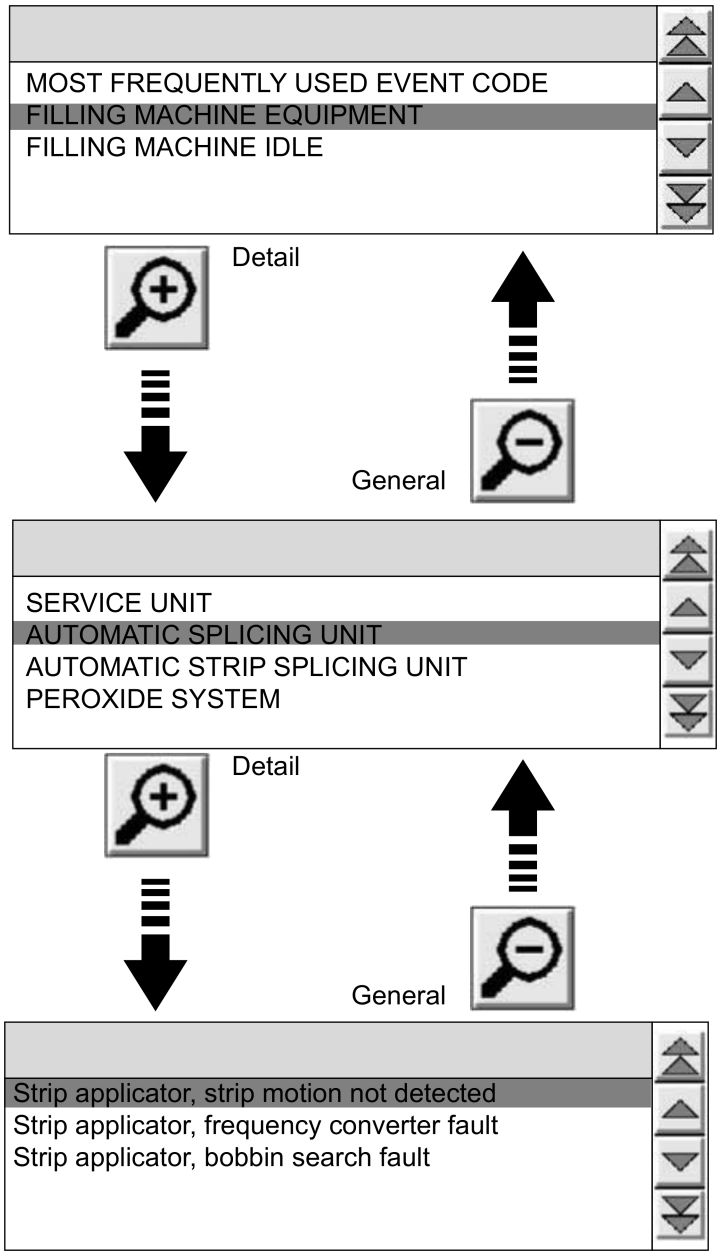

1

Selecting the Cause of an Event

When the Collect System requests the selection of the cause of an event, it is possible to allocate the cause of the event at different levels of detail.

The first window lists the main level of causes.

To find the specific cause, use the arrows to select its main group, and then touch the DETAIL button. Repeat until the specific cause is found.

To move back one level, touch the GENERAL button.

The bar at the top of the cause list shows the previous level of detail.

Every time a specific cause is selected, the MOST FREQUENTLY USED EVENT CODE list is updated.

Note! Specific cause selection can be also made by pressing the alarm group button and selecting the alarm icon.



1

Monitoring and Regulating System Setting Parameters

Touch the PRODUCTION control button.

Touch one of the module buttons to open the associated setting window.

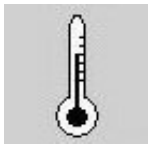

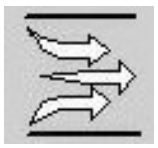

2

Note! This procedure is valid for both the TEMPERATURE icon and FLOW icon.

Touch a parameter icon.

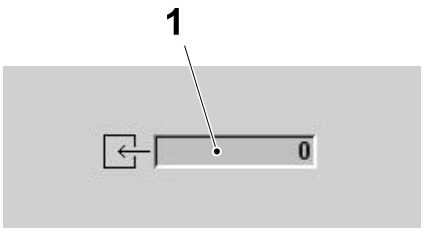

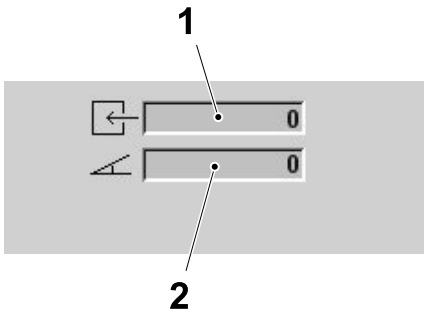

3

The dialogue window may display the following information:

- the current value (1)

or

- the current value (1) with the set point value (2), when available.

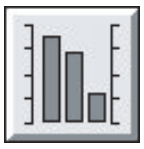

4

Touch the TREND button.

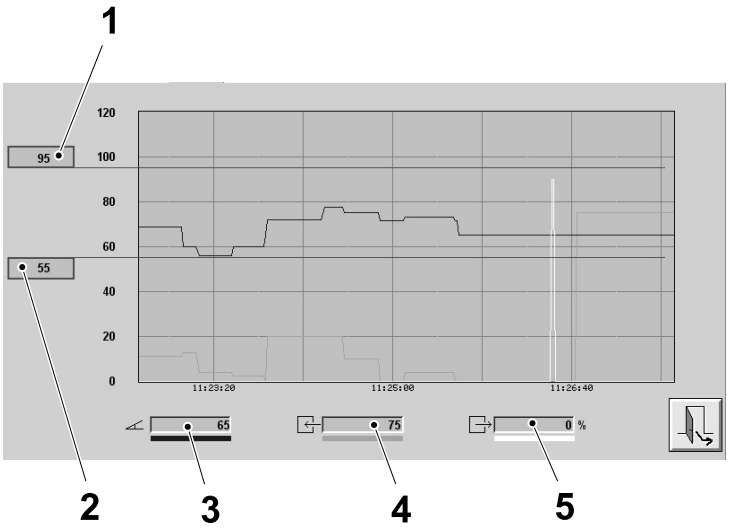

5

The graphic showing the parameter in real time is displayed. The monitor displays the following information:

- the upper value alarm (1)
- the lower value alarm (2)
- the set point value (3), when available
- the process current value (4)
- the regulator output (5), if present.



6

Touch the EXIT button.

2.2 Cleaning Procedures

This section describes how to start and stop the cleaning of the product line system with the internal cleaning unit and how to start and stop the external cleaning of the exposed mechanical parts of the machine.



To access the cleaning functions, touch the PRODUCTION CONTROL button.

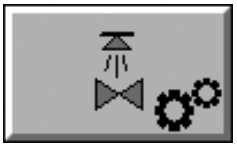

CIP Cleaning / CIP Drying 1

To clean the product line system, touch the CIP button.

If the machine is equipped with ICU see CIP Cleaning ICU (OE).

If the machine is not equipped with ICU see CIP Cleaning.

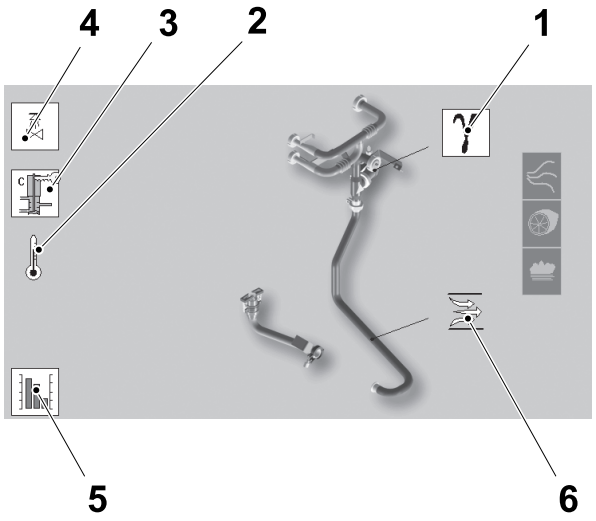

2

The CIP window is displayed.

All selectable icons are white. When an icon is selected the colour of the icon changes to blue.

In this window there are the following selectable icons:

- CIP CONDUCTIVITY (1)
- CIP TEMPERATURE (2)
- INTERMEDIATE OR FINAL CLEANING (3)
- CLEANING FUNCTION (4)
- CIP OVERVIEW (5)
- CIP FLOW (6).



3

Touch the CLEANING FUNCTION icon.



CIP Cleaning

1

Touch the RUN CLEANING button (1). When the PROGRAM UP button (2) starts to flash, press the PROGRAM UP button (2) to start the CIP cleaning.

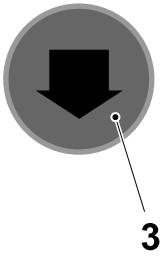

2

To stop the CLEANING CIP program, press the STEP DOWN button (3).

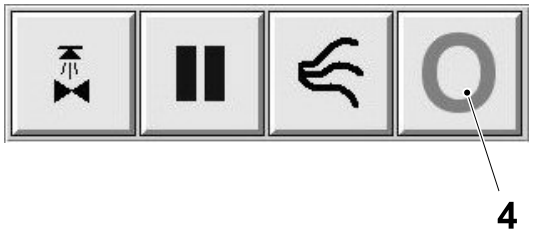

3

To exit from the CIP CLEANING function touch the ZERO button (4).

Note! If the ZERO button (4) is pressed a new CIP must be done to be able to run CIP DRYING.

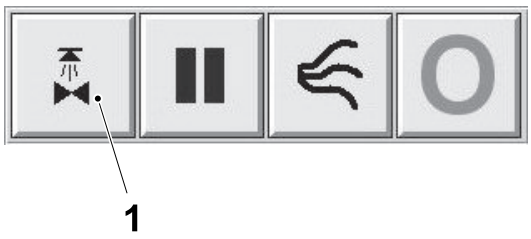

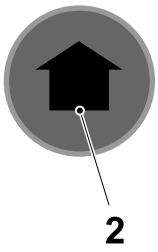

CIP Drying

1

Touch the CIP DRYING button (1). When the PROGRAM UP button (2) starts to flash, press the PROGRAM UP button (2) to start the CIP DRYING.

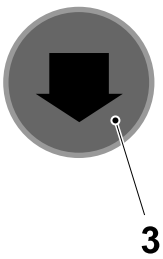

2

To stop the CIP DRYING program press the STEP DOWN button (3).

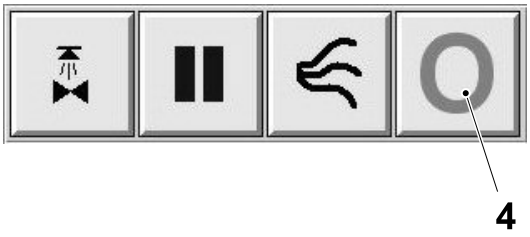

3

To exit from the CIP DRYING function touch the ZERO button (4).

Note! To be able to select intermediate or final cleaning log on as a technician, see User Log On on page 2-144.

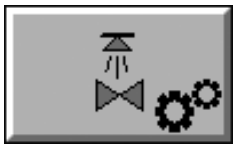

CIP Cleaning ICU (OE)

1

To clean the product line system with the ICU, touch the ICU button.

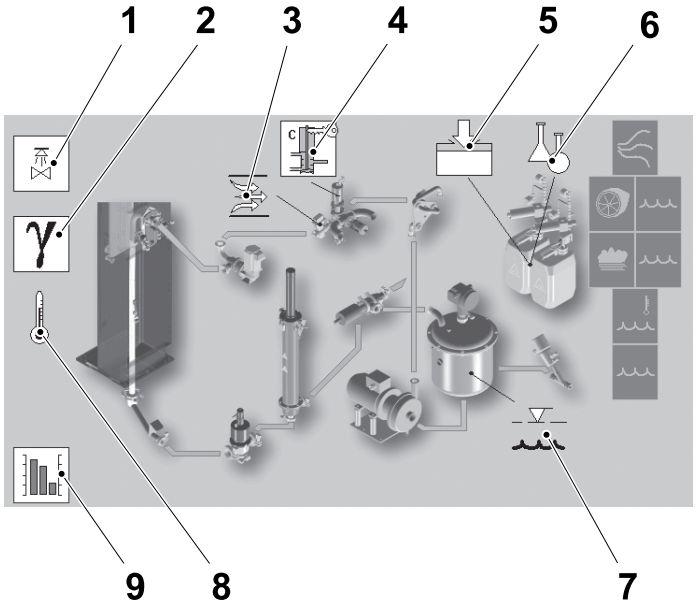

2

The ICU window is displayed.

All selectable icons are white. When an icon is selected the colour of the icon changes to blue.

In this window there are the following selectable icons:

- START CLEANING (1)
- CLEANING FLUID CONDUCTIVITY (2)
- CLEANING FLUID FLOW (3)
- FINAL CLEANING (4)
- CHEMICALS REFILLING (5)
- ALKALI/ACID SELECTION (6)
- ICU TANK LEVEL (7)
- CLEANING FLUID TEMPERATURE (8)
- CLEANING OVERVIEW (9).

For chemicals refilling follow the procedure 9.1.5 ICU.

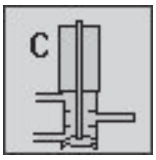

INTERMEDIATE CLEANING

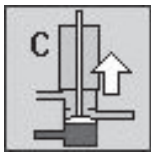

FINAL CLEANING

3

Decide if the INTERMEDIATE CLEANING or the FINAL CLEANING has to be performed.

FINAL CLEANING must be performed after every PRODUCTION run and at the same time as the cleaning of the product line.

To select the final cleaning, see Final Cleaning on page 9-33.

Touch the FINAL CLEANING button and check the current status of the steam valve C.

Note! It is recommended to perform the FINAL CLEANING at least once a week.



4

Touch the ALKALI/ACID SELECTION icon.

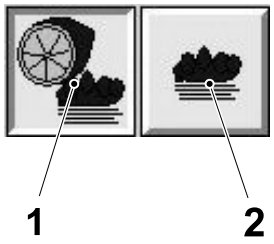

5

Touch the ALKALI AND ACID button (1) or the ALKALI button (2).

Note! It is recommended to use alkali cleaning after every production run or if production is stopped. Alkali and acid cleaning should be performed at least once a week. The use of alkali or alkali and acid for cleaning the filling system must be based on local conditions such as type of product, duration of production and the quality of the water used for cleaning.

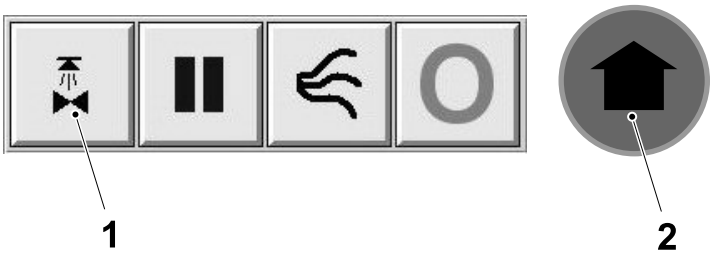

6

Touch the RUN CLEANING button (1). When the PROGRAM UP button (2) starts to flash, press the PROGRAM UP button (2) to start the CIP cleaning.

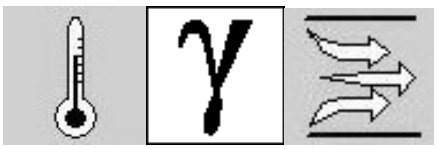

7

Touch one of the three icons for cleaning liquid temperature, conductivity and flow.

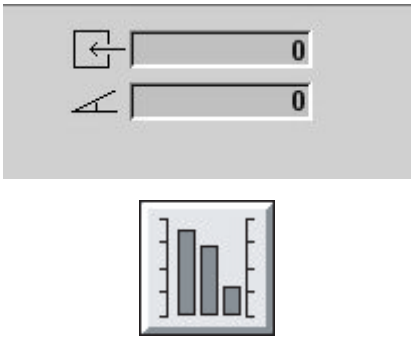

8

The dialogue window displays the current temperature, conductivity or flow value.

Touching the TREND button a graph showing the selected parameter in real time is displayed.

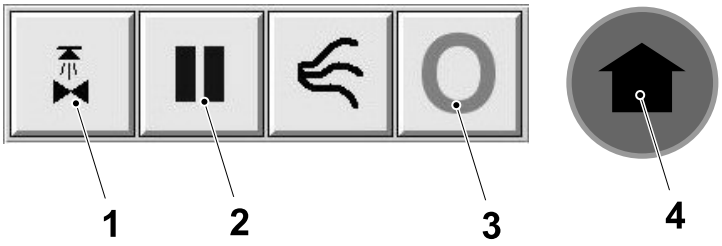

9

To pause or stop the CLEANING CIP program with the integrated cleaning unit:

- touch the PAUSE button (2): the cleaning cycle is paused and the cleaning circuit is drained.

  Note! Once the cleaning cycle has been paused, there is a maximum of 50 minutes available to restart the cleaning. Touch the ICU RUN button (1) to restart the cleaning cycle from the beginning of the last uncompleted cleaning step.

- touch the STOP button (3); when it starts flashing, press the STEP UP button (4) to stop the cleaning.

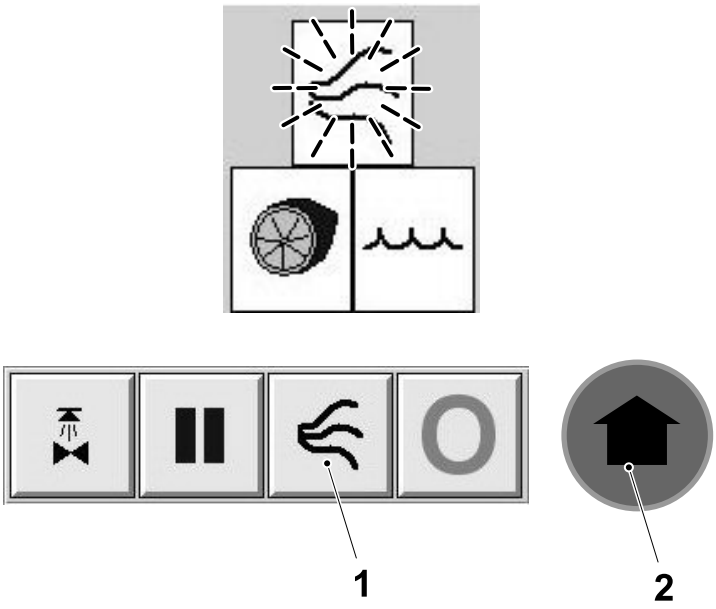

10

Once the cleaning and rinse cycle are finished, the DRYING STEP icon starts flashing.

Note! Once the CIP cleaning is completed, the drying must be performed within 5 hours. If not, repeat the CIP cleaning.

Switch the change over pipe in production position, see 9.1.9 Drying Preparation.

Touch the DRYING button (1); when it starts flashing, press the STEP UP button (2).

Note! If the machine is not stepped up to PRODUCTION within 36 hours after the drying, the CIP cleaning must be repeated.

Note! if the machine is shut down and restarted within 36 hours after the drying, CIP can be repeated or bypassed, see CIP Bypass at Start on page 2-17.

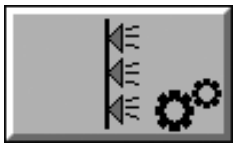

External Cleaning

1

Touch the EXTERNAL CLEANING button.

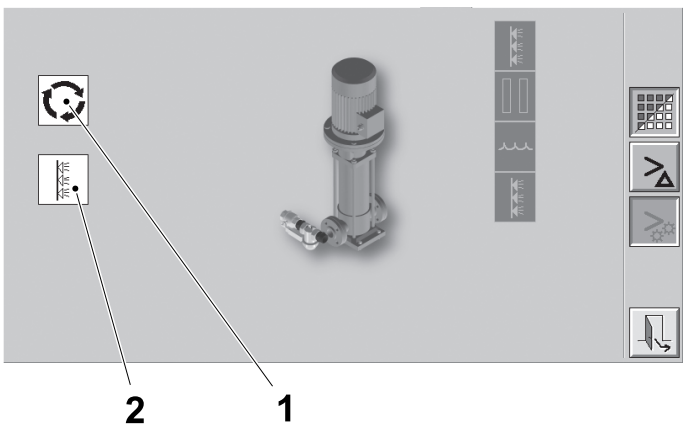

2

The EXTERNAL CLEANING window is displayed.

In this window the following information is displayed:

- CYCLES NUMBER SETTING (1)
- EXTERNAL CLEANING FUNCTION (2).



3

Touch the cycles number setting icon to set the quantity of cleaning cycles.

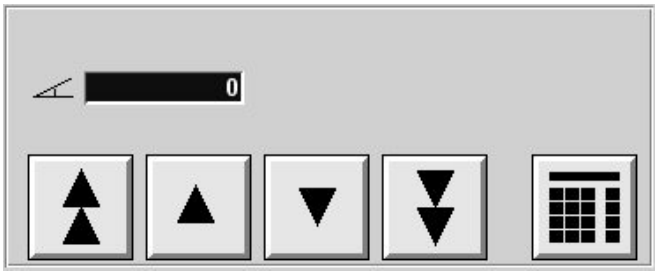

4

The CYCLES NUMBER SETTING key pad is displayed.

Use the ARROW buttons or the KEYBOARD button to set the value.



5

Touch the EXTERNAL CLEANING FUNCTION icon.

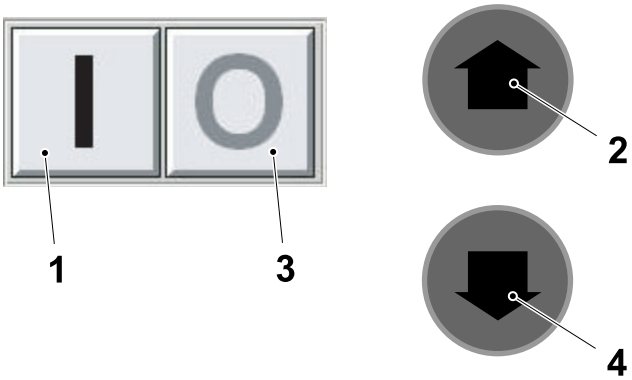

6

The ON/OFF button is displayed.

Touch the ON button (1) and press the STEP UP button (2) to start the external cleaning cycle.

To abort the external cleaning program, touch the OFF button (3) and press the STEP DOWN button (4).

2.3 Alarms

This section describes the machine alarms and how to manage alarms with the TPOP.



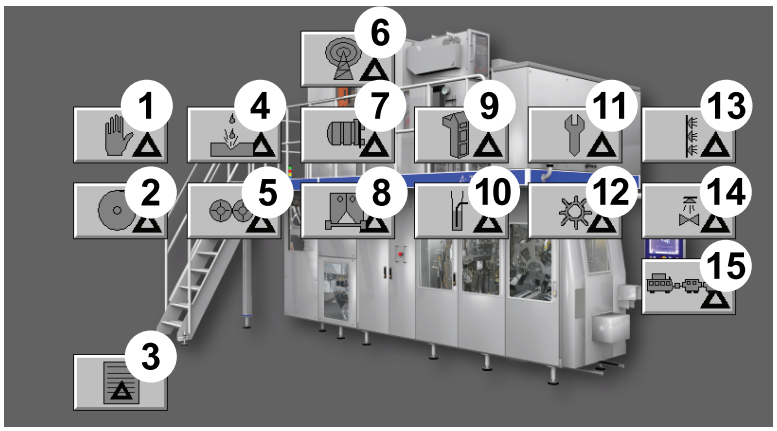



1 SAFETY
2 ASU
3 ALARM HISTORY
4 PEROXIDE SYSTEM
5 SA/MAGAZINE
6 NETWORK
7 STERILE SYSTEM
8 DRIVE UNIT/JAW SYSTEM
9 SUPERSTRUCTURE
10 FILLING SYSTEM
11 SERVICE UNIT
12 FINAL FOLDER
13 EXTERNAL CLEANING
14 INTERNAL CLEANING
15 DOWNSTREAM
16 RAW MATERIAL DATA INPUT (OE)
17 LGV/RAW MATERIAL REQUEST (OE)

Alarm Modules

This section describes the machine alarms and how to manage alarms with the TPOP.

Alarms show where there is a problem on the machine and how to resolve it.

Alarms are divided into groups. When an alarm is activated, an alarm window is displayed with the activated alarm lit up.

If no alarms appear, touch the ALARM button.

The ALARM MODULES window is displayed showing the alarm modules. Each ALARM MODULES button opens the corresponding alarm window.

2.3.1 Alarm Indication

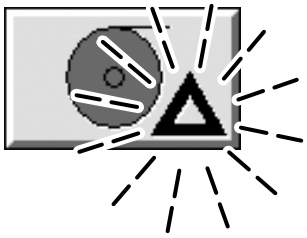

A flashing triangle symbol in an ALARM MODULE button, indicates that an alarm is active and has not been acknowledged.

Alarm Colour Codes

The alarms are colour coded:

- RED - hazardous condition
- YELLOW - abnormal condition
- BLUE - information or operator action.

When an alarm is present, the ALARM MODULE button changes colour to indicate the alarm type and the appropriate warning light on the machine warning lamp(s) light up.

A red or yellow alarm must be acknowledged. There is no need to acknowledge blue alarms as they disappear when the cause is corrected.

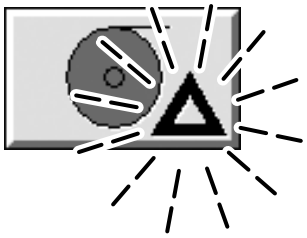

Navigating Alarms

1

When an alarm is active, the ALARMS BUTTON changes colour and the ALARM MODULE button is displayed with a flashing warning symbol.

Touch the ALARM MODULE button.

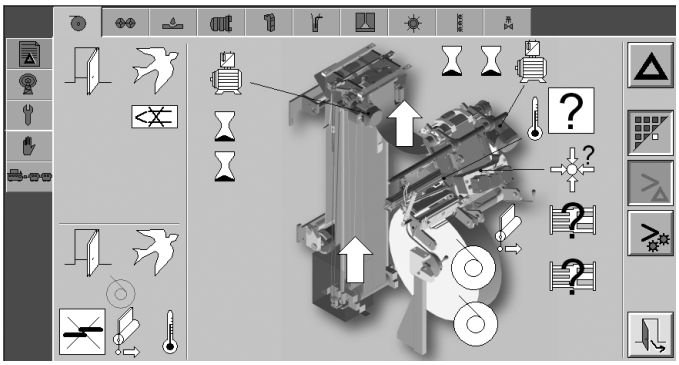

2

The ALARM MODULE window is displayed.

Only the current ALARM MODULE window and tab are active and is not possible to navigate to the other alarm module windows.

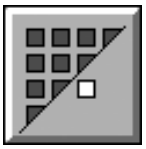

3

Touch the SHOW ALARMS button again to activate the tabs and enable navigation to the ALARM MODULE windows.

To clear an alarm follow the procedure described in Managing Alarms.

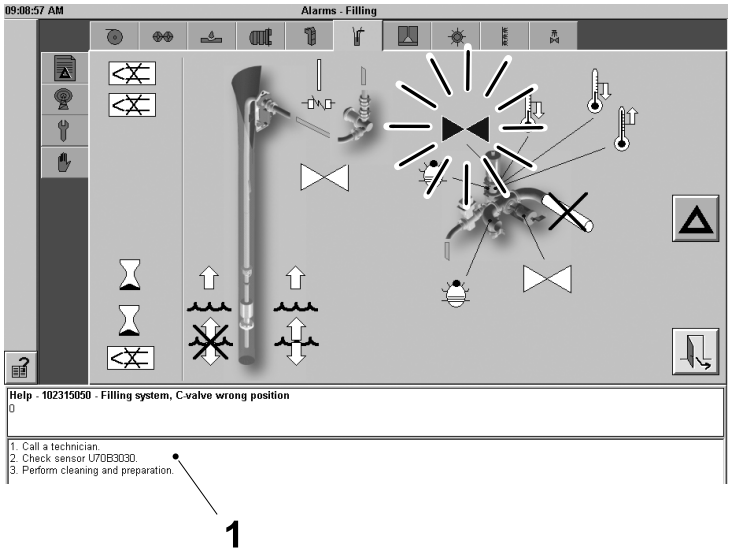

Managing Alarms

1

When an alarm module window opens, the active alarm icon is lit up. Touch the icon to open the dialogue window (1).

Follow the instructions in the order given.



2

Touch the flashing ACKNOWLEDGE button to acknowledge the alarm.

If the alarm window does not close after pressing the ACKNOWLEDGE button the alarm still exists.



3

Touch the EXIT button to return to the main window.

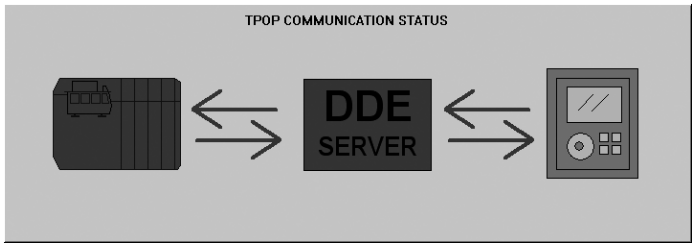

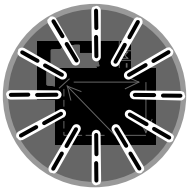

4

System Communication Fault

If a communication fault occurs, a dialogue window is displayed on the TPOP display and the TPOP RESET button flashes to show that an error has occurred.

Press the TPOP RESET button for five seconds and wait for system restart.

Note! If the communication fault remains, call a technician to check the communication cables between the PLC and the IPC.



Alarm History

1

Touch the ALARM HISTORY button.

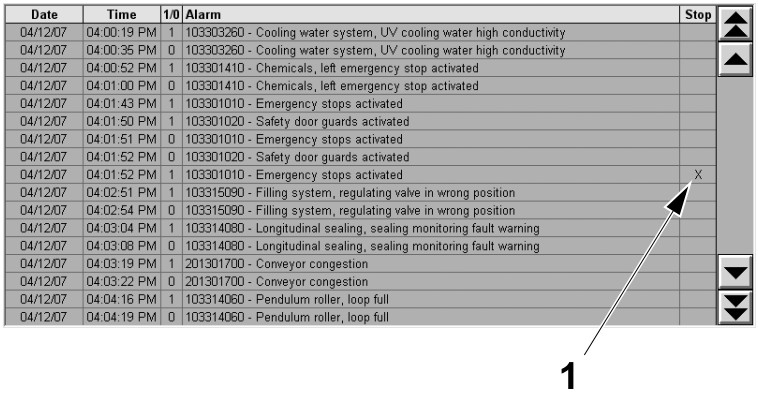

Date	Time	1/0	Alarm	Stop
04/12/07	04:00:19 PM	1	103303260 - Cooling water system, UV cooling water high conductivity	
04/12/07	04:00:35 PM	0	103303260 - Cooling water system, UV cooling water high conductivity	
04/12/07	04:00:52 PM	1	103301410 - Chemicals, left emergency stop activated	
04/12/07	04:01:00 PM	0	103301410 - Chemicals, left emergency stop activated	
04/12/07	04:01:43 PM	1	103301010 - Emergency stops activated	
04/12/07	04:01:50 PM	1	103301020 - Safety door guards activated	
04/12/07	04:01:51 PM	0	103301010 - Emergency stops activated	
04/12/07	04:01:52 PM	0	103301020 - Safety door guards activated	
04/12/07	04:01:52 PM	1	103301010 - Emergency stops activated	X
04/12/07	04:02:51 PM	1	103315090 - Filling system, regulating valve in wrong position	
04/12/07	04:02:54 PM	0	103315090 - Filling system, regulating valve in wrong position	
04/12/07	04:03:04 PM	1	103314080 - Longitudinal sealing, sealing monitoring fault warning	
04/12/07	04:03:08 PM	0	103314080 - Longitudinal sealing, sealing monitoring fault warning	
04/12/07	04:03:19 PM	1	201301700 - Conveyor congestion	
04/12/07	04:03:22 PM	0	201301700 - Conveyor congestion	
04/12/07	04:04:16 PM	1	103314060 - Pendulum roller, loop full	
04/12/07	04:04:19 PM	0	103314060 - Pendulum roller, loop full	

1

2

The ALARM HISTORY window is displayed.

The ALARM HISTORY window displays a chronological list of all the alarms that have occurred on the machine.

Note! The cross (1) in the column STOP indicates that the alarm caused a production stop.



3

Touch the EXIT button to close the ALARMS HISTORY window.

2.4 Collect System

This section describes how to register information to the machine's COLLECT system. The COLLECT system is divided into two main groups; PLANNED MAINTENANCE and WASTE.



Collect System Events

The machine automatically records events for PLANNED MAINTENANCE and WASTE, but for some events the TPOP prompts the operator to select the reason for an event or input other data to the COLLECT system.

The following lists the possible TPOP prompts and the machine phases that require an operator response.

During the PREPARATION phase:

- Delay in the Preparation Phase
- Jump to Step Zero During the Preparation Phase.

During the PRODUCTION phase:

- Manual Recording of a Production Stop Cause
- Check or Change a Production Stop Cause
- Jump to Step ZERO During the PRODUCTION Phase
- Jump to Step VENTING During the PRODUCTION Phase

Other Generic Tasks:

- Recording Package Waste for Quality Checks
- Recording Maintenance Time
- Copying Recorded Data

2.4.1 Manually Registering an Event During Preparation

The following lists the possible TPOP prompts during the preparation phase that require an operator response.

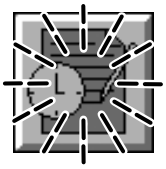

Delay in the Preparation Phase

1

If the PREPARATION PHASE is too long (more than 30 minutes), the COLLECT SYSTEM button starts to flash 5 minutes after the PRODUCTION phase has started.

Touch the COLLECT SYSTEM button.

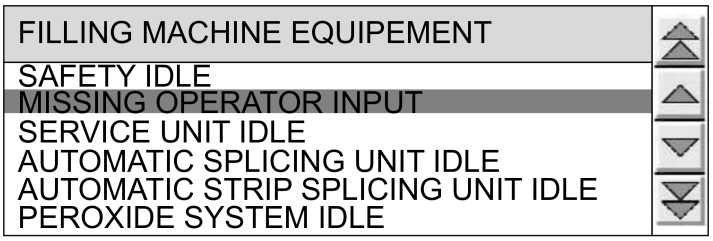

2

The TPOP prompts the question:

WHY SO MUCH PRE-PRODUCTION DELAY?

Select the correct cause for the event, see Selecting the Cause of an Event on page 2-25 for details.

If no answer is given within 10 minutes, a MISSING OPERATOR INPUT will be automatically assigned as the stop reason.

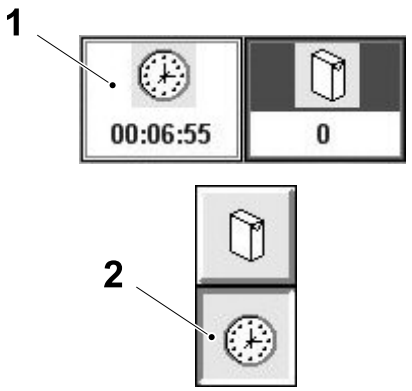

3

The CLOCK window (1) shows the extra PREPARATION time. The system allows the extra PREPARATION time to be divided and allocated to different causes.

Touch the CLOCK button (2).

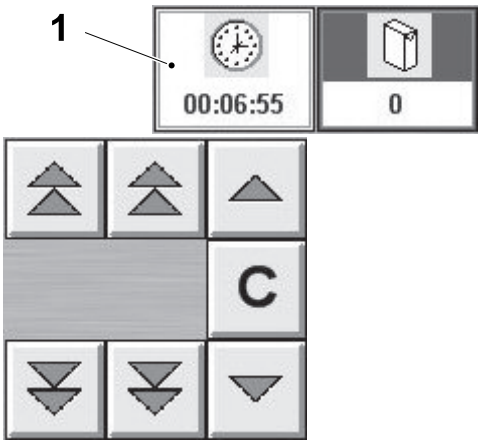

4

Enter the amount of time to be allocated to the selected cause by the ARROW buttons.

The CLOCK window (1) shows the amount of time which has been allocated to the selected cause.



5

Touch the OK button to record the data entered and return to the main window.

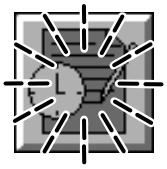

6

If the extra PREPARATION time is not fully allocated, the COLLECT SYSTEM button continues to flash.

Touch the COLLECT SYSTEM button and repeat the procedure to fully allocate the remaining extra PREPARATION time.

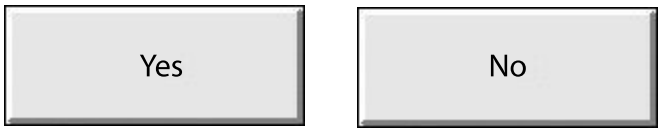

Jump to Step Zero During the Preparation Phase

When the machine steps down to ZERO during PREPARATION the TPOP prompts the following question:

DO YOU WANT TO CONTINUE THE PREPARATION PHASE?

- If the answer is YES the TPOP keeps the PREPARATION phase open. After 10 minutes in step ZERO the TPOP prompts the same question again. If the answer is YES again, the system allows an additional 10 minutes in step ZERO then closes the PREPARATION phase automatically
- If the answer is NO the TPOP closes the PREPARATION phase
- If no answer is given within 20 minutes the PREPARATION phase closes automatically.

2.4.2 Manually Registering an Event During Production

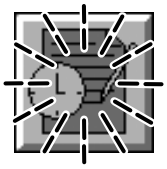

Manual Recording of a Production Stop Cause 1

During PRODUCTION phase, the machine may stop due to:

- conveyor congestion
- manual MOTOR START interruption
- manual SHORT STOP
- manual EMERGENCY STOP
- step out from PRODUCTION (Step up or Step down)
- manual filling off
- opening of a door.

The COLLECT SYSTEM button starts to flash.

Touch the COLLECT SYSTEM button.

2

The TPOP prompts one of the following questions:

- REASON FOR CONVEYOR CONGESTION?
- WHY DID YOU INTERRUPT MOTOR START?
- WHY DID YOU PRESS SHORT STOP?
- WHY DID YOU PRESS EMERGENCY STOP?
- WHY DID YOU STEP OUT FROM PRODUCTION?
- WHY DID YOU OPEN THE DOOR?
- WHY DID YOU TURN OFF THE FILLING?

Note! The TPOP prompts the question "WHY DID YOU INTERRUPT MOTOR START?" only at the first manual MOTOR START interruption after the PREPARATION phase.

Note! If the automatic catch of the distribution equipment stop function is enabled, the TPOP button will flash after a conveyor congestion only if a distribution equipment stop has not been detected.

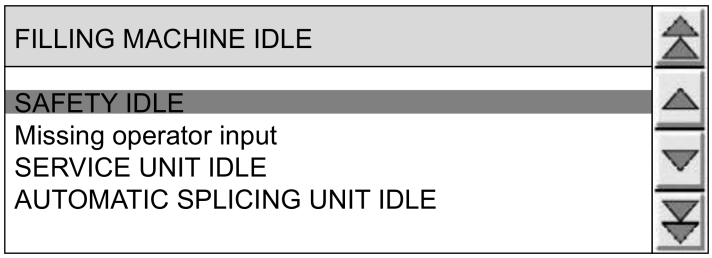

3

Answer by selecting the correct cause for the event, see Selecting the Cause of an Event on page 2-25 for details.

If no answer is given within 10 minutes after the restart, a MISSING OPERATOR INPUT will be assigned automatically as a stop reason.

Note! If the stop is due to a CONVEYOR CONGESTION, and no cause is manually selected within 10 minutes after the restart, a GENERIC CONVEYOR CONGESTION will be assigned automatically as a stop reason.

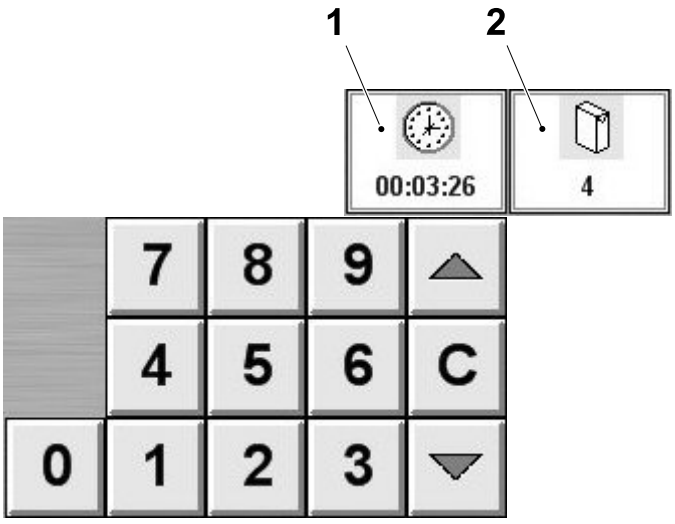

4

The CLOCK window (1) displays the total time taken for the stop.

When there is manual waste, enter the number of packaged taken using the numeric key pad.

Note! Manual waste means packages removed by the operator.

The PACKAGE window (2) displays the number of the wasted packages.



5

Touch the OK button to record the entered data and return to the main window.



Check or Change a Production Stop Cause

1

During a production stop, it is possible to check or change production stop causes which have been automatically assigned by the system.

Touch the COLLECT SYSTEM button.

Note! This button is only available during the stop and during the first 10 minutes after the restart.



2

Touch the LAST STOP button to check if the recorded stop cause is correct.

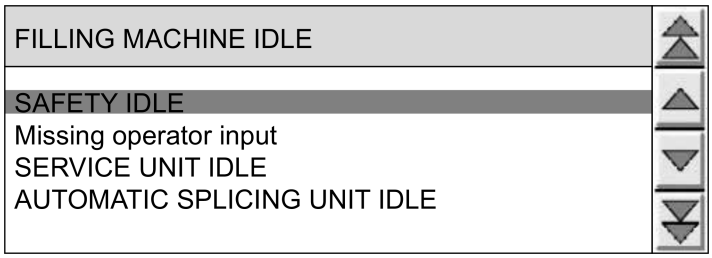

3

If the cause is not correct, select the correct cause in the scroll lists, see Selecting the Cause of an Event on page 2-25 for details.

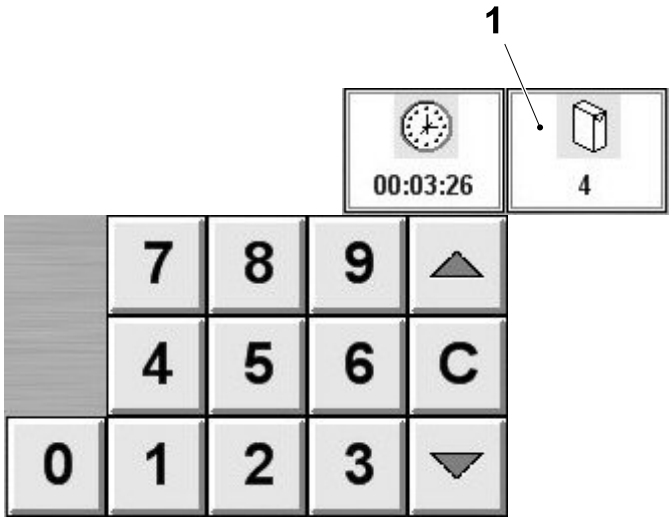

4

When there is manual waste, enter the number of packaged taken using the numeric key pad.

Note! Manual waste means packages removed by the operator.

The PACKAGE window (1) displays the number of the wasted packages.



5

Touch the OK button to record the entered data and return to the main window.

Is this the end of the current Production or is there a Breakdown?

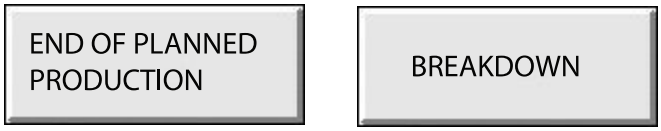

Jump to Step ZERO During the PRODUCTION Phase

When the machine steps to ZERO during the PRODUCTION phase the TPOP prompts the following question:

IS THIS THE END OF THE CURRENT PRODUCTION OR IS THERE A BREAKDOWN?

- If the answer is YES the TPOP closes the PRODUCTION phase
- If the answer is NO the TPOP keeps the PRODUCTION phase open and the period of time until the next PRODUCTION is recorded as a PRODUCTION stop. If the machine remains in step ZERO, the question appears again 10 minutes after the first prompt. If the answer is NO again, the system allows an additional 10 minutes in step ZERO, then closes the PRODUCTION phase automatically
- If no answer is given within 20 minutes, the PRODUCTION phase closes automatically.



Jump to Step VENTING During the PRODUCTION Phase

When the machine steps to VENTING during the PRODUCTION phase the TPOP prompts a question.

IS THIS THE END OF THE CURRENT PRODUCTION OR IS THERE A BREAKDOWN?

- If the answer is YES the TPOP closes the PRODUCTION phase
- If the answer is NO the TPOP keeps the PRODUCTION phase open and the period of time until the next PRODUCTION is recorded as PRODUCTION stop
- If no answer is given within 4 minutes the TPOP assigns as default YES.

2.4.3 Generic Collect System Tasks



Recording Package Waste for Quality Checks

1

Note! Remember to record the number of packages taken whenever packages are collected for quality checks.

Touch the COLLECT SYSTEM button.



2

Touch the WASTE button.

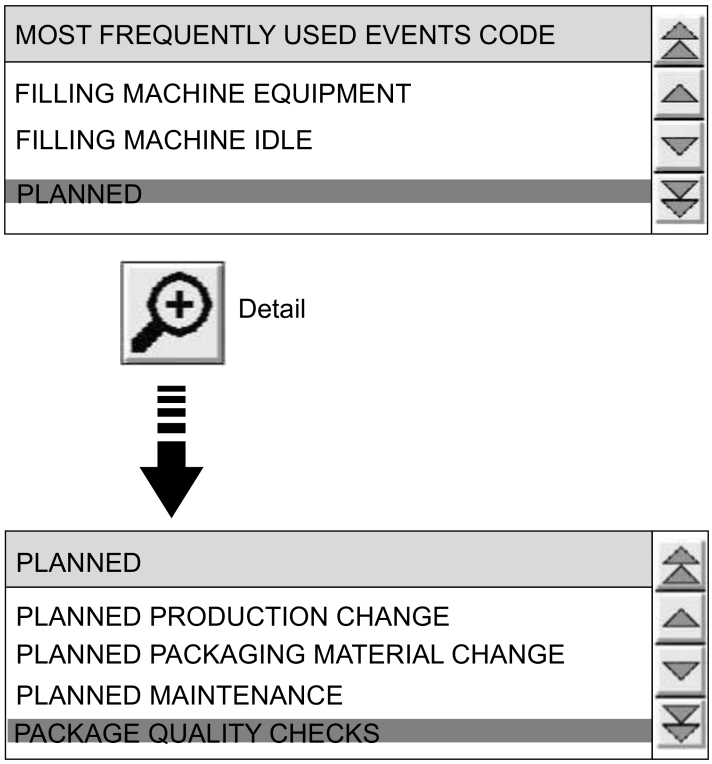

3

Use the arrow keys to select the PLANNED TIME.

Touch the DETAIL button and use the arrow keys to select PACKAGE QUALITY CHECKS.

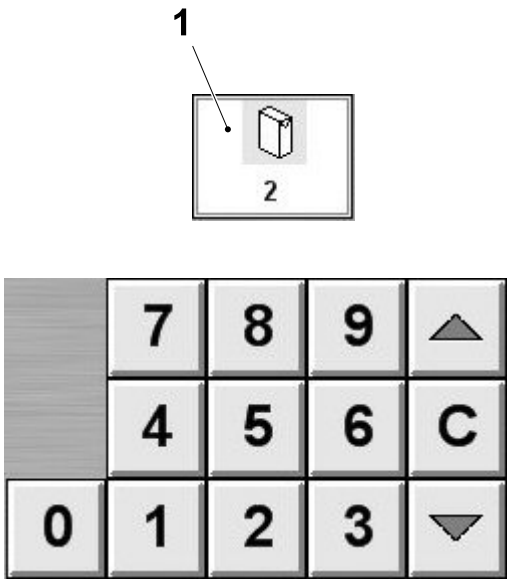

4

Enter the number of packages taken using the numeric key pad.

The PACKAGE window (1) displays the selected value.



5

Touch the OK button to record the data entry.



6

Touch the EXIT button to return to the main window.



Recording Maintenance Time

1

Touch the COLLECT SYSTEM button.



2

Touch the PLANNED MAINTENANCE button.

Note! This button is only available in step ZERO, and with the PREPARATION and PRODUCTION phases closed.

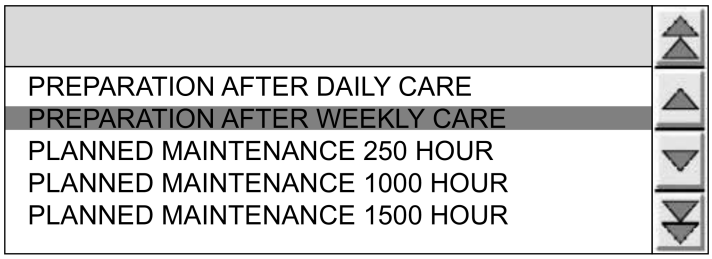

3

Select the correct item, see Selecting the Cause of an Event on page 2-25.

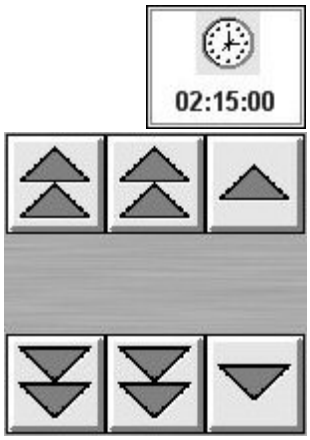

4

Use the ARROW buttons to enter the time used.

The CLOCK window displays the selected time.



5

Touch the OK button to record the data entry.



6

Touch the EXIT button to return to the main window.



Copying Recorded Data 1

The COPYLOG button is used to copy data from the TPOP to a USB pen drive.

See the MM of the filling machine for more details.

To analyse the data collected by the system, the data must be copied to an office PC and analysed utilising the appropriate software.

2.5 Machine Configuration

This section describes how to enable/disable the available machine options through the TPOP.

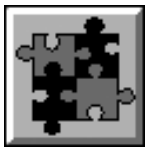

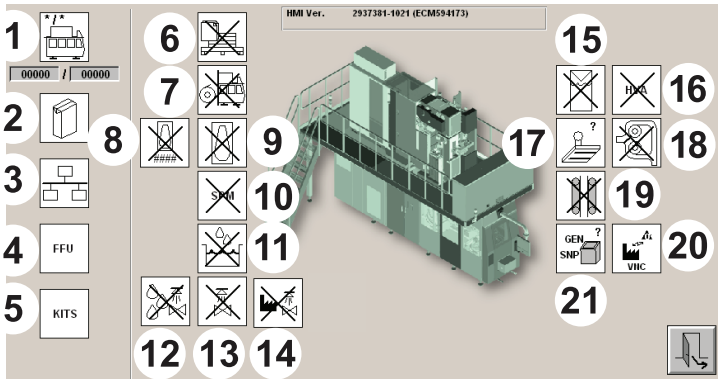

1 Machine No.
2 Volume
3 Ethernet Level 6
4 FFU LH, RH Outfeed
5 Upgrade Kit
6 iLine XT
7 ASU separate room
8 PullTab development step
9 PullTab
10 Strip position monitoring
11 Dilution kit
12 Extra Cleaning
13 ICU
14 ICU central refilling
15 Headspace by Injection
16 High Viscosity Aseptic
17 Dating unit
18 Quick switch
19 Belt brake
20 Remote Control
21 Line Supervision

Configuration Window

Note! To perform the following steps log on as a technician, see User Log On on page 2-144.

Touch the MACHINE CONFIGURATION button.

The CONFIGURATION window is displayed.

The window displays the configuration of the optional equipment for the filling machine.

Note! Icons marked with a cross are not enabled.

Touching an icon displays a dialogue window with a detailed description of the optional equipment.

Touch the icon of the machine option to be enabled or disabled.



The ON/OFF buttons are displayed.

Touch:

- the ON button to enable the option selected
- the OFF button to disable the option selected.



Belt Brake

Touch the BELT BRAKE icon.

Touch the ARROW UP / ARROW DOWN buttons until the correct belt brake is displayed.

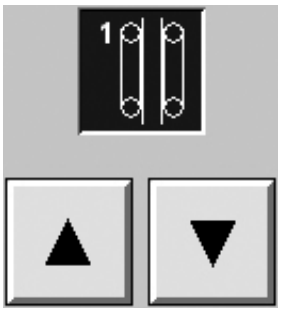

2.6 Production Control

This section describes how to use the TPOP to make machine settings, view process parameters, run machine functions and view package counters.



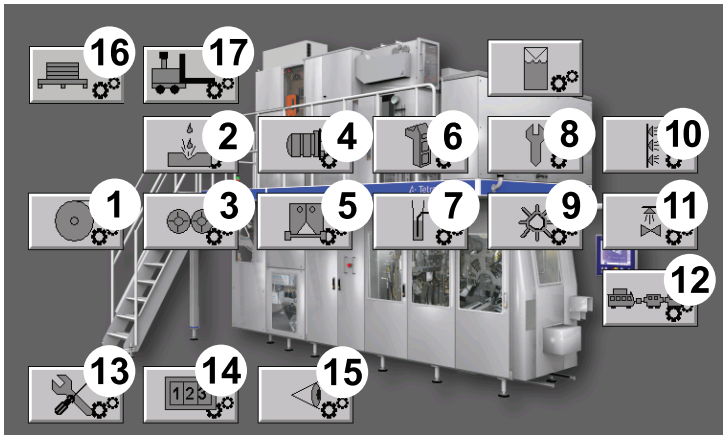

1 Automatic Splicing Unit
2 Peroxide System
3 Strip Splice
4 Sterile Air System
5 Jaw Unit
6 Superstructure
7 Filling System
8 Service
9 Final Folder Unit
10 External Cleaning
11 Integrated Cleaning
12 Downstream
13 Utility window
14 Package Counters
15 Overview
16 Raw Material Data Input (OE)
17 LGV/Raw Material Request (OE)

Production Control Modules

Touch the PRODUCTION CONTROL button to view the buttons corresponding to the various settings grouped by machine modules or function.

Touch one of the module buttons to open the associated dialogue window.

2.6.1 ASU Window

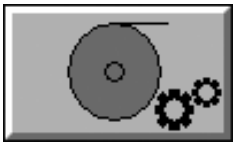

1
Touch the ASU button.

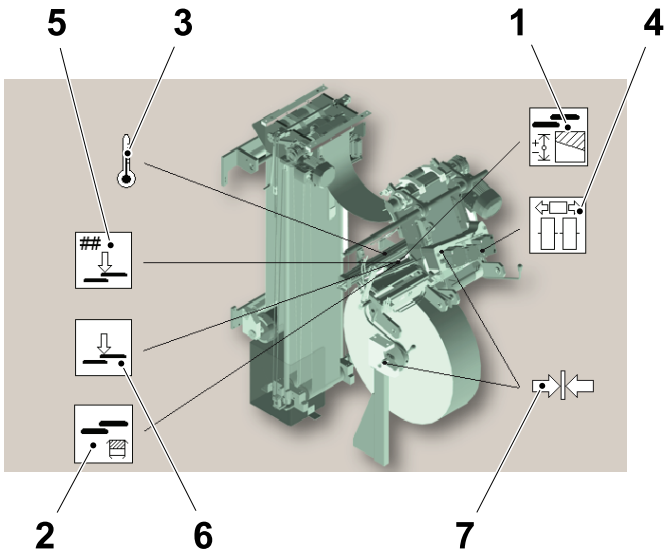

2

The ASU window is displayed.

All selectable icons are white. When an icon is selected the colour of the icon changes to blue.

In this window there are the following selectable icons:

- SPLICED PACKAGE REPEAT LENGTH (1)
- FORCE MANUAL SPLICE (2)
- CONSTANT HEAT BAR TEMPERATURE (3)
- MOVE SPLICE HEAD (4)
- PREPARATION DEVICE (5)
- SPLICE PREPARATION OPERATOR FEEDBACK (6)

  Note! The icon (6) is present only for ASU iLine XT.

- LGV SENSOR STATUS CONTROL (7).

  Note! The icon (7) is present only for ASU iLine XT.

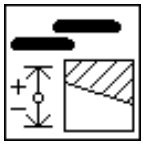

Spliced Package Repeat Length Offset

3

Touch the SPLICED PACKAGE REPEAT LENGTH OFFSET icon.

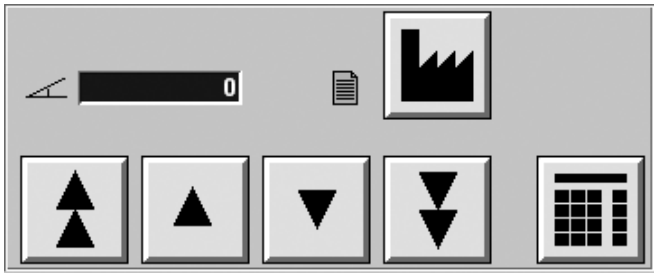

4

The SPLICED PACKAGE REPEAT LENGTH OFFSET key pad is displayed.

Use the ARROW buttons or the KEYBOARD button to set the value or touch the FACTORY button to reset the factory default value.

Note! The repeat length can be corrected with this adjustment if the error is ± 1.5 mm.



Constant Heat Bar Temperature

5

Touch the CONSTANT HEAT BAR TEMPERATURE icon.

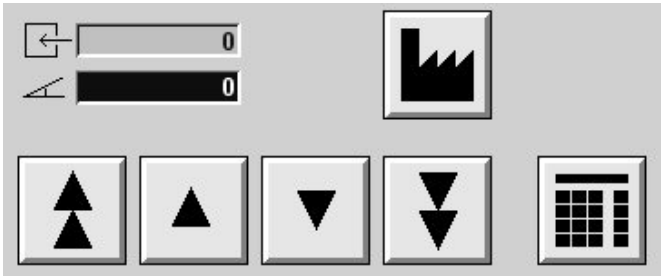

6

The CONSTANT HEAT BAR TEMPERATURE key pad is displayed.

Use the ARROW buttons or the KEYBOARD button to set the value; touch the FACTORY button to reset the factory default value.

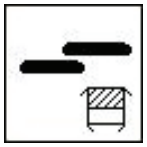

Force Manual Splice

7

When there is an urgent need to perform a packaging material splice because of an alarm condition, use the FORCE MANUAL SPLICE function.

This allows the possibility to perform a splice immediately and disregarding the packaging material position (out of design).

Touch the FORCE MANUAL SPLICE icon.

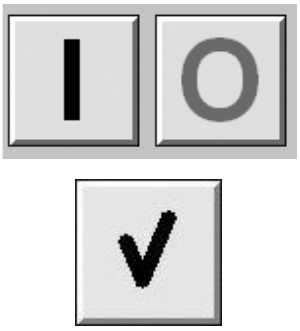

8

The ON/OFF buttons are displayed.

Touch the ON button to enable the FORCE MANUAL SPLICE function.

Touch the OK button to confirm.

To cancel the function, touch the OFF button.

Once the function is enabled, perform the manual splice, see 6.2.4 Manual Web Splice.

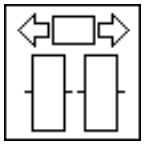

Move Splicing Head

9

Touch the MOVE SPLICING HEAD icon.

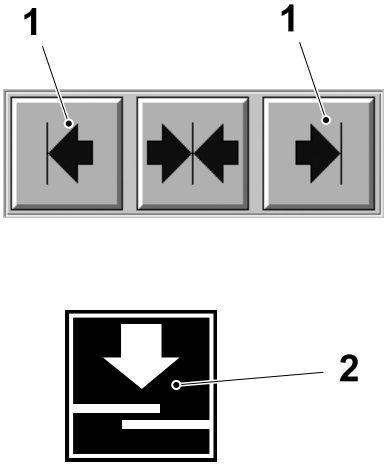

10

In PREPARATION, touch one of the ARROW buttons (1) to select the direction of the movement.

Note! The current position of the splicing head is indicated by the green coloured ARROW button.

Push the MANUAL WEB SPLICE button (2) button to start the movement of the splicing head.

Note! There are two selectable position: RH side and LH side.

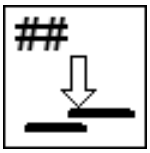

Preparation Device

11

Touch the PREPARATION DEVICE icon.

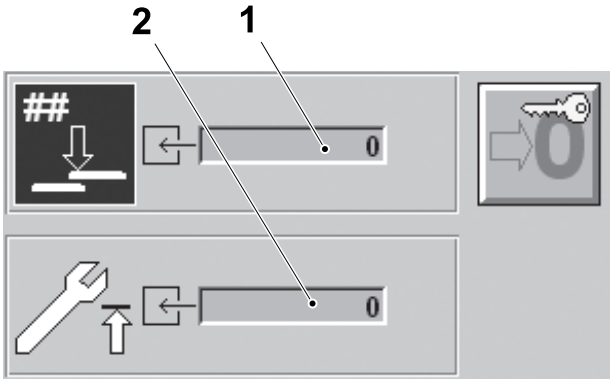

12

The dialogue window displays the following information:

- the number of splices counter (1)
- the maximum number of splices before the blade replacement (2).

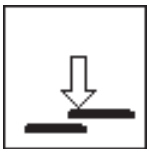

Splice Preparation Operator Feedback

13

Note! Valid for iLine XT Automatic version only.

Touch the SPLICE PREPARATION OPERATOR FEEDBACK icon to confirm the material holder availability for splice to the LGV.

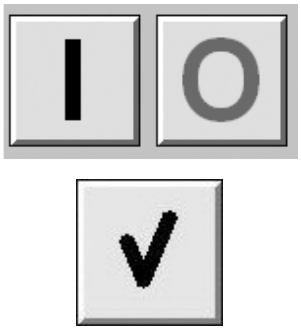

14

The ON/OFF buttons are displayed.

Touch the ON button to enable the function and the OK button to confirm.

To cancel the function, touch the OFF button.

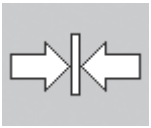

LGV Sensor Status Control 15

Note! Valid for iLine XT only.

Touch the LGV SENSOR STATUS CONTROL icon to check if the sensors read correctly.

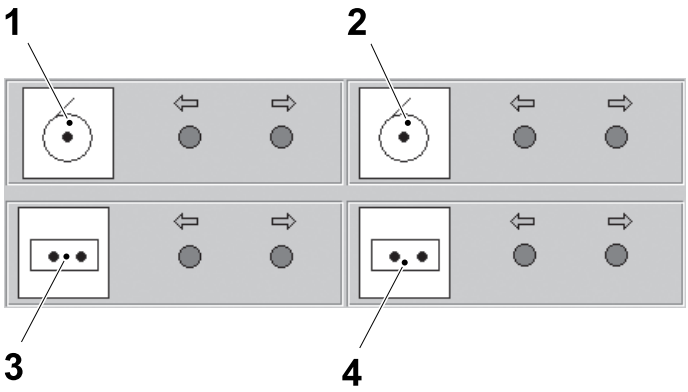

16

The dialogue window displays if the sensors read correctly or if they do not read the presence of :

- the paper reel holder on side 1 (1)
- the paper reel holder on side 2 (2)

Further, only for iLine XT Automatic version:

- the material holder table on side 1 (3)
- the material holder table on side 2 (4).

Note! Two sensors are present for every device, on LH side and on RH side.



17

Touch the EXIT button to return to the PRODUCTION CONTROL window.

2.6.2 Peroxide System Window



1

Touch the PEROXIDE SYSTEM button.

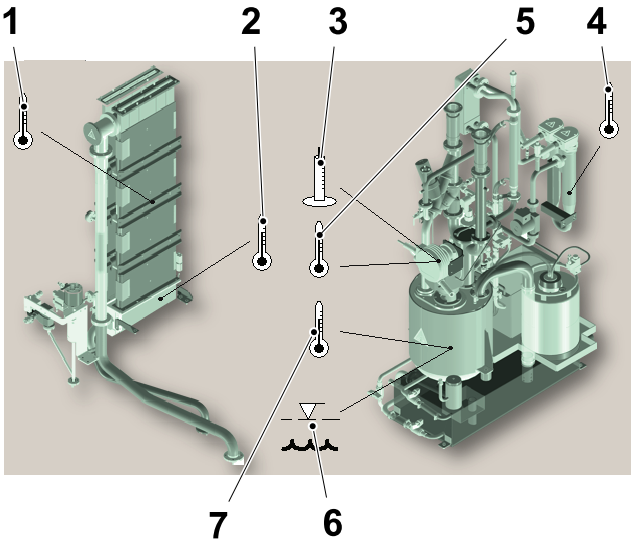

2

The PEROXIDE SYSTEM window is displayed.

All selectable icons are white. When an icon is selected the colour of the icon changes to blue.

Touch the MODULE WINDOW 1 or the MODULE WINDOW 2 buttons (see arrows) to navigate between the settings sub-windows.

In this window there are the following selectable icons:

- PEROXIDE BATH HEATER TEMPERATURE (1)
- PEROXIDE BATH TEMPERATURE (2)
- PEROXIDE CONCENTRATION AND TEMPERATURE MONITOR (3)
- HEAT EXCHANGER WATER TEMPERATURE (4).
- PEROXIDE TEMPERATURE MONITOR (5)
- PEROXIDE TANK LEVEL (6)
- PEROXIDE TANK TEMPERATURE (7)



Peroxide Concentration Monitor

3

Touch the PEROXIDE CONCENTRATION MONITOR icon.

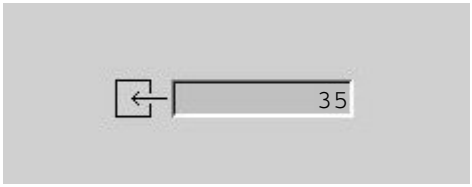

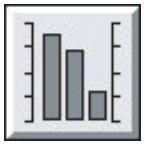

4

The value of the hydrogen peroxide concentration is displayed.

The data is shown in real time only for the first 10 minutes when the filling machine is in step PREPARATION or from step HEAT STERILIZATION to step PRODUCTION.

Touch the TREND button to display the graph of the hydrogen peroxide concentration during the last 8 hours of PRODUCTION.

Note! The graphs may show blocks of missing information due to the conditions mentioned above.



Peroxide Tank Level

5

Touch the PEROXIDE TANK LEVEL icon.

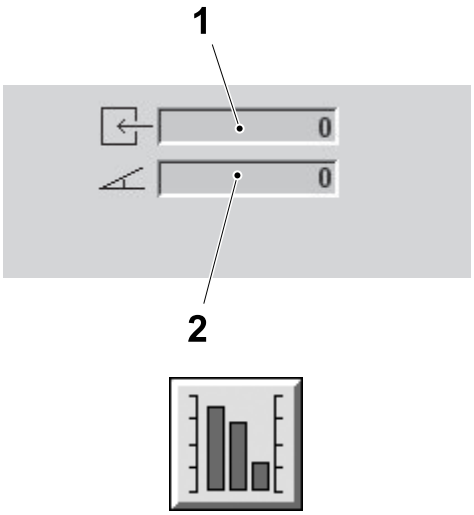

6

The dialogue window displays the following information:

- the actual value (1)
- the set point (2).

Touch the TREND button to display the graph showing the peroxide tank level in real time.



7

Touch the EXIT button to return to the PRODUCTION CONTROL window.

2.6.3 SA Magazine Window

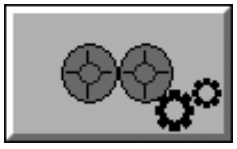

1

Touch the SA MAGAZINE button.

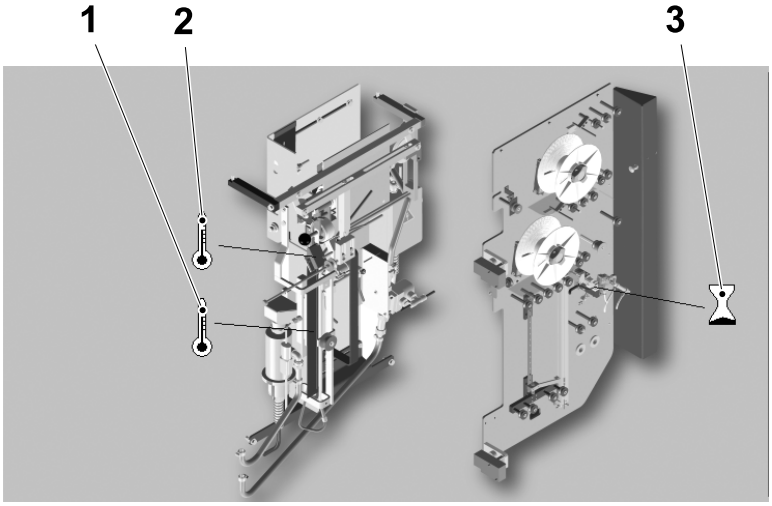

2

The SA MAGAZINE window is displayed.

All selectable icons are white. When an icon is selected the colour of the icon changes to blue.

In this window there are the following selectable icons:

- HEATING ELEMENT TEMPERATURE (1)
- SHORT STOP ELEMENT TEMPERATURE (2)
- STRIP SEALING TIME (3).

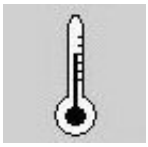

Heating Element Temperature

3

Touch the HEATING ELEMENT TEMPERATURE icon.

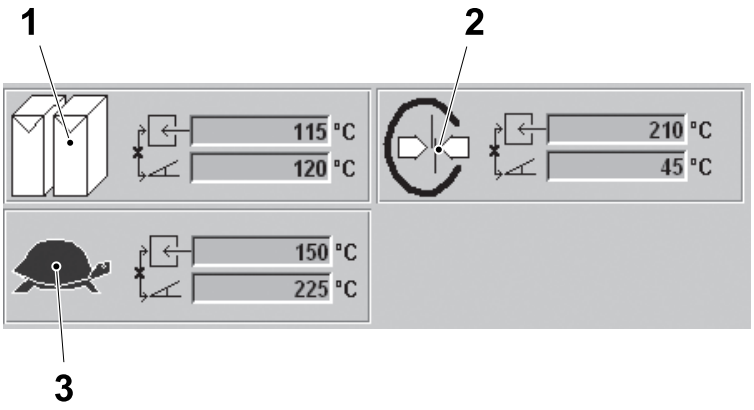

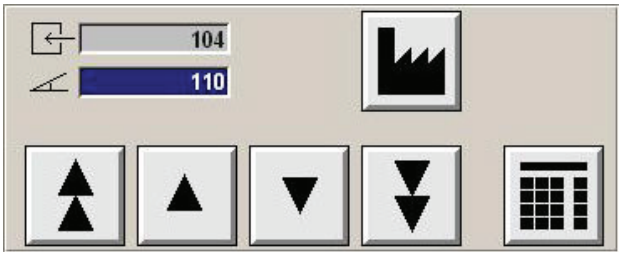

4

Two icons are displayed on the dialogue window.

Touch either:

- TEMPERATURE DURING PRODUCTION (1)
- TEMPERATURE DURING TUBE SEALING (2)
- TEMPERATURE DURING SLOW INCHING (3)

Use the ARROW buttons or the KEYBOARD button to set the value; touch the FACTORY button to reset the factory default value.



5

Touch the EXIT button to return to the PRODUCTION CONTROL window.



Strip Sealing Time

6

Touch the STRIP SEALING TIME icon.

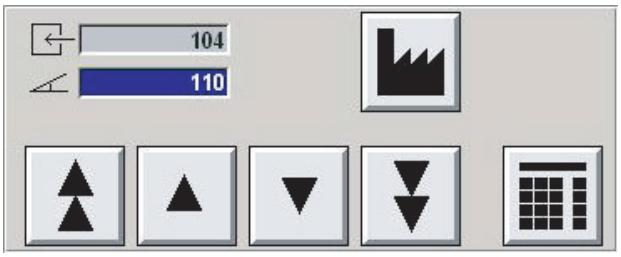

7

The STRIP SEALING TIME key pad is displayed.

Use the ARROW buttons or the KEYBOARD button to set the value; touch the FACTORY button to reset the factory default value.



8

Touch the EXIT button to return to the PRODUCTION CONTROL window.

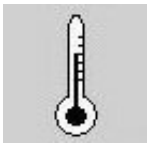

Short Stop Element Temperature

9

Touch the SHORT STOP ELEMENT TEMPERATURE icon.

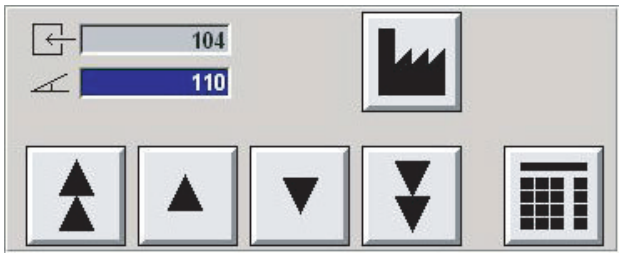

10

Use the ARROW buttons or the KEYBOARD button to set the value; touch the FACTORY button to reset the factory default value.



11

Touch the EXIT button to return to the PRODUCTION CONTROL window.

2.6.4 Sterile Air System Window

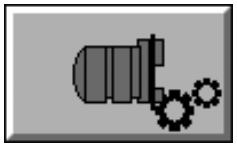

1
Touch the STERILE AIR SYSTEM button.

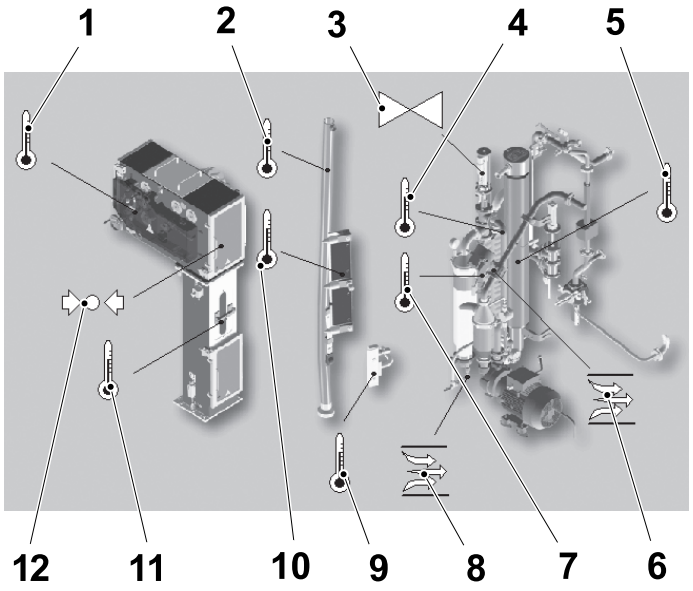

2

The STERILE AIR SYSTEM window is displayed.

All selectable icons are white. When an icon is selected the colour of the icon changes to blue.

In this window there are the following selectable icons:

- AIR KNIFE TEMPERATURE (1)
- STERILE AIR SYSTEM PRODUCT TEMPERATURE (2)
- HEAT EXCHANGER VALVE POSITION (3)
- HEAT STERILIZATION TEMPERATURE (4)
- SUPERHEATER TEMPERATURE (5)
- STERILE AIR FLOW (6).
- SCRUBBER WATER TEMPERATURE (7)
- AIR COMPRESSOR SEALING WATER FLOW (8)
- LONGITUDINAL SEALING SHORT STOP ELEMENT TEMPERATURE (9)
- ASEPTIC CHAMBER TEMPERATURE (11)
- ASEPTIC CHAMBER AIR PRESSURE (12)

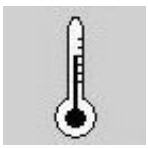

Longitudinal Sealing Short Stop Nozzle Temperature

3

Touch the LONGITUDINAL SEALING SHORT STOP NOZZLE TEMPERATURE icon.

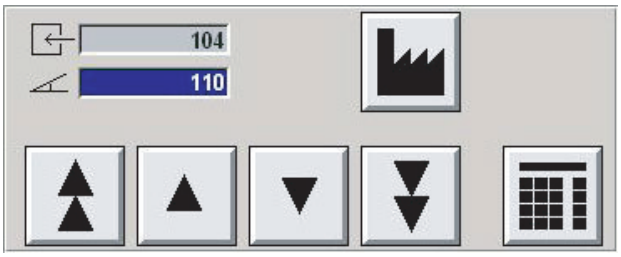

4

Use the ARROW buttons or the KEYBOARD button to set the value; touch the FACTORY button to reset the factory default value.



5

Touch the EXIT button to return to the STERILE AIR SYSTEM window.

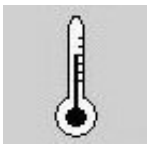

Longitudinal Sealing Heating Nozzle Temperature

6

Touch the LONGITUDINAL SEALING HEATING NOZZLE TEMPERATURE icon.

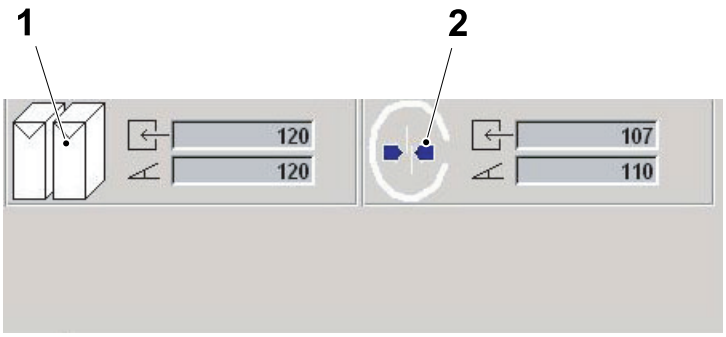

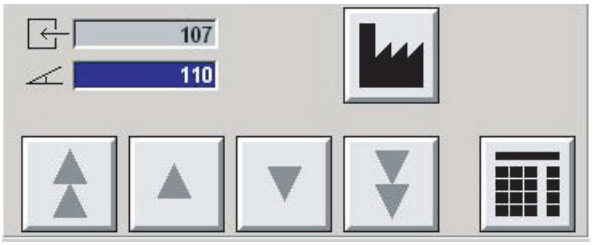

7

The following setting parameters are displayed:

- TEMPERATURE DURING PRODUCTION (1)
- TEMPERATURE DURING TUBE sealing (2).

To set a parameter, touch the parameter value displayed. The background colour of the selected value changes to blue.

Use the ARROW buttons or the KEYBOARD button to set the value; touch the FACTORY button to reset the factory default value.



8

Touch the EXIT button to return to the STERILE AIR SYSTEM window.

2.6.5 Package Forming Unit Window

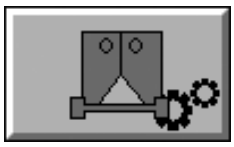

1

Touch the PACKAGE FORMING UNIT button.

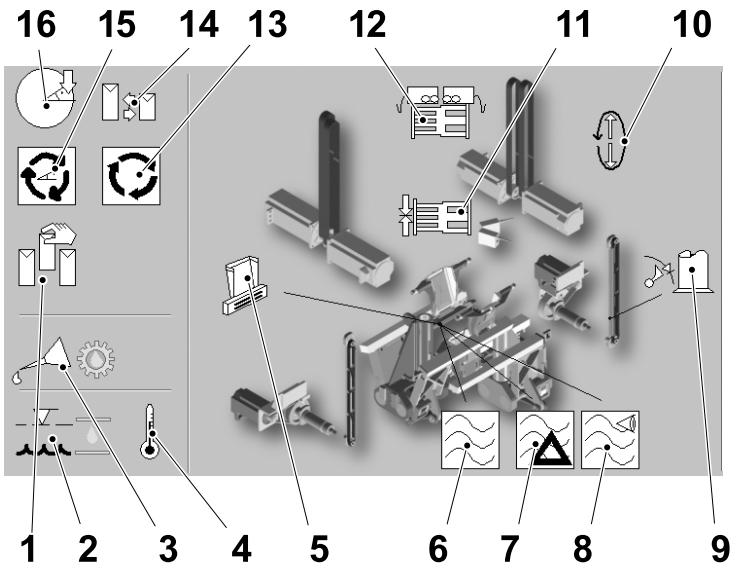

2

The PACKAGE FORMING UNIT window is displayed.

All selectable icons are white. When an icon is selected the colour of the icon changes to blue.

In this window there are the following selectable icons:

- SAMPLE PACKAGES (1)
- OIL LEVEL INDICATOR (2)
- LUBRICATION OIL LEVEL INDICATOR (3)
- LUBRICATION SYSTEM, OIL TEMPERATURE (4)
- CHANGE INDUCTOR (5)
- TS POWER (6)
- TS FAULT HISTORY (7)
- TRANSVERSAL SEALING MONITORING (8)
- FOLDING FLAPS PRODUCTION POSITION (9)
- STROKE ADJUSTMENT IN PRODUCTION (10) (Not in use)
- DESIGN CORRECTION OFFSET (11)
- PHOTOCELL UNIT (12)
- JAW INCHING SELECTOR (13)
- QUICK CHANGE (14)
- JAW SYSTEM TARGET POSITION (15)
- JAW SYSTEM CURRENT POSITION (16).

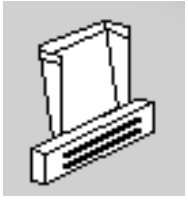

Change Inductor

3

Touch the CHANGE INDUCTOR icon.

Note! The CHANGE INDUCTOR icon is only available during step PRODUCTION.

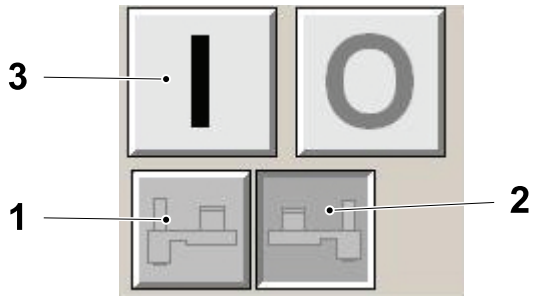

4

Touch the LH JAW button (1) to change the inductor in the LH pressure jaw or touch the RH JAW button (2) to change the inductor in the RH pressure jaw.

Touch the START button (3) to confirm the stop position.

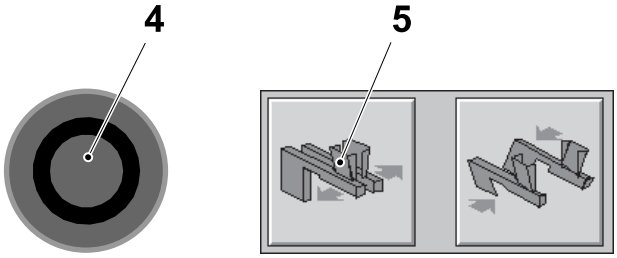

5

Press the SHORT STOP button (4).

Touch the OPEN button (5).



6

When the OK button begins to flash, touch it.

The jaw system moves to a position where the jaws are open and the inductors are easily accessible.

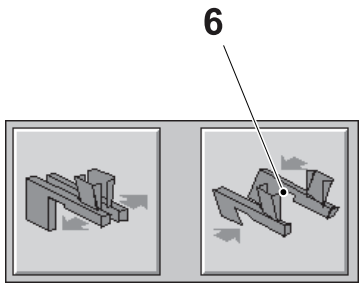

7

When the inductor has been changed and all necessary work has been completed, touch the CLOSE button (6).



8

When the OK button begins to flash, touch it.

The lower jaw pair return to the PRODUCTION position.



Jaw Lubrication

9

Touch the JAW LUBRICATION icon.

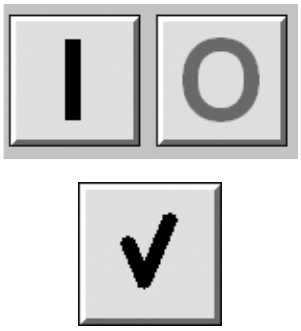

10

CAUTION
Hygiene.
Do not repeatedly cycle the lubrication system to avoid leakage of excess lubrication oil.

The ON/OFF buttons are displayed.

Touch the ON button to enable the JAW LUBRICATION function.

Touch the OK button to start the lubrication cycle.

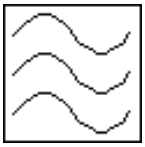

TS Power

11

Touch the TS POWER icon.

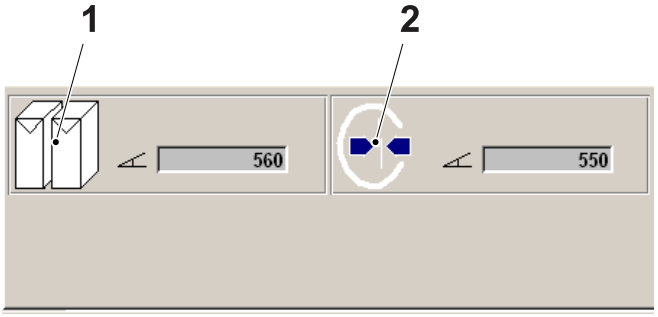

12

The following setting parameters are displayed

- TS POWER DURING PRODUCTION (1)
- TS POWER DURING EMPTY TUBE (2)

Use the ARROW buttons or the KEYBOARD button to set the value or touch the FACTORY button to reset the factory default values.

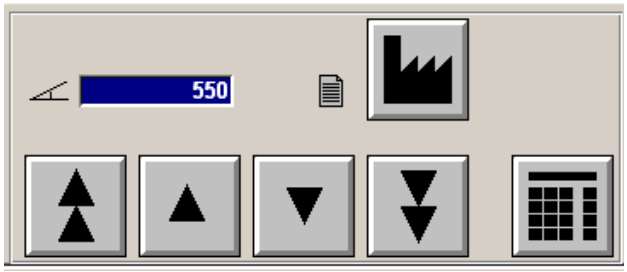



TS Fault History

13

Touch the TS FAULT HISTORY icon.

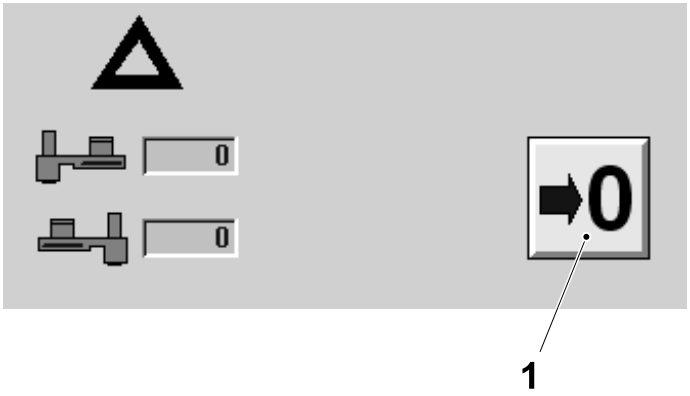

14

The number of faults of each inductor is shown.

Touch the RESET button (1) to restart counting from 0.

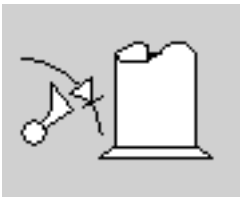

Folding Flaps Production Position

15

Touch the FOLDING FLAPS PRODUCTION POSITION icon.

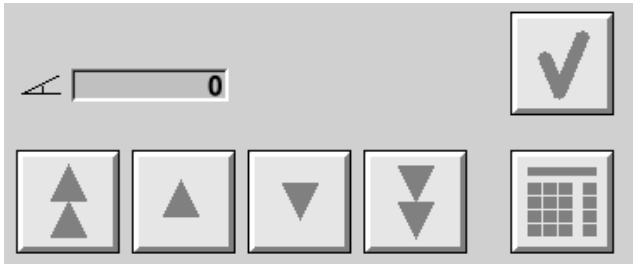

16

Use the ARROW buttons or the KEYBOARD button to set the value.

Touch the OK button to accept the new value.

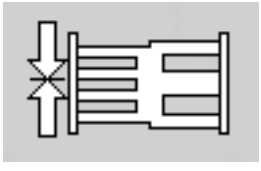

Design Correction Offset

17

Touch the DESIGN CORRECTION OFFSET icon.

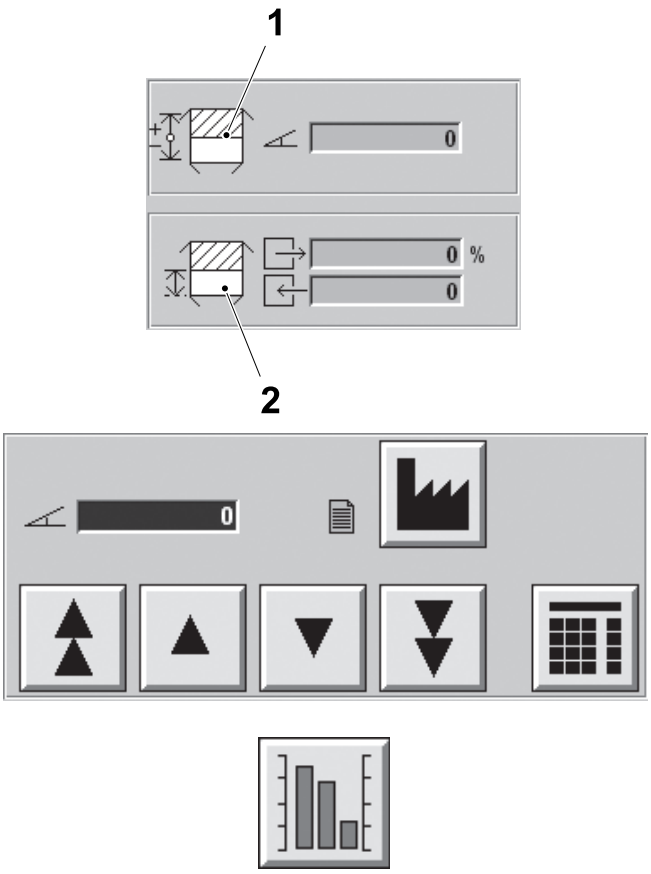

18

Two icons are displayed in the dialogue window:

Touch the DESIGN CORRECTION OFFSET icon (1) to display the key pad.

Use the ARROW buttons or the KEYBOARD button to align the package design by changing the offset value.

In the DESIGN ERROR MONITOR window (2) the following informations are displayed:

- the percentage of the current stroke (from -100% to +100%)
- the current design error value.

Touch the TREND button to display a graphic showing the parameter in real time.

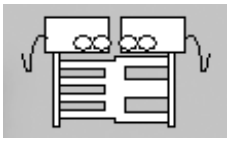

Photocell Unit

19

Touch the PHOTOCELL UNIT icon.

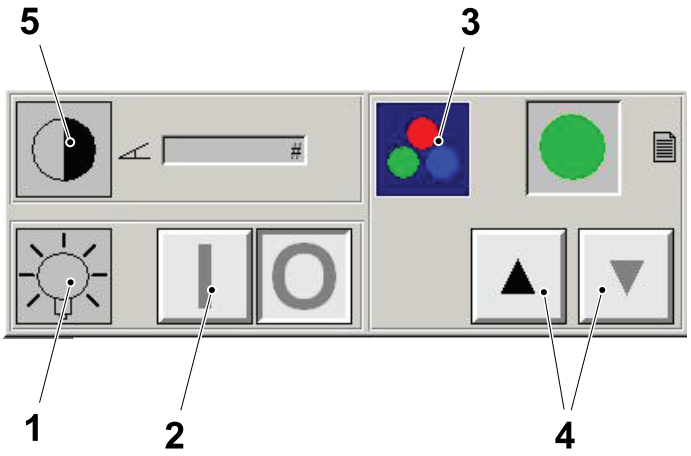

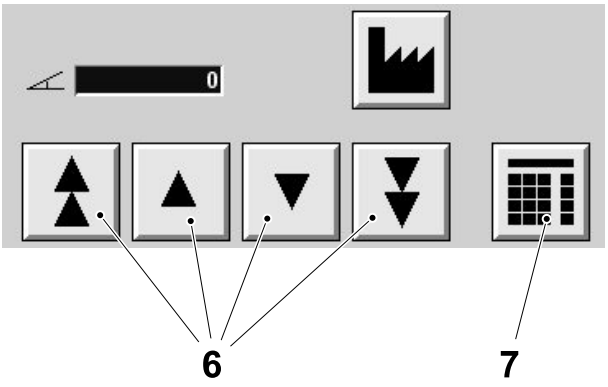

20

Three icons are displayed in the dialogue window:

Touch the PHOTOCELL SPOT ON icon (1) and the ON button (2) to light the spot on the photocells even if the machine is stopped, if needed.

Touch the PHOTOCELL SPOT COLOUR icon (3) and the ARROWS (4) to change the spot colour.

Touch the PHOTOCELL SENSITIVITY icon (5). The PHOTOCELL SENSITIVITY key pad is displayed.

Use the ARROW buttons (6) or the KEYBOARD button (7) to set the values.



Jaw Inching Selection

21

Touch the JAW INCHING SELECTION icon.

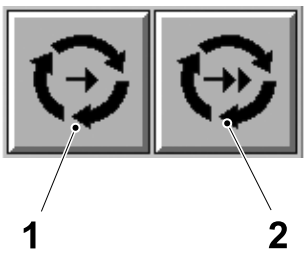

22

Touch either:

- the SLOW INCHING button (1) to slow inch the jaw system to check the machine movement or to reach an approximate position
- the FAST INCHING button (2) to fast inch the jaw system to check the machine movement.

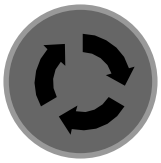

23

Press and hold the JAW SYSTEM INCHING button to start the machine movement.



Jaw System Target Position

24

Touch the JAW SYSTEM TARGET POSITION icon.

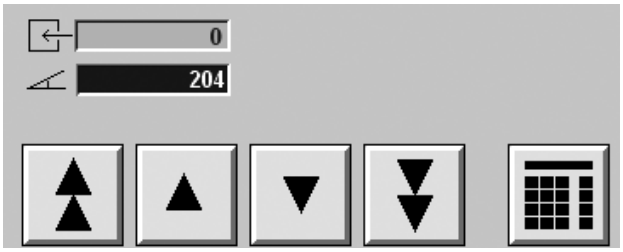

25

The ANGLE SELECTOR key pad is displayed.

Use the ARROW buttons or the KEYBOARD button to select the required angle.

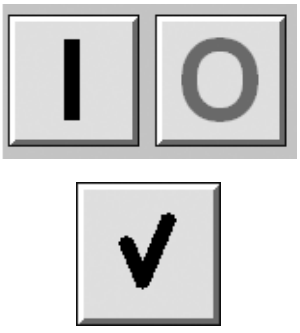

26

Touch the ON button to enable the target position function.

Touch the OK button to start the machine movement.

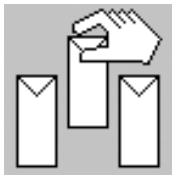

Sample Package

27

Touch the SAMPLE PACKAGE icon.

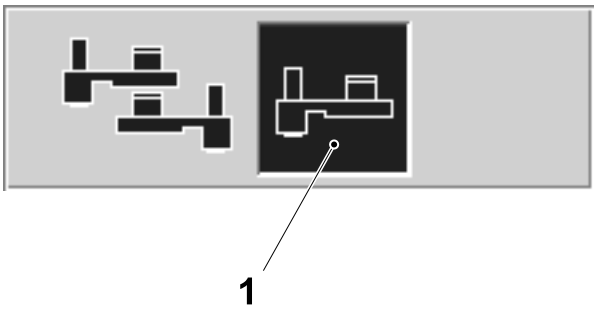

28

Touch the RH SIDE OR LH SIDE icon (1) (touching the icon switches between the LH and RH sides) to select the jaw pair from which the first package sample should be taken.

Note! If the RH side (2) is displayed, the jaw system ejects a package from the LH side jaw.





29

Touch the ON button and the OK button to start the sampling of the packages.



30

Touch the EXIT button to return to the PACKAGE FORMING UNIT window.

2.6.6 Tube Forming Unit Window

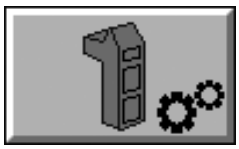

1

Touch the TUBE FORMING UNIT button.

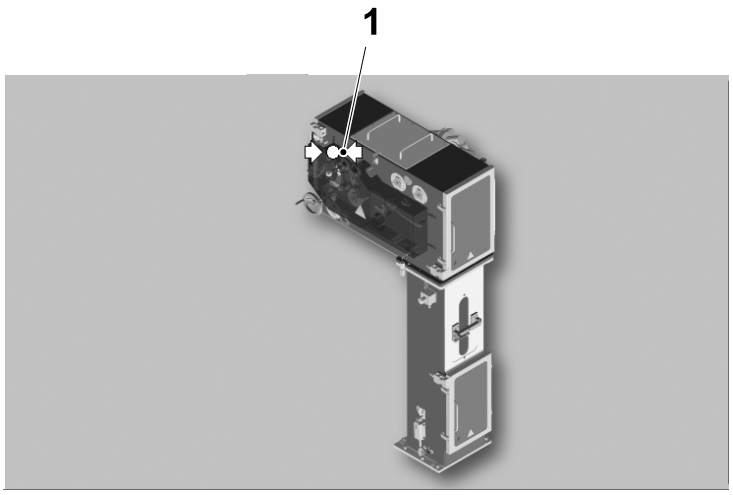

2

The TUBE FORMING UNIT window is displayed.

All selectable icons are white. When an icon is selected the colour of the icon changes to blue.

In this window there are the following selectable icons:

- PENDULUM ROLLER (1)

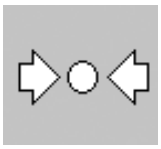

Pendulum Roller

3

Touch the PENDULUM ROLLER icon.

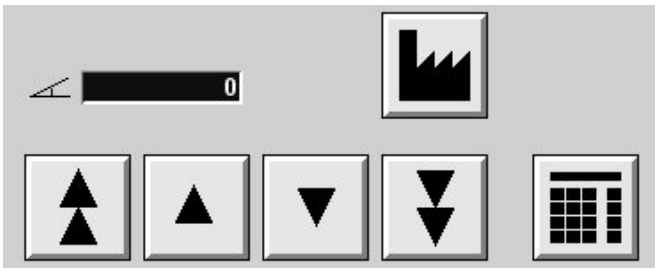

4

The PENDULUM ROLLER key pad is displayed.

Use the ARROW buttons or the KEYBOARD button to set the value or touch the FACTORY button to reset the factory default value.



5

Touch the EXIT button to return to the TUBE FORMING UNIT window.

2.6.7 Filling System Window



1

Touch the FILLING SYSTEM button.

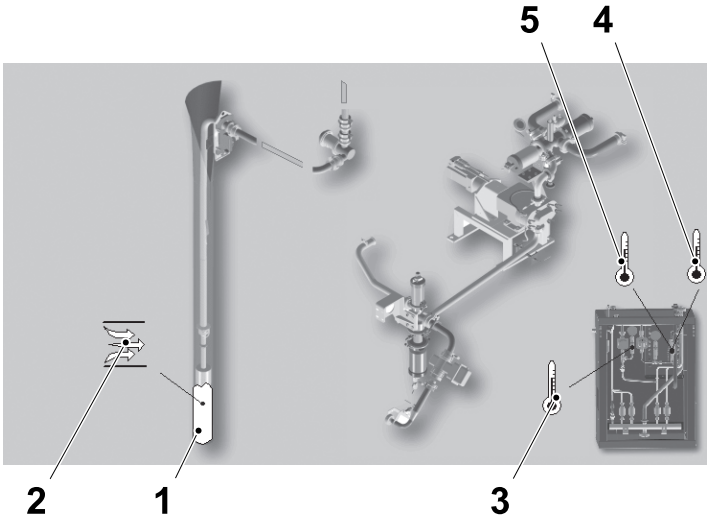

2

The FILLING SYSTEM window is displayed.

All selectable icons are white. When an icon is selected the colour of the icon changes to blue.

In this window there are the following selectable icons:

- PRODUCT LEVEL AND FLOW (1)
- STARTING FLOW (2)
- HVA PUMP BARRIER TEMPERATURE (3)
- HVA INLET STEAM TEMPERATURE (4)
- HVA STERILE TEMPERATURE (5)

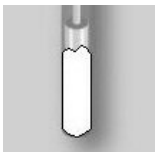

Product Level and Flow Graph

3

Touch the TUBE icon.

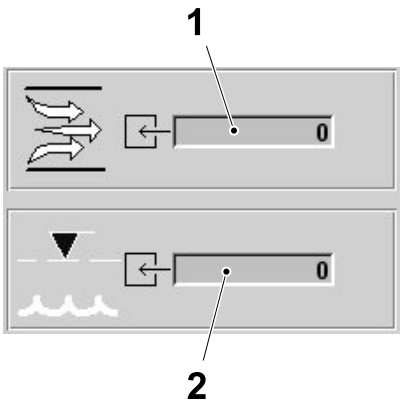

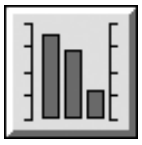

4

The monitor displays the following information:

- product flow (1), expressed as a percentage of machine nominal product flow
- product level (2).

Touch the TREND button to display the graph showing the values in real time.



5

Touch the EXIT button to return to the FILLING SYSTEM window.

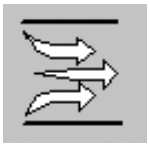

Starting Flow

6

Touch the STARTING FLOW icon to set the flow during the starting sequence.

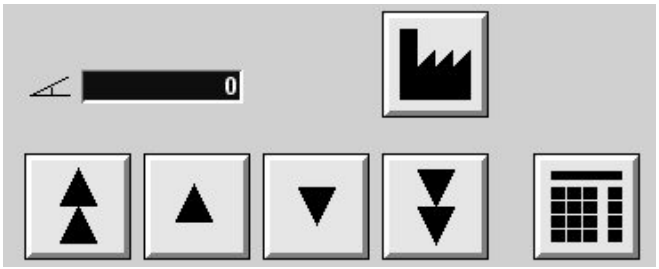

7

Use the ARROW buttons or the KEYBOARD button to set the value or touch the FACTORY button to reset the factory default value.

Increase the value in case too long time is needed to reach a stable product level; decrease the value in case of overfilling during production start.

Note! Make sure to insert these flow values for all the recipes and all the capacity (p/h) within the recipes.

Save the recipe with the new changes.



8

Touch the EXIT button to return to the FILLING SYSTEM window.

2.6.8 Service Unit Window

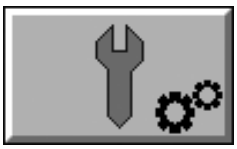

1

Touch the SERVICE UNIT button.

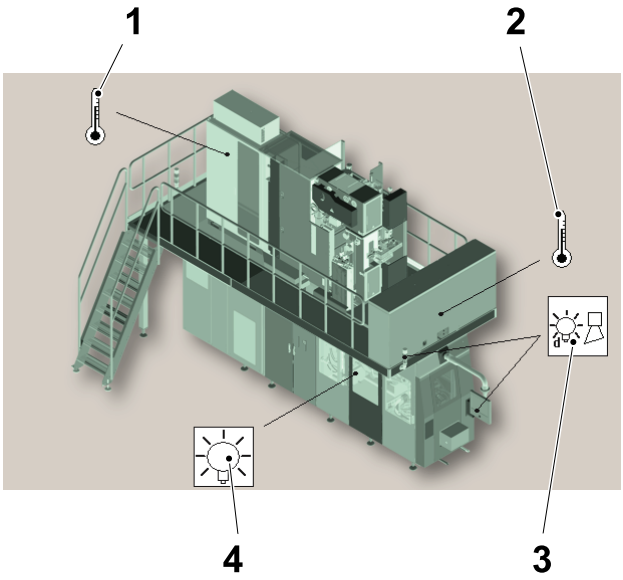

2

The SERVICE UNIT window is displayed.

All selectable icons are white. When an icon is selected the colour of the icon changes to blue.

In this window there are the following selectable icons:

- ELECTRICAL CABINET TEMPERATURE (1)
- COOLING WATER TEMPERATURE (2)
- LAMP TEST (3)
- LIGHTS ON/OFF (4)



3

Touch the EXIT button to return to the PRODUCTION CONTROL window.

2.6.9 Final Folder Unit Window

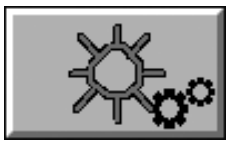

1

Touch the FINAL FOLDER button.

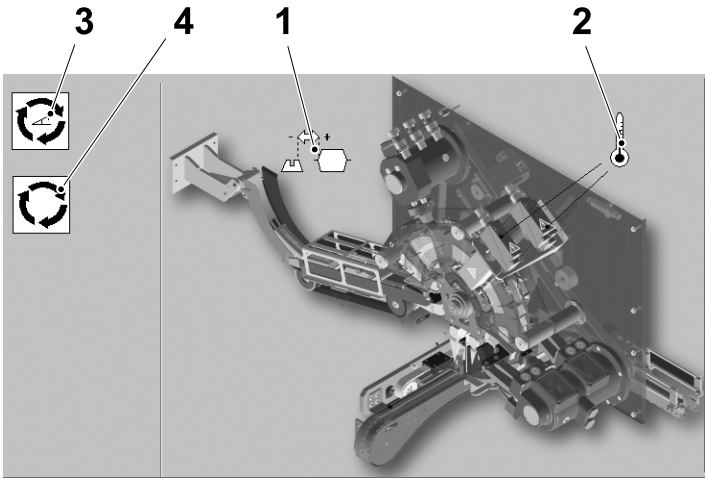

2

The FINAL FOLDER window is displayed.

All selectable icons are white. When an icon is selected the colour of the icon changes to blue.

In this window there are the following selectable icons:

- INFEED SYNCHRONIZATION (1)
- FLAP HEATER TEMPERATURE (2)
- FINAL FOLDER TARGET POSITION (3)
- JOG FINAL FOLDER (4)

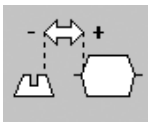

Final Folder Synchronization

3

Touch the INFEED SYNCHRONIZATION icon to set the offset between the package and the infeed station.

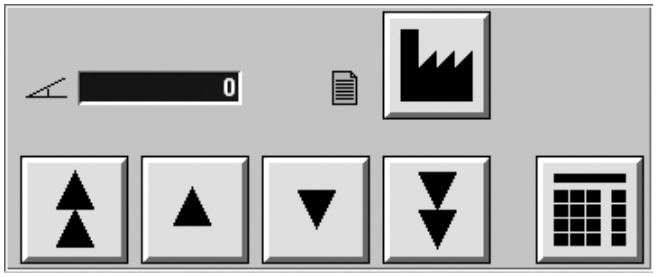

4

Use the ARROW buttons or the KEYBOARD button to set the offset value or touch the FACTORY button to reset the factory default value.



Flap Heater Temperature

5

Touch the FLAP HEATER TEMPERATURE icon.

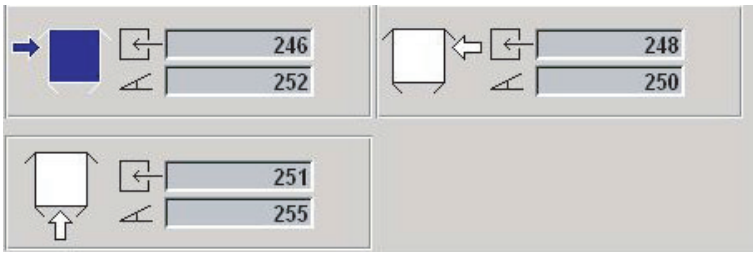

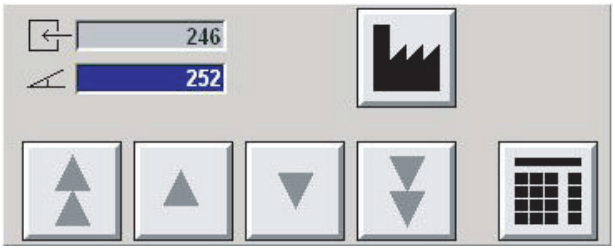

6

Note! Some temperatures can be changed, others are only monitors and cannot be changed.

The temperature of each single flap heater is displayed.

Touch one of the FLAP HEATER icons.

Use the ARROW buttons or the KEYBOARD button to set the value or touch the FACTORY button to reset the factory default value.



Final Folder Target Position 7

Touch the FINAL FOLDER POSITION icon.

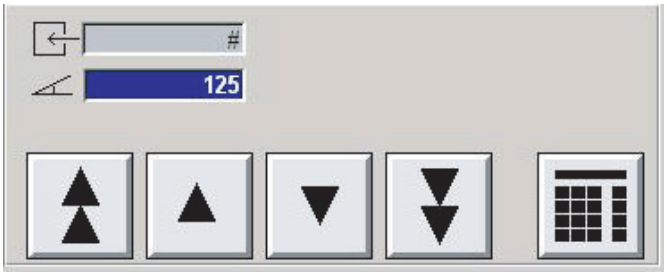



8

The FINAL FOLDER POSITION key pad is displayed.

Use the ARROW buttons or the KEYBOARD button to set the target position.

Touch the FINAL FOLDER POSITION icon to change the rotation of the Final Folder unit.





9

Touch the ON button to enable the FINAL FOLDER GO TO POSITION function.

Touch the OK button to move the final folder in the target position.



Jog Final Folder

10

Touch the JOG FINAL FOLDER icon.

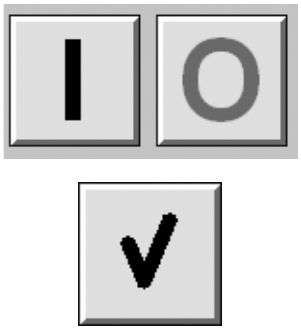

11

Touch the ON button and the OK button to enable the jog function.



12

Press and hold the FINAL FOLDER INCHING button to run the final folder module independently from the machine status.



13

Touch the EXIT button to return to the FINAL FOLDER window.

2.6.10 Down Stream

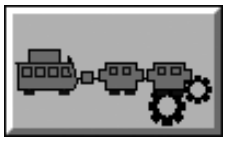

1

Touch the DOWN STREAM button.

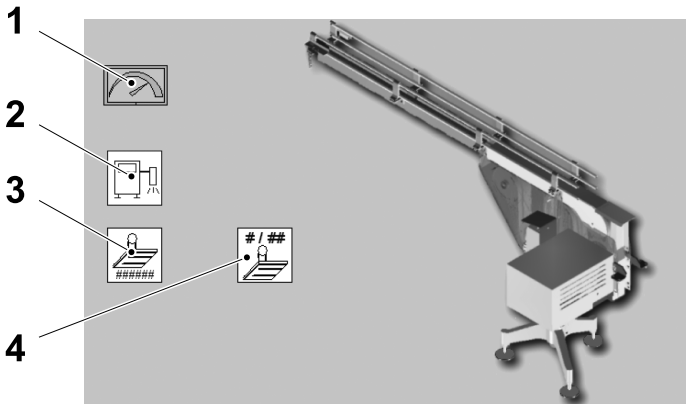

2

The DOWN STREAM window is displayed.

All selectable icons are white. When an icon is selected the colour of the icon changes to blue.

In this window there is the following selectable icon:

- OUTFEED CONVEYOR SPEED (1)
- OPTION DATE UNIT (2).
- JEID CONFIGURATION SELECTION (3)
- EVENT NUMBER SELECTION (4).

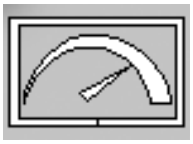

Outfeed Conveyor Speed

3

Touch the OUTFEED CONVEYOR SPEED icon.

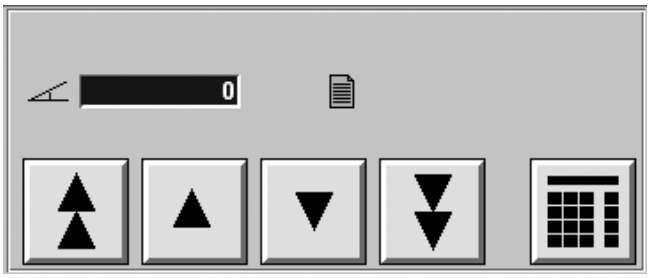

4

The OUTFEED CONVEYOR SPEED key pad is displayed.

Use the ARROW buttons or the KEYBOARD button to set the value.

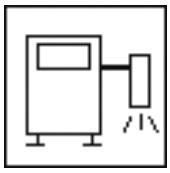

Option Date Unit

5

Touch the PRINTER INTERFACE icon.

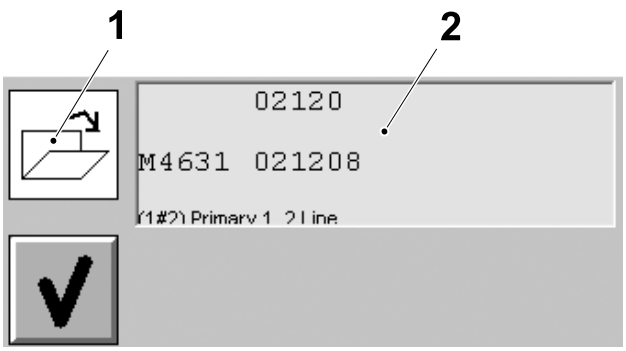

6

Touch the LAYOUT SELECTION icon (1) to load the PRINT LAYOUT (2).

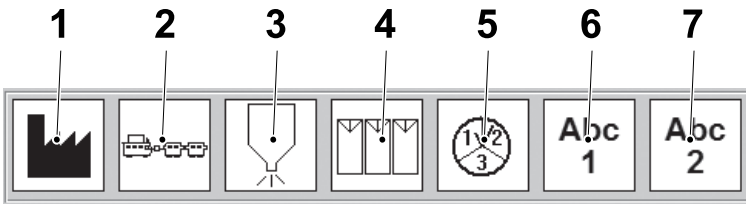

7

A set of informations may be entered in the layout by touching the following icons:

- FACTORY (1)
- LINE (2)
- PRODUCT (3)
- BATCH (4)
- PRODUCTION SHIFT (5)
- GENERIC FIELD 1 (6)
- GENERIC FIELD 2 (7).

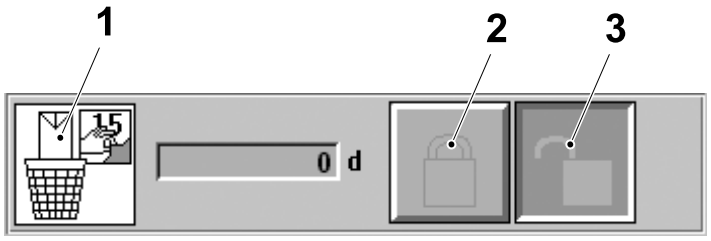

8

Best before date may be entered by touching the BEST BEFORE DATE icon (1).

Touch the LOCK icon (2) to lock the best before date (for example in case of production between two days).

Touch the UNLOCK icon (3) to unlock it.

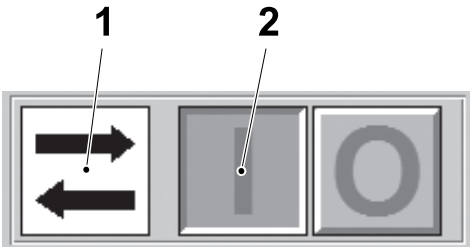

9

The print on the package may be reversed by touching the REVERSE PRINT icon (1).

Touch the ON button (2) to enable the function.

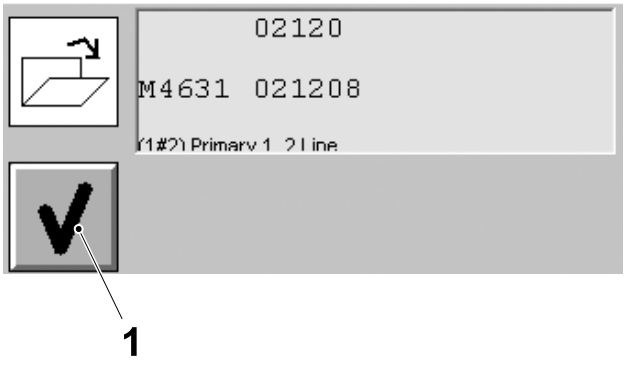

10

Touch the OK button (1) for 5 seconds to load the configuration.



11

Touch the EXIT button to return to the DOWNSTREAM window.



Jaw and Event ID Configuration Selection

12

Touch the JEID CONFIGURATION SELECTION icon.

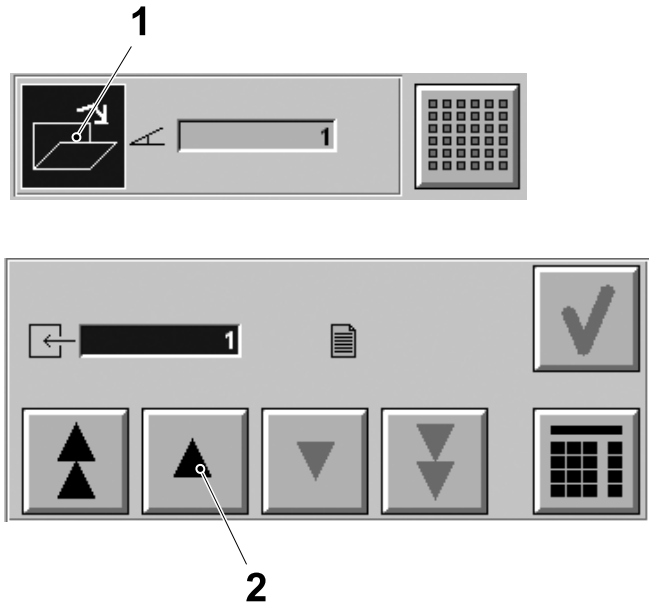

13

Touch the OPEN CONFIGURATION icon (1).

Use the ARROW buttons (2) to select the jaw and event ID configuration to be loaded.

Note! The number corresponds to a defined configuration; maximum 8 configurations are available to be selected.

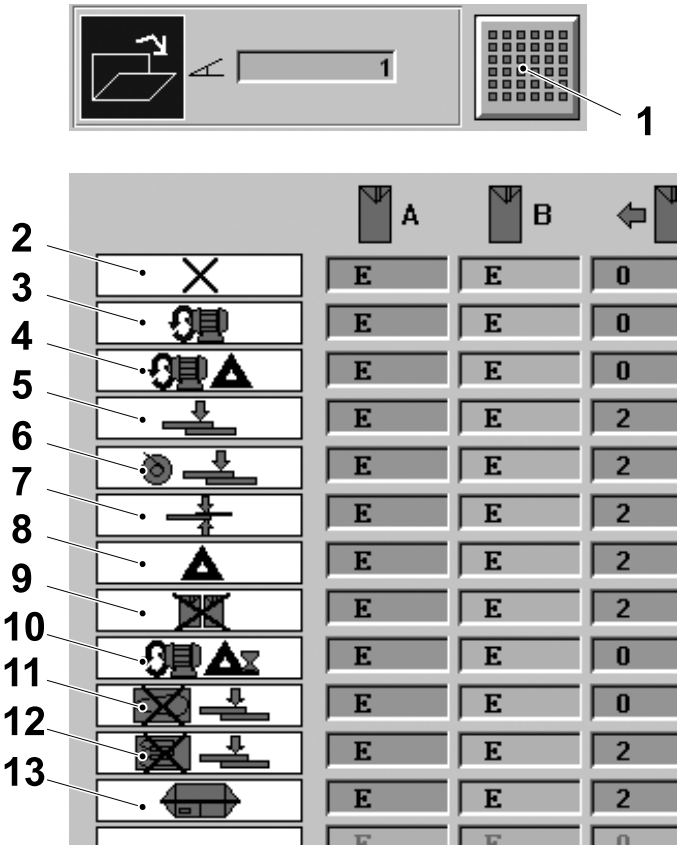

14

Touch the EVENT DISPLAY icon (1) to display the list of the events that may be printed on the package in the selected configuration.

- NO EVENT (2)
- FIRST START (3)
- RESTART AFTER STOP (4)
- PAPER SPLICE (5)
- FACTORY SPLICE (6)
- STRIP SPLICE (7)
- MACHINE STOP (8)
- END OF PRODUCTION STOP (9)
- RESTART AFTER AN ELAPSED SHORT STOP (10)
- PT TAB SPLICE (11)
- PT PATCH SPLICE (12)
- OPENING DEVICE STOP (13)



15

Touch the EXIT button to return to the DOWNSTREAM window.

2.6.11 Package and Time Counters Window

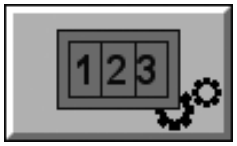

1

Touch the PACKAGE AND TIME COUNTERS button.

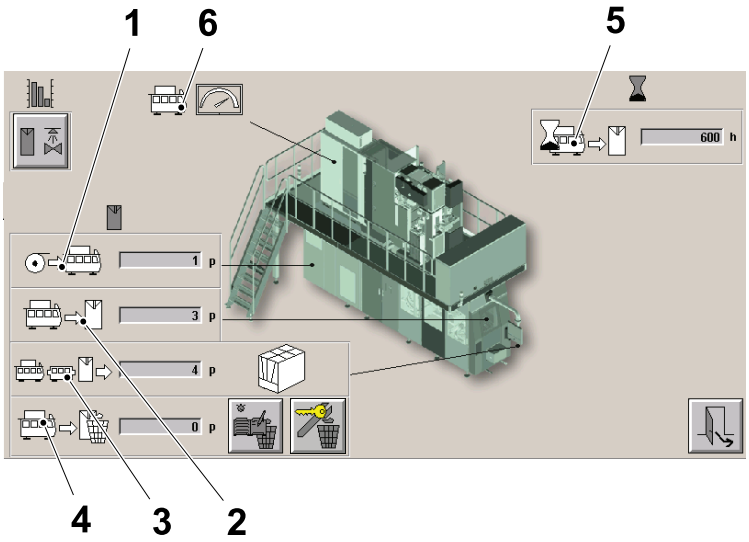

2

The PACKAGE AND TIME COUNTERS window is displayed.

On the LH side of this dialogue window the partial counters are displayed:

- the counter (1) displays the incoming packages into the filling machine
- the counter (2) displays the number of packages exiting from the final folder
- the counter (3) displays the number of packages passing the last counting point (depending on which last package point has been selected, see Last Package Point Selection on page 2-148)
- the counter (4) displays the total number of the wasted packages.

On the RH side of this dialogue window the counter (5) displays the total production time.

The counter (6) displays the actual speed of the filling machine.

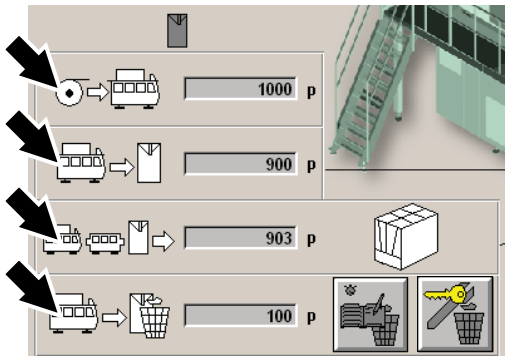

Partial Package Counters

3

Touch any of the partial package counters icons.

In the dialogue window are displayed:

- the RESET button (1)
- the number of packages for each volume (2).

To reset the counters, touch the RESET button (1) for four seconds.

Note! These counters per volume (2) cannot be reset.

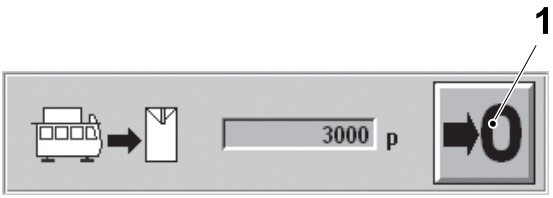

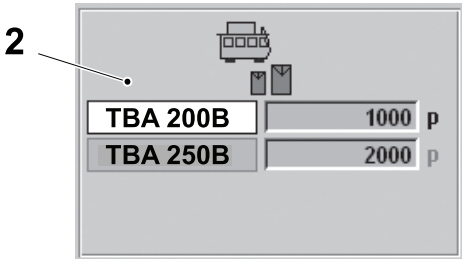

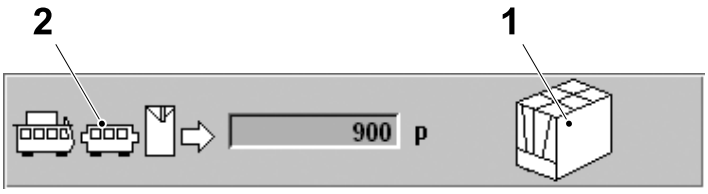

4

Touch the PACKAGE PER UNIT icon (1) next to the LAST COUNTING POINT icon (2).

Use the ARROW buttons or the KEYBOARD button to set the quantity of the packages contained in the cardboard.

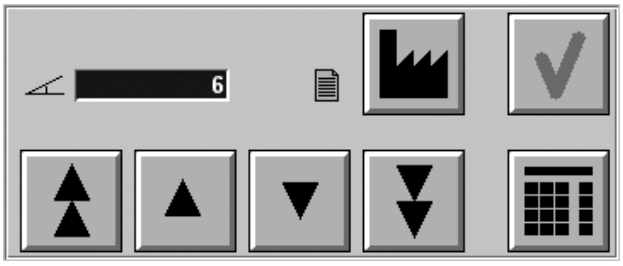

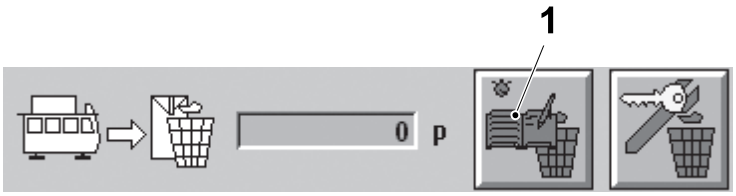

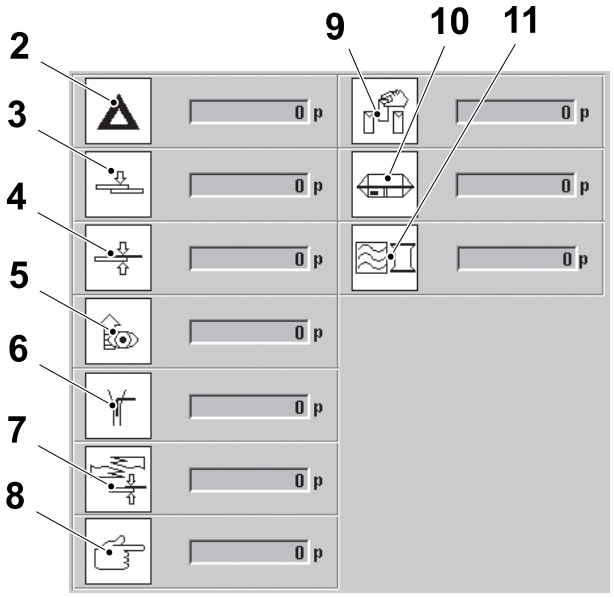

Waste Counters
5

Touch the PRODUCTION WASTE COUNTERS button (1) to identify which part of the machine is causing waste.

The following waste reasons are displayed:

- WASTE WHEN STOPPING (2)
- PACKAGING MATERIAL SPLICE (3)
- STRIP SPLICE (4)
- PACKAGE OUT OF DESIGN (5)
- FILLING NOT OK (6)
- STRIP APPLICATOR (7)
- MANUAL WASTE (8)
- PACKAGE SAMPLING (9)
- PRE-APPLICATOR (10).
- TRANSVERSAL SEALING (11).

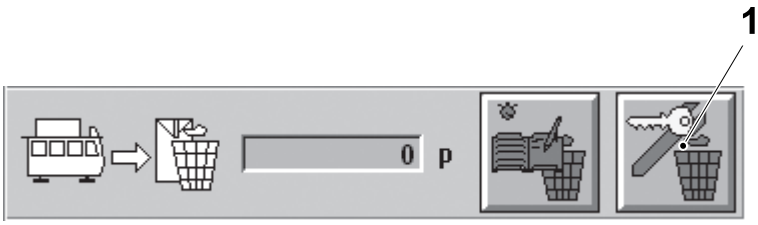

Technical Waste
6

Touch the TECHNICAL WASTE button (1) to display the technical waste reasons.

Note! The access to TECHNICAL WASTE is restricted to allowed users.

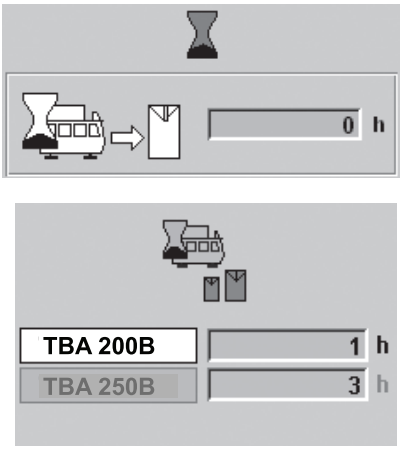

Production Time Counters
7

Touch the any of the production time button to display the production time counter for each volume.

Note! These counter cannot be reset.

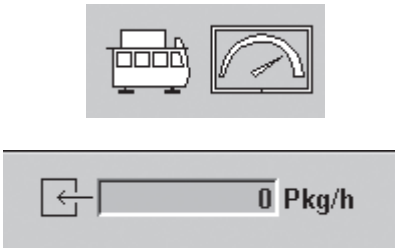

Actual Speed

8

Touch the ACTUAL SPEED icon to display the actual filling machine capacity.

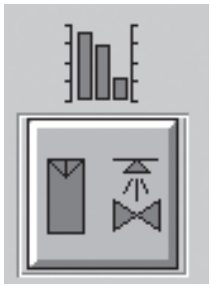

Production Graphic

9

Touch the PRODUCTION GRAPHIC button.

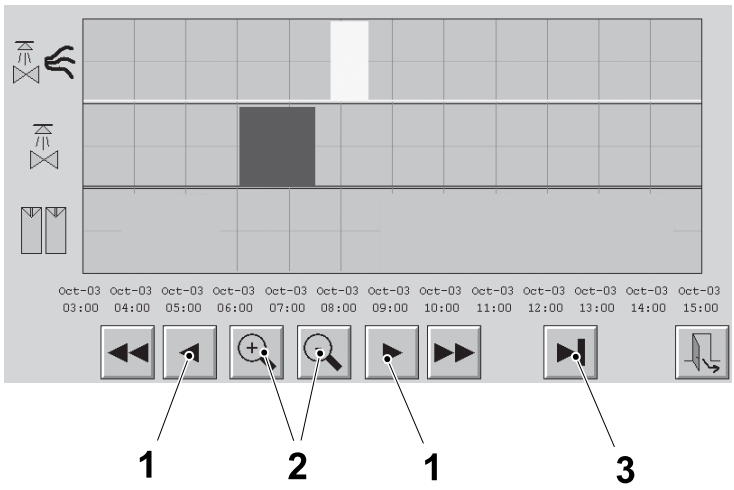

10

A graphic is displayed showing the last 12 hours of production, cleaning and drying.

Touch the ARROW buttons (1) to scroll back and forward the production graphic (up to 8 days backwards can be displayed).

Touch the ZOOM buttons (2) to increase or decrease the interval of time displayed in the window (from 11 minutes to 8 days).

Touch the RETURN button (3) to return to the present time.



11

Touch the EXIT button to return to the PACKAGE AND TIME COUNTERS window.

2.6.12 Utility Window

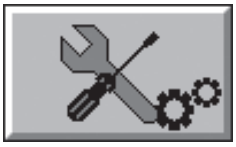

1

Touch the UTILITY button.

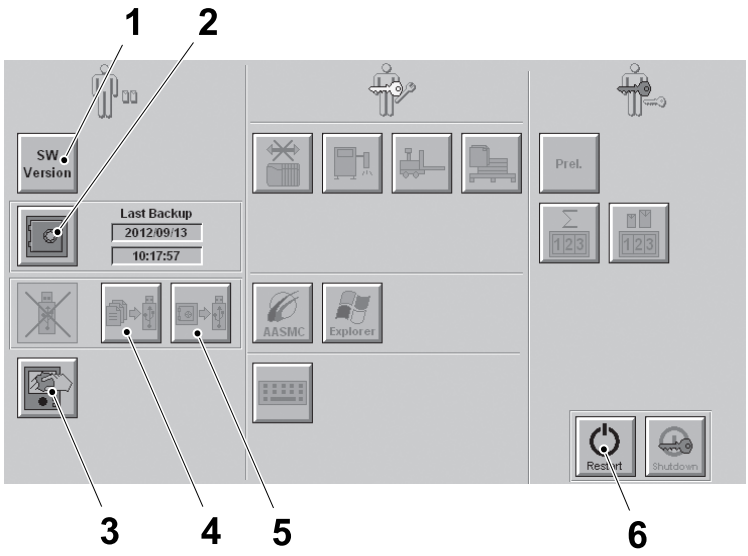

2

The UTILITY WINDOW window is displayed.

Note! The key symbol indicates that access to those buttons is restricted and only users with a valid password can access the utility.

In this window there are the following selectable buttons:

- the SOFTWARE VERSION (1)
- the BACKUP (2)
- the CLEAN PANEL (3)
- the COPY LOCAL FILES (4)
- the COPY BACKUP FILES (5)



Software Version

3

Touch the SOFTWARE VERSION button.

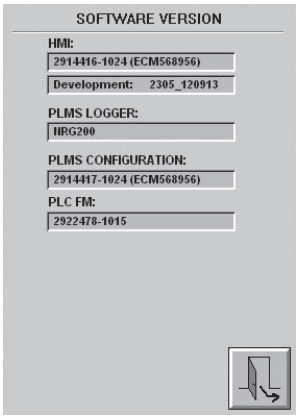

4

The SOFTWARE VERSION window is displayed, showing the numbers of the software currently installed.

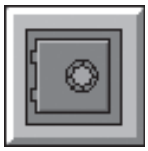

Backup

5

Touch the backup button to do a backup copy of the following files:

- the config files of the DE
- the PLMS NRG local setup
- the primary printer layout
- the counters
- the TMCC JEID configuration
- the printer interface message configuration for the primary printer

The IP address are not included in the backup.

Note! An automatic backup starts every 12 hours.

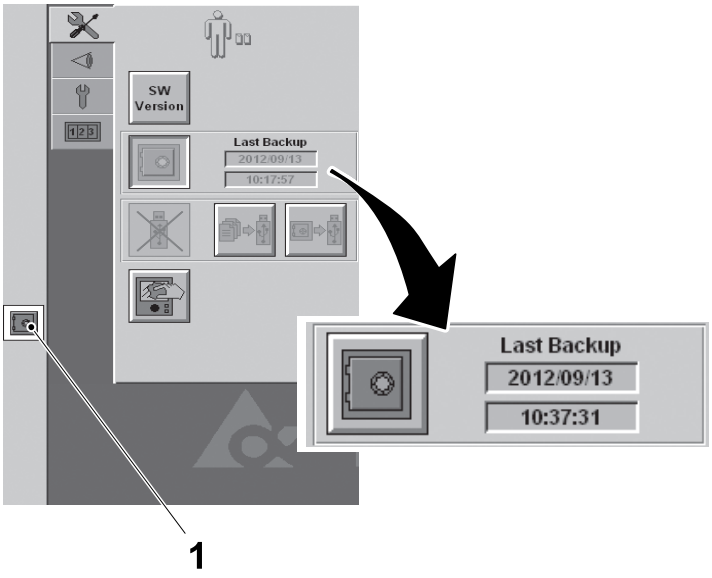

6

The BACKUP icon (1) appears on the status bar during the backup.

Note! The BACKUP icon (1) appears also during the automatic backup. Do not switch off the panel while the BACKUP icon (1) is displayed.

When the backup is completed, the BACKUP icon (1) disappears and the date and time are shown next to the backup button.



Clean Panel

7

Touch the CLEAN PANEL button.

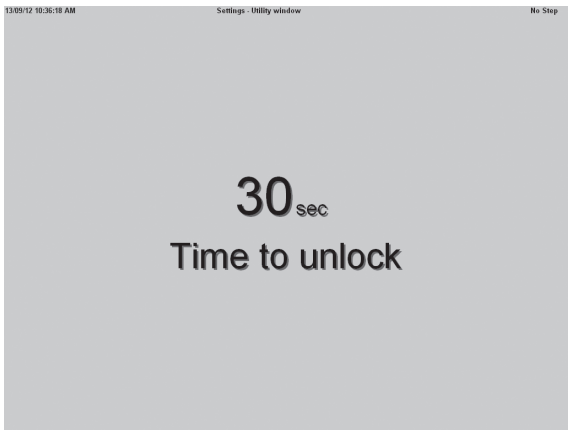

8

The panel is locked for 30 seconds and during this time it is possible to clean the screen.

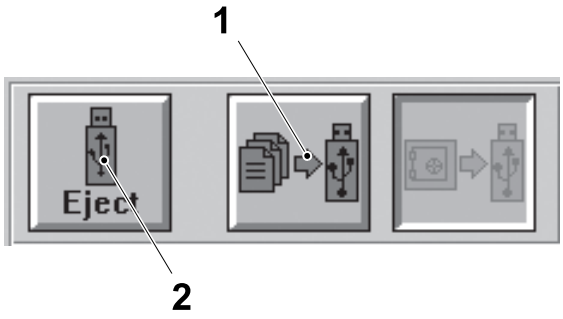

Copy Local Files
9

Touch the COPY LOCAL FILES button (1) to copy the folder C:\PLMS\DATA containing the local files (counters, servo motor faults...) in a USB key.

Touch the EJECT KEY button (2) to safely remove the USB key.

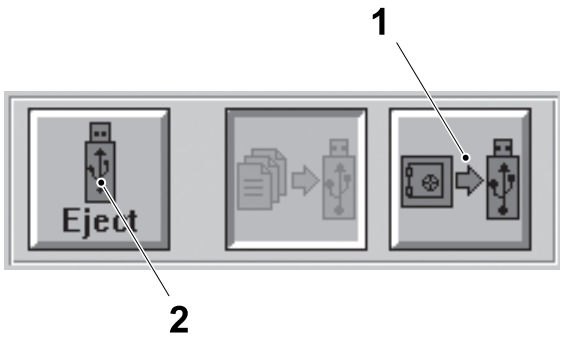

Copy Backup Files
10

Touch the COPY BACKUP FILES button (1) to copy the machine data files (stored in the CompactFlash memory card) in a USB key.

Touch the EJECT KEY button (2) to safely remove the USB key.



Restart Panel
11

Touch the the RESTART PANEL button for 5 seconds to reboot the panel.

2.6.13 Temperature Overview Window

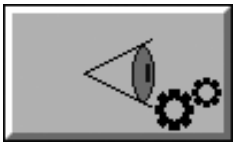

1

Touch the `TEMPERATURE OVERVIEW` button.

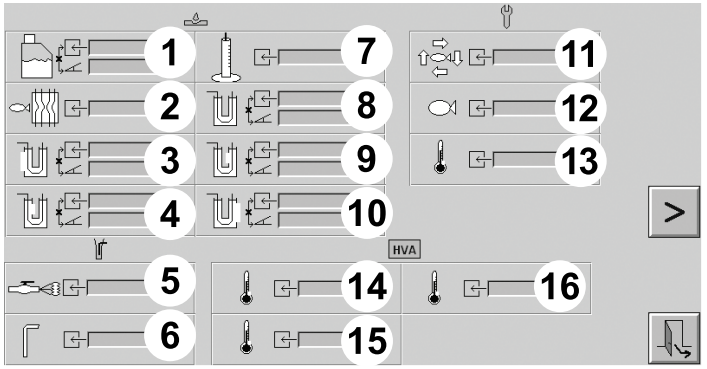

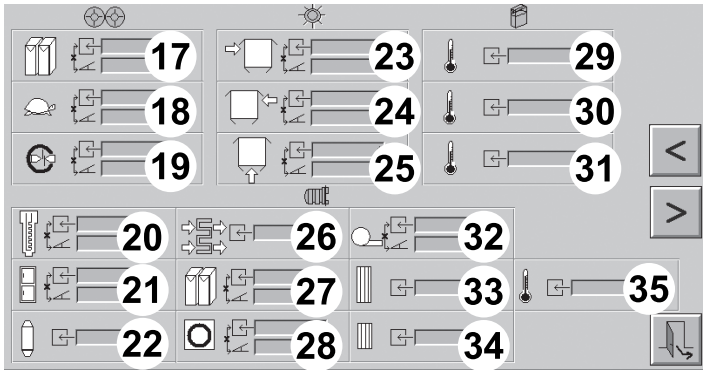

1 Peroxide tank
2 Water heat exchanger
3 Bath external heater, inlet
4 Bath internal heater, inlet
5 Steam
6 Filling pipe
7 Peroxide concentration
8 Peroxide bath
9 Bath internal heater, outlet
10 Bath external heater, outlet
11 Cooling water
12 Water inlet
13 Electrical cabinet
14 HVA heat sterilization
15 HVA pump barrier
16 HVA external product valve
17 SA during Production
18 SA during Slow Inching
19 SA during Tight Tube
20 Air superheater
21 Aseptic chamber
22 Scrubber water
23 Flap heater, top left
24 Flap heater, top right
25 Flap heater, bottom
26 Pre-sterilization
27 LS during Production
28 LS during Short Stop
29 HI Heater
30 HI Gas
31 HI Pipe
32 Air knife
33 LS element
34 LS short stop element
35 Air outlet

2

The TEMPERATURE OVERVIEW window is displayed.

To change a setting value, touch the corresponding module TAB that includes the setting value and follow the normal procedure to change the value.

Note! To keep the new value the recipe must be saved or saved as a new recipe.

Note! Values from temperature regulators can be changed, values from temperature monitors cannot be changed.



3

Touch the EXIT button to return to the TEMPERATURE OVERVIEW window.

2.6.14 LGV/Raw Material Request Window

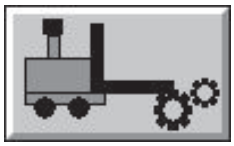

1

Touch the LGV/RAW MATERIAL REQUEST button.

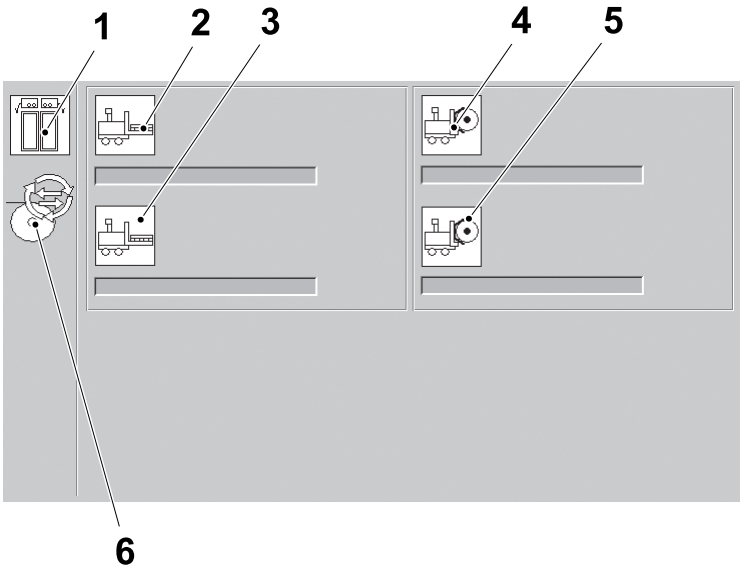

2

The LGV window is displayed.

All selectable icons are white. When an icon is selected the colour of the icon changes to blue.

In this window there are the following selectable icons:

- LGV ENABLE PHOTOCELLS FORCE (1)
- REQUEST MATERIAL FOR PALLET DELIVERY AT DELIVERY AREA 1 (2)
- REQUEST MATERIAL FOR PALLET DELIVERY AT DELIVERY AREA 2 (3)
- REQUEST REEL FOR ASU SIDE 1 (4)
- REQUEST REEL FOR ASU SIDE 2 (5).
- LGV AUTOMATIC MISSION DISABLE (6).

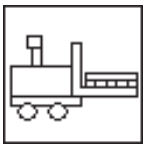

Request Material for Pallet Delivery at Delivery Area 1 or 2 3

Touch the REQUEST MATERIAL icon.

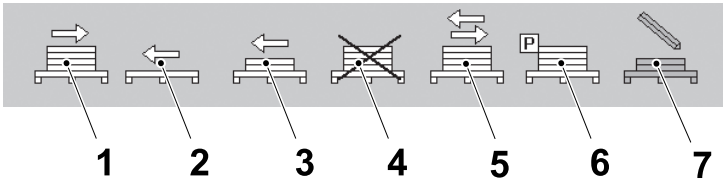

4

The REQUEST MATERIAL SUB_MENU is displayed.

All selectable icons are white. When an icon is selected the colour of the icon changes to blue.

In this window there are the following selectable icons:

- REQUEST FOR NEW MATERIAL (1)
- REQUEST FOR PICKING EMPTY PALLET AT PALLET DELIVERY AREA 1 OR 2 (2)
- REQUEST FOR PICKING REMAINING MATERIAL AT PALLET DELIVERY AREA 1 OR 2 (3)
- ABORT CURRENT MATERIAL REQUEST (4)
- REQUEST FOR SAME MATERIAL AS PREVIOUS (5).
- REQUEST FOR PARKING THE MATERIAL (6)
- MODIFY ACTIVE REQUEST (7).

Note! The commands (4) and (7) are available only if the mission to cancel or modify is not already in action.

Note! The mission (5) includes the request for picking the empty pallet.

Note! The mission (6) stores the material in a defined parking area. This action can be used when material not compliant to the specifications has been wrongly charged in the material magazine.

Select the mission type among the available ones.

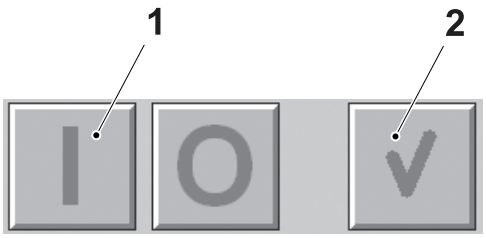

5

Touch the ON button (1) to enable the function configuring and the OK button (2) to activate it.

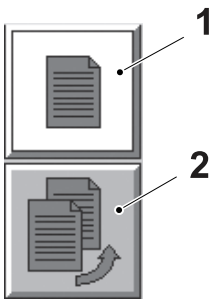

6

If requested from the mission type select the recipe in which the mission is applied.

Touch the ACTIVE RECIPE button (1) to request the material for the actually loaded recipe or the QUEUE RECIPE button (2) to request the material for the next recipe.

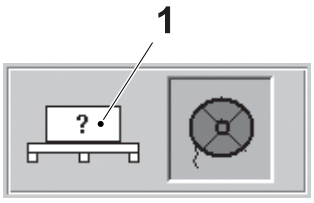

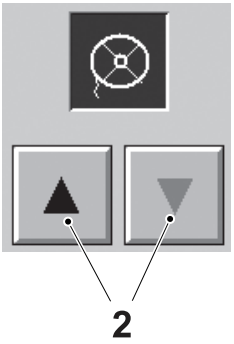

7

If requested from the mission type, touch the MATERIAL TYPE button (1) to select material type. This setting enables the operator to select the material type, for example: Strip, Peroxide, Tab or Patch.

Touch the ARROW buttons (2) to select the material for the mission.

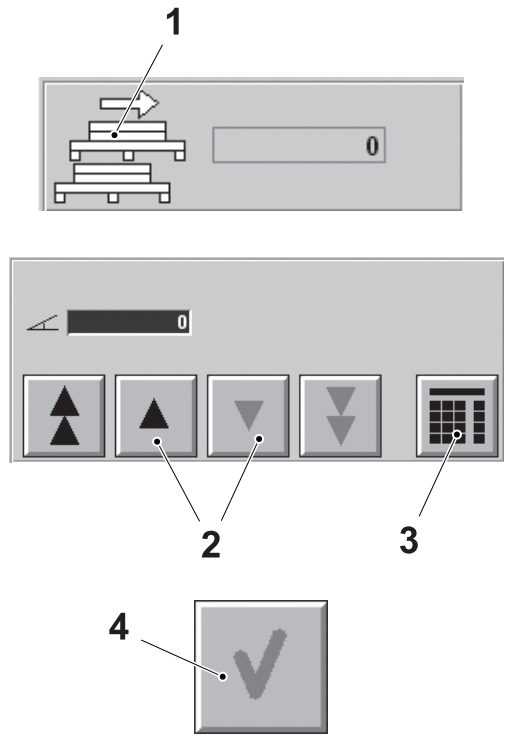

8

If requested from the mission type touch the MATERIAL QUANTITY button (1) to select material quantity (1).This setting enables the operator to insert the requested material quantity.

Set the quantity with the ARROW buttons (2) or using the KEYPAD (3).

Touch the OK button (4).

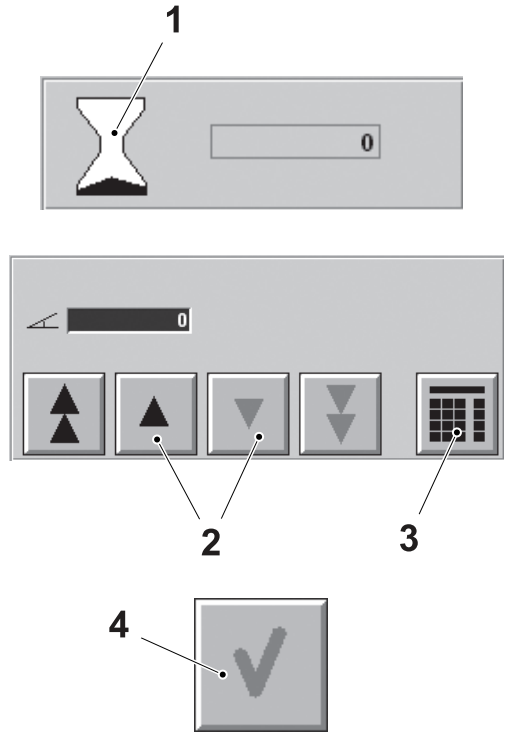

9

If requested from the mission type touch the TIME ESTIMATION button (1) select the estimated time (1). This setting enables the operator to insert the maximum interval time for the material delivery.

Set the time estimation value with the ARROW buttons (2) or using the KEYPAD (3).

Touch the OK button (4)

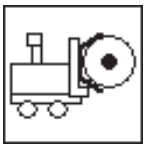

Request for Reel Delivery at ASU Side 1 or 2

10

Touch the REQUEST REEL icon.

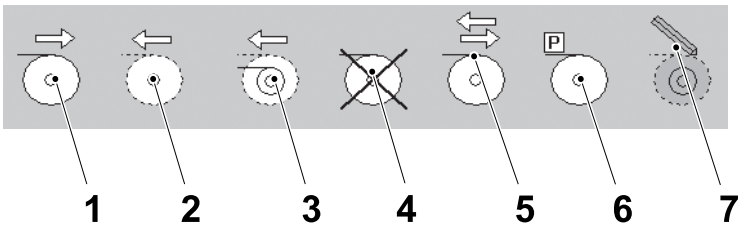

11

The REQUEST REEL SUB_MENU is displayed.

All selectable icons are white. When an icon is selected the colour of the icon changes to blue.

In this window there are the following selectable icons:

- REQUEST FOR NEW REEL (1)
- REQUEST FOR PICKING REEL CORE (2)
- REQUEST FOR PICKING NOT FINISHED REEL (3)
- ABORT CURRENT REEL REQUEST (4)
- REQUEST FOR SAME REEL TYPE AS PREVIOUS (5)
- REQUEST FOR PARKING THE REEL (6)
- MODIFY LATEST REQUEST (7).

Select the mission type among the available ones.

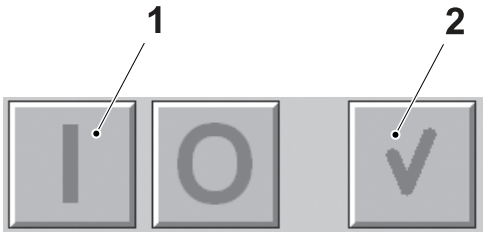

12

Touch the ON button (1) to enable the function configuring and the OK button (2) to activate it.

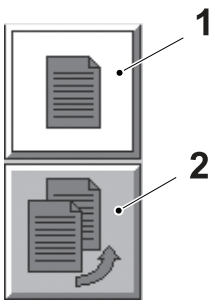

13

If requested from the mission type select the recipe in which the mission is applied.

Touch the ACTIVE RECIPE button (1) to request the reel for the actually loaded recipe or the QUEUE RECIPE button (2) to request the reel for the next recipe.

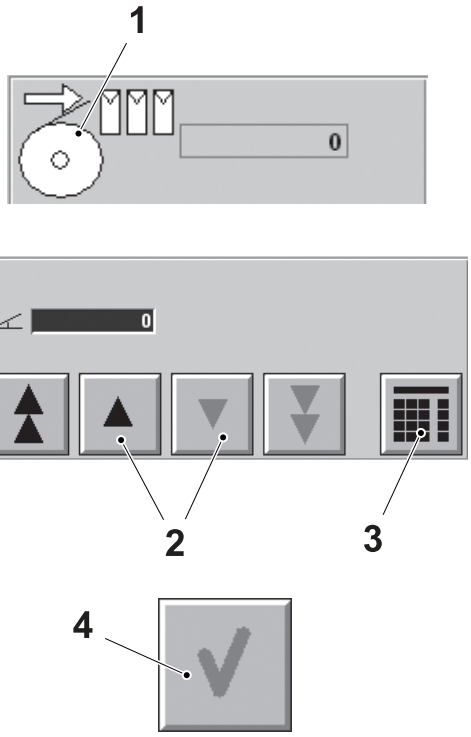

14

If requested from the mission type touch the MATERIAL QUANTITY button (1) to select material quantity (1).This setting enables the operator to insert the requested material quantity.

Set the quantity with the ARROW buttons (2) or using the KEYPAD (3).

Touch the OK button (4).

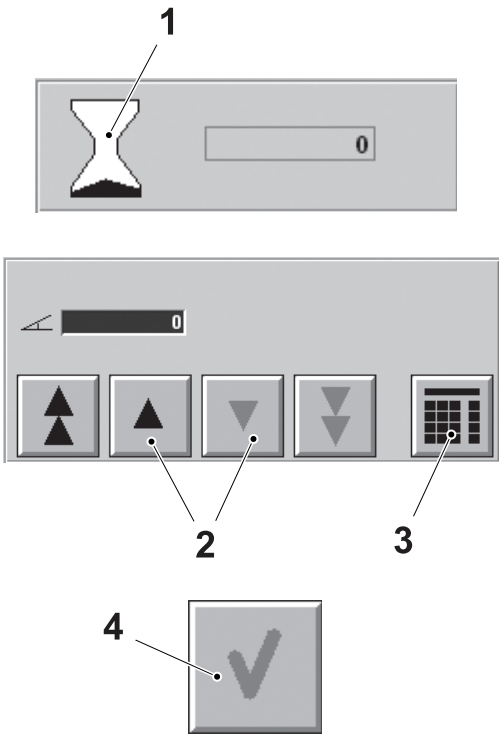

15

If requested from the mission type touch the TIME ESTIMATION button (1) select the estimated time (1). This setting enables the operator to insert the maximum interval time for the material delivery.

Set the time estimation value with the ARROW buttons (2) or using the KEYPAD (3).

Touch the OK button (4)

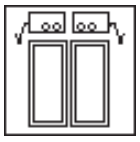

LGV Enable Photocells Force 16

Touch the LGV ENABLE PHOTOCELLS FORCE icon.

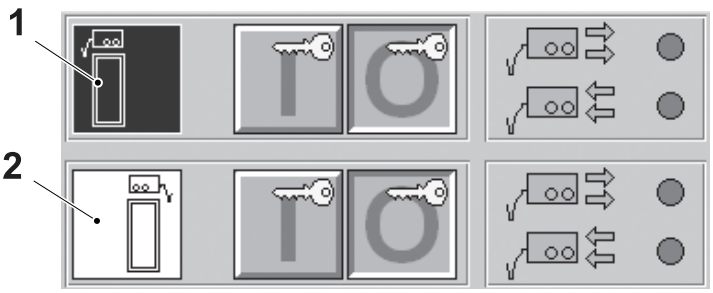

17

Check if the photocells of the ASU doors are enabled:

- DOOR SIDE 1 photocells (1)
- DOOR SIDE 2 photocells (2).

Note! The access to enable or disable the photocells is restricted to users with a valid password.



LGV Automatic Mission Disable

18

Touch the LGV AUTOMATIC MISSION DISABLE.



19

Touch the ON button to disable the double automatic mission of the LGV (picking the reel core and request for new reel) when a reel is finished.





20

To enable the double automatic mission, touch the LGV AUTOMATIC MISSION DISABLE button and the OFF button.



21

Touch the EXIT button to return to the PRODUCTION CONTROL window.

2.6.15 Raw Materials Data Input Window

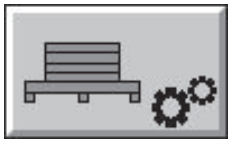

1

Touch the RAW MATERIALS DATA INPUT button.

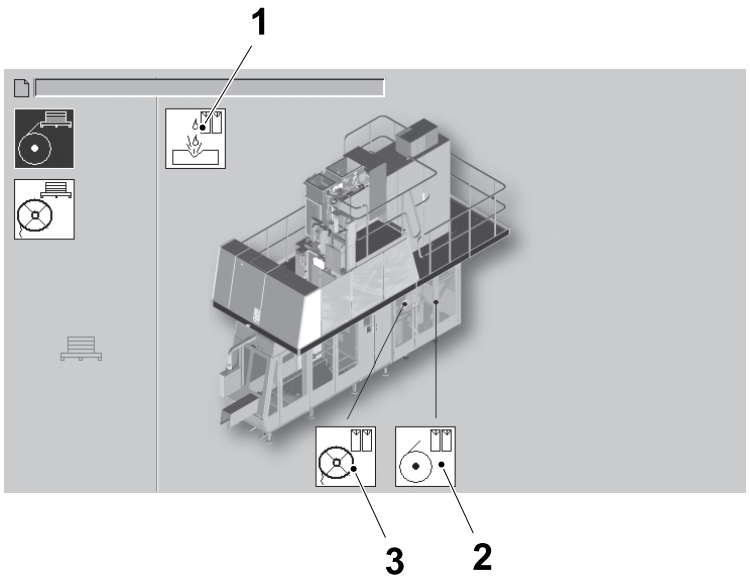

2

The RAW MATERIAL DATA INPUT window is displayed.

All selectable icons are white. When an icon is selected the colour of the icon changes to blue.

In this window there are the following selectable icons:

- HYDROGEN PEROXIDE TANK (1)
- PACKAGING MATERIAL (2)
- STRIP (3)

Depending on machine composition other materials can be available, for example: patch, tab or nitrogen.

Note! If the LGV automatic version is present, the data input are inserted directly from the LGV, but it is possible to modify them from the operator.

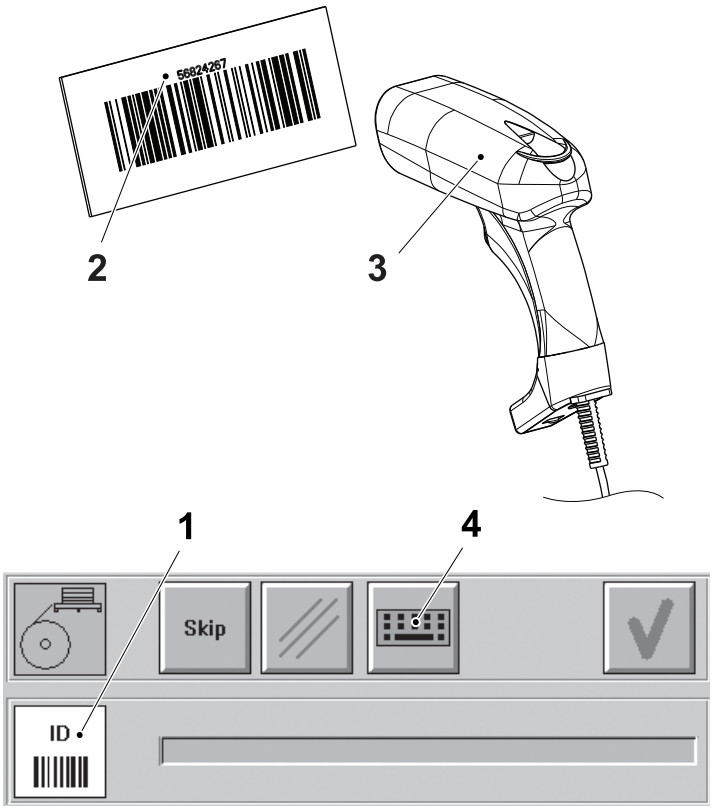

Raw Material Data

3

Press the ID button (1).

Enter the material ID (2) using the barcode scanner (3) or the KEYBOARD button (4).

Note! With the barcode scanner (3) the ok button is automatic.

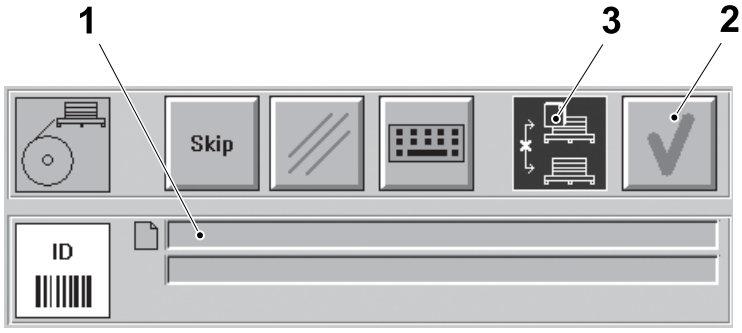

4

The entered material ID is automatically compared with the ID in the active recipe, shown in the material ID field (1).

If the materials match, press the OK button (2).

If a mismatch is detected, it will be indicated with the MISMATCH icon (3), see next item.

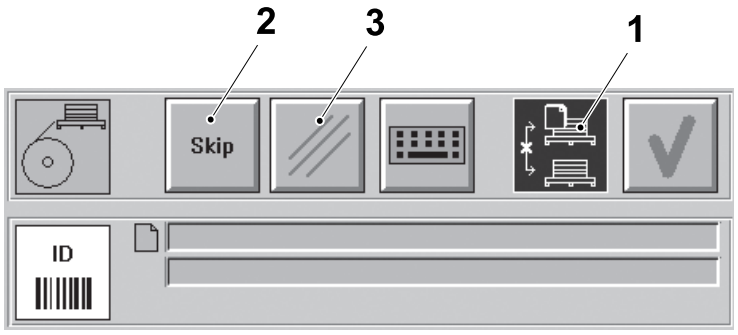

Mismatching Materials

5

If a material mismatch is detected it will be indicated by the mismatch icon (1) and must be handled.

- to confirm the mismatch and enter the material code, see item 6.
- to skip the operation, touch the SKIP button (2). The value 9999 will appear in the field. The system will recognize the number and no alarms will be shown.
- to cancel the procedure entirely, touch the cancel button (3). The procedure to load material is cancelled.

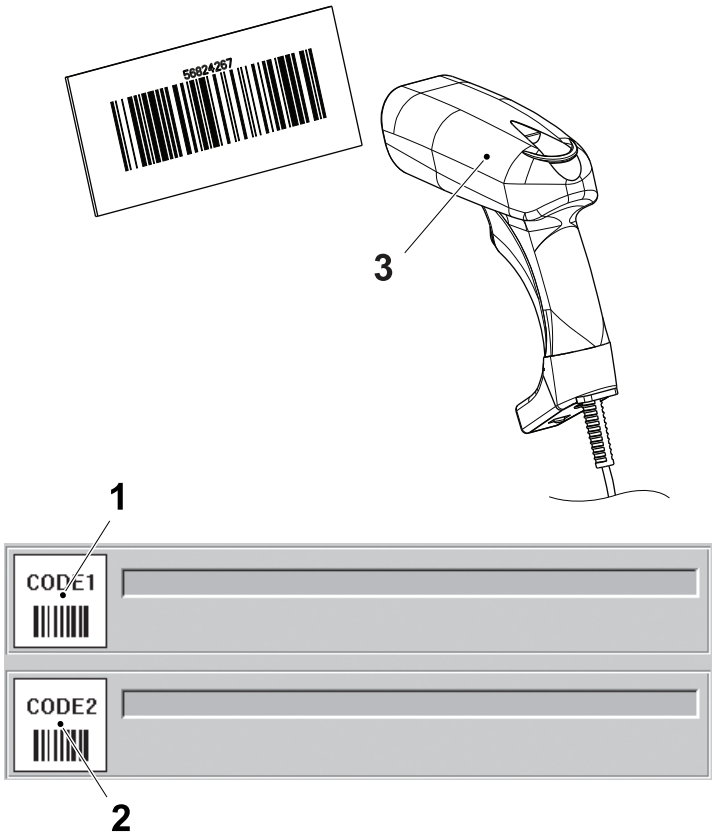

6

Note! Required when using traceability functions. Otherwise skip this operation.

Press the CODE1 button (1) or the CODE2 button (2).

Enter the code 1 or the code 2 using the barcode scanner (3) or the keyboard.

Note! With the barcode scanner (3) the ok button is automatic.

The material ID entered will only be used for logging purposes and will not be compared with other batch codes.



7

Touch the EXIT button to return to the PRODUCTION CONTROL window.

2.7 Recipes

This section describes how to load, save and delete a production recipe with the TPOP. A recipe is a set of parameters related to a certain type of production: when a recipe is loaded, the filling machine adapts its working parameters to the ones stored in the recipe.

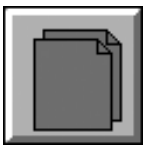

Recipes Window

1

Touch the RECIPES button.

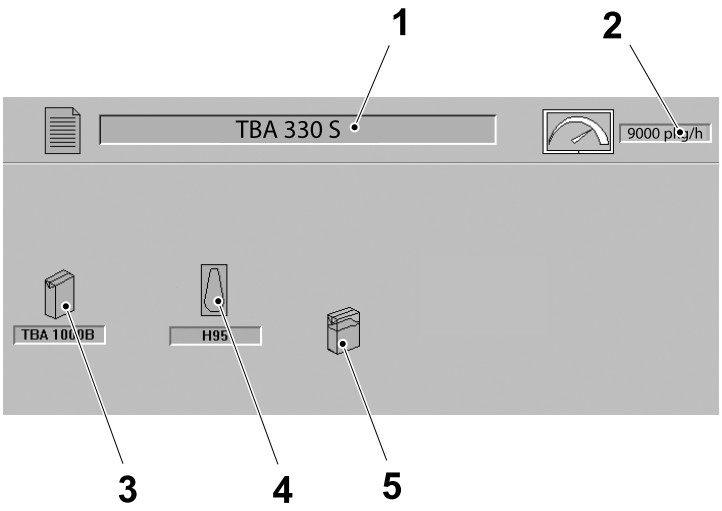

2

The RECIPE window is displayed.

The following information about the current recipe is displayed:

- the recipe name (1)
- the selected speed (2)
- the volume (3)
- the pulltab (4) and the headspace by injection (5), if present

Touch the ARROW button to view all the machine parameters stored with the current recipe.

It is possible to:

- load stored recipes
- modify parameters of existing recipes and save them
- modify parameters of existing recipes and save them with a new name.



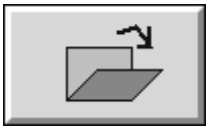

Load Recipe

3

Touch the LOAD button.

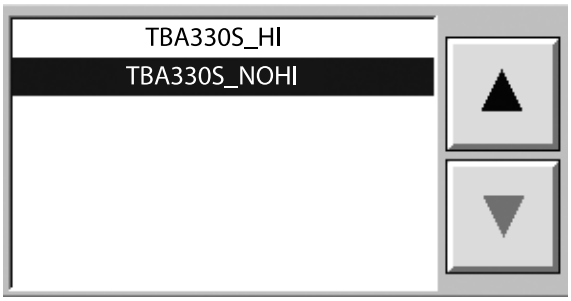

4

Use the ARROW buttons to select the new recipe from the recipes list.

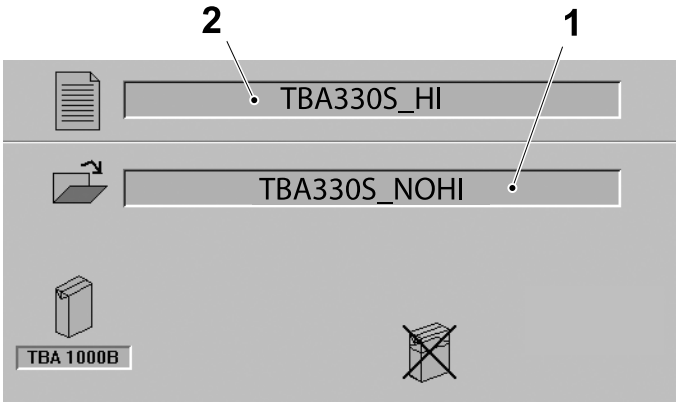

5

The recipe to be loaded (1) is displayed under the current recipe (2).



6

Touch the OK button to load the new recipe.

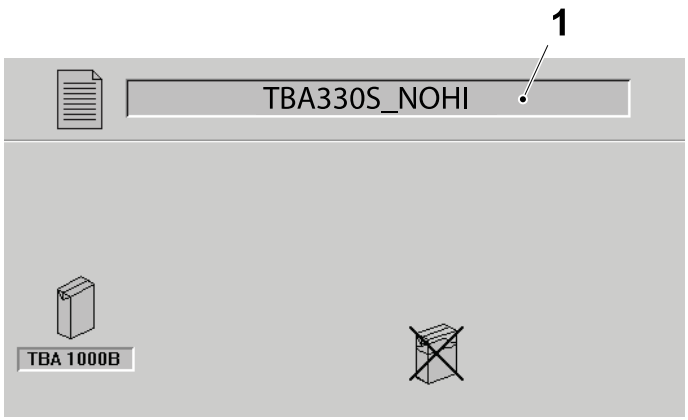

7

The new recipe is displayed in the RECIPE window (1).



8

If necessary the proposed production speed can be changed.

Touch the PRODUCTION SPEED icon.

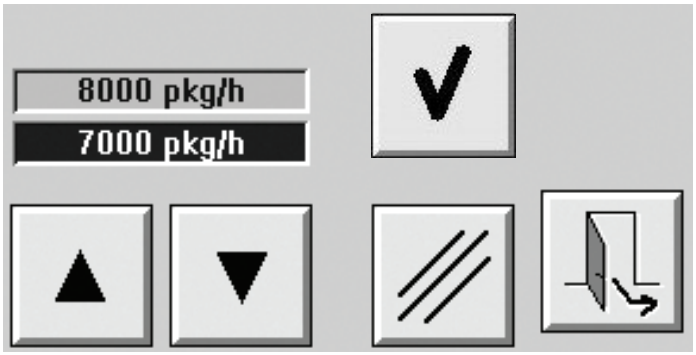

9

Use the ARROW buttons to set the production speed.

Touch the OK button to load the new speed.

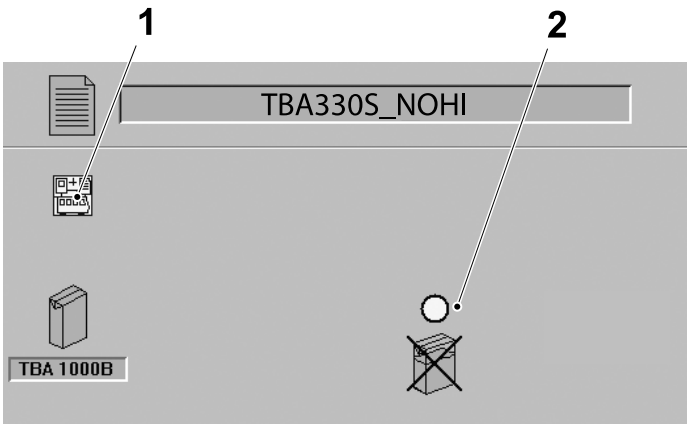

Mismatching Parameters

10

If the machine configuration has been changed since the recipe was saved, the CONFIGURATION MISMATCH icon (1) may appear.

A yellow dot (2) appears on the mismatching parameter.

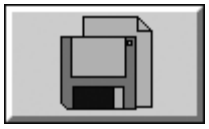

11

Touch the SAVE AS button.

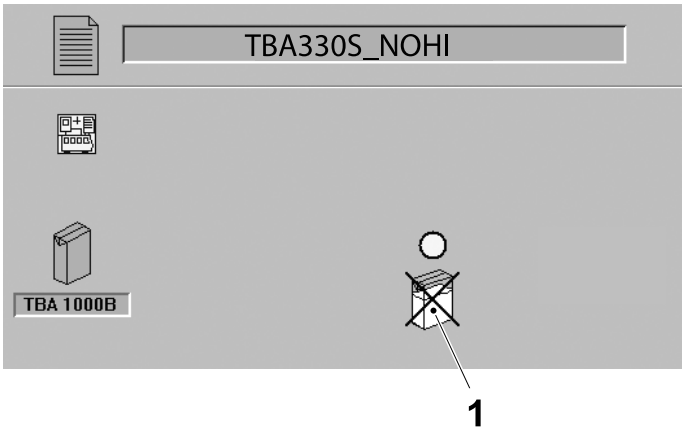

12

The mismatching parameter is highlighted.

If the mismatch concern an equipment which has been removed, a cross is displayed on the mismatching equipment icon.

Touch the MISMATCHING PARAMETER icon (1).



13

Touch the RESET button.

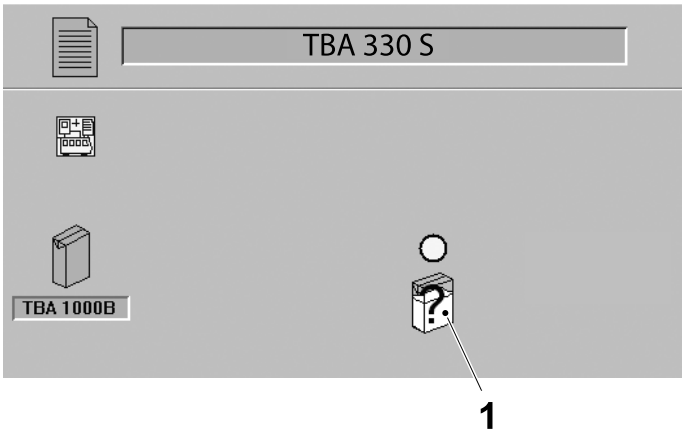

14

If the mismatch concern an equipment which has been installed, a question mark is displayed on the mismatching equipment icon.

Touch the MISMATCHING PARAMETER icon (1).

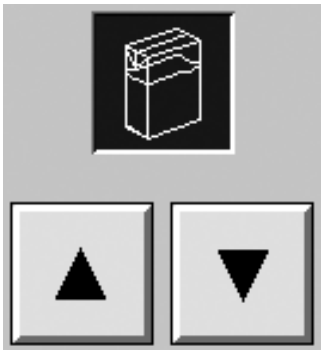

15

Use the ARROW buttons to select the production with or without the equipment for the new recipe.

Note! The HI equipment is shown as an example.



16

Touch the OK button.

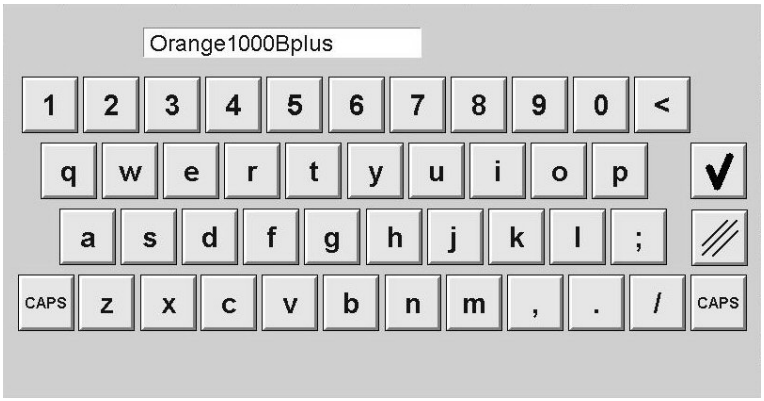

17

The KEYBOARD is displayed.

Type the new name of the recipe and touch the OK button.

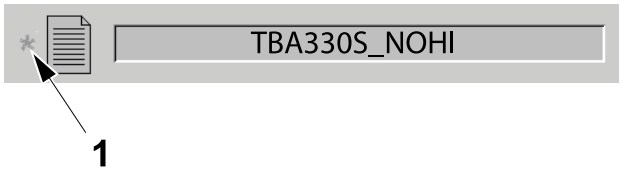

Save Recipe

18

When one or more of the recipe parameters have been modified, a star (1) appears beside the recipe name.

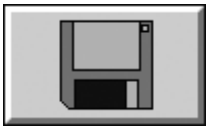

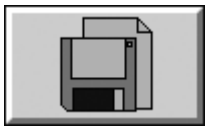

19

Touch either:

- the SAVE button to save the current recipe with the modified parameters
- the SAVE AS button to save the modified parameters as a new recipe.



20

Touch the OK button.

The recipe is now saved with the modified parameters.

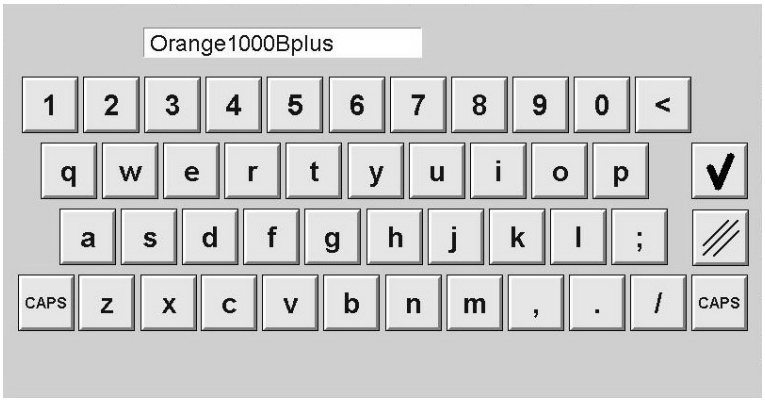

21

The KEYBOARD is displayed.

Type the name of the new recipe and touch the OK button.

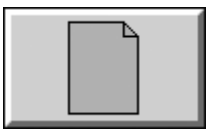

Create New Recipe

22

Touch the NEW button.

Note! To be able to create a new recipe log on as a power operator, see User Log On on page 2-144.



23
In the NEW RECIPE window, touch the VOLUME icon.



24
Use the ARROW buttons to select the required volume for the new recipe.



25
Touch the HI icon.

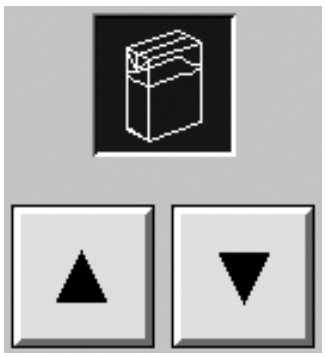

26
Use the ARROW buttons to select production with HI or NO HI for the new recipe.



27

Touch the ARROW button.

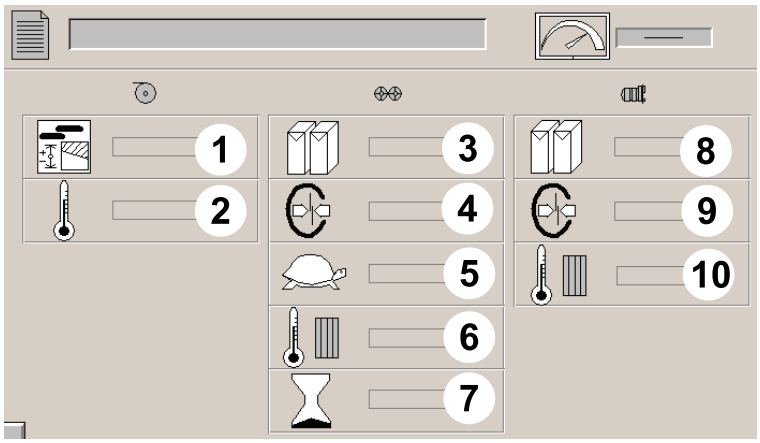

28

The default production setting values for the chosen volume are displayed by module.

To change a setting value, touch the corresponding module TAB that includes the setting value and follow the normal procedure to change the value.

- SPLICED PACKAGE REPEAT LENGTH OFFSET (1)
- CONSTANT HEAT BAR TEMPERATURE (2)
- STRIP SEALING TEMPERATURE DURING PRODUCTION (3)
- STRIP SEALING TEMPERATURE DURING TUBE SEALING (4)
- STRIP SEALING TEMPERATURE DURING INCHING (5)
- STRIP SEALING TIME (6)
- SA SHORT STOP ELEMENT TEMPERATURE (7)
- LS TEMPERATURE DURING PRODUCTION (8)
- LS TEMPERATURE DURING TUBE SEALING (9)
- LS SHORT STOP ELEMENT TEMPERATURE (10).



29

Touch the ARROW button to display the next screen.

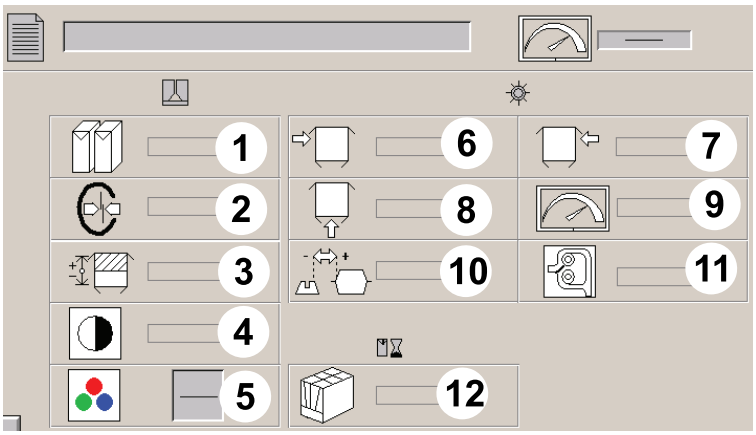

30

The default production setting values for the chosen volume are displayed by module.

Touch the ARROW button to display the next screen.

To change a setting value, touch the corresponding module TAB that includes the setting value and follow the normal procedure to change the value.

The setting values stored in second page of the recipe are:

- TS POWER DURING PRODUCTION (1)
- TS POWER DURING EMPTY TUBE (2)
- DESIGN CORRECTION OFFSET (3)
- PHOTOCELL SPOT ON (4)
- PHOTOCELL SPOT COLOUR (5)
- FLAP HEATER TEMPERATURE, TOP LEFT (6)
- FLAP HEATER TEMPERATURE, TOP RIGHT (7)
- FLAP HEATER TEMPERATURE, BOTTOM (8)
- OUTFEED CONVEYOR SPEED (9)
- INFEED SYNCHRONIZATION OFFSET (10)
- (11)
- PACKAGES PER UNIT (12)



31

Touch the ARROW button.

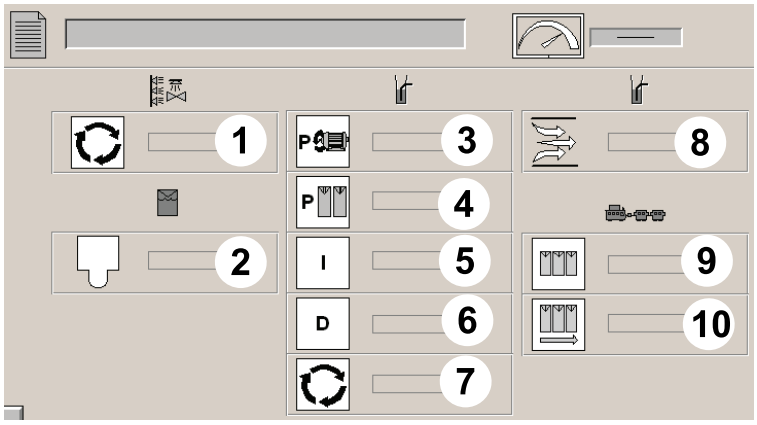

32

The default production setting values for the chosen volume are displayed by module.

Touch the ARROW button to display the next screen.

To change a setting value, touch the corresponding module TAB that includes the setting value and follow the normal procedure to change the value.

The setting values stored in third page of the recipe are:

- EXTERNAL CLEANING CYCLES (1).
- HI NOZZLE SELECTION (2)
- PROPORTIONAL GAIN AT START SEQUENCE (3)
- PROPORTIONAL GAIN PRODUCTION (4)
- INTEGRAL GAIN (5)
- DERIVATIVE GAIN (6)
- C VALVE CYCLE NUMBER (7)
- STARTING FLOW (8)
- CONVEYOR CONGESTION GUARD TIME (9)
- CONVEYOR DISCHARGE TIME (10)



33

Touch the OK button to save the new recipe.

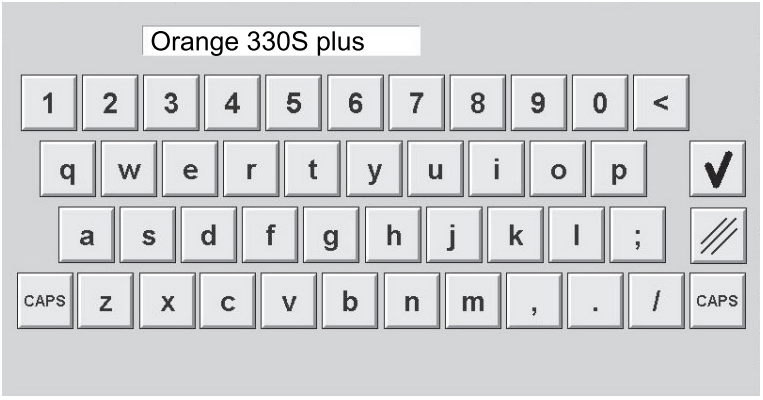

34

The KEYBOARD is displayed.

Type the name of the new recipe and touch the OK button.



Delete Recipe

35

Touch the DELETE button.

Note! To be able to delete a recipe log on as a power operator, see User Log On on page 2-144.

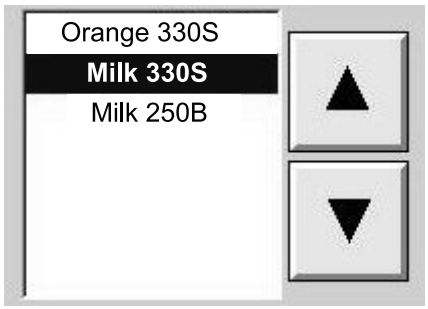

36

Use the ARROW buttons to select the recipe to delete from the recipes list.



37

Touch the OK button to delete the recipe.

2.8 System Setup

This section describes how to log on as a user, make the production shift setting and the language and time settings on the TPOP.

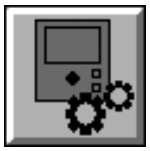

User Log On

1

Touch the SYSTEM SETUP button.



2

Touch the LOG ON button.

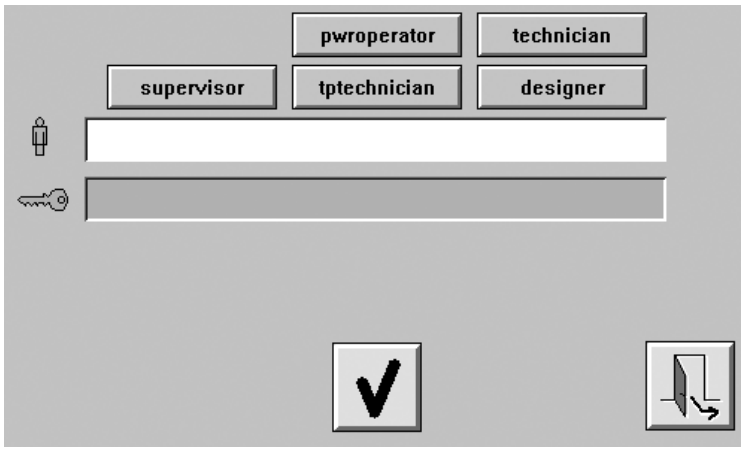

3

Touch the LOG ON button to display the LOG ON window.

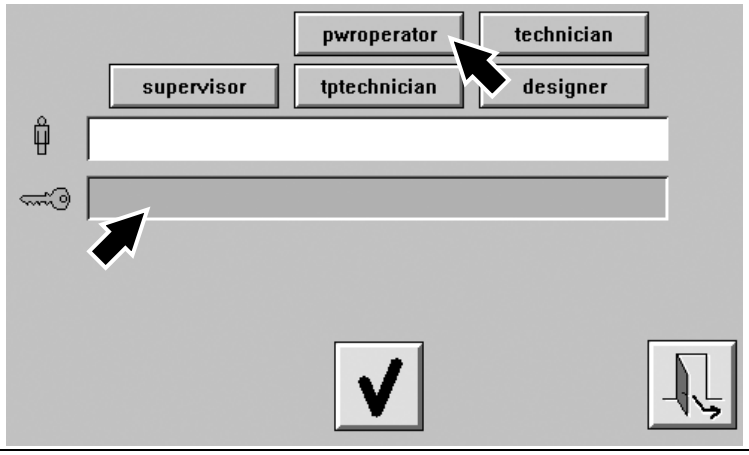

4

Touch the appropriate USER button corresponding to your user profile.

Touch the PASSWORD box to display the keyboard.



5

The KEYBOARD is displayed.

Type the password and touch the OK button.

Note! See the MM of the filling machine for the correct technician profile password.

Log on procedure is now complete and now allows access to restricted areas of the TPOP menus corresponding to your user profile. All changes to the system are recorded along with the user ID information.

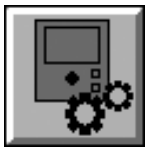

Language Setting

1

Touch the SYSTEM SETUP button.



2

Touch the LANGUAGE button.

Note! If the TPOP RESET button starts flashing, do not press it.



3

Touch the required LANGUAGE button.

Note! If the TPOP RESET button starts flashing, do not press it.





4

Touch the OK button and then the EXIT button.

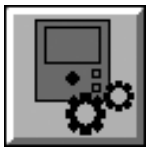

Time Setting

1

Note! The time setting procedure is only possible in STEP ZERO and with the PREPARATION and PRODUCTION phases closed.

Touch the SYSTEM SETUP button.



2

Touch the TIME button.

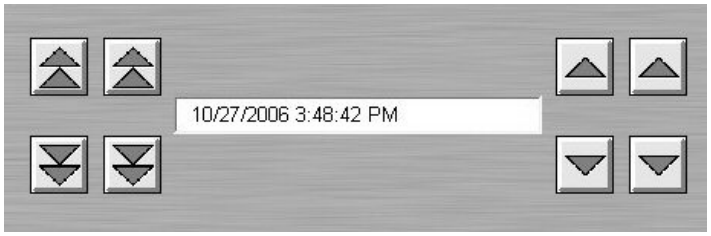

3

Touch the double ARROW buttons to set the hours and the single ARROW buttons to set the minutes.

It is only possible to change the time by a maximum of plus or minus three hours. The date cannot be changed.





4

Touch the OK button and then the EXIT button.

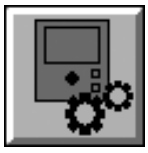

Production Shift Setting

1

Note! The Production shift setting can only be done in STEP ZERO and with the PREPARATION and PRODUCTION Phases closed.

Touch the SYSTEM SETUP button.



2

Touch the SHIFT button.

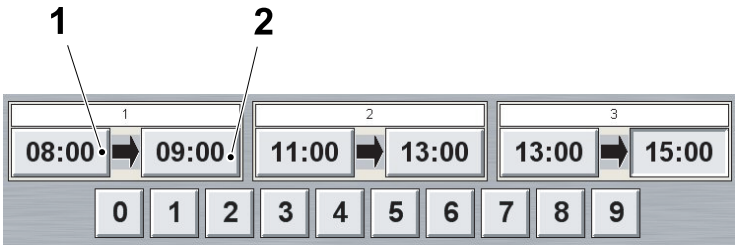

3

Input a start time (1) and an end time (2) for each shift as required.

The number may be modified when it is flashing.

Note! The shift time is preset into eight hour intervals. Do not overlap the shift times otherwise an error will be displayed.





4

Touch the OK button and then the EXIT button.

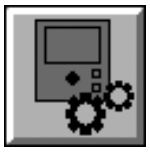

Last Package Point Selection

1

Note! The last package point selection setting can only be done in STEP ZERO and with the PREPARATION and PRODUCTION phases closed.

Touch the SYSTEM SETUP button.



2

Touch the LAST POINT PACKAGE SELECTION button.

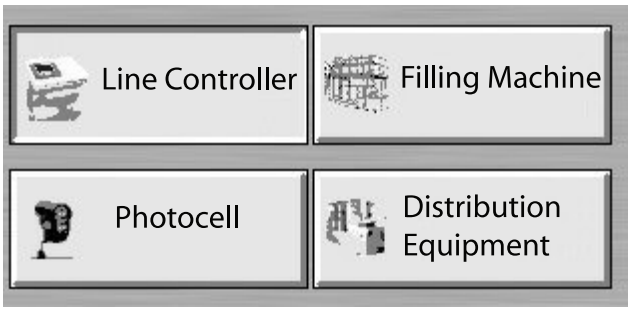

3

Select the source of the last package counting point in the line.

If selecting Distribution Equipment, select which Distribution Equipment in the list that is displayed.

Note! Select Distribution Equipment only if Line Controller is not available.

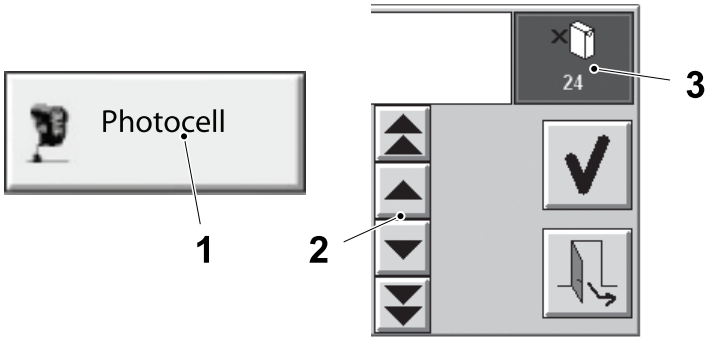

4

Note! If the photocell is selected as last point counter, follow the instruction below, otherwise go to item 5.

Touch the PHOTOCELL button (1).

Touch the ARROW buttons (2) to configure the number of packages contained in a cardboard.

The number of packages inputted will appear on the icon (3).

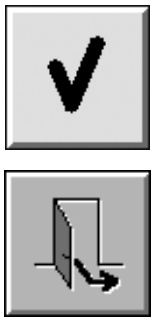

5

Touch the OK button and then the EXIT button.

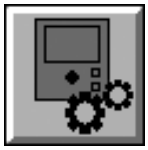

DE Overview

1

Note! The last package point selection setting can only be done in STEP ZERO and with the PREPARATION and PRODUCTION Phases closed.

Touch the SYSTEM SETUP button.



2

Touch the DE STATUS button.

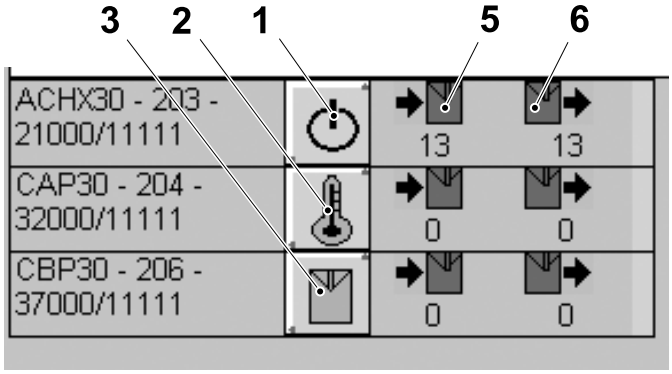

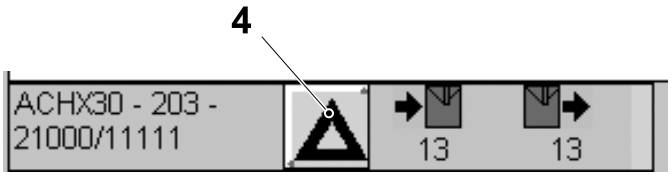

1 Machine OFF
2 Preparation
3 Production
4 Alarm
5 Package in
6 Package out

3

This window shows the status of all the DE within the same line and its status.

The icons (1), (2) and (3) represent the status of the DE equipment.

The icon (4) shows that there is an acknowledged alarm on that specific equipment.

The icons (5) and (6) display the number of package in and out from the DE equipment since the last restart.

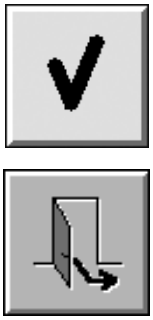

4

Touch the OK button and then the EXIT button.

2.9 Recorder Navigation

Note! Valid for recorder Jumo Logoscreen *es* TP No. 90459-4033.

The recorder displays and records the machines critical parameters during the filling machine production and CIP phases. Touching the buttons on the recorder front panel allows the operator to navigate through the recorders menu system.

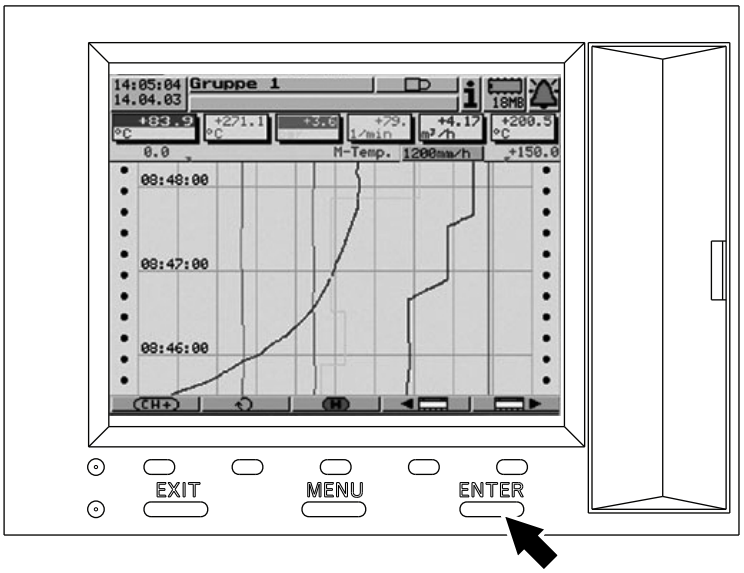

Login

1

Press the MENU button.

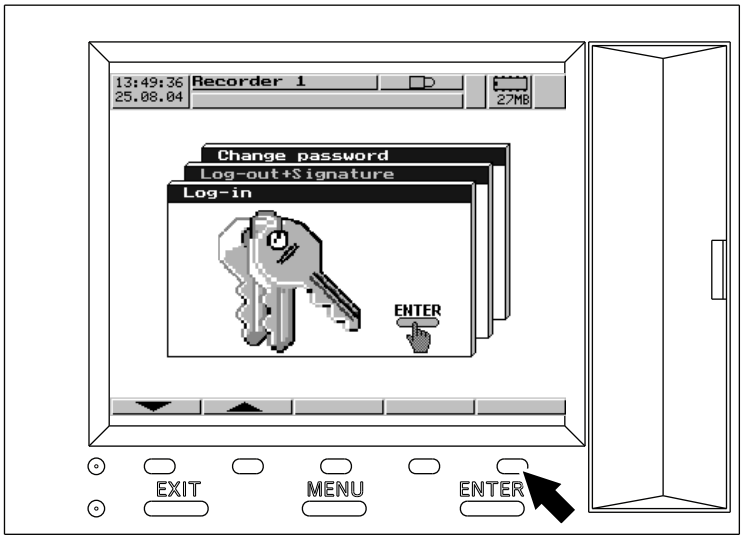

2

Press the LOGIN AND LOG OFF button.

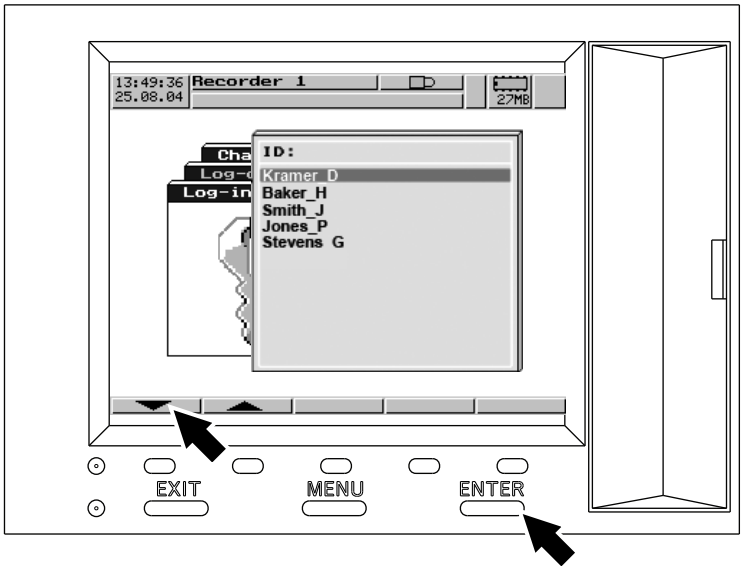

3

The USER ID list is displayed.

Use the ARROW buttons to select either the user ID USER or if the user ID list contains the names of individual users, use the ARROW buttons to select the appropriate user ID name from the list.

Press the ENTER button.

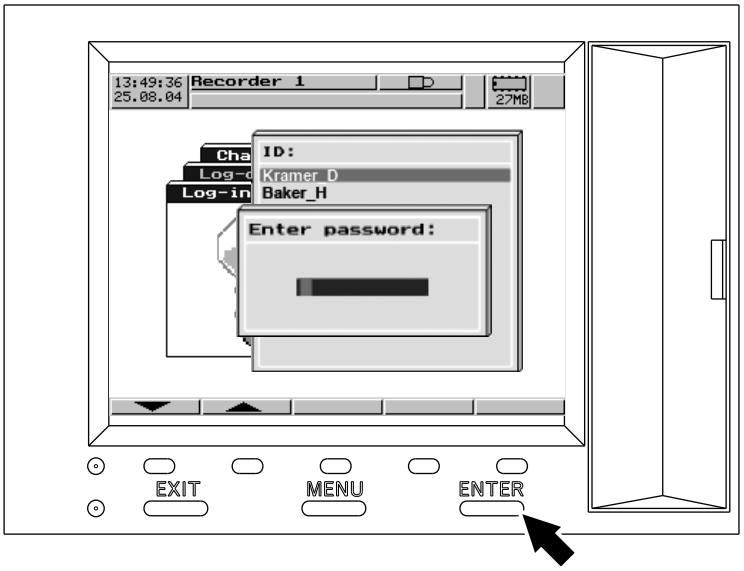

4

The PASSWORD window is displayed.

To login to the recorder with the user ID USER, enter the password "0"

To login to the recorder with an individual user ID enter the appropriate password.

Press the ENTER button.

The user is now logged into the recorder.

Note! If this is the first time an individual user ID and password has been input, the recorder will require that the password is changed. Follow the prompts on the recorder screen to change the password.

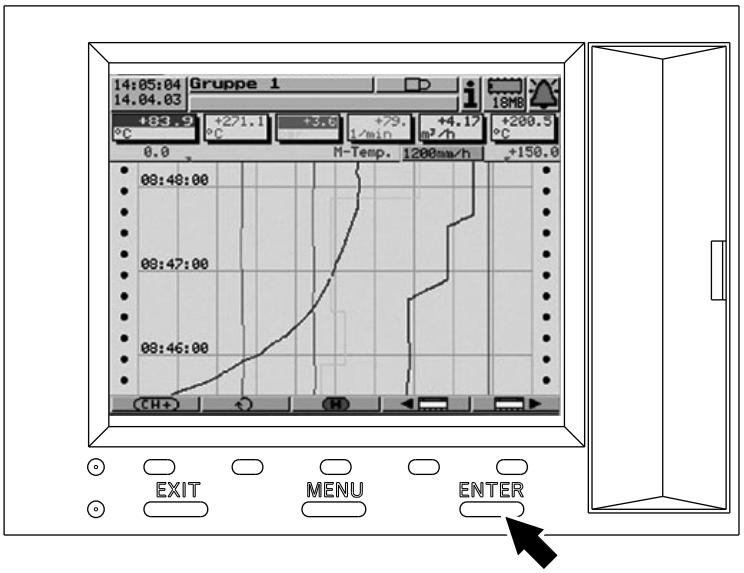

Log Off

1

Press the MENU button.

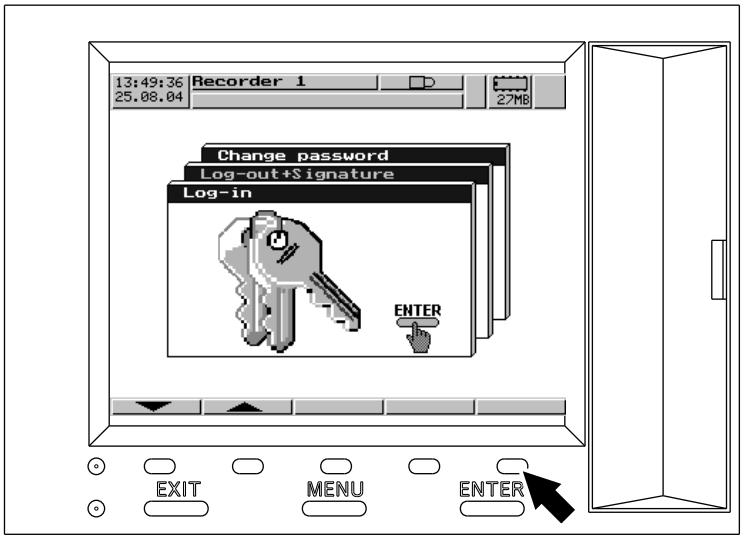

2

Press the LOGIN AND LOG OFF button.

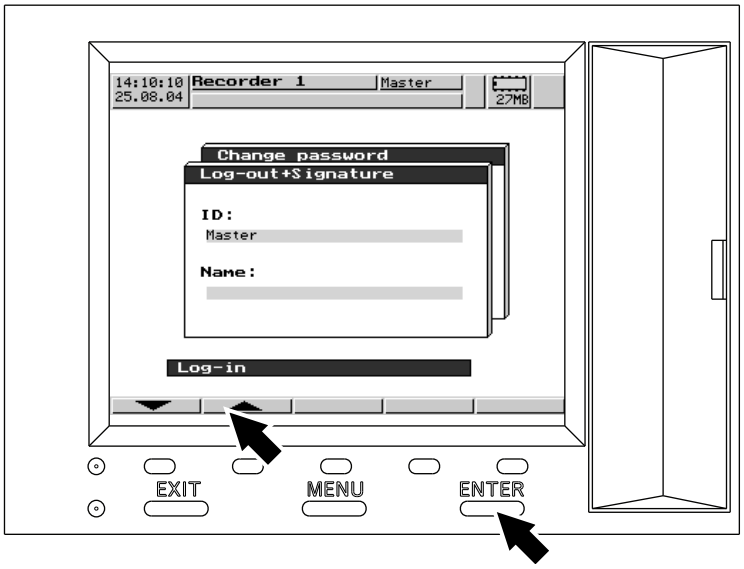

3

Use the ARROW buttons to select the LOG OUT window.

Press the ENTER button.

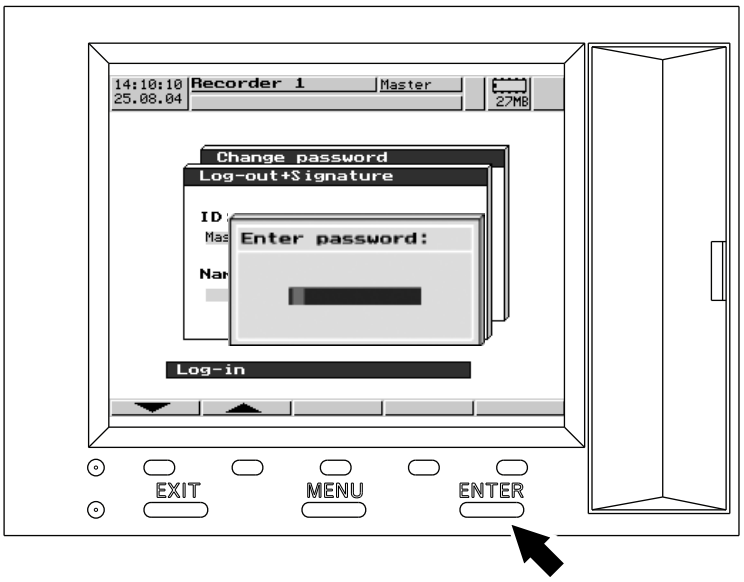

4

The PASSWORD window is displayed.

To log off the recorder with the user ID USER, enter the password "0"

To log off the recorder with an individual user ID enter the appropriate password.

Press the ENTER button.

A window appears requesting confirmation of the log off.

Press the ENTER button.

The user is now logged off from the recorder.

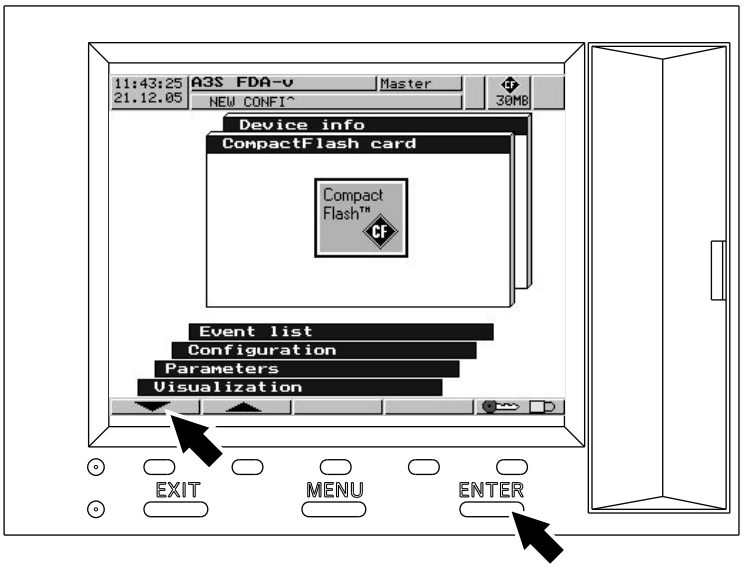

Change CompactFlash Card

1

Note! The CompactFlash card window is only available to users with the appropriate user ID access rights.

Login to the recorder, see Login on page 2-151.

Press the ENTER button.

Use the ARROW buttons to select the COMPACTFLASH CARD window.

Press the ENTER button.

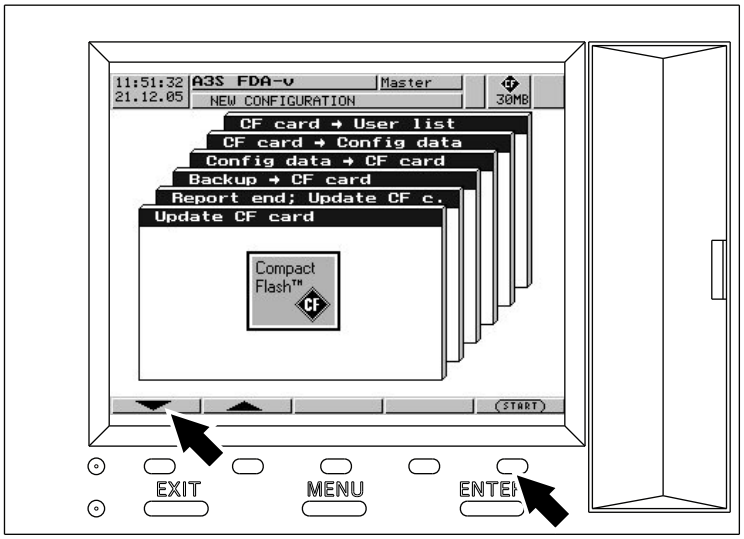

2

Use the ARROW buttons to select either:

- UPDATE CF CARD window to download any unsaved PRODUCTION and cip data to the Compactflash card.

or:

- REPORT END + UPDATE CF CARD window to conclude any ongoing batch records and to download any unsaved PRODUCTION and cip data to the Compactflash card.

Press the start button.

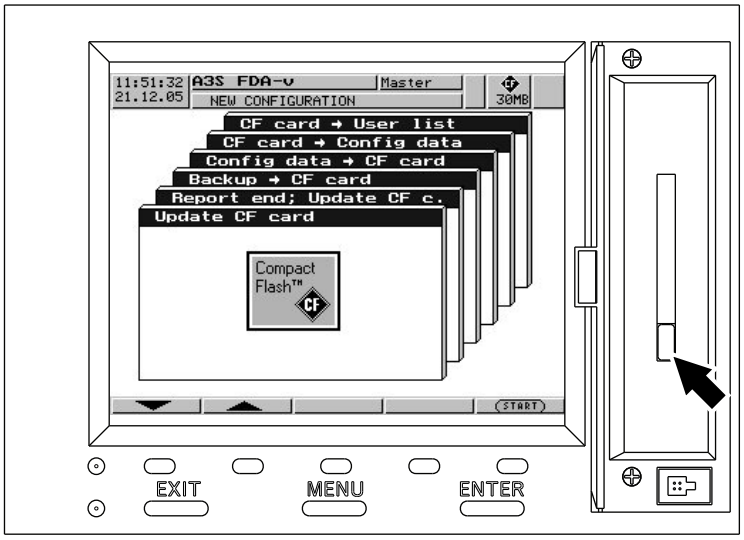

3

When the operation is complete, open the door and eject the CompactFlash card.

Insert the new CompactFlash card and close the door.

Log off the recorder, see Log Off on page 2-153.

Give the CompactFlash Memory Card to the person responsible for evaluation.

2.10 Recorder Navigation

Note! Valid for recorder Jumo Logoscreen *fd* TP No. 90606-4690.

The recorder displays and records the machines critical parameters during the filling machine production and CIP phases. The control knob on the recorder front panel allows the operator to navigate through the recorders menu system.

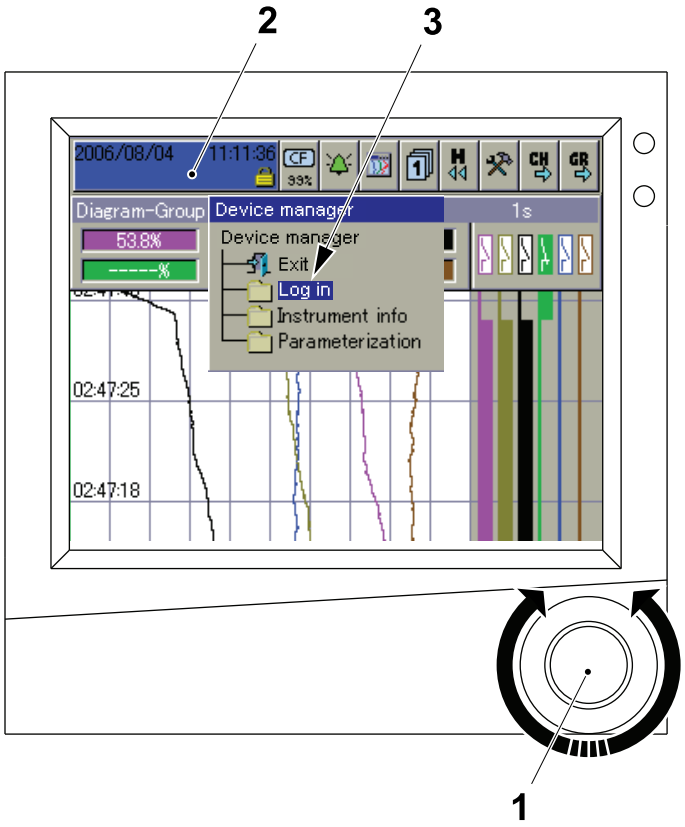

Login

1

Rotate the CONTROL KNOB (1) to access the `DEVICE MANAGER` (2) in the header and press the CONTROL KNOB (1).

Select `LOG IN` (3) by rotating the CONTROL KNOB (1) and press it.

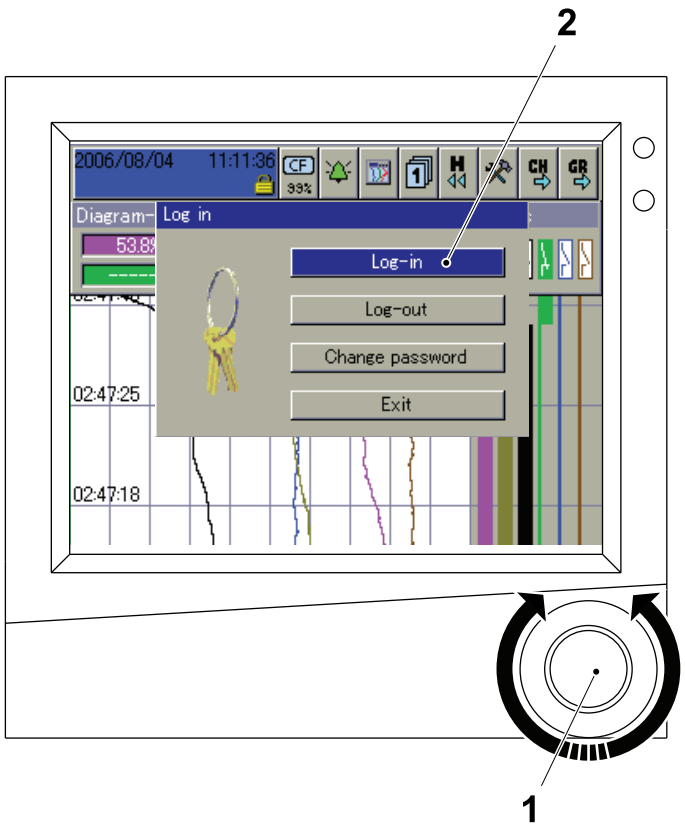

2

Rotate the CONTROL KNOB (1) to select the LOG-IN button (2) and press the CONTROL KNOB (1).

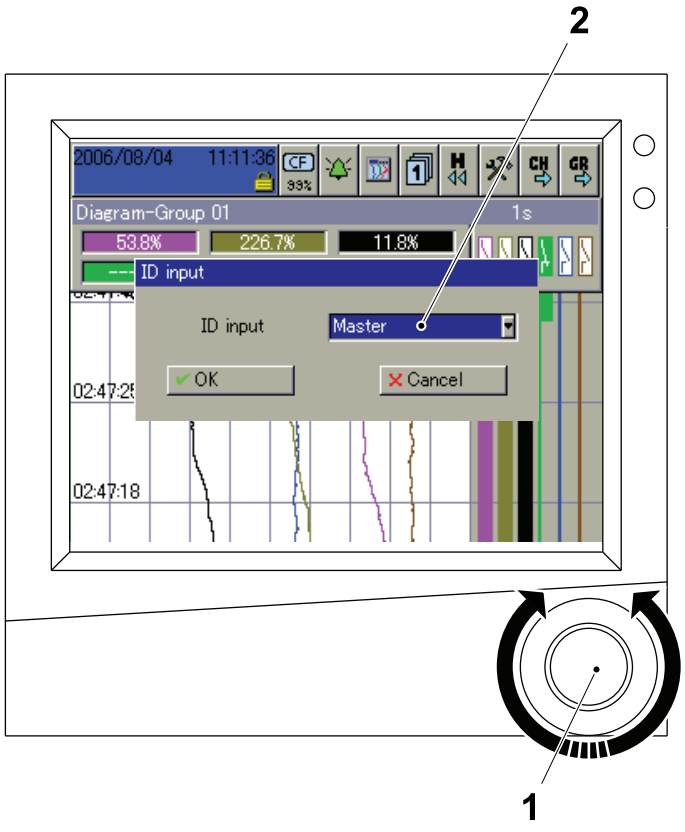

3

Rotate the CONTROL KNOB (1) to select the user ID field (2) and press the CONTROL KNOB (1).

Press the ENTER button.

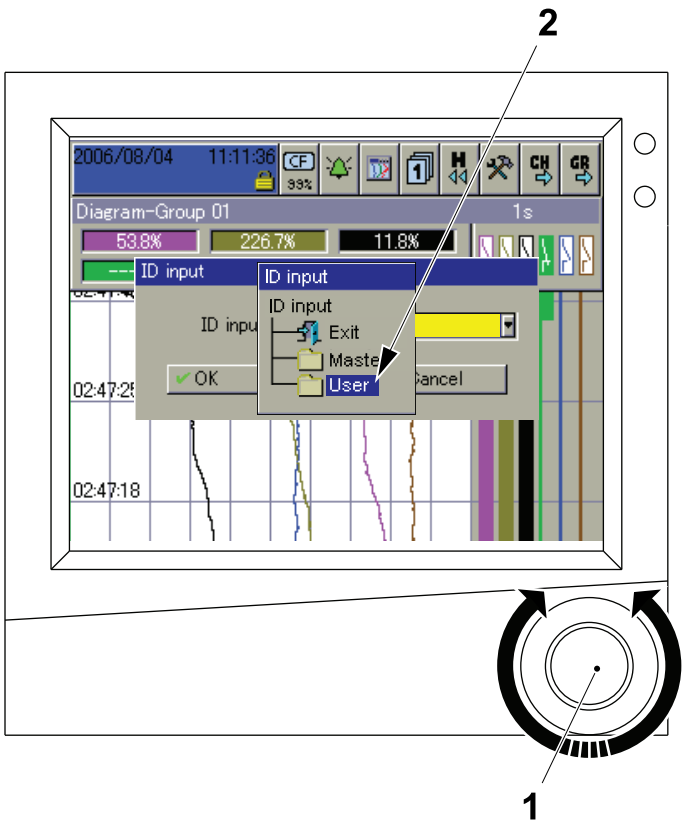

4

The ID INPUT list is displayed.

Rotate the CONTROL KNOB (1) to select either the user ID USER or if the user ID list contains the names of individual users, use the CONTROL KNOB (1) to select the appropriate user ID name from the list.

Press the CONTROL KNOB (1).

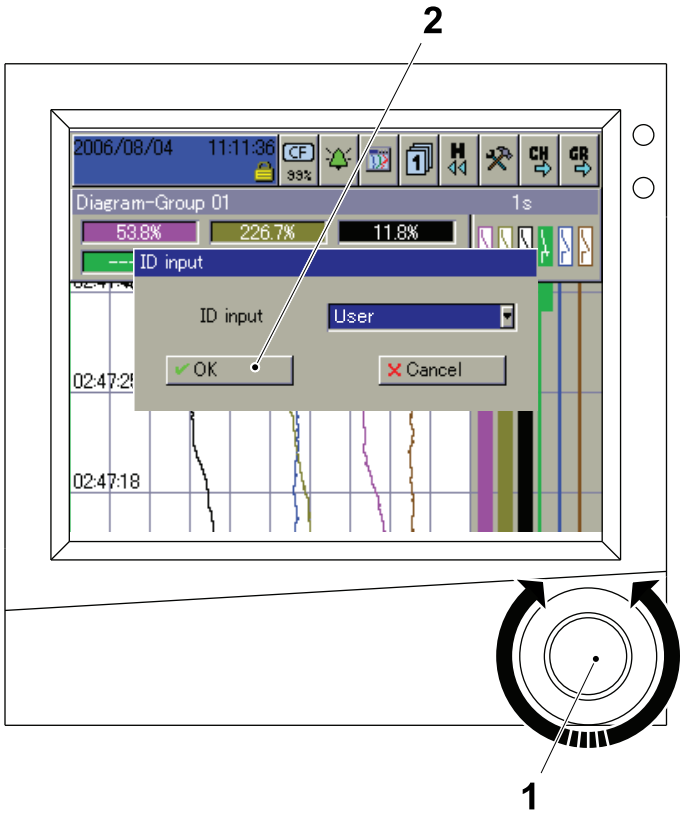

5

Rotate the CONTROL KNOB (1) to select the OK button(2) and press the CONTROL KNOB (1).

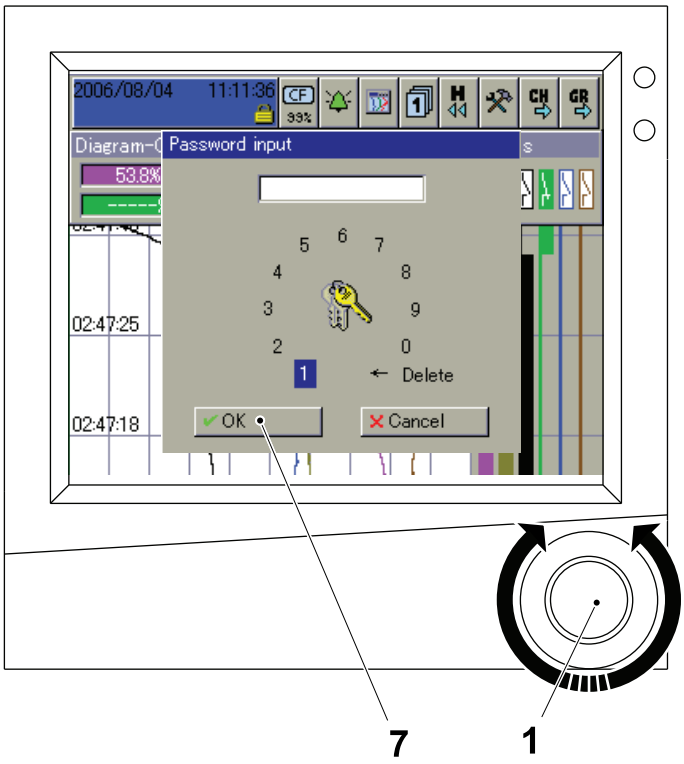

6

The PASSWORD INPUT window is displayed.

To login to the recorder with the user ID USER, rotate the CONTROL KNOB (1) to select the password "0" and press the CONTROL KNOB (1).

To login to the recorder with an individual user ID enter the appropriate password.

Rotate the CONTROL KNOB (1) to select the OK button (2) and press the CONTROL KNOB (1).

The user is now logged into the recorder.

Note! If this is the first time an individual user ID and password has been input, the recorder will require that the password is changed. Follow the prompts on the recorder screen to change the password.

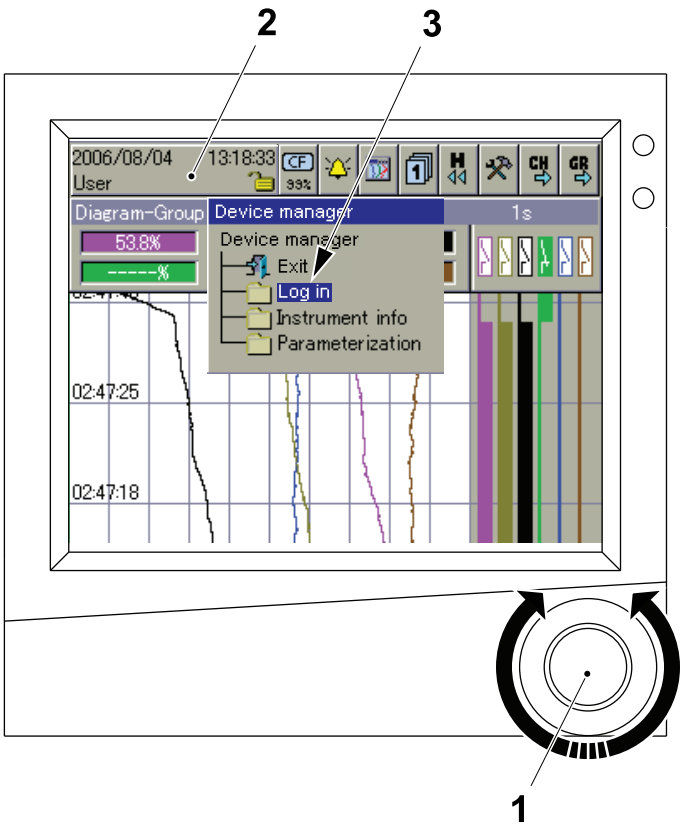

Log Out

1

Rotate the CONTROL KNOB (1) to access the DEVICE MANAGER (2) in the header and press the CONTROL KNOB (1).

Select LOG IN (3) by rotating the CONTROL KNOB (1) and press it.

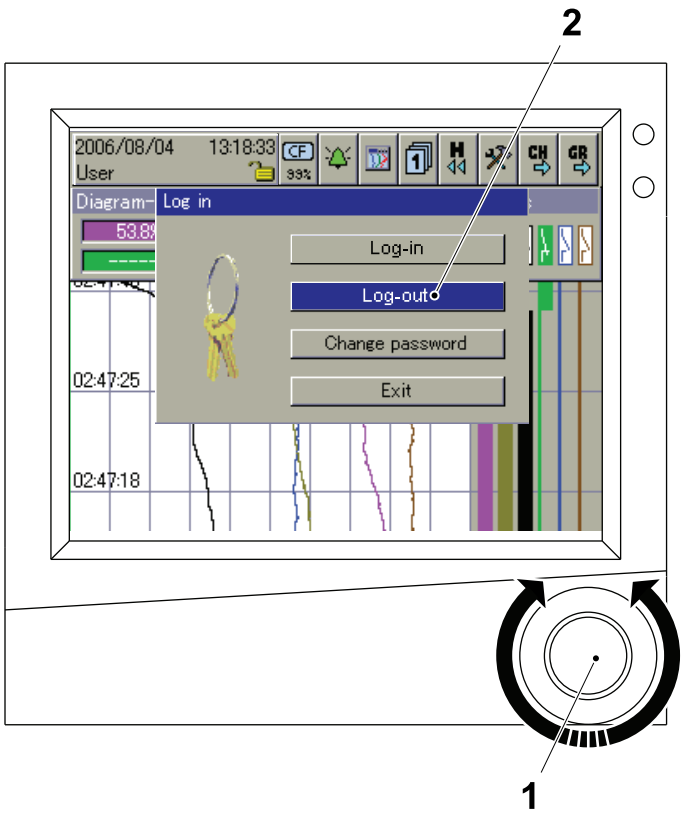

2

Rotate the CONTROL KNOB (1) to select the LOG-OUT button (2) and press the CONTROL KNOB (1).

The user is logged out from the recorder.

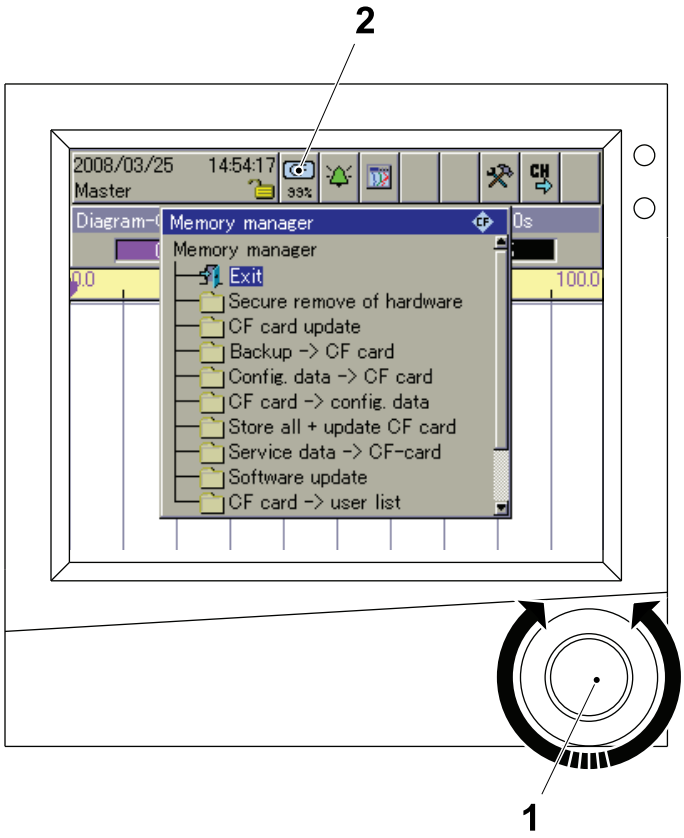

Change CompactFlash Card

1

Note! The CompactFlash card window is only available to users with the appropriate user ID access rights.

Login to the recorder, see Login on page 2-157.

Rotate the CONTROL KNOB (1) to access the MEMORY MANAGER (2) in the header and press the CONTROL KNOB (1).

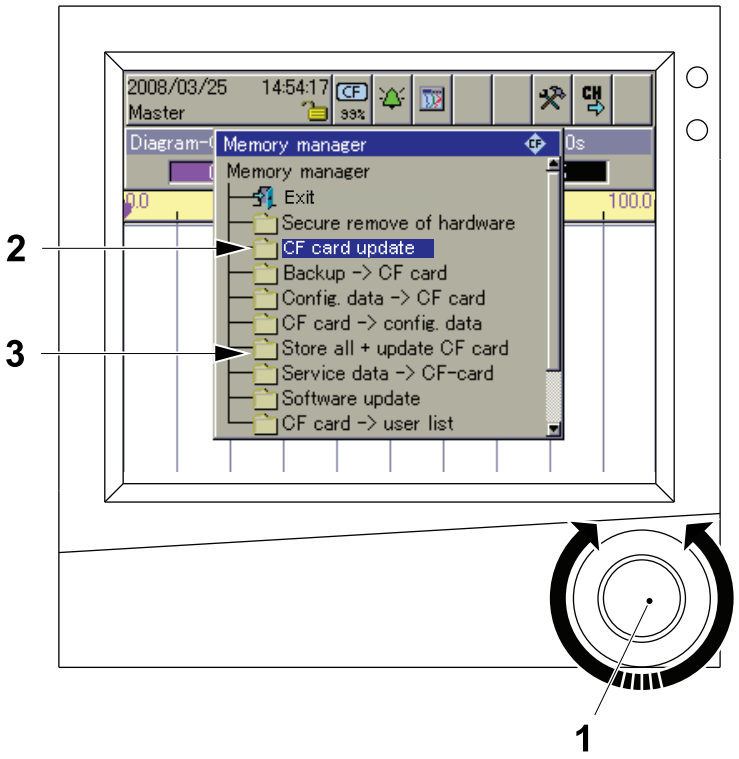

2

Rotate the CONTROL KNOB (1) to select either:

- `CF CARD UPDATE` (2) to download any unsaved PRODUCTION and CIP data to the CompactFlash card

or

- `STORE ALL + UPDATE CF CARD` (3) to conclude any ongoing batch records and to download any unsaved PRODUCTION and CIP data to the CompactFlash card.

Press the CONTROL KNOB (1).

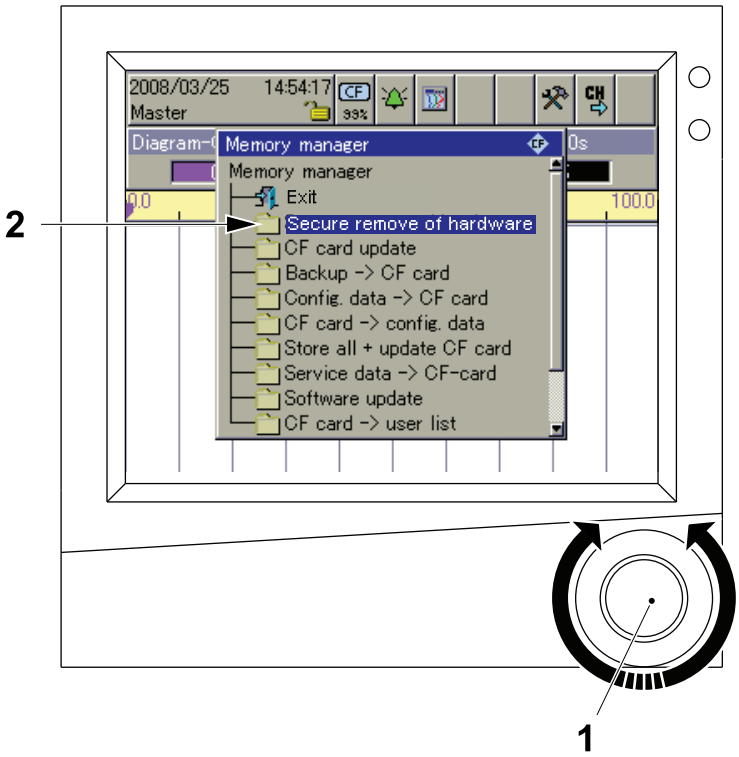

3

When the operation is complete, press the CONTROL KNOB (1) on `SECURE REMOVE OF HARDWARE` (2).

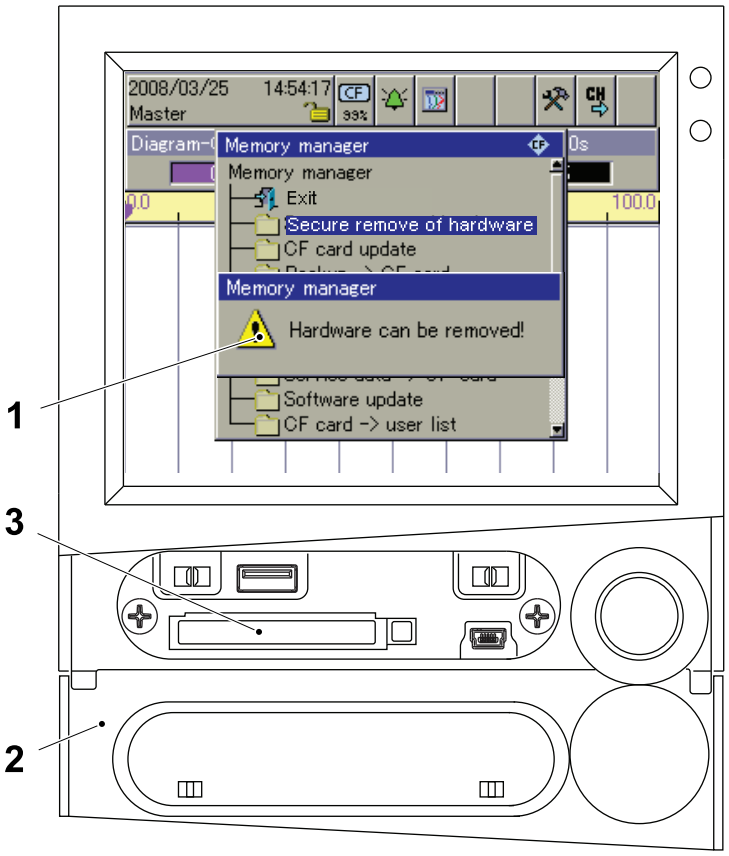

4

When the message `HARDWARE CAN BE REMOVED` (1) appears, open the cover (2) and eject the CompactFlash card (3).

Insert the new CompactFlash card and close the cover.

Log off the recorder, see Log Out on page 2-160.

Give the CompactFlash Memory Card to the person responsible for evaluation.

This page intentionally left blank

3 Preparation

Description

This chapter describes how to prepare the machine for PRODUCTION after Care and Cleaning has been performed.

Description 3-2

3.1 Preparing After Weekly Care..... 3-5

3.1.1 Loading the Packaging Material Reel 3-8

3.1.2 Threading Inside ASU Compartment..... 3-14

3.1.3 Threading Inside the Strip Applicator Compartment 3-17

Paper Magazine with Handle 3-18

Paper Magazine with Cylinder..... 3-19

3.1.4 Threading up to the Hydrogen Peroxide Bath..... 3-26

3.1.5 Threading Through the Hydrogen Peroxide Bath..... 3-28

3.2 Preparing after Daily Care 3-32

3.2.1 Flow Rates 3-34

3.2.2 Recorder 3-35

3.2.3 Hydrogen Peroxide 3-36

3.2.4 Superstructure 3-37

3.2.5 Production with HVA or HVA Bypassed..... 3-39

3.2.6 Change Production from HVA Bypassed to HVA 3-40

3.2.7 Change Production from HVA to HVA Bypassed..... 3-43

3.2.8 Filling Pipe 3-46

Production with HVA..... 3-50

Production with HVA Bypassed 3-51

3.2.9 Heat Sterilization 3-58

3.2.10 Strip Check 3-60

This page intentionally left blank

3.1 Preparing After Weekly Care

Note! If only Daily Care has been performed, start with 3.2 Preparing after Daily Care.

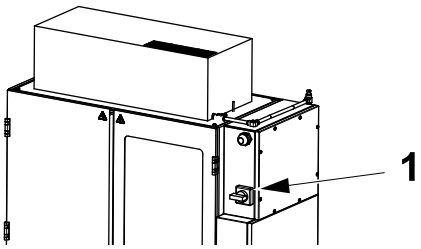

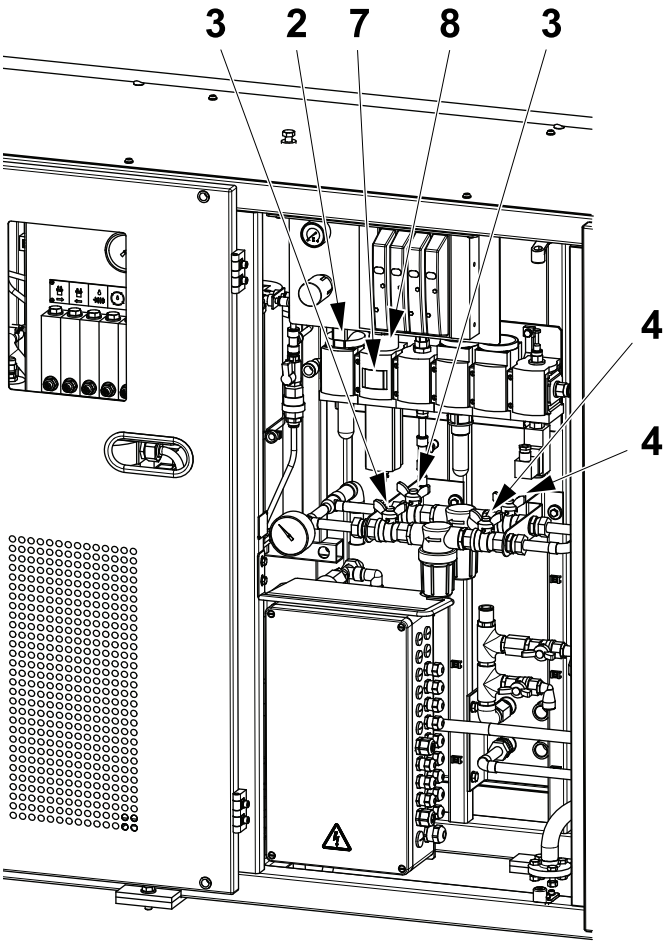

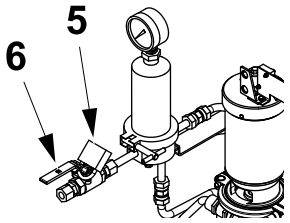

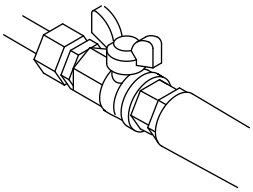

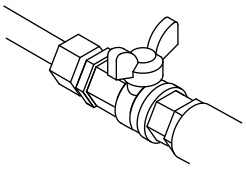

Cooling water ON

Cooling water OFF

1

If the machine has been shut down:

- Turn ON the main power switch (1)
- Turn ON the air supply (2)
- Turn ON the cooling water supply (3) or (4), depending on which filter is in use
- Release the pad lock (5) and turn ON the steam (6).
- Lock the steam (6) in open position with the pad lock (5).

Check that the pressure gauge (7) shows 5.5 to 6 bar. To adjust the pressure, lift and rotate the valve (8).



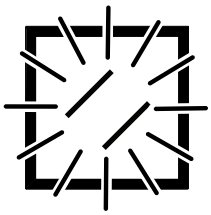

2

Make sure all covers and doors on the machine are closed and reset any alarms on the TPOP display.

If the RESET buttons on the machine body or ASU doors are ON, press the RESET buttons to reset the safety system, see 8.2 Security Stop.

If an alarm reappears, take the appropriate action or call a technician.



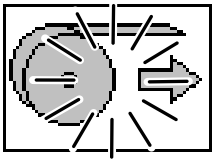

3

Press the PROGRAM UP button.

The PREPARATION symbol lights.

3.1.1 Loading the Packaging Material Reel

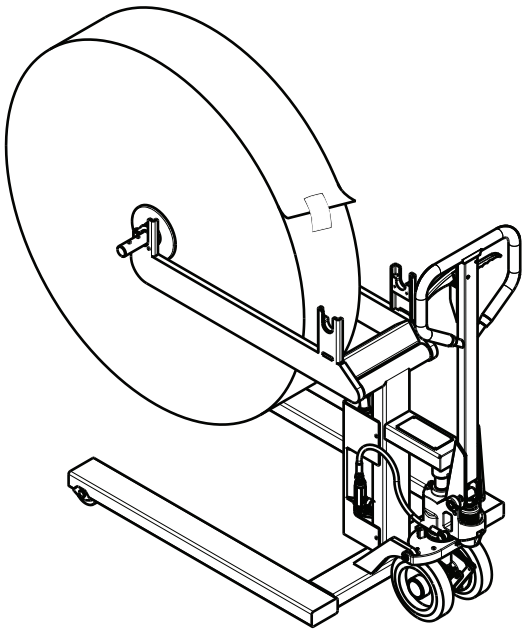

1

Prepare the packaging material reel and place it on the trolley, see Reel Handling on page 6-16.

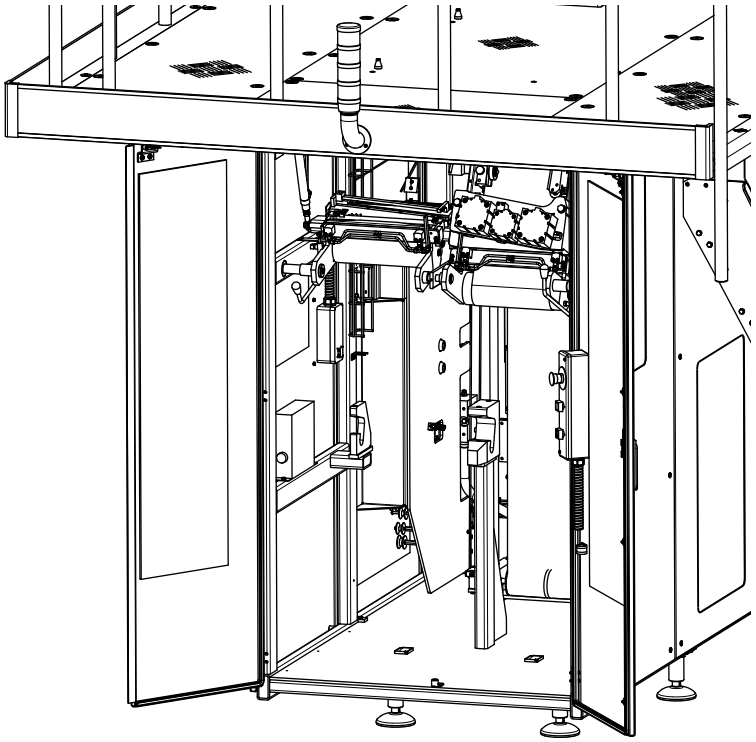

2

Open the ASU doors.

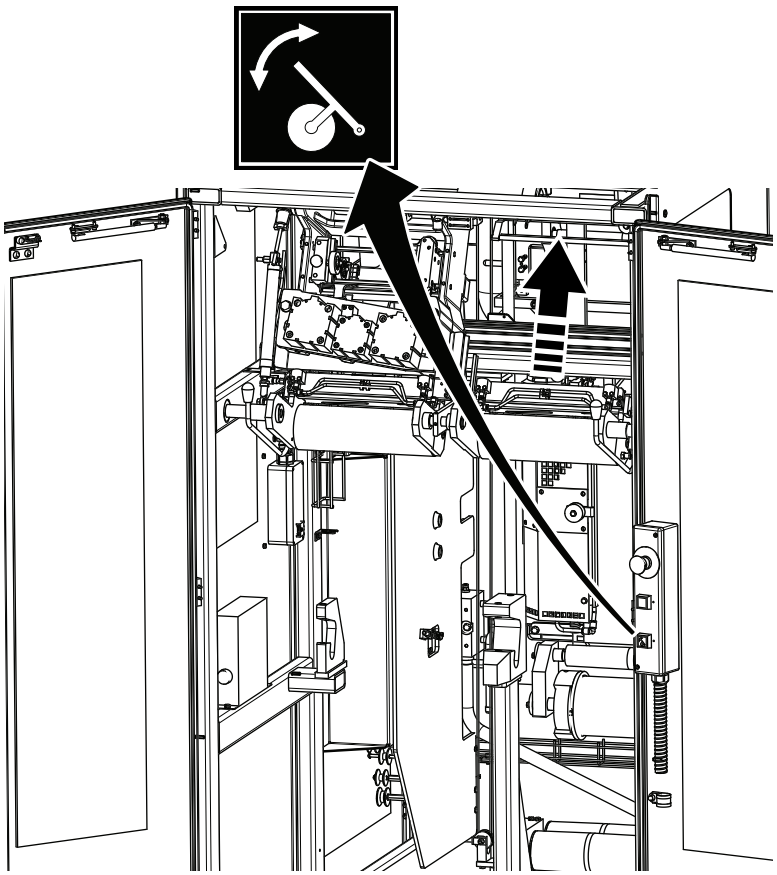

3

WARNING

Moving parts can crush and cut.

Press the PACKAGING MATERIAL HOLDER button.

The packaging material holder next to the splice unit lifts to allow enough space to insert the new reel.

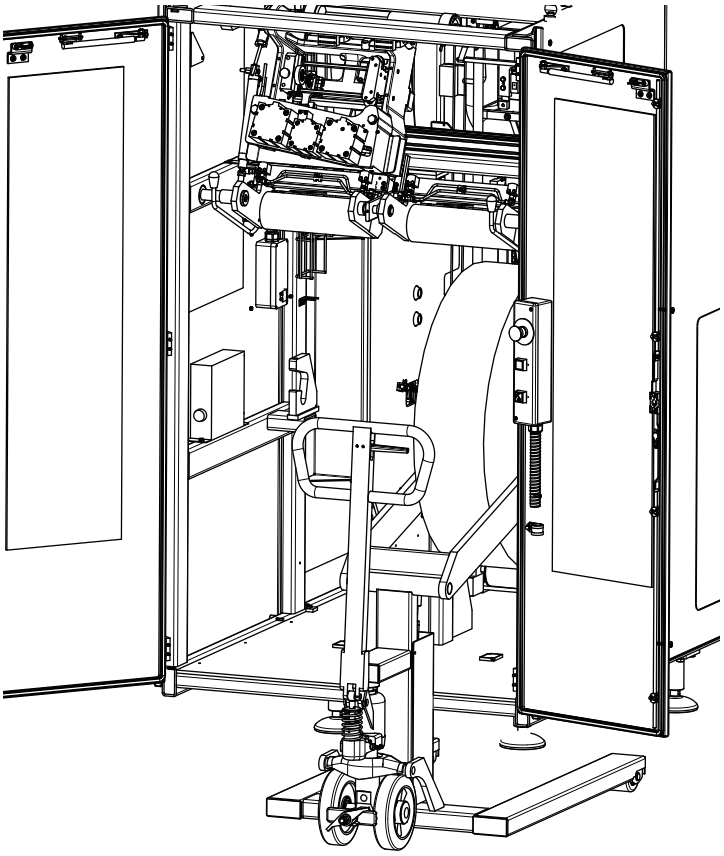

4

Load the reel of packaging material into the ASU.

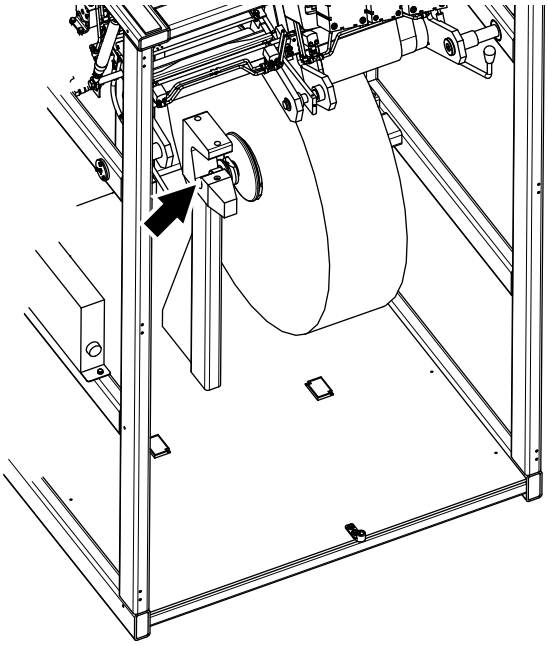

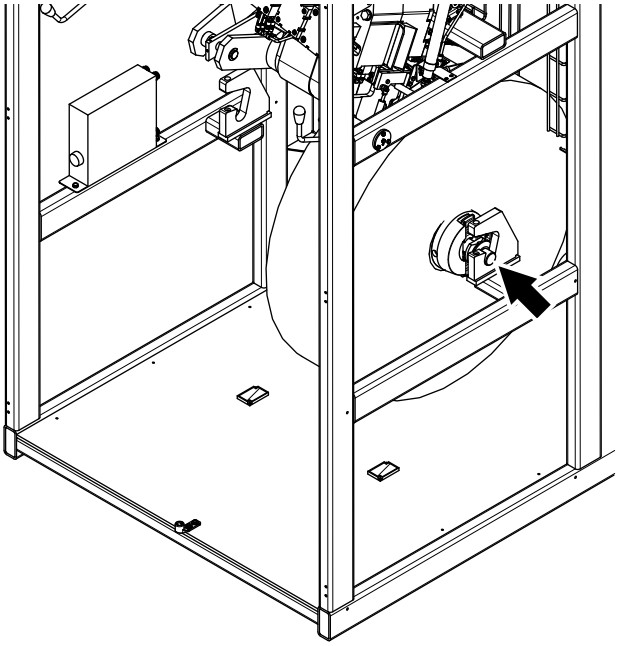

5

Load the reel of packaging material on the carriage.

Make sure the packaging material reel is aligned correctly on the bobbin holders.

Cut approximately two turns of packaging material from the reel.

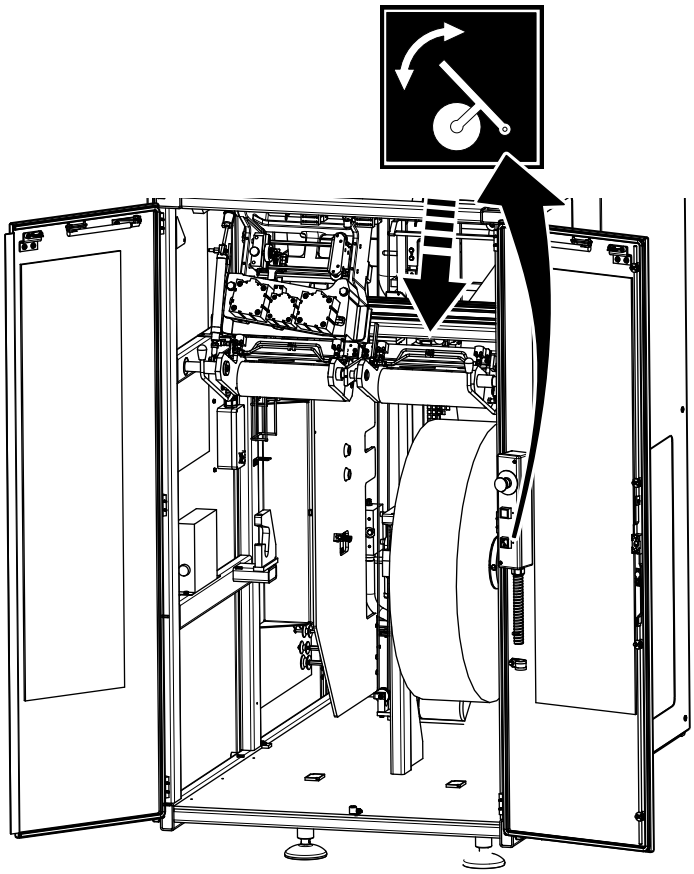

6

WARNING

Moving parts can crush and cut.

Press the PACKAGING MATERIAL HOLDER button.

The packaging material holder above the reel lowers.



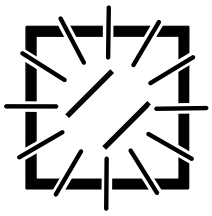

7

Close the ASU doors.

Make sure all covers and doors on the machine are closed and reset any alarms TPOP display.

If the RESET buttons on the machine body or ASU doors are ON, press the RESET buttons to reset the safety system, see 8.2 Security Stop.

If an alarm reappears, take the appropriate action or call a technician.

8

Move the splicing unit over the reel using the TPOP, see Move Splicing Head on page 2-65.

3.1.2 Threading Inside ASU Compartment

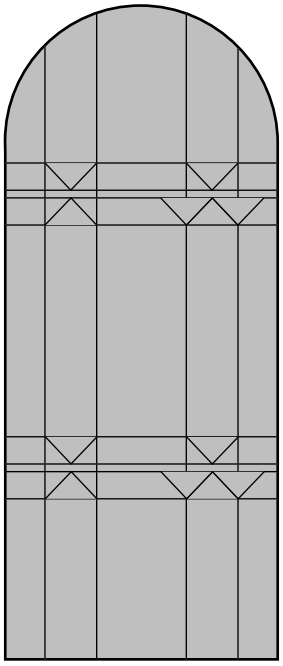

1

CAUTION
Hygiene.
Before handling clean parts, disinfect your hands/gloves with cleaning compound code **H**.

Cut the end of the packaging material as shown, avoiding crease lines on the tip.

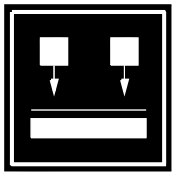

2

Press the MATERIAL LOCKING button for at least 5 seconds to release the material holder allowing the packaging material through the cutting table.

Note! After one minute the material holder locks automatically.

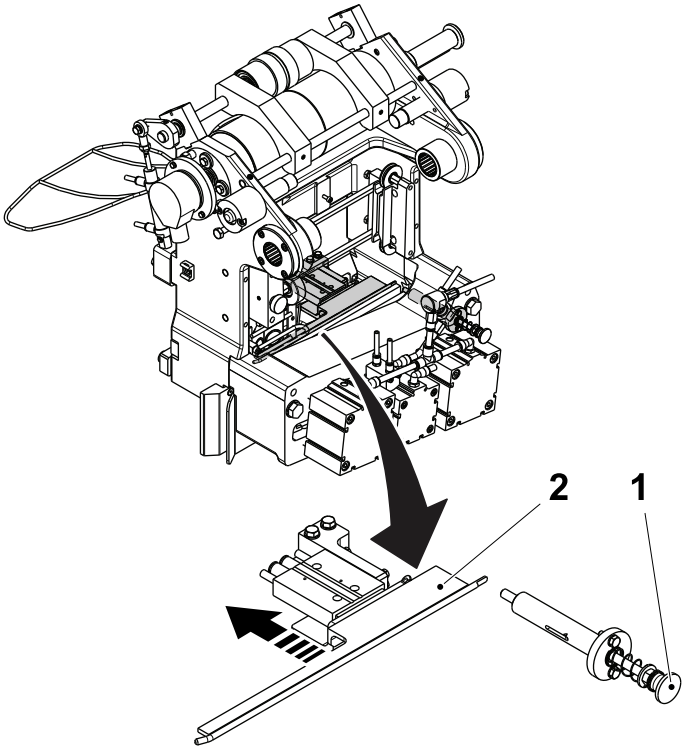

3

Press the knob (1) to move the web remover bracket (2) to its retracted position.

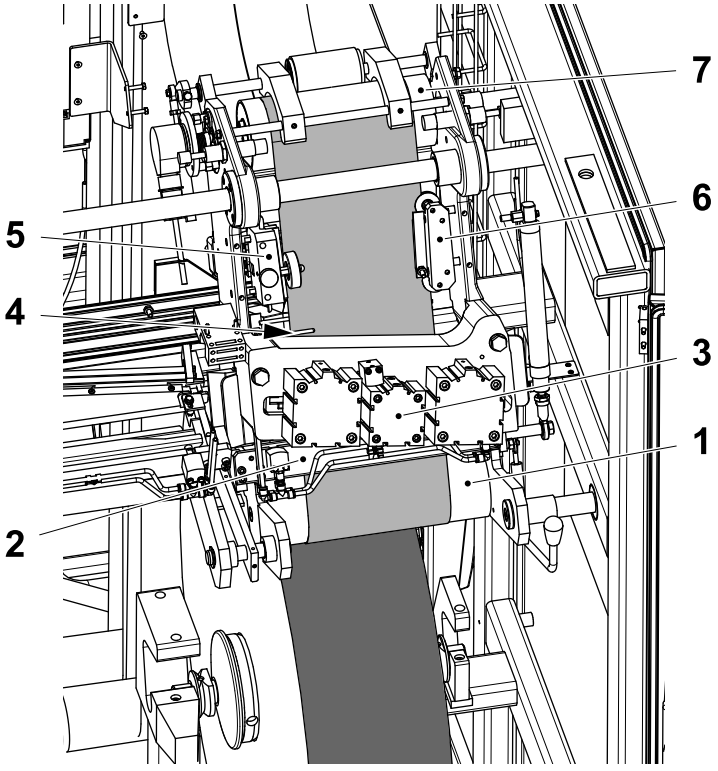

4

Thread the packaging material:

- around the bending roller (1)
- through the packaging material holder (2)
- through the splice unit (3)
- through the fingers (4)
- through the web guides (5) and (6)
- over the driven bending roller (7).

Feed the packaging material between the driven bending roller (7) and the counter pressure roller.



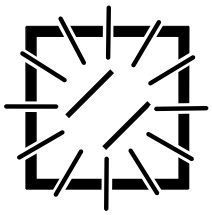

5

Close the ASU doors.

Make sure all covers and doors on the machine are closed and reset any alarms TPOP display.

If the RESET buttons on the machine body or ASU doors are ON, press the RESET buttons to reset the safety system, see 8.2 Security Stop.

The packaging material will be fed automatically into the ASU loop.

Allow the packaging material to be fed for approximately 30 seconds and then open the ASU doors to stop feeding the packaging material.

If an alarm reappears, take the appropriate action or call a technician.

3.1.3 Threading Inside the Strip Applicator Compartment

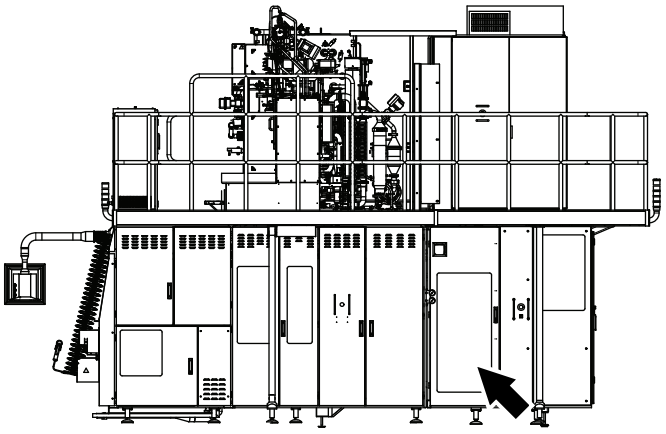

1

Open the door to the Strip Applicator unit.

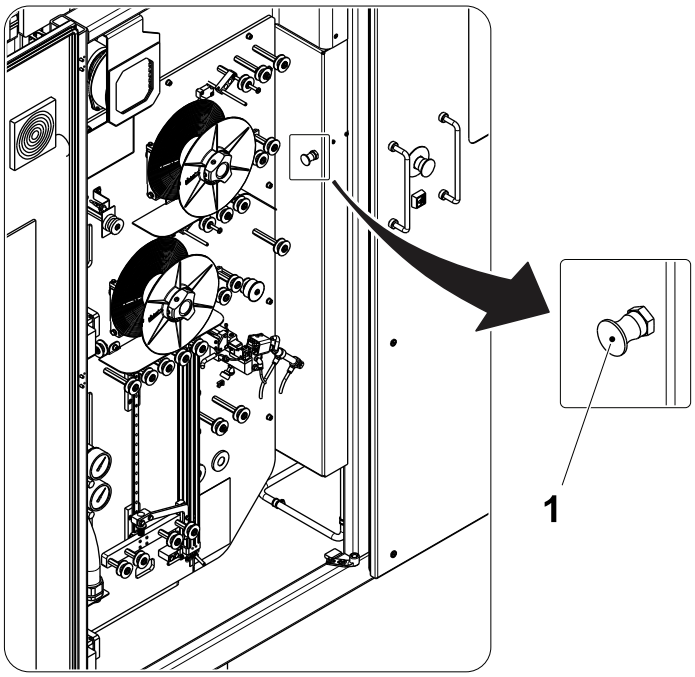

2

Pull the knob (1) and open the strip magazine frame.

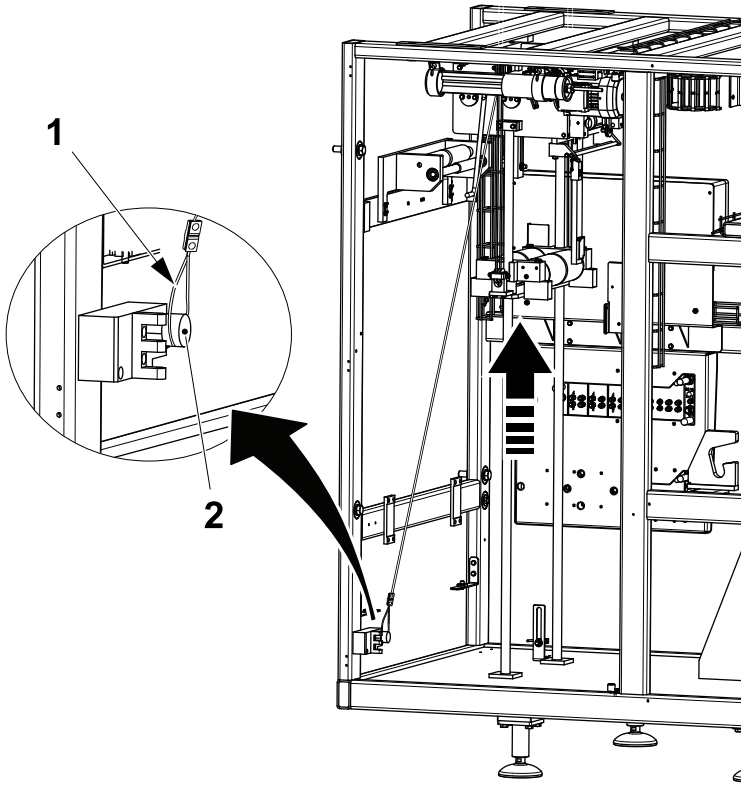

3

WARNING

Risk of personal injury

Make sure that the ropes are securely fastened.

Lift the magazine rollers by means of the rope and pulley and attach the hook (1) to the damper (2) to secure magazine rollers in the upper position.

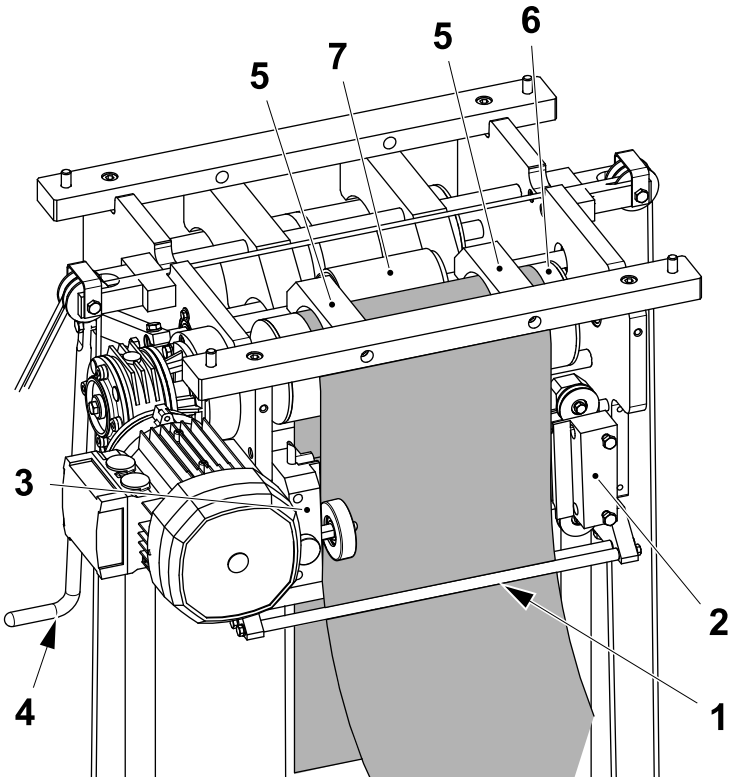

4

Paper Magazine with Handle

Feed the packaging material between the two shafts (1) and through the web guides (2) and (3).

Lift the handle (4) and feed the packaging material under the brackets (5), between the bending roller (6) and the counter pressure roller (7).

Release the handle (4).

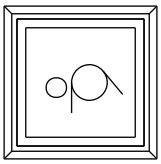

5

Paper Magazine with Cylinder

Press the PRESSURE ROLLER button to release the counter pressure roller.

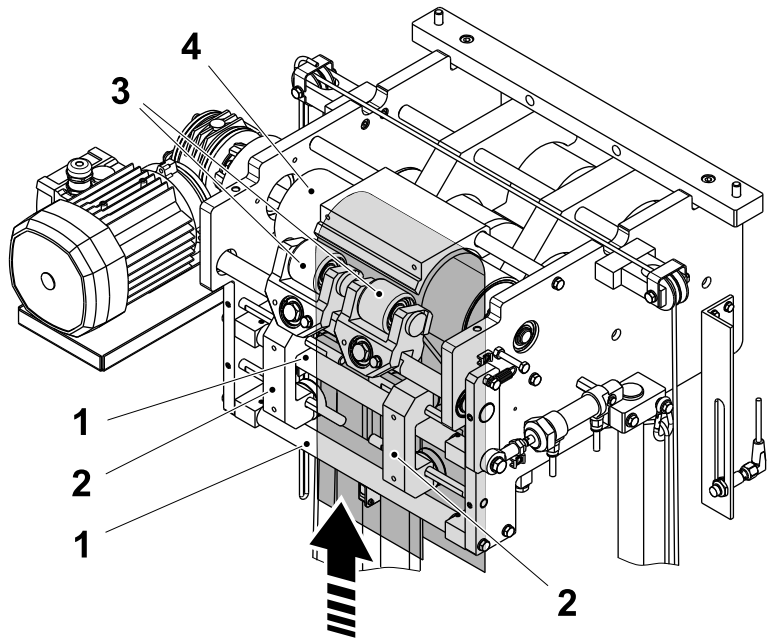

6

Feed the packaging material:

- between the rollers (1)
- through the web guides (2)
- between the counter rollers (3) and the drive roller (4).

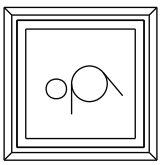

7

Press the PRESSURE ROLLER button to close the counter pressure roller.

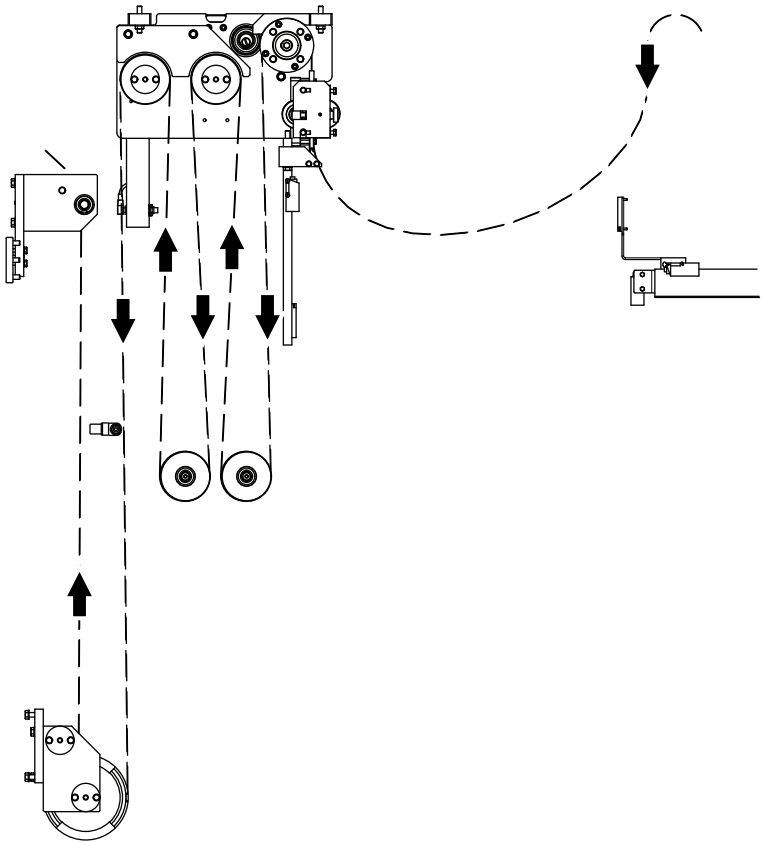

8

Thread the packaging material around the magazine rollers as indicated in the illustration.

If more packaging material is needed, close the strip applicator frame and reset the alarm on the TPOP.

Close the ASU doors.

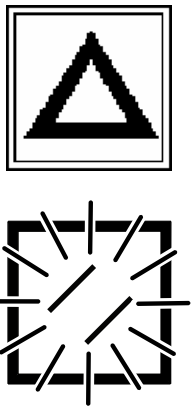

9

Close the ASU doors.

Make sure all covers and doors on the machine are closed and reset any alarms TPOP display.

If the RESET buttons on the machine body or ASU doors are ON, press the RESET buttons to reset the safety system, see 8.2 Security Stop.

The packaging material will be fed automatically into the ASU loop. Allow the packaging material to be fed for approximately 10 seconds and then open the ASU doors to stop feeding the packaging material.

If an alarm reappears, take the appropriate action or call a technician.

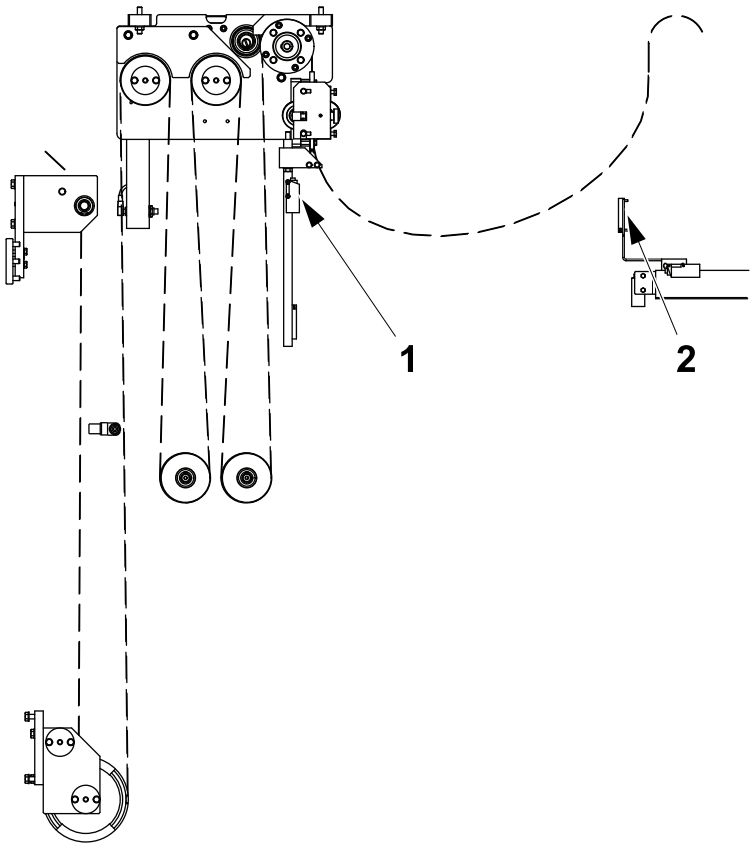

10

Make sure the loop of the packaging material covers the photocell (1) and the reflector (2).

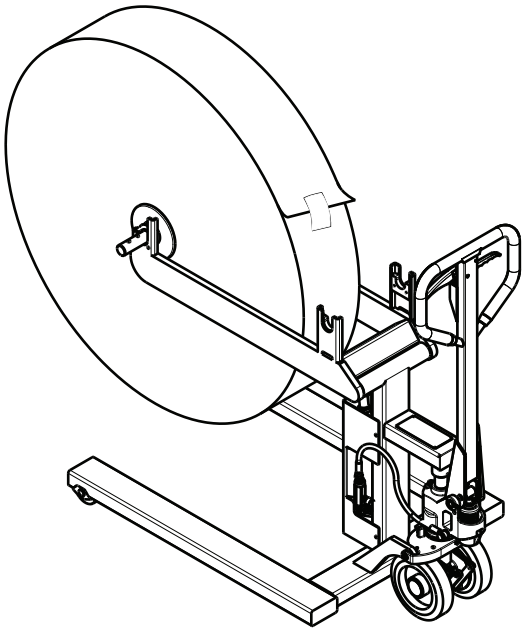

11

Load the second reel of packaging material into the ASU and prepare it for splicing, see 6.2 Packaging Material Supplies.

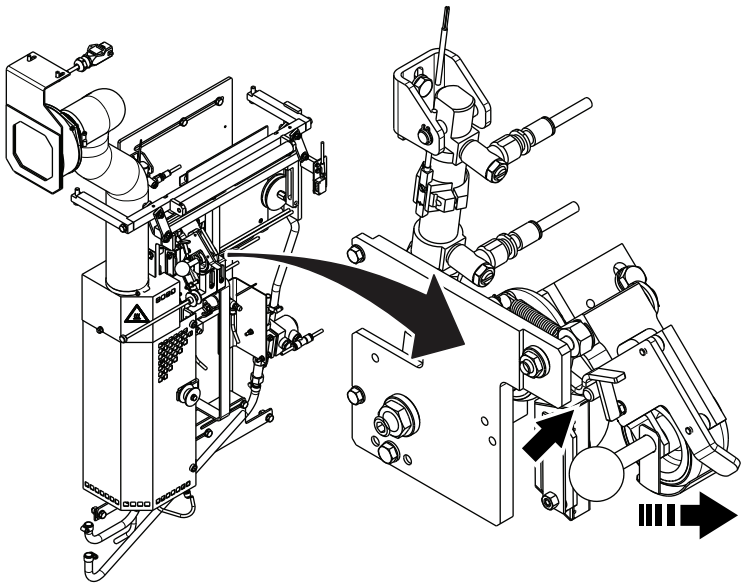

12

Pull the pressure roller away from its operating position and lock it in this position.

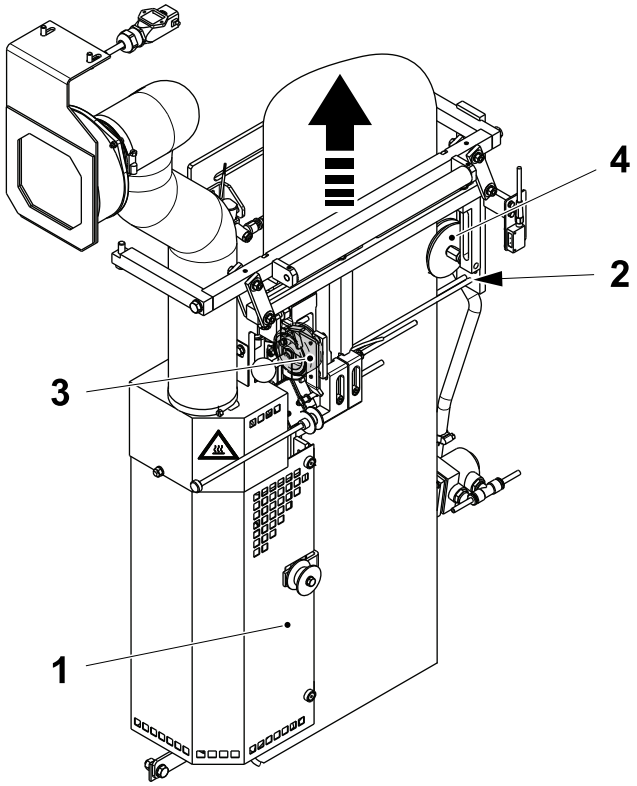

13

Feed the packaging material:

- through the SA (1)
- through the edge guide wheel (2)
- between the pressure rollers (3)
- between the shaft (4).

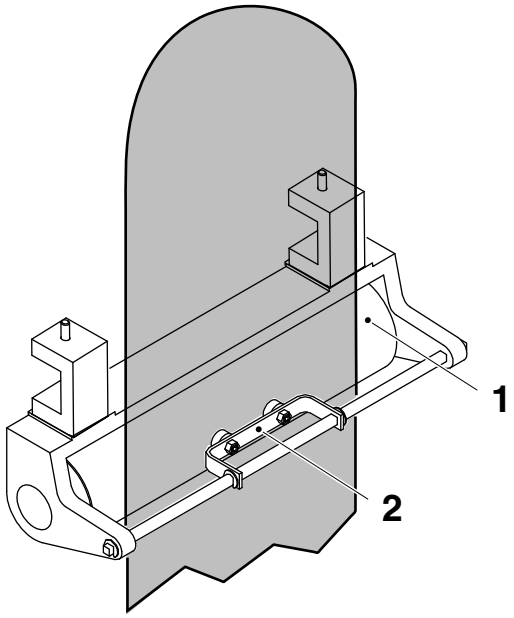

14

Thread approximately 1 meter of packaging material up through the platform floor and passed the bending roller (1).

Lock it in place by means of the material lock (2).

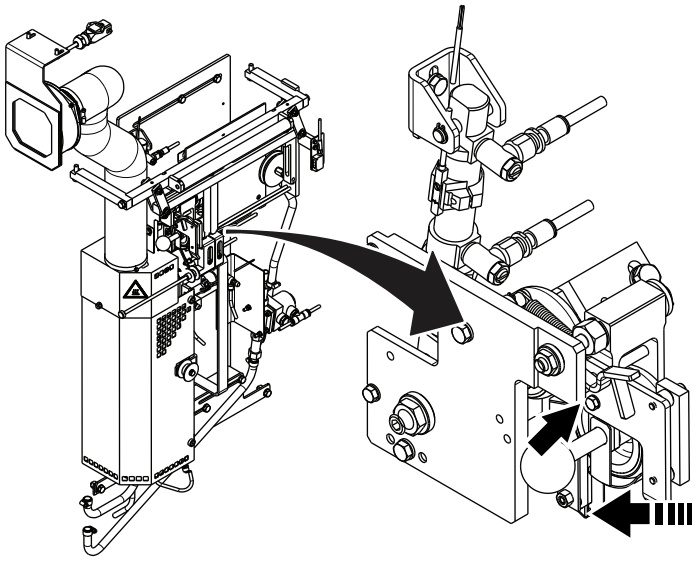

15

Release the catch to return the pressure roller to its operating position.

Note! The pressure roller will be damaged if left in the operating position and the machine is not used for a long time.

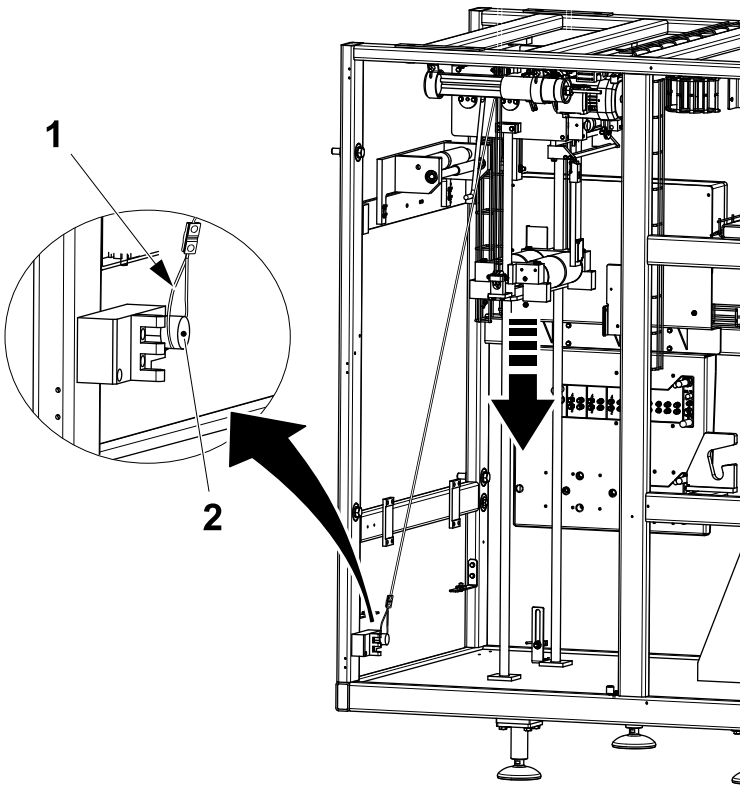

16

CAUTION

Risk of personal injury.

Make sure the rollers of the ASU magazine are in the lower position if it is necessary to cut the packaging material web. Failure to do so will result in the rollers dropping suddenly if the ropes are disengaged from the locking devices.

Make sure that the packaging material is correctly positioned over the rollers.

Release the rope (1) and slowly lower the magazine rollers.

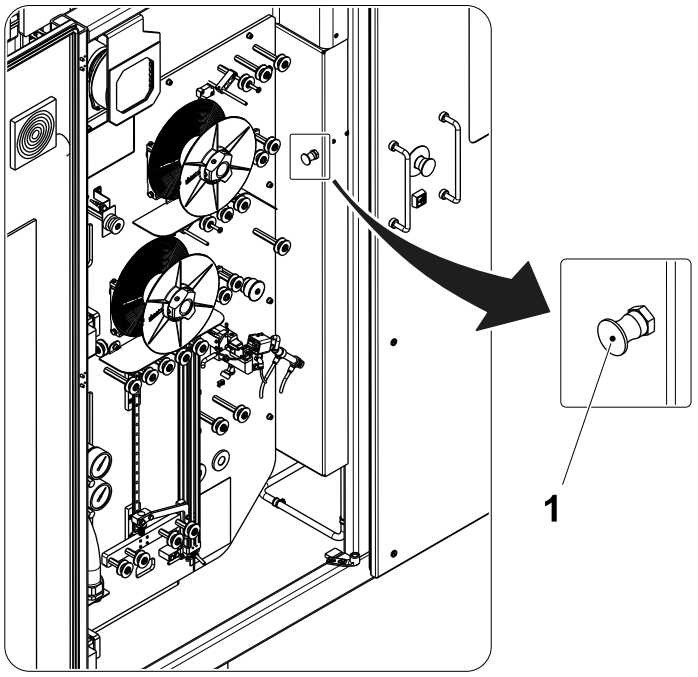

17

Close the strip magazine frame and make sure that the knob (1) locks into place.



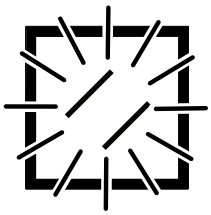

18

Close the ASU doors.

If the RESET buttons on the machine body or ASU doors are ON, press the RESET buttons to reset the safety system, see 8.2 Security Stop.

If an alarm reappears, take the appropriate action or call a technician.

3.1.4 Threading up to the Hydrogen Peroxide Bath

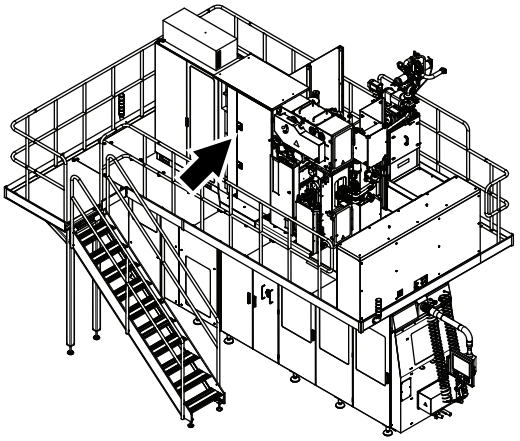

1

Open the cover (arrow) on the superstructure.

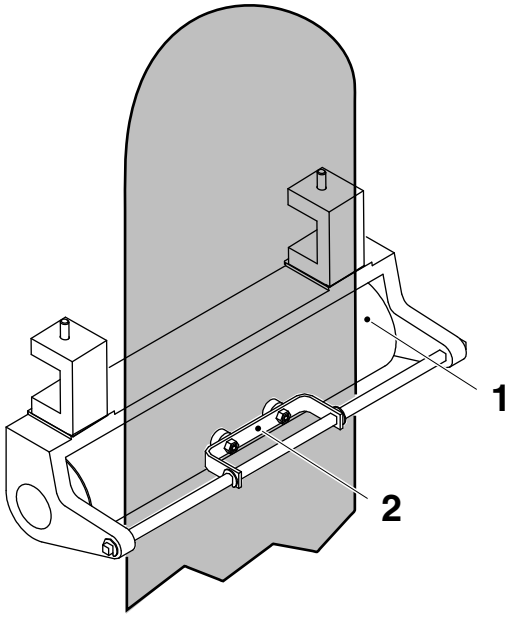

2

Thread approximately 7 meters of packaging material up through the platform floor and passed the bending roller (1).

Lock it in place by means of the material lock (2).

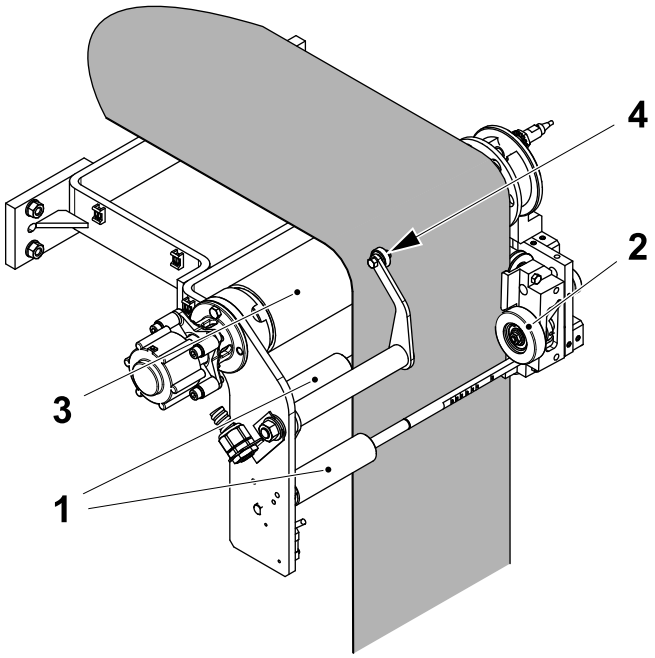

3

Release the material lock and pull up the packaging material.

Feed all the packaging material previously pulled between the rollers (1), between the rollers (2), and between the roller (3) and the counter roller (4).

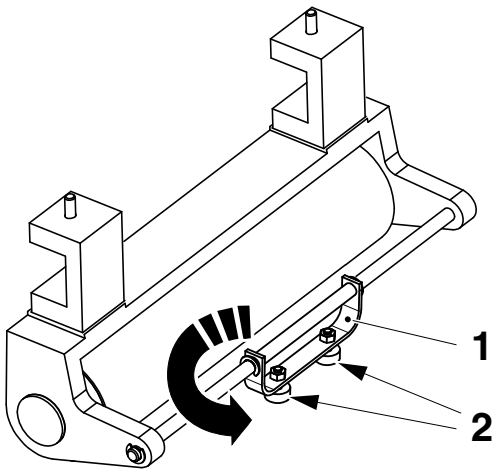

4

Swing up the lock (1) to make sure the packaging material does not touch the dampers (2) while running.

3.1.5 Threading Through the Hydrogen Peroxide Bath

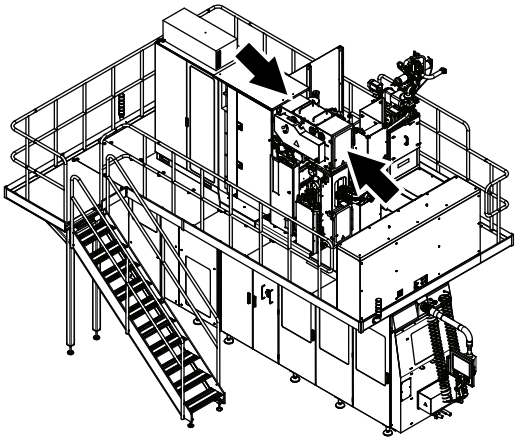

1

WARNING
Hydrogen Peroxide
Follow the safety precautions.

Open the top front aseptic chamber door and the top rear aseptic chamber door.

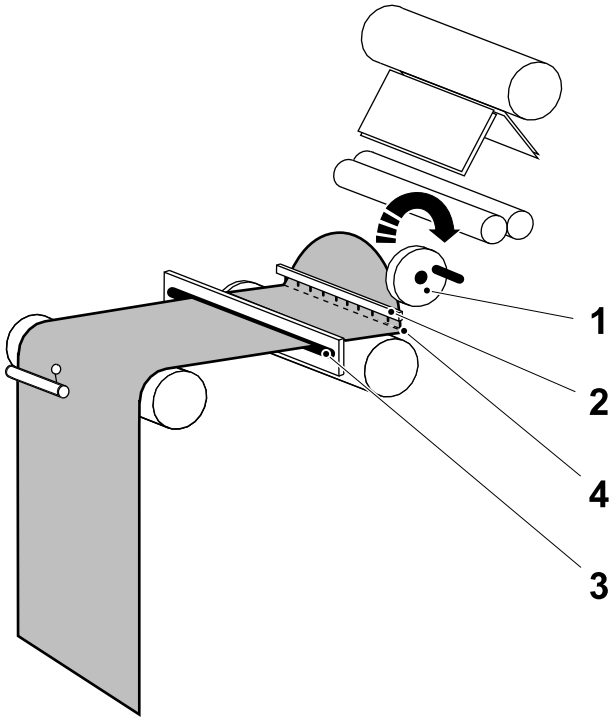

2

WARNING
The pins on the carrier are sharp.
Wear protective gloves.

Slowly crank the handle (1) clockwise until the carrier (2) on the chain stops.

Feed the packaging material through the rubber slot (3).

Fold the packaging material along a crease line (4).

Press the pins of the carrier (2) through the packaging material, then wrap the end of the packaging material around the carrier (2).

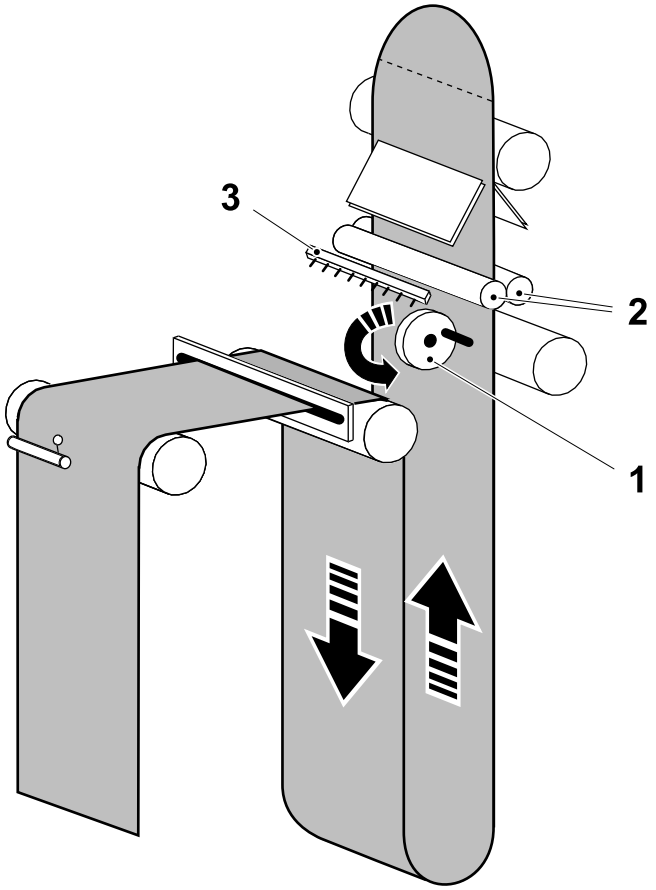

3

Crank the handle (1) anti-clockwise to pull the packaging material through the peroxide bath and up through the calendar rollers (2).

Remove the packaging material from the carrier (3).

Crank the handle (1) clockwise until the carrier (3) is safely out of the way of the packaging material.

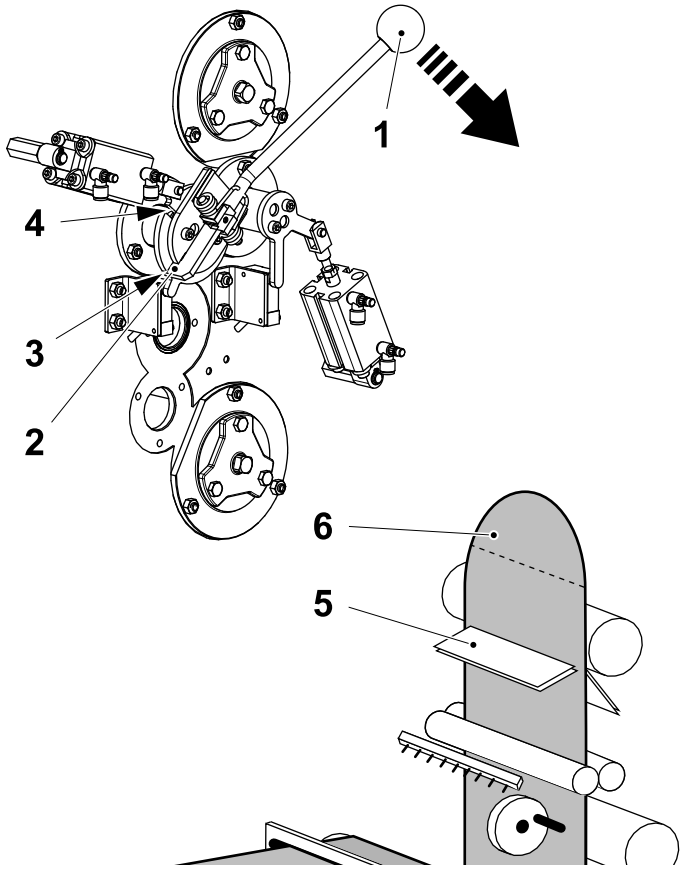

4

Push in the handle (1) until the teeth (2) comes out of the groove (3) and turn it clockwise until the teeth (2) enter into the groove (4). The air knife (5) opens.

Feed the packaging material through the air knife (5).

Pull up approximately one and a half metre of packaging material, and cut the end (6) again.

Make sure that the teeth (2) is into the groove (3).

Push in the handle (1) and turn it anti-clockwise to close the air knife (5).

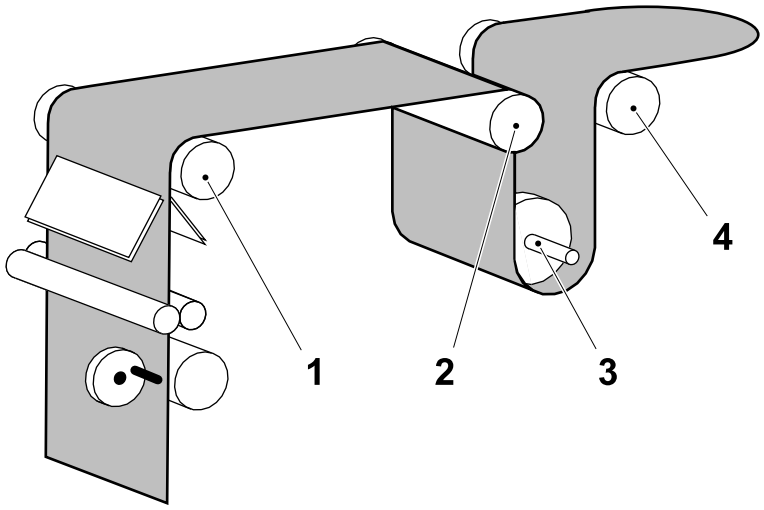

5

CAUTION

Risk of serious production fault.

Check that the packaging material edge is not broken or cracked. If necessary pull out the packaging material up to the broken/cracked part and cut smoothly the packaging material, avoiding crease lines on the tip.

Thread the packaging material over the rollers (1) and (2), under the pendulum roller (3) and over the roller (4).

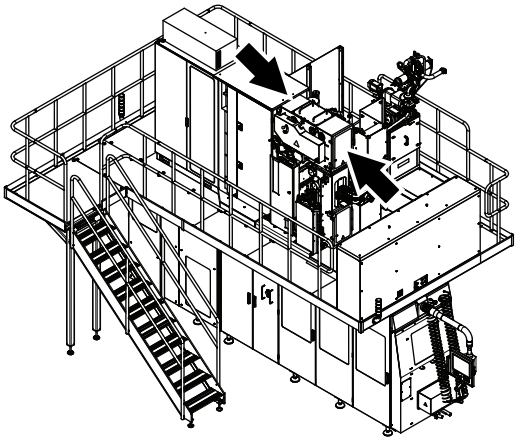

6

Close the top front aseptic chamber door and the top rear aseptic chamber door.

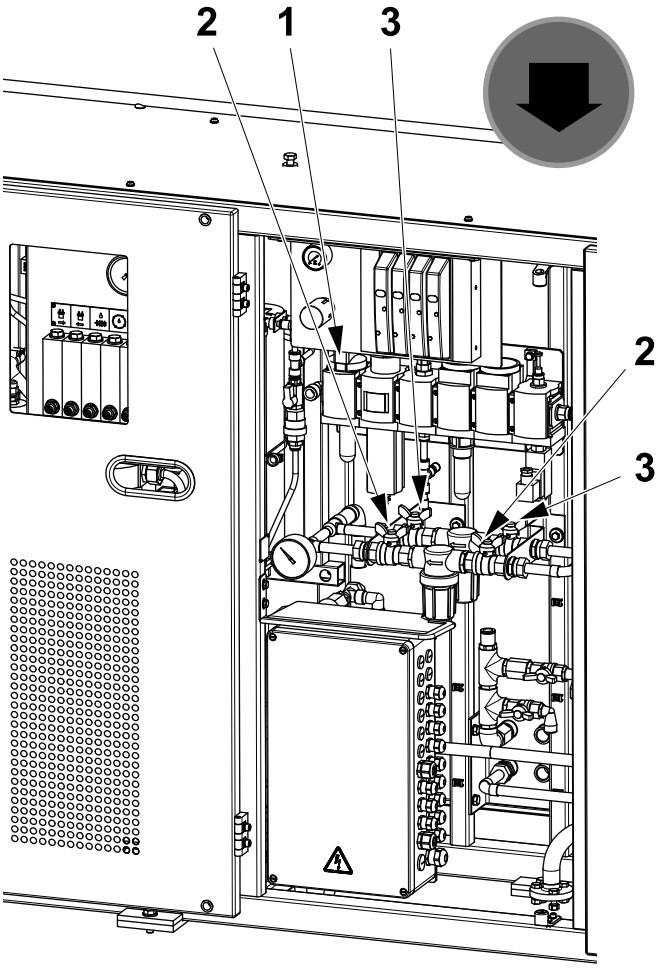

7

Preparing After Weekly Care is now finished.

If PRODUCTION is scheduled, continue according to 3.2 Preparing after Daily Care.

If PRODUCTION is not scheduled:

- Press the PROGRAM DOWN button to step down to STEP ZERO
- Turn OFF the air supply (1)
- Turn OFF the cooling water supply (2) or (3) depending on which filter is in use.

3.2 Preparing after Daily Care

Note! If Weekly Care has been performed, start with 3.1 Preparing After Weekly Care.

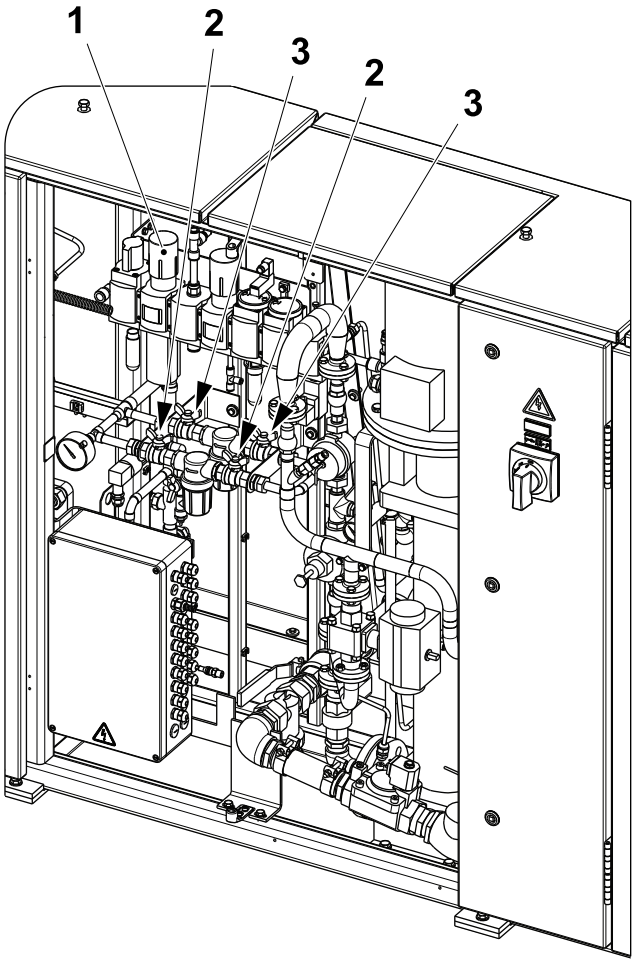

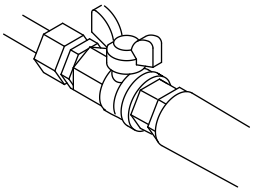

Cooling water ON

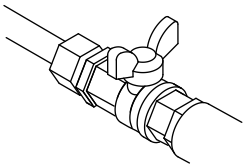

Cooling water OFF

1

Note! If Preparing after Weekly Care has just been carried out, continue with item 2.

Otherwise:

- Turn ON the air supply (1)
- Turn ON the cooling water supply (2) or (3) depending on which filter is in use.



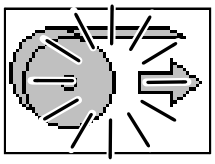

2

On the TPOP, press the PROGRAM UP button.

The machine steps to PREPARATION and the PREPARATION icon stops flashing.

3.2.1 Flow Rates

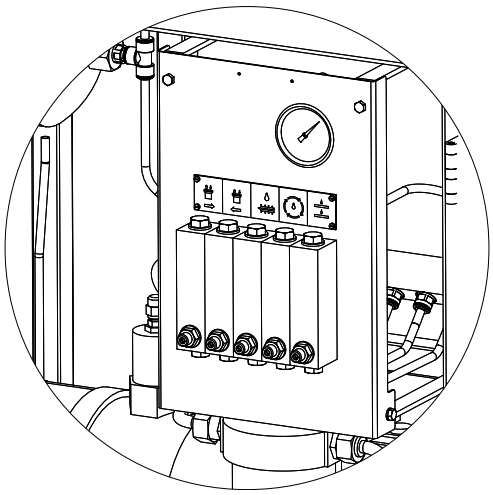

1

Check that the flow rate of the cooling circuits in the service unit are correct.

See the 11.1 Setting Values for the correct flow rates.

Call a technician if adjustments are needed.

3.2.2 Recorder

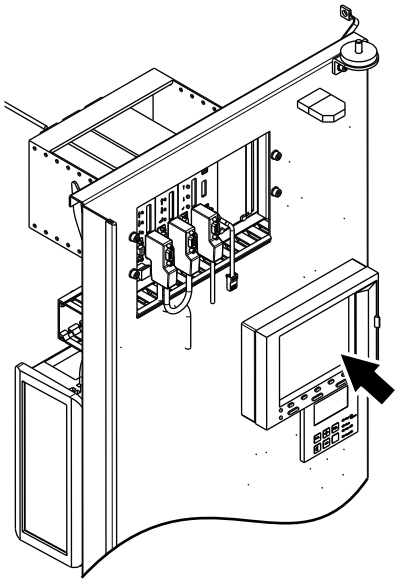

1

Every time the machine is started for PRODUCTION, it is suggested to input the following information:

- Machine serial number
- Batch data.

See the JUMO manual for more details.

3.2.3 Hydrogen Peroxide

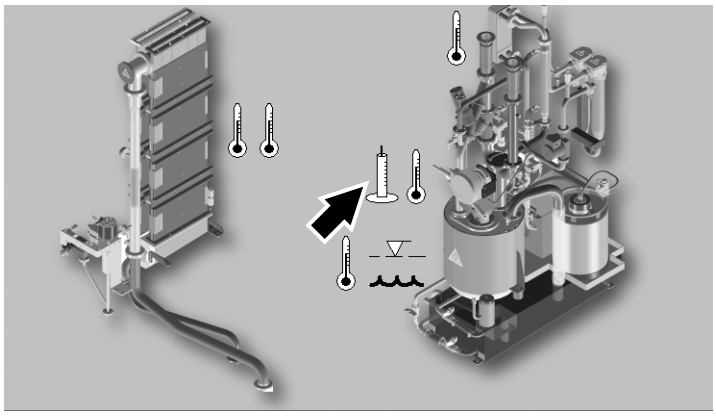

1

Check the hydrogen peroxide concentration.
See chapter 10 Sterilization Liquid.

3.2.4 Superstructure

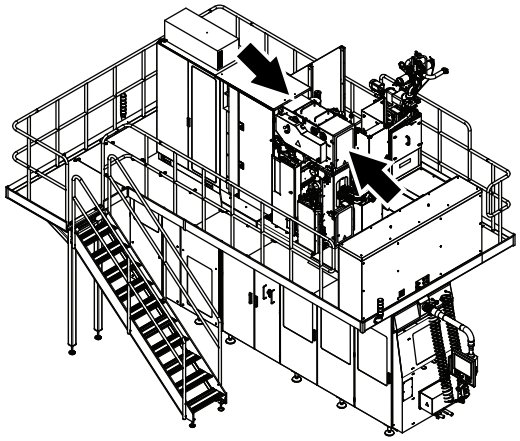

1

WARNING
Hydrogen Peroxide.
Follow the Safety Precautions.

Note! If Preparing after Weekly Care has been carried out, continue with 3.2.8 Filling Pipe.

Open the top front and rear drying chamber doors.

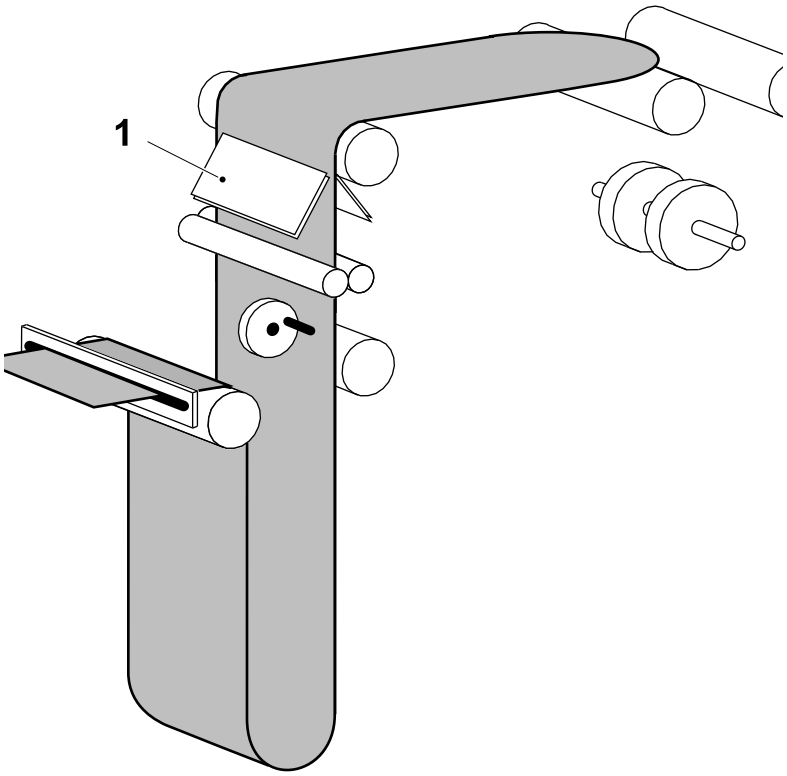

2

Shape the end of the packaging material as shown.

Feed the packaging material through the air knife (1).

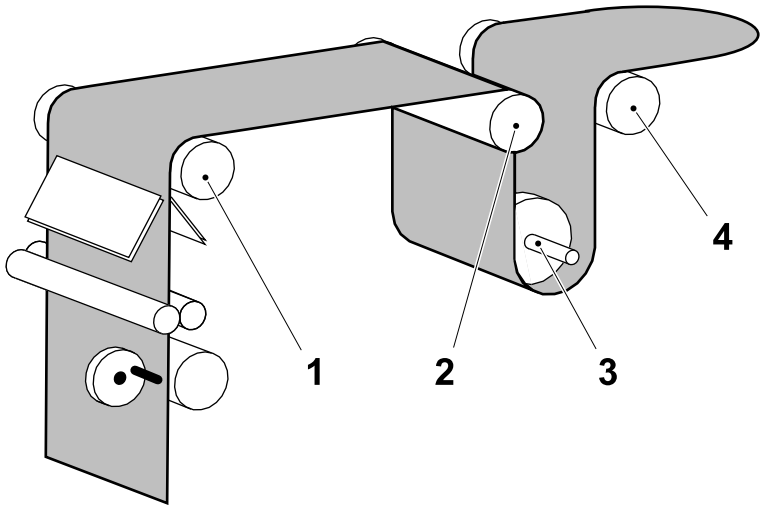

3

CAUTION

Risk of serious production fault.

Check that the packaging material edge is not broken or cracked. If necessary pull out the packaging material up to the broken/cracked part and cut smoothly the packaging material, avoiding crease lines on the tip.

Thread the packaging material over the rollers (1) and (2), under the pendulum roller (3) and over the roller (4).

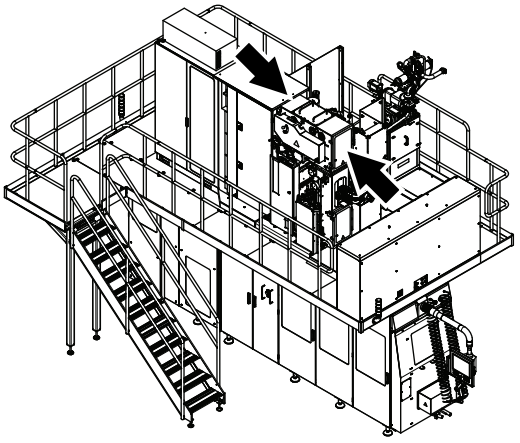

4

Close the front and rear drying chamber doors.

3.2.5 Production with HVA or HVA Bypassed

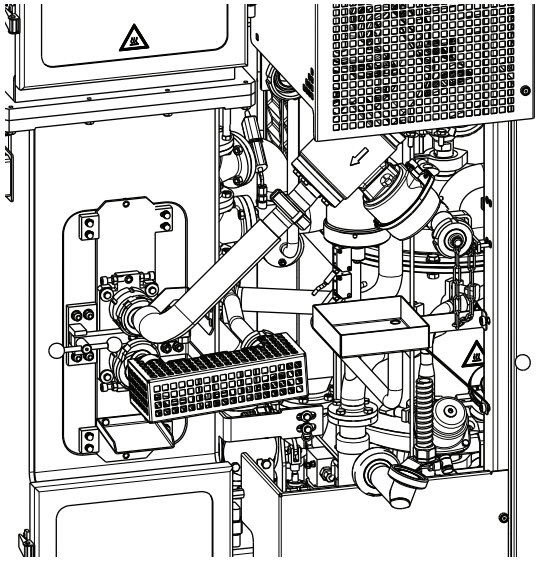

Product pipe configuration with HVA

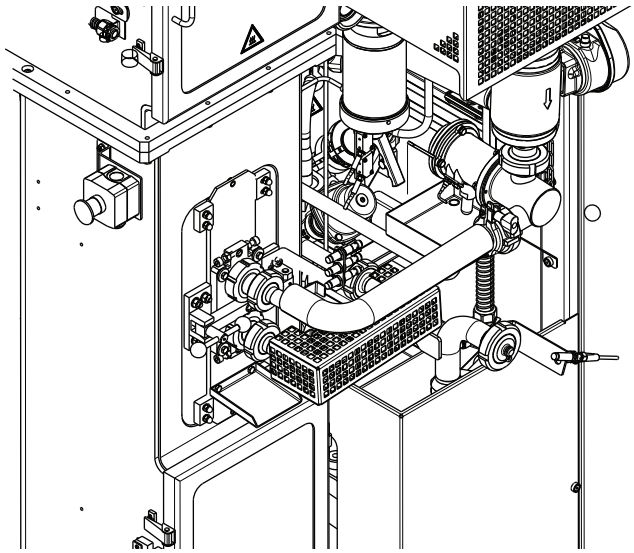

Product pipe configuration with HVA Bypassed

1

Depending on the type of product to be produced, make sure that the correct product pipe configuration is fitted, see illustration.

- To fit the correct product pipe for production with HVA, follow the procedure 3.2.6 Change Production from HVA Bypassed to HVA.
- To fit the correct product pipe for production without HVA, follow the procedure 3.2.7 Change Production from HVA to HVA Bypassed.

3.2.6 Change Production from HVA Bypassed to HVA

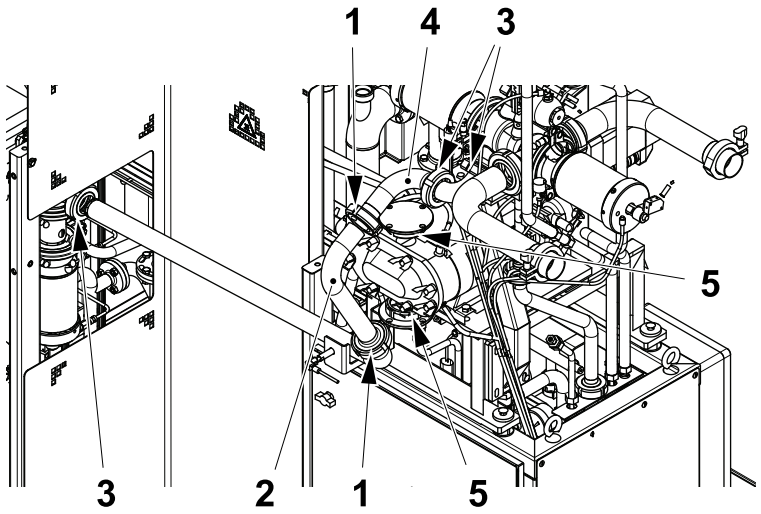

1

Remove the locking nuts (1) and the bypass pipe (2).

Remove the locking nuts (3) and the pipe (4).

Change the gaskets in positions (3).

Remove the blank nuts (5).

Change the gaskets in positions (5).

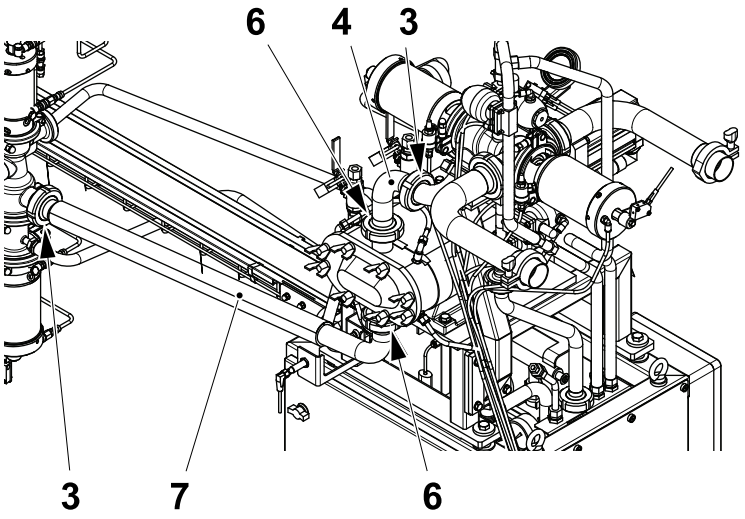

2

Fit the pipes (4) and (7) as illustrated.

Tighten the locking nuts (3) and (6).

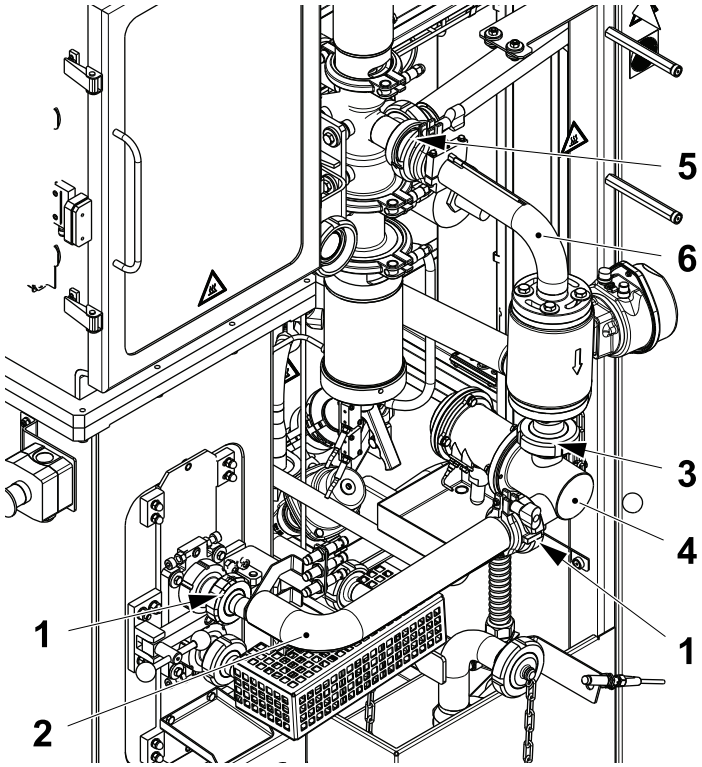

3

Remove the locking nuts (1) and the product pipe (2).

Remove the locking nut (3) and the regulating valve (4).

Remove the locking nut (5) and the pipe (6).

Change the gaskets in positions (1), (3) and (5).

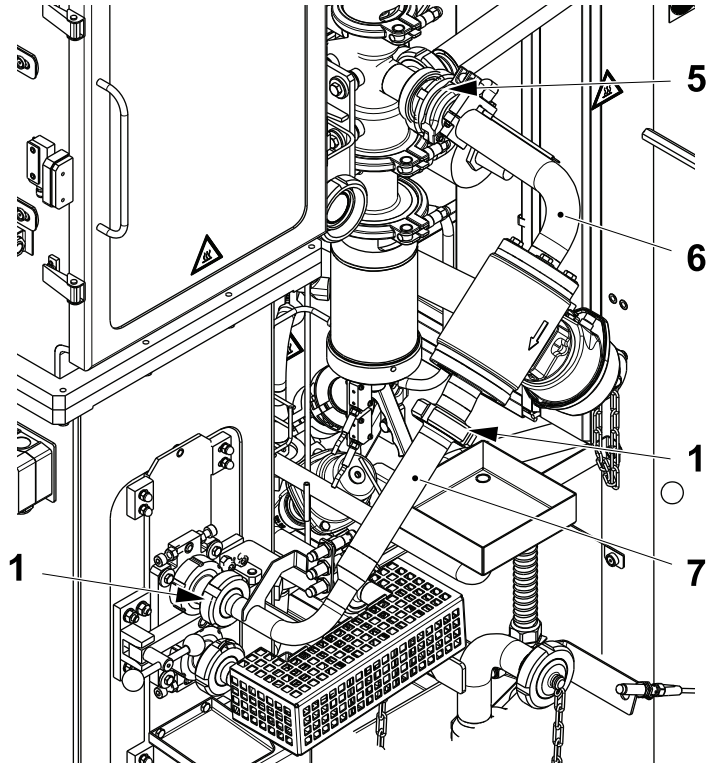

4

Fit the pipe (6) as illustrated.

Fit the product pipe (7) and tighten the locking nuts (1) and (5).

3.2.7 Change Production from HVA to HVA Bypassed

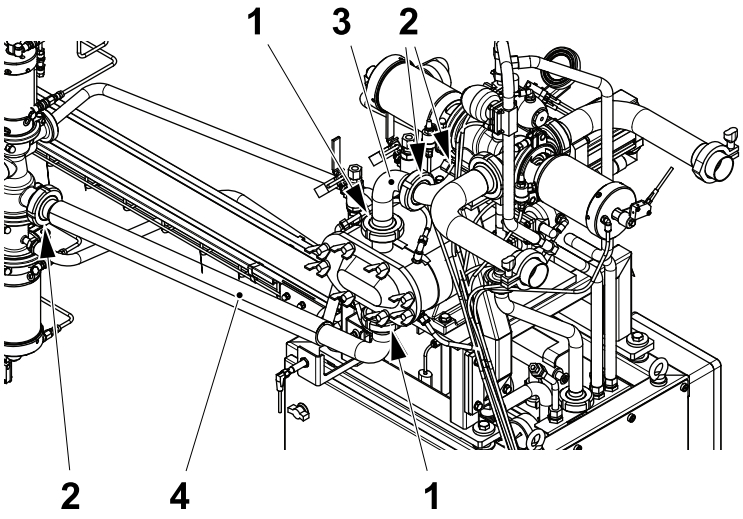

1

Remove the locking nuts (1).

Remove the locking nuts (2).

Remove the pipes (3) and (4).

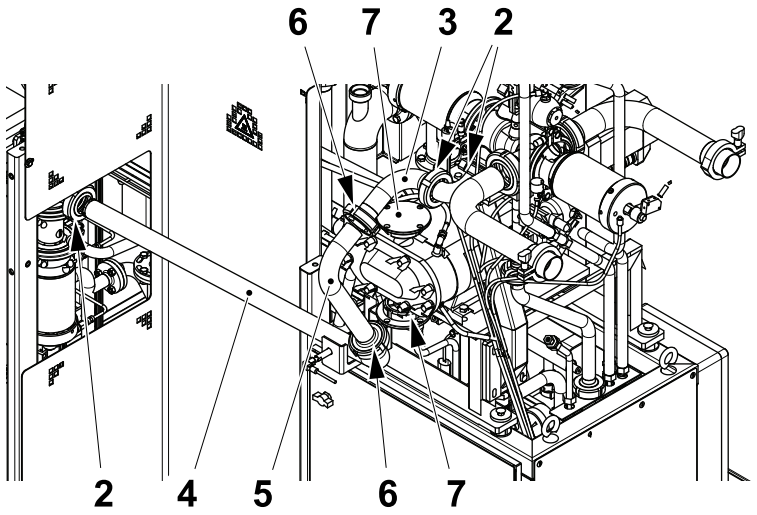

2

Change the gaskets in positions (2) and (6).

Fit the pipes (3) and (4) as illustrated.

Fit the bypass pipe (5) and tighten the locking nuts (6) and (2).

Fit the blank nuts (7).

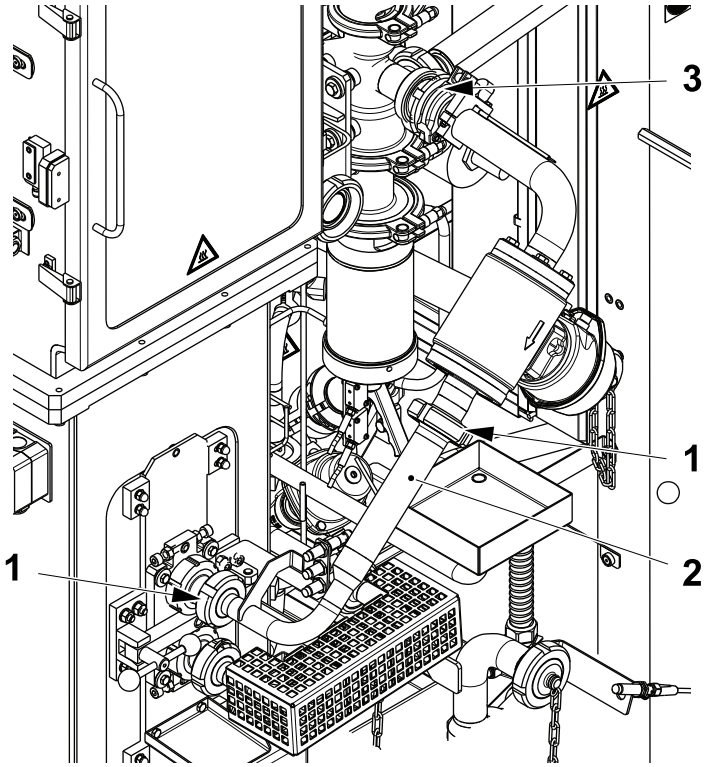

3

Remove the locking nuts (1) and the product pipe (2).

Remove the locking nut (3).

Change the gaskets in positions (1) and (3).

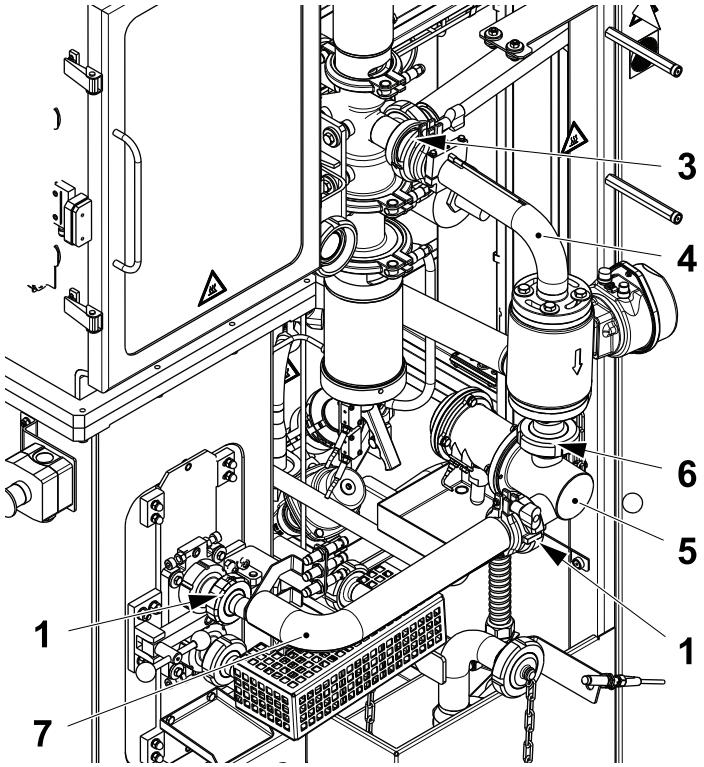

4

Turn the pipe (4) as illustrated.

Change the gaskets in positions (6).

Fit the regulating valve (5) and tighten the locking nut (6).

Fit the product pipe (7) and tighten the locking nuts (1) and (3).

3.2.8 Filling Pipe

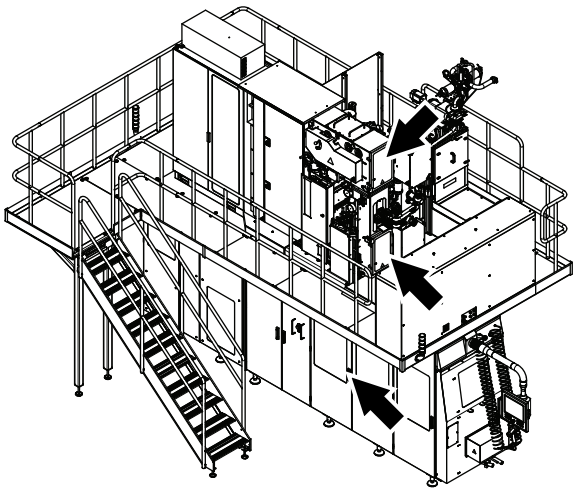

1

WARNING

Hydrogen Peroxide.
Follow the Safety Precautions.

Open the upper aseptic chamber door, the lower aseptic chamber door and the jaw system doors.

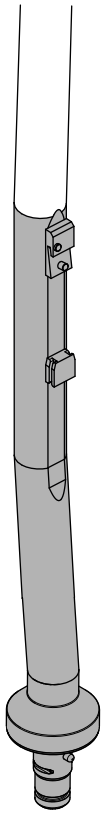

2

CAUTION
Risk of serious production fault.
Make sure all visible product residue has been removed from the pipe.

Check that all product residue has been removed from the lower part (area shown shaded) of the upper filling pipe.

Use a sponge or brush with water and cleaning compound code **D**.

Rinse with drinking water.

Note! For cleaning compound code information, see 11.2.1 Cleaning Compound Table.

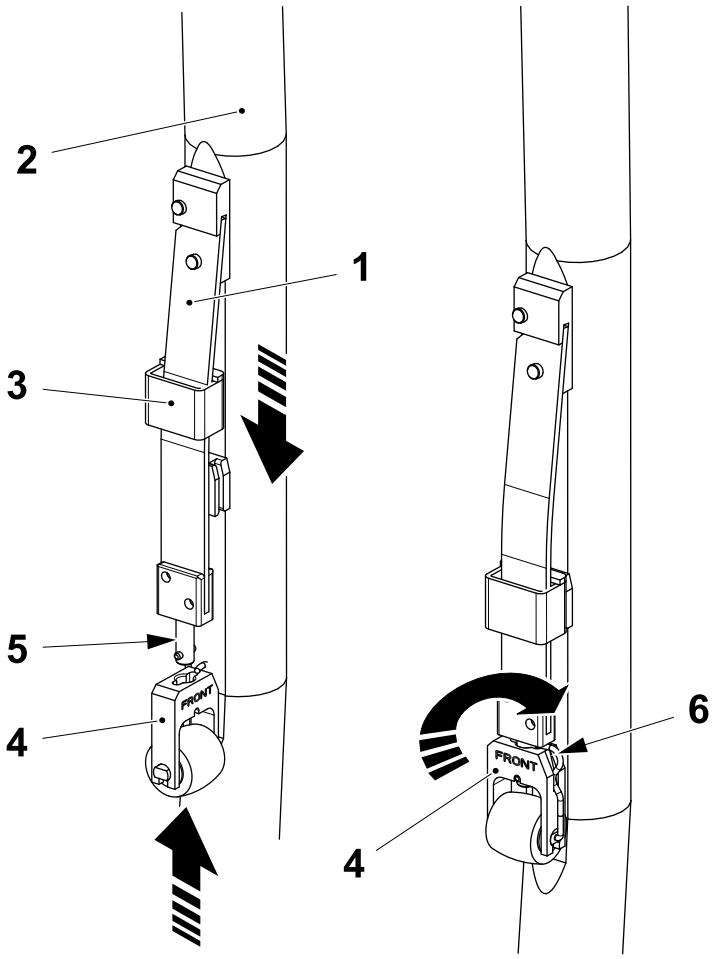

3

CAUTION
Hygiene.
Before handling clean parts, disinfect your hands/gloves with cleaning compound code **H**.

CAUTION
Risk of serious production fault.
Make sure the pressure roller is fitted with the word FRONT facing out from the filling pipe as shown in the illustration.

Take the pressure roller from its storage container.

Fit the spring (1) to the upper filling pipe (2).

Lower the hood (3) to lock the spring onto the filling pipe.

Fit the pressure roller assembly (4) into the shaft (5).

Rotate the pressure roller assembly (4) 90° and lock it in position with the hook (6).

Note! For cleaning compound code information, see 11.2.1 Cleaning Compound Table.

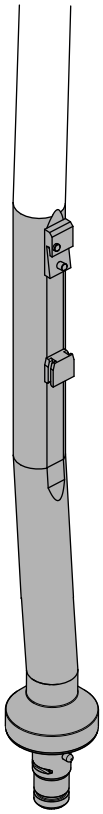

4

CAUTION
Risk of serious production fault.
Make sure all visible product residue has been removed from the pipe.

Spray a small quantity of disinfectant code **G3**, on the filling pipe covering entirely the flange and the area indicated by the shading in the illustration.

Note! For cleaning compound code information, see 11.2.1 Cleaning Compound Table.

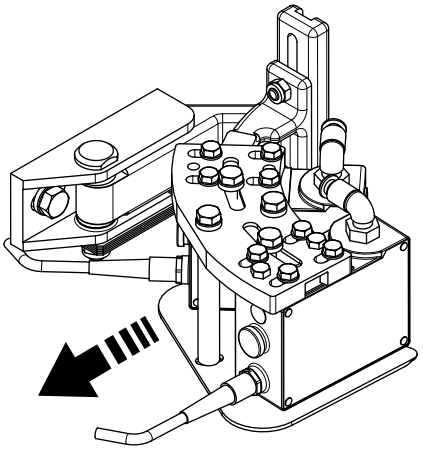

5

Swing the photocells outwards.

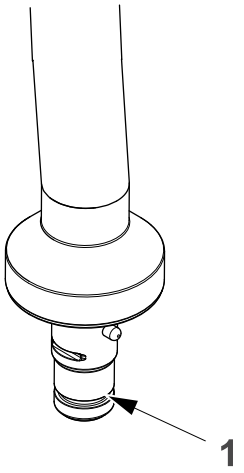

6

CAUTION
Hygiene.
Before handling clean parts, disinfect your hands/gloves with cleaning compound code **H**. Do not rinse the lower filling pipe with water. Allow the lower filling pipe to drip dry.

Fit a new O-ring (1) to the upper filling pipe.

Take the lower filling pipe from its storage container.

Note! For cleaning compound code information, see 11.2.1 Cleaning Compound Table.

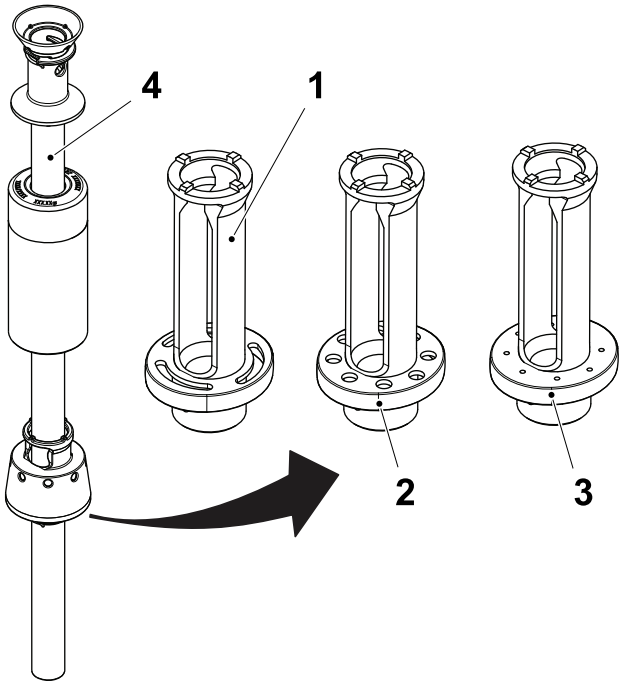

7

Production with HVA
Fit the correct flange (1), (2) or (3) to the lower filling pipe (4) depending on the type of product to be packed.

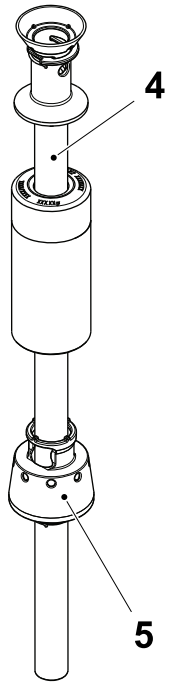

8

Production with HVA Bypassed

Fit the standard flange (5) to the lower filling pipe (4).

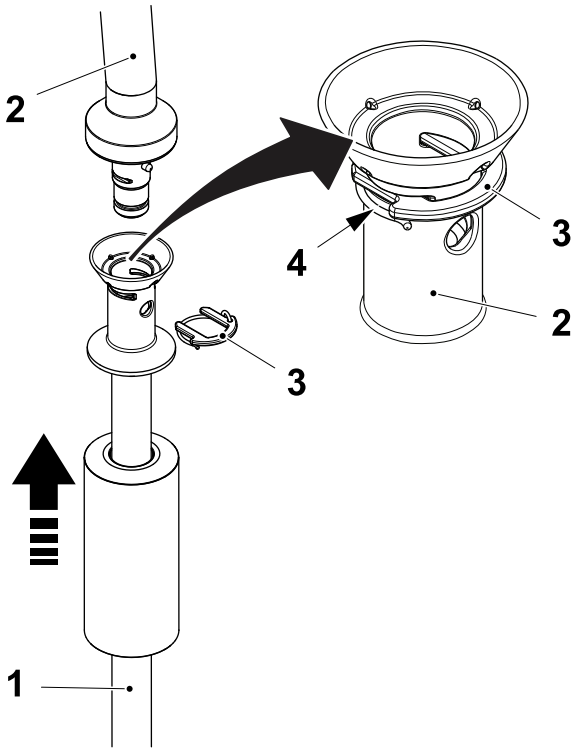

9

Fit the lower filling pipe (1) to the upper filling pipe (2) with the fork (3).

Note! Make sure that the spring (4) of the fork (3) is correctly locked around the filling pipe (1).

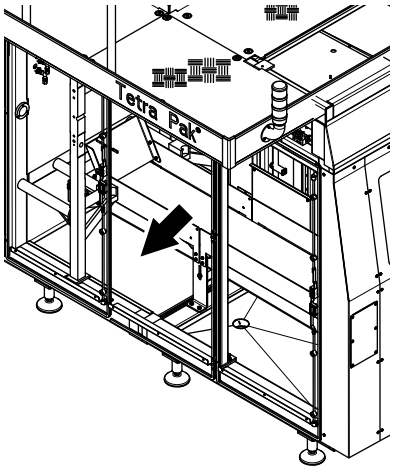

10

Clean away any foot prints left on the floor of the final folder with the water gun.

Close the doors.



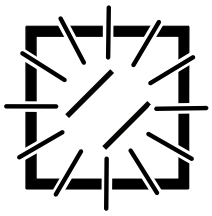

11

If the RESET buttons on the machine body doors are ON, press the RESET buttons to reset the safety system, see 8.2 Security Stop.

If an alarm reappears, take the appropriate action or call a technician.

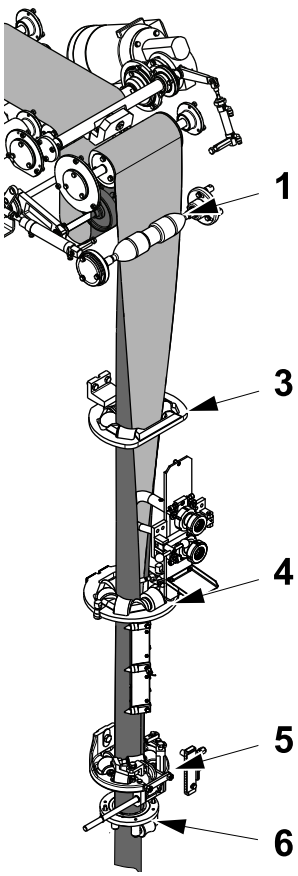

All other packages

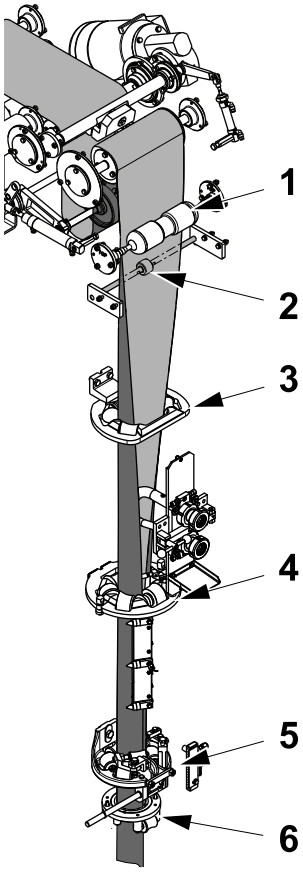

TBA 375 S

12

CAUTION

Hygiene.

Before handling clean parts, disinfect your hands/gloves with cleaning compound code **H**.

CAUTION

Risk of serious production fault.

Check that the packaging material edge is not ripped or cracked. If necessary pull out the packaging material up to the ripped/cracked part and cut smoothly the packaging material, avoiding crease lines on the tip. Packaging material ripped or cracked can cause unsterility or can cause burns on the tube when it stops in front of the LS inductor.

CAUTION

Risk of production fault.

Check that there is no condensation on the forming rings, the seal and on the aseptic chamber internal walls. Do not use compressed air. Dry with a clean cloth.

Pull the packaging material down through:

- the reverse bending roller (1)
- in front of the guide roller (2) (for TBA 375 S only)
- the forming ring (3)
- the upper forming ring (4)
- the lower forming ring (5)
- the seal (6).

Close the aseptic chamber doors.

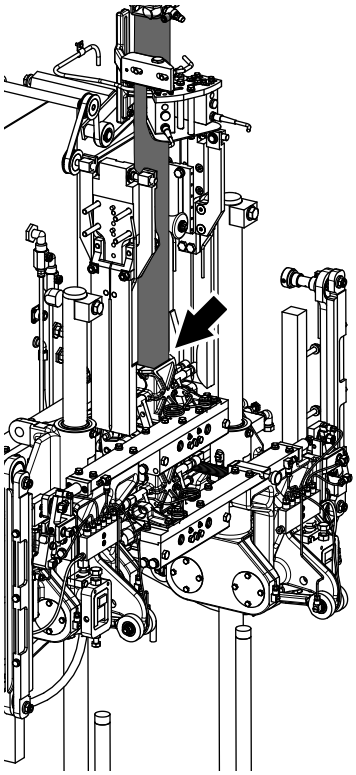

13

Open the jaw system doors.

Pull the packaging material down to the jaw system.

Check that the jaws grip the packaging material. If required pull down more packaging material.

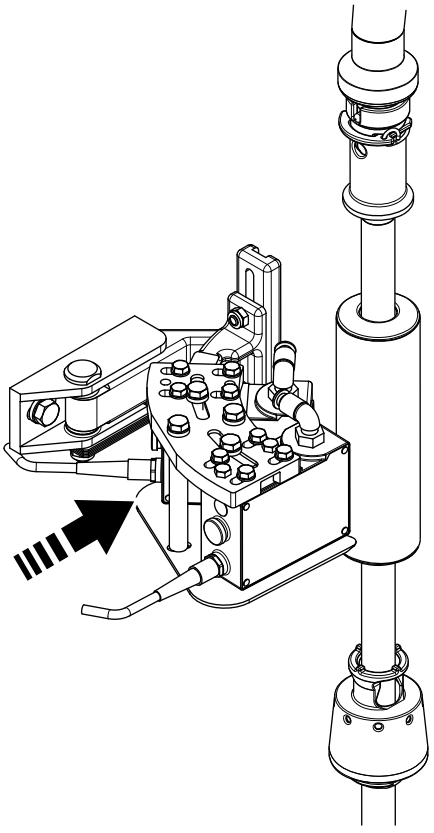

14

Push the photocells inwards.

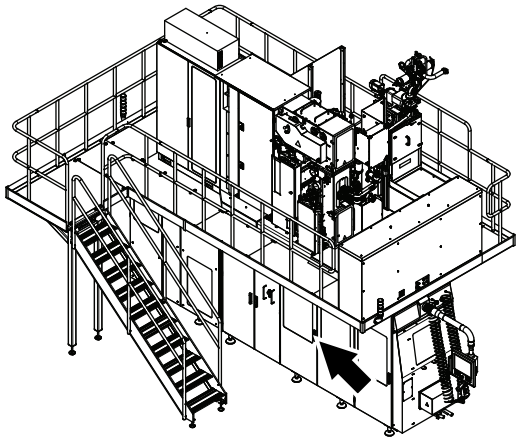

15
Close the jaw system doors.



16
Touch the PRODUCTION CONTROL button on the TPOP.

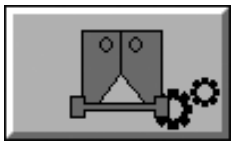

17
Touch the PACKAGE FORMING UNIT button.



18
Touch the JAW INCHING SELECTION icon.



19

Touch the SLOW INCHING button.

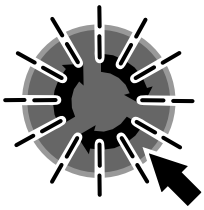

20

Press the INCHING button when it begins to flash.

The packaging material is pulled through the filling machine.

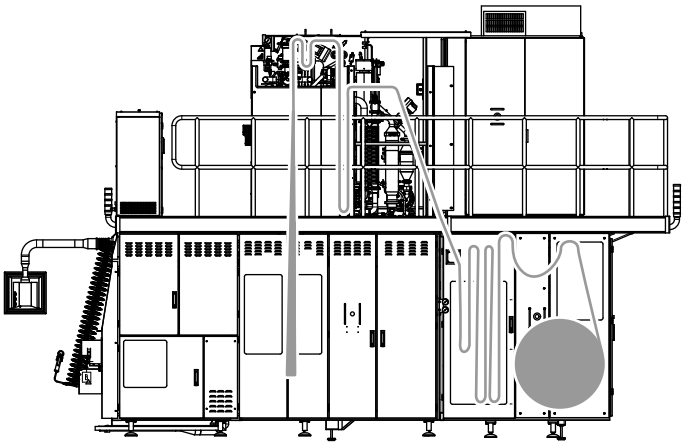

21

Check that the packaging material is properly positioned on all the filling machine bending rollers and that the packaging material passes correctly through the following areas:

- ASU
- Strip applicator
- Drying unit
- Aseptic chamber
- Jaw system

Correct the position of the packaging material if necessary.

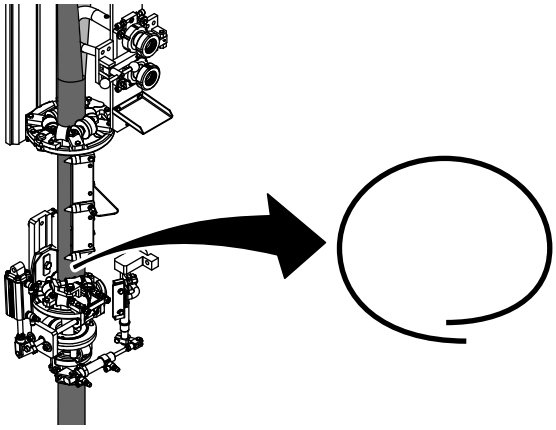

22

Make sure the LH edge of the packaging material overlaps the RH edge.

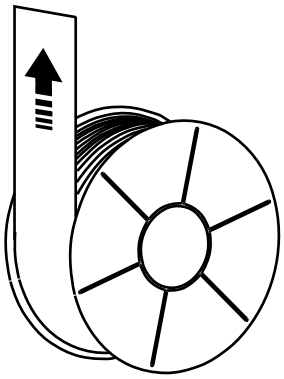

23

WARNING

Burn Hazard.
The components may be hot. Wear personal protective equipment.

CAUTION

Hygiene.
Before handling clean parts, disinfect your hands/gloves with cleaning compound code **H**.

Prepare the strip applicator for Production. See LS Strip Thread on page 6-5.

Note! For cleaning compound code information, see 11.2.1 Cleaning Compound Table.



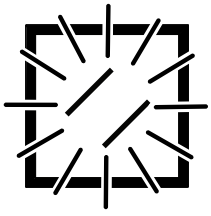

24

Close all covers and doors on the machine and reset the alarms on the TPOP display.

If the RESET buttons on the machine body doors are ON, press the RESET buttons to reset the safety system, see 8.2 Security Stop.

If an alarm reappears, take the appropriate action or call a technician.

3.2.9 Heat Sterilization

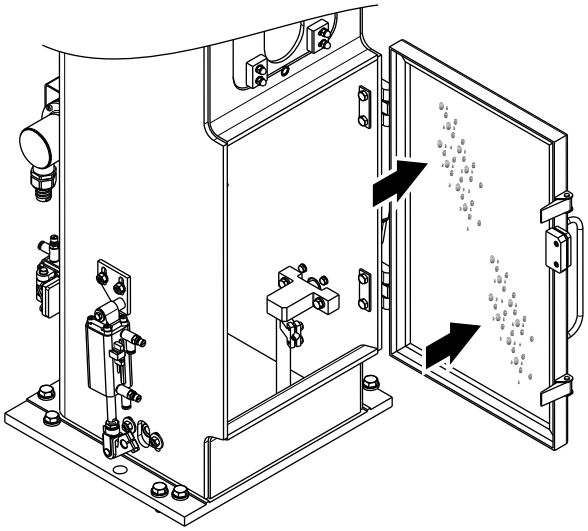

1

CAUTION

Risk of serious product fault.

Make sure that the internal surfaces and all parts inside the drying and aseptic chambers are dry. If necessary, dry with a clean cloth.

Before starting the filling machine sterilization phase, make sure that all the internal surfaces of the drying and aseptic chambers are dry.

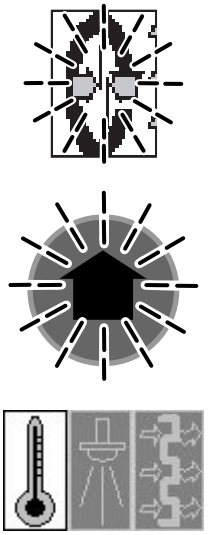

2

When the TUBE SEALING symbol and the PROGRAM UP button starts to flash, press the PROGRAM UP button.

The PROGRAM UP button stops to flash, waiting for the correct machine temperatures.

When the temperatures are reached, the PROGRAM UP button starts to flash again.

Press the PROGRAM UP button until the motor starts.

An audible warning signal sounds and the machine inches forward without stopping until the material tube is sealed with the LS strip.

Machine stops automatically to HEAT STERILIZATION.

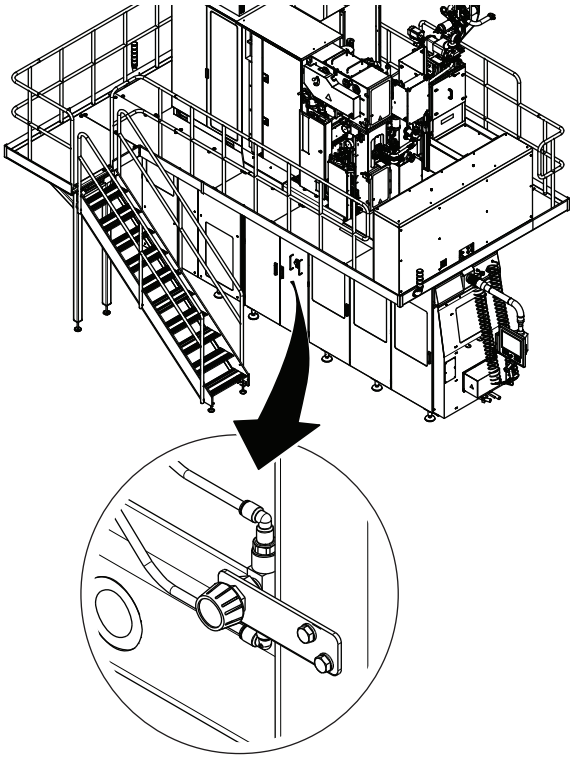

3

Check that the tube flushing flow is normal.

Note! A high flow rate may cause reading errors by the photocells. A low flow rate may cause forming problems.

Open the hydraulic unit door and adjust the flow of water with the knob.

3.2.10 Strip Check

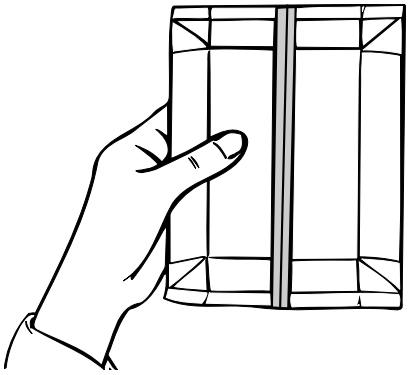

1

Take the last package inched out from the machine. Check that the LS strip is correctly positioned and properly sealed according to LS Strip Application.

If the seal is not satisfactory press and hold the PROGRAM DOWN button to step down to TUBE SEALING. Continue from 3.2.9 Heat Sterilization.

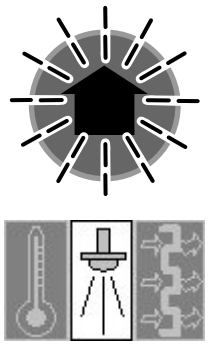

2

Press the PROGRAM UP button to confirm the TIGHT TUBE SEALING.

Machine will automatically step to spraying when HEAT STERILIZATION temperature is reached.

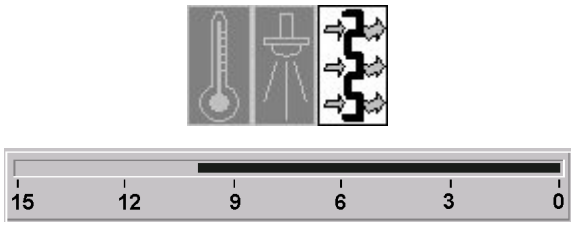

3

After the spraying sequence the DRYING symbol remains lit and the drying sequence starts automatically.

Note! If the sterilization fail the machine program automatically steps down to step Zero when the drying time is finished.

A time bar displays the time remaining.

Note! After the step DRYING and up to step PRODUCTION ENDED, the program steps VENTING, ASEPTIC CHAMBER DOORS, ASEPTIC CHAMBER are executed automatically when the machine program is stepped down.

Note! The machine steps automatically to STERILIZATION DONE after 30 minutes.

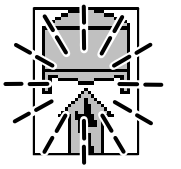

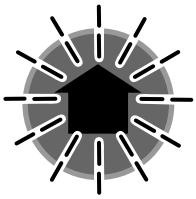

4

When the drying sequence is completed, the SIGNAL TO STERILIZER symbol and the PROGRAM UP button begin to flash.

Press the PROGRAM UP button.

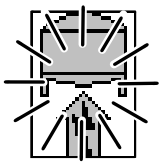

5

The symbol SIGNAL TO STERILIZER remains lit.

Note! If there is a connection between the filling machine and the sterilizer equipment, a request is sent for the product.

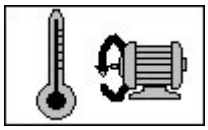

6

Two minutes indication appears for heaters to achieve temperature set point.

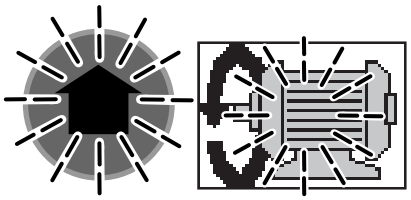

7

Note! If during stops or PRODUCTION the aseptic chamber doors are opened, or the tube opens or bursts the machine must be cleaned and sterilized before PRODUCTION can restart.

Production can start when the MOTOR START symbol and PROGRAM UP button begin to flash.

Proceed according to chapter 4 Start.

4 Start

Description

This chapter describes how to start the machine for PRODUCTION after Preparing after Daily Care. To start the machine after a stop, see the Stop section.

CAUTION

Hazardous noise.

Risk of impaired hearing. Hearing protection is recommended whenever this equipment is in operation.

Description 4-2

4.1 Starting Production 4-5

This page intentionally left blank

4.1 Starting Production



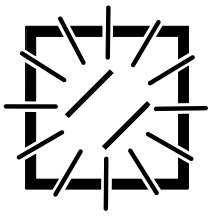

1

Make sure all covers and doors on the machine are closed and reset any alarms on the TPOP.

If the RESET buttons on the machine body or ASU doors are ON, press the RESET buttons to reset the safety system, see 8.2 Security Stop.

If an alarm is present, take the appropriate action or call a technician.



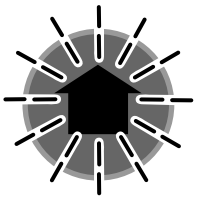

2

CAUTION

Risk of personal injury.

The first two packages discarded onto the waste conveyor after sterilization may contain concentrated hydrogen peroxide. It is recommended to carefully open and rinse these packages before disposal. Always wear personal protective equipment. See the Safety Precautions.

The machine is ready to start when the MOTOR START symbol is flashing.

Press the PROGRAM UP button. Keep the PROGRAM UP button pressed until the MOTOR START symbol remains lit and the warning signal stops.

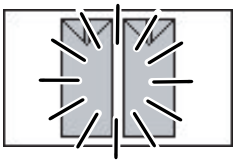

3

When the printed design on the tube is in the correct position, the PRODUCTION symbol lights up and the machine automatically lets the packages through the final folder.

CAUTION
Risk of serious production fault.
If during Stops or PRODUCTION the aseptic chamber doors are opened, or the tube bursts, tears, or it is manually cut, or product splashes occur, the machine must be cleaned and sterilized before PRODUCTION can restart.



4

Carry out the checks according to the chapter 5 Checks.

Note! Remember to register the number of packages taken for the checks. See Recording Package Waste for Quality Checks on page 2-54.

5 Checks

Description

This chapter describes the checks to perform when the machine is in step PRODUCTION.

CAUTION

Hazardous noise.
Risk of impaired hearing. Hearing protection is recommended whenever this equipment is in operation.

Description 5-2

5.1 Equipment Checks 5-7

5.2 Introduction to Package Checks 5-12

5.2.1 General Information 5-13

5.2.2 Terminology 5-14

5.2.2.1 Package 5-14

5.2.3 Package Identification 5-15

Selecting and Identifying Packages 5-15

Marking the Package Samples 5-17

5.2.4 Tools and Consumables 5-18

5.2.5 Checking Scheme 5-19

Checking Intervals 5-19

Package Selection 5-19

Package Utilisation 5-20

5.2.5.1 Package Sample Utilization at PRODUCTION Start and for Packaging Material Splices 5-21

5.2.5.2 Package Checks Flowchart 5-22

5.3 Package Checks 5-24

5.3.1 Preparation 5-25

5.3.2 Printing 5-26

5.3.3 Weight 5-27

5.3.4 Forming 5-28

Package 5-28

Shape and Design 5-28

Flap Sealing 5-29

Appearance 5-29

Openings and Closures 5-30

Positioning of Pre-Laminated Holes for HeliCaps 5-30

5.3.5 Integrity 5-31

Package 5-31
Crease Lines 5-31
Transversal Seal 5-32
Internal Surfaces 5-40
Longitudinal Seal 5-41
LS Strip Application 5-41

5.4 Laboratory Checks 5-48
5.4.1 General Recommendations 5-49
5.4.2 Package Selection and Utilization 5-50
5.4.3 Checking Scheme 5-51
5.4.3.1 Checking Scheme Table 5-52
5.4.4 Flowchart of the Laboratory Checks 5-54
5.4.5 Laboratory Package Checks 5-55
Equipment 5-55
Chemical Terminology 5-55
5.4.6 Package Integrity by Conductivity 5-56
5.4.7 Check for Leakages with Red Ink 5-59
5.4.8 Check TS Heat Pattern by Dissolving 5-61
Sample Preparation 5-61
Sample Dissolve 5-64
Method 1 - Dissolving with an Acid Agent 5-65
Preparation of Bath 1 (hydrochloric acid at 60°C) 5-66
Preparation of Bath 2 (hydrochloric acid at room temperature) 5-66
Preparation of Bath 3 (sodium carbonate at room temperature) 5-67
Method 2 - Dissolving with an Alkaline Agent 5-70
Sample Dry 5-72
Heat Pattern Check 5-73
Heat Pattern check (Single Loop Inductor) 5-74
Heat Pattern check (Twin Loop Inductor) 5-75

5.4.9 Check TS Integrity by Red Ink 5-76

5.4.10 LS by Red Ink Injection 5-77

This page intentionally left blank

5.1 Equipment Checks

This section describes the checks to perform on the filling machine during PRODUCTION. Unless otherwise stated the Equipment Checks should be performed at least once during every PRODUCTION run.

CAUTION
Risk of damage to the equipment.
Do not leave the machine unattended during PRODUCTION.

CAUTION
Risk of serious production fault.
If at any point during PRODUCTION the aseptic chamber doors are opened, or the tube bursts, tears, or it is manually cut, or product splashes occur, the machine must be cleaned and sterilized before PRODUCTION can restart.

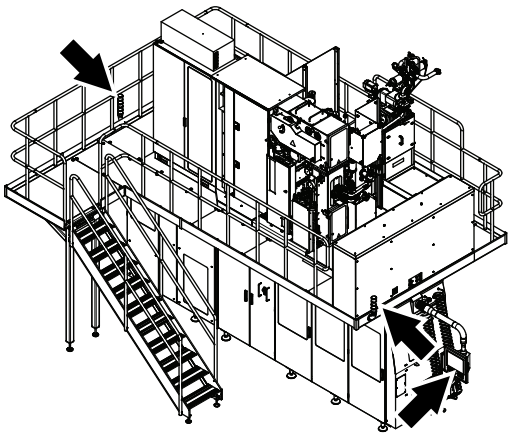

1

Check the warning beacons.

When the beacons are flashing, check the TPOP and take the appropriate action.

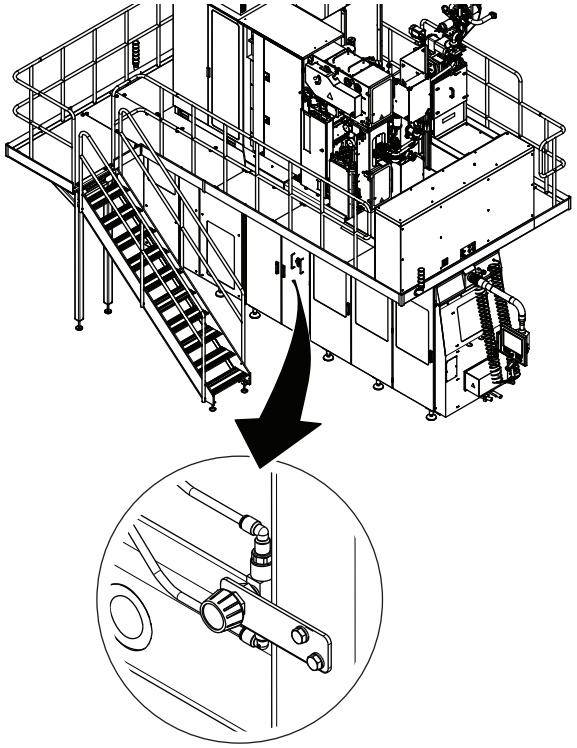

2

Check that the tube flushing flow is normal.

Note! A high flow rate may cause reading errors by the photocells. A low flow rate may cause forming problems.

Open the hydraulic unit door and adjust the flow of water with the knob.

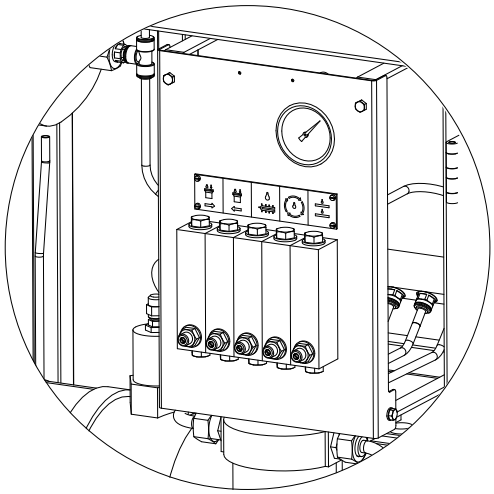

3

Check that the flow rate of the cooling circuits in the service unit are correct.

Check that all pressure gauges indicate the correct pressure setting.

See the 11 Technical Data section for the correct flow rates and pressure settings.

Call a technician if adjustments are needed.

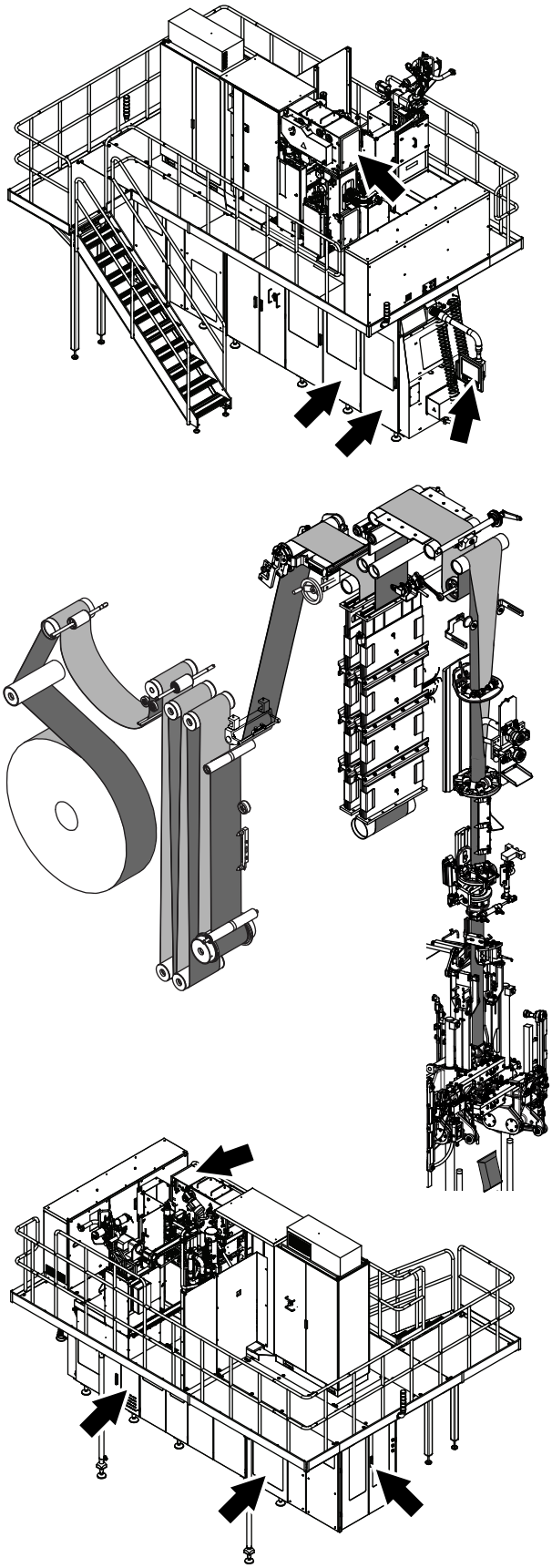

4

Make sure that the packaging material moves through the machine properly.

Make sure that all the strip supplies function correctly.

Make sure that the packages move through the jaw system, final folder area and outfeed correctly.

Refer to the threading diagram and make checks at the positions shown by the arrows:

- the ASU
- the LH side of the jaw system and final folder area
- the aseptic chamber
- the RH side of the jaw system
- the outfeed.

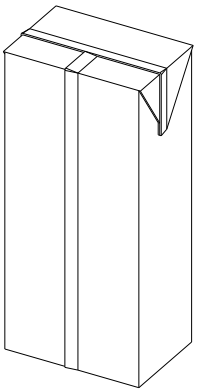

5

Check the forming and shape of the packages. See the 5.3 Package Checks section.

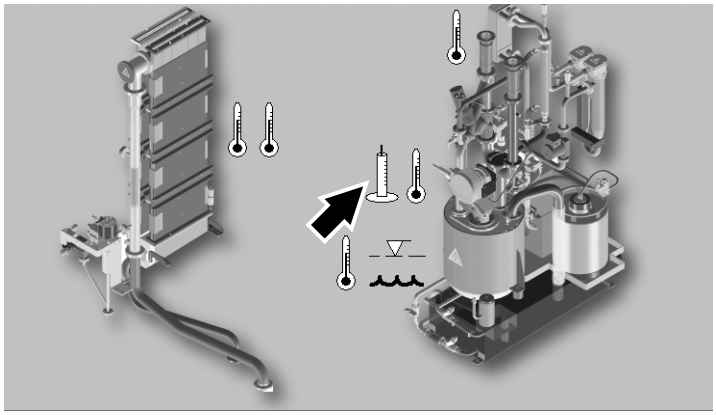

6

WARNING

Hydrogen Peroxide.
Follow the Safety Precautions.

Check the hydrogen peroxide concentration at least every eight hours of operation. See 2.6.2 Peroxide System Window.

Note! If indicated by the company's Good Manufacturing Practices, optional manual hydrogen peroxide concentration checks can be conducted as described in 10 Sterilization Liquid.

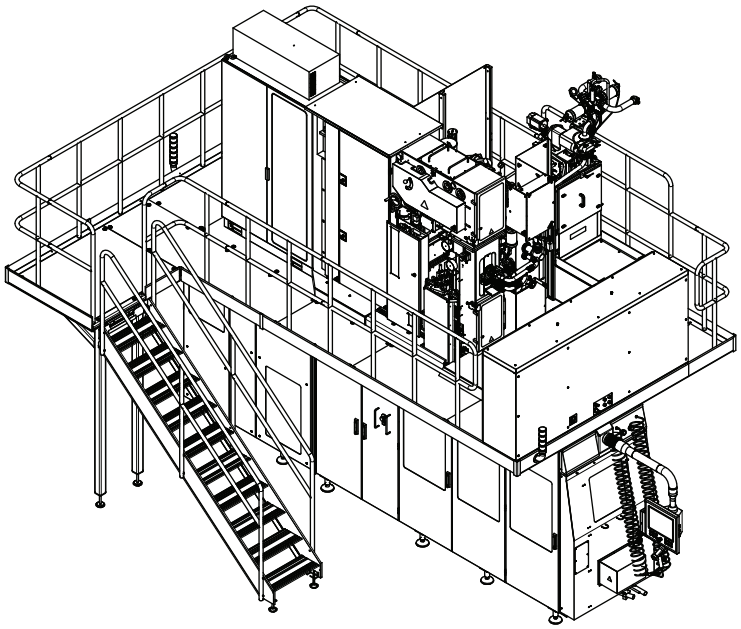

7

Check that all doors are closed. The doors of the electrical cabinet must be closed to ensure sufficient cooling.

Check that all safety covers and guards are fitted.

Make sure the platform, the stairs, and the area around the machine are clean and free from loose objects.

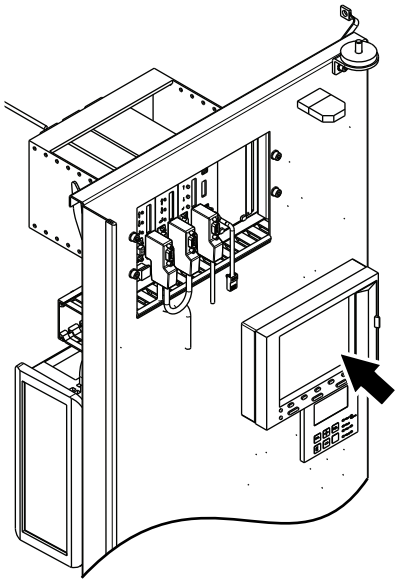

8

Check on the Production data recorder screen that the recorder is recording all of the channels. If not, call a technician.

5.2 Introduction to Package Checks

This section describes the checks to perform concerning the packages during PRODUCTION.

CAUTION
Package Checks and corrective actions will affect the Quality of the PRODUCTION.
Use these checking methods as the minimum requirement. If there is any doubt about the integrity of the packages, pick out more packages for further checking. Whenever a fault cannot be eliminated call a technician.

5.2.1 General Information

Perform the package checks according to the 5.2.5 Checking Scheme on page 5-19.

Use the 5.2.5.2 Package Checks Flowchart on page 5-22 to determine what actions (if any) are needed after each package check.

Carefully read the section 5.2.2.1 Package on page 5-14 to become fully acquainted with the terminology used to describe the different components and characteristics of the package.

5.2.2 Terminology

5.2.2.1 Package

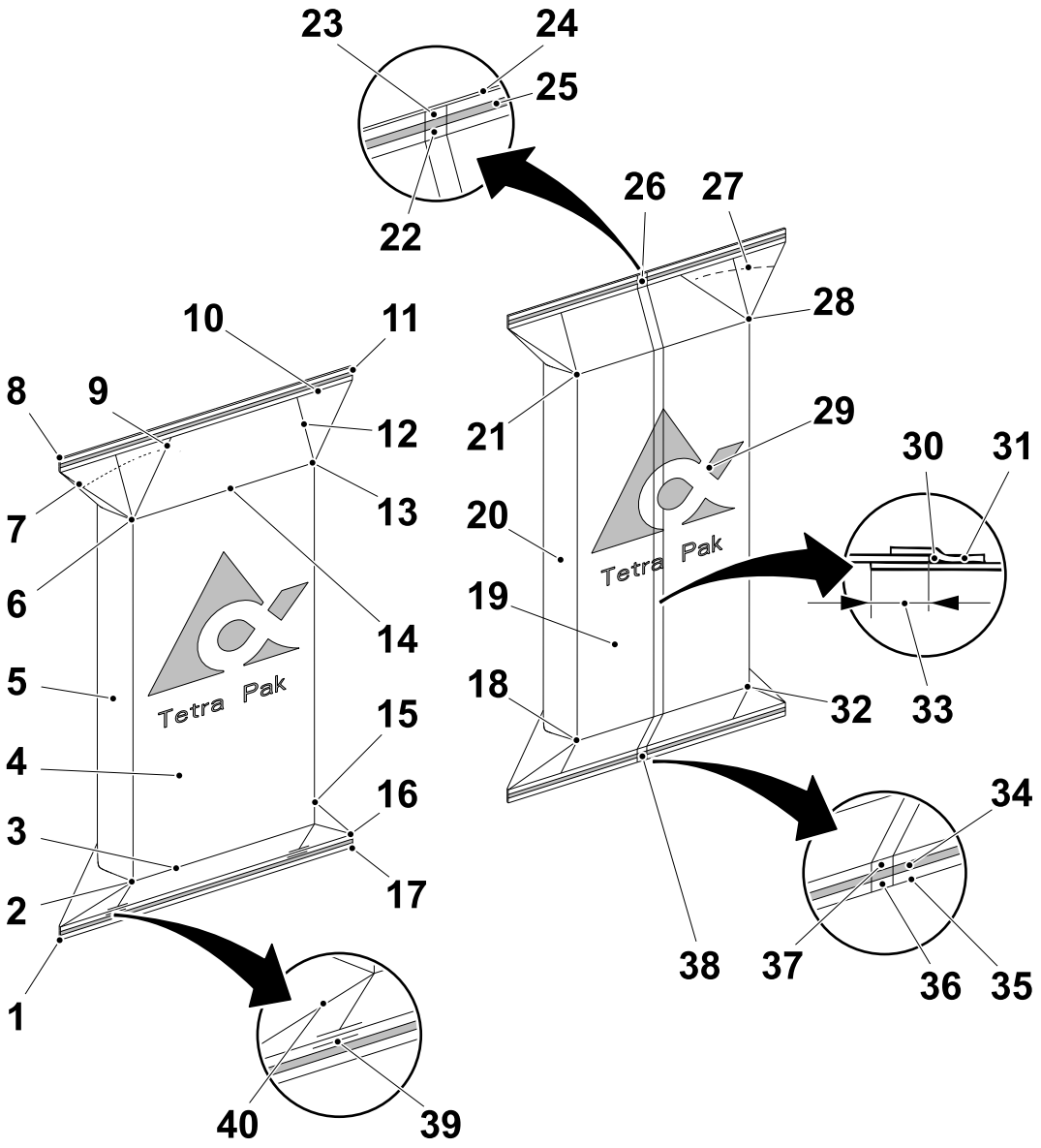

1 Bottom left fin corner
2 Bottom front left corner
3 Bottom crease
4 Front side of package/panel 3
5 Left side of package/panel 2
6 Top front left corner
7 Top flap creases
8 Top left fin corner
9 Spout crease
10 Top fin crease
11 Top right fin corner
12 Longitudinal crease
13 Top front right corner
14 Top crease
15 Bottom front right corner
16 Bottom fin crease
17 Bottom right fin corner
18 Bottom rear right corner
19 Rear side of package/panel 5
20 Right side of package/panel 4
21 Top rear right corner
22 Top inner cross
23 Top outer cross
24 Top cutting line
25 Top transversal seal
26 Top cross
27 Perforation
28 Top rear left corner
29 Rear side of package/panel 1
30 Air gap
31 LS strip
32 Bottom rear left corner
33 LS overlap
34 Bottom transversal seal
35 Bottom cutting line
36 Bottom outer cross
37 Bottom inner cross
38 Bottom cross
39 Double creases
40 Bottom flap crease

5.2.3 Package Identification



Selecting and Identifying Packages

1

To select packages and to be able to identify from which jaw pair the packages were formed, proceed as follows:

Touch the PRODUCTION CONTROL button.

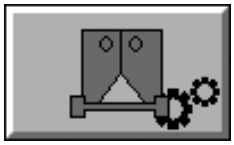

2

Touch the PACKAGE FORMING UNIT button.

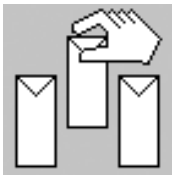

3

Touch the SAMPLE PACKAGE icon.

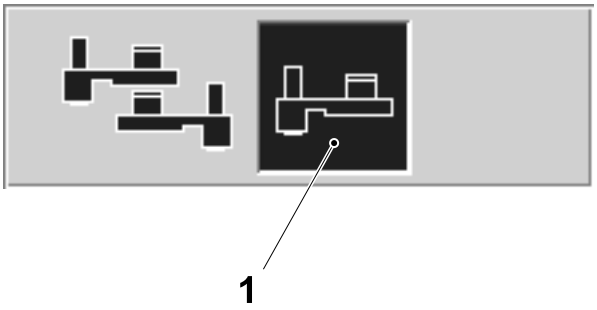

4

Touch the RH SIDE OR LH SIDE icon (1) (touching the icon switches between the LH and RH jaw sides) to select the jaw pair from which the first package sample should be taken.

Note! If the LH side (2) is displayed, the jaw system ejects a package from the LH side jaw.



5

Touch the ON button to start the sampling of the packages.

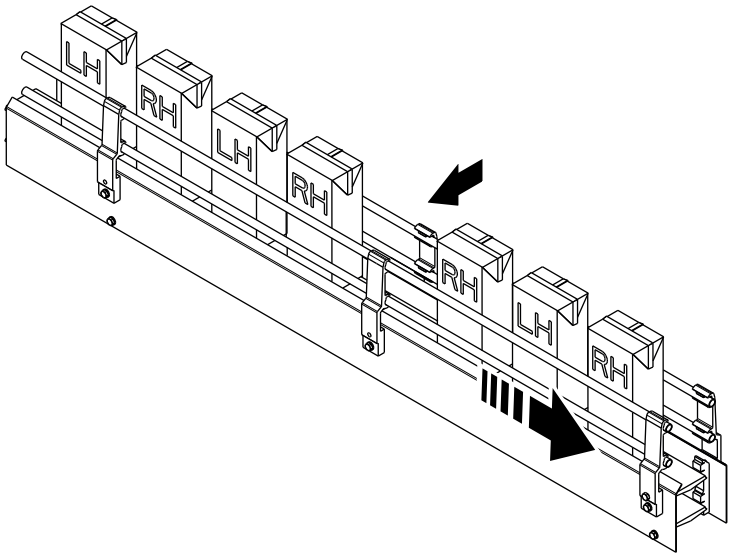

6

The jaw system discards a package.

Take the packages necessary for the checks from the conveyor after the gap caused by the discarded package.

Note! Always take the packages from the conveyor after the Domino printer.

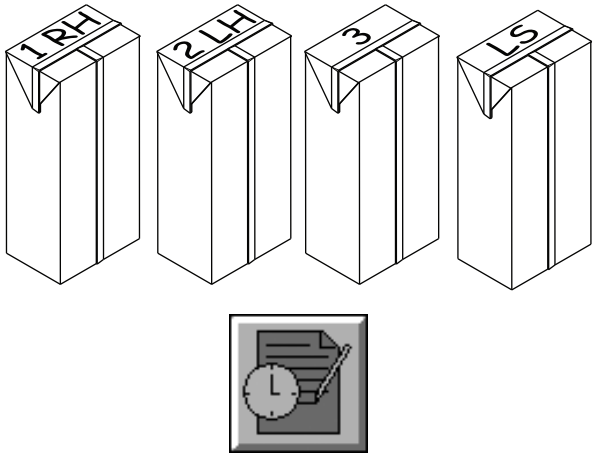

Marking the Package Samples 7

Mark the package samples on the top and bottom with an indelible pen as follows:

- mark a package made in the RH jaw pair with the letters RH and a sequential number
- mark a package made in the LH jaw pair with the letters LH and a sequential number
- mark a package with the letters LS.
- mark the remaining packages with a sequential number.

If a single package sample has been collected, mark the package sample on the top and bottom with an indelible pen with the letters LS.

Note! Remember to register the number of packages taken for the checks. See Recording Package Waste for Quality Checks on page 2-54.

5.2.4 Tools and Consumables

The following tools are needed to perform the package checks:

- scissors
- stretch pliers, TP No. 78073-0100
- a clean work bench in a well illuminated area
- scales for weighing

5.2.5 Checking Scheme

Checking Intervals

Perform the package checks at the following filling machine events:

- PRODUCTION start
- The splicing of a new roll of packaging material
- The splicing of a new roll of LS strip.

Package Selection

For package checks at PRODUCTION start or at the splicing of a new roll of packaging material, take **4** package samples.

For package checks at the splicing of a new LS strip roll, take **1** package sample.

Follow the instructions in Selecting and Identifying Packages on page 5-15 to take the package samples and the instructions in Marking the Package Samples on page 5-17 to mark the package samples.

Package Utilisation

If **4** package samples have been collected:

- Use **3** package samples to perform the package checks except the LS application check
- Use **1** package sample to perform the LS application check.

Use the table in the section 5.2.5.1 Package Sample Utilization at PRODUCTION Start and for Packaging Material Splices to identify which package sample to use for each of the package checks.

If **1** package sample has been collected, follow the instructions in the package check LS Strip Application on page 5-41.

5.2.5.1 Package Sample Utilization at PRODUCTION Start and for Packaging Material Splices

Package Check	Package Sample			
	No. RH, 1	**No. LH, 2**	**No. 3**	**No. LS**
Printing	✓	✓		
Weight	✓	✓		
Shape & Design			✓	
Flap Sealing			✓	
Crease Lines			✓	
TS Rough	✓	✓		
TS Accurate	✓	✓		
Internal Scratches			✓	
Longitudinal Seal			✓	
LS Strip Application				✓

5.2.5.2 Package Checks Flowchart

Flowchart Description

The Flowchart of Package Checks displays:

- the checks to be performed in the sequence described in the checking scheme table (1)
- the type of checks (2)
- the necessary actions (if any) to be taken depending on the result of the completed check (3).

○ = Legal requirement related check

△ = Package integrity related check

☆ = Package appearance and line efficiency related check

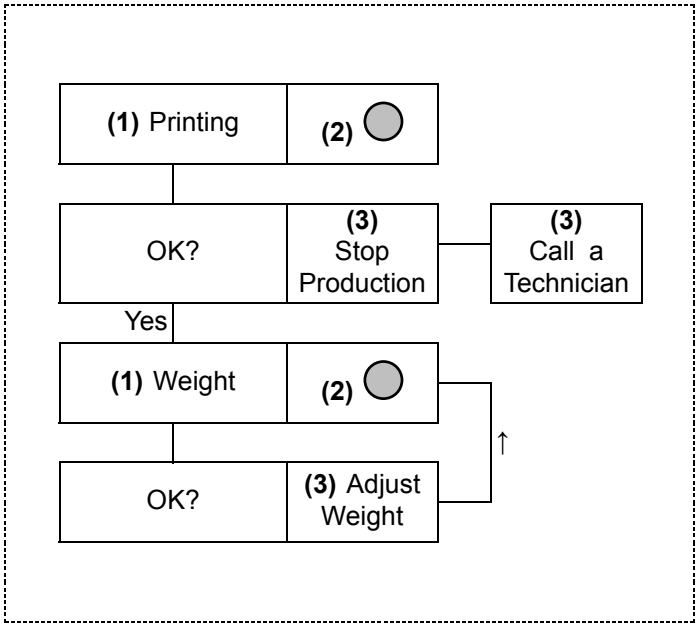

Extract from flowchart of the package checks.

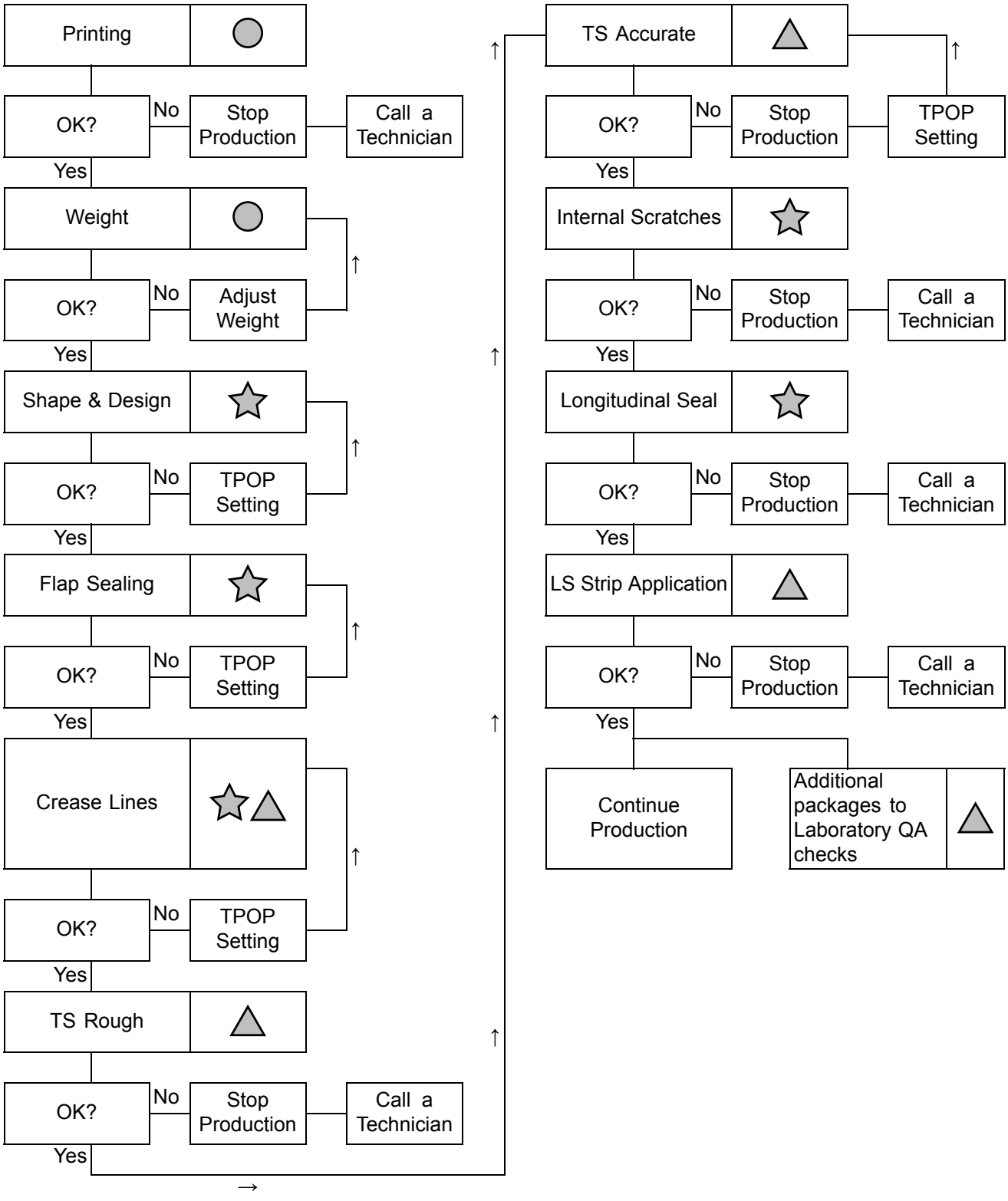
Printing
OK?
No
Stop Production
Call a Technician
Yes
Weight
OK?
No
Adjust Weight
Yes
Shape & Design
OK?
No
TPOP Setting
Yes
Flap Sealing
OK?
No
TPOP Setting
Yes
Crease Lines
OK?
No
TPOP Setting
Yes
TS Rough
OK?
No
Stop Production
Call a Technician
Yes
TS Accurate
OK?
No
Stop Production
TPOP Setting
Yes
Internal Scratches
OK?
No
Stop Production
Call a Technician
Yes
Longitudinal Seal
OK?
No
Stop Production
Call a Technician
Yes
LS Strip Application
OK?
No
Stop Production
Call a Technician
Yes
Continue Production
Additional packages to Laboratory QA checks

5.3 Package Checks

5.3.1 Preparation

Before starting the package checks, make sure that the:

- correct number of package samples have been taken, see 5.2.5 Checking Scheme on page 5-19
- package samples have been correctly identified and marked, see 5.2.3 Package Identification on page 5-15
- all the necessary tools and consumables are available, see 5.2.4 Tools and Consumables on page 5-18.

5.3.2 Printing

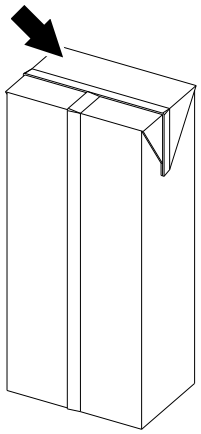

Check the date and code printing.

If necessary stop the filling machine and adjust the date printing according to the instructions supplied with the printer.

5.3.3 Weight

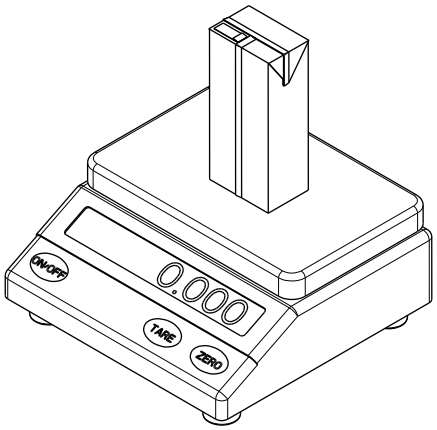

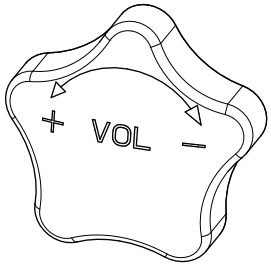

Weigh the packages and record their weights and weight deviations.

To adjust the package weight, turn the knob (1) behind the central lubrication system door (LH side of the machine):

- **plus**, increases the package weight
- **minus**, decreases the package weight.

This can be done during PRODUCTION.

After setting, pick out new packages and check them.

5.3.4 Forming

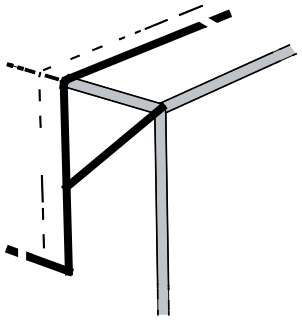

Correct shape

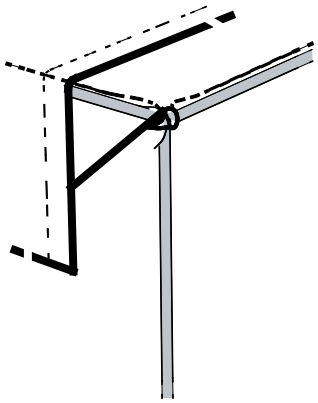

Low crease position

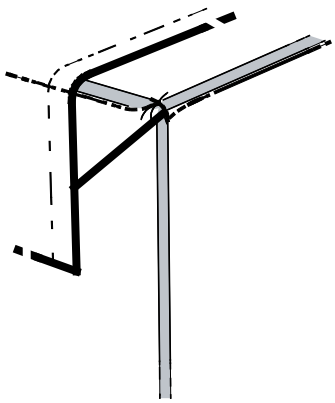

High crease position

Package 1

Shape and Design

Check the shape of the package.

Check that the preformed creases in the packaging material are correctly aligned along the edges of the package.

To adjust the package creases follow the procedure Design Correction Offset on page 2-84.

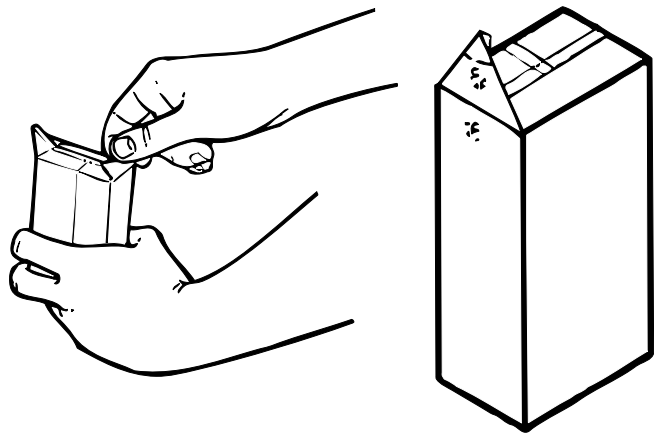

2

Flap Sealing

Unfold the flaps and check that they are properly sealed.

To adjust the flap sealing follow the instructions in 2.6.9 Final Folder Unit Window.

3

Appearance

Check the packages for wrinkles, cracks or any other defects.

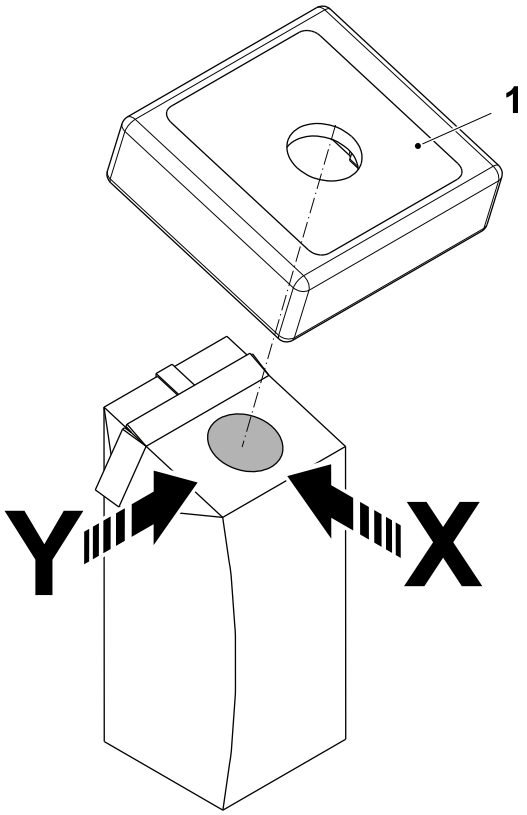

Openings and Closures 4

Positioning of Pre-Laminated Holes for HeliCaps

Note! Only valid for machines with HeliCap.

Put the template (1) on the package (2) with the template hole over the pre-laminated hole on the package.

The package is approved if the pre-laminated hole is located within the hole diameter of the template.

If the PLH is out of position in the direction X, follow the instructions in the section Design Correction Offset on page 2-84 to adjust the PLH position.

If the PLH is out of position in the direction Y, call a technician.

Note! The templates are supplied with the regular accessories of the cap applicator. For the correct template for the package, see the Templates and Tools section in the OM for the cap applicator.

5.3.5 Integrity

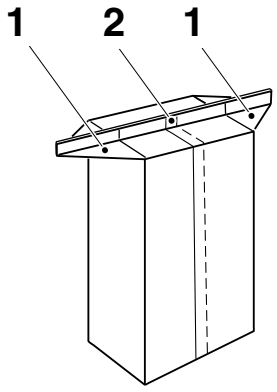

Bottom view of package

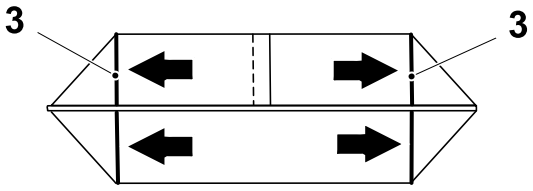

fig.1

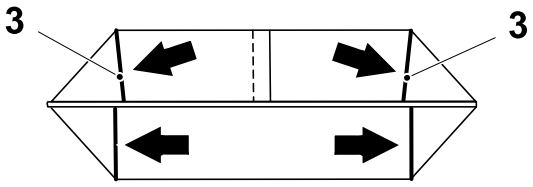

fig.2

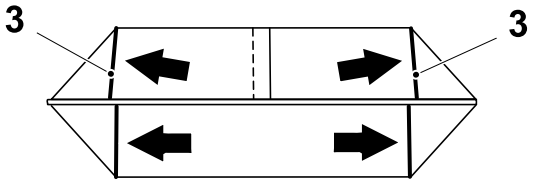

fig.3

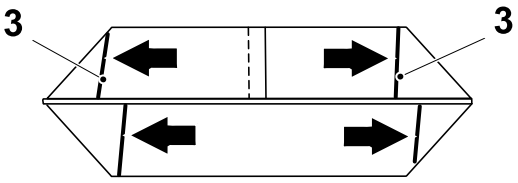

fig.4

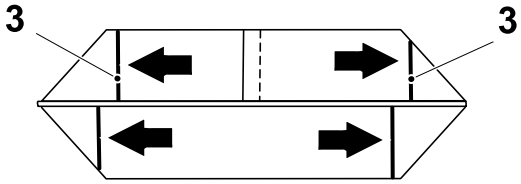

fig.5

Package 1

Crease Lines

Unfold the bottom flaps (1) and then lift up the package bottom fin (2).

Note! To correctly check the crease line alignment, it is important to unfold the flaps. Checking the crease line alignment with the flaps in the folded position may provide an incorrect indication of the crease line alignment due to the package folding.

Check the position of the preformed crease lines (3).

The position is acceptable if:

- the creases are opposite one another (fig.1) either parallel (fig.2) or at an angle (fig.3).

The position is not acceptable if:

- the preformed crease lines are not opposite one another (fig.4 and fig.5).

Note! Figures 2, 3 and 4 show a misalignment due to the LS overlap. The crease positions in figures 2 and 3 are considered acceptable, but may compromise cap application (if any).

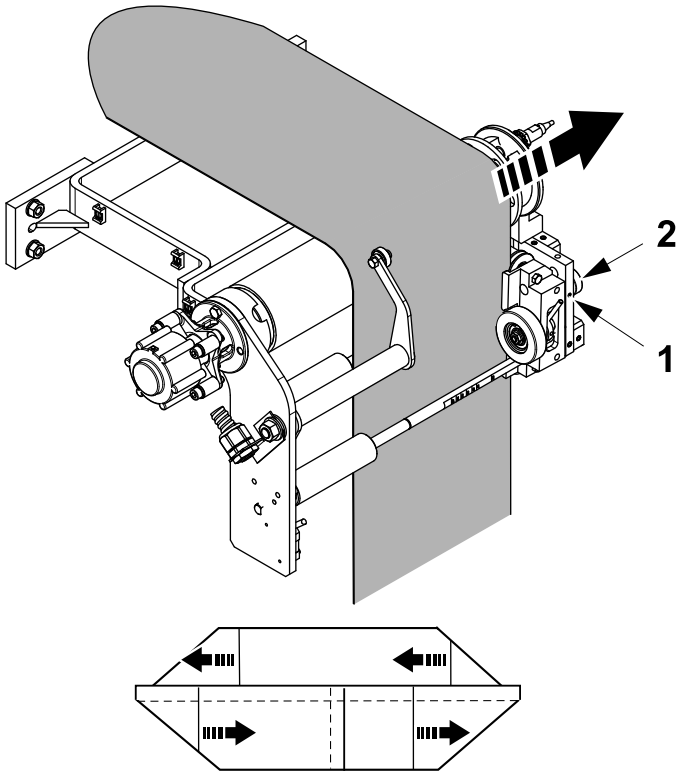

2

To adjust the position of the preformed crease lines, loosen the adjusting knob (1) and turn the knob (2) counterclockwise to adjust the position of the paper guide. This rotates the packaging material tube and moves the creases in the direction shown.

Turn the knob (2) clockwise to move the crease lines in the opposite direction.

Note! Remember to tighten the stop screw (1) when the adjustment is completed.

After adjustment, pick out new packages and check them. Check the longitudinal sealing according to item LS Strip Application on page 5-41.

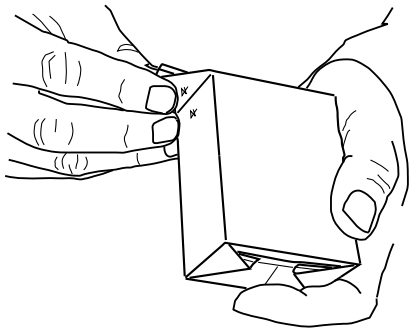

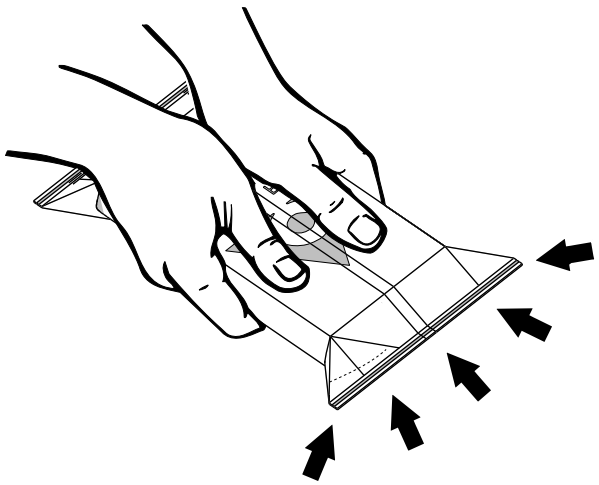

1

Transversal Seal
Rough Check

Unfold the flaps.

Check the integrity of the top and bottom transversal seal by gently squeezing the packages by hand.

Critical points are:

- the corners
- the intersections between the LS creases and the TS
- the crosses where the TS and the LS meet.

If any product leakage is found stop the machine and call a technician.

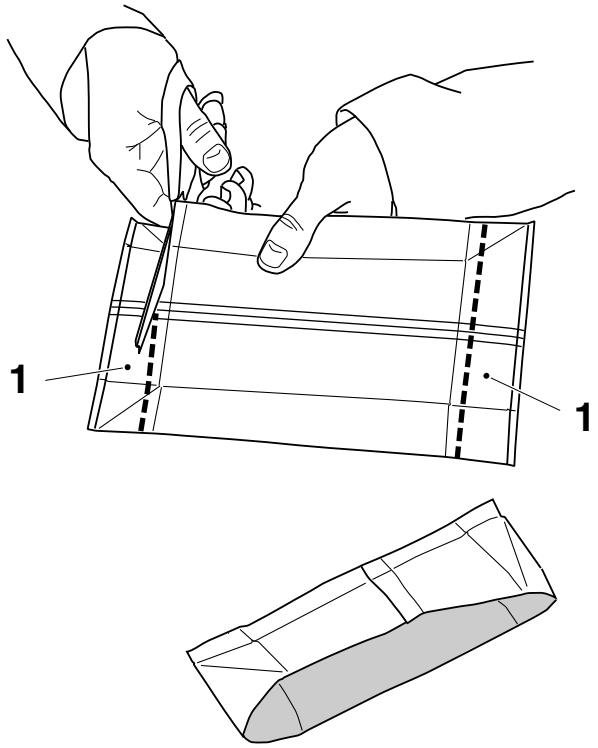

2

Accurate Check

Cut a sample strip (1) of about 25 mm in width from the top and bottom transversal seals.

Wash the samples and dry gently with compressed air from the filling machine or dry with a paper towel.

Note! Improper use of compressed air could create defects in the packages.

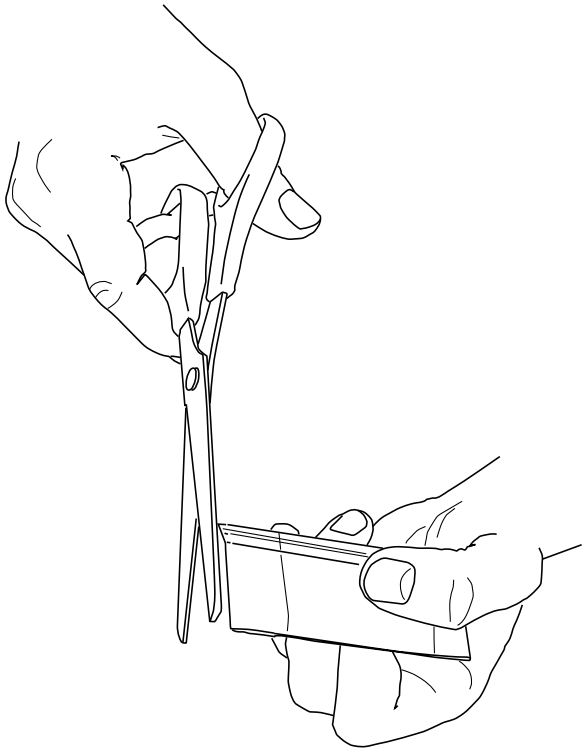

3

Cut off no more than 1 mm from each side of the package at a 90° angle to the TS.

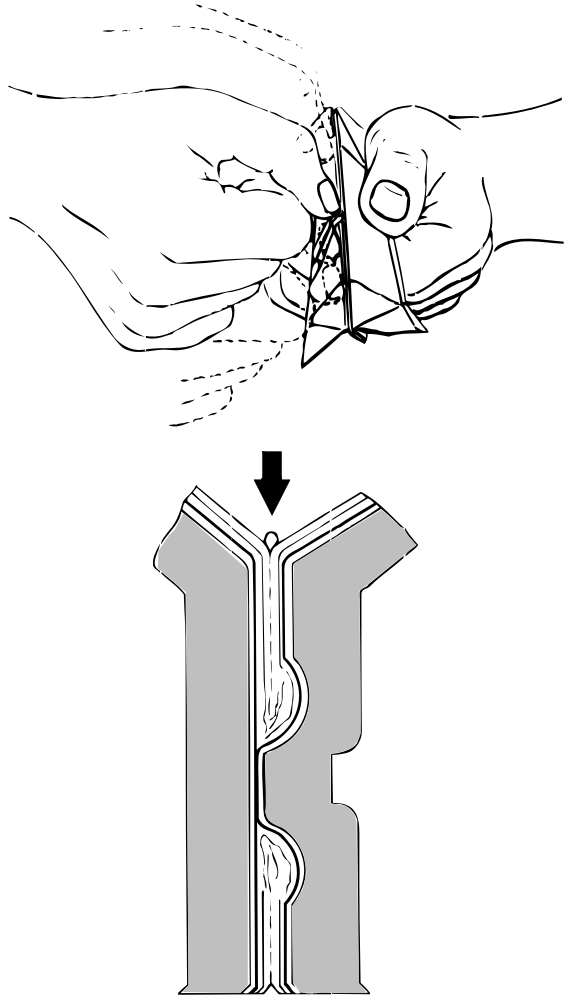

4

Bend the TS. The sealing is defective if there are lumps or ridges in the sealing area.

This may be caused by too much heat or high pressure on the jaws during sealing.

If the pressure is too high call a technician.

To adjust the power and correct the TS sealing, follow the instructions in 2.6.5 Package Forming Unit Window

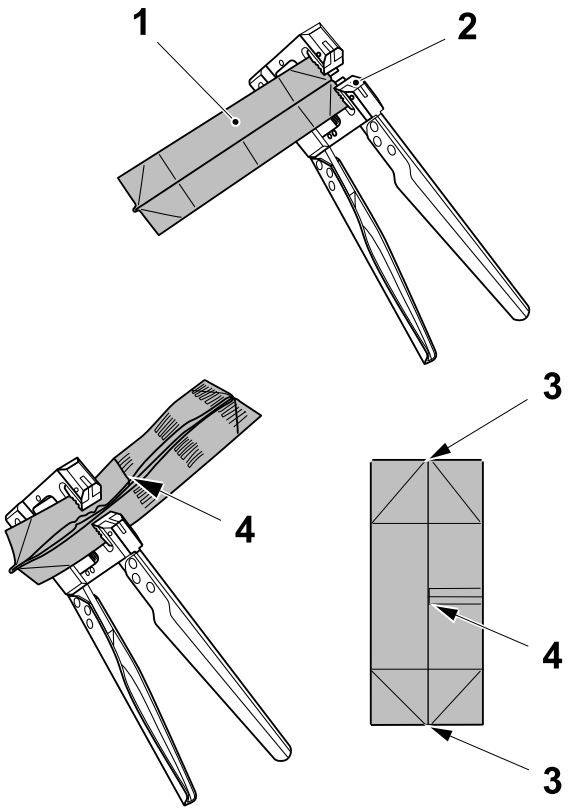

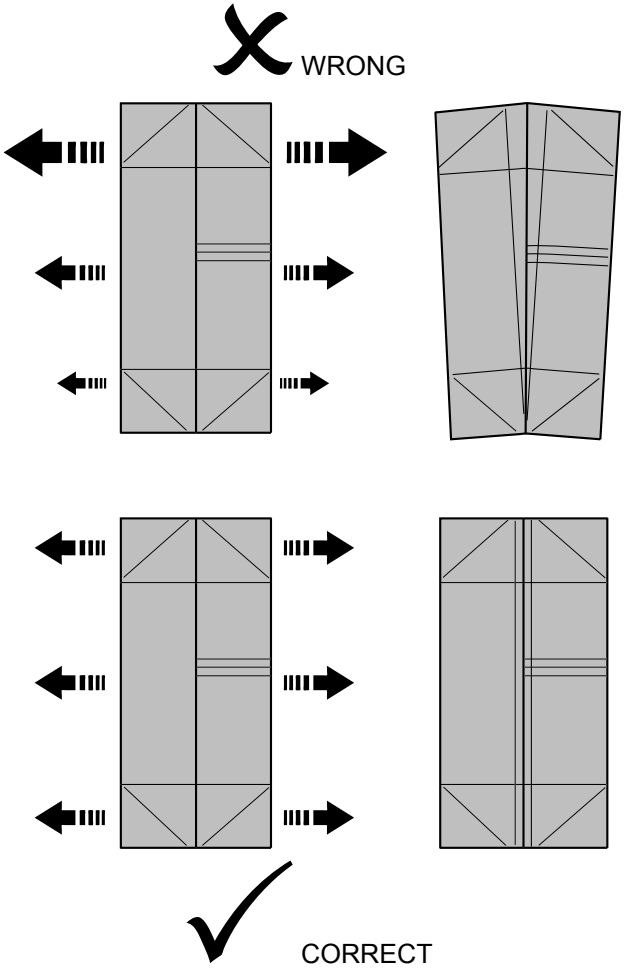

5

Insert the edges of the sample (1) into the gripping jaws (2) of the stretch pliers.

Gently squeeze the handles to stretch the seal.

Stretching slowly makes evaluation easier.

Observe that the seal area stretches and breaks.

Continue stretching along the sample (1) until it has completely opened.

The TS must be stretched and evaluated along the entire seal.

Pay special attention to the TS corners (3) and where the TS and the LS meet TS/LS cross (4).

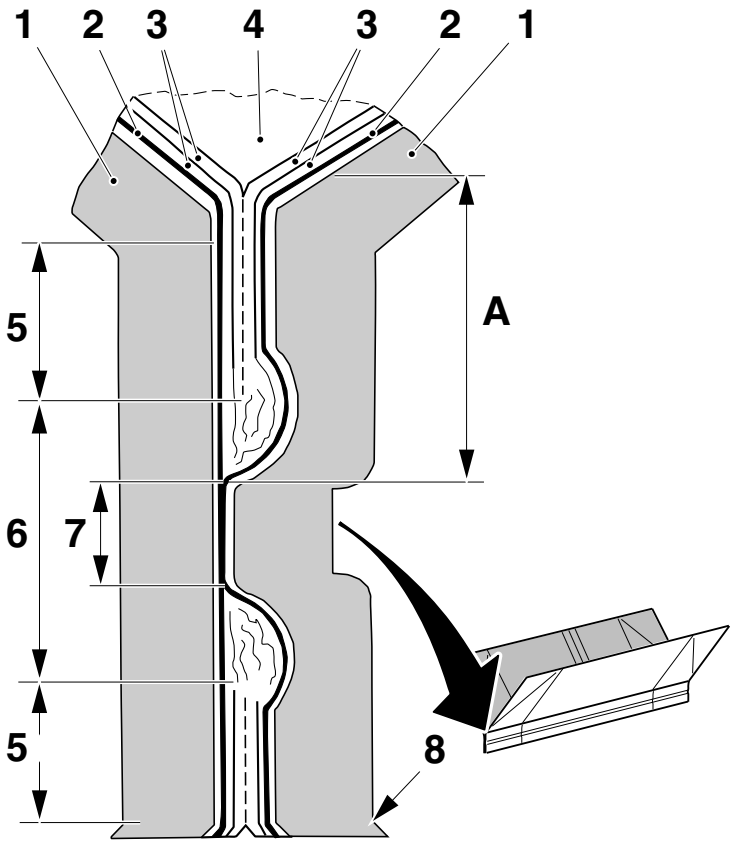

1 Paper board
2 Aluminium foil
3 Polyethylene (double layer)
4 Filling product
5 Blocked area
6 Sealed area
7 Ridge
8 Cutting line

6

Stretch the TS along the entire length of the seal with the stretch pliers and evaluate the seal.

It is mainly the sealing on the product side of area **A** that is important.

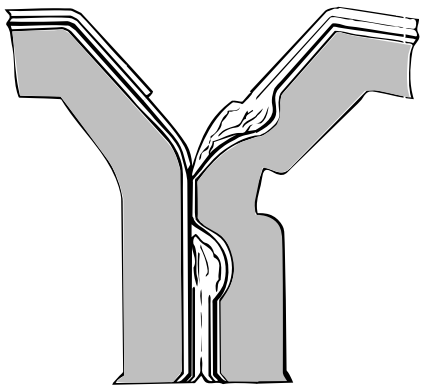

7

Check the TS sealing.

The sealing is acceptable if:

- The seal remains intact but a delamination between the two inner coatings takes place.

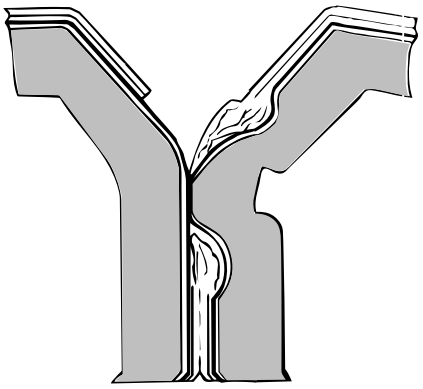

8

The sealing is acceptable if:

- The seal remains intact when the joint is pulled apart, but the Al-foil comes off on one of the sides presenting a shiny metal surface.

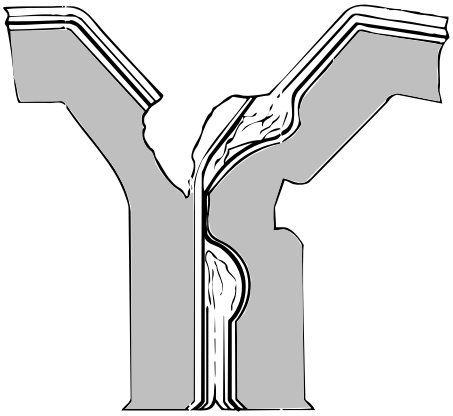

9

The sealing is acceptable if:

- The seal remains intact but a rupture takes place in the layer of paper board.

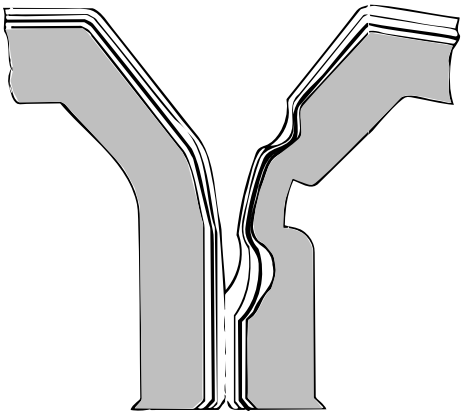

10

The sealing is defective if:

- The seal is so weak that the two PE layers separate without rupturing.

Adjust the power to correct the TS sealing, follow the instructions in 2.6.5 Package Forming Unit Window.

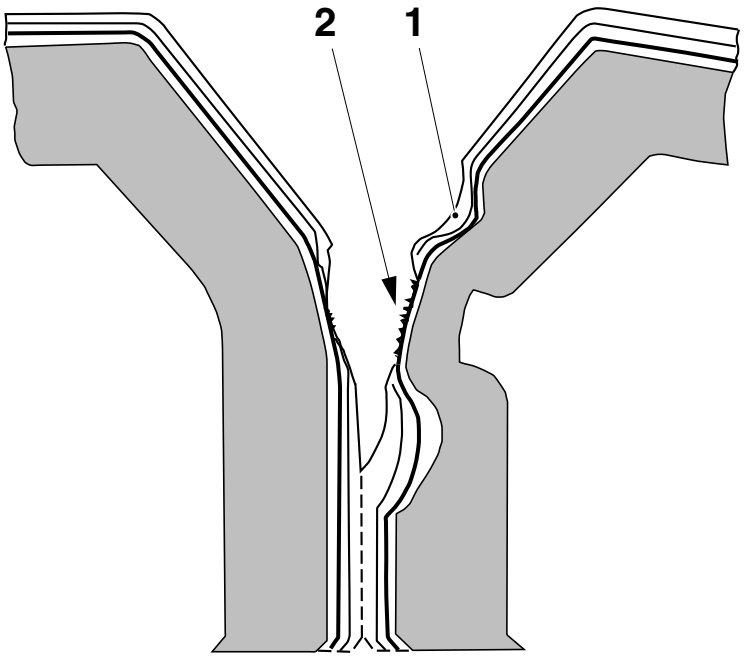

11

The TS is defective if:

- The seal is so overheated that the two PE layers (1) disappear from the sealing area because they have melted away and the aluminium foil (2) shows micro-cracks and cuts.

Adjust the power to correct the TS sealing, follow the instructions in 2.6.5 Package Forming Unit Window.

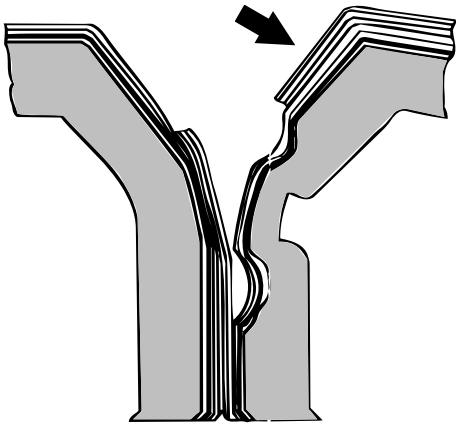

fig.1

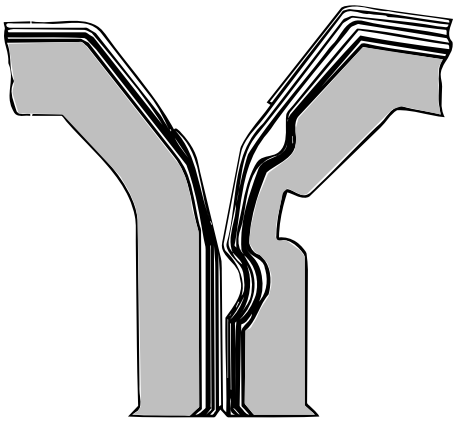

fig.2

12

Check the TS sealing in the cross area.

Note! The evaluation of the TS also applies to the evaluation of the cross.

The strip (shown by the arrow) can be regarded as additional layers coating the Al-foil.

The sealing is acceptable if:

- a rupture occurs in any of the layers (fig.1).

The sealing is defective if:

- there is **no** rupture (fig.2). This may be caused by too low a sealing power.

Adjust the power to correct the TS sealing, follow the instructions in 2.6.5 Package Forming Unit Window.

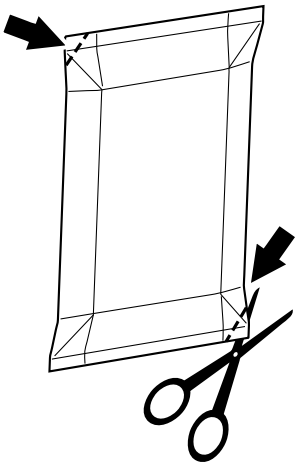

fig.1

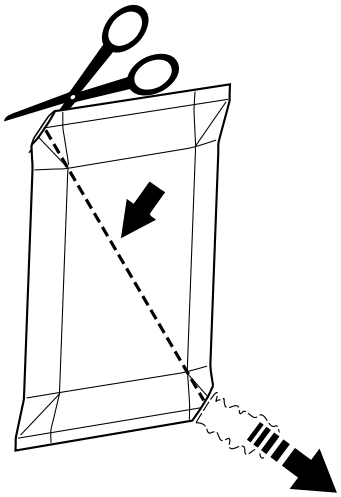

fig.2

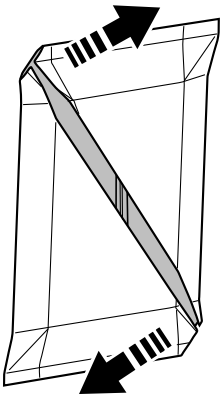

fig.3

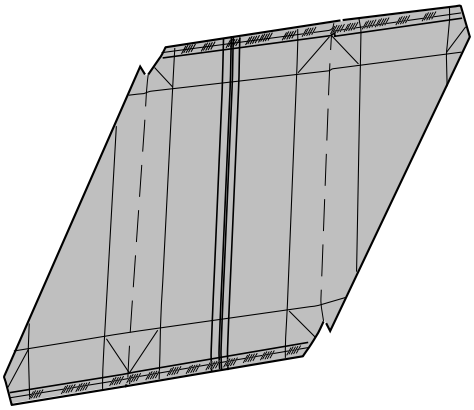

fig.4

1

Internal Surfaces

Cut two opposite corners (fig.1) and empty the content of the package.

Cut transversally the front panel of the package, from the lower cut corner to the opposite one (fig.2 and 3).

Split the TS apart and open the package (fig.4).

Rinse the package and dry gently with compressed air from the filling machine or dry with a paper towel.

Note! Improper use of compressed air could create defects in the packages.

Preparing the samples in this shape allows a fast preparation and avoids the risk of cutting the package internal surfaces.

Check the outside and inside surfaces of the package for scratches or other possible defects that can be detected with the fingernail.

Inside deep scratches might cause package integrity problems.

If there are any defects, call a technician.

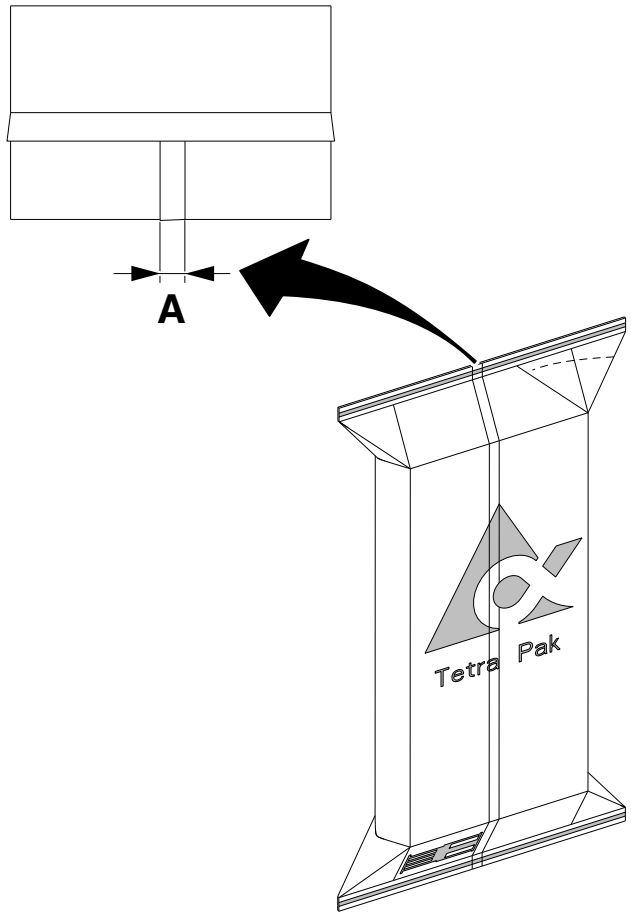

1

Longitudinal Seal Overlap

Check the width of the overlap (distance **A**)

Package	Distance A
TBA 80 S	6.0 ± 1.0 mm
TBA 100 B	4.0 ±0.5 mm
TBA 125 S	4.0 ±0.5 mm
TBA 160 S	4.0 ±0.5 mm
TBA 180 S	4.0 ±0.5 mm
TBA 200 B	8.0 ±1.0 mm
TBA 200 M	6.0 ±1.0 mm
TBA 200 S	4.0 ±0.5 mm
TBA 200 Sq	8.0 ±1.0 mm
TBA 250 B	8.0 ±1.0 mm
TBA 250 S	6.0 ±1.0 mm
TBA 250 Sq	8.0 ±1.0 mm
TBA 284 B	6.0 ±1.0 mm
TBA 300 S	6.0 ±1.0 mm
TBA 330 S	8.0 ±1.0 mm
TBA 375 S	9.0 ±1.0 mm
TPA 125 Sq	4.0 ± 0.5 mm
TPA 200 Sq	5.0 ± 1.0 mm
TPA 250 Sq	5.0 ± 1.0 mm
TPA 330 Sq	6.0 ±1.0 mm
TBA 200 E	7.0 ±1.0 mm
TBA 250 E	7.0 ±1.0 mm

1

LS Strip Application

The LS strip application evaluation consists of three steps:

a) Visual inspection of LS position and check of heat and pressure distribution.

b) Sealing quality check, by performing the mechanical tear down of the LS strip.

c) LS strip tightness, by performing the red ink injection test, as shown in section.

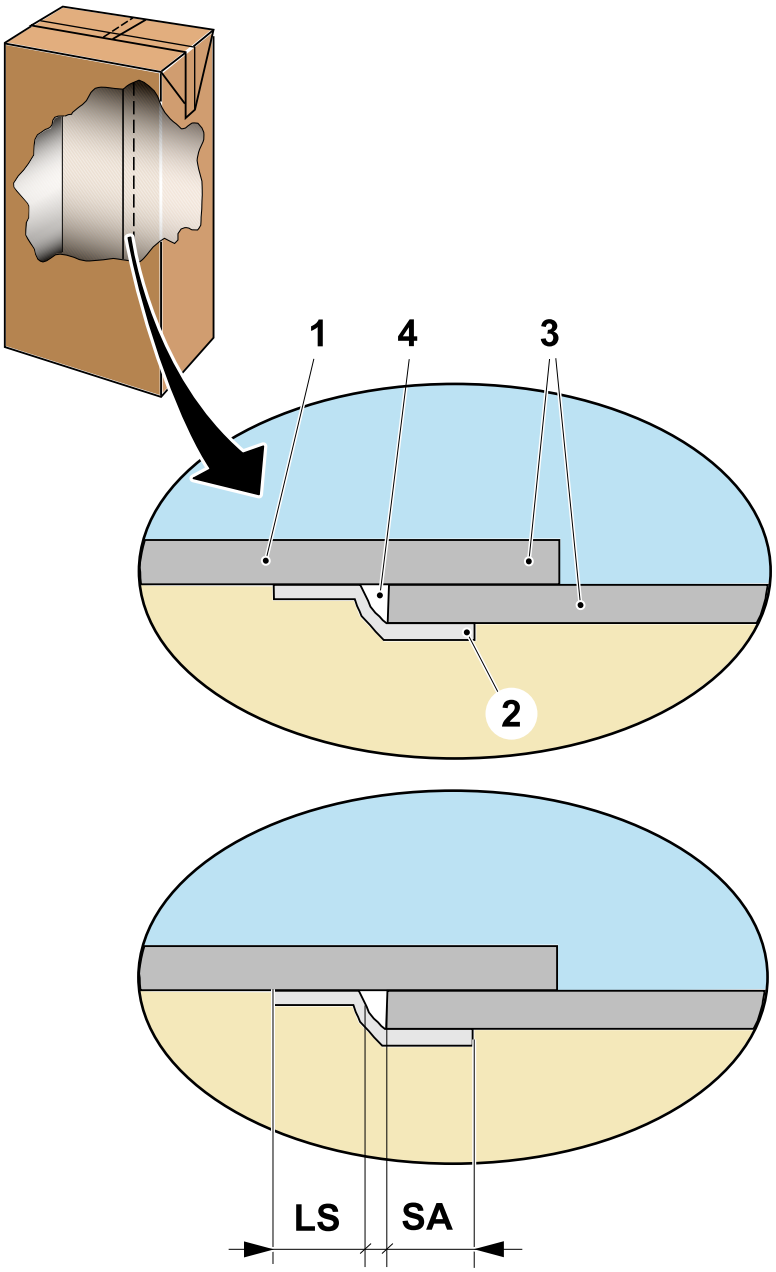

2

LS Strip Visual Inspection

The Strip Applicator side (SA) of the seal is where the strip (2) is attached to the packaging material by the Strip Applicator.

The Strip Applicator side (SA) is the side of the strip where the packaging material (3) is double.

The LS side is where the strip is attached to the packaging material during tube forming.

The Longitudinal Sealing side (LS) is the side of the strip (2) where the packaging material (1) is single.

An air gap (4) is present in the middle of the seal.

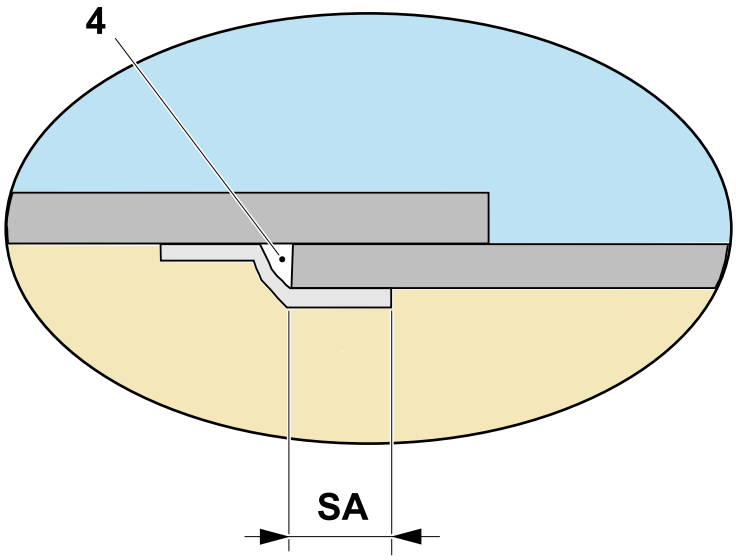

3

The LS strip is not always centred with respect to the seal. This condition changes depending on strip type and tension applied (MPM or PPP strip types).

Check that the dimensions of the SA side of the strip and the air channel (4) are as reported in the table below, according to the strip type application:

	strip type:	
	PPP	**MPM**
SA side	~3.5 mm	~4.2 mm
Air Channel	less than 1.0 mm	

Note! The air gap (4) should be simply visible and not exceeding 1.0 mm, to not compromise package performance during distribution chain.

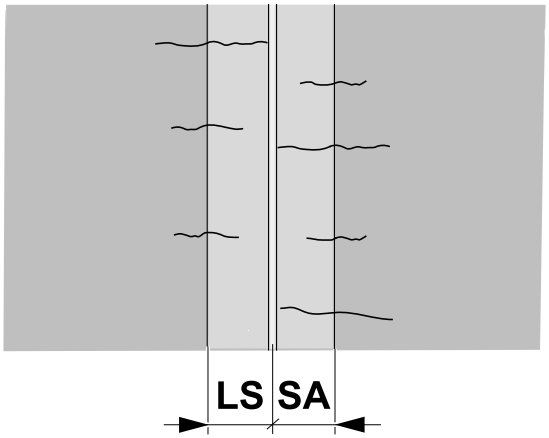

4

Carefully, visually, verify the heated area of both SA and LS application to ensure that the heat and pressure applied are correct.

If a too high heat or pressure are applied, the heat line is often also under the strip.

The following table shows the type of sealing used in this machine for SA and LS.

SA	**LS**
hot air	hot air

Note! Induction heating and hot air give different results in terms of visual appearance, therefore it is important to know which kind of sealing system is used during the package check phase.

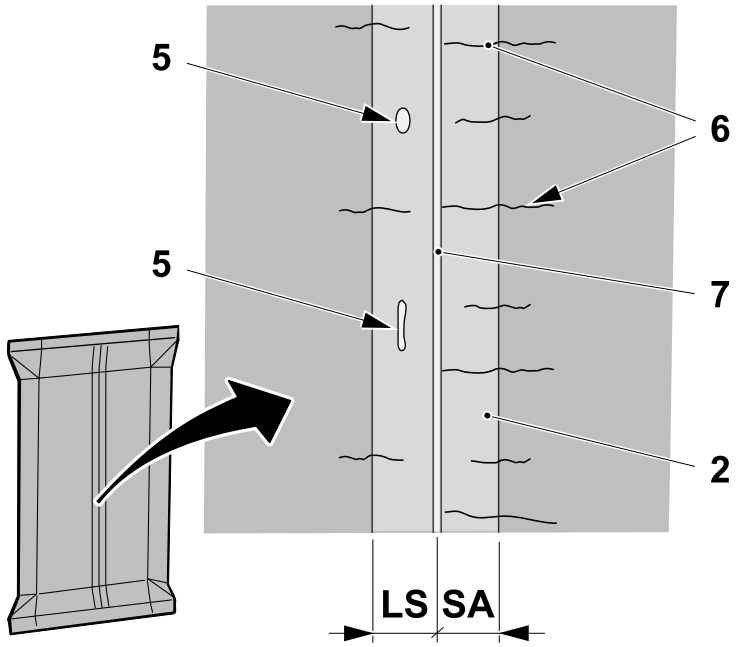

5

Check for blisters or bubbles (5) along the heated zone of the LS strip (2). The presence of blisters (5) in the LS side of the strip (2) indicates too much sealing temperature for the LS induction heater.

Presence of blisters in the SA side of the strip indicates too much sealing temperature for the strip applicator induction heater.

On the LS strip (2) there are some small heating lines (6) visible mainly on the SA side.

Note! The air channel (7) must be visible.

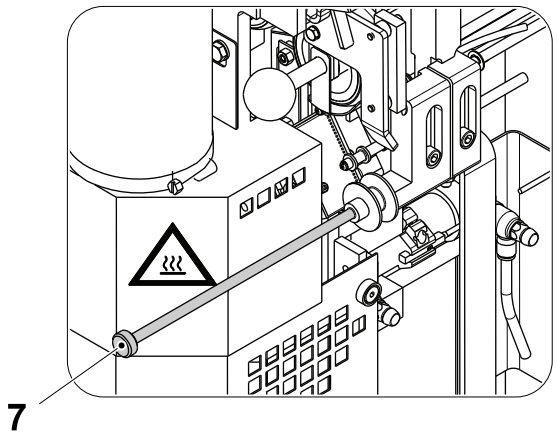

6

Note! Stop the machine in SHORT STOP before adjusting the strip position.

If required, adjust the position of the strip with the knob (7) on the strip roller.

Call a technician if the setting of the LS or SA must be changed.

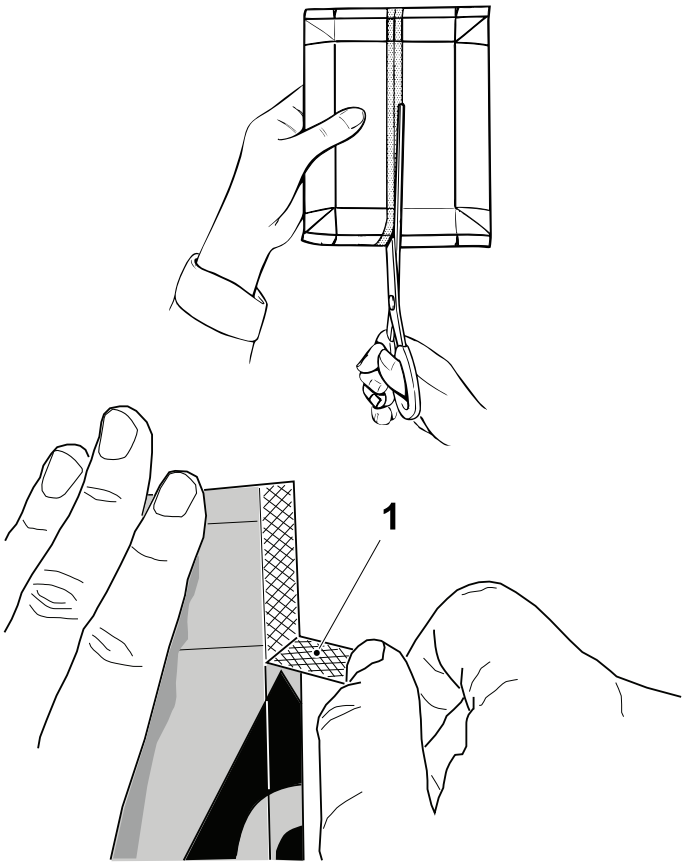

7

Sealing Quality

Cut through the middle of the LS strip, along the inner edge of the packaging material.

Pull off the outer layer of packaging material (1) where it is double, to check the overlap. A good overlap gives stability to the package. If there is any defect, corrective actions should be taken.

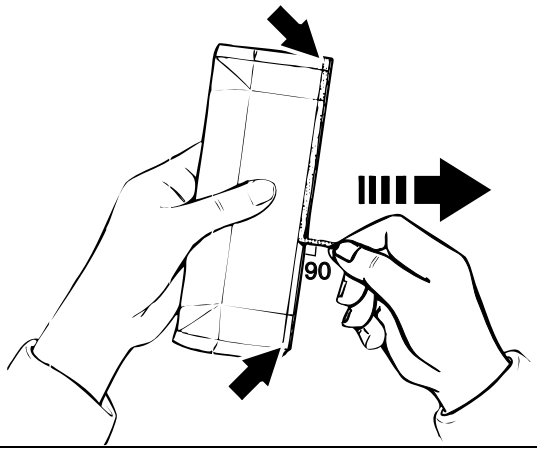

8

Check the strip by slowly pulling approximately 20 mm of the strip outwards at an angle of 90°. Pull **extremely** slowly over the creases. Take hold again and pull another 20 mm. Continue along the whole edge. Pull on both sides (SA and LS).

Note! If any of the layers come off, cut the strip and start pulling again.

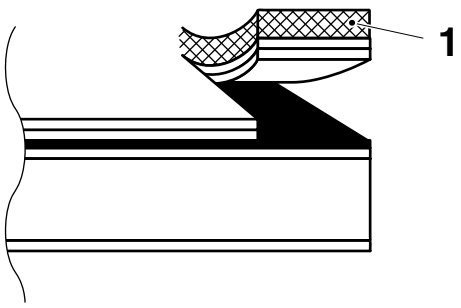

9

Check the strip sealing.

The sealing is **acceptable** if:

- both inner coatings come off with the strip (1), leaving the Al-foil bare.

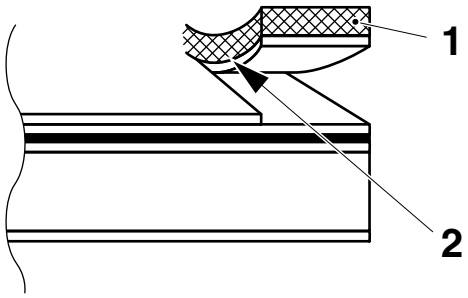

10

The sealing is **acceptable** if:

- one of the two inner coatings comes off with the strip (1), leaving a ruptured edge (2) along the seal.

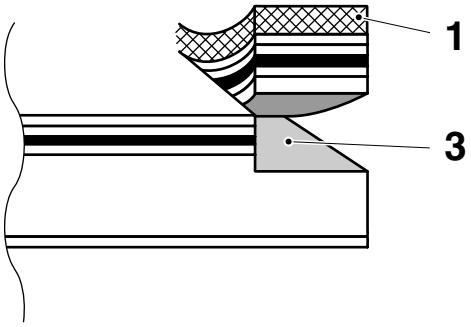

11

The sealing is **acceptable** if:

- all the inner layers including the Al-foil come off with the strip (1), although possibly leaving paper board fibres (3).

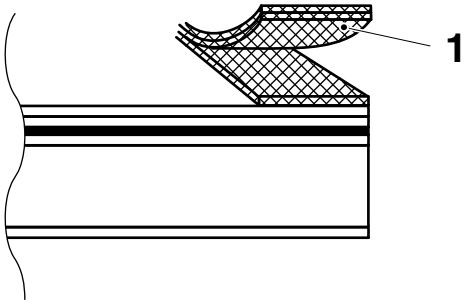

12

The sealing is **acceptable** if:

- the strip (1) separates (delaminates) when it is pulled off.

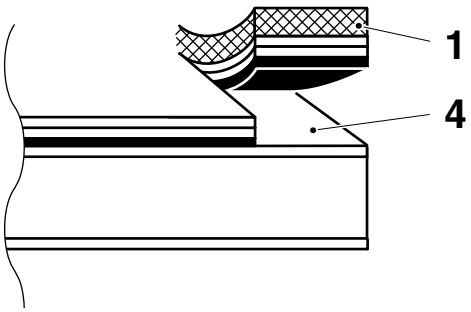

13

The sealing is **acceptable** if:

- all the inner layers including the Al-foil come off with the strip (1), even possibly leaving part of the inner PE layer (4) on both sides.

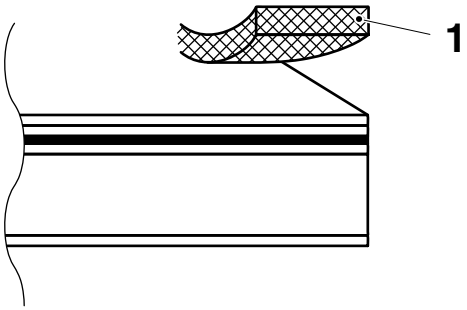

14

The sealing is **defective** if:

- the strip (1) comes off leaving the inner coatings of the packaging unaffected. In this case, stop PRODUCTION and call a technician for specific settings.

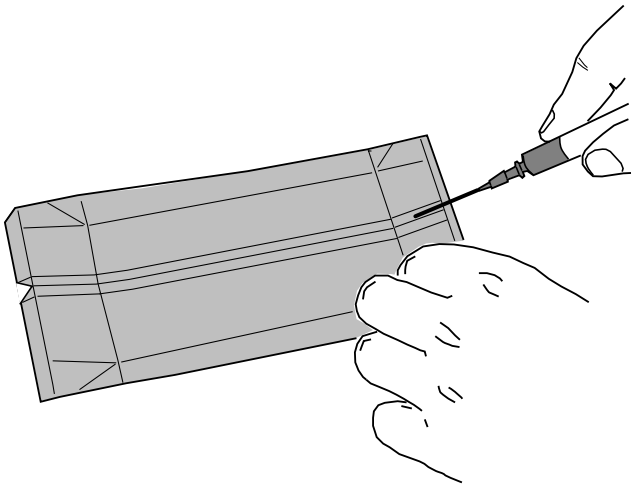

15

LS Strip Tightness

Check the LS strip tightness by performing the red ink injection as shown in section 5.4.10 LS by Red Ink Injection.

5.4 Laboratory Checks

The Laboratory Checks describe the checks to perform at least once per day.

CAUTION
Laboratory Checks and corrective actions can affect the Quality of the Production.
Whenever a fault cannot be eliminated call a technician.

5.4.1 General Recommendations

These package checks are **exclusively a laboratory assessment**. After specific training by a laboratory officer, an operator might perform on his own the evaluation in the laboratory premises using the fume extractor.

The preparation of chemicals is under the laboratory responsibility.

Take the package samples according to the section 5.4.2 Package Selection and Utilization.

If conductivity and dissolving tests are to be performed in parallel **2** extra packages are needed.

Follow the sequence of checks as described in the 5.4.4 Flowchart of the Laboratory Checks.

Record the checks performed using a Record or Sample Collecting sheet. Archive the test samples together with the record sheet, and keep them as part of the company Quality Assurance program.

Note! Examples of Recording and Sample collecting sheets are available on request.

If necessary, photocopy the 5.4.4 Flowchart of the Laboratory Checks and mark the check box when each check has been completed.

5.4.2 Package Selection and Utilization

To perform the checks **6** package samples are needed.

Take the package samples from the conveyor according to the procedure described on page 5-15.

Use an indelible pen to mark the package samples from 1 to 6 on the top and bottom.

Use **4** of the package samples to perform the checks, except the LS by Red Ink Injection which is destructive.

Note! An additional **2** package samples might be needed if conductivity and dissolving tests are to be performed in parallel.

For the LS by Red Ink Injection check use:

- the **2** package samples if the machine settings are stable and unchanged
- take an additional **10** package samples if the machine settings have been recently changed.

Use the Checking Scheme Table as a guide to the package sample utilization.

5.4.3 Checking Scheme

Perform the package checks in the sequence described in the Checking Scheme Table.

The Checking Scheme Table explains:

- the check to be performed
- the package sample to be used for the check

5.4.3.1 Checking Scheme Table

5.4 Laboratory Checks

Checking Scheme Table						
Check	**Package Samples**					
	Sample No. 1	Sample No. 2	Sample No. 3	Sample No. 4	Sample No. 3	Sample No. 4
Package Integrity by Conductivity	✓	✓				
Leakage by Red Ink	✓	✓				
TS Heat Pattern by Dissolving			✓	✓		
TS Integrity by Red Ink			✓	✓		
LS by Red Ink Injection					✓	✓

Notes:

5.4.4 Flowchart of the Laboratory Checks

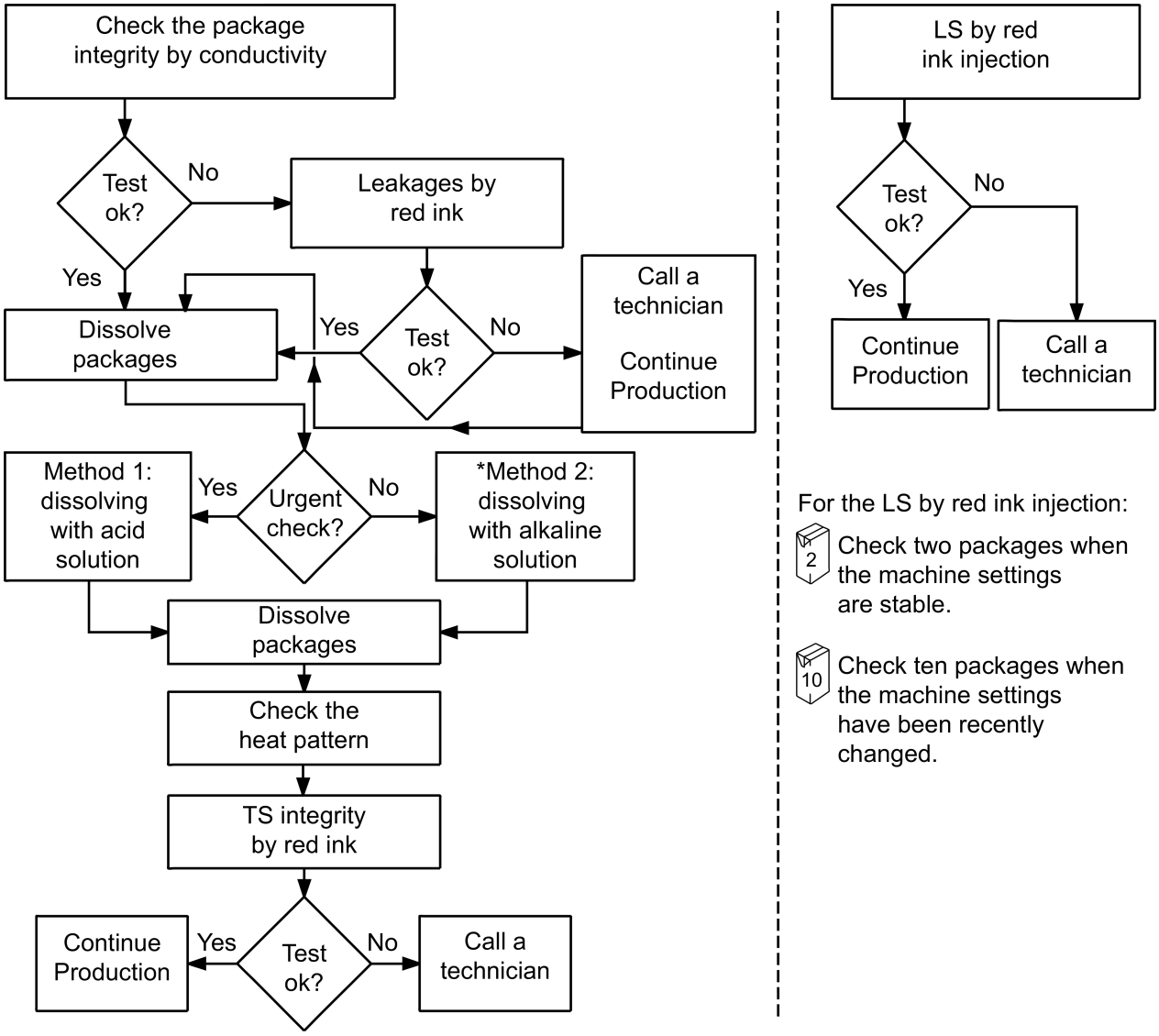

* Method 2 requires approximately 7 to 10 hours and should not be used as a test method between normal production runs.

CAUTION
Risk of LS strip damage.
The two dissolving methods must not be mixed (i.e. partly method 1 and method 2) due to chemical hazard.

5.4.5 Laboratory Package Checks

Equipment 1

The following equipment is needed:

- scissors
- plastic container
- ammeter (TP No. 90243-110)
- beakers and bowls
- table salt
- red ink (TP No. 90298-28)

Chemical Terminology 1

The following lists the formula and the corresponding compounds used in the Laboratory Package Checks:

Formula	Extended
$CuCl_2$	Copper Cloride
NaOH	Sodium Hydroxide
HCl	Hydrocloric Acid
Na_2CO_3	Sodium Carbonate

5.4.6 Package Integrity by Conductivity

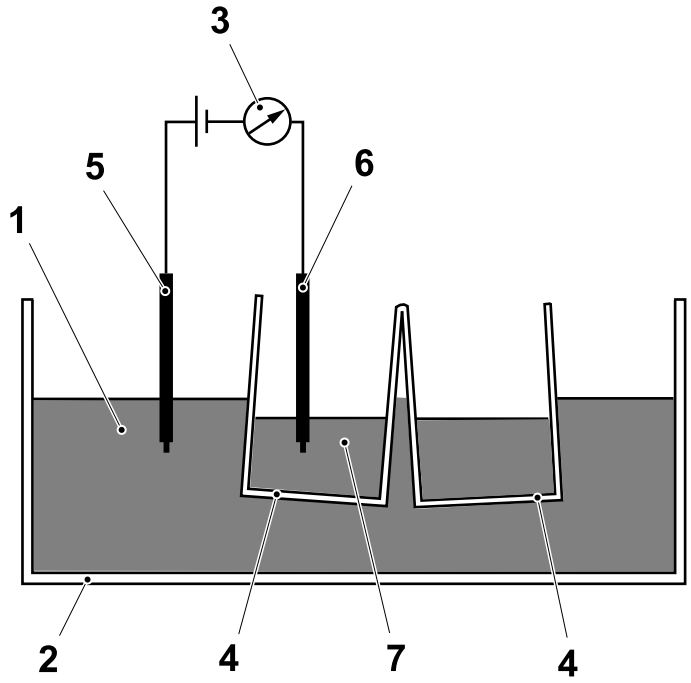

1 Table salt solution in container
2 Plastic container
3 Ammeter
4 Half package
5 Electrode
6 Electrode
7 Table salt solution in package

1

Note! If occasional package leakages are suspected, larger-scale investigation can be carried out by measuring the electrical conductivity.

If deviations are detected during measurements, the whole package section must be checked using red ink.

The following equipment is required:

- plastic container approximately 30 cm diameter, 10 cm depth
- ammeter with battery and electrodes
- 1% table salt solution (e.g. 10g table salt in 1 Litre water).

The water is rendered electrically conducting by the addition of table salt.

If the is defective or if the internal polyethylene coating is damaged, electric current will flow and the ammeter will display a reading.

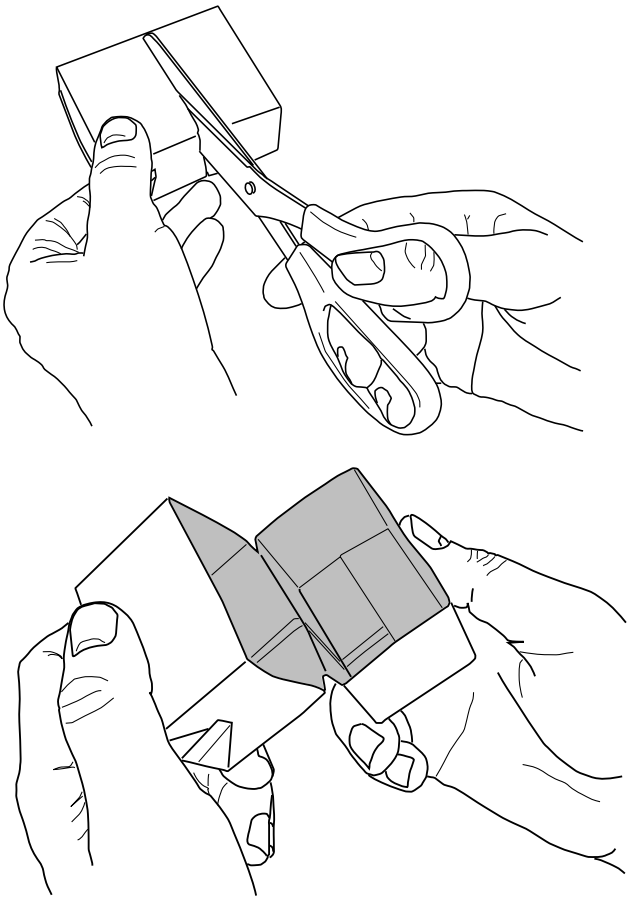

2

Note! Handling of the samples is of vital importance in the whole evaluation. Care and attention must be used at all stages of the evaluation.

Cut the package in half on the front side panel (the one without the LS), using the scissors.

Empty out the packages content.

Wash carefully the two halves of the package with water.

Dry thoroughly the cut edges of the package with paper towel.

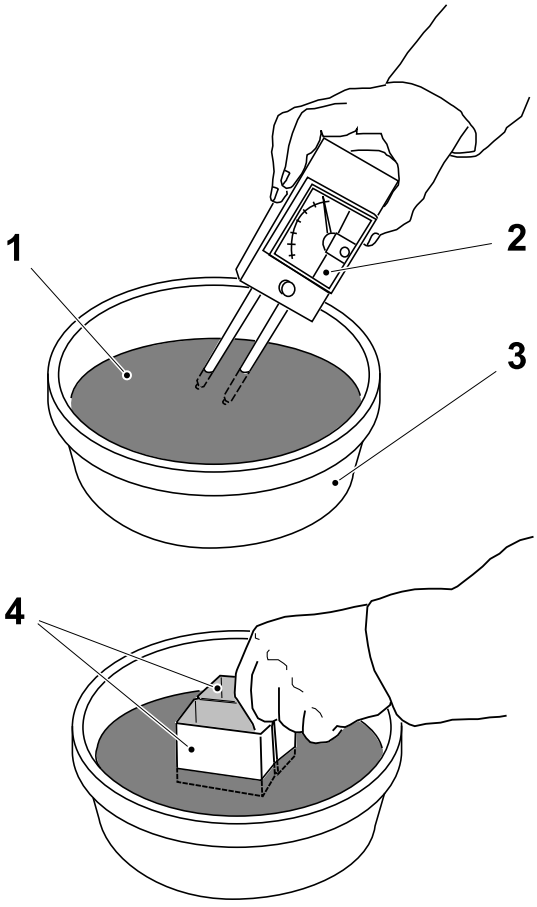

3

Pour the salt solution (1) into the container (2).

Insert the electrodes of the ammeter (3) into the salt solution (1) and check if the ammeter displays a reading.

Pour some of the salt solution into both halves of the package (4) and dry out the cut edges again with a paper towel.

Place the halves of the package (4) into the salt solution (1).

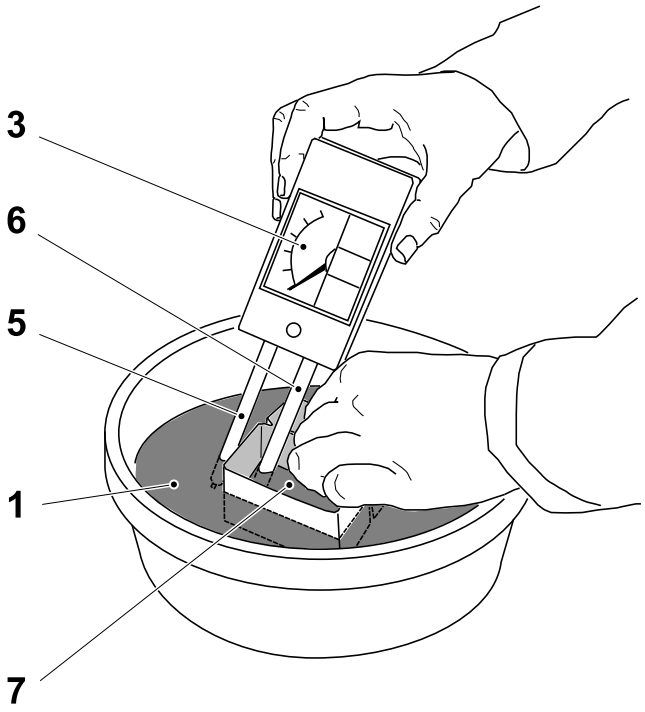

4

Immerse one electrode (5) of the ammeter (3) in the salt solution (1) and the other electrode (6) in the salt solution inside the package (7).

Note! Be sure that sample edges are completely dry since presence of water may cause bridging of current and false reading.

Check the ammeter (3) display.

- If the ammeter does not display a reading, the inner layer of PE is integer
- If the ammeter displays a reading, either the package is defective or the inner layer of PE is damaged: red ink test is needed.

Test both packages halves in the same way.

Note! The salt solution can be used several times. Change the solution when it is not clear or once a week.

- If there is no deflection of the ammeter, continue testing the package from item 5.4.8 Check TS Heat Pattern by Dissolving
- If there is a deflection of the ammeter, test the package with red ink, from next item.

5.4.7 Check for Leakages with Red Ink

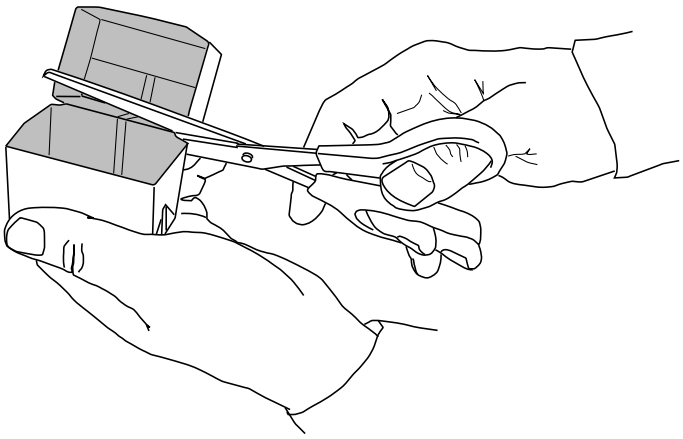

1

Dry carefully the inside of the halves of packages with a paper towel.

Cut the package to separate the two halves.

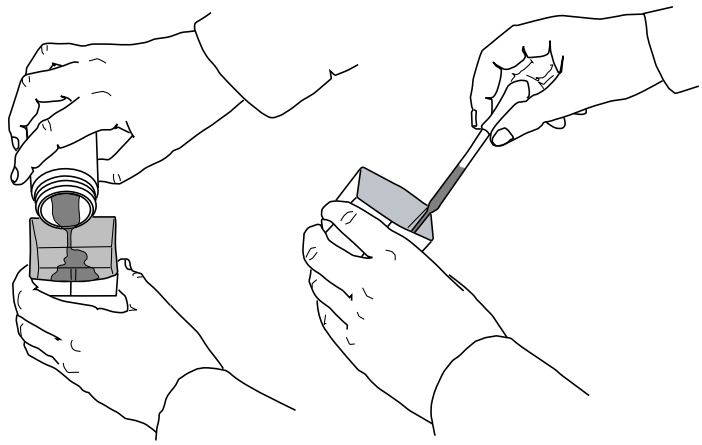

2

Pour some red ink inside the half package that displayed a deflection. Swirl the red ink around.

Leave the red ink inside the package for at least 5 minutes.

Remove any excess of red ink from the inside of the package with a plastic pipette.

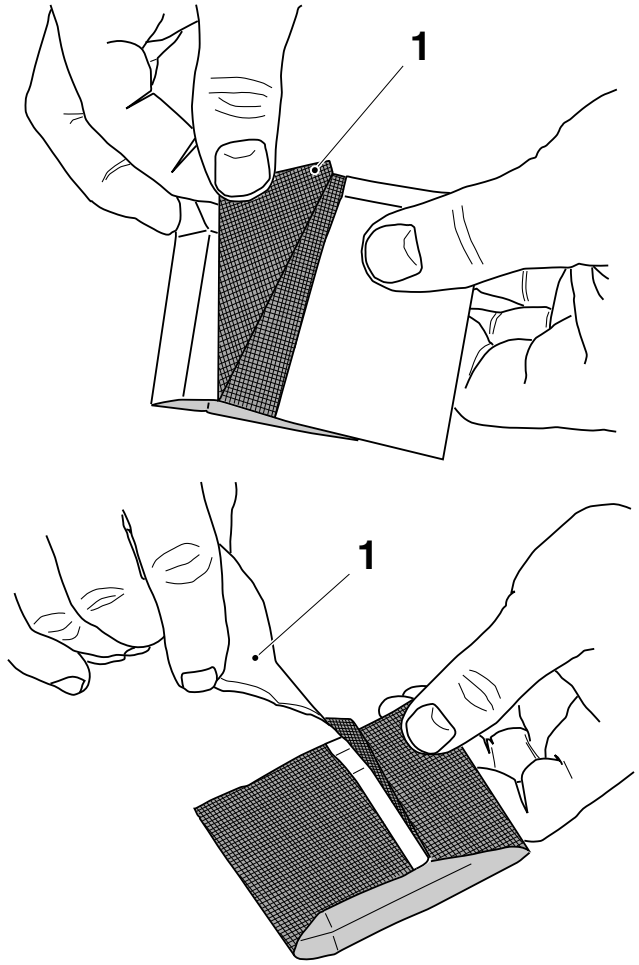

3

Rinse out the red ink residue and dry the inside of the half package with compressed air from the filling machine or dry with a paper towel.

Note! Improper use of compressed air could create defects in the packages.

Let it dry before carefully removing the outer layer of PE, splitting the packaging material. The outer PE and some paper board (1) will come off.

Note! If ink is still in the package when this operation is performed, artifact defects may be created.

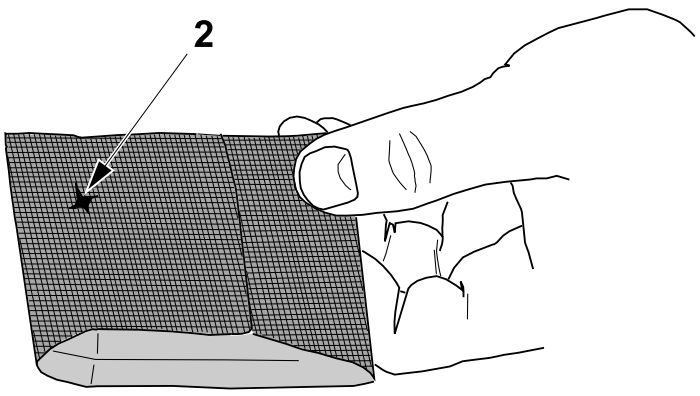

4

Check for any red marks (2) over the paper board layer over the package sample.

The presence of red marks indicates that the package leaks or that the inner PE pouch is damaged. In this case, call a technician.

5.4.8 Check TS Heat Pattern by Dissolving

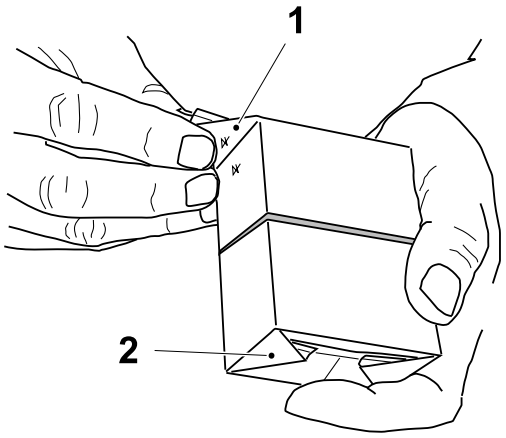

Sample Preparation

1

Take the cut package and unfold the top flaps (1) and bottom flaps (2).

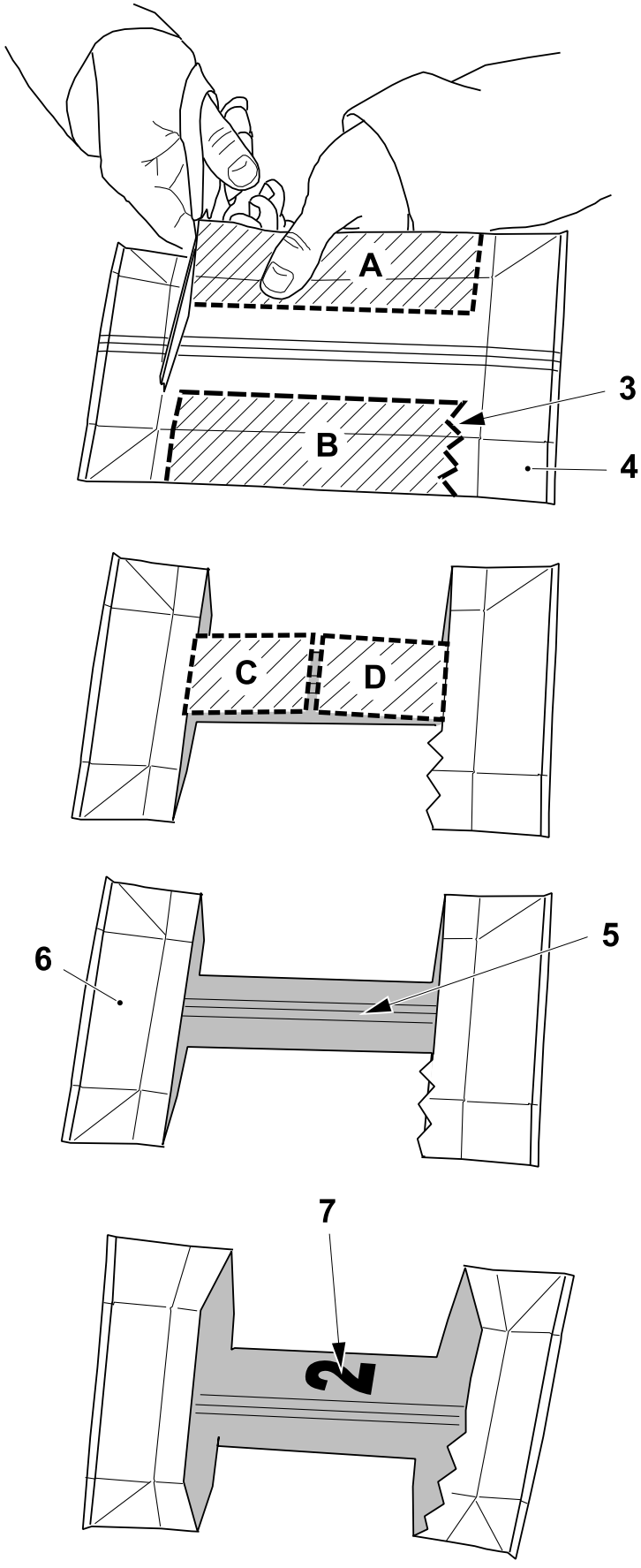

2

Flatten the package.

Note! Cut with a distinctive cut type (3) part of the sample to easily identify the top TS side (4) of the sample.

Cut out the pieces **A** and **B** to leave an I shaped sample, as shown in the drawing.

At the side not including the LS (5) cut away the pieces **C** and **D** to leave the final shape (6).

Carefully wash and dry the samples, inside and outside.

Mark each sample, on the inner PE, with progressive numbers (7), to identify from which jaw pairs the package comes.

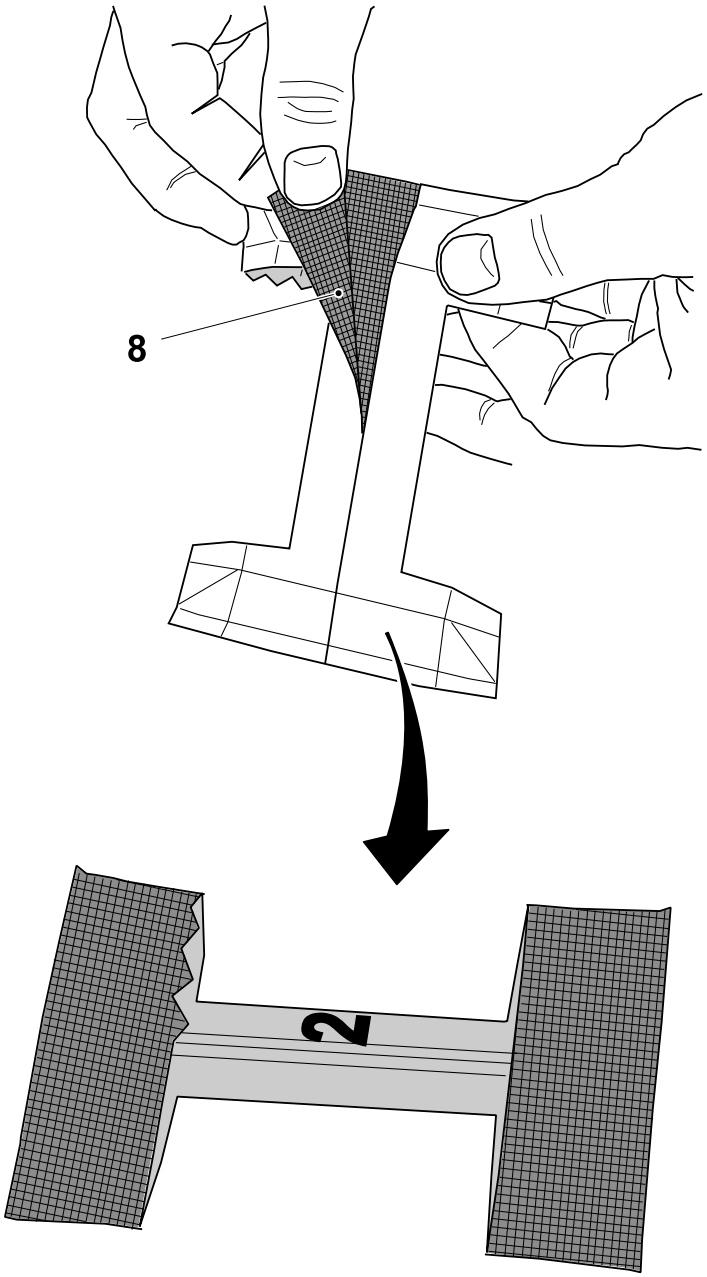

3

Carefully remove the outer layer of polyethylene, splitting the packaging material.

The outer polyethylene layer and some paper board (8) will come off to obtain the sample to utilize for the test.

4

Sample Dissolve

WARNING

Alkali and Acid.

Always follow the Safety precautions when working with acid and alkalis. Preparing and working with hydrochloric acid solutions and sodium hydroxide solutions must be carried out under well ventilated conditions as fumes may be given off. Wear protective goggles and gloves. For the preparation always use heat resistant glass beakers. Used liquids should be disposed of in accordance with the prevailing regulations.

The microbiological quality of the TS is checked by chemically exposing the inner coating (dissolving method) and checking its tightness by means of the leak detection fluid (red ink).

Note! The LS strip is extremely sensitive to chemical treatments. Pay attention to carefully follow the dissolving instructions to preserve the sample and avoid wrong samples assessment (MSE strip is particularly sensitive to high temperature and long chemical exposure).

Determine which type of dissolving method to use according to the time available for checking the samples. Two methods are available:

- Method 1 - Dissolving with an Acid Agent: using $CuCl_2$ in hydrochloric acid (37%) as the aluminium foil dissolving agent.
  This method is preferred when the urgency on the results is high and before production start. In this case follow the instructions on page 5-65.

  Note! The neutralizing step of this method is mandatory. If not performed the sample will be inconclusive and the LS strip negatively affected.
- Method 2 - Dissolving with an Alkaline Agent: this uses NaOH in water as the aluminium foil dissolving agent: the speed of reaction is lower (approximately 7 to 10 hours).
  This method is preferred when the amount of samples is large. In this case follow the instructions on page 5-70.

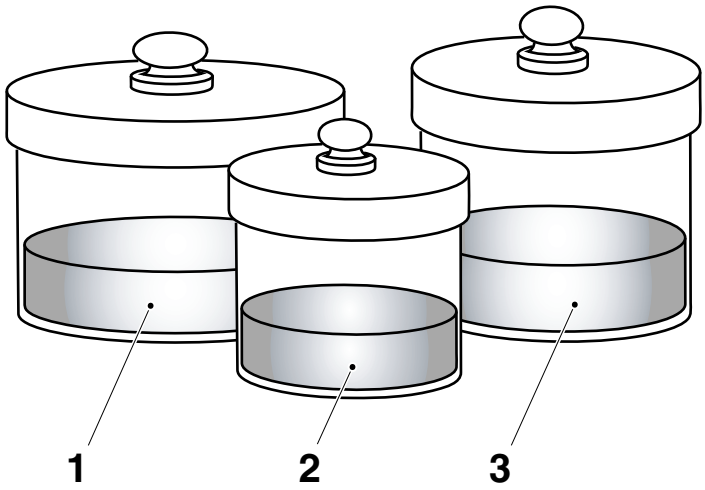

Method 1 - Dissolving with an Acid Agent

1

This consists of three solutions, bath (1), bath (2), bath (3).

The equipment and chemical preparations needed are:

- HCl 37%
- $CuCl_2$
- Na_2CO_3
- Distilled water
- Tongs
- Indelible felt-tipped pen
- Water bath
- Fume extractor
- Laboratory gloves (single use).

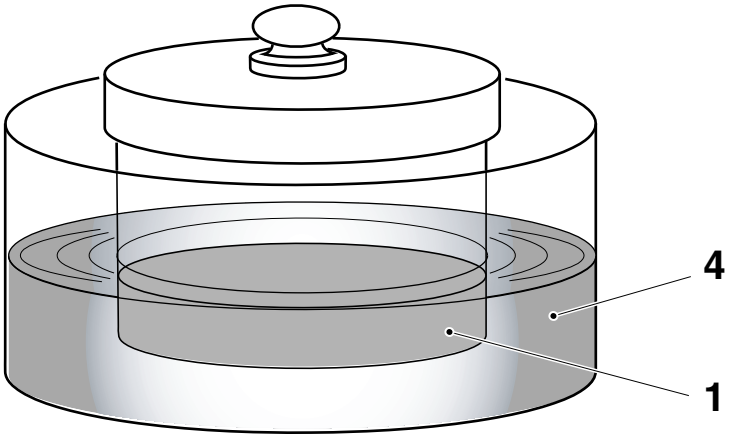

2

Preparation of Bath 1 (hydrochloric acid at 60°C)

WARNING

Do not use a direct flame!

The solution is prepared at room temperature but must be heated using a water bath (4) at 60°C when in use.

Dilute the HCl 1:1 with distilled water.

Add 1wgt% $CuCl_2$ (e.g. 1 lt HCl, 1 lt distilled water, 20 gr. $CuCl_2$).

Store the prepared bath (1) in a glass container with a glass lid.

Note! The bath might be filtered when it becomes dirty (filter at room temperature) and used for several TS examinations.

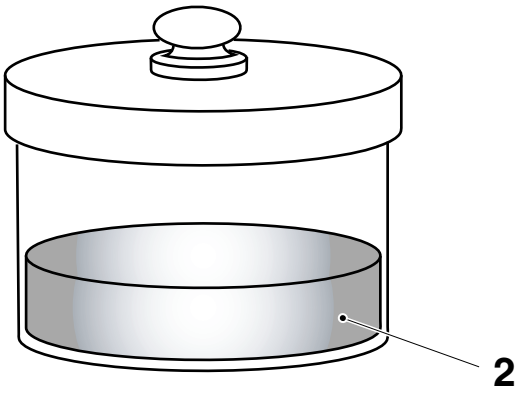

3

Preparation of Bath 2 (hydrochloric acid at room temperature)

Dilute the HCl 1:3 with distilled water. Add 0.5 wgt% $CuCl_2$ (e.g. 250 cc HCl, 750 cc distilled water, 5 gr. $CuCl_2$).

Store the chemical in a glass container with a glass lid.

Note! The bath might be filtered when it becomes dirty (filter at room temperature) and used for several TS examinations.

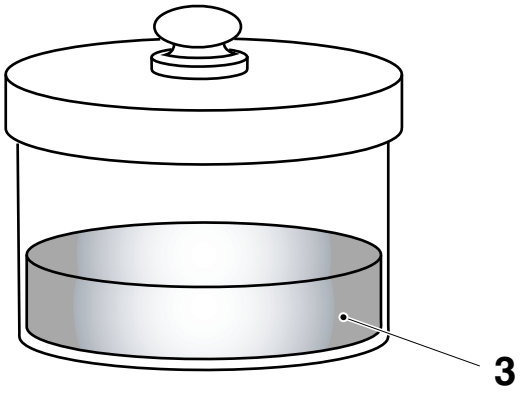

4

Preparation of Bath 3 (sodium carbonate at room temperature)

Note! The bath (3) spoils very quickly. The preparation of a new solution becomes necessary if its bubbling does not start when the samples are immersed in the solution.

Prepare 15 wgt% solution of Na_2CO_3 in distilled water (e.g. 150 gr Na_2CO_3, 1 lt distilled water).

Store the chemical in a glass container with a glass lid.

Note! The bath might be filtered when become dirty (filter at room temperature). The consumption of this bath is high compared to the others.

Note! This step is mandatory. If not performed the sample will be inconclusive and the LS strip negatively affected.

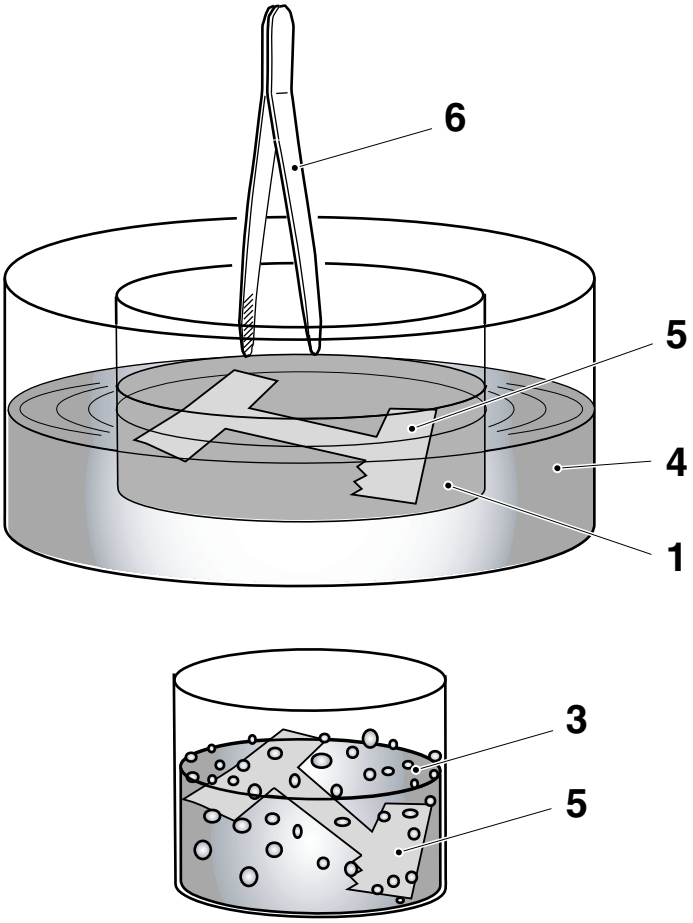

5

Note! Use one sample (5) at a time.

Immerse the samples (5) into the **Bath 1** with the aid of the tongs (6) and leave it there for approximately four minutes at 60 °C (warm water bath (4)).

Note! The bath temperature setting may need further adjustment. When samples are immersed, if the reaction is too fast (depending on how much board has been removed), the bath temperature could be lowered, even down to 50°C.

Remove the samples with the tongs and immerse them in **Bath 3** to neutralize them.

Note! The sodium carbonate bath (3) should bubble. If not, prepare a new solution.

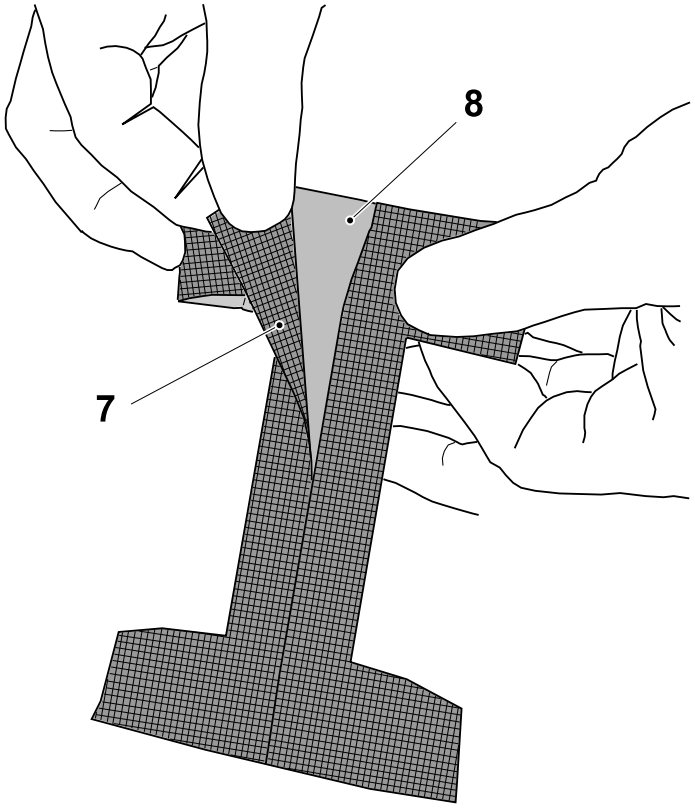

6

CAUTION
Chemical burn hazard.
Wear personal protective equipment.

Put the sample under tap water. The lamination layer (7) will separate from the aluminium foil (8) and can be easily removed.

If not, put it back in **Bath 1** for some extra time and rinse again the samples.

The inner pouch of PE and the aluminium foil (8) are left.

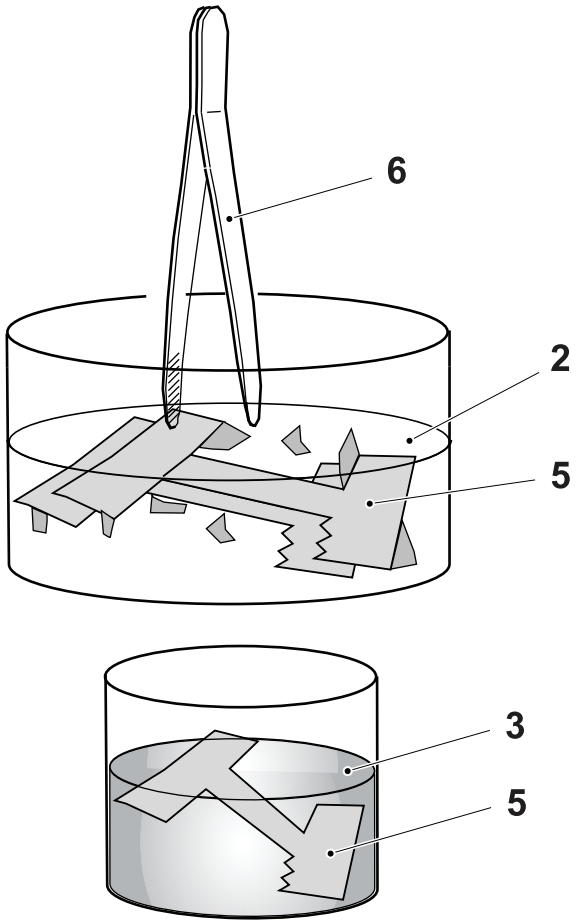

7

Note! This step is the most delicate. If it is not performed correctly, the sample can burn and be spoiled due to building of high temperature.

Immerse the samples completely and no more than two at a time in **bath 2** with the aid of the tongs (6). Take them away from the bath in fast sequence.

The aluminium layer will become detached. After separation, the sample (5) is reduced to a single inner coating.

The sample (5) now needs to be neutralized in **bath 3** and then rinsed carefully with tap water.

Dry the samples with paper towel and leave them on filter paper.

Continue from item Sample Dry on page 5-72.

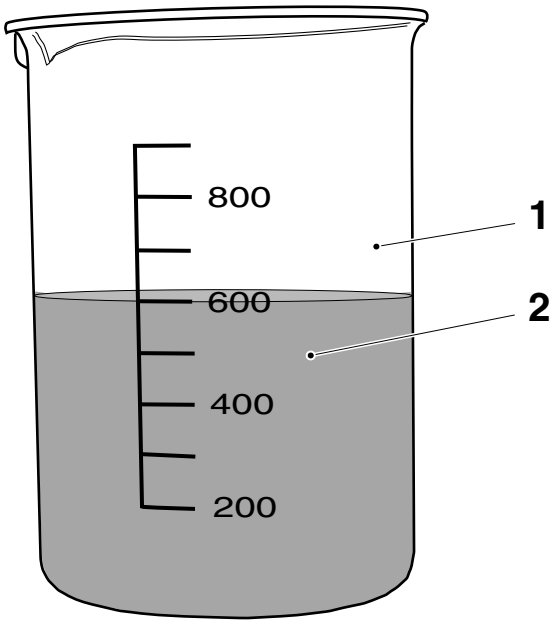

Method 2 - Dissolving with an Alkaline Agent

1

This consists of a 15% NaOH solution in water.

Prepare 15 wgt% NaOH distilled water solution by adding, while stirring, water to the NaOH pellets in a beaker (1).

The solution (2) becomes warms while water is added to the NaOH pellets.

The solution should be used at room temperature but pay attention not to wait too long as it might loose in efficiency if not carefully closed.

Note! CIP solution (normally 30%) can be used after dilution 1:1.

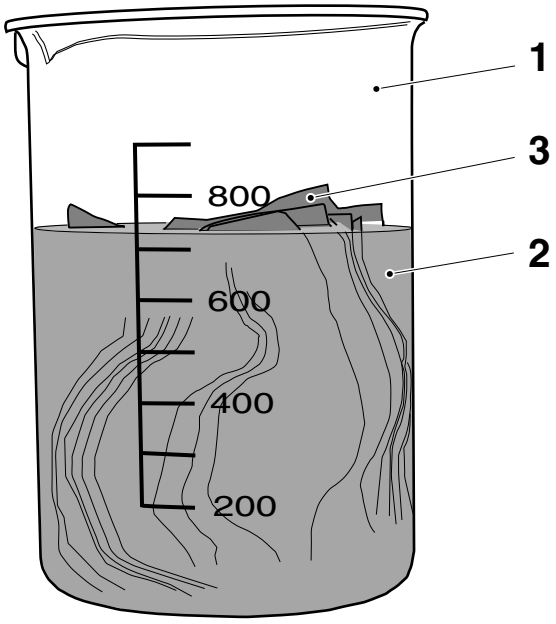

2

Carefully immerse the samples (3) completely in the dissolving solutions (2) without covering the glass beaker (1) as hydrogen fumes give off.

Note! The solution immediately starts to bubble and becomes warm. If not, make sure the solution has been freshly prepared.

Leave the samples in the dissolving solution for 7 to 10 hours.

Note! The temperature of the solution should not exceed 40 °C ± 2.0 °C.

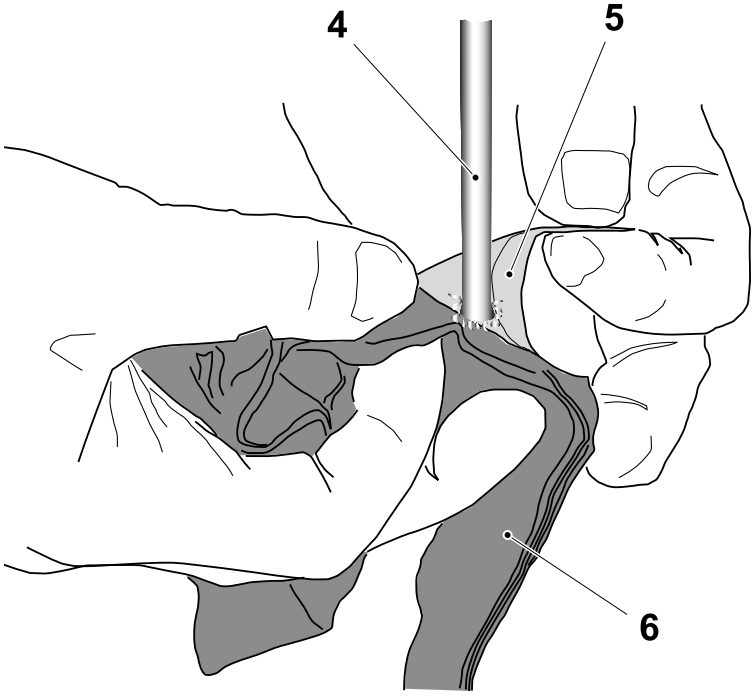

3

WARNING
Chemical burn hazard.
Wear personal protective equipment.

Before rinsing the samples make sure that the aluminium foil has disappeared. If not leave the samples in the solution a little longer or prepare a fresh solution.

Carefully rinse and split the samples under tap water (4). The inner coating pouch (5) of the sample becomes very easy to peel off and separate from the rest of the packaging materials (6).

Dry the samples, see section Sample Dry on page 5-72.

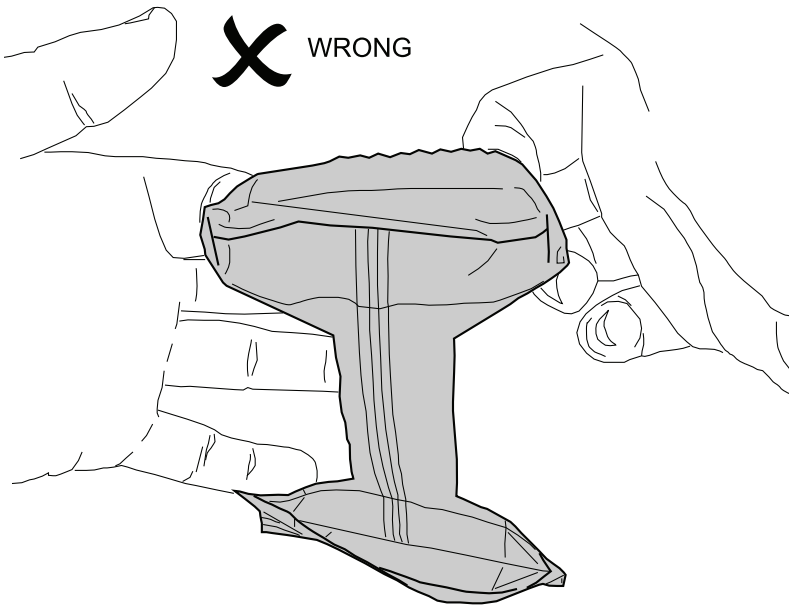

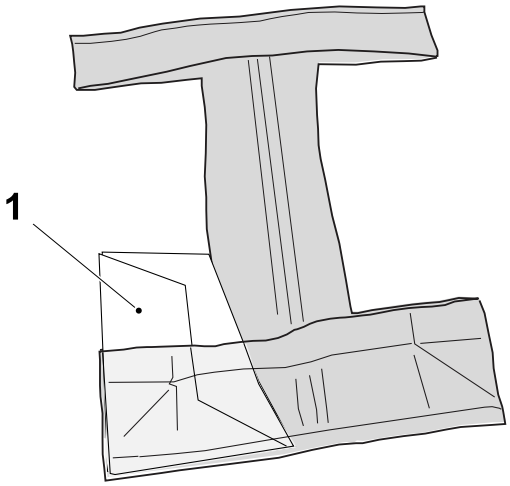

CORRECT

Sample Dry 4

Note! Do not dry the sample by reversing the bags. Sample can be spoiled easily. Dry the inside of the bags by carefully using paper towel.

Take one sample at a time.

Dry it carefully by inserting paper towel (1) in the bag and moving it carefully along the TS and in the bag corners.

Be sure that the sample is completely dry. Water prevents a good check.

Take note of the appearance of the sealing. Critical spots like bending off at the corners, plastic lumps, irregularity of the sealing are very easy to spot.

Continue with Heat Pattern Check on page 5-73.

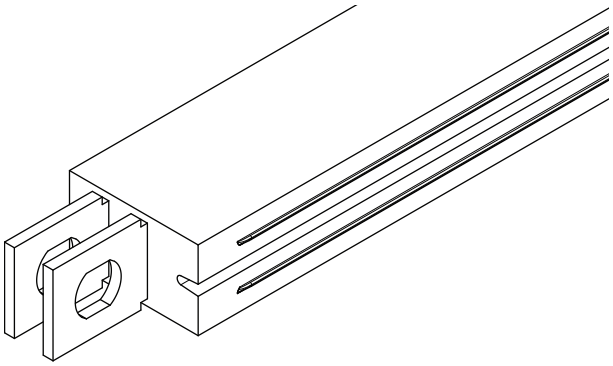

Standard inductor

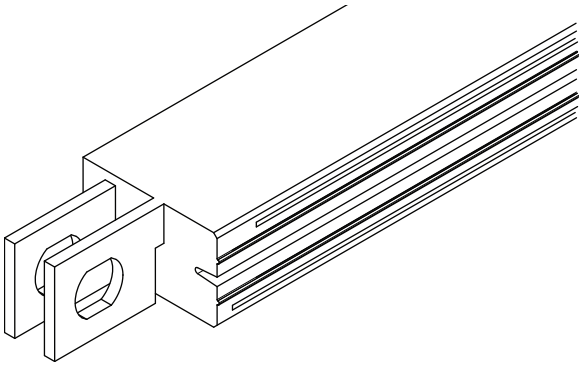

Twin loop inductor

Heat Pattern Check 5

Note! The checks on the heat pattern differs for twin loop inductor and standard inductors.

Identify the TS inductor installed on the machine.

Go to page 5-74 for Heat Pattern check (Single Loop Inductor) or go to page 5-75 for Heat Pattern check (Twin Loop Inductor).

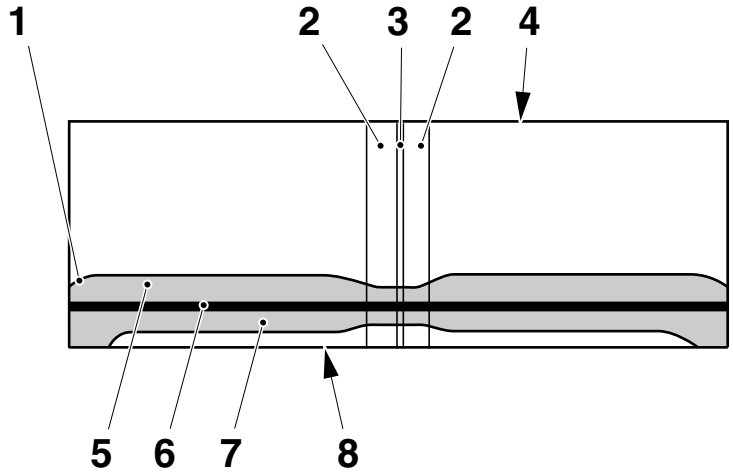

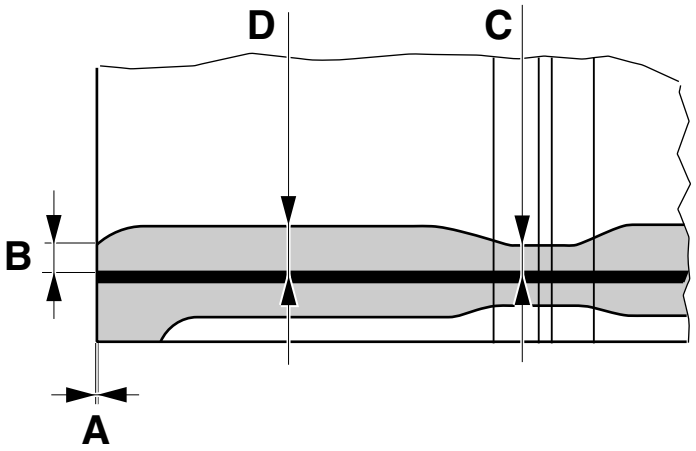

1 Bending off
2 LS
3 LS air gap
4 Product side
5 Upper heat pattern
6 Ridge
7 Lower heat pattern
8 Cutting side

Heat Pattern check (Single Loop Inductor) 6

Note! The Heat Pattern check is a qualitative assessment of the sealing. A good light and a 10X lens is sufficient for monitoring the production quality.

Holding the sample with both the hands, check all the critical spots like bending off (1) at the corners.

Take note of the appearance of the upper heat pattern (5) and lower heat pattern (7) and check:

- for channels to the outside
- for plastic lumps any irregularity of the sealing
- reduced heat pattern due to blocked seals.

Note! In package type TBA 125 S, dimension B (Bending Off) is 0,0 mm due to geometrical components constraint.

Dimension	Acceptable (mm)	NOT Acceptable (mm)
A	0	> 0
B	≥ 0.2	< 0.2
B (TBA 125 S only)	= 0.0	-
C	≥ 1	< 1
D	≥ 1	< 1

Ruptures in the sample somewhere other than in the TS area (like corners) are due to sample handling.

Note! Do not challenge the sample in any other way (for example stretch pliers) as the mechanical properties have been changed by the dissolving. At this stage samples have to be evaluated by means of a visual inspection and red ink only.

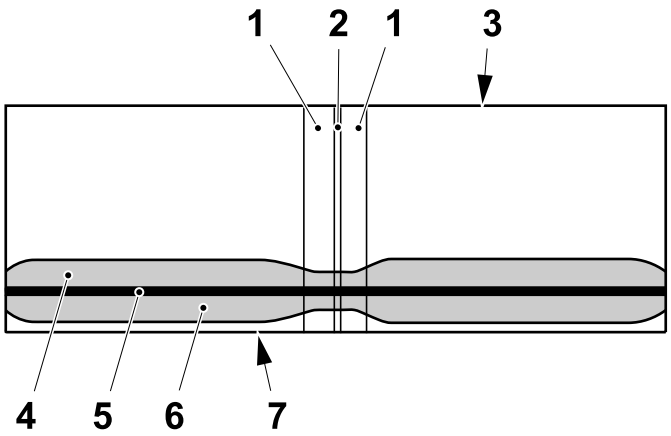

1 LS
2 LS air gap
3 Product side
4 Upper heat pattern
5 Ridge
6 Lower heat pattern
7 Cutting side

Heat Pattern check (Twin Loop Inductor) 7

Note! The Heat Pattern check is a qualitative assessment of the sealing. A good light and a 10X lens is sufficient for monitoring the production quality.

Holding the sample with both the hands, check all the critical spots along the TS.

Take note of the appearance of the upper and lower heat pattern (4) and (6) and check:

- for channels to the outside
- for plastic lumps any irregularity of the sealing
- reduced heat pattern due to blocked seals in the cross.

Note! Bubbles in the heat pattern are typical for the Twin Loop inductors. They are located between the ridge (5) and the product side (3).

Ruptures in the sample somewhere other than in the TS area (like corners) are due to sample handling.

Note! Do not challenge the sample in any other way (for example stretch pliers) as the mechanical properties have been changed by the dissolving. At this stage samples have to be evaluated by means of a visual inspection and red ink only.

5.4.9 Check TS Integrity by Red Ink

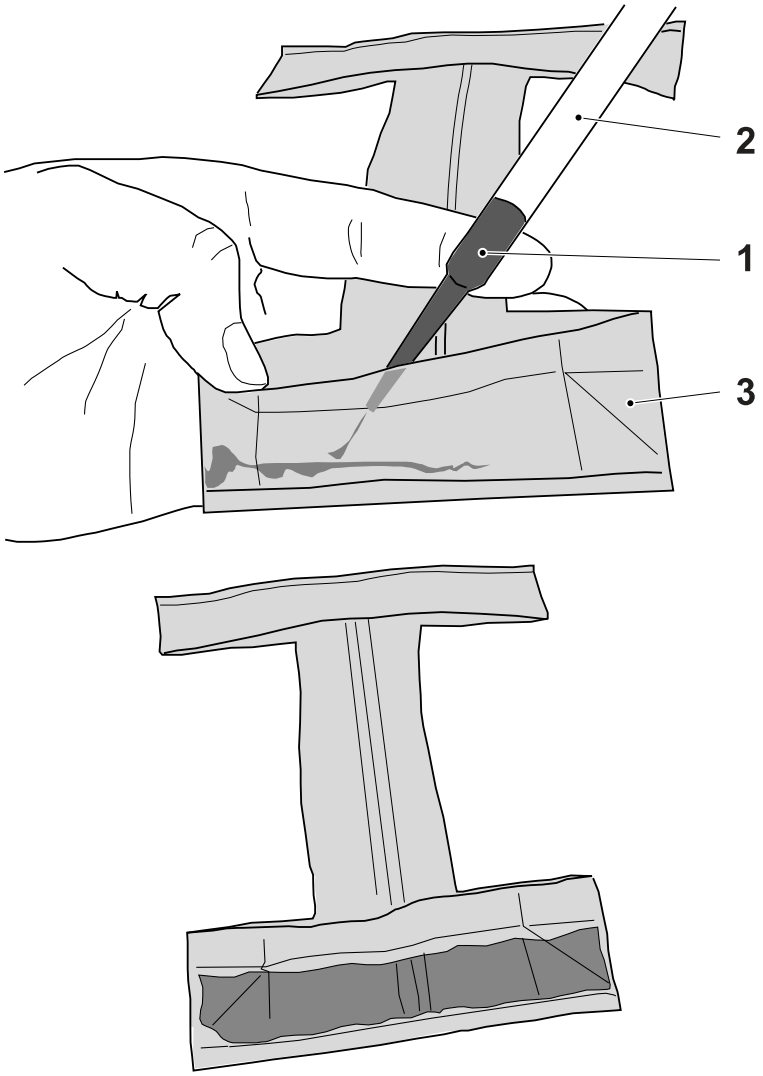

1

Pour some red ink fluid (2), by means of a plastic pipette (1), in to the pouch of the inner coating (3). Spread the red ink in to the pouch with the finger without applying pressure.

Leave it to stand for some time and then check the sample.

The sealing is defective if:

- any channel of red ink is present through the sealing.

In case channels are present, the fluid will pass through and stain the outside of the inner coating pouch.

Check again when the ink inside the sample is completely dry and, if necessary, call a technician.

5.4.10 LS by Red Ink Injection

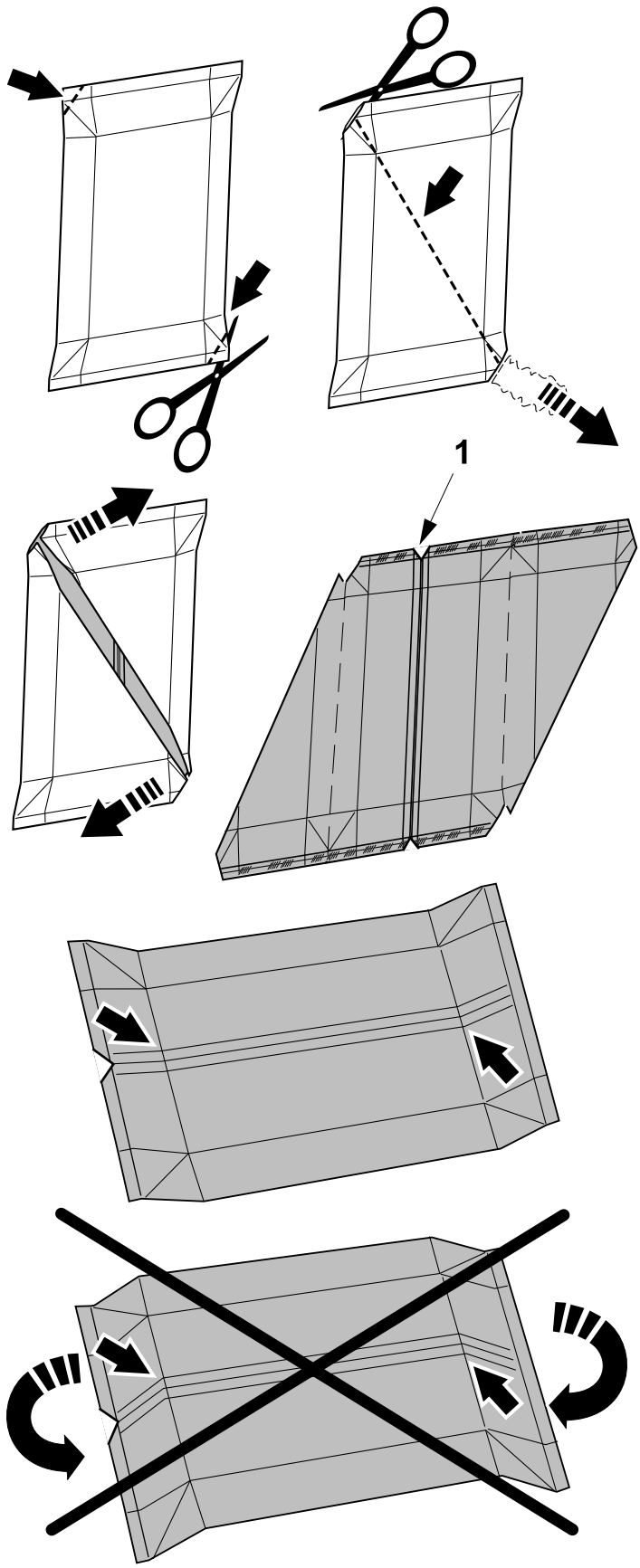

1

To perform this check take:

- **two** packages when machine setting are stable
- **ten** packages when machine settings have been recently changed.

Note! Be careful not to over stress samples during their preparation.

Cut open the packages as illustrated. Cut the corner (1) at one end of the LS seal.

Rinse and dry with a paper towel the packages without folding along the top and bottom creases in reverse direction.

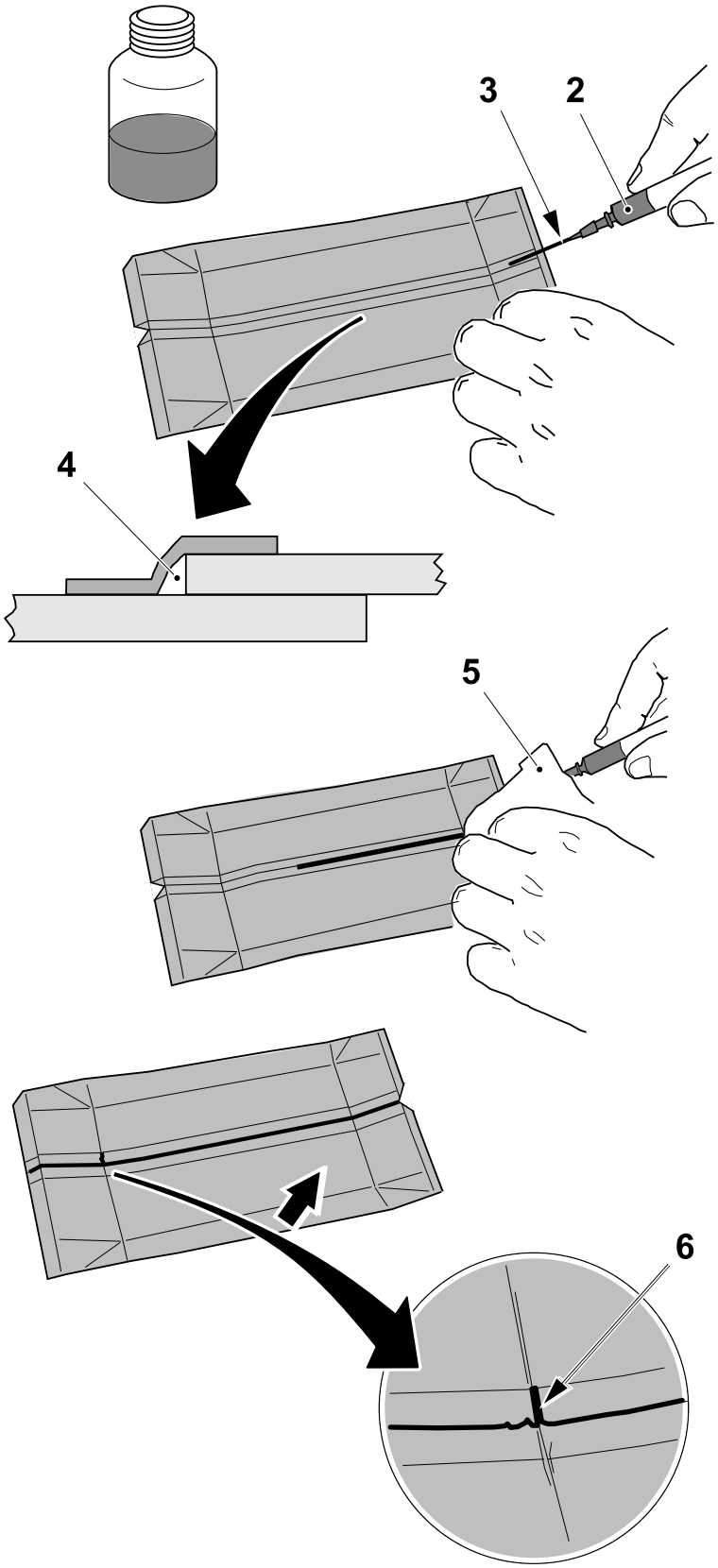

2

Prepare some red ink fluid (2) in a syringe.

Place the needle (3) of the syringe into the air channel (4) of the LS.

Cover the injection point with a piece of paper towel (5) to absorb any ink spilled and inject the red ink along the entire LS length.

The LS is defective if red ink channels (6) occur (the ink corners to the inside layers).

Call a technician in case of defects.

Critical points are where LS meets the top and bottom creases.

Note! When a channel is detected verify more closely the heat and pressure distribution, see LS Strip Application on page 5-41.

6 Supply of Materials

Description

This chapter describes how to load and prepare a new reel of packaging material and how to thread and splice the strips.

CAUTION

Hazardous noise.
Risk of impaired hearing. Hearing protection is recommended whenever this equipment is in operation.

Description 6-2

6.1 Strip Supplies..... 6-5

LS Strip Thread..... 6-5

6.1.1 Strip Reel Replacement..... 6-9

Fitting a New Reel on the Upper Reel Holder 6-9

Fitting a New Reel on the Lower Reel Holder 6-10

6.1.2 LS Strip Break 6-13

6.1.3 Manual LS Strip Splice 6-14

6.2 Packaging Material Supplies..... 6-16

Reel Handling..... 6-16

6.2.1 Splicing Preparation 6-22

6.2.2 Automatic Splicing Preparation 6-30

6.2.3 iLine XT Auxiliary Cutting Table Preparation..... 6-36

6.2.4 Manual Web Splice..... 6-40

6.2.5 Interrupted Web Splice 6-41

6.2.6 Packaging Material Broken or Splice Failure (ASU Loop Empty) 6-42

6.2.7 Immediate Splice Enabled..... 6-44

This page intentionally left blank

6.1 Strip Supplies

CAUTION
Hygiene.
Before touching the strip(s), disinfect hands/gloves.

Note! To avoid unnecessary PRODUCTION stops, always make sure that the strip reels are prepared and the strips are threaded.

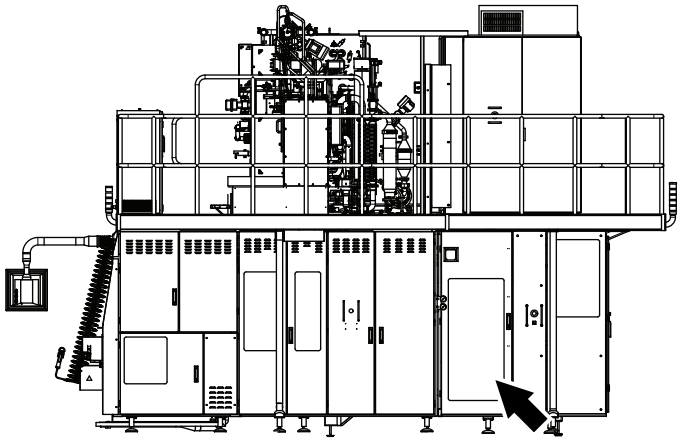

LS Strip Thread

1

Open the Strip applicator doors.

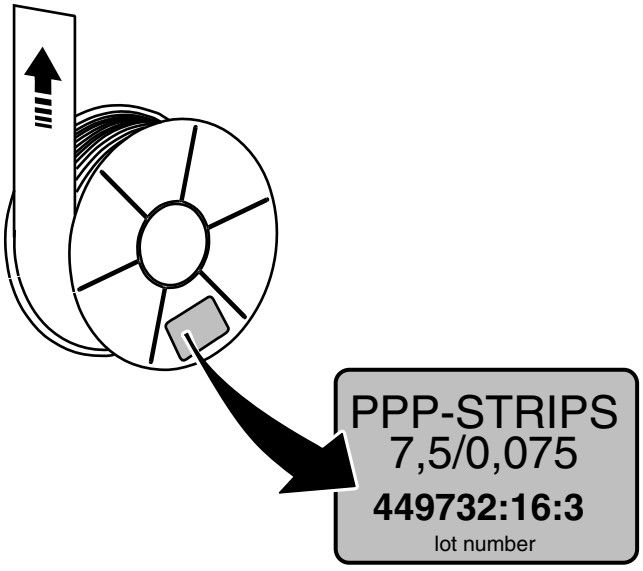

2

CAUTION
Hygiene.
Before handling clean parts, disinfect your hands/gloves with cleaning compound code H.

Remove the protective wrapping from the strip reel. Make a note of the strip type and the lot number indicated on the strip reel tag.

Note! The unique lot number allocated to each strip reel and printed on the strip reel tag provides traceability for the production batch. If a problem with the strip is detected the lot number must be quoted in any communication with Tetra Pak.

Note! For cleaning compound code information, see 11.2.1 Cleaning Compound Table.

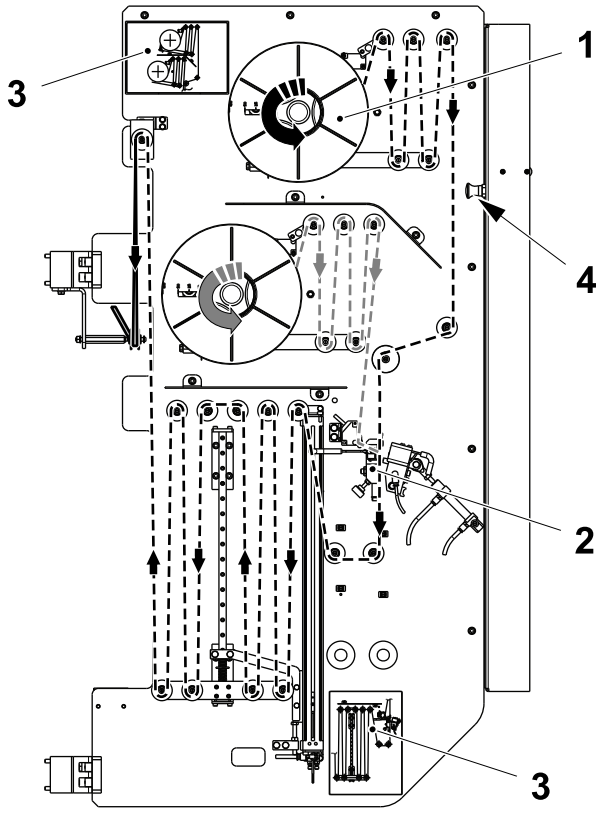

3

Fit the strip reel (1) on the top reel holder. This reel is used in PRODUCTION.

Thread the strip around the rollers, through the splicing head (2), and through the magazine (3), as shown. Avoid twisting the strip.

Note! Use the two signs (3) when threading the strip.

Pull the knob (4) and open the strip magazine frame.

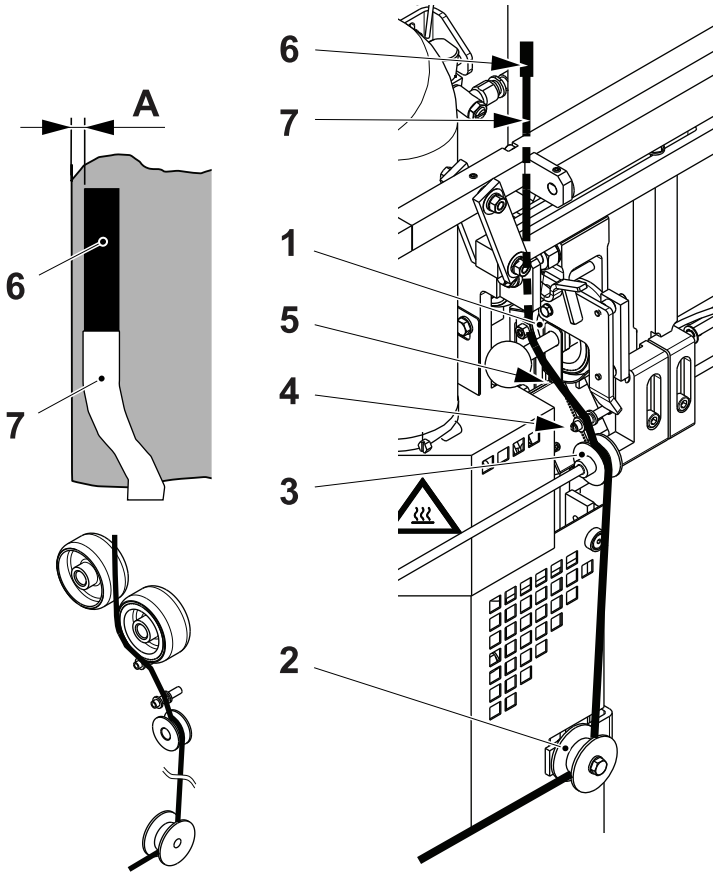

A = 2 ± 1 mm

4

Pull the pressure roller (1) away from the packaging material.

Fasten the strip (6) to the packaging material with tape and then pull the packaging material with strip (6) past the hot air nozzle.

Thread the strip under the roller (2), over the roller (3), over the finger (4), under the finger (5) and under the pressure roller (1).

Attach a piece of adhesive tape (5) to the end of the strip (6), not wider than the strip.

Attach the tape at distance **A** from the edge of the packaging material.

Close the strip magazine frame.

Note! Make sure that the strip magazine frame locks correctly.

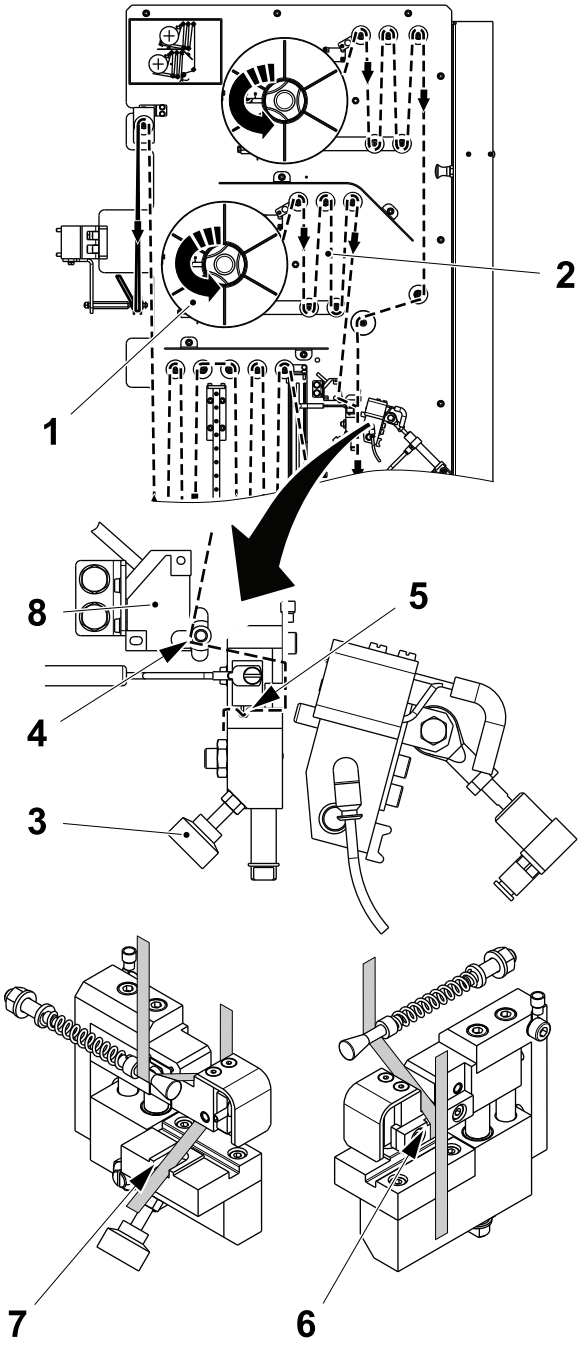

5

Fit a strip reel (1) on the lower reel holder. This reel is now prepared for splicing.

Thread the strip around the rollers (2) as illustrated. Avoid twisting the strip.

Pull the slide knob (3) down to open the splicing head.

Feed the strip around the finger (4) and through the channel (5).

Make sure that the strip is located in the grooves (6) and (7).

Check the strip is aligned correctly against the vertical strip, close the slide and cut off any excess strip.

Rewind the strip reel slightly to tension the strip until the LED of the sensor (8) switches OFF.

Note! If the LED of the sensor (8) is ON an alarm happens on the TPOP to indicate that the strip has not been prepared.

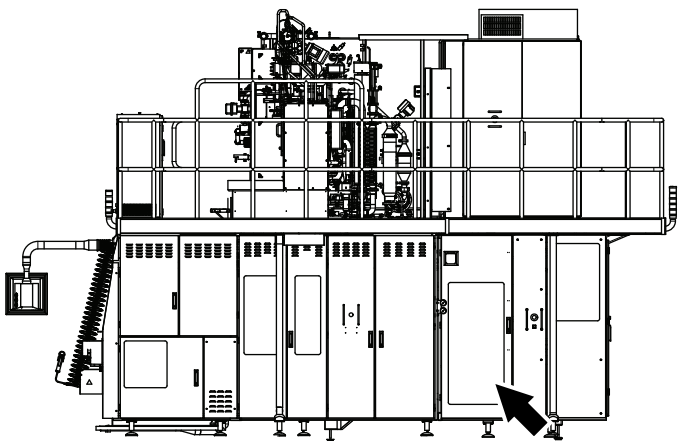

6

Close the strip applicator doors.



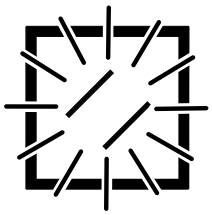

7

Reset the alarms on the TPOP display.

Press the RESET button on the ASU to reset the safety system.

The Strip Applicator is now prepared for an automatic strip splice.

Note! Make sure the strip applicator applies the strip correctly, without wrapping it around the pressure roller.

If an alarm is present, take the appropriate measures or call a technician.

6.1.1 Strip Reel Replacement

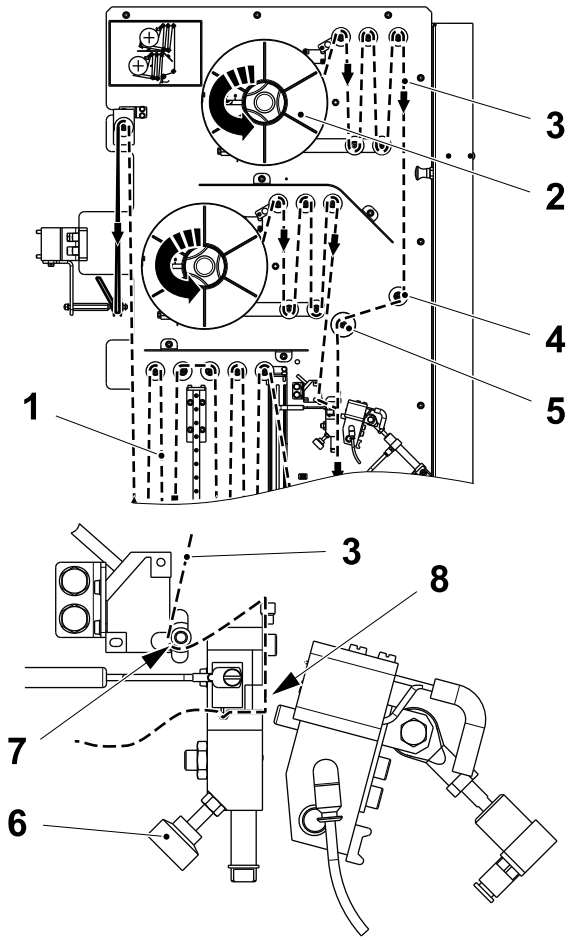

1

Fitting a New Reel on the Upper Reel Holder

WARNING

Burn Hazard.
Some parts may be hot. Wear personal protective equipment.

While the strip (1) is running, fit a new strip reel (2) on the upper reel holder. Thread the strip (3) around the rollers and down to the roller (4), then over the **larger** diameter of the roller (5). Avoid twisting the strip.

Pull the slide knob (6) down to open the splicing head.

Feed the strip around the finger (7) and through the channel (8). Check the strip is aligned correctly, close the slide and cut off any excess strip.

Rewind the strip reel slightly to tension the strip.

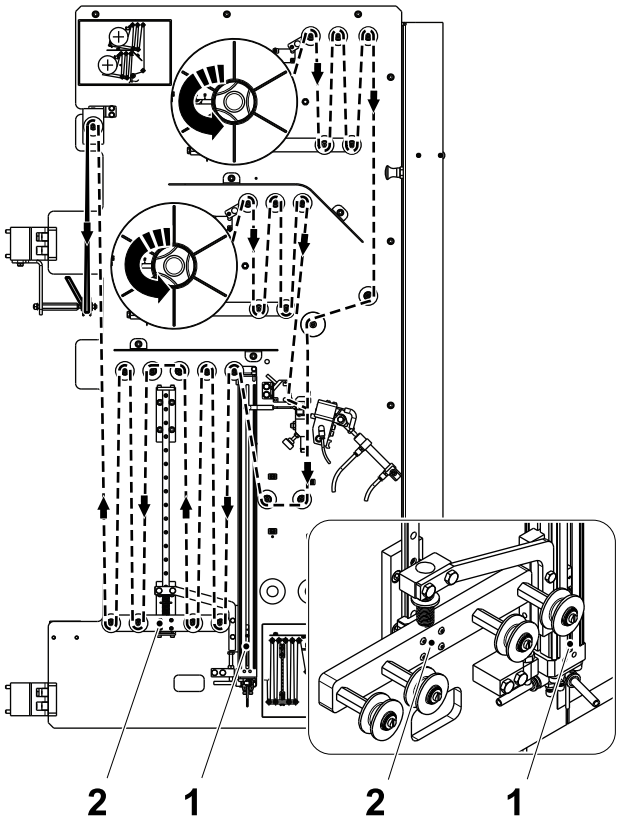

2

Make sure that the cylinder (1) keep the bearing block (2) in its lower position.

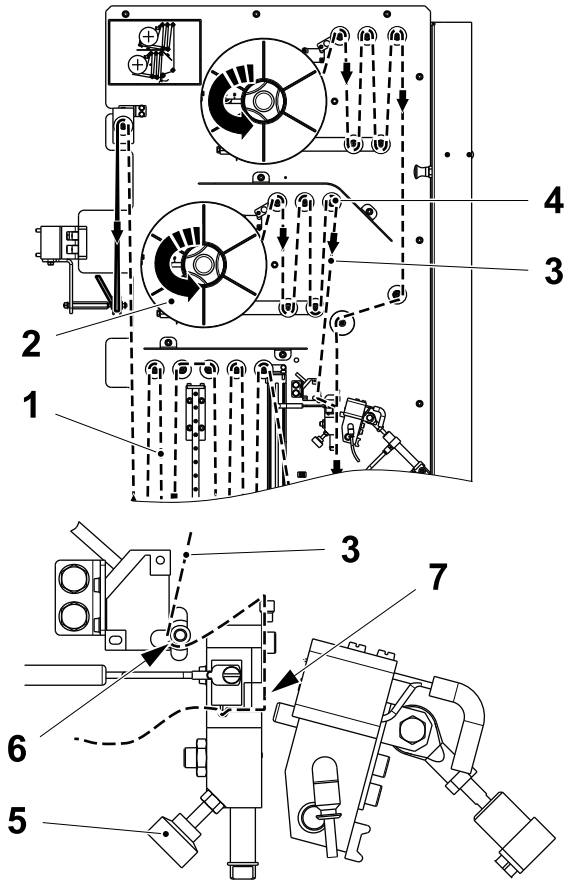

3

Fitting a New Reel on the Lower Reel Holder

While the strip (1) is running, fit a new strip reel (2) on the lower reel holder.

Thread the strip (3) around the rollers and to the roller (4). Avoid twisting the strip.

Pull the slide knob (5) sideways to open the splicing head.

Thread the strip around the finger (6) and through the channel (7).

Check that the strip is aligned correctly, close the slide and cut off any excess strip.

Rewind the strip reel slightly to tension the strip.

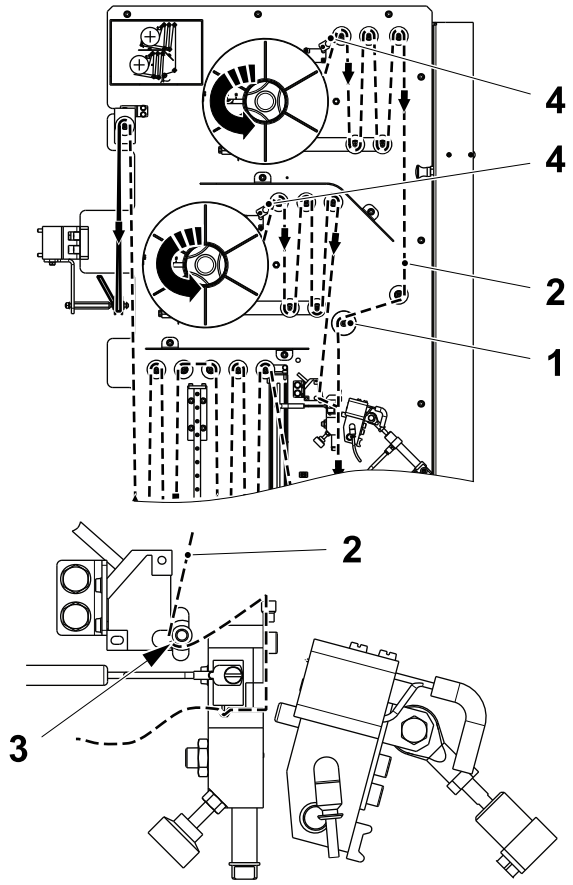

4

When the prepared upper reel is spliced, the LS strip (2) is pulled and jumps onto the smaller diameter of the roller (1).

This moves the finger (3) and activate the sensor that create a request of a new splice on the TPOP display.

Make sure both end-of-reel detectors (4) are above the strip.

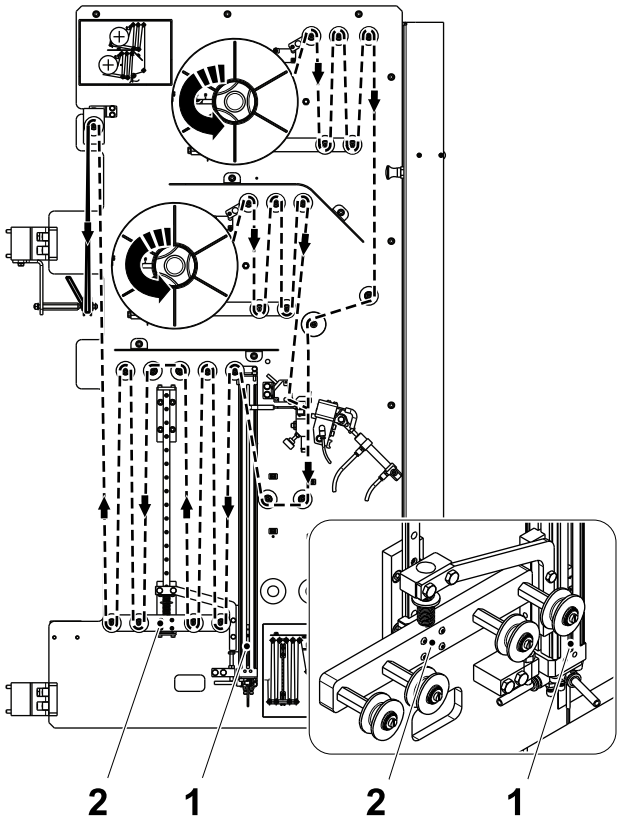

5

Make sure that the cylinder (1) keep the bearing block (2) in its lower position.



6

Some packages are discarded after the splice.

Carry out the checks according to the 5.2 Introduction to Package Checks.

Note! Register the number of packages taken for the checks, see Recording Package Waste for Quality Checks on page 2-54.

6.1.2 LS Strip Break

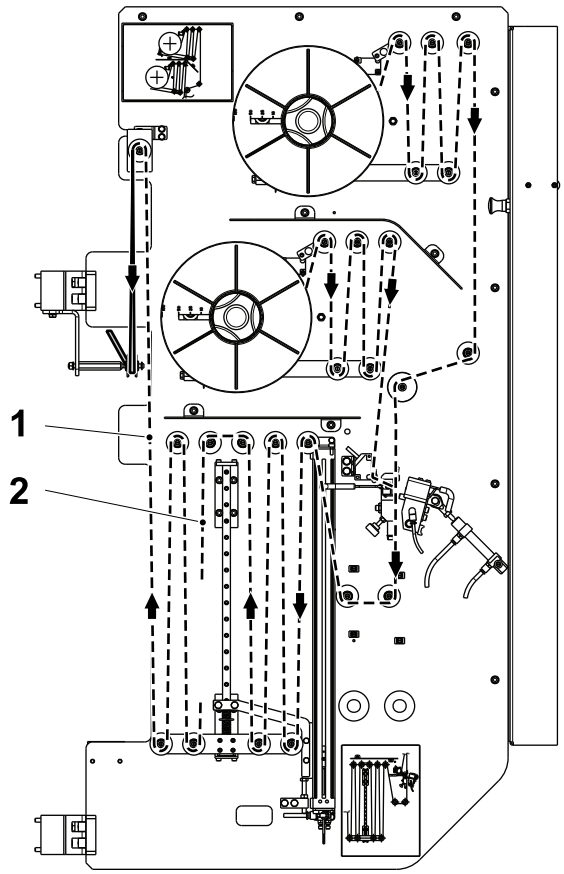

1

Note! Do not repair the LS strip with an adhesive tape.

In case of LS strip break, remove the piece of broken strip (1) and thread again the strip (2) through the magazine, see LS Strip Thread.

6.1.3 Manual LS Strip Splice

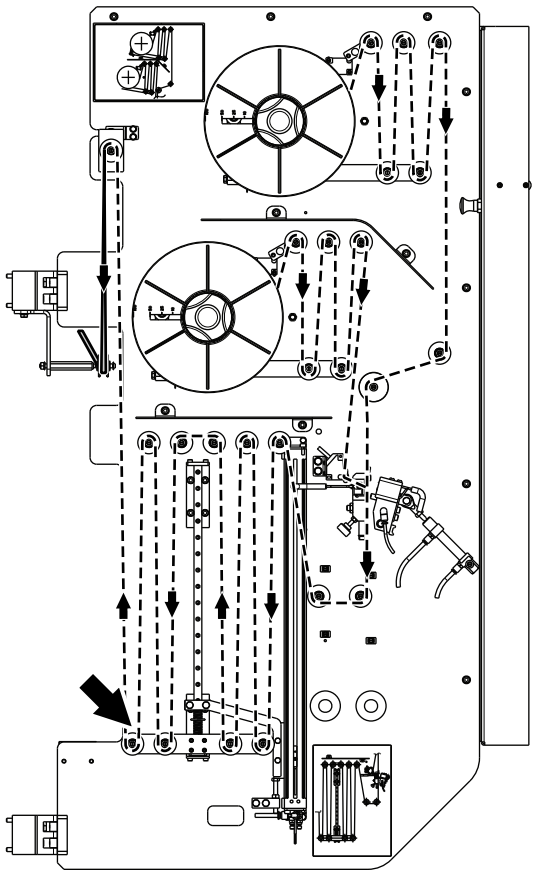

1

In some cases it may be necessary to perform a strip splice manually. Perform as follow:

Make sure that both reels of LS strip are threaded.

Make sure that the strip magazine is in its lower position.

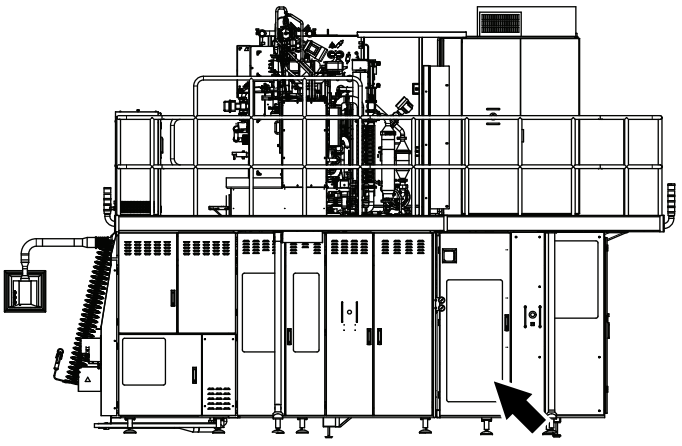

2

Make sure the door of the LS strip magazine is closed.

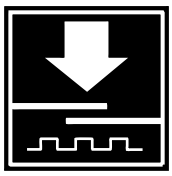

3

Press the MANUAL STRIP SPLICE button.



4

The packages with the strip splice are discarded automatically.

Carry out the checks according to the 5.2 Introduction to Package Checks section.

Note! Register the number of packages taken for the checks, see Recording Package Waste for Quality Checks on page 2-54.

6.2 Packaging Material Supplies

CAUTION
Hygiene.
The packaging material must never touch the floor. Before touching the packaging material, disinfect hands/gloves.

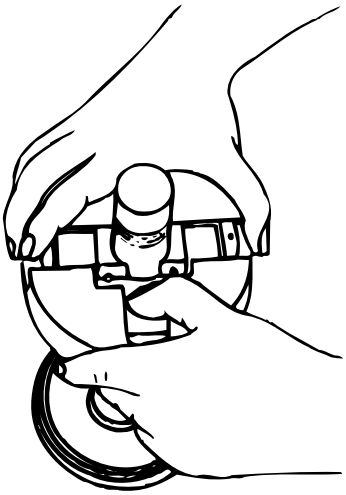

Reel Handling

1

Pull out the reel holder catch slightly while pushing in the spring-loaded lugs.

When the lugs lock, release the reel holder catch.

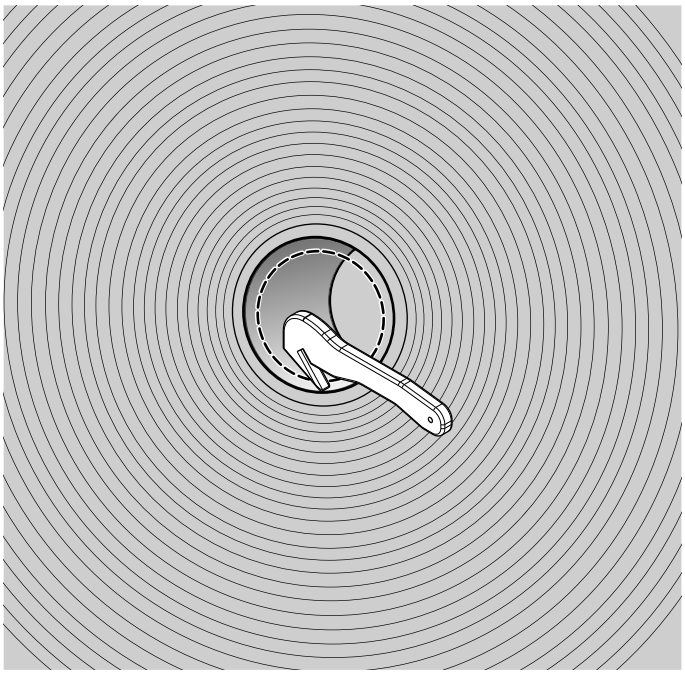

2

CAUTION
Hygienic hazard.
Plastic wrapping around pallets of packaging material may be dirty and must be removed in the packaging material storage area and away from the machine. Plastic wrapping around individual packaging material reel must be removed after the reel has been transported to the machine.

Cut away only a piece of plastic wrapping inside the hole in the reel.

Note! Be careful not to damage the sides of the reel. Use the safety cutter TP No. 90602-0330. A scratch can make a cut on the LS of the packages.

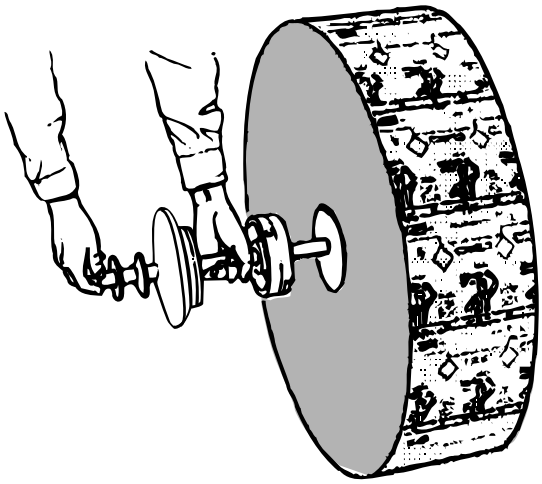

3

Insert the reel holder into the core.

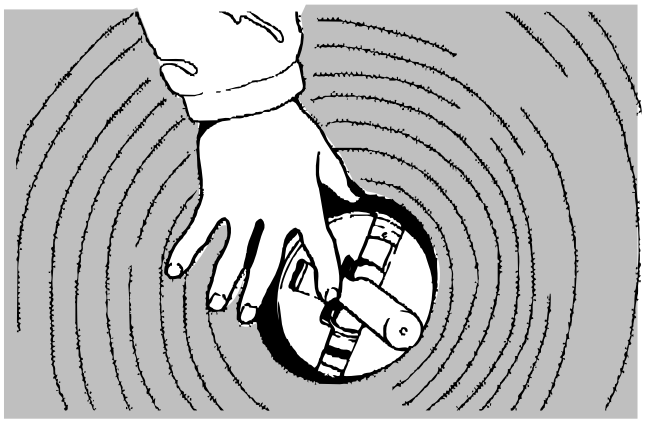

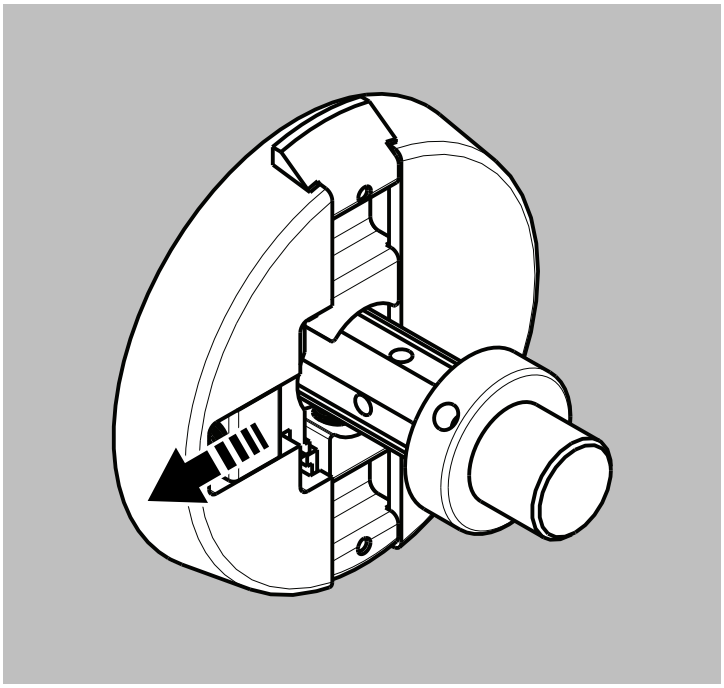

4

Pull out the reel holder catch to release the spring-loaded lugs.

Note! Check that the lugs have expanded to lock the reel holder to the reel.

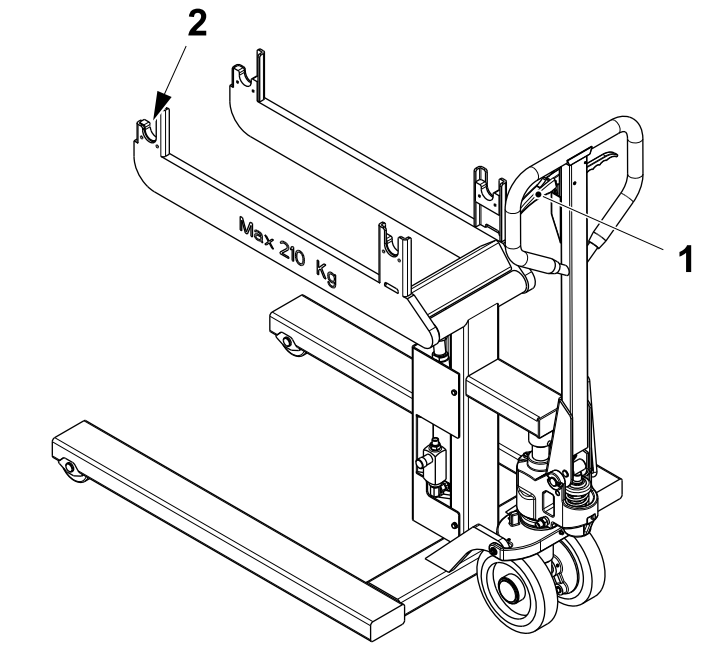

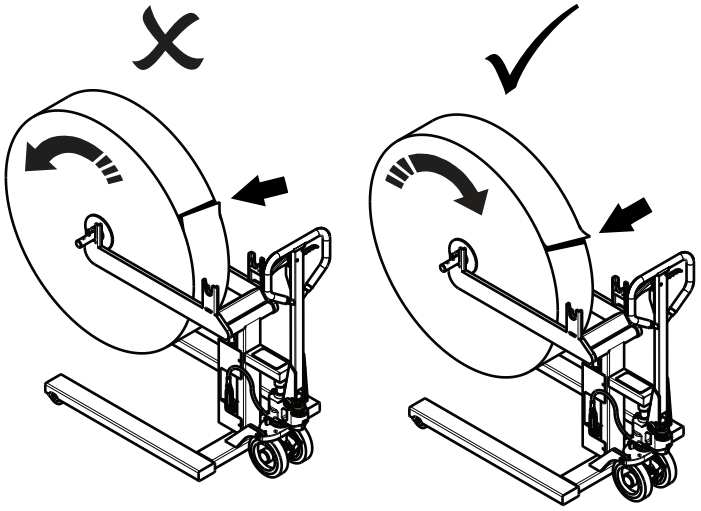

WRONG CORRECT

5

Position the reel so that the end of the packaging material is on top, and it will unwind towards the machine.

Squeeze the lever (1) to release the brake and move the trolley up to the reel. Position the trolley so that the spindle of the reel holder is above the yoke (2) of the trolley.

Note! Make sure the packaging material reel will be lifted onto the trolley with the correct direction of rotation as indicated in the illustration. Be careful not to damage the sides of the reel. A scratch can make a cut on the LS of the packages.

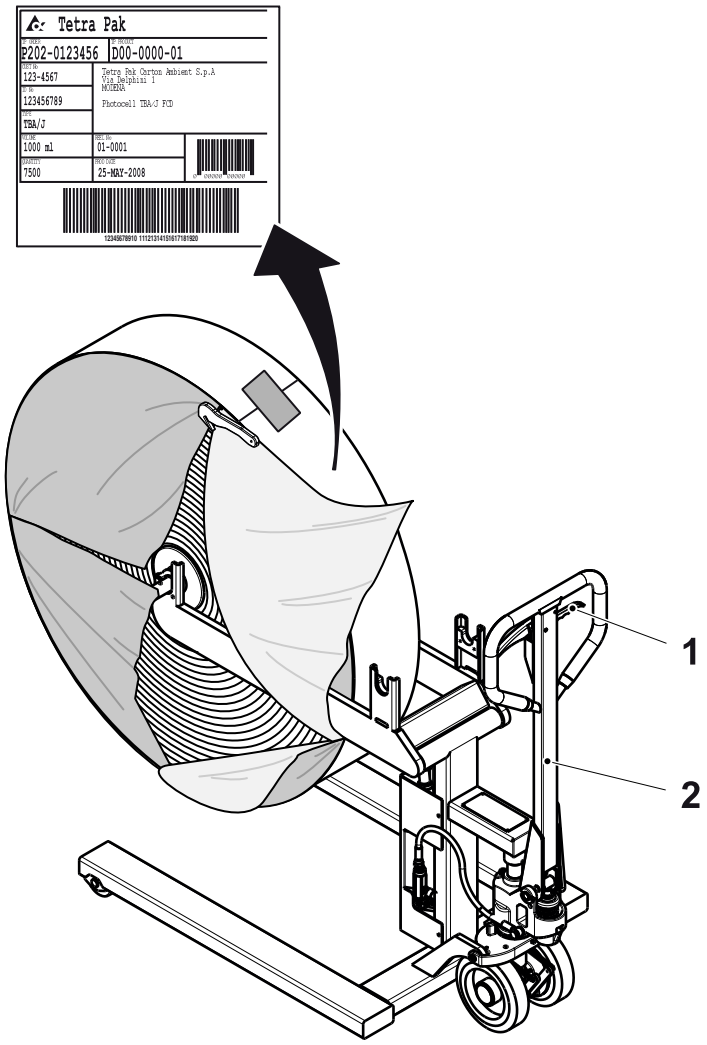

6

Lower the lever (1) fully down and pump the main handle (2) to lift the trolley arms.

Remove the plastic wrapping from the reel.

Note! For ASU iLine XT Semiautomatic version (OE), remove the plastic wrapping from the reel inside ASU.

CAUTION

Hygienic hazard.

Make sure that the packaging material does not touch the floor during the entire supply procedure.

Check carefully the edges of the packaging material reel for damages, cuts or dents due to reel transportation and handling. Report any damage that may effect equipment performance.

Remove and keep the P-order label.

Note! The unique P-order and reel numbers allocated to each packaging material reel and printed on the P-order label provide traceability for the production batch. If a problem with the packaging material is detected these numbers must be quoted in any communication with Tetra Pak.

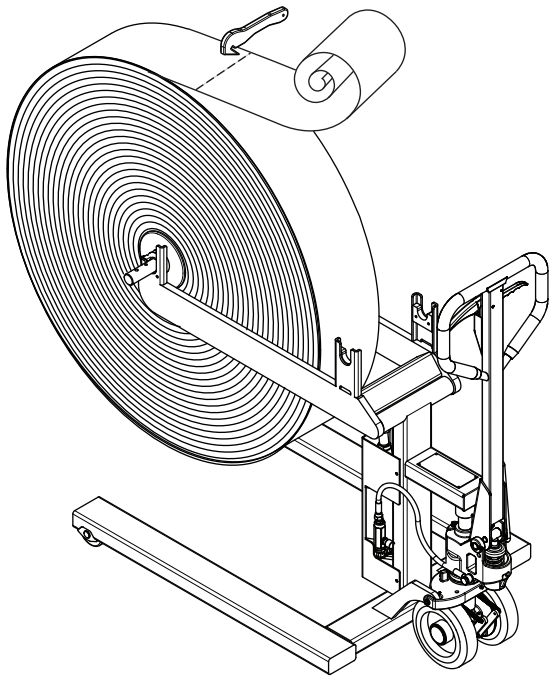

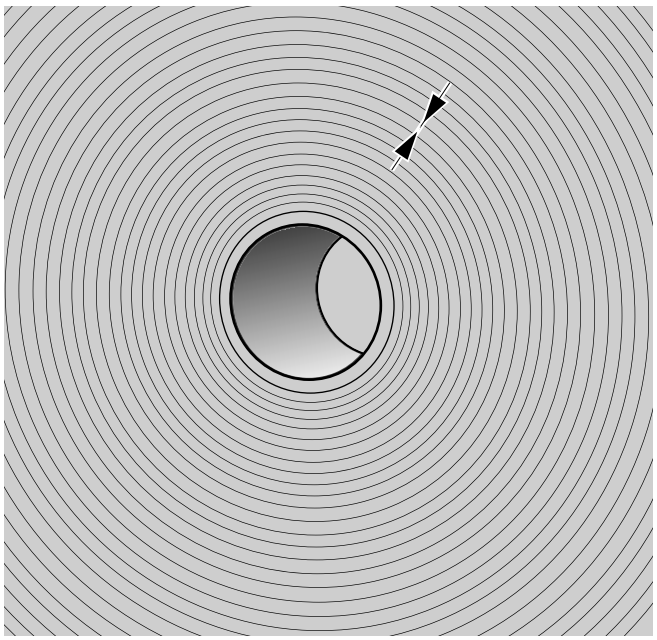

7

WARNING

Risk of unsterility.

Do not damage the underlying packaging material when cutting.

Always use the safety cutter TP No. 90602-0330.

Packaging material is shipped in protective wrapping labelled with non-marking labels. After removing the wrapping and peeling off the label, the entire packaging material can be used.

Note! In cases where the wrapping is missing or damaged, cut approximately one turn of packaging material from the reel. Do not damage the underlying packaging material when cutting.

Note! Arrow marks on the side of the reels indicate where there are factory splices. During production, the machine will automatically discard the packages which include a factory splice.

Always check the packages after a factory splice, see the 5.3 Package Checks section in chapter 5 Checks.

6.2.1 Splicing Preparation

Note! Valid for Standard Version.

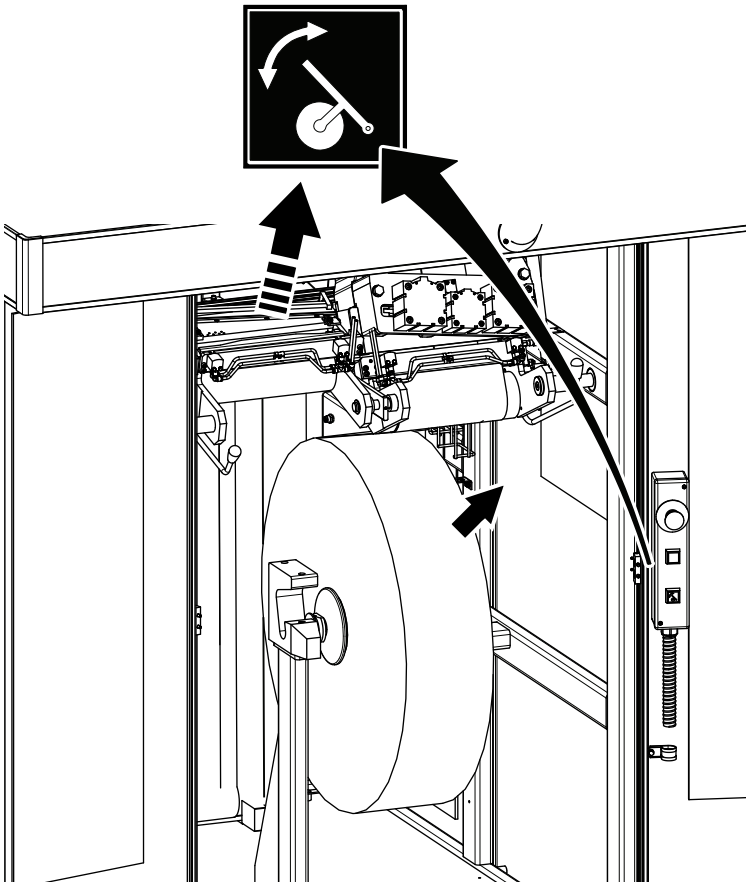

1

WARNING

Risk of personal injury.
Moving parts can crush and cut.

Open the ASU doors only when the splicing sequence is finished.

If required press the PACKAGING MATERIAL HOLDER button to raise the package material holder.

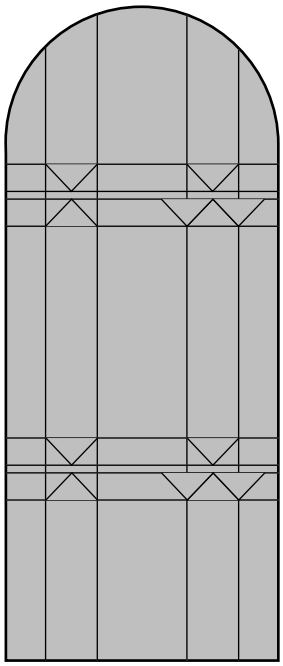

2

Cut the end of the packaging material as shown, avoiding crease lines on the tip.

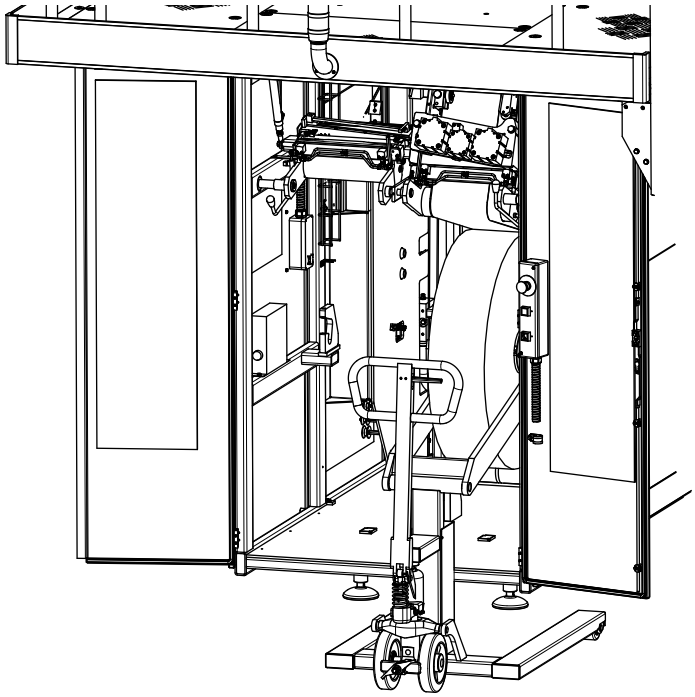

3

Load the reel of packaging material into the ASU.

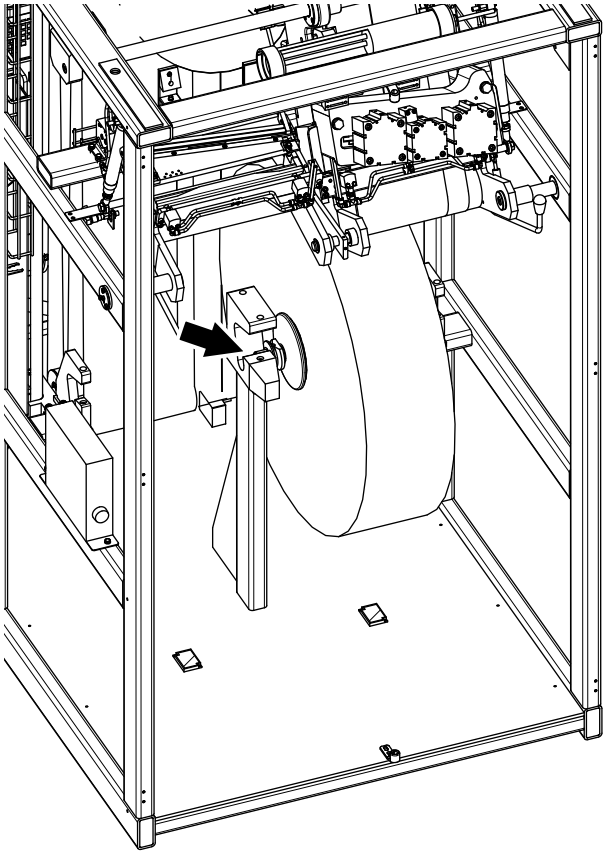

4

Make sure the packaging material reel is aligned correctly on the bobbin holders.

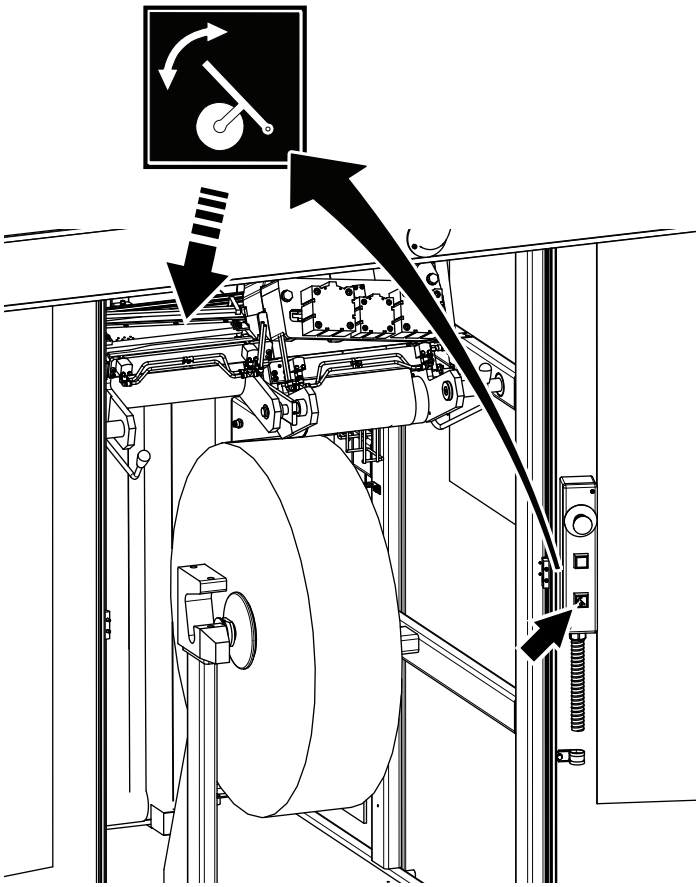

5

WARNING

Risk of personal injury.
Moving parts can crush and cut.

Press the PACKAGING MATERIAL HOLDER button.

The packaging material holder above the reel lowers.

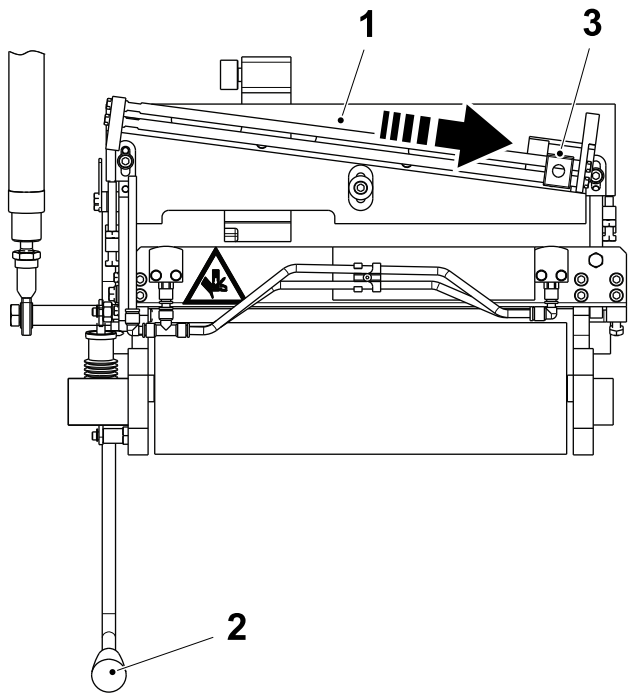

6

Raise the cutting table (1) by means of the handle (2).

Make sure that the knife holder (3) is on the RH side of the cutting table (1).

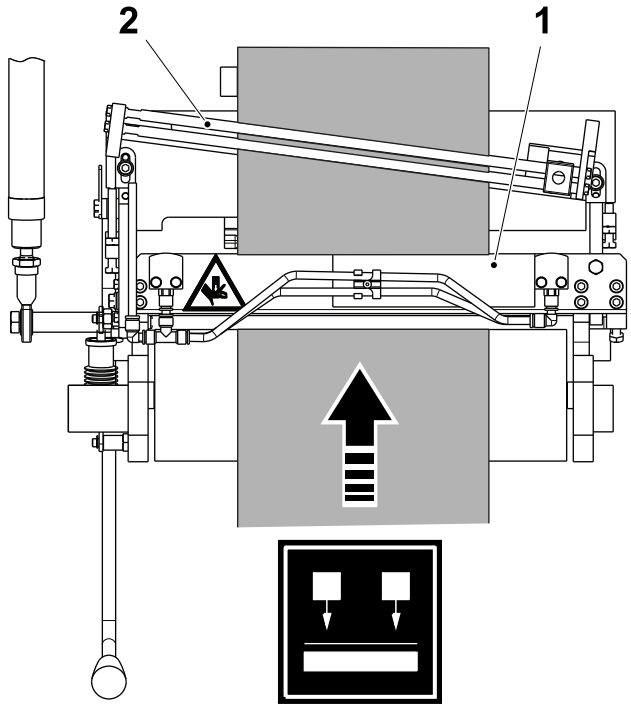

7

Press the MATERIAL LOCKING button to allow the packaging material to pass through the web brake shoe (1).

Thread the packaging material under the cutting device (2).

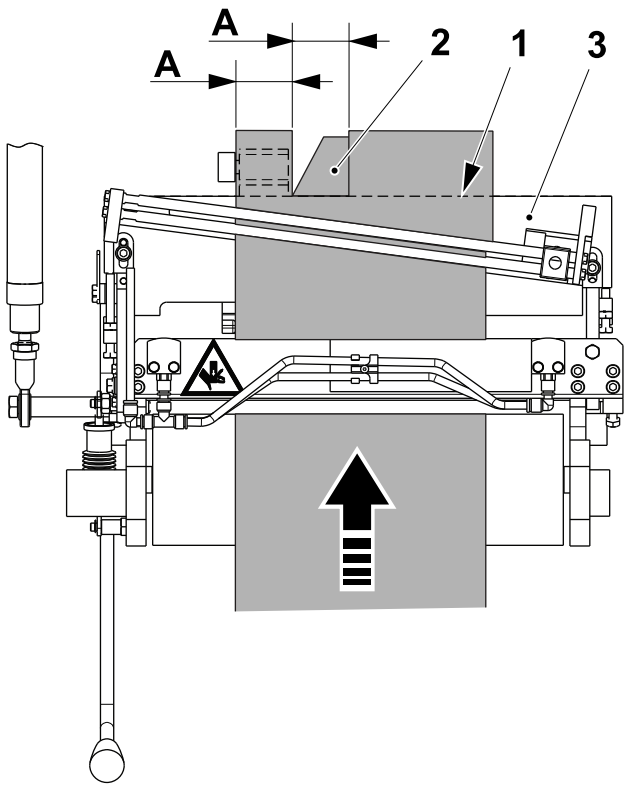

8

Fold the packaging material upwards along the top crease (1), then downwards to make a sharp crease.

Cut vertically the end of the packaging material to obtain a stripe (2) of 40 mm about at the distance 40 mm from the packaging material RH side.

For TBA Edge packages only cut vertically the end of the packaging material to obtain a stripe (2) of 40 mm about at the distance 75 mm from the packaging material RH side.

Fold the stripe (2) along the top crease (1) over the edge of the cutting table (3).

A = 40.0 mm
B = 75.0 mm

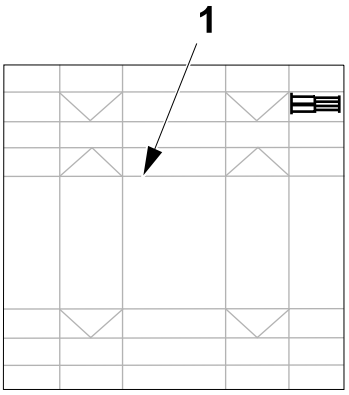

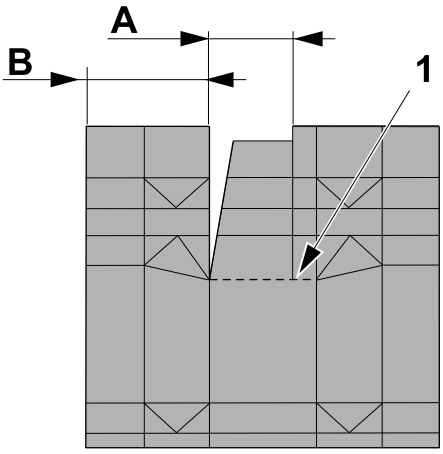

TBA Edge packages only

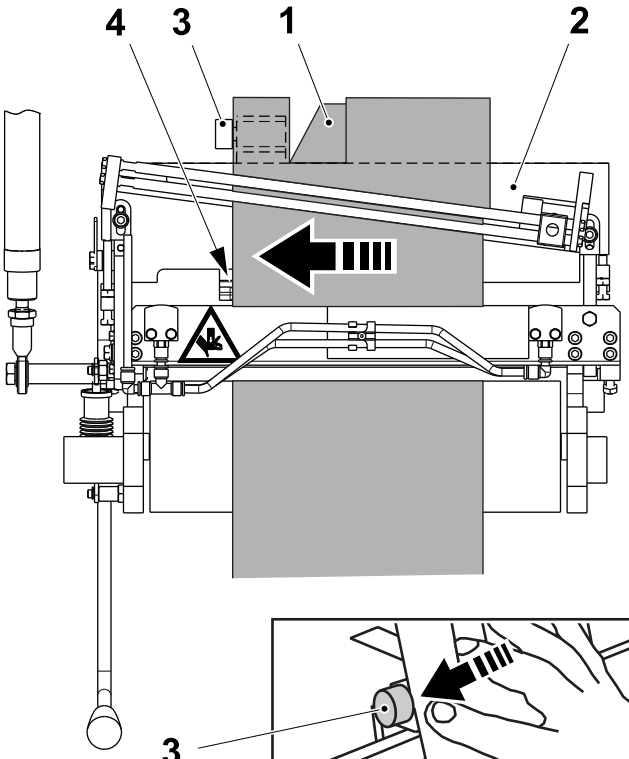

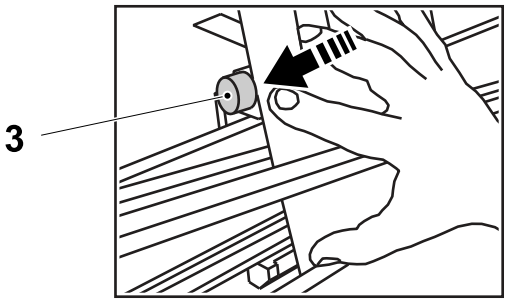

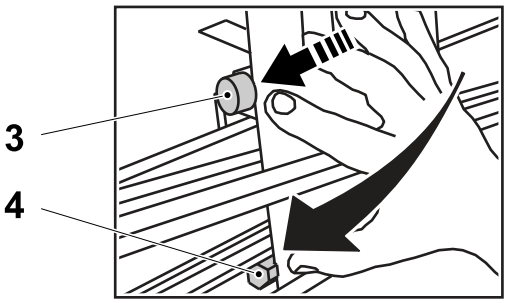

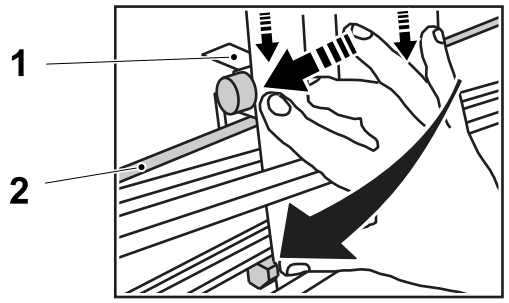

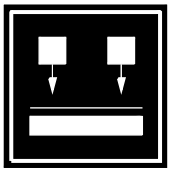

9

Hold the stripe (1) over the cutting table (2).

Move the packaging material against the adjusting screw (3).

Move the packaging material against the tooth (4).

Move the packaging material down until the stripe (1) is against the cutting table (2).

Press the MATERIAL LOCKING button to lock the packaging material in place.

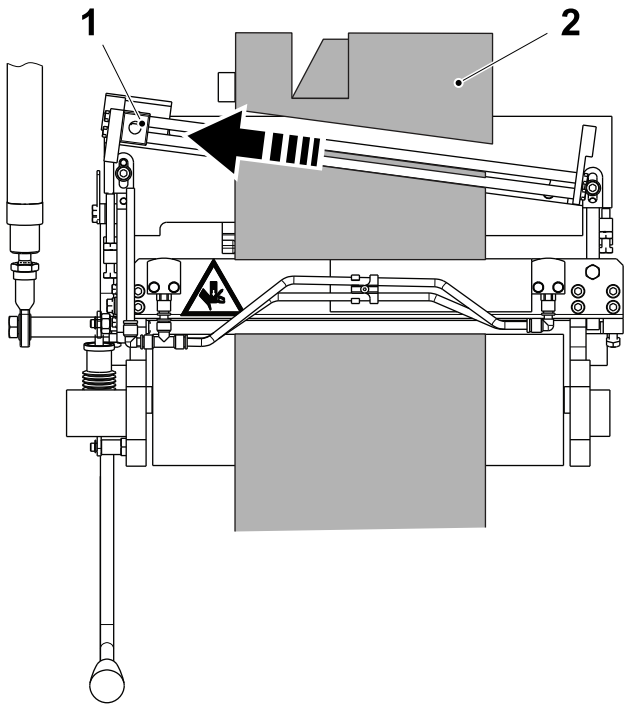

10

Cut off the end of the packaging material by sliding the knife (1) across the cutting table from RH side to LH side.

Remove the end piece (2).

Move back the knife (1) on the RH side.

Note! If the quality of the paper edge after the cut from RH side to LH side is not good enough, call a technician to change the knife (1) in the knife holder.

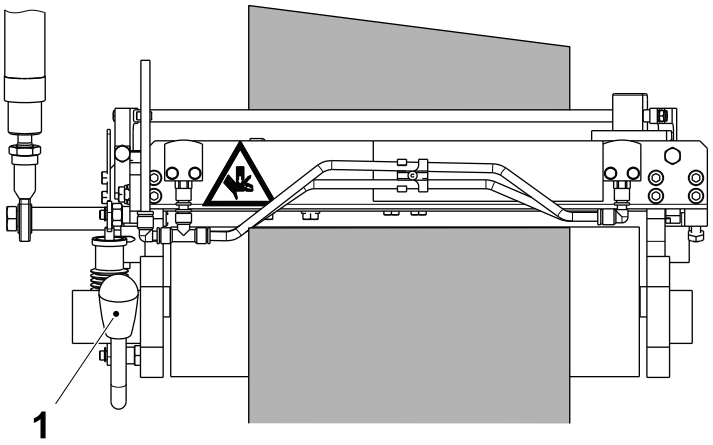

11

Lower the cutting table to the production position by means of the handle (1).

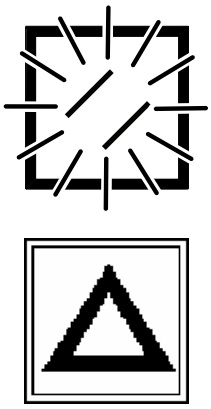

12

Close the ASU doors and press the RESET button to reset the safety system, see 8.2 Security Stop.

If an alarm appears, take the appropriate measures or call a technician.

6.2.2 Automatic Splicing Preparation

Note! Valid for ASU iLine XT Version (OE) according to the automatic procedure with the LGV.



1

Press the OPEN/CLOSE DOORS button to open the ASU doors.

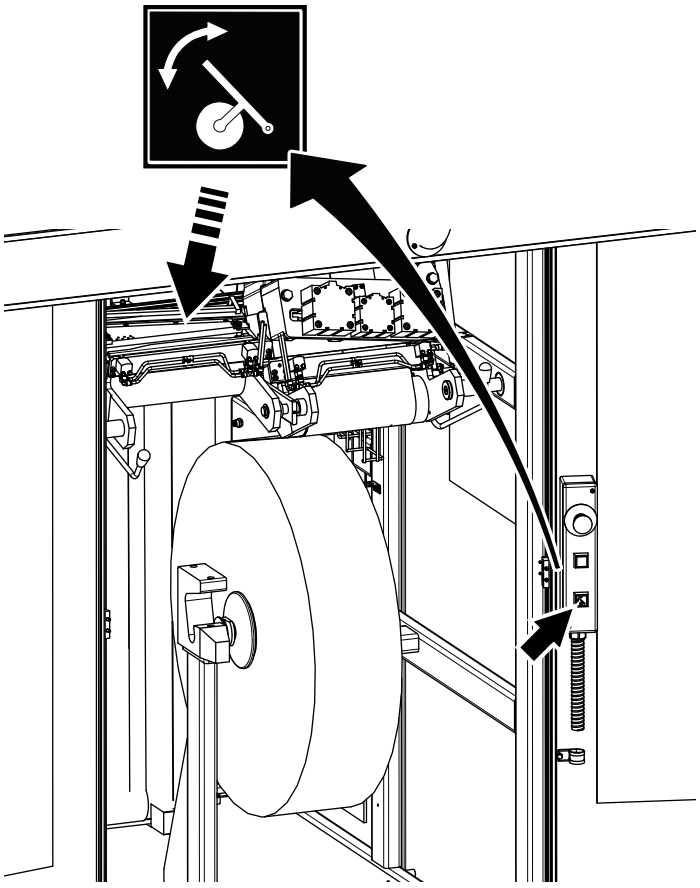

2

WARNING

Risk of personal injury.
Moving parts can crush and cut.

Press the PACKAGING MATERIAL HOLDER button.

The packaging material holder above the reel lowers.

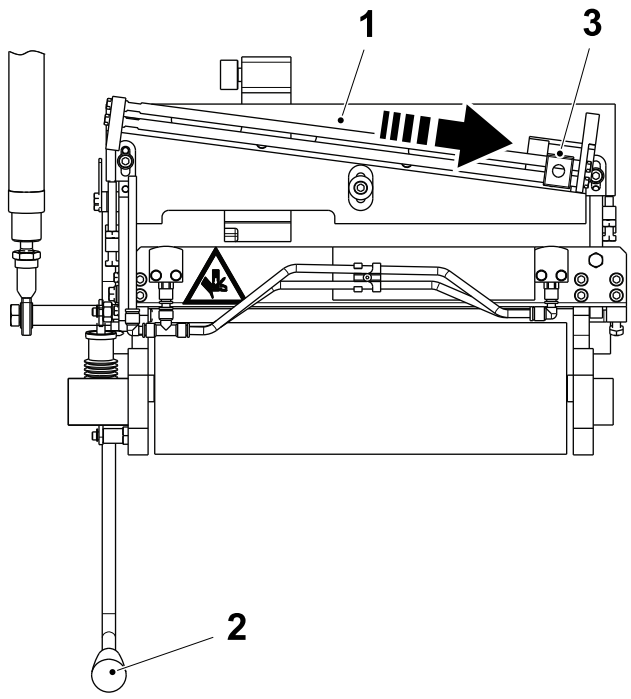

3

Raise the cutting table (1) by means of the handle (2).

Make sure that the knife holder (3) is on the RH side of the cutting table (1).

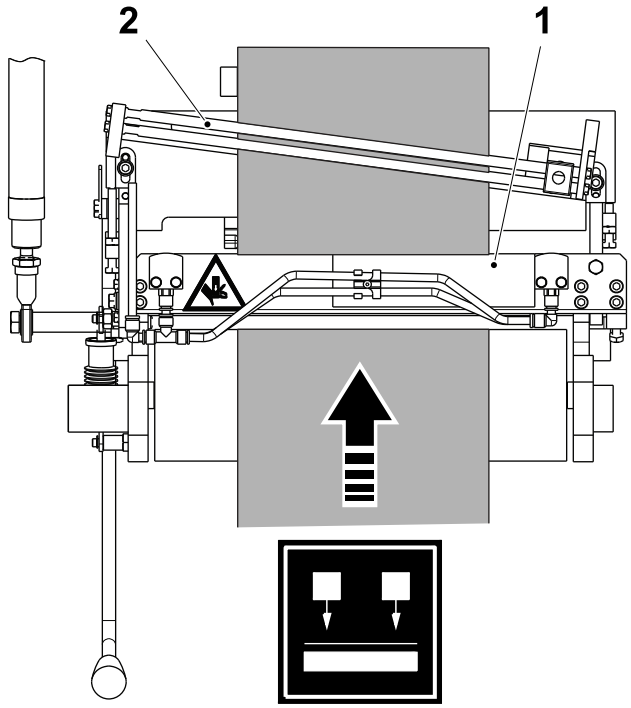

4

Press the MATERIAL LOCKING button to allow the packaging material to pass through the web brake shoe (1).

Thread the packaging material under the cutting device (2).

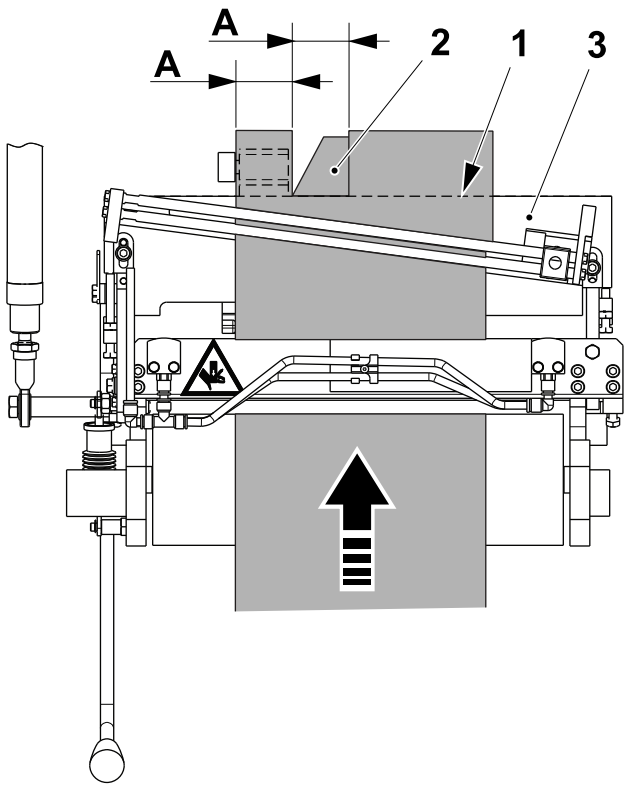

5

Fold the packaging material upwards along the top crease (1), then downwards to make a sharp crease.

Cut vertically the end of the packaging material to obtain a stripe (2) of 40 mm about at the distance 40 mm from the packaging material RH side.

For TBA Edge packages only cut vertically the end of the packaging material to obtain a stripe (2) of 40 mm about at the distance 75 mm from the packaging material RH side.

Fold the stripe (2) along the top crease (1) over the edge of the cutting table (3).

A = 40.0 mm
B = 75.0 mm

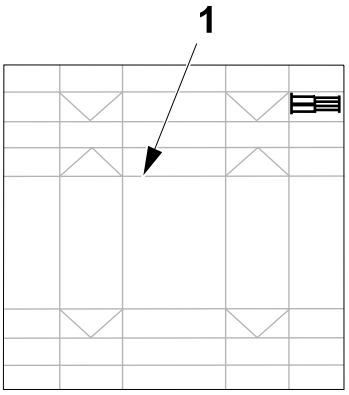

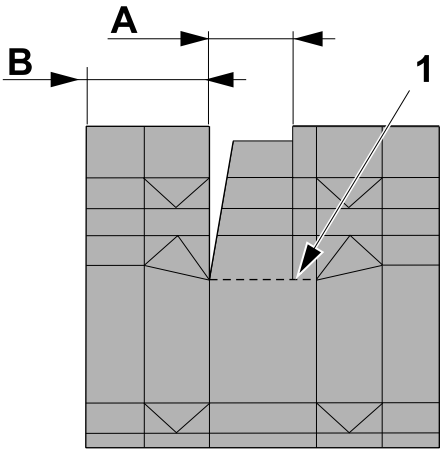

TBA Edge packages only

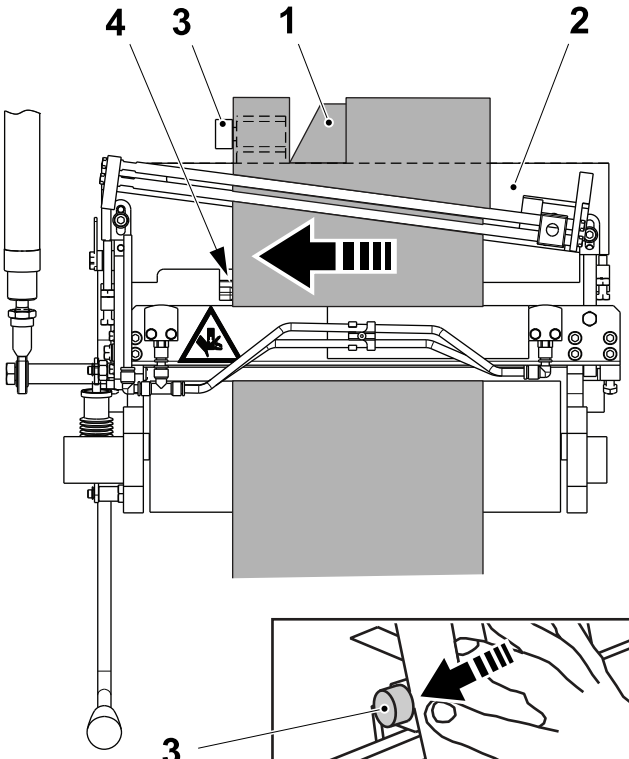

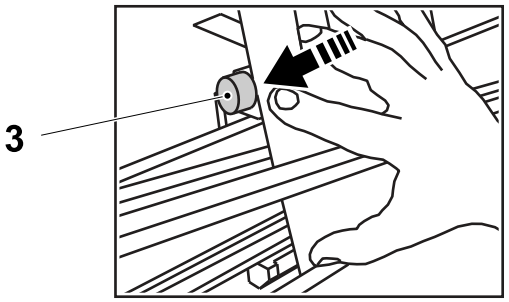

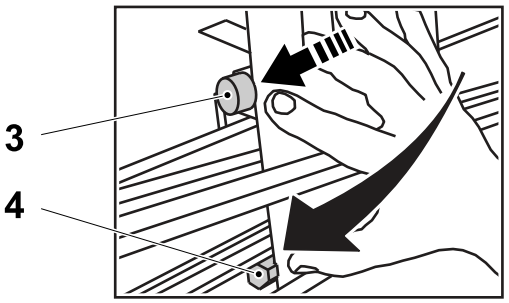

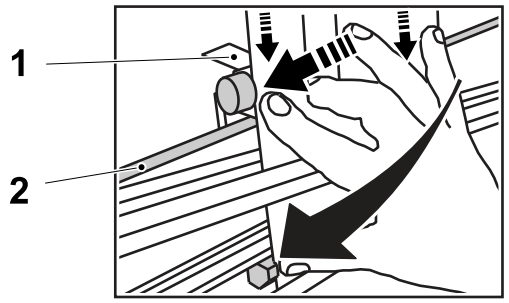

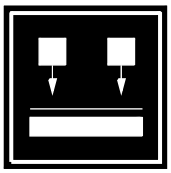

6

Hold the stripe (1) over the cutting table (2).

Move the packaging material against the adjusting screw (3).

Move the packaging material against the tooth (4).

Move the packaging material down until the stripe (1) is against the cutting table (2).

Press the MATERIAL LOCKING button to lock the packaging material in place.

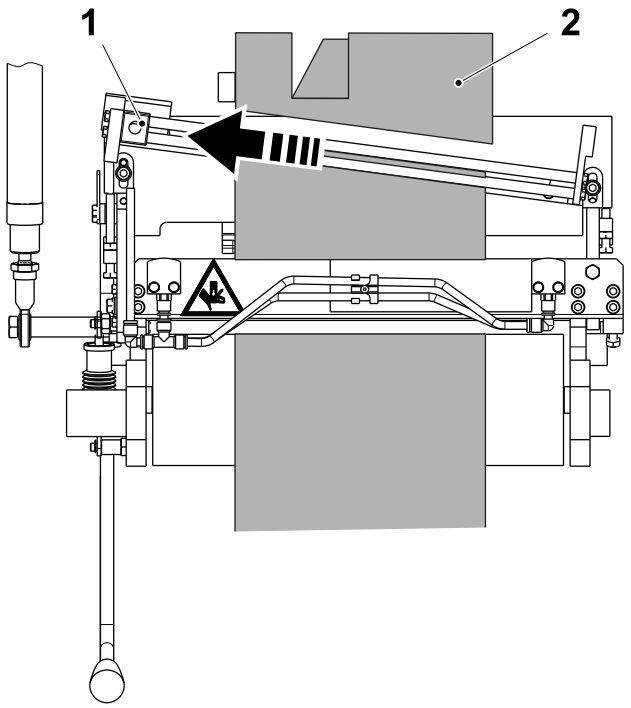

7

Cut off the end of the packaging material by sliding the knife (1) across the cutting table from RH side to LH side.

Remove the end piece (2).

Move back the knife (1) on the RH side.

Note! If the quality of the paper edge after the cut from RH side to LH side is not good enough, call a technician to change the knife (1) in the knife holder.

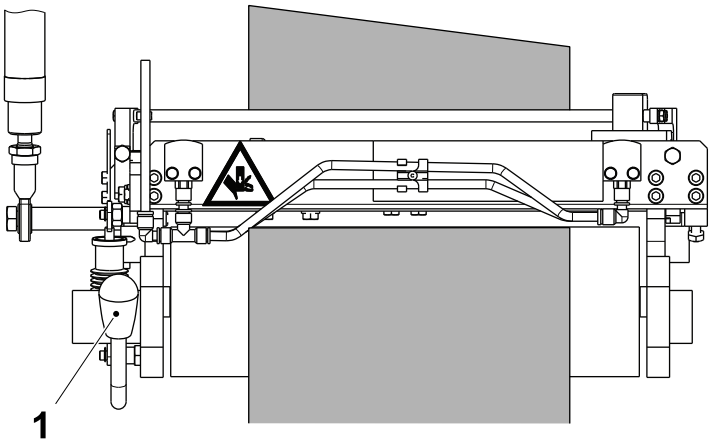

8

Lower the cutting table to the production position by means of the handle (1).



9

Press the OPEN/CLOSE DOORS button to close the ASU doors.

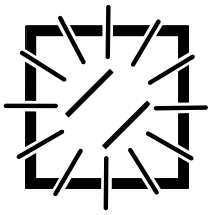

10

Press the reset buttons to reset the safety system, see 8.2 Security Stop.

If an alarm appears, take the appropriate measures or call a technician.

6.2.3 iLine XT Auxiliary Cutting Table Preparation

Note! Valid for ASU iLine XT Version (OE) according to the manual procedure with the auxiliary cutting table.



1

If the automatic splice fails, perform a manual splice, see the following instructions.

Press the OPEN/CLOSE DOORS button for manually open the doors.

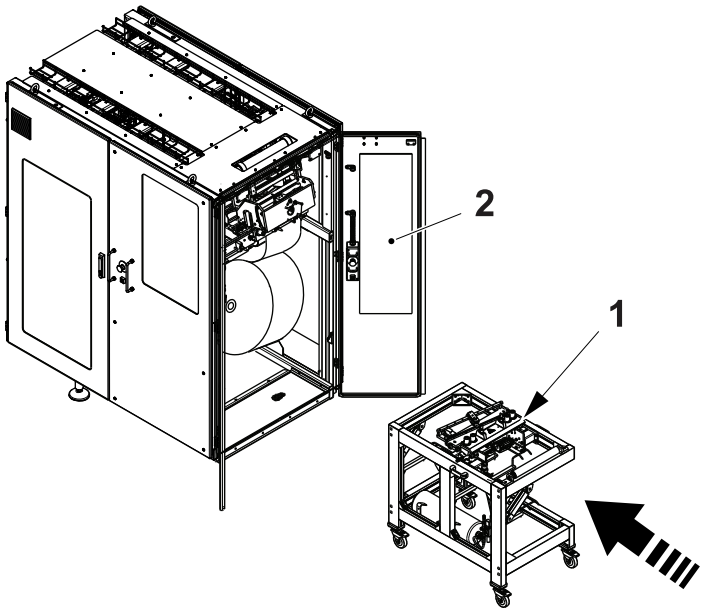

2

Position the auxiliary cutting table (1) in front of the ASU doors (2).

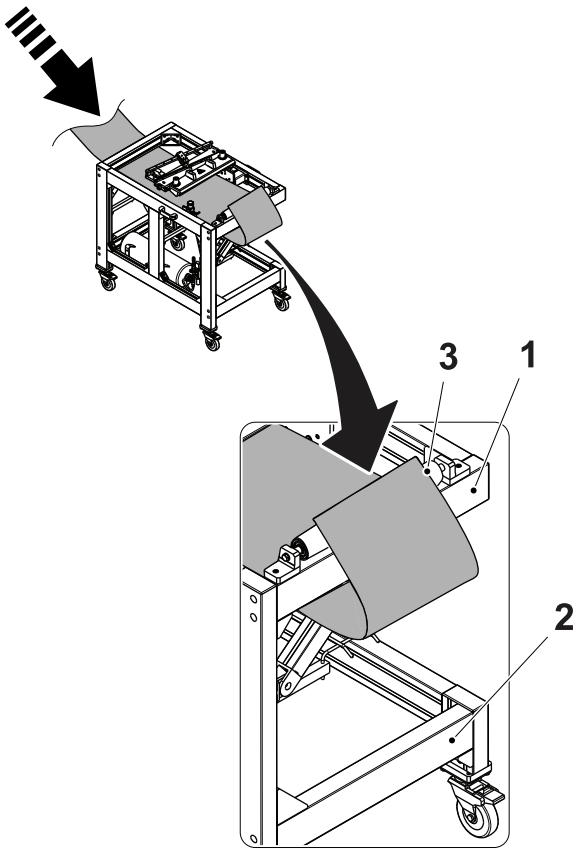

3

Thread the packaging material between the upper part (1) and lower part (2).

Thread the packaging material over the roller (3).

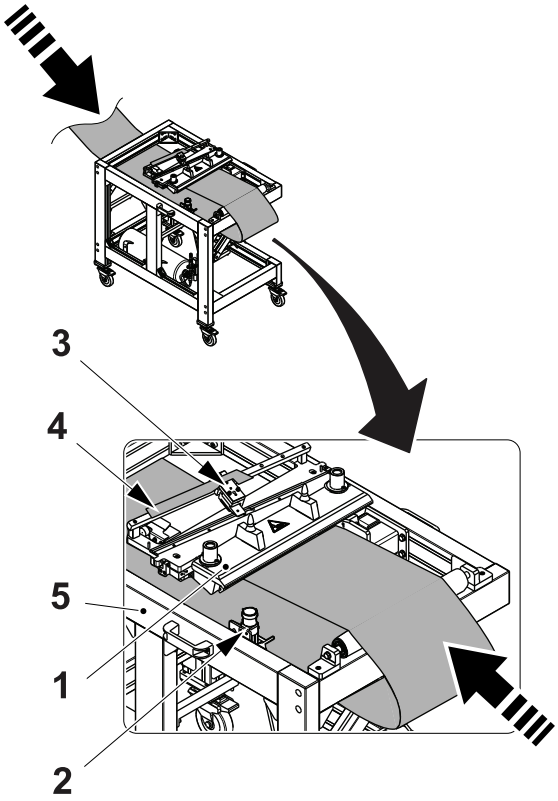

4

WARNING

Risk of crushing.
Moving part can crush and cut.

Thread the packaging material in the material holder (1).

Switch ON the pneumatic mechanism (2) to hold the packaging material.

Cut off the end of the packaging material by sliding the knife (3) across the cutting table from RH side to LH side.

Remove the cut off end piece (4).

Move back the knife (3) to the RH side.

Remove the material holder (1) from the auxiliary cutting table (5).

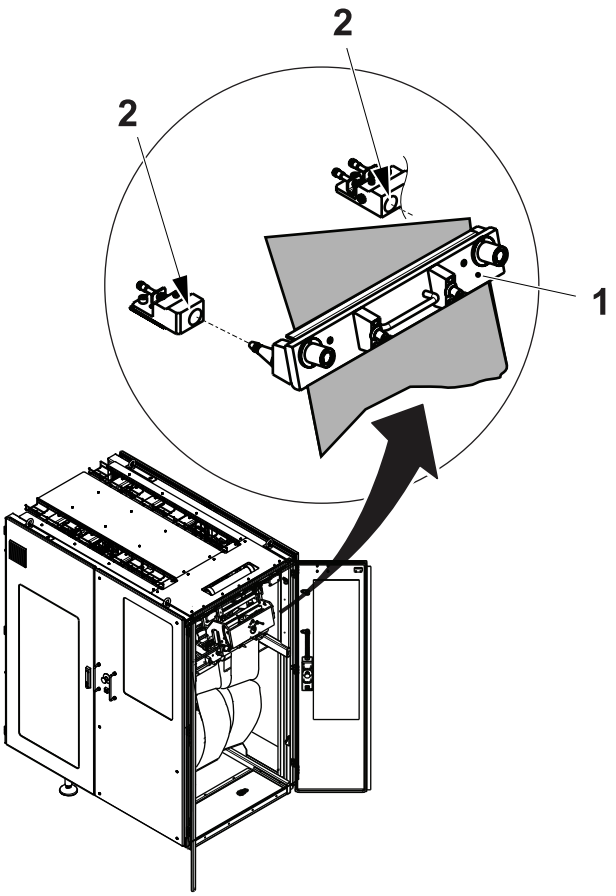

5

Fit the material holder (1) in the seats (2) of the ASU.

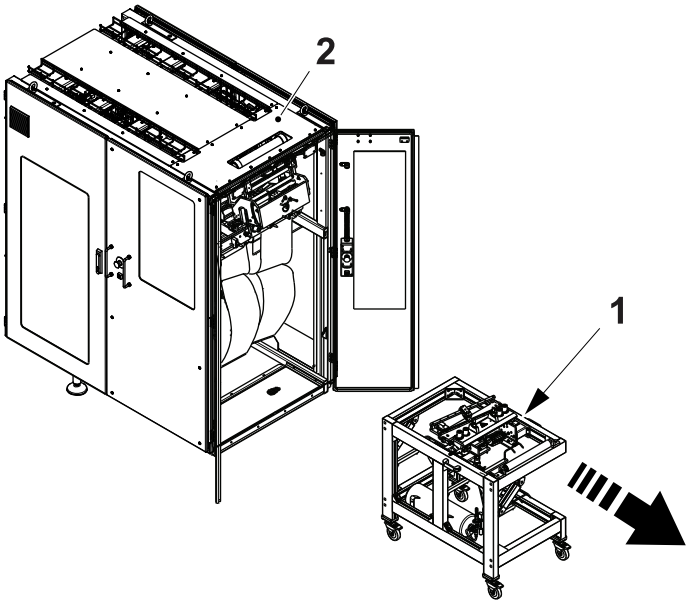

6

Remove the auxiliary cutting table (1) from the ASU (2).



7

Press the open/close doors button to close the ASU doors.

6.2.4 Manual Web Splice



1

Press the MANUAL WEB SPLICE button.

When the machine has performed the splice, open the ASU door behind the packaging material reel that is not in use.

Follow the instructions 6.2.1 Splicing Preparation

6.2.5 Interrupted Web Splice

CAUTION

Risk of personal injury.

The rollers of the ASU magazine may be suspended in an upper position when the machine is stopped due to an interrupted web splice. The rollers may drop suddenly if the packaging material web is cut.



1

If the machine stops when a packaging material splice is being performed, the `SPLICE INTERRUPTED` alarm appears on the TPOP.

To restart the machine, acknowledge the alarm, remove the cause of the stoppage and follow the instructions in 6.2.4 Manual Web Splice.



2

The packages with the splice are automatically discarded.

Carry out the checks according to the 5.3 Package Checks.

Note! Register the number of packages taken for the checks, see Recording Package Waste for Quality Checks on page 2-54.

6.2.6 Packaging Material Broken or Splice Failure (ASU Loop Empty)

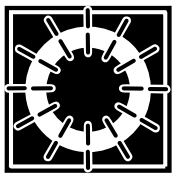

1

WARNING

Risk of serious production fault.
Never use tape to manually join or splice the packaging material when there is a splice failure or the packaging material is broken.

CAUTION

Hygiene.
Before handling clean parts, disinfect your hands/gloves with cleaning compound code H.

When there is an unsuccessful packaging material splice or the packaging material is broken, the ASU loop empties and the machine stops in SHORT STOP.

Note! Reset the alarm on the TPOP only **after** performing the splice.

The ASU LOOP EMPTY and SPLICE INTERRUPTED alarms are displayed on the TPOP and an audible signal is given to indicate that the machine is ready to perform a manual splice.

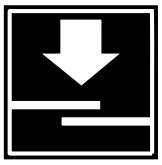

2

Pull back the packaging material and feed it back into the splicing unit.

Prepare a new packaging material splice, follow the instructions in 6.2.1 Splicing Preparation.

Close the ASU doors and press the MANUAL WEB SPLICE button.

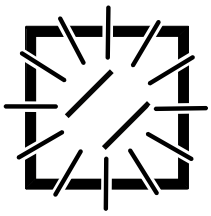



3

Press the RESET button to reset the safety system, see 8.2 Security Stop.

If an alarm appears, take the appropriate measures or call a technician.

The ASU loop is filled with packaging material.



4

Press the PROGRAM UP button to restart the machine.

6.2.7 Immediate Splice Enabled

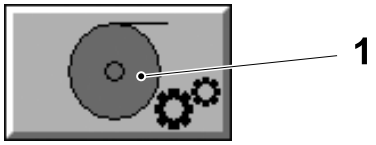

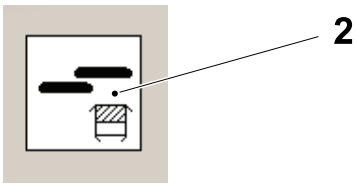

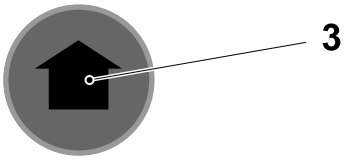

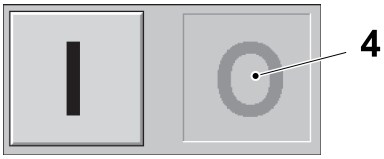

Note! Using the IMMEDIATE SPLICE ENABLED function will create extra package waste.

When there is an urgent need to perform a packaging material splice because of an alarm condition, it is possible to perform an immediate splice disregarding the packaging material position (out of design).

Touch the ASU button (1).

Touch the IMMEDIATE SPLICE ENABLED button (2).

Note! To cancel the function and return to production, press the PROGRAM UP button (3) or the OFF button (4).

An audible signal is given to indicate that the machine is ready to perform a manual web splice. Follow the instructions in 6.2.4 Manual Web Splice.

See also 2.6.1 ASU Window on page 2-62.

7 Conversion

Description

This chapter describes the procedures necessary to change the machine volume.

Description 7-2

7.1 QuickChange 7-5

Preparation 7-5

Equipment Checklist..... 7-5

7.1.1 Volume QuickChange..... 7-6

Automatic Volume QuickChange During PRODUCTION 7-6

Volume QuickChange During PREPARATION..... 7-7

7.1.2 Change Equipment..... 7-8

Volume Flaps 7-8

Support Roller (Valid for TBA 200 Sq and TBA 250 Sq only) 7-9

Wheel (Not valid for TPA 200 Sq, TPA 250 Sq, TBA 200 E and TBA 250 E)..... 7-9

Wheel (Valid for TPA 200 Sq and TPA 250 Sq only) 7-11

Wheel (Valid for TBA 200 E and TBA 250 E only)..... 7-12

Flap Heater..... 7-13

Pressure Device..... 7-14

Fin Folder 7-15

7.1.3 Volume QuickChange Completion..... 7-16

This page intentionally left blank

7.1 QuickChange

This section describes what must be done to change the package volume on the filling machine.



Preparation

1

Make sure the correct packaging material reel is spliced and prepared ready for PRODUCTION.

Check on the TPOP display which volume is currently in use.

Note! The size of the current package being produced is shown on the TPOP display.

Change the reel as necessary and prepare a packaging reel splice, see section 6.2 Packaging Material Supplies.

2

Equipment Checklist

Make sure the necessary volume change equipment is available:

- cutting and pressure jaw volume flaps
- pressure device pushers
- final folder wheel flaps (only for some package volumes)

7.1.1 Volume QuickChange

A volume QuickChange can be performed when the machine is in step PREPARATION, PRODUCTION or during a NORMAL STOP.

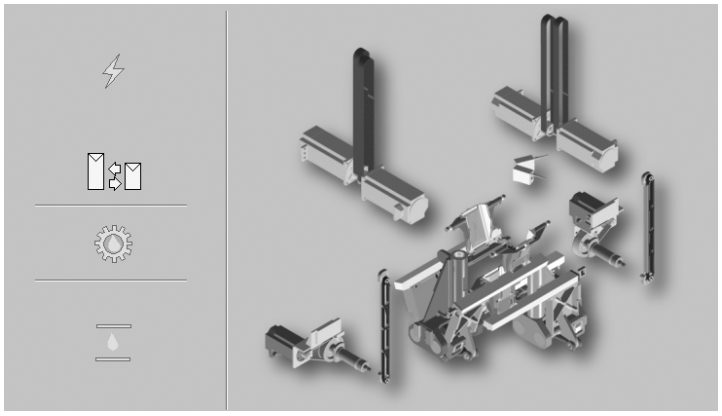

Automatic Volume QuickChange During PRODUCTION

Note! This procedure is not valid for quick change between TBA 284 B and TBA 300 S.

An automatic volume change is performed when the machine is running in PRODUCTION and a new volume size of packaging material is detected by the jaw system photocells.

The machine will stop automatically when the packaging material arrives at the jaw system and an alarm will appear on the TPOP.

Acknowledge the alarm and follow the procedure Volume QuickChange During PREPARATION.

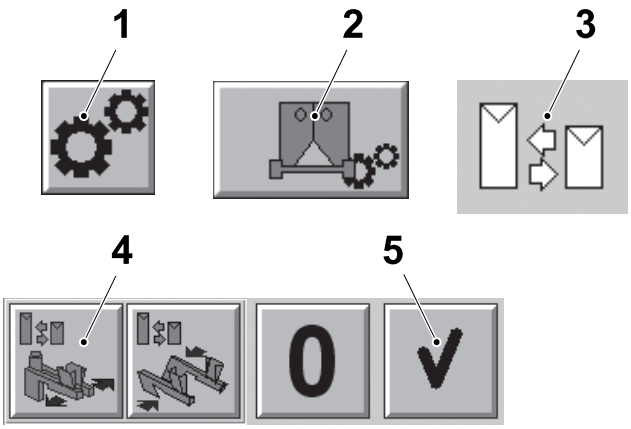

Volume QuickChange During PREPARATION 1

Note! This procedure can be performed also during NORMAL STOP.

a) Touch the PRODUCTION CONTROL button (1).

b) Touch the PACKAGE FORMING UNIT button (2).

c) Touch the CHANGE VOLUME icon (3).

d) Touch the OPEN button (4).

e) Touch the OK button (5) to confirm the selection.

f) Wait until the jaw system movement has completed and opened both jaw pairs.

g) Continue with the section 7.1.2 Change Equipment.

7.1.2 Change Equipment

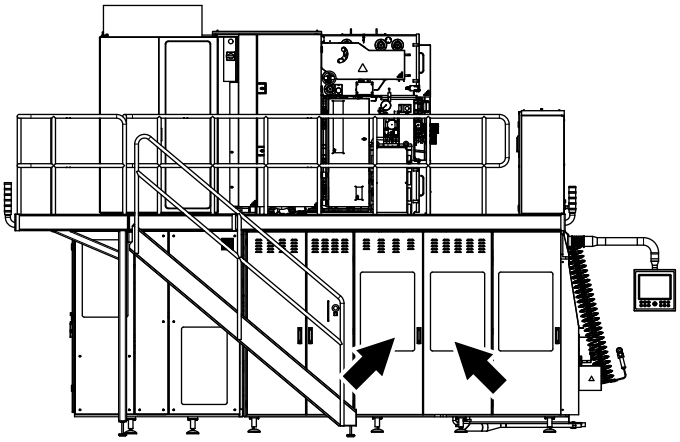

1

Open the two LH jaw system doors.

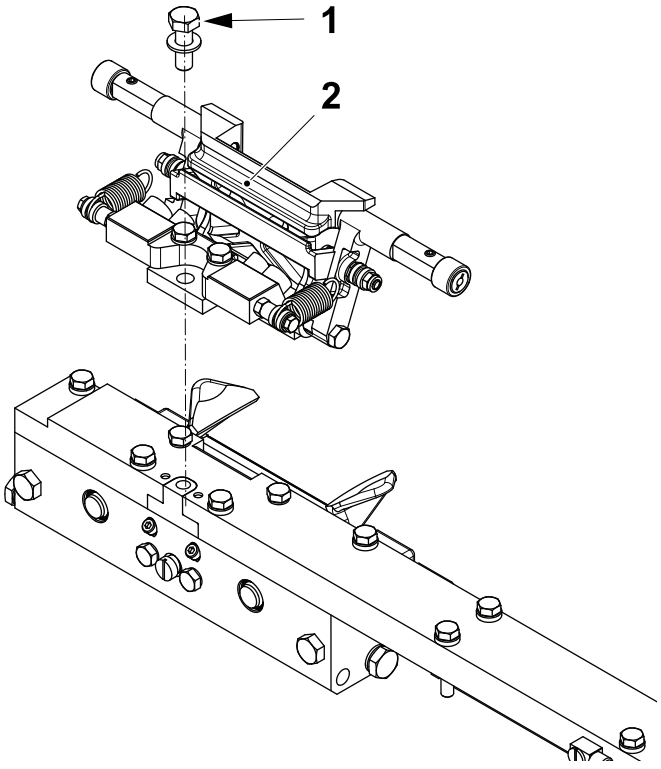

Volume Flaps

2

On each of the four volume flaps:

a) Release the screw (1) securing the volume flap (2) to the carrier and remove the volume flap (2).

b) Fit the correct volume flap according to the volume and secure them using the screw (1).

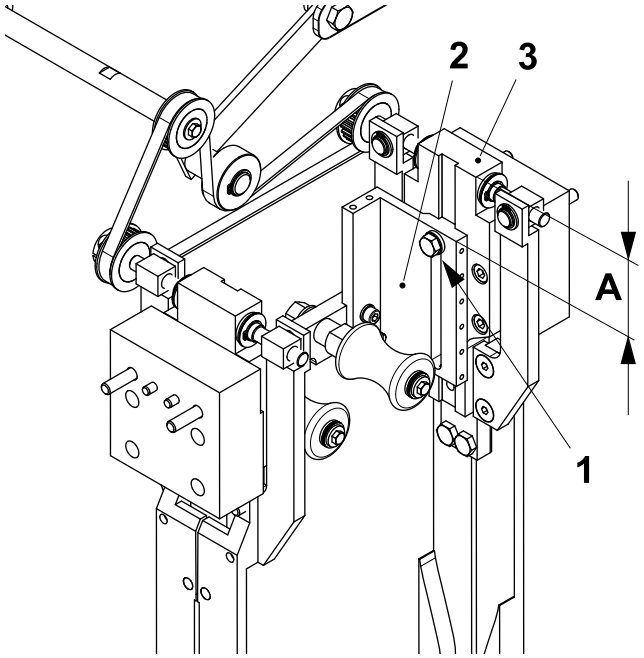

Support Roller (Valid for TBA 200 Sq and TBA 250 Sq only)
3

Loosen the screws (1) on both sides and set the distance **A** between the bracket (2) and the edge of the volume curve piece (3).

Tighten the screws (1).

Package	A ±1 (mm)
TBA 200 Sq	126
TBA 250 Sq	106

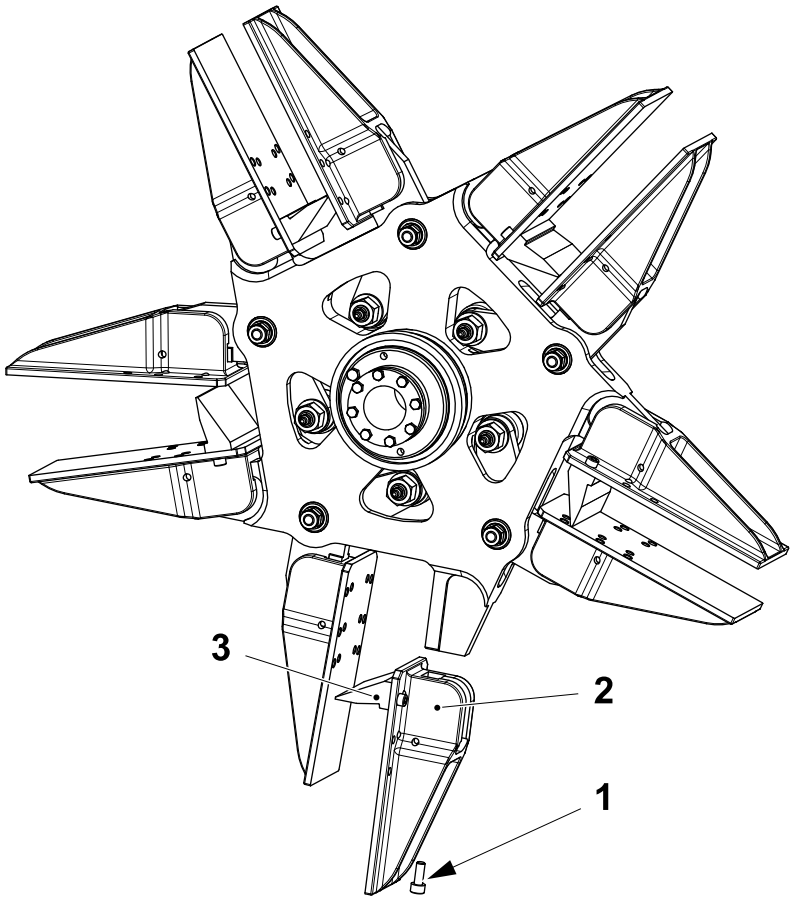

Wheel (Not valid for TPA 200 Sq, TPA 250 Sq, TBA 200 E and TBA 250 E)
4

Note! For TPA 200 Sq and TPA 250 Sq, TBA 200 E and TBA 250 E see page 7-11.

Note! For quick change between TBA 284 B and TBA 300 S no changes are required in the wheel group.

WARNING
Risk of crushing.
Be careful when manually turn the wheel.

Note! Turn the wheel to access the screws (1).

In each station loosen the screw (1) and remove the flap (2) holding the bottom plate (3).

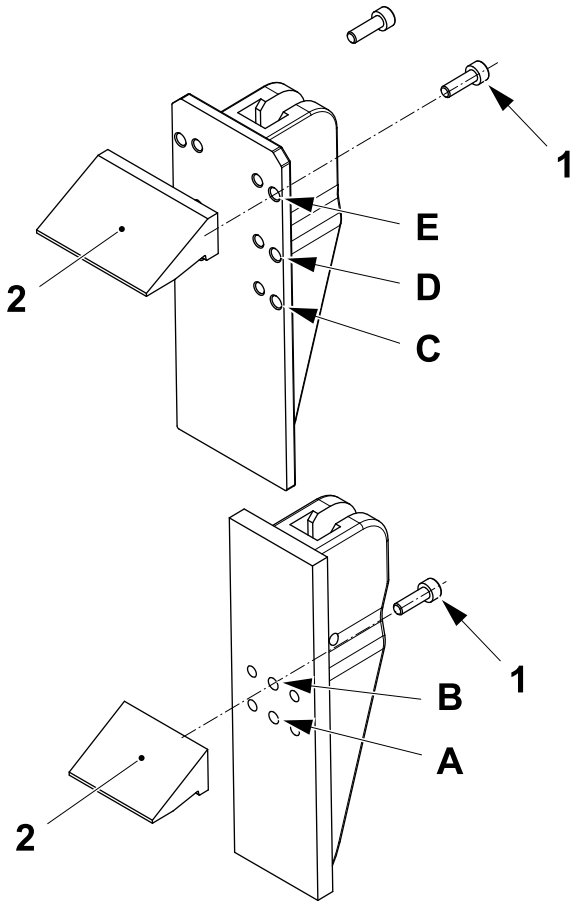

5

Remove the screws (1) and change the position of the bottom plate (2) according to the volume.

Tighten the screws (1).

Package	Position
TBA 100 B	A
TBA 125 S	B
TBA 160 S	A or C
TBA 200 B	C
TBA 200 M	A
TBA 200 S	B or E
TBA 250 B	D
TBA 250 S	B
TBA 330 S	E

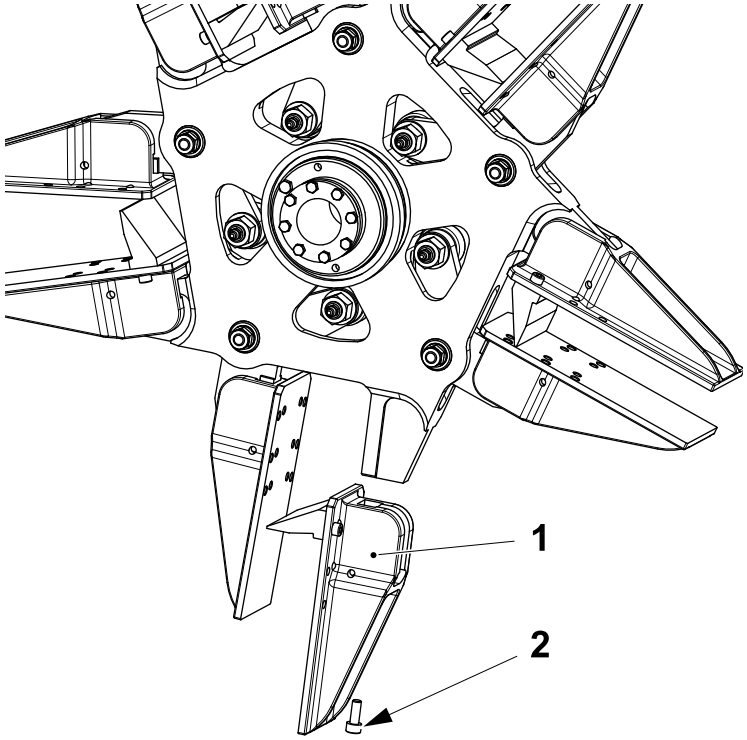

6

Fit the flap (1) and tighten the screw (2)

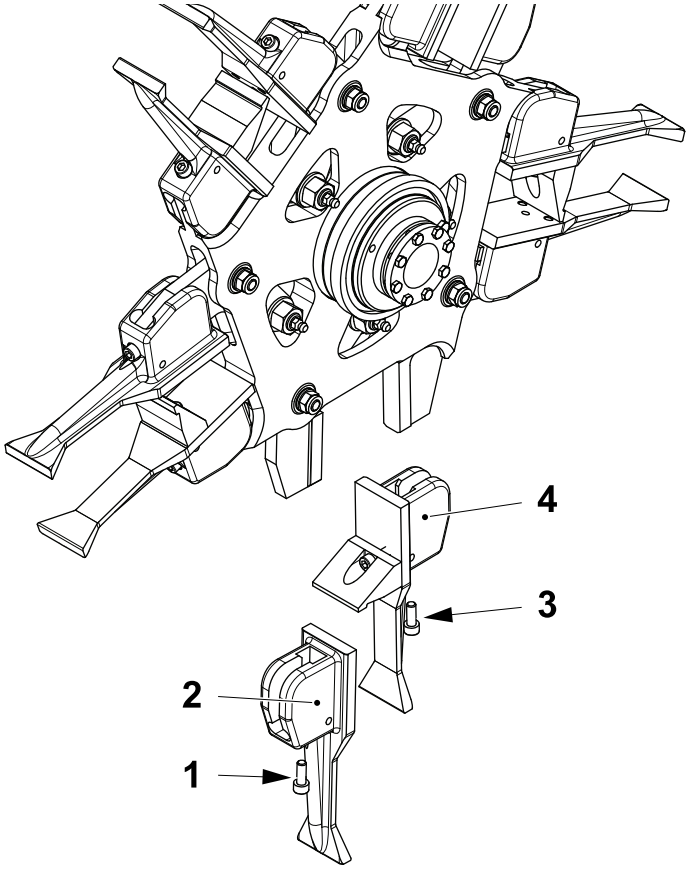

Wheel (Valid for TPA 200 Sq and TPA 250 Sq only)

7

WARNING

Risk of crushing.
Be careful when manually turn the wheel.

Note! Turn the wheel to access the screws (1).

In each station:

- remove the screw (1) and remove the flap (2)
- remove the screw (3) and remove the flap (4).

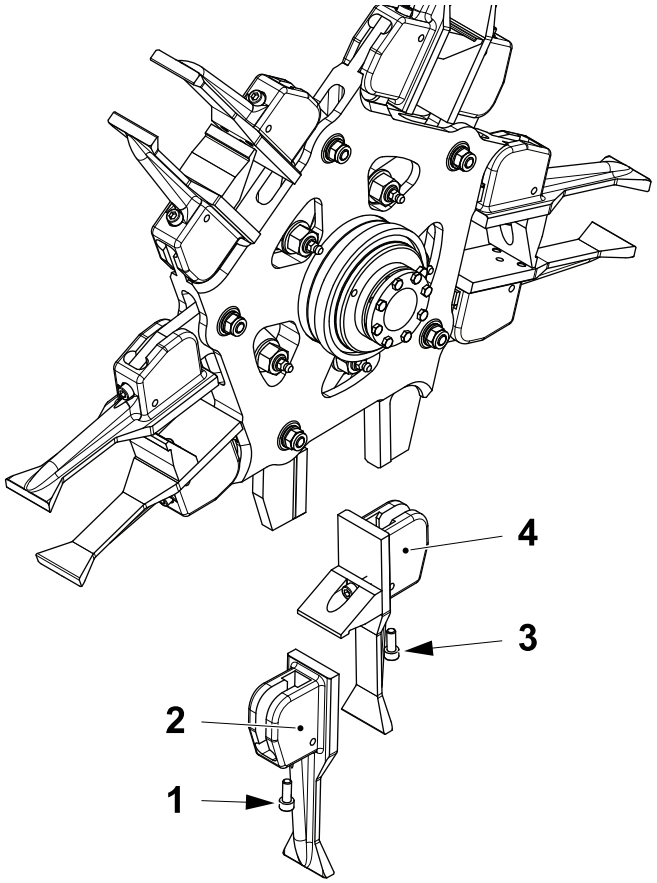

8

In each station:

- Fit the flap (4) related to the package to be installed and tighten the screw (3)
- Fit the flap (2) related to the package to be installed and tighten the screw (1).

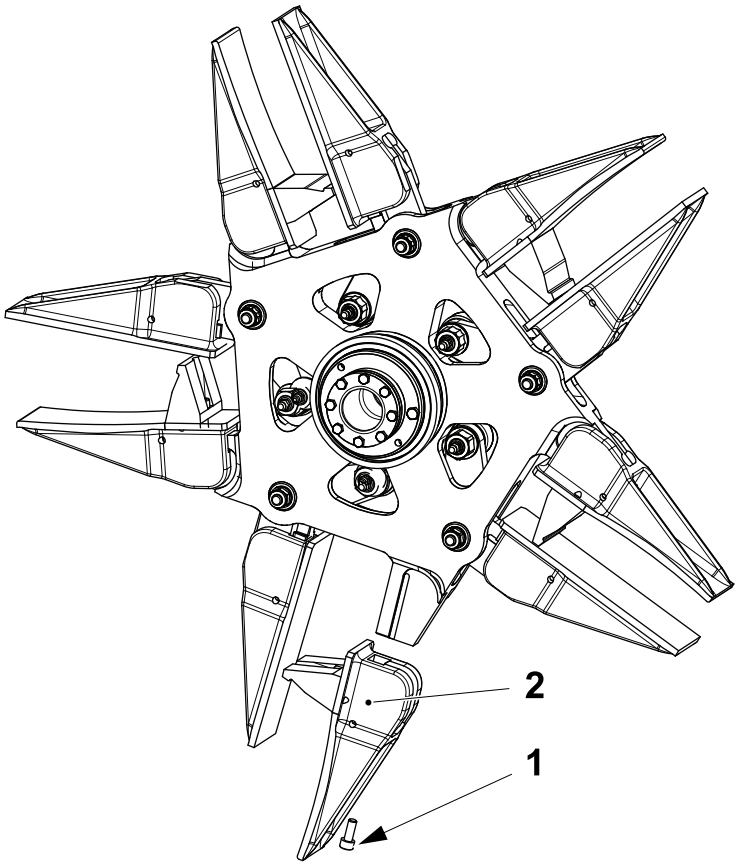

Wheel (Valid for TBA 200 E and TBA 250 E only)

9

WARNING

Risk of crushing.

Be careful when manually turn the wheel.

Note! Turn the wheel to access the screws (1).

In each station:

- remove the screw (1) and remove the flap (2)

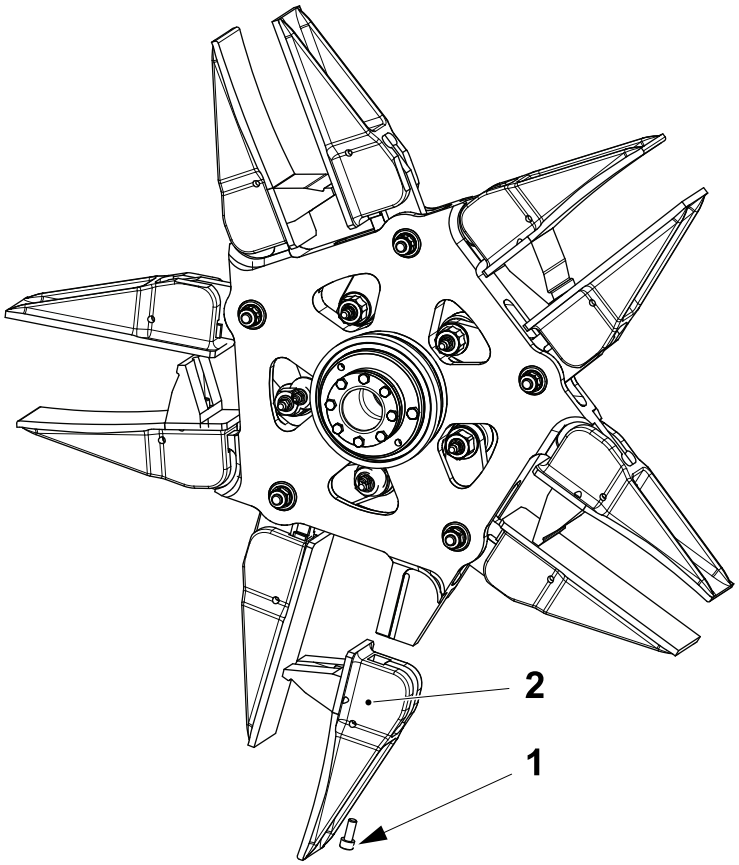

10

In each station:

- Fit the flap (2) related to the package to be installed and tighten the screw (1).

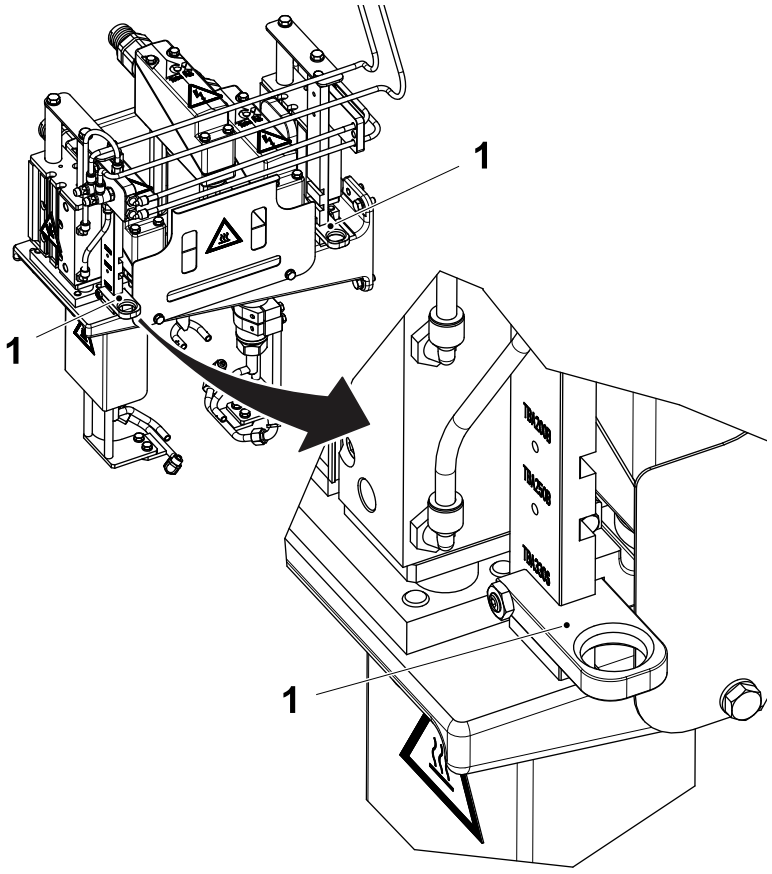

Flap Heater
11

Note! For quick change between TBA 284 B and TBA 300 S no changes are required in the Flap heater group.

Pull out the two stoppers (1).

Fit the two stoppers (1) in the correct volume position.

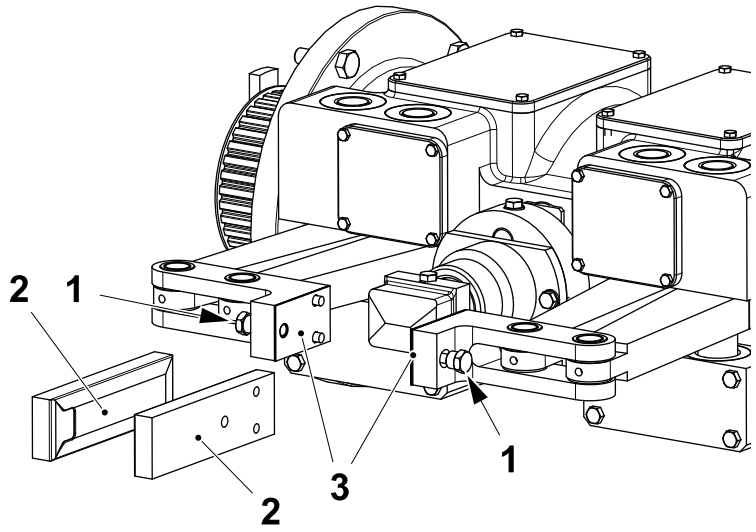

Pressure Device 12

Loosen the screws (1) and remove the pusher (2).

Note! Make sure not to loose the shims (3).

Note! For quick change between TBA 284 B and TBA 300 S volumes only: do not change the pusher (2) but remember to change the amount of shims (3).

Fit the pusher (2) according to the volume.

Note! For TPA and TBA Edge volumes only: make sure that the pushers (4) are fitted oriented according to the illustration below.

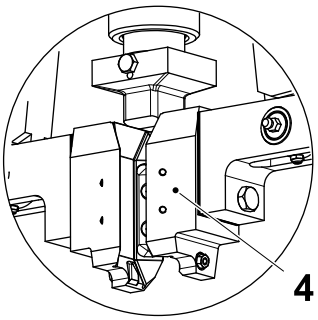

Valid for TPA volumes only

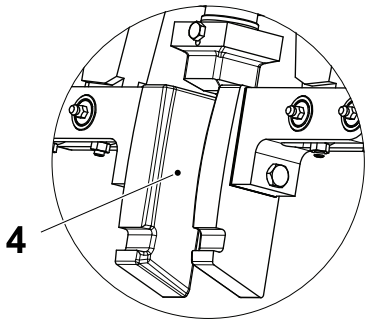

Valid for TBA Edge volumes only

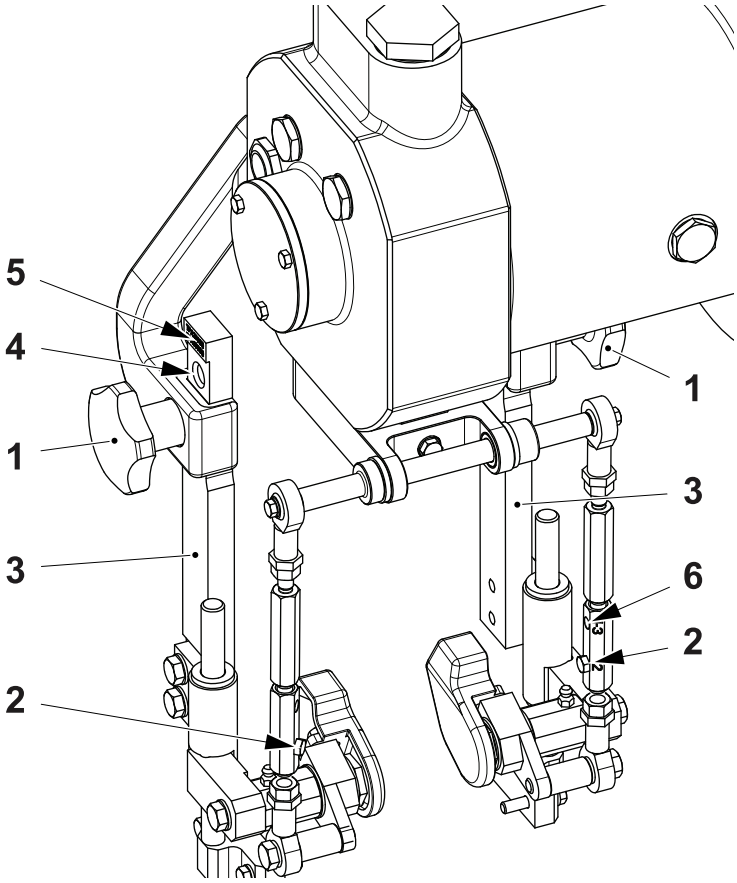

Fin Folder

13

Remove the knobs (1) and the screws (2).

Move the fin folder (3) to the correct position according to the package to be produced.

Fit the knobs (1) in the new holes (4) according to the package to be produced, see plate (5).

Fit the screw (2) in the new holes (6) according to the package to be produced.

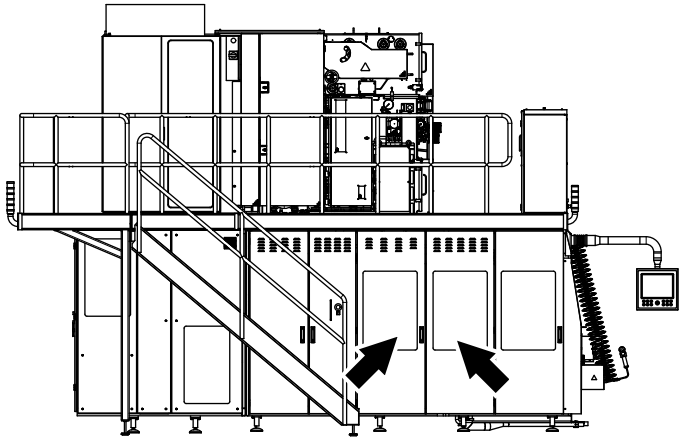

14

Close the two LH jaw system doors.

7.1.3 Volume QuickChange Completion

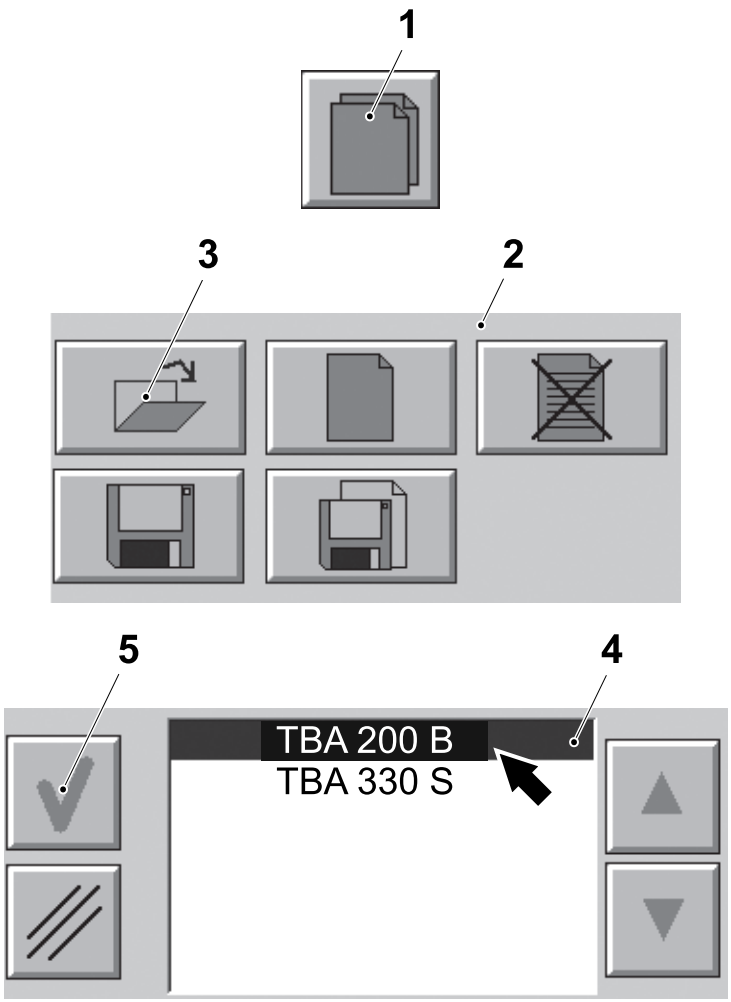

1

Note! If the filling machine is connected to the Line Controller, the recipe must be changed in the Line Controller.

a) Touch the RECIPE button (1).

b) The RECIPE window (2) is displayed.

c) Touch the OPEN RECIPE button (3) to display the RECIPE list (4).

d) Select the new volume from the RECIPE list (4).

e) Touch the OK button (5) for four seconds to confirm the new volume.

Note! An alarm will appear on the TPOP to indicate that an action is required.

Note! Check that the new volume is displayed in the home window, see Preparation on page 7-5.

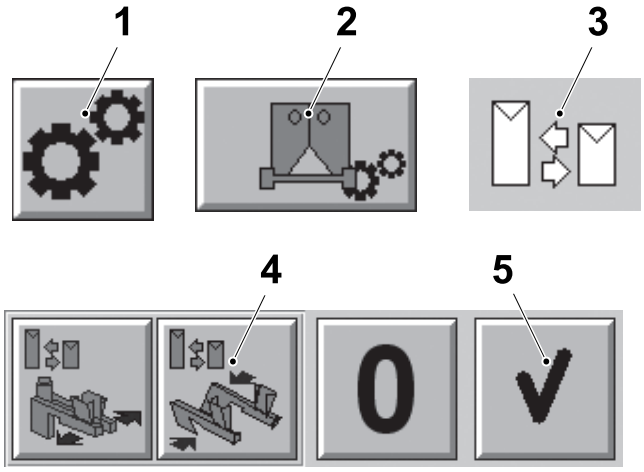

2

a) Close the LH jaw system doors and reset any alarms on the TPOP panel.

b) If not already done, touch the PRODUCTION CONTROL button (1).

c) Touch the PACKAGE FORMING UNIT button (2).

d) Touch the CHANGE VOLUME icon (3).

e) Touch the CLOSE button (4).

f) Touch the OK button (5) to confirm the selection.

g) Wait until the jaw system movement has completed and closed both jaw pairs.

The volume change has now been completed.

This page intentionally left blank

8 Stop

Description

This chapter describes the different types of stop conditions and how to stop the machine under normal operating conditions.

CAUTION

Hazardous noise.

Risk of impaired hearing. Hearing protection is recommended whenever this equipment is in operation.

CAUTION

Risk of damage to the equipment.

When possible, the machine should normally be stopped in a SHORT STOP during PRODUCTION.

Description 8-2

8.1 Emergency Stop 8-5

8.2 Security Stop 8-7

Aseptic Chamber Doors or Machine Failure..... 8-7

8.2.1 ASU Safety Mat (OE) 8-10

8.3 Short Stop 8-11

8.4 Normal Stop 8-14

8.5 Production Finished Stop 8-16

Interrupting the Automatic Sequence 8-18

This page intentionally left blank

8.1 Emergency Stop

When there is a risk of serious danger to people or to the machine, push any of the EMERGENCY STOP buttons (arrows) as quickly as possible.

CAUTION

Risk of serious production fault.

If during Stops the aseptic chamber doors are opened, or the tube bursts, tears, or it is manually cut, or product splashes occur, the machine must be cleaned and sterilized before PRODUCTION can restart.

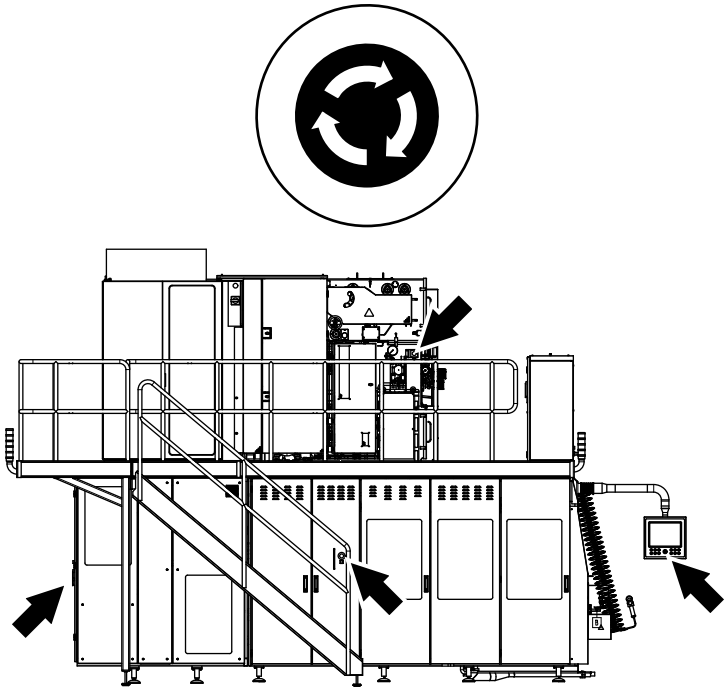

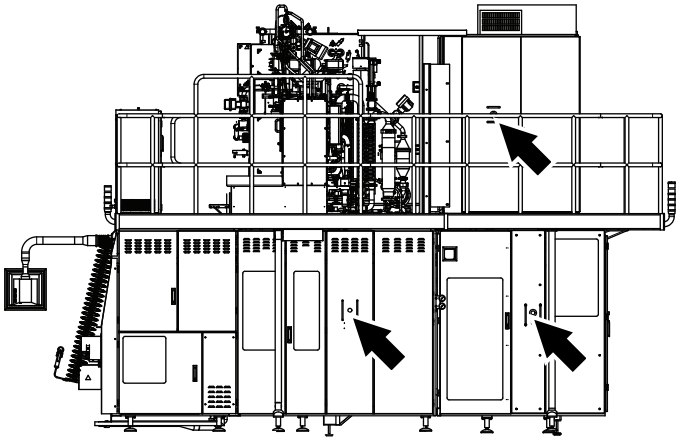

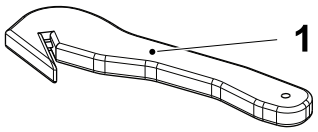

Safety cutter TP No. 90602-0330

1

Pressing an EMERGENCY STOP **button results in the following:**

- All machine movements and functions stop **instantly**
- The pneumatic system de-pressurizes completely
- The machine program steps down to step ZERO.

DANGER

Risk of serious personal injury.
Never open the doors of the drying or aseptic chambers to extinguish a fire on the packaging material.
Follow local emergency procedures.

CAUTION

Risk of serious production fault.
When cutting the product tube use the safety cutter (1) TP No. 90602-0330 to avoid damaging the float.

Take the following actions:

a) Eliminate the cause of the stop and clear any alarms.

b) Cut open the product tube using the safety cutter (1) to empty any remaining product.

c) Register the cause and number of wasted packages in the collect system. See the 2.4.2 Manually Registering an Event During Production on page 2-47.

d) Twist out and reset the EMERGENCY STOP button.

e) Clean the machine according to 9.1 Daily Care.

f) Restart PRODUCTION. See the 3.2 Preparing after Daily Care section.

8.2 Security Stop

All hazardous areas of the machine are fitted with safety switches. If any door or guard fitted with a safety switch is opened the machine will perform a SECURITY STOP.

CAUTION

Risk of serious production fault.
If during Stops the aseptic chamber doors are opened, or the tube bursts, tears, or it is manually cut, or product splashes occur, the machine must be cleaned and sterilized before PRODUCTION can restart.

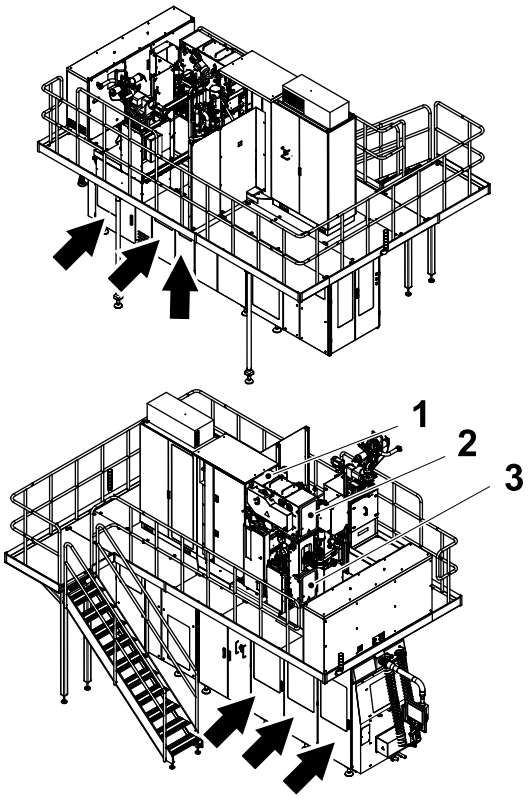

Aseptic Chamber Doors or Machine Failure

1

During PRODUCTION the machine will stop immediately if:

- any of the doors of the aseptic chamber (1), (2), or (3) are opened
- any of the doors indicated by the arrow are opened
- there are jammed packages
- there are final folder errors.

Also see the Safety Precautions chapter.

Note! If any of the aseptic chamber doors have been opened, the machine resets to step ZERO. Follow the instructions in the Daily care section.

Reset any alarms on the TPOP.

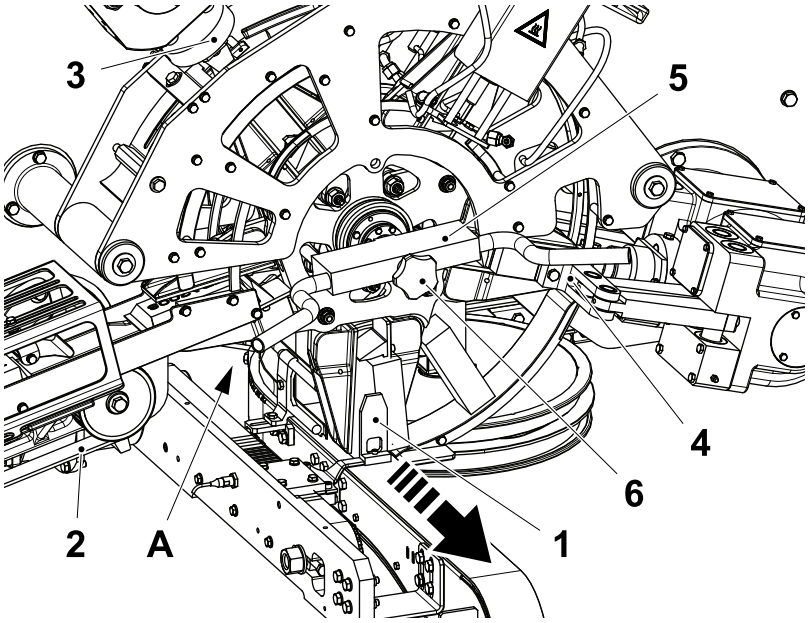

2

In case of jammed packages in the wheel of the final folder:

- pull the finger (1) far from the wheel
- turn the belt (2) until the block (3) and the pushers (4) do not interfere with the wheel
- fit the template (5) to the wheel by means of the knob (6)
- turn the template clockwise until the package is in position A.
- pull out all the jammed packages
- loosen the knob (6) and remove the template (5).

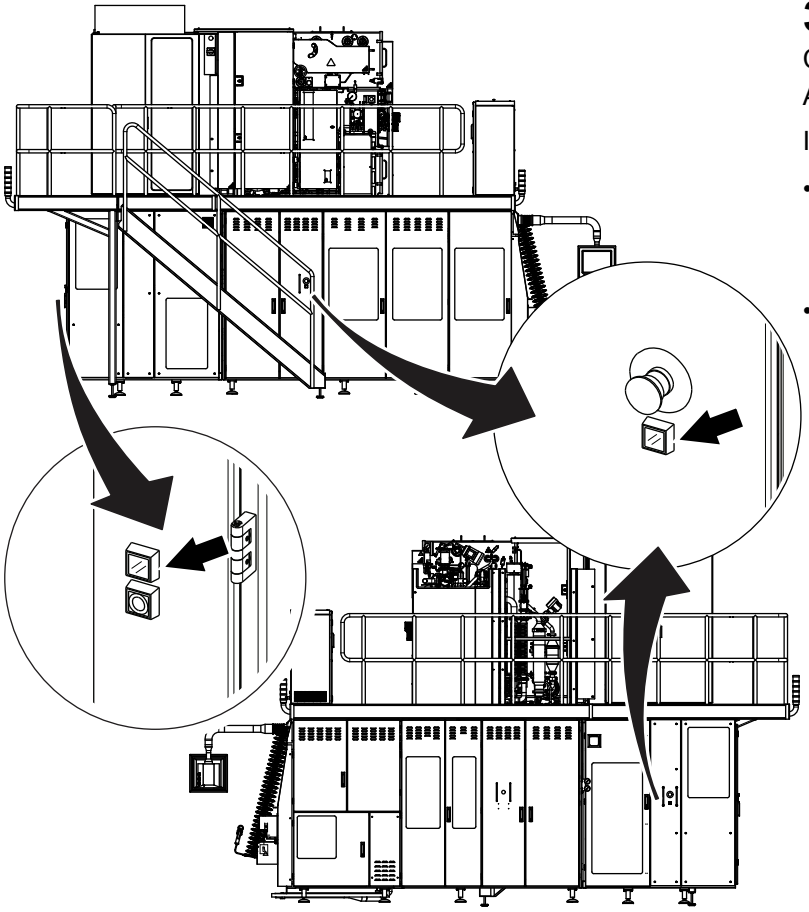

3

Close all the doors on the machine body and ASU.

If the alarm condition was caused by one of:

- the machine body doors, press one of the RESET buttons on the machine body doors
- the ASU doors, press the RESET button on the ASU.

Note! The light of the RESET button is intended to inform the operator when a door is open and the safety system must be reset. The light of the RESET button flashes when a door is open and after the door has been closed will remain ON until the RESET button has been pressed and safety system has completed the system reset.



4

Reset any alarms on the TPOP.

Press the PROGRAM UP button to restart the machine.

8.2.1 ASU Safety Mat (OE)

Note! Valid for ASU iLine XT Version (OE).

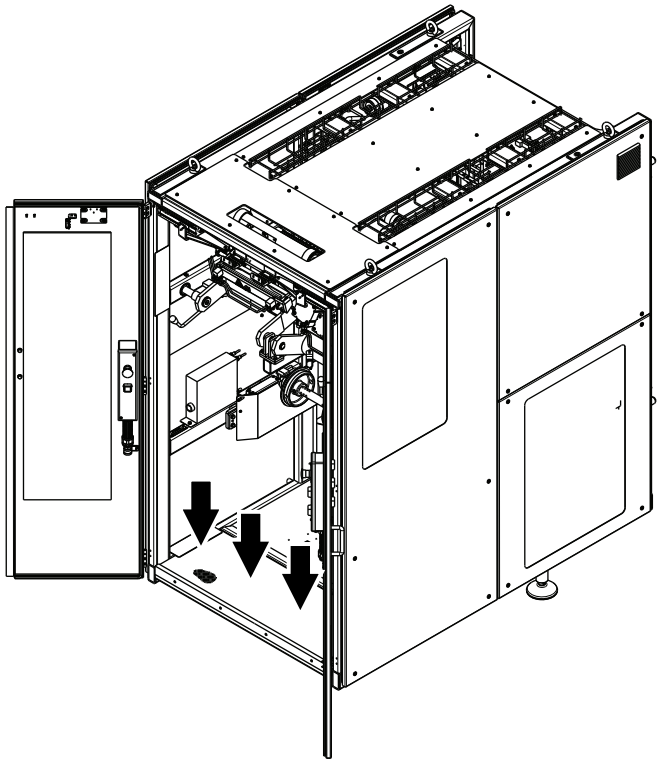

1

If activated during PRODUCTION, the safety mat disable the pneumatic system for the ASU automatic doors and the signal to the LGV.

The safety mat is activated when a pressure is applied, as for example a person standing on the safety mat.

Touch the ACKNOWLEDGE button on the TPOP to acknowledge the alarm.

8.3 Short Stop

Use the SHORT STOP button to stop the machine for 15 minutes or less.

Note! If the stop occurs after 30 minutes of PRODUCTION (or 5 minutes after the previous stop), a flushing sequence in the machine body will be performed immediately after the stop. During the flushing the machine body doors are locked.

CAUTION
Risk of serious production fault.
If the machine has been stopped for more than 120 minutes, the alarm `EXCESSIVE PRODUCTION STOP TIME` appears on the TPOP. It is recommended to terminate the PRODUCTION and perform CIP. For maximum waiting time recommendations, see table 11.4 Maximum Waiting/Stop Time Recommendations in chapter 11 Technical Data.

CAUTION
Risk of serious production fault.
If during Stops or PRODUCTION the aseptic chamber doors are opened, or the tube bursts, tears, or it is manually cut, or product splashes occur, the machine must be cleaned and sterilized before PRODUCTION can restart.

CAUTION
Risk of serious production fault.
If the machine has been stopped for more than 12 minutes the alarm `EXCEEDED SHORT STOP TIME WARNING` will appear on the TPOP. Restart production or press the INCHING button until the machine starts, the machine will automatically renew the packaging material in the superstructure to minimize the risk of unsterility and then stop. A dialogue window appears on the TPOP informing the operator of the `TUBE INTEGRITY DELAYED STOP`.

CAUTION

Risk of serious production fault.

If the machine has been stopped for more than 20 minutes the alarm exceeded `SHORT STOP TIME` will appear on the TPOP. Restart production or press the INCHING button until the machine starts, the machine will automatically renew the packaging material in the superstructure to minimize the risk of unsterility and then stop. A dialogue window appears on the TPOP informing the operator of the `TUBE INTEGRITY DELAYED STOP`.

CAUTION

Risk of serious production fault.

If the machine has been stopped by an alarm condition located before the jaw system and the packaging material in the superstructure includes an event critical to the tube integrity, for example; a packaging material splice, black tape or LS strip sealed during a TPIH fault. The alarm `ASEPTIC CHAMBER, PM INCLUDES EVENT CRITICAL TO TUBE INTEGRITY` will appear on the TPOP. Restart production or press the INCHING button until the machine starts, the machine will automatically waste the packaging material until the event critical to tube integrity has been discarded.

CAUTION

Risk of serious production fault.

If the machine has been stopped by the operator or by an alarm condition located after the jaws and the packaging material includes an event critical to the tube integrity, for example; packaging material splice, black tape, or LS strip sealed during a TPIH fault. The alarm `TUBE INTEGRITY DELAYED STOP` will appear on the TPOP and the audible alarm will sound. The filling machine will continue to run with the A-valve closed and waste the packaging material until the event critical to tube integrity has been discarded.

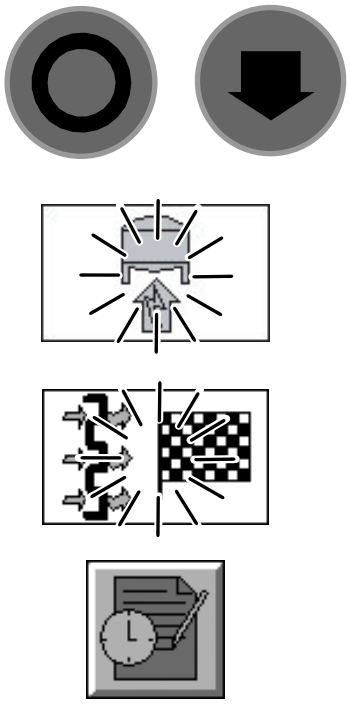

1

Use SHORT STOP or PROGRAM DOWN to stop the machine for 15 minutes or less.

To stop the machine during PRODUCTION:

- Press the SHORT STOP button or the PROGRAM DOWN button
- the machine program steps down to SIGNAL TO STERILIZER. The SIGNAL TO STERILIZER symbol and the DRYING symbol are lit
- the machine stops in design. A bar on the TPOP indicates the remaining time since the SHORT STOP button was pressed.

Note! If it is necessary to stop with the LH or the RH pair of jaws in an open position, see 2.6.5 Package Forming Unit Window.

Note! Register the stop reason in the collect system. See 2.4 Collect System.



2

Press the PROGRAM UP button to restart the machine.

When the machine is restarted if 15 minutes of stop time has been exceeded the packaging material tube from the peroxide bath inlet down to the jaw system is wasted before filling and production can continue.

To restart the machine, see chapter 4 Start.

8.4 Normal Stop

Use NORMAL STOP to stop the machine during PRODUCTION.

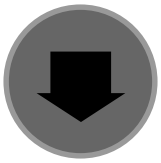

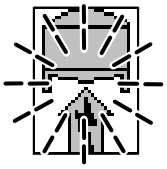

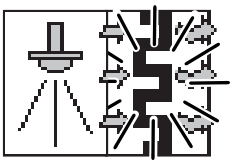



1

CAUTION

Risk of serious production fault.
If the machine has been stopped for more than 40 minutes, the alarm `NEW STERILIZATION IS RECOMMENDED` appears on the TPOP. It is recommended to step down the machine and perform a new sterilization of the machine.

CAUTION

Risk of serious production fault.
If the packaging material tube tears or is opened, the machine must be cleaned and sterilised.

CAUTION

Risk of broken packaging material web.
If the machine has been stopped for more than 20 minutes, the alarm `PERFORM JAW INCHING` appears on the TPOP. Press the INCHING button until the machine stops, this renews the packaging material from the inlet of the peroxide bath to the jaws, to minimize the risk of the packaging material web breaking.

To stop the machine during PRODUCTION, press the PROGRAM DOWN button twice.

The machine program steps down to DRYING. The `SIGNAL TO STERILIZER` symbol and the `DRYING` symbol are lit.

The machine continues until the product is emptied from the tube and then stops.

Register the stop reason in the collect system. See 2.4 Collect System.

Restart the machine as usual. See chapter 4 Start.

8.5 Production Finished Stop

Use PRODUCTION FINISHED if this is the planned time to end PRODUCTION.

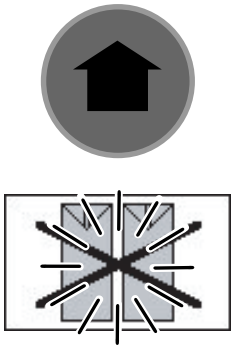

1

CAUTION
Risk of production fault.
Once the production is ended, the CIP (cleaning) must be performed within two hours. Exceeding the recommended period of waiting time increases the risk of product residue burning on hot contact surfaces and may affect the efficiency of the cleaning process. For maximum waiting time recommendations, see 11.4 Maximum Waiting/Stop Time Recommendations in chapter 11 Technical Data.

To stop PRODUCTION, press the PROGRAM UP button.

The machine program steps to PRODUCTION ENDED.

As soon as the tube is empty, there is a pause for two minutes.

Note! To interrupt the automatic sequence see Interrupting the Automatic Sequence on page 8-18.

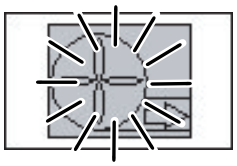

2

After the pause the machine program steps to VENTING ASEPTIC CHAMBER for 10 minutes. A time bar on the TPOP displays the remaining time.

When step VENTING ASEPTIC CHAMBER is finished the machine jump to zero automatically.

The peroxide fumes are exhausted, the compressor stops, and the aseptic chamber doors can be opened.

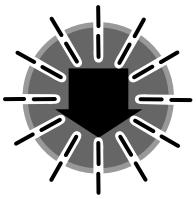

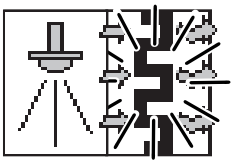

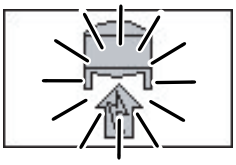



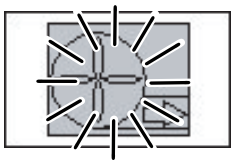

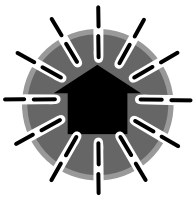

Go immediately to VENTING ASEPTIC CHAMBER

Return to PRODUCTION

Interrupting the Automatic Sequence

3

During the two minute pause before the program steps to VENTING ASEPTIC CHAMBER, it is possible to proceed straight to step VENTING, or return to PRODUCTION.

To step to VENTING ASEPTIC CHAMBER:

- press the PROGRAM UP button for three seconds.

To return to PRODUCTION:

- press the PROGRAM DOWN button, the program steps to DRYING
- the SIGNAL TO STERILIZER symbol and the PROGRAM UP button start to flash
- press the PROGRAM UP button and restart the machine, see chapter 4 Start.

9 Care and Cleaning

Description

This chapter describes how to clean and maintain the machine. Perform Daily Care after every PRODUCTION run. Perform Weekly Care once a week or after every 120 hours of operation.

CAUTION

Risk of minor or moderate injury.

Use only Tetra Pak recommended cleaning compounds when cleaning parts which may come into contact with hydrogen peroxide. Cleaning with non-recommended compounds may cause an explosion!

CAUTION

Risk of serious production fault.

Cleaning of the aseptic areas of the filling machine, such as the aseptic chamber and the drying chamber must always be performed with clean and disinfected hands or gloves.

Description 9-2

9.1 Daily Care 9-5

9.1.1 Daily Care or Daily and Weekly Care? 9-5

9.1.2 Packaging Material Removal, Daily Care Only 9-6

9.1.3 Packaging Material Removal, Daily and Weekly Care 9-9

9.1.4 Cleaning Preparation 9-16

For Production with HVA: 9-17

For Production with HVA bypassed: 9-19

9.1.5 ICU 9-27

Refill Containers 9-27

9.1.6 Internal Cleaning 9-31

Final Cleaning 9-33

Intermediate Cleaning 9-34

Recorder 9-37

9.1.7 External Cleaning 9-38

9.1.8 Manual Cleaning 9-41

9.1.9 Drying Preparation 9-46

For Production with HVA: 9-47

For Production with HVA bypassed: 9-49

9.1.10 CIP Drying 9-52

9.1.11 Recorder 9-54

9.1.12 Aseptic Chamber 9-55

9.1.13 Jaw System Unit 9-56

Check Dollies 9-57

9.2 Weekly Care 9-59

9.2.1 ASU 9-60

9.2.2 Drying Chamber 9-62

9.2.3 Aseptic Chamber 9-65

Production with HVA **9-71**
Production with HVA bypassed **9-72**
9.2.4 Change Oil **9-74**
9.2.5 Change Dollies **9-75**
9.2.6 Check Knife **9-76**
9.2.7 Peroxide Tank **9-78**
9.2.8 Service Unit **9-80**
Clean Filters **9-80**
9.2.9 Platforms and Surfaces **9-81**
9.2.10 Utilities **9-82**

9.1 Daily Care

This section describes what to do after each PRODUCTION run or at least every 24 operating hours.

9.1.1 Daily Care or Daily and Weekly Care?

Note! IF ONLY DAILY CARE IS TO BE PERFORMED, START WITH PROCEDURE 9.1.2 Packaging Material Removal, Daily Care Only AND SKIP PROCEDURE 9.1.3 Packaging Material Removal, Daily and Weekly Care.

Note! IF BOTH DAILY CARE AND WEEKLY CARE HAVE TO BE PERFORMED, START FROM PROCEDURE 9.1.2 Packaging Material Removal, Daily Care Only AND FOLLOW ALSO PROCEDURE 9.1.3 Packaging Material Removal, Daily and Weekly Care.

9.1.2 Packaging Material Removal, Daily Care Only

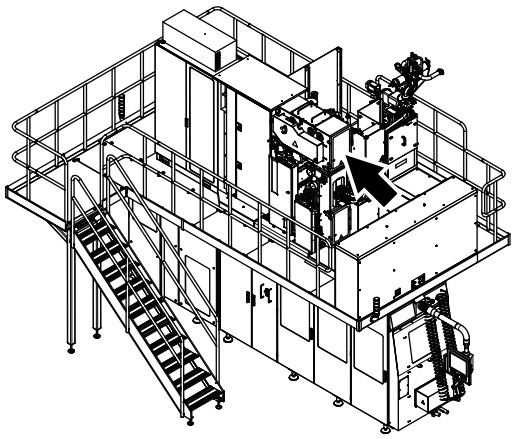

1

WARNING
Hydrogen Peroxide.
Follow the Safety Precautions.

Open the upper aseptic chamber doors.

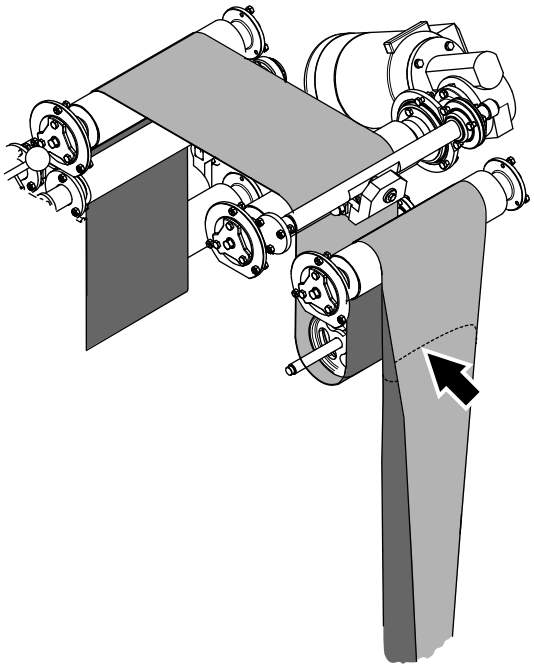

2

WARNING
Hot surface.
The inside of the aseptic chamber may be hot. Wear personal protective equipment.

Cut off the packaging material at the position shown in the illustration.

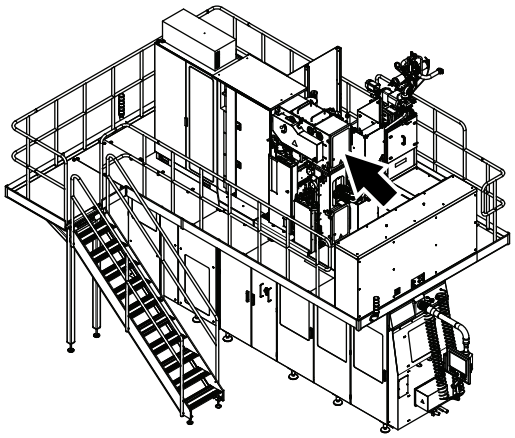

3

Close the upper aseptic chamber door.



4

Make sure all covers and doors on the machine are closed and reset any alarms on the TPOP display.

If an alarm reappears, take the appropriate action or call a technician.



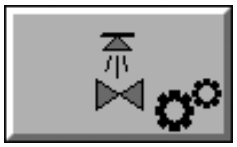

5

Touch the `PRODUCTION CONTROL` button.

Touch the `CIP PROGRAM` button.

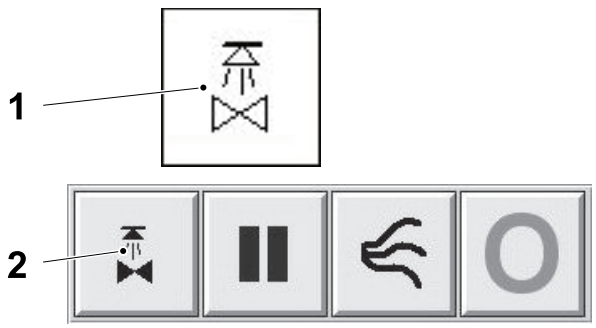

6

Touch the `CLEANING FUNCTION` icon (1). The following buttons appears.

Touch the `RUN CLEANING` button (2)

The jaw system slowly moves to the open position.

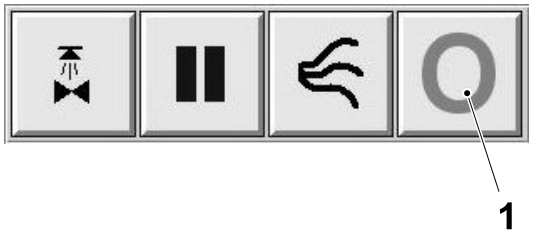

7

Manually pull down and remove the packaging material.

Touch the ZERO button to exit from the CIP menu.

To continue with DAILY CARE only go to procedure 9.1.4 Cleaning Preparation.

9.1.3 Packaging Material Removal, Daily and Weekly Care

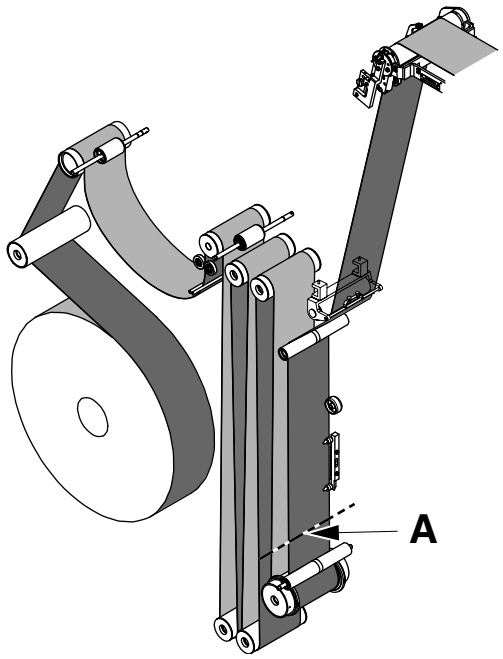

1

WARNING

Hydrogen Peroxide.

There is a risk of hydrogen peroxide residue on the packaging material when removing it from the hydrogen peroxide bath. Follow the Safety Precautions.

Cut the packaging material at point **A**.

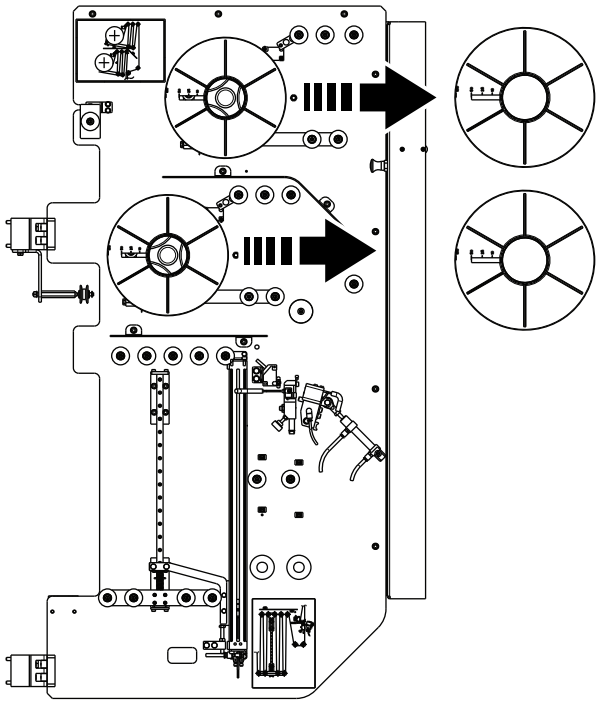

2

Cut the LS strip away from the packaging material. Rewind both LS strips back onto the reels and remove them from the machine.



3

Make sure all covers and doors on the machine are closed and reset any alarms TPOP display.

If an alarm reappears, take the appropriate action or call a technician.

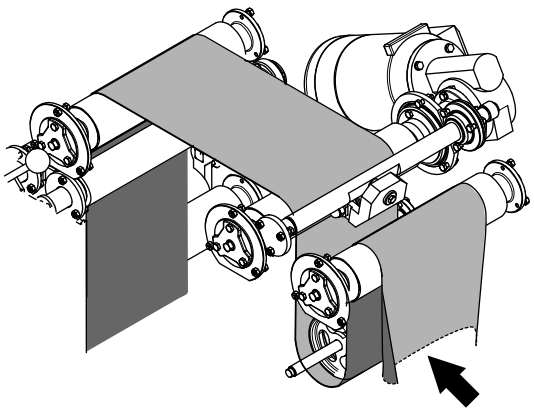

4

Manually pull the packaging material from the point shown with the arrow until it is completely removed from the machine.

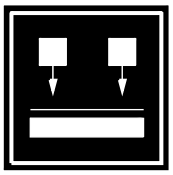

5

Press and hold the MATERIAL LOCKING button for five seconds to release the packaging material in the ASU.

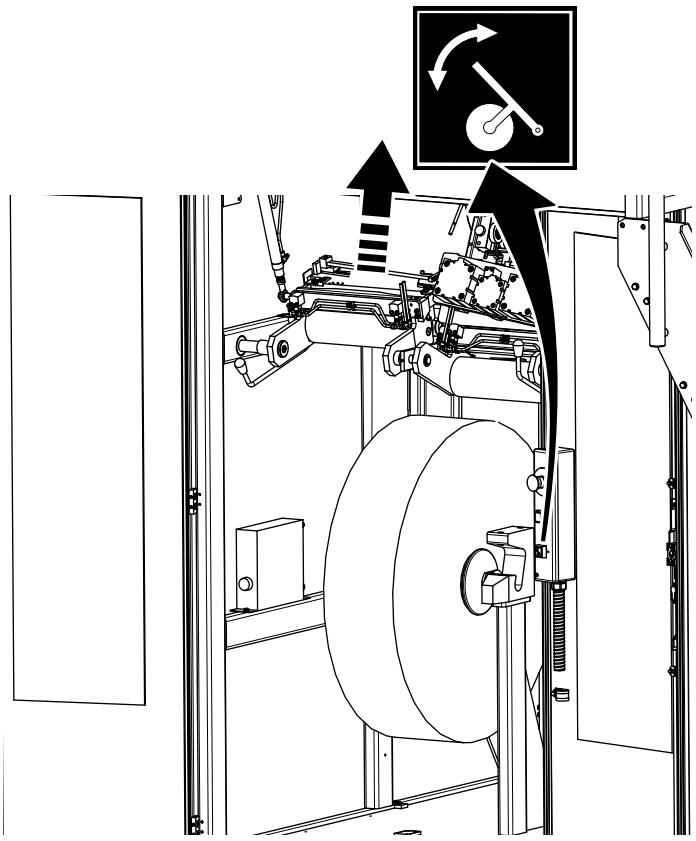

6

WARNING

Risk of personal injury.
Moving parts can crush and cut.

Press the PACKAGING MATERIAL HOLDER button.

The packaging material holder next to the splicing unit lifts.

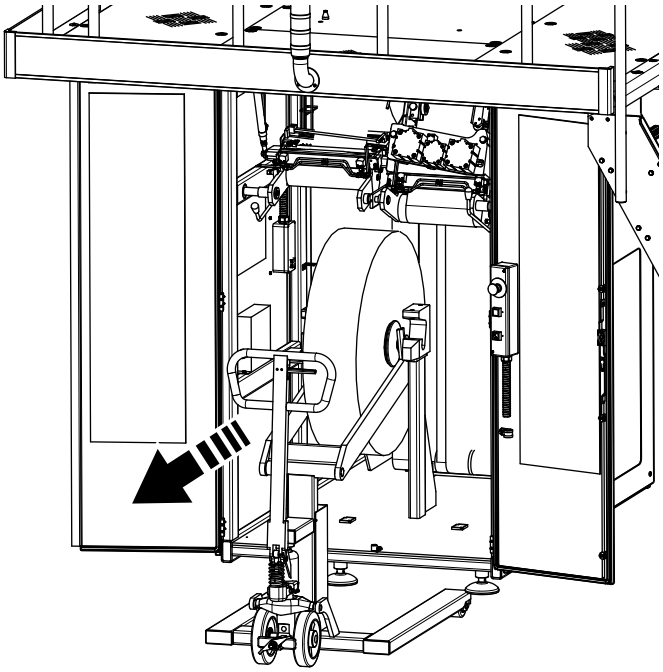

7

Remove the packaging material reel.

Secure the loose end of the reel with tape.

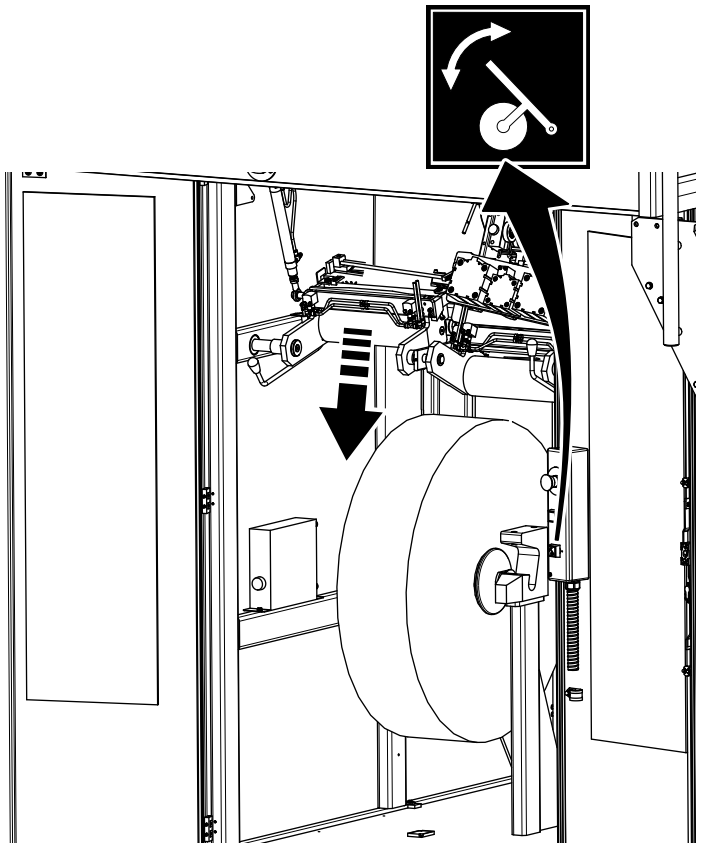

8

WARNING

Risk of personal injury.
Moving parts can crush and cut.

Press the PACKAGING MATERIAL HOLDER button.

The packaging material holder lowers.

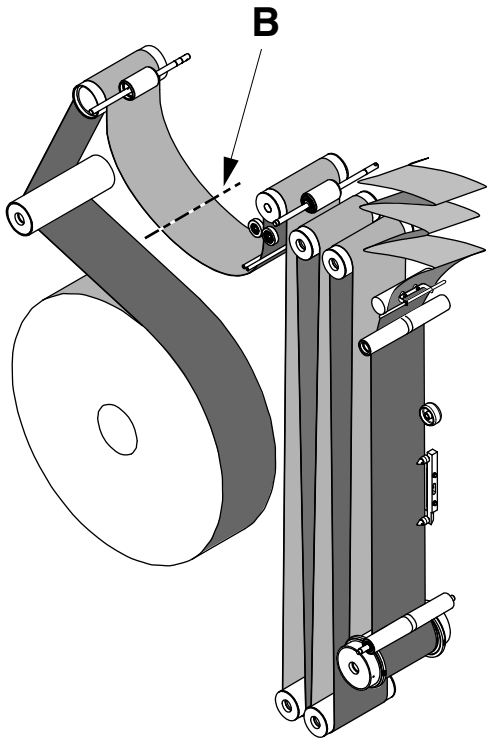

9

CAUTION

Risk of personal injury.
Make sure the rollers of the ASU magazine are in the lower position before cutting the packaging material web.

Cut the packaging material at point **B**.

Pull forward and remove all the remaining packaging material by hand from the ASU and the rest of the machine.

Note! Cut the packaging material at additional points to facilitate the removal of the packaging material.

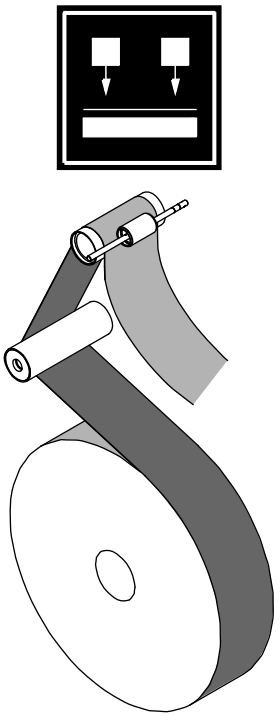

10

Press and hold the MATERIAL LOCKING button for ten seconds to release the packaging material in the ASU.

Unreel the remaining packaging material.



11

Close the ASU doors and reset any alarms on the TPOP display.

Move the splicing unit to the other side using the TPOP, see Move Splicing Head on page 2-65.

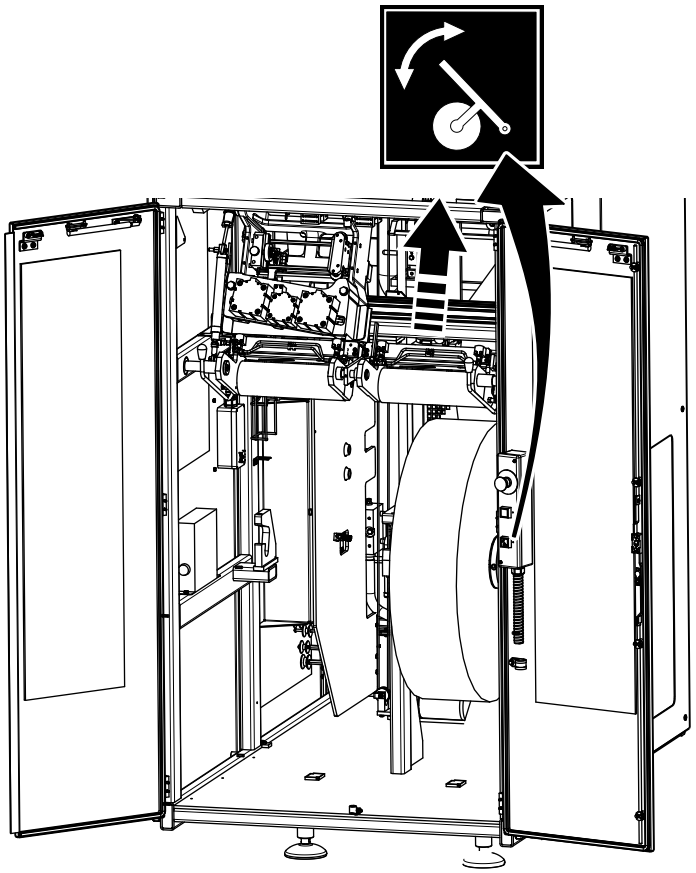

12

WARNING

Risk of personal injury.
Moving parts can crush and cut.

Press the PACKAGING MATERIAL HOLDER button.

The packaging material holder next to the splicing unit lifts.

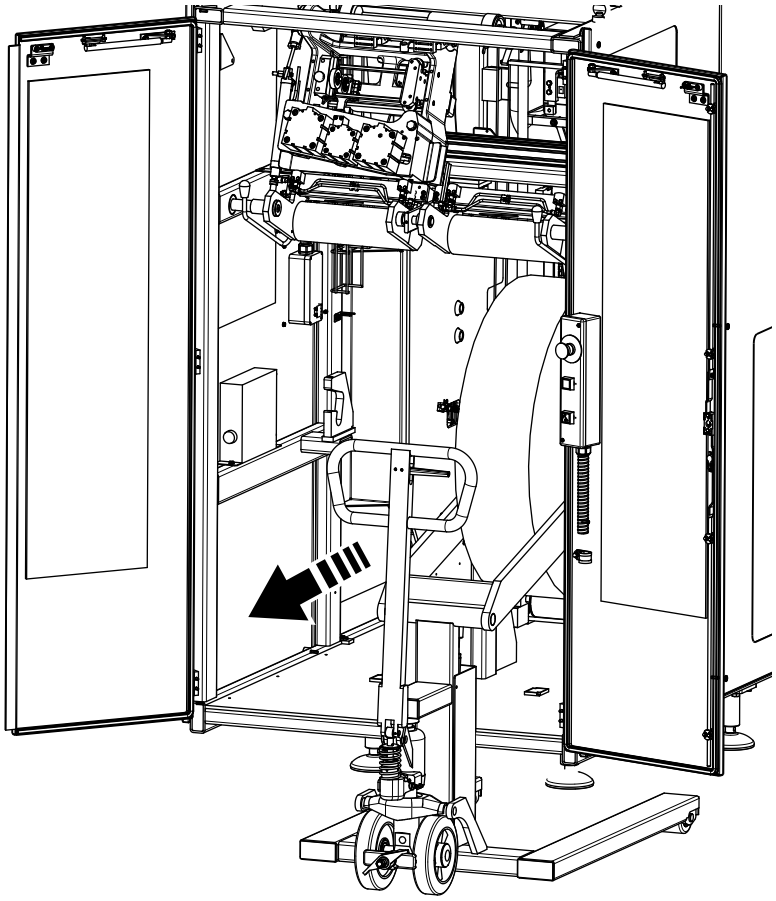

13

Remove the packaging material reel.

Secure the loose end of the reel with tape.

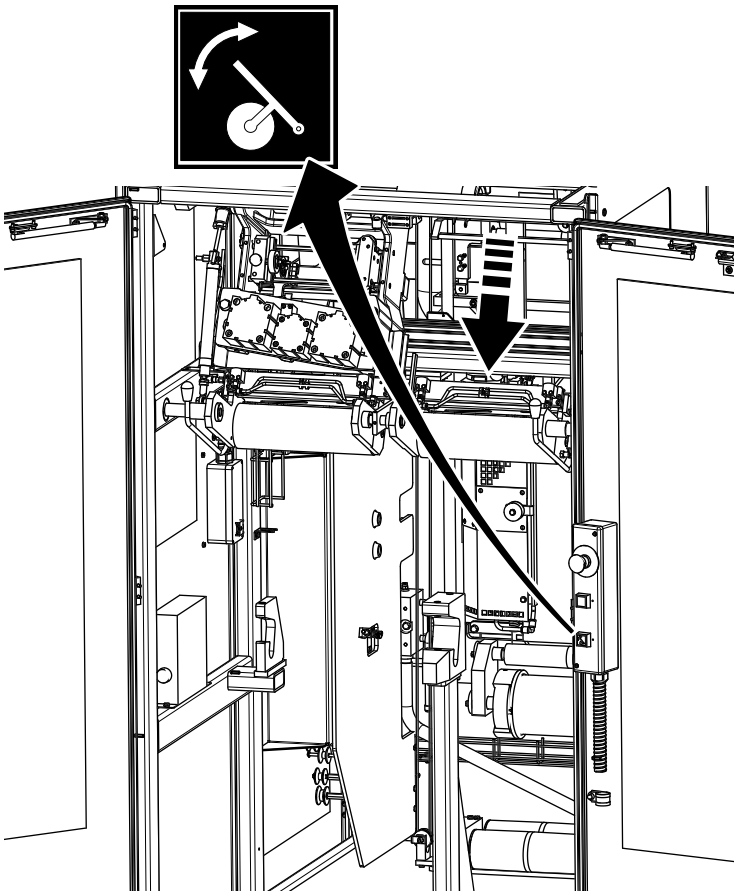

14

WARNING

Risk of personal injury.
Moving parts can crush and cut.

Press the PACKAGING MATERIAL HOLDER button.

The packaging material holder lowers.

Close the ASU doors.

9.1.4 Cleaning Preparation

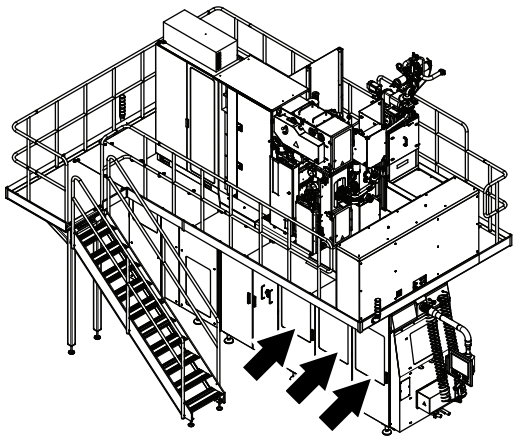

1

Open the doors to the jaw unit and the final folder unit.

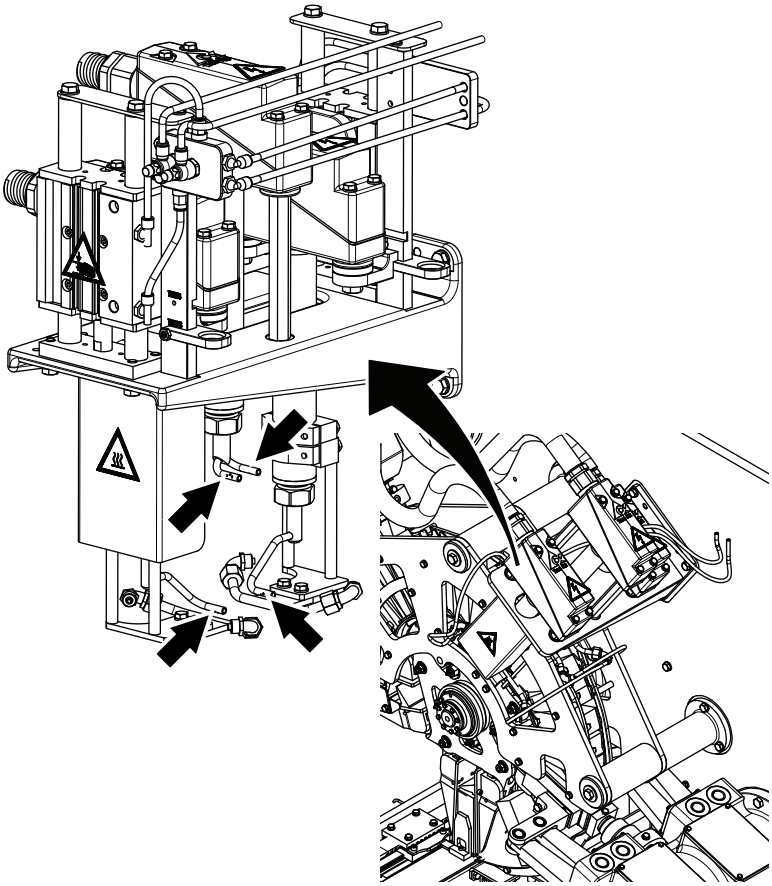

2

WARNING

Hot surface.

The nozzles and other parts of the final folder may be hot. Wear personal protective equipment.

Clean the four heating nozzles of the flap heater (arrow) in the final folder with a brass wire brush.

Check that the air holes of the nozzles are not clogged after the cleaning. Blow clean the nozzles with compressed air.

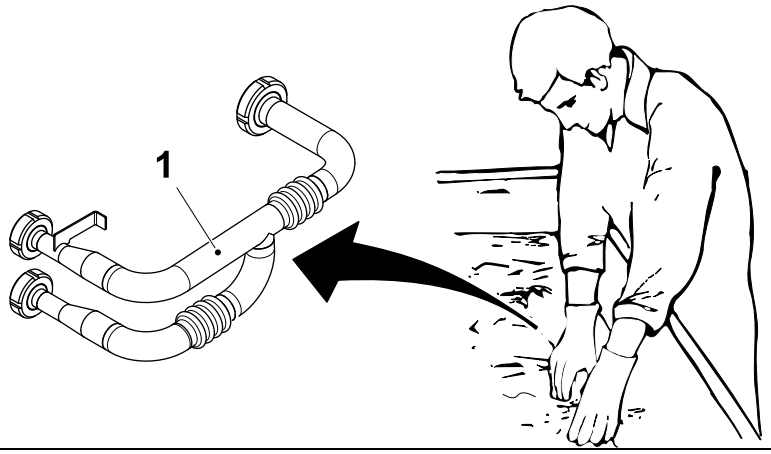

3

WARNING

Chemical product.
Follow the Safety Precautions.

Remove the cleaning pipe (1) from the bath.

Drain any cleaning compound left in the cleaning pipe (1).

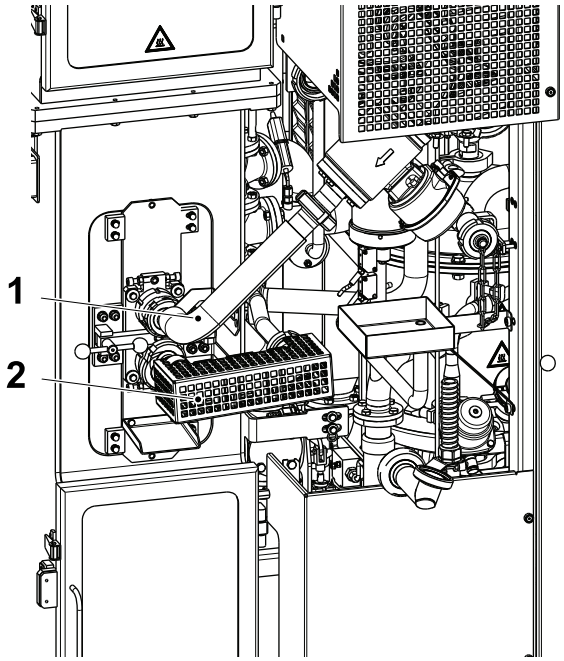

4

For Production with HVA:

WARNING

Hot surfaces.
The pipe may be hot. Wear personal protective equipment.

Remove the product pipe (1).

Remove the sterile air pipe (2).

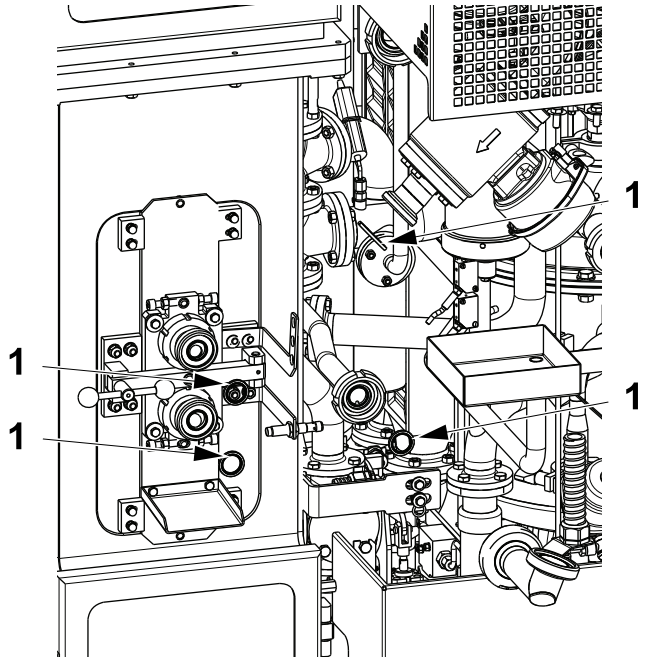

5

Fit new gaskets (1) every time the product and sterile air pipes are removed.

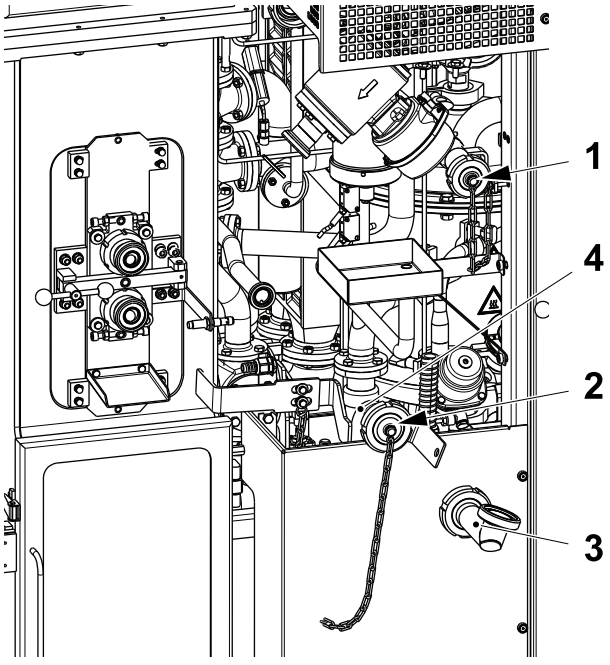

6

Remove the plugs (1) and (2).

Fit the proper elbow pipe (3) for Production with HVA to the pipe (4) and tighten the nut.

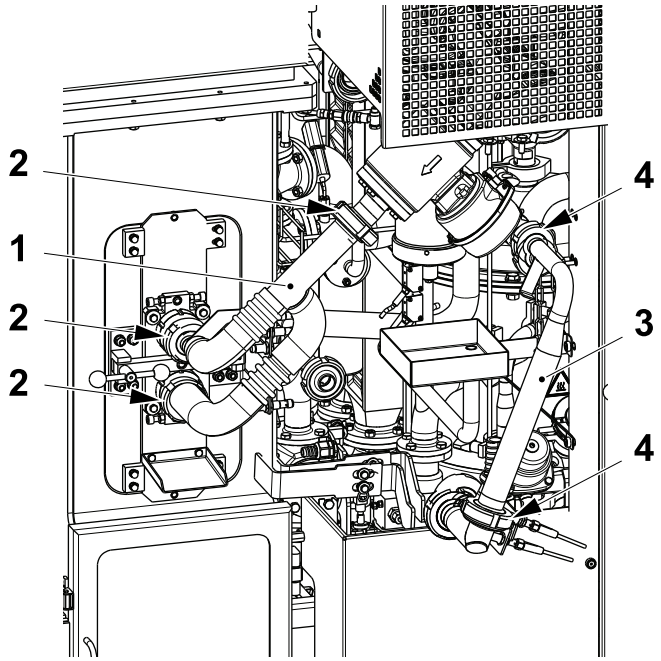

7

Connect the cleaning pipe (1) and tighten the locking nuts (2).

Fit the product pipe (3) and tighten the locking nuts (4).

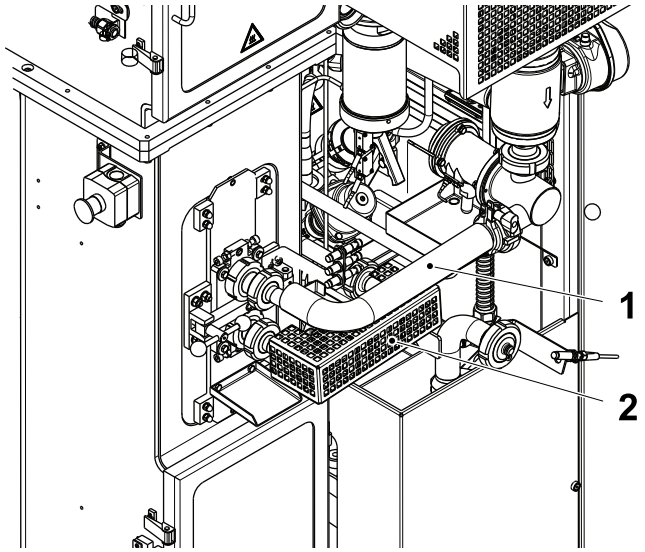

8

For Production with HVA bypassed:

WARNING

Hot surfaces.
The pipe may be hot. Wear personal protective equipment.

Remove the product pipe (1).

Remove the sterile air pipe (2).

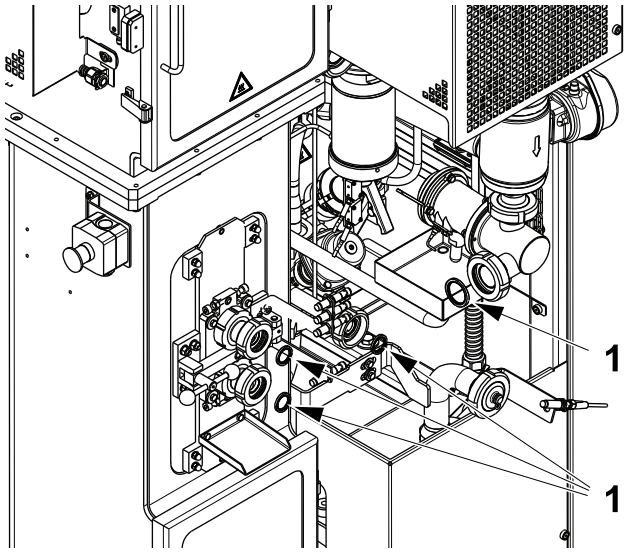

9

Fit new gaskets (1) every time the product and sterile air pipes are removed.

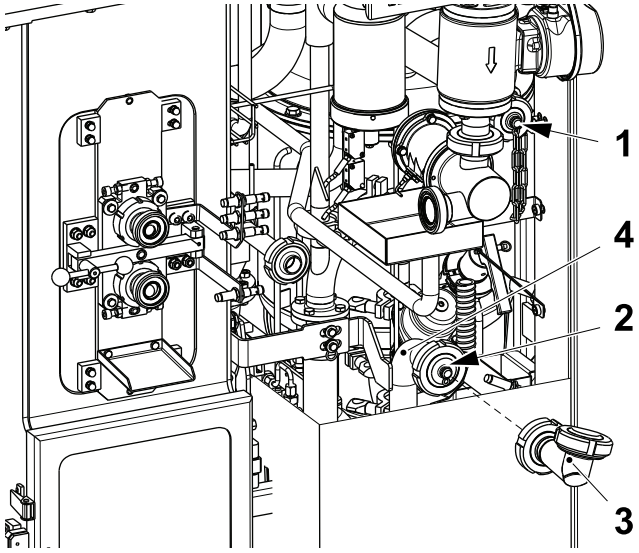

10

Remove the plugs (1) and (2).

Fit the proper elbow pipe (3) for Production with HVA bypassed to the pipe (4) and tighten the nut.

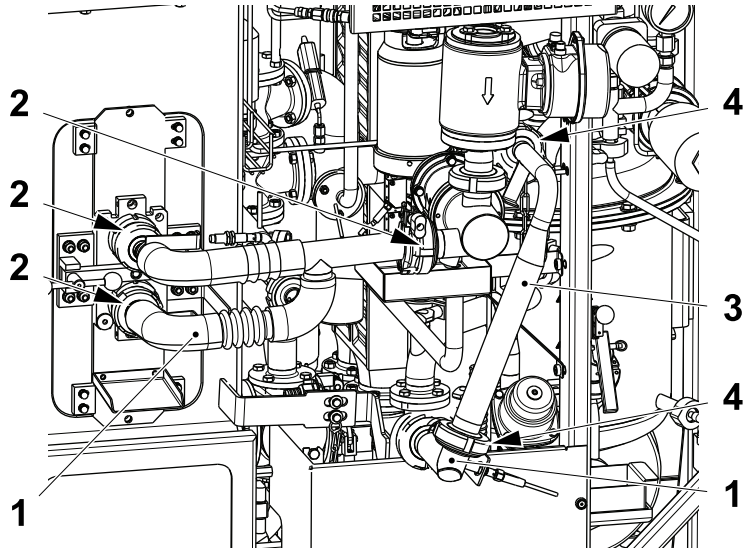

11

Connect the cleaning pipe (1) and tighten the locking nuts (2).

Fit the product pipe (3) and tighten the locking nuts (4).

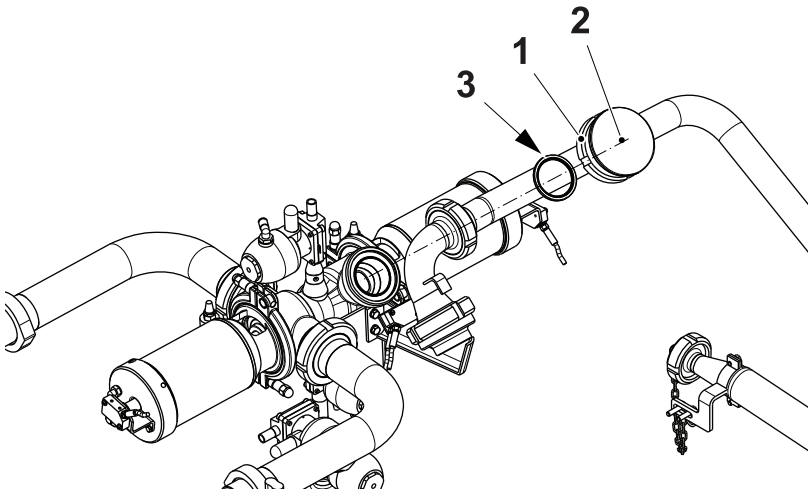

12

Loosen the nut (1) and remove the plug (2).

Fit a new gasket (3).

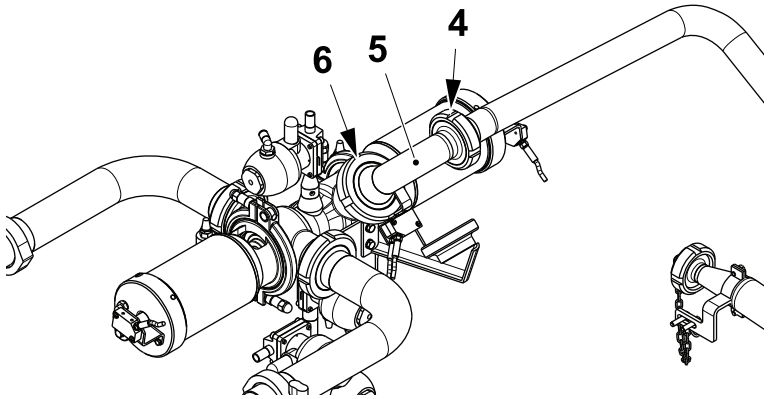

13

Loosen the nut (4).

Swing the cleaning pipe (5) and fit it to the valve fitting.

Tighten the nuts (4) and (6).

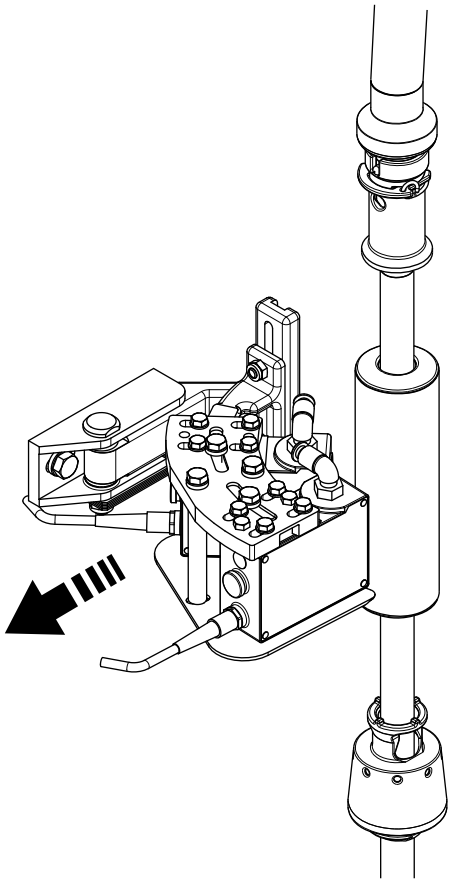

14

Swing the photocells outwards.

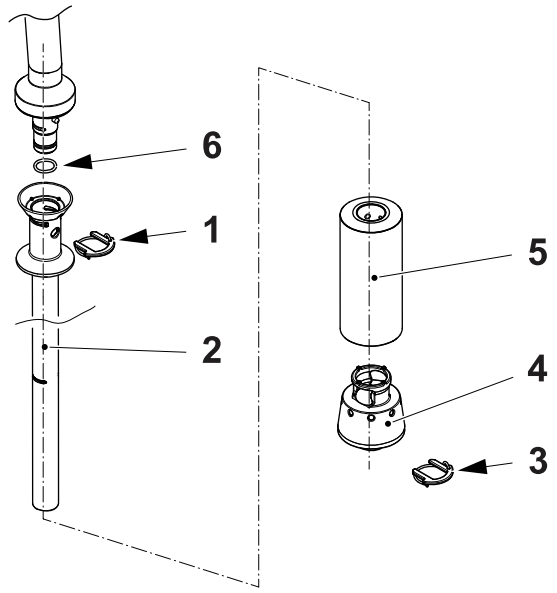

15

Remove the fork (1) and the lower part of the filling pipe (2).

Remove the fork (3), the flange (4) and the float (5).

Remove the O-ring (6).

Note! Fit a new O-ring every time the filling pipe (2) is removed.

Note! Make sure that these parts are cleaned after CIP and external cleaning have been started.

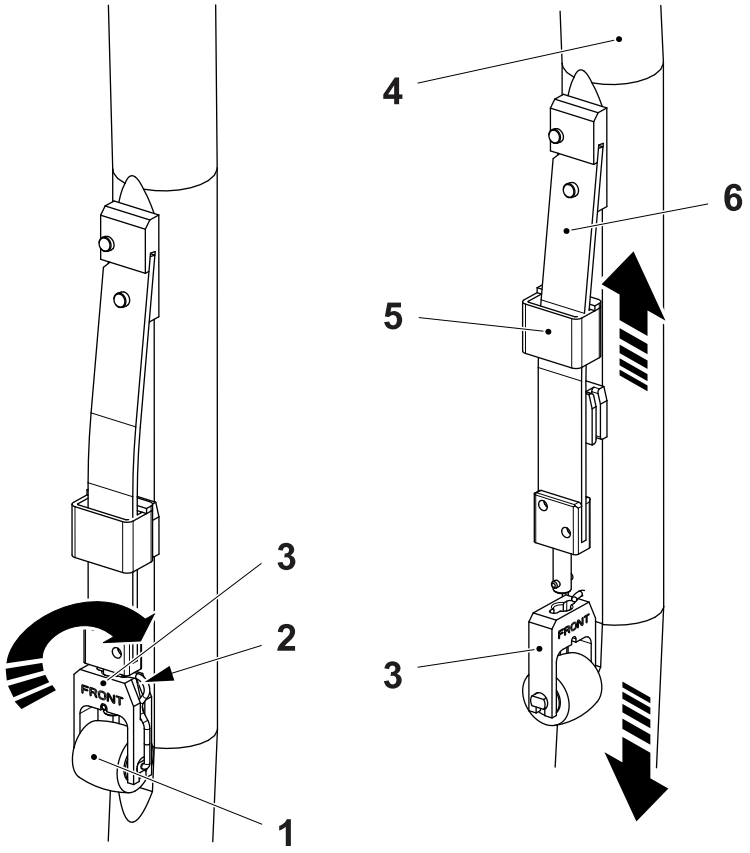

16

Note! Make a note of which direction the part number on the roller (1) is facing and assemble in the same direction after cleaning.

Pull out the hook (2).

Rotate the pressure roller assembly (3) 90° and remove it from the filling pipe (4).

Raise the hood (5) and remove the spring (6) from the filling pipe (4).

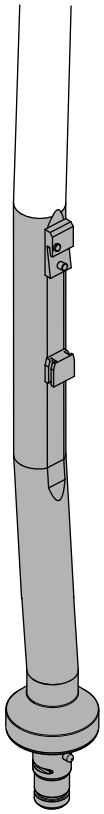

17

CAUTION
Risk of serious production fault.
Take care to remove all visible product residue from the pipe. Sterilization is only effective on clean surfaces and is not effective on product residue.

CAUTION
Hygiene.
Before handling clean parts, disinfect hand/gloves with cleaning compound code **H**.

Wipe off any product residue on the lower part of the upper filling pipe with a sponge.

Use water and cleaning compound code **D**. Rinse with drinking water.

Spray a small quantity of disinfectant code **G3**, on the filling pipe covering entirely the flange area, shown shaded in the illustration.

Note! For cleaning compound code information, see 11.2.1 Cleaning Compound Table.

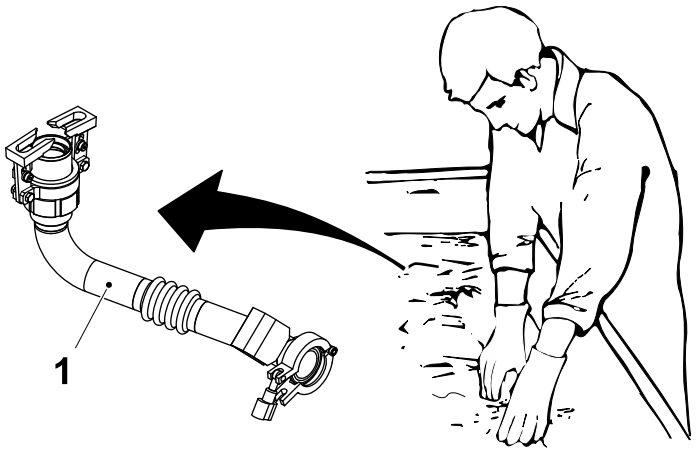

18

WARNING
Chemical product.
Follow the Safety Precautions.

Remove the cleaning sleeve (1) from the bath.

Drain any cleaning compound left in the cleaning sleeve (1).

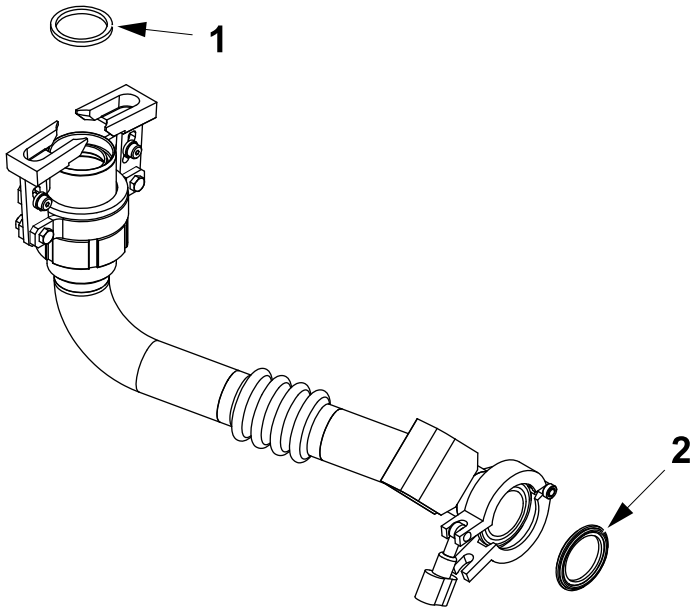

19

CAUTION
Risk of damage to the equipment.
Change the gaskets (1) and (2) every time the cleaning sleave is fitted. A bad seal may cause leakages and an ineffective cleaning process.

Change the gaskets (1) and (2) of the cleaning sleeve.

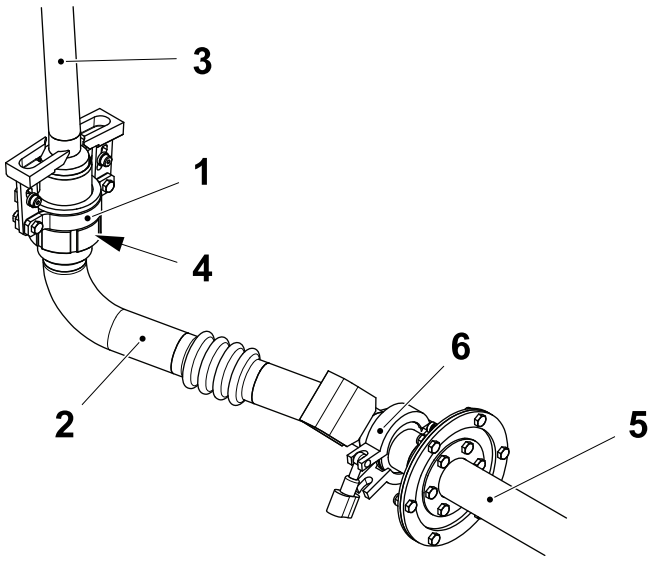

20

CAUTION
Risk of damage to the equipment.
Do not over tighten the nut (4).

Connect the cleaning attachment (1) of the cleaning sleeve (2) to the filling pipe (3) and tighten the nut (4).

Fit the cleaning sleeve (2) to the pipe (5) and secure it with the catch (6).



21

Close all covers and doors on the machine and reset the alarms on the TPOP display.

If an alarm is present, take the appropriate action or call a technician.

9.1.5 ICU

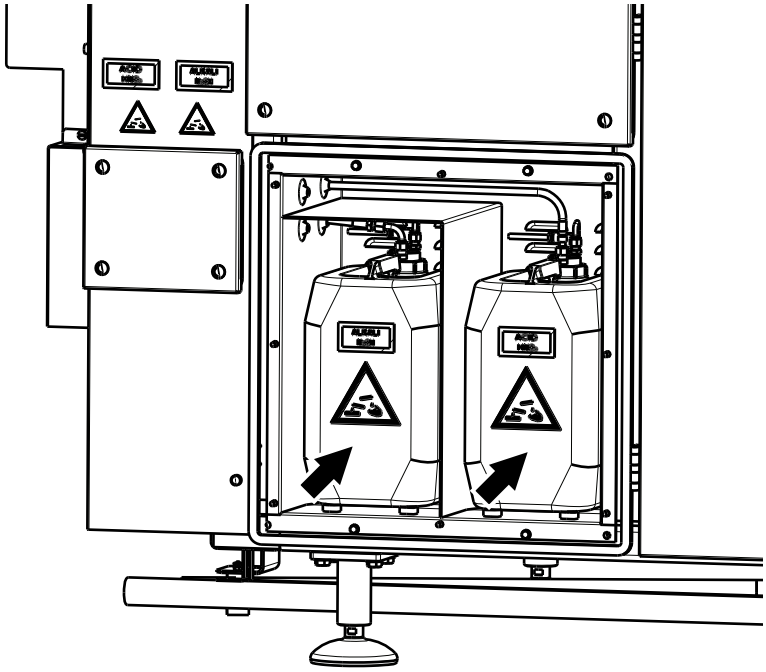

Refill Containers
1

Note! This procedure is valid only for machines equipped with ICU. For machine not equipped with ICU continue with 9.2.10 Utilities.

WARNING

Sudden and violent chemical reaction.
Never contaminate hydrogen peroxide with alkali or acid. The door to the hydrogen peroxide container must always be closed during the ICU refilling procedure. Keep spare hydrogen peroxide containers away from the filling machine during the ICU refilling procedure.

CAUTION

Risk of damage to the equipment.
The acid (Nitric Acid) concentration should not exceed a maximum of 50%. The alkali (Caustic Soda) concentration should not exceed a maximum of 30%.

Check the level of alkali and acid in the containers. If the containers need refilling, fetch the alkali and acid, if not continue with the next procedure.

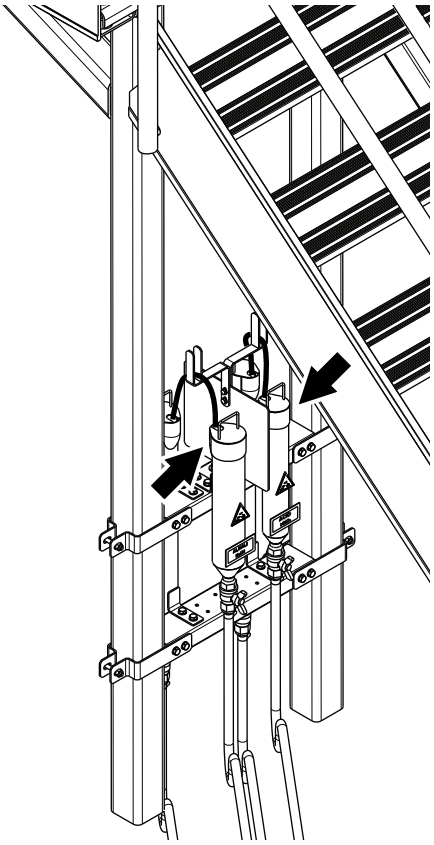

2

Remove the lids form the storage tubes and fetch the refilling pipes.

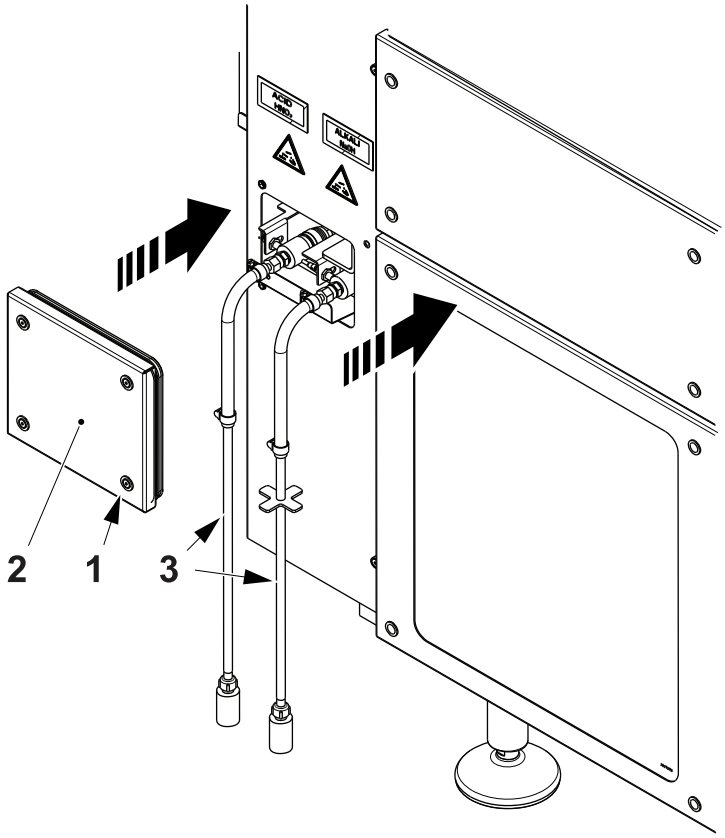

3

WARNING

Alkali and Acid.

Follow the Safety Precautions.

Remove the screws (1) and the lid (2).

Fetch the refilling pipes (3).

Note! The refilling pipe marked with a **yellow** stripe connects to the acid container. The refilling pipe marked with an **orange** stripe connects to the alkali container.

Connect the refilling pipes (3) to the appropriate connections and place the other end of the refilling pipes in the appropriate chemical container.



4

On the TPOP, touch the PRODUCTION CONTROL button.

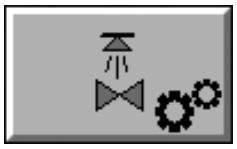

5

Touch the ICU button.

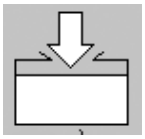

6

Touch the CHEMICALS REFILLING icon.

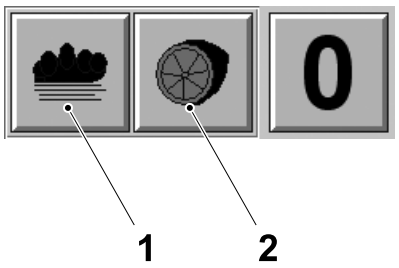

7

Touch the ALKALI button (1) or the ACID button (2) to start the refilling of the alkali or acid container.



8

Note! If it is necessary to stop the refilling procedure, touch the STOP button.

Refilling is stopped automatically when the maximum level is reached in the container.

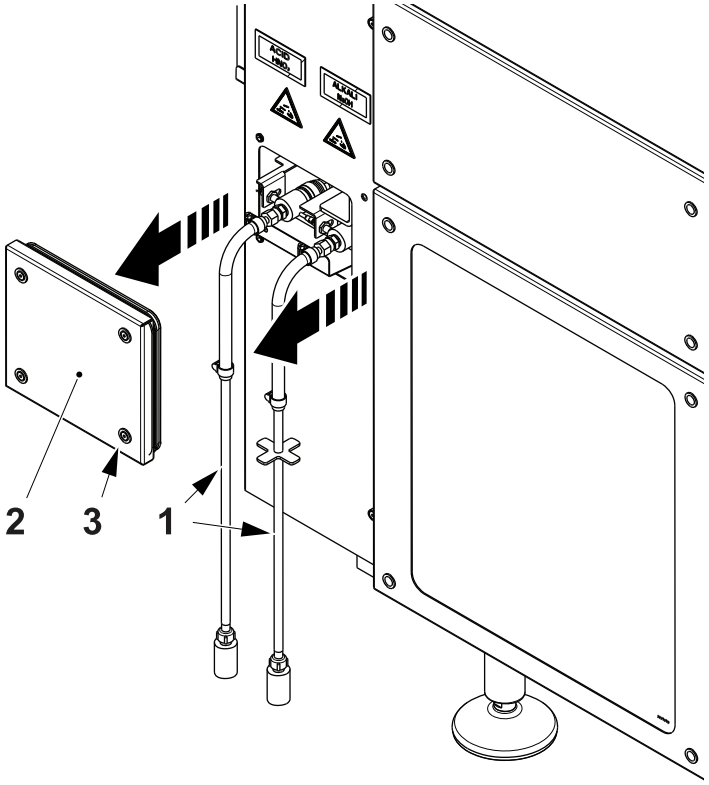

9

Carefully remove the refilling pipes (1) from the refilling connections and from the chemical containers.

Rinse the refilling pipes (1) with water.

Fit the lid (2) with the screws (3).

9.1.6 Internal Cleaning



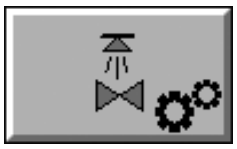

1

Note! Operators with an individual user ID for the recorder must login to the recorder before starting the CIP, see Login on page 2-151.

On the TPOP, touch the `PRODUCTION CONTROL` button.

Touch the `CIP PROGRAM` button, see CIP Cleaning / CIP Drying on page 2-28.

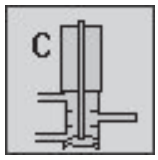

INTERMEDIATE CLEANING

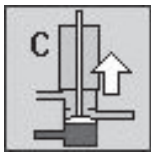

FINAL CLEANING

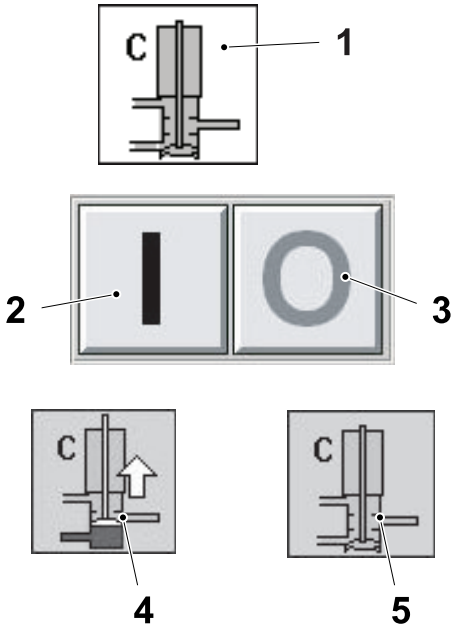

2

Decide which CIP method to use:

- Use INTERMEDIATE CLEANING only after an unplanned stop during PRODUCTION (such as an emergency stop) and when PRODUCTION will be started immediately after cleaning. All parts of the filling system, except the steam barrier are inside the valve C, are cleaned. Continue with item 4 to perform INTERMEDIATE CLEANING.
- Use FINAL CLEANING after every production run and while the product line is also being cleaned. The entire filling system including the steam barrier are inside the valve C is cleaned. Continue with item 3 to perform FINAL CLEANING.

Note! To be able to select INTERMEDIATE or FINAL CLEANING log on as a technician, see User Log On on page 2-144.

Touch the `INTERMEDIATE` or `FINAL CLEANING` icon (1).

- Touch the `ENABLE` button (2) to perform the FINAL CLEANING, the `FINAL CLEANING` icon is displayed
- Touch the `DISABLE` button (3) to perform the INTERMEDIATE CLEANING, the `INTERMEDIATE CLEANING` icon (5) is displayed.

Note! It is recommended to perform the FINAL CLEANING at least once a week.

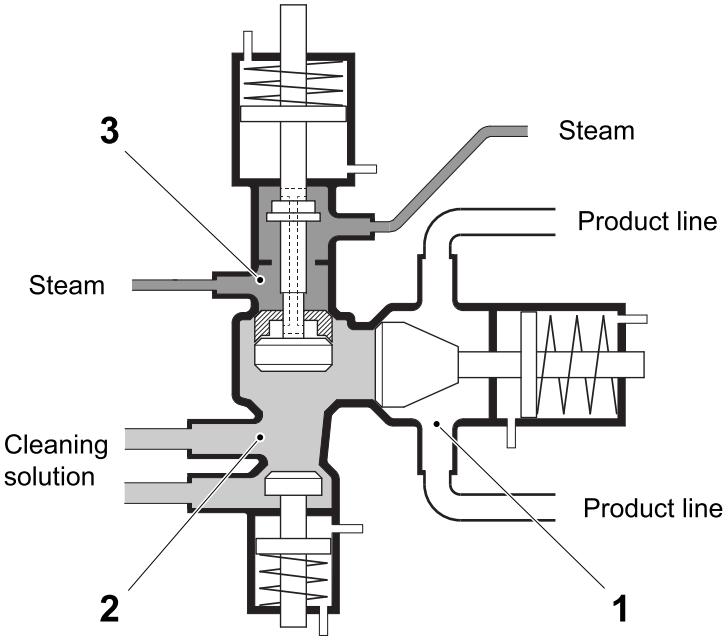

Product valve during FINAL CLEANING

Final Cleaning
3

CAUTION
Risk of serious production fault.
FINAL CLEANING must only be performed if the product line is empty and no other machines connected to the product line are in the PRODUCTION phase. Never perform FINAL CLEANING while product is present in the product line.

Note! For INTERMEDIATE CLEANING start with item 4.

FINAL CLEANING must be performed after every PRODUCTION run and before or at the same time as the cleaning of the product line.

The filling system and all of the surfaces inside the product valve which are in contact with product are cleaned. This includes the area inside the product valve which acts as a steam barrier between the filling system of the machine and the product line (the steam valve C).

1) PRODUCT VALVE (A)

2) STERILE AIR VALVE (B)

3) STEAM VALVE (C)

Continue with item 5.

Note! For further information concerning FINAL CLEANING and INTERMEDIATE CLEANING, see the manual: TeM -3275200-0101 Cleaning of Tetra Pak Aseptic Filling Machines..

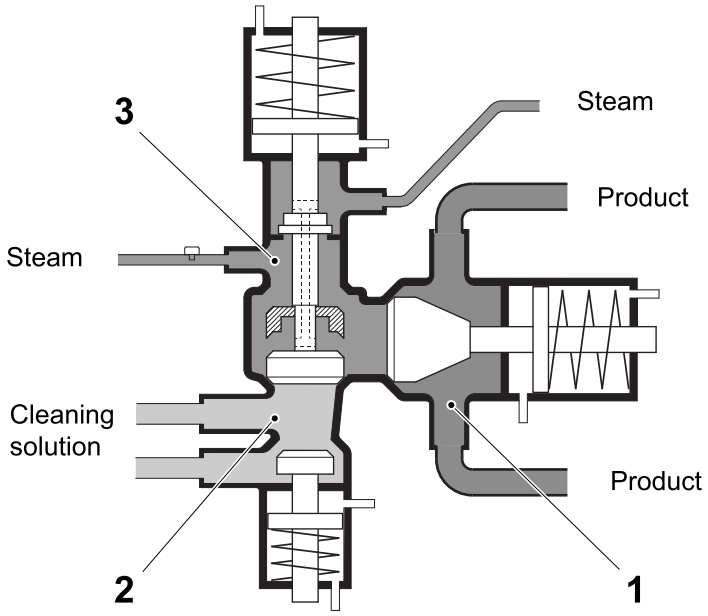

Product valve during INTERMEDIATE CLEANING

Intermediate Cleaning 4

CAUTION

Risk of serious production fault.
INTERMEDIATE CLEANING does not clean the area of the product valve acting as a steam barrier between the product valve and the product line (the C valve). Do not use INTERMEDIATE CLEANING if there will be a delay between the cleaning and the start of PRODUCTION. Never use INTERMEDIATE CLEANING as a replacement for FINAL CLEANING.

Note! For FINAL CLEANING start with item Final Cleaning.

INTERMEDIATE CLEANING must be performed if there is an unplanned stop of the filling machine, such as an emergency stop, and the production is to be restarted immediately after the cleaning.

The filling system and all of the surfaces inside the product valve which are in contact with product are cleaned except the area which acts as a steam barrier between the filling system of the machine and the product line (the steam valve C).

1) PRODUCT VALVE (A)

2) STERILE AIR VALVE (B)

3) STEAM VALVE (C)

Continue with item 5.

Note! For further information concerning FINAL CLEANING and INTERMEDIATE CLEANING, see the manual: TeM - 81648-0101 Cleaning of Tetra Bril Aseptic Filling machines..



5

Note! This procedure is valid only for machines equipped with ICU. For machine not equipped with ICU continue with item 7.

Touch the ALKALI/ACID SELECTION icon.

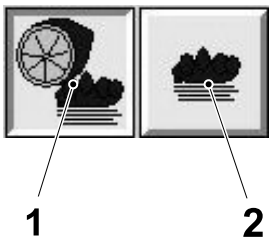

6

Touch the ALKALI button (2) to clean with alkali or the ALKALI AND ACID button (1) to clean with alkali and acid.

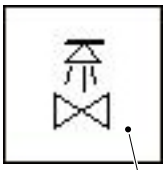



7

Touch the CLEANING FUNCTION icon (1). The following buttons appears.

Touch the RUN CLEANING button (2).

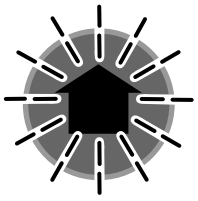

8

CAUTION
Risk of production fault.
Once the CIP CLEANING is ended, the CIP DRYING must be performed within five hours. If not, repeat the CIP CLEANING. Exceeding the recommended period of waiting time can severely jeopardize the efficiency of the process of machine sterilization. For maximum waiting time recommendations, see the table 11.4 Maximum Waiting/Stop Time Recommendations.

When the PROGRAM UP button starts to flash, press it.

To interrupt or stop the cleaning procedure see page 2-29.

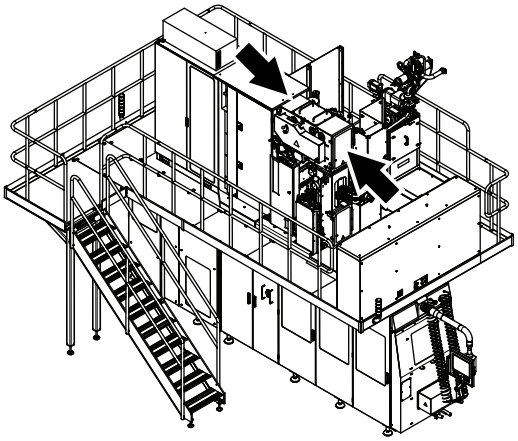

9

WARNING
Hydrogen Peroxide.
Follow the Safety Precautions.

Open the top aseptic chamber doors.

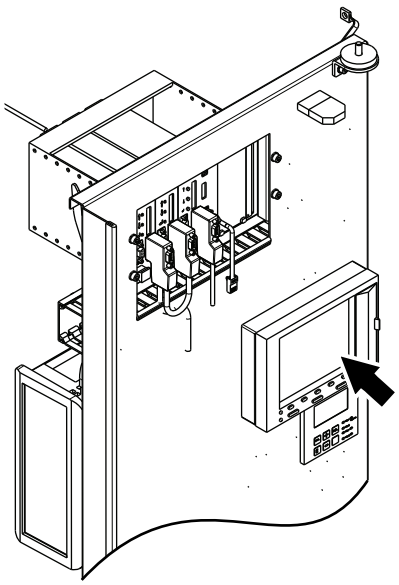

Recorder

10

Check on the CIP data recorder screen that the recorder is recording all of the channels. If not, call a technician.

9.1.7 External Cleaning

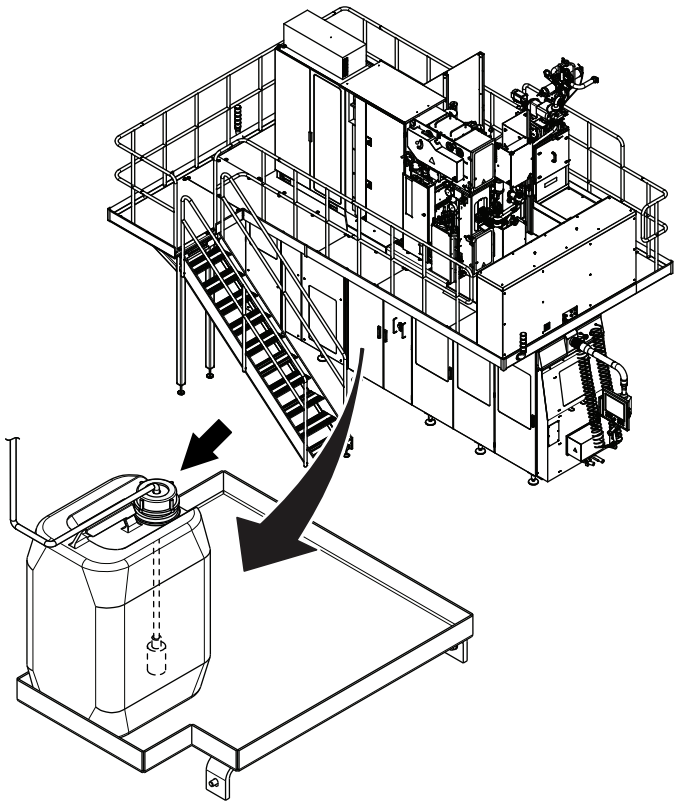

1

WARNING

Chemical Products.
Follow the Safety Precautions.

Check the level of the detergent in the container used for the external cleaning. If required, top up with the cleaning compound code **C1**.

Note! For cleaning compound code information, see 11.2.1 Cleaning Compound Table.

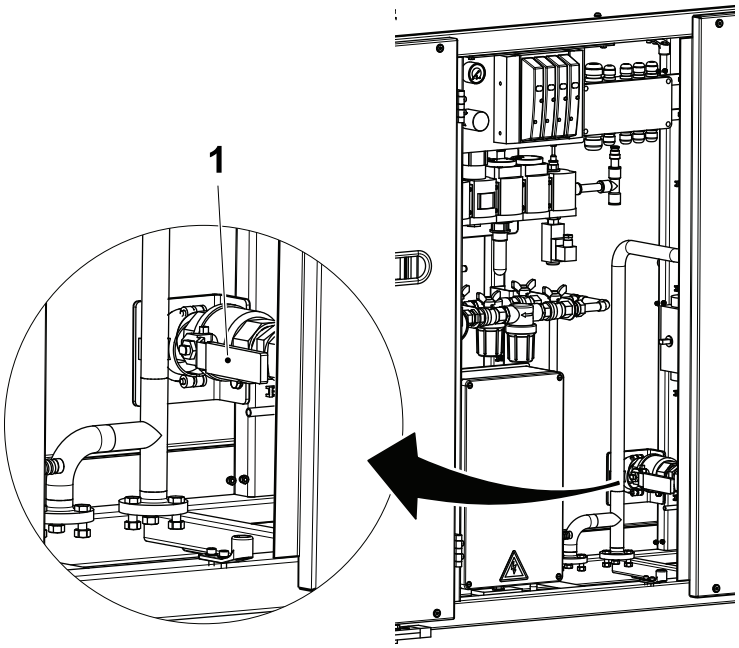

2

Use the cleaning handle (1) to open the cleaning valve.

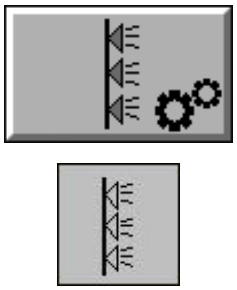

3

Touch the EXTERNAL CLEANING button.

Touch the EXTERNAL CLEANING FUNCTION icon.

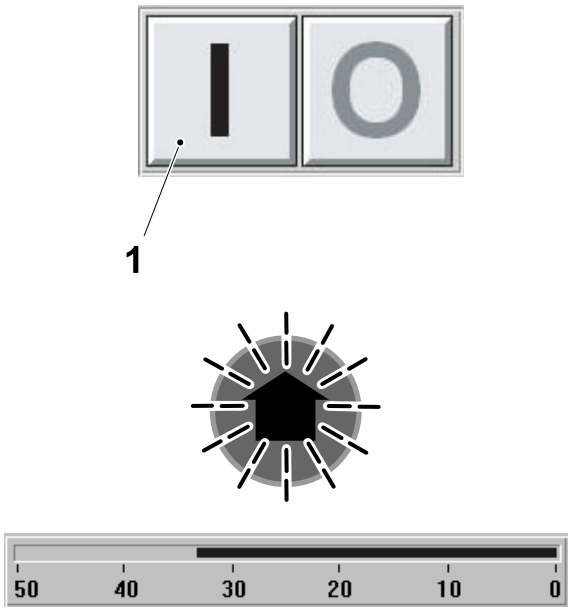

4

The ON/OFF button is displayed.

Touch the ON button (1).

CAUTION
Risk of damage to the equipment.
Do not turn off the compressed air and the water supply until CIP cleaning and external cleaning have been completed.

When the PROGRAM UP button begins to flash, press it to start the cleaning.

A bar is displayed on the TPOP showing the remaining time.

Note! To interrupt the cleaning procedures see page 2-36.

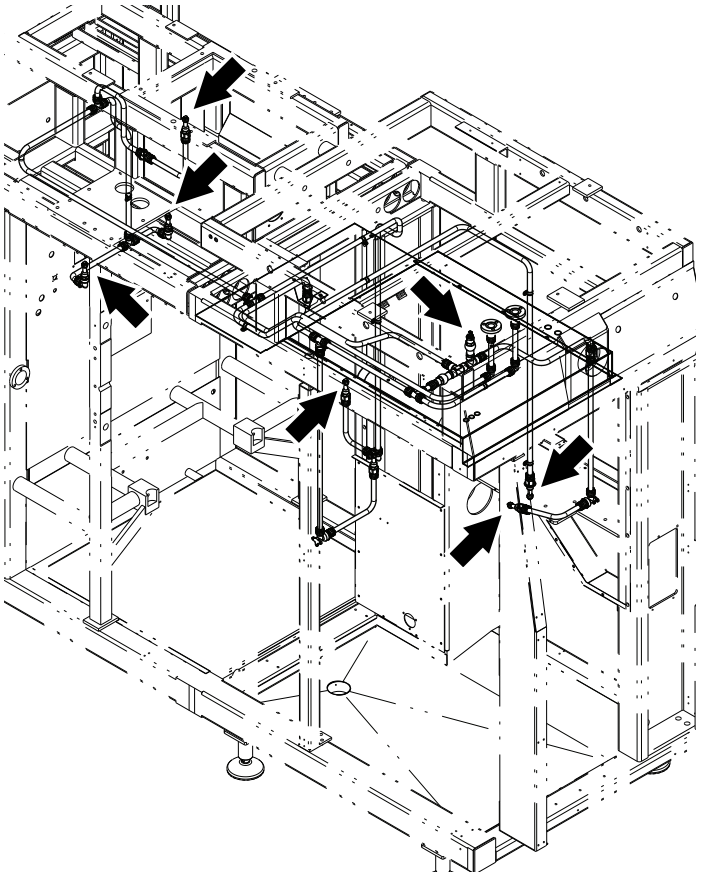

5

Check visually through the glass that the cleaning nozzles are functioning properly.

Call a service technician if any of the nozzles do not function.

9.1.8 Manual Cleaning

CAUTION
Risk of serious production fault.
Take care to remove all visible product residue from the parts. Sterilization is only effective on clean surfaces and is not effective on product residue.

CAUTION
Hygiene.
Before handling clean parts, disinfect hand/gloves with cleaning compound code **H**.

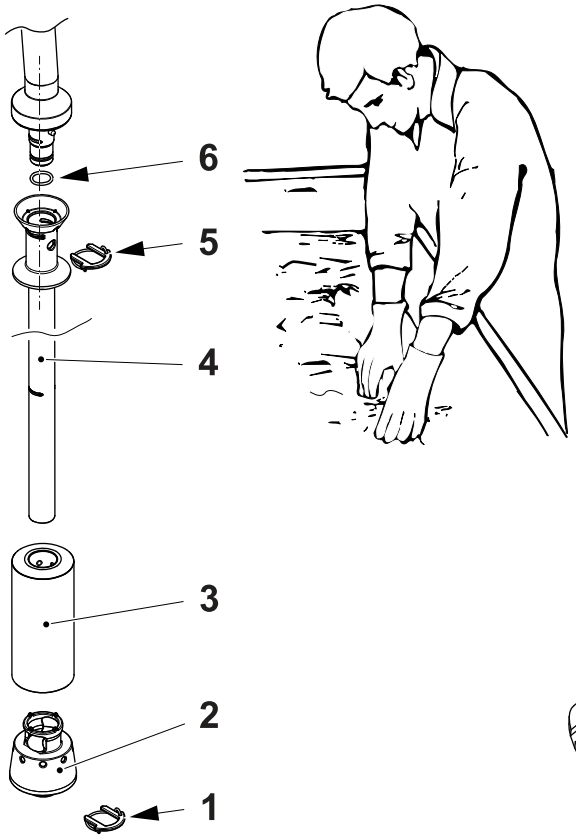

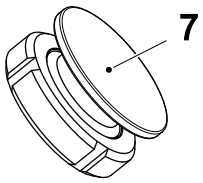

1

Clean separately by hand:

- the fork (1)
- the flange (2)
- the float (3)
- lower filling pipe (4).
- the fork (5)
- the plug (7) removed in 12 on page 9-21.

Use water and the cleaning compound code **D**. Rinse with drinking water.

Immerse the cleaned lower filling pipe parts in a bath of cleaning compound code **F3** until the next planned production.

Change the O-ring (6).

Note! Regularly change the cleaning compound code **F3** in the immersion bath to guarantee the effectiveness of the cleaning.

Note! The lower filling pipe components must be immersed in the cleaning compound **F3** for a minimum of 30 minutes for the cleaning compound to have a satisfactory effect. For cleaning compound code information, see 11.2.1 Cleaning Compound Table.

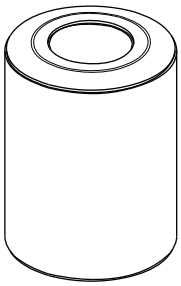

2

CAUTION
Risk of serious production fault.
Leakage into the float will result in product contamination.

Check:

- that the float is not damaged or cracked
- visually check that no liquid has leaked inside the float. Change if necessary.

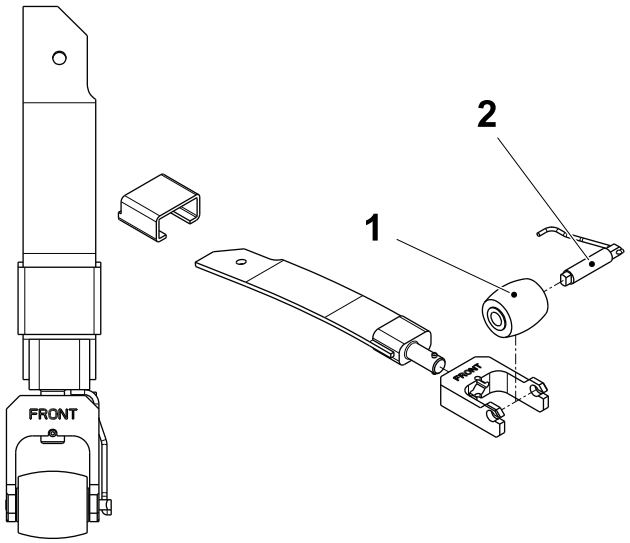

3

WARNING
Chemical Products.
Follow the Safety Precautions.

CAUTION
Risk of serious production fault.
Remove all product residue from the parts. Sterilization is only effective on clean surfaces and is not effective on product residue.

CAUTION
Hygiene.
Before handling clean parts, disinfect hand/gloves with cleaning compound code **H**.

Carefully note how the LS strip pressure roller is assembled, then disassemble it.

Using cleaning compound code **D**, clean all parts of the LS strip pressure roller.

After cleaning, rinse with drinking water.

Make sure that the roller (1) and the shaft (2) are not worn or damaged. Change if necessary.

Note! The roller(s) (1) must be changed once a week or every 120 hours of operation.

Assemble the LS strip pressure roller and place it in a dry, clean place.

Note! For cleaning compound code information, see 11.2.1 Cleaning Compound Table.

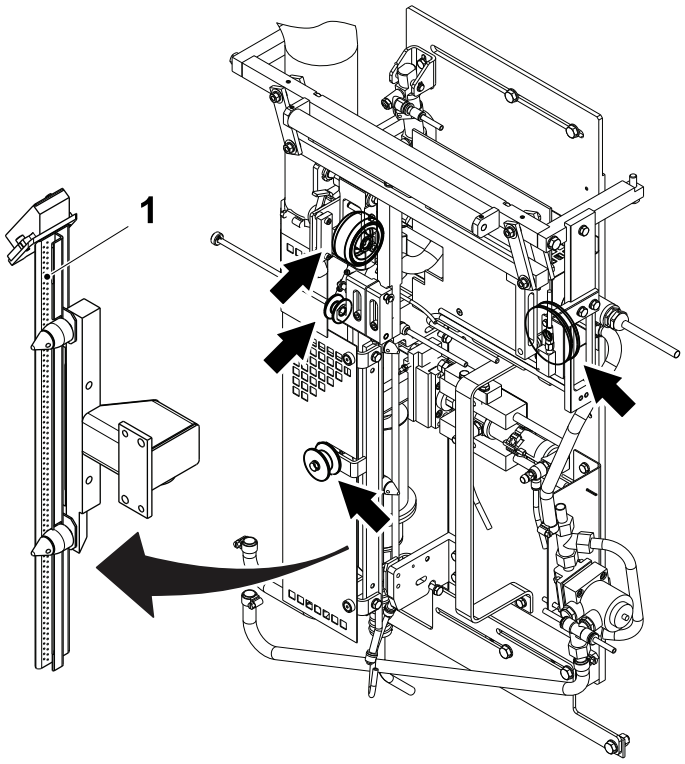

4

WARNING
Chemical Products.
Follow the Safety Precautions.

On the strip applicator, clean all the rollers (marked with arrow) with compressed air. Then use a sponge and cleaning compound code **G1** or **G2**.

Note! For cleaning compound code information, see 11.2.1 Cleaning Compound Table.

Using a mirror, visually check the air nozzle (1) for burnt deposits that can affect the function. Make sure that all the air holes are open. If necessary, clean the air nozzle (1) thoroughly with a wire brush and a knife.

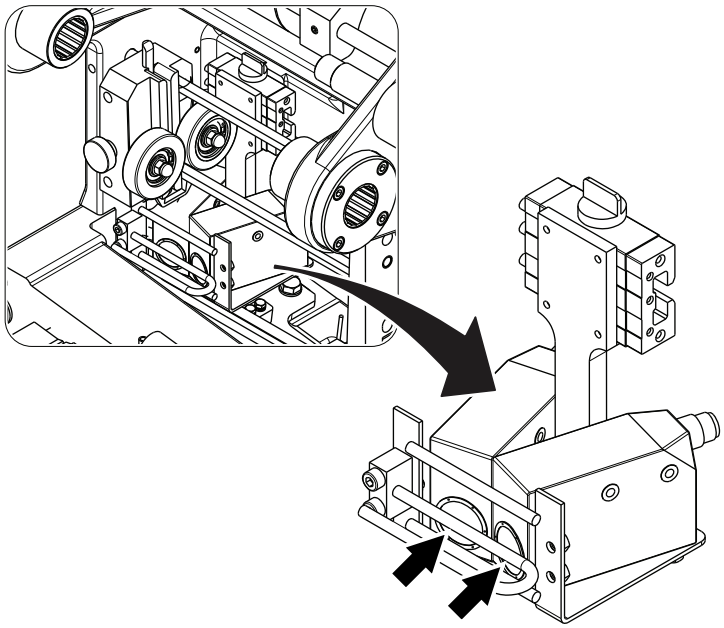

5

WARNING
Burn hazard.
Some parts may be hot. Wear personal protective equipment.

Clean the photocell lenses on the splicing unit using a clean cloth. A dirty lens may cause reading errors which can affect production.

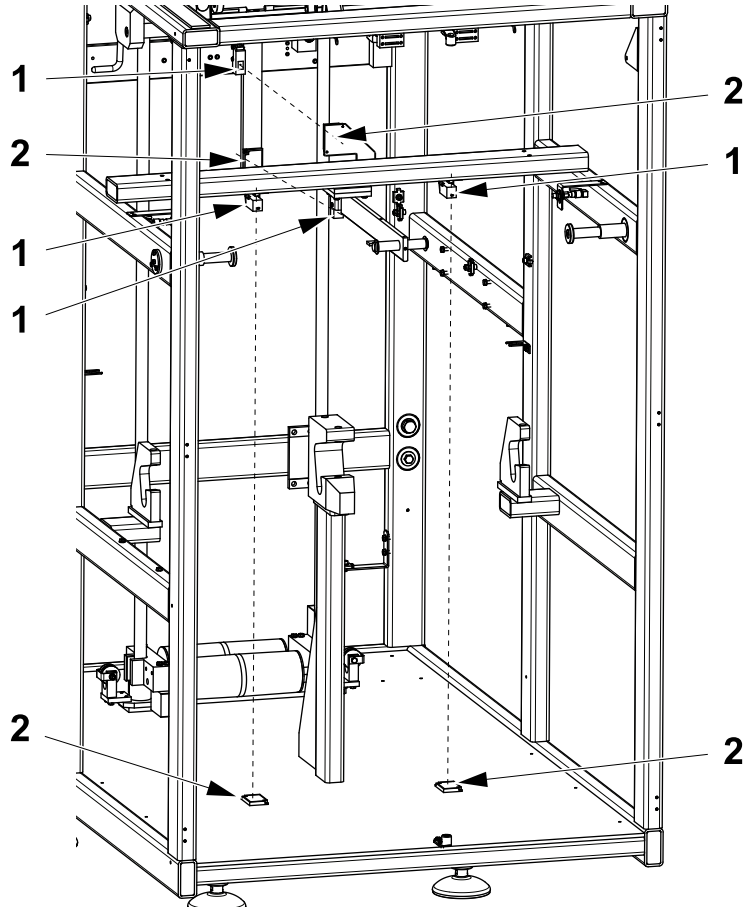

6

Note! Photocells are mounted on a moveable bracket. When cleaning, take care not to change the setting of the photocell.

Clean the four photocell lenses (1) and the four reflectors (2) in the ASU packaging material compartment with a clean dry cloth.

Note! A dirty lens may cause reading errors which can affect production.

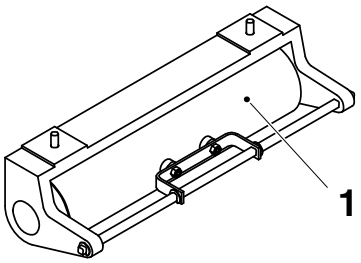

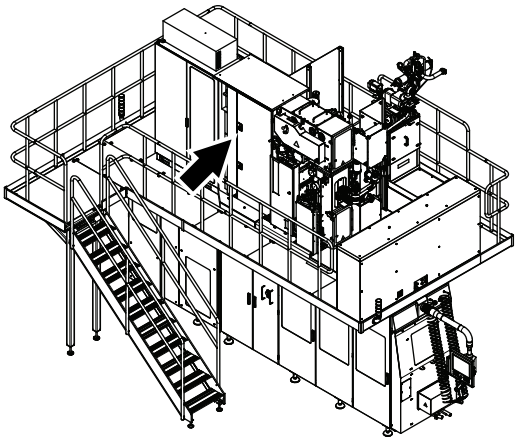

7

Open the doors indicated by the arrow in the illustration.

Clean the roller (1) with a sponge and cleaning compound code **G1** or **G2**.

Note! For cleaning compound code information, see 11.2.1 Cleaning Compound Table.

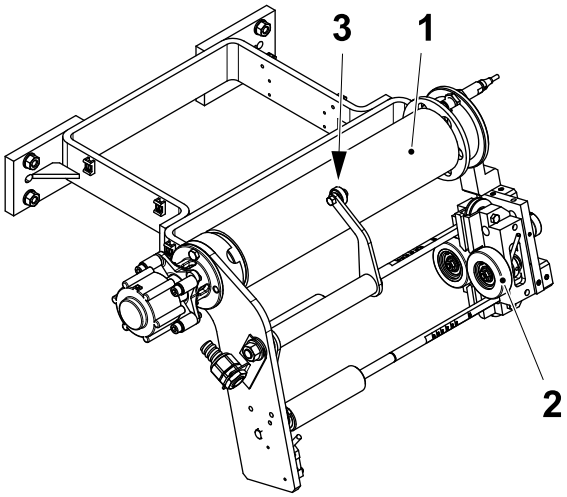

8

Clean the bending roller (1), the paper guide (2) and the splice guard (3) with a sponge. Use cleaning compound code **G1** or **G2**.

Wipe dry with a clean cloth.

Note! For cleaning compound code information, see chapter 11.2.1 Cleaning Compound Table.

9.1.9 Drying Preparation

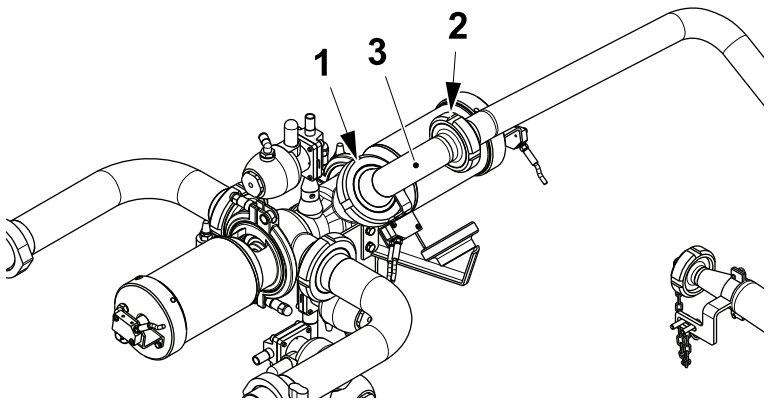

1

WARNING

Burn Hazard.
The components may be hot. Wear personal protective equipment.

When the CIP cleaning is finished, loosen the nuts (1) and (2) and swing the cleaning pipe (3).

Tighten the nut (2).

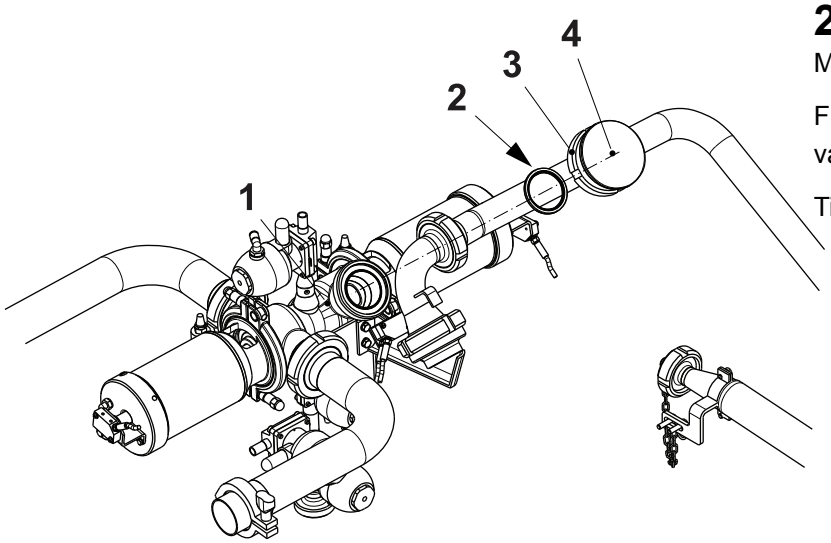

2

Make sure the gasket (2) is intact.

Fit the gasket (2) and the plug (4) to the valve fitting (1).

Tighten the nut (3).

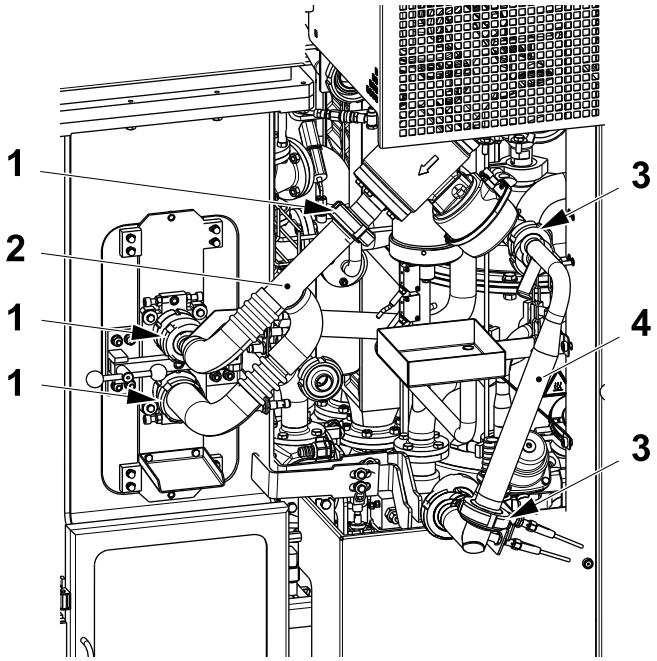

3

For Production with HVA:

Loosen the locking nuts (1) and remove the cleaning pipe (2).

Loosen the locking nuts (3) and remove the product pipe (4).

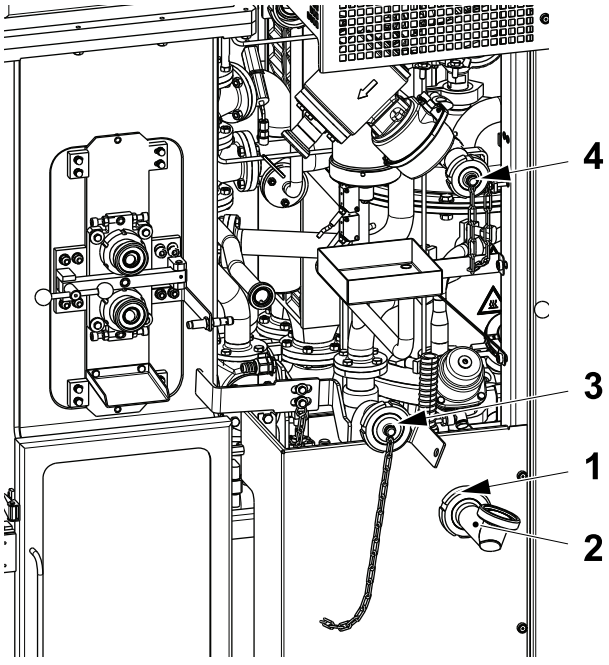

4

Loosen the locking nut (1) and remove the elbow pipe (2).

Store the elbow pipe (2) in a safe place.

Fit the plugs (3) and (4).

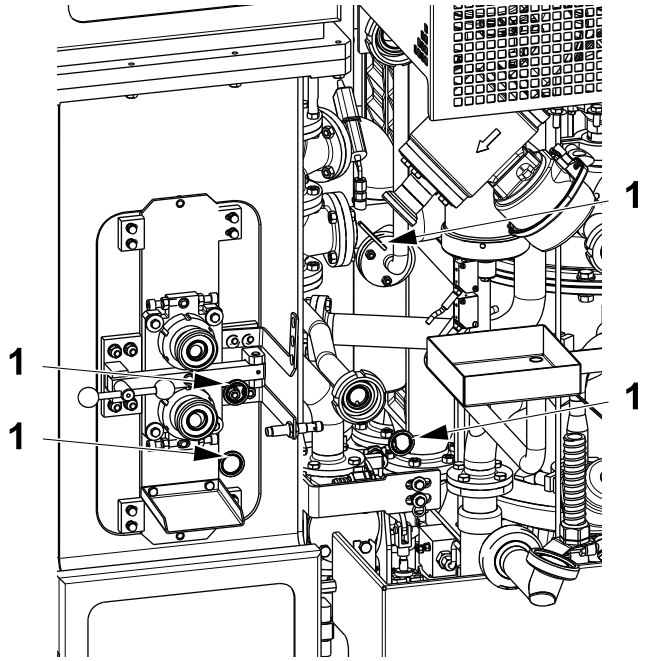

5

Change the gaskets (1).

If Weekly Care is scheduled go to item 11 on page 9-51.

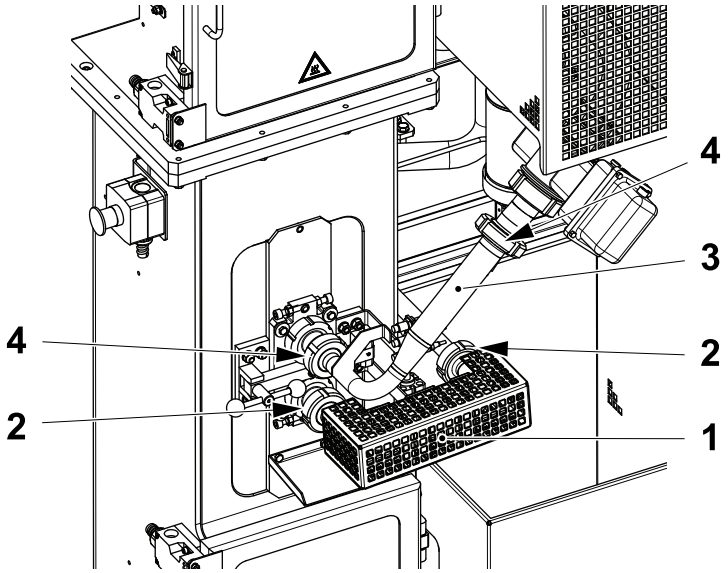

6

Fit the sterile air pipe (1) with the new gaskets and tighten manually the locking nuts (2).

Fit the product pipe (3) with the new gaskets and tighten manually the locking nuts (4).

Use the pipe wrench tool (TP No. 777200-0101) to tighten the locking nuts (2) and (4) further to the mechanical stop.

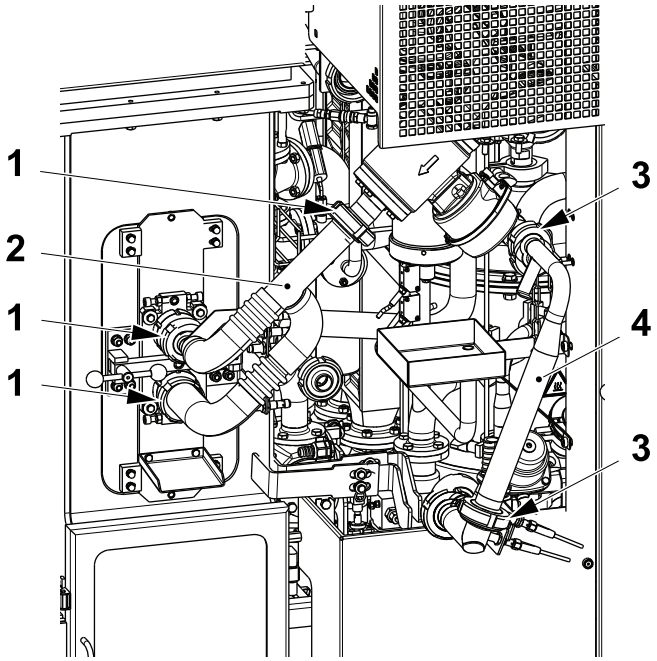

7

For Production with HVA bypassed:
Loosen the locking nuts (1) and remove the cleaning pipe (2).

Loosen the locking nuts (3) and remove the product pipe (4).

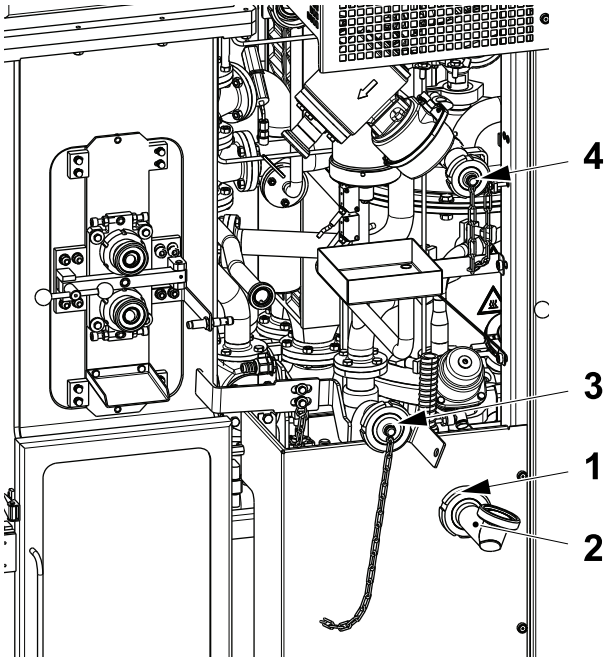

8

Loosen the locking nut (1) and remove the elbow pipe (2).

Store the elbow pipe (2) in a safe place.

Fit the plugs (3) and (4).

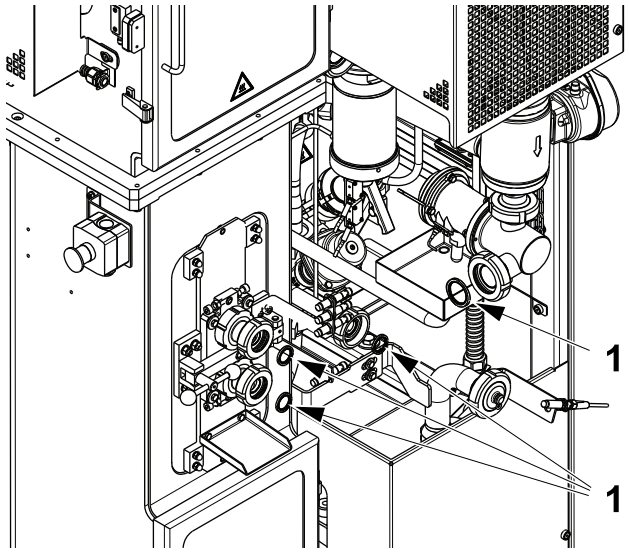

9

Change the gaskets (1).

If Weekly Care is scheduled go to item 11 on page 9-51.

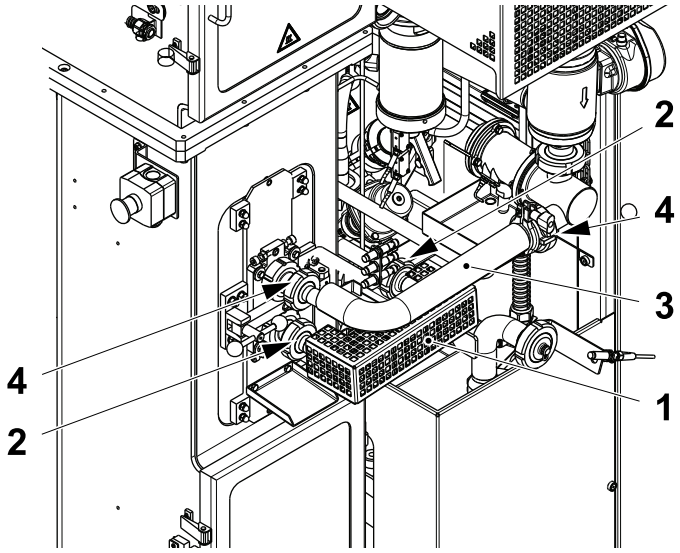

10

Fit the sterile air pipe (1) with the new gaskets and tighten manually the locking nuts (2).

Fit the product pipe (3) with the new gaskets and tighten manually the locking nuts (4).

Use the pipe wrench tool (TP No. 777200-0101) to tighten the locking nuts (2) and (4) further to the mechanical stop.

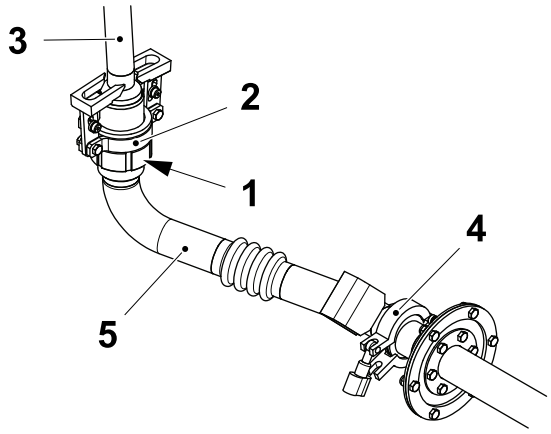

11

WARNING

Hot surface.

The components may be hot. Wear personal protective equipment.

Loosen the nut (1) disconnect the cleaning attachment (2) from the upper filling pipe (3).

Remove the catch (4) and the cleaning sleeve (5) from the filling machine.

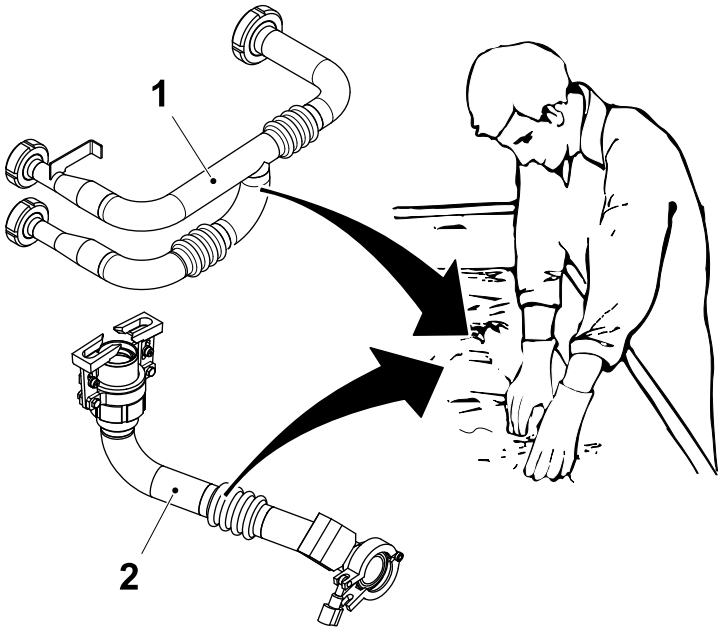

12

WARNING

Chemical product.

Follow the Safety Precautions.

Fill the cleaning pipe (1) with cleaning compound code **F3** before immersing it in the container in order to avoid trapped air inside the pipe.

Immerse both cleaning pipe (1) and cleaning sleeve (2) in a bath of cleaning compound **F3**.

Please make sure to immerse the whole length of both cleaning pipe (1) and cleaning sleeve (2).

Keep both cleaning pipe (1) and cleaning sleeve (2) in the container until the next use.



13

Close all covers and doors on the machine and reset the alarms on the TPOP.

9.1.10 CIP Drying

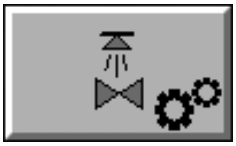

1

On the TPOP, touch the `CIP PROGRAM` button, see CIP Cleaning / CIP Drying on page 2-28.

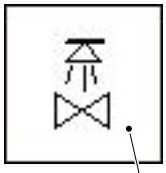

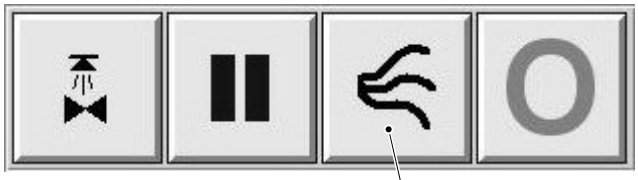

2

Touch the `CLEANING FUNCTION` icon (1). The following buttons appears.

Touch the `CIP DRYING` button (2).

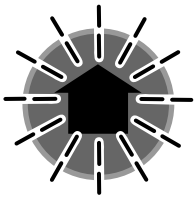

3

CAUTION

Risk of production fault.

Once the CIP DRYING is ended, machine must be brought back to PRODUCTION within 36 hours. If not, repeat the CIP CLEANING. Exceeding the recommended period of waiting time can lead to a deterioration of the condition of cleanliness established by the CIP. For maximum waiting time recommendations, see the table 11.4 Maximum Waiting/Stop Time Recommendations.

When the PROGRAM UP button starts to flash, press it.

Note! To interrupt or stop the CIP DRYING procedure see CIP Drying on page 2-30.

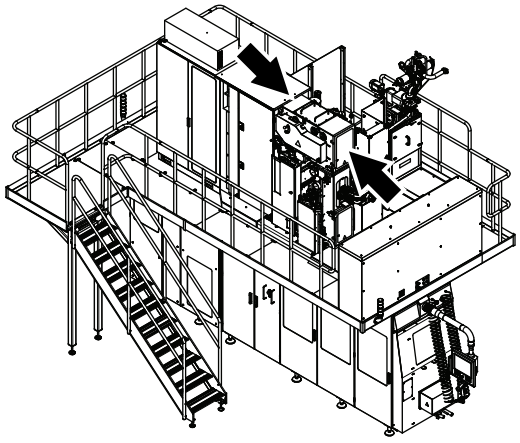

4

Open the top front aseptic chamber door and the top rear aseptic chamber door.

9.1.11 Recorder

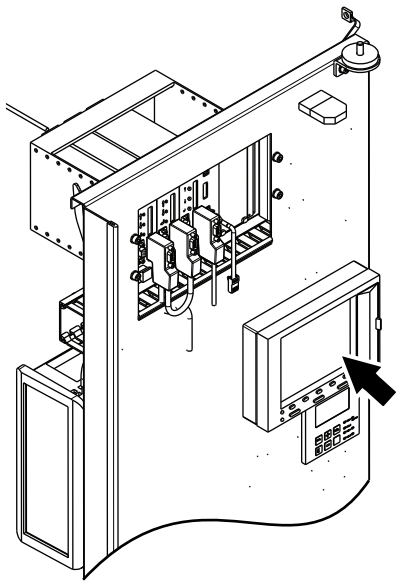

1

When the CIP and external cleaning are finished, check the percentage level of the CompactFlash Memory Card in the recorder screen. If the CompactFlash Memory Card is full or more than 90% complete, change the CompactFlash Memory Card, see section Change CompactFlash Card on page 2-155.

9.1.12 Aseptic Chamber

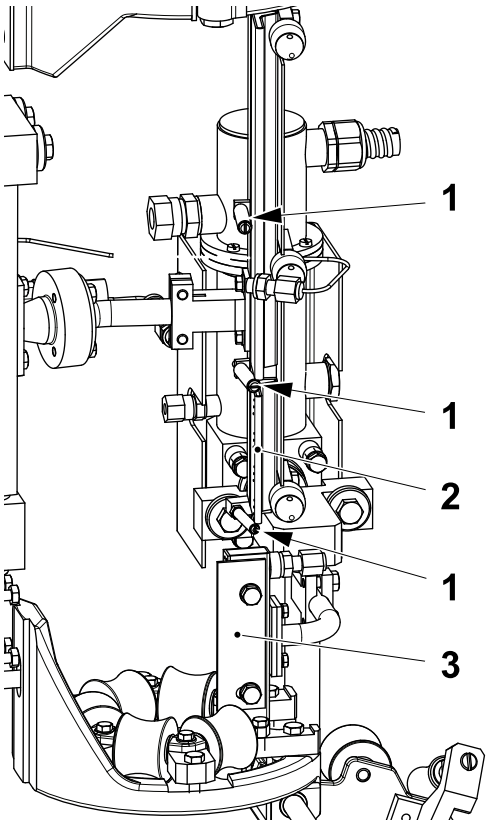

1

WARNING

Burn Hazard.
The components may be hot. Wear personal protective equipment.

Check the rotation and condition of the LS guide rollers (1). If required, call a service technician.

Taking care not to damage the surfaces, carefully remove all residue from:

- the rollers (1)
- the inside of the LS element (2).
- the inside of the LS SS element (3).

9.1.13 Jaw System Unit

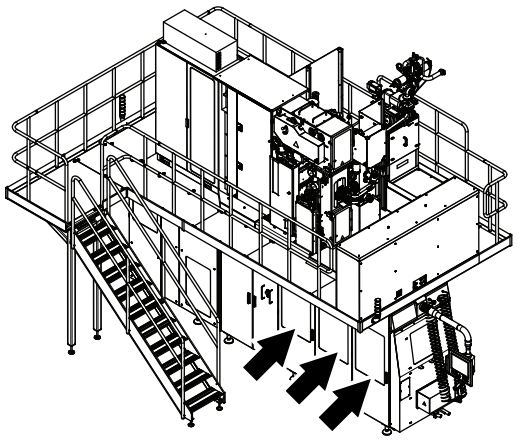

1

Open the doors to the jaw unit and the final folder unit.

Wipe down all the rubber seals on the doors of the jaw unit and final folder area with a sponge to remove water residue.

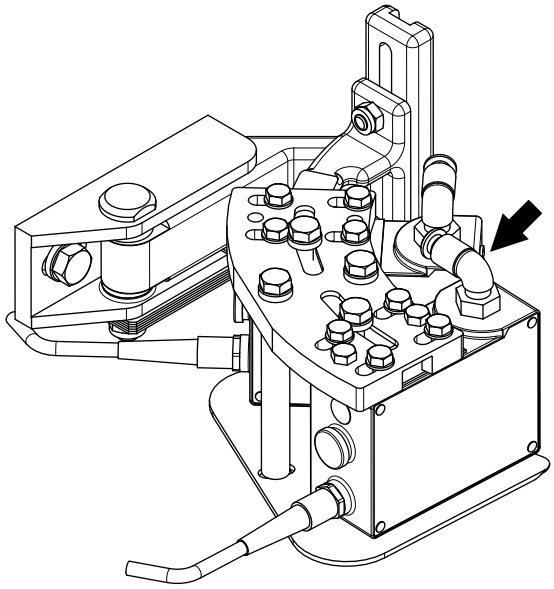

2

WARNING
Chemical Products.
Follow the Safety Precautions.

Clean the photocell lenses with a clean dry cloth.

Note! If there are small lime deposits on the design correction photocell lenses, use cleaning compound code **D**. A dirty lens may cause reading errors which can affect PRODUCTION.

Note! For cleaning compound code information, see 11.2.1 Cleaning Compound Table.

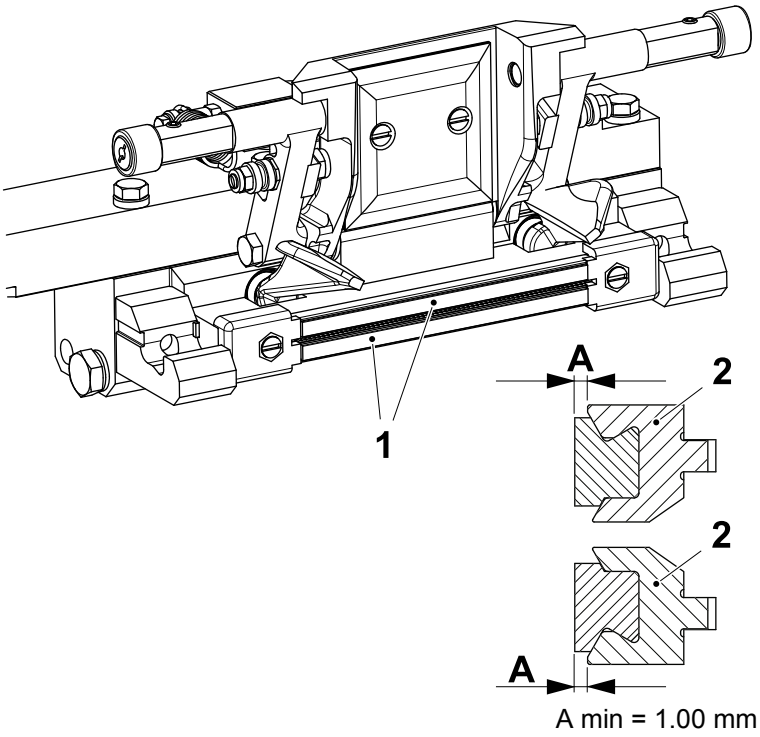

3

Check Dollies

WARNING

Blade and burn hazard.
The knife is sharp and may be hot. Wear personal protective equipment.

Check the dollies (1) for wear or damage.

They must protrude at least 1.00 mm outside of the cutting rail (2).

Change the dollies as necessary, follow the procedure 9.2.5 Change Dollies.

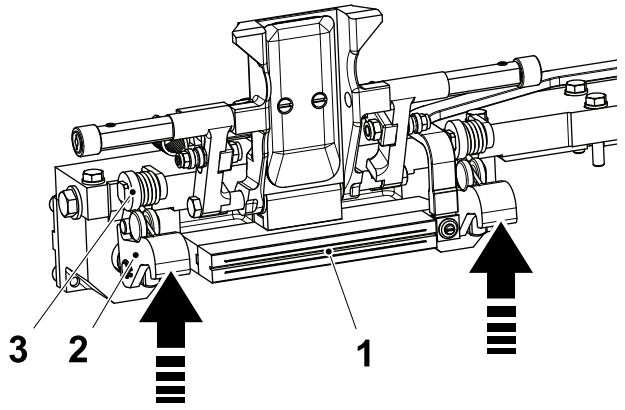

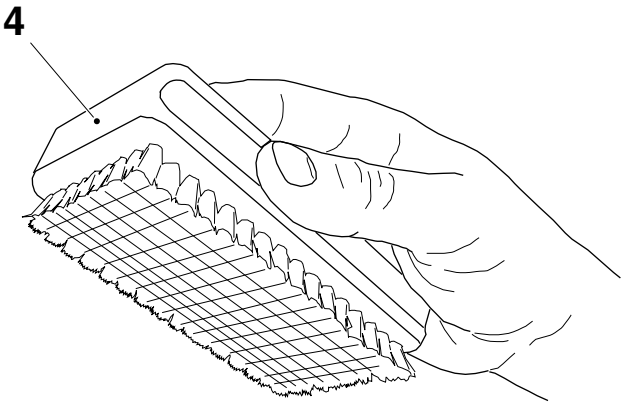

4

a) Clean the inductor (1) with a nylon or hard bristle flat brush (4). Check for damage and/or wear that could affect sealing quality.

b) If required call a technician to change the inductor (1).

c) Check that the catches (2) and the catch springs (3) are functioning: lift and then release each catch (2). The catch should return directly to the stop position.

d) Clean the catches (2) and the catch springs (3).

e) Call a technician to change the catches (2) and the catch springs (3) if required.

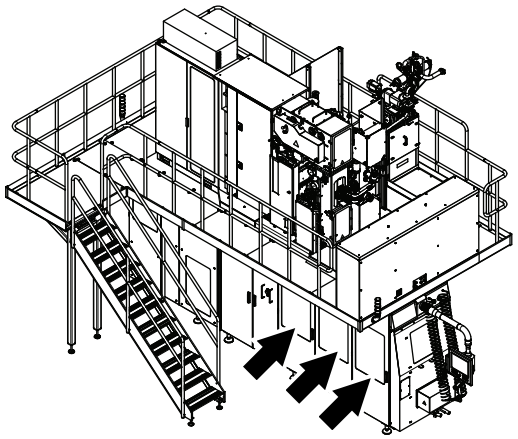

5

Close the jaw unit and final folder unit doors.

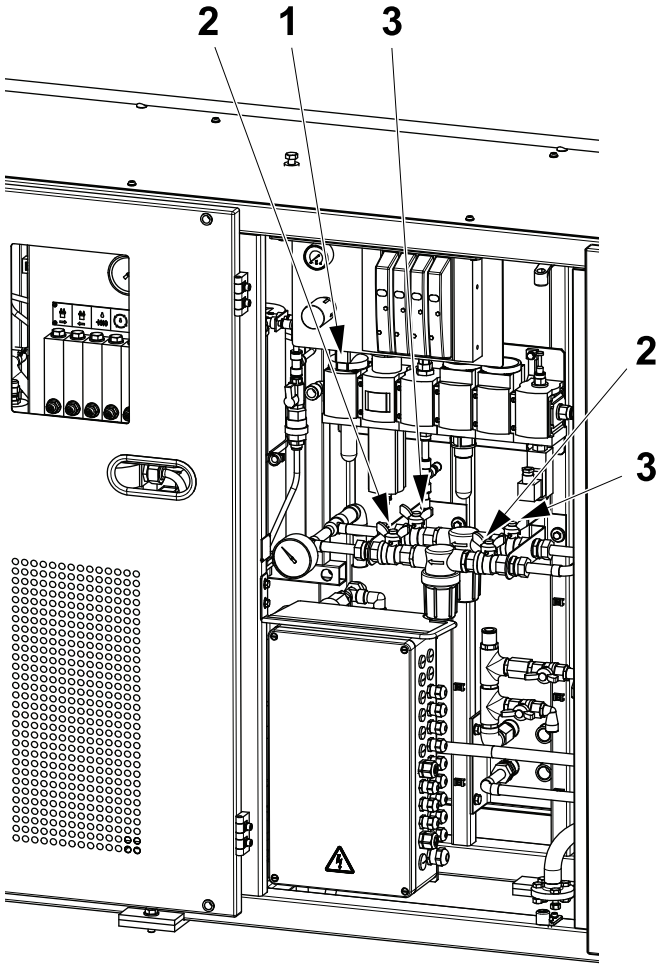

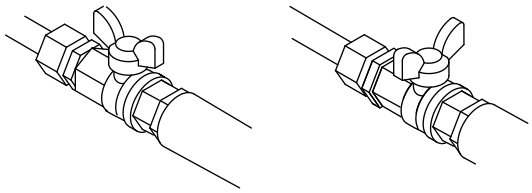

Cooling water ON Cooling water OFF

6

DAILY CARE has now been completed.

When resuming PRODUCTION, start from 3.2 Preparing after Daily Care.

To perform Weekly Care go to the section 9.2 Weekly Care.

If WEEKLY CARE or PRODUCTION is not scheduled, ensure that the air supply (1) is OFF and the cooling water supply (2) or (3) is OFF, depending on which filter is in use.

9.2 Weekly Care

This section describes what to do once a week or at least every 120 operating hours.

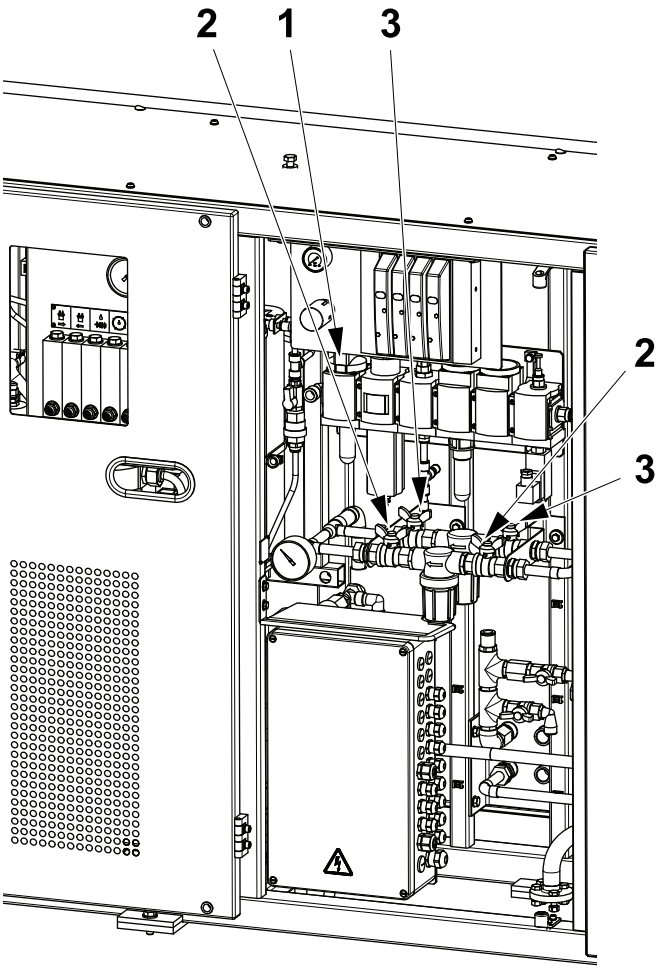

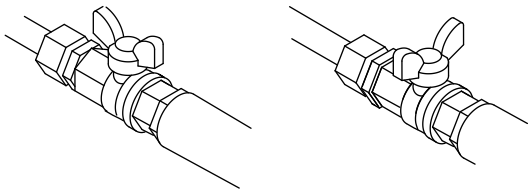

Cooling water ON Cooling water OFF

1

Turn ON the air supply (1),

Turn ON the cooling water supply (2) or (3) depending on which filter is in use.

9.2.1 ASU

WARNING
Chemical Products.
Follow the Safety Precautions.

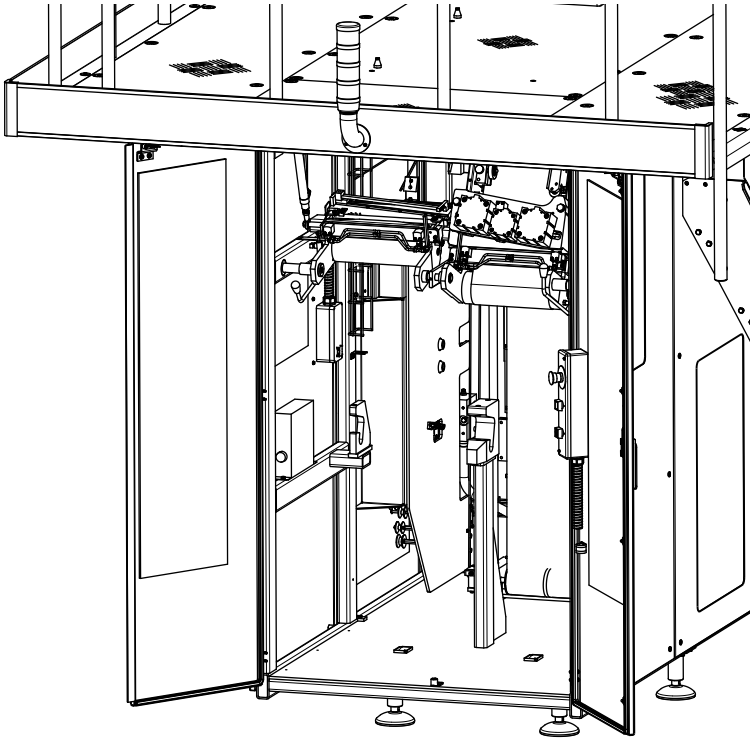

1
Vacuum clean the inside of the ASU (floor and walls).

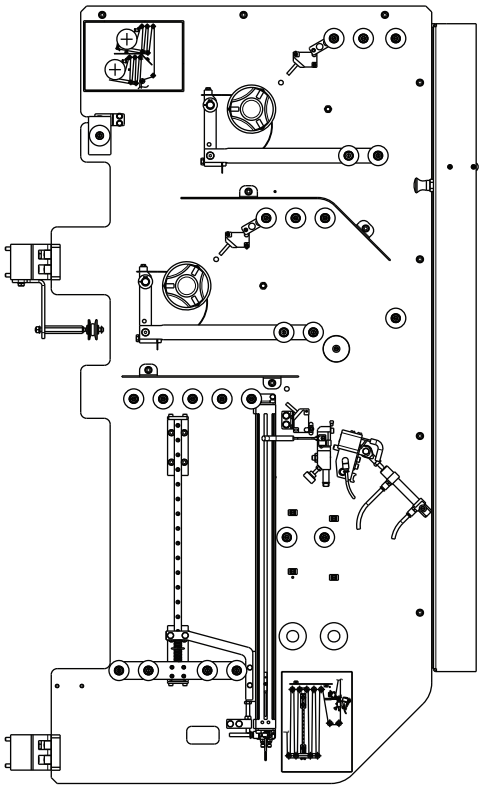

2

Clean the strip applicator unit with compressed air.

Clean all the rollers on the strip applicator and the sealing unit with a sponge. Use cleaning compound code **G1** or **G2**.

Clean the shafts of the strip magazine with a sponge. Use cleaning compound code **G1** or **G2**.

Wipe dry with a clean cloth.

Note! For cleaning compound code information, see 11.2.1 Cleaning Compound Table.

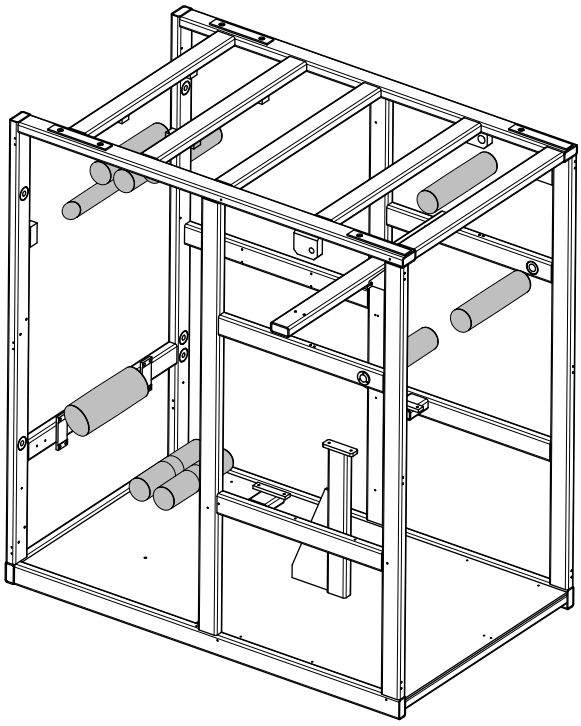

3

WARNING

Moving parts can crush and cut.
Make sure that the material holders are safely locked in either the upper or lower position.

Clean all the ASU rollers shown in the illustration. Use a sponge with cleaning compound code **G1** or **G2**.

Wipe dry with a clean cloth.

Note! For cleaning compound code information, see 11.2.1 Cleaning Compound Table.

9.2.2 Drying Chamber

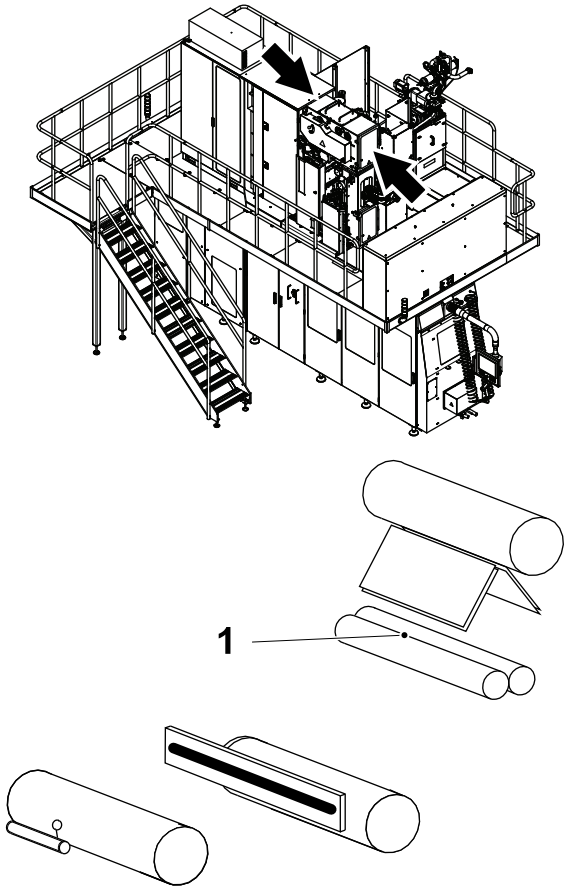

1

WARNING
Hydrogen Peroxide.
Follow the Safety Precautions.

Open the top aseptic chamber door.

Make sure the surfaces on both the calendar rollers (1) are smooth and undamaged. Use a sponge and **distilled water** only to clean these parts:

- calendar rollers (1)
- the inside of the chamber and all rollers
- the window of the aseptic chamber door
- the roller in the carrier compartment.

Make sure the rollers and internal surfaces of the drying chamber are dried with a clean cloth.

Close the top aseptic chamber door.

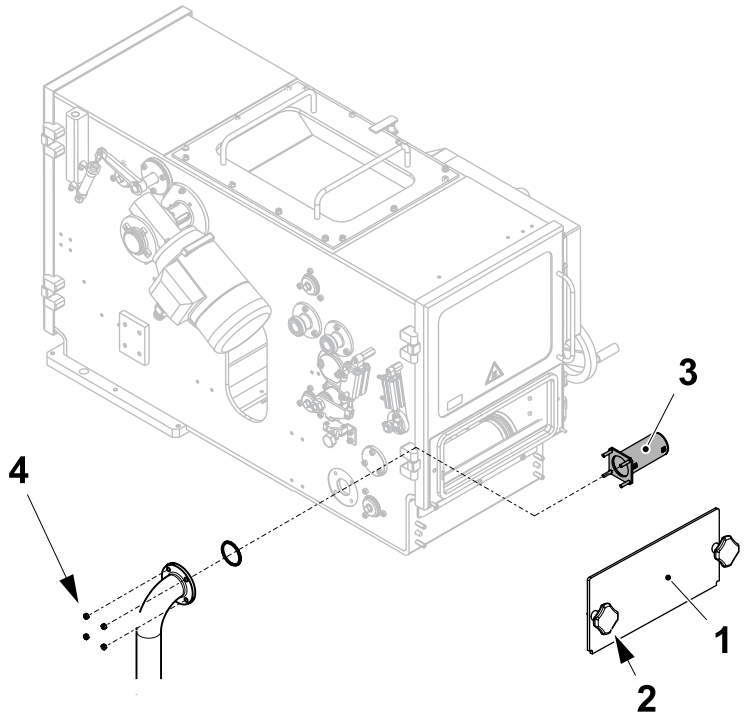

2

Remove the cover (1) with the knobs (2).

Clean the filter (3) from strip or packaging material residues making sure that no packaging material or strip drops inside the peroxide bath.

If the filter (3) is very dirty, loosen the nuts (4), remove the filter (3) and clean it with a brush wire. Fit back the filter (1).

Fit back the cover (1) with the knobs (2).

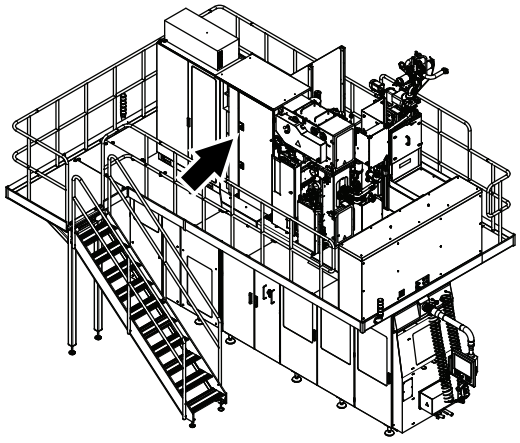

3

Open the door indicated by the arrow in the illustration.

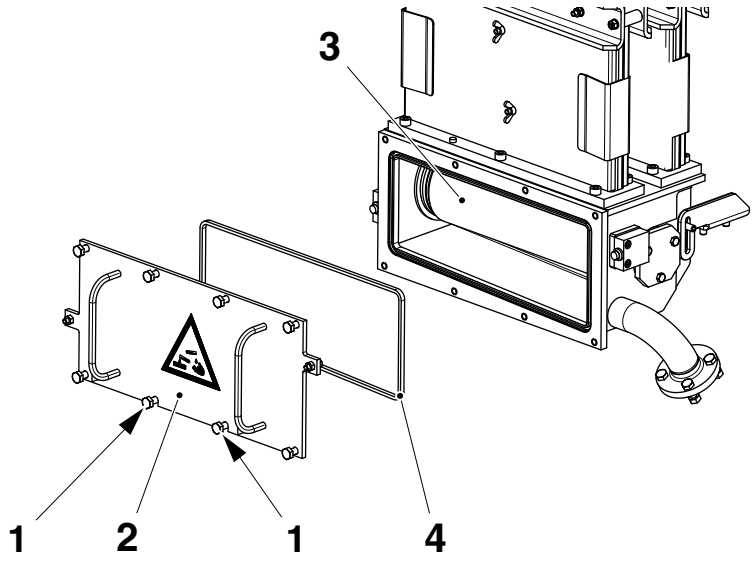

4

WARNING

Hydrogen Peroxide.
Follow the Safety Precautions.

a) Loosen the two lower screws (1), remove the rest of the screws holding the bottom cover (2) and remove the bottom cover (2).

b) Spin the peroxide bath roller (3) by hand to make sure it rotates smoothly in both directions.

c) Check for pieces of LS strip and paper dust.

d) Clean and rinse the peroxide bath roller (3) with a sponge and **distilled water** only.

e) Check the condition of the gasket (4).

f) Put the gasket (4) and the cover (2) back and tighten the all the screws holding the cover crosswise.

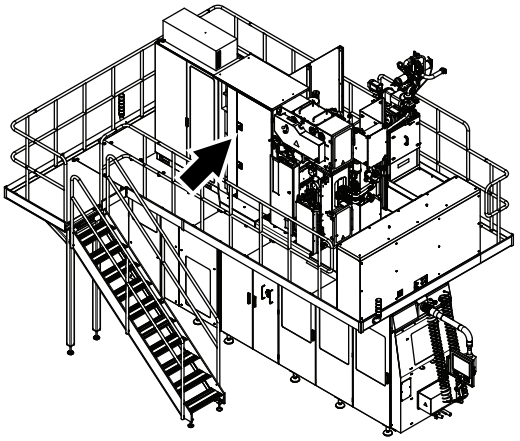

5

Close the door indicated by the arrow in the illustration.

9.2.3 Aseptic Chamber

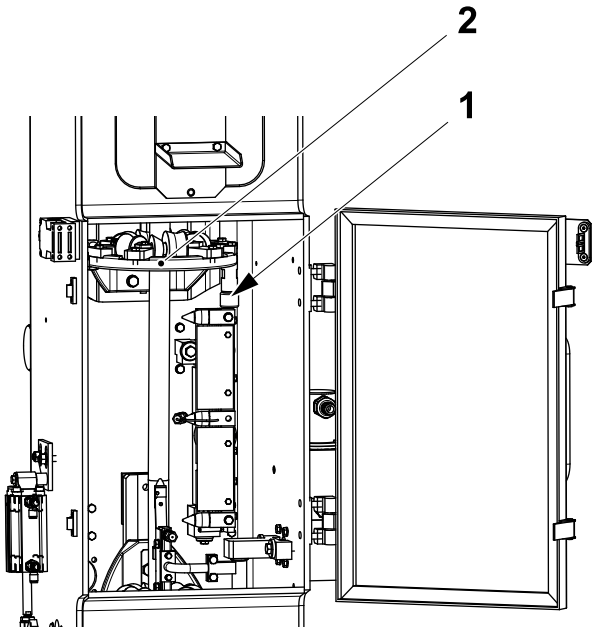

1

Pull the lever (1) and open the forming ring (2).

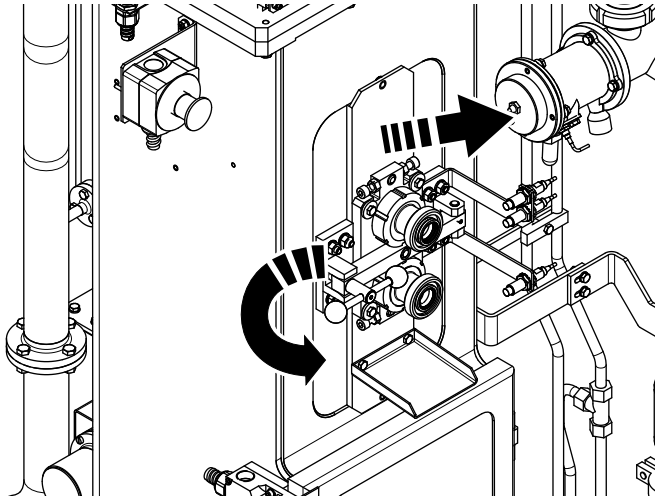

2

With one hand firmly holding the filling pipe, turn the knob to release the filling pipe from the aseptic tower.

Remove the upper filling pipe.

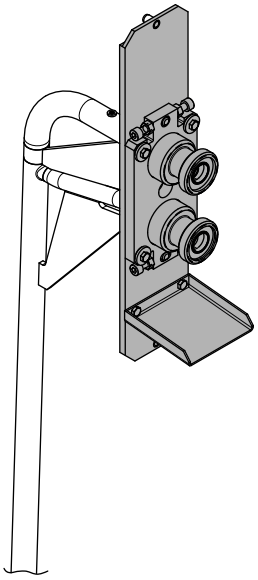

3

WARNING
Chemical products.
Follow the Safety precautions.

CAUTION
Risk of serious production fault.
Remove all product residue from the parts. Sterilization is only effective on clean surfaces and is not effective on product residue.

CAUTION
Risk of damage to the equipment.
Make sure the top connection area (shown in grey) does not come into contact with liquid.

Clean the outside of the upper filling pipe with cleaning compound code **D** and rinse with drinking water.

Clean the top connection area (shown in grey) with a sponge and cleaning compound **D**, rinse with drinking water and dry with a clean cloth.

Make sure that **all** product residue is removed from the pipe.

After cleaning, immerse the upper filling pipe in cleaning compound code **F3**, apart from the top connection area (shown in grey) that should remain dry and above the level of the liquid.

Note! The filling pipe must be immersed in the cleaning compound **F3** for a minimum of 1 hour for the cleaning compound to have a satisfactory effect. For cleaning compound code information, see 11.2.1 Cleaning Compound Table.

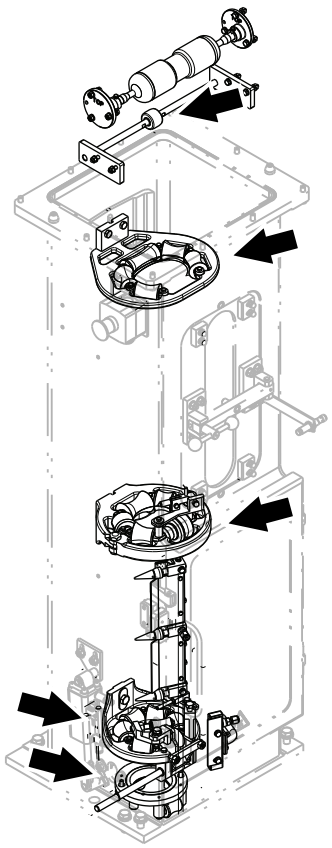

TBA 375 S

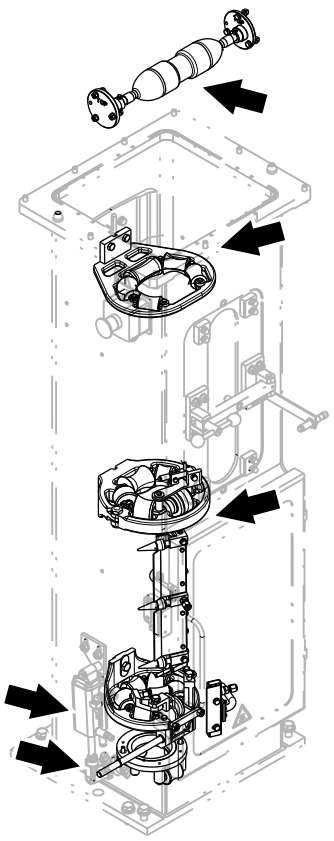

All other packages

4

WARNING
Chemical Products.
Follow the Safety Precautions.

CAUTION
Risk of serious production fault.
Remove all product residue from the parts. Sterilization is only effective on clean surfaces and is not effective on product residue.

CAUTION
Hygiene.
Do not dry with compressed air. Allow the rollers to dry.

Use a sponge or brush and cleaning compound **D** to clean the rollers and forming rings.

Rinse with drinking water and dry the rollers and the forming rings with a clean cloth.

Check the rollers for surface damage and make sure that they rotate freely in both directions. If necessary call a technician.

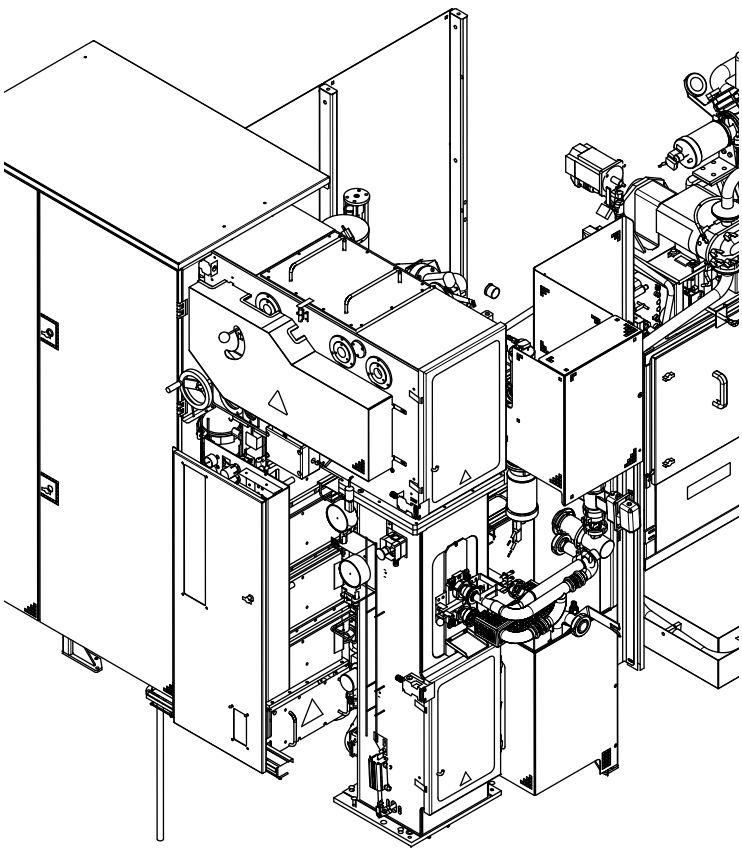

5

WARNING
Hydrogen Peroxide.
Follow the Safety Precautions.

WARNING
Risk of explosion.
Cleaning with not recommended cleaning agents, for example agents including alcohol, could cause explosion.

CAUTION
Hygiene.
Do not dry with compressed air. Make sure the internal surfaces of the aseptic chamber are dried with a clean cloth.

Clean the inside of the aseptic chamber and the door windows with a sponge. Use the cleaning compound code **D**.

Rinse with drinking water and a sponge. Dry the internal surfaces of the aseptic chamber with a clean cloth.

Note! For cleaning compound code information, see 11.2.1 Cleaning Compound Table.

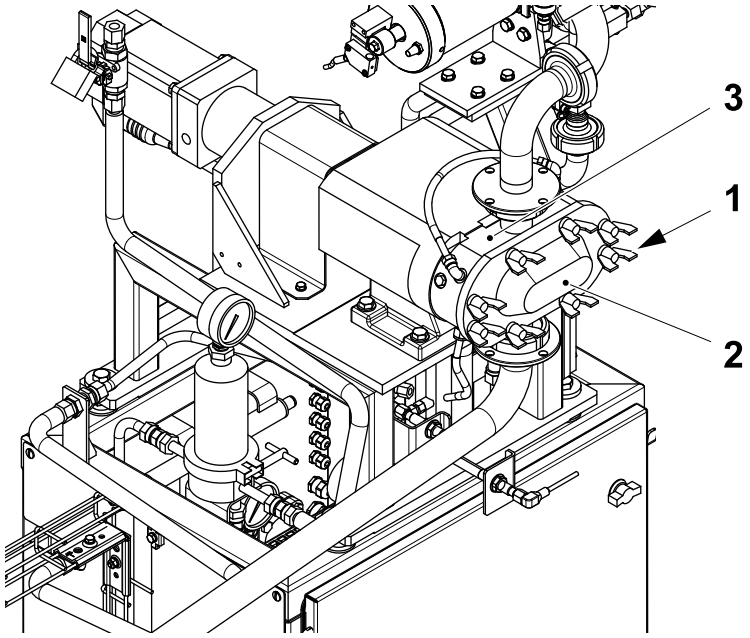

6

Remove the wing nuts (1) and the cover (2) from the pump (3).

Visual inspect the inside of the pump (3).

If necessary clean the inside of the pump (3).

Use water and the cleaning compound code **D**. Rinse with drinking water.

Note! For cleaning compound code information, see 11.2.1 Cleaning Compound Table.

Fit the cover (2) to the pump (3) and tighten the wing nuts (1).

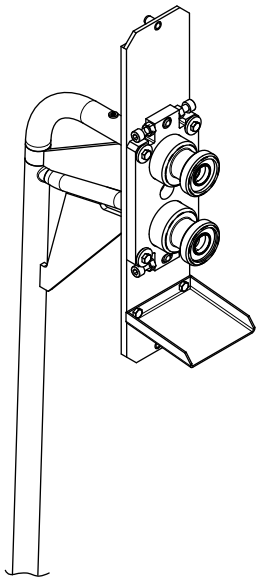

7

WARNING
Chemical products.
Follow the Safety Precautions.

CAUTION
Hygiene.
Before handling clean parts, disinfect your hands/gloves with cleaning compound code **H**.

Remove the immersed upper filling pipe from the cleaning compound code **F3**.

Let the upper filling pipe drip-dry in a clean area for about 15 minutes before fitting it back on the machine.

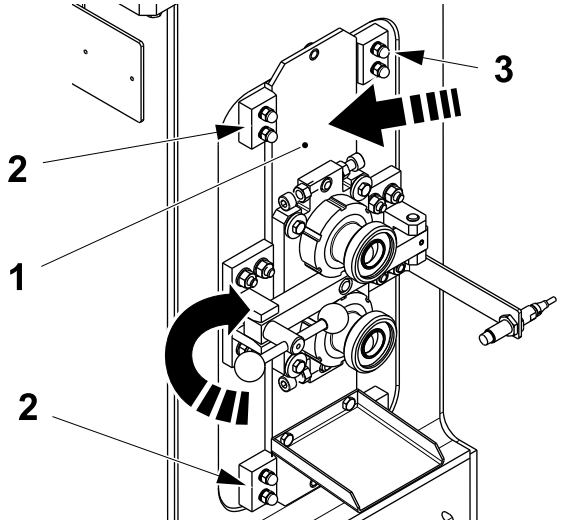

8

Fit the upper filling pipe in the aseptic chamber.

Note! Make sure that the upper filling pipe plate (1) is in contact with the blocks (2).

With one hand firmly holding the filling pipe, turn the two knobs to secure the filling pipe to the aseptic tower.

Note! Do not loosen the screws (3) in the blocks (2).

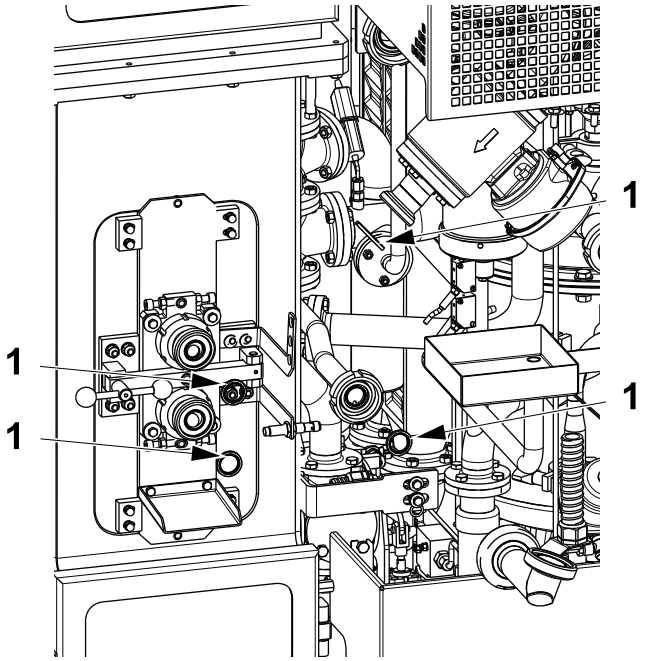

9

Production with HVA

Change the gaskets (1).

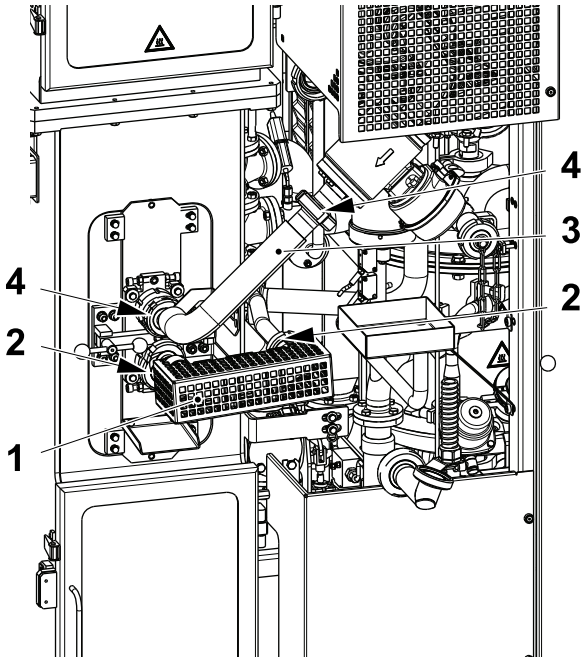

10

Fit the sterile air pipe (1) with the new gaskets and tighten manually the locking nuts (2).

Fit the product pipe (3) with the new gaskets and tighten manually the locking nuts (4).

Use the pipe wrench tool (TP No. 777200-0101) to tighten the locking nuts (2) and (4) further to the mechanical stop.

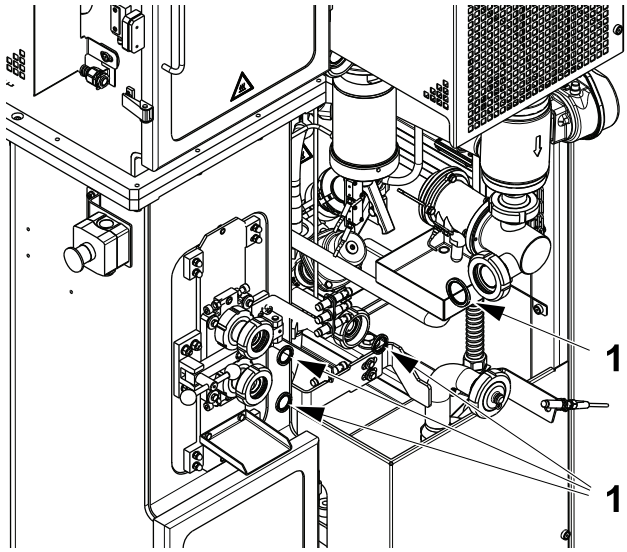

11

Production with HVA bypassed

Change the gaskets (1).

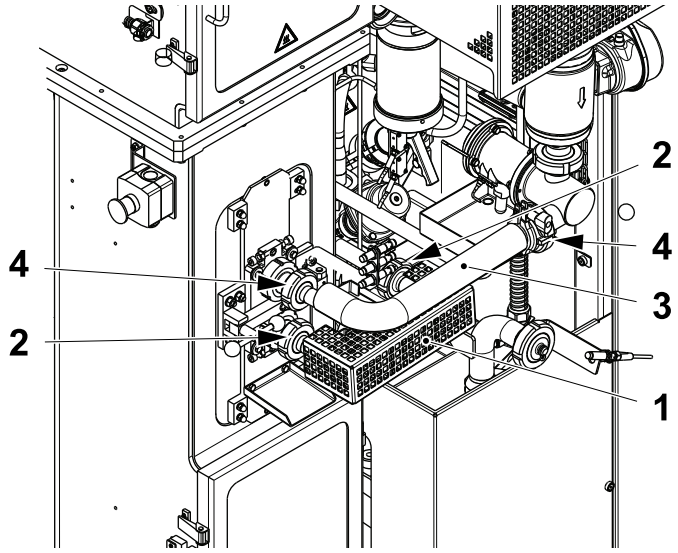

12

Fit the sterile air pipe (1) with the new gaskets and tighten manually the locking nuts (2).

Fit the product pipe (3) with the new gaskets and tighten manually the locking nuts (4).

Use the pipe wrench tool (TP No. 777200-0101) to tighten the locking nuts (2) and (4) further to the mechanical stop.

9.2.4 Change Oil

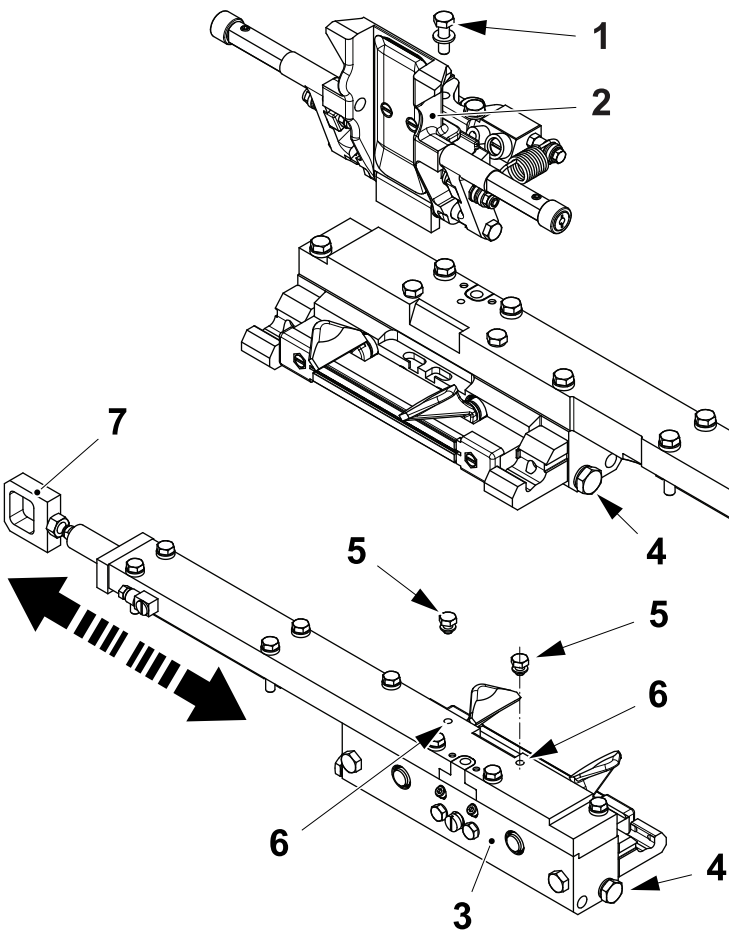

1

WARNING
Chemical Products.
Follow the Safety Precautions.

Perform the following work on both the cutting jaws.

a) Step up to step PREPARATION.

b) Inch a jaw pair to the lower horizontal position.

c) Step down to STEP ZERO.

d) Remove the screw (1) and the volume flap (2) from the bearing housing (3).

e) Remove the drain plugs (4) and the filling plugs (5) and drain the oil from the bearing housing (3).

Note! Use lubricant Kluberoil 4 UH1 320-N TP No. 344414-0000.

f) Fill the bearing housing (3) with oil through the filling plugs holes (6).

g) Manually move the ear (7) to ensure that both the internal chambers of the bearing housing (3) are filled with the oil.

h) Continue to fill with oil through the filling plugs holes (6) until it comes out from the holes of the drain plugs (4)

i) Fit and tighten the drain plugs (4) and the filling plugs (5).

9.2.5 Change Dollies

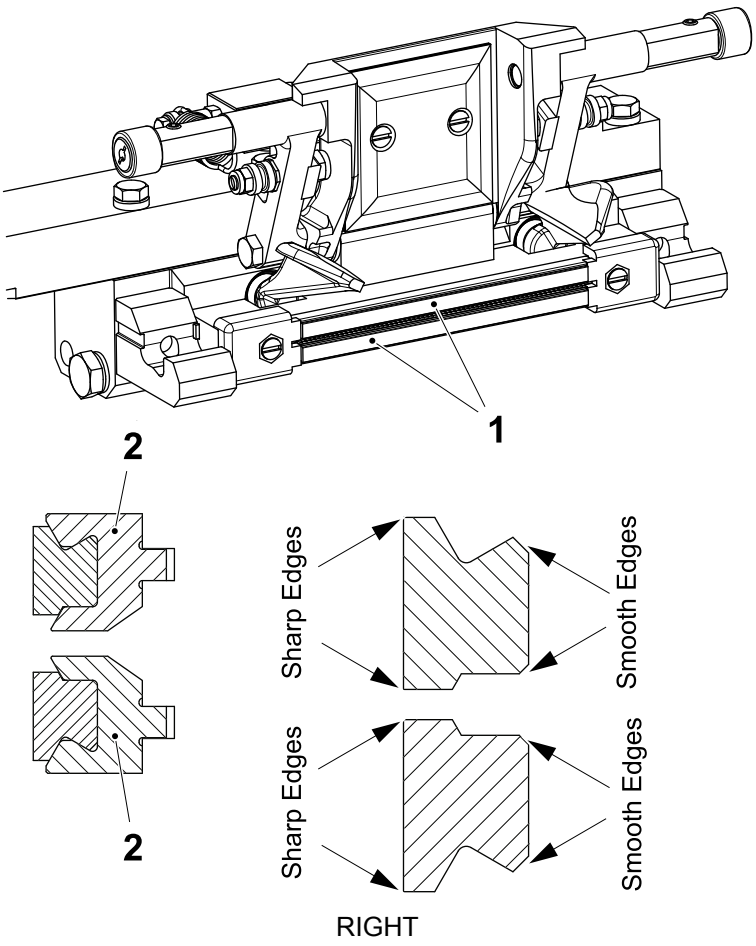

1

WARNING

Blade and burn hazard.
The knife is sharp and may be hot. Wear personal protective equipment.

Perform the following work on both the jaw pairs:

a) Step up to PREPARATION.

b) Inch a jaw pair to an open position.

c) Step down to ZERO.

d) Use a suitable tool to remove the dollies (1).

e) Clean and inspect the two cutting rails (2).

f) If the cutting rails (2) are damaged or worn, call a technician to change them.

g) Make sure to correctly insert the new dollies (1) into the cutting rails (2).

Note! Take care to correctly position the profiles when fitting the dollies (1). The two sharp edges of the rubber list must be facing outwards from the rails (2).

9.2.6 Check Knife

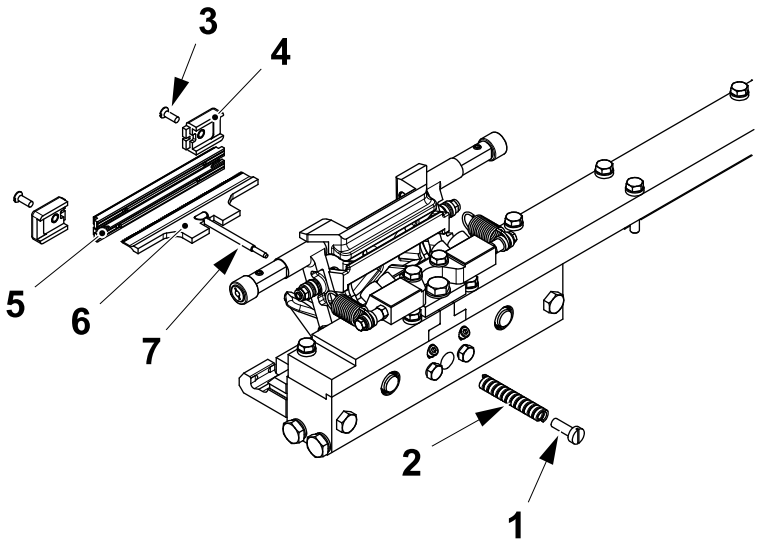

1

WARNING

Risk of cutting injury.
The knife is sharp and may be hot. Wear personal protective equipment.

Remove the screw (1) and the spring (2).

Remove the screws (3) and the brackets (4).

Remove the cutting rails (5).

Pull out the knife (6) and the link (7) together.

Note! Apply a layer of silicone grease TP No. 90296-0009 to the link (7) when assembling.

Clean any packaging material and product residue from the knife (6) with a brass brush.

Change the knife (6) if necessary.

Assemble in the reverse order.

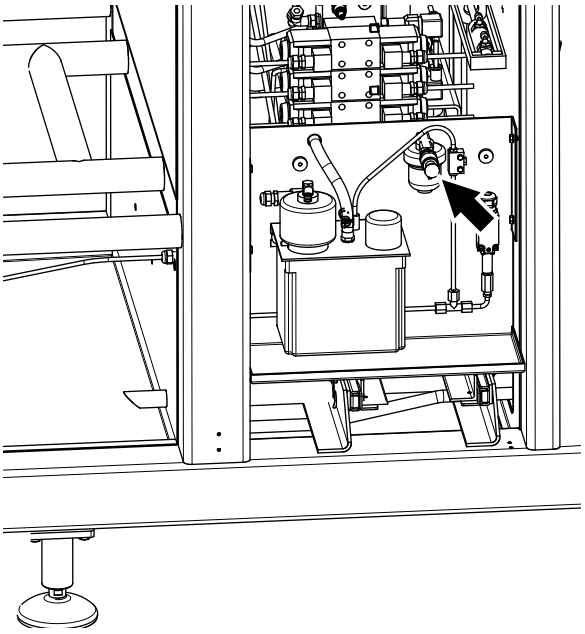

2

WARNING
Chemical Products.
Follow the Safety Precautions.

Check the oil level in the central lubrication tank. Refill if required. Use lubricant Kluberoil 4 UH1 320-N TP No. 344414-0000.

Note! Pump slowly as the level rises faster in the tank than in the level indicator.

9.2.7 Peroxide Tank

WARNING
Hydrogen Peroxide.
Follow the Safety precautions.

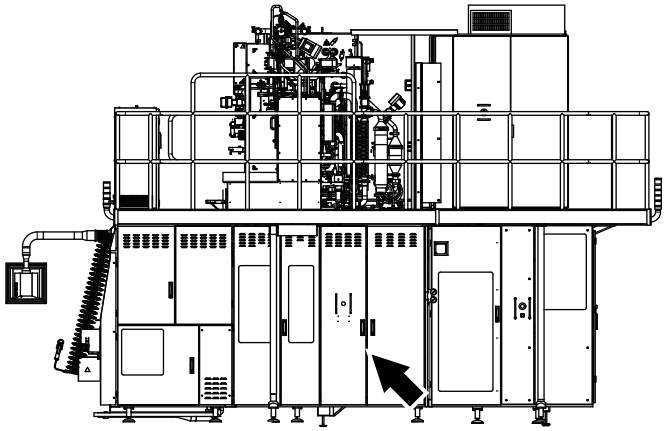

1

Open the door indicated by the arrow in the illustration.

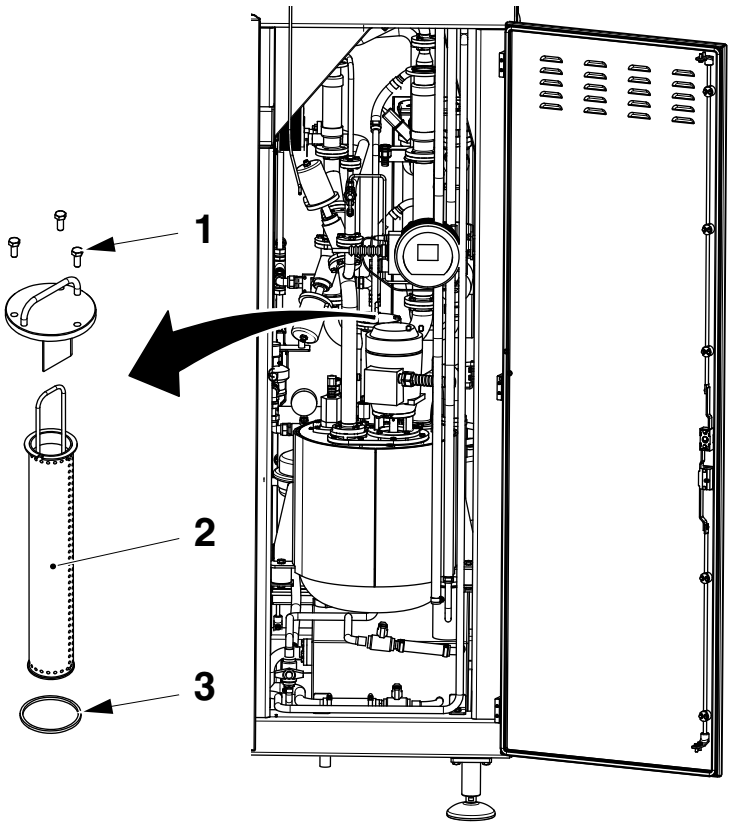

2

WARNING
Hydrogen Peroxide.
Follow the Safety precautions. Do not touch the filter with hands. Wear personal protective equipment.

Remove screws (1) and lift up the filter (2) from the hydrogen peroxide tank. Check the filter (2) and the gasket (3). Change if needed.

Rinse the filter with distilled water and clean it using compressed air.

Rinse the filter again with distilled water.

Fit back and tighten the screws.

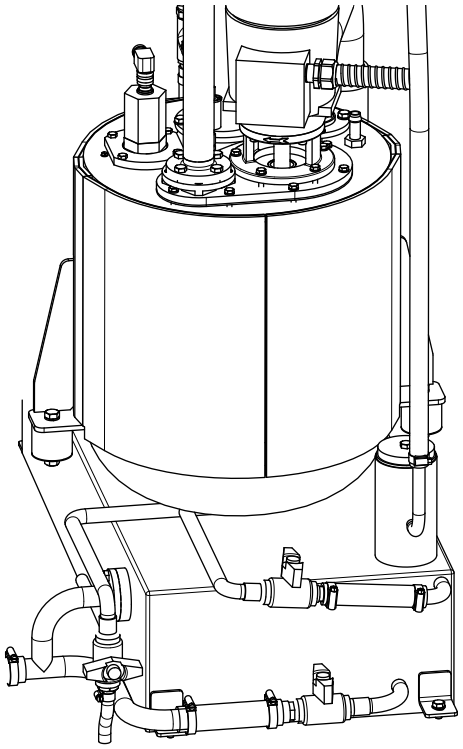

3

CAUTION

Risk of production fault.

The peroxide must be changed weekly to prevent paper dust and impurities accumulating in the tank. If this is not done, it can lead to peroxide stability problems.

Change the hydrogen peroxide, see 10.2 Change Hydrogen Peroxide.

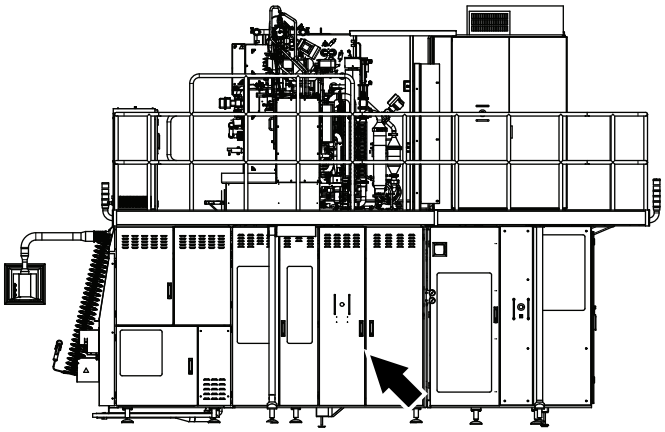

4

Close the door indicated by the arrow in the illustration.

9.2.8 Service Unit

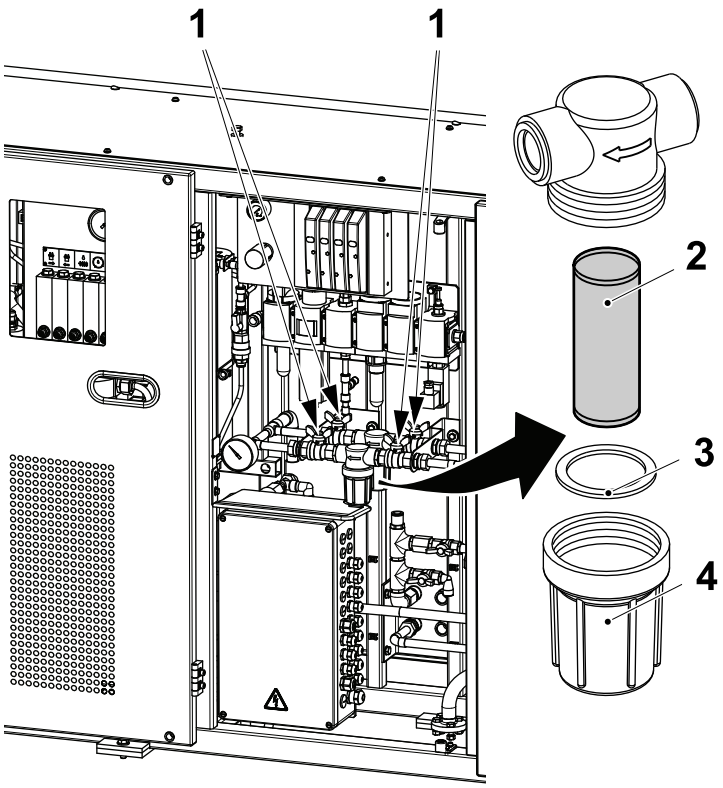

Clean Filters
1

Note! During PRODUCTION only one filtering line must be open.

a) Close the four water valves (1).

b) Unscrew the filter housing (4) and remove the filter insert (2).

c) Clean the filter insert (2) with compressed air or change if required.

d) Check the seal ring (3) for damage. Change as required.

e) Fit the filter insert (2), fit the seal ring (3) and tighten the filter housing (4).

f) Open two of the water valves (1) in one filtering line and make sure that there is no leakage.

Repeat the procedure for the other filter.

9.2.9 Platforms and Surfaces

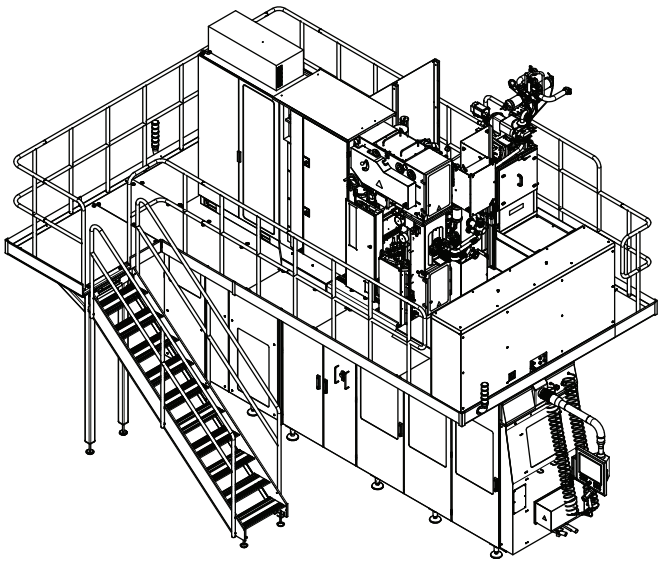

1

CAUTION
Risk of damage to the equipment.
Do not flush water towards the electrical cabinets, control panels, electrical motors or any electrical component even if protected. Failure to observe this caution may result in damage to the equipment.

CAUTION
Risk of damage to the equipment.
Do not use flushing water to clean the platform floor.

Clean the platform floor with a brush. Do not use any water.

Clean the outer machine surfaces with a sponge. Use cleaning compound code **G1** or **G2**.

Polish the stainless steel plating with paraffin oil.

Clean the windows on the machine with a sponge. Use cleaning compound code **G1** or **G2**.

Wipe dry with a clean cloth

Note! For cleaning compound code information, see 11.2.1 Cleaning Compound Table.

9.2.10 Utilities

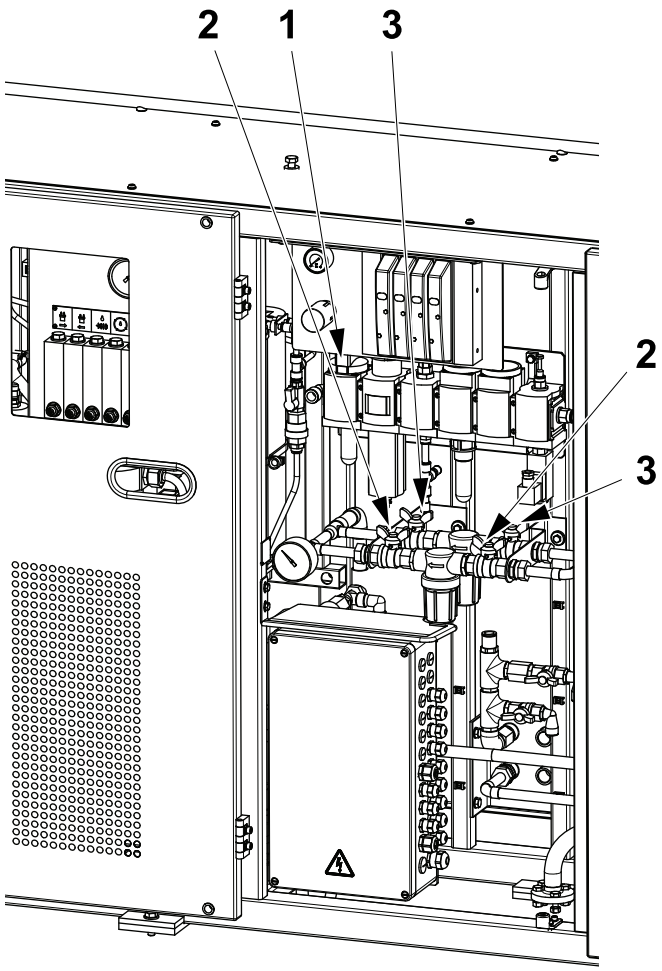

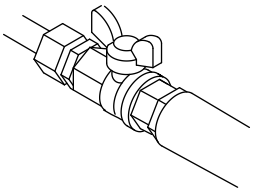

Cooling water ON

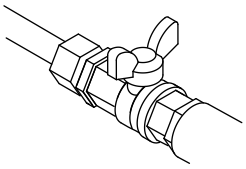

Cooling water OFF

1

Weekly care is now complete. When resuming production after weekly care, start from the 3.1 Preparing After Weekly Care.

If PRODUCTION is not scheduled:

- turn OFF the air supply (1)
- turn OFF the cooling water (2) or (3).

10 Sterilization Liquid

Description

This chapter describes how to handle hydrogen peroxide.

WARNING

Hydrogen Peroxide.
Follow the Safety Precautions.

Description 10-2

10.1 Concentration Check 10-5

Peroxide Concentration at Machine Start-up..... 10-7

Peroxide Concentration During PRODUCTION..... 10-7

10.1.1 Hydrogen Peroxide Concentration (by weight) 10-8

10.2 Change Hydrogen Peroxide..... 10-9

Dilution Tank..... 10-9

Change Container..... 10-12

This page intentionally left blank

10.1 Concentration Check

This section describes how to manually check the concentration of the hydrogen peroxide.

CAUTION

Hygiene.
The equipment must be thoroughly cleaned.

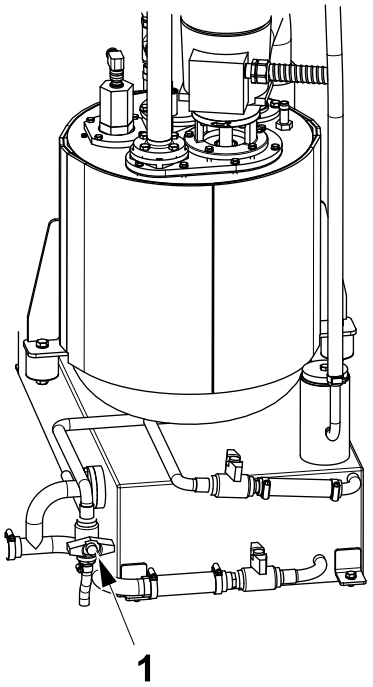

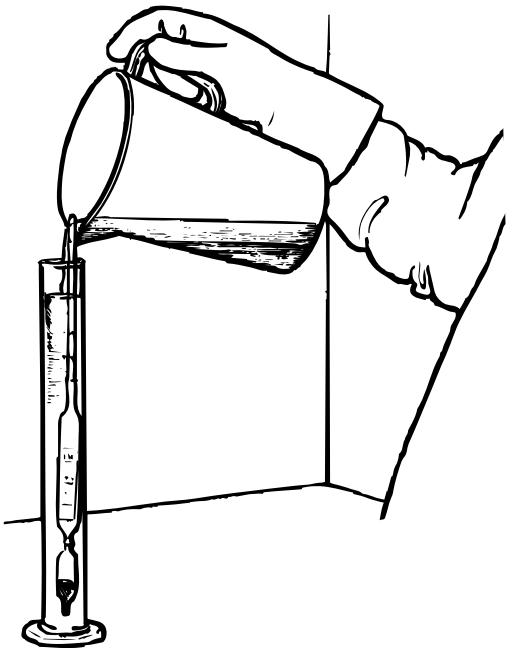

1

The following equipment is required:

- aerometer with thermometer
- graduated plastic cylinder with an inside diameter of 35 - 50 mm.

Open the valve (1) and draw approximately 250 ml of hydrogen peroxide from the tank into a clean vessel.

Pour a small amount of hydrogen peroxide into the graduated cylinder.

Lower the aerometer into the cylinder making sure that it contains enough liquid to float the aerometer.

If there are air bubbles on the aerometer, stir gently until the bubbles disappear.

Read the density at the liquid level on the aerometer and **at the same time** read the temperature.

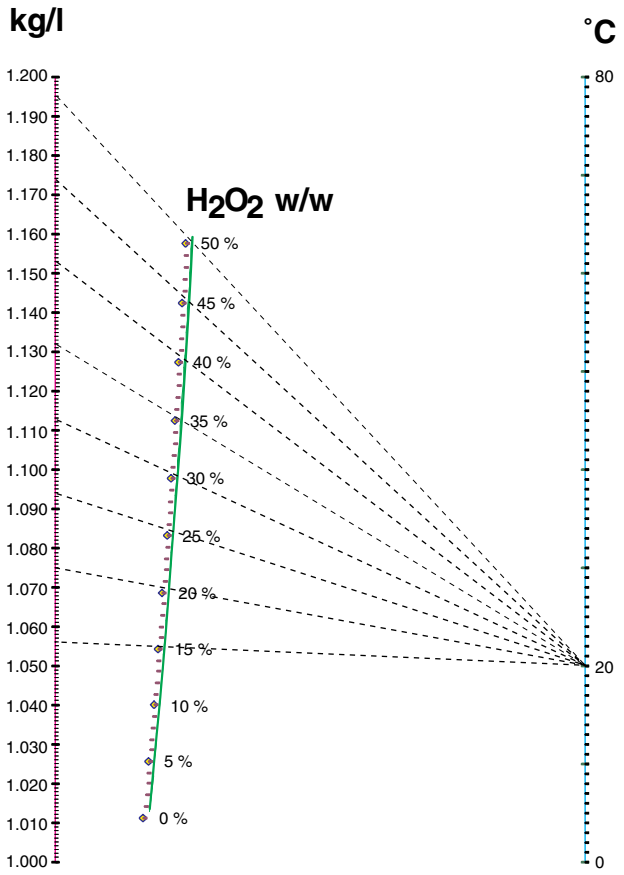

Sample nomogram

2

Evaluate the hydrogen peroxide concentration (in terms of percent by weight) from the nomogram.

With a ruler, join the density value of the sample with the temperature value to get the hydrogen peroxide concentration.

Note! Photocopying and/or resizing the nomogram may distort its accuracy. This could lead to incorrect evaluation of the hydrogen peroxide concentration.

To check the accuracy of the nomogram, refer to the following table reporting the concentration and density values calculated at 20 °C:

°C	kg/l	% w/w
20	1.056	15
20	1.075	20
20	1.094	25
20	1.113	30
20	1.132	35
20	1.153	40
20	1.174	45
20	1.195	50

3

Peroxide Concentration at Machine Start-up

Note! These values are applicable to checks made during PREPARING AFTER DAILY CARE.

If the concentration is below **32%** or above **48%**, change the hydrogen peroxide.

See 10.2 Change Hydrogen Peroxide.

If the hydrogen peroxide concentration is between **32%** and **35%**:

- repeat the check every 30 min
- if the concentration decreases, stop the machine and call a technician.

4

Peroxide Concentration During PRODUCTION

Note! These values are applicable to checks made during PRODUCTION.

If the concentration is below **30%** or above **50%**, change the hydrogen peroxide.

See 10.2 Change Hydrogen Peroxide.

If the hydrogen peroxide concentration is between **30%** and **35%**:

- repeat the check every 30 min
- if the concentration decreases, stop the machine and call a technician.

10.1.1 Hydrogen Peroxide Concentration (by weight)

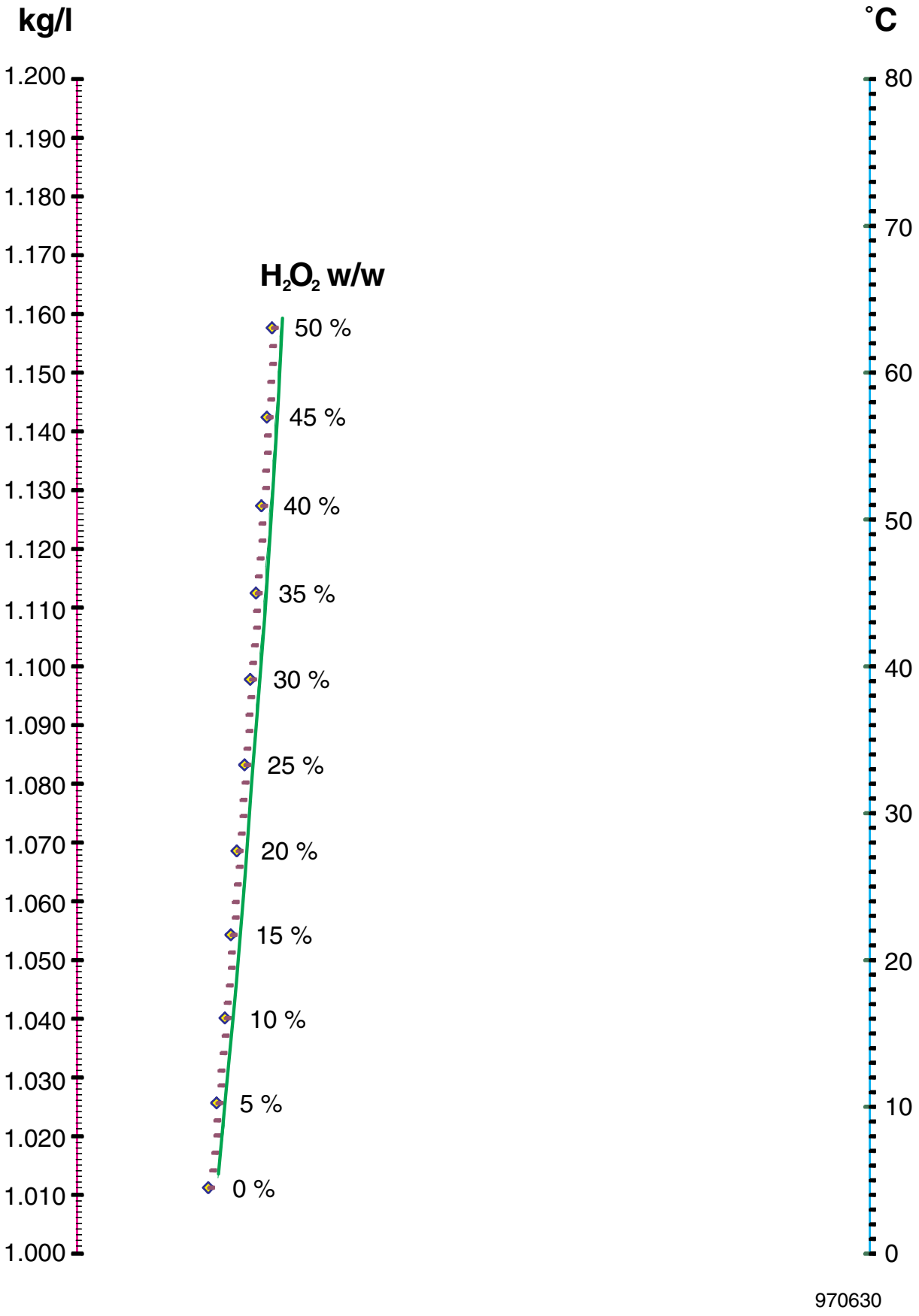

10.2 Change Hydrogen Peroxide

This section describes how to change the hydrogen peroxide in the dilution tank and how to change the hydrogen peroxide container.

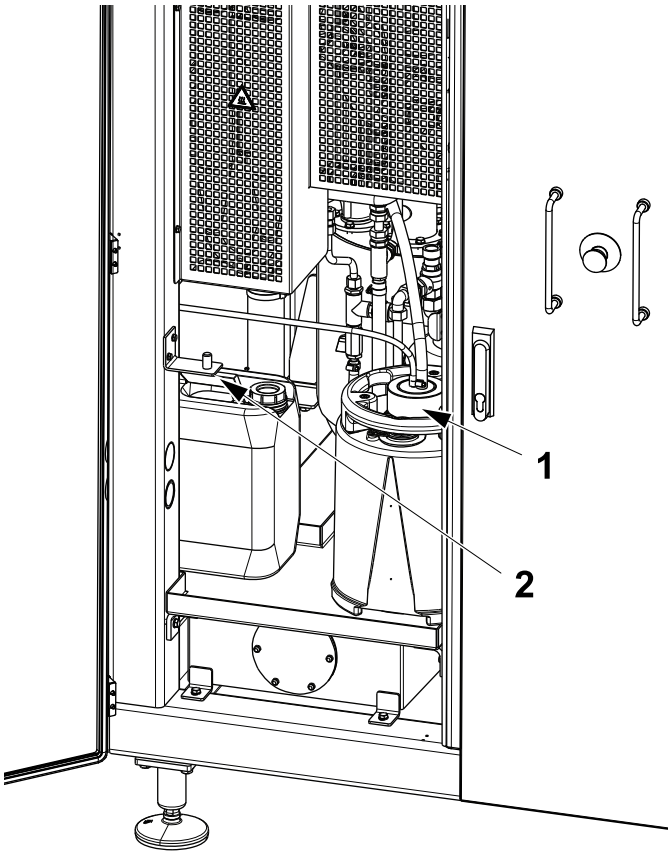

Dilution Tank

1

Lift the cap (1), to disengage the hydrogen peroxide container and place it over the bracket (2).

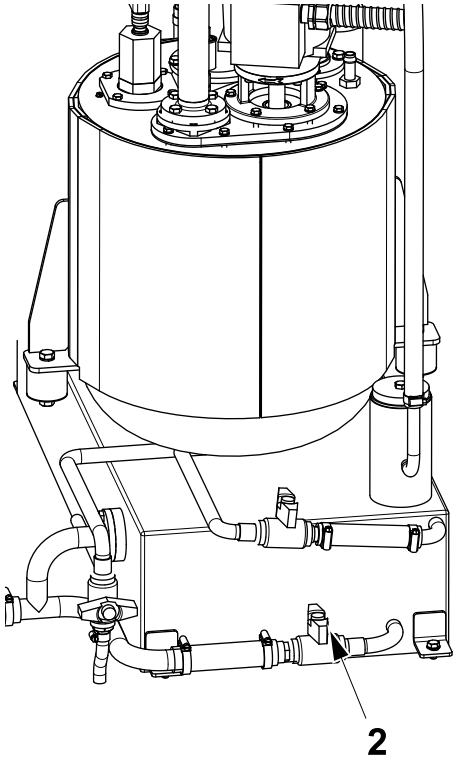

2

Open the valve (2), to empty the dilution tank. It takes approximately 5 minutes.

Note! When the machine has been in production for more than 24 hours, the hydrogen peroxide concentration in the dilution tank is less than 1%.

When the tank is empty, close the valve (2).

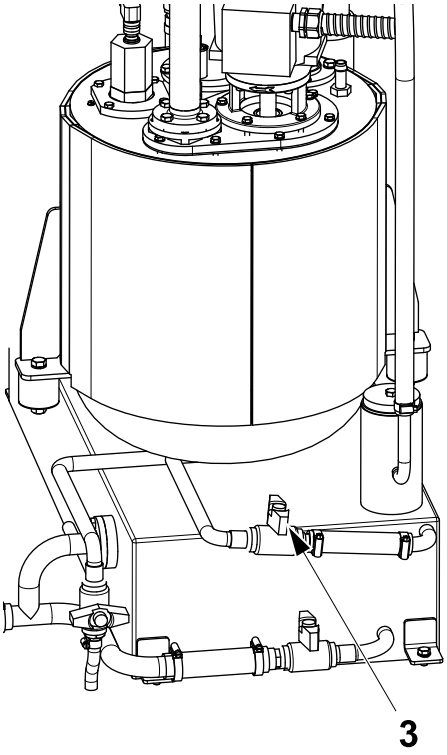

3

Open the valve (3), to drain the hydrogen peroxide from the tank into the dilution tank. It takes approximately 5 minutes.

When the tank is empty, close the valve (3).

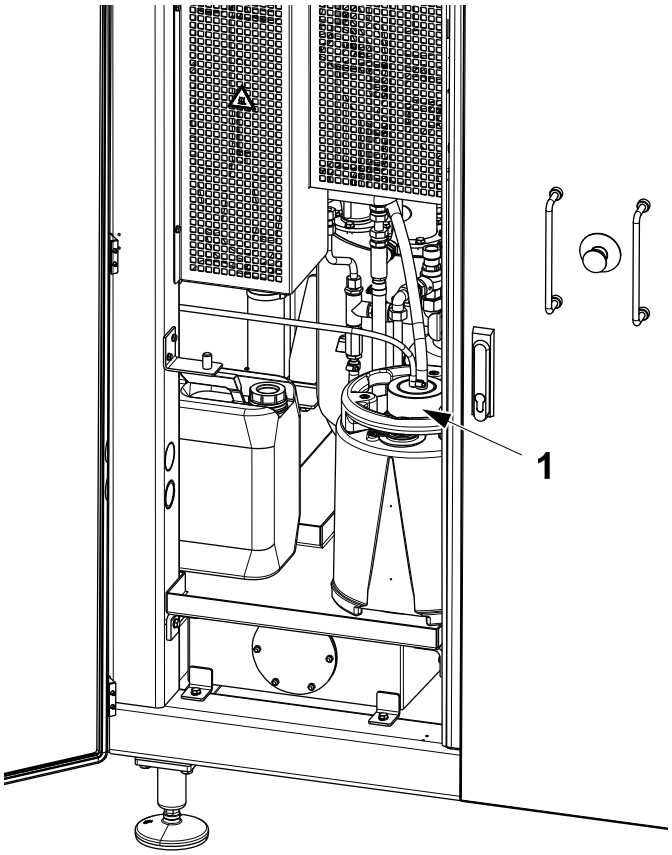

4

Fit the cap (1) to engage the hydrogen peroxide container.

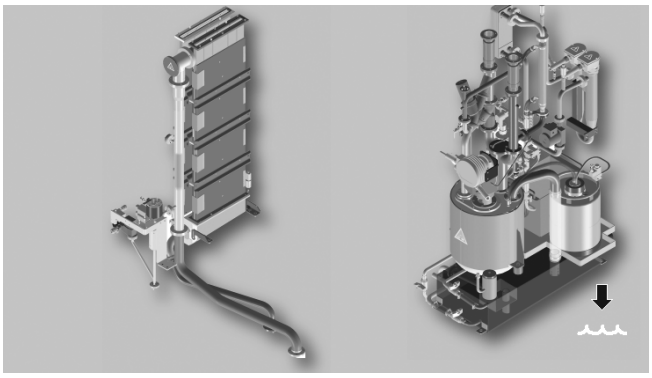

5

Follow the instructions on the TPOP when the alarm PEROXIDE CONTAINER LEVEL lights up.

Change the hydrogen peroxide container, see Change Container on page 10-12.

It takes approximately three full containers to fill up the hydrogen peroxide tank.

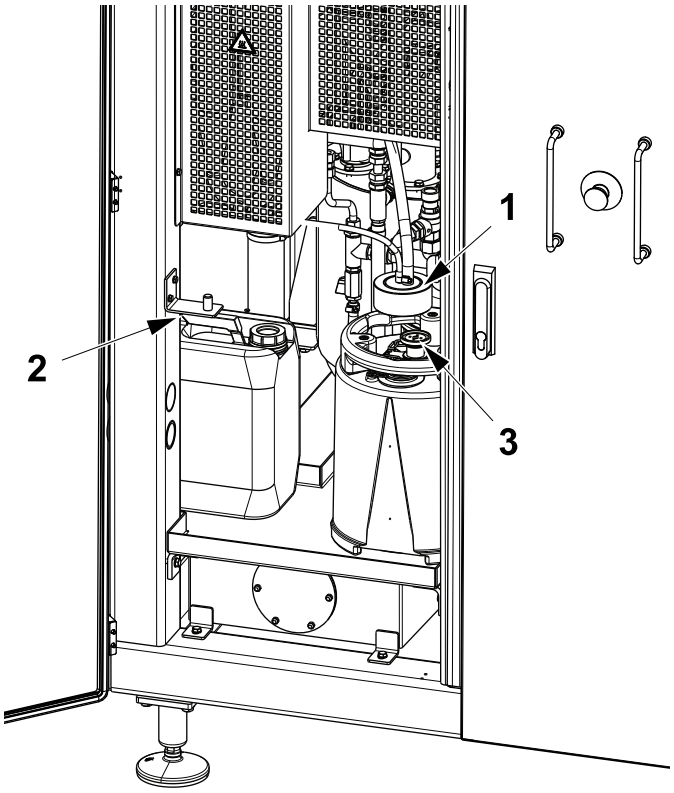

Change Container

1

WARNING

Hydrogen Peroxide.
Always transport and keep the hydrogen peroxide container stored with the lid (2) installed.

Lift the cap (1) to disengage the hydrogen peroxide container and place it over the bracket (2).

Put the lid (3) onto the connection and tighten it.

Remove the container from the filling machine.

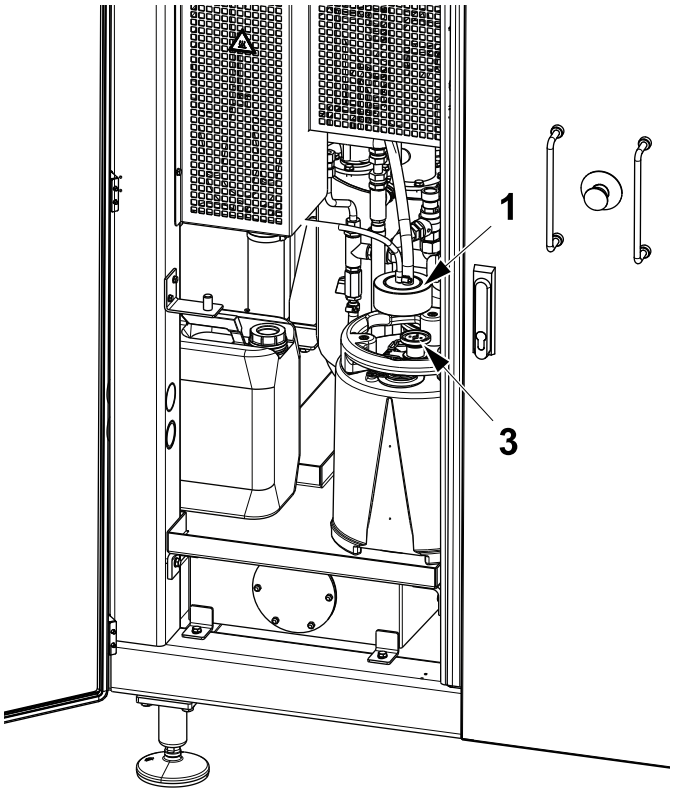

2

CAUTION

Risk of personal injury.
The peroxide container is heavy (approximately 17 kg when full). Avoid twisting the body and bending the back when lifting the peroxide container. Always use a trolley to transport the peroxide container.

Place a **full** container with 35% w/w hydrogen peroxide into the filling machine.

Remove the lid (3) and place it to one side.

Fit back the cap (1) to engage the hydrogen peroxide container.

11 Technical Data

Description

This chapter provides the standard values for setting this machine and information on the recommended chemicals and lubricants to be used with this machine.

Description 11-2

11.1 Setting Values 11-5

11.1.1 Pressure Setting Values 11-5

11.1.2 Temperature Setting Values 11-7

11.1.3 Coolant Flow Values 11-9

11.1.4 Consumption Data 11-9

11.1.5 Consumables 11-9

11.1.6 Tools 11-10

11.2 Cleaning Compounds 11-11

11.2.1 Cleaning Compound Table 11-11

11.3 Lubricants 11-14

11.4 Maximum Waiting/Stop Time Recommendations 11-16

This page intentionally left blank

11.1 Setting Values

This section provides the correct setting values for this machine.

11.1.1 Pressure Setting Values

Pressure	Symbol	Value (bar)
Air spray	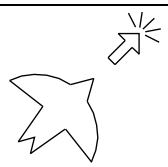	2.5
Cold water	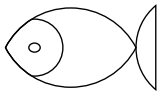	3.0 to 5.0
Flap sealing top left and right	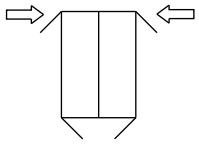	1.0 to 2.0
Flap sealing bottom left and right	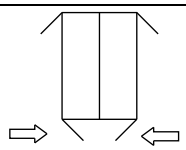	1.0 to 2.0
Air	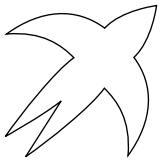	6 to 7
Warm water (red)	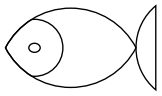	3.0 to 4.5
Main air, ASU		6 ±0.5
Product level regulation, anti-condensation	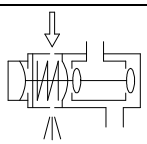	0.2
Temperature control steam barrier	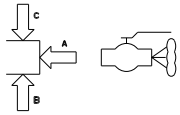	4.0
Calender roller	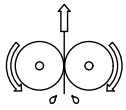	2.0

(Cont'd)

(Cont'd)

Pressure	Symbol	Value (bar)
Pendulum roller	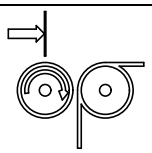	
• TBA 80 S		1.0
• TBA 160 S, TBA 180 S, TBA 200 S		2.0
• TBA 100 B, TBA 125 S		2.0
• TBA 200 M, TBA 250 S		2.0
• TBA 200 B, TBA 250 B, TBA 330 S		3.0
• TBA 200 Sq, TBA 250 Sq		2.0
• TBA 284 B, TBA 300 S		2.0
• TBA 375 S		2.0
• TPA 125 Sq		1.0
• TPA 200 Sq, TPA 250 Sq		3.0
• TPA 330 Sq		2.0
• TBA 200 E, TBA 250 E		2.0
Photocells, design correction, air	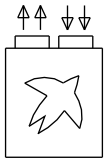	0.6
Foaming	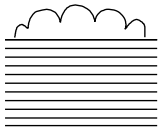	5.0
Peroxide tank filling		0.2
Cooling water system		2.0
Product pressure (dependant on product and local conditions)		1.0 to 3.0 HVA 0.7 to 2.5 HVA bypassed
LS Short Stop	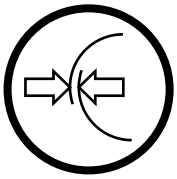	0.020

(Cont'd)

(Cont'd)

Pressure	Symbol	Value (bar)
LS	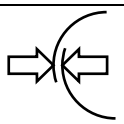	0.028
Web tension, ASU	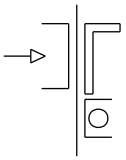	2.0
Air pressure, SA cooling		0.6

11.1.2 Temperature Setting Values

Temperature	Symbol	Process Value (° C)
Air superheater	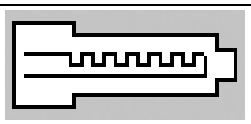	360
Cooling water (compressor) - Production		10 to 16
Cooling water	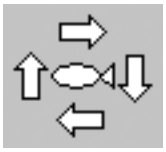	2 to 5
Flap heating, top (left and right)	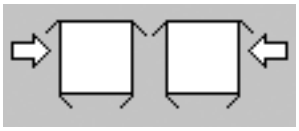	(the parameter is set in the recipe and is depending on the product and the packaging material being produced)
Flap heating, bottom (left and right)	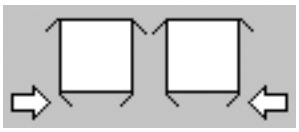	(the parameter is set in the recipe and is depending on the product and the packaging material being produced)
Heat sterilization	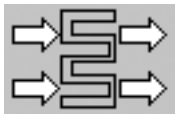	280
SA during Production		(the parameter is set in the recipe and depends on the product and the packaging material being produced)

(Cont'd)

(Cont'd)

Temperature	Symbol	Process Value (° C)
SA during Slow Inching		230
SA Short Stop		(the parameter is set in the recipe and is depending on the product and the packaging material being produced)
Top aseptic chamber	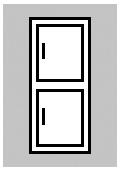	78
Warm water (red)	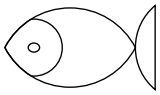	25 to 40
Peroxide tank	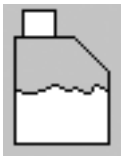	79
Steam (sterilization)	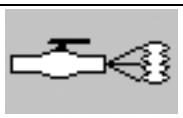	130
LS		(the parameter is set in the recipe and is depending on the product and the packaging material being produced)
LS short stop		(the parameter is set in the recipe and is depending on the product and the packaging material being produced)

11.1.3 Coolant Flow Values

Flow	Symbol	Value (litre/minute)
Cold water flow, TS right	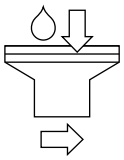	min 0.8
Cold water flow, TS left	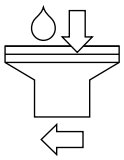	min 0.8
Cold water flow, final folder	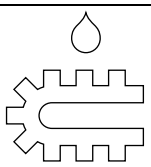	2.0
De-ionizing circuit	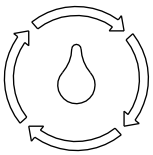	1.5
Cold water flow, hydraulic system	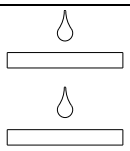	2.0

11.1.4 Consumption Data

Consumption	Unit	Value
Hydrogen peroxide	% w/w l/h	35 0.7 to 1.2
Detergent	l/cycle	1.8

11.1.5 Consumables

Standard Consumable Materials		
Leak detection fluid (red ink)	TP No.	90298-26
LS strip:		
- MPM	TP No.	8856-951-01
- MSE	TP No.	8858-951-01
- MWM	TP No.	8854-951-01

11.1.6 Tools

Tools		
Tool to remove packages from the FFU Wheel	TP No. 2894712-0100	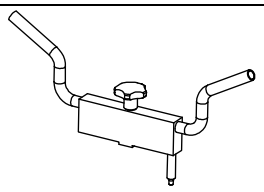
Safety cutter	TP No. 90602-0330	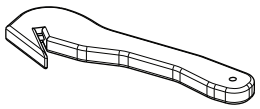

11.2 Cleaning Compounds

WARNING

Risk of explosion.

Cleaning with not recommended cleaning agents, for example agents including alcohol, could cause explosion. Use only Tetra Pak recommended cleaning agents when cleaning or disinfecting parts that can come into contact with hydrogen peroxide.

It is strongly recommended, in order to optimize the cleaning efficiency, to use water characterised by the following physicochemical parameters:

- water quality; chlorine free, drinkable water
- pH; between 7 and 8 pH units
- water hardness; between 5 and 10 °f French degrees of hardness (between 3 and 6 German degrees of hardness)
- chlorides; lower than 50 ppm
- silicates; lower than 10 ppm (in order to reduce the formation of solid deposits difficult to be removed)

11.2.1 Cleaning Compound Table

Comparable qualities from other suppliers may be selected in compliance with the technical requirements listed in the table. All cleaning compounds must comply with local legal requirements.

The supplier recommendations for concentration and temperature should be followed. When dosing the products automatically, the concentration should be checked.

(Cont'd)

(Cont'd)

Cleaning Type	TP Code		Detergent Type	Example 20101223									
				Raw Material				Formulated Products					
				Name	Max Conc w/w	Use Conc w/w	Use Temp °C (*)	Ecolab	Use Conc. w/w	Use Temp. °C (*)	Johnson Diversey	Use Conc vol/vol.	Use Temp. °C (*)
CIP	A	1	Alkali	NaOH	30%	1.50%	80	Mip CA	1.5%	80	VC 11	2.0%	80
	B	1	Acid	HNO_3	50%	1.00%	60	P3-horolith FL	1.0%	60	VA 5	1.0%	60
External Cleaning (automatic)	C	1	Alkali foam (**)					P3-Topactive LA	2.0%	20 - 40	VF 9	3.0%	20 - 40
		2	Alkali solution (***)					P3-mip FPC	2.0%	55	VK 12	1.0%	55
		3	Acid foam (****)					P3-Topax 56	2.0%	25	VF 11	2.0%	25
		4	Disinfection foam (****)					P3-Topax 990	2.0%	25	VS 1	1.0%	25
Manual Cleaning (wiping)	D	1	Alkali					P3-mip FPC	2.0%	25	VK 12	1.0%	25
Manual Disinfection (immersion)	F	3	Acid solution	Peracetic acid solution	15%	200ppm	25	Oxonia Active	0.50%	25	VT 6	0.15%	25
Manual Disinfection (spraying)	G	1	Alcoholic solution	Isopropanol			25	Spitaderm	Pure	25	VT 29	pure	25
		2	Alcoholic solution	Ethanol			25	Alcodes	Pure	25	VT 29	pure	25
		3	Acid solution	Peracetic acid solution	15%	200ppm	25	Oxonia Active	0.50%	25	VT 6	0.15%	25
Hand Disinfection	H	1						P3-Manodes gel	pure	25	H34	pure	25
PullTab Patch Sealing Plate Manual Cleaning	J	1	Solvent	Acetone CAS No 67-64-1 Technical Grade (*****)	Pure	25							

(Cont'd)

(Cont'd)

* 25 °C to the optimal ambient temperature.

** To be used on TBA/21, TBA/22, TP A3/Flex, TP A3/CompactFlex, TP A3/Speed, TB/21, TP C3/Flex.

*** To be used on TBA/8, TBA/9, TBA/19, TB/8, TB/9, TB/19.

**** To be used on TP C3/Flex

***** Acetone is a flammable solvent and the grade has to fulfil requirements for pharmaceutical use or food processing operations according to USO or NF or FCC.

11.3 Lubricants

WARNING

Risk of personal injury!

Certain lubricants can cause injury if they come into contact with the eyes, skin, mucous membranes, or clothing. Always follow the manufacturer's instructions for handling chemical products.

The table below lists the lubricants that can be used for this equipment with their respective designations.

Lubricant specifications may be ordered from:

Tetra Pak Technical Service - Parts Supply Chain, Ruben Rausings gata, SE-221 86 LUND, Sweden

Lubricant Description	Tetra Pak Part No.	Supplier	Product Designation	Lube Type
Gear oil	344413-0000 Reference for purchasing: 344413-0766 (20 l) 344413-0335 (200 l)	Klüber	Klüberoil 4 UH1 220-N	H1 PAO base
	344402-0000 Reference for purchasing: 344402-0766 (20 l) 344402-0335 (200 l)	Klüber	Klübersynth UH1 6-220	H1 PAG base
	344412-0000 Reference for purchasing: 344412-0766 (20 l) 344412-0335 (200 l)	Klüber	Klüberoil 4 UH1 150-N	H1 PAO base
	344401-0000 Reference for purchasing: 344401-0766 (20 l) 344401-0335 (200 l)	Klüber	Klübersynth UH1 6-150	H1 PAG base
Hydraulic oil	344390-0000 Reference for purchasing: 344390-0766 (20 l) 344390-0335 (200 l)	Klüber	Klüberfood 4 NH1-32	H1 PAO base
Grease	344408-0000 Reference for purchasing: 344408-0221 (50 g) 344408-0591 (400 g) 344408-0037 (1 Kg) 344408-0177 (25 Kg)	Klüber	Klübersynth UH1 64-62	H1
Central lubrication oil	344414-0000 Reference for purchasing: 344414-0764 (5 l) 344414-0766 (20 l) 344414-0335 (200 l)	Klüber	Klüberoil 4 UH1 320-N	H1 PAO base
Gearbox oil	344403-0000 Reference for purchasing: 344403-0766 (20 l) 344403-0335 (200 l)	Klüber	Klübersynth UH1 6-320	H1 PAG base
Silicone grease	90296-0009	Dow Corning	Dow Corning 7	H1

(Cont'd)

(Cont'd)

Lubricant Description	Tetra Pak Part No.	Supplier	Product Designation	Lube Type
PTFE grease	90296-0091	PINCO	Fluolub 210	H1
Synthetic grease	344406-0000 Reference for purchasing: 344406-0037 (1 kg) 344406-0177 (25 kg)	Klüber	Klübersynth UH1 14-1600	H1
Synthetic lubricating grease	344469-7277	Shell	Cassida HDS2	H1
Hydraulic fluid	344463-3201	Shell	Cassida Fluid HF32	H1 PAO base
Lubrication oil	344415-0000 Reference for purchasing: 344415-0766 (20 l) 344415-0335 (200 l)	Klüber	Klüberoil 4 UH1 460-N	H1 PAO base
	344404-0000 Reference for purchasing: 344404-0764 (5 l) 344404-0766 (20 l) 344404-0335 (200 l)	Klüber	Klübersynth UH1 6-460	H1 PAG base
Grease	344417-0000 Reference for purchasing: 344417-0213 (60 g) 344417-0594 (500 g)	Klüber	Klüberpaste UH1 84-201	H1
Food grade grease	90600-8108	OKS	Grease OKS 1110 NSF H1	H1
Grease	344397-0000 Reference for purchasing: 344397-0287 (100 g) 344397-0037 (1 Kg)	Klüber	Grease Barrierta L55/2 NSF H1	H1
Synthetic lubricating grease	344460-0000 Reference for purchasing: 344460-0101 (100 g) 344460-0702 (700 g) 344460-1003 (1 Kg)	Rocol	Shappire Endure	H1
Grease	344407-0000 Reference for purchasing: 344407-0285 (45 g) 344407-0591 (400 g) 344407-0037 (1 Kg) 344407-0177 (25 Kg)	Klüber	Klübersynth UH1 14-151	H1

11.4 Maximum Waiting/Stop Time Recommendations

These recommendations are only valid for the production of plain white milk and plain fruit juice. The maximum duration of stops and waiting times for products other than plain white milk and plain fruit juice must be evaluated by each customer case by case.

The duration of stops and waiting times should, in all cases, not exceed the recommendations provided in this table.

Note! The duration of the PRODUCTION phase in a food processing and packaging plant is highly product dependant and any limitations are generally related to phenomena affecting the thermal processing equipment, e.g. fouling of heat exchangers. The duration of the Production phase is decided by each customer according to product type, best practice, risk management, economical considerations, etc. As a general indication, Tetra Pak recommends not to exceed a period of 24 hours.

TB No. TBA_2008_01_01 Date 2008-03-20

Machine type*	**1: Maximum waiting time between End of Production and CIP start**	**2: Maximum waiting time between end of CIP and start of CIP Drying**	**3: Maximum waiting time between end of CIP and start of Disinfection**	**4: Maximum idle time between end of CIP and restart of operations**	**5: Maximum stop time during Production****	**6: Maximum duration of the Production phase**
Non-platform**	2 hours	n/a	TB machines: 5 hours TBA machines: n/a	36 hours	2 hours	Product dependent. Tetra Pak recommendation: 24 hours.
TB/21		n/a	5 hours			
TBA/21		5 hours***	n/a			
TBA/22		5 hours***	n/a			
C3/Flex		n/a	5 hours			
A3/Flex		5 hours	n/a			
A3/CompactFlex		5 hours	n/a			
A3/Speed		5 hours	n/			

* Models not listed here are not covered by these recommendations

** TBA/3, TB-TBA/8, TB-TBA/9, TB-TBA/19 and earlier machine systems

*** Machines with PLC program updated to include CIP Drying

**** Jaw inching every 10 minutes recommended for Chilled/XH machines. Sterile jaw inching every 20 minutes recommended for Aseptic machines.

Tetra Pak®

Label for 40 mm binder ***Note!*** *This page is generated* ***automatically.***

Tetra Pak® A3/CompactFlex
641550-0300 Issue 2014-09
Doc. No. OM-3212179-0110

Tetra Pak® A3/CompactFlex
641550-0300 Issue 2014-09
Doc. No. OM-3212179-0110

Tetra Pak® A3/CompactFlex 1(2)
641550-0300 Issue 2014-09
Doc. No. OM-3212179-0110

Tetra Pak® A3/CompactFlex 2(2)
641550-0300 Issue 2014-09
Doc. No. OM-3212179-0110

Tetra Pak® A3/CompactFlex 1(2)
641550-0300 Issue 2014-09
Doc. No. OM-3212179-0110

Tetra Pak® A3/CompactFlex 2(2)
641550-0300 Issue 2014-09
Doc. No. OM-3212179-0110

Tetra Pak® A3/CompactFlex1(3)
641550-0300 Issue 2014-09
Doc. No. OM-3212179-0110

Tetra Pak® A3/CompactFlex 2(3)
641550-0300 Issue 2014-09
Doc. No. OM-3212179-0110

Tetra Pak® A3/CompactFlex 3(3)
641550-0300 Issue 2014-09
Doc. No. OM-3212179-0110

Tetra Pak® A3/CompactFlex3(3)
641550-0300 Issue 2014-09
Doc. No. OM-3212179-0110

Label for 55 mm binder ***Note!*** *This page is generated* ***automatically.***

Tetra Pak® A3/CompactFlex
641550-0300 Issue 2014-09
Doc. No. OM-3212179-0110

Tetra Pak® A3/CompactFlex
641550-0300 Issue 2014-09
Doc. No. OM-3212179-0110

Tetra Pak® A3/CompactFlex 1(2)
641550-0300 Issue 2014-09
Doc. No. OM-3212179-0110

Tetra Pak® A3/CompactFlex 2(2)
641550-0300 Issue 2014-09
Doc. No. OM-3212179-0110

Tetra Pak® A3/CompactFlex
641550-0300 Issue 2014-09
Doc. No. OM-3212179-0110

Tetra Pak® A3/CompactFlex 1(3)
641550-0300 Issue 2014-09
Doc. No. OM-3212179-0110

Tetra Pak® A3/CompactFlex
641550-0300 Issue 2014-09
Doc. No. OM-3212179-0110

Tetra Pak® A3/CompactFlex 2(3)
641550-0300 Issue 2014-09
Doc. No. OM-3212179-0110

Tetra Pak® A3/CompactFlex
641550-0300 Issue 2014-09
Doc. No. OM-3212179-0110

Tetra Pak® A3/CompactFlex 3(3)
641550-0300 Issue 2014-09
Doc. No. OM-3212179-0110

Tetra Pak® A3/CompactFlex
641550-0300 Issue 2014-09
Doc. No. OM-3212179-0110

Tetra Pak® A3/CompactFlex 3(3)
641550-0300 Issue 2014-09
Doc. No. OM-3212179-0110

Tetra Pak® A3/CompactFlex
641550-0300 Issue 2014-09
Doc. No. OM-3212179-0110

Tetra Pak® A3/CompactFlex
641550-0300 Issue 2014-09
Doc. No. OM-3212179-0110

Tetra Pak® A3/CompactFlex
641550-0300 Issue 2014-09
Doc. No. OM-3212179-0110

Tetra Pak® A3/CompactFlex 1(3)
641550-0300 Issue 2014-09
Doc. No. OM-3212179-0110

Tetra Pak® A3/CompactFlex 1(2)
641550-0300 Issue 2014-09
Doc. No. OM-3212179-0110

Tetra Pak® A3/CompactFlex 2(3)
641550-0300 Issue 2014-09
Doc. No. OM-3212179-0110

Tetra Pak® A3/CompactFlex 2(2)

641550-0300 Issue 2014-09

Doc. No. OM-3212179-0110

Tetra Pak® A3/CompactFlex 3(3)

641550-0300 Issue 2014-09

Doc. No. OM-3212179-0110