OM

Operation Manual

TBA/19 0400 TPA

648160-0400

Options PT, HI and ASU included

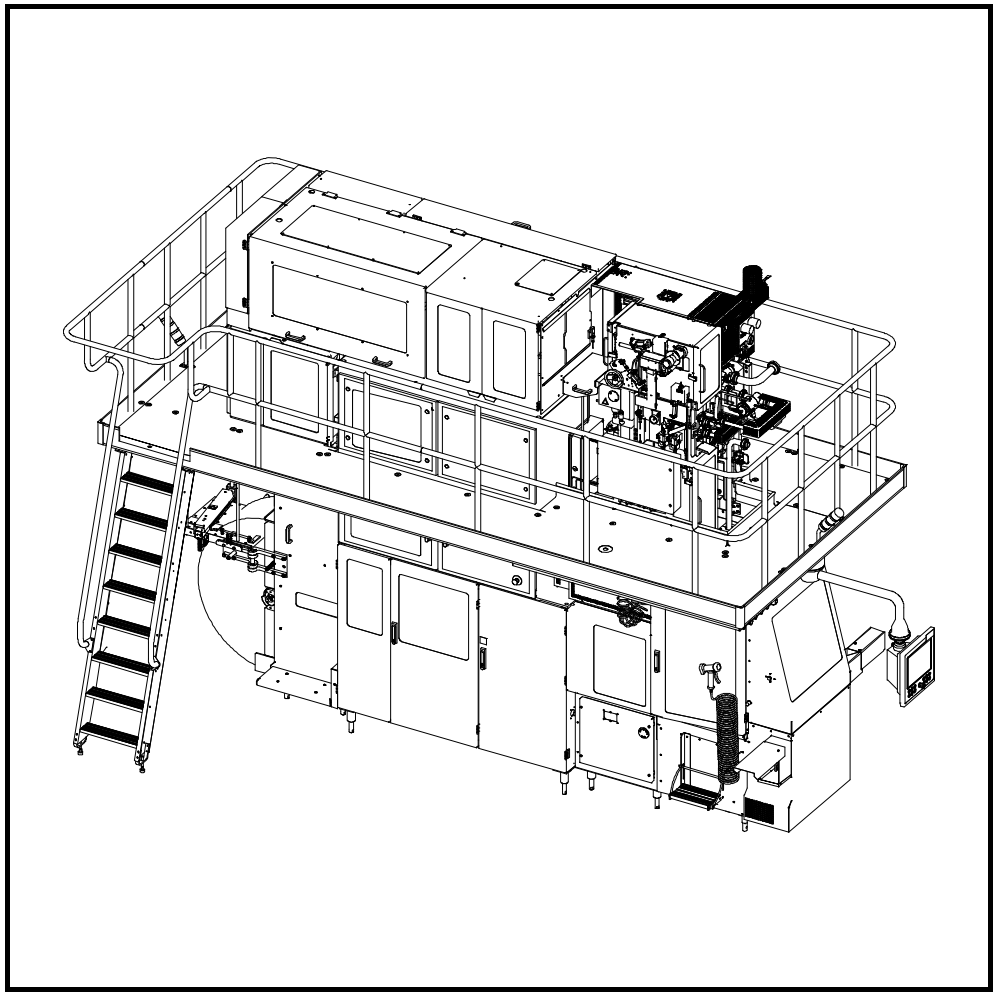

WARNING

Read and follow all safety precaution instructions throughout this manual and on safety signs attached to this equipment.

Failure to follow all safety precaution instructions could result in death or serious injury.

Tetra Pak

Doc. No. OM-1531318-0106

Copyright © 2013 Tetra Pak Group

All rights reserved. No part of this document may be reproduced or copied in any form or by any means without written permission from Tetra Pak Packaging Solutions AB.

Tetra Pak and all Tetra Pak products are trademarks belonging to the Tetra Pak Group.

The content of this manual is in accordance with the design and construction of the machine or equipment at the time of publishing. Tetra Pak reserves the right to introduce design modifications without prior notice.

The English language version of this document contains the original instructions. All other language versions are translations of the original instructions.

This document was produced by:

Tetra Pak Packaging Solutions AB
Ruben Rausings gata
SE-221 86 Lund
Sweden

Additional copies can be ordered from Tetra Pak. When ordering additional copies, always provide the document number.

Doc. No. OM-1531318-0106

Issue 2013-11

This manual is valid for:

Series No. / Machine no. Sign.

OM
Operation Manual

TBA/19 0400 TPA
648160-0400

i Introduction
ii Safety Precautions
1 General Description
2 Alarms and Troubleshooting
3 Preparation
4 Start
5 Checks
6 Supply of Materials
7 Stop
8 Care and Cleaning
9 Technical Data

Machine or equipment configurations that this manual is valid for are described on the next page.

Doc. No. OM-1531318-0106
Issue 2013-11

Tetra Pak

Tetra Pak Packaging Solutions AB

Valid for:

Name	Drawing Specification and Development Step	Additional Information
TBA/19 0400 TPA	648160-0400	This manual may be used for the following machine configurations: - Standard Machine (PMI included, HI excluded) and PT (option)) - Machine with ASU (option), with PT (option)) -Machine with HI (option) and PT (option) -Machine with ASU (option) and HI (option) and PT (option) The manual is valid for all volumes and package shapes

Update Log for Doc. No. OM-1531318-0106

This table shows all changes made to this manual, including installed rebuilding kits, added or removed pages. Page numbering on added pages begins with UP.

Date	Installed Kit	Added Pages (Doc. No.)	Removed Pages	Signature

Date	Installed Kit	Added Pages (Doc. No.)	Removed Pages	Signature

i Introduction

About the Introduction Chapter

This chapter contains basic information about this manual and the related Tetra Pak equipment.

About the Introduction Chapter i-2

Abbreviations and Terminology i-5

Manual Information i-7

Delivered Manuals i-7

EM i-7

IM i-7

MM i-7

OM i-7

SPC i-7

TeM i-8

Page Layout i-9

Page Numbering i-10

Typographical Conventions i-10

Symbols i-10

Machine Introduction i-11

Intended Use of the Equipment i-11

Manufacturer i-11

Support and Feedback i-11

Declaration of Conformity i-11

Identification i-12

CE Classification i-12

3-A Compliance i-12

Machine Plate i-12

Filling Machine i-13

Orientation i-14

Hygiene i-15

Packaging Material i-15

Steam Barrier in the Product Valve i-15

How to Use This OM i-16

Purpose of the OM i-16

Operator Workflow i-16

Support and Feedback i-17

Abbreviations and Terminology

Abbreviation/Terminology	Meaning	Translation
ASU	Automatic Splicing Unit	Automatic Splicing Unit
CE	Communautés Européennes/European Communities	Communautés Européennes/European Communities
CIP	Cleaning In Place	Cleaning In Place
DE	Distribution Equipment	Distribution Equipment
ECM	Engineering Change Management	Engineering Change Management
EEA	European Economic Area	European Economic Area
FCS	Filling Control System	Filling Control System
HI	Headspace by gas Injection	Headspace by gas Injection
IH	Induction Heating	Induction Heating
LED	Light Emitting Diode	Light Emitting Diode
LH	Left Hand	Left Hand
LR	Legal Requirement	Legal Requirement
LS	Longitudinal Seal(ing)	Longitudinal Seal(ing)
MDCS	Motorised Design Control System	Motorised Design Control System
MM	Maintenance Manual	Maintenance Manual
OE	Optional Equipment	Optional Equipment
OM	Operation Manual	Operation Manual
PA	Package Appearance	Package Appearance
PC	Personal Computer	Personal Computer
PE	Polyethylene	Polyethylene
PI	Package Integrity	Package Integrity
PLC	Programmable Logic Controller	Programmable Logic Controller
PLMS	Packaging Line Monitoring System	Packaging Line Monitoring System
PMI	Packaging Material Infeed	Packaging Material Infeed
PT	PullTab	PullTab
RH	Right Hand	Right Hand
SA	Strip Applicator	Strip Applicator
SPC	Spare Parts Catalogue	Spare Parts Catalogue
SS	Short Stop	Short Stop
TBA	Tetra Brik Aseptic	Tetra Brik Aseptic
TeM	Technical Manual	Technical Manual
TMCC	Tetra Multi-purpose Compact Controller	Tetra Multi-purpose Compact Controller
TP	Tetra Pak	

Abbreviation/Terminology	Meaning	Translation
TPIH	Tetra Pak Induction Heating	
TPO	Tetra Pak Oxidised	Tetra Pak Oxidised
TS	Transversal Sealing	Transversal Sealing
UP	Update Pages	Update Pages
USB	Universal Serial Bus	Universal Serial Bus

Manual Information

Tetra Pak recommends reading all delivered manuals carefully. Make sure that the delivered manuals are available to personnel who operate or maintain the equipment.

It is important to keep this manual for the lifetime of the equipment and to pass the manual on to any subsequent holder or user.

Any item that is named specifically in this manual is to be considered a designated item for the equipment. Designated items are verified by Tetra Pak for use with the equipment.

Tetra Pak will not be held responsible for any damage, loss, injury, or death caused by not following the instructions in the manuals that accompany this equipment, or by a failure to use designated items specified in the manuals that accompany this equipment.

Delivered Manuals

Manuals delivered with this equipment:

EM

The Electrical Manual provides technicians with information about the equipment's electrical system.

IM

The Installation Manual provides technicians with information required to safely install the equipment.

MM

The Maintenance Manual provides technicians with information on maintaining the equipment.

OM

The Operation Manual provides the operator with information on handling and operating the equipment before, during, and after production.

SPC

The Spare Parts Catalogue provides the information necessary to order spare parts from Tetra Pak.

TeM

The Technical Manual provides technicians with information which can be:

- information required to safely install the equipment
- information required to maintaining the equipment
- information about the machine's/equipment's electrical system
- information necessary to order spare parts from Tetra Pak
- other technical information

Page Layout

Every main page in a manual contains a header and a footer. The page header contains the chapter name (1) and the section name (2). The page footer contains the page number (3), and the document number (4). See also the Page Numbering section.

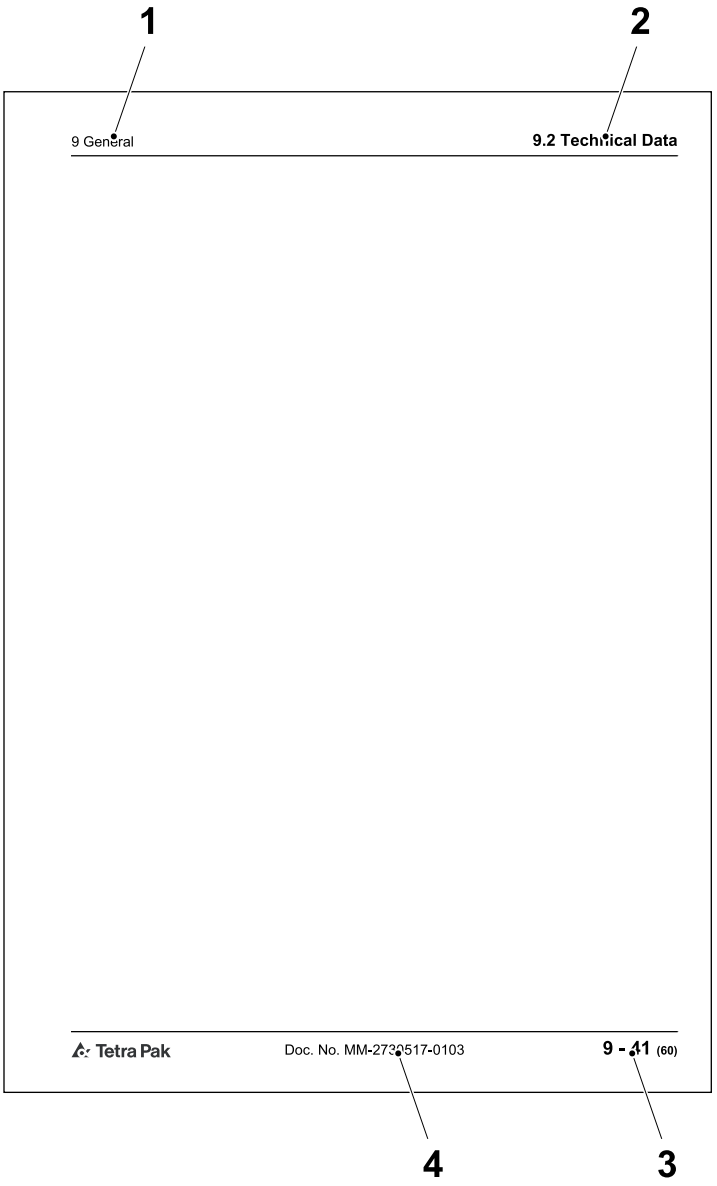

1 Chapter name
2 Section name
3 Page number
4 Document number

Page Numbering

A page number has three parts:

- chapter number (1)
- consecutive page number (2) within the chapter
- total number of pages (3) in the chapter

Note! The letters UP may replace the chapter number (1) if the manual includes update pages. The consecutive page number (2) and the total number of pages (3) of update pages do not follow the existing sequential page numbering of the chapter.

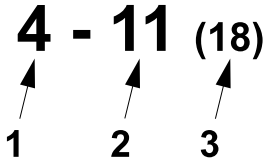

1 Chapter number
2 Consecutive page number
3 Total number of pages

Typographical Conventions

Controls on the operator panel, emergency stop devices, and program steps are printed in CAPITAL LETTERS.

Menu names, button names and other text displayed in software are printed in COURIER.

Cross-references are underlined.

Symbols

Symbols used in illustrations.

	A pointer arrow indicates the position of an object.
	A zoom arrow indicates that an object view is enlarged. The arrow points towards the enlarged view of the object.
	A rotation movement arrow indicates rotational movement of an object. The arrow points in the direction of rotation.
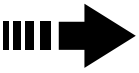	A straight movement arrow indicates movement of an object. The arrow points in the direction of movement.

Machine Introduction

Intended Use of the Equipment

The intended use of this Tetra Pak equipment is to pack liquid food products.

It is strictly prohibited to use this Tetra Pak equipment to fill products with an alcohol content higher than 19%.

Tetra Pak will not be held responsible for injury or damage if the equipment is used for any other purpose than the intended use described above.

Manufacturer

This Tetra Pak equipment has been manufactured by

Tetra Pak Packaging Solutions AB
Ruben Rausings gata
SE-221 86 Lund
Sweden

Support and Feedback

For assistance when operating this equipment, or other inquiries, comments, or suggestions, pose the questions or give feedback by contacting the nearest Tetra Pak representative. If access to the Tetra Pak intranet is available, contact Liaison via Query by typing QuTI-P in the address field of your browser. If access to QuTI-P is not available, request access by contacting the Global Service Desk.

Declaration of Conformity

A copy of the Declaration of Conformity can be found in the Installation Manual. The signed Declaration of Conformity is delivered separately with the equipment.

Identification

CE Classification

This equipment complies with the basic health and safety regulations of the European Economic Area (EEA).

3-A Compliance

This equipment complies with the 3-A Sanitary Standards for Formers, Fillers, and Sealers of Containers for Fluid Milk and Fluid Milk Products, Number 17-10.

Machine Plate

The illustration below shows an example of the machine plate and its location on the equipment. The machine plate carries data needed when contacting Tetra Pak concerning this specific equipment.

Make sure that the equipment data in the front pages of this manual corresponds to the machine plate data and the machine specification.

Filling Machine

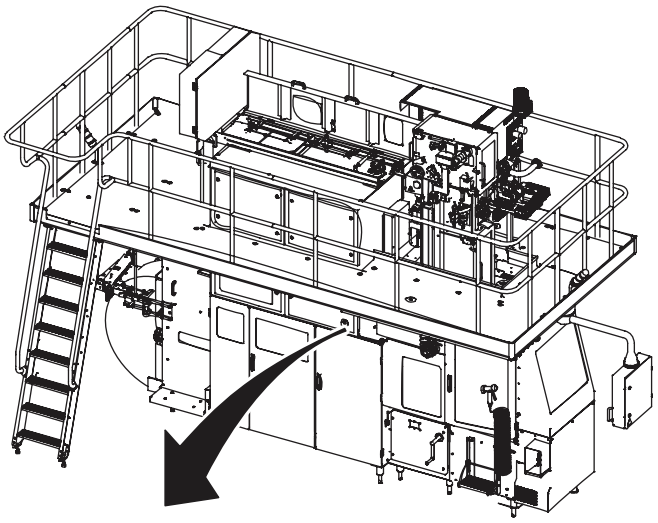

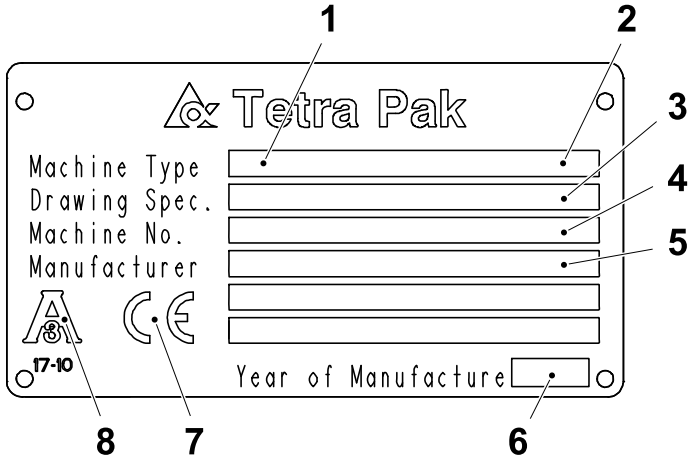

Machine plate on filling machine

1 Machine type
2 Volume
3 Drawing specifications
4 Machine serial number
5 Manufacturer
6 Year of manufacture
7 CE mark
8 3-A mark (for certain markets) The 3-A classification is valid for machine without OK Alcohol 20-45% Adaptation

Orientation

The illustration below shows the orientation of the equipment. This orientation information will be used throughout this manual. The arrows indicate the flow of material.

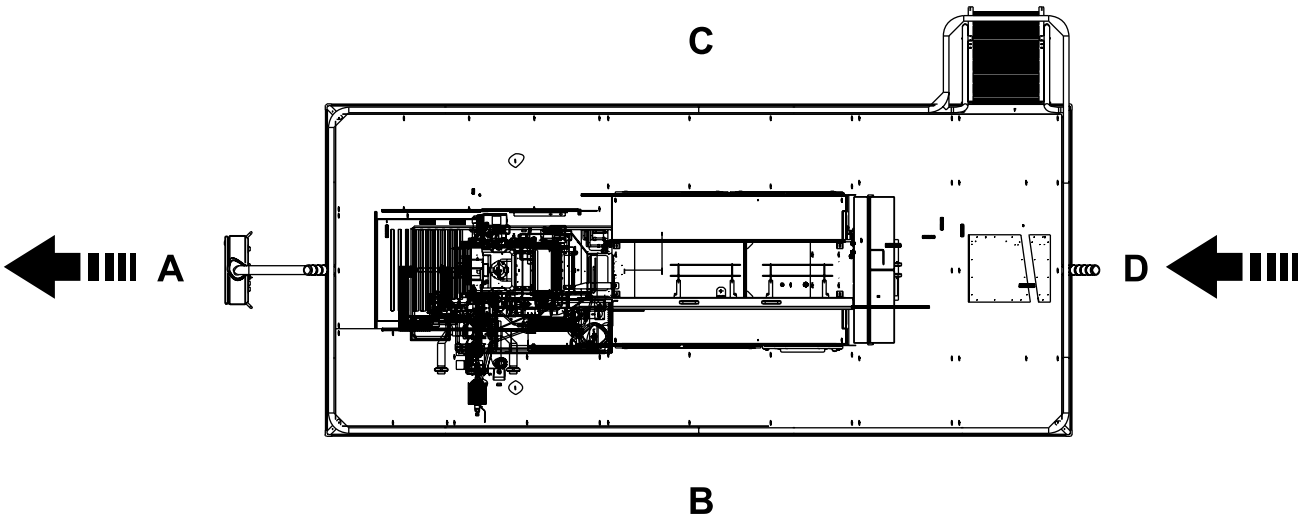

TBA/19 0400 standard is shown

A Front
B Right-hand side
C Left-hand side
D Back

Hygiene

Packaging Material

Avoid microbiological contamination of the packaging material:

- Always protect your packaging material against contamination.
- Always keep the doors to the filling room (area) closed. To prevent contamination via air streams, never open a window when the machine is in production.
- Never clean the floors or the machine in the filling room (area) when the machine is in production.
- Compressed air used for cleaning purposes is to be used only for cleaning filters and should only be used outside of the filling room (area) or in the final folder compartment of the filling machine.
- Prepare the splicing of the packaging material as late as possible.
- Disinfect your hands before touching anything that may come into contact with the product. Use code H disinfectant. See the Technical Data chapter of the Maintenance Manual.
- Keep your hands clean.
- Always wear some type of hair protection (cap or hairnet) and clean clothes (preferably white).
- Do not wear a watch, ring, necklace, earrings, or any other exposed jewellery.

Steam Barrier in the Product Valve

The filling machine's product valve employs a steam barrier to separate the product supply line from the filling machine. The steam barrier allows the machine and the product supply line to be independently sterilised to commercial sterility conditions.

- Never disengage the steam barrier, and never interrupt the steam supply when the filling machine or the product supply line is being brought to the pre-sterilization phase, or when the machine is already in the production phase.
- If any maintenance activity requires disengagement of the steam barrier or the interruption of the steam supply to the machine, make sure that the product supply line is idle and empty of product.

How to Use This OM

Purpose of the OM

The Operation Manual provides operators with information on handling and operating the equipment before, during, and after production.

Operator Workflow

Beginning with Chapter 3, the content is structured to follow the operator workflow, as described below.

Preparation Cycle

a) Preparation

Production Cycle

b) Start

c) Checks

d) Supply of Materials

e) Conversion

f) Change of Product

g) Stop

Care Cycle

h) Care and Cleaning

Support and Feedback

For assistance when operating this equipment, or other inquiries, comments, or suggestions, pose the questions or give feedback by contacting the nearest Tetra Pak representative. If access to the Tetra Pak intranet is available, contact Liaison via Query by typing QuTI-P in the address field of your browser. If access to QuTI-P is not available, request access by contacting the Global Service Desk.

This page intentionally left blank

ii Safety Precautions

Description

Safety Precaution Instructions

WARNING

Read and understand this manual before using the machine.
Failure to follow safety precautions and instructions can result in death or serious injury.

Definition of Lockout Procedure

A lockout procedure is a procedure to put each necessary energy isolating device in its safe position to prevent the energisation of the equipment, such as when a maintenance procedure should be carried out.

A lockout is the use of a device, for example, a padlock, to make sure that an energy isolating device cannot be operated.

An energy isolating device is a mechanical device that physically prevents transmission or release of energy, such as an electrical supply disconnecting device.

Description ii-2

Safety Messages Description ii-5

Personnel Requirements ii-6

Skilled Person ii-6

Instructed Person ii-6

Safety Signs ii-7

Locations of Safety Signs, Filling Machine ii-10

Locations of Safety Signs, ASU (OE) ii-14

Locations of Safety Signs, HI (OE) ii-15

Location of Safety Signs, PullTab (option) ii-16

Protective Devices ii-17

Emergency Stop ii-17

Emergency Stop Buttons ii-18

Emergency Stop Buttons, ASU (OE) ii-19

Emergency Stop Buttons, PT19 (option) ii-20

Safeguards ii-20

Safeguards, ASU (OE) ii-23

Safeguards, PT19 (option) ii-23

Indicating Tower ii-25

Audible Alarm ii-26

Safe Manual Handling ii-27

Personal Protection ii-28

Noise ii-28

Entanglement ii-28

Hazardous Substances ii-29

Disposal of Chemical Substances ii-29

Hydrogen Peroxide (H_2O_2) ii-29

Emergency Procedures ii-29

Eyes ii-30
Skin ii-30
Inhalation ii-30
Ingestion ii-30
Personal Protective Equipment ii-30
Handling of Hydrogen Peroxide ii-31
Storage of Hydrogen Peroxide ii-32
Disposal of Hydrogen Peroxide ii-33

Nitrogen (N_2) ii-34
Emergency Procedures ii-34
Handling and Storage of Nitrogen Gas ii-34
Disposal of Nitrogen Gas ii-34

Cooling Medium R134a ii-35
Emergency Procedures ii-35
Disposal of Cooling Medium R134a ii-35

Ink ii-36
Ink Container ii-36

Supply Systems ii-37
Electrical Supply ii-37
Residual Voltage ii-38
Electrical Cabinet ii-39
Socket Outlet ii-41
Air Supply ii-42
Steam Supply ii-44
Water Supply ii-44

Equipment for Lifting and Moving Loads ii-46

Safety Messages Description

A safety message is always accompanied by a safety alert symbol and a signal word.

The safety alert symbol is used to alert about potential personal injury hazards. To avoid hazards, obey all safety messages that follow this symbol.

The following safety alert symbols and signal words are used in this manual to inform the user of hazards.

DANGER	Danger indicates an imminently hazardous situation which, if not avoided, **will** result in **death or serious injury**.
WARNING	Warning indicates a potentially hazardous situation which, if not avoided, **could** result in **death or serious injury**.
CAUTION	Caution indicates a potentially hazardous situation which, if not avoided, **may** result in **minor or moderate injury.** It may also be used to alert against unsafe practices.
CAUTION	Caution without the safety alert symbol indicates a potentially hazardous situation which, if not avoided, **may** result in **property damage**.

Personnel Requirements

Note! Personnel includes all persons working on or near this equipment.

Only skilled or instructed persons are allowed to work with this equipment.

Skilled Person

A skilled person must have relevant education and experience to enable him or her to identify hazards, analyse risks, and avoid hazards which electricity, machinery, chemicals, other energies, and supply systems on this equipment can create.

Skilled persons must meet local regulations, such as certifications and qualifications for working with these energies and systems.

Instructed Person

An instructed person must be adequately advised or supervised by a skilled person. The skilled person enables the instructed person to identify hazards, analyse risks, and avoid hazards which electricity, machinery, chemicals, other energies, and supply systems on this equipment can create.

Safety Signs

WARNING

Damaged or missing safety signs.
Safety signs are used to indicate safety hazards. If the signs are missing or damaged, they can not fulfil this function. Replace all missing or damaged safety signs immediately.

Safety signs are attached to the equipment. The table below lists all the signs that are used, and illustrations show their locations on the equipment. Each position number refers to two standards of a safety sign in the table, but only one is used on the equipment.

- Make sure that each safety sign is legible and in its correct position after installation and maintenance.
- Replace all missing or damaged safety signs immediately.

Pos	ISO Standard	ANSI Standard
1	 **Moving parts can crush and cut.** Do not operate with guard removed. Follow lockout procedure before maintenance.	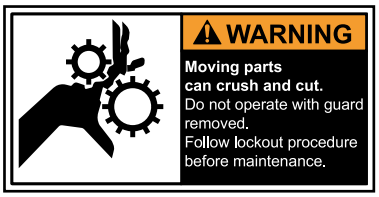
2	 **Hazardous voltage.** Will shock, burn, or cause death. Follow lockout procedure before maintenance.	
3	 **Chemical burn hazard.** Wear personal protective equipment.	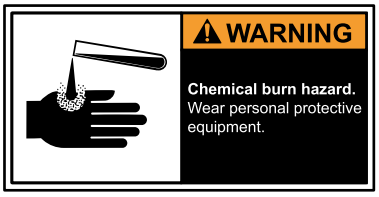

(Cont'd)

(Cont'd)

Pos	ISO Standard	ANSI Standard
4		
	Hot surface. Do not touch. Follow lockout procedure before maintenance.	
5		
	Moving part can crush and cut. Do not operate with guard removed. Follow lockout procedure before maintenance.	
6		
	Hazardous voltage. Can shock, burn, or cause death. Read Maintenance Manual (MM) before using this socket outlet.	
7		
	Read Operation Manual (OM) before using this equipment. Failure to do so could result in death or serious injury.	
8		
	Hazardous residual voltage on capacitors. Will shock, burn or cause death. Disconnect power and wait 5 minutes before opening. Follow instructions for safe work practices.	

(Cont'd)

(Cont'd)

Pos	ISO Standard	ANSI Standard
9	 **General warning.**	
10	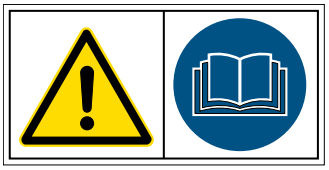 **To prevent serious injury:** Do not operate this machine unless all doors are closed and guards are in place and operating. Read manual before first operating machine. If manual is missing, contact Tetra Pak.	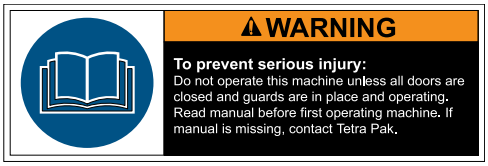
11	 **To prevent serious injury:** Do not operate this machine unless all doors are closed and guards are in place and operating. Read manual before first operating machine. If manual is missing, contact Tetra Pak.	

Locations of Safety Signs, Filling Machine

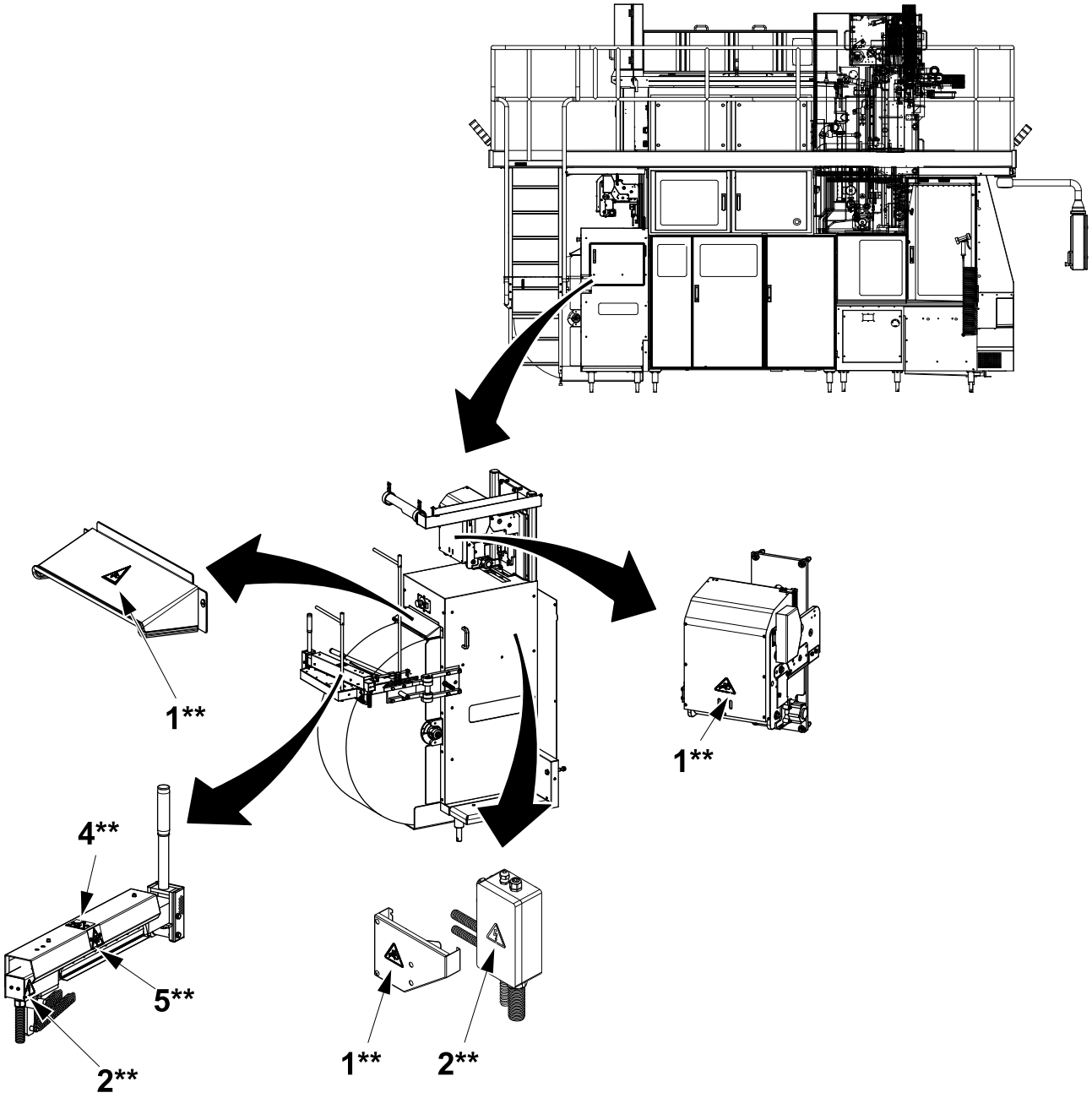

LH Side

** Not included in machine equipped with ASU (OE)

(Cont'd)

(Cont'd)

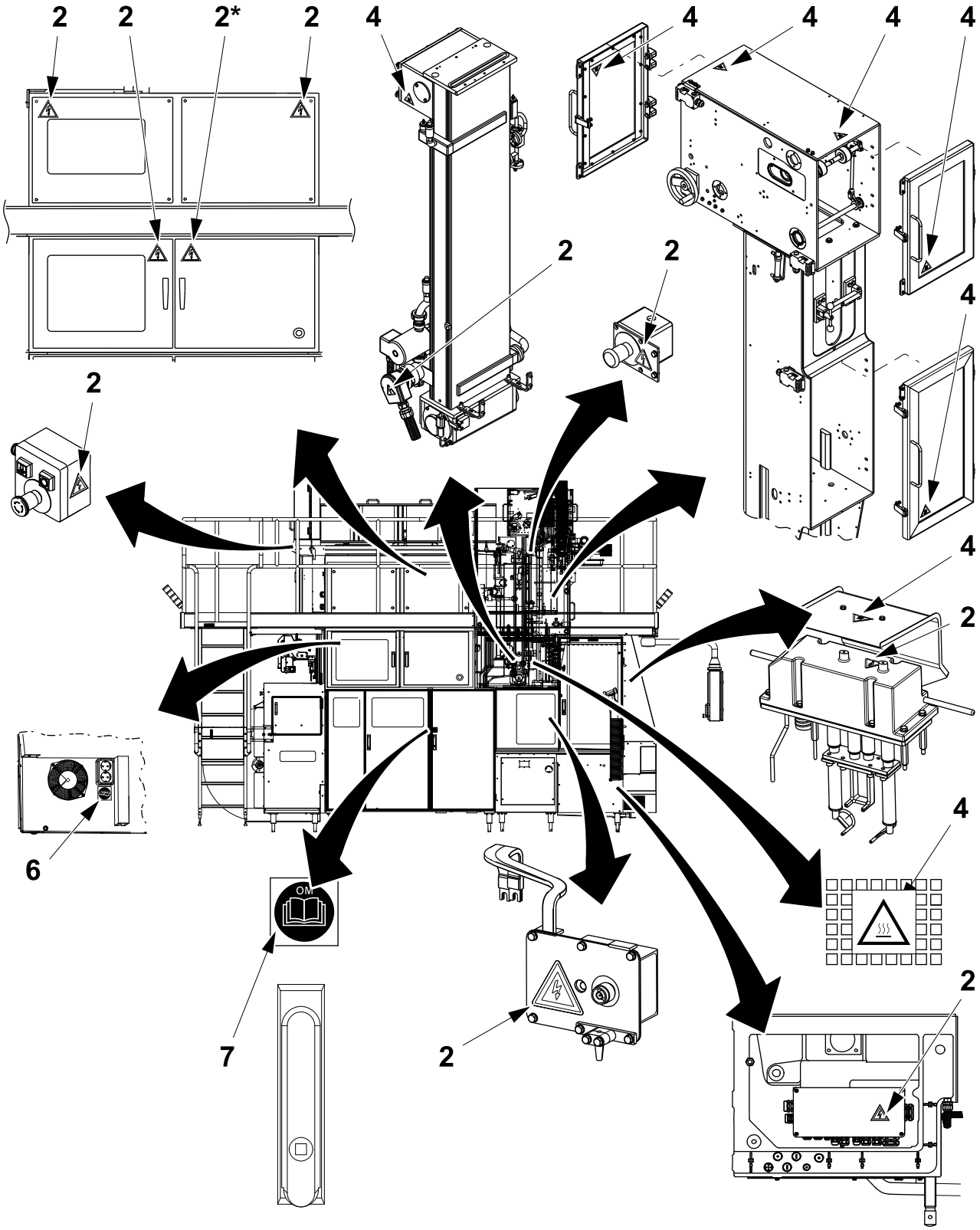

LH Side

* Symbol located on the inside door

(Cont'd)

(Cont'd)

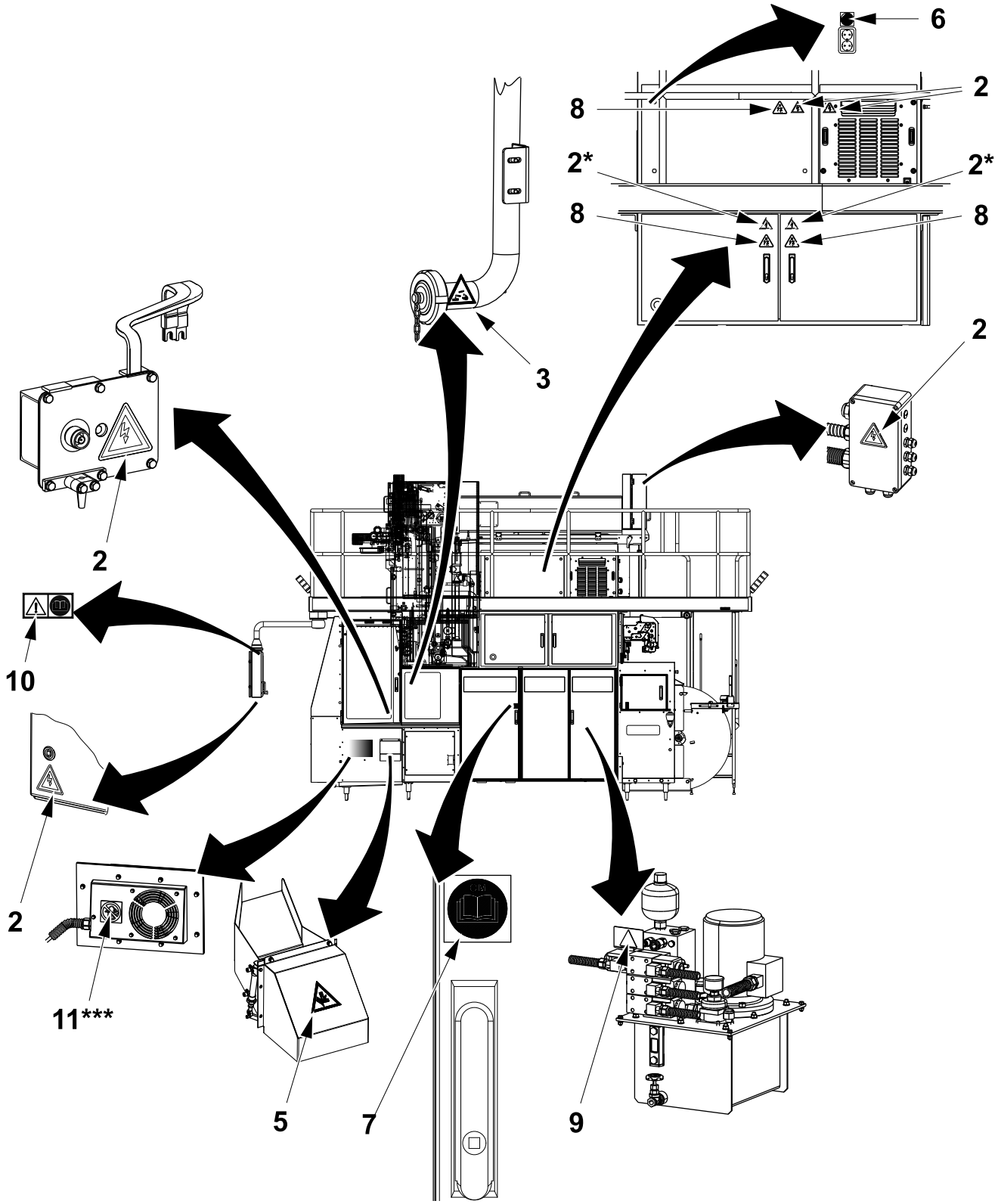

RH Side

* Symbol located on the inside door

*** Only for machines equipped with OK Alcohol 20-45% Adaptation

(Cont'd)

(Cont'd)

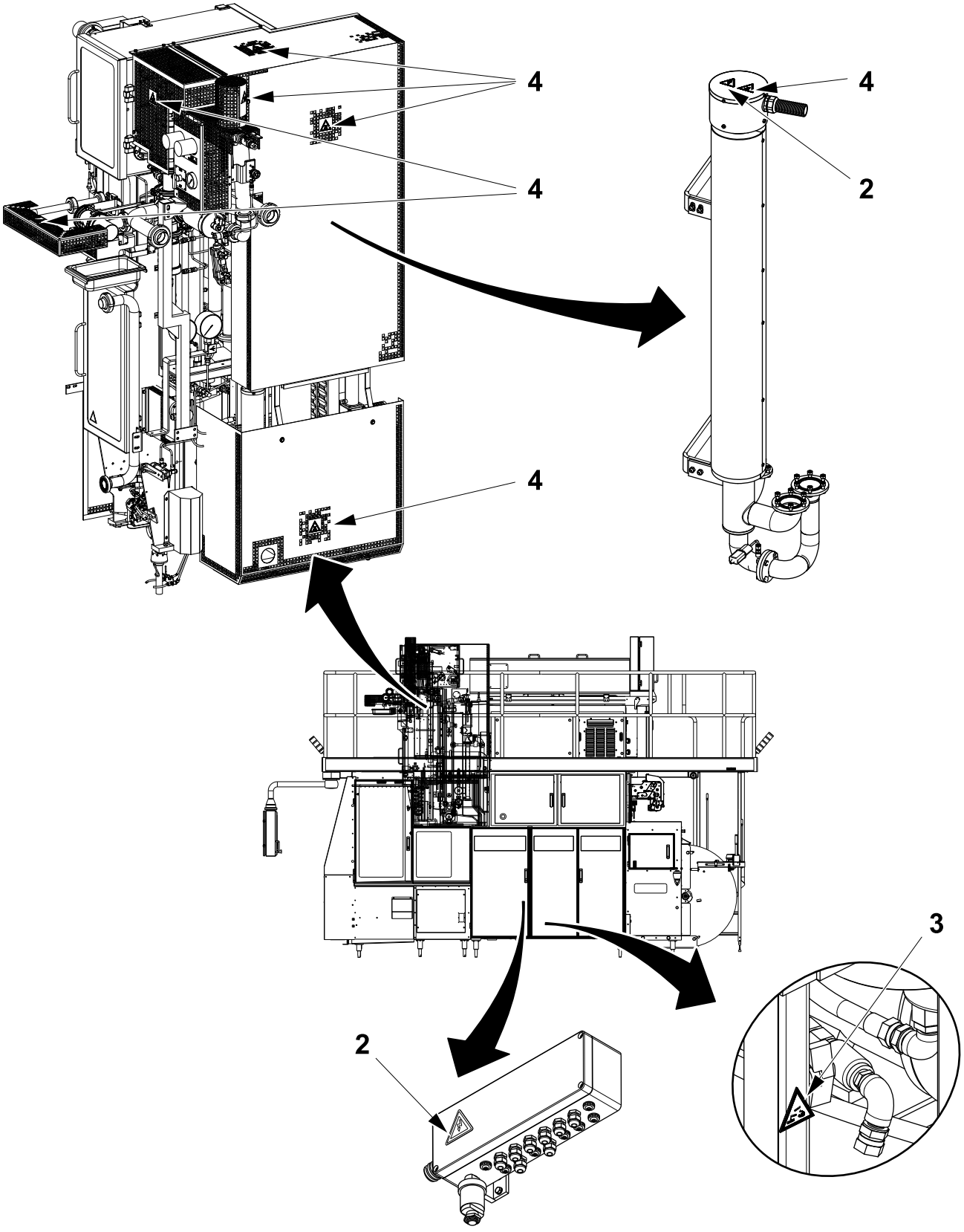

RH Side

Locations of Safety Signs, ASU (OE)

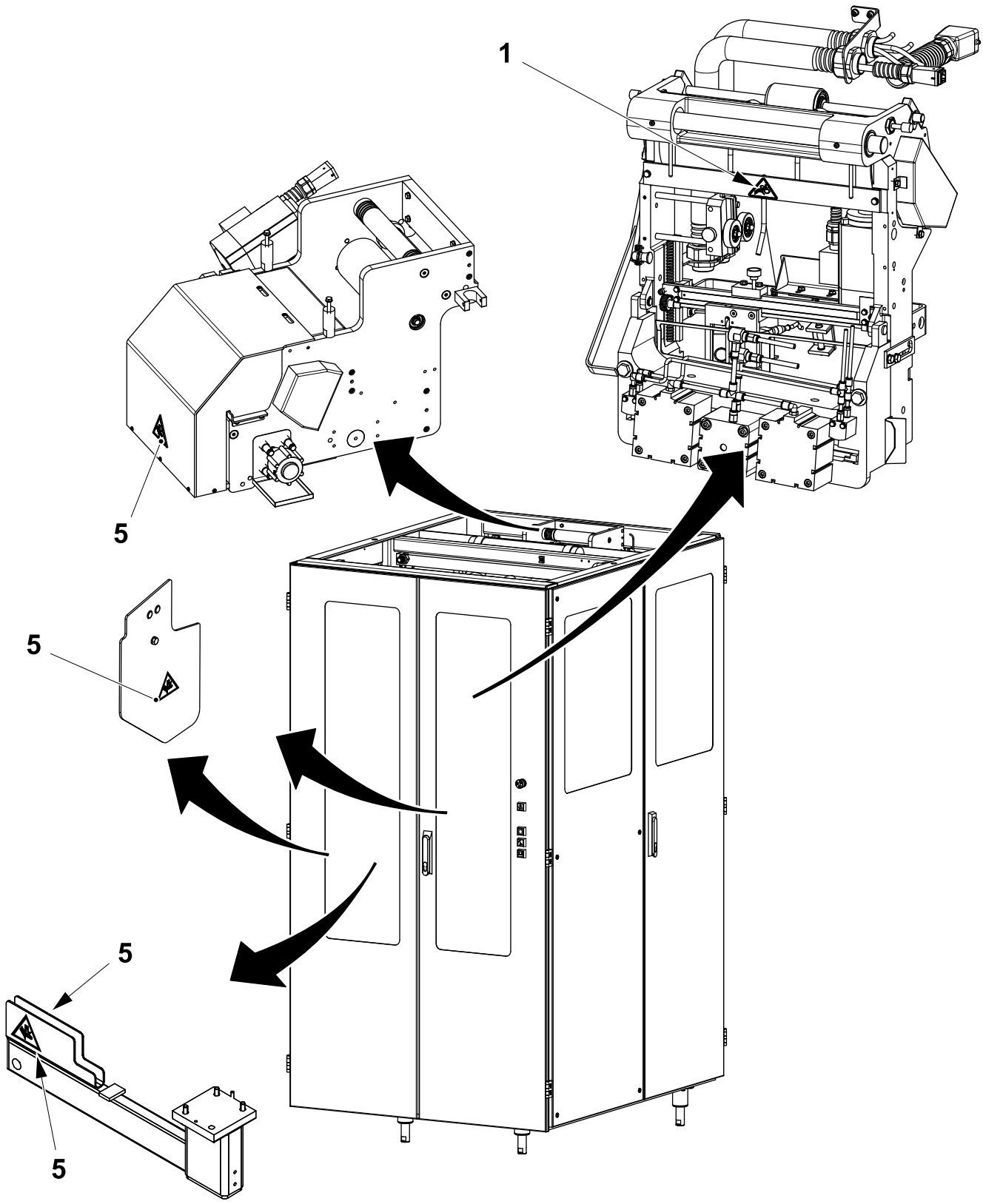

Locations of Safety Signs, HI (OE)

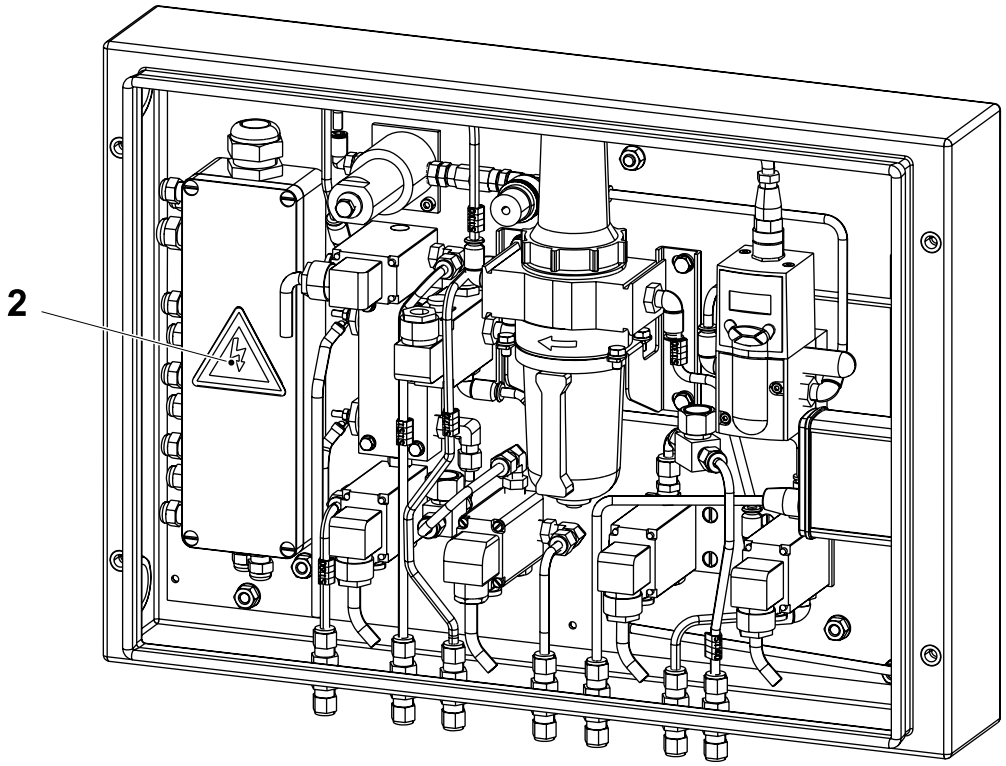

Location of Safety Signs, PullTab (option)

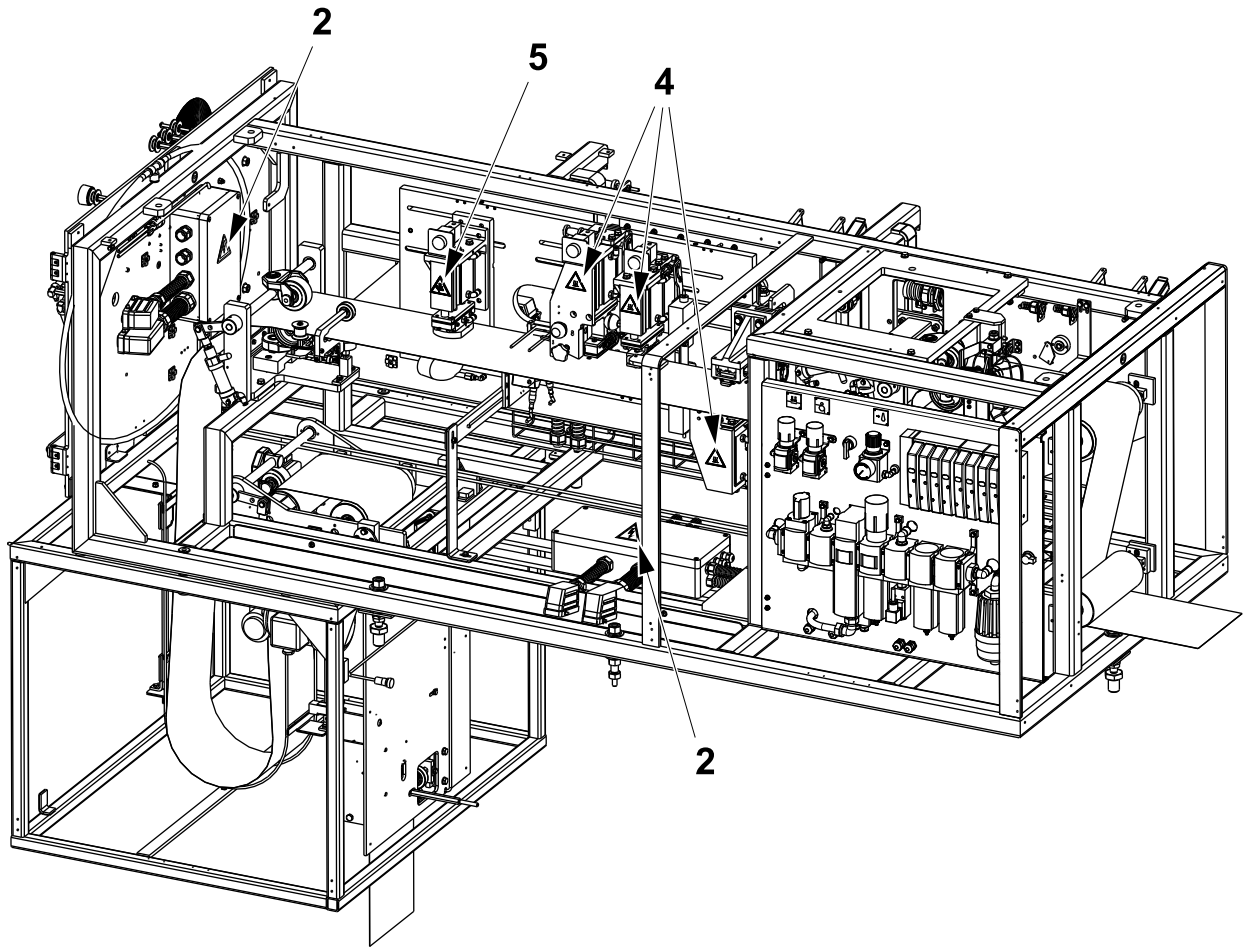

Protective Devices

There are different kinds of protective device designed to ensure safe use of the equipment. See the sections below.

WARNING
Hazardous zones.
Hazardous zones are safeguarded and provided with protective devices. Do not inch or run this equipment if any protective device is inoperative.

Change inoperative components of the safety system immediately.

For the locations of safeguards and/or other protective devices not mentioned in this section, see the Maintenance Manual.

Emergency Stop

DANGER
Hazardous voltage.
Will shock, burn, or cause death.
Hazardous voltage remains ON after activating an EMERGENCY STOP.

Emergency stop devices are used to stop this equipment immediately in a hazardous situation. Learn the positions of all emergency stop devices and how to use them.

Instructions for a normal production stop are included in the Stop chapter of the Operation Manual.

Emergency Stop Buttons

Push one of the EMERGENCY STOP buttons to stop this equipment immediately.

The location of each EMERGENCY STOP button is shown by an arrow.

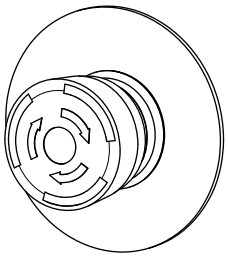

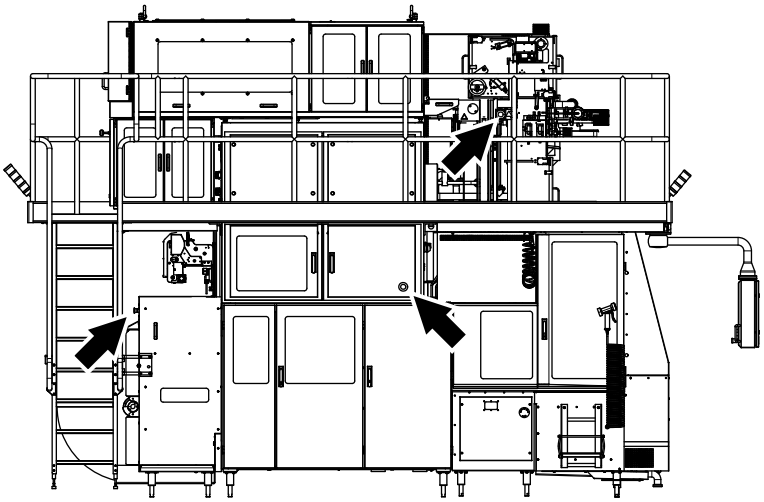

LH side

Machine with PMI (Standard) is shown

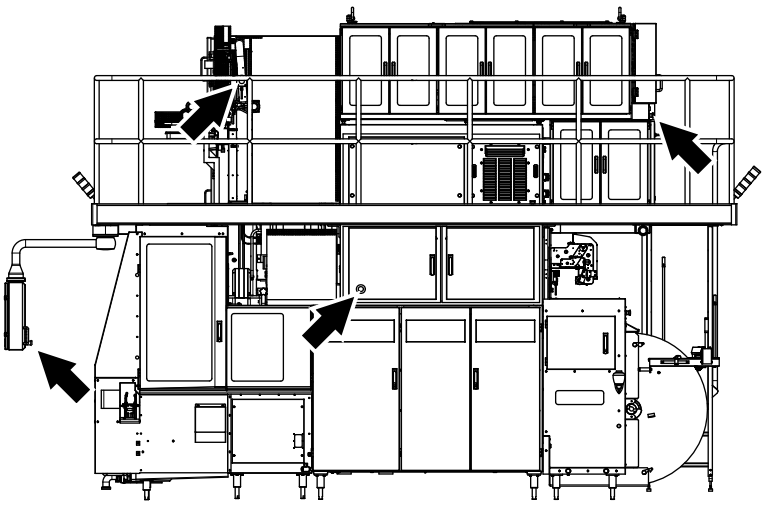

RH Side

Emergency Stop Buttons, ASU (OE)

Push one of the EMERGENCY STOP buttons to stop this equipment immediately.

The location of each EMERGENCY STOP button is shown by an arrow.

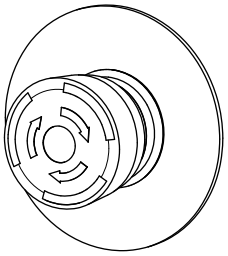

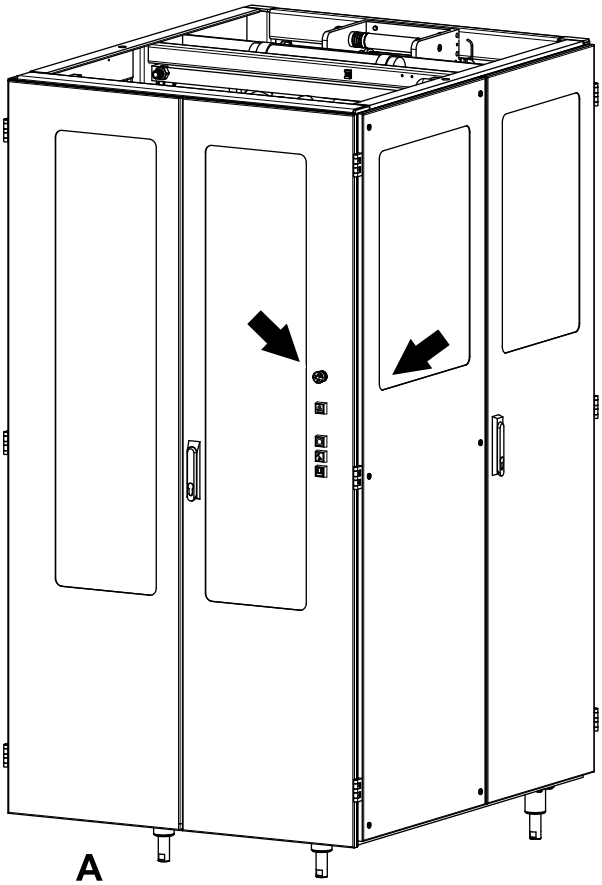

A Back

Emergency Stop Buttons, PT19 (option)

Push one of the EMERGENCY STOP buttons to stop this equipment immediately.

The location of each EMERGENCY STOP button is shown by an arrow.

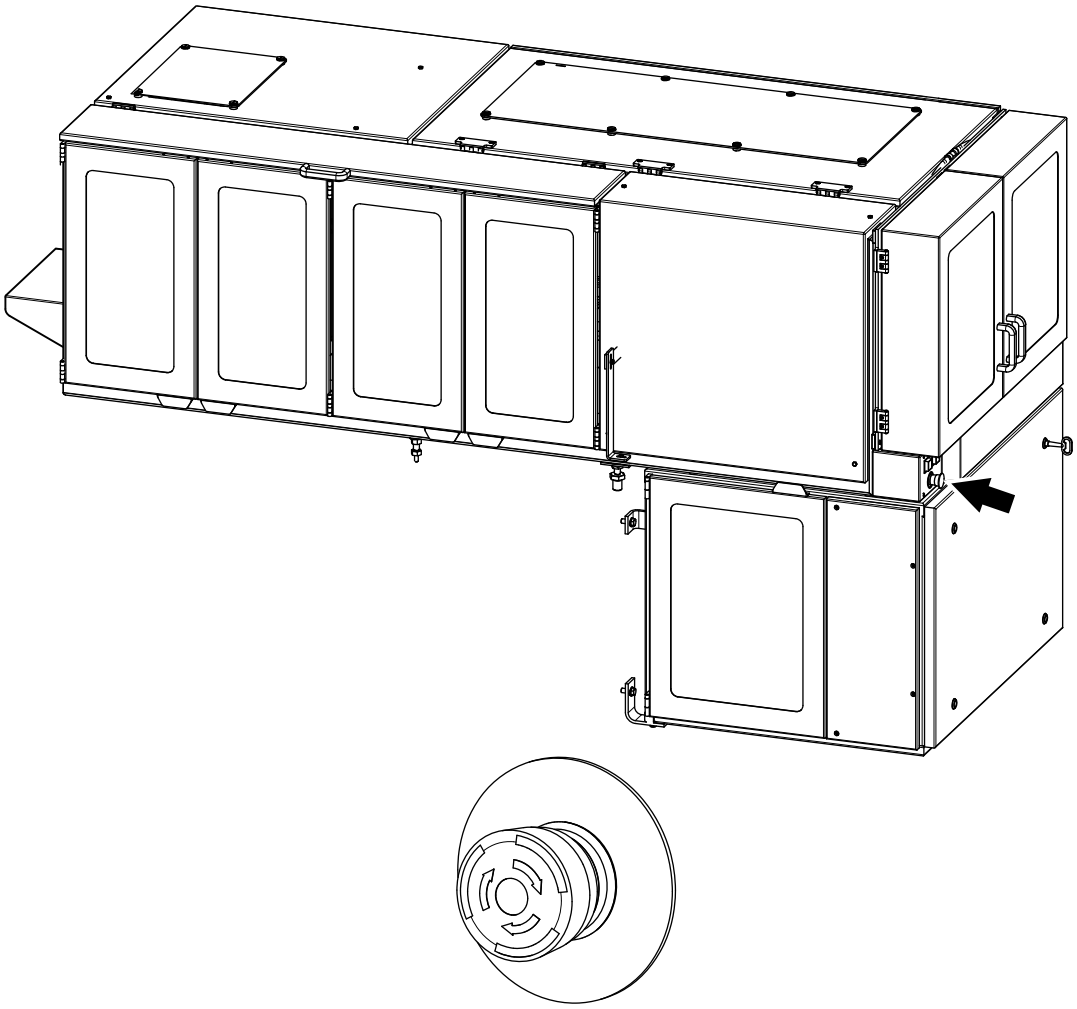

Safeguards

WARNING

Moving machinery parts.
Never defeat or bypass the interlocking devices.

Movable guards, for example, doors and covers leading to hazardous zones, are fitted with interlocking devices where required. These devices are usually electric safety switches that are parts of the safety system and must never be defeated, bypassed, or otherwise made inoperative.

Note! For work on the electrical equipment, the electrical power must also be disconnected.

(Cont'd)

(Cont'd)

CAUTION
Corners and edges.
Close the doors, guards, or parts of the equipment unless they must be open during work.

CAUTION
Burn hazard.
Parts of the equipment protected by guards may be hot after operation. Allow components to cool down or use personal protective equipment.

After installation and maintenance, and before this equipment is inched or run, check that all safeguards are in place and that they operate correctly.

CAUTION
Equipment damage.
The equipment can be damaged if it is not stopped in the correct way. Never stop this equipment by opening a movable guard, for example, a door or cover, equipped with an interlocking device.

The interlocking devices have different effects on the equipment:

- Stops equipment and steps to ZERO
- Stops equipment
- Stops ASU splice function
- Stops SA splice function

For more detailed information about the safeguards, see the filling machine MM, section 14.11 Safety Systems

(Cont'd)

(Cont'd)

The location of each interlocking device is shown below.

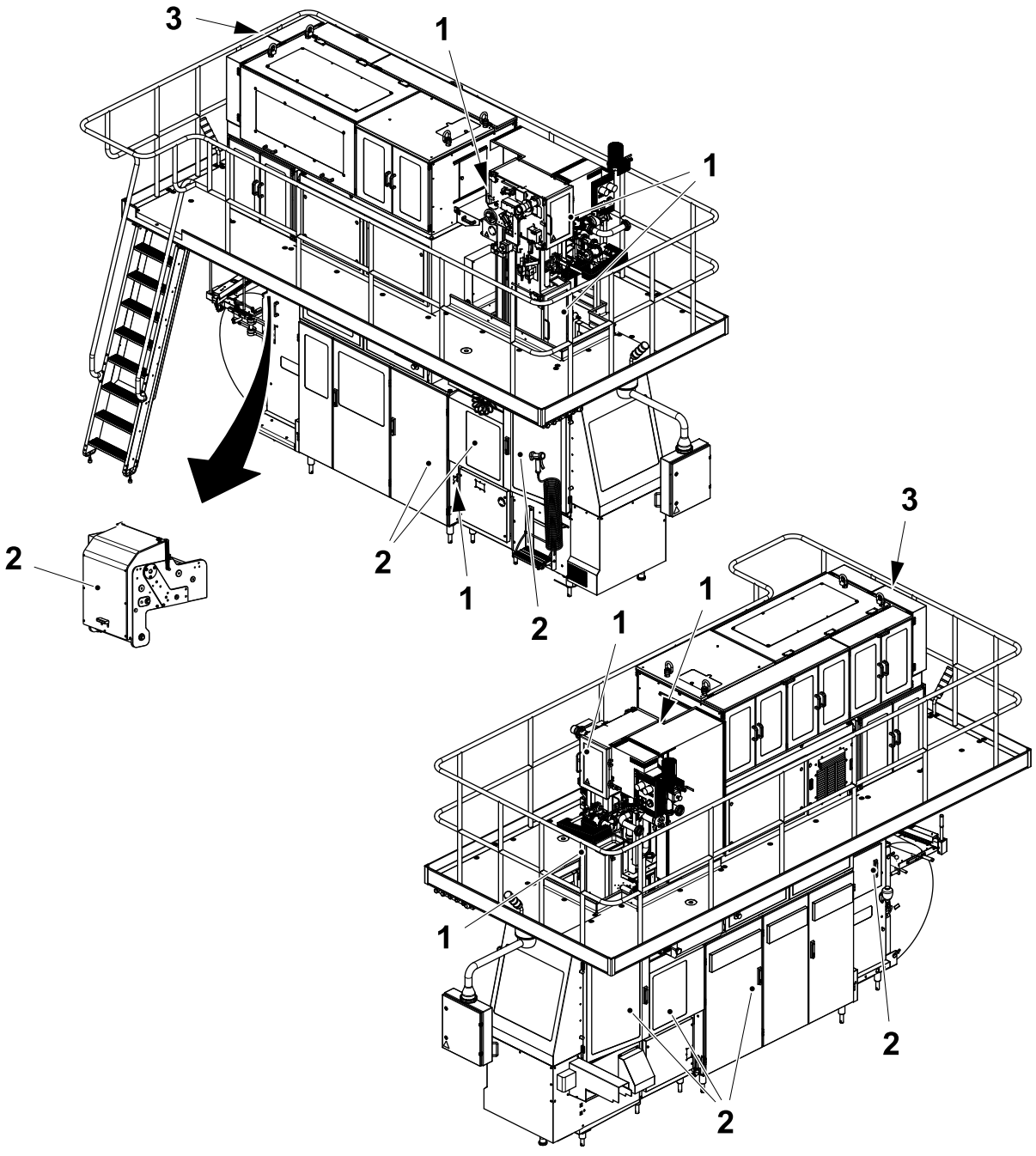

Machine with PMI (Standard) is shown

1 Stops equipment and steps to ZERO
2 Stops equipment
3 Stops SA splice function

Safeguards, ASU (OE)

The location of each interlocking device is shown below.

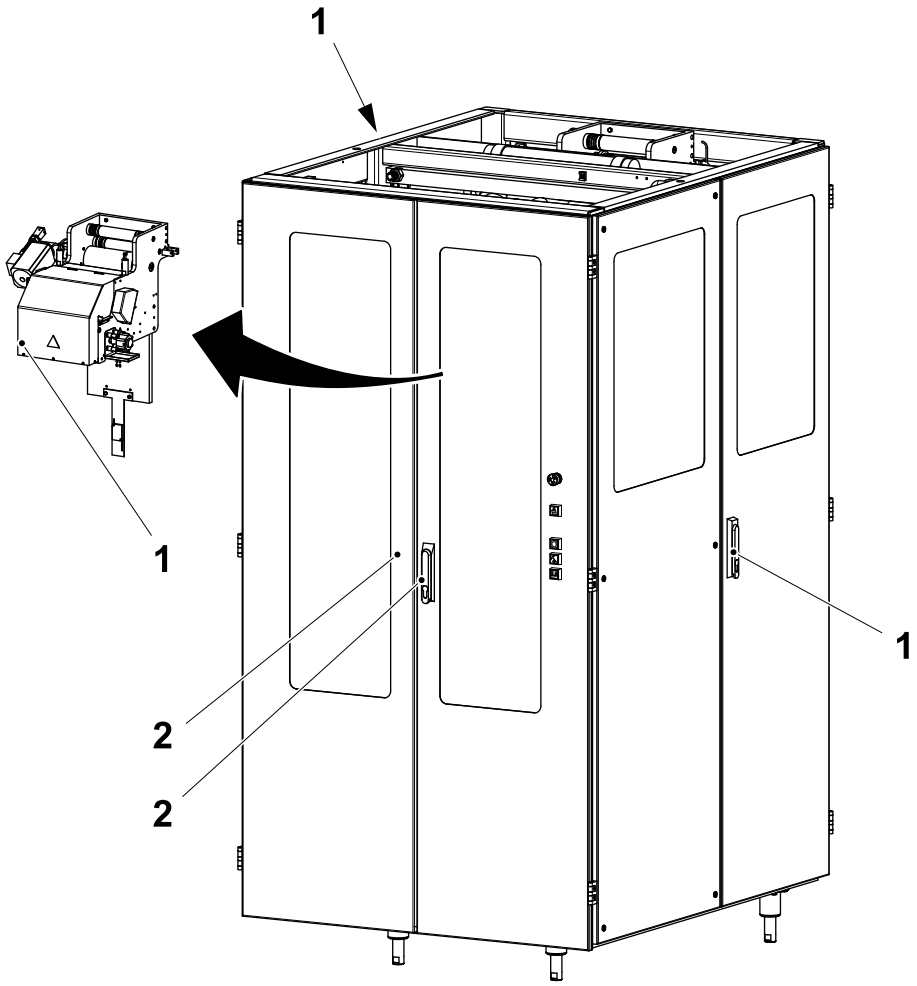

1 Stops equipment
2 Stops ASU splice function

Safeguards, PT19 (option)

The location of each interlocking device is shown below.

(Cont'd)

(Cont'd)

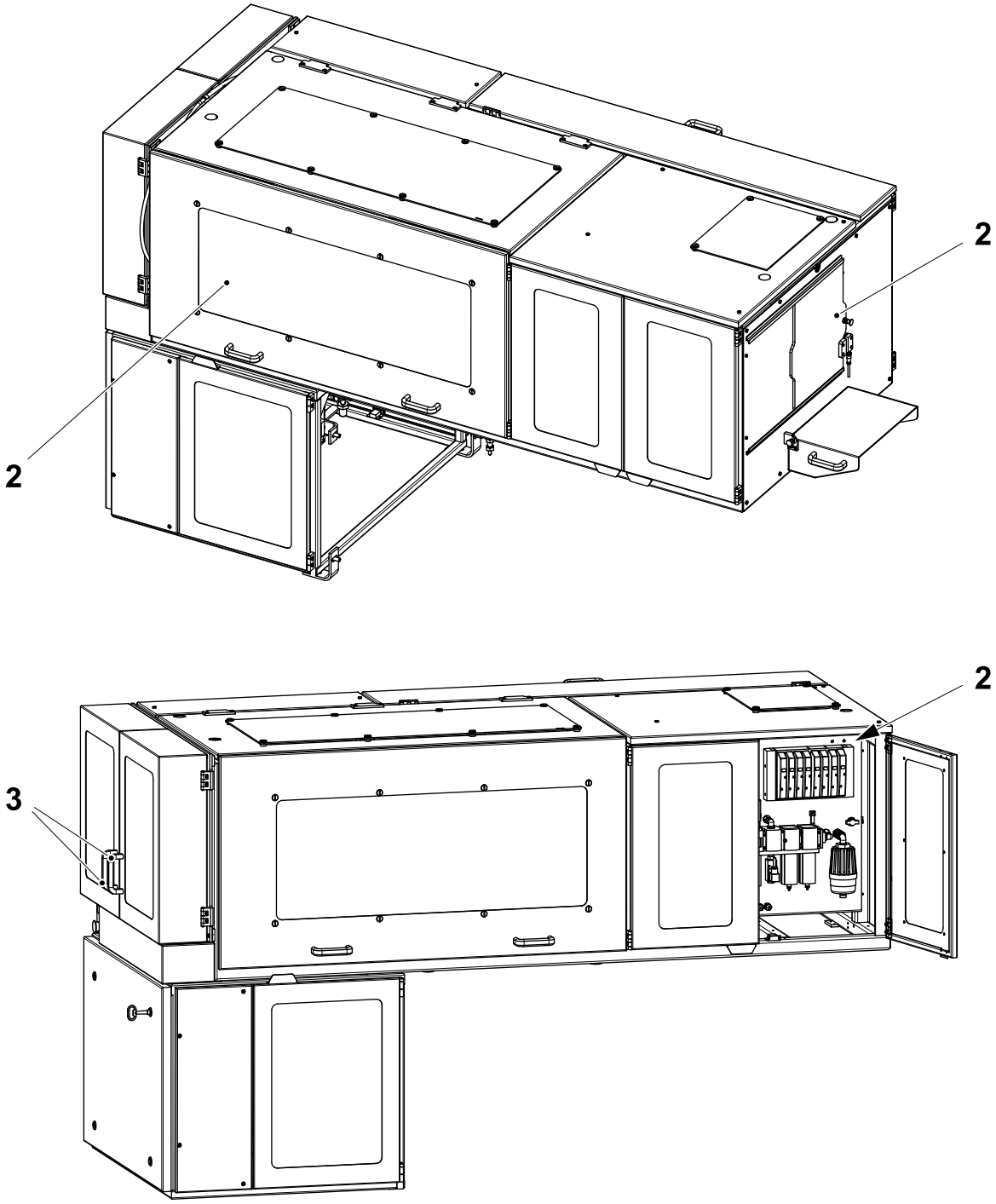

1 Stops equipment
2 Stops SA splice function

Indicating Tower

An indicating tower is a column of warning lights:

- A red light (1) indicates a hazardous condition. This is a situation that requires immediate action.
- A yellow light (2) indicates an abnormal or impending critical condition. This is a condition calling for action by the operator.
- A blue light (3) indicates that operator action is required.

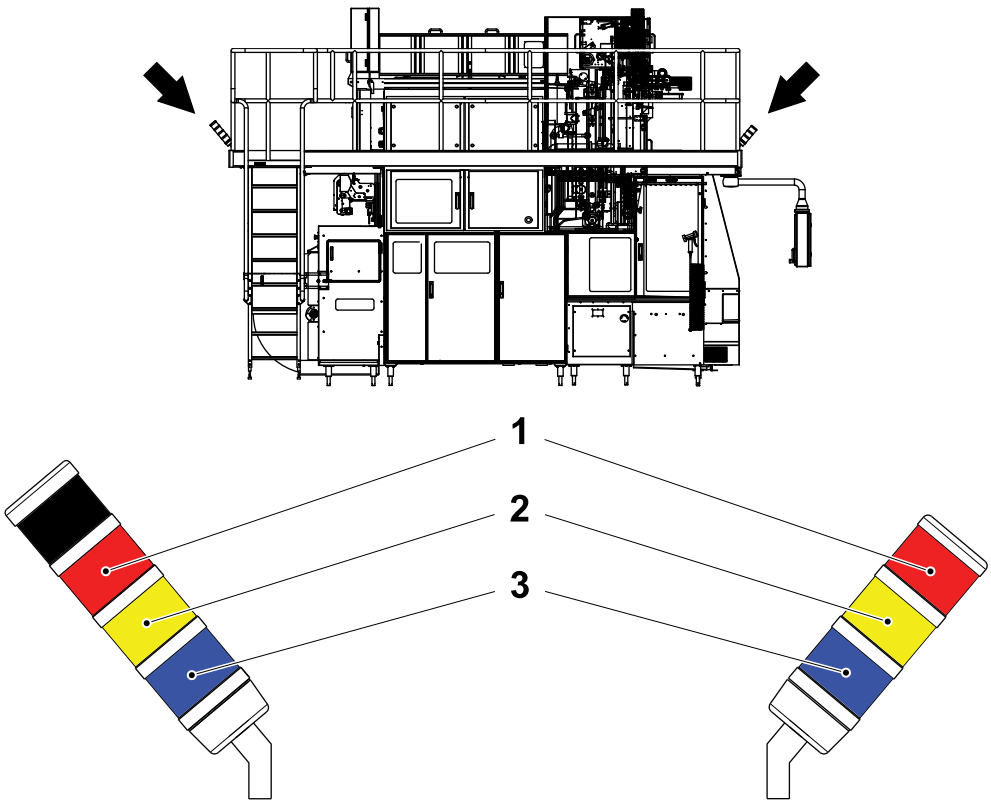

1 Red light
2 Yellow light
3 Blue light

Audible Alarm

The audible alarm (1) produces a warning signal every time this equipment is about to start. The warning signal sounds for approximately three seconds prior to starting to alert personnel.

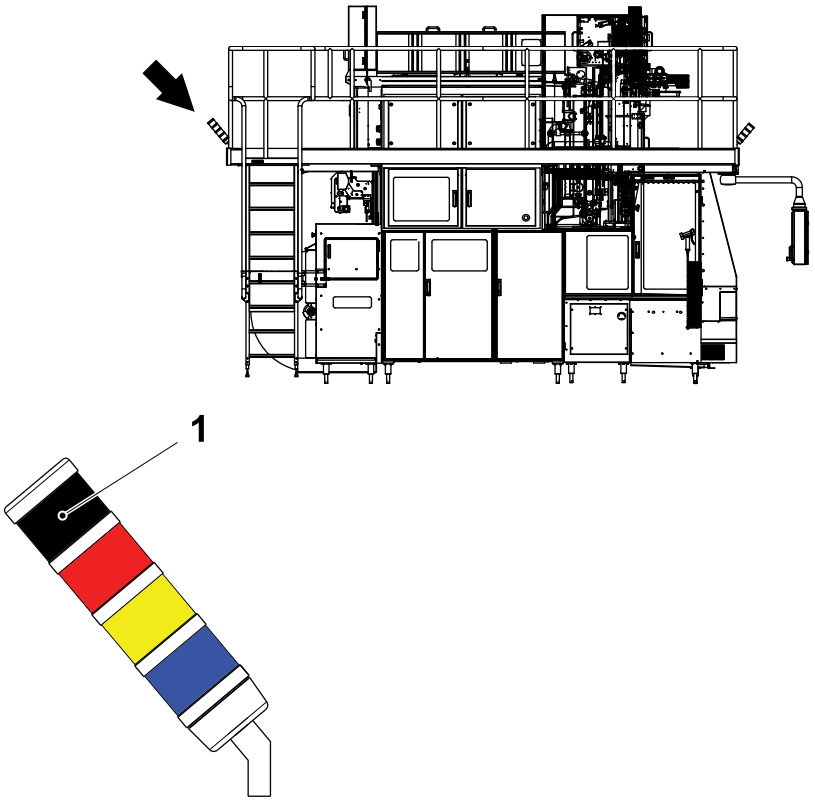

1 Audible alarm

Safe Manual Handling

Use mechanical lifting aids whenever possible. If mechanical lifting aids are not available, do not attempt to lift loads over 23 kg without the assistance of a colleague. Avoid lifting below knee height and above shoulder height. If it is necessary to lift from the floor, follow the instructions below to reduce the risk of back and disc injuries.

- Use safety shoes and be sure that the surface of the floor is not slippery.
- Get close to the load.
- Take a wide stance and find the best positions for your feet.
- Bend your hips and knees, and use your leg muscles.
- Keep the load close to your body.
- Do not twist your body while moving the load.
- Take small steps when turning.

In order to reduce the risk of injury to discs and back muscles, be careful to not bend or twist your back when lifting. Keep the load close to your body to reduce the strain on your back.

To reduce the ergonomic risks to each individual operator, job rotation is recommended, so that recovery and variety are provided.

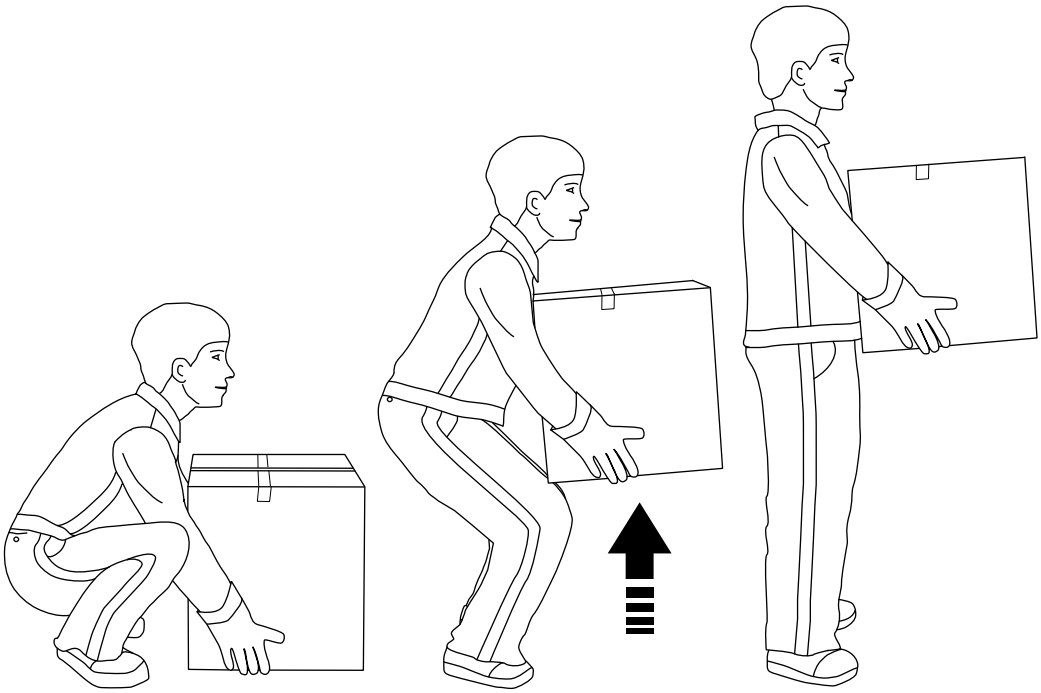

Personal Protection

This section applies to all personnel at all times when this equipment is in operation. For special personal protective equipment required when handling hazardous substances, see the Hazardous Substances section.

Noise

WARNING
Hazardous noise.
Can cause impaired hearing.
Wear hearing protection whenever this equipment is in operation.

CAUTION
Hazardous noise.
May cause impaired hearing.
Hearing protection is recommended whenever this equipment is in operation.

Entanglement

WARNING
Risk of entanglement.
Do not wear jewellery or loose clothing when working on or near this equipment. Restrain long hair with, for example, clips or rubber bands.

Hazardous Substances

WARNING
Contact with chemicals can cause death, serious injury, or illness.
Always read and follow the instructions in the safety data sheet supplied by the manufacturer or local supplier, when handling chemicals.

Make sure that

- the safety data sheet is available
- preparations have been done to ensure that the stated safety measures in the safety data sheet can be followed
- the locations of the first aid equipment are learned in order to act immediately in case of an accident

Disposal of Chemical Substances

Always read and follow the disposal instructions in the safety data sheet supplied by the manufacturer or local supplier.

It is strongly recommended that used chemical containers are

- disposed of according to the instructions immediately after use
- not used as disposal containers for other chemicals in order to avoid uncontrolled chemical reactions within the container

Hydrogen Peroxide (H_2O_2)

WARNING
Corrosive chemical.
Wear personal protective equipment.

In both liquid and gas states, hydrogen peroxide may cause irritation or damage if it comes into contact with skin, mucous membranes, eyes, or clothes. Call for medical attention immediately if there is an accident.

Liquid hydrogen peroxide in concentrations of less than 1% is generally considered harmless to humans.

Consult the instructions on the label of the tank or container.

Emergency Procedures

If there is an accident involving hydrogen peroxide, rinse the affected area as soon as possible with large amounts of water.

Eyes

If splashes or vapour from hydrogen peroxide come in contact with the eyes

- wash the eyes thoroughly with lukewarm water for 15 minutes (keep eyelids wide apart)
- call for medical attention immediately

Skin

If hydrogen peroxide comes into contact with skin or clothes

- rinse immediately with plenty of water
- call for medical attention immediately if skin burns appear
- thoroughly wash the clothes before wearing them again

Inhalation

If irritation or pain is experienced due to having **inhaled** hydrogen peroxide vapour

- leave the affected area and get some fresh air
- call for medical attention if the symptoms get worse

Ingestion

If hydrogen peroxide is swallowed

- do not attempt to cause vomiting
- drink large amounts of lukewarm water to dilute the peroxide
- call for medical attention immediately

Personal Protective Equipment

The personal protective equipment for hydrogen peroxide is

- protective goggles (for instance, TP No. 90303-11), tight fitting
  If there is a risk of splashes, a visor is a suitable complement
- protective gloves made of neoprene (for instance, TP No. 90303-12), nitrile, or butyl rubber
- protective apron (for instance, TP No. 90303-13), or protective suit when handling larger amounts
- protective shoes or boots made of PVC, PE plastic, or rubber
- proper respiratory equipment, if ventilation is insufficient

Handling of Hydrogen Peroxide

WARNING
Sudden and violent chemical reaction.
Avoid any contamination of hydrogen peroxide.

Hydrogen peroxide can react very suddenly and violently in combination with many compounds, or if it is contaminated. Never pour surplus hydrogen peroxide back into the original container. There is a risk of a violent decomposition liberating oxygen and heat, with a big increase in volume due to the oxygen generated by the peroxide decomposition. This will cause a large overpressure if the contaminated hydrogen peroxide is in a closed container. If the integrity of the container fails, this could result in a dangerous hazard.

Ensure that equipment used for handling and diluting hydrogen peroxide is clean before it comes in contact with hydrogen peroxide. Pumps or other equipment used for handling hydrogen peroxide must be **used for this purpose only** and must be manufactured from appropriate materials, such as stainless steel 316 L, glass, polyethylene, or teflon. After use, make sure that all peroxide residue is rinsed away.

If hydrogen peroxide is spilled, dilute it with large amounts of water. Dispose of the diluted hydrogen peroxide according to local regulations.



WARNING
Self-ignition.
Never wipe up hydrogen peroxide with materials such as rags or paper as these may self-ignite several hours after contact. If there is a fire, spray with large quantities of water.

Storage of Hydrogen Peroxide

WARNING

Containers may become overpressurised if they are not properly ventilated. If the integrity of a container fails, this could result in a dangerous hazard.

Keep the container upright and fitted with its proper ventilation cap. If there is a fire, cool all containers by spraying them with large quantities of water.

Hydrogen peroxide decomposes much faster with increasing temperature. There is a risk of a container becoming overpressurised at high temperatures, since the ventilation cap cannot release the gases produced quickly enough. If the integrity of the container fails, this could result in a dangerous hazard.

Hydrogen peroxide **must** be stored in the **original container** delivered by the supplier. Keep the container upright and fitted with its proper ventilation cap, which allows oxygen to escape. Otherwise there is a risk of overpressurisation of the container due to violent decomposition of the peroxide. If the integrity of the container fails, this could result in a dangerous hazard.

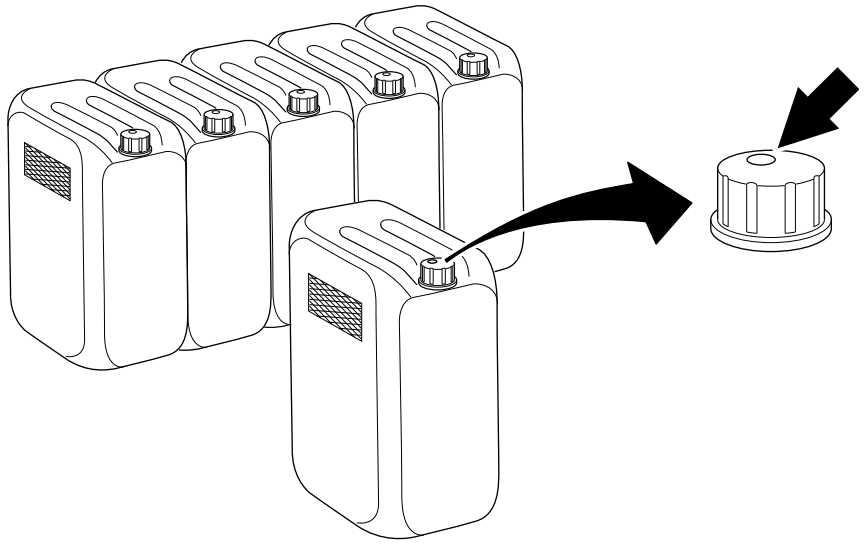

Make sure that the container is always properly closed.

Commercial food-grade hydrogen peroxide has been stabilized to inhibit the catalytic decomposition effects of metals and other impurities, but it can decompose into oxygen and water if it is exposed to heat or contaminated.

Make sure that the area used for storage of hydrogen peroxide is

- cool, clean, and well ventilated
- shielded from direct sunlight
- kept free from combustible materials

Disposal of Hydrogen Peroxide

Always read and follow the disposal instructions in the safety data sheet supplied by the manufacturer or local supplier.

Nitrogen (N_2)

WARNING
High pressure gas.
Nitrogen gas in high concentration can cause rapid suffocation.
Make sure that the areas for storing and using this gas are adequately ventilated.

WARNING
Extremely cold high pressure gas.
Rapidly expanding nitrogen gas can cause frostbite injuries.
Always wear personal protective equipment.

Emergency Procedures

Nitrogen gas in high concentrations can cause an oxygen deficient environment. Rapidly expanding nitrogen gas can cause frostbite injuries.

In the case of an accidental release of this gas:

- leave the affected area immediately
- never attempt to rescue victims of exposure to this gas without the proper personal protective equipment
- remove victims to fresh air and if necessary administer expired air resuscitation and/or cardiopulmonary resuscitation. Call for immediate medical attention
- in case of contact with eyes or skin, soak the exposed areas with luke warm water, not hot or cold. Call for immediate medical attention.
- allow the gas to dissipate, use auxiliary ventilation if available.

Handling and Storage of Nitrogen Gas

When handling nitrogen gas cylinders, make sure that:

- the areas used for the storage and handling of this gas are adequately ventilated (min. 19.5% oxygen)
- the cylinders are transported with the valves closed and with the valve protection caps securely in place
- the gas cylinders are connected only to connections marked for this gas
- the cylinder valves are opened slowly

Disposal of Nitrogen Gas

When returning nitrogen gas cylinders, make sure that:

- the cylinder valves are closed and the valve protection caps are securely in place
- there is still some gas in the cylinder.

Cooling Medium R134a

WARNING
Refrigerant gas.
Inhaling large quantities of cooling medium R134a vapour can cause dizziness, headache, confusion and unconsciousness. In liquid form R134a can cause frostbite injuries on contact with skin.
Always wear personal protective equipment.

Emergency Procedures

In case of an accidental release of this refrigerant:

- leave the affected area immediately
- remove victims to fresh air and if necessary administer expired air resuscitation and/or cardiopulmonary resuscitation. Call for immediate medical attention
- in case of contact with eyes or skin, soak the exposed areas with luke warm water, not hot or cold. Call for immediate attention
- allow the vapour to dissipate, use auxiliary ventilation of available

Disposal of Cooling Medium R134a

Cooling medium R134a should, whenever possible, be reprocessed or recycled. Contact the manufacturer or supplier for information on authorised refrigerant reclamation and recycling programs.

Ink

WARNING

Risk of personal injury.

Ink is inflammable and can be harmful if it comes into contact with the eyes or skin.

Carefully follow the instructions on the container label.

Ink Container

- Inflammable
- Avoid direct contact with the product
- Use gloves and goggles
- Care for good ventilation
- Propylene glycol mono methyl ether >30%
- Ethanol 1-5%
- Shake before use

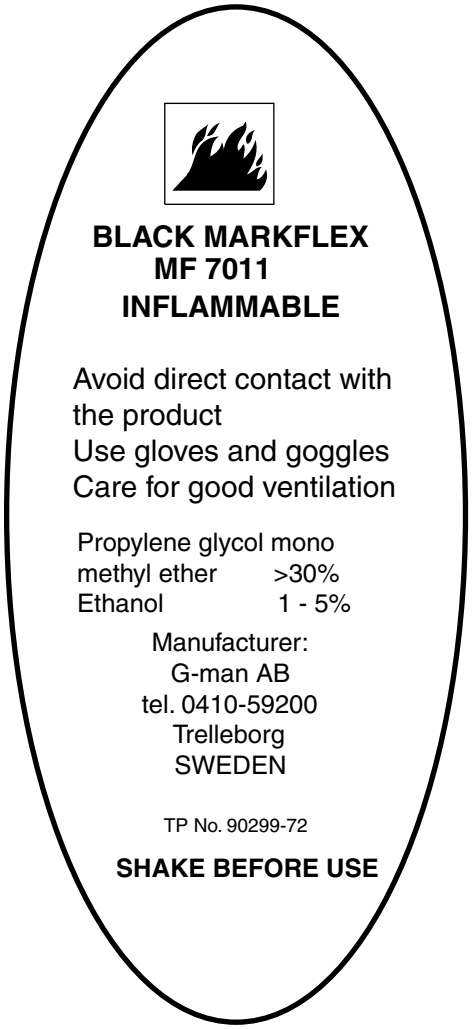

Supply Systems

Electrical Supply

DANGER

Hazardous voltage and moving machinery.
The electrical supply disconnecting device must be in position O (OFF) and secured with a lock before any maintenance that requires the electrical supply to be disconnected. See the Machine Status section of the MM Procedure Start Table.

Note! The key to the lock must be removed by the technician and retained in his/her possession until all work is completed.

DANGER

Hazardous voltage can be present with the power supply switched off.
Circuits identified by orange-coloured conductors are not disconnected by the main electrical supply disconnecting device. The location of the electrical supply disconnecting device of these circuits is described in the Maintenance Manual procedures that include work on these types of circuit.

Certain maintenance procedures may require power supply systems to be on. These exceptions are clearly stated in the Maintenance Manual.

(Cont'd)

(Cont'd)

The illustrations show the electrical supply disconnecting device and its location.

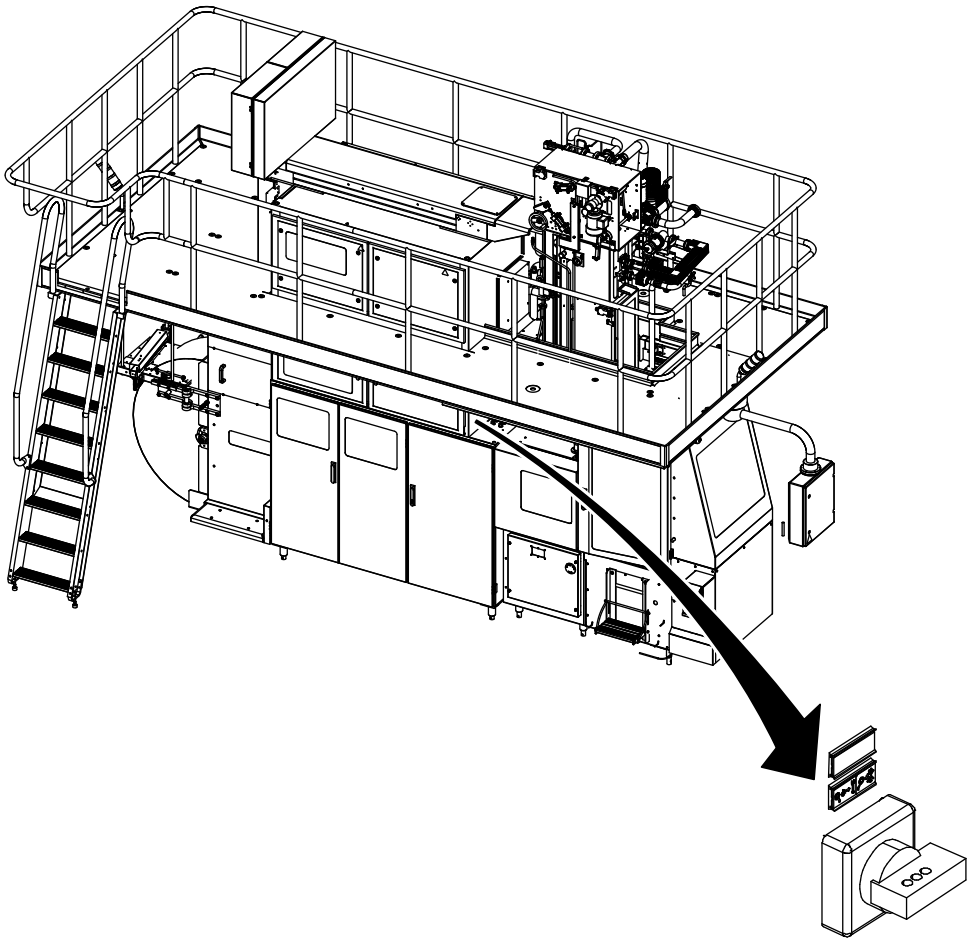

TBA/19 0400 Standard is shown

Residual Voltage

DANGER

Hazardous voltage.
Will shock, burn, or cause death.
After the electrical supply disconnecting device is turned to position O (OFF), residual voltage remains in the capacitor circuits. Wait five minutes before opening the enclosure containing these circuits. Ensure that no residual voltage remains on the capacitors before touching them.

Electrical Cabinet

DANGER

Hazardous voltage.
Will shock, burn, or cause death.
Parts behind doors to the electrical cabinet may be live. The electrical supply disconnecting device must be turned to position O (OFF) and secured with a lock before performing maintenance inside the electrical cabinet.

Note! The key to the lock must be removed by the technician and retained in his/her possession until all work is completed.

The use of a key or a tool is necessary to access to the electrical cabinet.

Make sure that the electrical cabinet doors are closed after working inside the electrical cabinet. Doors with locks must be locked.

(Cont'd)

(Cont'd)

The location of each electrical cabinet is shown by an arrow.

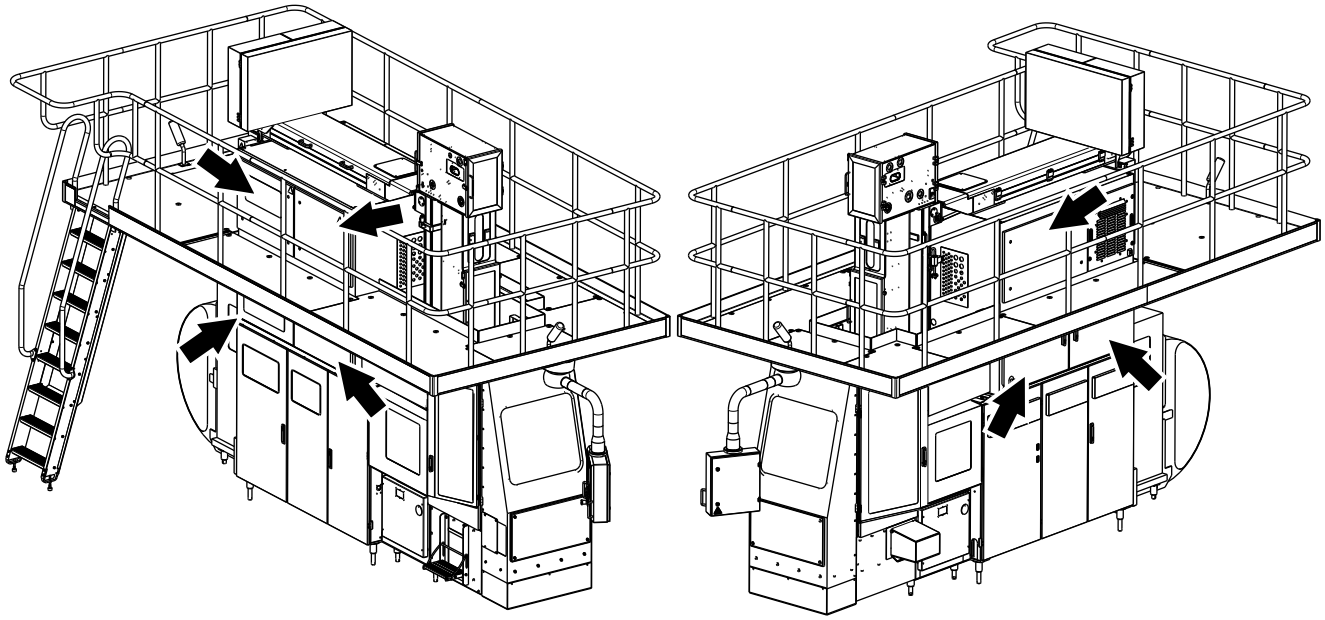

TBA/19 0400 Standard is shown

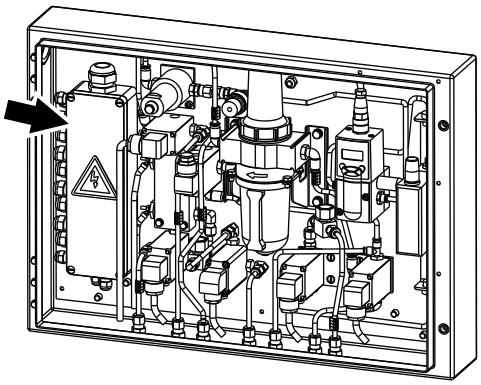

Electrical cabinet, HI (OE)

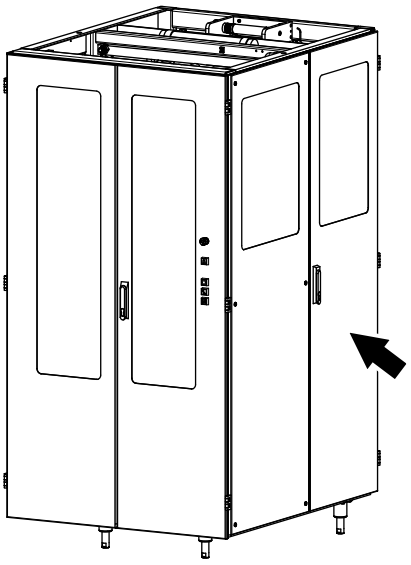

Electrical cabinet, ASU (OE)

Socket Outlet

WARNING
Hazardous voltage.
Can shock, burn, or cause death.
Read the Maintenance Manual before using this socket outlet.

The socket outlet (1) is connected to a residual current device (2) to protect users against electrical shock if there is an earth fault in the connected equipment. The residual current device must be tested each time before the socket outlet is being used. See the MM for test procedure.

The illustrations show the socket outlet, the residual current device, and their locations.

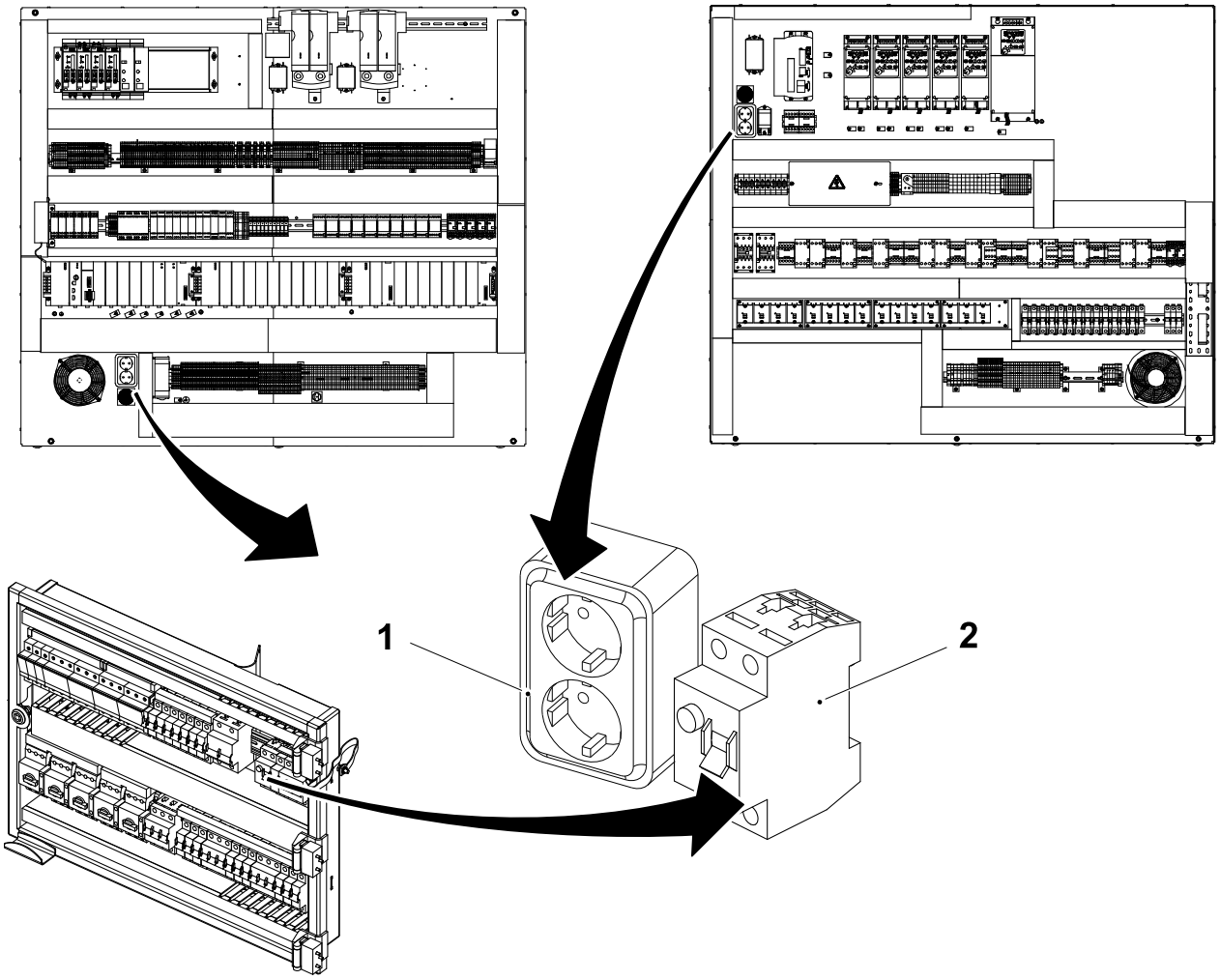

1 Socket outlet
2 Residual current device

Air Supply

WARNING

Compressed air and moving machinery.
Close the valve supply valve, any Optional Equipment air valves, and lock them, and safely release compressed air from the air system before any maintenance that requires the air supply to be closed. See the Machine Status section of the MM Procedure Start Table.

Note! The key to the lock must be removed by the technician and retained in his/her possession until all work is completed.

Certain maintenance procedures may require air supply systems to be on. These exceptions are clearly stated in the Maintenance Manual.

The illustrations below show the main air valve (1) and its location.

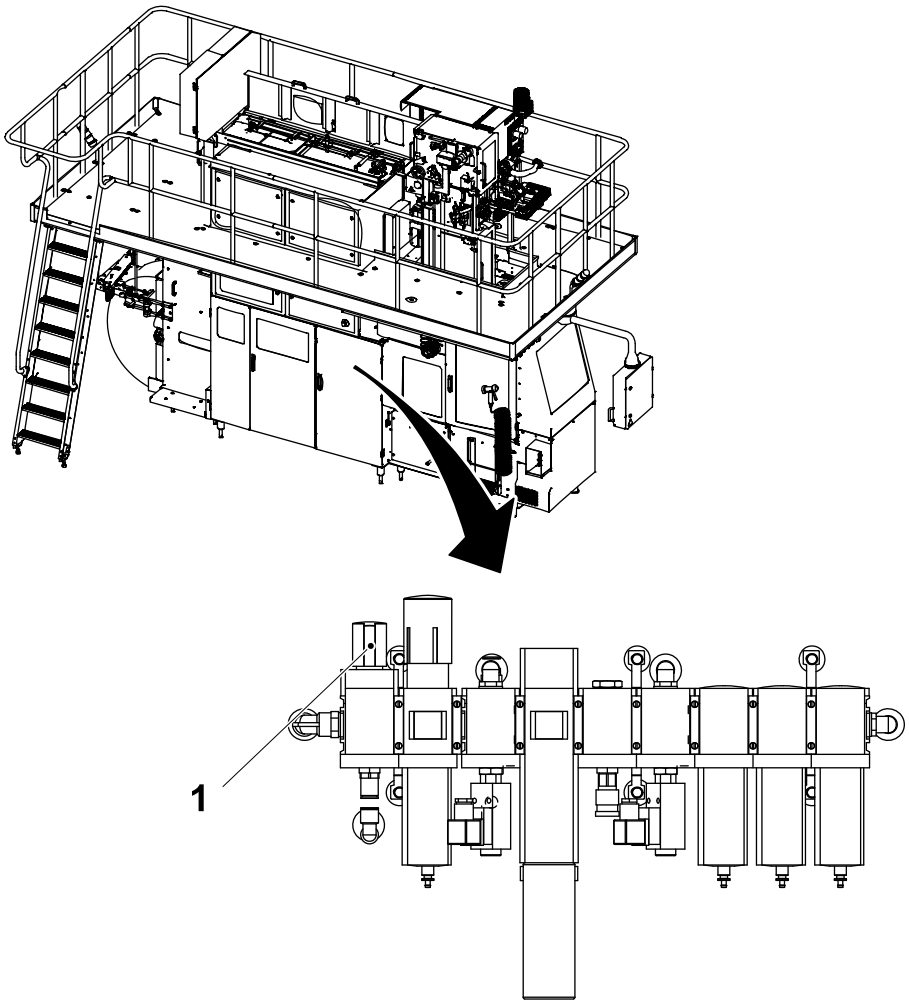

Machine with PMI (standard) is shown

1 Main air valve

(Cont'd)

(Cont'd)

Air Supply Optional Equipment - ASU:

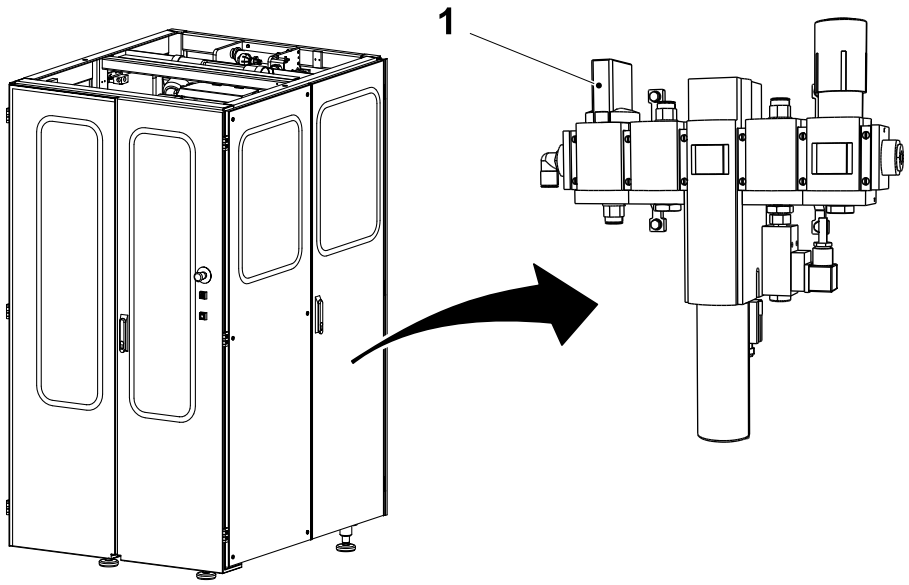

1 Air valve, ASU (OE)

Air Supply Optional Equipment - PT19:

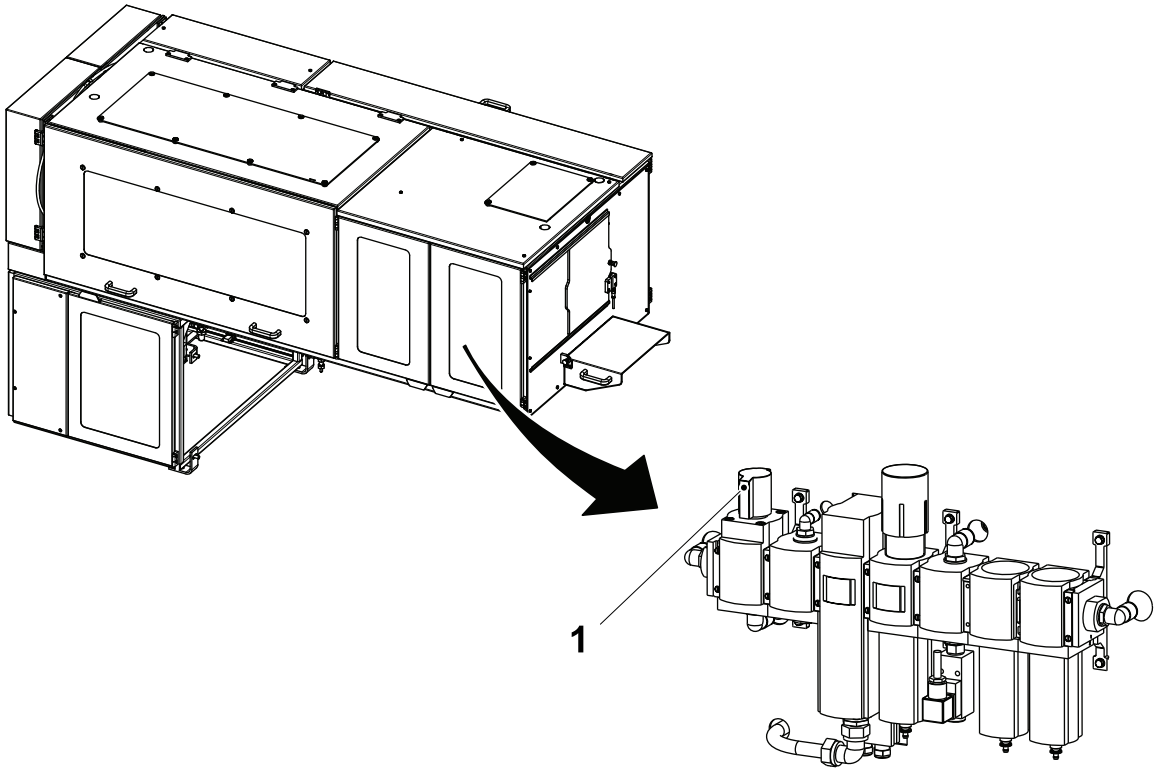

PT19 0400 for TBA is shown

1 Air valve, PT19 (OE)

Steam Supply

WARNING
Hot steam can cause scalds.
Pressurised steam can be discharged unexpectedly.
Close the steam supply valve and lock it, and safely vent all steam pressure from the steam system before any maintenance on parts with steam, such as pipes and valves, that requires the steam supply to be closed. See the Machine Status section of the MM Procedure Start Table.

Note! The key to the lock must be removed by the technician and retained in his/her possession until all work is completed.

Certain maintenance procedures may require steam supply systems to be on. These exceptions are clearly stated in the Maintenance Manual.

The illustrations show the steam supply valve (1), and its location.

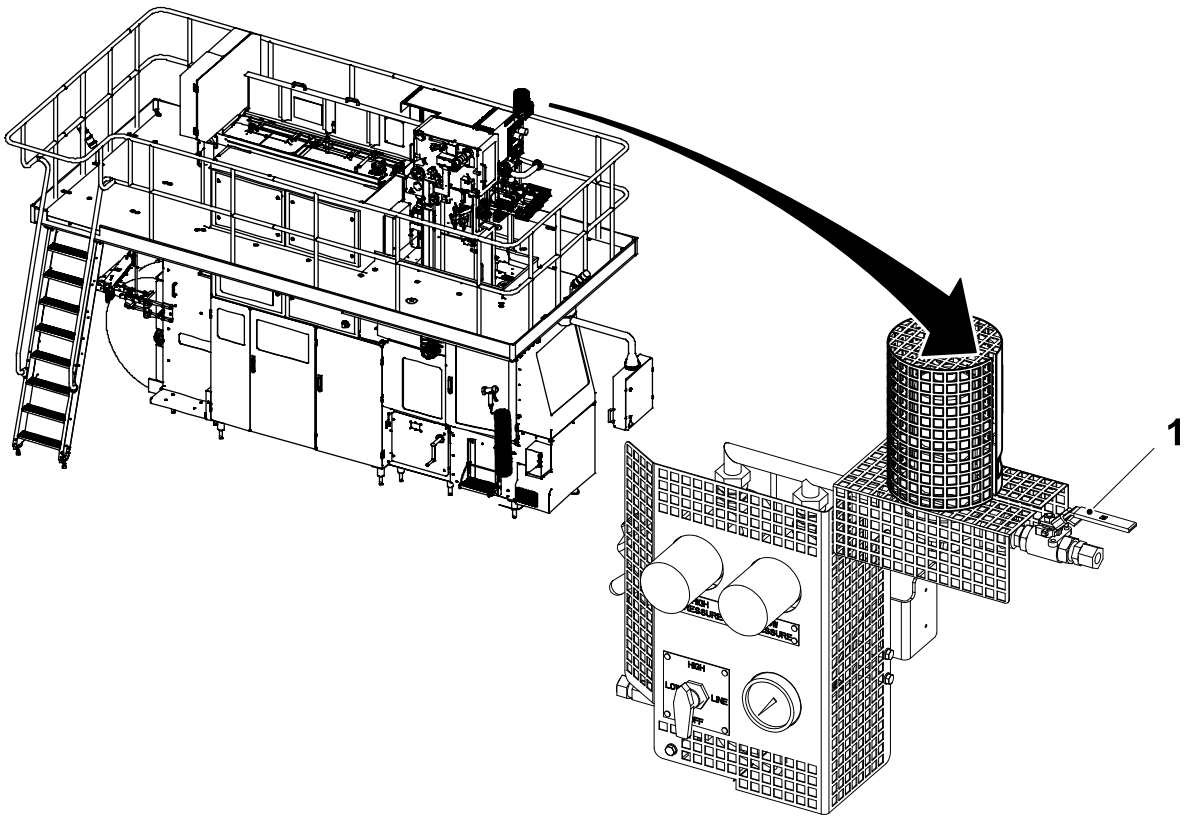

1 Steam supply valve

Water Supply

CAUTION
Water under pressure.
Close the water supply valves before any maintenance.

(Cont'd)

(Cont'd)

Certain maintenance procedures may require water supply systems to be on. These exceptions are clearly stated in the Maintenance Manual.

The illustrations show the water supply valve (1) and the hot water supply valve (2), and their location.

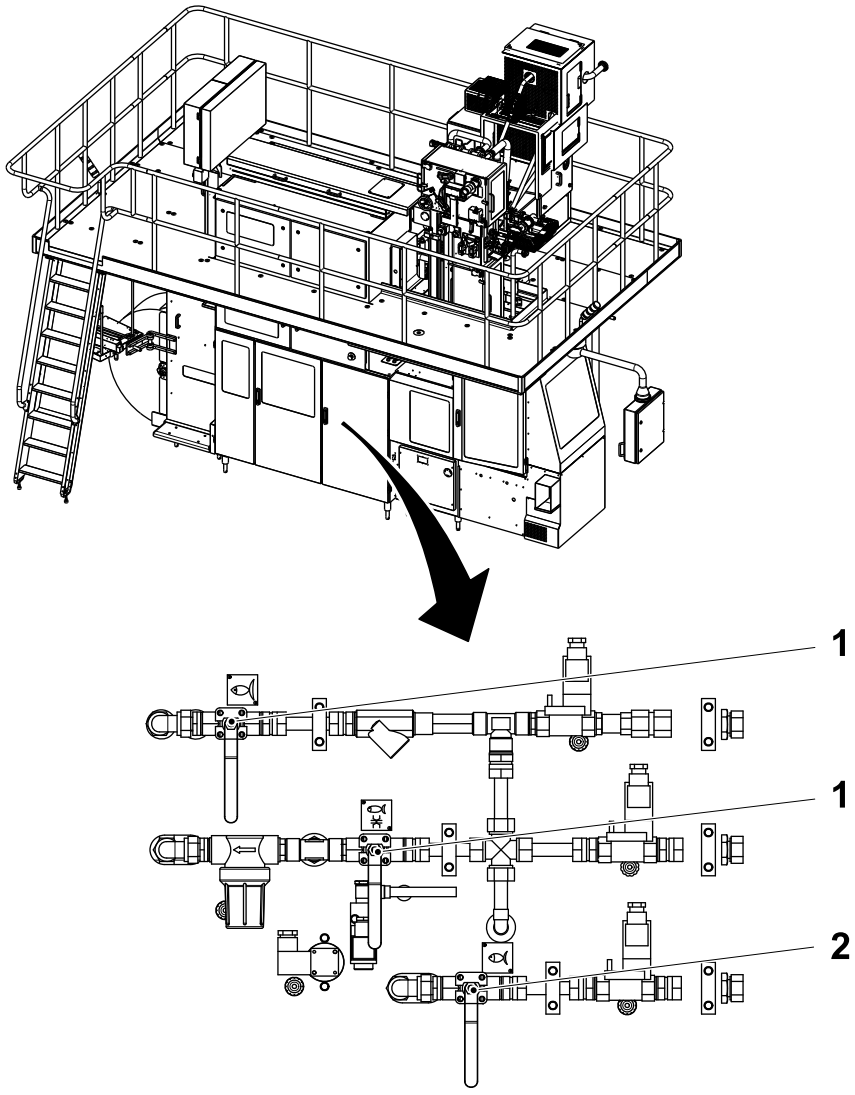

1 Valve, water supply
2 Valve, hot water supply

Equipment for Lifting and Moving Loads

DANGER

Risk of crushing.
The equipment can be heavy and can cause injury and death if it falls. Make sure that the capacity of the lifting equipment is adequate and that the equipment itself is in proper working order.

If lifting tackle must be joined to make up the necessary lengths, make sure that the joints are secure and have the same lifting capacity as the rest of the lifting tackle.

Always engage safety clips fitted to lifting hooks to prevent the lifting tackle from slipping off

Use ropes or poles to steady and manoeuvre suspended loads. Do not use hands or feet.

Make sure that the route and destination are free from obstacles before moving a suspended load. It must always be possible to quickly and safely lower the load to the floor in an emergency.

When depositing loads, keep lifting tackle in place until the stability of the load has been substantiated.

1 General Description

Description

This chapter contains general information of the machine, its functions, and its components.

WARNING

Risk of personal injury or damage to the equipment.

To ensure maximum safety, always read this section and chapter ii Safety Precautions carefully before doing any work on the equipment or making any adjustments.

1.1 Machine Description 1-5
1.2 Valve Panel 1-8
1.2.1 Valve Panel, Main Machine 1-8
1.2.2 Valve Panel, PullTab (option) 1-9
1.2.3 Valve Panel, ASU (Option) 1-10
1.3 Electrical Cabinet 1-11
1.3.1 Electrical Cabinet Filling Machine 1-11
1.3.2 Temperature Controller 1-13
1.4 Temperature Controlled Steam Barrier - TCSB19 1-14
1.5 Headspace by Injection - HI (option) 1-15
1.6 ASU (Option) 1-16
1.7 PullTab (option) 1-17
1.8 Symbols 1-18
1.8.1 Symbols on Valve Panel 1-18
1.8.2 Symbols on Electrical Cabinet 1-18
1.8.3 Symbols on Equipment 1-20
1.8.4 Symbols on Hydraulic Unit 1-20
1.8.5 Symbols on PullTab (Option) 1-20
1.8.6 Symbols on ASU (Option) 1-21
1.9 Packaging Material Web 1-22
1.10 Crank 1-24
1.10.1 How to Crank the Machine 1-24

This page intentionally left blank

1.1 Machine Description

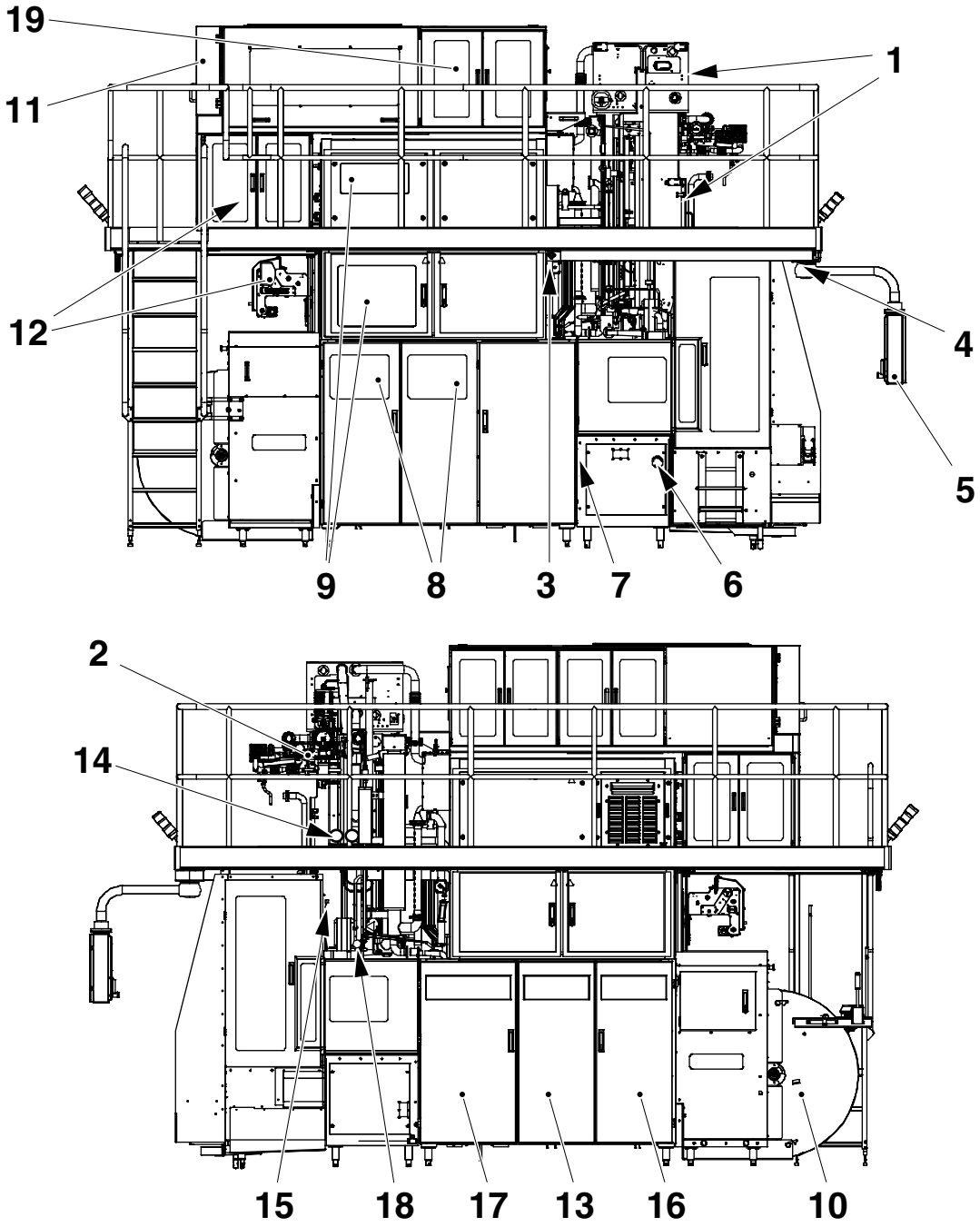

(Cont'd)

(Cont'd)

1 Aseptic chamber doors
2 Product valve
3 Main switch
4 Water, air inlet
5 Control panel
6 Position for crank
7 Crank switch
8 Flow regulators and pressure gauges
9 Electrical cabinet (regulators and TMCC2 card)
10 PMI cover
11 Strip magazine
12 Infeed units
13 Cabinet with hydrogen peroxide and water accumulator
14 Pressure gauges, air pressure LS and LS short stop
15 Tube flushing regulator
16 Detergent bottle and pump; hydraulic unit
17 Hydrogen peroxide filter
18 Knob for package volume adjusting
19 Valve panel PullTab

(Cont'd)

(Cont'd)

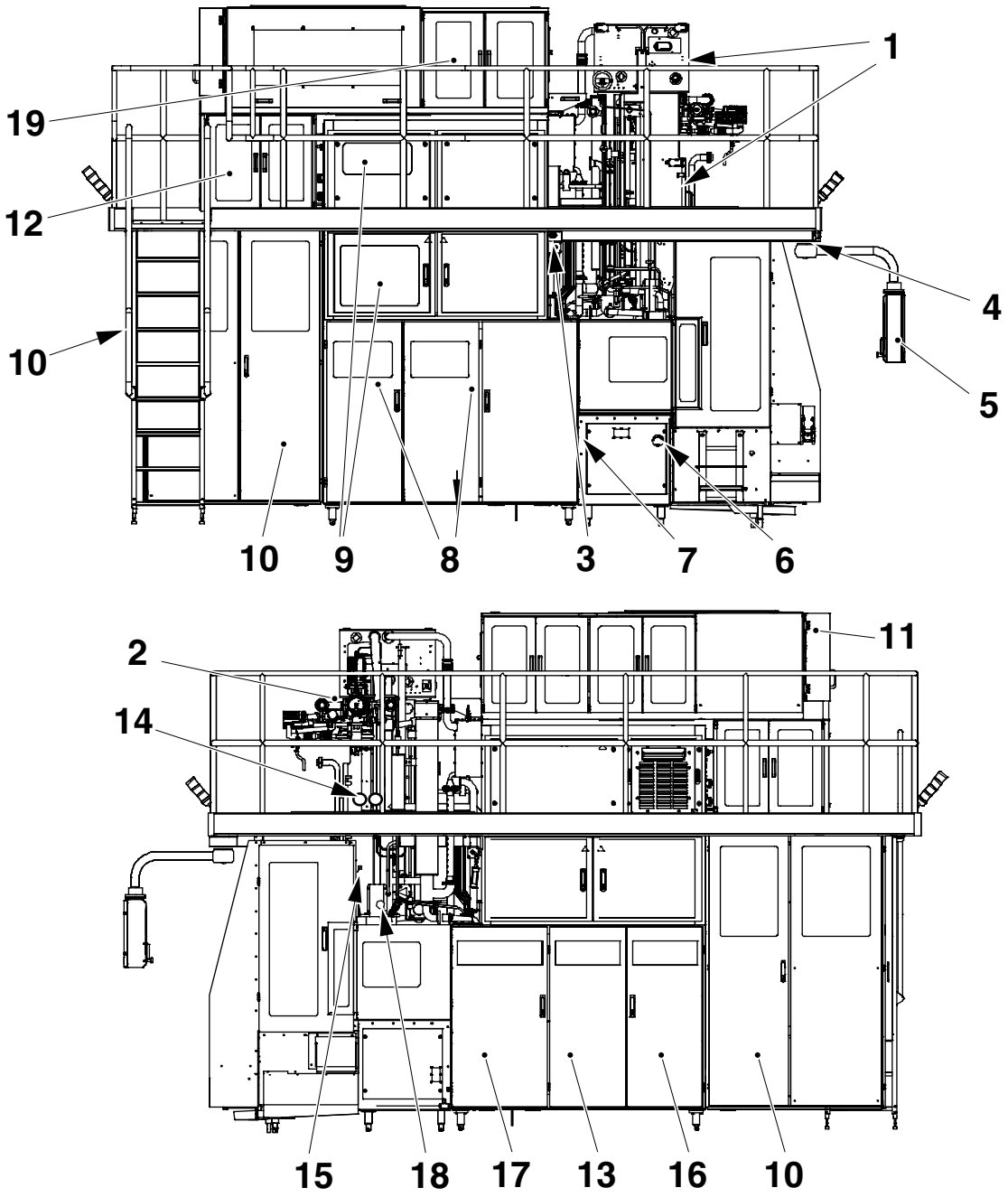

1 Aseptic chamber doors
2 Product valve
3 Main switch
4 Water, air inlet
5 Control panel
6 Position for crank
7 Crank switch
8 Flow regulators and pressure gauges
9 Electrical cabinet (regulators and TMCC2 card)
10 ASU doors
11 Strip magazine
12 Infeed unit PullTab
13 Cabinet with hydrogen peroxide and water accumulator
14 Pressure gauges, air pressure LS and LS short stop
15 Tube flushing regulator
16 Detergent bottle and pump; hydraulic unit
17 Hydrogen peroxide filter
18 Knob for package volume adjusting
19 Valve panel PullTab

1.2 Valve Panel

1.2.1 Valve Panel, Main Machine

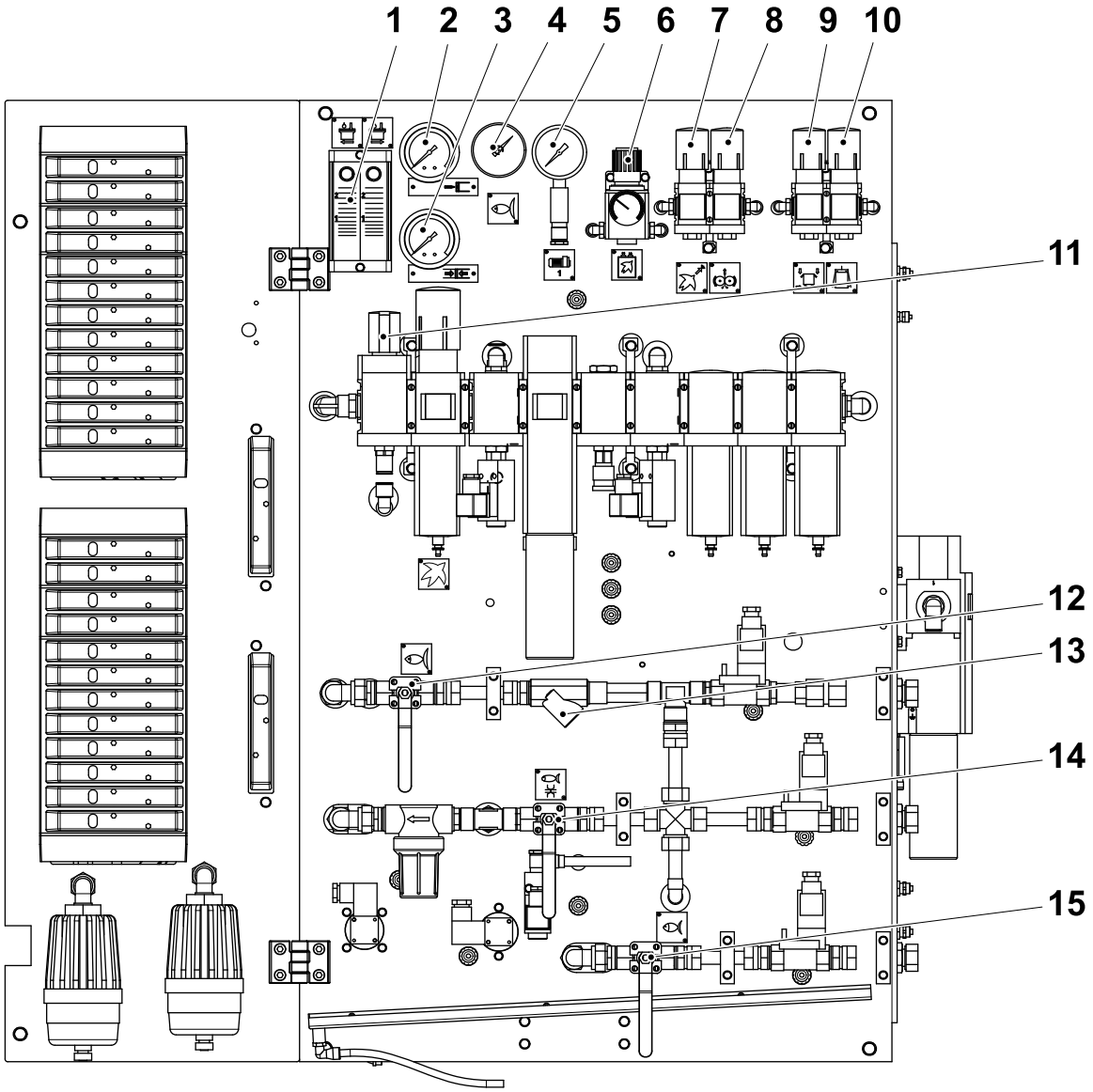

1 Flow meter, LH jaw / RH jaw
2 Hydraulic pressure, jaw knife
3 Hydraulic pressure, jaw catches
4 Water pressure
5 Air pressure, sterile air (separator)
6 Air pressure, design correction photocell and discharger
7 Air pressure, peroxide generator
8 Air pressure, calendar rollers
9 Air pressure, flap sealing
10 Air pressure, pressure device
11 Air shut off valve (shown in closed position)
12 Cooling water valve
13 Magnetic filter
14 Water TS cooling
15 Hot water valve

1.2.2 Valve Panel, PullTab (option)

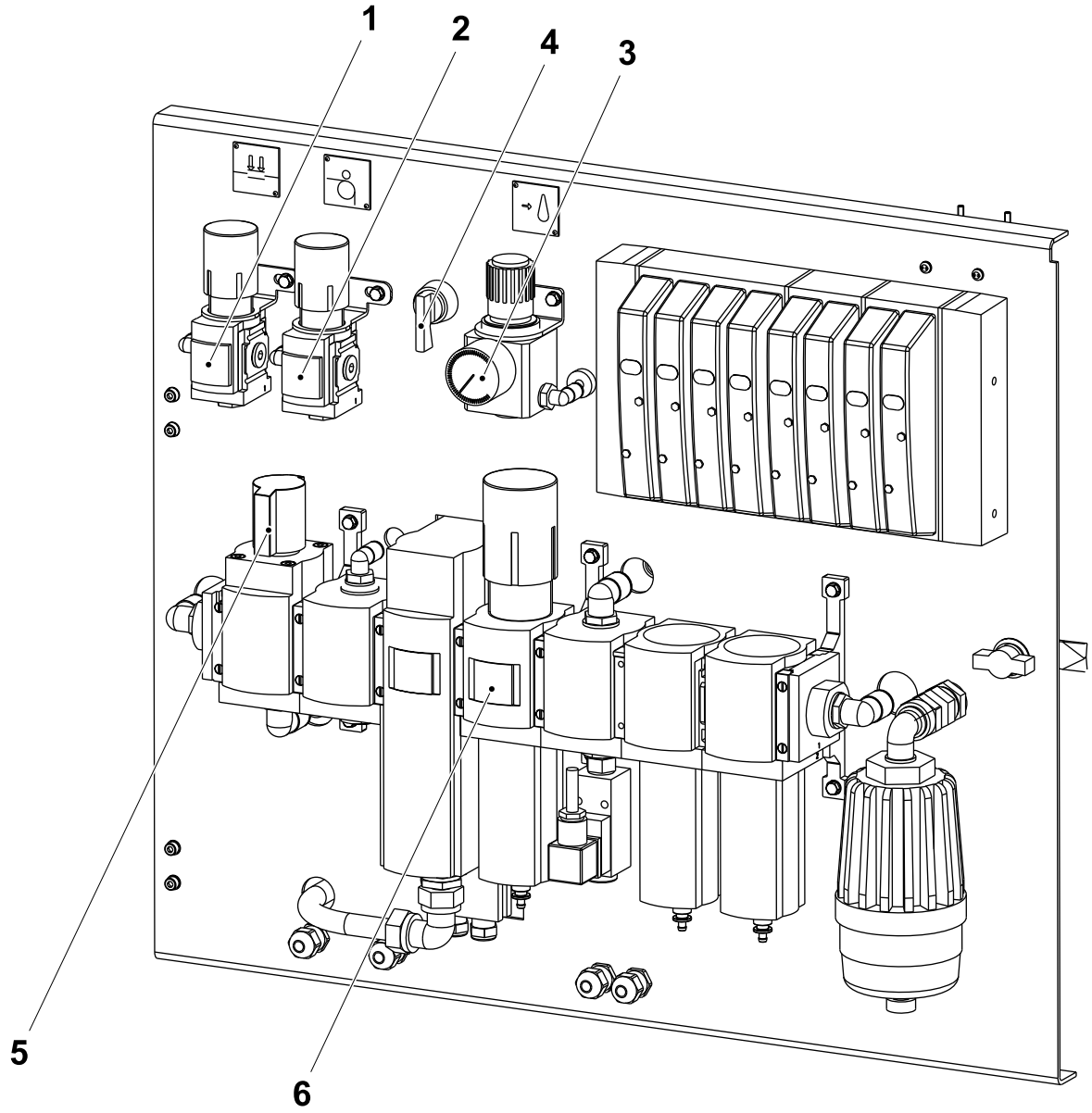

1 Air pressure, CAP blowing
2 Air pressure, counter jaw
3 Air pressure, pressure rollers
4 Switch, counter pressure roller on/off
5 Air shut off valve, PullTab
6 Incoming air pressure, PullTab

1.2.3 Valve Panel, ASU (Option)

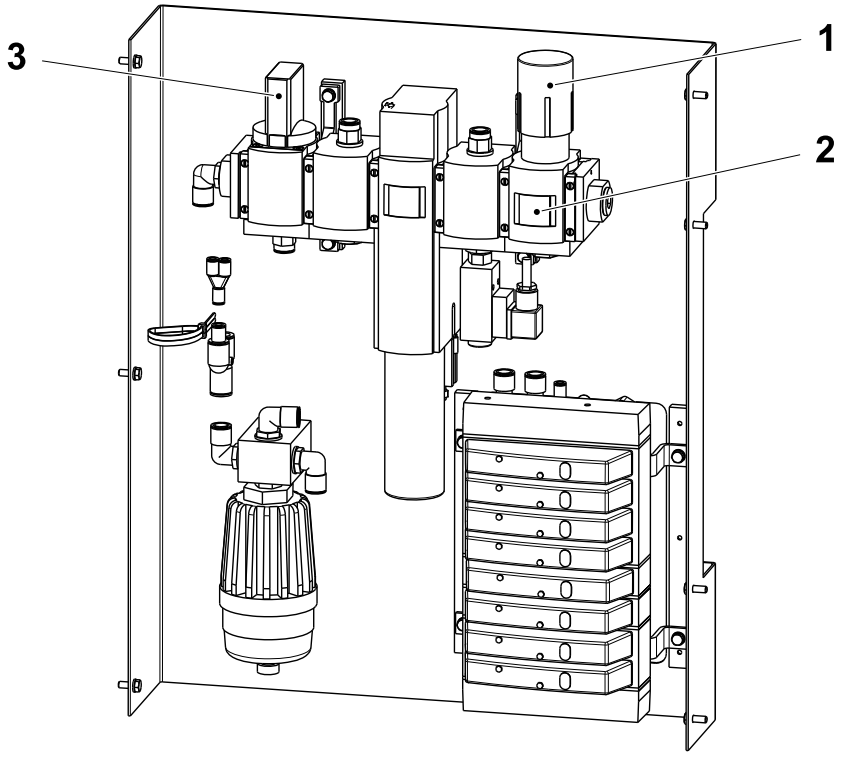

1 Regulator, web tension
2 Pressure gauge, web tension
3 Air shut off valve, ASU

1.3 Electrical Cabinet

CAUTION
Risk of damage to the equipment.
The components in the electrical cabinet have to be kept in a safe environment.
No storing is allowed inside the cabinet.

1.3.1 Electrical Cabinet Filling Machine

Note! The configuration of the electrical cabinet can change according to the machine version. For the labels description on the electrical cabinet see 1.8.2 Symbols on Electrical Cabinet on page 1-18.

The TMCC2 display (8) shows:

- the status of the process when the TMCC2 program is active
- the name, the number, and the ECM of the program when the program is not active.

WARNING
Risk of personal injury.
The keys for service switch (6) and cleaning steam barrier space switch (7) must be removed and stored in a safe place.

(Cont'd)

(Cont'd)

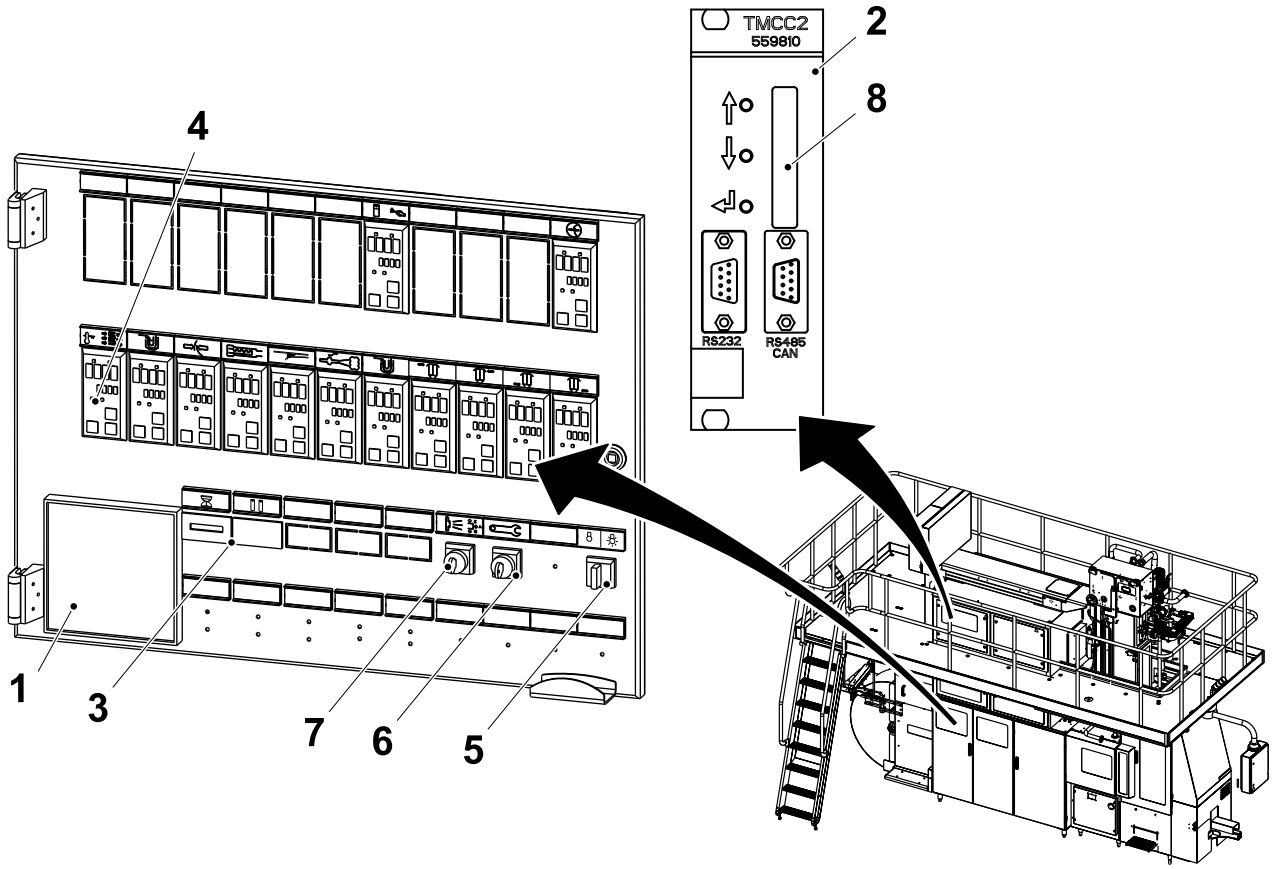

1 JUMO Process recorder
2 TMCC2 cards
3 Counters
4 Temperature controllers
5 Machine light
6 Service switch
7 Cleaning steam barrier space switch
8 TMCC2 display

1.3.2 Temperature Controller

The temperature controller display includes:

- the process value display (1)
  Displays the value for the process.
- the set-point, controller output (2)
  Displays the parameter name or parameter value for configuration and extended operating mode.
- the Err LED (3)
  Indicates errors. If yellow, call a service technician.

Further instructions for temperature controller KS 50-1 are found in the filling machine MM.

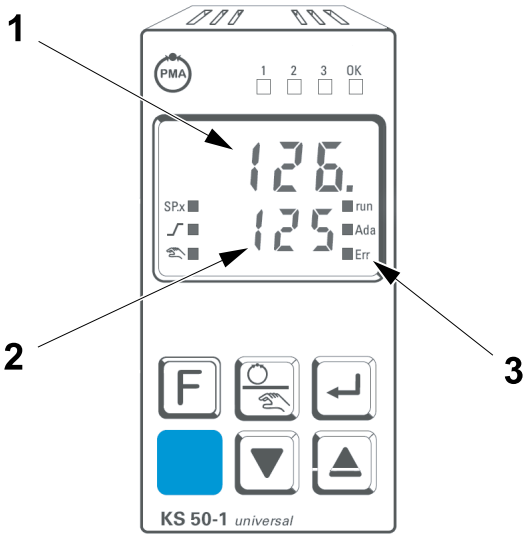

1 Process value display
2 Set-point, controller output
3 Err LED

1.4 Temperature Controlled Steam Barrier - TCSB19

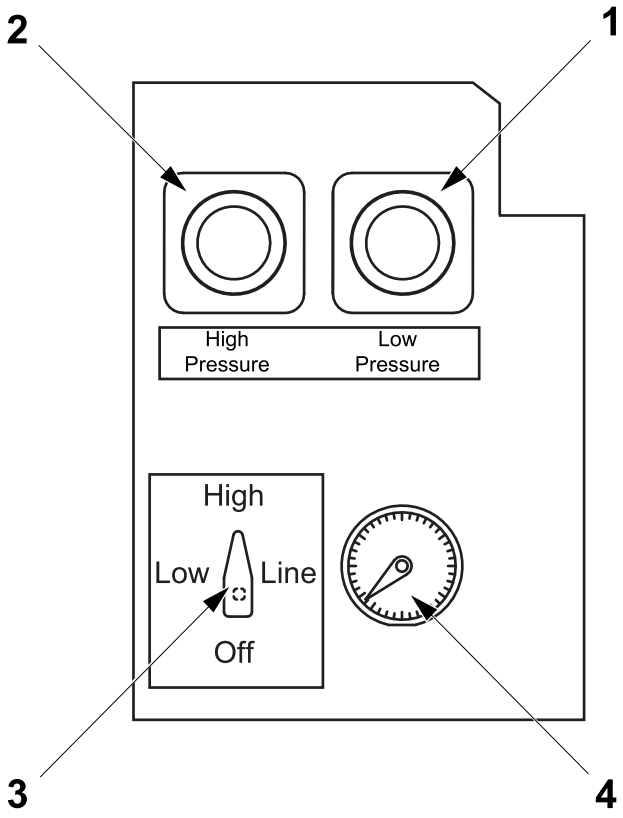

1 Pressure regulator - Low
2 Pressure regulator - High
3 Selector
4 Manometer

1.5 Headspace by Injection - HI (option)

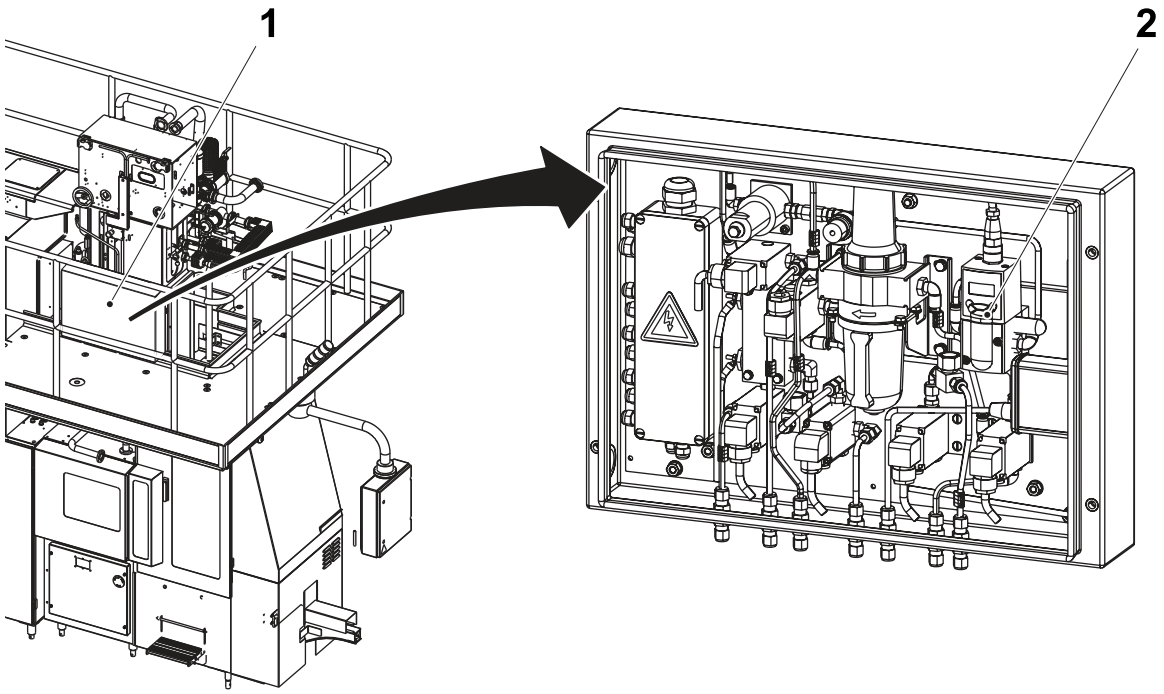

1 HI cabinet
2 I/P transducer

1.6 ASU (Option)

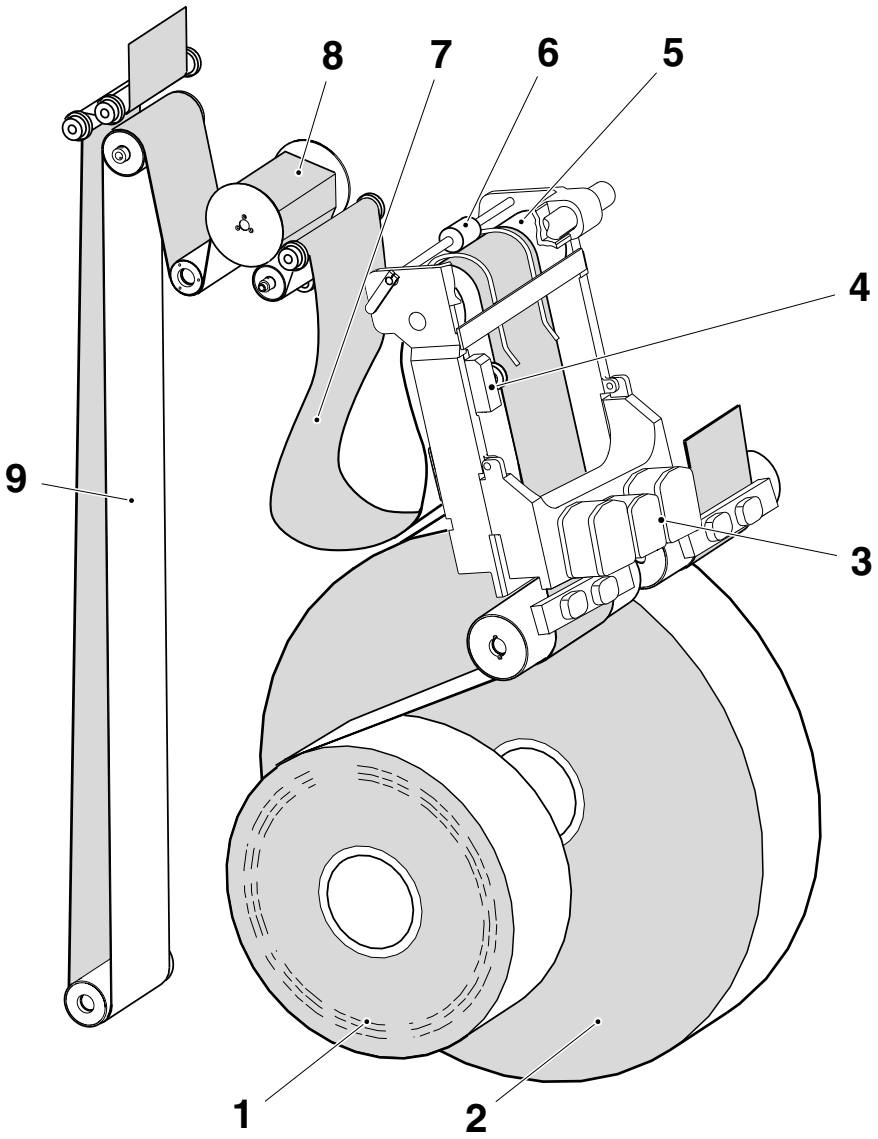

1 Packaging material reel in use
2 Packaging material reel prepared for splice
3 Splicing device
4 Web guide, splicing device
5 Driven bending roller, splicing device
6 Counter pressure roller, splicing device
7 Free loop
8 Driven bending roller, infeed unit
9 Web magazine

1.7 PullTab (option)

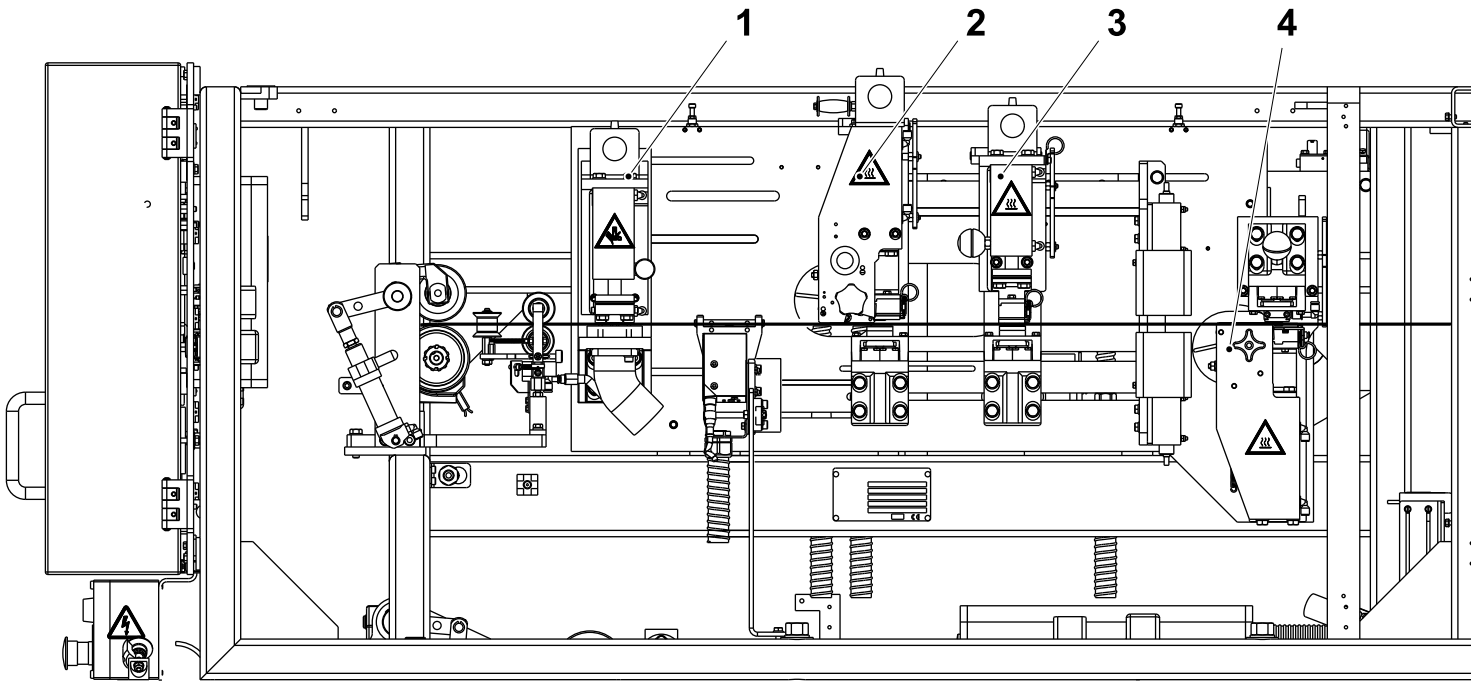

1 Punch unit
2 Inner patch sealing unit
3 Sealing device
4 Tab sealing unit

1.8 Symbols

1.8.1 Symbols on Valve Panel

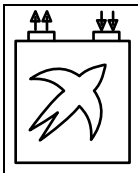	Air pressure, design correction photocells	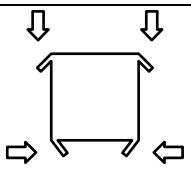	Air pressure, flap sealing
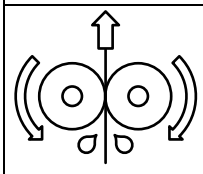	Air pressure, calendar rollers	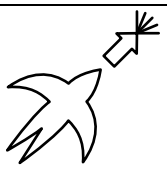	Air pressure, peroxide generator
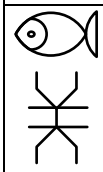	Cooling water TS	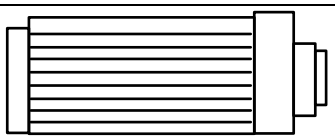	Air pressure, sterile air (separator)
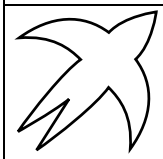	Air valve	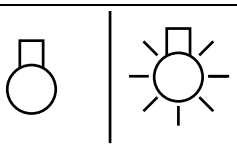	Light machine (off/on)
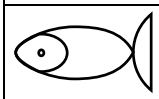	Cooling water valve (blue)	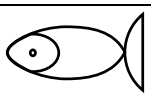	Hot water valve (red)
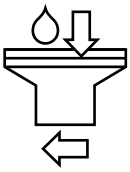	Cooling water flow meter, LH jaw	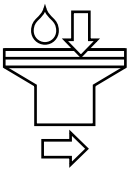	Cooling water flow meter, RH jaw

1.8.2 Symbols on Electrical Cabinet

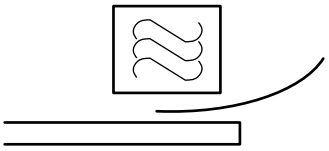	Power, LS strip sealing	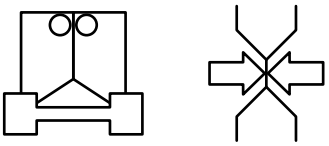	Power, RH TS
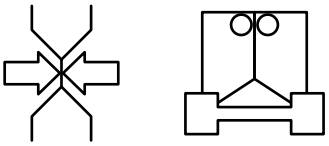	Power, LH TS	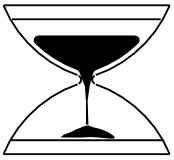	Hour meter
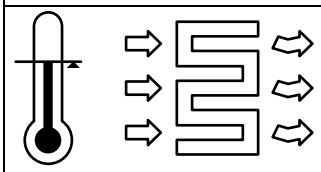	Temperature, pre-sterilisation valve	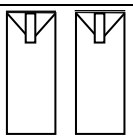	Package counter, total No. of packages

(Cont'd)

(Cont'd)

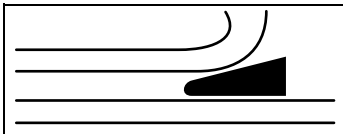	Temperature air knife	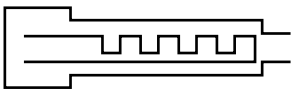	Temperature, - air superheater - air superheater preheating
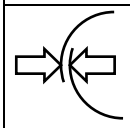	Temperature, - LS - LS tube sealing	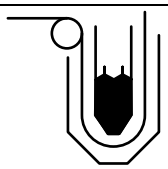	Temperature, - water bath - water bath during preheating
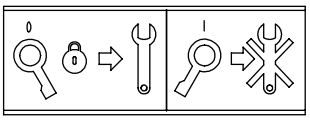	Main switch	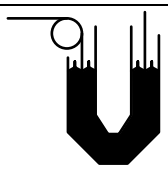	Temperature, hydrogen peroxide bath
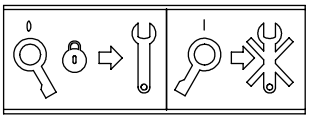	Main switch		
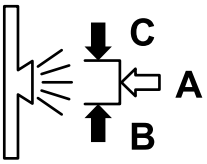	Cleaning steam barrier space	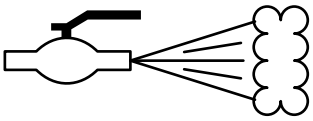	Temperature, steam
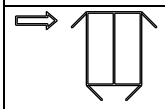	Flap heating, top LH	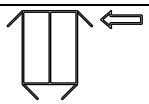	Flap heating, top RH
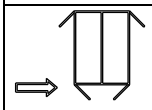	Flap heating, bottom LH	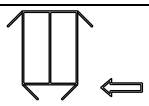	Flap heating, bottom RH
	Machine program switch, smaller/larger packages, Volume conversion	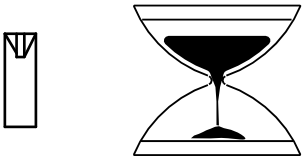	Hour meter, smaller packages, Volume conversion
	Hour meter, larger packages, Volume conversion	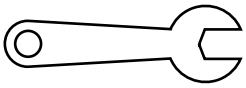	Service switch
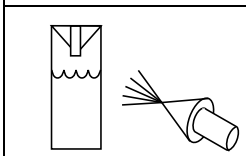	Temperature, spraying HI (option)	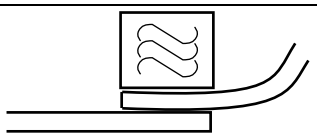	IH setting, web splice
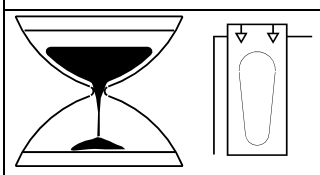	Hour meter, PullTab unit	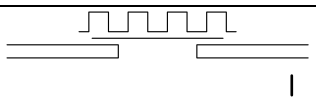	Temperature, patch pre-sealer
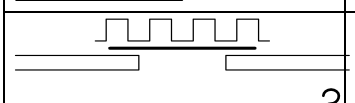	Temperature, patch final sealer	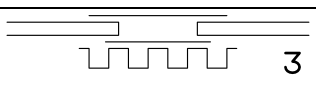	Temperature, tab sealer

1.8.3 Symbols on Equipment

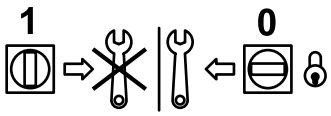	Main switch (on/off)	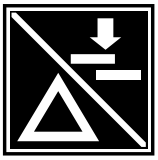	Manual strip splice/Reset alarm, Strip Applicator
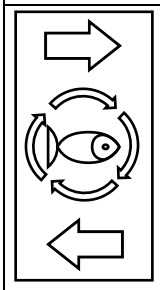	Re circulation of cooling water inlet/outlet	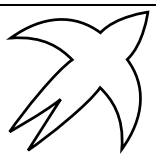	Air inlet
		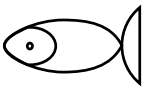	Hot water inlet (red) Cold water inlet (blue)
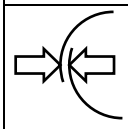	Temperature, LS	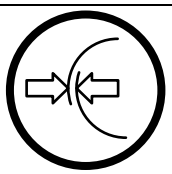	Temperature, LS short stop
	Nitrogen gas inlet, HI (option)	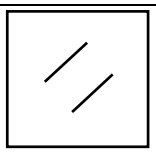	Final folder alarm, hardware reset

1.8.4 Symbols on Hydraulic Unit

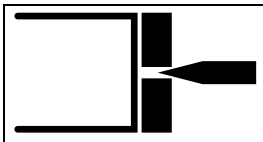	Cutting pressure	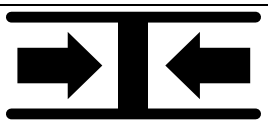	Jaw pressure

1.8.5 Symbols on PullTab (Option)

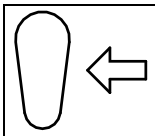	Air pressure, cap blowing	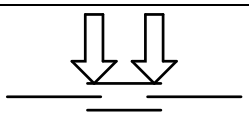	Air pressure, counter jaw
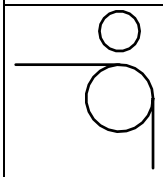	Air pressure, pressure rollers	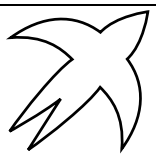	Air inlet, PullTab unit

1.8.6 Symbols on ASU (Option)

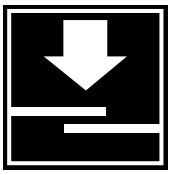	Manual web splice	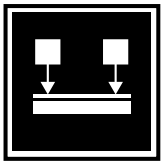	Material locking
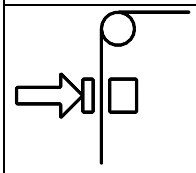	Air pressure, web tension	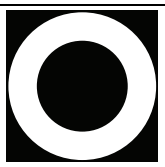	Short stop
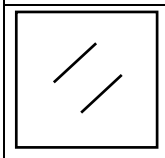	ASU alarm, hardware reset	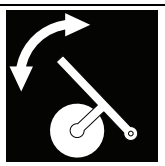	Packaging material holder

1.9 Packaging Material Web

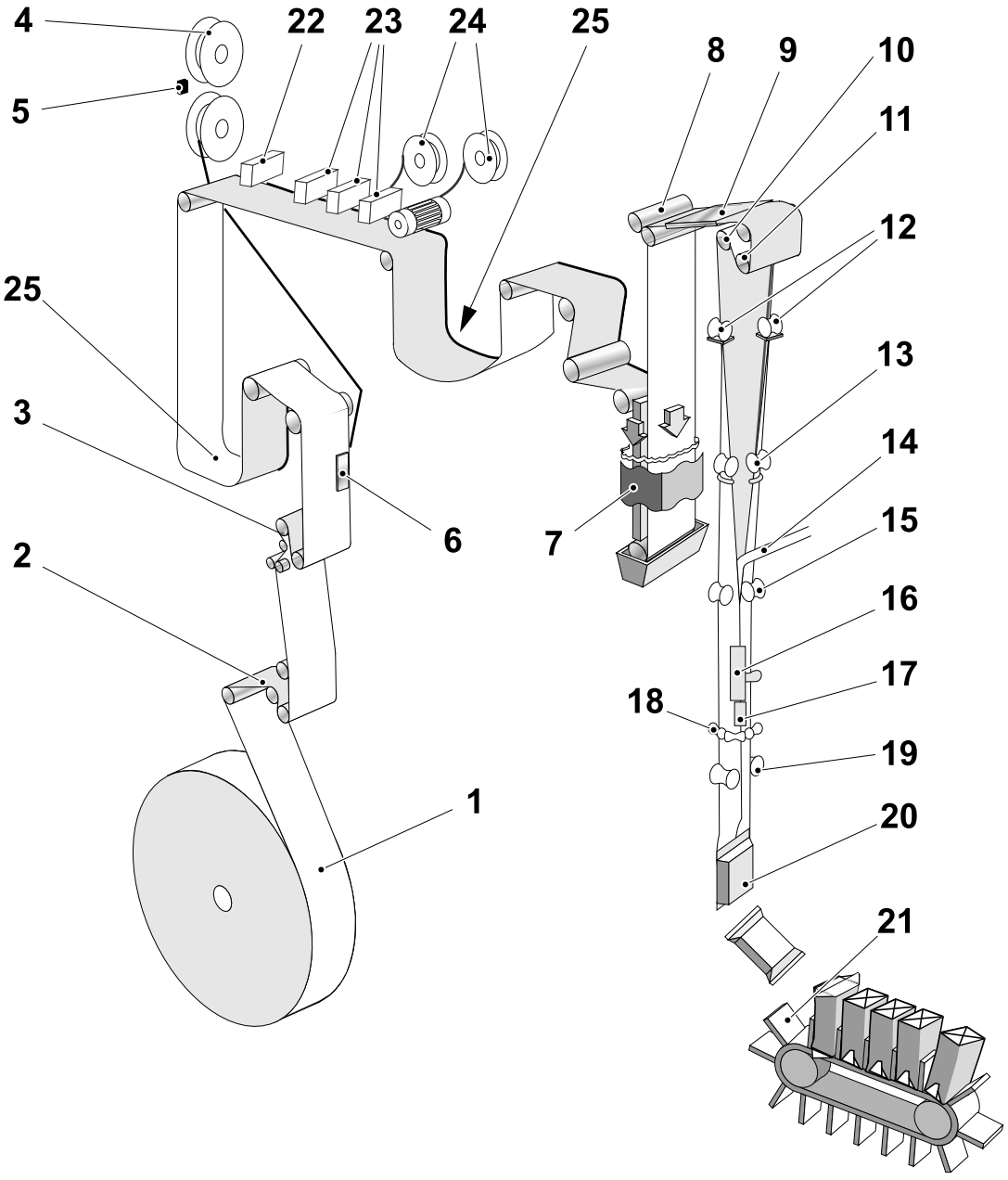

Machine with PMI

1 Packaging material reel
2 Packaging material magazine
3 Infeed unit
4 LS strip reels
5 Splicing unit for LS strip
6 Strip Applicator
7 Sterilisation bath
8 Calendar rollers
9 Air knife
10 Bending roller (driven)
11 Pendulum roller
12 Upper forming ring
13 Movable forming ring
14 Filler tube
15 Divided forming ring
16 LS nozzle
17 LS short stop nozzle
18 Lower forming ring
19 Tube support rollers
20 Package in jaw system
21 Final folder station chain
22 Punch unit
23 Patch/Tab sealer unit
24 Patch/Tab strip reels
25 Packaging material magazine

(Cont'd)

(Cont'd)

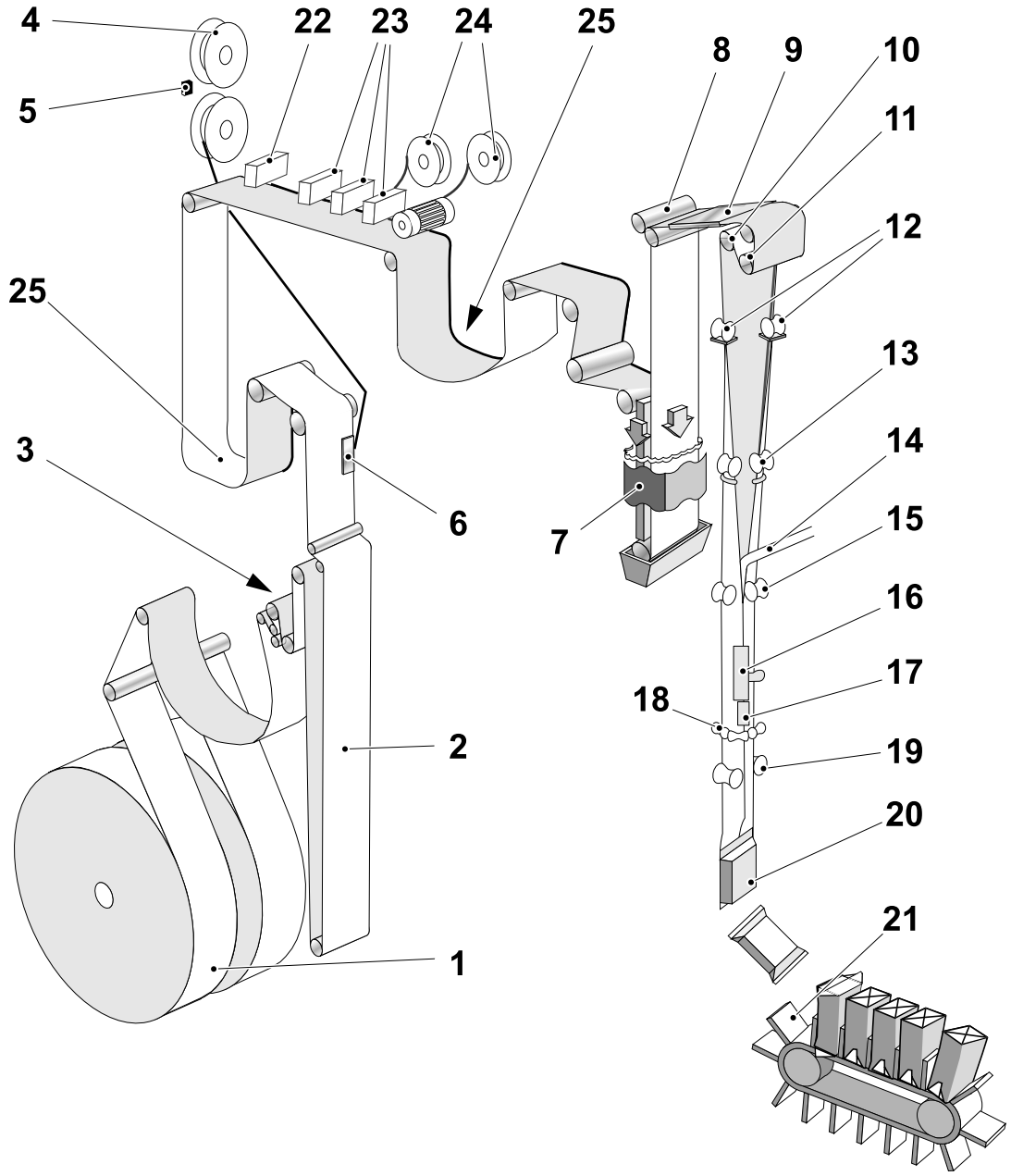

Machine with ASU

1 Packaging material reel
2 Packaging material magazine
3 Infeed unit
4 LS strip reels
5 Splicing unit for LS strip
6 Strip Applicator
7 Sterilisation bath
8 Calendar rollers
9 Air knife
10 Bending roller (driven)
11 Pendulum roller
12 Upper forming ring
13 Movable forming ring
14 Filler tube
15 Divided forming ring
16 LS nozzle
17 LS short stop nozzle
18 Lower forming ring
19 Tube support rollers
20 Package in jaw system
21 Final folder station chain
22 Punch unit
23 Patch/Tab sealer unit
24 Patch/Tab strip reels
25 Packaging material magazine

1.10 Crank

1.10.1 How to Crank the Machine

Note! The machine stops immediately if the crank switch is activated during PRODUCTION.

a) Turn the crank switch (1) downwards.

b) The exact degree position of the machine is shown on the degree scale (3) behind the window. Insert the crank (2) and crank the machine into the required position.

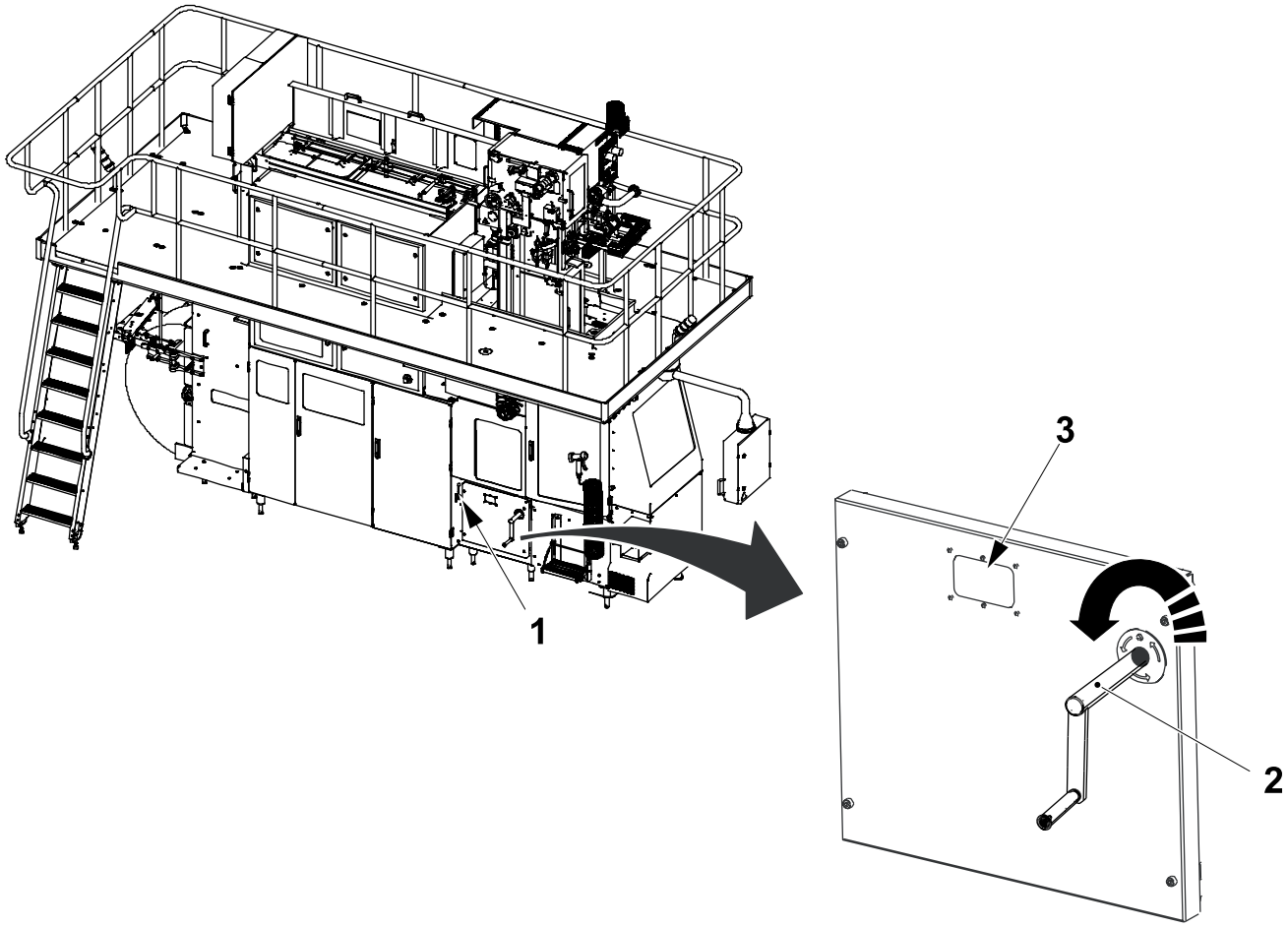

1 Crank switch
2 Crank
3 Degree scale

2 Alarms and Troubleshooting

Description

This chapter describes how to navigate and use the TPOP, what to do when alarms occur, and how to make machine settings.

CAUTION
Risk of damage to the equipment.
This chapter contains instructions for making machine settings. These settings must only be made by a trained TPOP operator.

2.1 Control Panel Description 2-5

2.1.1 Indicating Tower 2-6

2.2 TPOP Description 2-7

TPOP Main Window 2-7

2.3 Navigation 2-8

2.3.1 Selecting the Cause of an Event 2-10

2.3.2 Common Buttons and Icons 2-11

2.3.3 Common Symbols 2-12

2.3.4 Changing Values 2-13

2.3.5 Resetting a System Communication Fault 2-14

2.4 Program Steps 2-15

2.5 System Settings 2-18

2.5.1 Setting the Language 2-19

2.5.2 Setting the Time 2-20

2.5.3 Setting the Production Shifts 2-22

2.6 Alarm System 2-24

2.6.1 Alarm Group Buttons 2-25

2.6.2 General Information 2-26

2.6.3 Alarm Colour Codes 2-27

2.6.4 Alarm Handling 2-28

2.6.5 Reset Final Folder and ASU (Option) Door Alarm 2-30

2.6.6 Reset the Station Chain 2-31

2.6.7 Reset the Side Feeder 2-33

2.7 Collect System 2-35

2.7.1 Conditions for a Manually Registered Event 2-36

2.7.2 PLMS Phases 2-37

2.7.3 Delay in the Preparation Phase 2-38
2.7.4 Jump to Step Zero During the Preparation Phase 2-41
2.7.5 Manual Recording Causes of Production Stops 2-42
2.7.6 Check or Change a Production Stop Cause 2-46
2.7.7 Jump to Step ZERO During the PRODUCTION Phase 2-49
2.7.8 Jump to Step VENTING During the PRODUCTION Phase 2-50
2.7.9 Record Package Waste for Quality Checks 2-51
2.7.10 Record Maintenance Time 2-54
2.7.11 Copy Recorded Data 2-56
2.8 Manoeuvre System 2-57
2.8.1 Manoeuvre System Buttons 2-58
2.8.2 Display Line Configuration Status 2-59
2.8.3 Set Package Counters 2-61
Package Counters 2-63
Waste Counters 2-64
Packages per Tray/Unit 2-64
2.8.4 Set SA Strip Splice Pulse Time 2-66
2.8.5 Set SA Sealing TPIH Power 2-68
Set ASU Splice Pulse Time, Valid for Machines with ASU (Option) 2-69
2.8.6 Set Transversal Sealing TPIH Power 2-71
2.8.7 Manual Lubrication Sequence 2-73
2.8.8 Filling Mode Selection 2-75
2.8.9 Filling Product Parameters 2-77
2.8.10 Check Drive Position 2-79
2.8.11 Adjust Design Correction 2-81
2.8.12 Move Splicing Device, Valid for Machines Equipped with ASU (Option) 2-83

2.1 Control Panel Description

The TPOP display is a touch-sensitive screen. Pressing buttons and icons allows the operator to manage and communicate with the filling machine control system.

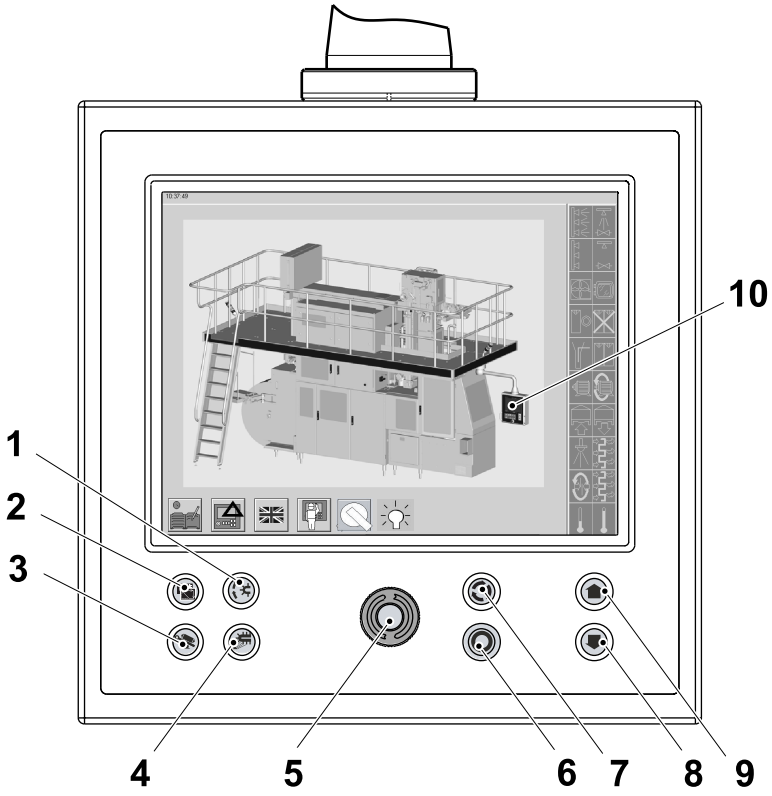

1 FINAL FOLDER INCHING flashes when inching is possible
2 TPOP RESET (flashing light = restart the TPOP)
3 PACKAGE EJECTOR
4 MANUAL FLUSHING (final folder and jaw system)
5 EMERGENCY STOP
6 SHORT STOP
7 JAW SYSTEM INCHING (flashes when inching is possible)
8 PROGRAM DOWN
9 PROGRAM UP
10 TPOP display

2.1.1 Indicating Tower

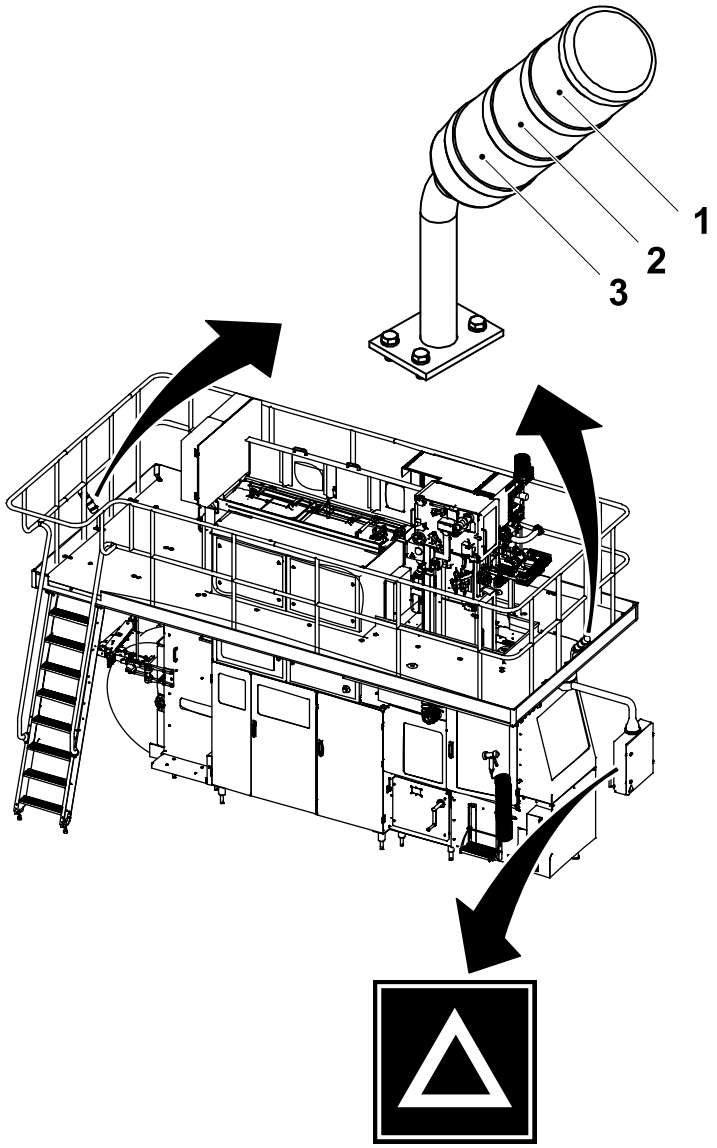

Standard machines (with PMI and without PullTab) shown

1 Red lamp
2 Yellow lamp
3 Blue lamp

When a machine fault occurs, the indicating tower light up.

The indicating tower colours are:

- RED lamp (1) ON means an Emergency stop.
- YELLOW lamp (2) ON means machine alarms or door open.
- BLUE lamp (3) flashing requires an operator's action.

The priority of the colours is from top to bottom.

If multiple alarms occur simultaneously, the alarm with highest priority overrides the others. When the highest level alarm switches OFF, the next level alarm appears.

When there is an alarm, the red and yellow lamps continue to flash until the operator acknowledges the alarm.

When the alarm is acknowledged, the lamp changes from flashing to a fixed light.

When the cause of the alarm is resolved and the alarm stops, the related alarm lamp switches OFF.

If the blue lamp is flashing, it switches OFF only when the cause of the alarm is resolved.

Press the `Alarm reset` button on the TPOP to reset all alarms. The signal lamp on the control panel changes from flashing to a fixed light, except when the blue lamp is flashing.

A warning signal takes place before machine start.

2.2 TPOP Description

The TPOP display is a touch-sensitive screen. Pressing buttons and icons allows the operator to communicate with and manage the filling machine control system.

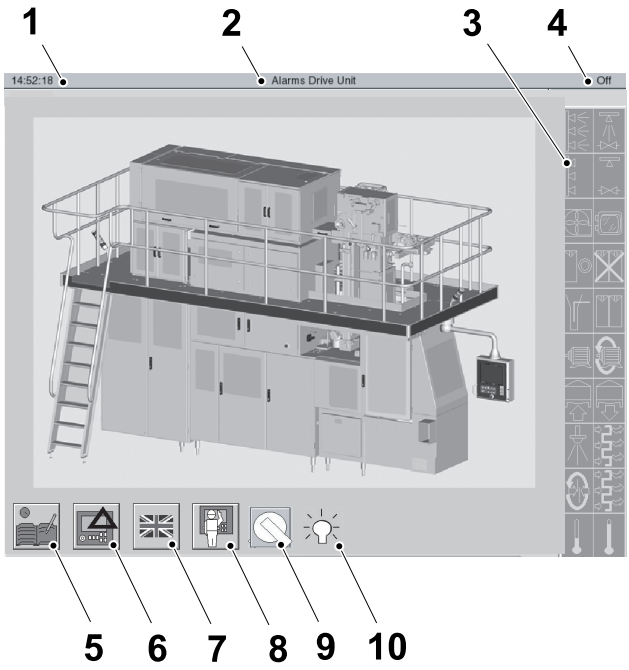

Display example

1 Current time
2 Alarm group (if any activated)
3 Program step symbol
4 Program step name
5 `Collect system` button
6 `Alarm system` button
7 `System setting` button
8 `Manoeuvre system` button
9 `Selector` button
10 `Lamp test` button

TPOP Main Window

The TPOP main window displays the buttons and icons used identify the status of the machine and to access the different sections of the filling machine control system.

2.3 Navigation

This section describes the commonly used buttons, icons and procedures used to navigate through the TPOP windows.



Press the `OK` button to record a data entry and close the active window.

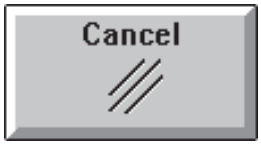

Press the `Cancel` button to close an active window without recording any data.



If the number entered is incorrect, press the `Clear` button and enter the correct number.



Press the `Exit` button to close the active window.

2.3.1 Selecting the Cause of an Event

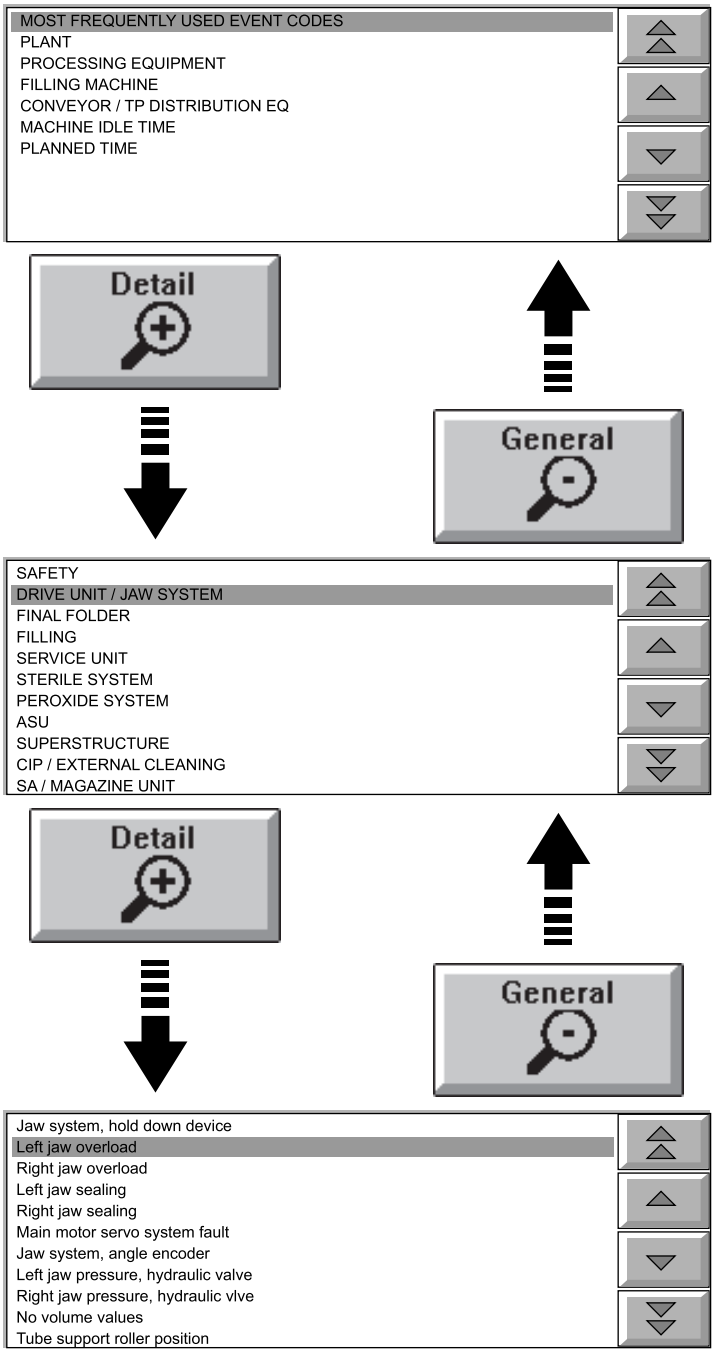

When selecting the cause of an event, different levels of detail are available.

The first window lists the generic causes. Use the `Arrow` buttons to select a group, then press the `Detail` button. Repeat until the cause is found.

To move back one level, press the `GENERAL` button.

Most Frequently Used Event Codes

Every time a specific cause is selected, the `MOST FREQUENTLY USED EVENT CODE` list is updated.

Note! Specific cause selection can also be made by pressing the alarm group button and selecting the alarm symbol.

2.3.2 Common Buttons and Icons

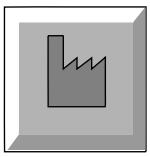

Factory button



Inductor icon

- `Factory` button - press and hold for at least three seconds to reset values to the factory setting. The button changes to white to indicate that the value has been reset.

  Note! Some settings have more than one factory value (such as the setting for the tab sealing pad heater that changes with the hole type). For these settings, the factory button only provides an approximate value.

- `Inductor` icon - press to display the current value(s) for the inductor

2.3.3 Common Symbols

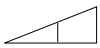

Set point

- `Set Point` - value that has been set for the particular function

2.3.4 Changing Values

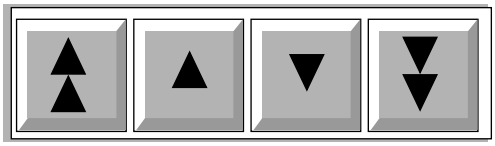

If a dialogue window has arrow keys, the values can be changed in increments of ten with the double-arrow keys or in increments of one with the single-arrow keys.

Note! After a single-arrow key has been pressed continuously for ten increments of one, the values will change by ten instead of one.

2.3.5 Resetting a System Communication Fault

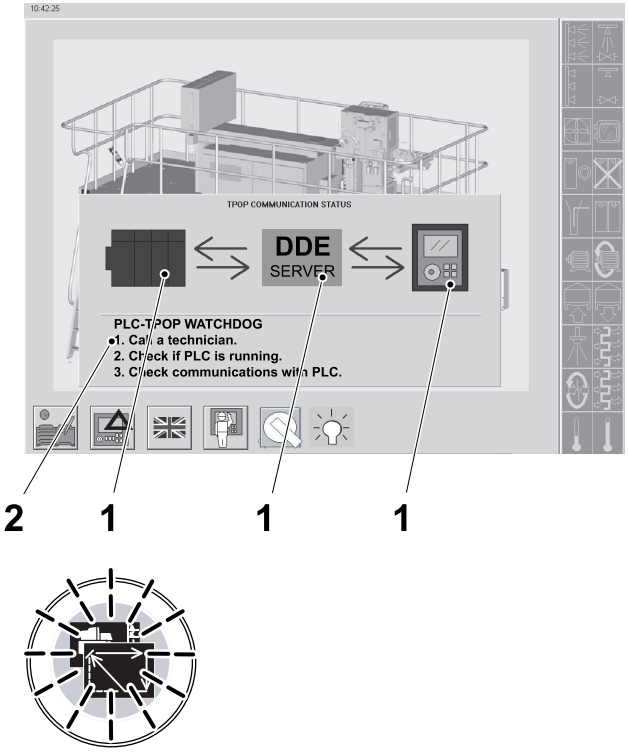

1 `Alarm`
2 Help window

If a communication fault occurs, a dialogue window is displayed on the TPOP display and the TPOP RESET button flashes to show that an error has occurred.

Note! Press one of the three `Alarm` symbols (1) to display the help window (2).

Press the TPOP RESET button to reset the TPOP.

Note! If the communication fault remains, call a technician to check the communication cables between the PLC and the PC unit.

2.4 Program Steps

This section describes the program steps displayed on the TPOP to indicate the machine status before, during, and after PRODUCTION and CIP.

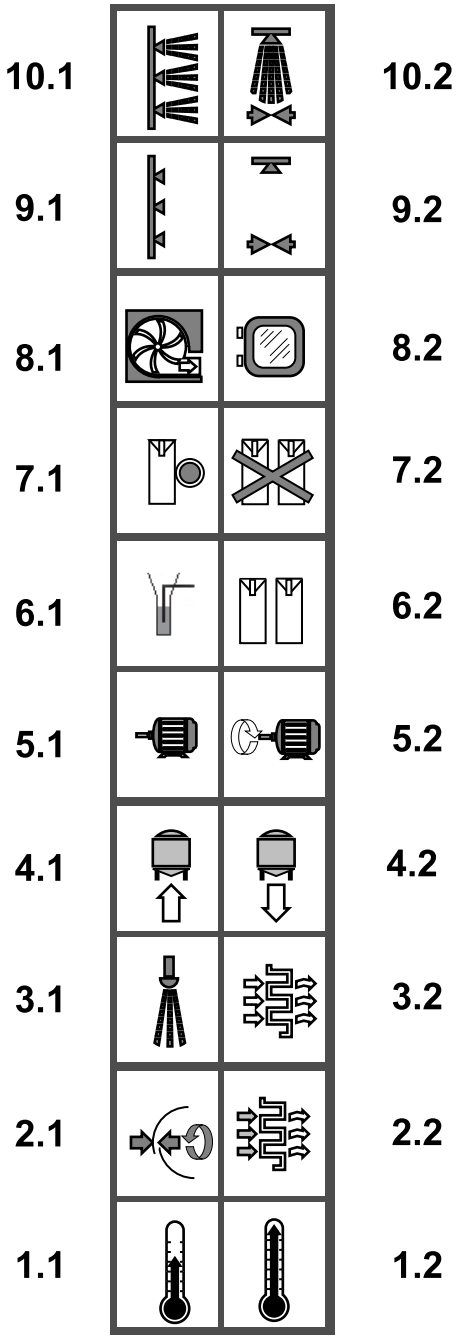

Before and During PRODUCTION

1.1 PREHEATING I (preheating of bath water)

1.2 PREHEATING II (preheating of machine)

2.1 TUBE SEALING

2.2 PREHEATING III (preheating of sterile air system)

3.1 SPRAYING SEQUENCE

3.2 DRYING

4.1 SIGNAL TO STERILISER

4.2 SIGNAL FROM STERILISER

5.1 READY FOR PRODUCTION

5.2 MOTOR START (machine running without filling)

6.1 FILLING

6.2 PRODUCTION

After PRODUCTION

7.1 SHORT STOP (Security stop)

7.2 PRODUCTION ENDED

8.1 VENTING (venting of aseptic chamber)

8.2 READY FOR DOORS TO BE OPENED

Cleaning CIP

9.1 PREPARATION FOR EXTERNAL CLEANING

9.2 PREPARATION FOR CIP

10.1 EXTERNAL CLEANING

10.2 CIP

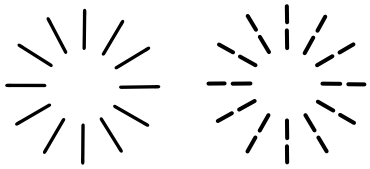

Fixed light Flashing light

A fixed light means this is the current program step.

A flashing light means that the machine is ready for the program step.

2.5 System Settings

This section describes how to set the language used by the TPOP, the time on the TPOP and the Production Shift Setting.

2.5.1 Setting the Language



1
Press the `System Setting` button.

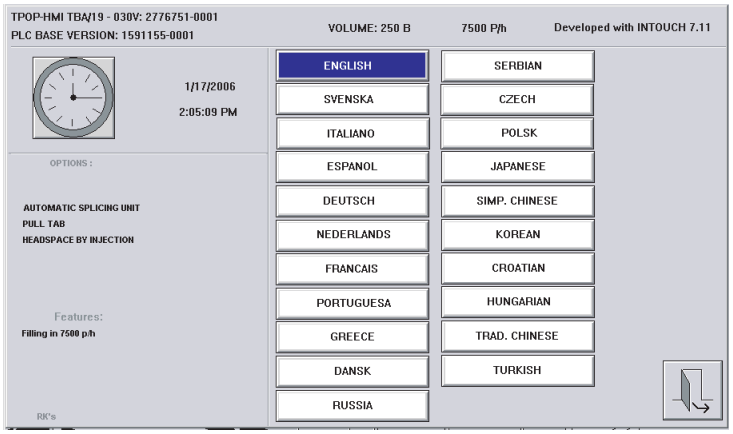

2
Press the required language button and wait for a few seconds.

Note! If the `TPOP Reset` button starts flashing, do not press it.



3
Press the `Exit` button.

2.5.2 Setting the Time



1

Note! The time setting procedure is only possible in step ZERO and with the PREPARATION and PRODUCTION phases closed.

Press the `System setting` button.



2

Press the `Clock` button.

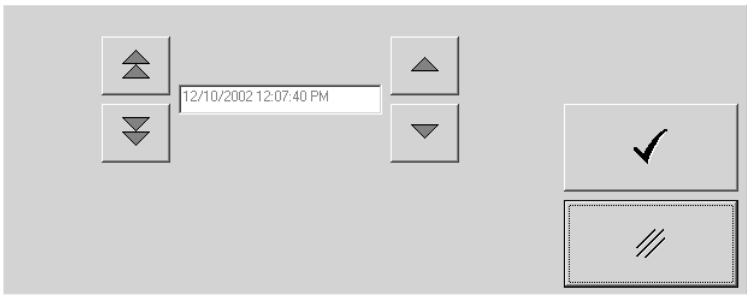

3

Press the double `Arrow` buttons to set the hours and the single `Arrow` buttons to set the minutes.



4
Press the OK button.



5
Press the Exit button.

2.5.3 Setting the Production Shifts



1

The Production shift setting can only be done in step ZERO and with the PREPARATION and PRODUCTION phases closed.

Press the `Collect System` button.



2

Press the `Shift` button.

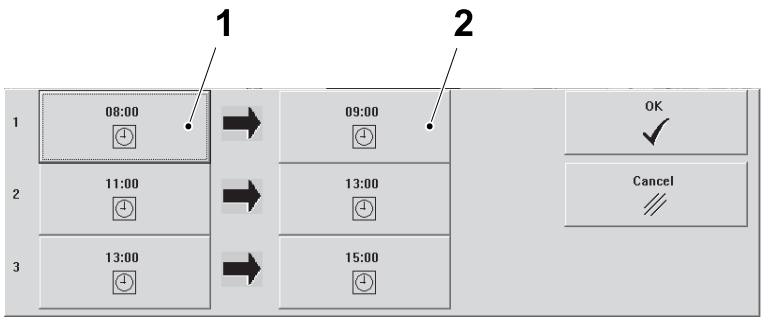

1 `Shift start time`
2 `Shift end time`

3

Press the required `Shift` button (1) or (2).

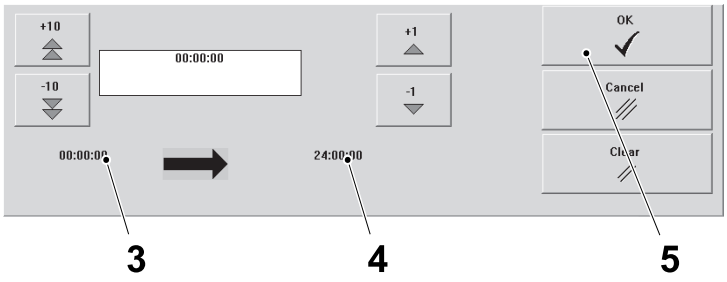

1 Start time
2 End time
3 OK

4

Note! Do not overlap the shift times otherwise an error will be displayed.

Input a start time (1) and an end time (2) for each shift as required, and then press the OK button (3).

Repeat for the other shifts.

2.6 Alarm System

This section describes the machine alarms and how to handle alarms with the TPOP.

2.6.1 Alarm Group Buttons



Alarm system

Alarms show where there is a fault in the machine and how to resolve it.

Alarms are divided into groups. When an alarm is activated, an alarm window appears with the activated alarm lit up.

If no alarms appear, press the Alarm system button.

The ALARM SYSTEM window is displayed showing the alarm groups. Each button opens the corresponding alarm window.

Note! Further alarm groups can be present depending on the machine configuration.

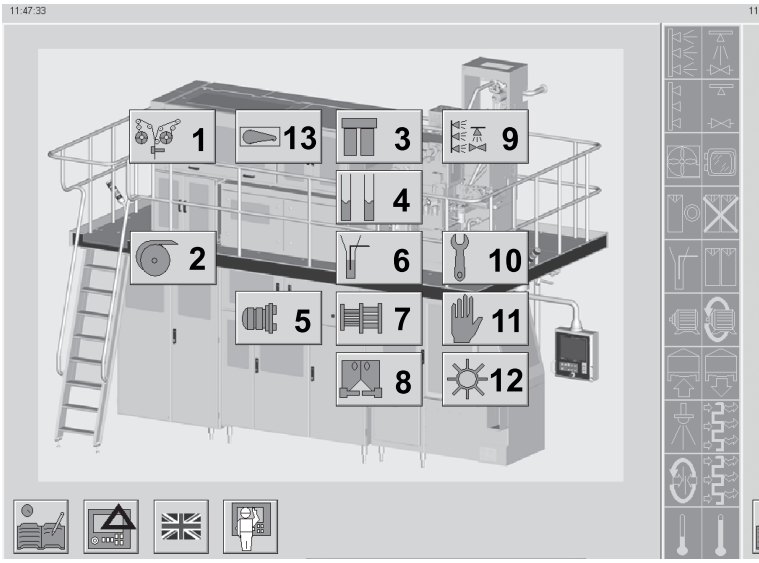

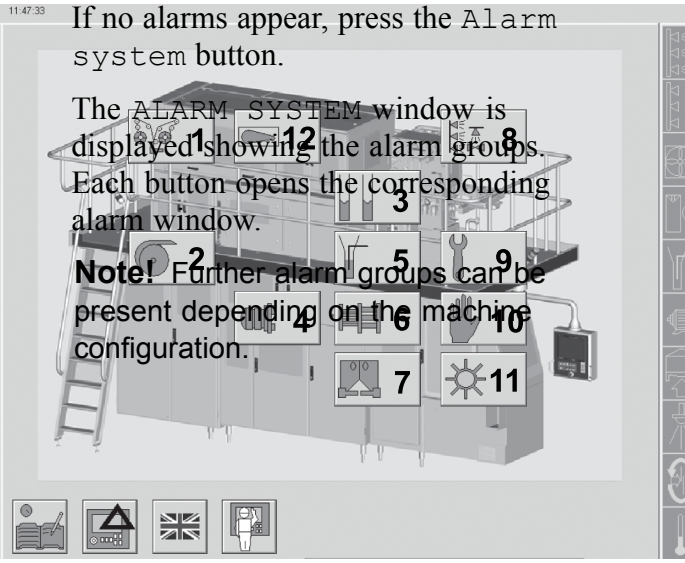

1 SA/Magazine
2 PMI or ASU (Option)
3 Superstructure
4 Peroxide system
5 Sterile system
6 Filling equipment
7 Design correction
8 Drive unit / Jaw system
9 External cleaning and CIP
10 Service unit
11 Safety, right
12 Final folder unit
13 PullTab unit (Option)

2.6.2 General Information



Multiple alarm



When the `Multiple alarm` button is displayed, other alarm groups have also been activated. Press the button to display these groups.

A triangle in the symbol for an alarm group, indicates that an alarm has not been acknowledged.

2.6.3 Alarm Colour Codes



Acknowledge

The alarms are colour coded:

- RED - hazardous condition
- YELLOW - abnormal condition
- BLUE - information or operator action.

A red or yellow alarm must be acknowledged. There is no need to acknowledge blue alarms they disappear when the cause is corrected.

Note! If the alarm window does not close after pressing the Acknowledge button, the cause of the alarm still exists.

2.6.4 Alarm Handling

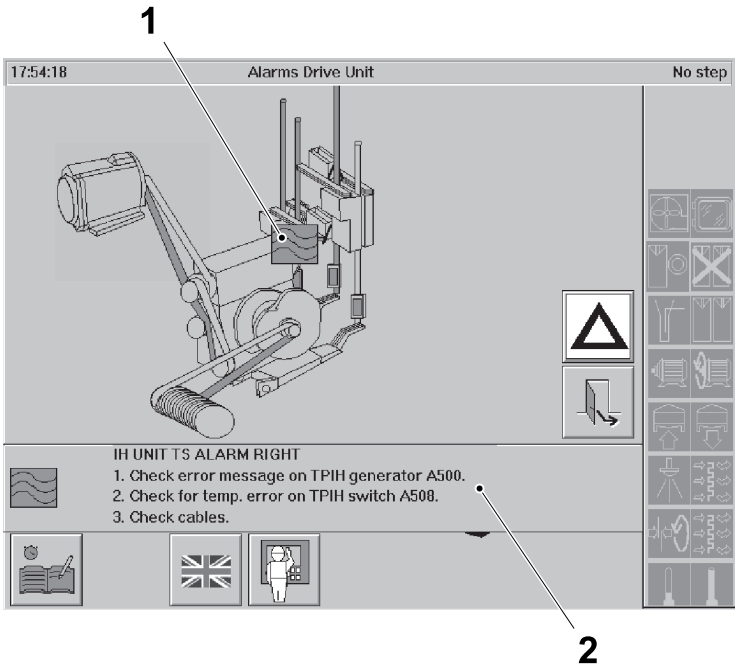

Display example

1 Lit symbol
2 Instruction window

1

When an alarm window opens, the active alarm is lit up. Press the lit symbol (1) to open the instruction window (2).

Follow the instructions in the order given.

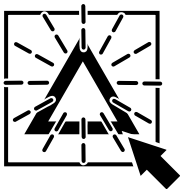

2

Press the flashing `Acknowledge` button to acknowledge the alarm.



3
Press the `Exit` button to return to the main window.

2.6.5 Reset Final Folder and ASU (Option) Door Alarm

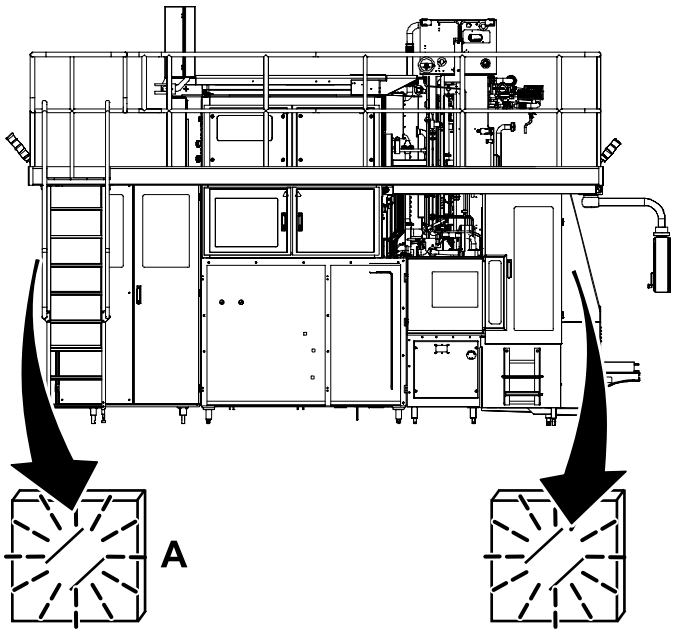

A Only machines with ASU (option)

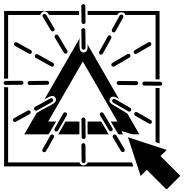

Reset the final folder and ASU (option) door alarms in the following way:

Press the flashing HARDWARE RESET button (arrow).

If needed, press the `Acknowledge` button on the TPOP.

2.6.6 Reset the Station Chain

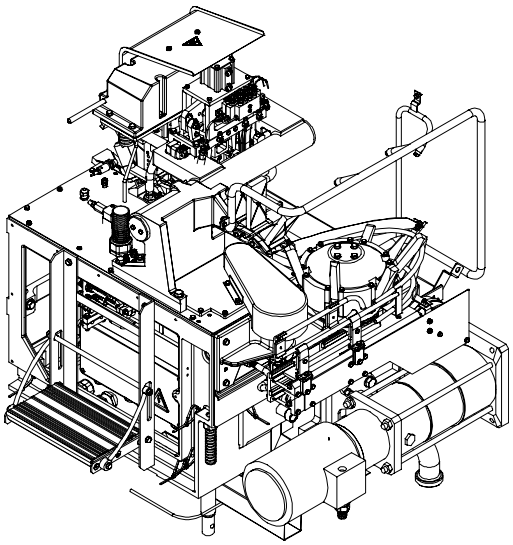

1

If the station chain has moved out of position, and an alarm occurs, then reset the station chain as follows:

Open the cover to the Final Folder.

Remove all of the packages from the station chain and outfeed unit and dispose of them.

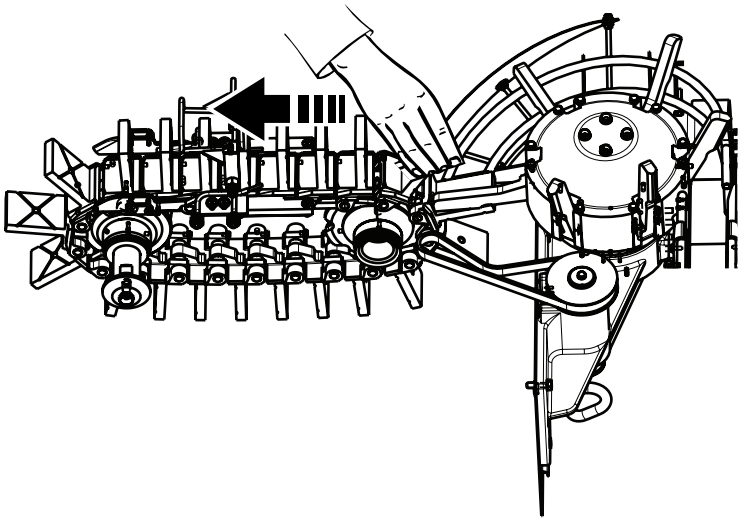

2

WARNING

Moving parts can crush and cut.
Be careful when working inside the machine.

Start near the outfeed unit and pull the station chain backwards, in the direction shown, into its correct position.

Note! If necessary, use a soft rubber mallet to move the station chain.

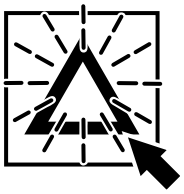

3

Press the flashing `Acknowledge` button to acknowledge the alarm.



4

Press the `Exit` button to return to the main window.

2.6.7 Reset the Side Feeder

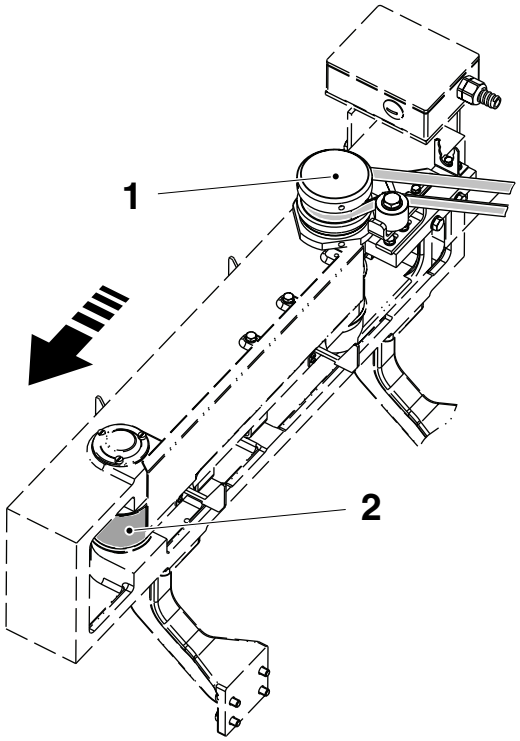

1 Clutch
2 Belt

1

If packages become jammed in the side feeder or in the DE outfeed conveyor, causing conveyor congestion, remove all of the packages from the conveyor and dispose of them.

Note! Do not damage the carriers when pulling the belt (2) .

To reset and synchronise the side feeder, pull the belt (2) by hand until the ball inside the clutch (1) engages with a click.

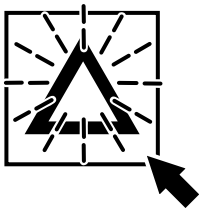

2

Press the flashing ACKNOWLEDGE button to acknowledge the alarm.



3

Press the EXIT button to return to the main window.

2.7 Collect System

This section describes how to manually register reasons in the TPOP for stops or delays in the PREPARATION and PRODUCTION phases of the machine and for other generic tasks.

2.7.1 Conditions for a Manually Registered Event



The machine automatically records the causes of events in the PREPARATION and PRODUCTION Phases.

The operator is asked to interact with the PLMS Collect system in the following cases:

Preparation Phase

- 2.7.3 Delay in the Preparation Phase
- 2.7.4 Jump to Step Zero During the Preparation Phase.

Production Phase

- 2.7.5 Manual Recording Causes of Production Stops
- 2.7.6 Check or Change a Production Stop Cause
- 2.7.7 Jump to Step ZERO During the PRODUCTION Phase
- 2.7.8 Jump to Step VENTING During the PRODUCTION Phase.

Generic Tasks

- 2.7.9 Record Package Waste for Quality Checks
- 2.7.10 Record Maintenance Time
- 2.7.11 Copy Recorded Data.

2.7.2 PLMS Phases

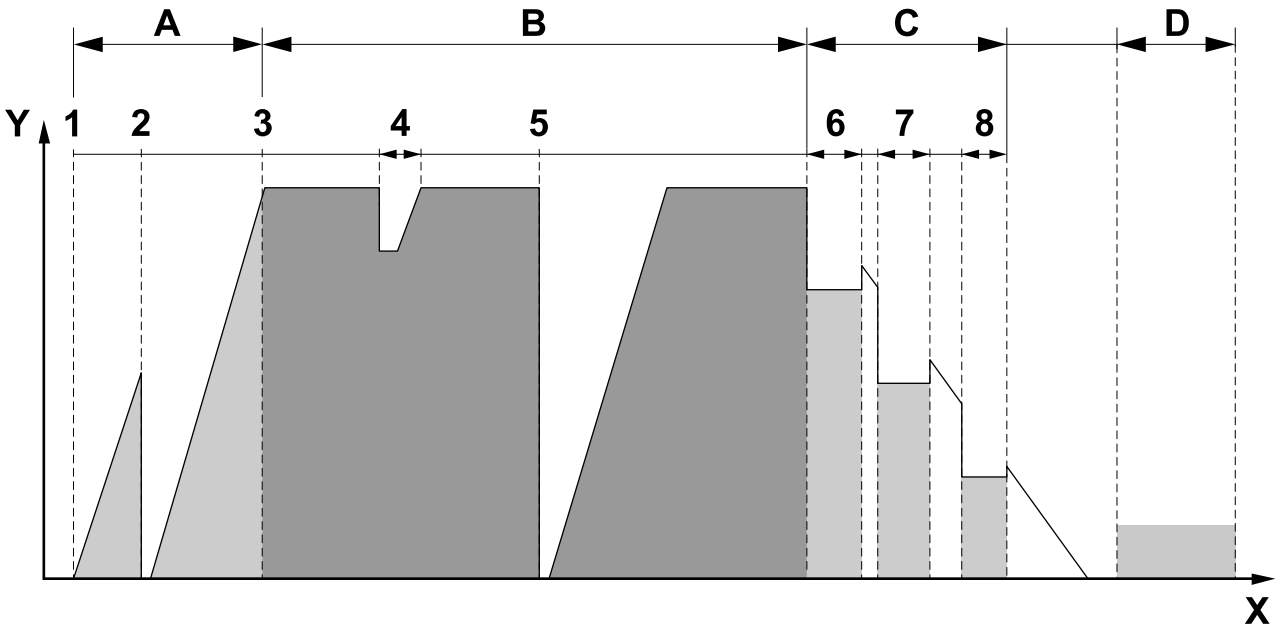

The diagram show an example of a filling machine PLMS Attendance Phase.

X Time

Y Machine step level

1 PREHEATING II
2 Jump to ZERO during PREPARATION Phase (only if it occurs)
3 Motor start
4 SHORT STOP (only if it occurs)
5 Jump to ZERO during PRODUCTION Phase (only if it occurs, CLEANING and PREPARATION follow)
6 VENTING
7 CLEANING - CIP
8 EXTERNAL CLEANING

A Preparation Phase

Starts with the first attempt to prepare the equipment for planned production. It ends when the Production Phase starts.

B Production Phase

Starts with the first attempt to produce packages. It ends when the planned production is completed or when production is interrupted.

C After Production Phase

Starts with the first attempt to run the after-production program. It ends when tasks in the After Production Phase have been completed.

D Planned Maintenance Phase

Starts at the beginning of the first preventive action. It ends when the planned maintenance has been completed.

2.7.3 Delay in the Preparation Phase



1

If the PREPARATION phase is longer than 40 minutes, the `Collect system` button starts to flash five minutes after the PRODUCTION phase has started.

Press the `Collect system` button.

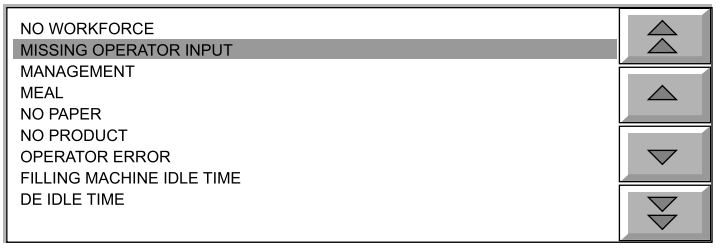

2

The TPOP prompts the question:

`WHY SO MUCH PRE-PRODUCTION DELAY?`

Select the correct cause for the event, see 2.3.1 Selecting the Cause of an Event on page 2-10 for details.

If no answer is given within ten minutes, `MISSING OPERATOR INPUT` will be automatically assigned as the stop reason.



3

The `CLOCK` button shows the extra PREPARATION time. The system allows the extra PREPARATION time to be divided and allocated to different causes.

Press the `CLOCK` button.

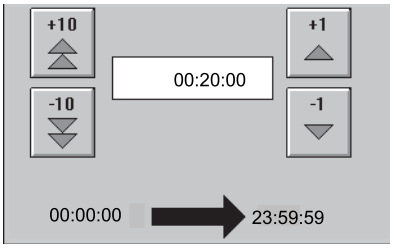

4
Select the reasons for the delay, and enter the time taken for each reason.



5
Press the OK button to accept the entry and return to the previous window.



6
The Clock button shows any remaining delay time that has not been allocated.



7
Press the OK button to record the data entered and return to the main window.



8

If the extra PREPARATION time is not fully allocated, the `Collect system` button continues to flash.

Press the `Collect system` button and repeat the procedure to fully allocate the remaining extra PREPARATION time.

2.7.4 Jump to Step Zero During the Preparation Phase

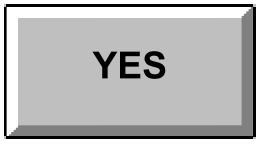

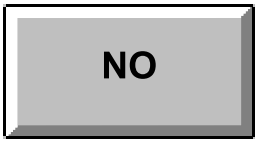

When the machine steps down to ZERO during the PREPARATION phase the TPOP prompts the following question:

`DO YOU WANT TO CONTINUE THE PREPARATION PHASE?`

- If the answer is `YES`, the TPOP keeps the PREPARATION phase open. After ten minutes in step ZERO, the TPOP prompts the same question again. If the answer is `YES` again, the system allows an additional ten minutes in step ZERO and then closes the PREPARATION phase automatically
- If the answer is `NO`, the TPOP closes the PREPARATION phase
- If no answer is given within 20 minutes, the PREPARATION phase closes automatically.

2.7.5 Manual Recording Causes of Production Stops



1

During PRODUCTION phase, the machine may stop because of:

- conveyor congestion
- manual MOTOR START interruption
- manual SHORT STOP
- manual EMERGENCY STOP
- step out from PRODUCTION (Step up or Step down)
- opening a door.

The `Collect system` button starts to flash.

Press the `Collect system` button.

2

The TPOP prompts one of the following questions:

- REASON FOR CONVEYOR CONGESTION?
- WHY DID YOU INTERRUPT MOTOR START?
- WHY DID YOU PRESS SHORT STOP?
- WHY DID YOU PRESS EMERGENCY STOP?
- WHY DID YOU STEP OUT FROM PRODUCTION?
- WHY DID YOU OPEN THE DOOR?

Note! The TPOP prompts the question "WHY DID YOU INTERRUPT MOTOR START?" only at the first manual MOTOR START interruption after the PREPARATION phase.

Note! If the automatic catch of the distribution equipment stop function is enabled, the TPOP button will flash after a conveyor congestion only if a distribution equipment stop has not been detected.

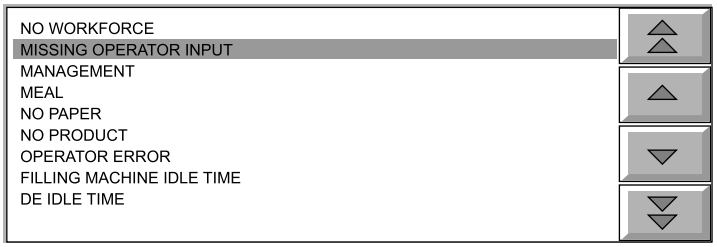

3

Answer by selecting the correct cause for the event, see 2.3.1 Selecting the Cause of an Event on page 2-10 for details.

If no answer is given within ten minutes after the restart, `MISSING OPERATOR INPUT` is assigned automatically as a stop reason.

Note! If the stop is due to `CONVEYOR CONGESTION`, and no cause is manually selected within ten minutes after the restart, `GENERIC CONVEYOR CONGESTION` is assigned automatically as the reason for the stop.



4

The `Clock` symbol displays the total time taken for the stop.



5

When there is manual waste, press the `Waste number` button.

Note! Manual waste means packages removed by the operator.

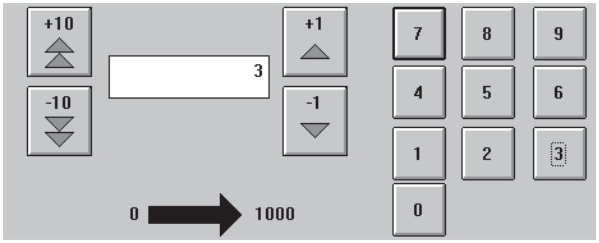

6

Use the `Arrow` buttons or the numeric keypad to enter the number of packages taken.



7

Press the `OK` button to accept the entry and return to the previous window.



8

Press the `OK` button to record the stop cause, the waste and return to the main window.

2.7.6 Check or Change a Production Stop Cause



1

During a production stop, it is possible to check or change production stop causes which have been automatically assigned by the system.

Press the `Collect system` button.

Note! This button is only available during the stop and during the first ten minutes after restarting.



2

Press the `SeeStop` button to check if the recorded cause of the stop is correct.



3

If the cause is not correct, select the correct cause in the scroll lists, see 2.3.1 Selecting the Cause of an Event on page 2-10 for details.



4

When there is a manual waste, press the `Waste number` button.

Note! Manual waste means packages removed by the operator.

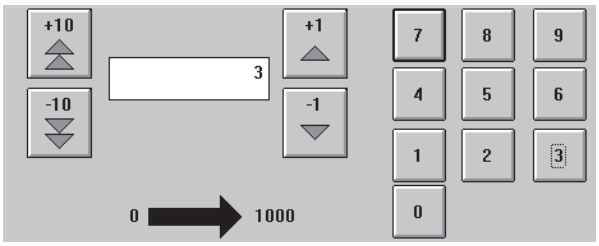

5

Use the `Arrow` buttons or the numeric keypad to enter the number of packages taken.



6

Press the `OK` button to accept the entered data for package numbers and return to the previous window.



7

Check the `Engineer attended` function to mark the cause and easily identify it in the Off-line analysis report.



8

Press the OK button to record the entered data and return to the main window.

2.7.7 Jump to Step ZERO During the PRODUCTION Phase



YES = End of production

NO = Machine failure - Prepare for a new production

When the machine steps to ZERO during the PRODUCTION phase the TPOP prompts the following question:

`IS THIS THE END OF PRODUCTION?`

- If the answer is `YES`, the TPOP closes the PRODUCTION phase
- If the answer is `NO`, the TPOP keeps the PRODUCTION phase open and the period of time until the next PRODUCTION is recorded as a PRODUCTION stop. If the machine remains in step ZERO, the question appears again ten minutes after the first prompt. If the answer is `NO` again, the system allows an additional ten minutes in step `ZERO`, then closes the PRODUCTION phase automatically
- If no answer is given within 20 minutes, the PRODUCTION phase closes automatically.

2.7.8 Jump to Step VENTING During the PRODUCTION Phase



YES = End of production

NO = Machine failure - Prepare for a new production

When the machine steps to VENTING during the PRODUCTION phase the TPOP prompts a question.

`IS THIS THE END OF PRODUCTION?`

- If the answer is `YES` the TPOP closes the PRODUCTION phase
- If the answer is `NO` the TPOP keeps the PRODUCTION phase open and the period of time until the next PRODUCTION is recorded as PRODUCTION stop
- If no answer is given within four minutes the TPOP assigns as default `YES`.

2.7.9 Record Package Waste for Quality Checks



1

Note! Remember to record the number of packages taken whenever packages are collected for quality checks.

Press the `Collect system` button.



2

Press the `Waste` button.

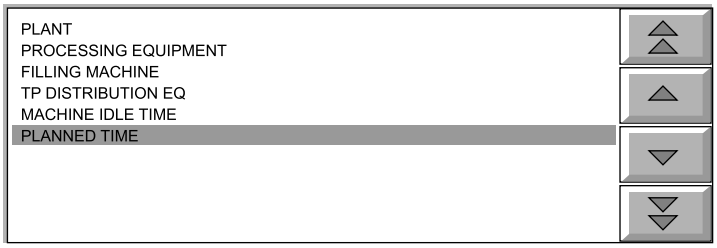

3

Use the `Arrow` keys to select the `PLANNED TIME`.



4
Press the `Detail` button.

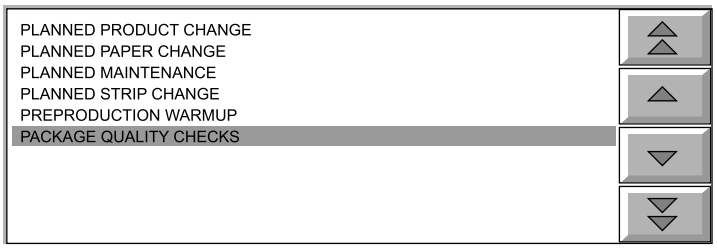

5
Use the arrow keys to select `PACKAGE QUALITY CHECKS`.



6
Press the `Waste number` button.

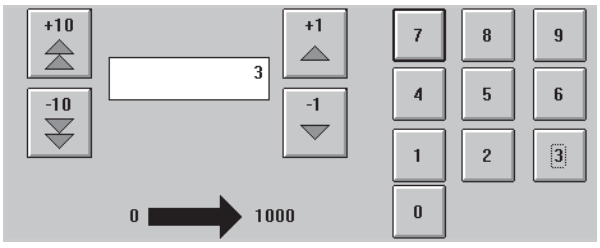

7
Use the `Arrow` buttons or the numeric keypad to enter the number of packages taken.



8

Press the OK button to accept the entry for package numbers and return to the previous window.



9

Press the OK button to record the data entry and return to the main window.

2.7.10 Record Maintenance Time



1
Press the `Collect system` button.



2
Press the `Planned maintenance` button.

Note! This button is only available in step ZERO, and with the PREPARATION and PRODUCTION phases closed.

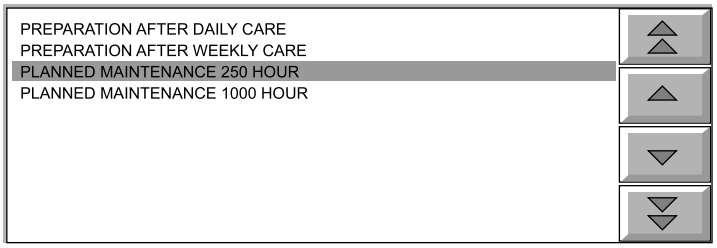

3
Select the correct item, see 2.3.1 Selecting the Cause of an Event on page 2-10 for details.



4
Press the `Clock` button.

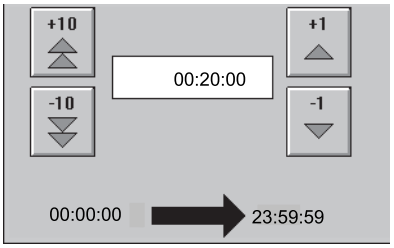

5
Use the `Arrow` buttons or the numeric keypad to enter the time used.



6
Press the `OK` button to accept the time entry and return to the previous window.



7
Press the `OK` button to record the data entry and return to the main window.

2.7.11 Copy Recorded Data



The `CopyLog` button is used to copy data from the PC unit to a USB key.

To analyse the data collected by the system, the data must be copied to an office PC and analysed utilising the appropriate software.

2.8 Manoeuvre System

This section describes how to use the TPOP to make machine settings, view the number of packages wasted, reset counters and to set the number of packages per tray/unit.

2.8.1 Manoeuvre System Buttons



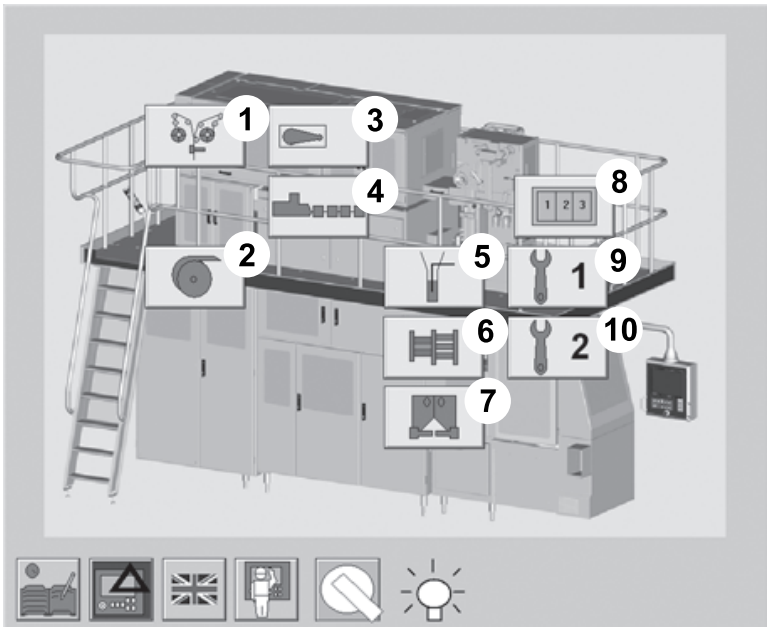

1 Strip applicator
2 ASU (option)
3 PullTab (option)
4 Line configuration
5 Filling System
6 Design Correction
7 Drive/Jaw Unit
8 Package counter
9 Settings 1
10 Settings 2

Press the Manoeuvre system button to view the buttons corresponding to the various manoeuvre functions.

Press a Manoeuvre button to open the associated manoeuvre window.

Note! The Settings 2 button (10) is only available in step ZERO.

Note! Further manoeuvre buttons can be present depending on the machine configuration.

The following pages provide instructions on how to perform typical actions within the manoeuvre windows. The actions performed use a common logic which is repeatable in all manoeuvre windows.

2.8.2 Display Line Configuration Status



1
Press the `Manoeuvre system` button.

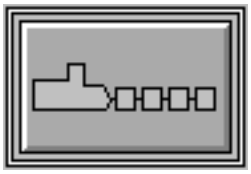

2
Press the `Line configuration` button.

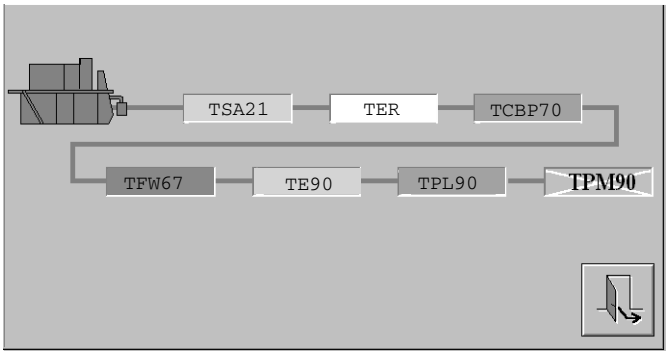

3
The configuration of the line is shown and the colour of the distribution equipment has the following meaning:

- Yellow = Alarm
- White = Preparation
- Green = Production
- Grey = OFF
- Cross = Equipment not found



4
Press the `Exit` button.

2.8.3 Set Package Counters



1
Press the `Manoeuvre system` button.

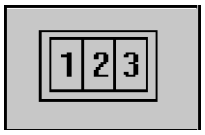

2
Press the `Package counter` button.

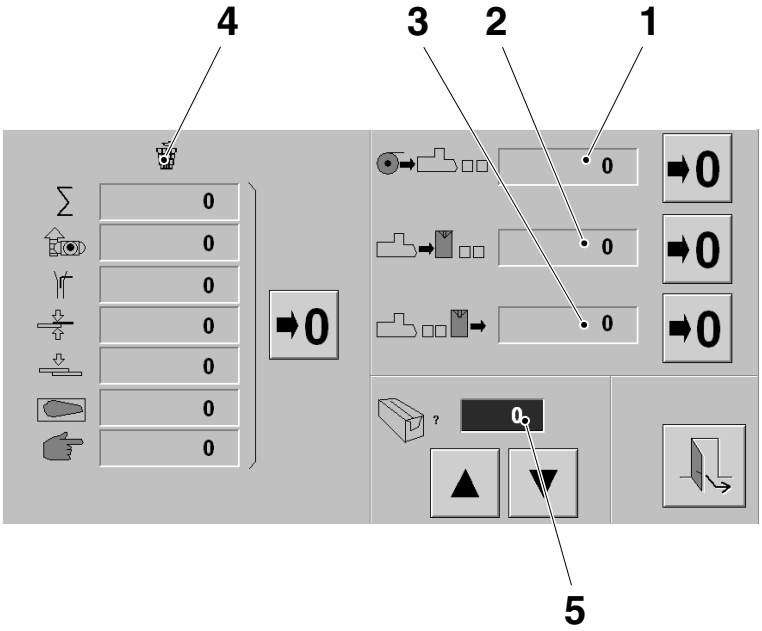

1 Incoming package counter
2 Exiting package counter
3 Last point DE package counter
4 Waste counter
5 Packages per tray/unit counter

3

The `Package monitoring` window appears, displaying the following package counters:

- Incoming package counter (1)
- Exiting package counter (2)
- Last point DE package counter (3)
- Waste counter (4)
- Packages per tray/unit counter (5)

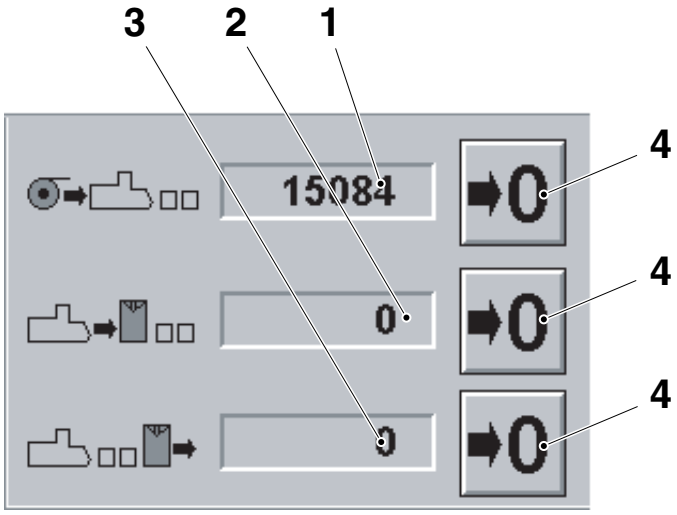

1 Incoming package counter
2 Exiting package counter
3 Last point DE package counter
4 `Reset` button

4

Package Counters

The counter (1) displays the incoming packages into the filling machine.

The counter (2) displays the number of packages exiting from the final folder.

The counter (3) displays the number of packages passing the last counting point photocell on the packaging line or coming out from the cardboard packer according to the configuration.

The counters can be reset by pressing and holding the corresponding `Reset` button (4) for 2 seconds.

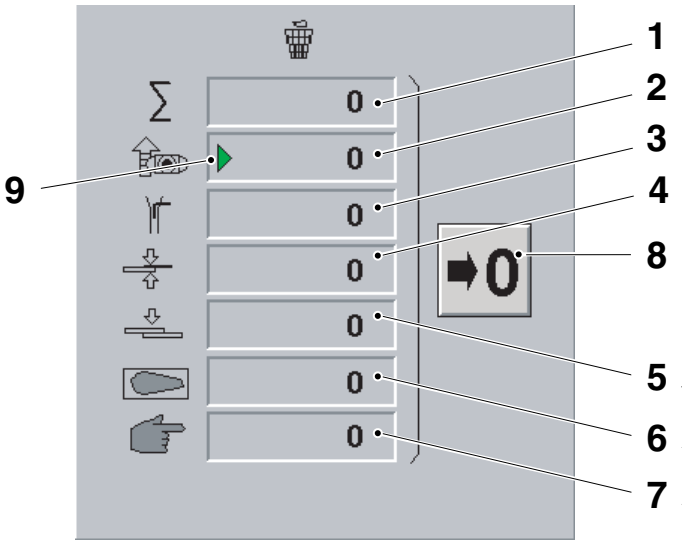

1 Total waste
2 Design correction system
3 Filling system
4 Strip applicator splice
5 Packaging material splice
6 Tab
7 Manual waste
8 `Reset` button
9 Arrow symbol

5

Waste Counters

The waste counters show which part of the machine is causing waste, see illustration.

The counters can be reset by pressing and holding the `Reset` button (8) for two seconds.

The arrow symbol (9) shows the most recent reason for waste.

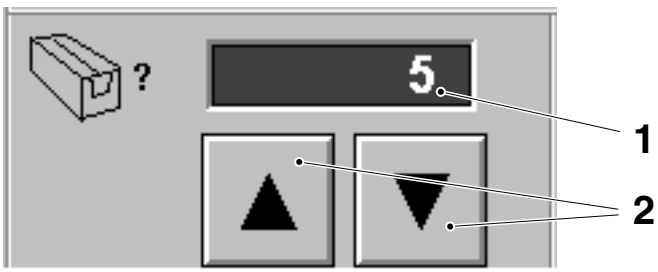

1 Packages per tray/unit counter
2 Button for change value

6

Packages per Tray/Unit

The counter (1) displays the number of packages per tray/unit. Press the buttons (2) to change the value.

The value of the counter (1) has a range of 1 to 200 packages.

Note! This setting is not available if the cardboard packer is the last counting point configured for the packaging line.



7

Press the `Exit` button twice.

2.8.4 Set SA Strip Splice Pulse Time



1
Press the `Manoeuvre system` button.

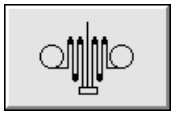

2
Press the `Strip applicator` button.

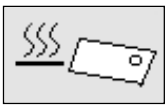

3
Press the `Strip applicator pulse` button.

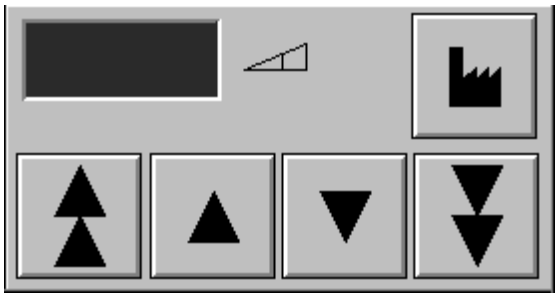

4

Use the `Arrow` buttons to set the strip cut pulse time according to the values reported in the MM section Strip Applicator - Heating Device.



5

Press the `Exit` button.

2.8.5 Set SA Sealing TPIH Power

For machines equipped with ASU (Option), go to Set ASU Splice Pulse Time, Valid for Machines with ASU (Option) on page 2-69.



1
Press the `Manoeuvre system` button.

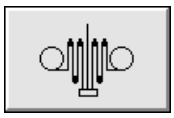

2
Press the `Strip applicator` button.



3
Press the `Strip applicator inductor` button.

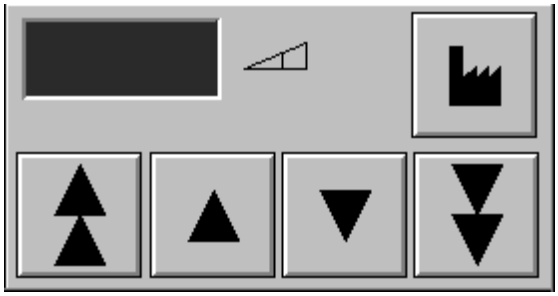

4
Use the `Arrow` buttons to set the Strip Applicator power according to the values reported in the MM section TPIH System - Set SA Power.



5
Press the `Exit` button.



6
Set ASU Splice Pulse Time, Valid for Machines with ASU (Option)
Press the `Manoeuvre system` button.

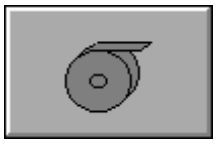

7
Press the ASU button.

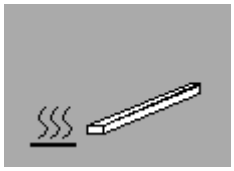

8
Press the TPO bar button.

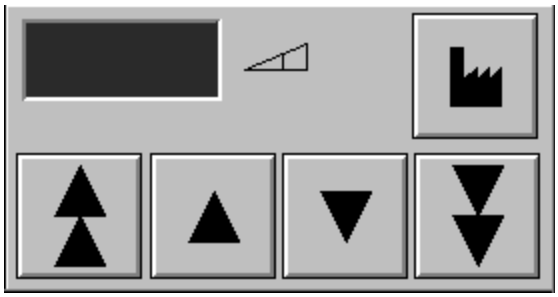

9
Use the Arrow buttons to set the TPO bar splicing time according to the values reported in ASU MM section Set TPO Bar.



10
Press the Exit button.

2.8.6 Set Transversal Sealing TPIH Power



1
Press the `Manoeuvre system` button.

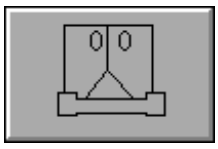

2
Press the `Jaw unit` button.

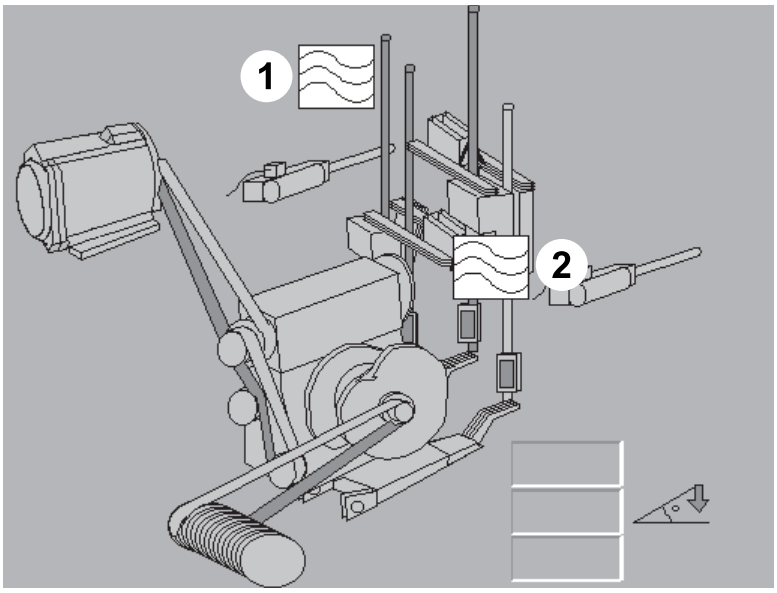

1 Sealing power RH Jaw
2 Sealing power LH jaw

3

Press the `TS Setting` symbol to set the sealing power for the RH (1) and/or LH (2) jaws.

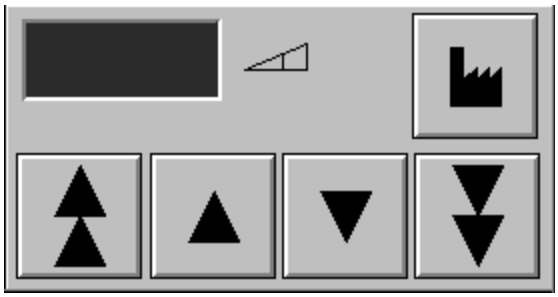

4

Use the `Arrow` buttons to set the TS power according to the values reported in the MM section TPIH System - Set TS Power.



5

Press the `Exit` button.

2.8.7 Manual Lubrication Sequence



1
Press the `Manoeuvre system` button.

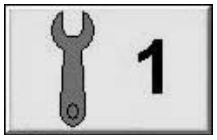

2
Press the `Settings` button.



3
Press the `Manual lubrication` button.



4

Press and hold the `1` button for approximately two seconds until the lubrication sequence starts.



5

Press the `Exit` button.

2.8.8 Filling Mode Selection



1
Press the `Manoeuvre system` button.

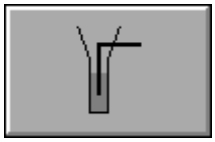

2
Press the `Filling system` button.

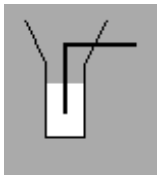

3
Press the `Filling mode selection` button.

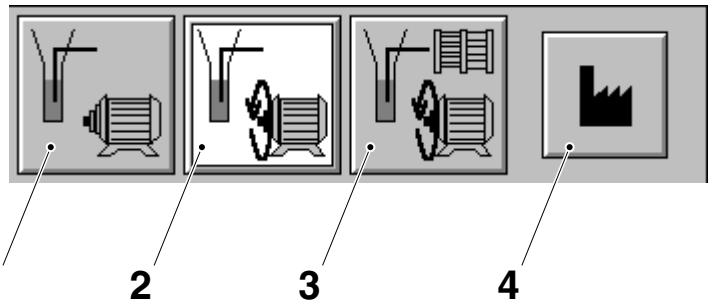

1 Pre-filling
2 Asynchronous filling
3 Normal filling
4 Reset parameters button

4

Select the required filling mode by pressing and holding for three seconds one of the `Filling mode` buttons.



5

Press the `Exit` button.

2.8.9 Filling Product Parameters



1
Press the `Manoeuvre system` button.

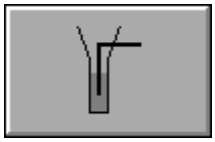

2
Press the `Filling system` button.



3
Press the `Product parameters` button.

This function allows to store and reuse a specific flow (up to four) that has been optimised for a product.

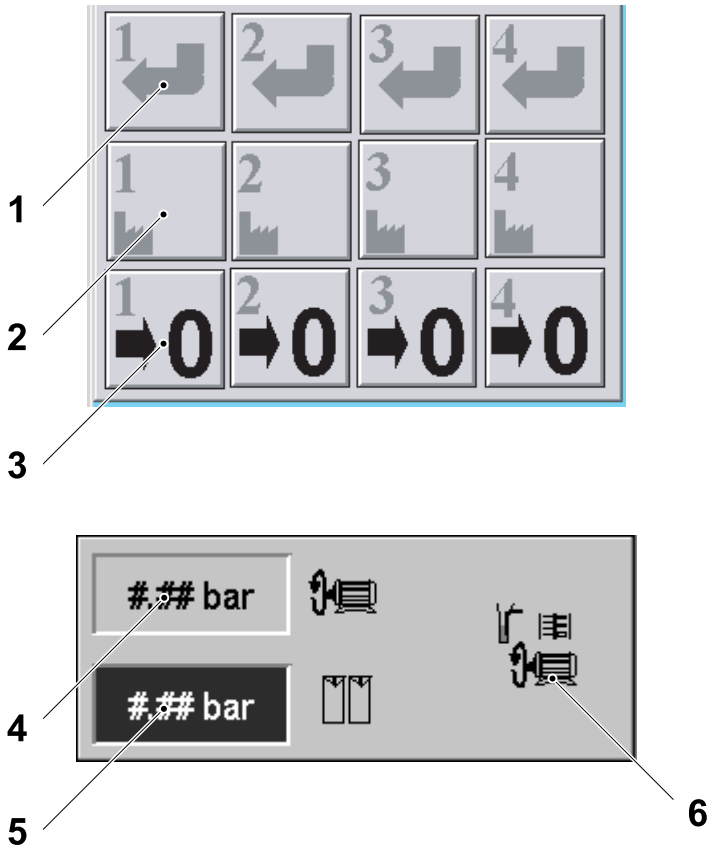

1 Display and store
2 Load
3 Reset
4 Start flow value
5 Production flow value
6 Filling mode icon

4

There are four programmable filling modes. For each one:

The Display and store button (1) has two functions:

- Press the Display and store button (1) to display the start flow (4) and production flow (5) values.
- Press and hold the Display and store button (1) for three seconds to store the pressure flow values in use, overwriting any previous values.

The Load button (2) loads the pre-programmed filling mode parameters:

- Press and hold the Load button (2) for three seconds to load the pre-programmed start flow (4) and production flow (5) values, for example, when changing product.

The Reset button (3) resets the stored values for the filling mode.

The icon (6), which is also shown on each Load button (2), identifies the filling mode currently in use.



5

Press the Exit button.

2.8.10 Check Drive Position



1
Press the `Manoeuvre system` button.

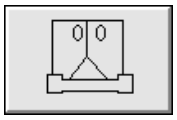

2
Press the `Drive unit` button.

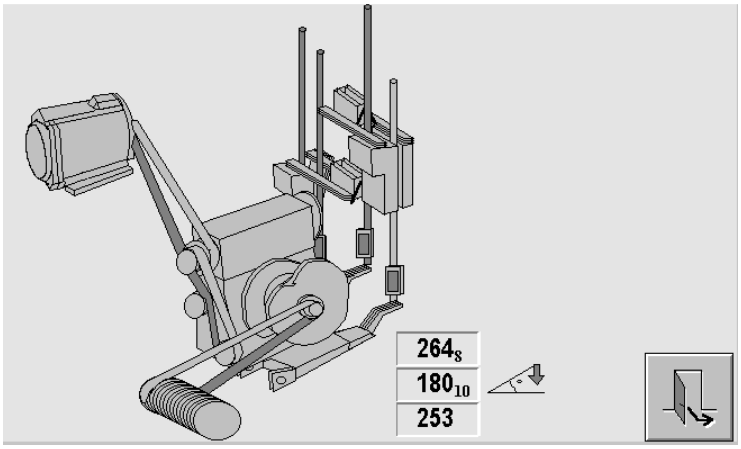

3
Crank the filling machine until the drive is in the required position, see section 1.10.1 How to Crank the Machine.



4
Press the `Exit` button.

2.8.11 Adjust Design Correction



1
Press the `Manoeuvre system` button.

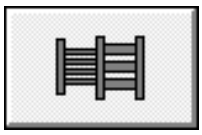

2
Press the `Design correction` button.

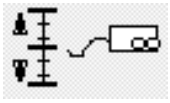

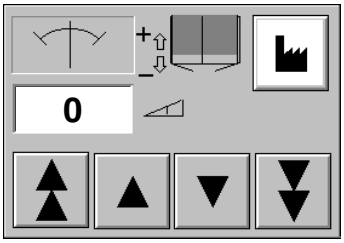

3
Press the `Adjustment` button and then adjust the values as required.



4
Press the `Exit` button.

2.8.12 Move Splicing Device, Valid for Machines Equipped with ASU (Option)

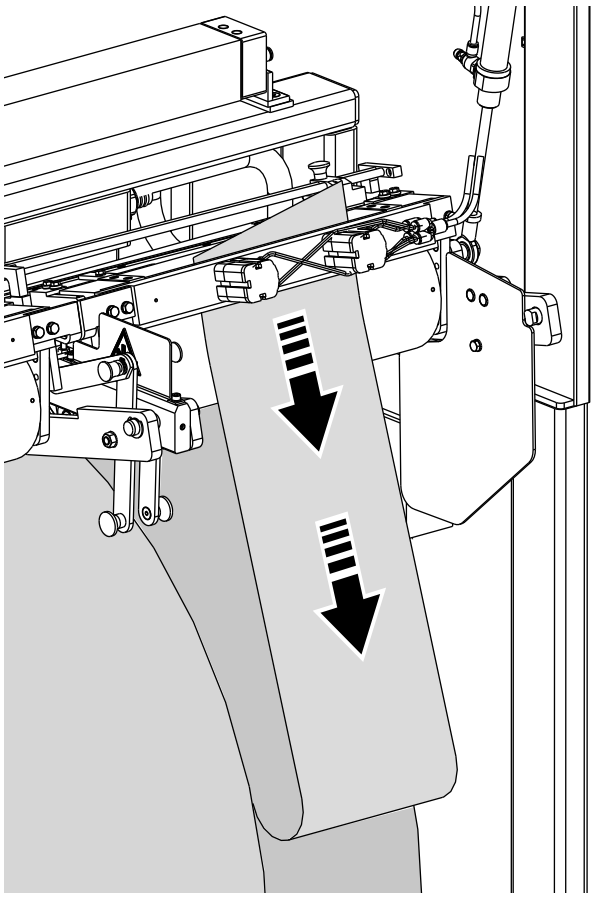

1

Make sure there is no packaging material loop in the ASU. If else, pull out all the packaging material out of the ASU.

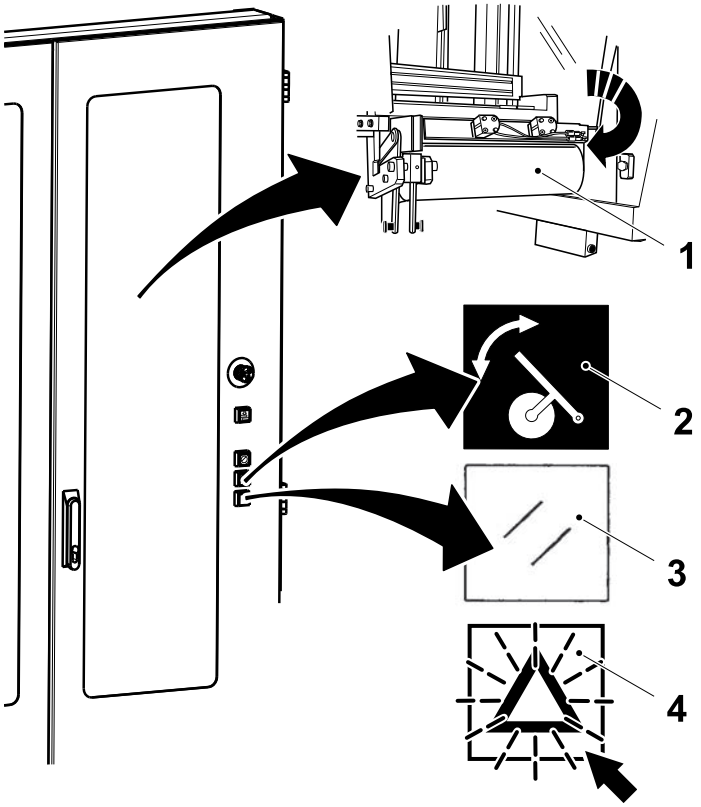

1 Material holder
2 PACKAGING MATERIAL HOLDER
3 HARDWARE RESET
4 `Acknowledge`

2

Close the ASU doors.

Press the HARDWARE RESET button (3).

Press the `Acknowledge` button (4) on the TPOP.

Make sure that both material holders (1) are in their lower position. If they are not, press the PACKAGING MATERIAL HOLDER button (2).



3

If not already done, step up the machine to step PREHEATING I:

Press the PROGRAM UP button.

The Preheating I symbol lights.



4
Press the `Manoeuvre` button.

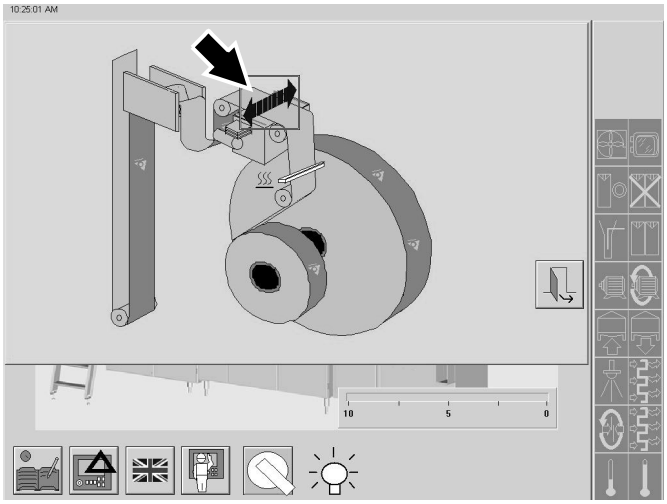

5
Press and hold the `Splicing device` button for three seconds.



6
Press the `Exit` button.

This page intentionally left blank

3 Preparation

Description

This chapter describes all tasks that must be performed before the equipment can be started for production.

WARNING

Sudden and violent chemical reaction.

Do not use chlorine-based or iodine-based cleaning compounds when cleaning parts which may come in contact with hydrogen peroxide.

3.1 Preparation After Daily Care 3-5

Valid with ASU (Option) only..... 3-7

Valid with HI (option) only 3-10

Machines without HI 3-15

Machines Equipped with HI (option) 3-17

HI (option) Bypassed..... 3-20

Valid for all Machine Configurations 3-21

Valid with HI (option) only 3-27

Loading Chart Paper 3-29

Change the Print Head 3-32

Valid with PMI only 3-39

Valid for machines with JUMO Process Recorder..... 3-42

After 20 Minutes..... 3-43

After 40 Minutes..... 3-43

3.2 Preparation After Weekly Care 3-45

Valid with ASU (option) only..... 3-47

Machines with PMI (standard) 3-51

Machines Equipped with ASU (Option) 3-56

Valid for all Machine Configurations 3-62

Threading through the Bath.....3-69

This page intentionally left blank

3.1 Preparation After Daily Care

Note! These instructions must be followed before starting the machine after Daily Care. If Weekly Care has also been completed, then start with 3.2 Preparation After Weekly Care on page 3-45.

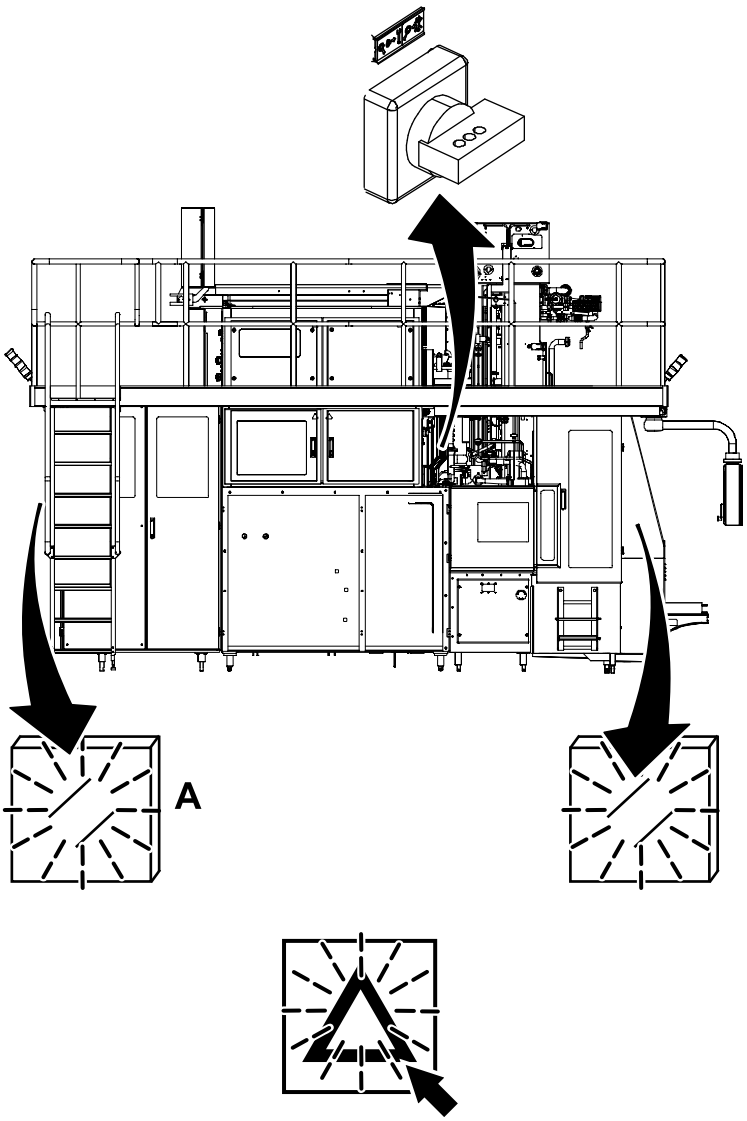

A Only machines with ASU (Option)

If the electrical supply disconnecting device on the machine needs to be switched on an alarm will appear on the TPOP.

Reset the alarm by pressing the flashing HARDWARE RESET buttons on the final folder (all machine configurations), and on the ASU (option).

Reset the alarm by pressing the flashing HARDWARE RESET buttons on the final folder (all machine configurations).

Then press the `Acknowledge` button on the TPOP.

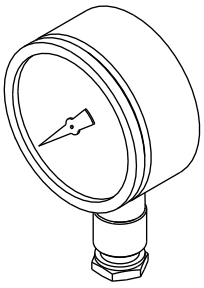

1

Note! If Preparation after Weekly Care has been carried out, then start with item 6 on page 3-9.

Make sure all pressure gauges show zero. If not, they could be malfunctioning. Call a technician.

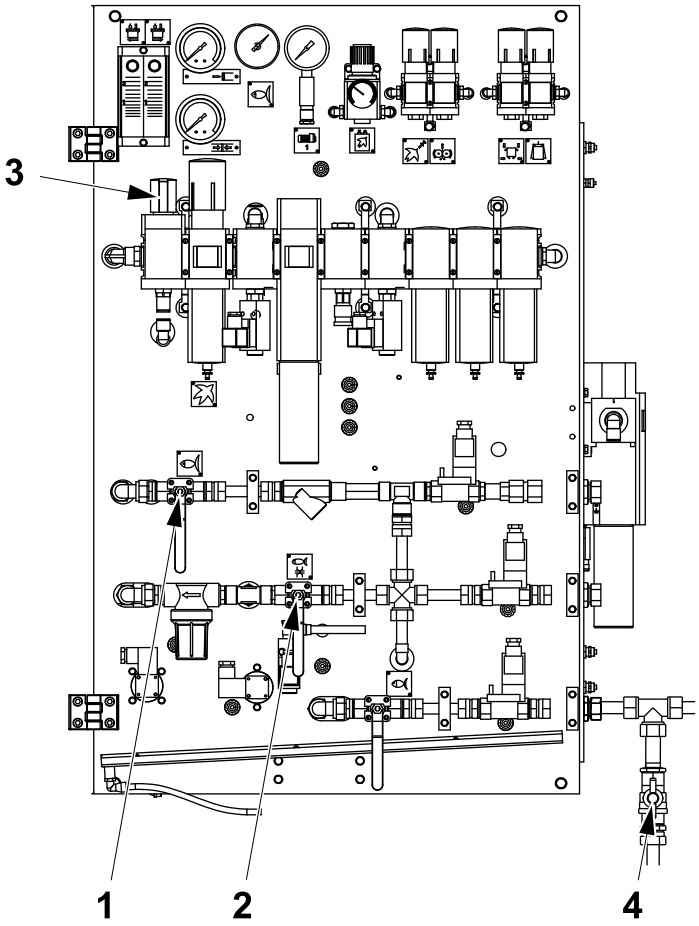

1 Cooling water
2 TS cooling water
3 Input air
4 Cooling water

2

If the machine does not use cooling water circulation:

- Open the cooling water valve (1).
- Open the TS cooling water valve (2).
- Open the input air valve (3).
- Open the cooling water valve (4).

If the machine is connected for cooling water circulation:

- Close the TS cooling water valve (2).
- Open the input air valve (3).
- Close the cooling water valve (4).

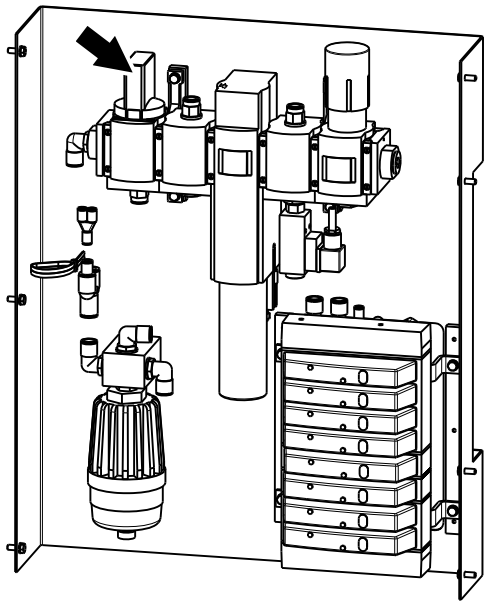

3

Valid with ASU (Option) only

Make sure the input air valve on the ASU valve panel is opened.

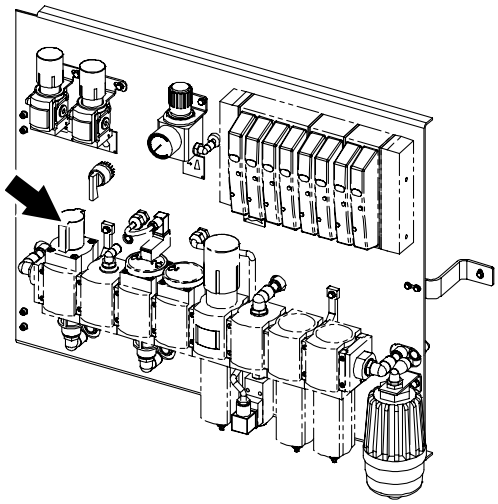

4

Make sure the input air valve on the PullTab valve panel is opened.



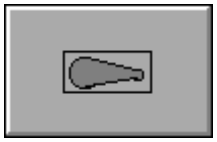

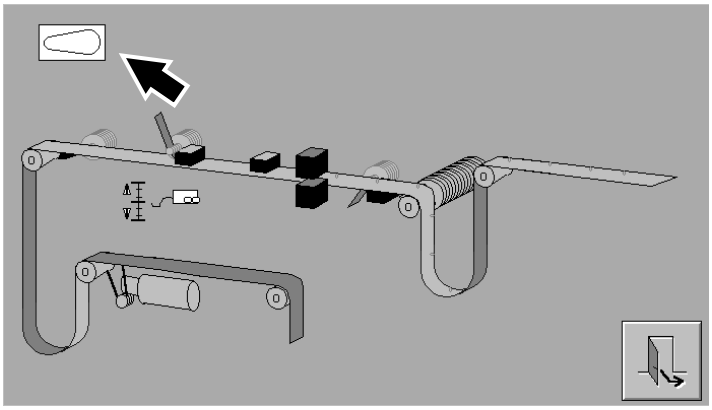

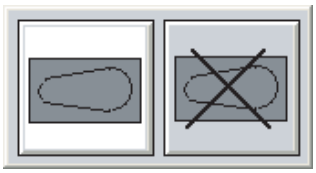



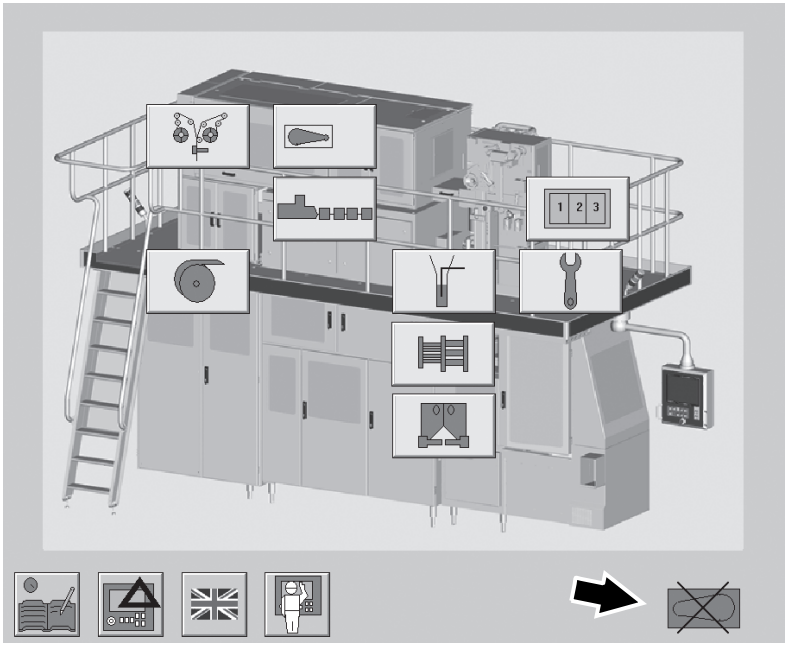

5

Select the required production mode using the TPOP as follows:

a) Press the `Manoeuvre system` button.

b) Press the `PT selector` button.

c) Press the `PT mode` button

d) Press the required `Production mode` button.

e) Press the `Exit` button.

Note! When the PT unit is excluded, the symbol indicated with an arrow is shown.

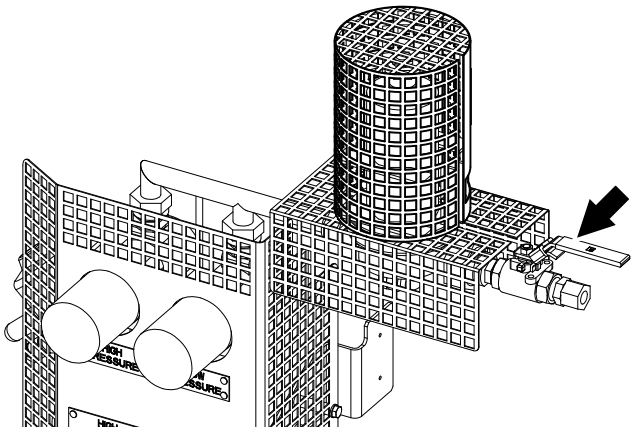

6

WARNING

Hot surface.
Risk of burns.
The steam valve and adjacent parts may be hot. If necessary, wear heat resistant protective gloves.

Make sure that the steam valve (arrow) is open.

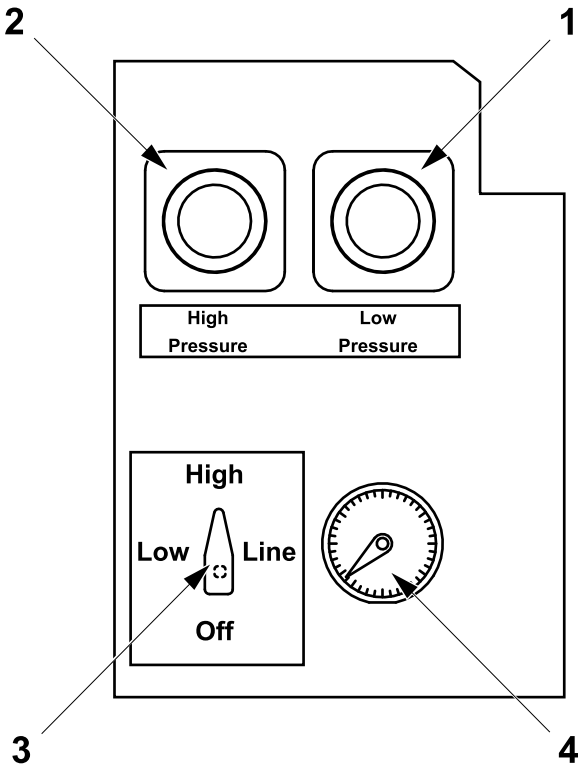

1 Pressure regulator low pressure
2 Pressure regulator high pressure
3 Selector
4 Manometer

7

Check that the TCSB pressure gauges show the correct pressures:

a) Turn the selector (3) to the LINE position. The value on the manometer (4) corresponds to the steam pressure in the line.

b) Turn the selector (3) to the LOW position (Pressure during production). Turn the pressure regulator (1) to set the steam pressure to between 0.4 and 0.5 bar. This pressure range corresponds to a temperature range of 109 to 111°C.

c) Turn the selector (3) to the HIGH position (Pressure during sterilisation). Turn the pressure regulator (2) to set the steam pressure to between 1.7 and 1.8 bar. This pressure range corresponds to a temperature range of 130 to 131°C.

d) Turn the selector (3) to the OFF position.

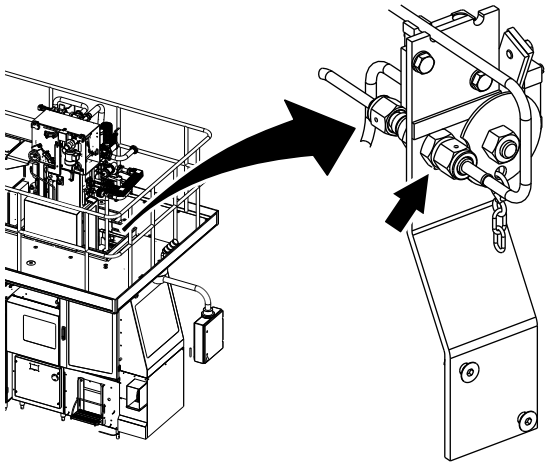

8

Valid with HI (option) only

Make sure that the nitrogen pipe is positioned to the left (production mode).

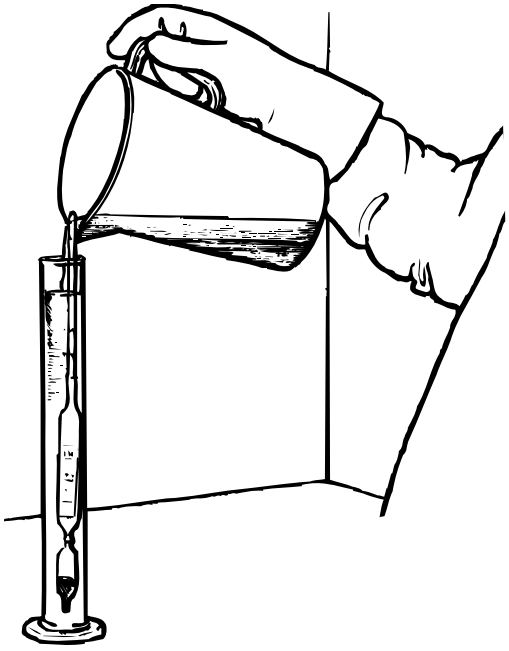

9

⚠ WARNING

Hydrogen peroxide.
Risk of personal injury.
Follow the ii Safety Precautions.

Check the hydrogen peroxide concentration, see 9.1.1.1 Hydrogen Peroxide Concentration (by Weight) on page 9-9.

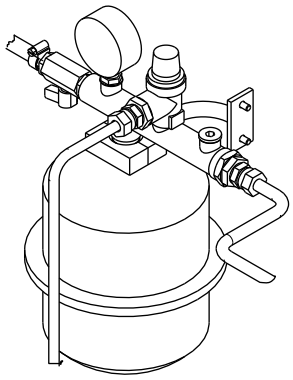

10

Check that the water pressure is 0.5 bar.

If not, call a technician.

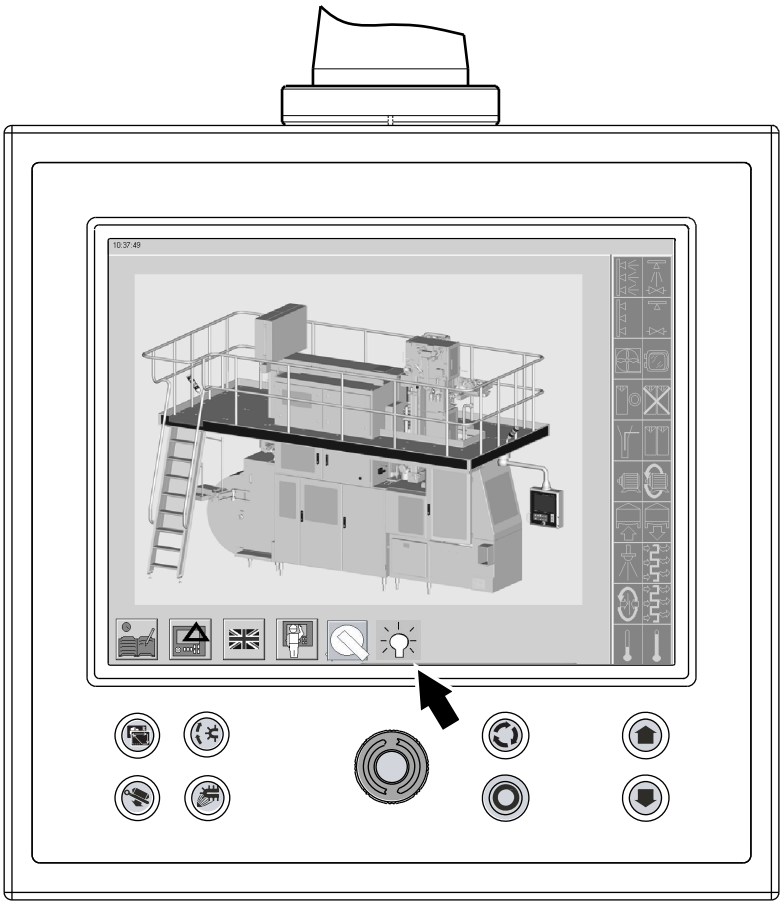

11

Press and hold the `Lamp test` button (arrow) for three seconds and check that:

- the warning signal sounds, see chapter ii Safety Precautions, section Audible Alarm on page ii-26.
- the warning lamps on the machine are flashing, see chapter ii Safety Precautions, section Indicating Tower on page ii-25.
- all the buttons on the control panel light up.

Call a technician to replace any faulty lamp before starting production.

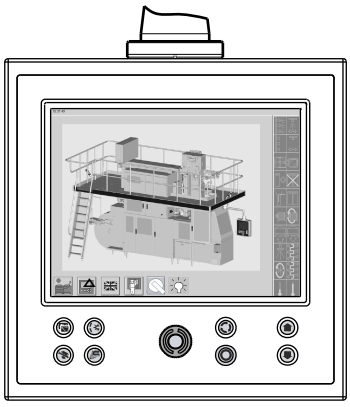

12

Reset the package counters on the TPOP. See 2.8.3 Set Package Counters on page 2-61.

13

If 3.2 Preparation After Weekly Care has just been carried out, go directly to item 31 on page 3-24.

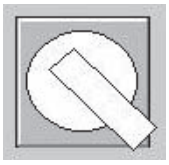

14

Press the `Selector` button on the TPOP display to the LH position.

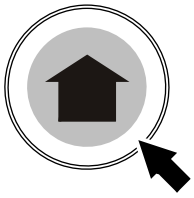

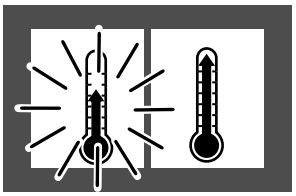

15

Press the PROGRAM UP button.

The PREHEATING I symbol lights.

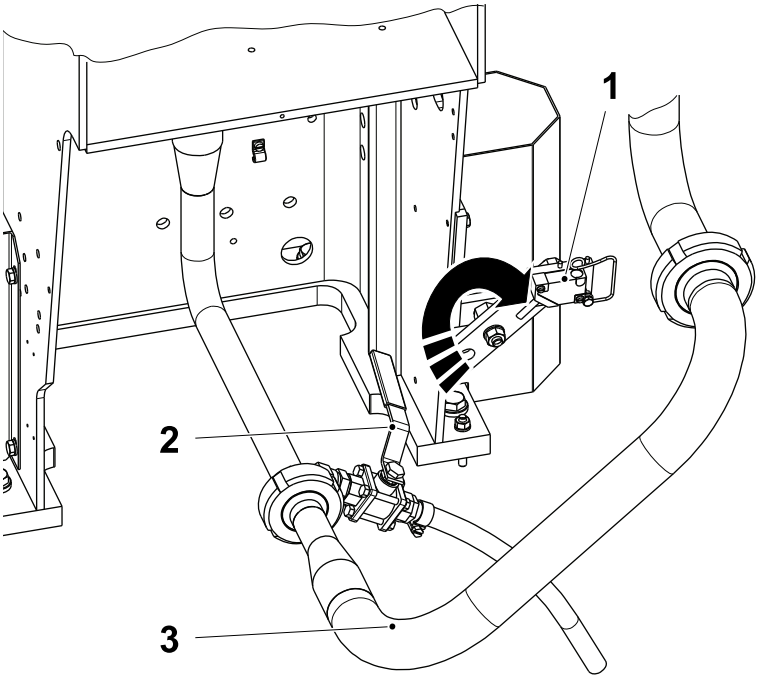

1 Sensor
2 Valve
3 Product pipe

16

WARNING
Hydrogen peroxide.
Risk of personal injury.
Follow the ii Safety Precautions.

a) Lift the sensor (1) and open the valve (2) to drain the cleaning pipe.

b) Close the valve (2) completely.

Note! The product pipe gaskets must be changed every time the product pipe (3) is removed.

c) Remove the product pipe (3).

d) Visually inspect the product pipe (3) for product residue.

WARNING
Hazardous substances.
Risk of personal injury.
Cleaning compound. Follow the ii Safety Precautions.

If necessary, clean the product pipe (3) with cleaning compound code D and a clean dry cloth.

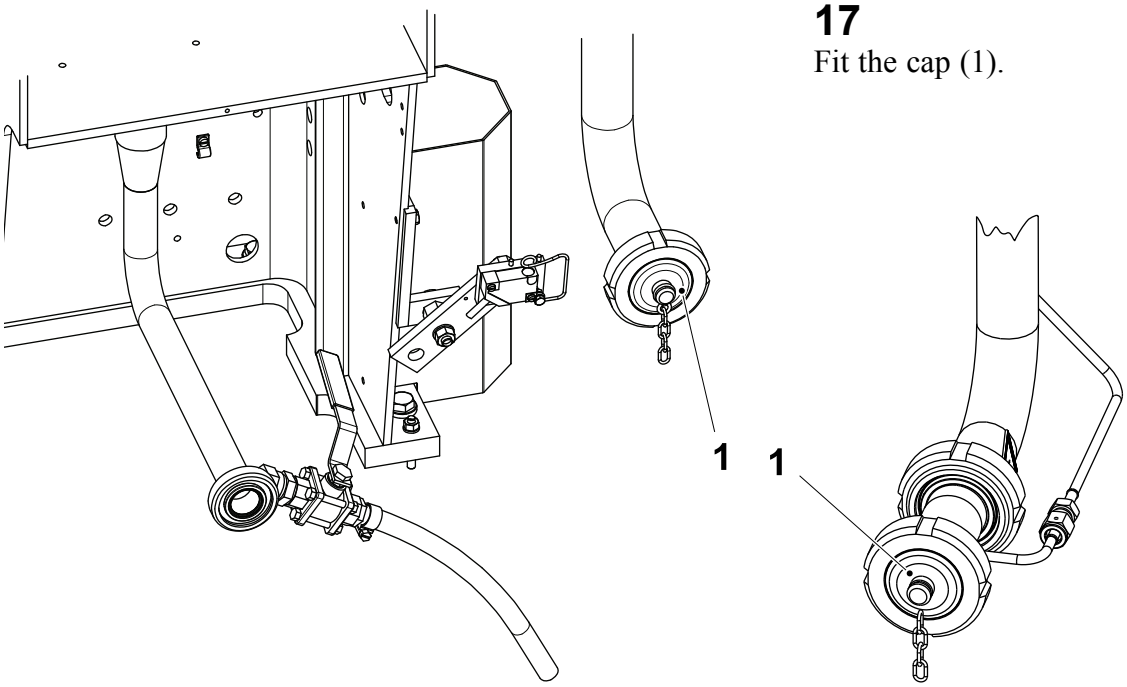

1 Cap

17

Fit the cap (1).

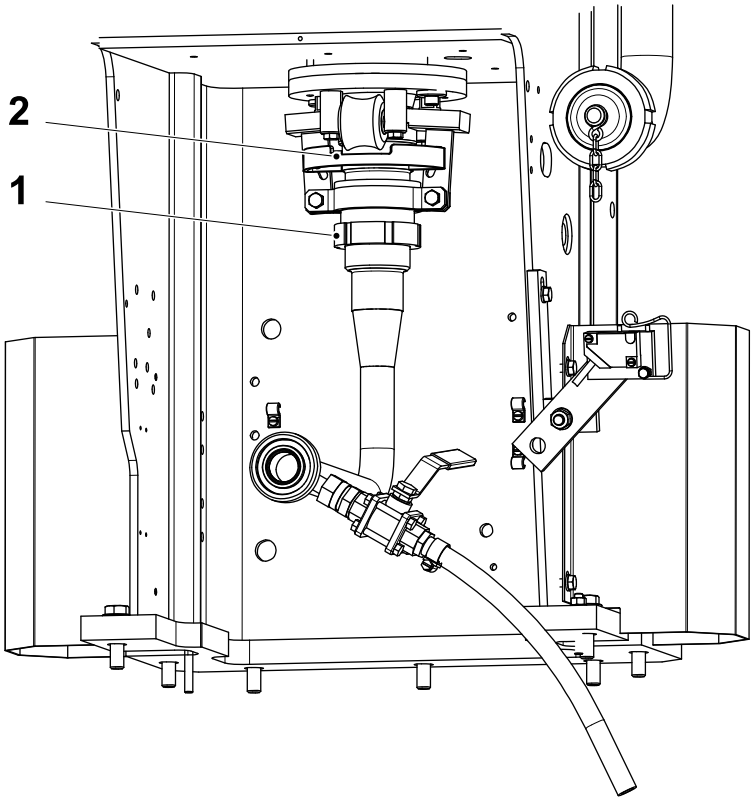

1 Nut
2 Cleaning attachment

18

Loosen the nut (1) and remove the cleaning attachment (2).

Machines without HI

For machines with HI (option), go to item 23 on page 3-18.

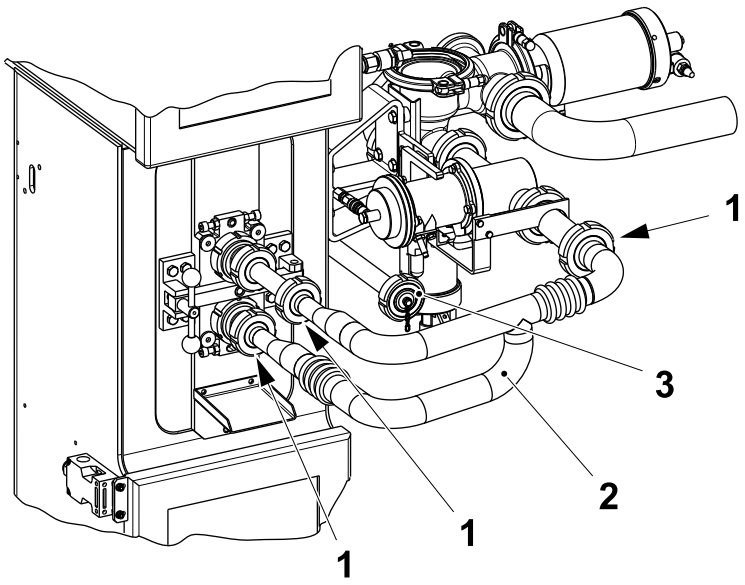

1 Nut
2 Cleaning pipe
3 Cap

19

Release the nuts (1) and remove the cleaning pipe (2).

Remove the cap (3).

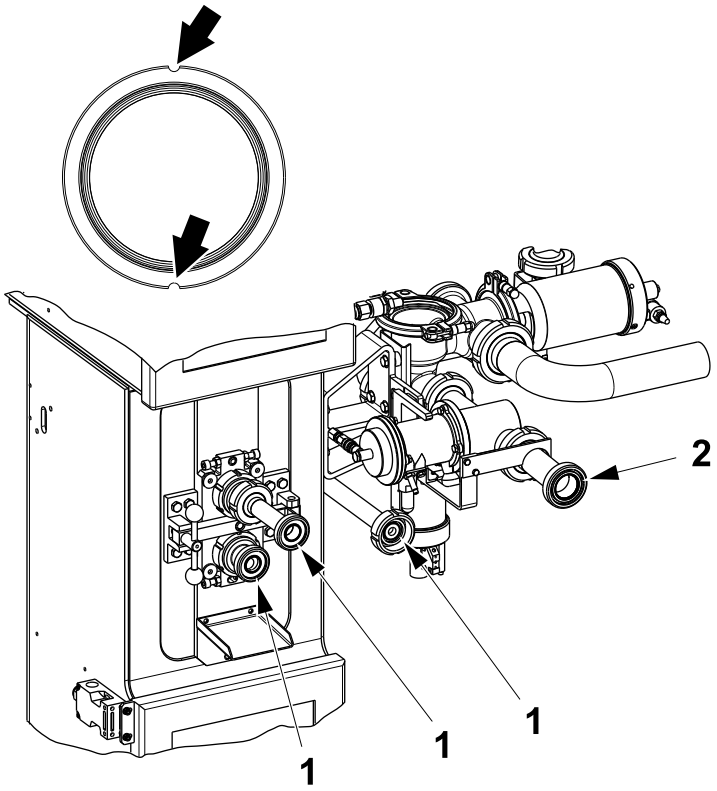

1 Gasket (3092164-0000 Ø 32.0 mm)
2 Gasket (3024322-0000 Ø 46.8 mm)

20

WARNING
Hazardous substances.
Risk of personal injury.
Cleaning compound. Follow the ii Safety Precautions.

Remove the gaskets from the pipe fittings using the slots indicated.

Check the gaskets for dirt or wear, and change them if required.

Disinfect the gaskets with cleaning compound code G, see 9.4 Cleaning and Disinfecting Agents on page 9-18.

Note! Make sure that the gaskets are in the correct positions.

Fit the gaskets without rinsing.

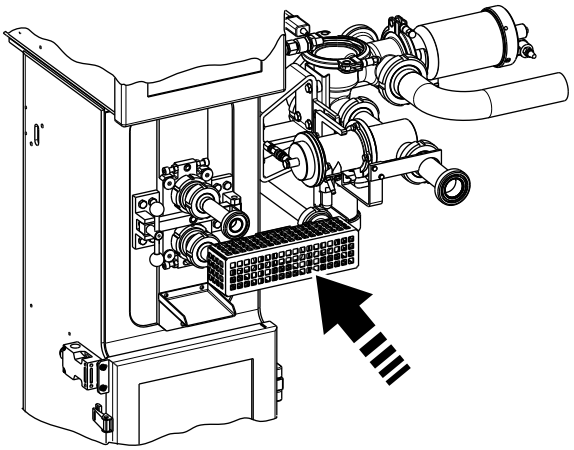

21

Fit the sterile air pipe.

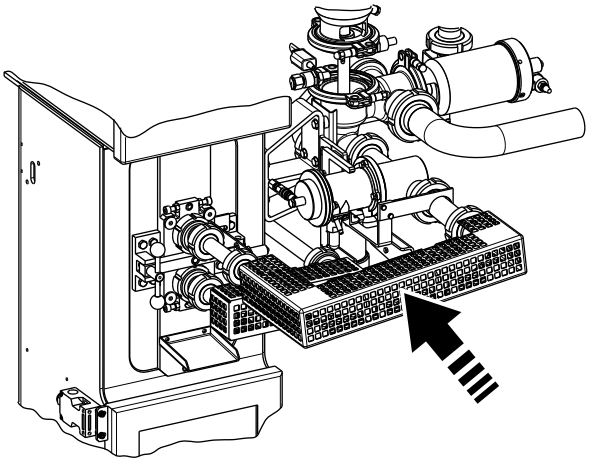

22

Fit the product pipe.

Go to item 28 on page 3-22.

Machines Equipped with HI (option)

If HI is bypassed, go to item 25 on page 3-20.

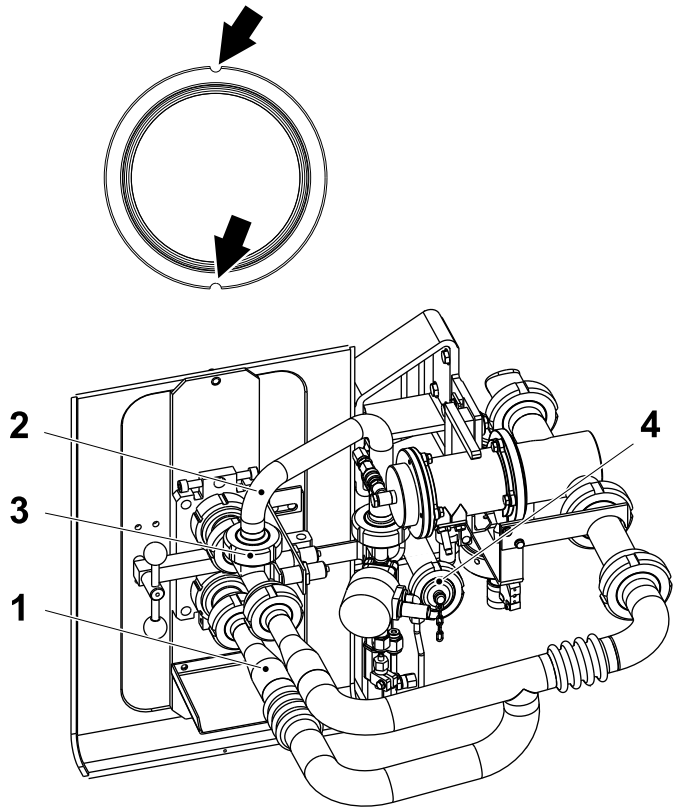

1 Cleaning pipe
2 HI pipe
3 T-connection
4 Cap

23

a) Remove the cleaning pipe (1) and the HI pipe (2).

b) Use the slots indicated to remove the gasket TP No. 315229-104 from T-connection (3).

c) Remove the cap (4).

⚠ WARNING
Hazardous substances.
Risk of personal injury.
Cleaning compound. Follow the ii Safety Precautions.

a) Use the slots indicated to remove the gaskets from the pipe fittings.

b) Check the gaskets for dirt or wear, and change them if required.

c) Disinfect the gaskets with cleaning compound code G, see 9.4 Cleaning and Disinfecting Agents on page 9-18.

Note! Make sure that the gaskets are in the correct positions.

d) Fit the gaskets without rinsing.

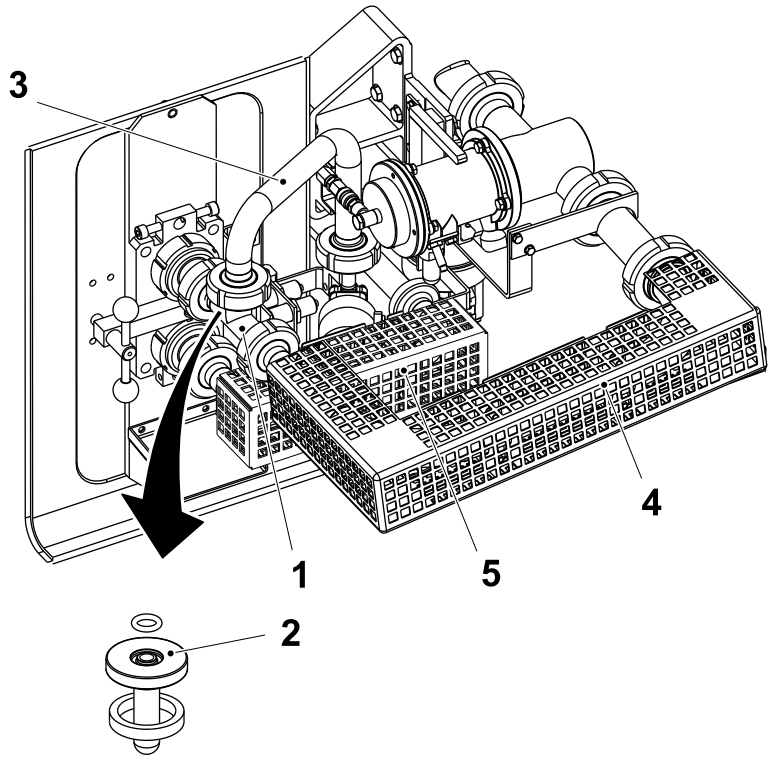

1 T-connection
2 injection nozzle
3 HI pipe
4 Product pipe
5 Sterile air pipe

24

Fit the T-connection (1) with a gasket TP No. 3092164-0000 at both ends.

Fit the injection nozzle (2) with O-ring TP No. 315204-0207 on the upper side and a gasket TP No. 12242-0001 into the nozzle seat.

Fit the HI pipe (3) with an O-ring TP No. 315204-0207 on the HI stop valve side.

Fit the product pipe (4) and the sterile air pipe (5).

Go to item 28 on page 3-22.

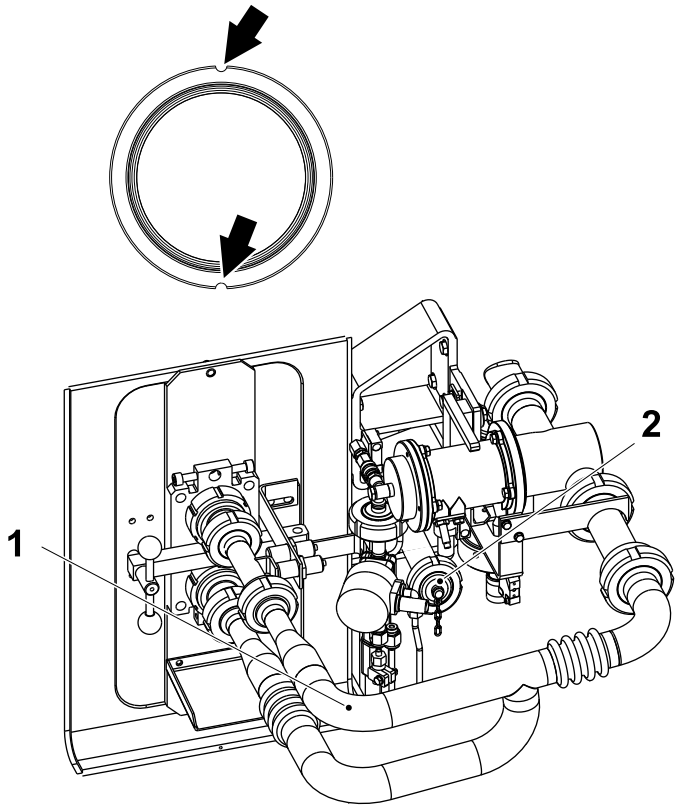

1 Cleaning pipe
2 Cap

25

HI (option) Bypassed

a) Remove the cleaning pipe (1).

b) Remove the cap (2).

WARNING
Hazardous substances.
Risk of personal injury.
Cleaning compound. Follow the ii Safety Precautions.

a) Use the slots indicated to remove the gaskets from the pipe fittings.

b) Check the gaskets for dirt or wear, and change them if required.

c) Disinfect the gaskets with cleaning compound code G, see 9.4 Cleaning and Disinfecting Agents on page 9-18.

Note! Make sure that the gaskets are in the correct positions.

d) Fit the gaskets without rinsing.

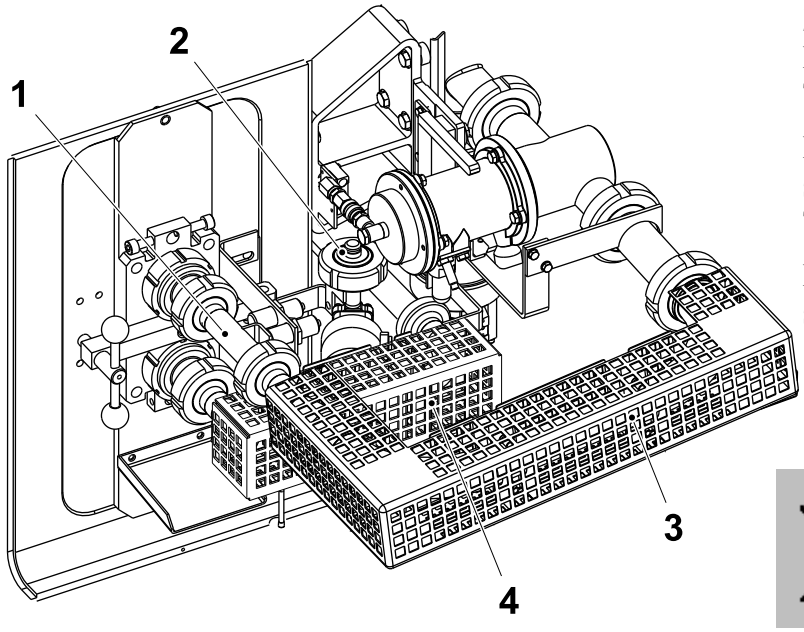

1 Extension pipe
2 Lid
3 Product pipe
4 Sterile air pipe
5 Icon on TPOP

26

Fit the extension pipe (1) with gaskets TP No. 3092164-0000.

Make sure that the lid (2) on the HI stop valve is in place and with O-ring TP No. 315204-207.

Fit the product pipe (3) and sterile air pipe (4).

Note! When HI is bypassed the icon (5) is shown on the TPOP.

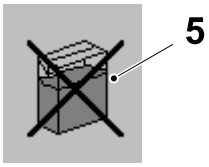

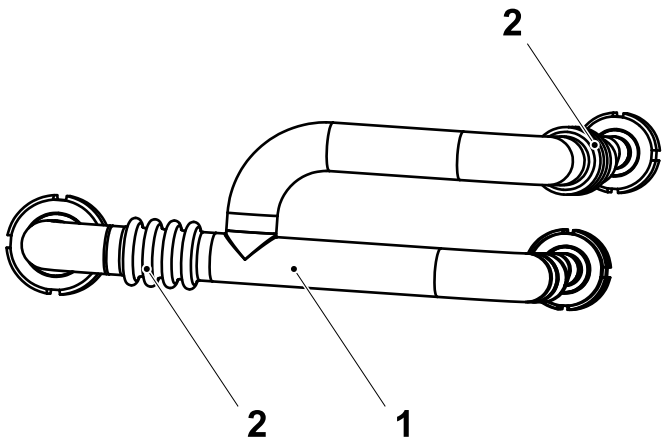

1 Cleaning pipe
2 Flexible part

27

Inspect the cleaning pipe (1) and clean theflexible parts (2) thoroughly by using a brush with water.

Store the cleaning pipe in a clean place.

Valid for all Machine Configurations

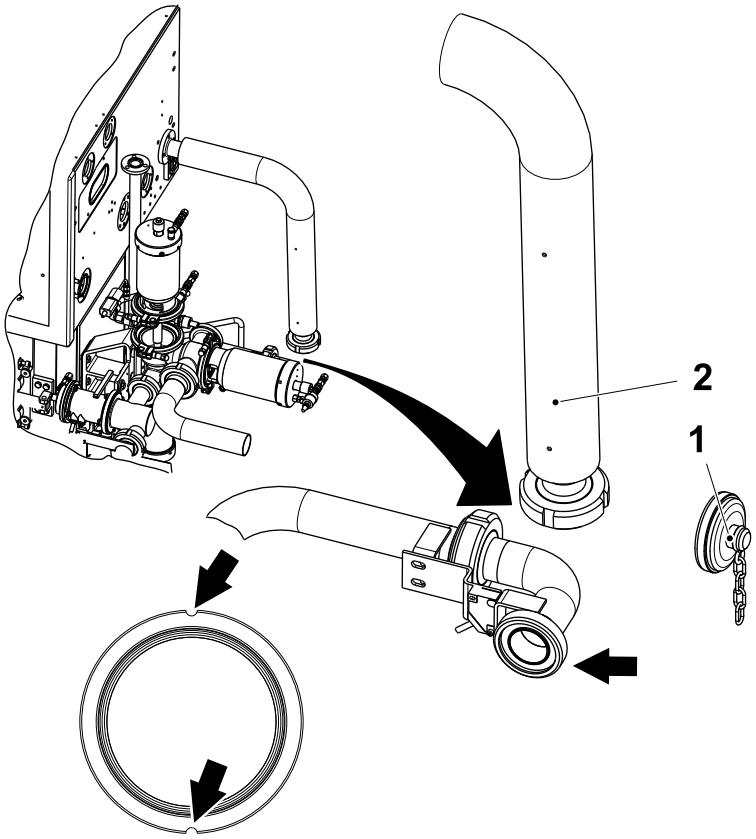

1 Cap
2 Sterile air pipe

28

Disconnect the incoming cleaning pipe.

a) Remove the cap (1) from the sterile air pipe (2).

b) Use the indicated slots to remove the gasket.

WARNING

Hazardous substances.
Risk of personal injury.
Cleaning compound. Follow the ii Safety Precautions.

a) Check the gaskets for dirt or wear. Clean or change them if required.

b) Disinfect the gaskets with cleaning compound code G, see 9.4 Cleaning and Disinfecting Agents on page 9-18.

Note! Make sure that the gaskets are in the correct positions.

c) Fit the gaskets without rinsing.

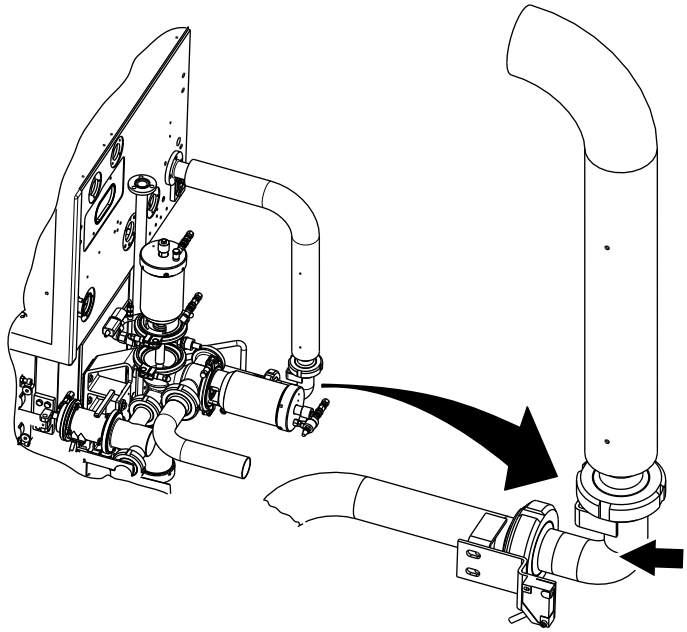

29

Connect the elbow pipe to the sterile air pipe.

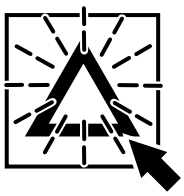

30

Close all covers and doors on the machine and press the flashing `Acknowledge` button to acknowledge the alarm.

If an alarm is lit, take the appropriate measures or call a technician.

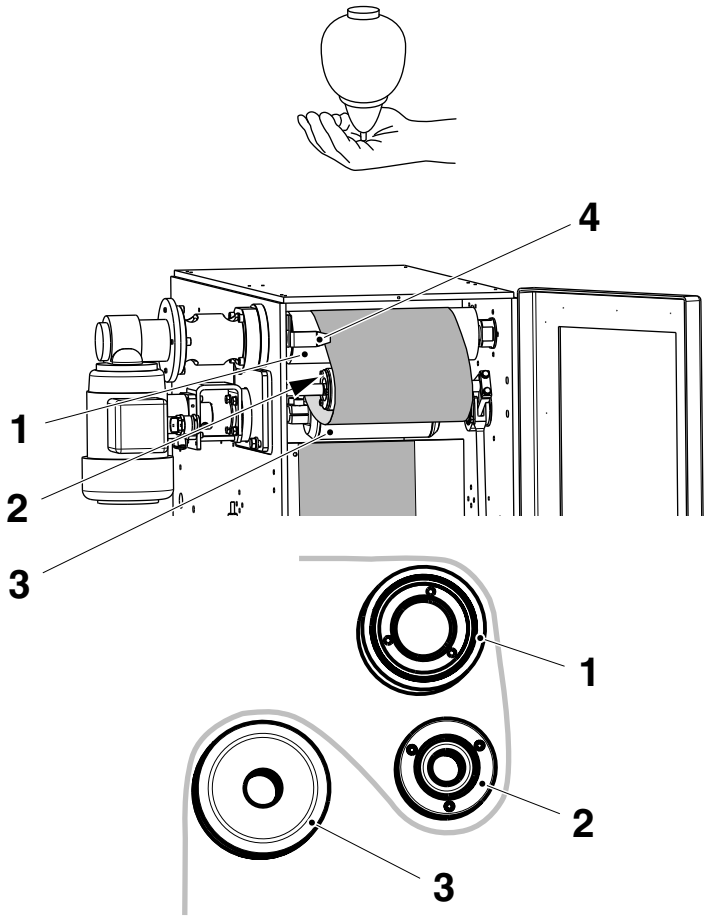

1 Roller
2 Bending roller
3 Roller
4 Pointer

31

Make sure the PullTab is ready for use before opening the aseptic chamber door.

CAUTION
Risk of unsterility.
Before touching the packaging material, disinfect your hands or gloves.

a) Inside the PullTab, pull out a loop of approximately three meters of packaging material.

b) Open the aseptic chamber door.

c) Thread the packaging material slowly over the roller (1), under the bending roller (2), over the roller (3), and down through the aseptic chamber.

d) Make sure that the packaging material is aligned with the pointer (4) in the aseptic chamber.

e) Close the aseptic chamber door.

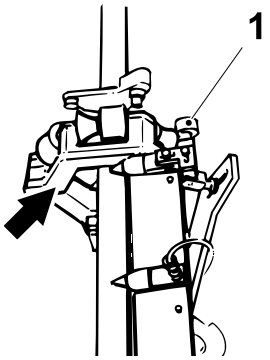

1 Handle

32

Open the lower aseptic chamber door and open the divided forming ring (arrow) by lifting the handle (1).

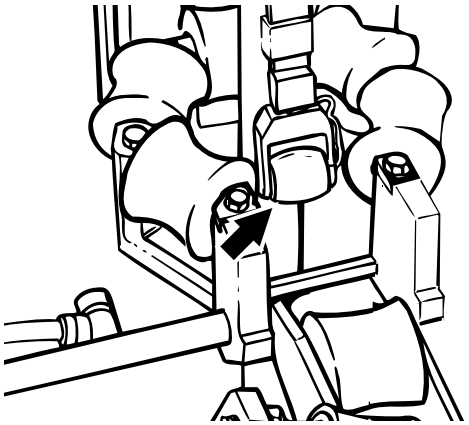

33

Make sure that the LS strip pressure roller (arrow).

- is correctly attached,
- is clean,
- has no surface defects.

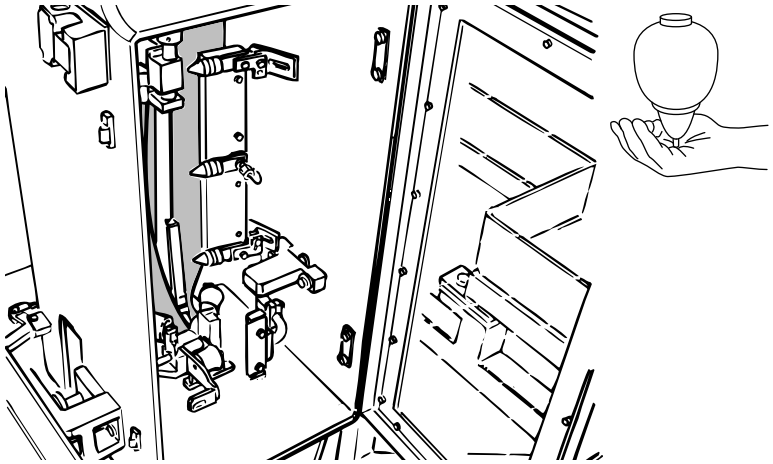

34

Pull the packaging material down through the divided forming ring and lower forming ring.

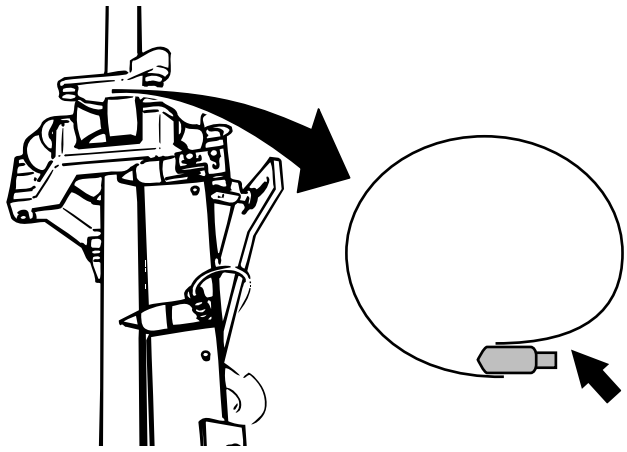

35

Close the divided forming ring.

Note! Not valid for TBA 100 B, TBA 125 S, or TBA 200 S.

Make sure that the guide roller is lowered and the packaging material passes on each side of it.

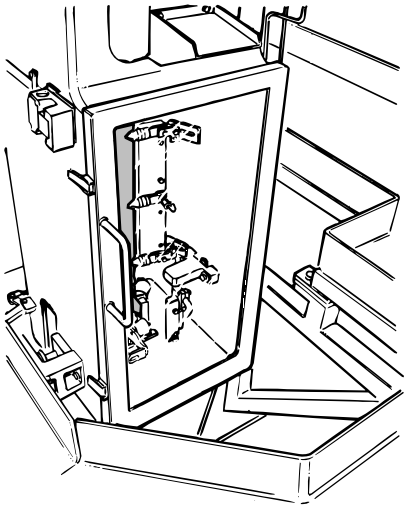

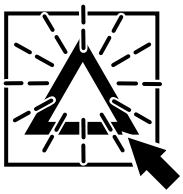

36

Close the aseptic chamber doors.

Close all covers and doors on the machine and press the flashing `Acknowledge` button to acknowledge the alarm.

If an alarm is lit, take the appropriate measures or call a technician.



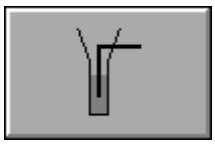

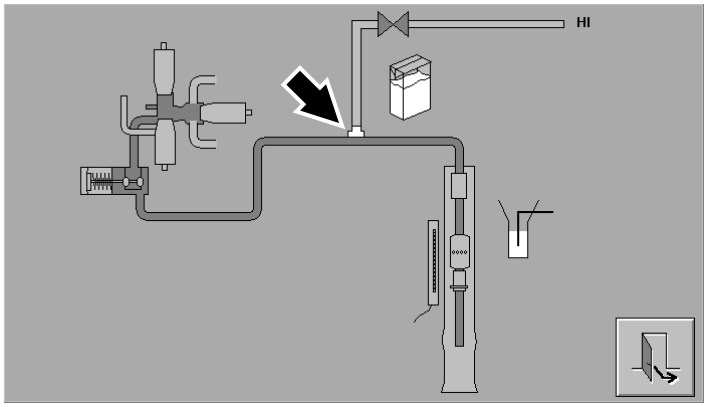

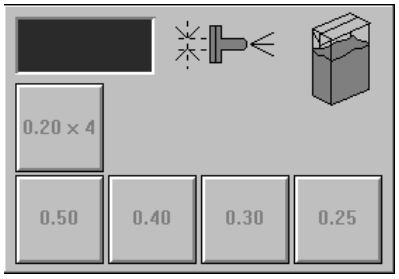



37

Valid with HI (option) only

Select the correct HI nozzle corresponding to the nozzle that has been installed (see item 24 on page 3-19) as follows:

a) Press the MANOEUVRE SYSTEM button.

b) Press the FILLING SYSTEM button.

c) Press the display in the position indicated.

d) Select the correct nozzle.

e) Press the EXIT button.

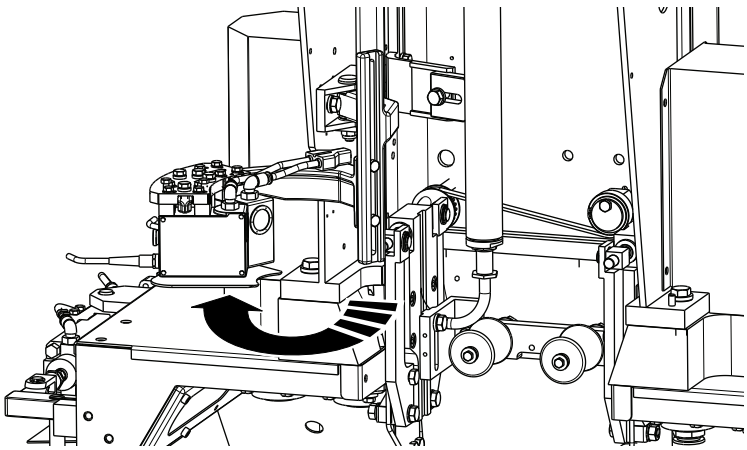

38

Swing the photocell unit out to make it easier to thread the packaging material.

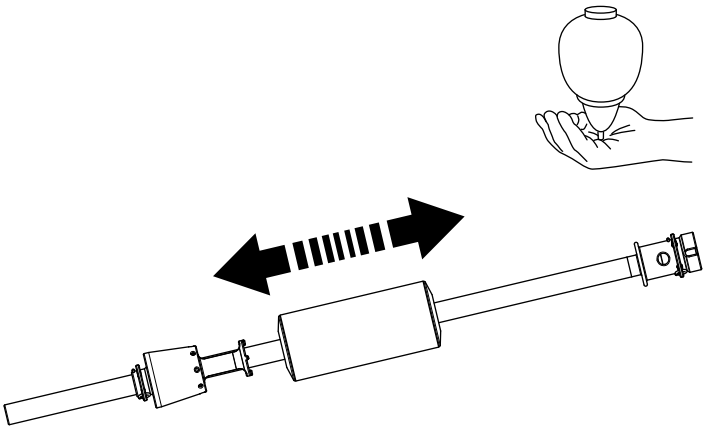

39

CAUTION
Risk of unsterility.
Before touching the lower filling pipe, disinfect your hands or gloves.

Make sure that the float on the lower filling pipe moves freely.



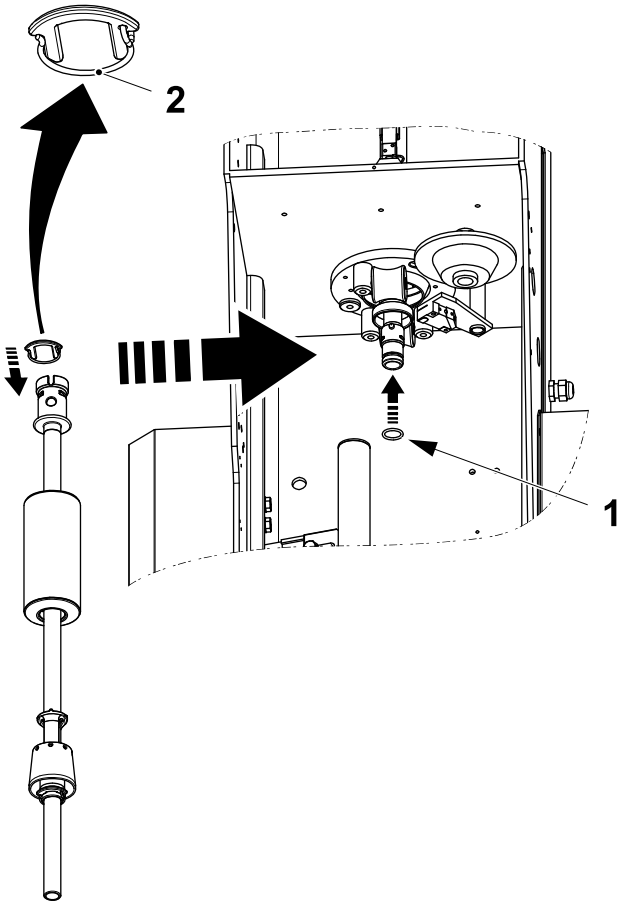

40

Make sure that the O-ring (1) is in the correct position on the upper filling pipe and not worn or damaged, replace if required.

Note! Replace the O-ring (1) every week (or every 100 hours).

Fit the lower filling pipe without rinsing it.

Note! Attach the locking fork with the spring (2) facing upwards.

WARNING
Hazardous substances.
Risk of personal injury.
Cleaning compound. Follow the ii Safety Precautions.

Spray the lower filling pipe with cleaning compound code G3, see 9.4 Cleaning and Disinfecting Agents on page 9-18.

1 O-ring
2 Spring

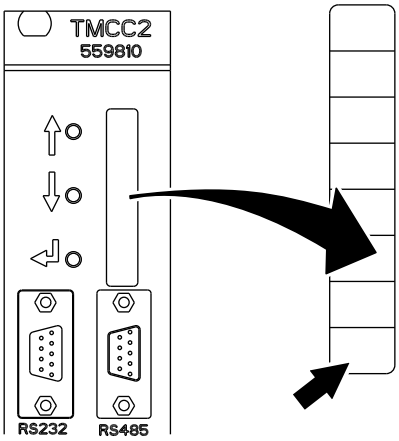

41

On the FCS TMCC2 card (A310) make sure that the LED S8 on the front panel is OFF.

If not, call a technician.

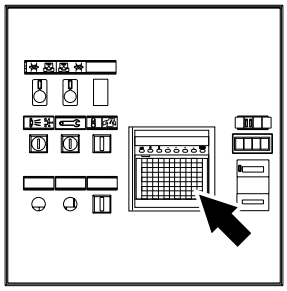

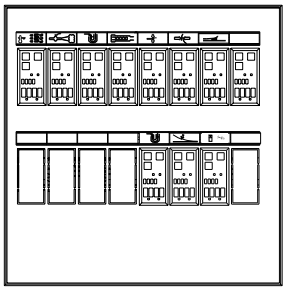

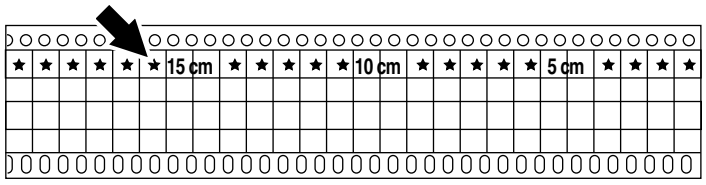

42

Note! For machines without the JUMO Process Recorder, continue with item 52 on page 3-33.

Make sure that there is enough chart paper in the process recorder for at least one day of production. If required, load new paper, see item 43.

Note! The last meter of chart paper is marked with stars.

Every time the machine is started for PRODUCTION, input the following information on the dotted lines:

- machine serial number
- machine type
- product and volume
- operator's name
- production code.

See the JUMO process recorder manual for details.

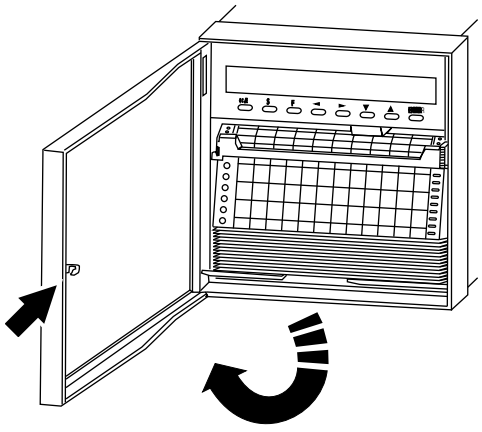

43

Loading Chart Paper

Press down the button (or turn the knob) and open the door.

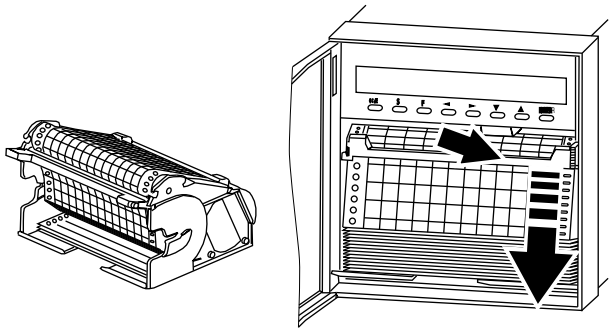

44

Press down the button and remove the chart cassette.

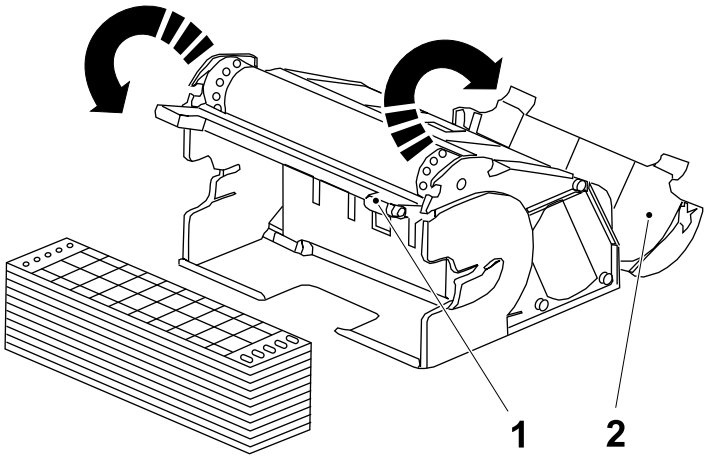

1 Paper guide
2 Paper guide

45

Open the paper guides (1) and (2). Remove the old chart paper.

If required, clean the cassette with a damp cotton cloth.

Note! See chapter 9 Technical Data for the correct type of chart paper.

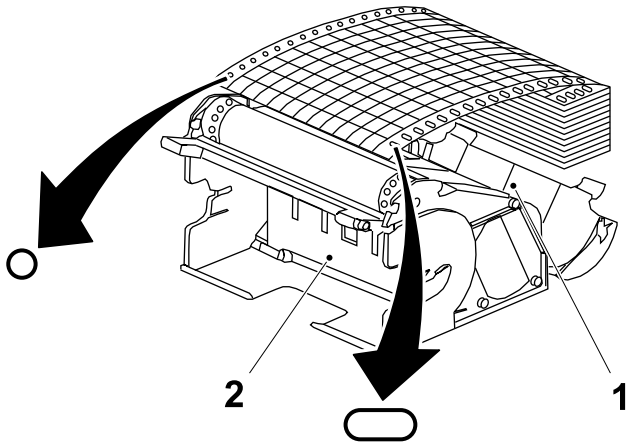

1 Back compartment
2 Compartment

46

Place the fan fold chart in the back compartment (1) with the folds in the horizontal plane.

The slots of the fan folding paper must be on the RH side, and the graph side of the paper at the top. Pull two folds of paper into the compartment (2).

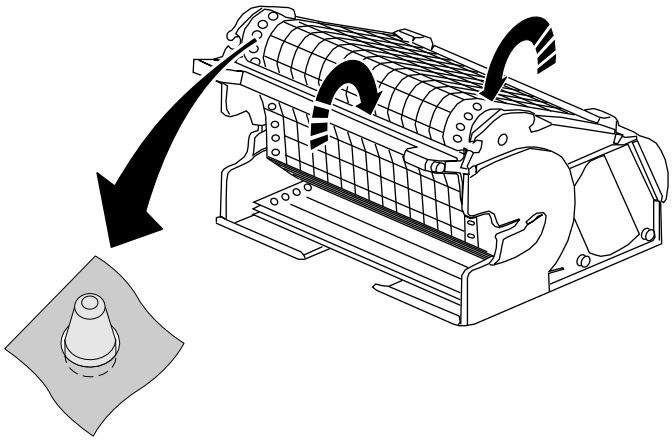

47

Make sure that the sprocket teeth on both sides of the chart cassette are properly engaged in the holes of the fan fold chart.

Close the covers of the chart cassette.

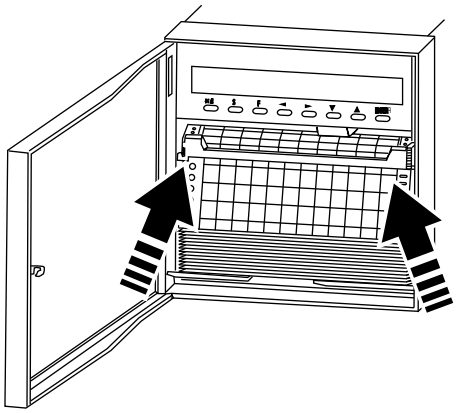

48

Insert the chart cassette. Push the chart cassette inwards, on both sides, with a slight motion upwards.

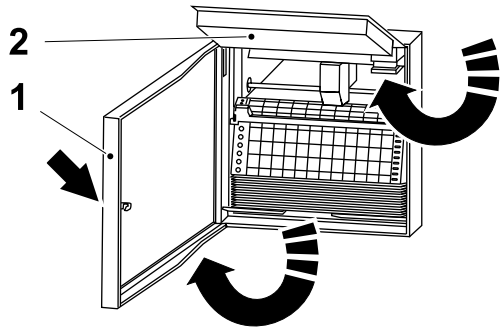

1 Door
2 Display

49

Change the Print Head

Press down the button (or turn the knob) and open the door (1).

Open the display (2).

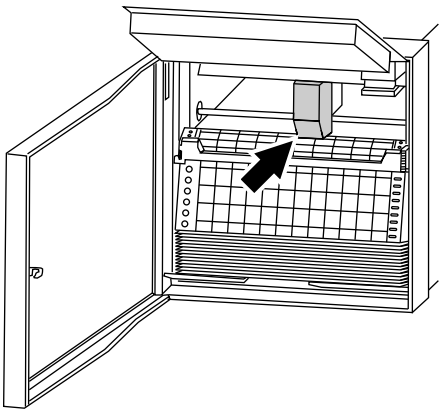

50

Change the print head.

Note! See chapter 9 Technical Data for the correct type of print head.

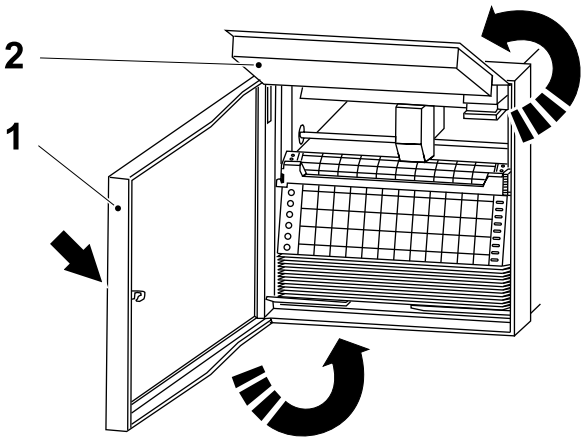

1 Door
2 Display

51

Close the display (2) and the door (1).

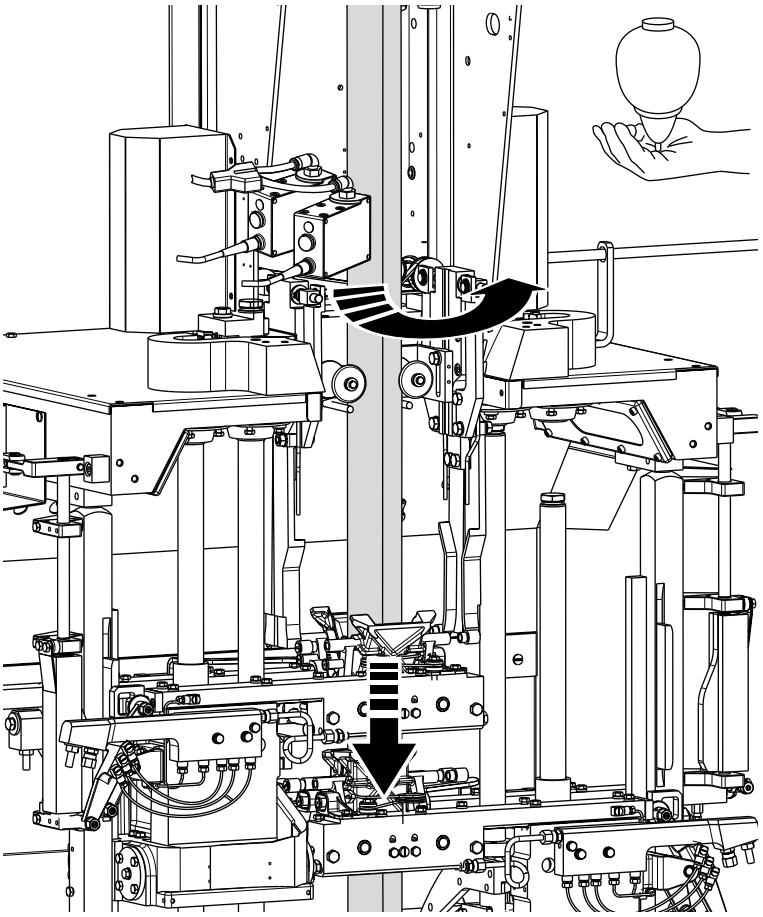

52

CAUTION
Risk of unsterility.
Before touching the packaging material, disinfect your hands or gloves.

Pull the packaging material down to the jaws.

Swing the photocells back into their production position.

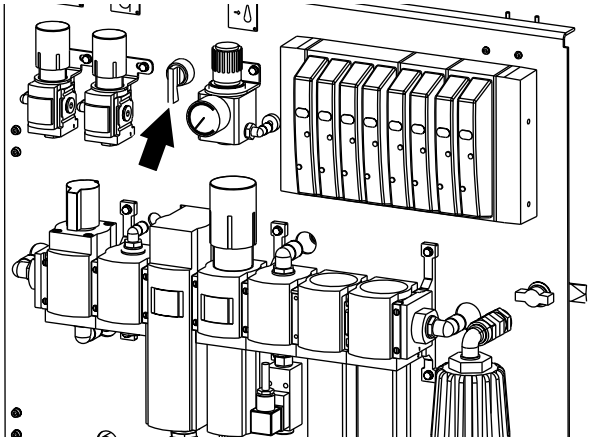

53

On the PullTab valve panel, apply the counter pressure rollers by turning the switch to the RH position.

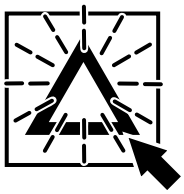

54

Close all covers and doors on the machine and press the flashing `Acknowledge` button to acknowledge the alarm.

If an alarm is lit, take the appropriate measures or call a technician.

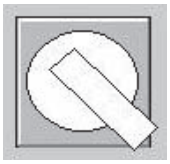

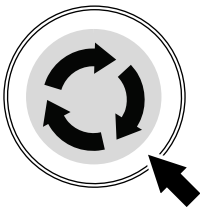

55

Select `Slow Inching`.

Press the INCHING button until the jaws grip the packaging material and pull it down.

56

Make sure that the packaging material runs correctly through the machine; see chapter 1 General Description section 1.9 Packaging Material Web.

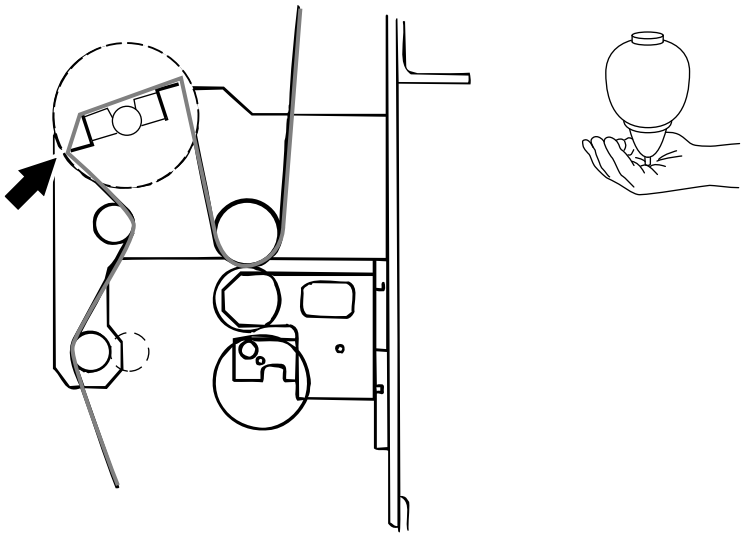

Machine with PMI

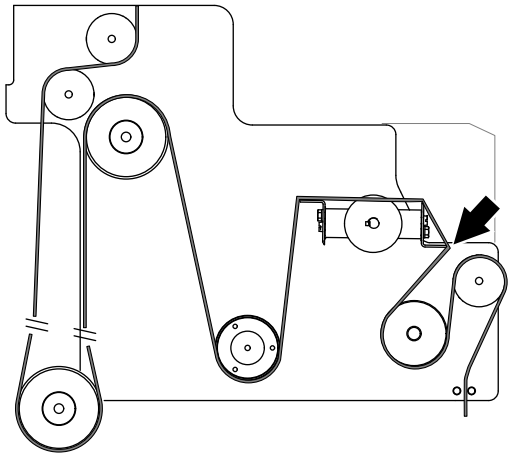

Machine with ASU (Option)

57

WARNING

Risk of cutting and crushing.
Sharp moving parts can cut and crush. Take care when handling the crease wheel.

CAUTION

Risk of unsterility.
Before touching the packaging material, disinfect your hands or gloves.

Make sure that the top creases of the packaging material match the short edge of the crease wheel (small arrow).

See the 5.2 Package Checks section for identification of the top creases.

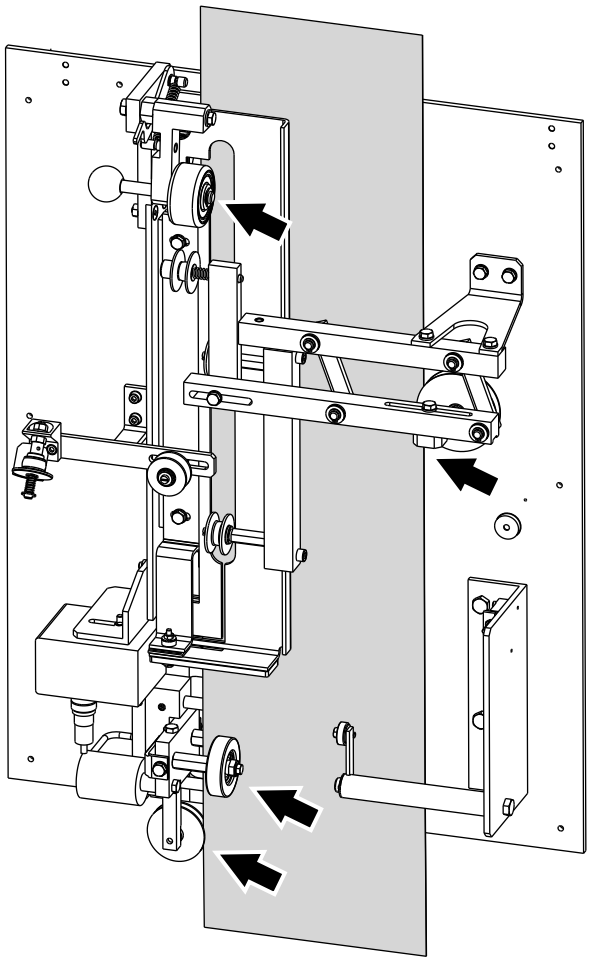

58

Make sure that the packaging material is correctly positioned in the guides.

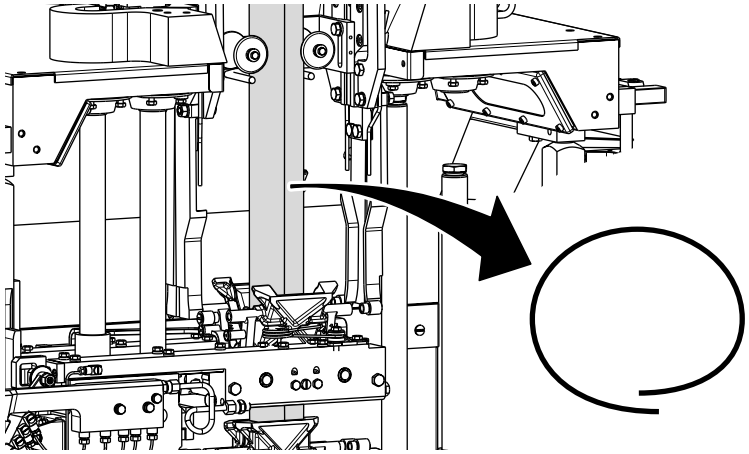

59
Make sure that the LH edge of the packaging material overlaps the RH edge.



60
Press the `Collect System` button to open the collect system menu.

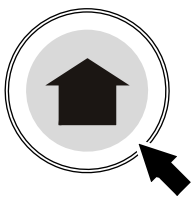

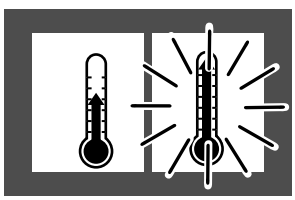

61
Press the PROGRAM UP button until the PREHEATING II symbol stops flashing but remains lit.

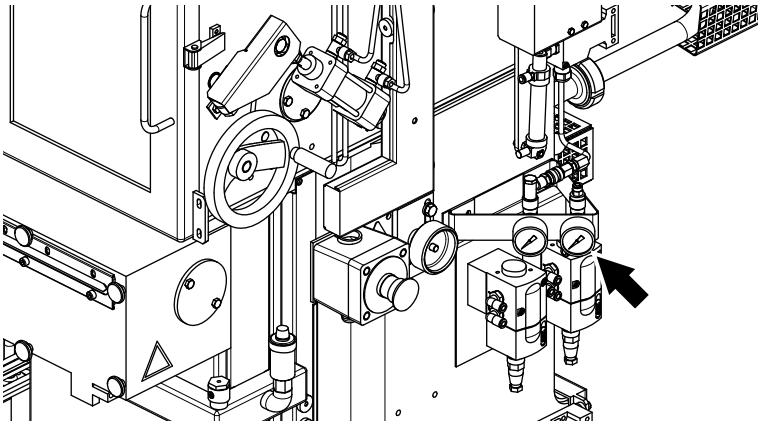

62

Check that the I/P transducer pressure is 2.0 bar.

If not, call a technician.

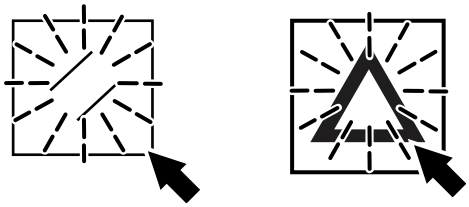

63

Close all covers and doors on the machine.

If needed, reset the ASU (option) and Final Folder door alarms by pressing the flashing HARDWARE RESET buttons.

If needed, reset the Final Folder door alarms by pressing the flashing HARDWARE RESET buttons.

Press the flashing `Acknowledge` button on the TPOP to acknowledge the alarm.

If an alarm is lit, take the appropriate measures or call a technician.

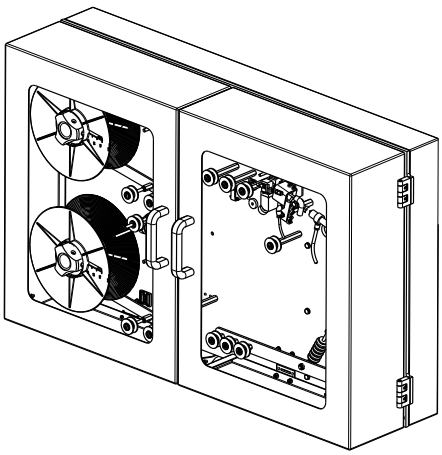

64

Thread the LS strip, see 6.1 Strip Supply.

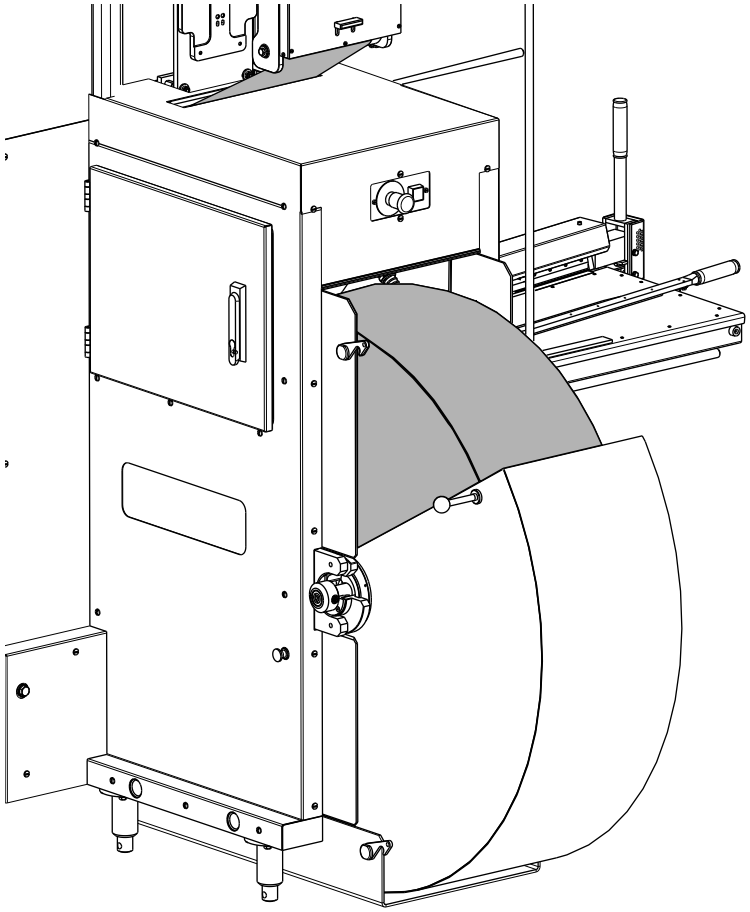

65

Valid with PMI only

Make sure that there is enough packaging material for at least ten minutes of production (to avoid changing the reel during start-up).

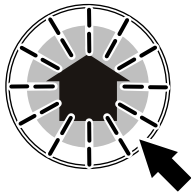

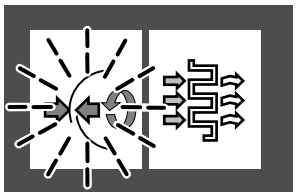

66

When the TUBE SEALING symbol and the PROGRAM UP button start to flash, press PROGRAM UP.

The machine now inches forward without stopping until the packaging material tube is sealed with the LS strip.

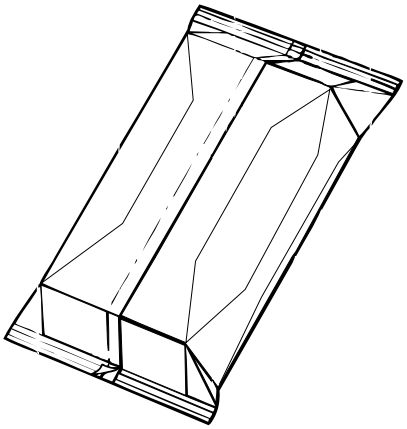



67

Pick out the last package discarded from the machine.

Check the LS strip is correctly positioned and properly sealed, see 5.2 Package Checks on page 5-11.

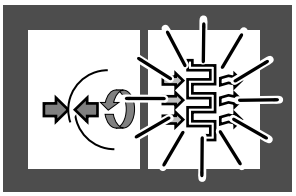

68

When the packaging material tube is sealed, the PREHEATING III symbol stops flashing but remains lit.

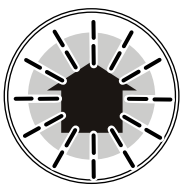

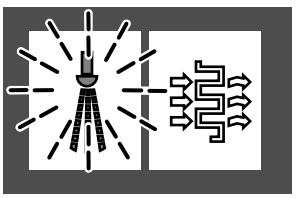

69

When the pre-sterilisation temperature is reached, the SPRAYING symbol and the PROGRAM UP button begin to flash.



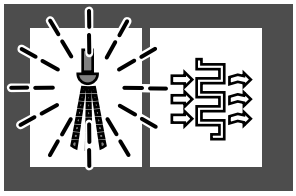

70

WARNING

Inhalation hazard from hydrogen peroxide.

Hydrogen peroxide can cause irritation to muscuous membranes and the respiratory tract.

See chapter ii Safety Precautions.

Press the PROGRAM UP button.

The SPRAYING symbol stops flashing but remains lit.

CAUTION

Unsterility hazard.

From now on, the doors of the aseptic chamber must not be opened until the end of the venting sequence. The jaw system and the final folder doors must not be opened until the Spraying and Drying sequences are completed.

If the Spraying or Drying sequence for some reason has been interrupted, the machine resets to VENTING. The venting sequence will be prolonged to 15 minutes.

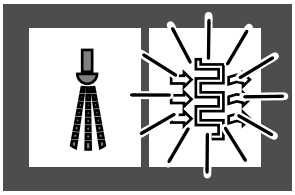

71

After spraying, the DRYING symbol lights.

The drying time is 20 minutes.

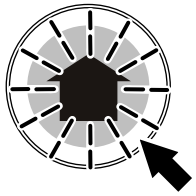

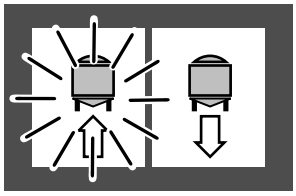

72

When the SIGNAL TO STERILISER symbol and the PROGRAM UP button start to flash, press the PROGRAM UP button.

The SIGNAL TO STERILISER symbol stops flashing but remains lit.

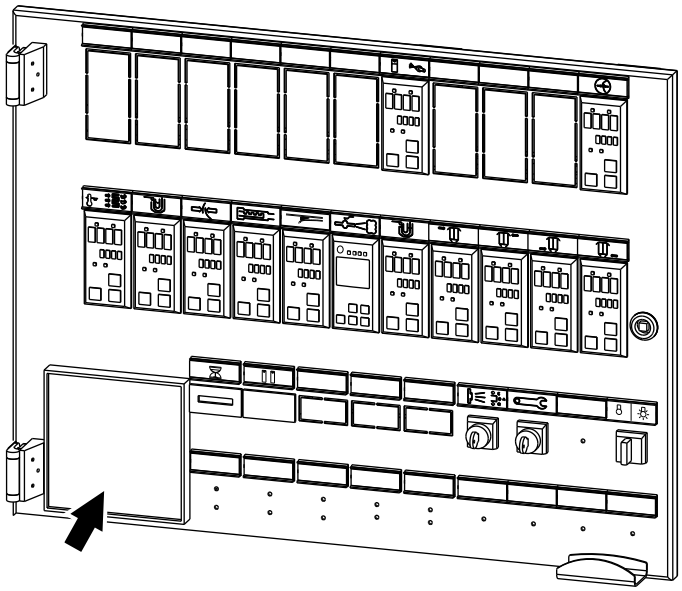

73

Valid for machines with JUMO Process Recorder

On the process recorder air knife channel, check the machine has been sterilised.

At least two items which represent 60 seconds should be over 200 °C.

Refer to the process recorder manual for details.

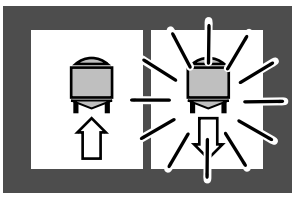

74

When the steriliser is ready for production, the SIGNAL FROM STERILISER symbol stops flashing but remains lit.

Proceed according to 4 Start.

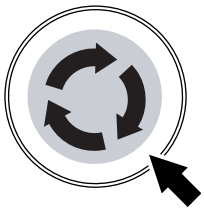

75

After 20 Minutes

CAUTION
Risk of tearing the packaging material.
If the machine cannot be stepped to PRODUCTION within 20 minutes, the packaging material may tear.

If the machine cannot be stepped to PRODUCTION within 20 minutes, press the INCHING button to renew the length of packaging material between the PullTab unit and the jaws.

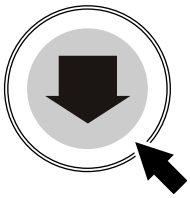

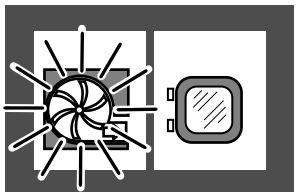

76

After 40 Minutes

CAUTION
Risk of tearing the packaging material.
If the machine cannot be stepped to PRODUCTION within 40 minutes, the packaging material may tear.

If the machine cannot be stepped to PRODUCTION within 40 minutes, press PROGRAM DOWN twice.

The program steps to VENTING.

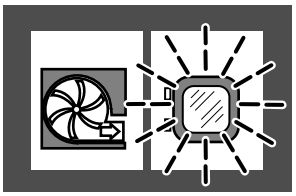

77

WARNING
Hydrogen peroxide.
Risk of personal injury.
Follow the ii Safety Precautions.

After five minutes, the VENTING FINISHED symbol starts to flash. Open and close one of the aseptic chamber doors.

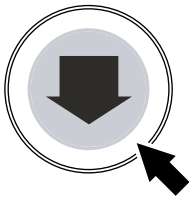

78

Press the PROGRAM DOWN button.

The machine resets to ZERO.

Restart, see item 15 on page 3-12.



79

Record the time taken for Preparation After Daily Care. See 2.7.10 Record Maintenance Time on page 2-54 in chapter 2 Alarms and Troubleshooting.

3.2 Preparation After Weekly Care

Note! If Weekly Care has not been completed, then skip this section. These instructions must be followed before starting the machine after Weekly Care. If only Daily Care has been completed, then start with 3.1 Preparation After Daily Care.

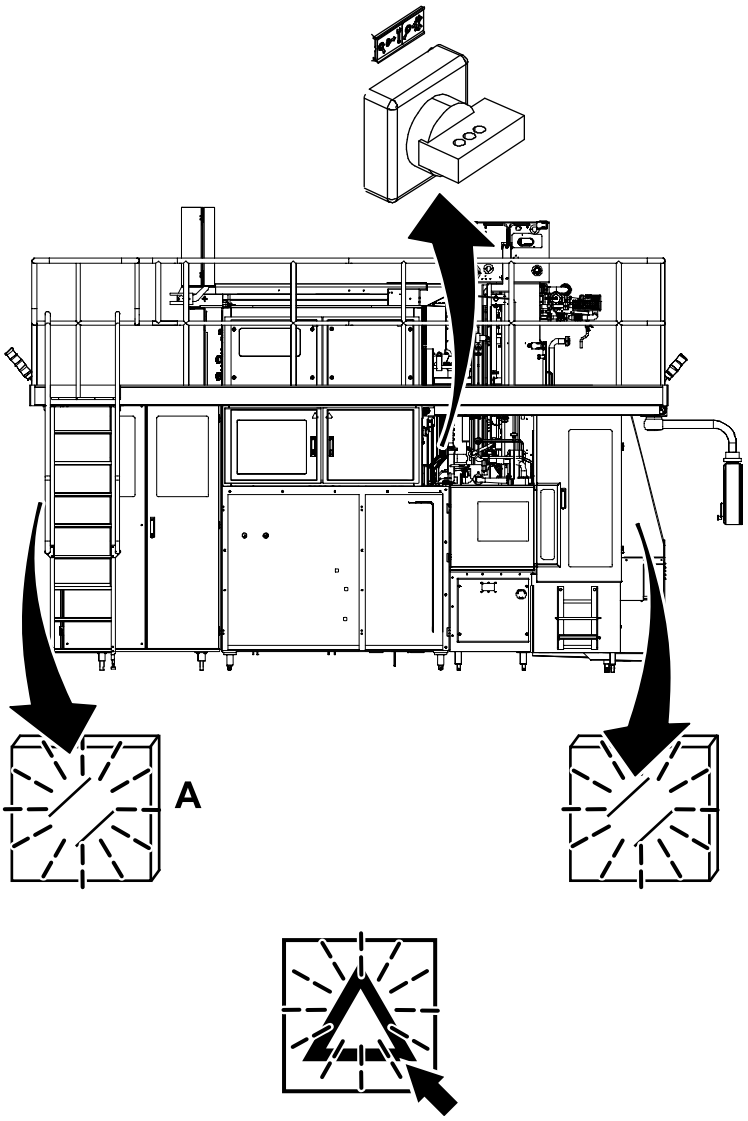

A Only machines with ASU (Option)

If the electrical supply disconnecting device on the machine needs to be switched on an alarm will appear on the TPOP.

Reset the alarm by pressing the flashing HARDWARE RESET buttons on the final folder (all machine configurations), and on the ASU (option).

Reset the alarm by pressing the flashing HARDWARE RESET buttons on the final folder (all machine configurations).

Then press the `Acknowledge` button on the TPOP.

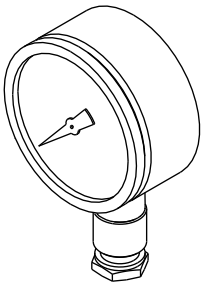

1

Make sure all pressure gauges show zero. If not, the gauges could be malfunctioning. Call a technician.

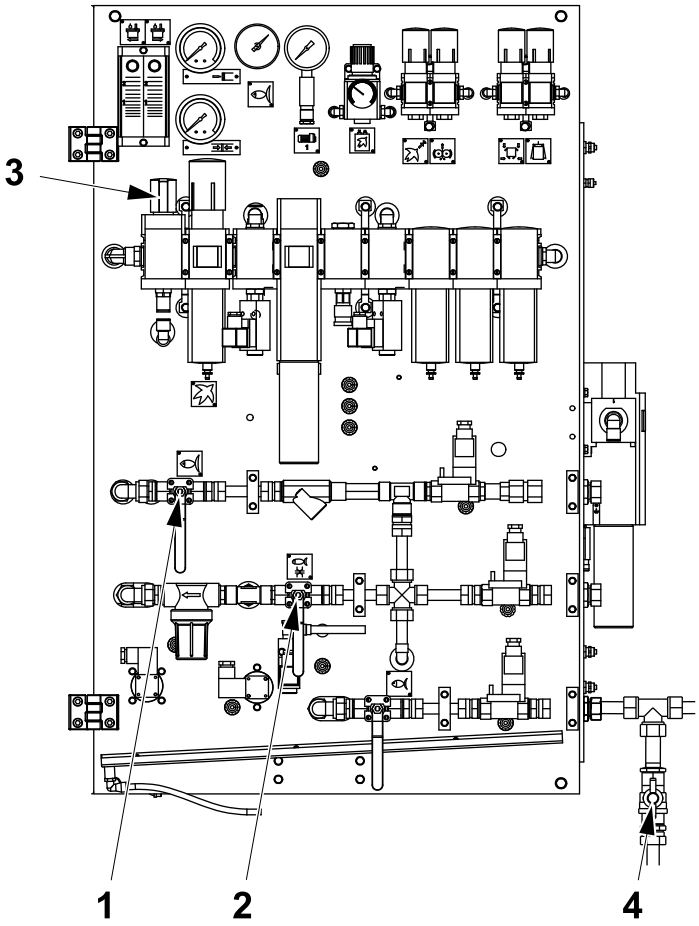

1 Cooling water
2 TS cooling water
3 Input air
4 Cooling water

2

Open the cooling water valve (1) and TS cooling water valve (2).

Open the input air valve (3).

Make sure that the cooling water valve (4) is open.

Note! If the machine is connected for cooling water circulation, the TS cooling water valve (2) and the cooling water valve (4) must be closed.

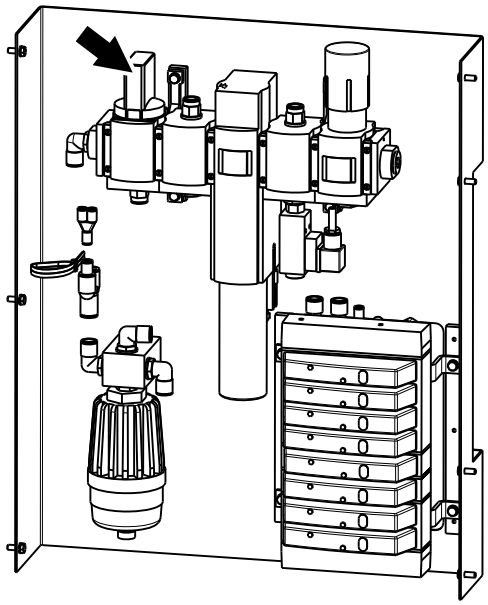

3

Valid with ASU (option) only

Make sure the input air valve on the ASU valve panel is opened.

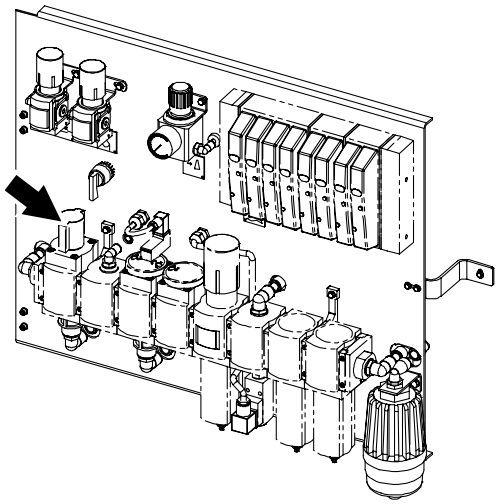

4

Make sure the input air valve on the PullTab valve panel is opened.

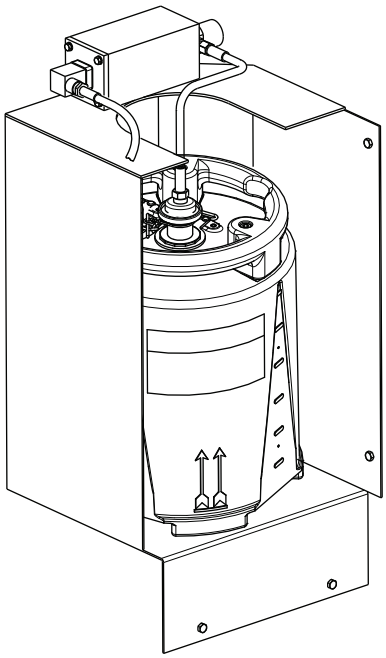

5

WARNING
Hydrogen peroxide.
Risk of personal injury.
Follow the ii Safety Precautions.

CAUTION
Ergonomic hazard.
Risk of personal injury due to strain when lifting heavy objects.
The peroxide container is heavy (approximately 21 kg when full). Avoid twisting the body, especially when bending forward while lifting the peroxide container.

Use a trolley when transporting the container.

Fit a fully filled hydrogen peroxide container, see 9.1 Hydrogen Peroxide on page 9-5.



6

Press the `Selector` button on the TPOP display to the LH position.

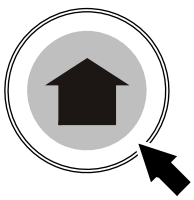

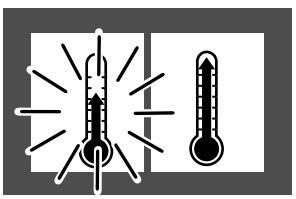

7

Press the PROGRAM UP button until the light goes out.

The PREHEATING I symbol stops flashing but remains lit and preheating of the water bath starts.

The hydrogen peroxide tank starts to fill up.

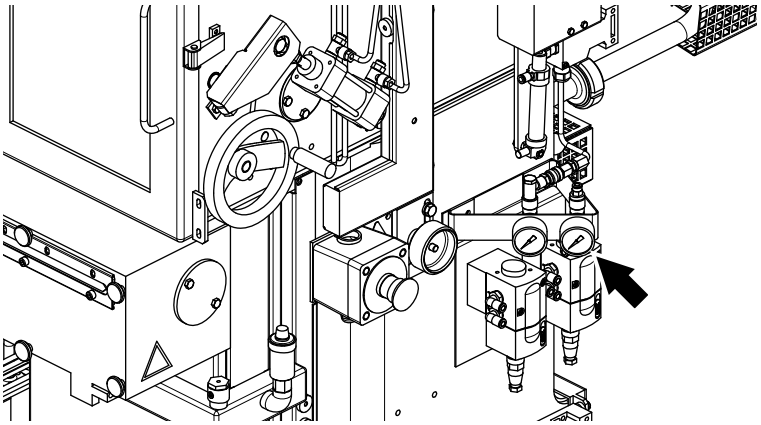

8

Check that the I/P transducer pressure is 0.1 bar.

If not, call a technician.

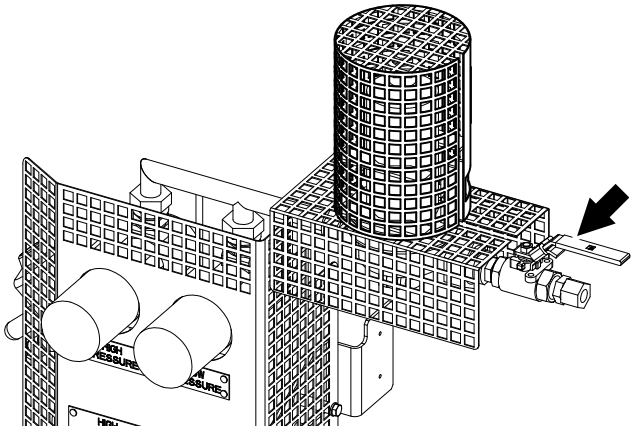

9

WARNING

Hot surface.
Risk of burns.
The steam valve and adjacent parts may be hot. If necessary, wear protective gloves.

Open the steam valve (arrow).

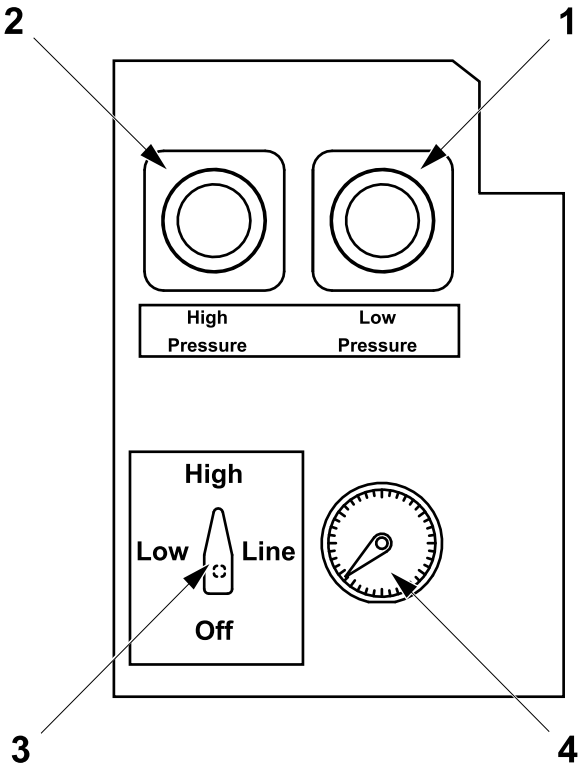

1 Pressure regulator low pressure
2 Pressure regulator high pressure
3 Selector
4 Manometer

10

Set the TCSB pressure as follows:

a) Turn the selector (3) to the LOW position (Pressure during production). Turn the pressure regulator (1) to set the steam pressure to between 0.4 and 0.5 bar. This pressure range corresponds to a temperature range of 109 to 111°C.

b) Turn the selector (3) to the HIGH position (Pressure during sterilisation). Turn the pressure regulator (2) to set the steam pressure to between 1.7 and 1.8 bar. This pressure range corresponds to a temperature range of 130 to 131°C.

c) Turn the selector (3) to the OFF position.

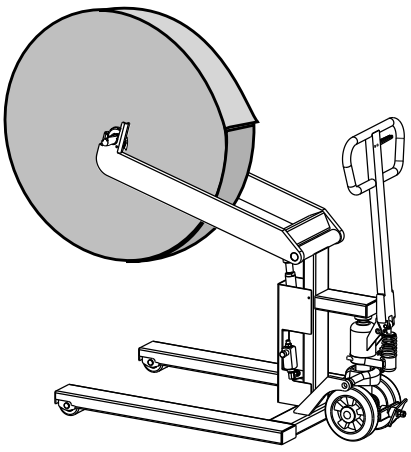

11

Prepare the packaging material reel and place it on the trolley, see 6.2.1 Reel Handling.

Put the trolley behind the packaging material magazine.

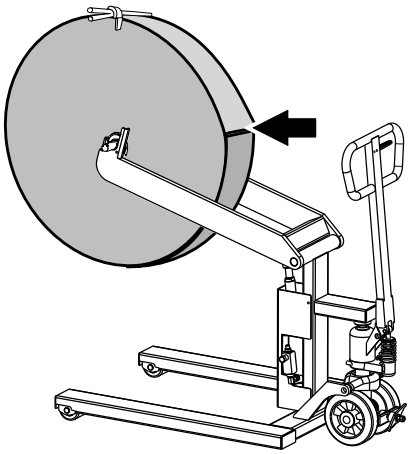

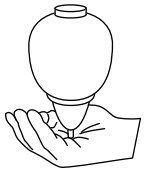

12

CAUTION
Risk of unsterility.
Before touching the packaging material, disinfect your hands or gloves.

Remove the plastic wrapping from the packaging material reel.

Cut the packaging material making the tip rounded.

Machines with PMI (standard)

For machines with ASU, go to Machines Equipped with ASU (Option) on page 3-56.

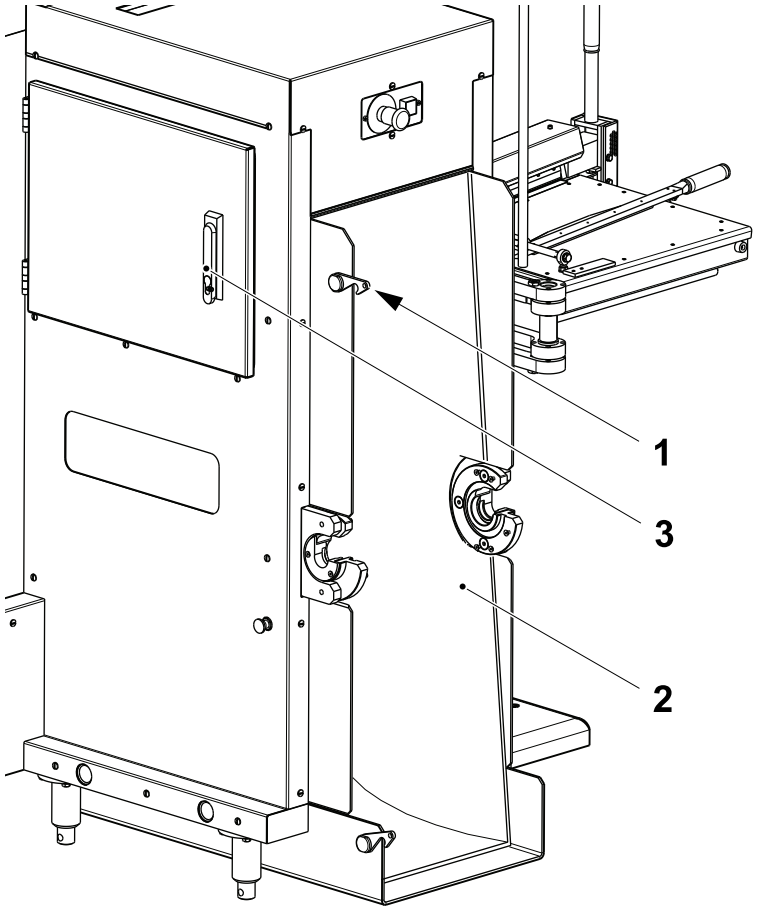

1 Catch
2 Cover
3 Door

13

Release the catch (1) and lower the cover (2).

Open the door (3).

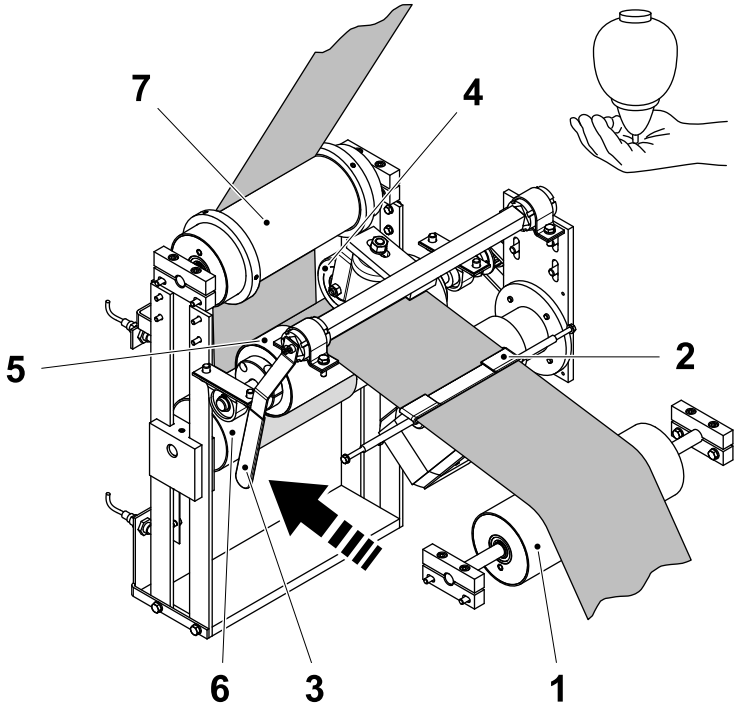

1 Paper guide roller
2 Guide
3 Handle
4 Brake roller
5 Roller
6 Roller
7 Roller

14

CAUTION
Risk of unsterility.
Before touching the packaging material, disinfect your hands or gloves. Make sure the packaging material does not touch the floor.

Bring the trolley close to the PMI and thread the packaging material over the paper guide roller (1) and through the guide (2).

Push the handle (3) to release the brake roller (4), and thread the packaging material between the brake roller (4) and the roller (5).

Thread the packaging material under the roller (6) and past the roller (7).

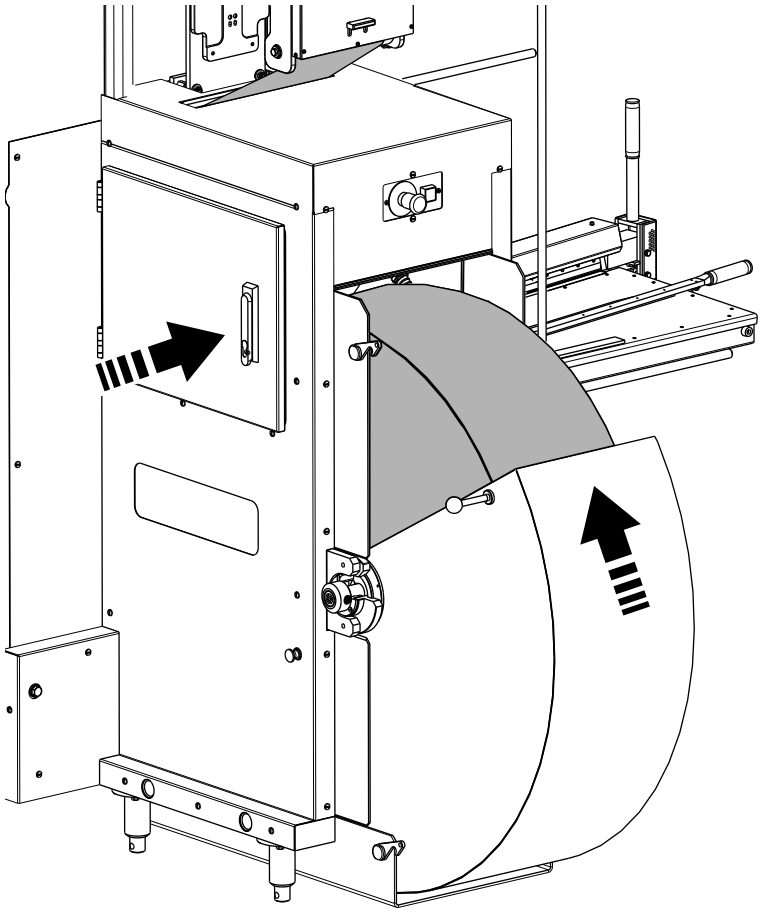

15

Place the packaging material reel in the PMI.

Close the cover and the door.

16

Select the required production mode from the TPOP:

- with PullTab
- without PullTab (only for TBA)

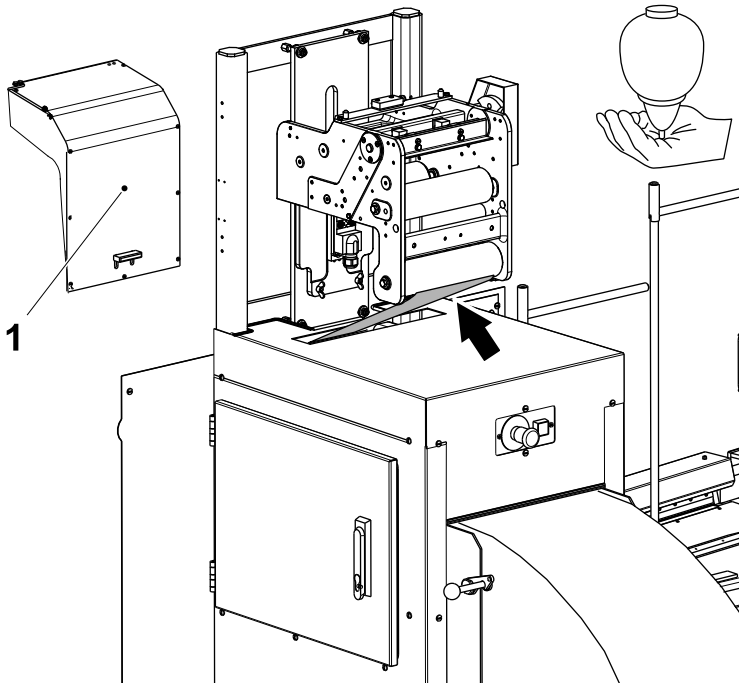

1 Cover

17

CAUTION
Risk of unsterility.
Before touching the packaging material, disinfect your hands or gloves.

Remove the cover (1).

Pull the packaging material under the bending roller and up to the infeed unit.

Pull out enough packaging material to pull it through the infeed unit.

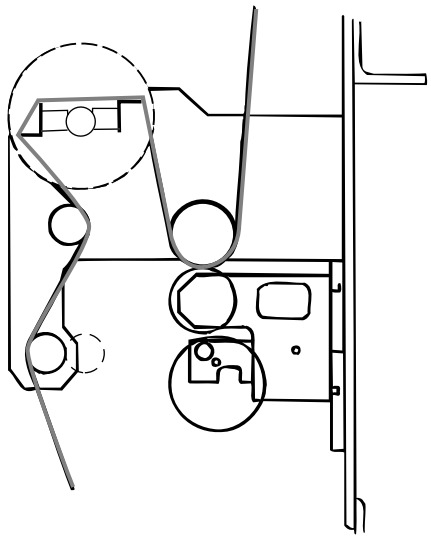

18

WARNING

Risk of cutting and crushing.
Sharp moving parts can cut and crush. Take care when threading the package material on the crease wheel.

Note! Position the crease wheel horizontally before threading the packaging material through the infeed unit.

Thread the packaging material through the infeed unit as shown.

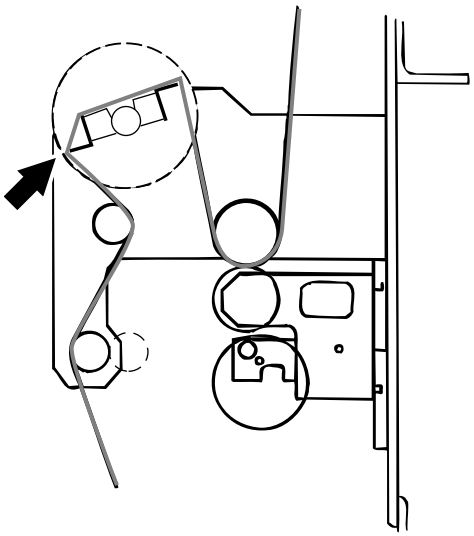

19

Make sure that the top creases of the packaging material match the short edge of the crease wheel (arrow).

See the 5.2 Package Checks section for identification of the top creases.

Put back the cover (1) on the infeed unit.

Continue with Valid for all Machine Configurations on page 3-62.

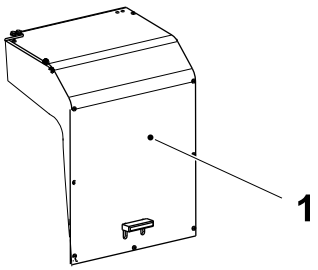

1 Cover

Machines Equipped with ASU (Option)

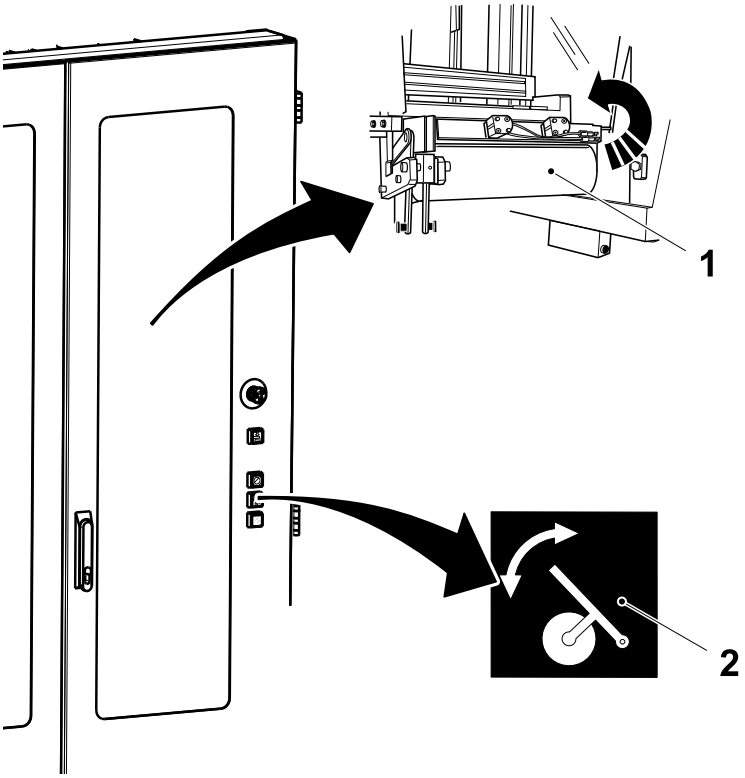

1 Material holder
2 PACKAGING MATERIAL HOLDER

20

Before opening the ASU doors, make sure the material holder (1) is fully elevated.

If not, press the PACKAGING MATERIAL HOLDER button (2).

WARNING
Risk of cutting and crushing.
The knife is sharp and the crease wheel may cut and crush.

Open the ASU back doors.

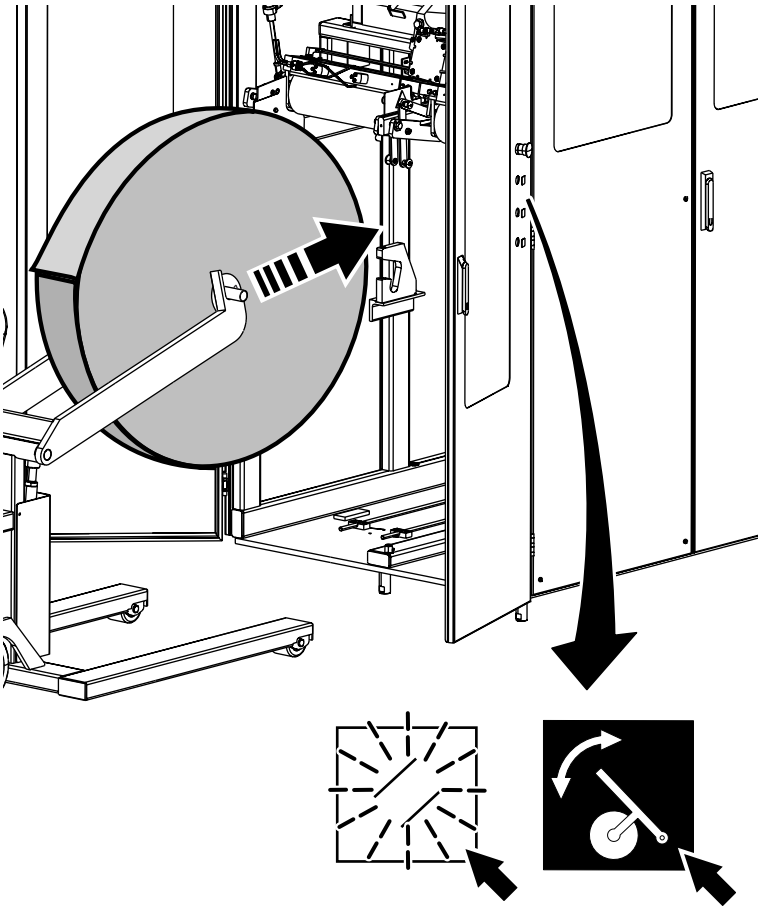

21

CAUTION
Risk of unsterility.
Make sure the packaging material does not touch the floor.

a) Insert the new reel into the ASU.

b) Close the ASU back doors.

c) Press the HARDWARE RESET button.

d) If the material holder is not lowered, press the PACKAGING MATERIAL HOLDER button.

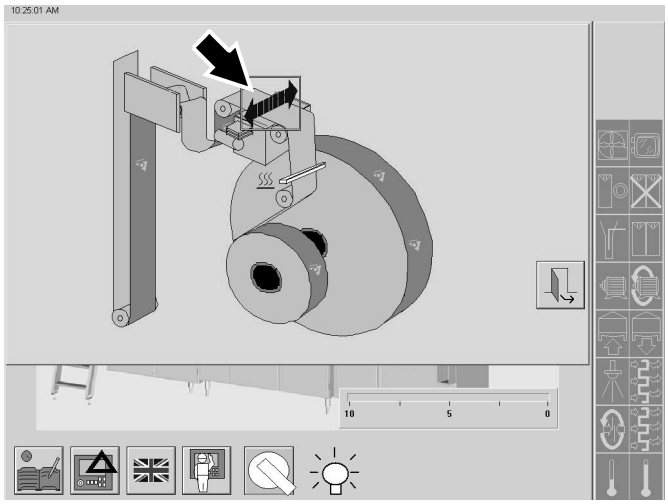

22

Move the splicing device over the packaging material reel, see 2.8.12 Move Splicing Device, Valid for Machines Equipped with ASU (Option) on page 2-83.

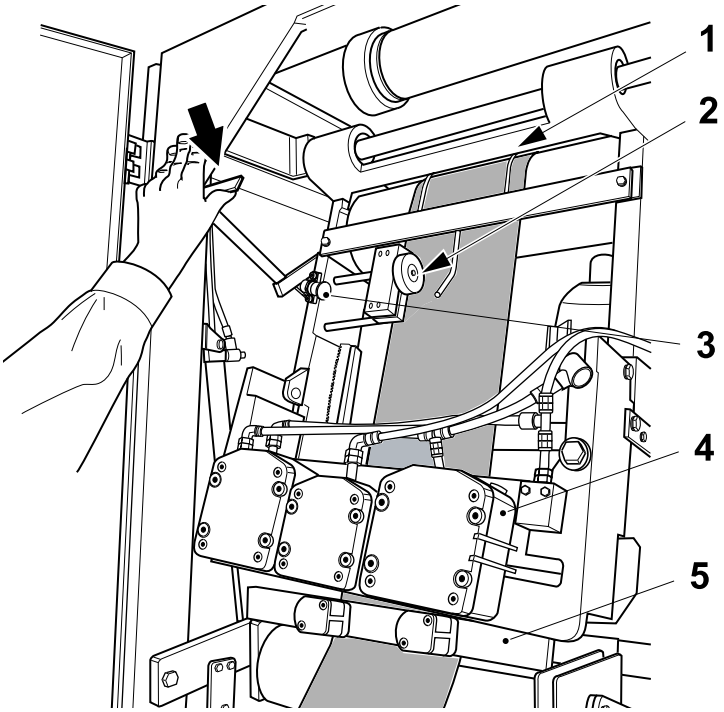

1 Pressure roller
2 Roller
3 Knob
4 Splicing device
5 Material holder

- Unlock the knob (3) and lift the handle.
- Loosen the tension between the two rollers (2).
- Thread the packaging material
- through the material holder (5)
- through the splicing device (4)
- under the pressure roller (1).

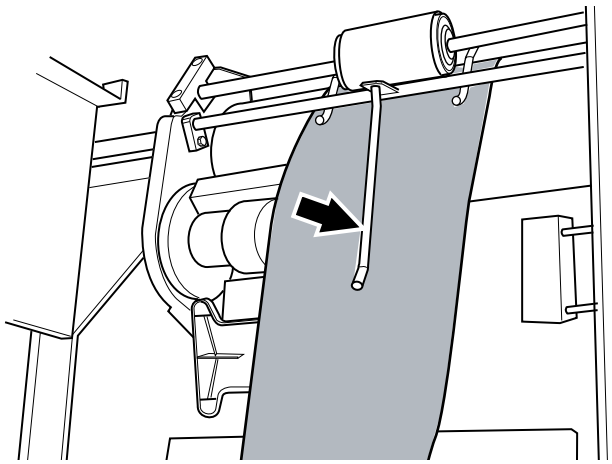

23

a) Open the RH side ASU doors.

b) Thread the packaging material through the guide.

c) Pull out as much packaging material as needed to reach the Strip Applicator.

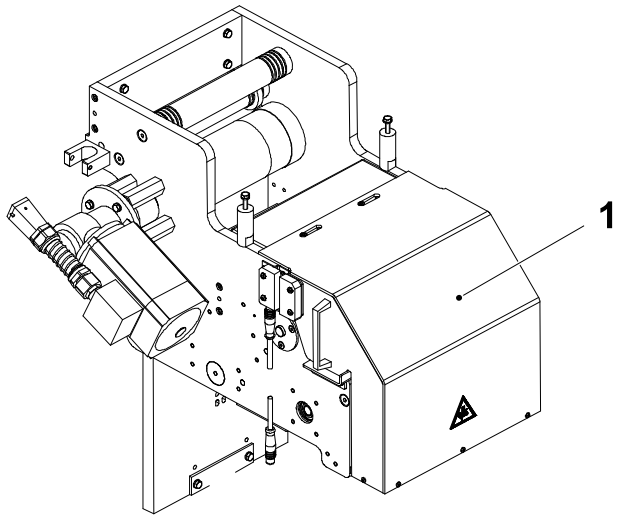

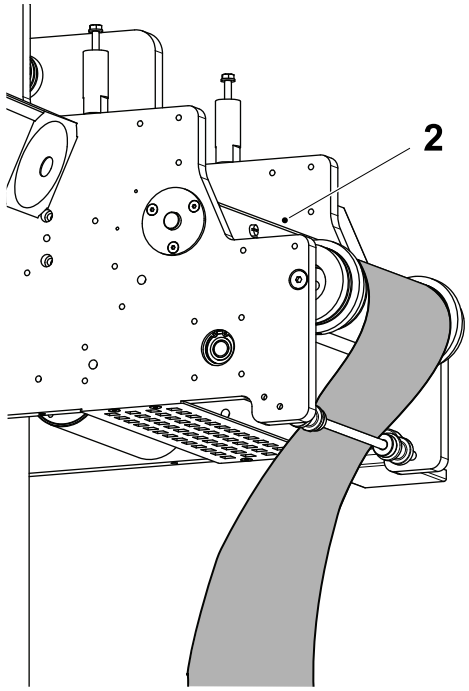

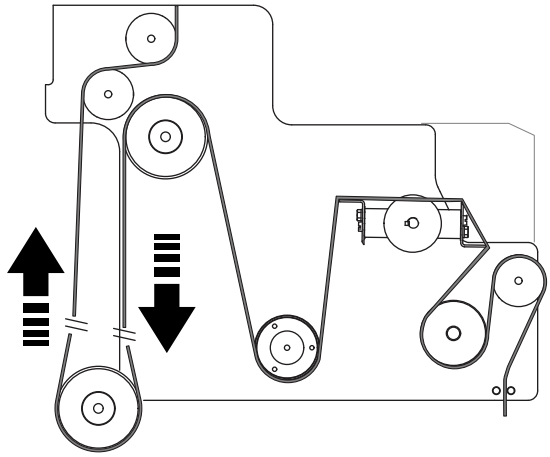

1 Cover
2 Infeed unit

24

Remove the cover (1).

Thread the packaging material into the infeed unit (2).

WARNING
Risk of cutting and crushing.
Sharp moving parts can cut and crush. Take care when threading the package material on the crease wheel (arrow).

Note! Position the crease wheel horizontally before threading the packaging material through the infeed unit.

Thread the packaging material through the infeed unit as shown.

Attach the cover (1) of the infeed unit (2).

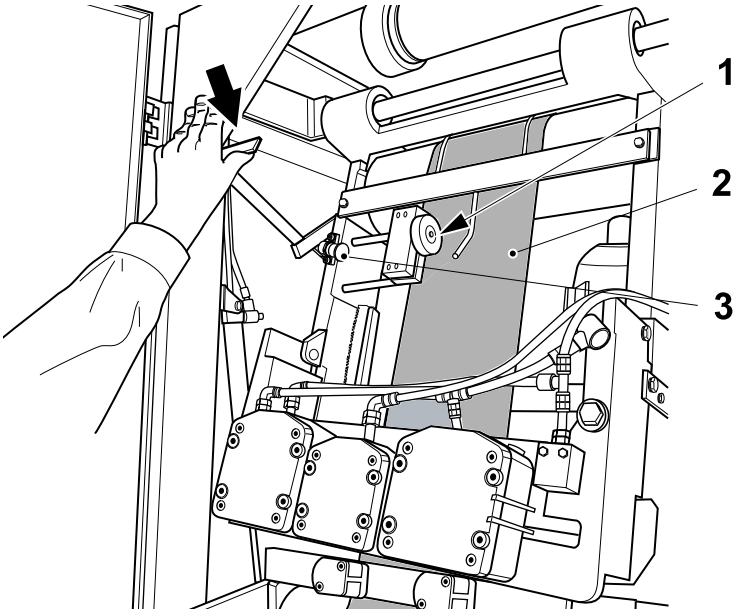

1 Roller
2 Packaging material
3 Knob

25

Align the packaging material (2) and tighten the tension between the two rollers (1). Lock the knob (3).

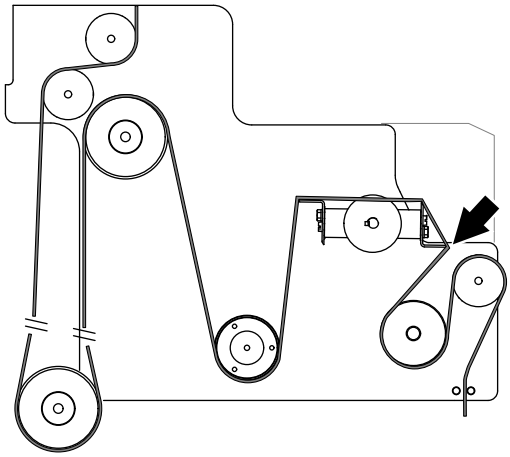

26

Make sure that the top creases of the packaging material match the short edge of the crease wheel (arrow).

See the 5.2 Package Checks for identification of the top creases.

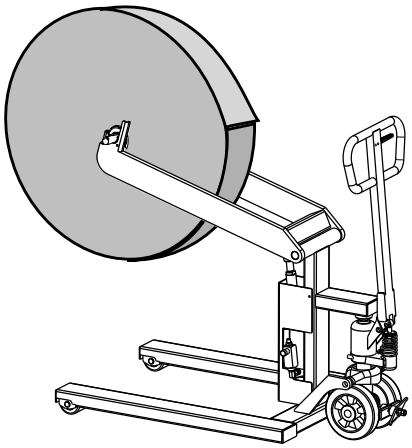

27

Prepare another packaging material reel on the other material holder. See the 6.2 Packaging Material Supply on page 6-32.

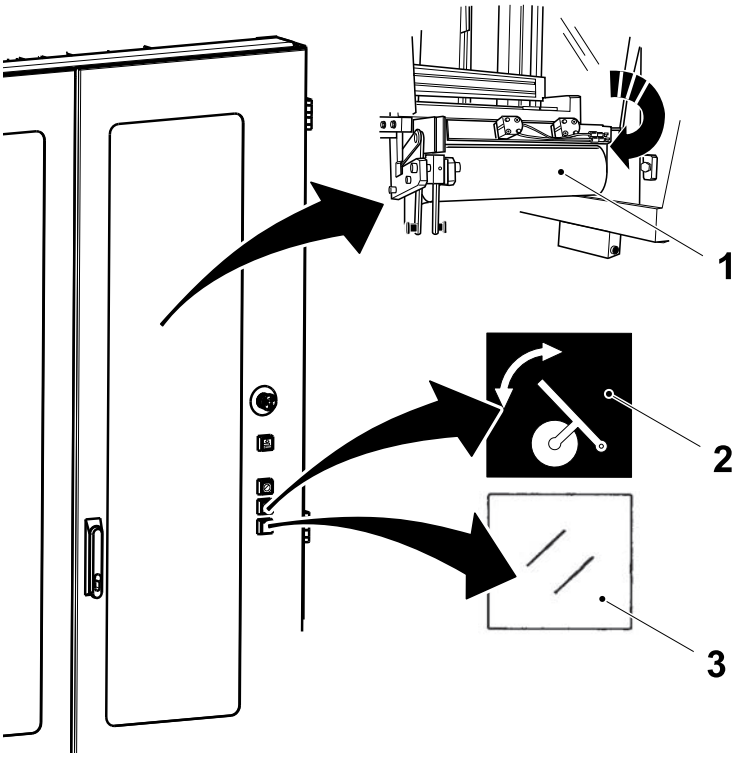

1 Material holder
2 PACKAGING MATERIAL HOLDER
3 HARDWARE RESET

28

Close the ASU doors.

Press the HARDWARE RESET button (3).

The material holder (1) above the reel lowers. If not, press the PACKAGING MATERIAL HOLDER button (2).

Valid for all Machine Configurations

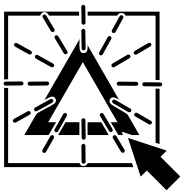

29

Close all covers and doors on the machine and press the flashing `Acknowledge` button to acknowledge the alarm.

If an alarm is lit, take the appropriate measures or call a technician.

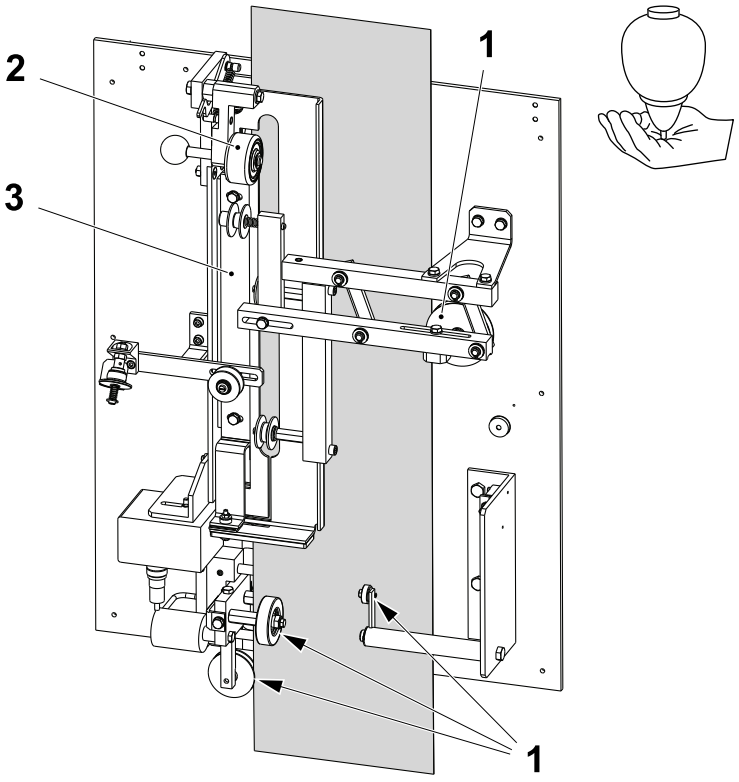

1 Guide wheel
2 Pressure roller
3 Inductor

30

CAUTION
Risk of unsterility.
Before touching the packaging material, disinfect your hands or gloves.

Open the Strip Applicator door.

Thread the packaging material through the guide wheels (1) and between the pressure rollers (2).

Thread the packaging material through the inductor (3) and pull the packaging material up to the bending roller.

Note! Make sure that the packaging material is correctly positioned in the guides.

Close the Strip Applicator door.

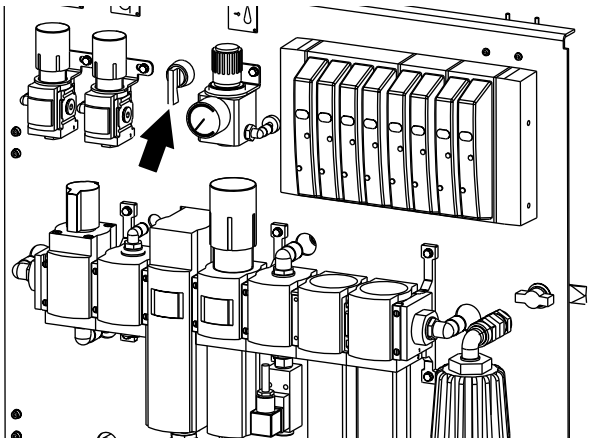

31

Open the doors of the valve panel.

Release the counter pressure rollers by turning the switch on the PullTab unit valve panel to the LH position.

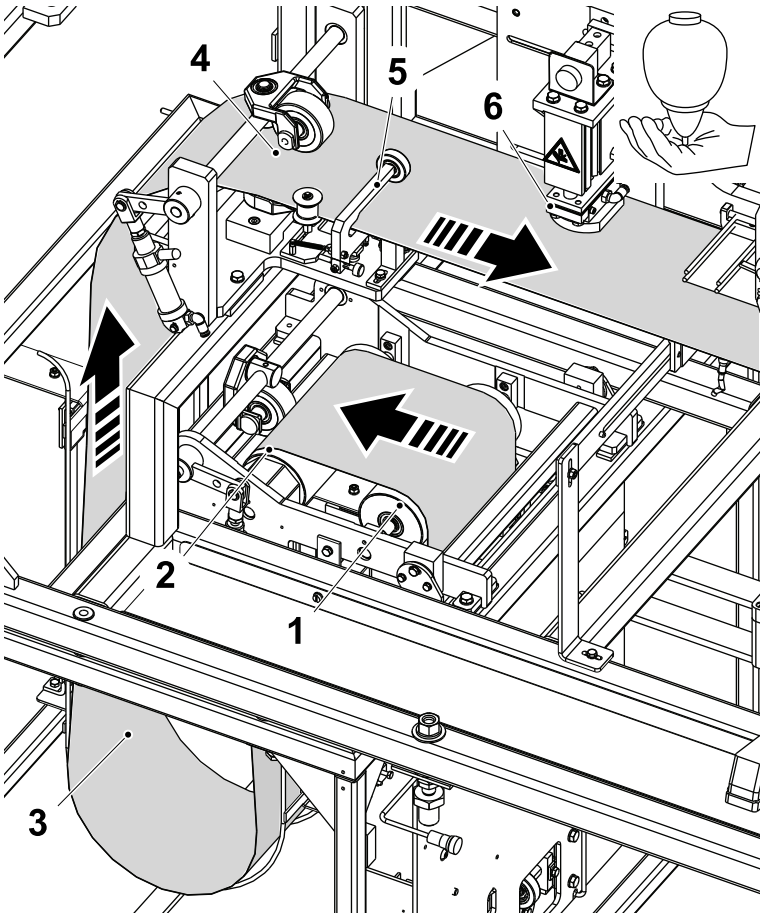

1 Bending roller
2 Counter pressure roller
3 Magazine
4 Paper brake
5 Paper guide
6 Punch unit

32

Open the PullTab covers.

CAUTION
Risk of unsterility.
Before touching the packaging material, disinfect your hands or gloves.

Note! Make sure you have pulled approximately four meters of packaging material through the spare loop.

Thread the packaging material:

- up to the bending roller (1),
- between the driven bending roller and the counter pressure roller (2),
- down to the packaging material magazine (3),
- up to the paper brake (4),
- through the paper guide (5),
- and the punch unit (6).

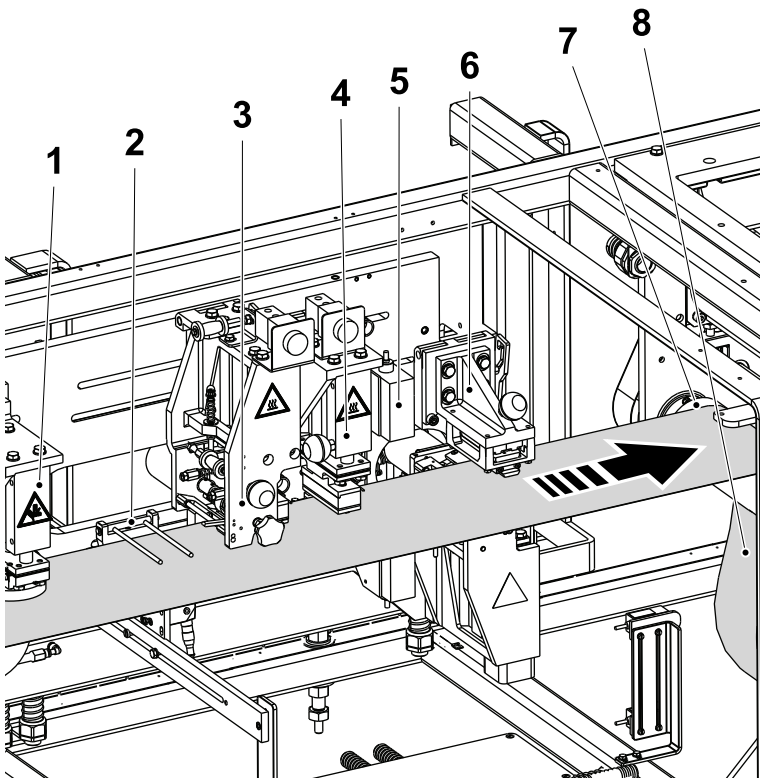

1 Punch unit
2 Guide
3 Patch unit
4 Sealing station
5 Sensor unit
6 Patch unit
7 Driven bending roller
8 Magazine

33

Note! The upper fingers of the guide (2) can be lifted to allow the positioning of the packaging material.

Pull the packaging material from the punch unit (1) through the:

- guide (2),
- patch unit (3),
- sealing station (4),
- sensor unit (5),
- patch unit (6),
- driven bending roller (7),
- and down to the packaging material magazine (8).

Note! Make sure to return the upper fingers of the guide (2) to their lower positions.

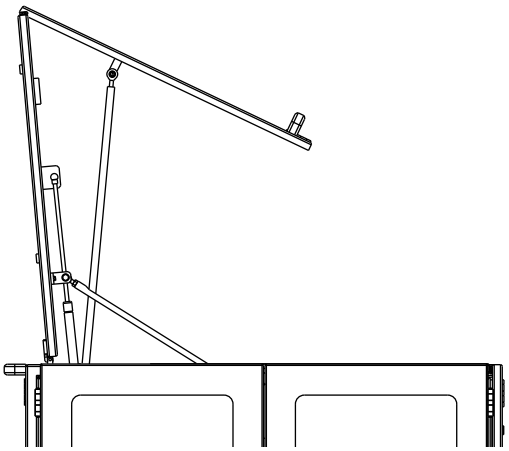

34
Close the PullTab cover.

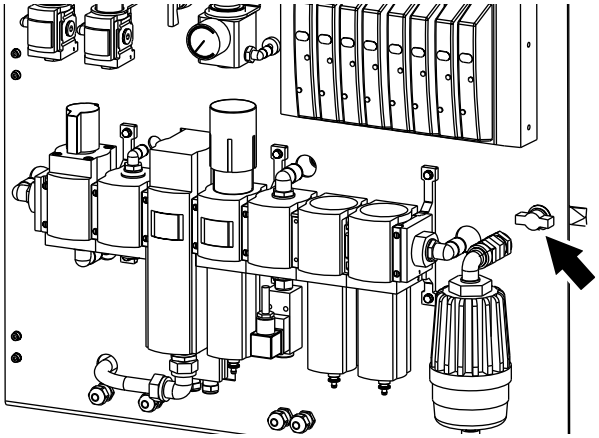

35
Turn the handle (arrow) and swing out the valve panel plate.

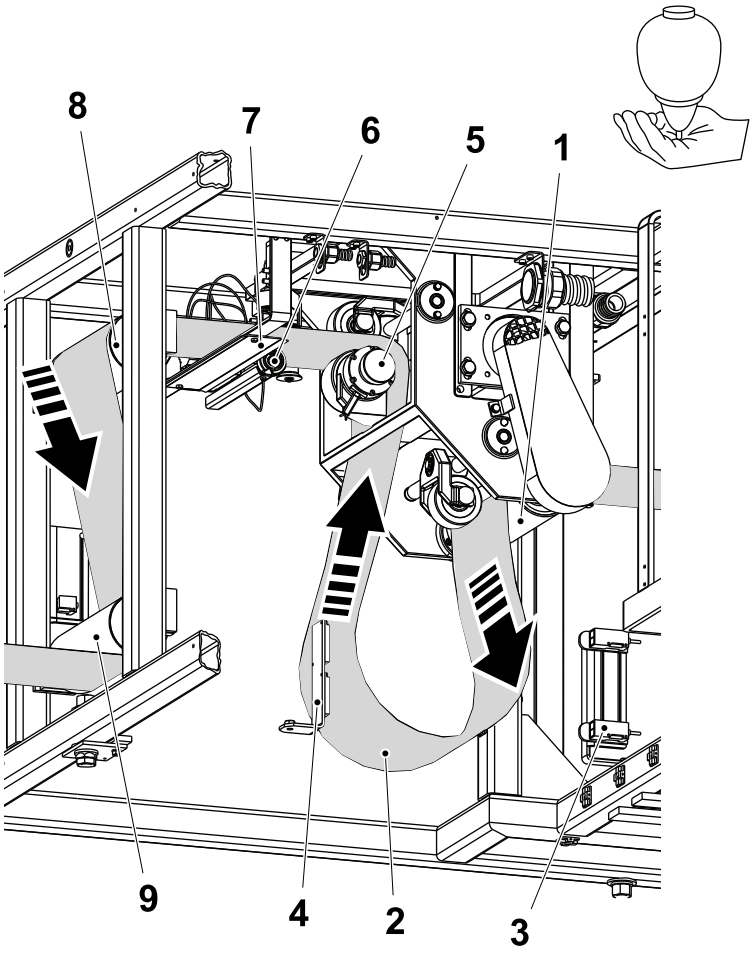

1 Bending roller
2 Magazine
3 Photocell
4 Reflector
5 Brake unit
6 Guide
7 Plate
8 Bending roller
9 Bending roller

36

CAUTION
Risk of unsterility.
Before touching the packaging material, disinfect your hands or gloves.

Thread the packaging material through the:

- driven bending roller (1),
- down to the packaging material magazine (2),

  Note! Make sure that the packaging material is in between the photocells (3) and the reflectors (4),
- up to the brake unit (5),
- through the guide (6) and the plates (7),
- bending roller (8),
- down to the bending roller (9),

and out of the PullTab towards the lid of the suction box.

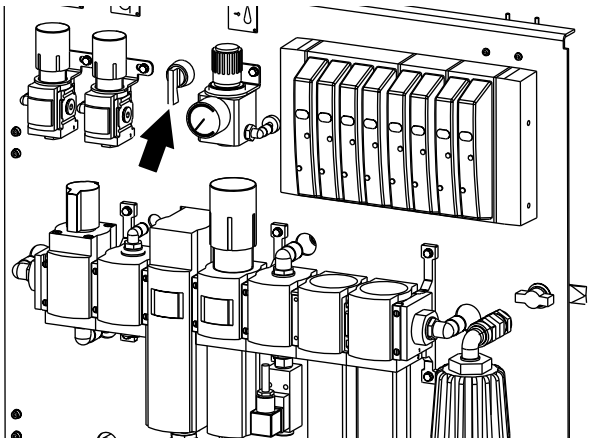

37

Close the valve panel plate.

Apply the counter pressure rollers by turning the switch on the PullTab valve panel to the RH position.

Close the valve panel door.

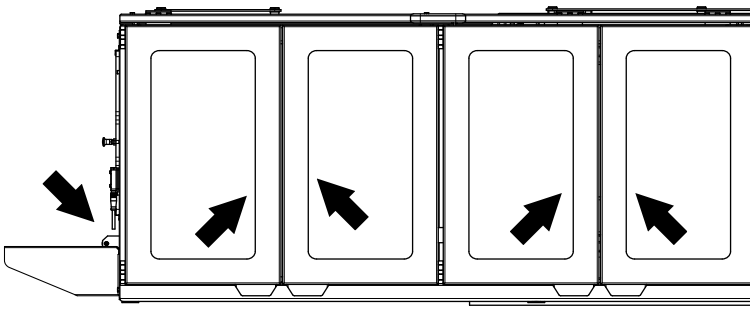

38

Thread the patch strip and the tab strip, see 6.1.

Close the PullTab doors and open the web cover.

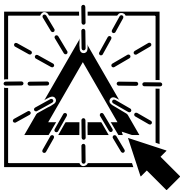

39

Close all covers and doors on the machine and press the flashing `Acknowledge` button to acknowledge the alarm.

If an alarm is lit, take the appropriate measures or call a technician.

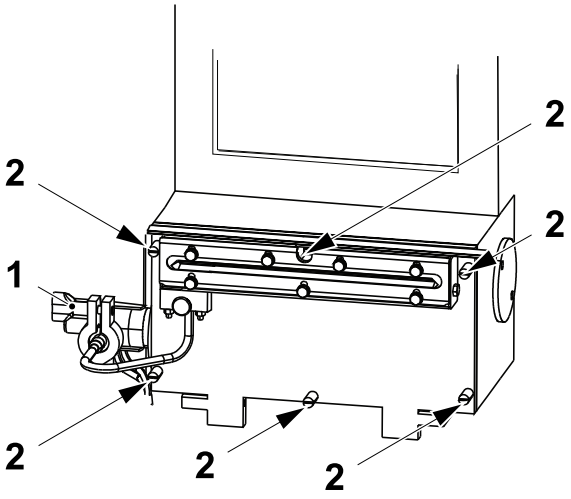

1 Clamp
2 Screw

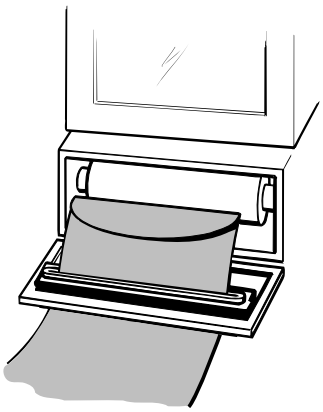

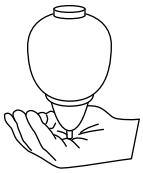

Threading through the Bath 40

WARNING
Hydrogen peroxide.
Risk of personal injury.
Follow the ii Safety Precautions.

CAUTION
Risk of unsterility.
Before touching the packaging material, disinfect your hands or gloves.

Make a three meter loop of packaging material to reduce paper friction.

Loosen the throttle (pipe) using the clamp (1).

Loosen the six screws (2), open the suction box lid and thread the packaging material through it.

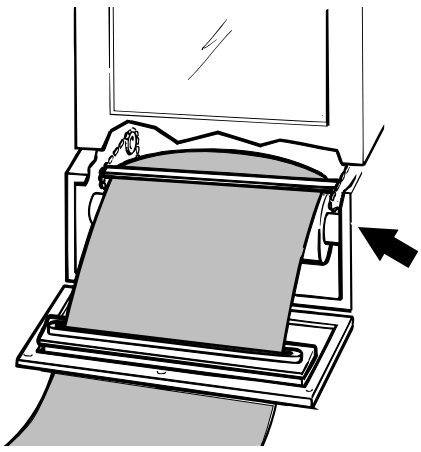

41

Fold the packaging material and put it under the carrier between the chains of the bath.

The carrier is in its start position, just above the bending roller (arrow).

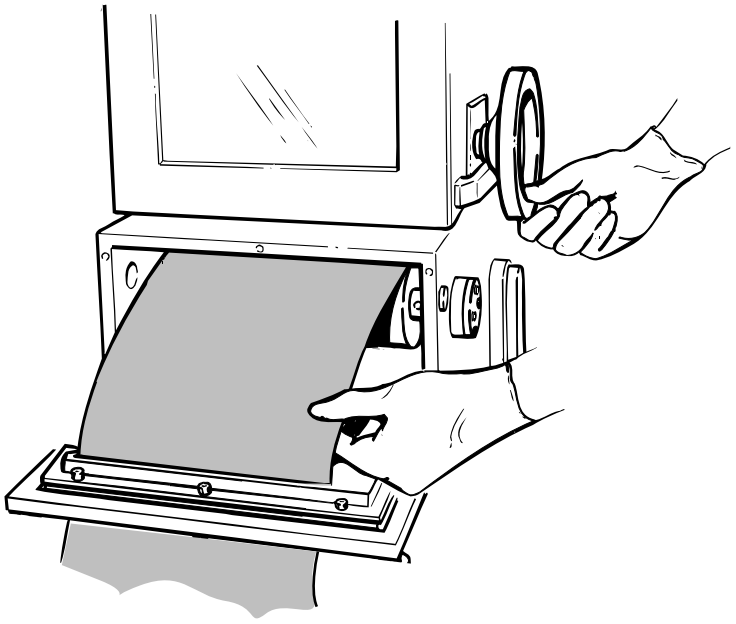

42

Crank the packaging material through the sterilisation bath.

When the edge of the packaging material is visible through the aseptic chamber doors, open the aseptic chamber doors.

Remove the packaging material from the carrier and immediately crank the carrier back to its starting position.

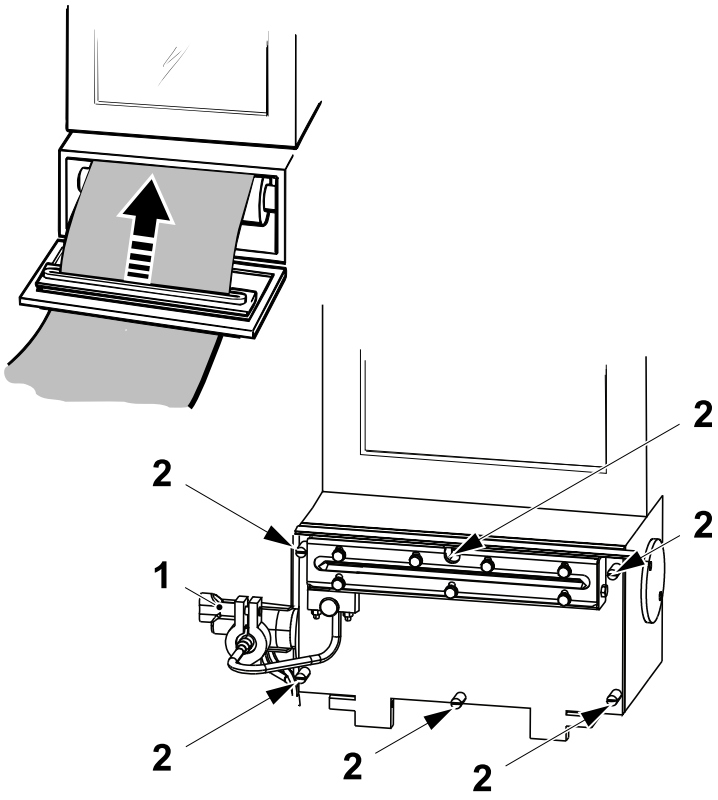

1 Clamp
2 Screw

43

Close the suction box lid and tighten the six screws (2).

Tighten the clamp (1) to fasten the throttle (pipe).

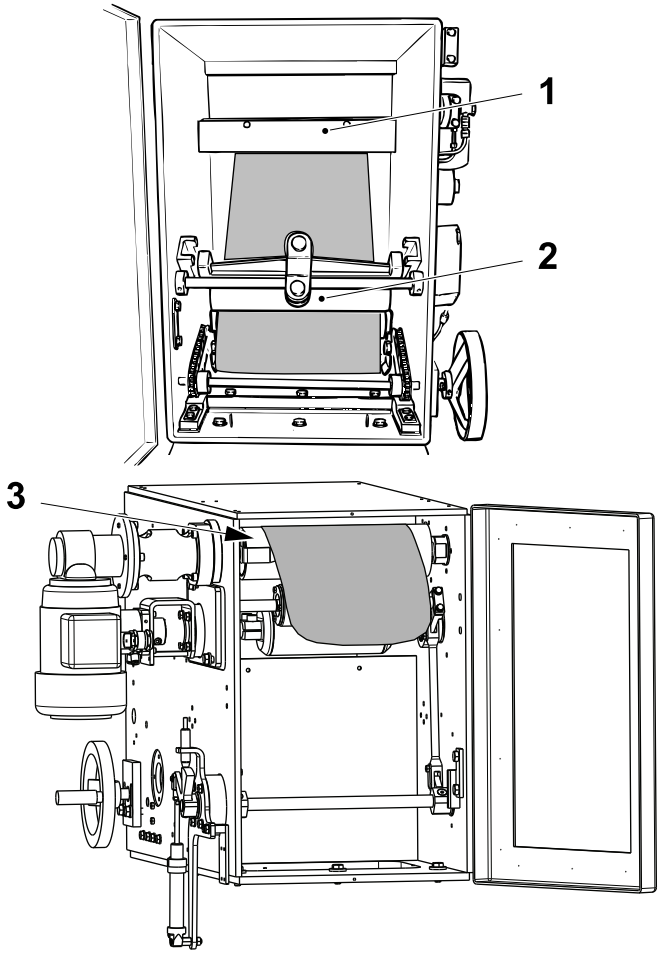

1 Air knife
2 Calendar roller
3 Bending roller

44

Thread the packaging material between the calendar rollers (2), under the air knife (1), and up over the bending roller (3).

Close the aseptic chamber doors.

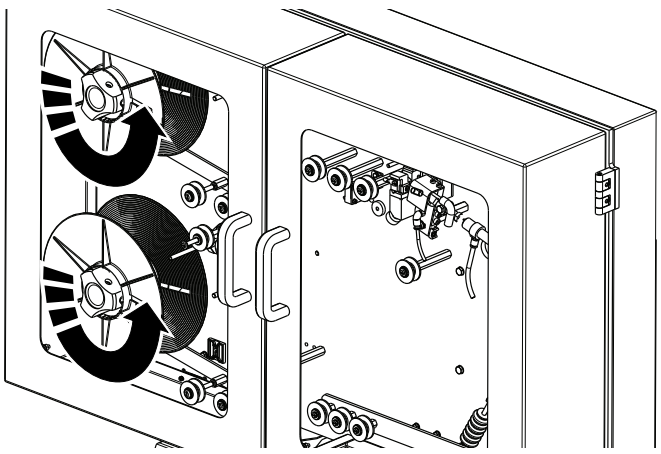

45

Open the front covers of the SA.

Fit the LS strip reels on the holders.

Position the reels in the direction of rotation.



46

Record the time taken for Preparation after weekly care. See 2.7.10 Record Maintenance Time on page 2-54.

47

Preparation After Weekly Care is now complete.

Continue with 3.1 on page 3-5 before starting PRODUCTION.

4 Start

Description

This chapter describes how to start the equipment for production. The Start chapter begins after all of the pre-production preparations have been completed, see chapter 3 Preparation.

CAUTION
Hazardous noise.
Risk of impaired hearing.
Hearing protection is recommended whenever this equipment is in operation.

4.1 Start Production 4-5
Pre-Filling Mode 4-6
Normal Filling or Asynchronous Filling Mode 4-7
Valid with HI (option) only 4-10
4.2 Restart after LS Strip Splice Failure 4-12

This page intentionally left blank

4.1 Start Production

CAUTION
Risk of unsterility.
If the maximum idle time between end of CIP and restart of production is exceeded, this might lead to a lower efficiency of the machine sterilisation and might cause unsterility to the product.

The maximum idle time between end of CIP cleaning and restart of production is 36 hours.

If the maximum idle time is exceeded, restart the CIP cleaning. See on page .

The production phase duration is recommended to a maximum of 24 hours.

The duration of the production phase is product dependent, but if the recommended production phase duration is exceeded, the product quality might be jeopardised.

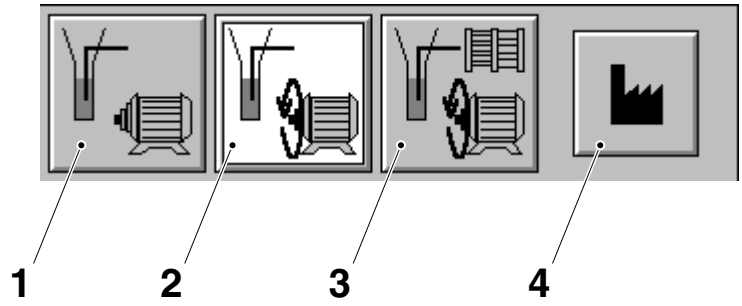

1 Pre-filling
2 Asynchronous filling
3 Normal filling
4 Reset parameters

1

Pick the correct filling mode for the product being filled.

- PRE-FILLING (1) fills the paper tube while the machine is not running, see item 2.
- ASYNCHRONOUS FILLING (2) fills the paper tube while the machine is running, see item 5.
- NORMAL FILLING (3) fills the paper tube while the machine is running in synchronisation with the package design, see item 5.

See 2.8.9 Filling Product Parameters on page 2-77 for the selection of the flow memorized for specific product.

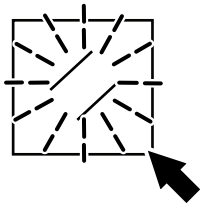

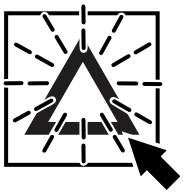

Pre-Filling Mode

2

Close all covers and doors on the machine.

If needed, reset the ASU and Final Folder door alarms by pressing the flashing HARDWARE RESET buttons.

Press the flashing `Acknowledge` button on the TPOP to acknowledge the alarm.

If an alarm is lit, take the appropriate measures or call a technician.

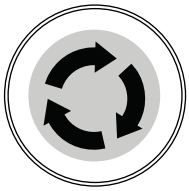

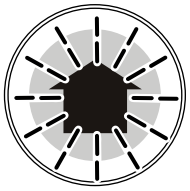

3

Press and hold the INCHING button until the PROGRAM UP button starts to flash slowly. Packages are discharged during this time.

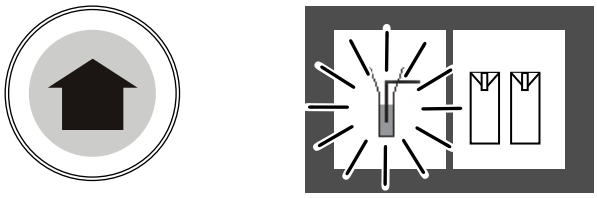

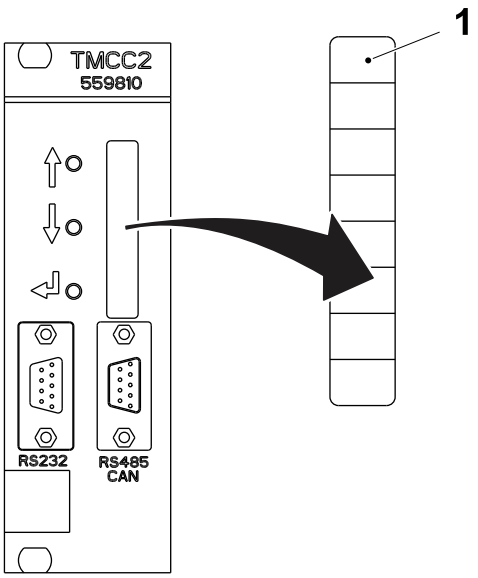

1 LED S1

4

Press the PROGRAM UP button. The LED S1 (1) on the FCS TMCC2 card (A310) starts to flash and the FILLING symbol on the TPOP lights.

Keep the PROGRAM UP button pressed until the LED S1 (1) stops flashing but remains lit. The change of LED status means the product level has been reached.

Note! If the level is not reached at the first attempt, repeat the procedure from the INCHING PHASE.

Note! If the machine stops for more than five minutes in NORMAL STOP or if the C valve is closed, the machine starts automatically in ASYNCHRONOUS FILLING mode.

If the pre-filling sequence is performed correctly, go to item 8.

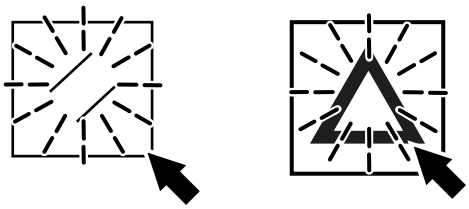

Normal Filling or Asynchronous Filling Mode

5

Close all covers and doors on the machine.

If needed, reset the ASU and Final Folder door alarms by pressing the flashing HARDWARE RESET buttons.

If needed, reset the Final Folder door alarms by pressing the flashing HARDWARE RESET buttons.

Press the flashing `Acknowledge` button on the TPOP to acknowledge the alarm.

If an alarm is lit, take the appropriate measures or call a technician.

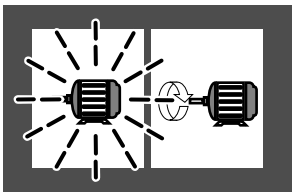

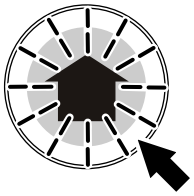

6

When the READY FOR PRODUCTION symbol and the PROGRAM UP button start to flash, press the PROGRAM UP button.

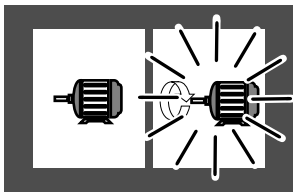

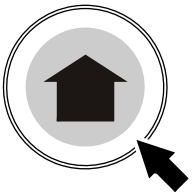

7

Keep the PROGRAM UP button pressed until the drive motor starts and the MOTOR START symbol stops flashing but remains lit.

If this is performed correctly, go to item 8.

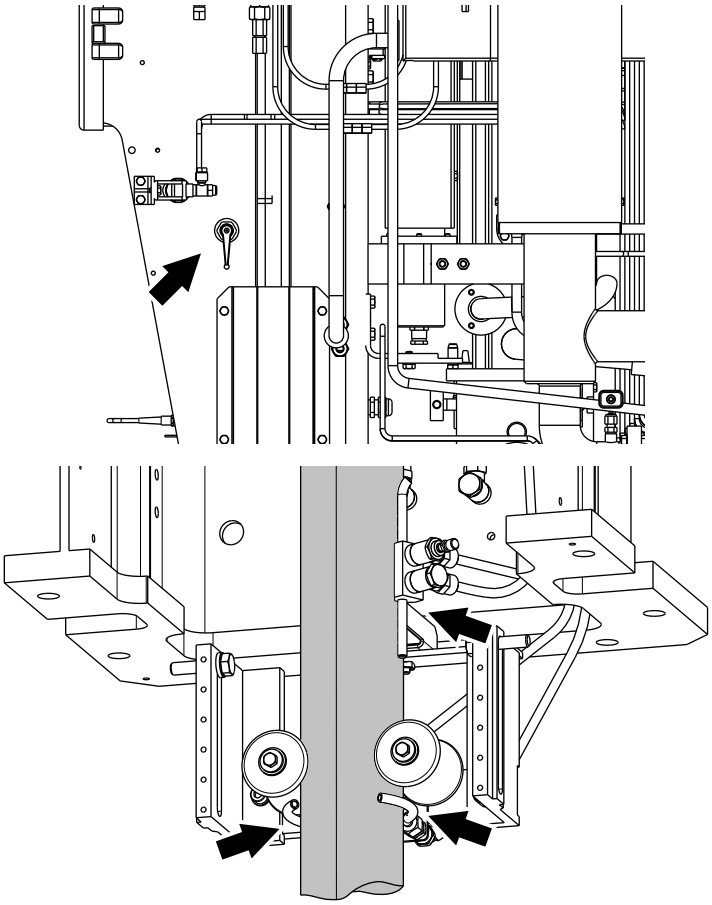

8

Check that the tube flushing water valve is open, and the tube flushing works properly.

CAUTION

Risk of serious production fault.

If during Stops or PRODUCTION the aseptic chamber doors are opened, or the tube bursts, tears, or it is manually cut, or product splashes occur, the machine must be cleaned and sterilized before PRODUCTION can restart.

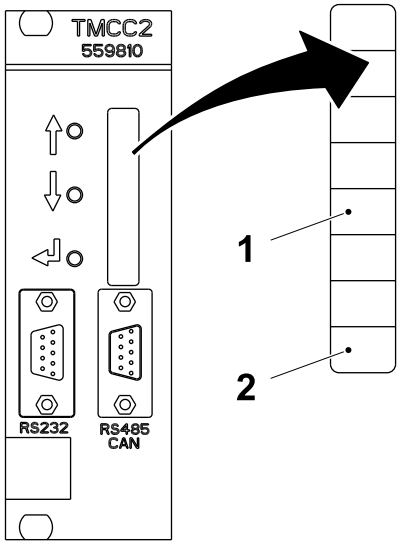

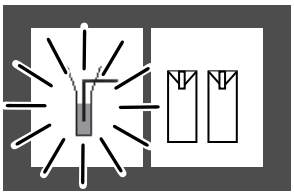

1 LED S5
2 LED S8

9

On the FCS TMCC2 card (A310):

When the FILLING symbol lights, the level start to increase and is indicated from LED S8 (2) to LED S5 (1); the level indicator should stabilise within seven or eight packages.

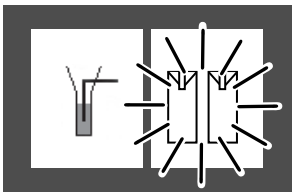

10

When the packages start to be produced correctly, the PRODUCTION symbol stops flashing but remains lit.

The drop chute changes direction and the packages are directed to the final folder.

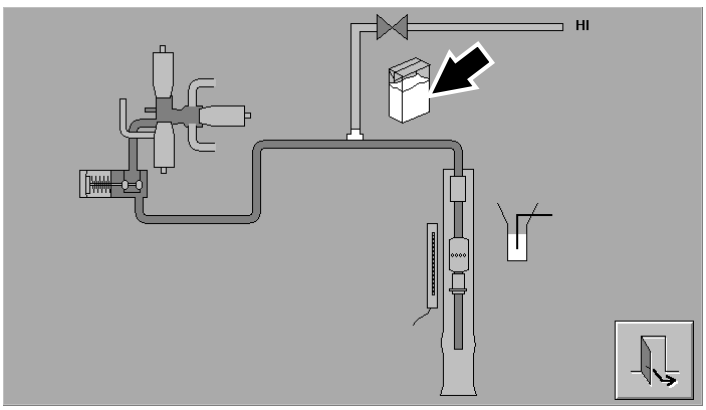

11

Valid with HI (option) only

Make sure that the HI headspace is set with the correct values. Adjust if required, see section 5.2 Package Checks.

Note! The value depends on the product and the required amount of headspace.

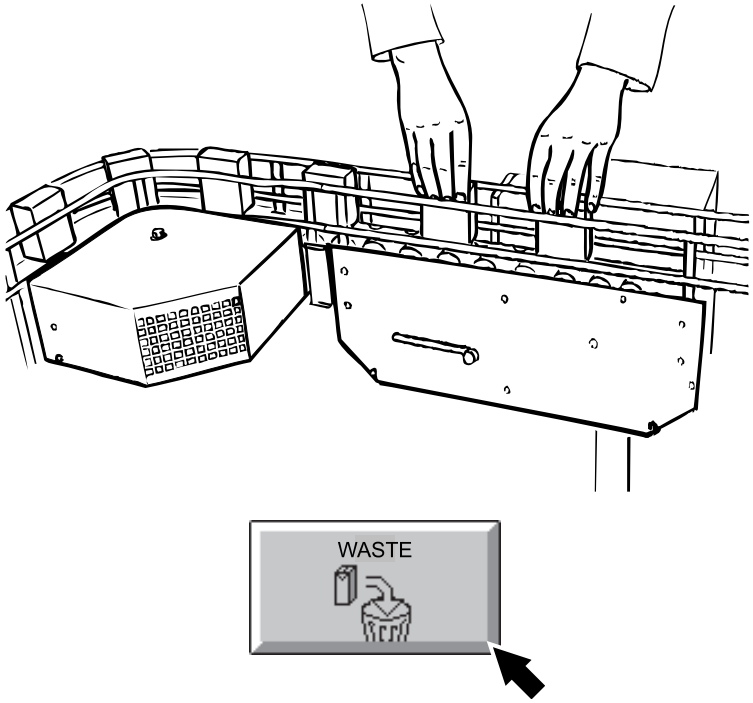

12

Pick out the first two packages discharged from the final folder and number them, see section 5.2 Package Checks.

Register the number of packages taken. See 2.7.9 Record Package Waste for Quality Checks on page 2-51.

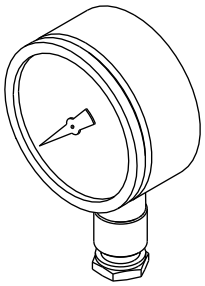

13

Check that all pressure gauges show the correct settings, see 9.2 Setting Values on page 9-14.

4.2 Restart after LS Strip Splice Failure

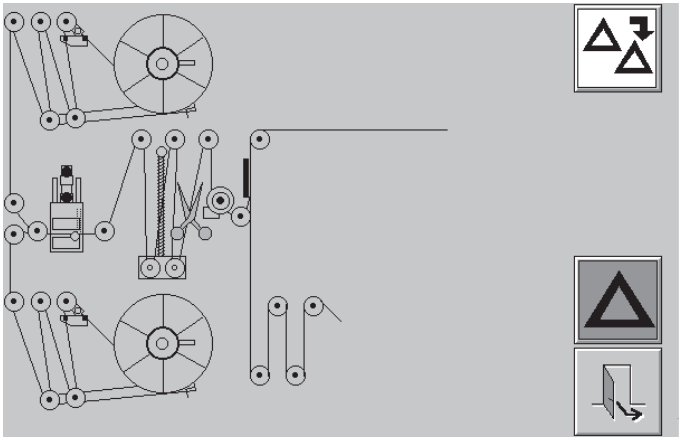

1

The `SA LS Strip Broken` alarm lights.

The filling machine steps to DRYING.

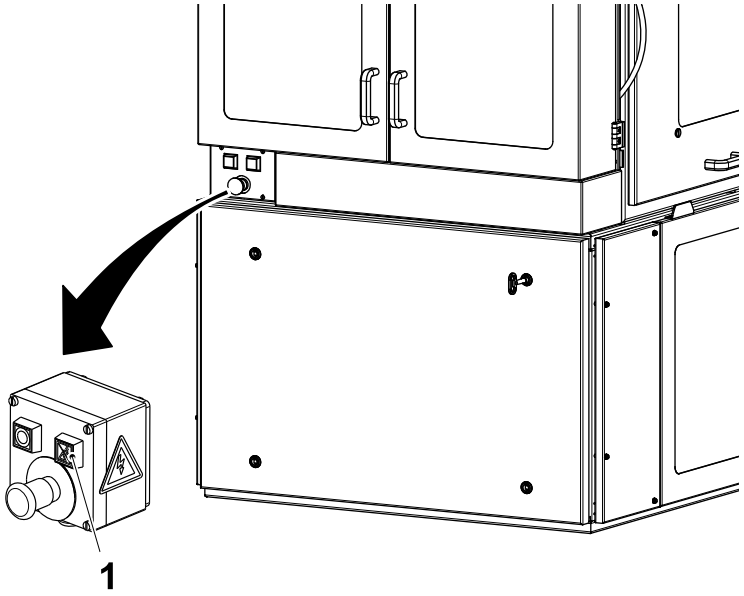

1 ACKNOWLEDGE

2

Open the SA doors and press the to acknowledge the alarm.

Thread the LS strip and attach to the packaging material.

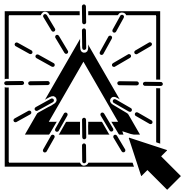

3

Close all covers and doors on the machine.

Press the `Acknowledge` button on the TPOP. If an alarm is present, take the appropriate measures or call a technician.

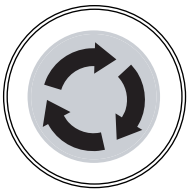

4

Press and hold the INCHING button until the strip splice is discarded and the LS strip is securely attached. Packages will be discarded from the drop chute during this time.

If necessary, see section LS Strip Application in chapter 5 Checks.

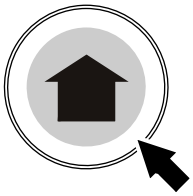

5

Press the PROGRAM UP button until the drive motor starts.

The PRODUCTION symbol stops flashing but remains lit.

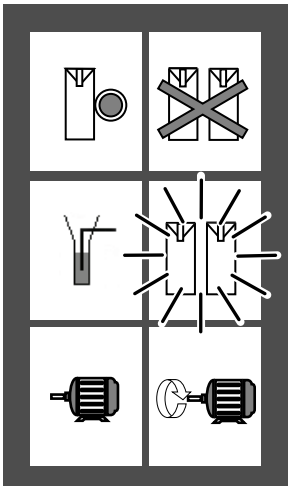

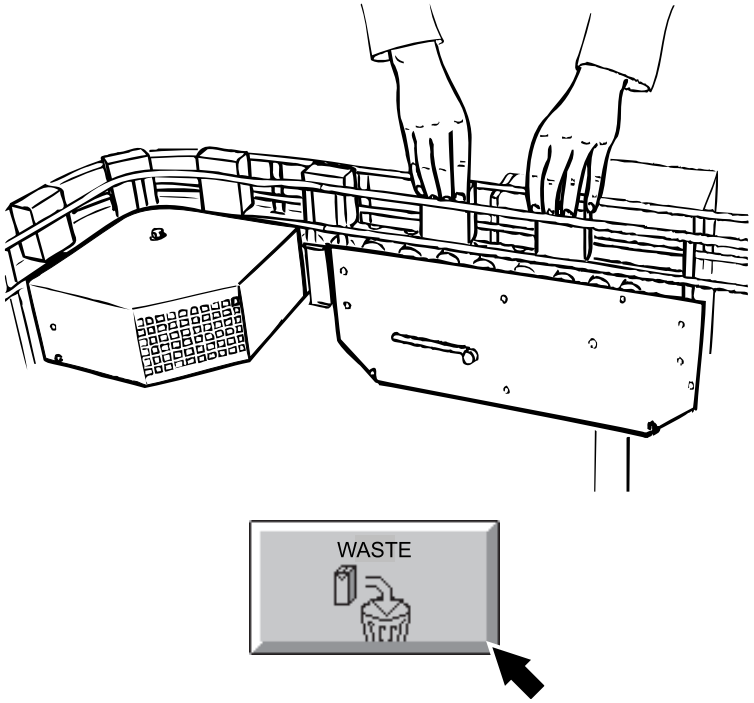

6

Pick out the first two packages discharged from the final folder and number them, see section 5.2 Package Checks.

Register the number of packages taken. See 2.7.9 Record Package Waste for Quality Checks on page 2-51.

5 Checks

Description

This chapter describes all of the checks the operator must perform during the production run.

CAUTION
Hazardous noise.
Risk of impaired hearing.
Hearing protection is recommended whenever this equipment is in operation.

5.1 Production Checks 5-5

Valid for machines with JUMO Process Recorder 5-8

Product Spillage during Production 5-10

5.2 Package Checks 5-11

5.2.1 Package Utilisation and Recommendations 5-12

5.2.2 Package Selection 5-13

5.2.3 Package Identification 5-14

5.2.4 Checking Scheme 5-15

Production Start 5-16

After every Packaging Material Splice 5-17

After every LS Strip Splice 5-18

After every Patch or Tab Strip Splice 5-18

5.2.5 Flow of Production Quality Checks 5-19

5.2.6 TPA Package Description 5-21

5.2.7 Production Quality Checks 5-22

Date Printing with External Dating Unit (Option) 5-22

Weight 5-22

Machines without HI 5-22

Weight, Machines Equipped with HI (Option) 5-23

Weight fine tuning 5-24

TS - Rough Check 5-25

TS - Accurate Check 5-25

Check the TS Sealing 5-29

Extended Evaluation of TS 5-31

Shape and Design 5-32

Shape and Bottom Creases 5-33

Tab (PullTab) 5-34

Flap Sealing 5-34

Crease Lines 5-35
LS Overlap 5-38
Surfaces 5-39
PullTab Hole Position 5-40
Patch and Tab Sealing 5-42
Outer Patch 5-46
LS Strip Application 5-47
5.2.8 Laboratory Package Checks 5-53

5.1 Production Checks

This section describes the checks to perform on the filling machine during PRODUCTION.

CAUTION
Risk of damage to the equipment.
Do not leave the machine unattended during production.

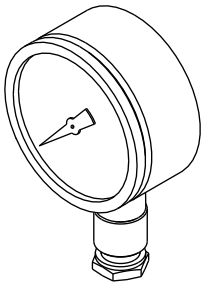

1
Check all pressure gauges show the correct settings.

Setting data, see chapter 9 Technical Data.

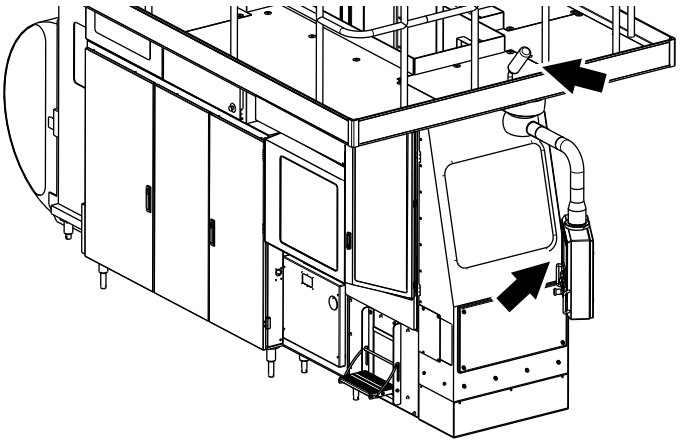

2
Check that the indicating tower is not flashing.

If it starts flashing, take the actions shown on the Control panel and TPOP.

See section 2.1 Control Panel Description.

3
Check that the packaging material and the LS strip run correctly through the machine; see chapter 1 General Description section 1.9 Packaging Material Web.

If required, make a SHORT STOP and adjust the threading, see sections 3.1 Preparation After Daily Care and 3.2 Preparation After Weekly Care.

4

Check all doors are closed and all safety covers and guards are fitted, see chapter ii Safety Precautions.

Note! The electrical cabinet doors must be closed to ensure sufficient cooling.

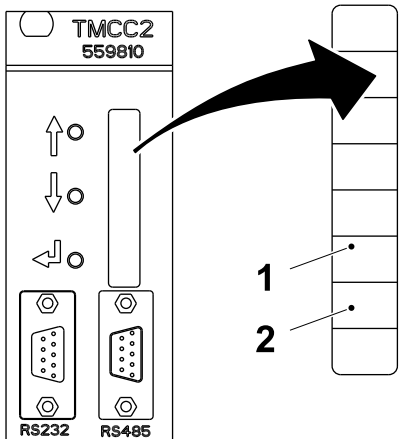

1 LED S6
2 LED S7

5

On the FCS TMCC2 card (A310):

Check that the level indicator shows a smooth movement around 40% flow: LEDs S6 (1) or S7 (2) are ON.

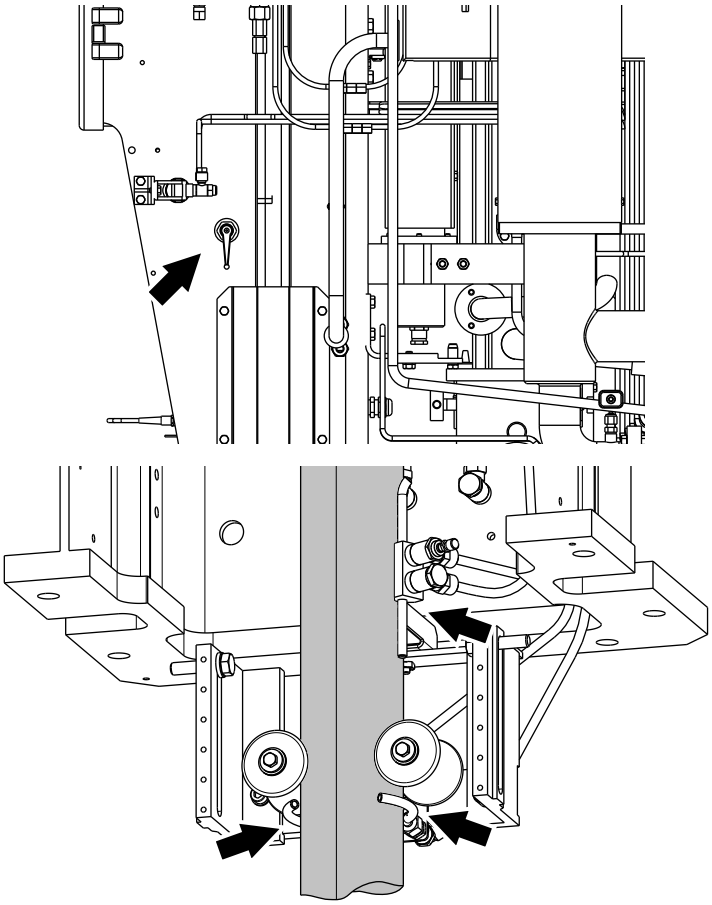

6

Check that the tube flushing water valve is open, and the tube flushing works properly.

If required, adjust using the valve.

Make sure that the platform, ladder and area around the machine are clean and free from loose objects.

CAUTION

Risk of serious production fault.

If at any point during PRODUCTION the aseptic chamber doors are opened, or the tube bursts, tears, or it is manually cut, or product splashes occur, the machine must be cleaned and sterilized before PRODUCTION can restart.

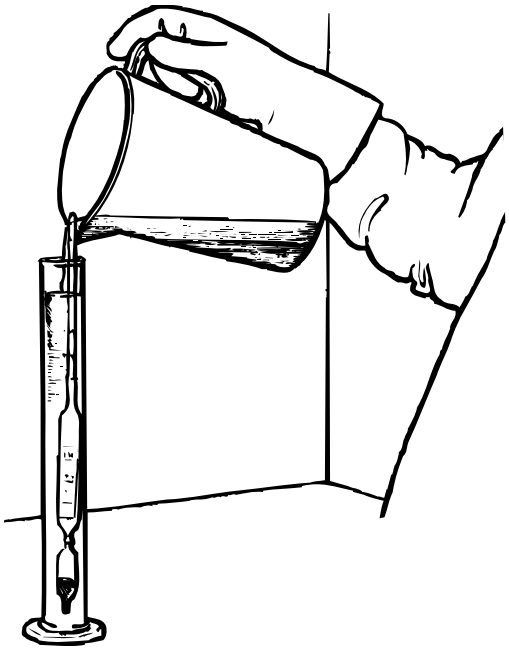

7

WARNING
Hydrogen peroxide.
Risk of personal injury.
Follow the ii Safety Precautions.

Check the hydrogen peroxide concentration at least every 8 hours of operation, see section 9.1.1.1 Hydrogen Peroxide Concentration (by Weight).

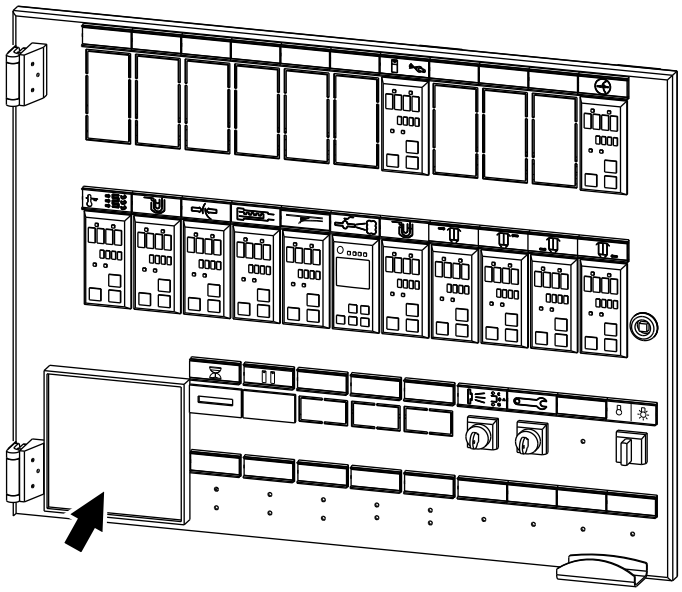

8

Valid for machines with JUMO Process Recorder

Check that the process recorder works correctly.

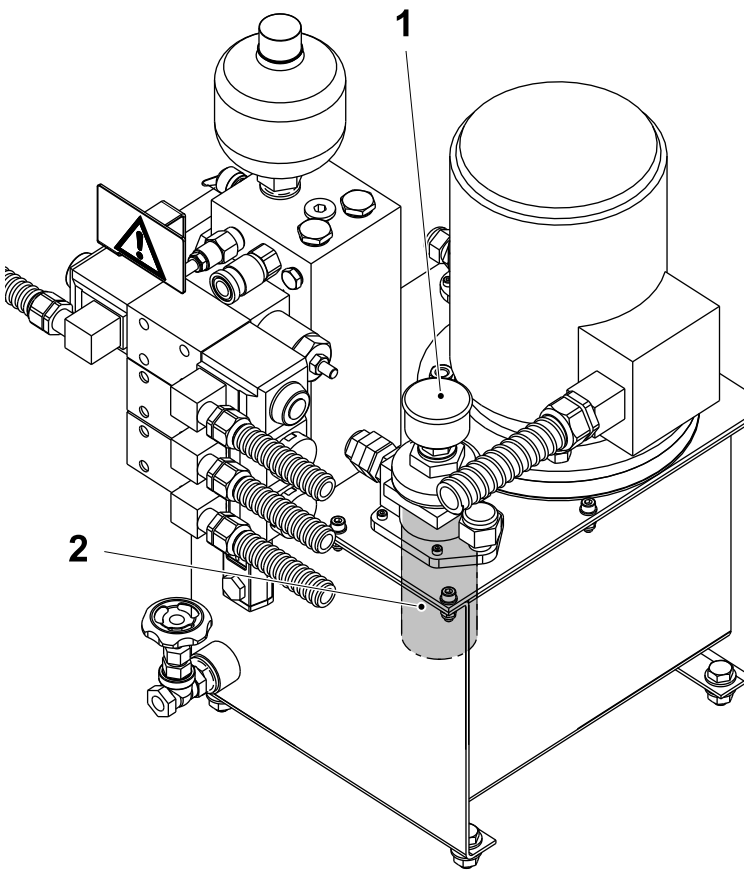

1 Pressure gauge
2 Filter insert

9

Check the pressure gauge (1). If the arrow is in the red field, remove the pressure gauge (1) and change the filter insert (2).

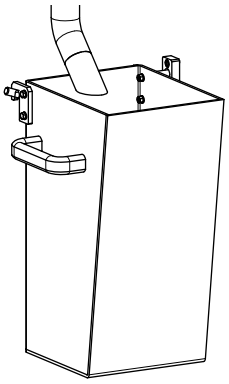

Machine with PMI

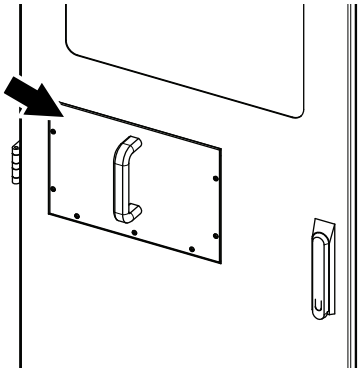

Machine with ASU (option)

10

Check and if necessary, empty the PullTab waste box.

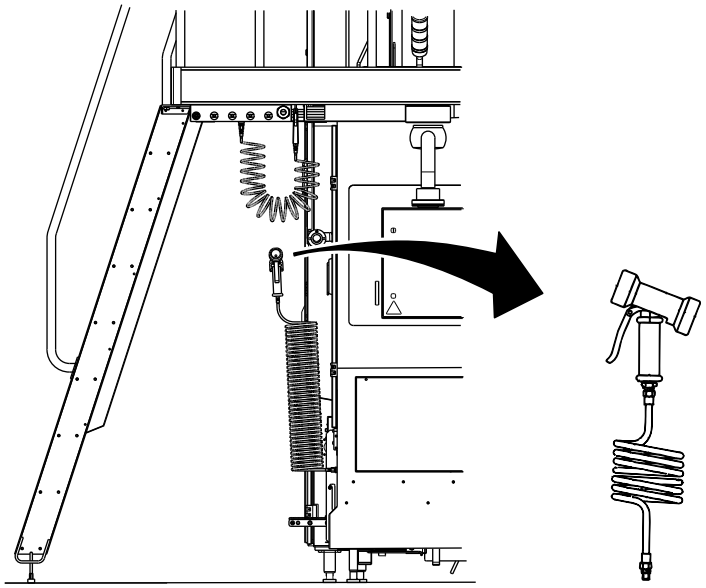

Product Spillage during Production

In case of package jam in the final folder leading to product spillage, rinse with a water gun and check that there is no product residue left in the final folder.

Step up the machine after the production stop, see chapter 7 Stop.

5.2 Package Checks

This section describes the checks to perform on the packages during PRODUCTION.

Package Checks and corrective actions will affect the quality of the PRODUCTION. Use these checking methods as the minimum requirement. If there is any doubt about the integrity of the packages, pick out more packages for further checking.

Whenever a fault cannot be eliminated call a technician.

5.2.1 Package Utilisation and Recommendations

To waste the minimum quantity of packages and to perform the checks in the optimum amount of time, proceed as follows:

Take **three** packages from the conveyor.

Follow the instructions in 5.2.2 Package Selection on page 5-13 and 5.2.3 Package Identification on page 5-14.

Note! Use the same two packages to perform all of the checks that require two packages. The third package is only used for the LS/SA check. Take only one package for the check performed after a LS strip splice.

Follow the package checks according to 5.2.4 Checking Scheme on page 5-15.

Use 5.2.5 Flow of Production Quality Checks on page 5-19 to determine which actions (if any) that are needed after each package check.

Carefully read the section on page to become fully acquainted with the terminology used to describe the different components and characteristics of the package.

5.2.2 Package Selection

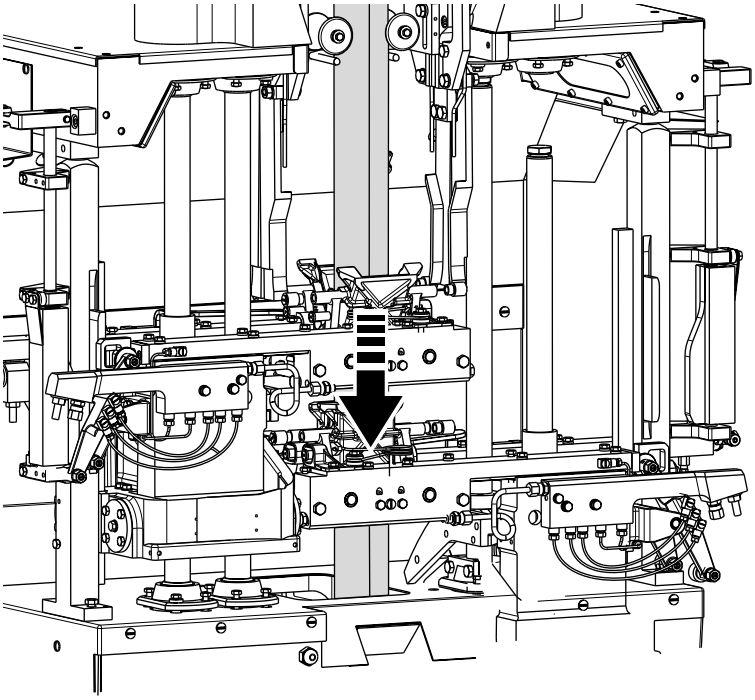

When selecting packages for quality checks, always select packages in pairs.

When the jaw system is running, visually identify a package made in one of the jaws.

Press the PACKAGE EJECTOR button to eject just one package, and note which jaw made it. The first package which leaves the outfeed conveyor after the gap was made in the other jaw.

5.2.3 Package Identification

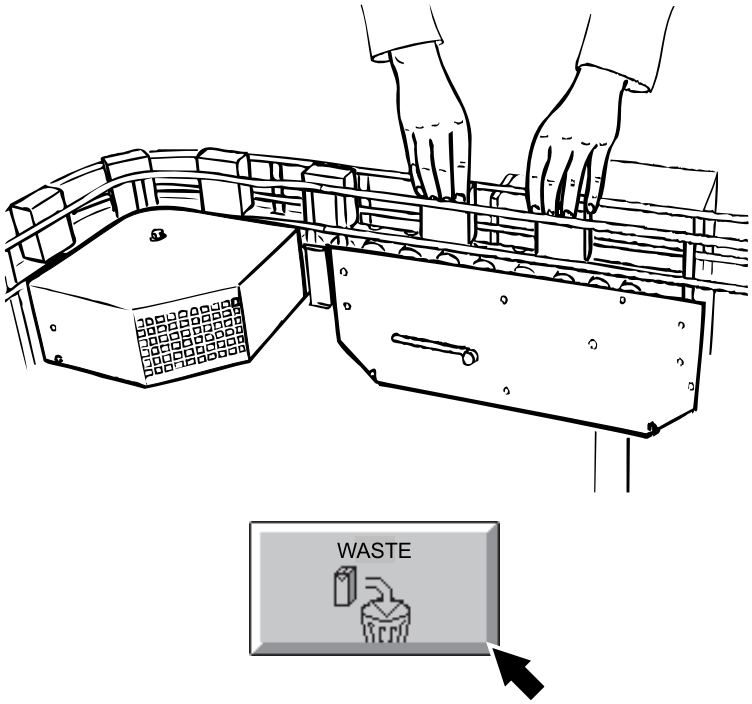

To prevent confusion, mark RH on the package made in the RH jaw. Mark LH on the package made in the LH jaw.

Register the number of packages taken. See 2.7.9 Record Package Waste for Quality Checks on page 2-51.

Note! Remove the packages only after they have passed the first package counter photocell on the machine conveyor, see IM section Communication Connections.

5.2.4 Checking Scheme

Perform the package checks in the sequence described for each recommended event.

Mark the check box when the check has been completed. ☑

Note! The Checking Scheme event lists can be photocopied and used as templates during PRODUCTION.

Production Start

Number of packages needed for package checks for this event: **3**.

- Date Printing with External Dating Unit (Option) on page 5-22.

  Check on **1** package. ☐
- Weight on page 5-22.

  Check on **2** packages. ☐
- TS - Rough Check on page 5-25.

  Check on **2** packages. ☐
- TS - Accurate Check on page 5-25.

  Check on **2** packages. ☐
- Shape and Design on page 5-32.

  Check on **1** package. ☐
- Tab (PullTab) on page 5-34.

  Check on **1** package. ☐
- Flap Sealing on page 5-34.

  Check on **1** package. ☐
- Crease Lines on page 5-35.

  Check on **1** package. ☐
- LS Overlap on page 5-38.

  Check on **1** package. ☐
- Surfaces on page 5-39.

  Check on **1** package. ☐
- PullTab Hole Position on page 5-40.

  Check on **1** package. ☐
- Patch and Tab Sealing on page 5-42.

  Check on **1** package. ☐
- LS Strip Application on page 5-47.

  Check on **1** package. ☐

After every Packaging Material Splice

Number of packages needed for package checks for this event: **3**.

- Date Printing with External Dating Unit (Option) on page 5-22.

  Check on **1** package. ☐
- Weight on page 5-22.

  Check on **2** packages. ☐
- TS - Rough Check on page 5-25.

  Check on **2** packages. ☐
- TS - Accurate Check on page 5-25.

  Check on **2** packages. ☐
- Shape and Design on page 5-32.

  Check on **1** package. ☐
- Tab (PullTab) on page 5-34.

  Check on **1** package. ☐
- Flap Sealing on page 5-34.

  Check on **1** package. ☐
- Crease Lines on page 5-35.

  Check on **1** package. ☐
- LS Overlap on page 5-38.

  Check on **1** package. ☐
- Surfaces on page 5-39.

  Check on **1** package. ☐
- PullTab Hole Position on page 5-40.

  Check on **1** package. ☐
- Patch and Tab Sealing on page 5-42.

  Check on **1** package. ☐
- LS Strip Application on page 5-47.

  Check on **1** package. ☐

After every LS Strip Splice

Number of packages needed for package checks for this event: **1**.

- LS Strip Application on page 5-47.

  Check on **1** package. ☐

After every Patch or Tab Strip Splice

Number of packages needed for package checks for this event: **1**.

- Tab (PullTab) on page 5-34.

  Check on **1** package. ☐
- PullTab Hole Position on page 5-40.

  Check on **1** package. ☐
- Patch and Tab Sealing on page 5-42.

  Check on **1** package. ☐

5.2.5 Flow of Production Quality Checks

The flow of Production Quality Checks display the checks to be performed, the number of packages to check, the type of check, and the necessary actions (if any) to be taken depending on the result of the completed check.

The type of check are either a Legal requirement related check (LR), a Package integrity Related check (PI), or a Package appearance and line efficiency related check (PA).

a) Date Printing with External Dating Unit (Option), 2, LR
   - OK: Continue with item b).
   - Not OK: Stop PRODUCTION. Call a technician.

b) Weight, 2, LR
   - OK: Continue with item c).
   - Not OK: Adjust weight. Repeat item b).

c) TS - Rough Check, 2, PI
   - OK: Continue with item d).
   - Not OK: Stop PRODUCTION. Call a technician.

d) TS - Accurate Check, 2, PI
   - OK: Continue with item e).
   - Not OK: Stop PRODUCTION. Call a technician. Repeat item d).

e) Shape and Design, 1, PA
   - OK: Continue with item f).
   - Not OK: Adjust. Repeat item e).

f) Tab (PullTab), 1, PA
   - OK: Continue with item g).
   - Not OK: Adjust. Repeat item f).

g) Flap Sealing, 1, PA
   - OK: Continue with item h).
   - Not OK: Stop PRODUCTION. Call a technician.

h) Crease Lines, 1, PA
   - OK: Continue with item i).
   - Not OK: Adjust. Repeat item h).

i) LS Overlap, 1, PI and PA
   - OK: Continue with item j).
   - Not OK: Stop PRODUCTION. Call a technician.

j) Surfaces, 1, PA
   - OK: Continue with item k).
   - Not OK: Stop PRODUCTION. Call a technician.

(Cont'd)

(Cont'd)

k) PullTab Hole Position, 1, PI
- OK: Continue with item l).
- Not OK: Adjust. Repeat item k).

l) Patch and Tab Sealing, 1, PI
- OK: Continue with item m).
- Not OK: Stop PRODUCTION. Call a technician.

m) LS Strip Application, 1, PI
- OK: Continue PRODUCTION.
- Not OK: Stop PRODUCTION. Call a technician.

5.2.6 TPA Package Description

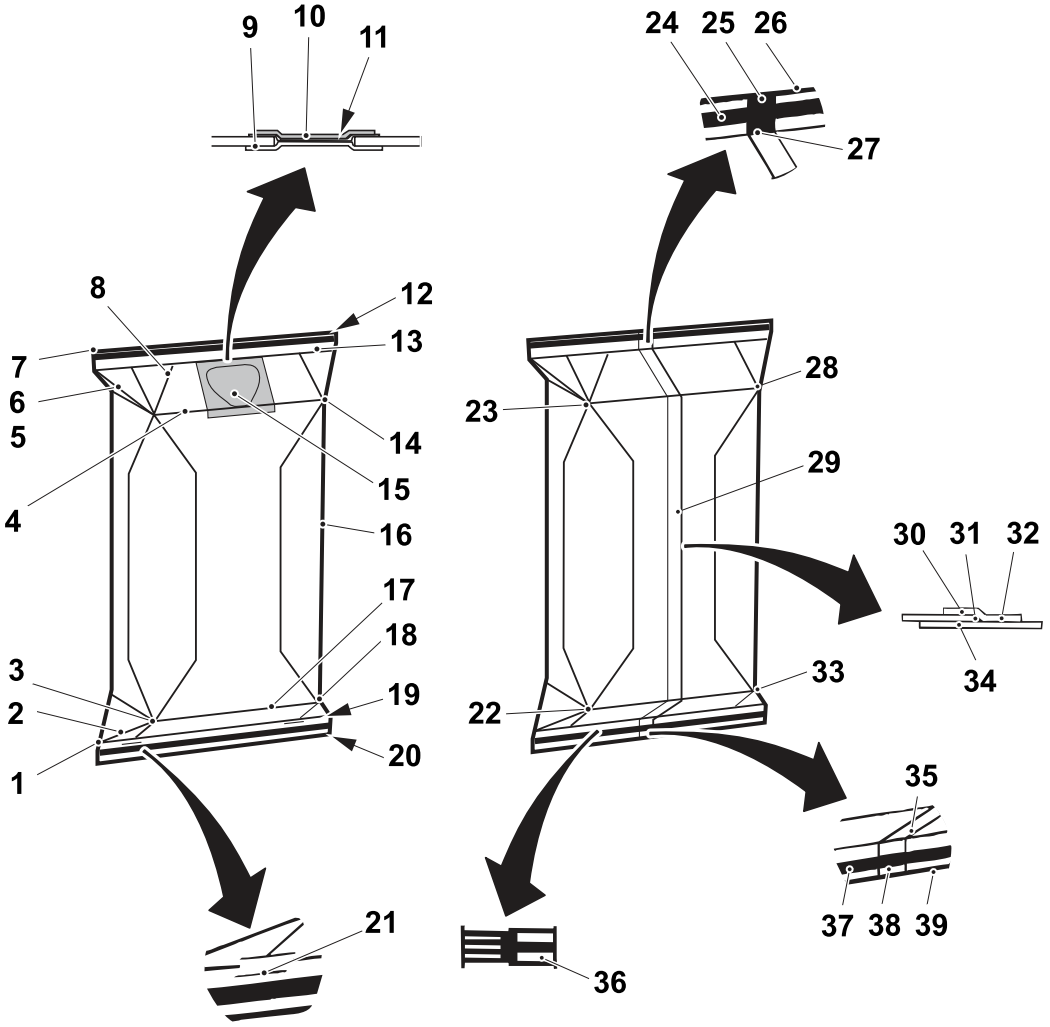

1 Bottom left fin corner
2 Bottom flap crease
3 Bottom left corner
4 Top crease
5 Top left corner
6 Top flap creases
7 Top left fin corner
8 Spout crease
9 Patch
10 PullTab
11 Outer patch
12 Top right fin corner
13 Top fin crease
14 Top front right corner
15 PullTab hole
16 Longitudinal crease
17 Bottom crease
18 Bottom front right corner
19 Bottom fin crease
20 Bottom right fin corner
21 Double creases
22 Bottom rear right corner
23 Top rear right corner
24 Top TS
25 Top outer cross
26 Top cutting line
27 Top inner cross
28 Top rear left corner
29 LS
30 LS strip (SA side)
31 Air gap
32 LS strip (LS side)
33 Bottom rear left corner
34 LS overlap
35 Bottom inner cross
36 Register code
37 Bottom TS
38 Bottom outer cross
39 Bottom cutting line

5.2.7 Production Quality Checks

Tools needed:

- scissors
- stretch pliers, TP No. 78073-0100
- a clean work bench in a well illuminated area.

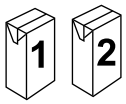

Date Printing with External Dating Unit (Option)

Check the date printing.

If required, adjust the date printing.

For more details see the dating unit supplier's documentation.

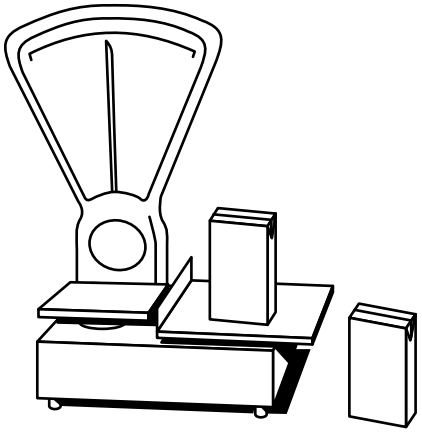

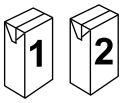

Weight

1

Machines without HI

For machines equipped with HI (option), continue with Weight, Machines Equipped with HI (Option) on page 5-23.

Weigh the packages.

Record their weights and their deviations from the standard weight.

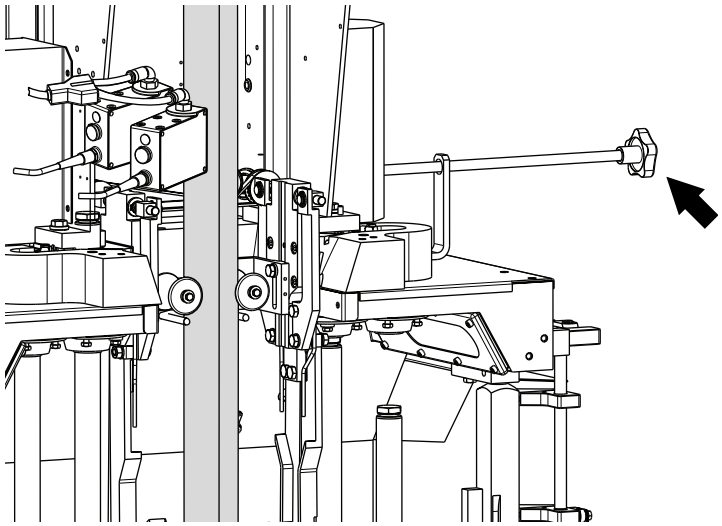

2

If required, adjust the package volume using the knob:

- plus, increases the package volume and, therefore, weight
- minus, decreases the package volume and weight

This can be done during PRODUCTION.

After setting, pick out new packages, label which jaw they came from and check their weights.

If there is a significant difference between packages from the LH and RH jaw pairs, call a technician.

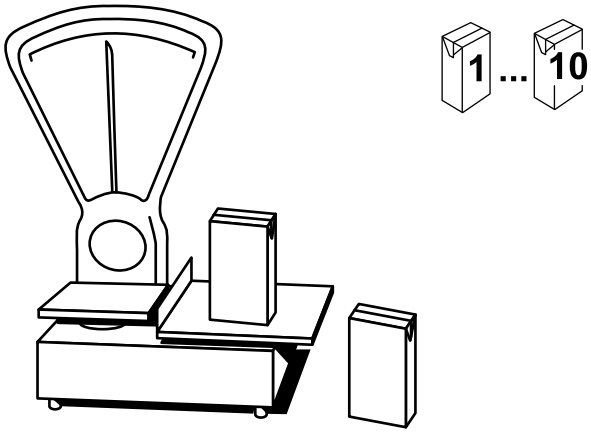

3

Weight, Machines Equipped with HI (Option)

Weigh ten packages.

Record their weight and their deviations from the standard weight.

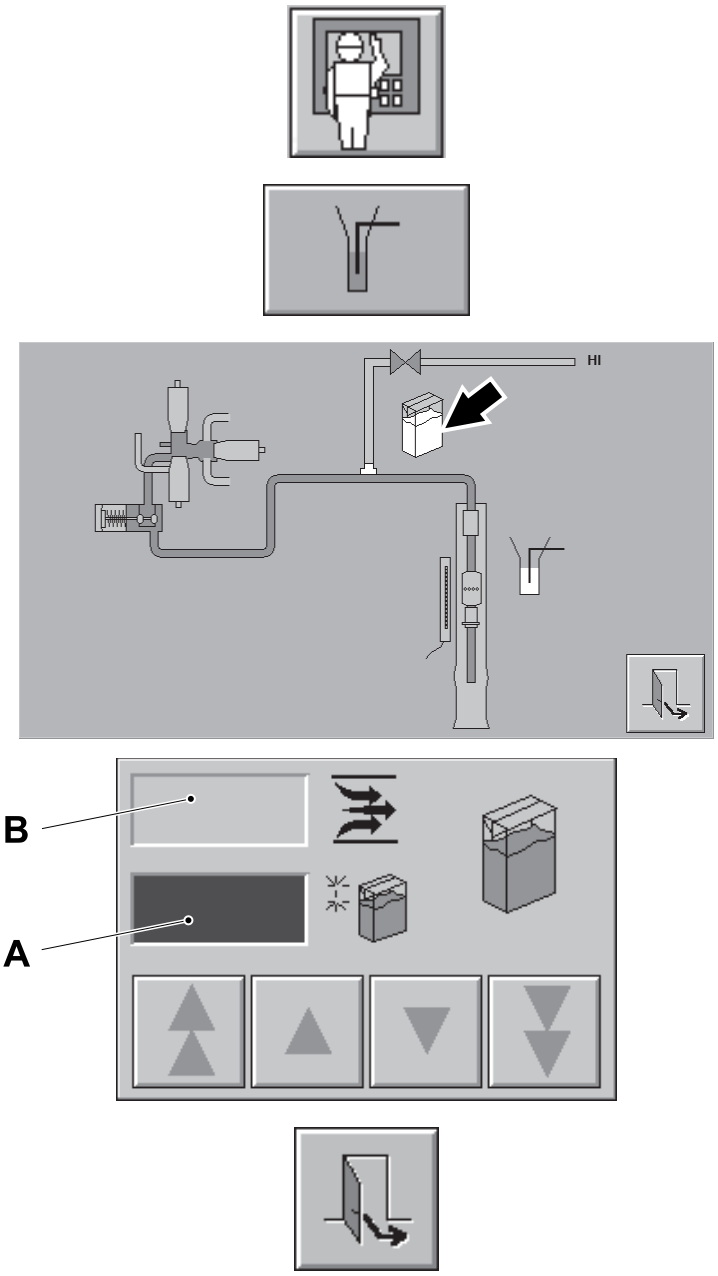

A Headspace amount, value from 0 to 100 corresponding to the status of the I/P transducer

B Current flow (L/min)

4

Weight fine tuning

If the weight of two packages is the same but wrong, set the weight using TPOP as follows:

- Press the `Manoeuvre system` button.
- Press the `Filling system` button.
- Press the display in the indicated position
- Select the required amount of headspace by pressing the `Arrow` buttons in the window **A** is shown the amount of headspace (the values from 0 to 100 correspond to the status of the I/P transducer) in the window **B** is shown the current flow L/min.
- Press the `Exit` button.

After setting, pick out new packages and check.

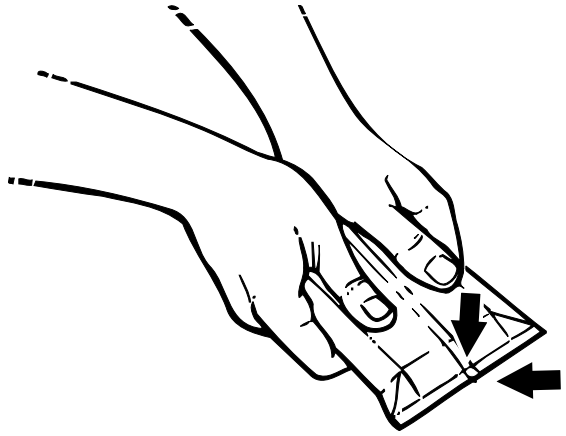

TS - Rough Check

Check the integrity of the top and bottom transversal seals by gently squeezing the package by hand.

Critical points are:

- the corners
- the intersections between the LS creases and the TS
- the crosses where the TS and the LS meet.

If any product leakage is found, stop the machine and call a technician.

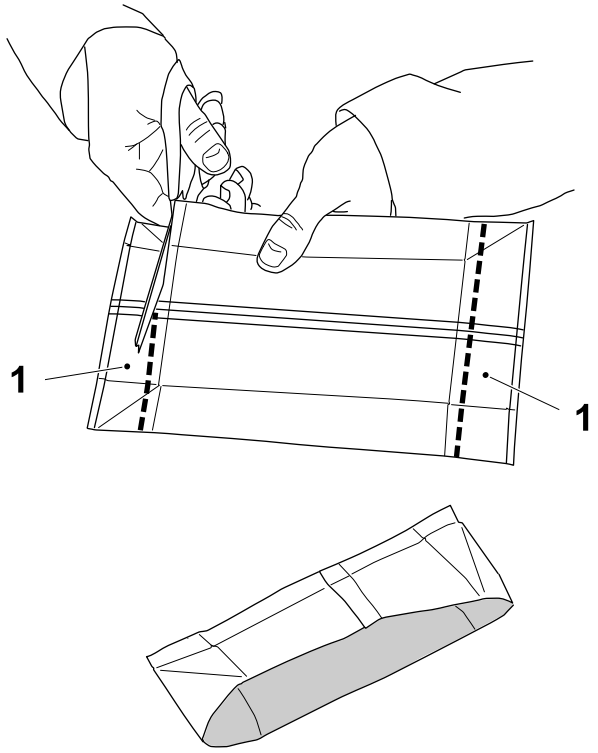

1 Sample

TS - Accurate Check

1

Cut a sample strip (1) of about 25 mm in width from the top and bottom transversal seals.

Wash the samples and dry them, with compressed air from the filling machine.

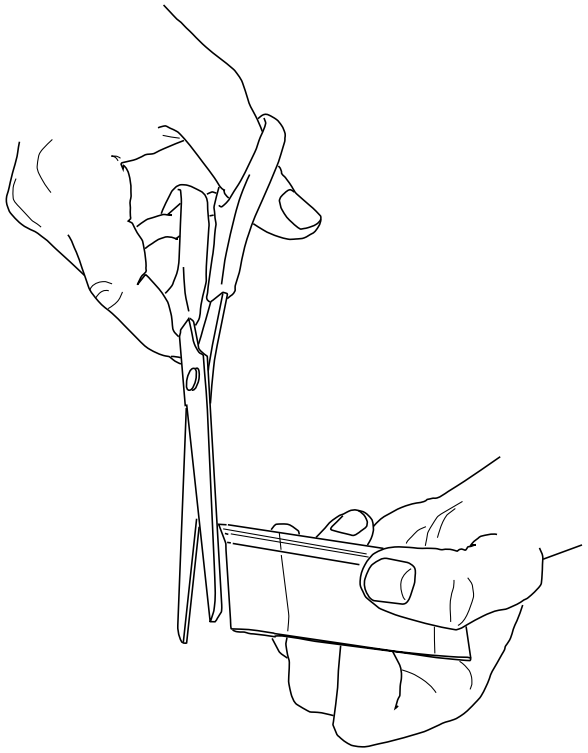

2

Cut off no more than 1 mm from each side of the package at a 90° angle to the TS.

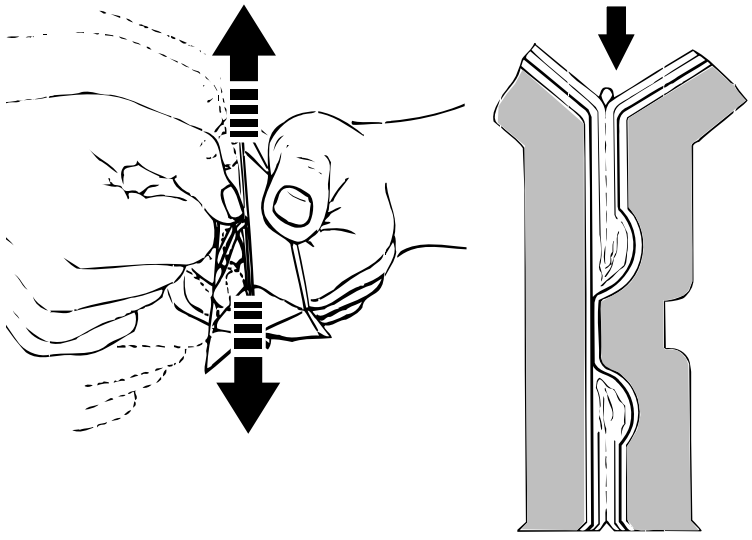

3

Bend the TS.

The sealing is **defective** if there are lumps or ridges in the sealing area.

This may be caused by a sealing temperature that is too high. Reduce the TPIH power in steps of 10 scale division and check until there are no lumps, see 2.8.6 Set Transversal Sealing TPIH Power on page 2-71.

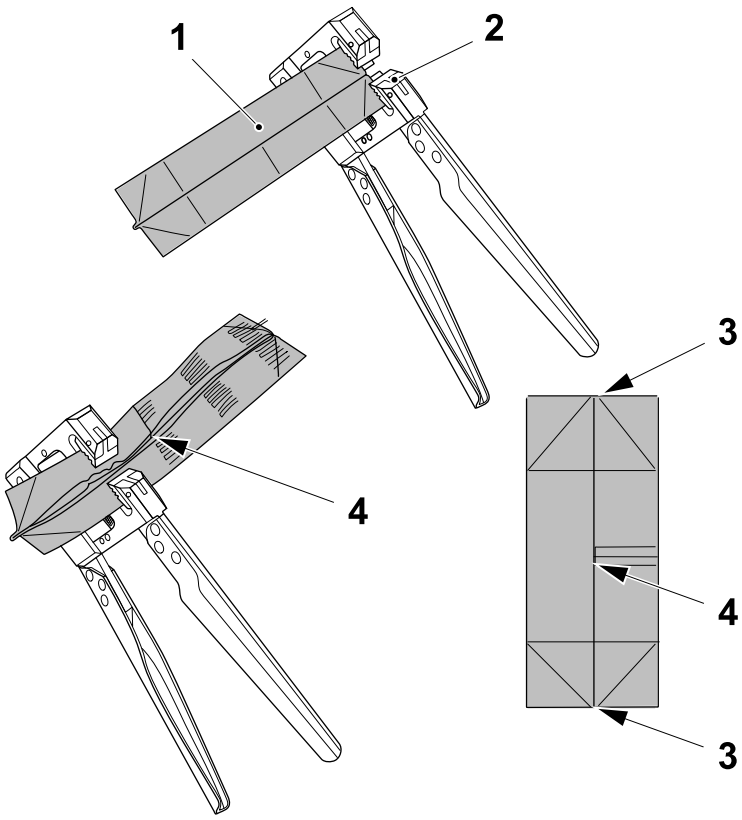

1 Sample
2 Gripping jaws
3 TS corners
4 TS/LS cross

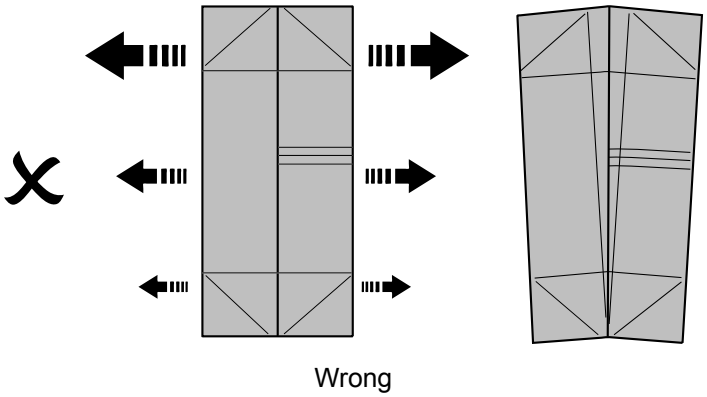

Wrong

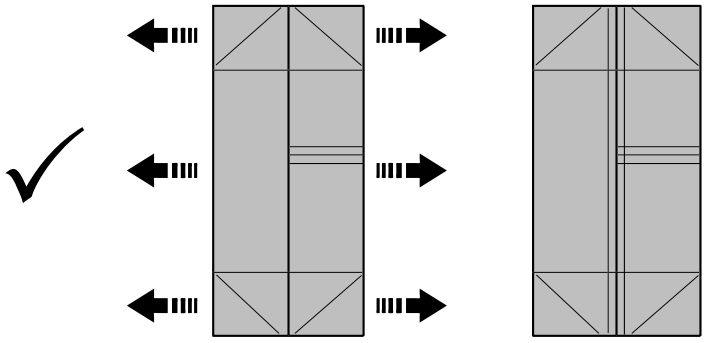

Correct

4

Insert the edges of the sample (1) into the gripping jaws (2) of the stretch pliers.

Gently squeeze the handles to stretch the seal.

Stretching slowly makes evaluation easier.

Observe that the seal area stretches and breaks.

Continue stretching along the sample (1) until it has completely opened.

The TS must be stretched and evaluated along the entire seal.

Note! Move the pliers from side to side often to avoid pulling only at one end.

Pay special attention to the TS corners (3) and where the TS and the LS meet TS/LS cross (4).

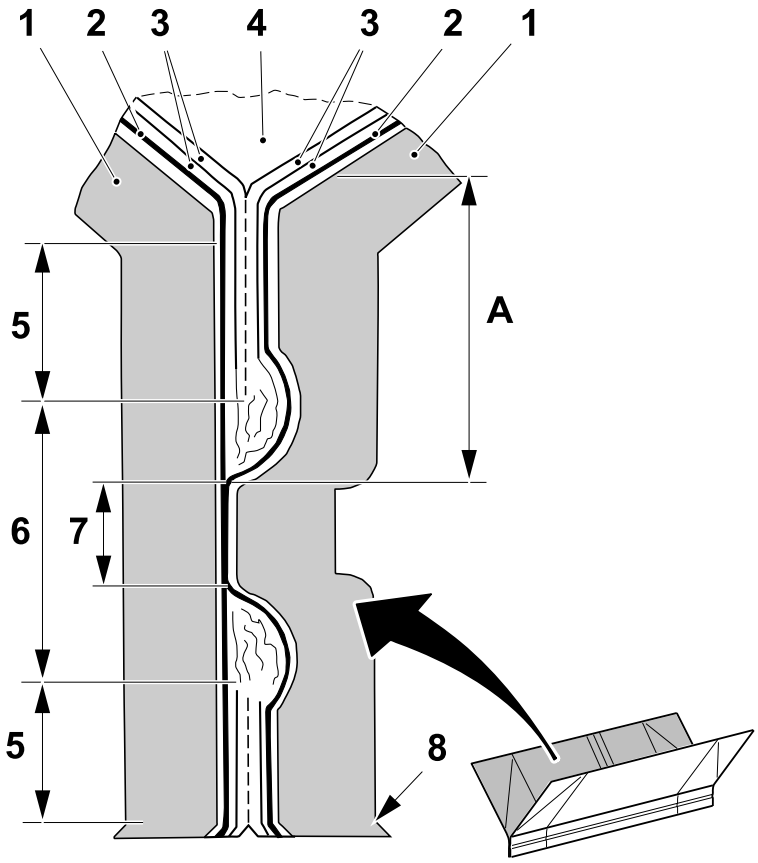

1 Paper board
2 Aluminium foil
3 Polyethylene (double layer)
4 Filling product
5 Blocked area
6 Sealed area
7 Ridge
8 Cutting line

5

Stretch the TS along the entire length of the seal with the stretch pliers and evaluate the seal.

The sealing on the product side of area **A** is the most important.

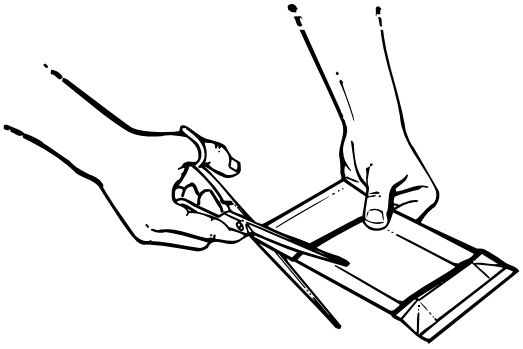

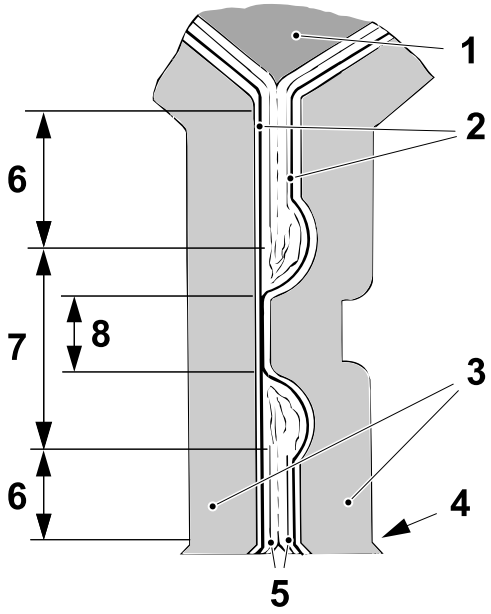

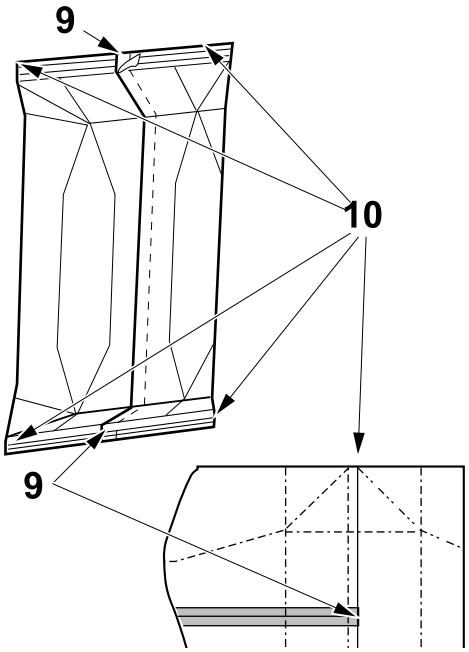

1 Filling product
2 Aluminium foil
3 Paper board
4 Cutting line
5 Plastic film, double layers
6 Blocked area
7 Sealed area
8 Ridge
9 Cross
10 Corner

Check the TS Sealing

1

Critical points of the TS are:

- the crosses (9) (where the TS and the LS meet)
- the corners (10).

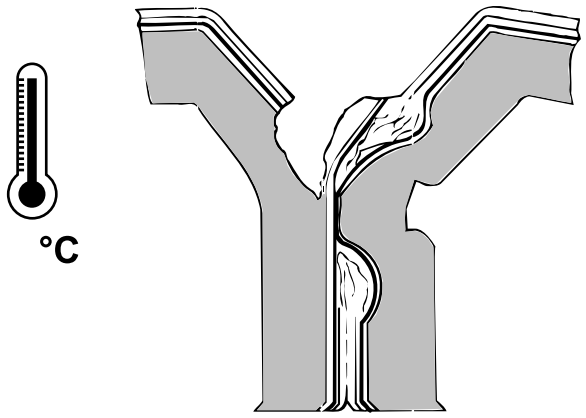

2

The sealing is **acceptable** if the seal remains intact but a rupture takes place in the paper board layer.

Note! In this situation, the sealing temperature might be very close to the highest limit.

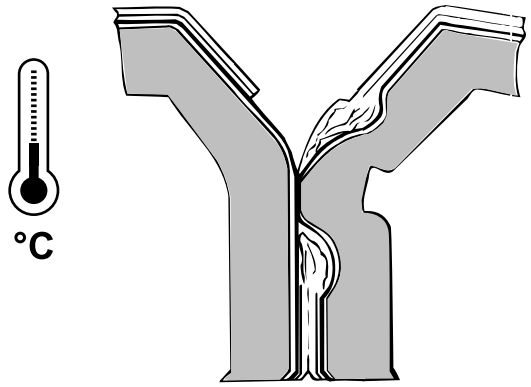

3

The sealing is **acceptable** if the seal remains intact when the joint is pulled apart, but the aluminium foil comes off on one of the sides presenting a shiny metal surface.

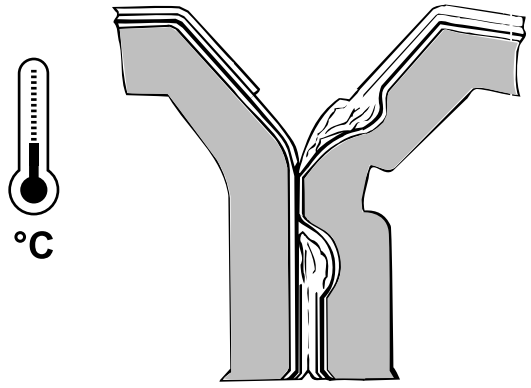

4

The sealing is **acceptable** if the seal remains intact but a delamination between the two inner coatings takes place.

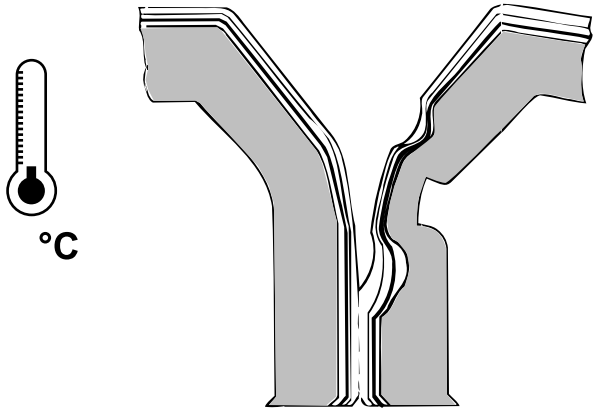

5

The sealing is **defective** if the seal is so weak the two plastic layers separate without rupturing. This may be caused by a sealing temperature that is too low.

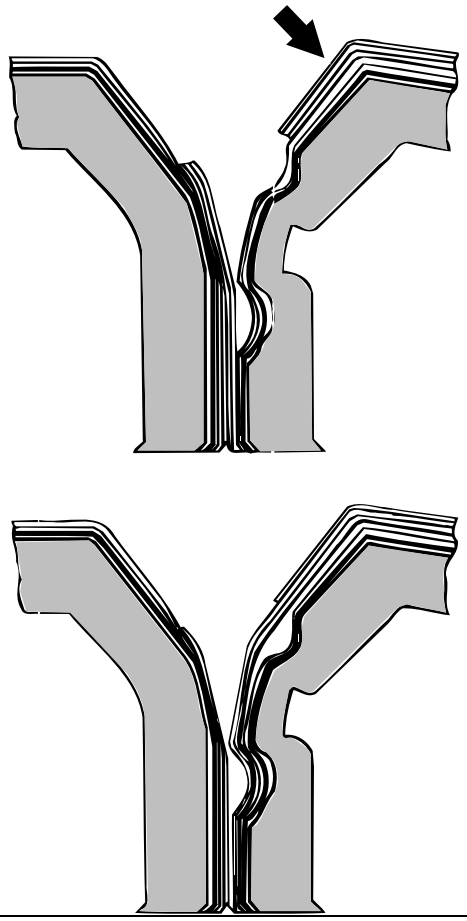

6

Check the TS sealing in the cross area.

Note! The evaluation of the TS also applies to the evaluation of the cross.

The strip (shown by the arrow) can be regarded as additional coating layers on the aluminium foil.

The sealing is **acceptable** if a rupture occurs in any of the layers.

The sealing is **defective** if there is no rupture.

Extended Evaluation of TS

For a better evaluation, dissolve some packages and measure the heat pattern.

This procedure can only be carried out in a laboratory.

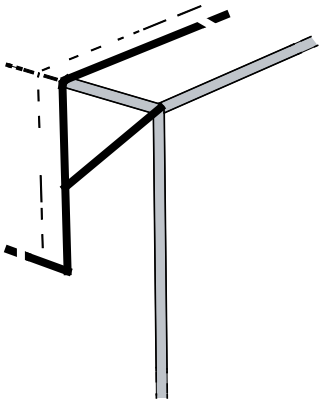

Correct shape

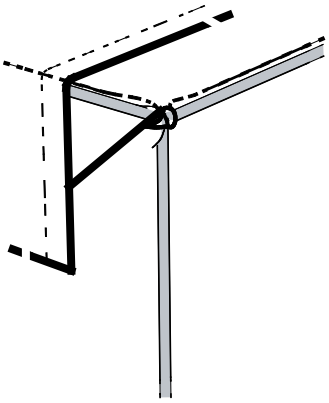

Low crease position

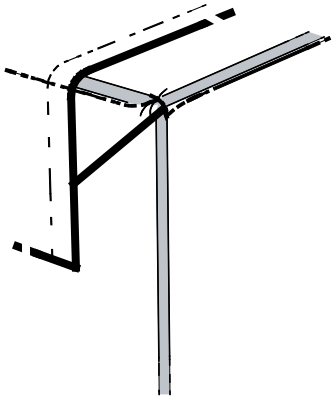

High crease position

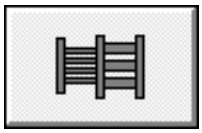

Design Correction

Shape and Design

Check the shape of the packages.

Check that the preformed creases in the packaging material are correctly aligned along the top crease.

Adjust the value if required.

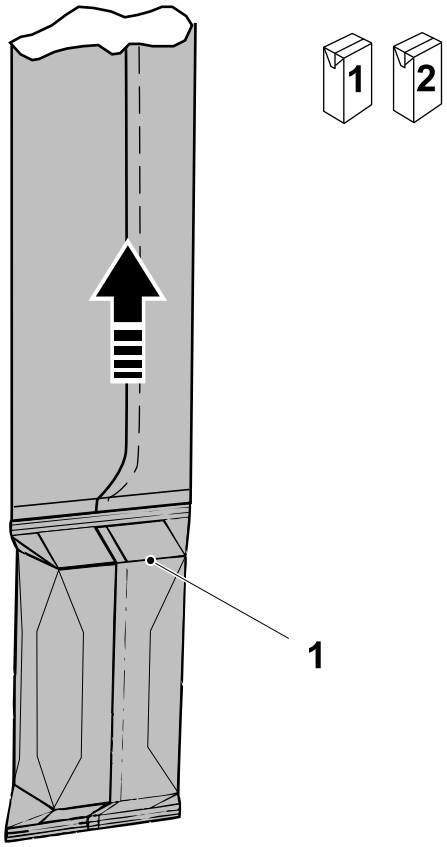

1 Bottom crease

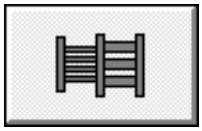

Design Correction

Shape and Bottom Creases

Check the shape of the packages.

Check that the bottom creases (1) bottom creases are correctly positioned.

Adjust the value if required.

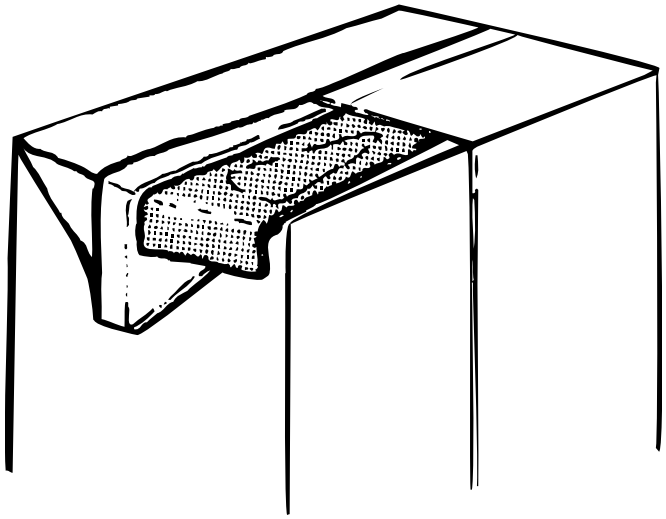

Tab (PullTab)

Check the tab is not folded under the top flap. If it is, call a technician.

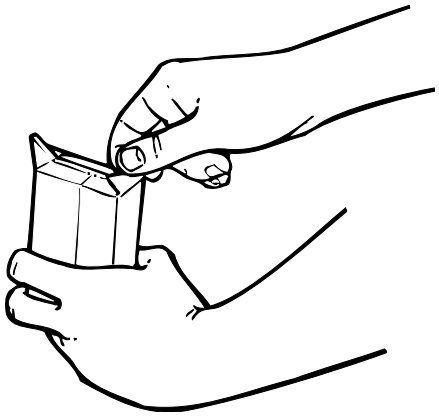

Flap Sealing

Unfold the flaps and check they are properly sealed.

If not, call a technician.

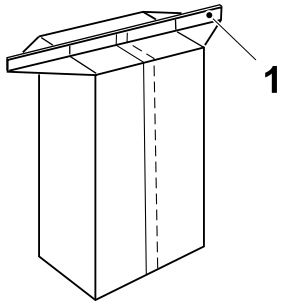

Bottom view of package

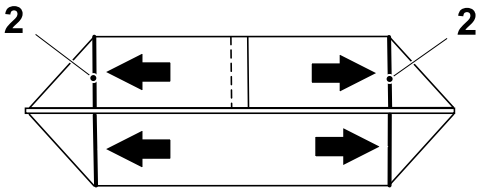

Fig. 1 - Acceptable

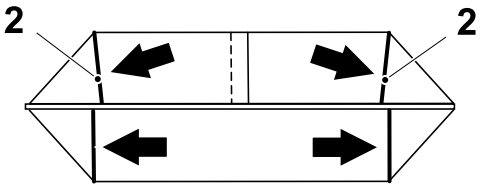

Fig. 2 - Acceptable

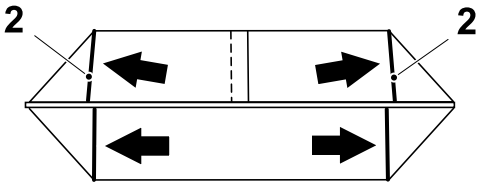

Fig. 3 - Acceptable

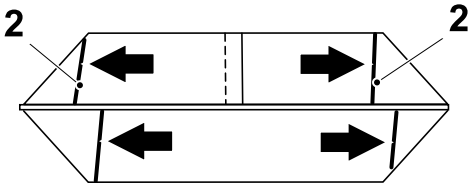

Fig. 4 - Not Acceptable

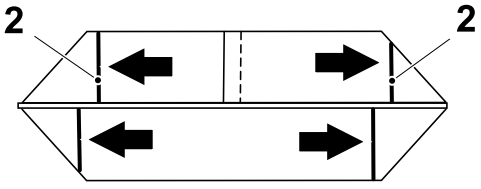

Fig. 5 - Not Acceptable

1 Bottom fin
2 Crease line

Crease Lines

1

Lift the package bottom fin (1) after having opened the flaps.

Note! To correctly check crease line alignment, it is important to lift the flaps, since closed flaps may give an indication of wrongly set crease lines due to package folding.

Check the position of the preformed crease lines (2).

The position is **acceptable** if the creases are opposite one another (fig. 1) either parallel (fig. 2) or at an angle (fig. 3).

The position is **not acceptable** if the preformed crease lines are not opposite one another (fig. 4 and 5).

Note! Figures 2, 3, and 4 show a misalignment, mostly due to LS overlap. Crease positions in figures 2 and 3 are still considered acceptable, although they might compromise a good cap application (if any).

To adjust the package creases, follow the instructions in item 2 on page 5-36 and item 3 on page 5-36 in this chapter.

After adjustment, pick out new packages and check them. Check the longitudinal sealing according to item 11 on page 5-52.

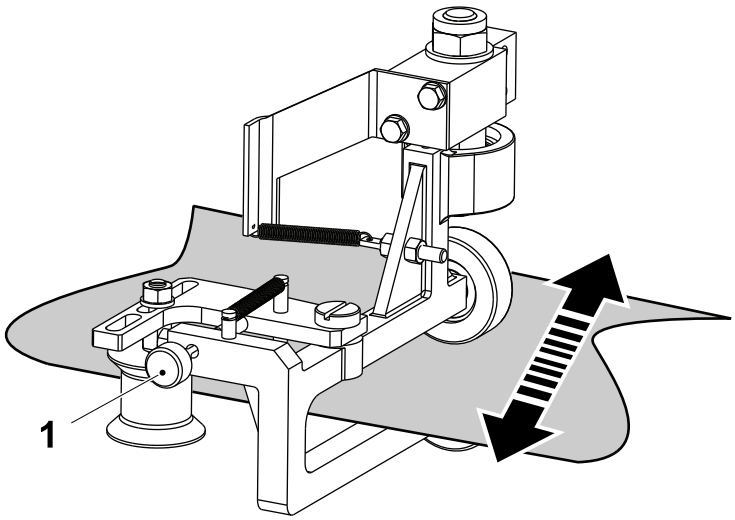

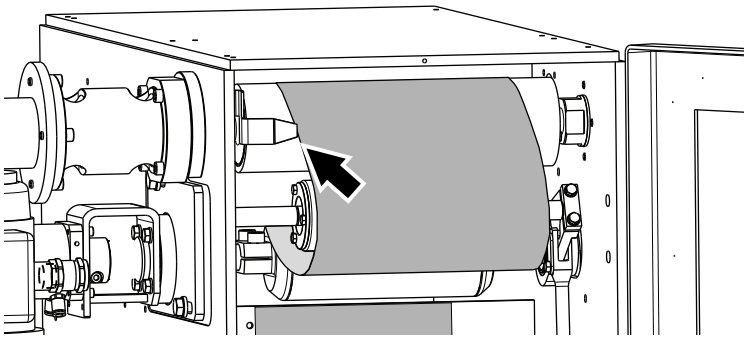

1 Knob

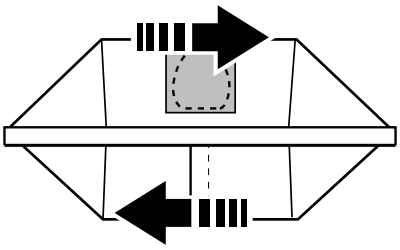

TPA package top

2

Check that the packaging material is aligned with the pointer in the aseptic chamber.

If required, adjust using the knob (1) on the PT outfeed group guide.

Note! After approximately 1 minute of production, check the position of the packaging material again.

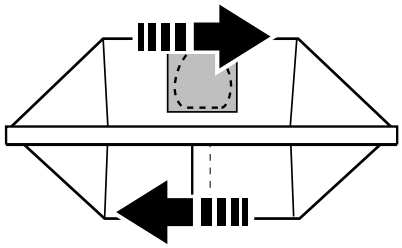

TPA package top

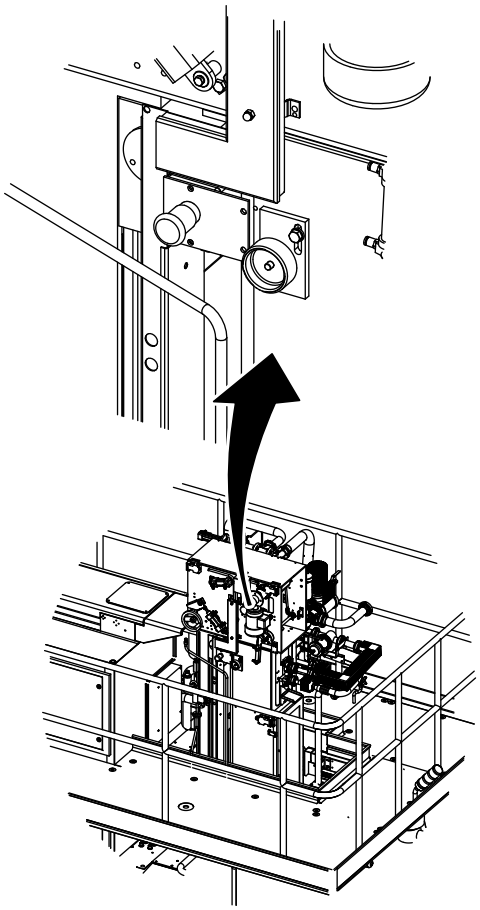

3

Using the Tube Positioning control on the superstructure, fine adjust the packaging material position as shown.

After any adjustment, pick out new packages and check them.

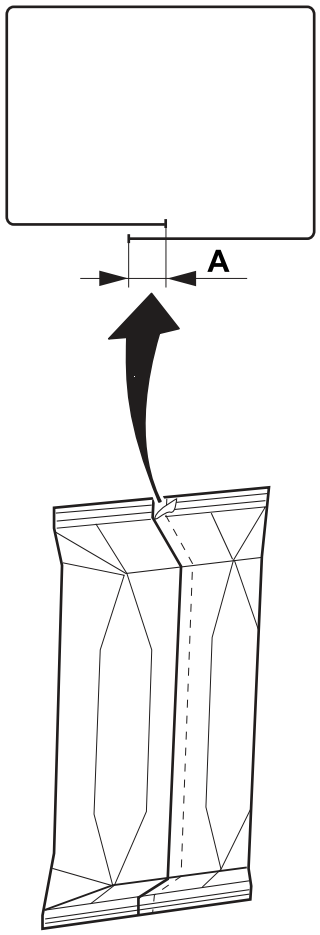

LS Overlap

1

Check the width of the LS overlap, distance **A**. If the distance **A** is not within range, call a technician.

Shape	Package	A (mm)
TPA	200 Sq	4.5 to 5.5
TPA	250 Sq	4.5 to 5.5
TPA	330 Sq	4.5 to 5.5

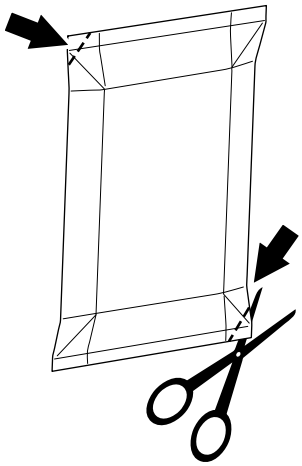

fig. 1

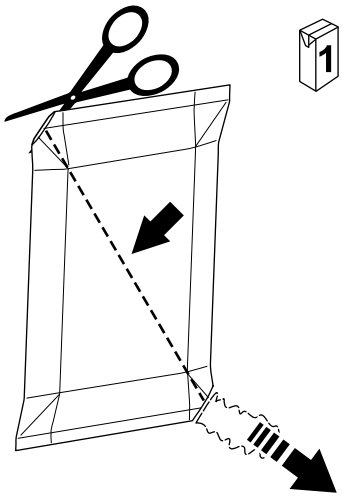

fig. 2

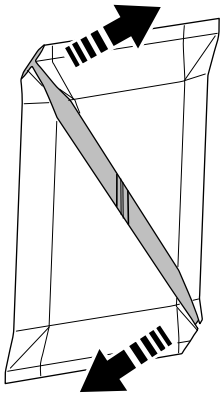

fig. 3

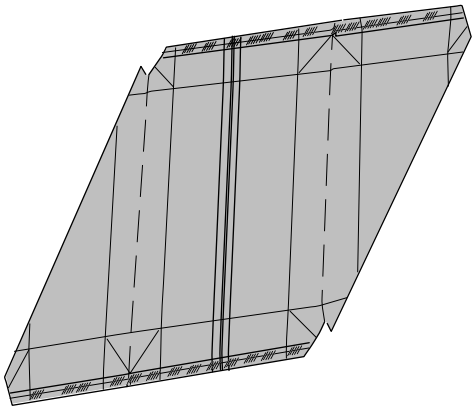

fig. 4

Surfaces

Cut two opposite corners (fig. 1) and empty the content of the package.

Cut transversally the front panel of the package, from the lower cut corner to the opposite one (fig. 2 and 3).

Split the TS apart and open the package (fig. 4).

Rinse and dry the package with compressed air from the filling machine.

Check the outside and inside surfaces of the package for scratches or other possible defects that can be detected with the eye.

Inside deep scratches might cause package integrity problems.

If there are any defects, call a technician.

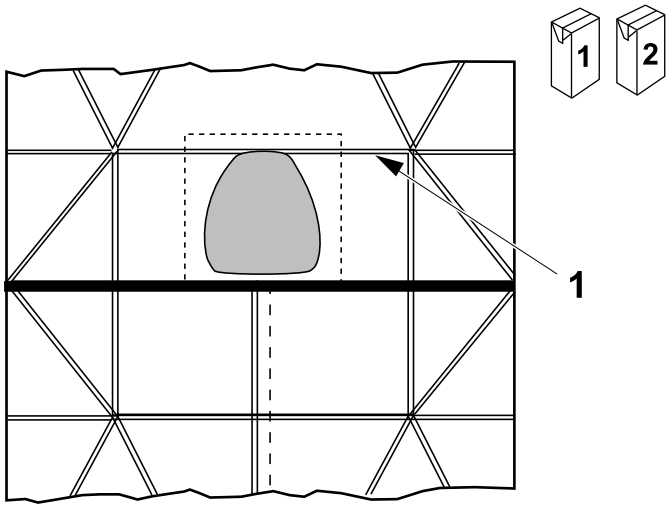

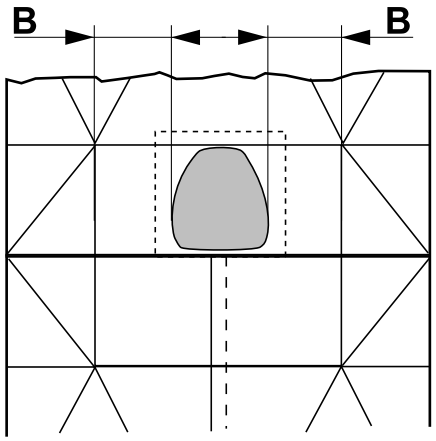

1 Top crease

PullTab Hole Position 1

On the inside of the package, check that the edge of the PullTab hole meets the middle of the top crease (1).

Check that the hole is centred on the packaging material, distance **B**.

Package (TPA)	A ± 1 (mm)	B ± 1 (mm)	C ± 1 (mm)
200 SQ		13.0	
250 SQ		13.0	
330 SQ		15.5	



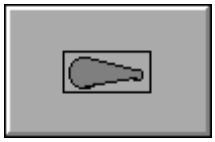

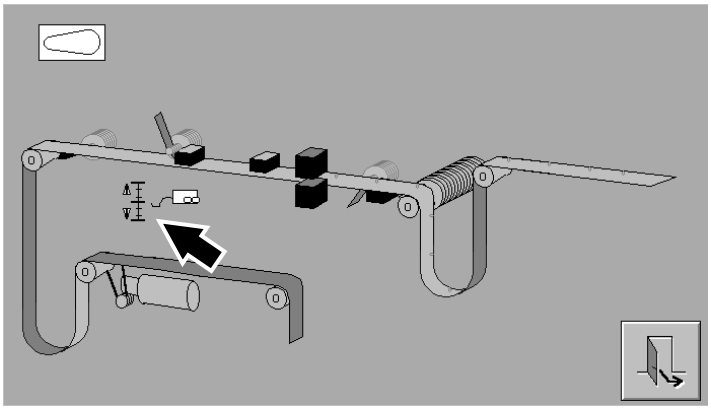

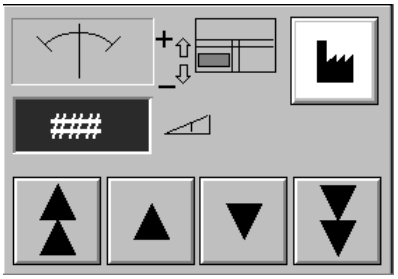



2

If required, adjust the longitudinal position of the PullTab hole using the TPOP as follows:

- Press the `Manoeuvre system` button.
- Press the `PT Selector` button.
- Press the `PT Design Correction` button
- Press the `Adjustment` button and then adjust the values as required (a variation of 50 of the setting value gives a shift of 0.2 mm)
- Press the `Exit` button.

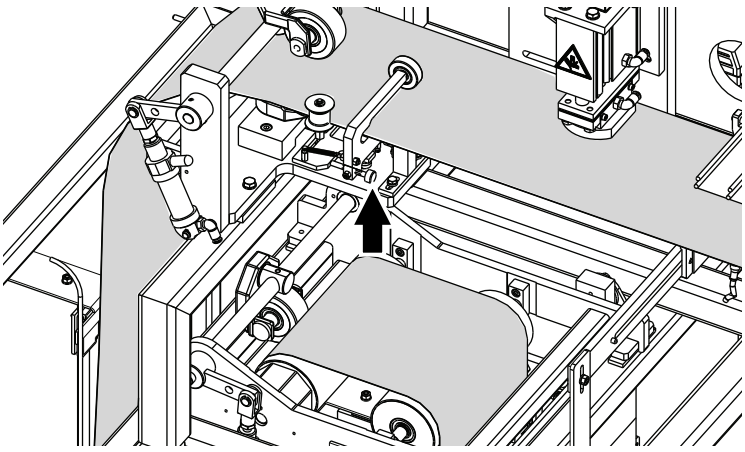

3

If required, adjust the transversal position of the hole using the PT inlet web guide.

Perform a SHORT STOP.

Turn the knob (arrow) on the web guide.

After adjustment, pick out new packages and check.

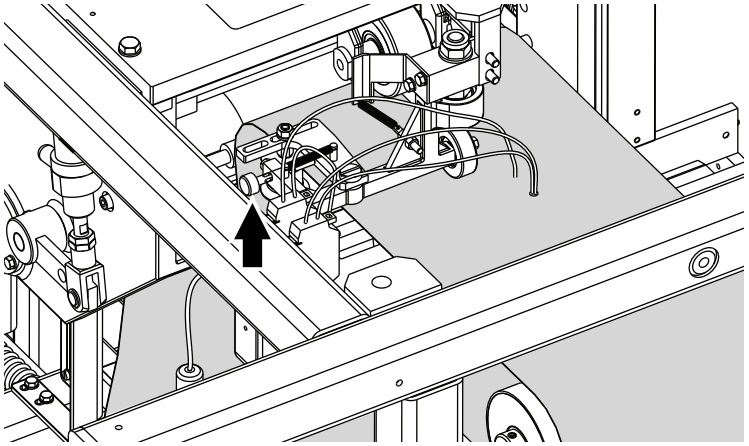

4

Set the PT outlet web guide parallel to the previous web guide.

See item 3 on page 5-41.

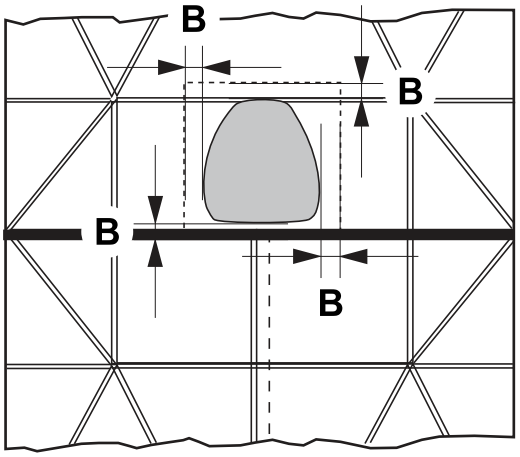

Outside view of package

B ≤ 0.5 mm

Patch and Tab Sealing

1

On the outside of the package, check that the hole is centred relative to the sealed part of the tab.

Also check that there is a minimum of 0.5 mm of tab all around the hole.

If not, call a technician.

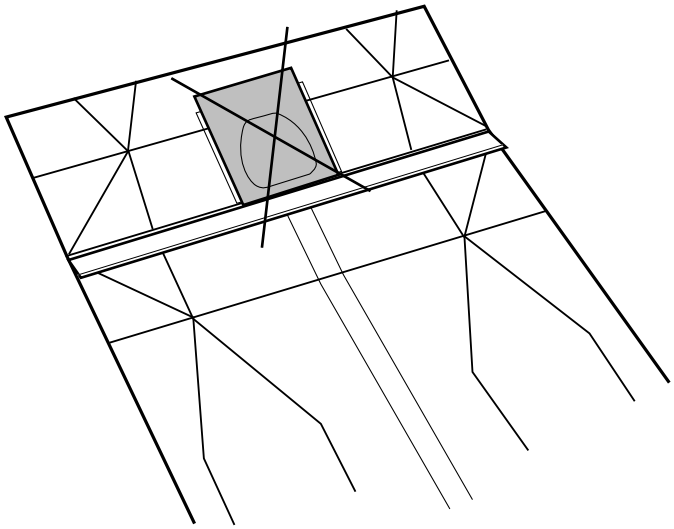

2

Check that the tab does not overlap the top fin crease.

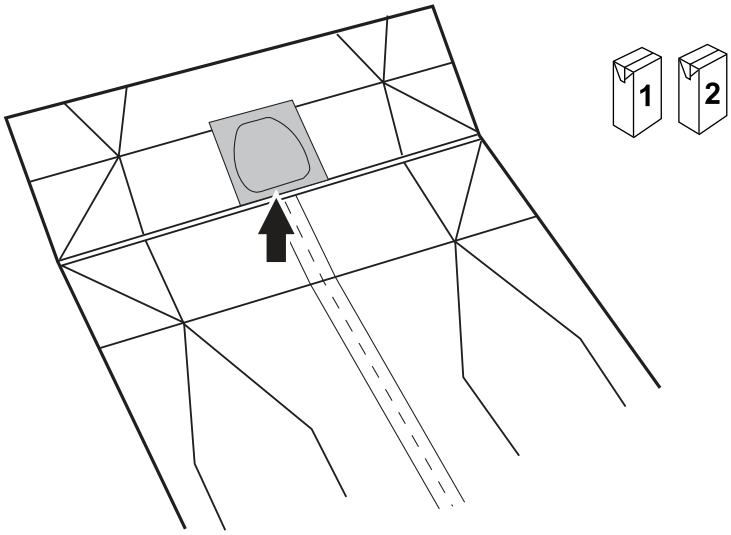

3

On the inside of the package, check the patch is fully sealed to the inside of the packaging material, and it covers the PullTab hole completely.

Also check there is minimum 2 mm of patch all around the PullTab hole.

If not, the package integrity is defective. Call a technician.

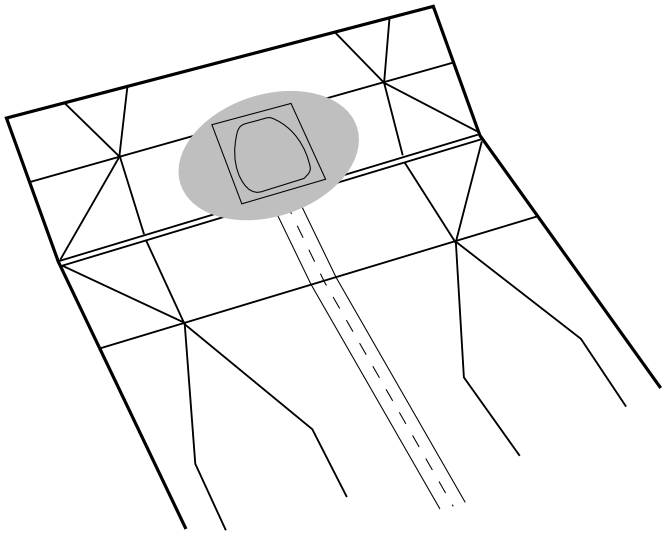

4

Apply red ink (see the chapter 9 Technical Data) with a plastic pipette to the inside surface of the packages in the area shown.

Wait for 5 minutes to let the ink dry.

If too much ink has been applied, wipe it off with a clean dry cloth.

Check that there are no scratches or wrinkles in the patch.

Check there is no ink penetration through the edges of the patch.

If there is, there may be sterilisation problems. Call a technician.

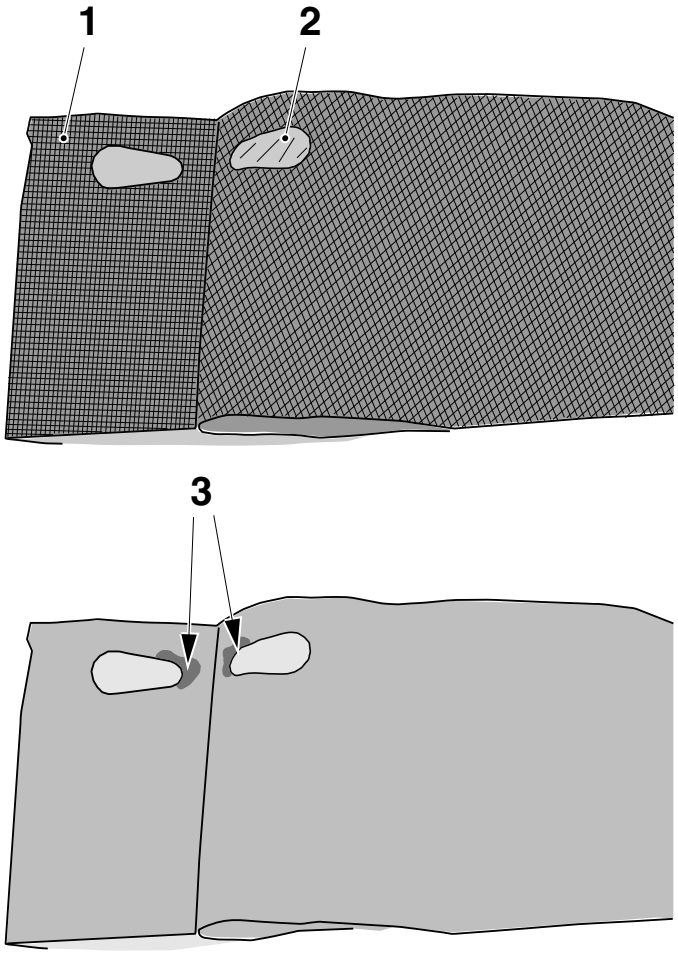

Paper board fibres not shown for better clarity of the drawing

1 Paper board
2 PT
3 Red ink spot

5

Carefully start to peel off the outer layer of PE starting from the cut edge of the sample.

Continue peeling the package.

Some paper board (1) will come off together with the PE and the PT (2) will open up.

Note! If the ink is still in the package before performing this operation, artefact defects might be created.

The PullTab sealing is defective if there are red ink spots (3) on the paper board layer around the PullTab hole.

Red spots indicate that the PullTab application is defective. This may cause sterilisation problems. The PullTab applicators' temperatures or pressures must be set. Call a technician.

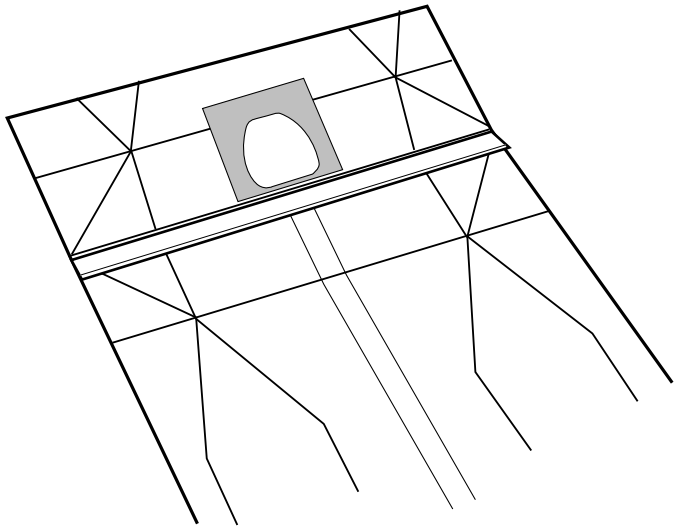

6

Check that the amount of plastic residue on the edge of the PullTab hole is less than 2 mm.

If not, call a technician.

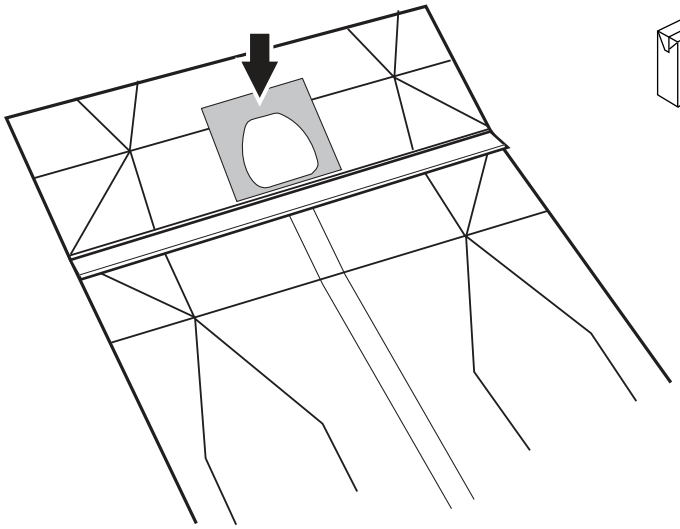

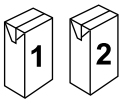

Outer Patch

1

Check that the outer patch remains attached to the packaging material when the tab is pulled off, and that it is not wrinkled or folded.

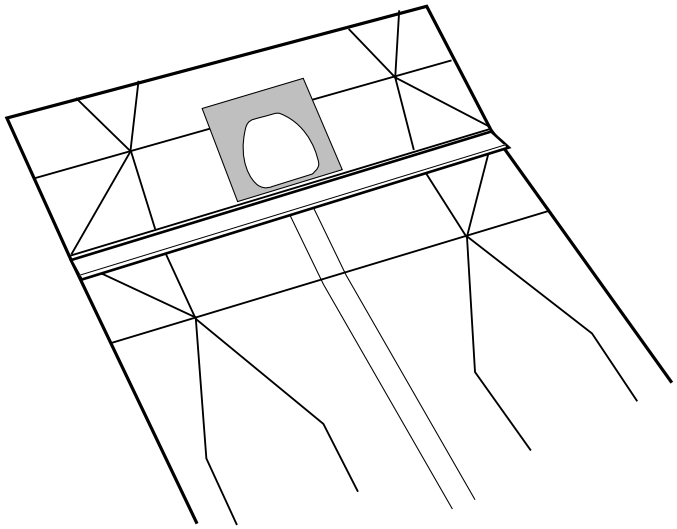

2

Check that the outer patch covers the PullTab hole completely.

If not, call a technician.

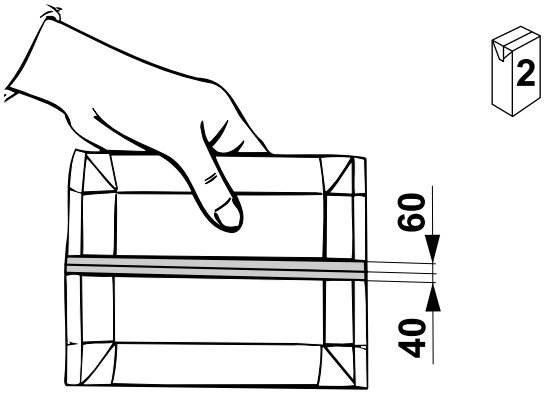

With MPM strip

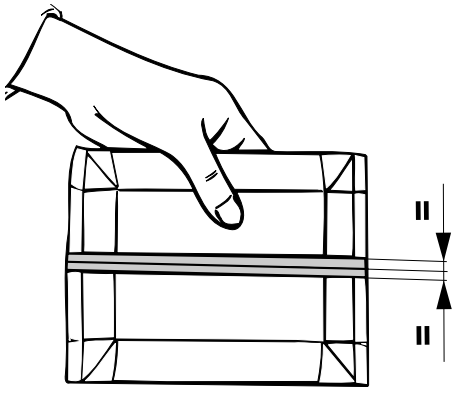

With PPP strip

LS Strip Application

1

With MPM strip, check that the LS strip is positioned 40%:60% on **one** package.

With PPP strip only: check that the LS strip is symmetrically positioned on **one** package.

Note! After an LS strip splice, check two packages.

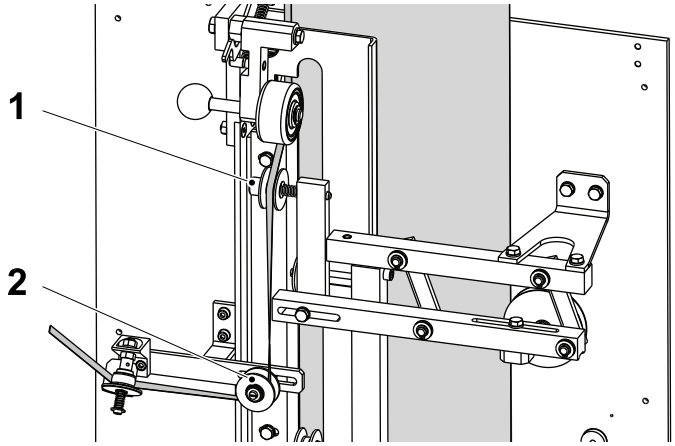

1 Guide roller
2 Roller

2

CAUTION
Risk of entanglement.
Stop the machine in SHORT STOP before adjusting the strip position.

If required, adjust the position of the LS strip using the knob on the guide roller (1). Make sure to align the roller (2) with the guide roller (1).

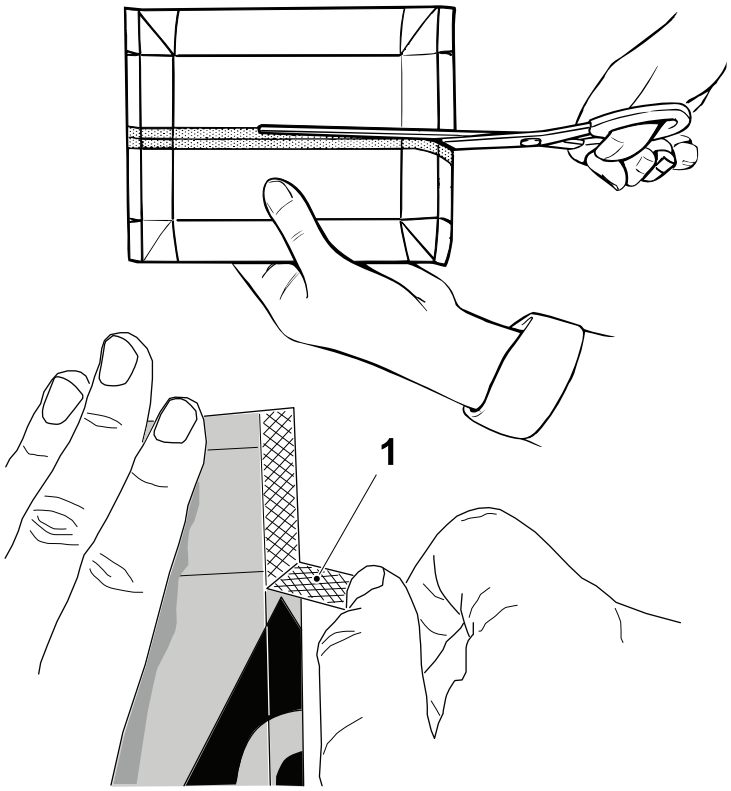

1 Overlapping packaging material

3

Check there are no blisters in the heated area.

Cut through the middle of the LS strip, along the inner edge of the packaging material.

Pull off the overlapping packaging material (1) layer along the outside of the package. If there is any defect in the overlap, corrective actions should be taken.

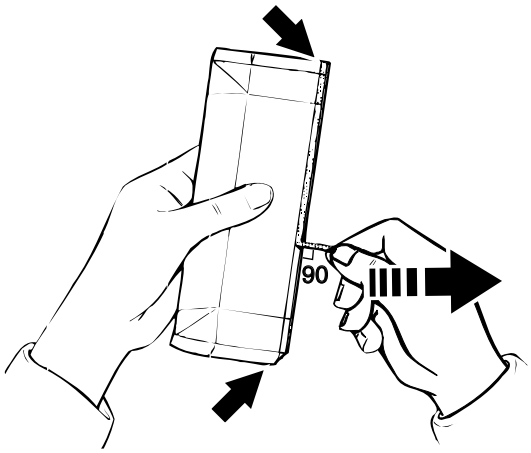

4

Check the strip sealing by slowly pulling approximately 20 mm of the strip outwards at an angle of 90°. Pull extremely slowly over the creases.

Take hold again and pull another 20 mm. Continue along the whole edge. Pull from top to bottom.

°C

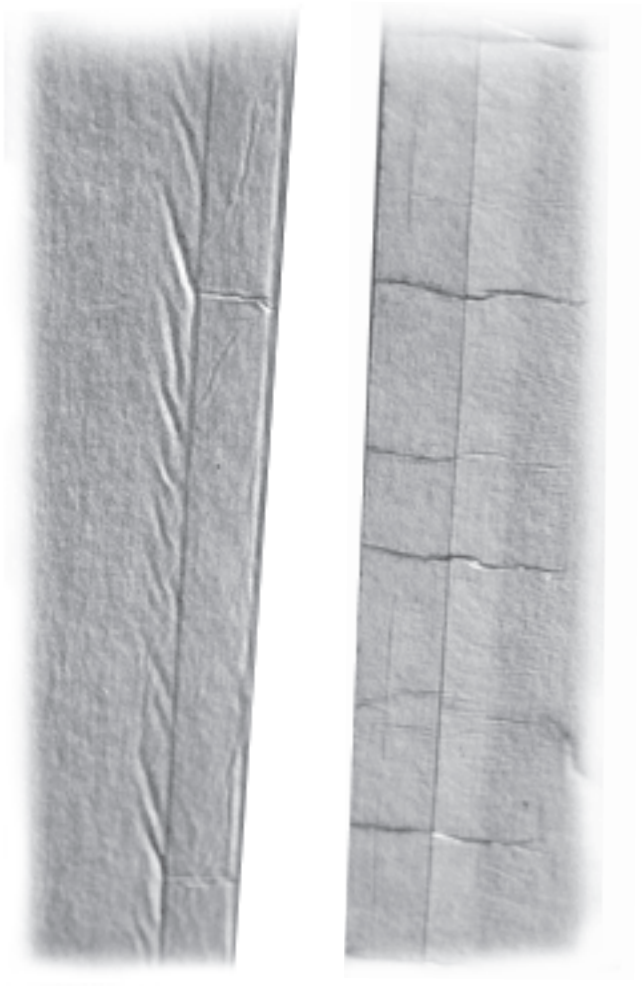

LS sealing SA sealing

5

Check the LS sealing.

The sealing is critical if:

- A high concentration of wrinkles appears along the LS or across the SA sealing.

  Note! In this case the sealing temperature might be very close to the highest limit.
- SA side: Decrease the LS sealing temperature in steps of ten degrees.
- LS side: Decrease the LS tube sealing temperature in steps of ten degrees.

See 2.8.5 Set SA Sealing TPIH Power on page 2-68.

Check the seal by tearing the strip after each adjustment. Repeat if required.

Note! If a large adjustment of the default setting value is needed to correct the sealing, call a technician.

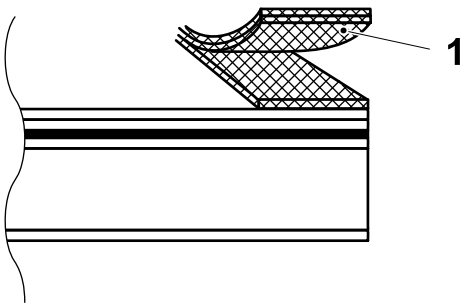

1 Strip

6

Check the strip sealing.

The sealing is **acceptable** if the strip (1) separates (delaminates) when it is pulled off.

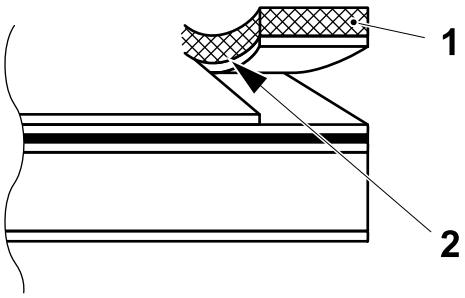

1 Strip
2 Edge

7
The sealing is **acceptable** if one of the two inner layers comes off with the strip (1), leaving a ruptured edge (2) along the seal.

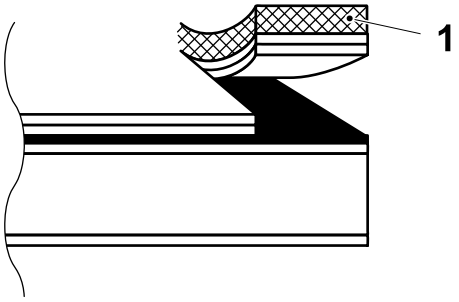

1 Strip

8
The sealing is **acceptable** if both inner layers come off with the strip (1), leaving the aluminium foil bare.

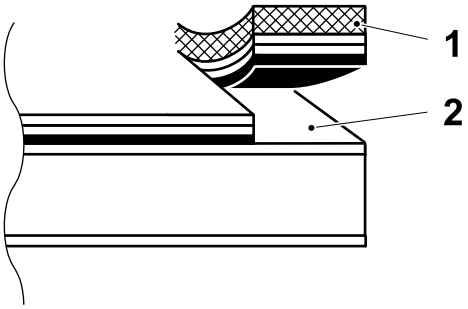

1 Strip
2 Inner PE layer

9
The sealing is **acceptable** if all of the inner layers including the aluminium foil come off with the strip (1), even possibly leaving part of the inner PE layer (2) on both sides.

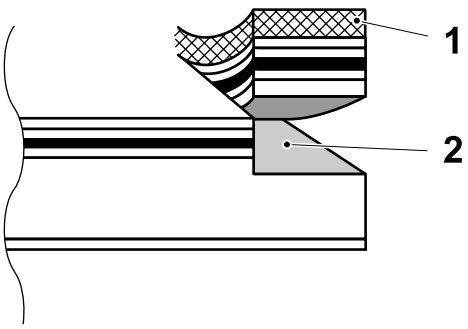

1 Strip
2 Paper board

10
The sealing is **acceptable** if all of the inner layers including the aluminium foil come off with the strip (1), leaving bare paper board (2).

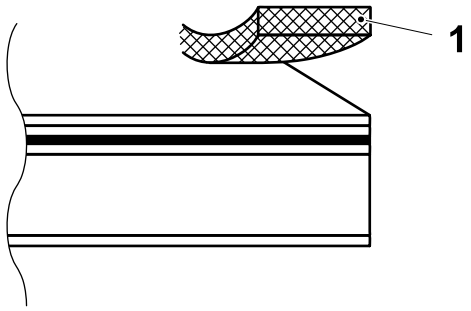

1 Strip

11

The sealing is **defective** if the strip (1) comes off leaving the inner layers of the packaging unaffected.

This may be caused by a sealing temperature that is too low. To correct this, stop PRODUCTION and perform the setting as follows:

- SA side: Increase the LS sealing temperature in steps of 20 degrees.
- LS side: Increase the LS tube sealing temperature in steps of 20 degrees.

See 2.8.5 Set SA Sealing TPIH Power on page 2-68.

Check the seal by tearing the strip after each adjustment. Repeat if required.

Note! If a large adjustment of the default setting value is needed to correct the sealing, call a technician.

5.2.8 Laboratory Package Checks

If needed, also perform a Laboratory Package Check, according to the instructions in the TeM-1531354-0102, or a more recent version.

The Laboratory Checks give a better consistency of package evaluation. Also, the dissolved Transversal Sealing can be stored and archived, allowing traceability.

Contact Tetra Pak for more information.

This page intentionally left blank

6 Supply of Materials

Description

This chapter describes how to load and prepare a new reel of packaging material and how to thread and splice the LS strips.

CAUTION
Hazardous noise.
Risk of impaired hearing.
Hearing protection is recommended whenever this equipment is in operation.

6.1 Strip Supply 6-5
6.1.1 Threading the LS Strip 6-6
6.1.2 Changing the LS Strip Reel 6-13
6.1.3 Threading the Patch Strip 6-17
6.1.4 Threading the Tab Strip 6-21
6.1.5 Patch Strip Reel Change 6-26
6.1.6 Tab Strip Reel Change 6-29
6.2 Packaging Material Supply 6-32
6.2.1 Reel Handling 6-33
6.2.2 Machines Equipped with PMI (Standard) 6-38
6.2.3 Machines Equipped with ASU (Option) 6-44
Manual Web Splice 6-50

This page intentionally left blank

6.1 Strip Supply

CAUTION
Maintain sterility
Before touching the strip, disinfect your hands or gloves.

Note! Always make sure that the strip reels are prepared and that the strips are threaded to avoid unnecessary production stops.

6.1.1 Threading the LS Strip

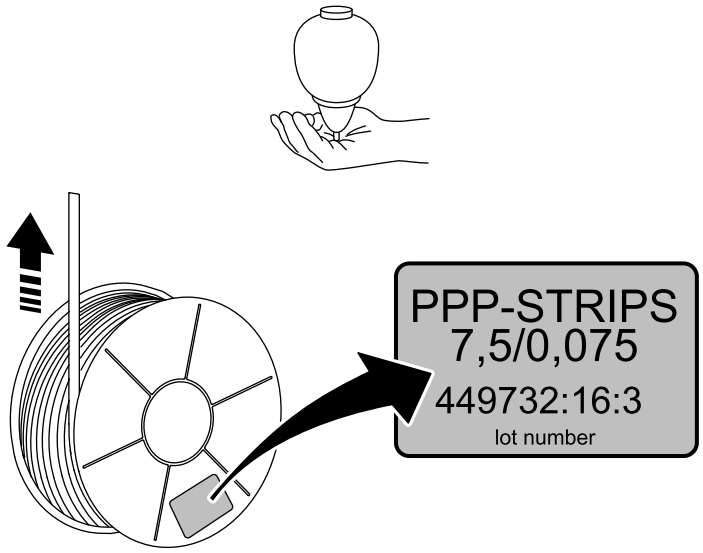

Example of tag

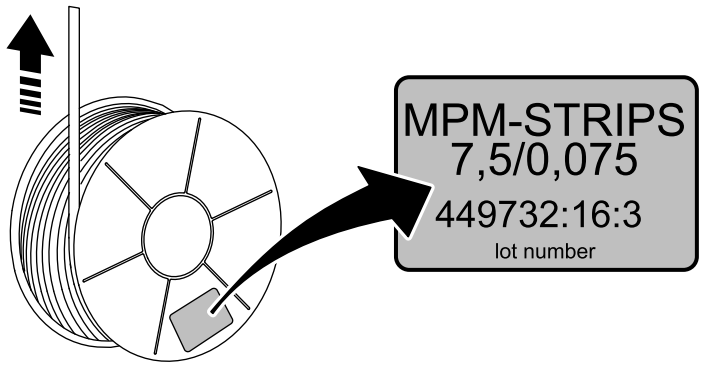

Example of tag

1

Remove the protective wrapping from the strip reel. Make a note of the strip type and the lot number indicated on the strip reel tag.

Note! The unique lot number allocated to each strip reel and printed on the strip reel tag provides traceability for the production batch. If a problem with the strip is detected, the lot number must be quoted in any communication with Tetra Pak.

Note! Remove the coloured end of the strip from the reel.

Open the strip magazine doors.

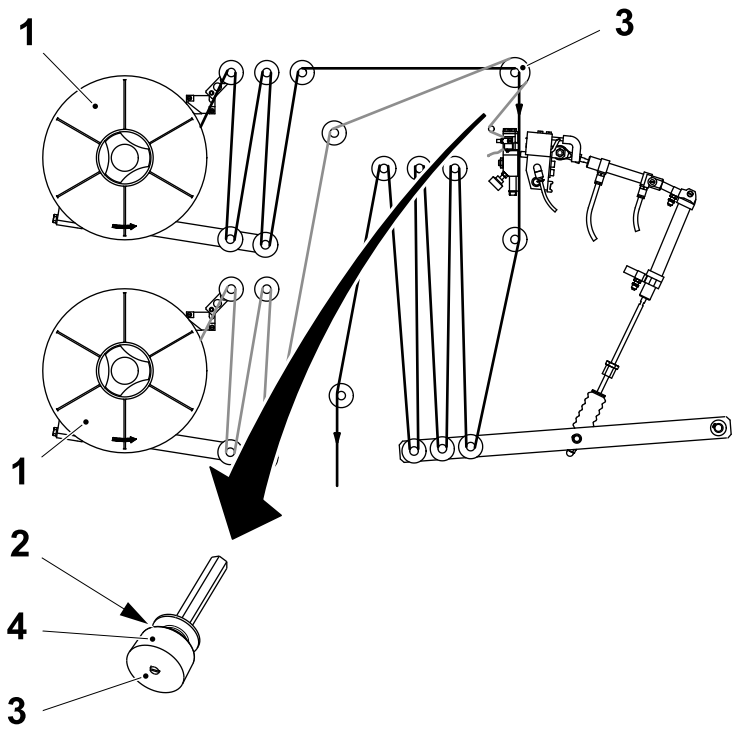

1 Strip reel
2 Position of strip when prepared for production
3 Roller
4 Position of strip when prepared for splice

2

Note! The strip shown in black will be used for production. The strip shown in grey is prepared for splicing.

a) Fit a new jumbo strip reel (1) on the reel holders.

b) Thread as shown. Do not twist the strip while threading.

c) Thread the strip to be used for production over the smaller diameter (2) of the roller (3).

d) Thread the strip prepared for the splice over the larger diameter (4) of the roller (3).

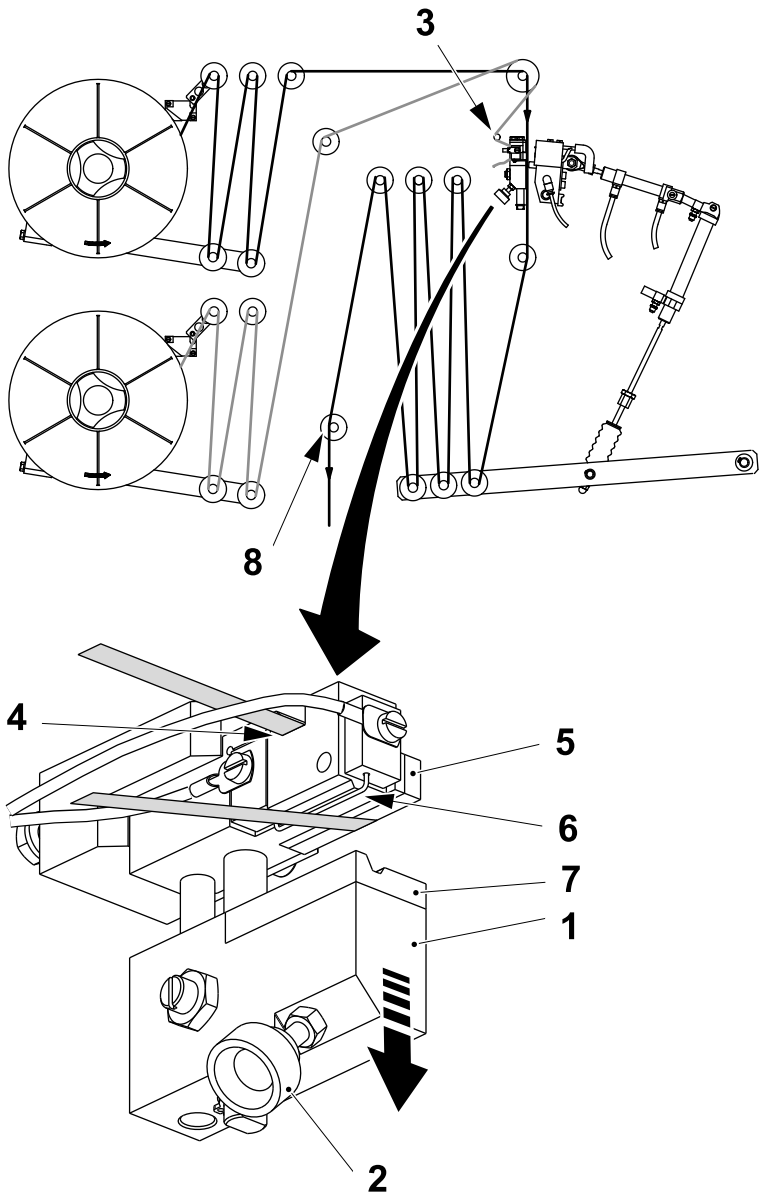

1 Slide
2 Knob
3 Finger
4 Groove
5 Pad
6 Cutting wire
7 Pad
8 Roller

3

a) Move the slide (1) down using the slide knob (2).

b) Fit the strip around the metal finger (3), through the groove (4), around the pad (5), then between the cutting wire (6) and the pad (7).

c) Move the slide up using the knob (2).

d)

Note! With PT unit installed, the strip passes the RH side of the roller (8).

Pull the strip that will be used for production through the magazine and over the roller (8).

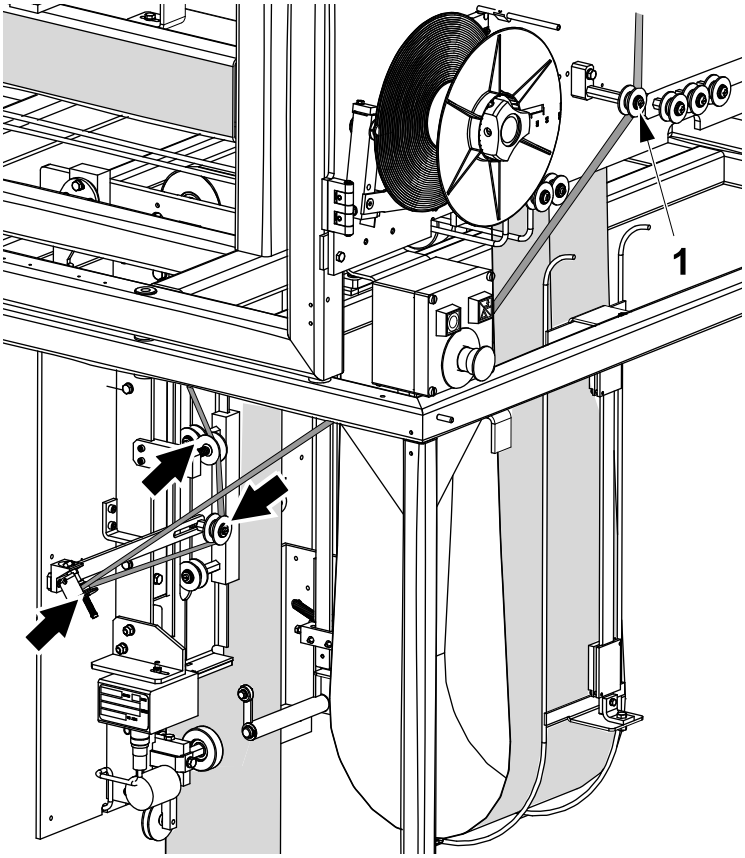

1 Strip magazine roller

4

Pull the strip that will be used for production from the strip magazine roller (1) to the strip applicator passing trough the indicated rollers.

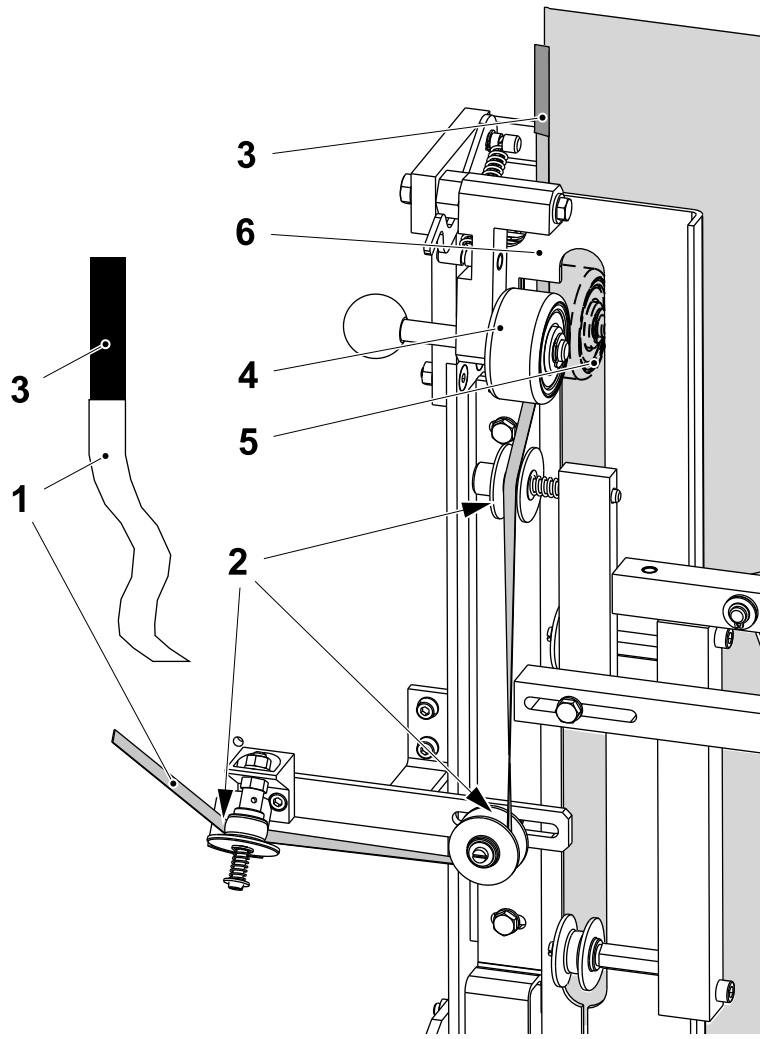

1 Strip
2 Roller
3 Tape
4 Pressure roller
5 Roller
6 Inductor

5

Open the strip applicator door.

a) Thread the strip (1) around the rollers (2).

b) Attach a piece of adhesive tape (3) to the end of the strip (not wider than the strip).

c) Pull thepressure roller (4) away from the packaging material and lock it into place.

d) Pass the strip between the pressure roller (4), the roller (5), under the inductor (6) and attach it to the packaging material.

e)

Note! Make sure that the adhesive tape (3) does not protrude past the edge of the packaging material, otherwise it may stick to the rollers.

Attach the strip to the edge of the packaging material using the piece of adhesive tape (3).

f) Release the pressure roller (4).

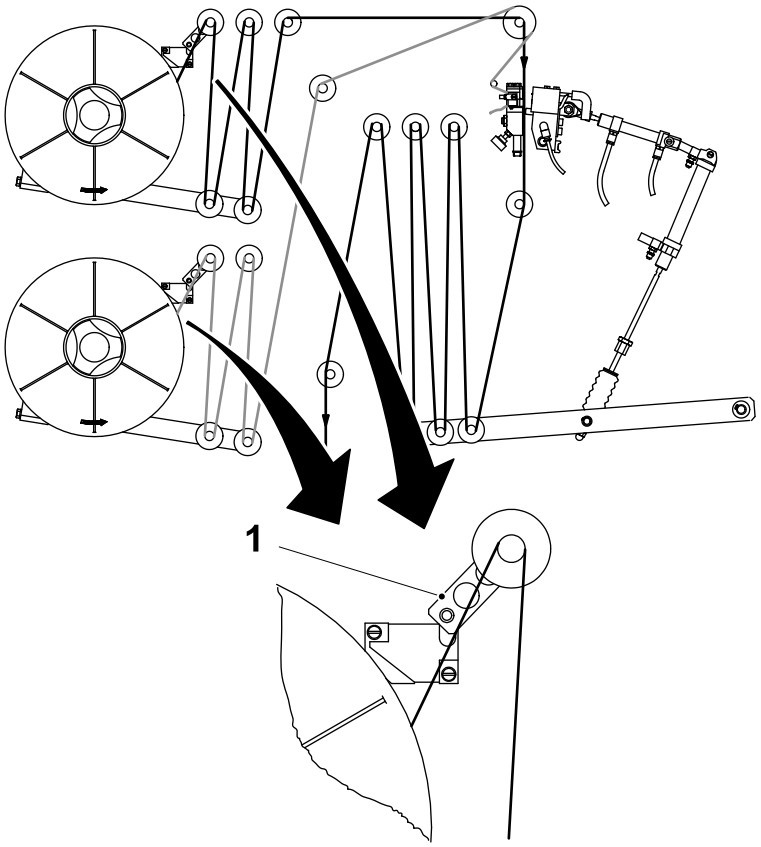

1 Strip guard

6

a) Make sure that the strip is correctly threaded.

b) Make sure that the strip guards (1) are positioned on top of the strip.

c) Rewind the strip reel slightly to tension the strip.

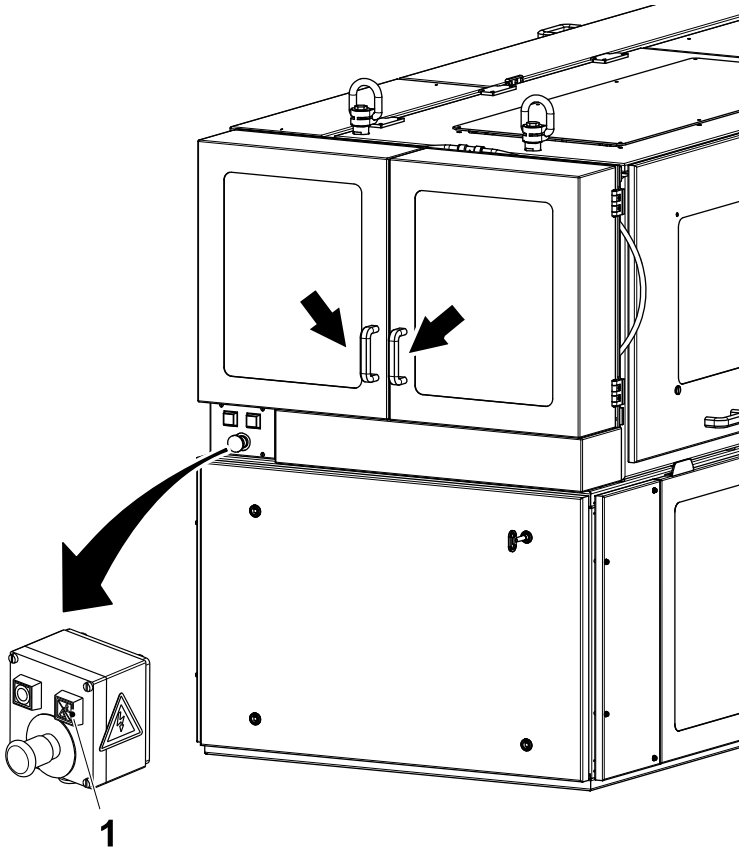

1 STRIP SPLICE/RESET ALARM

7

Note! When the STRIP SPLICE/RESET ALARM button (1) is flashing, the alarm can only be reset with open doors.

a) Perform a manual reset by pressing the STRIP SPLICE/RESET ALARM button (1).

b) Close the strip applicator door and the strip magazine doors.

c) The machine is now prepared for an automatic LS strip splice. The package that has the strip splice will be discarded automatically.

d) To perform a manual splice press the STRIP SPLICE/RESET ALARM button (1).

e) Press the `Acknowledge` button on the TPOP.

f) Close all covers and doors on the machine and press the flashing `Acknowledge` button to acknowledge the alarm.

6.1.2 Changing the LS Strip Reel

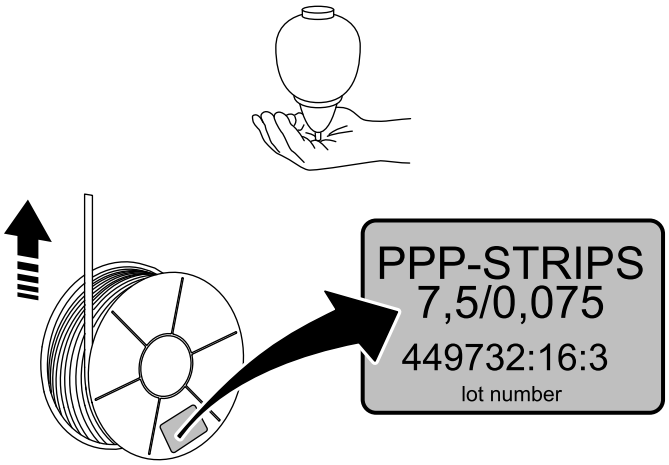

Example of tag

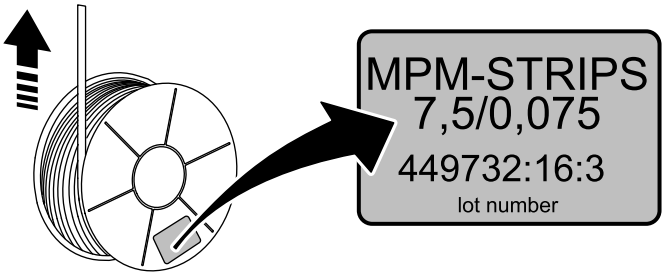

Example of tag

1

Remove the protective wrapping from the strip reel. Make a note of the strip type and the lot number indicated on the strip reel tag.

Note! The unique lot number allocated to each strip reel and printed on the strip reel tag provides traceability for the production batch. If a problem with the strip is detected, the lot number must be quoted in any communication with Tetra Pak.

Note! Remove the coloured end of the strip from the reel.

Open the strip magazine doors.

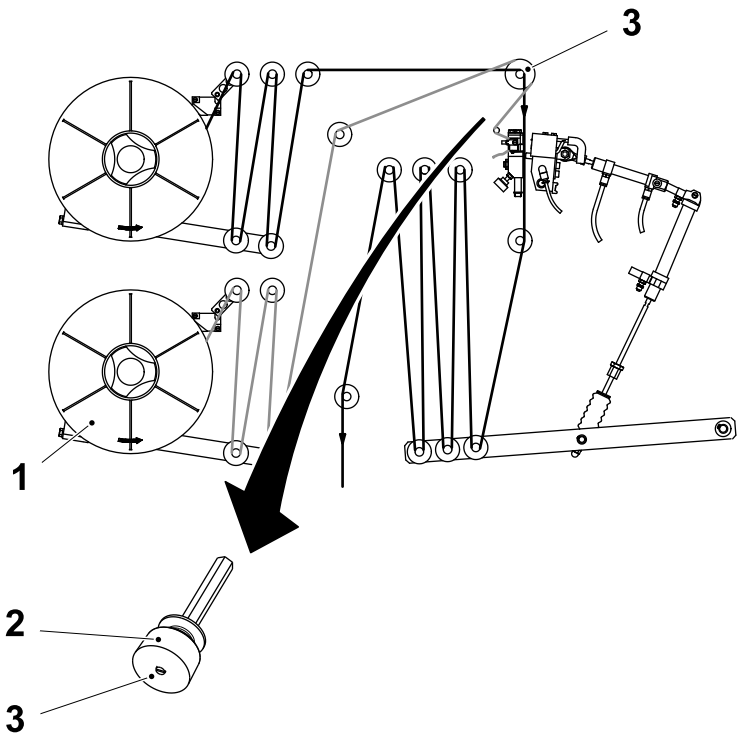

1 Strip reel
2 Position of strip when prepared for splice
3 Roller

2

Note! The strip shown in black is used for production. The strip shown in grey is going to be prepared for splicing.

a) Fit a new jumbo strip reel (1) on the reel holder required.

b) Thread as shown. Do not twist the strip while threading.

c) Thread the strip prepared for the splice over the larger diameter (2) of the roller (3).

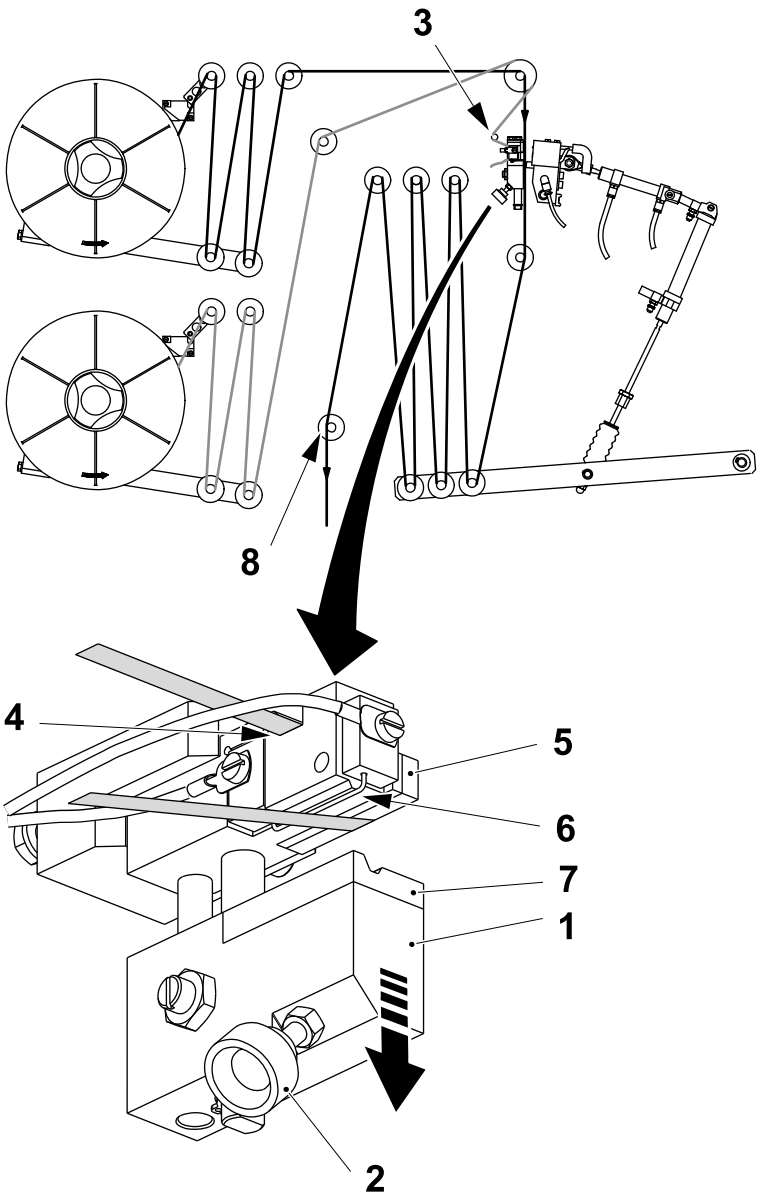

1 Slide
2 Knob
3 Finger
4 Groove
5 Pad
6 Cutting wire
7 Pad
8 Roller

3

a) Move the slide (1) down using the slide knob (2).

b) Fit the strip around the metal finger (3), through the groove (4), around the pad (5), then between the cutting wire (6) and the pad (7).

c) Move the slide (1) up using the knob (2).

d) Pull the strip that will be used for production through the magazine and over the (8).

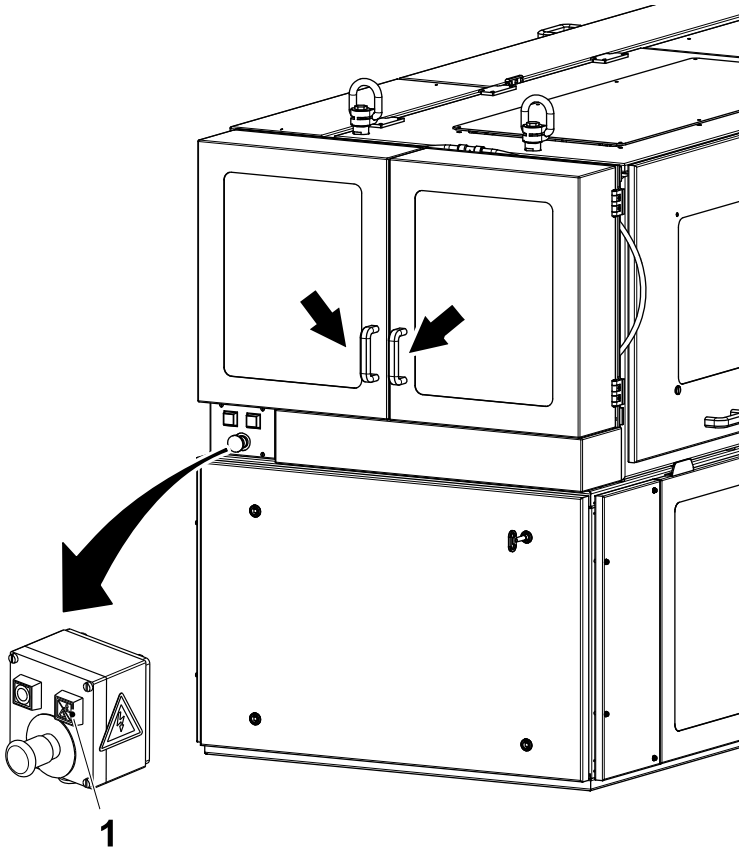

1 STRIP SPLICE/RESET ALARM

4

Note! When the is flashing, the alarm can be reset with open doors only.

a) Perform a manual reset by pressing STRIP SPLICE/RESET ALARM button (1).

b) Close the strip magazine doors.

c) The machine is now prepared for an automatic LS strip splice. The package that has the strip splice will be discarded automatically.

d) To perform a manual splice, press the STRIP SPLICE/RESET ALARM button (1).

e) Press the `Acknowledge` button on the TPOP.

6.1.3 Threading the Patch Strip

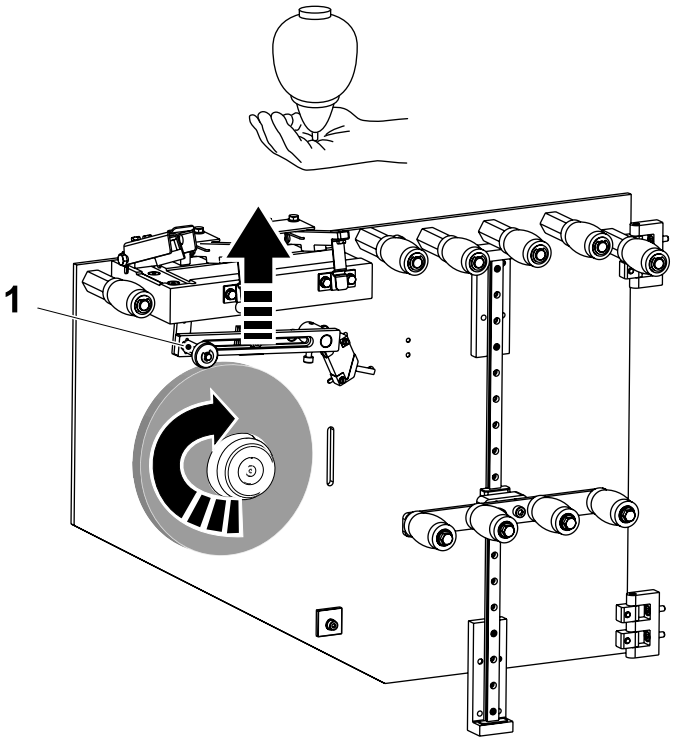

1 Arm

1

Open the doors of the patch strip magazine.

Push the arm (1) upwards until it is locked in its upper position.

Fit the patch strip reel on the PullTab unit in the direction of rotation as illustrated.

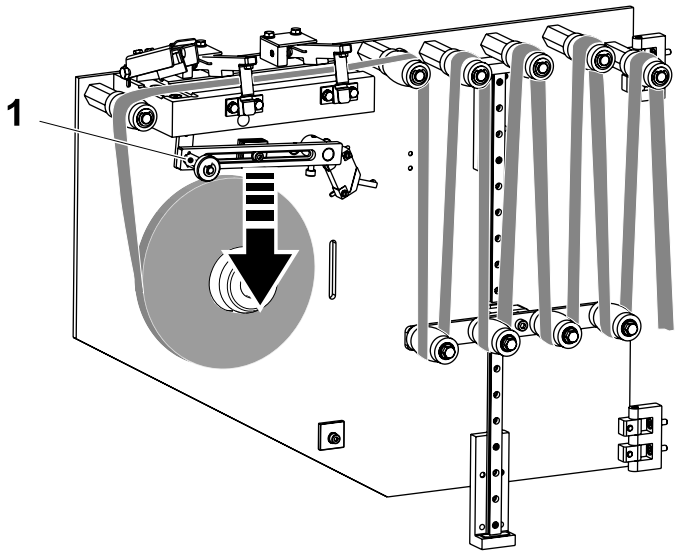

1 Arm

2

Thread the patch strip up to the splicing table and through the patch strip magazine as illustrated.

Release the arm (1).

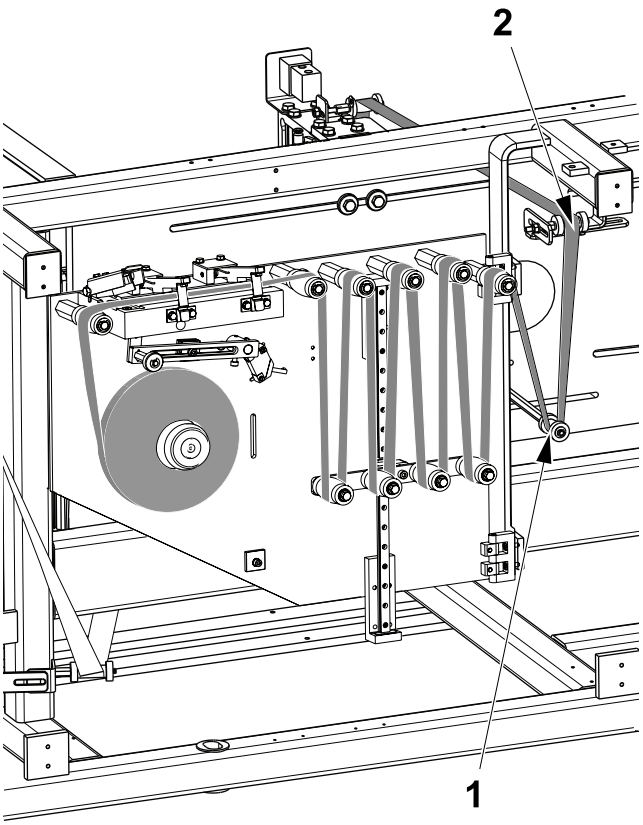

1 Roller
2 Roller

3

Note! Do not twist the strip when threading it.

Thread the patch strip out of the strip magazine down to the roller (1) up to the roller (2) and on the other side forward to the patch sealing unit (1) as shown.

Note! Make sure the strip is positioned in the sealing unit with the **matt** side upwards.

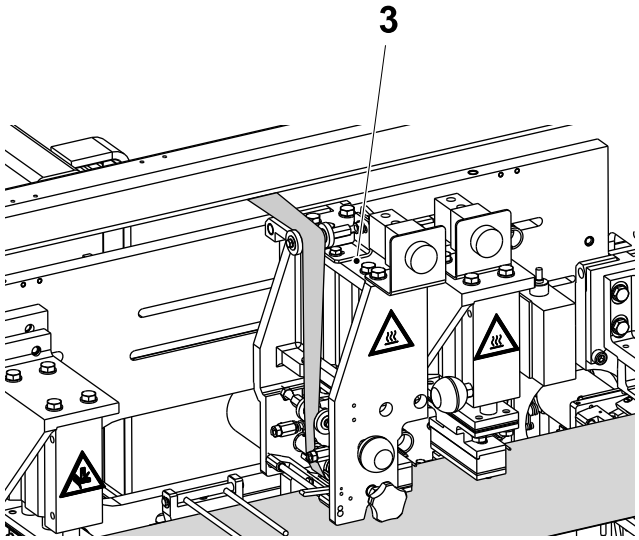

1 Patch sealing unit

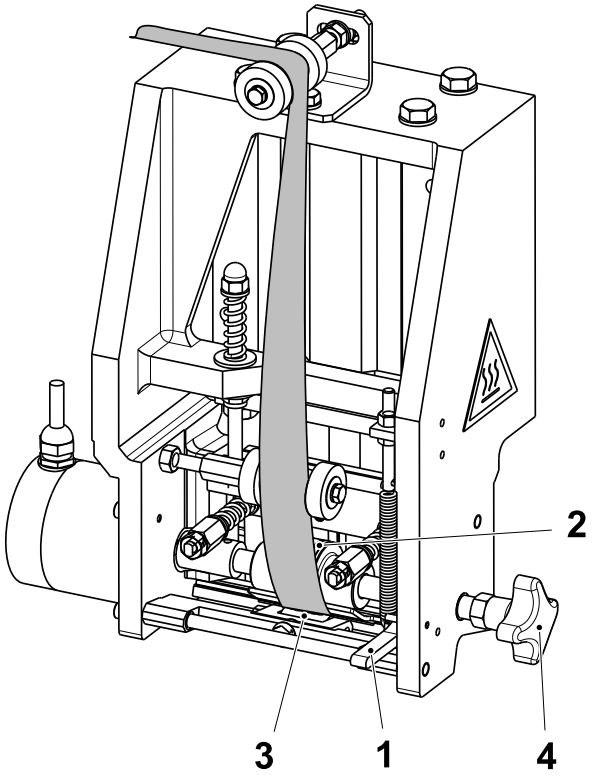

1 Handle
2 Roller
3 Bearing
4 Knob

4

Lower the handle (1) to release the one-way bearing (3) from the drive roller (2).

Thread the strip between the drive roller (2) and the one-way bearing (3).

Raise the handle (1).

Feed the strip through the patch sealing unit using the knob (4). Feed until the strip has passed the knife.

6.1.4 Threading the Tab Strip

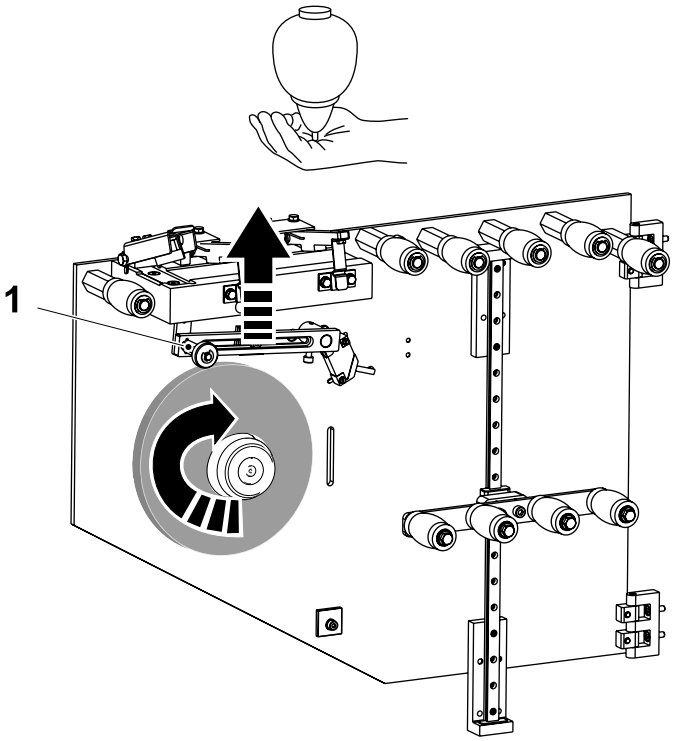

1 Arm

1

Open the doors of the tab strip magazine.

Push the arm (1) upwards until is locked in its upper position.

Fit the tab strip reel on the PullTab unit in the direction of rotation as illustrated.

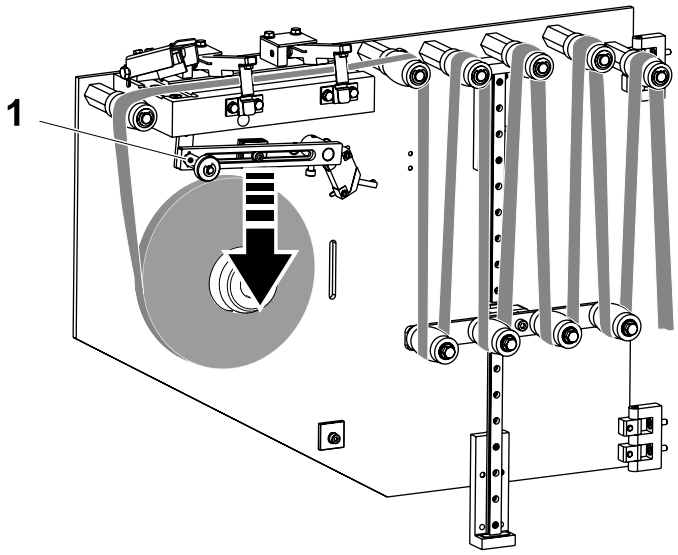

1 Arm

2

Thread the tab strip up to the splicing table and through the patch strip magazine as illustrated.

Release the arm (1).

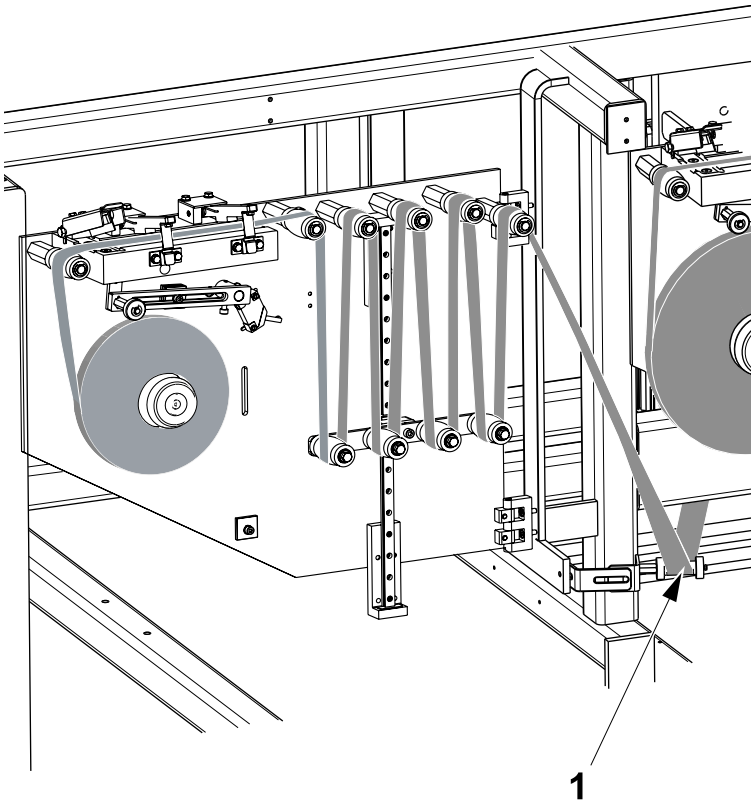

1 Roller

3

Thread the strip out of the strip magazine, down to the roller (1) , to the other side forward to the roller (1) and to the tab sealing unit (2) as illustrated.

Note! Make sure that the non-printed side of the strip is in contact with the packaging material.

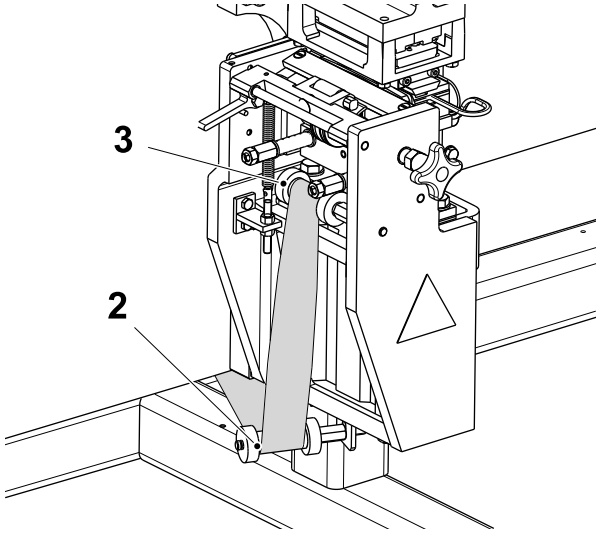

1 Roller
2 Tab sealing unit

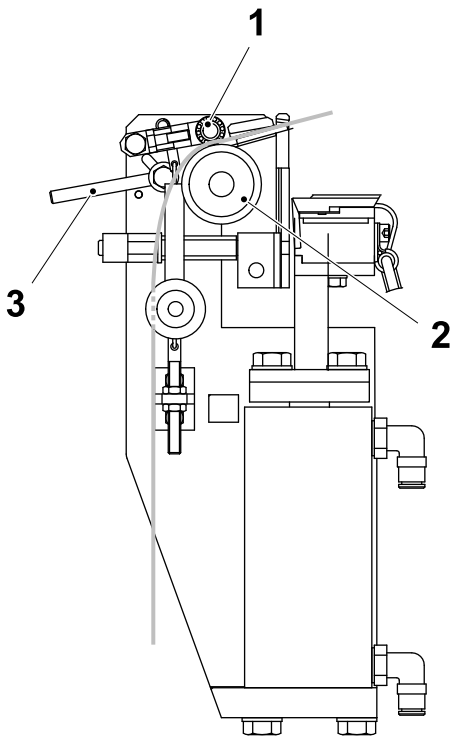

1 Bearing
2 Roller
3 Handle

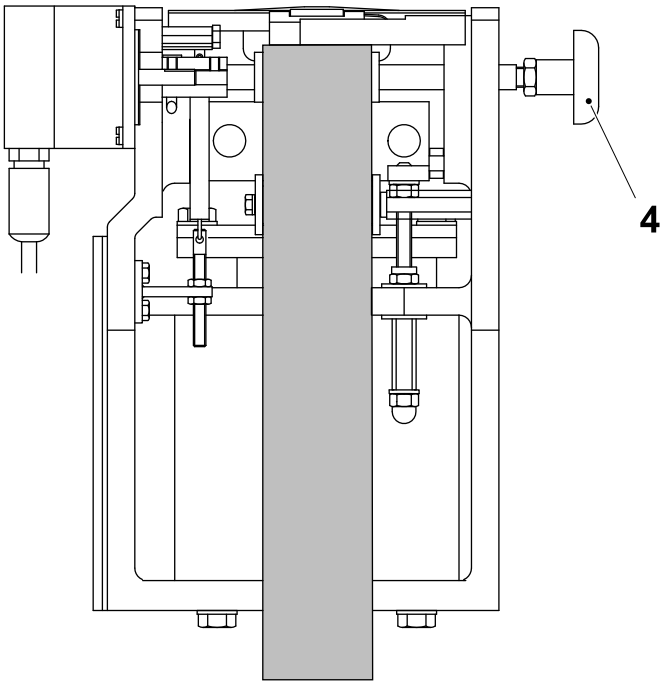

1 Knob

4

Raise the handle (3) to release the one-way bearing (1) from the drive roller (2).

Thread the strip between the drive roller (2) and the one-way bearing (1).

Lower the handle (3).

Feed the strip through the tab sealing unit using the knob (1). Feed until the strip has passed the knife.

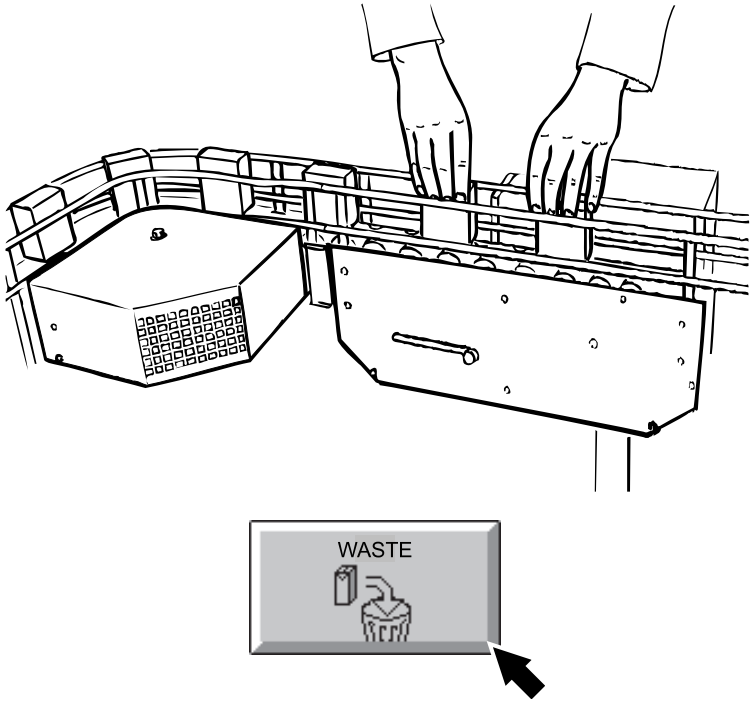

5

Pick out the first two packages discharged from the final folder after the splice.

Check the packages, see the section 5.2 Package Checks.

Register the number of packages taken. See 2.7.9 Record Package Waste for Quality Checks on page 2-51.

6.1.5 Patch Strip Reel Change

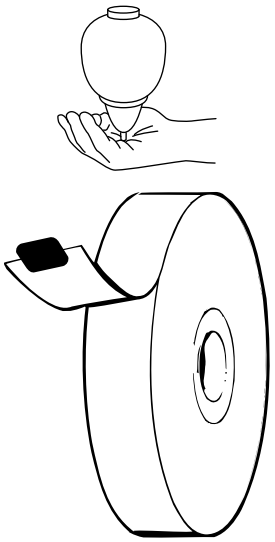

1

When the patch strip reel during operation is finishing an alarm pops-up on the TPOP panel; proceed as follows.

Open the doors of the patch strip magazine.

Take a new reel of patch strip and put the black tape on the inner side of the strip.

Note! See chapter 9 Technical Data for the correct black tape type.

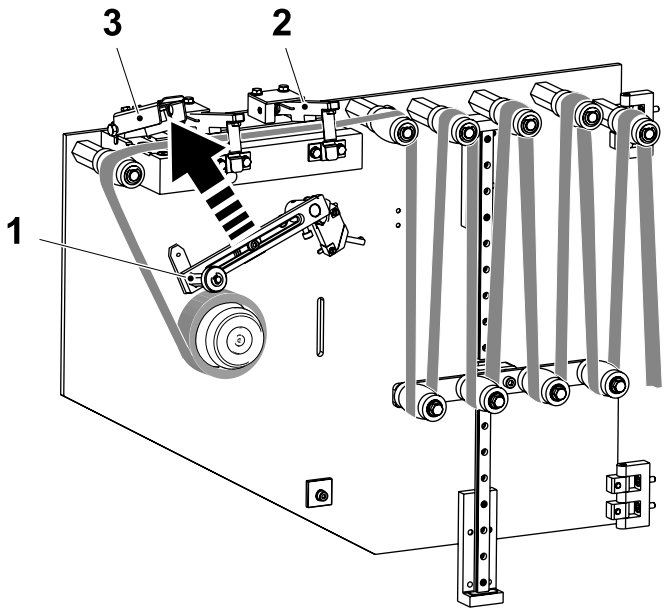

1 Arm
2 RH lock grip
3 Knife

2

Push the arm (1) upwards until is locked in its upper position.

Push the RH lock grip (2) down, stretch the strip and cut it with the knife (3).

Release the RH lock grip (2), place the end of old the strip between the lock grips and push the RH lock grip (2) down.

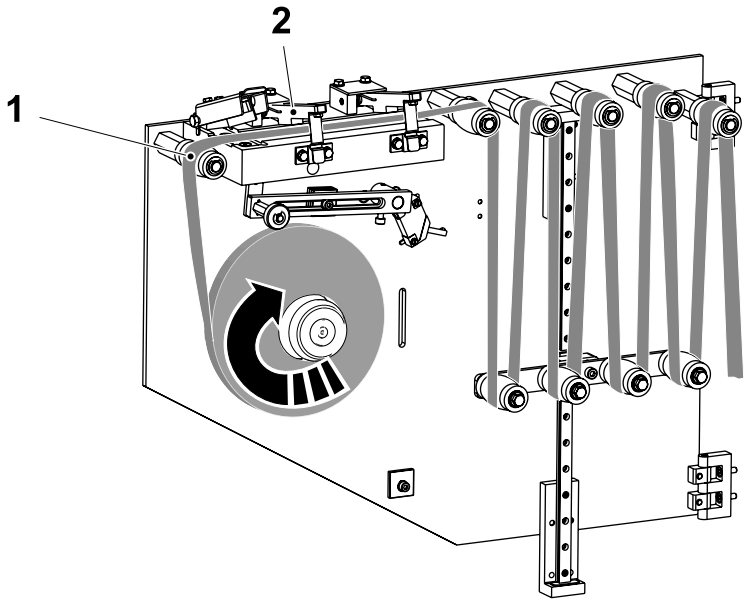

1 Roller
2 LH lock grip

3

Change the patch strip reel.

Note! Fit the reel in the direction of rotation as illustrated.

Thread the new patch strip over the roller (1) and past the LH lock grip (2). Place the new strip under the strip old with approximately 2 mm overlap.

Push the LH lock grip (2) down and join the two patch strips together with the black tape.

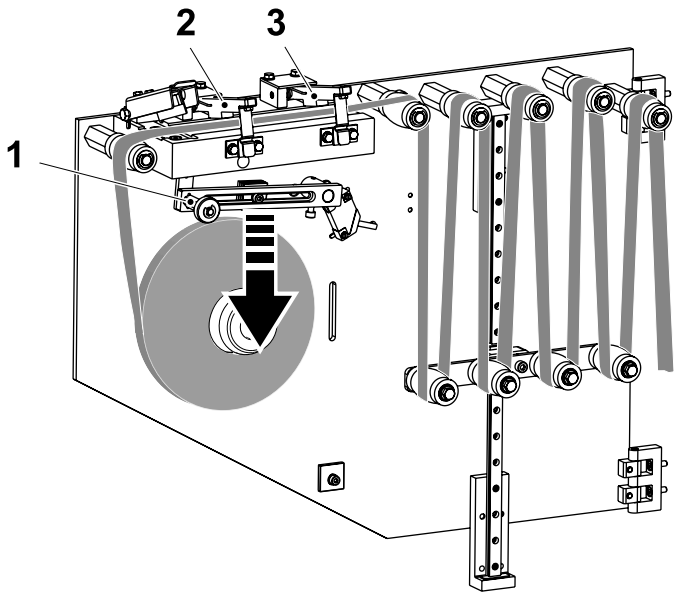

1 Arm
2 Lock grip
3 Lock grip

4

Release the arm (1).

Release the lock grips (2) and (3) and close the covers.

Press the `Acknowledge` button on the TPOP to reset the alarm.

The package carrying the strip splice will be discarded automatically.

6.1.6 Tab Strip Reel Change

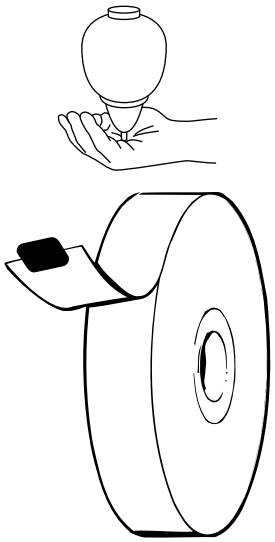

1

When the tab strip reel during operation is finishing an alarm pops-up on the TPOP panel; proceed as follows.

Open the doors of the tab strip magazine.

Take a new reel of tab strip and put the black tape on the inner side of the strip.

Note! See chapter 9 Technical Data for the correct type of black tape.

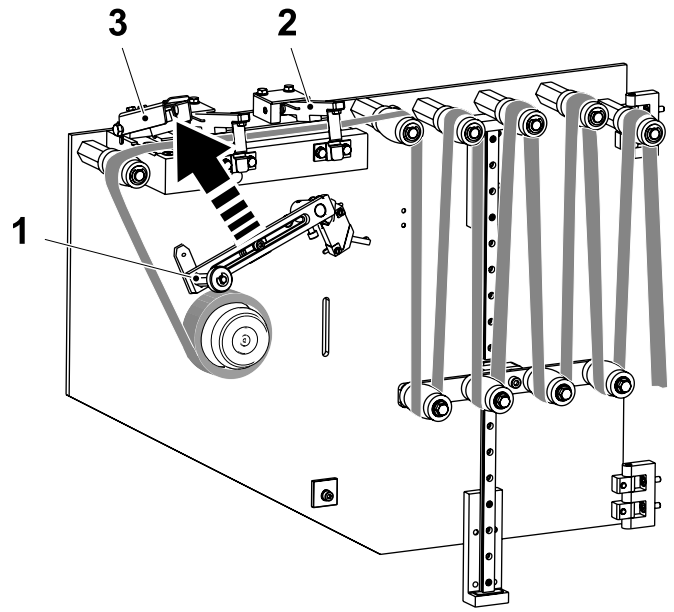

1 Arm
2 RH lock grip
3 Knife

2

Push the arm (1) upwards until is locked in its upper position.

Push the RH lock grip (2) down, stretch the strip and cut it with the knife (3).

Release the RH lock grip (2), place the end of old the strip between the lock grips and push the RH lock grip (2).

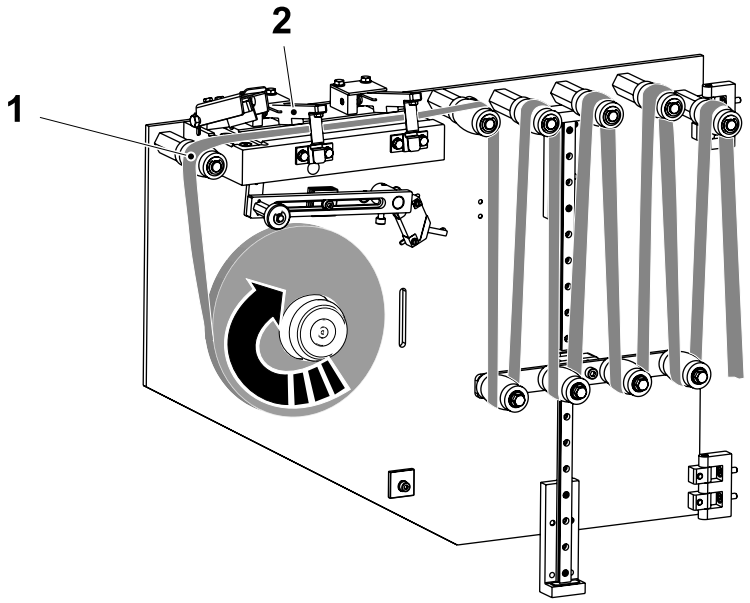

1 Roller
2 LH lock grip

3

Change the tab strip reel.

Note! Fit the reel in the direction of rotation as illustrated.

Thread the new tab strip over the roller (1) and past the LH lock grip (2). Place the new strip under the strip old with approximately 2 mm overlap.

Push the LH lock grip (2) down and join the two tab strips together with the black tape.

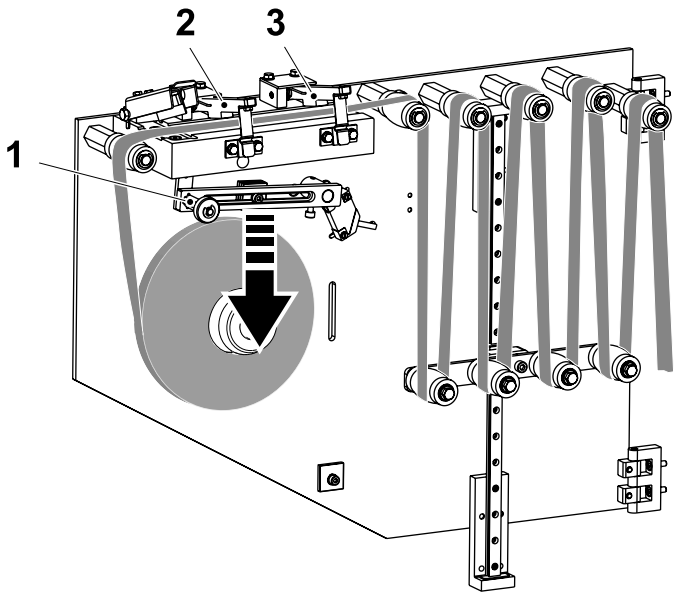

1 Arm
2 Lock grip
3 Lock grip

4

Release the arm (1).

Release the lock grips (2) and (3)and close the covers.

Press the `Acknowledge` button on the TPOP to reset the alarm.

The package carrying the strip splice will be discarded automatically.

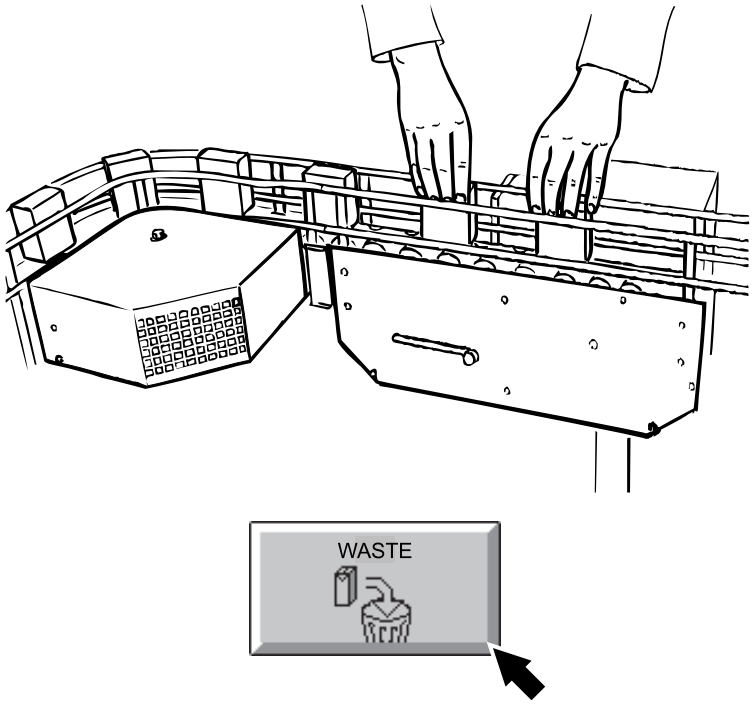

5

Pick out the first two packages discarded from the final folder and number them, see section 5.2 Package Checks.

Register the number of packages taken. See 2.7.9 Record Package Waste for Quality Checks on page 2-51.

6.2 Packaging Material Supply

CAUTION
Risk of unsterility.
Make sure that the packaging material does not touch the floor.
Before touching the packaging material, disinfect your hands or gloves.

6.2.1 Reel Handling

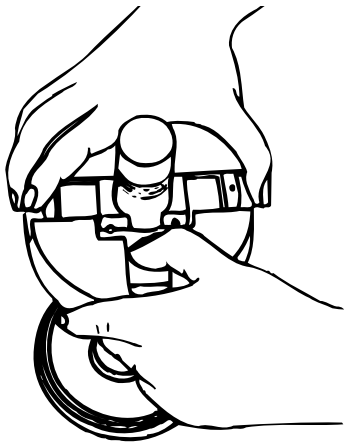

1

Pull out the reel holder catch slightly while pushing in the spring-loaded lugs.

When the lugs lock, release the reel holder catch.

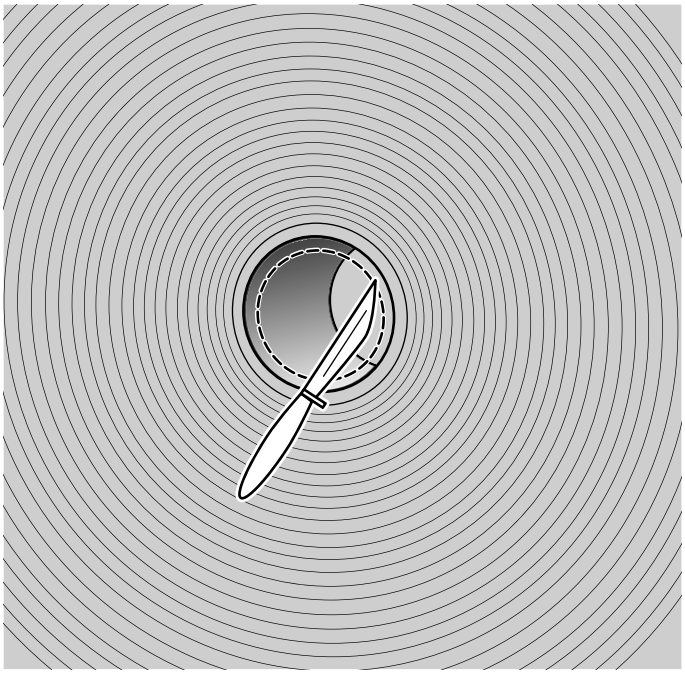

2

CAUTION
Hygienic Hazard.
Plastic wrapping around pallets of packaging material may be dirty and must be removed in the packaging material storage area and away from the machine.
Plastic wrapping around individual packaging material reel must be removed after the reel has been transported to the machine.

Cut away only a piece of plastic wrapping inside the hole in the reel.

Note! Be careful not to damage the sides of the reel. A scratch can make a cut on the LS of the packages.

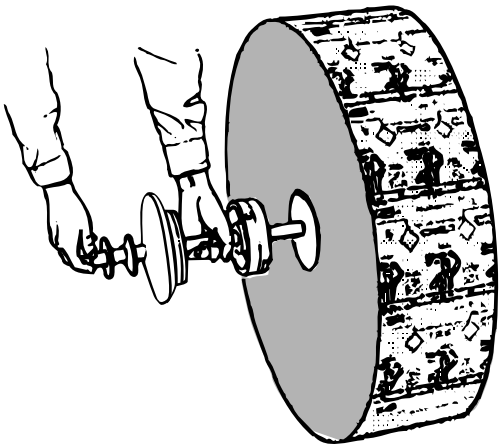

3

Insert the reel holder into the core.

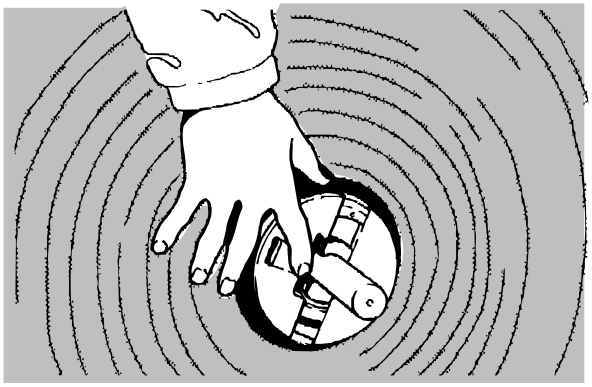

4

Pull out the reel holder catch to release the spring-loaded lugs.

Note! Check that the lugs have expanded to lock the reel holder to the reel.

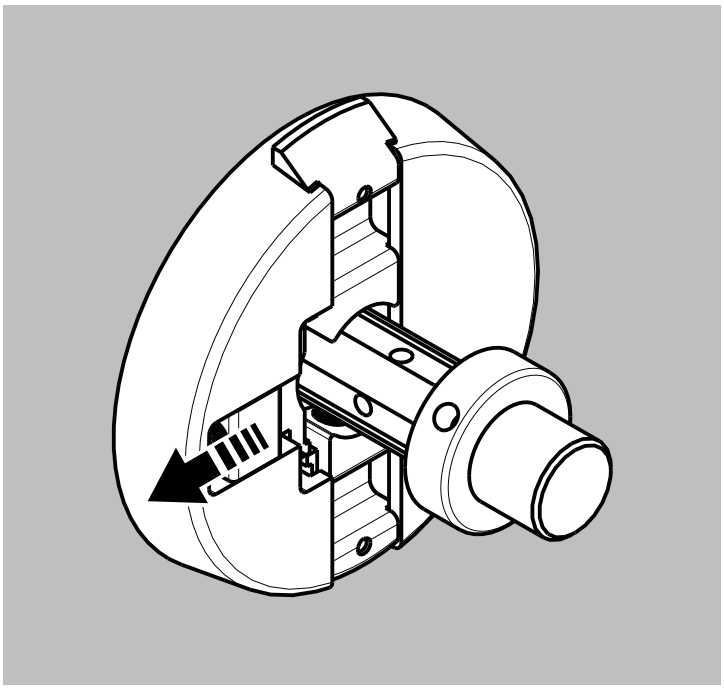

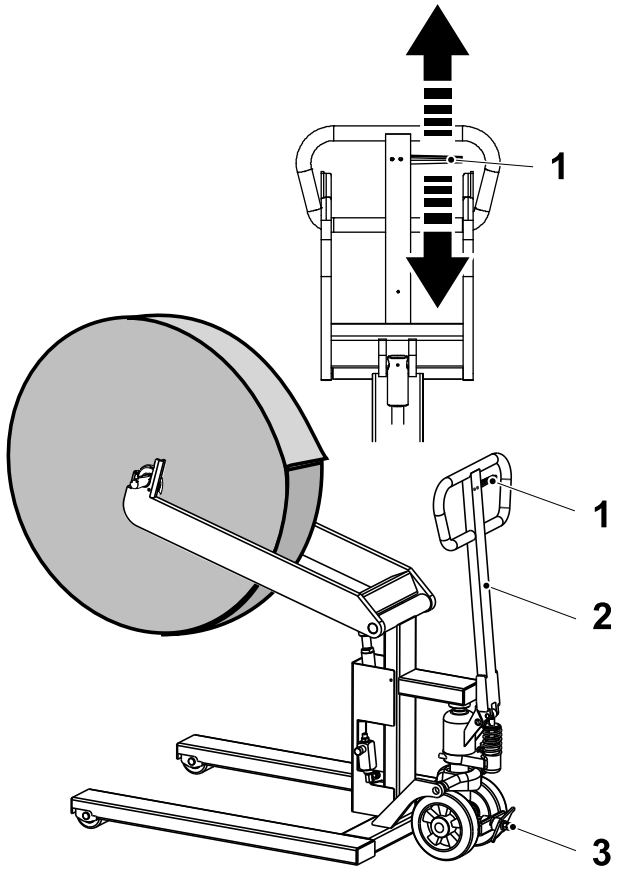

1 Lever
2 Handle
3 Brake pedal

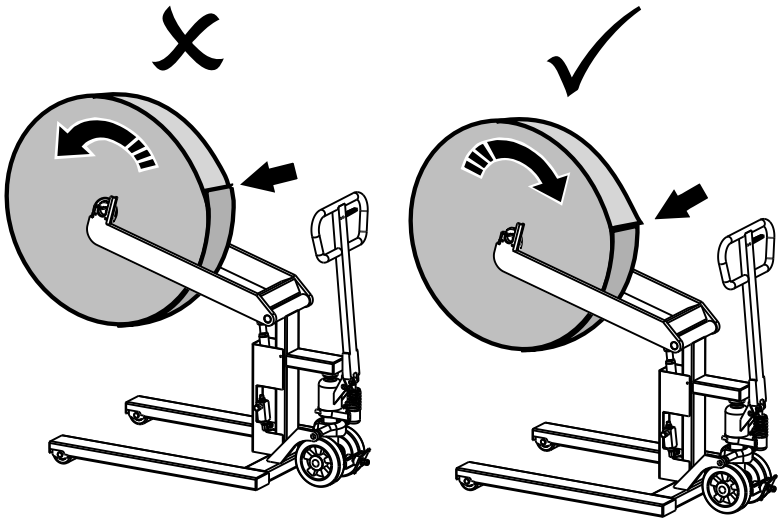

Incorrect Correct

5

Manoeuvre the trolley until the reel holder is positioned in the lifting arms.

Note! Make sure that the reel is placed in the correct direction of rotation.

Lifting

Lower the lever (1) and lift the reel by pumping the handle (2).

Lowering

Raise the lever (1).

Braking

- Press the right side of the brake pedal (3) to brake.

- Press the left side of the brake pedal (3) to release the brake.

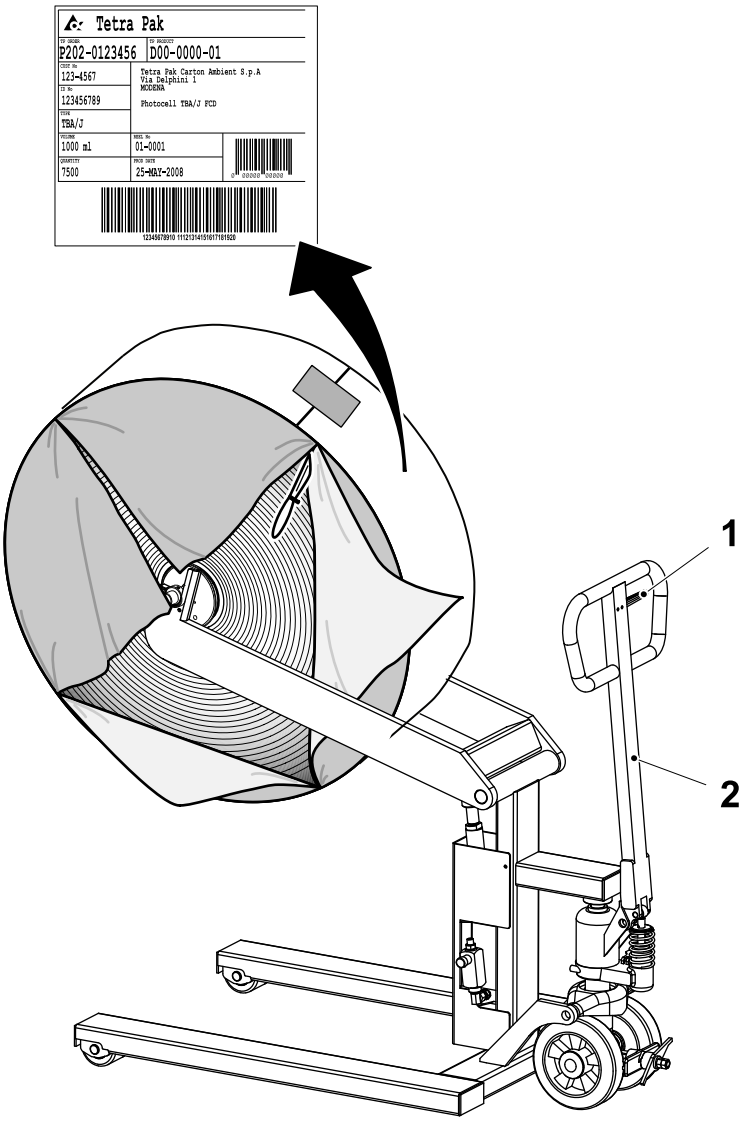

1 Lever
2 Handle

6

Lower the lever (1) and pump the main handle (2) to lift the trolley arms.

Remove the plastic wrapping from the reel.

CAUTION
Hygienic Hazard.
Make sure that the packaging material does not touch the floor during the entire supply procedure.

Check carefully the edges of the packaging material reel for damages, cuts or dents due to reel transportation and handling. Report any damage that may effect equipment performance.

Remove and keep the P-order tag.

Note! The unique P-order and reel numbers allocated to each packaging material reel and printed on the P-order tag provide traceability for the production batch. If a problem with the packaging material is detected these numbers must be quoted in any communication with Tetra Pak.

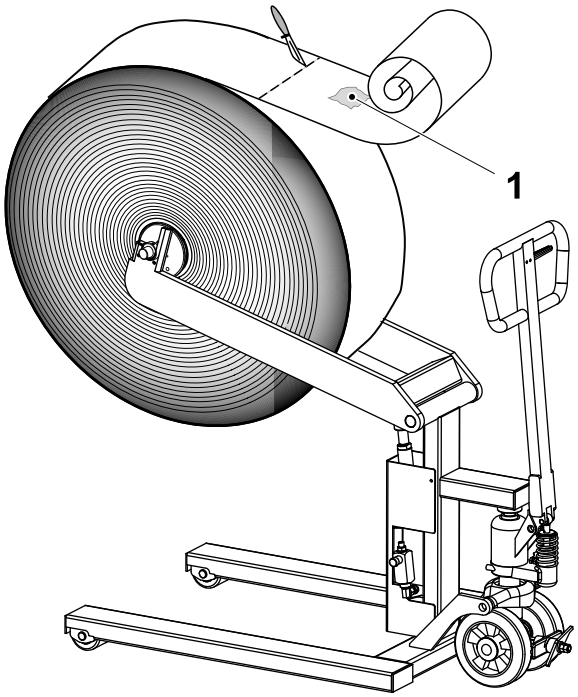

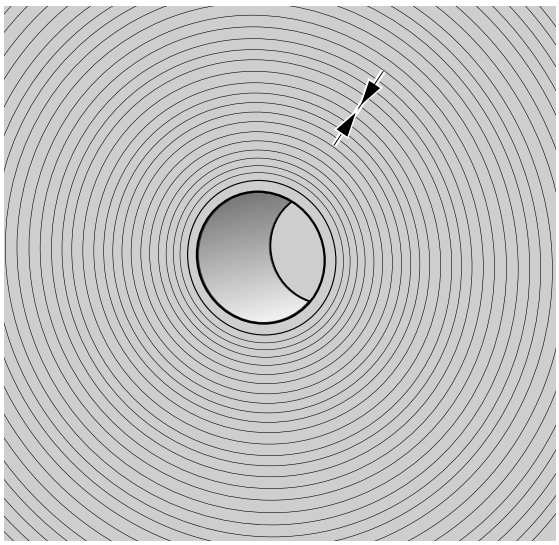

1 Area

7

WARNING

Risk of unsterility.

Do not damage the underlying packaging material when cutting.

Cut approximately one turn of packaging material from the reel. Make sure that the packaging material cut includes the area (1) where the P-order tag was applied.

Note! Arrow marks on the side of the reels indicate where there are factory splices. During production, the machine will automatically discard the packages which include a factory splice.

Always check the packaging after a factory splice, see section 5.2 Package Checks.

6.2.2 Machines Equipped with PMI (Standard)

For machines with ASU (Option), see 6.2.3 Machines Equipped with ASU (Option) on page 6-44.

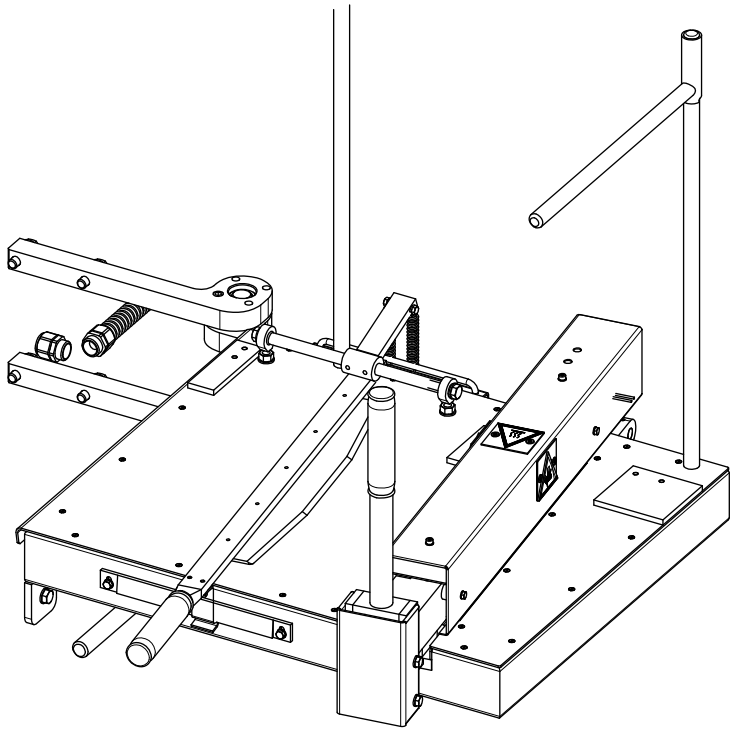

1

WARNING
Hot surface.
Risk of burns.
The heating rail may be hot. Do not touch.

WARNING
Risk of cutting.
The heating block is movable and the knife sharp. Take care when cleaning the splicing device.

WARNING
Hazardous substances.
Risk of personal injury.
Cleaning compound. Follow the ii Safety Precautions.

Disinfect the material holder using cleaning compound code G, see Chapter 9 Technical Data.

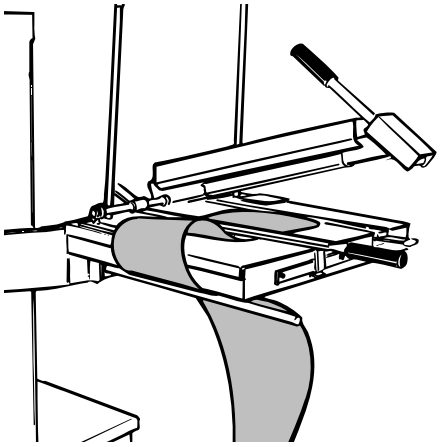

2

Pull the packaging material onto the splicing table and under the splicing device.

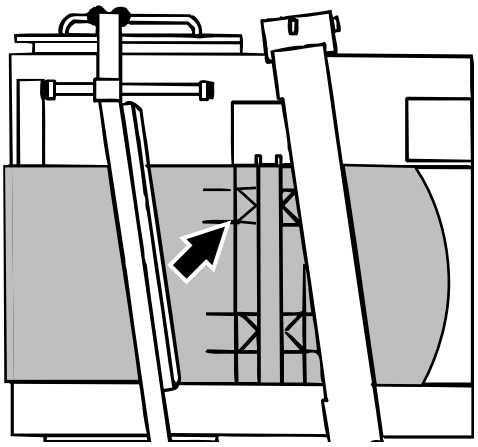

3

Place the new packaging material on the splicing device so the top and bottom fin creases line up with the marks on the splicing device.

Press the knife down and tear off the packaging material.

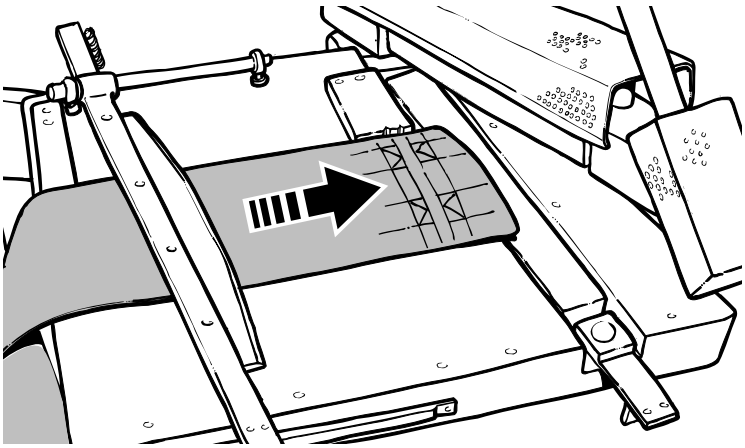

4

Slide the cut-off packaging material forward so the next pair of creases line up with the marks.

Press the knife down to lock the packaging material and swing the splicing device out of the way.

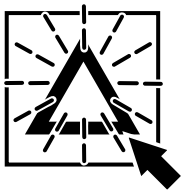

5

When the paper supply alarm is triggered, press the `Acknowledge` button.

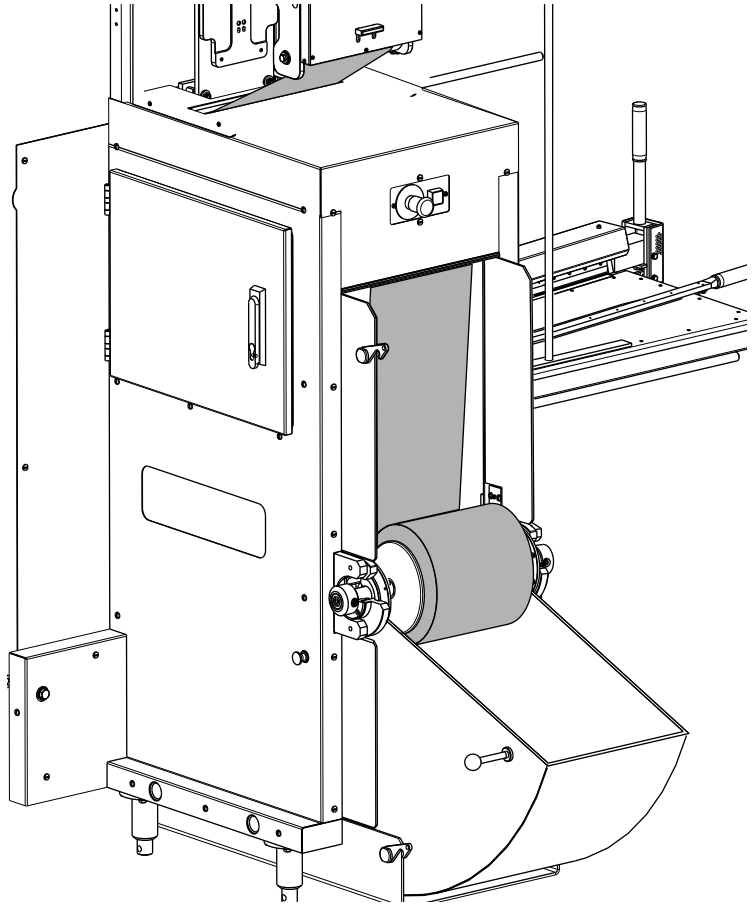

6

Release the catch and lower the cover of the packaging material magazine to its intermediate position.

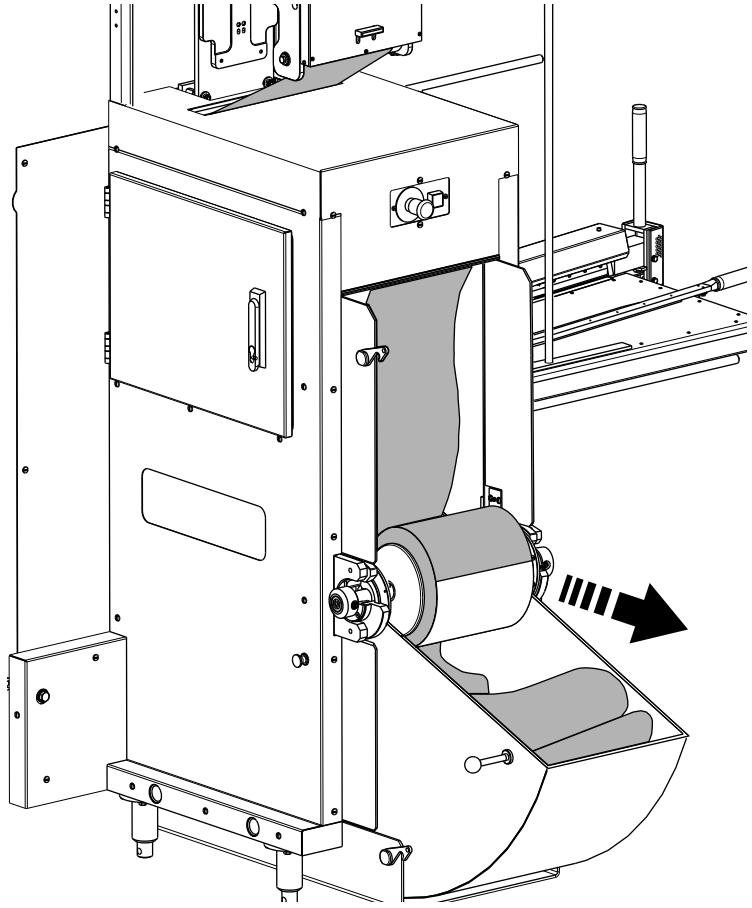

7

Unreel the remaining packaging material from the old reel.

Remove the empty reel holder.

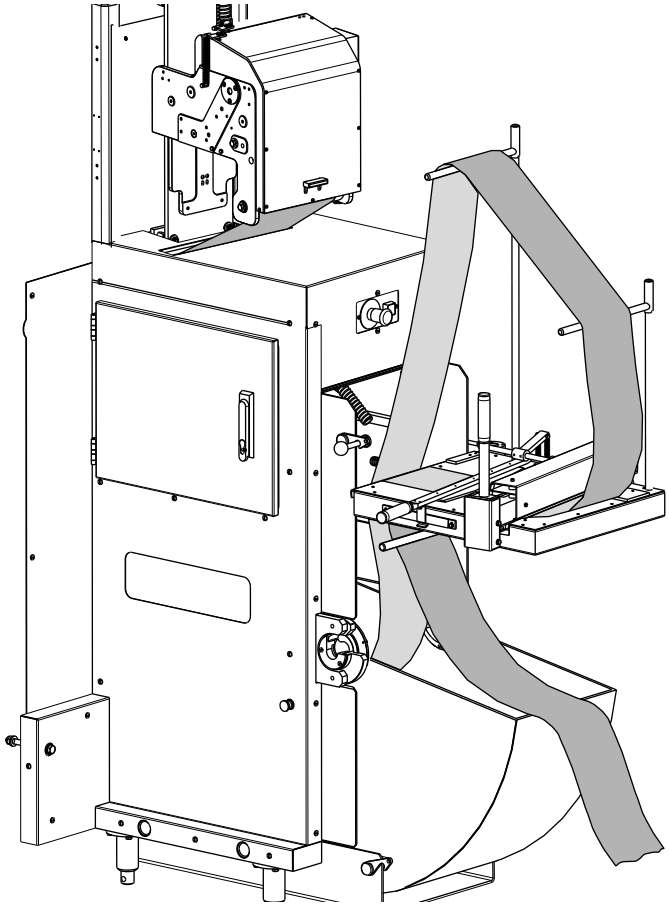

8

Pull the packaging material from the old reel up over the support rods and down onto the splicing device.

Place it on top of the old packaging material.

The top fin crease and the bottom fin crease must line up with the location marks on the splicing device, see item 3.

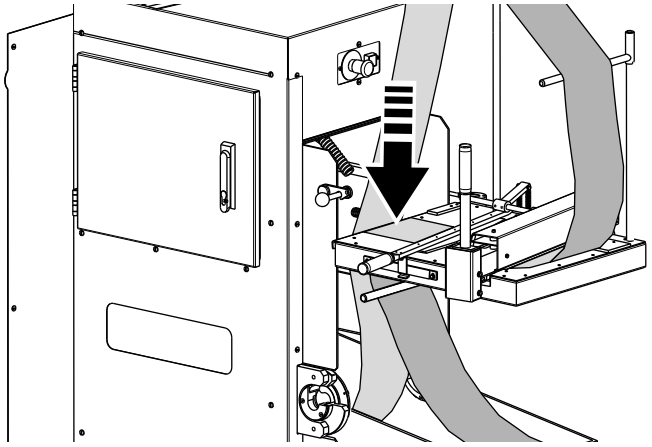

9

Press down and lock the sealing arm. Tear off the end of the packaging material.

Release the knife.

After 10-15 seconds, release the sealing arm.

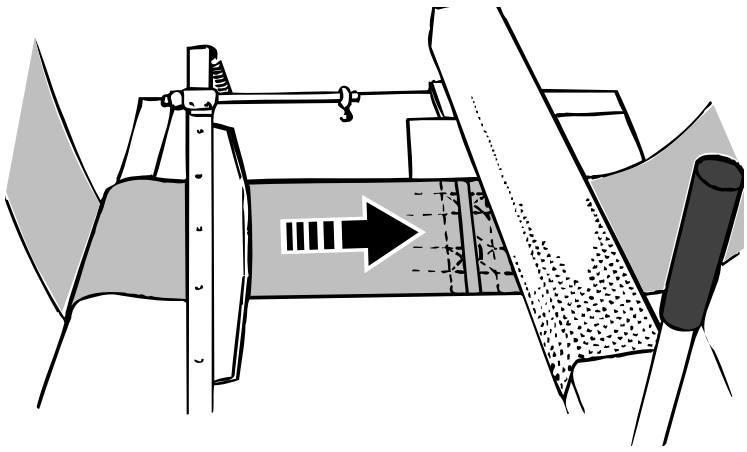

10

Move the packaging material approximately 15 mm in the direction shown by the arrow.

Press the knife down. Press the sealing arm down for about 5 seconds.

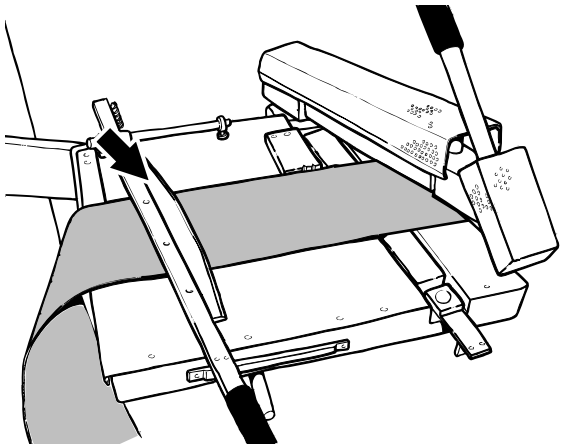

11

Release the knife.

Remove the packaging material from the splicing device and put it in the trolley basket.

Press the knife down.

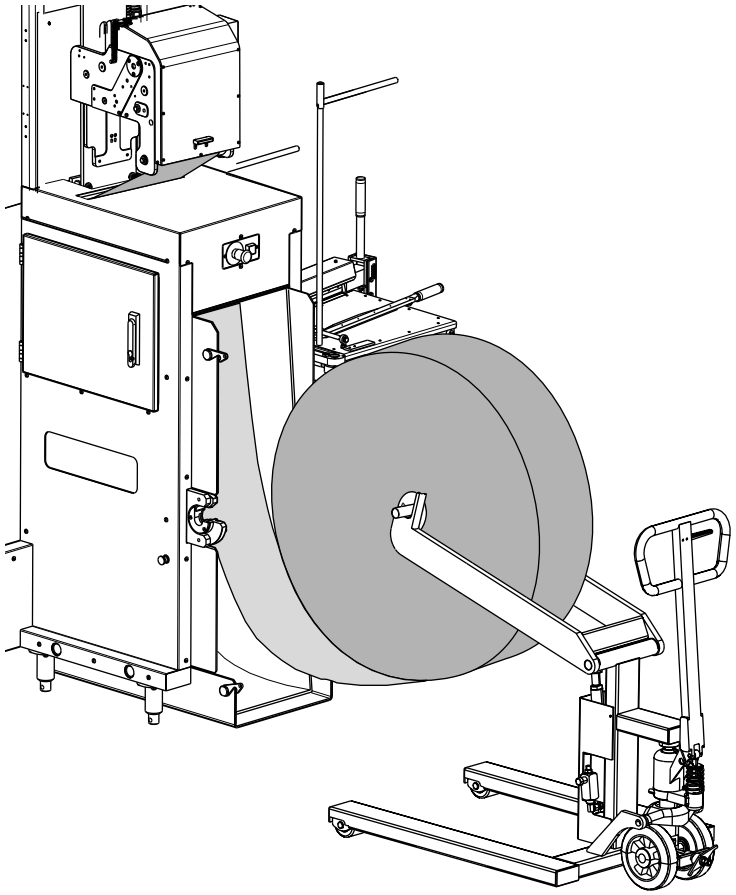

12

Swing the splicing device out of the way.

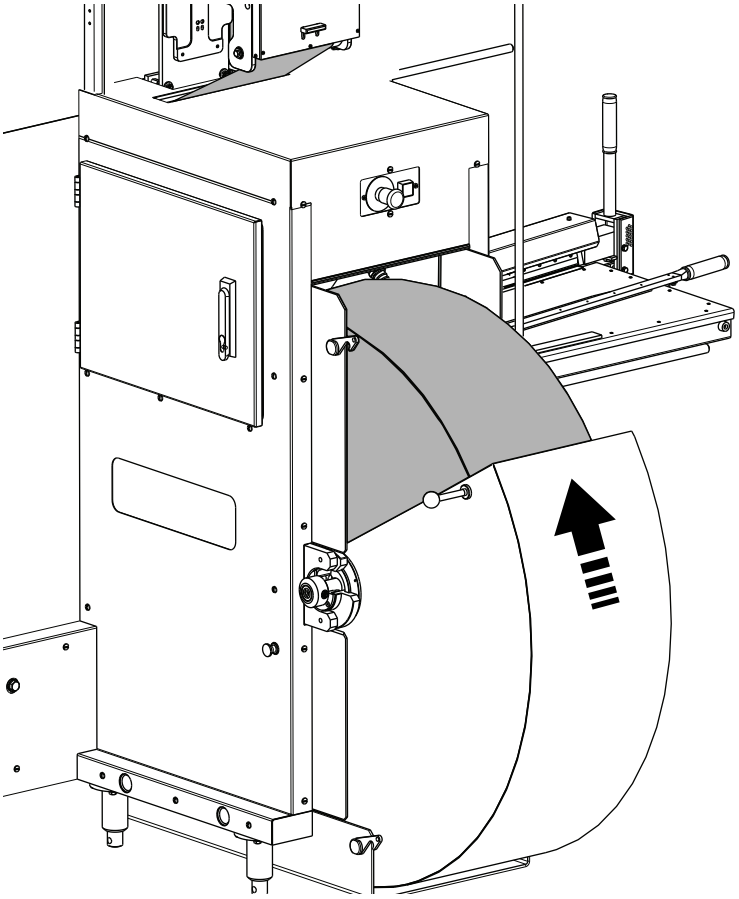

13

Transfer the reel from the trolley into the PMI.

Close the cover.

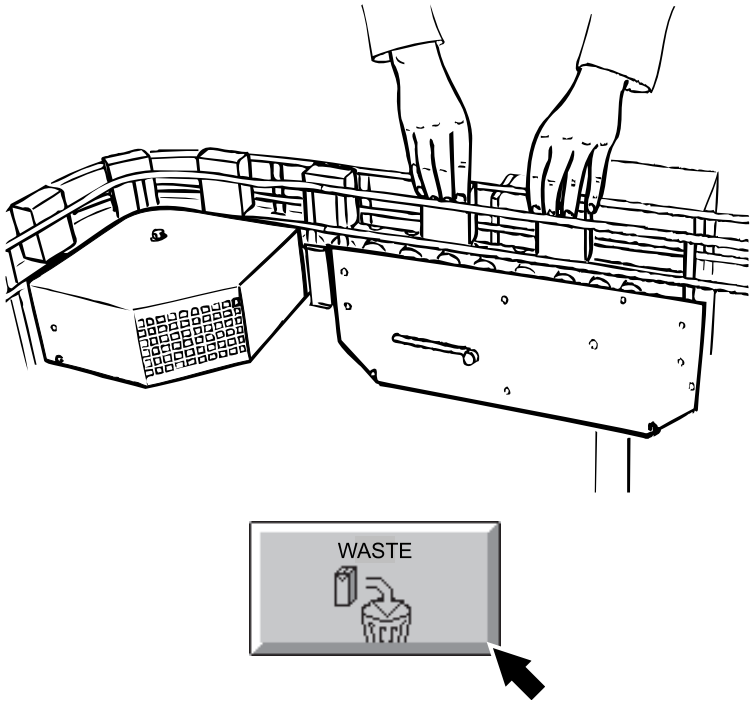

14

After the splice is performed, pick out the first two packages discharged from the final folder and number them, see Section 5.2 Package Checks.

Register the number of packages taken. See Section 2.7.9 Record Package Waste for Quality Checks on page 2-51.

6.2.3 Machines Equipped with ASU (Option)

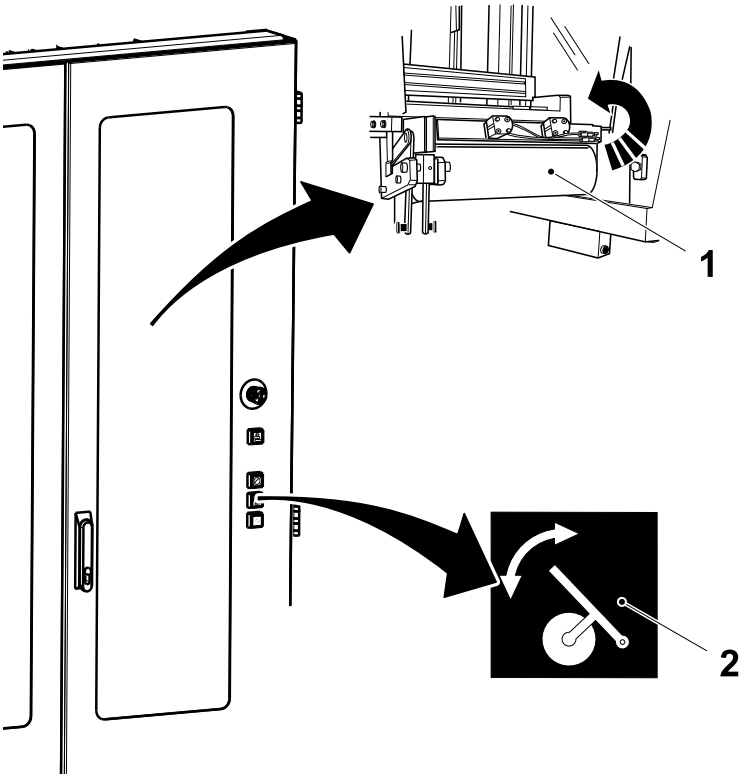

1 Material holder
2 PACKAGING MATERIAL HOLDER

1

Before opening the ASU doors, make sure the material holder (1) is fully elevated.

If not, press the PACKAGING MATERIAL HOLDER button (2).

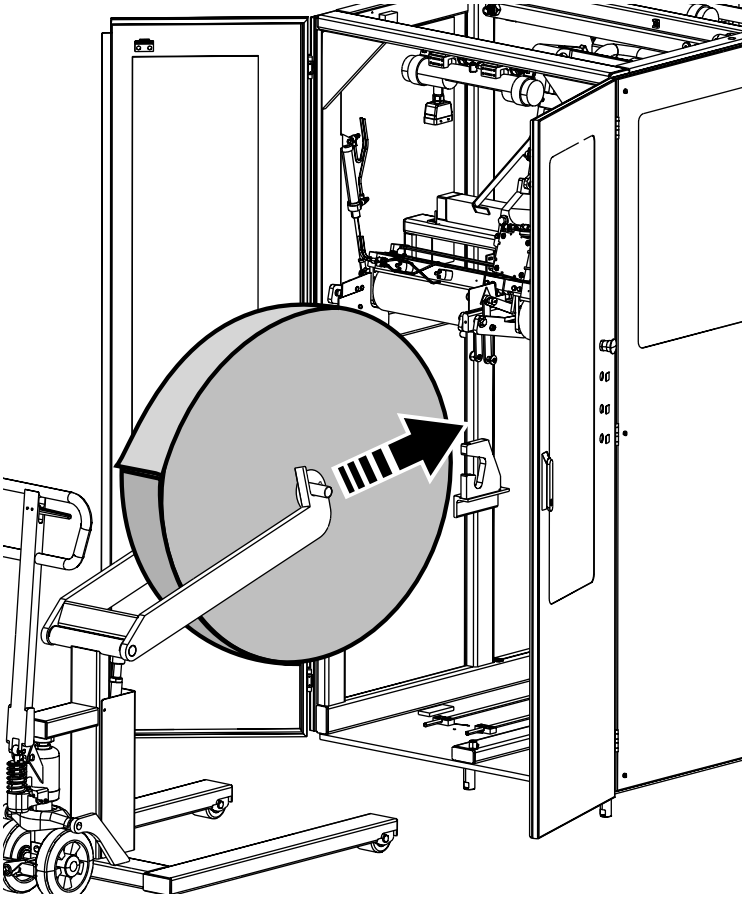

2

WARNING

Risk of cutting and crushing.
The knife is sharp and the crease wheel may cut and crush.

Open the ASU door behind the empty packaging material reel.

Remove the empty reel holder, then transfer the packaging material reel from the trolley to the ASU.

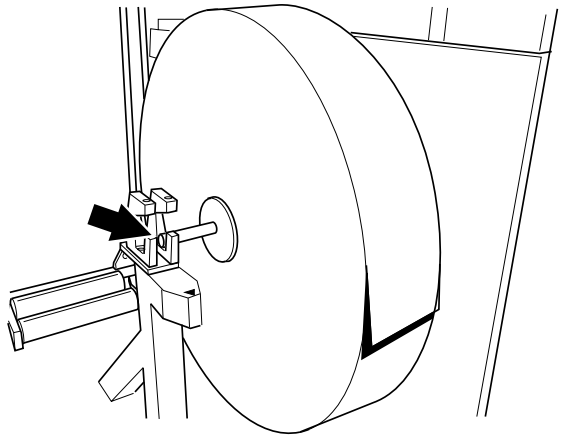

3

Make sure that the packaging material reel is aligned correctly on the bobbin holders.

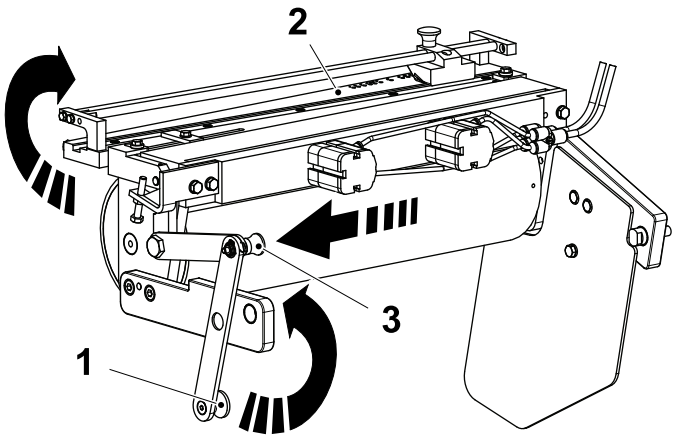

1 Handle
2 Cutting table
3 Handle

4

Open the ASU doors.

Using the handle (1), raise the cutting table (2). Make sure that the handle (3) is blocked in a safe position.

WARNING
Hazardous substances.
Risk of personal injury.
Cleaning compound. Follow the ii Safety Precautions.

Clean the cutting table (2) with a wet sponge and disinfect it using cleaning compound code G, see chapter 9 Technical Data.

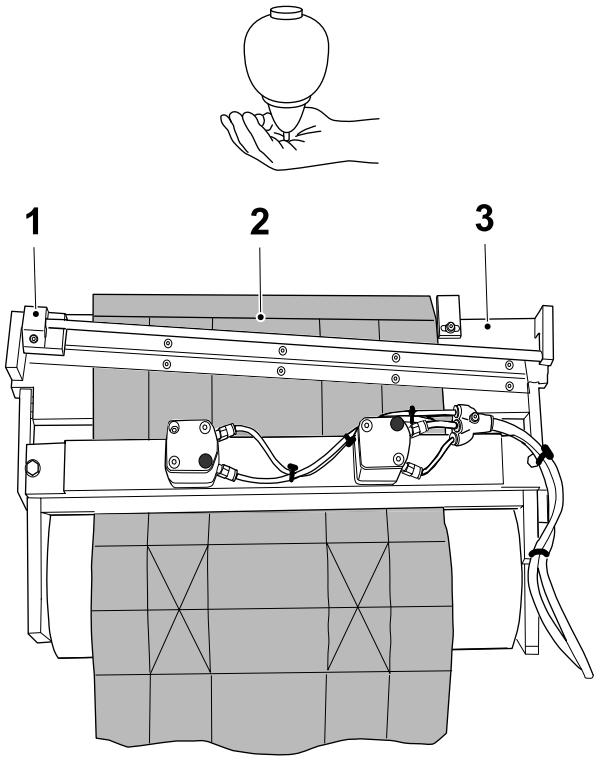

1 Splicing device
2 Top crease
3 Cutting table

5

Thread the packaging material through the cutting table (3), past the splicing device (1).

Fold the packaging material upwards along the top crease (2), then downwards to make a sharp crease.

Fold the top crease (2) of the packaging material over the edge of the cutting table (3).

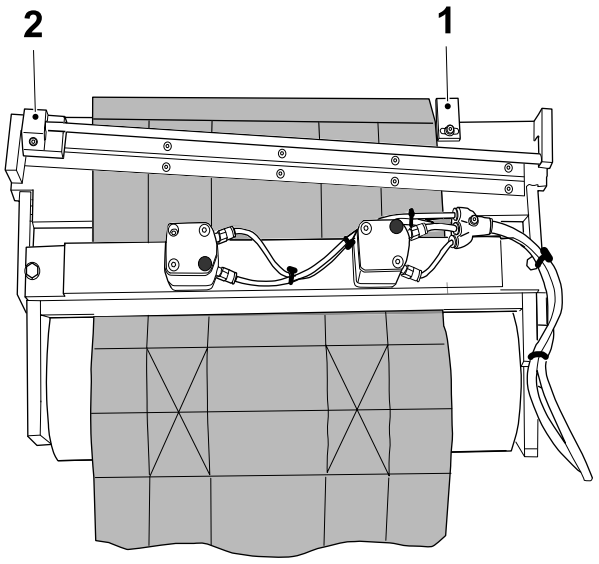

1 Guide
2 Knife

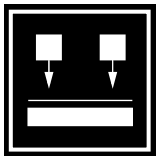

6

Hold the packaging material edge against the guide (1); do not move it once aligned.

Press the MATERIAL LOCKING button to lock the packaging material in place.

WARNING
Risk of cutting.
The knife (2) is sharp

Cut off the end of the packaging material by sliding the knife (2) across the splicing table.

Note! Leave the knife in its RH position after the cut.

Remove the end piece.

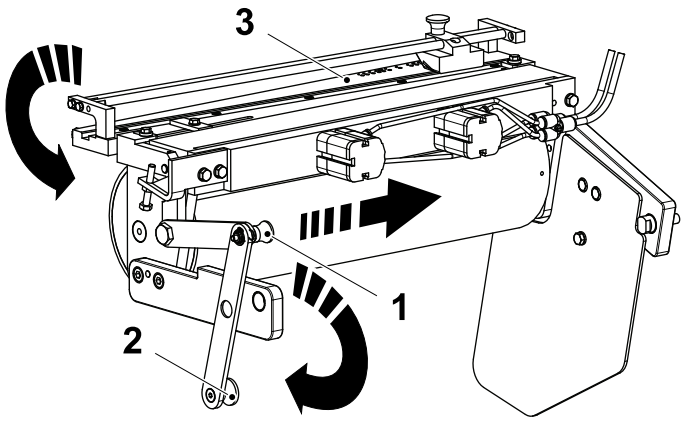

1 Handle
2 Handle
3 Cutting table

7

Unlock the handle (1), and using the handle (2) lower the cutting table (3) to the production position.

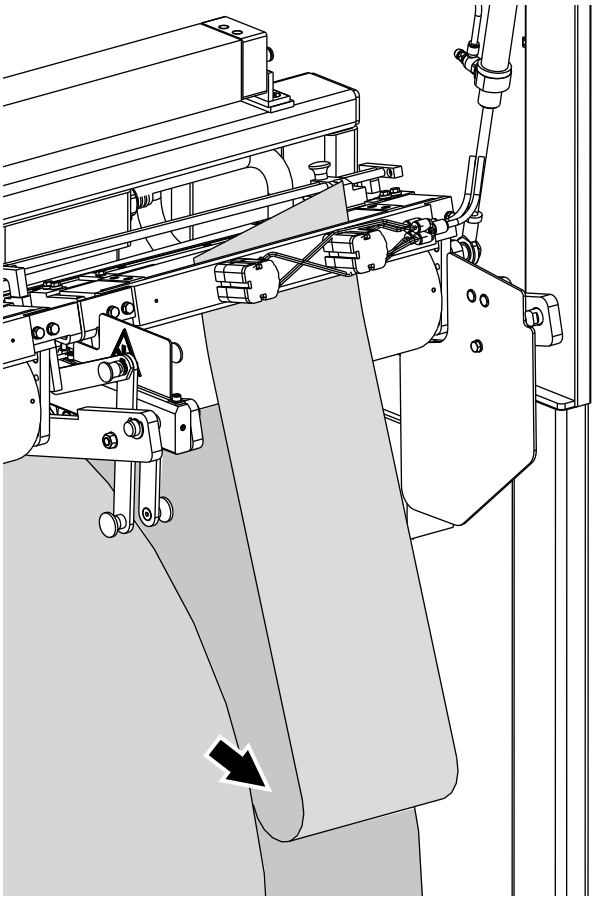

8

Make sure to leave a certain amount of packaging material as a free loop.

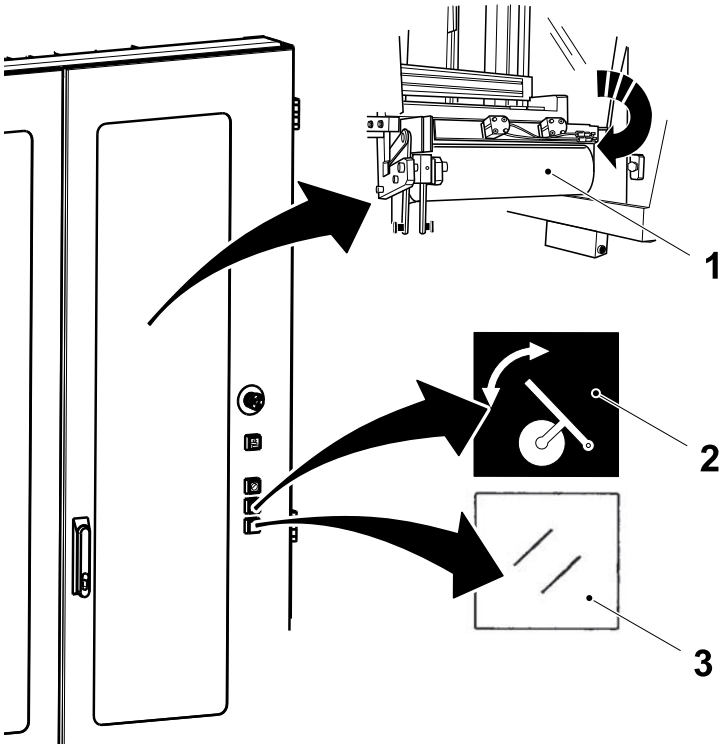

1 Material holder
2 PACKAGING MATERIAL HOLDER
3 HARDWARE RESET

9

Close the ASU doors.

Press the HARDWARE RESET button (3).

The material holder (1) above the reel lowers. If not, press the PACKAGING MATERIAL HOLDER button (2).

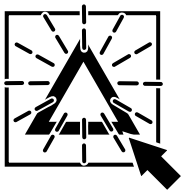

10

If flashing, press the `Acknowledge` button on the TPOP.

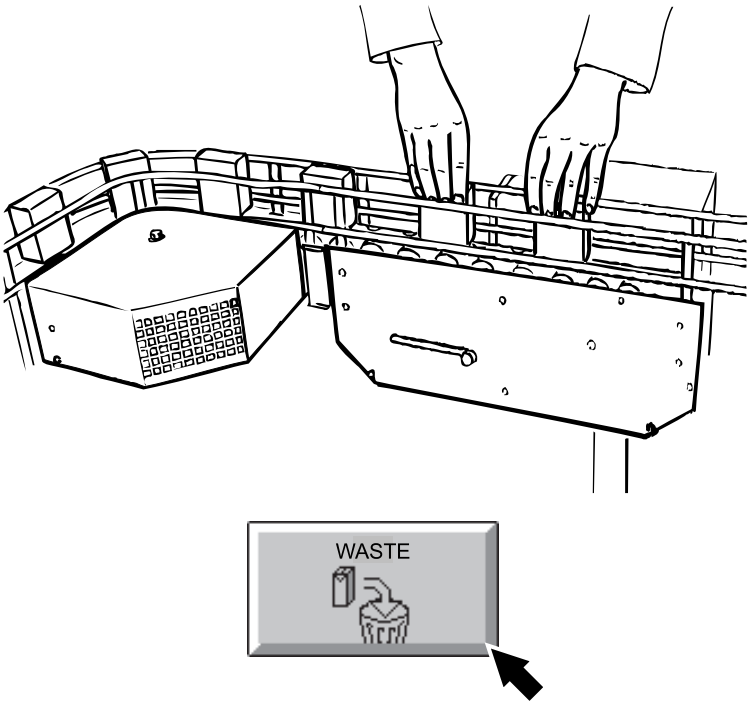

11

After the splice is performed, pick out the first two packages discharged from the final folder and number them, see Section 5.2 Package Checks.

Register the number of packages taken. See Section 2.7.9 Record Package Waste for Quality Checks on page 2-51.

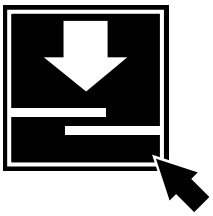

Manual Web Splice

During PRODUCTION:

- Press the MANUAL WEB SPLICE button.
- When the machine has performed the splice, open the ASU door behind the packaging material reel which is not in use.
- Go to item 3.

Not in PRODUCTION:

- To perform a splice that is in line with the packaging material design, press the MANUAL WEB SPLICE button for less than five seconds.
- To perform a splice that is not in line with the packaging material design, press the MANUAL WEB SPLICE button for more than five seconds.

7 Stop

Description

This chapter contains instructions for all methods of stopping the equipment.

CAUTION
Risk of damage to the equipment.
When possible, the machine should normally be stopped in SHORT STOP or NORMAL STOP during PRODUCTION.

CAUTION
Hazardous noise.
Risk of impaired hearing.
Hearing protection is recommended whenever this equipment is in operation.

7.1 Emergency Stop 7-5
7.2 Security Stop 7-9
7.2.1 Product Supply Stop during Security Stop 7-12
7.3 Short Stop (up to Five Minutes) 7-14
7.3.1 At the First SHORT STOP Every Day 7-16
7.3.2 Crank Switch Activated during SHORT STOP 7-18
7.3.3 Missing Tab or Patch 7-21
7.3.4 Packaging Material Slipping 7-25
7.3.5 SHORT STOP Time Exceeded 7-27
7.4 Normal Stop (up to Two Hours) 7-29
7.4.1 After 20 Minutes Stop 7-30
7.4.2 Stop Time Exceeding Two Hours 7-31
7.5 PRODUCTION Finished Stop 7-34

This page intentionally left blank

7.1 Emergency Stop

When there is a risk of serious danger to people or to the machine, push any of the EMERGENCY STOP buttons as quickly as possible.

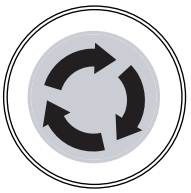

1

Press one of the EMERGENCY STOP buttons.

CAUTION
Risk of damage to equipment.
The cause of the emergency must be remedied before attempting to restart the machine.

Eliminate the cause of the stop, then twist the EMERGENCY STOP button to reset it.

Note! Pressing any EMERGENCY STOP button will reset the machine program to Venting or to Zero and will deactivate all air cylinders.

See also chapter ii Safety Precautions.

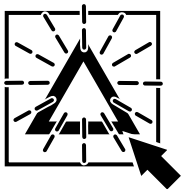

2

Press the `Acknowledge` button.



3

Press the `Selector` button on the TPOP display to the LH position.

Press the PROGRAM UP button.

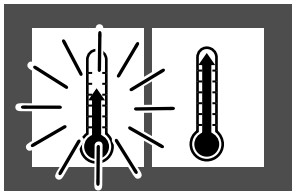

4

The PREHEATING I symbol stops flashing but remains lit.

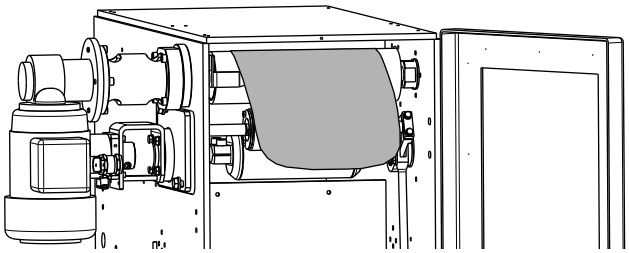

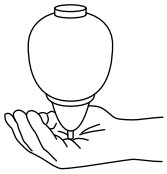

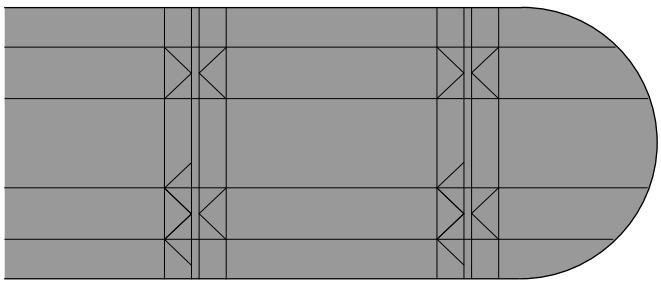

5

⚠ WARNING
Hydrogen peroxide.
Risk of personal injury.
Follow the ii Safety Precautions.

Open the aseptic chamber door.

CAUTION
Risk of unsterility.
Before touching the packaging material, disinfect your hands or gloves.

Cut the packaging material as shown, avoiding crease lines on the tip.

Remove the rest of the material, from the aseptic chamber down to the jaw system.

Open the Final Folder and empty it.

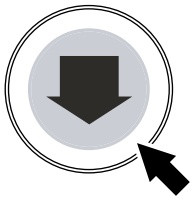
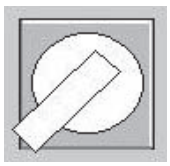

6

Press the PROGRAM DOWN button.

Press the `Selector` button on the TPOP display to the RH position.

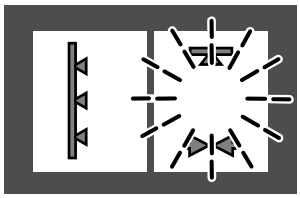

7

The PREPARATION FOR CIP symbol starts to flash.

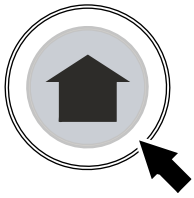
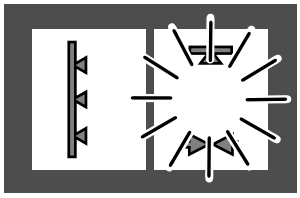

8

Press the PROGRAM UP button.

The PREPARATION FOR CIP symbol becomes fixed.

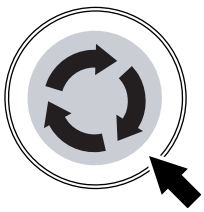

9

Press the INCHING button to remove all the packaging material from the lower part of the aseptic chamber and jaw system.

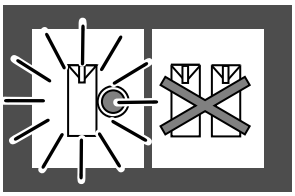

10

CAUTION
Production fault hazard.
Before restarting, the machine must be cleaned and sterilised. Maximum waiting time is two hours between end of production and start of CIP cleaning.

Select the cleaning program, see section 8.1 Daily Care.

7.2 Security Stop

CAUTION
Risk of serious production fault.
If during Stops the aseptic chamber doors are opened, or the tube bursts, tears, or it is manually cut, or product splashes occur, the machine must be cleaned and sterilized before production can restart.

1

During PRODUCTION, the machine stops immediately if:

- the final folder doors are opened
- the infeed unit cover is opened
- the PMI cover is open
- the ASU (option) side doors are opened
- the aseptic chamber doors are opened
- the crank switch is activated
- the PullTab unit stations cover is open.

See also chapter ii Safety Precautions.

When the aseptic chamber doors are opened, or the crank switch is activated, the machine resets to VENTING, see 7.3.2 Crank Switch Activated during SHORT STOP on page 7-18.

If the equipment cannot be restarted within 20 minutes, see 7.4.1 After 20 Minutes Stop on page 7-30.

CAUTION
Production fault hazard.
If the machine cannot be brought back into PRODUCTION within two hours, see 7.4.2 Stop Time Exceeding Two Hours on page 7-31.

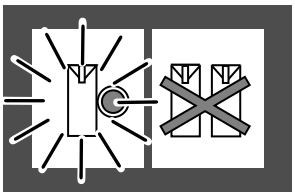

2
The machine steps to SHORT STOP (Security stop).

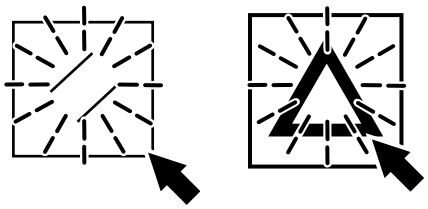

3
Close all covers and doors on the machine.

If needed, reset the ASU and Final Folder door alarms by pressing the flashing HARDWARE RESET buttons.

If needed, reset the Final Folder door alarm by pressing the flashing HARDWARE RESET buttons.

Press the flashing `Acknowledge` button on the TPOP to acknowledge the alarm.

If an alarm is lit, take the appropriate measures or call a technician.

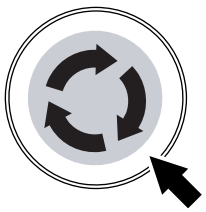

4
Press the INCHING button to feed all packages out of the final folder.

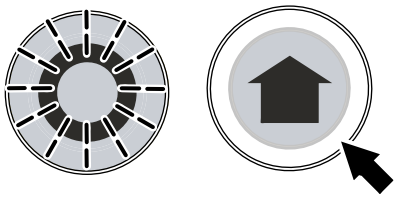

5

After four minutes the SHORT STOP button starts to flash.

Press the PROGRAM UP button to restart the machine. Keep the button pressed until the drive motor starts.

CAUTION

Production fault hazard.

If the Short stop time is exceeded, see item 7.3.5 SHORT STOP Time Exceeded on page 7-27.

7.2.1 Product Supply Stop during Security Stop

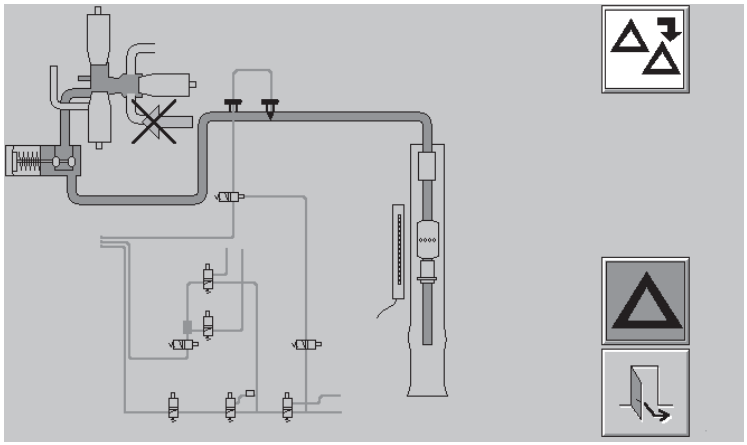

1
The alarm on the TPOP lights.

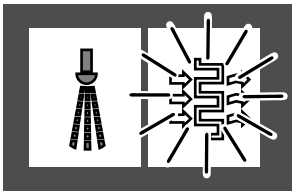

2
The machine steps to DRYING.

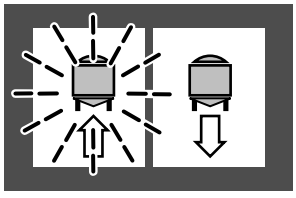

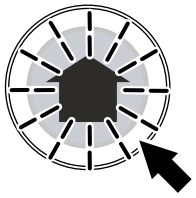

3
When the SIGNAL TO STERILISER symbol and the PROGRAM UP button starts to flash, press the PROGRAM UP button.

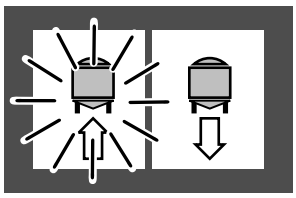

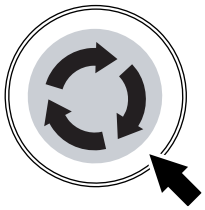

4

The SIGNAL TO STERILISER symbol stops flashing but remains lit.

Within 15 minutes, press the INCHING button for at least 30 seconds to inch the tube.

5

Contact your production manager for confirmation of a restart.

Restart, see chapter 4 Start.

If the equipment cannot be restarted within 20 minutes, see item 7.4.1 After 20 Minutes Stop on page 7-30.

CAUTION

Production fault hazard.

If the machine cannot be brought back into PRODUCTION within 2 hours, see 7.4.2 Stop Time Exceeding Two Hours on page 7-31.

7.3 Short Stop (up to Five Minutes)

CAUTION
Risk of serious production fault.
If during Stops or production the aseptic chamber doors are opened, or the tube bursts, tears, or it is manually cut, or product splashes occur, the machine must be cleaned and sterilized before production can restart.

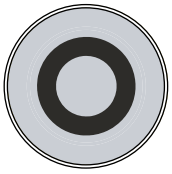

1

See chapter 1 General Description for short stop button locations.

Note! SHORT STOP also interrupts INCHING and TUBE SEALING.

Valid with ASU (option) only

During PRODUCTION the machine stops in short stop if:

- the rear ASU door where the packaging material reel is in use is opened
- a splice is required while one of the side doors of the infeed unit or the rear ASU door are opened.

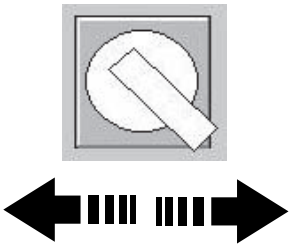

2

Press the SELECTOR button to select which one of the LH or the RH jaw pair to stop in open position.

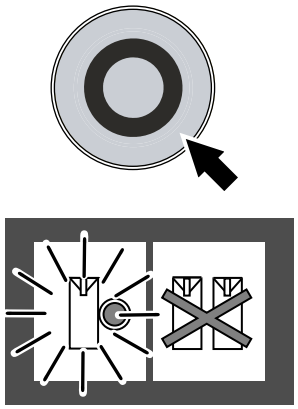

3

Press the SHORT STOP button and keep it pressed until the SHORT STOP symbol stops flashing but remains lit.

The machine stops with a filled packaging material tube, synchronised printed design and the selected jaw pair in the open position.

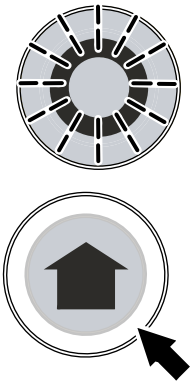

4

After four minutes the SHORT STOP button starts to flash.

Press and hold the PROGRAM UP button until the drive motor starts.

CAUTION
Production fault hazard.
If the SHORT STOP time is exceeded, see item 1 on page 7-27.

7.3.1 At the First SHORT STOP Every Day

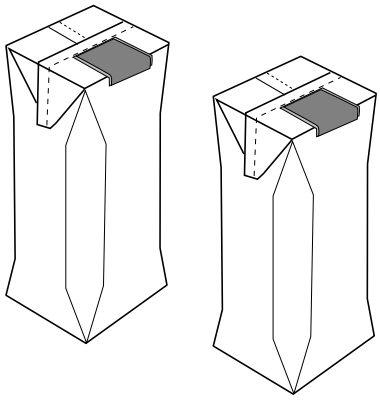



1

After restarting, take the packages that were opposite the LS nozzle during the SHORT STOP.

Cut them open and check the LS strip, see section 5.2 Package Checks.

Register the number of packages taken. See 2.7.9 Record Package Waste for Quality Checks on page 2-51.

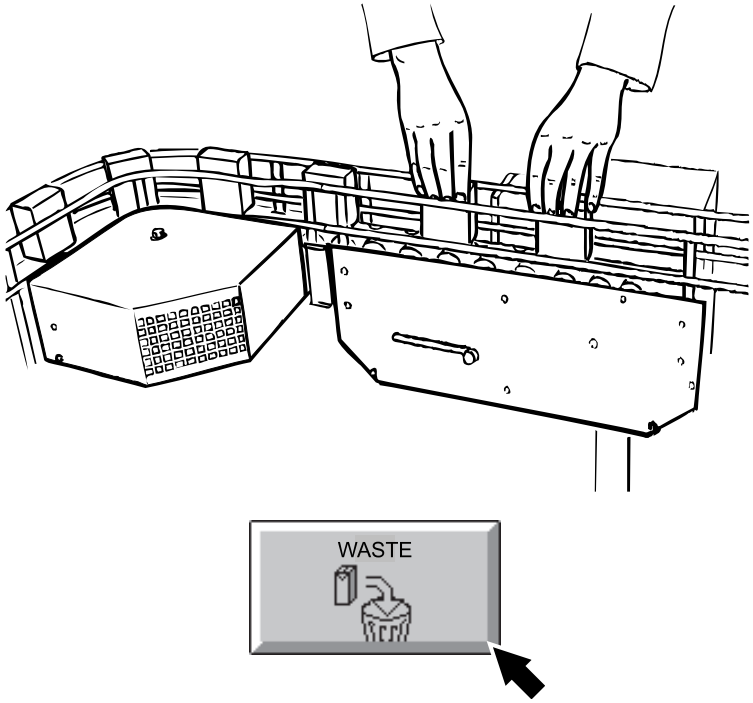

2

When the machine stops discarding packages, pick out the first two packages discharged from the final folder.

Check the packages, see section 5.2 Package Checks.

Register the number of packages taken. See 2.7.9 Record Package Waste for Quality Checks on page 2-51.

7.3.2 Crank Switch Activated during SHORT STOP

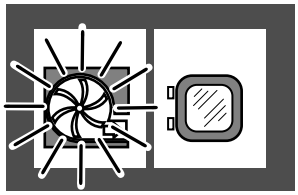

1
The machine steps to VENTING.

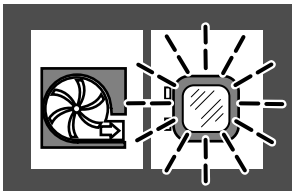

2
After 5 minutes the VENTING FINISHED symbol starts to flash.

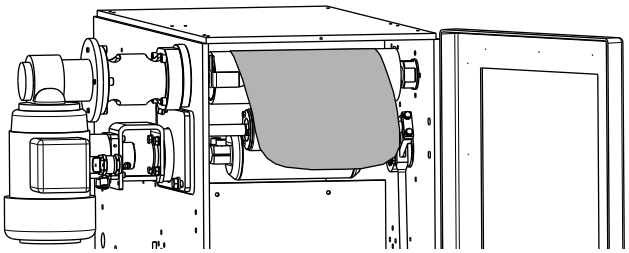

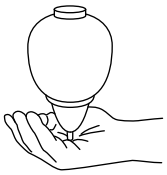

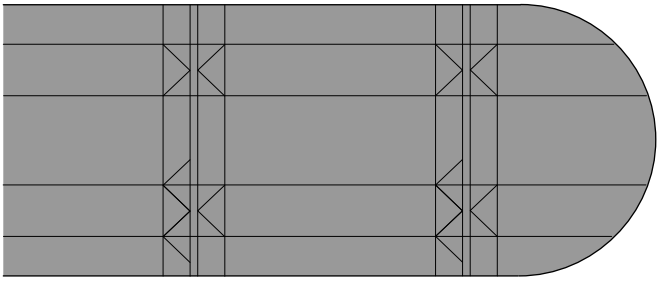

3

WARNING
Hydrogen peroxide.
Risk of personal injury.
Follow the ii Safety Precautions.

Open the aseptic chamber door.

CAUTION
Production fault hazard.
Before touching the packaging material, disinfect your hands or gloves.

Cut the packaging material as shown, avoiding crease lines on the tip.

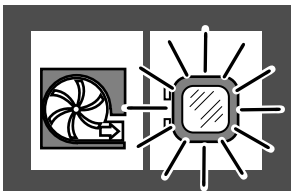

4

Close the aseptic chamber door.

The VENTING FINISHED symbol stops flashing but remains lit.

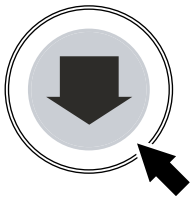



5

Press the PROGRAM DOWN button.

Press the `Selector` button on the TPOP display to the RH position.

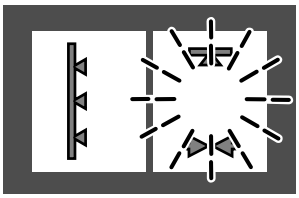

6

The PREPARATION FOR CIP symbol starts to flash.



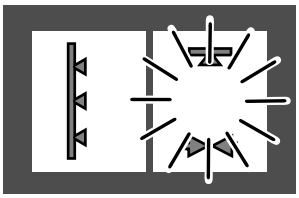

7

Press the PROGRAM UP button.

The PREPARATION FOR CIP symbol becomes fixed.

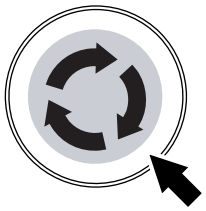

8

Press the INCHING button to remove all the packaging material from the lower part of the aseptic chamber and jaw system.

9

CAUTION
Production fault hazard.
Before restarting, the machine must be cleaned and sterilised. Maximum waiting time is two hours between end of production and start of CIP cleaning.

Select the cleaning program, see section 8.1 Daily Care.

7.3.3 Missing Tab or Patch

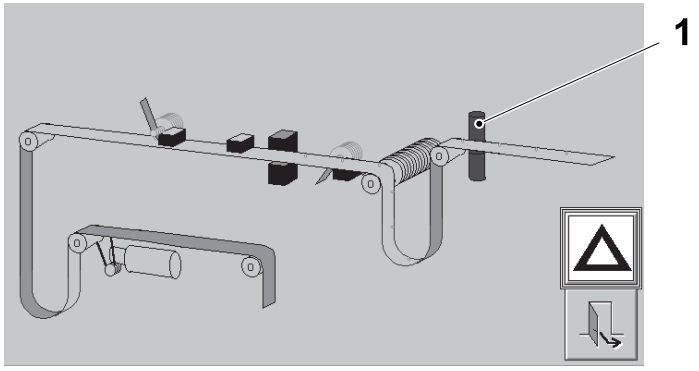

1

If the tab is missing, the `Missing tab` alarm (1) on the TPOP lights.

If the patch is missing, the `Missing patch` alarm (2) on the TPOP lights.

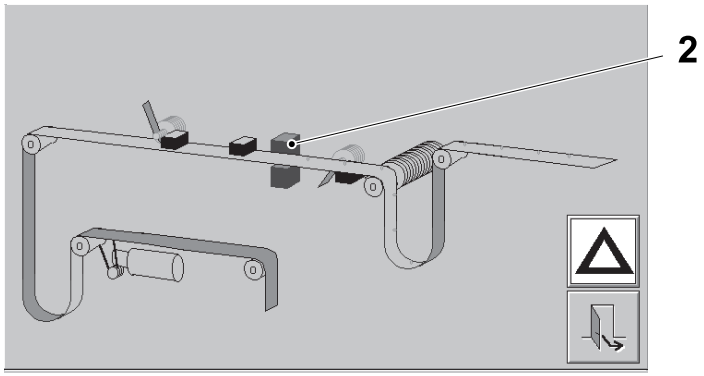

1 `Missing tab` alarm
2 `Missing patch` alarm

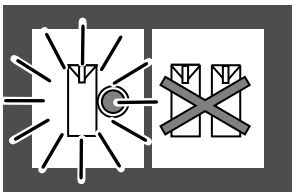

2

The machine stops in SHORT STOP.

Open the PullTab cover.

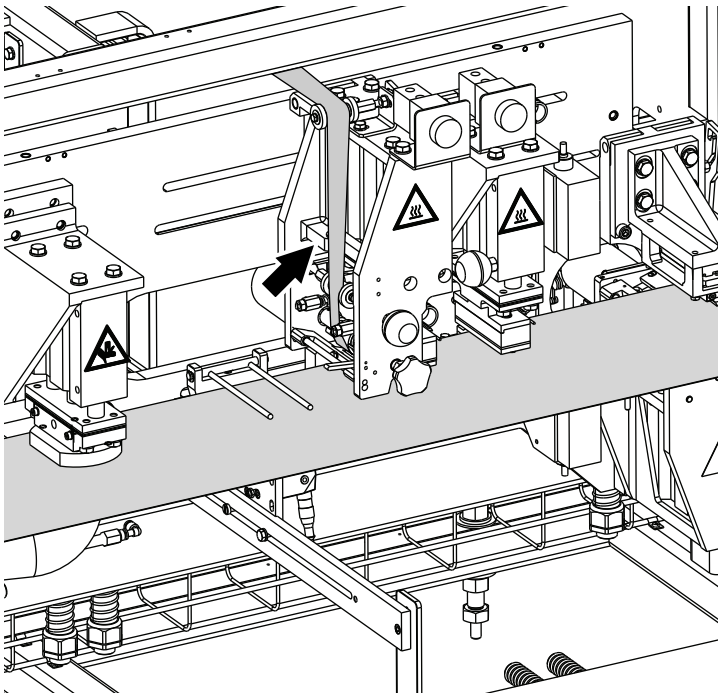

3

WARNING

Hot surface.
Risk of burns.
The sealing unit may be hot. If necessary, wear heat resistant protective gloves.

If the patch is missing, remove all the jammed patch strip from the patch sealing unit.

Carefully remove any plastic build-up from the sealing plate and the knives.

CAUTION

Risk of unsterility.
Before touching the packaging material, disinfect your hands or gloves.

Thread the patch strip again, see section 6.1.3 Threading the Patch Strip.

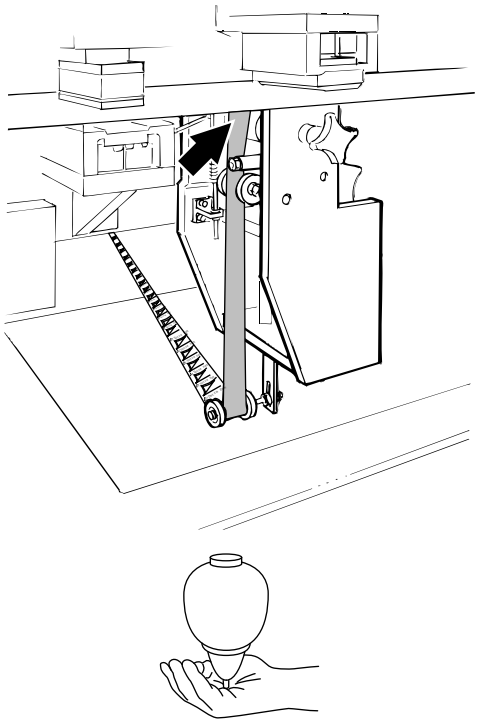

4

WARNING
Hot surface.
Risk of burns.
The sealing unit may be hot. If necessary, wear heat resistant protective gloves.

If the tab is missing, remove all the jammed tab strip from the tab sealing unit.

Carefully remove any plastic build-up from the heating rail and knives.

CAUTION
Risk of unsterility.
Before touching the packaging material, disinfect your hands or gloves.

Thread the tab strip again, see section 6.1.4 Threading the Tab Strip.

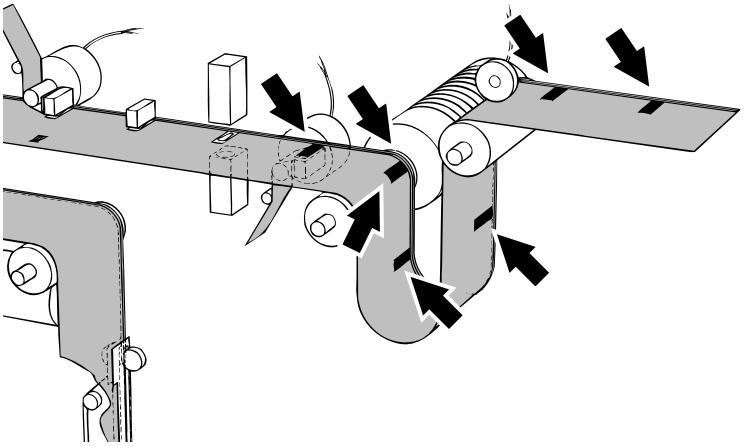

5

Close all the missed holes with the black tape.

Note! See chapter 9 Technical Data for the correct type of black tape.

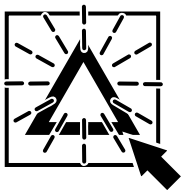

6

Close all covers and doors on the machine and press the flashing ACKNOWLEDGE button to acknowledge the alarm.

If an alarm is lit, take the appropriate measures or call a technician.

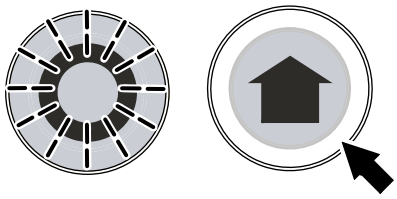

7

After four minutes the SHORT STOP button starts to flash.

Press and hold the PROGRAM UP button until the drive motor starts.

CAUTION
Production fault hazard.
If the SHORT STOP time is exceeded, see item 1 on page 7-27.

7.3.4 Packaging Material Slipping

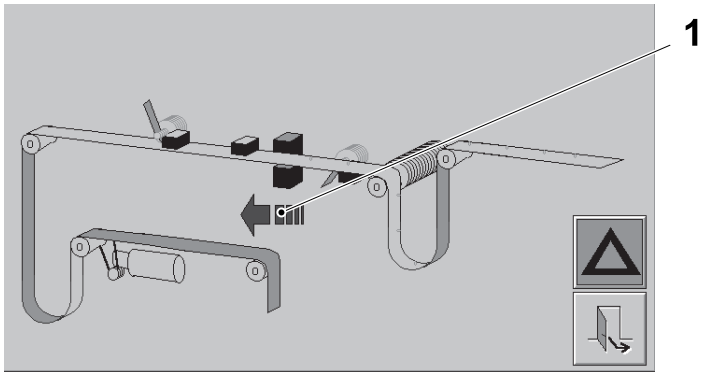

1 Alarm

1
The PullTab mechanism continuously stops and starts the packaging material.

If the packaging material slips, the alarm (1) on the TPOP lights.

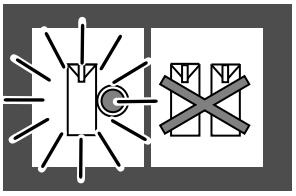

2
The machine performs a SHORT STOP.

Open the PullTab cover.

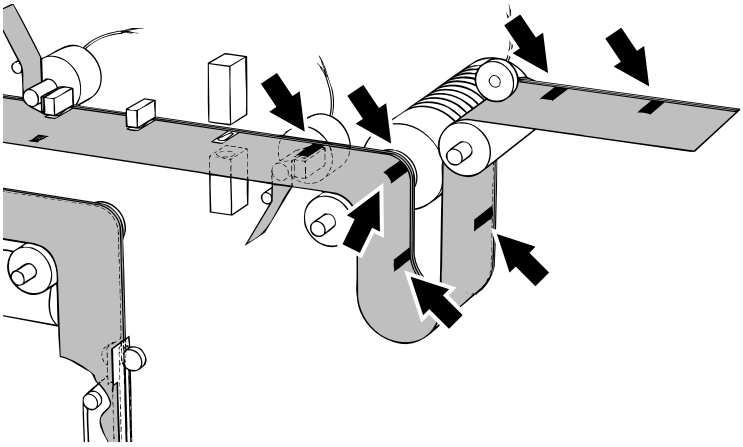

3
Close all the missing holes with the black tape.

Note! See chapter 9 Technical Data for the correct type of black tape.

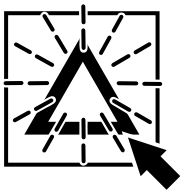

4

Close all covers and doors on the machine and press the flashing ACKNOWLEDGE button to acknowledge the alarm.

If an alarm is lit, take the appropriate measures or call a technician.

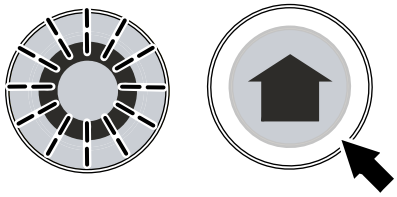

5

After four minutes the SHORT STOP button starts to flash.

Restart the machine by pressing the PROGRAM UP button. Keep the button pressed until the drive motor starts.

CAUTION
Production fault hazard.
If the SHORT STOP time is exceeded, see item 1 on page 7-27.

7.3.5 SHORT STOP Time Exceeded

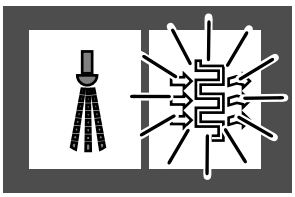

1
The machine steps to DRYING.

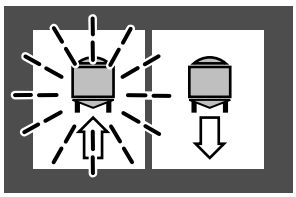

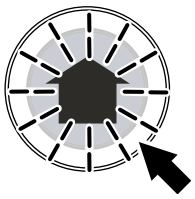

2
When the SIGNAL TO STERILISER symbol and the PROGRAM UP button start to flash, press the PROGRAM UP button.

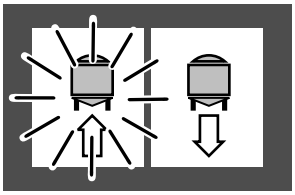

3
The SIGNAL TO STERILISER symbol stops flashing but remains lit.

4

Restart, see chapter 4 Start.

If the equipment cannot be restarted within 20 minutes, see 7.4.1 After 20 Minutes Stop on page 7-30.

CAUTION

Production fault hazard.

If the machine cannot be brought back into Production within two hours, see 7.4.2 Stop Time Exceeding Two Hours on page 7-31.

7.4 Normal Stop (up to Two Hours)

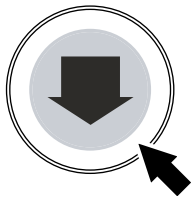

Press the PROGRAM DOWN button once to stop the filling process.

Press the PROGRAM DOWN button once again to stop the machine.

7.4.1 After 20 Minutes Stop

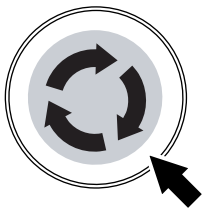

1

CAUTION
Production fault hazard.
To avoid packaging material web breaking the tube must be renewed every 20 minutes. Maximum duration between inching is 20 minutes.

Inch for at least 30 seconds to renew the packaging material web from the strip applicator to the jaws and, if needed, to empty the tube.

If the packaging material tears, the machine must be cleaned and sterilised.

CAUTION
Production fault hazard.
If the machine cannot be brought back into PRODUCTION within 2 hours, see item 1 on page 7-31.

2

Restart, see chapter 4 Start.

7.4.2 Stop Time Exceeding Two Hours

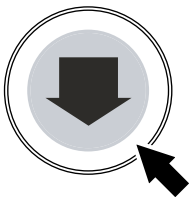

1

CAUTION
Production fault hazard.
Long stop times may increase fouling on hot surfaces and may jeopardise product safety.

Press the PROGRAM DOWN button twice.

Note! The second time, the button must be pressed for at least four seconds.

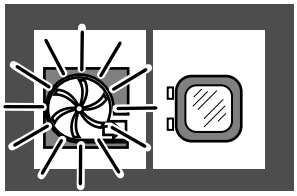

2

The machine steps to VENTING.

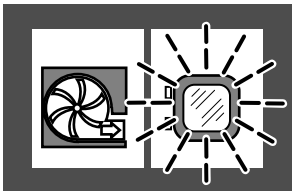

3

After five minutes, the VENTING FINISHED symbol starts to flash.

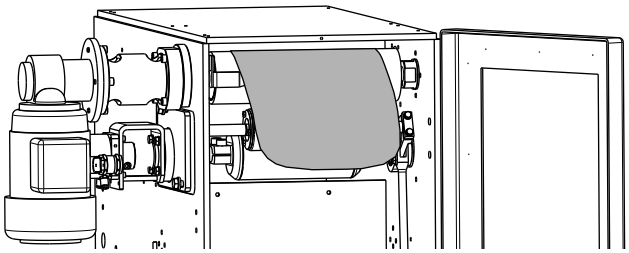

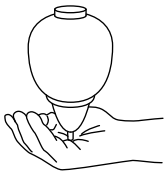

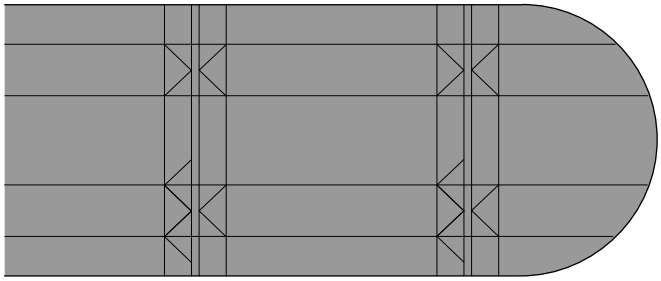

4

WARNING
Hydrogen peroxide.
Risk of personal injury.
Follow the ii Safety Precautions.

Open the aseptic chamber door.

CAUTION
Risk of unsterility.
Before touching the packaging material, disinfect your hands or gloves.

Cut the packaging material as shown, avoiding crease lines on the tip.

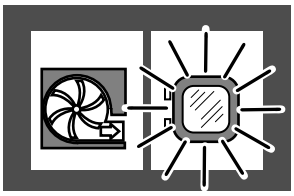

5

Close the aseptic chamber door.

The VENTING FINISHED symbol stops flashing but remains lit.

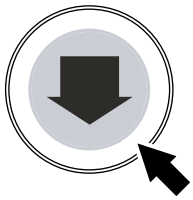



6

Press the PROGRAM DOWN button.

Press the `Selector` button on the TPOP display to the RH position.

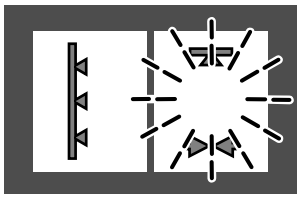

7

The PREPARATION FOR CIP symbol starts to flash.

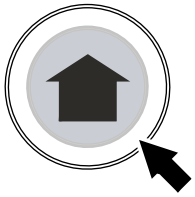

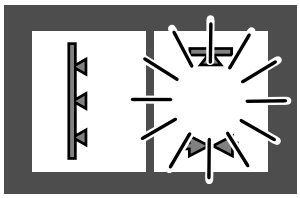

8

Press the PROGRAM UP button.

The PREPARATION FOR CIP symbol becomes fixed.

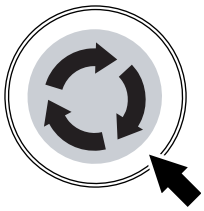

9

Press the INCHING button to remove all the packaging material from the lower part of the aseptic chamber and jaw system.

10

CAUTION
Production fault hazard.
Before restarting, the machine must be cleaned and sterilised. Maximum waiting time is two hours between end of PRODUCTION and start of CIP cleaning.

Select the cleaning program, see section 8.1 Daily Care.

7.5 PRODUCTION Finished Stop

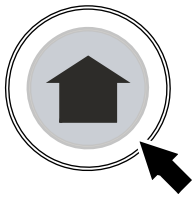

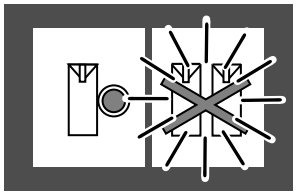

1

When PRODUCTION is finished, press the PROGRAM UP button.

Note! To restart the machine within 2 minutes, press the PROGRAM DOWN button. The SIGNAL TO STERILISER symbol starts to flash and the machine can be restarted.

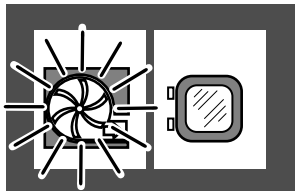

2

After two minutes the VENTING symbol become fixed. Venting of the aseptic chamber starts.

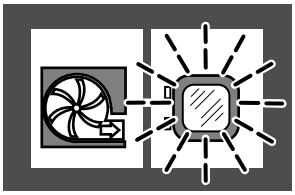

3

After five minutes, the VENTING FINISHED symbol starts to flash.

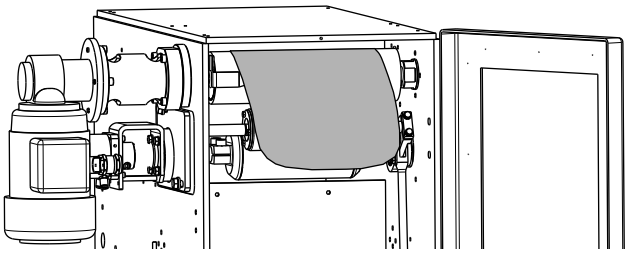

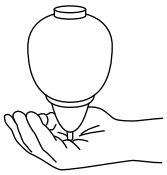

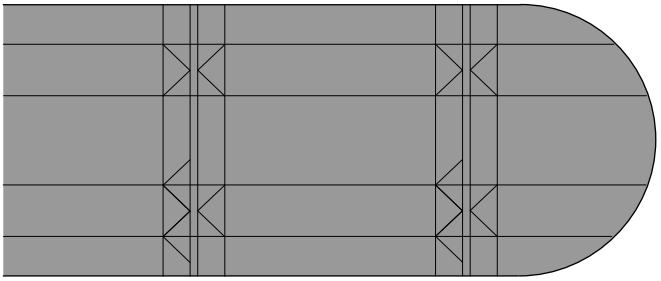

4

WARNING
Hydrogen peroxide.
Risk of personal injury.
Follow the ii Safety Precautions.

Open the aseptic chamber door.

CAUTION
Risk of unsterility.
Before touching the packaging material, disinfect your hands or gloves.

Cut the packaging material as shown, avoiding crease lines on the tip.

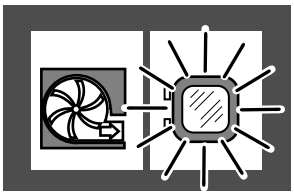

5

Close the aseptic chamber door.

The VENTING FINISHED symbol stops flashing but remains lit.

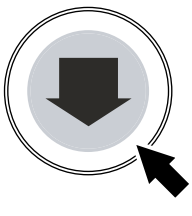

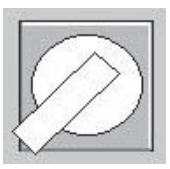

6

Press the PROGRAM DOWN button.

Press the `Selector` button on the TPOP display to the RH position.

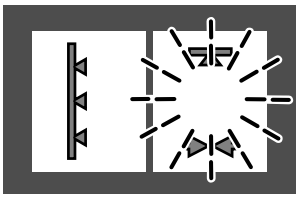

7

The PREPARATION FOR CIP symbol starts to flash.



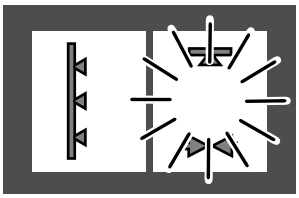

8

Press the PROGRAM UP button.

The PREPARATION FOR CIP symbol becomes fixed.

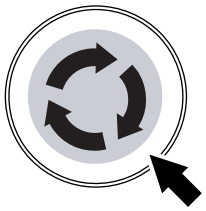

9

Press the INCHING button to remove all the packaging material from the lower part of the aseptic chamber and jaw system.

10

CAUTION
Production fault hazard.
Before restarting, the machine must be cleaned and sterilised. Maximum waiting time is two hours between end of production and start of CIP cleaning. Select the cleaning program, see section 8.1 Daily Care.

8 Care and Cleaning

Description

This chapter contains instructions for all tasks to be performed on the machine or equipment at regular, described intervals after PRODUCTION. Maintenance items such as cleaning the work area, emptying filters, and checking lubricant levels are included in this chapter.

Perform Daily Care after every PRODUCTION run. See 8.1 Daily Care on page 8-5.

Perform Weekly Care once a week, or after every 120 hours of operation. See 8.2 Weekly Careon page 8-46.

WARNING

Sudden and violent chemical reaction hazard.

Do not use chlorine-based or iodine-based cleaning compounds when cleaning parts which may come in contact with hydrogen peroxide.

CAUTION

Risk of production damage.

When using a water gun always point the water gun downwards.

CAUTION

Risk of unsterility.

Use of a compressed air gun in the aseptic chamber leads to small oil droplets ending on the surface of the aseptic chamber. This can cause sterility problems.

Therefore it is recommended to be restrictive in using a compressed air gun inside the aseptic chamber and always use compressed air of the specifications stated in the IM, section Compressed Air Specifications.

Description 8-2

8.1 Daily Care 8-5

8.1.1 CIP Preparation 8-6

Machines without HI 8-6

Machines Equipped with HI (option) 8-10

With HI (option) Bypassed 8-11

Valid for all Machine Configurations 8-12

Valid with HI (option) only 8-19

Valid with HI (Option) Only 8-19

8.1.2 CIP Cleaning 8-21

Intermediate Cleaning 8-21

Final Cleaning 8-22

8.1.3 External Cleaning 8-26

Valid with PMI only 8-28

Valid with HI (Option) only 8-33

Valid with ASU (Option) only 8-43

Valid for machines with JUMO Process Recorder 8-44

8.2 Weekly Care 8-46

8.2.1 Valid for Machines Equipped with PMI (Standard) 8-47

Patch Sealing Unit 8-61

Patch Final Sealer 8-63

Ultrasonic Sensor 8-63

Tab Sealing Unit 8-64

Every week or after a maximum of 120 operating hours 8-77

8.2.2 Valid for Machines Equipped with ASU (Option) 8-78

Patch Sealing Unit 8-95

Patch Final Sealer 8-97

Ultrasonic Sensor 8-97

Tab Sealing Unit 8-98

Every week or after a maximum of 120 operating hours 8-111

8.1 Daily Care

This section describes the cleaning procedure to be performed after every PRODUCTION run, or at least every 24 hours.

CAUTION
Risk of unsterility.
A prolonged waiting time increases the risk of burnt residue on contact surfaces. This may affect the cleaning result and may cause unsterility to the product.
Perform CIP cleaning within the maximum recommended waiting time after finished production. Maximum waiting time is two hours between end of production and start of CIP.

If the maximum waiting time is exceeded, do as follows:

a) Call a service technician to dismantle and inspect the C-valve steam barrier area, and to remove any burnt residue.

b) After the manual cleaning, assemble the C-valve and restart the cleaning following the instructions in the following sections.

8.1.1 CIP Preparation

1

The following items describe how to prepare the machine for CIP (Cleaning In Place).

For machine without HI (standard), see page 8-6.

For machine with HI (option), see page 8-10.

Machines without HI

For machines **with** HI (option), go to page 8-10.

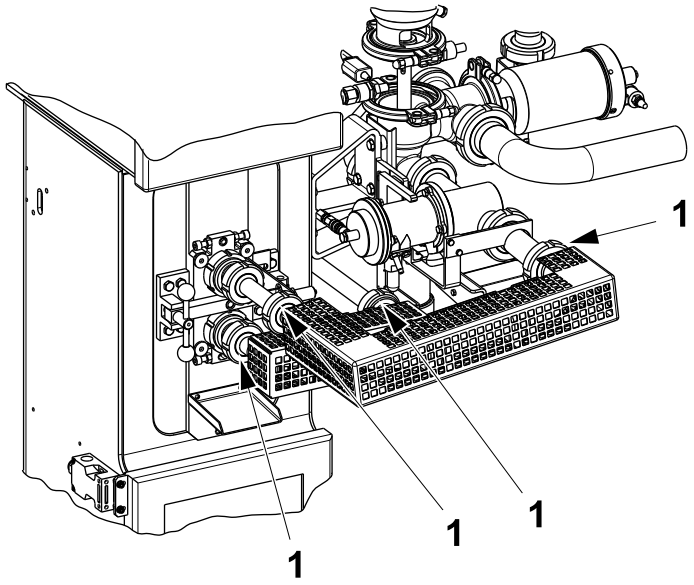

1 Nut

2

Release the nuts (1).

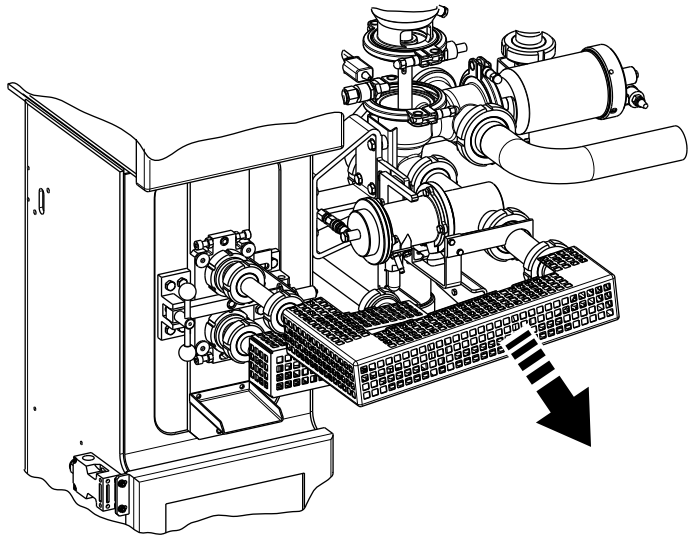

3

Remove the product pipe.

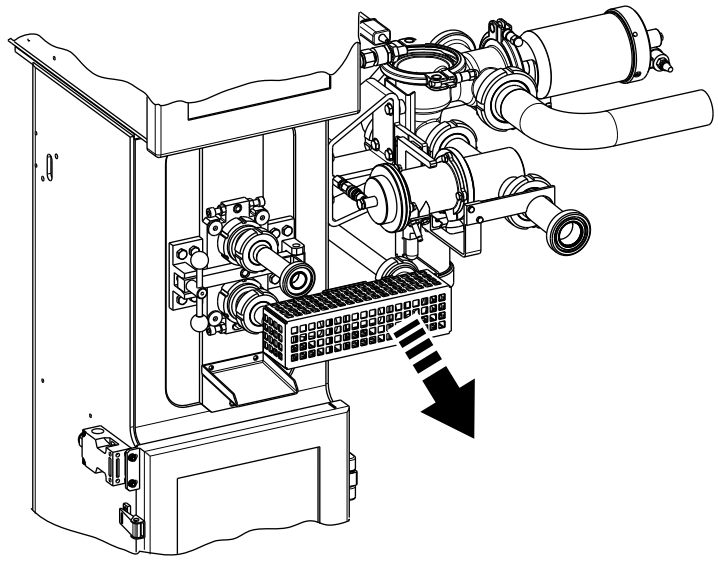

4

Remove the sterile air pipe.

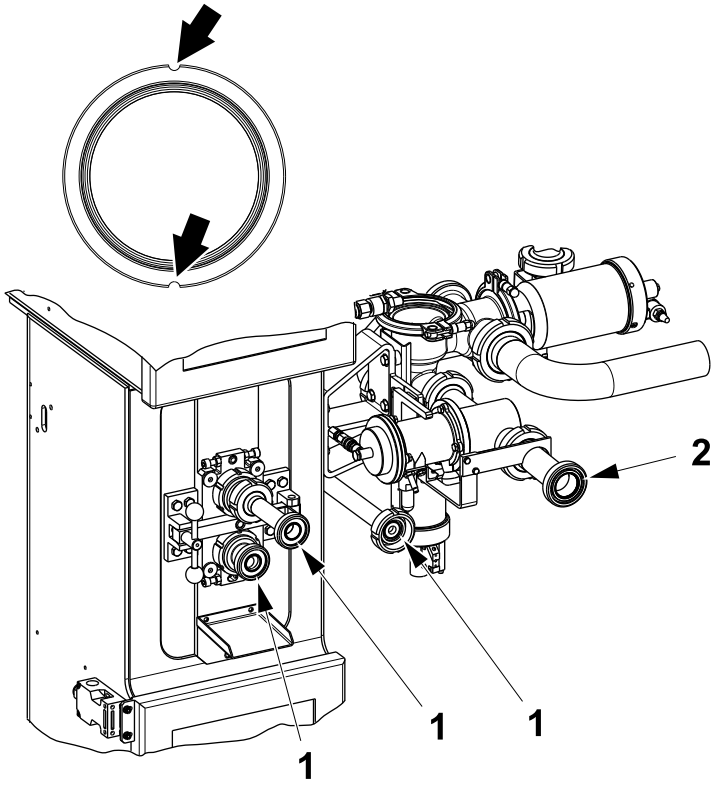

1 Gasket
2 Gasket

5

Note! If required, use the indicated slots to remove the gaskets.

Make sure that the gaskets (1) and (2) are intact and are fitted correctly.

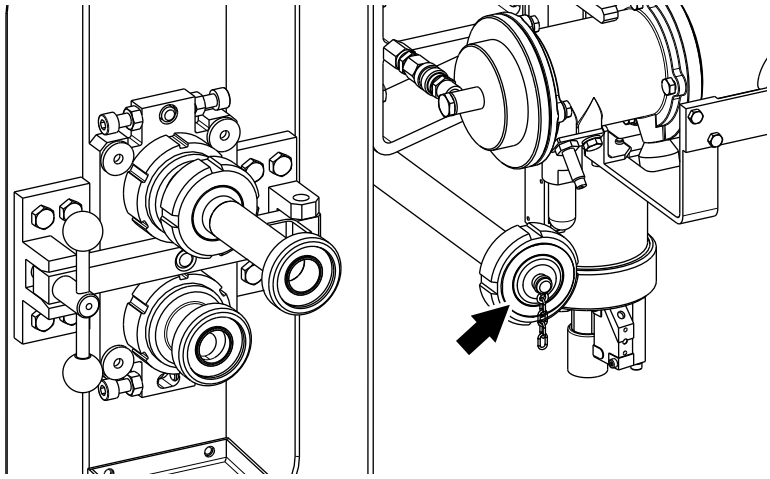

6
Fit the cap (arrow).

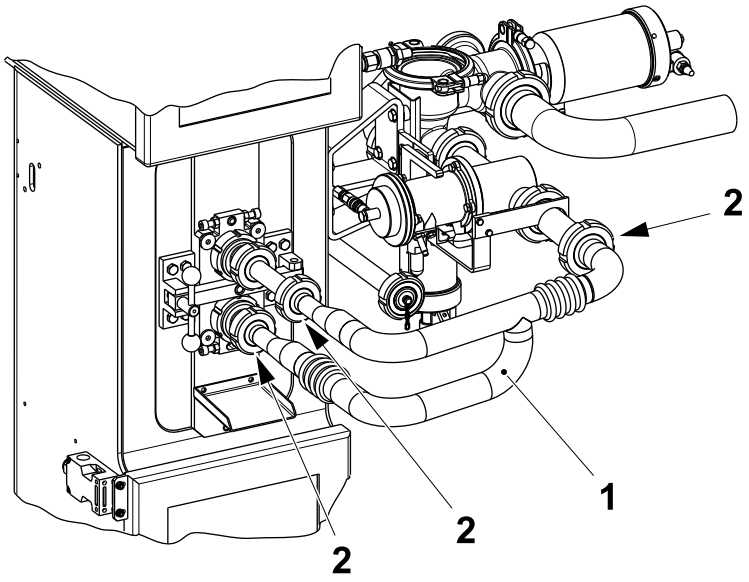

1 Cleaning pipe
2 Nut

7
Connect the cleaning pipe (1) and tighten the nuts (2).

Go to page 8-12.

Machines Equipped with HI (option)

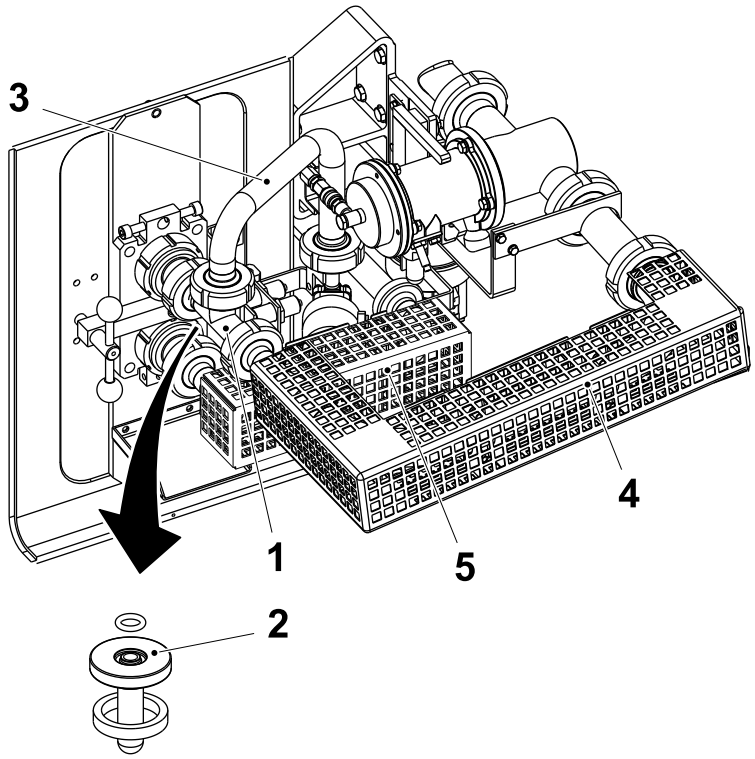

1 T-connection
2 Injection nozzle
3 HI pipe
4 Product pipe
5 Sterile air pipe

8

Remove the product pipe (4) and the sterile air pipe (5).

Remove the HI pipe (3) with the O-ring at the HI stop valve side.

Remove the T-connection pipe (1) with the gasket at both ends.

Remove the injection nozzle (2) with the O-ring at the upper side and a gasket in the nozzle seat.

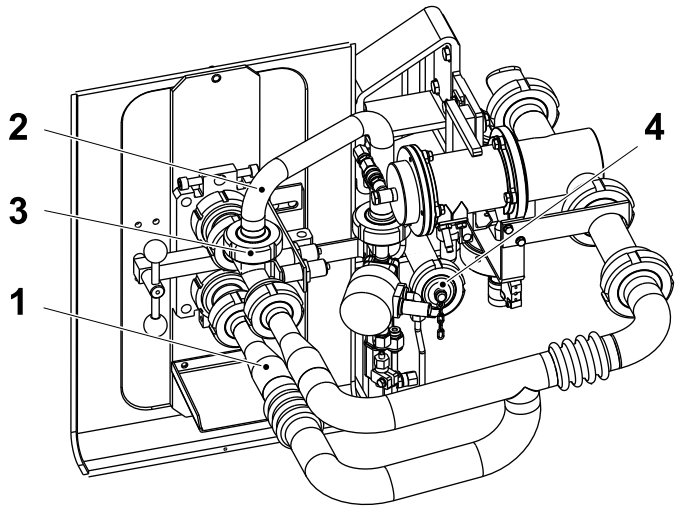

1 Cleaning pipe
2 HI pipe
3 T-connection
4 Cap

9

Make sure that the gaskets are not damaged and are in the correct positions.

Fit the cap (4).

Fit the gasket on the T-connection (3) and fit the T-Connection in place.

Fit the cleaning pipe (1) and the HI pipe (2).

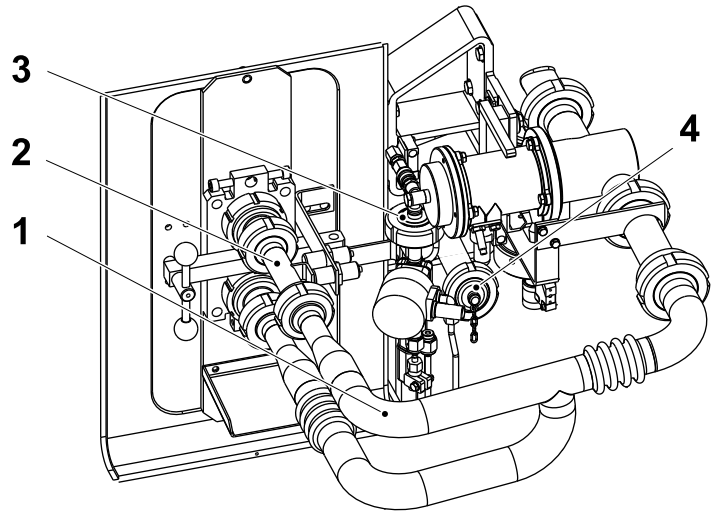

1 Cleaning pipe
2 Extension pipe
3 Lid
4 Cap

10

With HI (option) Bypassed

Fit the cap (4).

Fit the extension pipe (2) with gaskets.

Make sure that the O-ring is in place on the HI stop valve, fit the lid (3).

Fit the cleaning pipe (1).

Valid for all Machine Configurations

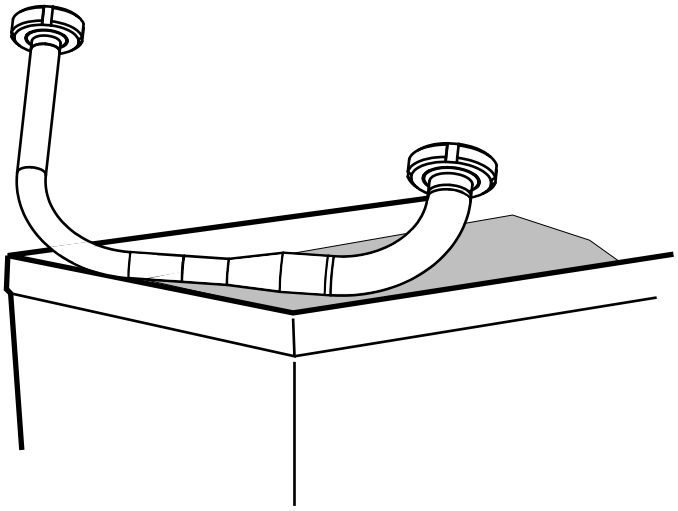

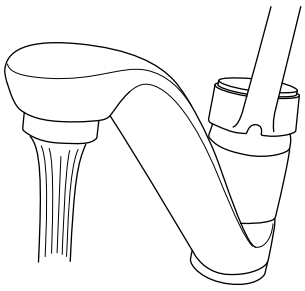

11

WARNING
Hazardous substances.
Risk of personal injury. Cleaning compound. Follow the ii Safety Precautions.

Manually clean the sterile air pipe with a solution of hot water and cleaning compound code D.

Rinse with drinking water and dry with a clean dry cloth.

Store the sterile air pipe in a clean place.

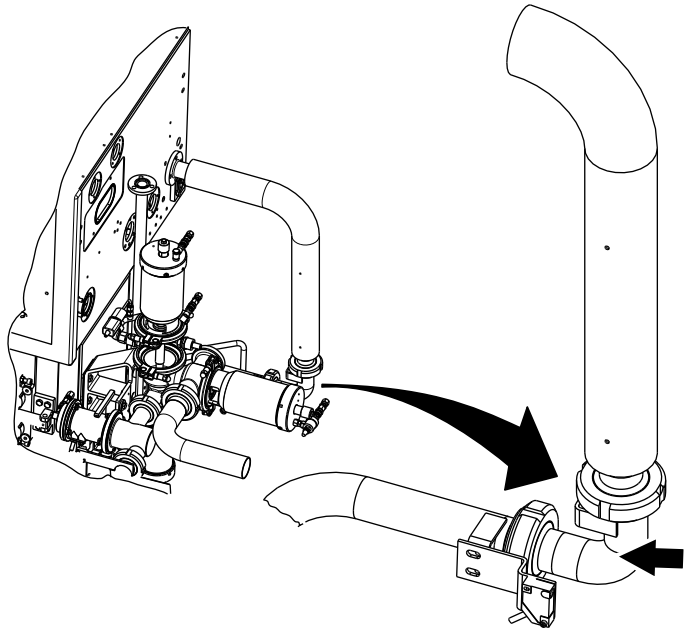

12

Disconnect the elbow pipe from the sterile air pipe.

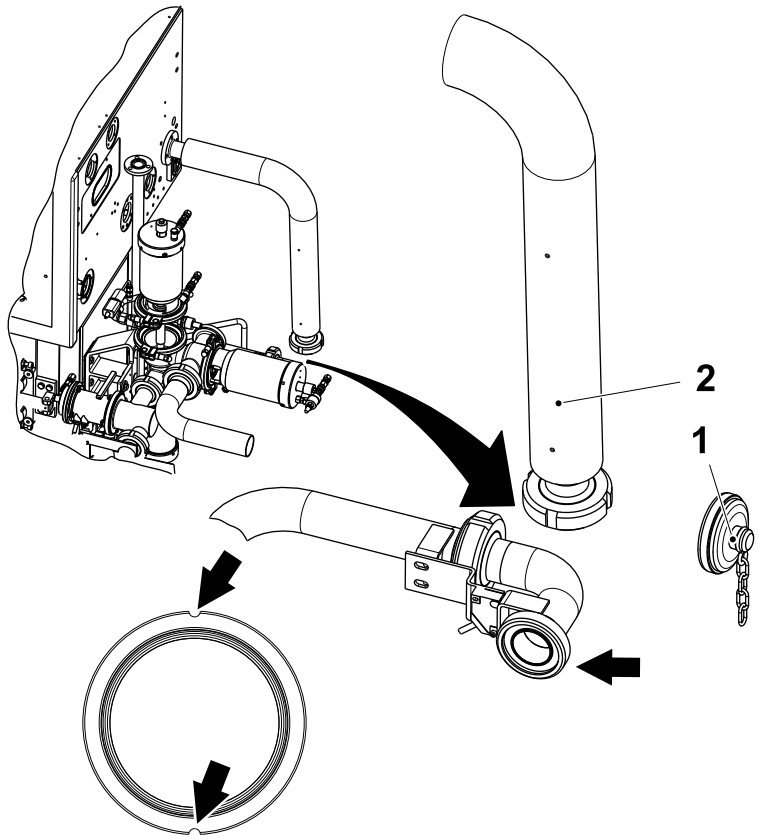

1 Cap
2 Sterile air pipe

13

Note! If required use the indicated slots to remove the gaskets.

Make sure all gaskets are intact.

Connect the elbow pipe to the incoming cleaning pipe.

Fit the cap (1) on the sterile air pipe (2).

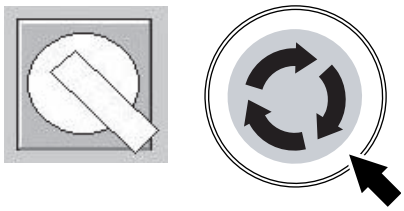

14

Select SLOW INCHING and press the INCHING button until the cut-off length of packaging material is fed out.

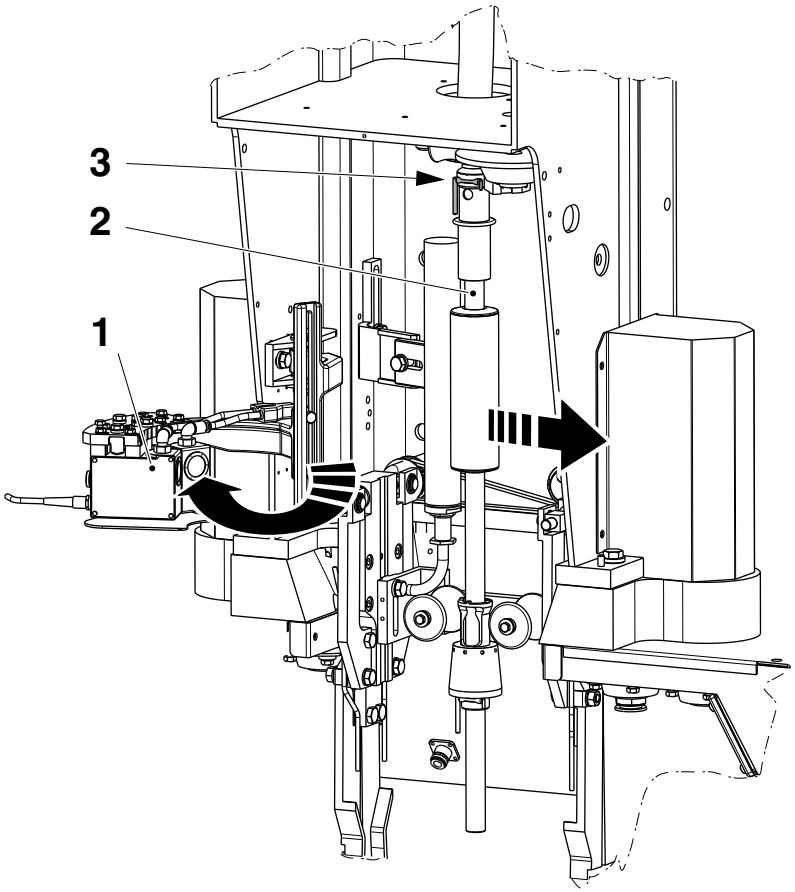

1 Photocell unit
2 Lower filling pipe
3 Locking fork

15

Rinse with water.

Swing out the photocell unit (1).

Remove the lower filling pipe (2) by removing the locking fork (3).

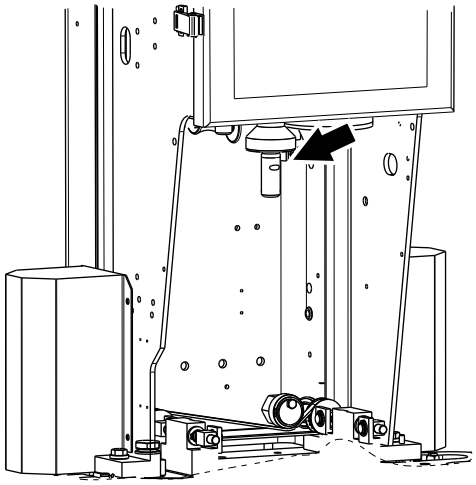

16

WARNING
Hot surfaces.
Risk of burns. The LS nozzle and the aseptic chamber may be hot. If necessary, wear protective gloves.

WARNING
Hazardous substances.
Risk of personal injury. Cleaning compound. Follow the ii Safety Precautions.

CAUTION
Production fault hazard.
Risk of serious production fault. Remove all visible product residue from the upper pipe. Sterilisation is effective on clean surfaces but may not be effective on product residue.

Check that the upper filler tube is free from remnants of product. If required, clean it with a brush.

Use cleaning compound code D, see chapter 9 Technical Data.

Rinse with drinking water.

Spray the flange area with cleaning compound code G3, see 9.4 Cleaning and Disinfecting Agents on page 9-18.

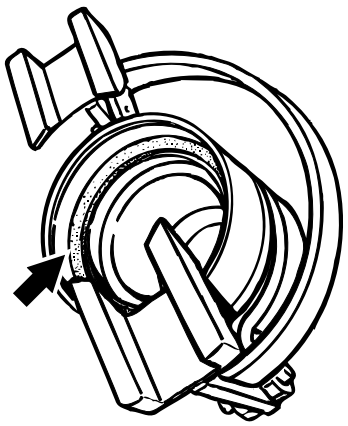

17

WARNING
Hazardous substances.
Risk of personal injury. Lubricant. Follow the ii Safety Precautions.

Check the O-ring of the cleaning attachment is not damaged.

Lubricate the O-ring with silicon grease, TP No. 90296-0091, see 9.5 Lubricant Recommendations on page 9-21.

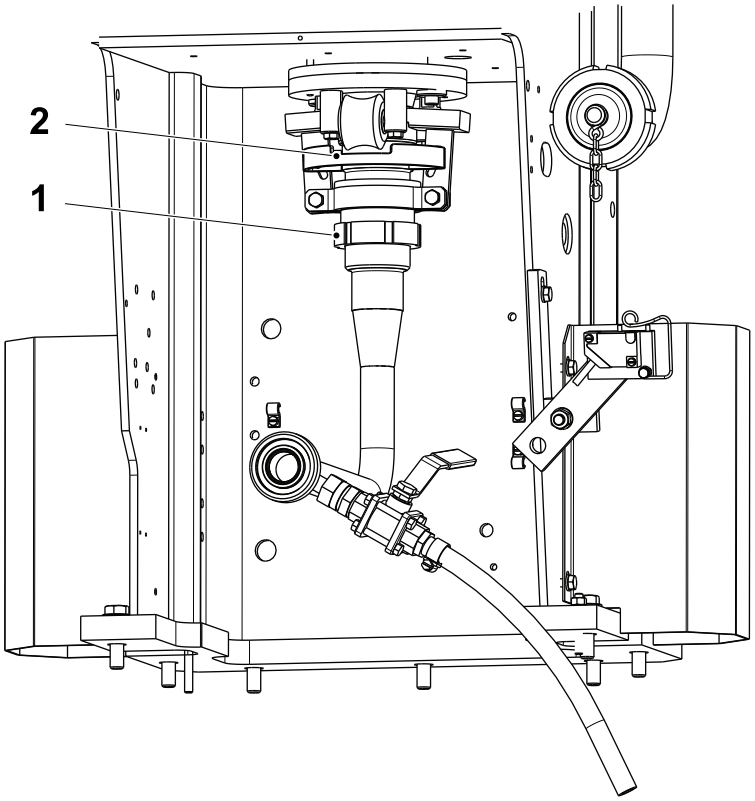

1 Nut
2 Cleaning attachment

18

CAUTION
Product damage.
Do not overtighten the nut.

Connect the cleaning attachment (2) and tighten the nut (1) by hand.

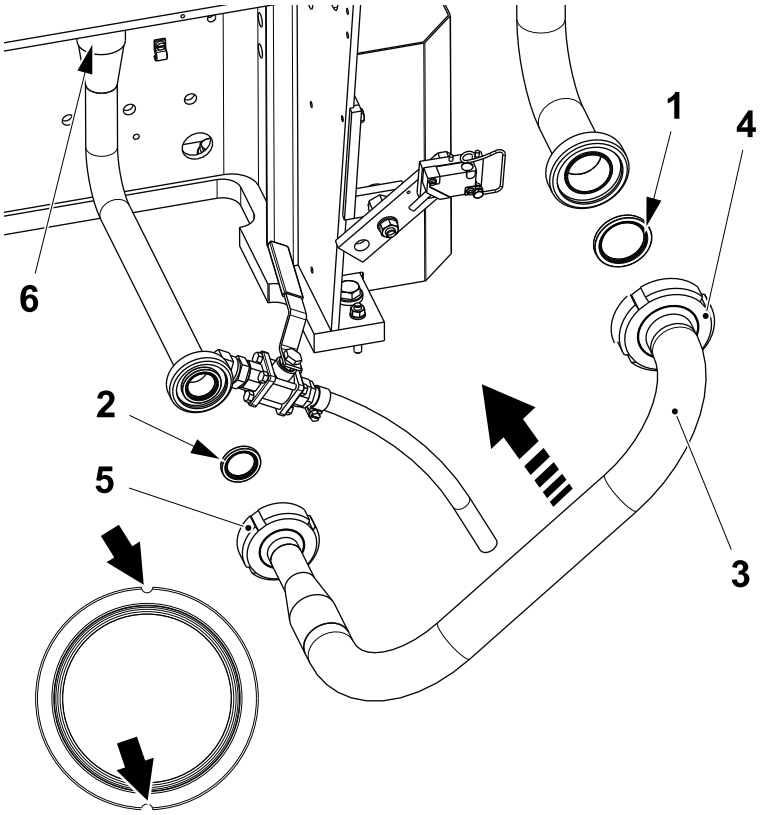

1 Gasket
2 Gasket
3 Product pipe
4 Nut
5 Nut
6 Nut

19

Note! Use the indicated slots to remove the gaskets (1) and (2).

Note! The product pipe gaskets must be changed every time the product pipe is removed.

Make sure that the gaskets (1) and (2) are intact.

Connect the product pipe (3) as shown.

Tighten the nuts (4), (5), and (6) in the mentioned order.

Note! Make sure that the nuts (4), (5), and (6) are properly tightened.

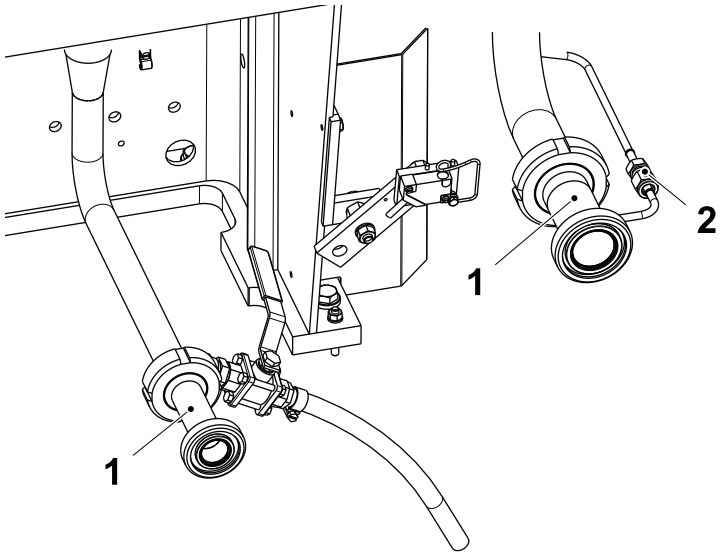

1 Intermediate pipe
2 Connection

20

Valid with HI (option) only

Make sure that the intermediate pipe (1) and the connection (2) are fit.

For machines without HI go to item 22.

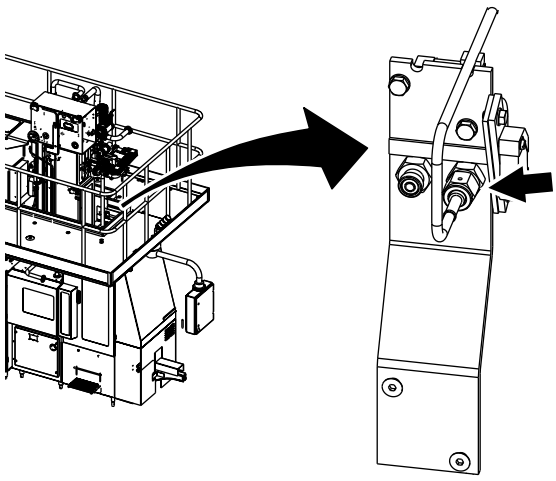

21

Valid with HI (Option) Only

Make sure that the nitrogen pipe is positioned to the right (cleaning mode).

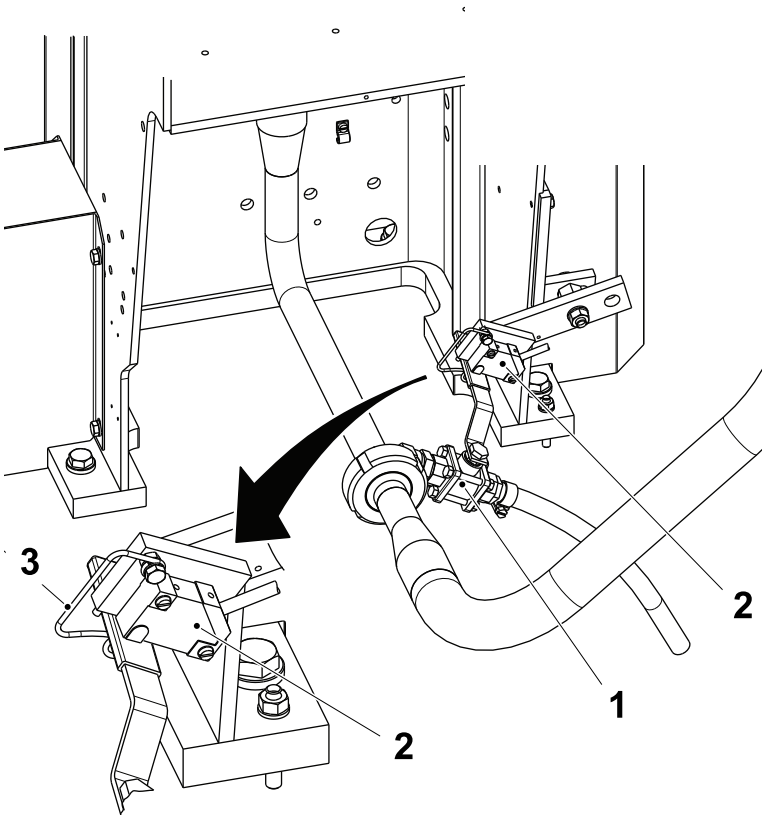

1 Valve
2 Sensor
3 Spring

22

WARNING

Hazardous substances.
Risk of personal injury. Cleaning compound. Follow the ii Safety Precautions.

Before starting CIP make sure that:

- the valve (1) is properly closed
- the sensor (2) is in position and locked by the spring (3).

8.1.2 CIP Cleaning

1

The machine is now ready for CIP.

Select either INTERMEDIATE CLEANING or FINAL CLEANING.

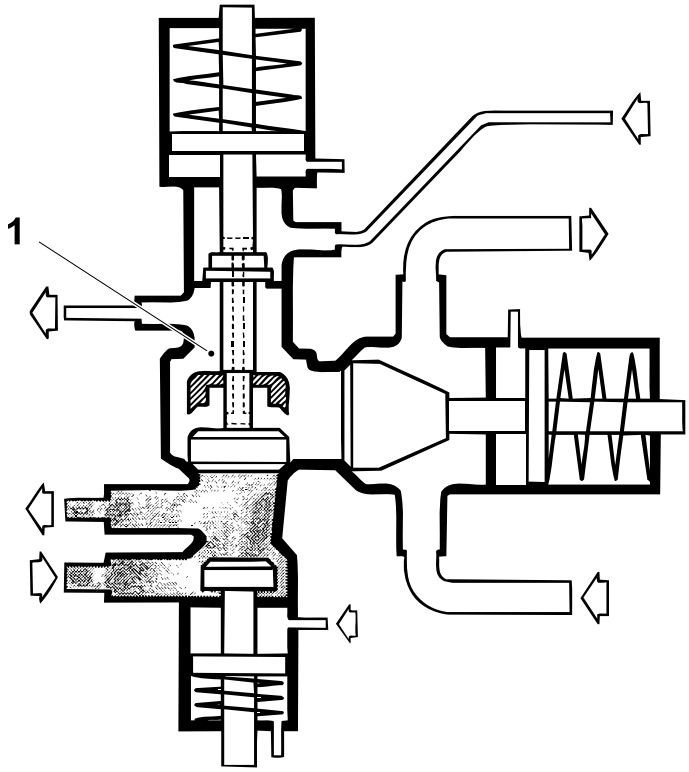

1 Steam barrier

2

Intermediate Cleaning

If product remains in the product line, perform cleaning with the product valve in the position shown.

There will then be a steam barrier (1) between the cleaning liquid and the product. This type of cleaning is called Intermediate Cleaning.

The valve the this position when the program is in CIP, see item 5.

INTERMEDIATE CLEANING must be performed immediately after the stop, except when a FINAL CLEANING can be performed within 1 hour, see item 3.

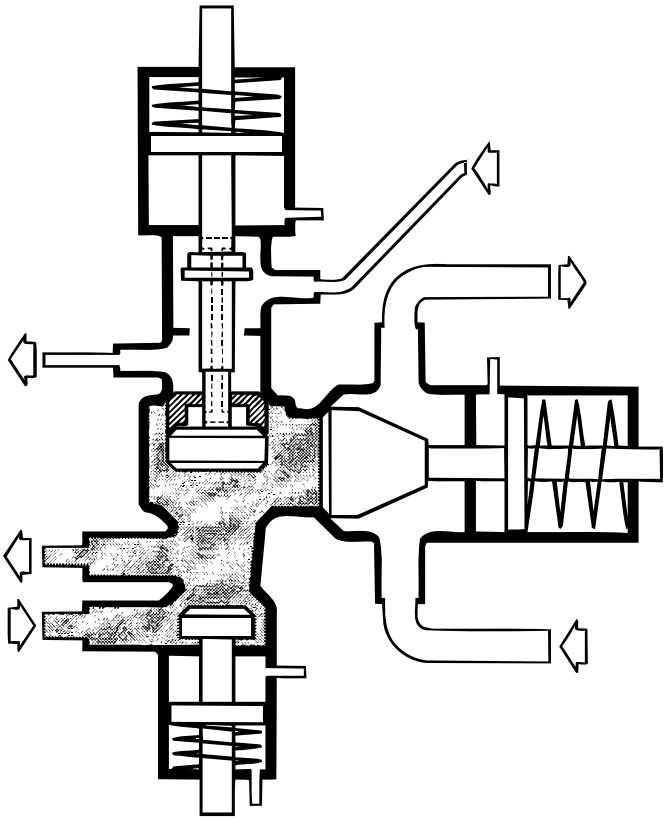

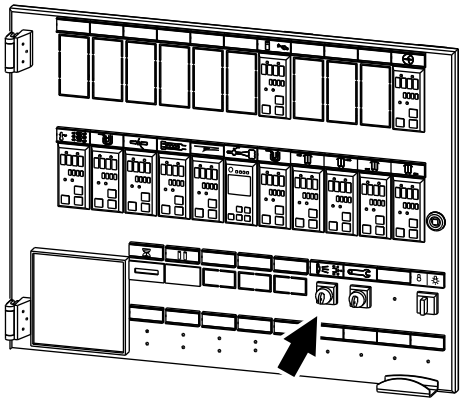

3

Final Cleaning

WARNING

Risk of serious production fault.
Never perform final cleaning when there is product remaining in the product line.

Switch the key (arrow) to CLEANING STEAM BARRIER SPACE and step the machine to CIP.

The product valve will then be in the position shown, and all parts that have been in contact with the product can then be cleaned.

Note! Cleaning in this position must be carried out daily after every PRODUCTION run or at least every 24 operating hours.

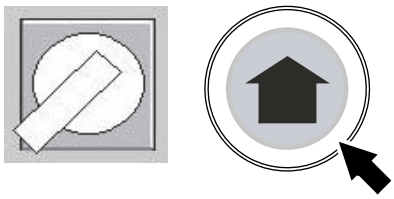

4

Press the `Selector` button on the TPOP display to the RH position.

Press the PROGRAM UP button.

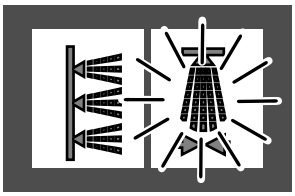

5

The CIP symbol stops flashing but remains lit.

While CIP is in progress, continue with EXTERNAL CLEANING.

Note! Opening any safety door at this point will cause the machine to step out of CIP.

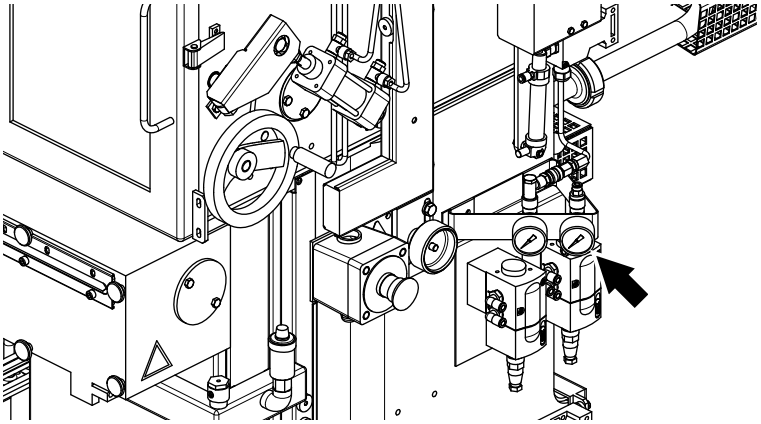

6

Check the I/P transducer pressure is 4.0 bar.

If not, call a technician.

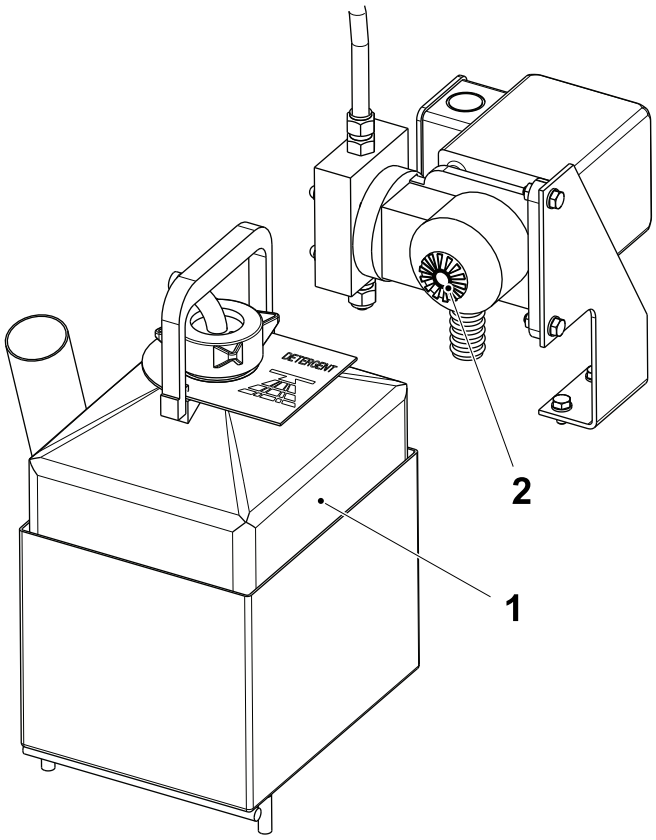

1 Detergent bottle
2 Ring nut

7

WARNING
Hazardous substances.
Risk of personal injury.
Cleaning compound. Follow the ii Safety Precautions.

Check the detergent level in the bottle (1). If required, top up with cleaning compound code C2, see chapter 9 Technical Data.

Mark the level to check how much detergent has been used after completion of the cleaning.

0.7 to 0.8 liters should be used up each time.

To set the detergent pump feed rate, loosen the ring nut (2) and turn the scale to the left to increase the feed. Make the changes in very small steps.

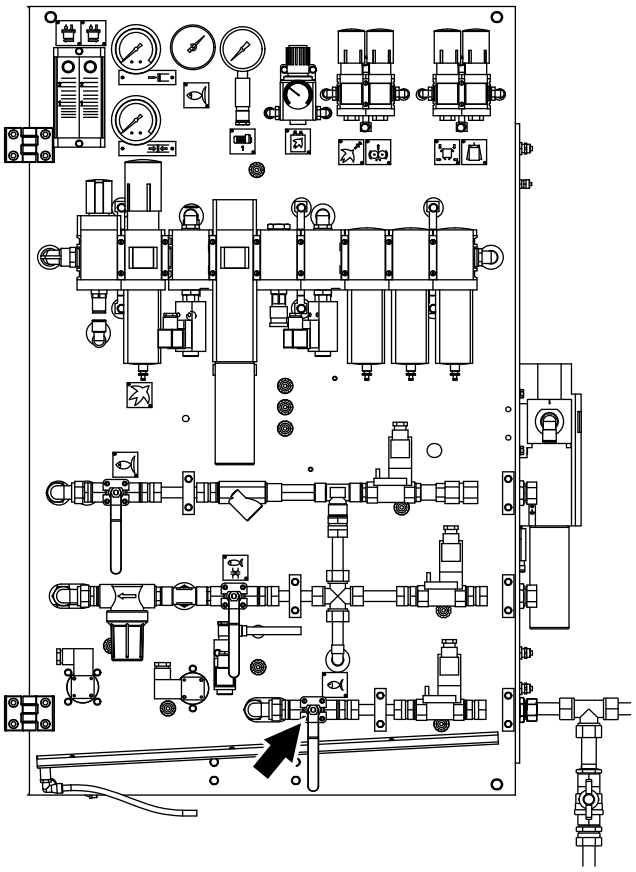

8

Open the hot water inlet for cleaning.



9

Close all the doors and covers.

Make sure that the SAFETY MONITOR is OFF.

8.1.3 External Cleaning

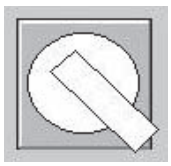

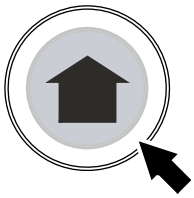

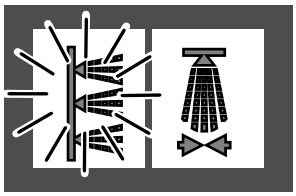

1

Press the `Selector` button on the TPOP display to the LH position.

Press the PROGRAM UP button.

The EXTERNAL CLEANING symbol stops flashing but remains lit.

The two cleaning programs do not interfere with one another.

Note! To stop EXTERNAL CLEANING, press the PROGRAM DOWN button with the `Selector` button in the LH position.

To restart cleaning, press the PROGRAM UP button.

EMERGENCY STOP and SECURITY STOP interrupt EXTERNAL CLEANING.

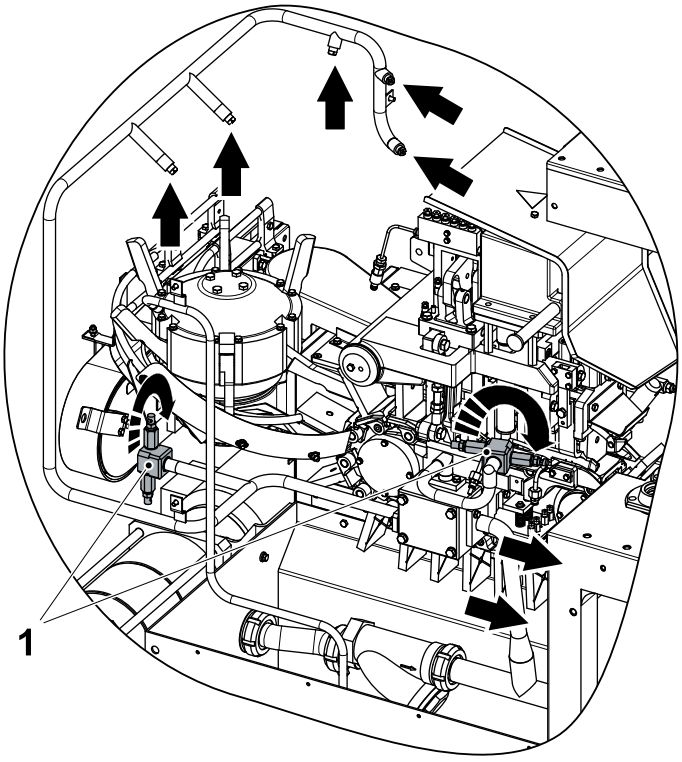

1 Rotor

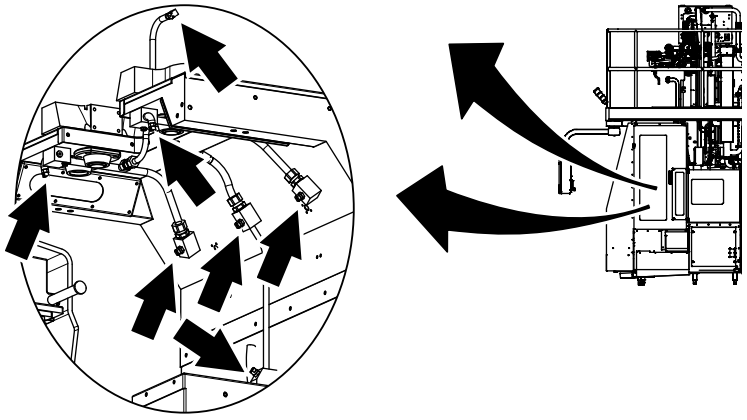

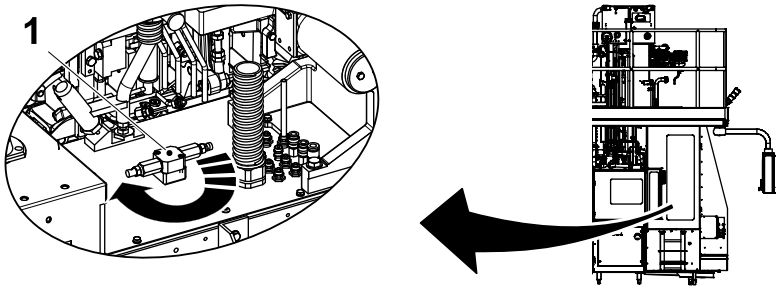

2

Check during external cleaning that the nozzles (arrows) function and that the rotors (1) rotate. If not, call a technician.

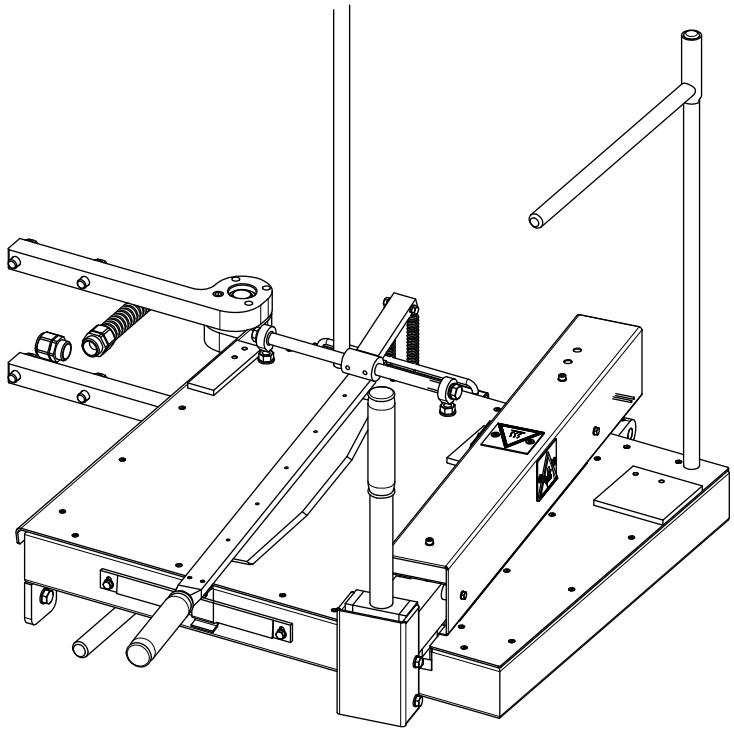

3

Valid with PMI only

WARNING

Hot surface.
Risk of burns.
The heating rail may be hot. Do not touch.

WARNING

Risk of cutting.
The heating block is movable and the knife sharp. Take care when cleaning the splicing device.

Clean the splicing device with a wet sponge.

WARNING

Hazardous substances.
Risk of personal injury.
Cleaning compound. Follow the ii Safety Precautions.

Disinfect the splicing device. Use cleaning compound code G1 or G2, see chapter 9 Technical Data.

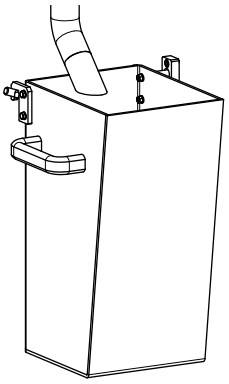

Machine with PMI

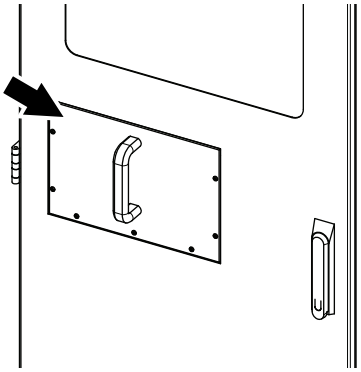

Machine with ASU (option)

4

Empty the PullTab waste box.

During operation check the waste box each shift.

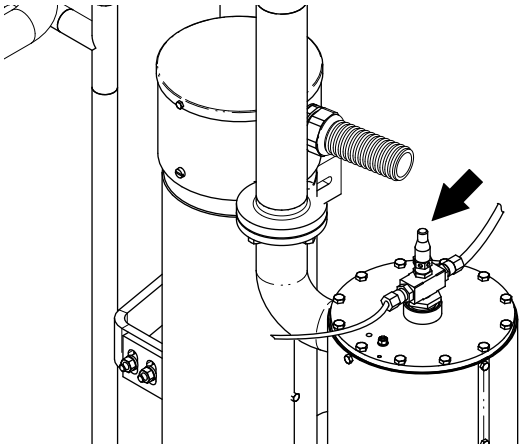

5

Press the button on the hydrogen peroxide evaporator a few times to clean the spray nozzle.

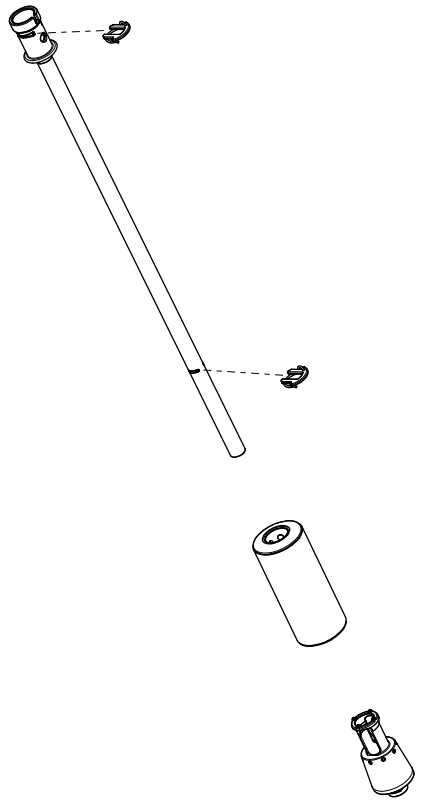

6

WARNING
Hot surfaces.
Risk of burns.
The filling pipe may be hot. If necessary, wear protective gloves.

WARNING
Hazardous substances.
Risk of personal injury.
Cleaning compound. Follow the ii Safety Precautions.

CAUTION
Production fault hazard.
Risk of serious production fault.
Remove all visible product residue from the pipe. Sterilisation is effective on clean surfaces but may not be effective on product residue.

Dismantle the lower filling pipe and clean it. Use cleaning compound code D, see chapter 9 Technical Data.

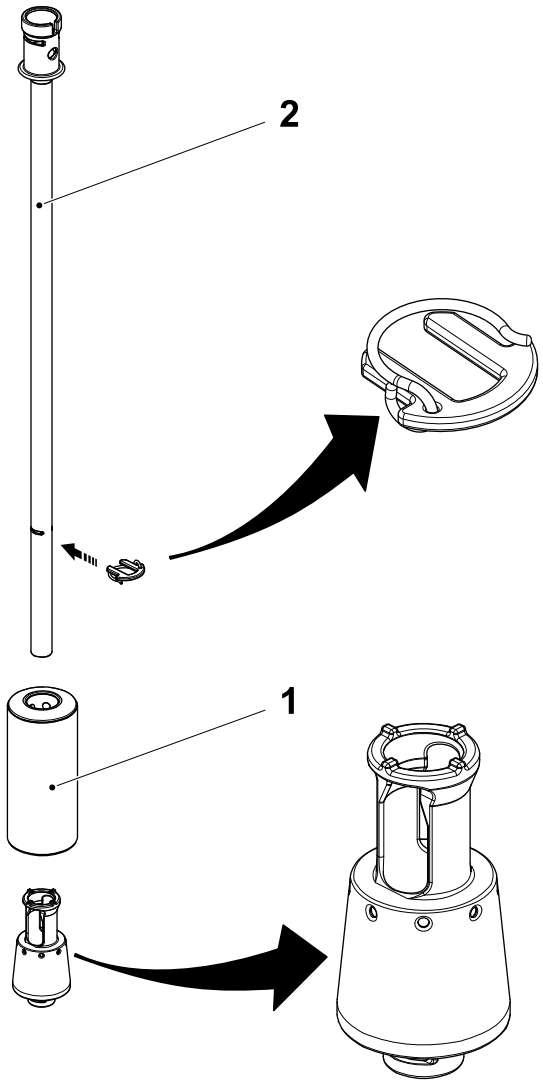

1 Float
2 Filling pipe

7

CAUTION
Risk of unsterility.
Leakage into the float (1) might result in product unsterility.

Check:

- that the float (1) is not damaged or cracked
- visually check that no liquid has leaked inside the float. Change if necessary.

WARNING
Hazardous substances.
Risk of personal injury.
Cleaning compound. Follow the ii Safety Precautions.

Clean the float (1) (if changed, also the new one) with cleaning compound code D and rinse it with drinking water.

Attach the float (1) to the lower filling pipe (2).

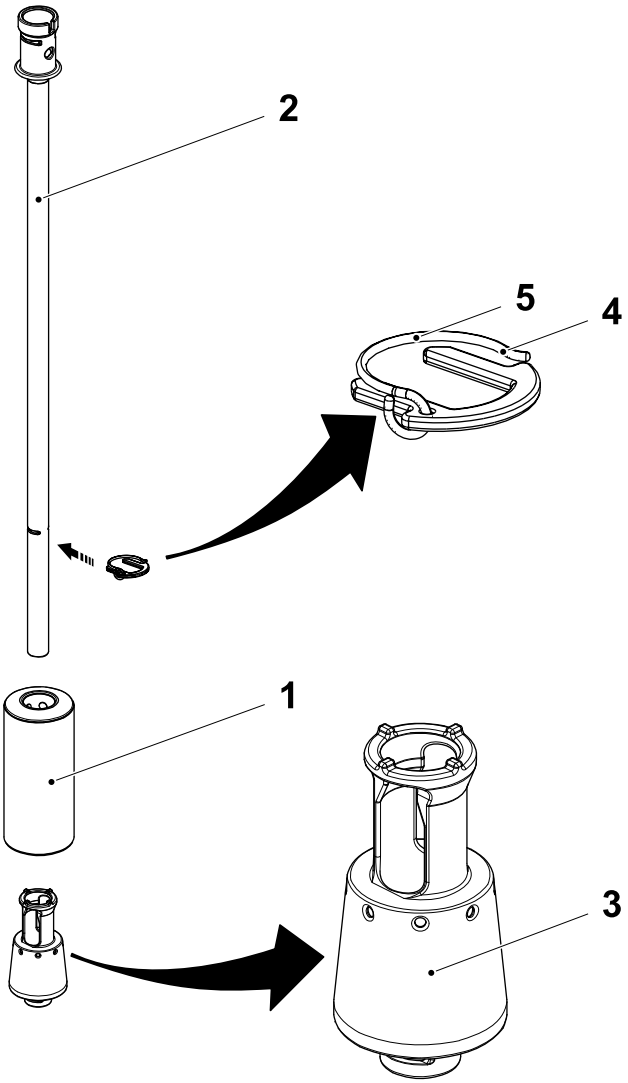

1 Float
2 Filling pipe
3 Support flange
4 Locking fork
5 Spring

Lock the float (1) with the support flange (3) and the locking locking fork (4) . Make sure the spring (5) is facing upwards.

Note! Do not rinse the filling pipe (2) after disinfecting it.

Do one of the following:

- Store the lower filling pipe (2) in a clean, dry area until the next production run. In preparation for the next production run, dismantle the lower filling pipe (2) and clean it. Use cleaning compound code D, see chapter 9 Technical Data. Reassemble the lower filling pipe (2) and put it in a container with cleaning compound code F (see chapter 9 Technical Data) no more than 1 hour before the production run.

or:

CAUTION
Risk of unsterility.
Change the cleaning compound at intervals recommended by the supplier. Follow the supplier's recommendations for correct concentration.

- Put the lower filling pipe (2) in a container with cleaning compound code F (see chapter 9 Technical Data) until the next PRODUCTION run.

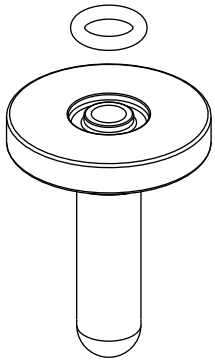

8

Valid with HI (Option) only

WARNING
Hazardous substances.
Risk of personal injury.
Cleaning compound. Follow the ii Safety Precautions.

WARNING
Risk of eye injury.
Compressed air.
Wear eye protection.

Remove the O-ring from the HI nozzle and clean the nozzle with cleaning compound code D, see chapter 9 Technical Data. Clean the inside and outside. Blow through the nozzle with compressed air.

Make sure that the O-ring is clean and without defects. Change if required.

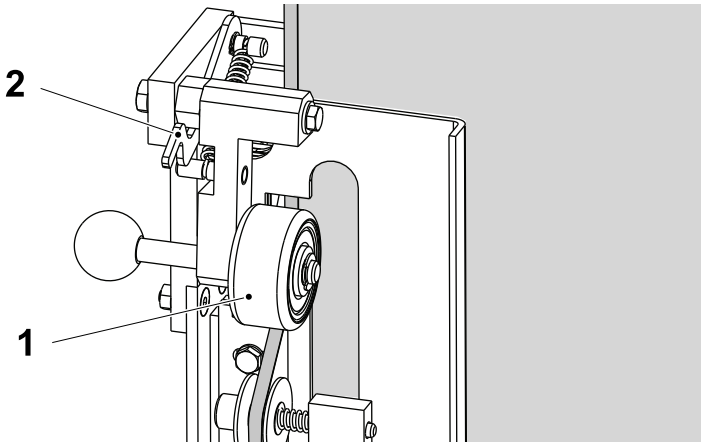

1 Pressure roller
2 Catch

9

Cut the LS strip, then disengage the pressure roller (1) of the Strip Applicator by releasing its catch (2).

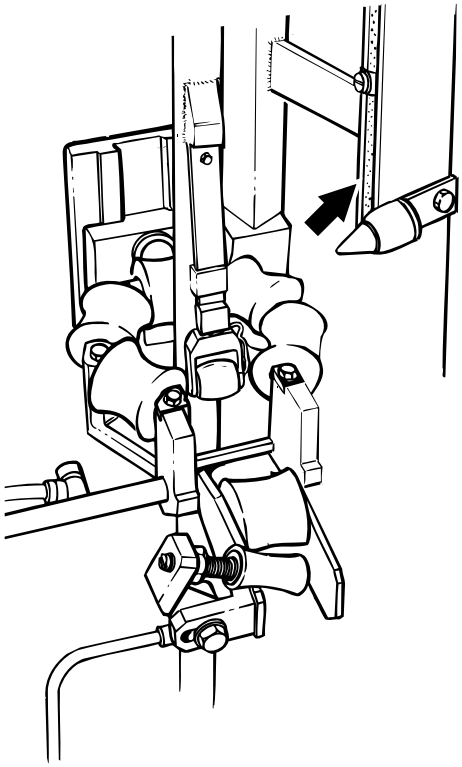

10

WARNING

Hot surface.
Risk of burns.
The LS nozzle may be hot. If necessary, wear heat resistant protective gloves.

Clean the LS nozzle. Remove any burnt deposits.

If required, remove the cover plates on the LS nozzle and clean the nozzle with a nylon or hard bristle brush.

Make sure all air holes are open.

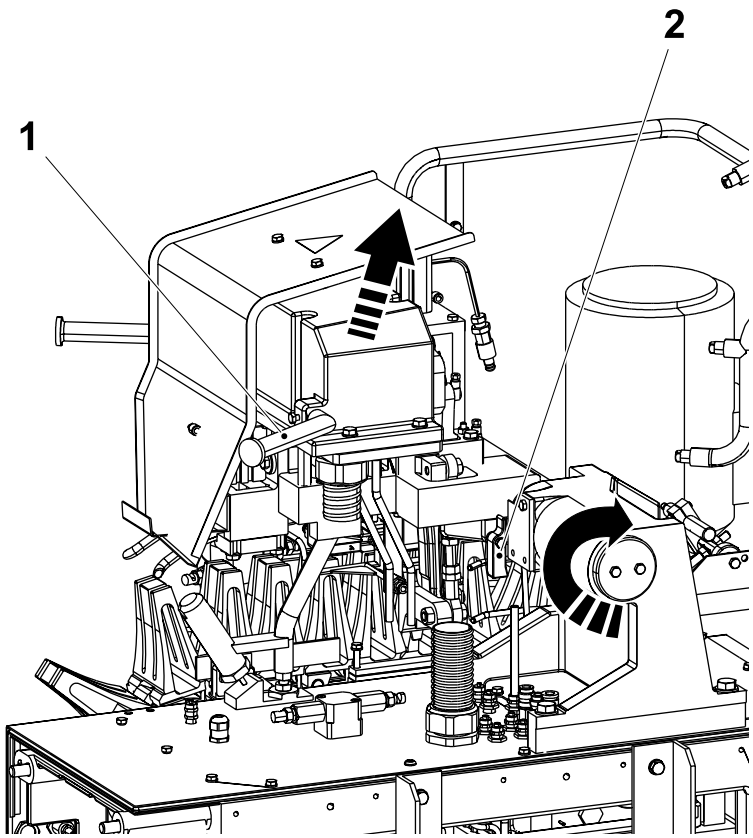

1 Handle
2 Locking piece

11

After external cleaning has finished:

- Check that the jaw system/final folder area is clean (no product residue). If necessary, repeat external cleaning.

WARNING

Ergonomic Hazard.
Risk of personal injury due to strain when lifting heavy objects.
The pivot frame is heavy. Use both hands when lifting.

- Lift the pivot frame using the handle (1) and clean the hot air nozzles
- Remove any burnt deposits with a nylon or hard bristle brush and a knife
- Make sure that the air holes are open.

Disengage the locking piece (2) and lower the pivot frame back into its working position.

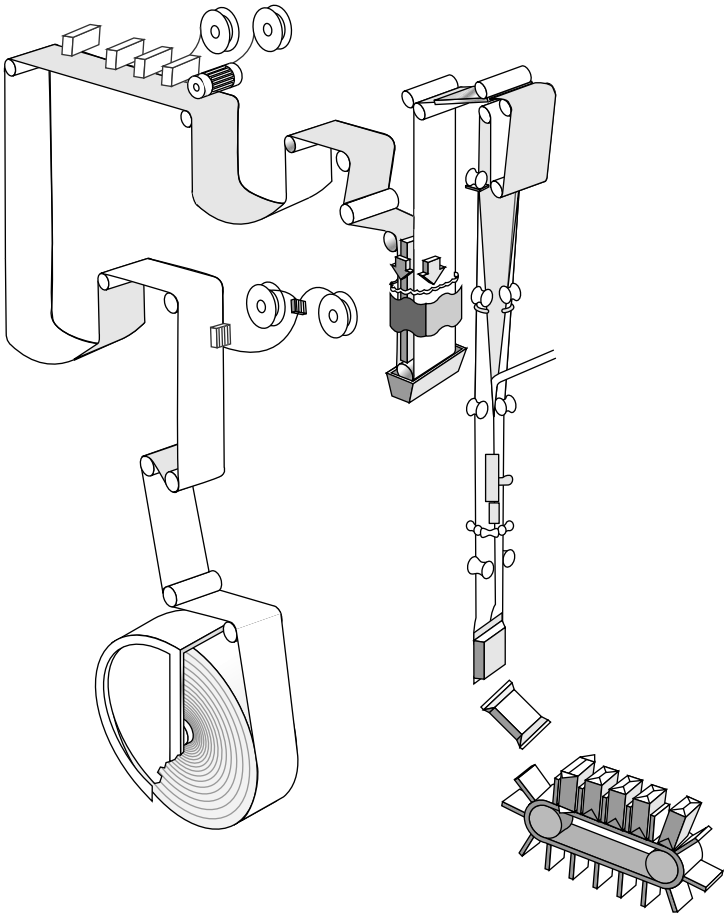

Machine with PMI

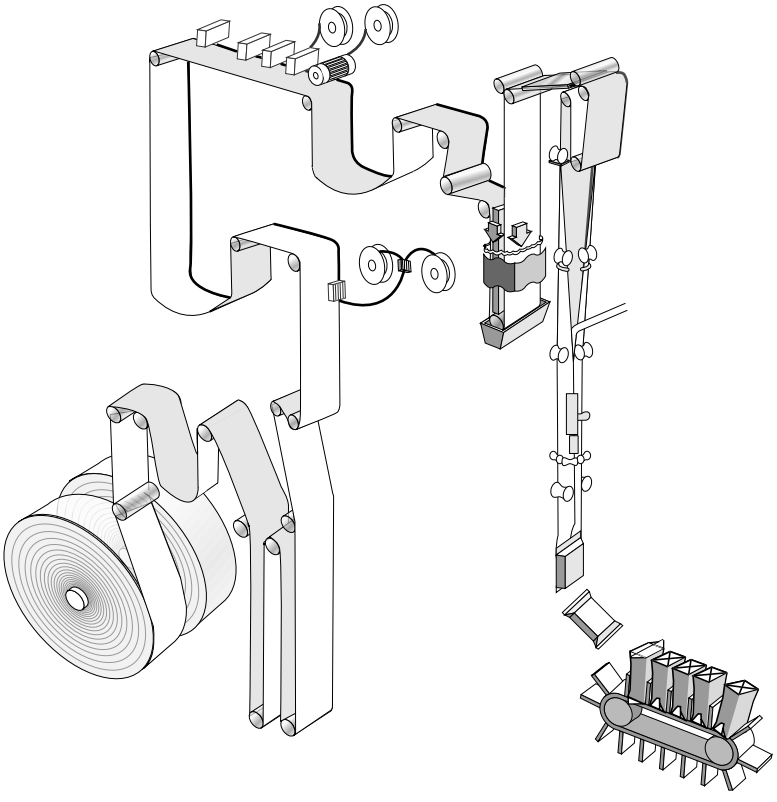

Machine with ASU (option)

12

WARNING
Hydrogen peroxide.
Risk of personal injury.
Follow the ii Safety Precautions.

Make sure all moving parts are clean and dry, and that they move freely.

Check:

- the SA pressure and counter rollers
- the SA bending rollers
- the splice monitor wheel
- the calendar rollers
- the rollers of the forming rings
- the pressure roller and counter rollers of the upper filler tube

Make sure all roller surfaces are clean and not damaged, and the rollers rotate freely in both directions.

See chapter 1 General Description section 1.9 Packaging Material Web.

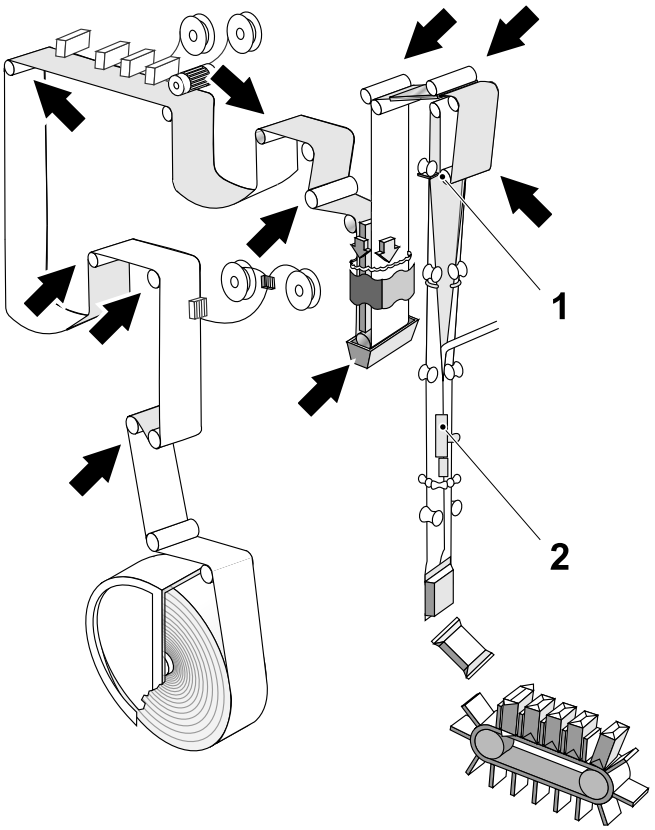

Machine with PMI

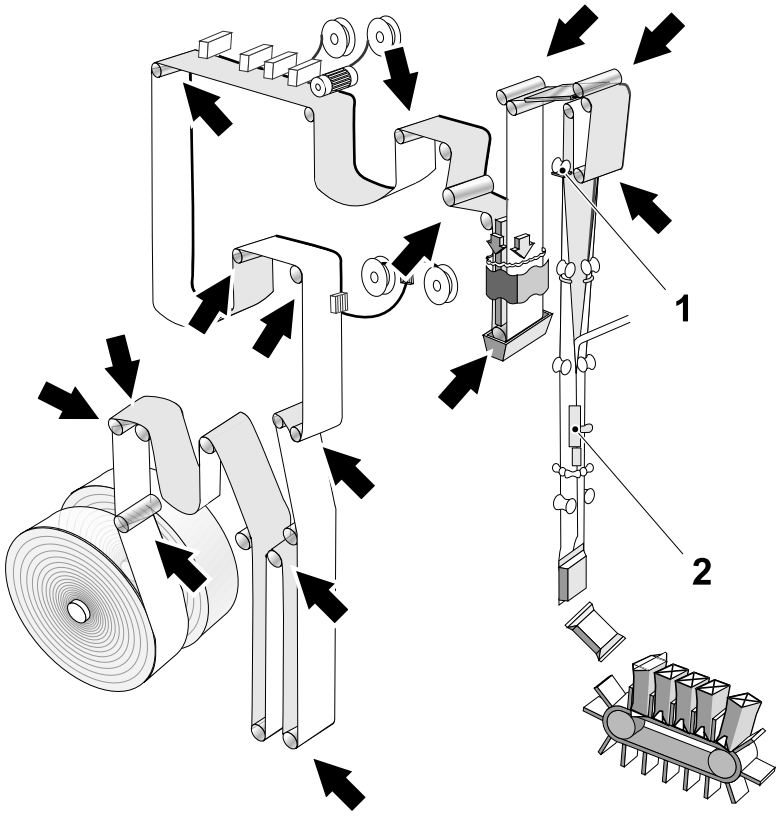

Machine with ASU (option)

1 Upper forming ring
2 LS short stop element

13

Perform if necessary:

WARNING
Hazardous substances.
Risk of personal injury.
Cleaning compound. Follow the ii Safety Precautions.

CAUTION
Risk of unsterility.
Residual water in the aseptic chamber will result in diluted hydrogen peroxide that will not be able to sterilise the surface as intended.
Do not spray water in the drying chamber (above the upper forming ring (1)) or on the LS short stop element (2).

CAUTION
Risk of unsterility.
Do not dry the rollers with compressed air.

Clean the bending rollers with a sponge and cleaning compound G1 or G2, see 9.4 Cleaning and Disinfecting Agents on page 9-18. Rinse them with drinking water and then wipe them dry with a clean dry cloth.

Clean the calendar rollers with a sponge and distilled water only.

For the locations of the rollers, see chapter 1 General Description section 1.9 Packaging Material Web.

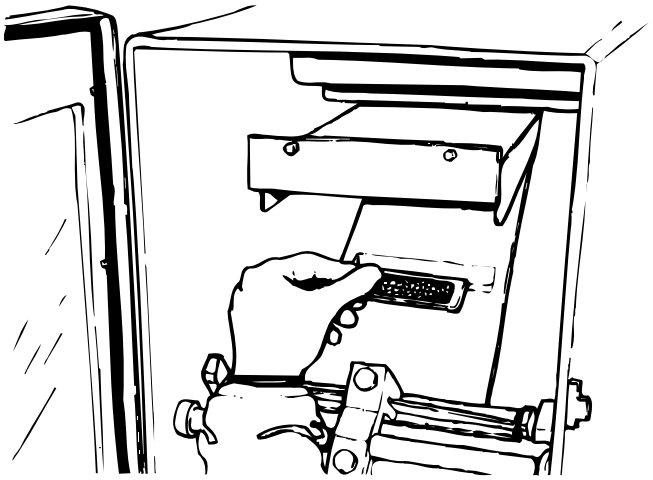

14

WARNING
Hydrogen peroxide.
Risk of personal injury.
Follow the ii Safety Precautions.

WARNING
Risk of eye injury.
Compressed air. Wear eye protection.

Pull the packaging material to gain access to the air knife.

Remove the air knife cover.

Remove and clean the filter with compressed air.

Refit the filter and fit the cover.

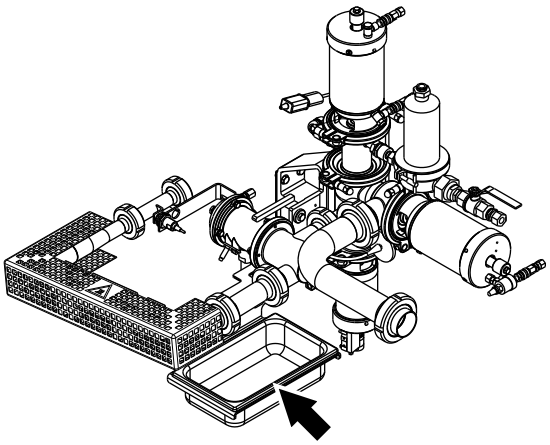

15

Check the condensation container and empty if required.

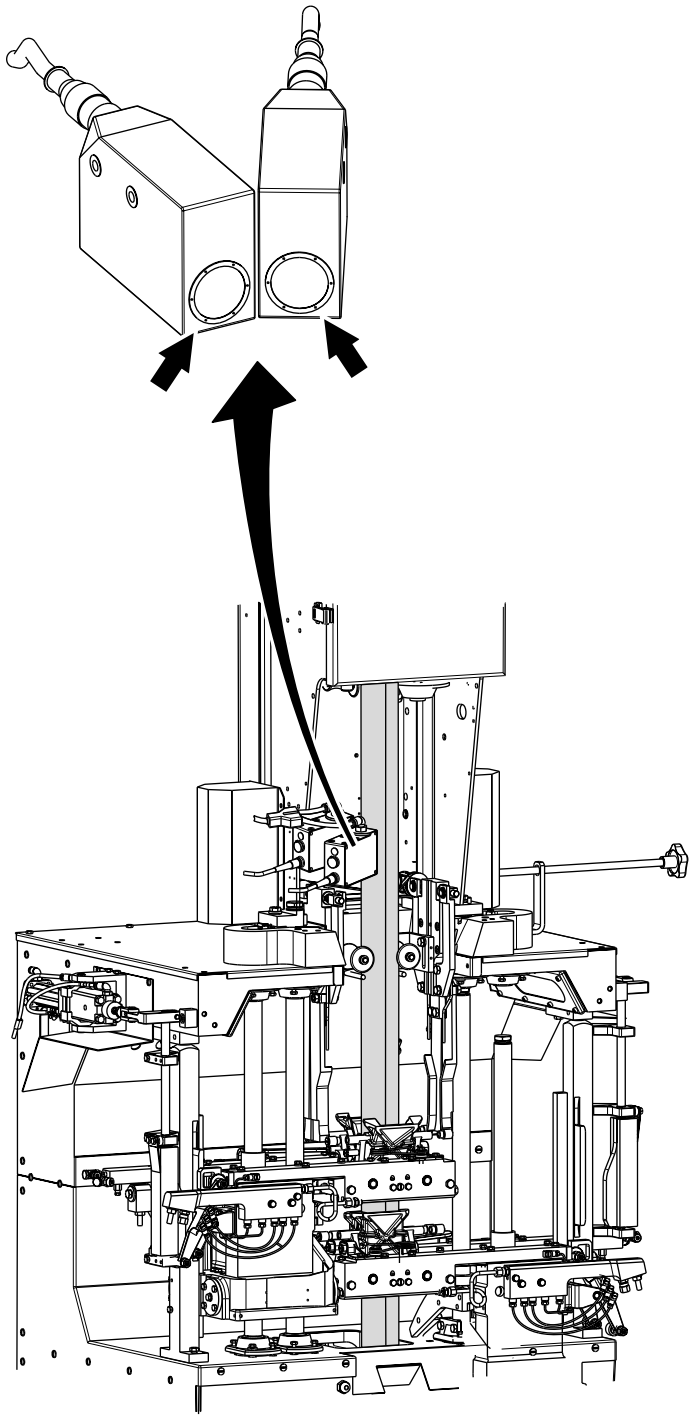

16

WARNING
Hazardous substances.
Risk of personal injury.
Deliming agent. Follow the ii Safety Precautions.

Wipe the design correction photocells with a dry cloth. If there are small lime deposits on the photocell lenses, clean them with cleaning compound code D, see 9.4 Cleaning and Disinfecting Agents on page 9-18. If the photocell lenses are damaged or thickly covered with lime deposits, call a technician.

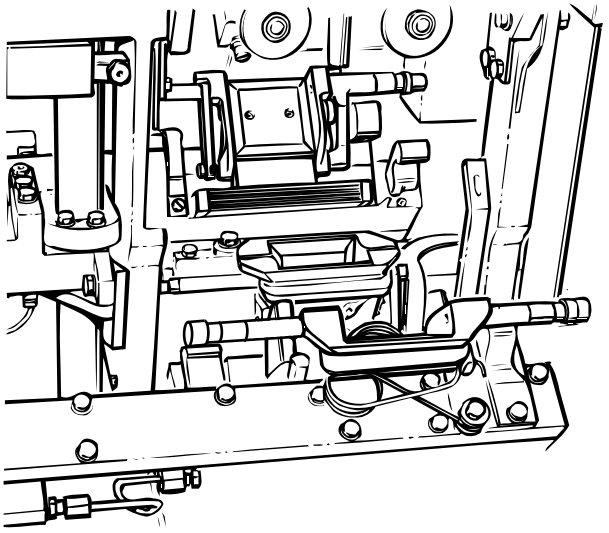

17

WARNING
Risk of eye injury.
Compressed air. Wear eye protection.

Crank until the inductor of the pressure jaw becomes accessible, see section 1.10.1 How to Crank the Machine.

CAUTION
Risk of damage to the equipment.
Do **not** clean with a metallic brush.

Clean the inductor with a nylon or hard bristle brush.

Rinse with water and blow the inductor and knife clean.

Check the inductor. If it is damaged call a technician. Repeat on the other pressure jaw.

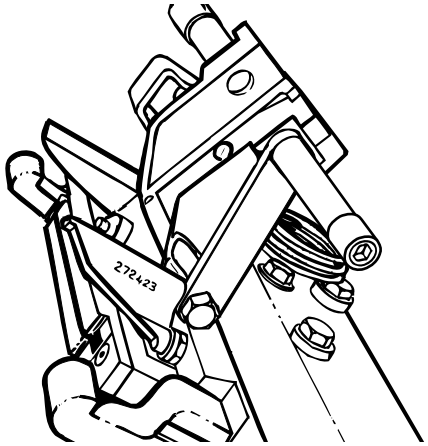

18

Crank until one jaw pair is open, see section 1.10.1 How to Crank the Machine.

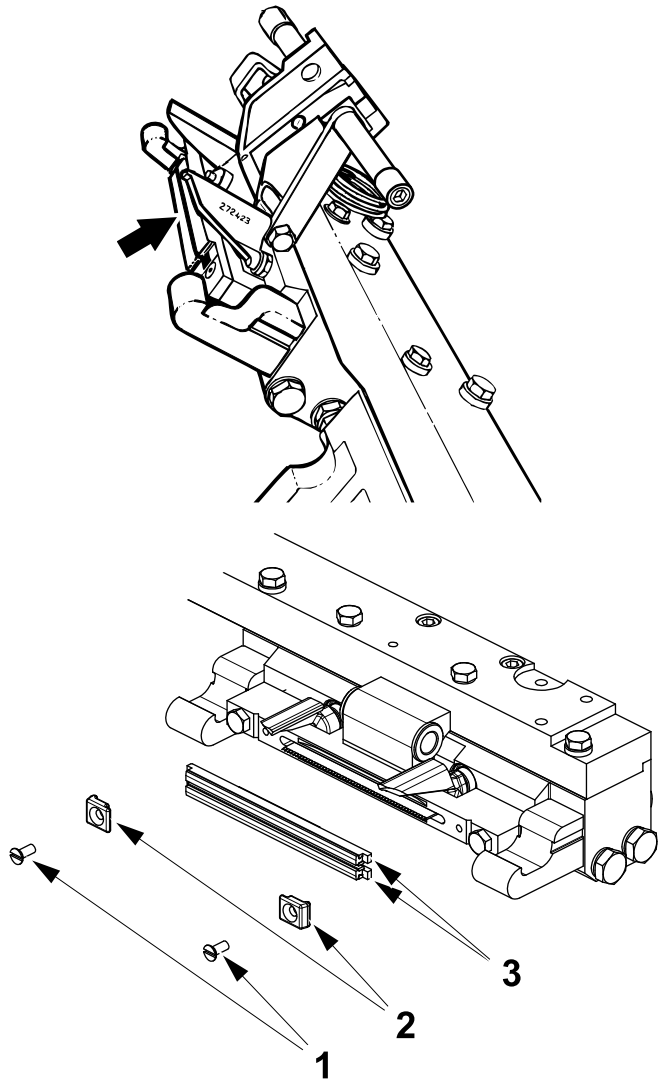

1 Screw
2 Bracket
3 Dolly

19

Check the cutting jaw dollies are not deformed or worn. They must protrude at least 1 mm from their holders.

Change any defective dollies according to the following instructions:

WARNING
Risk of cutting.
Moving parts can cut.

Remove the screws (1) and the brackets (2) and pull off the dollies (3). Replace the dollies (3) and assemble in reverse order.

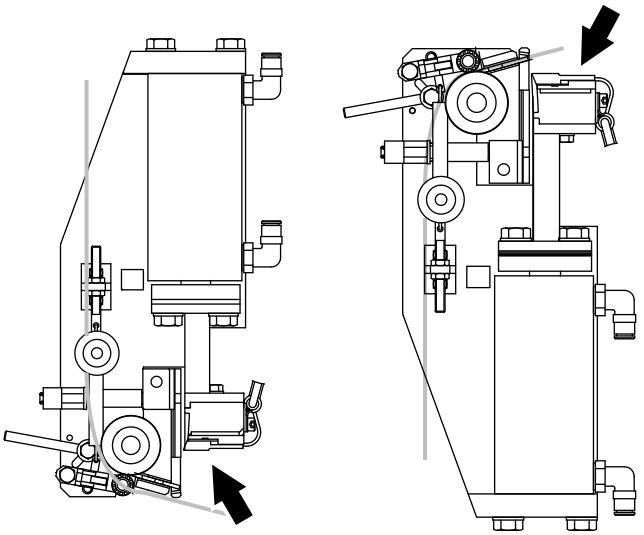

20

WARNING
Hot surface.
The heating rail is hot. If necessary, wear heat resistant protective gloves.

WARNING
Risk of cutting.
Moving parts can cut.

While the heating rail is still warm, carefully clean the patch sealing unit and tab sealing unit with a soft non-abrasive cloth.

Remove any plastic residue and make sure there is no paper dust inside the PullTab unit.

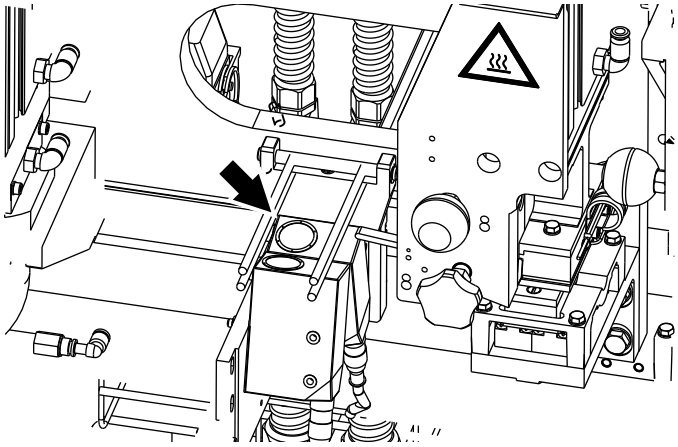

21

Clean the photocell lenses in the PullTab with a dry cloth.

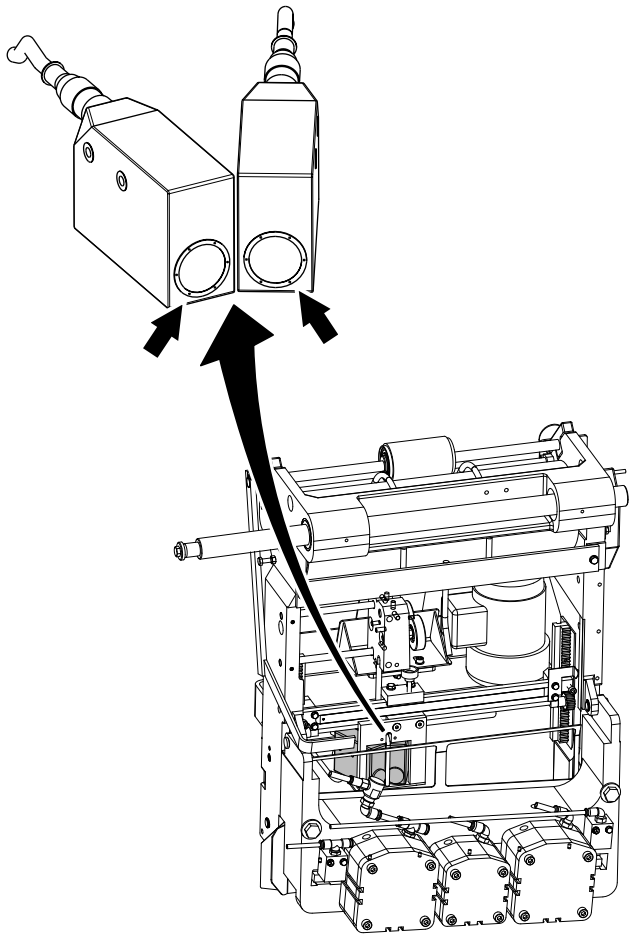

22

Valid with ASU (Option) only

Clean the photocell lenses in the splicing unit with a dry cloth.

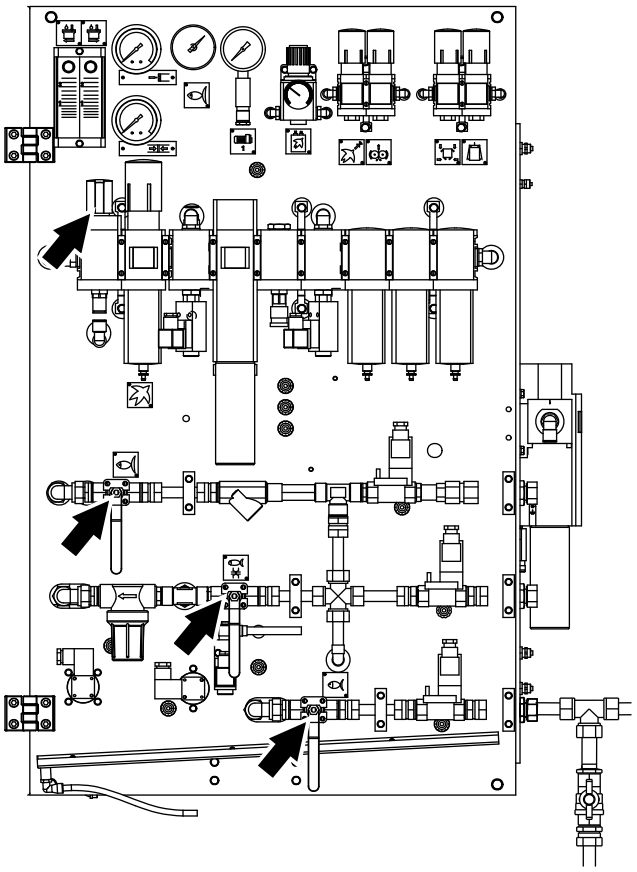

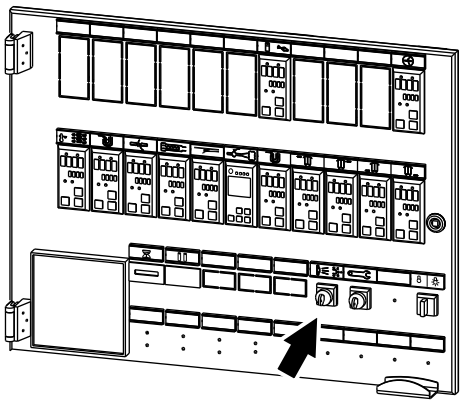

23

CAUTION
Production fault hazard.
The main air valve must not be closed until CLEANING-CIP is finished.

When CIP and EXTERNAL CLEANING are finished, close the valves for cooling water, hot water and incoming air.

CAUTION
Risk of production damage.
Do not exceed the maximum idle time of 36 hours between end of CIP cleaning and restart of production.

Make a note of when CIP cleaning is finished.

WARNING
Risk of personal injury
The key (arrow) for the CLEANING STEAM BARRIER SPACE switch must be removed and stored in a safe place.

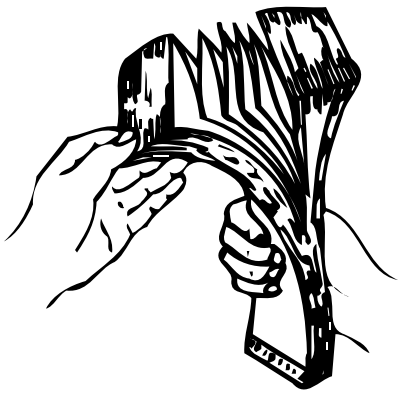

24

Valid for machines with JUMO Process Recorder
Take the production report from the process recorder and give it to the person responsible for the evaluation.

25

Daily care is now complete.

When resuming PRODUCTION, start from 3.1 Preparation After Daily Care on page 3-5.

If 8.2 Weekly Care has been performed, start from 3.2 Preparation After Weekly Care on page 3-45 instead.

8.2 Weekly Care

This section describes the cleaning procedure to be performed once a week or at least every 120 operating hours.

8.2.1 Valid for Machines Equipped with PMI (Standard)

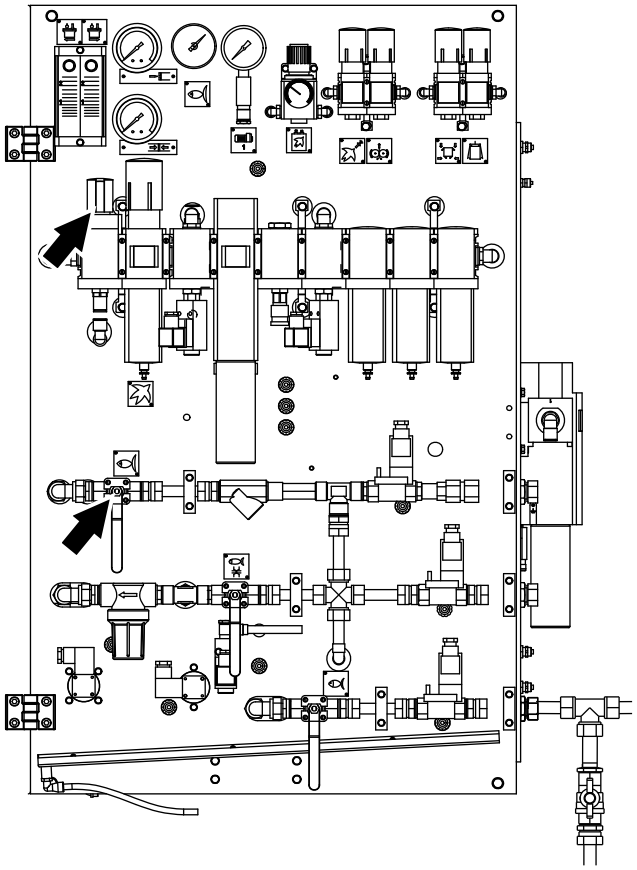

1

Open the air valve and incoming water.

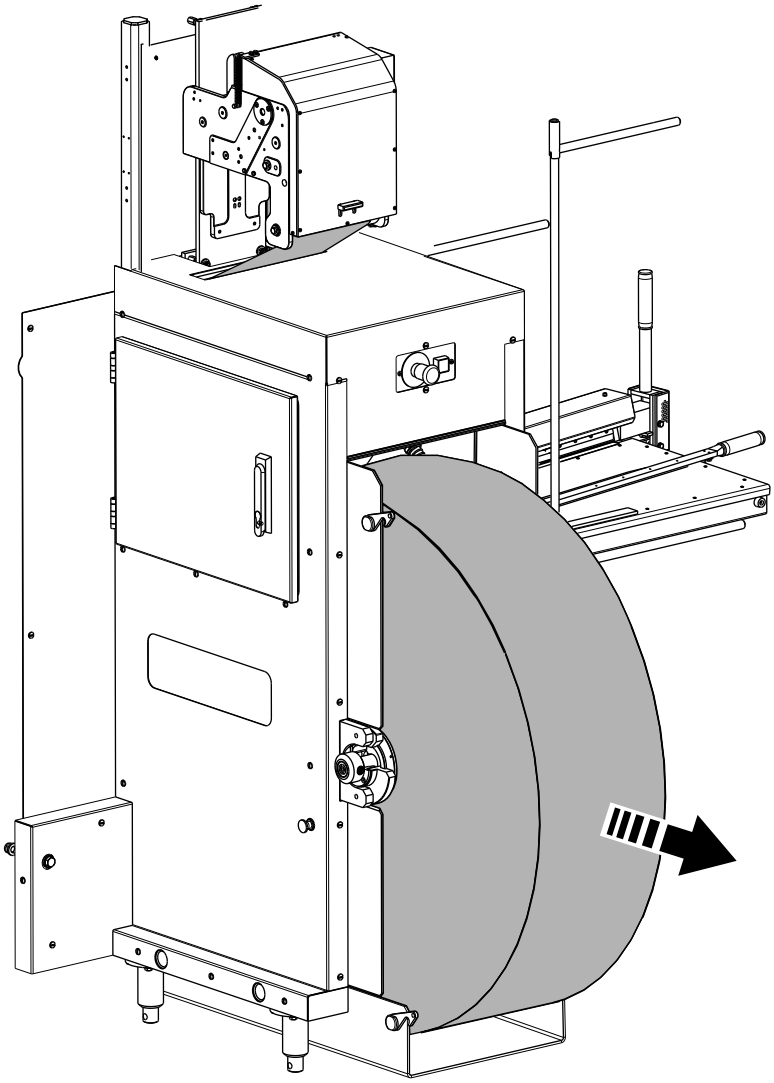

2

WARNING

Hot surfaces.
Risk of burns.
The heating rail on the splicing device may be hot. If necessary, wear protection gloves.

Remove the packaging material reel.

Pull all the remaining packaging material out of the machine.

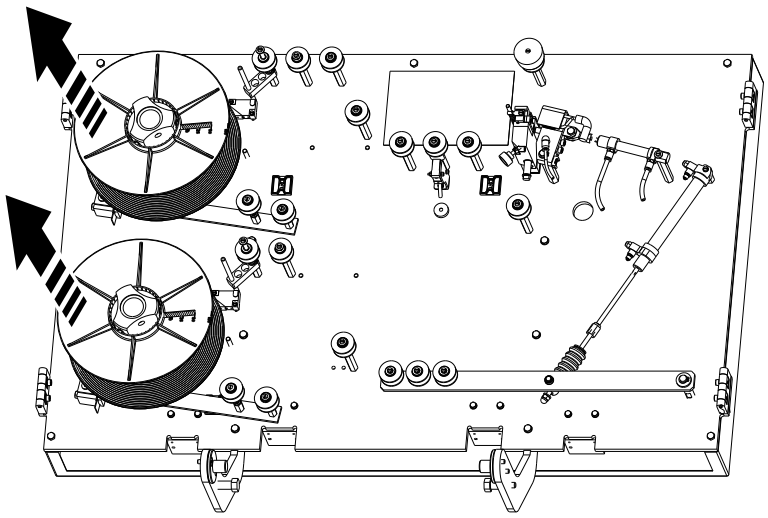

3

Cut the LS strips.

Rewind the LS strip back onto the reels and remove the reels from the machine.

WARNING
Risk of eye injury.
Compressed air. Wear eye protection.

Clean the LS strip magazine with compressed air.

WARNING
Hazardous substances.
Risk of personal injury.
Cleaning compound. Follow the ii Safety Precautions.

Clean the rollers with a sponge and cleaning compound code G1 or G2, see 9.4 Cleaning and Disinfecting Agents on page 9-18, and then wipe them dry with a clean cloth.

Note! Do not lubricate the rollers.

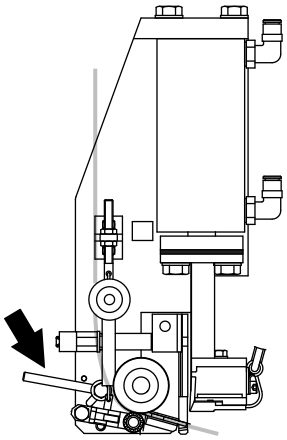

4

Lower the handle and remove the patch strip from the patch sealing unit.

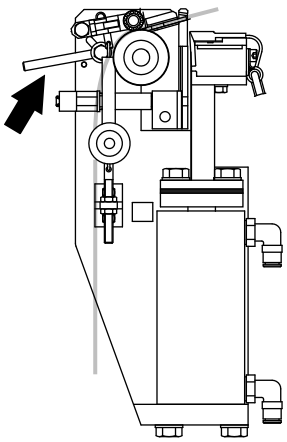

5

Raise the handle and remove the tab strip from the tab sealing unit.

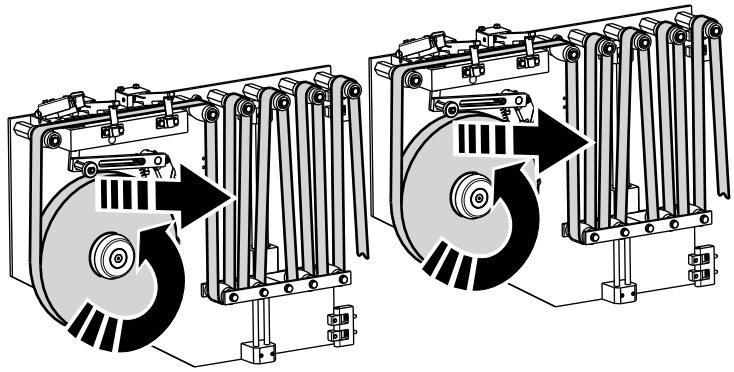

6

Rewind the patch and tab strips back onto the reels and remove the reels from the machine.

WARNING
Risk of eye injury.
Compressed air. Wear eye protection.

Clean the patch and tab strip magazines with compressed air.

WARNING
Hazardous substances.
Risk of personal injury.
Cleaning compound. Follow the ii Safety Precautions.

Clean the rollers with a sponge and cleaning compound code G1 or G2, and then wipe them dry with a clean cloth.

Note! Do not lubricate the rollers.

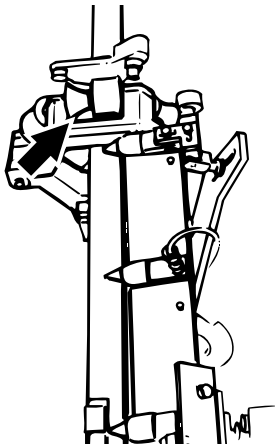

7

WARNING
Hot surfaces.
The filling pipe may be hot. If necessary, wear protective gloves.

Open the divided forming ring.

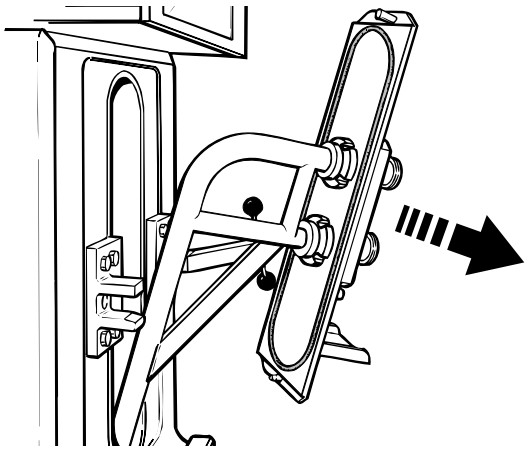

8

Loosen the plate of the upper filler tube and remove the upper filler tube.

Remove the O-rings from the upper filler tube.

Change the O-rings if required.

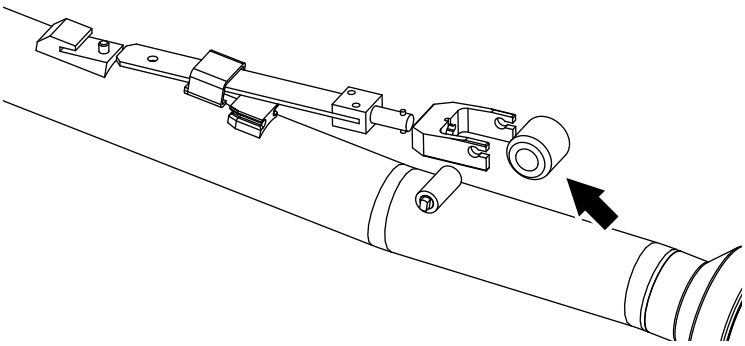

9

Remove the LS strip pressure roller (arrow) from the upper filler tube.

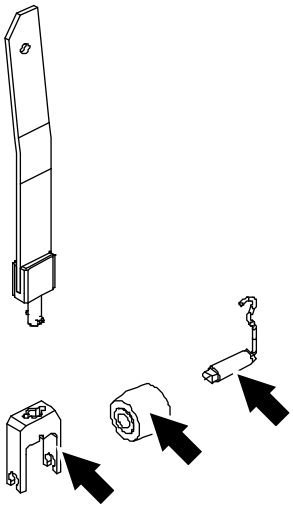

10

Make sure that the roller and its shaft are not worn or damaged.

Change them, if required.

⚠ WARNING
Hazardous substances.
Risk of personal injury.
Cleaning compound. Follow the ii Safety Precautions.

Use a clean brush to carefully clean the parts shown with cleaning compound code D, see 9.4 Cleaning and Disinfecting Agents on page 9-18.

Rinse the parts with drinking water.

Store the LS roller in a clean, dry, and protected place.

Immerse the stainless steel parts of the LS pressure roller assembly in a no rinse sanitiser until the machine is ready to be threaded with packaging material, or for a minimum of five minutes.

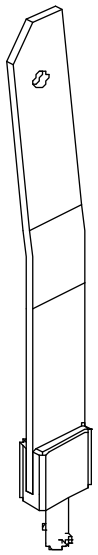

11

WARNING
Hazardous substances.
Risk of personal injury.
Cleaning compound. Follow the ii Safety Precautions.

Use a stainless steel brush to clean the LS flat spring with cleaning compound code D, see 9.4 Cleaning and Disinfecting Agents on page 9-18.

Rinse the spring with drinking water.

Fill an ultrasonic cleaning unit with cleaning compound code B, see 9.4 Cleaning and Disinfecting Agents on page 9-18.

Turn the heater on and run the ultrasonic cleaning unit for at least 10 minutes to de-gas the solution.

Note! Do not clean more than two LS flat springs at a time in the ultrasonic cleaning unit.

After ten minutes, and when the solution has reached a minimum temperature of 55 °C, place the LS flat spring in the ultrasonic cleaning unit.

Run the ultrasonic cleaning unit with the heater on and the cover in place for 45 minutes.

When the unit has completed its run, remove the LS flat spring and rinse it with drinking water.

Place the LS spring in a no rinse sanitiser until the machine is ready to be threaded with packaging material, or for a minimum of five minutes.

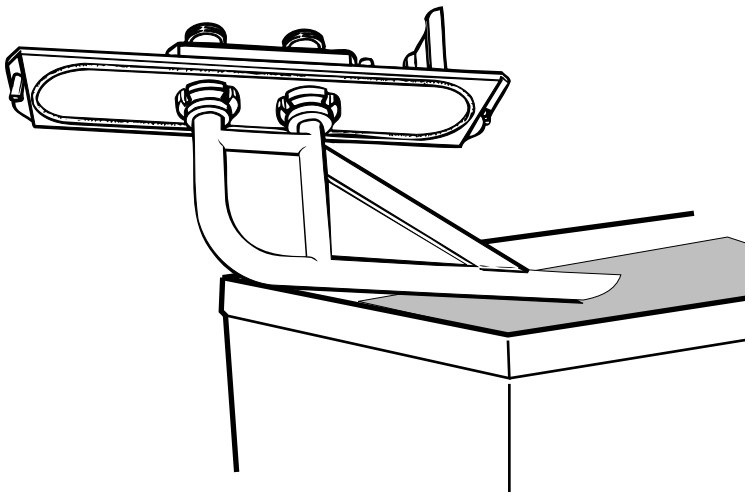

12

WARNING
Hot surfaces.
If necessary, wear protective gloves.

WARNING
Hazardous substances.
Risk of personal injury.
Cleaning compound. Follow the ii Safety Precautions.

CAUTION
Production fault hazard.
Risk of serious production fault.
Remove all visible product residue from the pipe. Sterilisation is effective on clean surfaces but may not be effective on product residue.

Carefully clean the outside of the upper filling pipe and rinse with drinking water. Use cleaning compound code D, see chapter 9 Technical Data.

Make sure that all product residue is removed from the pipe.

After cleaning, immerse the upper filling pipe in code F3 cleaning compound, see 9.4 Cleaning and Disinfecting Agents on page 9-18.

The upper filling pipe must remain immersed for a minimum of one hour in the cleaning compound, or until the next production run.

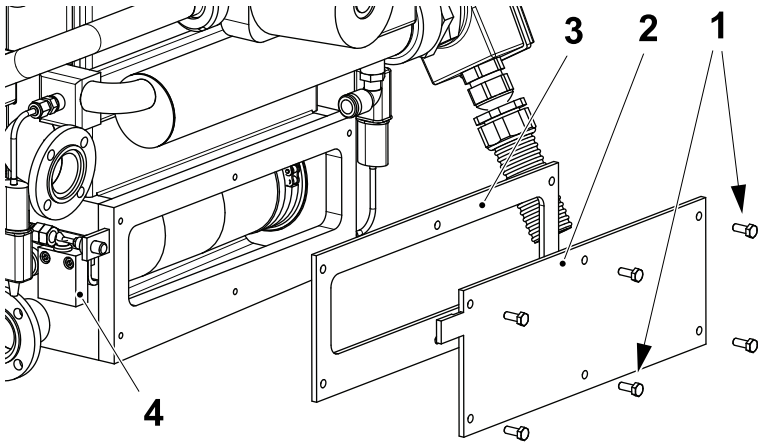

1 Screw
2 Front cover
3 O-ring
4 Proximity switch

13

WARNING
Hydrogen peroxide.
Risk of personal injury.
Follow the ii Safety Precautions.

Remove the six screws (1) and remove the front cover (2) of the bath.

Remove any strip remnants from the bottom of the bath.

Make sure that the O-ring (3) is intact.

Fit the cover.

Make sure that the proximity switch (4) is activated when the cover has been fitted.

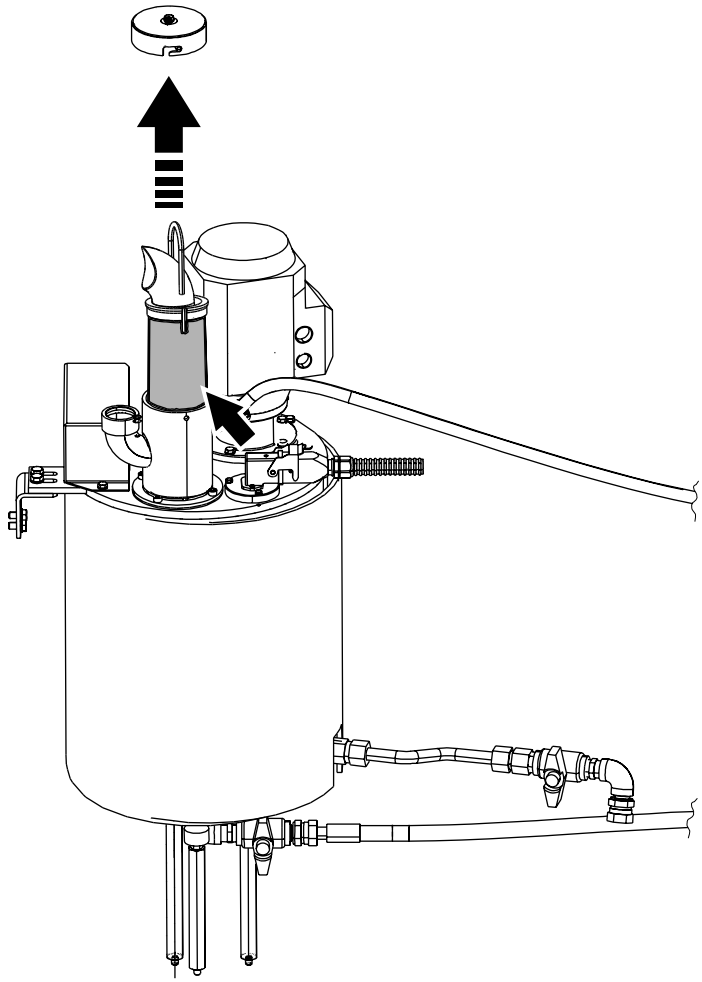

14

WARNING
Hydrogen peroxide.
Risk of personal injury.
Follow the ii Safety Precautions.

WARNING
Risk of eye injury.
Compressed air. Wear eye protection.

CAUTION
Production fault hazard.
Do not touch the filter with hands.

Remove the filter (arrow) from the hydrogen peroxide tank.

Rinse the filter with distilled water and clean it with compressed air. Rinse again with distilled water.

Put the filter back.

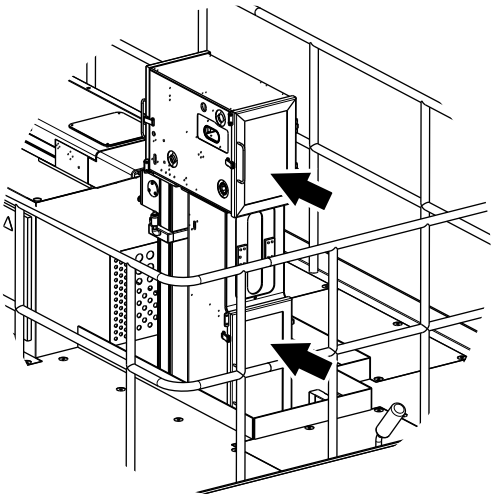

15

WARNING
Hydrogen peroxide.
Risk of personal injury.
Follow the ii Safety Precautions.

WARNING
Hot surfaces.
Risk of burns.
The LS nozzle and the aseptic chamber may be hot. Wear protective gloves.

WARNING
Sudden and violent chemical reaction hazard.
Risk of personal injury or equipment damage.
Do not use any detergent containing an alcohol solution when cleaning the aseptic chamber.

CAUTION
Risk of equipment damage.
Never let water into the electrical cabinet.

Wash the inside of the aseptic chamber, the doors, and windows with a sponge and cleaning compound code D, see 9.4 Cleaning and Disinfecting Agents on page 9-18.

Rinse with a sponge and drinking water, and then wipe dry with a clean, dry cloth.

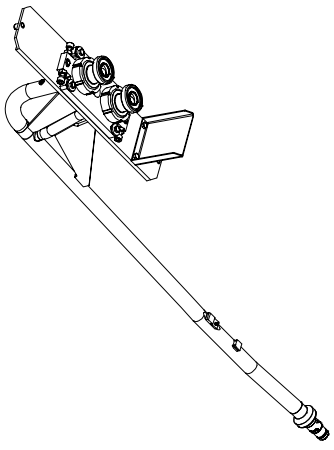

16

Remove the immersed upper filling pipe from the code F3 cleaning compound.

Let the upper filling pipe drip-dry in a clean area for about 15 minutes before putting it back on the machine.

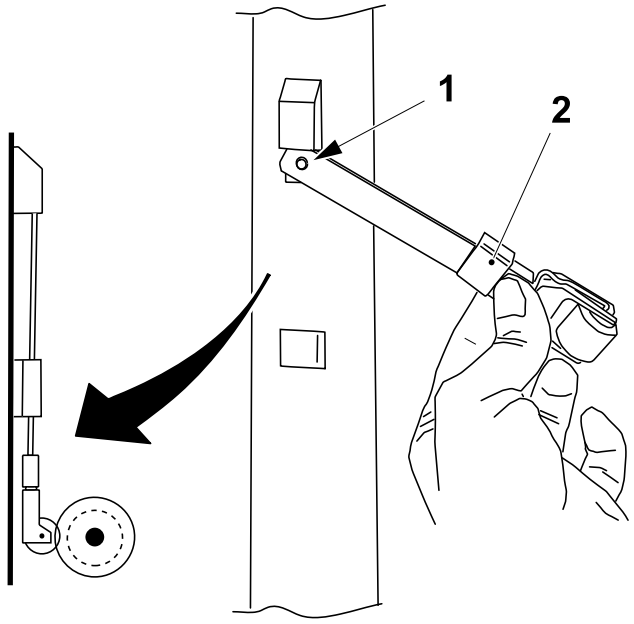

1 Pin
2 Hood

17

CAUTION
Risk of unsterility.
Before touching the packaging material, disinfect your hands or gloves.

Fetch the LS strip pressure roller from its storage container.

Fit the LS strip pressure roller on the pin (1).

Check that the slot in the hood (2) is towards the filling pipe.

Lock the pressure roller onto the filling pipe with the hood (2).

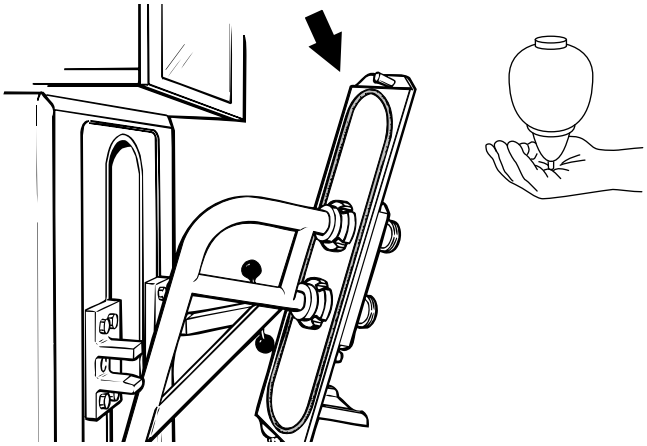

18

CAUTION
Risk of damage to the equipment.
Do not damage the LS nozzle rollers, or change their setting.

Fit the upper filler tube into the machine.

Make sure that the O-ring of the upper filler tube stays in the correct position.

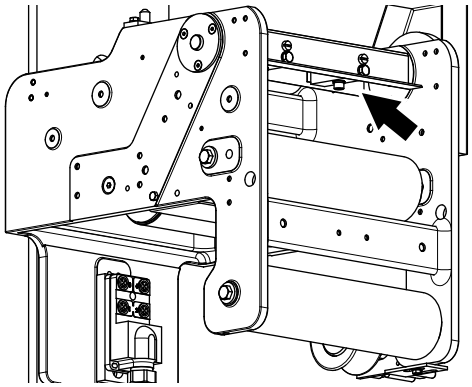

19

WARNING
Risk of cutting and crushing.
Sharp moving parts can cut and crush. Take care when handling the crease wheel.

WARNING
Hazardous substances.
Risk of personal injury.
Solvent. Follow the ii Safety Precautions.

Clean the crease wheel with solvent, Propylene glycol methylene ether/Dowanol PM.

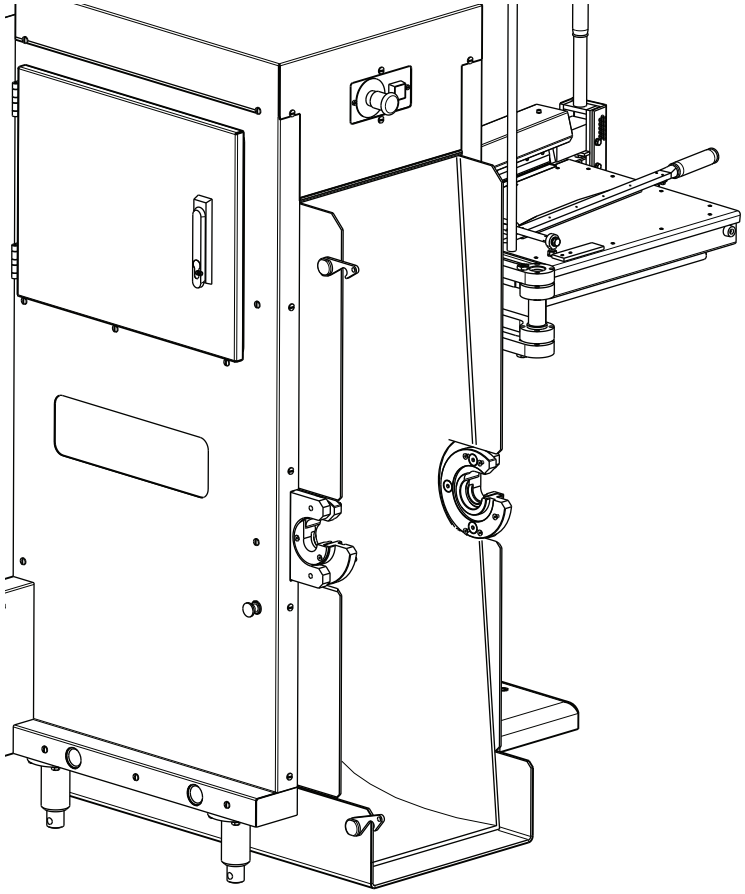

20

Clean the inside of the PMI and the magazine with a clean dry cloth.

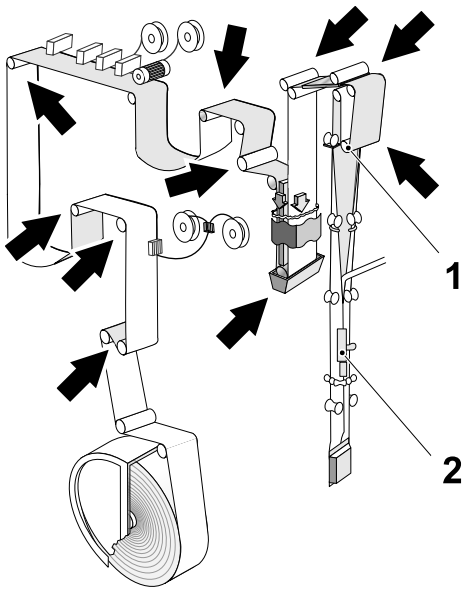

Machine with PMI

1 Upper forming ring
2 LS short stop element

21

WARNING
Hazardous substances.
Risk of personal injury.
Cleaning compound. Follow the ii Safety Precautions.

CAUTION
Risk of unsterility.
Residual water in the aseptic chamber will result in diluted hydrogen peroxide that will not be able to sterilise the surface as intended.
Do not spray water in the drying chamber (above the upper forming ring (1)) or on the LS short stop element (2).

CAUTION
Risk of unsterility.
Do not dry the rollers with compressed air.

Clean the bending rollers with a sponge and cleaning compound G1 or G2, see 9.4 Cleaning and Disinfecting Agents on page 9-18. Rinse them with drinking water and then wipe them dry with a clean dry cloth.

Clean the calendar rollers with a sponge and distilled water only.

For the locations of the rollers, see chapter 1 General Description section 1.9 Packaging Material Web.

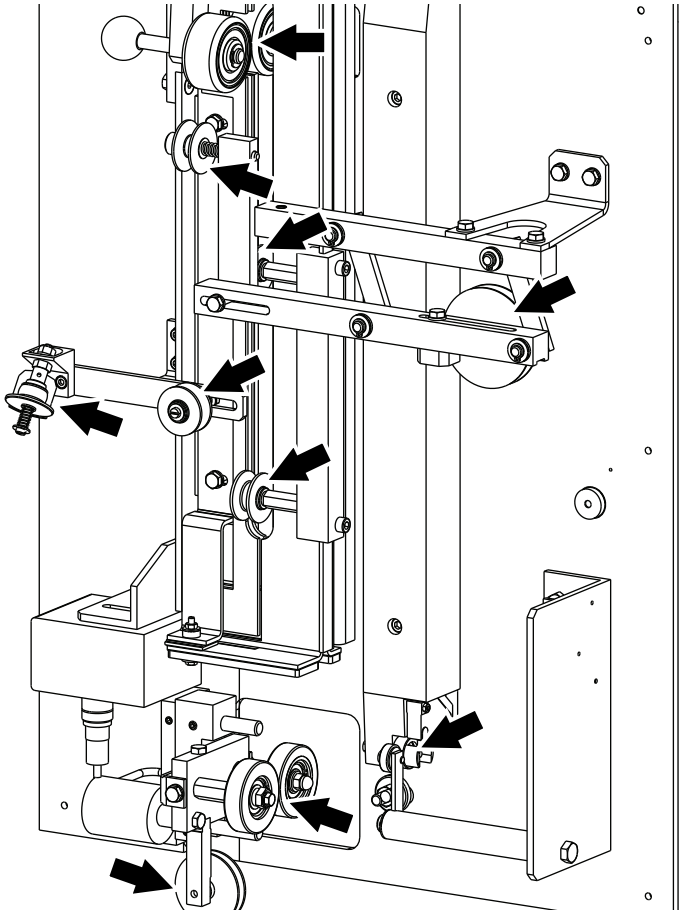

22

WARNING
Risk of eye injury.
Compressed air. Wear eye protection.

Clean the inductor and the SA with compressed air.

WARNING
Hazardous substances.
Risk of personal injury.
Cleaning compound. Follow the ii Safety Precautions.

Clean the strip rollers with a sponge and cleaning compound code G1 or G2, see 9.4 Cleaning and Disinfecting Agents on page 9-18. Wipe them dry with a clean dry cloth.

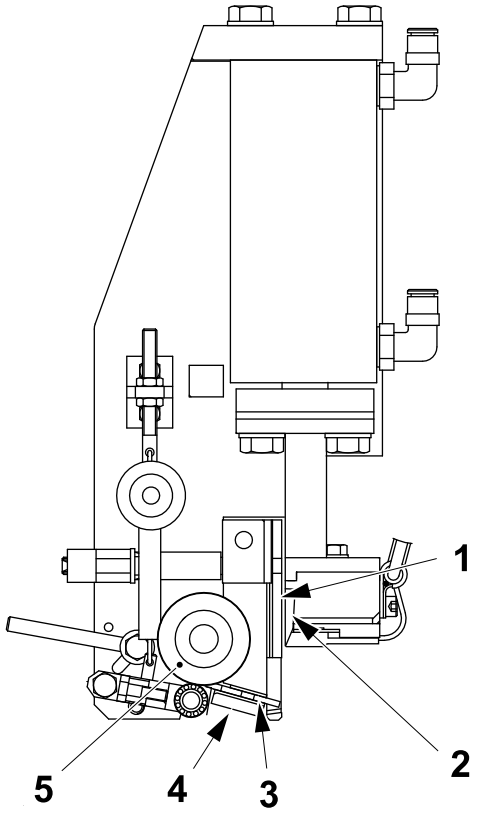

1 Window knife
2 Flat knife
3 Head plate
4 Steering
5 Drive roller

23

Patch Sealing Unit

WARNING

Hot surface.
Risk of burns.
The sealing unit heating rail may be hot. If necessary, wear heat resistant protective gloves.

WARNING

Risk of cutting.
Moving parts can cut.

WARNING

Risk of eye injury.
Compressed air. Wear eye protection.

Blow the components (1) to (5) of the patch sealing unit with compressed air.

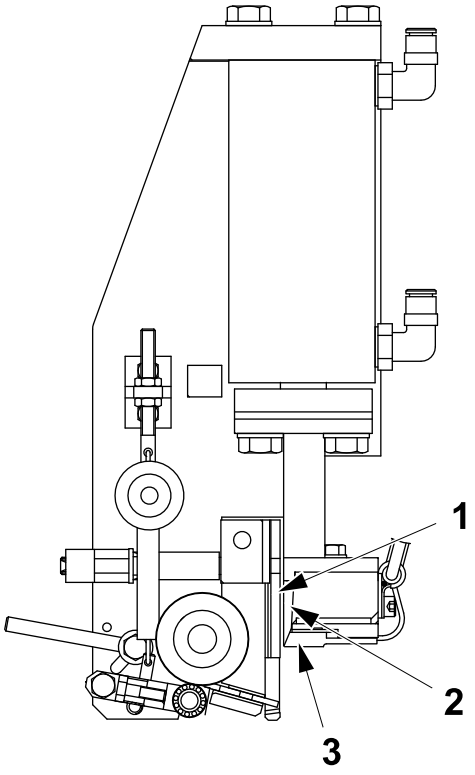

1 Window knife
2 Flat knife
3 Heating rail

24

On the patch sealing unit check the window knife (1), the flat knife (2), and the heating rail (3) for wear or damage.

If required, call a technician.

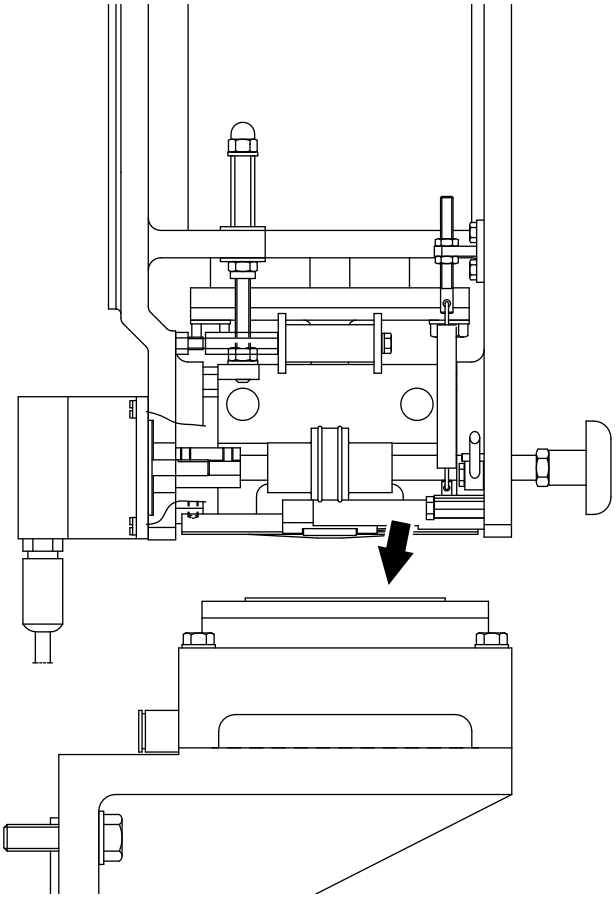

25

On the patch sealing unit check the plate of the counter jaw (arrow) for wear or damage.

If required, call a technician.

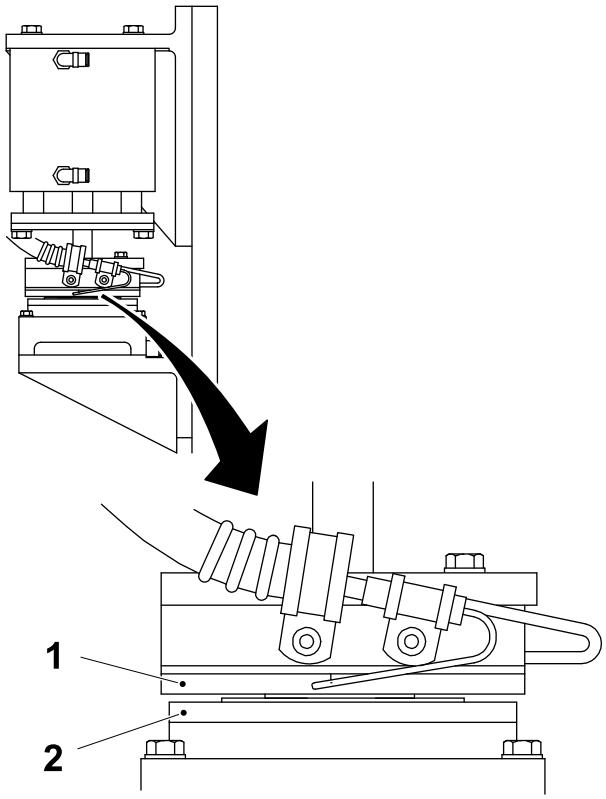

1 Heating rail
2 Plate

26

Patch Final Sealer

WARNING

Hot surface.
Risk of burns.
The heating rail may be hot. If necessary wear heat resistant protective gloves.

On the patch final sealer check the heating rail (1) and the plate (2) of the counter jaw for wear or damage.

If required, call a technician.

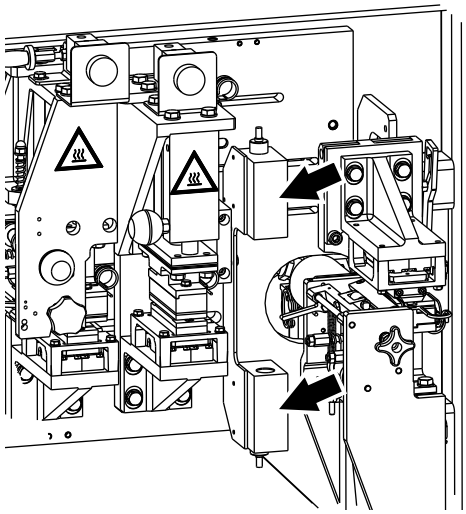

27

Ultrasonic Sensor

CAUTION

Risk of damage to the equipment.
Do not use compressed air to blow clean the ultrasonic sensors when cleaning the PullTab unit stations.

CAUTION

Risk of damage to the equipment.
The ultrasonic sensors (indicated with arrows) are sensitive to shock. Be careful when handling or cleaning the sensor or adjacent parts.

Carefully clean the ultrasonic sensors with a soft, non-abrasive cloth.

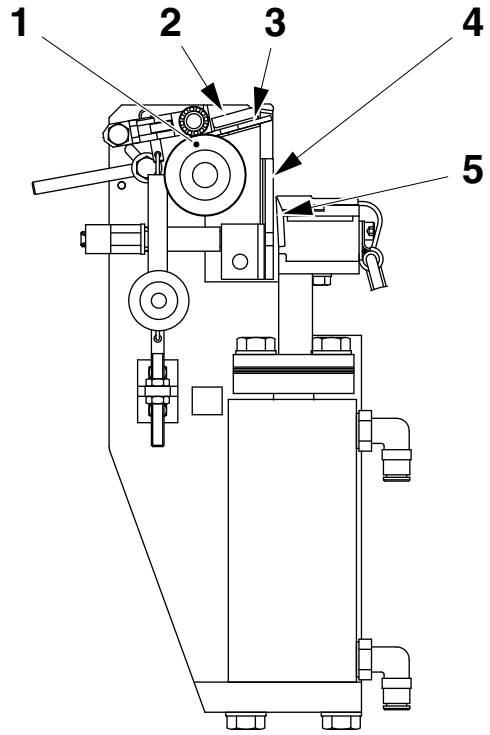

1 Drive roller
2 Head plate
3 Steering
4 Window knife
5 Flat knife

28

Tab Sealing Unit

WARNING

Hot surface.
Risk of burns.
The sealing unit heating rail may be hot.
If necessary wear heat resistant gloves.

WARNING

Risk of cutting.
Moving parts can cut.

WARNING

Risk of eye injury.
Compressed air. Wear eye protection.

Blow components components (1) to (5) of the tab sealing unit with compressed air.

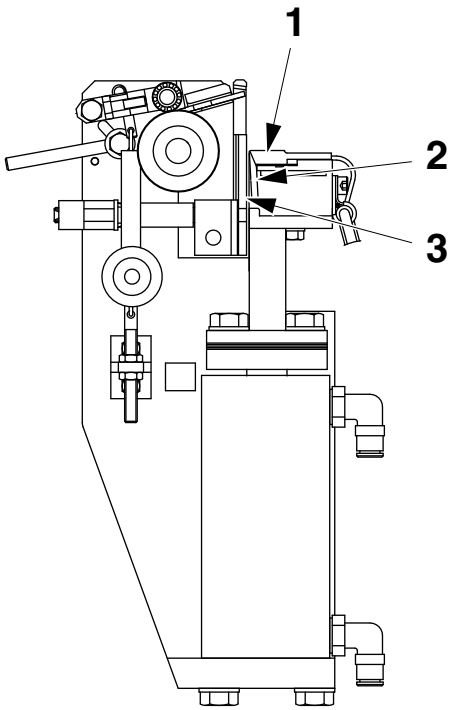

1 Heating rail
2 Flat knife
3 Window knife

29

On the tab sealing unit check the heating rail heating rail (1), the flat knife (2), and the window knife (3) for wear or damage.

If required, call a technician.

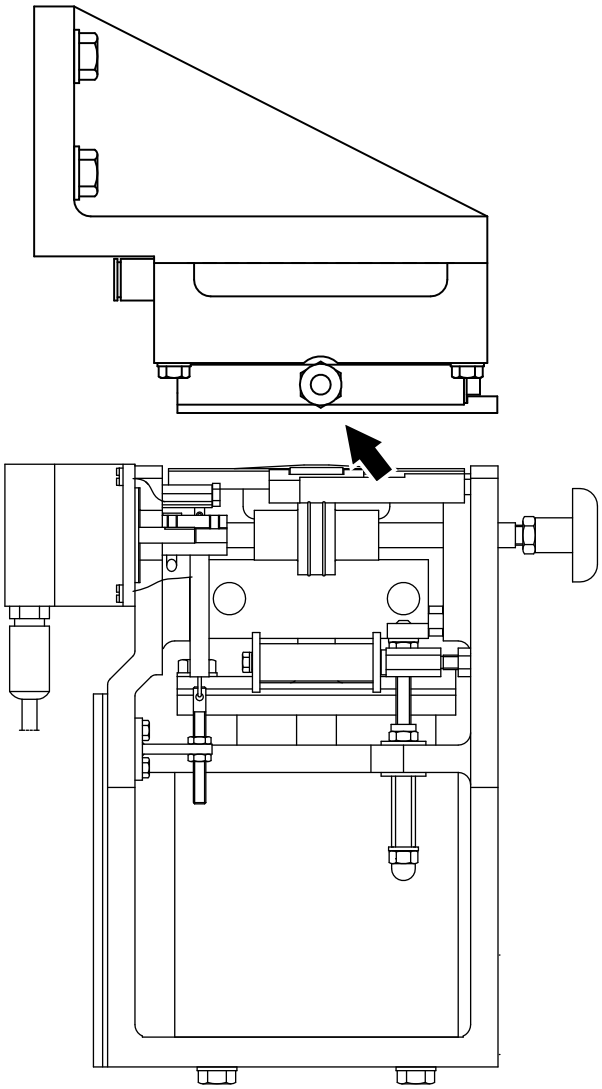

30

On the tab sealing unit check the plate of the dolly jaw (arrow) for wear or damage.

If required, call a technician.

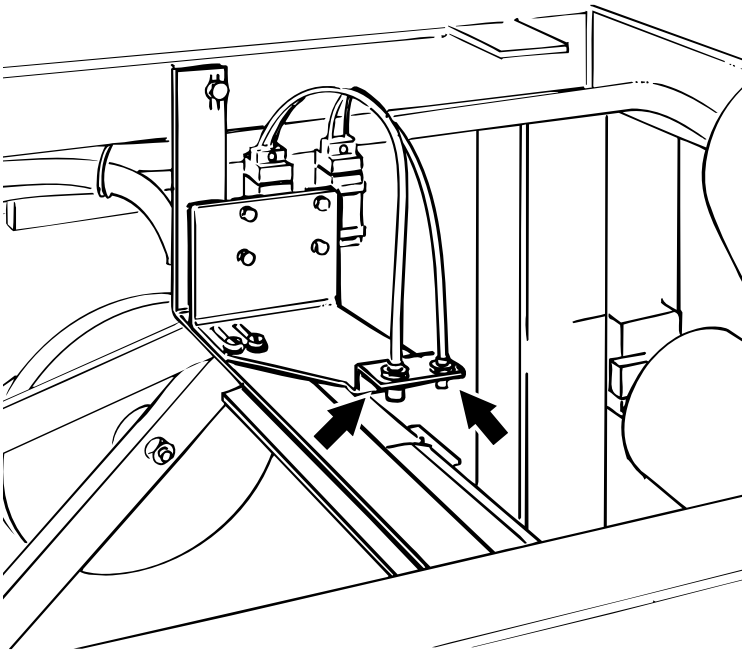

31

Clean the fibre optic sensors with a damp cloth.

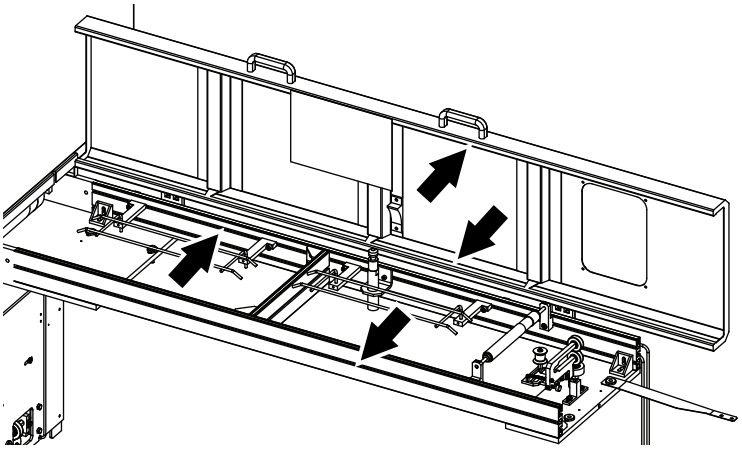

32

WARNING

Risk of eye injury.

Compressed air. Wear eye protection.

Clean the pockets (arrows) with compressed air.

Clean the inside of the strip applicator with a food industry vacuum cleaner. Make sure all dust is removed.

Wipe with a dry cloth.

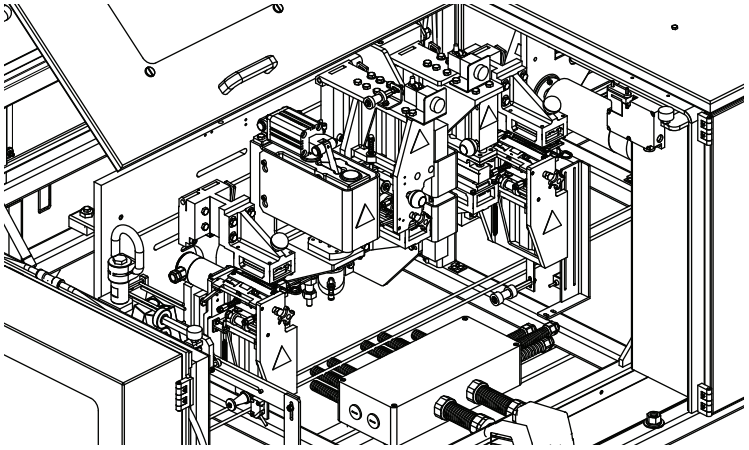

33

WARNING

Risk of eye injury.

Compressed air. Wear eye protection.

Clean the inside of the PullTab with compressed air.

Clean the inside with a food industry vacuum cleaner. Make sure all dust is removed.

Wipe with a dry cloth.

Note! Take care to clean all cables, hoses, pockets and the bottom plate.

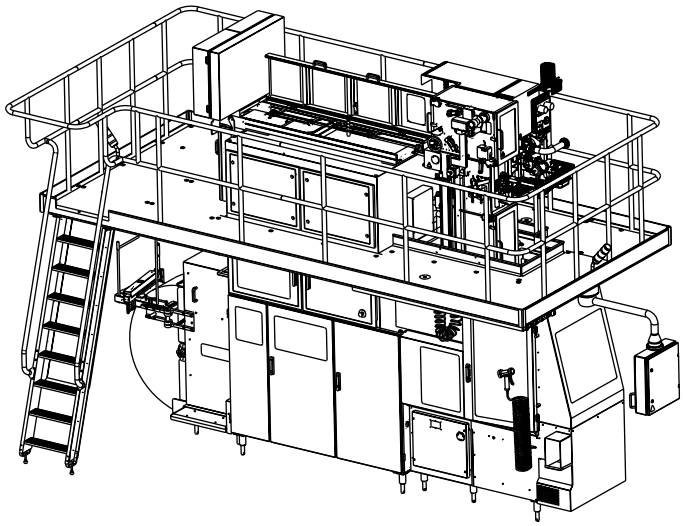

34

WARNING
Hot surfaces.
Risk of burns.
The aseptic chamber and surroundings may be hot. If necessary wear protective gloves.

WARNING
Hazardous substances.
Risk of personal injury.
Cleaning compound. Follow the ii Safety Precautions.

CAUTION
Production fault hazard and risk of equipment damage.
Do not use water when cleaning the platform or the electrical cabinet. Never let water into the electrical cabinet.

- Close the aseptic chamber doors.
- Clean the platform with a food industry vacuum cleaner. Make sure that the platforms, the ladder and the area under and around the machine are clean and tidy.
- Clean the door handles, TPOP, windows, and the outside of the machine (except the stainless steel plating) with a sponge and cleaning compound code G1 or G2, see chapter 9 Technical Data.
- Clean the stainless steel plating (except the electrical cabinet) with cleaning compound code D, see chapter 9 Technical Data.
- Wipe the electrical cabinet with a dry cloth. Rinse the other components with drinking water and wipe dry.
- When the stainless steel is dry, rub it with paraffin oil.

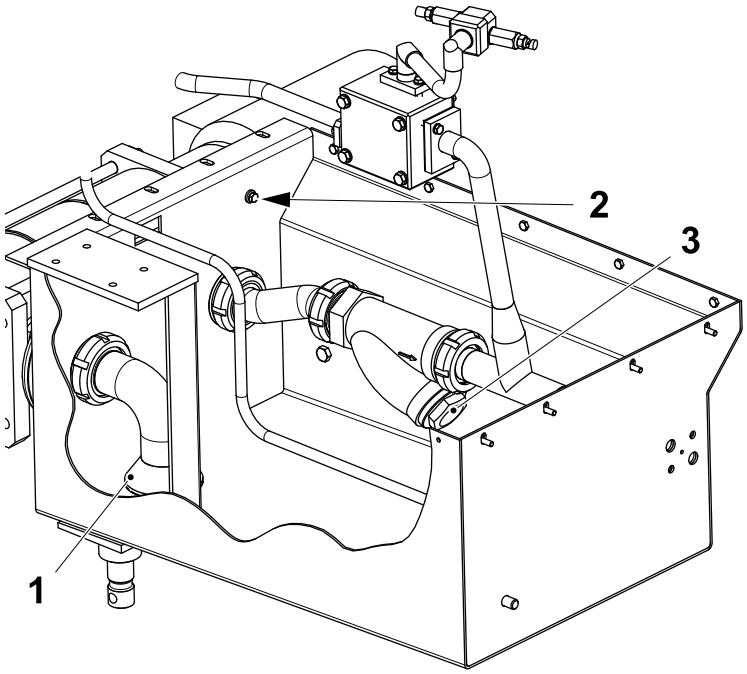

1 Level sensor
2 Strainer
3 Lid

35

WARNING
Risk of eye injury.
Compressed air. Wear eye protection.

Remove the lid (3) and remove the filter insert.

Clean the filter insert with compressed air, then fit it back.

Clean the level sensor (1) and remove any remnants of packaging material from the tray.

Make sure that the strainer (2) is clean.

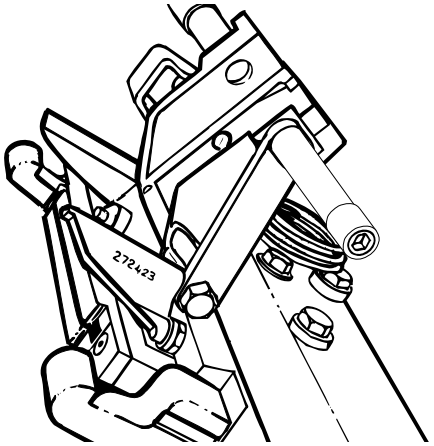

36

Crank the filling machine until one jaw pair is open, see section 1.10.1 How to Crank the Machine.

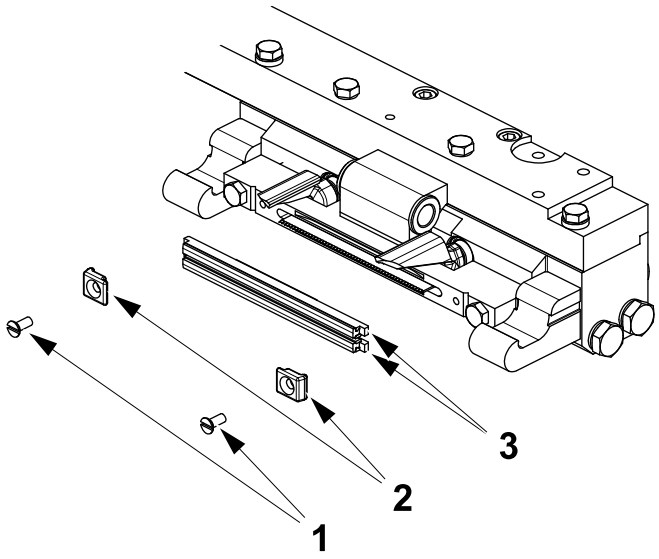

1 Screw
2 Bracket
3 Dolly

37

WARNING
Risk of cutting.
Moving parts can cut.

Remove the screws (1) and the brackets (2) and pull off the dollies (3).

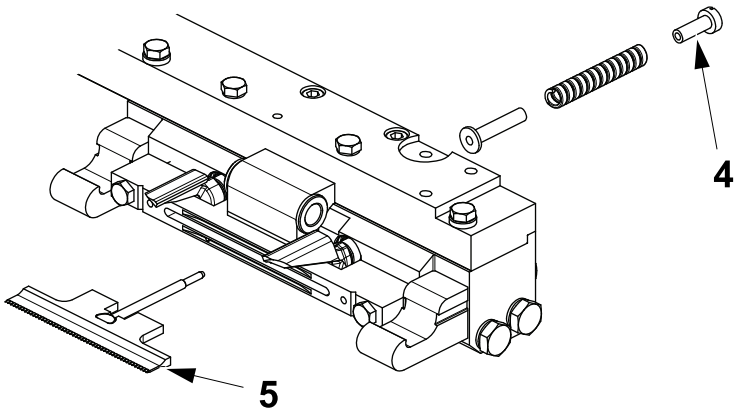

1 Screw
2 Knife holder

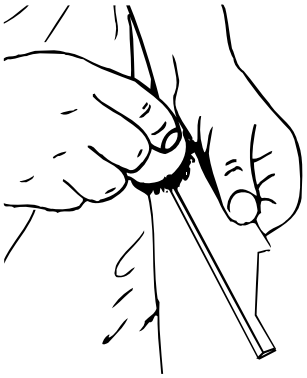

38

Remove the screw (1) and the knife holder (2).

Clean the knife by scraping both sides with a brass wire brush.

Wipe the knife.

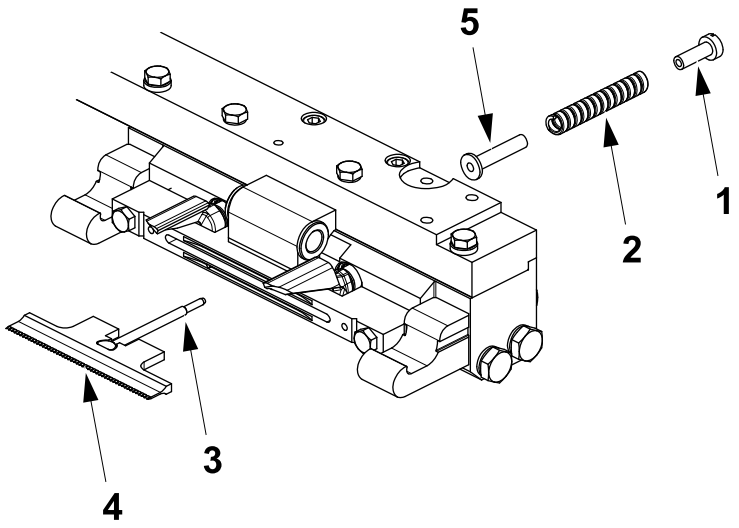

1 Nut
2 Spring
3 Link
4 Knife holder
5 Steering

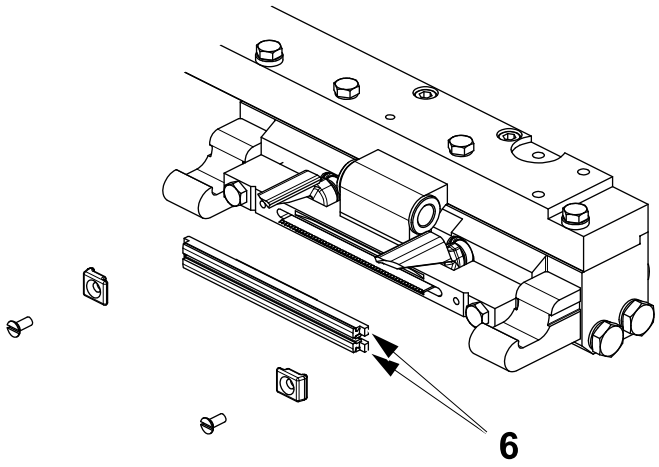

1 Dolly

39

WARNING
Risk of eye injury.
Compressed air. Wear eye protection.

Using compressed air, clean the spring (2) and the seat of the spring in the cutting jaw.

WARNING
Hazardous substances.
Risk of personal injury.
Grease. Follow the ii Safety Precautions.

Grease the nut (1), the spring (2), the link (3), the knife holder (4), and the steering (5) with grease, TP No. 90296-0091, see chapter 9 Technical Data. Remove excess grease.

Replace the dollies (1) and assemble in reverse order.

Repeat items 36 to 39 for the other cutting jaw.

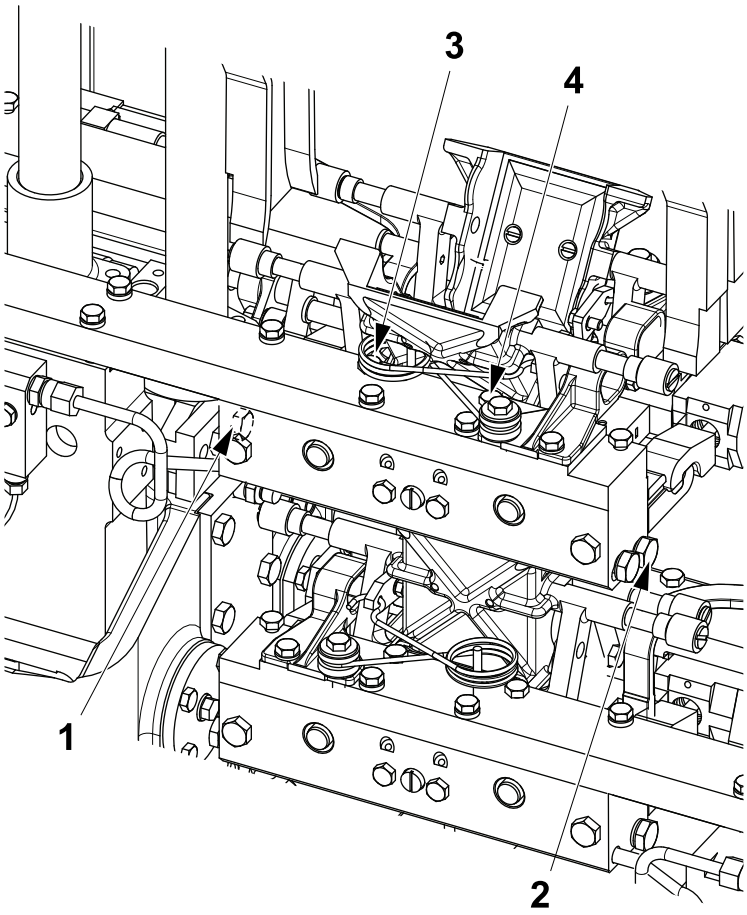

1 Drain hole
2 Drain hole
3 Bleed hole
4 Bleed hole

40

Crank the filling machine until one jaw pair is open, see section 1.10.1 How to Crank the Machine.

Drain the oil from the bearing housing by removing the plugs in the drain hole (1), the drain hole (2), the bleed hole (3), and the bleed hole (4).

WARNING
Risk of eye injury.
Compressed air. Wear eye protection.

Clean the bleed hole (3) and the bleed hole (4). with compressed air.

WARNING
Hazardous substances.
Risk of personal injury.
Lubricant. Follow the ii Safety Precautions.

Fill the bearing housing with oil, TP No.90296-0075 (TP No. 90296-0073 in production plant with start temperature below 5 °C), see chapter 9 Technical Data.

Top up with oil through the drain hole (1).

When oil starts flowing out of the bleed hole (3), put a finger over the hole, remove the oil can and fit the plug into the drain hole (1).

Repeat the same procedure for the other drain hole (2).

When oil starts flowing out of the bleed hole (4), put a finger over the hole, remove the oil can and fit the plug into the drain hole (2).

Fit the bleed hole plugs.

Note! Crank and repeat the whole procedure for the other cutting jaw.

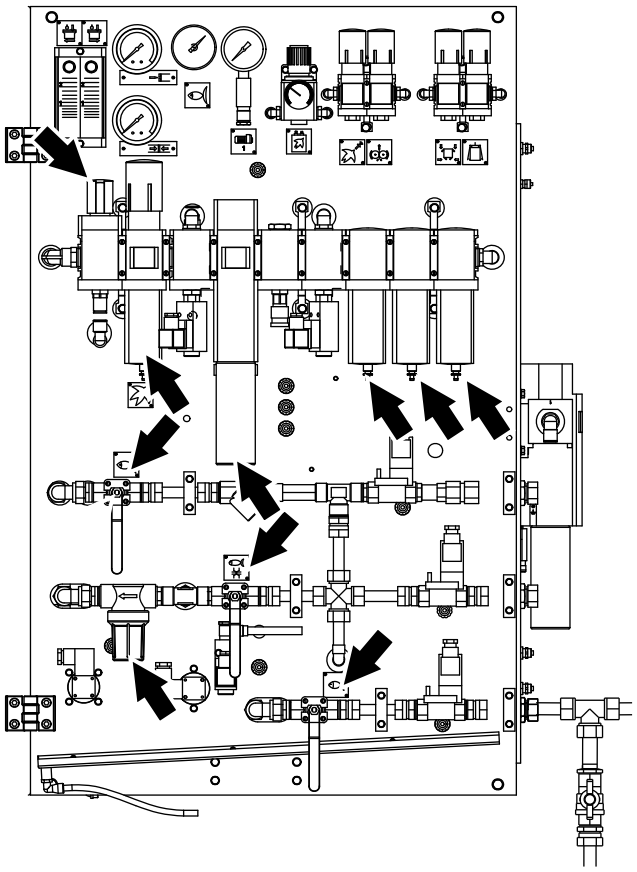

41

WARNING
Risk of eye injury.
Compressed air. Wear eye protection.

Close the incoming water and air.

Remove the magnetic filter and water filter and clean them with compressed air.

Fit the filters.

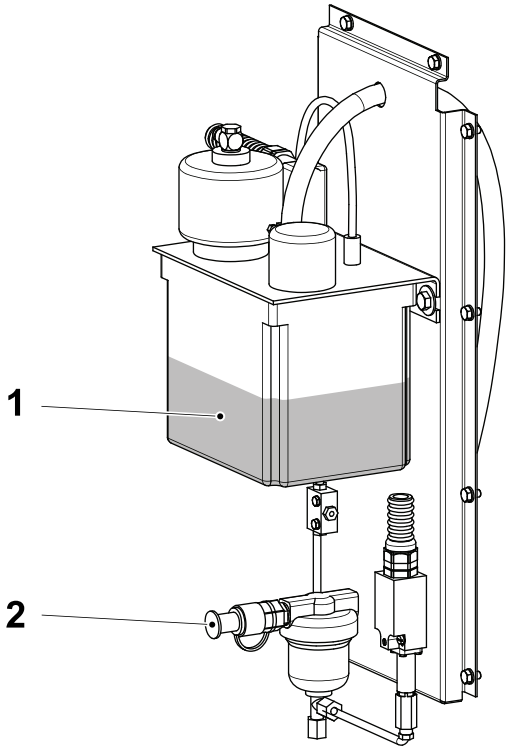

1 Central lubrication tank
2 Cap

42

WARNING
Hazardous substances.
Risk of personal injury.
Lubricant. Follow the ii Safety Precautions.

Check the oil level in the central lubrication tank (1).

If required, remove the cap (2) and fill to the correct level. Use oil, TP No. 90296-0075 (TP No. 90296-0073 in production plant with start temperature below 5 °C), see chapter 9 Technical Data.

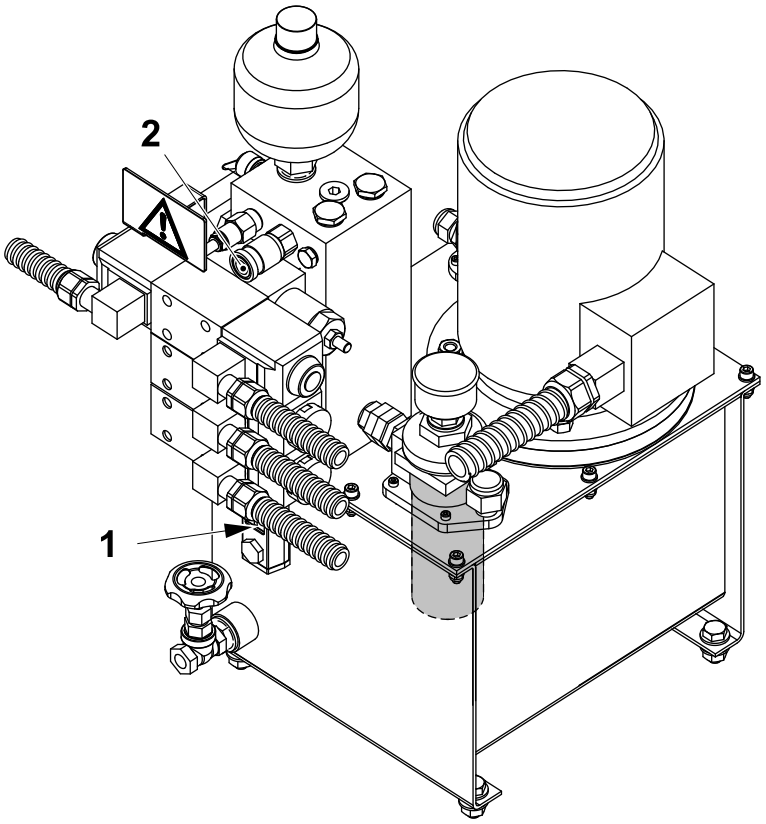

1 Level glass
2 Quick-coupling

43

WARNING
Hazardous substances.
Risk of personal injury.
Lubricant. Follow the ii Safety Precautions.

Check the oil level at the level glass (1).

If required, connect the oil supply through the quick-coupling (2) and top up the oil.

Use oil, TP No. 90296-0053, see chapter 9 Technical Data.

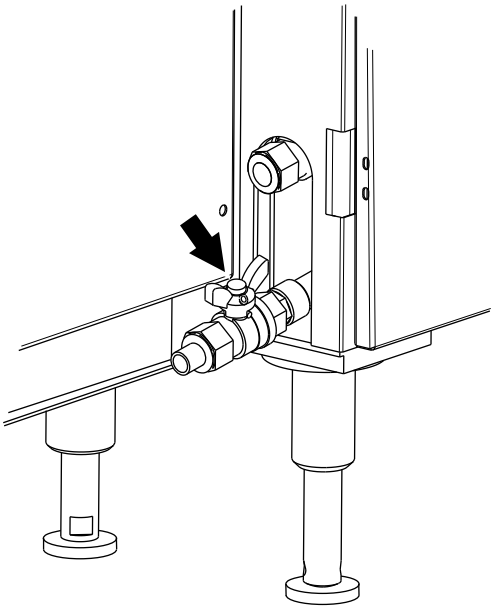

44

Every week or after a maximum of 120 operating hours

WARNING
Hydrogen peroxide.
Risk of personal injury.
Follow the ii Safety Precautions.

Drain the hydrogen peroxide in the dilution tank, see 9.1.2 Change Hydrogen Peroxide on page 9-10 in chapter 9 Technical Data.

CAUTION
Product fault hazard.
Risk of serious production fault.
The hydrogen peroxide must be changed weekly to prevent paper dust and impurities from accumulating in the tank. If this is not done, it could lead to peroxide stability problems.

Fill the dilution tank with new hydrogen peroxide at the start of PRODUCTION to ensure best quality.

Note! After changing the hydrogen peroxide, check the concentration, see 9.1.1 Check Hydrogen Peroxide Concentrationon page 9-6 in chapter 9 Technical Data.

45

When resuming PRODUCTION after 8.2 Weekly Care, start from 3.2 Preparation After Weekly Care on page 3-45.

8.2.2 Valid for Machines Equipped with ASU (Option)

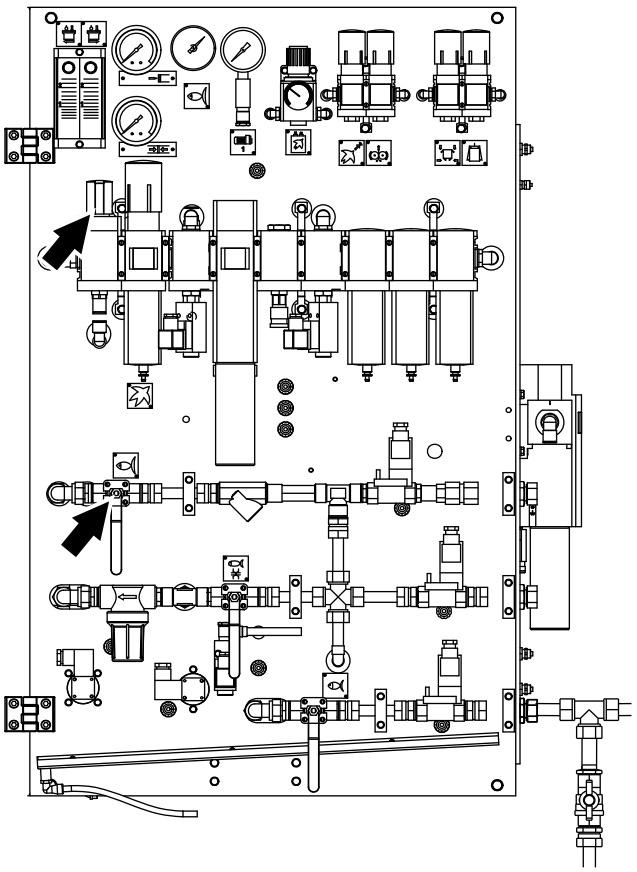

1

Open the air valve and incoming water.

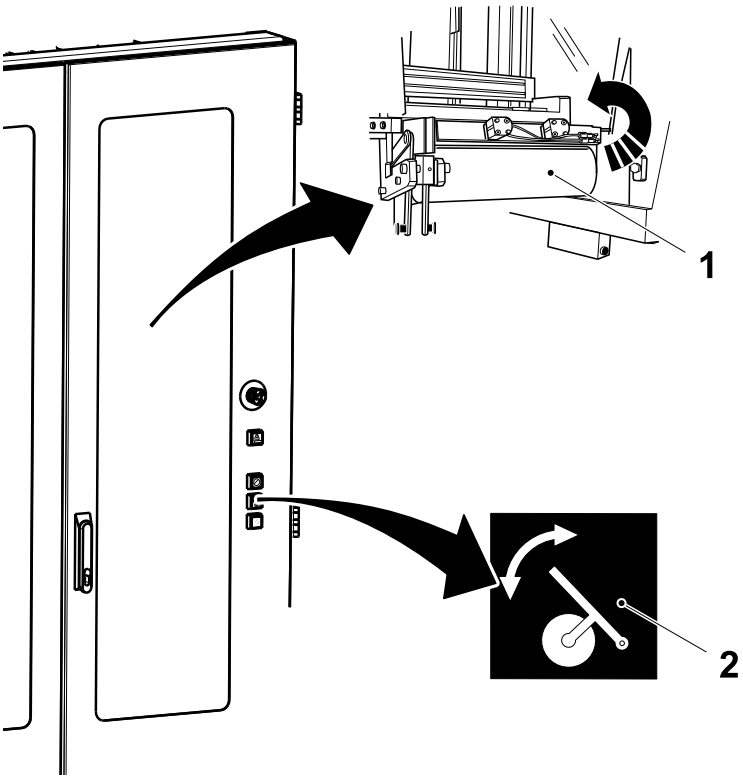

1 Material holder
2 PACKAGING MATERIAL HOLDER

2

Before opening the ASU doors, make sure the material holder (1) is fully elevated.

If not, press the PACKAGING MATERIAL HOLDER button (2).

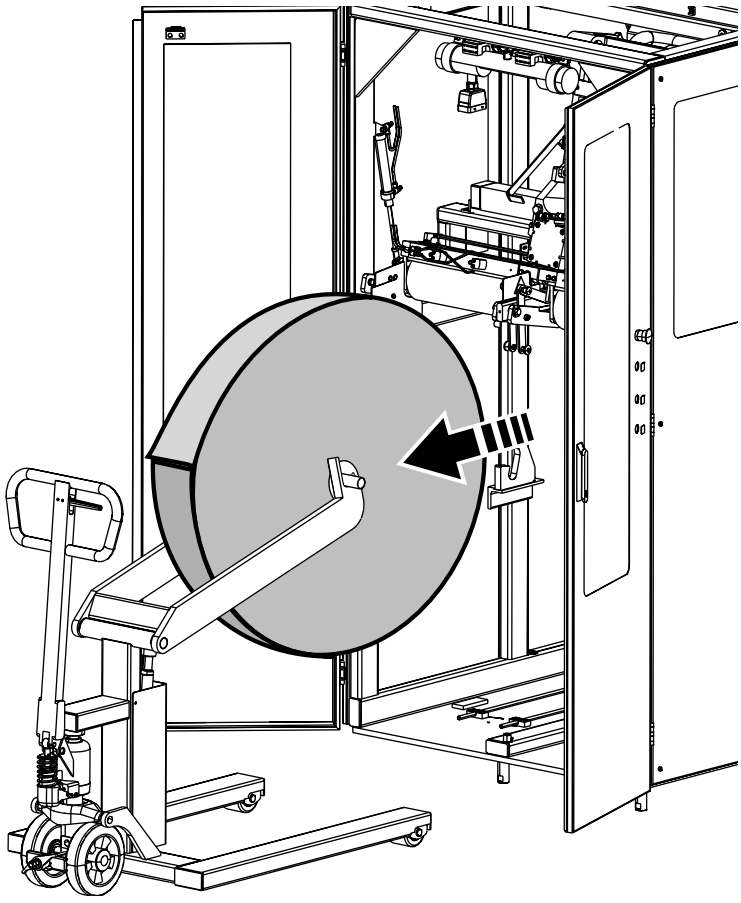

3

WARNING

Risk of cutting and crushing.
The knife is sharp and the crease wheel may cut and crush.

Open the ASU doors.

Remove the packaging material reel.

Pull all the remaining packaging material out of the machine.

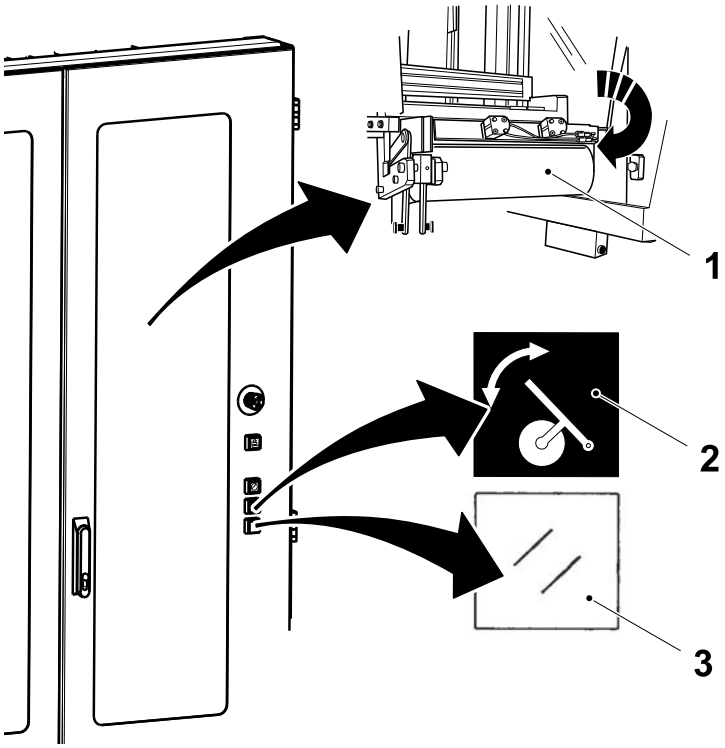

1 Material holder
2 PACKAGING MATERIAL HOLDER
3 HARDWARE RESET

4

Close the ASU doors.

Press the HARDWARE RESET button (3).

The material holder (1) above the reel lowers. If not, press the PACKAGING MATERIAL HOLDER button (2).

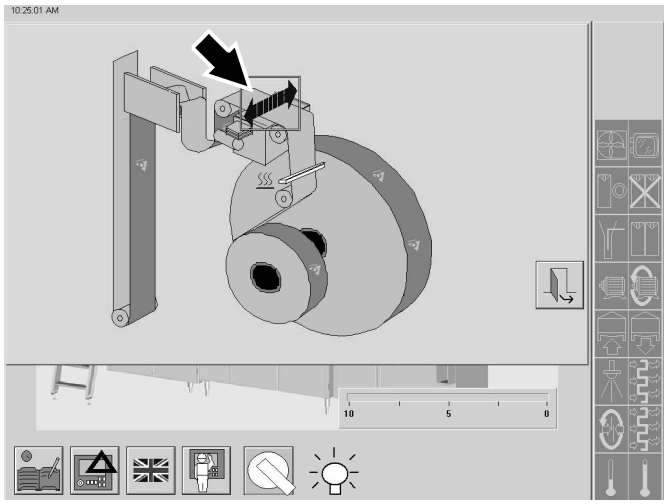

5

Move the splicing device over the packaging material reel, see 2.8.12 Move Splicing Device, Valid for Machines Equipped with ASU (Option) on page 2-83.

Repeat from item 2, until the material holder above the reel lowers.

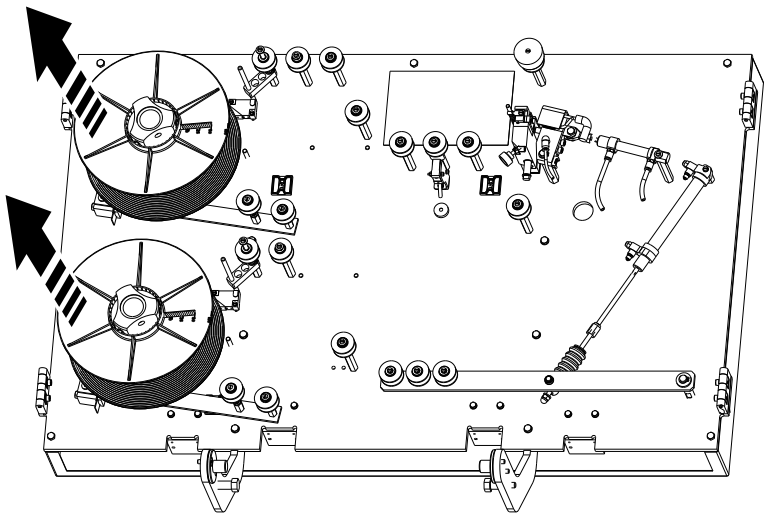

6

Cut the LS strips.

Rewind the LS strip back onto the reels and remove the reels from the machine.

WARNING
Risk of eye injury.
Compressed air. Wear eye protection.

Clean the LS strip magazine with compressed air.

WARNING
Hazardous substances.
Risk of personal injury.
Cleaning compound. Follow the ii Safety Precautions.

Clean the rollers with a sponge and cleaning compound code G1 or G2, see 9.4 Cleaning and Disinfecting Agents on page 9-18, and then wipe them dry with a clean cloth.

Note! Do not lubricate the rollers.

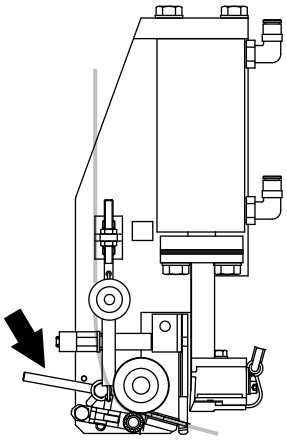

7

Lower the handle and remove the patch strip from the patch sealing unit.

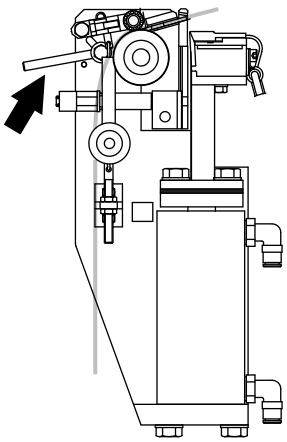

8

Raise the handle and remove the tab strip from the tab sealing unit.

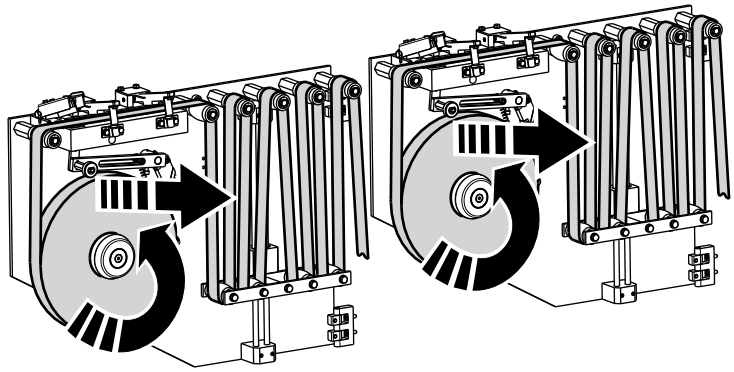

9

Rewind the patch and tab strips back onto the reels and remove the reels from the machine.

WARNING
Risk of eye injury.
Compressed air. Wear eye protection.

Clean the patch and tab strip magazines with compressed air.

WARNING
Hazardous substances.
Risk of personal injury.
Cleaning compound. Follow the ii Safety Precautions.

Clean the rollers with a sponge and cleaning compound code G1 or G2, and then wipe them dry with a clean cloth.

Note! Do not lubricate the rollers.

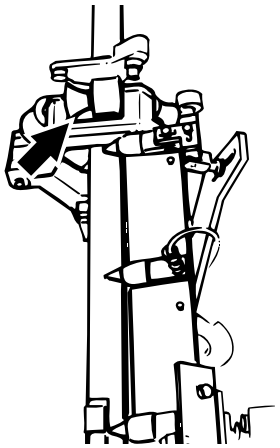

10

WARNING
Hot surfaces.
The filling pipe may be hot. If necessary, wear protective gloves.

Open the divided forming ring.

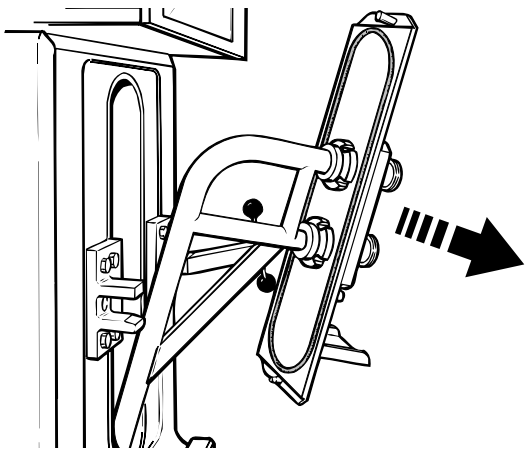

11

Loosen the plate of the upper filler tube and remove the upper filler tube.

Remove the O-rings from the upper filler tube.

Change the O-rings if required.

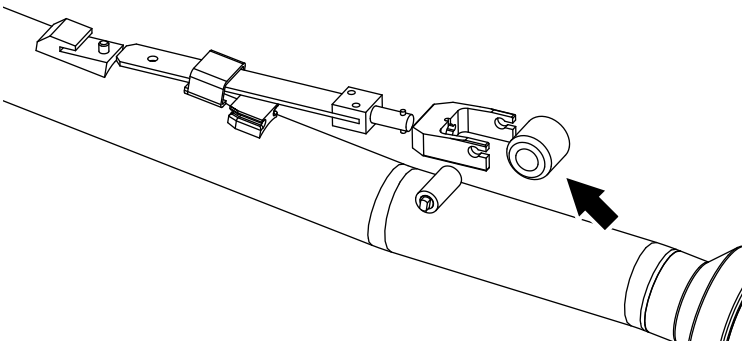

12

Remove the LS strip pressure roller (arrow) from the upper filler tube.

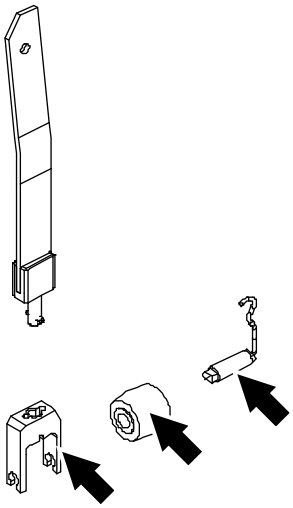

13

Make sure that the roller and its shaft are not worn or damaged.

Change them, if required.

⚠ WARNING
Hazardous substances.
Risk of personal injury.
Cleaning compound. Follow the ii Safety Precautions.

Use a clean brush to carefully clean the parts shown with cleaning compound code D, see 9.4 Cleaning and Disinfecting Agents on page 9-18.

Rinse the parts with drinking water.

Store the LS roller in a clean, dry, and protected place.

Immerse the stainless steel parts of the LS pressure roller assembly in a no rinse sanitiser until the machine is ready to be threaded with packaging material, or for a minimum of five minutes.

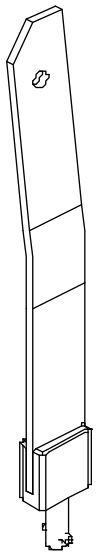

14

WARNING
Hazardous substances.
Risk of personal injury.
Cleaning compound. Follow the ii Safety Precautions.

Use a stainless steel brush to clean the LS flat spring with cleaning compound code D, see 9.4 Cleaning and Disinfecting Agents on page 9-18.

Rinse the spring with drinking water.

Fill an ultrasonic cleaning unit with cleaning compound code B, see 9.4 Cleaning and Disinfecting Agents on page 9-18.

Turn the heater on and run the ultrasonic cleaning unit for at least 10 minutes to de-gas the solution.

Note! Do not clean more than two LS flat springs at a time in the ultrasonic cleaning unit.

After ten minutes, and when the solution has reached a minimum temperature of 55 °C, place the LS flat spring in the ultrasonic cleaning unit.

Run the ultrasonic cleaning unit with the heater on and the cover in place for 45 minutes.

When the unit has completed its run, remove the LS flat spring and rinse it with drinking water.

Place the LS spring in a no rinse sanitiser until the machine is ready to be threaded with packaging material, or for a minimum of five minutes.

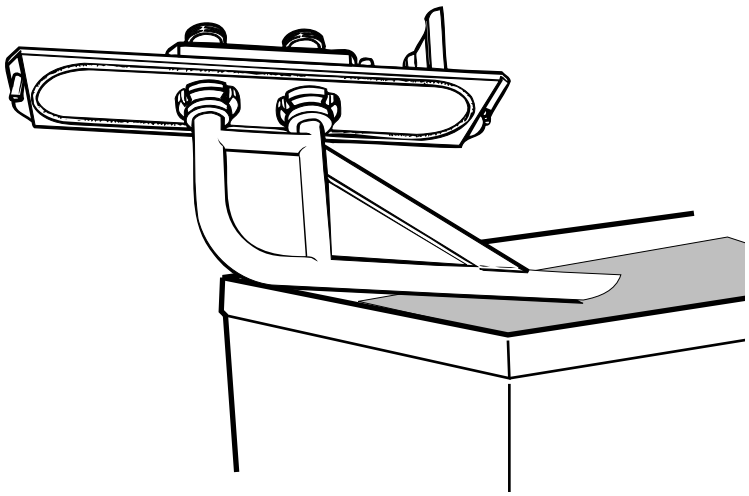

15

WARNING
Hot surfaces.
If necessary, wear protective gloves.

WARNING
Hazardous substances.
Risk of personal injury.
Cleaning compound. Follow the ii Safety Precautions.

CAUTION
Production fault hazard.
Risk of serious production fault. Remove all visible product residue from the pipe. Sterilisation is effective on clean surfaces but may not be effective on product residue.

Carefully clean the outside of the upper filling pipe and rinse with drinking water. Use cleaning compound code D, see chapter 9 Technical Data.

Make sure that all product residue is removed from the pipe.

After cleaning, immerse the upper filling pipe in code F3 cleaning compound, see 9.4 Cleaning and Disinfecting Agents on page 9-18.

The upper filling pipe must remain immersed for a minimum of one hour in the cleaning compound, or until the next production run.

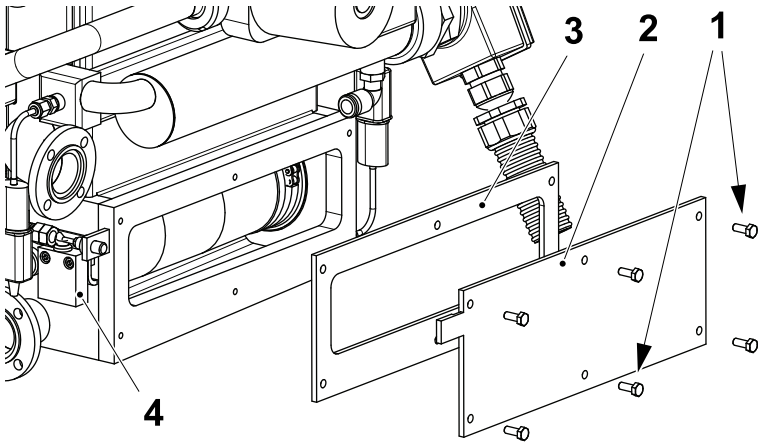

1 Screw
2 Front cover
3 O-ring
4 Proximity switch

16

WARNING
Hydrogen peroxide.
Risk of personal injury.
Follow the ii Safety Precautions.

Remove the six screws (1) and remove the front cover (2) of the bath.

Remove any strip remnants from the bottom of the bath.

Make sure that the O-ring (3) is intact.

Fit the cover.

Make sure that the proximity switch (4) is activated when the cover has been fitted.

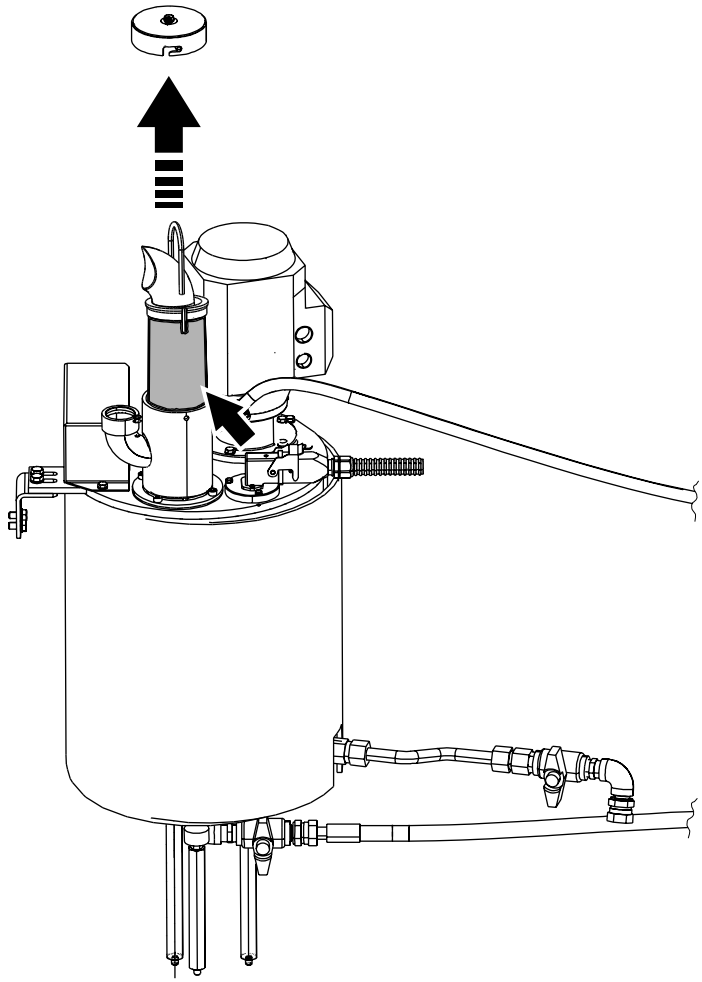

17

WARNING
Hydrogen peroxide.
Risk of personal injury.
Follow the ii Safety Precautions.

WARNING
Risk of eye injury.
Compressed air. Wear eye protection.

CAUTION
Production fault hazard.
Do not touch the filter with hands.

Remove the filter (arrow) from the hydrogen peroxide tank.

Rinse the filter with distilled water and clean it with compressed air. Rinse again with distilled water.

Put the filter back.

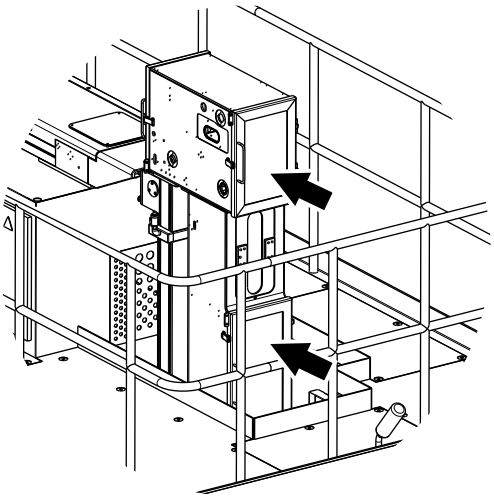

18

WARNING
Hydrogen peroxide.
Risk of personal injury.
Follow the ii Safety Precautions.

WARNING
Hot surfaces.
Risk of burns.
The LS nozzle and the aseptic chamber may be hot. Wear protective gloves.

WARNING
Sudden and violent chemical reaction hazard.
Risk of personal injury or equipment damage.
Do not use any detergent containing an alcohol solution when cleaning the aseptic chamber.

CAUTION
Risk of equipment damage.
Never let water into the electrical cabinet.

Wash the inside of the aseptic chamber, the doors, and windows with a sponge and cleaning compound code D, see 9.4 Cleaning and Disinfecting Agents on page 9-18.

Rinse with a sponge and drinking water, and then wipe dry with a clean, dry cloth.

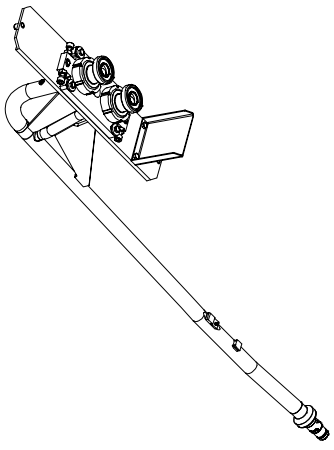

19

Remove the immersed upper filling pipe from the code F3 cleaning compound.

Let the upper filling pipe drip-dry in a clean area for about 15 minutes before putting it back on the machine.

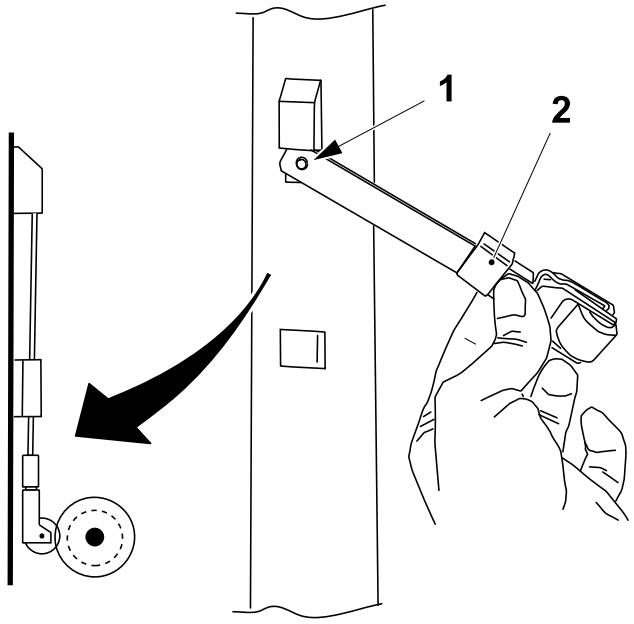

1 Pin
2 Hood

20

CAUTION
Risk of unsterility.
Before touching the packaging material, disinfect your hands or gloves.

Fetch the LS strip pressure roller from its storage container.

Fit the LS strip pressure roller on the pin (1).

Check that the slot in the hood (2) is towards the filling pipe.

Lock the pressure roller onto the filling pipe with the hood (2).

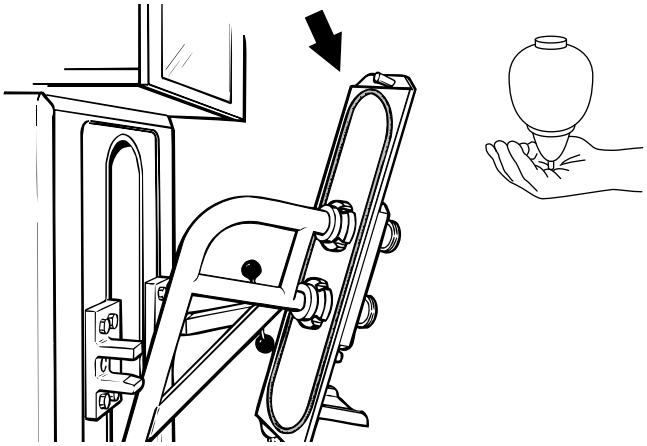

21

CAUTION
Risk of damage to the equipment.
Do not damage the LS nozzle rollers, or change their setting.

Fit the upper filler tube into the machine.

Make sure that the O-ring of the upper filler tube stays in the correct position.

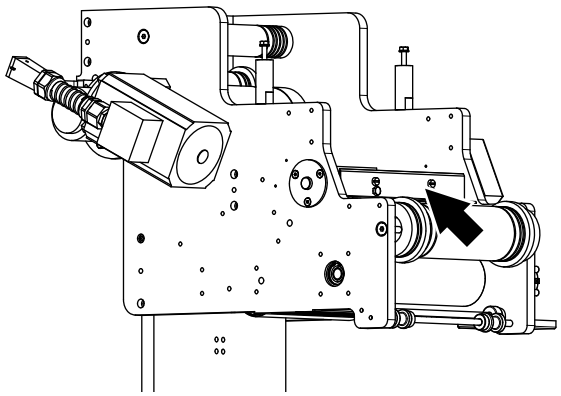

22

WARNING
Risk of cutting and crushing.
Sharp moving parts can cut and crush.
Take care when handling the crease wheel.

WARNING
Hazardous substances.
Risk of personal injury.
Solvent. Follow the ii Safety Precautions.

Clean the crease wheel with solvent, Propylene glycol methylene ether/Dowanol PM.

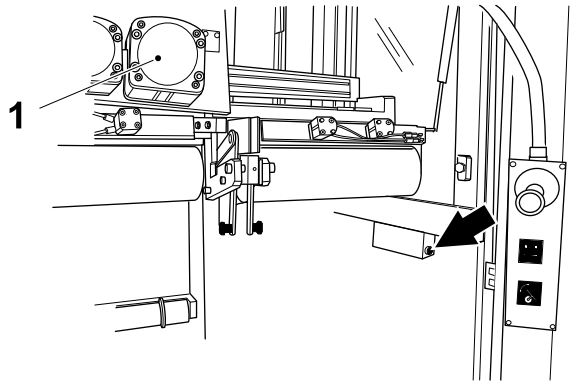

1 Splicing device

23

Open the ASU doors.

Press the button to release the splicing device (1).

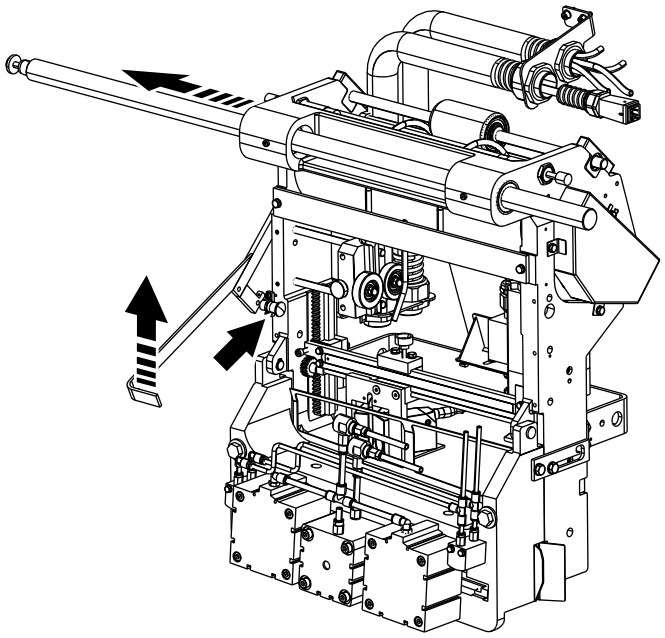

24

Push the splicing device aside. Pull the knob (arrow) and lift up the lever.

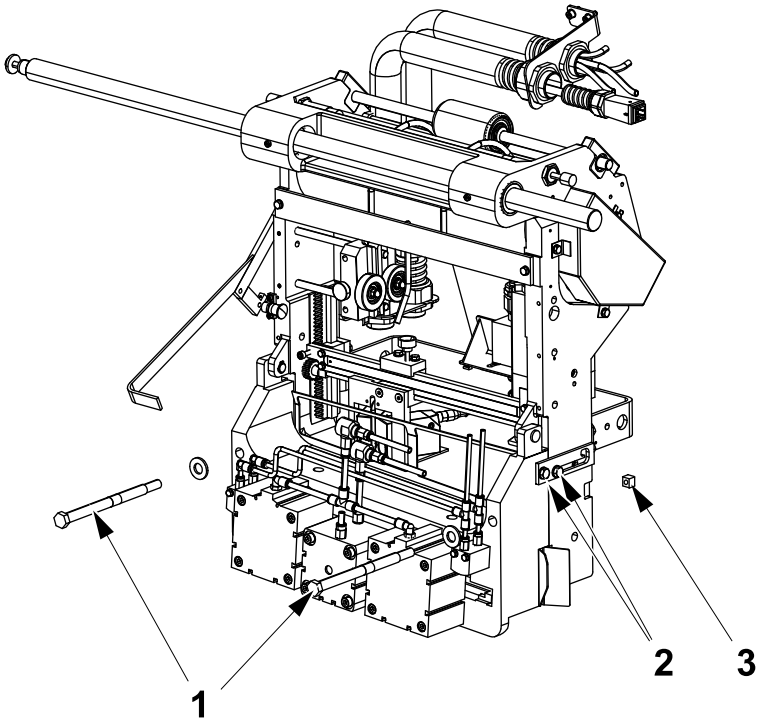

25

Remove the two screws (1), the washers, and the two nuts (3).

Loosen the two screws (2) slightly.

1 Screw
2 Screw
3 Nut

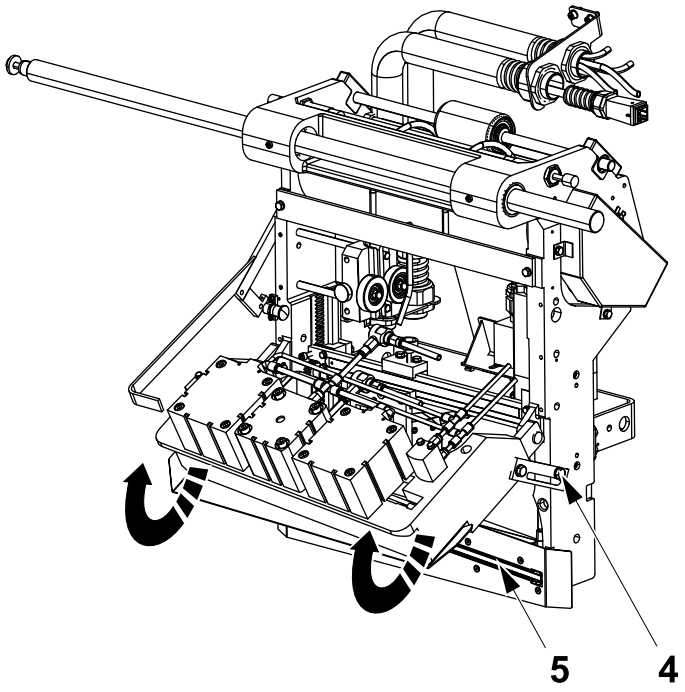

1 Screw
2 TPO-bar

26

CAUTION
Risk of personal injury.
The pressure jaw can fall down if it is not secured by the screw (1) and the notch in the bracket.

Lift up the pressure jaw as illustrated. Make sure the pressure jaw is secured in upright position by the screw (1) and the notch in the bracket.

CAUTION
Risk of equipment damage.
Do not use a metallic brush or metallic scraper to clean the TPO-bar (2) .

Clean the surface of the TPO-bar (2) from plastic residue with a nylon or bristle brush. A plastic scraper can also be used to clean the TPO-bar (2).

Assemble in the reverse order.

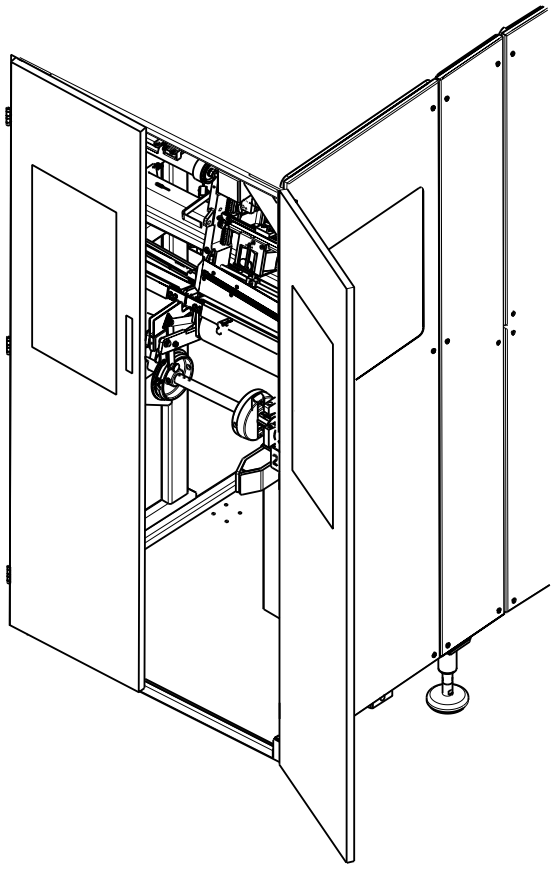

27

Clean the inside of the ASU with a food industry vacuum cleaner. Make sure all paper dust is removed.

CAUTION
Production fault hazard.
Risk of product contamination.
Remove any moisture.

Inspect the ASU and wipe dry with a cloth.

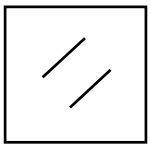

28

Close the ASU doors and press the HARDWARE RESET button.

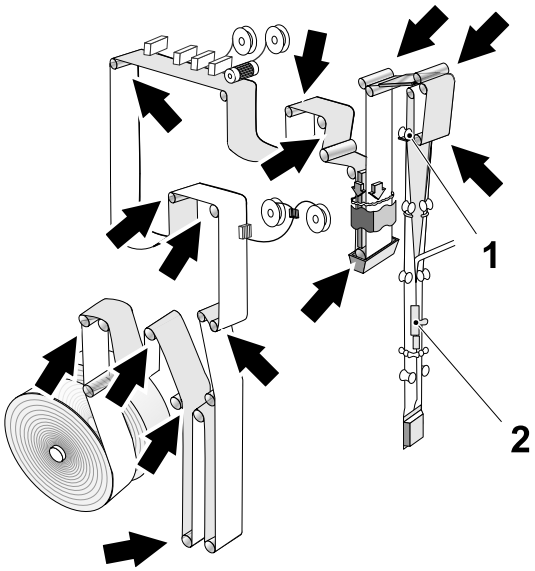

1 Upper forming ring
2 LS short stop element

29

WARNING
Hazardous substances.
Risk of personal injury.
Cleaning compound. Follow the ii Safety Precautions.

CAUTION
Risk of unsterility.
Residual water in the aseptic chamber will result in diluted hydrogen peroxide that will not be able to sterilise the surface as intended.
Do not spray water in the drying chamber (above the upper forming ring (1)) or on the LS short stop element (2).

CAUTION
Risk of unsterility.
Do not dry the rollers with compressed air.

Clean the bending rollers with a sponge and cleaning compound G1 or G2, see 9.4 Cleaning and Disinfecting Agents on page 9-18. Rinse them with drinking water and then wipe them dry with a clean dry cloth.

Clean the calendar rollers with a sponge and distilled water only.

For the locations of the rollers, see chapter 1 General Description section 1.9 Packaging Material Web.

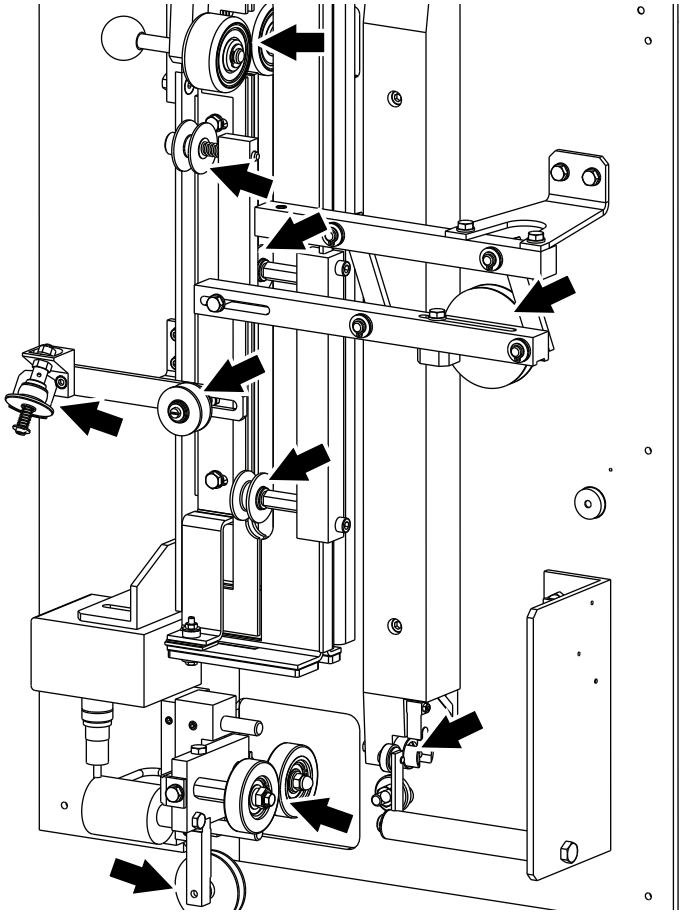

30

WARNING
Risk of eye injury.
Compressed air. Wear eye protection.

Clean the inductor and the SA with compressed air.

WARNING
Hazardous substances.
Risk of personal injury.
Cleaning compound. Follow the ii Safety Precautions.

Clean the strip rollers with a sponge and cleaning compound code G1 or G2, see 9.4 Cleaning and Disinfecting Agents on page 9-18. Wipe them dry with a clean dry cloth.

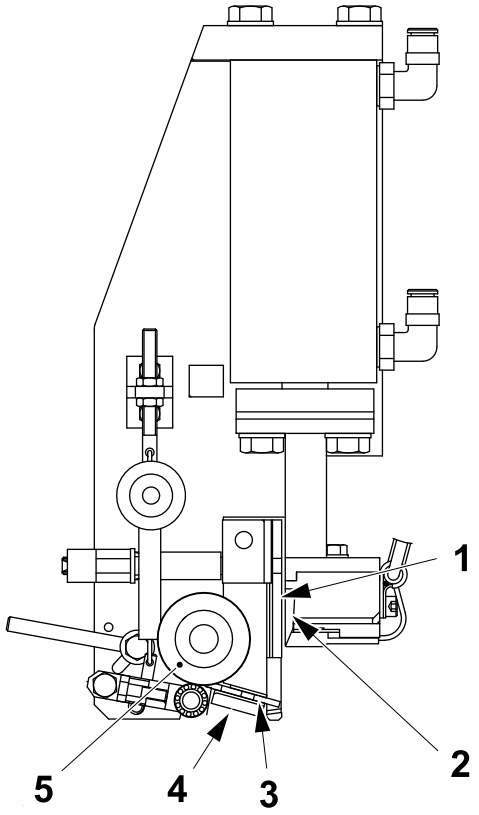

1 Window knife
2 Flat knife
3 Head plate
4 Steering
5 Drive roller

31

Patch Sealing Unit

WARNING

Hot surface.
Risk of burns.
The sealing unit heating rail may be hot. If necessary, wear heat resistant protective gloves.

WARNING

Risk of cutting.
Moving parts can cut.

WARNING

Risk of eye injury.
Compressed air. Wear eye protection.

Blow the components (1) to (5) of the patch sealing unit with compressed air.

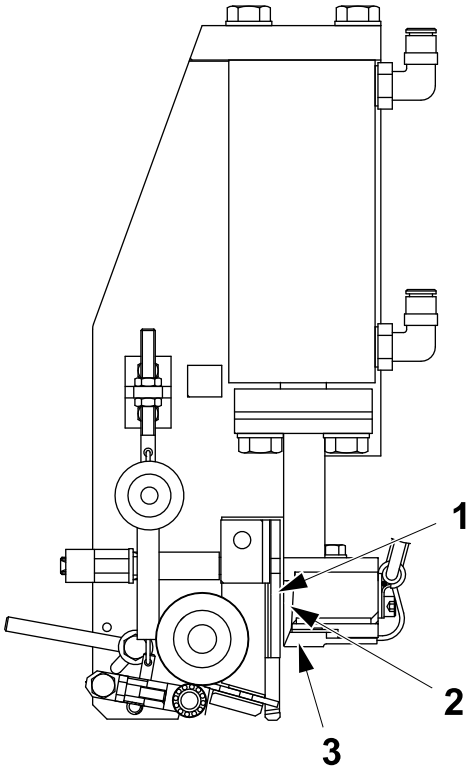

1 Window knife
2 Flat knife
3 Heating rail

32

On the patch sealing unit check the window knife (1), the flat knife (2), and the heating rail (3) for wear or damage.

If required, call a technician.

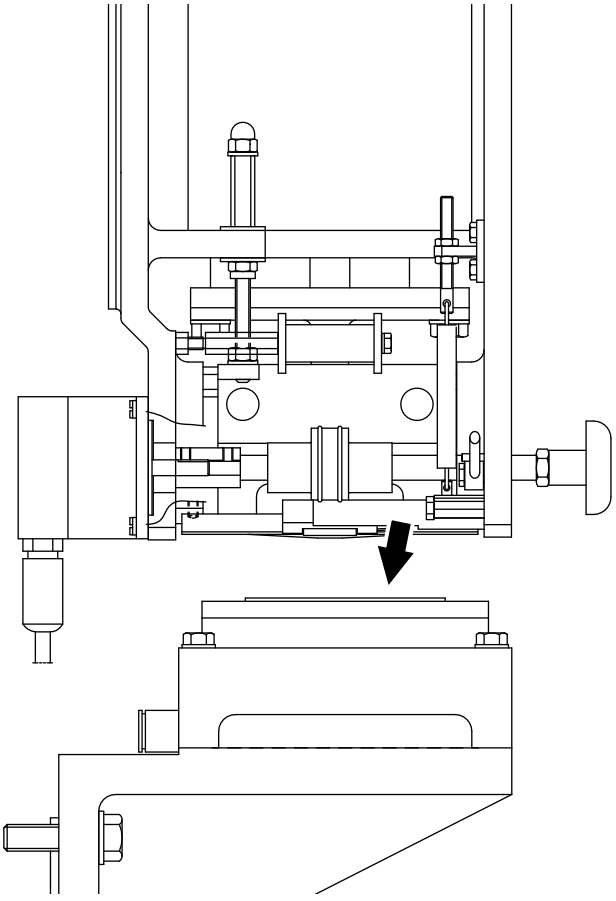

33

On the patch sealing unit check the plate of the counter jaw (arrow) for wear or damage.

If required, call a technician.

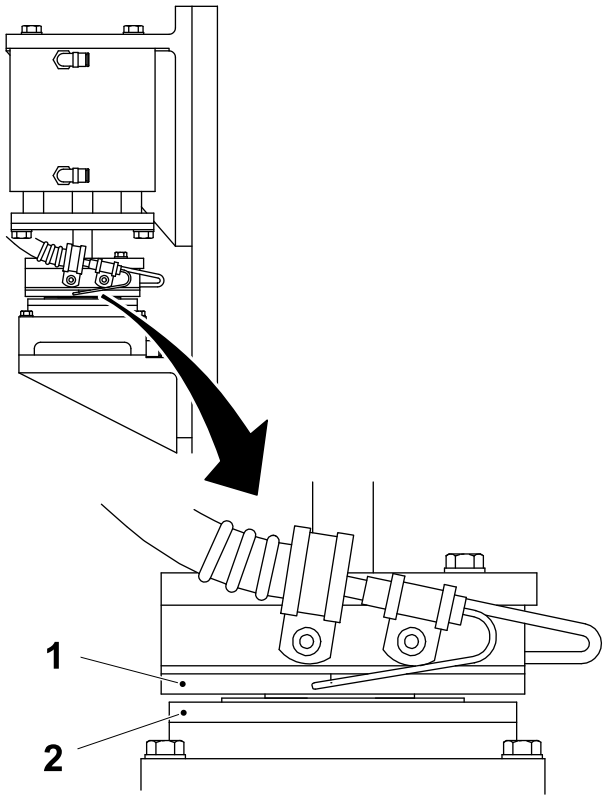

1 Heating rail
2 Plate

34

Patch Final Sealer

WARNING

Hot surface.
Risk of burns.
The heating rail may be hot. If necessary wear heat resistant protective gloves.

On the patch final sealer check the heating rail (1) and the plate (2) of the counter jaw for wear or damage.

If required, call a technician.

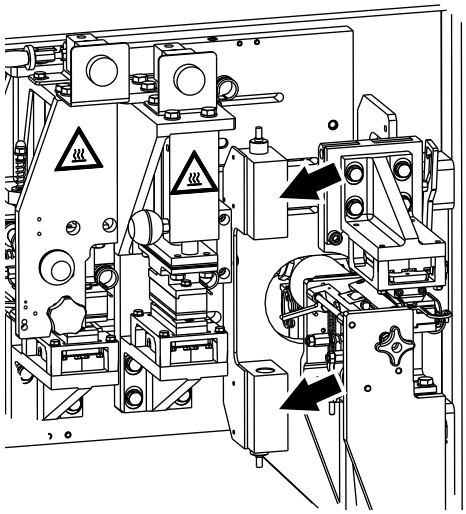

35

Ultrasonic Sensor

CAUTION

Risk of damage to the equipment.
Do not use compressed air to blow clean the ultrasonic sensors when cleaning the PullTab unit stations.

CAUTION

Risk of damage to the equipment.
The ultrasonic sensors (indicated with arrows) are sensitive to shock. Be careful when handling or cleaning the sensor or adjacent parts.

Carefully clean the ultrasonic sensors with a soft, non-abrasive cloth.

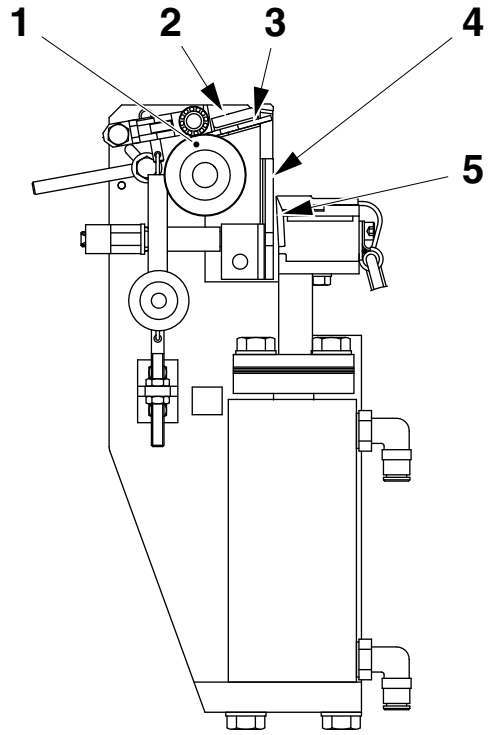

1 Drive roller
2 Head plate
3 Steering
4 Window knife
5 Flat knife

36

Tab Sealing Unit

WARNING

Hot surface.
Risk of burns.
The sealing unit heating rail may be hot.
If necessary wear heat resistant gloves.

WARNING

Risk of cutting.
Moving parts can cut.

WARNING

Risk of eye injury.
Compressed air. Wear eye protection.

Blow components (1) to (5) of the tab sealing unit with compressed air.

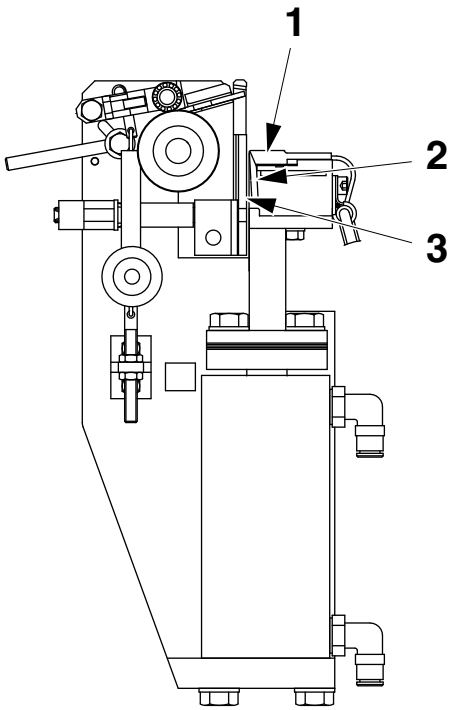

1 Heating rail
2 Flat knife
3 Window knife

37

On the tab sealing unit check the heating rail (1), the flat knife (2), and the window knife (3) for wear or damage.

If required, call a technician.

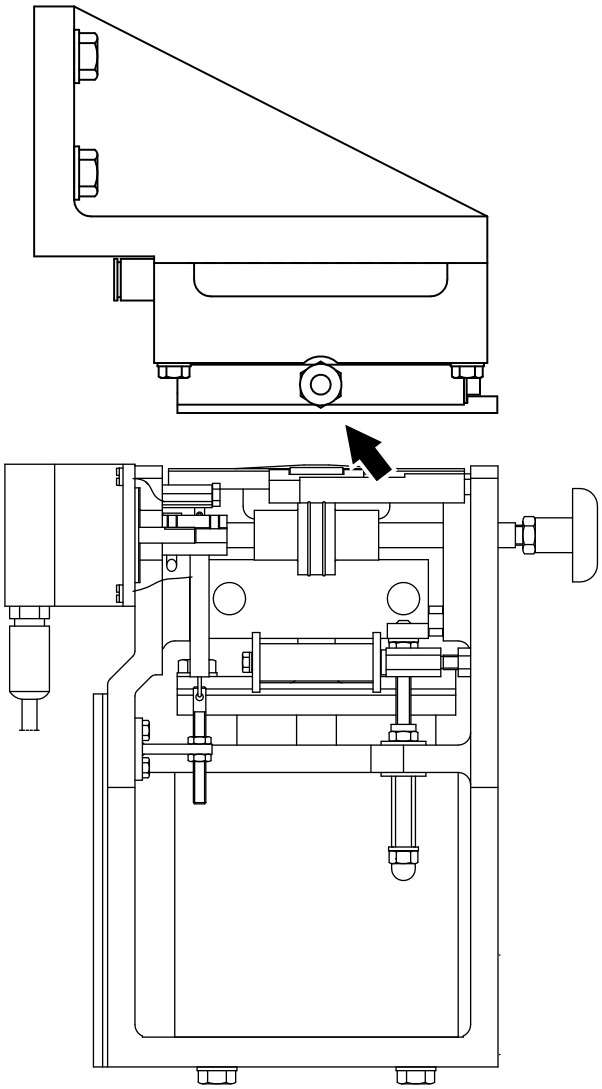

38

On the tab sealing unit check the plate of the dolly jaw (arrow) for wear or damage.

If required, call a technician.

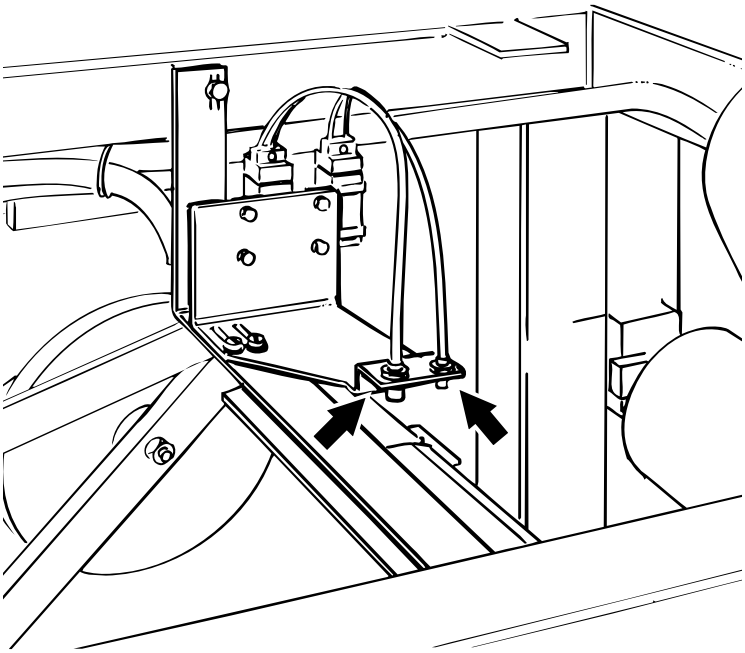

39

Clean the fibre optic sensors with a damp cloth.

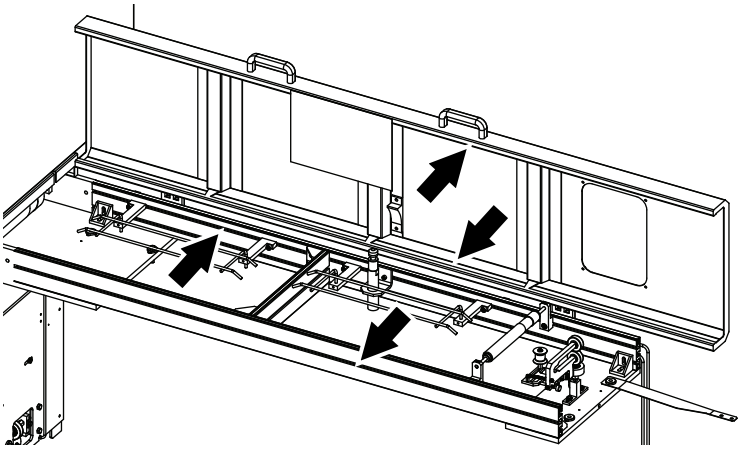

40

WARNING

Risk of eye injury.

Compressed air. Wear eye protection.

Clean the pockets (arrows) with compressed air.

Clean the inside of the strip applicator with a food industry vacuum cleaner. Make sure all dust is removed.

Wipe with a dry cloth.

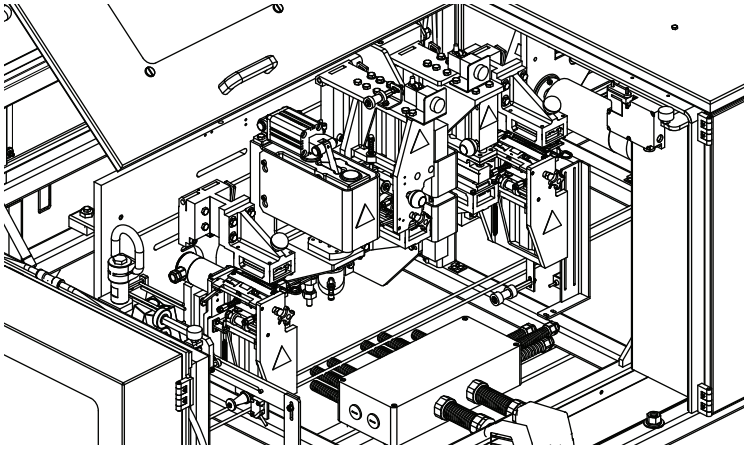

41

WARNING

Risk of eye injury.

Compressed air. Wear eye protection.

Clean the inside of the PullTab with compressed air.

Clean the inside with a food industry vacuum cleaner. Make sure all dust is removed.

Wipe with a dry cloth.

Note! Take care to clean all cables, hoses, pockets and the bottom plate.

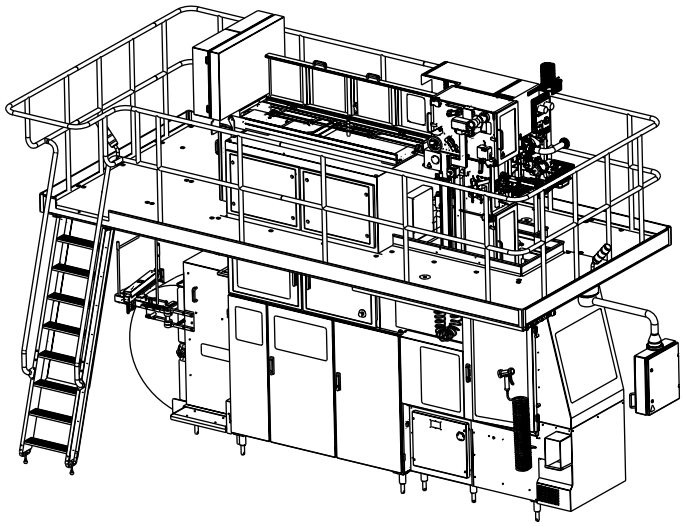

42

WARNING
Hot surfaces.
Risk of burns.
The aseptic chamber and surroundings may be hot. If necessary wear protective gloves.

WARNING
Hazardous substances.
Risk of personal injury.
Cleaning compound. Follow the ii Safety Precautions.

CAUTION
Production fault hazard and risk of equipment damage.
Do not use water when cleaning the platform, the ASU (option), or the electrical cabinet. Never let water into the ASU (option) or into the electrical cabinet.

- Close the aseptic chamber doors.
- Clean the platform with a food industry vacuum cleaner. Make sure that the platforms, the ladder and the area under and around the machine are clean and tidy.
- Clean the door handles, TPOP, windows, and the outside of the machine (except the stainless steel plating) with a sponge and cleaning compound code G1 or G2, see 9.4 Cleaning and Disinfecting Agents on page 9-18.
- Clean the stainless steel plating (except the electrical cabinet) with cleaning compound code D, see 9.4 Cleaning and Disinfecting Agents on page 9-18.
- Wipe the electrical cabinet with a dry cloth. Rinse the other components with drinking water and wipe dry.
- When the stainless steel is dry, rub it with paraffin oil.

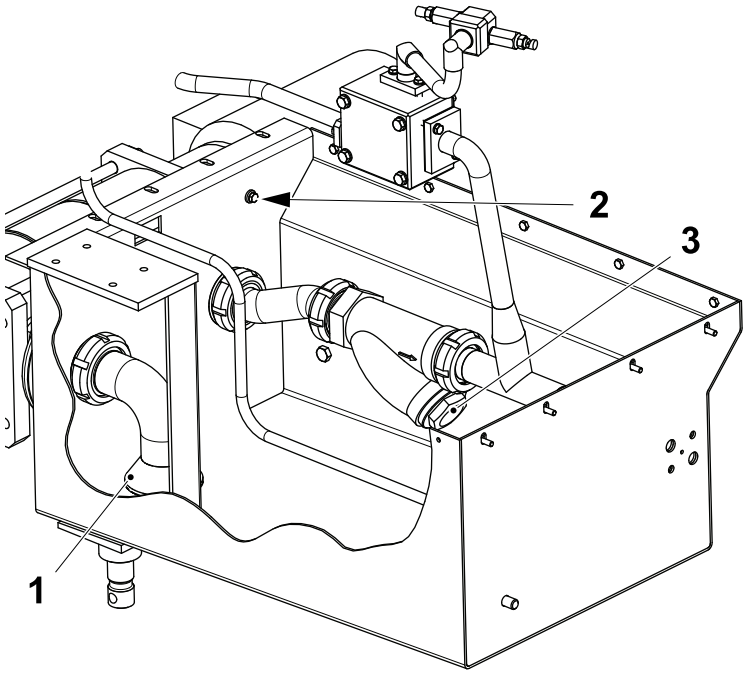

1 Level sensor
2 Strainer
3 Lid

43

WARNING
Risk of eye injury.
Compressed air. Wear eye protection.

Remove the lid (3) and remove the filter insert.

Clean the filter insert with compressed air, then fit it back.

Clean the level sensor (1) and remove any remnants of packaging material from the tray.

Make sure that the strainer (2) is clean.

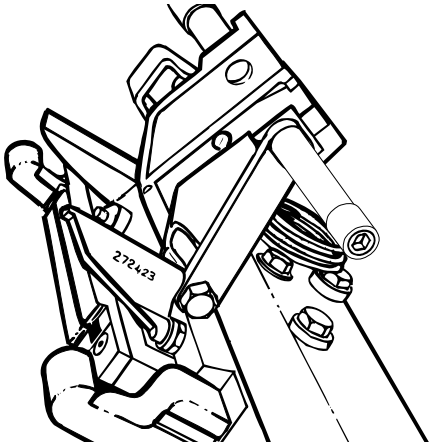

44

Crank the filling machine until one jaw pair is open, see section 1.10.1 How to Crank the Machine.

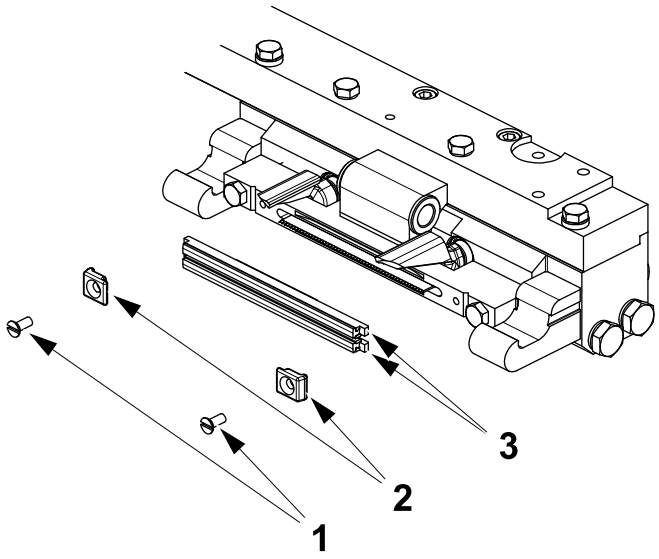

1 Screw
2 Bracket
3 Dolly

45

WARNING
Risk of cutting.
Moving parts can cut.

Remove the screws (1) and the brackets (2) and pull off the dollies (3).

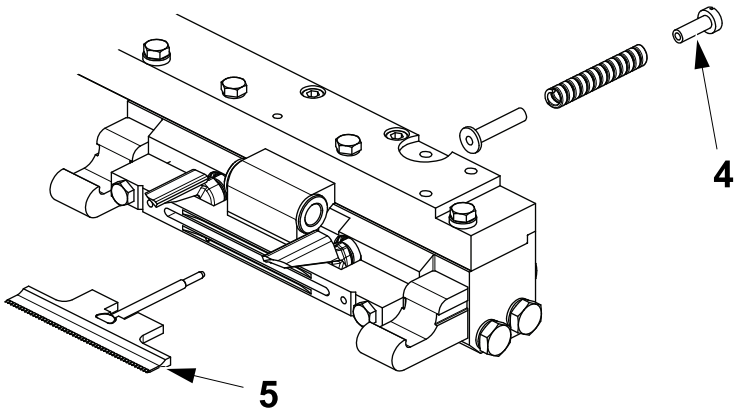

1 Screw
2 Knife holder

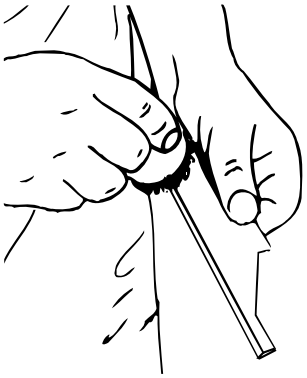

46

Remove the screw (1) and the knife holder (2).

Clean the knife by scraping both sides with a brass wire brush.

Wipe the knife.

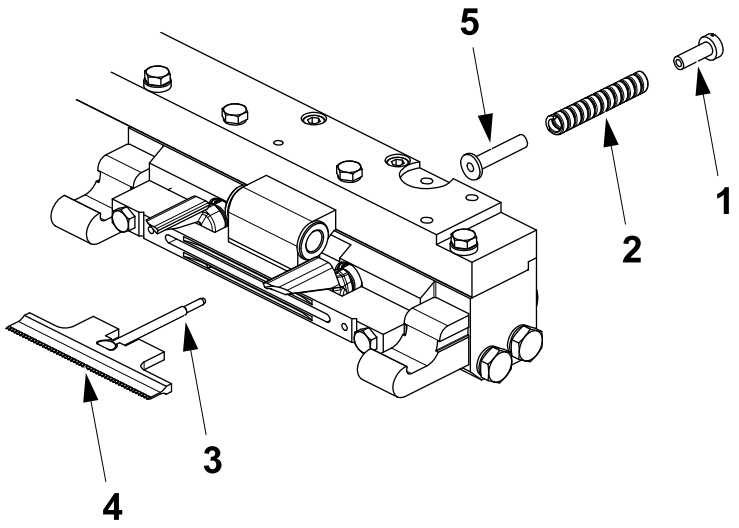

1 Nut
2 Spring
3 Link
4 Knife holder
5 Steering

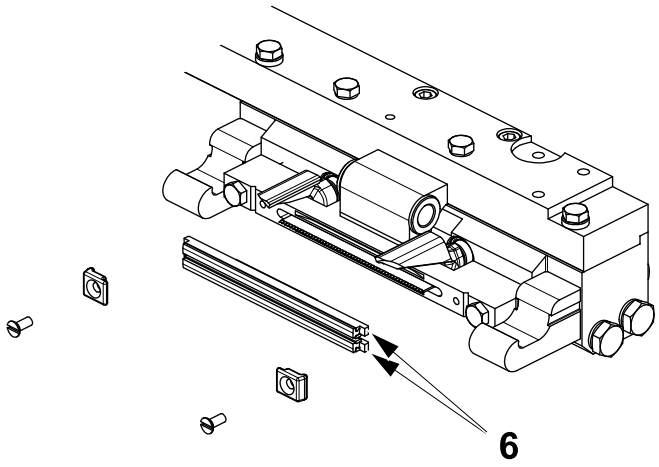

1 Dolly

47

WARNING
Risk of eye injury.
Compressed air. Wear eye protection.

Using compressed air, clean the spring (2) and the seat of the spring in the cutting jaw.

WARNING
Hazardous substances.
Risk of personal injury.
Grease. Follow the ii Safety Precautions.

Grease the nut (1), the spring (2), the link (3), the knife holder (4), and the steering (5) with grease, TP No. 90296-0091, see chapter 9.2 Setting Values. Remove excess grease.

Replace the dollies (1) and assemble in reverse order.

Repeat items 44 to 47 for the other cutting jaw.

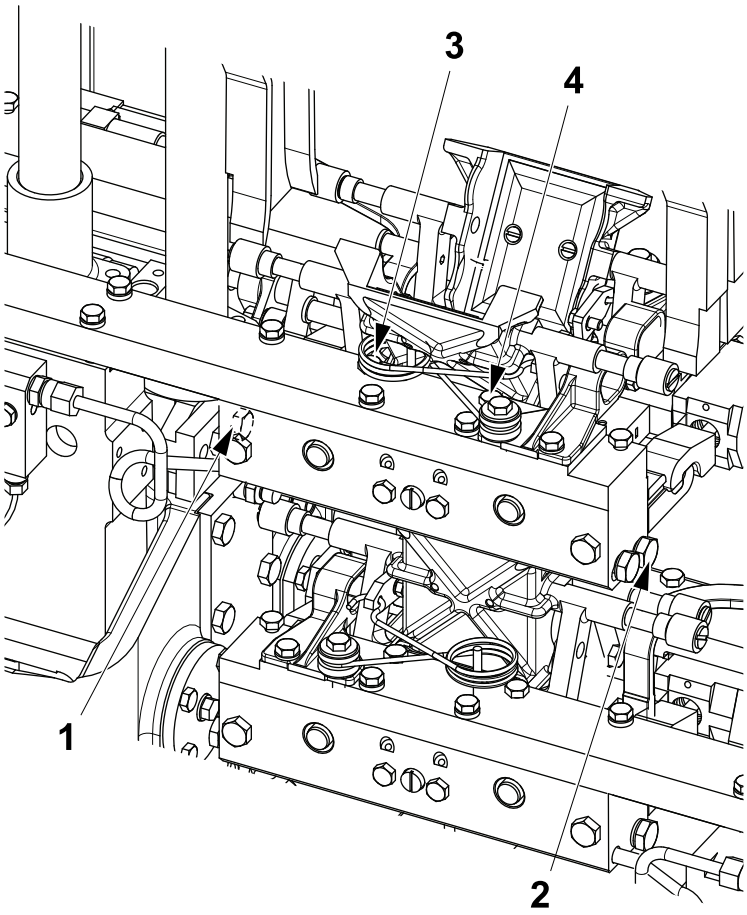

1 Drain hole
2 Drain hole
3 Bleed hole
4 Bleed hole

48

Crank the filling machine until one jaw pair is open, see section 1.10.1 How to Crank the Machine.

Drain the oil from the bearing housing by removing the plugs in the drain hole (1), the drain hole (2), the bleed hole (3), and the bleed hole (4).

WARNING
Risk of eye injury.
Compressed air. Wear eye protection.

Clean the bleed hole (3) and the bleed hole (4) with compressed air.

WARNING
Hazardous substances.
Risk of personal injury.
Lubricant. Follow the ii Safety Precautions.

Fill the bearing housing with oil, TP No. 90296-0075 (TP No. 90296-0073 in production plant with start temperature below 5 °C), see chapter 9 Technical Data.

Top up with oil through the drain hole (1).

When oil starts flowing out of the bleed hole (3), put a finger over the hole, remove the oil can and fit the plug into the drain hole (1).

Repeat the same procedure for the other drain hole (2).

When oil starts flowing out of the bleed hole (4), put a finger over the hole, remove the oil can and fit the plug into the drain hole (2).

Fit the bleed hole plugs.

Note! Crank and repeat the hole procedure for the other cutting jaw.

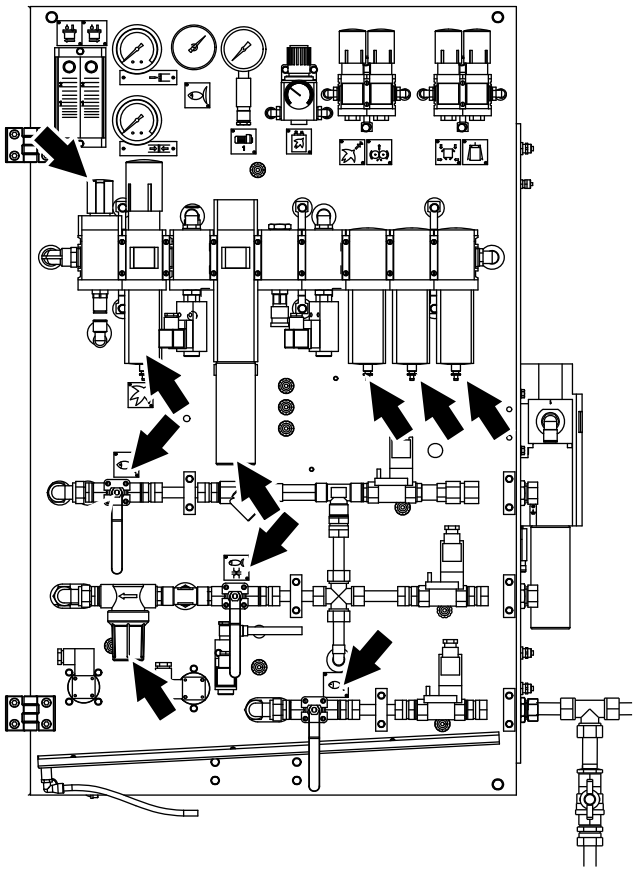

49

WARNING
Risk of eye injury.
Compressed air. Wear eye protection.

Close the incoming water and air.

Remove the magnetic filter and water filter and clean them with compressed air.

Fit the filters.

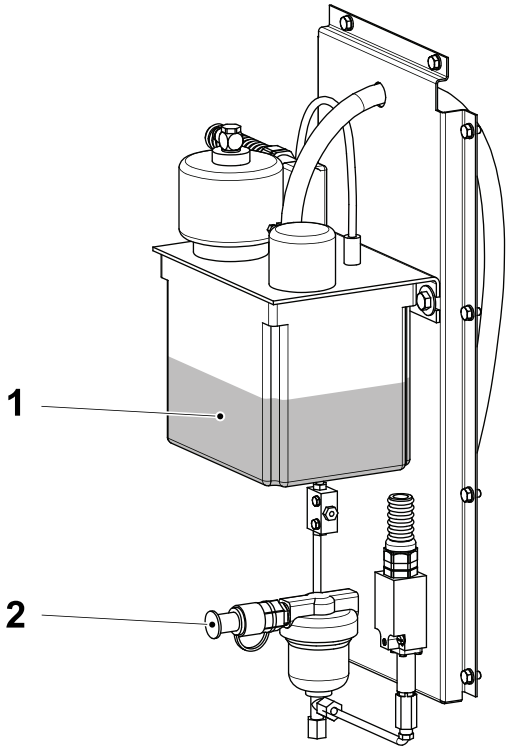

1 Central lubrication tank
2 Cap

50

WARNING
Hazardous substances.
Risk of personal injury.
Lubricant. Follow the ii Safety Precautions.

Check the oil level in the central lubrication tank (1).

If required, remove the cap (2) and fill to the correct level. Use oil, TP No. 90296-0075 (TP No. 90296-0073 in production plant with start temperature below 5 °C), see chapter 9 Technical Data.

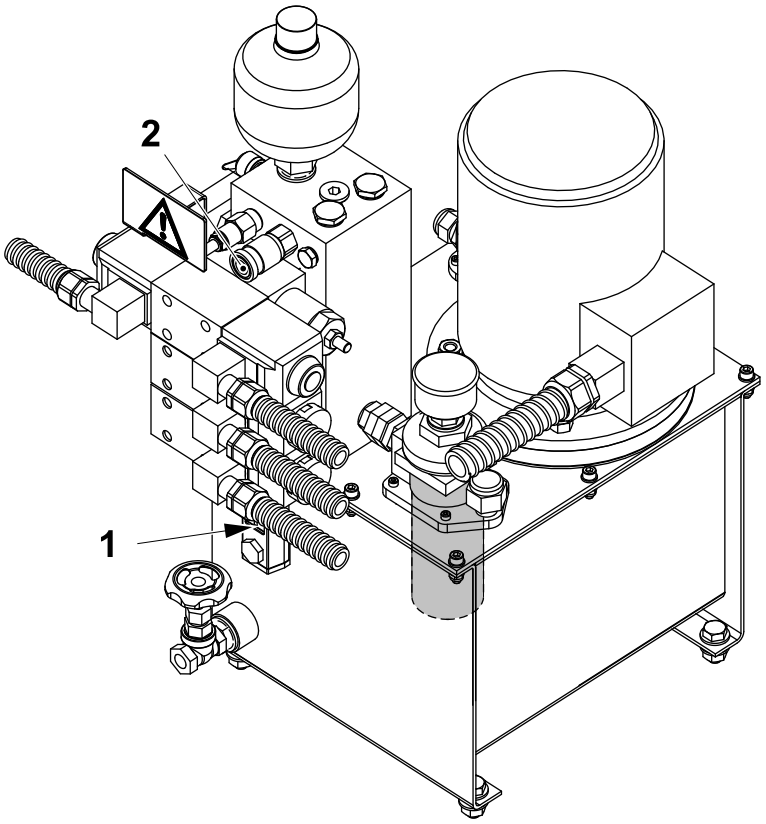

1 Level glass
2 Quick-coupling

51

WARNING
Hazardous substances.
Risk of personal injury.
Lubricant. Follow the ii Safety Precautions.

Check the oil level at the level glass (1).

If required, connect the oil supply through the quick-coupling (2) and top up the oil.

Use oil, TP No. 90296-0053, see chapter 9 Technical Data.

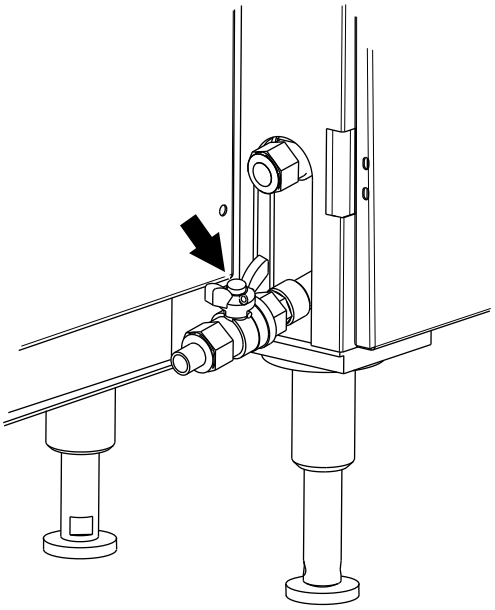

52

Every week or after a maximum of 120 operating hours

WARNING
Hydrogen peroxide.
Risk of personal injury.
Follow the ii Safety Precautions.

Drain the hydrogen peroxide in the dilution tank, see 9.1.2 Change Hydrogen Peroxide on page 9-10 in chapter 9 Technical Data.

CAUTION
Product fault hazard.
Risk of serious production fault.
The hydrogen peroxide must be changed weekly to prevent paper dust and impurities from accumulating in the tank. If this is not done, it could lead to peroxide stability problems.

Fill the dilution tank with new hydrogen peroxide at the start of production to ensure best quality.

Note! After changing the hydrogen peroxide, check the concentration, see 9.1.1 Check Hydrogen Peroxide Concentration on page 9-6 in chapter 9 Technical Data.

53

When resuming PRODUCTION after 8.2 Weekly Care, start from 3.2 Preparation After Weekly Care.

This page intentionally left blank

9 Technical Data

Description

This chapter contains a table that lists all setting values that the operator must check or set. In addition to setting values, this chapter also contains information related to cleaning and disinfecting agents, lubricants, and any other special equipment required to perform the procedures described in the manual, as well as instructions for handling hydrogen peroxide.

Description 9-2

9.1 Hydrogen Peroxide 9-5

9.1.1 Check Hydrogen Peroxide Concentration 9-6

Peroxide Concentration at Machine Start-Up 9-8

Peroxide Concentration during Production 9-8

9.1.1.1 Hydrogen Peroxide Concentration (by Weight) 9-9

9.1.2 Change Hydrogen Peroxide 9-10

Dilution Tank 9-10

Change Hydrogen Peroxide Container 9-13

9.2 Setting Values 9-14

9.2.1 Pressure Setting Values 9-14

9.2.2 Temperature Setting Values 9-15

9.2.3 Miscellaneous 9-16

9.3 Water Quality 9-17

9.3.1 Technical Water Parameters 9-17

9.4 Cleaning and Disinfecting Agents 9-18

9.5 Lubricant Recommendations 9-21

This page intentionally left blank

9.1 Hydrogen Peroxide

9.1.1 Check Hydrogen Peroxide Concentration

This section describes how to manually check the concentration the hydrogen peroxide.

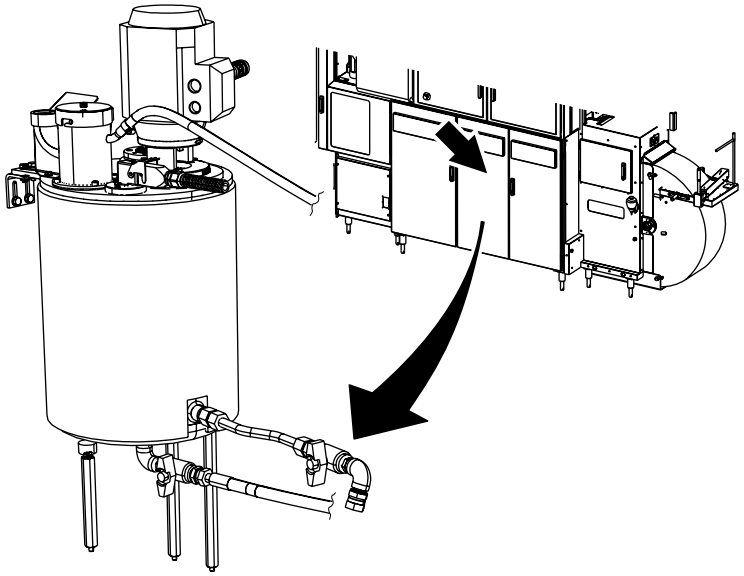

RH side

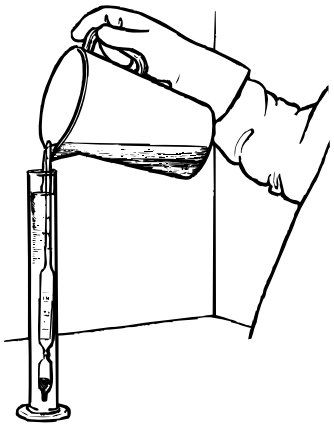

1

CAUTION
The equipment must be thoroughly cleaned.
Unclean equipment can affect the evaluation results.

The following equipment is required:

- aerometer with thermometer
- graduated plastic cylinder with an inside diameter of 35 - 50 mm.

Open the doors (arrow) to reach the valve and draw approximately 250 ml of hydrogen peroxide from the hydrogen peroxide tank into a clean vessel.

Pour a small amount of hydrogen peroxide into the graduated cylinder.

Lower the aerometer into the cylinder, making sure it contains enough liquid to float the aerometer.

If there are air bubbles on the aerometer, stir gently until the bubbles disappear.

Read the density at the liquid level on the aerometer and at the same time read the temperature.

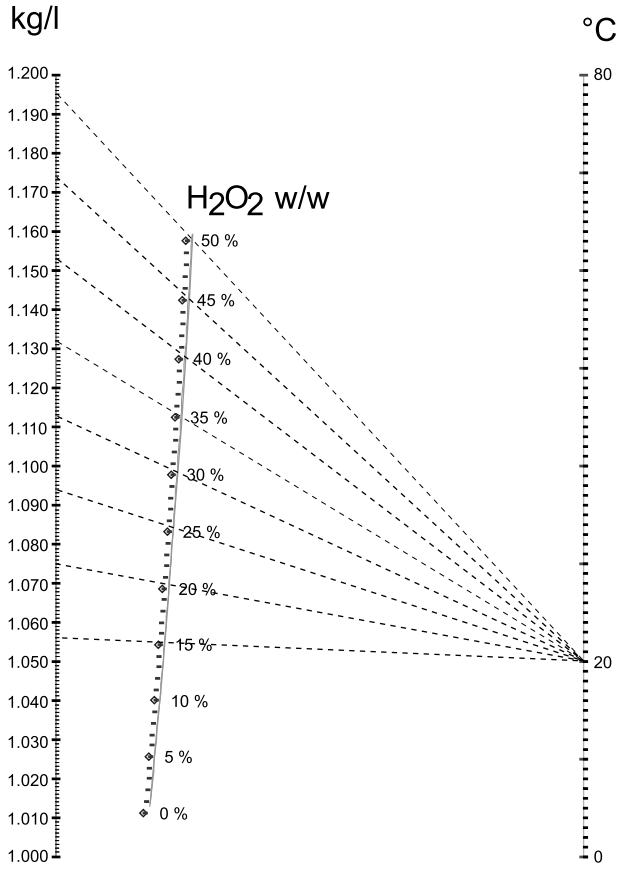

Sample nomogram

2

Evaluate the hydrogen peroxide concentration (in terms of percent by weight) from the nomogram on page 9-9.

With a ruler, join the density value of the sample with the temperature value to obtain the hydrogen peroxide concentration.

Note! Photocopying or resizing the nomogram may distort its accuracy. This could lead to incorrect evaluation of the hydrogen peroxide concentration.

To check the accuracy of the nomogram, refer to the following table reporting the concentration and density values calculated at 20 °C:

°C	kg/l	% w/w
20	1.056	15
20	1.075	20
20	1.094	25
20	1.113	30
20	1.132	35
20	1.153	40
20	1.174	45
20	1.195	50

For information regarding hydrogen peroxide concentration:

- at machine start up, see Peroxide Concentration at Machine Start-Up
- at PRODUCTION, see Peroxide Concentration during Production

Peroxide Concentration at Machine Start-Up

Note! Values to be used during 3.1 Preparation After Daily Care.

If the concentration is below 32% or above 48%, change the hydrogen peroxide. See section Dilution Tank on page 9-10.

If the hydrogen peroxide concentration is between 32% and 35%:

- repeat the check at PRODUCTION START
- follow the instruction Peroxide Concentration during Production below.

Peroxide Concentration during Production

If the concentration is below 30% or above 50%, change the hydrogen peroxide. See section Dilution Tank on page 9-10.

If the hydrogen peroxide concentration is between 30% and 35%:

- repeat the check every 30 minutes
- If the concentration decreases, stop the machine and call a technician.

9.1.1.1 Hydrogen Peroxide Concentration (by Weight)

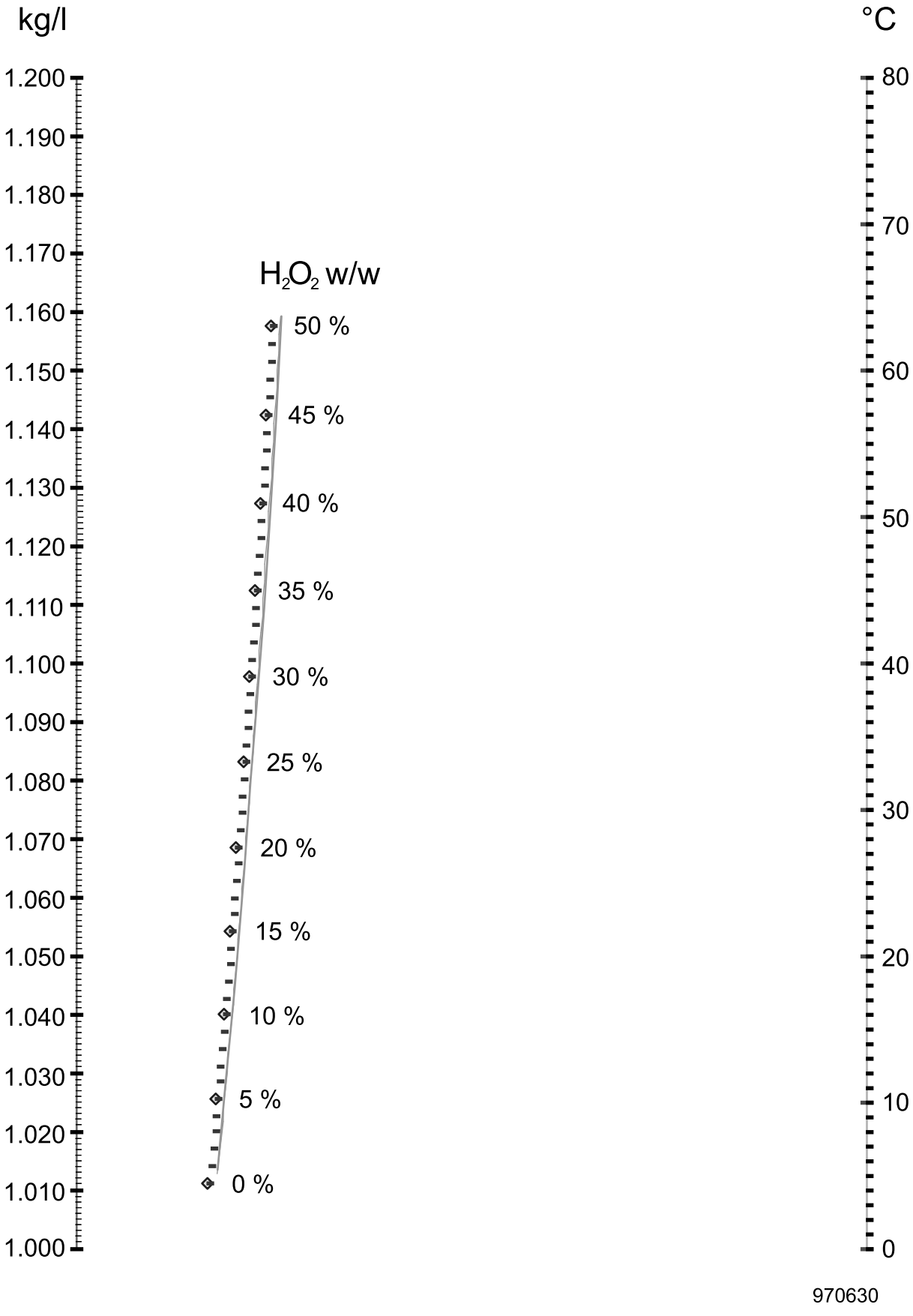

9.1.2 Change Hydrogen Peroxide

This section describes how to change the hydrogen peroxide in the dilution tank and how to change the peroxide container.

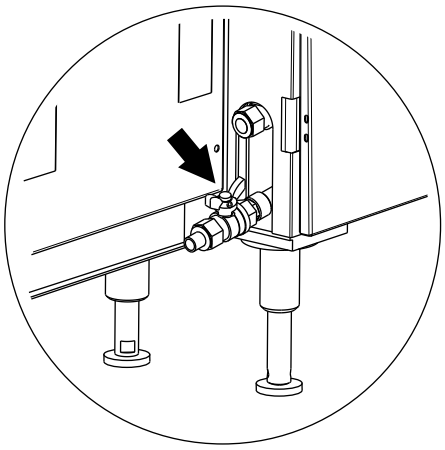

Dilution Tank

1

Open the valve (arrow) on the RH side of the machine to drain the dilution tank.

Note! The hydrogen peroxide concentration in the dilution tank is less than 1% when the machine has been in production for more than 24 hours.

When the dilution tank is empty, close the valve.

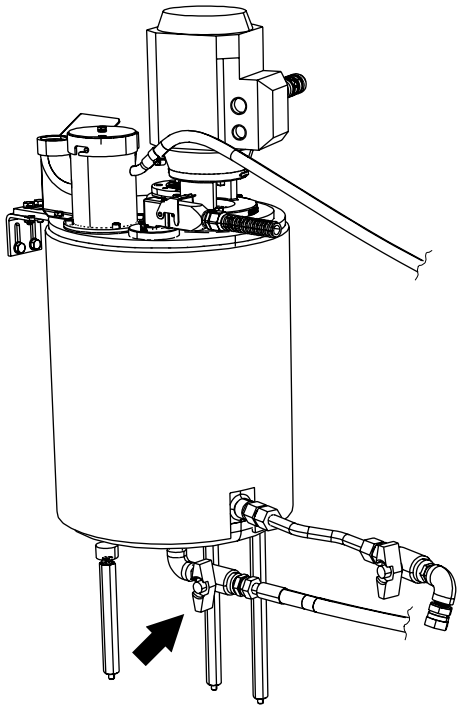

2

Open the valve (arrow) to drain the hydrogen peroxide from the hydrogen peroxide tank into the dilution tank. The draining time is approximately ten minutes.

When the hydrogen peroxide tank is empty, close the valve.



3

Press the `Selector` button on the TPOP display to the LH position.

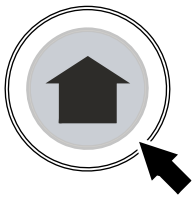

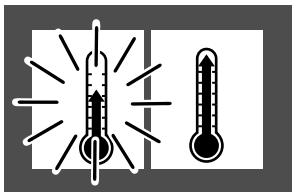

4

Press and hold the PROGRAM UP button until it goes out.

The PREHEATING I symbol stops flashing but remains lit.

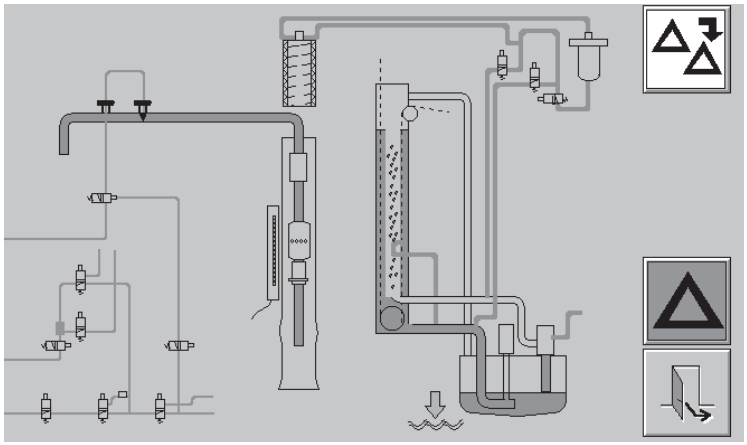

5

WARNING
Risk of corrosion.
Chemical product. See chapter ii Safety Precautions.

When the STERILISATION LIQUID TANK LOW LEVEL alarm lights, change the hydrogen peroxide container, see Change Hydrogen Peroxide Container on page 9-13. It takes approximately two full containers to fill up the hydrogen peroxide tank.

WARNING
Risk of overfilling tank.
Make sure that the hydrogen peroxide tank does not overfill. Watch the alarm to go out.

If the STERILISATION LIQUID TANK LOW LEVEL alarm does not go out, stop the filling by lifting the quick connection and call a technician.



6

Press the Acknowledge button.

Hydrogen peroxide starts to fill from the container to the tank.

Restart from item 5 until the STERILISATION LIQUID TANK LOW LEVEL alarm goes out.

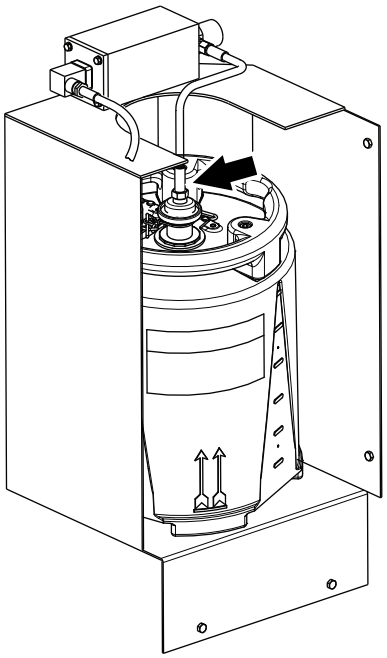

Change Hydrogen Peroxide Container

1

Release the quick connection (arrow) to disengage the hydrogen peroxide container.

Remove the container from the machine.

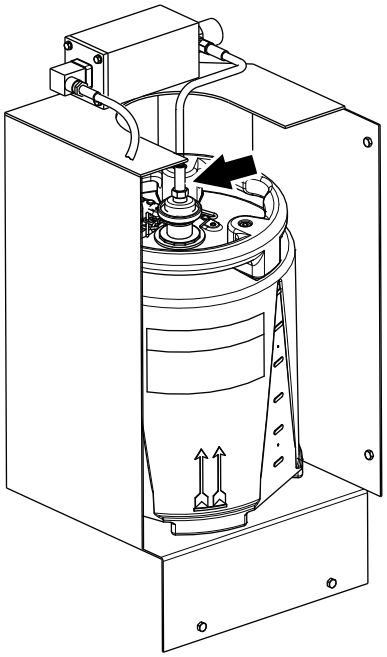

2

CAUTION

Ergonomic hazard.
Risk of personal injury due to strain when lifting heavy objects.
The peroxide container is heavy (approximately 21 kg when full). Avoid twisting the body, especially when bending forward while lifting the peroxide container.

Use a trolley when transporting the container.

Place a full container with 35% hydrogen peroxide into the machine.

Fit the quick connection (arrow) to engage the hydrogen peroxide container.

CAUTION

Hydrogen peroxide.
Risk of personal injury.
Make sure that the quick connection is properly fitted.

9.2 Setting Values

This section provides the correct setting values for this machine.

9.2.1 Pressure Setting Values

Pressure	Unit	Value
Input air	**MPa** (bar)	**0.65 to 0.70** (6.5 to 7.0)
Input cooling water	**MPa** (bar)	**0.30 to 0.45** (3.0 to 4.5)
Input hot water	**MPa** (bar)	**0.30 to 0.45** (3.0 to 4.5)
Input steam	**MPa** (bar)	**0.25 ±0.03*** (2.5 ±0.3*)
Sterile air		**45 to 50***** (0.45 to 0.50***)
- TPA 200 Sq	**kPa** (bar)	**30 to 35** (0.30 to 0.35)
- TPA 250 Sq	kPa (**bar**)	**30 to 35** (0.30 to 0.35)
- TPA 330 Sq	kPa (**bar**)	
PullTab		
- Counter jaw	kPa (bar)	300 (3.0)
- Cap blowing	kPa (bar)	10 to 30 (0.1 to 3.0)
- Pressure rollers	kPa (bar)	400 (4.0)
- Input air	kPa (bar)	500 (5.0)
Calender rollers		
- TPA 200 Sq	kPa **(bar)**	240 (**2.4**)
- TPA 250 Sq	kPa (**bar**)	240 (**2.4**)
- TPA 330 Sq	kPa (**bar**)	300 (**3.0**)
LS	**kPa** (bar)	**2.7** (0.0027)
LS short stop	**kPa** (bar)	**2.5**** (0.025**)
Air to photocell unit MDCS and discharger	**kPa** (bar)	**10** (0.1)
Jaw pressure		
- TPA 200 Sq	**MPa** (bar)	**10.0 to 11.0** (100 to 110)
- TPA 250 Sq	**MPa** (bar)	**10.0 to 11.0** (100 to 110)
- TPA 330 Sq	**MPa** (bar)	**10.0 to 11.0** (100 to 110)
Cutting pressure	**MPa** (bar)	**8.0 to 9.0** (80 to 9)

* Basic Setting

** Check after thirty minutes of production.

*** Only at 60 Hz.

(Cont'd)

(Cont'd)

Pressure	Unit	Value
Air to spray container	**mPa** (bar)	**0.3** (3.0)
Flap sealing	kPa (**bar**)	150 to 200 (**1.5 to 2.0**)
Pressure device	kPa (**bar**)	400 to 600 (**4.0 to 6.0**)
Pressure accumulator, water		
- cold machine, during start-up	kPa (**bar**)	50 (**0.5**)
Peroxide bath water	kPa (**bar**)	130 (**1.3**)
Regulating valve, I/P transducer		
- during preheating	kPa (**bar**)	10 (**0.1**)
- during sterilisation	kPa (**bar**)	200 (**2.0**)
- during cleaning	kPa (**bar**)	400 (**4.0**)
WTC (pendulum) I/P transducer		
- basic setting	kPa (**bar**)	0 to 300 (**0 to 3.0**)
- working range	kPa (**bar**)	50 to 250 (**0.5 to 2.5**)

Pressure Switch	Unit	Value
Sterile air	**kPa** (bar)	**15** (0.15)
Input air	**MPa** (bar)	**0.4** (4.0)

9.2.2 Temperature Setting Values

Temperatures	Unit	Value
Pre-sterilisation	°C (°F)	270 (518)
Sterilisation bath, water	°C (°F)	74 (165) 0* (0)*
Sterilisation bath, water PREHEATING	°C (°F)	80* (176*) 0* (0)*
Sterilisation bath, peroxide	°C (°F)	70 (158)
LS sealed tube, (basic setting)	°C (°F)	300 (572)
LS sealing, (basic setting)		
- TPA 200 Sq	°C (°F)	380 (716)
- TPA 250 Sq	°C (°F)	420 (788)
- TPA 330 Sq	°C (°F)	420 (788)
Air superheater	°C (°F)	360 (680)
Air superheater, PREHEATING	°C (°F)	400 (752)
Air knife	°C (°F)	125 (257)
Steam	°C (°F)	130 (266)
TCSB	°C (°F)	110 (230)
TCSB, PREHEATING	°C (°F)	130 (266)
Flap heater (Top)	°C (°F)	400 (752)
Flap heater (Bottom)	°C (°F)	450 (842)
Hot air element (LS SS)	°C (°F)	165** (329**)
HI spraying	°C (°F)	60 (140)

* Basic setting. In a cold environment, increase this if necessary, up to a maximum of 85 °C (185 °F).

* Not in function for Alcohol machines

** Basic setting.

9.2.3 Miscellaneous

Miscellaneous	Unit	Value
Cooling water, RH jaw pair	l/min	minimum 0.8
Cooling water, LH jaw pair	l/min	minimum 0.8
Hydrogen peroxide	% w/w	35

Miscellaneous	TP No.
Black tape	90602-9550
Folded paper for Jumo Process Recorder (Option)	90459-0084
Print head for Jumo Process Recorder (Option)	90459-0087

9.3 Water Quality

In order to ensure good equipment operation and cleanliness, as a minimum, it is highly recommended to use a supply of water to the equipment with **drinking water** quality. This applies to water used for cooling, product flushing, rinsing and cleaning. A definition and description of drinking water may be found in the documents listed in the table below.

Term	Definition according to geographic area and document(s)
Drinking water	**EEA/EU:** COUNCIL DIRECTIVE 98/83/EC **USA:** DFDA Title 40 Code of Federal Regulations - CFR Part 141, 142, and 143 **All Countries except USA and EEA/EU:** WHO Guidelines for Drinking Water Quality

9.3.1 Technical Water Parameters

CAUTION

Risk of damage to the equipment.

The drinking water physical-chemicals parameters below have been identified to be critical in cleaning efficiency and to avoid/prevent corrosion and the formation/build up of deposits. It is therefore highly desirable and strongly recommended to use water with these parameters within the ranges listed below.

Parameter	Recommended values	Additional info
pH	between 7 and 8 pH units	In order to minimise corrosion the water should be slightly alkaline (the pH value is easily determined by litmus paper or a pH meter).
Water hardness	between 5 and 10 °f French degrees of hardness (i.e. between 3 and 6 German degrees of hardness)	If the water is hard (high concentration of calcium carbonate, $CaCO_3$), deposits will accumulate in devices such as valves. This process is accelerated at high temperatures. Cleaning results and detergent consumption will also be affected due to hard water. These effects become more severe the harder the water.
Chlorides	lower than 50 ppm*	In order to minimise corrosion the water should have low concentration of chlorine (Cl2) and/or chloride ions (Cl-). * The given value applies only to level of chloride.
Silicates	lower than 10 ppm	In order to reduce the formation of solid deposits difficult to be removed.

9.4 Cleaning and Disinfecting Agents

WARNING
Risk of explosion.
Cleaning with not recommended cleaning agents, for example agents including alcohol, could cause an explosion.
Use only Tetra Pak recommended cleaning agents when cleaning or disinfecting parts that come into contact with hydrogen peroxide.

It is strongly recommended, in order to optimize the cleaning efficiency, to use water characterised by the following physico-chemical parameters:

- water quality; chlorine free, drinkable water
- pH; between 7 and 8 pH units
- water hardness; between 5 and 10 °f French degrees of hardness (between 3 and 6 German degrees of hardness)
- chlorides; lower than 50 ppm
- silicates; lower than 10 ppm.

Cleaning Compound Table

Comparable qualities from other suppliers may be selected in compliance with the technical requirements listed in the table on the next page. All cleaning compounds must comply with local legal requirements.

The supplier recommendations for concentration and temperature should be followed. When dosing the products automatically, the concentration should be checked.

(Cont'd)

(Cont'd)

Ref.: Technical Bulletin TB_2007_01_02													
Cleaning type	**TP code**		**Detergent type**	**Raw Material**				**Formulated Products**					
				Name	**Max Conc. w/w**	**Use Conc. w/w**	**Use Temp °C**	**Ecolab**	**Use Conc. w/w**	**Use Temp °C**	**Johnson Diversey**	**Use Conc. vol/vol**	**Use Temp °C**
CIP	A	1	Alkali	NaOH	30%	1.50%	80	P3-mip CIP	2.0%	80	VC 11	2.0%	80
	B	1	Acid	HNO_3	30%	1.00%	60	P3-horolith L31	1.0%	60	VA 5	2.0%	60
External Cleaning (automatic)	C	2	Alkali solution					P3-mip FPC	2.0%	55	VK 12	1.0%	55
Manual cleaning (wiping)	D	1	Alkali					P3-mip FPC	2.0%	25	VK 12	1.0%	25
Manual Disinfection (immersion)	F	3	Acid solution	Peracetic acid solution	15%	200 ppm	25	Oxonia Active	0.50%	25	VT 6	0.10%	25
Manual Disinfection (spraying)	G	1	Alcoholic solution	Isopropanol			25	Spitaderm	Pure	25	VT 29	Pure	25
		2	Alcoholic solution	Ethanol			25	Alcodes	Pure	25			25
		3	Acid solution	Peracetic acid solution	15%	200 ppm	25	Oxonia Active	0.50%	25	VT 26	0.10%	25
Hand Disinfection	H	1						Manodes	Pure	25	H34	Pure	25
PullTab Patch Sealing Plate Manual Cleaning	J	1	Solvent	Acetone CAS Nº 67-64-1 Technical Grade *		pure	25						

(Cont'd)

(Cont'd)

* Acetone is a flammable solvent and the grade has to fulfil requirements for pharmaceutical use or food processing operations according to USP or NF or FCC.

9.5 Lubricant Recommendations

WARNING

Risk of personal injury.

Certain lubricants can cause injury if they come into contact with the eyes, skin, mucous membranes, or clothing.

Always follow the manufacturer's instructions for handling chemical products.

The table below lists lubricants to be used with this machine with their respective designations.

Lubricant specifications may be ordered from:

Tetra Pak Technical Service AB,

Ruben Rausings gata

SE-221 86 Lund,

Sweden

Lubricant description	Part No. (used when ordering from Tetra Pak)	Supplier	Product Designation
High pressure oil	90296-0075 90296-0073 (For use in production plant with start temperature below 5 °C)	Shell Shell	Omala Oil 320 Omala Oil 220 (For use in production plant with start temperature below 5 °C)
Hydraulic oil	90296-0053	Shell	Tellus Oil T 32
PTFE grease	90296-0091	Shell	Fluolub 210

This page intentionally left blank

Label for 40 mm binder ***Note!*** *This page is generated* ***automatically.***

TBA/19 0400 TPA
648160-0400 Issue 2013-11
Doc. No. OM-1531318-0106

TBA/19 0400 TPA 1(2)
648160-0400 Issue 2013-11
Doc. No. OM-1531318-0106

TBA/19 0400 TPA
648160-0400 Issue 2013-11
Doc. No. OM-1531318-0106

TBA/19 0400 TPA 2(2)
648160-0400 Issue 2013-11
Doc. No. OM-1531318-0106

TBA/19 0400 TPA
648160-0400 Issue 2013-11
Doc. No. OM-1531318-0106

TBA/19 0400 TPA 1(2)
648160-0400 Issue 2013-11
Doc. No. OM-1531318-0106

TBA/19 0400 TPA
648160-0400 Issue 2013-11
Doc. No. OM-1531318-0106

TBA/19 0400 TPA 2(2)
648160-0400 Issue 2013-11
Doc. No. OM-1531318-0106

TBA/19 0400 TPA
648160-0400 Issue 2013-11
Doc. No. OM-1531318-0106

TBA/19 0400 TPA 1(3)
648160-0400 Issue 2013-11
Doc. No. OM-1531318-0106

TBA/19 0400 TPA
648160-0400 Issue 2013-11
Doc. No. OM-1531318-0106

TBA/19 0400 TPA 2(3)
648160-0400 Issue 2013-11
Doc. No. OM-1531318-0106

TBA/19 0400 TPA
648160-0400 Issue 2013-11
Doc. No. OM-1531318-0106

TBA/19 0400 TPA 3(3)
648160-0400 Issue 2013-11
Doc. No. OM-1531318-0106

TBA/19 0400 TPA
648160-0400 Issue 2013-11
Doc. No. OM-1531318-0106

TBA/19 0400 TPA 3(3)
648160-0400 Issue 2013-11
Doc. No. OM-1531318-0106

Label for 55 mm binder ***Note!*** *This page is generated* ***automatically.***

TBA/19 0400 TPA
648160-0400 Issue 2013-11
Doc. No. OM-1531318-0106

TBA/19 0400 TPA 1(2)
648160-0400 Issue 2013-11
Doc. No. OM-1531318-0106

TBA/19 0400 TPA
648160-0400 Issue 2013-11
Doc. No. OM-1531318-0106

TBA/19 0400 TPA 2(2)
648160-0400 Issue 2013-11
Doc. No. OM-1531318-0106

TBA/19 0400 TPA
648160-0400 Issue 2013-11
Doc. No. OM-1531318-0106

TBA/19 0400 TPA 1(3)
648160-0400 Issue 2013-11
Doc. No. OM-1531318-0106

TBA/19 0400 TPA
648160-0400 Issue 2013-11
Doc. No. OM-1531318-0106

TBA/19 0400 TPA 2(3)
648160-0400 Issue 2013-11
Doc. No. OM-1531318-0106

TBA/19 0400 TPA
648160-0400 Issue 2013-11
Doc. No. OM-1531318-0106

TBA/19 0400 TPA 3(3)
648160-0400 Issue 2013-11
Doc. No. OM-1531318-0106

TBA/19 0400 TPA
648160-0400 Issue 2013-11
Doc. No. OM-1531318-0106

TBA/19 0400 TPA 3(3)
648160-0400 Issue 2013-11
Doc. No. OM-1531318-0106

TBA/19 0400 TPA
648160-0400 Issue 2013-11
Doc. No. OM-1531318-0106

TBA/19 0400 TPA
648160-0400 Issue 2013-11
Doc. No. OM-1531318-0106

TBA/19 0400 TPA
648160-0400 Issue 2013-11
Doc. No. OM-1531318-0106

TBA/19 0400 TPA 1(3)
648160-0400 Issue 2013-11
Doc. No. OM-1531318-0106

TBA/19 0400 TPA 1(2)
648160-0400 Issue 2013-11
Doc. No. OM-1531318-0106

TBA/19 0400 TPA 2(3)
648160-0400 Issue 2013-11
Doc. No. OM-1531318-0106

TBA/19 0400 TPA 2(2)

648160-0400 Issue 2013-11

Doc. No. OM-1531318-0106

TBA/19 0400 TPA 3(3)

648160-0400 Issue 2013-11

Doc. No. OM-1531318-0106