# MM

# Maintenance Manual

## Headspace Unit

### 3057110-0100

### Tetra Pak A3/Flex - Tetra Pak A3/Speed

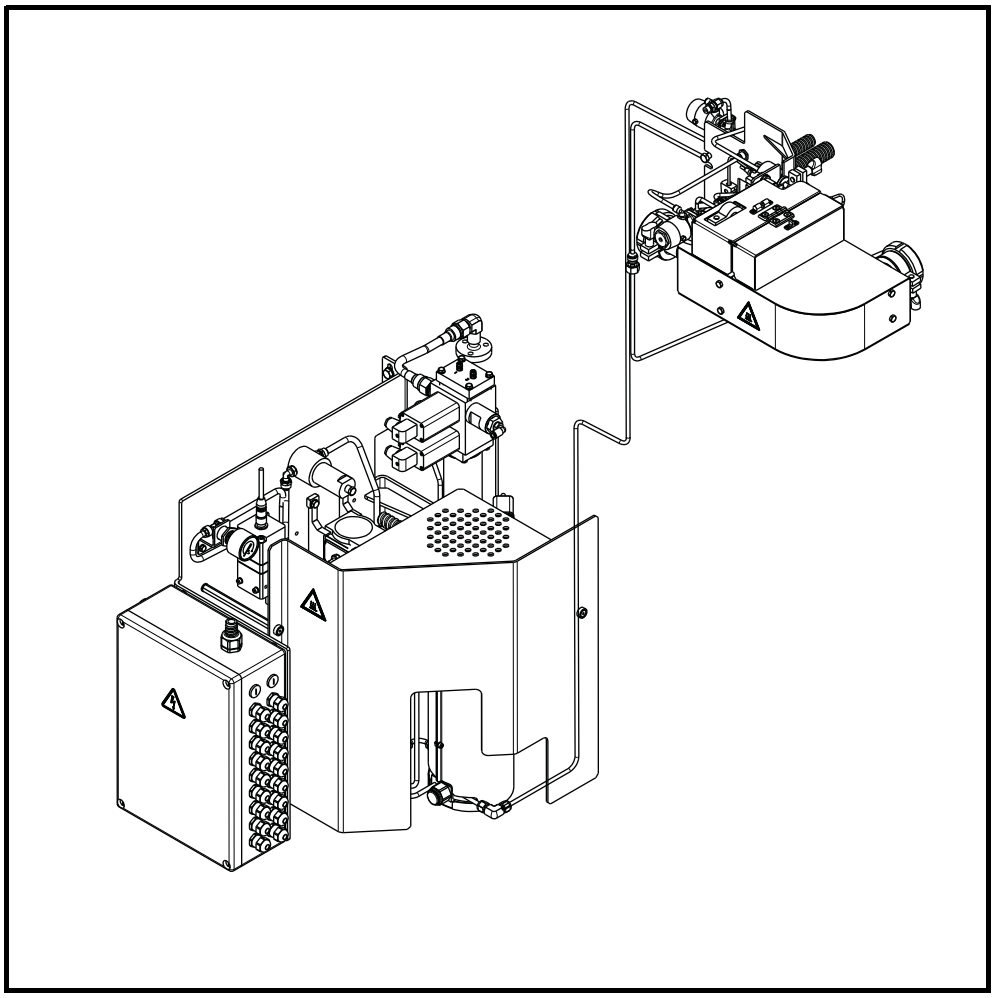

TechPub_2614345_0106 - MM_3047408_0103fro.fm

**WARNING**

**Read and follow all safety precaution instructions throughout this manual and on safety signs attached to this equipment.**

Failure to follow all safety precaution instructions could result in death or serious injury.

Tetra Pak

Doc. No. MM-3047408-0103

Copyright © 2011 Tetra Pak Group

All rights reserved. No part of this document may be reproduced or copied in any form or by any means without written permission from Tetra Pak Packaging Solutions.

Tetra Pak and all Tetra Pak products are trademarks belonging to the Tetra Pak Group.

The content of this manual is in accordance with the design and construction of the machine or equipment at the time of publishing. Tetra Pak reserves the right to introduce design modifications without prior notice.

The English language version of this document contains the original instructions. All other language versions are translations of the original instructions.

This document was produced by:

Tetra Pak Packaging Solutions
Via Delfini 1
41123 Modena
Italy

Additional copies can be ordered from Tetra Pak. When ordering additional copies, always provide the document number.

Doc. No. MM-3047408-0103

Issue 2011-10

TechPub_2614345_0106 - MM_3047408_0103fro.fm

This manual is valid for:

Series No./ Machine No. Sign.


i Introduction

ii Safety Precautions

1 Headspace by Injection

2 General


# MM

## Maintenance Manual

Headspace Unit
3057110-0100

TechPub_2614345_0106 - MM_3047408_0103fro.fm

Machine or equipment configurations that this manual is valid for are described on the next page.

Doc. No. MM-3047408-0103

Issue 2011-10

Tetra Pak

**Tetra Pak Packaging Solutions**

# Valid for:

| Name | Drawing Specification and Development Step | Additional Information |
|---|---|---|
| Tetra Pak A3/Speed | 648576-0300 | |
| | 648576-0200 | |
| Tetra Pak A3/Flex | 648575-0300 | |
| | 648575-0200 | |

TechPub_2614345_0106 - MM_3047408_0103fro.fm

# Update Log for Doc. No. MM-3047408-0103

This table shows all changes made to this manual, including installed rebuilding kits, added or removed pages. Page numbering on added pages begins with UP.

| Date | Installed Kit | Added Pages (Doc. No.) | Removed Pages | Signature |
|---|---|---|---|---|
| | | | | |
| | | | | |
| | | | | |
| | | | | |
| | | | | |
| | | | | |
| | | | | |
| | | | | |
| | | | | |
| | | | | |
| | | | | |
| | | | | |
| | | | | |
| | | | | |
| | | | | |
| | | | | |
| | | | | |
| | | | | |
| | | | | |
| | | | | |
| | | | | |
| | | | | |

TechPub_2614345_0106 - MM_3047408_0103fro.fm

| Date | Installed Kit | Added Pages (Doc. No.) | Removed Pages | Signature |
|---|---|---|---|---|
| | | | | |
| | | | | |
| | | | | |
| | | | | |
| | | | | |
| | | | | |
| | | | | |
| | | | | |
| | | | | |
| | | | | |
| | | | | |
| | | | | |
| | | | | |
| | | | | |
| | | | | |
| | | | | |
| | | | | |
| | | | | |
| | | | | |
| | | | | |
| | | | | |
| | | | | |
| | | | | |
| | | | | |
| | | | | |

TechPub_2614345_0106 - MM_3047408_0103fro.fm

# i Introduction

TechPub_2614345_0106 - in01_3055123_01.fm

## About the Introduction Chapter

This chapter contains basic information about this manual and the related Tetra Pak equipment.

TechPub_2614345_0106 - in01_3055123_01.fm

Abbreviations and Terminology . . . . . i - 5
Manual Information . . . . . i - 6
Delivered Manuals . . . . . i - 6
Page Layout . . . . . i - 7
Page Numbering. . . . . i - 8
Typographical Conventions . . . . . i - 8
Symbols . . . . . i - 8
Machine Introduction . . . . . i - 9
Intended Use of the Equipment . . . . . i - 9
Manufacturer . . . . . i - 9
Support and Feedback . . . . . i - 9
Declaration of Conformity . . . . . i - 9
Identification . . . . . i - 10
CE Classification . . . . . i - 10
Machine Plate . . . . . i - 10
Orientation . . . . . i - 11
Hygiene. . . . . i - 12
Packaging Material. . . . . i - 12
Steam Barrier in the Product Valve . . . . . i - 12
How to Use This MM . . . . . i - 13
Procedures . . . . . i - 13
Procedure Start Table . . . . . i - 13
TPMS . . . . . i - 14
Planned Maintenance Program . . . . . i - 14
Checklists and Spare Parts Recommendations . . i - 14

TechPub_2614345_0106 - in01_3055123_01.fm

This page intentionally left blank

TechPub_2614345_0106 - in01_3055123_01.fm

# Abbreviations and Terminology

| Abbreviation/ Terminology | Meaning | Translation |
|---|---|---|
| ARL | Automatic Reel Loading | |
| ASU | Automatic Splicing Unit | |
| B | Base (package shape) | |
| CIP | Cleaning In Place | |
| DCS | Design Control System | |
| DE | Distribution Equipment | |
| DIMC | Direct Injection Moulded Concept | |
| ECM | Engineering Change Management | |
| EM | Electrical Manual | |
| HI | Headspace by gas Injection | |
| ICU | Integrated Cleaning Unit | |
| IH | Induction Heating | |
| LED | Light Emitting Diode | |
| LH | Left Hand | |
| LS | Longitudinal Seal(ing) | |
| MB | Master Batch | |
| min | Minimum | |
| max | Maximum | |
| MKC | Mandatory Kit Corrective | |
| MKS | Mandatory Kit Human and Product Safety | |
| MM | Maintenance Manual | |
| OK | Optional Kit | |
| OE | Optional Equipment | |
| OM | Operation Manual | |
| PE | Polyethylene | |
| PM | Packaging Material | |
| PT | PullTab | |
| RH | Right Hand | |
| RK | Rebuilding Kit | |
| RM | Rebuilding Manual | |
| S | Slim (package shape) | |
| SA | Strip Applicator | |
| SPC | Spare Parts Catalogue | |
| Sq | Square (package shape) | |
| TBA | Tetra Brik Aseptic | |
| TMCC | Tetra Pak Multi-purpose Compact Controller | |
| TPOP | Tetra Pak Operator Panel | |
| TS | Transversal Sealing | |
| UK | Upgrade Kit | |

TechPub_2614345_0106 - in01_3055123_01.fm

# Manual Information

Tetra Pak recommends reading all delivered manuals carefully. Make sure that the delivered manuals are available to personnel who operate or maintain the equipment.

It is important to keep this manual for the lifetime of the equipment and to pass the manual on to any subsequent holder or user.

Tetra Pak will not be held responsible for any damage to the equipment caused by not following the instructions given in this manual.

## Delivered Manuals

Manuals delivered with this equipment:

- CM
  The Conversion Manual provides technicians with information on converting the equipment between different production modes.
- EM
  The Electrical Manual provides technicians with information about the equipment's electrical system.
- IM
  The Installation Manual provides technicians with information required to safely install the equipment.
- MM
  The Maintenance Manual provides technicians with information on maintaining the equipment.
- OM
  The Operation Manual manual provides the operator with information on handling and operating the equipment before, during, and after production.
- SPC
  The Spare Parts Catalogue provides the information necessary to order spare parts from Tetra Pak
- TeM
  The Technical Manual provides technicians with information which can be:
  - information required to safely install the equipment
  - information required to maintaining the equipment
  - information about the machine's/equipment's electrical system
  - information necessary to order spare parts from Tetra Pak
  - other technical information.

TechPub_2614345_0106 - in01_3055123_01.fm

# Page Layout

Every main page in a manual contains a header and a footer. The page header contains the chapter name (1) and the section name (2). The page footer contains the page number (3), and the document number (4). See also the Page Numbering section.

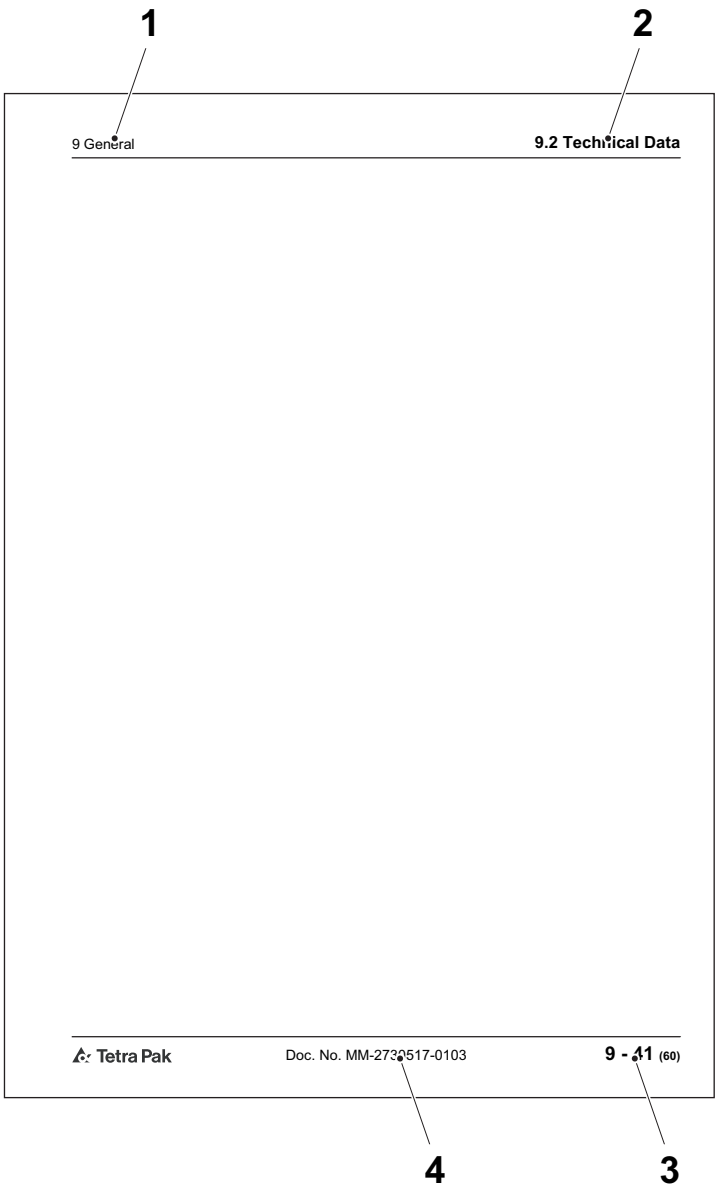


1 Chapter name
2 Section name
3 Page number
4 Document number

TechPub_2614345_0106 - in01_3055123_01.fm

## Page Numbering

A page number has three parts:

- chapter number (1)
- consecutive page number (2) within the chapter
- total number of pages (3) in the chapter.

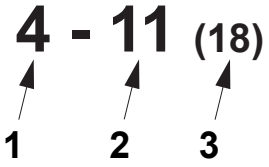


1 Chapter number
2 Consecutive page number
3 Total number of pages

## Typographical Conventions

Controls on the operator panel, emergency stop devices, and program steps are printed in CAPITAL LETTERS.

Menu names, button names and other text displayed in software are printed in `Courier`.

Cross-references are underlined.

## Symbols

Symbols used in illustrations.

| | |
|---|---|
|  | A pointer arrow indicates the position of an object. |
|  | A zoom arrow indicates that an object view is enlarged. The arrow points towards the enlarged view of the object. |
|  | A rotation movement arrow indicates rotational movement of an object. The arrow points in the direction of rotation. |
|  | A straight movement arrow indicates movement of an object.<br>The arrow points in the direction of movement. |

TechPub_2614345_0106 - in01_3055123_01.fm

# Machine Introduction

## Intended Use of the Equipment

The intended use of this Tetra Pak equipment is to provide a percentage of free space inside a package.

All other use is prohibited. Tetra Pak will not be held responsible for injury or damage if the equipment is used for any other purpose.

## Manufacturer

This Tetra Pak equipment has been manufactured by

Tetra Pak Packaging Solutions
Via Delfini 1
41123 Modena
Italy

## Support and Feedback

If you encounter problems when operating this equipment or have other inquiries, comments, or suggestions for improvement, contact Tetra Pak.

## Declaration of Conformity

A copy of the Declaration of Conformity can be found in the Installation Manual. The signed Declaration of Conformity is delivered separately with the equipment.

TechPub_2614345_0106 - in01_3055123_01.fm

# Identification

## CE Classification

This equipment complies with the basic health and safety regulations of the European Economic Area (EEA).

## Machine Plate

The illustration below shows an example of the machine plate and its location on the equipment. The machine plate carries data needed when contacting Tetra Pak concerning this specific equipment.

Make sure that the equipment data in the front pages of this manual corresponds to the machine plate data and the machine specification.

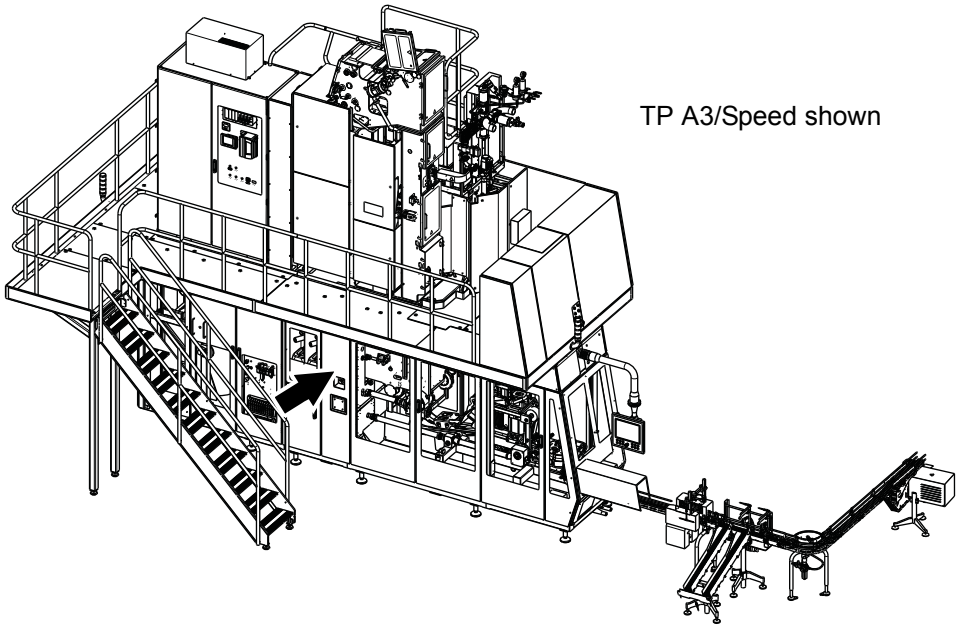

TP A3/Speed shown

TechPub_2614345_0106 - in01_3055123_01.fm

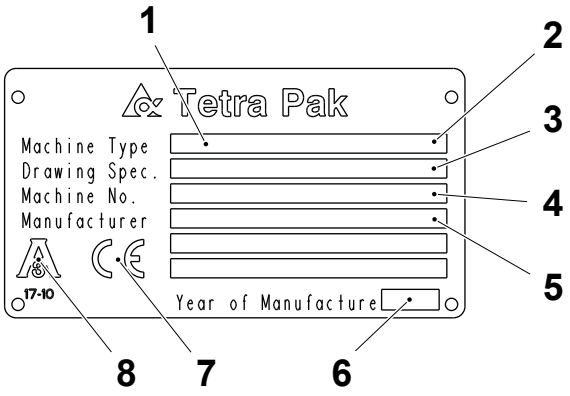


1 Machine type
2 Volume
3 Drawing specifications
4 Machine serial number
5 Manufactured by
6 Year of manufacture
7 CE mark
8 3-A mark

# Orientation

The illustration below shows the orientation of the equipment. This orientation information will be used throughout this manual. The arrows indicate the flow of material.

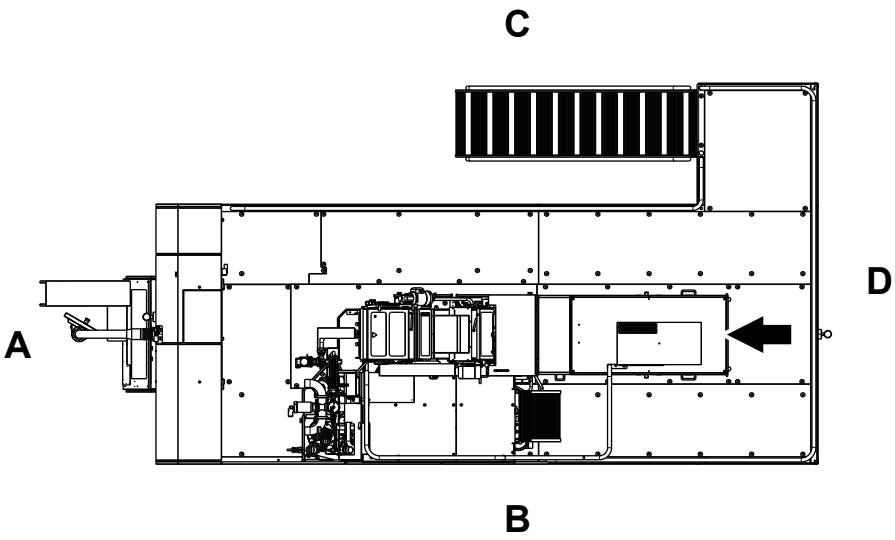


A Front
B Right-hand side
C Left-hand side
D Back

TechPub_2614345_0106 - in01_3055123_01.fm

# Hygiene

## Packaging Material

Avoid microbiological contamination of the packaging material:

- Always protect your packaging material against contamination.
- Always keep the doors to the filling room (area) closed. To prevent contamination via air streams, never open a window when the machine is in production.
- Never clean the floors or the machine in the filling room (area) when the machine is in production.
- Compressed air used for cleaning purposes is to be used only for cleaning filters and should only be used outside of the filling room (area) or in the final folder compartment of the filling machine.
- Prepare the splicing of the packaging material as late as possible.
- Disinfect your hands before touching anything that may come into contact with the product. Use code H disinfectant. See the Technical Data chapter of the Maintenance Manual.
- Keep your hands clean.
- Always wear some type of hair protection (cap or hairnet) and clean clothes (preferably white).
- Do not wear a watch, ring, necklace, earrings, or any other exposed jewellery.

## Steam Barrier in the Product Valve

The filling machine's product valve employs a steam barrier to separate the product supply line from the filling machine. The steam barrier allows the machine and the product supply line to be independently sterilised to commercial sterility conditions.

- Never disengage the steam barrier, and never interrupt the steam supply when the filling machine or the product supply line is being brought to the pre-sterilization phase, or when the machine is already in the production phase.
- If any maintenance activity requires disengagement of the steam barrier or the interruption of the steam supply to the machine, make sure that the product supply line is idle and empty of product.

TechPub_2614345_0106 - in01_3055123_01.fm

# How to Use This MM

## Procedures

The name of the chapters and sections in the MM correspond to the groups in the structure of the equipment. Procedures correspond to a chapter or a section:

- The dashes indicate that it is a procedure heading. The example below shows a heading for Procedure number 3 in Section 1.5.
- The text after the second dash tells what type of procedure it is. Check, Change and Set are common procedure types.

**1.5-3 Outfeed Servo - Change Bearings**

Maintenance procedures in this manual are connected to the Tetra Pak Maintenance System, TPMS. See the TPMS section.

### Procedure Start Table

Procedures in this manual begin with a table providing information needed to begin the procedure.

- Machine Status (1) shows actuator status, program step, and any other machine status necessary to begin the procedure.
- Special Equipment (2) shows a list of personal protective equipment and special tools that are not normally carried by a service technician, but are needed in the procedure.
- Consumables (3) shows items, such as lubricants, that are required to perform the procedure. Consumables do not include replacement parts.
- SPC Reference (4) shows the assembly number, found in the index of the SPC.

| | | |
|---|---|---|
| 1 | Machine Status | Power supply disconnector OFF<br>Air valve OFF<br>Water valve OFF |
| 2 | Special Equipment | Hook spanner TP No. 777170-0105<br>Dial indicator |
| 3 | Consumables | Grease code F |
| 4 | SPC Reference | 2501234-0100 |

1 Machine Status
2 Special Equipment
3 Consumables
4 SPC Reference

TechPub_2614345_0106 - in01_3055123_01.fm

# TPMS

To ensure uninterrupted production, all machines and equipment must be maintained on a regular basis.

Tetra Pak has developed a planned maintenance system to keep pace with the ongoing development of new and existing machines and equipment from Tetra Pak, and to meet the demands set by Tetra Pak's customers for higher efficiency and better economy.

## Planned Maintenance Program

The Tetra Pak planned maintenance system reduces unplanned downtime and maintenance time for complete production lines, as well as for individual machines and equipment.

With the Tetra Pak planned maintenance system, preventive maintenance can be performed before production is affected. The system is continually updated based on experience with Tetra Pak machines and equipment worldwide.

The Tetra Pak planned maintenance system maintains records of when maintenance is performed, when parts are changed, whether alterations are made, and so on. These records, combined with usage statistics, enable reliable predictions of the service life of all machine and equipment parts.

## Checklists and Spare Parts Recommendations

Customers using the Tetra Pak planned maintenance system receive checklists from their local Tetra Pak office whenever planned maintenance is due. These checklists are individualised for each of Tetra Pak's customer, according to the type of machine, equipment usage, and maintenance occasion. In addition, the system recommends spare parts, rotation units, tools, and templates according to the statistics collected.

**Tip!** Contact the local Tetra Pak office for additional information about the Tetra Pak Maintenance System and its planned maintenance program.

TechPub_2614345_0106 - in01_3055123_01.fm

# ii Safety Precautions

TechPub_2614345_0106 - sp03_3055124_01.fm

## Safety Precaution Instructions

**WARNING**

**Read all safety precaution instructions throughout this manual and on safety signs attached to this equipment.**
Failure to follow all safety precaution instructions could result in death or serious injury.

## Definition of Lockout Procedure

A lockout procedure is a procedure to put each necessary energy isolating device in its safe position to prevent the energisation of the equipment, such as when a maintenance procedure should be carried out.

A lockout is the use of a device, for example, a padlock, to make sure that an energy isolating device cannot be operated.

An energy isolating device is a mechanical device that physically prevents transmission or release of energy, such as a power supply disconnector.

TechPub_2614345_0106 - sp03_3055124_01.fm

Safety Messages Description . . . . . ii - 5
Personnel Requirements . . . . . ii - 6
Skilled Person . . . . . ii - 6
Instructed Person. . . . . ii - 6
Safety Signs . . . . . ii - 7
Locations of Tetra Pak A3/Speed Safety Signs. . ii - 10
Locations of Tetra Pak A3/Flex Safety Signs . . . ii - 20
Location of HI Equipment (OE) Safety Signs . . . ii - 31
Protective Devices. . . . . ii - 32
Emergency Stop. . . . . ii - 32
Emergency Stop Push-Buttons . . . . . ii - 33
Safeguards . . . . . ii - 35
Indicating Tower. . . . . ii - 38
Audible Alarm. . . . . ii - 39
Safe Manual Handling . . . . . ii - 40
Personal Protection. . . . . ii - 41
Noise Hazard . . . . . ii - 41
Entanglement Hazard . . . . . ii - 41
Ergonomic Hazard . . . . . ii - 41
Hazardous Substances . . . . . ii - 42
Disposal of Chemical Substances . . . . . ii - 43
Hydrogen Peroxide ($H_2O_2$) . . . . . ii - 44
Emergency Procedures. . . . . ii - 44
Personal Protective Equipment . . . . . ii - 45
Handling of Hydrogen Peroxide. . . . . ii - 46
Storage of Hydrogen Peroxide. . . . . ii - 47
Disposal of Hydrogen Peroxide . . . . . ii - 48
Caustic Soda/Sodium Hydroxide (NaOH) . . . . . ii - 49

TechPub_2614345_0106 - sp03_3055124_01.fm

Emergency Procedures . . . . . ii - 49
Personal Protective Equipment . . . . . ii - 50
Handling and Storage of Caustic Soda/Sodium Hydroxide . . . . . ii - 51
Disposal of Caustic Soda/Sodium Hydroxide . . . ii - 51
Nitric Acid (HNO3) . . . . . ii - 52
Emergency Procedures . . . . . ii - 52
Personal Protective Equipment . . . . . ii - 54
Handling and Storage of Nitric Acid . . . . . ii - 55
Disposal of Nitric Acid . . . . . ii - 56
Ultraviolet Light . . . . . ii - 57
Supply Systems . . . . . ii - 58
Power Supply . . . . . ii - 58
Residual Voltage . . . . . ii - 58
Electrical Cabinet . . . . . ii - 59
Socket Outlet . . . . . ii - 60
Air Supply . . . . . ii - 61
Steam Supply . . . . . ii - 63
Water Supply . . . . . ii - 64
Equipment for Lifting and Moving Loads . . . . ii - 65

TechPub_2614345_0106 - sp03_3055124_01.fm

# Safety Messages Description

A safety message is always accompanied by a safety alert symbol and a signal word.

The safety alert symbol is used to alert about potential personal injury hazards. To avoid hazards, obey all safety messages that follow this symbol.

The following safety alert symbols and signal words are used in this manual to inform the user of hazards.

| | |
|---|---|
| **DANGER** | Danger indicates an imminently hazardous situation which, if not avoided, will result in death or serious injury. |
| **WARNING** | Warning indicates a potentially hazardous situation which, if not avoided, **could** result in **death or serious injury**. |
| **CAUTION** | Caution indicates a potentially hazardous situation which, if not avoided, **may** result in **minor or moderate injury.** It may also be used to alert against unsafe practices. |
| **CAUTION** | Caution without the safety alert symbol indicates a potentially hazardous situation which, if not avoided, **may** result in **property damage**. |

TechPub_2614345_0106 - sp03_3055124_01.fm

# Personnel Requirements

**Note!** Personnel includes all persons working on or near this equipment.

Only skilled or instructed persons are allowed to work with this equipment.

## Skilled Person

A skilled person must have relevant education and experience to enable him or her to identify hazards, analyse risks, and avoid hazards which electricity, machinery, chemicals, other energies, and supply systems on this equipment can create.

Skilled persons must meet local regulations, such as certifications and qualifications for working with these energies and systems.

## Instructed Person

An instructed person must be adequately advised or supervised by a skilled person. The skilled person enables the instructed person to identify hazards, analyse risks, and avoid hazards which electricity, machinery, chemicals, other energies, and supply systems on this equipment can create.

TechPub_2614345_0106 - sp03_3055124_01.fm

# Safety Signs

**WARNING**

**Damaged or missing safety signs increase the risk of death or serious injury.**

Replace all missing or damaged safety signs immediately.

Safety signs are attached to the equipment. The table below lists all the signs that are used, and illustrations show their locations on the equipment. Each position number refers to two variants of a safety sign in the table, but only one is used on the equipment.

- Make sure that each safety sign is legible and in its correct position after installation and maintenance.
- Replace all missing or damaged safety signs immediately.

| Pos. | ISO sign | ANSI sign |
|---|---|---|
| 1 |  |  |
| | **Hot surface.**<br>Do not touch.<br>Follow lockout procedure before maintenance. | |
| 2 |  |  |
| | **Chemical burn hazard.**<br>Wear personal protective equipment. | |
| 3 | 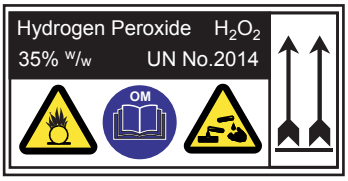 | 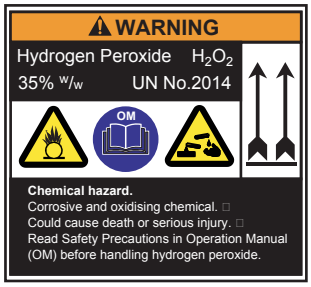 |
| | **Chemical hazard.**<br>Corrosive and oxidising chemical. Could cause death or serious injury. Read Safety Precautions in Operation Manual (OM) before handling hydrogen peroxide. | |

TechPub_2614345_0106 - sp03_3055124_01.fm

| Pos. | ISO sign | ANSI sign |
|---|---|---|
| 4 |  |  |
| | **Risk of eye injury.**<br>Wear eye protection. | |
| 5 |  |  |
| | **Hazardous voltage.**<br>Will shock, burn, or cause death.<br>Follow lockout procedure before maintenance. | |
| 6 |  |  |
| | **Hazardous voltage 6 kV.**<br>Will shock, burn, or cause death.<br>Follow lockout procedure before maintenance. | |
| 7 |  |  |
| | **Hazardous residual voltage on capacitors.**<br>Will shock, burn or cause death. Do not touch until safe.<br>Follow instructions for safe work practices. | |
| 8 |  |  |
| | **Hazardous voltage.**<br>Can shock, burn, or cause death.<br>Read Maintenance Manual (MM) before using this socket outlet. | |

TechPub_2614345_0106 - sp03_3055124_01.fm

| Pos. | ISO sign | ANSI sign |
|---|---|---|
| 9 |  | 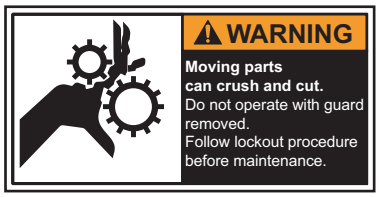 |
| | **Moving parts can crush and cut.**<br>Do not operate with guard removed.<br>Follow lockout procedure before maintenance. | |
| 10 |  |  |
| | **Moving part can crush and cut.**<br>Do not operate with guard removed.<br>Follow lockout procedure before maintenance. | |
| 11 |  |  |
| | **Do not reach in.**<br>Moving parts may cause injury<br>Follow instructions for safe work practice. | |

TechPub_2614345_0106 - sp03_3055124_01.fm

## Locations of Tetra Pak A3/Speed Safety Signs

The illustration shows where the safety signs are located. The position numbers refer to the table in the Safety Signs section.

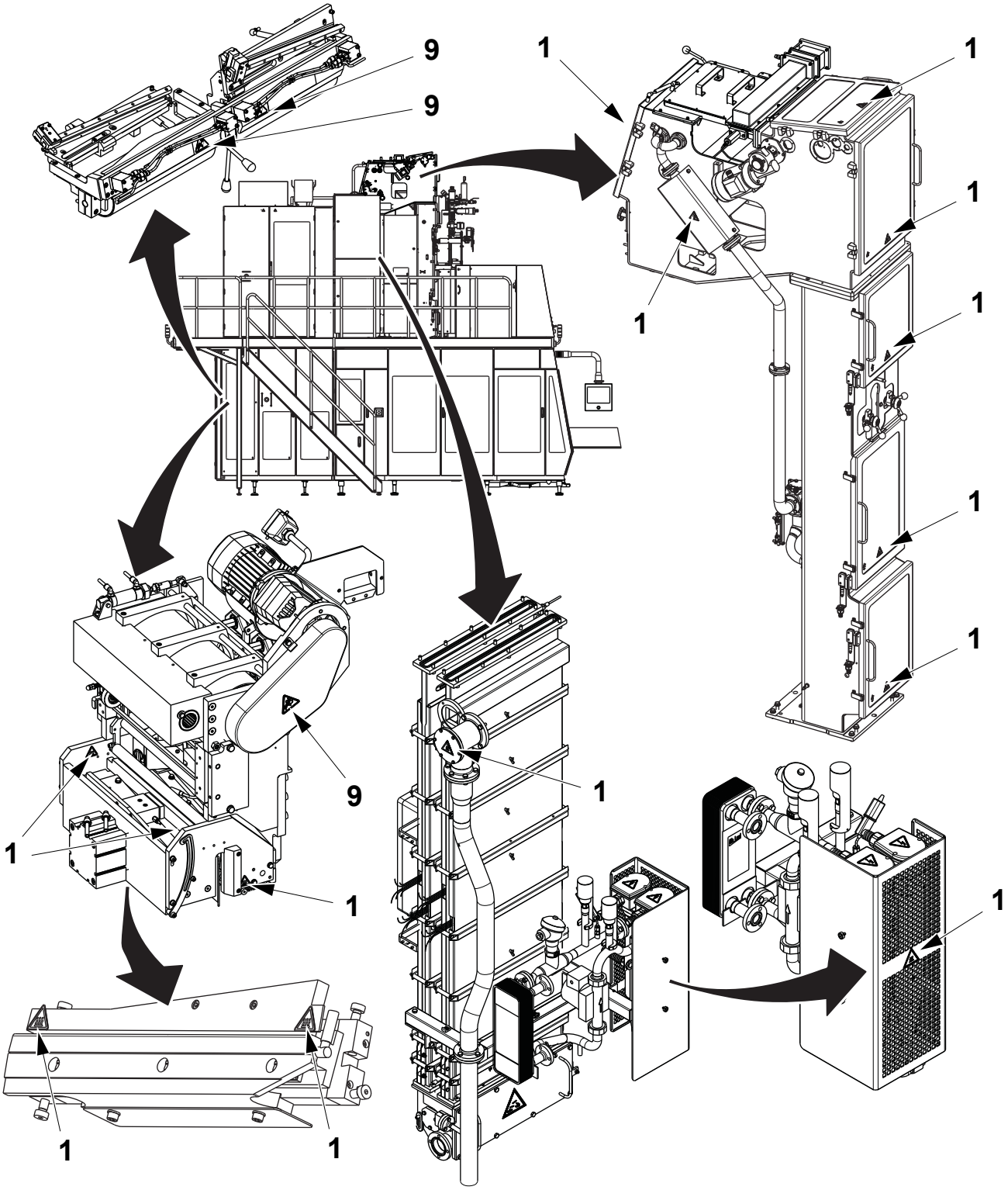


*(Cont'd)*

TechPub_2614345_0106 - sp03_3055124_01.fm

*(Cont'd)*

The illustration shows where the safety signs are located. The position numbers refer to the table in the Safety Signs section.

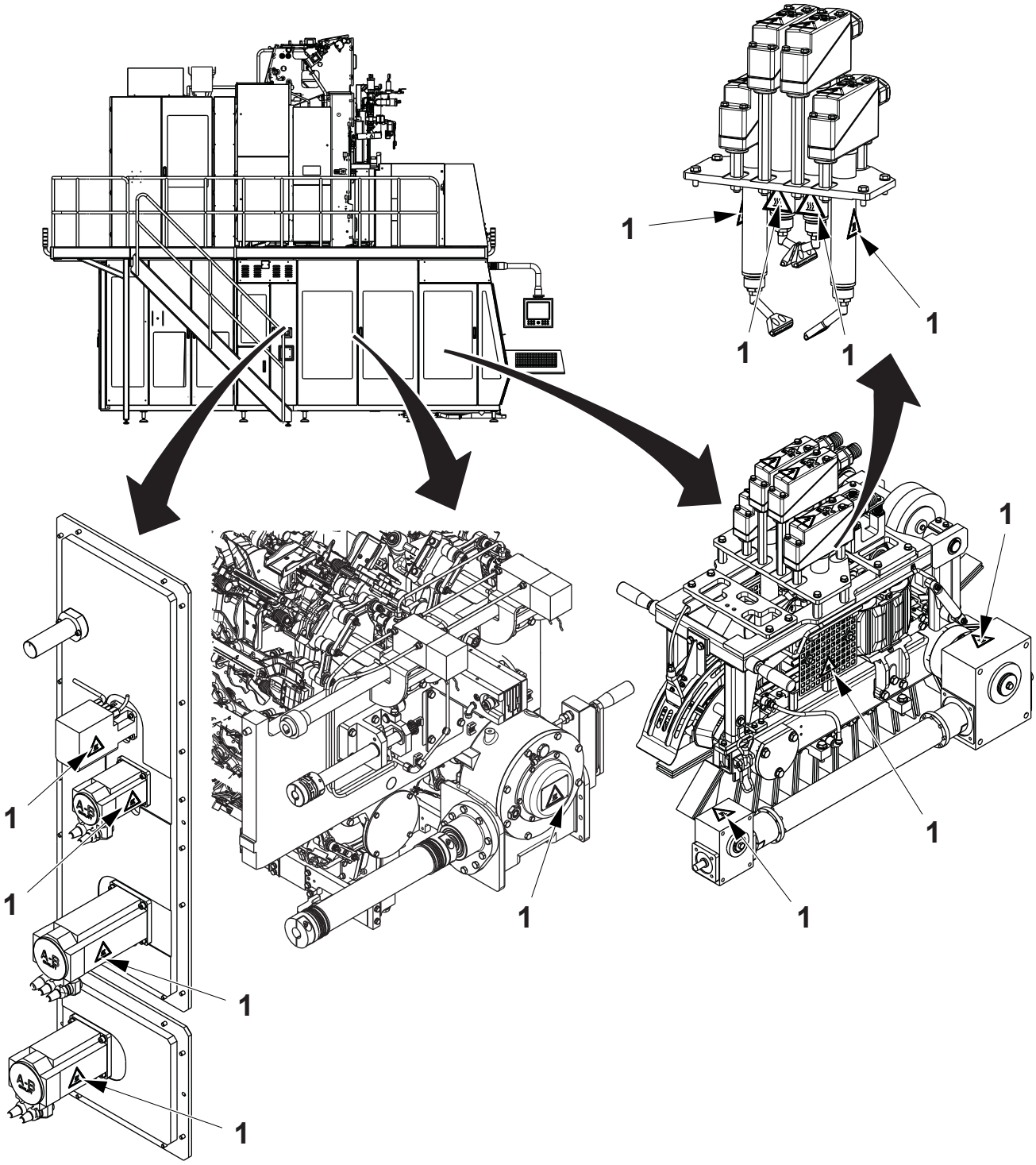


*(Cont'd)*

TechPub_2614345_0106 - sp03_3055124_01.fm

*(Cont'd)*

The illustration shows where the safety signs are located. The position numbers refer to the table in the Safety Signs section.

**Note!** The sign (1) in the ASU is removed for Tetra Pak A3/Speed from T-order 21215/00245.

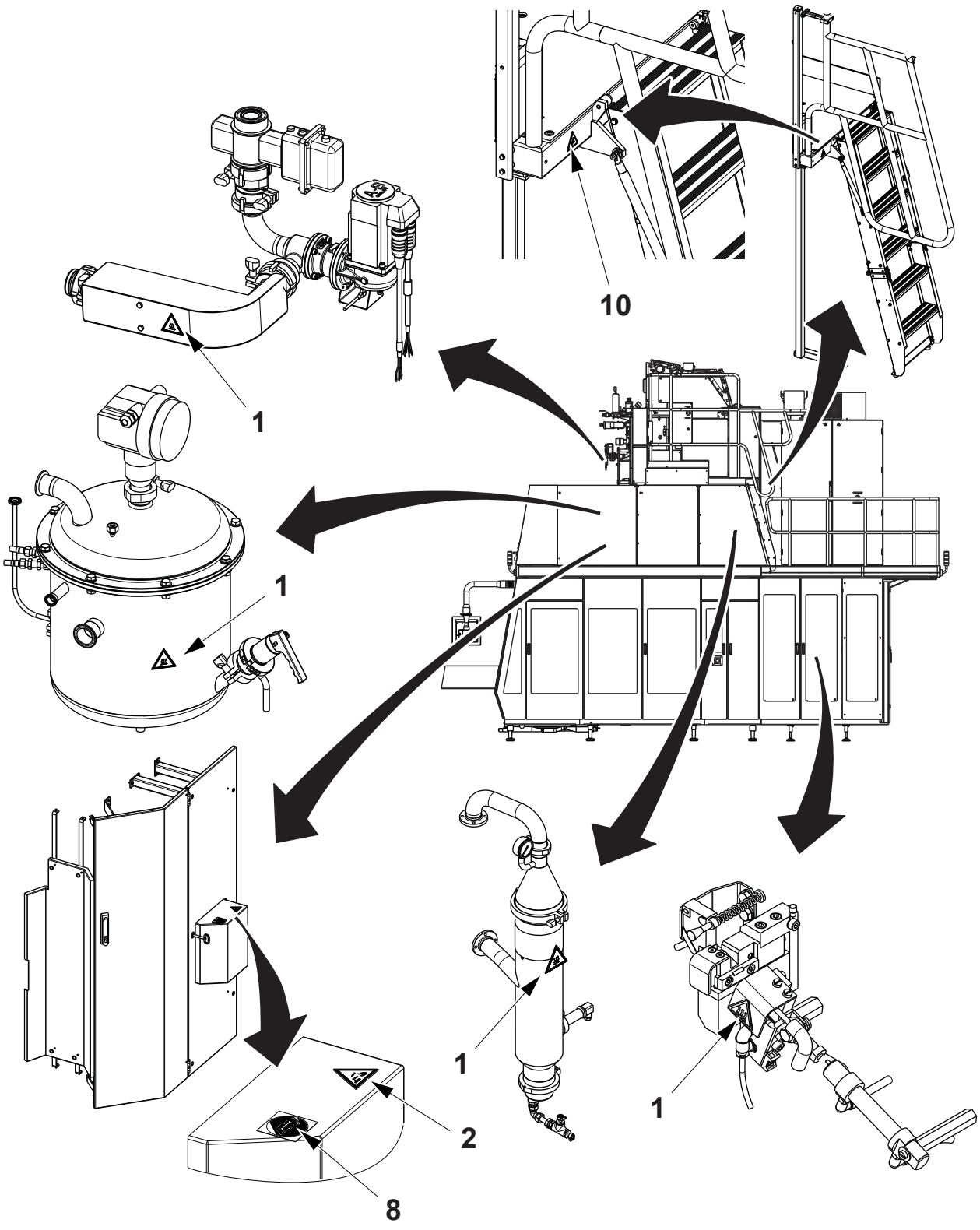


TechPub_2614345_0106 - sp03_3055124_01.fm

*(Cont'd)*

*(Cont'd)*

The illustration shows where the safety signs are located. The position numbers refer to the table in the Safety Signs section.

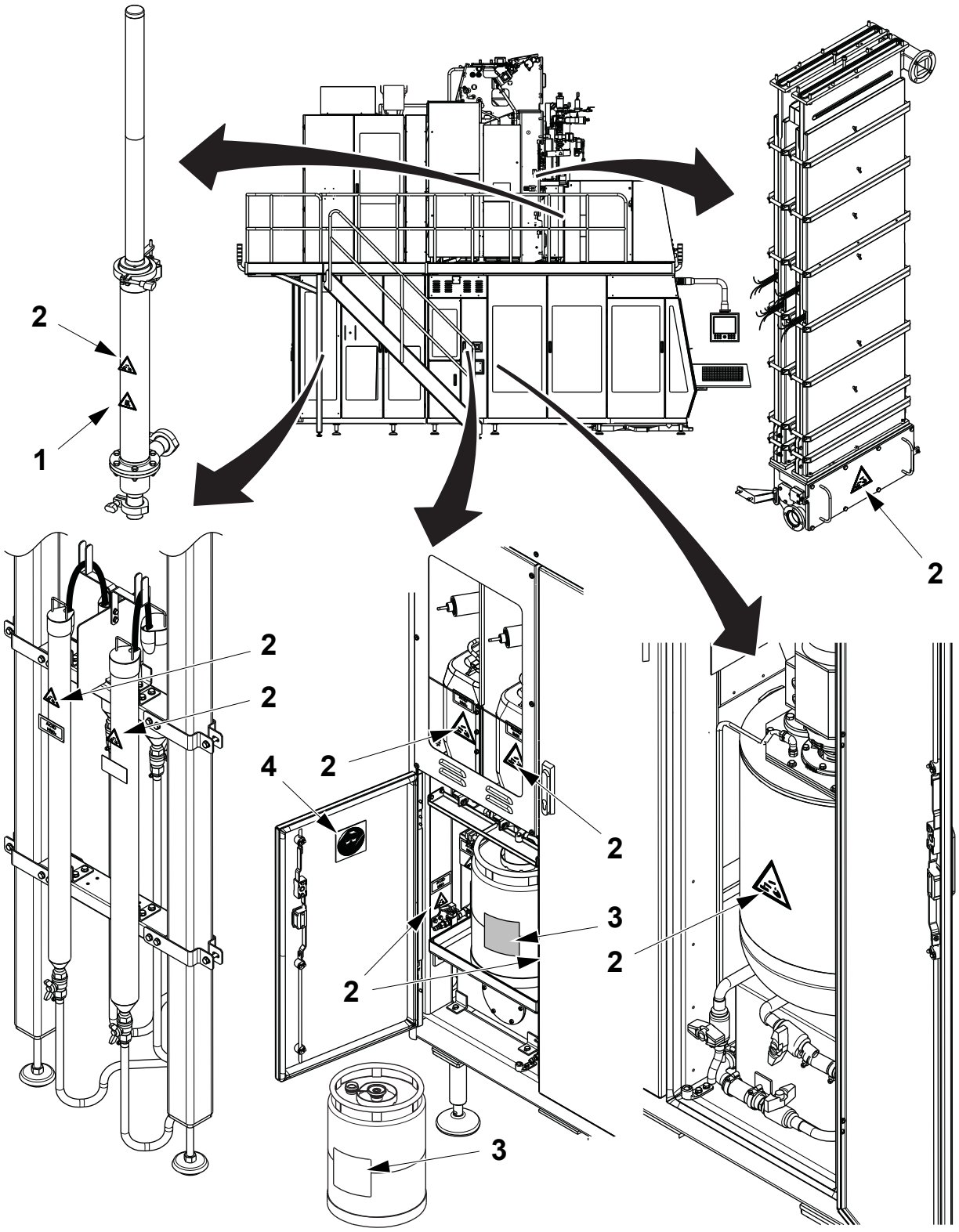


TechPub_2614345_0106 - sp03_3055124_01.fm

*(Cont'd)*

*(Cont'd)*

The illustration shows where the safety signs are located. The position numbers refer to the table in the Safety Signs section.

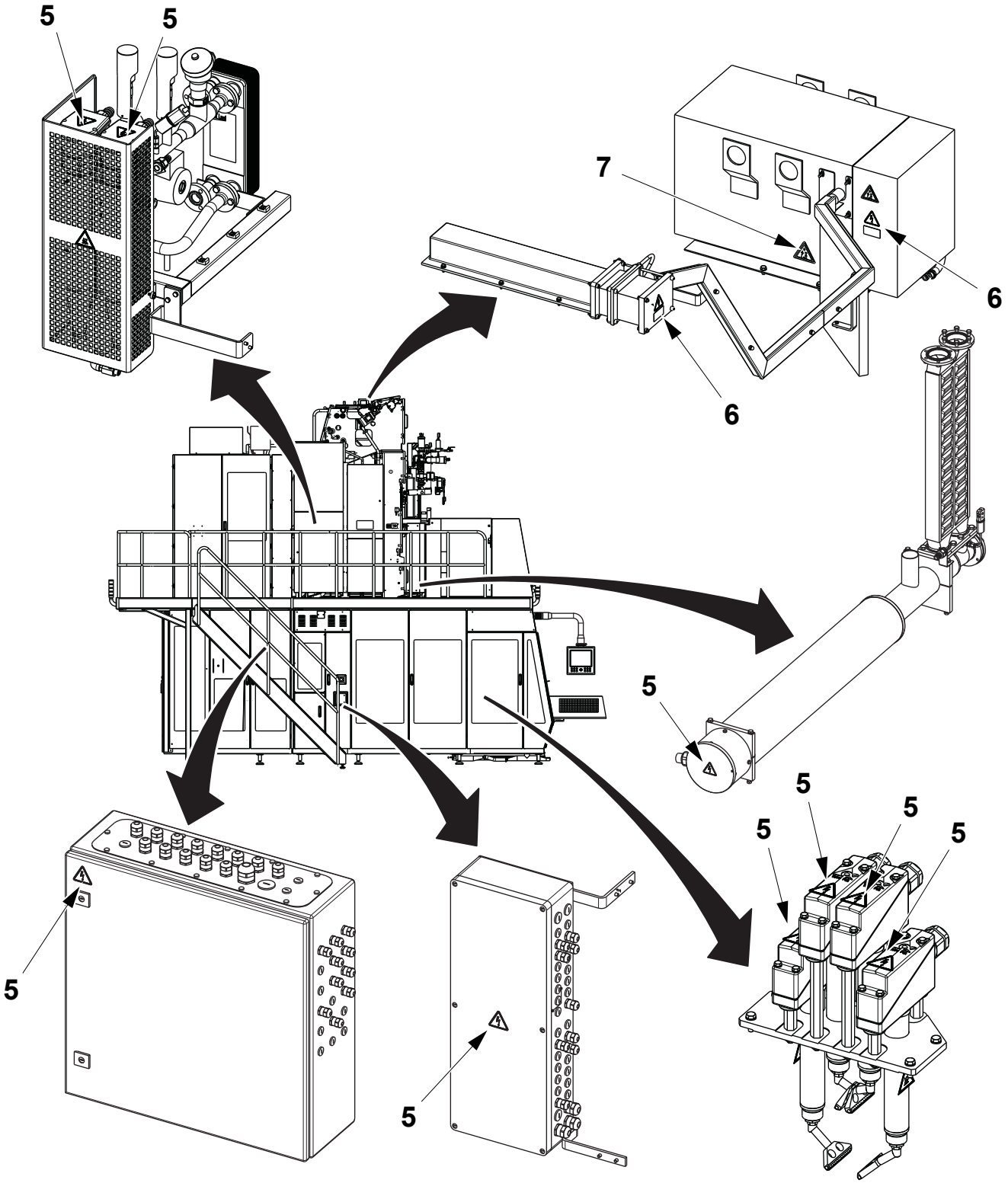


TechPub_2614345_0106 - sp03_3055124_01.fm

*(Cont'd)*

*(Cont'd)*

The illustration shows where the safety signs are located. The position numbers refer to the table in the Safety Signs section.

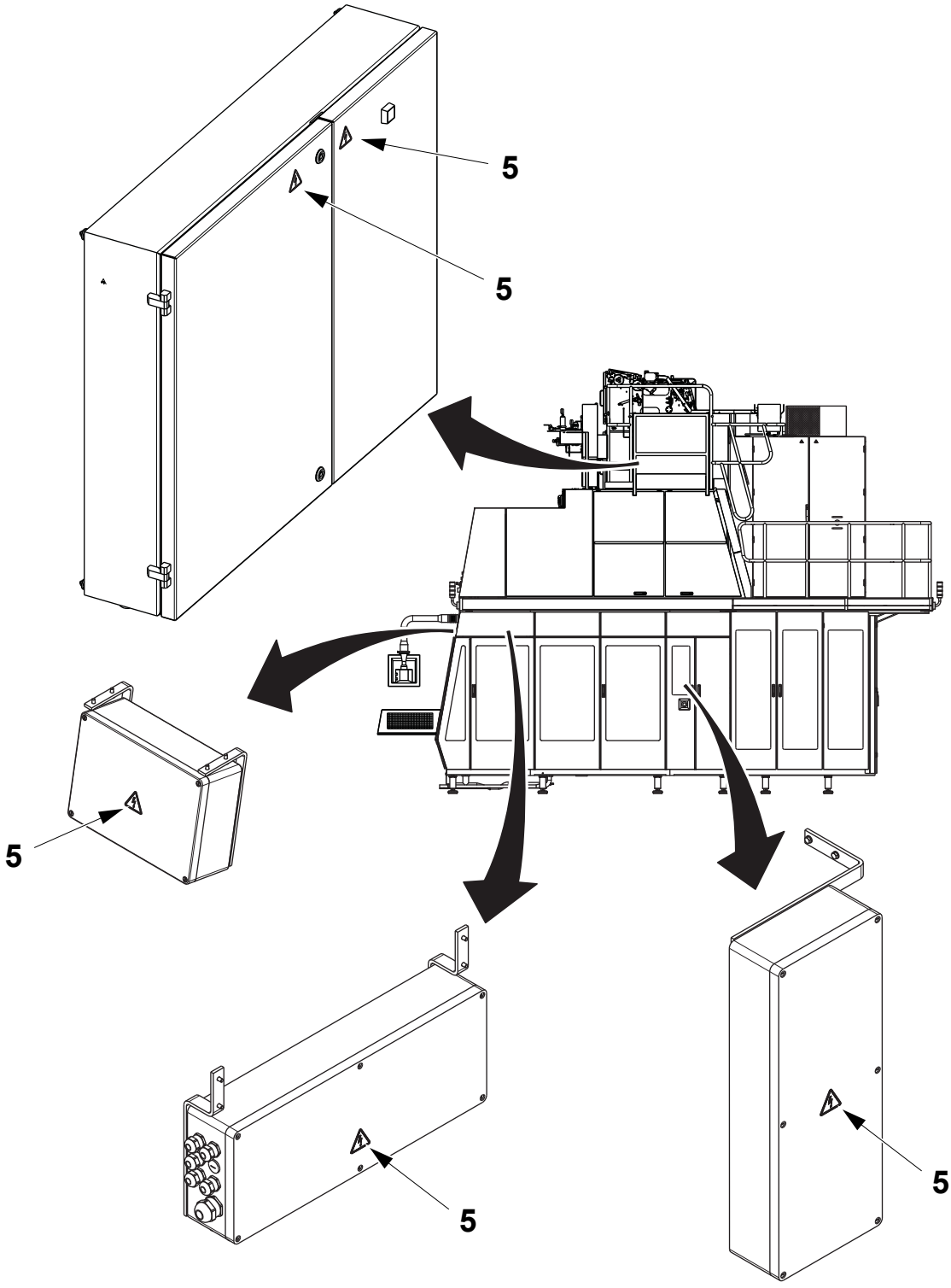


*(Cont'd)*

TechPub_2614345_0106 - sp03_3055124_01.fm

*(Cont'd)*

The illustration shows where the safety signs are located. The position numbers refer to the table in the Safety Signs section.

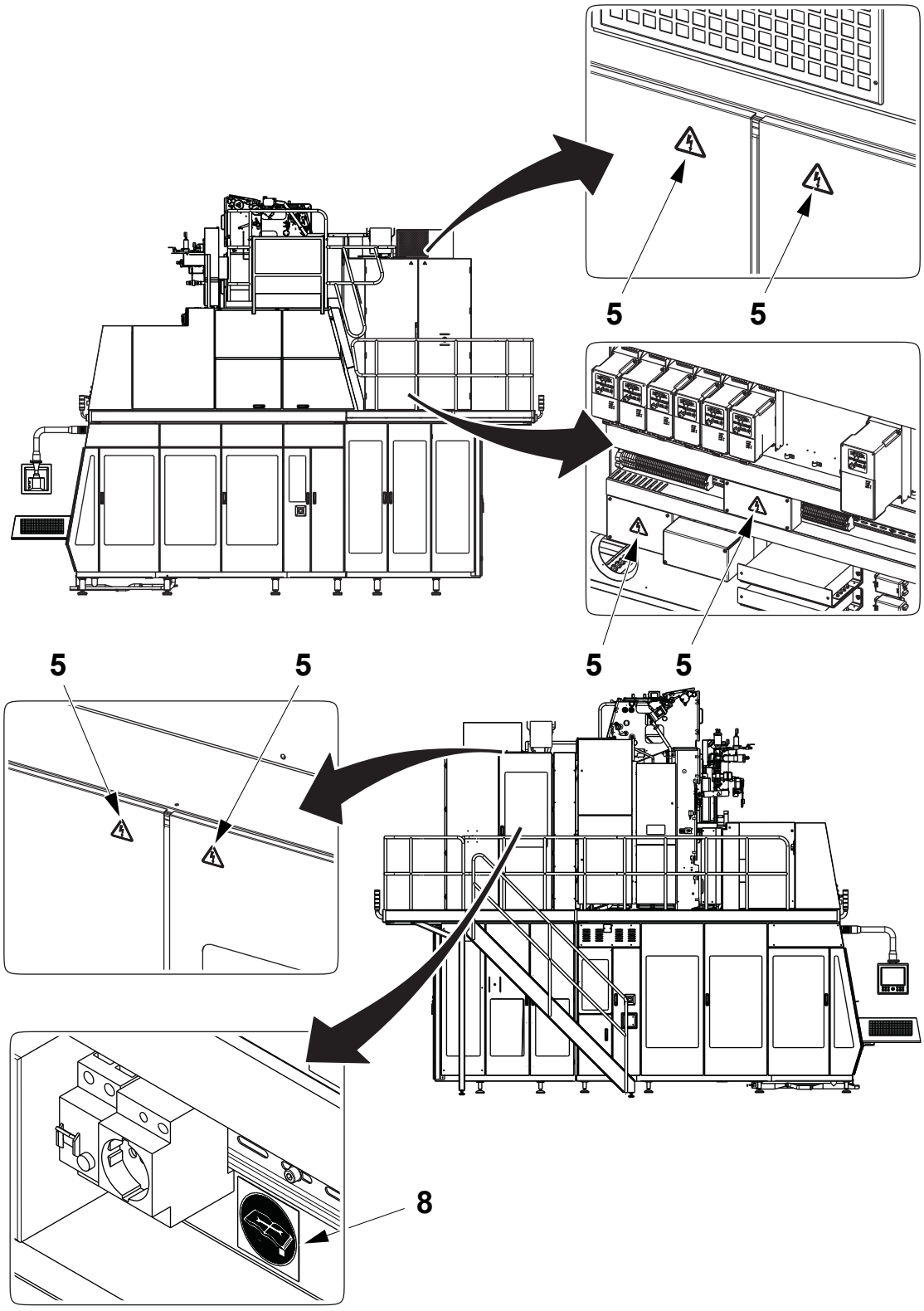


TechPub_2614345_0106 - sp03_3055124_01.fm

*(Cont'd)*

*(Cont'd)*

The illustration shows where the safety signs are located. The position numbers refer to the table in the Safety Signs section.

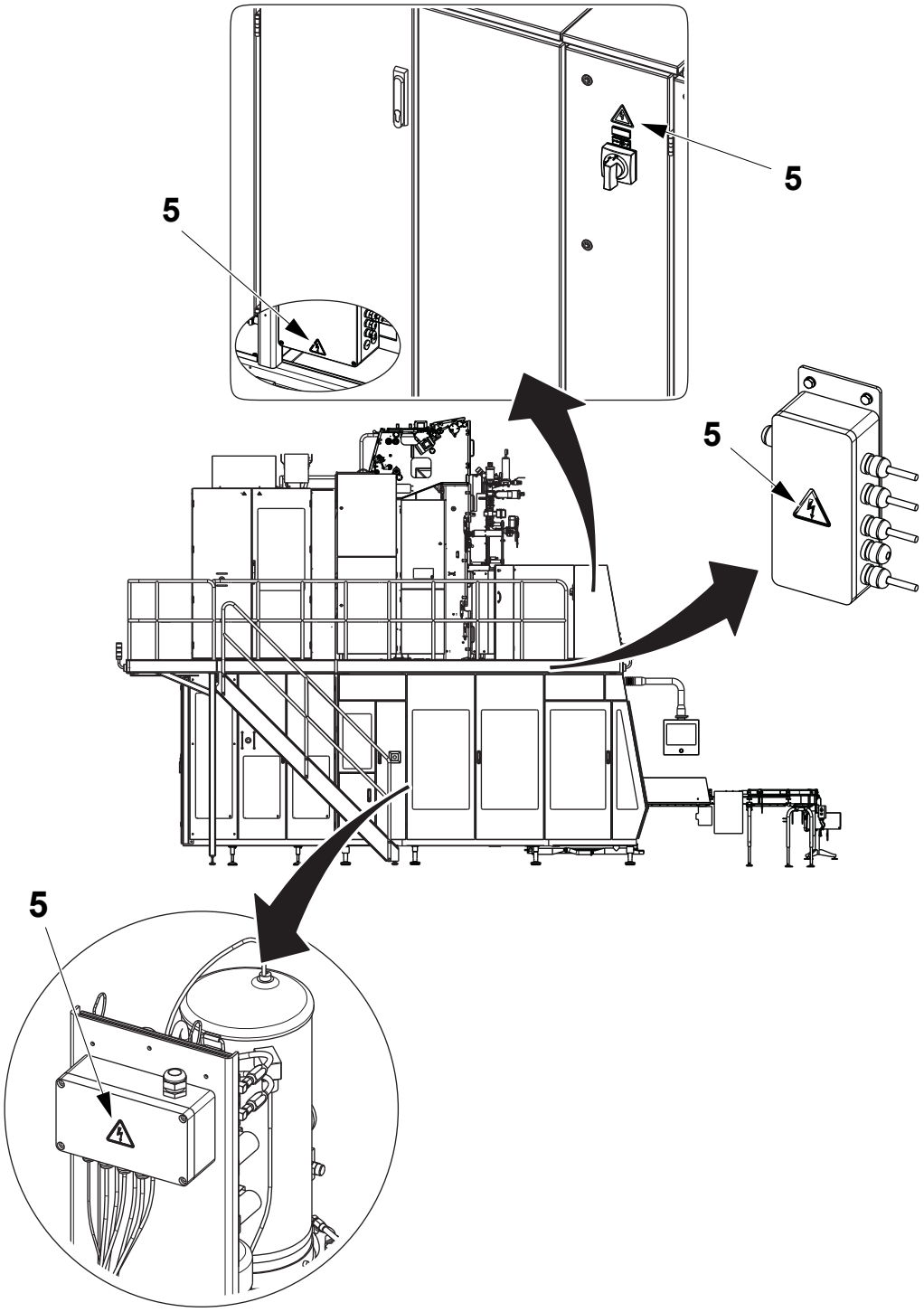


*(Cont'd)*

TechPub_2614345_0106 - sp03_3055124_01.fm

*(Cont'd)*

The illustration shows where the safety signs are located. The position numbers refer to the table in the Safety Signs section.

**Note!** The two signs (10) are introduced for Tetra Pak A3/Speed from T-order 21215/00070.

**Note!** The sign (1) is introduced for Tetra Pak A3/Speed from T-order 21215/00245.

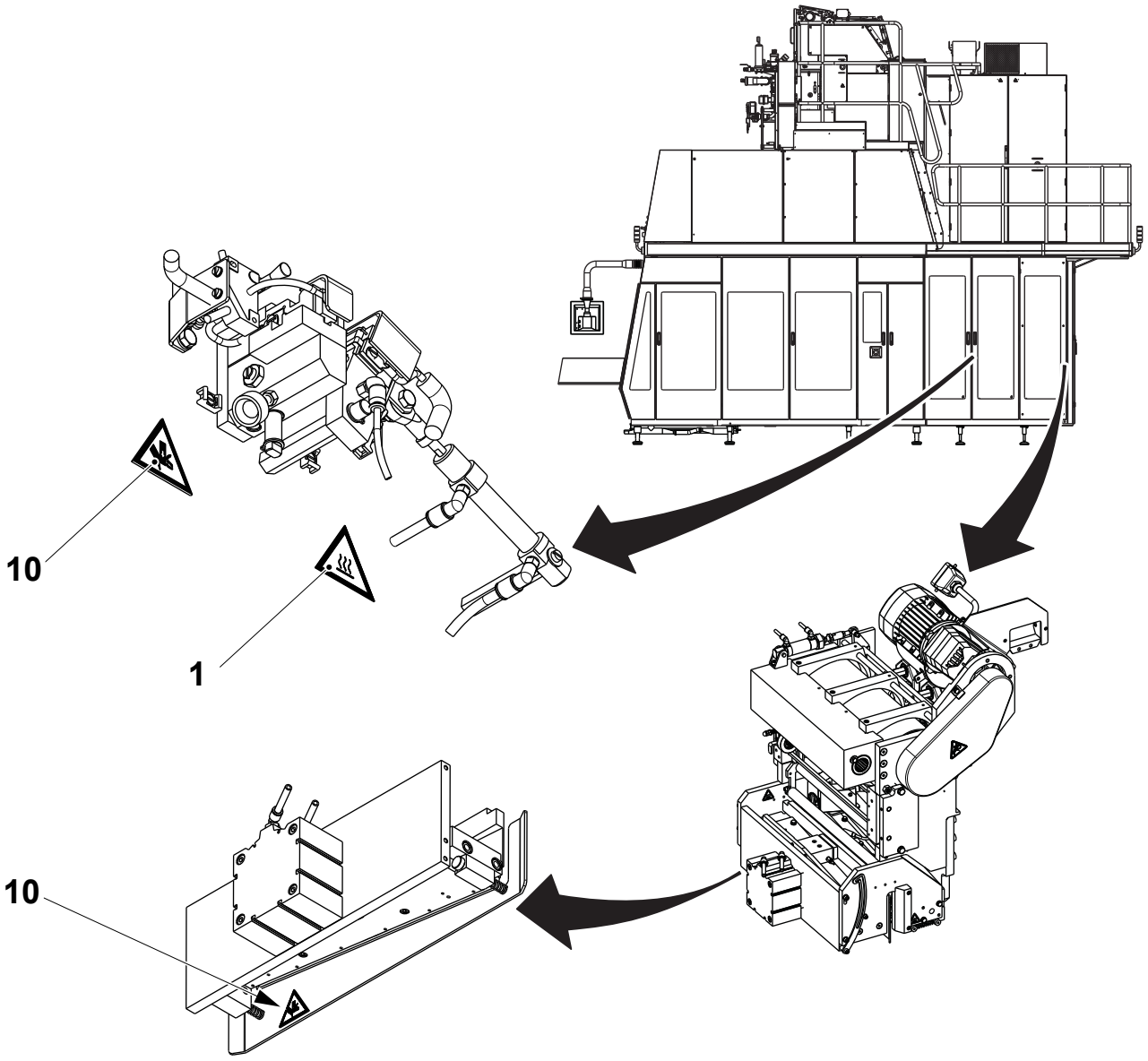


TechPub_2614345_0106 - sp03_3055124_01.fm

*(Cont'd)*

*(Cont'd)*

The illustration shows where the safety signs are located. The position numbers refer to the table in the Safety Signs section.

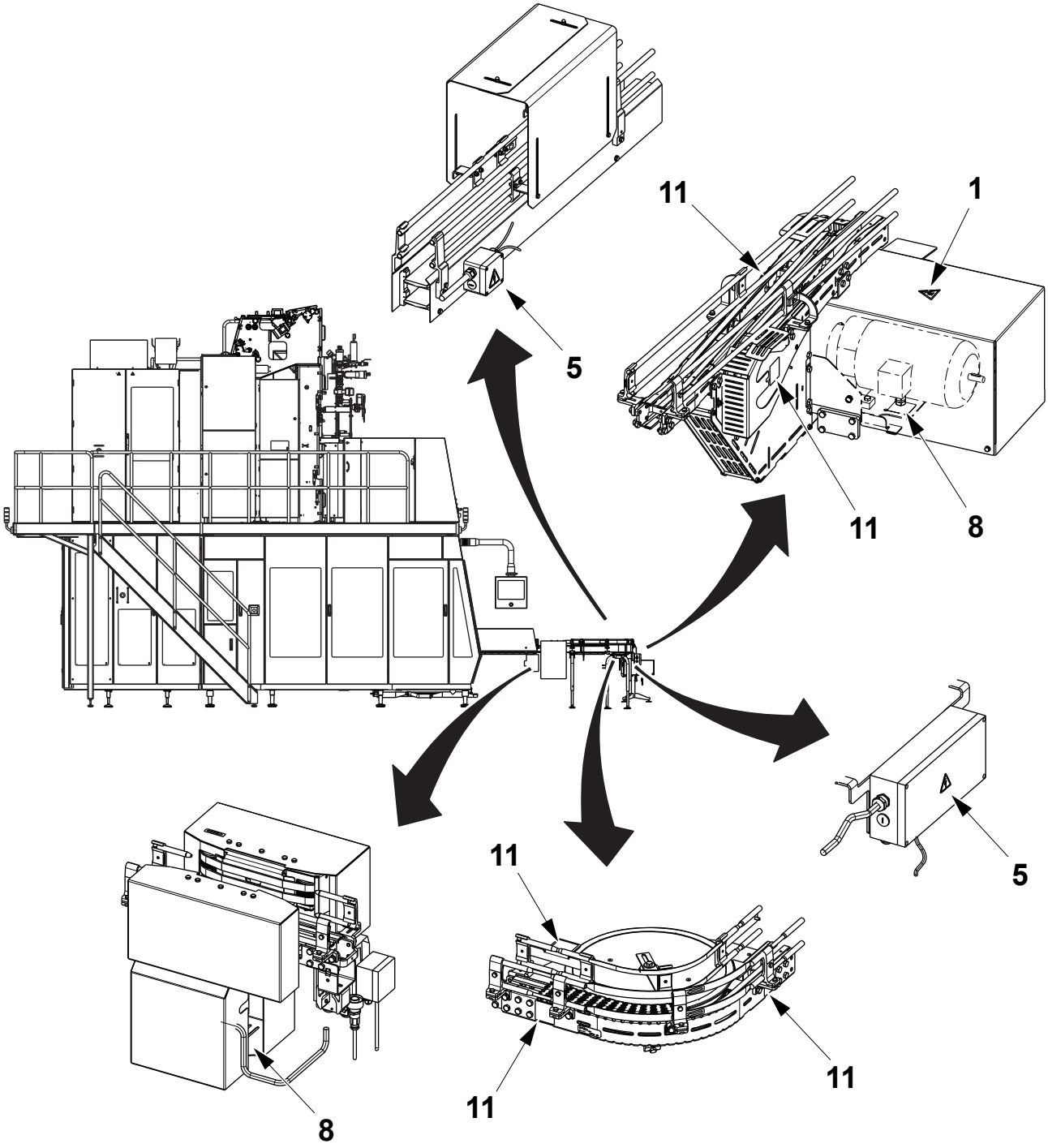


*(Cont'd)*

TechPub_2614345_0106 - sp03_3055124_01.fm

*(Cont'd)*

## Locations of Tetra Pak A3/Flex Safety Signs

The illustration shows where the safety signs are located. The position numbers refer to the table in the Safety Signs section.

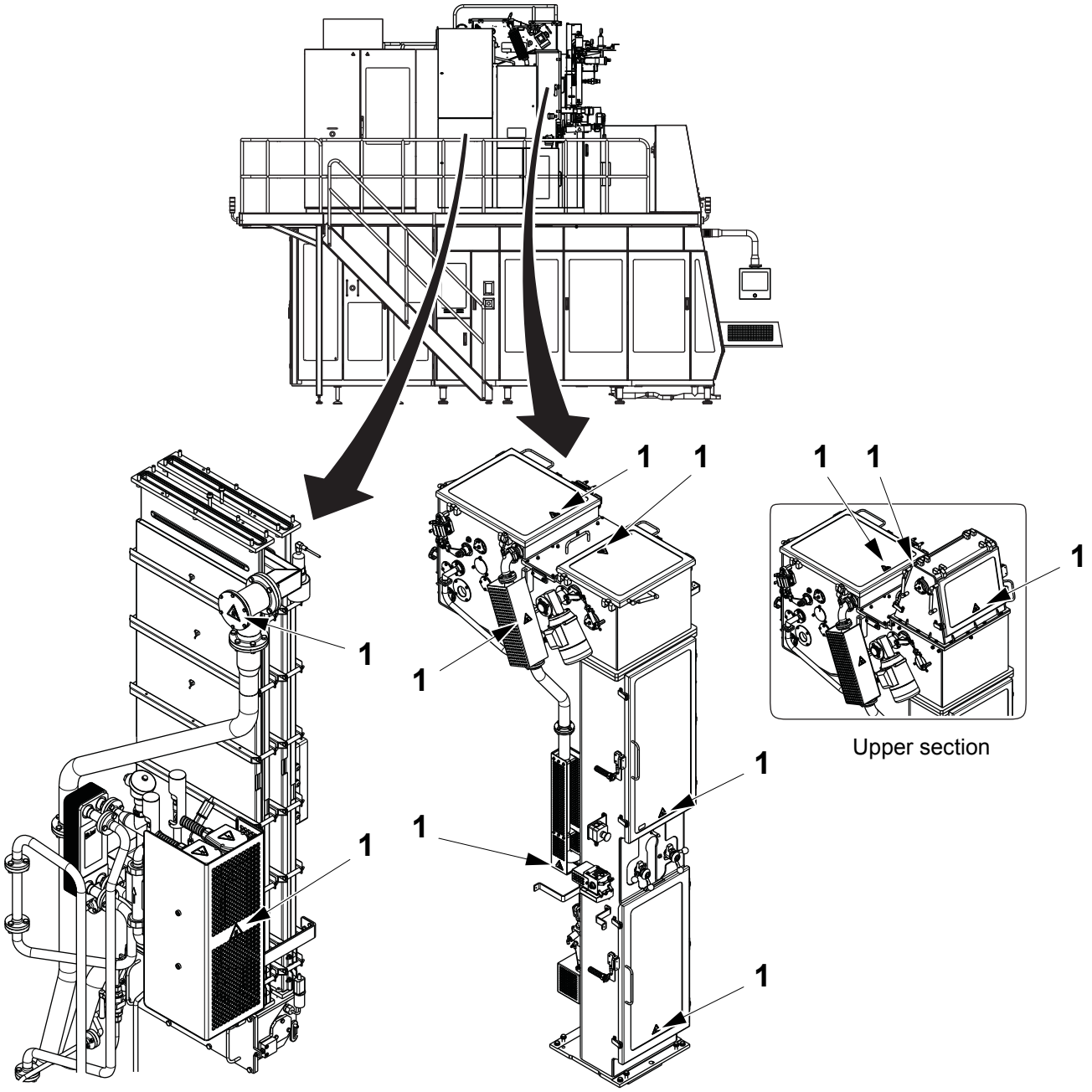


*(Cont'd)*

TechPub_2614345_0106 - sp03_3055124_01.fm

*(Cont'd)*

The illustration shows where the safety signs are located. The position numbers refer to the table in the Safety Signs section.

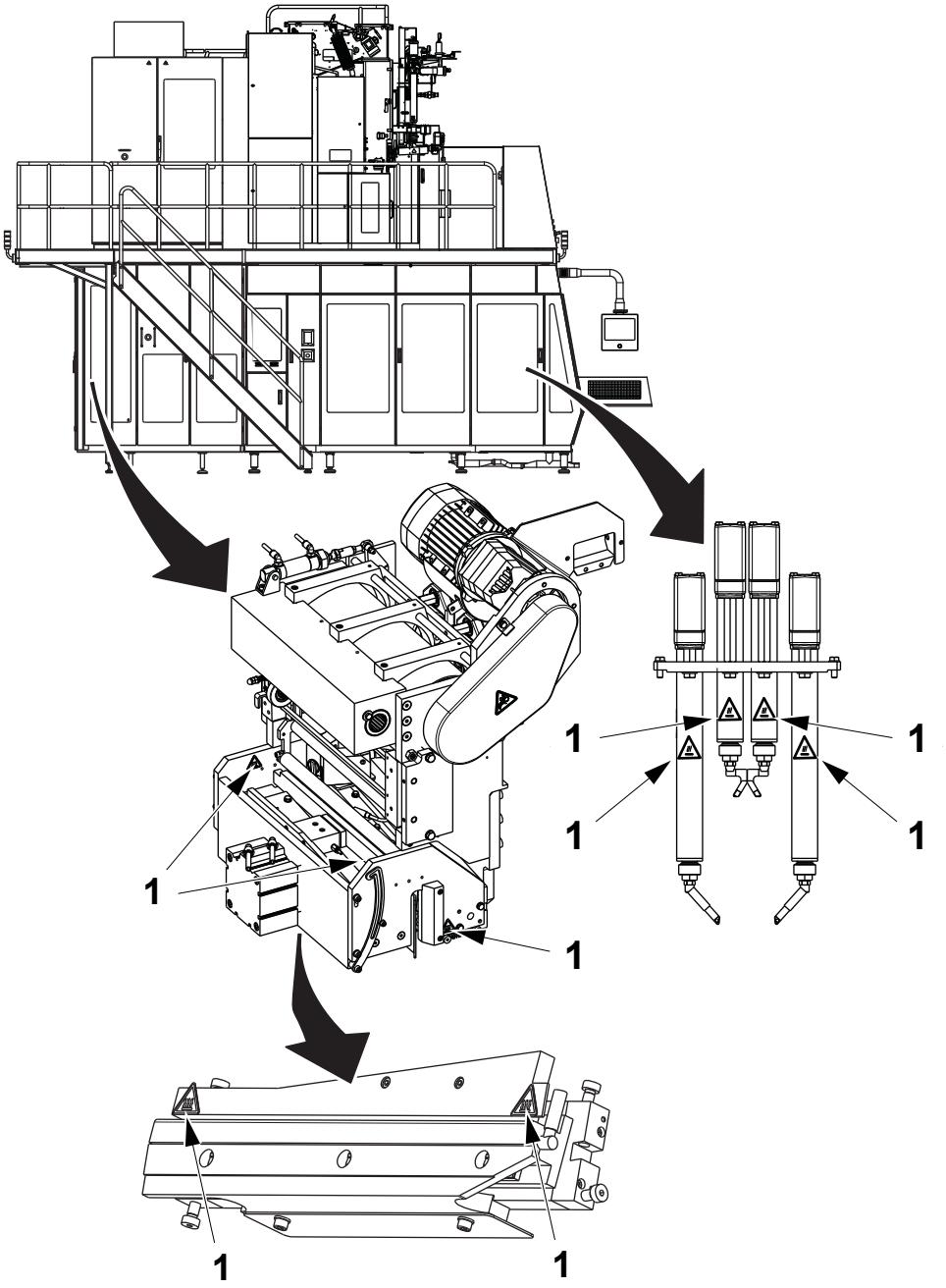


*(Cont'd)*

TechPub_2614345_0106 - sp03_3055124_01.fm

*(Cont'd)*

The illustration shows where the safety signs are located. The position numbers refer to the table in the Safety Signs section.

**Note!** The sign (1) in the ASU is removed for Tetra Pak A3/Flex from T-order 21214/00165.

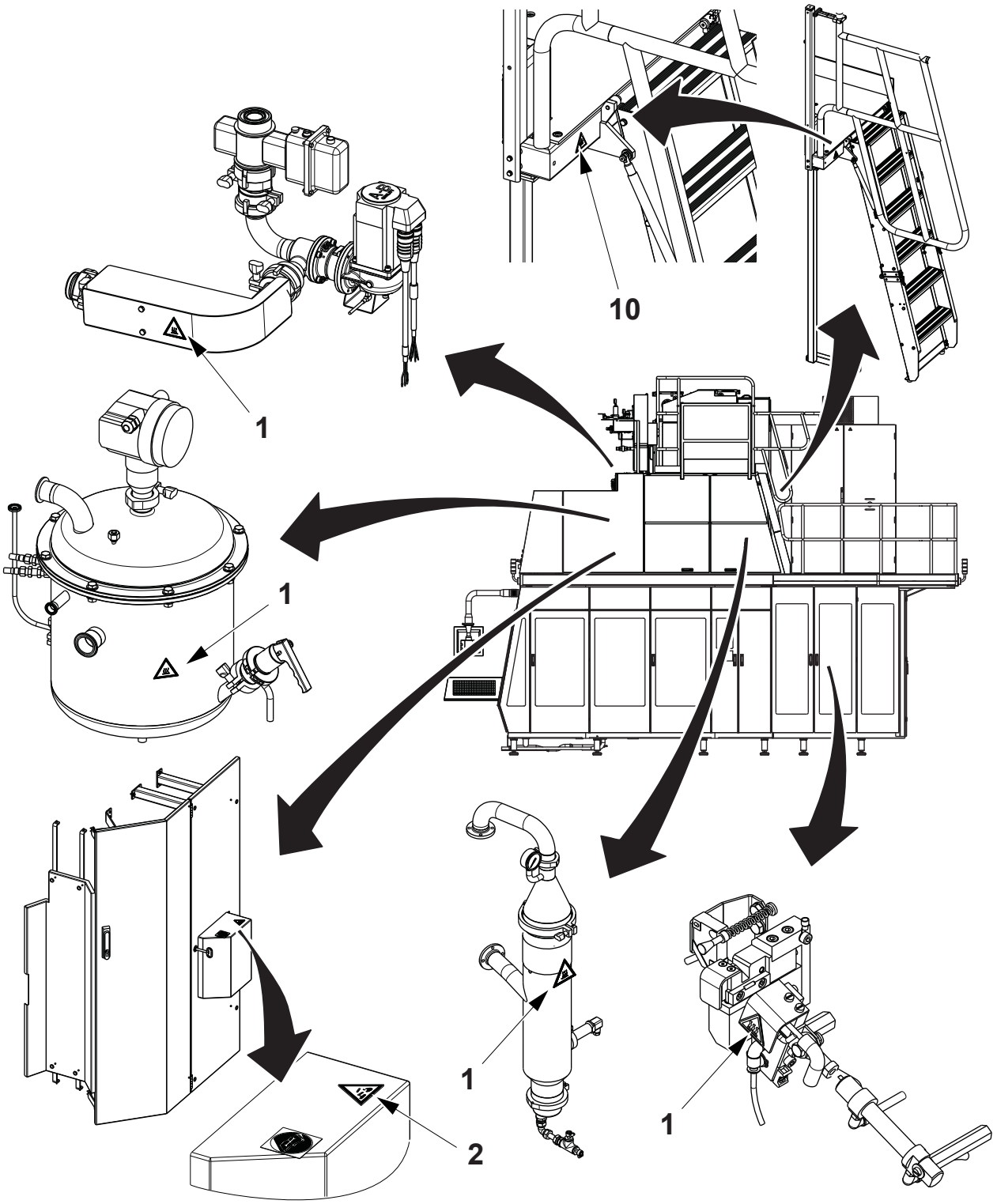


TechPub_2614345_0106 - sp03_3055124_01.fm

*(Cont'd)*

*(Cont'd)*

The illustration shows where the safety signs are located. The position numbers refer to the table in the Safety Signs section.

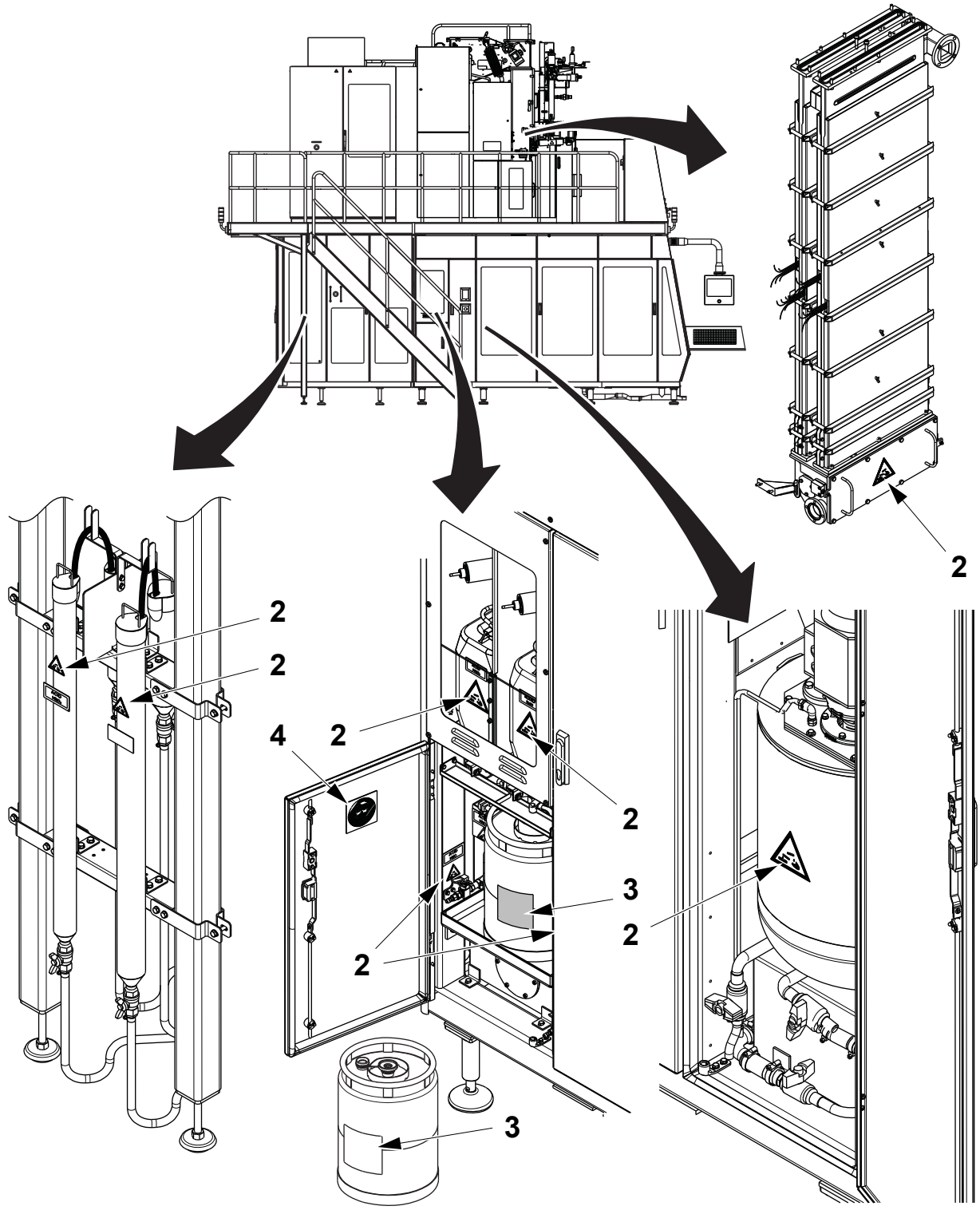


*(Cont'd)*

TechPub_2614345_0106 - sp03_3055124_01.fm

*(Cont'd)*

The illustration shows where the safety signs are located. The position numbers refer to the table in the Safety Signs section.

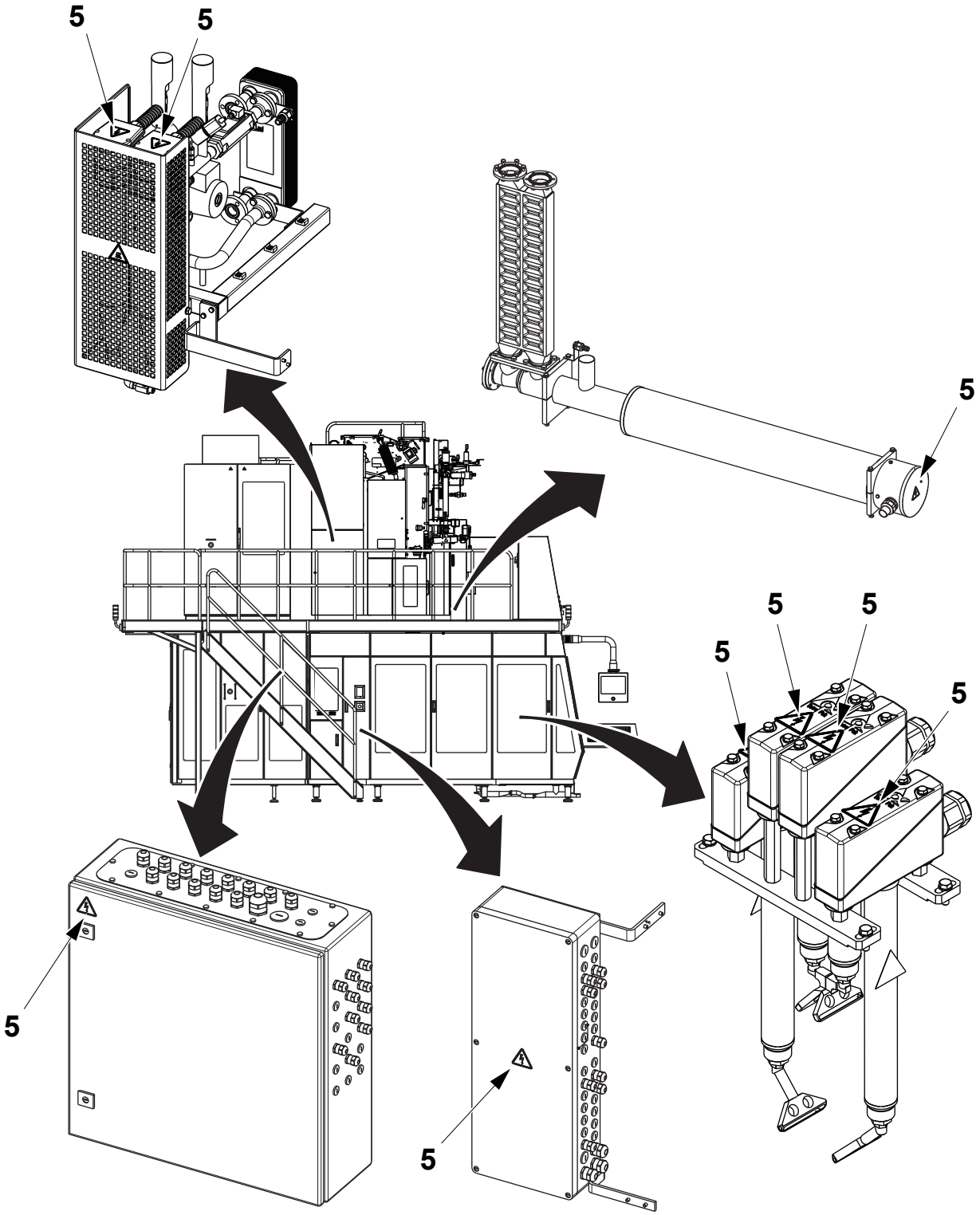


TechPub_2614345_0106 - sp03_3055124_01.fm

*(Cont'd)*

*(Cont'd)*

The illustration shows where the safety signs are located. The position numbers refer to the table in the Safety Signs section.

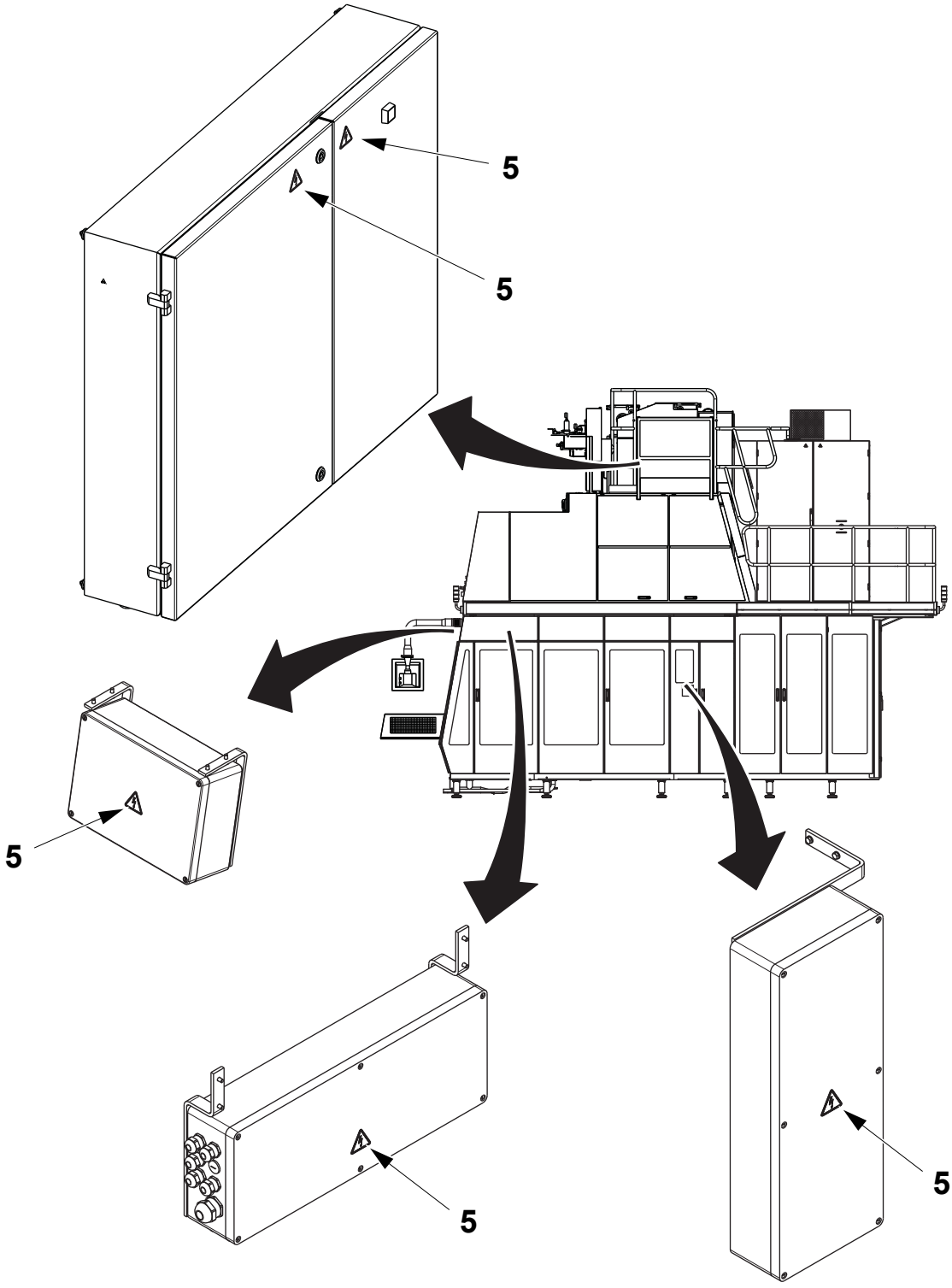


*(Cont'd)*

TechPub_2614345_0106 - sp03_3055124_01.fm

*(Cont'd)*

The illustration shows where the safety signs are located. The position numbers refer to the table in the Safety Signs section.

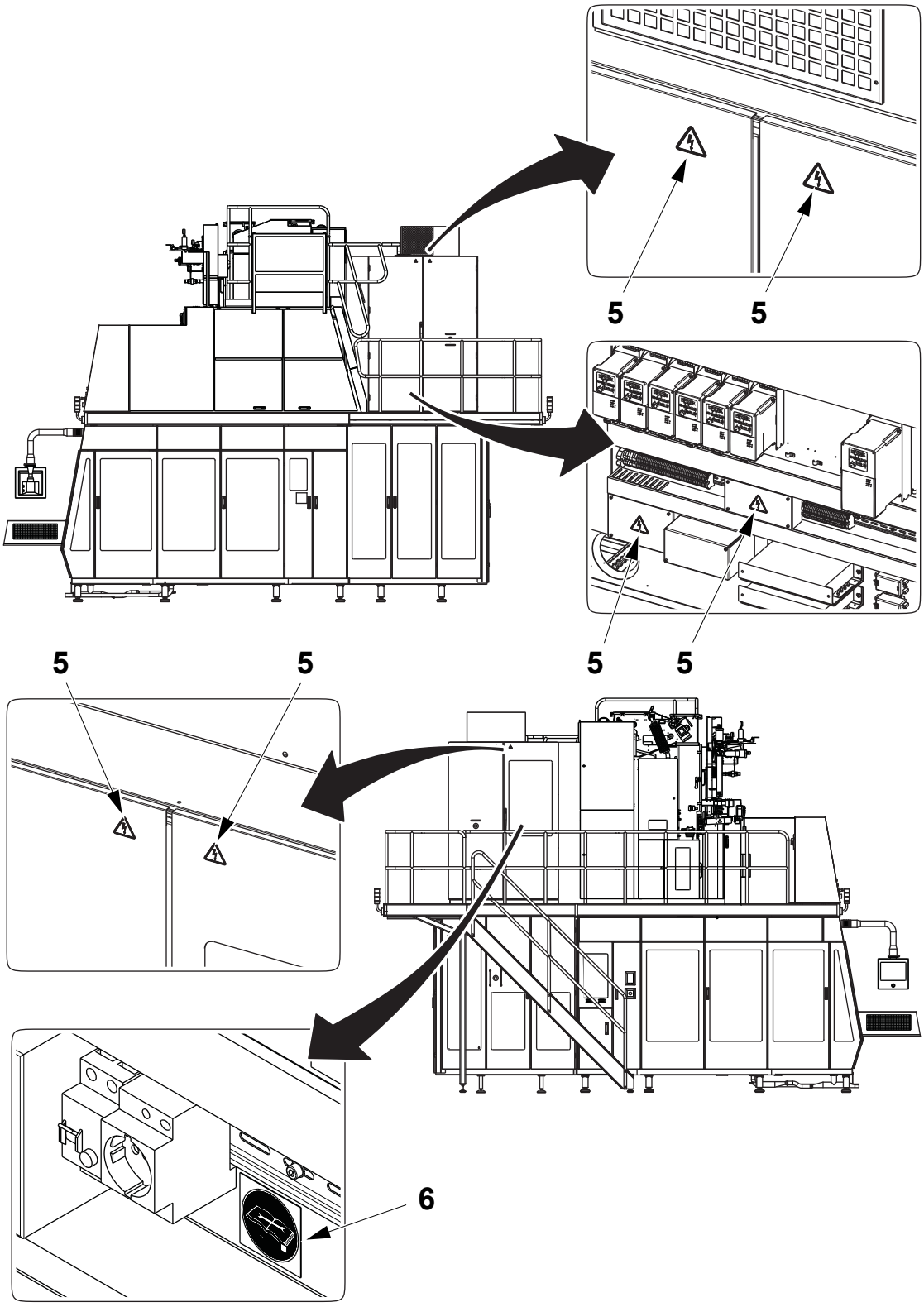


TechPub_2614345_0106 - sp03_3055124_01.fm

*(Cont'd)*

*(Cont'd)*

The illustration shows where the safety signs are located. The position numbers refer to the table in the Safety Signs section.

A3/Flex TGA

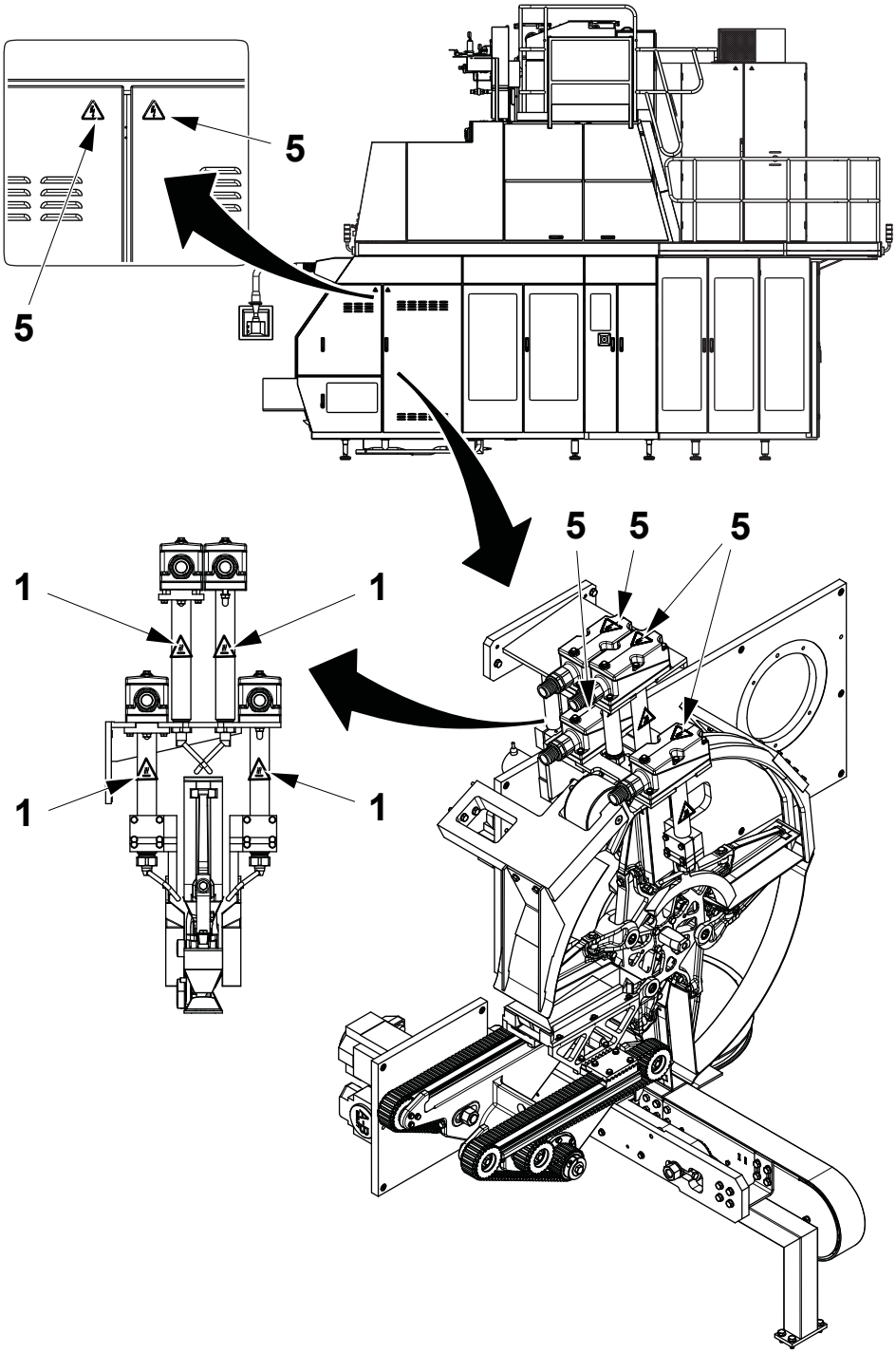


*(Cont'd)*

TechPub_2614345_0106 - sp03_3055124_01.fm

*(Cont'd)*

The illustration shows where the safety signs are located. The position numbers refer to the table in the Safety Signs section.

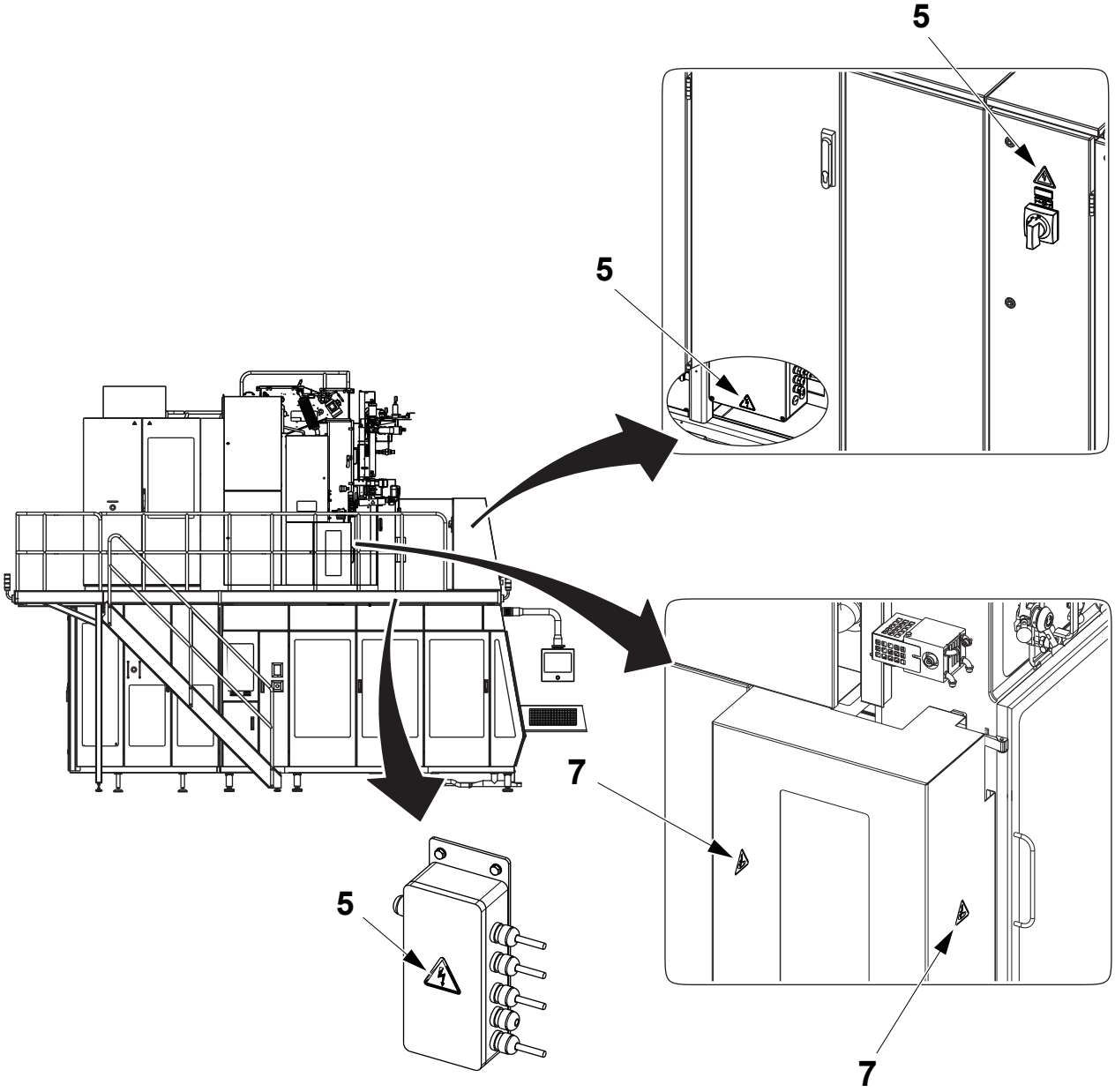


TechPub_2614345_0106 - sp03_3055124_01.fm

*(Cont'd)*

*(Cont'd)*

The illustration shows where the safety signs are located. The position numbers refer to the table in the Safety Signs section.

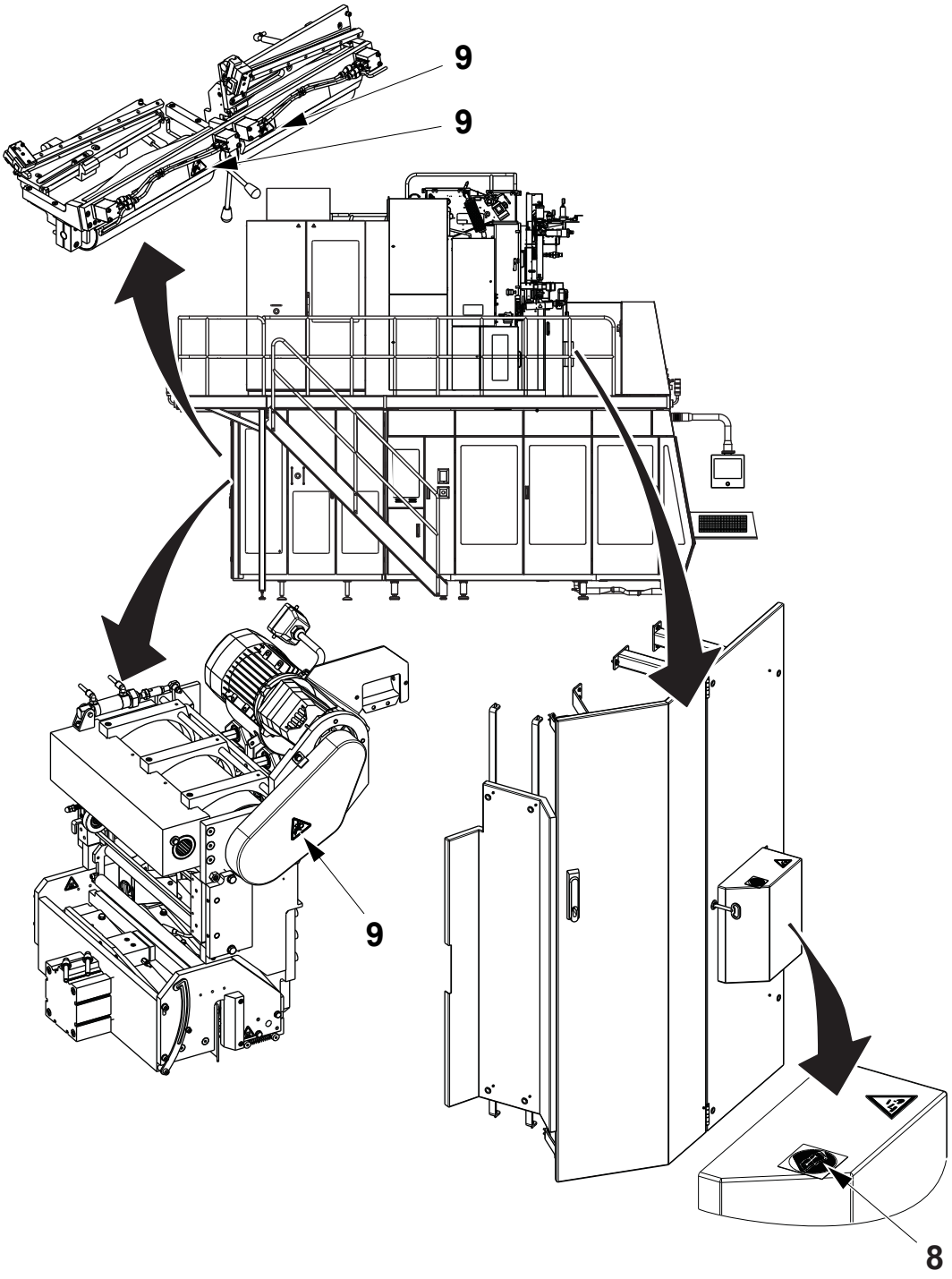


*(Cont'd)*

TechPub_2614345_0106 - sp03_3055124_01.fm

*(Cont'd)*

The illustration shows where the safety signs are located. The position numbers refer to the table in the Safety Signs section.

**Note!** The two signs (10) are introduced for Tetra Pak A3/Flex from T-order 21214/00045.

**Note!** The sign (1) is introduced for Tetra Pak A3/Flex from T-order 21214/00165.

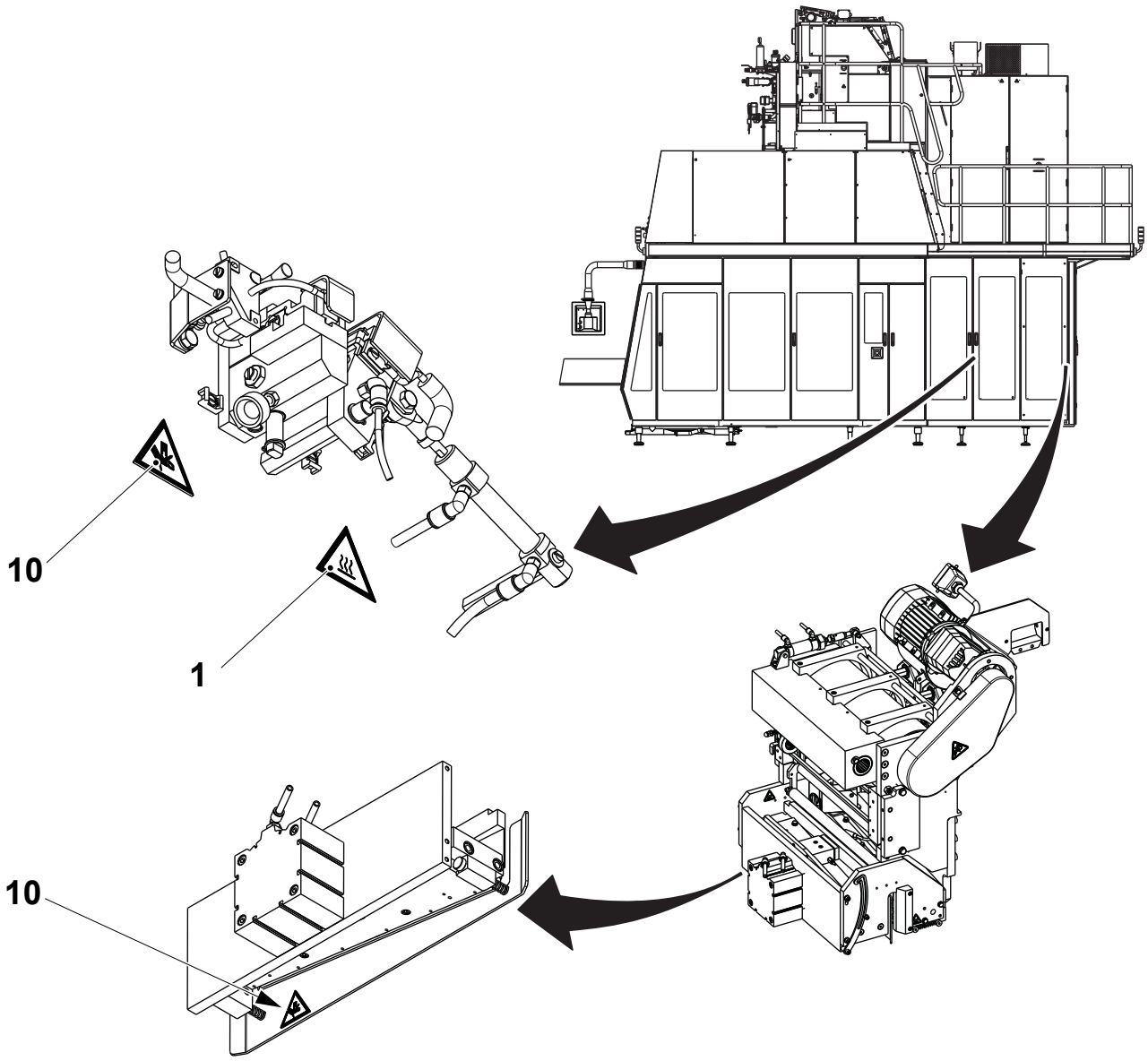


TechPub_2614345_0106 - sp03_3055124_01.fm

*(Cont'd)*

*(Cont'd)*

## Location of HI Equipment (OE) Safety Signs

The illustration shows where the safety signs are located. The position numbers refer to the table in the Safety Signs section.

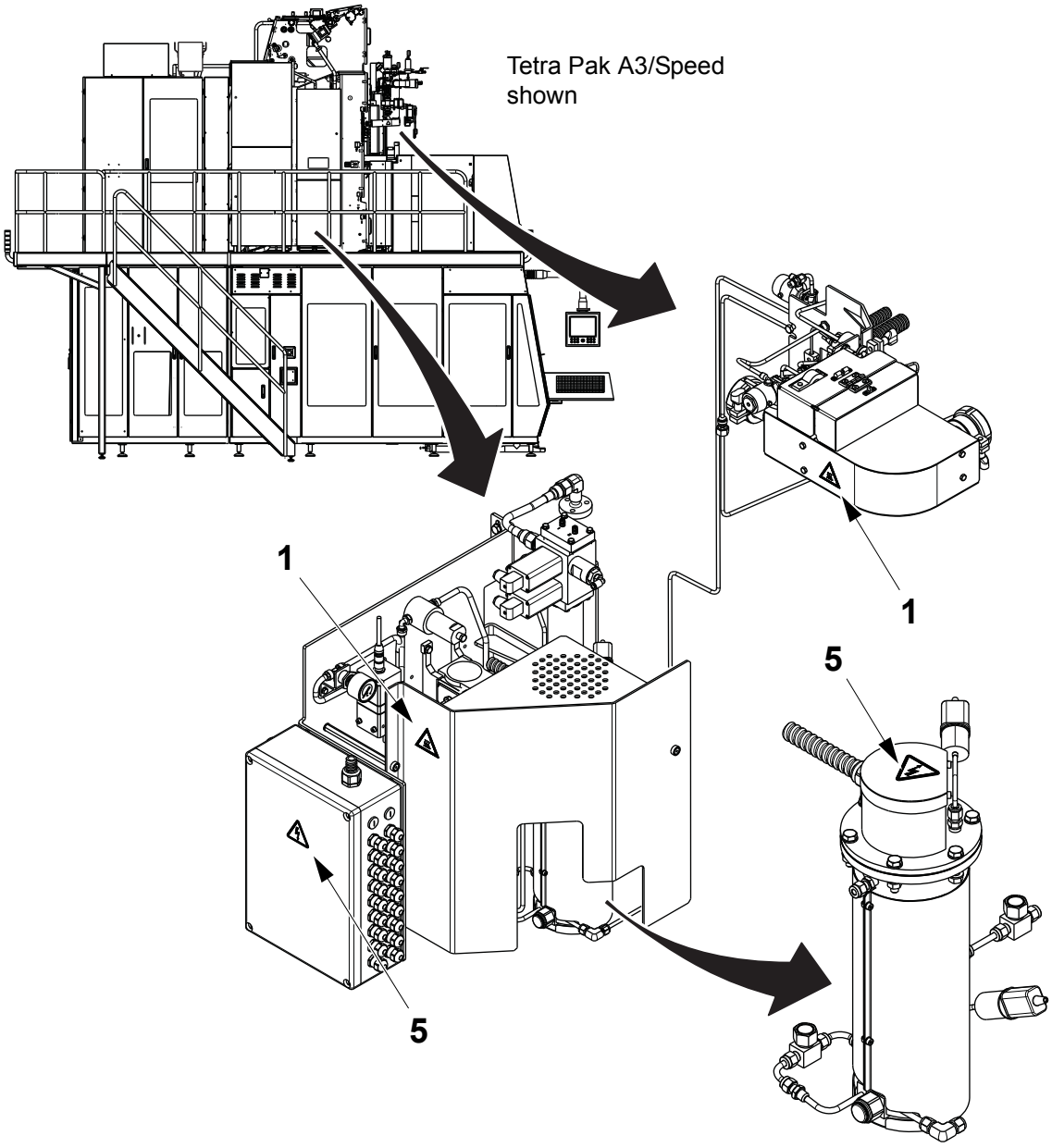


TechPub_2614345_0106 - sp03_3055124_01.fm

# Protective Devices

There are different kinds of protective device designed to ensure safe use of the equipment. See the sections below.

**WARNING**

**Hazardous zones.**

Hazardous zones are safeguarded and provided with protective devices. Do not inch or run this equipment if any protective device is inoperative.

Change inoperative components of the safety system immediately.

For the locations of safeguards and/or other protective devices not mentioned in this section, see the Maintenance Manual.

**WARNING**

**Hazardous voltage.**

Hazardous voltage remains on this equipment after activating an EMERGENCY STOP or an interlocking device.

## Emergency Stop

Emergency stop devices are used to stop this equipment immediately in an hazardous situation. Learn the positions of all emergency stop devices and how to use them.

Instructions for a normal production stop are included in the Stop chapter of the Operation Manual.

TechPub_2614345_0106 - sp03_3055124_01.fm

## Emergency Stop Push-Buttons

Push one of the EMERGENCY STOP push-buttons to stop this equipment immediately.

### Tetra Pak A3/Flex

The location of each EMERGENCY STOP push-button is shown by an arrow.

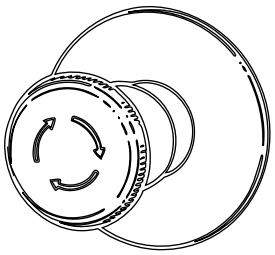

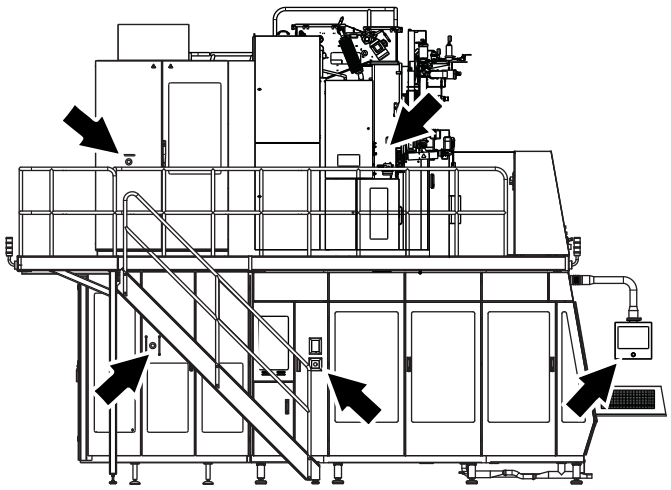

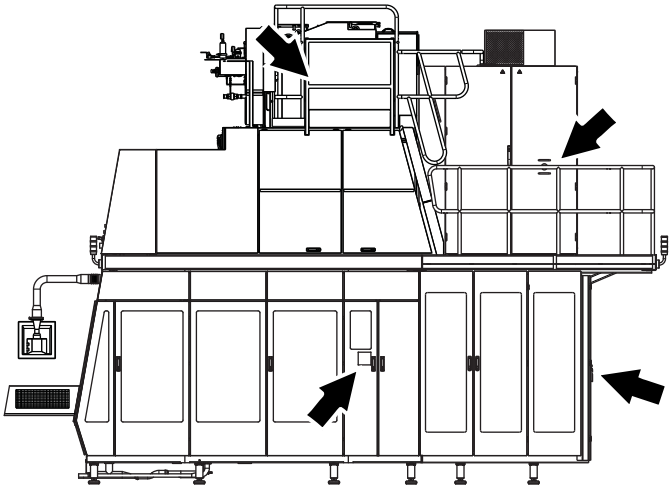

(behind door)

*(Cont'd)*

TechPub_2614345_0106 - sp03_3055124_01.fm

*(Cont'd)*

Tetra Pak A3/Speed

The location of each EMERGENCY STOP push-button is shown by an arrow.

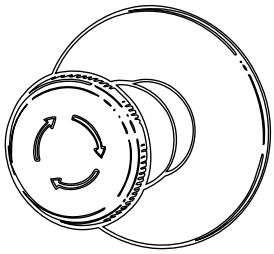

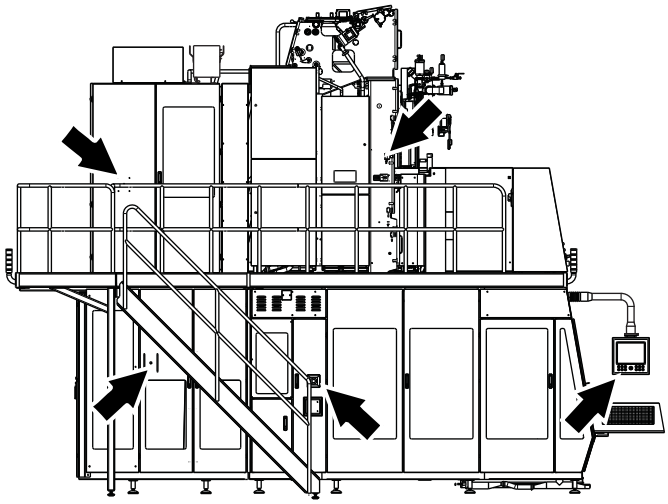

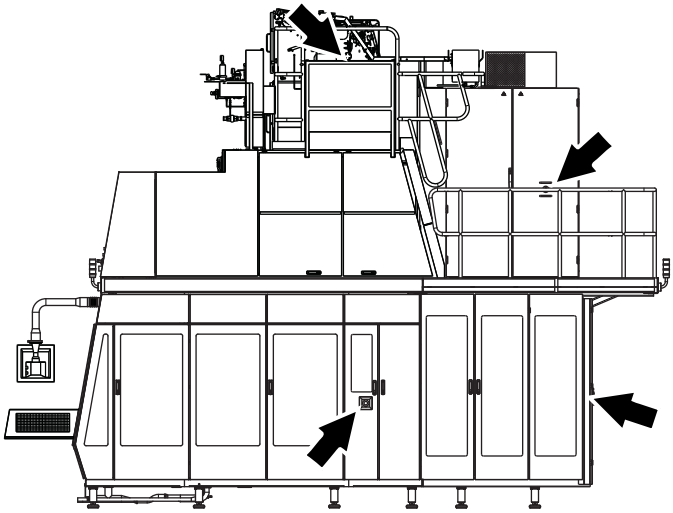

(behind door)

TechPub_2614345_0106 - sp03_3055124_01.fm

# Safeguards

**WARNING**

**Moving machinery.**

Never defeat or bypass the interlocking devices.

Movable guards, for example, doors and covers leading to hazardous zones, are fitted with interlocking devices where required. These devices are usually electric safety switches that are parts of the safety system and must never be defeated, bypassed, or otherwise made inoperative.

**WARNING**

**Corners and edges.**

To prevent injury from corners and edges of open doors and covers, close them unless they must be open during such work. Be careful when working under an open door, cover or elsewhere below parts of the equipment with corners and edges.

**CAUTION**

**Burn hazard.**

Parts of this equipment may be hot after operation.

After installation and maintenance, and before this equipment is inched or run, check that all safeguards are in place and that they operate correctly.

*(Cont'd)*

TechPub_2614345_0106 - sp03_3055124_01.fm

*(Cont'd)*

**CAUTION**
**Equipment damage.**
Never stop this equipment by opening an interlocking guard.

Tetra Pak A3/Flex
The location of each interlocking guard is shown by an arrow.

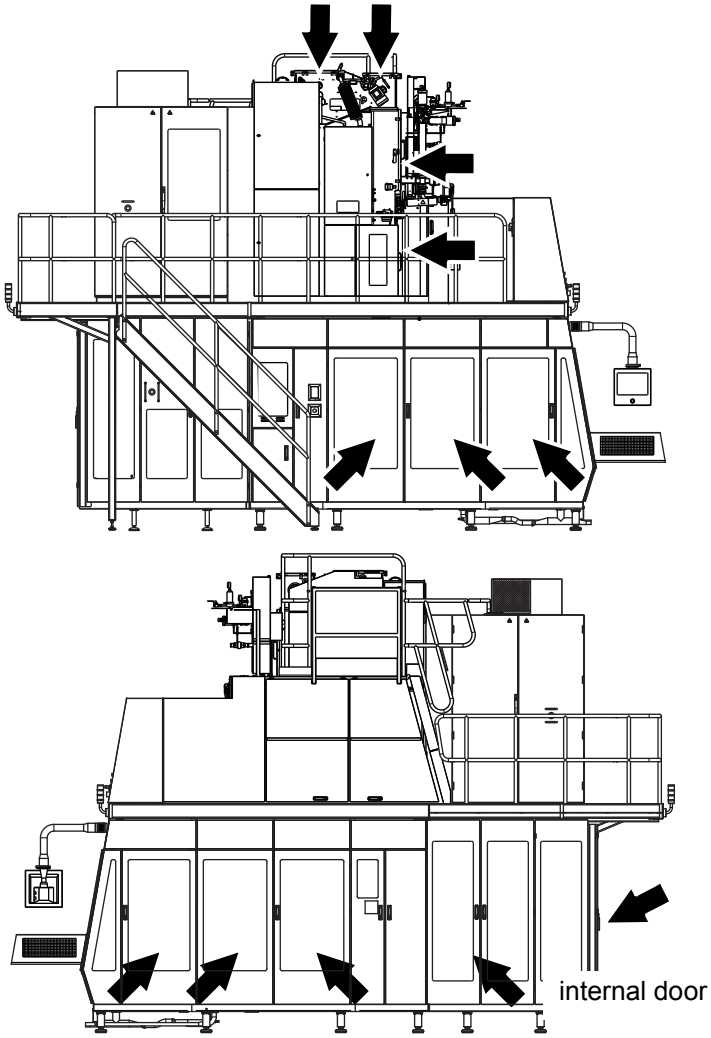


*(Cont'd)*

TechPub_2614345_0106 - sp03_3055124_01.fm

*(Cont'd)*

**CAUTION**
**Equipment damage.**
Never stop this equipment by opening an interlocking guard.

Tetra Pak A3/Speed
The location of each interlocking guard is shown by an arrow.

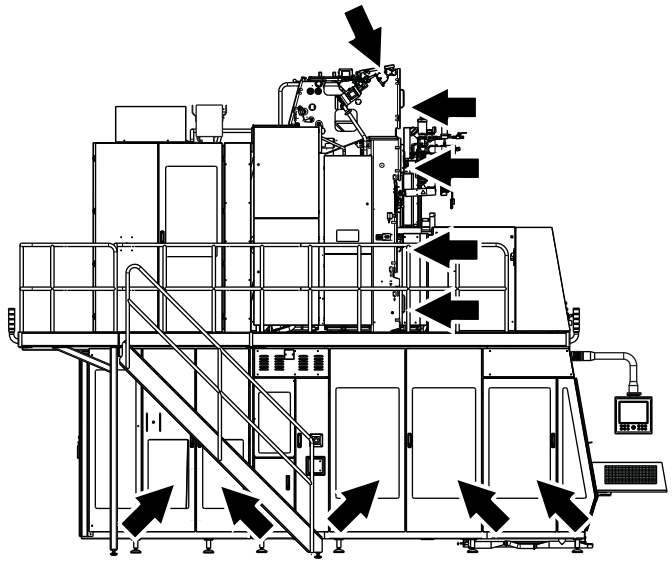

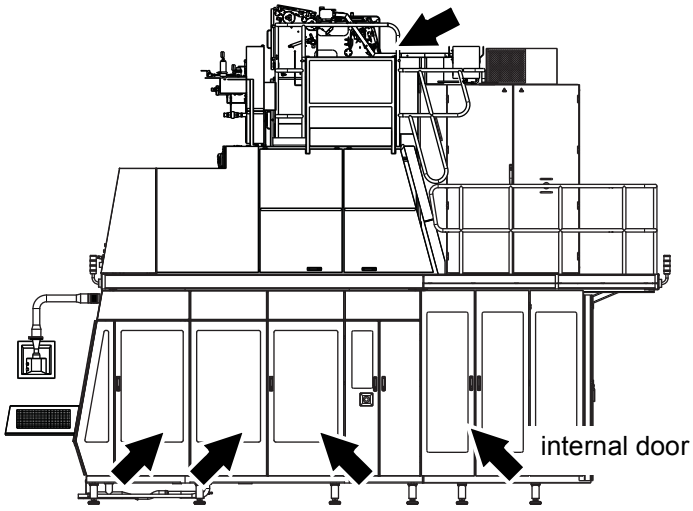


TechPub_2614345_0106 - sp03_3055124_01.fm

## Indicating Tower

An indicating tower is a column of warning lights:

- A red light (1) indicates a hazardous condition. This is a situation that requires immediate action.
- A yellow light (2) indicates an abnormal or impending critical condition. This is a condition calling for action by the operator.
- A blue light (3) indicates that operator action is required.
- A green light (4) indicates a normal condition.

Tetra Pak A3/Flex shown

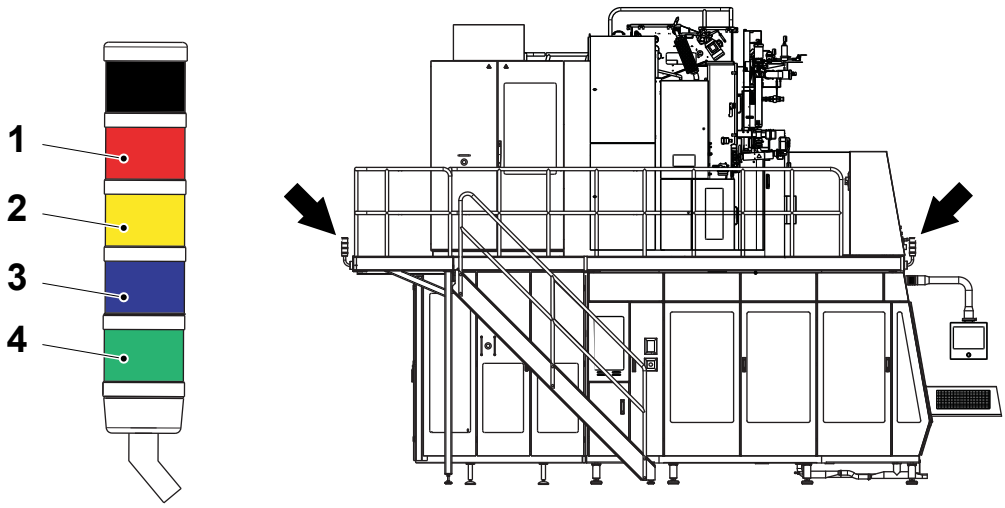


1 Red light
2 Yellow light
3 Blue light
4 Green light

TechPub_2614345_0106 - sp03_3055124_01.fm

# Audible Alarm

The audible alarm (1) produces a warning signal every time this equipment is about to start. The warning signal sounds for approximately three seconds prior to starting to alert personnel.

Tetra Pak A3/Flex shown

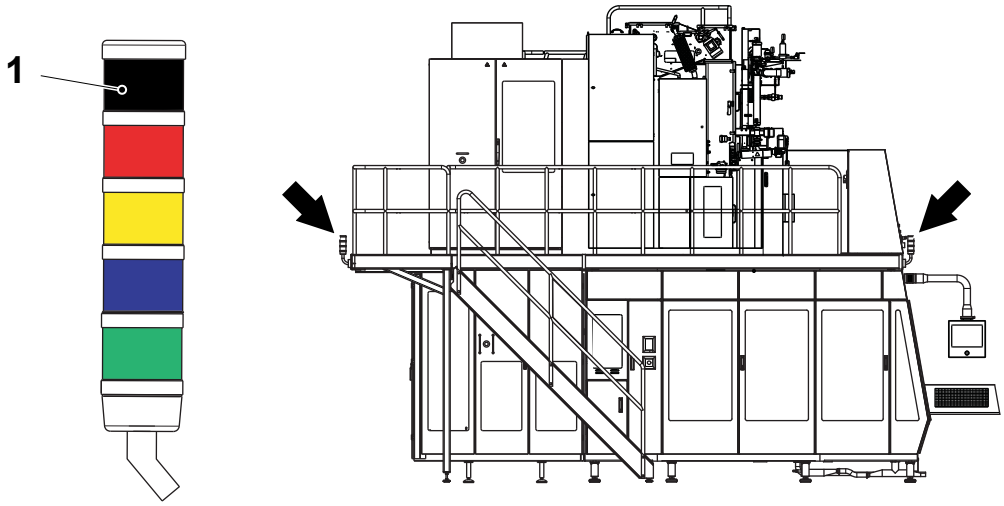


1 Audible alarm

TechPub_2614345_0106 - sp03_3055124_01.fm

# Safe Manual Handling

Use mechanical lifting aids whenever possible. If mechanical lifting aids are not available, do not attempt to lift loads over 23 kg without the assistance of a colleague. Avoid lifting below knee height and above shoulder height. If it is necessary to lift from the floor, follow the instructions below to reduce the risk of back and disc injuries.

- Use safety shoes and be sure that the surface of the floor is not slippery.
- Get close to the load.
- Take a wide stance and find the best positions for your feet.
- Bend your hips and knees, and use your leg muscles.
- Keep the load close to your body.
- Do not twist your body while moving the load.
- Take small steps when turning.

In order to reduce the risk of injury to discs and back muscles, be careful to not bend or twist your back when lifting. Keep the load close to your body to reduce the strain on your back.

To reduce the ergonomic risks to each individual operator, job rotation is recommended, so that recovery and variety are provided.

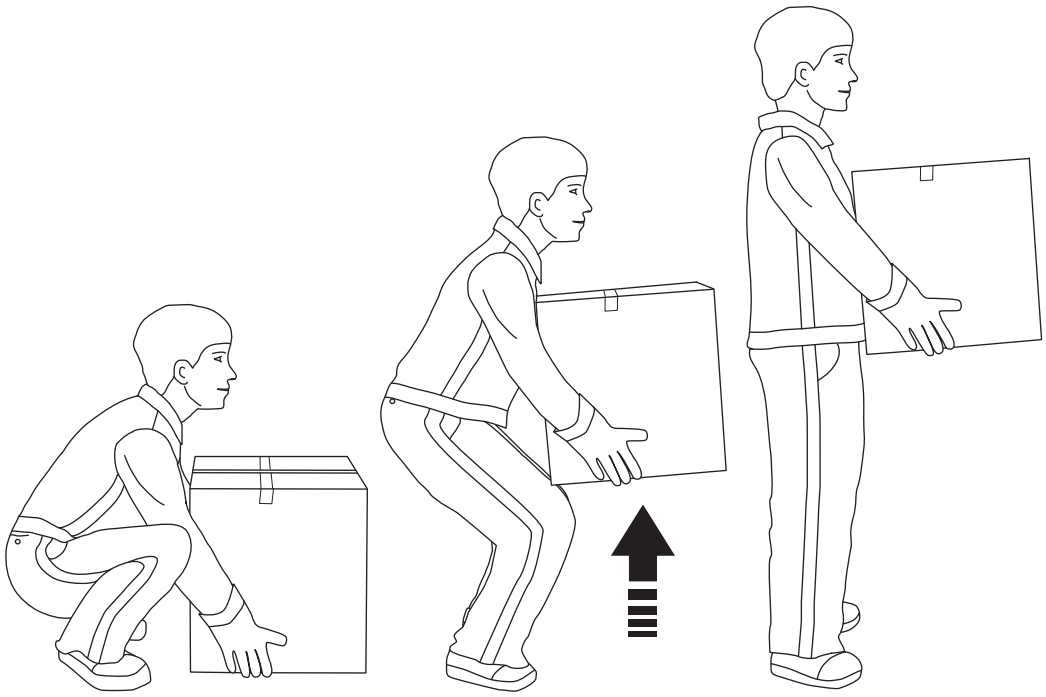

TechPub_2614345_0106 - sp03_3055124_01.fm

# Personal Protection

This section applies to all personnel at all times when this equipment is in operation. For special personal protection required when handling hazardous substances, see the Hazardous Substances section.

## Noise Hazard

**CAUTION**

**Hazardous noise.**

Risk of impaired hearing. Hearing protection is recommended whenever this equipment is in operation.

## Entanglement Hazard

**WARNING**

**Risk of entanglement.**

Do not wear jewellery or loose clothing when working on or near this equipment. Long hair may not be loose.

## Ergonomic Hazard

**WARNING**

**Ergonomic hazard.**

Handling materials and supplies, for the machine, can be repetitive manual work and involve ergonomic hazards with risk for personal injury.
Materials and supplies should be located. e.g. layout design, to avoid twisting the body or bending the back when placing them into the machine. It is recommended to use aids such as a lifting table or lifting device for these tasks.
Follow instructions for safe work practices.

TechPub_2614345_0106 - sp03_3055124_01.fm

# Hazardous Substances

**WARNING**

**Contact with chemicals can cause death, serious injury, or illness.**
Always read and follow the instructions in the safety data sheet supplied by the manufacturer or local supplier, when handling chemicals.

Make sure that

- the safety data sheet is available
- the showers work
- an eyewash device, movable or wall-mounted, is available and operational
- additional washing facilities are nearby

**Note!** Learn the locations of all washing facilities in order to act immediately in case of an accident



TechPub_2614345_0106 - sp03_3055124_01.fm

## Disposal of Chemical Substances

Always read and follow the disposal instructions in the safety data sheet supplied by the manufacturer or local supplier.

It is strongly recommended that used chemical containers are

- disposed of according to the instructions immediately after use
- not used as disposal containers for other chemicals in order to avoid uncontrolled chemical reactions within the container

TechPub_2614345_0106 - sp03_3055124_01.fm

# Hydrogen Peroxide ($H_2O_2$)

**WARNING**
**Corrosive chemical.**
Wear personal protective equipment.

In both liquid and gas states, hydrogen peroxide may cause irritation or damage if it comes into contact with skin, mucous membranes, eyes, or clothes. Call for medical attention immediately if there is an accident.

Liquid hydrogen peroxide in concentrations of less than 1% is generally considered harmless to humans.

Consult the instructions on the label of the tank or container.

## Emergency Procedures

If there is an accident involving hydrogen peroxide, rinse the affected area as soon as possible with large amounts of water.

If hydrogen peroxide is swallowed

- do not attempt to cause vomiting
- drink large amounts of lukewarm water to dilute the peroxide
- call for medical attention immediately

If splashes or vapour from hydrogen peroxide come in contact with the eyes

- wash the eyes thoroughly with lukewarm water for 15 minutes (keep eyelids wide apart)
- call for medical attention immediately

If hydrogen peroxide comes into contact with skin or clothes

- rinse immediately with plenty of water
- call for medical attention immediately if skin burns appear
- thoroughly wash the clothes before wearing them again

If irritation or pain is experienced due to having **inhaled** hydrogen peroxide vapour

- leave the affected area and get some fresh air
- call for medical attention if the symptoms get worse

TechPub_2614345_0106 - sp03_3055124_01.fm

## Personal Protective Equipment

The personal protective equipment for hydrogen peroxide is

- protective goggles (TP No. 90303-11)
- protective gloves made of neoprene (TP No. 90303-12)
- protective apron (TP No. 90303-13)
- protective shoes made of PVC, PE plastic, or rubber

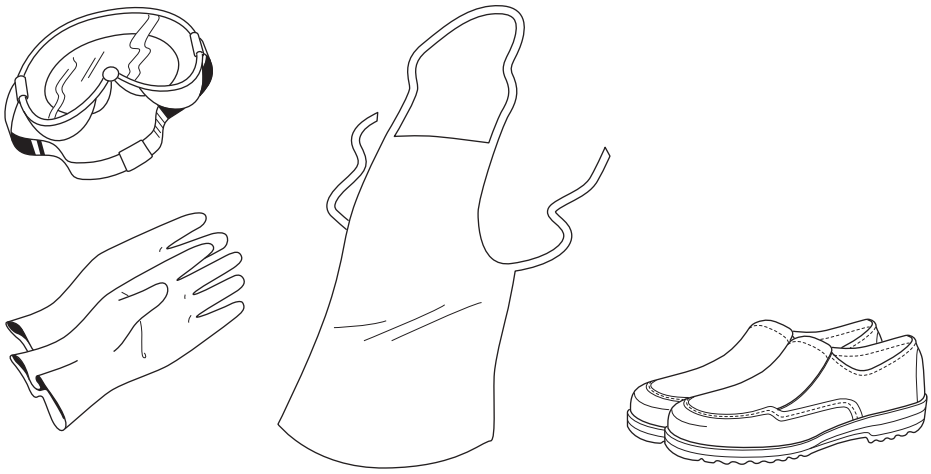

TechPub_2614345_0106 - sp03_3055124_01.fm

## Handling of Hydrogen Peroxide

**WARNING**

**Sudden and violent chemical reaction.**

Avoid any contamination of hydrogen peroxide.

Hydrogen peroxide reacts suddenly and violently with many compounds or if it is contaminated. The reaction is a violent decomposition liberating oxygen and heat, with a big increase in volume due to the oxygen produced by the peroxide decomposition.

Never pour surplus hydrogen peroxide back into the original container if it contains fresh hydrogen peroxide. There is a risk of explosion when hydrogen peroxide is in a closed container.

Ensure that equipment used for handling and diluting hydrogen peroxide is clean before it comes in contact with hydrogen peroxide. Pumps or other equipment used for handling hydrogen peroxide must be **used for this purpose only** and must be manufactured from appropriate materials, such as stainless steel 316 L, glass, polyethylene, or teflon. After use, make sure that all peroxide residue is rinsed away.

If hydrogen peroxide is spilled, dilute it with large amounts of water. Dispose of the diluted hydrogen peroxide according to local regulations.

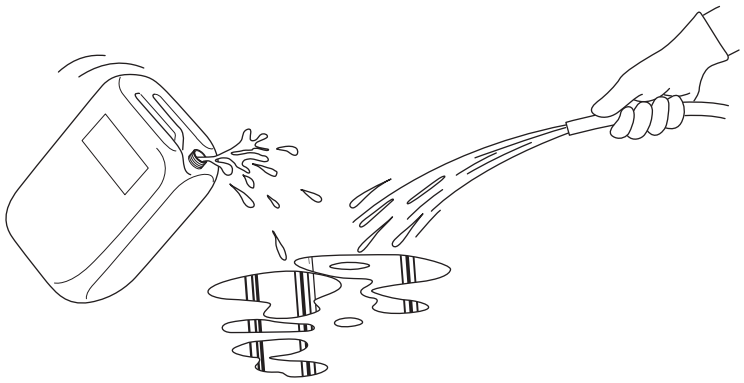

**WARNING**

**Self-ignition.**

Never wipe up hydrogen peroxide with materials such as rags or paper as these may self-ignite several hours after contact. If there is a fire, spray with large quantities of water.

TechPub_2614345_0106 - sp03_3055124_01.fm

## Storage of Hydrogen Peroxide

**DANGER**

**Containers may explode if not properly ventilated.**
Keep the container upright and fitted with its proper ventilation cap. If there is a fire, cool all containers by spraying them with large quantities of water.

Hydrogen peroxide decomposes much faster with increasing temperature. There is a risk of explosion at high temperatures, since the ventilation cap cannot release the gases produced quickly enough.

Hydrogen peroxide **must** be stored in the **original container** delivered by the supplier. Keep the container upright and fitted with its proper ventilation cap, which allows oxygen to escape. Otherwise, there can be an explosion if decomposition of the peroxide occurs violently.

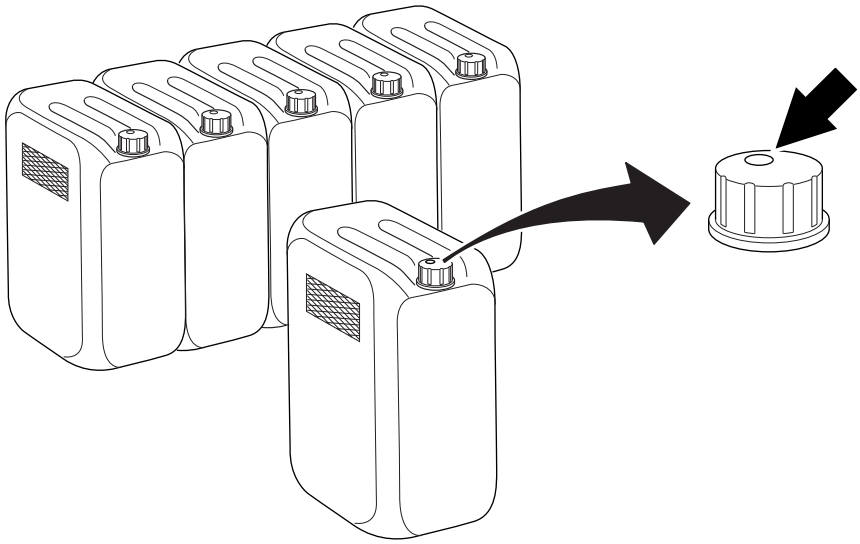

Make sure that the container is always properly closed.

*(Cont'd)*

TechPub_2614345_0106 - sp03_3055124_01.fm

*(Cont'd)*

Commercial food-grade hydrogen peroxide has been stabilized to inhibit the catalytic decomposition effects of metals and other impurities, but it can decompose into oxygen and water if it is exposed to heat or contaminated.

Make sure that the area used for storage of hydrogen peroxide is

- cool, clean, and well ventilated
- shielded from direct sunlight
- kept free from combustible materials

## Disposal of Hydrogen Peroxide

Always read and follow the disposal instructions in the safety data sheet supplied by the manufacturer or local supplier.

TechPub_2614345_0106 - sp03_3055124_01.fm

# Caustic Soda/Sodium Hydroxide (NaOH)

**WARNING**
**Corrosive chemical.**
Wear personal protective equipment.

Caustic soda/sodium hydroxide is highly corrosive in all forms and can cause serious burns on contact with skin and eyes.

Always wear personal protective equipment (as specified on the next page).

## Emergency Procedures

### First Aid Measures

**Inhalation**
Remove victim immediately from source of exposure, provide rest, warmth and fresh air, get medical attention if any discomfort continues.

**Ingestion**
Do not induce vomiting, immediately rinse mouth and drink plenty of water (200 - 300 ml) and get medical attention immediately!

**Skin Contact**
Immediately remove contaminated clothing, rinse the skin with lots of water and get medical attention.

**Eye Contact**
May cause permanent damage if eye is not immediately irrigated. Make sure to remove any contact lenses from eyes before rinsing. Promptly wash eyes with plenty of water while lifting the eyelids, get immediately medical attention and continue to rinse.

TechPub_2614345_0106 - sp03_3055124_01.fm

**WARNING**
**Corrosive chemical.**
Wear personal protective equipment.

**Accidental Release, Spillage or Splashing**
In case of accidental release, spillage or splashing

- wash contaminated area with water. Alternatively, absorb in vermiculite, dry sand or earth, place into containers and wash the affected area
- in case of contact with eyes or skin wash with plenty of water
- remove any contaminated clothing immediately

## Personal Protective Equipment

The personal protective equipment for caustic soda/sodium hydroxide is

- protective goggles (TP No. 90303-11)
- protective gloves made of neoprene (TP No. 90303-12)
- protective apron (TP No. 90303-13)
- protective shoes made of PVC, PE plastic, or rubber

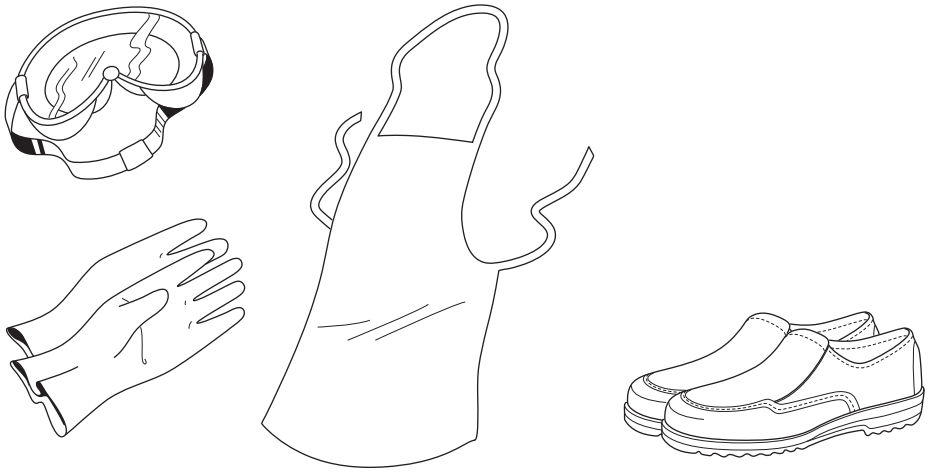

TechPub_2614345_0106 - sp03_3055124_01.fm

## Handling and Storage of Caustic Soda/Sodium Hydroxide

**WARNING**

**Sudden and violent chemical reaction.**

Avoid any contamination of caustic soda/sodium hydroxide. Never store or mix caustic soda together with hydrogen peroxide.

Ensure that

- containers are kept tightly closed
- containers are stored in a cool dry place away from direct sunlight or sources of heat
- designated storage and handling areas are adequately ventilated and that emergency shower and eye wash facilities are available nearby
- handle containers carefully during transport
- avoid spilling, skin and eye contact
- use dedicated equipment when sampling, pouring or decanting
- never store or mix caustic soda together with hydrogen peroxide

## Disposal of Caustic Soda/Sodium Hydroxide

Dispose of waste and residues in accordance with local authority requirements. Used caustic soda should be sent to an approved facility for destruction. Never allow caustic soda to be disposed into the drain.

**CAUTION**

**Fire-Fighting Measures**

Always apply the following measures.

### Extinguishing Media

The product is non-combustible, use fire extinguishing media appropriate for surrounding materials.

### Specific Hazards

Corrosive liquid.

### Protective Measures in Fire

Self-contained breathing apparatus and full-protective clothing must be worn in case of fire.

**Note!** Always refer to your supplier's Material Safety Data Sheet (MSDS) for caustic soda.

TechPub_2614345_0106 - sp03_3055124_01.fm

# Nitric Acid ($HNO_3$)

**WARNING**
**Corrosive chemical.**
Wear personal protective equipment.

Nitric acid is extremely hazardous; it is corrosive, reactive, a strong oxidizer and a poison. Liquid and mist can cause serious burns on contact with skin and eyes; contact with other material may cause fire; liquid and mist cause severe burns to skin and eyes; inhalation may cause lung and tooth damage.

Always wear personal protective equipment (as specified on the next page).

## Emergency Procedures

### First Aid Measures

**Inhalation**
Remove victim immediately from source of exposure, provide rest, warmth and fresh air. If not breathing, give artificial respiration; if breathing is difficult give oxygen. Get medical attention immediately.

**Ingestion**
Do not induce vomiting, immediately rinse mouth and drink plenty of water or milk if available. Never give anything by mouth to an unconscious person. Get medical attention immediately.

**Skin Contact**
Immediately remove contaminated clothing, rinse the skin with lots of water and get medical attention.

**Eye Contact**
May cause permanent damage if eye is not immediately irrigated. Make sure to remove any contact lenses from eyes before rinsing. Promptly wash eyes with plenty of water while lifting the eyelids, get immediately medical attention and continue to rinse. Get medical attention if any discomfort continues.

*(Cont'd)*

TechPub_2614345_0106 - sp03_3055124_01.fm

*(Cont'd)*

**WARNING**
**Corrosive chemical.**
Wear personal protective equipment.

### Accidental Release, Spillage or Splashing

In case of accidental release, spillage or splashing

- ventilate area of leak or spill, isolate hazard area, keep unnecessary and unprotected personnel from entering, contain and recover liquid when possible, neutralise with alkaline material (soda ash, lime) then absorb with an inert material (e.g.,vermiculite, dry sand or earth), place in a chemical waste container; do not use combustible materials, such as saw dust, rags, paper, wood
- in case of contact with eyes or skin wash with plenty of water
- remove any contaminated clothing immediately; see the Fire-fighting (fire) measures section on page ii-56

TechPub_2614345_0106 - sp03_3055124_01.fm

## Personal Protective Equipment

The personal protective equipment for nitric acid is

- protective goggles (TP No. 90303-11)
- protective gloves made of neoprene (TP No. 90303-12)
- protective apron (TP No. 90303-13)
- protective shoes made of PVC, PE plastic, or rubber

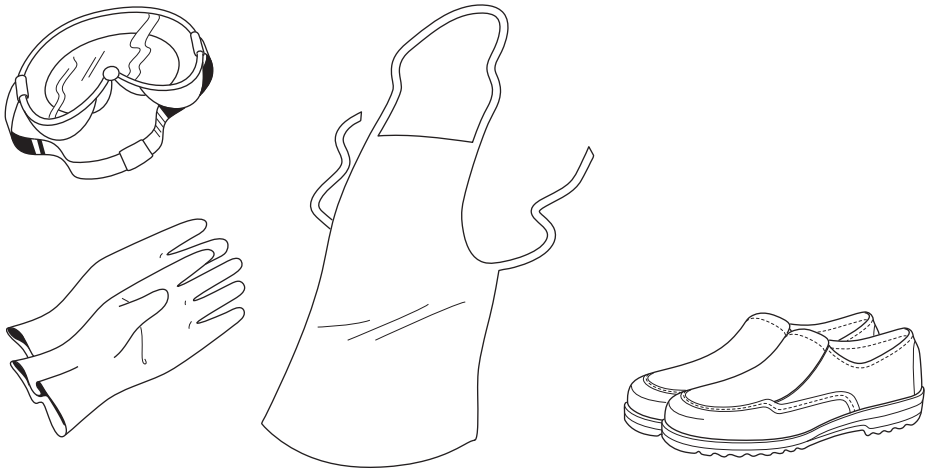

TechPub_2614345_0106 - sp03_3055124_01.fm

## Handling and Storage of Nitric Acid

**WARNING**

**Sudden and violent chemical reaction.**
Avoid any contamination of nitric acid.

Ensure that

- containers are kept tightly closed
- containers are stored in a cool dry place away from direct sunlight or sources of heat, water and incompatible materials and that emergency shower and eye wash facilities are available nearby
- designated storage and handling areas are adequately ventilated and have acid-resistant floors
- handle containers carefully during transport
- avoid spilling, skin and eye contact
- use dedicated equipment when sampling, pouring or decanting
- do not wash out container and use it for other purposes. Containers of this material may be hazardous when empty since they retain product residues (vapours, liquid)

TechPub_2614345_0106 - sp03_3055124_01.fm

## Disposal of Nitric Acid

Dispose of waste and residues in accordance with local authority requirements. Used nitric acid should be sent to an approved facility for destruction. Never allow nitric acid to be disposed into the drain.

**CAUTION**
**Fire-fighting measures.**
Always apply the following measures.

### Fire

The product is non-combustible, but it is a strong oxidiser and its heat of reaction with reducing agents or combustibles may cause ignition. Can react with metals to release flammable hydrogen gas.

### Explosion

Reacts explosively with combustible organic or readily oxidizable materials such as alcohols, turpentine, charcoal, organic refuse, metal powder, hydrogen sulphide, etc. Reacts with most metals to release hydrogen gas which can form explosive mixtures with air.

### Extinguishing Media

Water spray may be used to keep containers exposed to the fire cool. Do not get water inside containers. Use fire extinguishing media appropriate for surrounding materials.

### Special Information

Increases the flammability of combustible, organic and readily oxidizable materials.

### Protective Measures In Fire

Self-contained breathing apparatus and full-protective clothing must be worn in case of fire.

**Note!** Always refer to your supplier's Material Safety Data Sheet (MSDS) for nitric acid.

TechPub_2614345_0106 - sp03_3055124_01.fm

# Ultraviolet Light

**WARNING**

**Severe burn hazard.**

Ultraviolet light can cause eye and skin injuries.

The ultraviolet lamp may only be operated when it is in normal operating position and protected by safeguards.

An ultraviolet lamp is protected by an interlocking guard, such as a door or cover. If the guard is opened or removed the power to the lamp is turned off by an attached interlocking device.

Ultraviolet light damage is cumulative. Extended exposure may cause illness. Exposure to ultraviolet light should be avoided.

**CAUTION**

**Burn hazard.**

The assembly housing and components around the ultraviolet light assembly are hot. Allow components to cool down before maintenance.

The location of each ultraviolet light is shown by an arrow.

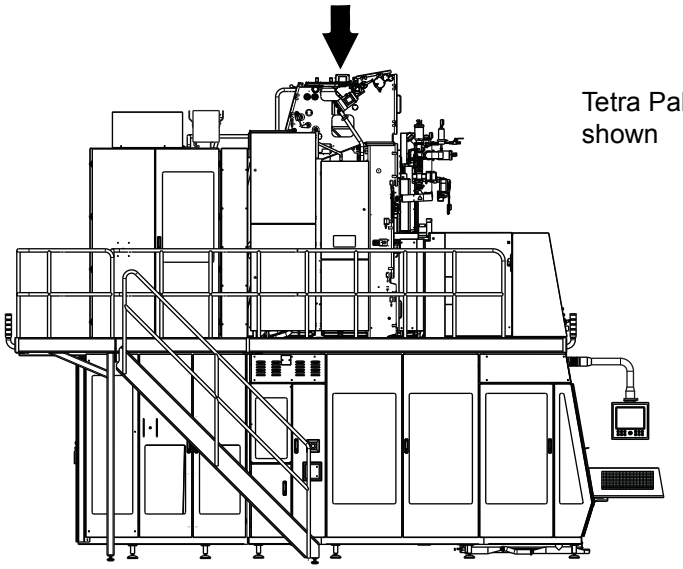

Tetra Pak A3/Speed shown

TechPub_2614345_0106 - sp03_3055124_01.fm

# Supply Systems

## Power Supply

**DANGER**

**Hazardous voltage and moving machinery.**
The power supply disconnector must be turned off and secured with a lock before any maintenance.

**Note!** The key to the lock must be removed by the technician and retained in his/her possession until all work is completed.

Certain maintenance procedures may require power supply systems to be on. These exceptions are clearly stated in the Maintenance Manual.

The illustrations show the power supply disconnector and its location.

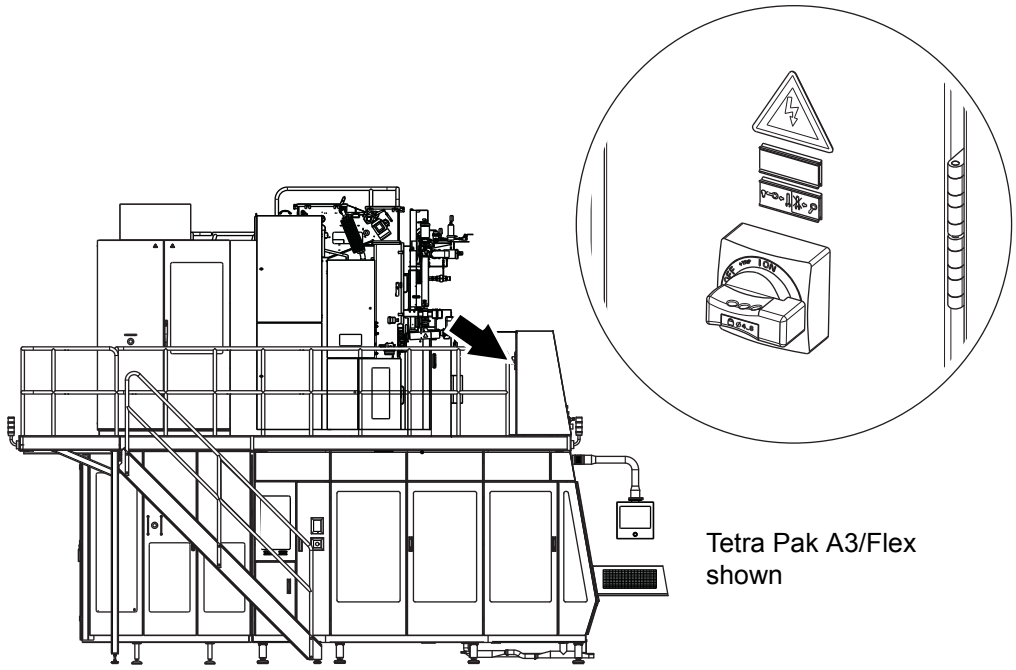

Tetra Pak A3/Flex shown

TechPub_2614345_0106 - sp03_3055124_01.fm

## Residual Voltage

**DANGER**

**Hazardous voltage.**
Do not touch any terminals immediately after the power supply disconnector is turned off. Ensure that no residual voltage remains on the capacitors before touching. Wait five minutes. Failure to observe this information will cause death or serious injury.

After the power supply disconnector is turned off, residual voltage remains in the capacitor circuits.

## Electrical Cabinet

**DANGER**

**Hazardous voltage.**
Will shock, burn, or cause death.
The power supply disconnector must be turned off and secured with a lock before maintenance inside the electrical cabinet.

**Note!** The key to the lock must be removed by the technician and retained in his/her possession until all work is completed.

Make sure that the electrical cabinet doors are closed after working inside the electrical cabinet. Doors with lock must be locked.

The location of each electrical cabinet is shown by an arrow.

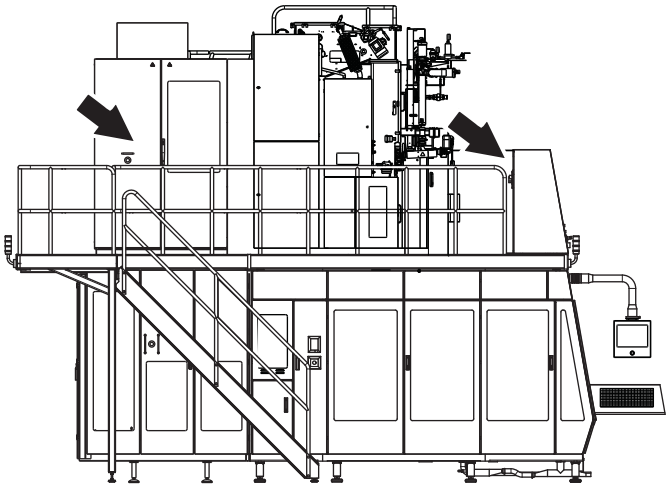

Tetra Pak A3/Flex shown

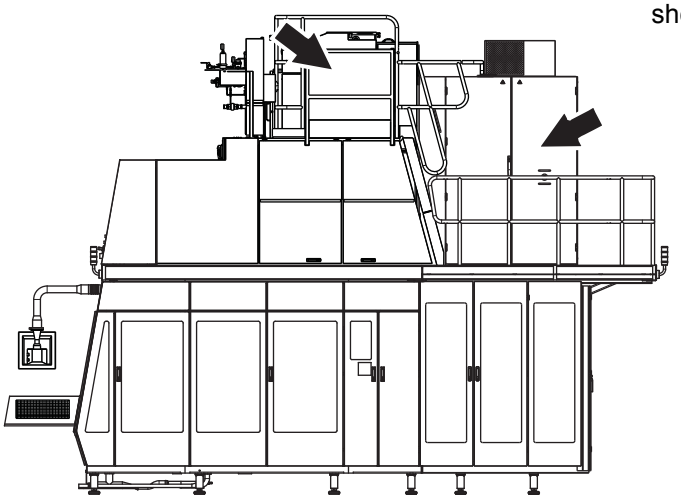

TechPub_2614345_0106 - sp03_3055124_01.fm

## Socket Outlet

**WARNING**

**Hazardous voltage.**

Can shock, burn, or cause death. Read the Maintenance Manual before using this socket outlet.

The socket outlet (1) is connected to a residual current device (2) to protect users against electrical shock if there is an earth fault in the connected equipment. The residual current device shall be tested each time before the socket outlet is being used. See the MM for test procedure.

The illustrations show the socket outlet, the residual current device, and their location.

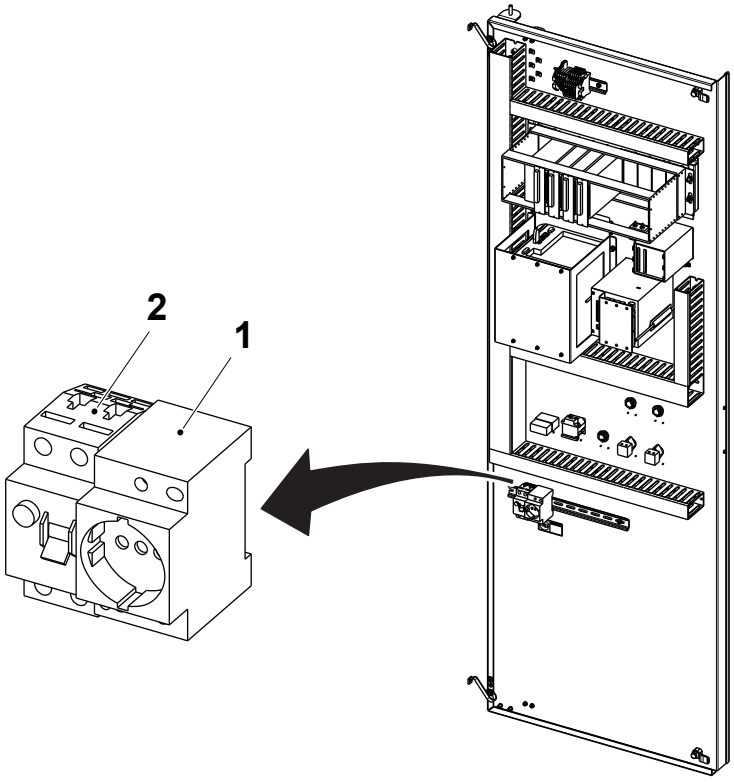


1 Socket outlet
2 Residual current device

TechPub_2614345_0106 - sp03_3055124_01.fm

# Air Supply

**WARNING**

**Compressed air and moving machinery.**
Switch the main air off before any maintenance.

Certain maintenance procedures may require air supply systems to be on. These exceptions are clearly stated in the Maintenance Manual.

The illustrations show the main air switch (1), the main air regulator (2) and their location in the filling machine.

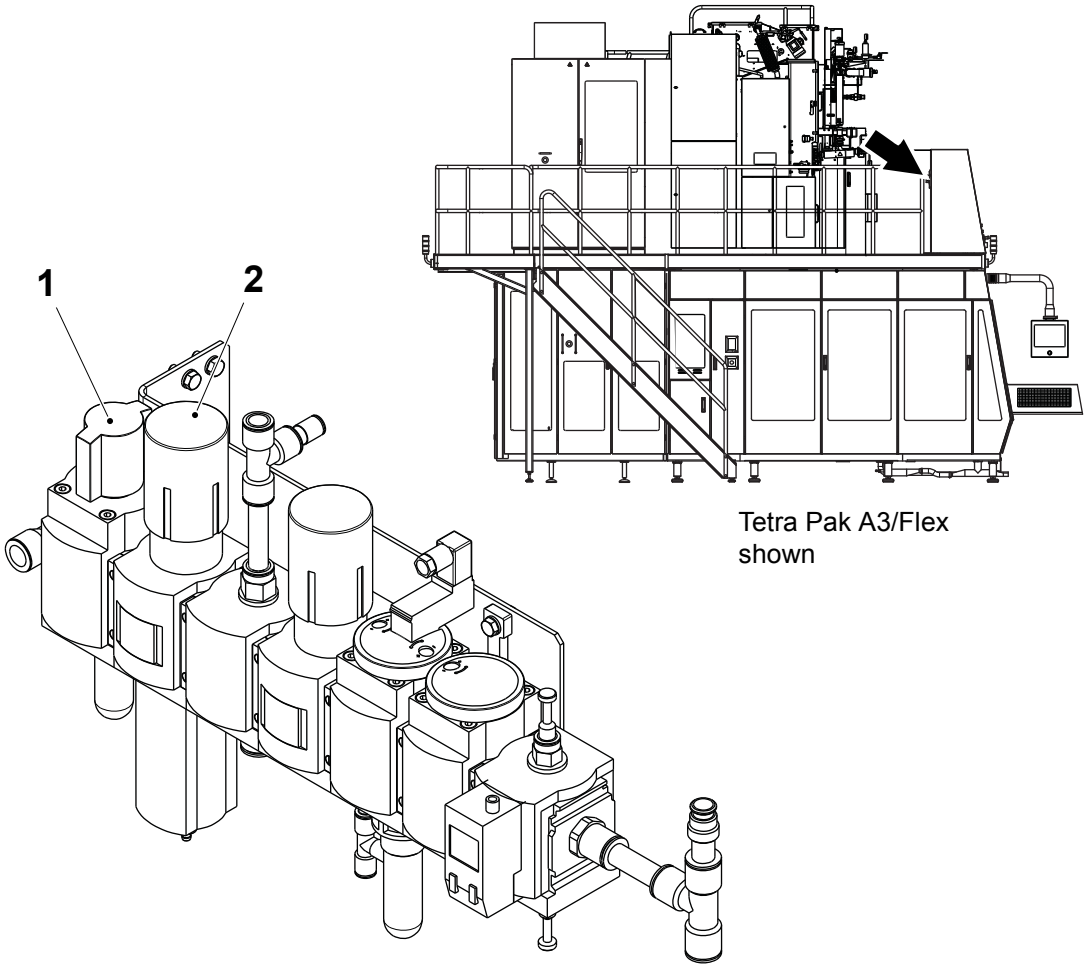


Tetra Pak A3/Flex shown

1 Main air switch
2 Main air regulator

*(Cont'd)*

TechPub_2614345_0106 - sp03_3055124_01.fm

*(Cont'd)*

**Note!** The air for the ASU pneumatic panel and the pre-applicator pneumatic panel are taken before the main air valve (1).

The illustrations show the air valve (3) for the ASU, the air valve (4) for the pre-applicator, the main air valve (5) on the ASU pneumatic panel and their location in the filling machine.

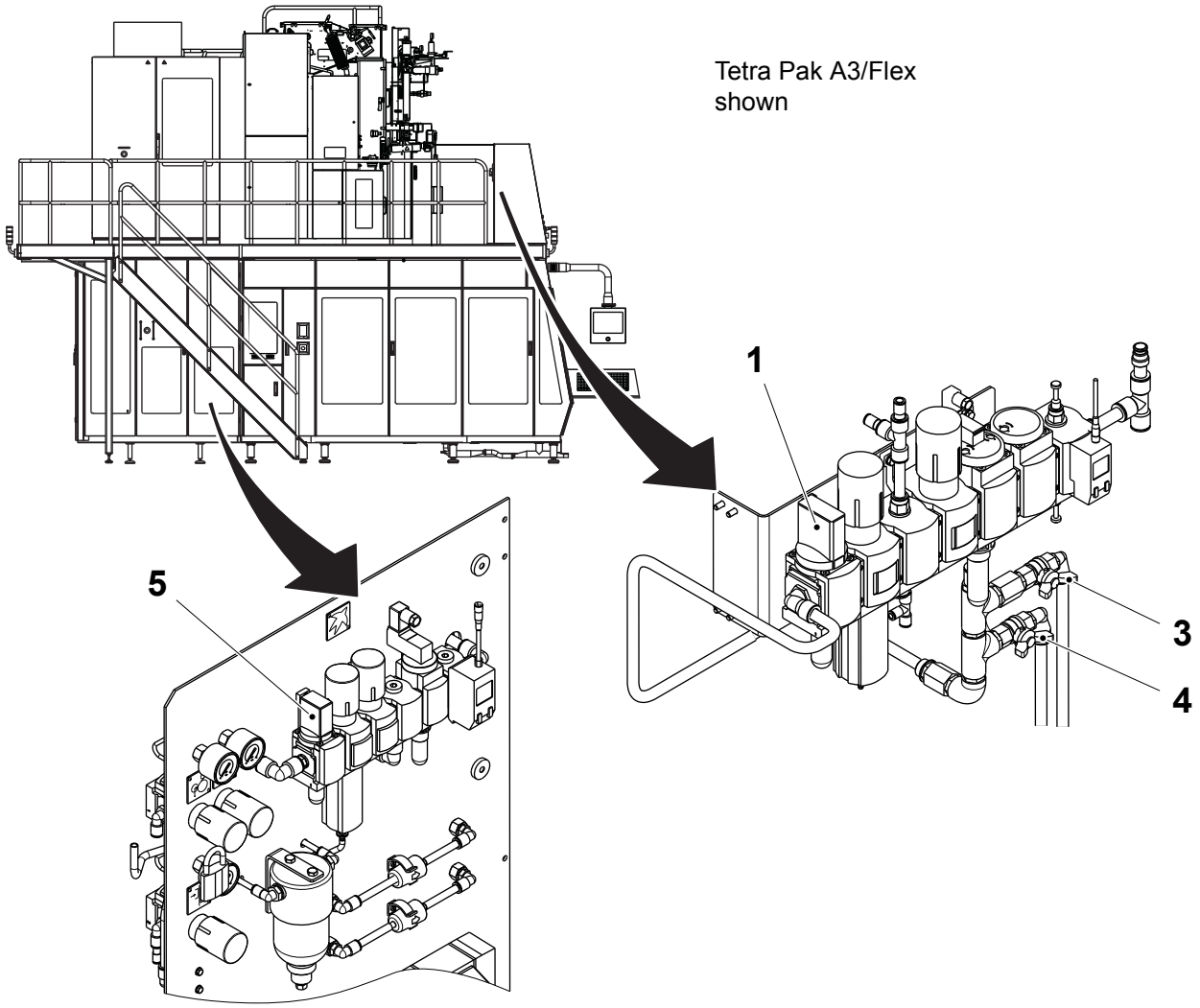


1 Main air valve
3 Valve
4 Valve
5 Main air valve

TechPub_2614345_0106 - sp03_3055124_01.fm

# Steam Supply

**WARNING**

**Hot steam can cause scalds.**
Pressurized steam can be discharged unexpectedly.
Close the steam supply valve and lock it, depressurize and vent all steam safely before any maintenance on parts with steam, such as pipes and valves.

**Note!** The key to the lock must be removed by the technician and retained in his/her possession until all work is completed.

Certain maintenance procedures may require steam supply systems to be on. These exceptions are clearly stated in the Maintenance Manual.

The steam supply system is separated in two different supply: the valve (1) is for the steam barrier in the product valve, the valve (2) is for the cleaning system only.

The illustrations show the steam supply valves (1) and (2) with the padlocks (3) and their location.

TechPub_2614345_0106 - sp03_3055124_01.fm

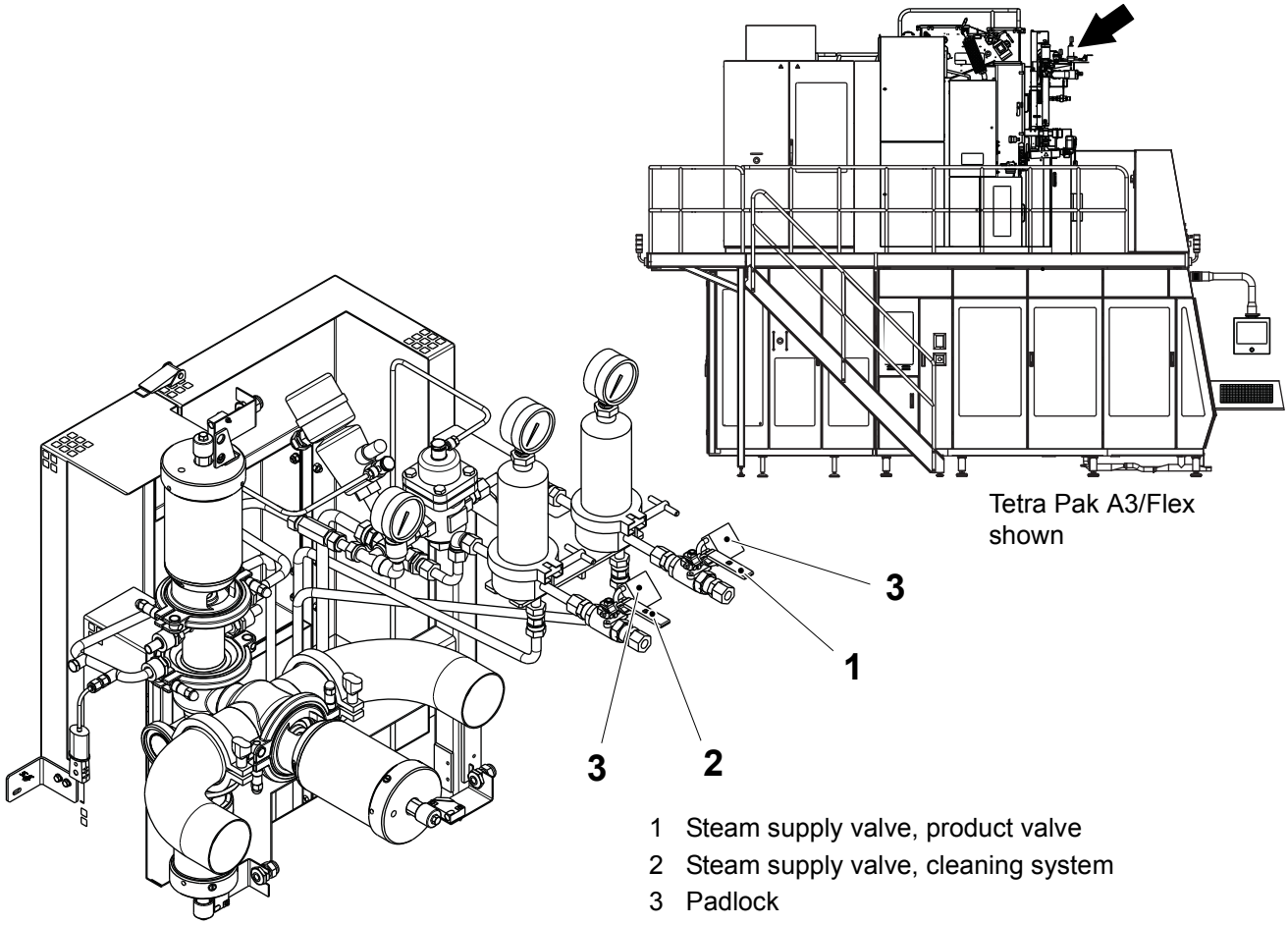


Tetra Pak A3/Flex shown

1 Steam supply valve, product valve
2 Steam supply valve, cleaning system
3 Padlock

# Water Supply

**CAUTION**

**Water under pressure.**

Close the water supply valves before any maintenance.

Certain maintenance procedures may require water supply systems to be on. These exceptions are clearly stated in the Maintenance Manual.

The illustrations show the water supply valves (1) and (2), and their location.

Tetra Pak A3/Flex shown

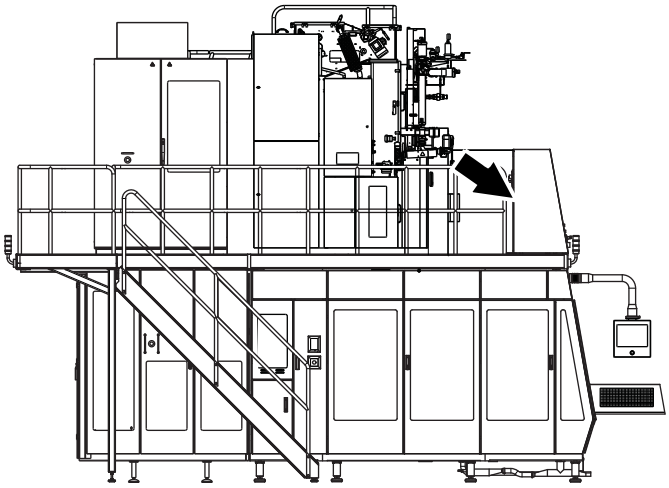

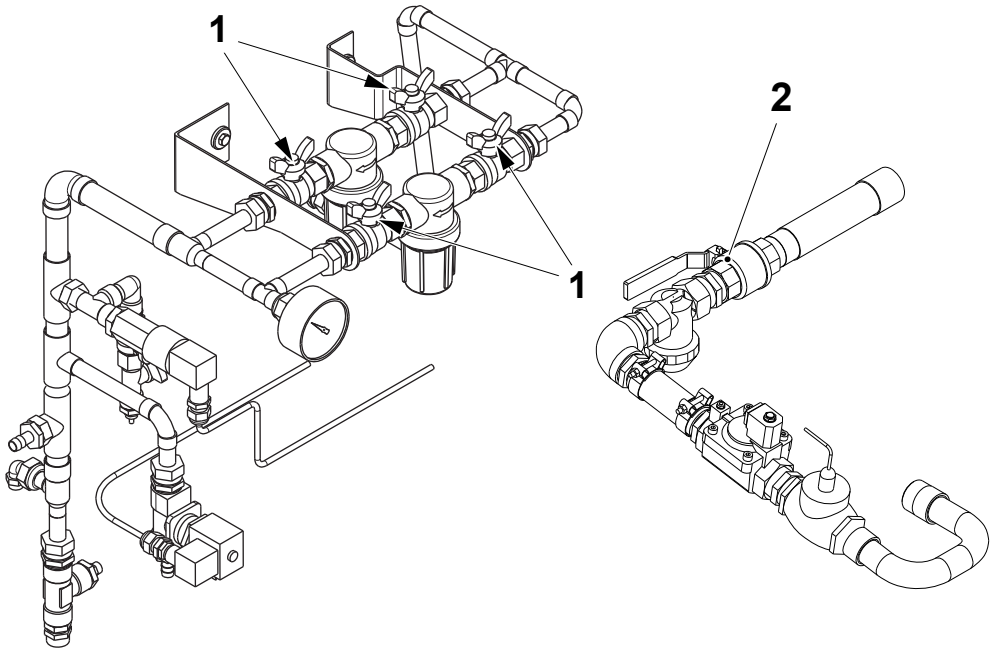


1 Water supply valve
2 Hot water supply valve

TechPub_2614345_0106 - sp03_3055124_01.fm

# Equipment for Lifting and Moving Loads

**WARNING**

**Risk of crushing injury.**

Make sure that the capacity of the lifting equipment is adequate and that the equipment itself is in proper working order.

If lifting tackle must be joined to make up the necessary lengths, make sure that the joints are secure and have the same lifting capacity as the rest of the lifting tackle.

Always engage safety clips fitted to lifting hooks to prevent the lifting tackle from slipping off.

Use ropes or poles to steady and manoeuvre suspended loads. Do **not** use hands or feet.

Make sure that the route and destination are free from obstacles before moving a suspended load. It must always be possible to quickly and safely lower the load to the floor in an emergency.

When depositing loads, keep lifting tackle in place until the stability of the load has been substantiated.

TechPub_2614345_0106 - sp03_3055124_01.fm

This page intentionally left blank

TechPub_2614345_0106 - sp03_3055124_01.fm

# 1 Headspace by Injection

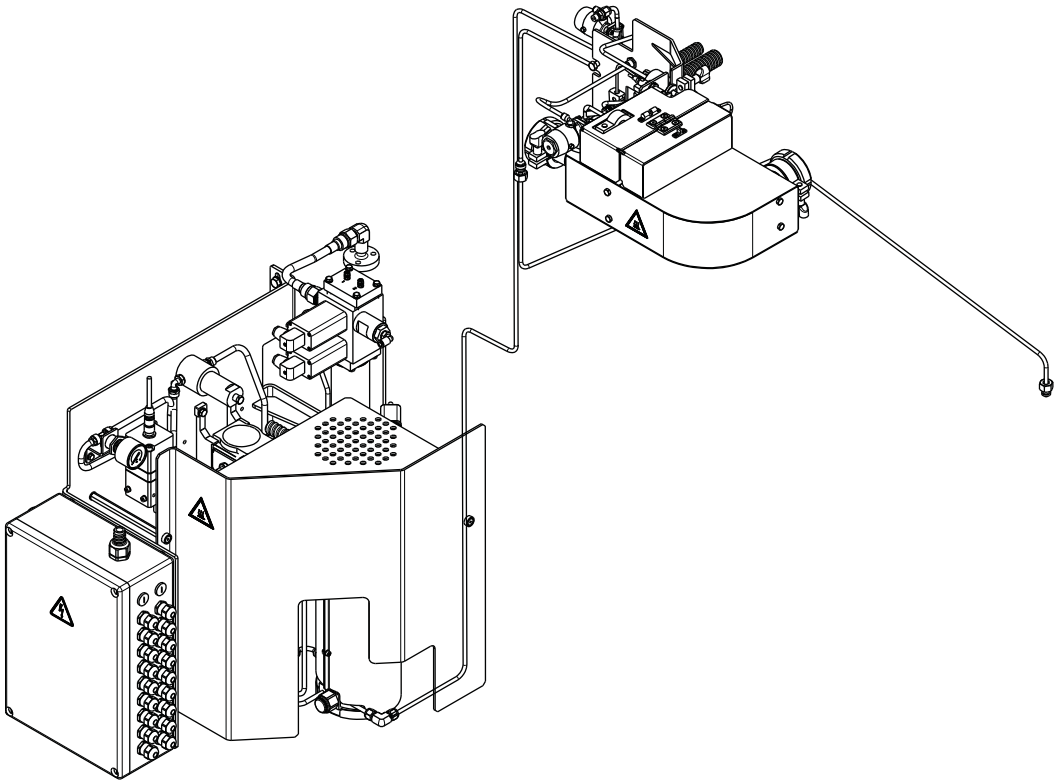

## Description

| | |
|---|---|
| SPC Reference | 3057110-0100 |

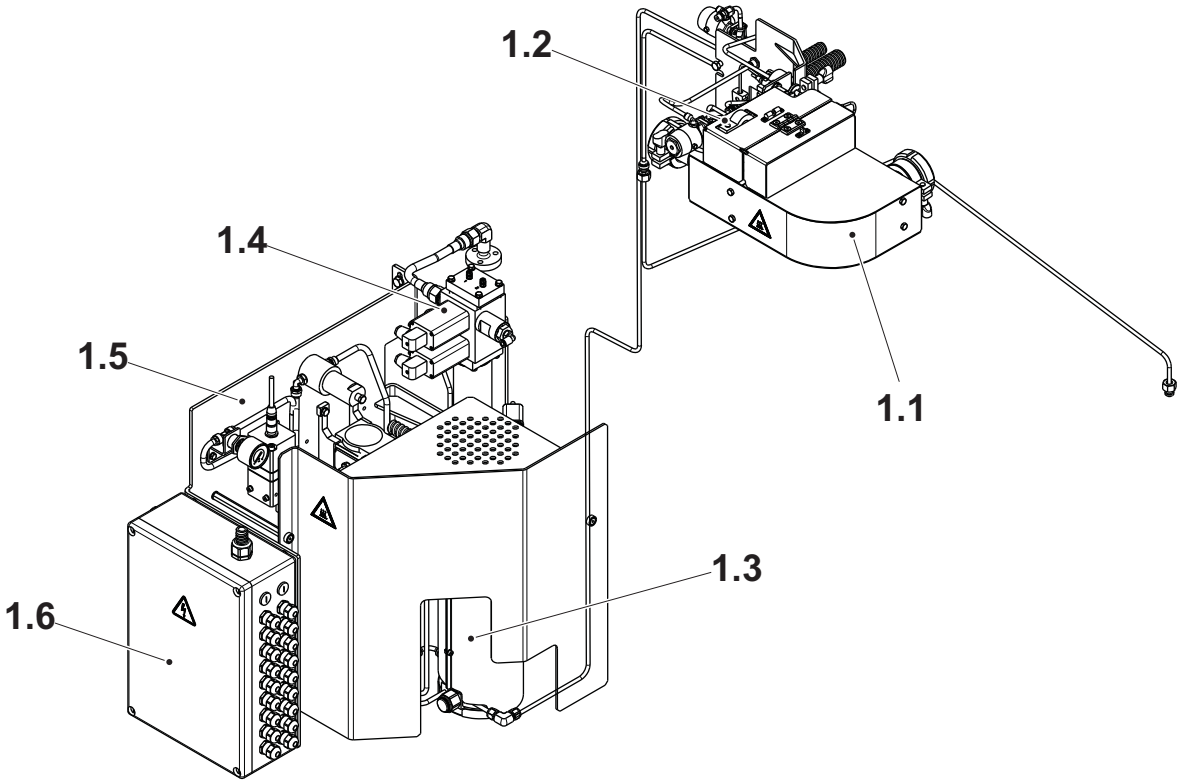


1.1 Filling Pipe
1.2 Nozzle Unit
1.3 Heater
1.4 Spray Tank
1.5 Pneumatic Panel
1.6 Connection Box

1 Headspace by Injection . . . . . 1 - 5

1.1 Filling Pipe . . . . . 1 - 8

1.1.1 Filling Pipe (TP/A3/Speed) . . . . . 1 - 8

1.1.1-1 Filling Pipe (TP A3/Speed) - Remove . . . . . 1 - 8

1.1.1-2 Filling Pipe (TP A3/Speed) - Fit . . . . . 1 - 15

1.1.1-3 Filling Pipe (TP A3/Speed) - Set Position . . . . . 1 - 24

1.1.2 Filling Pipe (TP A3/Flex) . . . . . 1 - 33

1.1.2-1 Filling Pipe (TP A3/Flex) - Remove . . . . . 1 - 33

1.1.2-2 Filling Pipe (TP A3/Flex) - Fit . . . . . 1 - 38

1.1.2-3 Filling Pipe (TP A3/Flex) - Set Position . . . . . 1 - 44

1.2 Nozzle Unit . . . . . 1 - 50

1.2-1 Nozzle Unit - Change O-rings and Diaphragm . 1 - 50

1.2-2 Nozzle Unit - Set Proximity Switches . . . . . 1 - 55

1.2-3 Nozzle Unit - Clean Nozzle . . . . . 1 - 60

1.2-4 Nozzle Unit - Check Thermocouple . . . . . 1 - 64

1.3-5 Nozzle Unit - Modify (from HI to HI bypassed) 1 - 65

1.3 Heater . . . . . 1 - 68

1.3-1 Heater - Check Peroxide Filter . . . . . 1 - 68

1.3-2 Heater - Check Electrical Terminals . . . . . 1 - 71

1.3-3 Heater - Check Thermocouples . . . . . 1 - 73

1.3-4 Heater - Check No-return Valve . . . . . 1 - 76

1.4 Spray Tank . . . . . 1 - 78

1.4-1 Spray Tank - Check . . . . . 1 - 78

1.4-2 Spray Tank - Clean Peroxide Filter . . . . . 1 - 80

1.4-3 Spray Tank - Clean Filter . . . . . 1 - 82

1.4-4 Spray Tank - Set Pressure . . . . . 1 - 84

1.5 Pneumatic Panel . . . . . 1 - 85

1.5-1 Pneumatic Panel - Set Pressure Switch . . . . . 1 - 85

1.5-2 Pneumatic Panel - Check Flow Switch . . . . . 1 - 88

1.5-3 Pneumatic Panel - Change Filters . . . . . 1 - 89

1.5-4 Pneumatic Panel - Set I/P Transducer . . . . . 1 - 90

**1.6 Connection Box . . . . . 1 - 95**

**1.6.1 Level Control . . . . . 1 - 95**

1.6.1-1 Level Control - LED Description . . . . . 1 - 95

1.6.1-2 Level Control - Set . . . . . 1 - 97

# 1 Headspace by Injection

| SPC Reference | 3057110-0100 |
|---|---|

## General Description

Headspace by Gas Injection provides a percentage of free space inside a package. The amount of headspace possible inside a package is defined by the product being filled, this varies between a minimum of 2% and a maximum of 10%. The headspace is created by blowing a controlled amount of sterile inert gas, air or nitrogen directly into the product line.

The introduction of the HI line introduces a sterilisation process before the production process and a cleaning process after.

The HI/CIP swing pipe must be moved to the PRODUCTION position for all phases except when CIP is to be run.

The air or gas leaving the circulation heater is maintained at the correct temperature by simultaneously adjusting the heater power and regulating the amount of air or gas flowing through the heater. The flow is regulated by a proportional control valve on the pneumatic panel.

*(Cont'd)*

*(Cont'd)*

Circuit Component Description

| Component | Function |
|---|---|
| Pneumatic panel | Where the pressure and flow of the system air are regulated. |
| Valve U70K4230 | Selects the system air for sterilisation or the inert gas for the HI process |
| Proportional Valve U70T4330 | Maintains the air or gas at the desired pressure |
| Valve U70K4240 | Turns the output of the valve panel ON and OFF |
| Heater | Heats the air or inert gas to the correct temperature.<br>Heats the peroxide to the correct temperature to achieve sterilisation. This is done in a spiral wound around the main heating element. This provides isolation between the peroxide and the air/inert gas circuit in the heater tank. |
| Valve U70Q1454 | Diverts the hot air or peroxide to the Aseptic Chamber inlet connection to increase the flow through the heater. This causes the temperature of the air or peroxide to rise quickly. |
| Aseptic Chamber by-pass connection | Entrance point for air or peroxide to Aseptic Chamber |
| HI/CIP swing pipe | Manual switch to clean the HI line |
| Valve U70Q1452 | Feeds the peroxide, air or inert gas to the HI nozzle |
| Nozzle | Entry point into the product line |
| Valve U70K4220 | Used to empty the HI tank by blowing air into it. |
| HI peroxide spray tank | Used to store peroxide for the Spraying phase of Sterilisation |
| Valve U70K4210 | Used to drain the HI tank or feed the contents of the HI tank to the heater. |
| Level regulating valve | Regulates the product flow |
| Product valve group | Selects the Product or the CIP cleaning fluid and sterile air. |
| Flow meter U70B4290 | Checks the right amount of air flow through the circuit |
| Flow switch U70B4080 | Checks for the right amount of air flow through the by-pass circuit |

*(Cont'd)*

1 Headspace by Injection

*(Cont'd)*

Circuit Overhead

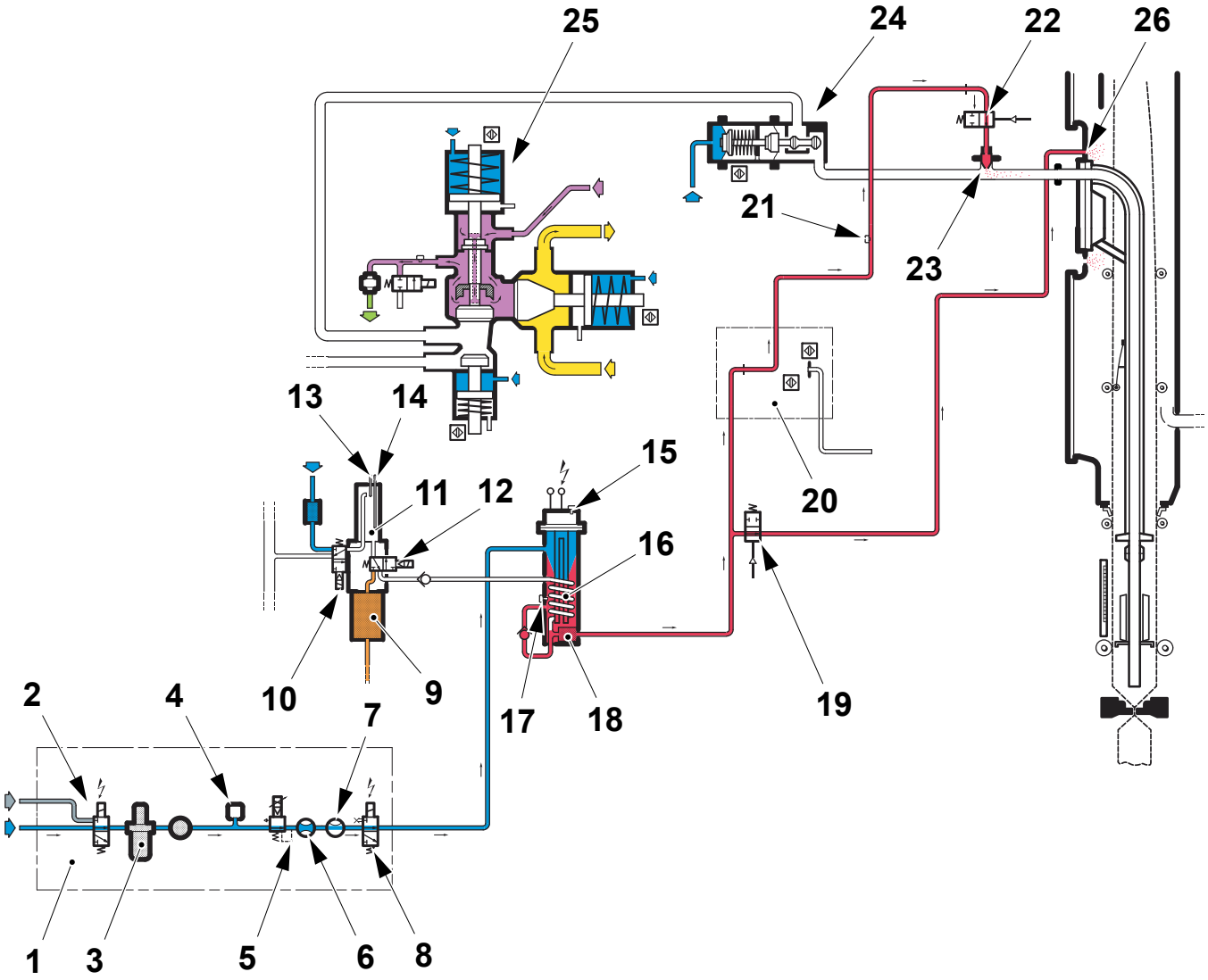


1 Pneumatic panel
2 Filling gas selection valve U70K4230
3 Filtering section
4 Pressure switch U70B4010
5 Proportional ValveU70T4330
6 Flow meter U70B4290
7 Flow switch U70B4080
8 HI main valve U70K4240
9 Peroxide tank
10 Drain/spray valve U70K4220
11 HI spray tank
12 Filling/emptying valve U70K4210
13 High level sensor
14 Low level sensor
15 Superheater temperature probe U70B4350
16 Heater
17 Air temperature probe U70B4360
18 Stainless steel filter
19 HI by-pass valve U70Q1454
20 HI/CIP switch
21 HI circuit temperature probe U70B4370
22 HI injection valve U70Q1452
23 Nozzle
24 Servo dosing valve
25 Product valve group
26 Aseptic Chamber by-pass connection

# 1.1 Filling Pipe

| | |
|---|---|
| SPC Reference | 1549160-0300<br>2501310-0300 |

## 1.1.1 Filling Pipe (TP/A3/Speed)

### 1.1.1-1 Filling Pipe (TP A3/Speed) - Remove

| | |
|---|---|
| Machine Status | Mains Power OFF<br>Air OFF<br>Steam ON<br>Water OFF |
| SPC Reference | 1549160-0300 |

a) Open the aseptic chamber doors (1).

b) Open the level control device (2).

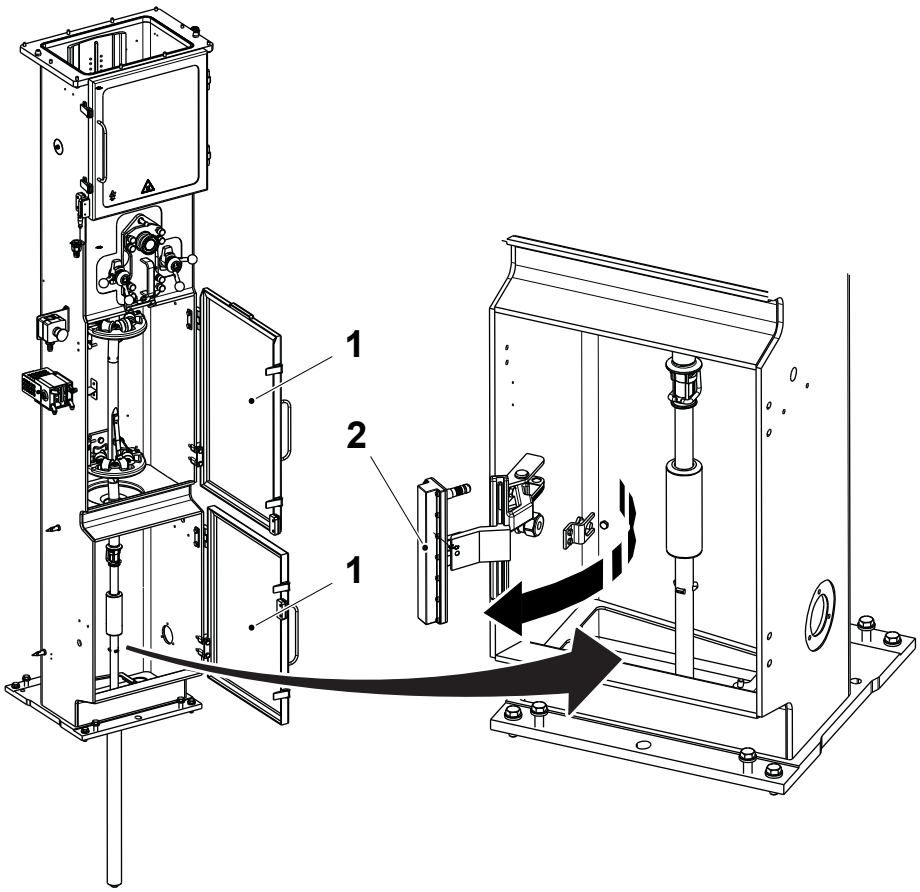


1 Door
2 Level control device

*(Cont'd)*

*(Cont'd)*

**CAUTION**
**Risk of damage to the equipment.**
Extract the lower part of the filling pipe very carefully and holding the pipe as straight as possible in order to prevent any damage to the photocells below the pillar. For Family Packages, follow the instruction 1.5.1-9 Filling Pipe - Remove Bucket in the filling machine MM.

c) Remove the locking pins (3) and the lower part of the filling pipe (4).

**Note!** The link (5) is for Family Packages only.

d) Remove the O-ring (6) from the lower part of the filling pipe (4).

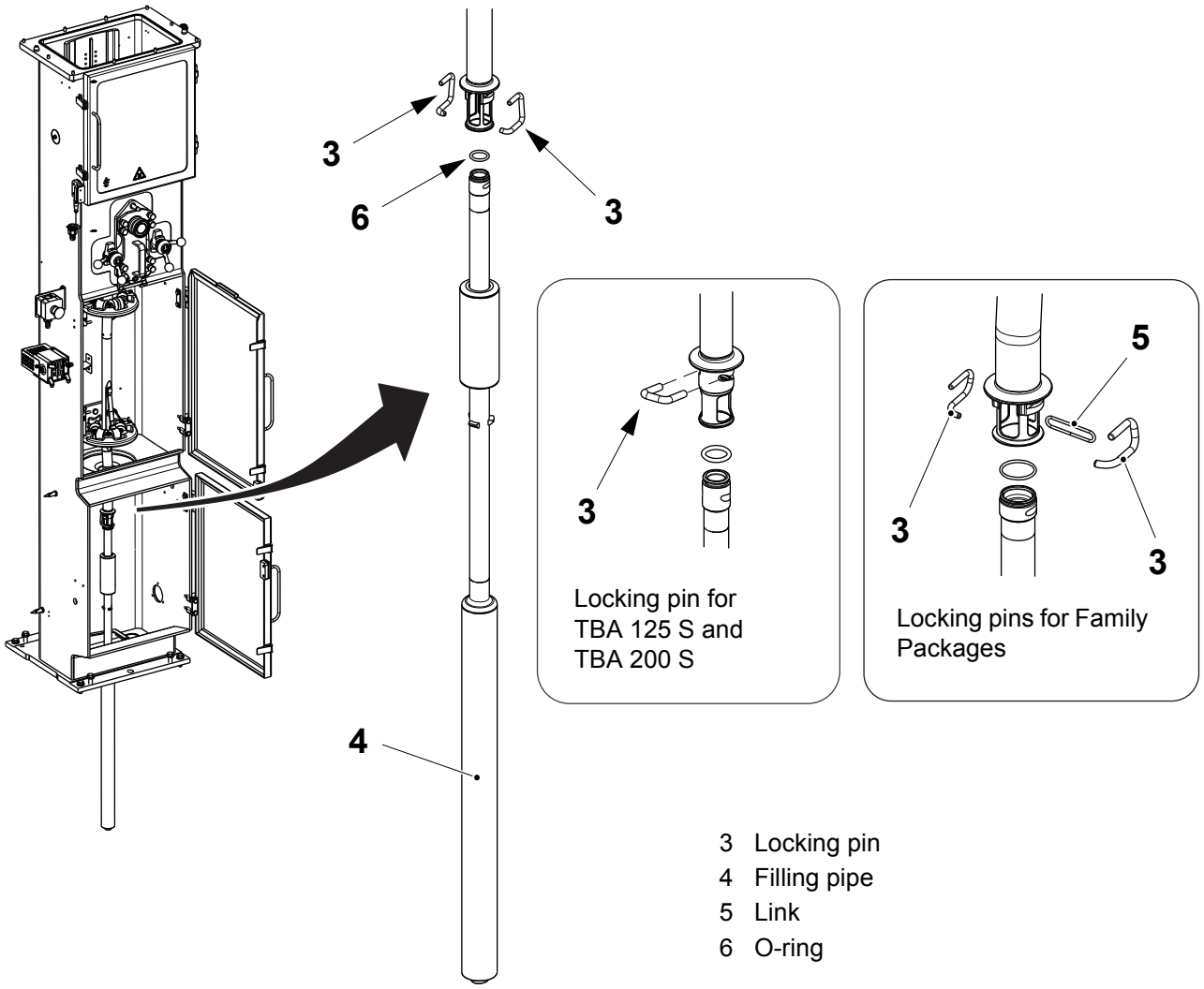


3 Locking pin
4 Filling pipe
5 Link
6 O-ring

*(Cont'd)*

*(Cont'd)*

e) Open the LS inductor (7) by turning the knob (8).

**Note!** Only for TBA 125 S, swing the LS finger (9) open.

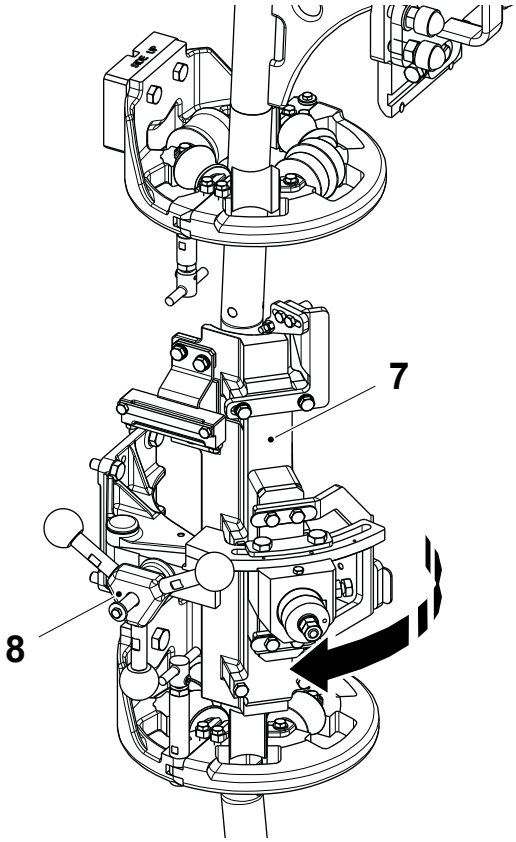


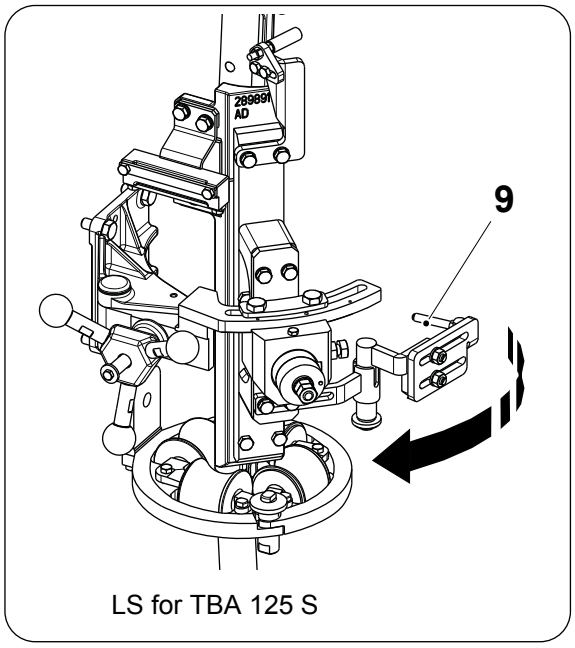


LS for TBA 125 S

7 LS inductor
8 Knob
9 LS finger

*(Cont'd)*

*(Cont'd)*

**CAUTION**
**Risk of damage to the equipment.**
Press the front half of the lower forming ring (11) backwards while turning the knob (10) to avoid damaging the threaded screw on the end of the knob (10).

f) Unscrew the knob (10) and open the lower forming ring (11).

g) Remove the pressure rollers assembly (12) from the filling pipe.

h) Unscrew the knob (13) and open the upper forming ring (14).

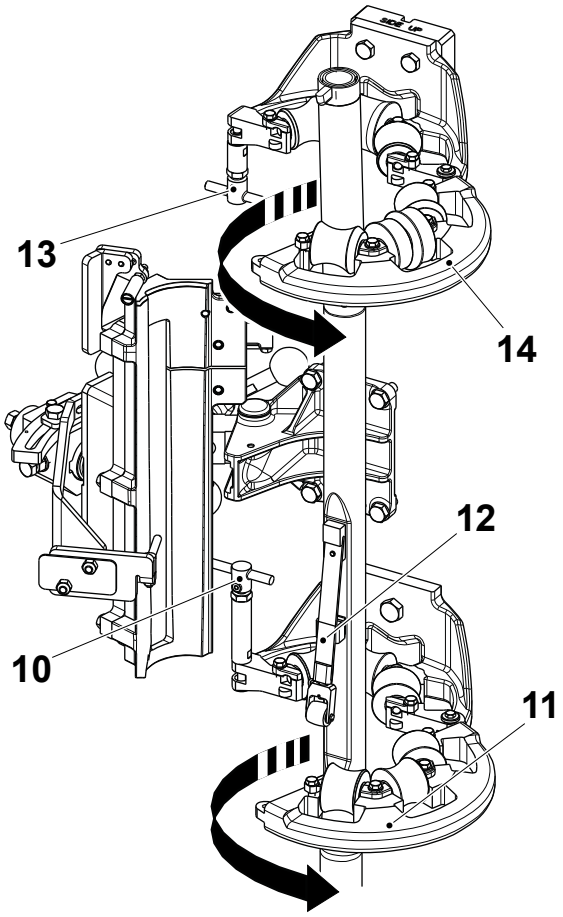


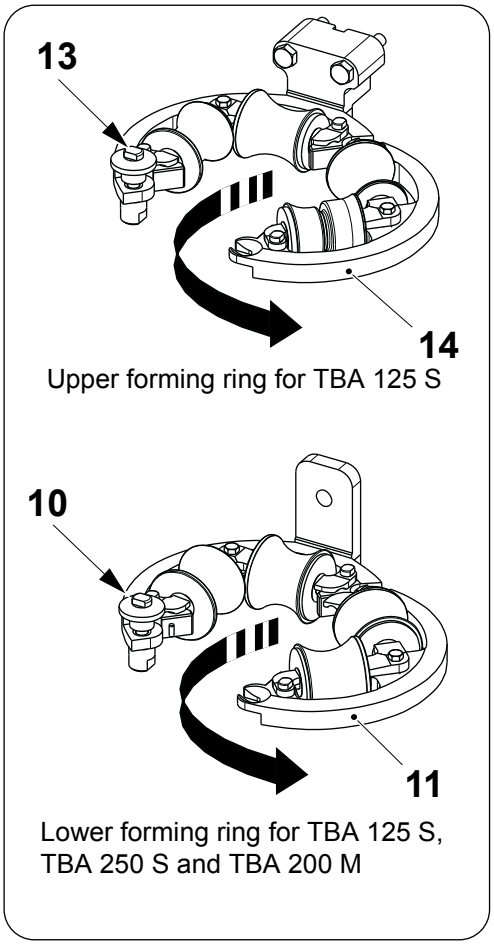


10 Knob
11 Lower forming ring
12 Pressure roller assembly
13 Knob
14 Upper forming ring

*(Cont'd)*

*(Cont'd)*

**WARNING**

**Burn hazard.**

The product pipe and adjacent components may be hot. If necessary wear personal protective equipment.

i) Swing the cover (15) open and lock it in position.

j) Disconnect the hose from the bulkhead lead-in (16).

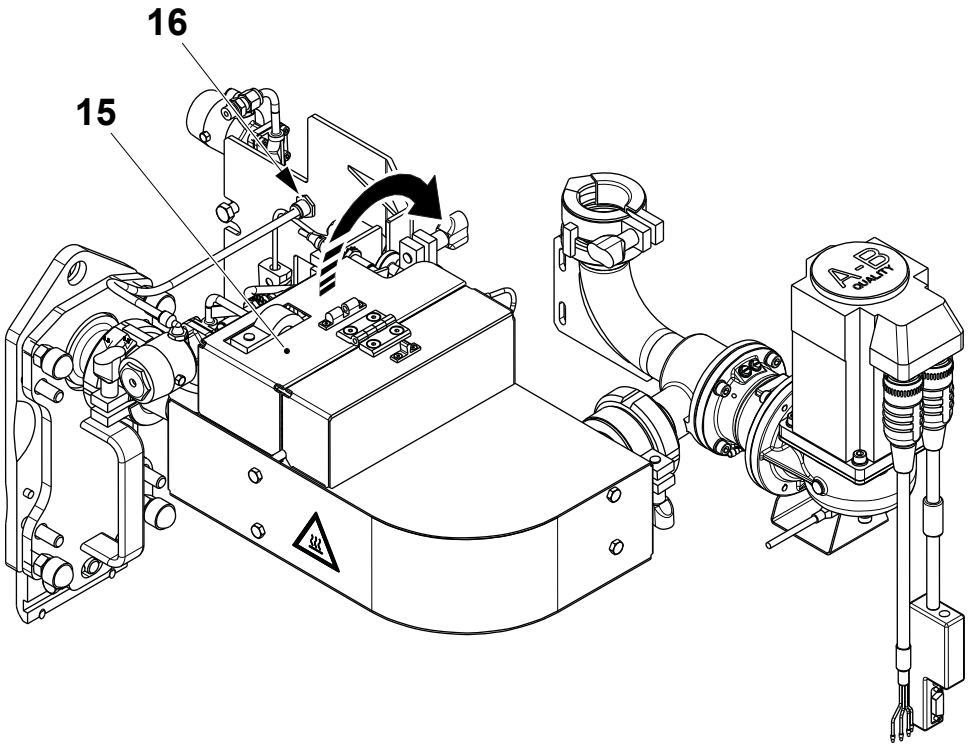


15 Cover
16 Bulkhead lead-in

*(Cont'd)*

*(Cont'd)*

**Note!** Take care of the gaskets (23) and the O-ring (24). Change them if necessary.

k) Loosen the clamping piece (17).

l) Loosen the locking devices (18) and remove the product pipe (19) with the pneumatic valve (20) assembled.

m) Fit the plug (21) on the pipe (22) by tightening the clamping piece (17).

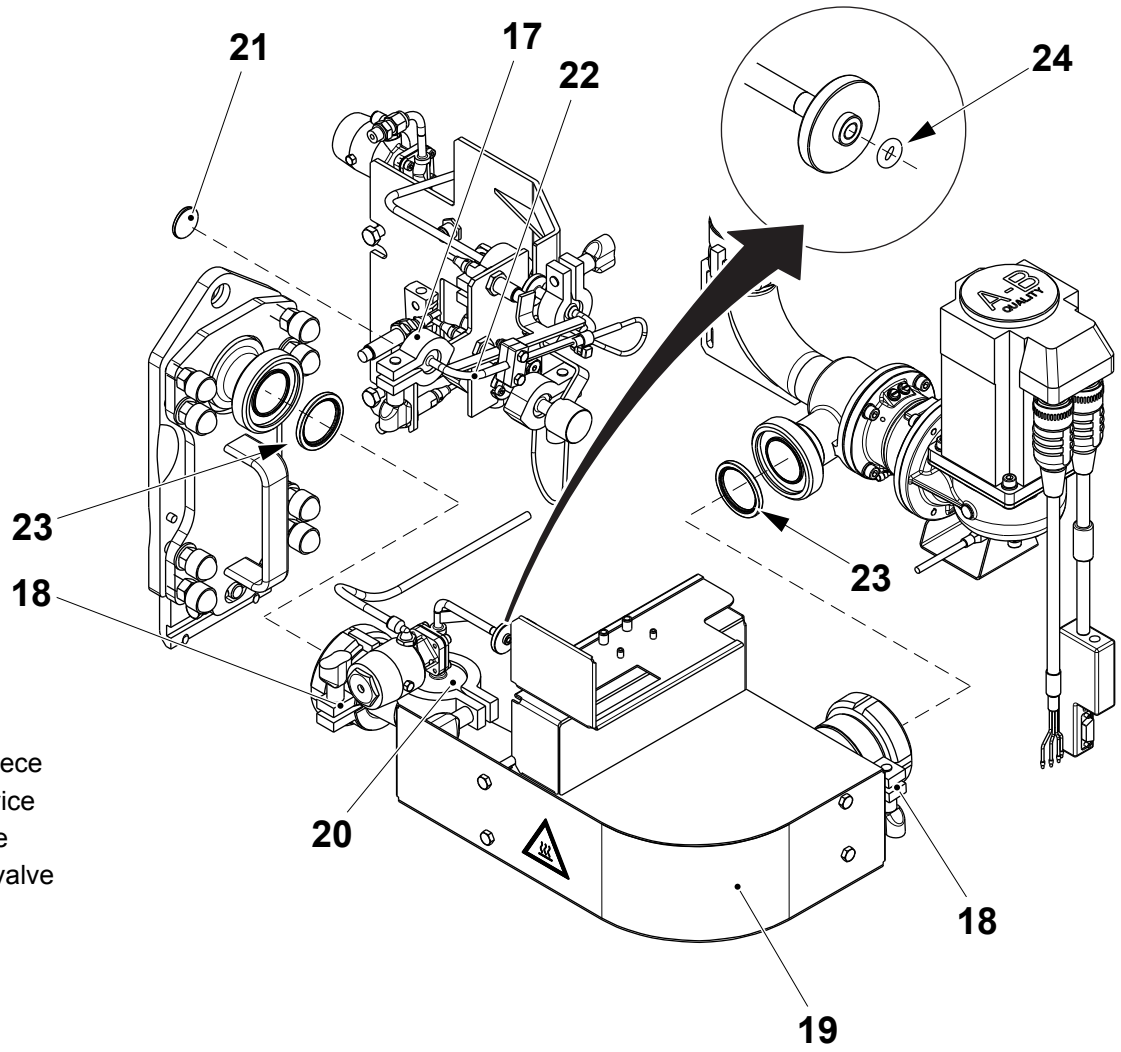


17 Clamping piece
18 Locking device
19 Product pipe
20 Pneumatic valve
21 Plug
22 Pipe
23 Gasket
24 O-ring

*(Cont'd)*

*(Cont'd)*

n) With one hand firmly holding the filling pipe (25), undo the locking handles (26).

o) Remove the filling pipe (25) and store it in a safe place.

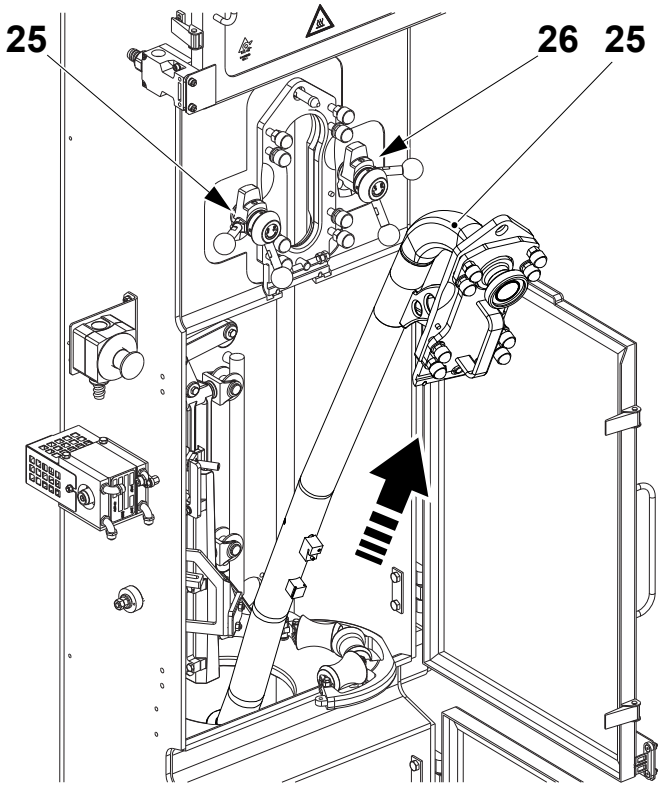


25 Filling pipe
26 Locking handle

### 1.1.1-2 Filling Pipe (TP A3/Speed) - Fit

| | |
|---|---|
| Machine Status | Mains Power OFF<br>Air OFF<br>Steam ON<br>Water OFF |
| SPC Reference | 1549160-0300 |

a) Open the LS inductor (1) by turning the knob (2).

**Note!** Only for TBA 125 S, swing the LS finger (3) open.

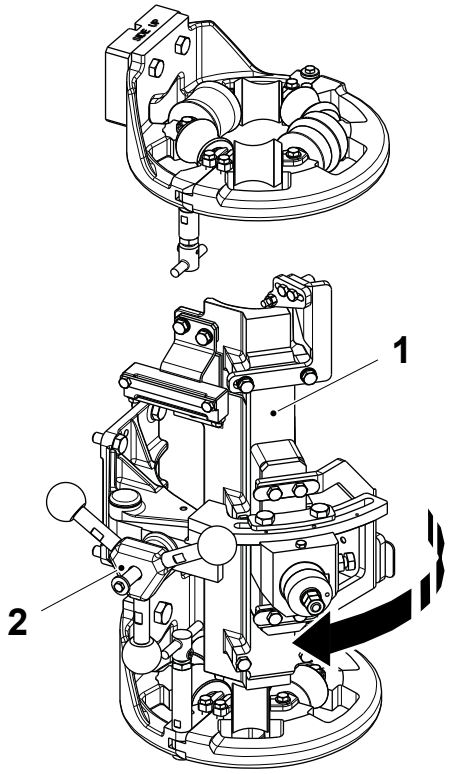


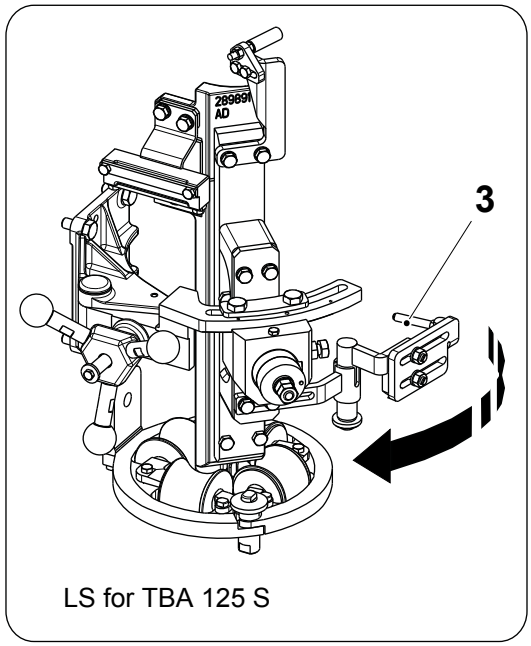


LS for TBA 125 S

1 LS inductor
2 Knob
3 LS finger

*(Cont'd)*

*(Cont'd)*

**Note!** Press the front half of the lower forming ring (7) backwards while turning the knob (6) to avoid damaging the threaded screw on the end of the knob (6).

a) Unscrew the knob (4) and open the upper forming ring (5).

b) Unscrew the knob (6) and open the lower forming ring (7).

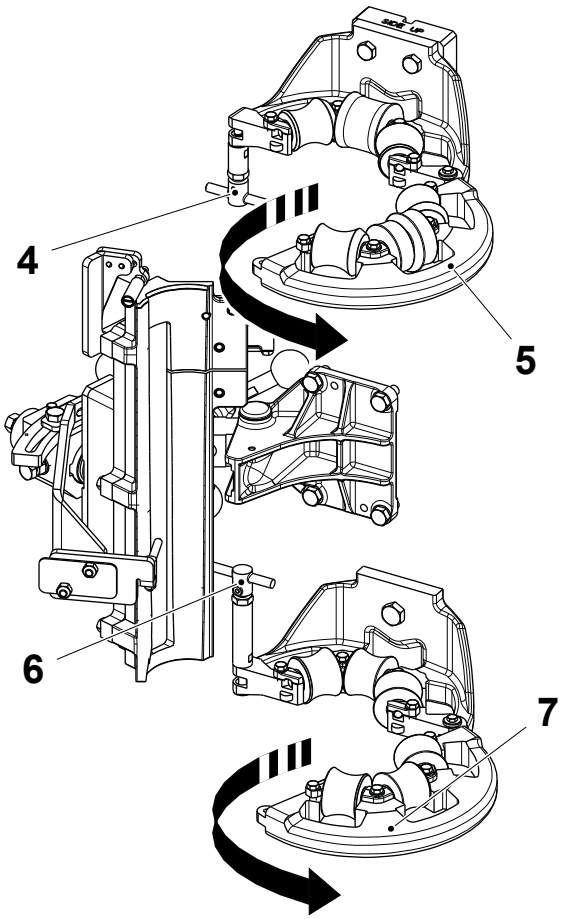


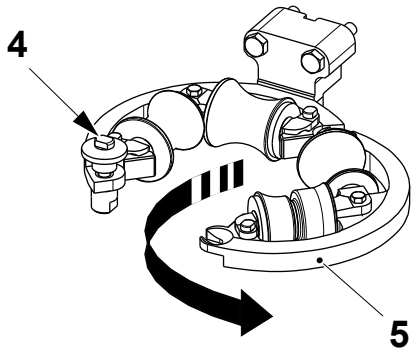


Upper forming ring for TBA 125 S

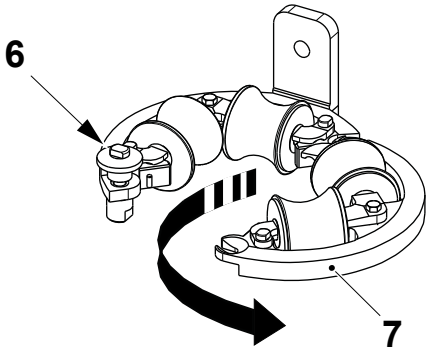


Lower forming ring for TBA 125 S, TBA 250 S and TBA 200 M

4 Knob
5 Lower forming ring
6 Knob
7 Upper forming ring

*(Cont'd)*

*(Cont'd)*

c) Fit the filling pipe (8) and secure it in to position with the locking handles (9).

d) Mount the pressure roller assembly (10) on to the filling pipe.

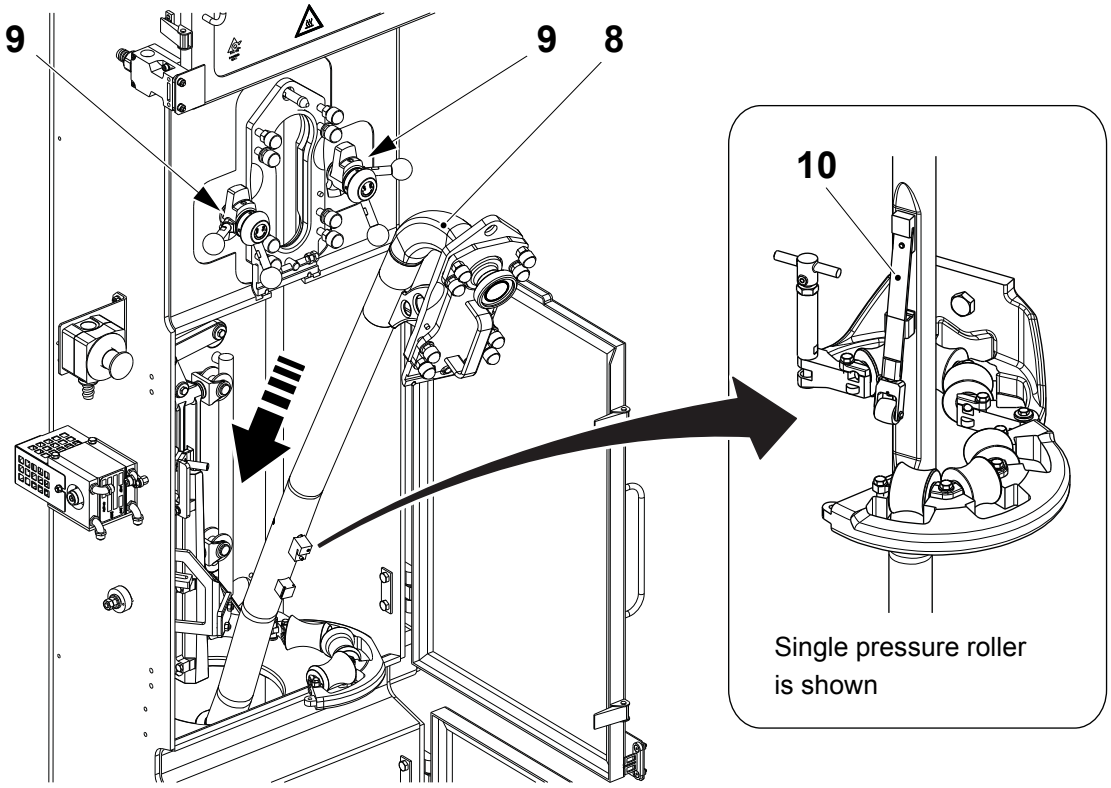


8 Filling pipe
9 Locking handle
10 Pressure roller assembly

*(Cont'd)*

*(Cont'd)*

**CAUTION**
**Risk of damage to the equipment.**
Press the front half of the lower forming ring (7) backwards while tightening the knob (6) to avoid damaging the threaded screw on the end of the knob (6).

**CAUTION**
**Risk of damage to the equipment.**
In machines TBA 125 S, TBA 250 S and TBA 200 M do not tighten the knobs (4) and (6) by the spanner to avoid damaging the thread.

e) Close the upper forming ring (4) and tighten the knob (3).

f) Close the lower forming ring (7) and tighten the knob (6).

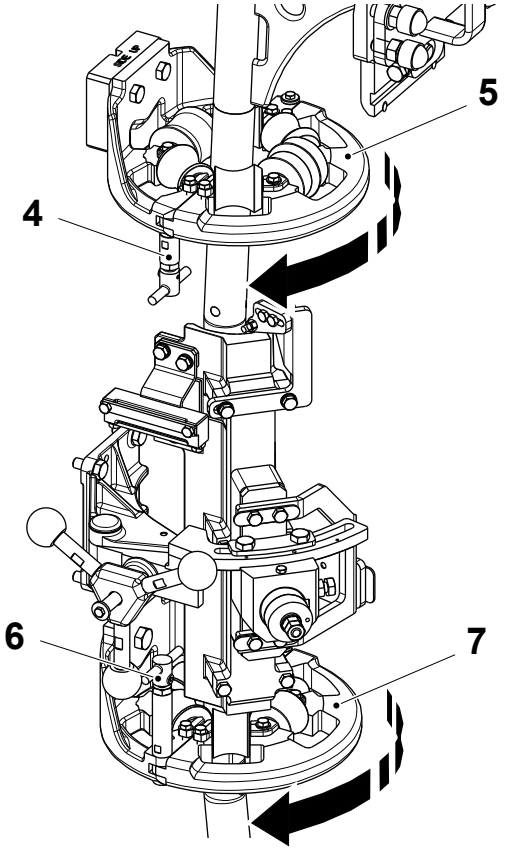


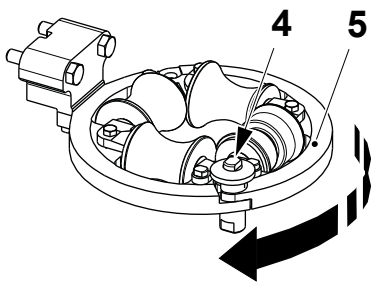


Upper forming ring for TBA 125 S

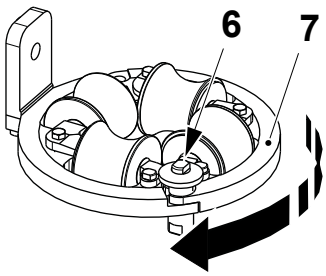


Lower forming ring for TBA 125 S, TBA 250 S and TBA 200 M

4 Knob
5 Lower forming ring
6 Knob
7 Upper forming ring

*(Cont'd)*

*(Cont'd)*

g) Close the LS inductor (1) by turning the knob (2).

**Note!** Only for TBA 125 S, swing the LS finger (3) close.

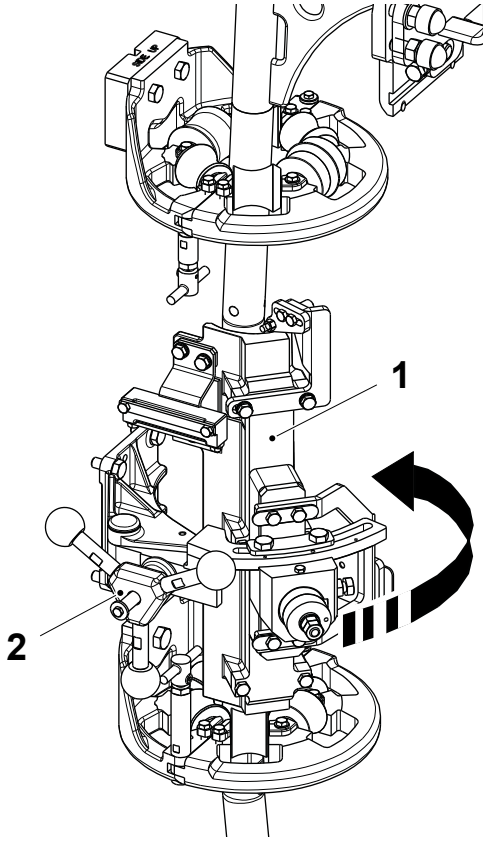


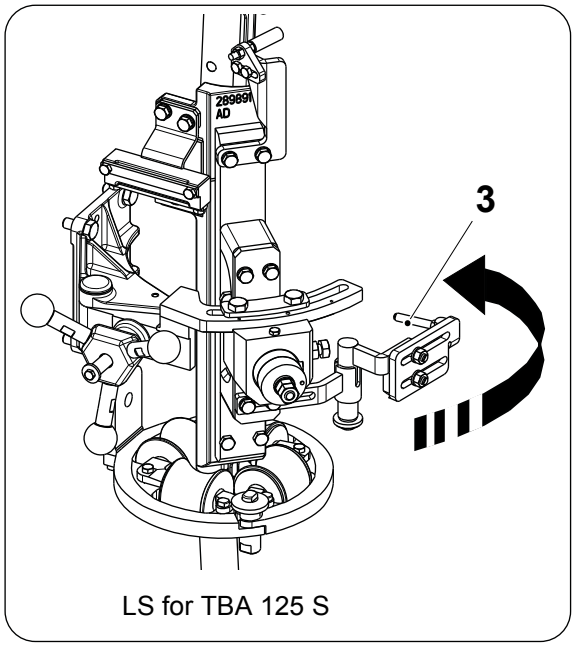


LS for TBA 125 S

1 LS inductor
2 Knob
3 LS finger

*(Cont'd)*

*(Cont'd)*

h) Loosen the clamping piece (11) and remove the plug (12).

i) Fit the product pipe (13) with the gaskets (14) by the locking devices (15).

j) Fit the O-ring (16) on the pneumatic valve (17).

k) Connect the pneumatic valve (17) to the pipe (18) by the clamping piece (11).

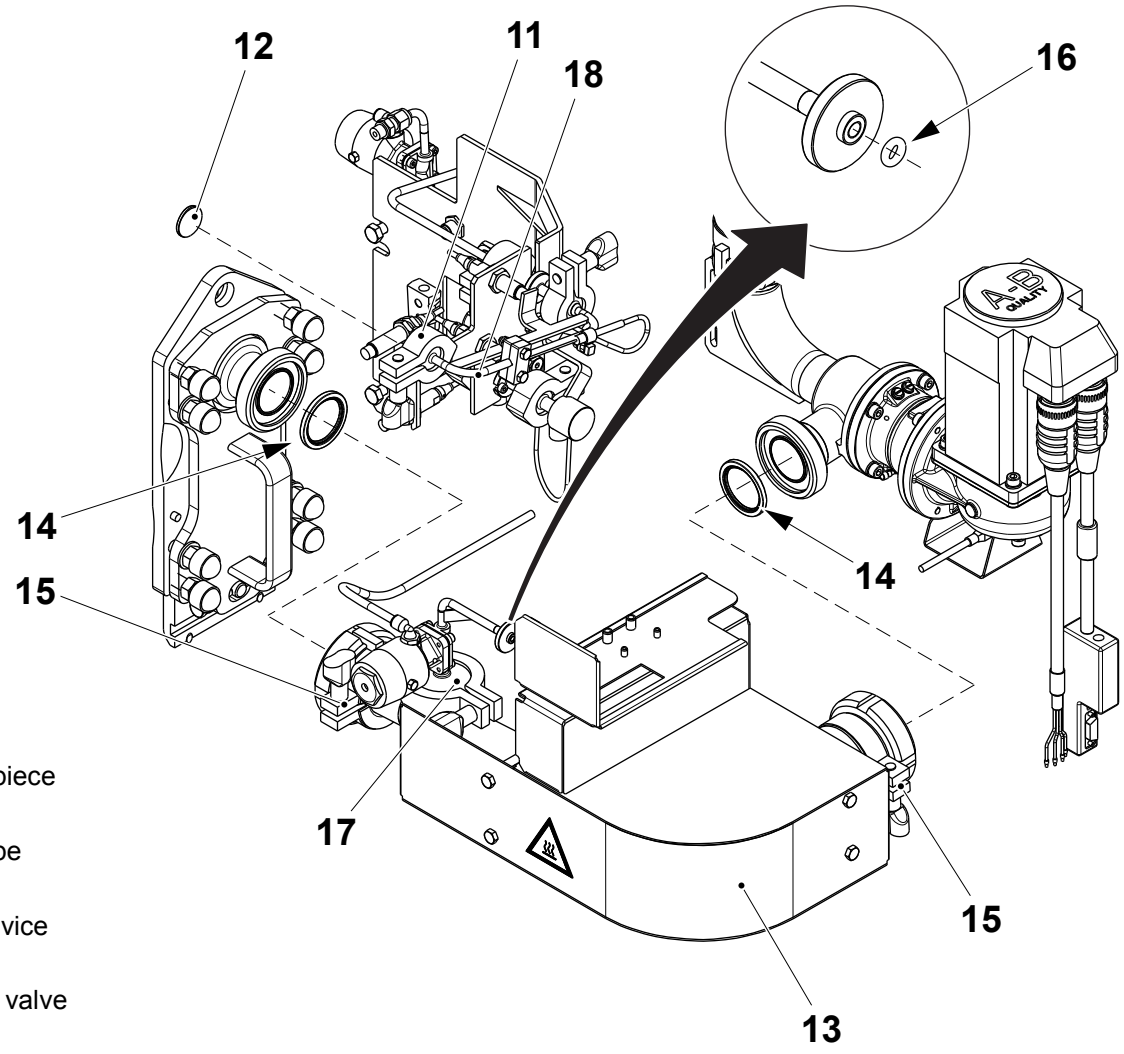


11 Clamping piece
12 Plug
13 Product pipe
14 Gasket
15 Locking device
16 O-ring
17 Pneumatic valve
18 Pipe

*(Cont'd)*

*(Cont'd)*

l) Connect the air hose from the pneumatic valve (17) to the bulkhead lead-in (19).

m) Swing the cover (20) close.

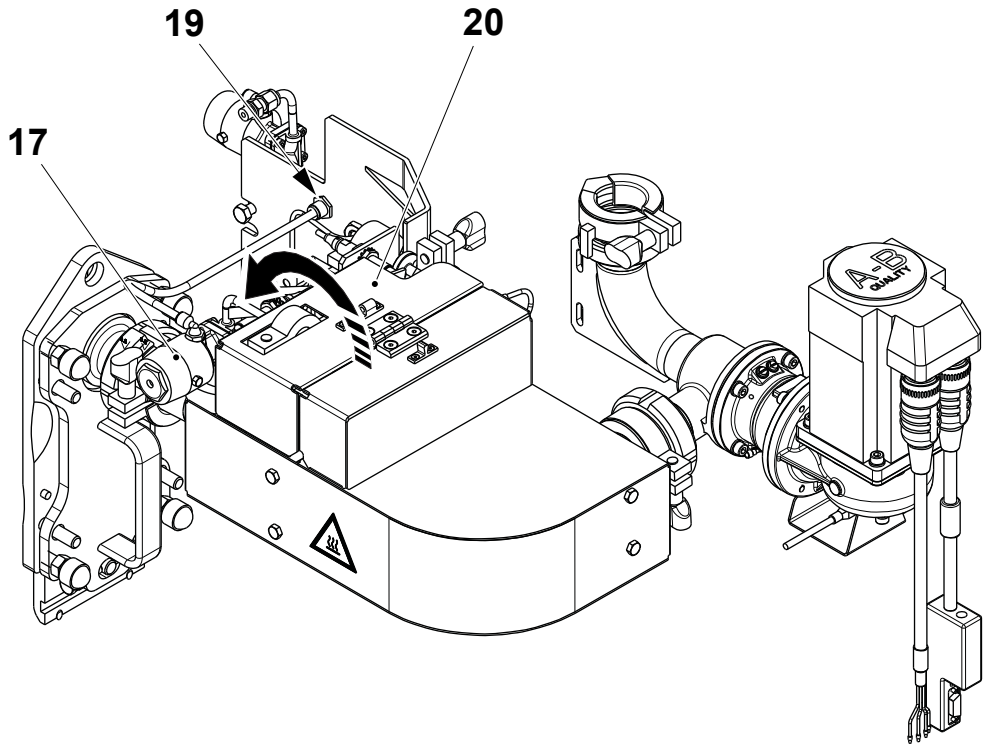


17 Pneumatic valve
19 Bulkhead lead-in
20 Cover

*(Cont'd)*

*(Cont'd)*

**CAUTION**
**Risk of damage to the equipment.**
Insert the lower part of the filling pipe very carefully and holding the pipe as straight as possible in order to prevent any damage to the photocells below the pillar. For Family Packages, follow the instruction 1.5.1-9 Filling Pipe - Remove Bucket in the filling machine MM.

n) Fit the O-ring (21) in its seat on the lower part of the filling pipe (22).

o) Fit the lower part of the filling pipe (22) and secure it in to position with the locking pins (23).

**Note!** The link (24) is for Family Packages only.

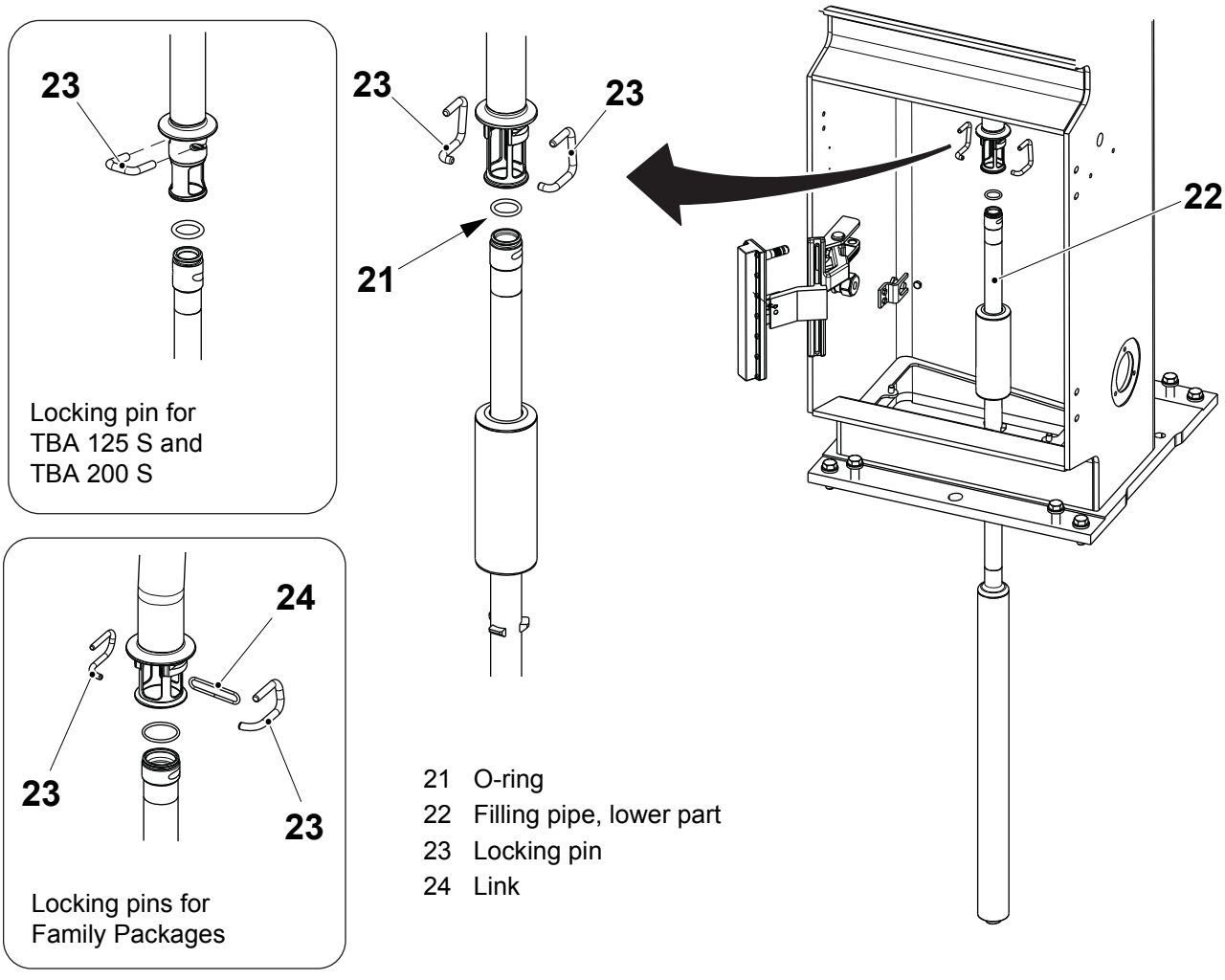


21 O-ring
22 Filling pipe, lower part
23 Locking pin
24 Link

*(Cont'd)*

*(Cont'd)*

p) Close the level control device (25).

**Note!** Make sure that the locking pin is fitted in the groove (26) and not in the O-ring seat (27).

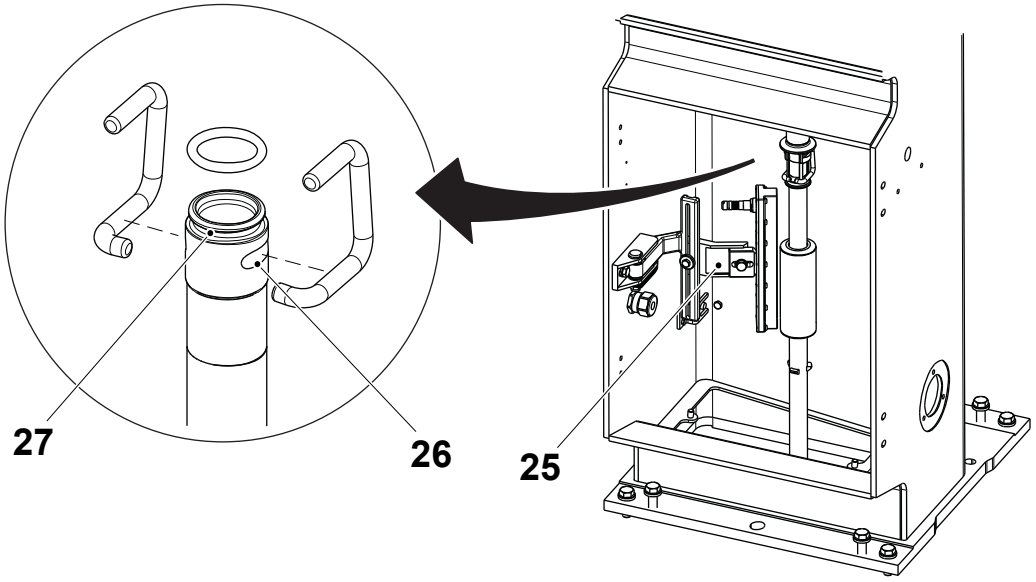


25 Level control device
26 Groove
27 O-ring seat

### 1.1.1-3 Filling Pipe (TP A3/Speed) - Set Position

| | |
|---|---|
| Machine Status | Mains Power OFF<br>Air OFF<br>Steam ON<br>Water OFF |
| Special Equipment | Template TP No. 3038999-0100 |
| SPC Reference | 1549160-0300 |

a) Remove the lower part of the filling pipe (1), see 1.1.1-1 Filling Pipe (TP A3/Speed) - Remove, steps a) to d).

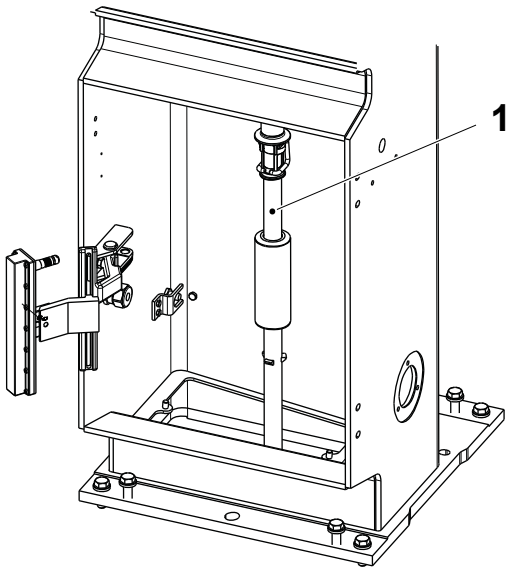


1 Filling pipe, upper part

*(Cont'd)*

*(Cont'd)*

**WARNING**

**Burn hazard.**

The product pipe and adjacent components may be hot. If necessary wear personal protective equipment.

b) Swing the cover (2) open and lock it in position.

c) Disconnect the hose from the bulkhead lead-in (3).

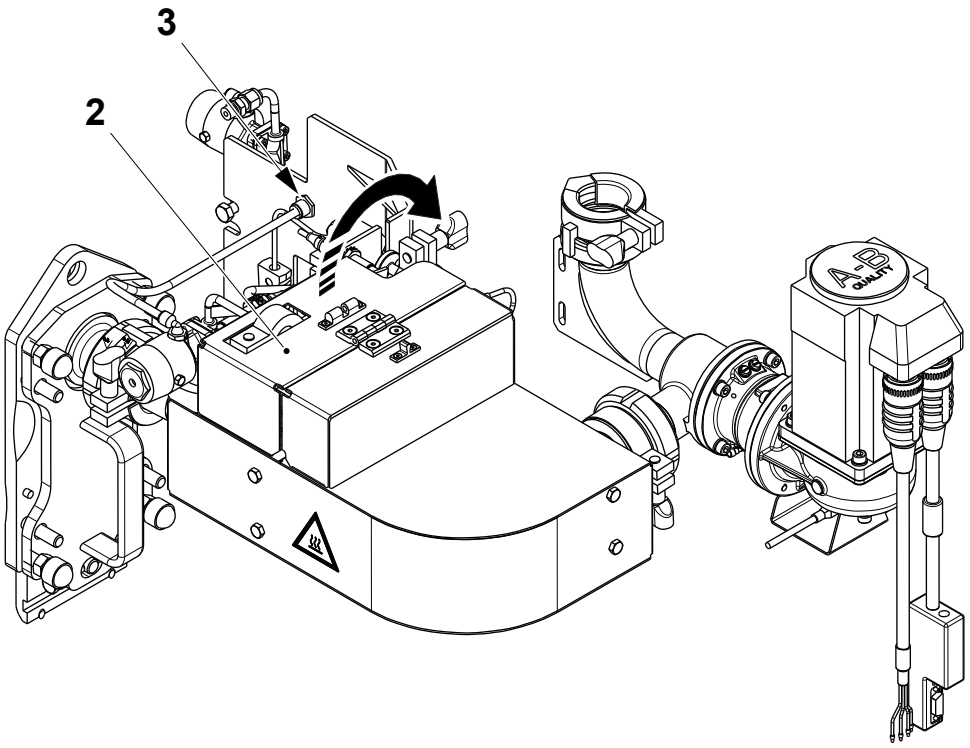


2 Cover
3 Bulkhead lead-in

*(Cont'd)*

*(Cont'd)*

**Note!** Take care of the gaskets (10) and the O-ring (11). Change them if necessary.

d) Loosen the clamping piece (4).

e) Loosen the locking devices (5) and remove the product pipe (6) with the pneumatic valve (7) assembled.

f) Fit the plug (8) on the pipe (9) by tightening the clamping piece (4).

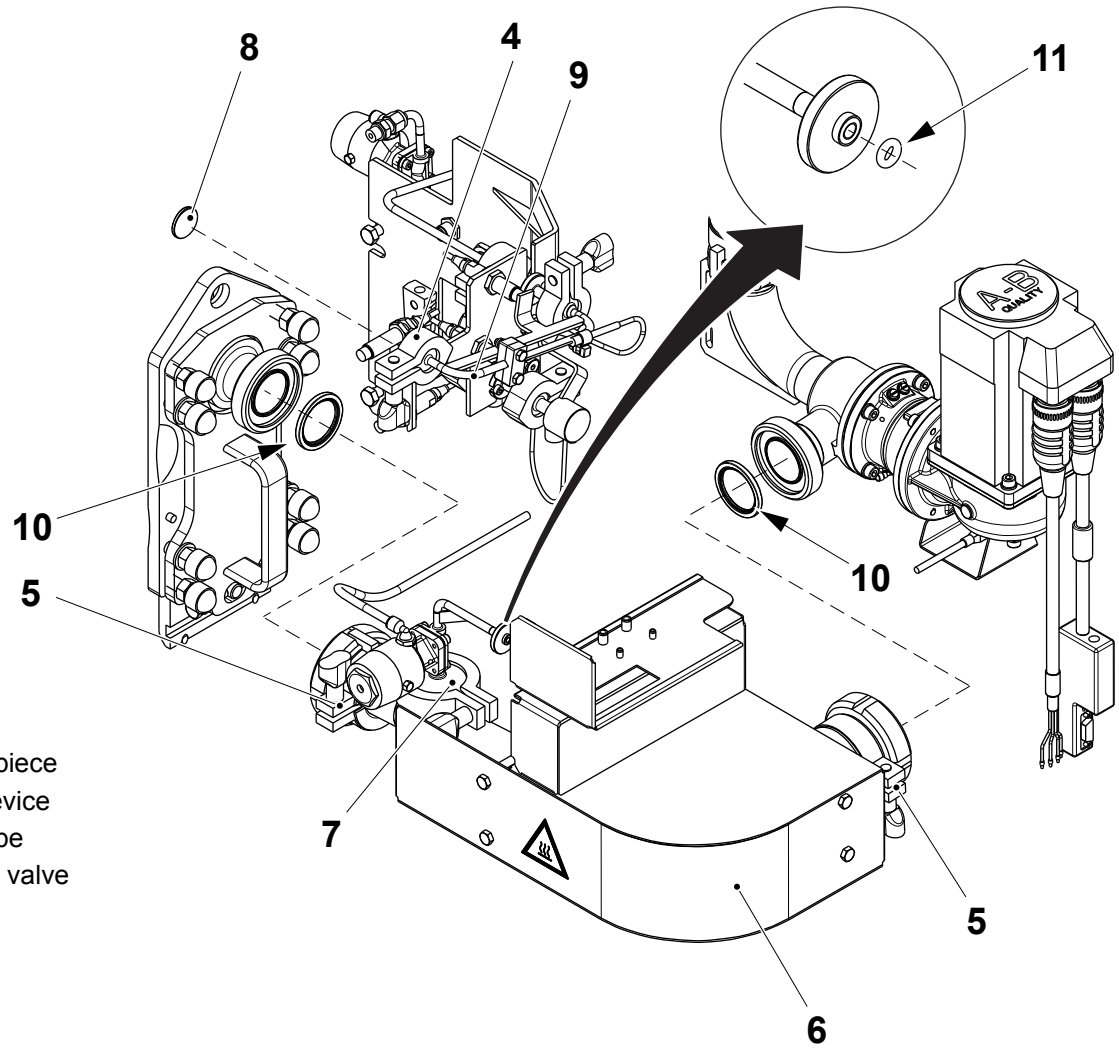


4 Clamping piece
5 Locking device
6 Product pipe
7 Pneumatic valve
8 Plug
9 Pipe
10 Gasket
11 O-ring

*(Cont'd)*

*(Cont'd)*

**Note!** The lower forming ring (15) must be in its closed position. Put a double piece of packaging material between the pressure roller and the counter roller, see 1.5.1-5 Filling Pipe - Set Pressure Roller in the filling machine MM.

g) Check that the seal (12) between the mounting plate (13) and the fastening plate (14) is compressed to dimension **A**.

**Note!** It is important to set the distance **A** correctly.

A = 6.0 ±0.5 mm

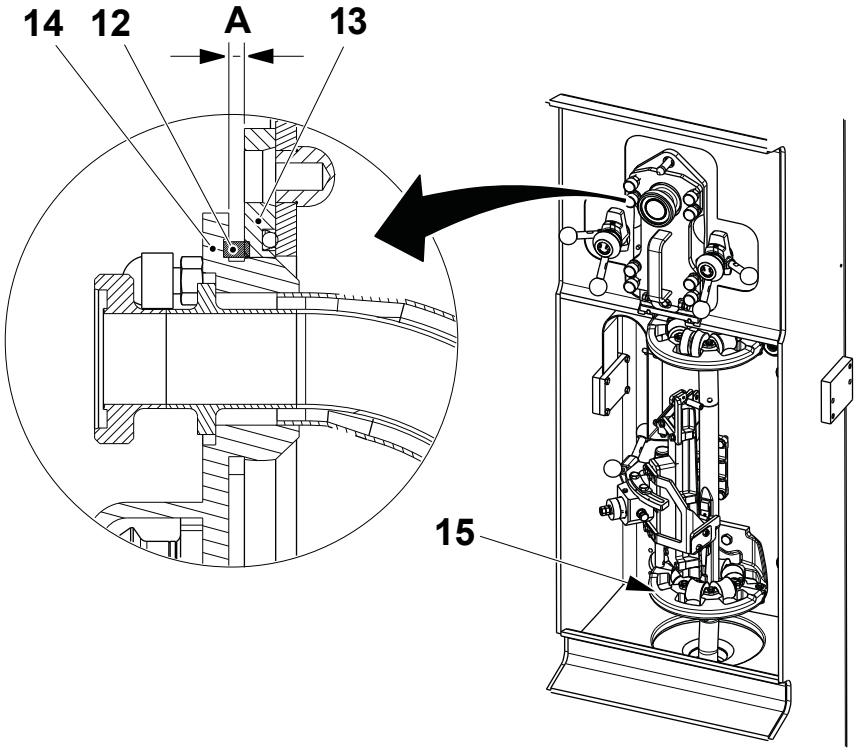


12 Seal
13 Mounting plate
14 Fastening plate
15 Lower forming ring

*(Cont'd)*

*(Cont'd)*

h) Remove the steering ring (16), see 1.2.7-1 Steering Ring - Overhaul in the filling machine MM.

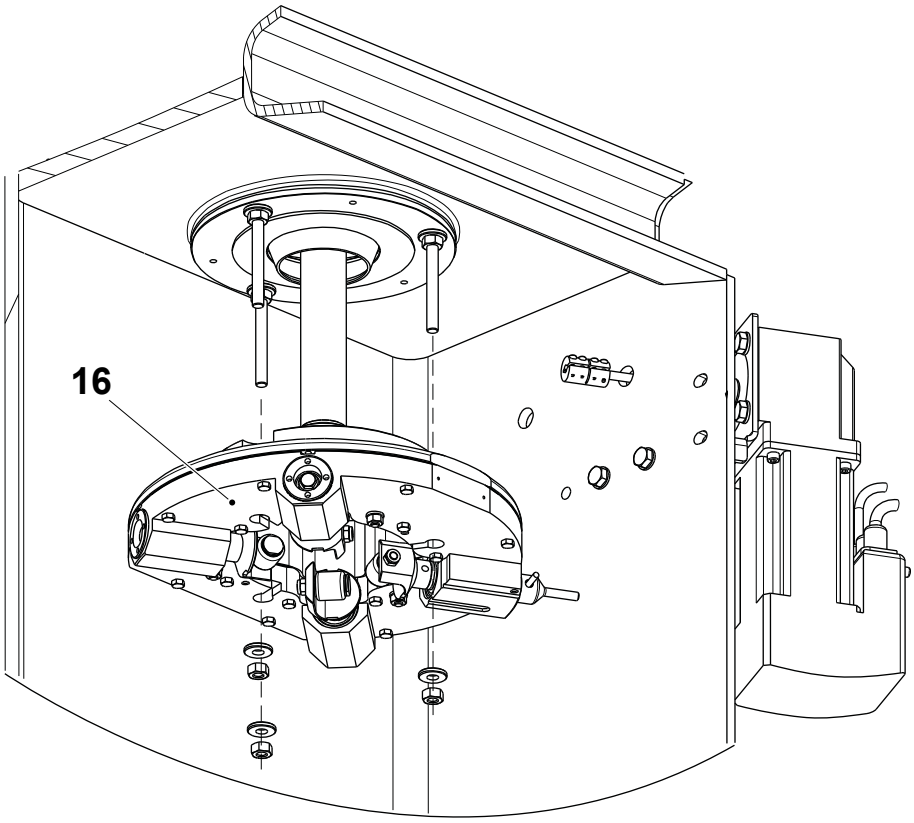


16 Steering ring

*(Cont'd)*

*(Cont'd)*

i) Fit the template (17) on the stud screws (18) by the nuts (19).

j) Tighten the nuts (19).

**Note!** Do not loosen the stud screws (18) to not lose the position setting of the seal ring.

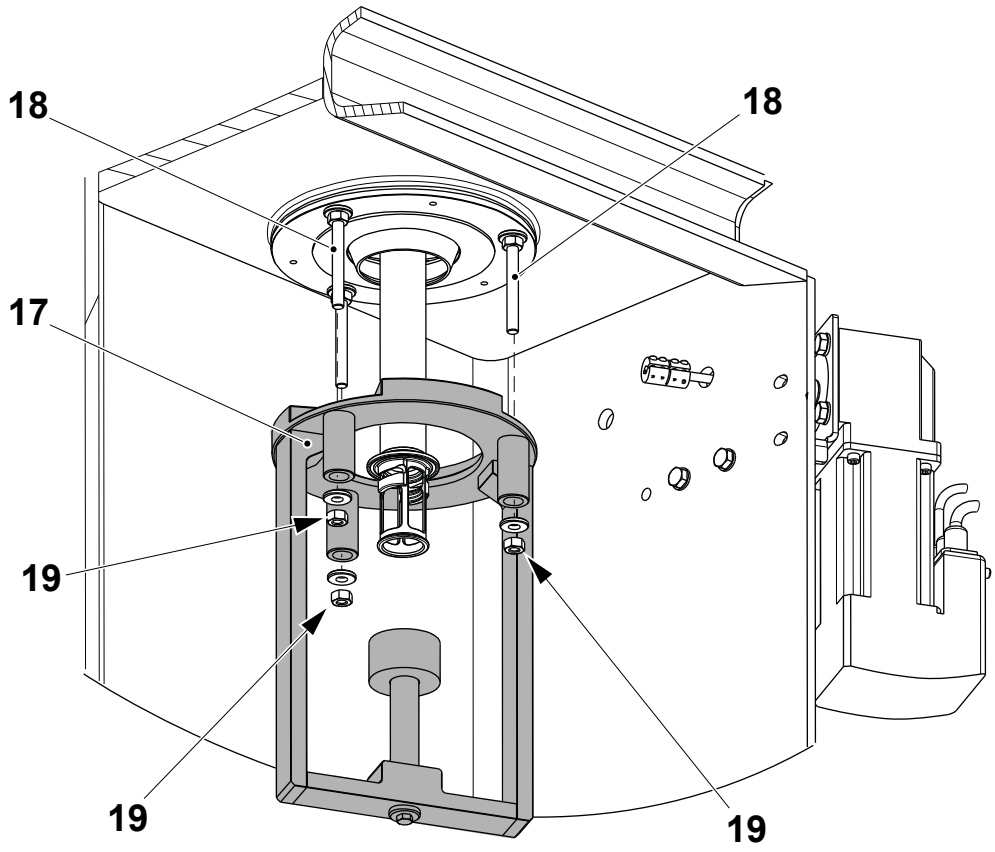


17 Template
18 Stud screw
19 Nut

*(Cont'd)*

*(Cont'd)*

k) Check the alignment of the filling pipe by raising the movable part of the template (20). It should slide easily over the end of the filling pipe. If this is the case, proceed from point q). If the pipe is not aligned correctly, continue below.

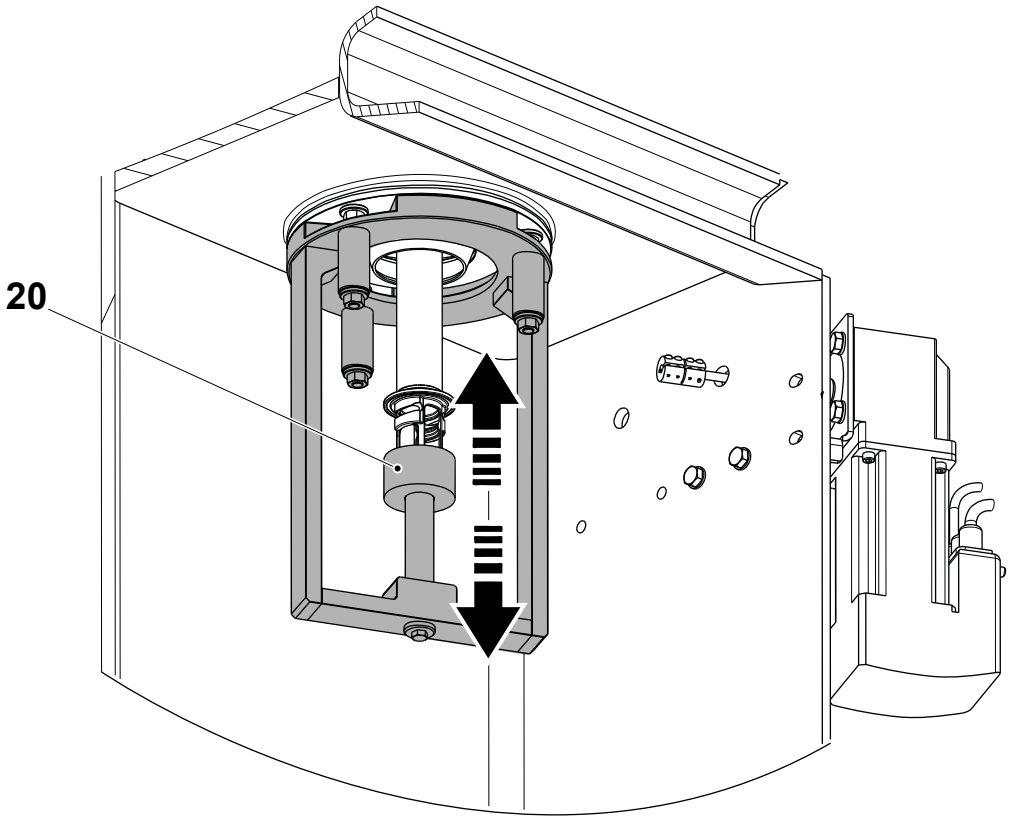


20 Movable part of template

*(Cont'd)*

*(Cont'd)*

l) On the fastening plate (14), loosen the lock nuts on the screws (21) and (22). Loosen the screws (21) a few turns.

m) Align and centre the filling pipe to the template using the screws (22) and (23). Do not over tighten the screws (22). Lock in position with the lock nuts on screws (22) and (23).

n) Tighten the screws (21) on the fastening plate (14) until they just touch the mounting plate. Do not over tighten. Lock the screws (22) with the lock nuts.

o) Check that:

- the gasket compression is according to item g). If it is not correct, reset it and proceed from item k).
- the spring load is correct, see 1.5.1-5 Filling Pipe - Set Pressure Roller. in the filling machine MM; adjust if necessary
- the filling pipe alignment is according to step k).

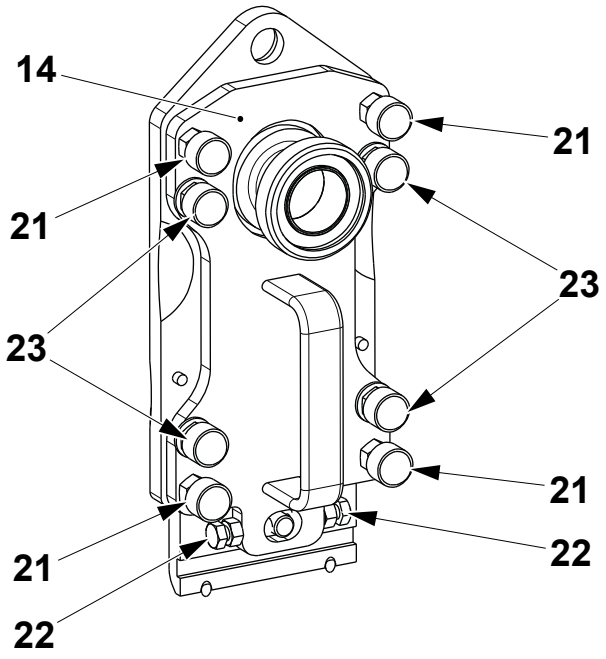


14 Fastening plate
21 Screw
22 Screw
23 Screw

*(Cont'd)*

*(Cont'd)*

p) Remove the template (17) by the nuts (19).

**Note!** Do not loosen the stud screws (18) to not lose the position setting of the seal ring.

q) Fit back the steering ring, see in the reverse order 1.2.7-1 Steering Ring - Overhaul.

r) Fit back the product pipe and the lower filling pipe, see 1.1.1-2 Filling Pipe (TP A3/Speed) - Fit starting from step h).

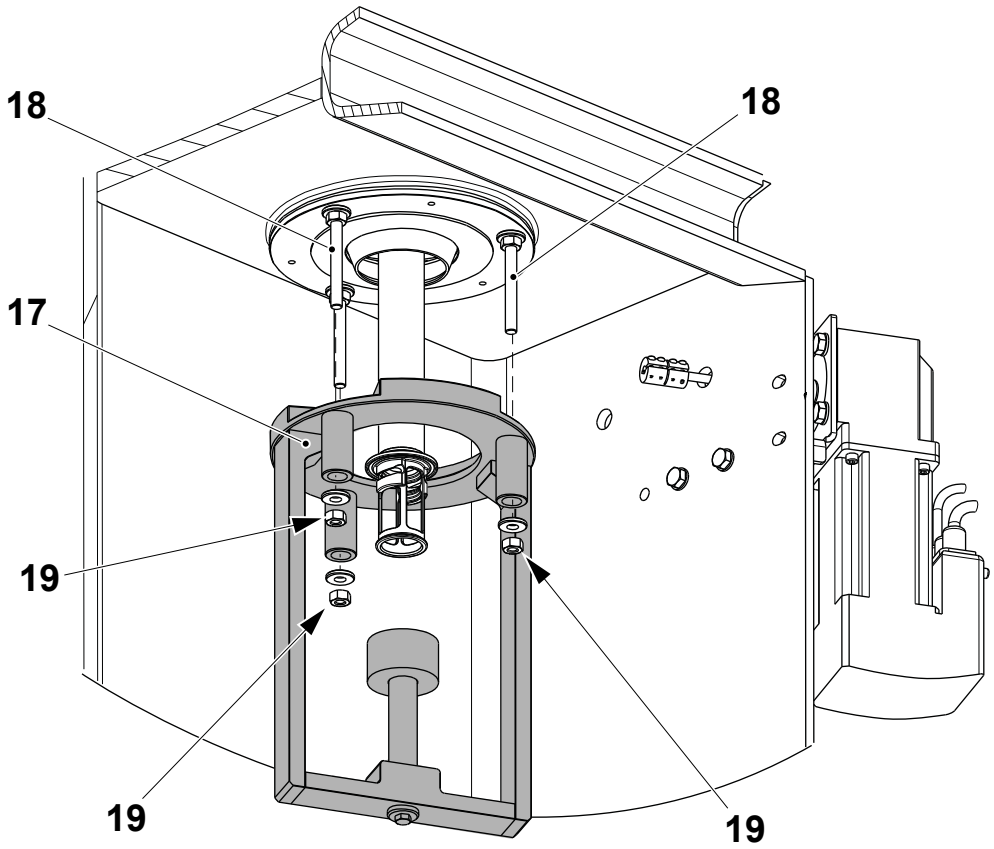


17 Template
19 Stud screw
18 Nut

## 1.1.2 Filling Pipe (TP A3/Flex)

### 1.1.2-1 Filling Pipe (TP A3/Flex) - Remove

| | |
|---|---|
| Machine Status | Mains Power OFF<br>Air OFF<br>Steam ON<br>Water OFF |
| SPC Reference | 2501310-0300 |

a) Remove the pin (1) and the lower part of the filling pipe (2).

b) Remove the O-ring (3), check the O-ring (3) and change if necessary.

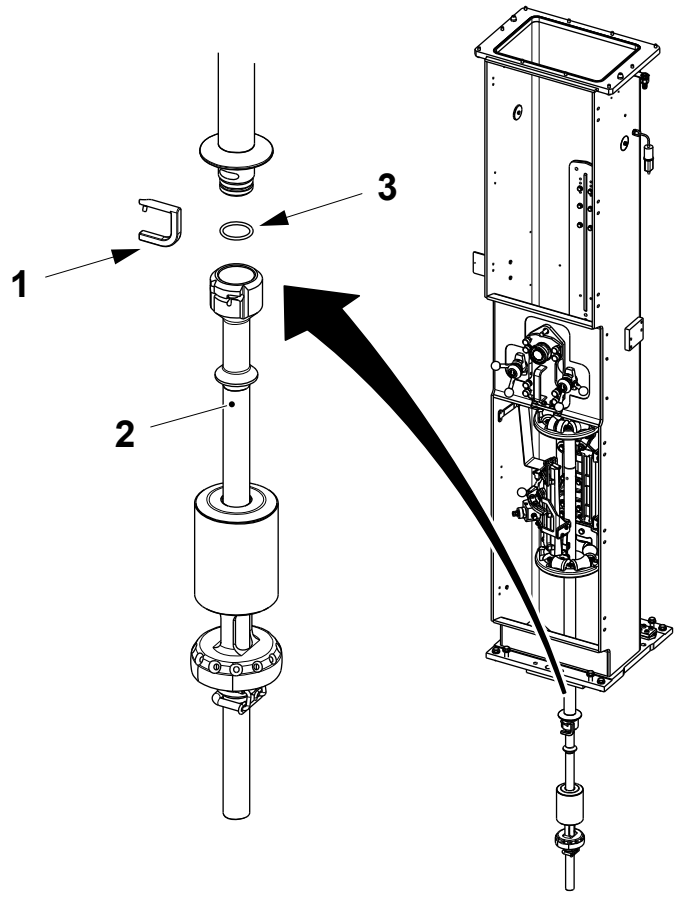


1 Pin
2 Filling pipe
3 O-ring

*(Cont'd)*

*(Cont'd)*

**CAUTION**
**Risk of damage to the equipment.**
Press the front half of the lower forming ring (7) backwards while turning the knob (6) to avoid damaging the threaded screw on the end of the knob (6).

c) Open the LS inductor (4) by turning the knob (5).

d) Unscrew the knob (6) and open the lower forming ring (7).

e) Remove the pressure rollers assembly (8) from the filling pipe.

f) Unscrew the knob (9) and open the upper forming ring (10).

Single pressure roller is shown

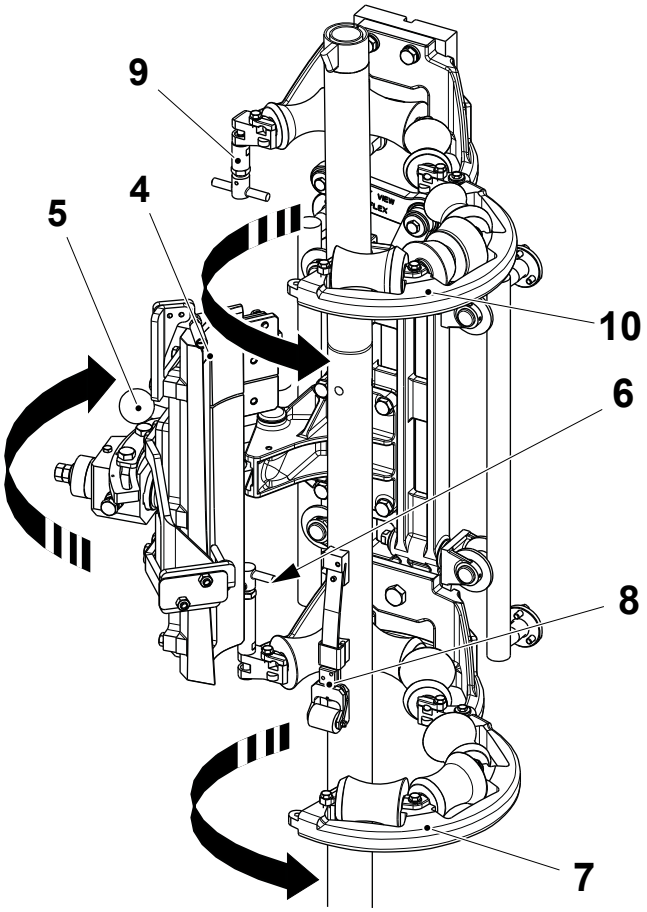


4 LS inductor
5 Knob
6 Knob
7 Lower forming ring
8 Pressure roller assembly
9 Knob
10 Upper forming ring

*(Cont'd)*

*(Cont'd)*

**WARNING**

**Burn hazard.**

The product pipe and adjacent components may be hot. If necessary wear personal protective equipment.

g) Swing the cover (11) open and lock it in position.

h) Disconnect the hose from the bulkhead lead-in (12).

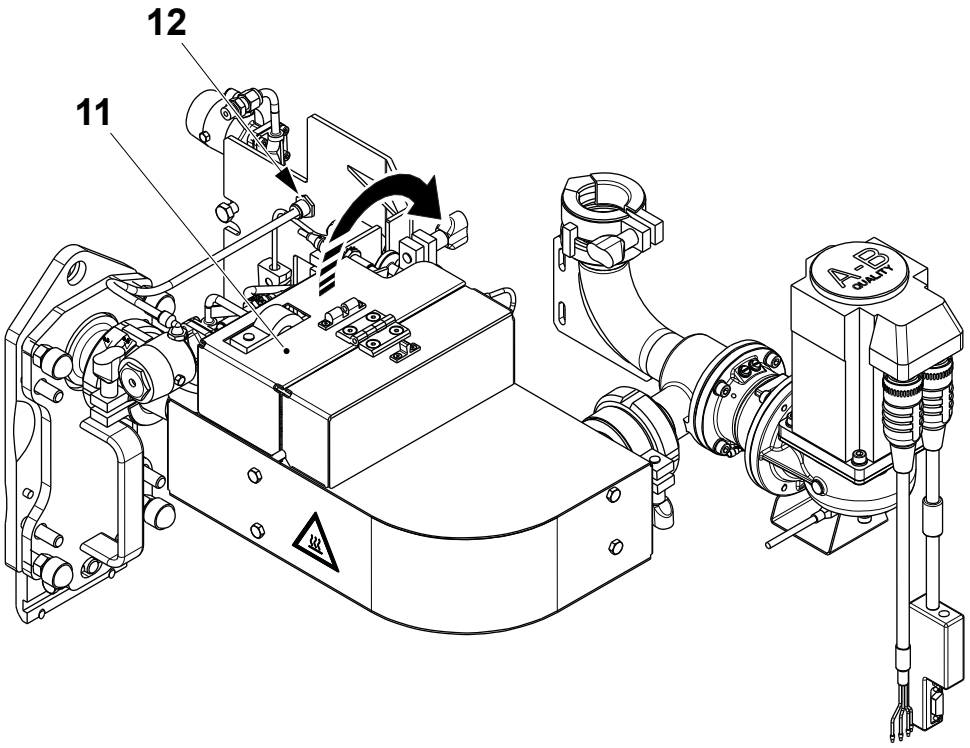


11 Cover
12 Bulkhead lead-in

*(Cont'd)*

*(Cont'd)*

**Note!** Take care of the gaskets (19) and the O-ring (20). Change them if necessary.

i) Loosen the clamping piece (13).

j) Loosen the locking devices (14) and remove the product pipe (15) with the pneumatic valve (16) assembled.

k) Fit the plug (17) on the pipe (18) by tightening the clamping piece (13).

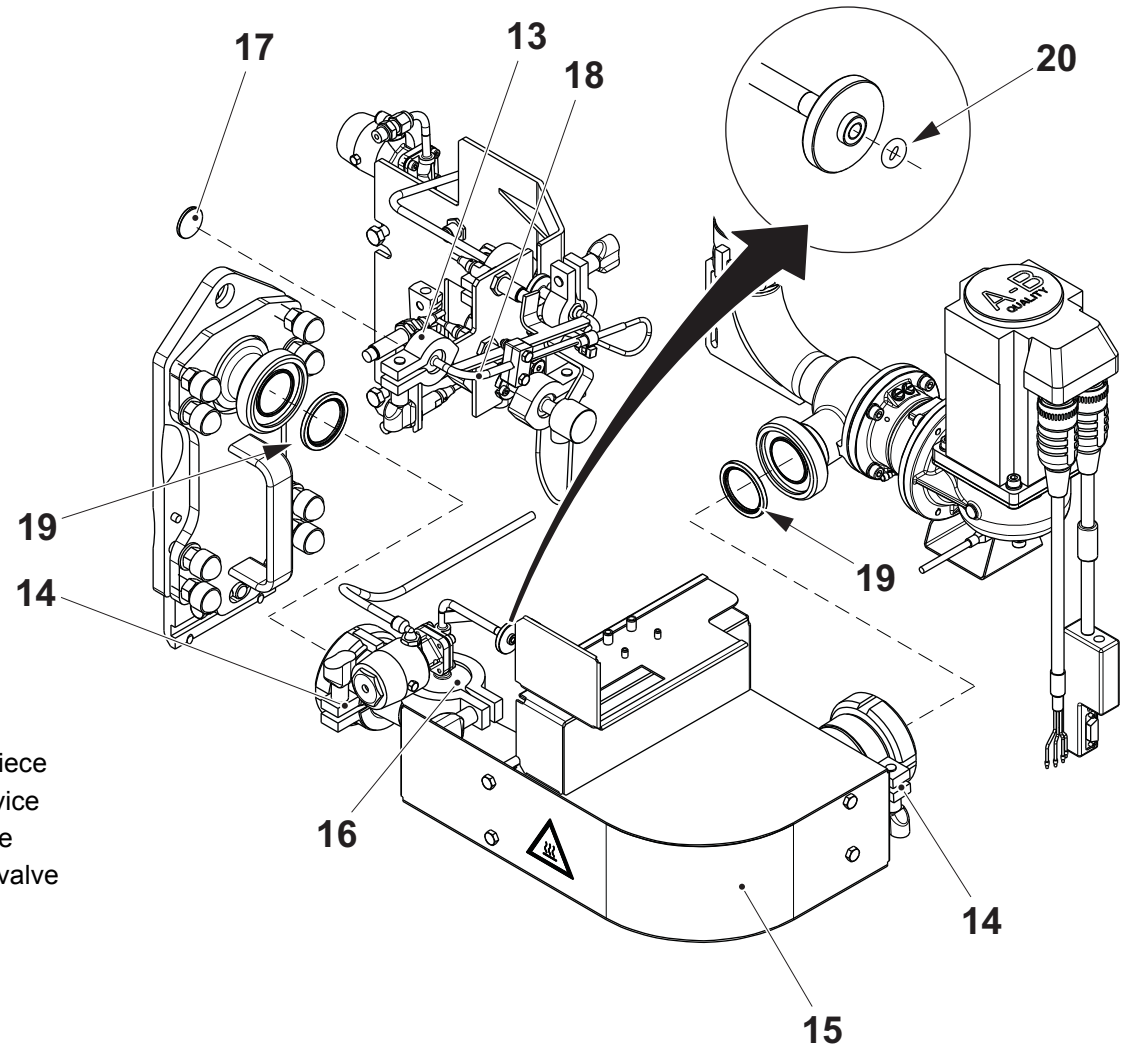


13 Clamping piece
14 Locking device
15 Product pipe
16 Pneumatic valve
17 Plug
18 Pipe
19 Gasket
20 O-ring

*(Cont'd)*

*(Cont'd)*

l) With one hand firmly holding the filling pipe (21), undo the locking handles (22).

m) Remove the filling pipe (21) and store it in a safe place.

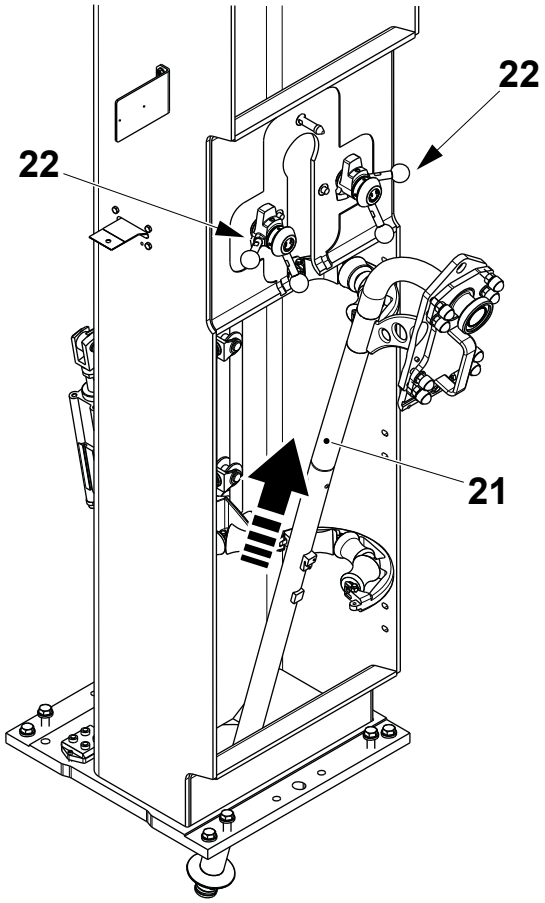


21 Filling pipe
22 Locking handle

## 1.1.2-2 Filling Pipe (TP A3/Flex) - Fit

| | |
|---|---|
| Machine Status | Mains Power OFF<br>Water OFF<br>Air OFF<br>Steam ON |
| SPC Reference | 2501310-0300 |

**CAUTION**
**Risk of damage to the equipment.**
Press the front half of the lower forming ring (6) backwards while turning the knob (5) to avoid damaging the threaded screw on the end of the knob (5).

a) Unscrew the knob (1) and open the upper forming ring (2).

b) Open the LS inductor (3) by turning the knob (4).

c) Unscrew the knob (5) and open the lower forming ring (6).

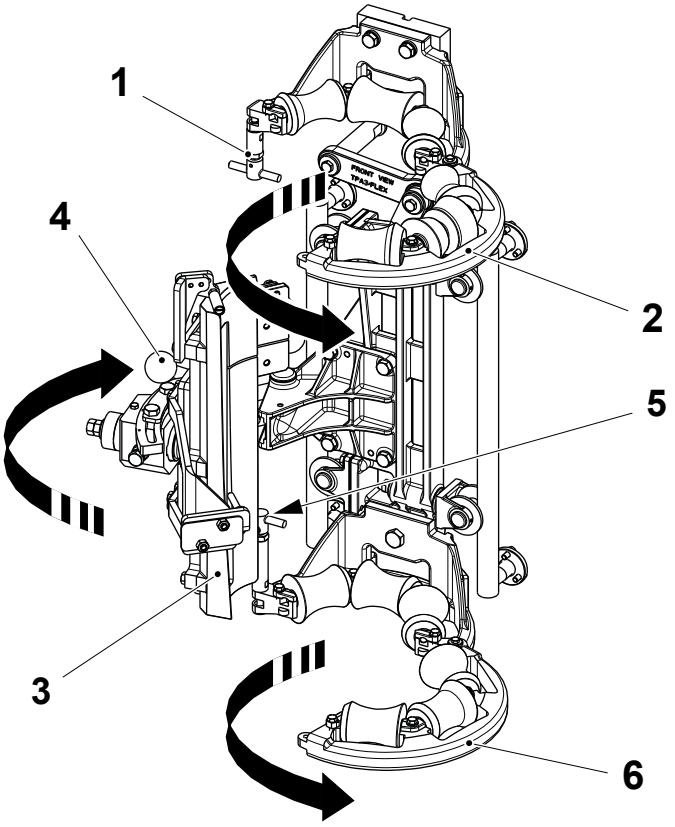


1 Knob
2 Upper forming ring
3 LS inductor
4 Knob
5 Knob
6 Lower forming ring

*(Cont'd)*

*(Cont'd)*

d) Fit the filling pipe (7) and secure it in to position with the locking handles (8).

e) Mount the pressure roller assembly (9) on to the filling pipe.

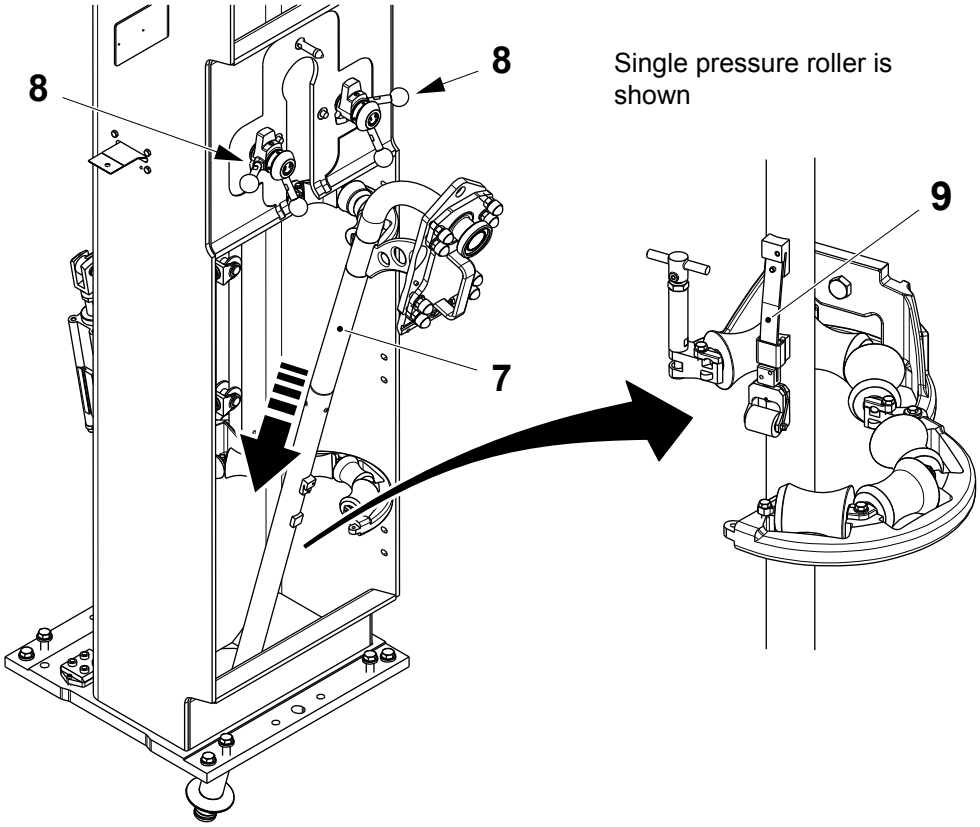


7 Filling pipe
8 Locking handle
9 Pressure roller assembly

*(Cont'd)*

*(Cont'd)*

**CAUTION**
**Risk of damage to the equipment.**
Press the front half of the lower forming ring (6) backwards while tightening the knob (5) to avoid damaging the threaded screw on the end of the knob (5).

f) Close the upper forming ring (2) and tighten the knob (1).

g) Close the LS inductor (3) by turning the knob (4).

h) Close the lower forming ring (6) tighten the knob (5).

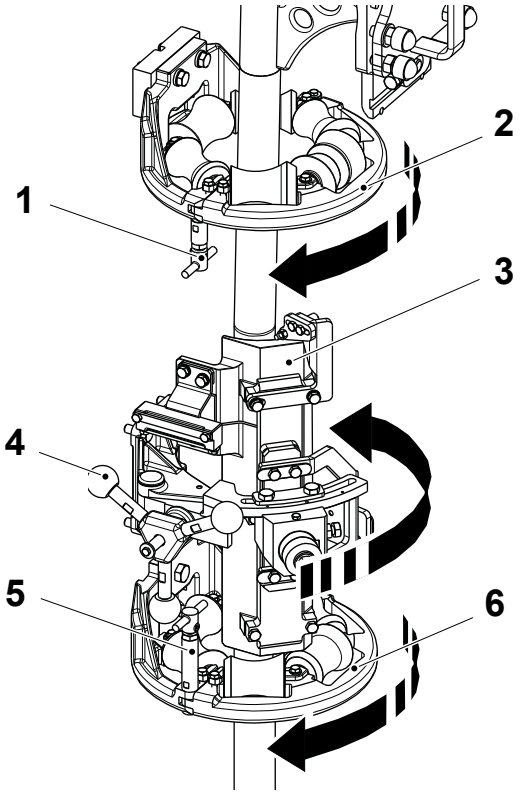


1 Knob
2 Upper forming ring
3 LS inductor
4 Knob
5 Knob
6 Forming ring

*(Cont'd)*

*(Cont'd)*

i) Loosen the clamping piece (10) and remove the plug (11).

j) Fit the product pipe (12) with the gaskets (13) by the locking devices (14).

k) Fit the O-ring (15) on the pneumatic valve (16).

l) Connect the pneumatic valve (16) to the pipe (17) by the clamping piece (10).

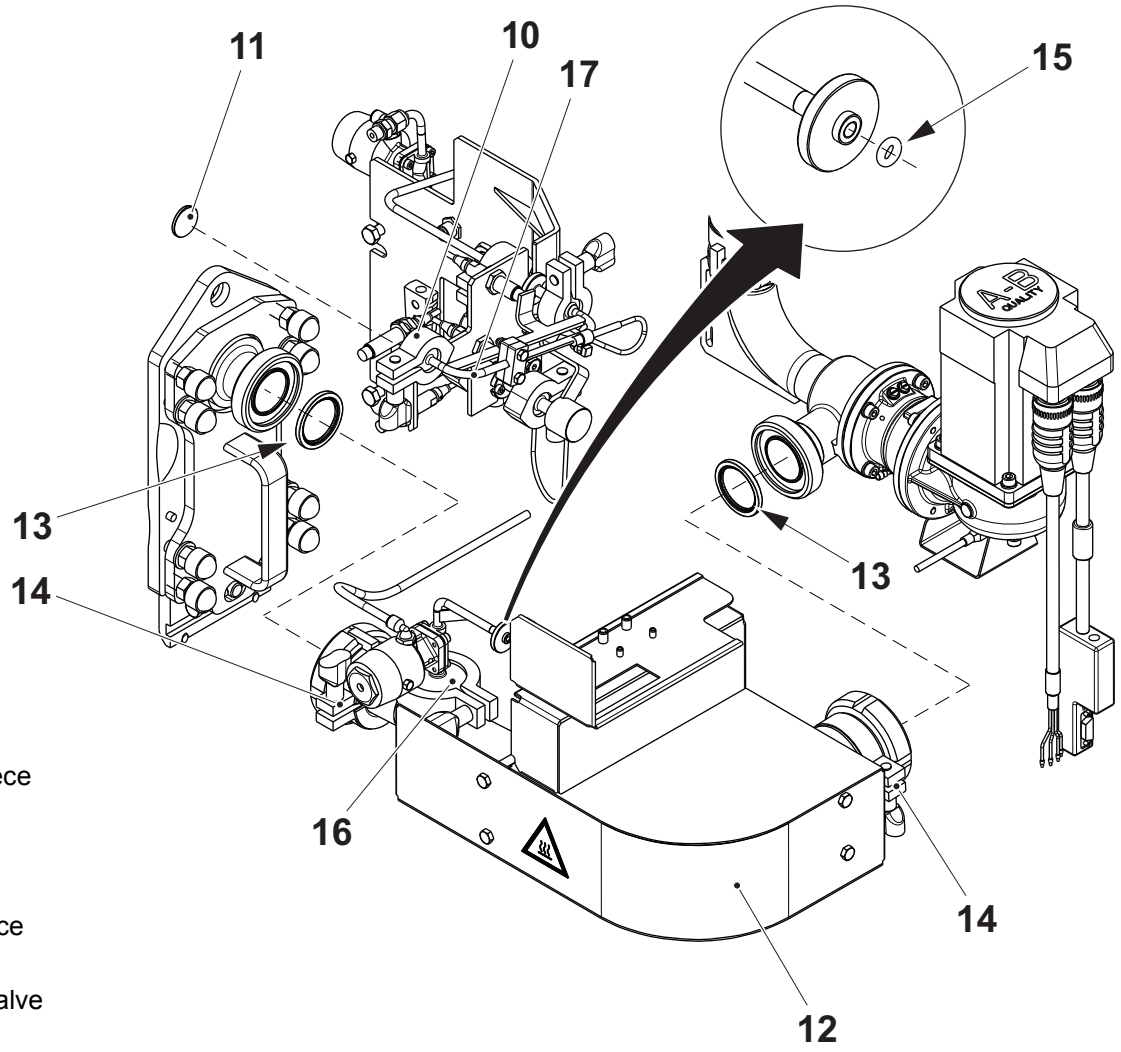


10 Clamping piece
11 Plug
12 Product pipe
13 Gasket
14 Locking device
15 O-ring
16 Pneumatic valve
17 Pipe

*(Cont'd)*

*(Cont'd)*

m) Connect the air hose from the pneumatic valve (16) to the bulkhead lead-in (18).

n) Swing the cover (19) close.

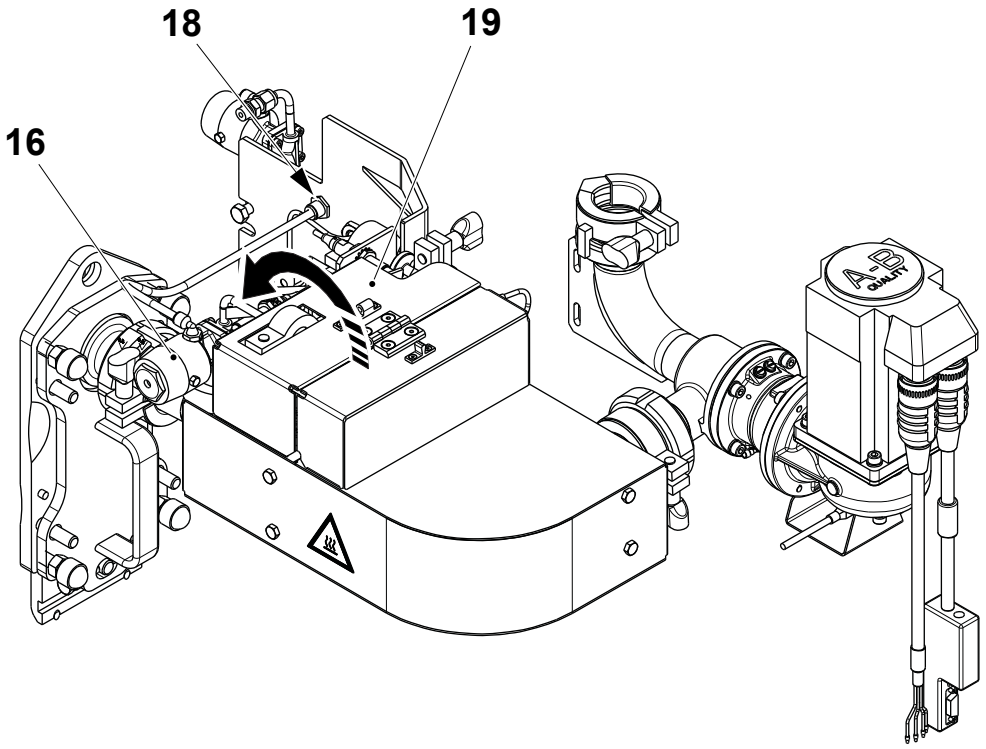


16 Pneumatic valve
18 Bulkhead lead-in
19 Cover

*(Cont'd)*

*(Cont'd)*

o) Fit the O-ring (20) in its seat on the upper part of the filling pipe (21).

p) Fit the lower part of the filling pipe (22) and secure it in to position with the locking device (23).

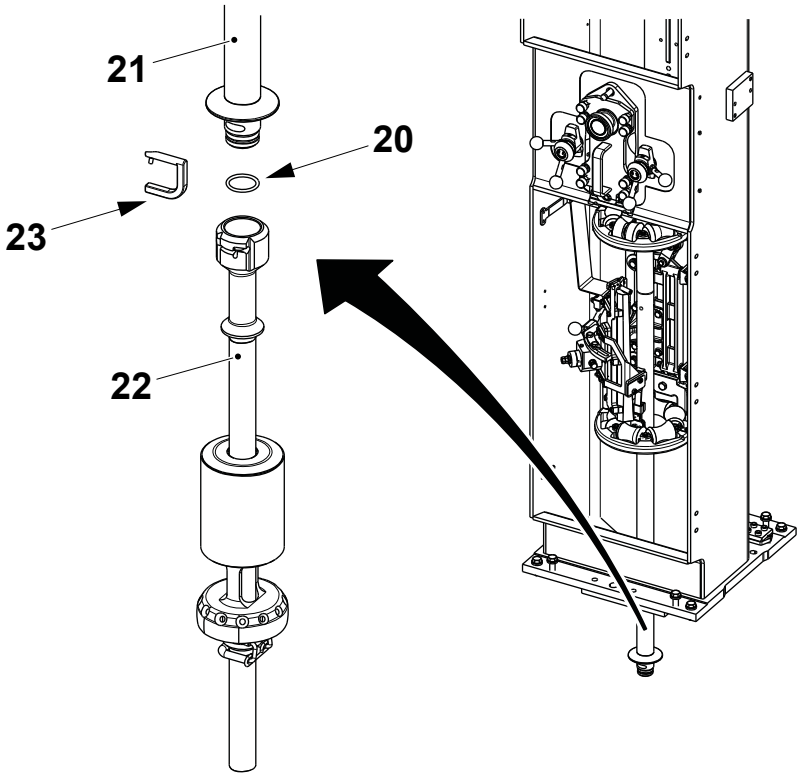


20 O-ring
21 Filling pipe, upper part
22 Filling pipe, lower part
23 Locking device

### 1.1.2-3 Filling Pipe (TP A3/Flex) - Set Position

| | |
|---|---|
| Machine Status | PREPARATION |
| SPC Reference | 2501310-0300 |

**Note!** For volume dependent template and tool codes, see 10.2 Templates and Tools in the filling machine MM. This setting procedure must performed in accordance with the instructions described in the filling machine MM, see 1 Superstructure.

a) Swing out the design correction photocell holder (1).

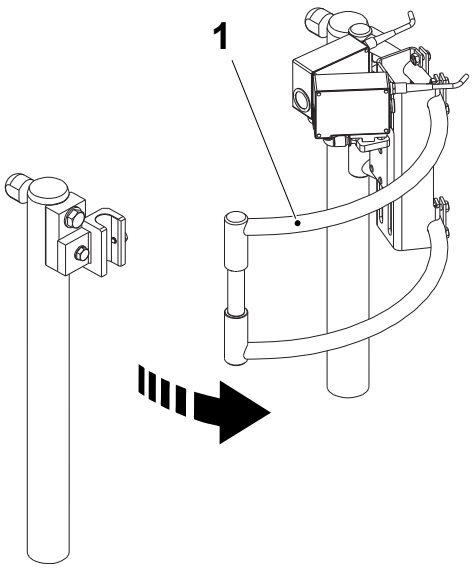


1 Photocell holder

*(Cont'd)*

*(Cont'd)*

**WARNING**

**Burn hazard.**

The product pipe and adjacent components may be hot. If necessary wear personal protective equipment.

b) Swing the cover (2) open and lock it in position.

c) Disconnect the hose from the bulkhead lead-in (3).

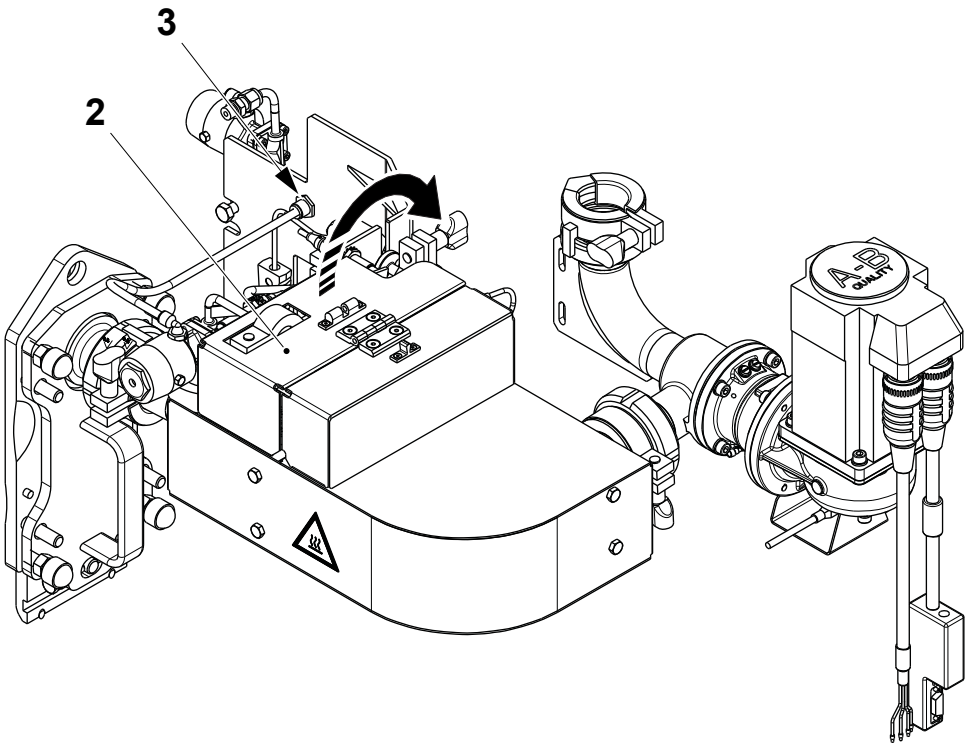


2 Cover
3 Bulkhead lead-in

*(Cont'd)*

*(Cont'd)*

**Note!** Take care of the gaskets (10) and the O-ring (11). Change them if necessary.

d) Loosen the clamping piece (4).

e) Loosen the locking devices (5) and remove the product pipe (6) with the pneumatic valve (7) assembled.

f) Fit the plug (8) on the pipe (9) by tightening the clamping piece (4).

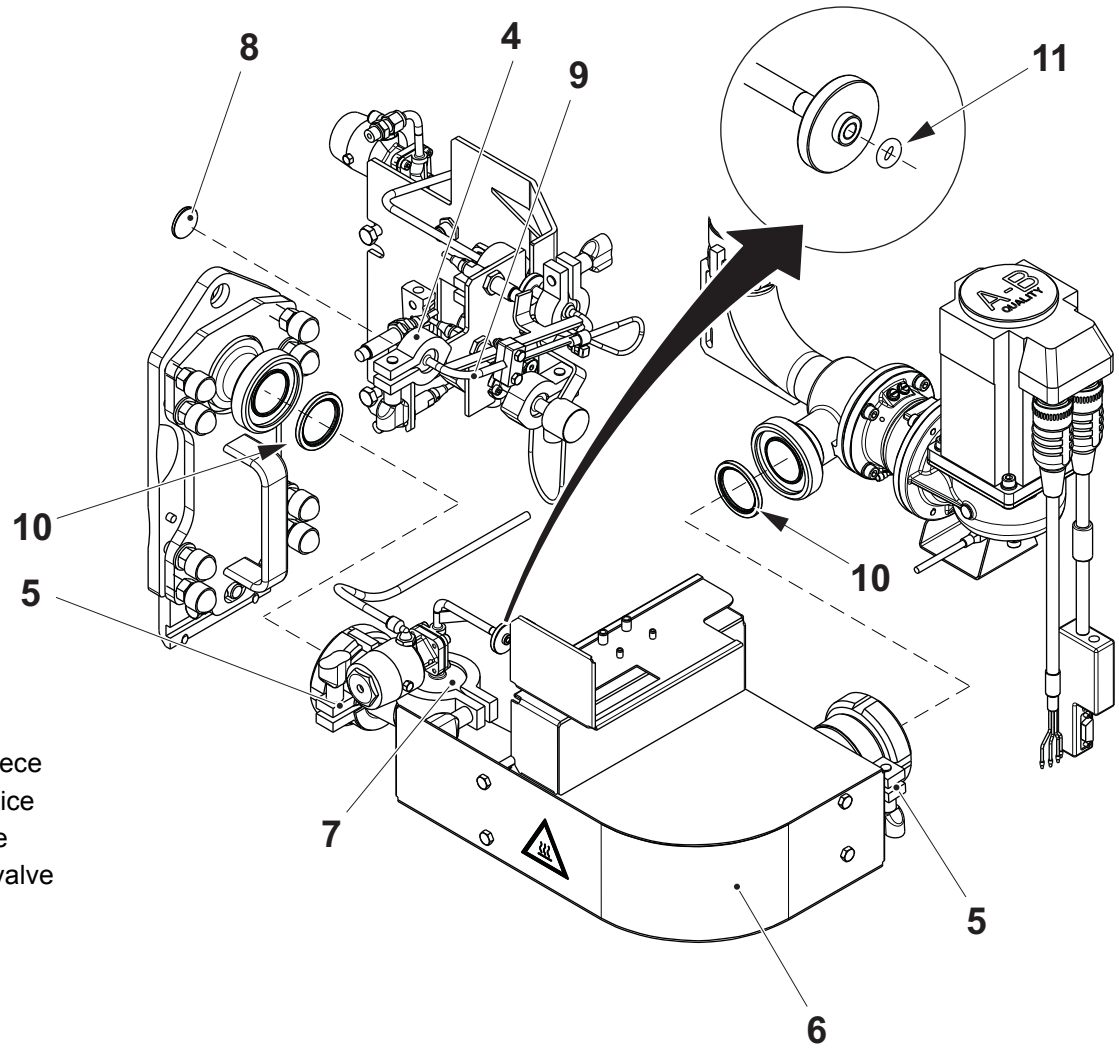


4 Clamping piece
5 Locking device
6 Product pipe
7 Pneumatic valve
8 Plug
9 Pipe
10 Gasket
11 O-ring

*(Cont'd)*

*(Cont'd)*

**Note!** The lower forming ring (15) must be in its closed position. Put a double piece of packaging material between the pressure roller and the counter roller, see 1.5.1-5 Filling Pipe - Set Pressure Roller in the filling machine MM.

g) Check that the seal (12) between the mounting plate (13) and the fastening plate (14) is compressed to dimension **A**.

**Note!** It is important to set the distance **A** correctly.

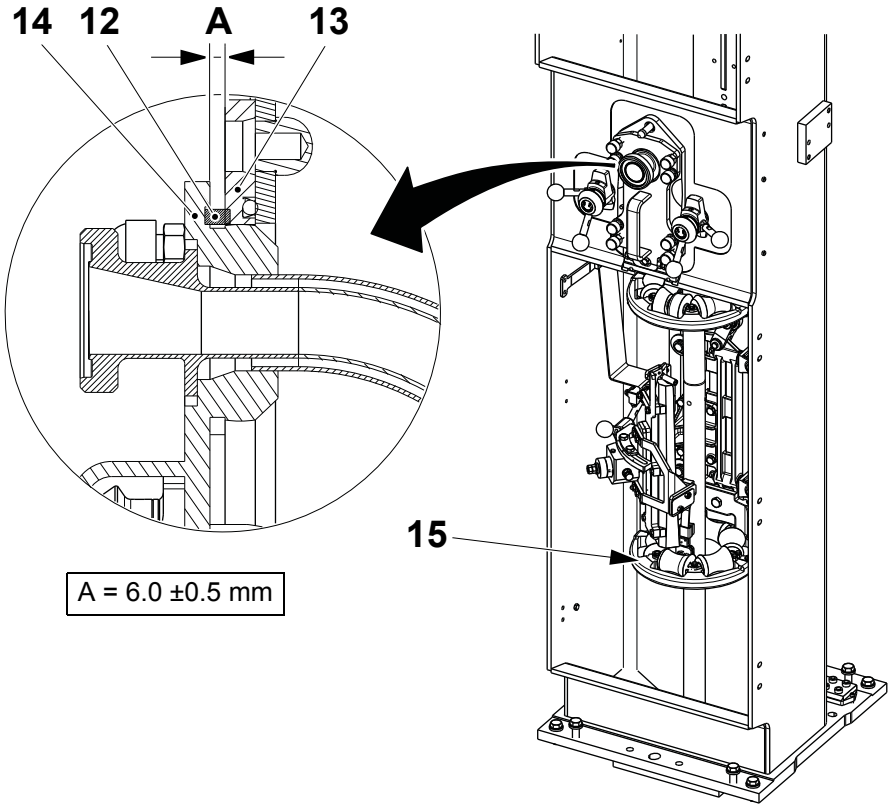


12 Seal
13 Mounting plate
14 Fastening plate
15 Lower forming ring

*(Cont'd)*

*(Cont'd)*

h) Centre the support rollers (16), see 4.2.6-6 Volume Curve Piece - Set Support Rollers in the filling machine MM.

i) Fit the O-ring (17) on the template (18).

j) Fit the template (18) on the flange (19).

k) Check that the filling pipe (20) and the template (18) are centred with respect to the support rollers (16). If the filling pipe is not correctly centred, continue with item l).

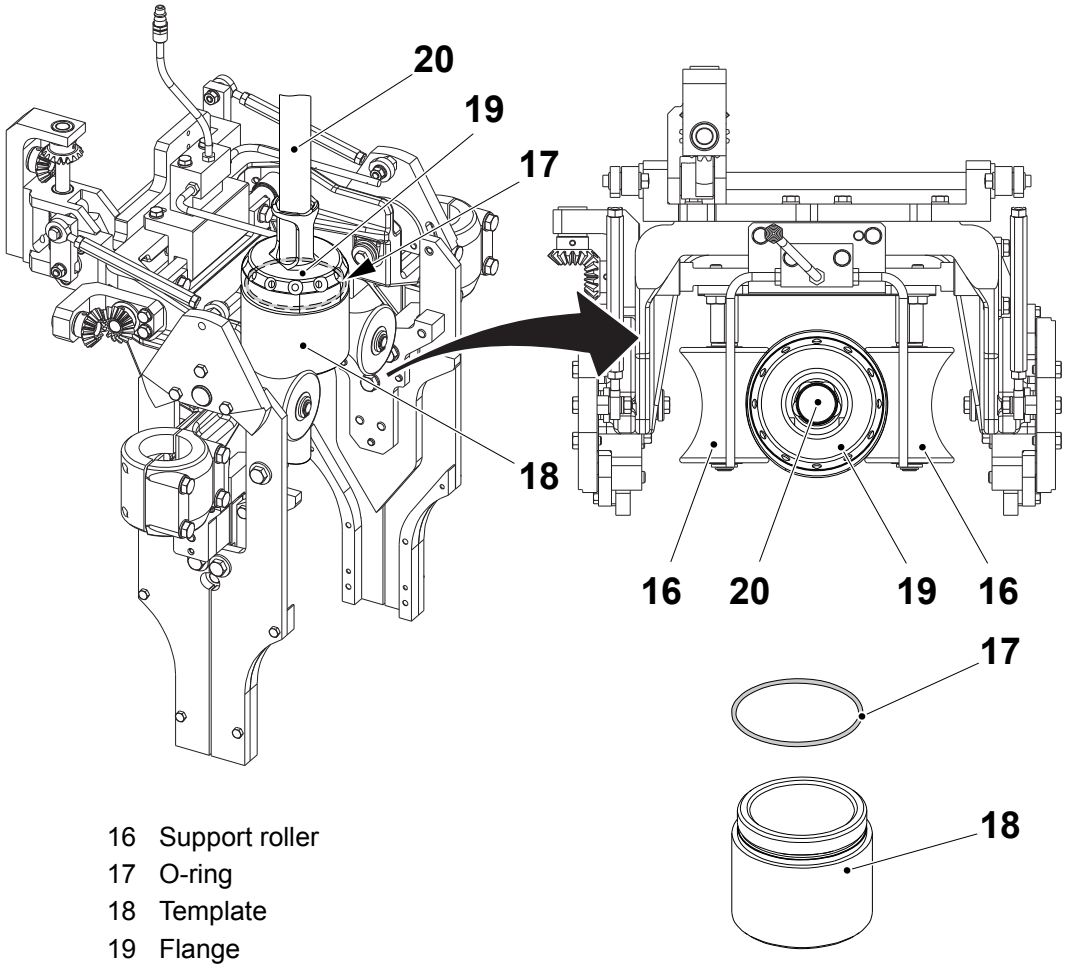


16 Support roller
17 O-ring
18 Template
19 Flange
20 Filling pipe

*(Cont'd)*

*(Cont'd)*

l) On the fastening plate (14), loosen the lock nuts on the screws (21) and (22). Loosen the screws (21) a few turns.

m) Align and centre the filling pipe to the template using the screws (22) and (23). Do not over tighten the screws (23). Lock in position with the lock nuts on screws (22) and (23).

n) Tighten the screws (21) on the fastening plate (14) until they just touch the mounting plate. Do not over tighten. Lock the screws (21) with the lock nuts.

o) Check that:

- the gasket compression is according to item g). If it is not correct, reset it and proceed from item l).
- the spring load is correct, see 1.5.1-5 Filling Pipe - Set Pressure Roller in the filling machine MM. Adjust if necessary
- the filling pipe alignment is according to step l).

**Note!** Fit new gaskets at both ends of the product pipe when assembling.

p) Assemble in the reverse order.

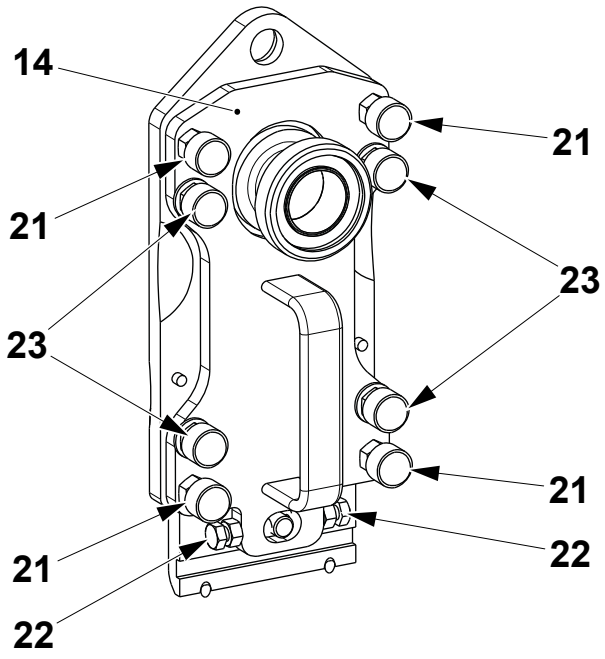


14 Fastening plate
21 Screw
22 Screw
23 Screw

# 1.2 Nozzle Unit

| | |
|---|---|
| SPC Reference | 2632642-0400 |

## 1.2-1 Nozzle Unit - Change O-rings and Diaphragm

| | |
|---|---|
| Machine Status | Mains Power OFF<br>Air OFF<br>Steam ON<br>Water OFF |
| SPC Reference | 2632642-0400 |

**WARNING**
**Burn hazard.**
Parts may be hot. Follow the Safety Precautions.

**WARNING**
**Hydrogen peroxide!**
Follow the Safety precautions.

a) Swing the cover (1) open and lock it in position.

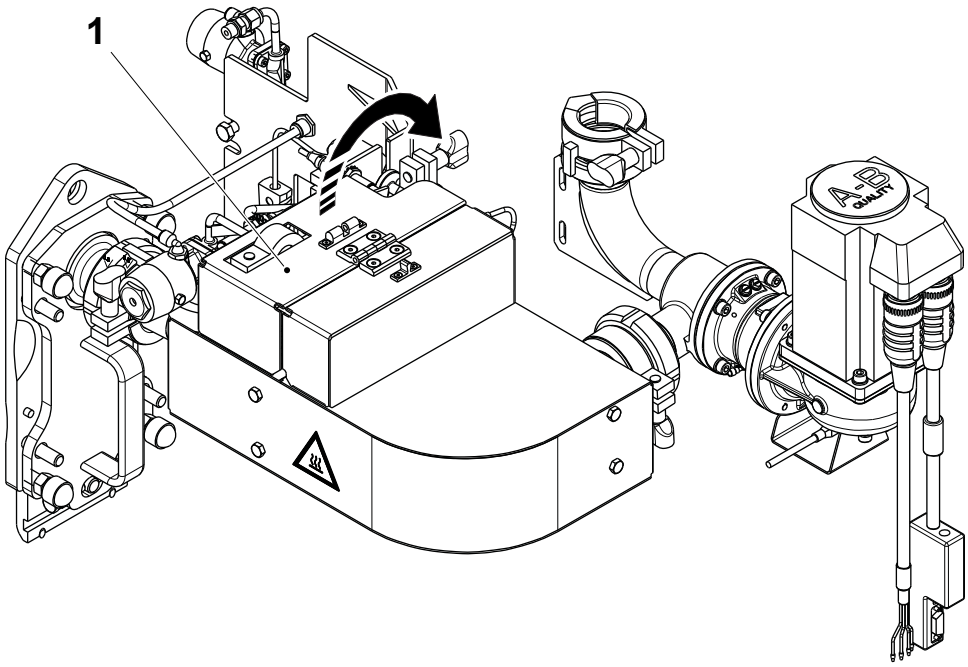


1 Cover

*(Cont'd)*

*(Cont'd)*

b) Remove the clamps (2).

c) Remove the pipe (3) and change the O-rings (4).

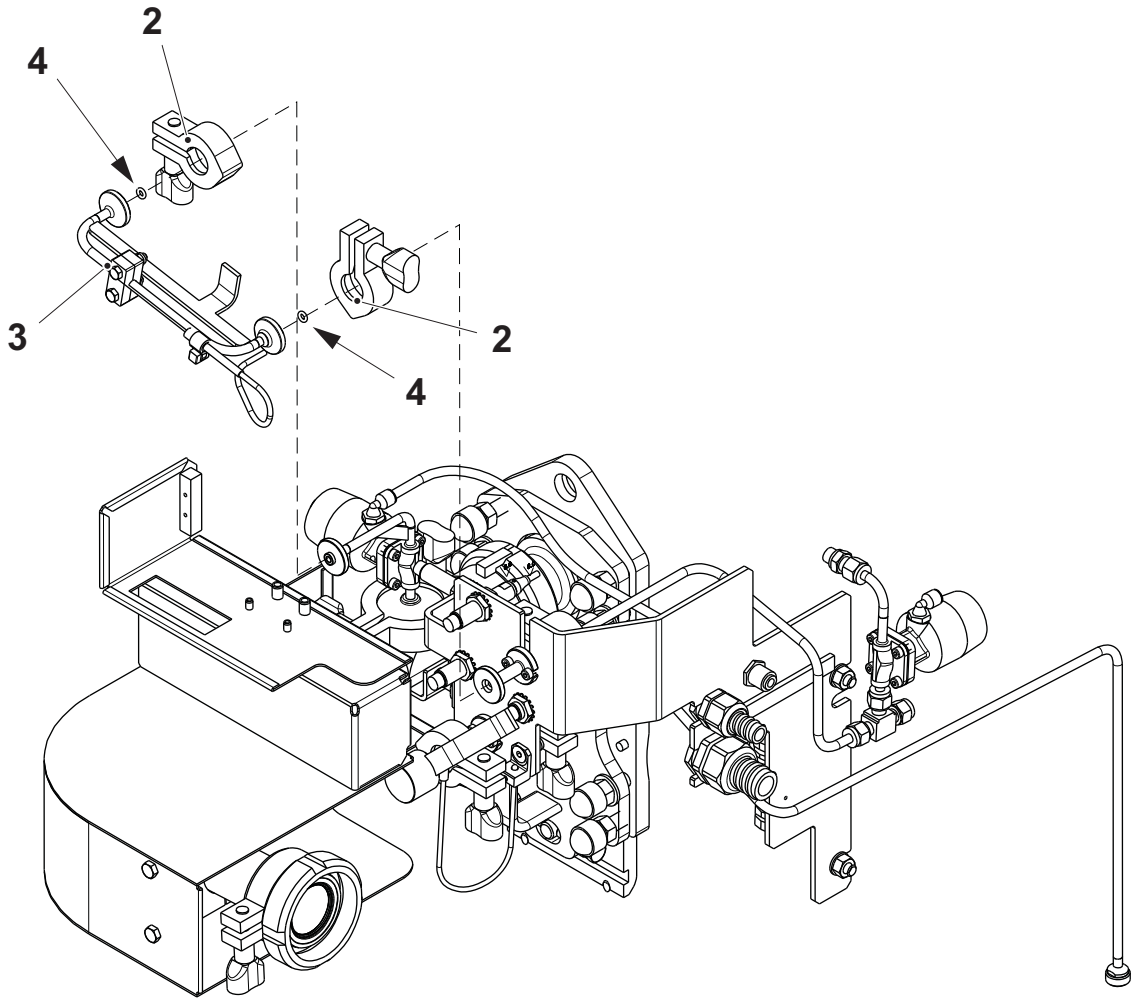


2 Clamp
3 Pipe
4 O-ring

*(Cont'd)*

*(Cont'd)*

d) Remove the clamp (5) and the pneumatic valve (6).

e) Remove the nozzle (7) and change the O-rings (8) and (9).

f) Remove the blind plug (10) by loosening the clamping piece (11) and change the O-ring (12).

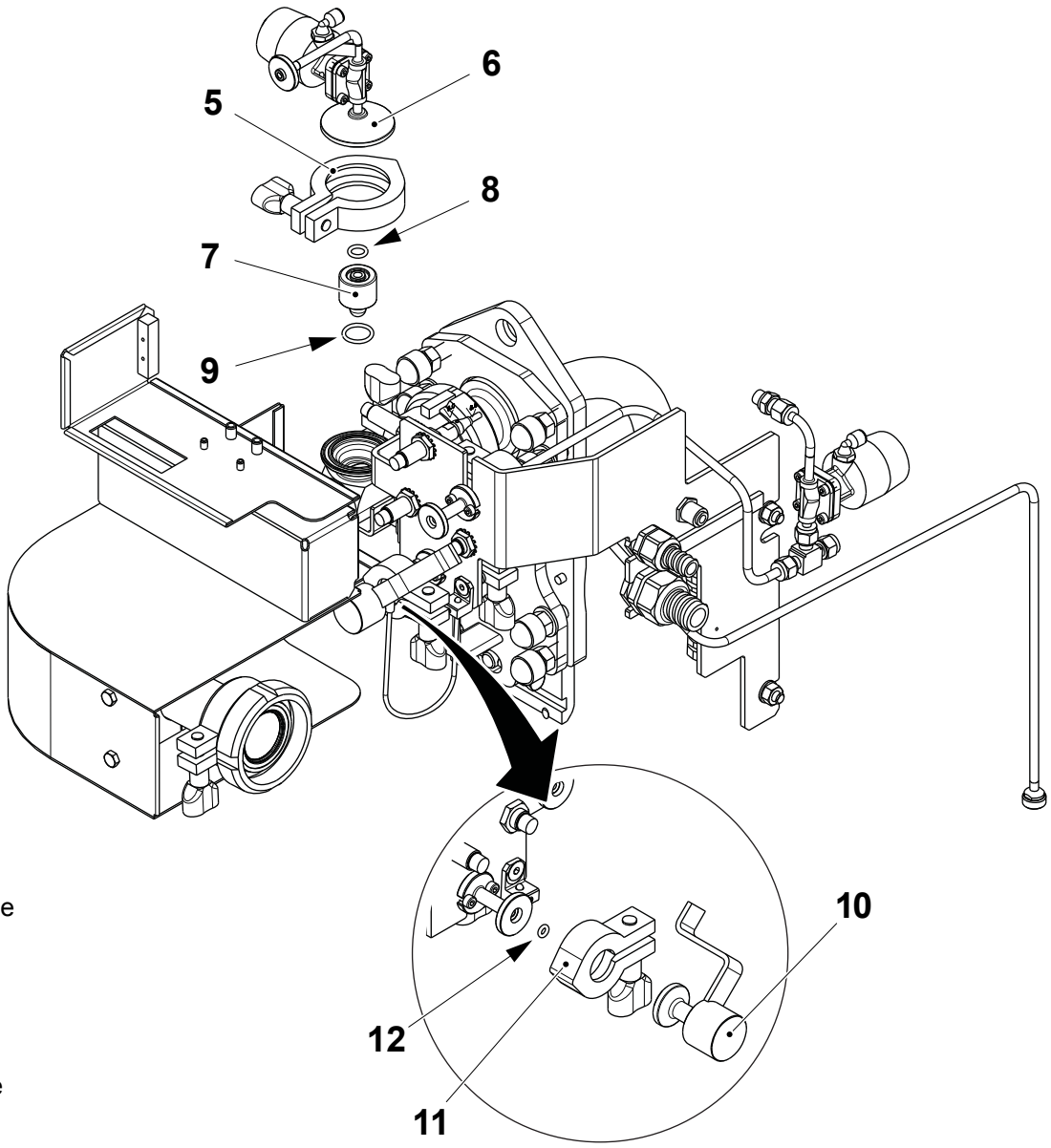


5 Clamp
6 Pneumatic valve
7 Nozzle
8 O-ring
9 O-ring
10 Blind plug
11 Clamping piece
12 O-ring

*(Cont'd)*

*(Cont'd)*

g) Loosen the clamping pieces (13) and slightly pull back the pipes (14) and (15).

h) Change the O-rings (16) and (17).

i) Fit back the pipes (14) and (15) and tighten the clamping pieces (13).

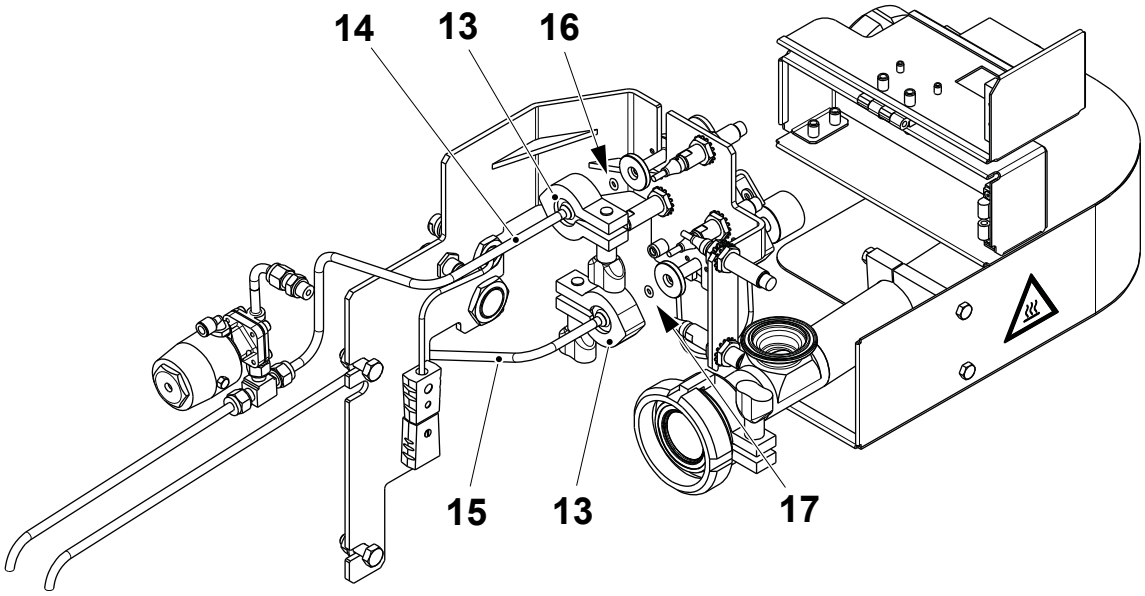


13 Clamping piece
14 Pipe
15 Pipe
16 O-ring
17 O-ring

*(Cont'd)*

*(Cont'd)*

**Note!** When assembling the actuators (19) and (22), make sure that the shutter rim (23) is aligned with the milling (24) of the valve body.

j) Remove the screws (18) and the actuator (19) from the valve body (20). Change the diaphragm (21).

k) Repeat the same procedure on the other actuator (22).

l) Assemble in the reverse order.

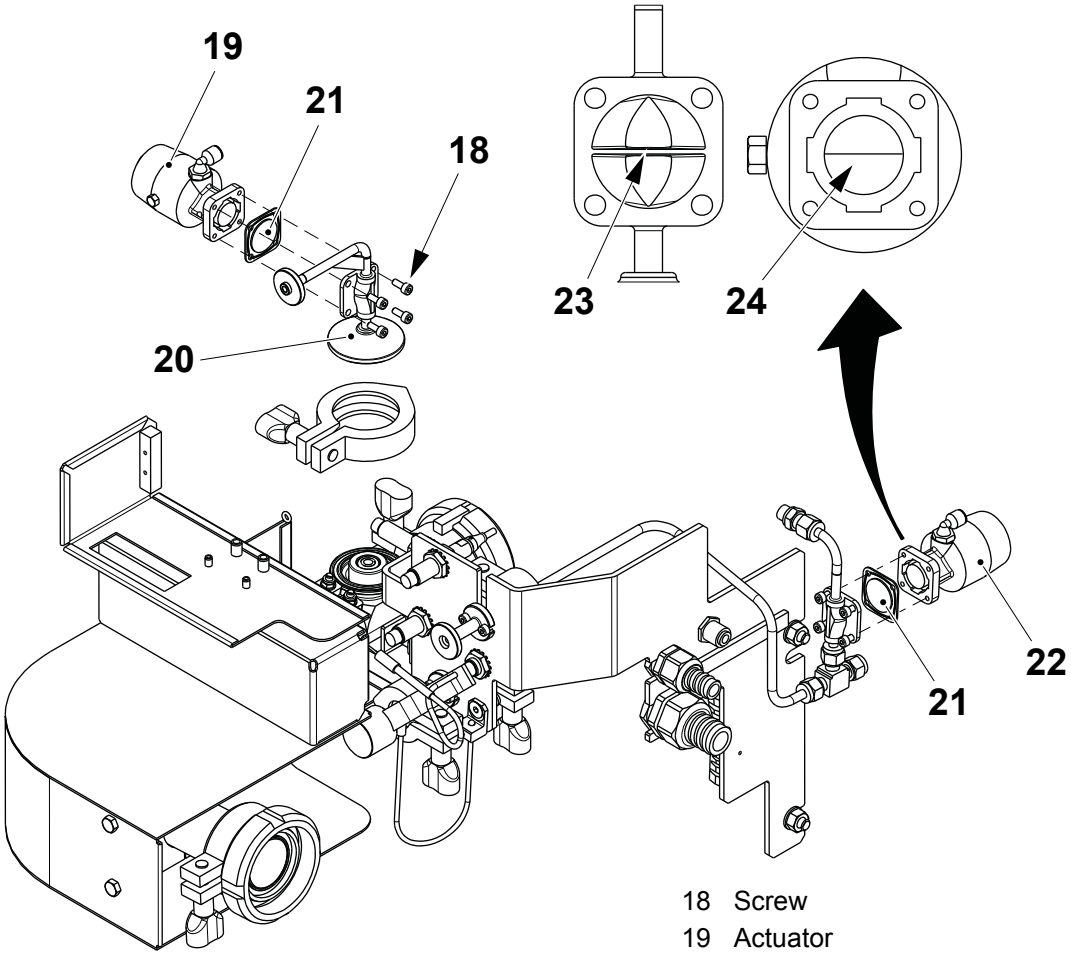


18 Screw
19 Actuator
20 Valve body
21 Diaphragm
22 Actuator
23 Shutter rim
24 Milling

## 1.2-2 Nozzle Unit - Set Proximity Switches

| | |
|---|---|
| Machine Status | Mains Power OFF<br>Air OFF<br>Steam ON<br>Water OFF |
| SPC Reference | 2632642-0400 |

**Product Pipe Fitted**

Set the distance **A** between the end of the proximity switch (1) and the bracket (2) on the product pipe (3).

Check that the proximity switch (1) functions correctly.

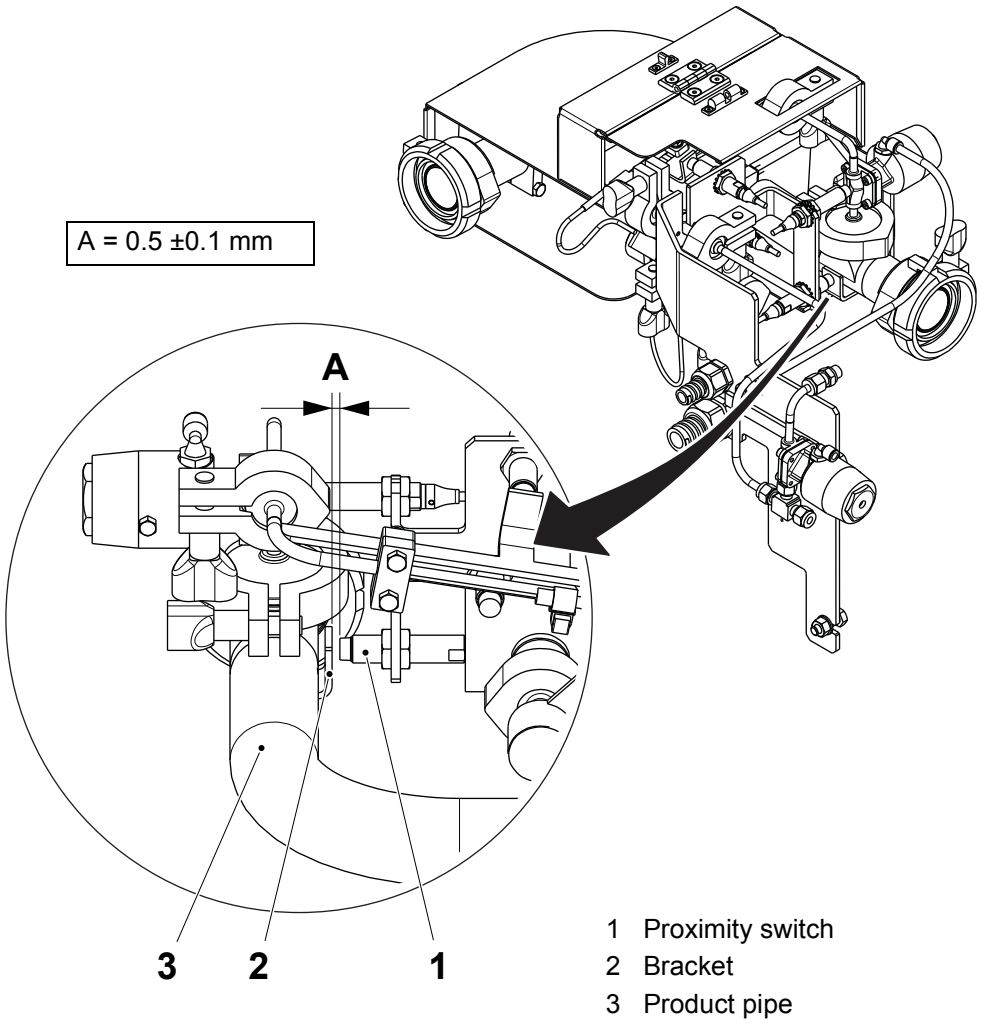


1 Proximity switch
2 Bracket
3 Product pipe

*(Cont'd)*

*(Cont'd)*

**HI ON**

Set the distance **A** between the end of the proximity switch (1) and the flat surface of the valve body (2).

Check that the proximity switch (1) functions correctly.

A = 0.5 ±0.1 mm

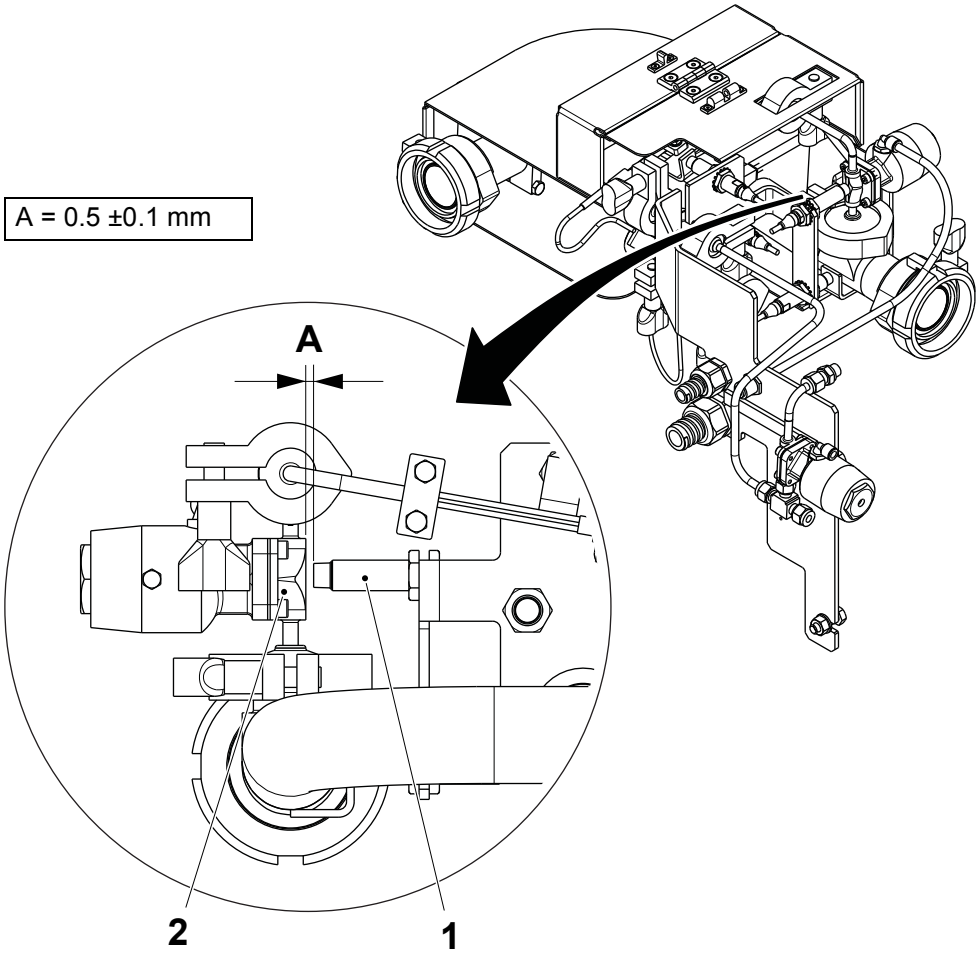


1 Proximity switch
2 Valve body

*(Cont'd)*

*(Cont'd)*

**CIP Cleaning**

a) Swing the pipe (1) into the CIP position as shown and fit the plug (2) to prevent the ingress of dirt.

b) Set the distance **A** between the end of the proximity switch (3) and the bracket (4) on the pipe (1).

c) Check that the proximity switch (3) functions correctly.

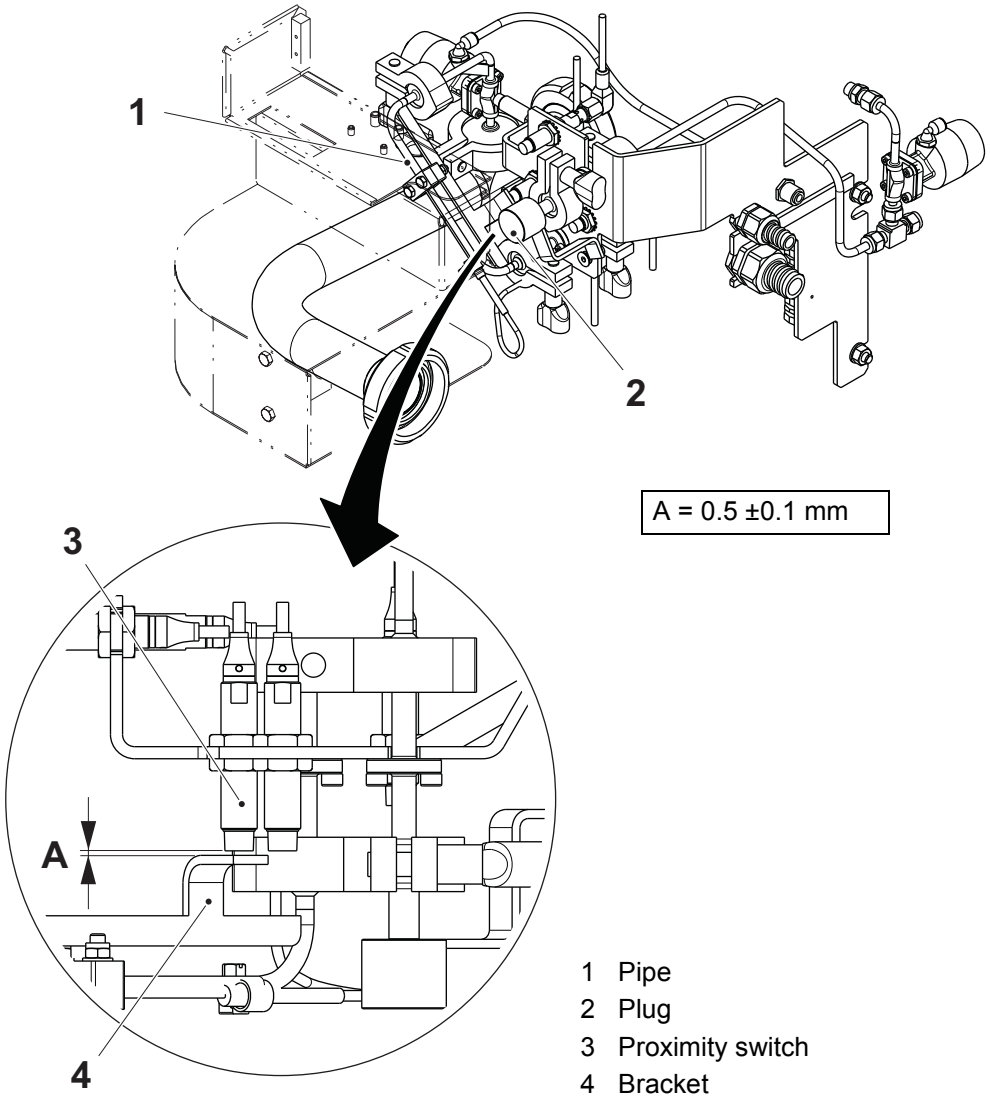


1 Pipe
2 Plug
3 Proximity switch
4 Bracket

*(Cont'd)*

*(Cont'd)*

**Production**

a) Swing the pipe (1) into the PRODUCTION position as shown and fit the plug (2) to prevent the ingress of dirt.

b) Set the distance **A** between the end of the proximity switch (3) and the bracket (4) on the pipe (1).

c) Check that the proximity switch (3) functions correctly.

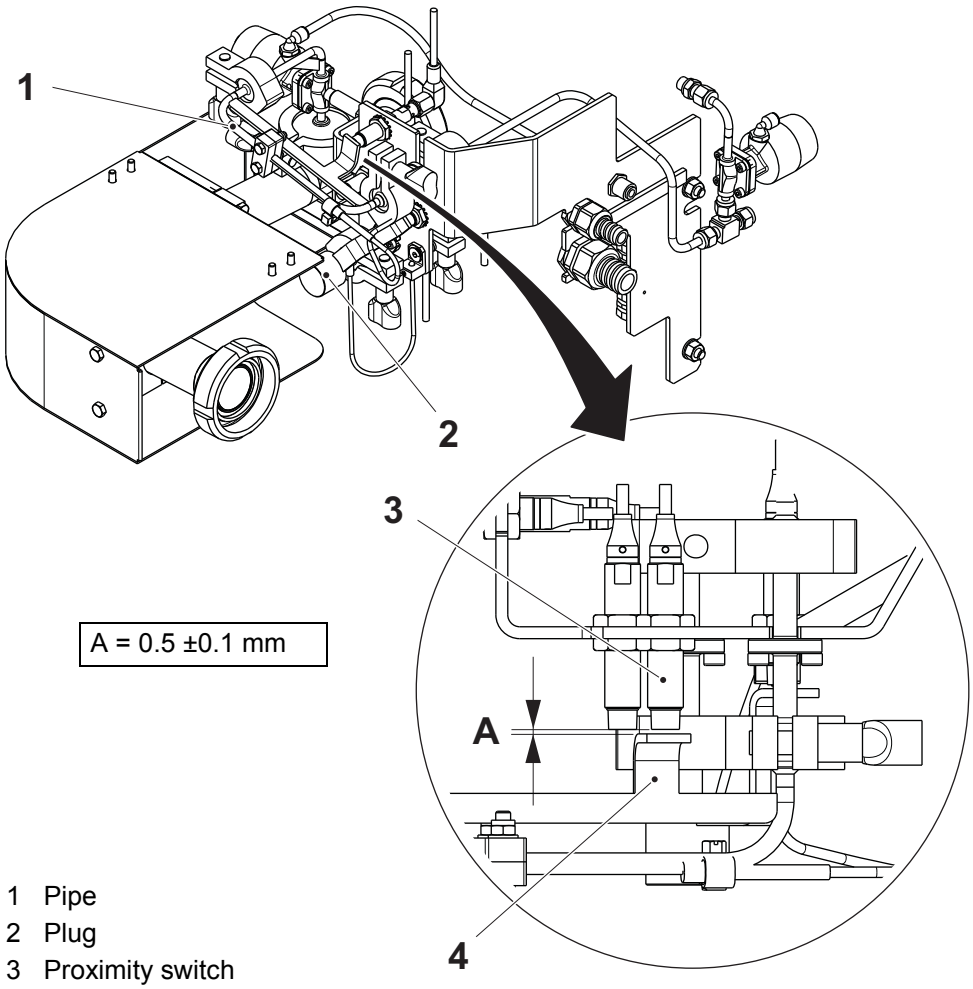


A = 0.5 ±0.1 mm

1 Pipe
2 Plug
3 Proximity switch
4 Bracket

*(Cont'd)*

*(Cont'd)*

### Plug in Position

Set the distance **A** between the end of the proximity switch (1) and the bracket (2) on the plug (3).

Check that the proximity switch (1) functions correctly.

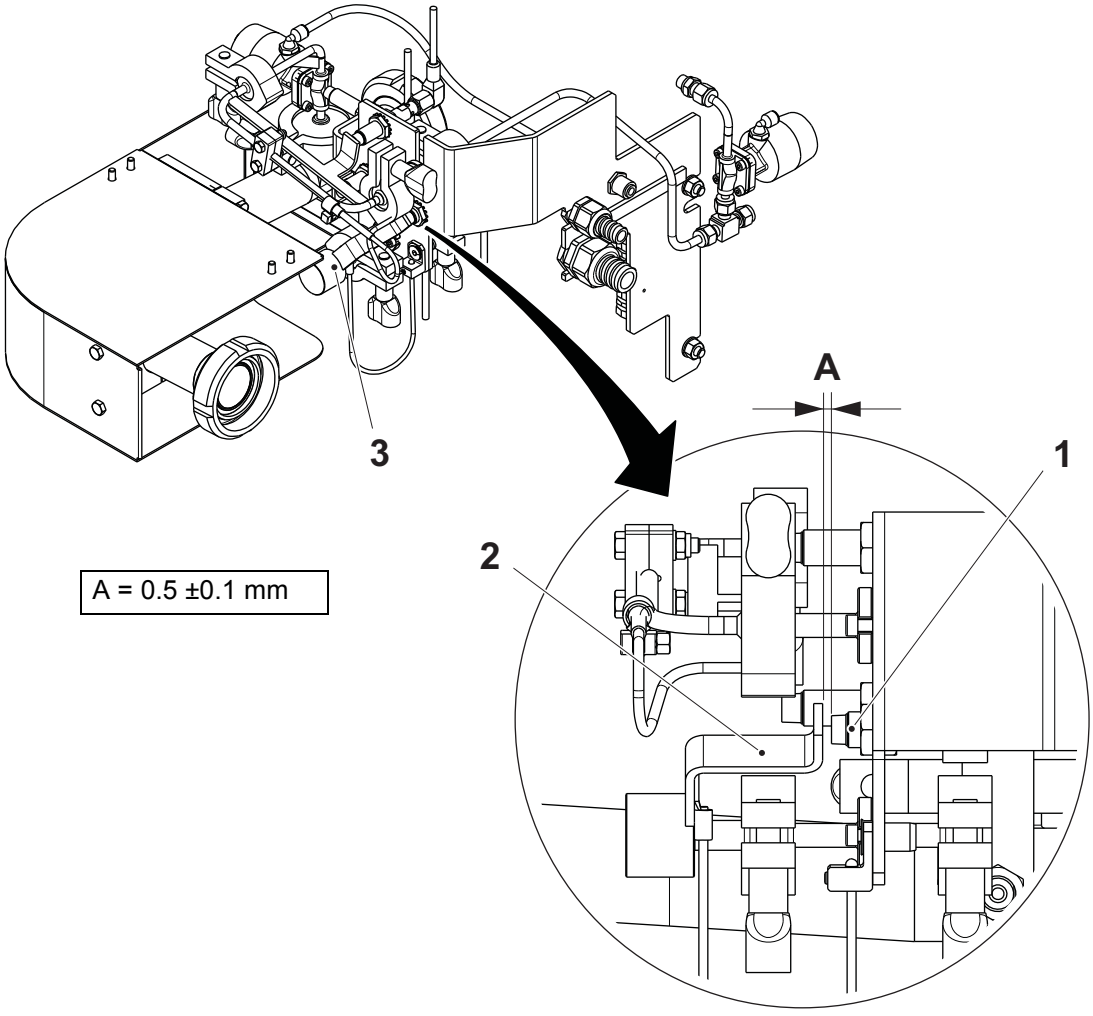


A = 0.5 ±0.1 mm

1 Proximity switch
2 Bracket
3 Plug

## 1.2-3 Nozzle Unit - Clean Nozzle

| | |
|---|---|
| Machine Status | Mains Power OFF<br>Air OFF<br>Steam ON<br>Water OFF |
| Special Equipment | Reamer TP No. 90600-5057 for nozzle Ø 0.3<br>Reamer TP No. 90600-5347 for nozzle Ø 0.4<br>Reamer TP No. 90600-5348 for nozzle Ø 0.5,<br>Reamer TP No. 90600-5349 for nozzle Ø 0.6 |
| SPC Reference | 2632642-0400 |

**WARNING**
**Burn hazard.**
Parts may be hot. Follow the Safety Precautions.

**WARNING**
**Hydrogen peroxide!**
Follow the Safety precautions.

*(Cont'd)*

*(Cont'd)*

a) Swing the cover (1) open and lock it in position.
b) Disconnect the hose (2) from the bulkhead lead-in (3).

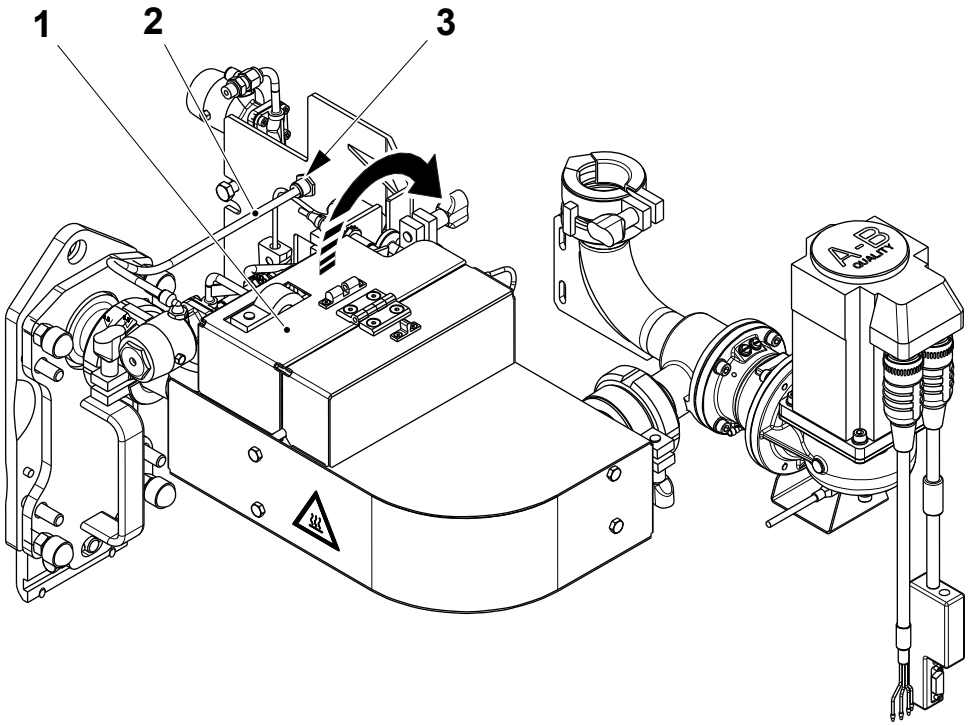


1 Cover
2 Hose
3 Bulkhead lead-in

*(Cont'd)*

*(Cont'd)*

c) Remove the clamping piece (4).

d) Loosen the clamp (5) and remove the pneumatic valve (6) taking care of the O-ring (7).

e) Fit the plug (8) by the clamping piece (4).

f) Remove the nozzle (9) and the O-rings (10) and (11).

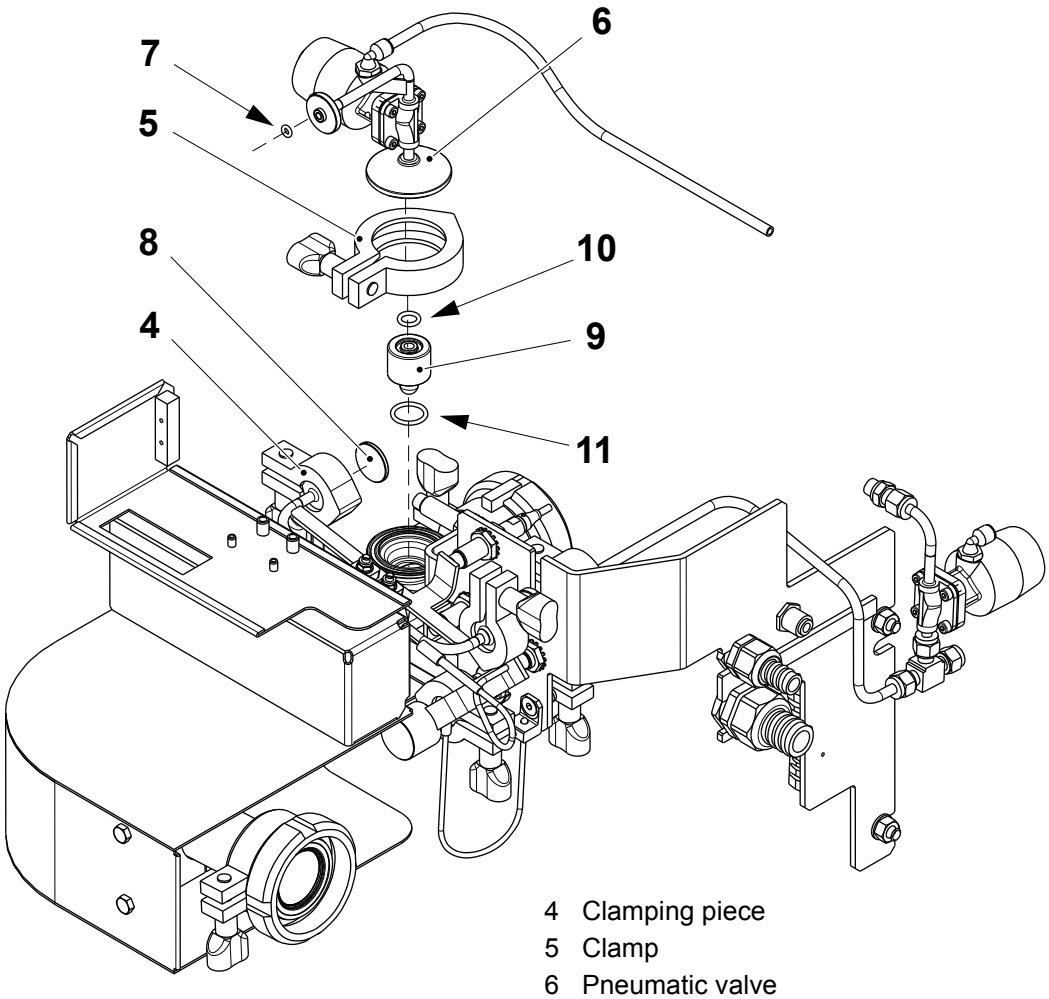


4 Clamping piece
5 Clamp
6 Pneumatic valve
7 O-ring
8 Plug
9 Nozzle
10 O-ring
11 O-ring

*(Cont'd)*

*(Cont'd)*

**CAUTION**
**Risk of damage to the equipment.**
Clean the nozzle using a reamer (12) suitable for the hole in order to not modify the nozzle hole size.

g) By means of a reamer (12), clean the nozzle hole from the residues.

h) Clean the nozzle (9) and the O-rings (10) and (11) with alkali solution. After cleaning rinse with drinking water.

i) When the nozzle (9) is dry, hold it up to the light and check that there are no residues blocking the nozzle.

j) Assemble in the reverse order.

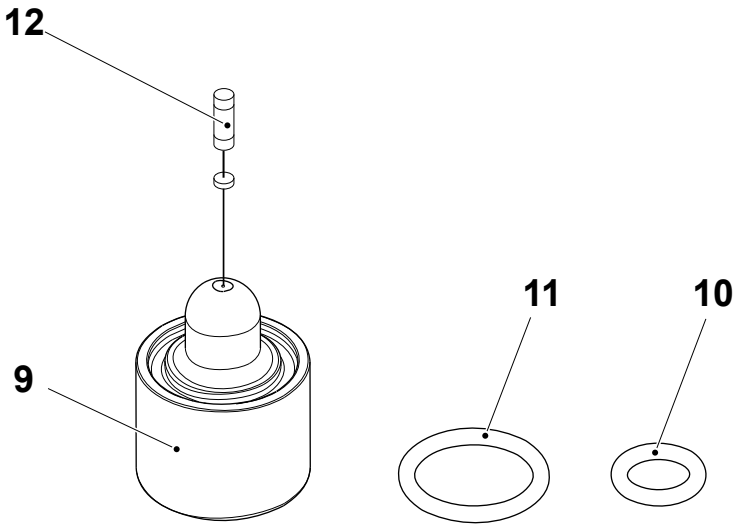


9 Nozzle
10 O-ring
11 O-ring
12 Reamer

## 1.2-4 Nozzle Unit - Check Thermocouple

| | |
|---|---|
| Machine Status | Mains Power OFF<br>Air OFF<br>Steam ON<br>Water OFF |
| SPC Reference | 2632642-0400 |

**Note!** Perform this check to ensure that the measurement of the temperature value is not affected by environmental conditions.

Check that the end of the thermocouple (1) on the HI pipe (2) is completely covered by the clamp (3).

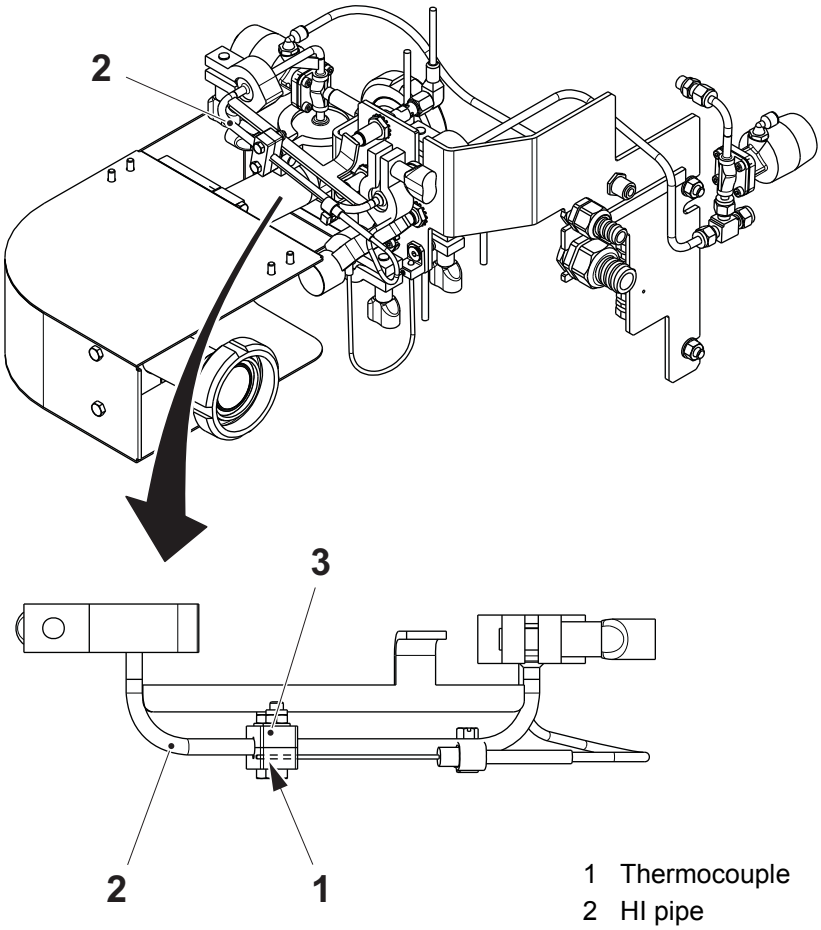


1 Thermocouple
2 HI pipe
3 Clamp

## 1.3-5 Nozzle Unit - Modify (from HI to HI bypassed)

| | |
|---|---|
| Machine Status | Mains Power OFF<br>Air OFF<br>Steam ON<br>Water OFF |
| SPC Reference | 2632642-0400 |

**WARNING**

**Burn hazard.**

Parts may be hot. Follow the Safety Precautions.

a) Swing the cover (1) open and lock it in position.

b) Disconnect the hose (2) from the bulkhead lead-in (3).

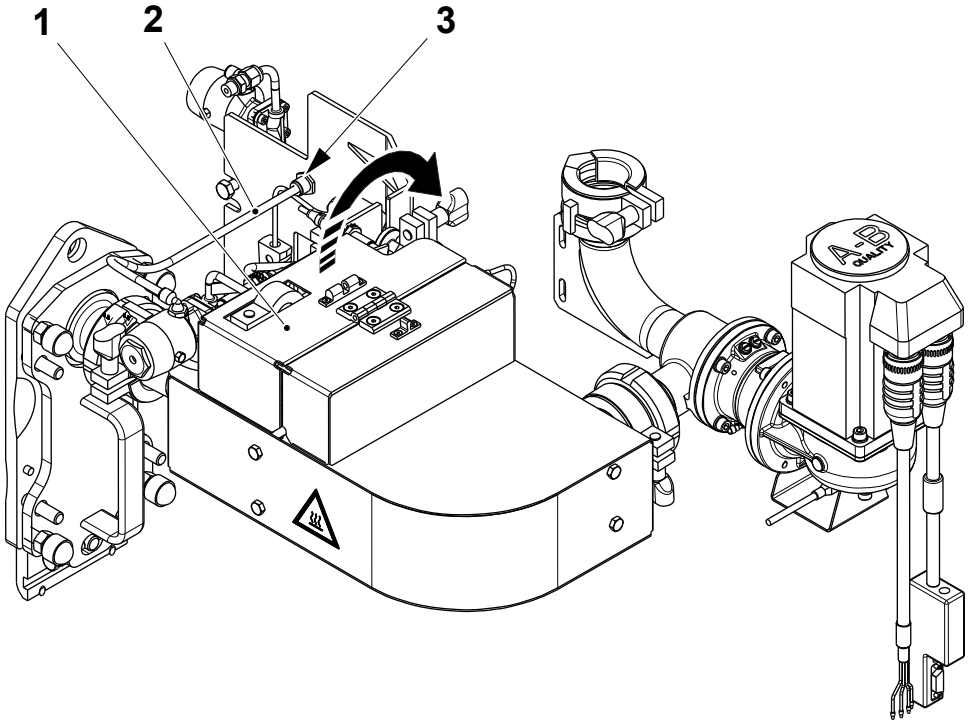


1 Cover
2 Hose
3 Bulkhead lead-in

*(Cont'd)*

*(Cont'd)*

c) Loosen the clamping piece (4).

d) Loosen the locking devices (5) and remove the product pipe (6) with the pneumatic valve (7) assembled taking care of the O-ring (8).

e) Fit the plug (9) on the HI pipe (10) by tightening the clamping piece (4).

f) Change the gaskets (11).

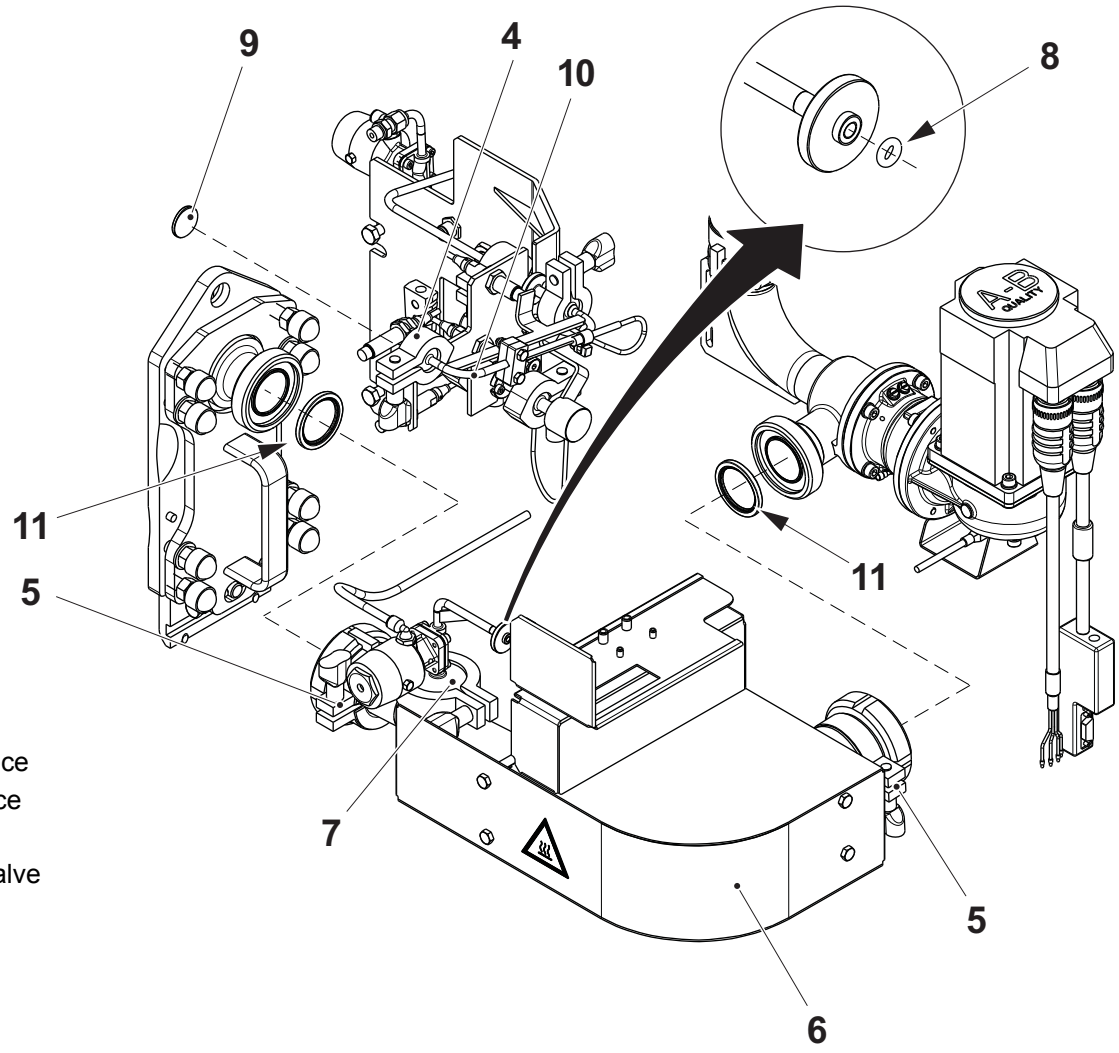


4 Clamping piece
5 Locking device
6 Product pipe
7 Pneumatic valve
8 O-ring
9 Plug
10 HI pipe
11 Gasket

*(Cont'd)*

*(Cont'd)*

g) Fit the product pipe (12) for HI bypassed by tightening the locking devices (13).

h) Fit the covering panel (14) for HI bypassed by the screws (15) and the clamps (16).

**Note!** Follow the reverse order to modify from HI bypassed to HI.

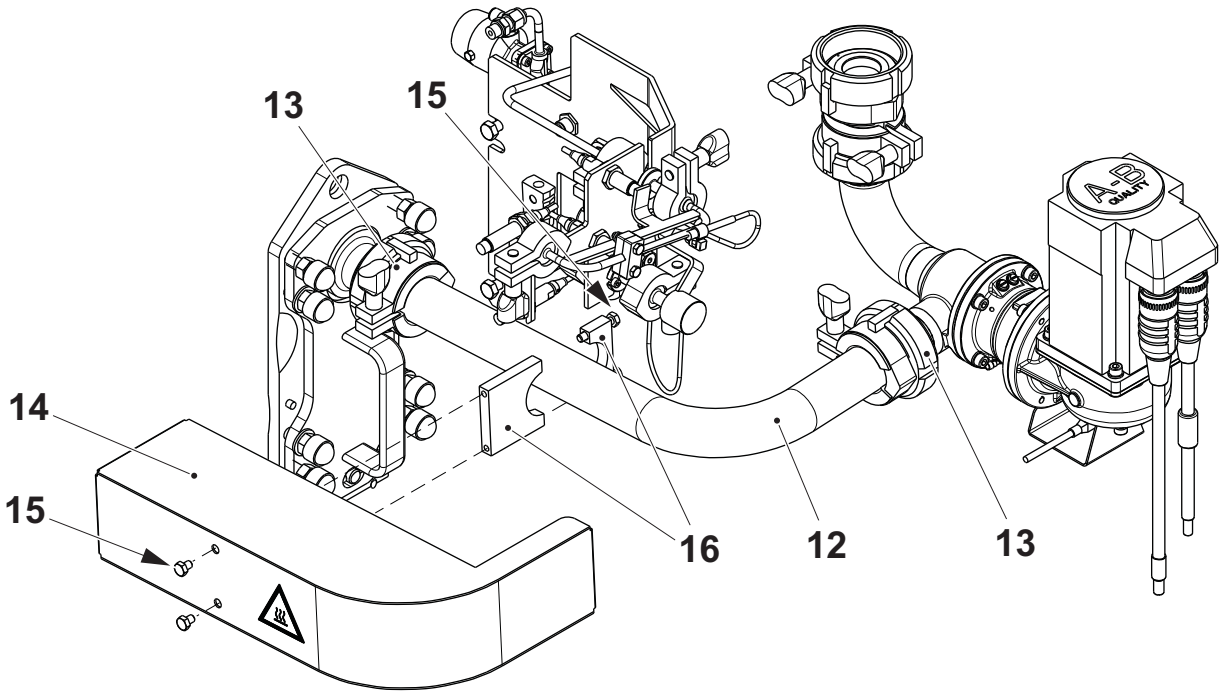


12 Product pipe
13 Locking device
14 Covering panel
15 Screw
16 Clamp

# 1.3 Heater

| | |
|---|---|
| SPC Reference | 2696118-0300 |

## 1.3-1 Heater - Check Peroxide Filter

| | |
|---|---|
| Machine Status | Mains Power OFF<br>Air OFF<br>Steam ON<br>Water OFF |
| SPC Reference | 2696118-0300 |

**WARNING**
**Hydrogen peroxide!**
Follow the Safety precautions.

**WARNING**
**Burn hazard.**
The heater may be extremely hot. Always wear personal protective equipment and wait for the heater to cool down before performing the following procedure.

**Note!** The procedure to clean the peroxide filter is for customers with a laboratory or facilities for performing the task.

*(Cont'd)*

*(Cont'd)*

a) Carefully remove the cap (1) from the housing (2).
b) Remove the filter element (3) and O-ring (4) from the housing (2).
c) Change the filter or clean it according to the Cleaning Procedure on the following page.
d) Assemble in the reverse order.

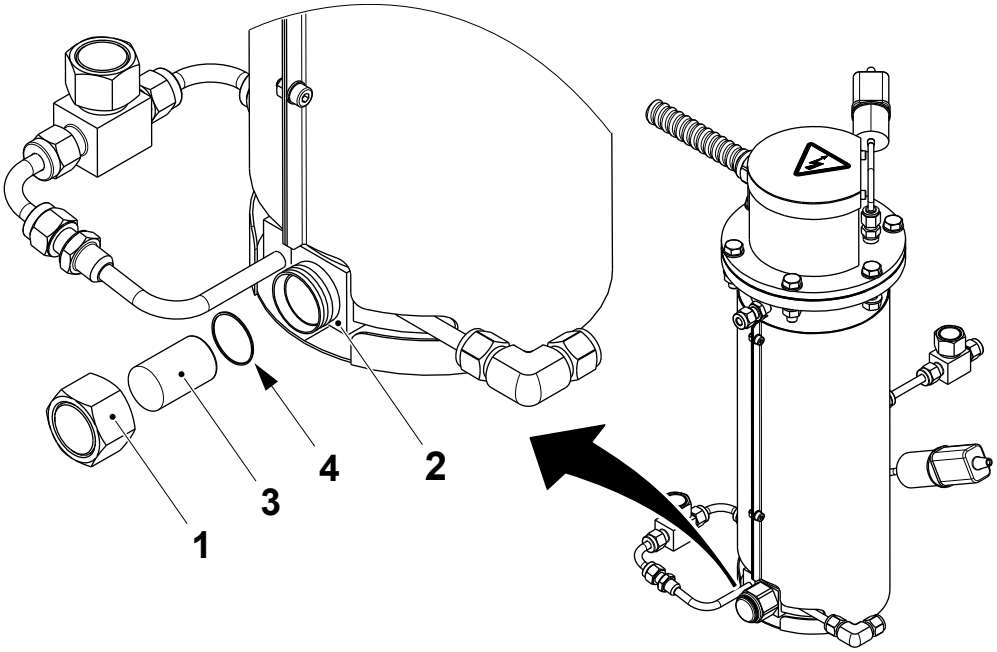


1 Cap
2 Housing
3 Filter element
4 O-ring

*(Cont'd)*

*(Cont'd)*

### Cleaning Procedure

**Note!** Dispose the nitric acid solution according to the local legislation.

a) In a beaker and under a gas exhauster, prepare approximately 50 ml of Nitric Acid ($HNO_3$) at a concentration of 10 to 15% by weight.

b) Place the beaker on a magnet stirrer with a heater.

c) Immerse the filter element in to the solution.

d) Heat the $HNO_3$ solution to 60°C for 20 minutes stirring continually.

e) Using a pair of pliers, carefully remove the filter element from the solution and rinse it well with distilled water.

**Note!** Use a 60 micron filter element.

## 1.3-2 Heater - Check Electrical Terminals

| | |
|---|---|
| Machine Status | Mains Power OFF<br>Air OFF<br>Steam ON<br>Water OFF |
| SPC Reference | 2696118-0300 |

**WARNING**

**Burn hazard.**

The heater may be extremely hot. Always wear personal protective equipment and wait for the heater to cool down before performing the following procedure.

If the heater does not reach the required temperature, check the heater is working properly by performing the following electrical test.

*(Cont'd)*

*(Cont'd)*

Remove the screws (1) and open the plug (2), then using a tester measure the following resistance values:

- between the "**phase**" (3) and the "**neutral**" (4) electrical terminals the value must be about 24 Ohm.
- between the "**phase**" (3) electrical terminal and the heater flange (5) the value must be more than 1 MOhm.
- between the "**neutral**" (4) electrical terminal and the heater flange (5) the value must be more than 1MOhm.

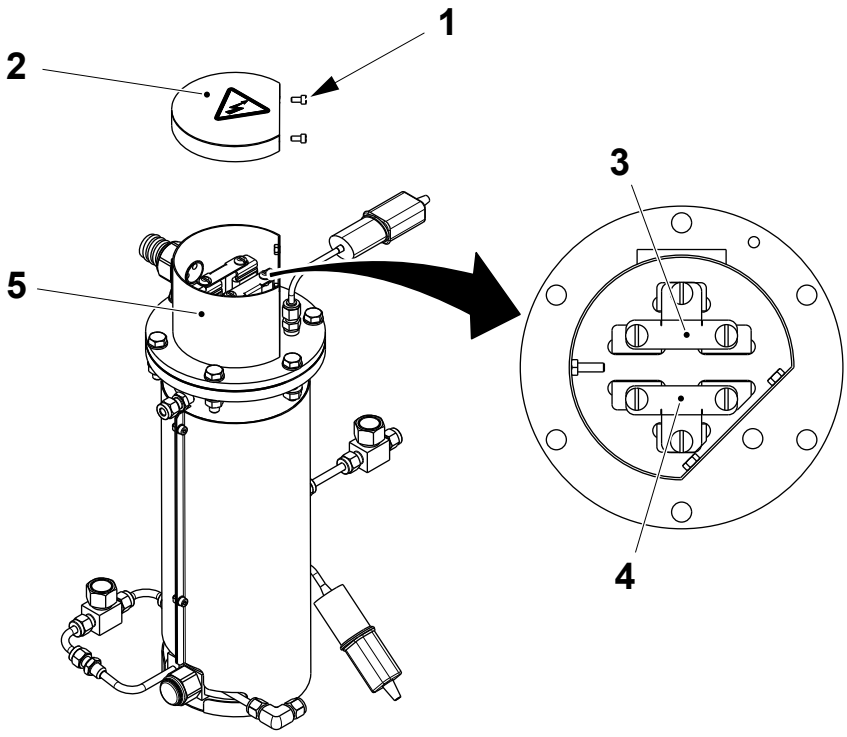


1 Screw
2 Plug
3 Phase terminal
4 Neutral terminal
5 Flange

## 1.3-3 Heater - Check Thermocouples

| | |
|---|---|
| Machine Status | Mains Power OFF<br>Air OFF<br>Steam ON<br>Water OFF |
| SPC Reference | 2696118-0300 |

**DANGER**

**Hazardous voltage.**
Make sure that the mains power is switched OFF. Follow the lockout procedure before maintenance.

**WARNING**

**Burn hazard.**
The heater may be extremely hot. Always wear personal protective equipment and wait for the heater to cool down before performing the following procedure.

**Note!** Perform this check when the heater does not reach the temperature required.

*(Cont'd)*

*(Cont'd)*

a) Open the plug (1) and disconnect the cable U70W0370 (2), see the Electrical Manual.

b) Disconnect the thermocouple plug U70X4350 (3).

c) Remove the screws (4) and the heating element (5).

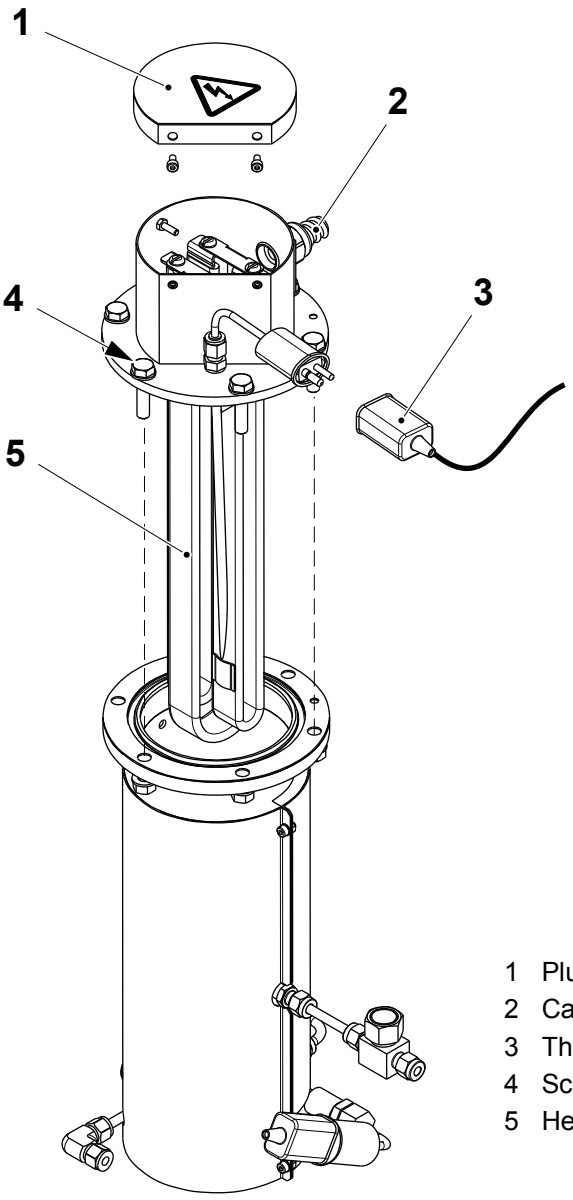


1 Plug
2 Cable U70W0370
3 Thermocouple plug U70X4350
4 Screw
5 Heating element

*(Cont'd)*

*(Cont'd)*

d) Check that the end of the thermocouple (6) is in the centre of the air outlet pipe (7).

e) Change the gaskets (8) and (9).

f) Assemble in the reverse order.

**Note!** Change always the gaskets (8) and (9) when disassembling the heating element.

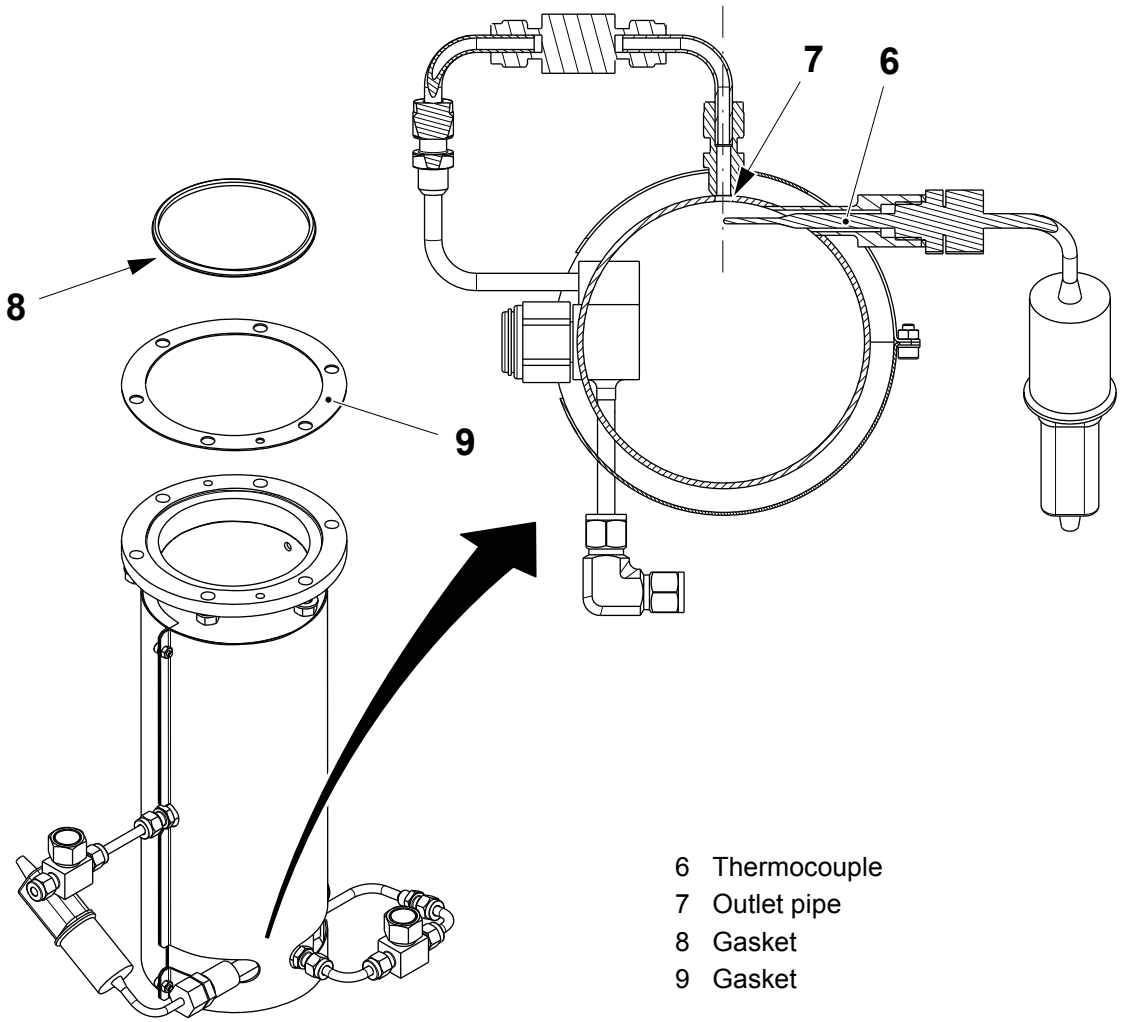


6 Thermocouple
7 Outlet pipe
8 Gasket
9 Gasket

## 1.3-4 Heater - Check No-return Valve

| | |
|---|---|
| Machine Status | Mains Power OFF<br>Air OFF<br>Steam ON<br>Water OFF |
| SPC Reference | 2696118-0300 |

**WARNING**

**Burn hazard.**

The heater may be extremely hot. Always wear personal protective equipment and wait for the heater to cool down before performing the following procedure.

*(Cont'd)*

*(Cont'd)*

a) Loosen the nuts (1) and remove the no-return valve (2).
b) Carefully remove the cap (3).
c) Check that the needle (4) is clean and goes easily up and down.
d) Clean the no-return valve or change it if necessary.
e) Assemble in the reverse order.
f) Repeat the same procedure for the valve (5).

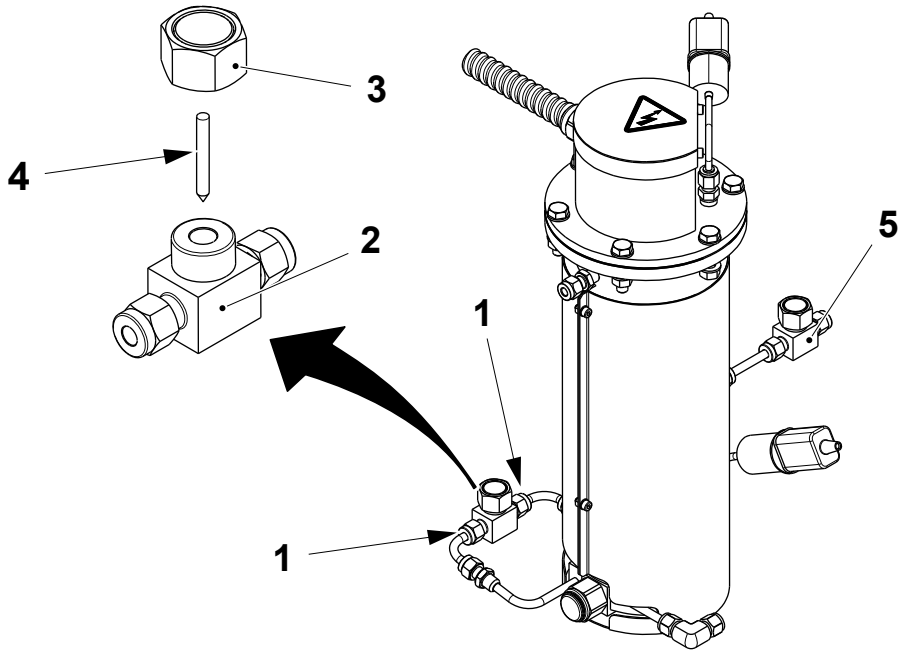


1 Nut
2 No-return valve
3 Cap
4 Needle
5 Valve

# 1.4 Spray Tank

| | |
|---|---|
| SPC Reference | 2539458-0200 |

## 1.4-1 Spray Tank - Check

| | |
|---|---|
| Machine Status | Mains Power OFF<br>Air OFF<br>Steam ON<br>Water OFF |
| SPC Reference | 2539458-0200 |

**WARNING**
**Hydrogen peroxide!**
Follow the Safety precautions.

*(Cont'd)*

*(Cont'd)*

**Note!** Mark all connections before removal.

Check for peroxide leakages in the spray unit. Change the O-rings indicated by the arrow if damaged or worn.

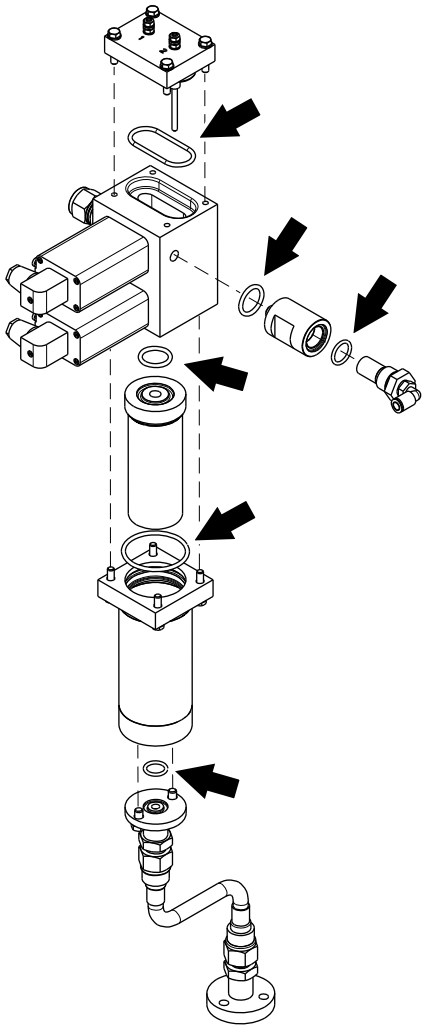

## 1.4-2 Spray Tank - Clean Peroxide Filter

| | |
|---|---|
| Machine Status | Mains Power OFF<br>Air OFF<br>Steam ON<br>Water OFF |
| SPC Reference | 2539458-0200 |

**WARNING**
**Hydrogen peroxide!**
Follow the Safety precautions.

*(Cont'd)*

*(Cont'd)*

a) Remove the screws (1) and the filter housing (2).
b) Pull out the peroxide filter (3), rinse it with deionized water and clean it with compressed air.
c) If required change the peroxide filter (3).
d) Fit the peroxide filter (3) and the filter housing (2).
e) Tighten the screws (1).

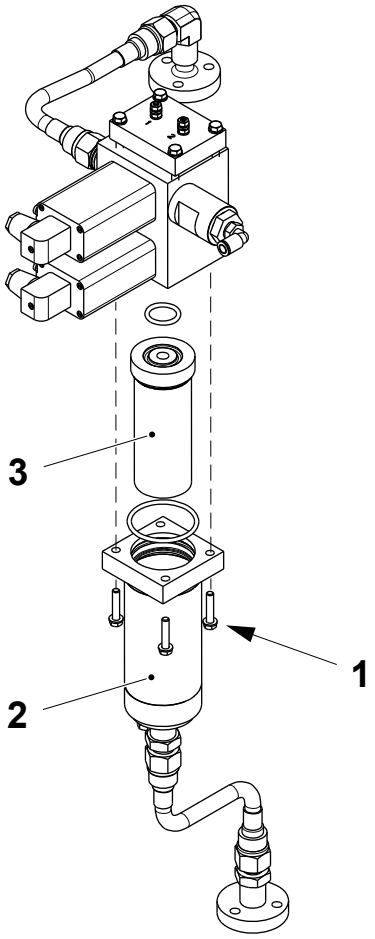


1 Screw
2 Filter housing
3 Peroxide filter

## 1.4-3 Spray Tank - Clean Filter

| | |
|---|---|
| Machine Status | Mains Power OFF<br>Air OFF<br>Steam ON<br>Water OFF |
| SPC Reference | 2539458-0200 |

**WARNING**
**Hydrogen peroxide!**
Follow the Safety precautions.

*(Cont'd)*

*(Cont'd)*

a) Disconnect the air pipe (1) from the filter group (2).

b) Remove the filter group (2).

c) Remove the filter (3) from the filter house (4).

d) Clean the filter (3) with compressed air.

e) Check the O-rings (5) for wear and/or damage and change if required.

**Note!** While assembling make sure that the O-rings (5) are correctly assembled.

f) Assemble in the reverse order.

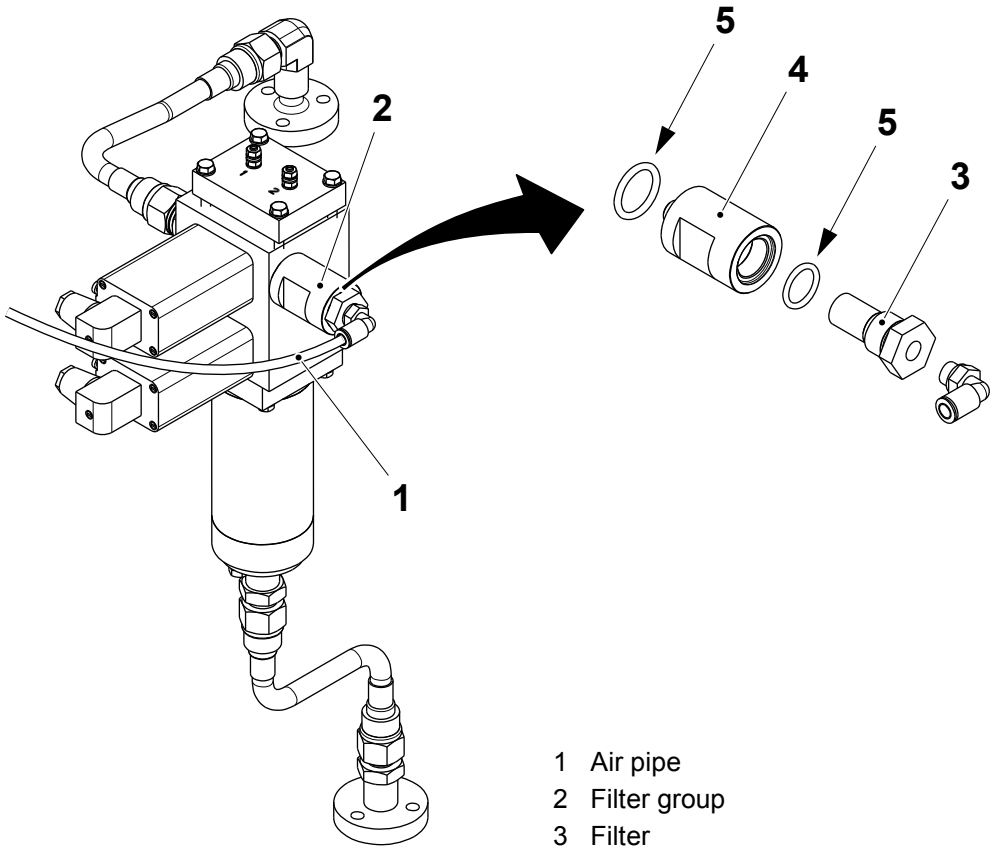


1 Air pipe
2 Filter group
3 Filter
4 Filter house
5 O-ring

## 1.4-4 Spray Tank - Set Pressure

| | |
|---|---|
| Machine Status | PREPARATION |
| SPC Reference | 2539458-0200<br>2914523-0100 |

Using the pressure regulator (1) on the valve panel, set the HI spray system air pressure, see 2.1 Technical Data.

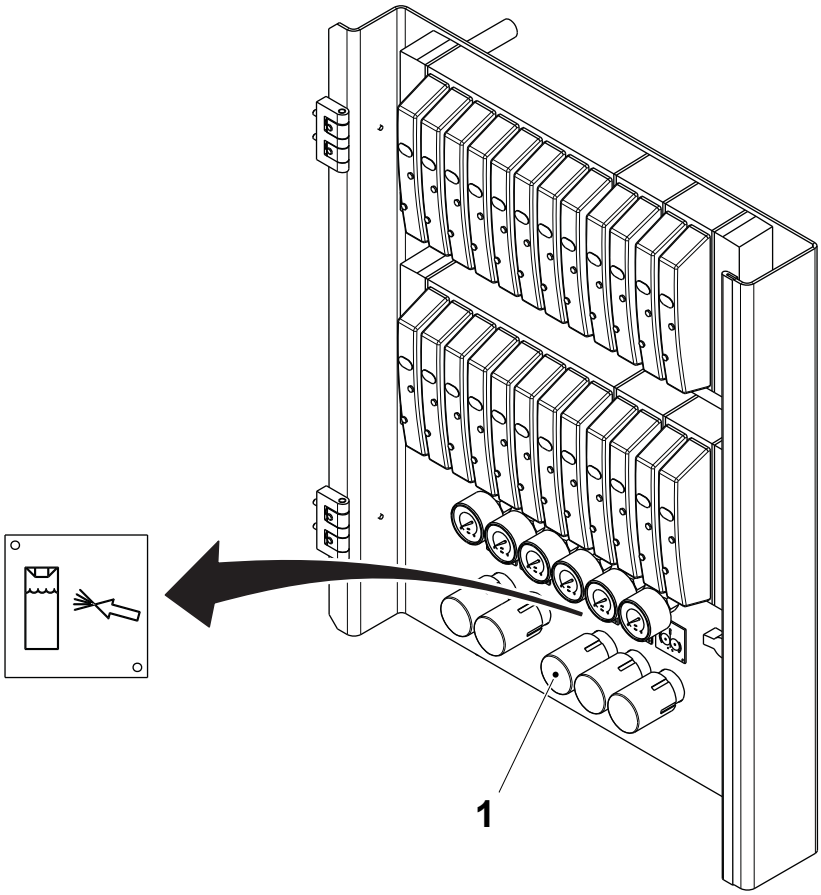


1 Pressure regulator

# 1.5 Pneumatic Panel

| | |
|---|---|
| SPC Reference | 2696120-0200 |

## 1.5-1 Pneumatic Panel - Set Pressure Switch

| | |
|---|---|
| Machine Status | Mains Power ON<br>Air ON<br>Steam ON<br>Water OFF |
| SPC Reference | 2696120-0200 |

**WARNING**

**Burn hazard.**

The HI pneumatic panel is located close to the heater, which may be extremely hot. Always wear personal protective equipment and wait for the heater to cool down before performing the following procedure.

a) In the service unit, turn the pressure regulator (1) until the pressure gauge (2) shows 5.5 bar.

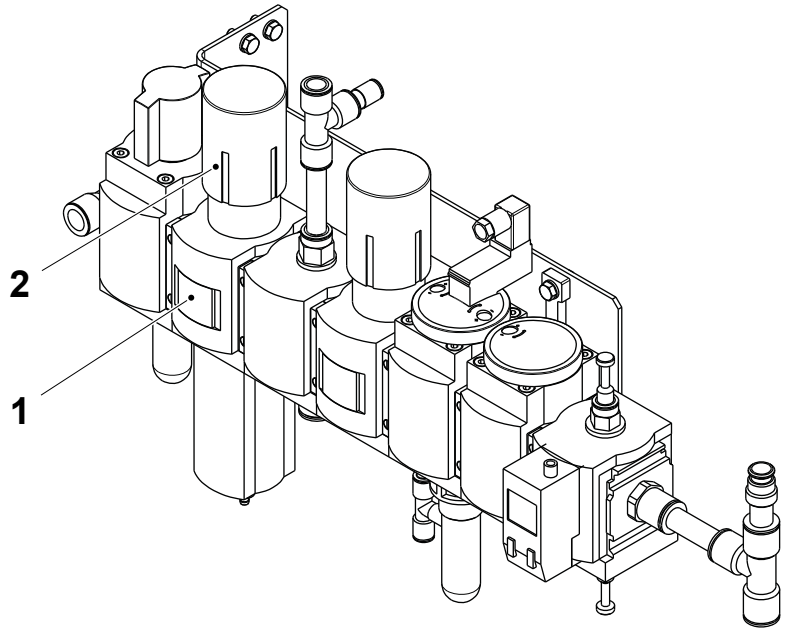


1 Pressure regulator
2 Pressure gauge

*(Cont'd)*

*(Cont'd)*

b) On the pressure switch (3), loosen the grub screw (4) and then turn the adjusting screw (5) fully counter-clockwise.

c) Turn the adjusting screw (5) slowly clockwise until the HI/$N_2$ alarm starts to flash on the TPOP and then tighten the grub screw (4).

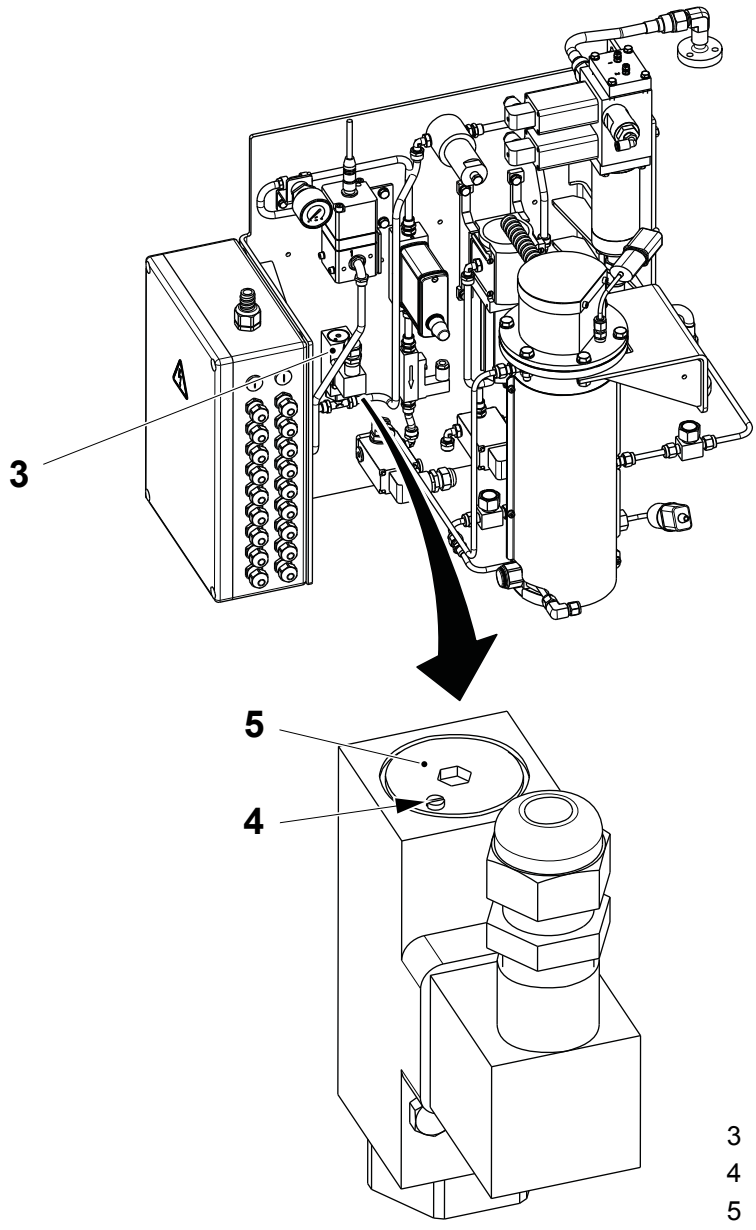


3 Pressure switch
4 Grub screw
5 Adjusting screw

*(Cont'd)*

*(Cont'd)*

d) Turn the pressure regulator (1) until the pressure gauge (2) shows the correct air pressure for the machine, see chapter 10.1 Technical data in the MM for the Filling Machine.

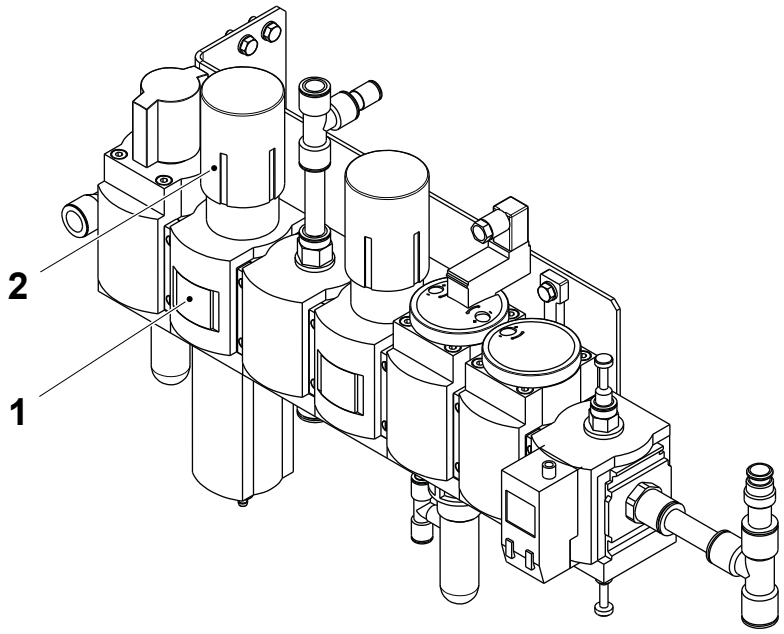


1 Pressure regulator
2 Pressure gauge

## 1.5-2 Pneumatic Panel - Check Flow Switch

| | |
|---|---|
| Machine Status | Mains Power OFF<br>Air OFF<br>Steam ON<br>Water OFF |
| SPC Reference | 2696120-0200 |

**WARNING**

**Burn hazard.**

The pneumatic panel is located close to the heater, which may be extremely hot. Always wear personal protective equipment and wait for the heater to cool down before performing the following procedure.

Check on the flow switch (1) that the arrow on the movable body (2) is aligned to the arrow of the setting label, as shown below. If not, change the flow switch (1).

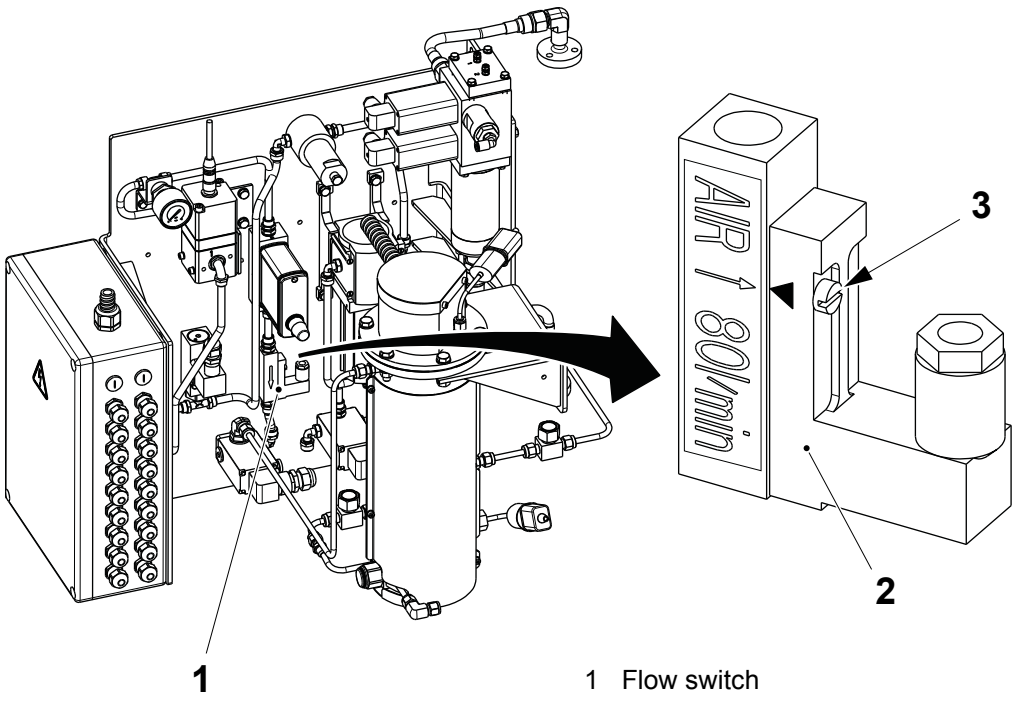


1 Flow switch
2 Movable body
3 Screw

## 1.5-3 Pneumatic Panel - Change Filters

| | |
|---|---|
| Machine Status | Mains Power OFF<br>Air OFF<br>Steam ON<br>Water OFF |
| SPC Reference | 2696120-0200 |

**WARNING**

**Burn hazard.**

The pneumatic panel is located close to the heater, which may be extremely hot. Always wear personal protective equipment and wait for the heater to cool down before performing the following procedure.

**Note!** There may be nitrogen under pressure in the circuit. Close the nitrogen supply before removing the filters.

Remove and change the filter inserts from the filter housings (1) and (2).

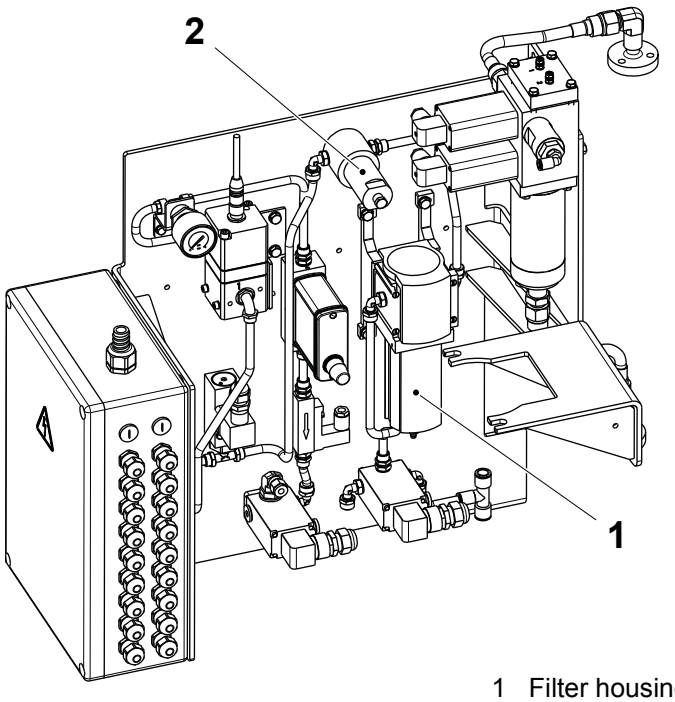


1 Filter housing
2 Filter housing

## 1.5-4 Pneumatic Panel - Set I/P Transducer

| | |
|---|---|
| Machine Status | Mains Power ON<br>Air ON<br>Steam ON<br>Water OFF |
| SPC Reference | 2696120-0200 |

**Note!** Only valid for machines equipped with I/P transducer TP No. 90459-1420. This I/P transducer has been delivered with the OE Headspace Unit in the following machines: Tetra Pak A3/Flex 0200; Tetra Pak A3/Speed 0200; Tetra Pak A3/Flex 0300 with T-order 21214/00001 to 21214/00044; Tetra Pak A3/Speed 0300 with T-order 21215/0001 to 21215/0069.

**Note!** No setting is needed for machines equipped with I/P transducer TP No. 90600-4354.

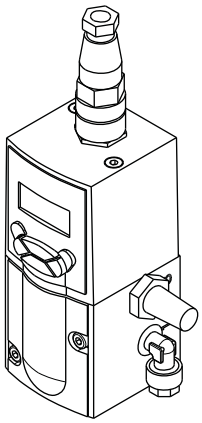

TP No. 90459-1420

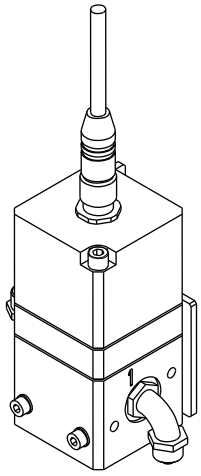

TP No. 90600-4354

*(Cont'd)*

*(Cont'd)*

Navigate the transducer interface using the buttons explained in the table below.

| Button | Function |
|---|---|
| OK (5) | enter the menu from the default screen |
| | move to the next level of the menu structure |
| | accept changes within the functions |
| CANCEL (6) | move back through the levels of the menu structure |
| | cancel changes within the functions |
| UP (1)/DOWN (3) | move between menu options within a level |
| | set digit values within the functions |
| LEFT (4)/RIGHT (2) | move between digits within the functions |

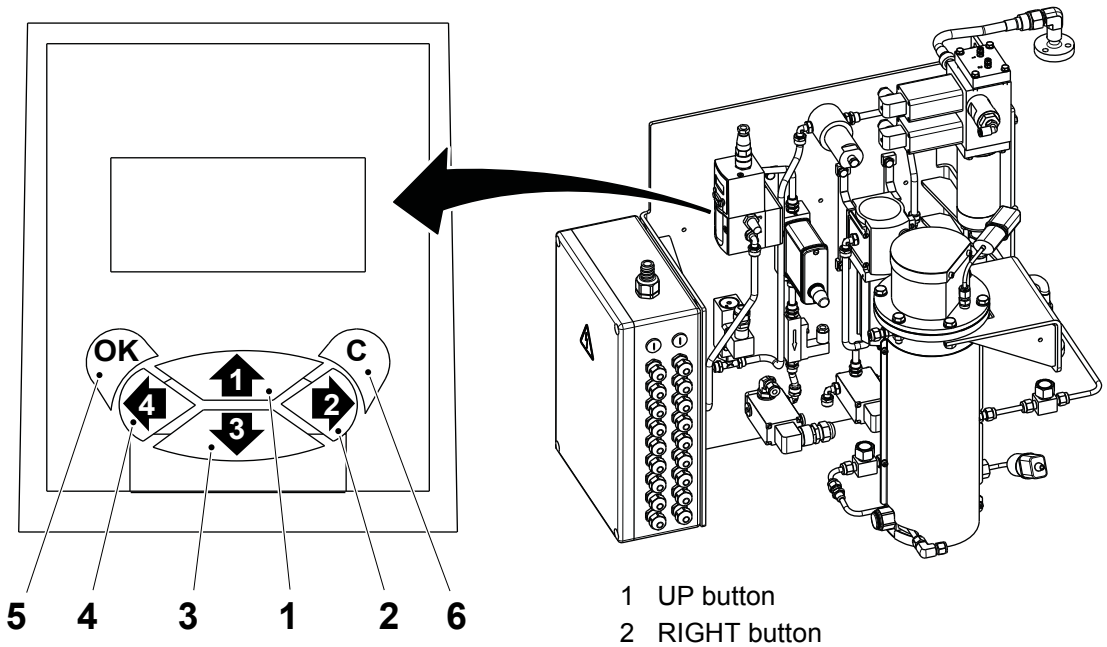


1 UP button
2 RIGHT button
3 DOWN button
4 LEFT button
5 OK button
6 CANCEL button

*(Cont'd)*

*(Cont'd)*

a) Press the OK button (5). The display (7) shows `PASSWORD OK?`.

b) Enter the password, **2121**, by means of the UP (1), RIGHT (2), DOWN (3) and LEFT (4) buttons. The display (7) shows `DISPLAY SETUP`.

c) Press the DOWN button (3). The display (7) shows `OFFLINE SETUP`.

d) Press the OK button (5). The display (7) shows `MIN SETUP`.

e) Press the OK button (5). The display (7) shows `00.0 BAR 00.0V`.

f) Press the OK button (5). The display (7) shows `WARNING P2 SHIFT`.

g) Press the OK button (5). The display (7) shows `MIN SETUP`.

h) Press the DOWN button (3). The display (7) shows `MAX SETUP`.

i) Press the OK button (5). The display (7) shows `06.0 BAR 10.0V`.

j) Press the OK button (5). The display (7) shows `WARNING P2 SHIFT`.

k) Press the OK button (5). The display (7) shows `MAX SETUP`.

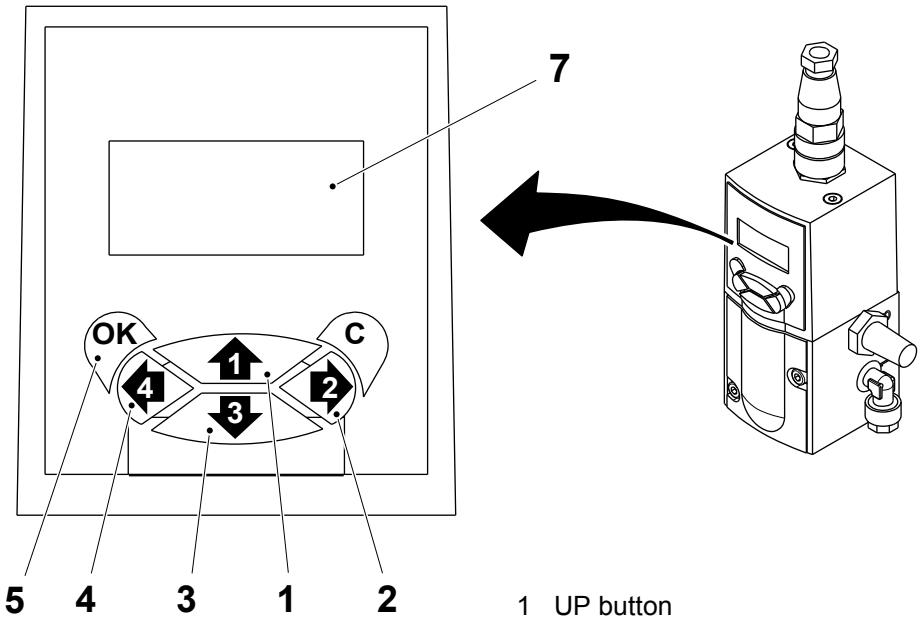


1 UP button
2 RIGHT button
3 DOWN button
4 LEFT button
5 OK button
7 Display

*(Cont'd)*

*(Cont'd)*

l) Press the DOWN button (3). The display (7) shows `SPEED SETTING`.

m) Press the OK button (5). Set the value to **0** by means of the UP (1) and DOWN (3) buttons.

n) Press the OK button (5). The display (7) shows `SPEED SETTING`.

o) Press the DOWN button (3).
   - if the display (7) shows `DITHER AMP`, continue with items p) to y).
   - if the display (7) shows `DYNAMIC RESPONSE`, continue with items z) to af).

p) Press the OK button (5). Set the value to **1** by means of the UP (1) and DOWN (3) buttons.

q) Press the OK button (5). The display (7) shows `DITHER AMP`.

r) Press the DOWN button (3). The display (7) shows `PROP GAIN`.

s) Press the OK button (5). Set the value to **7** by means of the UP (1) and DOWN (3) buttons.

t) Press the OK button (5). The display (7) shows `PROP GAIN`.

u) Press the DOWN button (3). The display (7) shows `INT GAIN`.

v) Press the OK button (5). Set the value to **2** by means of the UP (1) and DOWN (3) buttons.

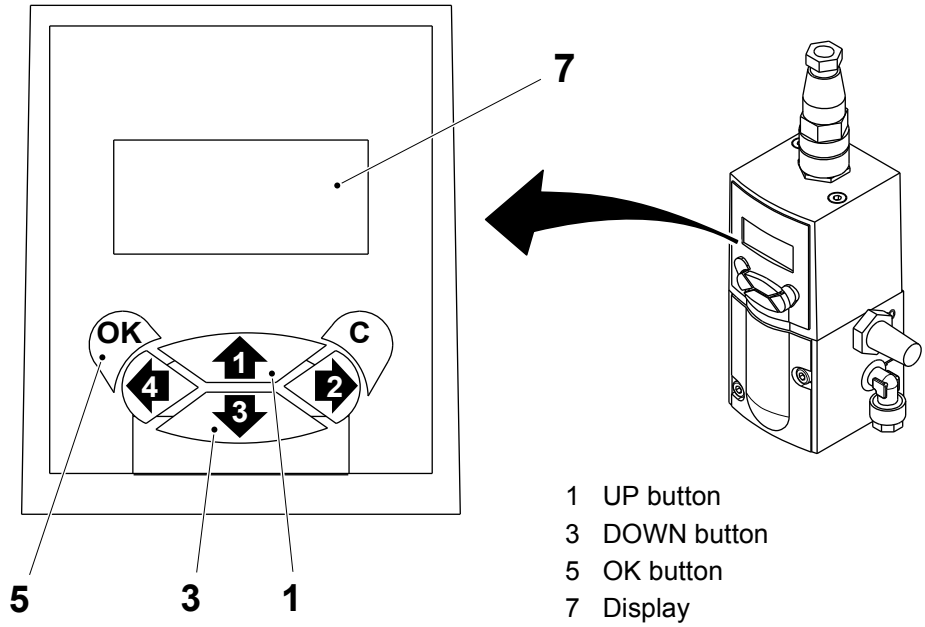


1 UP button
3 DOWN button
5 OK button
7 Display

*(Cont'd)*

*(Cont'd)*

w) Press the OK button (5). The display (7) shows `INT GAIN`.

x) Press the CANCEL button (6).The display (7) shows `OFFLINE SETUP`.

y) Press the CANCEL button (6). The display (7) shows `00.0 BAR 00.0V`.

z) Press the OK button (5). Set the value to **2** by means of the UP (1) and DOWN (3) buttons.

aa) Press the OK button (5). The display (7) shows `DYNAMIC RESPONSE`.

ab) Press the DOWN button (3). The display (7) shows `DITHER AMP`.

ac) Press the OK button (5). Set the value to **1** by means of the UP (1) and DOWN (3) buttons.

ad) Press the OK button (5). The display (7) shows `DITHER AMP`.

ae) Press the CANCEL button (6).The display (7) shows `OFFLINE SETUP`.

af) Press the CANCEL button (6). The display (7) shows `00.0 BAR 00.0V`.

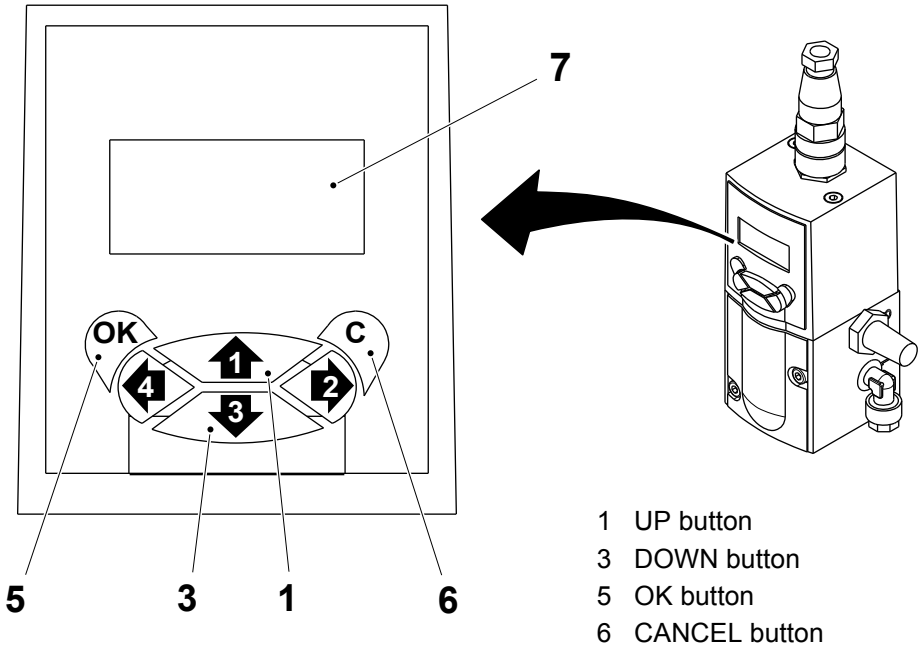


1 UP button
3 DOWN button
5 OK button
6 CANCEL button
7 Display

# 1.6 Connection Box

| SPC Reference | 2847233-0100 |
|---|---|

## 1.6.1 Level Control

### 1.6.1-1 Level Control - LED Description

| SPC Reference | 90459-2742 |
|---|---|

The level regulator relays (RM4-LA) monitor fluid levels by measuring the change in resistance of immersed and non immersed electrodes. The relay sensitivity must be set according to the conductivity of the fluid.

The level regulator parameters are set using the potentiometer and selectors shown in the illustration below:

a) The selector (1) sets the filling/empty functionality:
   - in the empty function the output relay is activated when the high level electrode is immersed and deactivated when the low level electrode is "dry"
   - in the fill function the output relay is activated when the low level electrode is "dry" and deactivated when the high level electrode is immersed.

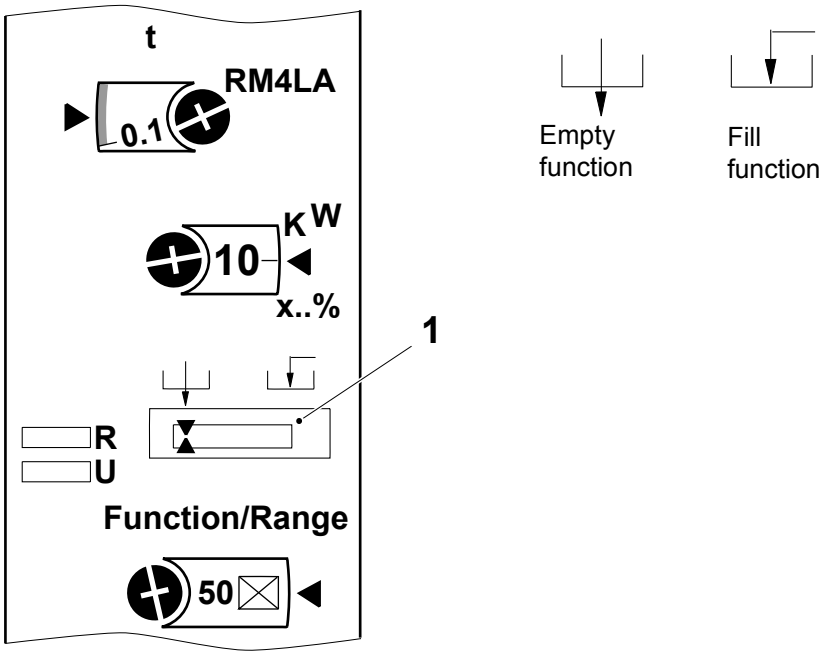


1 Functionality selector

*(Cont'd)*

*(Cont'd)*

b) The potentiometer (2) gives a fine adjustment of the sensitivity as a percentage (%) of the sensitivity range (6).

c) The potentiometer (3) sets the delay.

d) The selector (6) sets the sensitivity range of the relay and the energisation time delay option.

e) The yellow LED (4) is lit when the relay is CLOSED.

f) The green LED (5) is lit when the power is ON.

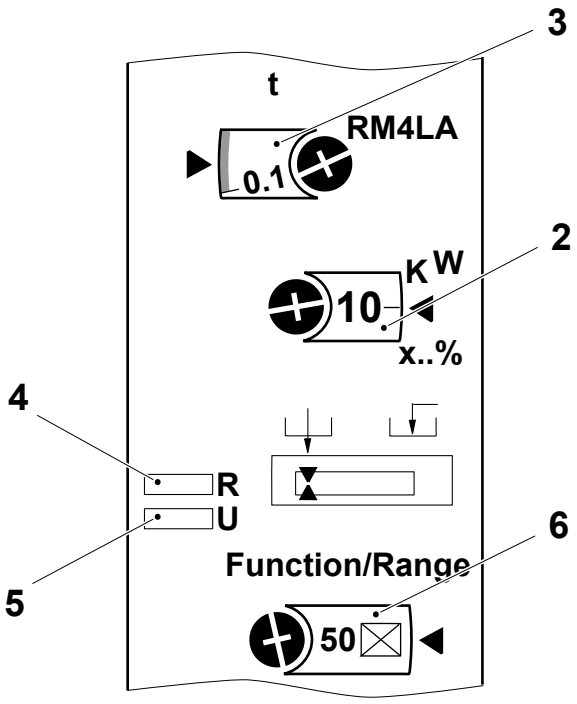


2 Potentiometer
3 Potentiometer
4 Yellow LED
5 Green LED
6 Selector

### 1.6.1-2 Level Control - Set

| | |
|---|---|
| Machine Status | Mains Power ON<br>Air OFF<br>Steam ON<br>Water OFF |
| SPC Reference | 90459-2742 |

Set the display functions with a screwdriver, see table below:

| **Description** | | **Time value (1)** | **R-value potentiometer (2)** | **Functionality selector (3)** | **Function/range selector (4)** |
|---|---|---|---|---|---|
| HI level peroxide spray tank | U70K4061 | 0 | 20 | ⊔ | **50** ⊠ |

**Note!** It is recommended that the functionality selector (3) is always set according to the table to avoid problems.

When necessary make fine adjustments by means of the R-value potentiometer (2).

Make sure that the yellow LED is lit when the level is obtained.

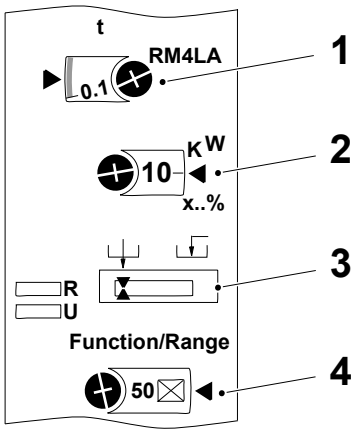


1 Time value
2 R-value potentiometer
3 Functionality selector
4 Function/range selector

This page intentionally left blank

# 2 General

TechPub_2614345_0106 - 0201_3055126_01.fm

## Description

| | |
|---|---|
| SPC Reference | 3057110-0100 |

This chapter includes the technical data and the tools required for the Headspace Unit.

TechPub_2614345_0106 - 0201_3055126_01.fm

2.1 Technical Data . . . . . 2 - 5

2.1.1 General . . . . . 2 - 5

2.1.2 Nitrogen Supply for HI . . . . . 2 - 6

2.2 Templates and Tools . . . . . 2 - 7

TechPub_2614345_0106 - 0201_3055126_01.fm

This page intentionally left blank

TechPub_2614345_0106 - 0201_3055126_01.fm

# 2.1 Technical Data

## 2.1.1 General

| Process phase | Unit | Location | Value |
|---|---|---|---|
| Preparation | Air flow | Nozzle 0.3<br>Nozzle 0.4<br>Nozzle 0.5<br>Nozzle 0.6 | 3 - 6.5 l/min<br>4 - 7.5 l/min<br>7.8 - 13 l/min<br>13 - 20 l/min |
| Heat sterilization | Air pressure | Gas circuit | 5 - 6 bar<br>(0.5 - 0.6 MPa) |
| End of heat sterilization | Air temperature | Heater output | 370°C |
| Spraying | Air pressure | Spraying circuit | 3 bar<br>(0.3 Mpa) |
| End of spraying | $H_2O_2$ temperature | Nozzle input | 25º C over the temperature recorded at the beginning of step SPRAYING. |
| Drying | Air temperature | Heater output | 300ºC - 360º C<br>(0-120 sec.)<br>330ºC - 360º C<br>(rest of Drying) |
| Production | Air/$N_2$ pressure | Gas circuit | Dependent upon product and amount of headspace |
| | Air/$N_2$ temperature | Heater output | 330°C - 360°C |
| | Air/$N_2$ flow | Gas circuit | Dependent upon product and amount of headspace |
| Cleaning | Cleaning agent temperature | Nozzle input | Temperature of CIP |
| All phases | Temperature | Heating element | <720°C |

TechPub_2614345_0106 - 0201_3055126_01.fm

## 2.1.2 Nitrogen Supply for HI

| Characteristics | Value | Notes |
|---|---|---|
| Quality | Nitrogen must comply with local regulations and specifications. In the absence of local regulations and specifications follow either the European Directive 1996/77/EC or the US Code of Federal Regulations 21CFR184.1540 | |
| Supply pressure | 600 - 700 kPa (6 - 7 bar) [60 - 100 psi] | This may be from a permanent connection or from a gas bottle |
| Consumption | 2 - 5 + headspace volume Nl/min | The 2 to 5 Nl/min represents the amount of nitrogen consumed during the HI process.<br>The nominal headspace volume Nl/min represents the amount of nitrogen determined by the local customized headspace setting. Both amounts are dependent on the type of package and product being produced. |

TechPub_2614345_0106 - 0201_3055126_01.fm

# 2.2 Templates and Tools

| Illustration | Description |
|---|---|
| 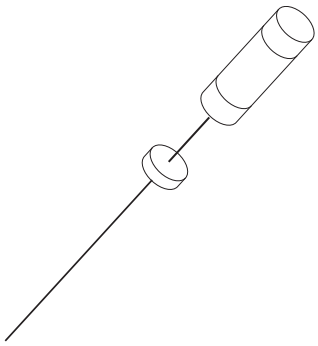 | Reamer<br>TP No. 90600-5057 for nozzle Ø 0.3<br>TP No. 90600-5347 for nozzle Ø 0.4<br>TP No. 90600-5348 for nozzle Ø 0.5<br>TP No. 90600-5349 for nozzle Ø 0.6<br>**1.2 Nozzle Unit** |

TechPub_2614345_0106 - 0201_3055126_01.fm

This page intentionally left blank

TechPub_2614345_0106 - 0201_3055126_01.fm

## F

Filling Pipe (TP A3/Flex) - Fit . . . . . 1 - 38
Filling Pipe (TP A3/Flex) - Set Position . . . . . 1 - 44
Filling Pipe (TP A3/Speed) - Fit . . . . . 1 - 15
Filling Pipe (TP A3/Speed) - Set Position . . . 1 - 24
Filling Pipe (TP A3/Flex) - Remove . . . . . 1 - 33
Filling Pipe (TP A3/Speed) - Remove . . . . . 1 - 8

## H

Heater - Check Electrical Terminals . . . . . 1 - 71
Heater - Check No-return Valve . . . . . 1 - 76
Heater - Check Peroxide Filter . . . . . 1 - 68
Heater - Check Thermocouples . . . . . 1 - 73

## L

Level Control - LED Description . . . . . 1 - 95
Level Control - Set . . . . . 1 - 97

## N

Nozzle Unit - Change O-rings and Diaphragm 1 - 50
Nozzle Unit - Check Thermocouple . . . . . 1 - 64
Nozzle Unit - Clean Nozzle . . . . . 1 - 60
Nozzle Unit - Modify (from HI to HI bypassed) 1 - 65
Nozzle Unit - Set Proximity Switches . . . . . 1 - 55

## P

Pneumatic Panel - Change Filters . . . . . 1 - 89
Pneumatic Panel - Check Flow Switch . . . . . 1 - 88
Pneumatic Panel - Set I/P Transducer . . . . . 1 - 90
Pneumatic Panel - Set Pressure Switch . . . . 1 - 85

## S

Spray Tank - Check . . . . . 1 - 78
Spray Tank - Clean Filter . . . . . 1 - 82
Spray Tank - Clean Peroxide Filter . . . . . 1 - 80
Spray Tank - Set Pressure . . . . . 1 - 84

TechPub_2614345_0104 - MM_3047408_0103IOM.fm

This page intentionally left blank

TechPub_2614345_0104 - MM_3047408_0103IOM.fm

***Note!*** *This page is generated* ***automatically****.*
*using the* ***variable definitions*** *made in the* ***front page*** *file!*

# Headspace Unit
**3057110-0100**
Issue 2011-10 Doc. No. MM-3047408-0103

# Headspace Unit 1(2)
**3057110-0100**
Issue 2011-10 Doc. No. MM-3047408-0103


# Headspace Unit
**3057110-0100**
Issue 2011-10 Doc. No. MM-3047408-0103

# Headspace Unit 1(2)
**3057110-0100**
Issue 2011-10 Doc. No. MM-3047408-0103

# Headspace Unit
**3057110-0100**
Issue 2011-10 Doc. No. MM-3047408-0103

# Headspace Unit 1(2)
**3057110-0100**
Issue 2011-10 Doc. No. MM-3047408-0103

# Headspace Unit
**3057110-0100**
Issue 2011-10 Doc. No. MM-3047408-0103

# Headspace Unit 1(2)
**3057110-0100**
Issue 2011-10 Doc. No. MM-3047408-0103

# Headspace Unit
**3057110-0100**
Issue 2011-10 Doc. No. MM-3047408-0103

# Headspace Unit 2(2)
**3057110-0100**
Issue 2011-10 Doc. No. MM-3047408-0103

# Headspace Unit
**3057110-0100**
Issue 2011-10 Doc. No. MM-3047408-0103

# Headspace Unit 2(2)
**3057110-0100**
Issue 2011-10 Doc. No. MM-3047408-0103

# Headspace Unit
**3057110-0100**
Issue 2011-10 Doc. No. MM-3047408-0103

# Headspace Unit 2(2)
**3057110-0100**
Issue 2011-10 Doc. No. MM-3047408-0103

# Headspace Unit
**3057110-0100**
Issue 2011-10 Doc. No. MM-3047408-0103

# Headspace Unit 2(2)
**3057110-0100**
Issue 2011-10 Doc. No. MM-3047408-0103

*40 mm Full width* ***Note!*** *This page is generated* ***automatically****.*
*using the* ***variable definitions*** *made in the* ***front page*** *file!*

# Headspace Unit
**3057110-0100**

Issue 2011-10 Doc. No. MM-3047408-0103


# Headspace Unit 1(2)
**3057110-0100**

Issue 2011-10 Doc. No. MM-3047408-0103

# Headspace Unit
**3057110-0100**

Issue 2011-10 Doc. No. MM-3047408-0103

# Headspace Unit 1(2)
**3057110-0100**

Issue 2011-10 Doc. No. MM-3047408-0103

# Headspace Unit
**3057110-0100**

Issue 2011-10 Doc. No. MM-3047408-0103

# Headspace Unit 1(2)
**3057110-0100**

Issue 2011-10 Doc. No. MM-3047408-0103

# Headspace Unit
**3057110-0100**

Issue 2011-10 Doc. No. MM-3047408-0103

# Headspace Unit 2(2)
**3057110-0100**

Issue 2011-10 Doc. No. MM-3047408-0103

# Headspace Unit
**3057110-0100**

Issue 2011-10 Doc. No. MM-3047408-0103

# Headspace Unit 2(2)
**3057110-0100**

Issue 2011-10 Doc. No. MM-3047408-0103

# Headspace Unit
**3057110-0100**

Issue 2011-10 Doc. No. MM-3047408-0103

# Headspace Unit 2(2)
**3057110-0100**

Issue 2011-10 Doc. No. MM-3047408-0103