SPC
Spare Parts Catalogue

Headspace by gas Injection
2636960-0100

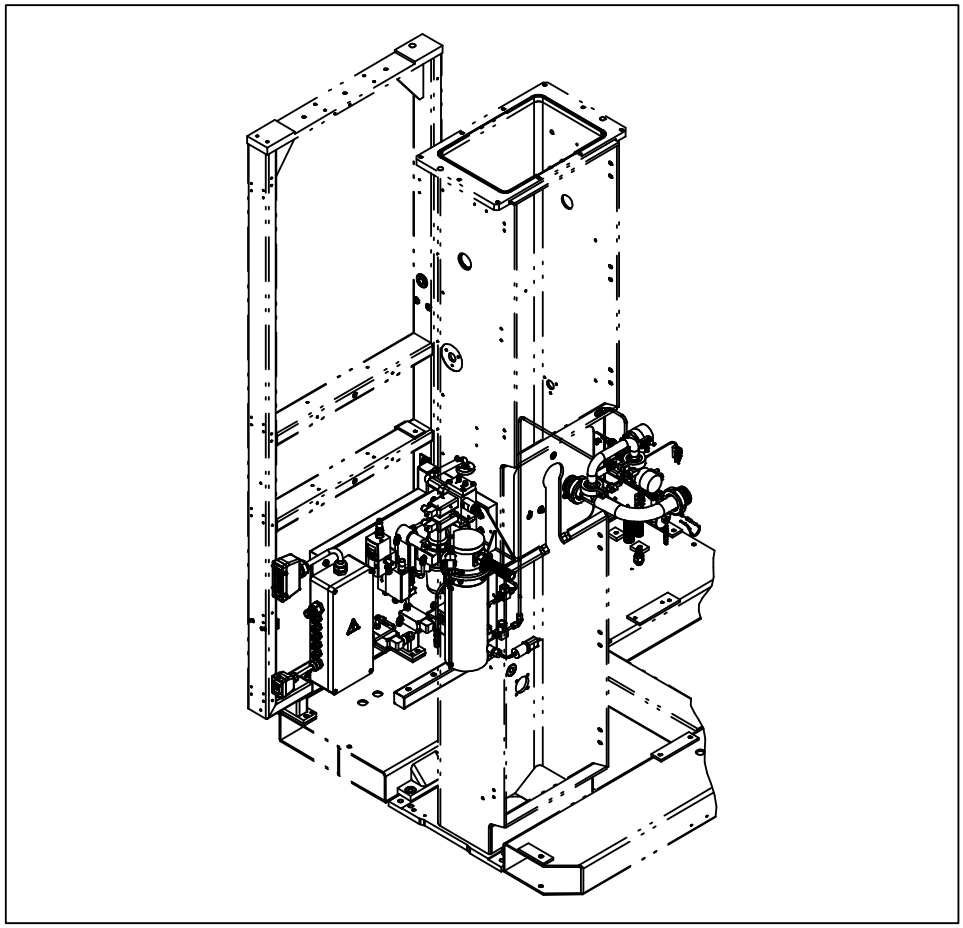

Field Test

Tetra Pak

Doc. No: SPC-2659900-0101

Main Groups of the Machine

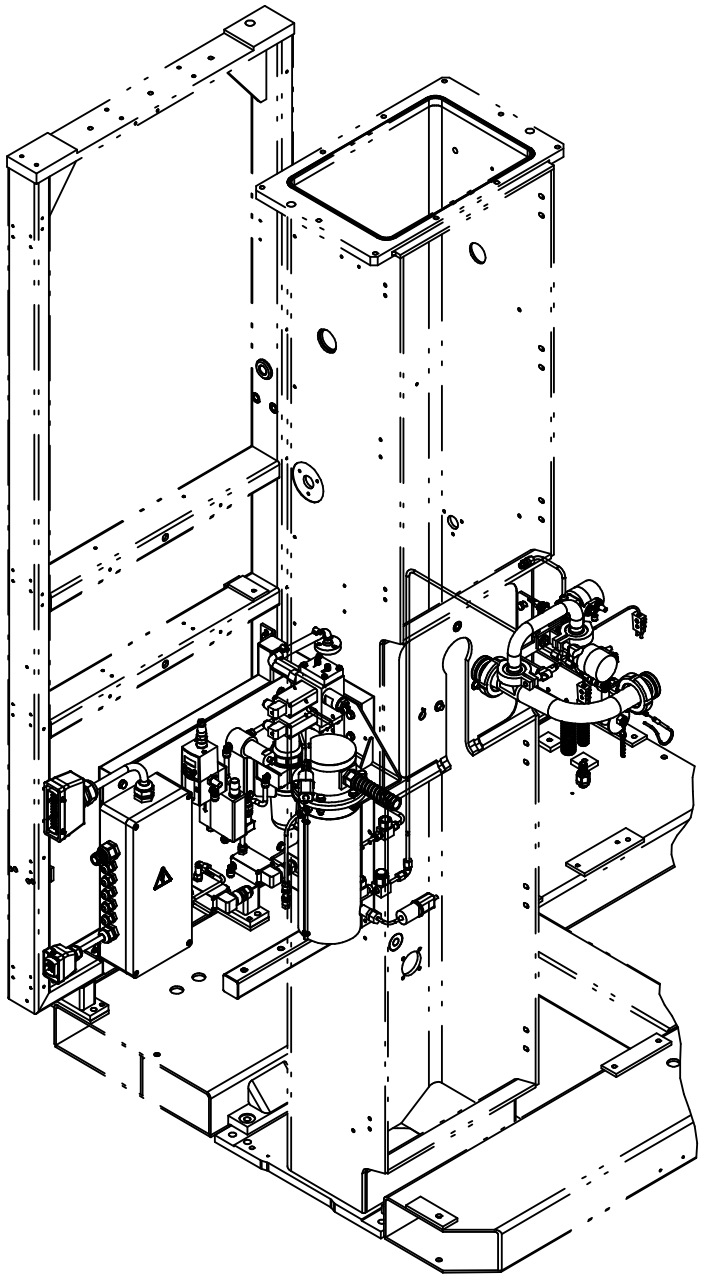

Headspace by gas Injection

For the correct machine data, check your machine specification, supplied with the machine!

This document is valid for:

Series No/Machine No Sign.

SPC
Spare Parts Catalogue

Tetra Pak A/3 Flex
648575-0100

Table of Content:

Introduction ..... , **5**

Optional Kit
RK-2636960-0100 ..... , **9**

Part Number Index ..... , **31**

Electrical Parts Index ..... , **37**

Field Test

Doc. No: SPC-2659900-0101

Issue 2003-11

Tetra Pak

Tetra Pak Carton Ambient S.p.A.

General information

Manufacturer

This machine is produced by:
Tetra Pak Carton Ambient S.p.A.
Via Delfini 1
41100 Modena /Italy

Document producer

This document has been produced by:
Tetra Pak Carton Ambient S.p.A.
Technical Publications
Via Delfini 1
41100 Modena /Italy

Number of pages

This document contains totally **40 pages**, including the first **8** introduction pages.

Copyright © 2003 Tetra Pak Carton Ambient S.p.A.

All rights reserved. No parts of this document may be reproduced or copied in any forms or by any means, without written permission from Tetra Pak Carton Ambient S.p.A..

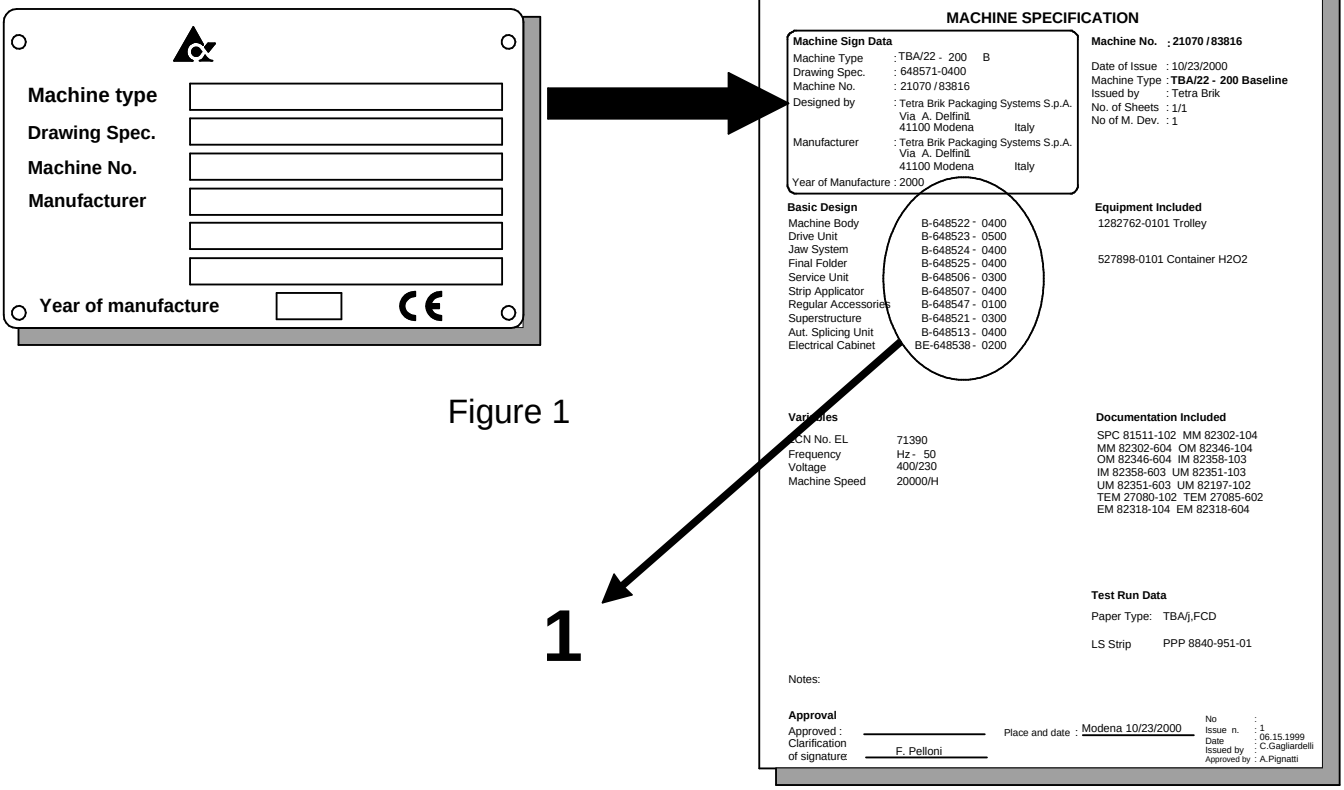

Figure 1

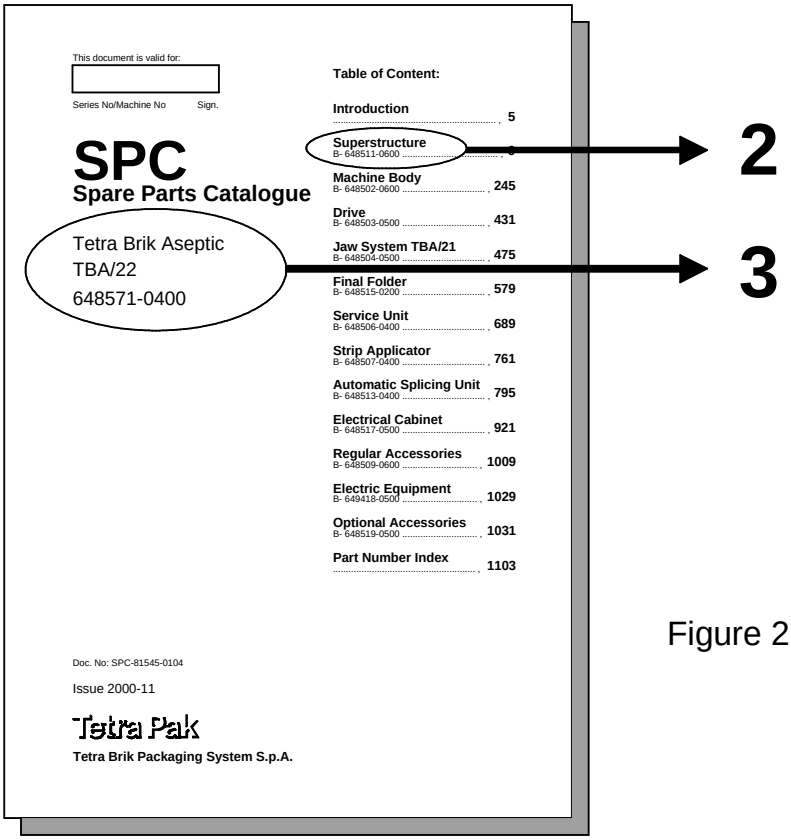

Figure 2

Figure 3 A-648571-0400

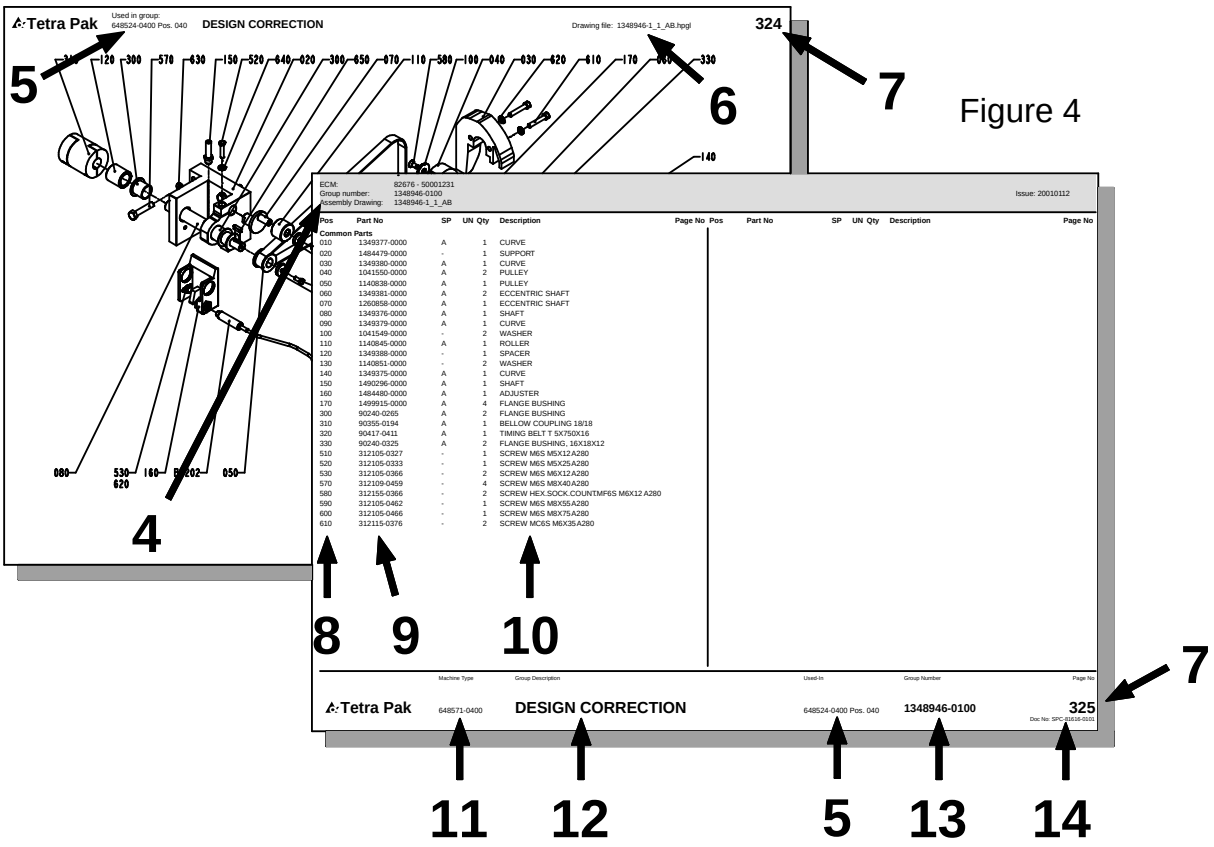

Figure 4

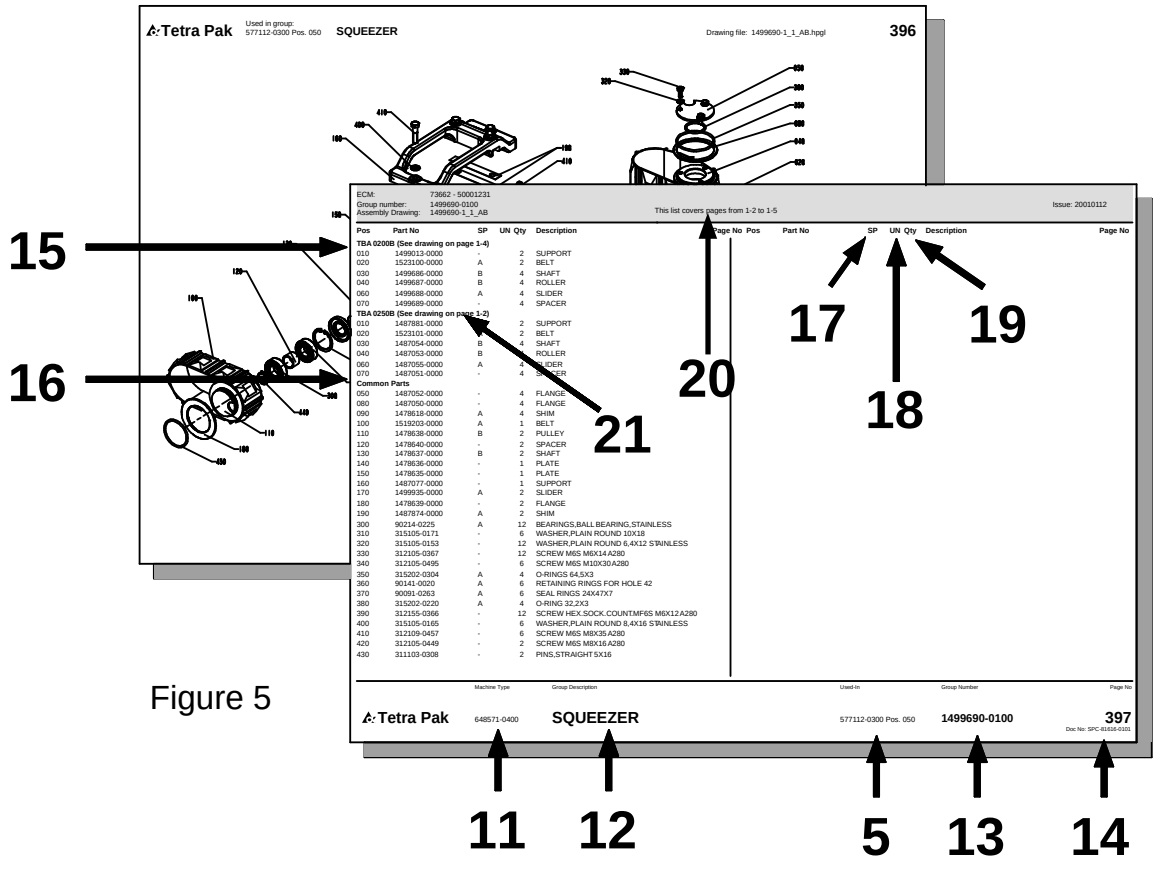

Figure 5

General information

Service

When ordering spare parts for your machine, contact the nearest Tetra Pak service station.

Machine identification

This machine plate is an example of the type of machine plate, attached to the machine frame. The plate carries data needed when contacting Tetra Pak concerning this particular machine **(see Figure 1)**.

Purpose of the Spare Parts Catalogue.

The purpose of the Spare Parts Catalogue (SPC) is to provide the technicians and contact personnel with information on how to find and order spare parts for maintenance and service of the machine.
For instructions of how to replace parts and adjust machine setup, see the Maintenance Manual (MM).

Delivered documentation

The technical documentation delivered with this machine is stated in the Machine Specification.
Note! If any of these documents is missing, it must be reported in the document **Start Up Machine Quality Report**. For more information, see chapter 8 Preparation for Commissioning in the Installation Manual.
It is important that you keep these documents for the life of the equipment, and pass the documents on to any subsequent holder or user of the equipment.

Design modification

The content of this document is in accordance with the design and construction of the machine at the time it was delivered from the Tetra Pak machine production facility.

Further copies

Additional copies can be ordered from the nearest Tetra Pak service station. When ordering technical publications, always quote the document number printed on the front cover of the document concerned.

Tetra Pak Part numbering system

The third and forth digits in the sub-number, specify one unique group which can be ordered. If the forth digit is replaced by a "0", the number combination only points to a bill-of-material document.
The first and second digits in the sub-number, specify the development step (model) of the machine or group. **(see fig. 3)**
Main number of machine /group /article, depending on level.
Prefix, giving information about level, eg.
A = Machine
B = Main section (*)
C = Groups and subgroups
*) Customized distribution machines are registered as B-level as well.

How to find the correct Spare Part Number

A. Check that the data on your machine sign, and /or machine specification, corresponds with the catalogue.**(see fig.1)**
1) Main groups of the machine

B. The second catalogue sheet contains a table of content for the main groups, included in the catalogue. The information regarding machine and main group status MUST correspond with your machine specification.
Locate and choose the main groups page number (1), in which you want to search for spare parts.
(see fig. 2)
2) Main group
3) Machine type

C. Search in the main group illustration, the item number, which may hold your wanted spare part. Go to the text page below and find the page number for the actual group. **(see fig. 4)**
4) Internal information, such as latest Engineering Change, Bill-of-Material included in the catalogue page and the Assembly Drawing required
5) Used-In reference to next higher level in the machine structure
6) Assembly drawing number including the archive file extension
7) Continuous page numbering through the document
8) Pos number corresponding to illustration
9) Group or article number. Groups having own pages are indicated by a Page reference. Some Part Numbers may contain sub parts, these are listed in *italic font* after their parent item.
10) Group or article description..
11) Machine type including development status
12) Group description
13) Group number (bill-of-material) including development status
14) Document number

D. Continue to the found page number, and search in the illustration for your spare part. Go to the text row for the found item number, and read the part number. Take eventual variant headings in consideration; if you are unsure, read your machine specification. **(see fig. 5)**
15) Variant heading, eg volume, left /right etc.
16) Heading for common parts

17a) SP = Code for articles, which are included into various spare part kits. (from R3 source)
A = Critical Spare Part
B = Non - Critical Spares Part
C = Don't stop function, can bypassed
D = Seldom break, long time production

17b) SP = Code for articles, which are included into various spare part kits. (from AS400 source)
U = Starting-up kit supplied on machine delivery
P = Production kit to be held at production site workshop
S = Service kit to be held at service stations store
C = Central depot kit to be available at the central store

18) UN = Short code for measure units, eg mm, kg etc.
19) Qty = Number of items needed in the complete assembly.

E. Some Groups in the Catalogue may span over multiple pages, due to long text pages and/ or need of multiple drawings. When this occurs, a note (*This list covers pages from x-2 to x-5*) is written in the text page header.
20) List length information

F. When the list has more then one variant and each variant has its own assembly drawing dedicated, a page reference to the right drawing is given by the note *(See drawing on page: x-2)* after the variant heading.
21) Drawing reference information

SPC
Spare Parts Catalogue

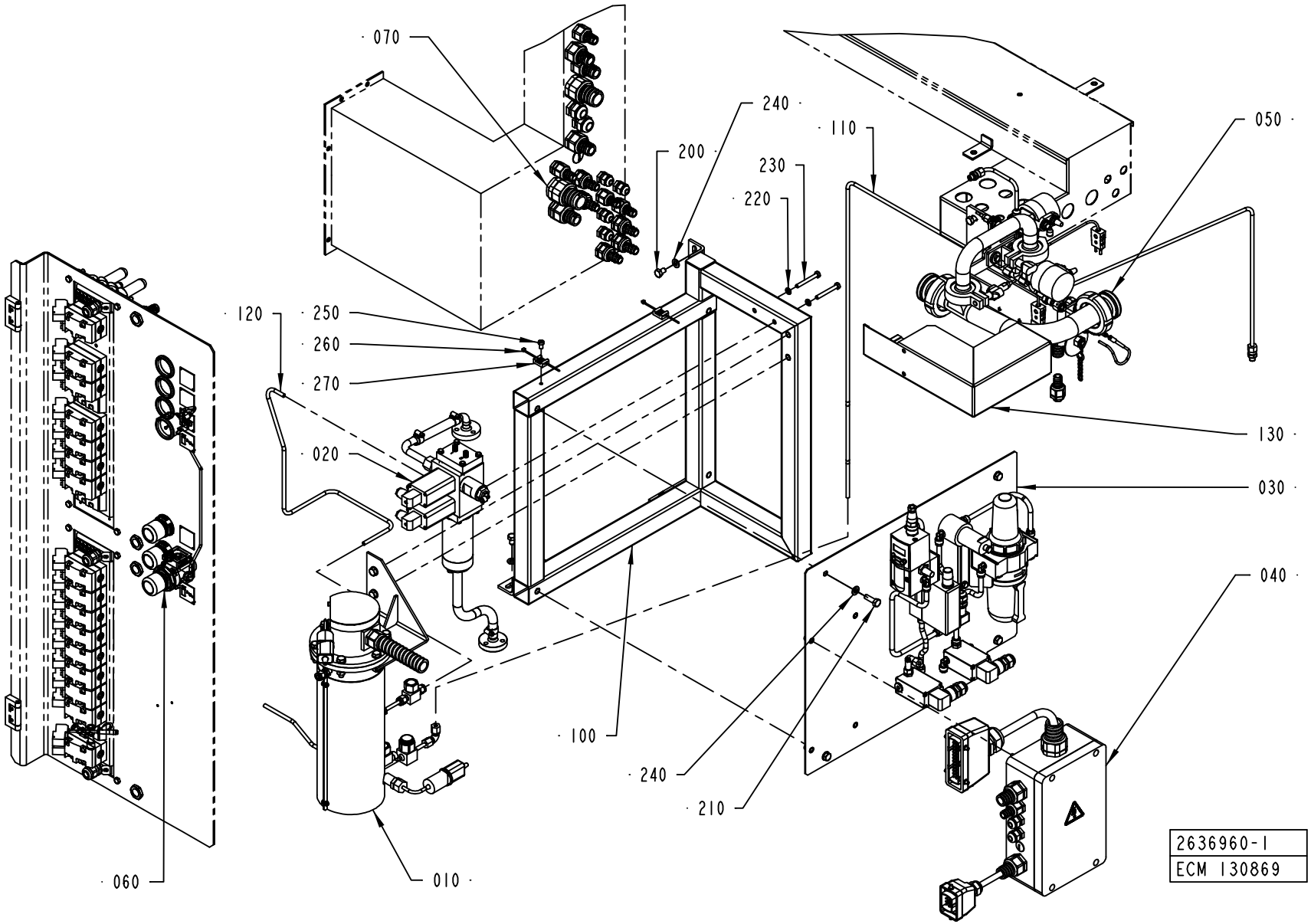
· 070
240 ·
· 110
050 ·
200 ·
230
· 220
120 ·
· 250
· 260
· 270
· 020
130 ·
030 ·
040 ·
· 100
· 240
· 210
· 060
· 010
2636960-1
ECM 130869

ECM: 140219 - 20031113
Group number: 2636960-0100
Assembly Drawing: 2636960-1_1_AA

Pos	Part No	SP	UN	Qty	Description	Page No
-						
005	2641478-0101	-		1	DOCUMENT FOLDER	
006	2649168-0000	-		1	PNEUMATIC DIAGRAM	
007	2649169-0000	-		1	FUNCTION DIAGRAM	
010	2607082-0100	-		1	HEATER	**13**
020	2539458-0100	-		1	SPRAY TANK	**15**
030	2562893-0100	-		1	PNEUMATIC PANEL	**17**
040	2564106-0100	-		1	CONNECTION BOX	**19**
050	2632642-0100	-		1	NOZZLE UNIT	**23**
060	2640820-0100	-		1	VALVE PANEL	**25**
070	2649165-0100	-		1	CABLE DUCT	**27**
080	2651328-0100	-		1	ELECTRIC MATERIALS	**29**
100	2629327-0000	-		1	FRAME	
110	2629325-0000	-		1	PIPE	
120	2629326-0000	-		1	PIPE	
130	2651326-0000	-		1	TOUCH GUARD	
200	312105-0447	-		6	SCREW M6S ISO 4017 M8X12 A480	
210	312105-0453	-		4	SCREW M6S ISO 4017 M8X25 A480	
220	315105-0153	-		2	WASHER BRB6,4X12RFR	
230	312105-0380	-		2	SCREW M6S ISO 4014 M6X50 A480	
240	315105-0165	-		10	WASHER BRB8,4X16RFR	
250	312125-0364	-		2	SCREW SLOT.PAN HD. MCS 6X10 A480	
260	352113-0101	-		2	CLIP STRIP, 92X2,5 MM	
270	352113-0204	-		2	ANCHOR PLATES FOR STRIPS, TYPE TM3S25-M	

Pos	Part No	SP	UN	Qty	Description	Page No

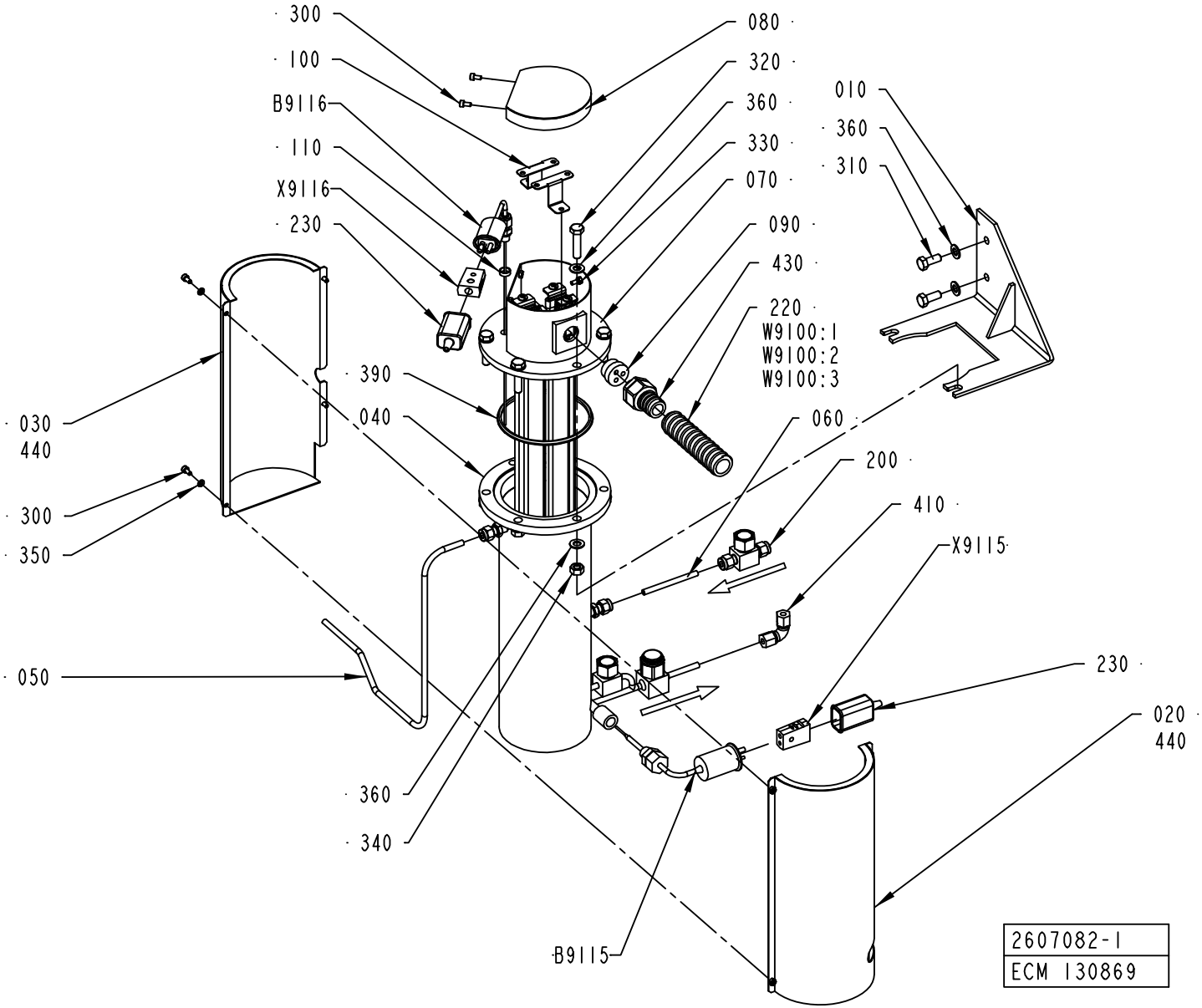
300
100
B9116
110
X9116
230
080
320
360
330
070
090
430
220
W9100:1
W9100:2
W9100:3
010
360
310
390
040
030
440
300
350
050
060
200
410
X9115
230
020
440
360
340
B9115
2607082-1
ECM 130869

ECM: 140210 - 20031113
Group number: 2607082-0100
Assembly Drawing: 2607082-1_1_AA

Pos	Part No	SP	UN	Qty	Description	Page No
-						
010	2629324-0000	-		1	BRACKET	
020	2629322-0000	-		1	COVER	
030	2629323-0000	-		1	COVER	
040	2629321-0000	-		1	COIL	
050	2651329-0000	-		1	PIPE	
060	2562307-0000	-		1	PIPE	
070	2558137-0000	A		1	HEATING ELEMENT	
080	2562315-0000	-		1	PLUG	
090	2579745-0000	-		1	INSERT	
100	2598084-0000	-		2	PLATE	
110	2598085-0000	-		1	SPACER	
200	90230-0064	A		1	CHECK VALVE, 6 MM HIGH TEMP.	
220	90152-0051	-	M	4	SPIRAL CONDUIT, 25X18, UL 1816	
230	90326-0012	-		2	PROTECTIVE COVER, T31A4618	
300	312115-0287	-		6	SCREW ISO4762 M4X8 A4	
310	312105-0451	-		2	SCREW M6S ISO 4017 M8X20 A480	
320	312109-0457	-		6	SCREW M6S ISO 4017 M8X35 A480	
330	312607-0312	-		1	HEXAGON NUT, EN 24032 M6M M4 A480	
340	312605-0318	-		6	HEXAGON NUT, M6M M8 A280	
350	315105-0136	-		4	WASHER BRB4,3XRFR	
360	315105-0165	-		14	WASHER BRB8,4X16RFR	
390	315229-0208	A		1	GASKET 97,4X105,4X3,7 MM 4"	
410	342737-0204	-		1	CONN. ELBOW W-6 LRFR	
430	353244-0003	-		1	EXTENDED WITHOUT INSERT, HIGH TEMP, PG13	
440	90411-0001	-	M	1	INSULATING MAT	
B9115	90326-0053	A		1	THERMOCOUPLE, 12826-35	
B9116	90459-2122	A		1	THERMOCOUPLE, EN-5130060-0001	
W9100:1	90459-3165	A	M	7	CABLE ÖLFLON PTFE 1X4,72MM² BLACK	
W9100:2	90459-3165	A	M	7	CABLE ÖLFLON PTFE 1X4,72MM² BLACK	
W9100:3	90459-3154	A	M	7	CABLE ÖLFLON PTFE 1X4,72MM² YELLOW-GREEN	
X9115	90326-0020	-		1	PLUG, FEMALE YELLOW CR-AL	
X9116	90326-0020	-		1	PLUG, FEMALE YELLOW CR-AL	

Pos	Part No	SP	UN	Qty	Description	Page No

Machine Type | Group Description | Used-In | Group Number | Page No

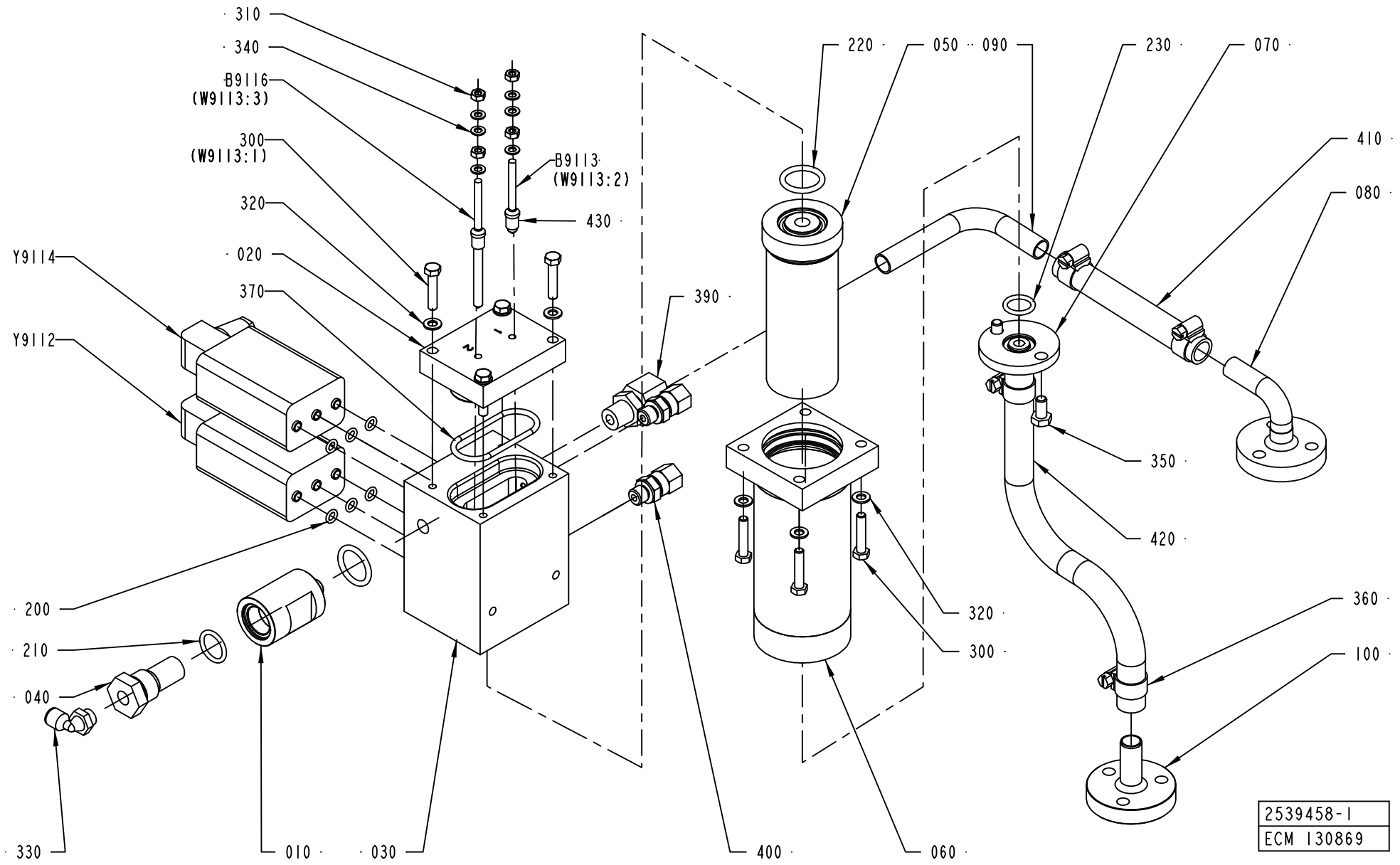
310
340
B9116
(W9113:3)
300
(W9113:1)
320
020
370
Y9114
Y9112
B9113
(W9113:2)
430
390
220
050
090
230
070
410
080
350
420
320
300
360
100
200
210
040
330
010
030
400
060
2539458-1
ECM 130869

ECM: 130895 - 20031113
Group number: 2539458-0100
Assembly Drawing: 2539458-1_1_AA

Pos	Part No	SP	UN	Qty	Description	Page No
-						
010	1519486-0000	-		1	FILTER HOUSE	
020	2553167-0000	A		1	LID	
030	2512939-0000	A		1	DISTRIBUTOR BLOCK	
040	450833-0000	A		1	FILTER	
050	554141-0000	A		1	FILTER	
060	554142-0000	A		1	FILTER HOUSING	
070	2608156-0000	-		1	PIPE FLANGE	
080	2608157-0000	-		1	PIPE FLANGE	
090	2610966-0000	-		1	PIPE	
100	2649166-0000	-		1	PIPE FLANGE	
200	927420-0001	A		6	O-RING 5.1X1.6 SILICON	
210	927421-0004	A		1	O-RING 15.3X2.4 SILICON	
220	927422-0001	A		2	O-RING 19.2X3 SILICON	
230	927421-0003	A		1	O-RING 13.3X2.4 SILICON	
300	312105-0333	-		8	SCREW M6S ISO 4017 M5X25 A480	
310	312605-0312	-		4	HEXAGON NUT, M6M M4 A280	
320	315105-0146	-		8	BRICKA BRB5,3X10RFR	
330	90458-2956	-		1	ELBOW PIPE JOINT, EXT.THREAD, D=6MM-G1/8	
340	315105-0136	-		6	WASHER BRB4,3XRFR	
350	312105-0366	-		2	SCREW M6S M6X12 A280	
360	342991-0101	-		4	HOSE CLIP,WORM DRIVE TYPE (13)-16	
370	315202-0224	A		1	O-RING 42,2X3 MM	
380	90330-0066	-		1	PLUG, EXT. G-THREAD, G1/8	
390	90030-0088	-		1	CONN. STR., 12-R1/4, EXT. THREAD	
400	90030-0184	-		1	CONN. STR. GA-6-G1/8	
410	90166-0161	-	MM	110	HOSE	
420	90166-0161	-	MM	230	HOSE	
430	90458-2906	-	MM	16	HOSE, SILICONE, 60 SHORE, 4/6 MM	
B9113	2559045-0001	A		1	ELECTRODE	
B9116	2559045-0002	A		1	ELECTRODE	
Y9112	90042-0203	A		1	SOLENOID VALVE BURKERT	
Y9114	90042-0203	A		1	SOLENOID VALVE BURKERT	

Pos	Part No	SP	UN	Qty	Description	Page No

Machine Type | Group Description | Used-In | Group Number | Page No

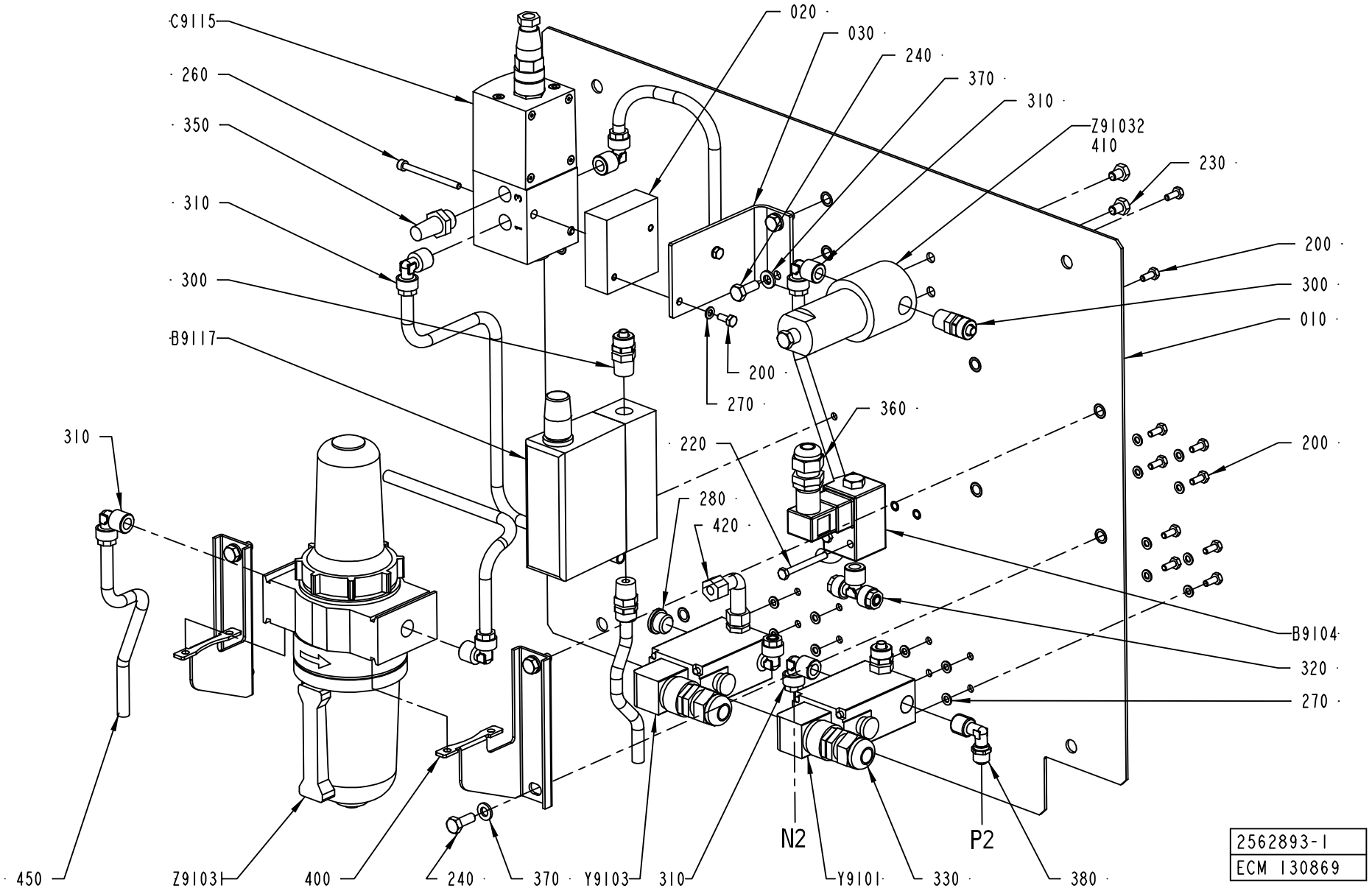
C9115
260
350
310
300
B9117
310
450
Z9103
400
240
370
Y9103
310
020
030
240
370
310
Z91032
410
230
200
300
010
200
270
360
220
280
420
200
B9104
320
270
N2
P2
Y9101
330
380
2562893-1
ECM 130869

ECM: 132091 - 20031113
Group number: 2562893-0100
Assembly Drawing: 2562893-1_1_AA

Pos	Part No	SP	UN	Qty	Description	Page No
-						
010	2564607-0000	-		1	PLATE	
020	2511330-0000	-		1	SPACER	
030	2564606-0000	-		1	SUPPORT PLATE	
200	312105-0289	-		12	SCREW M6S ISO 4017 M4X10 A480	
220	312105-0303	-		2	SCREW M6S ISO 4017 M4X40 A480	
230	312105-0362	-		2	SCREW M6S ISO 4017 M6X8 A480	
240	312105-0368	-		6	SCREW M6S M6X16 A280	
260	312115-0305	-		2	SCREW ISO4762 M4X50 A4	
270	315105-0136	-		18	WASHER BRB4,3XRFR	
280	342713-0210	-		1	PLUG, EXT THREAD HEX SOCKET 8638-00-140	
300	342920-0122	-		4	STRAIGHT COUPLING,EXT.THREADED 8/6-R1/4"	
310	342930-0122	-		7	ELBOW 90 COUPL.,EXT.THREAD 8/6-R1/4"	
320	342940-0122	-		1	T-COUPLING,EXT.THREAD 8/6-R1/4"	
330	352103-0106	-		2	CABLE GLAND, ST 11, PR18,6/PG11	
350	346800-0110	-		1	SILENCER FILTER R1/4"	
360	352103-0101	-		1	CABLE GLAND, ST 9, PR15,2/PG9	
370	315105-0153	-		6	WASHER BRB6,4X12RFR	
380	342930-0114	-		1	ELBOW 90 COUPL.,EXT.THREAD 6/4-R1/4"	
400	90236-0041	-		1	BRACKET	
410	90277-0324	A		1	FILTER CARTRIDGE 050-11-A	
420	90030-0203	-		1	ADJUSTABLE ELBOW CONNECTION,EXT 6-G1/4	
450	90166-0013	-	MM	2000	TUBE 8 MM PA BLUE	
B9104	90274-0110	A		1	PRESSURE SWITCH, 50 - 1000 KPA	
B9117	90458-2619	A		1	FLOW METER, D-6230-HGB-BB-AV-99-0-N2	
C9115	90459-1420	A		1	PROPORTIONAL VALVE 0 - 10V/0-6 BAR	
	90458-1262	*-*		*1*	*CONNECTOR 131028001 FOR PROP. VALVE*	
Y9101	90042-0171	A		1	SOLENOID VALVE BUERKERT	
	90042-0466	*C*		*1*	*DIAPHRAGM 330.95.2 VITON*	
Y9103	90042-0171	A		1	SOLENOID VALVE BUERKERT	
	90042-0466	*C*		*1*	*DIAPHRAGM 330.95.2 VITON*	
Z91031	90277-0104	A		1	FILTER F64B-2GN-ARO	
	90113-0457	*-*		*1*	*FILTER ELEMENTS*	
	90113-0458	*-*		*1*	*FILTER ELEMENTS*	
Z91032	90277-0323	A		1	FILTER HOUSING / ART.NO 95S6-1/4 S 5430	

Pos	Part No	SP	UN	Qty	Description	Page No

Machine Type | Group Description | Used-In | Group Number | Page No

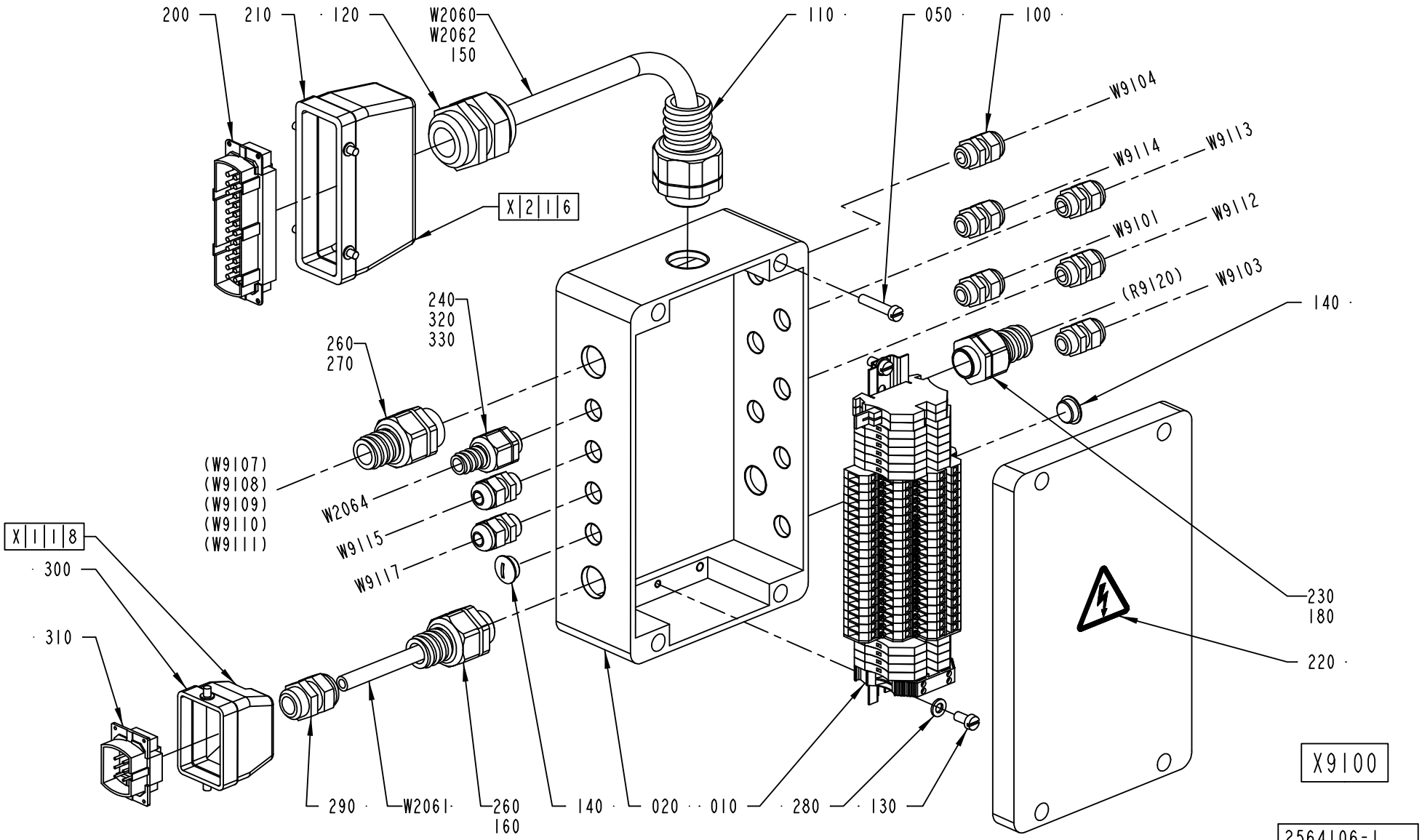
200
210
120
W2060
W2062
150
110
050
100
W9104
W9114
W9113
W9101
W9112
(R9120)
W9103
140
X216
240
320
330
260
270
(W9107)
(W9108)
(W9109)
(W9110)
(W9111)
W2064
W9115
W9117
X118
300
310
230
180
220
290
W2061
260
160
140
020
010
280
130
X9100
2564106-1
ECM 130869

ECM: 132090 - 20031113
Group number: 2564106-0100
Assembly Drawing: 2564106-1_1_AA

Pos	Part No	SP	UN	Qty	Description	Page No
-						
010	2565432-0100	-		1	TERMINAL BLOCK	**21**
020	2564105-0000	-		1	CONNECTION BOX	
050	312125-0374	-		4	SCREW PAN HEAD MCS M6X30 SS	
100	352103-0101	-		8	CABLE GLAND, ST 9, PR15,2/PG9	
110	353243-0007	-		1	EXTENDED WITHOUT INSERT, PG21	
120	352103-0120	-		1	CABLE GLAND, STR 29, PR37,0/PG29	
130	312125-0366	-		2	SCREW PAN HEAD MCS M6X12 SS	
140	90002-0013	-		2	BLANK-OFF PLUG, PR 15,2 SKINDICHT-BLK9	
150	90152-0070	-	MM	5500	METAL HOSE, 32,5X26, UL 2621	
160	90152-0051	-	MM	7000	SPIRAL CONDUIT, 25X18, UL 1816	
180	90152-0051	-	MM	500	SPIRAL CONDUIT, 25X18, UL 1816	
200	90110-0150	A		1	MALE INSERT 121110 0000	
210	90110-0152	-		1	CABLE HOOD 24-POL 70.352.2428.1	
220	359705-0015	A		1	WARNING SIGN ISO, RISK OF ELECTRIC SHOCK	
230	353244-0003	-		1	EXTENDED WITHOUT INSERT, HIGH TEMP, PG13	
240	353243-0001	-		1	EXTENDED WITHOUT INSERT, PG9	
260	353243-0005	-		2	EXTENDED WITHOUT INSERT, PG16	
270	353249-0013	-		1	INSERT, SINGEL HOLE, EK 154/13	
280	315105-0153	-		2	WASHER BRB6,4X12RFR	
290	352103-0108	-		1	CABLE GLAND, ST 13,5 , PR20,4/PG13,5	
300	90110-0157	-		1	CABLE HOOD 6-POL 70.352.0628.1	
310	90110-0159	A		1	MALE INSERT 70.310.0640.0	
320	353249-0008	-		1	INSERT, SINGEL HOLE, EK 152/7	
330	90152-0058	-	MM	7000	SPIRAL CONDUIT, 15X9, UL 0909	
W2060	90220-0201	-	MM	5500	CABLE OLFLEX 18X0,75 MM2	
W2061	351150-0417	-	MM	7000	CABLE OLFLEX 3X2,5 MM2 LIGHT/GREY	
W2062	90220-0165	-	MM	7000	SCR. CABLE 5X0,34MM2	
W2064	90220-0034	-	MM	7000	THERMOCOUPLE CABLE K/ 2X0,5MM2	
W9101	351150-0403	-	MM	1400	CABLE OLFLEX 3X0,75 MM2 LIGHT/GREY	
W9103	351150-0403	-	MM	1100	CABLE OLFLEX 3X0,75 MM2 LIGHT/GREY	
W9104	351150-0403	-	MM	1100	CABLE OLFLEX 3X0,75 MM2 LIGHT/GREY	
W9112	351150-0403	-	MM	800	CABLE OLFLEX 3X0,75 MM2 LIGHT/GREY	
W9113	351150-0404	-	MM	1000	CABLE OLFLEX 4X0,75 MM2 LIGHT/GREY	
W9114	351150-0403	-	MM	900	CABLE OLFLEX 3X0,75 MM2 LIGHT/GREY	
W9115	90220-0165	-	MM	1300	SCR. CABLE 5X0,34MM2	
W9117	90220-0165	-	MM	1400	SCR. CABLE 5X0,34MM2	

Pos	Part No	SP	UN	Qty	Description	Page No

Machine Type | Group Description | Used-In | Group Number | Page No

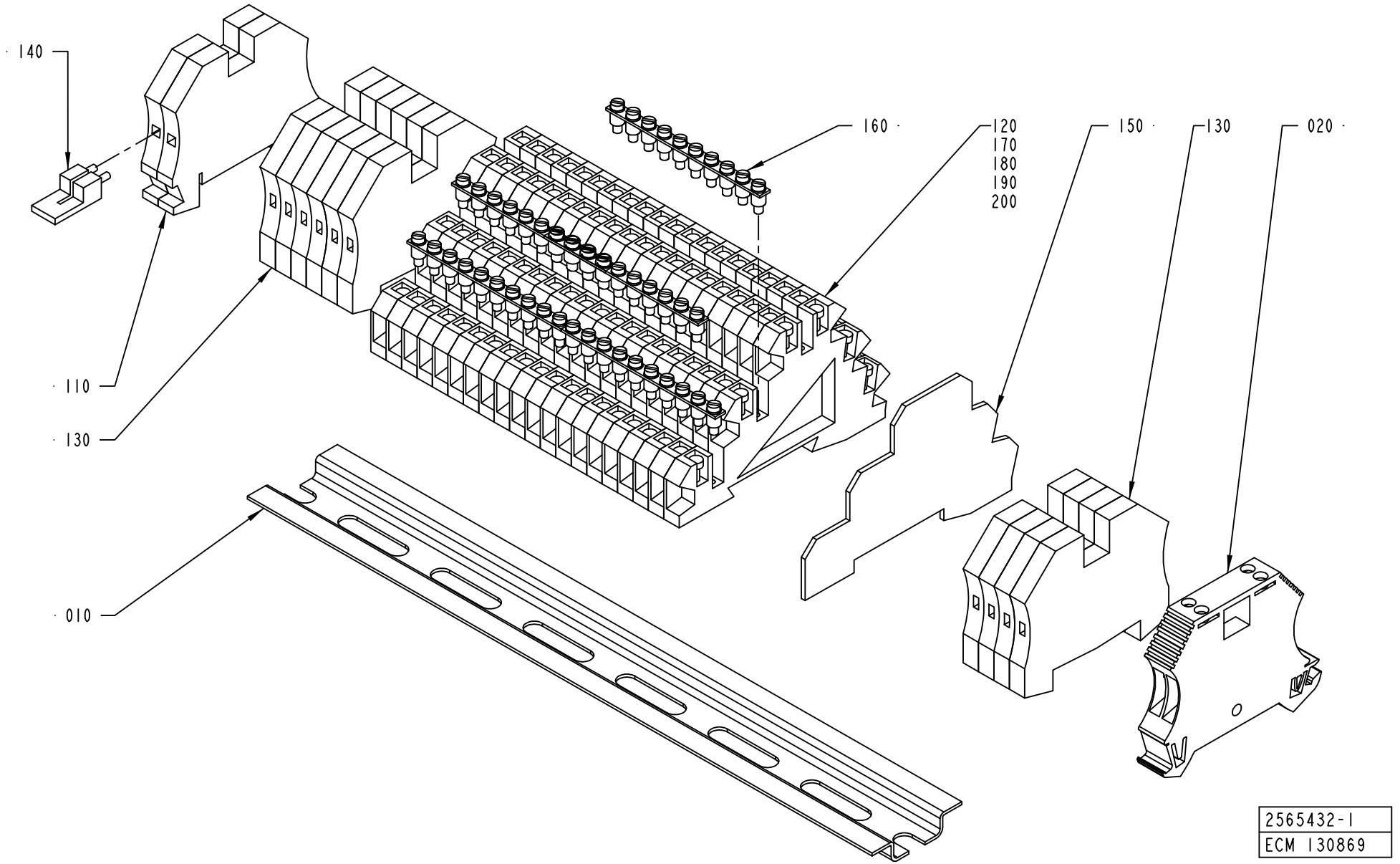
140
160
120
170
180
190
200
150
130
020
110
130
010
2565432-1
ECM 130869

ECM: 130897 - 20031113
Group number: 2565432-0100
Assembly Drawing: 2565432-1_1_AA

Pos	Part No	SP	UN	Qty	Description	Page No
-						
010	1532237-0000	-		1	RAIL	
020	90459-1742	-		1	FEED THROUGH TERMINAL, 1024100	
110	353021-0213	-		2	FEED THROUGH TERMINAL, 10201.0	
120	353021-0302	-		20	TERMINALS,TRIPLE-LEVEL, DLD 2,5/35 PA	
130	353024-0205	-		10	EARTH TERMINAL, 1010.1	
140	353034-0030	-		1	BRIDGE CONNECTOR WQV 2,5/10, 10544.6	
150	353032-0302	-		1	END PLATE WAP	
160	353034-0404	-		5	BRIDGE CONNECTOR Q10, 13131.0	
170	359011-0823	-		1	SET OF SIGNS 6-FW 101-150	
180	359011-0834	-		1	SET OF SIGNS 6-GW(EARTH)	
190	359011-0832	-		1	SET OF SIGNS 6-GW (+)	
200	359011-0833	-		1	SET OF SIGNS 6-GW (-)	

Pos	Part No	SP	UN	Qty	Description	Page No

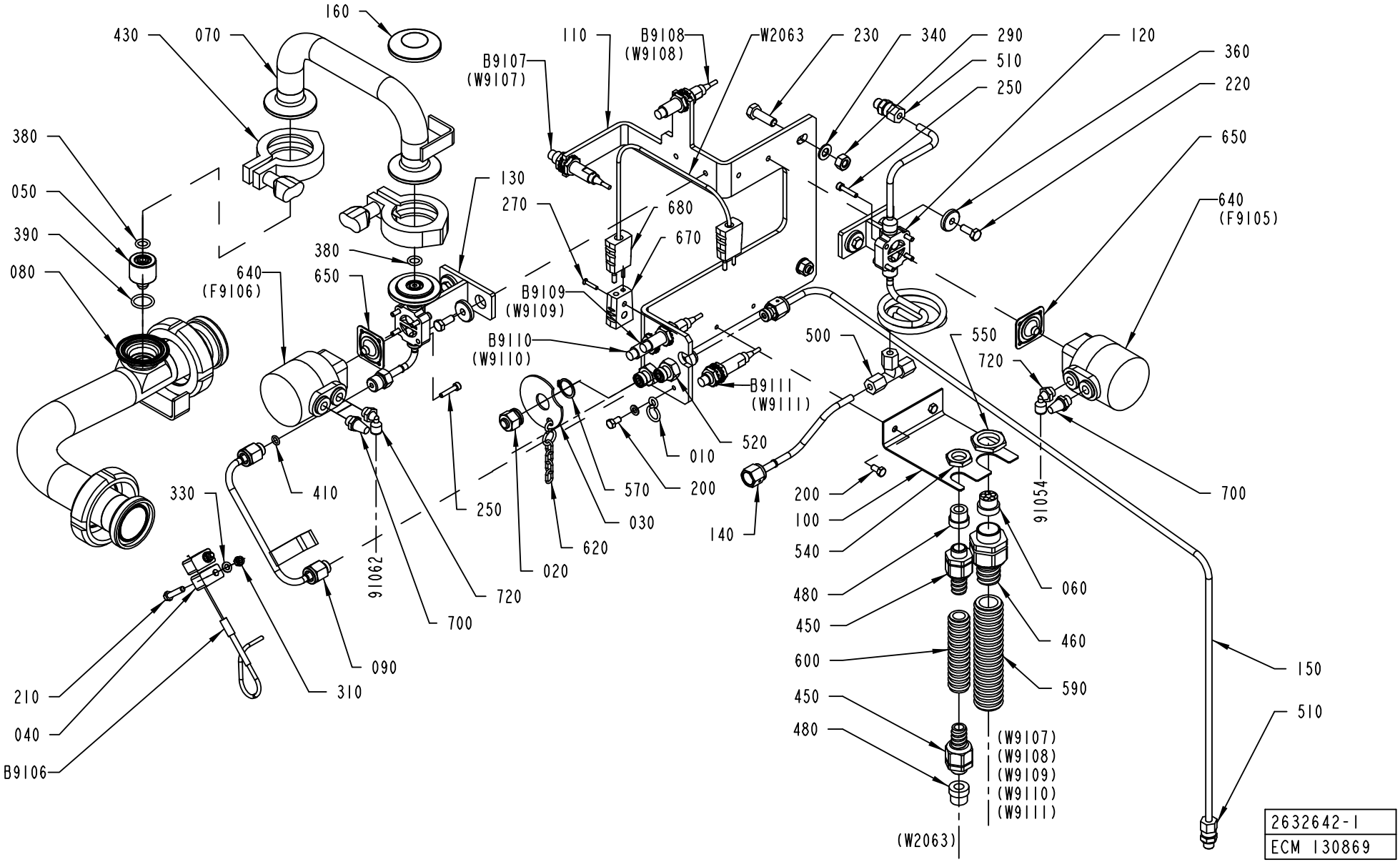
160
430
070
110
B9108
(W9108)
W2063
230
340
290
120
360
B9107
(W9107)
510
250
220
380
650
130
270
680
640
(F9105)
050
670
390
380
080
640
(F9106)
650
B9109
(W9109)
B9110
(W9110)
500
550
720
B9111
(W9111)
520
010
570
200
700
330
410
250
030
200
100
91054
140
620
540
020
91062
720
480
060
450
460
700
600
090
150
210
310
590
450
510
040
480
(W9107)
(W9108)
(W9109)
(W9110)
(W9111)
B9106
(W2063)
2632642-1
ECM 130869

ECM: 140184 - 20031113
Group number: 2632642-0100
Assembly Drawing: 2632642-1_1_AA

Pos	Part No	SP	UN	Qty	Description	Page No
-						
010	209183-0000	-		2	RING	
020	978380-0000	A		1	BLIND PLUG	
030	978381-0000	-		1	WASHER 56X2MM	
040	978440-0000	-		2	CRAMP	
050	1523154-0003	A		1	SPRAY NOZZLE	
050	1523154-0004	A		1	SPRAY NOZZLE	
050	1523154-0005	A		1	SPRAY NOZZLE	
050	1523154-0006	A		1	SPRAY NOZZLE	
060	2559051-0000	-		1	INSERT	
070	2562881-0000	-		1	TRANSITION PIPE	
080	2562882-0000	-		1	ELBOW PIPE	
090	2562883-0000	A		1	PIPE	
100	2564608-0000	-		1	HOLDER	
110	2632638-0000	-		1	HOLDER	
120	2632639-0000	-		1	VALVE BODY	
130	2632640-0000	-		1	VALVE BODY	
140	2632641-0000	-		1	PIPE	
150	2564108-0000	-		1	PIPE	
160	979813-0000	-		1	PLUG	
200	312105-0325	-		3	SCREW M6S ISO 4017 M5X10 A480	
210	312105-0333	-		2	SCREW M6S ISO 4017 M5X25 A480	
220	312105-0368	-		4	SCREW M6S M6X16 A280	
230	312105-0453	-		2	SCREW M6S ISO 4017 M8X25 A480	
250	312115-0295	-		8	SCREW ISO4762 M4X20 A4	
270	312145-0228	-		1	SCREW COUNTERS.SLOT.HD. MFS 3X16 SS	
290	312605-0318	-		2	HEXAGON NUT, M6M M8 A280	
310	312812-0314	-		2	HEXAGON NUT, NY-LOCK M5 A480	
330	315105-0146	-		3	BRICKA BRB5,3X10RFR	
340	315105-0165	-		2	WASHER BRB8,4X16RFR	
360	315125-0153	-		4	WASHER TBRSB 6,4X22X4 A4	
380	315204-0208	A		2	O-RING 9,3X2,4 MM	
390	315204-0214	A		1	O-RING 17,3X2,4 MM	
410	315205-0505	A		5	O-RING 6,07X1,78 MM	
430	342840-0103	-		2	CLAMPING PIECE	
450	353243-0001	-		2	EXTENDED WITHOUT INSERT, PG9	
460	353243-0005	-		1	EXTENDED WITHOUT INSERT, PG16	
480	353249-0009	-		2	INSERT, SINGEL HOLE, EK 152/9	
500	90030-0076	-		1	CONN. T-PIPE T-6	
510	90030-0184	-		2	CONN. STR. GA-6-G1/8	
520	90030-0549	-		2	CONN. STRAIGHT, BULKHEAD, SS-4-VCO-61	
540	90099-0104	-		1	NUT, PR 15,2 (PG9)	
550	90099-0110	-		1	NUT, PR 22,5 (PG16)	
570	90141-0017	-		1	RETAINING RING FOR SHAFT, 17X1MM	
590	90152-0051	-	MM	7000	SPIRAL CONDUIT, 25X18, UL 1816	
600	90152-0059	-	MM	1000	SPIRAL CONDUIT, 18X12, UL 1211	
620	90155-0008	-	MM	300	HANGER CHAIN, 18	
640	90187-0176	A		2	ACTUATOR ECC 008 FOR DIAPHR. VALVE	
650	90187-0325	A		2	DIAPHRAGM, 214/300 AO08 4-B -20-150§C	
670	90326-0020	-		1	PLUG, FEMALE YELLOW CR-AL	
680	90326-0022	-		2	PLUG, MALE YELLOW CR-AL	
700	90328-0003	-		2	SILENCER	
720	90458-2956	-		2	ELBOW PIPE JOINT, EXT.THREAD, D=6MM-G1/8	
B9106	90326-0060	A		1	THERMOCOUPLE, CR-AL	
B9107	90458-0672	A		1	PROXIMITY SENSOR E2E2-X5MB1-5M	
B9108	90458-0672	A		1	PROXIMITY SENSOR E2E2-X5MB1-5M	
B9109	90458-0672	A		1	PROXIMITY SENSOR E2E2-X5MB1-5M	
B9110	90458-0672	A		1	PROXIMITY SENSOR E2E2-X5MB1-5M	
B9111	90458-0672	A		1	PROXIMITY SENSOR E2E2-X5MB1-5M	
W2063	90220-0034	-	MM	7000	THERMOCOUPLE CABLE K/ 2X0,5MM2	

Machine Type Group Description Used-In Group Number Page No

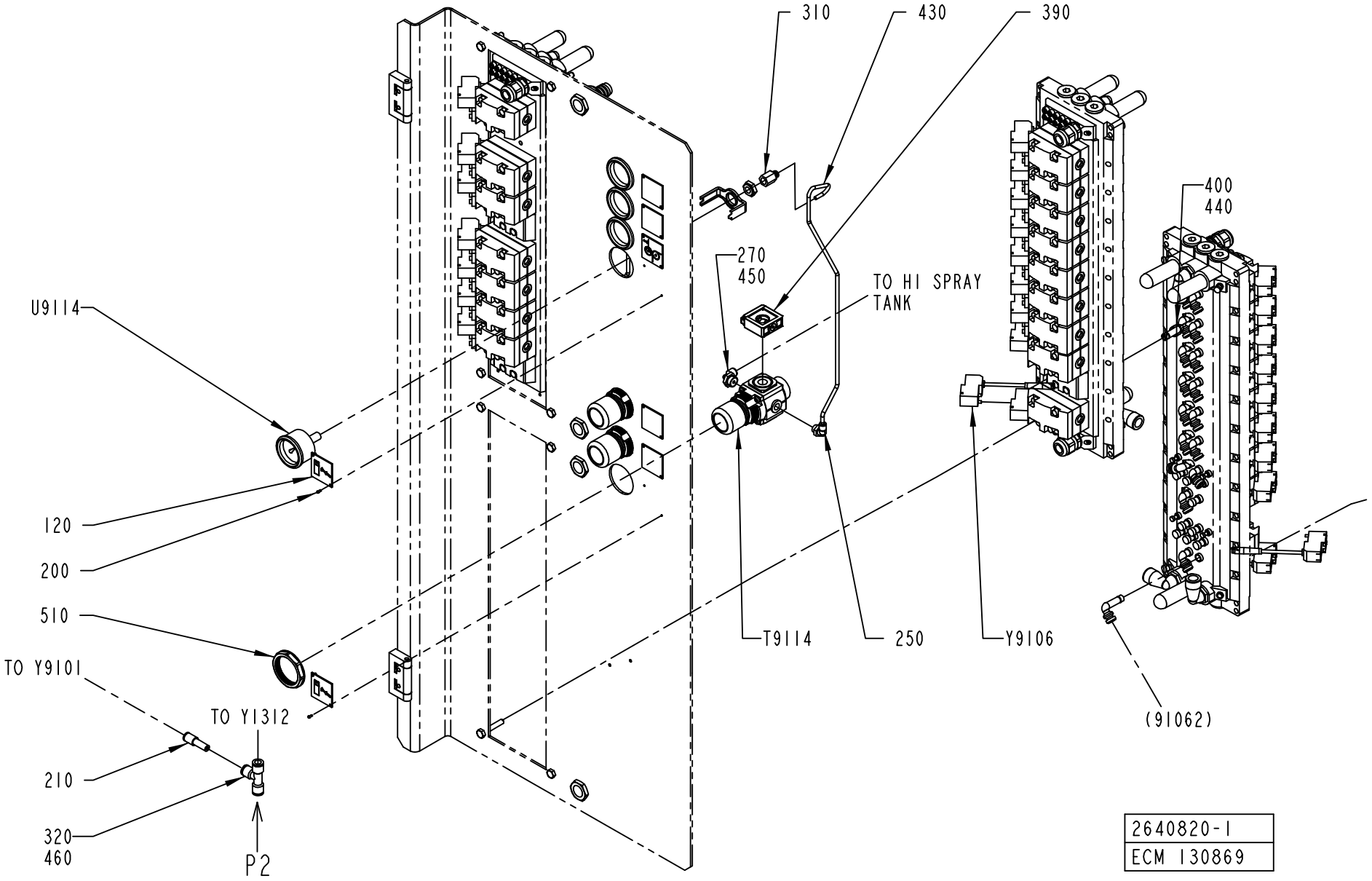
310
430
390
400
440
270
450
TO HI SPRAY TANK
U9114
120
200
510
TO Y9101
TO Y1312
210
320
460
P2
T9114
250
Y9106
(91062)
2640820-1
ECM 130869

ECM: 143261 - 20031113
Group number: 2640820-0100
Assembly Drawing: 2640820-1_1_AA

Pos	Part No	SP	UN	Qty	Description	Page No
-						
120	2640822-0000	-		2	SIGN	
200	312502-0120	-		4	DRIVE SCREW ROUND HEAD KDS 0X5	
210	350006-0003	-		1	PUSH-IN FITTING QS-F-8H-6	
250	90458-2955	-		1	ELBOW PIPE JOINT, EXT.THREAD, D=4MM-G1/8	
270	90458-2957	-		1	ELBOW PIPE JOINT, EXT.THREAD, D=6MM-G1/4	
310	342770-0101	-		1	STRAIGHT COUPLING INT, D=4 MM - G1/8	
320	342748-0103	-		1	T-CONNECTION 8MM	
390	90113-0140	-		1	QUICK CLAMP	
400	90055-0143	-		1	HOSE,ELBOW 90 COUPLING,FPT,6X8MM	
430	90166-0095	-	MM	1000	TUBE 4 MM PA BLUE	
440	90166-0081	-	MM	7000	TUBE 6 MM PA BLUE	
450	90166-0081	-	MM	4000	TUBE 6 MM PA BLUE	
460	90166-0081	-	MM	3000	TUBE 6 MM PA BLUE	
510	90457-0078	-		1	PANEL NUT	
T9114	90113-0469	A		1	MANIFOLD REGULATOR 4 BAR	
U9114	90043-0065	B		1	PRESSURE GAUGE, 2048 D=40 MM	
Y9106	90042-0538	A		1	PILOT VALVE L=500MM	

Pos	Part No	SP	UN	Qty	Description	Page No

Machine Type | Group Description | Used-In | Group Number | Page No

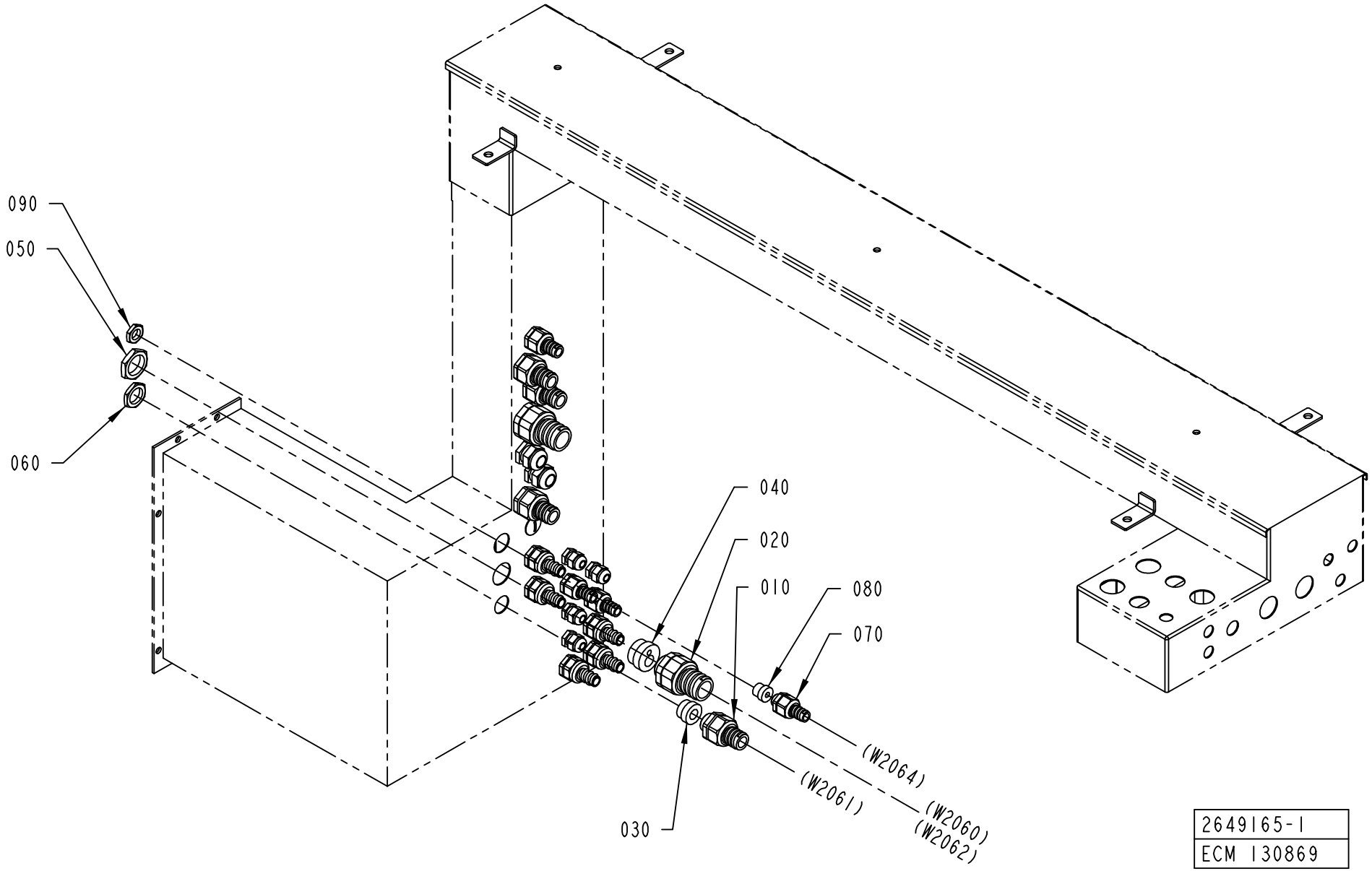

2649165-1
ECM 130869

ECM: 144315 - 20031113
Group number: 2649165-0100
Assembly Drawing: 2649165-1_1_AA

Pos	Part No	SP	UN	Qty	Description	Page No
-						
010	353243-0005	-		1	EXTENDED WITHOUT INSERT, PG16	
020	353243-0007	-		1	EXTENDED WITHOUT INSERT, PG21	
030	353249-0013	-		1	INSERT, SINGEL HOLE, EK 154/13	
040	2649167-0000	-		1	INSERT	
050	90099-0119	-		1	NUT, PR 28,3 (PG21)	
060	90099-0110	-		1	NUT, PR 22,5 (PG16)	
070	353243-0001	-		1	EXTENDED WITHOUT INSERT, PG9	
080	353249-0008	-		1	INSERT, SINGEL HOLE, EK 152/7	
090	90099-0104	-		1	NUT, PR 15,2 (PG9)	

Pos	Part No	SP	UN	Qty	Description	Page No

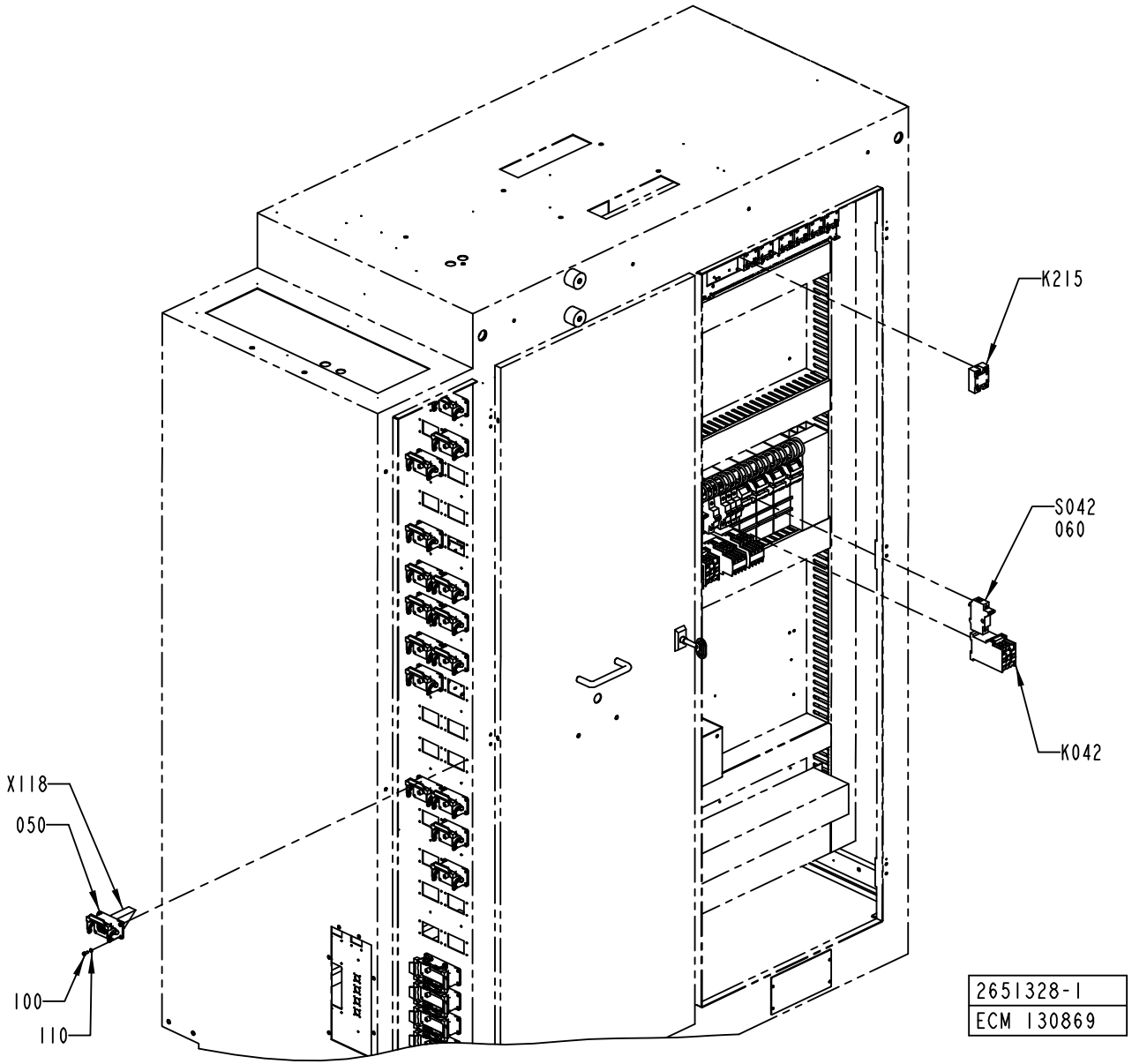
K215
S042
060
K042
X118
050
100
110
2651328-1
ECM 130869

ECM: 149444 - 20031113
Group number: 2651328-0100
Assembly Drawing: 2651328-1_1_AA

Pos	Part No	SP	UN	Qty	Description	Page No
-						
050	90110-0166	-		1	CHASSIS HOUSING 310144-33	
060	90233-0027	-		1	TUBE FUSE, 16A	
	90233-0305	*C*		*1*	*INDICATOR*	
100	312125-0289	-		4	SPåRSKRUV MCS 4X10 A480	
110	315105-0136	-		4	WASHER BRB4,3XRFR	
120	351160-0102	-	MM	5000	CABLE AWM 1X0,75 MM2 DARKBLUE	
130	351161-0105	-	MM	3000	CABLE AWM 1X2,5 MM2 LIGHTBLUE	
140	351162-0105	-	MM	3000	CABLE AWM 1X2,5 MM2 YELLOW-GREEN	
150	351164-0105	-	MM	6000	CABLE AWM 1X2,5 MM2 BLACK	
K042	90075-0127	-		1	CONTACTOR, 4KW 24VDC	
K215	90119-0067	-		1	SOLID-STATE RELAY, H12WD4850	
S042	90233-0303	-		1	FUSE HOLDER, ST10	
X118	90110-0161	-		1	FEMALE INSERT 70 105 0653 0	

Pos	Part No	SP	UN	Qty	Description	Page No

Machine Type | Group Description | Used-In | Group Number | Page No

Tetra Pak

SPC
Spare Parts Catalogue

Part No	Description	Page No
90002-0013	BLANK-OFF PLUG, PR 15,2 SKINDICHT-BLK9	19
90030-0076	CONN. T-PIPE T-6	23
90030-0088	CONN. STR., 12-R1/4, EXT. THREAD	15
90030-0184	CONN. STR. GA-6-G1/8	15, 23
90030-0203	ADJUSTABLE ELBOW CONNECTION,EXT 6-G1/4	17
90030-0549	CONN. STRAIGHT, BULKHEAD, SS-4-VCO-61	23
90042-0171	SOLENOID VALVE BUERKERT	17
90042-0203	SOLENOID VALVE BURKERT	15
90042-0538	PILOT VALVE L=500MM	25
90043-0065	PRESSURE GAUGE, 2048 D=40 MM	25
90055-0143	HOSE,ELBOW 90 COUPLING,FPT,6X8MM	25
90075-0127	CONTACTOR, 4KW 24VDC	29
90099-0104	NUT, PR 15,2 (PG9)	23, 27
90099-0110	NUT, PR 22,5 (PG16)	23, 27
90099-0119	NUT, PR 28,3 (PG21)	27
90110-0150	MALE INSERT 121110 0000	19
90110-0152	CABLE HOOD 24-POL 70.352.2428.1	19
90110-0157	CABLE HOOD 6-POL 70.352.0628.1	19
90110-0159	MALE INSERT 70.310.0640.0	19
90110-0161	FEMALE INSERT 70 105 0653 0	29
90110-0166	CHASSIS HOUSING 310144-33	29
90113-0140	QUICK CLAMP	25
90113-0469	MANIFOLD REGULATOR 4 BAR	25
90119-0067	SOLID-STATE RELAY, H12WD4850	29
90141-0017	RETAINING RING FOR SHAFT, 17X1MM	23
90152-0051	SPIRAL CONDUIT, 25X18, UL 1816	13, 19, 23
90152-0058	SPIRAL CONDUIT, 15X9, UL 0909	19
90152-0059	SPIRAL CONDUIT, 18X12, UL 1211	23
90152-0070	METAL HOSE, 32,5X26, UL 2621	19
90155-0008	HANGER CHAIN, 18	23
90166-0013	TUBE 8 MM PA BLUE	17
90166-0081	TUBE 6 MM PA BLUE	25
90166-0095	TUBE 4 MM PA BLUE	25
90166-0161	HOSE	15
90187-0176	ACTUATOR ECC 008 FOR DIAPHR. VALVE	23
90187-0325	DIAPHRAGM, 214/300 AO08 4-B -20-150§C	23
90220-0034	THERMOCOUPLE CABLE K/ 2X0,5MM2	19, 23
90220-0165	SCR. CABLE 5X0,34MM2	19
90220-0201	CABLE OLFLEX 18X0,75 MM2	19
90230-0064	CHECK VALVE, 6 MM HIGH TEMP.	13
90233-0027	TUBE FUSE, 16A	29
90233-0303	FUSE HOLDER, ST10	29
90236-0041	BRACKET	17
90274-0110	PRESSURE SWITCH, 50 - 1000 KPA	17
90277-0104	FILTER F64B-2GN-ARO	17
90277-0323	FILTER HOUSING / ART.NO 95S6-1/4 S 5430	17
90277-0324	FILTER CARTRIDGE 050-11-A	17
90326-0012	PROTECTIVE COVER, T31A4618	13
90326-0020	PLUG, FEMALE YELLOW CR-AL	13, 23
90326-0022	PLUG, MALE YELLOW CR-AL	23
90326-0053	THERMOCOUPLE, 12826-35	13
90326-0060	THERMOCOUPLE, CR-AL	23
90328-0003	SILENCER	23
90330-0066	PLUG, EXT. G-THREAD, G1/8	15
90411-0001	INSULATING MAT	13
90457-0078	PANEL NUT	25
90458-0672	PROXIMITY SENSOR E2E2-X5MB1-5M	23
90458-2619	FLOW METER, D-6230-HGB-BB-AV-99-0-N2	17
90458-2906	HOSE, SILICONE, 60 SHORE, 4/6 MM	15
90458-2955	ELBOW PIPE JOINT, EXT.THREAD, D=4MM-G1/8	25
90458-2956	ELBOW PIPE JOINT, EXT.THREAD, D=6MM-G1/8	15, 23
90458-2957	ELBOW PIPE JOINT, EXT.THREAD, D=6MM-G1/4	25
90459-1420	PROPORTIONAL VALVE 0 - 10V/0-6 BAR	17
90459-1742	FEED THROUGH TERMINAL, 1024100	21
90459-2122	THERMOCOUPLE, EN-5130060-0001	13
90459-3154	CABLE ÖLFLON PTFE 1X4,72MM² YELLOW-GREEN	13
90459-3165	CABLE ÖLFLON PTFE 1X4,72MM² BLACK	13
209183-0000	RING	23
312105-0289	SCREW M6S ISO 4017 M4X10 A480	17
312105-0303	SCREW M6S ISO 4017 M4X40 A480	17
312105-0325	SCREW M6S ISO 4017 M5X10 A480	23
312105-0333	SCREW M6S ISO 4017 M5X25 A480	15, 23
312105-0362	SCREW M6S ISO 4017 M6X8 A480	17
312105-0366	SCREW M6S M6X12 A280	15
312105-0368	SCREW M6S M6X16 A280	17, 23
312105-0380	SCREW M6S ISO 4014 M6X50 A480	11
312105-0447	SCREW M6S ISO 4017 M8X12 A480	11
312105-0451	SCREW M6S ISO 4017 M8X20 A480	13
312105-0453	SCREW M6S ISO 4017 M8X25 A480	11, 23
312109-0457	SCREW M6S ISO 4017 M8X35 A480	13
312115-0287	SCREW ISO4762 M4X8 A4	13
312115-0295	SCREW ISO4762 M4X20 A4	23
312115-0305	SCREW ISO4762 M4X50 A4	17
312125-0289	SPåRSKRUV MCS 4X10 A480	29

Part No	Description	Page No
312125-0364 ..	SCREW SLOT.PAN HD. MCS 6X10 A480	11
312125-0366 ..	SCREW PAN HEAD MCS M6X12 SS	19
312125-0374 ..	SCREW PAN HEAD MCS M6X30 SS	19
312145-0228 ..	SCREW COUNTERS.SLOT.HD. MFS 3X16 SS	23
312502-0120 ..	DRIVE SCREW ROUND HEAD KDS 0X5	25
312605-0312 ..	HEXAGON NUT, M6M M4 A280	15
312605-0318 ..	HEXAGON NUT, M6M M8 A280	13, 23
312607-0312 ..	HEXAGON NUT, EN 24032 M6M M4 A480	13
312812-0314 ..	HEXAGON NUT, NY-LOCK M5 A480	23
315105-0136 ..	WASHER BRB4,3XRFR	13, 15, 17, 29
315105-0146 ..	BRICKA BRB5,3X10RFR	15, 23
315105-0153 ..	WASHER BRB6,4X12RFR	11, 17, 19
315105-0165 ..	WASHER BRB8,4X16RFR	11, 13, 23
315125-0153 ..	WASHER TBRSB 6,4X22X4 A4	23
315202-0224 ..	O-RING 42,2X3 MM	15
315204-0208 ..	O-RING 9,3X2,4 MM	23
315204-0214 ..	O-RING 17,3X2,4 MM	23
315205-0505 ..	O-RING 6,07X1,78 MM	23
315229-0208 ..	GASKET 97,4X105,4X3,7 MM 4"	13
342713-0210 ..	PLUG, EXT THREAD HEX SOCKET 8638-00-140	17
342737-0204 ..	CONN. ELBOW W-6 LRFR	13
342748-0103 ..	T-CONNECTION 8MM	25
342770-0101 ..	STRAIGHT COUPLING INT, D=4 MM - G1/8	25
342840-0103 ..	CLAMPING PIECE	23
342920-0122 ..	STRAIGHT COUPLING,EXT.THREADED 8/6-R1/4"	17
342930-0114 ..	ELBOW 90 COUPL.,EXT.THREAD 6/4-R1/4"	17
342930-0122 ..	ELBOW 90 COUPL.,EXT.THREAD 8/6-R1/4"	17
342940-0122 ..	T-COUPLING,EXT.THREAD 8/6-R1/4"	17
342991-0101 ..	HOSE CLIP,WORM DRIVE TYPE (13)-16	15
346800-0110 ..	SILENCER FILTER R1/4"	17
350006-0003 ..	PUSH-IN FITTING QS-F-8H-6	25
351150-0403 ..	CABLE OLFLEX 3X0,75 MM2 LIGHT/GREY	19
351150-0404 ..	CABLE OLFLEX 4X0,75 MM2 LIGHT/GREY	19
351150-0417 ..	CABLE OLFLEX 3X2,5 MM2 LIGHT/GREY	19
351160-0102 ..	CABLE AWM 1X0,75 MM2 DARKBLUE	29
351161-0105 ..	CABLE AWM 1X2,5 MM2 LIGHTBLUE	29
351162-0105 ..	CABLE AWM 1X2,5 MM2 YELLOW-GREEN	29
351164-0105 ..	CABLE AWM 1X2,5 MM2 BLACK	29
352103-0101 ..	CABLE GLAND, ST 9, PR15,2/PG9	17, 19
352103-0106 ..	CABLE GLAND, ST 11, PR18,6/PG11	17
352103-0108 ..	CABLE GLAND, ST 13,5 , PR20,4/PG13,5	19
352103-0120 ..	CABLE GLAND, STR 29, PR37,0/PG29	19
352113-0101 ..	CLIP STRIP, 92X2,5 MM	11
352113-0204 ..	ANCHOR PLATES FOR STRIPS, TYPE TM3S25-M	11
353021-0213 ..	FEED THROUGH TERMINAL, 10201.0	21
353021-0302 ..	TERMINALS,TRIPLE-LEVEL, DLD 2,5/35 PA	21
353024-0205 ..	EARTH TERMINAL, 1010.1	21
353032-0302 ..	END PLATE WAP	21
353034-0030 ..	BRIDGE CONNECTOR WQV 2,5/10, 10544.6	21
353034-0404 ..	BRIDGE CONNECTOR Q10, 13131.0	21
353243-0001 ..	EXTENDED WITHOUT INSERT, PG9	19, 23, 27
353243-0005 ..	EXTENDED WITHOUT INSERT, PG16	19, 23, 27
353243-0007 ..	EXTENDED WITHOUT INSERT, PG21	19, 27
353244-0003 ..	EXTENDED WITHOUT INSERT, HIGH TEMP, PG13	13, 19
353249-0008 ..	INSERT, SINGEL HOLE, EK 152/7	19, 27
353249-0009 ..	INSERT, SINGEL HOLE, EK 152/9	23
353249-0013 ..	INSERT, SINGEL HOLE, EK 154/13	19, 27
359011-0823 ..	SET OF SIGNS 6-FW 101-150	21
359011-0832 ..	SET OF SIGNS 6-GW (+)	21
359011-0833 ..	SET OF SIGNS 6-GW (-)	21
359011-0834 ..	SET OF SIGNS 6-GW(EARTH)	21
359705-0015 ..	WARNING SIGN ISO, RISK OF ELECTRIC SHOCK	19
450833-0000 ..	FILTER	15
554141-0000 ..	FILTER	15
554142-0000 ..	FILTER HOUSING	15
927420-0001 ..	O-RING 5.1X1.6 SILICON	15
927421-0003 ..	O-RING 13.3X2.4 SILICON	15
927421-0004 ..	O-RING 15.3X2.4 SILICON	15
927422-0001 ..	O-RING 19.2X3 SILICON	15
978380-0000 ..	BLIND PLUG	23
978381-0000 ..	WASHER 56X2MM	23
978440-0000 ..	CRAMP	23
979813-0000 ..	PLUG	23
1519486-0000 .	FILTER HOUSE	15
1523154-0003 .	SPRAY NOZZLE	23
1523154-0004 .	SPRAY NOZZLE	23
1523154-0005 .	SPRAY NOZZLE	23
1523154-0006 .	SPRAY NOZZLE	23
1532237-0000 .	RAIL	21
2511330-0000 .	SPACER	17
2512939-0000 .	DISTRIBUTOR BLOCK	15
2539458-0100 .	SPRAY TANK	11
2553167-0000 .	LID	15
2558137-0000 .	HEATING ELEMENT	13

Part No	Description	Page No
2559045-0001	.ELECTRODE	15
2559045-0002	.ELECTRODE	15
2559051-0000	.INSERT	23
2562307-0000	.PIPE	13
2562315-0000	.PLUG	13
2562881-0000	.TRANSITION PIPE	23
2562882-0000	.ELBOW PIPE	23
2562883-0000	.PIPE	23
2562893-0100	.PNEUMATIC PANEL	11
2564105-0000	.CONNECTION BOX	19
2564106-0100	.CONNECTION BOX	11
2564108-0000	.PIPE	23
2564606-0000	.SUPPORT PLATE	17
2564607-0000	.PLATE	17
2564608-0000	.HOLDER	23
2565432-0100	.TERMINAL BLOCK	19
2579745-0000	.INSERT	13
2598084-0000	.PLATE	13
2598085-0000	.SPACER	13
2607082-0100	.HEATER	11
2608156-0000	.PIPE FLANGE	15
2608157-0000	.PIPE FLANGE	15
2610966-0000	.PIPE	15
2629321-0000	.COIL	13
2629322-0000	.COVER	13
2629323-0000	.COVER	13
2629324-0000	.BRACKET	13
2629325-0000	.PIPE	11
2629326-0000	.PIPE	11
2629327-0000	.FRAME	11
2632638-0000	.HOLDER	23
2632639-0000	.VALVE BODY	23
2632640-0000	.VALVE BODY	23
2632641-0000	.PIPE	23
2632642-0100	.NOZZLE UNIT	11
2640820-0100	.VALVE PANEL	11
2640822-0000	.SIGN	25
2641478-0101	.DOCUMENT FOLDER	11
2649165-0100	.CABLE DUCT	11
2649166-0000	.PIPE FLANGE	15
2649167-0000	.INSERT	27
2649168-0000	.PNEUMATIC DIAGRAM	11
2649169-0000	.FUNCTION DIAGRAM	11
2651326-0000	.TOUCH GUARD	11
2651328-0100	.ELECTRIC MATERIALS	11
2651329-0000	.PIPE	13

Part No	Description	Page No	Part No	Description	Page No

Machine Type	Group Description	Page No

Tetra Pak

SPC
Spare Parts Catalogue

Pos	Part No	Description	Page No
B			
B9104	90274-0110	PRESSURE SWITCH, 50 - 1000 KPA	17
B9106	90326-0060	THERMOCOUPLE, CR-AL	23
B9107	90458-0672	PROXIMITY SENSOR E2E2-X5MB1-5M	23
B9108	90458-0672	PROXIMITY SENSOR E2E2-X5MB1-5M	23
B9109	90458-0672	PROXIMITY SENSOR E2E2-X5MB1-5M	23
B9110	90458-0672	PROXIMITY SENSOR E2E2-X5MB1-5M	23
B9111	90458-0672	PROXIMITY SENSOR E2E2-X5MB1-5M	23
B9113	2559045-0001	ELECTRODE	15
B9115	90326-0053	THERMOCOUPLE, 12826-35	13
B9116	90459-2122	THERMOCOUPLE, EN-5130060-0001	13
B9116	2559045-0002	ELECTRODE	15
B9117	90458-2619	FLOW METER, D-6230-HGB-BB-AV-99-0-N2	17
C			
C9115	90459-1420	PROPORTIONAL VALVE 0 - 10V/0-6 BAR	17
K			
K042	90075-0127	CONTACTOR, 4KW 24VDC	29
K215	90119-0067	SOLID-STATE RELAY, H12WD4850	29
S			
S042	90233-0303	FUSE HOLDER, ST10	29
T			
T9114	90113-0469	MANIFOLD REGULATOR 4 BAR	25
U			
U9114	90043-0065	PRESSURE GAUGE, 2048 D=40 MM	25
W			
W2060	90220-0201	CABLE OLFLEX 18X0,75 MM2	19
W2061	351150-0417	CABLE OLFLEX 3X2,5 MM2 LIGHT/GREY	19
W2062	90220-0165	SCR. CABLE 5X0,34MM2	19
W2063	90220-0034	THERMOCOUPLE CABLE K/ 2X0,5MM2	23
W2064	90220-0034	THERMOCOUPLE CABLE K/ 2X0,5MM2	19
W9100:1	90459-3165	CABLE ÖLFLON PTFE 1X4,72MM² BLACK	13
W9100:3	90459-3154	CABLE ÖLFLON PTFE 1X4,72MM² YELLOW-GREEN	13
W9101	351150-0403	CABLE OLFLEX 3X0,75 MM2 LIGHT/GREY	19
W9103	351150-0403	CABLE OLFLEX 3X0,75 MM2 LIGHT/GREY	19
W9104	351150-0403	CABLE OLFLEX 3X0,75 MM2 LIGHT/GREY	19
W9112	351150-0403	CABLE OLFLEX 3X0,75 MM2 LIGHT/GREY	19
W9113	351150-0404	CABLE OLFLEX 4X0,75 MM2 LIGHT/GREY	19
W9114	351150-0403	CABLE OLFLEX 3X0,75 MM2 LIGHT/GREY	19
W9115	90220-0165	SCR. CABLE 5X0,34MM2	19
W9117	90220-0165	SCR. CABLE 5X0,34MM2	19
X			
X118	90110-0161	FEMALE INSERT 70 105 0653 0	29
X9115	90326-0020	PLUG, FEMALE YELLOW CR-AL	13
Y			
Y9101	90042-0171	SOLENOID VALVE BUERKERT	17
Y9103	90042-0171	SOLENOID VALVE BUERKERT	17
Y9106	90042-0538	PILOT VALVE L=500MM	25
Y9112	90042-0203	SOLENOID VALVE BURKERT	15
Z			
Z91031	90277-0104	FILTER F64B-2GN-ARO	17
Z91032	90277-0323	FILTER HOUSING / ART.NO 95S6-1/4 S 5430	17

Pos	Part No	Description	Page No	Pos	Part No	Description	Page No

Machine Type	Group Description	Page No

Tetra Pak

SPC binder labels. 30 mm Full width using the **variable definitions** *made in the* **front page** *file!!*

Note! This page is generated **automatically.**

Headspace by gas Injection

2636960-0100 Field Test

Issue: 2003-11 Doc No: SPC-2659900-0101

Headspace by gas Injection

2636960-0100 Field Test

Issue: 2003-11 Doc No: SPC-2659900-0101

Headspace by gas Injection

2636960-0100 Field Test

Issue: 2003-11 Doc No: SPC-2659900-0101

Headspace by gas Injection

2636960-0100 Field Test

Issue: 2003-11 Doc No: SPC-2659900-0101

Headspace by gas Injection

2636960-0100 Field Test

Issue: 2003-11 Doc No: SPC-2659900-0101

Headspace by gas Injection

2636960-0100 Field Test

Issue: 2003-11 Doc No: SPC-2659900-0101

Headspace by gas Injection

2636960-0100 Field Test

Issue: 2003-11 Doc No: SPC-2659900-0101

Headspace by gas Injection

2636960-0100 Field Test

Issue: 2003-11 Doc No: SPC-2659900-0101

Headspace by gas Injection

2636960-0100 Field Test

Issue: 2003-11 Doc No: SPC-2659900-0101

Headspace by gas Injection

2636960-0100 Field Test

Issue: 2003-11 Doc No: SPC-2659900-0101

Headspace by gas Injection

2636960-0100 Field Test

Issue: 2003-11 Doc No: SPC-2659900-0101