SPC
Spare Parts Catalogue

Tetra Pak A3/Flex

648575-0100

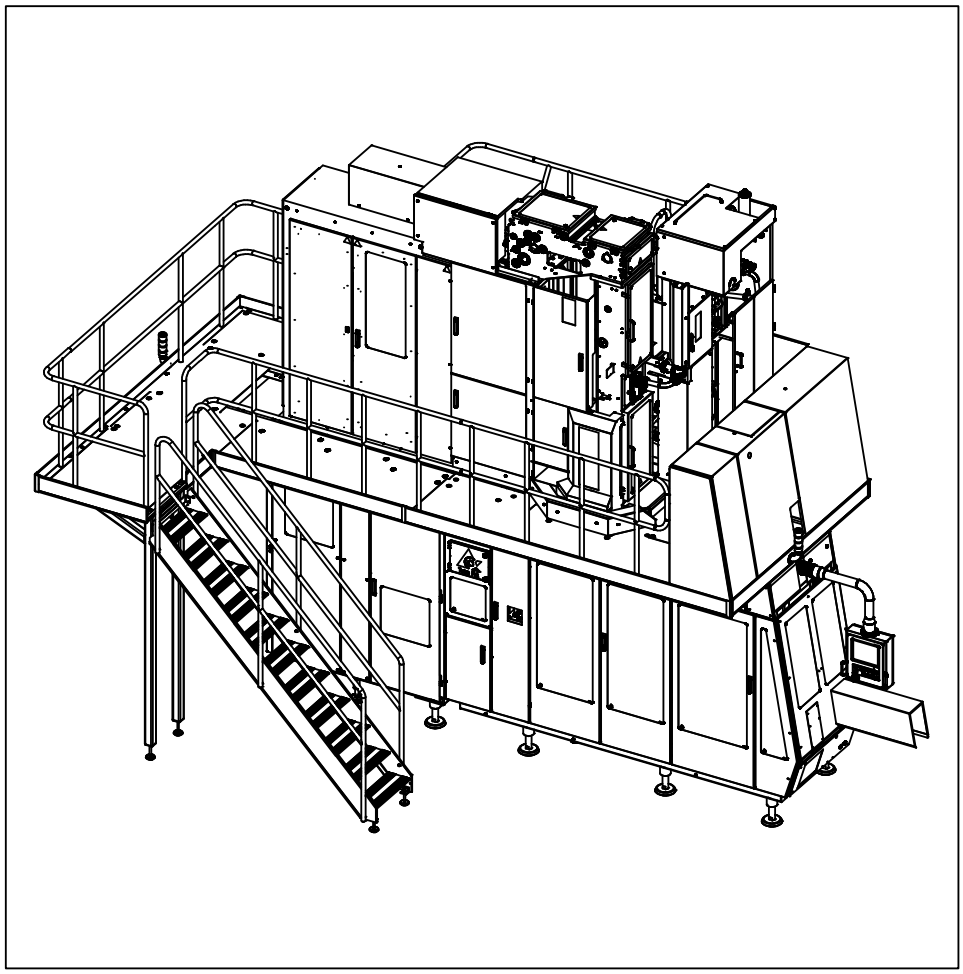

Tetra Pak

Doc. No: SPC-2708464-0101

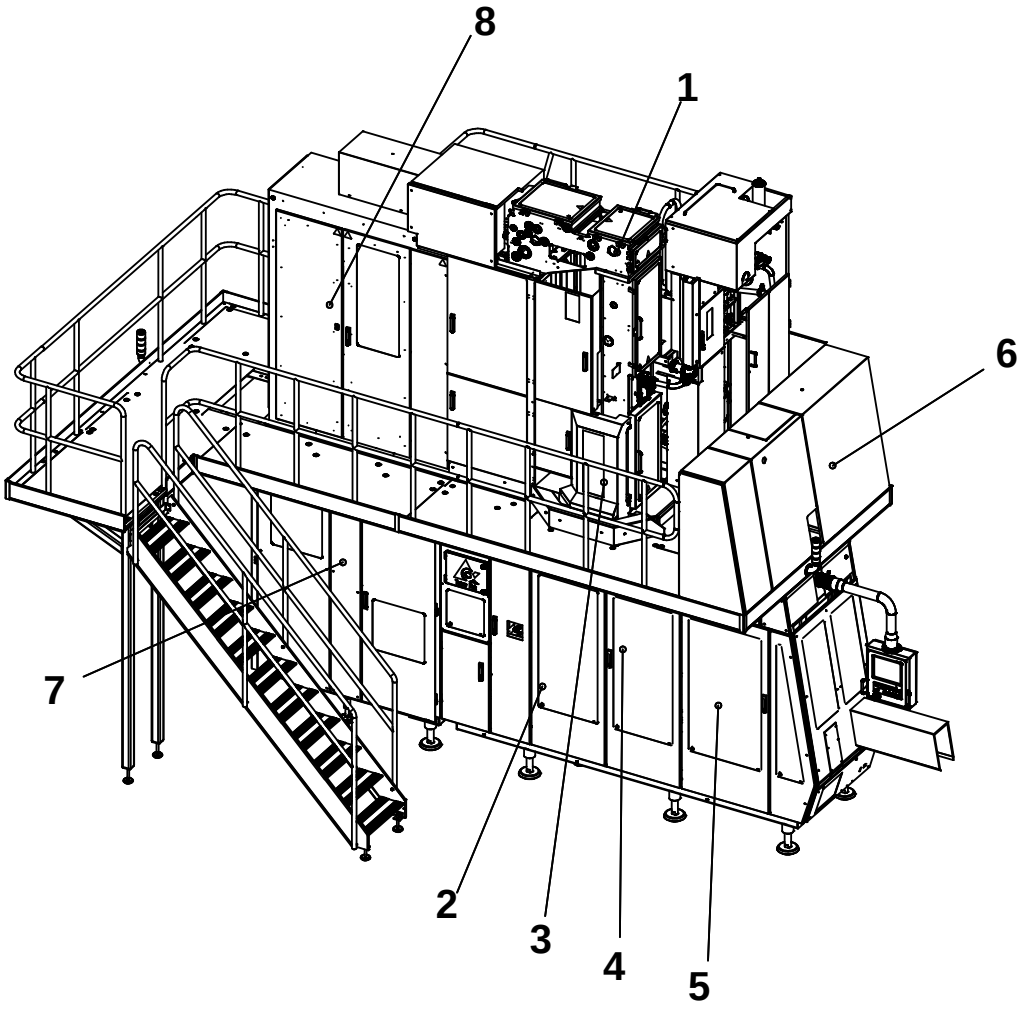

The position numbers in the illustration correspond with the chapter numbers listed on the next page.

Copyright © 2004 Tetra Pak Group

All rights reserved. No part of this document may be reproduced or copied in any form or by any means without written permission from Tetra Pak Carton Ambient S.p.A..

Tetra Pak and all Tetra Pak products are trademarks belonging to the Tetra Pak Group.

The content of this manual is in accordance with the design and construction of the machine or equipment at the time of publishing. Tetra Pak reserves the right to introduce design modifications without prior notice.

This document was produced by:

Tetra Pak Carton Ambient S.p.A.
Technical Publications
Via Delfini 1
41100 Modena /Italy

This Tetra Pak equipment was manufactured by:

Tetra Pak Carton Ambient S.p.A.
Via Delfini 1
41100 Modena /Italy

Additional copies can be ordered from Tetra Pak Parts or the nearest Tetra Pak office. When ordering additional copies, always provide the document number. This can be found in the machine specification document. It is also printed on the front cover and in the footer on each page of the manual.

Doc. No. SPC-2708464-0101

Issue 2004-09

This document is valid for:

21207/00098

Series No/Machine No Sign.

SPC

Spare Parts Catalogue

Tetra Pak A3/Flex
648575-0100

NOTE!!
This document is valid only for Machine Series No.:
21207/00098; 21207/00128
21207/00130; 21207/00135
21207/00144; 21207/00145
21207/00147; 21207/00151
21207/00155

A list of all optional equipment, optional kits, and rebuilding kits that this catalogue is valid for is found on the next page.

BINDER 1

i Introduction

1 Superstructure
B-648555-0100

2 Machine Body
B-648559-0100

3 Drive Unit
B-648543-0300

4 Jaw System
B-648549-0300

BINDER 2

5 Final Folder
B-648552-0100

6 Service Unit
B-648506-0400

7 Automatic Splicing Unit
B-648528-0200

8 Electrical Cabinet
B-648539-0100

9 Regular Accessories
B-648561-0100

10 Optional Accessories
B-648564-0100

ii Part Number Index

iii Electrical Parts Index

Doc. No: SPC-2708464-0101

Issue 2004-09

Tetra Pak

Tetra Pak Carton Ambient S.p.A.

Valid for:

HI - Headspace by Injection
2636960-0100

Stair on RH side
2564231-0100

Tetra Pak DIMC
648553-0100

Tetra Pak PT/Flex
648556-0100

Update Log for Doc. No. SPC-2708464-0101

This table shows all changes made to this catalogue, such as kits installed and pages added or removed.

Date	Installed Kit	Added Pages (Doc. No.)	Removed Pages	Signature

Date	Installed Kit	Added Pages (Doc. No.)	Removed Pages	Signature

i Introduction

en About the Introduction Chapter
This chapter contains basic information about this catalogue and related Tetra Pak equipment.

cs Seznámení s úvodní kapitolou
Tato kapitola obsahuje základní informace o tomto katalogu a o příslušném zařízení Tetra Pak.

da Om indledningen
Kapitlet indeholder grundlæggende oplysninger om dette katalog og tilhørende Tetra Pak-udstyr.

de Zur Einleitung
Dieses Kapitel enthält grundlegende Informationen zu diesem Handbuch und der entsprechenden Tetra Pak Ausrüstung.

el Σχετικά με το Κεφάλαιο 'Εισαγωγή'
Αυτό το κεφάλαιο περιέχει βασικές πληροφορίες για τον παρόντα κατάλογο και τον σχετικό εξοπλισμό της Tetra Pak.

es Sobre el Capítulo de Introducción
Este capítulo contiene información básica sobre este manual y el equipo Tetra Pak relacionado.

et Sissejuhatava peatüki kohta
Sellest peatükist leiate põhiinfo kataloogi ja Tetra Pak seadmete kohta.

fi Tietoja Johdanto-luvusta
Tässä luvussa on perustietoja tästä luettelosta ja Tetra Pak -laitteesta.

fr Concernant le chapitre d'Introduction
Le présent chapitre contient les renseignements de base concernant ce manuel et l'équipement Tetra Pak concerné.

hu A Bevezetés fejezetről
Ezen fejezet alapvető információt tartalmaz jelen kézikönyvről és a kapcsolódó Tetra Pak berendezésről.

it Informazioni sulla sezione Introduzione
Questa sezione contiene informazioni generali sul presente catalogo e la relativa macchina Tetra Pak.

lt Apie pristatymo skyrių
Šiame skyriuje yra pagrindinė informacija apie šį katalogą ir su juo susijusią Tetra Pak įrangą.

lv Par Ievada nodaļu
Šī nodaļa satur galveno informāciju par katalogu un par Tetra Pak iekārtām, uz kurām tas attiecas.

mt Dwar il-Kapitlu ta' l-Introduzzjoni
Dan il-kapitlu fih informazzjoni bażika dwar dan il-katalgu u tagħmir relatat ta' Tetra Pak.

nl Omtrent het hoofdstuk Inleiding
Dit hoofdstuk bevat basisinformatie betreffende dit handboek en daarmee verband houdende apparatuur van Tetra Pak.

no Om kapitlet Introduksjon
Dette kapitlet inneholder grunnleggende informasjon om denne katalogen og relatert Tetra Pak-ustyr.

pl Informacje na temat Rozdziału Wprowadzającego
Rozdział ten zawiera podstawowe informacje na temat niniejszego katalogu i związanego z nim wyposażenia Tetra Pak.

pt Sobre o capítulo Introdução
Este capítulo contém informações básicas sobre este catálogo e ao equipamento Tetra Pak relacionado.

sk O úvodnej kapitole
Táto kapitola obsahuje základné informácie o tomto katalógu a príslušnom zariadení Tetra Pak.

sl Informacija o uvodnem poglavju
Poglavje vsebuje osnovne informacije o tem katalogu in opremi Tetra Pak.

sv Om inledningskapitlet
Det här kapitlet innehåller grundläggande information om katalogen och Tetra Pak-utrustningen.

Introduction

Illustrations . . . . . i - 5
English Text . . . . . i - 7

Úvod

Obrázky . . . . . i - 5
Český text . . . . . i - 11

Indledning

Illustrationer . . . . . i - 5
Dansk tekst . . . . . i - 15

Einleitung

Abbildungen . . . . . i - 5
Deutscher Text . . . . . i - 19

Εισαγωγή

Εικόνες . . . . . i - 5
Ελληνικό Κείμενο . . . . . i - 23

Introducción

Ilustraciones . . . . . i - 5
Texto español . . . . . i - 27

Sissejuhatus

Illustratsioonid . . . . . i - 5
Eestikeelne tekst . . . . . i - 31

Johdanto

Kuvat . . . . . i - 5
Suomenkielinen teksti . . . . . i - 35

Introduction

Figures . . . . . i - 5
Texte français . . . . . i - 39

Bevezetés

Ábrák . . . . . i - 5
Magyar szöveg . . . . . i - 43

Introduzione

Figure . . . . . i - 5
Testo in italiano . . . . . i - 47

Įvadas

Iliustracijos . . . . . i - 5
Lietuviškas tekstas . . . . . i - 51

Ievads

Ilustrācijas . . . . . i - 5
Latviešu teksts . . . . . i - 55

Introduzzjoni

Stampi . . . . . i - 5
Test bil-Malti . . . . . i - 59

Inleiding

Illustraties . . . . . i - 5
Nederlands tekst . . . . . i - 63

Introduksjon

Illustrasjoner . . . . . i - 5
Norsk tekst . . . . . i - 67

Wprowadzenie

Ilustracje . . . . . i - 5
Tekst po polsku . . . . . i - 71

Introdução

Ilustrações . . . . . i - 5
Texto em portugese . . . . . i - 75

Úvod

Zobrazenie . . . . . i - 5
Slovenský text . . . . . i - 79

Uvod

Risbe . . . . . i - 5
Slovensko besedilo . . . . . i - 83

Inledning

Bilder . . . . . i - 5
Svensk text . . . . . i - 87

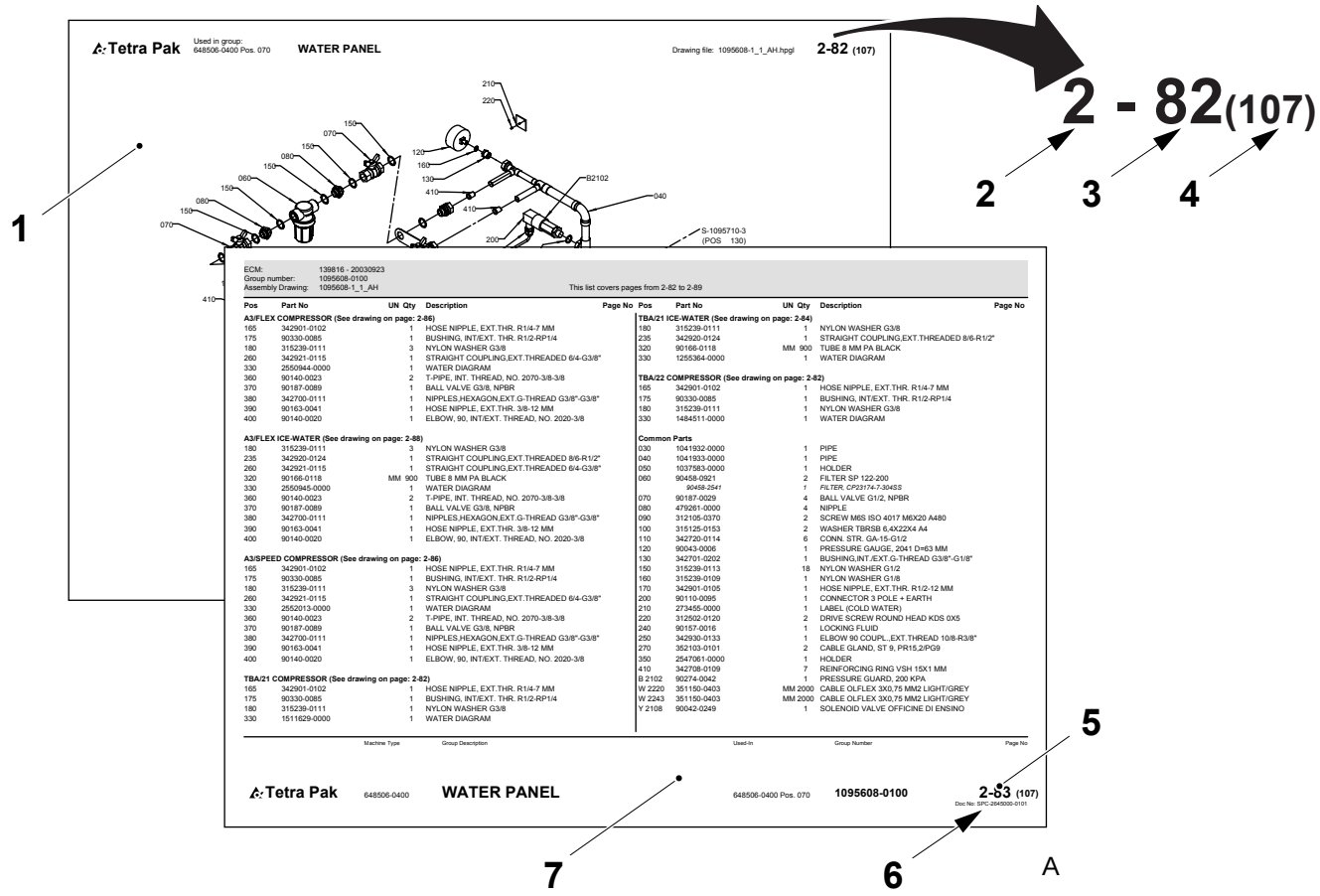
Tetra Pak
Used in group: 648506-0400 Pos. 070
WATER PANEL
Drawing file: 1095608-1_1_AH.hpgl
2-82 (107)
2 - 82(107)
1
2
3
4
5
6
7
A
ECM: 139816 - 20030923
Group number: 1095608-0100
Assembly Drawing: 1095608-1_1_AH
This list covers pages from 2-82 to 2-89
Tetra Pak 648506-0400 WATER PANEL 648506-0400 Pos. 070 1095608-0100 2-83 (107)

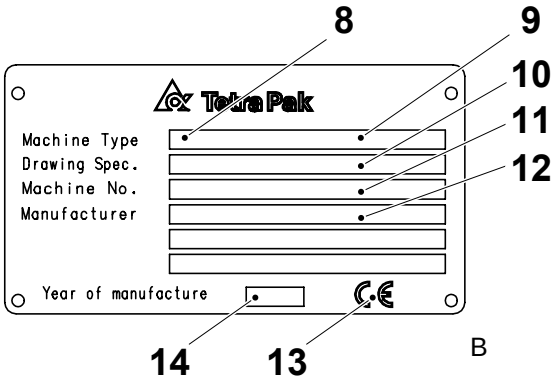
8
9
10
11
12
Tetra Pak
Machine Type
Drawing Spec.
Machine No.
Manufacturer
Year of manufacture
14
13
B

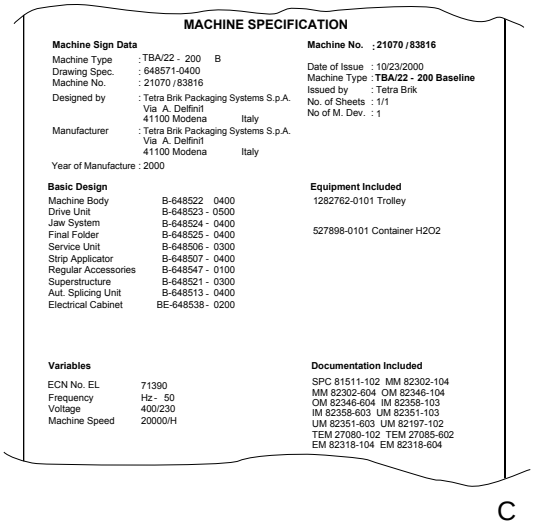
MACHINE SPECIFICATION
Machine Sign Data
Machine Type : TBA/22 - 200 B
Drawing Spec. : 648571-0400
Machine No. : 21070 / 83816
Designed by : Tetra Brik Packaging Systems S.p.A. Via A. Delfini 41100 Modena Italy
Manufacturer : Tetra Brik Packaging Systems S.p.A. Via A. Delfini 41100 Modena Italy
Year of Manufacture : 2000
Machine No. : 21070 / 83816
Date of Issue : 10/23/2000
Machine Type : TBA/22 - 200 Baseline
Issued by : Tetra Brik
No. of Sheets : 1/1
No of M. Dev. : 1
Basic Design
Machine Body B-648522 0400
Drive Unit B-648523 - 0500
Jaw System B-648524 - 0400
Final Folder B-648525 - 0400
Service Unit B-648506 - 0300
Strip Applicator B-648507 - 0400
Regular Accessories B-648547 - 0100
Superstructure B-648521 - 0300
Aut. Splicing Unit B-648513 - 0400
Electrical Cabinet BE-648538 - 0200
Equipment Included
1282762-0101 Trolley
527898-0101 Container H2O2
Variables
ECN No. EL 71390
Frequency Hz - 50
Voltage 400/230
Machine Speed 20000/H
Documentation Included
SPC 81511-102 MM 82302-104
MM 82302-604 OM 82346-104
OM 82346-604 IM 82358-103
IM 82358-603 UM 82351-103
UM 82351-603 UM 82197-102
TEM 27080-102 TEM 27085-602
EM 82318-104 EM 82318-604
C

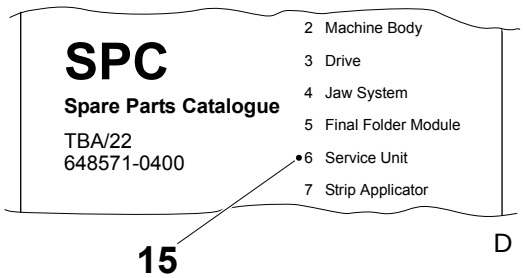
SPC
Spare Parts Catalogue
TBA/22
648571-0400
2 Machine Body
3 Drive
4 Jaw System
5 Final Folder Module
6 Service Unit
7 Strip Applicator
15
D

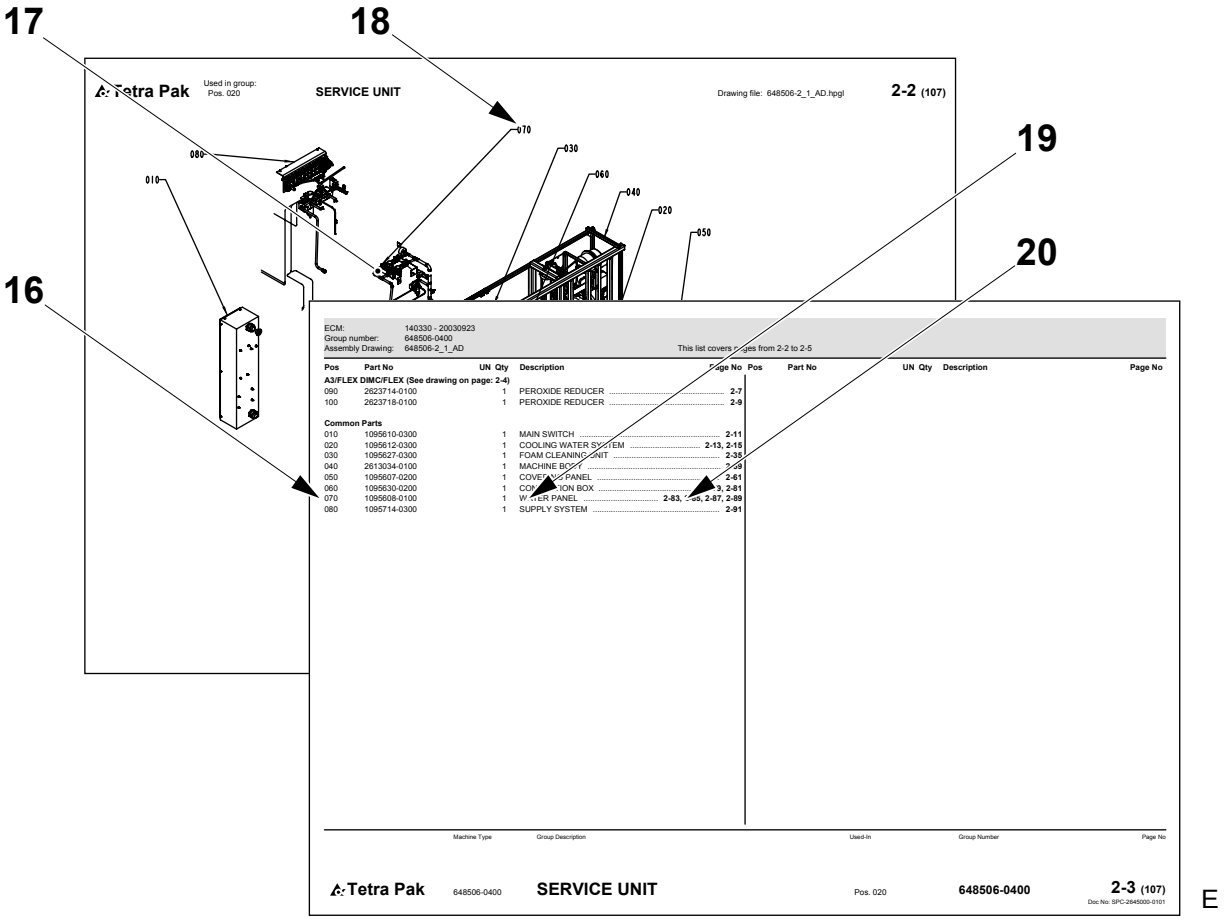
17
18
19
20
16
Tetra Pak
SERVICE UNIT
Drawing file: 648506-2_1_AD.hpgl
2-2 (107)
070
030
080
060
010
040
020
050
ECM: 140330 - 20030923
Group number: 648506-0400
Assembly Drawing: 648506-2_1_AD
This list covers pages from 2-2 to 2-5
Pos Part No UN Qty Description Page No
A3/FLEX DIMC/FLEX (See drawing on page: 2-4)
090 2623714-0100 1 PEROXIDE REDUCER 2-7
100 2623718-0100 1 PEROXIDE REDUCER 2-9
Common Parts
010 1095610-0300 1 MAIN SWITCH 2-11
020 1095612-0300 1 COOLING WATER SYSTEM 2-13, 2-15
030 1095627-0300 1 FOAM CLEANING UNIT 2-35
040 2613034-0100 1 MACHINE BODY
050 1095607-0200 1 COVERING PANEL 2-61
060 1095630-0200 1 CONTROL BOX 2-3, 2-81
070 1095608-0100 1 WATER PANEL 2-83, 2-87, 2-89
080 1095714-0300 1 SUPPLY SYSTEM 2-91
Machine Type
Group Description
Used-In
Group Number
Page No
Tetra Pak
648506-0400
SERVICE UNIT
Pos. 020
648506-0400
2-3 (107)
Doc No: SPC-2645000-0101

E

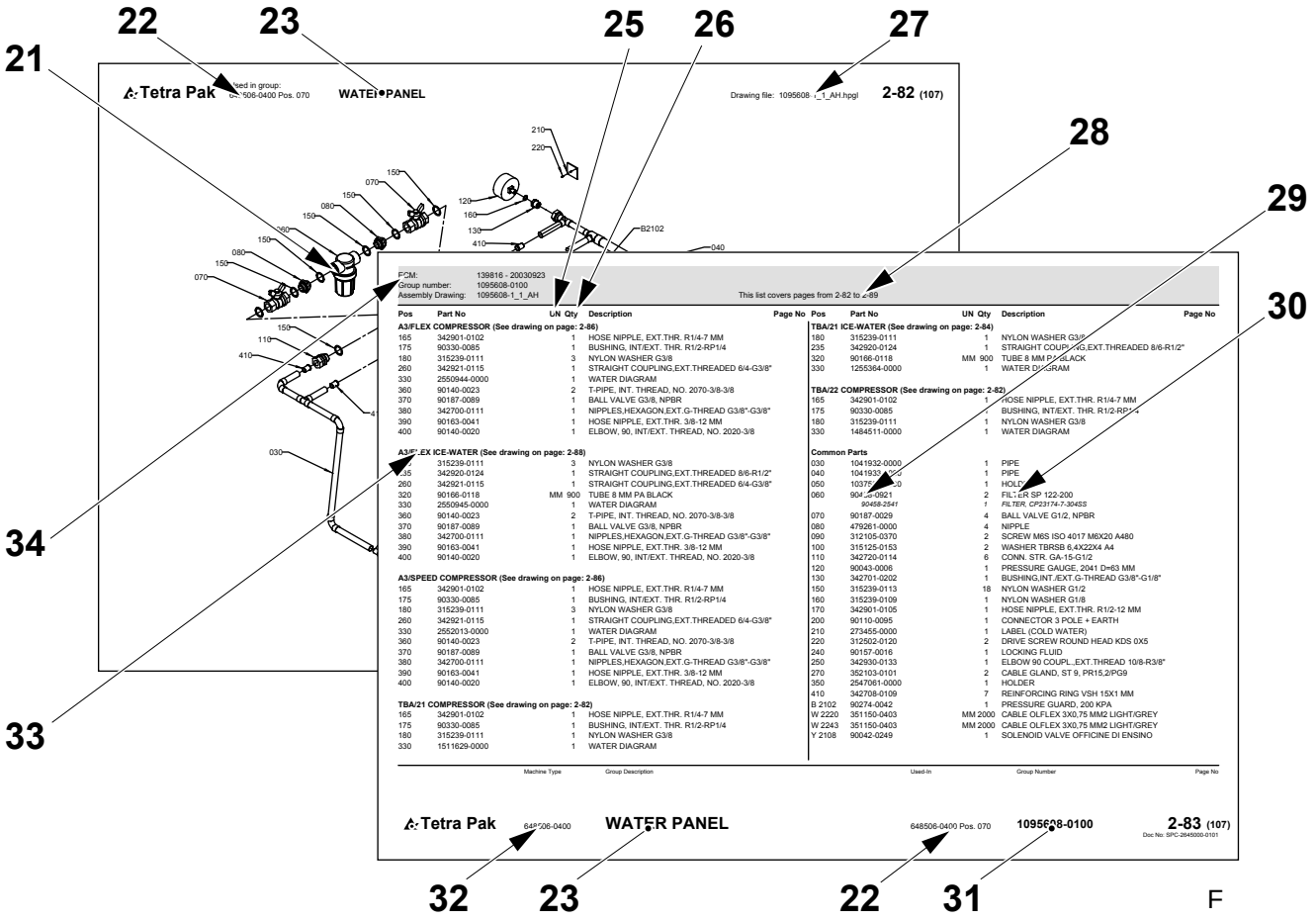
22
23
25
26
27
21
28
29
30
34
33
Tetra Pak
WATER PANEL
Drawing file: 1095608-1_1_AH.hpgl
2-82 (107)
210
220
150
070
080
120
160
130
410
B2102
040
030
110
ECM: 139816 - 20030923
Group number: 1095608-0100
Assembly Drawing: 1095608-1_1_AH
This list covers pages from 2-82 to 2-89
Pos Part No UN Qty Description Page No
A3/FLEX COMPRESSOR (See drawing on page: 2-86)
165 342901-0102 1 HOSE NIPPLE, EXT.THR. R1/4-7 MM
175 90330-0085 1 BUSHING, INT/EXT. THR. R1/2-RP1/4
180 315239-0111 3 NYLON WASHER G3/8
260 342921-0115 1 STRAIGHT COUPLING,EXT.THREADED 6/4-G3/8"
330 2550944-0000 1 WATER DIAGRAM
360 90140-0023 2 T-PIPE, INT. THREAD, NO. 2070-3/8-3/8
370 90187-0089 1 BALL VALVE G3/8, NPBR
380 342700-0111 1 NIPPLES,HEXAGON,EXT.G-THREAD G3/8"-G3/8"
390 90163-0041 1 HOSE NIPPLE, EXT.THR. 3/8-12 MM
400 90140-0020 1 ELBOW, 90, INT/EXT. THREAD, NO. 2020-3/8
A3/FLEX ICE-WATER (See drawing on page: 2-88)
155 315239-0111 3 NYLON WASHER G3/8
165 342920-0124 1 STRAIGHT COUPLING,EXT.THREADED 8/6-R1/2"
260 342921-0115 1 STRAIGHT COUPLING,EXT.THREADED 6/4-G3/8"
320 90166-0118 MM 900 TUBE 8 MM PA BLACK
330 2550945-0000 1 WATER DIAGRAM
360 90140-0023 2 T-PIPE, INT. THREAD, NO. 2070-3/8-3/8
370 90187-0089 1 BALL VALVE G3/8, NPBR
380 342700-0111 1 NIPPLES,HEXAGON,EXT.G-THREAD G3/8"-G3/8"
390 90163-0041 1 HOSE NIPPLE, EXT.THR. 3/8-12 MM
400 90140-0020 1 ELBOW, 90, INT/EXT. THREAD, NO. 2020-3/8
A3/SPEED COMPRESSOR (See drawing on page: 2-86)
165 342901-0102 1 HOSE NIPPLE, EXT.THR. R1/4-7 MM
175 90330-0085 1 BUSHING, INT/EXT. THR. R1/2-RP1/4
180 315239-0111 3 NYLON WASHER G3/8
260 342921-0115 1 STRAIGHT COUPLING,EXT.THREADED 6/4-G3/8"
330 2552013-0000 1 WATER DIAGRAM
360 90140-0023 2 T-PIPE, INT. THREAD, NO. 2070-3/8-3/8
370 90187-0089 1 BALL VALVE G3/8, NPBR
380 342700-0111 1 NIPPLES,HEXAGON,EXT.G-THREAD G3/8"-G3/8"
390 90163-0041 1 HOSE NIPPLE, EXT.THR. 3/8-12 MM
400 90140-0020 1 ELBOW, 90, INT/EXT. THREAD, NO. 2020-3/8
TBA/21 COMPRESSOR (See drawing on page: 2-82)
165 342901-0102 1 HOSE NIPPLE, EXT.THR. R1/4-7 MM
175 90330-0085 1 BUSHING, INT/EXT. THR. R1/2-RP1/4
180 315239-0111 1 NYLON WASHER G3/8
330 1511629-0000 1 WATER DIAGRAM
TBA/21 ICE-WATER (See drawing on page: 2-84)
180 315239-0111 1 NYLON WASHER G3/8
235 342920-0124 1 STRAIGHT COUPLING,EXT.THREADED 8/6-R1/2"
320 90166-0118 MM 900 TUBE 8 MM PA BLACK
330 1255364-0000 1 WATER DIAGRAM
TBA/22 COMPRESSOR (See drawing on page: 2-82)
165 342901-0102 1 HOSE NIPPLE, EXT.THR. R1/4-7 MM
175 90330-0085 1 BUSHING, INT/EXT. THR. R1/2-RP1/4
180 315239-0111 1 NYLON WASHER G3/8
330 1484511-0000 1 WATER DIAGRAM
Common Parts
030 1041932-0000 1 PIPE
040 1041933-0000 1 PIPE
050 1037[illegible] 1 HOLDER
060 9045[illegible]-0921 2 FILTER SP 122-200
90458-2541 1 FILTER, CP23174-7-30455
070 90187-0029 4 BALL VALVE G1/2, NPBR
080 479261-0000 4 NIPPLE
090 312105-0370 2 SCREW M6S ISO 4017 M6X20 A480
100 315125-0153 2 WASHER TBRSB 6,4X22X4 A4
110 342720-0114 6 CONN. STR. GA-15-G1/2
120 90043-0006 1 PRESSURE GAUGE, 2041 D=63 MM
130 342701-0202 1 BUSHING,INT./EXT.G-THREAD G3/8"-G1/8"
150 315239-0113 18 NYLON WASHER G1/2
160 315239-0109 1 NYLON WASHER G1/8
170 342901-0105 1 HOSE NIPPLE, EXT.THR. R1/2-12 MM
200 90110-0095 1 CONNECTOR 3 POLE + EARTH
210 273455-0000 1 LABEL (COLD WATER)
220 312502-0120 2 DRIVE SCREW ROUND HEAD KDS 0X5
240 90157-0016 1 LOCKING FLUID
250 342930-0133 1 ELBOW 90 COUPL.,EXT.THREAD 10/8-R3/8"
270 352103-0101 2 CABLE GLAND, ST 9, PR15,2/PG9
350 2547061-0000 1 HOLDER
410 342708-0109 7 REINFORCING RING VSH 15X1 MM
B 2102 90274-0042 1 PRESSURE GUARD, 200 KPA
W 2220 351150-0403 MM 2000 CABLE OLFLEX 3X0,75 MM2 LIGHT/GREY
W 2243 351150-0403 MM 2000 CABLE OLFLEX 3X0,75 MM2 LIGHT/GREY
Y 2108 90042-0249 1 SOLENOID VALVE OFFICINE DI ENSINO
Machine Type
Group Description
Used-In
Group Number
Page No
Tetra Pak
648506-0400
WATER PANEL
648506-0400 Pos. 070
1095608-0100
2-83 (107)
Doc No: SPC-2648000-0101
32
23
22
31

F

Introduction

Manual Information

Tetra Pak recommends reading all delivered manuals carefully. Make sure that the delivered manuals are available to personnel who operate or maintain the equipment.

It is important to keep this catalogue for the lifetime of the equipment and to pass the catalogue on to any subsequent holder or user.

Tetra Pak will not be held responsible for any damage to the equipment caused by not following the instructions given in the manuals that accompany this equipment.

Delivered Manuals

The manuals delivered with this equipment may include

- Conversion Manual (CM)
  This manual provides technicians with information on converting the equipment between different production modes.
- Electrical Manual (EM)
  This manual provides technicians with information about the equipment's electrical system.
- Installation Manual (IM)
  This manual provides technicians with information required to safely install the equipment.
- Maintenance Manual (MM)
  This manual provides technicians with information on maintaining the equipment.
- Operation Manual (OM)
  This manual provides the operator with information on handling and operating the equipment before, during, and after production.
- Spare Parts Catalogue (SPC)
  This manual provides the information necessary to order spare parts from Tetra Pak.
- Technical Manual (TeM)
  - provides technicians with information required to safely install the equipment
  - provides technicians with information on maintaining the equipment
  - provides technicians with information about the equipment's electrical system
  - provides the information necessary to order spare parts from Tetra Pak

Page Layout

Refer to the illustration (A) on page i-5: The main pages in a Spare Parts Catalogue consist of an illustration page (1) and a corresponding list page (7). The page number (5) is shown in the header of an illustration page and in the footer of a list page. The document number (6) is shown in the footer of a list page.

Page Numbering

Refer to the illustration (A) on page i-5: A page number (5) has three parts:

- chapter number (2)
- consecutive page number within the chapter (3)
- total number of pages in the chapter (4)

Machine Introduction

Manufacturer

For the manufacturer's name and address, see the second page of this catalogue.

Service

To order spare parts for this machine, or to report problems associated with operating this machine, contact the nearest Tetra Pak office.

Contact the Liaison with other inquiries, comments, or suggestions for improvement regarding the equipment and its documentation.

Identification

CE Classification

This equipment complies with the basic health and safety regulations of the European Economic Area (EEA).

Machine Plate

The illustration (B) on page i-5 shows an example of a machine plate. An illustration of the valid machine plate and its location on the equipment is shown in the Introduction chapter of the manuals delivered with this equipment. The machine plate contains the data listed below, needed when contacting Tetra Pak concerning this specific equipment.

- Machine type (8)
- Volume (9)
- Drawing specifications (10)
- Machine serial number (11)
- Manufacturer (12)
- CE mark (13)
- Year of manufacture (14)

The illustration (C) on page i-5 shows an example of a machine specification. Make sure that the equipment data listed in the front pages of this manual corresponds to the machine plate data and the machine specification.

How to Use This Spare Parts Catalogue

Locate a Spare Part Number

a) Refer to the illustration (D) on page i-5: Go to the chapter number (15) indicated beside the main group that contains the part you want to locate.

Items b) and c) refer to the illustration (E) on page i-6.

b) On the main group illustration, look for the machine subgroup (17) that contains the part or subgroup you are looking for. Note the position number (18) and go to the list page that follows the illustration.

c) Look for the position number (16) or the subgroup name (19). Go to the corresponding page number (20) listed in the right-hand column.

Items d) and e) refer to the illustration (F) on page i-6.

d) Locate the part (21) that you are looking for on the subgroup illustration and note the part's position number.

e) The part number (29) and part description (30) are listed beside the position number on the list page.

Information Listed in a Spare Parts Catalogue

The list below refers to the illustration (F) on page i-6. A Spare Parts Catalogue contains the following information about groups, subgroups, and spare parts for the equipment:

- Group structure reference (22). Indicates the next higher group in the equipment list structure.
- Group name (23)
- Unit of measure (25)
- Quantity (26)
- Assembly drawing number (27)
- List page range (28). Included if there are multiple pages in the group illustration or list.
- Part or subgroup number (29)
- Subgroup name or part description (30)
- Group number (31)
- Equipment number (32)
- Group information heading (33). Indicates if the section below the heading is for a specific machine variant or if it is a list of common parts. If a list has more than one variant and each variant has its own assembly drawing, a page reference to the variant's assembly drawing is shown.
- Internal information (34)

Úvod

Informace o příručce

Společnost Tetra Pak doporučuje, abyste se důkladně seznámili se všemi dodanými příručkami. Dodané příručky musí být k dispozici pracovníkům, kteří provádějí obsluhu nebo údržbu zařízení.

Tento katalog je třeba uchovávat po celou dobu životnosti zařízení a předat jej každému dalšímu vlastníkovi nebo uživateli.

Společnost Tetra Pak nezodpovídá za škody na zařízení způsobené nedodržováním pokynů uvedených v příručkách dodaných se zařízením.

Dodané příručky

Mezi příručky dodané se zařízením patří:

- Příručka pro konverzi (CM)
  Tato příručka obsahuje informace pro techniky o konverzi zařízení mezi jednotlivými výrobními režimy.
- Příručka pro elektroinstalaci (EM)
  Tato příručka obsahuje informace pro techniky o elektroinstalaci zařízení.
- Příručka pro instalaci (IM)
  Tato příručka obsahuje informace pro techniky týkající se bezpečné instalace zařízení.
- Příručka pro obsluhu (MM)
  Tato příručka obsahuje informace pro techniky o údržbě zařízení.
- Provozní příručka (OM)
  Tato příručka obsahuje informace pro obsluhu o manipulaci a provozu zařízení před, během a po výrobě.
- Katalog náhradních dílů (SPC)
  Tato příručka obsahuje informace nezbytné pro objednávání náhradních dílů od společnosti Tetra Pak.
- Technická příručka (TeM)
  - obsahuje informace pro techniky týkající se bezpečné instalace zařízení
  - obsahuje informace pro techniky o údržbě zařízení
  - obsahuje informace pro techniky o elektroinstalaci zařízení
  - obsahuje informace nezbytné pro objednávání náhradních dílů od společnosti Tetra Pak

Vzhled stránky

Viz obrázek (A) na stránce i-5: hlavní stránky v katalogu náhradních dílů se skládají ze stránky s obrázkem (1) a z odpovídající katalogové stránky (7). Číslo stránky (5) je uvedeno v záhlaví stránky s obrázkem a v zapatí katalogové stránky. Číslo dokumentu (6) je uvedeno v záhlaví katalogové stránky.

Číslování stránek

Viz obrázek (A) na stránce i-5: číslo stránky (5) se skládá ze tří částí:

- číslo kapitoly (2)
- číslo další stránky (3) v rámci kapitoly
- celkový počet stránek (4) v kapitole

Seznámení se zařízením

Výrobce

Název a adresa výrobce jsou uvedeny na druhé stránce tohoto katalogu.

Servis

Chcete-li objednat náhradní díly pro toto zařízení nebo chcete-li ohlásit potíže spojené s provozem zařízení, obrat’te se na nejbližší pobočku společnosti Tetra Pak.

S ostatními stížnostmi, připomínkami nebo zlepšovacími návrhy v souvislosti se zařízením a dokumentací se obrat’te na zastoupení společnosti.

Označení

Klasifikace CE

Toto zařízení vyhovuje základním zdravotním a bezpečnostním směrnicím EEA (European Economic Area).

Typový štítek

Na obrázku (B) na stránce i-5 je uveden příklad typového štítku zařízení. Příslušné typové štítky a jejich umístění na zařízení jsou uvedeny v kapitole Úvod v příručkách dodaných se zařízením. Typový štítek obsahuje níže uvedené údaje, které je třeba uvést při kontaktování společnosti Tetra Pak ohledně tohoto zařízení.

- typ zařízení (8)
- množství (9)
- označení schémat (10)
- sériové číslo zařízení (11)
- výrobce (12)
- symbol CE (13)
- rok výroby (14)

Na obrázku (C) na stránce i-5 je uveden příklad specifikace zařízení. Údaje o zařízení uvedené na předních stránkách této příručky musí souhlasit s údaji na typovém štítku a se specifikacemi zařízení.

Jak používat tento katalog náhradních dílů

Vyhledání čísla náhradního dílů

a) Viz obrázek (D) na stránce i-5: přejdete na číslo kapitoly (15) uvedené vedle hlavní skupiny, která obsahuje hledaný díl.

Položky b) a c) odkazují na obrázek (E) na stránce i-6.

b) Na obrázku hlavní skupiny vyhledejte podskupinu zařízení (17) která obsahuje hledaný díl nebo podskupinu. Zapamatujte si číslo umístění (18) a přejděte na katalogovou stránku, která následuje obrázek.

c) Vyhledejte číslo umístění (16) nebo název podskupiny (19). Přejděte na příslušné číslo stránky (20) uvedené v pravém sloupci.

Položky d) a e) odkazují na obrázek (F) na stránce i-6.

d) Na obrázku podskupiny vyhledejte požadovaný díl (21) a poznamenejte si číslo jeho umístění.

e) Na katalogové stránce je vedle čísla umístění uvedeno číslo dílu (29) a popis (30).

Informace uvedené v katalogu náhradních dílů

Následující seznam odkazuje na obrázek (F) na stránce i-6. Katalog náhradních dílů obsahuje následující informace o skupinách, podskupinách a náhradních dílech pro toto zařízení:

- Označení struktury skupiny (22). Označuje další vyšší skupinu ve struktuře katalogu zařízení.
- Název skupiny (23)
- Měrné jednotky (25)
- Množství (26)
- Číslo schématu součásti (27)
- Rozsah katalogových stránek (28). Je uvedeno, pokud obrázek skupiny nebo katalog obsahují více stránek.
- Číslo dílu nebo podskupiny (29)
- Název podskupiny nebo popis dílu (30)
- Číslo skupiny (31)
- Číslo zařízení (32)
- Nadpis informací o skupině (33). Označuje, zda se oddíl pod nadpisem vztahuje na konkrétní variantu zařízení nebo představuje katalog běžných dílů. Pokud některý katalog obsahuje více, než jednu variantu, a pokud má každá varianta vlastní schéma součásti, zobrazí se odkaz na stránku se schématem součásti dané varianty.
- Vnitřní informace (34)

Indledning

Information om manualen

Tetra Pak anbefaler, at alle leverede manualer læses omhyggeligt. Sørg for, at de leverede manualer er tilgængelige for medarbejdere, der betjener eller vedligeholder udstyret.

Det er vigtigt at opbevare dette katalog hele udstyrets levetid og give kataloget videre til eventuelt kommende ejere eller brugere.

Tetra Pak kan ikke holdes ansvarlig for eventuel beskadigelse af udstyr, der opstår, fordi instruktionerne i manualerne til dette udstyr ikke følges.

Leverede manualer

De manualer, der leveres sammen med dette udstyr, kan omfatte:

- Konverteringsmanual (CM)
  Denne manual forsyner teknikere med informationer om konvertering af udstyret mellem forskellige produktionstilstande.
- Elektrisk manual (EM)
  Denne manual forsyner teknikere med informationer om udstyrets elektriske system.
- Installationsmanual (IM)
  Denne manual forsyner teknikere med informationer, der er nødvendige for en sikker installation af udstyret.
- Vedligeholdelsesmanual (MM)
  Denne manual forsyner teknikere med informationer om vedligeholdelse af udstyret.
- Betjeningsmanual (OM)
  Denne manual forsyner operatøren med informationer om håndtering og betjening af udstyret før, under og efter produktion.
- Reservedelskatalog (SPC)
  Denne manual indeholder de informationer, der er nødvendige for at kunne bestille reservedele fra Tetra Pak.
- Teknisk manual (TeM)
  - forsyner teknikere med informationer, der er nødvendige for en sikker installation af udstyret.
  - forsyner teknikere med informationer om vedligeholdelse af udstyret.
  - forsyner teknikere med informationer om udstyrets elektriske system.
  - indeholder de informationer, der er nødvendige for at kunne bestille reservedele fra Tetra Pak.

Sidelayout

Se illustrationen (A) på side i-5: Hovedsiderne i et reservedelskatalog består af en illustrationsside (1) og en tilsvarende listeside (7). Sidenummeret (5) vises i sidehovedet på en illlustrationsside og i sidefoden på en listeside. Dokumentnummeret (6) vises i sidefoden på en listeside.

Sidenummerering

Se illustrationen (A) på side i-5: Et sidenummer (5) har tre dele:

- kapitelnummer (2)
- fortløbende sidenummer i kapitlet (3)
- samlet sideantal i kapitlet (4)

Præsentation af maskinen

Producent

Producentens navn og adresse findes på side to i dette katalog.

Service

Kontakt nærmeste Tetra Pak-kontor for at bestille reservedele eller rapportere problemer i forbindelse med betjening af denne maskine.

Kontakt kontaktpersonen med andre forespørgsler, kommentarer eller forslag til forbedringer af udstyret og dets dokumentation.

Identifikation

CE-klassificering

Dette udstyr overholder de grundlæggende sundheds- og sikkerheds-bestemmelser for Det Europæiske Økonomiske Samarbejdsområde (EØS).

Maskinskilt

Illustrationen (B) på side i-5 viser et eksempel på et maskinskilt. En illustration af et gyldigt maskinskilt og dets placering på udstyret er vist i indledningskapitlet i de manualer, der leveres med dette udstyr. Maskinskiltet indeholder nedennævnte data. Disse er nødvendige ved kontakt med Tetra Pak vedrørende dette specifikke udstyr.

- Maskintype (8)
- Volumen (9)
- Tegningsspecifikationer (10)
- Maskinens serienummer (11)
- Producent (12)
- CE-mærke (13)
- Produktionsår (14)

Illustrationen (C) på side i-5 viser et eksempel på en maskinspecifikation. Kontroller, at de udstyrsdata, der er anført på de første sider i denne manual, svarer til maskinskiltsdataene og maskinspecifikationen.

Sådan bruges dette reservedelskatalog

Find et reservedelsnummer

a) Se illustrationen (D) på side i-5: Gå til kapitelnummeret (15), der er angivet ved siden af hovedgruppen, der indeholder den del, der ønskes fundet.

Punkterne b) og c) refererer til illustrationen (E) på side i-6.

b) I hovedgruppeillustrationen skal man se efter maskinundergruppen (17), som indeholder den del eller undergruppe, der søges. Bemærk placeringsnummeret (18), og gå til listesiden, som følger illustrationen.

c) Se efter placeringsnummeret (16) eller undergruppens navn (19). Gå til det tilsvarende sidenummer (20) angivet i den højre kolonne.

Punkterne d) og e) refererer til illustrationen (F) på side i-6.

d) Find den del (21), du søger i undergruppeillustrationen, og notér delens placeringsnummer.

e) Reservedelsnummeret (29) og -beskrivelsen (30) er angivet ved siden af placeringsnummeret på listesiden.

Informationer der er angivet i et reservedelskatalog

Listen nedenfor refererer til illustrationen (F) på side i-6. Et reservedelskatalog indeholder følgende informationer om grupper, undergrupper og reservedele til udstyret:

- Gruppestrukturreference (22). Angiver næste overordnede gruppe i udstyrslistestrukturen.
- Gruppenavn (23)
- Måleenhed (25)
- Antal (26)
- Samletegningsnummer (27)
- Listens sideområde (28). Er angivet, hvis gruppeillustrationen eller -listen inkluderer mange sider.
- Del- eller undergruppenummer (29)
- Undergruppens navn eller delsbeskrivelse (30)
- Gruppenummer (31)
- Udstyrsnummer (32)
- Overskrift for gruppeinformation (33). Angiver om afsnittet under overskriften er for en specifik maskinvariant, eller om det er en liste over fælles dele. Hvis en liste har mere end én variant, og hver variant har sin egen samletegning, vises en sidereference til variantens samletegning.
- Intern information (34)

Einleitung

Handbuch-Informationen

Tetra Pak empfiehlt, alle gelieferten Handbücher sorgfältig zu lesen. Es muss sichergestellt werden, dass die gelieferten Handbücher dem Bediener- oder Wartungspersonal der Ausrüstung verfügbar sind.

Es ist wichtig, dieses Handbuch während der Lebensdauer der Ausrüstung vorzuhalten und es an nachfolgende Halter oder Benutzer weiterzugeben.

Tetra Pak ist nicht verantwortlich für Schäden an der Ausrüstung, die durch die Nichtbefolgung der Anweisungen dieses Handbuchs verursacht werden.

Gelieferte Handbücher

Die mit dieser Ausrüstung gelieferten Handbücher umfassen

- Umbauhandbuch (CM)
  Dieses Handbuch liefert den Technikern Informationen über den Umbau der Ausrüstung zwischen den verschiedenen Produktionsweisen.
- Elektrohandbuch (EM)
  Dieses Handbuch liefert den Technikern Informationen zum Elektrosystem der Ausrüstung.
- Installationshandbuch (IM)
  Dieses Handbuch liefert den Technikern Informationen für die sichere Installation der Ausrüstung.
- Wartungshandbuch (MM)
  Dieses Handbuch liefert den Technikern Informationen über die Wartung der Ausrüstung.
- Betriebshandbuch (OM)
  Dieses Handbuch liefert dem Bediener Informationen über die Handhabung und den Betrieb der Ausrüstung vor, während und nach der Produktion.
- Ersatzteilkatalog (SPC)
  Dieses Handbuch liefert Informationen, wie sie für die Bestellung von Ersatzteilen bei Tetra Pak erforderlich sind.
- Technisches Handbuch (TeM)
  - liefert den Technikern Informationen für die sichere Installation der Ausrüstung
  - liefert den Technikern Informationen über die Wartung der Ausrüstung
  - liefert den Technikern Informationen über das Elektrosystem der Ausrüstung
  - liefert die erforderlichen Informationen für die Bestellung von Ersatzteilen bei Tetra Pak.

Seitenlayout

Bezugnahme Abbildung (A) auf Seite i-5: Die Hauptseiten in einem Ersatzteilkatalog bestehen aus einer Abbildungsseite (1) und einer entsprechenden Listenseite (7). Die Seitennummer (5) ist im Kopf einer Abbilldungsseite und im Fuß einer Listenseite aufgeführt. Die Dokumentennummer (6) ist ist im Fuß einer Listenseite angegeben.

Seitennummerierung

Bezugnahme Abbildung (A) auf Seite i-5: Eine Seitennummer (5) besteht aus drei Teilen:

- Kapitelnummer (2)
- Fortlaufende Seitennummer innerhalb des Kapitels (3)
- Gesamtanzahl der Seiten im Kapitel (4)

Einführung in die Maschine

Hersteller

Für Name und Anschrift des Herstellers, siehe die zweite Seite dieses Kataloges.

Service

Um Ersatzteile für diese Maschine zu bestellen oder um über Probleme beim Betrieb dieser Maschine zu berichten, ist das nächstgelegene Büro von Tetra Pak anzusprechen.

Mit anderen Anfragen. Kommentaren oder Vorschlägen zur Ausrüstung und der Dokumentation ist die Verbindungsstelle anzusprechen.

Identifizierung

CE-Klassifizierung

Diese Ausrüstung entspricht den grundlegenden Gesundheits- und Sicherheitsvorschriften des Europäischen Wirtschaftsraumes (EEA).

Maschinenschild

Die Abbildung (B) auf Seite i-5 zeigt das Beispiel eines Maschinenschildes. Die Abbildung eines gültigen Maschinenschildes und die Lage desselben auf der Ausrüstung befindet sich im Einleitungskapitel der mit der Ausrüstung gelieferten Handbücher. Das Maschinenschild enthält die nachstehend aufgeführten Daten, wie sie erforderlich sind, wenn Tetra Pak wegen dieser spezifischen Ausrüstung anzusprechen ist.

- Maschinentyp (8)
- Volumen (9)
- Zeichnungs-Spezifikationen (10)
- Serien-Nummer der Maschine (11)
- Hersteller (12)
- CE-Markierung (13)
- Baujahr (14)

Die Abbildung (C) auf Seite i-5 zeigt das Beispiel einer Maschinenspezifikation. Es muss sichergestellt sein, dass die in den Frontseiten dieses Handbuchs aufgeführten Ausrüstungsdaten mit den Daten des Maschinenschildes und der Maschinenspezifikation übereinstimmen.

Verwendung dieses Ersatzteilkatalogs

Anordnung einer Ersatzteilnummer

a) Bezugnahme auf Abbildung (D) auf Seite i-5: Weiter zur Kapitelnummer (15), die neben der Hauptgruppe angegeben ist, die das entsprechende Teil enthält.

Die Pos. b) und c) beziehen sich auf die Abbildung (E) auf Seite i-6.

b) Auf der Hauptgruppenabbildung die Maschinen-Untergruppe (17) suchen, die das gesuchte Teil oder die gesuchte Untergruppe enthält. Die Positionsnummer (18) notieren und weiter zur Listenseite gehen, die der Abbildung folgt.

c) Die Positionsnummer (16) oder den Namen der Untergruppe (19) suchen. Dann zur entsprechenden Seitennummer (20) in der rechten Spalte gehen.

Pos. d) und e) beziehen sich auf die Abbildung (F) auf Seite i-6.

d) Suchen Sie Teil (21) auf der Untergruppen-Abbildung und notieren Sie die Positionsnummer des Teils.

e) Die Teilnummer (29) und die Teilebeschreibung (30) finden Sie neben der Positionsnummer auf der Listenseite.

In einem Ersatzteilkatalog enthaltene Information

Die nachstehende Liste bezieht sich auf die Abbildung (F) auf Seite i-6.
Ein Ersatzteilkatalog enthält folgende Informationen über Gruppen, Untergruppen und Ersatzteile für die Ausrüstung:

- Gruppenstrukturreferenz (22). Sie gibt die nächst höhere Gruppe in der Ausrüstungslistenstruktur an
- Gruppenname (23)
- Maßeinheit (25)
- Menge (26)
- Nummer der Zusammenbauzeichnung (27)
- Listenseite, Bereich (28). Eingeschlossen, wenn Mehrfachseiten in der Gruppenabbildung oder Liste enthalten sind
- Teile- oder Untergruppennummer (29)
- Untergruppenname oder Teilebeschreibung (30)
- Gruppennummer (31)
- Ausrüstungsnummer (32)
- Gruppeninformationsüberschrift (33). Gibt an, ob der Abschnitt unter der Überschrift sich auf eine spezifische Maschinenvariante bezieht oder eine Liste der allgemeinen Teile ist. Wenn eine Liste sich auf mehr als eine Variante bezieht und jede Variante eine eigene Zusammenbauzeichnung hat, wird eine Seitenreferenz zur Zusammenbauzeichnung der Variante vorgestellt.
- Interne Information (34)

Εισαγωγή

Πληροφορίες για το Εγχειρίδιο

Η Tetra Pak σας συνιστά να διαβάζετε προσεκτικά όλα τα χορηγούμενα εγχειρίδια. Βεβαιωθείτε ότι είναι διαθέσιμα όλα τα χορηγούμενα εγχειρίδια για το προσωπικό που χειρίζεται ή συντηρεί τον εξοπλισμό.

Είναι σημαντικό να διατηρείτε αυτό τον κατάλογο καθ' όλη τη διάρκεια ζωής του εξοπλισμού καθώς και να παραδίδετε τον κατάλογο στον τυχόν επόμενο ιδιοκτήτη ή χρήστη του εξοπλισμού.

Η Tetra Pak δεν πρόκειται να αναλάβει καμία ευθύνη για οποιαδήποτε ζημιά που προκαλείται στον εξοπλισμό λόγω της παράβλεψης των οδηγιών που δίνονται στα εγχειρίδια που συνοδεύουν αυτό τον εξοπλισμό.

Χορηγούμενα Εγχειρίδια

Τα εγχειρίδια που χορηγούνται μ' αυτόν τον εξοπλισμό, μπορεί να περιλαμβάνουν

- Εγχειρίδιο Μετατροπής (CM)
  Αυτό το εγχειρίδιο χορηγεί στους τεχνικούς πληροφορίες για τη μετατροπή του εξοπλισμού στους διαφορετικούς τρόπους παραγωγής.
- Εγχειρίδιο Ηλεκτρικού (EM)
  Αυτό το εγχειρίδιο χορηγεί στους τεχνικούς πληροφορίες για το ηλεκτρικό σύστημα του εξοπλισμού.
- Εγχειρίδιο Εγκατάστασης (IM)
  Αυτό το εγχειρίδιο χορηγεί στους τεχνικούς τις απαιτούμενες πληροφορίες για την ασφαλή εγκατάσταση του εξοπλισμού.
- Εγχειρίδιο Συντήρησης (MM)
  Αυτό το εγχειρίδιο χορηγεί στους τεχνικούς πληροφορίες για τη συντήρηση του εξοπλισμού.
- Εγχειρίδιο Χρήσης (OM)
  Αυτό το εγχειρίδιο χορηγεί στο χειριστή πληροφορίες για τη διακίνηση και το χειρισμό του εξοπλισμού πριν, κατά τη διάρκεια και μετά την παραγωγή.
- Κατάλογος Ανταλλακτικών (SPC)
  Αυτό το εγχειρίδιο χορηγεί τις απαραίτητες πληροφορίες για την παραγγελία ανταλλακτικών από την Tetra Pak.
- Τεχνικό Εγχειρίδιο (TeM)
  - χορηγεί στους τεχνικούς τις απαιτούμενες πληροφορίες για την ασφαλή εγκατάσταση του εξοπλισμού
  - χορηγεί στους τεχνικούς πληροφορίες για τη συντήρηση του εξοπλισμού
  - χορηγεί στους τεχνικούς πληροφορίες για το ηλεκτρικό σύστημα του εξοπλισμού
  - χορηγεί τις απαραίτητες πληροφορίες για την παραγγελία ανταλλακτικών από την Tetra Pak

Σχεδίαση Σελίδας

Ανατρέξτε στην εικόνα (A) της σελίδας i-5: Οι κύριες σελίδες ενός Καταλόγου Ανταλλακτικών αποτελούνται από μία εικονογραφημένη σελίδα (1) και από μία αντίστοιχη σελίδα καταλόγου (7). Ο αριθμός σελίδας (5) φαίνεται στην κεφαλίδα μιας εικονογραφημένης σελίδας και στο υποσέλιδο μιας σελίδας καταλόγου. Ο αριθμός εγγράφου (6) φαίνεται στο υποσέλιδο μιας σελίδας λίστας.

Αρίθμηση Σελίδων

Ανατρέξτε στην εικόνα (A) της σελίδας i-5: Ένας αριθμός σελίδας (5) αποτελείται από τρία μέρη:

- αριθμός κεφαλαίου (2)
- αύξων αριθμός σελίδας του κεφαλαίου (3)
- συνολικός αριθμός σελίδων του κεφαλαίου (4)

Εισαγωγή στη Μηχανή

Κατασκευαστής

Για την επωνυμία και τη διεύθυνση του κατασκευαστή, βλέπετε στη δεύτερη σελίδα αυτού του καταλόγου.

Σέρβις

Για να παραγγείλετε ανταλλακτικά για τη συγκεκριμένη μηχανή, ή για να αναφέρετε προβλήματα που σχετίζονται με το χειρισμό αυτής της μηχανής, επικοινωνήστε με το πλησιέστερο γραφείο της Tetra Pak.

Εάν έχετε άλλου είδους ερωτήσεις, σχόλια ή προτάσεις βελτίωσης όσον αφορά τον εξοπλισμό και την έγγραφη τεκμηρίωσή του, επικοινωνήστε με το Τμήμα Σχέσεων.

Αναγνώριση

Κατάταξη ΕΚ

Αυτός ο εξοπλισμός συμμορφώνεται με τους βασικούς κανονισμούς υγείας και ασφάλειας του Ευρωπαϊκού Οικονομικού Χώρου (ΕΟΧ).

Πινακίδα Μηχανής

Η εικόνα (B) της σελίδας i-5 δείχνει ένα παράδειγμα μιας πινακίδας μηχανής. Μια εικόνα της ενδεδειγμένης μορφής και θέσης της πινακίδας μηχανής στον εξοπλισμό, υποδεικνύεται στο κεφάλαιο 'Εισαγωγή' των εγχειριδίων που χορηγούνται μ' αυτόν τον εξοπλισμό. Η πινακίδα μηχανής περιέχει τα στοιχεία που παρατίθενται παρακάτω, τα οποία χρειάζονται όταν επικοινωνείτε με την Tetra Pak για όσον αφορά αυτό το συγκεκριμένο εξοπλισμό.

- Τύπος μηχανής (8)
- Όγκος (9)
- Προδιαγραφές σχεδίου (10)
- Αριθμός σειράς μηχανής (11)
- Κατασκευαστής (12)
- Σήμα ΕΚ (13)
- Έτος κατασκευής (14)

Η εικόνα (C) της σελίδας i-5 δείχνει ένα παράδειγμα τεχνικών χαρακτηριστικών μηχανής. Βεβαιωθείτε ότι τα στοιχεία εξοπλισμού που παρατίθενται στις πρώτες σελίδες αυτού του εγχειριδίου αντιστοιχούν με τα στοιχεία της πινακίδας μηχανής και τα τεχνικά χαρακτηριστικά μηχανής.

Πώς Χρησιμοποιείται Αυτός ο Κατάλογος Ανταλλακτικών

Εντοπισμός ενός Αριθμού Ανταλλακτικού

a) Ανατρέξτε στην εικόνα (D) της σελίδας i-5: Πηγαίνετε στον αριθμό κεφαλαίου (15) που υποδεικνύεται δίπλα από το κύριο συγκρότημα το οποίο περιλαμβάνει το εξάρτημα που θέλετε να εντοπίσετε.

Τα βήματα b) και c) αναφέρονται στην εικόνα (E) της σελίδας i-6.

b) Στην εικόνα της κύριου συγκροτήματος, αναζητήστε το υποσυγκρότημα μηχανής (17) που περιλαμβάνει το εξάρτημα ή το υποσυγκρότημα που αναζητάτε. Σημειώστε τον αριθμό θέσης (18) και πηγαίνετε στη σελίδα καταλόγου που ακολουθεί την εικόνα.

c) Αναζητήστε τον αριθμό θέσης (16) ή το όνομα υποσυγκροτήματος (19). Πηγαίνετε στον αντίστοιχο αριθμό σελίδας (20) που αναγράφεται στη δεξιά στήλη.

Τα βήματα d) και e) αναφέρονται στην εικόνα (F) της σελίδας i-6.

d) Εντοπίστε το εξάρτημα (21) που αναζητάτε στην εικόνα υποσυγκροτήματος και σημειώστε τον αριθμό θέσης του εξαρτήματος.

e) Ο αριθμός του εξαρτήματος (29) και η περιγραφή του εξαρτήματος (30) παρατίθενται δίπλα στον αριθμό θέσης στη σελίδα καταλόγου.

Πληροφορίες που Περιέχονται σε έναν Κατάλογο Ανταλλακτικών

Ο παρακάτω κατάλογος αναφέρεται στην εικόνα (F) της σελίδας i-6. Ένας Κατάλογος Ανταλλακτικών περιέχει τις ακόλουθες πληροφορίες σχετικά με συγκροτήματα, υποσυγκροτήματα και ανταλλακτικά του εξοπλισμού:

- Αναφορά συγκροτήματος κατασκευής (22). Υποδεικνύει το επόμενο μεγαλύτερο συγκρότημα στον πίνακα εξοπλισμού κατασκευής.
- Όνομα συγκροτήματος (23)
- Μονάδα μέτρησης (25)
- Ποσότητα (26)
- Αριθμός σχεδίου συναρμολόγησης (27)
- Σειρά σελίδων καταλόγου (28). Περιλαμβάνεται εάν υπάρχουν πολλαπλές σελίδες στην εικόνα ή στον κατάλογο συγκροτήματος.
- Αριθμός εξαρτήματος ή υποσυγκροτήματος (29)
- Όνομα υποσυγκροτήματος ή περιγραφή εξαρτήματος (30)
- Αριθμός συγκροτήματος (31)
- Αριθμός εξοπλισμού (32)
- Επικεφαλίδα πληροφοριών συγκροτήματος (33). Υποδεικνύει εάν η ενότητα κάτω από την επικεφαλίδα αφορά μια ειδική παραλλαγή μηχανής ή είναι ένας κατάλογος κοινών εξαρτημάτων. Εάν ένας κατάλογος περιέχει περισσότερες από μία παραλλαγές και κάθε παραλλαγή έχει το δικό της σχέδιο συναρμολόγησης, υποδεικνύεται μια παραπομπή στη σελίδα σχεδίου συναρμολόγησης της παραλλαγής.
- Εσωτερικές πληροφορίες (34)

Introducción

Información del manual

Tetra Pak recomienda que se lean cuidadosamente todos los manuales entregados. Comprobar que todos los manuales entregados estén disponibles para el personal que efectúe la operación o el mantenimiento del equipo.

Es importante conservar este manual durante la vida útil del equipo, así como facilitárselo a cualquier propietario o usuario posterior.

Tetra Pak no se responsabilizará de daños en la máquina o equipo debidos a la inobservancia de las instrucciones dadas en los manuales que acompañan este equipo.

Manuales entregados

Los manuales entregados con este equipo pueden incluir

- Manual de conversión (CM)
  Este manual proporciona a los técnicos información sobre cómo convertir el equipo entre diferentes modos de producción.
- Manual eléctrico (EM)
  Este manual proporciona a los técnicos información acerca del sistema eléctrico del sistema.
- Manual de instalación (IM)
  Este manual proporciona a los técnicos la información necesaria para la instalación segura del equipo.
- Manual de mantenimiento (MM)
  Este manual proporciona a los técnicos la información acerca del mantenimiento del equipo.
- Manual de servicio (OM)
  Este manual proporciona al operador información acerca de la manipulación y operación de la máquina antes, durante y después de la producción.
- Catálogo de piezas de recambio (SPC)
  Este manual proporciona la información necesaria para pedir piezas de recambio a Tetra Pak.
- Manual técnico (TeM)
  - proporciona a los técnicos la información necesaria para la instalación segura del equipo
  - proporciona a los técnicos la información acerca del mantenimiento del equipo
  - proporciona a los técnicos información acerca del sistema eléctrico del sistema
  - proporciona la información necesaria para pedir piezas de recambio a Tetra Pak

Organización de las páginas

Remitirse a la ilustración (A) en la página i-5: Las páginas principales en un Catálogo de piezas de recambio se componen de una página de ilustración (1) y una página de lista correspondiente (7). El número de la página (5) se muestra en el encabezado de una página de ilustración y en el pie de página de una página de lista. El número del documento (6) se muestra en el pie de página de una página de lista.

Numeración de las páginas

Remitirse a la ilustración (A) en la página i-5: Un número de página (5) se compone de tres partes:

- Número de capítulo (2)
- número de página consecutivo (2) dentro del capítulo (3)
- número total de páginas del capítulo (4)

Introducción a la máquina

Fabricante

Para el nombre y la dirección del fabricante, ver la segunda página de este catálogo.

Servicio

Para pedir piezas de recambio para esta máquina o informar problemas asociados con la operación de esta máquina, contactar con la oficina de Tetra Pak más cercana.

Ponerse en contacto con el responsable correspondiente para otras preguntas, comentarios o sugerencias sobre mejoras de la máquina o equipo y su documentación.

Identificación

Clasificación de la CE

Este equipo cumple los requisitos esenciales relativos a la salud y la seguridad del Área Económica Europea (EEA).

Placa de la máquina

La ilustración (B) en la página i-5 muestra un ejemplo de placa de máquina. En la Introducción del capítulo de los manuales entregados con este equipo se muestra una ilustración de la placa de máquina válida y su ubicación en el equipo La placa de máquina contiene los datos listados a continuación requeridos al contactar con Tetra Pak en relaciôn a este equipo específico.

- Tipo de máquina (8)
- Volumen (9)
- Especificaciones de plano (10)
- Número de serie de la máquina (11)
- Fabricante (12)
- Marca de la CE (13)
- Año de fabricación (14)

La ilustración (C) en la página i-5 muestra un ejemplo de especificación máquina. Asegúrese que los datos de equipo listados en las páginas de cubierta de este manual corresponden a los datos de la placa de máquina y la especificación máquinav.

Cómo utilizar este Catálogo de piezas de recambio

Localizar un número de pieza de recambio

a) Remitirse a la ilustración (D) en la página i-5: Ir al número de capítulo (15) indicado detrás el grupo principal que contiene la parte que usted desea localizar.

Los items b) y c) se refieren a la ilustracióni (E) en la página i-6.

b) En la ilustración del grupo principal, buscar el subgrupo máquina (17) que contiene la pieza o subgrupo que usted busca. Anote el número de posición (18) y vaya a la página de lista que sigue la ilustración.

c) Busque el número de posición (16) o el nombre del subgrupo (19). Vaya al número de página correspondiente (20) listado en la columna de la derecha.

Los items d) y e) se refieren a la ilustración (F) en la página i-6.

d) Localizar la pieza (21) que busca en la ilustración del subgrupo y anotar el número de posición de la pieza.

e) El número de pieza (29) y la descripción de pieza (30) están listadas detrás del número de posición en la página de lista.

Información listada en un Catálogo de piezas de recambio

La lista a continuación remite a la ilustración (F) en la página i-6.
Un Catálogo de piezas de recambio contiene la siguiente información sobre grupos, subgrupos y piezas de recambio para el equipo:

- Referencia de estructura de grupo (22). Indica el siguiente grupo más alto en la estructura de lista del equipo.
- Nombre del grupo (23)
- Unidad de medida (25)
- Cantidad (26)
- Número de plano de conjunto (27)
- Gama de página lista (28). Incluida si hay páginas múltiples en la ilustración o lista de grupo.
- Número de pieza o subgrupo (29)
- Nombre, subgrupo o descripción de pieza (30)
- Número de grupo (31)
- Número de equipo (32)
- Encabezado de información grupo (33). Indica si la sección debajo del encabezado es para una variante máquina específica o si es una lista de piezas comunes. Si la lista tiene más de una variante y cada variante tiene su propio plano de conjunto, se muestra una referencia página para el plano de conjunto de la variante.
- Información interna (34)

Sissejuhatus

Kasutusjuhendi teave

Tetra Pak soovitab lugeda hoolega kõiki kaasasolevaid juhendeid. Veenduge, et juhendid on seadmega töötavatele ja neid hooldavatele töötajatele kättesaadavad.

Oluline on hoida kataloog alles kogu seadme eluea jooksul ja anda kataloog kaasa ka järgmisele omanikule või kasutajale.

Tetra Pak ei vastuta seadme kahjustuste eest, mille põhjuseks on seadmega kaasasolevas juhendis toodud juhiste mittejärgimine.

Kaasasolevad juhendid

Seadmega kaasasolevad juhendid võivad sisaldada järgmist:

- Konverteerimisjuhend (ÜJ)
  Juhend annab tehnikutele teavet seadme konverteerimise kohta eri tootmisrežiimide korral.
- Elektrijuhend (EJ)
  Juhend annab tehnikutele teavet seadme elektrisüsteemi kohta.
- Paigaldusjuhend (PJ)
  Juhend annab tehnikutele teavet seadme ohutu paigaldamise kohta.
- Hooldusjuhend (HJ)
  Juhend annab tehnikutele teavet seadme hoolduse kohta.
- Kasutusjuhend (KJ)
  Juhend annab operaatorile teavet seadme käitlemise ja töö kohta enne tootmist, selle ajal ja pärast seda.
- Varuosade kataloog (VOK)
  Juhend annab Tetra Pakilt varuosade tellimiseks vajalikku teavet.
- Tehniline juhend (TJ)
  - annab tehnikutele seadme ohutuks paigaldamiseks vajalikku teavet
  - annab tehnikutele teavet seadme hoolduse kohta
  - annab tehnikutele teavet seadme elektrisüsteemi kohta
  - annab Tetra Pakilt varuosade tellimiseks vajalikku teavet

Küljend

Vt illustratsiooni (A) lk i-5: Varuosade kataloogi põhilehtedeks on illustratsioonilehed (1) ja vastavad loetelulehed (7). Lehekülje number (5) on toodud illustratsioonilehe päises ja loetelulehe jaluses. Dokumendi number (6) on toodud loetelulehe jaluses.

Leheküljenummerdus

Vt illustratsiooni (A) lk i-5: Lehekülje number (5) koosneb kolmest osast:

- peatüki number (2)
- lehekülgede järjestikused numbrid peatüki sees (3)
- lehekülgede koguarv peatükis (4)

Sissejuhatus masina kohta

Tootja

Tootja nimi ja aadress on toodud kataloogi teisel lehel.

Teenindus

Varuosade tellimiseks masinale või selle tööga seotud probleemidest teatamiseks võtke ühendust lähima Tetra Pak kontoriga.

Kui teil on muid küsimusi, märkusi või soovitusi seadmete ja dokumentatsiooni täiustamise kohta, võtke ühendust Tetra Paki kontaktisikuga.

Identifitseerimine

CE-klassifikatsioon

Seade vastab Euroopa Majanduspiirkonna (EMP) põhilistele tervisekaitse ja ohutuse alastele määrustele.

Masina andmeplaat

Illustratsioon (B) leheküljel i-5 kujutab masina andmeplaati.
Masina andmeplaadi pilt ja selle asukoht seadmel on toodud seadmega kaasasolevate juhendite sissejuhatavas peatükis. Masina andmeplaadil on allpool nimetatud andmed, mida vajate antud konkreetse seadmega seoses Tetra Paki poole pöördudes.

- Masina tüüp (8)
- Maht (9)
- Joonisspetsifikatsioonid (10)
- Masina seerianumber (11)
- Tootja (12)
- CE-tähis (13)
- Tootmisaasta (14)

Illustratsioon (C) leheküljel i-5 kujutab masina spetsifikatsiooni. Veenduge, et käesoleva juhendi esimestel lehekülgedel toodud andmed seadme kohta vastavad masina andmesildil olevatele andmetele ja masina spetsifikatsioonile.

Kuidas varuosade kataloogi kasutada

Leidke varuosa number

a) Vt illustratsiooni (D) lk i-5: Leidke peatükk, mille number (15) on toodud selle põhirühma juures, mis sisaldab teie poolt otsitavat varuosa.

Punktid b) ja c) käivad illustratsiooni (E) kohta lk i-6.

b) Põhirühma illustratsioonil leidke masina alarühm (17), mis sisaldab osa või alarühma, mida otsite. Leidke positsiooni number (18) ja avage siis illustratsioonile järgnev loeteluleht.

c) Leidke positsiooni number (16) või alarühma nimetus (19). Leidke vastav leheküljenumber (20) parempoolsest veerust.

Punktid d) ja e) käivad illustratsiooni (F) kohta lk i-6.

d) Leidke otsitav osa (21) alarühma illustratsioonilt ja siis osa positsiooninumber.

e) Osa number (29) ja osa kirjeldus (30) on toodud positsiooninumbri kõrval loetelulehel.

Varuosade kataloogis toodud teave

Allpool toodud loetelu käib illustratsiooni (F) kohta lk i-6. Varuosade kataloogis on järgmine teave seadme rühmade, alarühmade ja varuosade kohta:

- Rühmastruktuuri viide (22). Esitab järgmise kõrgema rühma seadmete loetelu struktuuris.
- Rühma nimetus (23)
- Mõõtühik (25)
- Kogus (26)
- Koostejoonise number (27)
- Loetelu lehekülgede vahemik (28). Märgitud, kui rühma illustratsioonid või loetelu on mitmel lehel.
- Osa või alarühma number (29)
- Alarühma nimetus või osa kirjeldus (30)
- Rühma number (31)
- Seadme number (32)
- Rühma teabe rubriik (33). Näitab, kas rubriigi all toodud jaotis on konkreetse masinavariandi kohta või on tegemist tavaliste varuosade loeteluga. Kui loetelus on üle ühe variandi ja iga variandi jaoks on oma koostejoonis, esitatakse viide selle variandi koostejoonise leheküljele.
- Siseteave (34)

Johdanto

Tietoja käsikirjasta

Tetra Pak suosittelee kaikkien toimitettavien oppaiden lukemista huolellisesti. Varmista, että toimitetut oppaat ovat laitetta käyttävän tai huoltavan henkilökunnan saatavilla.

Tämä luettelo on säilytettävä laitteen käyttöiän ajan ja toimitettava edelleen mahdolliselle seuraavalle omistajalle tai käyttäjälle.

Tetra Pak ei vastaa laitevaurioista, jotka aiheutuvat laitteen mukana tulevissa oppaissa annettujen ohjeiden noudattamatta jättämisestä.

Toimitettavat ohjeet

Tämän laitteen mukana toimitettaviin ohjeisiin kuuluvat:

- Muutoskirja (CM)
  Tässä oppaassa on teknikoille tarkoitettuja ohjeita laitteiston muuttamisesta eti tuotantotiloihin.
- Sähkökirja (EM)
  Tässä oppaassa on teknikoille tarkoitettuja tietoja laitteen sähköjärjestelmästä.
- Asennuskäsikirja (IM)
  Tässä oppaassa on teknikoille tarkoitettuja tietoja, jotka tarvitaan laitteen turvallista asentamista varten.
- Huoltokäsikirja (MM)
  Tässä oppaassa on teknikoille tarkoitettuja tietoja tämän laitteen huoltamisesta.
- Käyttäjän käsikirja (OM)
  Tässä oppaassa on käyttäjälle tarkoitettuja tietoja laitteiston käsittelystä ja käyttämisestä ennen tuotantoa, tuotannon aikana ja sen jälkeen.
- Varaosakuvasto (SPC)
  Tässä oppaassa on tietoja, joita tarvitaan varaosien tilaamiseen Tetra Pakilta.
- Tekninen käsikirja (TeM)
  - sisältää teknikoille tarkoitettuja tietoja, joita tarvitaan laitteen turvallista asentamista varten
  - sisältää teknikoille tarkoitettuja tietoja laitteen huoltamisesta
  - sisältää teknikoille tarkoitettuja tietoja laitteen sähköjärjestelmästä
  - sisältää tietoja, joita tarvitaan varaosien tilaamiseen Tetra Pakilta.

Sivujen asettelu

Katso kuva (A) sivulla i-5: Varaosaluettelon pääsivut koostuvat kuvasivusta (1) ja sitä vastaavasta luettelosivusta (7). Sivunumero (5) näytetään kuvasivun ylätunnisteessa ja luettelosivun alatunnisteessa. Asiakirjan numero (6) näytetään luettelosivun alatunnisteessa.

Sivunumerointi

Katso kuva (A) sivulla i-5: Sivunumerossa (5) on kolme osaa:

- luvun numero (2)
- perättäinen sivunumero (3) luvun sisällä
- luvun kokonaissivumäärä (4).

Koneen esittely

Valmistaja

Valmistajan nimi ja osoite on ilmoitettu tämän luettelon toisella sivulla.

Huolto

Jos haluat tilata tähän koneeseen varaosia tai jos tämän koneen käytössä ilmenee ongelmia, jotka haluat raportoida, ota yhteyttä lähimpään Tetra Pakin toimistoon.

Jos sinulla on muuta kysyttävää, huomautettavaa tai ehdotuksia laitteistoa ja sen asiakirjoja koskevista parannuksista, ota yhteys yhteyshenkilöön.

Tunnistetiedot

CE-luokitus

Tämä laite vastaa Euroopan talousalueen (EEA) perustason terveys- ja turvallisuusvaatimuksia.

Koneen tyyppikilpi

Kuvassa (B) sivulla i-5 on esimerkki koneen tyyppikilvestä. Voimassa olevan tyyppikilven kuva ja sen sijainti koneessa käy ilmi laitteiston mukana tulleiden ohjeiden Johdanto-luvusta. Tyyppikilvessä on tarvitsemasi Tetra Pakin voimassa olevat yhteystiedot, kun on kyseessä tämä nimenomainen laite.

- Konetyyppi (8)
- Tilavuus (9)
- Piirustuserittelyt (10)
- Koneen sarjanumero (11)
- Valmistaja (12)
- CE-merkki (13)
- Valmistusvuosi (14)

Kuvassa (C) sivulla i-5 on esimerkki koneen erittelystä. Varmista, että tämän ohjeen etusivuilla ilmoitetut laitetiedot vastaavat tyyppikilven ja kone-erittelyn tietoja.

Tämän varaosaluettelon käyttäminen

Etsi varaosan numero

a) Katso kuva (D) sivulla i-5: Siirry lukuun (15), joka on ilmoitettu etsittävän osan pääryhmän vieressä.

Kohdat b) ja c) viittaavat kuvaan (E) sivulla i-6.

b) Etsi pääryhmän kuvasta koneen alaryhmä (17), joka sisältää etsimäsi osan tai alaryhmän. Merkitse muistiin paikkanumero (18) ja siirry luettelosivulle, joka seuraa kuvaa.

c) Etsi paikkanumero (16) tai alaryhmän nimi (19). Siirry vastaavalle sivunumerolle (20), joka on ilmoitettu oikeassa sarakkeessa.

Kohdat d) ja e) viittaavat kuvaan (F) sivulla i-6.

d) Hae etsittävä osa (21) alaryhmän kuvasta ja merkitse osan paikkanumero muistiin.

e) Osanumero (29) ja osan kuvaus (30) on annettu paikkanumeron vieressä luettelosivulla.

Varaosaluettelossa olevat tiedot

Alla oleva luettelo viittaa kuvaan (F) sivulla i-6. Varaosaluettelo sisältää seuraavat tiedot ryhmistä, alaryhmistä ja laitteen varaosista:

- Ryhmärakenneviite (22). Osoittaa seuraavaksi ylemmän ryhmän laiteluettelorakenteessa.
- Ryhmän nimi (23)
- Mittayksikkö (25)
- Määrä (26)
- Kokoonpanopiirustuksen numero (27)
- Luettelosivun väli (28). Tämä on mukana, jos ryhmäkuvassa tai luettelossa on useita sivuja.
- Osan tai alaryhmän numero (29)
- Alaryhmän nimi tai osan kuvaus (30)
- Ryhmän numero (31)
- Laitteen numero (32)
- Ryhmätietojen otsikko (33). Osoittaa, koskeeko alla oleva osio tiettyä koneversiota vai onko kyseessä yleisten osien luettelo. Jos luettelolla on useampi kuin yksi versio ja kullakin versiolla on oma kokoonpanopiirustuksensa, näytetään version kokoonpanopiirustuksen sivuviittaus.
- Sisäiset tiedot (34)

Introduction

Information sur le manuel

Tetra Pak recommande de lire attentivement tous les manuels fournis. S'assurer que les manuels fournis soient accessibles au personnel qui s'occupe du fonctionnement ou de la maintenance de l'équipement.

Il est important de conserver ce manuel pendant toute la durée d'utilisation de la machine et de le transmettre à tout détenteur ou utilisateur ultérieur.

Tetra Pak ne sera pas tenu responsable d'un dommage causé à la machine ou à l'équipement par le fait de ne pas avoir respecté les instructions figurant dans le présent manuel.

Manuels fournis

Les manuels fournis avec cette machine comprennent

- Le Manuel de Conversion (CM)
  Ce manuel fournit aux techniciens les informations nécessaires pour convertir la machine en vue des différents modes de production.
- Manuel Electrique (EM)
  Ce manuel fournit aux techniciens les informations sur le système électrique de la machine.
- Manuel de Mise en Place (IM)
  Ce manuel fournit aux techniciens les informations nécessaires pour l'installation de la machine en toute sécurité.
- Manuel de Maintenance (MM)
  Ce manuel fournit aux techniciens les informations pour la maintenance.
- Manuel d'Opérateur (OM)
  Ce manuel fournit aux opérateurs les informations nécessaires pour la manutention et le fonctionnement de la machine avant, pendant et après la production.
- Catalogue de Pièces de Rechange (SPC)
  Ce manuel fournit l'information nécessaire à la commande de pièces de rechange auprès de Tetra Pak
- Manuel Technique (TeM)
  - fournit aux techniciens les informations nécessaires pour l'installation de la machine en toute sécurité
  - fournit aux techniciens les informations pour la maintenance
  - fournit aux techniciens les informations sur le système électrique de la machine
  - fournit l' information nécessaire à la commande de pièces de rechange auprès de Tetra Pak

Présentation d’une page

Se référer à la figure (A) à la page i-5: Les pages principales du Catalogue des Pièces de Rechange sont composées d'une page de figure (1) et d'une page de liste correspondante (7). Le numéro de page (5) est indiqué dans le titre de la page de figure et dans le bas de page d'une page de liste.
Le numéro de document (6) est indiqué dans le bas de page de la page de liste.

Numérotation de page

Se référer (A) à la page i-5: Un numéro de page (5) possède trois parties:

- Numéro de chapitre (2)
- numéro de page consécutif (2) à l'intérieur du chapitre (3)
- nombre total de pages dans le chapitre (4)

Présentation de la machine

Fabricant

Pour le nom et l'adresse du fabricant, voir la deuxième page de ce catalogue.

Assistance technique

Pour commander les pièces de rechange de cette machine ou pour rapporter les problèmes associés au fonctionnement de celle-ci, prendre contact avec le bureau Tetra Pak le plus proche.

Prendre contact avec le responsable de liaison pour les renseignements, commentaires ou suggestions concernant la machine ou l’équipement et sa documentation.

Identification

Certification CE

Cet équipement est conforme aux réglementations essentielles d'hygiène et de sécurité de la Communauté Economique Européenne (CEE).

Plaque signalétique de machine

La figure (B) à la page i-5 montre un exemple d'une plaque signalétique de machine.
Une représentation de la plaque de machine valable et son emplacement sur l'équipement est indiquée au Chapitre Introduction des manuels fournis avec l'équipement. La plaque de machine contient les caractéristiques figurant dans la liste ci-dessous, nécessaires pour prendre contact avec Tetra Pak au sujet de cet équipement spécifique.

- Type de machine (8)
- Volume (9)
- Spécifications du plan (10)
- Numéro de série de la machine (11)
- Fabricant (12)
- Marquage CE (13)
- Année de fabrication (14)

La figure (C) à la page i-5 montre un exemple d'une spécification de machine. S'assurer que les caractéristiques de l'équipement figurant dans la liste des pages de garde de ce manuel correspondent aux caractéristiques de la plaque signalétique de la machine et à ses spécifications.

Comment utiliser ce Catalogue de Pièces de Rechange

Localiser un numéro de pièce de rechange

a) Se référer à la figure (D) à la page i-5: Aller au numéro de chapitre (15) indiqué à côté du groupe principal qui contient la pièce que vous souhaitez localiser.

Les articles b) et c) se réfèrent à la figure (E) à la page i-6.

b) Sur la figure du groupe principal, chercher la sous-groupe de machine (17) qui contient la pièce ou le sous-groupe que vous recherchez. Noter le numéro de repère (18) et aller à la page de liste qui suit la figure.

c) Rechercher le numéro de repère (16) ou le nom de sous-groupe (19). Aller au numéro de page correspondant (20) figurant dans la liste de la colonne de droite.

Les articles d) et e) se réfèrent à la figure (F) à la page i-6.

d) Localiser la pièce (21) que vous recherchez sur la figure de sous-groupe et noter le numéro de repère de la pièce.

e) Le numéro de pièce (29) et la description de la pièce (30) figurent dans la liste à côté du numéro de repère sur la page de liste.

Informations figurant dans la liste dans un Catalogue de Pièces de Rechange

La liste ci-dessous se réfère à la figure (F) à la page i-6. Un Catalogue de Pièces de Rechange contient les renseignements suivants relatifs aux groupes, sous-groupes et pièces de rechange de l'équipement:

- Référence de structure de groupe (22). Indique le groupe supérieur suivant dans la structure de liste d'équipement.
- Nom du groupe (23).
- Unité de mesure (25).
- Quantité (26).
- Numéro de plan de montage (27).
- Gamme de la page de liste (28). Incluse s'il y a des pages multiples dans la figure de groupe ou dans la liste.
- Numéro de pièce ou de sous-groupe (29).
- Nom de sous-groupe ou description de la pièce (30).
- Numéro de groupe (31).
- Numéro de l'équipement (32).
- Titre des informations de groupe (33). Indique si la section sous le titre est pour une variante de machine spécifique ou s'il y a une liste de pièces communes. Si une liste comporte plus d'une variante et que chaque variante possède son propre plan de montage, une référence de page au plan de montage de la variante est alors indiqué.
- Renseignements internes (34).

Bevezetés

Kézikönyv információ

A Tetra Pak az összes rendelkezésre bocsátott kézikönyv figyelmes elolvasását ajánlja. Győződjön meg arról, hogy a rendelkezésre bocsátott kézikönyveket hozzáférhetővé tették a berendezést kezelő és karbantartó személyzet számára.

Föltétlenül őrizzék meg ezen kézikönyvet a berendezés teljes élethossza alatt, és adják át a következő tulajdonosnak vagy felhasználónak.

A Tetra Pak nem vonható felelősségre a berendezést ért olyan károkért, amelyek a kézikönyvben meghatározott utasítások be nem tartásából erednek.

Rendelkezésre bocsátott kézikönyvek

A géppel vagy berendezéssel együtt a következő dokumentumokat szállítjuk

- Karbantartási kézikönyv (CM)
  Ezen kézikönyv a technikusok számára szolgáltat adatokat a berendezés átkapcsolásáról egyik üzemmódból a másikba.
- Elektromos kézikönyv (EM)
  Ezen kézikönyv a villamosmérnökök és szervizelő technikusok számára szolgáltat adatokat a berendezés elektromos hálózatáról.
- Beszerelési kézikönyv (IM)
  Ezen kézikönyv a berendezés biztonságos beszerelésével kapcsolatos adatokat szolgáltat a technikusoknak.
- Karbantartási kézikönyv (MM)
  Ezen kézikönyv a technikusok számára szolgáltat adatokat a berendezés karbantartásáról.
- Kezelési kézikönyv (OM)
  Ezen kézikönyv a berendezés kezelésével és vezérlésével kapcsolatos adatokat szolgáltat a kezelőknek termelés előtt, közben és után.
- Cserealkatrész katalógus (SPC)
  Ezen kézikönyv a cserealkatrészek Tetra Pak cégtől való megrendeléséhez szükséges adatokat tartalmaz.
- Műszaki kézikönyv (TeM)
  - a berendezés biztonságos beszerelésével kapcsolatos adatokat szolgáltat a technikusoknak
  - a technikusok számára szolgáltat adatokat a berendezés karbantartásáról
  - a villamosmérnökök és szervizelő technikusok számára szolgáltat adatokat a berendezés elektromos hálózatáról
  - a cserealkatrészek Tetra Pak cégtől való megrendeléséhez szükséges adatokat tartalmaz

Lap elrendezése

Tekintse meg a i-5 oldalon levő ábrát (A): A Cserealkatrészek katalógusának főoldalai egy rajzoldalból (1) és egy hozzá tartozó listaoldalból (7) állnak. Az oldalszám (5) a rajzoldal fejlécében és a listaoldal láblécében jelenik meg. A dokumentumszám (6) a listaoldal láblécében jelenik meg.

Oldalszámozás

Tekintse meg a i-5 oldalon levő ábrát (A): Az oldalszám (5) három részből áll:

- fejezetszám (2)
- folytonos oldalszám (3) a fejezeten belül
- fejezet oldalszáma (4)

A gép bemutatása

Gyártó

A gyártó neve és címe ezen katalógus, második oldalán található.

Szervizelés

Ezen gép valamely cserealkatrészének megrendelése vagy a gép működésével kapcsolatos üzemzavarok bejelentése végett, forduljon a legközelebbi Tetra Pak képviselethez.

Bármilyen más, a berendezés, illetve dokumentációjának feljavítására irányuló kérdéseivel, megjegyzéseivel vagy javaslataival forduljon kapcsolattartóhoz.

Azonosítás

CE besorolás

Ezen berendezés megfelel az Európai Gazdasági Régió (EEA) alapvető egészségügyi és biztonsági előírásainak.

A gép adattáblája

A i-5 oldalon található ábra (B) a gép adattáblájának egyik példája.
A megfelelő gép-adattábla ábrája és helye a berendezésen a berendezéssel szállított kézikönyvek Bevezetés fejezetében található. A gép adattáblája az alább felsorolt adatokat tartalmazza, amelyek ezen berendezésre vonatkoznak, és a Tetra Pak céggel való kapcsolat felvételekor szükségesek.

- Géptípus (8)
- Térfogat (9)
- Tervrajz (10)
- A gép sorozatszáma (11)
- Gyártó (12)
- CE jelzés (13)
- Gyártás éve (14)

A i-5 oldalon található ábra (C) példa a gép műszaki leírására. Győződjön meg arról, hogy ezen kézikönyv előlapjain közölt berendezésadatok megegyeznek a gép adattábláján és a gép műszaki leírásában megjelenő információval.

A Cserealkatrészek katalógus használata

Keresse meg a cserealkatrész számát

a) Tekintse meg a i-5 oldalon levő ábrát (D): Lapozzon a keresett alkatrészt tartalmazó főcsoport mellett feltüntetett számú (15) fejezetre.

A b) és c) elemek a i-6 oldalon levő ábrára vonatkoznak.

b) A főcsoport-ábrán keresse meg azt az alcsoportot (17), amelyik a keresett alkatrészt vagy alcsoportot tartalmazza. Jegyezze le a helyszámot (18), majd lapozzon az ábrát követő listaoldalra.

c) Keresse meg a lejegyzett helyszámot (16) vagy a keresett alcsoport nevét (19). Lapozzon a jobb oldali oszlopban feltüntetett számú (20) oldalra.

A d) és e) elemek a i-6 oldalon levő ábrára (F) vonatkoznak.

d) Az alcsoport ábrán keresse meg a keresett alkatrészt (21), és jegyezze le az alkatrész helyszámát.

e) Az alkatrészek száma (29) és leírása (30) a listaoldalon, a helyszám mellett láthatóak.

A Cserelkatrész katalógusban közölt adatok

Az alábbi lista a i-6 oldalon található ábrára (F) vonatkozik. A Cserealkatrészek katalógus a következő, csoportokra, alcsoportokra és cserealkatrészkere vonatkozó, adatokat tartalmazza:

- Csoportstruktúra hivatkozás (22). A berendezés listás struktúrájában közvetlenül az aktuális csoport fölött álló csoportot jelöli.
- Csoportnév (23)
- Mértékegység (25)
- Menniség (26)
- Szerelvény tervrajza (27)
- Lista oldaltartománya (28). Abban az esetben jelenik meg, ha a csoport ábrája vagy listája többboldalas.
- Alkatrész vagy alcsoport száma (29)
- Alcsoport neve vagy alkatrész leírása (30)
- Csoportszám (31)
- Berendezésszám (32)
- Csoportinformáció fejléc (33). Azt mutatja, hogy a fejléc után következő rész egy bizonyos gépváltozatra vonatkozik vagy az általános cserealkatrészek listája. Ha a listának több változata van, és mindegyikhez más szerelvény-tervrajz tartozik, az illető szerelvény-tervrajz oldalhivatkozása is megjelenik.
- Belső információ (34)

Introduzione

Informazioni sul manuale

Tetra Pak consiglia di leggere con attenzione tutti i manuali forniti in dotazione. Assicurarsi che tutti i manuali in dotazione siano disponibili per il personale addetto al funzionamento e alla manutenzione della macchina.

È importante conservare il presente catalogo per tutta la durata della macchina e consegnarlo al successivo proprietario o utilizzatore.

Tetra Pak non sarà da ritenersi responsabile per eventuali danni alla macchina causati dal mancato rispetto delle istruzioni fornite nei manuali che accompagnano le macchine.

Manuali in dotazione

I manuali consegnati con la presente macchina possono comprendere:

- Manuale di Conversione (CM)
  Questo manuale fornisce ai tecnici le informazioni necessarie per la conversione della macchina da una modalità di produzione a un'altra.
- Manuale Elettrico (EM)
  Questo manuale fornisce ai tecnici informazioni sull'impianto elettrico della macchina.
- Manuale di Installazione (IM)
  Questo manuale fornisce ai tecnici le informazioni necessarie per installare in sicurezza la macchina.
- Manuale di Manutenzione (MM)
  Questo manuale fornisce ai tecnici le informazioni necessarie per la manutenzione della macchina.
- Manuale Operativo (OM)
  Questo manuale fornisce all'operatore le informazioni sull'utilizzo e il funzionamento della macchina prima, durante e dopo la produzione.
- Catalogo Pezzi di Ricambio (SPC)
  Questo manuale fornisce le informazioni necessarie per ordinare a Tetra Pak i pezzi di ricambio.
- Manuale Tecnico (TeM)
  - fornisce ai tecnici le informazioni necessarie per installare in sicurezza la macchina
  - fornisce ai tecnici le informazioni necessarie per la manutenzione della macchina
  - fornisce ai tecnici informazioni sull'impianto elettrico della macchina
  - fornisce le informazioni necessarie per ordinare a Tetra Pak i pezzi di ricambio.

Schema della pagina

Consultare la figura (A) a pagina i-5. Le pagine principali del Catalogo Pezzi di Ricambio consistono in una pagina con la figura (1) e una pagina elenco corrispondente (7). Il numero di pagina (5) è indicato nell'intestazione delle pagine con le figure e nel piè di pagina delle pagine elenco. Il codice del documento (6) è indicato nel piè di pagina delle pagine elenco.

Numerazione delle pagine

Consultare la figura (A) a pagina i-5. Il numero di pagina (5) è suddiviso in tre parti:

- numero della sezione (2)
- numero progressivo di pagina all'interno della sezione (3)
- numero totale di pagine della sezione (4)

Introduzione alla macchina

Fabbricante

Il nome e l'indirizzo del fabbricante sono riportati sulla seconda pagina del presente catalogo.

Assistenza

Per ordinare i pezzi di ricambio per questa macchina oppure per riferire problemi associati con il funzionamento della macchina, contattare il più vicino ufficio Tetra Pak.

Per tutte le altre richieste, commenti o suggerimenti per eventuali miglioramenti da apportare alla macchina e alla relativa documentazione, contattare il responsabile di collegamento.

Identificazione

Marchio CE

La macchina è conforme alle principali norme sanitarie e di sicurezza dell'Area Economica Europea (EEA).

Targhetta della macchina

La figura (B) a pagina i-5 illustra un esempio di targhetta della macchina. La sezione Introduzione di tutti i manuali consegnati con la presente macchina contiene invece la figura della targhetta della macchina valida e l'illustrazione della sua posizione sulla macchina. La targhetta riporta i dati elencati sotto che sono necessari per contattare Tetra Pak in relazione a questa macchina specifica.

- Tipo di macchina (8)
- Volume (9)
- Specifiche disegno (10)
- Numero di matricola della macchina (11)
- Fabbricante (12)
- Marchio CE (13)
- Anno di fabbricazione (14)

La figura (C) a pagina i-5 mostra un esempio delle specifiche di una macchina. Verificare che i dati relativi alla macchina elencati nelle pagine iniziali del manuale corrispondano ai dati riportati sulla targhetta della macchina e nelle specifiche della macchina.

Come usare questo Catalogo Pezzi di Ricambio

Individuare il numero del pezzo di ricambio

f) Vedere la figura (D) a pagina i-5. Andare al numero della sezione (15) indicato accanto al gruppo principale che contiene il pezzo che si desidera individuare.

I punti b) e c) fanno riferimento alla figura (E) a pagina i-6.

g) Nella figura del gruppo principale, identificare il sottogruppo della macchina (17) che contiene il pezzo o il sottogruppo cercato. Annotare il numero di posizione (18) e andare alla pagina elenco che segue la figura.

h) Identificare il numero di posizione (16) o il nome del sottogruppo (19). Andare al numero di pagina corrispondente (20) indicato nella colonna di destra.

I punti d) e e) fanno riferimento alla figura (F) a pagina i-6.

i) Individuare il pezzo (21) cercato sulla figura del sottogruppo e annotare il numero di posizione del pezzo.

j) Il numero del pezzo (29) e la descrizione del pezzo (30) sono indicati accanto al numero di posizione sulla pagina elenco.

Informazioni contenute nel Catalogo Pezzi di Ricambio

L'elenco seguente fa riferimento alla figura (F) a pagina i-6. Il Catalogo Pezzi di Ricambio contiene le seguenti informazioni sui gruppi, i sottogruppi e i pezzi di ricambio della macchina:

- Riferimento struttura gruppo (22). Indica il gruppo superiore più prossimo nella struttura elenco della macchina.
- Nome gruppo (23)
- Unità di misura (25)
- Quantità (26)
- Numero disegno di assemblaggio (27)
- Pagine dell'elenco (28). Questa informazione è presente se la figura o l'elenco relativi al gruppo occupano più di una pagina del manuale.
- Numero pezzo o sottogruppo (29)
- Nome sottogruppo o descrizione pezzo (30)
- Numero gruppo (31)
- Numero macchina (32)
- Titolo informazioni gruppo (33). Indica se la sezione che segue il titolo si riferisce a una variante di macchina specifica oppure se si tratta di un elenco di parti comuni. Se un elenco contiene più di una variante ed esiste un disegno di assemblaggio specifico per ogni variante, viene fornito il riferimento alla pagina in cui è riportato il disegno di assemblaggio relativo alla variante.
- Informazioni interne (34)

Įvadas

Žinyno informacija

Tetra Pak rekomenduoja atidžiai perskaityti visus pateikiamus žinynus. Užtikrinkite, kad pateikti žinynai būtų prieinami darbuotojams, kurie naudoja ar aptarnauja įrangą.

Svarbu išsaugoti šį katalogą visą įrangos naudojimo laiką ir perduoti jį vėlesniems savininkams ar naudotojams.

Tetra Pak neprisiima atsakomybės už bet kokius pažeidimus įrangai, kuriuos sukels nurodymų, pateikiamų žinynuose kartu su įranga, nesilaikymas.

Pateikiami žinynai

Žinynuose, pateikiamuose su šia įranga, gali būti:

- Konversijos žinynas (KŽ)
  Šiame žinyne technikams pateikiama informacija apie įrangos perjungimą skirtingais gamybiniais režimais.
- Elektros žinynas (EŽ)
  Šiame žinyne technikams pateikiama informacija apie įrangos elektros sistemą.
- Montavimo žinynas (MŽ)
  Šiame žinyne technikams pateikiama informacija, reikalinga saugiam įrangos sumontavimui.
- Aptarnavimo žinynas (AŽ)
  Šiame žinyne technikams pateikiama informacija apie įrangos aptarnavimą.
- Naudotojo žinynas (NŽ)
  Šiame žinyne operatoriui pateikiama informacija apie įrangos priežiūrą ir naudojimą prieš gamybos procesą, jo metu ir po jo.
- Atsarginių detalių katalogas (ADK)
  Šiame žinyne pateikiama informacija, reikalinga norint užsakyti atsargines detales iš Tetra Pak.
- Techninis žinynas (TeŽ)
  - pateikia technikams informaciją, reikalingą saugiam įrangos sumontavimui
  - pateikia technikams informaciją, reikalingą įrangos aptarnavimui
  - pateikiama technikams informacija apie įrangos elektros sistemą
  - pateikiama informacija, kaip užsakyti atsargines detales iš Tetra Pak

Puslapio išdėstymas

Remkitės iliustracija (A) puslapyje i-5: Pagrindiniai atsarginių detalių katalogo puslapiai yra sudaryti iš iliustracijos puslapio (1) ir jį atitinkančio sąrašo puslapio (7). Puslapio numeris (5) parodytas iliustracijos puslapio viršutinėje paraštėje ir sąrašo puslapio apatinėje paraštėje. Dokumento numeris (6) yra parodytas apatinėje sąrašo puslapio paraštėje.

Puslapių numeravimas

Vadovaukitės iliustracija (A) puslapyje i-5: A puslapio numeris (5) turi tris dalis:

- skyriaus numerį (2)
- puslapio eilės numerį skyriuje (3)
- bendrą puslapių skaičių skyriuje (4)

Mašinos pristatymas

Gamintojas

Gamintojo pavadinimą ir adresą galite rasti šio katalogo antrajame puslapyje.

Aptarnavimas

Norėdami užsakyti atsargines detales šiai mašinai arba pranešti apie nesklandumus, susijusius su šios mašinos naudojimu, susisiekite su artimiausiu Tetra Pak biuru.

Susisiekite su Liaison dėl kitų komentarų, klausimų ar pasiūlymų, kaip patobulinti įrangą ar jos dokumentaciją.

Identifikacija

CE Klasifikacija

Ši įranga atitinka Europos ekonominės erdvės (EEE) pirminius sveikatos ir saugumo normatyvus.

Mašinos plokštelė

Iliustracijoje (B) puslapyje i-5 parodytas mašinos plokštelės pavyzdys. Mašinos specifikacijos plokštelės iliustracija ir jos vieta prie įrangos parodyta įžanginiame žinynų, pateikiamų su šia įranga, skyriuje. Mašinos plokštelėje yra žemiau išvardinti duomenys, reikalingi kreipiantis į Tetra Pak su šia konkrečia įranga susijusiais klausimais:

- mašinos tipas (8)
- tomas (9)
- brėžinių specifikacijos (10)
- mašinos serijos numeris (11)
- gamintojas (12)
- CE ženklas (13)
- pagaminimo metai (14)

Iliustracija (C) puslapyje i-5 vaizduoja mašinos specifikacijos pavyzdį. Įsitikinkite, kad įrangos duomenys, išdėstyti šio žinyno pirmuosiuose puslapiuose, atitinka duomenis mašinos plokštelėje ir mašinos specifikaciją.

Kaip naudotis šiuo atsarginių detalių katalogu?

Atsarginės detalės numerio nustatymas

a) Remkitės iliustracija (D) puslapyje i-5: eikite į skyrių Nr. (15), nurodytą šalia pagrindinės grupės, kurioje yra jūsų ieškoma detalė.

Elementai b) ir c) nurodo iliustraciją (E) puslapyje i-6.

b) Pagrindinės grupės iliustracijoje suraskite mašinos pogrupį (17), kuriame yra jūsų ieškoma detalė. Įsidėmėkite pozicijos numerį ir pereikite į sąrašo puslapį, kuris atitinka iliustraciją.

c) Ieškokite pozicijos numerio (16) arba pogrupio pavadinimo (19). Pereikite į atitinkamo numerio puslapį (20), kuris nurodytas dešiniajame stulpelyje.

Elementai d) ir e) nurodo iliustraciją (F) puslapyje i-6.

d) Raskite ieškomą detalę (21) pogrupio iliustracijoje ir įsidėmėkite detalės pozicijos numerį.

e) Detalės numeris (29) ir detalės aprašymas (30) pateikiami šalia pozicijos numerio sąrašo puslapyje.

Informacija, pateikiama atsarginių detalių kataloge

Žemiau pateikiamas sąrašas nurodo iliustraciją (F) puslapyje i-6. Atsarginių detalių kataloge yra tokia informacija apie grupes, pogrupius ir atsargines detales įrangai:

- Grupės struktūros nuorodos (22). Nurodo tolimesnę aukštesnę grupę įrangos sąrašo struktūroje.
- Grupės pavadinimas (23)
- Mato vienetas (25)
- Kiekis (26)
- Surinkimo brėžinio numeris (27)
- Sąrašo puslapio diapazonas (28). Įtrauktas, jei egzistuoja daug puslapių grupės iliustracijoje arba sąraše.
- Detalės arba pogrupio numeris (29)
- Pogrupio pavadinimas ar detalės aprašymas (30)
- Grupės numeris (31)
- Įrangos numeris (32)
- Grupės informacinė antraštė (33). Nurodo, ar žemiau antraštės esantis skyrius yra skirtas specifiniam mašinos variantui, ar tai yra įprastinių detalių sąrašas. Jei sąrašas turi daugiau nei vieną variantą ir kiekvienas variantas iliustruojamas surinkimo brėžiniu, pateikiama nuoroda į surinkimo brėžinio puslapį.
- Vidinė informacija (34)

Ievads

Informācija par rokasgrāmatu

Tetra Pak iesaka rūpīgi izlasīt visas piegādātās rokasgrāmatas. Piegādātajām rokasgrāmatām ir jābūt pieejamām personālam, kas apkalpo iekārtas vai veic to apkopi.

Nepieciešams saglabāt šo katalogu visu laiku, kamēr iekārtas tiek izmantotas, un nodot katalogu nākamajam īpašniekam vai lietotājam.

Tetra Pak neatbild par iekārtas bojājumiem, kuri rodas līdz ar iekārtu piegādāto instrukciju neievērošanas rezultātā.

Piegādātās rokasgrāmatas

Līdz ar iekārtu var tikt piegādātas šādas rokasgrāmatas

- Pārslēgšanas rokasgrāmata (CM)
  Šī rokasgrāmata sniedz tehniķiem informāciju par iekārtas pārslēgšanu dažādos atšķirīgos ražošanas režīmos.
- Elektriskās instalācijas rokasgrāmata (EM)
  Šī rokasgrāmata sniedz tehniķiem informāciju par iekārtas elektriskās instalācijas sistēmu.
- Uzstādīšanas rokasgrāmata (IM)
  Šī rokasgrāmata sniedz tehniķiem informāciju, kas nepieciešama drošai iekārtas uzstādīšanai.
- Apkopes rokasgrāmata (MM)
  Šī rokasgrāmata sniedz tehniķiem informāciju par iekārtas apkopi.
- Ekspluatācijas rokasgrāmata (OM)
  Šī rokasgrāmata sniedz apkalpojošajam personālam informāciju par iekārtas apkalpošanu un ekspluatēšanu pirms darba sākuma, darba laikā un pēc darba beigām.
- Rezerves daļu katalogs (SPC)
  Šī rokasgrāmata sniedz informāciju, kas nepieciešama, lai pasūtītu rezerves daļas no Tetra Pak.
- Tehniskā rokasgrāmata (TeM)
  - sniedz tehniķiem informāciju, kas nepieciešama drošai iekārtas uzstādīšanai
  - sniedz tehniķiem informāciju par iekārtas apkopi
  - sniedz tehniķiem informāciju par iekārtas elektrisko instalāciju
  - sniedz informāciju, kas nepieciešama, lai pasūtītu rezerves daļas no Tetra Pak

Lappuses izkārtojums

Skatīt ilustrāciju (A) i-5 lappusē: Galvenās lappuses Rezerves daļu katalogā sastāv no ilustrāciju lapas (1) un atbilstīgās saraksta lapas (7). Lappuses numurs (5) ir norādīts ilustrācijas lapas galvenē un saraksta lapas kājenē. Dokumenta numurs (6) ir norādīts saraksta lapas kājenē.

Lappušu numerācija

Skatīt ilustrāciju (A) lappusē i-5: Lappuses numurs (5) sastāv no trim daļām:

- nodaļas numura (2)
- secīga lappuses numura nodaļas ietvaros (3)
- kopējā lappušu skaita nodaļā (4)

Iepazīstināšana ar iekārtu

Ražotājs

Ražotāja nosaukumu un adresi skatīt šī kataloga otrajā lappusē.

Serviss

Ja nepieciešams pasūtīt rezerves daļas šai mašīnai vai ziņot par problēmām, kas saistītas ar mašīnas ekspluatāciju, tad, lūdzu, sazinieties ar tuvāko Tetra Pak pārstāvniecību.

Ja Jums ir citi jautājumi, piezīmes vai ieteikumi par iekārtas un tās dokumentācijas uzlabošanu, tad lūdzam sazināties ar Sakaru biroju.

Identifikācija

CE klasifikācija

Šī iekārta atbilst galvenajām Eiropas Ekonomiskās Zonas (EEA) regulām, kuras attiecas uz veselību un drošību.

Mašīnas tipa plāksnīte

Ilustrācijā (B) i-5lappusē redzams mašīnas tipa plāksnītes paraugs. Aktuālās mašīnas tipa plāksnīte un tās atrašanās vieta uz iekārtas ir parādīta līdz ar šo iekārtu piegādāto rokasgrāmatu Ievada nodaļā. Mašīnas tipa plāksnīte satur tālāk uzskaitīto informāciju, kura ir nepieciešama, sazinoties ar Tetra Pak par šo iekārtu.

- Mašīnas tips (8)
- Daudzums (9)
- Rasējuma specifikācijas (10)
- Mašīnas sērijas numurs (11)
- Ražotājs (12)
- CE apzīmējums (13)
- Izgatavošanas gads (14)

Ilustrācijā (C) i-5lappusē ir parādīts mašīnas specifikācijas paraugs. Pārliecinieties, ka šīs rokasgrāmatas titullapās minētā informācija par iekārtu atbilst tai, kas norādīta uz mašīnas tipa plāksnītes un mašīnas specifikācijā.

Rezerves daļu kataloga lietošana

Vajadzīgās rezerves daļas numura atrašana

a) Skatiet ilustrāciju (D) i-5lappusē: atrodiet nodaļas numuru (15), kas norādīts līdzās galvenajai grupai, kurā ietilpst Jūsu meklētā rezerves daļa.

Pozīcijas b) un c) skatiet ilustrāciju (E) i-6lappusē.

b) Galvenās grupas ilustrācijā atrodiet mašīnas apakšgrupu (17), kurā ietilpst Jūsu meklētā detaļa vai apakšgrupa. Atzīmējiet pozīcijas numuru (18) un pievērsieties saraksta lappusei, kura seko šai ilustrācijai.

c) Sameklējiet atbilstīgo pozīcijas numuru (16) vai apakšgrupas nosaukumu (19). Pievērsieties atbilstīgajam lappuses numuram (20), kas norādīts ailē pa labi.

Pozīcijas d) un e) skatiet ilustrāciju (E) i-6lappusē.

d) Atrodiet vajadzīgo rezerves daļu (21) apakšgrupas ilustrācijā un atzīmējiet šīs detaļas pozīcijas numuru.

e) Šīs daļas numurs (29) un apraksts (30) atrodas saraksta lapā līdzās pozīcijas numuram.

Rezerves daļu katalogā sniegtā informācija

Šis saraksts attiecas uz ilustrāciju (F) i-6lappusē. Rezerves daļu katalogs satur šādu informāciju par grupām, apakšgrupām un iekārtas rezerves daļām:

- Norādes par grupu struktūru (22). Norāde uz tuvāko augstāko grupu iekārtas saraksta struktūrā.
- Grupas nosaukums (23)
- Mērvienība (25)
- Skaits (26)
- Montāžas rasējuma numurs (27)
- Saraksta lappuses zona (28). Tiek izmantota tad, ja grupas ilustrācija vai saraksts ir uz vairākām lappusēm.
- Daļas vai apakšgrupas numurs (29)
- Apakšgrupas nosaukums vai daļas apraksts (30)
- Grupas numurs (31)
- Iekārtas numurs (32)
- Grupas informācijas iedaļas apzīmējums (33). Norāda, vai iedaļa zem šī apzīmējuma attiecas uz noteiktu mašīnas variantu, vai arī tas ir kopējo rezerves daļu saraksts. Ja sarakstam ir vairāk par vienu variantu un katram variantam ir savs montāžas rasējums, tad tiek dota atsauce uz lappusi, kur atrodams katra varianta montāžas rasējums.
- Iekšējā informācija (34)

Introduzzjoni

Informazzjoni tal-Manwal

Tetra Pak tirrakkomanda li jinqraw bl-attenzjoni l-manwali kkunsinnati kollha. Aċċerta ruħek li l-manwali kkunsinnati kollha huma disponibbli għall-personàl li jħaddem jew li jagħmel manutezjoni fuq it-tagħmir.

Huwa importanti li żżomm dan il-katalgu sakemm idum jaħdem it-tagħmir, u li tgħaddi l-katalgu lil xi sid jew lil xi persuna oħra li tuża dan it-tagħmir fil-futur.

Tetra Pak ma tistax tinżamm responsabbli ta' xi ħsara lit-tagħmir ikkawżata minn nuqqas ta' osservanza ta' l-istruzzjonijiet li jingħataw f'dan il-manwal.

Manwali Kkunsinnati

Il-manwali kkunsinnati ma' dan it-tagħmir jinkludu

- Manwal tal-Konverżjoni (CM)
  Dan il-manwal jipprovdi informazzjoni lit-tekniċi dwar il-konverżjoni tat-tagħmir bejn modi differenti tal-produzzjoni.
- Manwal Elettriku (EM)
  Dan il-manwal jipprovdi informazzjoni lit-tekniċi dwar is-sistema ta' l-elettriku tat-tagħmir.
- Manwal ta' l-Installazzjoni (IM)
  Dan il-manwal jipprovdi lit-tekniċi b'informazzjoni meħtieġa biex jinstallaw it-tagħmir mingħajr periklu.
- Manwal tal-Manutenzjoni (MM)
  Dan il-manwal jipprovdi lit-tekniċi b'informazzjoni fuq kif jagħmlu manutenzjoni fuq it-tagħmir.
- Manwal ta' l-Operazzjoni (OM)
  Dan il-manwal jipprovdi informazzjoni lill-operatur fuq kif jimmaniġġja u jħaddem it-tagħmir, qabel, waqt, u wara l-produzzjoni.
- Katalgu tal-Partijiet Għat-Tibdil (SPC)
  Dan il-manwal jipprovdi l-informazzjoni neċessarja biex jiġu ordnati partijiet għat-tibdil mingħand Tetra Pak.
- Manwal Tekniku (TeM)
  - jipprovdi lit-tekniċi b'informazzjoni meħtieġa biex jinstallaw it-tagħmir mingħajr periklu
  - jipprovdi lit-tekniċi b'informazzjoni fuq kif jagħmlu manutenzjoni fuq it-tagħmir
  - jipprovdi informazzjoni lit-tekniċi dwar is-sistema ta' l-elettriku tat-tagħmir.
  - jipprovdi l-informazzjoni neċessarja biex jiġu ordnati partijiet għat-tibdil mingħand Tetra Pak

Taqsim tal-Paġna

Irreferi għal stampa (A) f'paġna i-5: Il-paġni ewlenin fil-Katalgu tal-Partijiet Għat-Tibdil jikkonsistu f'paġna bl-istampi (1) u paġna b'lista li tikkorrispondi (7). In-numru tal-paġna (5) jintwera fil-header ta' paġna bl-istampi u fil-footer ta' paġna b'lista. In-numru tad-dokument (6) jintwera fil-footer ta' paġna b'lista.

Numru tal-paġna

Irreferi għal stampa (A) f'paġna i-5: In-numru tal-paġna (5) fih tliet partijiet:

- numru tal-kapitlu (2)
- in-numru konsekuttiv tal-paġna fil-kapitlu (3)
- in-numru totali ta' paġni fil-kapitlu (4)

Introduzzjoni tal-Magna

Manifattur

Għall-isem u l-indirizz tal-manifattur, ara t-tieni paġna ta' dan il-katalgu.

Servizz

Biex tordna partijiet għat-tibdil għal din il-magna, jew biex tirrapporta problemi assoċjati mat-tħaddim ta' din il-magna, ikkuntattja l-eqreb uffiċċju ta' Tetra Pak.

Ikkuntattja lill-persuna responsabbli mill-komunikazzjoni jekk ikollok xi mistoqsijiet, kummenti, jew suġġerimenti oħrajn biex ittejjeb it-tagħmir u d-dokumentazzjoni tiegħu.

Identifikazzjoni

Klassifikazzjoni CE

Dan it-tagħmir huwa konformi mar-regolamenti bażiċi tas-saħħa u s-sigurtà tal- European Economic Area (EEA).

Pjanċa tal-Magna

L-istampa (B) fuq paġna i-5 turi eżempju ta' pjanċa tal-magna.
Stampa tal-pjanċa valida tal-magna u l-lok tagħha fuq it-tagħmir hi murija fil-kapitlu ta' l-Introduzzjoni tal-manwali kkunsinnati ma' dan it-tagħmir.
Il-pjanċa tat-tagħmir fiha l-informazzjoni elenkata hawn taħt, meħtieġa meta tikkuntattja lil Tetra Pak dwar dan it-tagħmir partikulari.

- Tip ta' magna (8)
- Volum (9)
- Speċifikazzjonijiet tad-Disinn (10)
- Numru tas-serje tal-magna (11)
- Manifattur (12)
- Marka CE (13)
- Sena tal-manifattura (14)

L-istampa (Ċ) fuq paġna i-5 turi eżempju ta' speċifikazzjoni tal-magna.
Aċċerta ruħek li l-informazzjoni tat-tagħmir elenkata fuq il-paġni ta' quddiem ta' dan il-manwal tikkorrispondi għall-informazzjoni tal-pjanċa tal-magna u l-ispeċifikazzjoni tal-magna.

Kif Tuża Dan il-Katalgu tal-Partijiet Għat-Tibdil

Sib Numru ta' Parti Għat-Tibdil

a) Irreferi għal stampa (D) f'paġna i-5: Mur fin-numru tal-kapitlu (15) indikat ħdejn il-grupp prinċipali li fih il-parti li trid issib.

Oġġetti b) u c) irreferi għal stampa (E) f'paġna i-6.

b) Fl-istampa tal-grupp prinċipali, fittex għas-sottogrupp tal-magna (17) li fih il-parti jew sottogrupp li tkun qed tfittex. Innota n-numru tal-pożizzjoni (18) u mur fil-paġna bil-lista li ssegwi l-istampa.

c) Fittex in-numru tal-pożizzjoni (16) jew l-isem tas-sottogrupp (19). Mur fin-numru tal-paġna li jikkorrispondi (20) elenkat fil-kolonna tan-naħa tal-lemin.

Oġġetti d) u e) irreferi għal stampa (F) f'paġna i-6.

d) Sib il-parti (21) li qed tfittex fl-istampa tas-sottogrupp u nnota n-numru tal-pożizzjoni tal-parti.

e) In-numru tal-parti (29) u d-deskrizzjoni tal-parti (30) huma elenkati ħdejn n-numru tal-pożizzjoni fuq il-paġna bil-lista.

Informazzjoni Elenkata fil-Katalgu tal-Partijiet Għat-Tibdil

Il-lista t'hawn taħt tirreferi għal stampa (F) fuq paġna i-6. Il-Katalgu tal-Partijiet Għat-Tibdil fih din l-informazzjoni li ġejja dwar gruppi, sottogruppi, u partijiet għat-tibdil għat-tagħmir:

- Referenza ta' l-istruttura tal-grupp (22). Tindika l-ogħla grupp li jmiss fl-istruttura tal-lista tat-tagħmir.
- Isem tal-grụpp (23)
- Unit tal-kejl (25)
- Kwantità (26)
- Numru tad-disinn ta' l-immuntar (27)
- Medda tal-paġni tal-lista (28). Inklużi jekk hemm paġni multipli fil-lista jew fl-istampa tal-grupp.
- Numru tal-parti jew sottogrupp (29)
- Deskrizzjoni ta' l-isem tas-sottogrupp jew parti (30)
- Numru tal-grupp (31)
- Numru tat-tagħmir (32)
- Heading ta' l-informazzjoni tal-grupp (33). Tindika jekk is-sezzjoni ta' taħt il-heading hix għal xi varjant speċifiku tal-magna jew jekk hix lista ta' partijiet komuni. Jekk lista jkun fiha aktar minn varjant wieħed u jekk kull varjant ikollu d-disinn ta' l-immuntar tiegħu, tintwera referenza ta' paġna għad-disinn ta' l-immuntar tal-varjant.
- Informazzjoni interna (34)

Inleiding

Informatie betreffende dit handboek

Tetra Pak raadt aan alle geleverde documentatie zorgvuldig te lezen. Ga na of de geleverde documentatie ter beschikking is van het personeel dat de machine moet bedienen of servicewerkzaamheden moet uitvoeren.

Het is belangrijk deze catalogus voor de duur van de machine te bewaren en de catalogus door te geven aan elke volgende eigenaar of gebruiker.

Tetra Pak aanvaardt geen verantwoordelijkheid voor om het even welke soort beschadiging aan de machine als gevolg van het niet opvolgen van de in dit handboek gegeven instructies.

Bijgeleverde handboeken

De met deze apparatuur geleverde handboeken omvatten

- Conversiehandboek (CM)
  Dit handboek geeft technici informatie over het ombouwen van de apparatuur tussen verschillende productiemodi.
- Handboek Elektriciteit (EM)
  Dit handboek geeft elektriciens en servicetechnici informatie betreffende het elektrisch systeem van de apparatuur.
- Installatiehandboek (IM)
  Dit handboek geeft installatiepersoneel informatie om op veilige wijze de apparatuur te installeren.
- Onderhoudshandboek (MM)
  Dit handboek geeft technici informatie over het onderhoud van de apparatuur.
- Bedieningshandboek (OM)
  Dit handboek geeft de operator informatie betreffende het omgaan met en bedienen van de apparatuur, voor, tijdens en na productie.
- Catalogus reservedelen (SPC).
  Dit handboek geeft de nodige informatie om reserveonderdelen bij Tetra Pak te bestellen.
- Technisch Handboek (TeM)
  - Dit handboek geeft technici informatie, nodig om op veilige wijze de apparatuur te installeren
  - Dit handboek geeft technici informatie over het onderhoud van de apparatuur
  - Dit handboek geeft technici informatie betreffende het elektrisch systeem van de apparatuur
  - geeft de nodige informatie, nodig om reserveonderdelen bij Tetra Pak te bestellen

Pagina lay-out

Refereer naar de illustratie (A) op bladzijde i-5: De belangrijkste bladzijden van een Catalogus Reserveonderdelen bestaan uit een bladzijde met een illustratie (1) en een corresponderende bladzijde met een lijst (7).
Het bladzijdenummer (5) is te vinden in de kop van een illustratiebladzijde en in de voetnoot van de lijstbladzijde. Het documentnummer (6) is te vinden in de voetnoot van een lijstbladzijde.

Bladzijdenummering

Refereer naar de illustratie (A) op bladzijde i-5: een bladzijdenummer (5) bestaat uit drie delen:

- hoofdstuknummer (2)
- opeenvolgende bladzijdenummer in het hoofdstuk (3)
- totaal aantal bladzijden in het hoofdstuk (4)

Introductie van de machine

Fabrikant

Voor naam en adres van de fabrikant, zie de tweede bladzijde van deze catalogus.

Service

Voor het bestellen van reserveonderdelen of om bedieningsproblemen van deze machine te melden, contacteer de dichtst bijzijnde vestiging van Tetra Pak.

Neem contact op met de contactpersoon voor andere informatie, opmerkingen of suggesties ter verbetering van de machine en de bijbehorende documentatie.

Identificatie

CE-classificatie

Deze apparatuur voldoet aan de basiseisen voor gezondheid en veiligheid voor het Europese Economische Gebied (EEA).

Machineplaatje

De illustratie (B) op bladzijde i-5 toont een voorbeeld van een machineplaatje.
Een illustratie van het wettige machineplaatje en de plaatsing ervan wordt getoond in het hoofdstuk Introductie van de handboeken, meegeleverd met deze apparatuur. Het machineplaatje bevat onderstaande gegevens die nodig zijn wanneer Tetra Pak moet worden gecontacteerd betreffende deze apparatuur.

- Machinetype (8)
- Volume (9)
- Tekeningspecificaties (10)
- Serienummer machine (11)
- Fabrikant (12)
- CE-markering (13)
- Fabricagejaar (14)

De illustratie (C) op bladzijde i-5 toont een voorbeeld van een machineplaatje. Controleer of de gegevens betreffende de apparatuur in de voorste bladzijden van dit handboek overeenkomen met de gegevens op het machineplaatje en de machinespecificaties.

Hoe dient deze catalogus reserveonderdelen te worden gebruikt

Lokaliseren van een nummer van een reserveonderdeel

a) Refereer naar de illustratie (D) op bladzijde i-5: ga naar het hoofdstuknummer (15), naast de hoofdgroep die het gewenste deel bevat.

Items b) en c) refereer naar de illustratie (E) op bladzijde i-6.

b) Op de illustratie van de hoofdgroep, zoek de machinesub-groep (17) op die het deel van de gewenste sub-groep bevat. Noteer het positienummer (18) en ga naar de lijstbladzijde die op de illustratie volgt.

c) Op de illustratie van de hoofdgroep, zoek de machinesub-groep (17) op die het deel van de gewenste sub-groep bevat. Noteer het positienummer (18) en ga naar de lijstbladzijde die op de illustratie volgt.

Items d) en e) refereren naar de illustratie (F) op bladzijde i-6.

d) Lokaliseer het gewenste onderdeel (21) in de illustratie van de sub-groep en noteer het positienummer van het onderdeel.

e) Het onderdeelnummer (29) en de beschrijving ervan (30) worden naast het positienummer op de lijstbladzijde weergegeven.

Informatie die in een Catalogus reserveonderdelen wordt gegeven

Onderstaande lijst verwijst naar de illustratie (F) op bladzijde i-6.
Een Catalogus reserveonderdelen bevat de volgende informatie betreffende groepen, sub-groepen en reserveonderdelen voor de apparatuur:

- Referentie groepsstructuur (22). Geeft de volgende hoogste groep in de structuur van de apparatuur aan.
- Groepsnaam(23)
- Meeteenheid (25)
- Hoeveelheid (26)
- Tekeningnummer montage (27)
- Lijst met bladzijdenreeks (28). Inclusief indien er meerdere bladzijden in de groepsillustratie of lijst voorkomen.
- Onderdeel of sub-groepsnummer (29)
- Naam sub-groep of beschrijving onderdeel (30)
- Groepsnummer (31)
- Apparatuurnummer (32)
- Titel groepsinformatie (33). Geeft aan of het deel onder de titel voor een specifieke machine is, voor een variant of een lijst is met algemene onderdelen. Indien een lijst meer dan één variant bevat en elke variant heeft zijn eigen montagetekening, wordt een bladzijdenreferentie naar de montagetekening van de variant gegeven.
- Interne informatie (34)

Introduksjon

Informasjon om håndboken

Tetra Pak anbefaler at du leser nøye gjennom alle leverte håndbøker. Sørg for at håndbøkene er tilgjengelige for alle som betjener eller vedlikeholder utstyret.

Det er viktig at du tar vare på denne katalogen under hele levetiden til utstyret og at du gir den videre til eventuelle nye eiere eller brukere.

Tetra Pak vil ikke være ansvarlig for skader på utstyret som oppstår fordi brukeren ikke følger instruksjonene i håndbøkene som følger med utstyret.

Leverte håndbøker

Håndbøkene som leveres med dette utstyret, kan inkludere

- Konverteringsmanual (CM)
  Denne håndboken gir teknikere informasjon om hvordan de konverterer utstyret mellom ulike produksjonsmodi.
- Electrisk manual (EM)
  Denne håndboken gir teknikere informasjon om utstyrets elektriske system.
- Installasjonsmanual (IM)
  Denne håndboken gir teknikere informasjon som kreves for å kunne installere utstyret på en sikker måte.
- Vedlikeholdsmanual (MM)
  Denne håndboken gir teknikere informasjon om vedlikehold av utstyret.
- Driftsmanual (OM)
  Denne håndboken gir operatøren informasjon om hvordan han håndterer og bruker utstyret før, under og etter produksjon.
- Reservedelskatalog (SPC)
  Denne håndboken inneholder informasjon som du trenger for å bestille reservedeler fra Tetra Pak.
- Teknisk manual (TeM)
  - gir teknikere informasjon om sikker installasjon av utstyret
  - gir teknikere informasjon om vedlikehold av utstyret
  - gir teknikere informasjon om utstyrets elektriske system
  - inneholder informasjon som du trenger for å bestille reservedeler fra Tetra Pak

Sideoppsett

Se illustrasjonen (A) på side i-5: Hovedsidene i reservedelskatalogen består av en illustrasjonsside (1) og en korresponderende listeside (7). Sidenummeret (5) vises i topptekster på illustrasjonssiden og i bunnteksten listesiden. Dokumentnummeret (6) vises i bunnteksten på listesiden.

Sidenummerering

Se illustrasjonen (A) på side i-5: Et sidenummer (5) består av tre deler:

- kapittelnummer (2)
- etterfølgende sidenummer i kapitlet (3)
- det totale antall sider i kapitlet (4)

Introduksjon av maskinen

Produsent

Hvis du ønsker produsentens navn og adresse, kan du se side to i denne katalogen.

Service

Når du skal bestille reservedeler til denne maskinen eller rapportere problemer forbundet med driften av denne maskinen, må du kontakte ditt nærmeste Tetra Pak-kontor.

Når det gjelder andre forespørsler, kommentarer eller forslag til forbedringer av utstyret og dets dokumentasjon, kan du ta kontakt med din kontaktperson.

Identifisering

CE-klassifisering

Dette utstyret er i overensstemmelse med de grunnleggende helse- og sikkerhetsforskriftene i Det europeiske økonomiske samarbeidsområdet (EØS).

Maskinplate

Illustrasjonen (B) på side i-5 viser et eksempel på en maskinplate. En illustrasjon av en gyldig maskinplate og hvor denne er plassert på utstyret, er vist i introduksjonskapitlet i håndbøkene som følger med dette utstyret. Maskinplaten inneholder nedenstående data, som du trenger når du skal kontakte Tetra Pak angående dette bestemte utstyret.

- Maskintype (8)
- Volum (9)
- Tegningsspesifikasjoner (10)
- Maskin-serienummer (11)
- Produsent (12)
- CE-merke (13)
- Produksjonsår (14)

Illustrasjonen (C) på side i-5 viser et eksempel på en maskinspesifikasjon. Sørg for at utstyrsdataene som står oppført foran i denne håndboken samsvarer med dataene på maskinplaten og maskinspesifikasjonen.

Hvordan bruke denne reservedelskatalogen

Finn et reservedelsnummer

a) Se illustrasjonen (D) på side i-5: Gå til kapittelnummeret (15) som er angitt ved siden av hovedgruppen som inneholder delen du vil finne.

Punkt b) og c) viser til illustrasjonen (E) på side i-6.

b) På hovedgruppeillustrasjonen ser du etter maskinundergruppen (17) som inneholder delen eller undergruppen du ser etter. Merk deg posisjonsnummeret (18), og gå til listesiden som kommer etter illustrasjonen.

c) Se etter posisjonsnummeret (16) eller undergruppenavnet (19). Gå til det korresponderende sidenummeret (20) som står oppført i høyre kolonne.

Punkt d) og e) viser til illustrasjonen (F) på side i-6.

d) Finn delen (21) du ser etter på undergruppeillustrasjonen, og merk deg delens posisjonsnummer.

e) Delenummeret (29) og delebeskrivelsen (30) finner du ved siden av posisjonsnummeret på listesiden.

Informasjon i en reservedelskatalog

Listen nedenfor viser til illustrasjonen (F) på side i-6. En reservedelskatalog inneholder følgende informasjon om grupper, undergrupper og reservedeler for utstyret:

- Gruppeinndelingsreferanse (22). Angir den neste gruppen opp i inndelingen av utstyrslisten.
- Gruppenavn (23)
- Målenhet (25)
- Antall (26)
- Tegningsnummer (27)
- Listesideområde (28). Inkludert hvis det er flere sider i gruppeillustrasjonen eller listen.
- Dele- eller undergruppenummer (29)
- Undergruppenavn eller delebeskrivelse (30)
- Gruppenummer (31)
- Utstyrsnummer (32)
- Gruppeinformasjonsoverskrift (33). Angir om avsnittet under overskriften er for en bestemt maskinvariant eller om det er en liste over vanlige deler. Hvis en liste har flere varianter og hver variant har sin egen sammenstillingstegning, vises det en sidereferanse til variantens sammenstillingstegning.
- Intern informasjon (34)

Wprowadzenie

Informacje o Instrukcji

Tetra Pak zaleca dokładne zapoznanie się ze wszystkimi dostarczonymi instrukcjami obsługi. Upewnij się, że dostarczone instrukcje obsługi są dostępne dla personelu obsługującego lub konserwującego wyposażenie.

Ważne jest, aby niniejszy katalog zachować na cały okres eksploatacji urządzenia i przekazać go każdemu kolejnemu użytkownikowi/ właścicielowi.

Tetra Pak nie ponosi odpowiedzialności za żadne uszkodzenia urządzenia spowodowane nieprzestrzeganiem zaleceń zawartych instrukcjach dołączonych do tego urządzenia.

Dostarczone Instrukcje

Instrukcje dostarczone z tym urządzeniem zawierają

- Instrukcję Konwersji (CM)
  Instrukcja ta dostarcza technikom informacje o sposobie konwersji urządzenia pomiędzy różnymi trybami produkcji.
- Instrukcję Elektryki (EM)
  Instrukcja ta dostarcza technikom informacje o układzie elektrycznym urządzenia.
- Instrukcję Instalacyjną (IM)
  Instrukcja ta dostarcza technikom informacje niezbędne do bezpiecznego zainstalowania urządzenia.
- Instrukcję Konserwacji (MM)
  Instrukcja ta dostarcza technikom informacje o sposobie konserwacji urządzenia.
- Instrukcję Operacyjną (OM)
  Instrukcja ta dostarcza operatorowi informacje o sposobie manipulacji i obsługi urządzenia przed, podczas i po produkcji.
- Katalog Części Zamiennych (SPC)
  Instrukcja ta dostarcza informacje niezbędne do zamawiania części zamiennych z firmy Tetra Pak.
- Instrukcję Techniczną (TeM)
  - dostarcza technikom informacje niezbędne do bezpiecznego zainstalowania urządzenia
  - dostarcza technikom informacje o konserwacji urządzenia
  - dostarcza technikom informacje o układzie elektrycznym urządzenia
  - dostarcza informacje niezbędne do zamawiania części zamiennych z firmy Tetra Pak

Układ Strony

Patrz ilustracja (A) na stronie i-5: Kartki główne Katalogu Części Zamiennych składają się z ze strony z ilustracją (1) oraz odpowiadającej jej strony z listą (7). W nagłówku strony z ilustracją oraz w stopce strony z listą pokazany jest numer strony (5). Numer dokumentu (6)umieszczony jest w stopce strony z listą.

Numeracja stron

Patrz ilustracja (A) na stronie i-5:Numer strony (5) zawiera trzy części:

- numer rozdziału (2)
- kolejny numer strony (3) w ramach rozdziału
- łączna ilość stron (4) w rozdziale

Wprowadzenie do Maszyny

Producent

Nazwę i adres producenta można znaleźć na drugiej stronie niniejszego katalogu.

Serwis

Aby zamówić części zapasowe do tej maszyny lub zgłosić problemy związane z jej pracą należy skontaktować się z najbliższym biurem Tetra Pak.

Prosimy o nawiązanie kontaktu w przypadku jakichkolwiek zapytań, komentarzy, lub sugestii zmierzających do usprawnienia wyposażenia oraz dokumentacji z nimi związanych.

Identyfikacja

Klasyfikacja CE

Urządzenie spełnia wymagania podstawowych przepisów BHP Europejskiego Obszaru Ekonomicznego (EEA).

Płyta znamionowa maszyny

Ilustracja (B) przedstawiona na stronie i-5 pokazuje przykład płyty znamionowej maszyny.
Ilustracja prawidłowej płyty znamionowej oraz jej położenie na urządzeniu pokazana jest w rozdziale Wprowadzenie zawartym w instrukcjach dostarczonych z tym urządzeniem. Płyta znamionowa maszyny zawiera niżej przedstawione dane, potrzebne podczas kontaktowania się z firmą Tetra Pak w sprawach dotyczących tego konkretnego urządzenia.

- Typ maszyny (8)
- Objętość (9)
- Specyfikacje rysunkowe (10)
- Numer seryjny urządzenia (11)
- Producent (12)
- Oznaczenie symbolemCE (13)
- Rok produkcji (14)

Ilustracja (C) zawarta na stronie i-5 pokazuje przykład specyfikacji maszyny. Należy sprawdzić, czy dane wyposażenia przedstawione na pierwszej stronie tej instrukcji odpowiadają danym zawartym na płycie znamionowej maszyny oraz specyfikacji maszyny.

Jak Korzystać z niniejszego Katalogu Części Zamiennych

Należy znaleźć Numer części zamiennej

a) Patrz ilustracja (D) zawarta na stronie i-5: Przejdź do numeru rozdziału (15) pokazanego obok głównej grupy zawierającej część, którą chcesz odszukać.

Pozycje b) i c) odnoszą się do ilustracji (E) zawartej na stronie i-6.

b) Na ilustracji grupy głównej odszukaj podgrupę maszyny (17), która zawiera odpowiednią część lub podgrupę, której szukasz. Zanotuj numer pozycji (18) i przejdź na stronę z listą, umieszczoną za ilustracją.

c) Odszukaj numer pozycji (16) lub nazwę podgrupy (19). Przejdź do odpowiedniego numeru strony (20) pokazanego w kolumnie umieszczonej po prawej stronie.

Pozycje d) i e) odnoszą się do ilustracji (F) zawartej na stronie i-6.

d) Znajdź na ilustracji podgrupy część (21), której szukasz i zanotuj numer pozycji części.

e) Numer części (29) oraz opis części (30) są umieszczone na stronie z listą obok numeru pozycji.

Informacje zawarte w Katalogu Części Zamiennych

Poniższa lista odnosi się do ilustracji (F) zawartej na stronie i-6. Katalog Części Zamiennych zawiera następujące informacje o grupach, podgrupach oraz częściach zamiennych dla urządzenia:

- Struktura referencji grup (22). Wskazuje następną wyższą grupę zawartą w strukturze listy wyposażenia.
- Nazwa grupy (23)
- Jednostka miary(25)
- Ilość (26)
- Numer rysunku montażowego (27)
- Zakres strony z listą (28). Zawarty w przypadku występowania wielu stron dla ilustracji lub listy grupy.
- Numer części lub podgrupy (29)
- Nazwa podgrupy lub opis części (30)
- Numer grupy (31)
- Numer urządzenia (32)
- Nagłówek informacyjny grupy (33). Wskazuje, czy sekcja umieszczona pod nagłówkiem dotyczy określonego wariantu maszyny, czy też jest to lista wspólna dla wszystkich wariantów. Jeśli lista występuje w wielu wariantach i dla każdego z nich dostępny jest własny rysunek montażowy, pokazany jest numer strony odniesienia rysunku montażowego dla danego wariantu.
- Informacje wewnętrzne (34)

Introdução

Informação do Manual

A Tetra Pak recomenda ler cuidadosamente todos os manuais fornecidos. Verificar se os manuais fornecidos estão ao dispor do pessoal que trabalha com o equipamento ou que faz a manutenção do mesmo.

É importante guardar este catálogo durante o tempo útil de vida da máquina ou do equipamento e de entregar o catálogo a qualquer proprietário ou utilizador subsequente.

A Tetra Pak não toma a responsabilidade por quaisquer danos no equipamento causados devido ao facto de que as instruções dadas nos manuais que acompanham este equipamento não foram seguidas.

Manuais fornecidos

Os manuais fornecidos com este equipamento incluem

- Manual de Conversão (CM)
  Este manual fornece aos técnicos as informações sobre a conversão do equipamento entre os diferentes modos de produção.
- Manual Eléctrico (EM)
  Este manual fornece aos técnicos as informações sobre o sistema eléctrico do equipamento.
- Manual de Instalação (IM)
  Este manual fornece aos técnicos as informações necessárias para instalar seguramente o equipamento.
- Manual de Manutenção (MM)
  Este manual fornece aos técnicos as informações para a manutenção do equipamento.
- Manual de Operação (OM)
  Este manual fornece ao operador as informações que ele necessita para manejar e accionar o equipamento antes, durante e depois da produção.
- Catálogo de Peças Sobressalentes (SPC)
  Este manual fornece as informações necessárias para encomendar peças sobressalentes à Tetra Pak.
- Manual Técnico (TeM)
  - fornece aos técnicos as informações necessárias para instalar seguramente o equipamento
  - fornece aos técnicos as informações para a manutenção do equipamento
  - fornece aos técnicos as informações sobre o sistema eléctrico do equipamento
  - fornece as informações necessárias para encomendar peças sobressalentes à Tetra Pak

Disposição da página

Referência à ilustração (A) na página i-5: As páginas principais num Catálogo de Peças Sobressalentes consistem numa página ilustrada (1) e numa página com a lista correspondente (7). O número da página (5) é mostrado no cabeçalho de uma página ilustrada e no rodapé de uma página com lista. O número do documento (6) é mostrado no rodapé de uma página com lista.

Numeração da página

Referência à ilustração (A) na página i-5: Um número de página (5) tem três partes:

- Número do capítulo (2)
- número consecutivo da página dentro do capítulo (3)
- número total de páginas no capítulo (4)

Introdução da máquina

Fabricante

Para o nome e morada do fabricante, ver a segunda página deste catálogo.

Assistência técnica

Para encomendar peças sobressalentes para esta máquina, ou para relatar problemas associados com a operação desta máquina, contactar a companhia Tetra Pak mais próxima.

Contactar a Liaison se tiver quaisquer questões, comentários ou sugestões para o desenvolvimento relacionado com o equipamento e a sua documentação.

Identificação

Classificação CE

Este equipamento está de acordo com os regulamentos de segurança e saúde da Área Económica Europeia (EEA).

Placa da máquina

A ilustração (B) na página i-5 mostra um exemplo de uma placa da máquina. Uma ilustração da placa da máquina válida e a sua localização no equipamento é mostrada no capítulo Introdução dos manuais fornecidos com este equipamento. A placa da máquina contem os dados alistados em baixo, necessários quando se contactar a Tetra Pak relacionando-se a este equipamento em específico.

- Tipo da máquina (8)
- Volume (9)
- Especificações dos desenhos (10)
- Número de série da máquina (11)
- Fabricante (12)
- Marca CE (13)
- Ano de construção (14)

A ilustração (C) na página i-5 mostra um exemplo de uma especificação da máquina. Verificar se os dados do equipamento alistados nas páginas da frente deste manual correspondem aos dados na placa da máquina e à especificação da máquina.

Como usar este Catálogo de Peças Sobressalentes

Localizar um Número da peça sobressalente

f) Referência à ilustração (D) na página i-5: Para o número do capítulo (15) indicado ao lado do grupo principal que contem a peça que quer localizar.

Pos. b) e c) referem-se à ilustração (E) na página i-6.

g) Na ilustração do grupo principal, procurar o subgrupo da máquina (17) que contem a peça ou subgrupo que está à procura. Anotar o número da posição (18) e passar para a página da lista que segue a ilustração.

h) Procurar o número da posição (16) ou o nome do subgrupo (19). Passar para o número da página correspondente (20) alistado na coluna do lado direito.

Pos. d) e e) referem-se à ilustração (F) na página i-6.

i) Localizar a peça (21) que está à procura na ilustração do subgrupo e anotar o número da posição da peça.

j) O número da peça (29) e a descrição da peça (30) estão alistados ao lado do número da posição na página da lista.

Informações indicadas num Catálogo de Peças Sobressalentes

A lista em baixo refere-se à ilustração (F) na página i-6. Um Catálogo de Peças Sobressalentes contem as seguintes informações sobre grupos, subgrupos e peças sobressalentes para o equipamento:

- Referência da estrutura do grupo (22). Indica o grupo a seguir mais elevado na estrutura da lista do equipamento.
- Nome do grupo (23)
- Unidade de medição (25)
- Quantidade (26)
- Número do desenho de montagem (27)
- Gama da página de lista (28). Incluída se houver páginas múltiplas na ilustração do grupo ou lista.
- Número da peça ou do subgrupo (29)
- Nome do subgrupo ou descrição da peça (30)
- Número do grupo (31)
- Número do equipamento (32)
- Título da informação do grupo (33). Indica se a secção abaixo do título é para uma variante de máquina específica ou se é uma lista de peças comuns. Se uma lista tiver mais do que uma variante e cada variante tiver o seu próprio desenho de montagem, é mostrada uma referência para a página do desenho de montagem da variante.
- Informação interna (34)

Úvod

Informácie o príručke

Tetra Pak doporučuje čítať pozorne všetky dodané príručky. Presvedčte sa, že dodané príručky sú k dispozícii personálu, ktorý vykonáva obsluhu alebo údržbu zariadenia.

Je dôležité ponechať si tento katalóg počas životnosti zariadenia a odovzdať katalóg inému majiteľovi alebo užívateľovi.

Tetra Pak nebude zodpovedať za nijaké zničenie zariadenia spôsobené nedodržaním pokynov uvedených v príručke vzhľadom na toto zariadenie.

Dodané príručky

Príručky dodané s týmto zariadením majú obsahovať

- Konverznú príručku (CM)
  Táto príručka poskytuje technikom informácie o konvertovaní zariadenia medzi rozličnými režimami výroby.
- Príručku elektriky (EM)
  Táto príručka poskytujetechnikom informácie o zariadeniach elektrickej inštalácie.
- Inštalačnú príručku (IM)
  Táto príručka poskytuje technikom informácie, požadované pre bezpečnú inštaláciu zariadenia.
- Údržbársku príručku (MM)
  Táto príručka poskytujetechnikom informáciu o údržbe zariadenia.
- Návod k použitiu (OM)
  Táto príručka poskytuje obsluhe informáciu o zaobchádzaní a obsluhe zariadenia pred, počas a po výrobe.
- Katalóg náhradných dielov (SPC)
  Táto príručka poskytuje informácie potrebné pre objednávku náhradných dielov Tetra Pak.
- Technická príručka (TeM)
  - poskytuje technikom informácie potrebné pre bezpečnú inštaláciu zariadenia
  - poskytuje technikom informácie o údržbe zariadenia
  - poskytujetechnikom informácie o zariadení elektrickej inštalácie
  - poskytuje informácie potrebné pre objednávku náhradných dielov z Tetra Pak

Formát stránky

Odvoláva sa na zobrazenie (A) na stranei-5: Hlavné stránky v katalógu náhradných dielov pozostávajú zo stránky zobrazenia (1) a stránky príslušného zoznamu (7). Stránka číslo (5) ukazuje v hlavičke stránky zobrazenie a v zápätí stránky zoznam. Číslo dokumentu (6) je zobrazené v zápätí stránky zoznamu.

Číslo stránky

Odvoláva sa na zobrazenie (A) na stranei-5: Číslo stránky (5) má tri časti:

- číslo kapitoly (2)
- nasledujúce číslo stránky v rámci kapitoly (3)
- celkový počet strán v kapitole (4)

Úvod o stroji

Výrobca

Pre názov a adresu výrobcu, viď druhá strana tohoto katalógu.

Servis

Pre objednávku náhradných dielov pre tento stroj, alebo pre hlásenie problémov spojených s obsluhou tohoto stroja, kontaktujte najbližšiu pobočku spoločnosti Tetra Pak.

Kontaktujte styčnú osobu s inými žiadosťami, poznámkami, alebo zlepšovacími návrhmi týkajúcimi sa zariadenia a jeho dokumentácie.

Označenie

CE klasifikácia

Zariadenie spĺňa základné zdravotné a bezpečnostné predpisy Európskeho hospodárskeho priestoru (EEA).

Prístrojová doska

Zobrazenie (B) na strane i-5 ukazuje príklad prístrojovej dosky. Zobrazenie správnej prístrojovej dosky a jej umiestnenie na zariadení je uvedené v kapitole Úvod príručky dodanej s týmto zariadením. Prístrojová doska obsahuje dole zoznam údajov, potrebných ak kontaktujete spoločnosť Tetra Pak ohľadom tohoto špeciálneho zariadenia.

- Typ stroja (8)
- Kapacita (9)
- Výkres špecifikácie (10)
- Sériové číslo stroja (11)
- Výrobca (12)
- značka CE (13)
- Rok výroby (14)

Zobrazenie (C) na strane i-5 ukazuje príklad špecifikácie stroja. Presvedčte sa, či údaje zariadenia uvedené na prednej strane tejto príručky zodpovedajú údajom prístrojovej dosky a špecifikácii stroja.

Ako používať tento katalóg náhradných dielov

Vyhľadajte číslo náhradného dielu

a) Odvoláva sa na zobrazenie (D) na strane i-5: Chodťe na kapitolu číslo (15) označenú při halvnej skupine, ktorá obsahuje diel, ktorý chcete vyhľadať.

Položky b) a c) sa odvolávajú na zobrazenie (E) na strane i-6

b) Na zobrazení hlavnej skupiny, hľadajte pre stroj podskupinu (17) ktorá obsahuje diel alebo podskupinu, ktoré hľadáte. Zaznamenajte pozíciu číslo (18) a choďte na stránku zoznamu, ktorá sleduje zobrazenie.

c) Hľadajte číslo položky (16) alebo názov podskupiny (19). Choďte na zodpovedajúcu stránku číslo (20)uvedenú v stĺpci po pravej ruke.

Položky d) a e) sa odvolávajú na zobrazenie (F) na stranei-6

d) Vyhľadajte diel (21), ktorý hľadáte podľa zobrazenia podskupiny a poznámky čísla položky dielu.

e) Číslo dielu (29) a popis dielu (30) sú uvedené pri čísle položky na zozname stránok.

Informácie uvedené v katalógu náhradných dielov

Zoznam dole sa odvoláva na zobrazenie (F) na strane i-6 Katalóg náhradných dielov obsahuje informácie o skupinách, podskupinách a náhradných dieloch pre zariadenie:

- Odkaz na usporiadanie skupiny (22) Označuje nasledujúcu vyššiu skupinu v štruktúre zoznamu zariadenia.
- Názov skupiny (23)
- Jednotka merania(25)
- Množstvo (26)
- Číslo výkresu montáže (27)
- Zoznam rozsahu stránok (28). Zahrnutý, ak sú to mnohonásobné stránky v zobrazení skupiny alebo zoznam.
- Diel alebo číslo podskupiny (29)
- Názov podskupiny alebo popis dielu (30)
- Číslo skupiny (31)
- Ćíslo zariadenia (32)
- Základné informácie o skupine (33). Označuje, ak sekcia pod hlavičkou je pre špeciálnu variantu stroja alebo ak je to zoznam všeobecných dielov. Ak zoznam má viac ako jednu variantu a každá varianta má svoj vlastný montážny výkres, tak je zobrazená strana, ktorá odkazuje na varianty montážneho výkresu.
- Interné informácie (34)

Uvod

Informacija o priročnikih

Podjetje Tetra Pak priporoča, da natančno preberete vse priložene priročnike. Osebje, ki upravlja in vzdržuje opremo, mora imeti dostop do priloženih priročnikov.

Katalog hranite v celotnem času uporabe opreme. V primeru, ko opremo pridobi drug uporabnik, mu obenem izročite tudi katalog.

Podjetje Tetra Pak ne prevzema odgovornosti za poškodbe na opremi, ki nastanejo zaradi neupoštevanja navodil iz priročnikov, ki so priloženi opremi.

Priloženi priročniki

Priročniki, ki so priloženi opremi, vključujejo

- Priročnik za zamenjavo (CM)
  V tem priročniku so podatki, ki tehnikom omogočajo izvesti zamenjavo opreme med različnimi načini proizvodnje.
- Električni priročnik (EM)
  Priročnik vsebuje informacije za tehnike o električnem sistemu opreme.
- Priročnik za namestitev (IM)
  Priročnik vsebuje ustrezne tehnične informacije za varno namestitev opreme.
- Priročnik za vzdrževanje (MM)
  Priročnik vsebuje informacije za tehnike o vzdrževanju opreme.
- Priročnik za obratovanje (OM)
  Priročnik je namenjen informiranju za pravilno rokovanje in upravljanje s strojem pred, med in po proizvodnem postopku.
- Katalog rezervnih delov (SPC)
  Priročnik vsebuje potrebne informacije za naročanje rezervnih delov v podjetju Tetra Pak.
- Tehnični priročnik (TeM) vsebuje:
  - ustrezne tehnične informacije za tehnike za varno namestitev opreme
  - informacije za tehnike o vzdrževanju opreme
  - informacije za tehnike o električnem sistemu opreme
  - potrebne informacije za naročanje rezervnih delov v podjetju Tetra Pak

Zgradba strani

Oglejte si risbo (A) na strani i-5: Glavne strani v Katalogu rezervnih delov sestavljata stran z risbo (1) ter ustrezna stran s seznamom (7). Številka strani (5) je v glavi na strani z risbo ter v nogi na strani s seznamom. Številka dokumenta (6) je v nogi na strani s seznamom.

Številčenje strani

Oglejte si risbo (A) na strani i-5: Številko strani (5) sestavljajo trije deli:

- številka poglavja (2)
- zaporedna številka strani v poglavju (3)
- skupno število strani poglavja (4)

Predstavitev stroja

Proizvajalec

Ime in naslov proizvajalca poiščite na drugi strani tega kataloga.

Servis

Za naročanje rezervnih delov za stroj ter za sporočanje motenj pri delovanju stroja se obrnite na najbližjo servisno službo podjetja Tetra Pak.

V primeru drugih zahtev, komentarjev, predlogov za izboljšavo opreme ali dokumentacije se obrnite na odgovorno osebo.

Identifikacijska oznaka

CE klasifikacija

Oprema je izdelana v skladu z osnovnimi zdravstvenimi in varnostnimi predpisi Evropskega gospodarskega prostora (EGP).

Ploščica s podatki

Risba (B) na strani i-5 prikazuje primer ploščice s podatki.
Risba veljavne ploščice s podatki ter mesto njene namestitve na opremi je v uvodnem poglavju posameznih priročnikov, ki so priloženi opremi.
Na ploščici s podatki so zapisani spodaj našteti podatki, ki jih potrebujete pri posvetovanju s podjetjem Tetra Pak.

- Tip stroja (8)
- Prostornina (9)
- Specifikacija risbe (10)
- Serijska številka stroja (11)
- Proizvajalec (12)
- CE oznaka (13)
- Leto izdelave (14)

Risba (C) na strani i-5 prikazuje primer specifikacije strojne opreme.
Prepričajte se, da podatki o opremi, ki so zapisani na prvih straneh priročnika, ustrezajo podatkom na ploščici s podatki in specifikaciji strojne opreme.

Uporaba Kataloga rezervnih delov

Določitev številke rezervnega dela

a) Oglejte si risbo (D) na strani i-5: Zatem si oglejte poglavje številka (15), ki je označeno poleg glavne skupine, ki vsebuje želeni del.

Točki b) in c) se nanašata na risbo (E) na strani i-6.

b) Na risbi glavne skupine poiščite podskupino stroja (17), ki vključuje del ali podskupino, ki ga (jo) iščete. Zapomnite si pozicijsko številko (18) in pojdite na stran s seznamom, ki sledi risbi.

c) Poiščite pozicijsko številko (16) ali ime podskupine (19). Pojdite na ustrezno številko strani (20), ki je označena v desnem stolpcu.

Točki d) in e) se nanašata na risbo (F) na strani i-6.

d) Na risbi podskupine poiščite sestavni del (21) in si zapišite njegovo pozicijsko številko.

e) Številka sestavnega dela (29) in opis sestavnega dela (30) se nahajata poleg pozicijske številke na strani s seznamom.

Informacije v Katalogu rezervnih delov

Spodnji seznam se nanaša na risbo (F) na strani i-6. V Katalogu rezervnih delov so naslednje informacije o skupinah, podskupinah in rezervnih delih za opremo:

- Referenca strukture skupine (22). Označuje naslednjo višjo skupino v strukturi seznama opreme.
- Ime skupine (23)
- Merska enota (25)
- Količina (26)
- Številka sestavne risbe (27)
- Število strani seznama (28). Vključeno, kadar risba ali seznam skupine vsebuje več strani.
- Številka dela ali podskupine (29)
- Ime podskupine ali opis dela (30)
- Številka skupine (31)
- Številka opreme (32)
- Naslov skupine informacij (33). Označuje, če se odsek pod naslovom nanaša na specifično izvedbo stroja, ali je seznam skupnih delov. Če ima seznam več izvedb ter ima vsaka izvedba svojo sestavno risbo, je prikazana referenčna stran sestavne risbe za to izvedbo.
- Interna informacija (34)

Inledning

Information om manualerna

Tetra Pak rekommenderar att alla manualer läses noggrant. Se till att manualerna är tillgängliga för personalen som använder eller underhåller utrustningen.

Det är viktigt att denna katalog behålls under utrustningens livslängd, och att den överlämnas till varje efterföljande innehavare eller användare av utrustningen.

Tetra Pak tar inte ansvar för någon skada på utrustningen som orsakats av att instruktionerna i medföljande manualer inte har följts.

Medföljande manualer

Följande manualer levereras tillsammans med utrustningen:

- Konverteringsmanual (CM)
  Manualen innehåller information för tekniker om hur utrustningen ska konverteras mellan olika produktionslägen.
- Elektrisk manual (EM)
  Manualen innehåller information för tekniker om utrustningens elektriska system.
- Installationsmanual (IM)
  Manualen innehåller information för tekniker om hur utrustningen installeras på ett säkert sätt.
- Underhållsmanual (MM)
  Manualen innehåller information för tekniker om hur utrustningen ska underhållas.
- Driftsmanual (OM)
  Manualen innehåller information för operatören om hur utrustningen ska hanteras före, under och efter produktion.
- Reservdelskatalog (SPC)
  Manualen innehåller information som behövs för beställning av reservdelar från Tetra Pak.
- Teknisk manual (TeM)
  - innehåller information för tekniker om hur utrustningen installeras på ett säkert sätt.
  - innehåller information för tekniker om hur utrustningen ska underhållas.
  - innehåller information för tekniker om utrustningens elektriska system.
  - innehåller information som behövs för beställning av reservdelar från Tetra Pak.

Sidlayout

Se bilden (A) på sidan i-5: Huvudsidorna i reservdelskatalogen består av en bildsida (1) och en motsvarande listsida (7). Sidnumret (5) visas i sidhuvudet på bildsidan och i sidfoten på listsidan. Dokumentnumret (6) visas i sidfoten på listsidan.

Sidnumrering

Se bilden (A) på sidan i-5: Ett sidnummer (5) består av tre delar:

- kapitelnummer (2)
- löpande sidnummer inom kapitlet (3)
- totalt sidantal i kapitlet (4)

Introduktion till maskinen

Tillverkare

Tillverkarens namn och adress finns på sidan 2 i katalogen.

Service

För att beställa reservdelar till denna maskin eller för att rapportera problem som uppstått i samband med driften kontaktar du närmaste Tetra Pak-kontor.

Har du andra frågor, kommentarer eller förslag som gäller förbättring av maskinen eller utrustningen och dokumentationen vänder du dig till din kontaktperson på Tetra Pak.

Identifiering

CE-klassificering

Denna utrustning överensstämmer med de grundläggande hälso- och säkerhetsbestämmelserna inom den europeiska ekonomiska unionen (EEA).

Maskinskylt

Bilden (B) på sidan i-5 visar ett exempel på en maskinskylt. En bild på giltig maskinskylt och dess placering på utrustningen visas i inledningskapitlet som medföljer utrustningen. Skylten innehåller de uppgifter som listas nedan och som behövs vid kontakt med Tetra Pak angående utrustningen.

- Maskintyp (8)
- Volym (9)
- Ritningsspecifikationer (10)
- Maskinnummer (11)
- Tillverkare (12)
- CE-märkning (13)
- Tillverkningsår (14)

Bilden (C) på sidan i-5 visar ett exempel på en maskinspecifikation. Kontrollera att informationen om utrustningen som listas på manualens framsida motsvarar informationen på maskinskylten och i maskinspecifikationen.

Använda reservdelskatalogen

Hitta ett reservdelsnummer

a) Se bilden (D) på sidan i-5: Gå till kapitelnumret (15) som står vid sidan om huvudgruppen som innehåller den del du vill leta reda på.

Punkt b) och c) hänvisar till bilden (E) på sidan i-6.

b) På huvudgruppsbilden letar du efter den maskinundergrupp (17) som innehåller delen eller undergruppen du letar efter. Notera positionsnumret (18) och gå till listsidan som följer efter bilden.

c) Leta efter positionsnumret (16) eller undergruppsnamnet (19). Gå till motsvarande sidnummer (20) som listas i den högra kolumnen.

Punkt d) och e) hänvisar till bilden (F) på sidan i-6.

d) Leta reda på delen (21) i undergruppsbilden och notera delens positionsnummer.

e) Reservdelsnumret (29) och reservdelsbeskrivningen (30) står bredvid positionsnumret på listsidan.

Information i reservdelskatalogen

Listan nedan hänvisar till bilden (F) på sidan i-6. Reservdelskatalogen innehåller följande information om grupper, undergrupper och reservdelar för utrustningen:

- Gruppstrukturreferens (22). Anger nästa högre grupp i utrustningslistans struktur.
- Gruppnamn (23)
- Måttenhet (25)
- Kvantitet (26)
- Monteringsritningsnummer (27)
- Listsidesintervall (28). Står med om det finns flera sidor i gruppbilden eller listan.
- Reservdels- eller undergruppsnummer (29)
- Undergruppsnamn eller reservdelsbeskrivning (30)
- Gruppnummer (31)
- Utrustningsnummer (32)
- Gruppinformationsrubrik (33). Anger om avsnittet under rubriken gäller en viss maskinvariant eller om det är en lista över allmänna delar. Om en lista har fler än en variant och varje variant har sin egen monteringsritning, visas en sidhänvisning till variantens monteringsritning.
- Intern information (34)

SPC
Spare Parts Catalogue

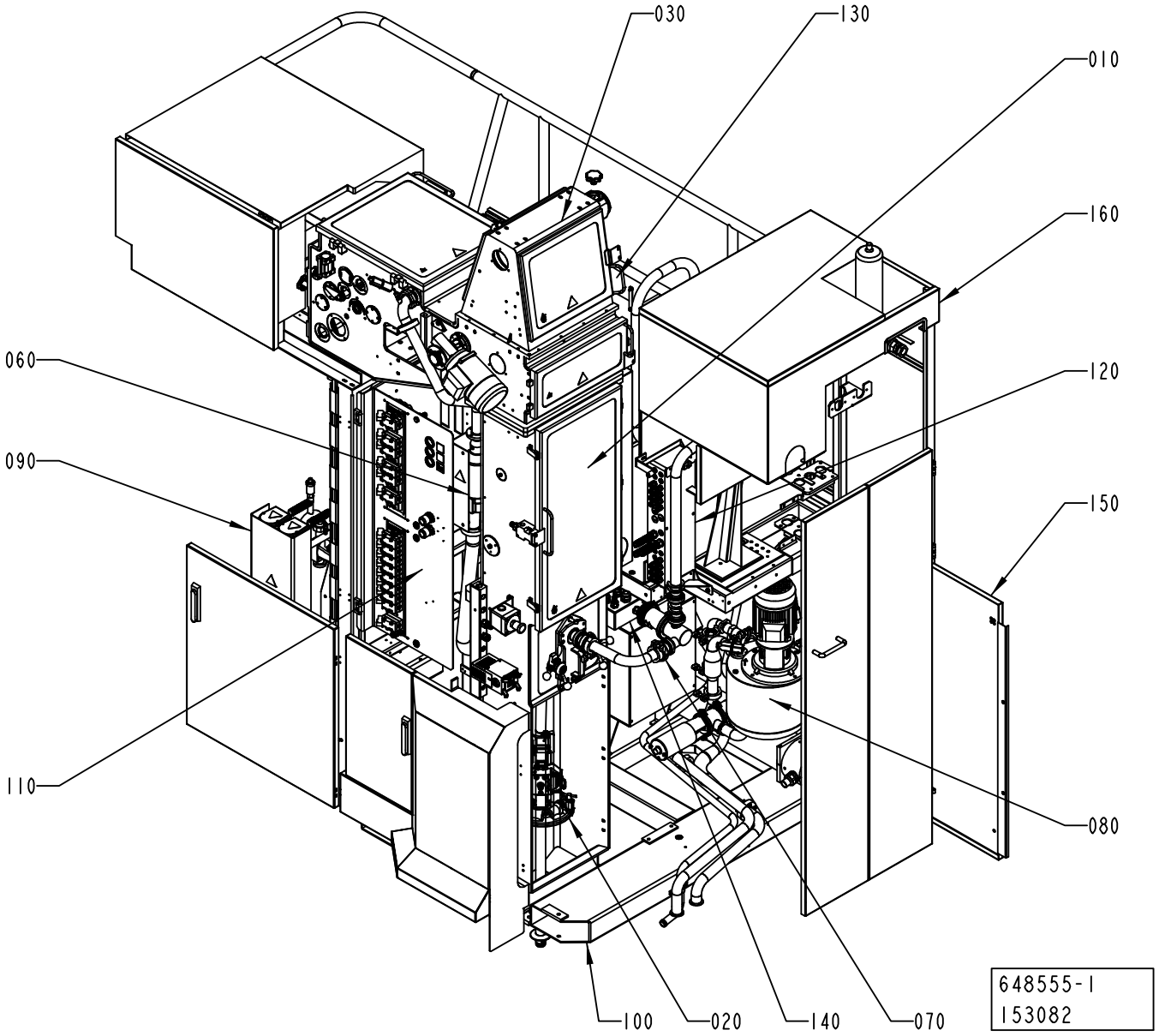
030
130
010
160
060
120
090
150
110
080
100
020
140
070
648555-1
153082

ECM: 174527 - 50001231
Group number: 648555-0100
Assembly Drawing: 648555-1_1_AB

Pos	Part No	UN	Qty	Description	Page No
-					
010	2539440-0100		1	ASEPTIC CHAMBER	**1-5**
020	2544850-0100		1	FORMING SECTION	**1-21, 1-23, 1-25**
030	2539450-0200		1	DRYING CHAMBER	**1-87, 1-89**
060	2528076-0100		1	STERILE AIR SYSTEM	**1-149**
070	2501290-0100		1	FILLING SYSTEM	**1-181, 1-183**
080	2512910-0100		1	CLEANING SYSTEM	**1-233, 1-235**
090	2541680-0100		1	HYDROGEN PEROXIDE	**1-261**
100	1558497-0100		1	FRAME SECTION,UPPER	**1-279**
110	2528079-0100		1	PNEUMATIC SYSTEM	**1-301**
120	1558834-0100		1	CONNECTION BOX	**1-335**
130	1548733-0100		1	CONNECTION BOX	**1-339, 1-341, 1-343**
140	2504502-0100		1	CABLE TRENCH	**1-349, 1-351, 1-353, 1-355, 1-357, 1-359, 1-361, 1-363**
150	2533766-0100		1	COVERING PANEL	**1-369**
160	2532909-0100		1	COVERING PANEL	**1-371**
170	2504496-0100		1	TRANSPORT EQUIPMENT	**1-381**

Pos	Part No	UN	Qty	Description	Page No

ASEPTIC CHAMBER

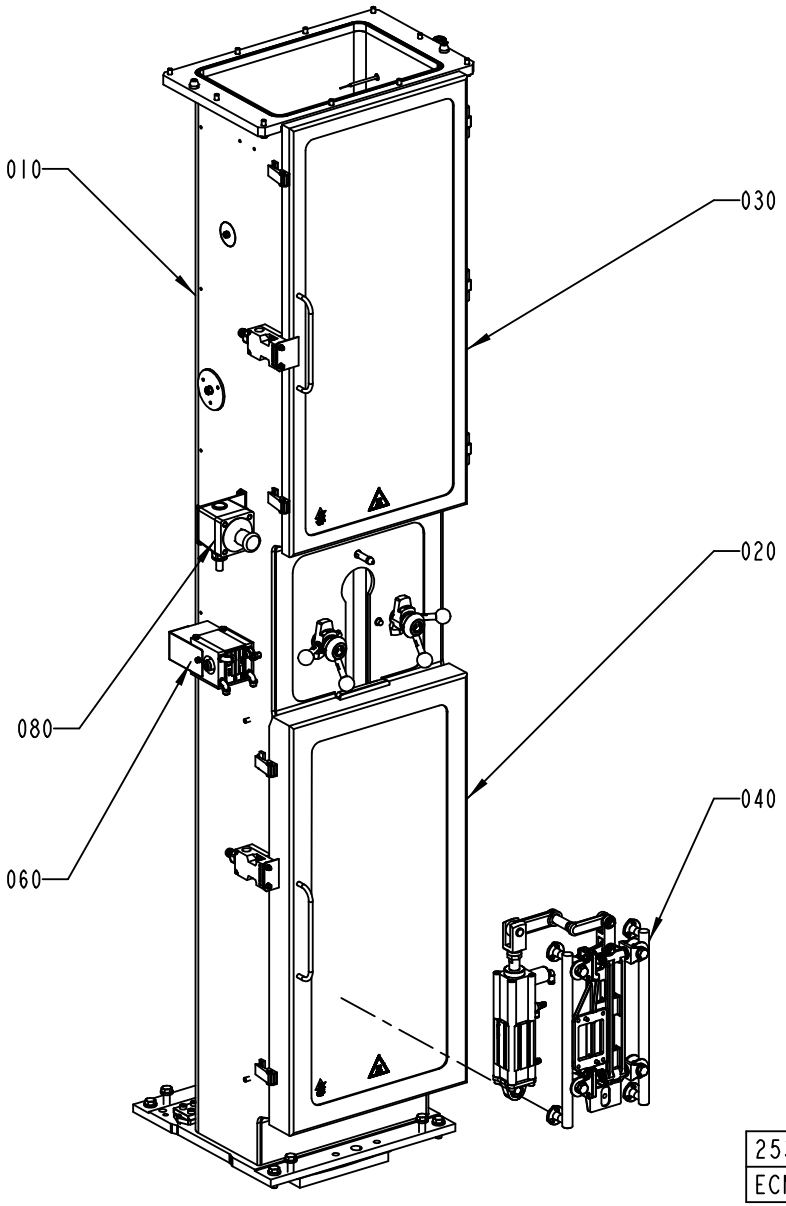

ECM: 140173 - 20031124
Group number: 2539440-0100
Assembly Drawing: 2539440-1_1_AA

Pos	Part No	UN	Qty	Description	Page No
A3/FLEX					
020	2508283-0100		1	DOOR	**1-7**
030	2508279-0100		1	DOOR	**1-9**
060	1548876-0100		1	IH EQUIPMENT	**1-11**
Common Parts					
010	1548872-0100		1	PILLAR	**1-13, 1-15**
040	2512930-0100		1	SUPPORT RAIL	**1-17**
080	2528087-0100		1	EMERGENCY STOP	**1-19**

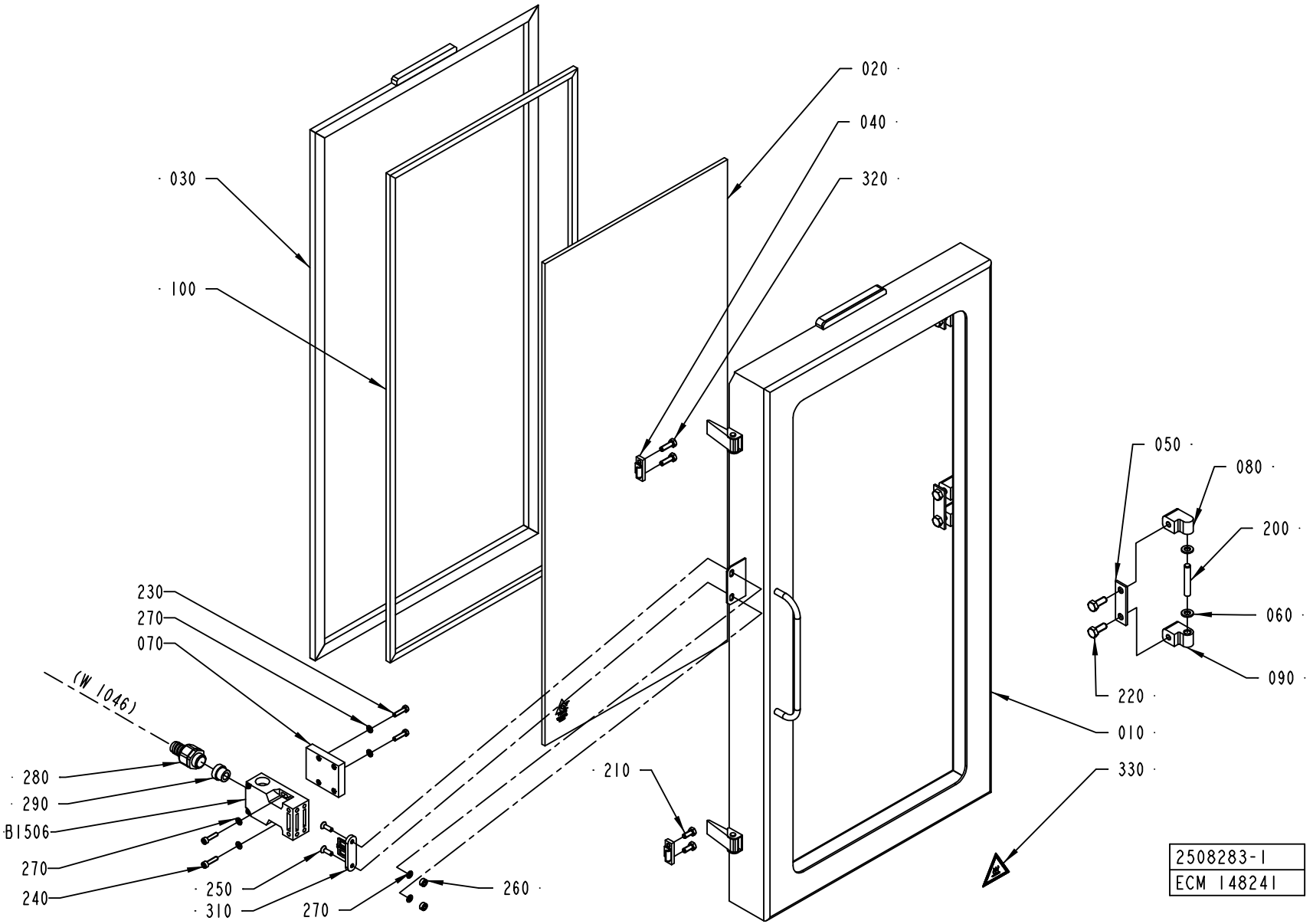
020
040
320
030
100
050
080
200
060
090
220
010
330
230
270
070
(W 1046)
280
290
B1506
270
240
250
310
270
260
210
2508283-1
ECM 148241

ECM: 148241 - 20031006
Group number: 2508283-0100
Assembly Drawing: 2508283-1_1_AB

Pos	Part No	UN	Qty	Description	Page No
-					
010	2508284-0000		1	FRAME	
020	2508286-0000		1	GLASS PANE	
030	2508285-0000		1	GASKET	
040	271860-0000		2	CLAMP BLOCK	
050	441737-0000		3	WASHER	
060	441739-0000		6	WASHER	
070	2541651-0000		1	PLATE	
080	1041978-0000		3	HINGE FLANGE	
090	1041979-0000		3	HINGE FLANGE	
100	2508314-0000		1	GASKET	
200	311103-0413		3	PARALLEL PIN ISO 2338 8M6X50 A1	
210	312105-0367		2	SCREW M6S ISO 4017 M6X14 A480	
220	312105-0451		6	SCREW M6S ISO 4017 M8X20 A480	
230	312105-0331		2	SCREW M6S ISO 4017 M5X20 A480	
240	312115-0331		2	SCREW ISO4762 M5X20 A4	
250	312155-0329		2	SCREW EN 10642 MF6S M5X16 A480	
260	575034-0000		2	ROUND NUT	
270	315105-0146		6	WASHER BRB5,3X10RFR	
280	90458-0429		1	HOSE GLAND W/O INSERT M20 EXTENDED	
290	353249-0011		1	INSERT, SINGEL HOLE, EK 153/11	
310	90044-0310		1	KEY FOR SAFETY SWITCH, AZ 15/16 B1	
320	312105-0370		2	SCREW M6S ISO 4017 M6X20 A480	
330	359705-0007		1	WARNING SIGN ISO, HOT SURFACE	
B1506	90459-0472		1	KEY SAF.SW. AZ 16 02ZVRK-M20-2152-2254	

Pos	Part No	UN	Qty	Description	Page No

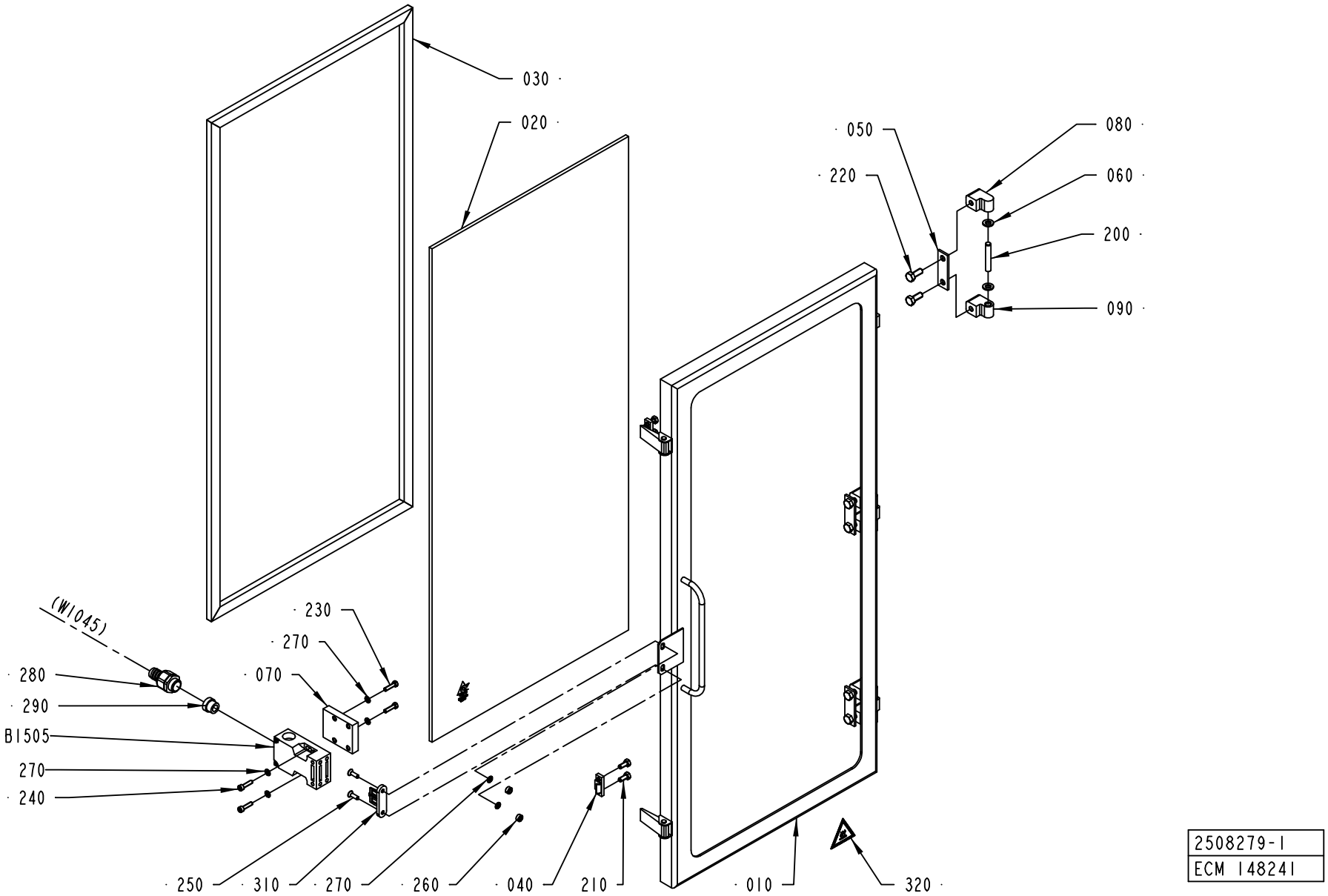

2508279-1
ECM 148241

ECM: 148241 - 20031006
Group number: 2508279-0100
Assembly Drawing: 2508279-1_1_AB

Pos	Part No	UN	Qty	Description	Page No
-					
010	2508280-0000		1	FRAME	
020	2508282-0000		1	GLASS PANE	
030	2508281-0000		1	GASKET	
040	271860-0000		2	CLAMP BLOCK	
050	441737-0000		3	WASHER	
060	441739-0000		6	WASHER	
070	2541651-0000		1	PLATE	
080	1041978-0000		3	HINGE FLANGE	
090	1041979-0000		3	HINGE FLANGE	
200	311103-0413		3	PARALLEL PIN ISO 2338 8M6X50 A1	
210	312105-0367		4	SCREW M6S ISO 4017 M6X14 A480	
220	312105-0451		6	SCREW M6S ISO 4017 M8X20 A480	
230	312105-0331		2	SCREW M6S ISO 4017 M5X20 A480	
240	312115-0331		2	SCREW ISO4762 M5X20 A4	
250	312155-0329		2	SCREW EN 10642 MF6S M5X16 A480	
260	575034-0000		2	ROUND NUT	
270	315105-0146		6	WASHER BRB5,3X10RFR	
280	90458-0429		1	HOSE GLAND W/O INSERT M20 EXTENDED	
290	353249-0011		1	INSERT, SINGEL HOLE, EK 153/11	
310	90044-0310		1	KEY FOR SAFETY SWITCH, AZ 15/16 B1	
320	359705-0007		1	WARNING SIGN ISO, HOT SURFACE	
B1505	90459-0472		1	KEY SAF.SW. AZ 16 02ZVRK-M20-2152-2254	

Pos	Part No	UN	Qty	Description	Page No

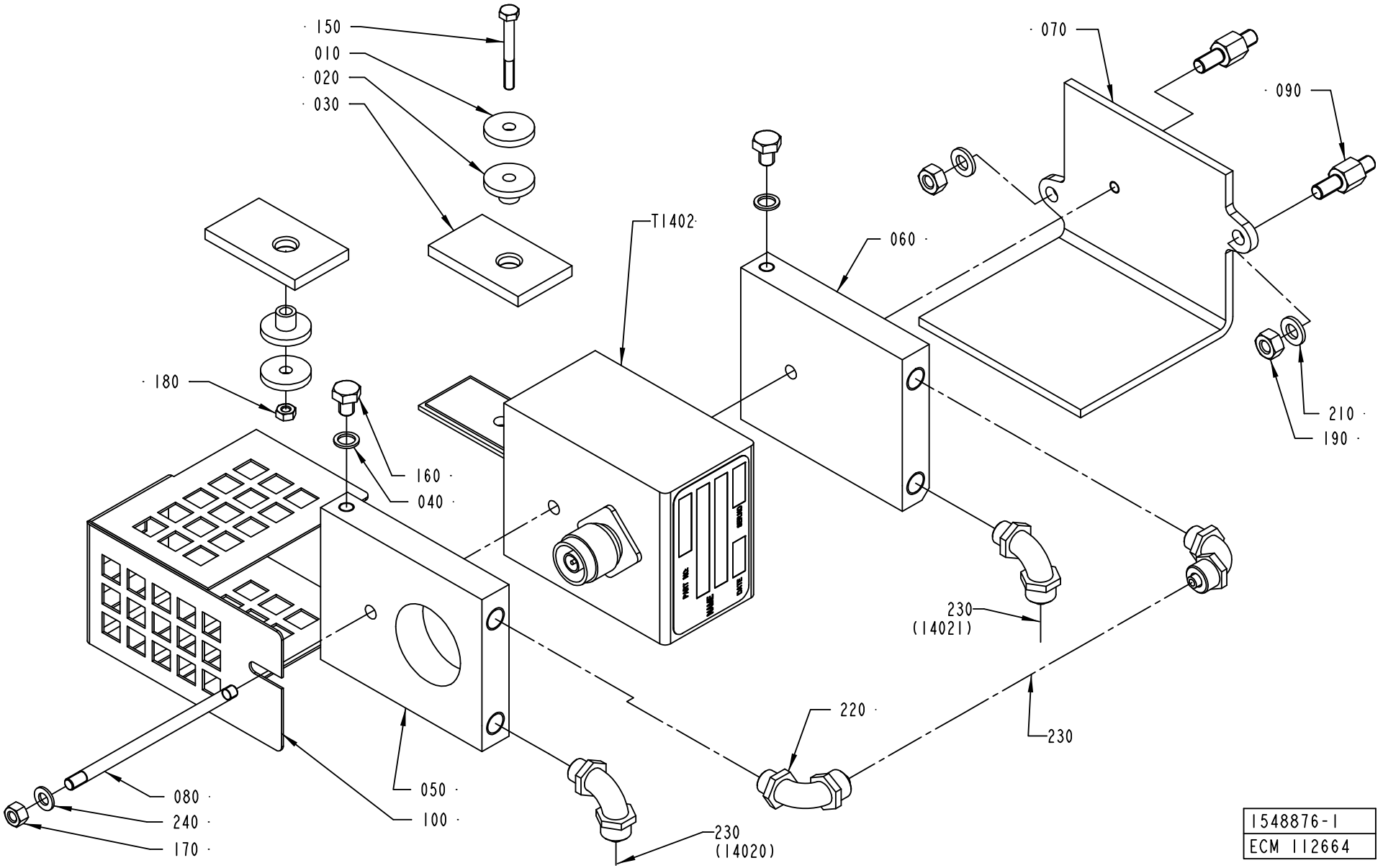
150
010
020
030
070
090
T1402
060
180
210
190
160
040
230
(14021)
220
230
080
240
170
050
100
230
(14020)
1548876-1
ECM 112664

ECM: 181622 - 50001231
Group number: 1548876-0100
Assembly Drawing: 1548876-1_1_AA

Pos	Part No	UN	Qty	Description	Page No
A3/FLEX TBA 0200B, A3/FLEX TBA 0250B, A3/FLEX TBA 0330S, A3/FLEX TPA 0330SQ, A3/FLEX TPA 0500SQ					
T1402	67379-0412		1	TRANSFORMER	
T1402	67379-0412		1	TRANSFORMER	
A3/FLEX TBA 0200S, A3/FLEX TBA 1890S, A3/FLEX TBA 2000S, A3/FLEX TBA 0200M, A3/FLEX TBA 0250S					
T1402	67379-0414		1	TRANSFORMER	
T1402	67379-0414		1	TRANSFORMER	
A3/FLEX TBA 0500B, A3/FLEX TBA 1000B, A3/FLEX TPA 1000SQ, A3/FLEX TBA 1500S					
T1402	67379-0417		1	TRANSFORMER	
T1402	67379-0417		1	TRANSFORMER	
A3/FLEX TBA 1000S NODIMC					
T1402	67379-0404		1	TRANSFORMER	
T1402	67379-0404		1	TRANSFORMER	
A3/FLEX TBA 1000SQ, A3/FLEX TBA 1000S DIMC/FLEX					
T1402	67379-0405		1	TRANSFORMER	
T1402	67379-0405		1	TRANSFORMER	
Common Parts					
010	263311-0000		2	WASHER	
020	1539174-0000		2	BUSHING	
030	1539175-0000		2	PLATE	
040	1140077-0000		2	RING	
050	1558830-0000		1	COOLING PLATE	
060	1558831-0000		1	COOLING PLATE	
070	1558441-0000		1	BRACKET	
080	2559066-0000		1	STUD SCREW	
090	2532979-0000		2	SPACER	
100	2541664-0000		1	COVER	
150	312105-0301		1	SCREW M6S ISO 4017 M4X35 A470	
160	312105-0362		2	SCREW M6S ISO 4017 M6X8 A480	
170	312605-0314		1	HEXAGON NUT, M6M M5 A280	
180	312605-0312		1	HEXAGON NUT, M6M M4 A280	
190	312605-0316		2	HEXAGON NUT, M6M M6 A280	
210	315105-0153		2	WASHER BRB6,4X12RFR	
220	342931-0121		4	ELBOW 90 COUPL.,EXT.THREAD 8/6-G1/8"	
230	90166-0118	MM	6000	TUBE 8 MM PA BLACK	
240	315105-0146		1	WASHER BRB5,3X10RFR	
250	90157-0037		1	THREAD SEALANT LOCTITE 542	

Pos	Part No	UN	Qty	Description	Page No

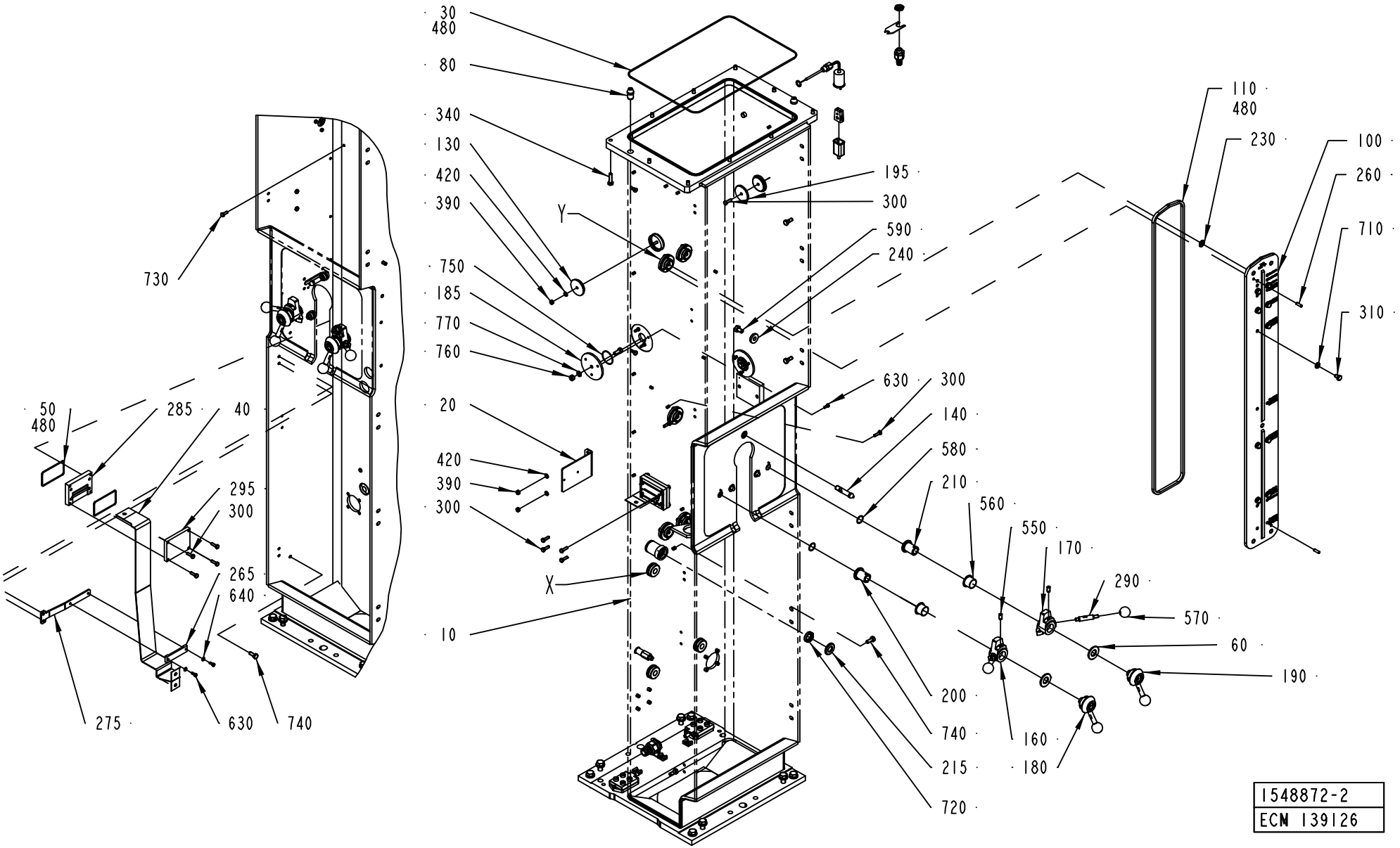
30
480
80
340
130
420
390
Y
750
185
770
760
20
420
390
300
X
10
730
50
480
285
40
295
300
265
640
275
630
740
195
300
590
240
630
300
140
580
210
560
550
170
290
570
60
190
200
740
215
720
160
180
110
480
230
100
260
710
310
1548872-2
ECM 139126

ECM: 177407 - 50001231
Group number: 1548872-0100
Assembly Drawing: 1548872-2_1_AC

This list covers pages from 1-12 to 1-15

Pos	Part No	UN	Qty	Description	Page No
A3/FLEX TBA 0500B, A3/FLEX TBA 1000B, A3/FLEX TBA 1000S, A3/FLEX TBA 1000SQ, A3/FLEX TPA 1000SQ, A3/FLEX TBA 0200S, A3/FLEX TBA 1500S, A3/FLEX TBA 0200B, A3/FLEX TBA 0250B, A3/FLEX TBA 0330S, A3/FLEX TPA 0330SQ, A3/FLEX TPA 0500SQ, A3/FLEX TBA 0200M, A3/FLEX TBA 0250S, A3/FLEX TBA 0500S (See drawing on pages: 1-12, 1-14)					
010	1558513-0000		1	PILLAR	
040	1533493-0000		1	BUSBAR	
050	90459-1174		2	O-RING 75,87X2,62 MM	
150	1036293-0000		1	HOLDER	
185	2555609-0000		2	PLUG	
265	2532978-0000		1	PLATE	
275	2532977-0000		1	BRACKET	
285	2533628-0000		1	SUPPORT BLOCK	
295	2533627-0000		1	SUPPORT BLOCK	
296	1129086-0000		1	BRACKET	
300	312105-0370		12	SCREW M6S ISO 4017 M6X20 A480	
310	312105-0447		12	SCREW M6S ISO 4017 M8X12 A480	
390	312605-0316		4	HEXAGON NUT, M6M M6 A280	
490	90099-0104		1	NUT, PR 15,2 (PG9)	
500	353243-0001		1	HOSE GLAND W/O INSERT PG9 EXTENDED	
510	353249-0008		1	INSERT, SINGEL HOLE, EK 152/7	
520	90326-0020		1	PLUG, FEMALE YELLOW CR-AL	
530	90326-0012		1	PROTECTIVE COVER, T31A4618	
540	315237-0110		1	WASHER,PL.RND.AL.13,5/18,H=1,5	
630	312105-0327		8	SCREW M6S ISO 4017 M5X12 A480	
640	315105-0146		2	WASHER BRB5,3X10RFR	
680	90458-0638		2	DISTRIBUTION FRAME, ASB 4/LED 5-4-12/5M	
690	312115-0293		6	SCREW ISO4762 M4X16 A4	
730	312105-0368		2	SCREW M6S ISO 4017 M6X16 A480	
740	312105-0451		6	SCREW M6S ISO 4017 M8X20 A480	
750	315205-0801		2	O-RING 37,82X1,78 MM	
760	312605-0318		2	HEXAGON NUT, M6M M8 A280	
770	315105-0165		2	WASHER BRB8,4X16RFR	
780	353243-0005		1	HOSE GLAND W/O INSERT PG16 EXTENDED	
790	353249-0014		1	INSERT, SINGEL HOLE, EK 154/16	
800	90099-0110		1	NUT, PR 22,5 (PG16)	
B1109	90458-0341		1	THERMOCOUPLE, 5130050-001	
A3/FLEX TBA 1890S, A3/FLEX TBA 2000S (See drawing on pages: 1-12, 1-14)					
010	1558513-0000		1	PILLAR	
040	2698178-0000		1	BUSBAR	
050	90459-1174		2	O-RING 75,87X2,62 MM	
150	1036293-0000		1	HOLDER	
185	2555609-0000		2	PLUG	
265	2532978-0000		1	PLATE	
275	2532977-0000		1	BRACKET	
285	2533628-0000		1	SUPPORT BLOCK	
295	2533627-0000		1	SUPPORT BLOCK	
296	1129086-0000		1	BRACKET	
300	312105-0370		12	SCREW M6S ISO 4017 M6X20 A480	
310	312105-0447		12	SCREW M6S ISO 4017 M8X12 A480	
390	312605-0316		4	HEXAGON NUT, M6M M6 A280	
490	90099-0104		1	NUT, PR 15,2 (PG9)	
500	353243-0001		1	HOSE GLAND W/O INSERT PG9 EXTENDED	
510	353249-0008		1	INSERT, SINGEL HOLE, EK 152/7	
520	90326-0020		1	PLUG, FEMALE YELLOW CR-AL	
530	90326-0012		1	PROTECTIVE COVER, T31A4618	
540	315237-0110		1	WASHER,PL.RND.AL.13,5/18,H=1,5	
630	312105-0327		8	SCREW M6S ISO 4017 M5X12 A480	
640	315105-0146		2	WASHER BRB5,3X10RFR	
680	90458-0638		2	DISTRIBUTION FRAME, ASB 4/LED 5-4-12/5M	
690	312115-0293		6	SCREW ISO4762 M4X16 A4	
730	312105-0368		2	SCREW M6S ISO 4017 M6X16 A480	
740	312105-0451		6	SCREW M6S ISO 4017 M8X20 A480	
750	315205-0801		2	O-RING 37,82X1,78 MM	
760	312605-0318		2	HEXAGON NUT, M6M M8 A280	
770	315105-0165		2	WASHER BRB8,4X16RFR	
780	353243-0005		1	HOSE GLAND W/O INSERT PG16 EXTENDED	
790	353249-0014		1	INSERT, SINGEL HOLE, EK 154/16	
800	90099-0110		1	NUT, PR 22,5 (PG16)	
B1109	90458-0341		1	THERMOCOUPLE, 5130050-001	
Common Parts					
020	2528088-0000		1	HOLDER	
030	90459-1175		1	O-RING 418X3,0 MM	
060	2562677-0000		2	WASHER	
080	1519150-0000		2	PIN	
100	2528111-0000		1	PLATE	
110	2634997-0000		1	GASKET	
120	2544865-0000		1	BUSHING	
130	2506281-0000		2	PLUG	
140	2506283-0000		1	PIN	
160	2526859-0000		1	CAM	
170	2528068-0000		1	CAM	
180	2528070-0000		1	LOCKING LEVER	
190	2528102-0000		1	LOCKING LEVER	
195	2552138-0000		2	LID	

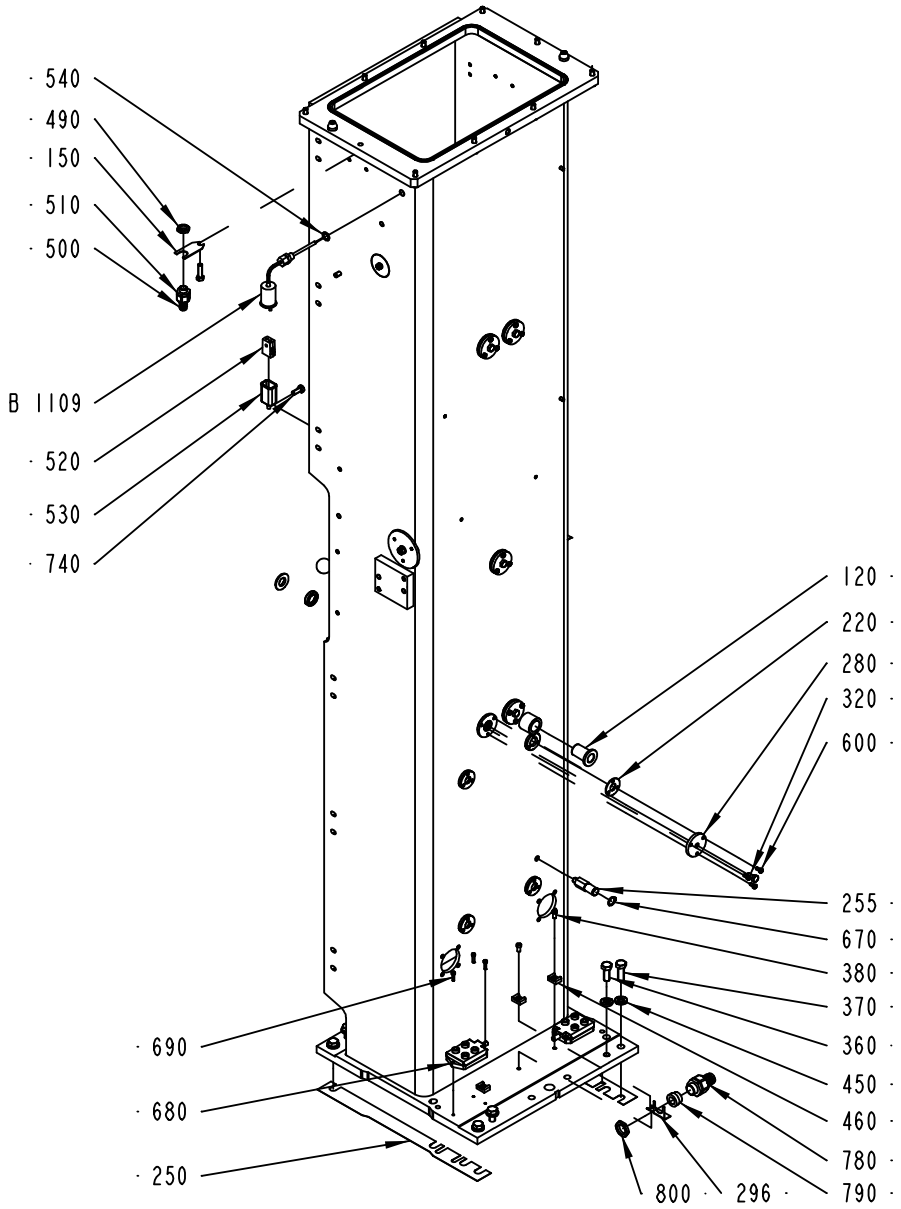

1548872-2
ECM 139126

Pos	Part No	UN	Qty	Description	Page No
Common Parts (Cont'd)					
210	2512768-0000		1	SHAFT	
215	2544866-0000		1	WASHER	
220	2512774-0000		4	SHIM	
230	2528107-0000		5	SHIM	
235	2541645-0000		4	SHIM	
240	315125-0173		2	WASHER TBRSB 10,5X28X6 A4	
245	2541646-0000		5	SHIM	
250	2512772-0001		2	SHIM	
250	2512772-0002		2	SHIM	
250	2512772-0003		2	SHIM	
255	2547386-0000		1	SHAFT	
260	2528109-0000		2	PIN	
270	2512786-0000		2	PIN	
280	2528106-0000		5	FLANGE	
290	2526858-0000		2	DOWEL	
320	312105-0449		5	SCREW M6S ISO 4017 M8X16 A480	
340	312105-0455		10	SCREW M6S ISO 4017 M8X30 A480	
360	312105-0536		4	SCREW M6S ISO 4017 M12X30 A480	
370	312105-0538		4	SCREW M6S ISO 4017 M12X35 A480	
380	312125-0366		3	SCREW ISO 1207 M6X12 A4	
420	315105-0153		4	WASHER BRB6,4X12RFR	
450	315115-0178		8	WASHER PLAIN, TBRB 13/24 H=4	
460	352113-0204		3	ANCHOR PLATES FOR STRIPS, TYPE TM3S25-M	
480	90153-0023		1	ADHESIVE, SILICON 251470 TUB 90CC	
550	90287-0112		2	SCREW SPRINGLOAD. SLOTTED HEAD M8X16	
560	90240-0293		2	FLANGE BUSHING, 25X28X21 MM	
570	318800-0104		2	HANDLE,SPHERICAL KNOB,INT.THRE.,D.30-M8	
580	315205-0707		2	O-RING 20,35X1,78 MM	
590	312105-0489		2	SCREW M6S ISO 4017 M10X16 A480	
600	312105-0325		15	SCREW M6S ISO 4017 M5X10 A480	
670	315751-0113		1	RETAINING RING FOR SHAFT DIN 471 16 A2	
710	315115-0165		12	WASHER PLAIN, TBRB 8,4/16 H=3	
720	90459-0871		1	SEALING RING 18X30X7 MM	

Pos	Part No	UN	Qty	Description	Page No

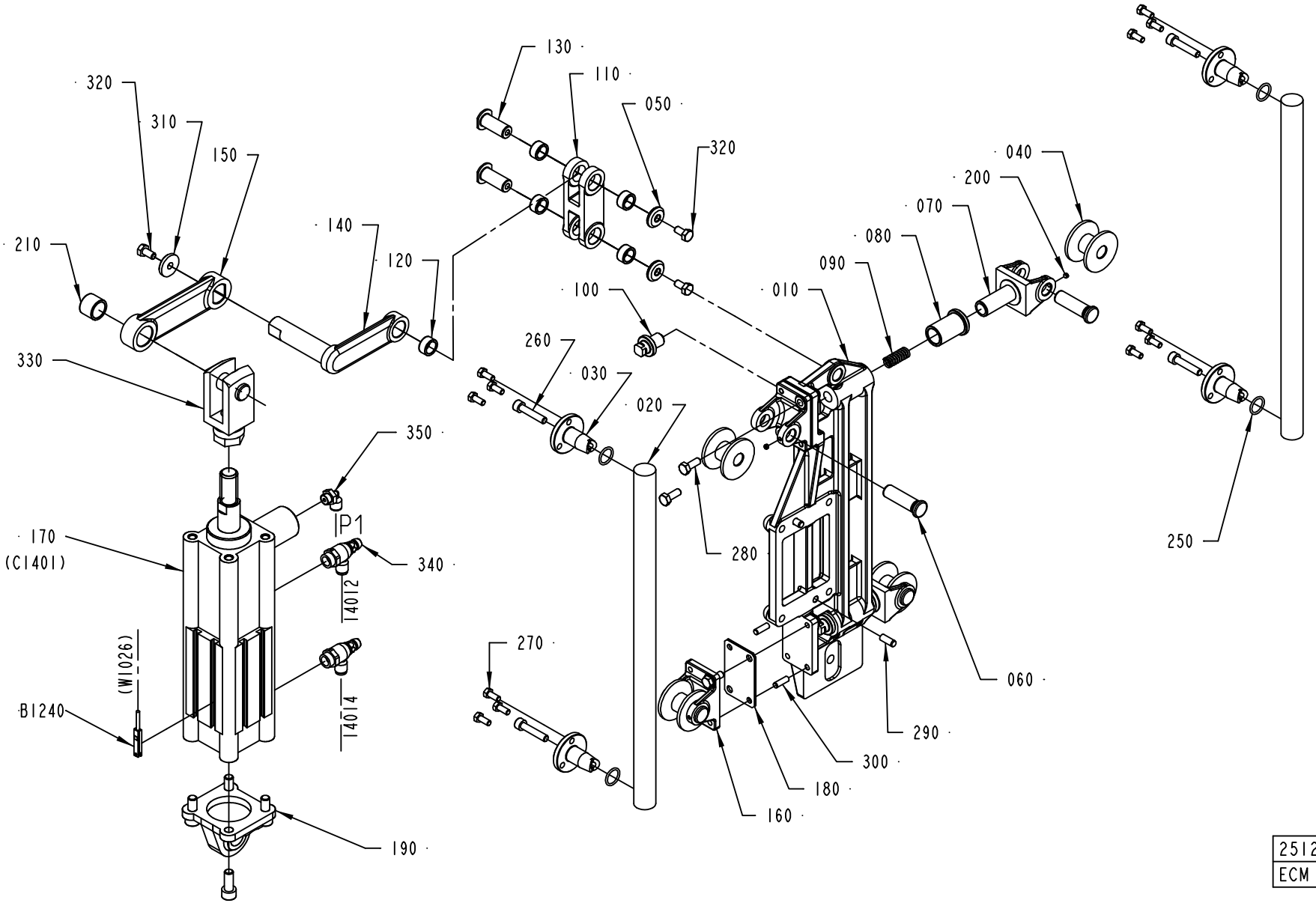

2512930-1
ECM 135479

ECM: 174644 - 50001231
Group number: 2512930-0100
Assembly Drawing: 2512930-1_1_AC

Pos	Part No	UN	Qty	Description	Page No
A3/FLEX TBA 0500B, A3/FLEX TBA 1000B, A3/FLEX TBA 1000S, A3/FLEX TPA 1000SQ, A3/FLEX TBA 0200S, A3/FLEX TBA 1500S, A3/FLEX TBA 0200B, A3/FLEX TBA 0250B, A3/FLEX TBA 0330S (See drawing on page: 1-16)					
150	2506273-0000		1	LEVER	
210	2506269-0000		1	BUSHING	
A3/FLEX TPA 0330SQ, A3/FLEX TPA 0500SQ, A3/FLEX TBA 1890S, A3/FLEX TBA 2000S, A3/FLEX TBA 0200M, A3/FLEX TBA 0250S (See drawing on page: 1-16)					
150	2677636-0000		1	LEVER	
210	2685417-0000		1	BUSHING	
Common Parts					
010	2547401-0000		1	SUPPORT PLATE	
020	2504521-0000		2	BAR	
030	2504523-0000		4	CENTERING	
040	2547403-0000		4	WHEEL	
050	2508297-0000		2	WASHER	
060	2526841-0000		4	SHAFT	
070	2552121-0000		2	BRACKET	
080	2522233-0000		2	BUSHING	
090	2522235-0000		2	COMPRESSION SPRING	
100	2541658-0000		2	SCREW	
110	2506271-0000		1	LEVER	
120	2506291-0000		5	BUSHING	
130	2522232-0000		2	SHAFT	
140	2522234-0000		1	LEVER	
160	2547402-0000		2	BRACKET	
170	90459-0587		1	DOUBLE ACTING, PROFILE, CYL 50-50	
180	2547419-0000		2	SHIM	
190	90459-0586		1	SWIVEL FLANGE 50	
200	90459-1395		4	SCREW HEX.SOCK.SET CONEPT.MS6SS M4X4 A2	
250	315205-0703		4	O-RING 14,0X1,78 MM	
260	312115-0374		4	SCREW ISO4762 M6X30 A4	
270	312105-0327		12	SCREW M6S ISO 4017 M5X12 A480	
280	312105-0368		4	SCREW M6S ISO 4017 M6X16 A480	
290	311103-0351		2	PARALLEL PIN ISO 2338 6M6X16 A1	
300	311103-0308		4	PARALLEL PIN ISO 2338 5M6X16 A1	
310	315125-0153		1	WASHER TBRSB 6,4X22X4 A4	
320	312105-0366		3	SCREW M6S ISO 4017 M6X12 A480	
330	2547387-0000		1	ROD END	
340	90235-0847		2	THROTTLE CHECK VALVE, G1/4", MANUAL,6	
350	90458-2956		1	ELBOW PIPE JOINT, EXT.THREAD, D=6MM-G1/8	
B1240	90458-2775		1	PROXIMITY SWITCH SMT-8-PS-K-LED-	

Machine Type	Group Description	Used-In	Group Number	Page No

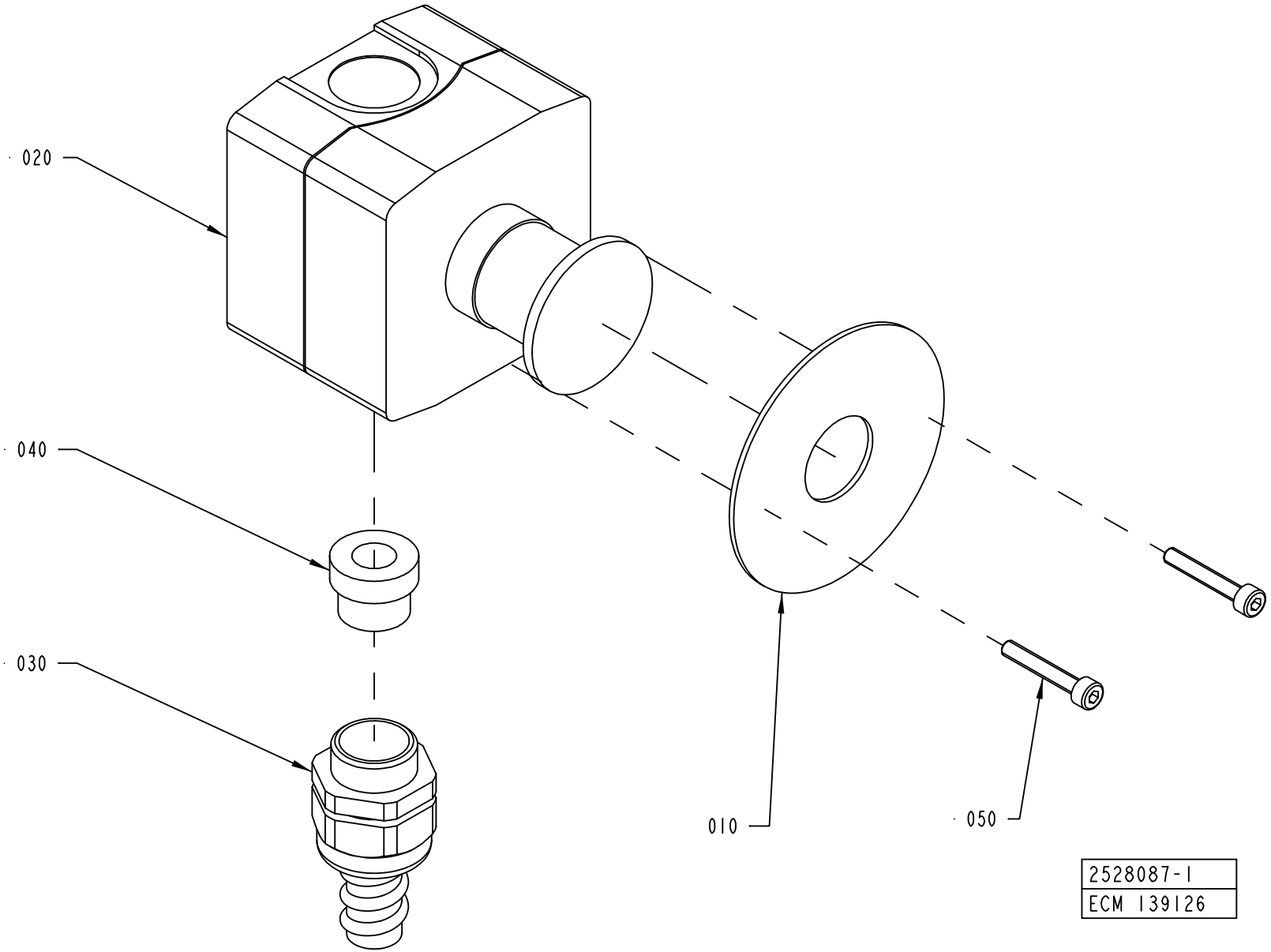
020
040
030
010
050
2528087-1
ECM 139126

ECM: 140172 - 20031124
Group number: 2528087-0100
Assembly Drawing: 2528087-1_1_AA

Pos	Part No	UN	Qty	Description	Page No
-					
010	486826-0001		1	SIGN "EMERGENCY STOP"	
020	90459-1130		1	EM. STOP XAL-K178F	
030	353243-0009		1	HOSE GLAND W/O INSERT PG13,5 EXTENDED	
040	353249-0011		1	INSERT, SINGEL HOLE, EK 153/11	
050	312115-0297		2	SCREW ISO4762 M4X25 A4	

Pos	Part No	UN	Qty	Description	Page No

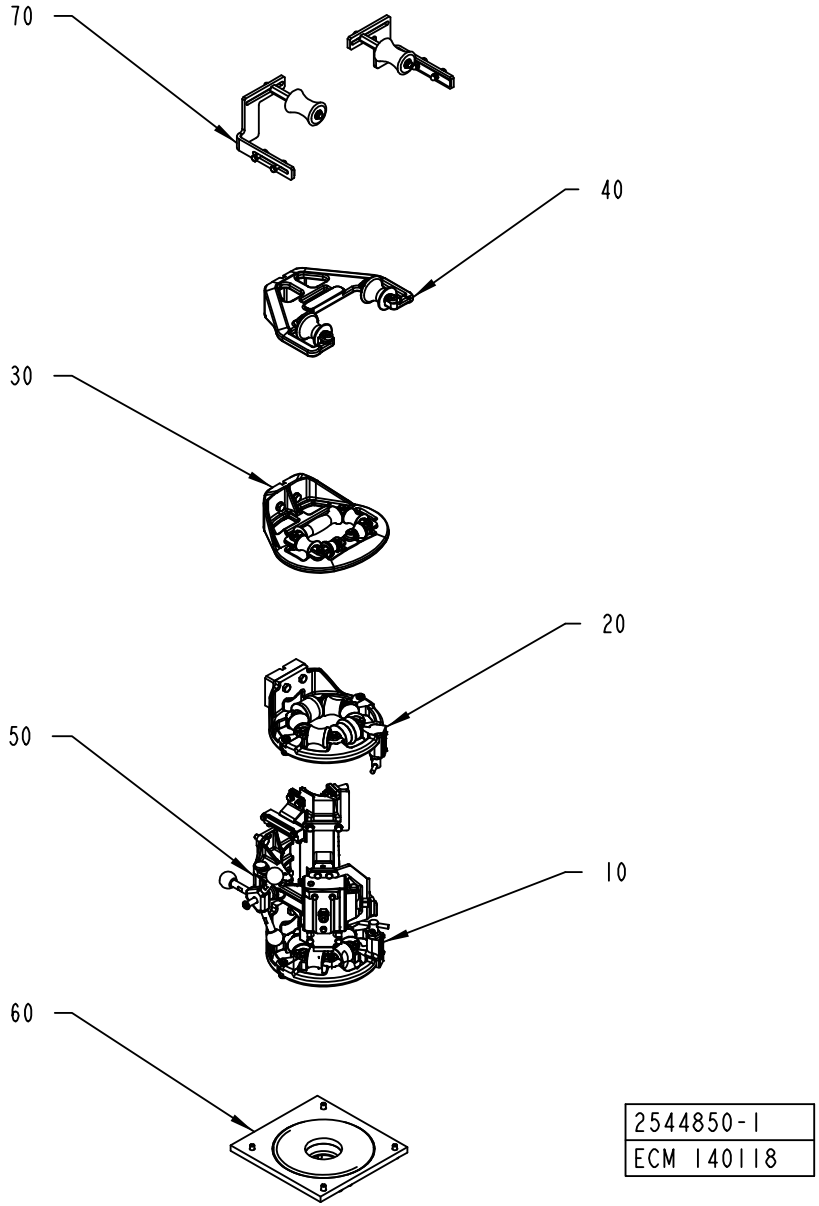
70
40
30
20
50
10
60
2544850-1
ECM 140118

ECM: 181634 - 50001231
Group number: 2544850-0100
Assembly Drawing: 2544850-1_1_AA

This list covers pages from 1-20 to 1-25

Pos	Part No	UN	Qty	Description	Page No
A3/FLEX DIMC/FLEX (See drawing on page: 1-22)					
010	2559063-0100		1	LOWER FORMING RING	**1-27**
020	2559061-0100		1	UPPER FORMING RING	**1-29, 1-31**
030	2592550-0100		1	FORMING RING	**1-33**
050	2544890-0100		1	LONGITUDINAL SEALING	**1-35, 1-37**
060	2559064-0100		1	SEAL	**1-41, 1-43**
A3/FLEX TBA 0200M NODIMC, A3/FLEX TBA 0250S NODIMC (See drawing on page: 1-20)					
010	2559062-0100		1	LOWER FORMING RING	**1-45, 1-47**
020	2547422-0100		1	UPPER FORMING RING	**1-49, 1-51, 1-53, 1-55, 1-57, 1-59**
030	2547421-0100		1	FORMING RING	**1-61, 1-63, 1-65**
040	2547420-0100		1	EDGE ROLLER	**1-67, 1-69**
050	2657873-0100		1	LONGITUDINAL SEALING	**1-71, 1-73**
060	2512780-0100		1	SEAL	**1-75, 1-77**
A3/FLEX TBA 0200S NODIMC, A3/FLEX TBA 0200B NODIMC, A3/FLEX TBA 0250B NODIMC, A3/FLEX TBA 0330S NODIMC (See drawing on page: 1-20)					
010	2559062-0100		1	LOWER FORMING RING	**1-45, 1-47**
020	2547422-0100		1	UPPER FORMING RING	**1-49, 1-51, 1-53, 1-55, 1-57, 1-59**
030	2547421-0100		1	FORMING RING	**1-61, 1-63, 1-65**
040	2674188-0100		1	EDGE ROLLER	**1-79**
050	2544890-0100		1	LONGITUDINAL SEALING	**1-35, 1-37**
060	2512780-0100		1	SEAL	**1-75, 1-77**
A3/FLEX TBA 1000B NODIMC, A3/FLEX TBA 0500B NODIMC, A3/FLEX TBA 1000S NODIMC, A3/FLEX TBA 1000SQ NODIMC, A3/FLEX TPA 1000SQ NODIMC, A3/FLEX TBA 1500S NODIMC (See drawing on page: 1-22)					
010	2559062-0100		1	LOWER FORMING RING	**1-45, 1-47**
020	2547422-0100		1	UPPER FORMING RING	**1-49, 1-51, 1-53, 1-55, 1-57, 1-59**
030	2547421-0100		1	FORMING RING	**1-61, 1-63, 1-65**
050	2544890-0100		1	LONGITUDINAL SEALING	**1-35, 1-37**
060	2512780-0100		1	SEAL	**1-75, 1-77**
A3/FLEX TBA 2000S NODIMC, A3/FLEX TBA 1890S NODIMC (See drawing on page: 1-24)					
010	2559062-0100		1	LOWER FORMING RING	**1-45, 1-47**
020	2547422-0100		1	UPPER FORMING RING	**1-49, 1-51, 1-53, 1-55, 1-57, 1-59**
030	2547421-0100		1	FORMING RING	**1-61, 1-63, 1-65**
040	2547420-0100		1	EDGE ROLLER	**1-67, 1-69**
050	2657873-0100		1	LONGITUDINAL SEALING	**1-71, 1-73**
060	2512780-0100		1	SEAL	**1-75, 1-77**
090	2555627-0100		1	PRESSURE ROLLER	**1-81**
A3/FLEX TPA 0330SQ NODIMC (See drawing on page: 1-22)					
010	2559062-0100		1	LOWER FORMING RING	**1-45, 1-47**
020	2547422-0100		1	UPPER FORMING RING	**1-49, 1-51, 1-53, 1-55, 1-57, 1-59**
030	2547421-0100		1	FORMING RING	**1-61, 1-63, 1-65**
050	2657873-0100		1	LONGITUDINAL SEALING	**1-71, 1-73**
060	2512780-0100		1	SEAL	**1-75, 1-77**
A3/FLEX TPA 0500SQ NODIMC (See drawing on page: 1-22)					
010	2559062-0100		1	LOWER FORMING RING	**1-45, 1-47**
020	2547422-0100		1	UPPER FORMING RING	**1-49, 1-51, 1-53, 1-55, 1-57, 1-59**
030	2547421-0100		1	FORMING RING	**1-61, 1-63, 1-65**
050	2657873-0100		1	LONGITUDINAL SEALING	**1-71, 1-73**
060	2512780-0100		1	SEAL	**1-75, 1-77**
Common Parts					
070	2541634-0100		1	EDGE ROLLER	**1-83, 1-85**

Machine Type	Group Description	Used-In	Group Number	Page No

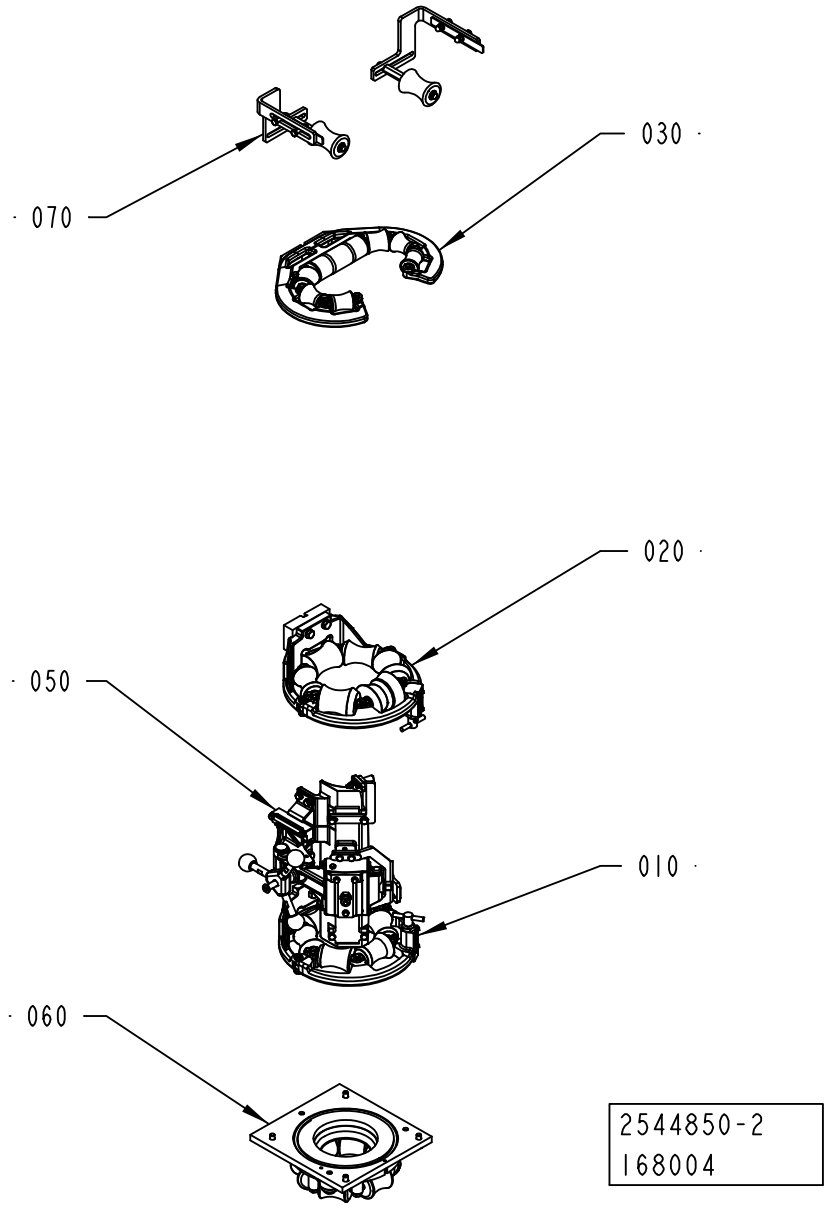
070
030
020
050
010
060
2544850-2
168004

ECM: 181634 - 50001231
Group number: 2544850-0100
Assembly Drawing: 2544850-2_1_AD

This list covers pages from 1-20 to 1-25

Pos	Part No	UN	Qty	Description	Page No
A3/FLEX DIMC/FLEX (See drawing on page: 1-22)					
010	2559063-0100		1	LOWER FORMING RING	**1-27**
020	2559061-0100		1	UPPER FORMING RING	**1-29, 1-31**
030	2592550-0100		1	FORMING RING	**1-33**
050	2544890-0100		1	LONGITUDINAL SEALING	**1-35, 1-37**
060	2559064-0100		1	SEAL	**1-41, 1-43**
A3/FLEX TBA 0200M NODIMC, A3/FLEX TBA 0250S NODIMC (See drawing on page: 1-20)					
010	2559062-0100		1	LOWER FORMING RING	**1-45, 1-47**
020	2547422-0100		1	UPPER FORMING RING	**1-49, 1-51, 1-53, 1-55, 1-57, 1-59**
030	2547421-0100		1	FORMING RING	**1-61, 1-63, 1-65**
040	2547420-0100		1	EDGE ROLLER	**1-67, 1-69**
050	2657873-0100		1	LONGITUDINAL SEALING	**1-71, 1-73**
060	2512780-0100		1	SEAL	**1-75, 1-77**
A3/FLEX TBA 0200S NODIMC, A3/FLEX TBA 0200B NODIMC, A3/FLEX TBA 0250B NODIMC, A3/FLEX TBA 0330S NODIMC (See drawing on page: 1-20)					
010	2559062-0100		1	LOWER FORMING RING	**1-45, 1-47**
020	2547422-0100		1	UPPER FORMING RING	**1-49, 1-51, 1-53, 1-55, 1-57, 1-59**
030	2547421-0100		1	FORMING RING	**1-61, 1-63, 1-65**
040	2674188-0100		1	EDGE ROLLER	**1-79**
050	2544890-0100		1	LONGITUDINAL SEALING	**1-35, 1-37**
060	2512780-0100		1	SEAL	**1-75, 1-77**
A3/FLEX TBA 1000B NODIMC, A3/FLEX TBA 0500B NODIMC, A3/FLEX TBA 1000S NODIMC, A3/FLEX TBA 1000SQ NODIMC, A3/FLEX TPA 1000SQ NODIMC, A3/FLEX TBA 1500S NODIMC (See drawing on page: 1-22)					
010	2559062-0100		1	LOWER FORMING RING	**1-45, 1-47**
020	2547422-0100		1	UPPER FORMING RING	**1-49, 1-51, 1-53, 1-55, 1-57, 1-59**
030	2547421-0100		1	FORMING RING	**1-61, 1-63, 1-65**
050	2544890-0100		1	LONGITUDINAL SEALING	**1-35, 1-37**
060	2512780-0100		1	SEAL	**1-75, 1-77**
A3/FLEX TBA 2000S NODIMC, A3/FLEX TBA 1890S NODIMC (See drawing on page: 1-24)					
010	2559062-0100		1	LOWER FORMING RING	**1-45, 1-47**
020	2547422-0100		1	UPPER FORMING RING	**1-49, 1-51, 1-53, 1-55, 1-57, 1-59**
030	2547421-0100		1	FORMING RING	**1-61, 1-63, 1-65**
040	2547420-0100		1	EDGE ROLLER	**1-67, 1-69**
050	2657873-0100		1	LONGITUDINAL SEALING	**1-71, 1-73**
060	2512780-0100		1	SEAL	**1-75, 1-77**
090	2555627-0100		1	PRESSURE ROLLER	**1-81**
A3/FLEX TPA 0330SQ NODIMC (See drawing on page: 1-22)					
010	2559062-0100		1	LOWER FORMING RING	**1-45, 1-47**
020	2547422-0100		1	UPPER FORMING RING	**1-49, 1-51, 1-53, 1-55, 1-57, 1-59**
030	2547421-0100		1	FORMING RING	**1-61, 1-63, 1-65**
050	2657873-0100		1	LONGITUDINAL SEALING	**1-71, 1-73**
060	2512780-0100		1	SEAL	**1-75, 1-77**
A3/FLEX TPA 0500SQ NODIMC (See drawing on page: 1-22)					
010	2559062-0100		1	LOWER FORMING RING	**1-45, 1-47**
020	2547422-0100		1	UPPER FORMING RING	**1-49, 1-51, 1-53, 1-55, 1-57, 1-59**
030	2547421-0100		1	FORMING RING	**1-61, 1-63, 1-65**
050	2657873-0100		1	LONGITUDINAL SEALING	**1-71, 1-73**
060	2512780-0100		1	SEAL	**1-75, 1-77**
Common Parts					
070	2541634-0100		1	EDGE ROLLER	**1-83, 1-85**

Machine Type	Group Description	Used-In	Group Number	Page No

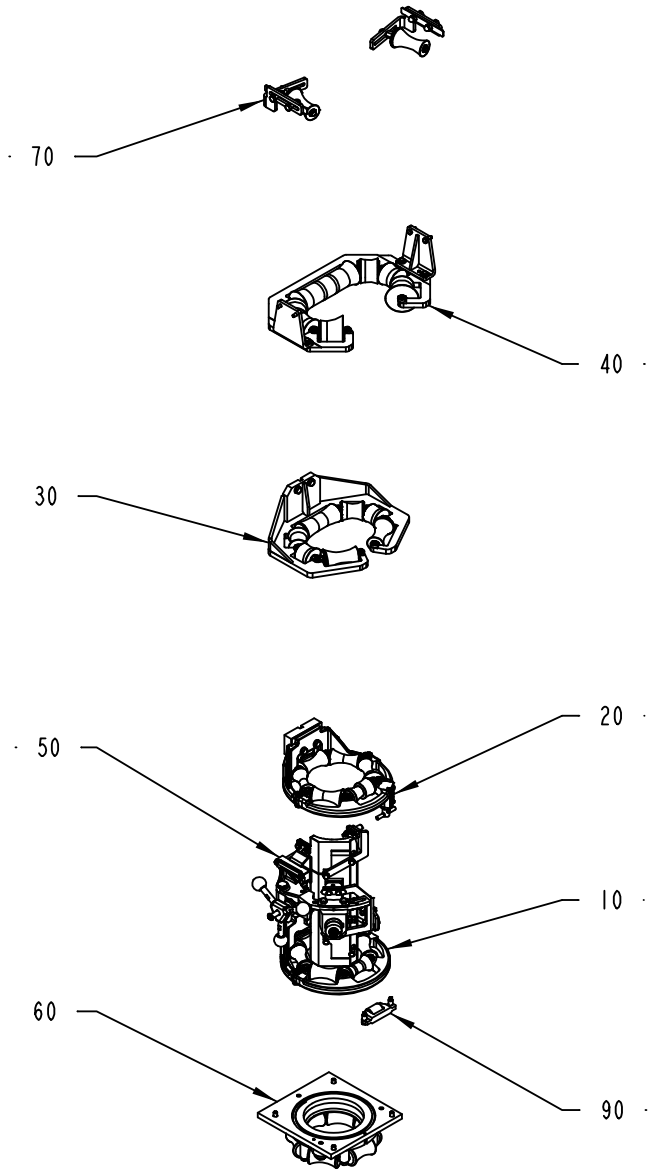
70
40
30
20
50
10
60
90
2544850-5
152564

ECM: 181634 - 50001231
Group number: 2544850-0100
Assembly Drawing: 2544850-5_1_AA

This list covers pages from 1-20 to 1-25

Pos	Part No	UN	Qty	Description	Page No
A3/FLEX DIMC/FLEX (See drawing on page: 1-22)					
010	2559063-0100		1	LOWER FORMING RING	**1-27**
020	2559061-0100		1	UPPER FORMING RING	**1-29, 1-31**
030	2592550-0100		1	FORMING RING	**1-33**
050	2544890-0100		1	LONGITUDINAL SEALING	**1-35, 1-37**
060	2559064-0100		1	SEAL	**1-41, 1-43**
A3/FLEX TBA 0200M NODIMC, A3/FLEX TBA 0250S NODIMC (See drawing on page: 1-20)					
010	2559062-0100		1	LOWER FORMING RING	**1-45, 1-47**
020	2547422-0100		1	UPPER FORMING RING	**1-49, 1-51, 1-53, 1-55, 1-57, 1-59**
030	2547421-0100		1	FORMING RING	**1-61, 1-63, 1-65**
040	2547420-0100		1	EDGE ROLLER	**1-67, 1-69**
050	2657873-0100		1	LONGITUDINAL SEALING	**1-71, 1-73**
060	2512780-0100		1	SEAL	**1-75, 1-77**
A3/FLEX TBA 0200S NODIMC, A3/FLEX TBA 0200B NODIMC, A3/FLEX TBA 0250B NODIMC, A3/FLEX TBA 0330S NODIMC (See drawing on page: 1-20)					
010	2559062-0100		1	LOWER FORMING RING	**1-45, 1-47**
020	2547422-0100		1	UPPER FORMING RING	**1-49, 1-51, 1-53, 1-55, 1-57, 1-59**
030	2547421-0100		1	FORMING RING	**1-61, 1-63, 1-65**
040	2674188-0100		1	EDGE ROLLER	**1-79**
050	2544890-0100		1	LONGITUDINAL SEALING	**1-35, 1-37**
060	2512780-0100		1	SEAL	**1-75, 1-77**
A3/FLEX TBA 1000B NODIMC, A3/FLEX TBA 0500B NODIMC, A3/FLEX TBA 1000S NODIMC, A3/FLEX TBA 1000SQ NODIMC, A3/FLEX TPA 1000SQ NODIMC, A3/FLEX TBA 1500S NODIMC (See drawing on page: 1-22)					
010	2559062-0100		1	LOWER FORMING RING	**1-45, 1-47**
020	2547422-0100		1	UPPER FORMING RING	**1-49, 1-51, 1-53, 1-55, 1-57, 1-59**
030	2547421-0100		1	FORMING RING	**1-61, 1-63, 1-65**
050	2544890-0100		1	LONGITUDINAL SEALING	**1-35, 1-37**
060	2512780-0100		1	SEAL	**1-75, 1-77**
A3/FLEX TBA 2000S NODIMC, A3/FLEX TBA 1890S NODIMC (See drawing on page: 1-24)					
010	2559062-0100		1	LOWER FORMING RING	**1-45, 1-47**
020	2547422-0100		1	UPPER FORMING RING	**1-49, 1-51, 1-53, 1-55, 1-57, 1-59**
030	2547421-0100		1	FORMING RING	**1-61, 1-63, 1-65**
040	2547420-0100		1	EDGE ROLLER	**1-67, 1-69**
050	2657873-0100		1	LONGITUDINAL SEALING	**1-71, 1-73**
060	2512780-0100		1	SEAL	**1-75, 1-77**
090	2555627-0100		1	PRESSURE ROLLER	**1-81**
A3/FLEX TPA 0330SQ NODIMC (See drawing on page: 1-22)					
010	2559062-0100		1	LOWER FORMING RING	**1-45, 1-47**
020	2547422-0100		1	UPPER FORMING RING	**1-49, 1-51, 1-53, 1-55, 1-57, 1-59**
030	2547421-0100		1	FORMING RING	**1-61, 1-63, 1-65**
050	2657873-0100		1	LONGITUDINAL SEALING	**1-71, 1-73**
060	2512780-0100		1	SEAL	**1-75, 1-77**
A3/FLEX TPA 0500SQ NODIMC (See drawing on page: 1-22)					
010	2559062-0100		1	LOWER FORMING RING	**1-45, 1-47**
020	2547422-0100		1	UPPER FORMING RING	**1-49, 1-51, 1-53, 1-55, 1-57, 1-59**
030	2547421-0100		1	FORMING RING	**1-61, 1-63, 1-65**
050	2657873-0100		1	LONGITUDINAL SEALING	**1-71, 1-73**
060	2512780-0100		1	SEAL	**1-75, 1-77**
Common Parts					
070	2541634-0100		1	EDGE ROLLER	**1-83, 1-85**

Machine Type	Group Description	Used-In	Group Number	Page No

LOWER FORMING RING

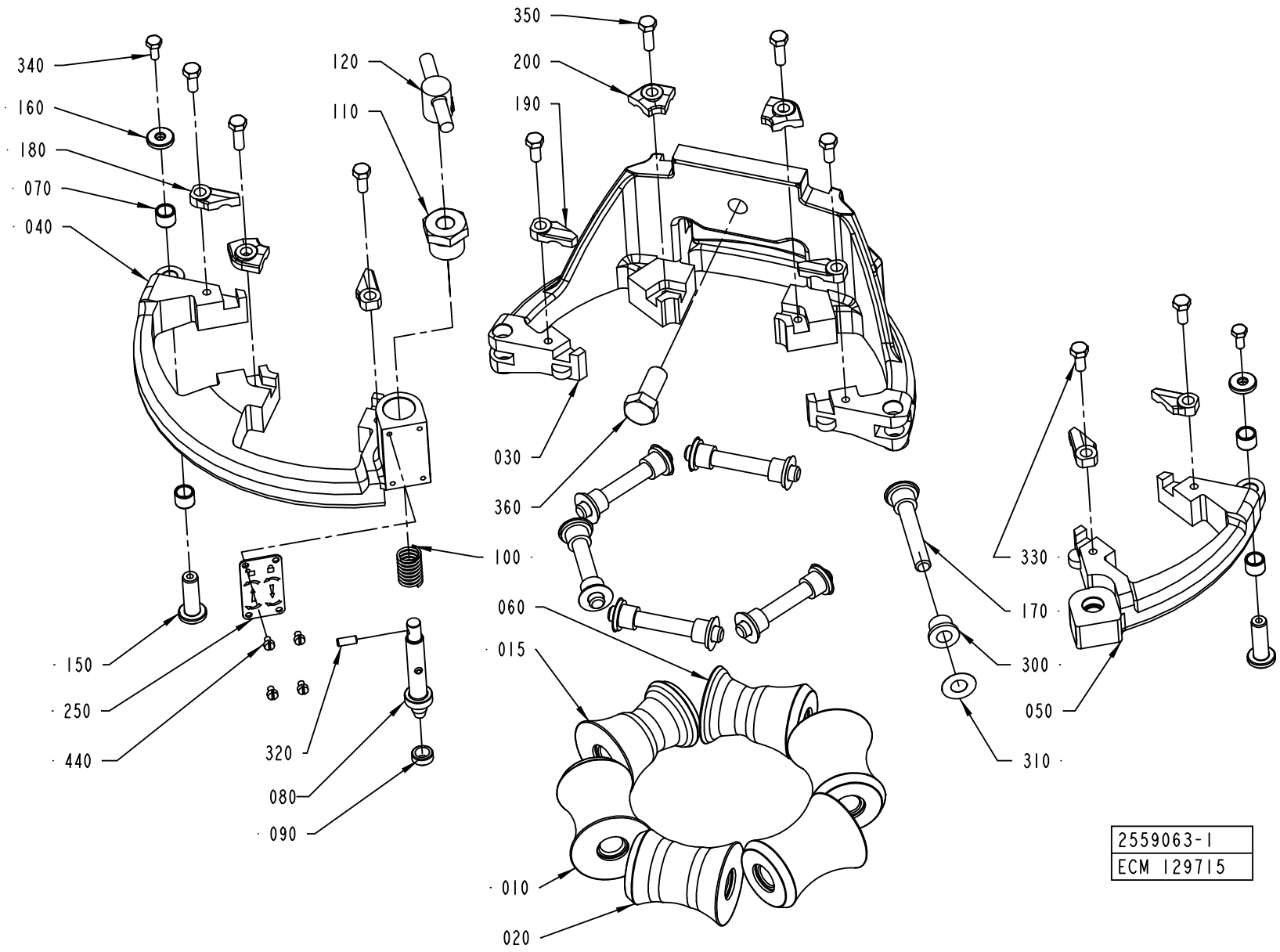

ECM: 129717 - 20030620
Group number: 2559063-0100
Assembly Drawing: 2559063-1_1_AA

Pos	Part No	UN	Qty	Description	Page No
TBA 1000B					
010	1349851-0000		3	ROLL	
	Remark : PLUS ROLLER 3-1349853				
	MINUS ROLLER 3-1349852				
015	2592540-0000		1	ROLLER	
020	2518098-0000		1	COUNTER ROLLER	
030	2552189-0000		1	LOWER FORMING RING	
040	2552190-0000		1	LOWER FORMING RING	
050	2552191-0000		1	LOWER FORMING RING	
060	2592539-0000		1	ROLLER	
170	752186-0014		6	SHAFT	
180	2528119-0004		3	LOCK PLATE	
190	2528118-0004		3	LOCK PLATE	
TBA 1000S					
010	567746-0001		3	ROLLER, (STD.SIZE)	
	Remark : PLUS ROLLER 3-567746-2				
	MINUS ROLLER 3-567746-3				
015	1523664-0001		1	ROLLER, (STD.SIZE)	
020	1334856-0000		1	COUNTER ROLLER	
030	2552192-0000		1	LOWER FORMING RING	
040	2552193-0000		1	LOWER FORMING RING	
050	2552194-0000		1	LOWER FORMING RING	
060	1523665-0001		1	ROLLER, (STD.SIZE)	
170	752186-0016		6	SHAFT	
180	2528119-0005		3	LOCK PLATE	
190	2528118-0005		3	LOCK PLATE	
Common Parts					
070	2526826-0000		4	BUSHING	
080	2526830-0000		1	SHAFT	
090	2526836-0000		1	BUSHING	
100	2526832-0000		1	SPRING	
110	2526833-0000		1	NUT	
120	2532973-0000		1	KNOB	
150	2526827-0000		2	SHAFT	
160	2526825-0000		2	WASHER	
200	2528123-0004		3	LOCK PLATE	
250	2555635-0000		1	SIGNS	
300	90240-0172		12	FLANGE BUSHING, 8X12X10 MM	
310	2033-0011		12	WASHER	
320	312318-0289		1	SCREW ISO4029 M4X10 A4	
330	312105-0327		6	SCREW M6S ISO 4017 M5X12 A480	
340	312105-0289		2	SCREW M6S ISO 4017 M4X10 A470	
350	312105-0329		3	SCREW M6S ISO 4017 M5X16 A480	
360	312105-0493		1	SCREW M6S ISO 4017 M10X25 A480	
440	90459-1228		4	SCREW ISO 1207 M3X4 A4	

Machine Type | Group Description | Used-In | Group Number | Page No

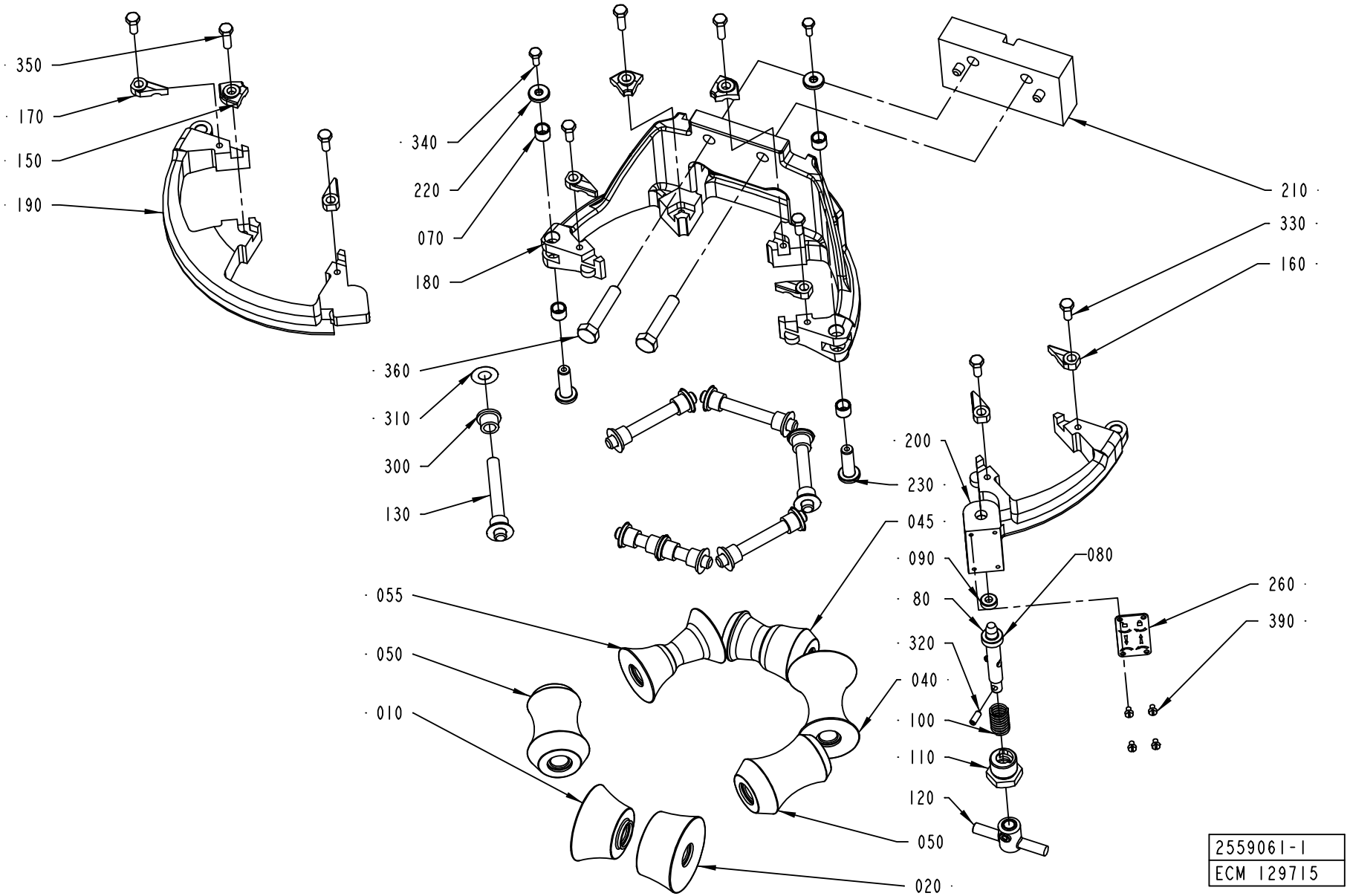
350
170
150
190
340
220
070
180
360
310
300
130
210
330
160
200
230
045
090
080
80
260
390
320
040
100
110
120
055
050
010
050
020
2559061-1
ECM 129715

ECM: 129718 - 20030620
Group number: 2559061-0100
Assembly Drawing: 2559061-1_1_AA

This list covers pages from 1-28 to 1-31

Pos	Part No	UN	Qty	Description	Page No
TBA 1000B (See drawing on page: 1-30)					
010	2512762-0000		1	ROLLER	
020	2514511-0000		1	ROLLER	
030	2514510-0000		1	ROLLER	
040	2514508-0000		1	ROLLER	
045	2592538-0000		1	ROLLER	
055	2592537-0000		1	ROLLER	
060	2514507-0000		1	ROLLER	
130	752186-0015		6	SHAFT	
150	2528123-0004		3	LOCK PLATE	
160	2528118-0005		3	LOCK PLATE	
170	2528119-0005		3	LOCK PLATE	
180	2552195-0000		1	UPPER FORMING RING	
190	2552196-0000		1	UPPER FORMING RING	
200	2552197-0000		1	UPPER FORMING RING	
360	312109-0460		2	SCREW M6S ISO 4017 M8X45 A480	
380	315105-0165		2	WASHER BRB8,4X16RFR	
TBA 1000S (See drawing on page: 1-28)					
010	2512737-0000		1	ROLLER	
020	2512738-0000		1	ROLLER	
040	2512741-0000		1	ROLLER	
045	2555622-0000		1	ROLLER	
050	2512742-0000		2	ROLLER	
055	2555621-0000		1	ROLLER	
130	752186-0007		6	SHAFT	
150	2528123-0001		3	LOCK PLATE	
160	2528118-0001		3	LOCK PLATE	
170	2528119-0001		3	LOCK PLATE	
180	2552198-0000		1	UPPER FORMING RING	
190	2552199-0000		1	UPPER FORMING RING	
200	2552200-0000		1	UPPER FORMING RING	
360	312109-0459		2	SCREW M6S ISO 4017 M8X40 A480	
Common Parts					
070	2526826-0000		4	BUSHING	
080	2526830-0000		1	SHAFT	
090	2526836-0000		1	BUSHING	
100	2526832-0000		1	SPRING	
110	2526833-0000		1	NUT	
120	2532973-0000		1	KNOB	
210	2532914-0000		1	SPACER	
220	2526825-0000		2	WASHER	
230	2526827-0000		2	SHAFT	
260	2555590-0000		1	SIGN	
300	90240-0172		14	FLANGE BUSHING, 8X12X10 MM	
310	2033-0011		14	WASHER	
320	312318-0289		1	SCREW ISO4029 M4X10 A4	
330	312105-0327		6	SCREW M6S ISO 4017 M5X12 A480	
340	312105-0289		2	SCREW M6S ISO 4017 M4X10 A470	
350	312105-0329		3	SCREW M6S ISO 4017 M5X16 A480	
390	90459-1228		4	SCREW ISO 1207 M3X4 A4	

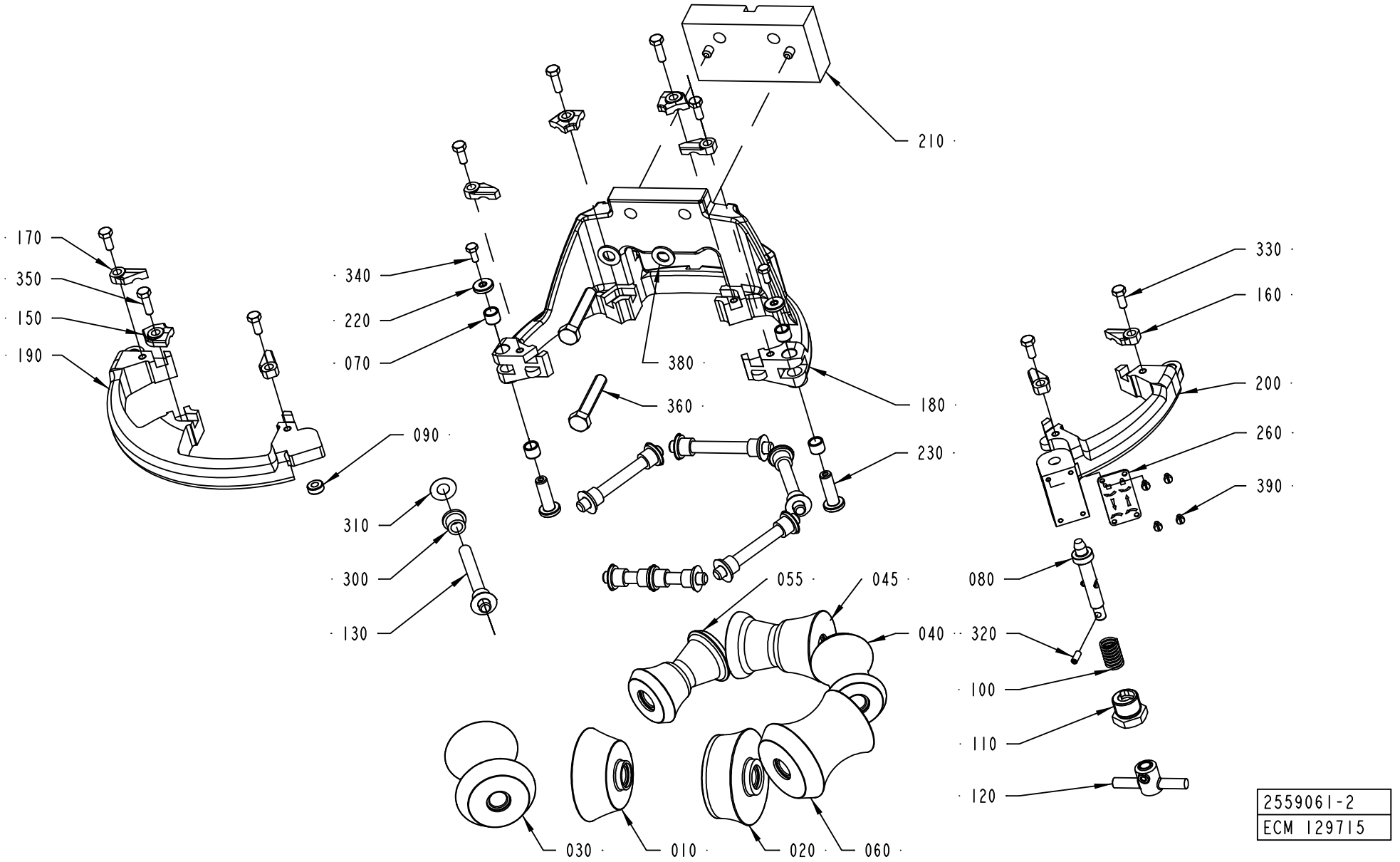
210
170
350
150
190
340
220
070
380
360
180
230
090
310
300
130
055
045
040
080
320
100
110
120
330
160
200
260
390
030
010
020
060
2559061-2
ECM 129715

ECM: 129718 - 20030620
Group number: 2559061-0100
Assembly Drawing: 2559061-2_1_AA

This list covers pages from 1-28 to 1-31

Pos	Part No	UN	Qty	Description	Page No
TBA 1000B (See drawing on page: 1-30)					
010	2512762-0000		1	ROLLER	
020	2514511-0000		1	ROLLER	
030	2514510-0000		1	ROLLER	
040	2514508-0000		1	ROLLER	
045	2592538-0000		1	ROLLER	
055	2592537-0000		1	ROLLER	
060	2514507-0000		1	ROLLER	
130	752186-0015		6	SHAFT	
150	2528123-0004		3	LOCK PLATE	
160	2528118-0005		3	LOCK PLATE	
170	2528119-0005		3	LOCK PLATE	
180	2552195-0000		1	UPPER FORMING RING	
190	2552196-0000		1	UPPER FORMING RING	
200	2552197-0000		1	UPPER FORMING RING	
360	312109-0460		2	SCREW M6S ISO 4017 M8X45 A480	
380	315105-0165		2	WASHER BRB8,4X16RFR	
TBA 1000S (See drawing on page: 1-28)					
010	2512737-0000		1	ROLLER	
020	2512738-0000		1	ROLLER	
040	2512741-0000		1	ROLLER	
045	2555622-0000		1	ROLLER	
050	2512742-0000		2	ROLLER	
055	2555621-0000		1	ROLLER	
130	752186-0007		6	SHAFT	
150	2528123-0001		3	LOCK PLATE	
160	2528118-0001		3	LOCK PLATE	
170	2528119-0001		3	LOCK PLATE	
180	2552198-0000		1	UPPER FORMING RING	
190	2552199-0000		1	UPPER FORMING RING	
200	2552200-0000		1	UPPER FORMING RING	
360	312109-0459		2	SCREW M6S ISO 4017 M8X40 A480	
Common Parts					
070	2526826-0000		4	BUSHING	
080	2526830-0000		1	SHAFT	
090	2526836-0000		1	BUSHING	
100	2526832-0000		1	SPRING	
110	2526833-0000		1	NUT	
120	2532973-0000		1	KNOB	
210	2532914-0000		1	SPACER	
220	2526825-0000		2	WASHER	
230	2526827-0000		2	SHAFT	
260	2555590-0000		1	SIGN	
300	90240-0172		14	FLANGE BUSHING, 8X12X10 MM	
310	2033-0011		14	WASHER	
320	312318-0289		1	SCREW ISO4029 M4X10 A4	
330	312105-0327		6	SCREW M6S ISO 4017 M5X12 A480	
340	312105-0289		2	SCREW M6S ISO 4017 M4X10 A470	
350	312105-0329		3	SCREW M6S ISO 4017 M5X16 A480	
390	90459-1228		4	SCREW ISO 1207 M3X4 A4	

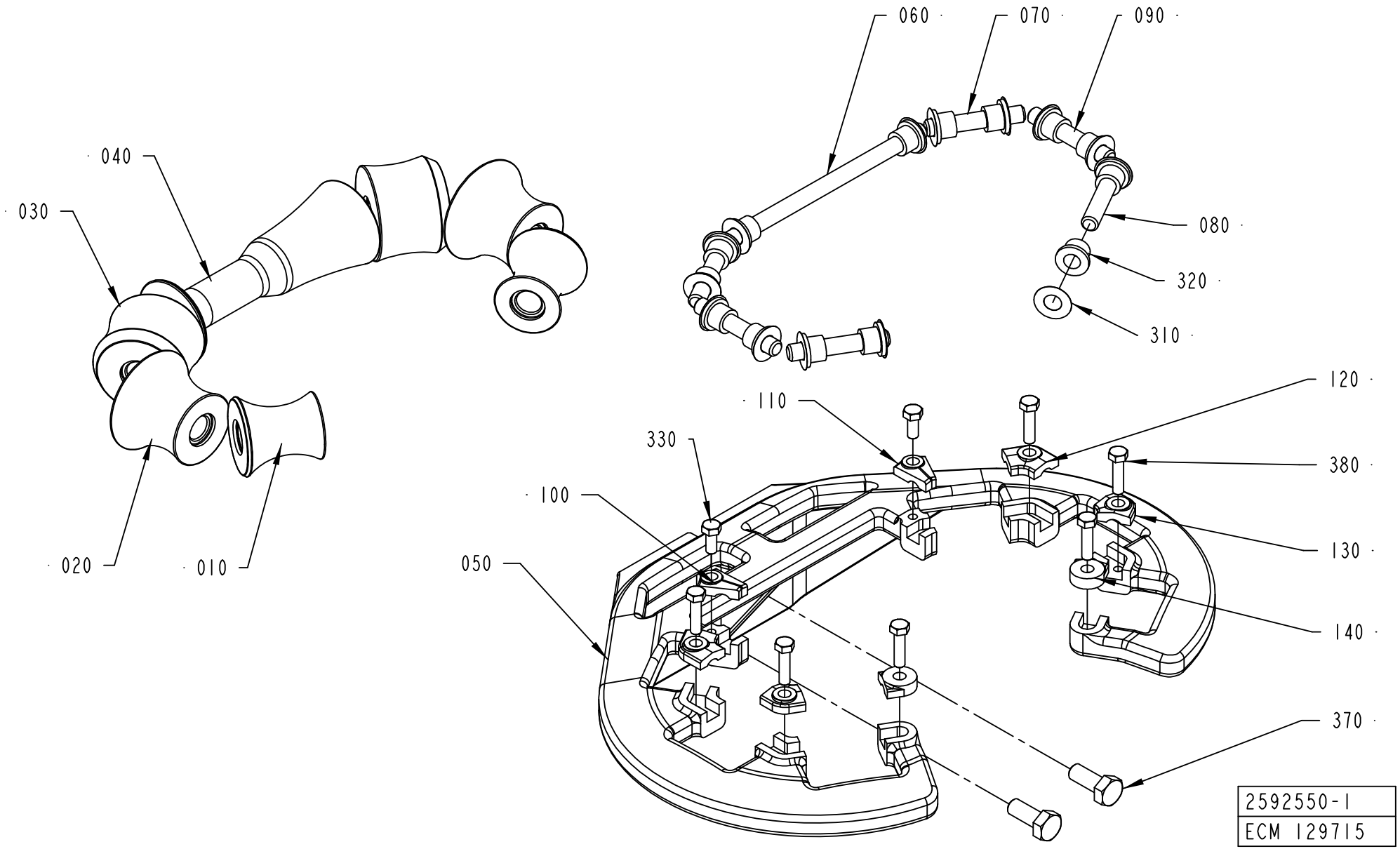
060
070
090
040
030
080
320
310
120
110
330
380
100
130
050
140
370
020
010
2592550-1
ECM 129715

ECM: 129719 - 20030620
Group number: 2592550-0100
Assembly Drawing: 2592550-1_1_AA

Pos	Part No	UN	Qty	Description	Page No
TBA 1000B					
010	2552206-0000		2	ROLLER	
020	2552205-0000		2	ROLLER	
030	2552188-0000		2	ROLLER	
040	2601240-0000		1	ROLLER	
050	2552160-0000		1	SUPPORT RING	
100	2552176-0001		1	LOCK PLATE	
110	2552177-0001		1	LOCK PLATE	
120	2528123-0002		2	LOCK PLATE	
130	2528123-0008		2	LOCK PLATE	
140	2532895-0004		2	LOCK PLATE	
TBA 1000S					
010	2512748-0000		2	ROLLER	
020	2512749-0000		2	ROLLER	
030	2512746-0000		2	ROLLER	
040	2592545-0000		1	ROLLER	
050	2552161-0000		1	SUPPORT RING	
100	2552176-0003		1	LOCK PLATE	
110	2552177-0003		1	LOCK PLATE	
120	2528123-0007		2	LOCK PLATE	
130	2528123-0001		2	LOCK PLATE	
140	2532895-0003		2	LOCK PLATE	
Common Parts					
060	2522213-0005		1	SHAFT	
070	752186-0005		2	SHAFT	
080	2522213-0004		2	SHAFT	
090	752186-0019		2	SHAFT	
310	2033-0011		14	WASHER	
320	90240-0172		14	FLANGE BUSHING, 8X12X10 MM	
330	312105-0327		2	SCREW M6S ISO 4017 M5X12 A480	
370	312105-0451		2	SCREW M6S ISO 4017 M8X20 A480	
380	312105-0331		6	SCREW M6S ISO 4017 M5X20 A480	

Pos	Part No	UN	Qty	Description	Page No

Machine Type	Group Description	Used-In	Group Number	Page No

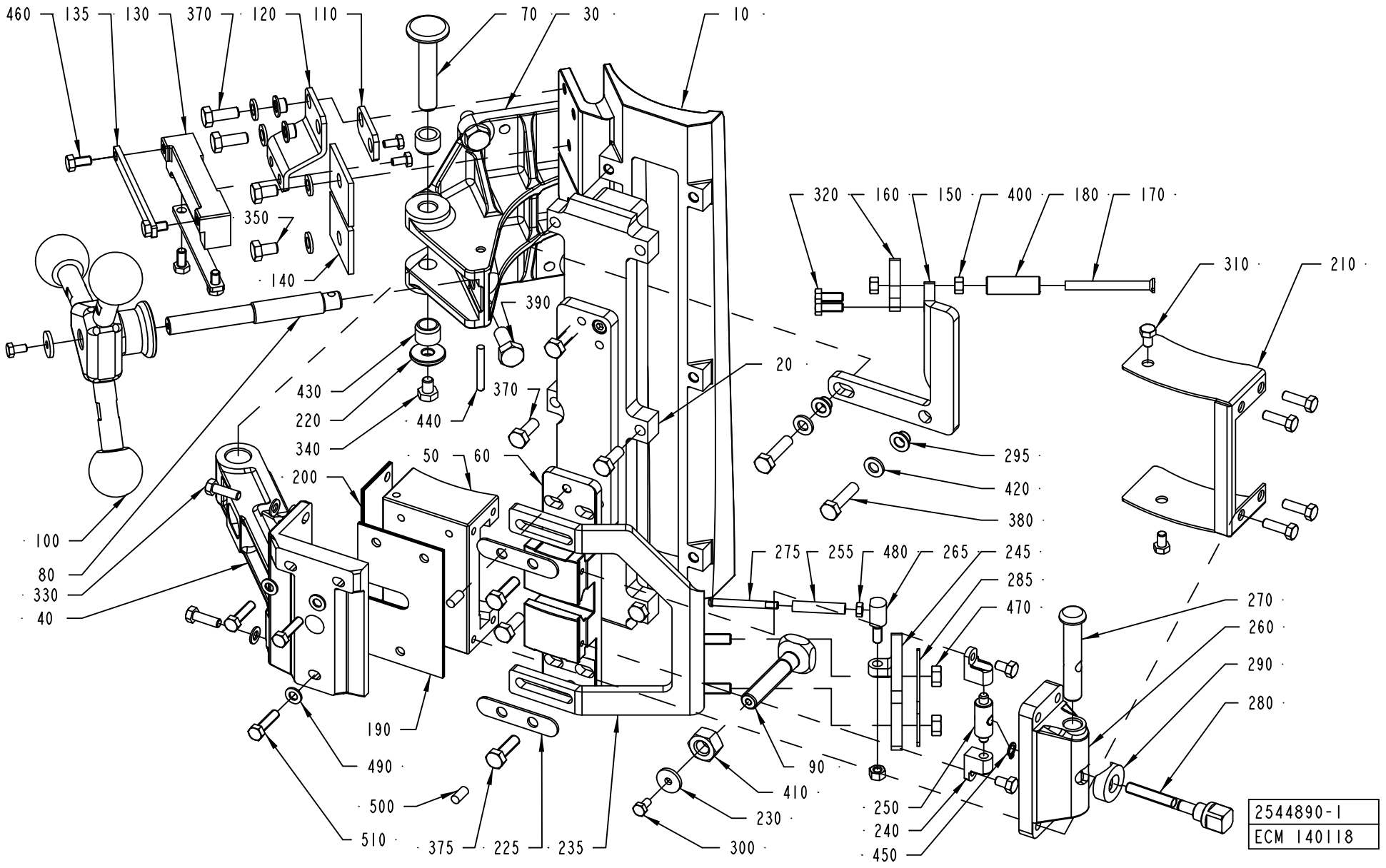
460
135
130
370
120
110
70
30
10
350
140
390
320
160
150
400
180
170
310
210
20
430
220
340
440
370
50
60
200
295
420
380
100
80
330
40
275
255
480
265
245
285
470
270
260
290
280
190
490
500
510
375
225
235
90
410
230
300
250
240
450
2544890-1
ECM 140118

ECM: 160436 - 20040309
Group number: 2544890-0100
Assembly Drawing: 2544890-1_1_AC

This list covers pages from 1-34 to 1-37

Pos	Part No	UN	Qty	Description	Page No
TBA 0200S					
010	2565440-0000		1	INDUCTOR	
020	2565441-0000		1	INSULATING PLATE	
245	2555619-0000		1	BRACKET	
370	312105-0368		6	SCREW M6S ISO 4017 M6X16 A480	
375	312105-0370		4	SCREW M6S ISO 4017 M6X20 A480	
380	312105-0372		2	SCREW M6S ISO 4017 M6X25 A480	
TBA 0330S, TBA 0200B, TBA 0250B					
010	2532938-0000		1	INDUCTOR	
020	2544894-0000		1	INSULATING PLATE	
245	2555619-0000		1	BRACKET	
370	312105-0368		6	SCREW M6S ISO 4017 M6X16 A480	
375	312105-0370		4	SCREW M6S ISO 4017 M6X20 A480	
380	312105-0372		2	SCREW M6S ISO 4017 M6X25 A480	
TBA 0500B, TBA 1000B, TBA 1500S					
010	2514514-0000		1	INDUCTOR	
020	2544891-0000		1	INSULATING PLATE	
245	2555615-0000		1	BRACKET	
370	312105-0368		6	SCREW M6S ISO 4017 M6X16 A480	
375	312105-0370		4	SCREW M6S ISO 4017 M6X20 A480	
380	312105-0372		2	SCREW M6S ISO 4017 M6X25 A480	
TBA 1000S					
010	2514522-0000		1	INDUCTOR	
020	2544892-0000		1	INSULATING PLATE	
245	2555615-0000		1	BRACKET	
370	312105-0368		2	SCREW M6S ISO 4017 M6X16 A480	
375	312105-0370		8	SCREW M6S ISO 4017 M6X20 A480	
380	312105-0374		2	SCREW M6S ISO 4014 M6X30 A480	
TBA 1000SQ					
010	2532925-0000		1	INDUCTOR	
020	2544893-0000		1	INSULATING PLATE	
245	2555615-0000		1	BRACKET	
370	312105-0368		6	SCREW M6S ISO 4017 M6X16 A480	
375	312105-0370		4	SCREW M6S ISO 4017 M6X20 A480	
380	312105-0372		2	SCREW M6S ISO 4017 M6X25 A480	
TPA 1000SQ					
010	2601289-0000		1	INDUCTOR	
020	2601307-0000		1	INSULATING PLATE	
245	2555615-0000		1	BRACKET	
370	312105-0368		6	SCREW M6S ISO 4017 M6X16 A480	
375	312105-0370		4	SCREW M6S ISO 4017 M6X20 A480	
380	312105-0372		2	SCREW M6S ISO 4017 M6X25 A480	

Pos	Part No	UN	Qty	Description	Page No
Common Parts					
030	2544897-0000		1	BRACKET	
040	2544889-0000		1	BRACKET	
050	2544888-0000		1	BRACKET	
060	2544887-0000		1	GUIDE	
070	2547388-0000		1	AXLE PIN	
080	2544898-0000		1	SHAFT	
090	2547378-0000		1	PIN	
100	2547376-0100		1	KNOB	**1-39**
110	2532898-0000		1	BRACKET	
120	2532899-0000		1	BRACKET	
130	2531060-0000		1	BRACKET	
135	2508309-0000		2	PLATE	
140	2508311-0000		2	PLATE	
150	2547404-0000		1	BRACKET	
160	2547405-0000		1	BRACKET	
170	269151-0000		1	SHAFT	
180	2555625-0000		1	ROLL	
190	2544895-0000		1	SHIM	
200	2544896-0000		1	SHIM	
210	2547379-0000		1	COVER	
220	2508297-0000		1	WASHER	
225	2555623-0000		2	COVER	
230	2547377-0000		2	WASHER	
235	2555614-0000		1	BRACKET	
240	2547392-0000		2	BRACKET	
250	2547393-0000		1	JOINT	
255	2555616-0000		1	ROLLER	
260	2547394-0000		1	BRACKET	
265	2555617-0000		1	PIN	
270	2547395-0000		1	JOINT	
275	2555618-0000		1	SHAFT	
280	2547396-0000		1	PIN	
285	2555620-0000		1	COVER	
290	2547397-0000		1	COVER	
295	2508292-0000		4	BUSHING	
300	312105-0287		4	SCREW M6S ISO4017 M4X8 A470	
310	312105-0323		4	SCREW M6S ISO 4017 M5X8 A480	
320	312105-0327		2	SCREW M6S ISO 4017 M5X12 A480	
330	312105-0329		6	SCREW M6S ISO 4017 M5X16 A480	
340	312105-0362		1	SCREW M6S ISO 4017 M6X8 A480	
350	312105-0364		2	SCREW M6S ISO 4017 M6X10 A480	

Machine Type | Group Description | Used-In | Group Number | Page No

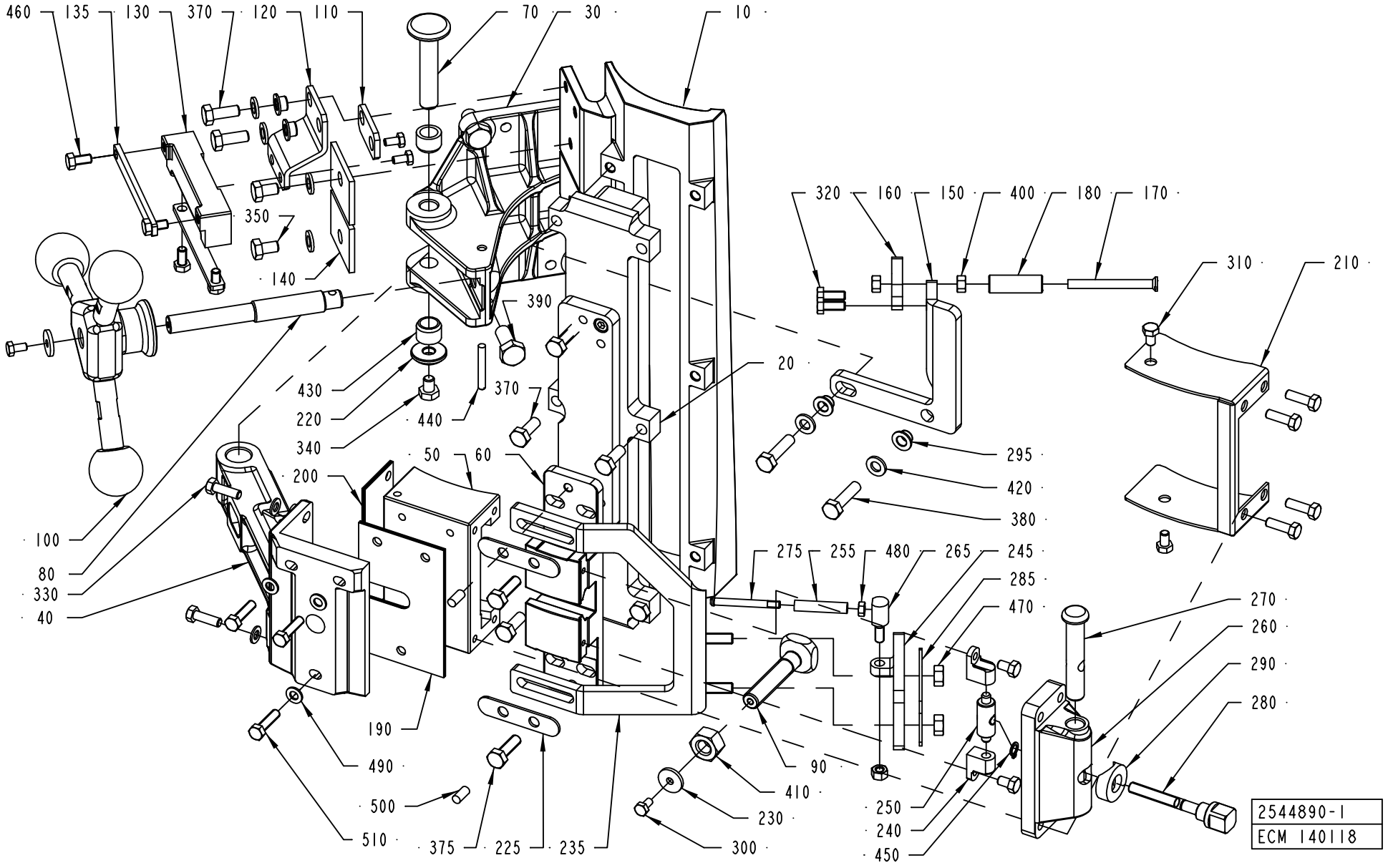
460
135
130
370
120
110
70
30
10
350
140
390
320
160
150
400
180
170
310
210
20
430
220
340
440
370
295
420
380
50
60
200
100
80
330
40
275
255
480
265
245
285
470
270
260
290
280
190
490
500
510
375
225
235
90
410
230
300
250
240
450
2544890-1
ECM 140118

Pos	Part No	UN	Qty	Description	Page No
Common Parts (Cont'd)					
390	312105-0451		4	SCREW M6S ISO 4017 M8X20 A480	
400	312605-0314		3	HEXAGON NUT, M6M M5 A280	
410	312605-0320		1	HEXAGON NUT, M6M M10 A280	
420	315105-0153		6	WASHER BRB6,4X12RFR	
430	321137-0140		2	BUSHING, 10X14X10 MM	
440	311103-0276		1	PARALLEL PIN ISO 2338 4M6X30 A1	
450	315751-0103		1	RETAINING RING FOR SHAFT DIN 471 6 A2	
460	312105-0325		4	SCREW M6S ISO 4017 M5X10 A480	
470	312605-0316		2	HEXAGON NUT, M6M M6 A280	
480	312605-0312		1	HEXAGON NUT, M6M M4 A280	
490	315105-0146		5	WASHER BRB5,3X10RFR	
500	311103-0306		2	PARALLEL PIN ISO 2338 5M6X12 A1	
510	312105-0331		3	SCREW M6S ISO 4017 M5X20 A480	

Pos	Part No	UN	Qty	Description	Page No

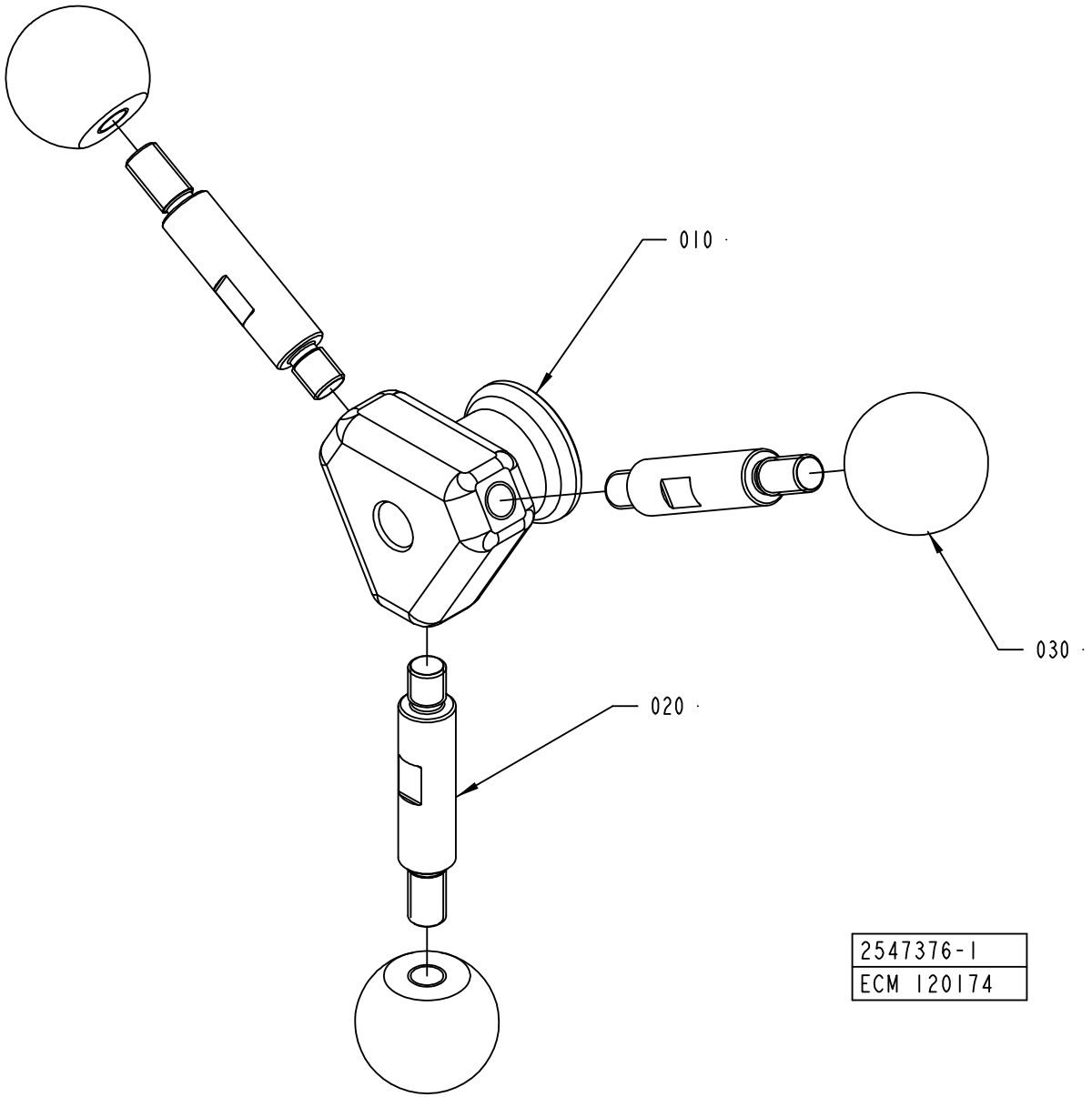
010
020
030
2547376-1
ECM 120174

ECM: 121123 - 20030123
Group number: 2547376-0100
Assembly Drawing: 2547376-1_1_AA

Pos	Part No	UN	Qty	Description	Page No
-					
010	2582574-0000		1	BODY	
020	2526858-0000		3	DOWEL	
030	2582575-0000		3	KNOB	

Pos	Part No	UN	Qty	Description	Page No

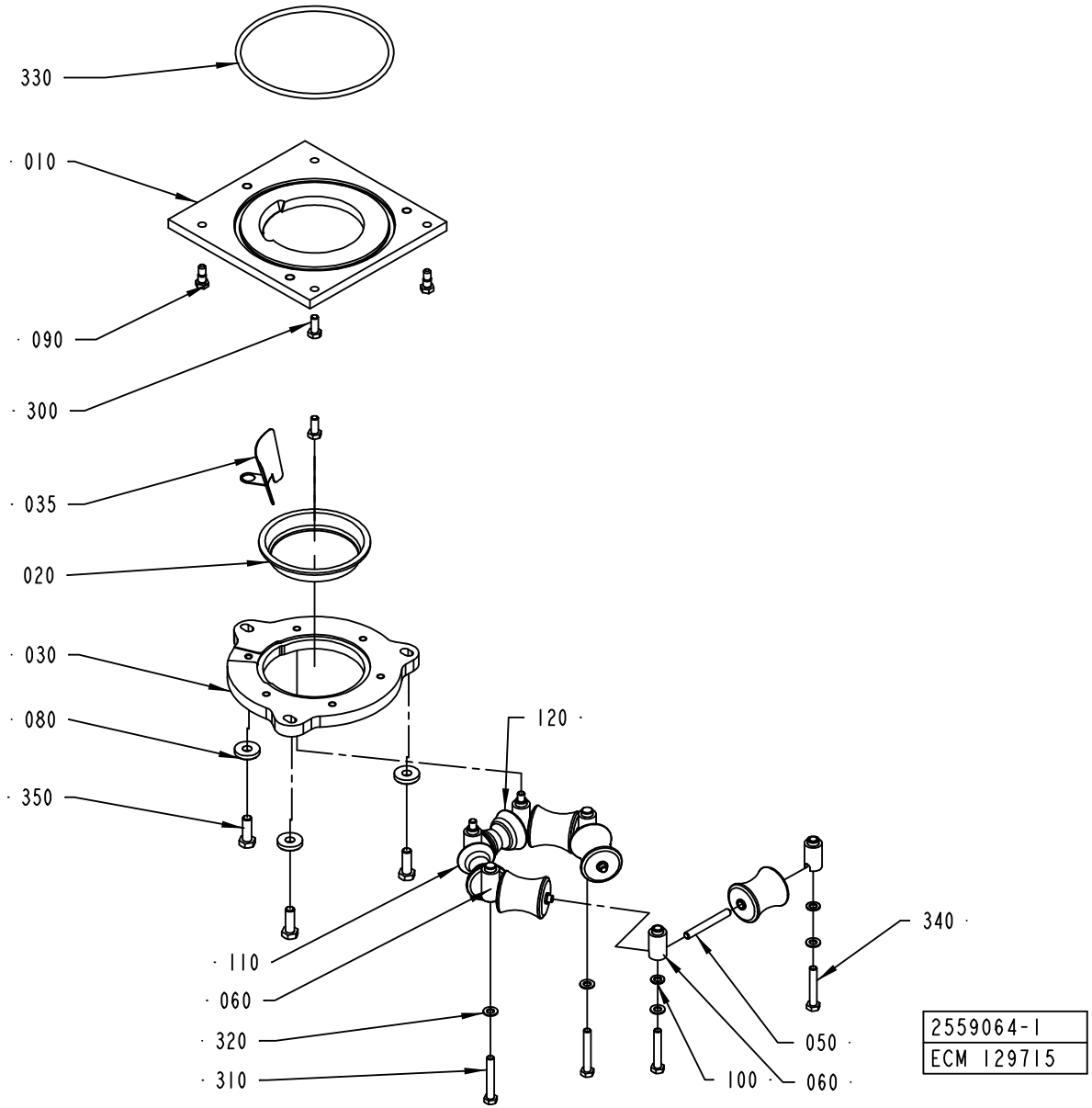
330
010
090
300
035
020
030
080
350
120
110
060
320
310
340
050
100
060
2559064-1
ECM 129715

ECM: 152268 - 20031219
Group number: 2559064-0100
Assembly Drawing: 2559064-1_1_AA

This list covers pages from 1-40 to 1-43

Pos	Part No	UN	Qty	Description	Page No
TBA 1000B (See drawing on page: 1-42)					
020	466042-0000		1	SEAL	
035	1539454-0000		1	GUIDE	
040	466046-0000		6	ROLLER	
110	2592548-0000		1	ROLLER	
120	2592549-0000		1	ROLLER	
TBA 1000S (See drawing on page: 1-40)					
020	567743-0000		1	SEAL	
035	1523696-0000		1	GUIDE	
040	573504-0000		4	ROLLER	
110	2592546-0000		1	ROLLER	
120	2592547-0000		1	ROLLER	
Common Parts					
010	2562687-0000		1	PLATE	
030	2562688-0000		1	RING	
050	263655-0009		6	SHAFT	
060	1036954-0000		4	AXLE SUPPORT	
070	1036955-0000		2	AXLE SUPPORT	
080	315125-0173		3	WASHER TBRSB 10,5X28X6 A4	
090	1037885-0000		2	REAMED BOLT	
100	1129431-0000		4	WASHER	
300	312105-0451		2	SCREW M6S ISO 4017 M8X20 A480	
310	312105-0462		2	SCREW M6S ISO 4014 M8X55 A480	
320	315105-0165		6	WASHER BRB8,4X16RFR	
330	315204-0324		1	O-RING 164,3X5,7 MM	
340	312109-0461		4	SCREW M6S ISO 4017 M8X50 A480	
350	312105-0495		3	SCREW M6S ISO 4017 M10X30 A480	

Pos	Part No	UN	Qty	Description	Page No

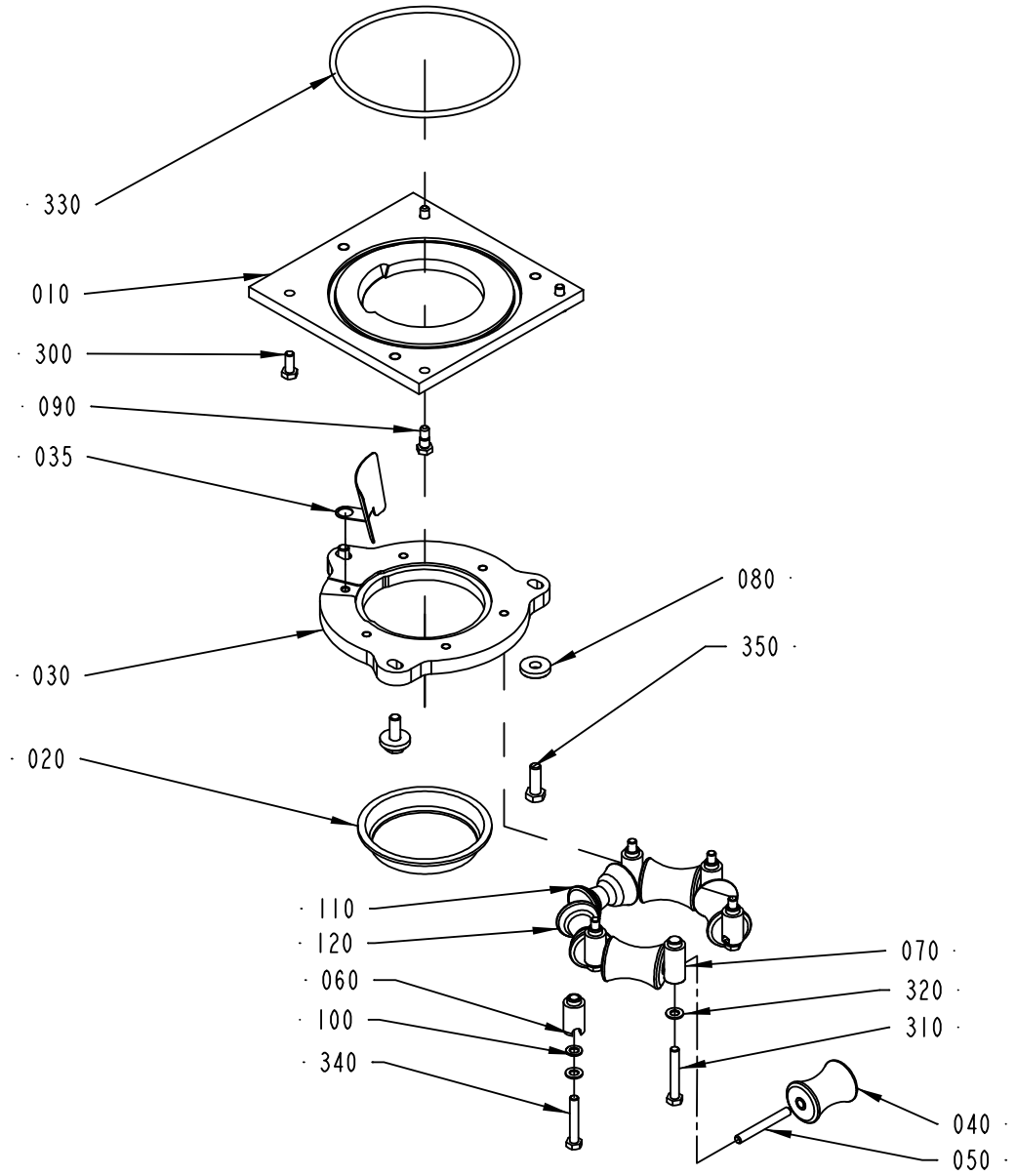
330
010
300
090
035
080
350
030
020
110
120
060
100
340
070
320
310
040
050
2559064-2
ECM 129715

ECM: 152268 - 20031219
Group number: 2559064-0100
Assembly Drawing: 2559064-2_1_AA

This list covers pages from 1-40 to 1-43

Pos	Part No	UN	Qty	Description	Page No
TBA 1000B (See drawing on page: 1-42)					
020	466042-0000		1	SEAL	
035	1539454-0000		1	GUIDE	
040	466046-0000		6	ROLLER	
110	2592548-0000		1	ROLLER	
120	2592549-0000		1	ROLLER	
TBA 1000S (See drawing on page: 1-40)					
020	567743-0000		1	SEAL	
035	1523696-0000		1	GUIDE	
040	573504-0000		4	ROLLER	
110	2592546-0000		1	ROLLER	
120	2592547-0000		1	ROLLER	
Common Parts					
010	2562687-0000		1	PLATE	
030	2562688-0000		1	RING	
050	263655-0009		6	SHAFT	
060	1036954-0000		4	AXLE SUPPORT	
070	1036955-0000		2	AXLE SUPPORT	
080	315125-0173		3	WASHER TBRSB 10,5X28X6 A4	
090	1037885-0000		2	REAMED BOLT	
100	1129431-0000		4	WASHER	
300	312105-0451		2	SCREW M6S ISO 4017 M8X20 A480	
310	312105-0462		2	SCREW M6S ISO 4014 M8X55 A480	
320	315105-0165		6	WASHER BRB8,4X16RFR	
330	315204-0324		1	O-RING 164,3X5,7 MM	
340	312109-0461		4	SCREW M6S ISO 4017 M8X50 A480	
350	312105-0495		3	SCREW M6S ISO 4017 M10X30 A480	

Pos	Part No	UN	Qty	Description	Page No

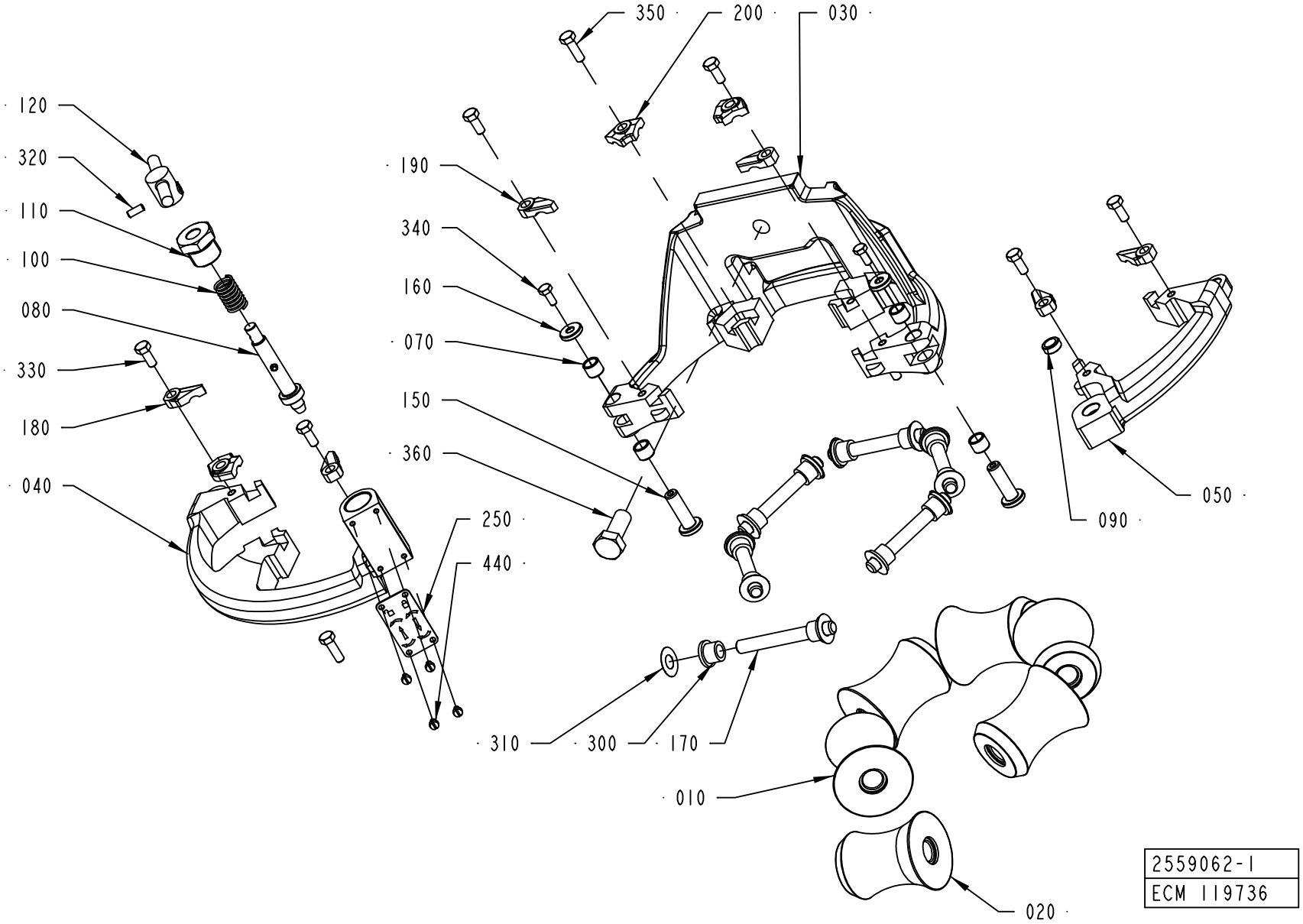
350
200
030
120
320
110
100
080
330
180
040
190
340
160
070
150
360
250
440
310
300
170
010
020
090
050
2559062-1
ECM 119736

ECM: 181632 - 50001231
Group number: 2559062-0100
Assembly Drawing: 2559062-1_1_AA

This list covers pages from 1-44 to 1-47

Pos	Part No	UN	Qty	Description	Page No
TBA 0200S (See drawing on page: 1-44)					
010	2565424-0000		5	ROLLER	
020	2565425-0000		1	COUNTER ROLLER	
030	2555606-0000		1	LOWER FORMING RING	
040	2555607-0000		1	LOWER FORMING RING	
050	2555608-0000		1	LOWER FORMING RING	
070	2526826-0000		4	BUSHING	
150	2526827-0000		2	SHAFT	
160	2526825-0000		2	WASHER	
170	752186-0004		6	SHAFT	
180	2528119-0005		3	LOCK PLATE	
190	2528118-0005		3	LOCK PLATE	
330	312105-0327		6	SCREW M6S ISO 4017 M5X12 A480	
340	312105-0289		2	SCREW M6S ISO 4017 M4X10 A470	
350	312105-0329		3	SCREW M6S ISO 4017 M5X16 A480	
TBA 0330S, TBA 0200B, TBA 0250B (See drawing on page: 1-44)					
010	751502-0000		5	ROLLER	
	Remark : PLUS ROLLER 3-752462				
	MINUS ROLLER 3-752463				
020	2544882-0000		1	COUNTER ROLLER	
030	2528124-0000		1	LOWER FORMING RING	
040	2528125-0000		1	LOWER FORMING RING	
050	2528126-0000		1	LOWER FORMING RING	
070	2526826-0000		4	BUSHING	
150	2526827-0000		2	SHAFT	
160	2526825-0000		2	WASHER	
170	752186-0005		6	SHAFT	
180	2528119-0005		3	LOCK PLATE	
190	2528118-0005		3	LOCK PLATE	
330	312105-0327		6	SCREW M6S ISO 4017 M5X12 A480	
340	312105-0289		2	SCREW M6S ISO 4017 M4X10 A470	
350	312105-0329		3	SCREW M6S ISO 4017 M5X16 A480	
TBA 0500B, TBA 1000B, TBA 1500S (See drawing on page: 1-44)					
010	1349851-0000		5	ROLL	
	Remark : PLUS ROLLER 1349853-0000				
	MINUS ROLLER 1349852-0000				
020	2518098-0000		1	COUNTER ROLLER	
030	2552189-0000		1	LOWER FORMING RING	
040	2552190-0000		1	LOWER FORMING RING	
050	2552191-0000		1	LOWER FORMING RING	
070	2526826-0000		4	BUSHING	
150	2526827-0000		2	SHAFT	
160	2526825-0000		2	WASHER	
170	752186-0014		6	SHAFT	
180	2528119-0004		3	LOCK PLATE	
190	2528118-0004		3	LOCK PLATE	
330	312105-0327		6	SCREW M6S ISO 4017 M5X12 A480	
340	312105-0289		2	SCREW M6S ISO 4017 M4X10 A470	
350	312105-0329		3	SCREW M6S ISO 4017 M5X16 A480	
TBA 1000S (See drawing on page: 1-44)					
010	567746-0001		5	ROLLER, (STD.SIZE)	
	Remark : PLUS ROLLER 3-567746-2				
	MINUS ROLLER 3-567746-3				
020	1334856-0000		1	COUNTER ROLLER	
030	2552192-0000		1	LOWER FORMING RING	
040	2552193-0000		1	LOWER FORMING RING	
050	2552194-0000		1	LOWER FORMING RING	
070	2526826-0000		4	BUSHING	
150	2526827-0000		2	SHAFT	
160	2526825-0000		2	WASHER	
170	752186-0016		6	SHAFT	
180	2528119-0005		3	LOCK PLATE	
190	2528118-0005		3	LOCK PLATE	
330	312105-0327		6	SCREW M6S ISO 4017 M5X12 A480	
340	312105-0289		2	SCREW M6S ISO 4017 M4X10 A470	
350	312105-0329		3	SCREW M6S ISO 4017 M5X16 A480	
TBA 1000SQ (See drawing on page: 1-44)					
010	1490765-0000		5	ROLLER	
	Remark : PLUS ROLLER 1490767-0000				
	MINUS ROLLER 1490763				
020	1499411-0000		1	COUNTER ROLLER	
030	2528120-0000		1	LOWER FORMING RING	
040	2528121-0000		1	UPPER FORMING RING	
050	2528122-0000		1	LOWER FORMING RING	
070	2526826-0000		4	BUSHING	
150	2526827-0000		2	SHAFT	
160	2526825-0000		2	WASHER	
170	752186-0016		6	SHAFT	
180	2528119-0004		3	LOCK PLATE	
190	2528118-0004		3	LOCK PLATE	
330	312105-0327		6	SCREW M6S ISO 4017 M5X12 A480	
340	312105-0289		2	SCREW M6S ISO 4017 M4X10 A470	
350	312105-0329		3	SCREW M6S ISO 4017 M5X16 A480	
TBA 1890S, TBA 2000S (See drawing on page: 1-46)					

Machine Type | Group Description | Used-In | Group Number | Page No

LOWER FORMING RING

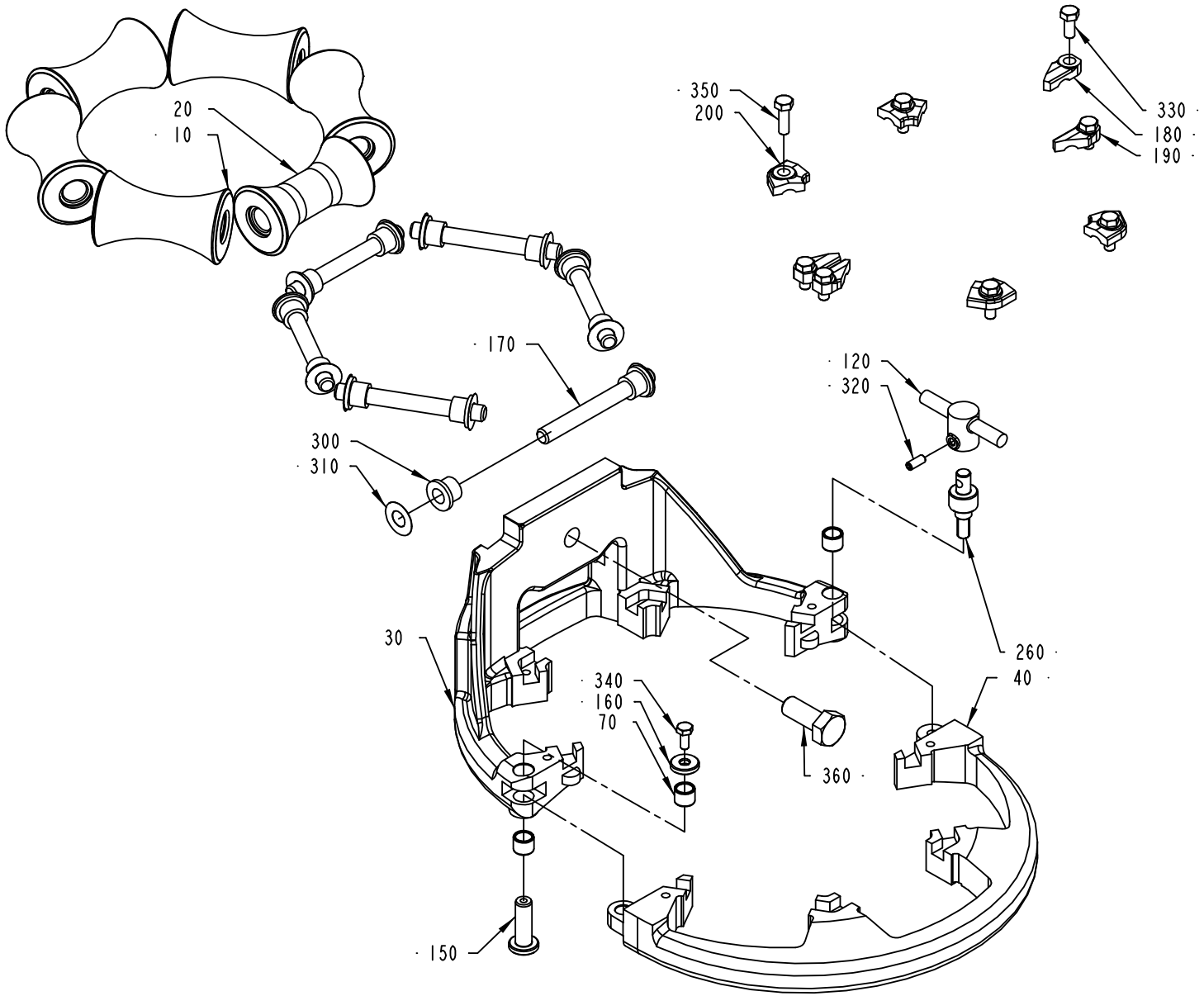

2559062-3
153082

ECM: 181632 - 50001231
Group number: 2559062-0100
Assembly Drawing: 2559062-3_1_AA

This list covers pages from 1-44 to 1-47

Pos	Part No	UN	Qty	Description	Page No
TBA 1890S, TBA 2000S (Cont'd) (See drawing on page: 1-46)					
010	2565513-0000		5	ROLLER	
020	2657923-0000		1	COUNTER ROLLER	
030	2592554-0000		1	LOWER FORMING RING	
040	2673023-0000		1	LOWER FORMING RING	
070	2526826-0000		3	BUSHING	
150	2526827-0000		1	SHAFT	
160	2526825-0000		1	WASHER	
170	752186-0015		6	SHAFT	
180	2528119-0004		2	LOCK PLATE	
190	2528118-0004		2	LOCK PLATE	
200	2528123-0004		4	LOCK PLATE	
260	2632565-0000		1	SHAFT	
330	312105-0327		4	SCREW M6S ISO 4017 M5X12 A480	
340	312105-0289		1	SCREW M6S ISO 4017 M4X10 A470	
350	312105-0329		4	SCREW M6S ISO 4017 M5X16 A480	
TPA 1000SQ (See drawing on page: 1-44)					
010	1524156-0000		5	ROLLER	
020	1524547-0000		1	COUNTER ROLLER	
030	2532900-0000		1	LOWER FORMING RING	
040	2531056-0000		1	LOWER FORMING RING	
050	2531057-0000		1	LOWER FORMING RING	
070	2526826-0000		4	BUSHING	
150	2526827-0000		2	SHAFT	
160	2526825-0000		2	WASHER	
170	2522213-0006		6	SHAFT	
180	2528119-0005		3	LOCK PLATE	
190	2528118-0005		3	LOCK PLATE	
330	312105-0327		6	SCREW M6S ISO 4017 M5X12 A480	
340	312105-0289		2	SCREW M6S ISO 4017 M4X10 A470	
350	312105-0329		3	SCREW M6S ISO 4017 M5X16 A480	
Common Parts					
080	2526830-0000		1	SHAFT	
090	2526836-0000		1	BUSHING	
100	2526832-0000		1	SPRING	
110	2526833-0000		1	NUT	
120	2532973-0000		1	KNOB	
200	2528123-0004		3	LOCK PLATE	
250	2555635-0000		1	SIGNS	
300	90240-0172		12	FLANGE BUSHING, 8X12X10 MM	
310	2033-0011		12	WASHER	
320	312318-0289		1	SCREW ISO4029 M4X10 A4	
360	312105-0493		1	SCREW M6S ISO 4017 M10X25 A480	
440	90459-1228		4	SCREW ISO 1207 M3X4 A4	

Machine Type | Group Description | Used-In | Group Number | Page No

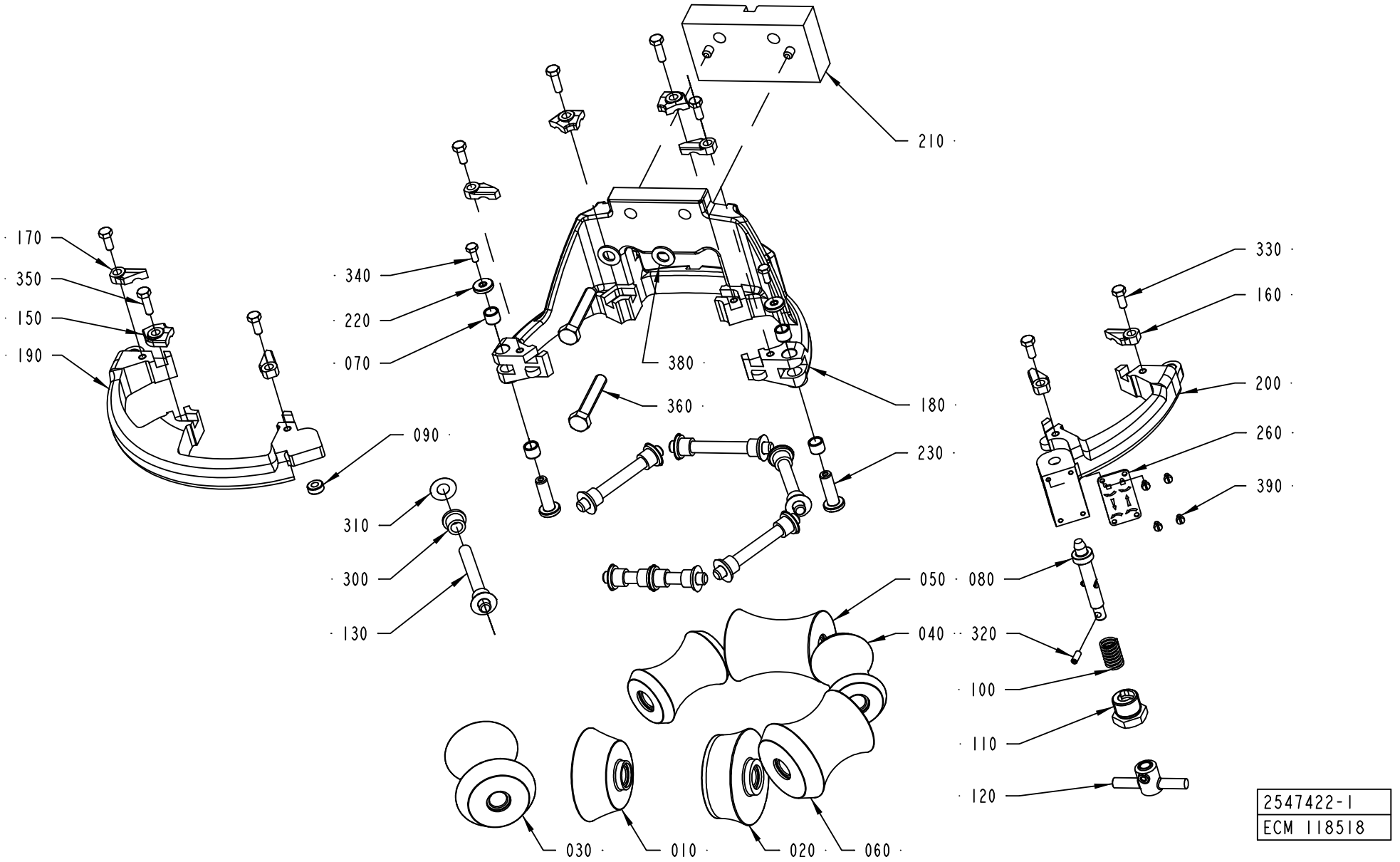
210
170
350
150
190
340
220
070
380
360
180
230
090
310
300
130
330
160
200
260
390
050
040
080
320
100
110
120
030
010
020
060
2547422-1
ECM 118518

ECM: 181630 - 50001231
Group number: 2547422-0100
Assembly Drawing: 2547422-1_1_AA

This list covers pages from 1-48 to 1-59

Pos	Part No	UN	Qty	Description	Page No
TBA 0200S (See drawing on page: 1-52)					
010	2634984-0000		1	ROLLER	
020	2634985-0000		1	ROLLER	
030	2634949-0000		1	ROLLER	
040	2634948-0000		2	ROLLER	
050	2634947-0000		1	ROLLER	
060	2634983-0000		1	ROLLER	
080	2526830-0000		1	SHAFT	
100	2526832-0000		1	SPRING	
110	2526833-0000		1	NUT	
120	2532973-0000		1	KNOB	
130	2522213-0004		6	SHAFT	
150	2528123-0001		3	LOCK PLATE	
160	2528118-0002		3	LOCK PLATE	
170	2528119-0002		3	LOCK PLATE	
180	2634944-0000		1	UPPER FORMING RING	
190	2634945-0000		1	UPPER FORMING RING	
200	2634946-0000		1	UPPER FORMING RING	
210	2634987-0000		1	SPACER	
260	2555590-0000		1	SIGN	
300	90240-0172		10	FLANGE BUSHING, 8X12X10 MM	
320	312318-0289		1	SCREW ISO4029 M4X10 A4	
360	312105-0451		2	SCREW M6S ISO 4017 M8X20 A480	
370	752156-0000		4	FLANGE BUSHING	
390	90459-1228		4	SCREW ISO 1207 M3X4 A4	
400	312115-0451		2	SCREW ISO4762 M8X20 A4	
TBA 0330S, TBA 0200B, TBA 0250B (See drawing on page: 1-50)					
010	2641285-0000		1	ROLLER	
020	2641286-0000		1	ROLLER	
030	2641287-0000		1	ROLLER	
040	2641288-0000		2	ROLLER	
050	2641289-0000		1	ROLLER	
060	2641290-0000		1	ROLLER	
080	2526830-0000		1	SHAFT	
100	2526832-0000		1	SPRING	
110	2526833-0000		1	NUT	
120	2532973-0000		1	KNOB	
130	2522213-0015		6	SHAFT	
150	2528123-0003		3	LOCK PLATE	
160	2528118-0003		3	LOCK PLATE	
170	2528119-0003		3	LOCK PLATE	
180	2657857-0000		1	UPPER FORMING RING	
190	2657858-0000		1	UPPER FORMING RING	
200	2657859-0000		1	UPPER FORMING RING	
210	2634987-0000		1	SPACER	
300	90240-0172		10	FLANGE BUSHING, 8X12X10 MM	
320	312318-0289		1	SCREW ISO4029 M4X10 A4	
360	312105-0451		2	SCREW M6S ISO 4017 M8X20 A480	
370	752156-0000		4	FLANGE BUSHING	
390	90459-1228		4	SCREW ISO 1207 M3X4 A4	
400	312115-0451		2	SCREW ISO4762 M8X20 A4	
TBA 0500B, TBA 1000B, TBA 1500S (See drawing on page: 1-52)					
010	2512762-0000		1	ROLLER	
020	2514511-0000		1	ROLLER	
030	2514510-0000		1	ROLLER	
040	2514508-0000		2	ROLLER	
050	2514509-0000		1	ROLLER	
060	2514507-0000		1	ROLLER	
080	2526830-0000		1	SHAFT	
100	2526832-0000		1	SPRING	
110	2526833-0000		1	NUT	
120	2532973-0000		1	KNOB	
130	752186-0015		6	SHAFT	
150	2528123-0004		3	LOCK PLATE	
160	2528118-0005		3	LOCK PLATE	
170	2528119-0005		3	LOCK PLATE	
180	2552195-0000		1	UPPER FORMING RING	
190	2552196-0000		1	UPPER FORMING RING	
200	2552197-0000		1	UPPER FORMING RING	
210	2532914-0000		1	SPACER	
260	2555590-0000		1	SIGN	
300	90240-0172		14	FLANGE BUSHING, 8X12X10 MM	
320	312318-0289		1	SCREW ISO4029 M4X10 A4	
360	312109-0460		2	SCREW M6S ISO 4017 M8X45 A480	
380	315105-0165		2	WASHER BRB8,4X16RFR	
390	90459-1228		4	SCREW ISO 1207 M3X4 A4	
TBA 1000S (See drawing on page: 1-48)					
010	2512737-0000		1	ROLLER	
020	2512738-0000		1	ROLLER	
030	2512740-0000		1	ROLLER	
040	2512741-0000		2	ROLLER	
050	2512742-0000		2	ROLLER	
080	2526830-0000		1	SHAFT	
100	2526832-0000		1	SPRING	

UPPER FORMING RING

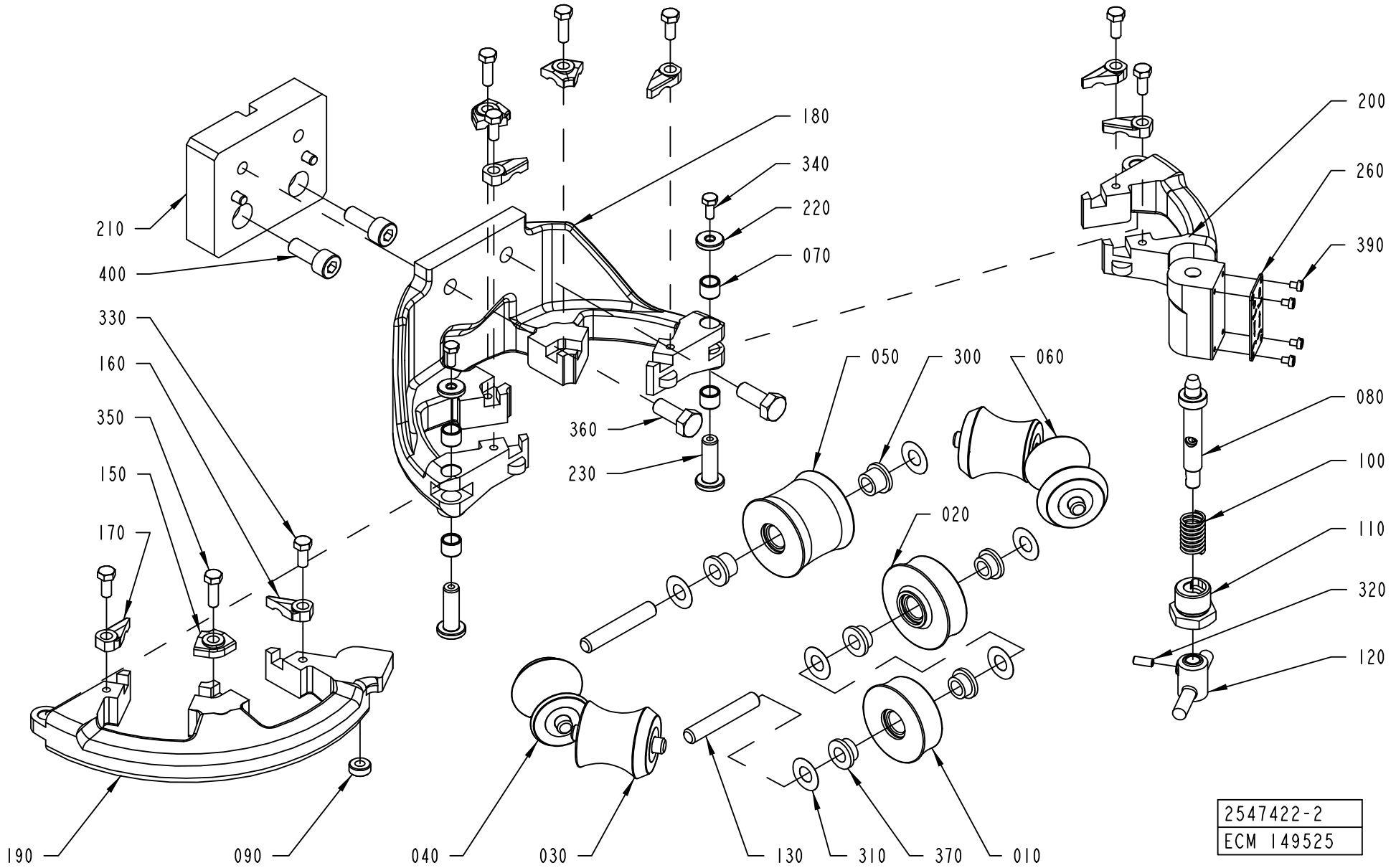

ECM: 181630 - 50001231
Group number: 2547422-0100
Assembly Drawing: 2547422-2_1_AA

This list covers pages from 1-48 to 1-59

Pos	Part No	UN	Qty	Description	Page No
TBA 1000S (Cont'd) (See drawing on page: 1-48)					
110	2526833-0000		1	NUT	
120	2532973-0000		1	KNOB	
130	752186-0007		6	SHAFT	
150	2528123-0001		3	LOCK PLATE	
160	2528118-0001		3	LOCK PLATE	
170	2528119-0001		3	LOCK PLATE	
180	2552198-0000		1	UPPER FORMING RING	
190	2552199-0000		1	UPPER FORMING RING	
200	2552200-0000		1	UPPER FORMING RING	
210	2532914-0000		1	SPACER	
260	2555590-0000		1	SIGN	
300	90240-0172		14	FLANGE BUSHING, 8X12X10 MM	
320	312318-0289		1	SCREW ISO4029 M4X10 A4	
360	312109-0459		2	SCREW M6S ISO 4017 M8X40 A480	
390	90459-1228		4	SCREW ISO 1207 M3X4 A4	
TBA 1000SQ (See drawing on page: 1-56)					
010	2532965-0000		1	ROLLER	
020	1548541-0000		1	OLLER	
030	1548531-0000		4	ROLLER	
060	1548540-0000		1	ROLLER	
080	2526830-0000		1	SHAFT	
100	2526832-0000		1	SPRING	
110	2526833-0000		1	NUT	
120	2532973-0000		1	KNOB	
130	752186-0007		6	SHAFT	
150	2528123-0004		3	LOCK PLATE	
160	2528118-0004		3	LOCK PLATE	
170	2528119-0004		3	LOCK PLATE	
180	2528115-0000		1	UPPER FORMING RING	
190	2528116-0000		1	UPPER FORMING RING	
200	2528117-0000		1	UPPER FORMING RING	
210	2532914-0000		1	SPACER	
260	2555590-0000		1	SIGN	
300	90240-0172		14	FLANGE BUSHING, 8X12X10 MM	
320	312318-0289		1	SCREW ISO4029 M4X10 A4	
360	312109-0459		2	SCREW M6S ISO 4017 M8X40 A480	
390	90459-1228		4	SCREW ISO 1207 M3X4 A4	
TBA 1890S, TBA 2000S (See drawing on page: 1-58)					
010	2634958-0000		1	ROLLER	
020	2634957-0000		1	ROLLER	
030	2634956-0000		1	ROLLER	
040	2634954-0000		2	ROLLER	
050	2634953-0000		1	ROLLER	
060	2634955-0000		1	ROLLER	
080	2526830-0000		1	SHAFT	
100	2526832-0000		1	SPRING	
110	2526833-0000		1	NUT	
120	2532973-0000		1	KNOB	
130	752186-0015		6	SHAFT	
150	2528123-0002		3	LOCK PLATE	
160	2528118-0003		3	LOCK PLATE	
170	2528119-0003		3	LOCK PLATE	
180	2634950-0000		1	UPPER FORMING RING	
190	2634951-0000		1	UPPER FORMING RING	
200	2634952-0000		1	UPPER FORMING RING	
210	2532914-0000		1	SPACER	
215	2634961-0000		1	SHIM	
260	2555590-0000		1	SIGN	
300	90240-0172		14	FLANGE BUSHING, 8X12X10 MM	
320	312318-0289		1	SCREW ISO4029 M4X10 A4	
360	312109-0459		2	SCREW M6S ISO 4017 M8X40 A480	
380	315105-0165		2	WASHER BRB8,4X16RFR	
390	90459-1228		4	SCREW ISO 1207 M3X4 A4	
TPA 1000SQ (See drawing on page: 1-54)					
010	2562685-0000		1	ROLLER	
020	2559101-0000		1	ROLLER	
030	1524151-0000		2	ROLLER	
040	1524152-0000		2	ROLLER	
050	2562686-0000		1	ROLLER	
080	2526830-0000		1	SHAFT	
100	2526832-0000		1	SPRING	
110	2526833-0000		1	NUT	
120	2532973-0000		1	KNOB	
130	2522213-0007		6	SHAFT	
150	2528123-0005		3	LOCK PLATE	
160	2528118-0005		3	LOCK PLATE	
170	2528119-0005		3	LOCK PLATE	
180	2559097-0000		1	UPPER FORMING RING	
190	2559098-0000		1	UPPER FORMING RING	
200	2559099-0000		1	UPPER FORMING RING	
210	2532914-0000		1	SPACER	
260	2555590-0000		1	SIGN	
300	90240-0172		14	FLANGE BUSHING, 8X12X10 MM	

Machine Type | Group Description | Used-In | Group Number | Page No

UPPER FORMING RING

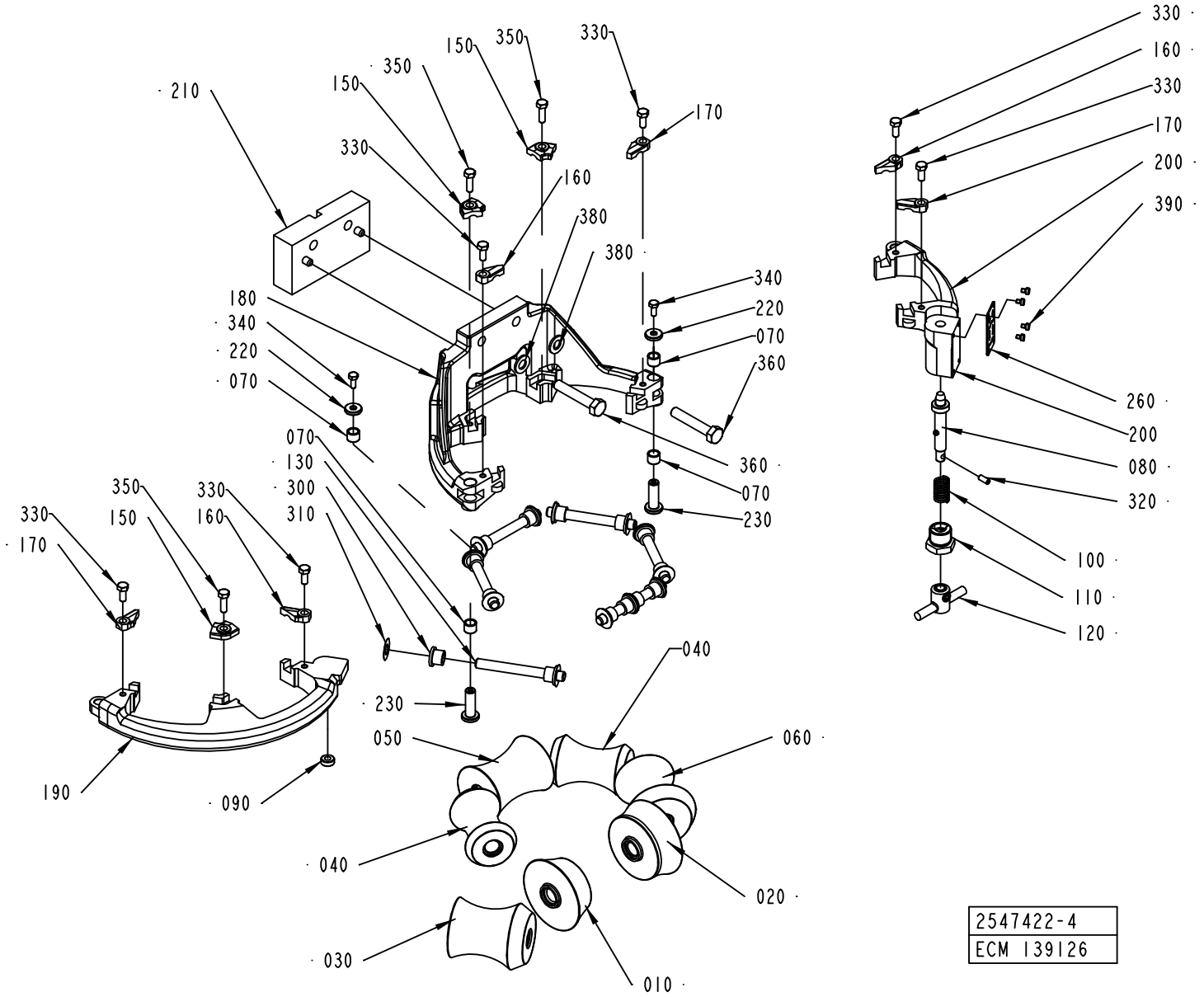

2547422-4
ECM 139126

Pos	Part No	UN	Qty	Description	Page No
TPA 1000SQ (Cont'd) (See drawing on page: 1-54)					
320	312318-0289		1	SCREW ISO4029 M4X10 A4	
360	312109-0459		2	SCREW M6S ISO 4017 M8X40 A480	
390	90459-1228		4	SCREW ISO 1207 M3X4 A4	
Common Parts					
070	2526826-0000		4	BUSHING	
090	2526836-0000		1	BUSHING	
220	2526825-0000		2	WASHER	
230	2526827-0000		2	SHAFT	
310	2033-0011		14	WASHER	
330	312105-0327		6	SCREW M6S ISO 4017 M5X12 A480	
340	312105-0289		2	SCREW M6S ISO 4017 M4X10 A470	
350	312105-0329		3	SCREW M6S ISO 4017 M5X16 A480	

Pos	Part No	UN	Qty	Description	Page No

UPPER FORMING RING

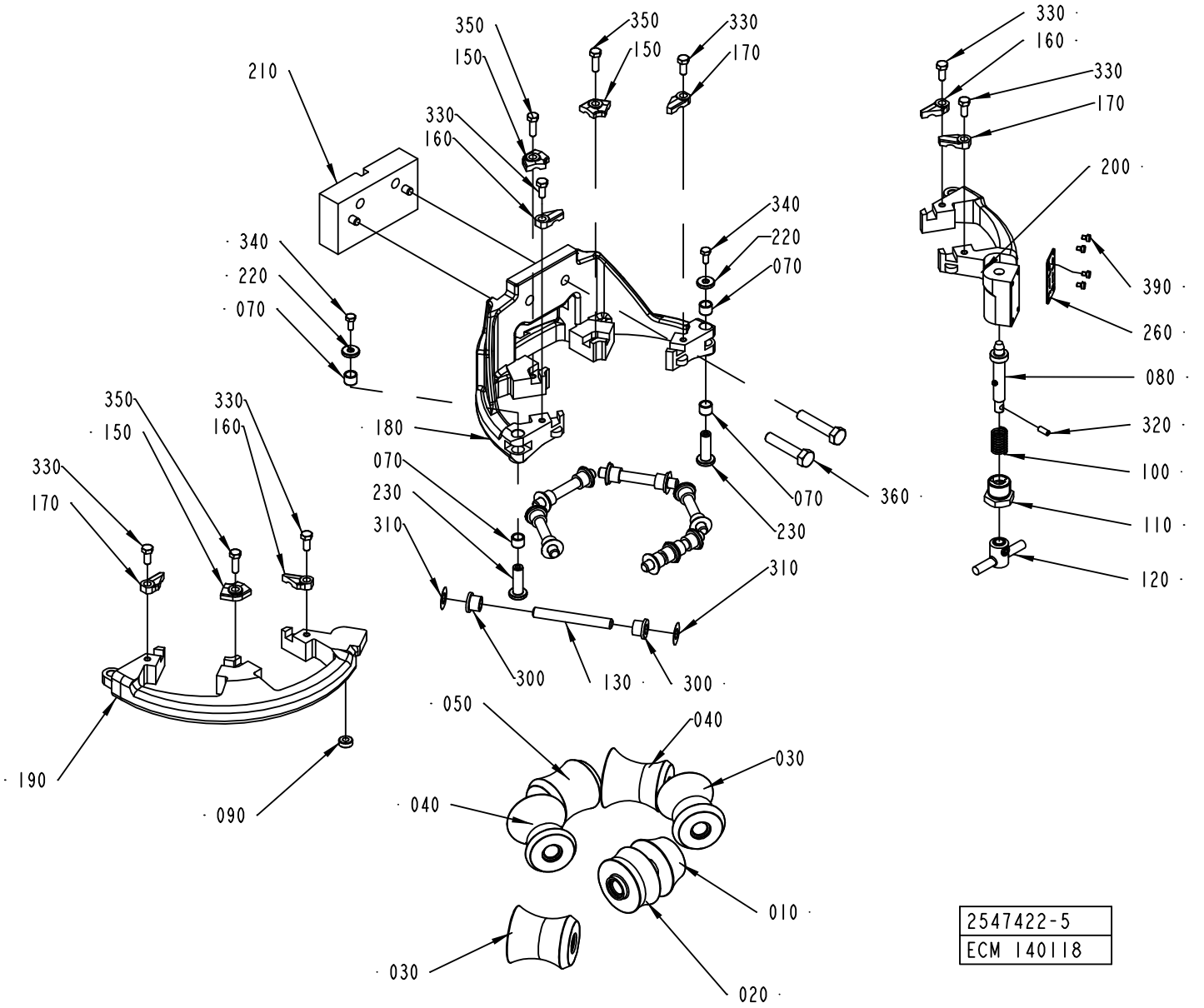

ECM: 181630 - 50001231
Group number: 2547422-0100
Assembly Drawing: 2547422-5_1_AA

This list covers pages from 1-48 to 1-59

Pos	Part No	UN	Qty	Description	Page No	Pos	Part No	UN	Qty	Description	Page No

SEE PREVIOUS LISTS PAGES: 1-49, 1-51, 1-53.

UPPER FORMING RING

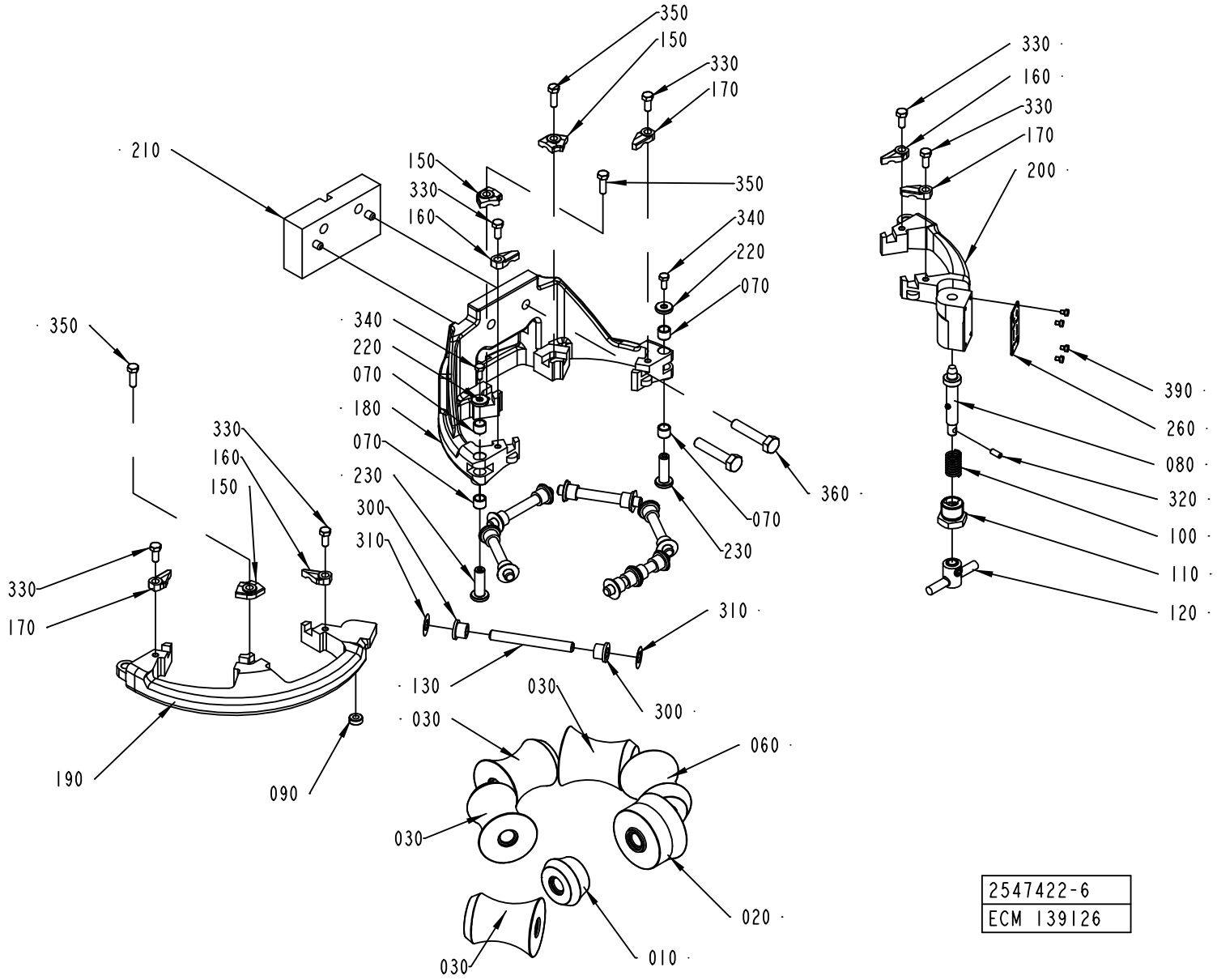

2547422-6
ECM 139126

Pos	Part No	UN	Qty	Description	Page No	Pos	Part No	UN	Qty	Description	Page No

SEE PREVIOUS LISTS PAGES: 1-49, 1-51, 1-53.

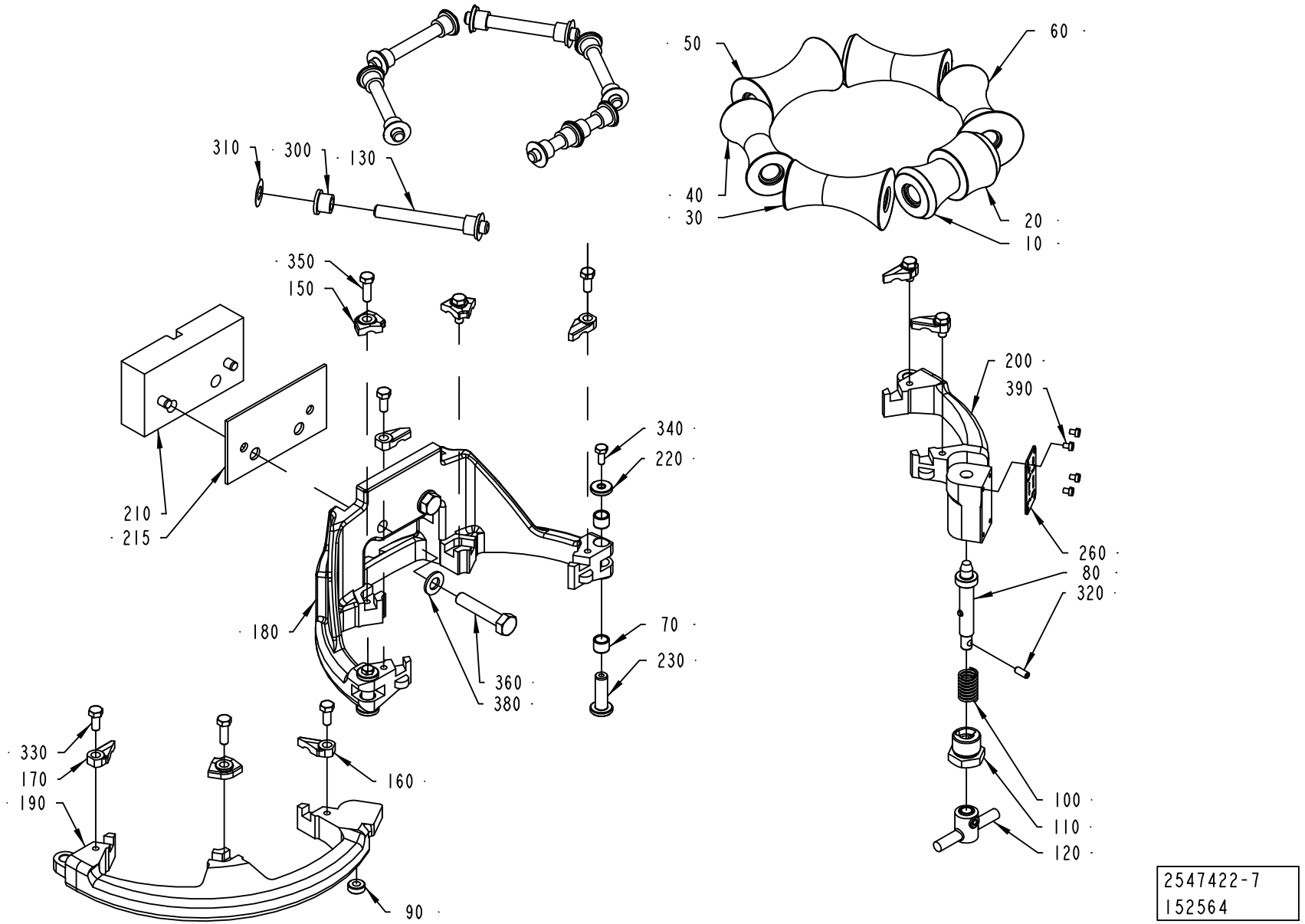
310
300
130
50
60
40
30
20
10
350
150
200
390
340
220
210
215
260
80
320
180
70
230
360
380
330
170
190
160
100
110
120
90
2547422-7
152564

Pos	Part No	UN	Qty	Description	Page No	Pos	Part No	UN	Qty	Description	Page No

SEE PREVIOUS LISTS PAGES: 1-49, 1-51, 1-53.

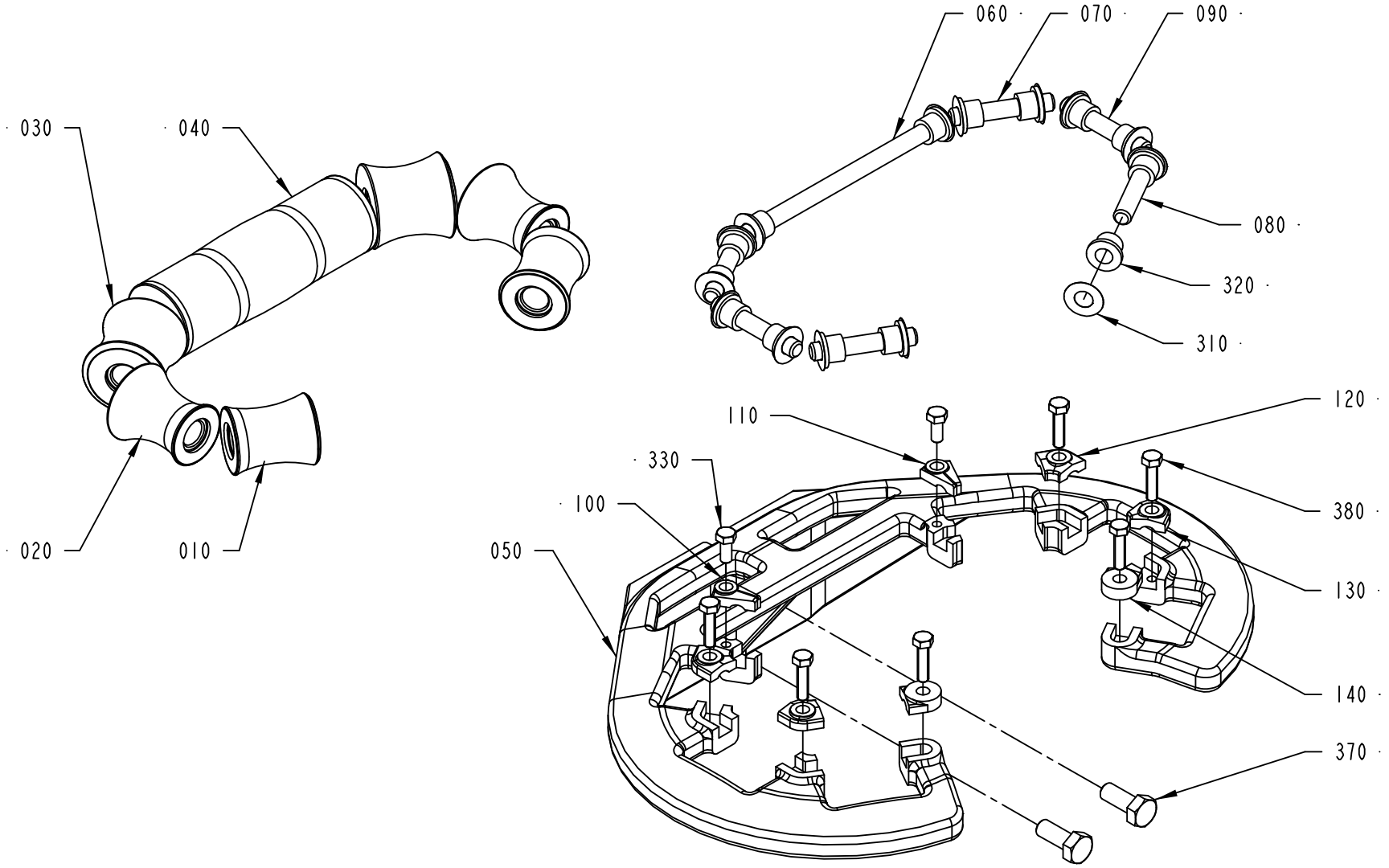

2547421-1
ECM 117070

ECM: 181629 - 50001231
Group number: 2547421-0100
Assembly Drawing: 2547421-1_1_AA

This list covers pages from 1-60 to 1-65

Pos	Part No	UN	Qty	Description	Page No
TBA 0200S (See drawing on page: 1-62)					
010	752128-0000		2	FORMING ROLLER	
020	752127-0000		2	FORMING ROLLER	
040	752126-0000		1	FORMING ROLLER	
050	2565430-0000		1	SUPPORT RING	
060	752186-0008		1	SHAFT	
070	2522213-0006		2	SHAFT	
080	2522213-0010		2	SHAFT	
100	2532912-0001		4	LOCK PLATE	
110	2532895-0002		2	LOCK PLATE	
310	2033-0011		10	WASHER	
320	90240-0172		6	FLANGE BUSHING, 8X12X10 MM	
340	752156-0000		4	FLANGE BUSHING	
350	315105-0165		2	WASHER BRB8,4X16RFR	
370	312105-0453		2	SCREW M6S ISO 4017 M8X25 A480	
380	312105-0331		6	SCREW M6S ISO 4017 M5X20 A480	
TBA 0330S, TBA 0200B, TBA 0250B (See drawing on page: 1-62)					
010	2544881-0000		2	ROLLER	
020	751492-0000		2	ROLL	
040	751491-0000		1	ROLL	
050	2565431-0000		1	SUPPORT RING	
060	2522213-0005		1	SHAFT	
070	2522213-0006		2	SHAFT	
080	2522213-0004		2	SHAFT	
100	2532912-0002		4	LOCK PLATE	
110	2532895-0003		2	LOCK PLATE	
310	2033-0011		10	WASHER	
320	90240-0172		10	FLANGE BUSHING, 8X12X10 MM	
350	315105-0165		2	WASHER BRB8,4X16RFR	
370	312105-0453		2	SCREW M6S ISO 4017 M8X25 A480	
380	312105-0331		6	SCREW M6S ISO 4017 M5X20 A480	
TBA 0500B, TBA 1000B, TBA 1500S (See drawing on page: 1-60)					
010	2552206-0000		2	ROLLER	
020	2552205-0000		2	ROLLER	
030	2552188-0000		2	ROLLER	
040	2552187-0000		1	ROLLER	
050	2552160-0000		1	SUPPORT RING	
060	2522213-0005		1	SHAFT	
070	752186-0005		2	SHAFT	
080	2522213-0004		2	SHAFT	
090	752186-0019		2	SHAFT	
100	2552176-0001		1	LOCK PLATE	
110	2552177-0001		1	LOCK PLATE	
120	2528123-0002		2	LOCK PLATE	
130	2528123-0008		2	LOCK PLATE	
140	2532895-0004		2	LOCK PLATE	
310	2033-0011		14	WASHER	
320	90240-0172		14	FLANGE BUSHING, 8X12X10 MM	
330	312105-0327		2	SCREW M6S ISO 4017 M5X12 A480	
370	312105-0451		2	SCREW M6S ISO 4017 M8X20 A480	
380	312105-0331		6	SCREW M6S ISO 4017 M5X20 A480	
TBA 1000S (See drawing on page: 1-60)					
010	2512748-0000		2	ROLLER	
020	2512749-0000		2	ROLLER	
030	2512746-0000		2	ROLLER	
040	2514521-0000		2	ROLLER	
050	2552161-0000		1	SUPPORT RING	
060	2522213-0005		1	SHAFT	
070	752186-0005		2	SHAFT	
080	2522213-0004		2	SHAFT	
090	752186-0019		2	SHAFT	
100	2552176-0003		1	LOCK PLATE	
110	2552177-0003		1	LOCK PLATE	
120	2528123-0007		2	LOCK PLATE	
130	2528123-0001		2	LOCK PLATE	
140	2532895-0003		2	LOCK PLATE	
310	2033-0011		16	WASHER	
320	90240-0172		16	FLANGE BUSHING, 8X12X10 MM	
330	312105-0327		2	SCREW M6S ISO 4017 M5X12 A480	
370	312105-0451		2	SCREW M6S ISO 4017 M8X20 A480	
380	312105-0331		6	SCREW M6S ISO 4017 M5X20 A480	
TBA 1000SQ (See drawing on page: 1-60)					
010	2634971-0000		2	ROLLER	
020	2634970-0000		2	ROLLER	
030	2634969-0000		2	ROLLER	
040	2634968-0000		1	ROLLER	
050	2634967-0000		1	SUPPORT RING	
060	2522213-0008		1	SHAFT	
070	752186-0012		2	SHAFT	
080	2522213-0009		4	SHAFT	
120	2562667-0009		6	LOCK PLATE	
140	2532895-0003		2	LOCK PLATE	
310	2033-0011		14	WASHER	
320	90240-0172		14	FLANGE BUSHING, 8X12X10 MM	

Machine Type | Group Description | Used-In | Group Number | Page No

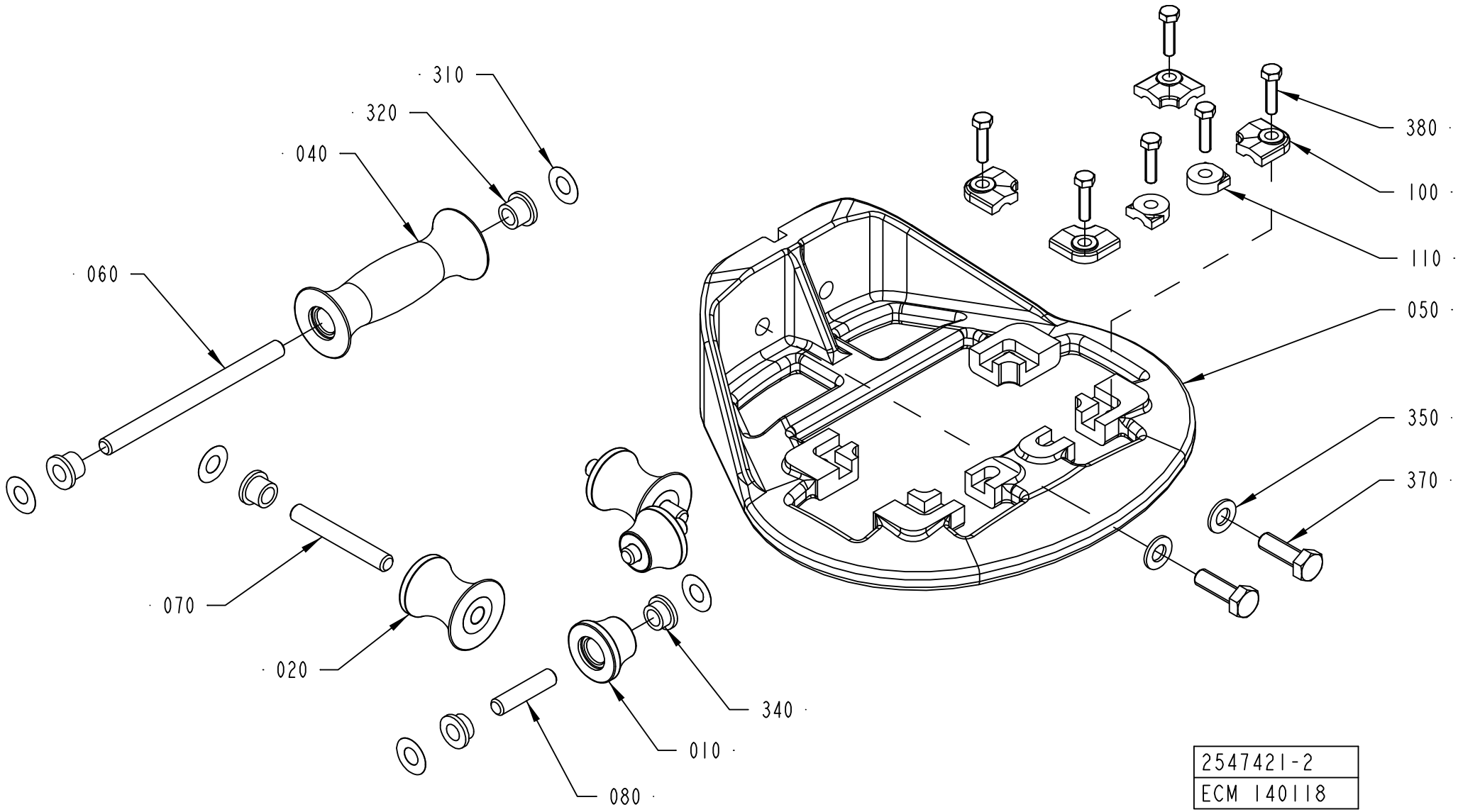
310
320
040
060
070
020
080
010
340
380
100
110
050
350
370
2547421-2
ECM 140118

Pos	Part No	UN	Qty	Description	Page No
TBA 1000SQ (Cont'd) (See drawing on page: 1-60)					
370	312105-0453		2	SCREW M6S ISO 4017 M8X25 A480	
380	312105-0331		8	SCREW M6S ISO 4017 M5X20 A480	
TBA 1890S, TBA 2000S (See drawing on page: 1-64)					
010	2601286-0000		2	ROLLER	
020	2601285-0000		2	ROLLER	
030	2601279-0000		2	ROLLER	
040	2601278-0000		1	ROLLER	
050	2634926-0000		1	SUPPORT ROLLER	
060	2522213-0019		1	SHAFT	
070	752186-0006		2	SHAFT	
080	2522213-0020		2	SHAFT	
090	752186-0019		2	SHAFT	
120	2562667-0008		4	LOCK PLATE	
130	2528123-0007		2	LOCK PLATE	
140	2532895-0002		2	LOCK PLATE	
310	2033-0011		14	WASHER	
320	90240-0172		14	FLANGE BUSHING, 8X12X10 MM	
350	315105-0165		2	WASHER BRB8,4X16RFR	
370	312105-0452		2	SCREW M6S ISO 4017 M8X22 A4 80	
380	312105-0329		8	SCREW M6S ISO 4017 M5X16 A480	
TPA 1000SQ (See drawing on page: 1-60)					
010	1524150-0000		2	ROLLER	
020	1524149-0000		2	ROLLER	
030	1524148-0000		2	ROLLER	
040	1524147-0000		1	ROLLER	
050	2559105-0000		1	SUPPORT RING	
060	2522213-0008		1	SHAFT	
070	752186-0012		2	SHAFT	
080	2522213-0009		4	SHAFT	
120	2562667-0008		6	LOCK PLATE	
140	2532895-0008		2	LOCK PLATE	
310	2033-0011		14	WASHER	
320	90240-0172		14	FLANGE BUSHING, 8X12X10 MM	
370	312105-0451		2	SCREW M6S ISO 4017 M8X20 A480	
380	312105-0331		8	SCREW M6S ISO 4017 M5X20 A480	

Pos	Part No	UN	Qty	Description	Page No

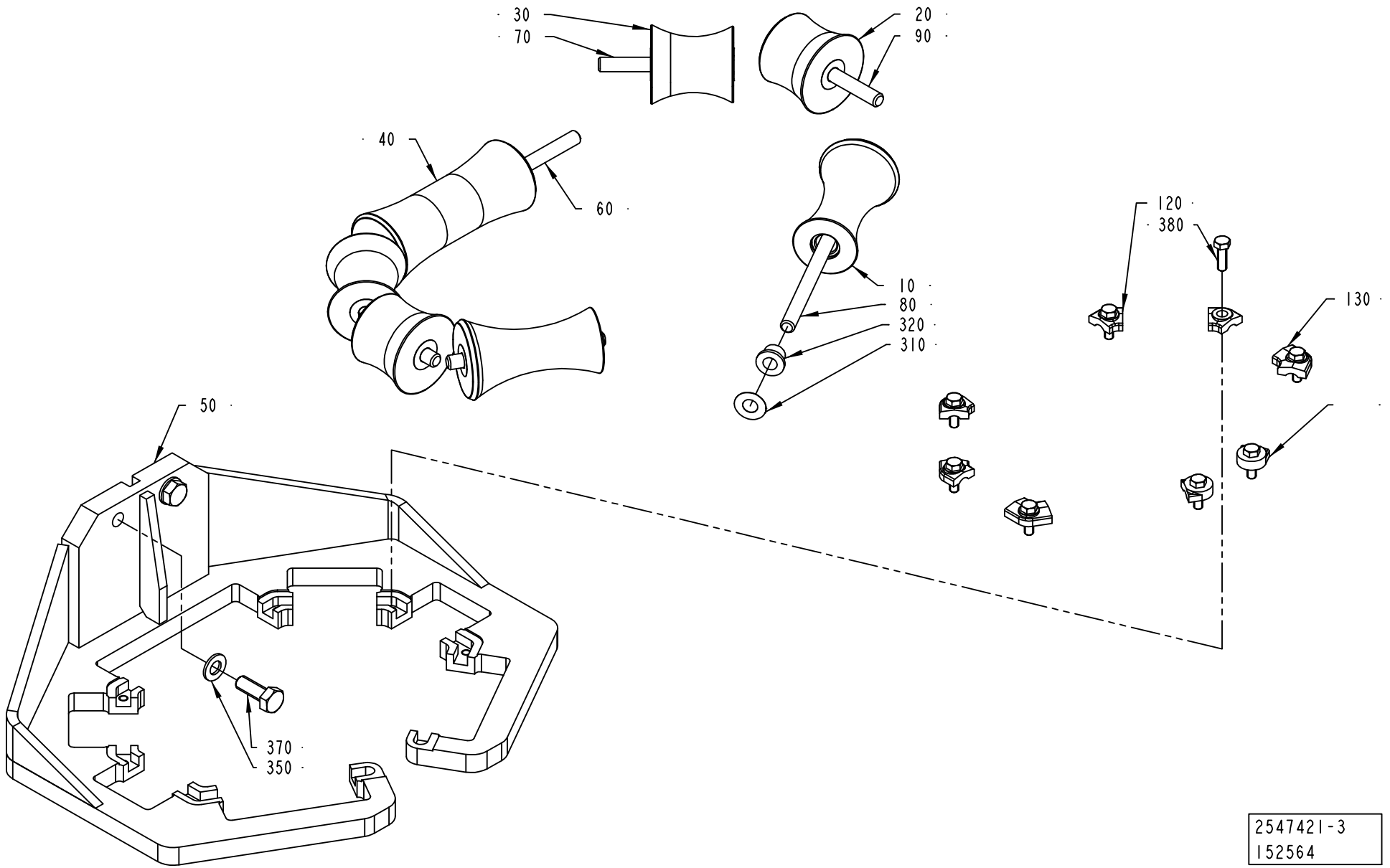
30
70
20
90
40
60
10
80
320
310
120
380
130
50
370
350
2547421-3
152564

Pos	Part No	UN	Qty	Description	Page No	Pos	Part No	UN	Qty	Description	Page No

SEE PREVIOUS LISTS PAGES: 1-61, 1-63.

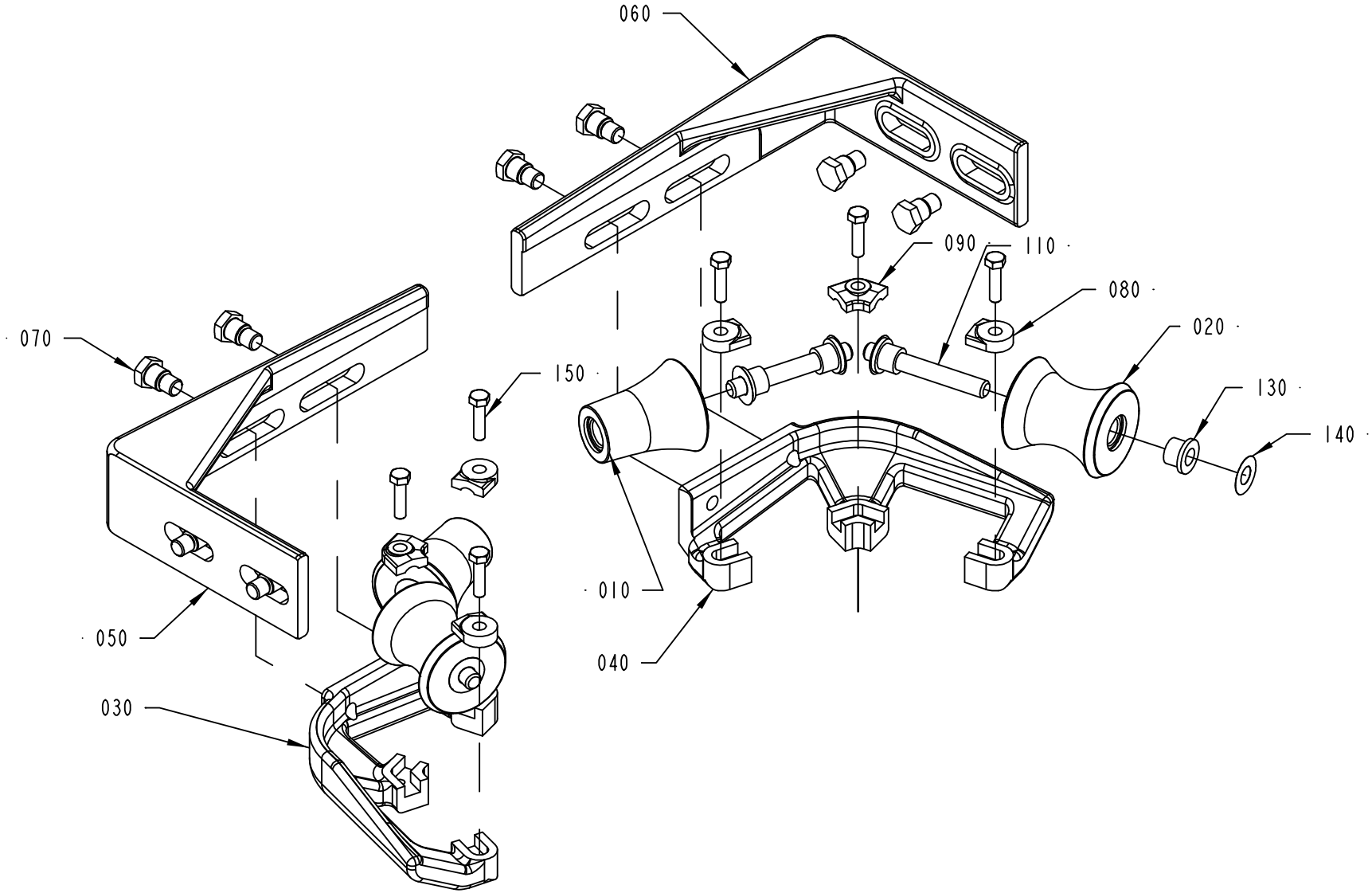

2547420-1
ECM 117070

ECM: 181633 - 50001231
Group number: 2547420-0100
Assembly Drawing: 2547420-1_1_AA

This list covers pages from 1-66 to 1-69

Pos	Part No	UN	Qty	Description	Page No
TBA 0500B, TBA 1000B (See drawing on page: 1-66)					
010	2651790-0000		2	ROLLER	
020	2651789-0000		2	ROLLER	
030	2552140-0000		1	BRACKET	
040	2552141-0000		1	BRACKET	
050	2552142-0000		1	BRACKET	
060	2552143-0000		1	BRACKET	
070	2552158-0000		8	SCREW	
080	2532895-0008		4	LOCK PLATE	
090	2528123-0006		2	LOCK PLATE	
110	752186-0016		4	SHAFT	
130	90240-0172		8	FLANGE BUSHING, 8X12X10 MM	
140	2033-0011		8	WASHER	
150	312105-0331		6	SCREW M6S ISO 4017 M5X20 A480	
TBA 1000S, TBA 1500S (See drawing on page: 1-66)					
010	2552144-0000		2	ROLL	
020	2562664-0000		2	ROLL	
030	2552140-0000		1	BRACKET	
040	2552141-0000		1	BRACKET	
050	2552142-0000		1	BRACKET	
060	2552143-0000		1	BRACKET	
070	2552158-0000		8	SCREW	
080	2532895-0008		4	LOCK PLATE	
090	2528123-0006		2	LOCK PLATE	
110	752186-0016		4	SHAFT	
130	90240-0172		8	FLANGE BUSHING, 8X12X10 MM	
140	2033-0011		8	WASHER	
150	312105-0331		6	SCREW M6S ISO 4017 M5X20 A480	
TBA 1000SQ (See drawing on page: 1-66)					
010	2552155-0000		2	ROLL	
020	2562684-0000		2	ROLL	
030	2552140-0000		1	BRACKET	
040	2552141-0000		1	BRACKET	
050	2552142-0000		1	BRACKET	
060	2552143-0000		1	BRACKET	
070	2552158-0000		8	SCREW	
080	2532895-0008		4	LOCK PLATE	
090	2528123-0006		2	LOCK PLATE	
110	752186-0016		4	SHAFT	
130	90240-0172		8	FLANGE BUSHING, 8X12X10 MM	
140	2033-0011		8	WASHER	
150	312105-0331		6	SCREW M6S ISO 4017 M5X20 A480	
TBA 1890S, TBA 2000S (See drawing on page: 1-68)					
010	2601269-0000		1	ROLLER	
015	2601272-0000		2	ROLLER	
020	2601271-0000		2	ROLLER	
025	2601273-0000		2	ROLLER	
050	2634930-0000		1	SUPPORT ROLLER	
060	2634931-0000		2	BRACKET	
080	2532895-0004		2	LOCK PLATE	
090	2562667-0002		6	LOCK PLATE	
100	2522213-0016		1	SHAFT	
110	2522213-0015		4	SHAFT	
120	2522213-0017		2	SHAFT	
130	90240-0172		14	FLANGE BUSHING, 8X12X10 MM	
140	2033-0011		14	WASHER	
150	312105-0329		8	SCREW M6S ISO 4017 M5X16 A480	
160	312105-0368		4	SCREW M6S ISO 4017 M6X16 A480	
170	312105-0370		4	SCREW M6S ISO 4017 M6X20 A480	
180	90005-0060		4	WASHER PLAIN, RBS 6,4/M6)/18,H=1,5	
190	311103-0353		2	PARALLEL PIN ISO 2338 6M6X20 A1	
TPA 1000SQ (See drawing on page: 1-66)					
010	2562694-0000		2	ROLLER	
020	2562695-0000		2	ROLLER	
030	2562696-0000		1	BRACKET	
040	2562697-0000		1	BRACKET	
050	2562692-0000		1	BRACKET	
060	2562693-0000		1	BRACKET	
070	2552158-0000		8	SCREW	
080	2532895-0008		4	LOCK PLATE	
090	2528123-0009		2	LOCK PLATE	
110	752186-0016		4	SHAFT	
130	90240-0172		8	FLANGE BUSHING, 8X12X10 MM	
140	2033-0011		8	WASHER	
150	312105-0331		6	SCREW M6S ISO 4017 M5X20 A480	

Machine Type | Group Description | Used-In | Group Number | Page No

EDGE ROLLER

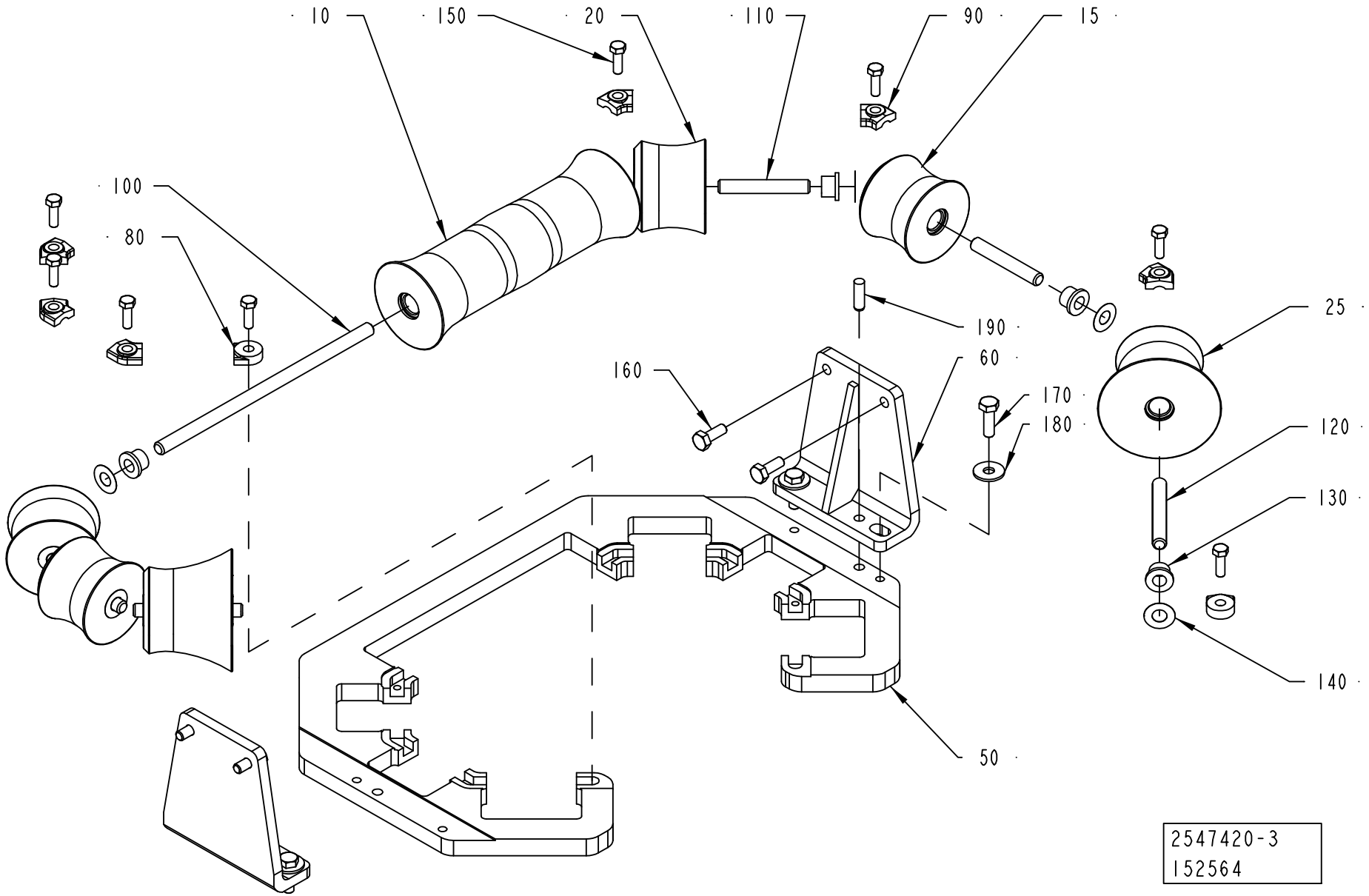
10
150
20
110
90
15
100
80
190
60
160
170
180
25
120
130
140
50
2547420-3
152564

ECM: 181633 - 50001231
Group number: 2547420-0100
Assembly Drawing: 2547420-3_1_AA

This list covers pages from 1-66 to 1-69

Pos	Part No	UN	Qty	Description	Page No
TBA 0500B, TBA 1000B (See drawing on page: 1-66)					
010	2651790-0000		2	ROLLER	
020	2651789-0000		2	ROLLER	
030	2552140-0000		1	BRACKET	
040	2552141-0000		1	BRACKET	
050	2552142-0000		1	BRACKET	
060	2552143-0000		1	BRACKET	
070	2552158-0000		8	SCREW	
080	2532895-0008		4	LOCK PLATE	
090	2528123-0006		2	LOCK PLATE	
110	752186-0016		4	SHAFT	
130	90240-0172		8	FLANGE BUSHING, 8X12X10 MM	
140	2033-0011		8	WASHER	
150	312105-0331		6	SCREW M6S ISO 4017 M5X20 A480	
TBA 1000S, TBA 1500S (See drawing on page: 1-66)					
010	2552144-0000		2	ROLL	
020	2562664-0000		2	ROLL	
030	2552140-0000		1	BRACKET	
040	2552141-0000		1	BRACKET	
050	2552142-0000		1	BRACKET	
060	2552143-0000		1	BRACKET	
070	2552158-0000		8	SCREW	
080	2532895-0008		4	LOCK PLATE	
090	2528123-0006		2	LOCK PLATE	
110	752186-0016		4	SHAFT	
130	90240-0172		8	FLANGE BUSHING, 8X12X10 MM	
140	2033-0011		8	WASHER	
150	312105-0331		6	SCREW M6S ISO 4017 M5X20 A480	
TBA 1000SQ (See drawing on page: 1-66)					
010	2552155-0000		2	ROLL	
020	2562684-0000		2	ROLL	
030	2552140-0000		1	BRACKET	
040	2552141-0000		1	BRACKET	
050	2552142-0000		1	BRACKET	
060	2552143-0000		1	BRACKET	
070	2552158-0000		8	SCREW	
080	2532895-0008		4	LOCK PLATE	
090	2528123-0006		2	LOCK PLATE	
110	752186-0016		4	SHAFT	
130	90240-0172		8	FLANGE BUSHING, 8X12X10 MM	
140	2033-0011		8	WASHER	
150	312105-0331		6	SCREW M6S ISO 4017 M5X20 A480	
TBA 1890S, TBA 2000S (See drawing on page: 1-68)					
010	2601269-0000		1	ROLLER	
015	2601272-0000		2	ROLLER	
020	2601271-0000		2	ROLLER	
025	2601273-0000		2	ROLLER	
050	2634930-0000		1	SUPPORT ROLLER	
060	2634931-0000		2	BRACKET	
080	2532895-0004		2	LOCK PLATE	
090	2562667-0002		6	LOCK PLATE	
100	2522213-0016		1	SHAFT	
110	2522213-0015		4	SHAFT	
120	2522213-0017		2	SHAFT	
130	90240-0172		14	FLANGE BUSHING, 8X12X10 MM	
140	2033-0011		14	WASHER	
150	312105-0329		8	SCREW M6S ISO 4017 M5X16 A480	
160	312105-0368		4	SCREW M6S ISO 4017 M6X16 A480	
170	312105-0370		4	SCREW M6S ISO 4017 M6X20 A480	
180	90005-0060		4	WASHER PLAIN, RBS 6,4/M6)/18,H=1,5	
190	311103-0353		2	PARALLEL PIN ISO 2338 6M6X20 A1	
TPA 1000SQ (See drawing on page: 1-66)					
010	2562694-0000		2	ROLLER	
020	2562695-0000		2	ROLLER	
030	2562696-0000		1	BRACKET	
040	2562697-0000		1	BRACKET	
050	2562692-0000		1	BRACKET	
060	2562693-0000		1	BRACKET	
070	2552158-0000		8	SCREW	
080	2532895-0008		4	LOCK PLATE	
090	2528123-0009		2	LOCK PLATE	
110	752186-0016		4	SHAFT	
130	90240-0172		8	FLANGE BUSHING, 8X12X10 MM	
140	2033-0011		8	WASHER	
150	312105-0331		6	SCREW M6S ISO 4017 M5X20 A480	

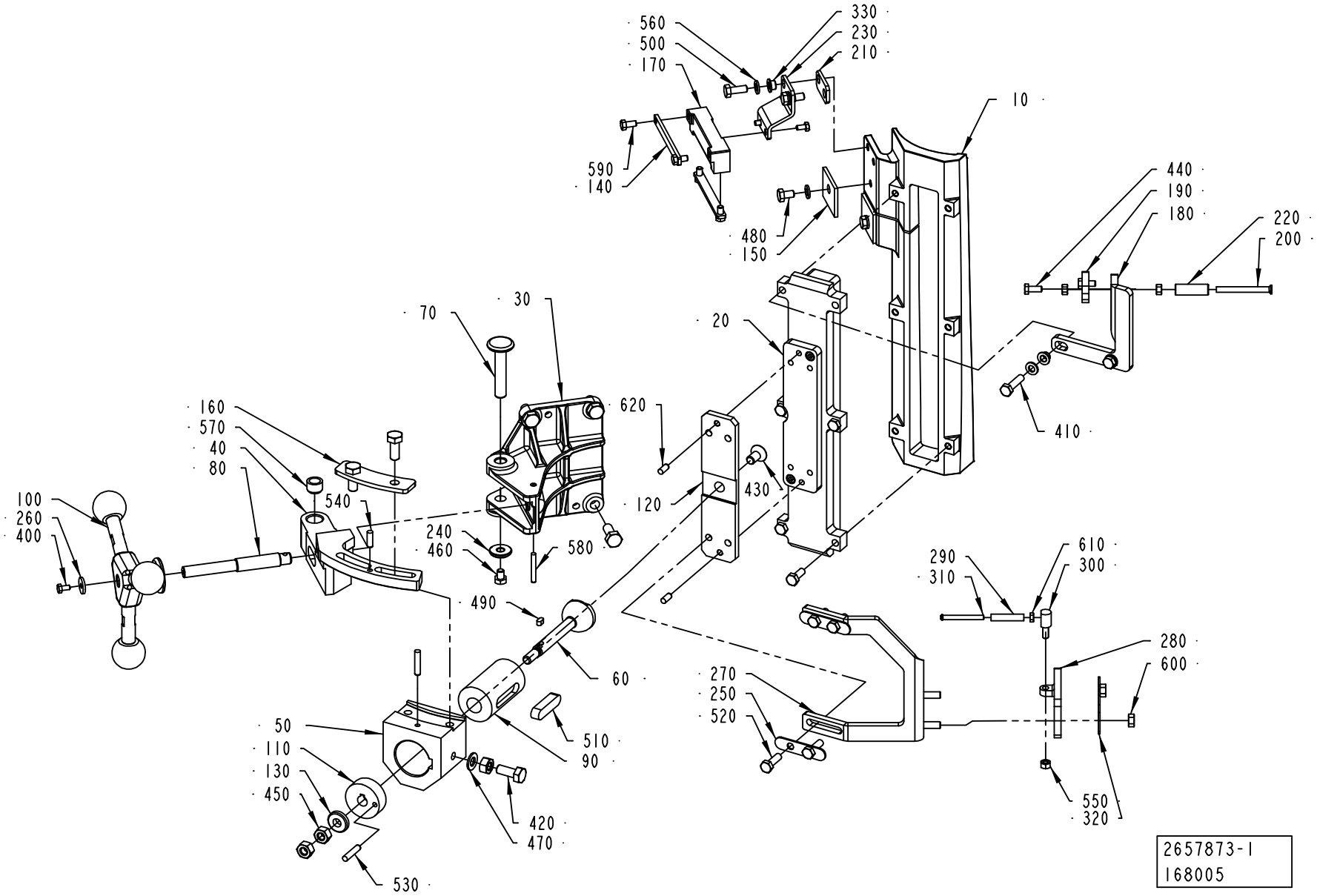
560
500
170
330
230
210
10
590
140
480
150
440
190
180
220
200
70
30
20
620
160
570
40
80
540
100
260
400
240
460
580
120
430
410
490
60
290
310
610
300
280
600
270
250
520
50
110
130
450
510
90
420
470
530
550
320
2657873-1
168005

ECM: 176196 - 20040906
Group number: 2657873-0100
Assembly Drawing: 2657873-1_1_AA

This list covers pages from 1-70 to 1-73

Pos	Part No	UN	Qty	Description	Page No
TBA 0200S					
010	2565440-0000		1	INDUCTOR	
020	2565441-0000		1	INSULATING PLATE	
180	2547404-0000		1	BRACKET	
270	2555614-0000		1	BRACKET	
280	2555619-0000		1	BRACKET	
TBA 0330S, TBA 0200B, TBA 0250B					
010	2532938-0000		1	INDUCTOR	
020	2544894-0000		1	INSULATING PLATE	
180	2547404-0000		1	BRACKET	
270	2555614-0000		1	BRACKET	
280	2555619-0000		1	BRACKET	
TBA 0500B, TBA 1000B, TBA 1500S					
010	2514514-0000		1	INDUCTOR	
020	2544891-0000		1	INSULATING PLATE	
180	2547404-0000		1	BRACKET	
270	2555614-0000		1	BRACKET	
280	2555615-0000		1	BRACKET	
TBA 1000S					
010	2514522-0000		1	INDUCTOR	
020	2544892-0000		1	INSULATING PLATE	
180	2547404-0000		1	BRACKET	
270	2555614-0000		1	BRACKET	
280	2555615-0000		1	BRACKET	
TBA 1000SQ					
010	2532925-0000		1	INDUCTOR	
020	2544893-0000		1	INSULATING PLATE	
180	2547404-0000		1	BRACKET	
270	2555614-0000		1	BRACKET	
280	2555615-0000		1	BRACKET	
TBA 1890S, TBA 2000S					
010	2601247-0000		1	INDUCTOR	
020	2601248-0000		1	INSULATING PLATE	
180	2601249-0000		1	BRACKET	
270	2594636-0000		1	BRACKET	
280	2555615-0000		1	BRACKET	
TPA 1000SQ					
010	2601289-0000		1	INDUCTOR	
020	2601307-0000		1	INSULATING PLATE	
180	2547404-0000		1	BRACKET	
270	2555614-0000		1	BRACKET	
280	2555615-0000		1	BRACKET	

Pos	Part No	UN	Qty	Description	Page No
Common Parts					
030	2544897-0000		1	BRACKET	
040	2694714-0000		1	GUIDE	
050	2694715-0000		1	SUPPORT	
060	2641000-0000		1	SHAFT	
070	2547388-0000		1	AXLE PIN	
080	2544898-0000		1	SHAFT	
090	2640991-0000		1	SLIDE	
100	2547376-0100		1	KNOB	**1-39**
110	2640992-0000		1	SLIDE	
120	2640993-0000		1	PLATE	
130	2641923-0000		1	WASHER	
140	2508309-0000		2	PLATE	
150	2508311-0000		2	PLATE	
160	2694716-0000		1	PLATE	
170	2531060-0000		1	BRACKET	
190	2547405-0000		1	BRACKET	
200	269151-0000		1	SHAFT	
210	2532898-0000		1	BRACKET	
220	2555625-0000		1	ROLL	
230	2532899-0000		1	BRACKET	
240	2508297-0000		1	WASHER	
250	2555623-0000		2	COVER	
260	2547377-0000		1	WASHER	
290	2555616-0000		1	ROLLER	
300	2555617-0000		1	PIN	
310	2555618-0000		1	SHAFT	
320	2555620-0000		1	COVER	
330	2508292-0000		4	BUSHING	
400	312105-0287		3	SCREW M6S ISO4017 M4X8 A470	
410	312105-0372		2	SCREW M6S ISO 4017 M6X25 A480	
420	312105-0451		7	SCREW M6S ISO 4017 M8X20 A480	
430	312155-0449		1	SCREW EN 10642 MF6S M8X16 A480	
440	312105-0327		2	SCREW M6S ISO 4017 M5X12 A480	
450	312605-0318		3	HEXAGON NUT, M6M M8 A280	
460	312105-0362		1	SCREW M6S ISO 4017 M6X8 A480	
470	315105-0165		6	WASHER BRB8,4X16RFR	
480	312105-0364		2	SCREW M6S ISO 4017 M6X10 A480	
490	315705-0164		1	PARALLEL KEY W. ROUND ENDS 4X4X8 MM	
500	312105-0368		6	SCREW M6S ISO 4017 M6X16 A480	
510	315705-0301		1	PARALLEL KEY W. ROUND ENDS 10X8X40 MM	
520	312105-0370		4	SCREW M6S ISO 4017 M6X20 A480	

Machine Type | Group Description | Used-In | Group Number | Page No

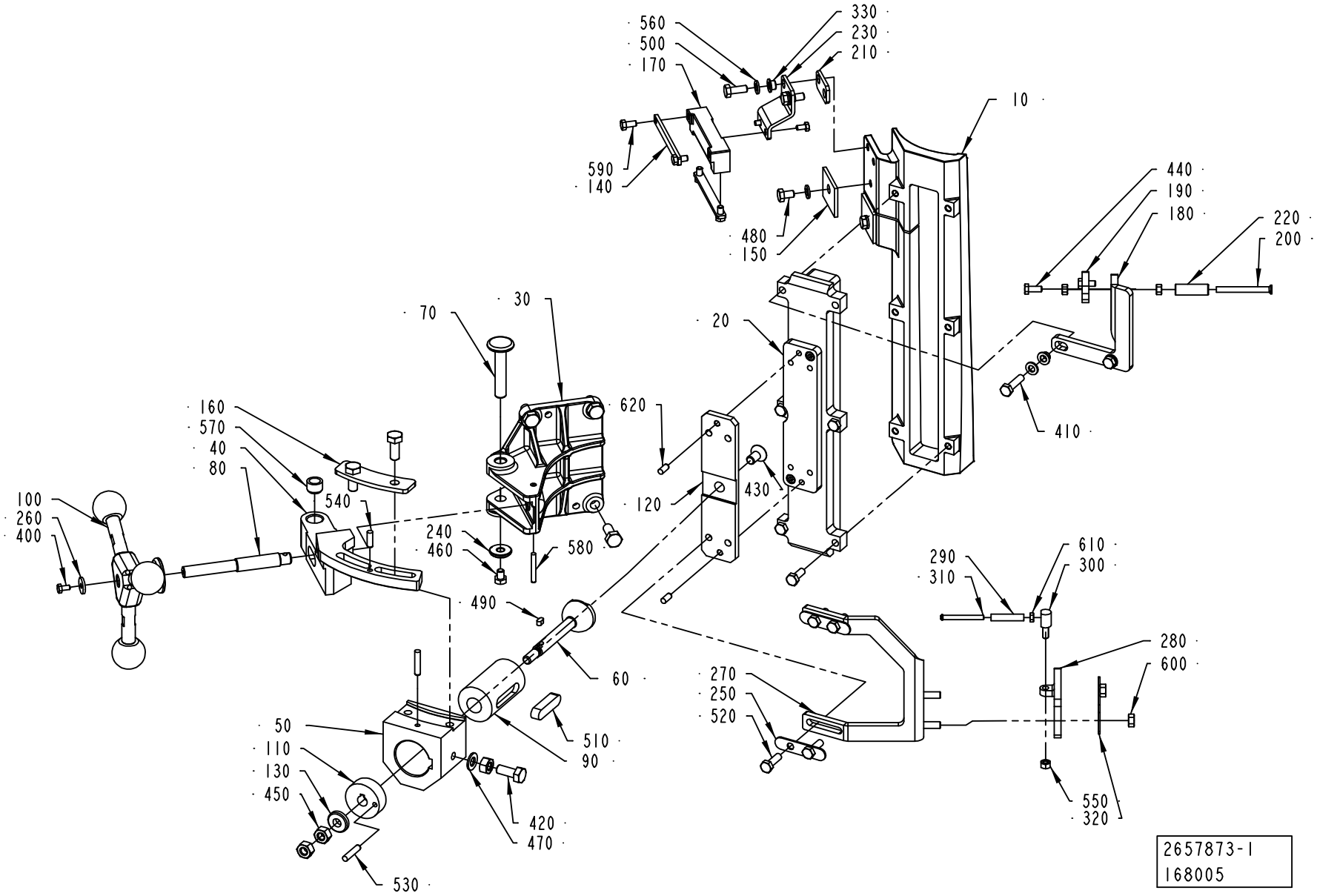
560
500
170
330
230
210
10
590
140
480
150
440
190
180
220
200
70
30
20
160
570
40
80
620
410
100
260
400
540
120
430
240
460
580
490
290
310
610
300
60
280
600
270
250
520
50
110
130
450
510
90
420
470
550
320
530
2657873-1
168005

Pos	Part No	UN	Qty	Description	Page No
Common Parts (Cont'd)					
530	311103-0312		2	PARALLELL PIN, M6, 5X25 MM	
540	311103-0308		1	PARALLEL PIN ISO 2338 5M6X16 A1	
550	312605-0314		3	HEXAGON NUT, M6M M5 A280	
560	315105-0153		6	WASHER BRB6,4X12RFR	
570	321137-0140		2	BUSHING, 10X14X10 MM	
580	311103-0276		1	PARALLEL PIN ISO 2338 4M6X30 A1	
590	312105-0325		4	SCREW M6S ISO 4017 M5X10 A480	
600	312605-0316		2	HEXAGON NUT, M6M M6 A280	
610	312605-0312		1	HEXAGON NUT, M6M M4 A280	
620	311103-0306		2	PARALLEL PIN ISO 2338 5M6X12 A1	

Pos	Part No	UN	Qty	Description	Page No

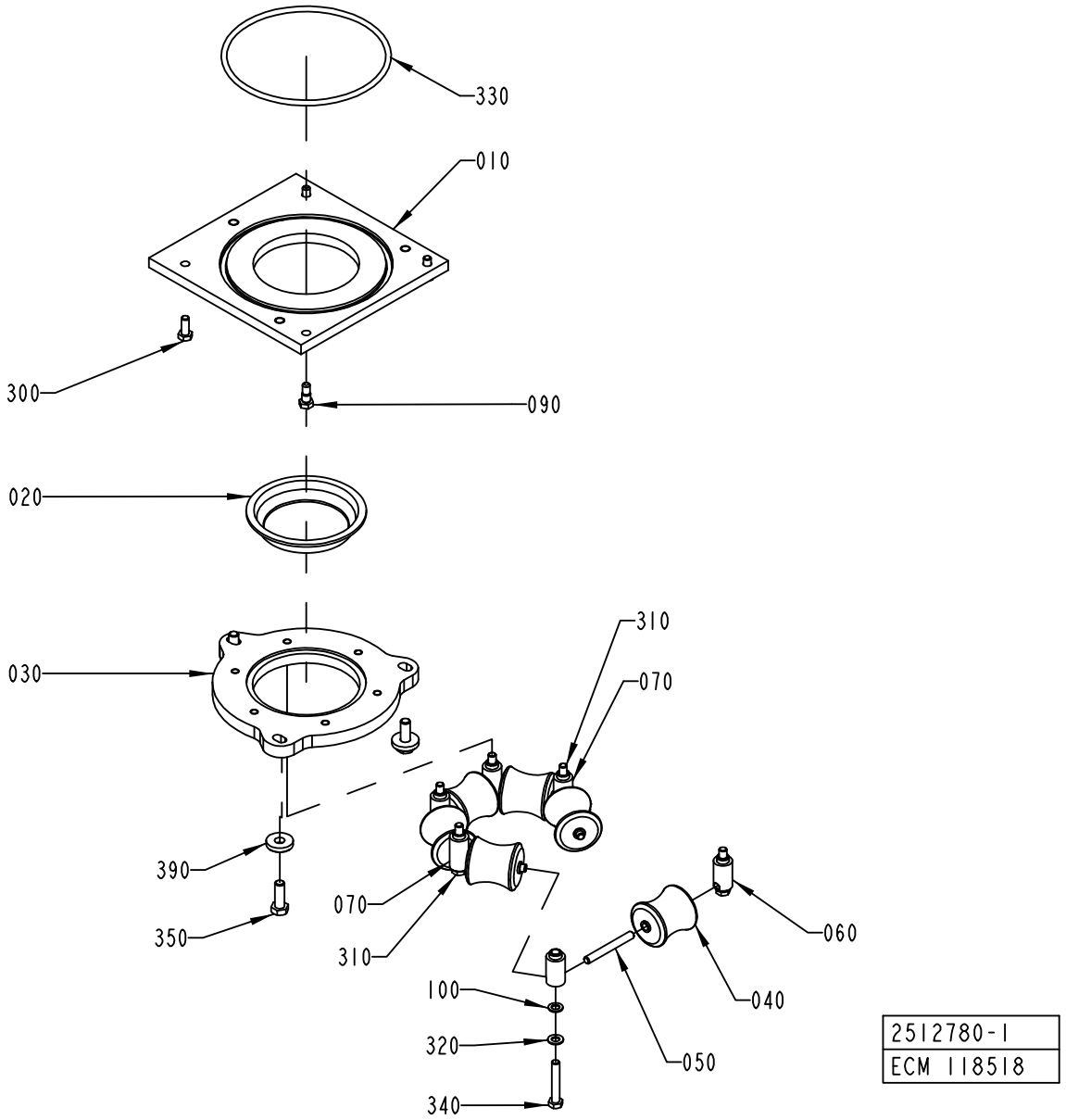
330
010
300
090
020
030
310
070
390
070
350
310
060
100
040
320
050
340
2512780-1
ECM 118518

ECM: 181626 - 50001231
Group number: 2512780-0100
Assembly Drawing: 2512780-1_1_AA

This list covers pages from 1-74 to 1-77

Pos	Part No	UN	Qty	Description	Page No
TBA 0200S (See drawing on page: 1-76)					
010	2562711-0000		1	PLATE	
020	490901-0000		1	SEAL	
030	2562710-0000		1	RING	
040	2562709-0000		2	ROLLER	
050	263655-0018		2	SHAFT	
060	1038576-0000		4	AXLE SUPPORT	
360	315125-0153		3	WASHER TBRSB 6,4X22X4 A4	
370	312105-0372		3	SCREW M6S ISO 4017 M6X25 A480	
380	312109-0459		4	SCREW M6S ISO 4017 M8X40 A480	
TBA 0330S, TBA 0200B, TBA 0250B (See drawing on page: 1-76)					
010	2528097-0000		1	PLATE	
020	273953-0000		1	SEAL	
030	2528096-0000		1	RING	
040	456796-0000		2	ROLLER	
050	263655-0006		2	SHAFT	
060	1038576-0000		4	AXLE SUPPORT	
360	315125-0153		3	WASHER TBRSB 6,4X22X4 A4	
370	312105-0372		3	SCREW M6S ISO 4017 M6X25 A480	
380	312109-0459		4	SCREW M6S ISO 4017 M8X40 A480	
TBA 0500B, TBA 1000B, TBA 1500S (See drawing on page: 1-74)					
010	2559104-0000		1	PLATE	
020	466042-0000		1	SEAL	
030	2512779-0000		1	RING	
040	466046-0000		6	ROLLER	
050	263655-0009		6	SHAFT	
060	1036954-0000		4	AXLE SUPPORT	
070	1036955-0000		2	AXLE SUPPORT	
100	1129431-0000		4	WASHER	
310	312105-0462		2	SCREW M6S ISO 4014 M8X55 A480	
320	315105-0165		6	WASHER BRB8,4X16RFR	
340	312109-0461		4	SCREW M6S ISO 4017 M8X50 A480	
350	312105-0495		3	SCREW M6S ISO 4017 M10X30 A480	
390	315125-0173		3	WASHER TBRSB 10,5X28X6 A4	
TBA 1000S (See drawing on page: 1-74)					
010	2559104-0000		1	PLATE	
020	567743-0000		1	SEAL	
030	2512779-0000		1	RING	
040	573504-0000		6	ROLLER	
050	263655-0009		6	SHAFT	
060	1036954-0000		4	AXLE SUPPORT	
070	1036955-0000		2	AXLE SUPPORT	
100	1129431-0000		4	WASHER	
310	312105-0462		2	SCREW M6S ISO 4014 M8X55 A480	
320	315105-0165		6	WASHER BRB8,4X16RFR	
340	312109-0461		4	SCREW M6S ISO 4017 M8X50 A480	
350	312105-0495		3	SCREW M6S ISO 4017 M10X30 A480	
390	315125-0173		3	WASHER TBRSB 10,5X28X6 A4	
TBA 1000SQ (See drawing on page: 1-74)					
010	2559104-0000		1	PLATE	
020	579318-0000		1	SEAL	
030	2512779-0000		1	RING	
040	1490762-0000		6	ROLLER	
050	263655-0009		6	SHAFT	
060	1036954-0000		4	AXLE SUPPORT	
070	1036955-0000		2	AXLE SUPPORT	
100	1129431-0000		4	WASHER	
310	312105-0462		2	SCREW M6S ISO 4014 M8X55 A480	
320	315105-0165		6	WASHER BRB8,4X16RFR	
340	312109-0461		4	SCREW M6S ISO 4017 M8X50 A480	
350	312105-0495		3	SCREW M6S ISO 4017 M10X30 A480	
390	315125-0173		3	WASHER TBRSB 10,5X28X6 A4	
TBA 1890S, TBA 2000S (See drawing on page: 1-74)					
010	2582616-0000		1	PLATE	
020	2582623-0000		1	SEAL	
030	2582629-0000		1	RING	
040	2582630-0000		6	ROLLER	
050	263655-0015		6	SHAFT	
060	1036954-0000		4	AXLE SUPPORT	
070	1036955-0000		2	AXLE SUPPORT	
100	1129431-0000		4	WASHER	
310	312105-0462		2	SCREW M6S ISO 4014 M8X55 A480	
320	315105-0165		6	WASHER BRB8,4X16RFR	
340	312109-0461		4	SCREW M6S ISO 4017 M8X50 A480	
350	312105-0495		3	SCREW M6S ISO 4017 M10X30 A480	
390	315125-0173		3	WASHER TBRSB 10,5X28X6 A4	
TPA 1000SQ (See drawing on page: 1-74)					
010	2559103-0000		1	PLATE	
020	1524414-0000		1	SEAL	
030	2559102-0000		1	RING	
040	1524416-0000		6	ROLLER	
050	263655-0007		6	SHAFT	
060	1036954-0000		4	AXLE SUPPORT	
070	1036955-0000		2	AXLE SUPPORT	

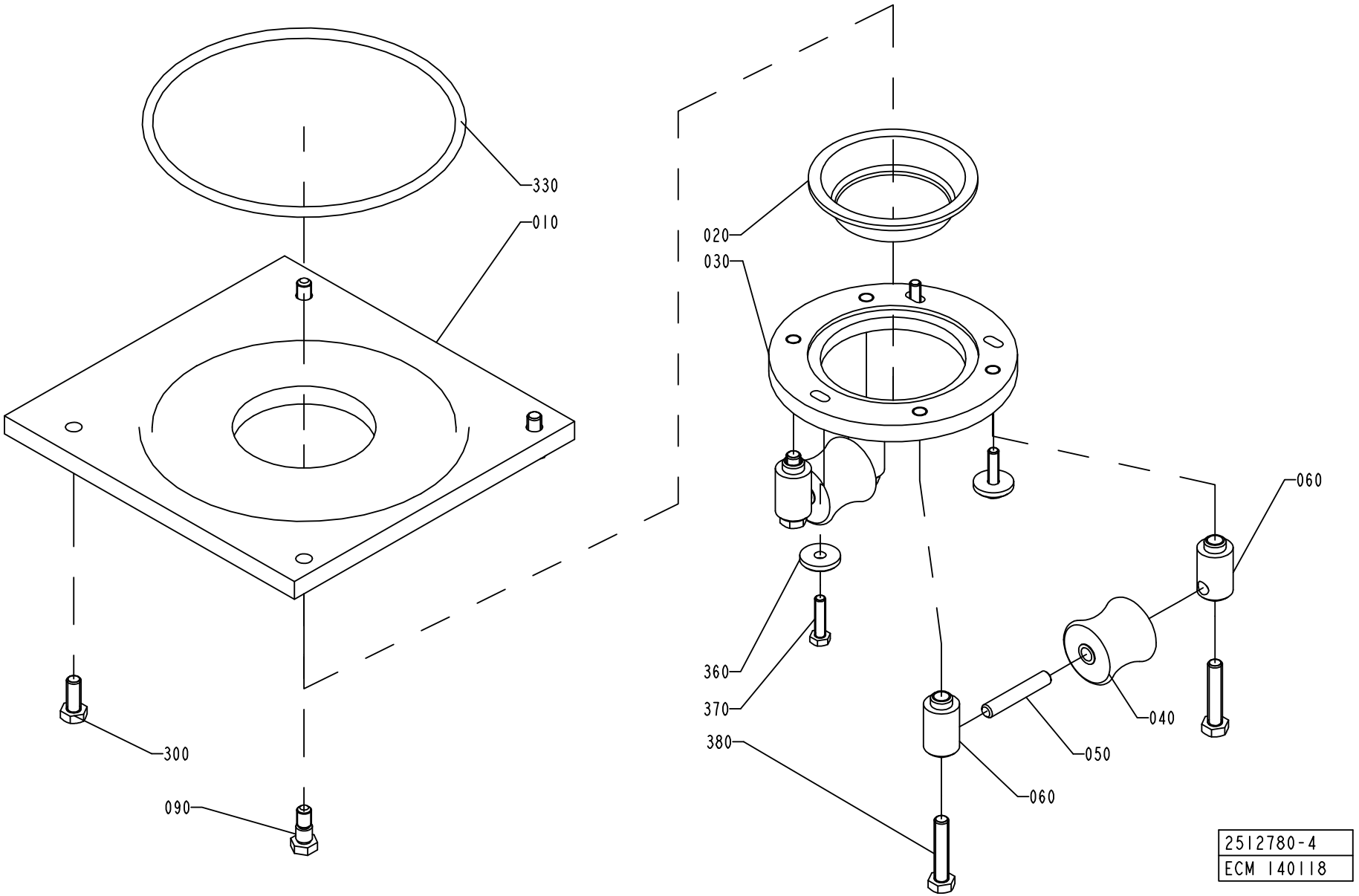
330
010
020
030
060
360
370
380
040
050
060
300
090
2512780-4
ECM 140118

ECM: 181626 - 50001231
Group number: 2512780-0100
Assembly Drawing: 2512780-4_1_AA

This list covers pages from 1-74 to 1-77

Pos	Part No	UN	Qty	Description	Page No
TPA 1000SQ (Cont'd) (See drawing on page: 1-74)					
100	1129431-0000		4	WASHER	
310	312105-0462		2	SCREW M6S ISO 4014 M8X55 A480	
320	315105-0165		6	WASHER BRB8,4X16RFR	
340	312109-0461		4	SCREW M6S ISO 4017 M8X50 A480	
350	312105-0495		3	SCREW M6S ISO 4017 M10X30 A480	
390	315125-0173		3	WASHER TBRSB 10,5X28X6 A4	
Common Parts					
040	2616231-0000		2	ROLLER	
090	1037885-0000		2	REAMED BOLT	
300	312105-0451		2	SCREW M6S ISO 4017 M8X20 A480	
330	315204-0324		1	O-RING 164,3X5,7 MM	

Pos	Part No	UN	Qty	Description	Page No

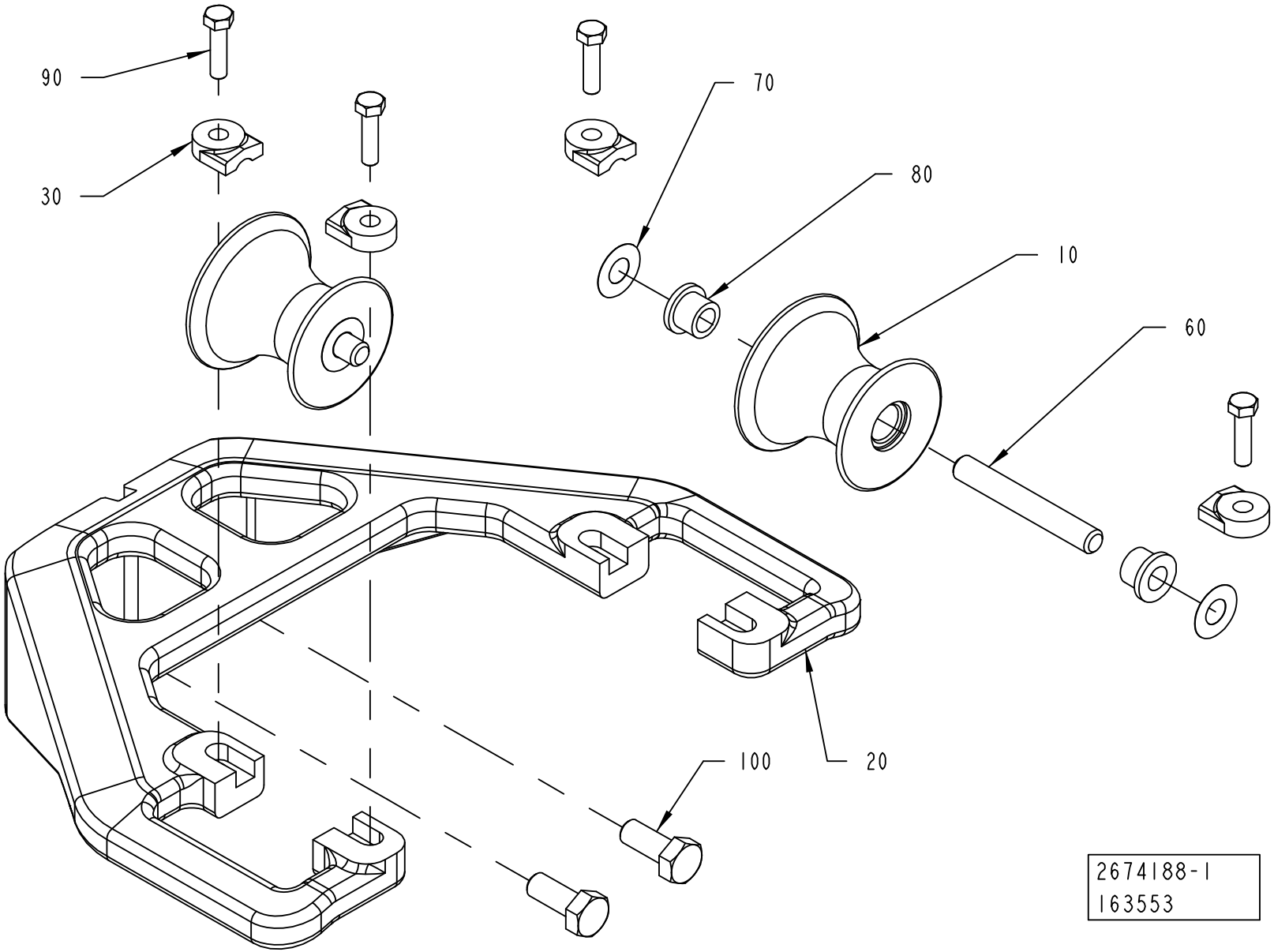
90
30
70
80
10
60
100
20
2674188-1
163553

ECM: 163553 - 20040309
Group number: 2674188-0100
Assembly Drawing: 2674188-1_1_AA

Pos	Part No	UN	Qty	Description	Page No
TBA 0200S					
010	2640354-0000		2	ROLLER	
020	2640353-0000		1	BRACKET	
030	2532895-0009		4	LOCK PLATE	
060	2522213-0006		2	SHAFT	
090	312105-0331		4	SCREW M6S ISO 4017 M5X20 A480	
100	312105-0451		2	SCREW M6S ISO 4017 M8X20 A480	
TBA 0330S, TBA 0200B, TBA 0250B					
010	2634943-0000		2	ROLLER	
020	2657860-0000		1	BRACKET	
030	2532895-0005		4	LOCK PLATE	
060	2522213-0007		2	SHAFT	
090	312105-0331		4	SCREW M6S ISO 4017 M5X20 A480	
100	312105-0449		2	SCREW M6S ISO 4017 M8X16 A480	
Common Parts					
070	2033-0011		4	WASHER	
080	90240-0172		4	FLANGE BUSHING, 8X12X10 MM	

Pos	Part No	UN	Qty	Description	Page No

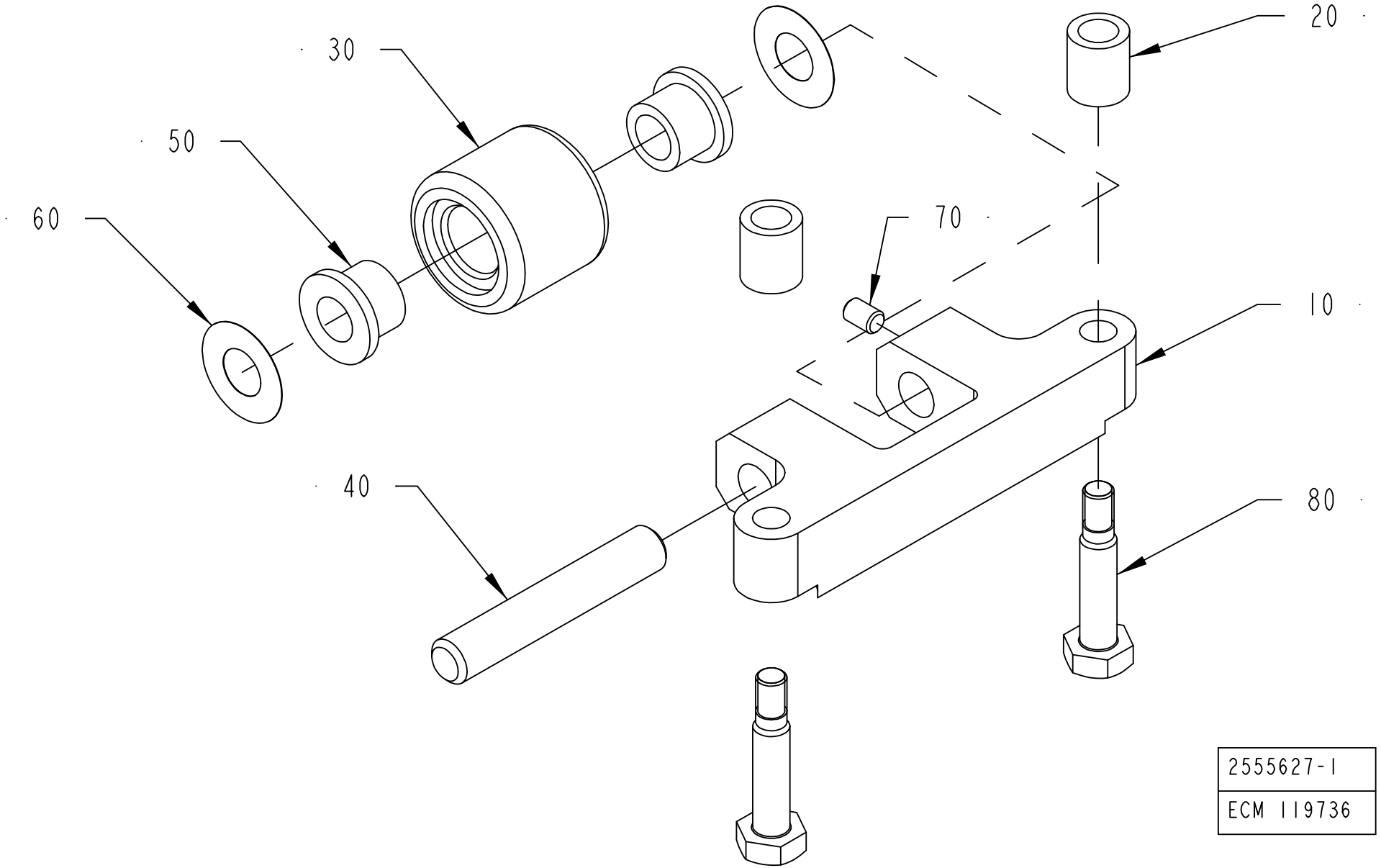
20
30
50
60
70
10
40
80
2555627-1
ECM 119736

ECM: 173006 - 50001231
Group number: 2555627-0100
Assembly Drawing: 2555627-1_1_AA

Pos	Part No	UN	Qty	Description	Page No
A3/FLEX TBA 1890S, A3/FLEX TBA 2000S					
010	2594596-0000		1	BRACKET	
030	2657925-0000		1	ROLLER	
080	2611072-0000		2	SCREW	
Common Parts					
040	752186-0005		1	SHAFT	
050	90240-0172		2	FLANGE BUSHING, 8X12X10 MM	
060	2033-0011		2	WASHER	
070	312318-0285		1	SCREW ISO4029 M4X6 A4	

Pos	Part No	UN	Qty	Description	Page No

EDGE ROLLER

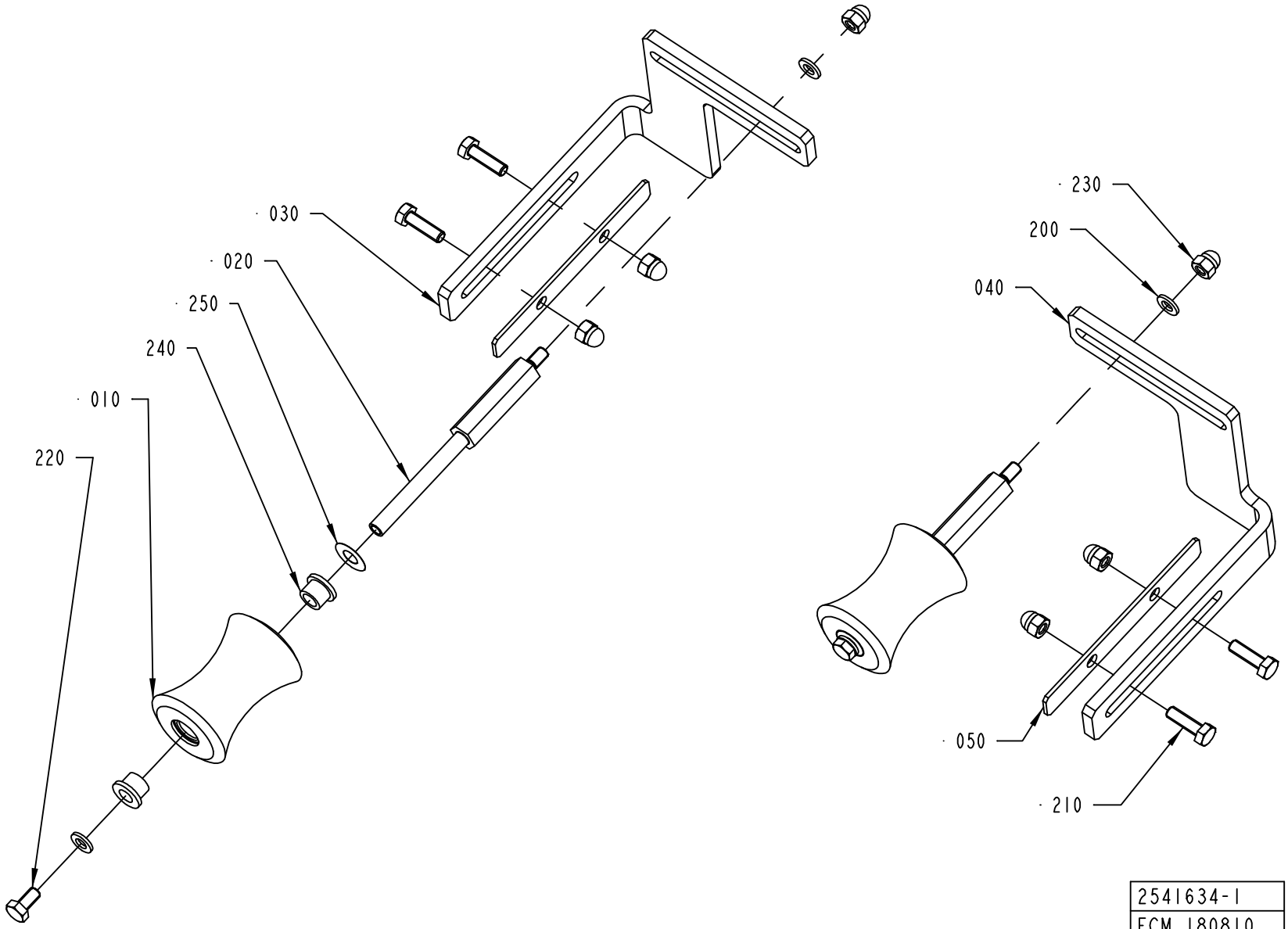
030
020
250
240
010
220
230
200
040
050
210
2541634-1
ECM 180810

Pos	Part No	UN	Qty	Description	Page No
A3/FLEX TBA 0500B, A3/FLEX TBA 1000B, A3/FLEX TBA 1000S, A3/FLEX TBA 1000SQ, A3/FLEX TPA 1000SQ, A3/FLEX TBA 0200S, A3/FLEX TBA 1500S, A3/FLEX TBA 0200B, A3/FLEX TBA 0250B, A3/FLEX TBA 0330S, A3/FLEX TPA 0330SQ, A3/FLEX TPA 0500SQ, A3/FLEX TBA 0200M, A3/FLEX TBA 0250S, A3/FLEX TBA 0500S (See drawing on page: 1-82)					
010	1478359-0000		2	ROLLER	
020	1511492-0000		2	SHAFT	
030	2528112-0000		1	BRACKET	
040	2528113-0000		1	BRACKET	
050	2528114-0000		2	COVER PLATE	
210	312105-0370		4	SCREW M6S ISO 4017 M6X20 A480	
220	312105-0366		2	SCREW M6S ISO 4017 M6X12 A480	
230	312705-0316		6	NUT HEX. DOMED CAP MHM-6 M6 A280	
A3/FLEX TBA 1890S, A3/FLEX TBA 2000S (See drawing on page: 1-84)					
010	2601286-0000		2	ROLLER	
020	2634934-0000		2	SHAFT	
030	2634932-0000		1	BRACKET	
040	2634933-0000		1	BRACKET	
050	2651695-0000		2	COVER PLATE	
210	312105-0452		4	SCREW M6S ISO 4017 M8X22 A4 80	
220	312105-0366		2	SCREW M6S ISO 4017 M6X12 A480	
230	312705-0316		2	NUT HEX. DOMED CAP MHM-6 M6 A280	
260	312705-0318		4	NUT HEX. DOMED CAP MHM-6 M8 A280	
Common Parts					
200	315105-0153		4	WASHER BRB6,4X12RFR	
240	90240-0172		4	FLANGE BUSHING, 8X12X10 MM	
250	2033-0011		2	WASHER	

Pos	Part No	UN	Qty	Description	Page No

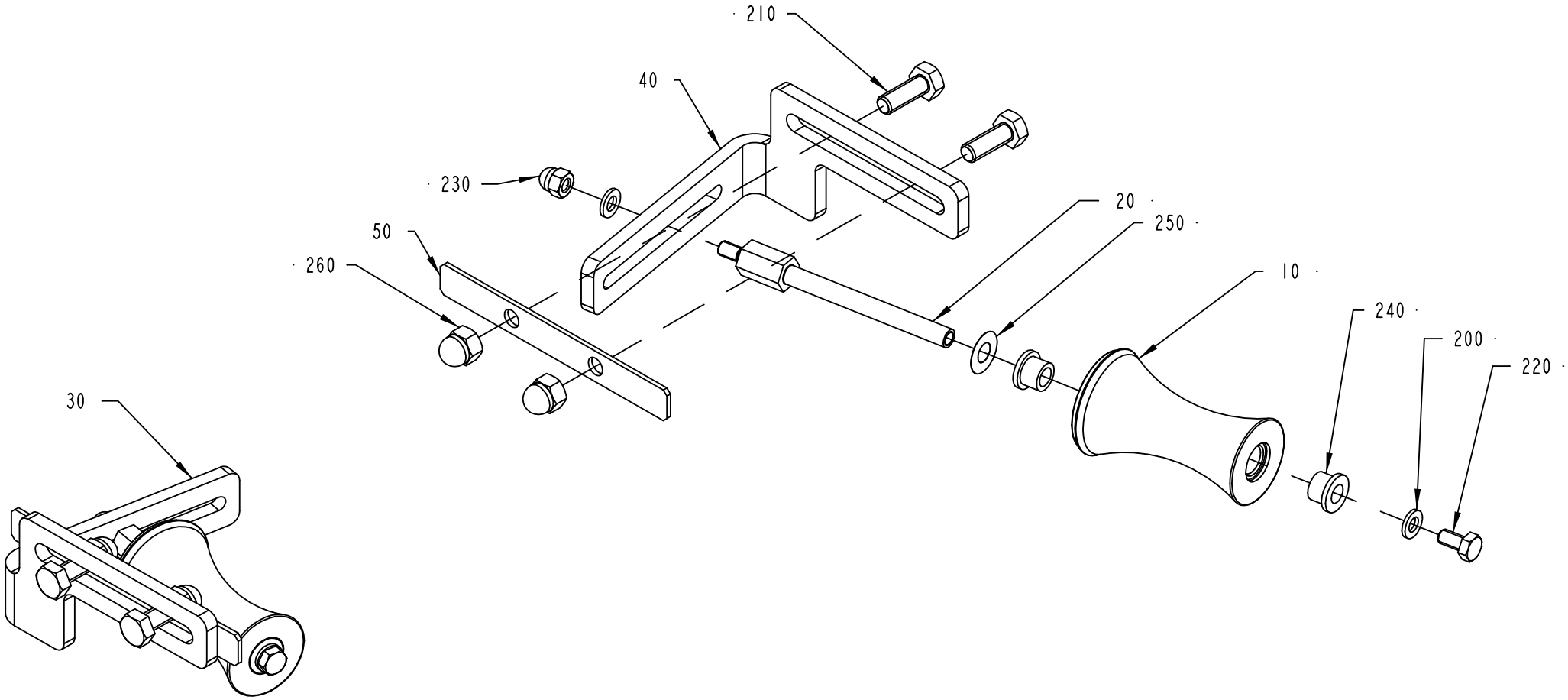

2541634-2
152564

Pos	Part No	UN	Qty	Description	Page No
A3/FLEX TBA 0500B, A3/FLEX TBA 1000B, A3/FLEX TBA 1000S, A3/FLEX TBA 1000SQ, A3/FLEX TPA 1000SQ, A3/FLEX TBA 0200S, A3/FLEX TBA 1500S, A3/FLEX TBA 0200B, A3/FLEX TBA 0250B, A3/FLEX TBA 0330S, A3/FLEX TPA 0330SQ, A3/FLEX TPA 0500SQ, A3/FLEX TBA 0200M, A3/FLEX TBA 0250S, A3/FLEX TBA 0500S (See drawing on page: 1-82)					
010	1478359-0000		2	ROLLER	
020	1511492-0000		2	SHAFT	
030	2528112-0000		1	BRACKET	
040	2528113-0000		1	BRACKET	
050	2528114-0000		2	COVER PLATE	
210	312105-0370		4	SCREW M6S ISO 4017 M6X20 A480	
220	312105-0366		2	SCREW M6S ISO 4017 M6X12 A480	
230	312705-0316		6	NUT HEX. DOMED CAP MHM-6 M6 A280	
A3/FLEX TBA 1890S, A3/FLEX TBA 2000S (See drawing on page: 1-84)					
010	2601286-0000		2	ROLLER	
020	2634934-0000		2	SHAFT	
030	2634932-0000		1	BRACKET	
040	2634933-0000		1	BRACKET	
050	2651695-0000		2	COVER PLATE	
210	312105-0452		4	SCREW M6S ISO 4017 M8X22 A4 80	
220	312105-0366		2	SCREW M6S ISO 4017 M6X12 A480	
230	312705-0316		2	NUT HEX. DOMED CAP MHM-6 M6 A280	
260	312705-0318		4	NUT HEX. DOMED CAP MHM-6 M8 A280	
Common Parts					
200	315105-0153		4	WASHER BRB6,4X12RFR	
240	90240-0172		4	FLANGE BUSHING, 8X12X10 MM	
250	2033-0011		2	WASHER	

Pos	Part No	UN	Qty	Description	Page No

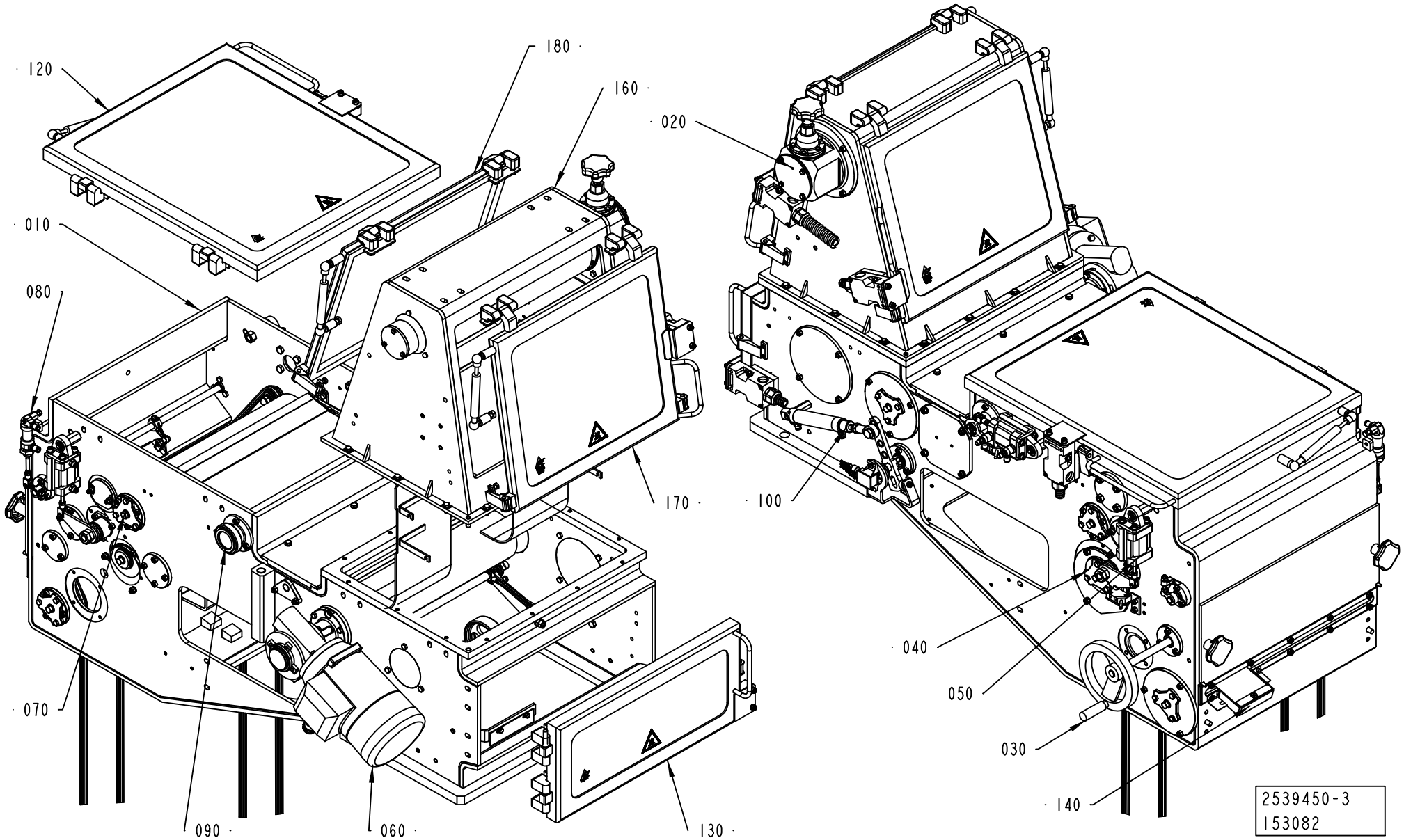
120
180
160
020
010
080
170
100
040
050
030
140
070
090
060
130
2539450-3
153082

ECM: 181446 - 50001231
Group number: 2539450-0200
Assembly Drawing: 2539450-3_1_AA

This list covers pages from 1-86 to 1-89

Pos	Part No	UN	Qty	Description	Page No
A3/FLEX DIMC/FLEX (See drawing on page: 1-88)					
020	1558522-0100		1	ADJUSTING ROLLER	**1-91**
110	2528146-0100		1	DOOR	**1-93**
140	1528746-0100		1	GUIDE	**1-95**
150	2528101-0100		1	BLOWING SYSTEM	**1-97**
A3/FLEX NODIMC NOPT (See drawing on page: 1-88)					
020	1558522-0100		1	ADJUSTING ROLLER	**1-91**
110	2528146-0100		1	DOOR	**1-93**
A3/FLEX TBA 0200B NODIMC PT/FLEX, A3/FLEX TBA 0200S NODIMC PT/FLEX, A3/FLEX TBA 0250B NODIMC PT/FLEX, A3/FLEX TBA 0330S NODIMC PT/FLEX, A3/FLEX TBA 0500B NODIMC PT/FLEX, A3/FLEX TBA 0500S NODIMC PT/FLEX, A3/FLEX TBA 1000B NODIMC PT/FLEX, A3/FLEX TBA 1000S NODIMC PT/FLEX, A3/FLEX TBA 1000SQ NODIMC PT/FLEX, A3/FLEX TBA 1500S NODIMC PT/FLEX, A3/FLEX TPA 1000SQ NODIMC PT/FLEX, A3/FLEX TPA 0330SQ NODIMC PT/FLEX, A3/FLEX TPA 0500SQ NODIMC PT/FLEX, A3/FLEX TBA 0250S NODIMC PT/FLEX, A3/FLEX TBA 0200M NODIMC PT/FLEX (See drawing on page: 1-88)					
020	1558522-0100		1	ADJUSTING ROLLER	**1-91**
110	2528146-0100		1	DOOR	**1-93**
140	1528746-0100		1	GUIDE	**1-95**
A3/FLEX TBA 1890S NODIMC PT/FLEX, A3/FLEX TBA 2000S NODIMC PT/FLEX (See drawing on page: 1-86)					
020	1558522-0100		1	ADJUSTING ROLLER	**1-91**
140	1528746-0100		1	GUIDE	**1-95**
160	2531043-0100		1	HOUSING	**1-101**
170	2531039-0100		1	DOOR	**1-103**
180	2528145-0100		1	DOOR	**1-105**
Common Parts					
010	2531047-0100		1	HOUSING	**1-107, 1-109, 1-111**
030	1549573-0100		1	CRANK	**1-115**
040	2541635-0100		1	SQUEE-GEE ROLLER	**1-117, 1-119, 1-121**
050	1548892-0100		1	CALENDER ROLLER	**1-123, 1-125**
060	1548753-0100		1	DRIVE ROLLER	**1-127, 1-129**
070	1548736-0100		1	BENDING ROLLER	**1-131, 1-133**
080	2539455-0100		1	VALVE	**1-135**
090	2532934-0100		1	AIR KNIFE	**1-137, 1-139, 1-141**
100	2539445-0200		1	PENDULUM ROLLER	**1-143**
120	1539746-0100		1	DOOR	**1-145**
130	2528142-0100		1	DOOR	**1-147**

Pos	Part No	UN	Qty	Description	Page No

DRYING CHAMBER

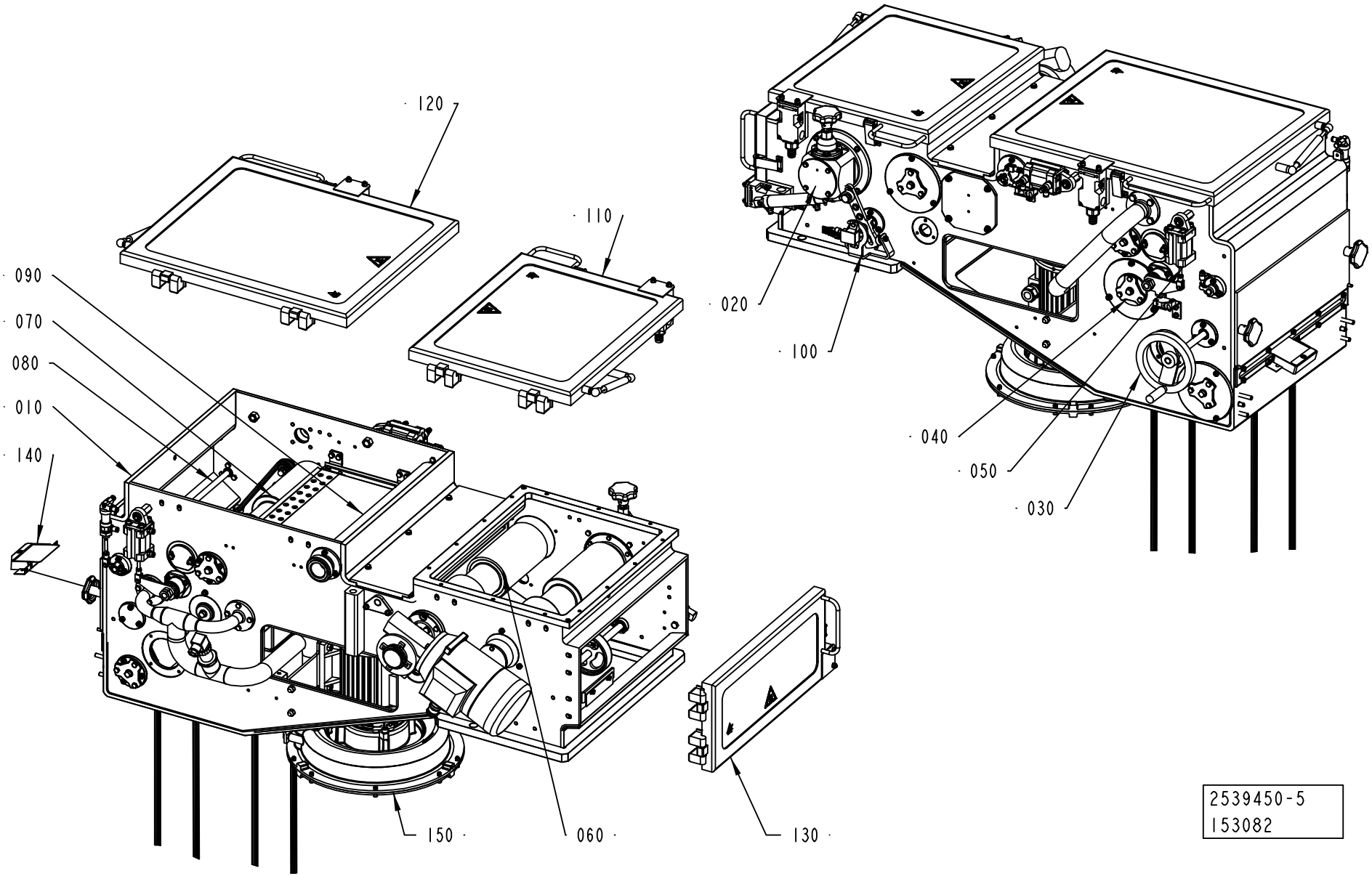

Pos	Part No	UN	Qty	Description	Page No
A3/FLEX DIMC/FLEX (See drawing on page: 1-88)					
020	1558522-0100		1	ADJUSTING ROLLER	**1-91**
110	2528146-0100		1	DOOR	**1-93**
140	1528746-0100		1	GUIDE	**1-95**
150	2528101-0100		1	BLOWING SYSTEM	**1-97**
A3/FLEX NODIMC NOPT (See drawing on page: 1-88)					
020	1558522-0100		1	ADJUSTING ROLLER	**1-91**
110	2528146-0100		1	DOOR	**1-93**
A3/FLEX TBA 0200B NODIMC PT/FLEX, A3/FLEX TBA 0200S NODIMC PT/FLEX, A3/FLEX TBA 0250B NODIMC PT/FLEX, A3/FLEX TBA 0330S NODIMC PT/FLEX, A3/FLEX TBA 0500B NODIMC PT/FLEX, A3/FLEX TBA 0500S NODIMC PT/FLEX, A3/FLEX TBA 1000B NODIMC PT/FLEX, A3/FLEX TBA 1000S NODIMC PT/FLEX, A3/FLEX TBA 1000SQ NODIMC PT/FLEX, A3/FLEX TBA 1500S NODIMC PT/FLEX, A3/FLEX TPA 1000SQ NODIMC PT/FLEX, A3/FLEX TPA 0330SQ NODIMC PT/FLEX, A3/FLEX TPA 0500SQ NODIMC PT/FLEX, A3/FLEX TBA 0250S NODIMC PT/FLEX, A3/FLEX TBA 0200M NODIMC PT/FLEX (See drawing on page: 1-88)					
020	1558522-0100		1	ADJUSTING ROLLER	**1-91**
110	2528146-0100		1	DOOR	**1-93**
140	1528746-0100		1	GUIDE	**1-95**
A3/FLEX TBA 1890S NODIMC PT/FLEX, A3/FLEX TBA 2000S NODIMC PT/FLEX (See drawing on page: 1-86)					
020	1558522-0100		1	ADJUSTING ROLLER	**1-91**
140	1528746-0100		1	GUIDE	**1-95**
160	2531043-0100		1	HOUSING	**1-101**
170	2531039-0100		1	DOOR	**1-103**
180	2528145-0100		1	DOOR	**1-105**
Common Parts					
010	2531047-0100		1	HOUSING	**1-107, 1-109, 1-111**
030	1549573-0100		1	CRANK	**1-115**
040	2541635-0100		1	SQUEE-GEE ROLLER	**1-117, 1-119, 1-121**
050	1548892-0100		1	CALENDER ROLLER	**1-123, 1-125**
060	1548753-0100		1	DRIVE ROLLER	**1-127, 1-129**
070	1548736-0100		1	BENDING ROLLER	**1-131, 1-133**
080	2539455-0100		1	VALVE	**1-135**
090	2532934-0100		1	AIR KNIFE	**1-137, 1-139, 1-141**
100	2539445-0200		1	PENDULUM ROLLER	**1-143**
120	1539746-0100		1	DOOR	**1-145**
130	2528142-0100		1	DOOR	**1-147**

Pos	Part No	UN	Qty	Description	Page No

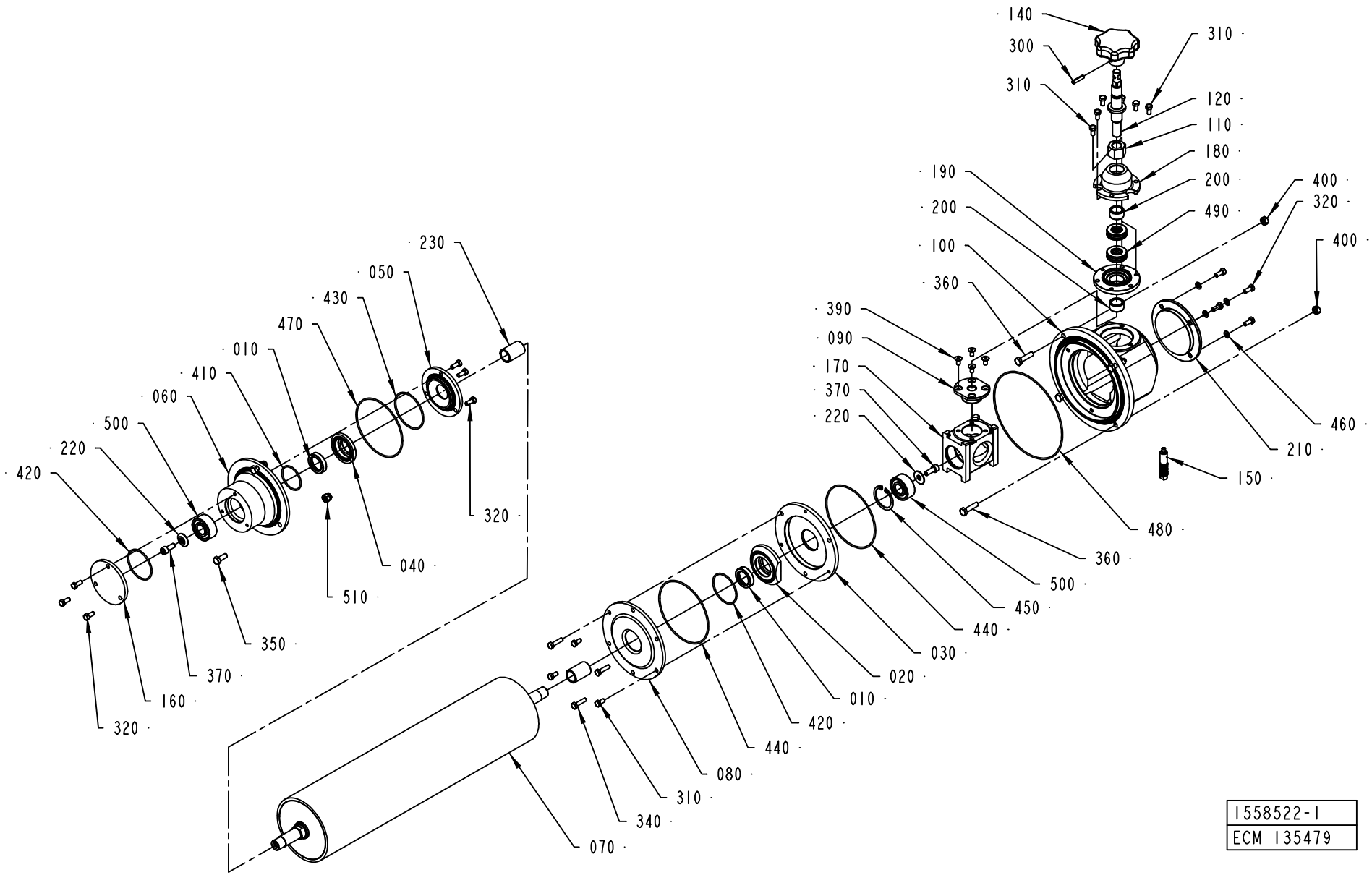
140
300
310
310
120
110
180
200
490
190
200
100
360
400
320
400
390
090
170
370
220
460
210
150
480
360
500
450
440
030
020
010
420
440
080
310
340
070
230
050
430
470
010
410
060
500
220
420
320
040
510
350
370
160
320
1558522-1
ECM 135479

ECM: 174639 - 50001231
Group number: 1558522-0100
Assembly Drawing: 1558522-1_1_AB

Pos	Part No	UN	Qty	Description	Page No
A3/FLEX DIMC/FLEX					
070	2550893-0000		1	BENDING ROLLER	
A3/FLEX TBA 2000S NODIMC, A3/FLEX TBA 1890S NODIMC					
070	2601237-0000		1	BENDING ROLLER	
A3/FLEX TBA 1000B NODIMC, A3/FLEX TBA 0500B NODIMC, A3/FLEX TBA 1000S NODIMC, A3/FLEX TBA 1000SQ NODIMC, A3/FLEX TBA 0200S NODIMC, A3/FLEX TPA 1000SQ NODIMC, A3/FLEX TBA 1500S NODIMC, A3/FLEX TBA 0200B NODIMC, A3/FLEX TBA 0250B NODIMC, A3/FLEX TBA 0330S NODIMC, A3/FLEX TPA 0330SQ NODIMC, A3/FLEX TPA 0500SQ NODIMC, A3/FLEX TBA 0200M NODIMC, A3/FLEX TBA 0250S NODIMC, A3/FLEX TBA 0500S NODIMC					
070	2550891-0000		1	BENDING ROLLER	
Common Parts					
010	90458-0639		2	VARILIP 20X30X7 MM	
020	1558748-0000		1	FLANGE	
030	1558749-0000		1	FLANGE	
040	1558750-0000		1	FLANGE	
050	1558751-0000		1	FLANGE	
060	1558752-0000		1	FLANGE	
080	1558754-0000		1	LID	
090	1558755-0000		1	FLANGE	
100	1558756-0000		1	HOUSING	
110	1558757-0000		1	NUT	
120	1558758-0000		1	SHAFT	
140	1558760-0000		1	KNOB	
150	1558761-0000		1	SHAFT	
160	1558762-0000		1	LID	
170	1558763-0000		1	SLIDER	
180	1558764-0000		1	FLANGE	
190	1558765-0000		1	FLANGE	
200	1558766-0000		2	BUSHING	
210	2528073-0000		1	LID	
220	1558768-0000		2	WASHER	
230	2555613-0000		2	BUSHING	
300	311112-0256		1	SPRING PIN, ISO 8752 4X20-C	
310	312105-0325		9	SCREW M6S ISO 4017 M5X10 A480	
320	312105-0327		10	SCREW M6S ISO 4017 M5X12 A480	
340	312105-0331		3	SCREW M6S ISO 4017 M5X20 A480	
350	312105-0368		3	SCREW M6S ISO 4017 M6X16 A480	
360	312105-0372		4	SCREW M6S ISO 4017 M6X25 A480	
370	312115-0368		2	SCREW ISO4762 M6X16 A4	
390	312155-0325		4	SCREW EN 10642 MF6S M5X10 A480	
400	312605-0316		4	HEXAGON NUT, M6M M6 A280	
410	315205-0716		1	O-RING 34,65X1,78 MM	
420	315205-0803		2	O-RING 44,17X1,78 MM	
430	315205-0805		1	O-RING 53,7X1,78 MM	
440	315205-0807		2	O-RING 94,97X1,78 MM	
450	315753-0124		1	RETAINING RING FOR BORE DIN 472 35 A2	
460	315105-0146		4	WASHER BRB5,3X10RFR	
470	90458-0640		1	O-RING 88,62X1,78 MM	
480	90459-0094		1	O-RING 133,07X1,78 MM	
490	90459-0098		2	THRUST BALL BEARING, 15X28X9 MM	
500	90214-0105		2	SPHERICAL BALL BEARING, 15X35X14 MM	
510	312705-0316		3	NUT HEX. DOMED CAP MHM-6 M6 A280	

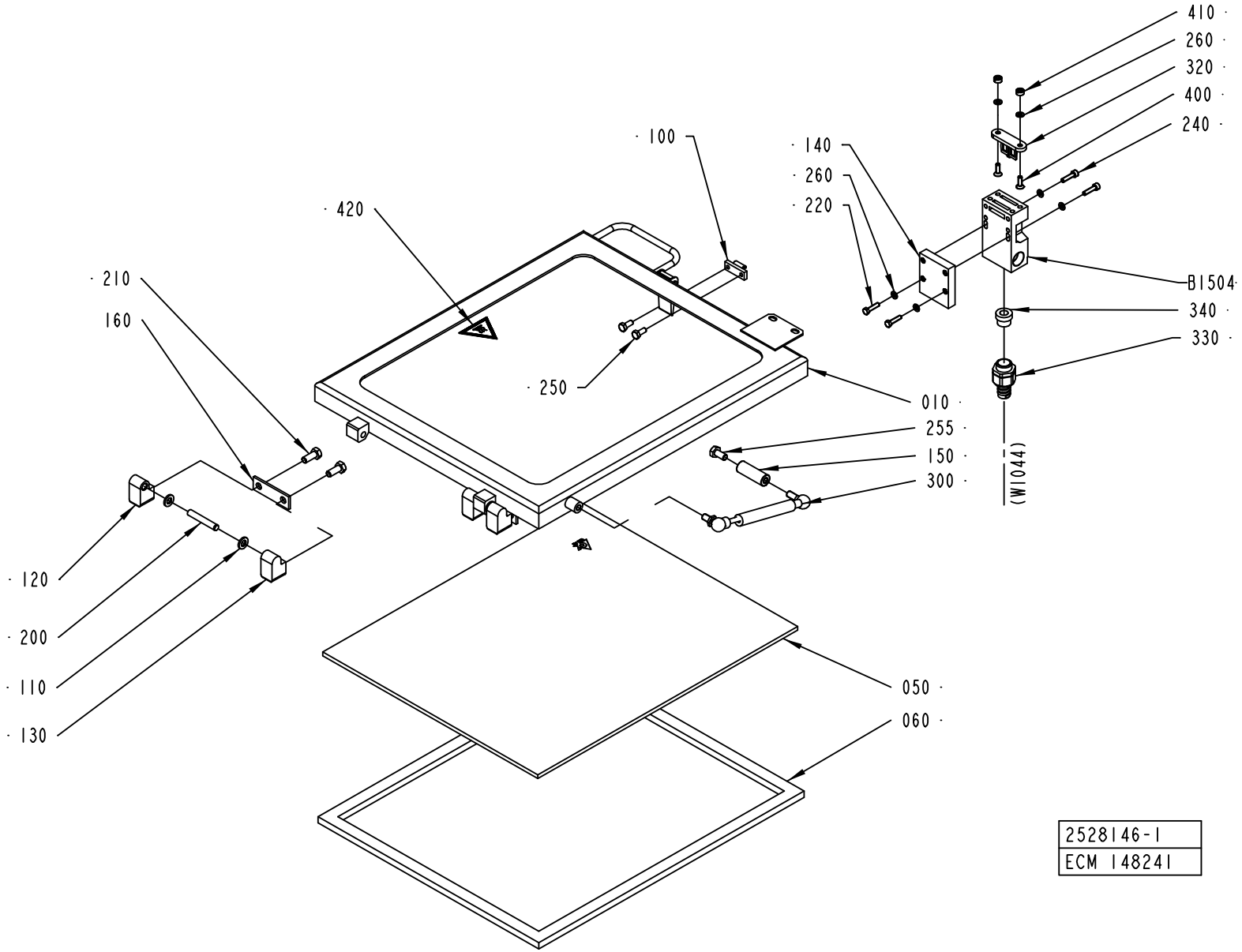
410
260
320
400
240
100
140
260
220
420
210
160
B1504
340
330
250
010
255
150
300
(W1044)
120
200
110
130
050
060
2528146-1
ECM 148241

ECM: 148241 - 20031006
Group number: 2528146-0100
Assembly Drawing: 2528146-1_1_AB

Pos	Part No	UN	Qty	Description	Page No
-					
010	2531037-0000		1	FRAME	
050	2531046-0000		1	GLASS PANE	
060	2531045-0000		1	GASKET	
100	271860-0000		1	CLAMP BLOCK	
110	441739-0000		4	WASHER	
120	1041979-0000		2	HINGE FLANGE	
130	1041978-0000		2	HINGE FLANGE	
140	2541651-0000		1	PLATE	
150	1548877-0000		1	SPACER	
160	441737-0000		2	WASHER	
200	311103-0413		2	PARALLEL PIN ISO 2338 8M6X50 A1	
210	312105-0451		4	SCREW M6S ISO 4017 M8X20 A480	
220	312105-0331		2	SCREW M6S ISO 4017 M5X20 A480	
240	312115-0331		2	SCREW ISO4762 M5X20 A4	
250	312105-0367		2	SCREW M6S ISO 4017 M6X14 A480	
255	312105-0449		1	SCREW M6S ISO 4017 M8X16 A480	
260	315105-0146		6	WASHER BRB5,3X10RFR	
300	90347-0039		1	DAMPER	
320	90044-0310		1	KEY FOR SAFETY SWITCH, AZ 15/16 B1	
330	90458-0429		1	HOSE GLAND W/O INSERT M20 EXTENDED	
340	353249-0011		1	INSERT, SINGEL HOLE, EK 153/11	
400	312155-0329		2	SCREW EN 10642 MF6S M5X16 A480	
410	575034-0000		2	ROUND NUT	
420	359705-0007		1	WARNING SIGN ISO, HOT SURFACE	
B1504	90459-0472		1	KEY SAF.SW. AZ 16 02ZVRK-M20-2152-2254	

Pos	Part No	UN	Qty	Description	Page No

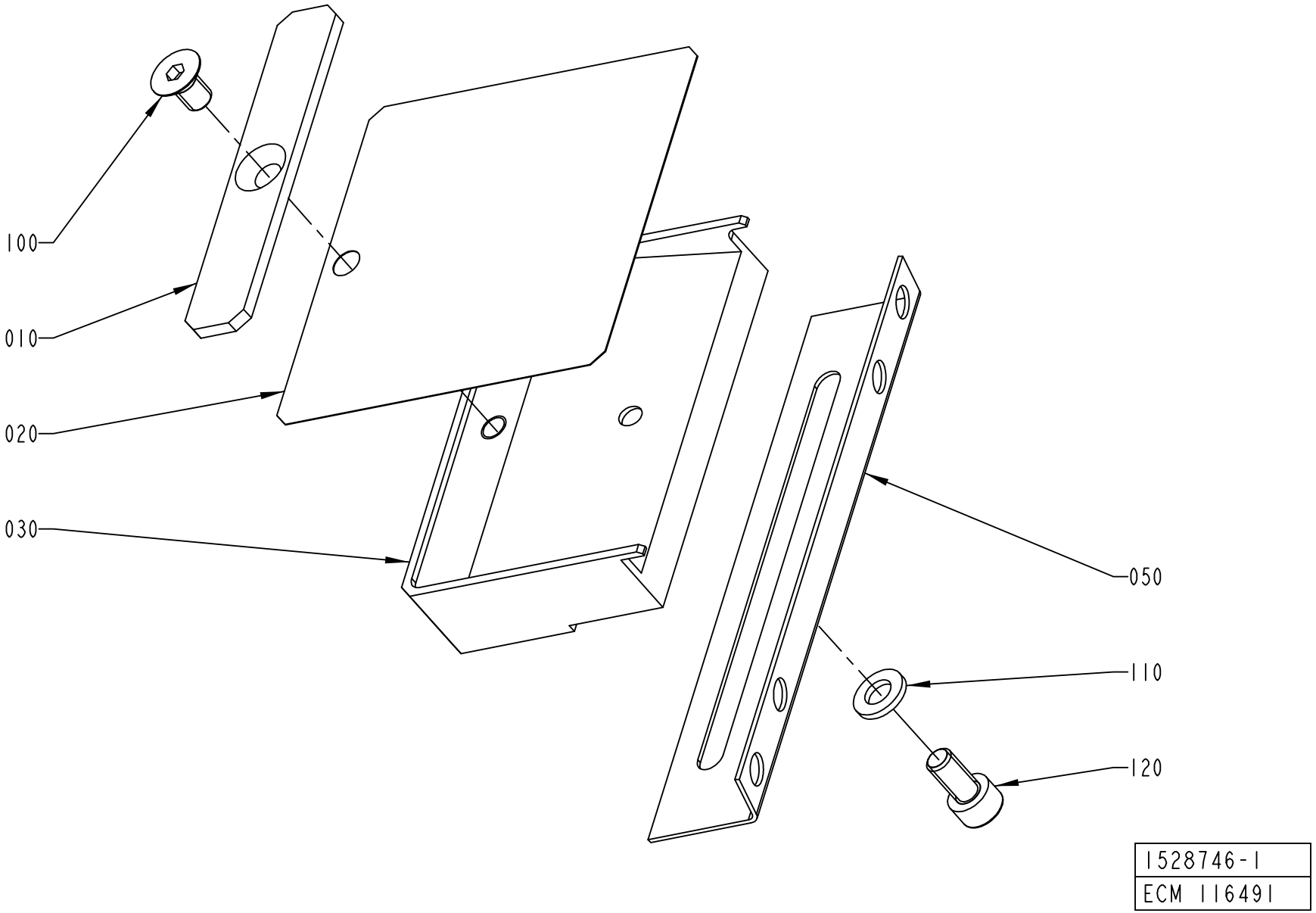
100
010
020
030
050
110
120
1528746-1
ECM 116491

ECM: 116491 - 20030123
Group number: 1528746-0100
Assembly Drawing: 1528746-1_1_AA

Pos	Part No	UN	Qty	Description	Page No
-					
010	1490715-0000		1	DOLLY	
020	1490714-0000		1	GUIDE	
030	1490713-0000		1	SPRING HOLDER	
040	1519799-0000		1	ANGLE BRACKET	
100	312155-0364		1	SCREW EN 10642 MF6S M6X10 A480	
110	315105-0153		1	WASHER BRB6,4X12RFR	
120	312115-0366		1	SCREW ISO4762 M6X12 A4	

Pos	Part No	UN	Qty	Description	Page No

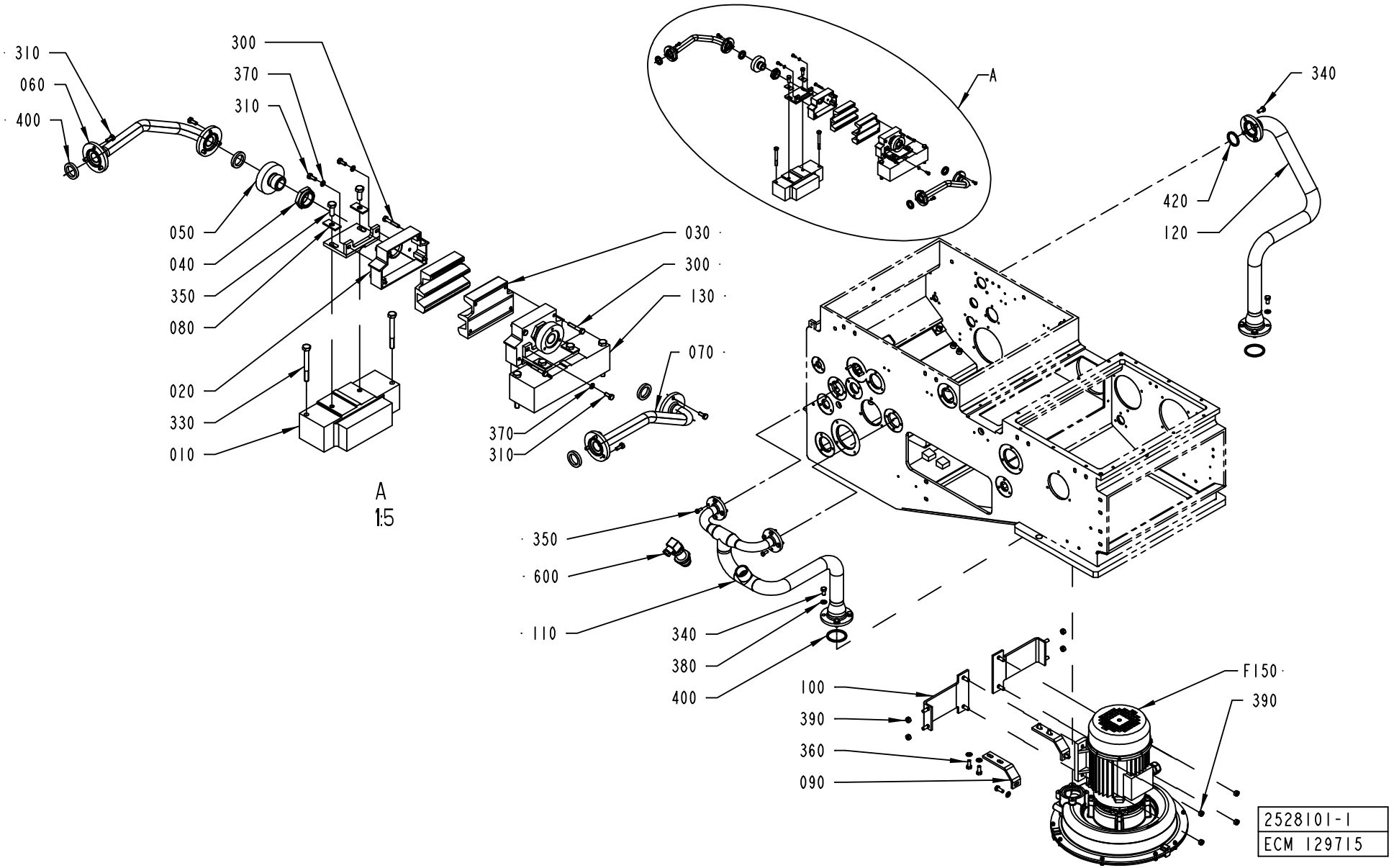
310
060
400
300
370
310
050
040
350
080
020
330
010
030
300
130
070
370
310
A
1:5
A
340
420
120
350
600
110
340
380
400
100
390
360
090
F150
390
2528101-1
ECM 129715

ECM: 129722 - 20030620
Group number: 2528101-0100
Assembly Drawing: 2528101-1_1_AA

Pos	Part No	UN	Qty	Description	Page No
-					
010	2553093-0000		1	PLATE	
015	2611104-0000		2	HOLDER	
020	2565482-0000		2	BOX	
030	2565483-0000		2	NOZZLE	
040	1484969-0000		2	SLEEVE	
050	2616237-0000		2	CONNECTION	
060	2553095-0000		1	PIPE	
070	2553094-0000		1	PIPE	
080	2616236-0000		4	WASHER	
090	2616238-0000		2	HOLDER	
100	2616239-0000		2	HOLDER	
110	1523680-0000		1	PIPE	
120	2616240-0000		1	PIPE	
130	2553092-0000		1	PLATE	
300	312105-0297		8	SCREW M6S ISO 4017 M4X25 A470	
310	312105-0289		16	SCREW M6S ISO 4017 M4X10 A470	
330	312105-0381		4	SCREW M6S ISO 4014 M6X55 A480	
340	312105-0449		12	SCREW M6S ISO 4017 M8X16 A480	
350	312105-0368		12	SCREW M6S ISO 4017 M6X16 A480	
360	312105-0451		6	SCREW M6S ISO 4017 M8X20 A480	
370	315105-0136		4	WASHER BRB4,3XRFR	
380	315105-0165		14	WASHER BRB8,4X16RFR	
390	312605-0318		8	HEXAGON NUT, M6M M8 A280	
400	315229-0102		4	GASKETS, 16,8X23,8X3,7 MM 3/4" FDA	
410	315229-0105		2	GASKETS, 48,5X55,5X3,7 MM 2" FDA	
420	315229-0104		1	GASKETS, 35,8X42,8X3,7 MM 1"1/2 FD	
600	90459-0642		1	PRESSURE TRANSMITTER 0 - 0,250 BAR	
F150	1523691-0100		1	BLOWING DEVICE	**1-99**

Pos	Part No	UN	Qty	Description	Page No

Machine Type	Group Description	Used-In	Group Number	Page No

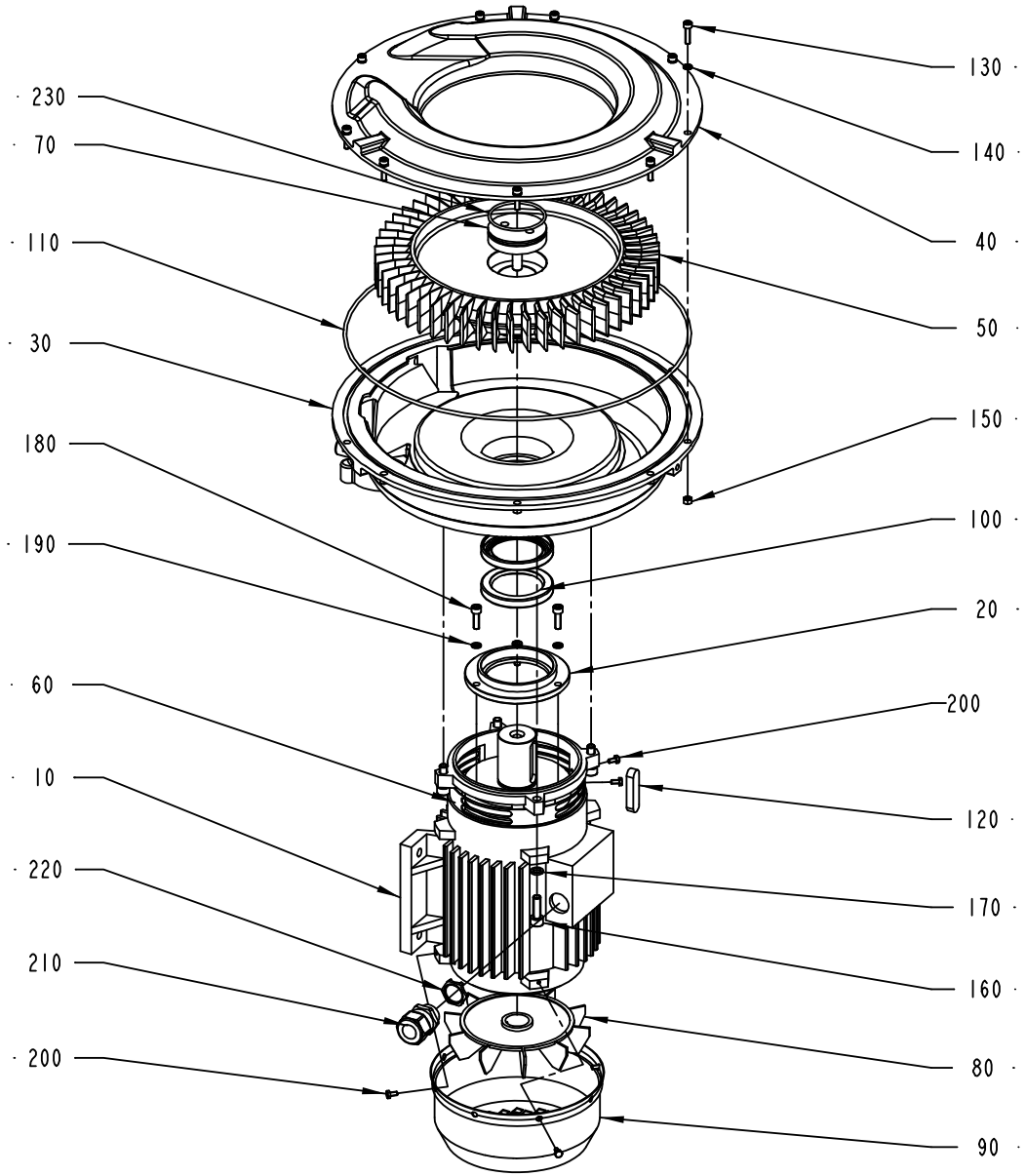
230
70
110
30
180
190
60
10
220
210
200
130
140
40
50
150
100
20
200
120
170
160
80
90
1523691-1
ECM 151236

ECM: 177871 - 20040701
Group number: 1523691-0100
Assembly Drawing: 1523691-1_1_AC

Pos	Part No	UN	Qty	Description	Page No
-					
010	90459-0804		1	MOTOR B3/B5 CE CODE: 159353	
	90459-3854		*1*	*ANG. BALL BEAR, 45X85X30,2 MM*	
020	2503634-0000		1	BEARING FLANGE	
030	1523687-0000		1	PUMP BODY	
040	1523686-0000		1	LID	
050	1523685-0000		1	IMPELLER	
060	2503635-0000		1	SHIELD	
070	2503636-0000		1	STOP SCREW	
080	2503637-0000		1	FAN	
090	2503638-0000		1	FAN HOUSING	
100	90459-0802		2	RADIAL SEAL 55X75X10 MM	
110	90459-0803		1	O-RING 355,19X3,53 MM	
120	315705-0334		1	PARALLEL KEY W. ROUND ENDS 12X8X50 MM	
130	312115-0331		9	SCREW ISO4762 M5X20 A4	
140	90062-0029		9	WASHER LOCK 5,1X 8,6, T= 1,5 DIN 7980	
150	312605-0314		9	HEXAGON NUT, M6M M5 A280	
160	312115-0453		4	SCREW ISO4762 M8X25 A4	
170	90062-0031		4	"LOCK WASHER 8,2X12,8; T=2 DIN 7980"	
180	312115-0370		3	SCREW ISO4762 M6X20 A4	
190	90062-0030		3	LOCK WASHER 6,1X9,7; T=1,5 DIN 7980	
200	312105-0287		6	SCREW M6S ISO4017 M4X8 A470	
210	353245-0005		1	GLAND, EXTENDED WITH INSERT, PG16/PR 22,	
220	90099-0178		1	GLAND, LOCKNUT, PG 16	
230	315202-0739		1	O-RING 55,25X2,62 MM	

Pos	Part No	UN	Qty	Description	Page No

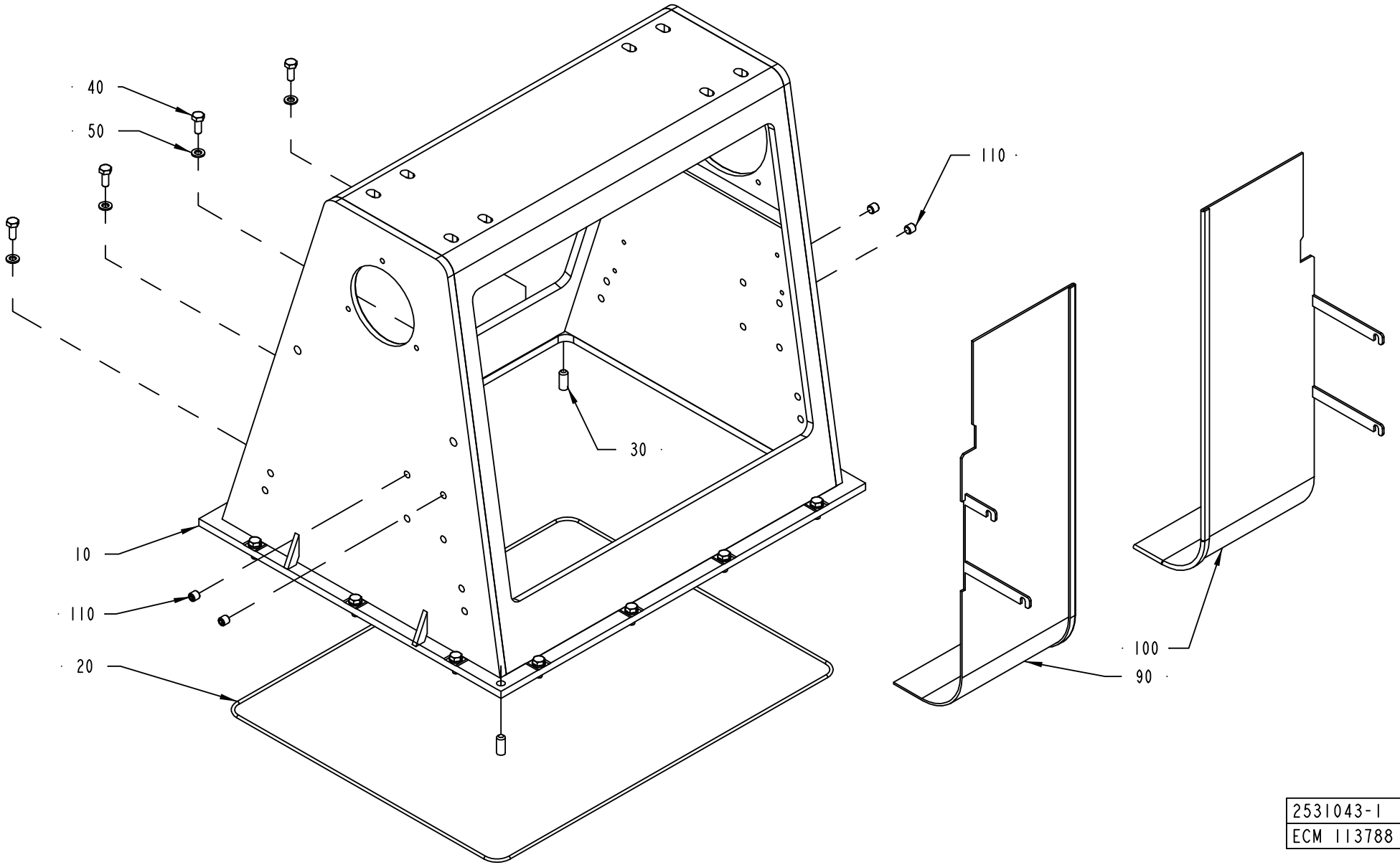

2531043-1
ECM 113788

ECM: 113788 - 20030123
Group number: 2531043-0100
Assembly Drawing: 2531043-1_1_AA

Pos	Part No	UN	Qty	Description	Page No
-					
010	2531044-0000		1	BOX FRAME	
020	90459-1314		1	O-RING 491X3 MM	
030	311103-0401		2	PARALLEL PIN ISO 2338 8M6X20 A1	
040	312105-0368		14	SCREW M6S ISO 4017 M6X16 A480	
050	315105-0153		14	WASHER BRB6,4X12RFR	
060	90153-0023		1	ADHESIVE, SILICON 251470 TUB 90CC	
090	2532963-0000		1	DEFLECTOR	
100	2532964-0000		1	DEFLECTOR	
110	312318-0443		4	SCREW ISO4029 M8X8 A4	

Pos	Part No	UN	Qty	Description	Page No

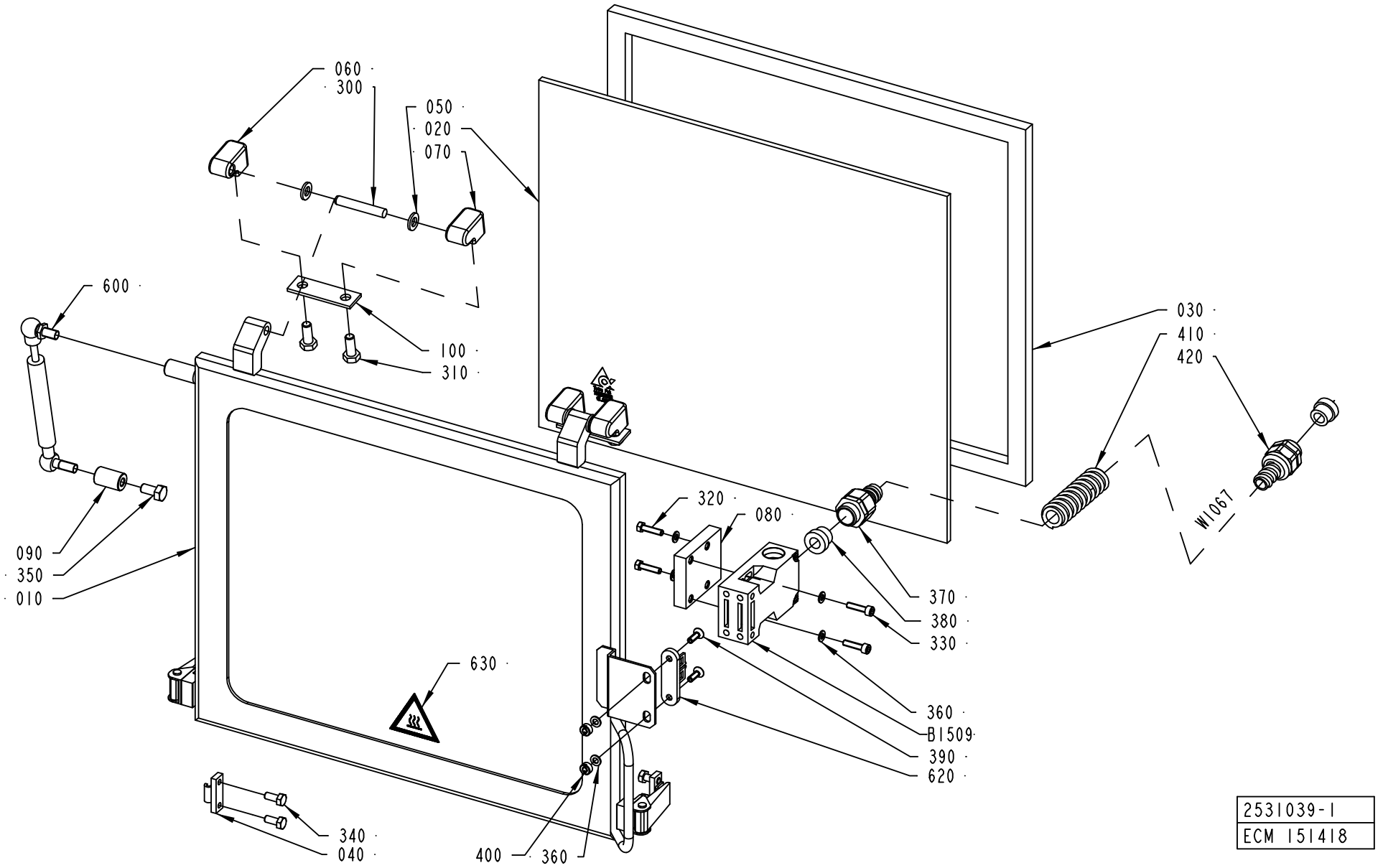
060
300
050
020
070
600
100
310
030
410
420
W1067
320
080
090
350
010
370
380
330
630
360
B1509
390
620
340
040
400
360
2531039-1
ECM 151418

ECM: 177408 - 50001231
Group number: 2531039-0100
Assembly Drawing: 2531039-1_1_AC

Pos	Part No	UN	Qty	Description	Page No
-					
010	2531038-0000		1	FRAME	
020	2531041-0000		1	GLASS PANE	
030	2531040-0000		1	GASKET	
040	271860-0000		2	CLAMP BLOCK	
050	441739-0000		4	WASHER	
060	1549992-0000		2	HINGE FLANGE	
070	1549993-0000		2	HINGE FLANGE	
080	2541651-0000		1	PLATE	
090	1549994-0000		1	SPACER	
100	441737-0000		2	WASHER	
300	311103-0413		2	PARALLEL PIN ISO 2338 8M6X50 A1	
310	312105-0451		4	SCREW M6S ISO 4017 M8X20 A480	
320	312105-0331		2	SCREW M6S ISO 4017 M5X20 A480	
330	312115-0331		2	SCREW ISO4762 M5X20 A4	
340	312105-0367		4	SCREW M6S ISO 4017 M6X14 A480	
350	312105-0449		1	SCREW M6S ISO 4017 M8X16 A480	
360	315105-0146		6	WASHER BRB5,3X10RFR	
370	90458-0429		1	HOSE GLAND W/O INSERT M20 EXTENDED	
380	353249-0011		2	INSERT, SINGEL HOLE, EK 153/11	
390	312155-0329		2	SCREW EN 10642 MF6S M5X16 A480	
400	575034-0000		2	ROUND NUT	
410	90152-0050	M	1	SPIRAL CONDUIT, 20X13, UL 1313	
420	353243-0009		1	HOSE GLAND W/O INSERT PG13,5 EXTENDED	
600	90347-0039		1	DAMPER	
620	90044-0310		1	KEY FOR SAFETY SWITCH, AZ 15/16 B1	
630	359705-0007		1	WARNING SIGN ISO, HOT SURFACE	
B1509	90459-0472		1	KEY SAF.SW. AZ 16 02ZVRK-M20-2152-2254	
W1067	351150-0405	M	1	CABLE OLFLEX 5X0,75 MM2 LIGHT/GREY	

Pos	Part No	UN	Qty	Description	Page No

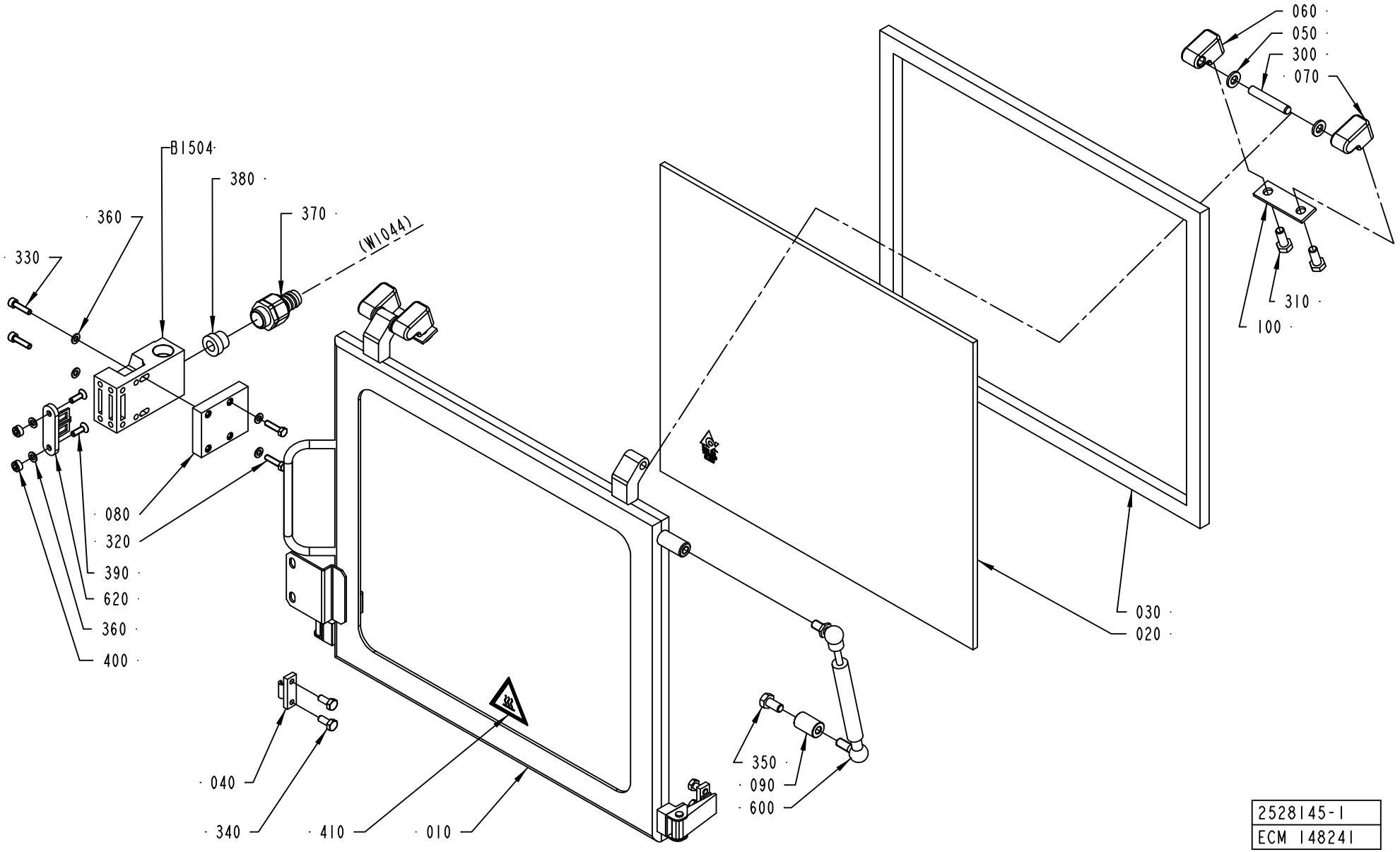

2528145-1
ECM 148241

ECM: 148241 - 20031006
Group number: 2528145-0100
Assembly Drawing: 2528145-1_1_AB

Pos	Part No	UN	Qty	Description	Page No
-					
010	2528144-0000		1	FRAME	
020	2531041-0000		1	GLASS PANE	
030	2531040-0000		1	GASKET	
040	271860-0000		2	CLAMP BLOCK	
050	441739-0000		4	WASHER	
060	1549992-0000		2	HINGE FLANGE	
070	1549993-0000		2	HINGE FLANGE	
080	2541651-0000		1	PLATE	
090	1549994-0000		1	SPACER	
100	441737-0000		2	WASHER	
300	311103-0413		2	PARALLEL PIN ISO 2338 8M6X50 A1	
310	312105-0451		4	SCREW M6S ISO 4017 M8X20 A480	
320	312105-0331		2	SCREW M6S ISO 4017 M5X20 A480	
330	312115-0331		2	SCREW ISO4762 M5X20 A4	
340	312105-0367		4	SCREW M6S ISO 4017 M6X14 A480	
350	312105-0449		1	SCREW M6S ISO 4017 M8X16 A480	
360	315105-0146		6	WASHER BRB5,3X10RFR	
370	90458-0429		1	HOSE GLAND W/O INSERT M20 EXTENDED	
380	353249-0011		1	INSERT, SINGEL HOLE, EK 153/11	
390	312155-0329		2	SCREW EN 10642 MF6S M5X16 A480	
400	575034-0000		2	ROUND NUT	
410	359705-0007		1	WARNING SIGN ISO, HOT SURFACE	
600	90347-0039		1	DAMPER	
620	90044-0310		1	KEY FOR SAFETY SWITCH, AZ 15/16 B1	
B1504	90459-0472		1	KEY SAF.SW. AZ 16 02ZVRK-M20-2152-2254	

Pos	Part No	UN	Qty	Description	Page No

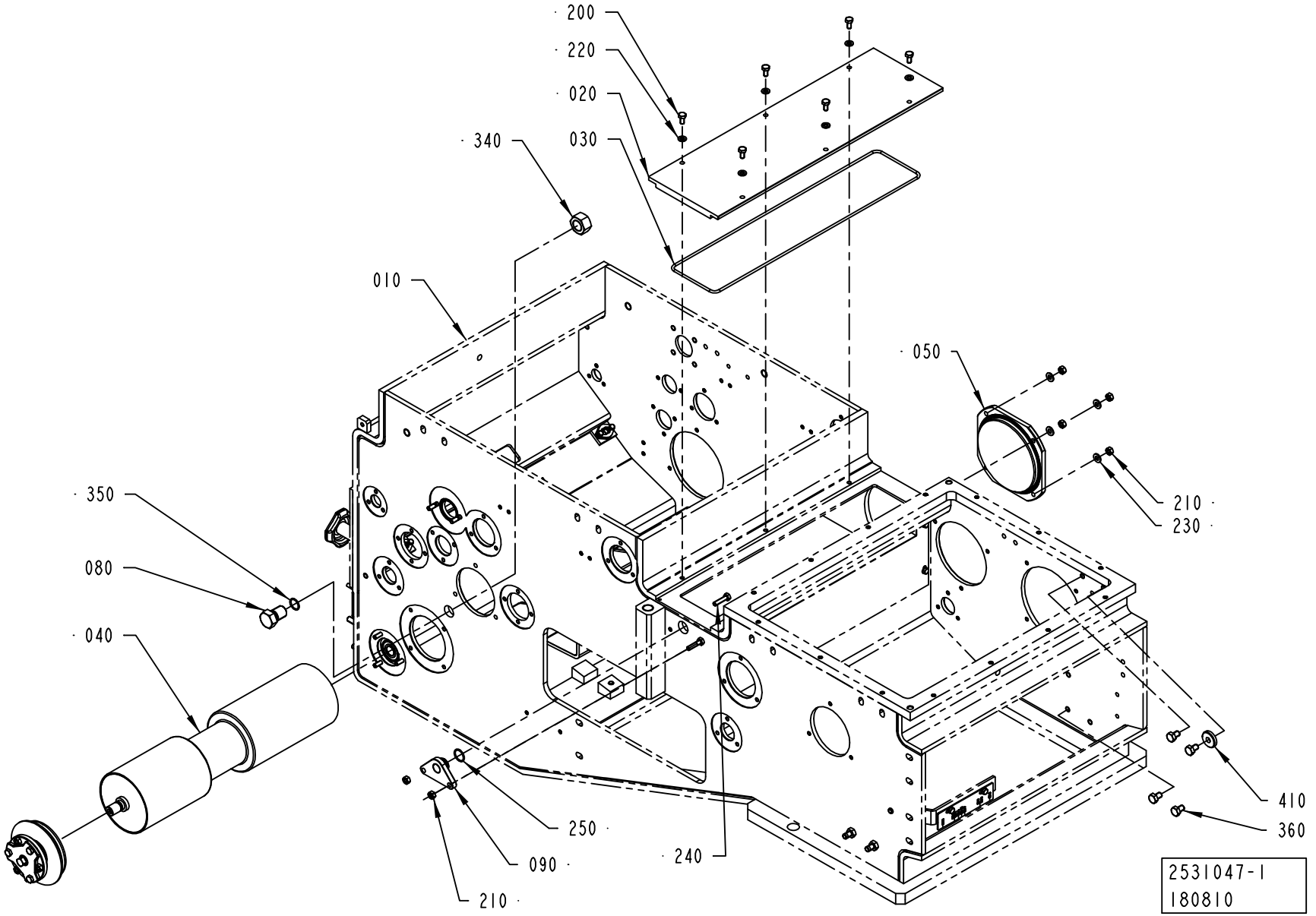
200
220
020
340
030
010
050
350
210
230
080
040
410
360
250
090
240
210
2531047-1
180810

ECM: 181437 - 50001231
Group number: 2531047-0100
Assembly Drawing: 2531047-1_1_AC

This list covers pages from 1-106 to 1-111

Pos	Part No	UN	Qty	Description	Page No
A3/FLEX DIMC/FLEX (See drawing on page: 1-106)					
020	2532896-0000		1	COVER	
030	2532897-0000		1	GASKET	
040	2531048-0000		1	BENDING ROLLER	
050	1548732-0000		1	LID	
080	2594624-0000		1	PLUG	
090	2531053-0000		1	PLUG	
200	312105-0366		6	SCREW M6S ISO 4017 M6X12 A480	
210	312605-0316		6	HEXAGON NUT, M6M M6 A280	
220	315105-0153		6	WASHER BRB6,4X12RFR	
230	315105-0156		4	WASHER BRB 6.7X14 RFR	
240	312105-0372		2	SCREW M6S ISO 4017 M6X25 A480	
250	315205-0705		1	O-RING 17,17X1,78 MM	
340	90099-0095		1	NUT HEX. M18X1,5	
350	315205-0704		1	O-RING 15,6X1,78 MM	
360	312105-0447		6	SCREW M6S ISO 4017 M8X12 A480	
410	315125-0165		1	WASHER TBRSB 8,4X26X5 A4	
A3/FLEX TBA 1000B NODIMC, A3/FLEX TBA 0500B NODIMC, A3/FLEX TBA 1000S NODIMC, A3/FLEX TBA 1000SQ NODIMC, A3/FLEX TBA 0200S NODIMC, A3/FLEX TPA 1000SQ NODIMC, A3/FLEX TBA 1500S NODIMC, A3/FLEX TBA 0200B NODIMC, A3/FLEX TBA 0250B NODIMC, A3/FLEX TBA 0330S NODIMC, A3/FLEX TPA 0330SQ NODIMC, A3/FLEX TPA 0500SQ NODIMC, A3/FLEX TBA 0200M NODIMC, A3/FLEX TBA 0250S NODIMC, A3/FLEX TBA 0500S NODIMC (See drawing on page: 1-108)					
020	2532896-0000		1	COVER	
030	2532897-0000		1	GASKET	
040	1498784-0000		1	BENDING ROLLER	
050	1548732-0000		1	LID	
090	2531053-0000		1	PLUG	
100	2531054-0000		2	PLUG	
110	2531055-0000		1	PLUG	
200	312105-0366		6	SCREW M6S ISO 4017 M6X12 A480	
210	312605-0316		14	HEXAGON NUT, M6M M6 A280	
220	315105-0153		6	WASHER BRB6,4X12RFR	
230	315105-0156		4	WASHER BRB 6.7X14 RFR	
240	312105-0372		2	SCREW M6S ISO 4017 M6X25 A480	
250	315205-0705		1	O-RING 17,17X1,78 MM	
260	315205-0802		2	O-RING 41,0X1,78 MM	
270	315229-0104		1	GASKETS, 35,8X42,8X3,7 MM 1"1/2 FD	
280	312105-0371		8	SCREW M6S ISO 4017 M6X22 A480	
290	312105-0452		4	SCREW M6S ISO 4017 M8X22 A4 80	
300	312605-0318		4	HEXAGON NUT, M6M M8 A280	
360	312105-0447		6	SCREW M6S ISO 4017 M8X12 A480	
410	315125-0165		1	WASHER TBRSB 8,4X26X5 A4	

Pos	Part No	UN	Qty	Description	Page No
A3/FLEX TBA 2000S NODIMC, A3/FLEX TBA 1890S NODIMC (See drawing on page: 1-110)					
020	2532896-0000		1	COVER	
030	2532897-0000		1	GASKET	
040	1498784-0000		1	BENDING ROLLER	
050	1548732-0000		1	LID	
090	2531053-0000		1	PLUG	
100	2531054-0000		2	PLUG	
110	2531055-0000		1	PLUG	
120	2547398-0000		1	LID	
130	2547399-0000		1	LID	
140	441737-0000		2	WASHER	
200	312105-0366		6	SCREW M6S ISO 4017 M6X12 A480	
210	312605-0316		17	HEXAGON NUT, M6M M6 A280	
220	315105-0153		8	WASHER BRB6,4X12RFR	
230	315105-0156		4	WASHER BRB 6.7X14 RFR	
240	312105-0372		2	SCREW M6S ISO 4017 M6X25 A480	
250	315205-0705		1	O-RING 17,17X1,78 MM	
260	315205-0802		2	O-RING 41,0X1,78 MM	
270	315229-0104		1	GASKETS, 35,8X42,8X3,7 MM 1"1/2 FD	
280	312105-0371		15	SCREW M6S ISO 4017 M6X22 A480	
290	312105-0452		9	SCREW M6S ISO 4017 M8X22 A4 80	
300	312605-0318		10	HEXAGON NUT, M6M M8 A280	
310	90458-0640		1	O-RING 88,62X1,78 MM	
320	90459-0094		1	O-RING 133,07X1,78 MM	
330	315105-0165		5	WASHER BRB8,4X16RFR	
360	312105-0447		6	SCREW M6S ISO 4017 M8X12 A480	
370	312105-0329		2	SCREW M6S ISO 4017 M5X16 A480	
380	315105-0146		2	WASHER BRB5,3X10RFR	
390	312605-0314		2	HEXAGON NUT, M6M M5 A280	
400	312105-0368		2	SCREW M6S ISO 4017 M6X16 A480	
Common Parts					
010	2528129-0100		1	FRAME HOUSING	**1-113**

Machine Type | Group Description | Used-In | Group Number | Page No

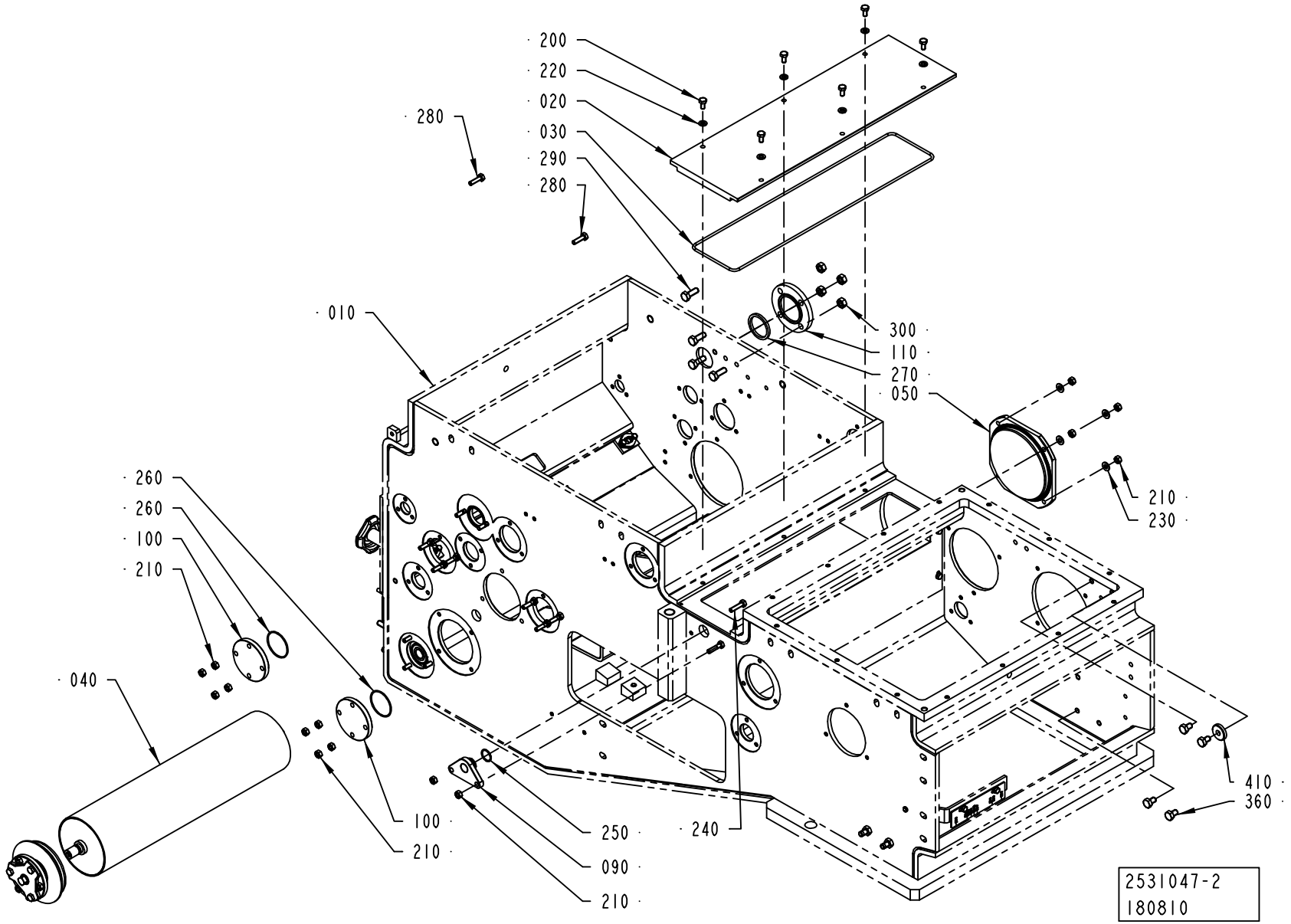
200
220
020
280
030
290
280
010
300
110
270
050
260
260
100
210
040
210
230
100
210
250
090
210
240
410
360
2531047-2
180810

ECM: 181437 - 50001231
Group number: 2531047-0100
Assembly Drawing: 2531047-2_1_AB

This list covers pages from 1-106 to 1-111

Pos	Part No	UN	Qty	Description	Page No
A3/FLEX DIMC/FLEX (See drawing on page: 1-106)					
020	2532896-0000		1	COVER	
030	2532897-0000		1	GASKET	
040	2531048-0000		1	BENDING ROLLER	
050	1548732-0000		1	LID	
080	2594624-0000		1	PLUG	
090	2531053-0000		1	PLUG	
200	312105-0366		6	SCREW M6S ISO 4017 M6X12 A480	
210	312605-0316		6	HEXAGON NUT, M6M M6 A280	
220	315105-0153		6	WASHER BRB6,4X12RFR	
230	315105-0156		4	WASHER BRB 6.7X14 RFR	
240	312105-0372		2	SCREW M6S ISO 4017 M6X25 A480	
250	315205-0705		1	O-RING 17,17X1,78 MM	
340	90099-0095		1	NUT HEX. M18X1,5	
350	315205-0704		1	O-RING 15,6X1,78 MM	
360	312105-0447		6	SCREW M6S ISO 4017 M8X12 A480	
410	315125-0165		1	WASHER TBRSB 8,4X26X5 A4	
A3/FLEX TBA 1000B NODIMC, A3/FLEX TBA 0500B NODIMC, A3/FLEX TBA 1000S NODIMC, A3/FLEX TBA 1000SQ NODIMC, A3/FLEX TBA 0200S NODIMC, A3/FLEX TPA 1000SQ NODIMC, A3/FLEX TBA 1500S NODIMC, A3/FLEX TBA 0200B NODIMC, A3/FLEX TBA 0250B NODIMC, A3/FLEX TBA 0330S NODIMC, A3/FLEX TPA 0330SQ NODIMC, A3/FLEX TPA 0500SQ NODIMC, A3/FLEX TBA 0200M NODIMC, A3/FLEX TBA 0250S NODIMC, A3/FLEX TBA 0500S NODIMC (See drawing on page: 1-108)					
020	2532896-0000		1	COVER	
030	2532897-0000		1	GASKET	
040	1498784-0000		1	BENDING ROLLER	
050	1548732-0000		1	LID	
090	2531053-0000		1	PLUG	
100	2531054-0000		2	PLUG	
110	2531055-0000		1	PLUG	
200	312105-0366		6	SCREW M6S ISO 4017 M6X12 A480	
210	312605-0316		14	HEXAGON NUT, M6M M6 A280	
220	315105-0153		6	WASHER BRB6,4X12RFR	
230	315105-0156		4	WASHER BRB 6.7X14 RFR	
240	312105-0372		2	SCREW M6S ISO 4017 M6X25 A480	
250	315205-0705		1	O-RING 17,17X1,78 MM	
260	315205-0802		2	O-RING 41,0X1,78 MM	
270	315229-0104		1	GASKETS, 35,8X42,8X3,7 MM 1"1/2 FD	
280	312105-0371		8	SCREW M6S ISO 4017 M6X22 A480	
290	312105-0452		4	SCREW M6S ISO 4017 M8X22 A4 80	
300	312605-0318		4	HEXAGON NUT, M6M M8 A280	
360	312105-0447		6	SCREW M6S ISO 4017 M8X12 A480	
410	315125-0165		1	WASHER TBRSB 8,4X26X5 A4	

Pos	Part No	UN	Qty	Description	Page No
A3/FLEX TBA 2000S NODIMC, A3/FLEX TBA 1890S NODIMC (See drawing on page: 1-110)					
020	2532896-0000		1	COVER	
030	2532897-0000		1	GASKET	
040	1498784-0000		1	BENDING ROLLER	
050	1548732-0000		1	LID	
090	2531053-0000		1	PLUG	
100	2531054-0000		2	PLUG	
110	2531055-0000		1	PLUG	
120	2547398-0000		1	LID	
130	2547399-0000		1	LID	
140	441737-0000		2	WASHER	
200	312105-0366		6	SCREW M6S ISO 4017 M6X12 A480	
210	312605-0316		17	HEXAGON NUT, M6M M6 A280	
220	315105-0153		8	WASHER BRB6,4X12RFR	
230	315105-0156		4	WASHER BRB 6.7X14 RFR	
240	312105-0372		2	SCREW M6S ISO 4017 M6X25 A480	
250	315205-0705		1	O-RING 17,17X1,78 MM	
260	315205-0802		2	O-RING 41,0X1,78 MM	
270	315229-0104		1	GASKETS, 35,8X42,8X3,7 MM 1"1/2 FD	
280	312105-0371		15	SCREW M6S ISO 4017 M6X22 A480	
290	312105-0452		9	SCREW M6S ISO 4017 M8X22 A4 80	
300	312605-0318		10	HEXAGON NUT, M6M M8 A280	
310	90458-0640		1	O-RING 88,62X1,78 MM	
320	90459-0094		1	O-RING 133,07X1,78 MM	
330	315105-0165		5	WASHER BRB8,4X16RFR	
360	312105-0447		6	SCREW M6S ISO 4017 M8X12 A480	
370	312105-0329		2	SCREW M6S ISO 4017 M5X16 A480	
380	315105-0146		2	WASHER BRB5,3X10RFR	
390	312605-0314		2	HEXAGON NUT, M6M M5 A280	
400	312105-0368		2	SCREW M6S ISO 4017 M6X16 A480	
Common Parts					
010	2528129-0100		1	FRAME HOUSING	**1-113**

Machine Type	Group Description	Used-In	Group Number	Page No

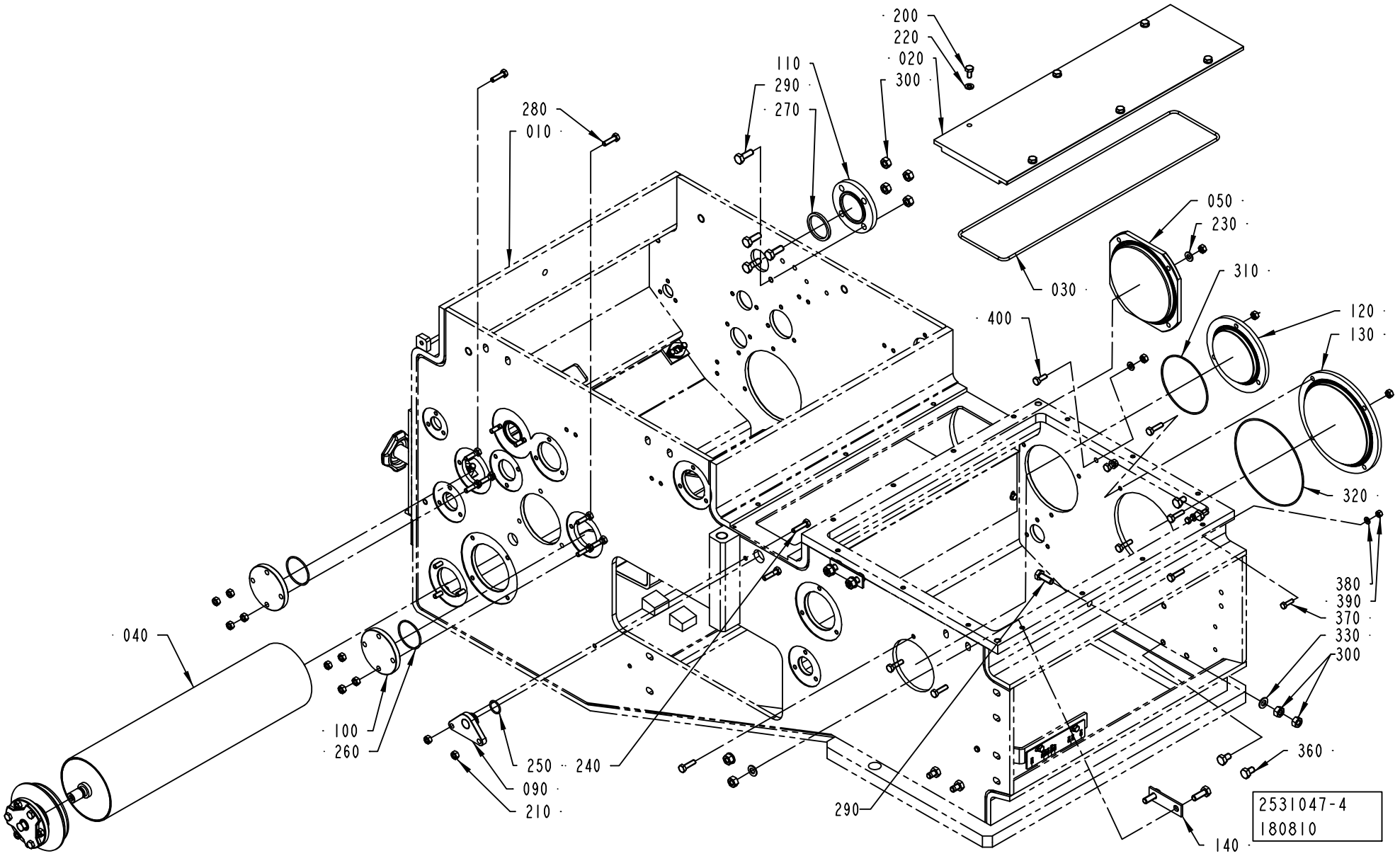
200
220
020
300
110
290
270
280
010
050
230
310
030
400
120
130
320
380
390
370
330
300
040
100
260
250
240
090
210
290
360
140
2531047-4
180810

ECM: 181437 - 50001231
Group number: 2531047-0100
Assembly Drawing: 2531047-4_1_AB

This list covers pages from 1-106 to 1-111

Pos	Part No	UN	Qty	Description	Page No
A3/FLEX DIMC/FLEX (See drawing on page: 1-106)					
020	2532896-0000		1	COVER	
030	2532897-0000		1	GASKET	
040	2531048-0000		1	BENDING ROLLER	
050	1548732-0000		1	LID	
080	2594624-0000		1	PLUG	
090	2531053-0000		1	PLUG	
200	312105-0366		6	SCREW M6S ISO 4017 M6X12 A480	
210	312605-0316		6	HEXAGON NUT, M6M M6 A280	
220	315105-0153		6	WASHER BRB6,4X12RFR	
230	315105-0156		4	WASHER BRB 6.7X14 RFR	
240	312105-0372		2	SCREW M6S ISO 4017 M6X25 A480	
250	315205-0705		1	O-RING 17,17X1,78 MM	
340	90099-0095		1	NUT HEX. M18X1,5	
350	315205-0704		1	O-RING 15,6X1,78 MM	
360	312105-0447		6	SCREW M6S ISO 4017 M8X12 A480	
410	315125-0165		1	WASHER TBRSB 8,4X26X5 A4	
A3/FLEX TBA 1000B NODIMC, A3/FLEX TBA 0500B NODIMC, A3/FLEX TBA 1000S NODIMC, A3/FLEX TBA 1000SQ NODIMC, A3/FLEX TBA 0200S NODIMC, A3/FLEX TPA 1000SQ NODIMC, A3/FLEX TBA 1500S NODIMC, A3/FLEX TBA 0200B NODIMC, A3/FLEX TBA 0250B NODIMC, A3/FLEX TBA 0330S NODIMC, A3/FLEX TPA 0330SQ NODIMC, A3/FLEX TPA 0500SQ NODIMC, A3/FLEX TBA 0200M NODIMC, A3/FLEX TBA 0250S NODIMC, A3/FLEX TBA 0500S NODIMC (See drawing on page: 1-108)					
020	2532896-0000		1	COVER	
030	2532897-0000		1	GASKET	
040	1498784-0000		1	BENDING ROLLER	
050	1548732-0000		1	LID	
090	2531053-0000		1	PLUG	
100	2531054-0000		2	PLUG	
110	2531055-0000		1	PLUG	
200	312105-0366		6	SCREW M6S ISO 4017 M6X12 A480	
210	312605-0316		14	HEXAGON NUT, M6M M6 A280	
220	315105-0153		6	WASHER BRB6,4X12RFR	
230	315105-0156		4	WASHER BRB 6.7X14 RFR	
240	312105-0372		2	SCREW M6S ISO 4017 M6X25 A480	
250	315205-0705		1	O-RING 17,17X1,78 MM	
260	315205-0802		2	O-RING 41,0X1,78 MM	
270	315229-0104		1	GASKETS, 35,8X42,8X3,7 MM 1"1/2 FD	
280	312105-0371		8	SCREW M6S ISO 4017 M6X22 A480	
290	312105-0452		4	SCREW M6S ISO 4017 M8X22 A4 80	
300	312605-0318		4	HEXAGON NUT, M6M M8 A280	
360	312105-0447		6	SCREW M6S ISO 4017 M8X12 A480	
410	315125-0165		1	WASHER TBRSB 8,4X26X5 A4	

Pos	Part No	UN	Qty	Description	Page No
A3/FLEX TBA 2000S NODIMC, A3/FLEX TBA 1890S NODIMC (See drawing on page: 1-110)					
020	2532896-0000		1	COVER	
030	2532897-0000		1	GASKET	
040	1498784-0000		1	BENDING ROLLER	
050	1548732-0000		1	LID	
090	2531053-0000		1	PLUG	
100	2531054-0000		2	PLUG	
110	2531055-0000		1	PLUG	
120	2547398-0000		1	LID	
130	2547399-0000		1	LID	
140	441737-0000		2	WASHER	
200	312105-0366		6	SCREW M6S ISO 4017 M6X12 A480	
210	312605-0316		17	HEXAGON NUT, M6M M6 A280	
220	315105-0153		8	WASHER BRB6,4X12RFR	
230	315105-0156		4	WASHER BRB 6.7X14 RFR	
240	312105-0372		2	SCREW M6S ISO 4017 M6X25 A480	
250	315205-0705		1	O-RING 17,17X1,78 MM	
260	315205-0802		2	O-RING 41,0X1,78 MM	
270	315229-0104		1	GASKETS, 35,8X42,8X3,7 MM 1"1/2 FD	
280	312105-0371		15	SCREW M6S ISO 4017 M6X22 A480	
290	312105-0452		9	SCREW M6S ISO 4017 M8X22 A4 80	
300	312605-0318		10	HEXAGON NUT, M6M M8 A280	
310	90458-0640		1	O-RING 88,62X1,78 MM	
320	90459-0094		1	O-RING 133,07X1,78 MM	
330	315105-0165		5	WASHER BRB8,4X16RFR	
360	312105-0447		6	SCREW M6S ISO 4017 M8X12 A480	
370	312105-0329		2	SCREW M6S ISO 4017 M5X16 A480	
380	315105-0146		2	WASHER BRB5,3X10RFR	
390	312605-0314		2	HEXAGON NUT, M6M M5 A280	
400	312105-0368		2	SCREW M6S ISO 4017 M6X16 A480	
Common Parts					
010	2528129-0100		1	FRAME HOUSING	**1-113**

Machine Type | Group Description | Used-In | Group Number | Page No

FRAME HOUSING

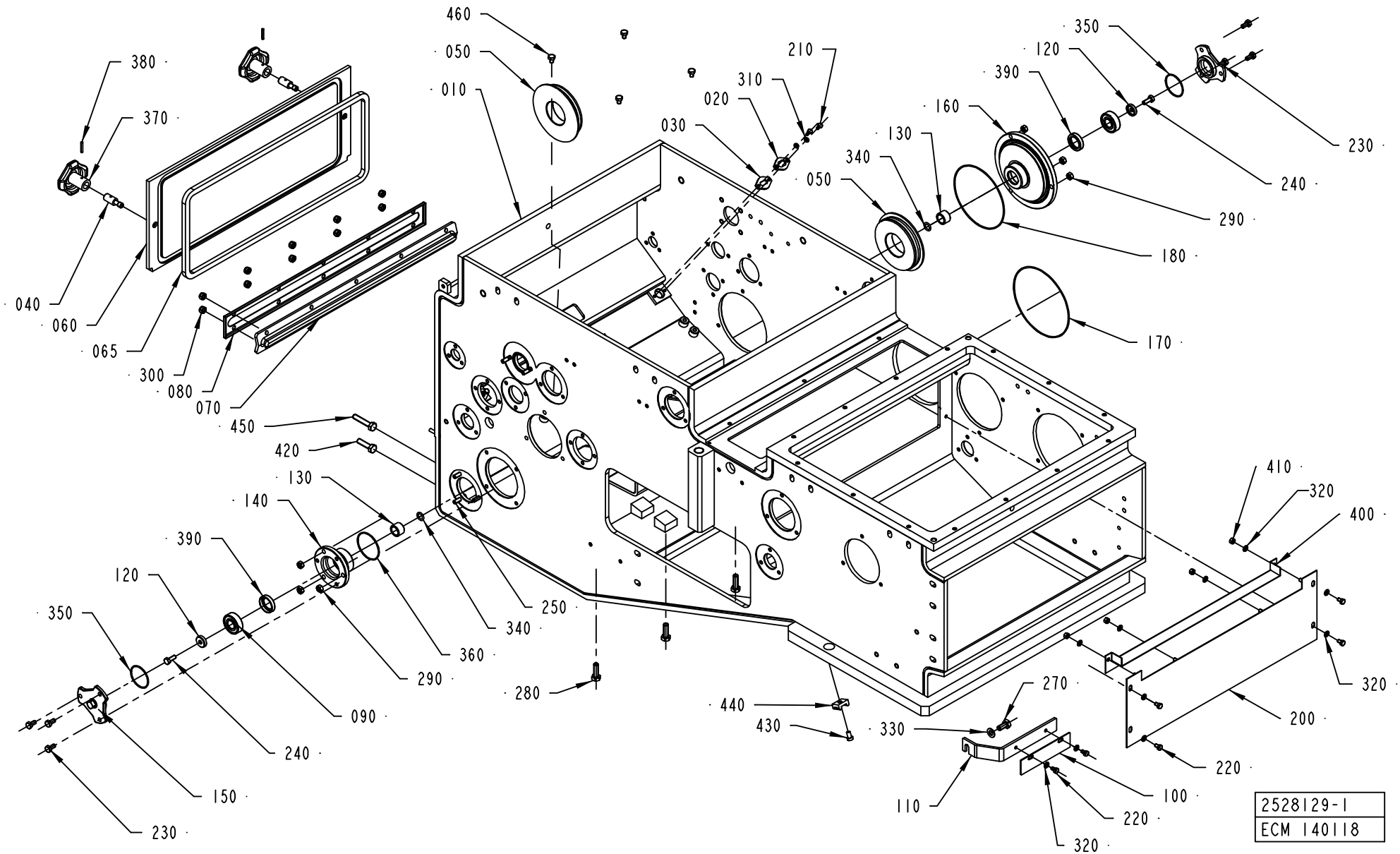

ECM: 181628 - 50001231
Group number: 2528129-0100
Assembly Drawing: 2528129-1_1_AB

Pos	Part No	UN	Qty	Description	Page No
TBA 0330S, TBA 0200B, TBA 0200S, TBA 0250B					
200	2619171-0000		1	PLATE	
320	315105-0146		10	WASHER BRB5,3X10RFR	
400	2619759-0000		1	SLIDE	
410	312605-0314		4	HEXAGON NUT, M6M M5 A280	
420	312105-0455		2	SCREW M6S ISO 4017 M8X30 A480	
430	312125-0364		6	SCREW ISO 1207 M6X10 A4	
440	352113-0204		6	ANCHOR PLATES FOR STRIPS, TYPE TM3S25-M	
450	312109-0459		2	SCREW M6S ISO 4017 M8X40 A480	
460	312105-0362		4	SCREW M6S ISO 4017 M6X8 A480	
TBA 0500B, TBA 1000S, TBA 1000SQ, TBA 1000B, TBA 1500S, TPA 1000SQ					
200	2619171-0000		1	PLATE	
320	315105-0146		10	WASHER BRB5,3X10RFR	
400	2619069-0000		1	SLIDE	
410	312605-0314		4	HEXAGON NUT, M6M M5 A280	
420	312105-0455		2	SCREW M6S ISO 4017 M8X30 A480	
430	312125-0364		6	SCREW ISO 1207 M6X10 A4	
440	352113-0204		6	ANCHOR PLATES FOR STRIPS, TYPE TM3S25-M	
450	312109-0459		2	SCREW M6S ISO 4017 M8X40 A480	
460	312105-0362		4	SCREW M6S ISO 4017 M6X8 A480	
TBA 1890S, TBA 2000S					
200	2592530-0000		1	PLATE	
320	315105-0146		6	WASHER BRB5,3X10RFR	
Common Parts					
010	2532985-0000		1	DRYING CHAMBER	
020	2528133-0000		2	WASHER	
030	2528134-0000		2	GASKET	
040	1036475-0000		2	PIN	
050	1498783-0000		2	WHEEL	
060	1499168-0000		1	LID	
065	1499169-0000		1	GASKET	
070	1499170-0000		1	GASKET	
080	1499171-0000		1	LID	
090	90458-1704		2	BALL BEARING, 15X35X11 MM	
100	1523206-0000		1	RULER	
110	1523207-0000		1	BRACKET	
120	1538725-0000		2	WASHER	
130	1538726-0000		2	BUSHING	
140	1548734-0000		1	FLANGE	
150	1548735-0000		2	LID	
160	1548739-0000		1	FLANGE	
170	90459-1686		1	O-RING 126,72X1,78 MM	
180	90459-1627		1	O-RING 114,02X1,78 MM	
210	312105-0289		4	SCREW M6S ISO 4017 M4X10 A470	
220	312105-0323		6	SCREW M6S ISO 4017 M5X8 A480	
230	312105-0366		6	SCREW M6S ISO 4017 M6X12 A480	
240	312105-0368		2	SCREW M6S ISO 4017 M6X16 A480	
250	312105-0370		16	SCREW M6S ISO 4017 M6X20 A480	
270	312105-0449		1	SCREW M6S ISO 4017 M8X16 A480	
280	312105-0453		3	SCREW M6S ISO 4017 M8X25 A480	
290	312605-0316		6	HEXAGON NUT, M6M M6 A280	
300	312812-0316		10	HEXAGON NUT, NY-LOCK M6 A480	
310	315105-0136		4	WASHER BRB4,3XRFR	
330	315105-0165		1	WASHER BRB8,4X16RFR	
340	315204-0209		2	O-RING 10,3X2,4 MM	
350	315205-0801		2	O-RING 37,82X1,78 MM	
360	315205-0804		1	O-RING 47,35X1,78 MM	
370	90051-0045		2	STELLAR KNOB, NO. 8323-2575	
380	90258-0031		2	PIN, STRAIGHT SLOTTED SPRING FRP 3X20	
390	90458-0639		2	VARILIP 20X30X7 MM	

Machine Type | Group Description | Used-In | Group Number | Page No

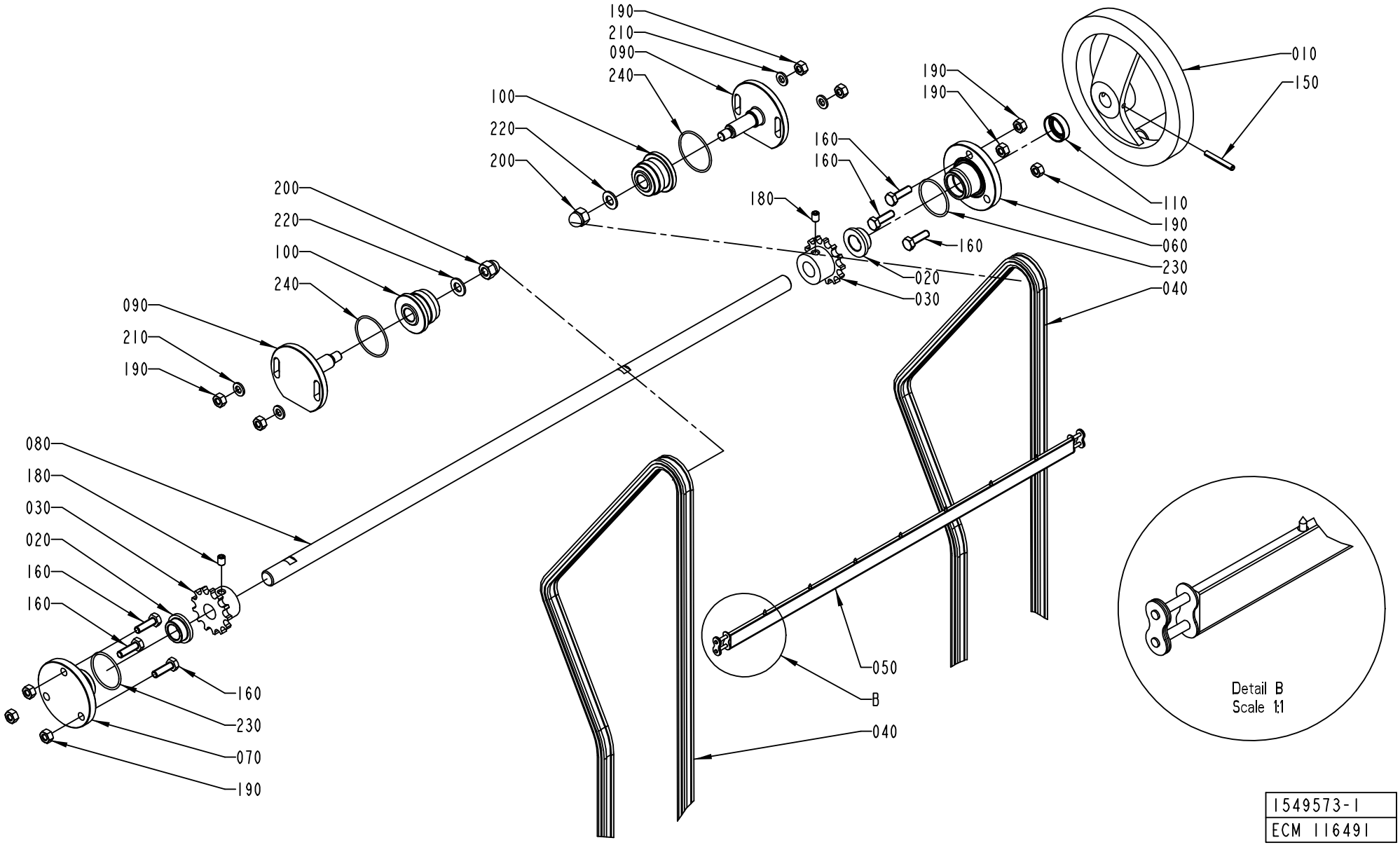
190
210
090
240
100
220
200
200
220
100
240
090
210
190
080
180
030
020
160
160
160
230
070
190
180
160
160
020
030
190
190
010
150
110
190
060
230
040
040
050
B
Detail B
Scale 1:1
1549573-1
ECM 116491

ECM: 116491 - 20030123
Group number: 1549573-0100
Assembly Drawing: 1549573-1_1_AA

Pos	Part No	UN	Qty	Description	Page No
-					
010	247358-0000		1	SHIFTER HANDLE	
020	279008-0000		2	BUSHING	
030	1038464-0000		2	SPROCKET	
040	1549568-0000		2	CHAIN	
050	1511740-0000		1	CARRIER	
060	1549982-0000		1	FLANGE	
070	1549981-0000		1	FLANGE	
080	1523190-0000		1	SHAFT	
090	1523191-0000		2	SHAFT	
100	1532249-0000		2	WHEEL	
110	90459-1148		1	VARILIP 14X24X7 MM	
150	311112-0262		1	SPRING PIN, ISO 8752 4X32-C	
160	312105-0370		6	SCREW M6S ISO 4017 M6X20 A480	
180	312318-0362		2	SCREW ISO4029 M6X8 A4	
190	312605-0316		10	HEXAGON NUT, M6M M6 A280	
200	312705-0318		2	NUT HEX. DOMED CAP MHM-6 M8 A280	
210	315105-0153		4	WASHER BRB6,4X12RFR	
220	315105-0165		2	WASHER BRB8,4X16RFR	
230	315205-0714		2	O-RING 31,47X1,78 MM	
240	315204-0123		2	O-RING 35,1X1,6 MM	

Pos	Part No	UN	Qty	Description	Page No

SQUEE-GEE ROLLER

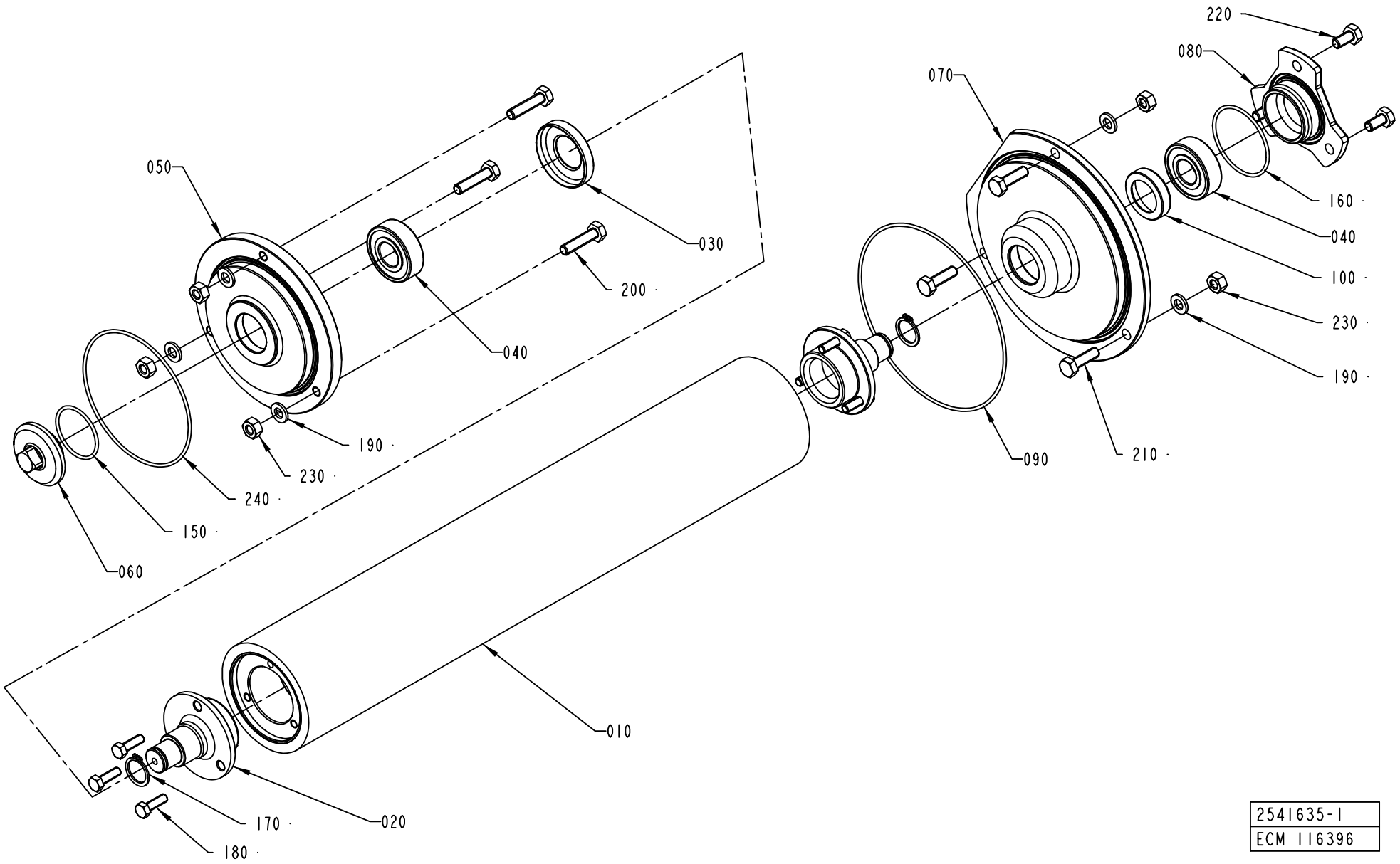

2541635-1
ECM 116396

ECM: 174650 - 50001231
Group number: 2541635-0100
Assembly Drawing: 2541635-1_1_AA

This list covers pages from 1-116 to 1-121

Pos	Part No	UN	Qty	Description	Page No
A3/FLEX DIMC/FLEX (See drawing on page: 1-118)					
010	2528136-0000		1	SQUEE-GEE ROLLER	
070	2532984-0000		1	FLANGE	
A3/FLEX TBA 2000S NODIMC, A3/FLEX TBA 1890S NODIMC (See drawing on page: 1-120)					
010	2547406-0000		1	ROLLER	
050	2541641-0000		1	FLANGE	
070	2541640-0000		1	FLANGE	
A3/FLEX TBA 1000B NODIMC, A3/FLEX TBA 0500B NODIMC, A3/FLEX TBA 1000S NODIMC, A3/FLEX TBA 1000SQ NODIMC, A3/FLEX TPA 1000SQ NODIMC, A3/FLEX TBA 1500S NODIMC, A3/FLEX TBA 0200B NODIMC, A3/FLEX TBA 0250B NODIMC, A3/FLEX TBA 0330S NODIMC, A3/FLEX TPA 0330SQ NODIMC, A3/FLEX TPA 0500SQ NODIMC, A3/FLEX TBA 0200M NODIMC, A3/FLEX TBA 0250S NODIMC, A3/FLEX TBA 0500S NODIMC (See drawing on page: 1-116)					
010	1511769-0000		1	ROLLER	
070	2532984-0000		1	FLANGE	
Common Parts					
020	2541637-0000		2	SHAFT	
030	2541647-0000		1	LID	
040	90458-1704		2	BALL BEARING, 15X35X11 MM	
050	2541633-0000		1	FLANGE	
060	2532983-0000		1	FLANGE	
080	2541639-0000		1	LID	
090	90459-1627		1	O-RING 114,02X1,78 MM	
100	2541648-0000		1	LID	
150	315205-0713		1	O-RING 29,87X1,78 MM	
160	315205-0802		1	O-RING 41,0X1,78 MM	
170	315751-0112		2	RETAINING RING FOR SHAFT DIN 471 15 A2	
180	312105-0329		6	SCREW M6S ISO 4017 M5X16 A480	
190	315103-0153		6	WASHER, BRB, 6,4/12,H=1,5 NIPL BR	
200	312105-0372		3	SCREW M6S ISO 4017 M6X25 A480	
210	312105-0370		3	SCREW M6S ISO 4017 M6X20 A480	
220	312105-0366		3	SCREW M6S ISO 4017 M6X12 A480	
230	312605-0316		6	HEXAGON NUT, M6M M6 A280	
240	90242-0270		1	O-RING 82,27X1,78 MM	

Pos	Part No	UN	Qty	Description	Page No

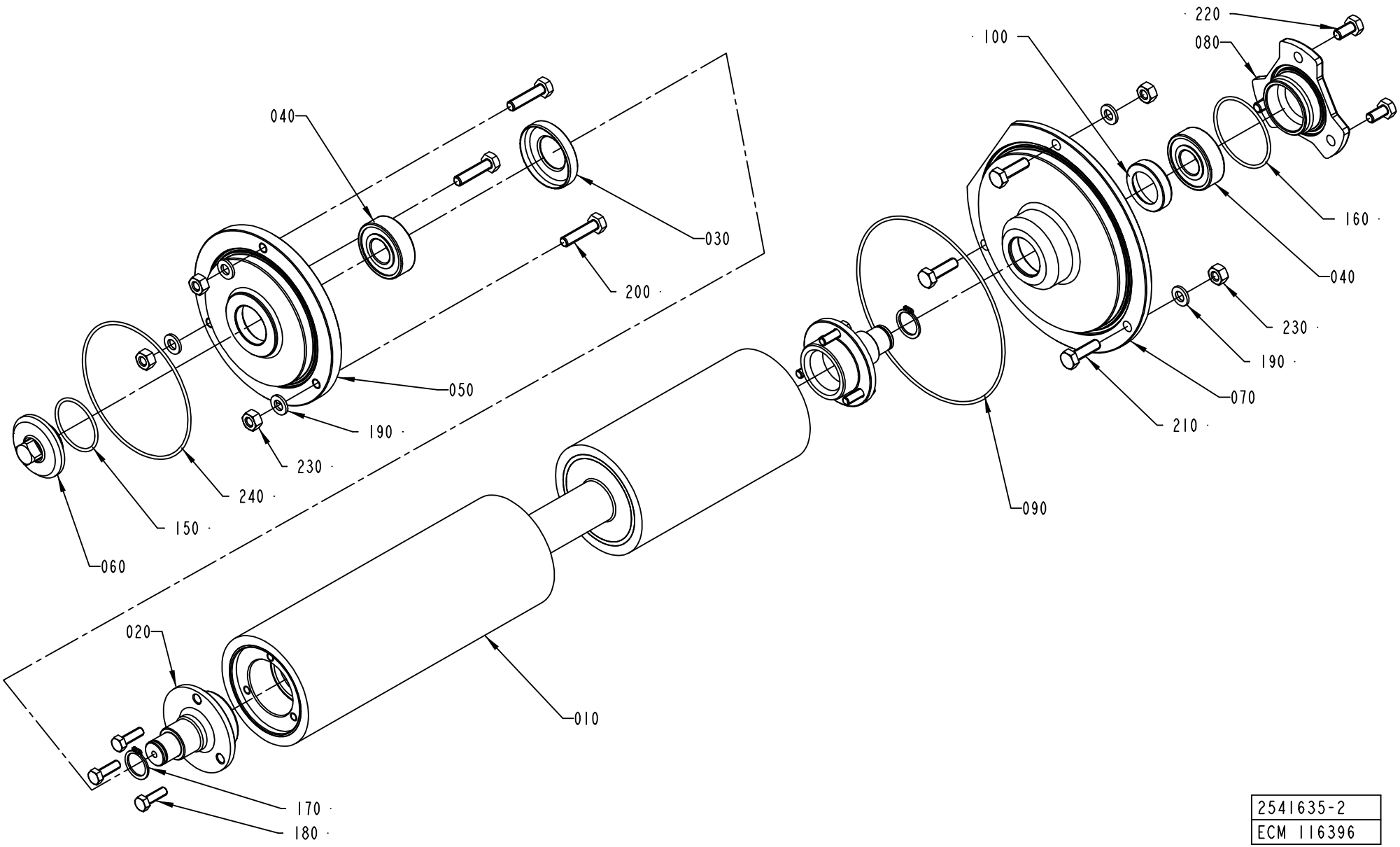

2541635-2
ECM 116396

ECM: 174650 - 50001231
Group number: 2541635-0100
Assembly Drawing: 2541635-2_1_AA

This list covers pages from 1-116 to 1-121

Pos	Part No	UN	Qty	Description	Page No
A3/FLEX DIMC/FLEX (See drawing on page: 1-118)					
010	2528136-0000		1	SQUEE-GEE ROLLER	
070	2532984-0000		1	FLANGE	
A3/FLEX TBA 2000S NODIMC, A3/FLEX TBA 1890S NODIMC (See drawing on page: 1-120)					
010	2547406-0000		1	ROLLER	
050	2541641-0000		1	FLANGE	
070	2541640-0000		1	FLANGE	
A3/FLEX TBA 1000B NODIMC, A3/FLEX TBA 0500B NODIMC, A3/FLEX TBA 1000S NODIMC, A3/FLEX TBA 1000SQ NODIMC, A3/FLEX TPA 1000SQ NODIMC, A3/FLEX TBA 1500S NODIMC, A3/FLEX TBA 0200B NODIMC, A3/FLEX TBA 0250B NODIMC, A3/FLEX TBA 0330S NODIMC, A3/FLEX TPA 0330SQ NODIMC, A3/FLEX TPA 0500SQ NODIMC, A3/FLEX TBA 0200M NODIMC, A3/FLEX TBA 0250S NODIMC, A3/FLEX TBA 0500S NODIMC (See drawing on page: 1-116)					
010	1511769-0000		1	ROLLER	
070	2532984-0000		1	FLANGE	
Common Parts					
020	2541637-0000		2	SHAFT	
030	2541647-0000		1	LID	
040	90458-1704		2	BALL BEARING, 15X35X11 MM	
050	2541633-0000		1	FLANGE	
060	2532983-0000		1	FLANGE	
080	2541639-0000		1	LID	
090	90459-1627		1	O-RING 114,02X1,78 MM	
100	2541648-0000		1	LID	
150	315205-0713		1	O-RING 29,87X1,78 MM	
160	315205-0802		1	O-RING 41,0X1,78 MM	
170	315751-0112		2	RETAINING RING FOR SHAFT DIN 471 15 A2	
180	312105-0329		6	SCREW M6S ISO 4017 M5X16 A480	
190	315103-0153		6	WASHER, BRB, 6,4/12,H=1,5 NIPL BR	
200	312105-0372		3	SCREW M6S ISO 4017 M6X25 A480	
210	312105-0370		3	SCREW M6S ISO 4017 M6X20 A480	
220	312105-0366		3	SCREW M6S ISO 4017 M6X12 A480	
230	312605-0316		6	HEXAGON NUT, M6M M6 A280	
240	90242-0270		1	O-RING 82,27X1,78 MM	

Pos	Part No	UN	Qty	Description	Page No

SQUEE-GEE ROLLER

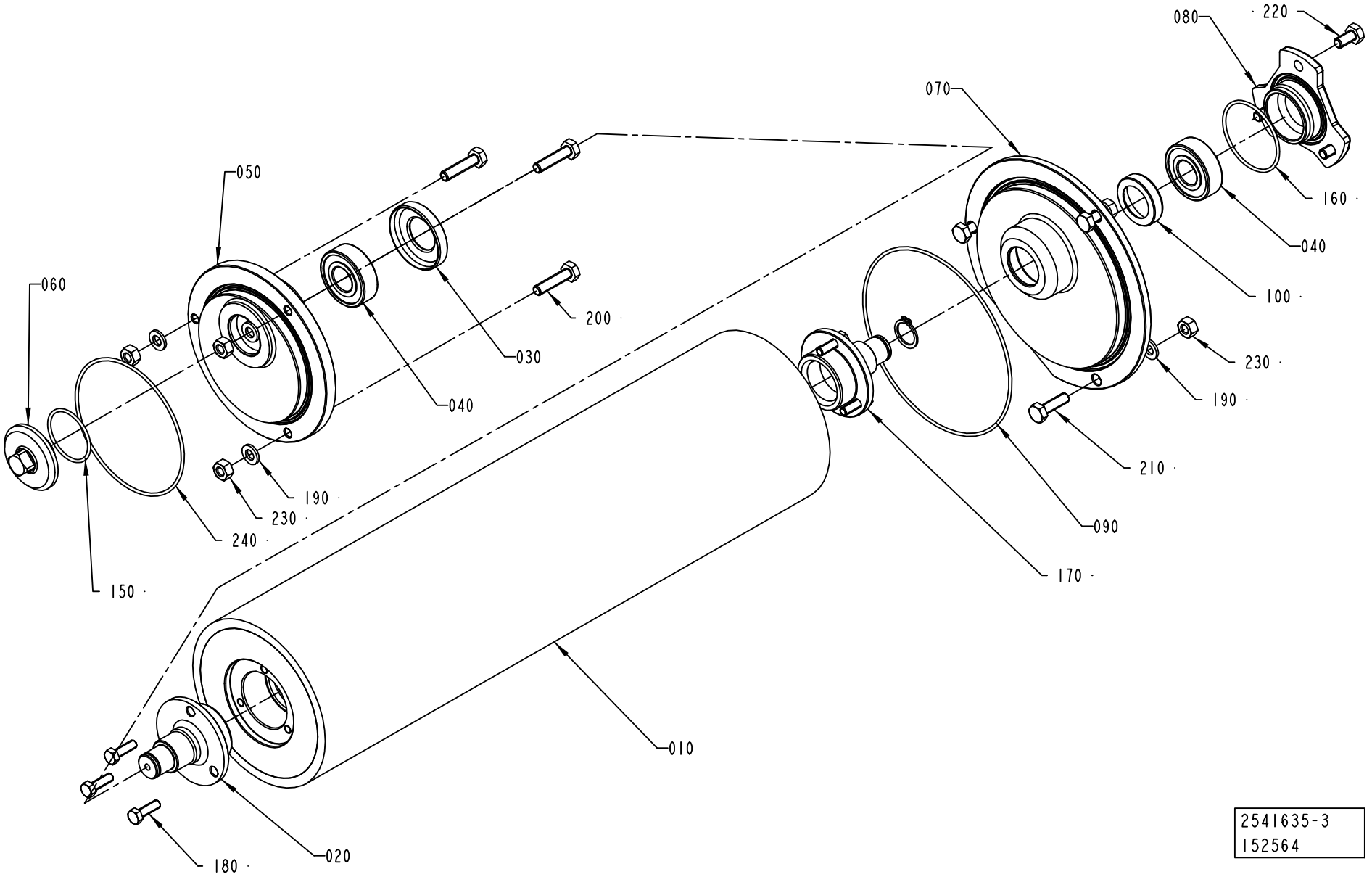

ECM: 174650 - 50001231
Group number: 2541635-0100
Assembly Drawing: 2541635-3_1_AA

This list covers pages from 1-116 to 1-121

Pos	Part No	UN	Qty	Description	Page No
A3/FLEX DIMC/FLEX (See drawing on page: 1-118)					
010	2528136-0000		1	SQUEE-GEE ROLLER	
070	2532984-0000		1	FLANGE	
A3/FLEX TBA 2000S NODIMC, A3/FLEX TBA 1890S NODIMC (See drawing on page: 1-120)					
010	2547406-0000		1	ROLLER	
050	2541641-0000		1	FLANGE	
070	2541640-0000		1	FLANGE	
A3/FLEX TBA 1000B NODIMC, A3/FLEX TBA 0500B NODIMC, A3/FLEX TBA 1000S NODIMC, A3/FLEX TBA 1000SQ NODIMC, A3/FLEX TPA 1000SQ NODIMC, A3/FLEX TBA 1500S NODIMC, A3/FLEX TBA 0200B NODIMC, A3/FLEX TBA 0250B NODIMC, A3/FLEX TBA 0330S NODIMC, A3/FLEX TPA 0330SQ NODIMC, A3/FLEX TPA 0500SQ NODIMC, A3/FLEX TBA 0200M NODIMC, A3/FLEX TBA 0250S NODIMC, A3/FLEX TBA 0500S NODIMC (See drawing on page: 1-116)					
010	1511769-0000		1	ROLLER	
070	2532984-0000		1	FLANGE	
Common Parts					
020	2541637-0000		2	SHAFT	
030	2541647-0000		1	LID	
040	90458-1704		2	BALL BEARING, 15X35X11 MM	
050	2541633-0000		1	FLANGE	
060	2532983-0000		1	FLANGE	
080	2541639-0000		1	LID	
090	90459-1627		1	O-RING 114,02X1,78 MM	
100	2541648-0000		1	LID	
150	315205-0713		1	O-RING 29,87X1,78 MM	
160	315205-0802		1	O-RING 41,0X1,78 MM	
170	315751-0112		2	RETAINING RING FOR SHAFT DIN 471 15 A2	
180	312105-0329		6	SCREW M6S ISO 4017 M5X16 A480	
190	315103-0153		6	WASHER, BRB, 6,4/12,H=1,5 NIPL BR	
200	312105-0372		3	SCREW M6S ISO 4017 M6X25 A480	
210	312105-0370		3	SCREW M6S ISO 4017 M6X20 A480	
220	312105-0366		3	SCREW M6S ISO 4017 M6X12 A480	
230	312605-0316		6	HEXAGON NUT, M6M M6 A280	
240	90242-0270		1	O-RING 82,27X1,78 MM	

Pos	Part No	UN	Qty	Description	Page No

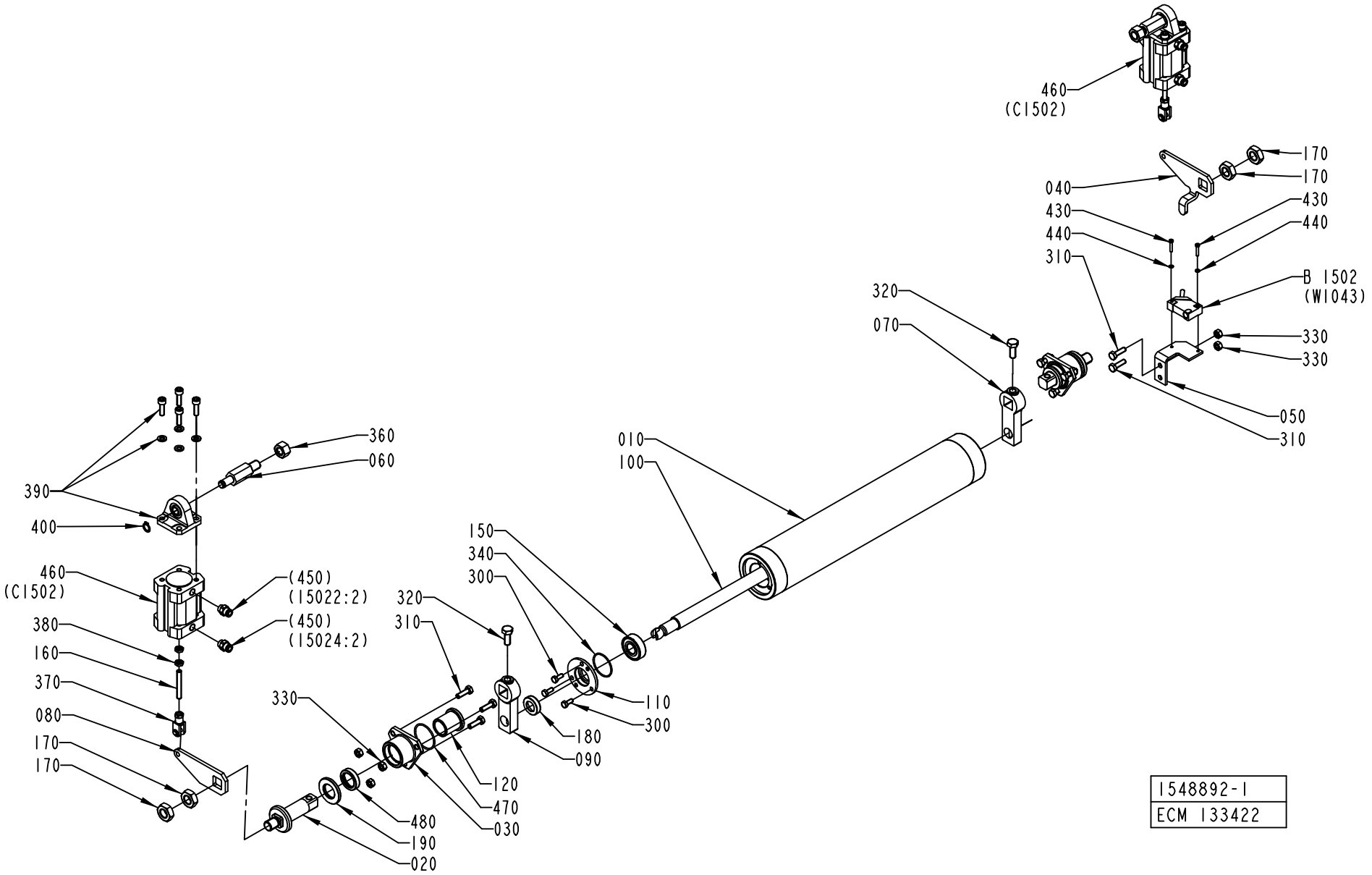
460
(C1502)
170
170
040
430
440
430
440
310
B 1502
(W1043)
320
070
330
330
050
310
010
100
360
060
390
400
460
(C1502)
(450)
(15022:2)
(450)
(15024:2)
380
160
370
080
170
170
150
340
300
320
310
330
110
300
180
090
120
470
030
480
190
020
1548892-1
ECM 133422

ECM: 181623 - 50001231
Group number: 1548892-0100
Assembly Drawing: 1548892-1_1_AB

This list covers pages from 1-122 to 1-125

Pos	Part No	UN	Qty	Description	Page No
A3/FLEX DIMC/FLEX (See drawing on page: 1-122)					
010	2528136-0000		1	SQUEE-GEE ROLLER	
040	1498130-0000		1	PLATE	
070	1498133-0000		1	ARM	
080	1498134-0000		1	PLATE	
090	1498135-0000		1	ARM	
A3/FLEX TBA 1000B NODIMC, A3/FLEX TBA 0500B NODIMC, A3/FLEX TBA 1000S NODIMC, A3/FLEX TBA 1000SQ NODIMC, A3/FLEX TBA 0200S NODIMC, A3/FLEX TBA 0200M NODIMC, A3/FLEX TBA 0250S NODIMC (See drawing on page: 1-122)					
010	1538496-0000		1	ROLLER	
040	1498130-0000		1	PLATE	
070	1498133-0000		1	ARM	
080	1498134-0000		1	PLATE	
090	1498135-0000		1	ARM	
A3/FLEX TBA 2000S NODIMC, A3/FLEX TBA 1890S NODIMC (See drawing on page: 1-124)					
010	2547406-0000		1	ROLLER	
040	2544883-0000		1	PLATE	
070	2544885-0000		1	ARM	
080	2544884-0000		1	PLATE	
A3/FLEX TPA 1000SQ NODIMC, A3/FLEX TBA 1500S NODIMC, A3/FLEX TBA 0200B NODIMC, A3/FLEX TBA 0250B NODIMC, A3/FLEX TBA 0330S NODIMC, A3/FLEX TPA 0330SQ NODIMC, A3/FLEX TPA 0500SQ NODIMC (See drawing on page: 1-122)					
010	1511769-0000		1	ROLLER	
040	1498130-0000		1	PLATE	
070	1498133-0000		1	ARM	
080	1498134-0000		1	PLATE	
090	1498135-0000		1	ARM	
Common Parts					
020	2532969-0000		2	SHAFT	
030	2541643-0000		2	FLANGE	
050	1498131-0000		1	BRACKET	
060	1498132-0000		2	SHAFT	
090	2544886-0000		1	ARM	
100	1498790-0000		1	SHAFT	
110	1498791-0000		2	FLANGE	
120	2541682-0000		2	BUSHING	
150	90458-1704		2	BALL BEARING, 15X35X11 MM	
160	90459-1728		2	SCREW ISO4029 M6X45 A4	
170	90099-0027		4	HEXAGON NUT, M14, DIN936	
180	2541650-0000		2	LID	
190	2541681-0000		2	WASHER	
300	312105-0327		6	SCREW M6S ISO 4017 M5X12 A480	
310	312105-0370		8	SCREW M6S ISO 4017 M6X20 A480	
320	312105-0451		2	SCREW M6S ISO 4017 M8X20 A480	
330	312605-0316		8	HEXAGON NUT, M6M M6 A280	
340	315204-0122		2	O-RING 32,1X1,6 MM	
360	312605-0322		2	HEXAGON NUT, M6M M12 A280	
370	90239-0489		2	ROD END, CLEVIS WITH AXLE M6X1,25	
380	312625-0316		4	HEXAGON THIN NUT, EN 24035 ML6M M6 A4	
390	90450-0756		2	BRACKET, REAR EYE 32	
400	90141-0016		2	RETAINING RING FOR SHAFT DIN 471 10 A2	
430	312125-0228		2	SCREW ISO 1207 M3X16 A4	
440	315105-0124		2	WASHER BRB3,2X6RFR	
450	342722-0202		4	PIPE COUPLING 1/8" D=6MM	
460	90458-0528		2	DOUBLE ACTING, COMPACT, CYL 32-25	
470	315205-0716		2	O-RING 34,65X1,78 MM	
480	90458-0639		2	VARILIP 20X30X7 MM	
B1502	90044-0194		1	PROX.SW. IN5329/IN3002-BPKG	

Machine Type | Group Description | Used-In | Group Number | Page No

CALENDER ROLLER

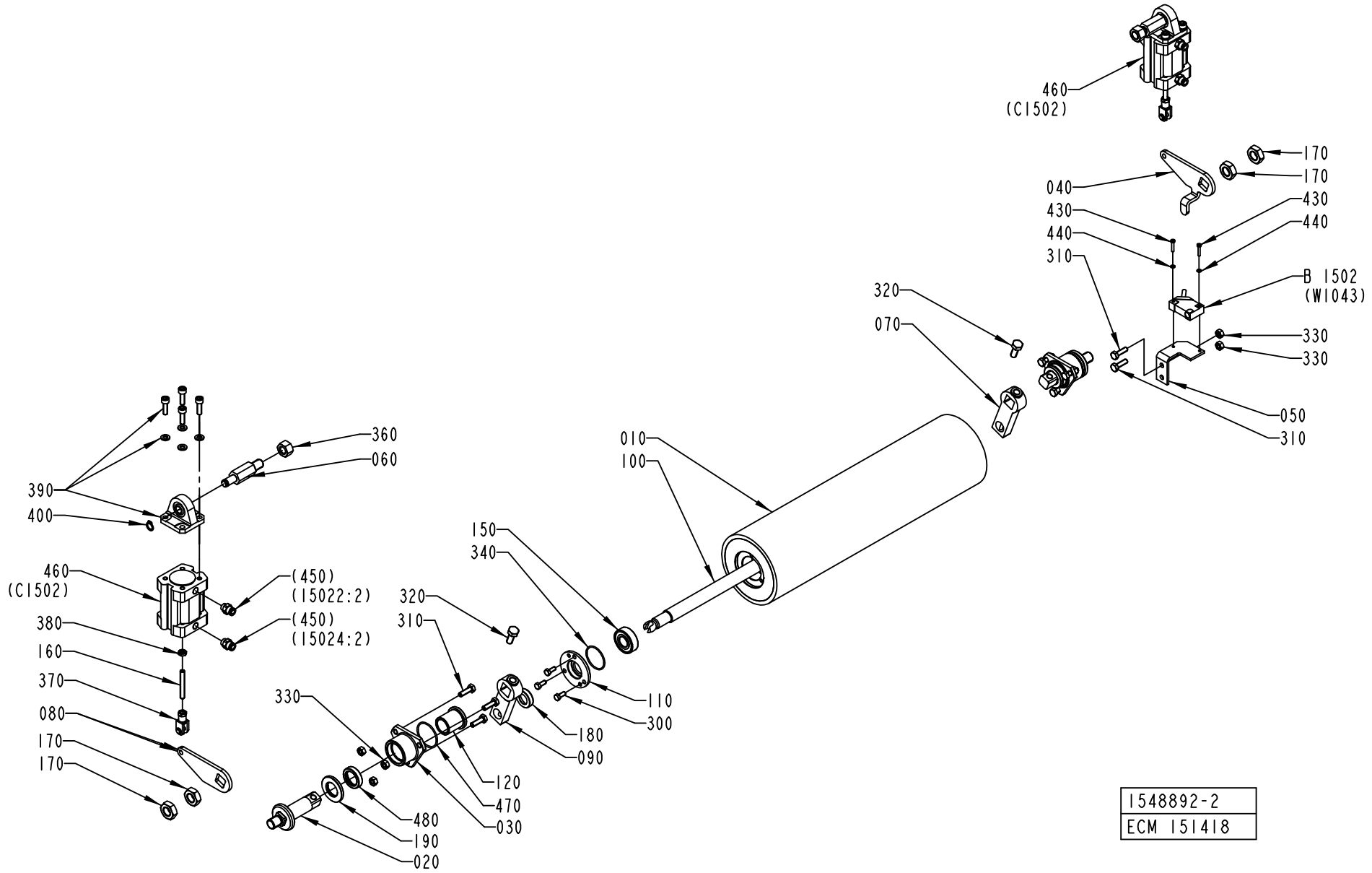

ECM: 181623 - 50001231
Group number: 1548892-0100
Assembly Drawing: 1548892-2_1_AA

This list covers pages from 1-122 to 1-125

Pos	Part No	UN	Qty	Description	Page No
A3/FLEX DIMC/FLEX (See drawing on page: 1-122)					
010	2528136-0000		1	SQUEE-GEE ROLLER	
040	1498130-0000		1	PLATE	
070	1498133-0000		1	ARM	
080	1498134-0000		1	PLATE	
090	1498135-0000		1	ARM	
A3/FLEX TBA 1000B NODIMC, A3/FLEX TBA 0500B NODIMC, A3/FLEX TBA 1000S NODIMC, A3/FLEX TBA 1000SQ NODIMC, A3/FLEX TBA 0200S NODIMC, A3/FLEX TBA 0200M NODIMC, A3/FLEX TBA 0250S NODIMC (See drawing on page: 1-122)					
010	1538496-0000		1	ROLLER	
040	1498130-0000		1	PLATE	
070	1498133-0000		1	ARM	
080	1498134-0000		1	PLATE	
090	1498135-0000		1	ARM	
A3/FLEX TBA 2000S NODIMC, A3/FLEX TBA 1890S NODIMC (See drawing on page: 1-124)					
010	2547406-0000		1	ROLLER	
040	2544883-0000		1	PLATE	
070	2544885-0000		1	ARM	
080	2544884-0000		1	PLATE	
A3/FLEX TPA 1000SQ NODIMC, A3/FLEX TBA 1500S NODIMC, A3/FLEX TBA 0200B NODIMC, A3/FLEX TBA 0250B NODIMC, A3/FLEX TBA 0330S NODIMC, A3/FLEX TPA 0330SQ NODIMC, A3/FLEX TPA 0500SQ NODIMC (See drawing on page: 1-122)					
010	1511769-0000		1	ROLLER	
040	1498130-0000		1	PLATE	
070	1498133-0000		1	ARM	
080	1498134-0000		1	PLATE	
090	1498135-0000		1	ARM	
Common Parts					
020	2532969-0000		2	SHAFT	
030	2541643-0000		2	FLANGE	
050	1498131-0000		1	BRACKET	
060	1498132-0000		2	SHAFT	
090	2544886-0000		1	ARM	
100	1498790-0000		1	SHAFT	
110	1498791-0000		2	FLANGE	
120	2541682-0000		2	BUSHING	
150	90458-1704		2	BALL BEARING, 15X35X11 MM	
160	90459-1728		2	SCREW ISO4029 M6X45 A4	
170	90099-0027		4	HEXAGON NUT, M14, DIN936	
180	2541650-0000		2	LID	
190	2541681-0000		2	WASHER	
300	312105-0327		6	SCREW M6S ISO 4017 M5X12 A480	
310	312105-0370		8	SCREW M6S ISO 4017 M6X20 A480	
320	312105-0451		2	SCREW M6S ISO 4017 M8X20 A480	
330	312605-0316		8	HEXAGON NUT, M6M M6 A280	
340	315204-0122		2	O-RING 32,1X1,6 MM	
360	312605-0322		2	HEXAGON NUT, M6M M12 A280	
370	90239-0489		2	ROD END, CLEVIS WITH AXLE M6X1,25	
380	312625-0316		4	HEXAGON THIN NUT, EN 24035 ML6M M6 A4	
390	90450-0756		2	BRACKET, REAR EYE 32	
400	90141-0016		2	RETAINING RING FOR SHAFT DIN 471 10 A2	
430	312125-0228		2	SCREW ISO 1207 M3X16 A4	
440	315105-0124		2	WASHER BRB3,2X6RFR	
450	342722-0202		4	PIPE COUPLING 1/8" D=6MM	
460	90458-0528		2	DOUBLE ACTING, COMPACT, CYL 32-25	
470	315205-0716		2	O-RING 34,65X1,78 MM	
480	90458-0639		2	VARILIP 20X30X7 MM	
B1502	90044-0194		1	PROX.SW. IN5329/IN3002-BPKG	

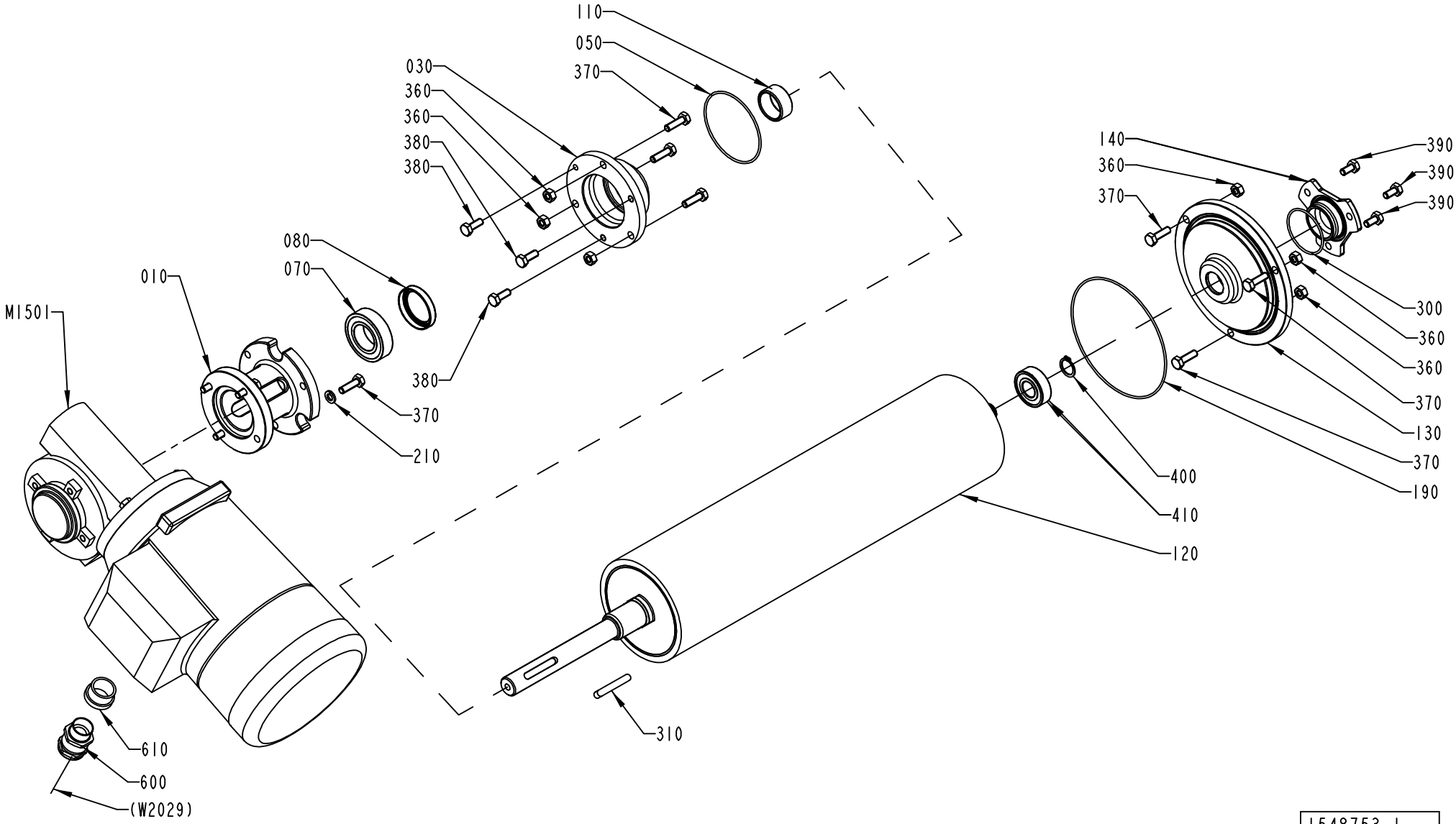

1548753-1
ECM 116071

ECM: 139404 - 20030710
Group number: 1548753-0100
Assembly Drawing: 1548753-1_1_AA

This list covers pages from 1-126 to 1-129

Pos	Part No	UN	Qty	Description	Page No
A3/FLEX DIMC/FLEX (See drawing on page: 1-128)					
120	2552139-0000		1	BENDING ROLLER	
M1501	90459-1226		1	GEARS, WORM MOTOR VF 44P-10+BN71B 0.37KW	
A3/FLEX NODIMC (See drawing on page: 1-126)					
120	2552135-0000		1	BENDING ROLLER	
M1501	90459-1226		1	GEARS, WORM MOTOR VF 44P-10+BN71B 0.37KW	
Common Parts					
010	2532931-0000		1	FLANGE	
030	1548882-0000		1	FLANGE	
050	90459-1623		1	O-RING 66,40X1,78 MM	
070	90214-0165		1	BALL BEARING, 25X47X12 MM	
080	90459-1650		1	VARILIP 30X40X7 MM	
110	1548751-0000		1	BUSHING	
130	2552136-0000		1	FLANGE	
140	2541639-0000		1	LID	
190	90459-1627		1	O-RING 114,02X1,78 MM	
210	315402-0156		4	LOCK WASHER FBB 6,5	
300	315205-0802		1	O-RING 41,0X1,78 MM	
310	315701-0239		1	PARALLEL KEY W. ROUND ENDS 6X6X40 MM	
360	312605-0316		6	HEXAGON NUT, M6M M6 A280	
370	312105-0370		10	SCREW M6S ISO 4017 M6X20 A480	
380	312105-0368		3	SCREW M6S ISO 4017 M6X16 A480	
390	312105-0366		3	SCREW M6S ISO 4017 M6X12 A480	
400	315751-0112		1	RETAINING RING FOR SHAFT DIN 471 15 A2	
410	90458-1704		1	BALL BEARING, 15X35X11 MM	
600	90012-0137		1	GLAND, EXTENDED WITH INSERT, PG11	
610	90089-0003		1	REDUCING SLEEVE, PR22,5/PR18,6	

Pos	Part No	UN	Qty	Description	Page No

Machine Type | Group Description | Used-In | Group Number | Page No

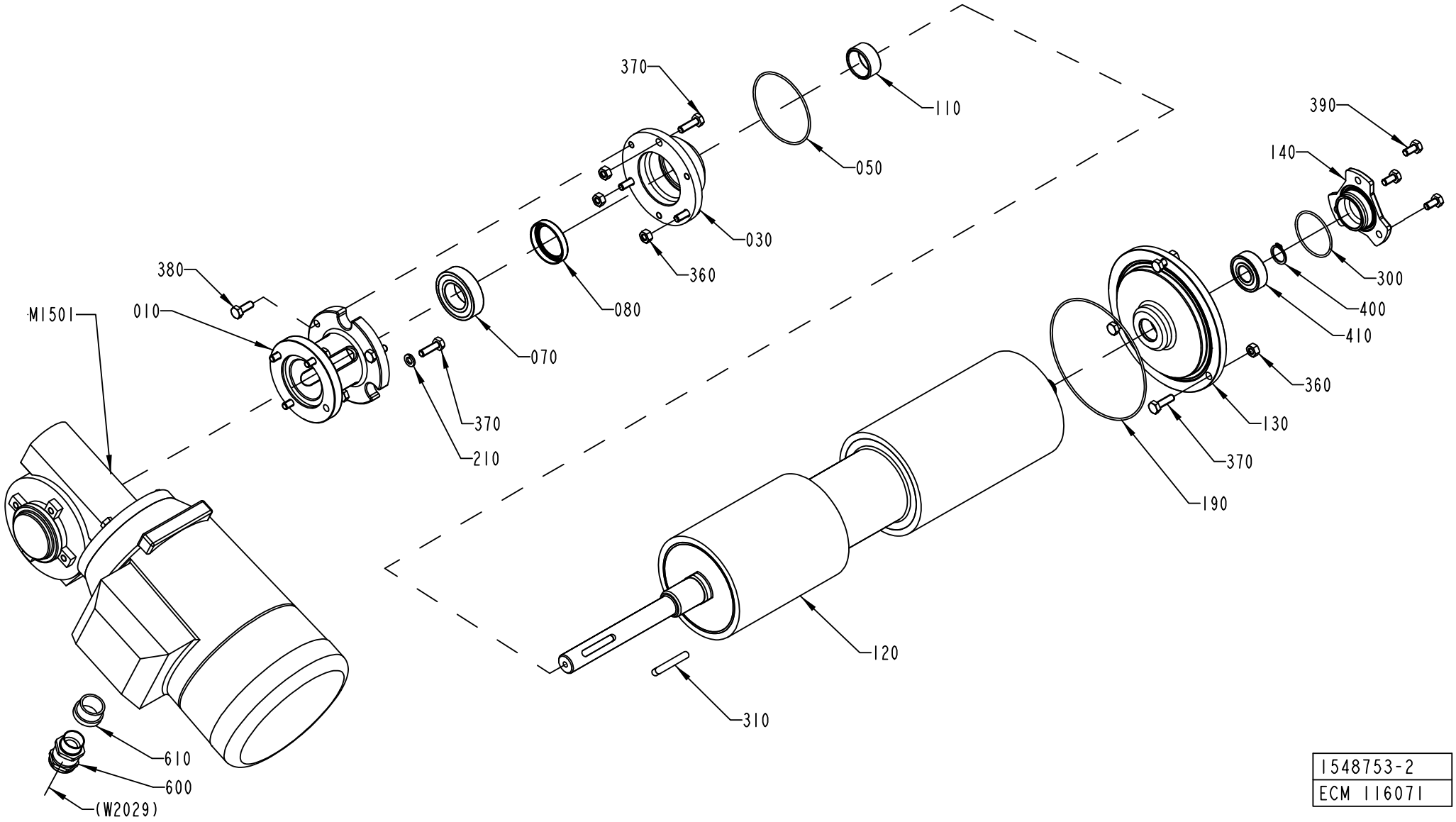
370
110
050
030
360
080
380
010
M1501
070
370
210
390
140
300
400
410
360
130
370
190
120
310
610
600
(W2029)
1548753-2
ECM 116071

ECM: 139404 - 20030710
Group number: 1548753-0100
Assembly Drawing: 1548753-2_1_AA

This list covers pages from 1-126 to 1-129

Pos	Part No	UN	Qty	Description	Page No
A3/FLEX DIMC/FLEX (See drawing on page: 1-128)					
120	2552139-0000		1	BENDING ROLLER	
M1501	90459-1226		1	GEARS, WORM MOTOR VF 44P-10+BN71B 0.37KW	
A3/FLEX NODIMC (See drawing on page: 1-126)					
120	2552135-0000		1	BENDING ROLLER	
M1501	90459-1226		1	GEARS, WORM MOTOR VF 44P-10+BN71B 0.37KW	
Common Parts					
010	2532931-0000		1	FLANGE	
030	1548882-0000		1	FLANGE	
050	90459-1623		1	O-RING 66,40X1,78 MM	
070	90214-0165		1	BALL BEARING, 25X47X12 MM	
080	90459-1650		1	VARILIP 30X40X7 MM	
110	1548751-0000		1	BUSHING	
130	2552136-0000		1	FLANGE	
140	2541639-0000		1	LID	
190	90459-1627		1	O-RING 114,02X1,78 MM	
210	315402-0156		4	LOCK WASHER FBB 6,5	
300	315205-0802		1	O-RING 41,0X1,78 MM	
310	315701-0239		1	PARALLEL KEY W. ROUND ENDS 6X6X40 MM	
360	312605-0316		6	HEXAGON NUT, M6M M6 A280	
370	312105-0370		10	SCREW M6S ISO 4017 M6X20 A480	
380	312105-0368		3	SCREW M6S ISO 4017 M6X16 A480	
390	312105-0366		3	SCREW M6S ISO 4017 M6X12 A480	
400	315751-0112		1	RETAINING RING FOR SHAFT DIN 471 15 A2	
410	90458-1704		1	BALL BEARING, 15X35X11 MM	
600	90012-0137		1	GLAND, EXTENDED WITH INSERT, PG11	
610	90089-0003		1	REDUCING SLEEVE, PR22,5/PR18,6	

Pos	Part No	UN	Qty	Description	Page No

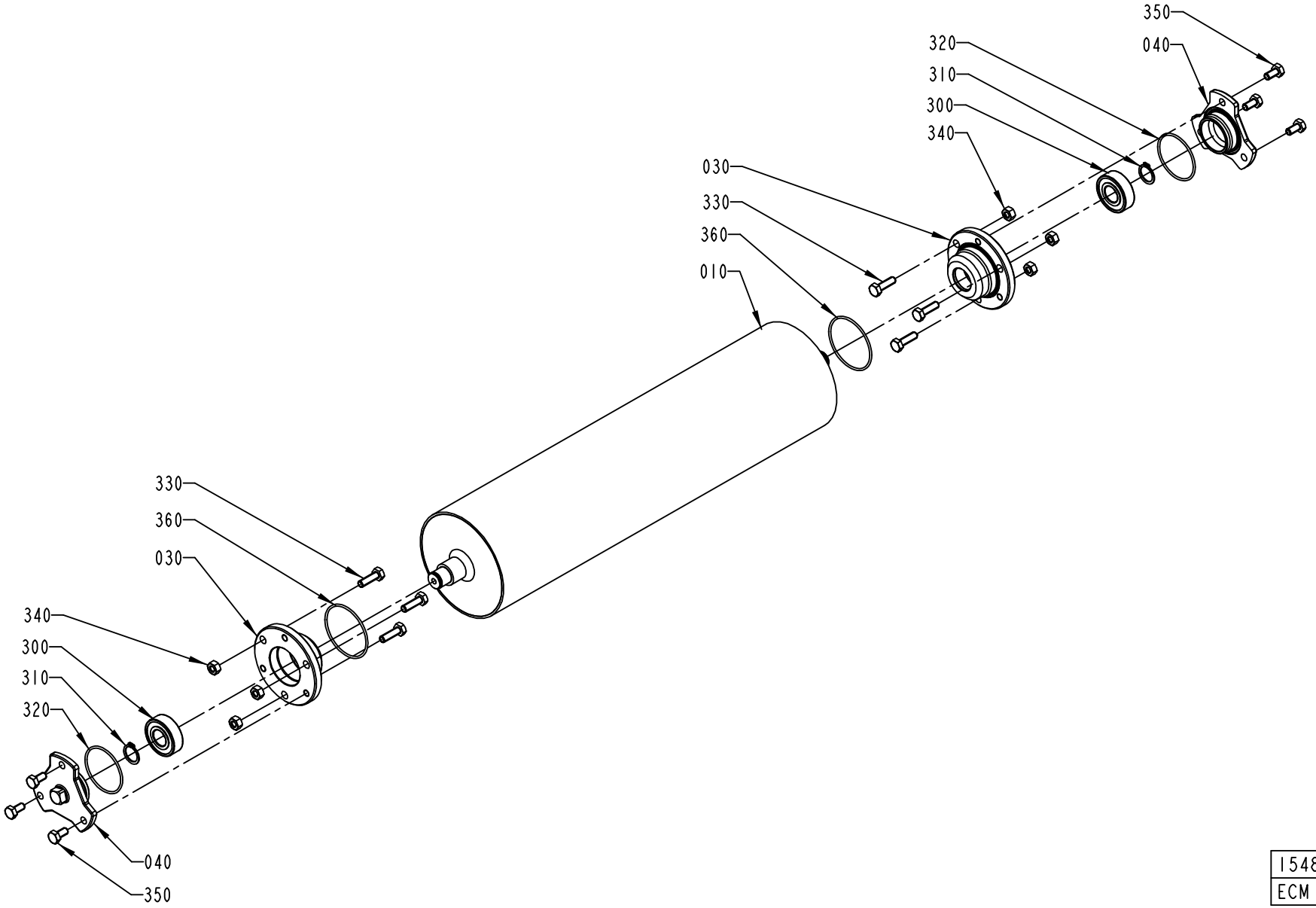

1548736-1
ECM 116071

ECM: 146565 - 20031117
Group number: 1548736-0100
Assembly Drawing: 1548736-1_1_AA

This list covers pages from 1-130 to 1-133

Pos	Part No	UN	Qty	Description	Page No
DIMC/FLEX (See drawing on page: 1-132)					
010	2552133-0000		1	BENDING ROLLER	
NODIMC (See drawing on page: 1-130)					
010	2532956-0000		1	BENDING ROLLER	
Common Parts					
030	2552127-0000		2	FLANGE	
040	2541639-0000		2	LID	
300	90458-1704		2	BALL BEARING, 15X35X11 MM	
310	315751-0112		2	RETAINING RING FOR SHAFT DIN 471 15 A2	
320	315205-0802		2	O-RING 41,0X1,78 MM	
330	312105-0370		6	SCREW M6S ISO 4017 M6X20 A480	
340	312605-0316		6	HEXAGON NUT, M6M M6 A280	
350	312105-0366		6	SCREW M6S ISO 4017 M6X12 A480	
360	315205-0804		2	O-RING 47,35X1,78 MM	

Pos	Part No	UN	Qty	Description	Page No

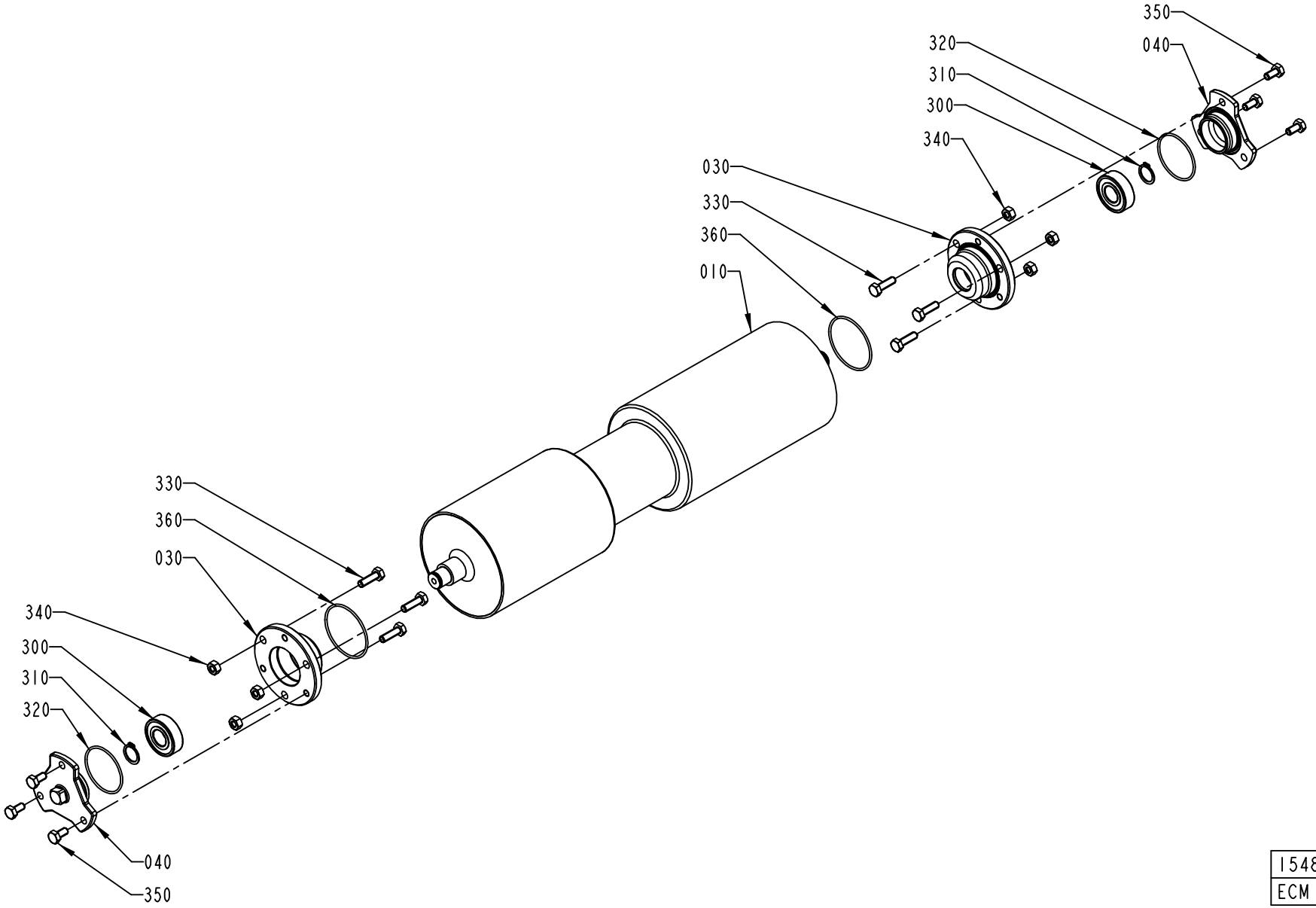

1548736-2
ECM 116071

ECM: 146565 - 20031117
Group number: 1548736-0100
Assembly Drawing: 1548736-2_1_AA

This list covers pages from 1-130 to 1-133

Pos	Part No	UN	Qty	Description	Page No
DIMC/FLEX (See drawing on page: 1-132)					
010	2552133-0000		1	BENDING ROLLER	
NODIMC (See drawing on page: 1-130)					
010	2532956-0000		1	BENDING ROLLER	
Common Parts					
030	2552127-0000		2	FLANGE	
040	2541639-0000		2	LID	
300	90458-1704		2	BALL BEARING, 15X35X11 MM	
310	315751-0112		2	RETAINING RING FOR SHAFT DIN 471 15 A2	
320	315205-0802		2	O-RING 41,0X1,78 MM	
330	312105-0370		6	SCREW M6S ISO 4017 M6X20 A480	
340	312605-0316		6	HEXAGON NUT, M6M M6 A280	
350	312105-0366		6	SCREW M6S ISO 4017 M6X12 A480	
360	315205-0804		2	O-RING 47,35X1,78 MM	

Pos	Part No	UN	Qty	Description	Page No

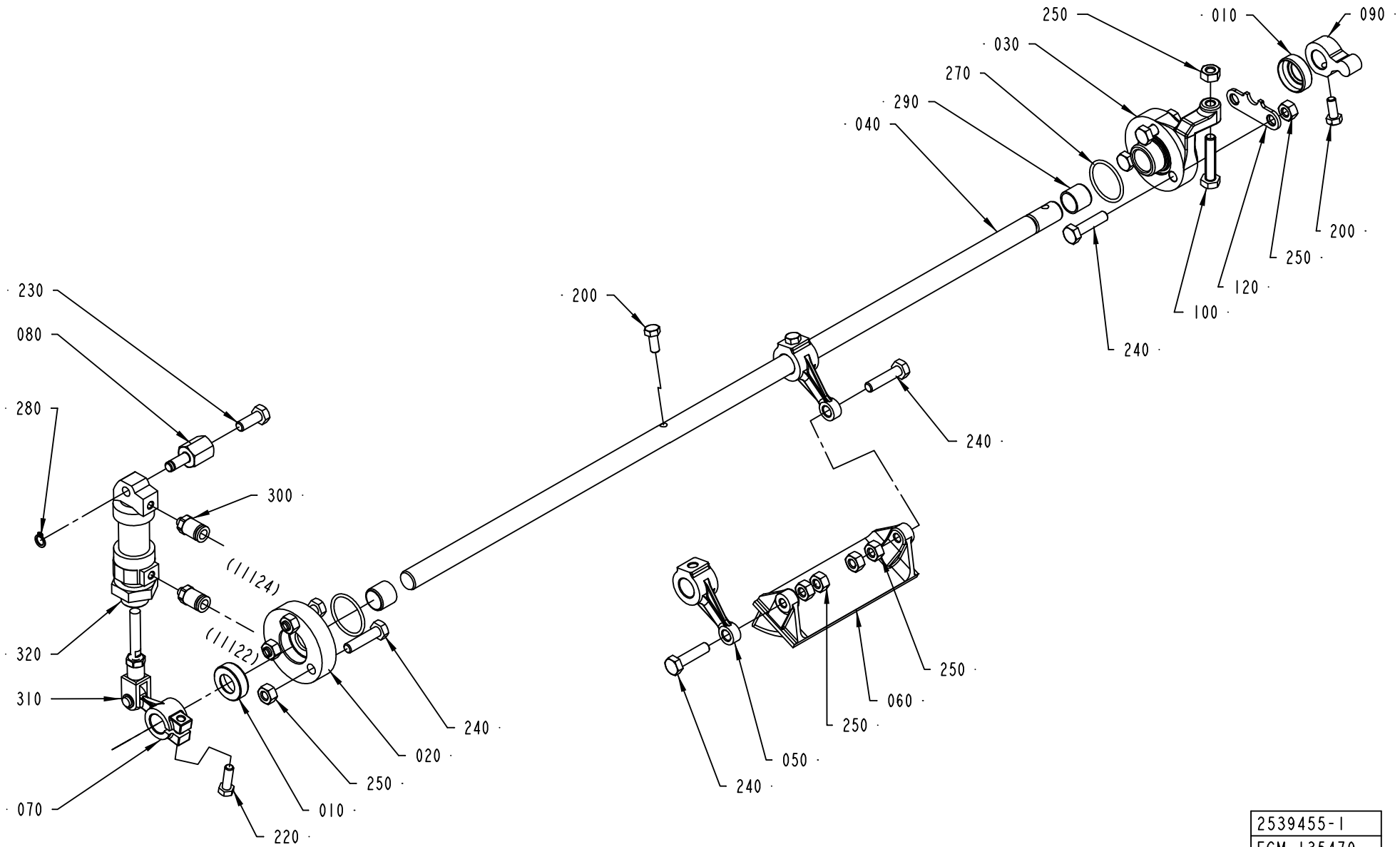

2539455-1
ECM 135479

ECM: 146566 - 20031117
Group number: 2539455-0100
Assembly Drawing: 2539455-1_1_AB

Pos	Part No	UN	Qty	Description	Page No
-					
010	2541661-0000		2	LID	
020	1523179-0000		1	FLANGE	
030	2522258-0000		1	FLANGE	
040	2526850-0000		1	SHAFT	
050	2526842-0000		2	LINK	
060	2526851-0000		1	SHUTTER	
070	2526820-0000		1	LINK	
080	1523185-0000		1	AXLE PIN	
090	1538163-0000		1	LEVER	
100	312109-0374		1	SCREW M6S ISO 4017 M6X30 A480	
120	2526849-0000		1	PLATE	
200	312105-0327		3	SCREW M6S ISO 4017 M5X12 A480	
220	312105-0329		1	SCREW M6S ISO 4017 M5X16 A480	
230	312105-0368		1	SCREW M6S ISO 4017 M6X16 A480	
240	312105-0372		8	SCREW M6S ISO 4017 M6X25 A480	
250	312605-0316		11	HEXAGON NUT, M6M M6 A280	
270	315205-0709		2	O-RING 23,52X1,78 MM	
280	315751-0103		1	RETAINING RING FOR SHAFT DIN 471 6 A2	
290	321133-0180		2	BUSHING, 12X14X12 MM	
300	342722-0197		2	STRAIGHT COUPLING	
310	90239-0489		1	ROD END, CLEVIS WITH AXLE M6X1,25	
320	90239-0841		1	DOUBLE ACTING, MINI-ISO, CYL. 16-25	

Pos	Part No	UN	Qty	Description	Page No

AIR KNIFE

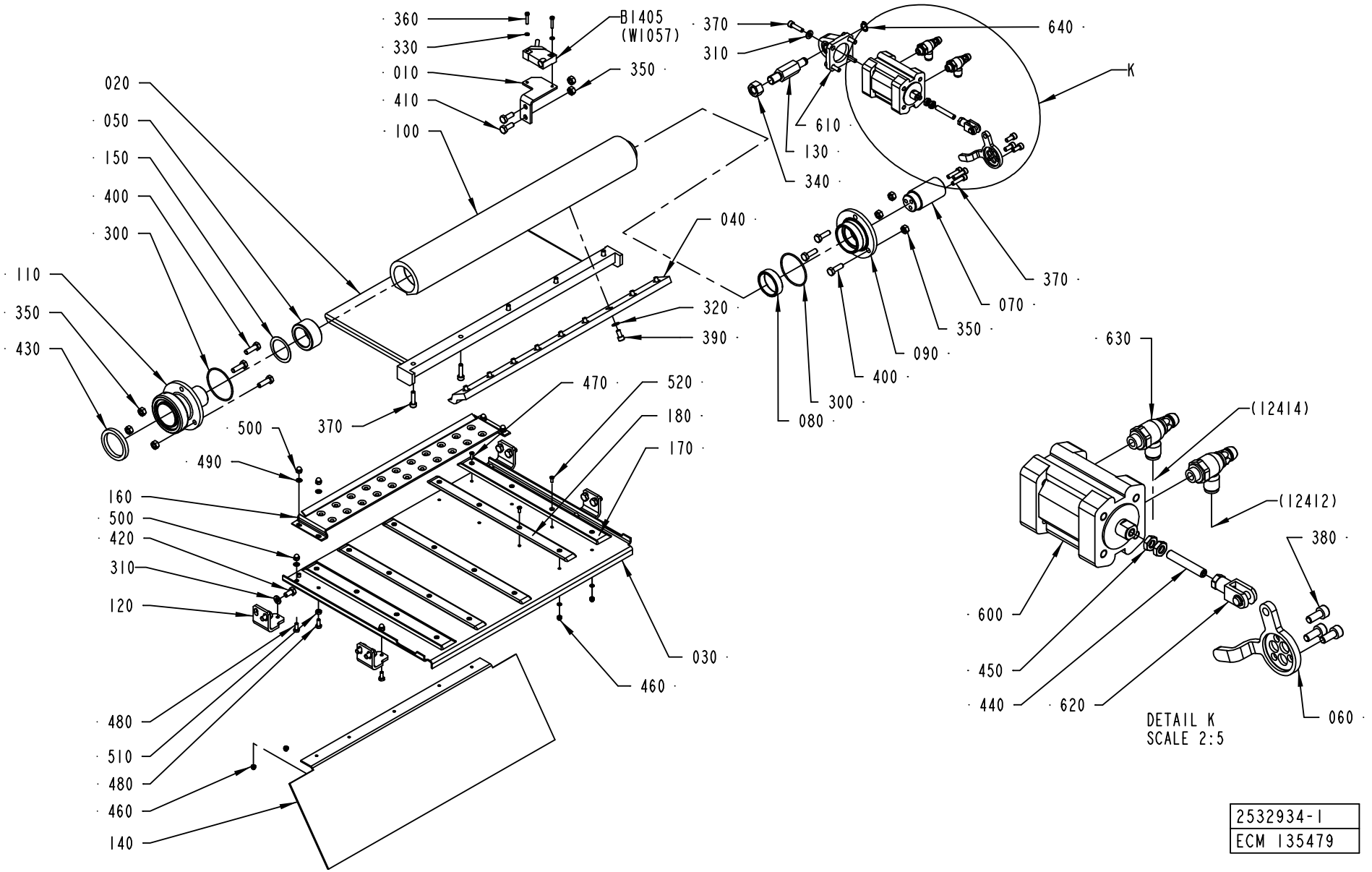

2532934-1
ECM 135479

ECM: 174647 - 50001231
Group number: 2532934-0100
Assembly Drawing: 2532934-1_1_AC

This list covers pages from 1-136 to 1-141

Pos	Part No	UN	Qty	Description	Page No
A3/FLEX DIMC/FLEX (See drawing on page: 1-138)					
030	2607087-0000		1	BOTTOM PLATE	
140	2532922-0000		1	PLATE	
180	2603630-0000		2	SLIDE PLATE	
190	2607440-0000		1	SLIDE PLATE	
330	315105-0124		14	WASHER BRB3,2X6RFR	
460	312705-0310		12	NUT HEX. DOMED CAP MHM-6 M3 A2	
470	312145-0224		2	SCREW ISO 2009 MFS M3X10 A4	
520	312145-0222		10	SCREW ISO 2009 MFS M3X8 A4	
A3/FLEX TBA 2000S NODIMC, A3/FLEX TBA 1890S NODIMC (See drawing on page: 1-140)					
010	2582651-0000		1	AIR GUIDE	
030	2582652-0000		1	AIR GUIDE	
040	2594601-0000		1	RAIL	
120	2582655-0000		4	HOLDER	
140	2582654-0000		1	PLATE	
160	2657886-0000		1	COUNTER PLATE	
170	2603546-0000		2	SLIDE PLATE	
180	2603630-0000		3	SLIDE PLATE	
330	315105-0124		22	WASHER BRB3,2X6RFR	
460	312705-0310		20	NUT HEX. DOMED CAP MHM-6 M3 A2	
470	312145-0224		5	SCREW ISO 2009 MFS M3X10 A4	
520	312145-0222		15	SCREW ISO 2009 MFS M3X8 A4	
650	312105-0291		2	SCREW M6S ISO 4017 M4X12 A470	
A3/FLEX TBA 1000B NODIMC, A3/FLEX TBA 0500B NODIMC, A3/FLEX TBA 1000S NODIMC, A3/FLEX TBA 1000SQ NODIMC, A3/FLEX TBA 0200S NODIMC, A3/FLEX TPA 1000SQ NODIMC, A3/FLEX TBA 1500S NODIMC, A3/FLEX TBA 0200B NODIMC, A3/FLEX TBA 0250B NODIMC, A3/FLEX TBA 0330S NODIMC, A3/FLEX TPA 0330SQ NODIMC, A3/FLEX TPA 0500SQ NODIMC, A3/FLEX TBA 0200M NODIMC, A3/FLEX TBA 0250S NODIMC, A3/FLEX TBA 0500S NODIMC (See drawing on page: 1-136)					
030	2603823-0000		1	BOTTOM PLATE	
140	2532919-0000		1	PLATE	
170	2603546-0000		2	SLIDE PLATE	
180	2603630-0000		3	SLIDE PLATE	
330	315105-0124		22	WASHER BRB3,2X6RFR	
460	312705-0310		20	NUT HEX. DOMED CAP MHM-6 M3 A2	
470	312145-0224		5	SCREW ISO 2009 MFS M3X10 A4	
520	312145-0222		15	SCREW ISO 2009 MFS M3X8 A4	
Common Parts					
010	2509674-0000		1	BRACKET	
020	2532916-0000		1	AIR GUIDE	
040	2509681-0000		1	RAIL	
050	1519166-0000		1	BUSHING	
060	1519163-0000		1	ARM	
070	1519160-0000		1	SHAFT	
080	1519159-0000		1	BUSHING	
090	1519158-0000		1	LID	
100	1519156-0000		1	AIR DISTRIBUTOR	
110	1532231-0000		1	CONNECTION	
120	2532918-0000		4	HOLDER	
130	1498132-0000		1	SHAFT	
150	2532915-0000		1	WASHER	
160	2603824-0000		1	COUNTER PLATE	
300	315205-0804		2	O-RING 47,35X1,78 MM	
310	315105-0153		12	WASHER BRB6,4X12RFR	
320	315105-0146		9	WASHER BRB5,3X10RFR	
340	312605-0322		1	HEXAGON NUT, M6M M12 A280	
350	312605-0316		8	HEXAGON NUT, M6M M6 A280	
360	312125-0228		2	SCREW ISO 1207 M3X16 A4	
370	312115-0331		12	SCREW ISO4762 M5X20 A4	
380	312115-0327		3	SCREW ISO4762 M5X12 A4	
390	312115-0325		9	SCREW ISO4762 M5X10 A4	
400	312105-0370		6	SCREW M6S ISO 4017 M6X20 A480	
410	312105-0368		2	SCREW M6S ISO 4017 M6X16 A480	
420	312105-0366		8	SCREW M6S ISO 4017 M6X12 A480	
430	12242-0003		1	GASKET 48X38X5,5	
440	312318-0376		1	SCREW ISO4029 M6X35 A4	
450	312625-0316		2	HEXAGON THIN NUT, EN 24035 ML6M M6 A4	
480	312105-0289		8	SCREW M6S ISO 4017 M4X10 A470	
490	315105-0136		8	WASHER BRB4,3XRFR	
500	312705-0312		8	NUT HEX. DOMED CAP MHM-6 M4 A280	
510	312605-0312		4	HEXAGON NUT, M6M M4 A280	
600	90458-0528		1	DOUBLE ACTING, COMPACT, CYL 32-25	
610	90450-0756		1	BRACKET, REAR EYE 32	
620	90239-0489		1	ROD END, CLEVIS WITH AXLE M6X1,25	
630	90235-0846		2	THROTTLE CHECK VALVE G1/8", MANUAL, 6	
640	90141-0016		1	RETAINING RING FOR SHAFT DIN 471 10 A2	
B1405	90044-0194		1	PROX.SW. IN5329/IN3002-BPKG	

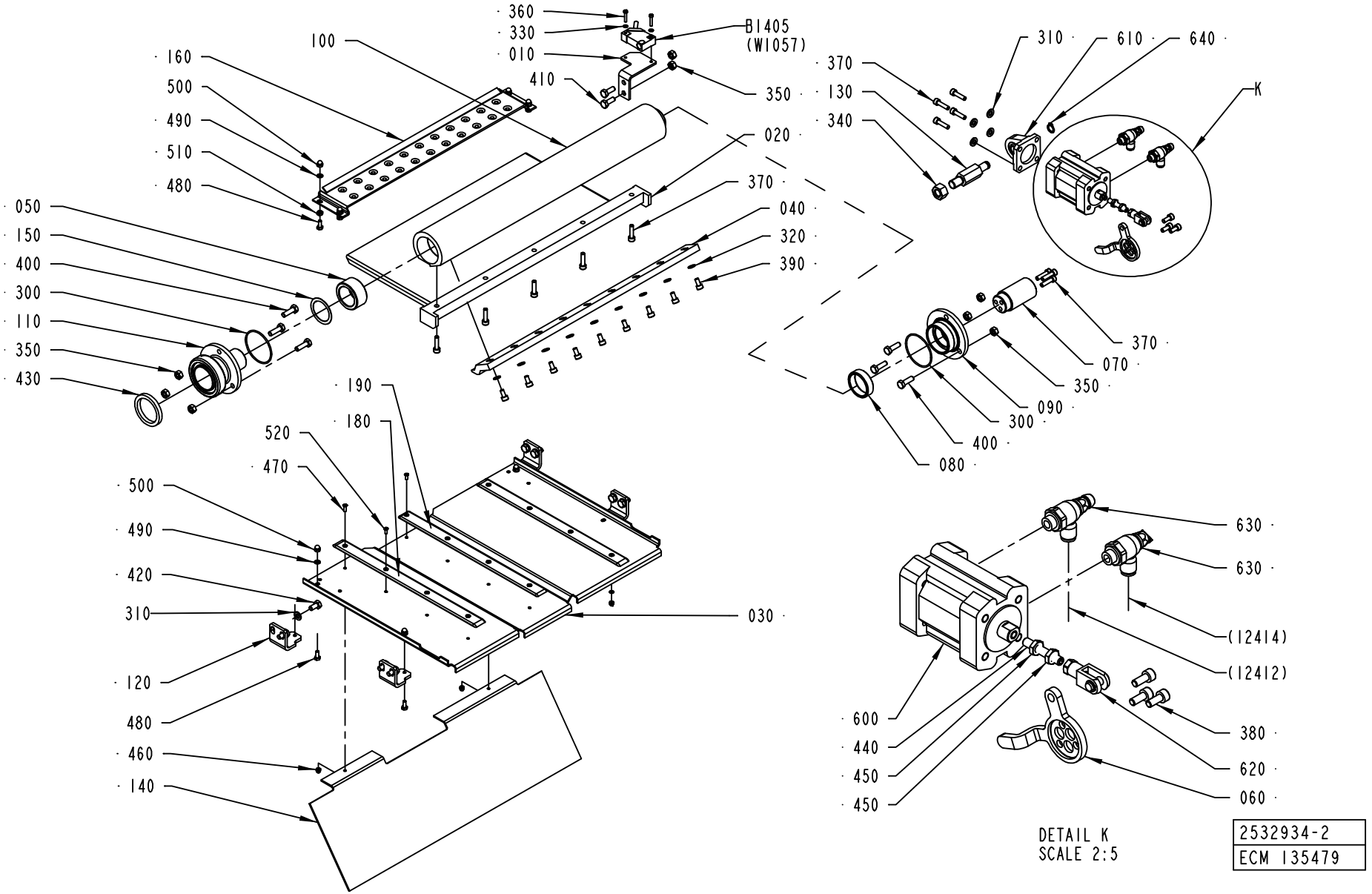
360
330
010
410
B1405
(W1057)
350
100
160
500
490
510
480
020
370
040
320
390
050
150
400
300
110
350
430
310
610
640
370
130
340
K
370
070
350
090
300
400
080
190
180
520
470
500
490
420
310
120
480
460
140
030
630
630
(12414)
(12412)
380
620
060
600
440
450
450
DETAIL K
SCALE 2:5
2532934-2
ECM 135479

ECM: 174647 - 50001231
Group number: 2532934-0100
Assembly Drawing: 2532934-2_1_AC

This list covers pages from 1-136 to 1-141

Pos	Part No	UN	Qty	Description	Page No
A3/FLEX DIMC/FLEX (See drawing on page: 1-138)					
030	2607087-0000		1	BOTTOM PLATE	
140	2532922-0000		1	PLATE	
180	2603630-0000		2	SLIDE PLATE	
190	2607440-0000		1	SLIDE PLATE	
330	315105-0124		14	WASHER BRB3,2X6RFR	
460	312705-0310		12	NUT HEX. DOMED CAP MHM-6 M3 A2	
470	312145-0224		2	SCREW ISO 2009 MFS M3X10 A4	
520	312145-0222		10	SCREW ISO 2009 MFS M3X8 A4	
A3/FLEX TBA 2000S NODIMC, A3/FLEX TBA 1890S NODIMC (See drawing on page: 1-140)					
010	2582651-0000		1	AIR GUIDE	
030	2582652-0000		1	AIR GUIDE	
040	2594601-0000		1	RAIL	
120	2582655-0000		4	HOLDER	
140	2582654-0000		1	PLATE	
160	2657886-0000		1	COUNTER PLATE	
170	2603546-0000		2	SLIDE PLATE	
180	2603630-0000		3	SLIDE PLATE	
330	315105-0124		22	WASHER BRB3,2X6RFR	
460	312705-0310		20	NUT HEX. DOMED CAP MHM-6 M3 A2	
470	312145-0224		5	SCREW ISO 2009 MFS M3X10 A4	
520	312145-0222		15	SCREW ISO 2009 MFS M3X8 A4	
650	312105-0291		2	SCREW M6S ISO 4017 M4X12 A470	
A3/FLEX TBA 1000B NODIMC, A3/FLEX TBA 0500B NODIMC, A3/FLEX TBA 1000S NODIMC, A3/FLEX TBA 1000SQ NODIMC, A3/FLEX TBA 0200S NODIMC, A3/FLEX TPA 1000SQ NODIMC, A3/FLEX TBA 1500S NODIMC, A3/FLEX TBA 0200B NODIMC, A3/FLEX TBA 0250B NODIMC, A3/FLEX TBA 0330S NODIMC, A3/FLEX TPA 0330SQ NODIMC, A3/FLEX TPA 0500SQ NODIMC, A3/FLEX TBA 0200M NODIMC, A3/FLEX TBA 0250S NODIMC, A3/FLEX TBA 0500S NODIMC (See drawing on page: 1-136)					
030	2603823-0000		1	BOTTOM PLATE	
140	2532919-0000		1	PLATE	
170	2603546-0000		2	SLIDE PLATE	
180	2603630-0000		3	SLIDE PLATE	
330	315105-0124		22	WASHER BRB3,2X6RFR	
460	312705-0310		20	NUT HEX. DOMED CAP MHM-6 M3 A2	
470	312145-0224		5	SCREW ISO 2009 MFS M3X10 A4	
520	312145-0222		15	SCREW ISO 2009 MFS M3X8 A4	
Common Parts					
010	2509674-0000		1	BRACKET	
020	2532916-0000		1	AIR GUIDE	
040	2509681-0000		1	RAIL	
050	1519166-0000		1	BUSHING	
060	1519163-0000		1	ARM	
070	1519160-0000		1	SHAFT	
080	1519159-0000		1	BUSHING	
090	1519158-0000		1	LID	
100	1519156-0000		1	AIR DISTRIBUTOR	
110	1532231-0000		1	CONNECTION	
120	2532918-0000		4	HOLDER	
130	1498132-0000		1	SHAFT	
150	2532915-0000		1	WASHER	
160	2603824-0000		1	COUNTER PLATE	
300	315205-0804		2	O-RING 47,35X1,78 MM	
310	315105-0153		12	WASHER BRB6,4X12RFR	
320	315105-0146		9	WASHER BRB5,3X10RFR	
340	312605-0322		1	HEXAGON NUT, M6M M12 A280	
350	312605-0316		8	HEXAGON NUT, M6M M6 A280	
360	312125-0228		2	SCREW ISO 1207 M3X16 A4	
370	312115-0331		12	SCREW ISO4762 M5X20 A4	
380	312115-0327		3	SCREW ISO4762 M5X12 A4	
390	312115-0325		9	SCREW ISO4762 M5X10 A4	
400	312105-0370		6	SCREW M6S ISO 4017 M6X20 A480	
410	312105-0368		2	SCREW M6S ISO 4017 M6X16 A480	
420	312105-0366		8	SCREW M6S ISO 4017 M6X12 A480	
430	12242-0003		1	GASKET 48X38X5,5	
440	312318-0376		1	SCREW ISO4029 M6X35 A4	
450	312625-0316		2	HEXAGON THIN NUT, EN 24035 ML6M M6 A4	
480	312105-0289		8	SCREW M6S ISO 4017 M4X10 A470	
490	315105-0136		8	WASHER BRB4,3XRFR	
500	312705-0312		8	NUT HEX. DOMED CAP MHM-6 M4 A280	
510	312605-0312		4	HEXAGON NUT, M6M M4 A280	
600	90458-0528		1	DOUBLE ACTING, COMPACT, CYL 32-25	
610	90450-0756		1	BRACKET, REAR EYE 32	
620	90239-0489		1	ROD END, CLEVIS WITH AXLE M6X1,25	
630	90235-0846		2	THROTTLE CHECK VALVE G1/8", MANUAL, 6	
640	90141-0016		1	RETAINING RING FOR SHAFT DIN 471 10 A2	
B1405	90044-0194		1	PROX.SW. IN5329/IN3002-BPKG	

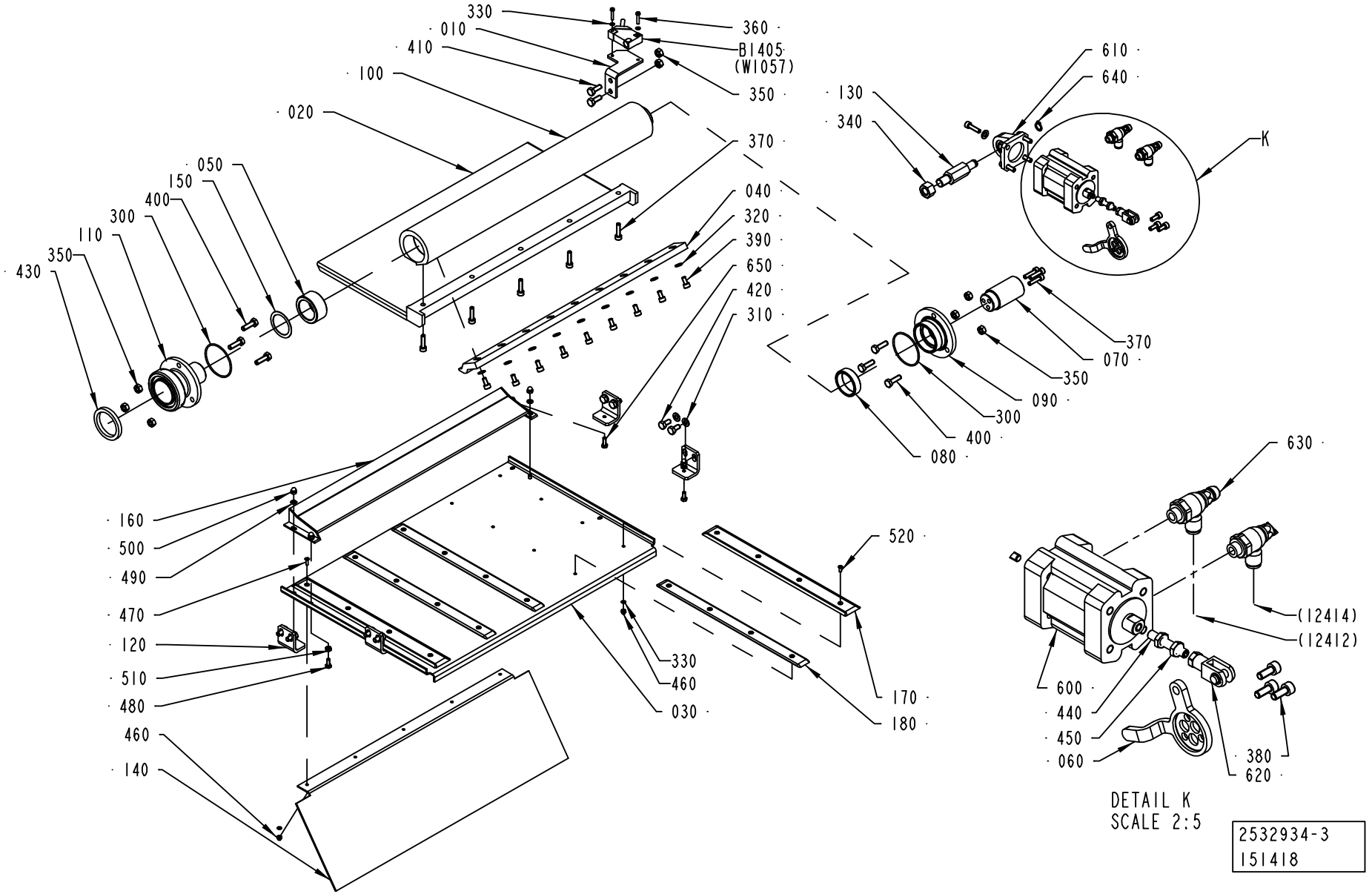
330
010
410
100
020
050
150
400
300
110
350
430
360
B1405
(W1057)
350
370
040
320
390
650
420
310
610
640
130
340
K
370
070
350
090
300
400
080
630
(12414)
(12412)
600
440
450
060
380
620
160
500
490
470
120
510
480
460
140
520
330
460
030
170
180
DETAIL K
SCALE 2:5
2532934-3
151418

ECM: 174647 - 50001231
Group number: 2532934-0100
Assembly Drawing: 2532934-3_1_AA

This list covers pages from 1-136 to 1-141

Pos	Part No	UN	Qty	Description	Page No
A3/FLEX DIMC/FLEX (See drawing on page: 1-138)					
030	2607087-0000		1	BOTTOM PLATE	
140	2532922-0000		1	PLATE	
180	2603630-0000		2	SLIDE PLATE	
190	2607440-0000		1	SLIDE PLATE	
330	315105-0124		14	WASHER BRB3,2X6RFR	
460	312705-0310		12	NUT HEX. DOMED CAP MHM-6 M3 A2	
470	312145-0224		2	SCREW ISO 2009 MFS M3X10 A4	
520	312145-0222		10	SCREW ISO 2009 MFS M3X8 A4	
A3/FLEX TBA 2000S NODIMC, A3/FLEX TBA 1890S NODIMC (See drawing on page: 1-140)					
010	2582651-0000		1	AIR GUIDE	
030	2582652-0000		1	AIR GUIDE	
040	2594601-0000		1	RAIL	
120	2582655-0000		4	HOLDER	
140	2582654-0000		1	PLATE	
160	2657886-0000		1	COUNTER PLATE	
170	2603546-0000		2	SLIDE PLATE	
180	2603630-0000		3	SLIDE PLATE	
330	315105-0124		22	WASHER BRB3,2X6RFR	
460	312705-0310		20	NUT HEX. DOMED CAP MHM-6 M3 A2	
470	312145-0224		5	SCREW ISO 2009 MFS M3X10 A4	
520	312145-0222		15	SCREW ISO 2009 MFS M3X8 A4	
650	312105-0291		2	SCREW M6S ISO 4017 M4X12 A470	
A3/FLEX TBA 1000B NODIMC, A3/FLEX TBA 0500B NODIMC, A3/FLEX TBA 1000S NODIMC, A3/FLEX TBA 1000SQ NODIMC, A3/FLEX TBA 0200S NODIMC, A3/FLEX TPA 1000SQ NODIMC, A3/FLEX TBA 1500S NODIMC, A3/FLEX TBA 0200B NODIMC, A3/FLEX TBA 0250B NODIMC, A3/FLEX TBA 0330S NODIMC, A3/FLEX TPA 0330SQ NODIMC, A3/FLEX TPA 0500SQ NODIMC, A3/FLEX TBA 0200M NODIMC, A3/FLEX TBA 0250S NODIMC, A3/FLEX TBA 0500S NODIMC (See drawing on page: 1-136)					
030	2603823-0000		1	BOTTOM PLATE	
140	2532919-0000		1	PLATE	
170	2603546-0000		2	SLIDE PLATE	
180	2603630-0000		3	SLIDE PLATE	
330	315105-0124		22	WASHER BRB3,2X6RFR	
460	312705-0310		20	NUT HEX. DOMED CAP MHM-6 M3 A2	
470	312145-0224		5	SCREW ISO 2009 MFS M3X10 A4	
520	312145-0222		15	SCREW ISO 2009 MFS M3X8 A4	
Common Parts					
010	2509674-0000		1	BRACKET	
020	2532916-0000		1	AIR GUIDE	
040	2509681-0000		1	RAIL	
050	1519166-0000		1	BUSHING	
060	1519163-0000		1	ARM	
070	1519160-0000		1	SHAFT	
080	1519159-0000		1	BUSHING	
090	1519158-0000		1	LID	
100	1519156-0000		1	AIR DISTRIBUTOR	
110	1532231-0000		1	CONNECTION	
120	2532918-0000		4	HOLDER	
130	1498132-0000		1	SHAFT	
150	2532915-0000		1	WASHER	
160	2603824-0000		1	COUNTER PLATE	
300	315205-0804		2	O-RING 47,35X1,78 MM	
310	315105-0153		12	WASHER BRB6,4X12RFR	
320	315105-0146		9	WASHER BRB5,3X10RFR	
340	312605-0322		1	HEXAGON NUT, M6M M12 A280	
350	312605-0316		8	HEXAGON NUT, M6M M6 A280	
360	312125-0228		2	SCREW ISO 1207 M3X16 A4	
370	312115-0331		12	SCREW ISO4762 M5X20 A4	
380	312115-0327		3	SCREW ISO4762 M5X12 A4	
390	312115-0325		9	SCREW ISO4762 M5X10 A4	
400	312105-0370		6	SCREW M6S ISO 4017 M6X20 A480	
410	312105-0368		2	SCREW M6S ISO 4017 M6X16 A480	
420	312105-0366		8	SCREW M6S ISO 4017 M6X12 A480	
430	12242-0003		1	GASKET 48X38X5,5	
440	312318-0376		1	SCREW ISO4029 M6X35 A4	
450	312625-0316		2	HEXAGON THIN NUT, EN 24035 ML6M M6 A4	
480	312105-0289		8	SCREW M6S ISO 4017 M4X10 A470	
490	315105-0136		8	WASHER BRB4,3XRFR	
500	312705-0312		8	NUT HEX. DOMED CAP MHM-6 M4 A280	
510	312605-0312		4	HEXAGON NUT, M6M M4 A280	
600	90458-0528		1	DOUBLE ACTING, COMPACT, CYL 32-25	
610	90450-0756		1	BRACKET, REAR EYE 32	
620	90239-0489		1	ROD END, CLEVIS WITH AXLE M6X1,25	
630	90235-0846		2	THROTTLE CHECK VALVE G1/8", MANUAL, 6	
640	90141-0016		1	RETAINING RING FOR SHAFT DIN 471 10 A2	
B1405	90044-0194		1	PROX.SW. IN5329/IN3002-BPKG	

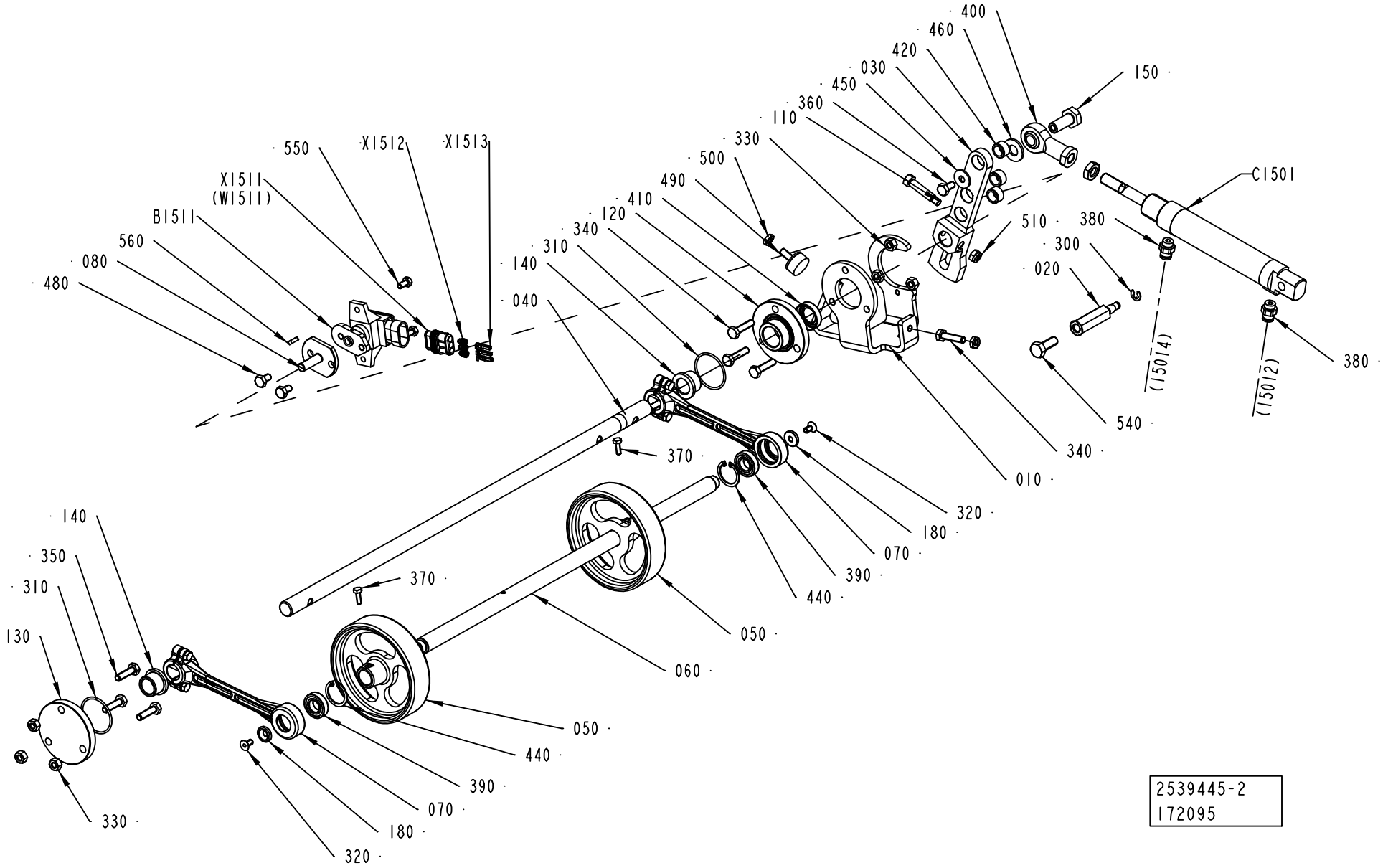
400
460
420
030
450
360
110
330
500
490
410
120
340
310
140
040
150
C1501
510
380
300
020
540
(15014)
(15012)
380
340
010
370
320
180
070
390
440
050
060
140
350
310
130
370
050
440
390
070
180
320
330
550
X1512
X1513
X1511
(W1511)
B1511
560
080
480
2539445-2
172095

ECM: 176432 - 20040720
Group number: 2539445-0200
Assembly Drawing: 2539445-2_1_AA

Pos	Part No	UN	Qty	Description	Page No
-					
010	2691185-0000		1	SUPPORT	
020	2658077-0000		1	SHAFT	
030	2648780-0000		1	LEVER	
040	2691184-0000		1	SHAFT	
050	1558358-0000		2	WHEEL	
060	1558357-0000		1	SHAFT	
070	2601284-0000		2	LEVER	
080	2691183-0000		1	FLANGED SHAFT	
110	2653607-0000		1	SCREW	
120	1549548-0000		1	FLANGE	
130	1549545-0000		1	FLANGE	
140	1511512-0000		2	BEARING BUSHING	
150	2611009-0000		1	SHAFT	
180	2594621-0000		2	WASHER	
300	315755-0107		1	RETAINING RING SHAFT DIN 6799 5 A2	
310	315205-0715		2	O-RING 33,05X1,78 MM	
320	312155-0325		2	SCREW EN 10642 MF6S M5X10 A480	
330	312605-0316		6	HEXAGON NUT, M6M M6 A280	
340	312105-0372		4	SCREW M6S ISO 4017 M6X25 A480	
350	312105-0371		3	SCREW M6S ISO 4017 M6X22 A480	
360	312105-0366		1	SCREW M6S ISO 4017 M6X12 A480	
370	312105-0291		2	SCREW M6S ISO 4017 M4X12 A470	
380	342722-0202		2	PIPE COUPLING 1/8" D=6MM	
390	90214-0112		2	BALL BEARING, 12X24X6 MM	
400	90459-1018		1	ROD END,BALL JOINT EYE M10X1,25	
410	90091-0429		1	VARILIP 15X26X7 MM	
420	90459-0805		3	BUSHING, 10X14X8 MM	
440	90458-2071		2	RETAINING RING FOR BORE DIN 472 24 A2	
450	90005-0060		1	WASHER PLAIN, RBS 6,4/M6)/18,H=1,5	
460	315105-0173		1	WASHER BRB10,5X22RFR	
480	312105-0364		2	SCREW M6S ISO 4017 M6X10 A480	
490	90459-3705		1	RUBBER BUFFER, TYPE P 20 10 - 60SH	
500	312625-0316		2	HEXAGON THIN NUT, EN 24035 ML6M M6 A4	
510	312812-0316		1	HEXAGON NUT, NY-LOCK M6 A480	
540	312105-0452		1	SCREW M6S ISO 4017 M8X22 A4 80	
550	312105-0325		2	SCREW M6S ISO 4017 M5X10 A480	
560	315705-0135		1	PARALLEL KEY W. ROUND ENDS 3X3X12 MM	
B1511	90459-3682		1	ROTARY POSITION SENSOR RPN1A111	
C1501	90459-3650		1	DOUBLE ACTING, MINI-ISO, CYL 25-40	
X1511	90459-3709		1	CONNECTOR 3-POLE AMP 282087-1	
X1512	90459-4077		3	WIRE SEAL , AMP 281934	
X1513	90459-4079		3	MINI MIC SRS, AMP 183035-1	

Machine Type | Group Description | Used-In | Group Number | Page No

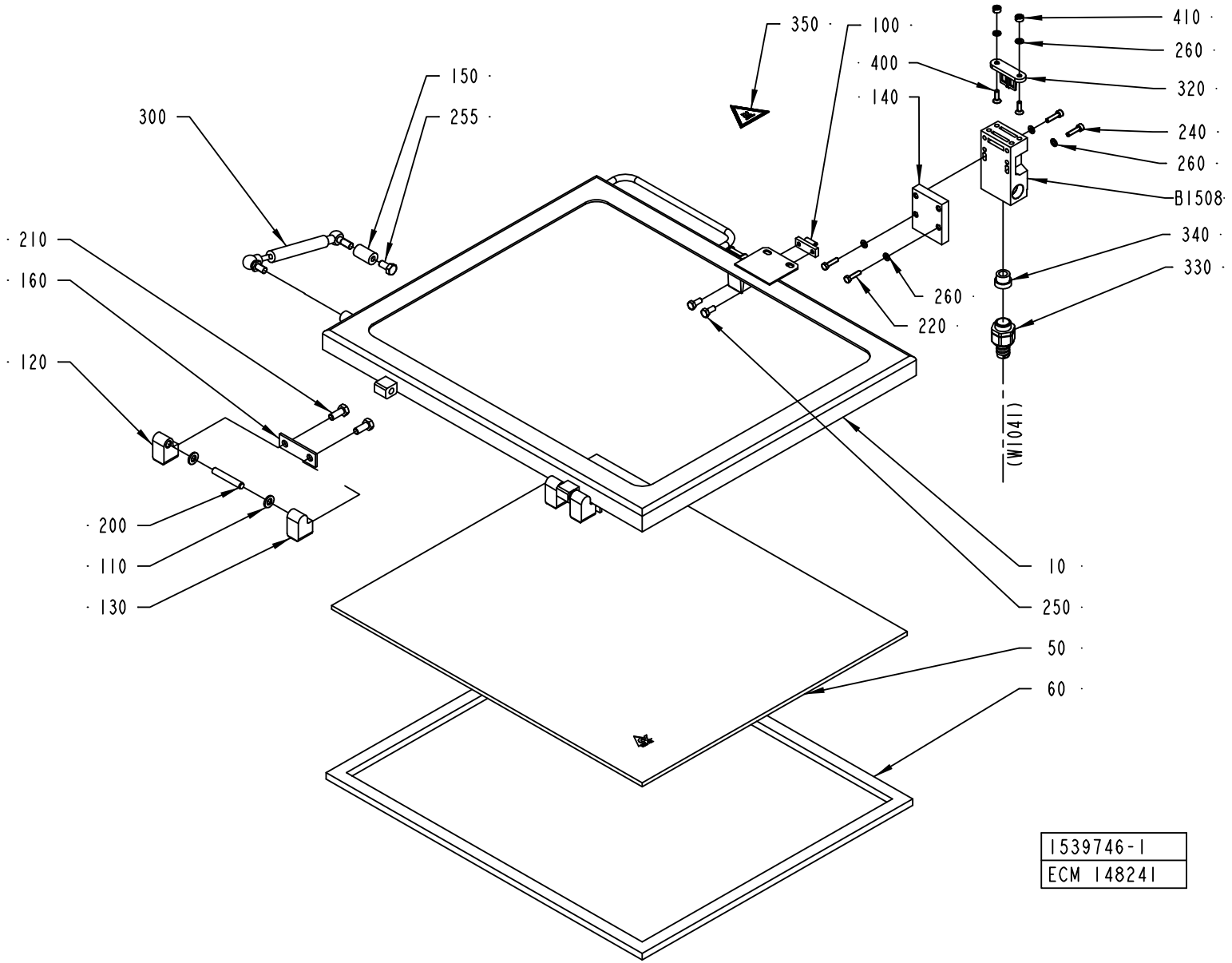
350
100
410
260
400
320
150
140
300
255
240
260
B1508
210
340
160
330
260
120
220
(W1041)
200
10
110
250
130
50
60
1539746-1
ECM 148241

ECM: 148241 - 20031006
Group number: 1539746-0100
Assembly Drawing: 1539746-1_1_AB

Pos	Part No	UN	Qty	Description	Page No
-					
010	1539747-0000		1	FRAME	
050	1539749-0000		1	GLASS PANE	
060	1539748-0000		1	GASKET	
100	271860-0000		1	CLAMP BLOCK	
110	441739-0000		4	WASHER	
120	1041979-0000		2	HINGE FLANGE	
130	1041978-0000		2	HINGE FLANGE	
140	2541651-0000		1	PLATE	
150	1037089-0000		1	SPACER	
160	441737-0000		2	WASHER	
200	311103-0413		2	PARALLEL PIN ISO 2338 8M6X50 A1	
210	312105-0451		4	SCREW M6S ISO 4017 M8X20 A480	
220	312105-0331		2	SCREW M6S ISO 4017 M5X20 A480	
240	312115-0331		2	SCREW ISO4762 M5X20 A4	
250	312105-0367		2	SCREW M6S ISO 4017 M6X14 A480	
255	312105-0449		1	SCREW M6S ISO 4017 M8X16 A480	
260	315105-0146		6	WASHER BRB5,3X10RFR	
300	90347-0039		1	DAMPER	
320	90044-0310		1	KEY FOR SAFETY SWITCH, AZ 15/16 B1	
330	90458-0429		1	HOSE GLAND W/O INSERT M20 EXTENDED	
340	353249-0011		1	INSERT, SINGEL HOLE, EK 153/11	
350	359705-0007		1	WARNING SIGN ISO, HOT SURFACE	
400	312155-0329		2	SCREW EN 10642 MF6S M5X16 A480	
410	575034-0000		2	ROUND NUT	
B1508	90459-0472		1	KEY SAF.SW. AZ 16 02ZVRK-M20-2152-2254	

Pos	Part No	UN	Qty	Description	Page No

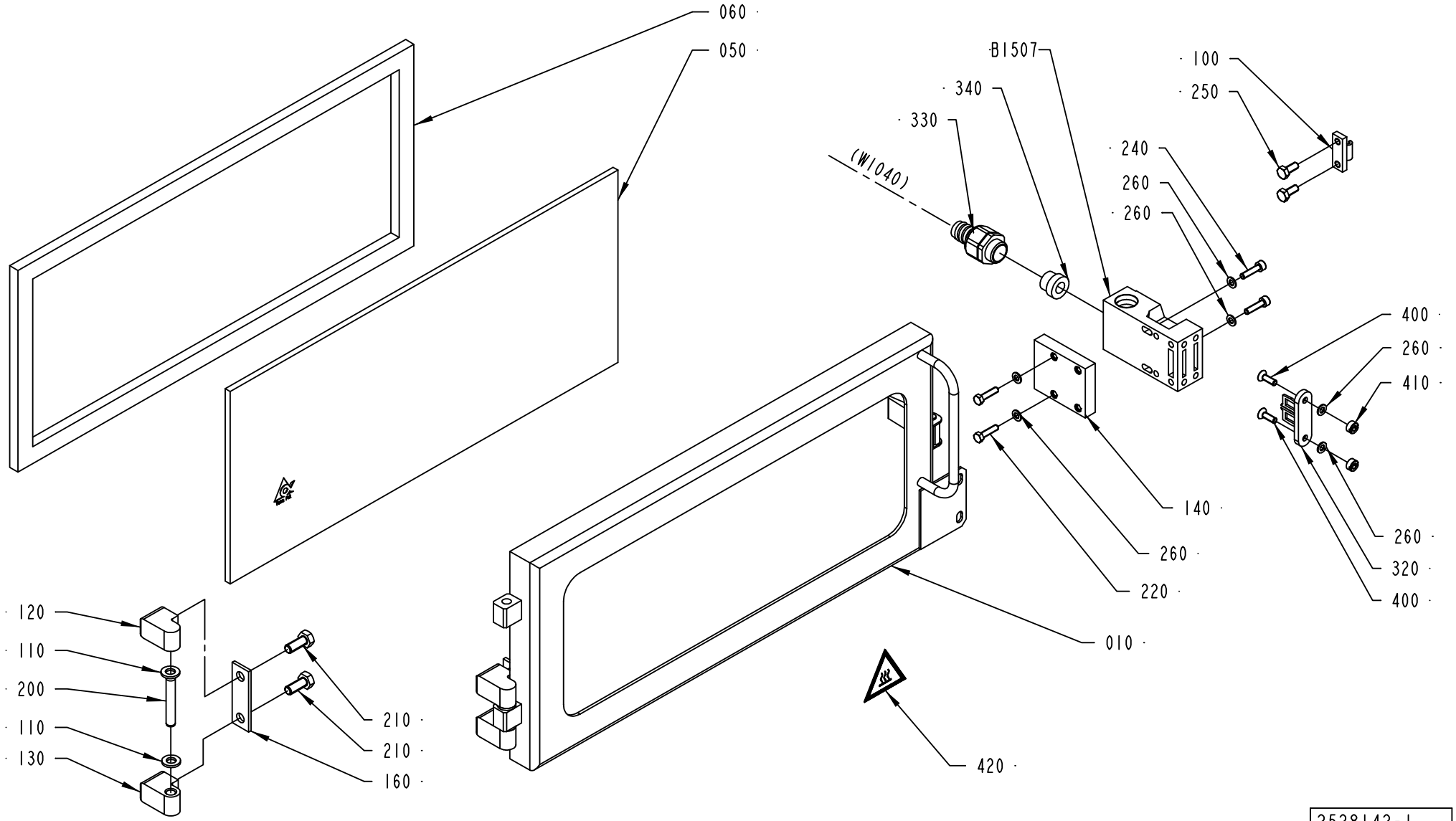

2528142-1
ECM 148241

ECM: 148241 - 20031006
Group number: 2528142-0100
Assembly Drawing: 2528142-1_1_AB

Pos	Part No	UN	Qty	Description	Page No
-					
010	2528143-0000		1	FRAME	
050	1499538-0000		1	GLASS PANE	
060	1499539-0000		1	GASKET	
100	271860-0000		1	CLAMP BLOCK	
110	441739-0000		4	WASHER	
120	1041979-0000		2	HINGE FLANGE	
130	1041978-0000		2	HINGE FLANGE	
140	2541651-0000		1	PLATE	
160	441737-0000		2	WASHER	
200	311103-0413		2	PARALLEL PIN ISO 2338 8M6X50 A1	
210	312105-0451		4	SCREW M6S ISO 4017 M8X20 A480	
220	312105-0331		2	SCREW M6S ISO 4017 M5X20 A480	
240	312115-0331		2	SCREW ISO4762 M5X20 A4	
250	312105-0367		2	SCREW M6S ISO 4017 M6X14 A480	
260	315105-0146		6	WASHER BRB5,3X10RFR	
320	90044-0310		1	KEY FOR SAFETY SWITCH, AZ 15/16 B1	
330	90458-0429		1	HOSE GLAND W/O INSERT M20 EXTENDED	
340	353249-0011		1	INSERT, SINGEL HOLE, EK 153/11	
400	312155-0329		2	SCREW EN 10642 MF6S M5X16 A480	
410	575034-0000		2	ROUND NUT	
420	359705-0007		1	WARNING SIGN ISO, HOT SURFACE	
B1507	90459-0472		1	KEY SAF.SW. AZ 16 02ZVRK-M20-2152-2254	

Pos	Part No	UN	Qty	Description	Page No

STERILE AIR SYSTEM

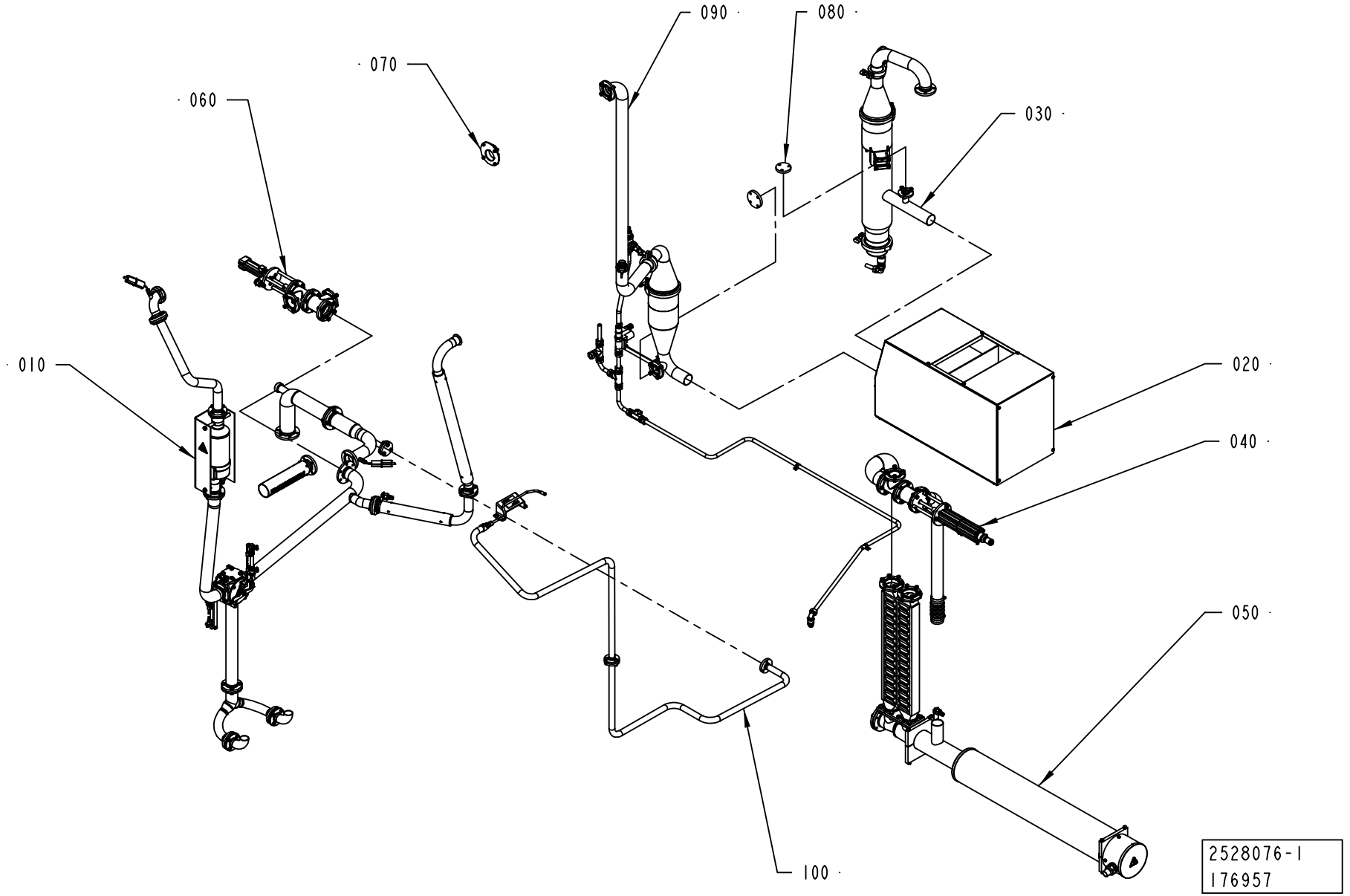

ECM: 177050 - 50001231
Group number: 2528076-0100
Assembly Drawing: 2528076-1_1_AD

Pos	Part No	UN	Qty	Description	Page No
A3/FLEX NODIMC					
100	2594606-0100		1	STERILE AIR PIPE	**1-151**
Common Parts					
010	1558511-0100		1	PIPE WORK-AIR	**1-157, 1-159**
020	1517134-0100		1	COMPRESSOR UNIT	**1-163**
030	1558769-0200		1	SEPARATOR	**1-165**
040	1532250-0100		1	HEAT EXCHANGER VALVE	**1-167**
050	1499158-0100		1	AIR SUPER-HEATER	**1-169**
060	1538166-0100		1	AIR VALVE	**1-171**
070	2550890-0100		1	VALVE	**1-173**
080	2547205-0200		1	PRESSURE REGULATOR	**1-175, 1-177**
090	1499160-0200		1	SCRUBBER	**1-179**

Pos	Part No	UN	Qty	Description	Page No

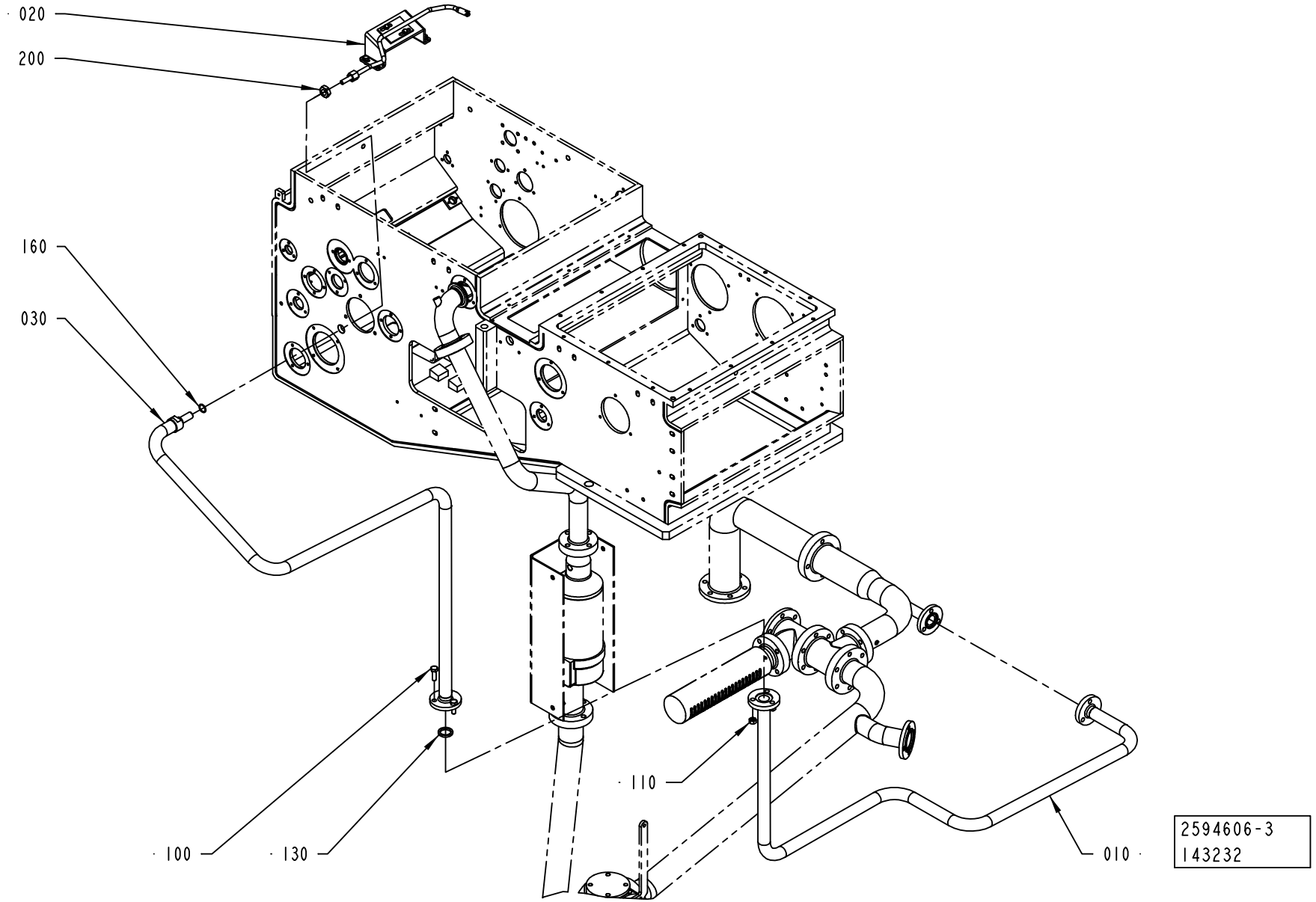
020
200
160
030
100
130
110
010
2594606-3
143232

ECM: 161141 - 20040503
Group number: 2594606-0100
Assembly Drawing: 2594606-3_1_AA

Pos	Part No	UN	Qty	Description	Page No
-					
010	2641298-0000		1	PIPE	
020	2671730-0100		1	AIR NOZZLE	**1-153, 1-155**
030	2641322-0000		1	PIPE	
100	312105-0453		3	SCREW M6S ISO 4017 M8X25 A480	
110	312605-0318		3	HEXAGON NUT, M6M M8 A280	
130	315229-0203		1	GASKET 22,1X31,1X3,7 MM 1"	
160	315205-0704		1	O-RING 15,6X1,78 MM	
200	90099-0053		1	HEXAGON NUT, M14X1,5, SMS2176	

Pos	Part No	UN	Qty	Description	Page No

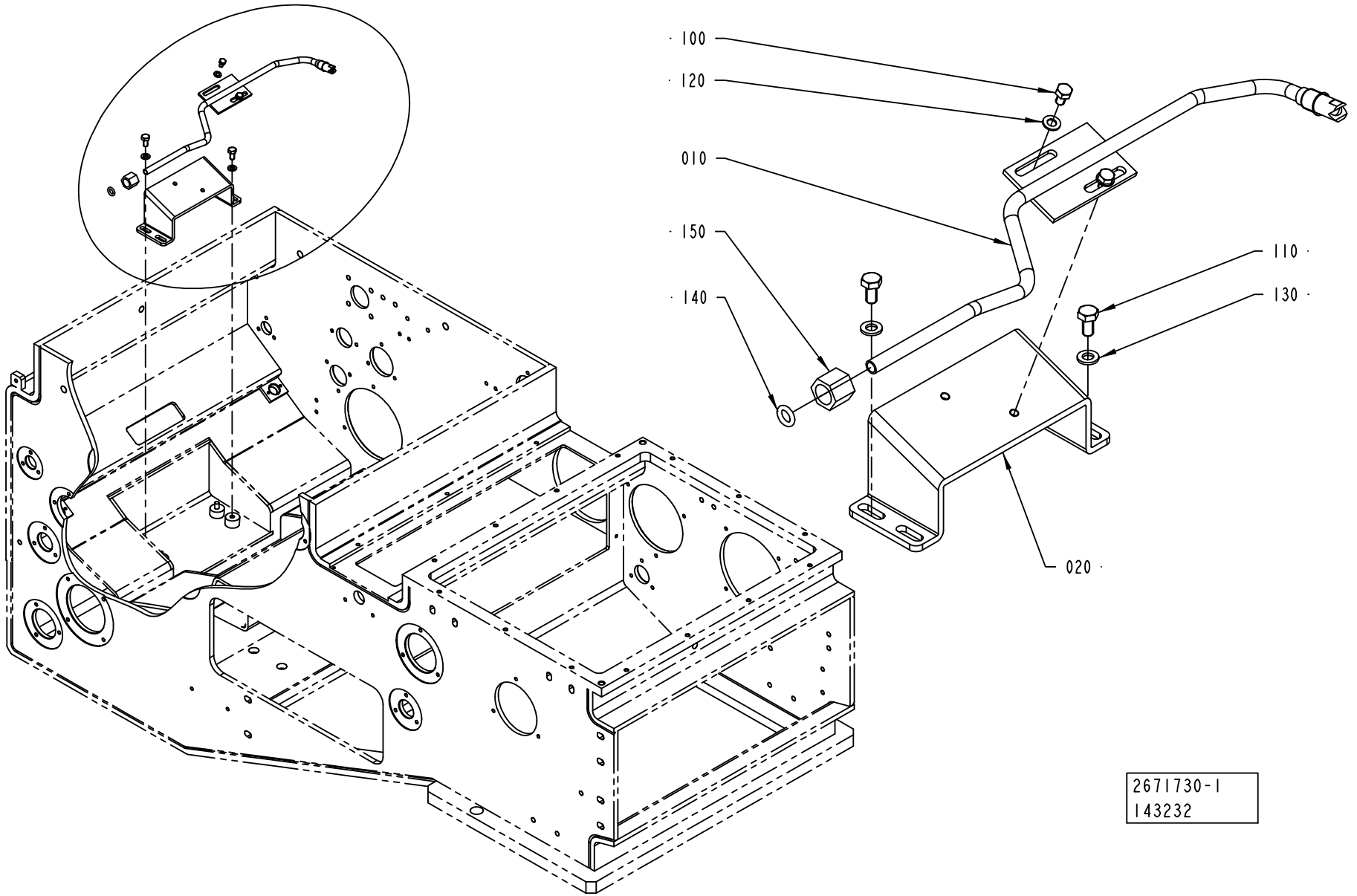
100
120
010
150
140
110
130
020
2671730-1
143232

Pos	Part No	UN	Qty	Description	Page No
TBA 0500B, TBA 1000S, TBA 1000SQ, TBA 1000B, TBA 0200B, TBA 0200S, TBA 0250B (See drawing on page: 1-154)					
010	2668569-0000		1	PLUG	
TBA 1500S (See drawing on page: 1-152)					
010	2641318-0000		1	NOZZLE	
150	342703-0208		1	NUT, PIPES & CONNECTORS,NUT M-8 SS	
TBA 1890S, TBA 2000S (See drawing on page: 1-152)					
010	2641317-0000		1	PIPE	
150	342703-0208		1	NUT, PIPES & CONNECTORS,NUT M-8 SS	
TPA 1000SQ (See drawing on page: 1-152)					
010	2668565-0000		1	NOZZLE	
150	342703-0208		1	NUT, PIPES & CONNECTORS,NUT M-8 SS	
Common Parts					
020	2641319-0000		1	BRACKET	
100	312105-0323		2	SCREW M6S ISO 4017 M5X8 A480	
110	312105-0366		2	SCREW M6S ISO 4017 M6X12 A480	
120	315105-0146		2	WASHER BRB5,3X10RFR	
130	315105-0153		2	WASHER BRB6,4X12RFR	
140	315205-0808		1	O-RING 7,59X2,62 MM	

Pos	Part No	UN	Qty	Description	Page No

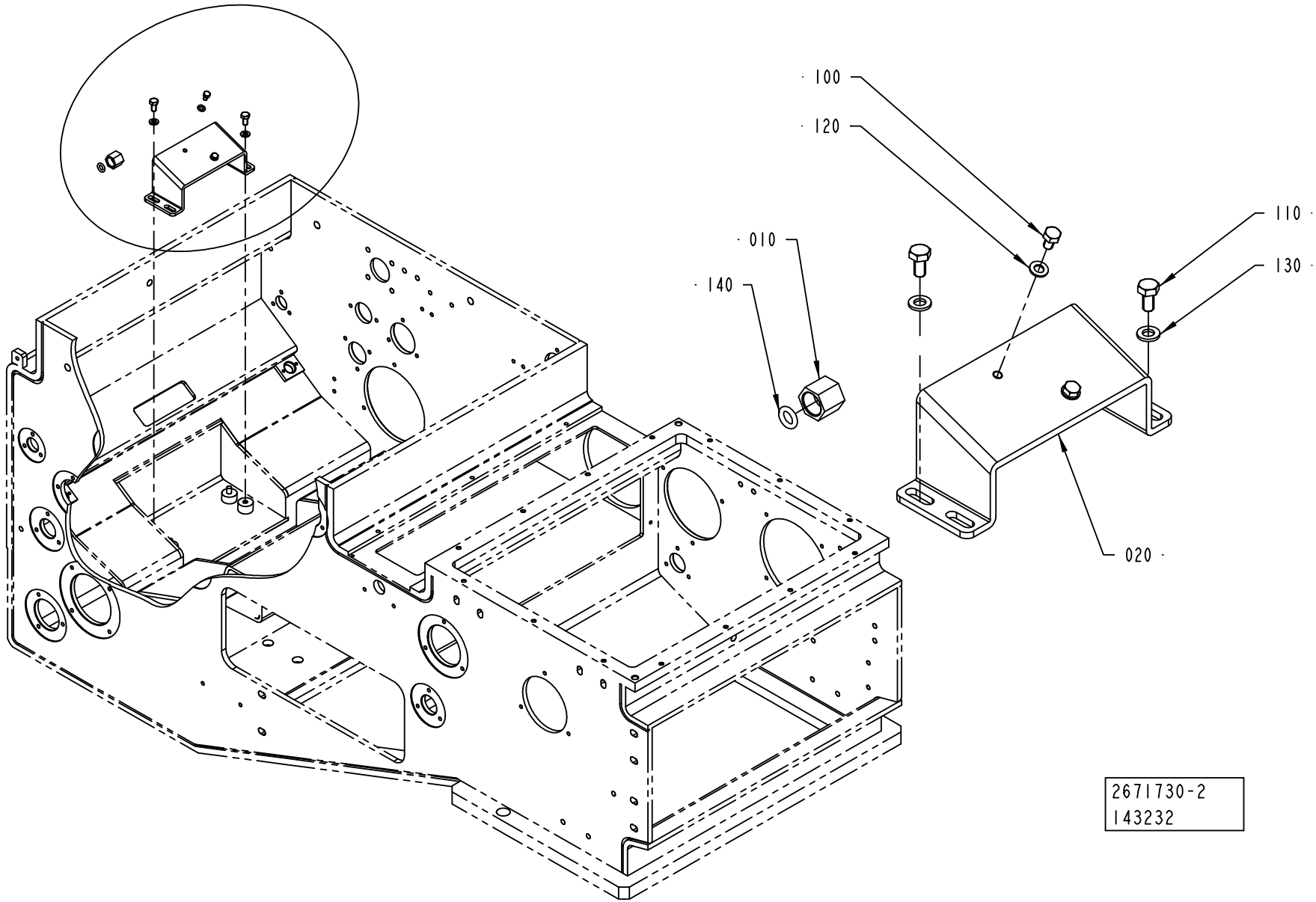
100
120
110
010
130
140
020
2671730-2
143232

ECM: 173059 - 50001231
Group number: 2671730-0100
Assembly Drawing: 2671730-2_1_AA

This list covers pages from 1-152 to 1-155

Pos	Part No	UN	Qty	Description	Page No
TBA 0500B, TBA 1000S, TBA 1000SQ, TBA 1000B, TBA 0200B, TBA 0200S, TBA 0250B (See drawing on page: 1-154)					
010	2668569-0000		1	PLUG	
TBA 1500S (See drawing on page: 1-152)					
010	2641318-0000		1	NOZZLE	
150	342703-0208		1	NUT, PIPES & CONNECTORS,NUT M-8 SS	
TBA 1890S, TBA 2000S (See drawing on page: 1-152)					
010	2641317-0000		1	PIPE	
150	342703-0208		1	NUT, PIPES & CONNECTORS,NUT M-8 SS	
TPA 1000SQ (See drawing on page: 1-152)					
010	2668565-0000		1	NOZZLE	
150	342703-0208		1	NUT, PIPES & CONNECTORS,NUT M-8 SS	
Common Parts					
020	2641319-0000		1	BRACKET	
100	312105-0323		2	SCREW M6S ISO 4017 M5X8 A480	
110	312105-0366		2	SCREW M6S ISO 4017 M6X12 A480	
120	315105-0146		2	WASHER BRB5,3X10RFR	
130	315105-0153		2	WASHER BRB6,4X12RFR	
140	315205-0808		1	O-RING 7,59X2,62 MM	

Pos	Part No	UN	Qty	Description	Page No

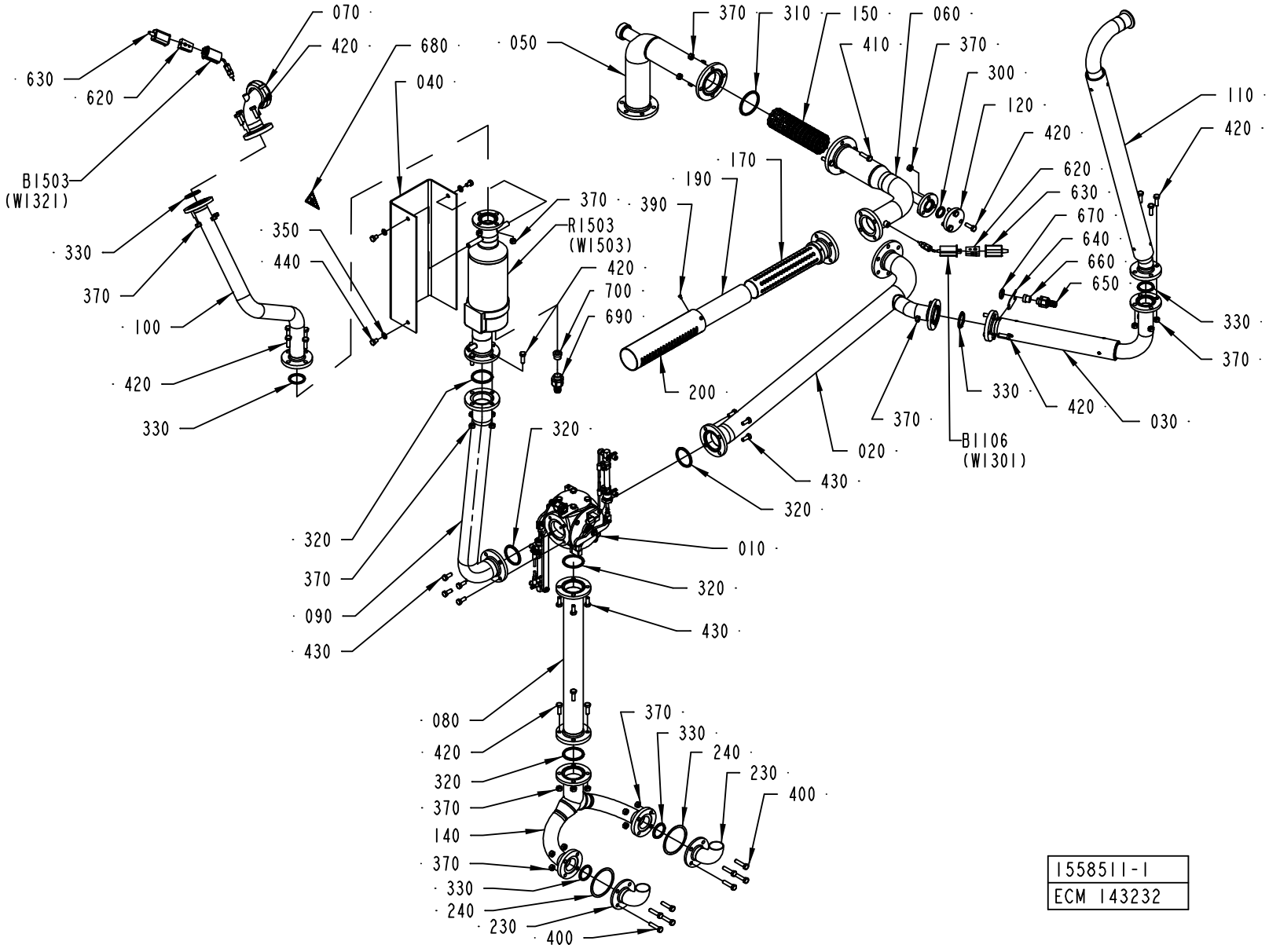

1558511-1
ECM 143232

ECM: 174638 - 50001231
Group number: 1558511-0100
Assembly Drawing: 1558511-1_1_AC

This list covers pages from 1-156 to 1-159

Pos	Part No	UN	Qty	Description	Page No
A3/FLEX DIMC/FLEX (See drawing on page: 1-156)					
080	1538183-0000		1	PIPE	
120	2565467-0000		1	FLANGE	
230	2547407-0000		2	PIPE	
320	315229-0205		5	GASKET 47,5X55,5X3,7 MM 2"	
370	312605-0318		39	HEXAGON NUT, M6M M8 A280	
420	312105-0453		27	SCREW M6S ISO 4017 M8X25 A480	
A3/FLEX TBA 1000B NODIMC, A3/FLEX TBA 0500B NODIMC, A3/FLEX TBA 1000S NODIMC, A3/FLEX TBA 1000SQ NODIMC, A3/FLEX TBA 0200S NODIMC, A3/FLEX TPA 1000SQ NODIMC, A3/FLEX TBA 1500S NODIMC, A3/FLEX TBA 0200B NODIMC, A3/FLEX TBA 0250B NODIMC, A3/FLEX TBA 0330S NODIMC, A3/FLEX TPA 0330SQ NODIMC, A3/FLEX TPA 0500SQ NODIMC, A3/FLEX TBA 0200M NODIMC, A3/FLEX TBA 0250S NODIMC, A3/FLEX TBA 0500S NODIMC (See drawing on page: 1-156)					
080	1538183-0000		1	PIPE	
230	2547407-0000		2	PIPE	
320	315229-0205		5	GASKET 47,5X55,5X3,7 MM 2"	
370	312605-0318		39	HEXAGON NUT, M6M M8 A280	
420	312105-0453		27	SCREW M6S ISO 4017 M8X25 A480	
A3/FLEX TBA 2000S NODIMC, A3/FLEX TBA 1890S NODIMC (See drawing on page: 1-158)					
080	1538183-0000		1	PIPE	
220	2657887-0000		1	HORN	
230	2657888-0000		1	HORN	
320	315229-0205		5	GASKET 47,5X55,5X3,7 MM 2"	
370	312605-0318		39	HEXAGON NUT, M6M M8 A280	
420	312105-0453		27	SCREW M6S ISO 4017 M8X25 A480	
Common Parts					
010	2550895-0100		1	CHANGE OVER VALVE	**1-161**
020	1558512-0000		1	PIPE	
030	1558510-0000		1	PIPE	
040	1538488-0000		1	PROTECTION	
050	1538487-0000		1	PIPE	
060	2641296-0000		1	PIPE	
070	1538474-0000		1	PIPE	
090	2641299-0000		1	PIPE	
100	1538181-0000		1	PIPE	
110	1558516-0000		1	PIPE	
140	1538154-0000		1	DRAIN PIPE	
150	1549526-0000		1	CONTAINER	
170	1517482-0000		1	TUBE	
190	1511755-0000		1	NET	
200	1511503-0000		1	PIPE	
240	1036294-0000		2	GASKET	
300	315229-0203		1	GASKET 22,1X31,1X3,7 MM 1"	
310	315229-0206		1	GASKET 60,2X68,2X3,7 MM 2"1/2	
330	315229-0204		6	GASKET 34,8X42,8X3,7 MM 1"1/2	
350	315105-0165		3	WASHER BRB8,4X16RFR	
390	312125-0285		4	SCREW ISO 1207 M4X6 A4	
400	312109-0457		8	SCREW M6S ISO 4017 M8X35 A480	
410	312105-0455		4	SCREW M6S ISO 4017 M8X30 A480	
430	312105-0451		12	SCREW M6S ISO 4017 M8X20 A480	
440	312105-0447		3	SCREW M6S ISO 4017 M8X12 A480	
620	90326-0020		2	PLUG, FEMALE YELLOW CR-AL	
630	90326-0012		2	PROTECTIVE COVER, T31A4618	
640	1036293-0000		1	HOLDER	
650	353243-0001		1	HOSE GLAND W/O INSERT PG9 EXTENDED	
660	353249-0008		1	INSERT, SINGEL HOLE, EK 152/7	
670	90099-0104		1	NUT, PR 15,2 (PG9)	
680	359705-0007		1	WARNING SIGN ISO, HOT SURFACE	
690	353243-0003		1	HOSE GLAND W/O INSERT PG11 EXTENDED	
700	353249-0011		1	INSERT, SINGEL HOLE, EK 153/11	
B1106	90326-0057		1	THERMOCOUPLE, CR-AL	
B1503	90326-0057		1	THERMOCOUPLE, CR-AL	
R1503	1532235-0000		1	HEATER	
W1301	90220-0034	MM	8000	THERMOCABLE TEX/SITW-20F-KX 2X0,5MM2	
W1321	90220-0034	MM	8000	THERMOCABLE TEX/SITW-20F-KX 2X0,5MM2	
W1503	351120-0164	MM	8000	CABLE SIHF 4X1,5MM2 GREEN/YELLOW	

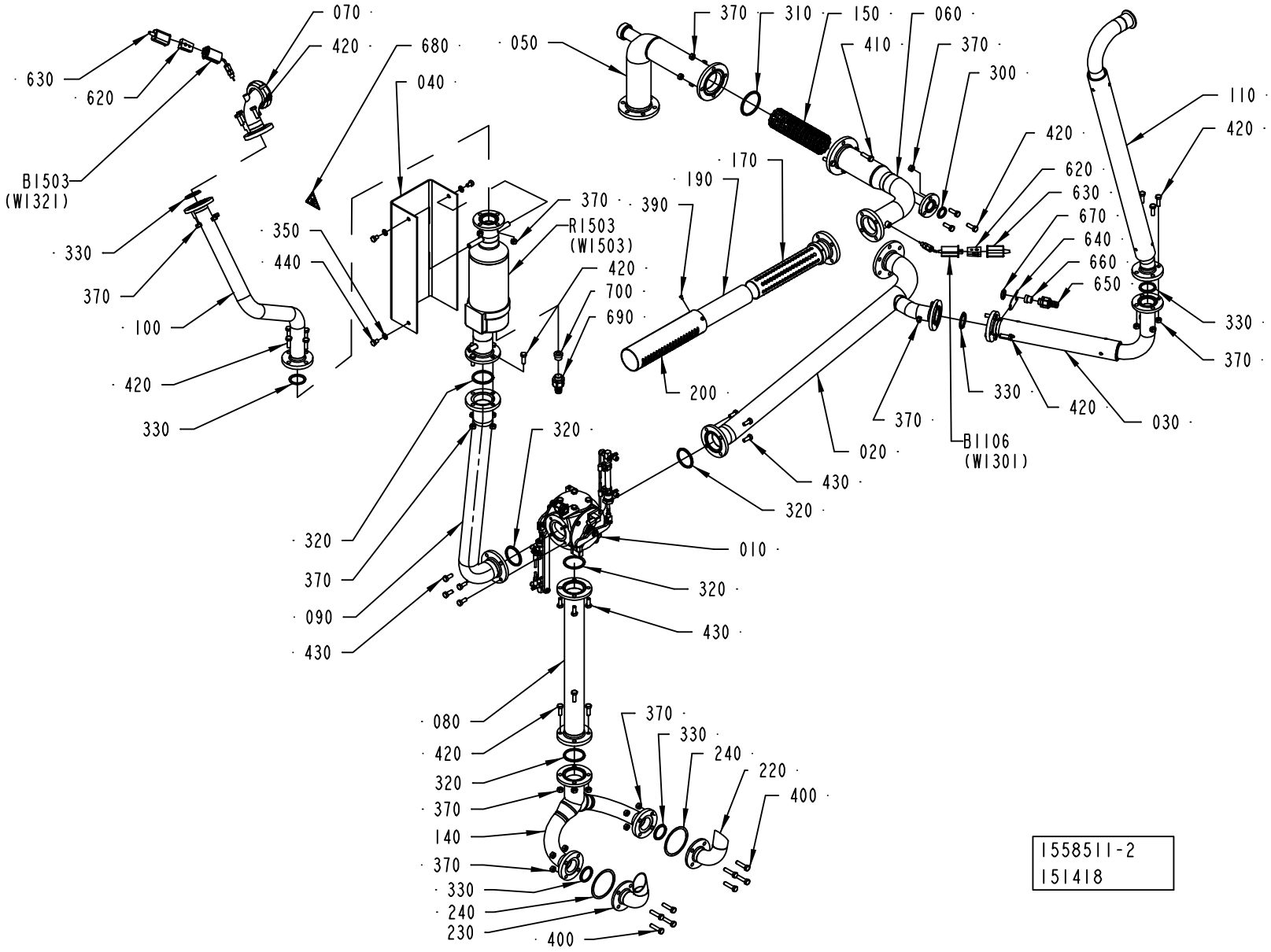
070
420
680
040
630
620
B1503
(W1321)
050
370
310
150
060
410
370
300
110
420
420
620
630
670
640
660
650
330
370
170
190
390
R1503
(W1503)
350
440
370
420
700
690
330
370
100
420
330
200
320
320
370
090
430
010
320
430
320
430
020
B1106
(W1301)
370
330
420
030
080
420
320
370
140
370
330
240
230
400
370
330
240
220
400
1558511-2
151418

ECM: 174638 - 50001231
Group number: 1558511-0100
Assembly Drawing: 1558511-2_1_AA

This list covers pages from 1-156 to 1-159

Pos	Part No	UN	Qty	Description	Page No
A3/FLEX DIMC/FLEX (See drawing on page: 1-156)					
080	1538183-0000		1	PIPE	
120	2565467-0000		1	FLANGE	
230	2547407-0000		2	PIPE	
320	315229-0205		5	GASKET 47,5X55,5X3,7 MM 2"	
370	312605-0318		39	HEXAGON NUT, M6M M8 A280	
420	312105-0453		27	SCREW M6S ISO 4017 M8X25 A480	
A3/FLEX TBA 1000B NODIMC, A3/FLEX TBA 0500B NODIMC, A3/FLEX TBA 1000S NODIMC, A3/FLEX TBA 1000SQ NODIMC, A3/FLEX TBA 0200S NODIMC, A3/FLEX TPA 1000SQ NODIMC, A3/FLEX TBA 1500S NODIMC, A3/FLEX TBA 0200B NODIMC, A3/FLEX TBA 0250B NODIMC, A3/FLEX TBA 0330S NODIMC, A3/FLEX TPA 0330SQ NODIMC, A3/FLEX TPA 0500SQ NODIMC, A3/FLEX TBA 0200M NODIMC, A3/FLEX TBA 0250S NODIMC, A3/FLEX TBA 0500S NODIMC (See drawing on page: 1-156)					
080	1538183-0000		1	PIPE	
230	2547407-0000		2	PIPE	
320	315229-0205		5	GASKET 47,5X55,5X3,7 MM 2"	
370	312605-0318		39	HEXAGON NUT, M6M M8 A280	
420	312105-0453		27	SCREW M6S ISO 4017 M8X25 A480	
A3/FLEX TBA 2000S NODIMC, A3/FLEX TBA 1890S NODIMC (See drawing on page: 1-158)					
080	1538183-0000		1	PIPE	
220	2657887-0000		1	HORN	
230	2657888-0000		1	HORN	
320	315229-0205		5	GASKET 47,5X55,5X3,7 MM 2"	
370	312605-0318		39	HEXAGON NUT, M6M M8 A280	
420	312105-0453		27	SCREW M6S ISO 4017 M8X25 A480	
Common Parts					
010	2550895-0100		1	CHANGE OVER VALVE	**1-161**
020	1558512-0000		1	PIPE	
030	1558510-0000		1	PIPE	
040	1538488-0000		1	PROTECTION	
050	1538487-0000		1	PIPE	
060	2641296-0000		1	PIPE	
070	1538474-0000		1	PIPE	
090	2641299-0000		1	PIPE	
100	1538181-0000		1	PIPE	
110	1558516-0000		1	PIPE	
140	1538154-0000		1	DRAIN PIPE	
150	1549526-0000		1	CONTAINER	
170	1517482-0000		1	TUBE	
190	1511755-0000		1	NET	
200	1511503-0000		1	PIPE	
240	1036294-0000		2	GASKET	
300	315229-0203		1	GASKET 22,1X31,1X3,7 MM 1"	
310	315229-0206		1	GASKET 60,2X68,2X3,7 MM 2"1/2	
330	315229-0204		6	GASKET 34,8X42,8X3,7 MM 1"1/2	
350	315105-0165		3	WASHER BRB8,4X16RFR	
390	312125-0285		4	SCREW ISO 1207 M4X6 A4	
400	312109-0457		8	SCREW M6S ISO 4017 M8X35 A480	
410	312105-0455		4	SCREW M6S ISO 4017 M8X30 A480	
430	312105-0451		12	SCREW M6S ISO 4017 M8X20 A480	
440	312105-0447		3	SCREW M6S ISO 4017 M8X12 A480	
620	90326-0020		2	PLUG, FEMALE YELLOW CR-AL	
630	90326-0012		2	PROTECTIVE COVER, T31A4618	
640	1036293-0000		1	HOLDER	
650	353243-0001		1	HOSE GLAND W/O INSERT PG9 EXTENDED	
660	353249-0008		1	INSERT, SINGEL HOLE, EK 152/7	
670	90099-0104		1	NUT, PR 15,2 (PG9)	
680	359705-0007		1	WARNING SIGN ISO, HOT SURFACE	
690	353243-0003		1	HOSE GLAND W/O INSERT PG11 EXTENDED	
700	353249-0011		1	INSERT, SINGEL HOLE, EK 153/11	
B1106	90326-0057		1	THERMOCOUPLE, CR-AL	
B1503	90326-0057		1	THERMOCOUPLE, CR-AL	
R1503	1532235-0000		1	HEATER	
W1301	90220-0034	MM	8000	THERMOCABLE TEX/SITW-20F-KX 2X0,5MM2	
W1321	90220-0034	MM	8000	THERMOCABLE TEX/SITW-20F-KX 2X0,5MM2	
W1503	351120-0164	MM	8000	CABLE SIHF 4X1,5MM2 GREEN/YELLOW	

CHANGE OVER VALVE

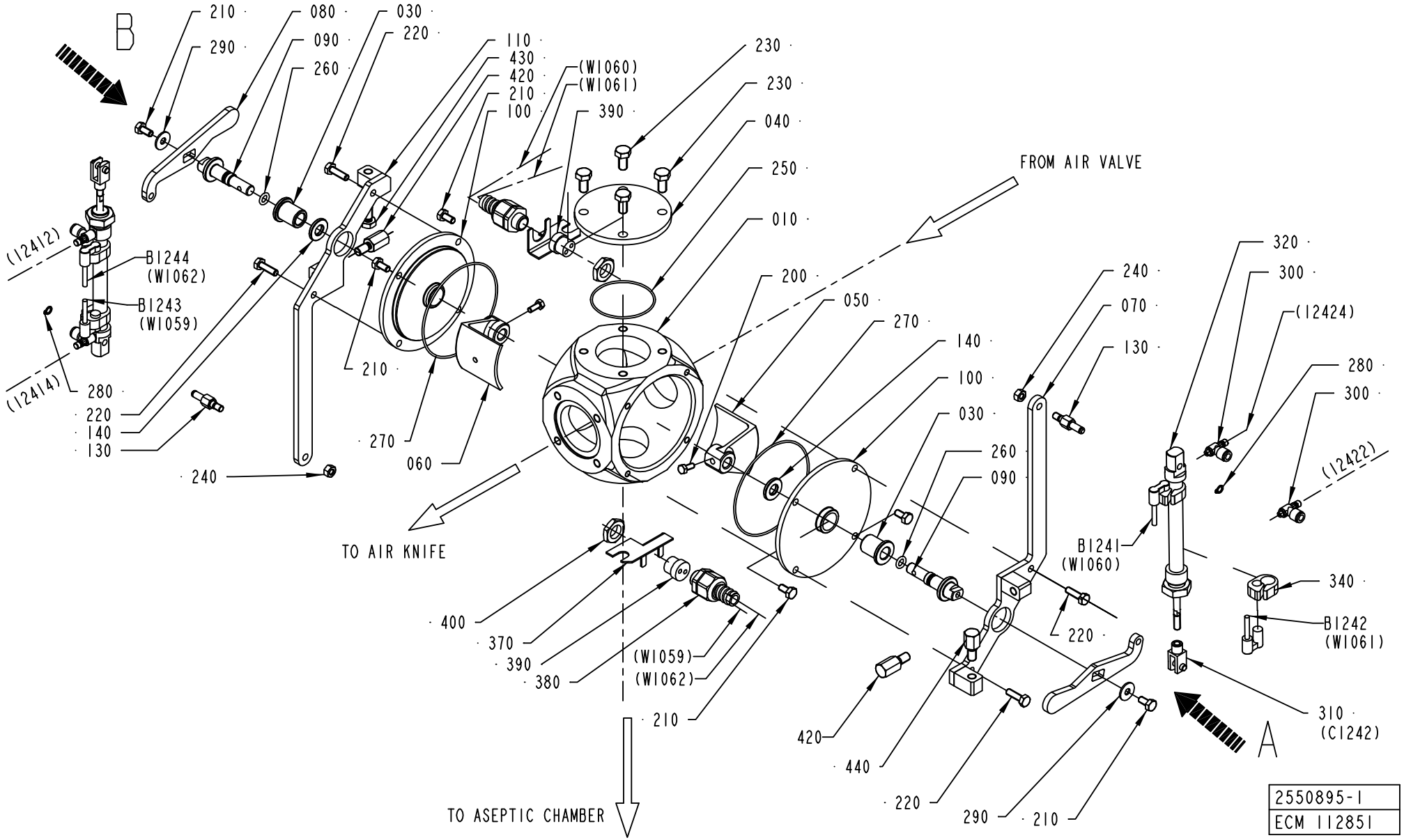

ECM: 129111 - 20030908
Group number: 2550895-0100
Assembly Drawing: 2550895-1_1_AA

Pos	Part No	UN	Qty	Description	Page No
A3/FLEX					
440	2582576-0000		1	STOP SCREW	
Common Parts					
010	1524236-0000		1	VALVE HOUSING	
030	1539740-0000		2	BUSHING	
040	1539741-0000		1	COVER	
050	1539742-0000		1	SHUTTER	
060	1539743-0000		1	SHUTTER	
070	1539744-0000		1	BRACKET	
080	1539745-0000		2	LEVER	
090	1539750-0000		2	SHAFT	
100	1539751-0000		2	COVER	
110	1539752-0000		1	BRACKET	
130	1548742-0000		2	SPACER	
140	1548743-0000		2	WASHER	
200	312105-0327		2	SCREW M6S ISO 4017 M5X12 A480	
210	312105-0366		6	SCREW M6S ISO 4017 M6X12 A480	
220	312105-0370		4	SCREW M6S ISO 4017 M6X20 A480	
230	312105-0449		4	SCREW M6S ISO 4017 M8X16 A480	
240	312605-0316		4	HEXAGON NUT, M6M M6 A280	
250	90459-1189		1	O-RING 56,87X1,78 MM	
260	315204-0206		2	O-RING 7,3X2,4 MM	
270	315205-0807		2	O-RING 94,97X1,78 MM	
280	315751-0103		2	RETAINING RING FOR SHAFT DIN 471 6 A2	
290	90005-0060		2	WASHER PLAIN, RBS 6,4/M6)/18,H=1,5	
300	90235-0844		4	THROTTLE CHECK VALVE, M5, MANUAL, 6MM	
310	90450-0725		2	ROD END, CLEVIS WITH AXLE M6	
320	90459-0713		2	DOUBLE ACTING, MINI-ISO, CYL 12-80	
340	90459-0799		4	SENSOR BRACKET SMBR-12 FOR CYL 12	
370	1036610-0000		2	BRACKET	
380	353243-0001		2	HOSE GLAND W/O INSERT PG9 EXTENDED	
390	353249-0036		2	INSERT, MULTI HOLE, EK152 M 2X4	
400	90099-0104		2	NUT, PR 15,2 (PG9)	
420	2528061-0000		2	SCREW	
430	2528062-0000		1	SCREW	
B1241	90459-0829		1	SENSOR, SMTO-4U-PS-K-LED-24	
B1242	90459-0829		1	SENSOR, SMTO-4U-PS-K-LED-24	
B1243	90459-0829		1	SENSOR, SMTO-4U-PS-K-LED-24	
B1244	90459-0829		1	SENSOR, SMTO-4U-PS-K-LED-24	

Pos	Part No	UN	Qty	Description	Page No

Machine Type	Group Description	Used-In	Group Number	Page No

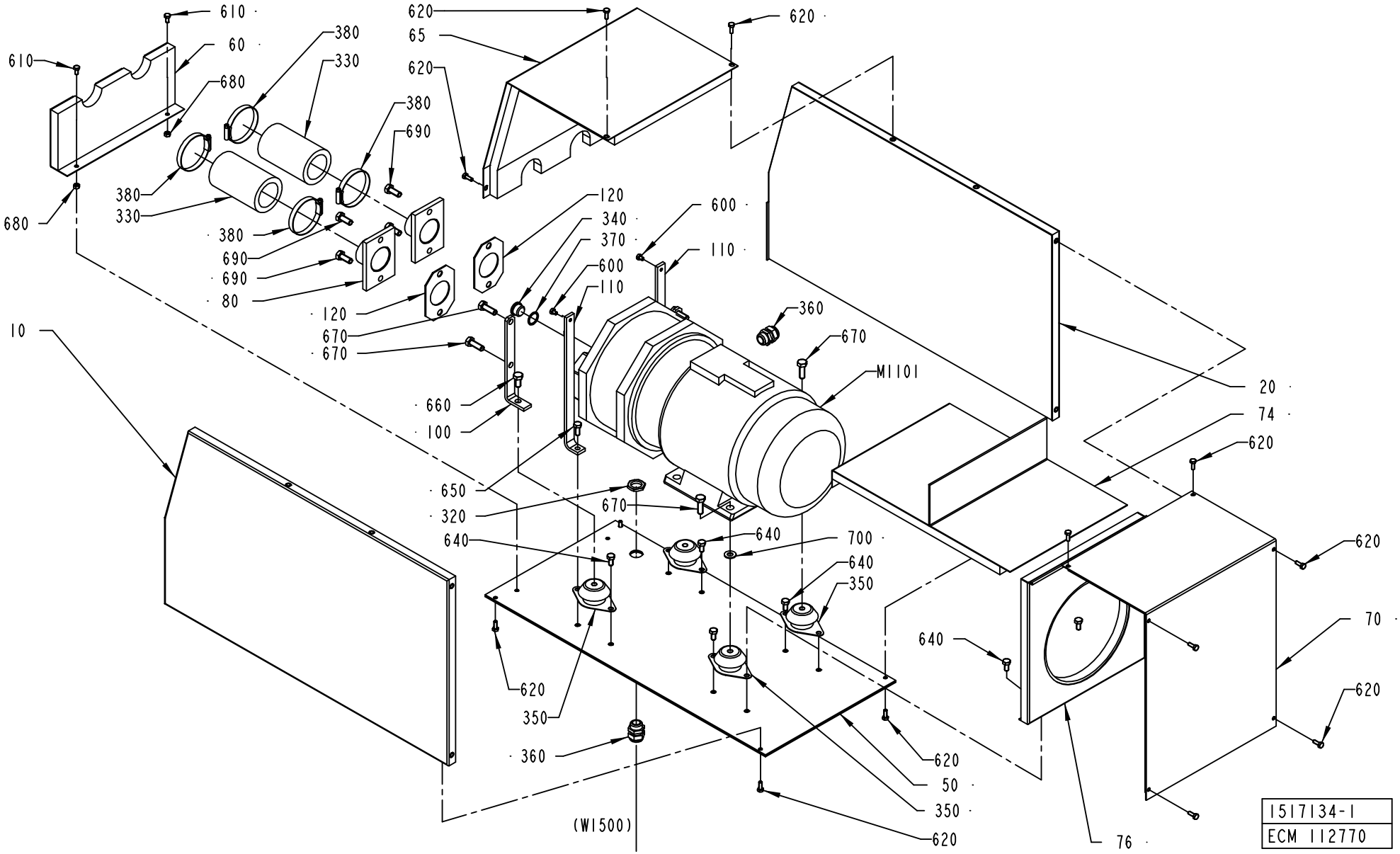
610
60
610
680
380
330
680
380
330
380
690
380
690
690
80
620
65
620
620
620
120
340
370
600
110
600
110
120
670
670
660
100
10
360
670
M1101
20
74
620
650
320
640
670
640
700
640
350
620
350
360
(W1500)
620
50
350
620
640
620
70
620
76
1517134-1
ECM 112770

ECM: 112770 - 20030123
Group number: 1517134-0100
Assembly Drawing: 1517134-1_1_AA

Pos	Part No	UN	Qty	Description	Page No
-					
010	1517137-0000		1	COVER	
020	1517138-0000		1	COVER	
050	1036314-0000		1	BOTTOM PANEL	
060	1517135-0000		1	FRONT PLATE	
065	1517136-0000		1	COVER	
070	1040876-0000		1	COVER	
074	1040877-0000		1	PLATE	
076	1040878-0000		1	PLATE	
080	1036318-0000		2	PIPE	
100	269859-0000		2	BRACKET	
110	1036319-0000		2	BRACKET	
120	230551-0000		2	GASKET	
320	90099-0110		1	NUT, PR 22,5 (PG16)	
330	90166-0199	MM	240	RUBBER HOSE	
340	342713-0213		1	PLUG, EXT THREAD HEX SOCKET 8638-00-120	
350	90347-0144		4	VIBRATION DAMPER, NO. RA 40EM-A	
360	352103-0111		2	CABLE GLAND, ST 16, PR22,5/PG16	
370	315234-0113		1	WASHER PL.RND.CU.21,3//26 H=1,5	
380	342991-0111		4	HOSE CLIP,WORM DRIVE TYPE (63)-73	
600	312105-0362		2	SCREW M6S ISO 4017 M6X8 A480	
610	312105-0366		2	SCREW M6S ISO 4017 M6X12 A480	
620	312105-0368		14	SCREW M6S ISO 4017 M6X16 A480	
640	312105-0449		6	SCREW M6S ISO 4017 M8X16 A480	
650	312105-0451		2	SCREW M6S ISO 4017 M8X20 A480	
660	312105-0491		2	SCREW M6S ISO 4017 M10X20 A480	
670	312105-0495		6	SCREW M6S ISO 4017 M10X30 A480	
680	312605-0316		2	HEXAGON NUT, M6M M6 A280	
690	312105-0493		4	SCREW M6S ISO 4017 M10X25 A480	
700	315105-0173		2	WASHER BRB10,5X22RFR	
M1101	90270-0017		1	COMPRESSOR NASH/ELMO 112 MB/4-2083	

Pos	Part No	UN	Qty	Description	Page No

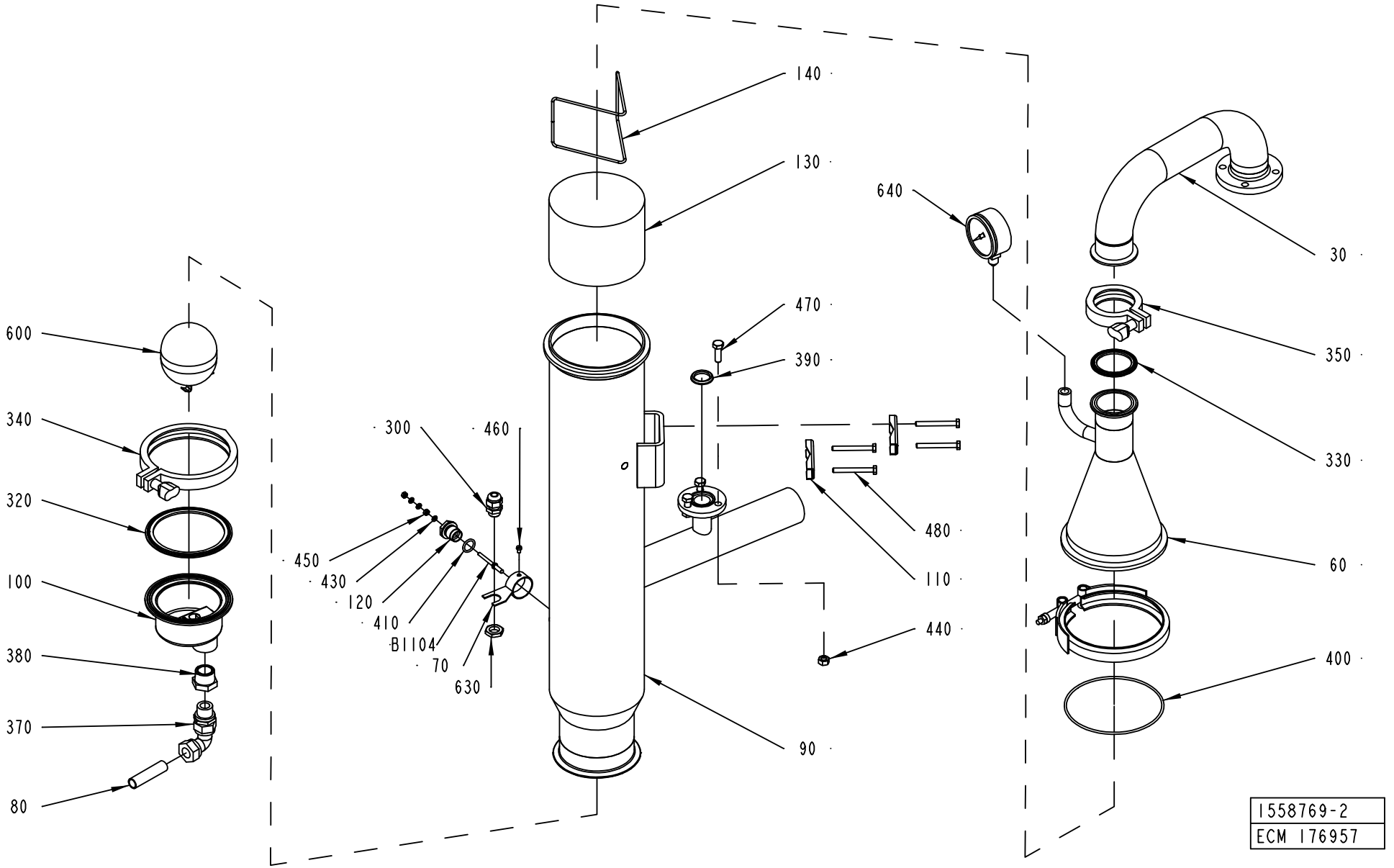
140
130
640
30
470
390
350
330
600
340
320
100
380
370
80
300
460
450
430
120
410
B1104
70
630
480
110
440
90
60
400
1558769-2
ECM 176957

ECM: 177049 - 50001231
Group number: 1558769-0200
Assembly Drawing: 1558769-2_1_AA

Pos	Part No	UN	Qty	Description	Page No
-					
030	2685246-0000		1	PIPE	
060	2685247-0000		1	UPPER SECTION	
070	1538169-0000		1	HOLDER	
080	1038866-0000		1	INTERMEDIARY SECTION	
090	2547215-0000		1	INTERMEDIARY SECTION	
100	1038634-0000		1	DRAINING	
110	1036811-0000		2	CLAMP	
120	560931-0000		1	BRACKET	
130	546929-0000		1	FILTER	
140	2685375-0000		1	RETAINING RING	
300	352103-0101		1	CABLE GLAND, ST 9, PR15,2/PG9	
320	342850-0408		1	GASKET 97X117,7X5,2 MM 4" FDA	
330	342850-0405		1	GASKET 47,8X62,6X5,2 MM 2" FDA	
340	342840-0108		1	CLAMP, 101,6 MM 3-A PCS+PMCS	
350	342840-0105		1	CLAMPING PIECE	
370	342738-0221		1	ADJUSTABLE ELBOW CONNECTION,EXT 15-G1/2	
380	342206-0109		1	BUSHING, TAPERED, INT/EXT. THRýNO. R211	
390	315229-0203		1	GASKET 22,1X31,1X3,7 MM 1"	
400	315204-0317		1	O-RING 129,5X3 MM	
410	315204-0213		1	O-RING 15,2X2,4 MM	
430	315105-0136		3	WASHER BRB4,3XRFR	
440	312605-0318		3	HEXAGON NUT, M6M M8 A280	
450	312605-0312		2	HEXAGON NUT, M6M M4 A280	
460	312125-0285		1	SCREW ISO 1207 M4X6 A4	
470	312105-0453		3	SCREW M6S ISO 4017 M8X25 A480	
480	312105-0381		4	SCREW M6S ISO 4014 M6X55 A480	
600	90360-0305		1	FLOAT, ART NO 10739920	
610	90157-0037		1	THREAD SEALANT LOCTITE 542	
620	90132-0030		1	HOLDER MV 87177 KS 580T	
630	90099-0104		1	NUT, PR 15,2 (PG9)	
640	90043-0095		1	PRESSURE GAUGE, 2740, D=63 MM, GLYC.	
700	90144-0073		1	TREBOFLON-TAPE W=13MM	
B1104	979500-0003		1	ELECTRODE	

Pos	Part No	UN	Qty	Description	Page No

HEAT EXCHANGER VALVE

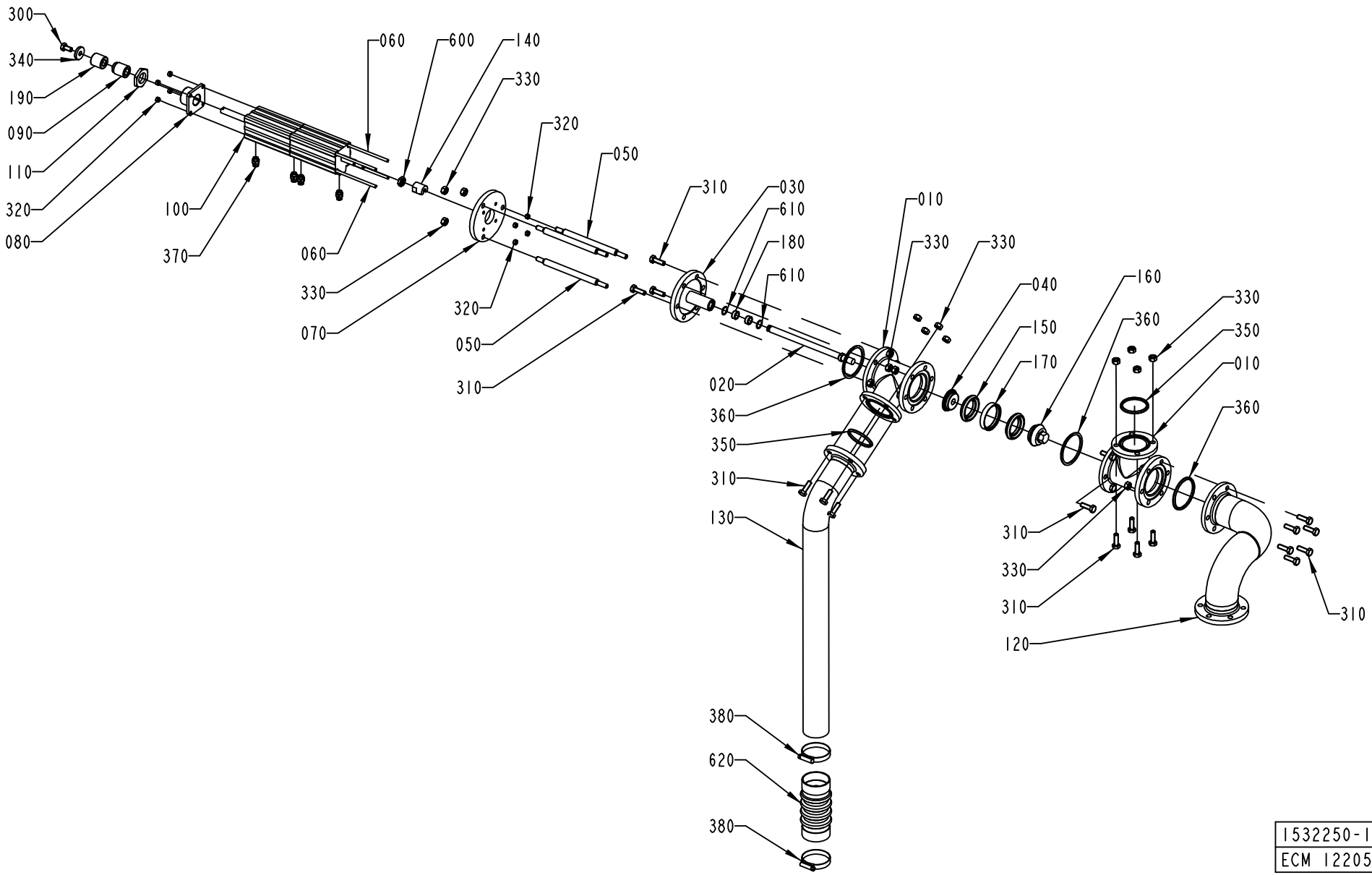

ECM: 127781 - 20030403
Group number: 1532250-0100
Assembly Drawing: 1532250-1_1_AB

Pos	Part No	UN	Qty	Description	Page No
-					
010	1036187-0000		2	T-PIPE	
020	1036188-0000		1	SHAFT	
030	1036189-0000		1	SPINDLE GUIDE	
040	1036191-0000		1	SEAL HOLDER	
050	1036192-0000		3	SPACER ROD	
060	1346656-0000		4	ROD	
070	1346657-0000		1	CYLINDER BRACKET	
080	1346658-0000		1	BRACKET	
090	1346659-0000		1	SCREW	
100	1346677-0000		1	CYLINDER	
110	1349398-0000		1	NUT	
120	1538157-0000		1	PIPE	
130	1538158-0000		1	PIPE	
140	441871-0000		1	PENDULUM SUSPENSION	
150	530589-0000		2	SEAL RING	
160	530590-0000		1	VALVE CONE	
170	530599-0000		1	RING	
180	532349-0000		2	PLAIN BEARING	
190	2532968-0000		1	BUSHING	
300	312105-0449		1	SCREW M6S ISO 4017 M8X16 A480	
310	312105-0453		23	SCREW M6S ISO 4017 M8X25 A480	
320	312605-0314		8	HEXAGON NUT, M6M M5 A280	
330	312605-0318		29	HEXAGON NUT, M6M M8 A280	
340	315125-0165		1	WASHER TBRSB 8,4X26X5 A4	
350	315229-0205		2	GASKET 47,5X55,5X3,7 MM 2"	
360	315229-0206		3	GASKET 60,2X68,2X3,7 MM 2"1/2	
370	342722-0202		4	PIPE COUPLING 1/8" D=6MM	
380	342991-0109		2	HOSE CLIP,WORM DRIVE TYPE (48)-50	
600	90099-0051		1	NUT HEX. M10X1,25, FE FZB	
610	90141-0022		2	SNAP RING B 16	
620	90342-0022		1	BELLOWS	

Pos	Part No	UN	Qty	Description	Page No

Machine Type | Group Description | Used-In | Group Number | Page No

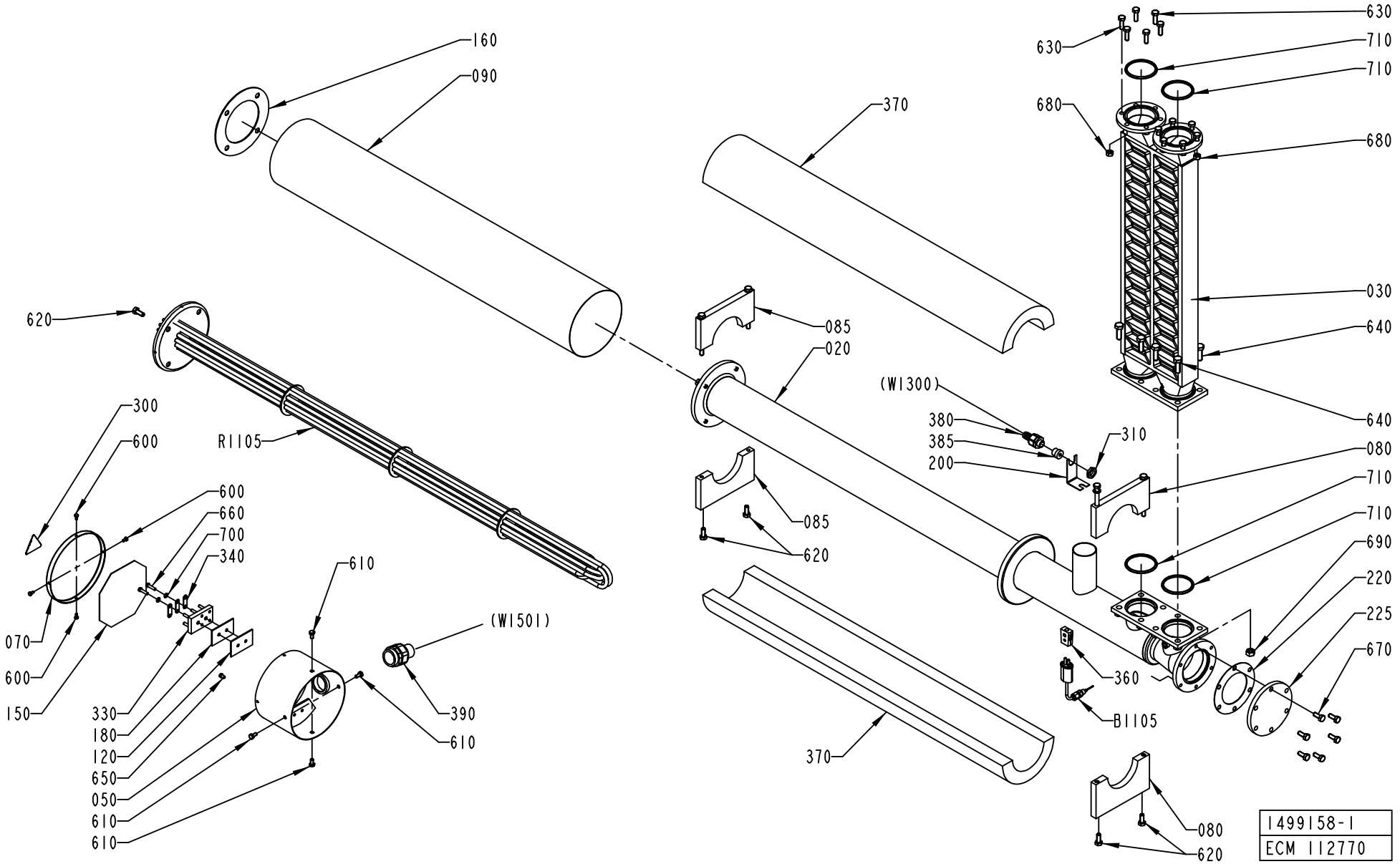
160
090
620
300
600
R1105
600
660
700
340
070
600
150
330
180
120
650
050
610
610
610
(W1501)
390
610
370
085
020
085
620
370
630
630
710
710
680
680
030
640
640
(W1300)
380
385
200
310
080
710
710
690
220
225
670
360
B1105
080
620
1499158-1
ECM 112770

ECM: 112792 - 20030123
Group number: 1499158-0100
Assembly Drawing: 1499158-1_1_AA

Pos	Part No	UN	Qty	Description	Page No
-					
020	1499157-0000		1	HEATING PIPE	
030	1347245-0000		1	HEAT EXCHANGER	
050	451430-0000		1	CONNECTION HOUS.(MINOR)	
070	29876-0000		1	COVER	
080	456123-0000		1	SUPPORT	
	312105-0471		*2*	*SCREW M6S ISO 4014 M8X100 A480*	
	315105-0165		*2*	*WASHER BRB8,4X16RFR*	
085	1484080-0000		1	SUPPORT	
090	1036372-0000		1	PIPE	
120	30298-0000		1	INSULATION	
150	491305-0000		1	CONN.DIAGRAM AIR SUPERH.	
160	531731-0000		1	GASKET	
180	751009-0000		1	INSULATION	
190	90326-0051		1	THERMOCOUPLE, 12826-33	
195	273429-0000		1	WASHER	
200	1036373-0000		1	HOLDER	
220	927454-0000		1	GASKET	
225	1490962-0000		1	LID	
300	359705-0015		1	WARNING SIGN ISO, RISK OF ELECTRIC SHOCK	
310	90099-0104		1	NUT, PR 15,2 (PG9)	
320	90153-0020		1	ADHESIVE, BOSTIK 1782 125ML	
330	90195-0028		1	TERM.BLOCK 6-POLE STEATIT	
340	90195-0029		3	CONN. LINK NO324 FOR -28	
360	90326-0020		1	PLUG, FEMALE YELLOW CR-AL	
370	90411-0005	MM	900	INSULATOR	
380	353243-0001		1	HOSE GLAND W/O INSERT PG9 EXTENDED	
385	353249-0008		1	INSERT, SINGEL HOLE, EK 152/7	
390	90012-0126		1	HOSE GLAND W/O INSERT PG29 NORMAL	
600	312105-0287		4	SCREW M6S ISO4017 M4X8 A470	
610	312105-0366		4	SCREW M6S ISO 4017 M6X12 A480	
620	312105-0451		8	SCREW M6S ISO 4017 M8X20 A480	
630	312105-0453		12	SCREW M6S ISO 4017 M8X25 A480	
640	312105-0495		8	SCREW M6S ISO 4017 M10X30 A480	
650	312125-0323		1	SCREW ISO 1207 M5X8 A4	
660	312125-0331		2	SCREW ISO 1207 M5X20 A4	
670	312105-0451		6	SCREW M6S ISO 4017 M8X20 A480	
680	312605-0318		12	HEXAGON NUT, M6M M8 A280	
690	312605-0320		8	HEXAGON NUT, M6M M10 A280	
700	315105-0146		2	WASHER BRB5,3X10RFR	
710	315229-0206		4	GASKET 60,2X68,2X3,7 MM 2"1/2	
R1105	449939-0001		1	HEATING ELEMENT 15KW	

Pos	Part No	UN	Qty	Description	Page No
	449938-0001		*2*	*HEATING PIPE*	
	449938-0002		*2*	*HEATING PIPE*	
	449938-0003		*2*	*HEATING PIPE*	

Machine Type	Group Description	Used-In	Group Number	Page No

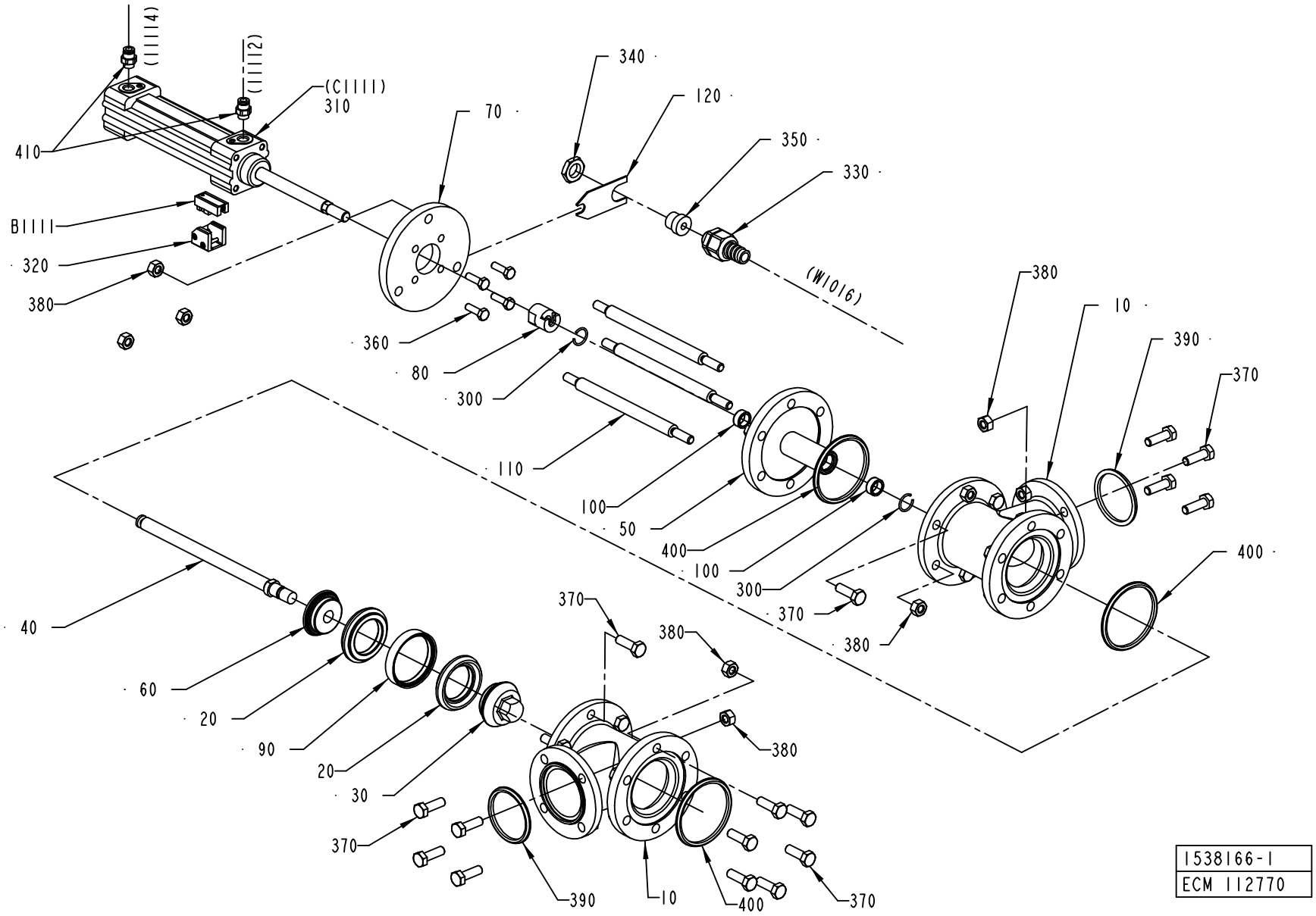
(11114)
(11112)
(C1111)
310
410
B1111
320
380
70
340
120
350
330
(W1016)
360
80
300
110
100
50
400
100
300
370
380
380
10
390
370
400
40
60
20
90
20
30
370
380
380
370
390
10
400
370
1538166-1
ECM 112770

ECM: 146569 - 20031117
Group number: 1538166-0100
Assembly Drawing: 1538166-1_1_AA

Pos	Part No	UN	Qty	Description	Page No
-					
010	1036187-0000		2	T-PIPE	
020	530589-0000		2	SEAL RING	
030	530590-0000		1	VALVE CONE	
040	1036188-0000		1	SHAFT	
050	1036189-0000		1	SPINDLE GUIDE	
060	1036191-0000		1	SEAL HOLDER	
070	1036193-0000		1	CYLINDER BRACKET	
080	441871-0000		1	PENDULUM SUSPENSION	
090	530599-0000		1	RING	
100	532349-0000		2	PLAIN BEARING	
110	1036192-0000		3	SPACER ROD	
120	1036293-0000		1	HOLDER	
300	90141-0022		2	SNAP RING B 16	
310	90450-0281		1	DOUBLE ACTING,PROF.CYL 32-80	
320	90450-0669		1	SENSOR, BRACKET SERIES 168	
330	353243-0001		1	HOSE GLAND W/O INSERT PG9 EXTENDED	
340	90099-0104		1	NUT, PR 15,2 (PG9)	
350	353249-0008		1	INSERT, SINGEL HOLE, EK 152/7	
360	312105-0370		4	SCREW M6S ISO 4017 M6X20 A480	
370	312105-0453		23	SCREW M6S ISO 4017 M8X25 A480	
380	312605-0318		31	HEXAGON NUT, M6M M8 A280	
390	315229-0205		2	GASKET 47,5X55,5X3,7 MM 2"	
400	315229-0206		3	GASKET 60,2X68,2X3,7 MM 2"1/2	
410	342722-0202		2	PIPE COUPLING 1/8" D=6MM	
B1111	90457-0047		1	SENSOR 2750-1-5111-1 W.ADAPTER PNP	

Pos	Part No	UN	Qty	Description	Page No

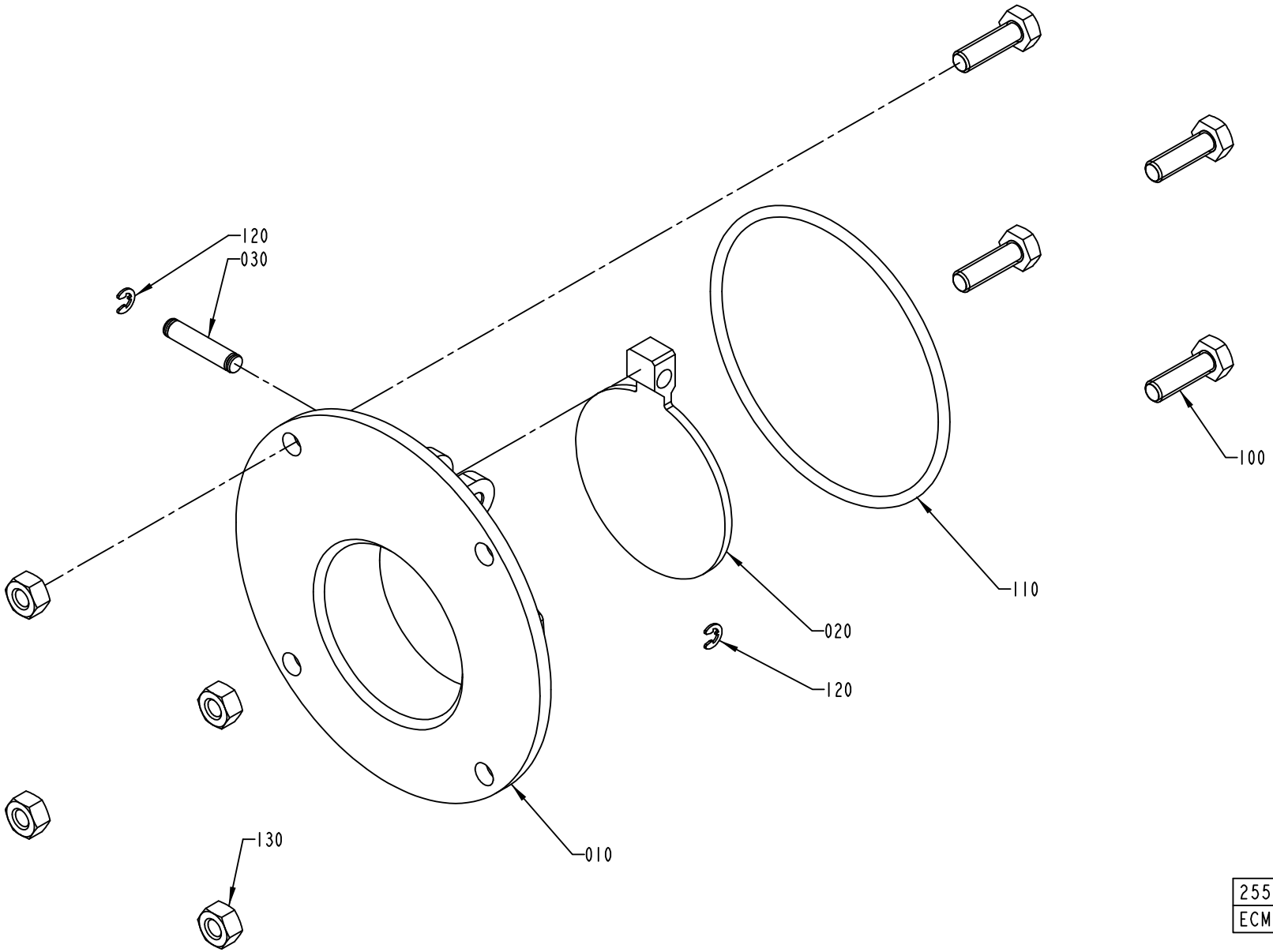

2550890-1
ECM 112851

ECM: 112851 - 20030123
Group number: 2550890-0100
Assembly Drawing: 2550890-1_1_AA

Pos	Part No	UN	Qty	Description	Page No
-					
010	1558417-0000		1	FLANGE	
020	1538494-0000		1	LID	
030	1558418-0000		1	SHAFT	
100	312105-0370		4	SCREW M6S ISO 4017 M6X20 A480	
110	315204-0307		1	O-RING 79,5X3 MM	
120	315755-0105		2	RETAINING RING SHAFT DIN 6799 3,2 A2	
130	312605-0316		4	HEXAGON NUT, M6M M6 A280	

Pos	Part No	UN	Qty	Description	Page No

PRESSURE REGULATOR

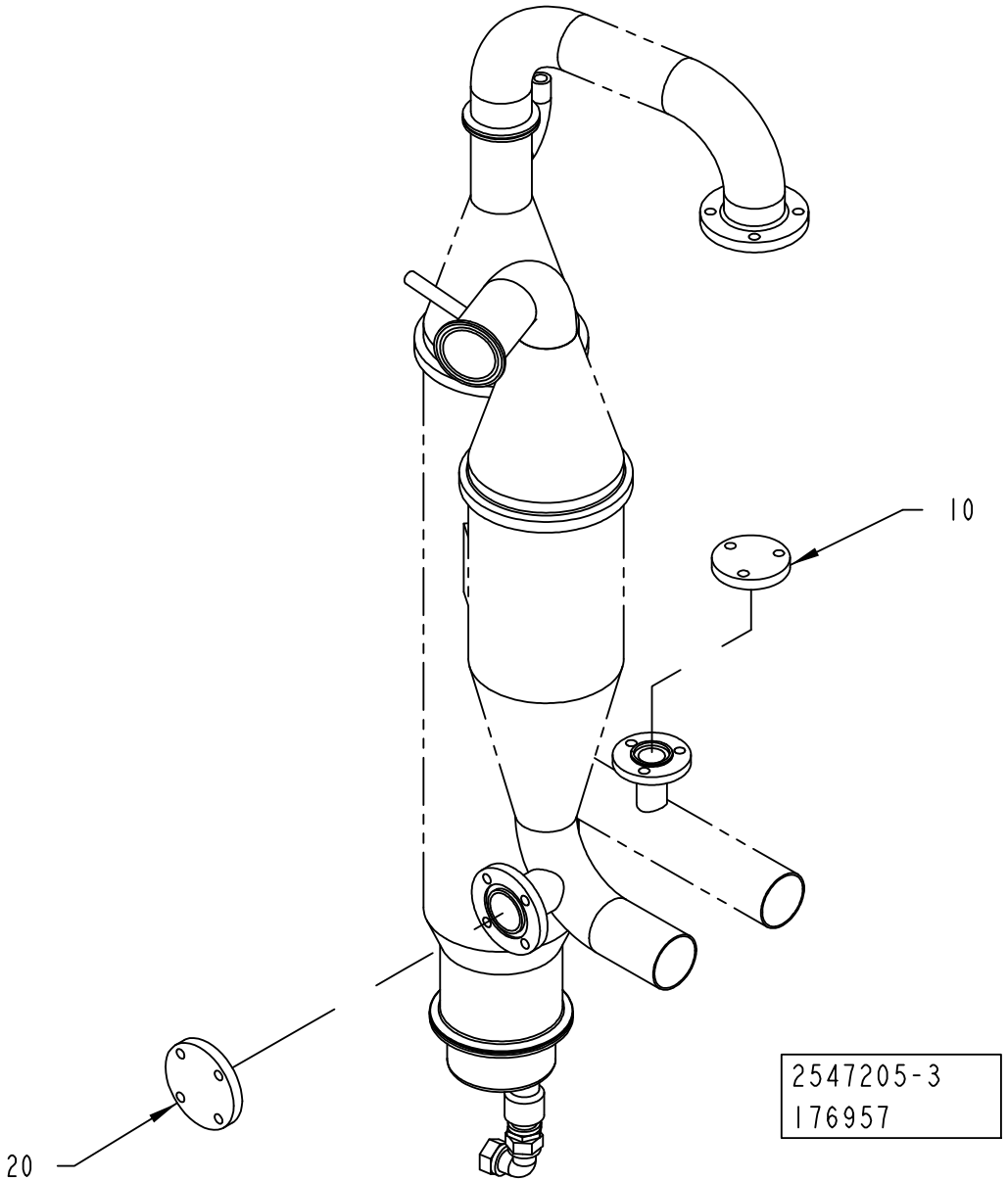

ECM: 177048 - 50001231
Group number: 2547205-0200
Assembly Drawing: 2547205-3_1_AA

This list covers pages from 1-174 to 1-177

Pos	Part No	UN	Qty	Description	Page No
50HZ (See drawing on page: 1-174)					
010	1037129-0000		1	LID	
020	1037268-0000		1	LID	
60HZ (See drawing on page: 1-176)					
010	1037267-0000		1	PIPE	
020	2685238-0000		1	PIPE	
030	490998-0000		1	THROTTLE SCREW	
040	442237-0000		1	NUT	
100	315202-0119		1	O-RING 25,1X1,6 MM	
110	315229-0203		1	GASKET 22,1X31,1X3,7 MM 1"	
120	312105-0453		3	SCREW M6S ISO 4017 M8X25 A480	
130	312605-0318		3	HEXAGON NUT, M6M M8 A280	

Pos	Part No	UN	Qty	Description	Page No

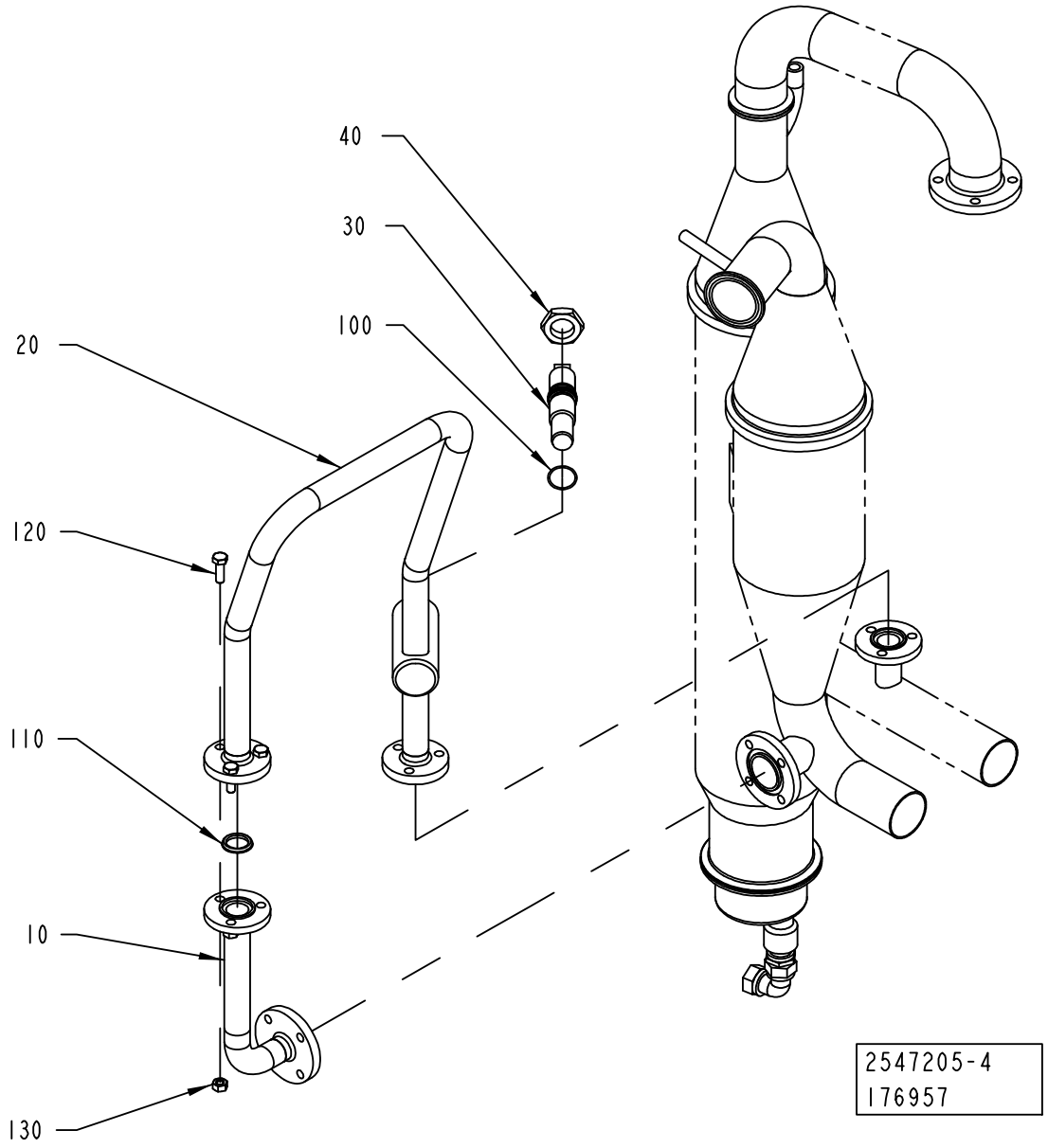
40
30
100
20
120
110
10
130
2547205-4
176957

ECM: 177048 - 50001231
Group number: 2547205-0200
Assembly Drawing: 2547205-4_1_AA

This list covers pages from 1-174 to 1-177

Pos	Part No	UN	Qty	Description	Page No
50HZ (See drawing on page: 1-174)					
010	1037129-0000		1	LID	
020	1037268-0000		1	LID	
60HZ (See drawing on page: 1-176)					
010	1037267-0000		1	PIPE	
020	2685238-0000		1	PIPE	
030	490998-0000		1	THROTTLE SCREW	
040	442237-0000		1	NUT	
100	315202-0119		1	O-RING 25,1X1,6 MM	
110	315229-0203		1	GASKET 22,1X31,1X3,7 MM 1"	
120	312105-0453		3	SCREW M6S ISO 4017 M8X25 A480	
130	312605-0318		3	HEXAGON NUT, M6M M8 A280	

Pos	Part No	UN	Qty	Description	Page No

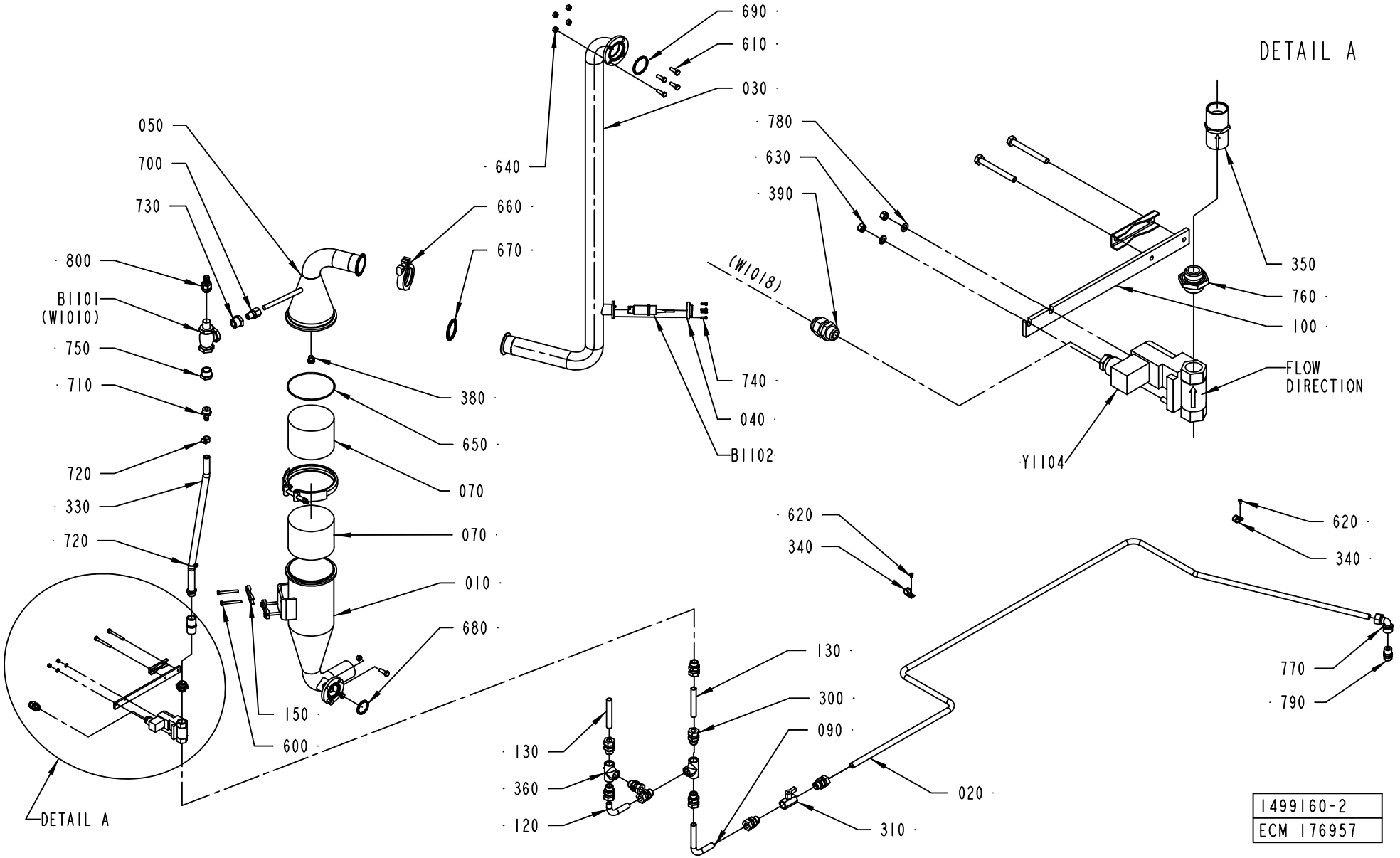
690
610
030
640
660
670
050
700
730
800
B1101
(W1010)
750
710
720
330
720
380
650
070
070
010
680
150
600
740
040
B1102
DETAIL A
780
630
390
(W1018)
350
760
100
FLOW
DIRECTION
Y1104
620
340
620
340
770
790
130
300
090
020
310
130
360
120
DETAIL A
1499160-2
ECM 176957

ECM: 177047 - 50001231
Group number: 1499160-0200
Assembly Drawing: 1499160-2_1_AA

Pos	Part No	UN	Qty	Description	Page No
-					
010	1036911-0000		1	CONTAINER	
020	1499162-0000		1	TUBE	
030	2547210-0000		1	PIPE	
050	1499172-0000		1	UPPER SECTION	
070	546929-0000		2	FILTER	
090	2519437-0000		1	TUBE	
100	1037041-0000		1	HOLDER	
120	2519439-0000		1	TUBE	
130	2519440-0000		2	TUBE	
150	1036811-0000		3	CLAMP	
300	90030-0188		9	CONN. STR. GA-15-G1/2	
310	90187-0062		1	BALL VALVE G1/2, NPBR	
330	90166-0121	MM	450	HOSE	
340	90165-0039		2	PIPE CLAMP, RSGU 1.15/12, D=15 MM	
350	90270-0349		1	CONSTANT FLOW VALVE, 1/2"X1/2" 2GPM	
360	90330-0049		2	T-PIPE, INT. THREAD, R-221R1/2	
380	90424-0054		1	SPRAY NOZZLE 120 DEG	
390	352103-0101		1	CABLE GLAND, ST 9, PR15,2/PG9	
400	90132-0030		1	HOLDER MV 87177 KS 580T	
410	90144-0073		1	TREBOFLON-TAPE W=13MM	
420	90157-0037		1	THREAD SEALANT LOCTITE 542	
430	353300-0006		1	SHRINKABLE HOSE	
600	312105-0381		6	SCREW M6S ISO 4014 M6X55 A480	
610	312105-0453		8	SCREW M6S ISO 4017 M8X25 A480	
620	312125-0323		2	SCREW ISO 1207 M5X8 A4	
630	312605-0314		2	HEXAGON NUT, M6M M5 A280	
640	312605-0318		8	HEXAGON NUT, M6M M8 A280	
650	315204-0317		1	O-RING 129,5X3 MM	
660	342840-0105		1	CLAMPING PIECE	
670	342850-0405		1	GASKET 47,8X62,6X5,2 MM 2" FDA	
680	315229-0204		1	GASKET 34,8X42,8X3,7 MM 1"1/2	
690	315229-0205		1	GASKET 47,5X55,5X3,7 MM 2"	
700	90030-0181		1	CONN. STR. GE 12-3/8-18 NPTF	
710	342901-0105		2	HOSE NIPPLE, EXT.THR. R1/2-12 MM	
720	342991-0101		2	HOSE CLIP,WORM DRIVE TYPE (13)-16	
730	90330-0078		1	BUSHING, INT/EXT. THR. R3/4-RP3/8	
750	342206-0109		1	BUSHING, TAPERED, INT/EXT. THRýNO. R211	
760	479261-0000		1	NIPPLE	
770	342733-0114		1	CONN. ELBOW WI-15-G1/2	
780	315105-0146		2	WASHER BRB5,3X10RFR	
790	342920-0151		1	STRAIGHT COUPL.,EXT.THREAD.15/12,5-R1/2"	
800	353243-0001		1	HOSE GLAND W/O INSERT PG9 EXTENDED	
B1101	90459-0711		1	FLOW SENSOR FS-400 SERIES / 26440	
Y1104	90042-0172		1	SOLENOID VALVE 4023/1005/1032 24VDC	
	90042-0467		*1*	*COIL 24VDC GSR*	

Machine Type	Group Description	Used-In	Group Number	Page No

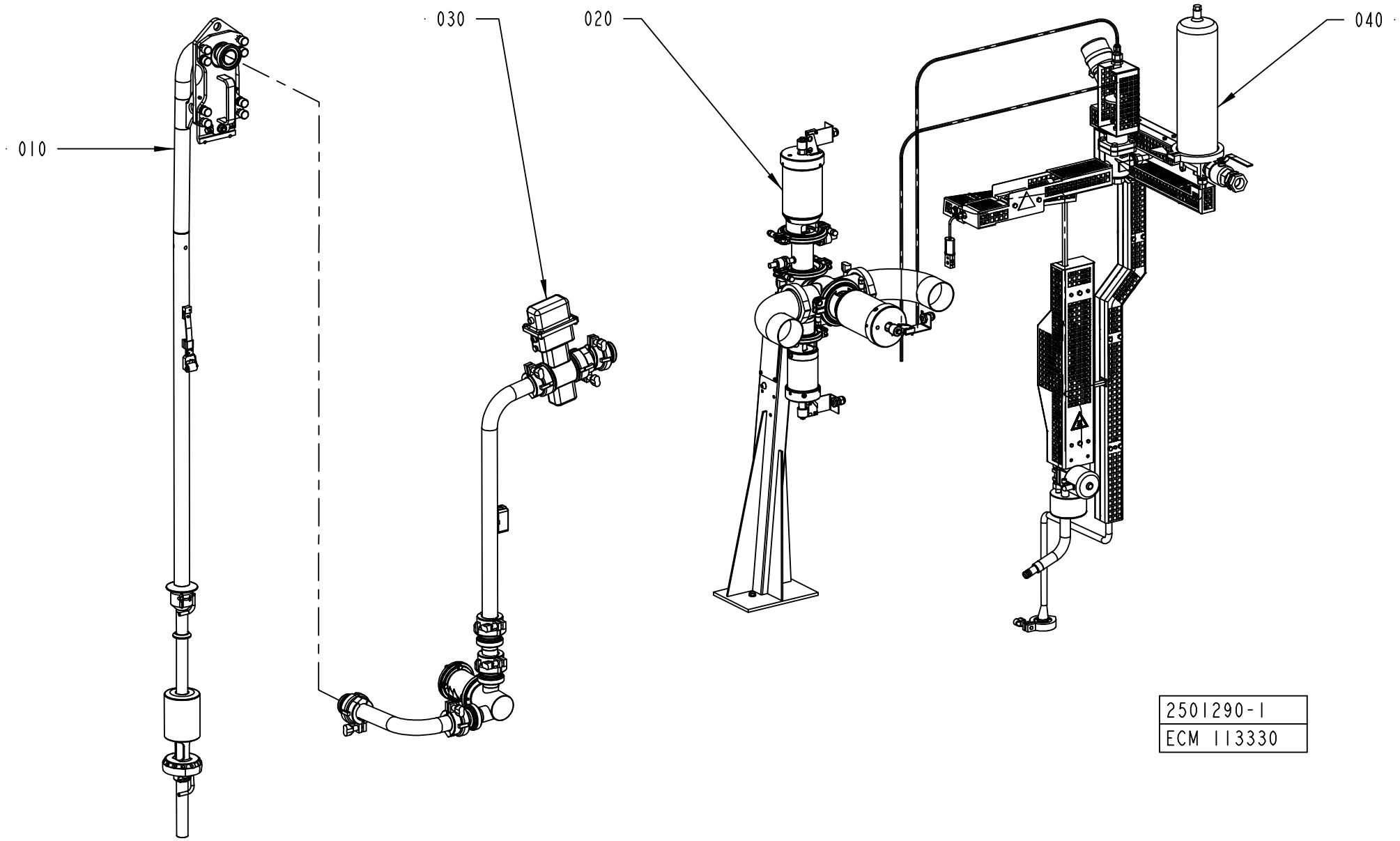
010
030
020
040
2501290-1
ECM 113330

ECM: 178768 - 20040517
Group number: 2501290-0100
Assembly Drawing: 2501290-1_1_AA

This list covers pages from 1-180 to 1-183

Pos	Part No	UN	Qty	Description	Page No
A3/FLEX HI (See drawing on page: 1-182)					
010	2501310-0100		1	FILLING PIPE	**1-185, 1-187, 1-189**
060	2656910-0100		1	HEAD SPACE BY INJECTION	**1-191**
A3/FLEX NOHI (See drawing on page: 1-180)					
010	2501310-0100		1	FILLING PIPE	**1-185, 1-187, 1-189**
Common Parts					
020	1558494-0100		1	PRODUCT VALVE	**1-205**
030	2507060-0200		1	PRODUCT LINES	**1-219, 1-221**
040	2545651-0100		1	STEAM SYSTEM	**1-227**

Pos	Part No	UN	Qty	Description	Page No

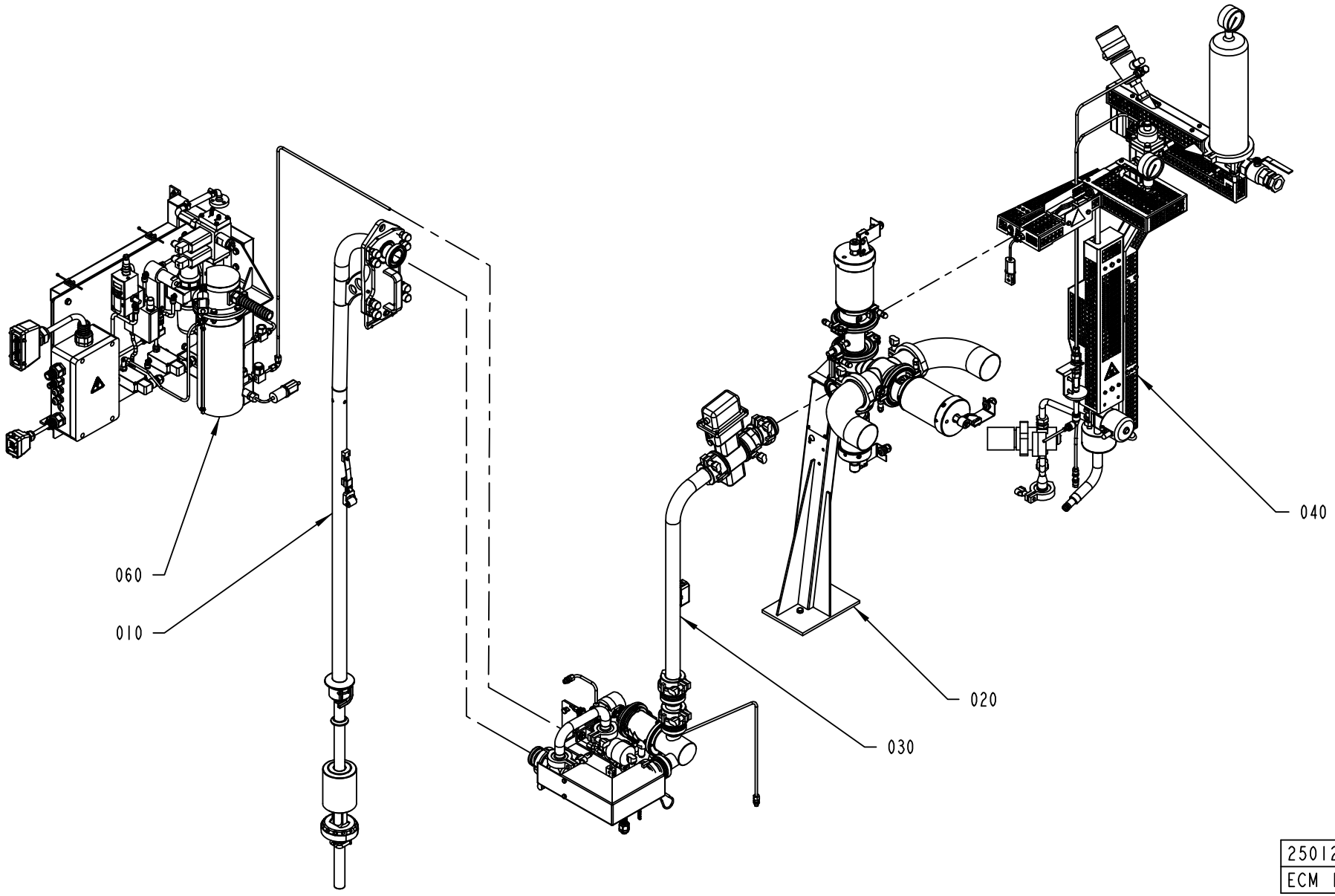

2501290-3
ECM 140502

ECM: 178768 - 20040517
Group number: 2501290-0100
Assembly Drawing: 2501290-3_1_AA

This list covers pages from 1-180 to 1-183

Pos	Part No	UN	Qty	Description	Page No
A3/FLEX HI (See drawing on page: 1-182)					
010	2501310-0100		1	FILLING PIPE	**1-185, 1-187, 1-189**
060	2656910-0100		1	HEAD SPACE BY INJECTION	**1-191**
A3/FLEX NOHI (See drawing on page: 1-180)					
010	2501310-0100		1	FILLING PIPE	**1-185, 1-187, 1-189**
Common Parts					
020	1558494-0100		1	PRODUCT VALVE	**1-205**
030	2507060-0200		1	PRODUCT LINES	**1-219, 1-221**
040	2545651-0100		1	STEAM SYSTEM	**1-227**

Pos	Part No	UN	Qty	Description	Page No

FILLING PIPE

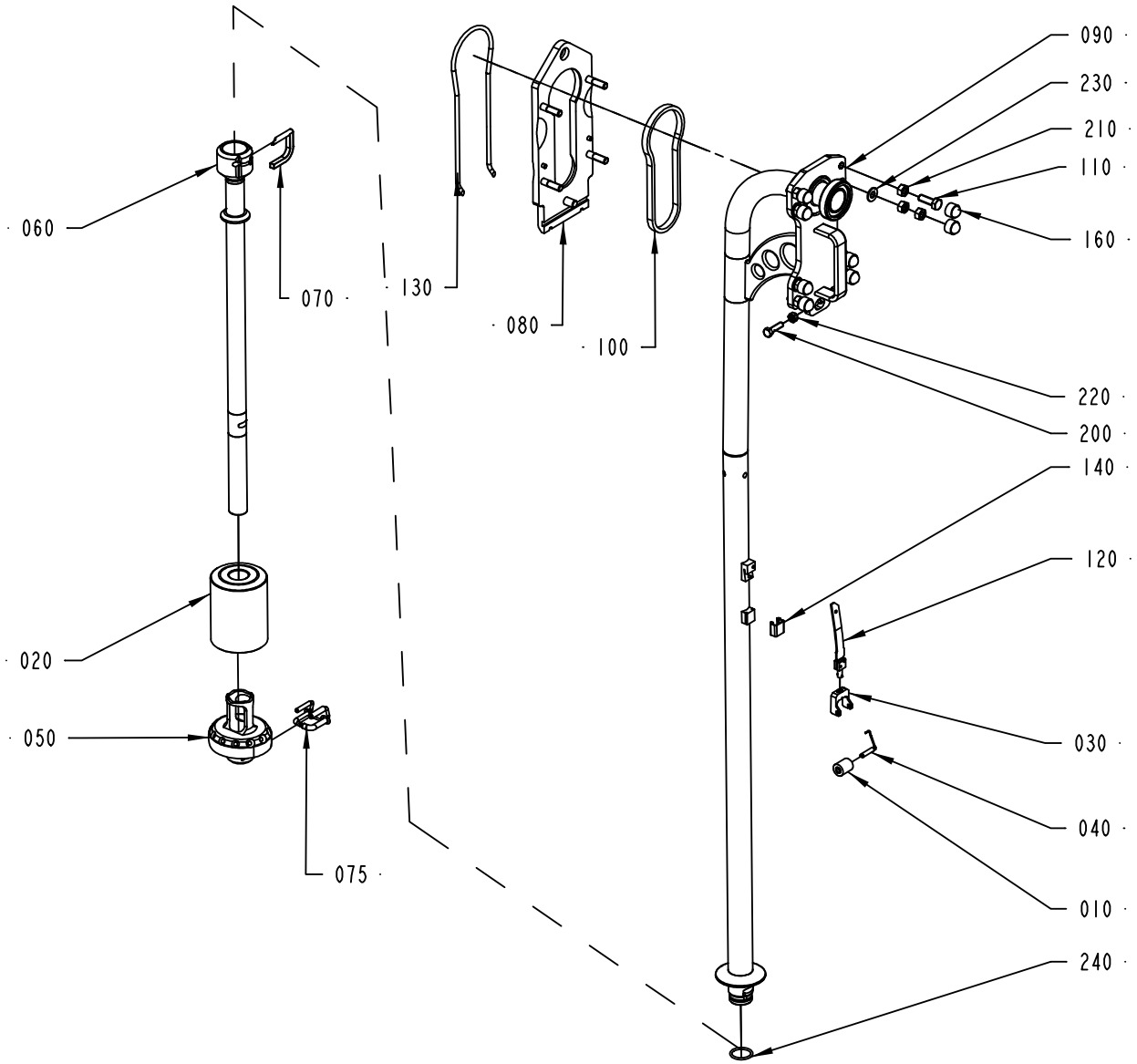

2501310-1
ECM 139126

ECM: 181624 - 50001231
Group number: 2501310-0100
Assembly Drawing: 2501310-1_1_AC

This list covers pages from 1-184 to 1-189

Pos	Part No	UN	Qty	Description	Page No
TBA 0500B NOQC, TBA 1000B NOQC (See drawing on page: 1-184)					
010	232979-0000		1	PRESSURE ROLLER	
020	2564596-0000		1	FLOAT	
030	1348048-0000		1	FORK	
040	2523268-0000		1	SHAFT	
050	2563294-0000		1	PRESSURE FLANGE	
060	2563293-0000		1	LOWER FILLING PIPE	
070	2598008-0000		1	STOP PIN	
075	2563295-0000		1	STOP PIN	
090	2501311-0000		1	FILLING PIPE	
120	1517053-0000		1	SPRING	
140	14600-0000		1	HOOD	
240	315204-0219		1	O-RING 29,2X3 MM	
TBA 0200B NOQC, TBA 0250B NOQC (See drawing on page: 1-186)					
010	257330-0000		1	PRESSURE ROLLER	
020	2564600-0000		1	FLOAT	
030	1317438-0000		1	FORK	
040	2529418-0000		1	SHAFT	
050	2601472-0000		1	PRESSURE FLANGE	
060	2598015-0000		1	LOWER FILLING PIPE	
070	2605148-0000		2	STOP PIN	
075	2563292-0000		1	STOP PIN	
090	2528104-0000		1	PIPE	
120	1498621-0000		1	SPRING	
140	295377-0003		1	HOOD	
150	1498143-0000		1	LOCKING RING	
240	315204-0215		1	O-RING 19,2X3 MM	
TBA 0200B QC, TBA 0330S QC, TBA 0250B QC (See drawing on page: 1-184)					
010	257330-0000		1	PRESSURE ROLLER	
020	2564600-0000		1	FLOAT	
030	1317438-0000		1	FORK	
040	2529418-0000		1	SHAFT	
050	2601472-0000		1	PRESSURE FLANGE	
060	2664098-0000		1	FILLING PIPE	
070	2605148-0000		2	STOP PIN	
075	2563292-0000		1	STOP PIN	
090	2528104-0000		1	PIPE	
120	1498621-0000		1	SPRING	
140	295377-0003		1	HOOD	
150	1498143-0000		1	LOCKING RING	
240	315204-0215		1	O-RING 19,2X3 MM	
TBA 0200S (See drawing on page: 1-186)					
010	272479-0000		1	PRESSURE ROLLER	
020	2564601-0000		1	FLOAT	
030	255978-0000		1	FORK	
040	2529416-0000		1	SHAFT	
050	2570015-0000		1	PRESSURE FLANGE	
060	2563296-0000		1	LOWER FILLING PIPE	
070	2605148-0000		2	STOP PIN	
075	2563292-0000		1	STOP PIN	
090	2528104-0000		1	PIPE	
120	751604-0000		1	SPRING	
140	295377-0001		1	HOOD	
150	1499114-0000		1	LOCKING RING	
240	315204-0215		1	O-RING 19,2X3 MM	
TBA 0500B QC, TBA 1000B QC (See drawing on page: 1-184)					
010	232979-0000		1	PRESSURE ROLLER	
020	2564596-0000		1	FLOAT	
030	1348048-0000		1	FORK	
040	2523268-0000		1	SHAFT	
050	2634524-0000		1	PRESSURE FLANGE	
060	2634523-0000		1	LOWER FILLING PIPE	
070	2598008-0000		1	STOP PIN	
075	2563295-0000		1	STOP PIN	
090	2501311-0000		1	FILLING PIPE	
120	1517053-0000		1	SPRING	
140	14600-0000		1	HOOD	
240	315204-0219		1	O-RING 29,2X3 MM	
TBA 1000S (See drawing on page: 1-184)					
010	499387-0000		1	PRESSURE ROLLER	
020	2564596-0000		1	FLOAT	
030	1348047-0000		1	FORK	
040	2529419-0000		1	SHAFT	
050	2563290-0000		1	PRESSURE FLANGE	
060	2563289-0000		1	LOWER FILLING PIPE	
070	2598008-0000		1	STOP PIN	
075	2563295-0000		1	STOP PIN	
090	2501311-0000		1	FILLING PIPE	
120	2539453-0000		1	SPRING	
140	434665-0000		1	HOOD	
240	315204-0219		1	O-RING 29,2X3 MM	
TBA 1000SQ (See drawing on page: 1-184)					
010	257330-0000		1	PRESSURE ROLLER	
020	2564597-0000		1	FLOAT	

Machine Type | Group Description | Used-In | Group Number | Page No

FILLING PIPE

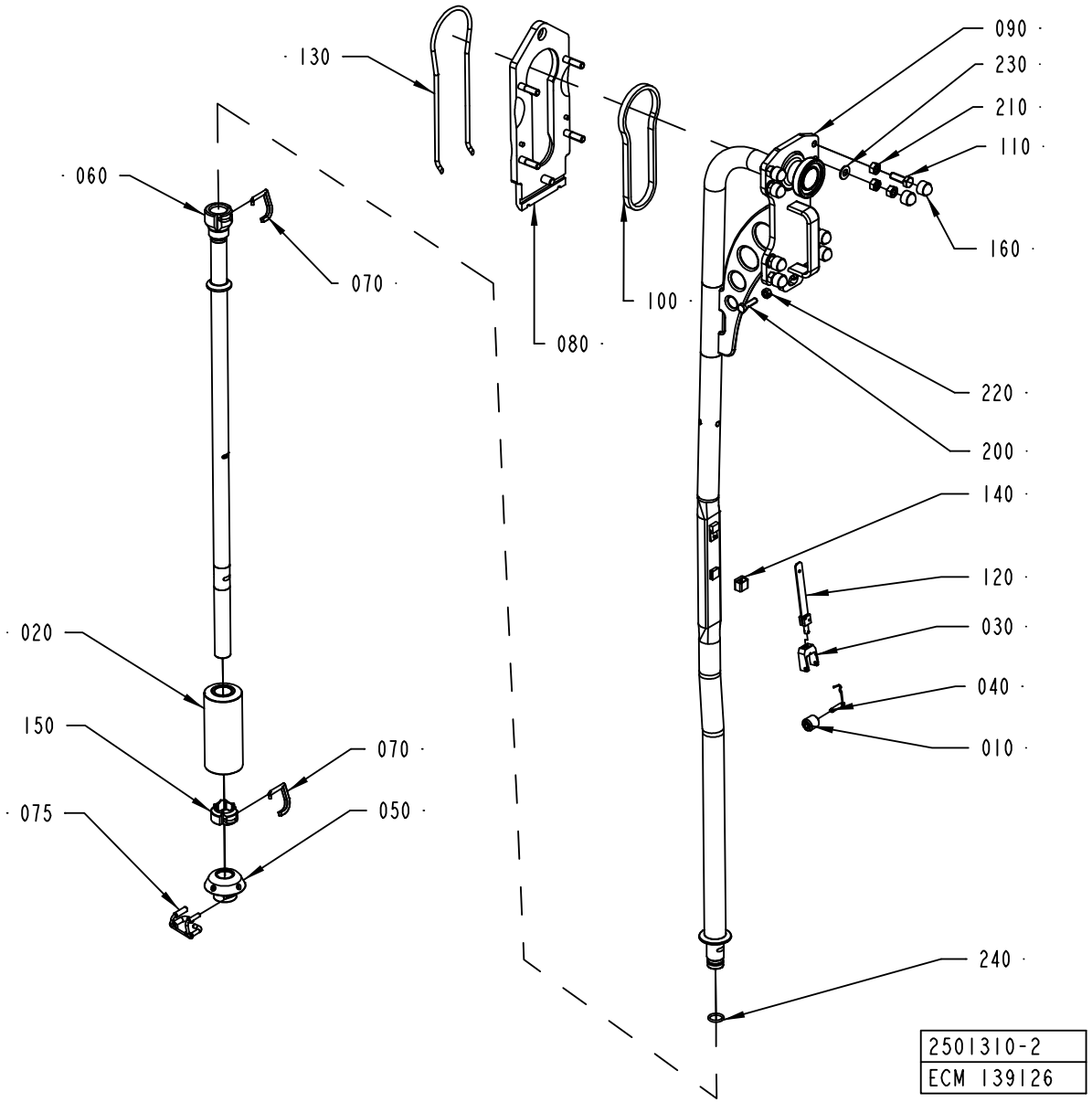

ECM: 181624 - 50001231
Group number: 2501310-0100
Assembly Drawing: 2501310-2_1_AC

This list covers pages from 1-184 to 1-189

Pos	Part No	UN	Qty	Description	Page No
TBA 1000SQ (Cont'd) (See drawing on page: 1-184)					
030	1348049-0000		1	FORK	
040	2529420-0000		1	SHAFT	
050	2601469-0000		1	PRESSURE FLANGE	
060	2563289-0000		1	LOWER FILLING PIPE	
070	2598008-0000		1	STOP PIN	
075	2563295-0000		1	STOP PIN	
090	2501311-0000		1	FILLING PIPE	
120	2539453-0000		1	SPRING	
140	434665-0000		1	HOOD	
240	315204-0219		1	O-RING 29,2X3 MM	
TBA 1500S (See drawing on page: 1-184)					
010	232979-0000		1	PRESSURE ROLLER	
020	2564596-0000		1	FLOAT	
030	1348048-0000		1	FORK	
040	2523268-0000		1	SHAFT	
050	2598017-0000		1	PRESSURE FLANGE	
060	2592525-0000		1	FILLING PIPE	
070	2598008-0000		1	STOP PIN	
075	2563295-0000		1	STOP PIN	
090	2501311-0000		1	FILLING PIPE	
120	1517053-0000		1	SPRING	
140	14600-0000		1	HOOD	
240	315204-0219		1	O-RING 29,2X3 MM	
TBA 1890S QC, TBA 2000S QC (See drawing on page: 1-188)					
010	232979-0000		2	PRESSURE ROLLER	
020	2634995-0000		1	FLOAT	
030	1538952-0000		1	FORK	
040	1538953-0000		1	SHAFT	
050	2641297-0000		1	PRESSURE FLANGE	
060	2594629-0000		1	FILLING PIPE	
070	2594617-0000		1	STOP PIN	
075	2641294-0000		1	STOP PIN	
090	2592544-0000		1	FILLING PIPE	
120	2601239-0000		1	SPRING	
140	2672994-0000		1	HOOD	
170	24928-0000		3	LOCKING RUBBER	
185	267728-0000		2	SHAFT	
190	2685285-0000		1	BRACKET	
240	315204-0223		1	O-RING 39,2X3 MM	
TPA 1000SQ (See drawing on page: 1-184)					
010	257330-0000		1	PRESSURE ROLLER	
020	2564602-0000		1	FLOAT	
030	1348049-0000		1	FORK	
040	2529420-0000		1	SHAFT	
050	2570017-0000		1	PRESSURE FLANGE	
060	2565444-0000		1	FILLING PIPE	
070	2598008-0000		1	STOP PIN	
075	2563295-0000		1	STOP PIN	
090	2565436-0000		1	FILLING PIPE	
120	1519485-0000		1	SPRING	
140	14600-0000		1	HOOD	
240	315204-0219		1	O-RING 29,2X3 MM	
Common Parts					
080	2500082-0000		1	MOUNTING PLATE	
100	2507048-0000		1	GASKET	
110	312105-0495		4	SCREW M6S ISO 4017 M10X30 A480	
130	2500071-0000		1	O-RING	
160	90459-0729		8	HEXAGONAL PROTECTIVE CAP GPN 1000	
200	312105-0455		2	SCREW M6S ISO 4017 M8X30 A480	
210	312605-0320		12	HEXAGON NUT, M6M M10 A280	
220	312605-0318		2	HEXAGON NUT, M6M M8 A280	
230	315105-0173		4	WASHER BRB10,5X22RFR	

Machine Type | Group Description | Used-In | Group Number | Page No

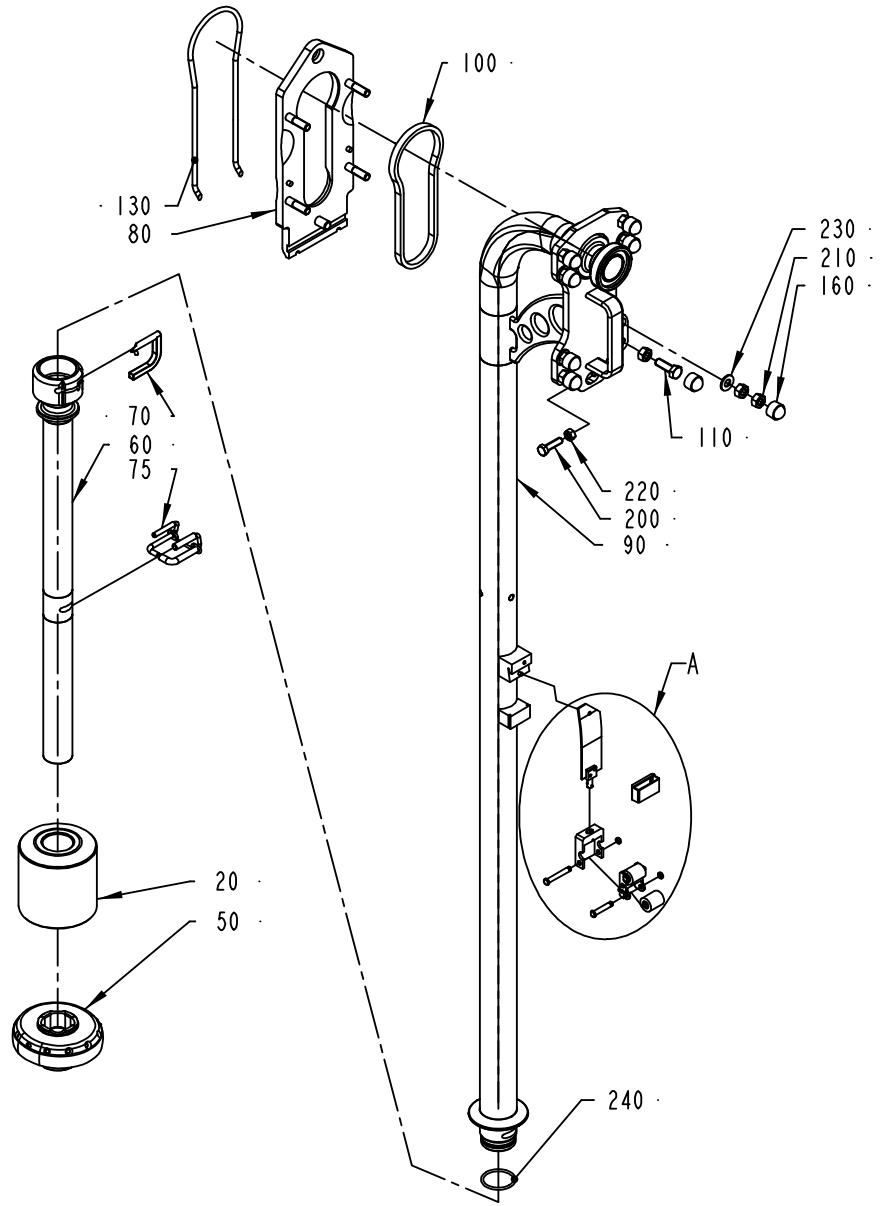

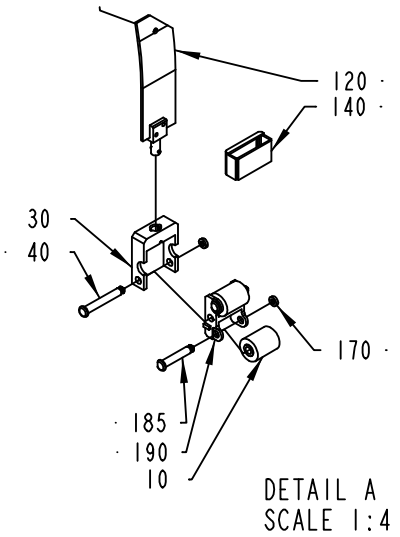

DETAIL A
SCALE 1:4

2501310-3
ECM 151418

ECM: 181624 - 50001231
Group number: 2501310-0100
Assembly Drawing: 2501310-3_1_AA

This list covers pages from 1-184 to 1-189

Pos	Part No	UN	Qty	Description	Page No	Pos	Part No	UN	Qty	Description	Page No

SEE PREVIOUS LISTS PAGES: 1-185, 1-187.

HEAD SPACE BY INJECTION

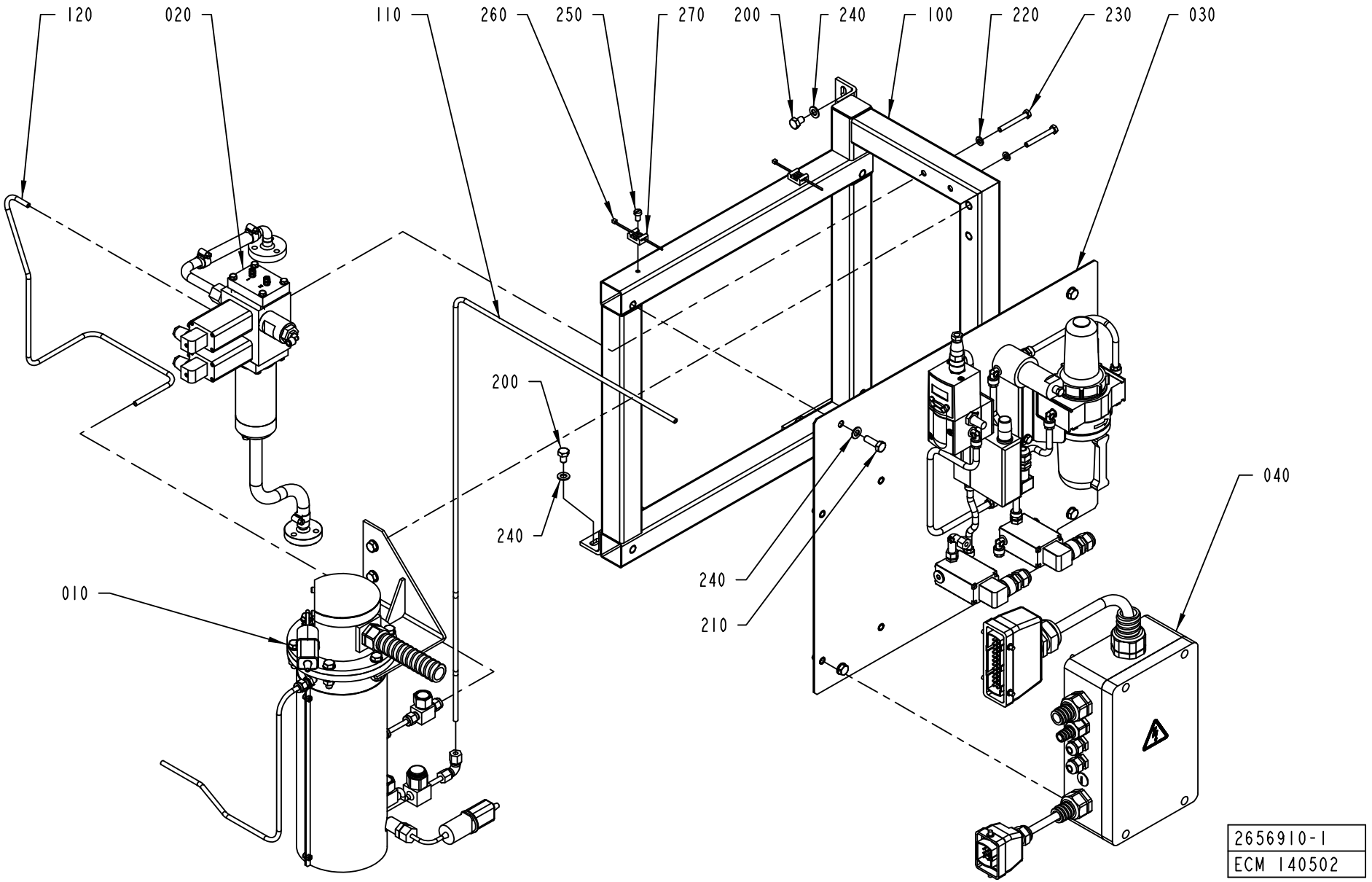

ECM: 150964 - 20031121
Group number: 2656910-0100
Assembly Drawing: 2656910-1_1_AA

Pos	Part No	UN	Qty	Description	Page No
-					
005	2649169-0000		1	FUNCTION DIAGRAM	
010	2607082-0100		1	HEATER	**1-193**
020	2539458-0100		1	SPRAY TANK	**1-195**
030	2562893-0100		1	PNEUMATIC PANEL	**1-197, 1-199**
040	2564106-0100		1	CONNECTION BOX	**1-201**
100	2629327-0000		1	FRAME	
110	2629325-0000		1	PIPE	
120	2629326-0000		1	PIPE	
200	312105-0447		6	SCREW M6S ISO 4017 M8X12 A480	
210	312105-0453		4	SCREW M6S ISO 4017 M8X25 A480	
220	315105-0153		2	WASHER BRB6,4X12RFR	
230	312105-0380		2	SCREW M6S ISO 4014 M6X50 A480	
240	315105-0165		10	WASHER BRB8,4X16RFR	
250	312125-0364		2	SCREW ISO 1207 M6X10 A4	
260	352113-0101		2	CLIP STRIP, 92X2,5 MM	
270	352113-0204		2	ANCHOR PLATES FOR STRIPS, TYPE TM3S25-M	

Pos	Part No	UN	Qty	Description	Page No

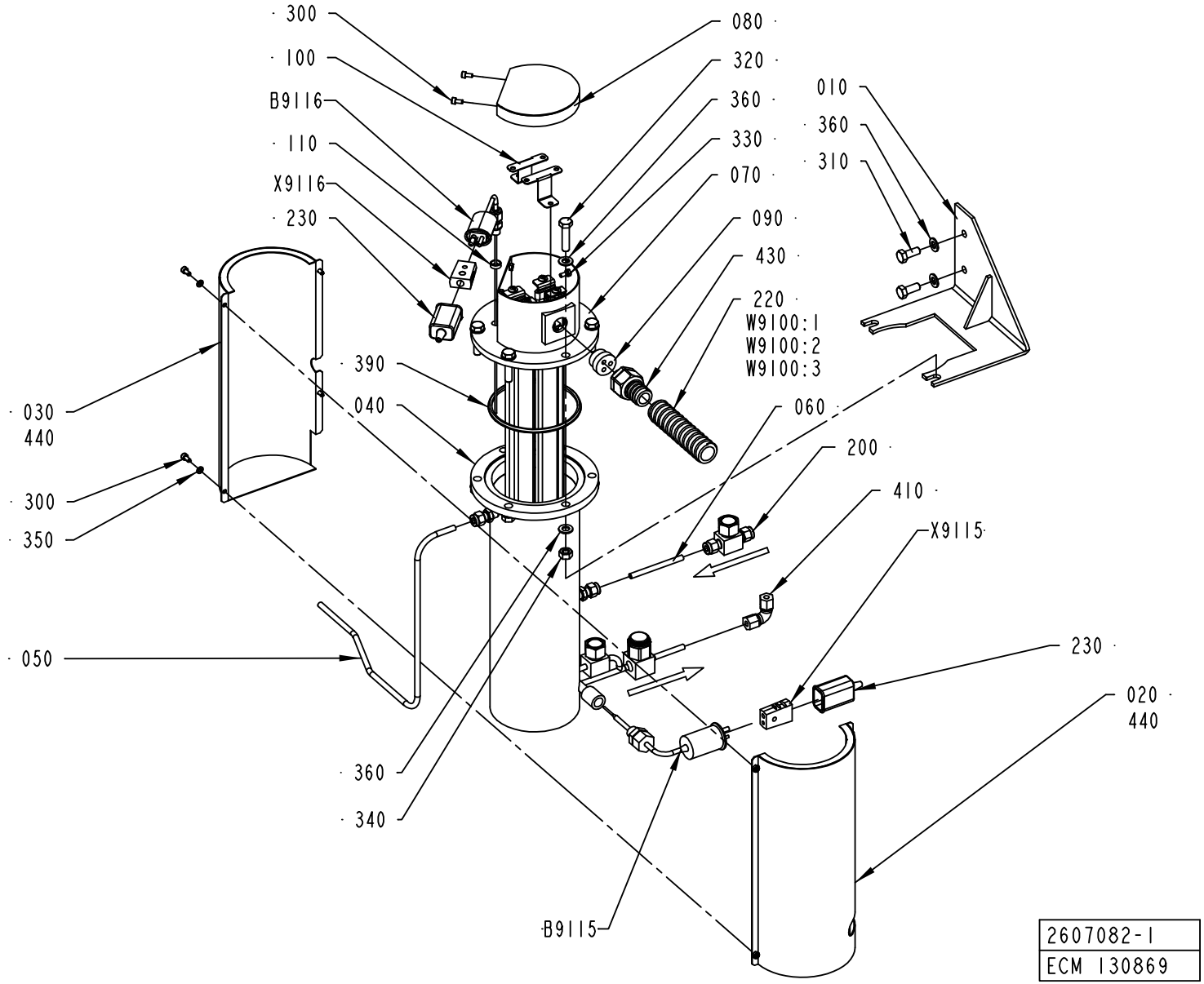
300
100
B9116
110
X9116
230
080
320
360
330
070
090
430
220
W9100:1
W9100:2
W9100:3
010
360
310
030
440
300
350
050
390
040
060
200
410
X9115
230
020
440
360
340
B9115
2607082-1
ECM 130869

ECM: 140210 - 20031113
Group number: 2607082-0100
Assembly Drawing: 2607082-1_1_AA

Pos	Part No	UN	Qty	Description	Page No
-					
010	2629324-0000		1	BRACKET	
020	2629322-0000		1	COVER	
030	2629323-0000		1	COVER	
040	2629321-0000		1	COIL	
050	2651329-0000		1	PIPE	
060	2562307-0000		1	PIPE	
070	2558137-0000		1	HEATING ELEMENT	
080	2562315-0000		1	PLUG	
090	2579745-0000		1	INSERT	
100	2598084-0000		2	PLATE	
110	2598085-0000		1	SPACER	
200	90230-0064		1	CHECK VALVE, 6 MM HIGH TEMP.	
220	90152-0051	M	4	SPIRAL CONDUIT, 25X18, UL 1816	
230	90326-0012		2	PROTECTIVE COVER, T31A4618	
300	312115-0287		6	SCREW ISO4762 M4X8 A4	
310	312105-0451		2	SCREW M6S ISO 4017 M8X20 A480	
320	312109-0457		6	SCREW M6S ISO 4017 M8X35 A480	
330	312607-0312		1	HEXAGON NUT, EN 24032 M6M M4 A480	
340	312605-0318		6	HEXAGON NUT, M6M M8 A280	
350	315105-0136		4	WASHER BRB4,3XRFR	
360	315105-0165		14	WASHER BRB8,4X16RFR	
390	315229-0208		1	GASKET 97,4X105,4X3,7 MM 4"	
410	342737-0204		1	CONN. ELBOW W-6 LRFR	
430	353244-0003		1	HOSE GLAND W/O INSERT PG13,5 EXTENDED	
440	90411-0001	M	1	INSULATING MAT	
B9115	90326-0053		1	THERMOCOUPLE, 12826-35	
B9116	90459-2122		1	THERMOCOUPLE, EN-5130060-0001	
W9100:1	90459-3165	M	7	CABLE OLFLON PTFE 1X4,72 MM² BLACK	
W9100:2	90459-3165	M	7	CABLE OLFLON PTFE 1X4,72 MM² BLACK	
W9100:3	90459-3154	M	7	CABLE OLFLONPTFE 1X4,72 MM² YELLOW-GREEN	
X9115	90326-0020		1	PLUG, FEMALE YELLOW CR-AL	
X9116	90326-0020		1	PLUG, FEMALE YELLOW CR-AL	

Pos	Part No	UN	Qty	Description	Page No

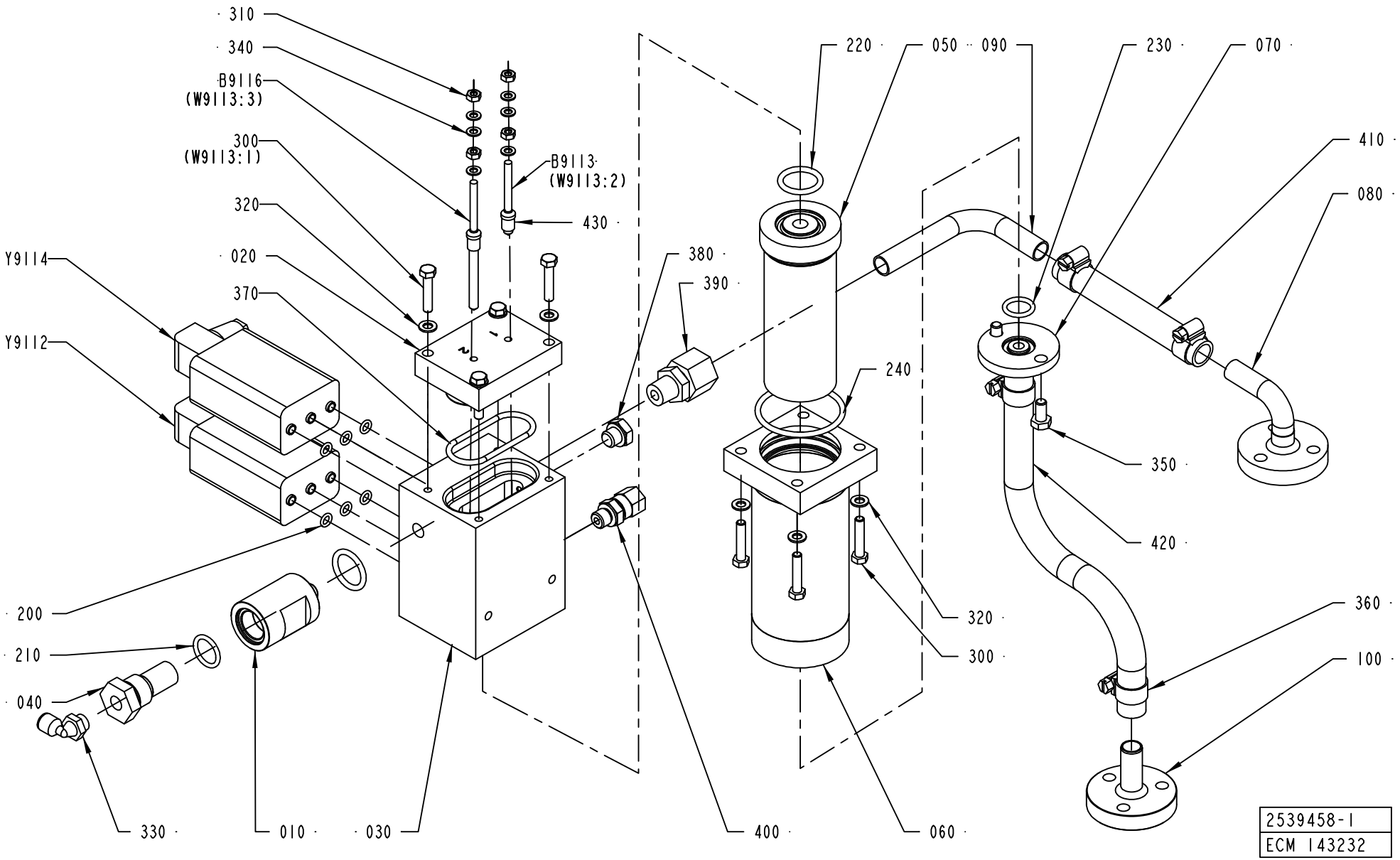
310
340
B9116
(W9113:3)
300
(W9113:1)
320
020
370
Y9114
Y9112
B9113
(W9113:2)
430
380
390
220
050
090
230
070
410
080
240
350
420
320
300
360
100
200
210
040
330
010
030
400
060
2539458-1
ECM 143232

ECM: 161701 - 20040503
Group number: 2539458-0100
Assembly Drawing: 2539458-1_1_AB

Pos	Part No	UN	Qty	Description	Page No
-					
010	1519486-0000		1	FILTER HOUSE	
020	2553167-0000		1	LID	
030	2512939-0000		1	DISTRIBUTOR BLOCK	
040	450833-0000		1	FILTER	
050	554141-0000		1	FILTER	
060	554142-0000		1	FILTER HOUSING	
070	2608156-0000		1	PIPE FLANGE	
080	2608157-0000		1	PIPE FLANGE	
090	2610966-0000		1	PIPE	
100	2649166-0000		1	PIPE FLANGE	
200	927420-0001		6	O-RING 5.1X1.6 SILICON	
210	927421-0004		1	O-RING 15.3X2.4 SILICON	
220	927422-0001		2	O-RING 19.2X3 SILICON	
230	927421-0003		1	O-RING 13.3X2.4 SILICON	
240	927422-0007		1	O-RING 44.2X3 SILICON	
300	312105-0333		8	SCREW M6S ISO 4017 M5X25 A480	
310	312605-0312		4	HEXAGON NUT, M6M M4 A280	
320	315105-0146		8	WASHER BRB5,3X10RFR	
330	90458-2956		1	ELBOW PIPE JOINT, EXT.THREAD, D=6MM-G1/8	
340	315105-0136		6	WASHER BRB4,3XRFR	
350	312105-0366		2	SCREW M6S ISO 4017 M6X12 A480	
360	342991-0101		4	HOSE CLIP,WORM DRIVE TYPE (13)-16	
370	927422-0006		1	O-RING 42.2X3 SILICON	
380	90330-0066		1	PLUG, EXT. G-THREAD, G1/8	
390	90030-0088		1	CONN. STR., 12-R1/4, EXT. THREAD	
400	90030-0184		1	CONN. STR. GA-6-G1/8	
410	90166-0161	MM	110	HOSE	
420	90166-0161	MM	230	HOSE	
430	90458-2906	MM	16	HOSE, SILICONE, 60 SHORE, 4/6 MM	
B9113	2559045-0001		1	ELECTRODE	
B9116	2559045-0002		1	ELECTRODE	
Y9112	90042-0203		1	SOLENOID VALVE BURKERT	
Y9114	90042-0203		1	SOLENOID VALVE BURKERT	

Pos	Part No	UN	Qty	Description	Page No

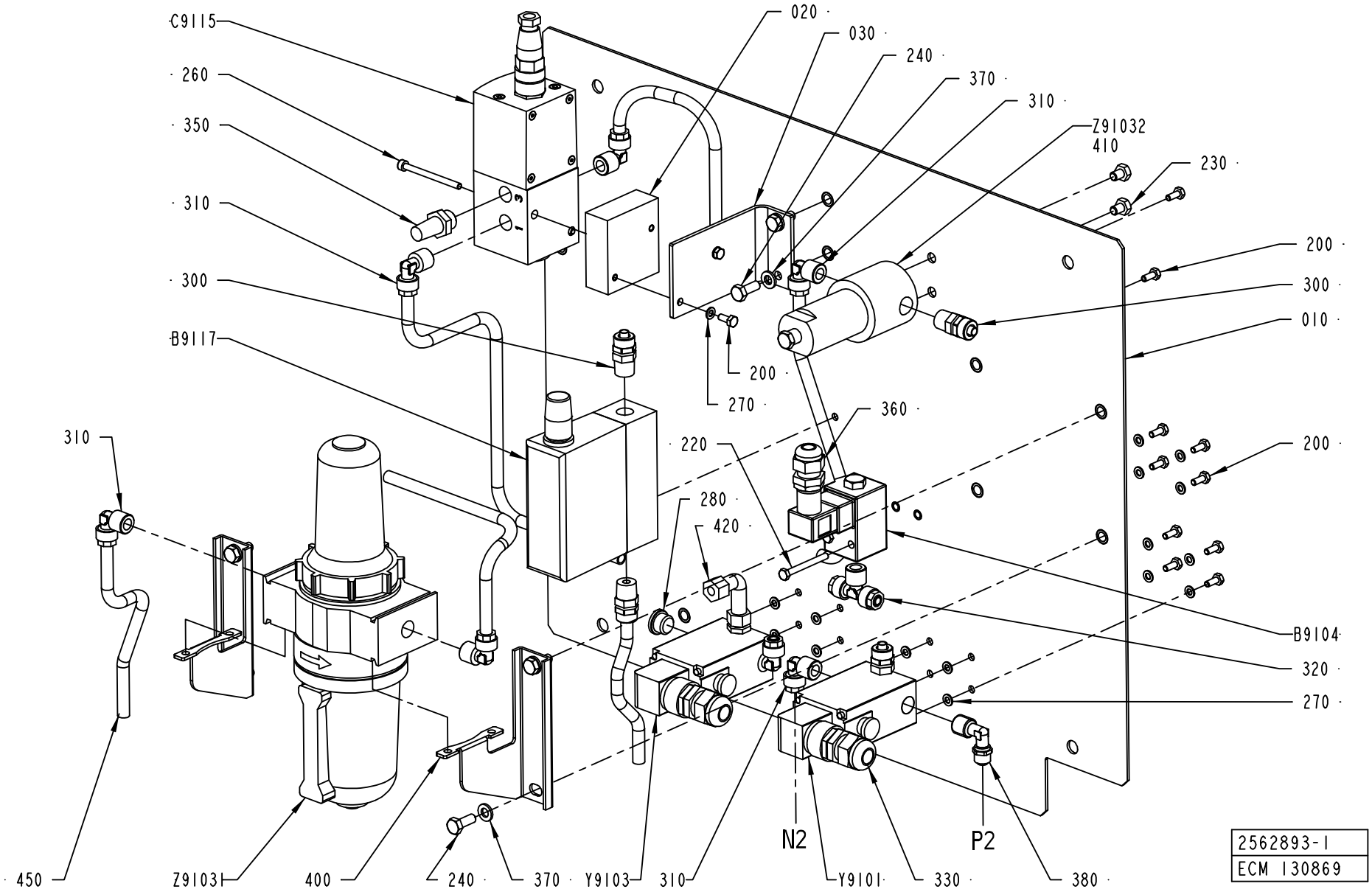
C9115
260
350
310
300
B9117
310
450
Z9103
400
240
370
Y9103
310
020
030
240
370
310
Z91032
410
230
200
300
010
200
270
360
220
280
420
200
B9104
320
270
N2
P2
Y9101
330
380
2562893-1
ECM 130869

ECM: 132091 - 20031113
Group number: 2562893-0100
Assembly Drawing: 2562893-1_1_AA

This list covers pages from 1-196 to 1-199

Pos	Part No	UN	Qty	Description	Page No
-					
010	2564607-0000		1	PLATE	
020	2511330-0000		1	SPACER	
030	2564606-0000		1	SUPPORT PLATE	
200	312105-0289		12	SCREW M6S ISO 4017 M4X10 A470	
220	312105-0303		2	SCREW M6S ISO 4017 M4X40 A470	
230	312105-0362		2	SCREW M6S ISO 4017 M6X8 A480	
240	312105-0368		6	SCREW M6S ISO 4017 M6X16 A480	
260	312115-0305		2	SCREW ISO4762 M4X50 A4	
270	315105-0136		18	WASHER BRB4,3XRFR	
280	342713-0210		1	PLUG, EXT THREAD HEX SOCKET 8638-00-140	
300	342920-0122		4	STRAIGHT COUPLING,EXT.THREADED 8/6-R1/4"	
310	342930-0122		7	ELBOW 90 COUPL.,EXT.THREAD 8/6-R1/4"	
320	342940-0122		1	T-COUPLING,EXT.THREAD 8/6-R1/4"	
330	352103-0106		2	CABLE GLAND, ST 11, PR18,6/PG11	
350	346800-0110		1	SILENCER FILTER R1/4"	
360	352103-0101		1	CABLE GLAND, ST 9, PR15,2/PG9	
370	315105-0153		6	WASHER BRB6,4X12RFR	
380	342930-0114		1	ELBOW 90 COUPL.,EXT.THREAD 6/4-R1/4"	
400	90236-0041		1	BRACKET	
410	90277-0324		1	FILTER CARTRIDGE 050-11-A	
420	90030-0203		1	ADJUSTABLE ELBOW CONNECTION,EXT 6-G1/4	
450	90166-0013	MM	2000	TUBE 8 MM PA BLUE	
B9104	90274-0110		1	PRESSURE SWITCH, 50 - 1000 KPA	
B9117	90458-2619		1	FLOW METER, D-6230-HGB-BB-AV-99-0-N2	
C9115	90459-1420		1	PROPORTIONAL VALVE 0 - 10V/0-6 BAR	
	90458-1262		*1*	*CONNECTOR 131028001 FOR PROP. VALVE*	
Y9101	90042-0171		1	SOLENOID VALVE BUERKERT	
	90042-0466		*1*	*DIAPHRAGM 330.95.2 VITON*	
Y9103	90042-0171		1	SOLENOID VALVE BUERKERT	
	90042-0466		*1*	*DIAPHRAGM 330.95.2 VITON*	
Z91031	90277-0104		1	FILTER F64B-2GN-ARO	
	90113-0457		*1*	*FILTER ELEMENTS*	
	90113-0458		*1*	*FILTER ELEMENTS*	
Z91032	90277-0323		1	FILTER HOUSING / ART.NO 95S6-1/4 S 5430	

Pos	Part No	UN	Qty	Description	Page No

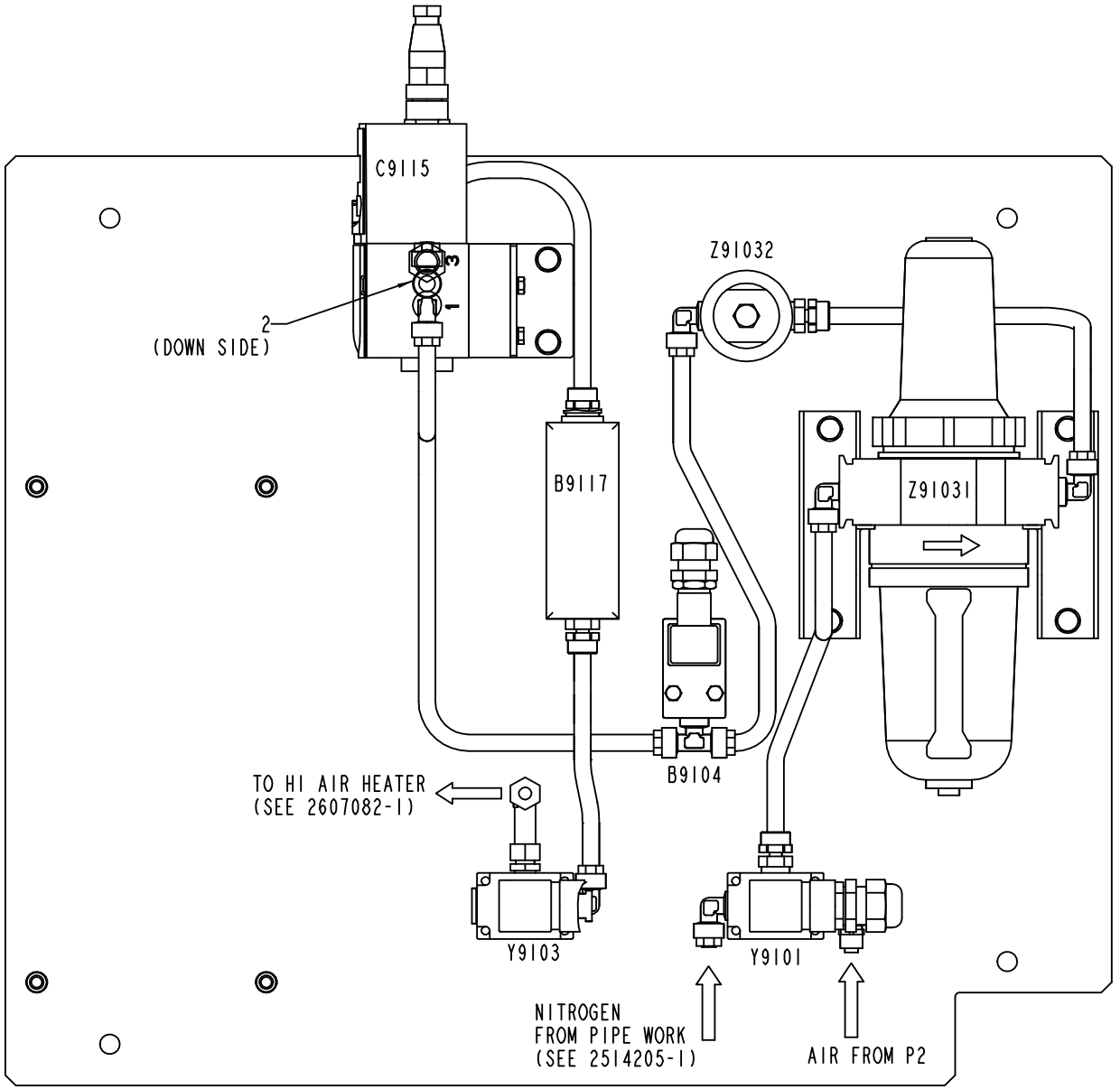
C9115
3
1
2
(DOWN SIDE)
Z91032
B9117
Z91031
B9104
TO HI AIR HEATER
(SEE 2607082-1)
Y9103
Y9101
NITROGEN
FROM PIPE WORK
(SEE 2514205-1)
AIR FROM P2

ECM: 132091 - 20031113
Group number: 2562893-0100
Assembly Drawing: 2562893-1_2_AA

This list covers pages from 1-196 to 1-199

Pos	Part No	UN	Qty	Description	Page No
-					
010	2564607-0000		1	PLATE	
020	2511330-0000		1	SPACER	
030	2564606-0000		1	SUPPORT PLATE	
200	312105-0289		12	SCREW M6S ISO 4017 M4X10 A470	
220	312105-0303		2	SCREW M6S ISO 4017 M4X40 A470	
230	312105-0362		2	SCREW M6S ISO 4017 M6X8 A480	
240	312105-0368		6	SCREW M6S ISO 4017 M6X16 A480	
260	312115-0305		2	SCREW ISO4762 M4X50 A4	
270	315105-0136		18	WASHER BRB4,3XRFR	
280	342713-0210		1	PLUG, EXT THREAD HEX SOCKET 8638-00-140	
300	342920-0122		4	STRAIGHT COUPLING,EXT.THREADED 8/6-R1/4"	
310	342930-0122		7	ELBOW 90 COUPL.,EXT.THREAD 8/6-R1/4"	
320	342940-0122		1	T-COUPLING,EXT.THREAD 8/6-R1/4"	
330	352103-0106		2	CABLE GLAND, ST 11, PR18,6/PG11	
350	346800-0110		1	SILENCER FILTER R1/4"	
360	352103-0101		1	CABLE GLAND, ST 9, PR15,2/PG9	
370	315105-0153		6	WASHER BRB6,4X12RFR	
380	342930-0114		1	ELBOW 90 COUPL.,EXT.THREAD 6/4-R1/4"	
400	90236-0041		1	BRACKET	
410	90277-0324		1	FILTER CARTRIDGE 050-11-A	
420	90030-0203		1	ADJUSTABLE ELBOW CONNECTION,EXT 6-G1/4	
450	90166-0013	MM	2000	TUBE 8 MM PA BLUE	
B9104	90274-0110		1	PRESSURE SWITCH, 50 - 1000 KPA	
B9117	90458-2619		1	FLOW METER, D-6230-HGB-BB-AV-99-0-N2	
C9115	90459-1420		1	PROPORTIONAL VALVE 0 - 10V/0-6 BAR	
	90458-1262		*1*	*CONNECTOR 131028001 FOR PROP. VALVE*	
Y9101	90042-0171		1	SOLENOID VALVE BUERKERT	
	90042-0466		*1*	*DIAPHRAGM 330.95.2 VITON*	
Y9103	90042-0171		1	SOLENOID VALVE BUERKERT	
	90042-0466		*1*	*DIAPHRAGM 330.95.2 VITON*	
Z91031	90277-0104		1	FILTER F64B-2GN-ARO	
	90113-0457		*1*	*FILTER ELEMENTS*	
	90113-0458		*1*	*FILTER ELEMENTS*	
Z91032	90277-0323		1	FILTER HOUSING / ART.NO 95S6-1/4 S 5430	

Pos	Part No	UN	Qty	Description	Page No

Machine Type | Group Description | Used-In | Group Number | Page No

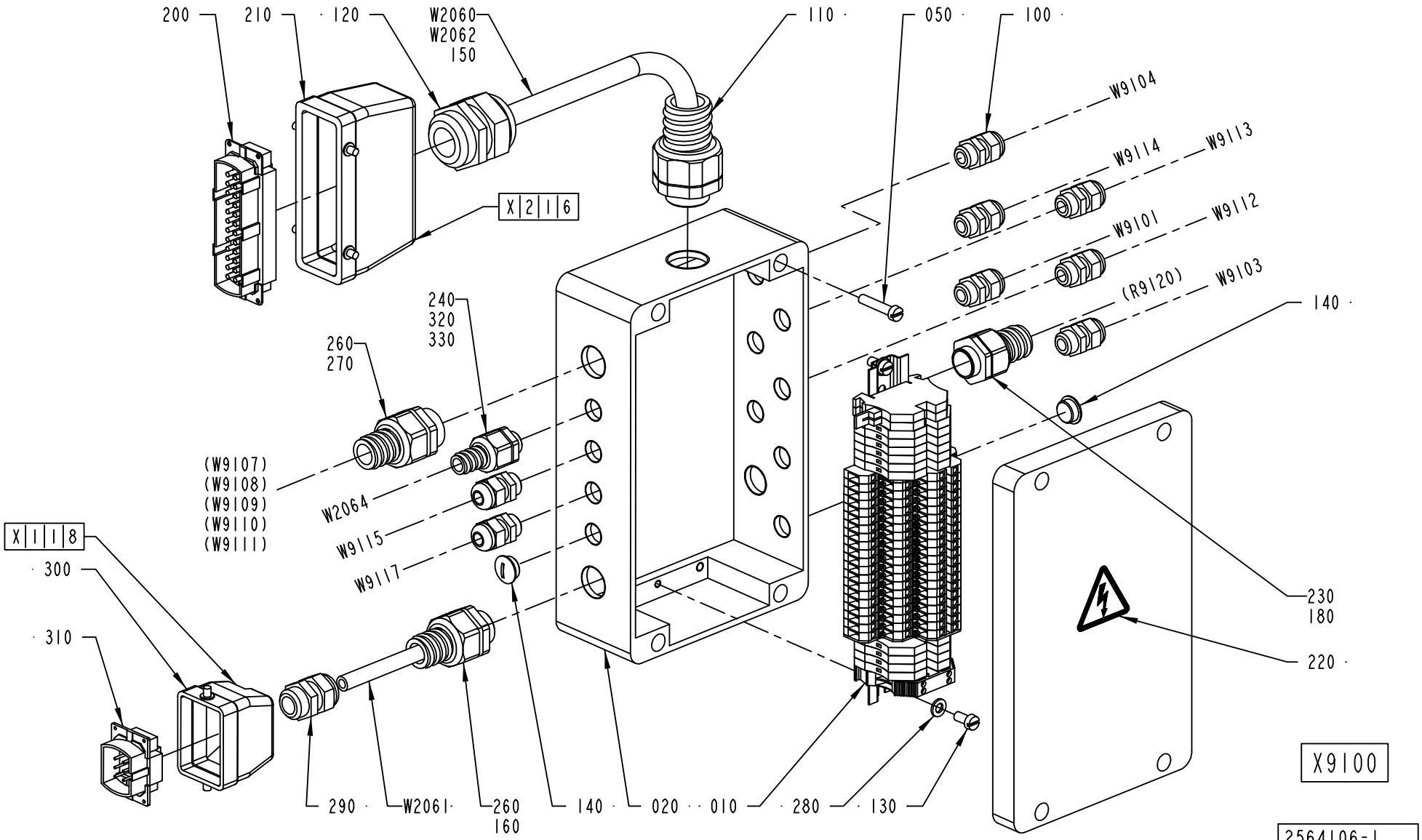
200
210
120
W2060
W2062
150
110
050
100
W9104
W9114
W9113
W9101
W9112
(R9120)
W9103
140
X216
240
320
330
260
270
(W9107)
(W9108)
(W9109)
(W9110)
(W9111)
W2064
W9115
W9117
X118
300
310
230
180
220
290
W2061
260
160
140
020
010
280
130
X9100
2564106-1
ECM 130869

ECM: 132090 - 20031113
Group number: 2564106-0100
Assembly Drawing: 2564106-1_1_AA

Pos	Part No	UN	Qty	Description	Page No
-					
010	2565432-0100		1	TERMINAL BLOCK	**1-203**
020	2564105-0000		1	CONNECTION BOX	
050	312125-0374		4	SCREW ISO 1207 M6X30 A4	
100	352103-0101		8	CABLE GLAND, ST 9, PR15,2/PG9	
110	353243-0007		1	HOSE GLAND W/O INSERT PG21 EXTENDED	
120	352103-0120		1	CABLE GLAND, STR 29, PR37,0/PG29	
130	312125-0366		2	SCREW ISO 1207 M6X12 A4	
140	90002-0013		2	BLANK-OFF PLUG, PR 15,2 SKINDICHT-BLK9	
150	90152-0070	MM	5500	METAL HOSE, 32,5X26, UL 2621	
160	90152-0051	MM	7000	SPIRAL CONDUIT, 25X18, UL 1816	
180	90152-0051	MM	500	SPIRAL CONDUIT, 25X18, UL 1816	
200	90110-0150		1	MALE INSERT 121110 0000	
210	90110-0152		1	CABLE HOOD 24-POL 70.352.2428.1	
220	359705-0015		1	WARNING SIGN ISO, RISK OF ELECTRIC SHOCK	
230	353244-0003		1	HOSE GLAND W/O INSERT PG13,5 EXTENDED	
240	353243-0001		1	HOSE GLAND W/O INSERT PG9 EXTENDED	
260	353243-0005		2	HOSE GLAND W/O INSERT PG16 EXTENDED	
270	353249-0013		1	INSERT, SINGEL HOLE, EK 154/13	
280	315105-0153		2	WASHER BRB6,4X12RFR	
290	352103-0108		1	CABLE GLAND, ST 13,5 , PR20,4/PG13,5	
300	90110-0157		1	CABLE HOOD 6-POL 70.352.0628.1	
310	90110-0159		1	MALE INSERT 70.310.0640.0	
320	353249-0008		1	INSERT, SINGEL HOLE, EK 152/7	
330	90152-0058	MM	7000	SPIRAL CONDUIT, 15X9, UL 0909	
W2060	90220-0201	MM	5500	CABLE OLFLEX 18X0,75 MM2	
W2061	351150-0417	MM	7000	CABLE OLFLEX 3X2,5 MM2 LIGHT/GREY	
W2062	90220-0165	MM	7000	SCR. CABLE 5X0,34MM2	
W2064	90220-0034	MM	7000	THERMOCABLE TEX/SITW-20F-KX 2X0,5MM2	
W9101	351150-0403	MM	1400	CABLE OLFLEX 3X0,75 MM2 LIGHT/GREY	
W9103	351150-0403	MM	1100	CABLE OLFLEX 3X0,75 MM2 LIGHT/GREY	
W9104	351150-0403	MM	1100	CABLE OLFLEX 3X0,75 MM2 LIGHT/GREY	
W9112	351150-0403	MM	800	CABLE OLFLEX 3X0,75 MM2 LIGHT/GREY	
W9113	351150-0404	MM	1000	CABLE OLFLEX 4X0,75 MM2 LIGHT/GREY	
W9114	351150-0403	MM	900	CABLE OLFLEX 3X0,75 MM2 LIGHT/GREY	
W9115	90220-0165	MM	1300	SCR. CABLE 5X0,34MM2	
W9117	90220-0165	MM	1400	SCR. CABLE 5X0,34MM2	

Pos	Part No	UN	Qty	Description	Page No

TERMINAL BLOCK

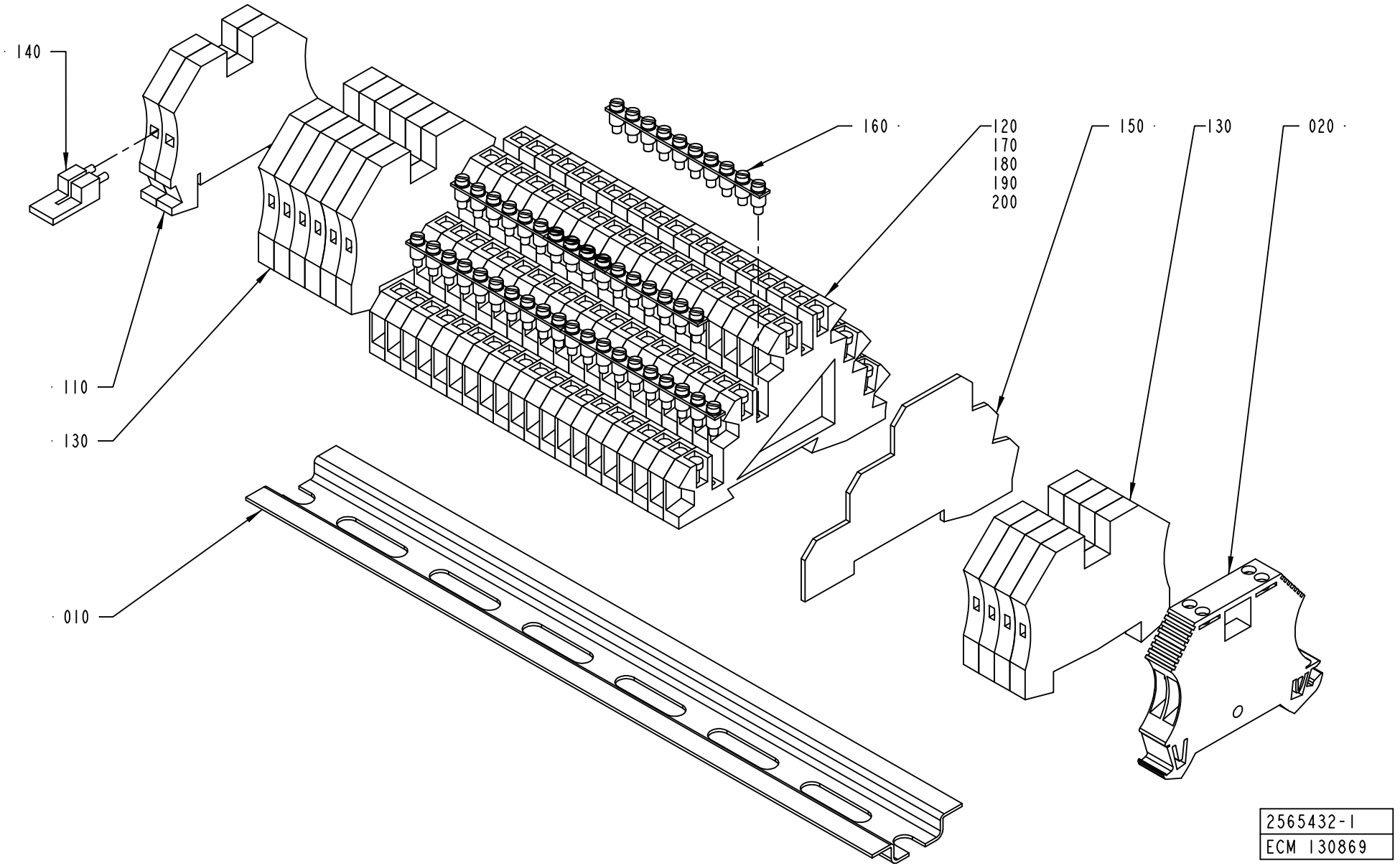

ECM: 130897 - 20031113
Group number: 2565432-0100
Assembly Drawing: 2565432-1_1_AA

Pos	Part No	UN	Qty	Description	Page No
-					
010	1532237-0000		1	RAIL	
020	90459-1742		1	FEED THROUGH TERMINAL, 1024100	
110	353021-0213		2	FEED THROUGH TERMINAL, 10201.0	
120	353021-0302		20	TERMINALS,TRIPLE-LEVEL, DLD 2,5/35 PA	
130	353024-0205		10	EARTH TERMINAL, 1010.1	
140	353034-0030		1	BRIDGE CONNECTOR WQV 2,5/10, 10544.6	
150	353032-0302		1	END PLATE WAP, 13176.6	
160	353034-0404		5	BRIDGE CONNECTOR Q10, 13131.0	
170	359011-0823		1	SET OF SIGNS 6-FW 101-150	
180	359011-0834		1	SET OF SIGNS 6-GW(EARTH)	
190	359011-0832		1	SET OF SIGNS 6-GW (+)	
200	359011-0833		1	SET OF SIGNS 6-GW (-)	

Pos	Part No	UN	Qty	Description	Page No

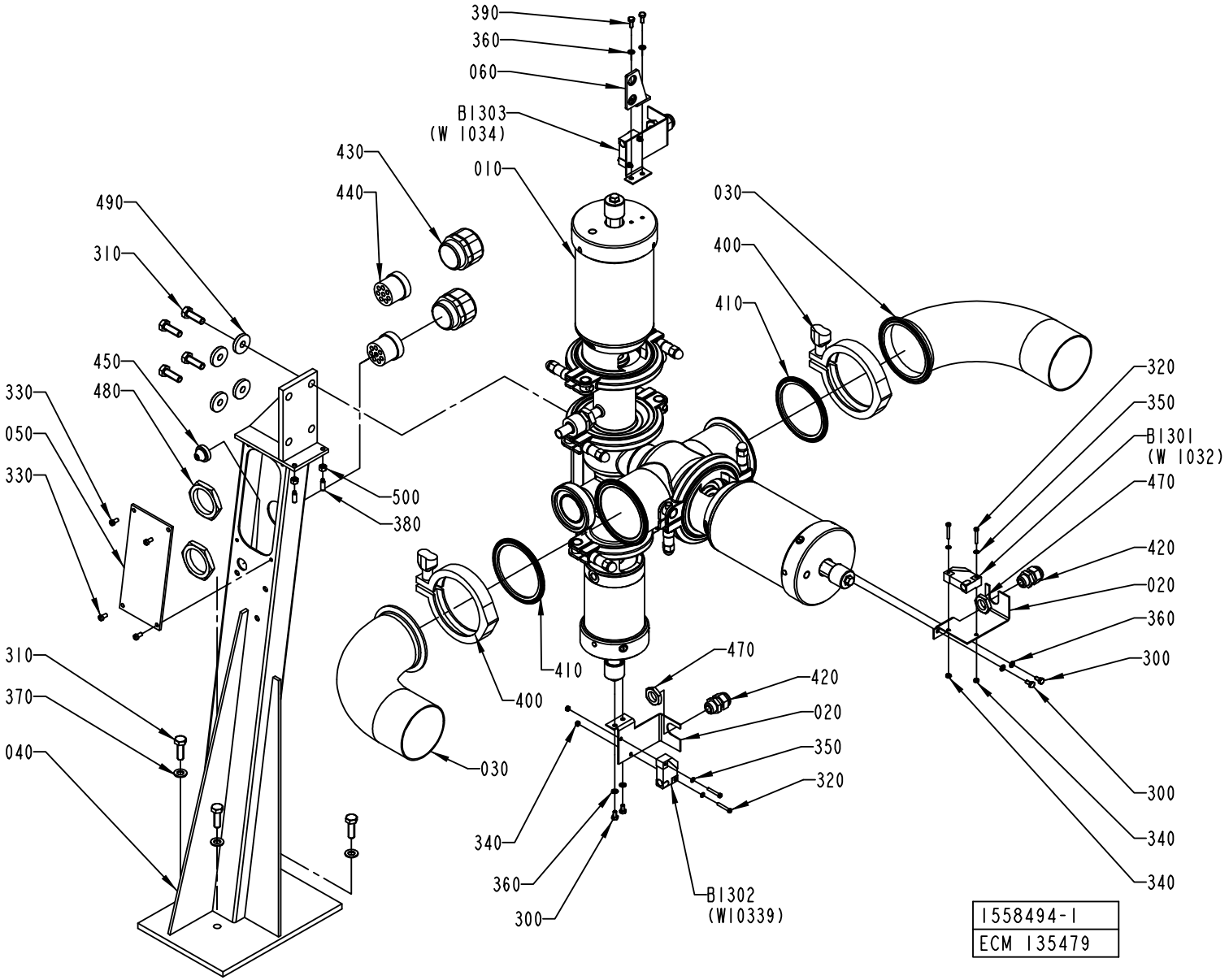
390
360
060
B1303
(W 1034)
430
440
010
030
490
310
400
410
450
480
330
050
330
500
380
320
350
B1301
(W 1032)
470
420
020
360
300
310
370
040
410
400
470
420
020
350
320
030
340
360
300
B1302
(W10339)
300
340
340
1558494-1
ECM 135479

ECM: 146571 - 20031117
Group number: 1558494-0100
Assembly Drawing: 1558494-1_1_AC

Pos	Part No	UN	Qty	Description	Page No
2"					
030	1129801-0000		2	PIPE	
400	342840-0105		2	CLAMPING PIECE	
410	342850-0305		2	GASKET 47,8X62,6X5,2 MM 2" FDA	
3"					
030	1129802-0000		2	PIPE	
400	342840-0107		2	CLAMPING PIECE	
410	342850-0307		2	GASKET 72,9X89,6X5,2 MM 3" FDA	
Common Parts					
010	2547410-0100		1	PRODUCT VALVE	**1-207**
020	1037093-0000		3	SENSOR BRACKET	
040	1558493-0000		1	VALVE BRACKET	
050	1255987-0000		1	COVER	
060	2559095-0000		1	BRACKET	
300	312105-0287		6	SCREW M6S ISO4017 M4X8 A470	
310	312105-0453		8	SCREW M6S ISO 4017 M8X25 A480	
320	312125-0230		6	SCREW ISO 1207 M3X20 A4	
330	312125-0287		4	SCREW ISO 1207 M4X8 A4	
340	312605-0310		6	HEXAGON NUT, M6M M3 A280	
350	315105-0124		6	WASHER BRB3,2X6RFR	
360	315105-0136		6	WASHER BRB4,3XRFR	
370	315105-0165		4	WASHER BRB8,4X16RFR	
380	312311-0329		2	SCREW ISO4028 M5X16 FZB	
390	312105-0289		2	SCREW M6S ISO 4017 M4X10 A470	
420	352103-0101		3	CABLE GLAND, ST 9, PR15,2/PG9	
430	353240-0006		2	GLAND W/O INSERT PG29 NORMAL	
440	353249-0079		2	INSERT, MULTI HOLE, E155M8X5,5	
450	90015-0020		1	LEAD-IN, TET5-7, E-1458016	
470	90099-0104		3	NUT, PR 15,2 (PG9)	
480	90099-0120		2	NUT PR 37 (PG29)	
490	315125-0165		4	WASHER TBRSB 8,4X26X5 A4	
500	312605-0314		2	HEXAGON NUT, M6M M5 A280	
B1301	90044-0194		1	PROX.SW. IN5329/IN3002-BPKG	
B1302	90044-0194		1	PROX.SW. IN5329/IN3002-BPKG	
B1303	90044-0194		1	PROX.SW. IN5329/IN3002-BPKG	

Pos	Part No	UN	Qty	Description	Page No

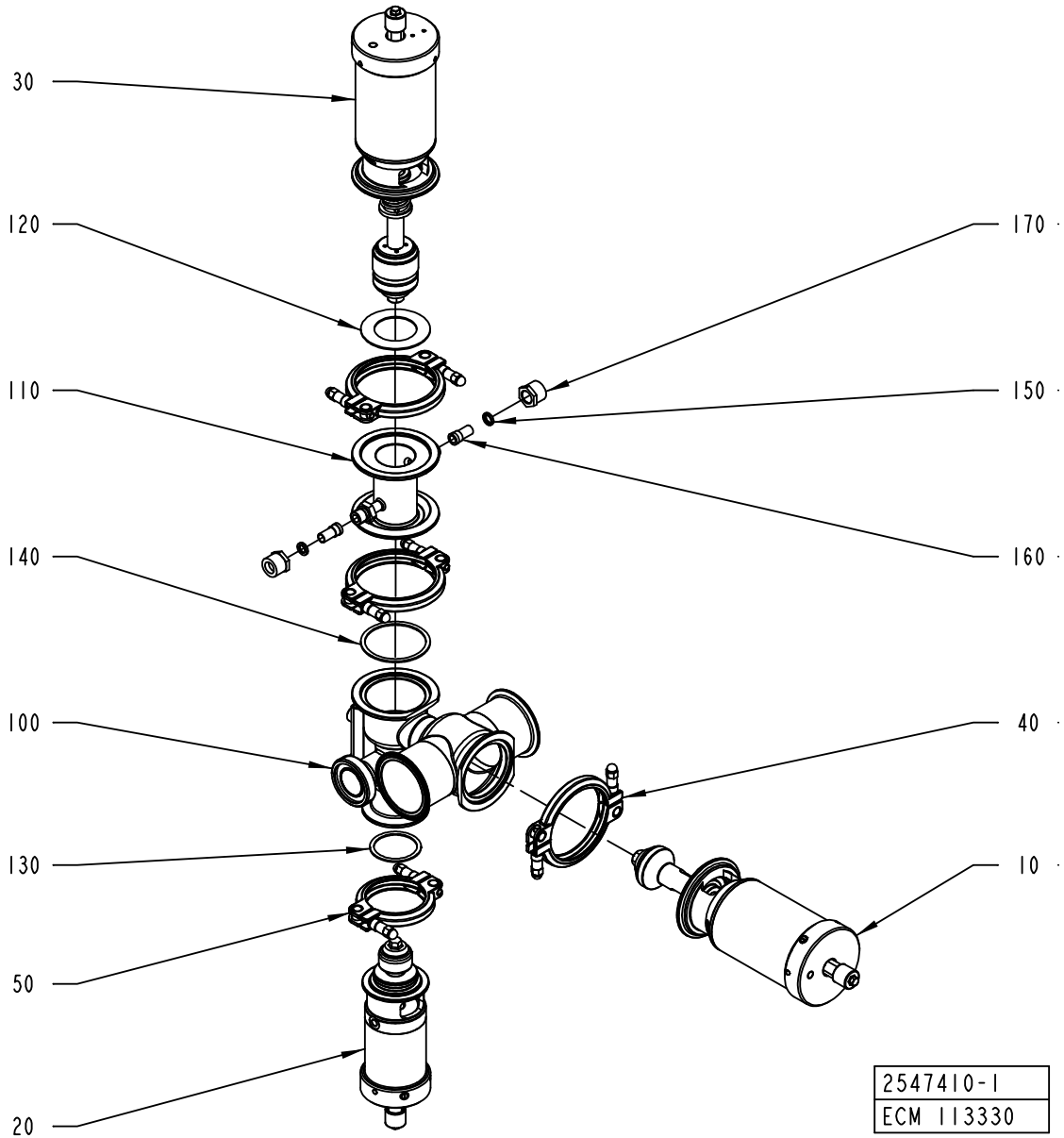
30
120
110
140
100
130
50
20
170
150
160
40
10
2547410-1
ECM 113330

ECM: 135914 - 20030908
Group number: 2547410-0100
Assembly Drawing: 2547410-1_1_AA

Pos	Part No	UN	Qty	Description	Page No
2"					
100	2629156-0000		1	BODY	
3"					
100	2547408-0000		1	BODY	
Common Parts					
010	576436-0100		1	A-CYLINDER	**1-209**
020	576438-0100		1	B-CYLINDER	**1-211**
030	576437-0100		1	C-CYLINDER	**1-213**
040	541163-0200		3	CLAMP RING	**1-215**
050	541164-0200		1	CLAMP RING	**1-217**
110	567018-0000		1	STEAM HOUSE	
120	539212-0000		1	GASKET	
130	90207-0365		1	GASKET	
140	90207-0363		1	GASKET	
150	90091-0266		2	SEAL RING 10,4X16,3X2,5 MM	
160	90030-0336		2	CONN. STRAIGHT, 316L-12M-BVCO-3	
170	90030-0338		2	NUT, PIPE & CONNECTORS, SS-8-BVCO-4	

Pos	Part No	UN	Qty	Description	Page No

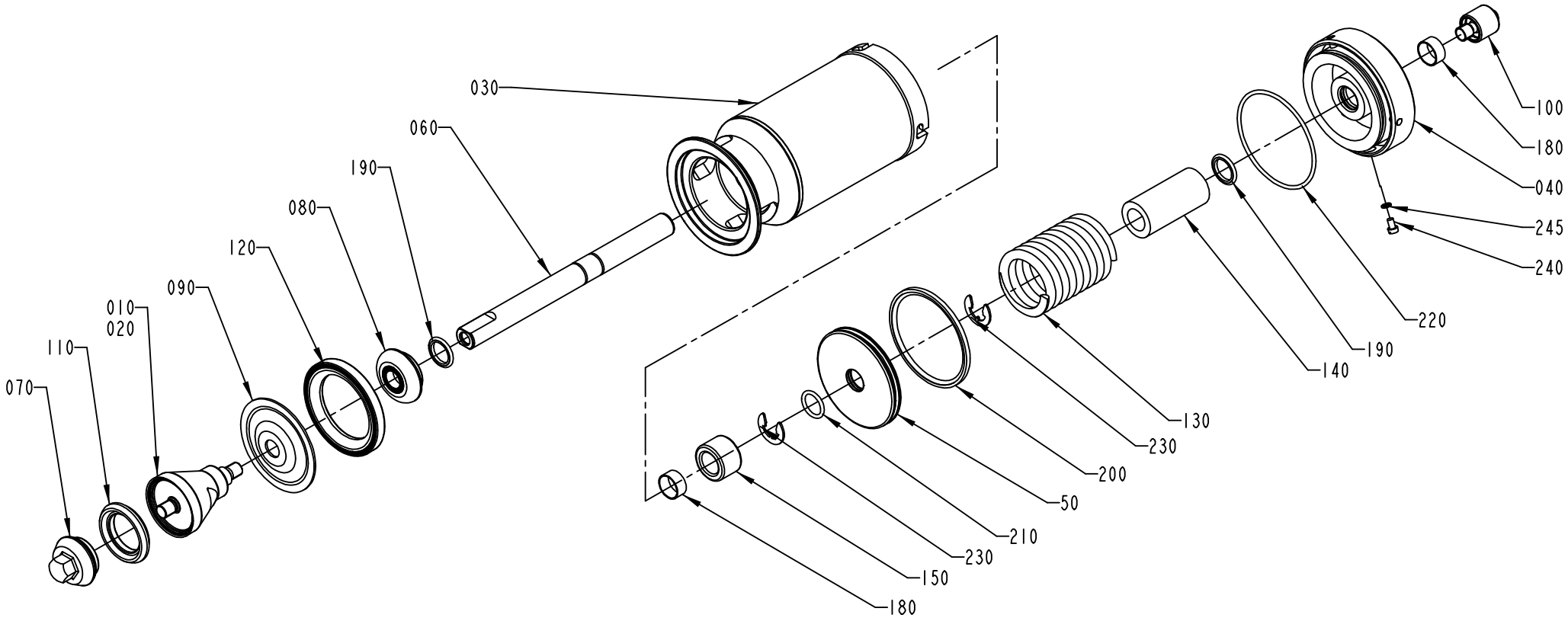

576436-1
ECN 73164

ECM: 156408 - 20040128
Group number: 576436-0100
Assembly Drawing: 576436-1_1_AB

Pos	Part No	UN	Qty	Description	Page No
2"					
	576436-0101		1	===CAD MODEL===	
010	530592-0000		1	SEAL RING HOLDER	
3"					
	576436-0102		1	===CAD MODEL===	
010	530595-0000		1	SEAL RING HOLDER	
Common Parts					
030	576439-0000		1	CYLINDER HOUSING	
040	576440-0000		1	END SECTION	
050	576441-0000		1	PISTON	
060	576446-0000		1	PISTON ROD	
070	530590-0000		1	VALVE CONE	
080	541166-0000		1	WASHER	
090	533169-0000		1	DIAPHRAGM	
100	553607-0000		1	SLEEVE	
110	530589-0000		1	SEAL RING	
120	440655-0000		1	RING	
130	440663-0000		1	COMPRESSION SPRING	
140	576448-0000		1	SPACER	
150	576449-0000		1	SPACER	
180	90091-0238		2	WEAR RING 20X22X10 MM	
190	90091-0237		2	ROD SEAL, GLIDORING 20X27,5X3 MM	
200	90091-0336		1	PISTON SEAL, GLIDORING 79X90X4 MM	
210	315204-0215		1	O-RING 19,2X3 MM	
220	315202-0308		1	O-RING 84,5X3 MM	
230	315754-0113		2	LOCKING WAE 15	
240	312125-0323		1	SCREW ISO 1207 M5X8 A4	
245	315233-0101		1	WASHER CAPTIVE SEALING M5	

Pos	Part No	UN	Qty	Description	Page No

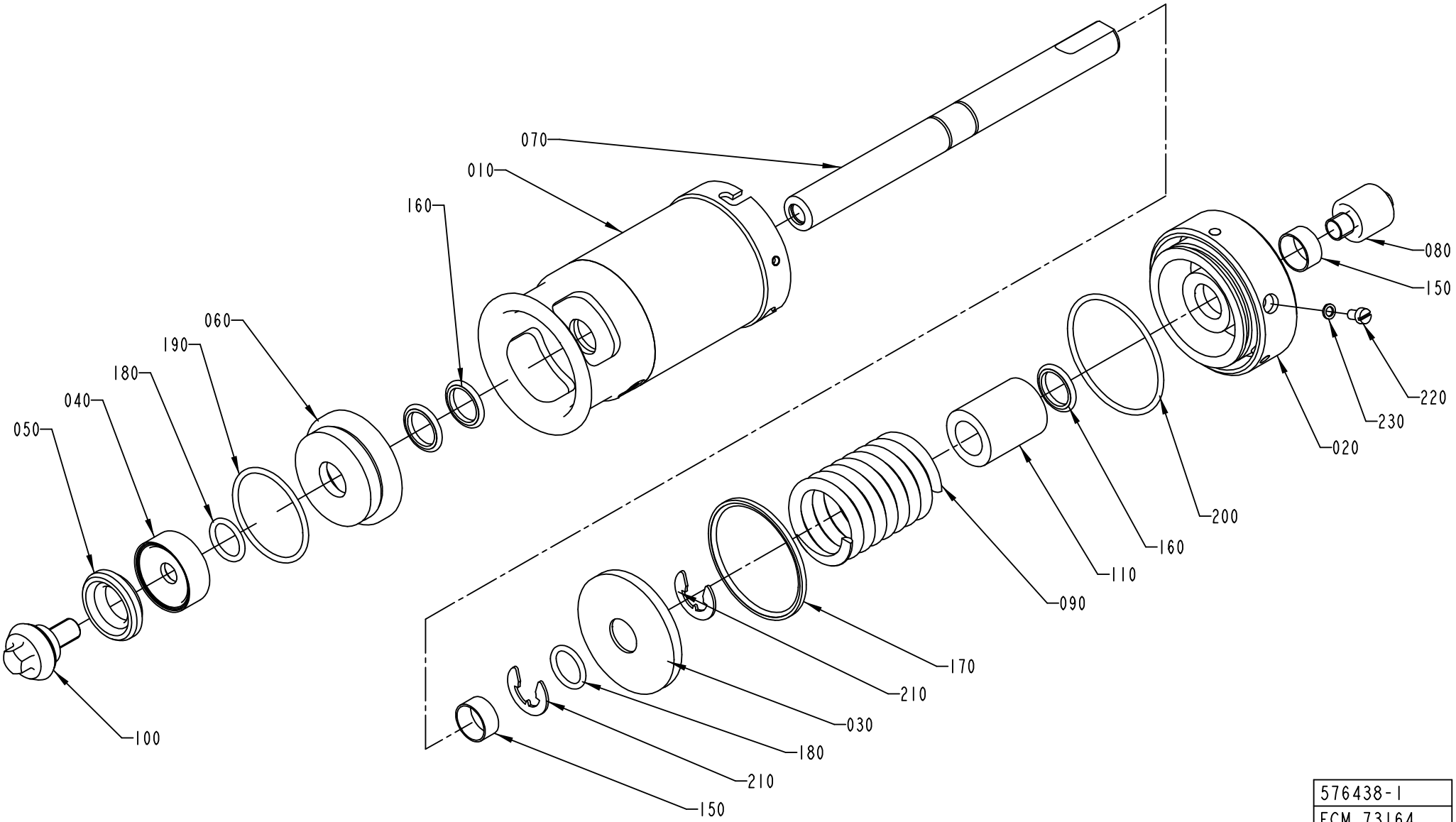

576438-1
ECM 73164

ECM: 177596 - 20040910
Group number: 576438-0100
Assembly Drawing: 576438-1_1_AB

Pos	Part No	UN	Qty	Description	Page No
-					
010	576443-0000		1	CYLINDER HOUSING	
020	576444-0000		1	END SECTION	
030	576445-0000		1	PISTON	
040	530587-0000		1	WASHER	
050	530588-0000		1	SEAL RING	
060	556133-0000		1	SEALING WASHER	
070	576447-0000		1	PISTON ROD	
080	553607-0000		1	SLEEVE	
090	440662-0000		1	COMPRESSION SPRING	
100	476185-0000		1	VALVE CONE	
110	576451-0000		1	SPACER	
150	90091-0238		2	WEAR RING 20X22X10 MM	
160	90091-0237		3	ROD SEAL, GLIDORING 20X27,5X3 MM	
170	90091-0335		1	PISTON SEAL,GLIDORING 62,5X70X3 MM	
180	315204-0215		2	O-RING 19,2X3 MM	
190	315204-0301		1	O-RING 49,5X3 MM	
200	315202-0304		1	O-RING 64,5X3 MM	
210	315754-0113		2	LOCKING WAE 15	
220	312125-0323		1	SCREW ISO 1207 M5X8 A4	
230	315233-0101		1	WASHER CAPTIVE SEALING M5	

Pos	Part No	UN	Qty	Description	Page No

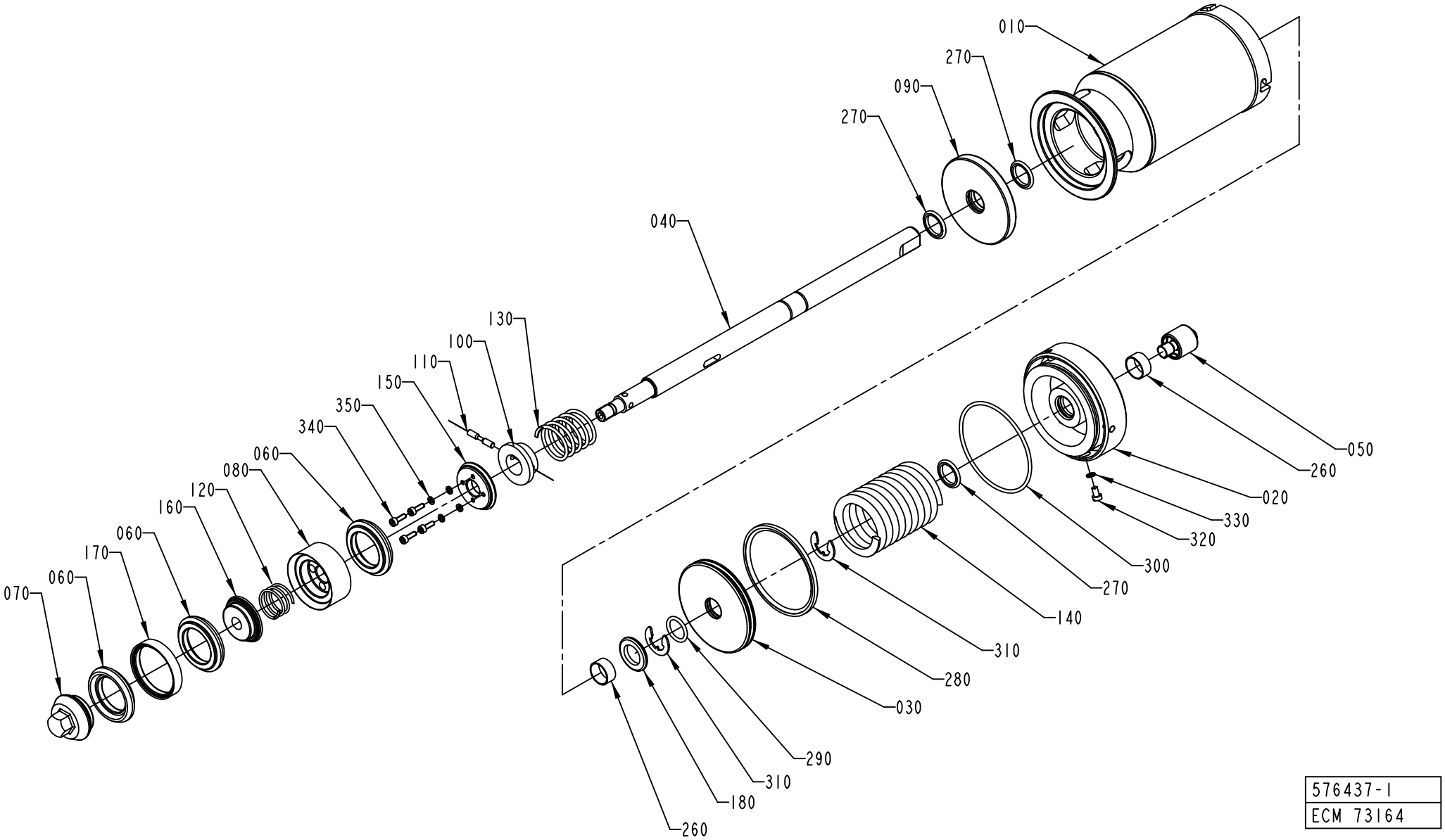

576437-1
ECM 73164

ECM: 178062 - 20040910
Group number: 576437-0100
Assembly Drawing: 576437-1_1_AB

Pos	Part No	UN	Qty	Description	Page No
-					
010	576439-0000		1	CYLINDER HOUSING	
020	576440-0000		1	END SECTION	
030	576441-0000		1	PISTON	
040	576442-0000		1	PISTON ROD	
050	553607-0000		1	SLEEVE	
060	530589-0000		3	SEAL RING	
070	530590-0000		1	VALVE CONE	
080	530591-0000		1	HOLDER	
090	555458-0000		1	SEALING WASHER	
100	440650-0000		1	WASHER	
110	440659-0000		1	CYLINDRICAL PIN	
120	440660-0000		1	COMPRESSION SPRING	
130	440661-0000		1	COMPRESSION SPRING	
140	440663-0000		1	COMPRESSION SPRING	
150	530597-0000		1	WASHER	
160	530598-0000		1	WASHER	
170	530599-0000		2	RING	
180	576450-0000		1	SPACER	
260	90091-0238		2	WEAR RING 20X22X10 MM	
270	90091-0237		3	ROD SEAL, GLIDORING 20X27,5X3 MM	
280	90091-0336		1	PISTON SEAL, GLIDORING 79X90X4 MM	
290	315204-0215		1	O-RING 19,2X3 MM	
300	315202-0308		1	O-RING 84,5X3 MM	
310	315754-0113		2	LOCKING WAE 15	
320	312125-0323		1	SCREW ISO 1207 M5X8 A4	
330	315233-0101		1	WASHER CAPTIVE SEALING M5	
340	312115-0291		4	SCREW ISO4762 M4X12 A4	
350	315402-0136		4	LOCK WASHER FBB 4,1	

Pos	Part No	UN	Qty	Description	Page No

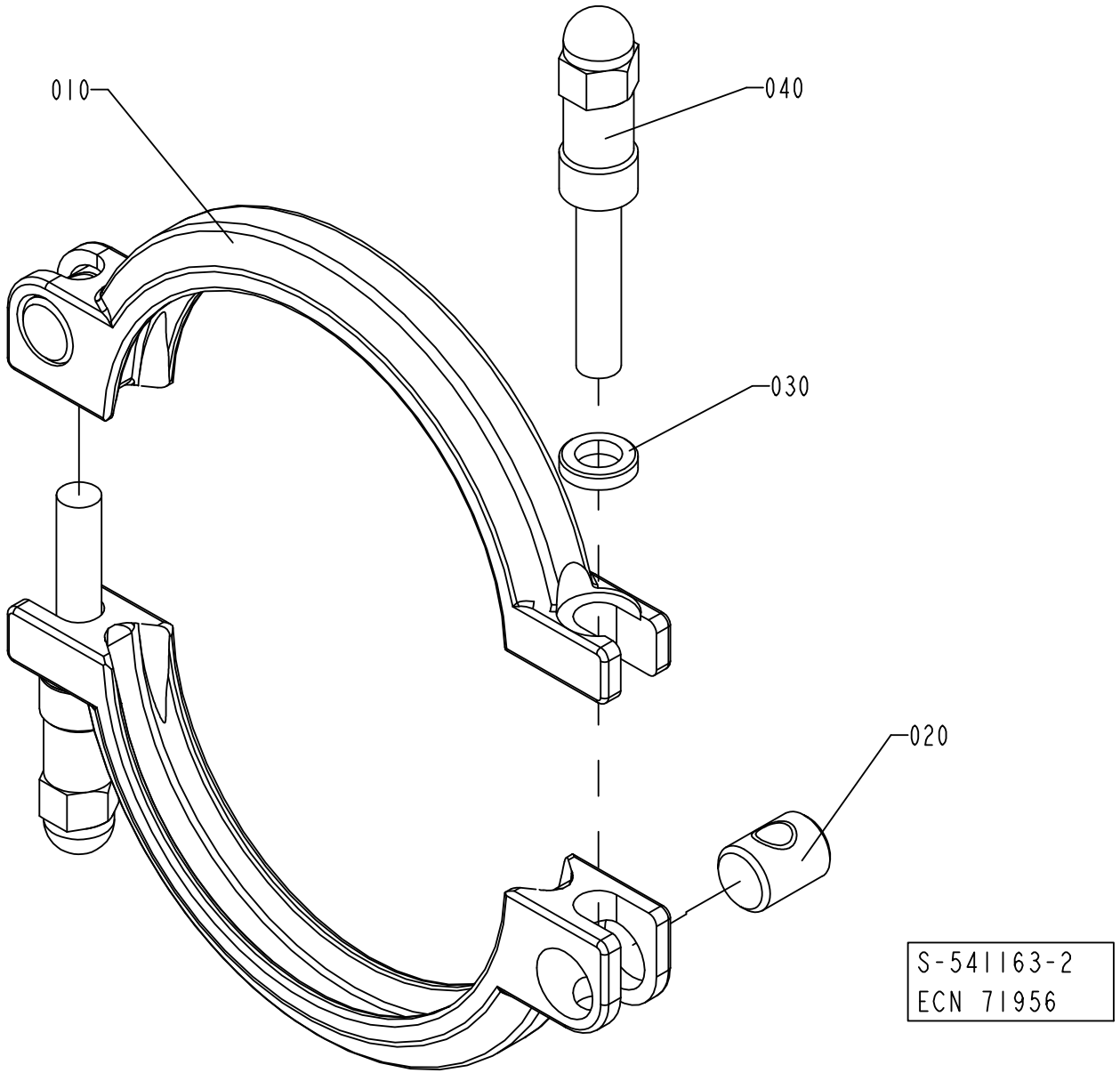
010
040
030
020
S-541163-2
ECN 71956

ECM: 178064 - 20040910
Group number: 541163-0200
Assembly Drawing: 541163-2_1_AB

Pos	Part No	UN	Qty	Description	Page No
-					
010	532117-0000		2	CLAMP RING	
020	497748-0000		2	PIN	
030	541165-0000		2	WASHER	
040	554162-0000		2	SCREW	

Pos	Part No	UN	Qty	Description	Page No

CLAMP RING

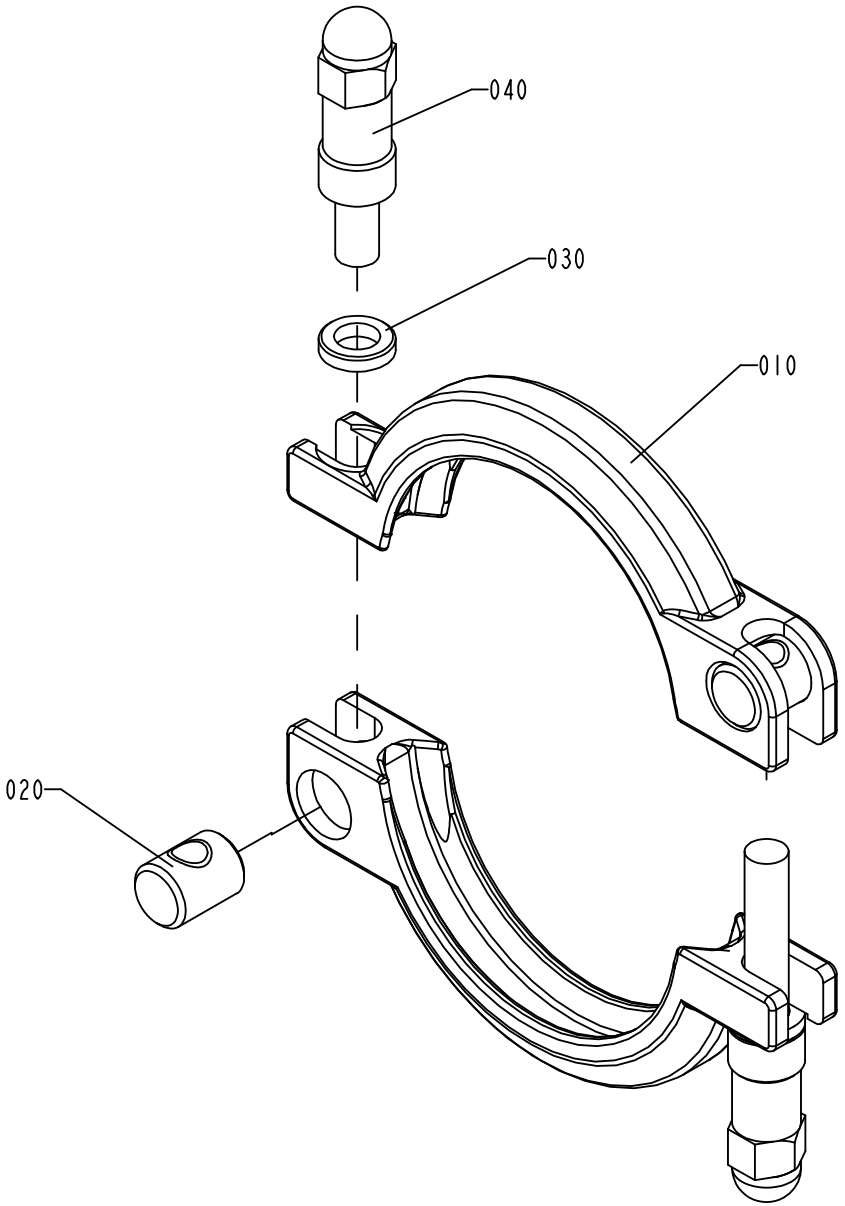

S-541164-2
ECN 71956

ECM: 178065 - 20040910
Group number: 541164-0200
Assembly Drawing: 541164-2_1_AB

Pos	Part No	UN	Qty	Description	Page No
-					
010	532118-0000		2	CLAMP RING	
020	497748-0000		2	PIN	
030	541165-0000		2	WASHER	
040	554162-0000		2	SCREW	

Pos	Part No	UN	Qty	Description	Page No

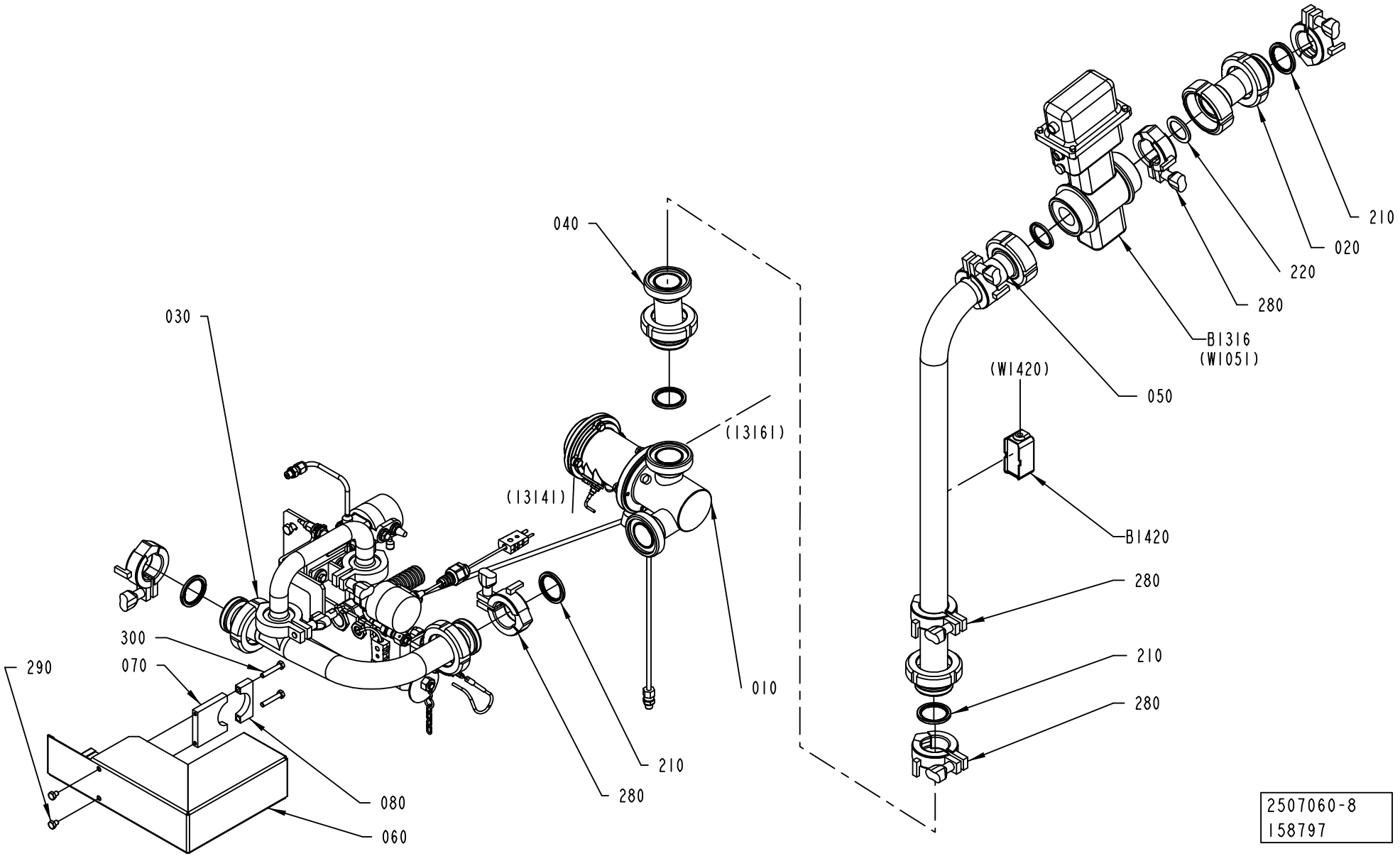
040
030
(13161)
(13141)
300
070
290
080
060
210
280
010
210
020
220
280
B1316
(W1051)
(W1420)
050
B1420
280
210
280
2507060-8
158797

Pos	Part No	UN	Qty	Description	Page No
A3/FLEX NOHI (See drawing on page: 1-220)					
030	2500081-0000		1	ELBOW PIPE	
050	2672962-0000		1	CONNECTING PIPE	
060	2529750-0000		1	COVERING PANEL	
A3/FLEX TBA 0200B HI, A3/FLEX TBA 0200M HI, A3/FLEX TBA 0200S HI, A3/FLEX TBA 0250B HI, A3/FLEX TBA 0250S HI, A3/FLEX TBA 0330S HI, A3/FLEX TPA 0330SQ HI, A3/FLEX TBA 0500B HI, A3/FLEX TBA 1000B HI, A3/FLEX TBA 1000S HI, A3/FLEX TBA 1000SQ HI, A3/FLEX TPA 0500SQ HI, A3/FLEX TPA 1000SQ HI, A3/FLEX TBA 1500S HI (See drawing on page: 1-218)					
030	2632642-0100		1	NOZZLE UNIT	**1-223**
050	2672962-0000		1	CONNECTING PIPE	
060	2651326-0000		1	TOUCH GUARD	
A3/FLEX TBA 2000S HI, A3/FLEX TBA 1890S HI (See drawing on page: 1-218)					
030	2632642-0100		1	NOZZLE UNIT	**1-223**
050	2685311-0000		1	CONNECTING PIPE	
060	2651326-0000		1	TOUCH GUARD	
Common Parts					
010	2507059-0200		1	REGULATING VALVE	**1-225**
020	2672963-0000		1	CONNECTING PIPE	
040	2501278-0000		1	ECCENTRIC	
070	1140480-0000		1	CLAMP	
080	1041988-0000		1	CLAMP	
210	90217-0348		5	GASKET 35,4X46,8X4 MM	
220	90459-4179		2	GASKET 30,5X42X4 MM FDA	
280	2552201-0000		7	LOCKING DEVICE	
290	312105-0362		2	SCREW M6S ISO 4017 M6X8 A480	
300	312109-0376		2	SCREW M6S ISO 4017 M6X35 A480	
B1316	90458-0806		1	FLOW METER, NO. XF DF23-DN32	
B1420	90459-0181		1	PIPE SURFACE THERM., PT-100 -50° -+260°C	

Pos	Part No	UN	Qty	Description	Page No

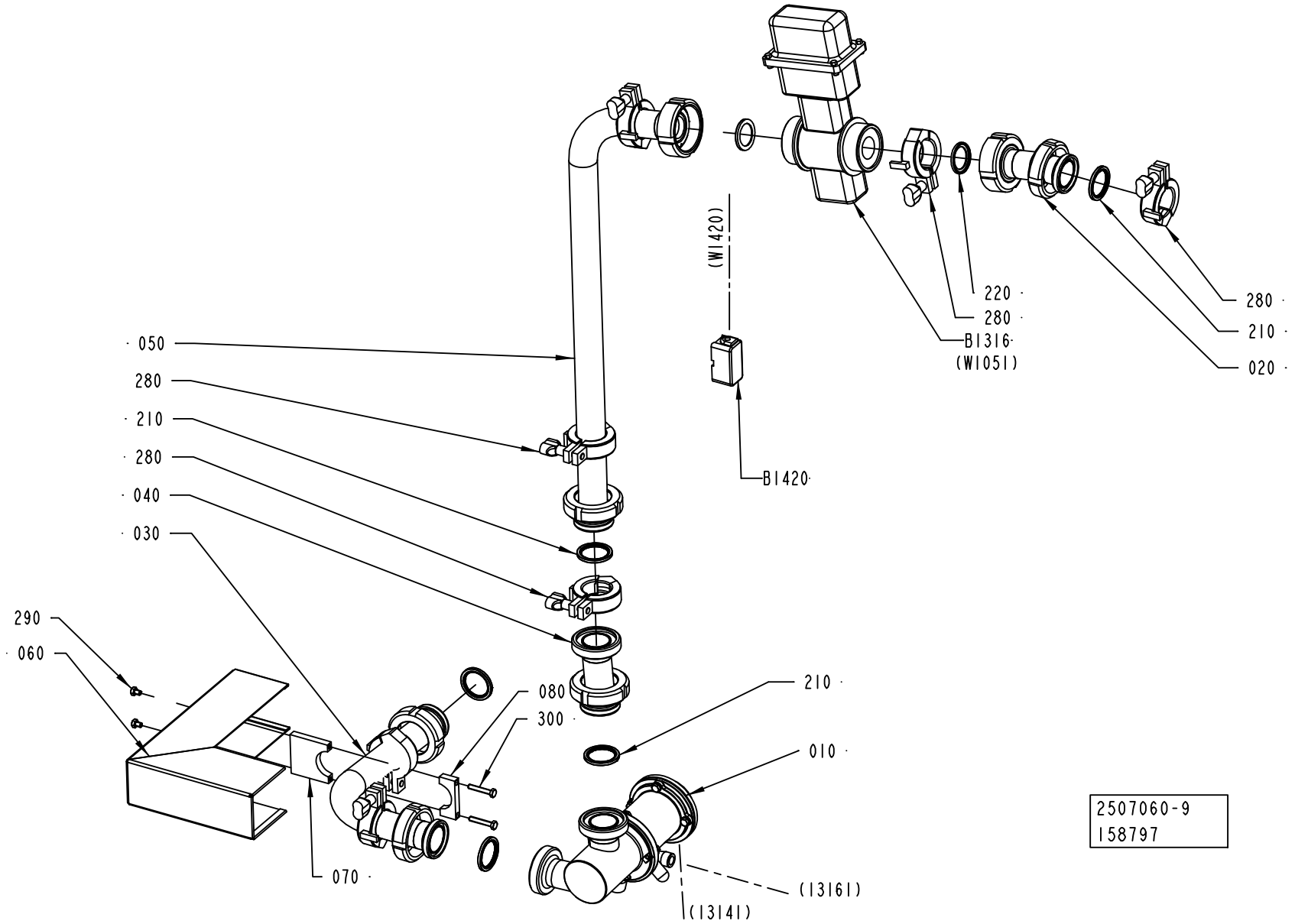
(W1420)
220
280
B1316
(W1051)
280
210
020
050
280
210
280
040
030
B1420
290
060
080
300
210
010
070
(13161)
(13141)
2507060-9
158797

Pos	Part No	UN	Qty	Description	Page No
A3/FLEX NOHI (See drawing on page: 1-220)					
030	2500081-0000		1	ELBOW PIPE	
050	2672962-0000		1	CONNECTING PIPE	
060	2529750-0000		1	COVERING PANEL	
A3/FLEX TBA 0200B HI, A3/FLEX TBA 0200M HI, A3/FLEX TBA 0200S HI, A3/FLEX TBA 0250B HI, A3/FLEX TBA 0250S HI, A3/FLEX TBA 0330S HI, A3/FLEX TPA 0330SQ HI, A3/FLEX TBA 0500B HI, A3/FLEX TBA 1000B HI, A3/FLEX TBA 1000S HI, A3/FLEX TBA 1000SQ HI, A3/FLEX TPA 0500SQ HI, A3/FLEX TPA 1000SQ HI, A3/FLEX TBA 1500S HI (See drawing on page: 1-218)					
030	2632642-0100		1	NOZZLE UNIT	**1-223**
050	2672962-0000		1	CONNECTING PIPE	
060	2651326-0000		1	TOUCH GUARD	
A3/FLEX TBA 2000S HI, A3/FLEX TBA 1890S HI (See drawing on page: 1-218)					
030	2632642-0100		1	NOZZLE UNIT	**1-223**
050	2685311-0000		1	CONNECTING PIPE	
060	2651326-0000		1	TOUCH GUARD	
Common Parts					
010	2507059-0200		1	REGULATING VALVE	**1-225**
020	2672963-0000		1	CONNECTING PIPE	
040	2501278-0000		1	ECCENTRIC	
070	1140480-0000		1	CLAMP	
080	1041988-0000		1	CLAMP	
210	90217-0348		5	GASKET 35,4X46,8X4 MM	
220	90459-4179		2	GASKET 30,5X42X4 MM FDA	
280	2552201-0000		7	LOCKING DEVICE	
290	312105-0362		2	SCREW M6S ISO 4017 M6X8 A480	
300	312109-0376		2	SCREW M6S ISO 4017 M6X35 A480	
B1316	90458-0806		1	FLOW METER, NO. XF DF23-DN32	
B1420	90459-0181		1	PIPE SURFACE THERM., PT-100 -50° -+260°C	

Pos	Part No	UN	Qty	Description	Page No

NOZZLE UNIT

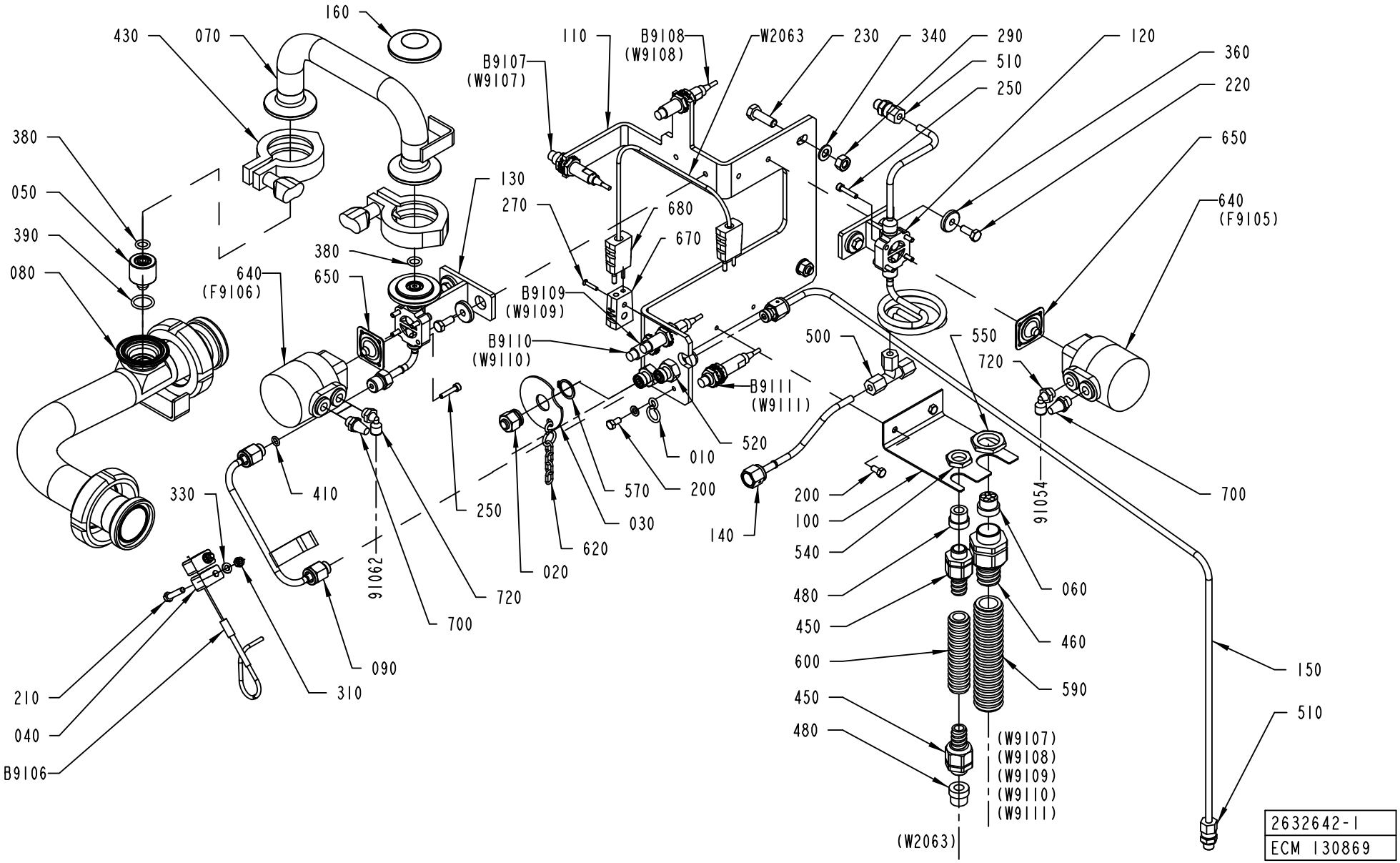
160
430
070
110
B9108
(W9108)
W2063
230
340
290
510
250
120
360
220
B9107
(W9107)
380
050
390
080
130
270
680
670
650
640
(F9105)
640
(F9106)
380
650
B9109
(W9109)
B9110
(W9110)
500
550
720
B9111
(W9111)
520
010
200
570
030
620
020
250
410
330
720
700
91062
090
310
210
040
B9106
140
200
100
540
480
450
600
450
480
91054
060
460
590
150
510
700
(W9107)
(W9108)
(W9109)
(W9110)
(W9111)
(W2063)
2632642-1
ECM 130869

ECM: 140184 - 20031113
Group number: 2632642-0100
Assembly Drawing: 2632642-1_1_AA

Pos	Part No	UN	Qty	Description	Page No
-					
010	209183-0000		2	RING	
020	978380-0000		1	BLIND PLUG	
030	978381-0000		1	WASHER 56X2MM	
040	978440-0000		2	CRAMP	
050	1523154-0003		1	SPRAY NOZZLE	
050	1523154-0004		1	SPRAY NOZZLE	
050	1523154-0005		1	SPRAY NOZZLE	
050	1523154-0006		1	SPRAY NOZZLE	
060	2559051-0000		1	INSERT	
070	2562881-0000		1	TRANSITION PIPE	
080	2562882-0000		1	ELBOW PIPE	
090	2562883-0000		1	PIPE	
100	2564608-0000		1	HOLDER	
110	2632638-0000		1	HOLDER	
120	2632639-0000		1	VALVE BODY	
130	2632640-0000		1	VALVE BODY	
140	2632641-0000		1	PIPE	
150	2564108-0000		1	PIPE	
160	979813-0000		1	PLUG	
200	312105-0325		3	SCREW M6S ISO 4017 M5X10 A480	
210	312105-0333		2	SCREW M6S ISO 4017 M5X25 A480	
220	312105-0368		4	SCREW M6S ISO 4017 M6X16 A480	
230	312105-0453		2	SCREW M6S ISO 4017 M8X25 A480	
250	312115-0295		8	SCREW ISO4762 M4X20 A4	
270	312145-0228		1	SCREW ISO 2009 MFS M3X16 A4	
290	312605-0318		2	HEXAGON NUT, M6M M8 A280	
310	312812-0314		2	HEXAGON NUT, NY-LOCK M5 A480	
330	315105-0146		3	WASHER BRB5,3X10RFR	
340	315105-0165		2	WASHER BRB8,4X16RFR	
360	315125-0153		4	WASHER TBRSB 6,4X22X4 A4	
380	315204-0208		2	O-RING 9,3X2,4 MM	
390	315204-0214		1	O-RING 17,3X2,4 MM	
410	315205-0505		5	O-RING 6,07X1,78 MM	
430	342840-0103		2	CLAMPING PIECE	
450	353243-0001		2	HOSE GLAND W/O INSERT PG9 EXTENDED	
460	353243-0005		1	HOSE GLAND W/O INSERT PG16 EXTENDED	
480	353249-0009		2	INSERT, SINGEL HOLE, EK 152/9	
500	90030-0076		1	CONN. T-PIPE T-6	
510	90030-0184		2	CONN. STR. GA-6-G1/8	
520	90030-0549		2	CONN. STRAIGHT, BULKHEAD, SS-4-VCO-61	
540	90099-0104		1	NUT, PR 15,2 (PG9)	
550	90099-0110		1	NUT, PR 22,5 (PG16)	
570	90141-0017		1	RETAINING RING SHAFT DIN 471 17 A2	
590	90152-0051	MM	7000	SPIRAL CONDUIT, 25X18, UL 1816	
600	90152-0059	MM	1000	SPIRAL CONDUIT, 18X12, UL 1211	
620	90155-0008	MM	300	HANGER CHAIN, 18	
640	90187-0176		2	ACTUATOR ECC 008 FOR DIAPHR. VALVE	
650	90187-0325		2	DIAPHRAGM, 214/300 AO08 4-B -20-150§C	
670	90326-0020		1	PLUG, FEMALE YELLOW CR-AL	
680	90326-0022		2	PLUG, MALE YELLOW CR-AL	
700	90328-0003		2	SILENCER, 338/110	
720	90458-2956		2	ELBOW PIPE JOINT, EXT.THREAD, D=6MM-G1/8	
B9106	90326-0060		1	THERMOCOUPLE, CR-AL	
B9107	90458-0672		1	PROXIMITY SENSOR E2E2-X5MB1-5M	
B9108	90458-0672		1	PROXIMITY SENSOR E2E2-X5MB1-5M	
B9109	90458-0672		1	PROXIMITY SENSOR E2E2-X5MB1-5M	
B9110	90458-0672		1	PROXIMITY SENSOR E2E2-X5MB1-5M	
B9111	90458-0672		1	PROXIMITY SENSOR E2E2-X5MB1-5M	
W2063	90220-0034	MM	7000	THERMOCABLE TEX/SITW-20F-KX 2X0,5MM2	

Machine Type	Group Description	Used-In	Group Number	Page No

REGULATING VALVE

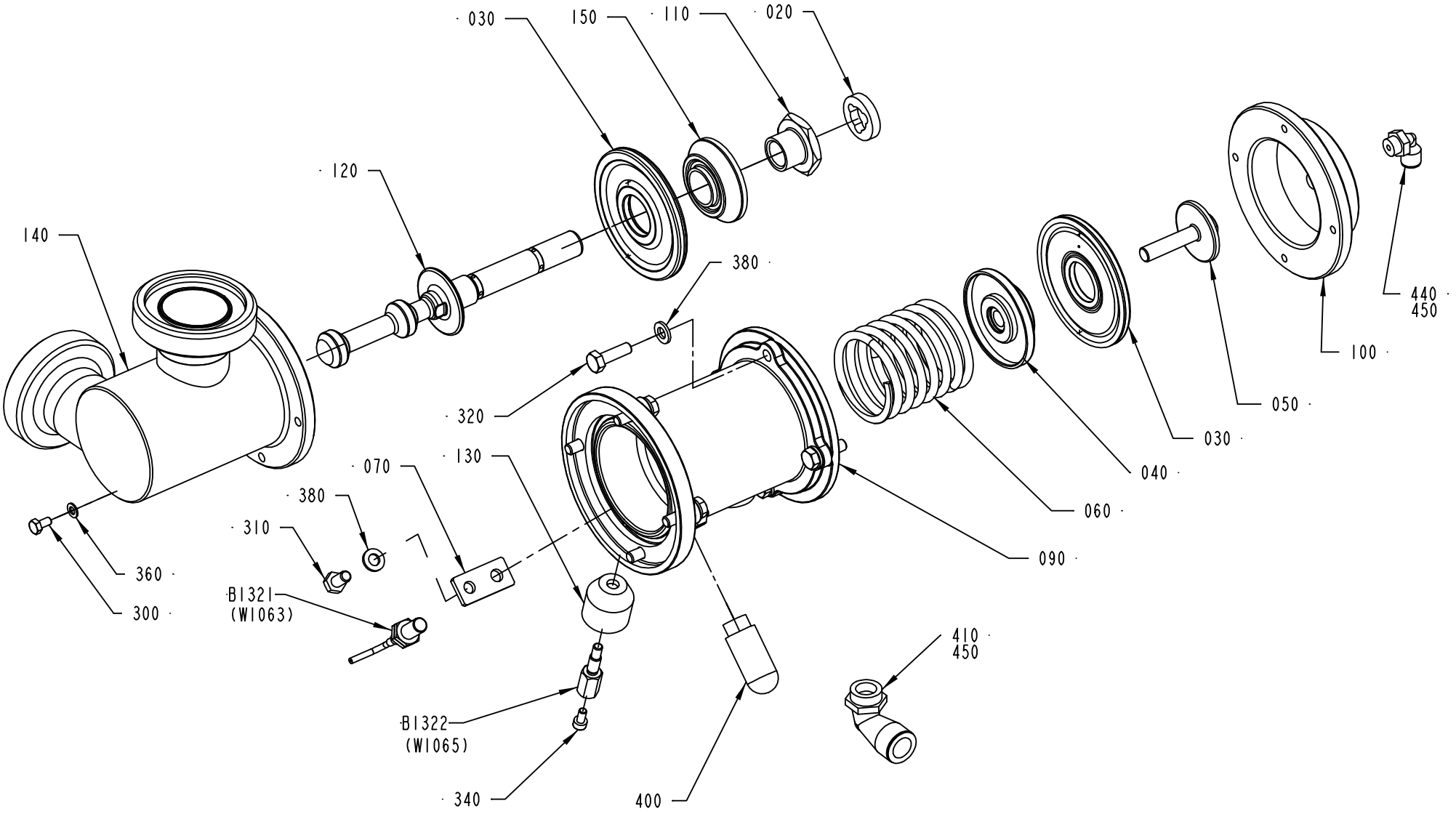

2507059-4
ECM 158797

ECM: 181115 - 50001231
Group number: 2507059-0200
Assembly Drawing: 2507059-4_1_AA

Pos	Part No	UN	Qty	Description	Page No
A3/FLEX TBA 0200S, A3/FLEX TBA 0200B, A3/FLEX TBA 0250B, A3/FLEX TBA 0330S, A3/FLEX TPA 0330SQ, A3/FLEX TBA 0200M, A3/FLEX TBA 0250S					
120	2672938-0000		1	SHUTTER	
140	2562704-0000		1	BODY	
A3/FLEX TBA 0500B, A3/FLEX TBA 1000B, A3/FLEX TBA 1000S, A3/FLEX TBA 1000SQ, A3/FLEX TPA 1000SQ, A3/FLEX TPA 0500SQ					
120	2672936-0000		1	SHUTTER	
140	1548230-0000		1	BODY	
A3/FLEX TBA 1500S					
120	2672937-0000		1	SHUTTER	
140	1498526-0000		1	REGULATOR BODY	
A3/FLEX TBA 1890S, A3/FLEX TBA 2000S					
120	2657922-0000		1	SHUTTER	
140	2500078-0000		1	BODY	
Common Parts					
020	2594043-0000		1	SHOCK ABSORBER	
030	925998-0000		2	DIAPHRAGM	
040	2693622-0000		1	SPACER	
050	926907-0000		1	SCREW	
060	1195397-0000		1	COMPRESSION SPRING	
070	926934-0000		1	SUPPORT	
080	927044-0000		1	SPACER	
090	2563766-0000		1	BODY	
100	927203-0000		1	COVER	
110	979434-0000		1	FERRULE	
130	1478813-0000		1	SPACER	
150	1511600-0000		1	SPACER	
300	312105-0287		1	SCREW M6S ISO4017 M4X8 A470	
310	312105-0366		1	SCREW M6S ISO 4017 M6X12 A480	
320	312105-0370		8	SCREW M6S ISO 4017 M6X20 A480	
340	312115-0287		1	SCREW ISO4762 M4X8 A4	
360	315105-0136		1	WASHER BRB4,3XRFR	
380	315105-0153		9	WASHER BRB6,4X12RFR	
400	90328-0026		1	SILENCER G1/4	
410	90458-2960		1	ELBOW PIPE JOINT, EXT.THREAD,D=12MM-G3/8	
440	90458-2956		2	ELBOW PIPE JOINT, EXT.THREAD, D=6MM-G1/8	
450	90144-0073		1	TREBOFLON-TAPE W=13MM	
B1321	90458-0138		1	PROX.SW. E2EG-X1R5B1-5M	
B1322	1478814-0000		1	SENSOR	

Pos	Part No	UN	Qty	Description	Page No

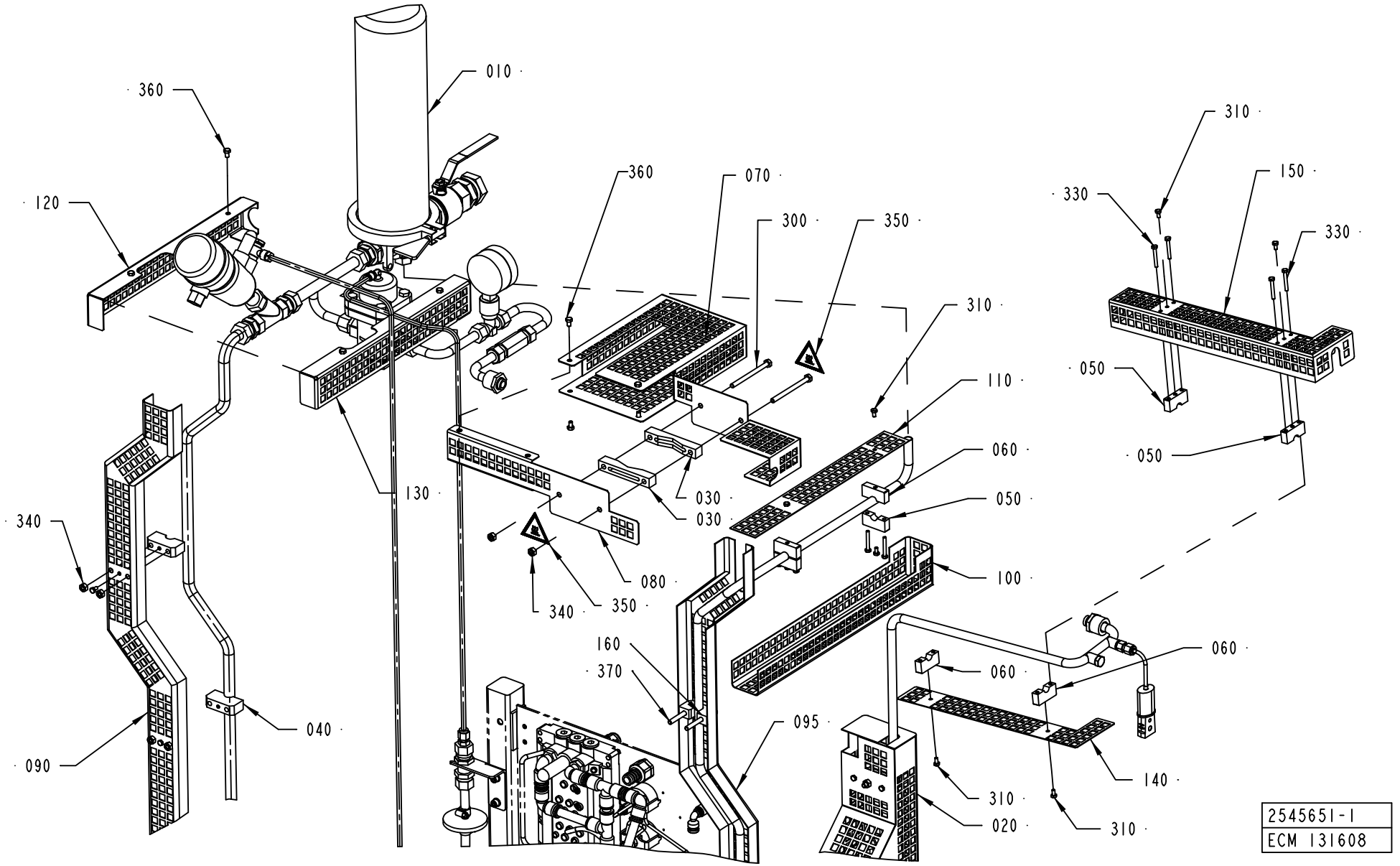
010
360
120
360
070
300
350
310
110
060
050
100
030
030
080
340
350
130
340
160
370
095
040
090
310
150
330
330
050
050
060
060
060
140
310
020
310
2545651-1
ECM 131608

ECM: 153468 - 20031219
Group number: 2545651-0100
Assembly Drawing: 2545651-1_1_AB

Pos	Part No	UN	Qty	Description	Page No
A3/FLEX					
040	2544192-0000		4	CLAMP	
050	1487840-0000		4	CLAMP	
060	1487839-0000		4	CLAMP	
120	2545643-0000		1	TOUCH GUARD	
130	2545644-0000		1	TOUCH GUARD	
160	2565455-0000		2	CLAMP	
330	312105-0299		8	SCREW M6S ISO 4017 M4X30 A470	
340	312605-0316		8	HEXAGON NUT, M6M M6 A280	
360	312105-0323		8	SCREW M6S ISO 4017 M5X8 A480	
370	312105-0382		6	SCREW M6S ISO 4014 M6X60 A480	
Common Parts					
010	2544199-0100		1	STEAM PIPE	**1-229**
020	2552215-0100		1	STEAM TRAP	**1-231**
030	1487200-0000		2	CLAMP	
070	2594602-0000		1	TOUCH GUARD	
080	2601241-0000		1	TOUCH GUARD	
090	2565452-0000		1	TOUCH GUARD	
095	2565451-0000		1	TOUCH GUARD	
100	2565453-0000		1	TOUCH GUARD	
110	2565454-0000		1	TOUCH GUARD	
140	2544205-0000		1	TOUCH GUARD	
150	2544204-0000		1	TOUCH GUARD	
300	312105-0386		2	SCREW M6S ISO 4014 M6X80 A480	
310	312105-0287		12	SCREW M6S ISO4017 M4X8 A470	
350	359705-0007		2	WARNING SIGN ISO, HOT SURFACE	

Pos	Part No	UN	Qty	Description	Page No

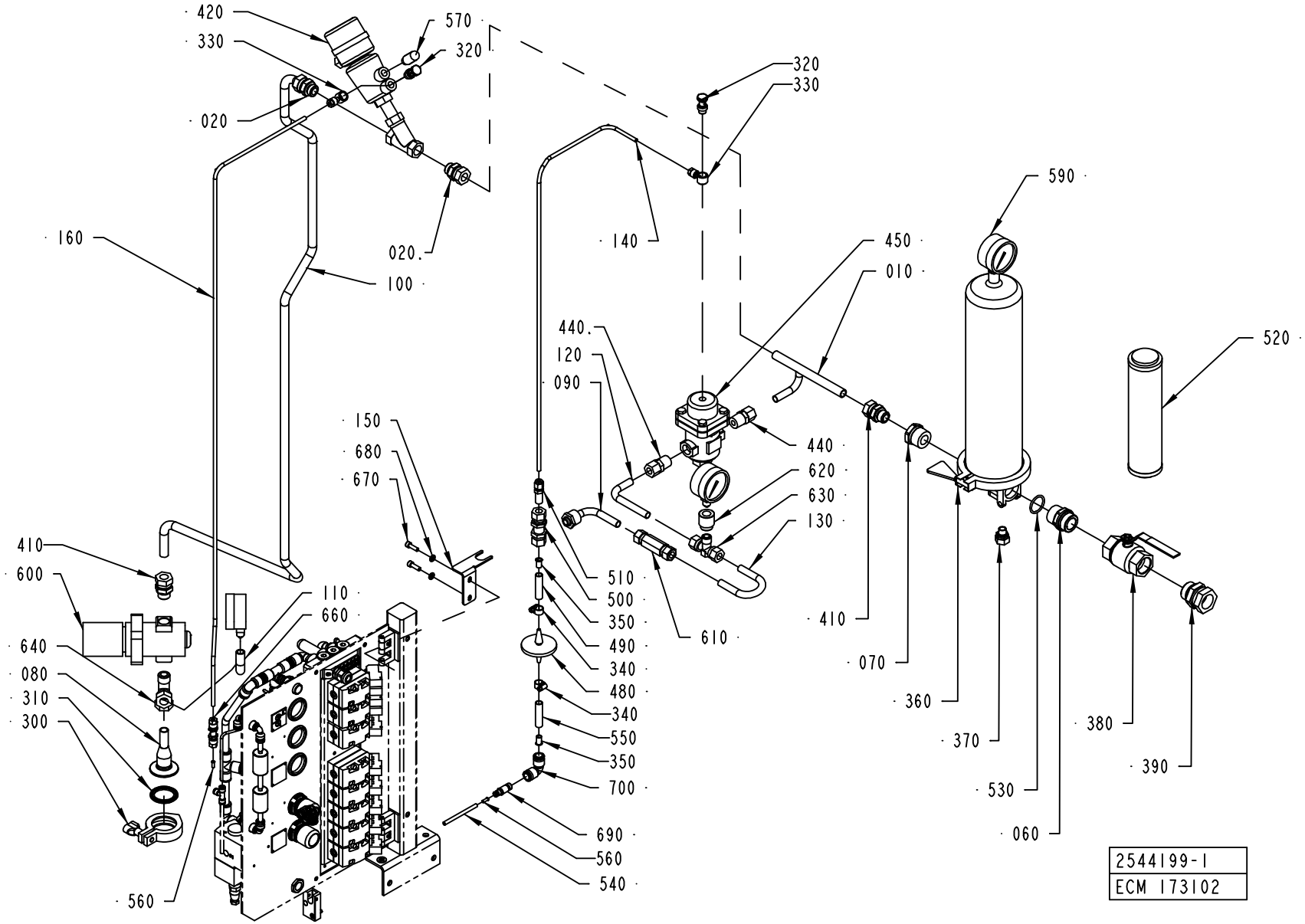
420
330
020
570
320
020
160
100
320
330
140
590
450
010
440
120
090
520
150
680
670
440
620
630
130
410
600
640
080
310
300
110
660
510
500
350
490
340
480
340
550
350
700
690
560
540
610
410
070
360
370
530
060
380
390
560
2544199-1
ECM 173102

ECM: 173105 - 20040614
Group number: 2544199-0100
Assembly Drawing: 2544199-1_1_AD

Pos	Part No	UN	Qty	Description	Page No
A3/FLEX					
010	2544197-0000		1	PIPE	
020	2522195-0000		2	CONNECTION	
080	2611077-0000		1	PIPE	
100	2611078-0000		1	PIPE	
110	2582590-0000		1	PIPE	
160	2616299-0000		1	PIPE	
300	342840-0103		1	CLAMPING PIECE	
310	342850-0204		1	GASKET 35,4X49,1X5,2 MM 1"1/2 FDA	
320	342980-0304		2	BANJO-HOLLOW BOLT COUPL,EXT.THR.01-G1/4"	
330	342797-0122		2	CONN. BANJO, RINGPIECE 6-1/4	
410	90030-0188		2	CONN. STR. GA-15-G1/2	
420	90459-1235		1	ANGLE SEAT VALVE, N.C. DN13 TYPE 2002	
540	90166-0193	MM	3500	TUBE 6 MM PUR BLUE	
560	342706-0130		2	ACCESSORIES, INSERT SLEEVE 6 MM	
570	90328-0026		1	SILENCER G1/4	
590	90043-0082		3	PRESSURE GAUGE, 2740, D=63 MM	
600	90113-0064		1	PRESSURE REGULATOR	
640	342751-0221		1	CONN. L-PIPE, EXT. LE-15-R1/2	
650	342930-0114		1	ELBOW 90 COUPL.,EXT.THREAD 6/4-R1/4"	
660	90224-0349		1	CONN. BULKHEAD. 1250-6	
Common Parts					
060	2552776-0000		1	ADAPTER	
070	2552777-0000		1	ADAPTER	
090	2594599-0000		1	PIPE	
120	2594597-0000		1	PIPE	
130	2594598-0000		1	PIPE	
140	2616297-0000		1	PIPE	
150	2616298-0000		1	BRACKET	
340	342991-0100		2	HOSE CLIP,WORM DRIVE TYPE 10-13	
350	342706-0195		2	ACCESSORIES, INSERT SLEEVE 12 MM	
360	90277-0056		1	FILTER HOUSING / DMS 011 G 16 H	
370	90030-0088		1	CONN. STR., 12-R1/4, EXT. THREAD	
380	90187-0096		1	BALL VALVE G1	
390	90030-0193		1	CONN. STR. GA-28-G1	
440	90030-0180		2	CONN. STR. GE 12-1/2-14 NPTF	
450	90458-2264		1	PRESSURE REGULATOR ARC-30-1/2"	
	90458-2655		*1*	*STRAINER FOR ARC-30-1/2"*	
	90458-2654		*1*	*GASKET KIT FOR ARC-30-1/2"*	
	90458-2653		*1*	*BELLOWS AISI 316L FOR ARC-30-1/2"*	
480	90458-2554		1	STERILE GRADE MEMBRANE FILTER 0,2µM	
490	90166-0195	MM	50	TUBE 12 MM PA BLUE	
500	90030-0030		1	CONN. BULKHEAD SV 12-L/SY	
510	90030-0481		1	REDUCER M12TURM6-316	
520	90277-0355		1	FILTER INSERT / MBS 100 IPH	
530	315204-0219		1	O-RING 29,2X3 MM	
550	90166-0195	MM	50	TUBE 12 MM PA BLUE	
610	90459-4686		1	NON RETURN VALVE, M12A-C6L-1-EPR-SS	
620	90330-0011		1	SLEEVE, REDUCTION, INT, R-2023/8X1/4	
630	342741-0209		1	CONN. T-PIPE TE-12-R3/8	
670	312115-0370		2	SCREW ISO4762 M6X20 A4	
680	315105-0153		2	WASHER BRB6,4X12RFR	
690	342716-0210		1	REDUCER 6-12	
700	342735-0109		1	ELBOW PIPE JOINT	

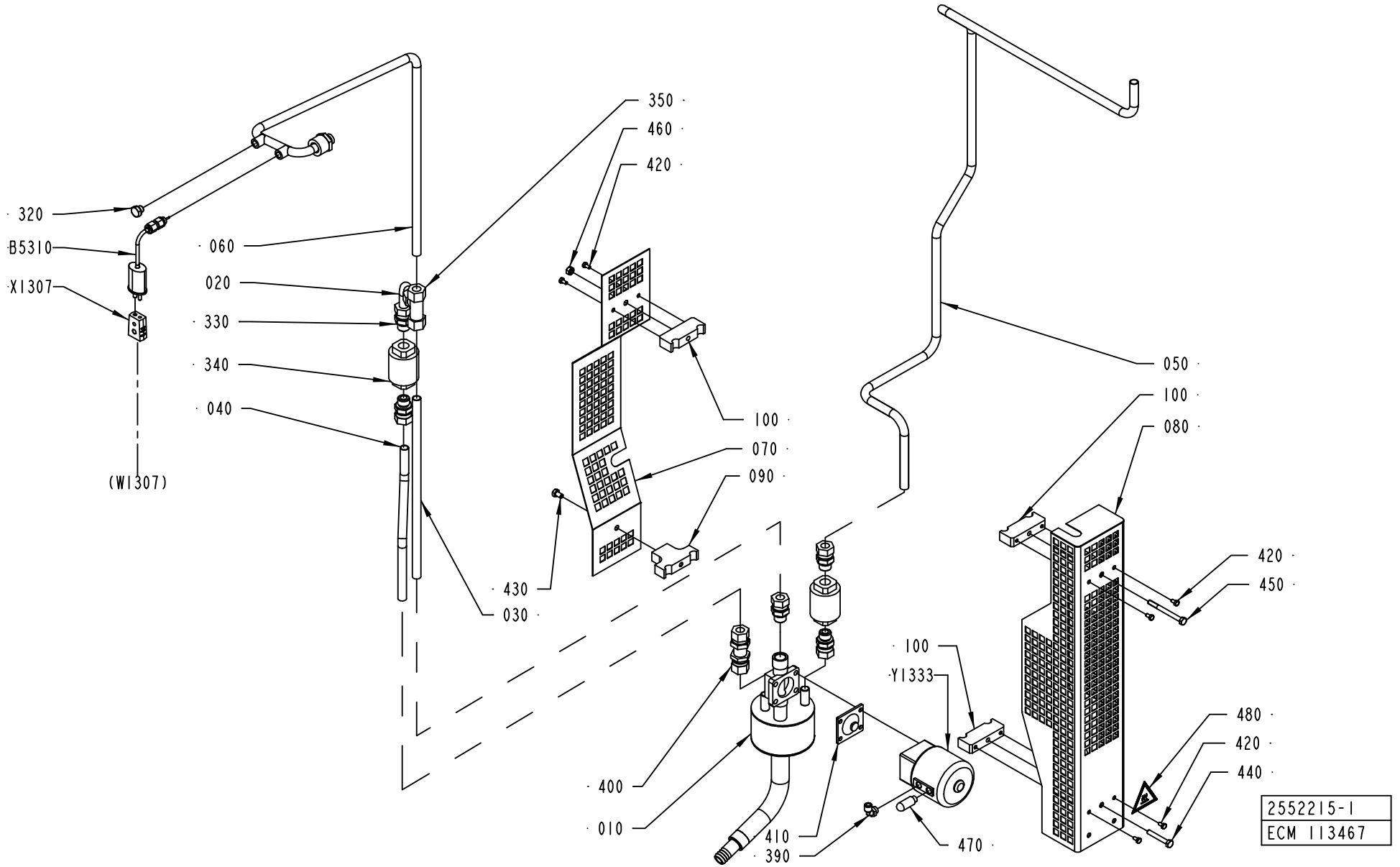
320
B5310
X1307
(W1307)
060
020
330
340
040
350
460
420
100
070
090
430
030
400
010
410
390
050
100
080
420
450
100
Y1333
480
420
440
470
2552215-1
ECM 113467

ECM: 113467 - 20030123
Group number: 2552215-0100
Assembly Drawing: 2552215-1_1_AA

Pos	Part No	UN	Qty	Description	Page No
-					
010	2552216-0000		1	ATTACHMENT PIPE	
020	2552218-0000		1	PIPE	
030	2552219-0000		1	PIPE	
040	2555586-0000		1	PIPE	
050	2565435-0000		1	PIPE	
060	2555588-0000		1	PIPE	
070	2555610-0000		1	LID	
080	2555611-0000		1	COVER	
090	2555612-0000		1	CLAMP	
100	2544195-0000		3	CLAMP	
320	90330-0066		1	PLUG, EXT. G-THREAD, G1/8	
330	90030-0187		5	CONN. STR. GA-12-G3/8	
340	90360-0020		2	STEAM TRAP / MK36/51 3/8"	
	90360-0310		*1*	*CAPSULE, FOR STEAM TRAP 90360-20*	
	90360-0309		*1*	*STRAINER, FOR STEAM TRAP 90360-20*	
350	90030-0058		1	CONN. T-PIPE T-12	
390	90458-2956		1	ELBOW PIPE JOINT, EXT.THREAD, D=6MM-G1/8	
400	90030-0030		1	CONN. BULKHEAD SV 12-L/SY	
410	90187-0312		1	DIAPHRAGM #328 FOR SIZE 15 VALVE	
420	312105-0287		6	SCREW M6S ISO4017 M4X8 A470	
430	312105-0364		1	SCREW M6S ISO 4017 M6X10 A480	
440	312105-0378		1	SCREW M6S ISO 4014 M6X40 A480	
450	312105-0383		1	SCREW M6S ISO 4014 M6X65 A480	
460	312605-0316		1	HEXAGON NUT, M6M M6 A280	
470	90328-0047		1	SILENCER G1/8	
480	359705-0007		1	WARNING SIGN ISO, HOT SURFACE	
B5310	90326-0089		1	THERMOCOUPLE, 5110-089-000	
X1307	90326-0020		1	PLUG, FEMALE YELLOW CR-AL	
Y1333	90187-0110		1	DIAPHRAGM VALVE DN15, N.C. WELD CONN.	

Pos	Part No	UN	Qty	Description	Page No

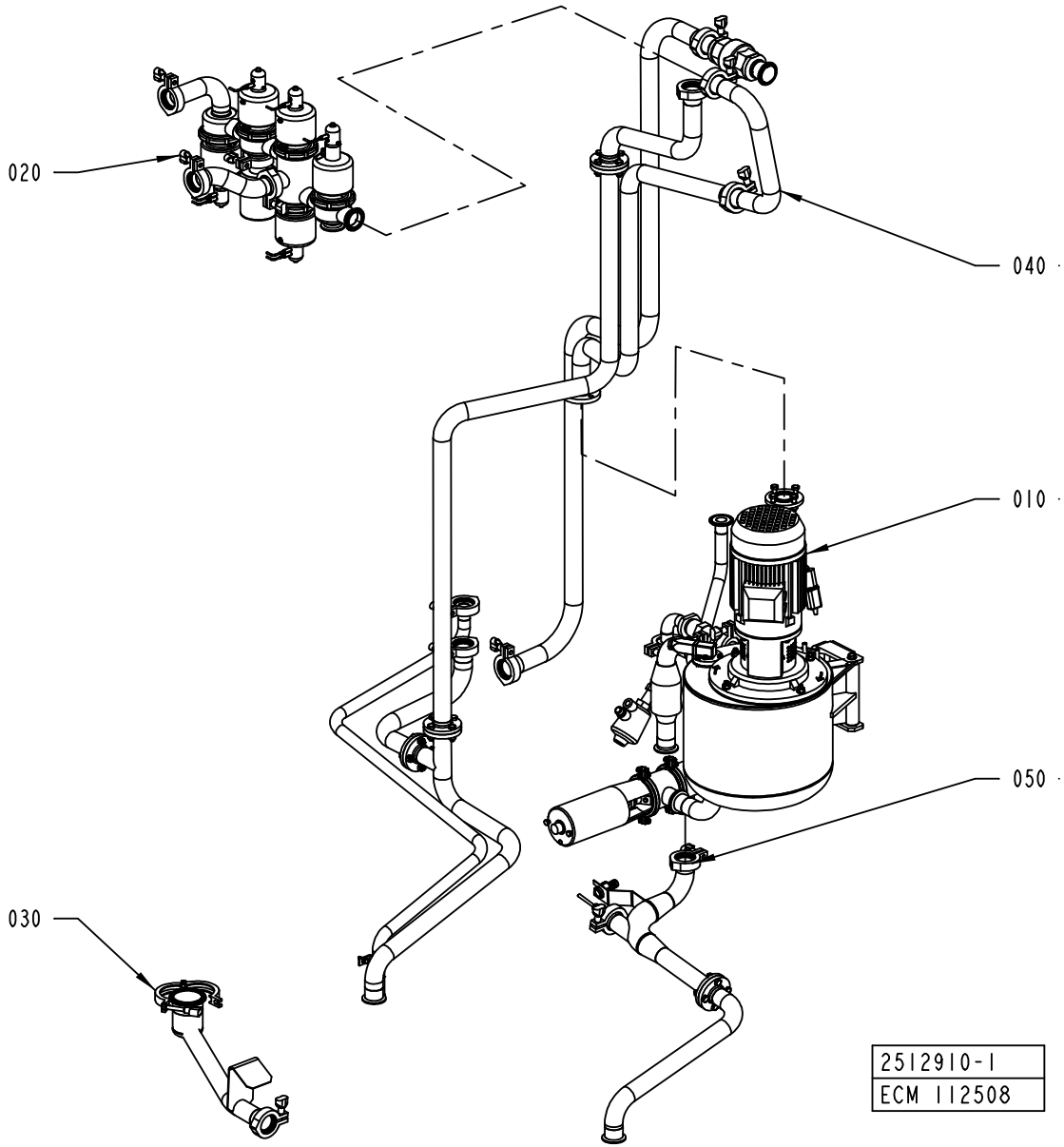
020
040
010
050
030
2512910-1
ECM 112508

ECM: 112508 - 20030123
Group number: 2512910-0100
Assembly Drawing: 2512910-1_1_AA

This list covers pages from 1-232 to 1-235

Pos	Part No	UN	Qty	Description	Page No
A3/FLEX AUTOMCIP (See drawing on page: 1-232)					
020	2501275-0100		1	CLEANING VALVES	**1-237**
030	2512936-0100		1	CLEANING CUP	**1-241, 1-243**
A3/FLEX MANUALCIP (See drawing on page: 1-234)					
020	2539452-0100		1	FLOW SWITCH	**1-245**
030	2512936-0100		1	CLEANING CUP	**1-241, 1-243**
Common Parts					
010	2531076-0100		1	INTEGRATED CLEANING UNIT	**1-247**
040	2539442-0100		1	CLEANING PIPE	**1-255, 1-257**
050	2539448-0100		1	CLEANING PIPE	**1-259**

Pos	Part No	UN	Qty	Description	Page No

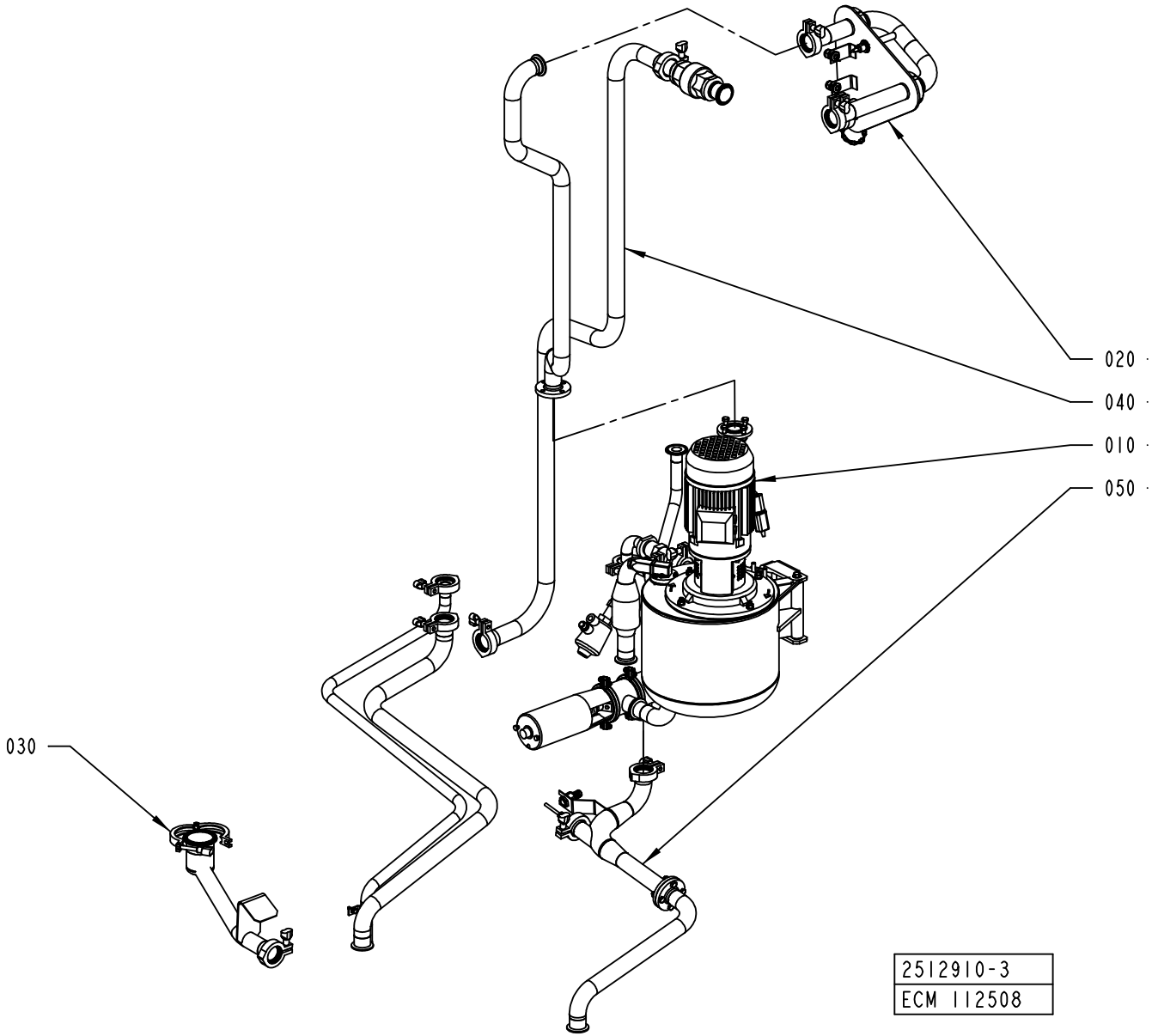
020
040
010
050
030
2512910-3
ECM 112508

ECM: 112508 - 20030123
Group number: 2512910-0100
Assembly Drawing: 2512910-3_1_AA

This list covers pages from 1-232 to 1-235

Pos	Part No	UN	Qty	Description	Page No
A3/FLEX AUTOMCIP (See drawing on page: 1-232)					
020	2501275-0100		1	CLEANING VALVES	**1-237**
030	2512936-0100		1	CLEANING CUP	**1-241, 1-243**
A3/FLEX MANUALCIP (See drawing on page: 1-234)					
020	2539452-0100		1	FLOW SWITCH	**1-245**
030	2512936-0100		1	CLEANING CUP	**1-241, 1-243**
Common Parts					
010	2531076-0100		1	INTEGRATED CLEANING UNIT	**1-247**
040	2539442-0100		1	CLEANING PIPE	**1-255, 1-257**
050	2539448-0100		1	CLEANING PIPE	**1-259**

Pos	Part No	UN	Qty	Description	Page No

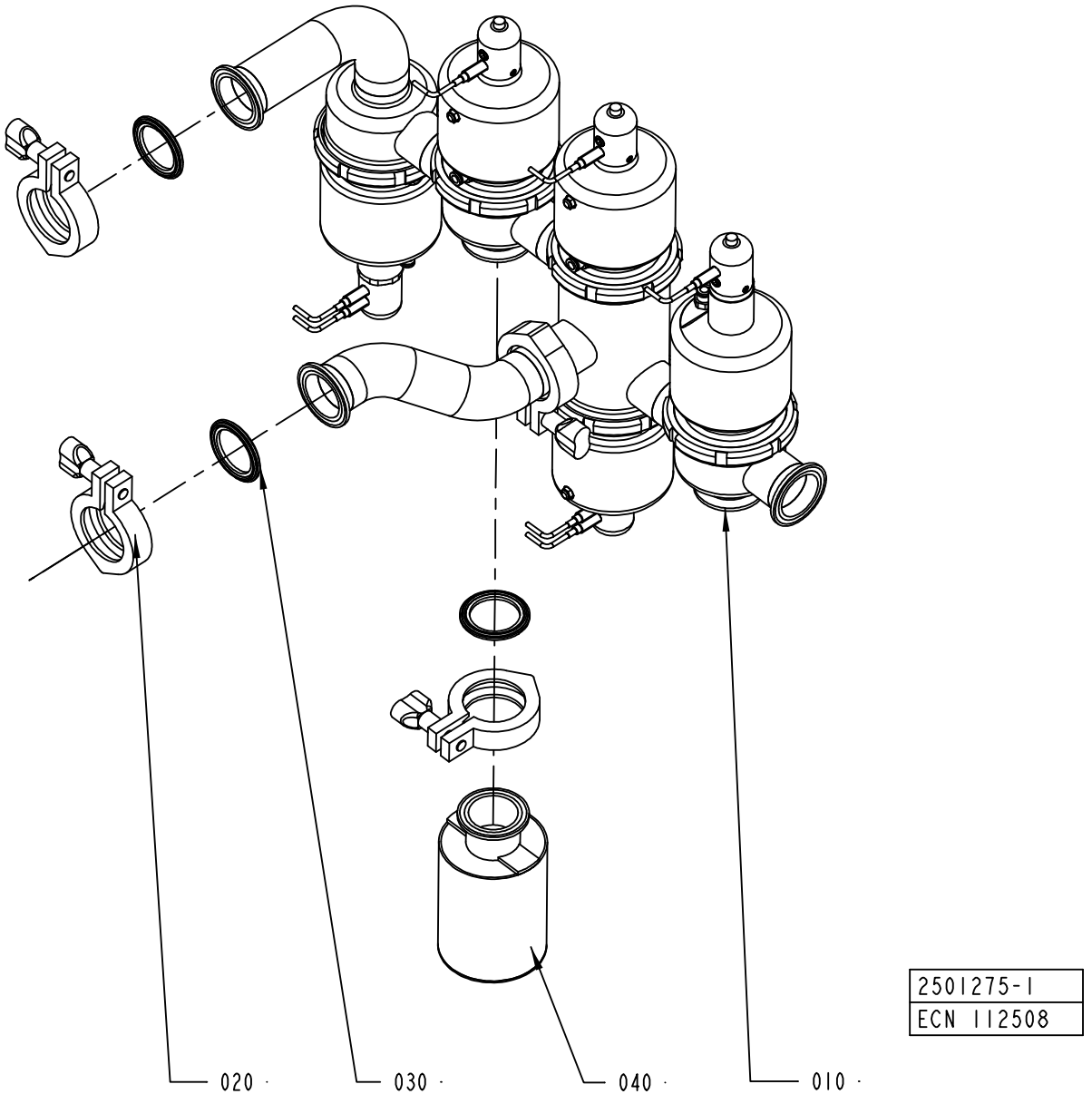
020
030
040
010
2501275-1
ECN 112508

ECM: 112508 - 20030123
Group number: 2501275-0100
Assembly Drawing: 2501275-1_1_AA

Pos	Part No	UN	Qty	Description	Page No
-					
010	1380755-0100		1	CLEANING VALVES	**1-239**
020	342840-0103		3	CLAMPING PIECE	
030	342850-0304		3	GASKET 35,4X49,1X5,2 1"1/2 FDA	
040	2512863-0000		1	CAN	

Pos	Part No	UN	Qty	Description	Page No

CLEANING VALVES

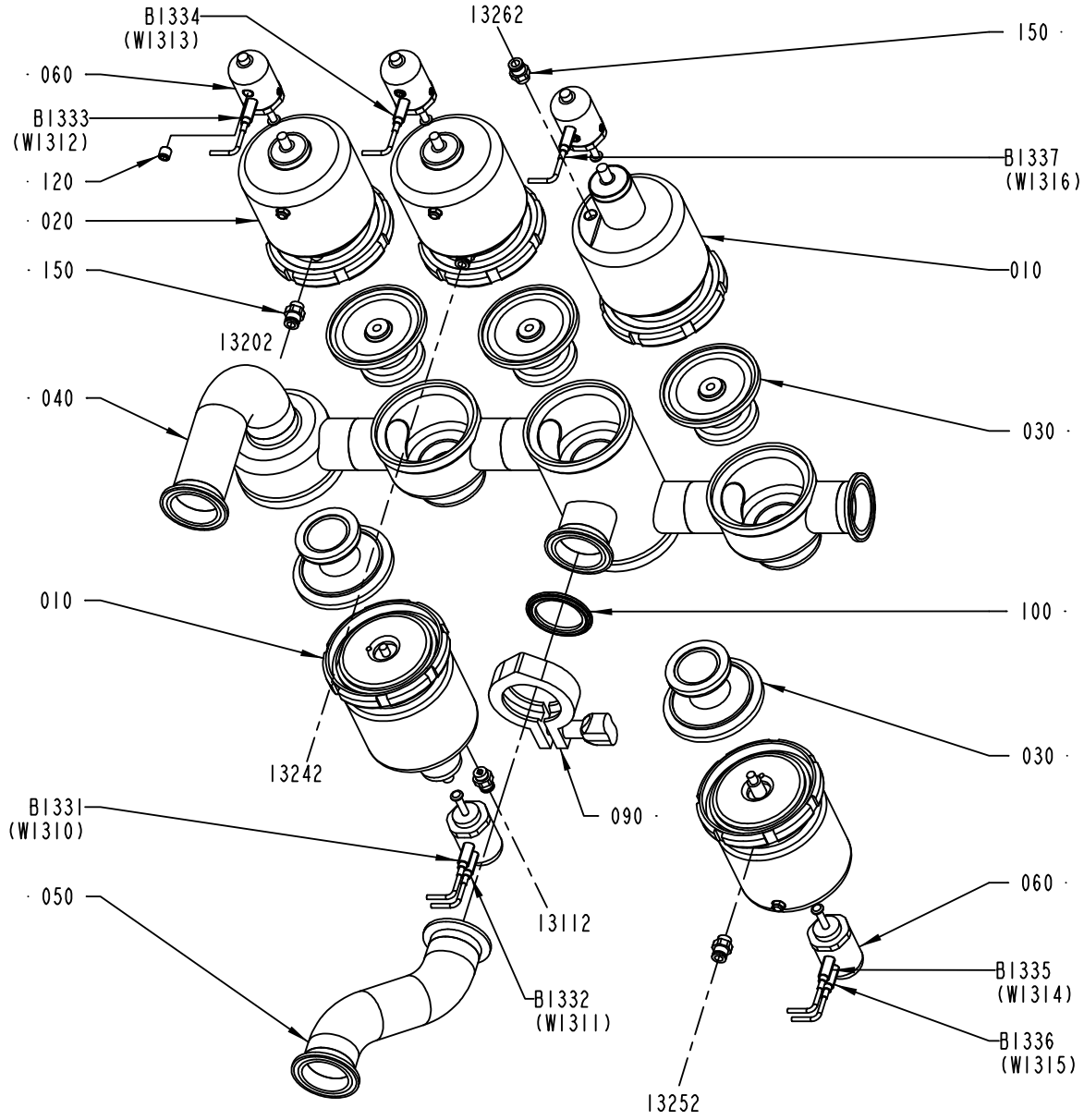

1380755-1
ECN 112508

ECM: 112508 - 20030123
Group number: 1380755-0100
Assembly Drawing: 1380755-1_1_AA

Pos	Part No	UN	Qty	Description	Page No
-					
010	90458-1531		2	ACTUATOR, N.O., PA 38/100	
	90458-1533		*1*	*LOCKING RING N7-29, FOR PA 38*	
	90458-1534		*1*	*SILENCER N4-23, FOR PA 38/100*	
020	90458-1532		3	ACTUATOR, N.C., PA 38/110	
	90458-1533		*1*	*LOCKING RING N7-29, FOR PA 38*	
	90458-1536		*1*	*SILENCER N4-3, FOR PA 38/110*	
030	90458-1541		5	DIAPHRAGM, NA 38/25 PFTE	
	90458-1542		*1*	*SUPPORT FOR NA 38/25 DIAPHRAGM*	
040	1380756-0000		1	VALVE HOUSING	
050	1380757-0000		1	PIPE	
060	90458-1537		5	HOLDER, FOR INDUCTIVE SENSORS	
090	342840-0103		1	CLAMPING PIECE	
100	342850-0304		1	GASKET 35,4X49,1X5,2 1"1/2 FDA	
120	312318-0443		3	SCREW ISO4029 M8X8 A4	
150	342722-0202		5	PIPE COUPLING 1/8" D=6MM	
B1331	90458-0138		1	PROX.SW. E2EG-X1R5B1-5M	
B1332	90458-0138		1	PROX.SW. E2EG-X1R5B1-5M	
B1333	90458-0138		1	PROX.SW. E2EG-X1R5B1-5M	
B1334	90458-0138		1	PROX.SW. E2EG-X1R5B1-5M	
B1335	90458-0138		1	PROX.SW. E2EG-X1R5B1-5M	
B1336	90458-0138		1	PROX.SW. E2EG-X1R5B1-5M	
B1337	90458-0138		1	PROX.SW. E2EG-X1R5B1-5M	

Pos	Part No	UN	Qty	Description	Page No

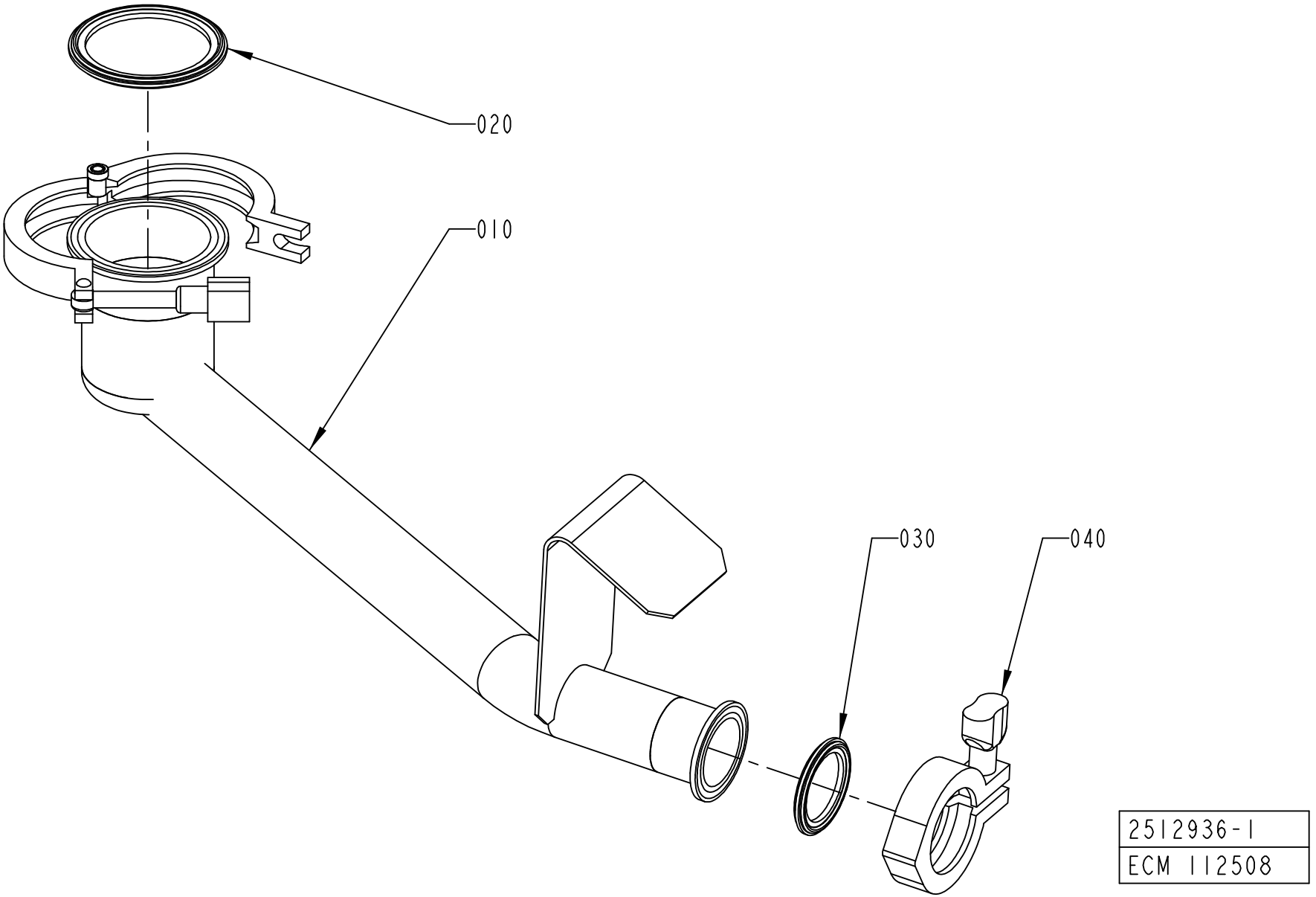
020
010
030
040
2512936-1
ECM 112508

ECM: 181627 - 50001231
Group number: 2512936-0100
Assembly Drawing: 2512936-1_1_AA

This list covers pages from 1-240 to 1-243

Pos	Part No	UN	Qty	Description	Page No
TBA 0330S, TBA 0200B, TBA 0200S, TBA 0250B (See drawing on page: 1-242)					
010	2540615-0000		1	CLEANING CUP	
030	342850-0304		2	GASKET 35,4X49,1X5,2 1"1/2 FDA	
TBA 1000S, TBA 1000SQ, TBA 1000B, TBA 1500S, TBA 1890S, TBA 2000S (See drawing on page: 1-240)					
010	2501312-0000		1	CLEANING CUP	
020	342850-0306		1	GASKET 60,3X76,1X5,2 MM 2"1/2 FDA	
030	342850-0304		1	GASKET 35,4X49,1X5,2 1"1/2 FDA	
TPA 1000SQ (See drawing on page: 1-240)					
010	2565437-0000		1	CLEANING CUP	
020	342850-0305		1	GASKET 47,8X62,6X5,2 MM 2" FDA	
030	342850-0304		1	GASKET 35,4X49,1X5,2 1"1/2 FDA	
Common Parts					
040	342840-0103		1	CLAMPING PIECE	

Pos	Part No	UN	Qty	Description	Page No

CLEANING CUP

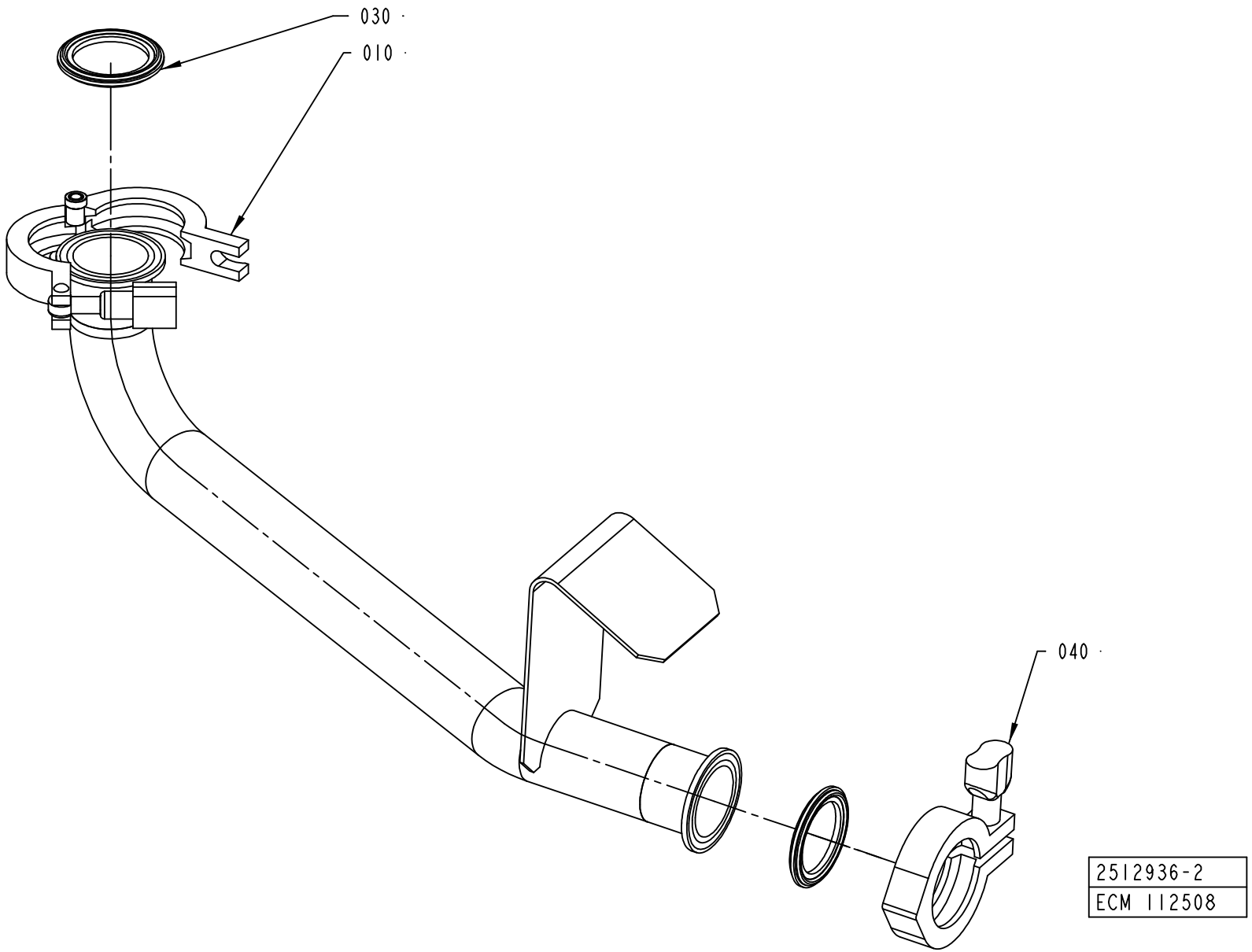

ECM: 181627 - 50001231
Group number: 2512936-0100
Assembly Drawing: 2512936-2_1_AA

This list covers pages from 1-240 to 1-243

Pos	Part No	UN	Qty	Description	Page No
TBA 0330S, TBA 0200B, TBA 0200S, TBA 0250B (See drawing on page: 1-242)					
010	2540615-0000		1	CLEANING CUP	
030	342850-0304		2	GASKET 35,4X49,1X5,2 1"1/2 FDA	
TBA 1000S, TBA 1000SQ, TBA 1000B, TBA 1500S, TBA 1890S, TBA 2000S (See drawing on page: 1-240)					
010	2501312-0000		1	CLEANING CUP	
020	342850-0306		1	GASKET 60,3X76,1X5,2 MM 2"1/2 FDA	
030	342850-0304		1	GASKET 35,4X49,1X5,2 1"1/2 FDA	
TPA 1000SQ (See drawing on page: 1-240)					
010	2565437-0000		1	CLEANING CUP	
020	342850-0305		1	GASKET 47,8X62,6X5,2 MM 2" FDA	
030	342850-0304		1	GASKET 35,4X49,1X5,2 1"1/2 FDA	
Common Parts					
040	342840-0103		1	CLAMPING PIECE	

Pos	Part No	UN	Qty	Description	Page No

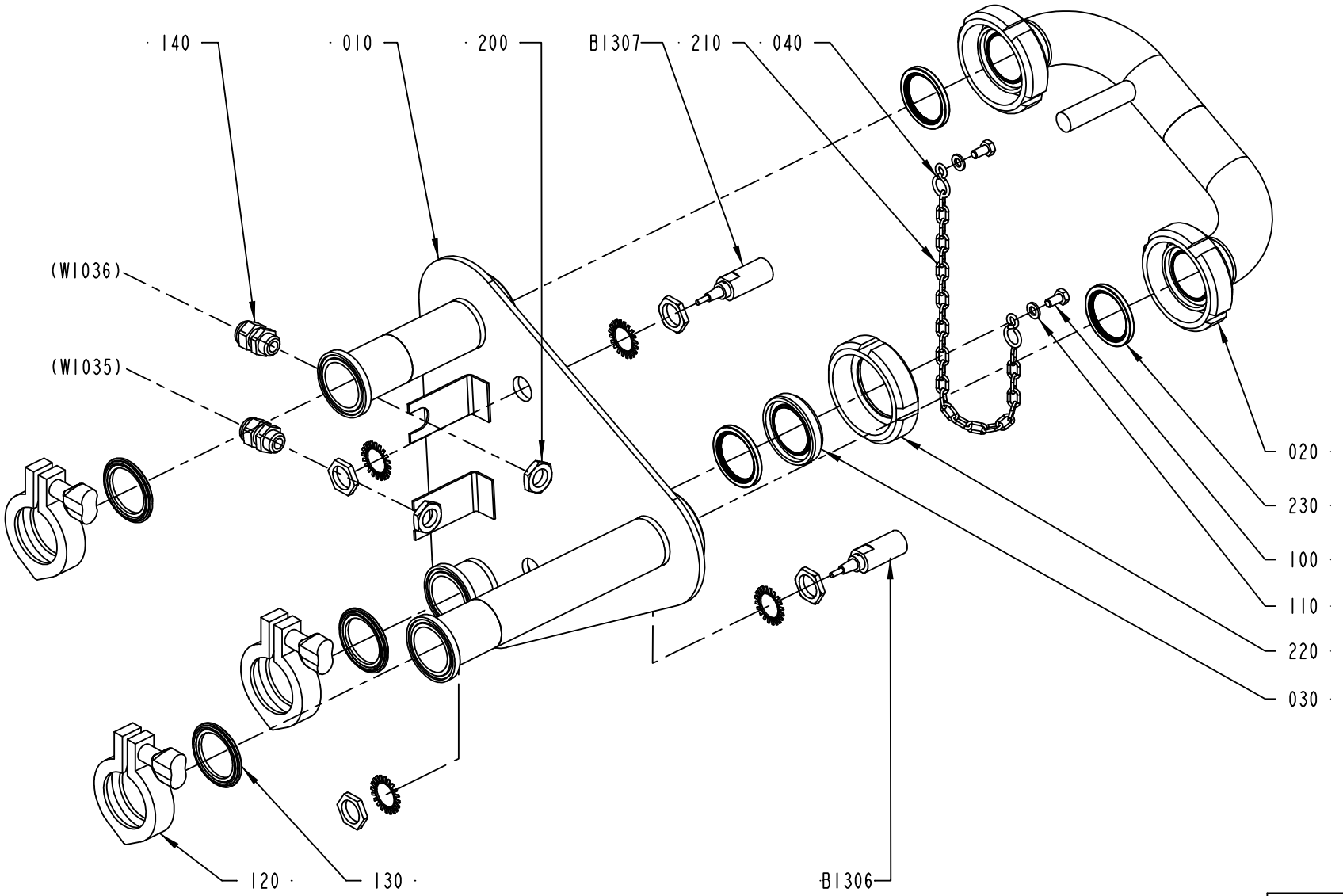

2539452-1
ECM 112370

ECM: 112370 - 20030123
Group number: 2539452-0100
Assembly Drawing: 2539452-1_1_AA

Pos	Part No	UN	Qty	Description	Page No
-					
010	2512889-0000		1	PIPE SUPPORT	
020	2524349-0000		1	CONNECTING PIPE	
030	2525338-0000		1	PLUG	
040	209183-0000		2	RING	
100	312105-0366		2	SCREW M6S ISO 4017 M6X12 A480	
110	315105-0153		2	WASHER BRB6,4X12RFR	
120	342840-0103		3	CLAMPING PIECE	
130	342850-0304		3	GASKET 35,4X49,1X5,2 1"1/2 FDA	
140	352103-0101		2	CABLE GLAND, ST 9, PR15,2/PG9	
200	90099-0104		2	NUT, PR 15,2 (PG9)	
210	90155-0008	MM	500	HANGER CHAIN, 18	
220	90217-0206		1	UNION NUT, 1 1/2 APV, 07-01-376/17	
230	90217-0348		3	GASKET 35,4X46,8X4 MM	
B1306	90458-0676		1	PROXIMITY SWITCH,E2EG-X5B1-6M	
B1307	90458-0676		1	PROXIMITY SWITCH,E2EG-X5B1-6M	

Pos	Part No	UN	Qty	Description	Page No

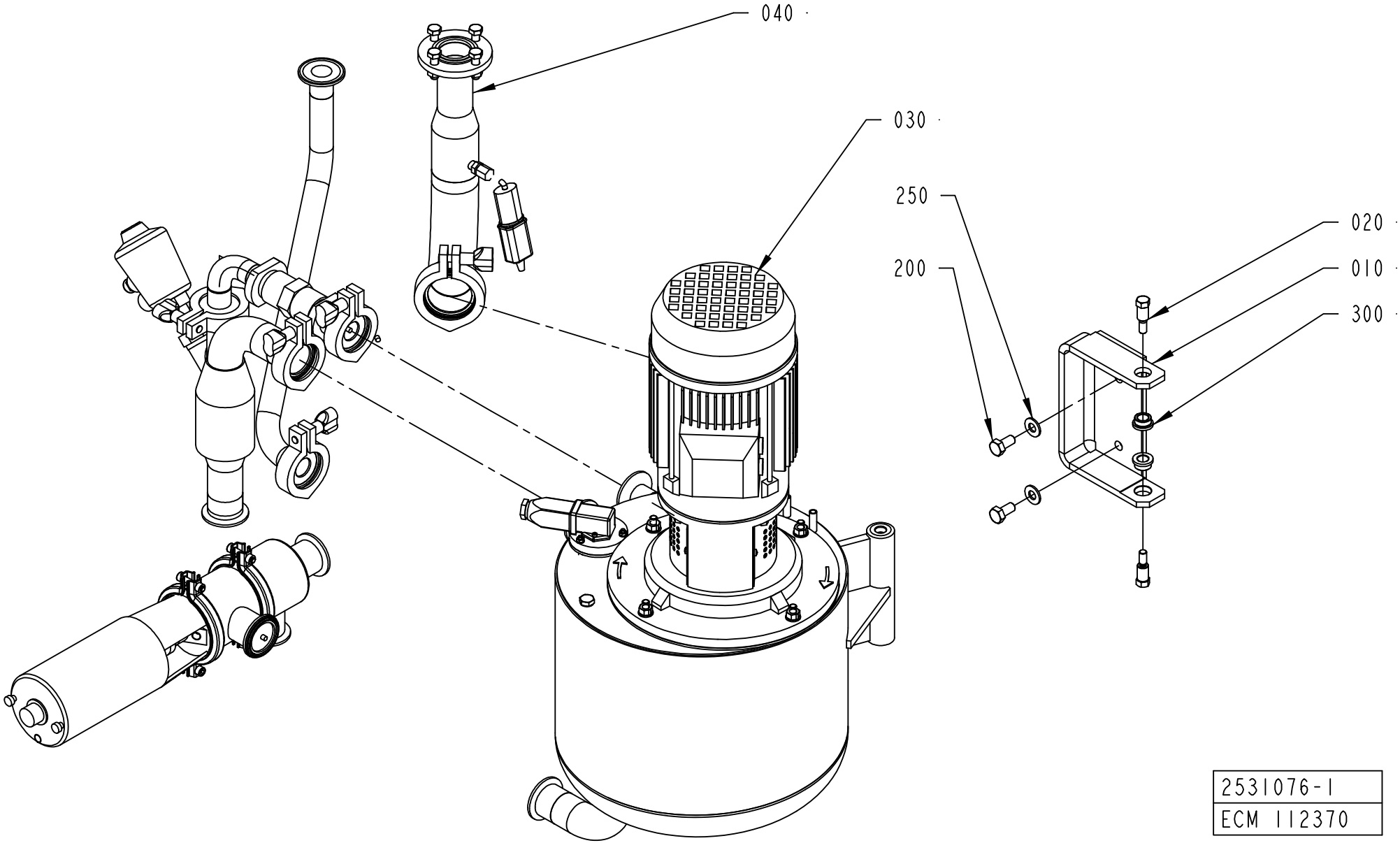
040
030
250
200
020
010
300
2531076-1
ECM 112370

ECM: 112370 - 20030123
Group number: 2531076-0100
Assembly Drawing: 2531076-1_1_AA

Pos	Part No	UN	Qty	Description	Page No
-					
010	2531074-0000		1	HINGE	
020	2531075-0000		2	SCREW	
030	2531077-0100		1	CLEANING TANK	**1-249**
040	2531078-0100		1	VALVE PIPE	**1-253**
200	312105-0491		2	SCREW M6S ISO 4017 M10X20 A480	
250	315105-0173		2	WASHER BRB10,5X22RFR	
300	321101-0172		2	FLANGE BUS 12F7X10	

Pos	Part No	UN	Qty	Description	Page No

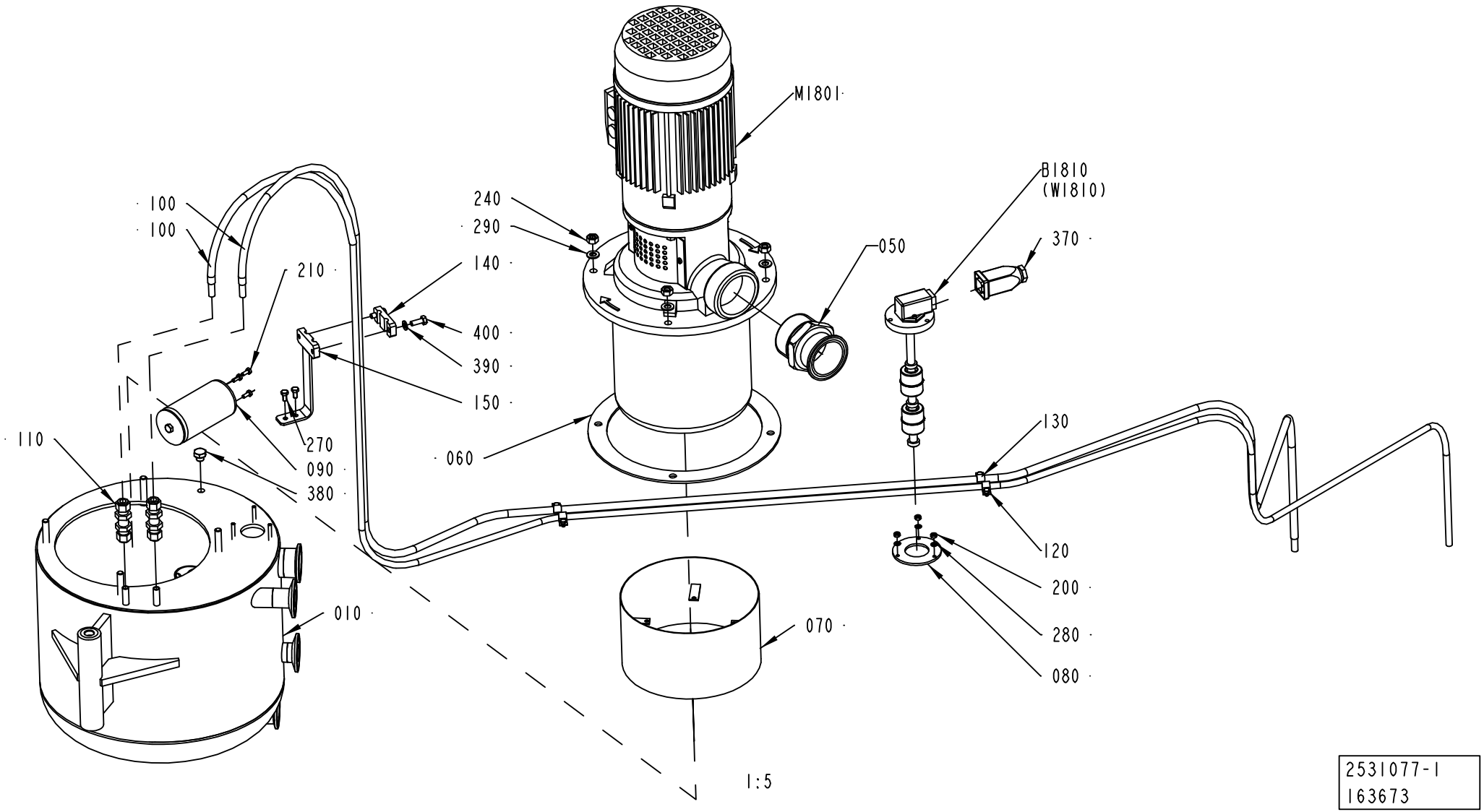
M1801
B1810
(W1810)
370
050
240
290
140
400
390
150
060
100
100
210
270
090
380
110
010
130
120
200
280
080
070
1:5
2531077-1
163673

ECM: 165922 - 20040607
Group number: 2531077-0100
Assembly Drawing: 2531077-1_1_AB

Pos	Part No	UN	Qty	Description	Page No
-					
010	2531073-0000		1	TANK	
050	2501660-0000		1	PIPE	
060	2504547-0000		1	GASKET	
070	2504567-0000		1	LINING	
080	2504572-0000		1	GASKET	
090	2537849-0100		1	DIFFUSOR	**1-251**
100	90459-4169		2	HOSE ASSEMBLY 919-1D-1D-8-8-5C-3800	
110	90030-0485		2	CONN. BULKHEAD SV 8-	
120	312105-0285		4	SCREW M6S ISO 4017 M4X6 A470	
130	316810-0106		4	PIPE CLIP FOR TUBE D=8 MM	
140	2530875-0000		1	BRACKET	
150	2672847-0000		1	ARM	
200	312602-0312		3	HEXAGON NUT, EN 24032 M6M M4 NIPLBR	
210	312105-0289		3	SCREW M6S ISO 4017 M4X10 A470	
240	312605-0318		4	HEXAGON NUT, M6M M8 A280	
270	312105-0325		2	SCREW M6S ISO 4017 M5X10 A480	
280	315105-0136		3	WASHER BRB4,3XRFR	
290	315105-0165		4	WASHER BRB8,4X16RFR	
370	90458-2664		1	CONNECTOR 4 POLE COD.600.00.750-1	
380	90330-0066		1	PLUG, EXT. G-THREAD, G1/8	
390	315105-0153		2	WASHER BRB6,4X12RFR	
400	312105-0368		2	SCREW M6S ISO 4017 M6X16 A480	
B1810	90458-2652		1	LEVEL PROBE, COD. 600.00.750-1	
M1801	90458-1607		1	PUMP, SVI 8 03/03 N15T 1.5KW	

Pos	Part No	UN	Qty	Description	Page No

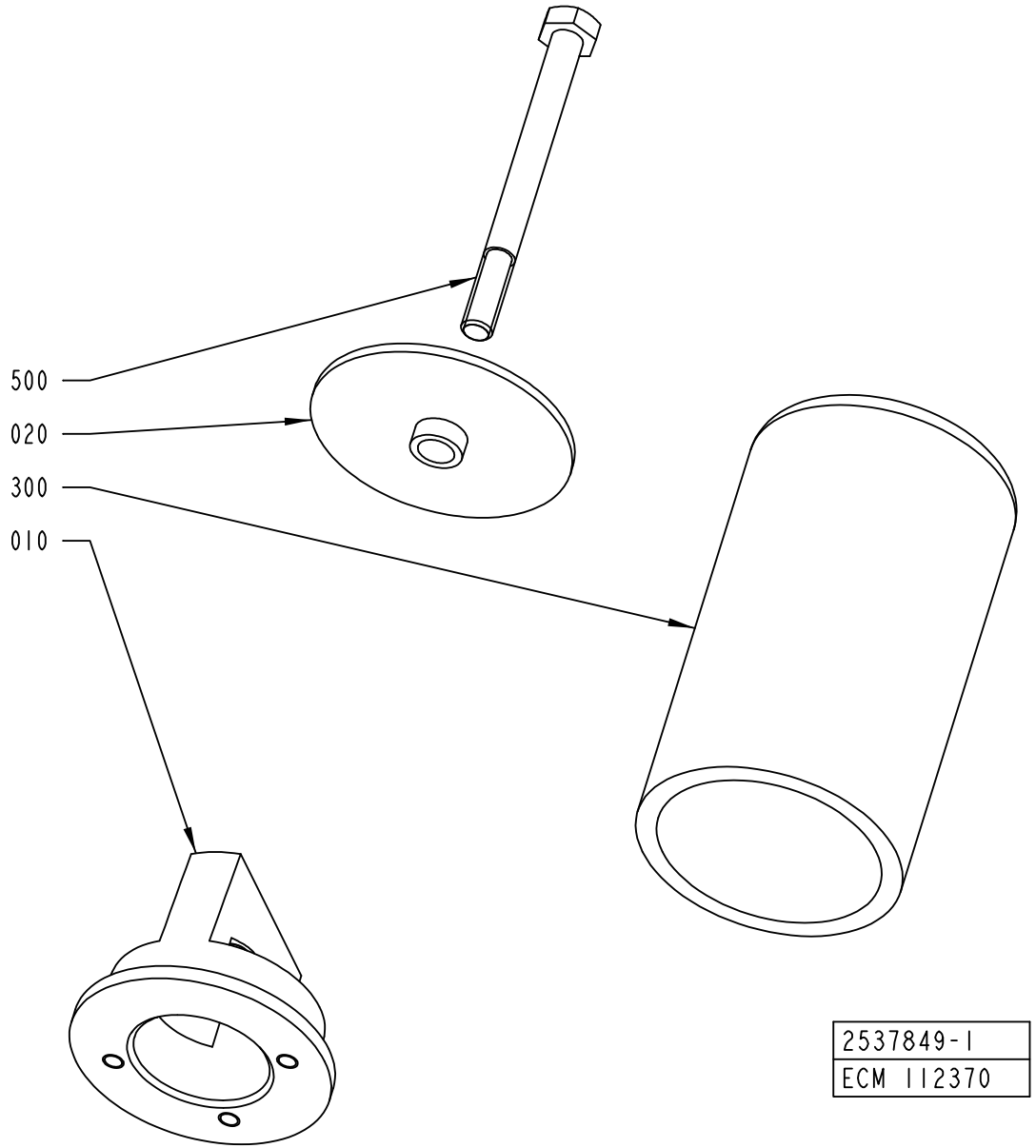
500
020
300
010
2537849-1
ECM 112370

ECM: 112370 - 20030123
Group number: 2537849-0100
Assembly Drawing: 2537849-1_1_AA

Pos	Part No	UN	Qty	Description	Page No
-					
010	2537848-0000		1	HOUSE	
020	2504569-0000		1	WASHER	
300	90458-2638		1	FILTER ELEMENT SINTERED, C3SF	
500	312105-0384		1	SCREW M6S ISO 4014 M6X70 A480	

Pos	Part No	UN	Qty	Description	Page No

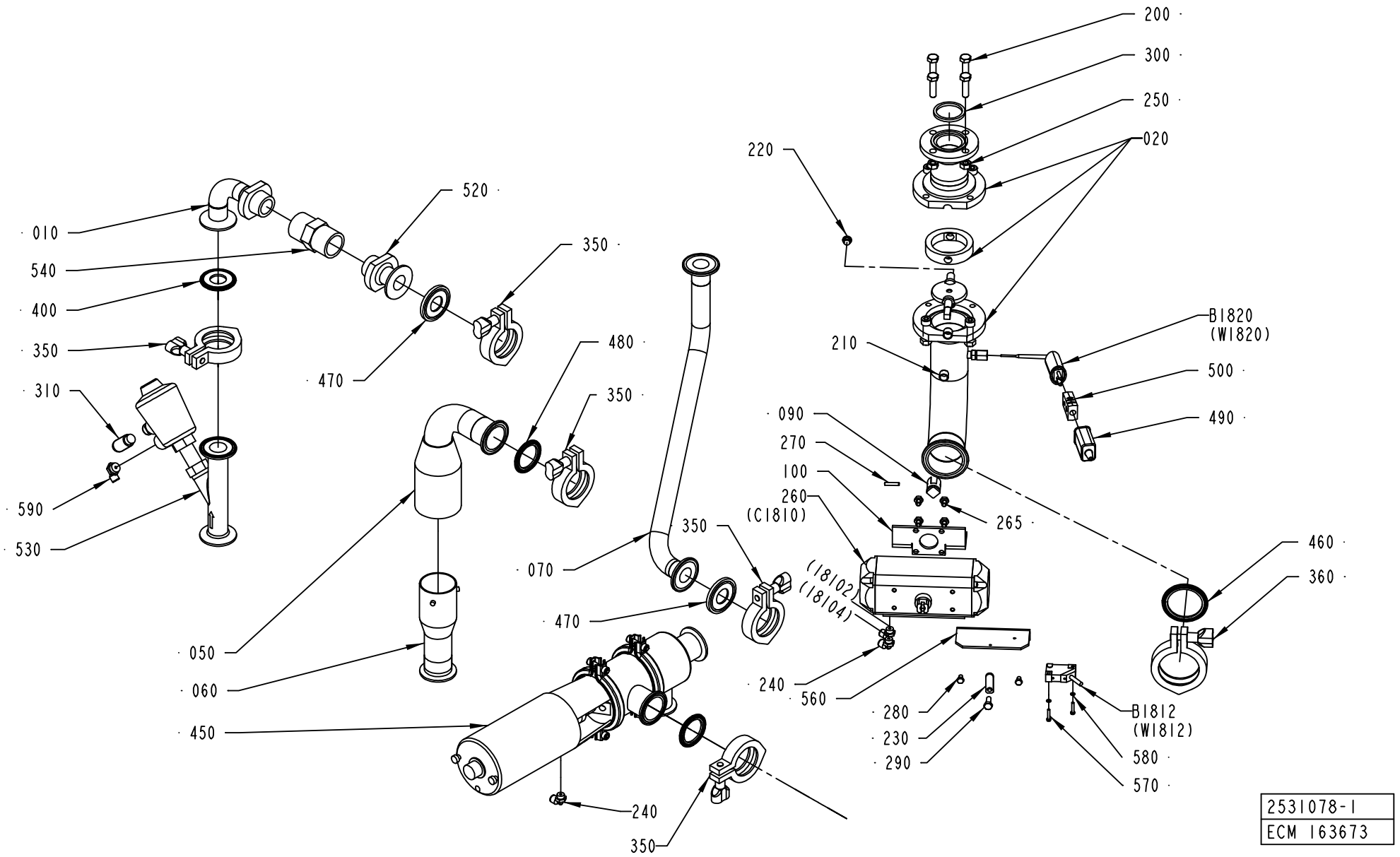
200
300
250
020
220
520
010
540
400
350
310
590
530
350
470
480
350
210
B1820
(W1820)
500
490
090
270
100
260
(C1810)
265
460
360
350
070
470
(18102)
(18104)
050
060
450
240
560
280
230
290
B1812
(W1812)
580
570
240
350
2531078-1
ECM 163673

ECM: 165791 - 20040607
Group number: 2531078-0100
Assembly Drawing: 2531078-1_1_AC

Pos	Part No	UN	Qty	Description	Page No
-					
010	2531079-0000		1	PIPE	
020	2611035-0000		1	PIPE	
050	1380788-0000		1	PIPE	
060	1380789-0000		1	PIPE	
070	2501658-0000		1	PIPE	
090	2662432-0000		1	COUPLING	
100	2662434-0000		1	BRACKET	
200	312105-0455		4	SCREW M6S ISO 4017 M8X30 A480	
210	90240-0302		2	BUSHING, 10X12X10 MM	
220	2531435-0000		1	PLUG	
230	2611034-0000		1	BRACKET	
240	90458-2956		3	ELBOW PIPE JOINT, EXT.THREAD, D=6MM-G1/8	
250	312605-0318		4	HEXAGON NUT, M6M M8 A280	
260	90459-4145		1	ROTARY ACTUATOR DRD-4-F05	
265	312105-0362		4	SCREW M6S ISO 4017 M6X8 A480	
270	311103-0272		1	PARALLEL PIN ISO 2338 4M6X20 A1	
280	312105-0323		2	SCREW M6S ISO 4017 M5X8 A480	
290	312105-0368		1	SCREW M6S ISO 4017 M6X16 A480	
300	315229-0104		1	GASKETS, 35,8X42,8X3,7 MM 1"1/2 FD	
310	90328-0026		1	SILENCER G1/4	
350	342840-0103		5	CLAMPING PIECE	
360	342840-0105		1	CLAMPING PIECE	
400	342850-0303		1	GASKET 22,7X49,1X5,2 MM 1" FDA	
450	90459-0241		1	VALVE, SEAT, N.C. SRC-38-NC-21	
460	342850-0305		1	GASKET 47,8X62,6X5,2 MM 2" FDA	
470	90217-0306		2	GASKET 22,8X50,5X5,5 MM	
480	342850-0304		2	GASKET 35,4X49,1X5,2 1"1/2 FDA	
490	90326-0012		1	PROTECTIVE COVER, T31A4618	
500	90326-0020		1	PLUG, FEMALE YELLOW CR-AL	
520	90458-2003		1	ADAPTER 1" MALE NPT X 1" DAIRY CLAMP	
530	90459-1241		1	ANGLE SEAT VALVE, TRI-CLAMP, N.C. DN20	
540	90458-2490		1	CONSTANT FLOW VALVE, GX 1"FX1"F 10GPM	
560	2662433-0000		1	BRACKET	
570	312125-0228		2	SCREW ISO 1207 M3X16 A4	
580	315105-0124		2	WASHER BRB3,2X6RFR	
590	90458-2957		1	ELBOW PIPE JOINT, EXT.THREAD, D=6MM-G1/4	
B1812	90044-0194		1	PROX.SW. IN5329/IN3002-BPKG	
B1820	90326-0043		1	THERMOCOUPLE, CR-ALPREM.G	

Pos	Part No	UN	Qty	Description	Page No

Machine Type	Group Description	Used-In	Group Number	Page No

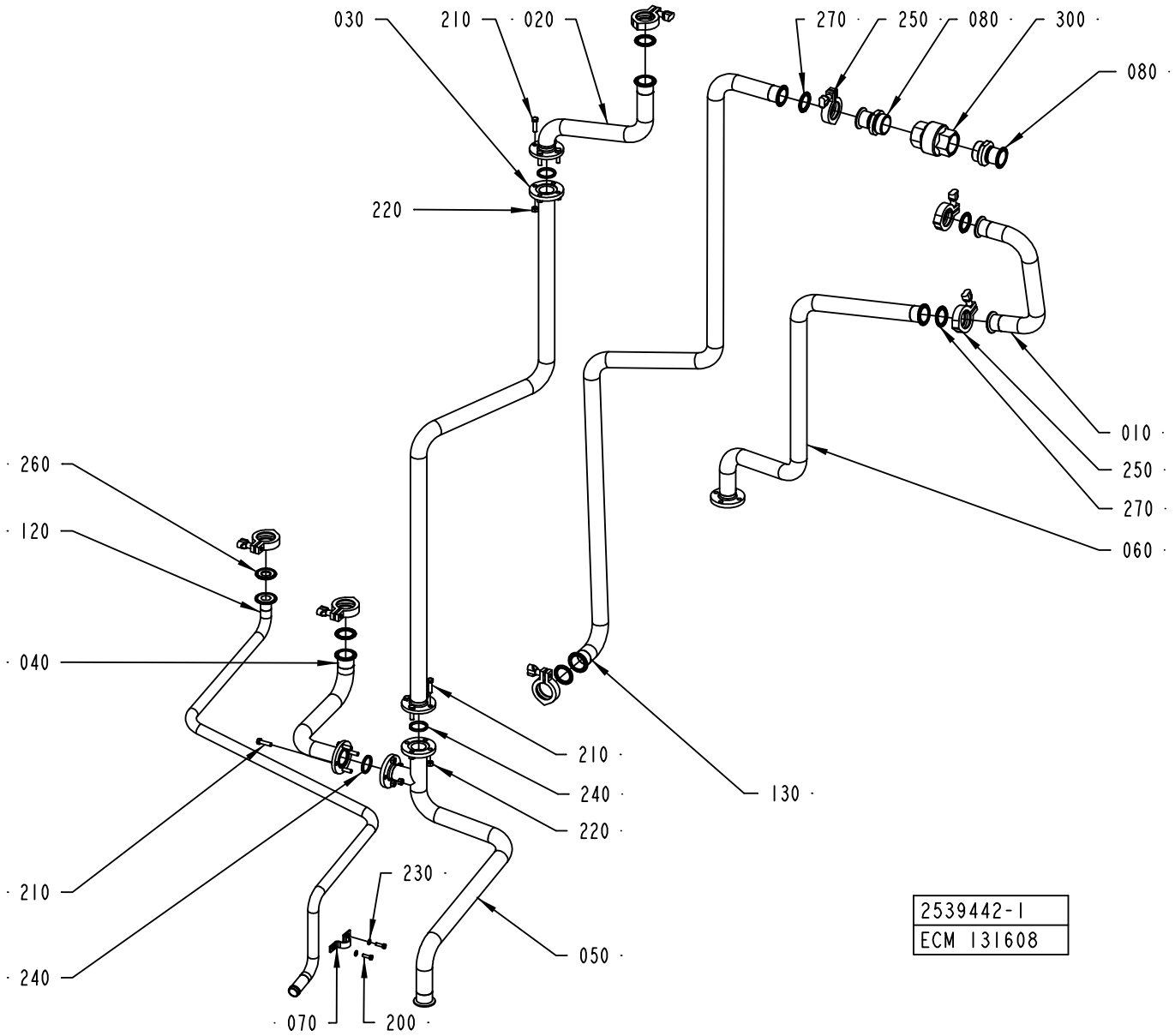
030
210
020
270
250
080
300
080
220
010
250
270
060
260
120
040
210
240
220
130
230
210
240
050
070
200
2539442-1
ECM 131608

ECM: 132437 - 20030908
Group number: 2539442-0100
Assembly Drawing: 2539442-1_1_AB

This list covers pages from 1-254 to 1-257

Pos	Part No	UN	Qty	Description	Page No
AUTOMCIP (See drawing on page: 1-254)					
010	2531064-0000		1	PIPE	
020	2531065-0000		1	PIPE	
030	2531066-0000		1	PIPE	
040	2531067-0000		1	PIPE	
050	2531068-0000		1	PIPE	
060	2531070-0000		1	PIPE	
210	312105-0455		12	SCREW M6S ISO 4017 M8X30 A480	
220	312605-0318		12	HEXAGON NUT, M6M M8 A280	
240	315229-0104		3	GASKETS, 35,8X42,8X3,7 MM 1"1/2 FD	
250	342840-0103		7	CLAMPING PIECE	
270	342850-0304		6	GASKET 35,4X49,1X5,2 1"1/2 FDA	
MANUALCIP (See drawing on page: 1-256)					
040	2512869-0000		1	DRAIN PIPE	
060	2512891-0000		1	PIPE	
250	342840-0103		4	CLAMPING PIECE	
270	342850-0304		3	GASKET 35,4X49,1X5,2 1"1/2 FDA	
Common Parts					
070	2531082-0000		1	CLAMP	
080	2531083-0000		2	SLEEVE	
120	2531080-0000		1	PIPE	
130	2594633-0000		1	PIPE	
200	312105-0370		2	SCREW M6S ISO 4017 M6X20 A480	
230	315105-0153		2	WASHER BRB6,4X12RFR	
260	342850-0303		1	GASKET 22,7X49,1X5,2 MM 1" FDA	
300	90230-0045		1	NON-RETURN VALVE 1 1/2"	
	90230-0309		*1*	*GASKET KIT*	

Pos	Part No	UN	Qty	Description	Page No

Machine Type | Group Description | Used-In | Group Number | Page No

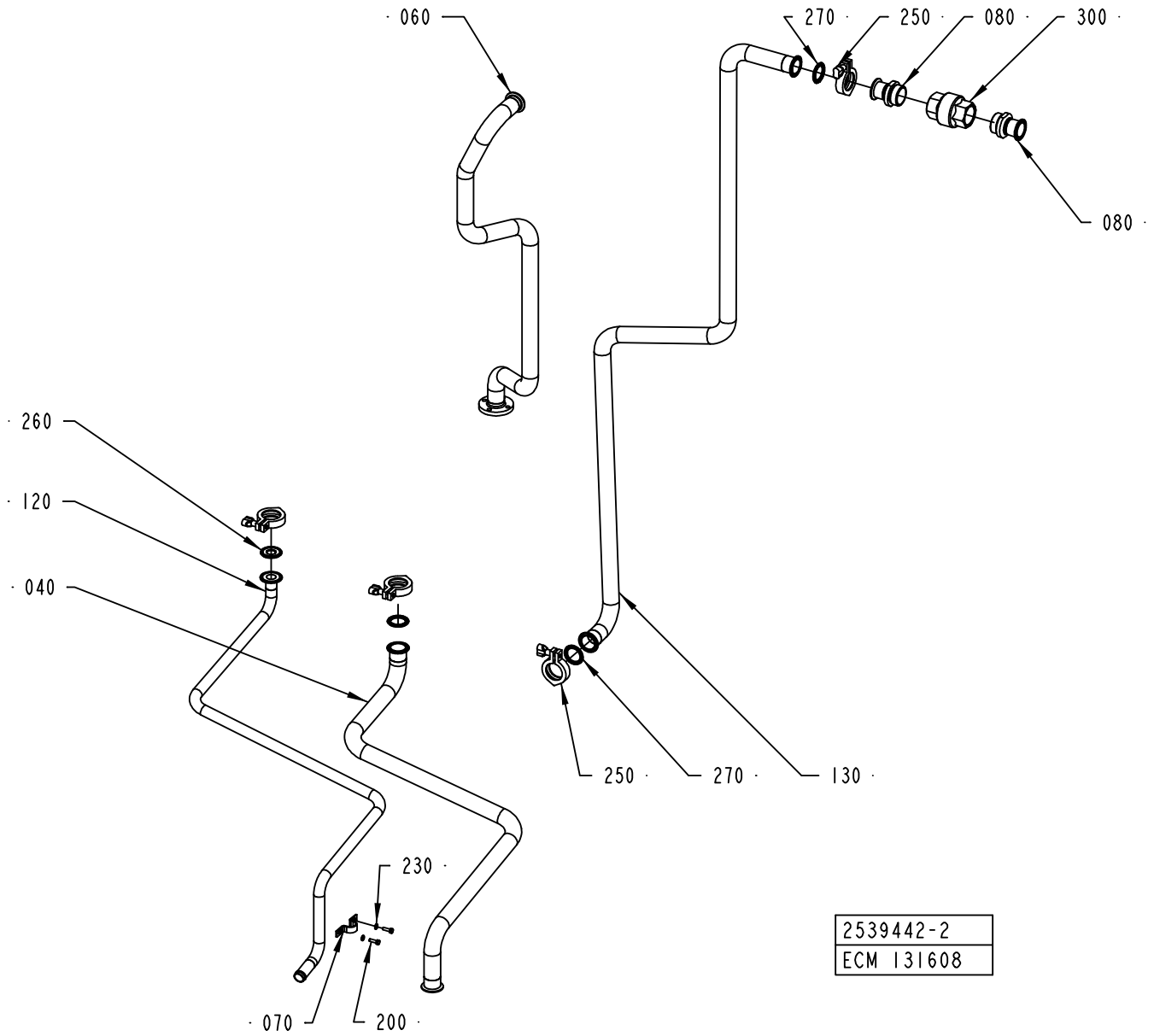
060
270
250
080
300
080
260
120
040
250
270
130
230
070
200
2539442-2
ECM 131608

ECM: 132437 - 20030908
Group number: 2539442-0100
Assembly Drawing: 2539442-2_1_AB

This list covers pages from 1-254 to 1-257

Pos	Part No	UN	Qty	Description	Page No
AUTOMCIP (See drawing on page: 1-254)					
010	2531064-0000		1	PIPE	
020	2531065-0000		1	PIPE	
030	2531066-0000		1	PIPE	
040	2531067-0000		1	PIPE	
050	2531068-0000		1	PIPE	
060	2531070-0000		1	PIPE	
210	312105-0455		12	SCREW M6S ISO 4017 M8X30 A480	
220	312605-0318		12	HEXAGON NUT, M6M M8 A280	
240	315229-0104		3	GASKETS, 35,8X42,8X3,7 MM 1"1/2 FD	
250	342840-0103		7	CLAMPING PIECE	
270	342850-0304		6	GASKET 35,4X49,1X5,2 1"1/2 FDA	
MANUALCIP (See drawing on page: 1-256)					
040	2512869-0000		1	DRAIN PIPE	
060	2512891-0000		1	PIPE	
250	342840-0103		4	CLAMPING PIECE	
270	342850-0304		3	GASKET 35,4X49,1X5,2 1"1/2 FDA	
Common Parts					
070	2531082-0000		1	CLAMP	
080	2531083-0000		2	SLEEVE	
120	2531080-0000		1	PIPE	
130	2594633-0000		1	PIPE	
200	312105-0370		2	SCREW M6S ISO 4017 M6X20 A480	
230	315105-0153		2	WASHER BRB6,4X12RFR	
260	342850-0303		1	GASKET 22,7X49,1X5,2 MM 1" FDA	
300	90230-0045		1	NON-RETURN VALVE 1 1/2"	
	90230-0309		*1*	*GASKET KIT*	

Pos	Part No	UN	Qty	Description	Page No

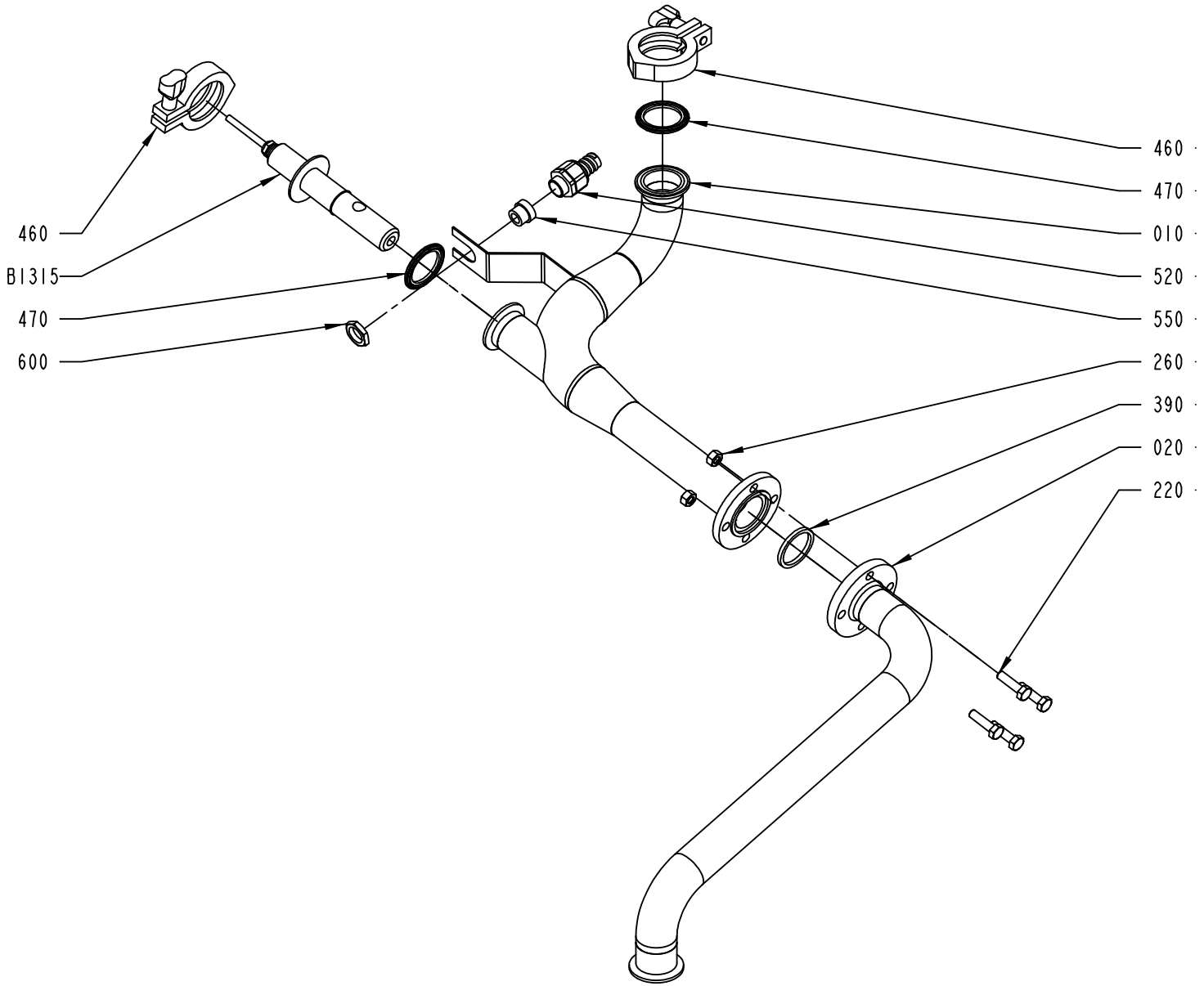

2539448-1
ECM 112370

ECM: 139371 - 20030630
Group number: 2539448-0100
Assembly Drawing: 2539448-1_1_AA

Pos	Part No	UN	Qty	Description	Page No
A3/FLEX					
010	2531069-0000		1	PIPE	
020	2531071-0000		1	PIPE	
260	312605-0318		4	HEXAGON NUT, M6M M8 A280	
460	342840-0103		2	CLAMPING PIECE	
470	342850-0304		2	GASKET 35,4X49,1X5,2 1"1/2 FDA	
Common Parts					
220	312105-0455		4	SCREW M6S ISO 4017 M8X30 A480	
390	315229-0104		1	GASKETS, 35,8X42,8X3,7 MM 1"1/2 FD	
520	353243-0003		1	HOSE GLAND W/O INSERT PG11 EXTENDED	
550	353249-0011		1	INSERT, SINGEL HOLE, EK 153/11	
600	90099-0117		1	NUT, PR 18,6 (PG11)	
B1315	90243-0321		1	CONDUCTIVITY SENSOR, TP5EL. 00343-10803	
	90242-0198		*1*	*O-RING*	

Pos	Part No	UN	Qty	Description	Page No

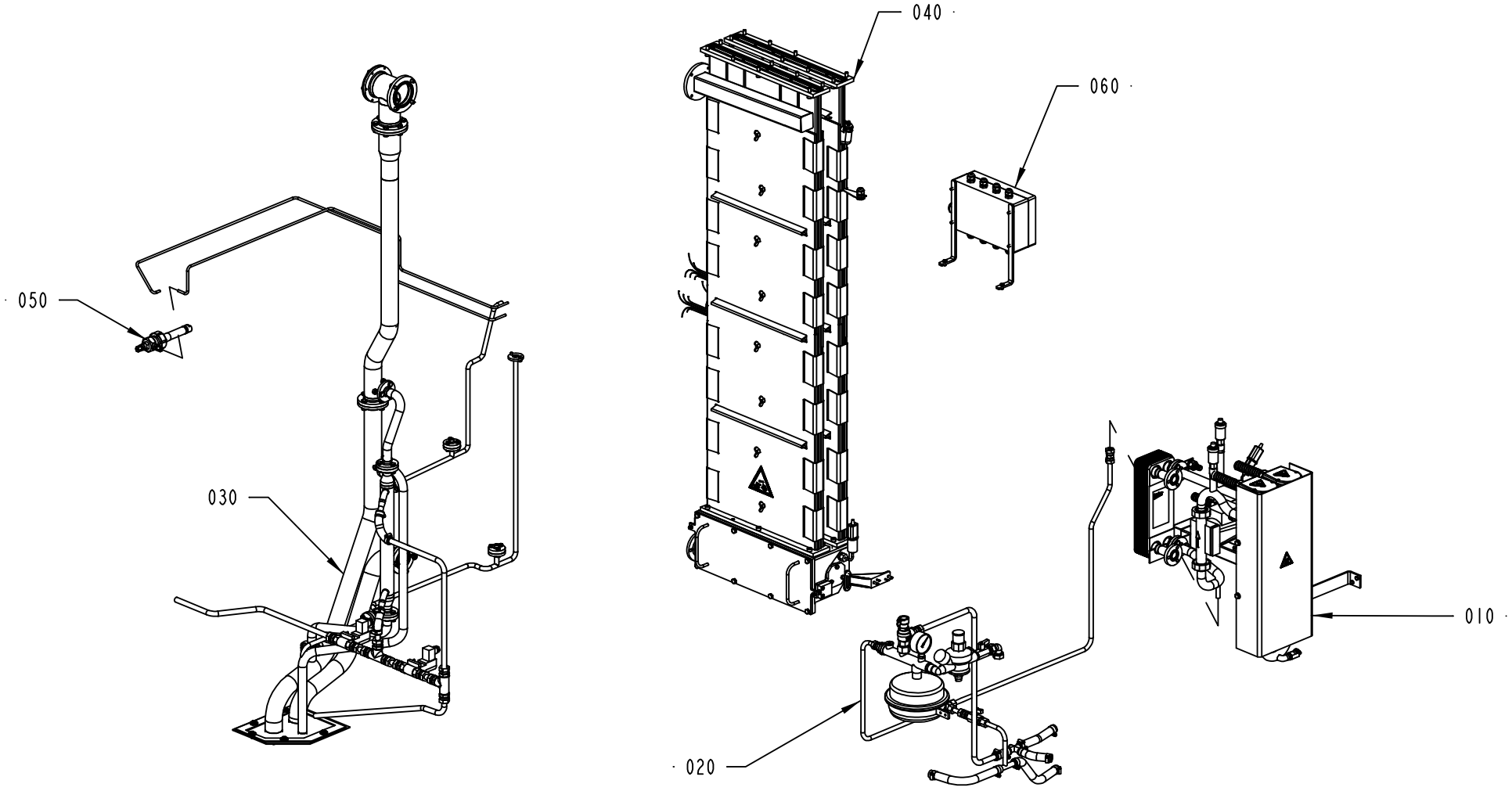

2541680-1
ECM 112991

ECM: 115856 - 20030123
Group number: 2541680-0100
Assembly Drawing: 2541680-1_1_AA

Pos	Part No	UN	Qty	Description	Page No
-					
010	1558495-0100		1	HEATING UNIT	**1-263**
020	2531052-0100		1	PRESSURE UNIT	**1-265**
030	2529484-0100		1	PEROXIDE PIPE	**1-267**
040	2528074-0100		1	BATH	**1-269, 1-271**
050	2547391-0100		1	NOZZLE	**1-273**
060	1532239-0100		1	CONNECTION BOX	**1-275**

Pos	Part No	UN	Qty	Description	Page No

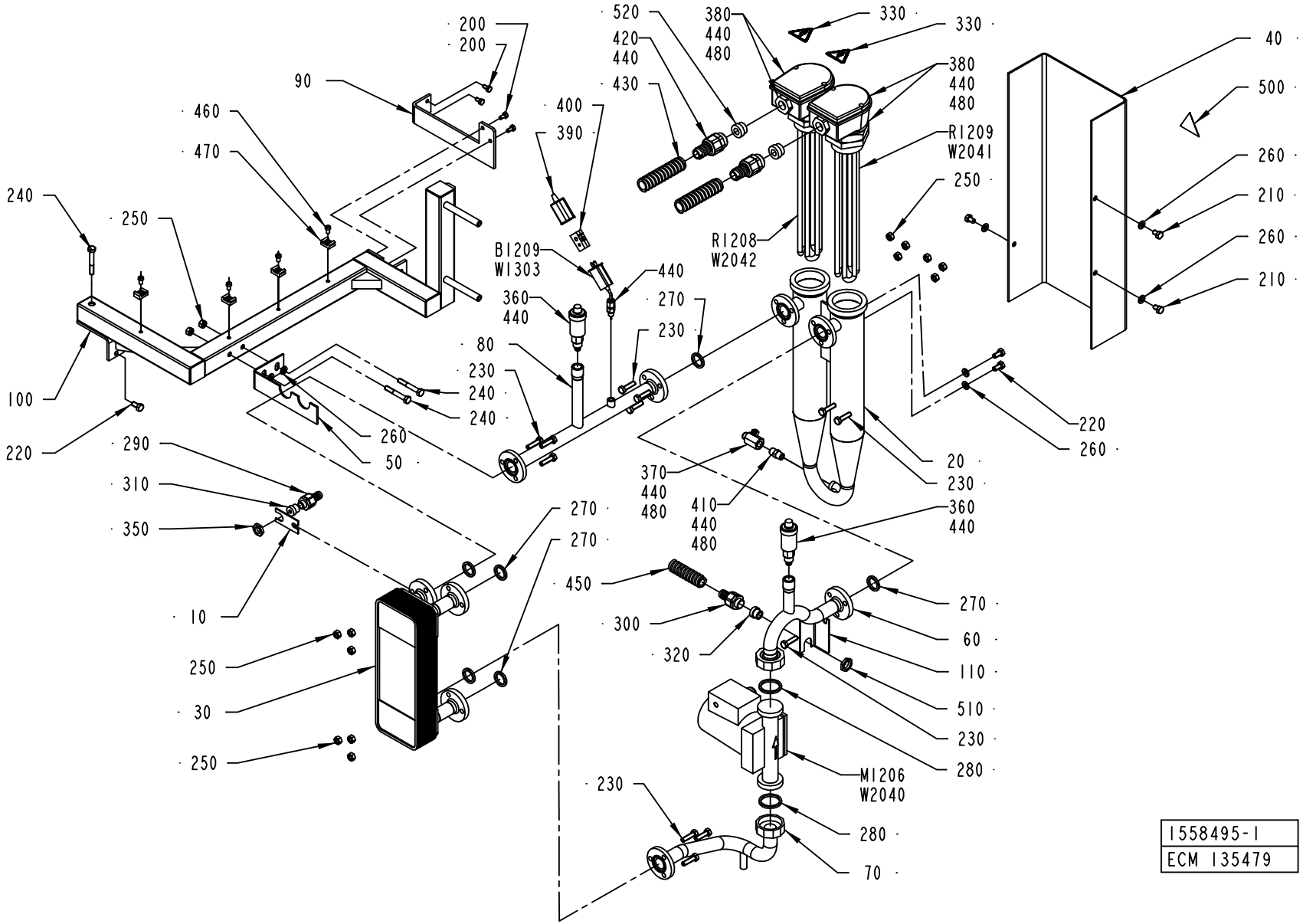
200
200
90
460
470
240
250
100
220
290
310
350
10
250
30
250
520
420
440
430
400
390
380
440
480
330
330
380
440
480
R1209
W2041
R1208
W2042
250
40
500
260
210
260
210
B1209
W1303
440
360
440
270
230
80
230
240
240
260
50
220
260
20
230
370
440
480
410
440
480
360
440
270
270
450
300
320
270
60
110
510
230
280
M1206
W2040
230
280
70
1558495-1
ECM 135479

ECM: 146905 - 20031117
Group number: 1558495-0100
Assembly Drawing: 1558495-1_1_AB

Pos	Part No	UN	Qty	Description	Page No
50HZ					
M1206	90321-0134		1	CIRC. PUMP TMB 40/2 230V50HZ	
60HZ					
M1206	90321-0135		1	CIRC. PUMP TMB 40/2 230V60HZ	
Common Parts					
010	1040970-0000		1	BRACKET	
020	1334507-0000		1	TUBE	
030	1346568-0000		1	HEAT EXCHANGER	
040	2544880-0000		1	PROTECTION	
050	1349608-0000		1	HOLDER	
060	1538049-0000		1	PIPE	
070	1538503-0000		1	PIPE	
080	1538723-0000		1	PIPE	
090	1538724-0000		1	BRACKET	
100	1558496-0000		1	FRAME	
110	1517707-0000		1	BRACKET	
200	312105-0366		4	SCREW M6S ISO 4017 M6X12 A480	
210	312105-0447		3	SCREW M6S ISO 4017 M8X12 A480	
220	312105-0449		3	SCREW M6S ISO 4017 M8X16 A480	
230	312105-0455		12	SCREW M6S ISO 4017 M8X30 A480	
240	312105-0462		3	SCREW M6S ISO 4014 M8X55 A480	
250	312605-0318		14	HEXAGON NUT, M6M M8 A280	
260	315105-0165		7	WASHER BRB8,4X16RFR	
270	315229-0103		6	GASKETS, 23,1X30,1X3,7 MM 1" FDA	
280	315229-0104		2	GASKETS, 35,8X42,8X3,7 MM 1"1/2 FD	
290	353243-0001		1	HOSE GLAND W/O INSERT PG9 EXTENDED	
300	353243-0003		1	HOSE GLAND W/O INSERT PG11 EXTENDED	
310	353249-0008		1	INSERT, SINGEL HOLE, EK 152/7	
320	353249-0011		1	INSERT, SINGEL HOLE, EK 153/11	
330	359705-0015		2	WARNING SIGN ISO, RISK OF ELECTRIC SHOCK	
350	90099-0104		1	NUT, PR 15,2 (PG9)	
360	90187-0105		2	PURGING VALVE, G3/8 FOR WATER	
370	90187-0158		1	THROTTLE BALL VALVE G1/4, R1/4	
380	90206-0326		2	JUNCTION BOX FOR 90206-56	
390	90326-0012		1	PROTECTIVE COVER, T31A4618	
400	90326-0020		1	PLUG, FEMALE YELLOW CR-AL	
410	90330-0043		1	NIPPLES, EXT. THREAD. R-207R1/4	
420	90012-0131		2	HOSE GLAND W/O INSERT PG21 NORMAL	
430	90152-0051	M	4	SPIRAL CONDUIT, 25X18, UL 1816	
440	90144-0073		1	TREBOFLON-TAPE W=13MM	
450	90152-0050	M	3	SPIRAL CONDUIT, 20X13, UL 1313	
460	312125-0364		4	SCREW ISO 1207 M6X10 A4	
470	352113-0204		4	ANCHOR PLATES FOR STRIPS, TYPE TM3S25-M	
480	90157-0037		1	THREAD SEALANT LOCTITE 542	
500	359705-0007		1	WARNING SIGN ISO, HOT SURFACE	
510	90099-0117		1	NUT, PR 18,6 (PG11)	
520	353249-0013		2	INSERT, SINGEL HOLE, EK 154/13	
B1209	90326-0057		1	THERMOCOUPLE, CR-AL	
R1208	90206-0070		1	HEATING ELEMENT 6000W 380/220V	
	90206-0326		*1*	*JUNCTION BOX FOR 90206-56*	
	90269-0308		*1*	*GASKET 59X68X3 MM*	
R1209	90206-0070		1	HEATING ELEMENT 6000W 380/220V	
	90206-0326		*1*	*JUNCTION BOX FOR 90206-56*	
	90269-0308		*1*	*GASKET 59X68X3 MM*	
W1303	90220-0034	M	5	THERMOCABLE TEX/SITW-20F-KX 2X0,5MM2	
W2040	351150-0412	M	4	CABLE OLFLEX 3X1,5 MM2 LIGHT/GREY	
W2041	351120-0164	M	4	CABLE SIHF 4X1,5MM2 GREEN/YELLOW	
W2042	351120-0164	M	4	CABLE SIHF 4X1,5MM2 GREEN/YELLOW	

Machine Type | Group Description | Used-In | Group Number | Page No

PRESSURE UNIT

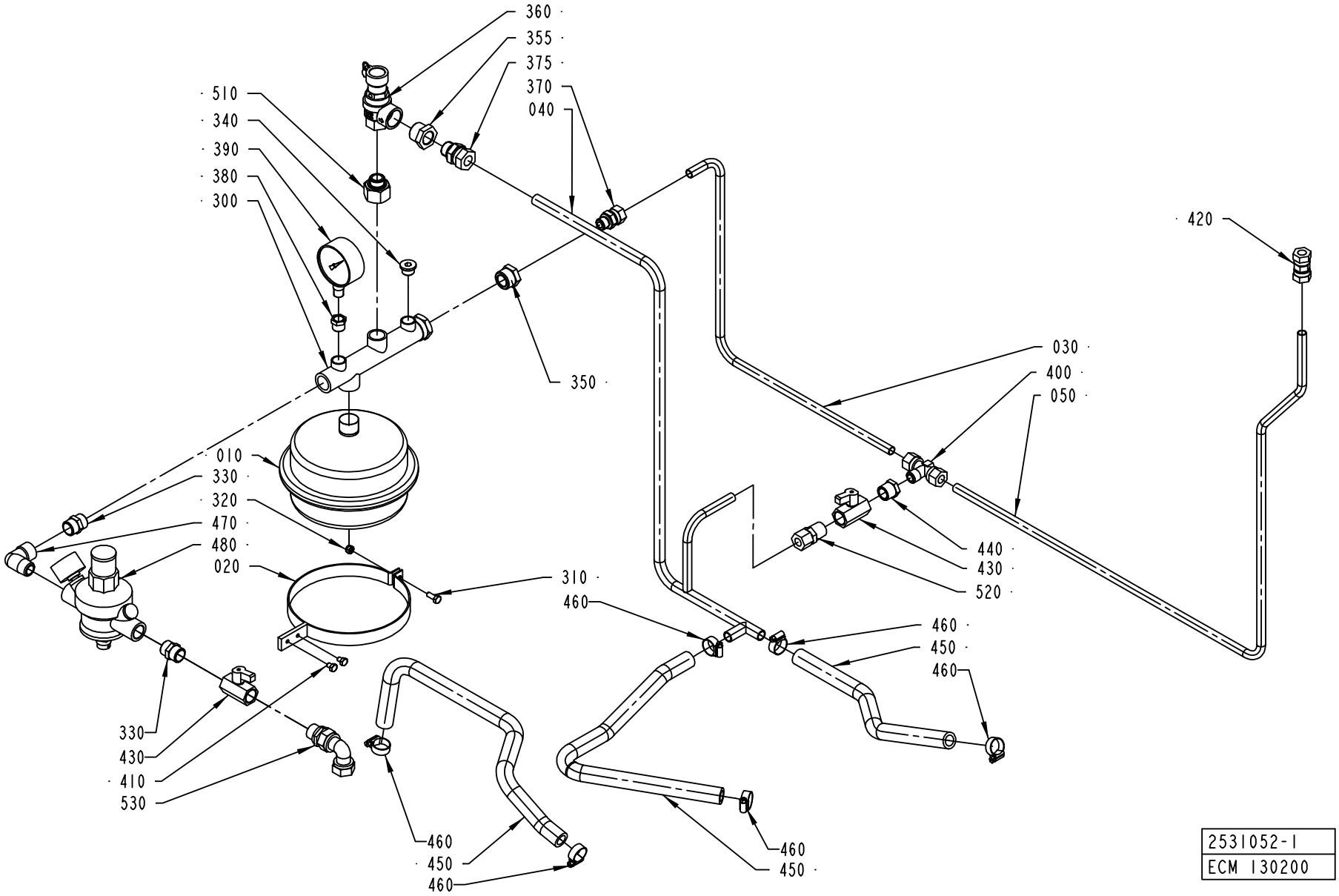

ECM: 132205 - 20030721
Group number: 2531052-0100
Assembly Drawing: 2531052-1_1_AB

Pos	Part No	UN	Qty	Description	Page No
-					
010	1511497-0000		1	CONTAINER	
020	1484081-0000		1	BRACKET	
030	1499166-0000		1	PIPE	
040	2611051-0000		1	PIPE	
050	1538502-0000		1	PIPE	
300	90304-0307		1	ATTACHMENT PIPE	
310	312105-0368		1	SCREW M6S ISO 4017 M6X16 A480	
320	312812-0316		1	HEXAGON NUT, NY-LOCK M6 A480	
330	342700-0113		2	NIPPLES,HEXAGON,EXT.G-THREAD G1/2"-G1/2"	
340	342713-0211		1	PLUG, EXT THREAD HEX SOCKET 8638-00-380	
350	342701-0209		1	BUSHING,INT./EXT.G-THREAD G3/4"-G3/8"	
355	342206-0109		1	BUSHING, TAPERED, INT/EXT. THRÿNO. R211	
360	90458-0200		1	PEROX. SAFETY VALVE, NO. 527-430 1/2X3/4	
370	90030-0187		1	CONN. STR. GA-12-G3/8	
375	90030-0188		1	CONN. STR. GA-15-G1/2	
380	342701-0203		1	BUSHING, INT/EXT. G-THREAD NO. 3/8-1/4	
390	90043-0002		1	PRESSURE GAUGE, 2040 D=63 MM	
400	342741-0209		1	CONN. T-PIPE TE-12-R3/8	
410	312105-0362		2	SCREW M6S ISO 4017 M6X8 A480	
420	90030-0106		1	CONN. PIPE G-12	
430	90187-0062		2	BALL VALVE G1/2, NPBR	
440	90330-0048		1	BUSHING, INT/EXT. THR. R1/2-RP3/8	
450	90166-0087	MM	1500	HOSE 15/23 REINF.PVC TRANSP.	
460	342991-0103		6	HOSE CLIP,WORM DRIVE TYPE (19)-23	
470	90140-0012		1	ELBOW, 90 INT/EXT, 2020-1/2-1/2	
480	90458-0201		1	FLUID AUT. FEEDER, ALINOX 1/2 46.04.00	
490	90144-0073	MM	1	TREBOFLON-TAPE W=13MM	
500	90157-0037	ML	1	THREAD SEALANT LOCTITE 542	
510	90458-0751		1	BUSHING,INT./EXT.G-THREAD G3/4"-G1/2"	
520	90030-0180		1	CONN. STR. GE 12-1/2-14 NPTF	
530	342738-0221		1	ADJUSTABLE ELBOW CONNECTION,EXT 15-G1/2	

Pos	Part No	UN	Qty	Description	Page No

Machine Type | Group Description | Used-In | Group Number | Page No

PEROXIDE PIPE

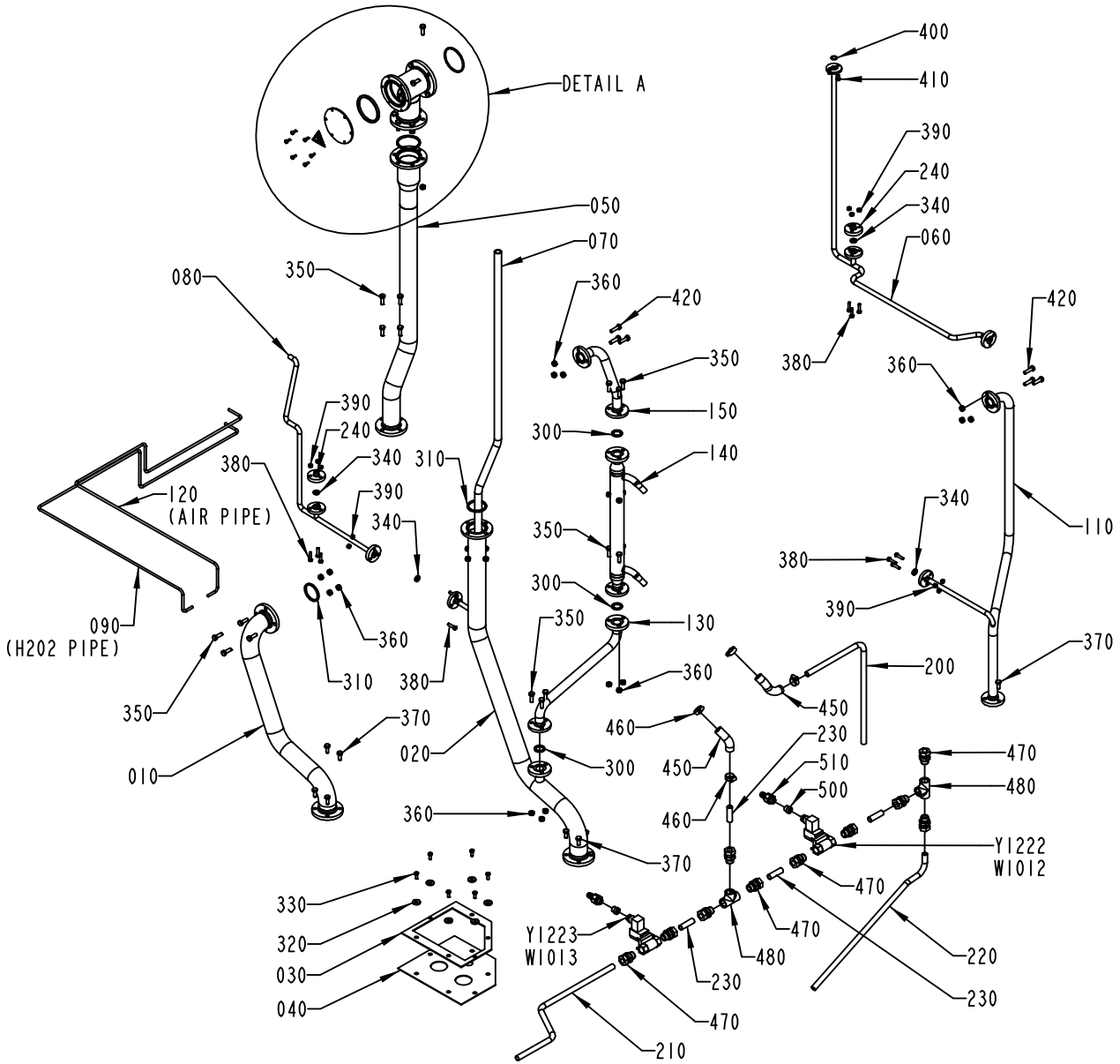

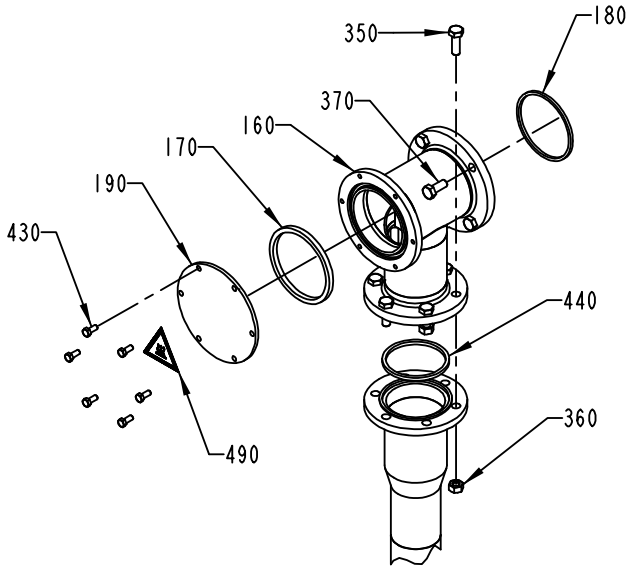

DETAIL A

2529484-1
ECM 135479

ECM: 146573 - 20031117
Group number: 2529484-0100
Assembly Drawing: 2529484-1_1_AB

Pos	Part No	UN	Qty	Description	Page No
-					
010	1558842-0000		1	PIPE	
020	1558841-0000		1	PIPE	
030	1038688-0000		1	HOLDER	
040	1255551-0000		1	SEAL CLOTH	
050	1499156-0000		1	PIPE	
060	2529073-0000		1	PIPE	
070	1499726-0000		1	PLASTIC HOSE	
080	2529072-0000		1	PIPE	
090	2563279-0000		1	PIPE	
110	1558840-0000		1	PIPE	
120	2563281-0000		1	PIPE	
130	2509654-0000		1	PIPE	
140	2509656-0000		1	PIPE	
150	2509655-0000		1	PIPE	
160	1511506-0000		1	CONNECTION PIPE	
170	436781-0000		1	GASKET	
180	1523808-0000		1	GASKET	
190	1558427-0000		1	LID	
200	2519444-0000		1	TUBE	
210	2519441-0000		1	TUBE	
220	2519443-0000		1	TUBE	
230	2519442-0000		4	TUBE	
240	2564107-0000		2	LID	
300	315229-0103		3	GASKETS, 23,1X30,1X3,7 MM 1" FDA	
310	315229-0105		2	GASKETS, 48,5X55,5X3,7 MM 2" FDA	
320	315125-0153		6	WASHER TBRSB 6,4X22X4 A4	
330	312105-0368		6	SCREW M6S ISO 4017 M6X16 A480	
340	315229-0101		4	GASKETS, 10,4X17,4X3,7 MM 1/2" FDA	
350	312105-0453		23	SCREW M6S ISO 4017 M8X25 A480	
360	312605-0318		29	HEXAGON NUT, M6M M8 A280	
370	312105-0451		15	SCREW M6S ISO 4017 M8X20 A480	
380	312105-0372		12	SCREW M6S ISO 4017 M6X25 A480	
390	312605-0316		12	HEXAGON NUT, M6M M6 A280	
400	927421-0003		1	O-RING 13.3X2.4 SILICON	
410	312105-0366		2	SCREW M6S ISO 4017 M6X12 A480	
420	312105-0455		6	SCREW M6S ISO 4017 M8X30 A480	
430	312105-0327		6	SCREW M6S ISO 4017 M5X12 A480	
440	315229-0106		1	GASKETS, 61,2X68,2X3,7 MM 2"1/2 FD	
450	90166-0087	MM	330	HOSE 15/23 REINF.PVC TRANSP.	
460	342991-0103		4	HOSE CLIP,WORM DRIVE TYPE (19)-23	
470	90030-0188		10	CONN. STR. GA-15-G1/2	
480	90330-0049		2	T-PIPE, INT. THREAD, R-221R1/2	
490	359705-0007		1	WARNING SIGN ISO, HOT SURFACE	
500	353249-0009		2	INSERT, SINGEL HOLE, EK 152/9	
510	353243-0001		2	HOSE GLAND W/O INSERT PG9 EXTENDED	
Y1222	90042-0172		1	SOLENOID VALVE 4023/1005/1032 24VDC	
	90042-0467		*1*	*COIL 24VDC GSR*	
Y1223	90042-0172		1	SOLENOID VALVE 4023/1005/1032 24VDC	
	90042-0467		*1*	*COIL 24VDC GSR*	

Machine Type	Group Description	Used-In	Group Number	Page No

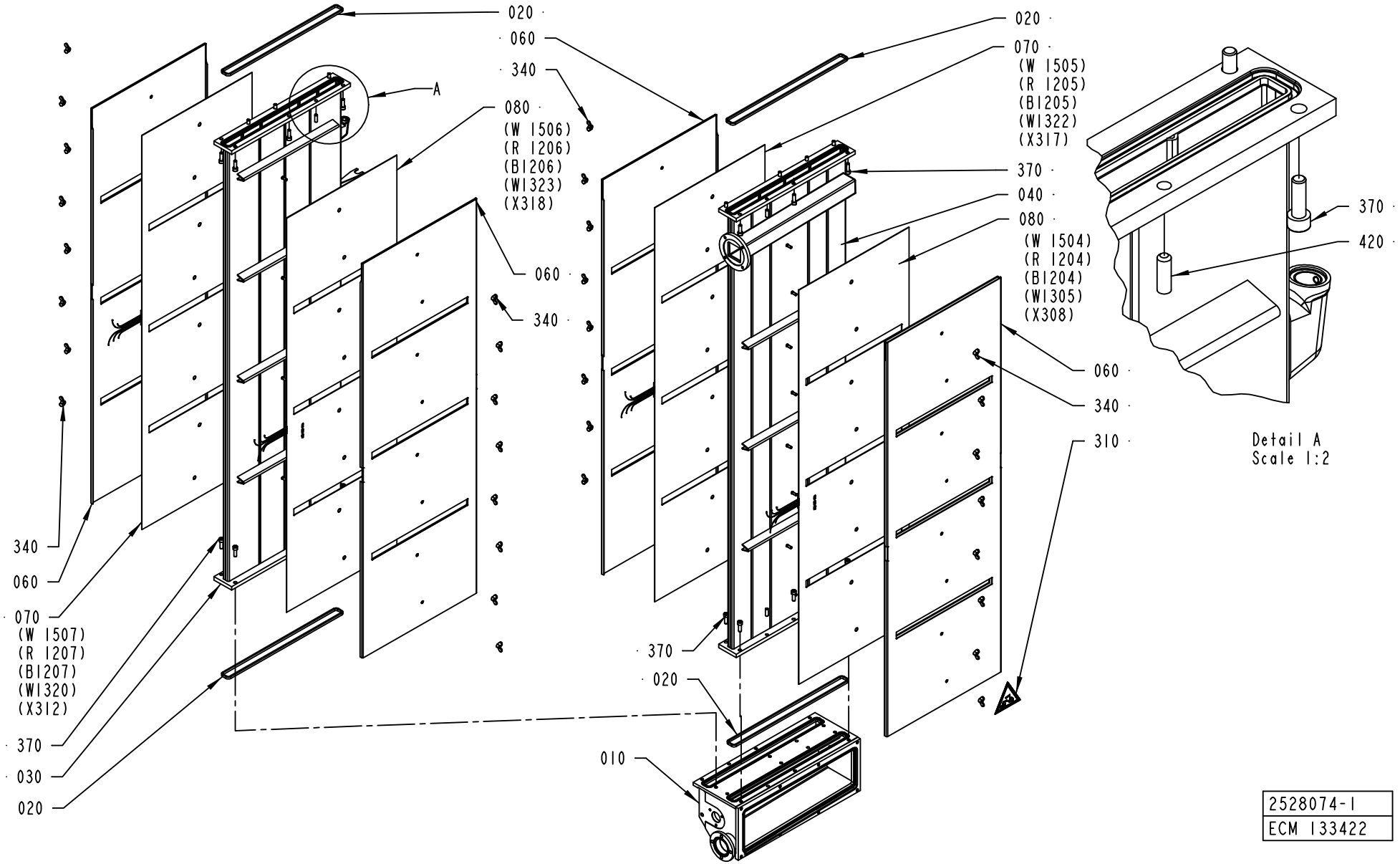
020
060
340
A
080
(W 1506)
(R 1206)
(B1206)
(W1323)
(X318)
060
340
340
060
070
(W 1507)
(R 1207)
(B1207)
(W1320)
(X312)
370
030
020
020
070
(W 1505)
(R 1205)
(B1205)
(W1322)
(X317)
370
040
080
(W 1504)
(R 1204)
(B1204)
(W1305)
(X308)
060
340
310
370
020
010
370
420
Detail A
Scale 1:2
2528074-1
ECM 133422

ECM: 138469 - 20031103
Group number: 2528074-0100
Assembly Drawing: 2528074-1_1_AB

This list covers pages from 1-268 to 1-271

Pos	Part No	UN	Qty	Description	Page No
-					
010	1538736-0000		1	BOTTOM SECTION	
020	1538735-0000		4	GASKET	
030	2528054-0000		1	PEROXIDE CHAMBER	
040	2528055-0000		1	PEROXIDE CHAMBER	
050	1528639-0000		1	GASKET	
060	2528058-0000		4	COVER	
070	2528056-0000		2	RESISTANCE	
080	2528057-0000		2	RESISTANCE	
090	1523805-0000		2	PIN	
100	1511759-0000		32	SPRING	
110	2528059-0000		2	BRACKET	
120	1539729-0000		2	BRACKET	
130	1538742-0000		1	LID	
140	1539727-0000		2	WHEEL	
150	1490057-0000		1	BENDING ROLLER	
170	1539726-0000		2	SHAFT	
180	2508315-0000		1	SCREW	
190	1484428-0000		1	PLASTIC PLUG	
300	927421-0004		1	O-RING 15.3X2.4 SILICON	
310	359705-0004		1	WARNING SIGN ISO, DANGEROUS CHEMICALS	
320	352103-0101		1	CABLE GLAND, ST 9, PR15,2/PG9	
330	315237-0110		1	WASHER,PL.RND.AL.13,5/18,H=1,5	
340	312715-0116		32	WING NUT DIN 315 A2 MVM-K M6	
350	312605-0316		2	HEXAGON NUT, M6M M6 A280	
370	312115-0453		24	SCREW ISO4762 M8X25 A4	
380	312105-0370		8	SCREW M6S ISO 4017 M6X20 A480	
390	312115-0329		4	SCREW ISO4762 M5X16 A4	
400	312105-0449		4	SCREW M6S ISO 4017 M8X16 A480	
420	311103-1403		8	PARALLEL PIN ISO 2338 8M6X24 A1	
430	311103-0270		4	PARALLEL PIN ISO 2338 4M6X16 A1	
440	312105-0451		4	SCREW M6S ISO 4017 M8X20 A480	
450	90144-0073	MM	1	TREBOFLON-TAPE W=13MM	
460	90326-0053		1	THERMOCOUPLE, 12826-35	
470	90326-0020		1	PLUG, FEMALE YELLOW CR-AL	
480	90326-0012		1	PROTECTIVE COVER, T31A4618	
490	315205-0802		2	O-RING 41,0X1,78 MM	
500	90240-0146		2	FLANGE BUSHING,15X21X20 MM	
510	90099-0104		1	NUT, PR 15,2 (PG9)	
520	90044-0084		2	LIMIT SW. 14 CE1-4	
530	567070-0012		1	ELECTRODE	
540	312605-0312		2	HEXAGON NUT, M6M M4 A280	
550	315105-0136		3	WASHER BRB4,3XRFR	
560	312115-0370		4	SCREW ISO4762 M6X20 A4	

Machine Type | Group Description | Used-In | Group Number | Page No

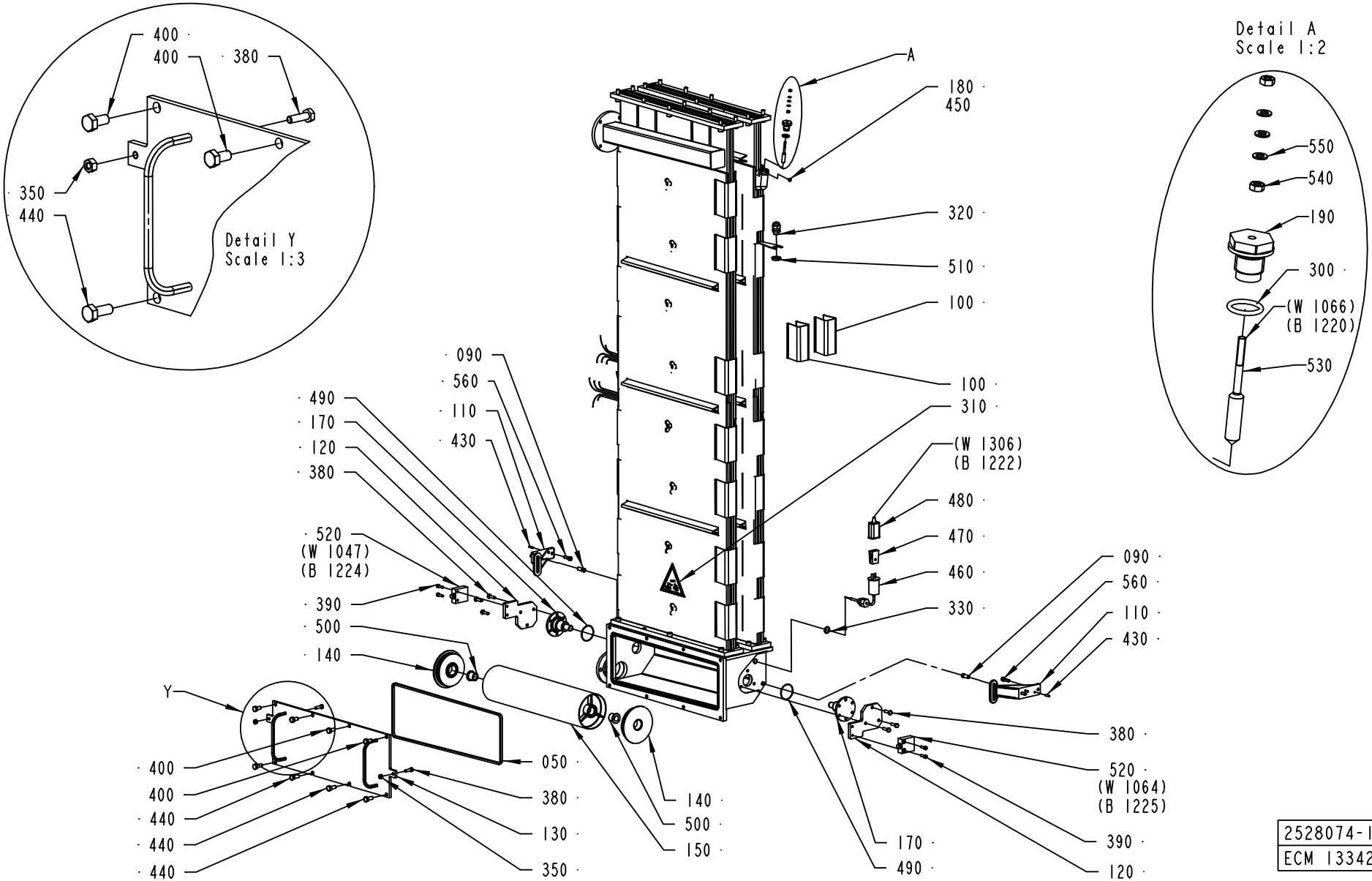

2528074-1
ECM 133422

ECM: 138469 - 20031103
Group number: 2528074-0100
Assembly Drawing: 2528074-1_2_AB

This list covers pages from 1-268 to 1-271

Pos	Part No	UN	Qty	Description	Page No
-					
010	1538736-0000		1	BOTTOM SECTION	
020	1538735-0000		4	GASKET	
030	2528054-0000		1	PEROXIDE CHAMBER	
040	2528055-0000		1	PEROXIDE CHAMBER	
050	1528639-0000		1	GASKET	
060	2528058-0000		4	COVER	
070	2528056-0000		2	RESISTANCE	
080	2528057-0000		2	RESISTANCE	
090	1523805-0000		2	PIN	
100	1511759-0000		32	SPRING	
110	2528059-0000		2	BRACKET	
120	1539729-0000		2	BRACKET	
130	1538742-0000		1	LID	
140	1539727-0000		2	WHEEL	
150	1490057-0000		1	BENDING ROLLER	
170	1539726-0000		2	SHAFT	
180	2508315-0000		1	SCREW	
190	1484428-0000		1	PLASTIC PLUG	
300	927421-0004		1	O-RING 15.3X2.4 SILICON	
310	359705-0004		1	WARNING SIGN ISO, DANGEROUS CHEMICALS	
320	352103-0101		1	CABLE GLAND, ST 9, PR15,2/PG9	
330	315237-0110		1	WASHER,PL.RND.AL.13,5/18,H=1,5	
340	312715-0116		32	WING NUT DIN 315 A2 MVM-K M6	
350	312605-0316		2	HEXAGON NUT, M6M M6 A280	
370	312115-0453		24	SCREW ISO4762 M8X25 A4	
380	312105-0370		8	SCREW M6S ISO 4017 M6X20 A480	
390	312115-0329		4	SCREW ISO4762 M5X16 A4	
400	312105-0449		4	SCREW M6S ISO 4017 M8X16 A480	
420	311103-1403		8	PARALLEL PIN ISO 2338 8M6X24 A1	
430	311103-0270		4	PARALLEL PIN ISO 2338 4M6X16 A1	
440	312105-0451		4	SCREW M6S ISO 4017 M8X20 A480	
450	90144-0073	MM	1	TREBOFLON-TAPE W=13MM	
460	90326-0053		1	THERMOCOUPLE, 12826-35	
470	90326-0020		1	PLUG, FEMALE YELLOW CR-AL	
480	90326-0012		1	PROTECTIVE COVER, T31A4618	
490	315205-0802		2	O-RING 41,0X1,78 MM	
500	90240-0146		2	FLANGE BUSHING,15X21X20 MM	
510	90099-0104		1	NUT, PR 15,2 (PG9)	
520	90044-0084		2	LIMIT SW. 14 CE1-4	
530	567070-0012		1	ELECTRODE	
540	312605-0312		2	HEXAGON NUT, M6M M4 A280	
550	315105-0136		3	WASHER BRB4,3XRFR	
560	312115-0370		4	SCREW ISO4762 M6X20 A4	

Machine Type | Group Description | Used-In | Group Number | Page No

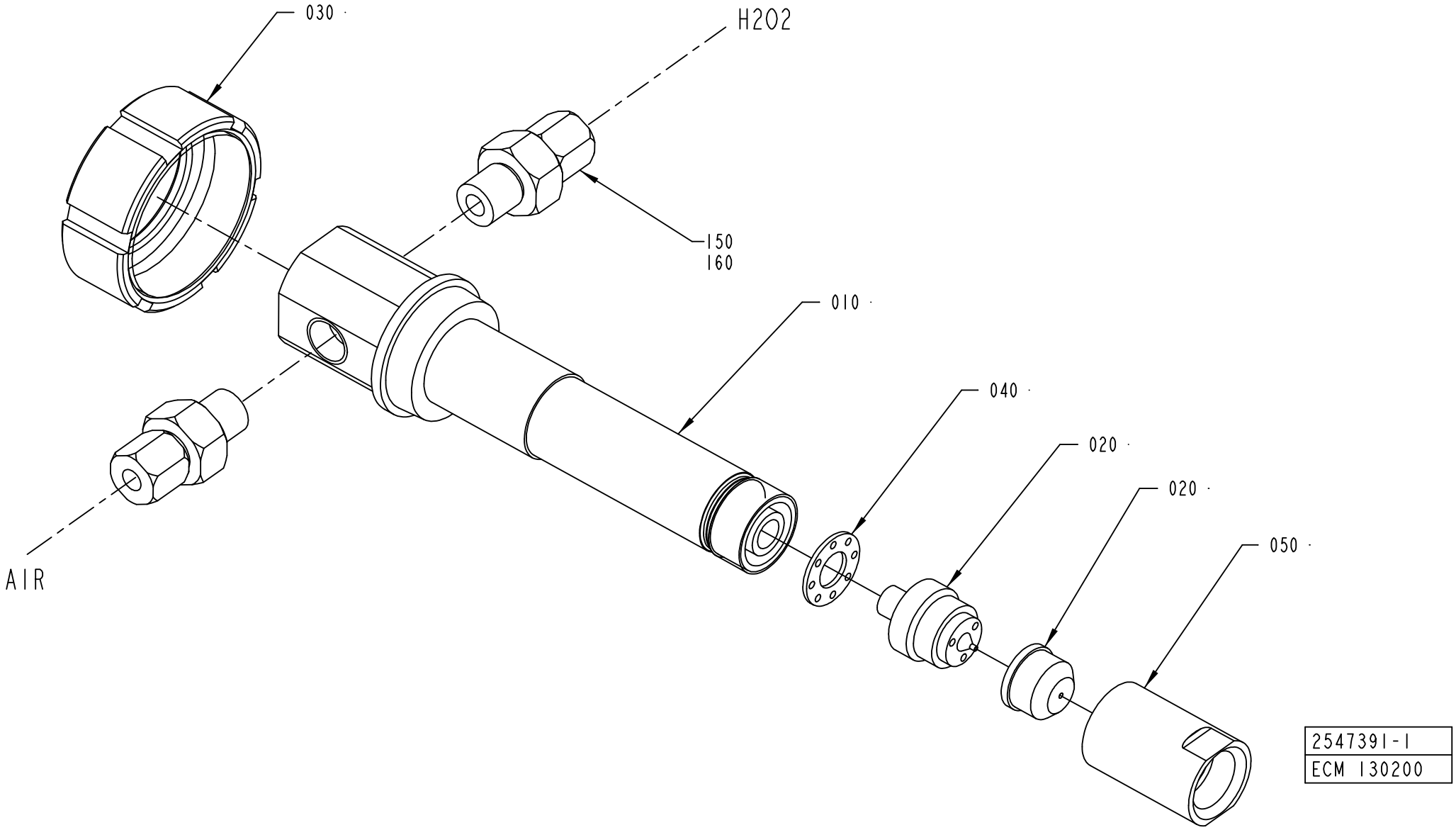
030
H2O2
150
160
010
040
020
020
050
AIR
2547391-1
ECM 130200

ECM: 130740 - 20030721
Group number: 2547391-0100
Assembly Drawing: 2547391-1_1_AB

Pos	Part No	UN	Qty	Description	Page No
-					
010	2563760-0000		1	EXTENSION	
020	2563759-0000		1	SPRAY SYSTEM	
030	1512405-0000		1	NUT	
040	2563762-0000		1	SPACER	
050	2563761-0000		1	NUT	
150	90030-0202		2	CONN. STR., 6-G1/4, EXT. THREAD	
160	90144-0007		1	TAPE	

Pos	Part No	UN	Qty	Description	Page No

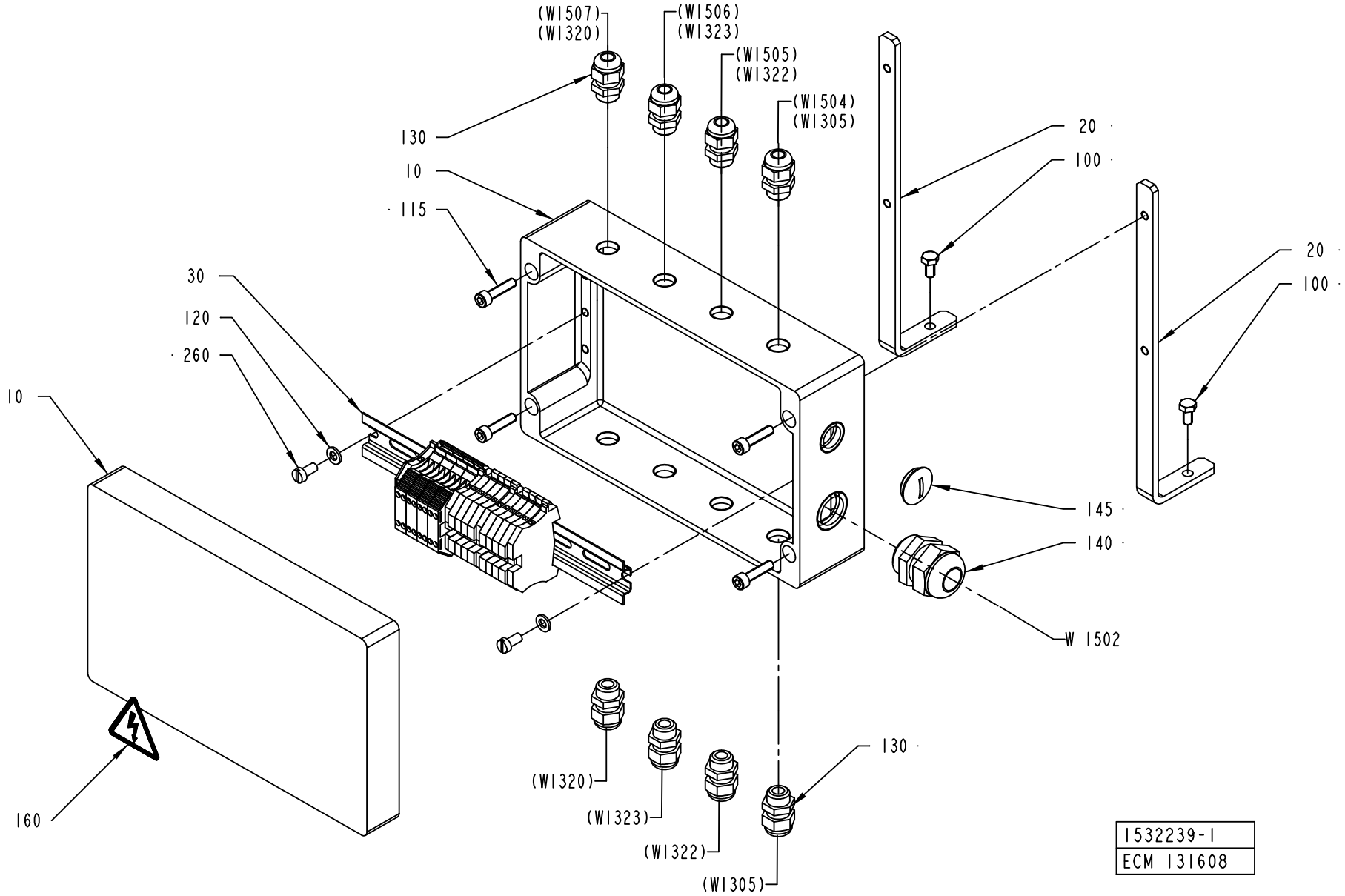
(W1507)
(W1320)
(W1506)
(W1323)
(W1505)
(W1322)
(W1504)
(W1305)
130
10
115
30
120
260
10
160
20
100
20
100
145
140
W 1502
130
(W1320)
(W1323)
(W1322)
(W1305)
1532239-1
ECM 131608

ECM: 146907 - 20031117
Group number: 1532239-0100
Assembly Drawing: 1532239-1_1_AB

Pos	Part No	UN	Qty	Description	Page No
-					
010	1532236-0000		1	CONNECTION BOX	
020	1532240-0000		2	BRACKET	
030	1532238-0100		1	TERMINAL BLOCK	**1-277**
100	312105-0366		2	SCREW M6S ISO 4017 M6X12 A480	
115	312115-0372		4	SCREW ISO4762 M6X25 A4	
120	315105-0153		2	WASHER BRB6,4X12RFR	
130	352103-0101		8	CABLE GLAND, ST 9, PR15,2/PG9	
140	352103-0115		1	CABLE GLAND, STR 21, PR28,3/PG21	
145	90002-0004		1	BLANK-OFF PLUG, PR 22,5 SKINDICHT-BLK16	
160	359705-0015		1	WARNING SIGN ISO, RISK OF ELECTRIC SHOCK	
260	312125-0366		2	SCREW ISO 1207 M6X12 A4	
W1502	351150-0196	M	7	CABLE OLFLEX 7X4 MM2 LIGHT/GREY	

Pos	Part No	UN	Qty	Description	Page No

TERMINAL BLOCK

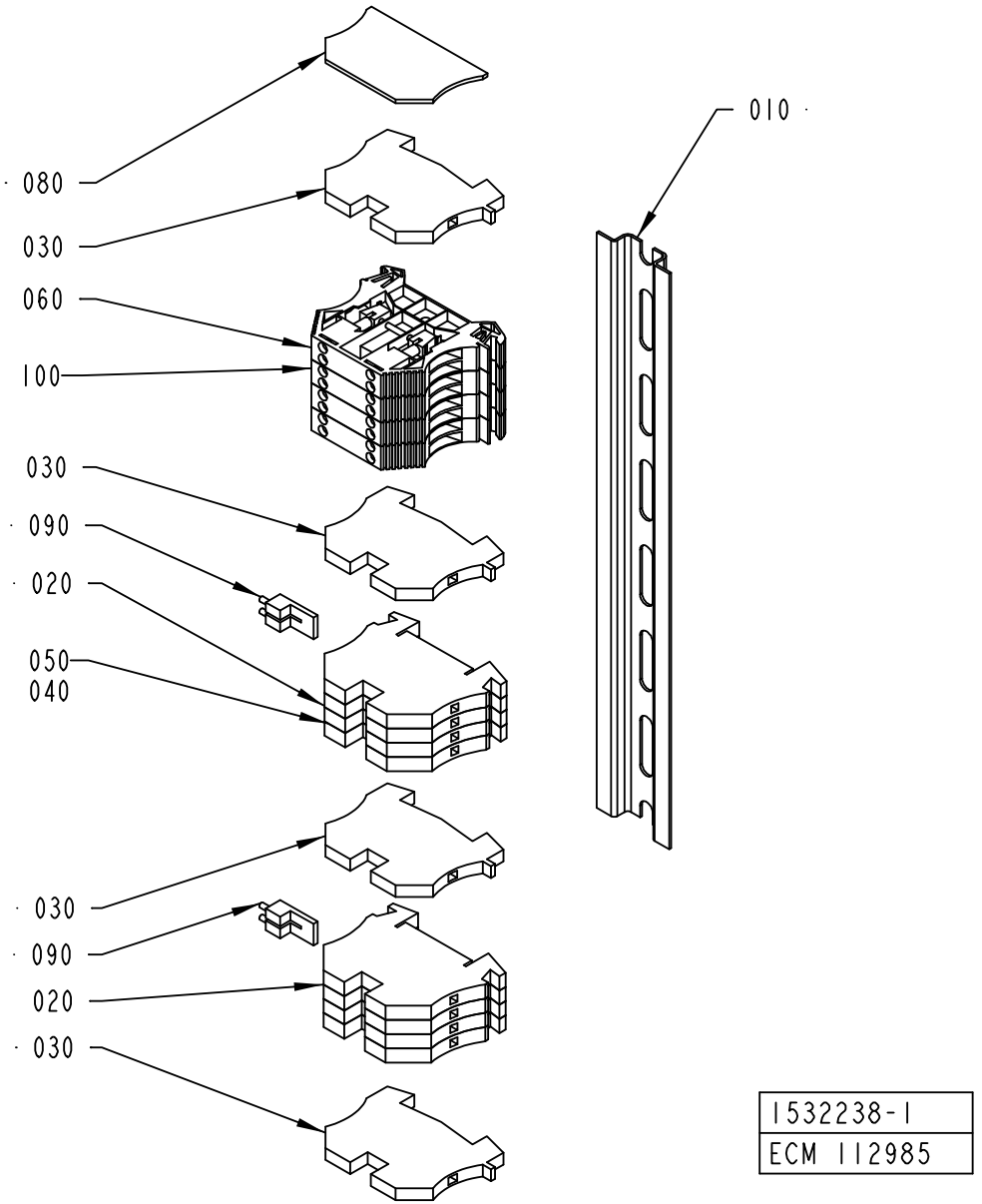

1532238-1
ECM 112985

ECM: 112985 - 20030123
Group number: 1532238-0100
Assembly Drawing: 1532238-1_1_AA

Pos	Part No	UN	Qty	Description	Page No
-					
010	1532237-0000		1	RAIL	
020	353021-0213		8	FEED THROUGH TERMINAL, 10201.0	
030	353024-0204		4	EARTH TERMINAL WPE 2,5	
040	359011-0834		1	SET OF SIGNS 6-GW(EARTH)	
050	359011-0821		1	SET OF SIGNS 6-FW 1-50	
060	90459-1742		4	FEED THROUGH TERMINAL, 1024100	
080	353032-0004		1	END PLATE WAP 2,5-10 BEIGE	
090	353034-0030		1	BRIDGE CONNECTOR WQV 2,5/10, 10544.6	
100	359011-0823		1	SET OF SIGNS 6-FW 101-150	
110	359011-0832		1	SET OF SIGNS 6-GW (+)	
120	359011-0833		1	SET OF SIGNS 6-GW (-)	

Pos	Part No	UN	Qty	Description	Page No

FRAME SECTION,UPPER

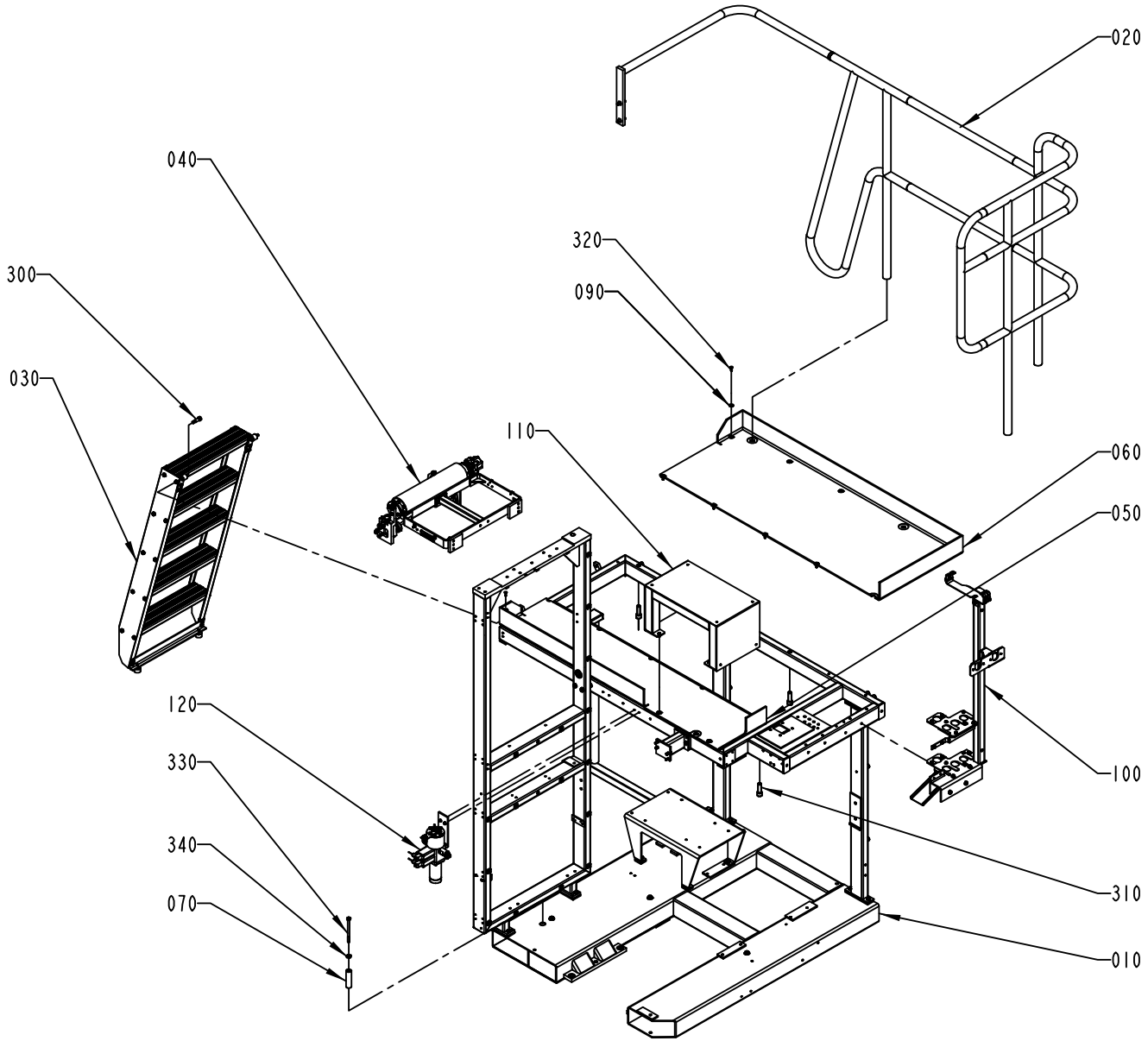

ECM: 174655 - 50001231
Group number: 1558497-0100
Assembly Drawing: 1558497-1_1_AB

Pos	Part No	UN	Qty	Description	Page No
A3/FLEX					
120	2529485-0100		1	SPRAY SYSTEM	**1-281**
Common Parts					
010	1549980-0100		1	FRAME	**1-283**
020	2529991-0100		1	RAILING	**1-285**
030	1095862-0100		1	LADDER	**1-287**
040	2552125-0100		1	BENDING ROLLER	**1-289, 1-291**
050	1558438-0000		1	CHECKER PLATE	
060	1558439-0000		1	CHECKER PLATE	
070	1511504-0000		3	SPACER	
090	2541673-0000		13	WASHER	
100	2545645-0100		1	POST	**1-297**
110	2530188-0100		1	STEP	**1-299**
300	312180-0534		2	SCREW ISO7379 H12X25	
310	312115-0630		3	SCREW ISO4762 M16X50 A4	
320	312155-0370		13	SCREW EN 10642 MF6S M6X20 A480	
330	312105-0517		4	SCREW M6S ISO 4014 M10X130 A480	
340	315115-0173		4	WASHER PLAIN, TBRB 10,5/22 H=4	

Pos	Part No	UN	Qty	Description	Page No

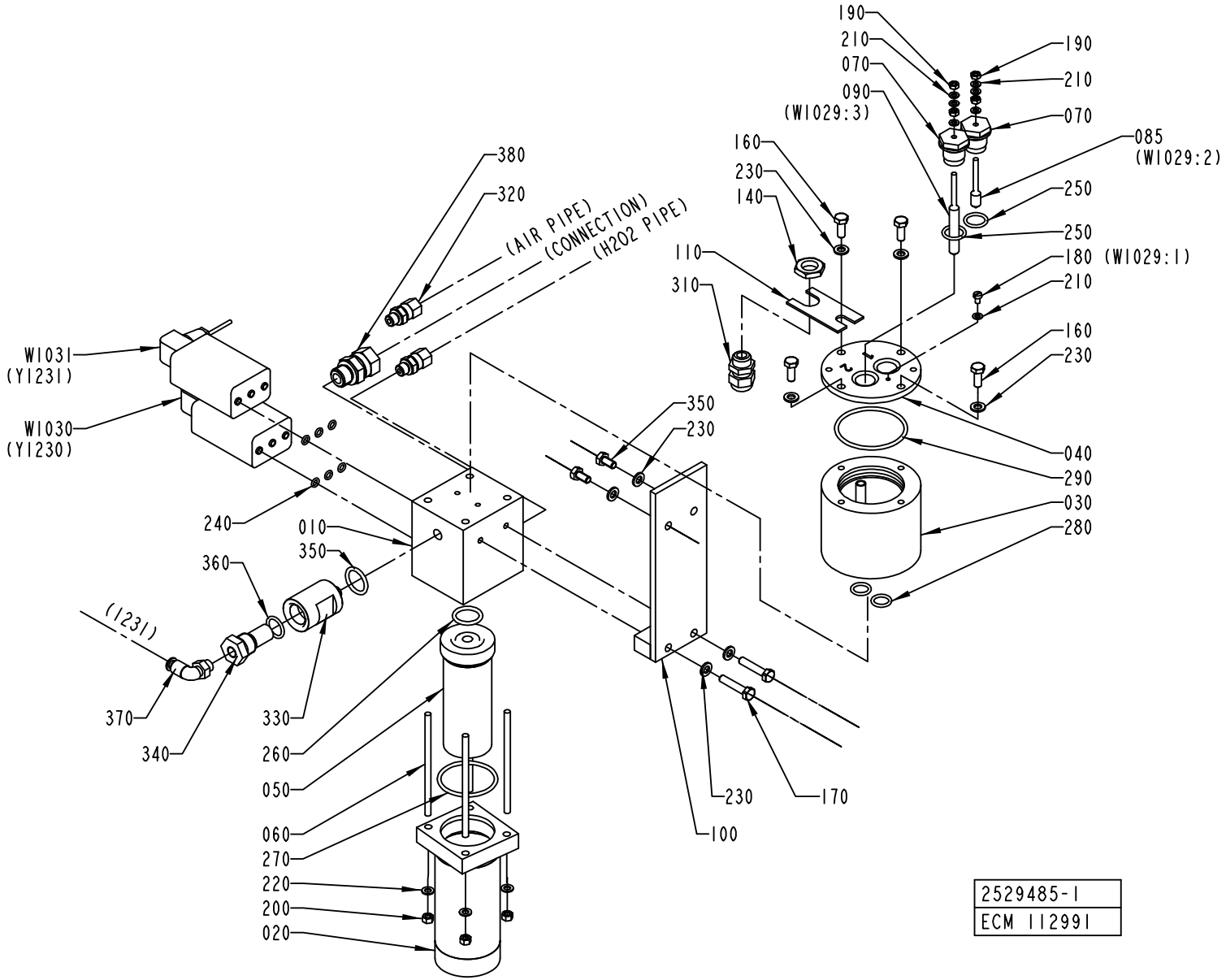
190
210
070
090
(W1029:3)
160
230
140
110
310
380
320
(AIR PIPE)
(CONNECTION)
(H2O2 PIPE)
W1031
(Y1231)
W1030
(Y1230)
240
010
350
360
(1231)
370
340
330
260
050
060
270
220
200
020
350
230
190
210
070
085
(W1029:2)
250
250
180 (W1029:1)
210
160
230
040
290
030
280
230
170
100
2529485-1
ECM 112991

ECM: 146904 - 20031117
Group number: 2529485-0100
Assembly Drawing: 2529485-1_1_AA

Pos	Part No	UN	Qty	Description	Page No
-					
010	1532223-0000		1	BLOCK	
020	554142-0000		1	FILTER HOUSING	
030	1478170-0000		1	CONTAINER	
040	549267-0000		1	LID	
050	554141-0000		1	FILTER	
060	554585-0000		4	STUD SCREW	
070	2578486-0000		2	BRACKET	
085	2559045-0004		1	ELECTRODE	
090	2559045-0003		1	ELECTRODE	
100	2529074-0000		1	INTERMEDIATE PART	
110	1040970-0000		1	BRACKET	
140	90099-0104		1	NUT, PR 15,2 (PG9)	
160	312105-0368		4	SCREW M6S ISO 4017 M6X16 A480	
170	312109-0376		2	SCREW M6S ISO 4017 M6X35 A480	
180	312125-0285		1	SCREW ISO 1207 M4X6 A4	
190	312605-0312		4	HEXAGON NUT, M6M M4 A280	
200	312605-0314		4	HEXAGON NUT, M6M M5 A280	
210	315105-0136		7	WASHER BRB4,3XRFR	
220	315105-0146		4	WASHER BRB5,3X10RFR	
230	315105-0153		8	WASHER BRB6,4X12RFR	
240	927420-0001		6	O-RING 5.1X1.6 SILICON	
250	927421-0004		2	O-RING 15.3X2.4 SILICON	
260	927422-0001		2	O-RING 19.2X3 SILICON	
270	927422-0007		1	O-RING 44.2X3 SILICON	
280	927421-0002		2	O-RING 12.3X2.4 SILICON	
290	927422-0009		1	O-RING 54.5X3 SILICON	
310	352103-0101		1	CABLE GLAND, ST 9, PR15,2/PG9	
320	90030-0184		2	CONN. STR. GA-6-G1/8	
330	1519486-0000		1	FILTER HOUSE	
340	450833-0000		1	FILTER	
350	312105-0366		2	SCREW M6S ISO 4017 M6X12 A480	
360	927421-0004		1	O-RING 15.3X2.4 SILICON	
370	90458-2956		1	ELBOW PIPE JOINT, EXT.THREAD, D=6MM-G1/8	
380	90030-0187		1	CONN. STR. GA-12-G3/8	
Y1230	90042-0203		1	SOLENOID VALVE BURKERT	
Y1231	90042-0203		1	SOLENOID VALVE BURKERT	

Pos	Part No	UN	Qty	Description	Page No

Machine Type	Group Description	Used-In	Group Number	Page No

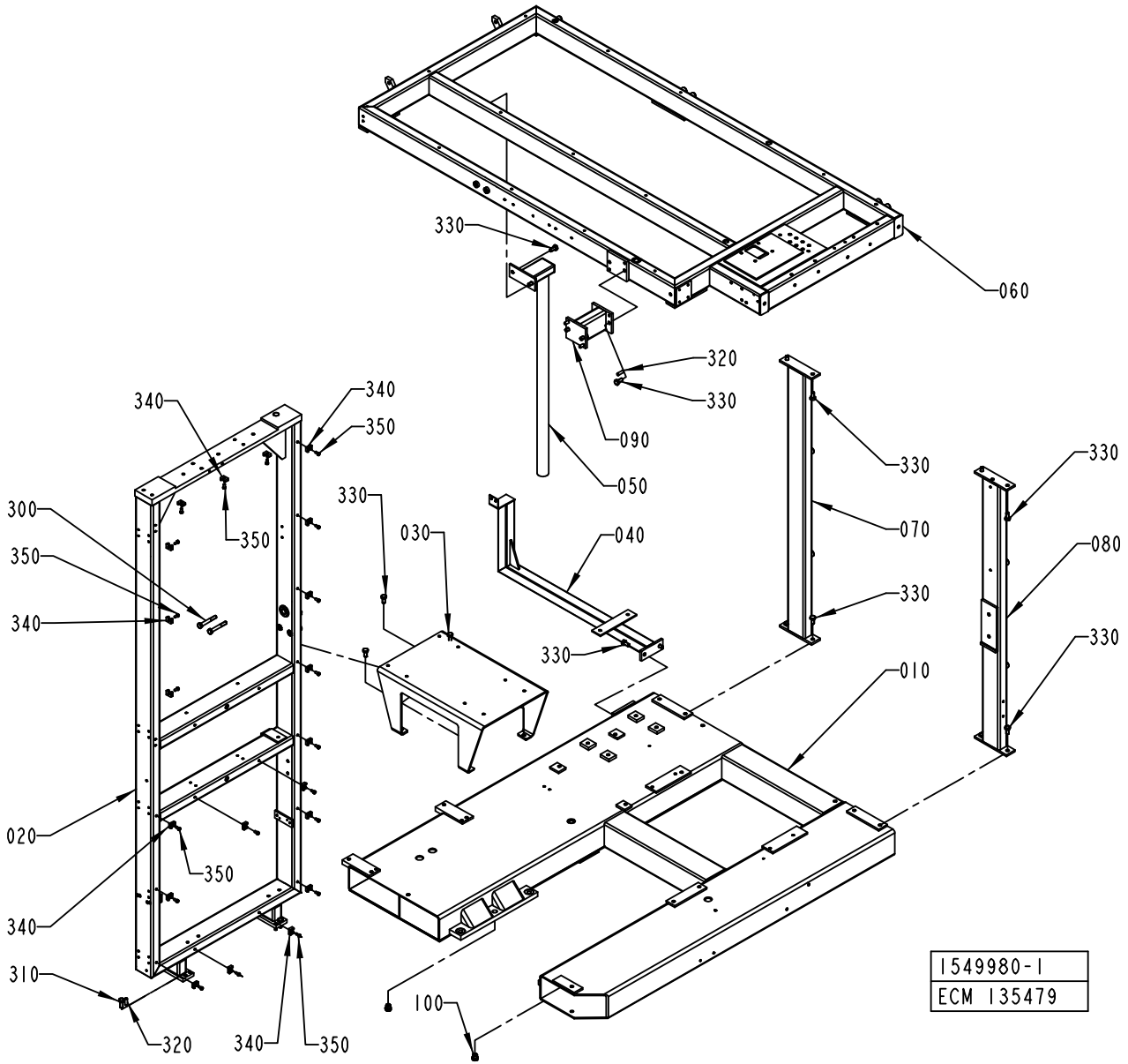
330
060
320
330
090
050
340
340
350
330
030
040
330
330
070
330
330
080
330
300
350
340
350
010
020
350
340
310
320
340
350
100
1549980-1
ECM 135479

ECM: 146902 - 20031117
Group number: 1549980-0100
Assembly Drawing: 1549980-1_1_AB

Pos	Part No	UN	Qty	Description	Page No
A3/FLEX					
020	1558437-0000		1	FRAME	
030	1498122-0000		1	BRACKET	
050	1484067-0000		1	BRACKET	
330	312105-0491		20	SCREW M6S ISO 4017 M10X20 A480	
340	352113-0204		20	ANCHOR PLATES FOR STRIPS, TYPE TM3S25-M	
350	312125-0366		20	SCREW ISO 1207 M6X12 A4	
Common Parts					
010	1498121-0000		1	BASE PLATE	
040	1498782-0000		1	TANK BRACKET	
060	1558434-0000		1	FRAME SECTION,UPPER	
070	1498787-0000		1	BRACKET	
080	1498789-0000		1	BRACKET	
090	1558440-0000		1	BRACKET	
100	1490046-0000		2	PIN	
300	312105-0505		2	SCREW M6S ISO 4014 M10X70 A480	
310	312105-0493		4	SCREW M6S ISO 4017 M10X25 A480	
320	311103-0403		6	PARALLELL PIN, M6, 8X25 MM	

Pos	Part No	UN	Qty	Description	Page No

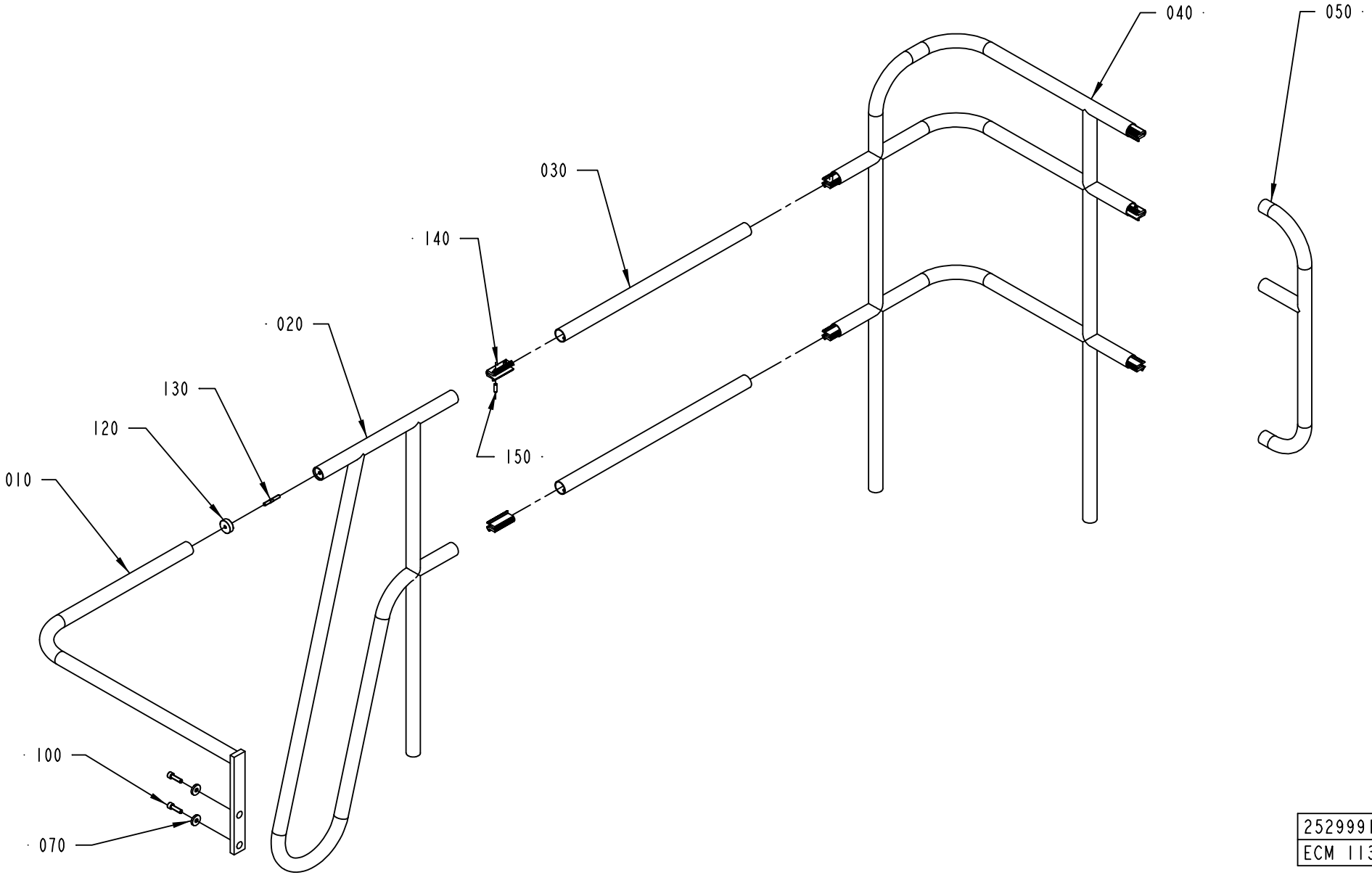

2529991-1
ECM 113014

ECM: 113014 - 20030123
Group number: 2529991-0100
Assembly Drawing: 2529991-1_1_AA

Pos	Part No	UN	Qty	Description	Page No
-					
010	1499735-0000		1	RAILING	
020	1129741-0000		1	RAILING	
030	1037044-0000		2	RAILING	
040	2530096-0000		1	RAILING	
050	2529926-0000		1	RAILING	
100	312115-0497		2	SCREW ISO4762 M10X35 A4	
110	1254410-0000		2	WASHER	
120	578640-0000		1	CLAMPING RING	
130	751485-0000		1	SCREW	
140	1035654-0000		7	CONNECTION	
150	312318-0453		14	SCREW ISO4029 M8X25 A4	

Pos	Part No	UN	Qty	Description	Page No

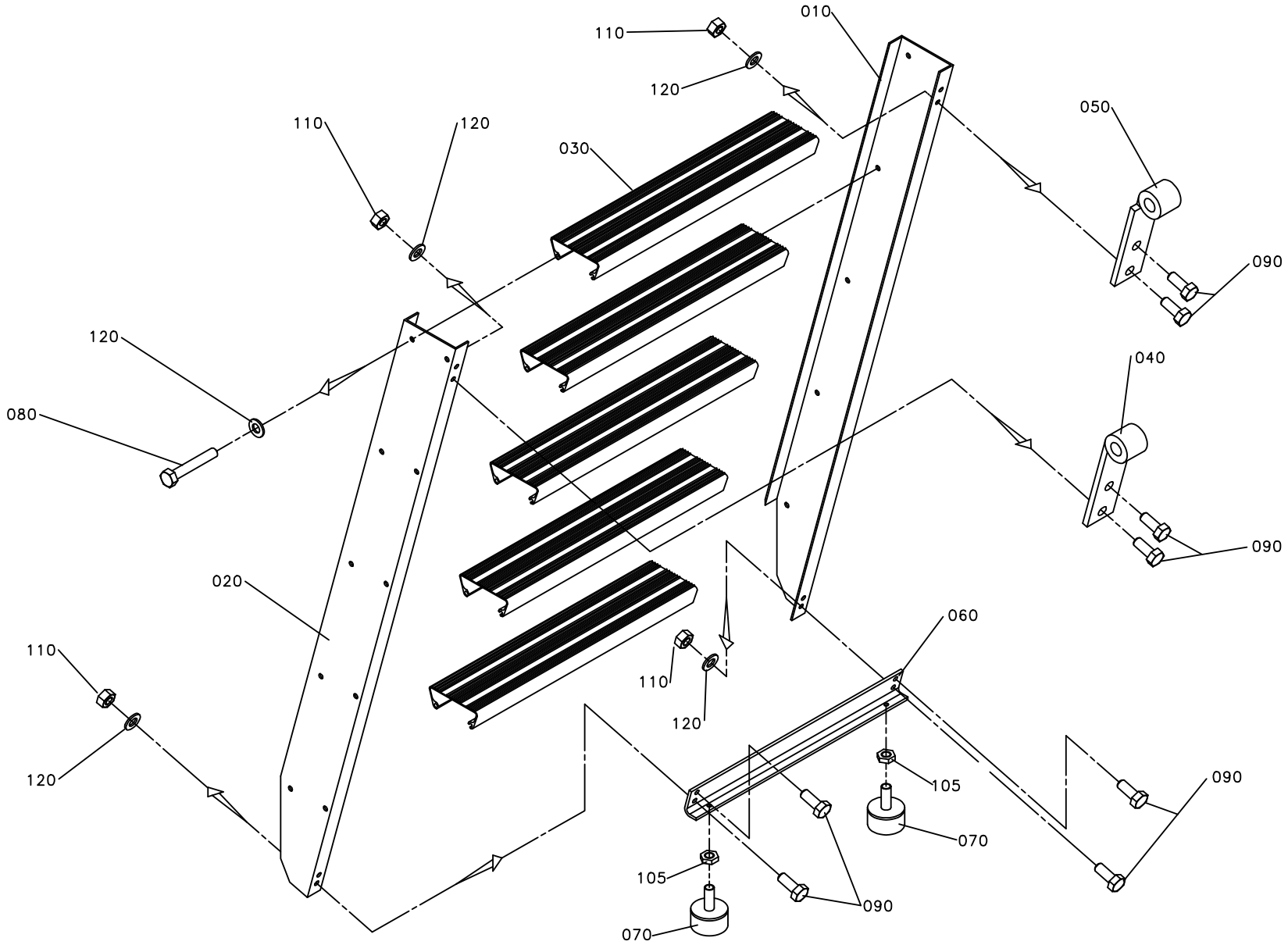
010
110
120
050
110
120
030
090
120
080
040
090
020
060
110
120
105
090
070
105
090
070

ECM: 71741 - 19980902
Group number: 1095862-0100
Assembly Drawing: 1095862-1_1_AA

Pos	Part No	UN	Qty	Description	Page No
-					
010	1036939-0000		1	SIDE PIECE	
020	1036940-0000		1	SIDE PIECE	
030	1129643-0000		5	STAIR	
040	1036963-0000		1	HOOK HOLDER	
050	1036965-0000		1	HOOK HOLDER	
060	1129644-0000		2	BRACKET	
070	90347-0004		2	VIBRATION DAMPER D=30 TH=M8 H=17 H2=21MM	
080	312104-0461		20	SCREW M6S M8X50H FZB	
090	312105-0451		8	SCREW M6S ISO 4017 M8X20 A480	
105	312625-0318		2	HEXAGON THIN NUT, EN 24035 ML6M M8 A4	
110	312605-0318		8	HEXAGON NUT, M6M M8 A280	
120	315101-0165		28	WASHER PLAIN, BRB, 8,4/16 H=1,5	

Pos	Part No	UN	Qty	Description	Page No

BENDING ROLLER

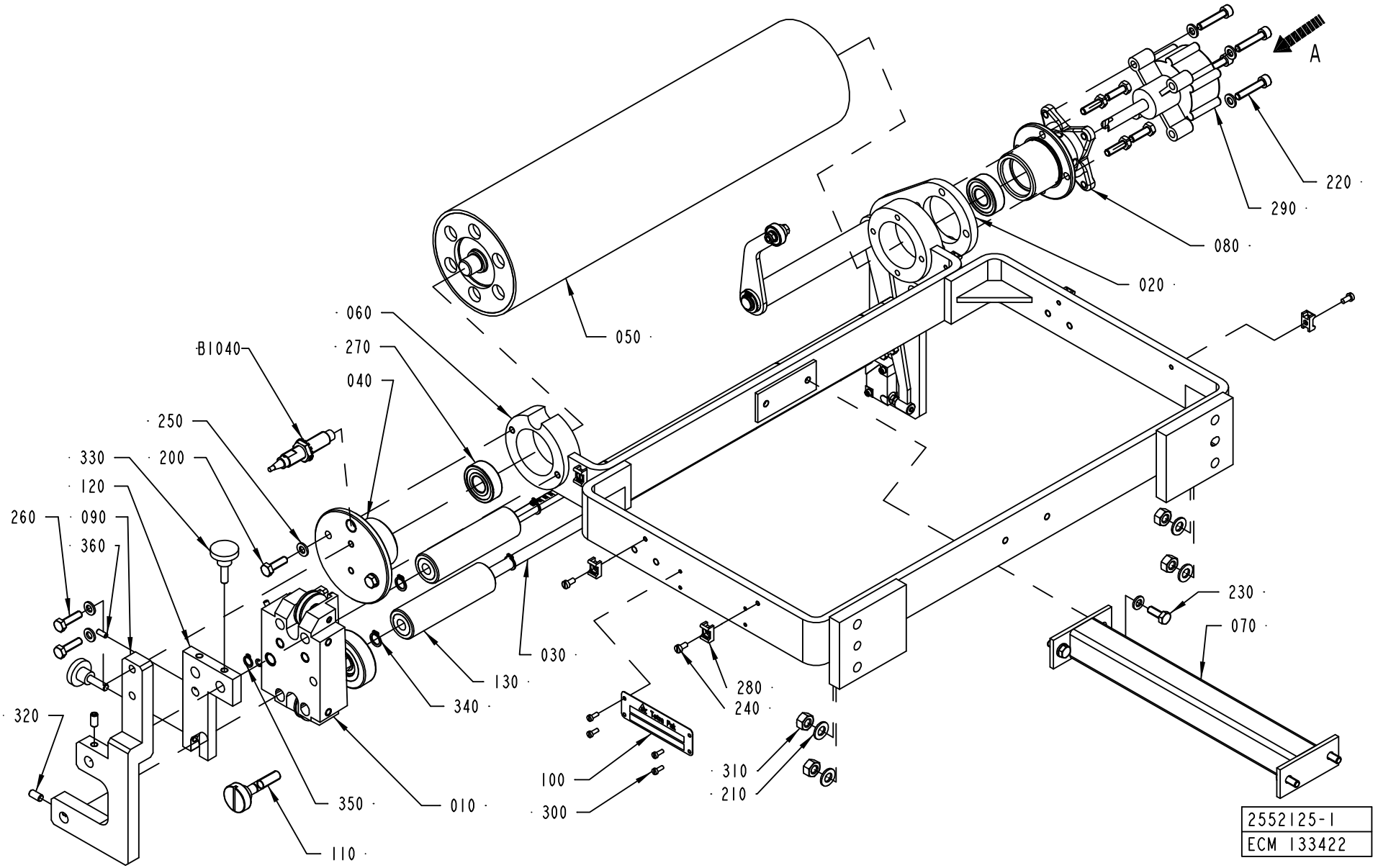

ECM: 150543 - 50001231
Group number: 2552125-0100
Assembly Drawing: 2552125-1_1_AB

This list covers pages from 1-288 to 1-291

Pos	Part No	UN	Qty	Description	Page No
A3/FLEX DIMC/FLEX (See drawing on page: 1-290)					
050	2532908-0000		1	ROLLER	
A3/FLEX TBA 2000S NODIMC, A3/FLEX TBA 1890S NODIMC (See drawing on page: 1-288)					
050	2662639-0000		1	ROLLER	
A3/FLEX TBA 1000B NODIMC, A3/FLEX TBA 0500B NODIMC, A3/FLEX TBA 1000S NODIMC, A3/FLEX TBA 1000SQ NODIMC, A3/FLEX TBA 0200S NODIMC, A3/FLEX TPA 1000SQ NODIMC, A3/FLEX TBA 1500S NODIMC, A3/FLEX TBA 0200B NODIMC, A3/FLEX TBA 0250B NODIMC, A3/FLEX TBA 0330S NODIMC, A3/FLEX TPA 0330SQ NODIMC, A3/FLEX TPA 0500SQ NODIMC, A3/FLEX TBA 0200M NODIMC, A3/FLEX TBA 0250S NODIMC, A3/FLEX TBA 0500S NODIMC (See drawing on page: 1-288)					
050	2532911-0000		1	ROLLER	
Common Parts					
010	2601483-0100		1	PAPER GUIDE	**1-293**
020	1558356-0100		1	SPLICE DETECTOR	**1-295**
030	2547566-0000		2	ROD	
040	1558352-0000		1	FLANGE	
060	2547425-0000		1	BRACKET	
070	2552124-0000		1	BRACKET	
080	2528110-0000		1	HOUSING	
090	2547568-0000		1	PLATE	
100	979548-0000		1	MACHINE PLATE	
110	1317713-0000		1	SHAFT	
120	2547565-0000		1	HOLDER	
130	2551075-0000		2	ROLLER	
200	312105-0370		6	SCREW M6S ISO 4017 M6X20 A480	
210	315105-0165		4	WASHER BRB8,4X16RFR	
220	312115-0374		4	SCREW ISO4762 M6X30 A4	
230	312105-0368		4	SCREW M6S ISO 4017 M6X16 A480	
240	312125-0287		6	SCREW ISO 1207 M4X8 A4	
250	315105-0153		12	WASHER BRB6,4X12RFR	
260	312105-0371		2	SCREW M6S ISO 4017 M6X22 A480	
270	321313-0102		2	BALL BEARING, 15X35X11 MM	
280	352113-0205		6	ANCHOR PLATES FOR STRIPS, TYPE TM2S8-C10	
290	90347-0054		1	DAMPER	
300	312125-0222		4	SCREW ISO 1207 M3X8 A4	
310	312605-0318		4	HEXAGON NUT, M6M M8 A280	
320	312318-0366		2	SCREW ISO4029 M6X12 A4	
330	90051-0049		2	KNOB, ADJUST.HI.EXT.THREAD, NO 8324-3755	
340	90141-0016		4	RETAINING RING FOR SHAFT DIN 471 10 A2	
350	315755-0108		1	RETAINING RING SHAFT DIN 6799 6 A2	
360	312318-0289		1	SCREW ISO4029 M4X10 A4	
B1040	90458-0672		1	PROXIMITY SENSOR E2E2-X5MB1-5M	

Pos	Part No	UN	Qty	Description	Page No

BENDING ROLLER

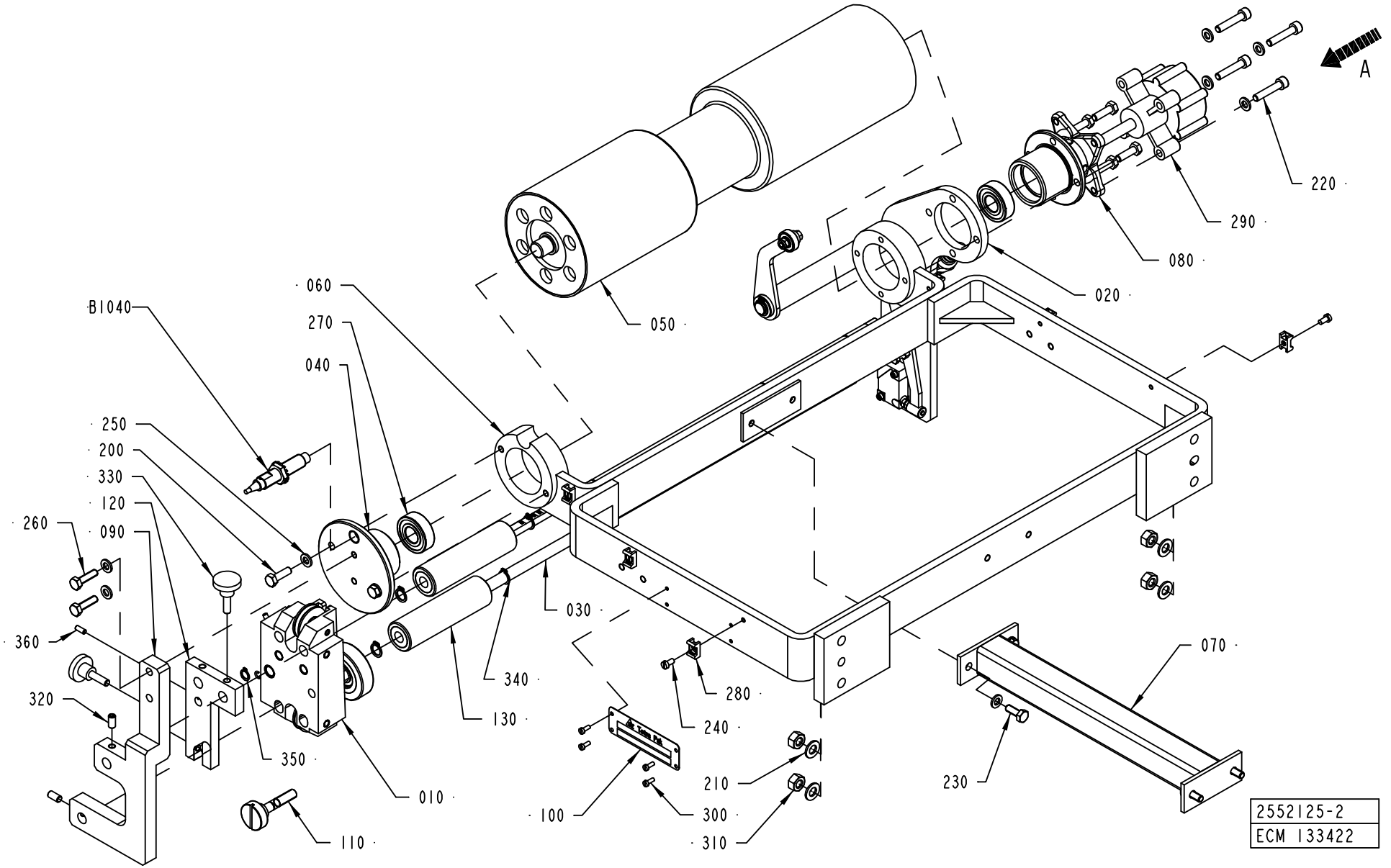

Pos	Part No	UN	Qty	Description	Page No
A3/FLEX DIMC/FLEX (See drawing on page: 1-290)					
050	2532908-0000		1	ROLLER	
A3/FLEX TBA 2000S NODIMC, A3/FLEX TBA 1890S NODIMC (See drawing on page: 1-288)					
050	2662639-0000		1	ROLLER	
A3/FLEX TBA 1000B NODIMC, A3/FLEX TBA 0500B NODIMC, A3/FLEX TBA 1000S NODIMC, A3/FLEX TBA 1000SQ NODIMC, A3/FLEX TBA 0200S NODIMC, A3/FLEX TPA 1000SQ NODIMC, A3/FLEX TBA 1500S NODIMC, A3/FLEX TBA 0200B NODIMC, A3/FLEX TBA 0250B NODIMC, A3/FLEX TBA 0330S NODIMC, A3/FLEX TPA 0330SQ NODIMC, A3/FLEX TPA 0500SQ NODIMC, A3/FLEX TBA 0200M NODIMC, A3/FLEX TBA 0250S NODIMC, A3/FLEX TBA 0500S NODIMC (See drawing on page: 1-288)					
050	2532911-0000		1	ROLLER	
Common Parts					
010	2601483-0100		1	PAPER GUIDE	**1-293**
020	1558356-0100		1	SPLICE DETECTOR	**1-295**
030	2547566-0000		2	ROD	
040	1558352-0000		1	FLANGE	
060	2547425-0000		1	BRACKET	
070	2552124-0000		1	BRACKET	
080	2528110-0000		1	HOUSING	
090	2547568-0000		1	PLATE	
100	979548-0000		1	MACHINE PLATE	
110	1317713-0000		1	SHAFT	
120	2547565-0000		1	HOLDER	
130	2551075-0000		2	ROLLER	
200	312105-0370		6	SCREW M6S ISO 4017 M6X20 A480	
210	315105-0165		4	WASHER BRB8,4X16RFR	
220	312115-0374		4	SCREW ISO4762 M6X30 A4	
230	312105-0368		4	SCREW M6S ISO 4017 M6X16 A480	
240	312125-0287		6	SCREW ISO 1207 M4X8 A4	
250	315105-0153		12	WASHER BRB6,4X12RFR	
260	312105-0371		2	SCREW M6S ISO 4017 M6X22 A480	
270	321313-0102		2	BALL BEARING, 15X35X11 MM	
280	352113-0205		6	ANCHOR PLATES FOR STRIPS, TYPE TM2S8-C10	
290	90347-0054		1	DAMPER	
300	312125-0222		4	SCREW ISO 1207 M3X8 A4	
310	312605-0318		4	HEXAGON NUT, M6M M8 A280	
320	312318-0366		2	SCREW ISO4029 M6X12 A4	
330	90051-0049		2	KNOB, ADJUST.HI.EXT.THREAD, NO 8324-3755	
340	90141-0016		4	RETAINING RING FOR SHAFT DIN 471 10 A2	
350	315755-0108		1	RETAINING RING SHAFT DIN 6799 6 A2	
360	312318-0289		1	SCREW ISO4029 M4X10 A4	
B1040	90458-0672		1	PROXIMITY SENSOR E2E2-X5MB1-5M	

Pos	Part No	UN	Qty	Description	Page No

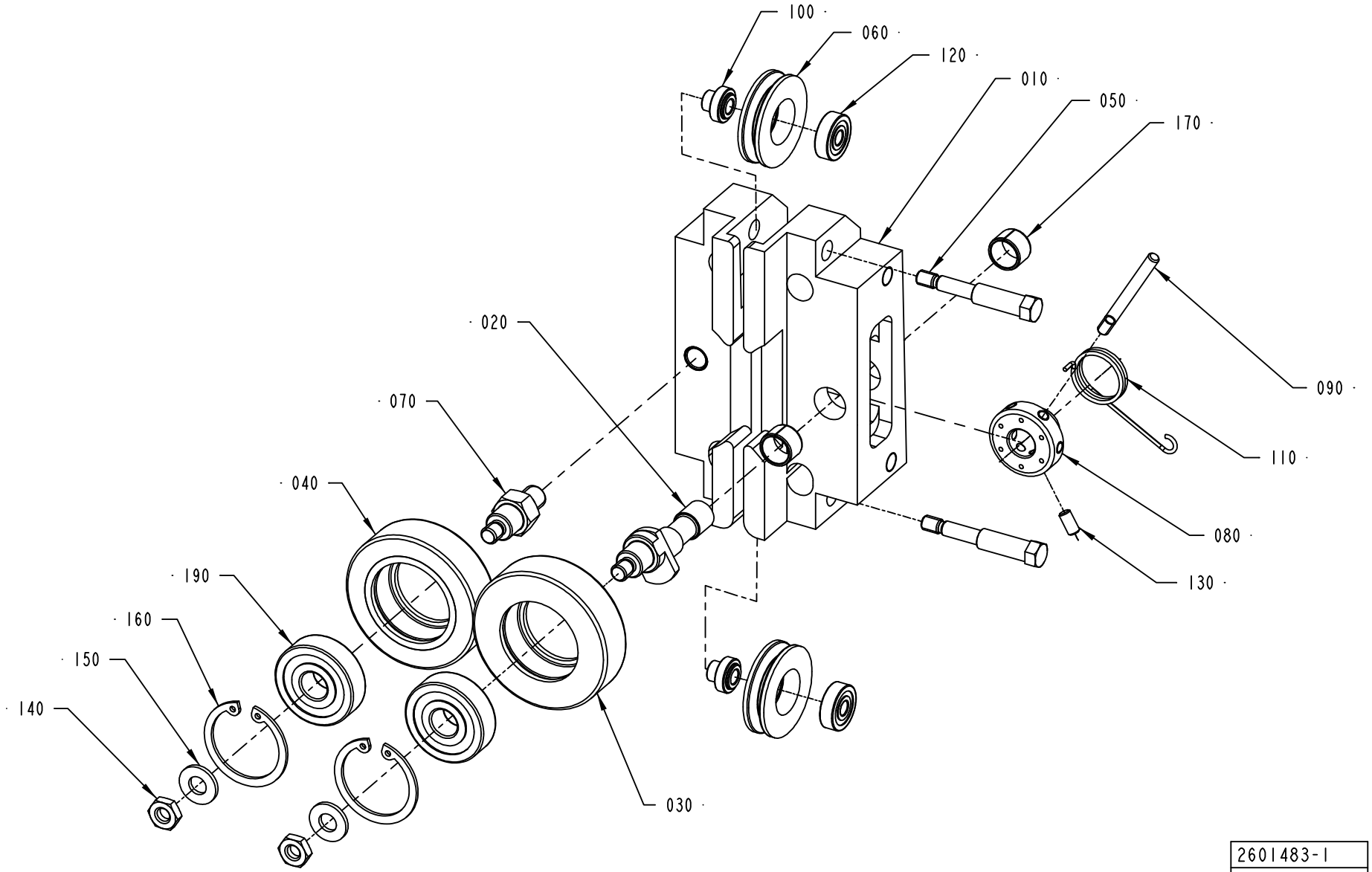

2601483-1
ECM 122050

ECM: 127879 - 20030403
Group number: 2601483-0100
Assembly Drawing: 2601483-1_1_AA

Pos	Part No	UN	Qty	Description	Page No
-					
010	2533670-0000		1	SUPPORT	
020	2503436-0000		1	SHAFT	
030	2594126-0000		1	GUIDE ROLLER	
040	1036623-0000		1	GUIDE ROLLER	
050	2533671-0000		2	SCREW	
060	2533673-0000		2	ROLLER	
070	1558254-0000		1	SHAFT	
080	2594125-0000		1	SLEEVE	
090	2503438-0000		1	LEVER	
100	2533672-0000		2	SHAFT	
110	2591782-0000		1	SPRING	
120	90214-0037		2	BALL BEARING, 5X16X5 MM	
130	312318-0287		1	SCREW ISO4029 M4X8 A4	
140	312625-0316		2	HEXAGON THIN NUT, EN 24035 ML6M M6 A4	
150	315105-0156		2	WASHER BRB 6.7X14 RFR	
160	315753-0122		2	RETAINING RING FOR BORE DIN 472 30 A2	
170	321141-0138		2	BEARING BUSHING W/O FL, 10X12X8 MM	
190	321313-0100		2	BALL BEARING, 10X30X9 MM	

Pos	Part No	UN	Qty	Description	Page No

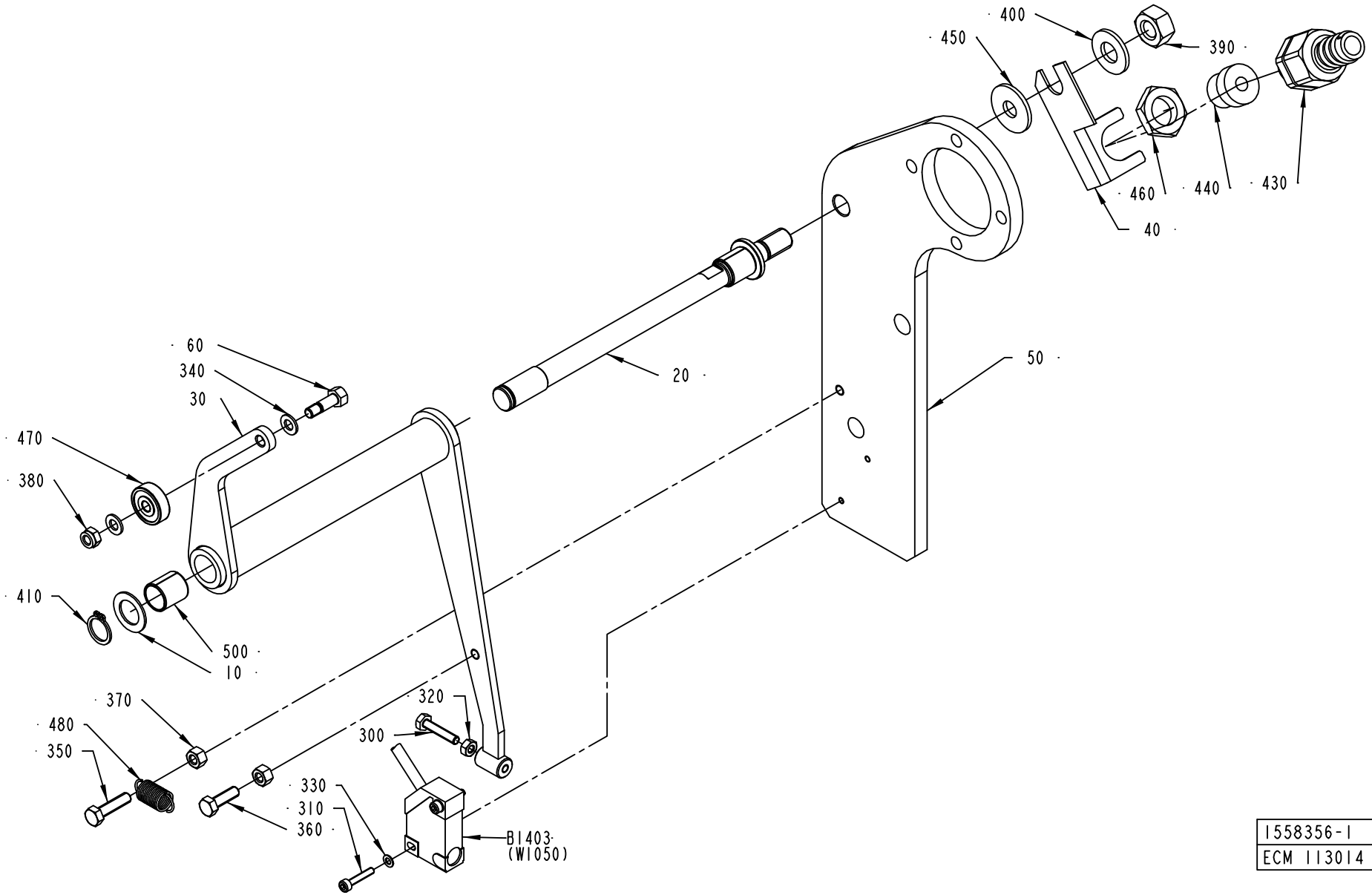

1558356-1
ECM 113014

ECM: 113014 - 20030123
Group number: 1558356-0100
Assembly Drawing: 1558356-1_1_AA

Pos	Part No	UN	Qty	Description	Page No
-					
010	266737-0000		1	WASHER	
020	2528128-0000		1	SHAFT	
030	2528127-0000		1	BRACKET	
040	1036610-0000		1	BRACKET	
050	2528105-0000		1	PLATE	
060	2528135-0000		1	SHAFT	
300	312105-0295		1	SCREW M6S ISO4017 M4X20 A470	
310	312115-0228		2	SCREW ISO4762 M3X16 A4	
320	312605-0312		1	HEXAGON NUT, M6M M4 A280	
330	315105-0124		2	WASHER BRB3,2X6RFR	
340	315105-0146		2	WASHER BRB5,3X10RFR	
350	312105-0331		1	SCREW M6S ISO 4017 M5X20 A480	
360	312105-0329		1	SCREW M6S ISO 4017 M5X16 A480	
370	312605-0314		2	HEXAGON NUT, M6M M5 A280	
380	312812-0314		1	HEXAGON NUT, NY-LOCK M5 A480	
390	312605-0320		1	HEXAGON NUT, M6M M10 A280	
400	315105-0173		1	WASHER BRB10,5X22RFR	
410	315751-0109		1	RETAINING RING FOR SHAFT DIN 471 12 A2	
430	353243-0001		1	HOSE GLAND W/O INSERT PG9 EXTENDED	
440	353249-0008		1	INSERT, SINGEL HOLE, EK 152/7	
450	90005-0116		1	WASHER PLAIN ROUND 8,4(M8)/24, H=2	
460	90099-0104		1	NUT, PR 15,2 (PG9)	
470	90214-0138		1	BALL BEARING, 5X19X6 MM	
480	90335-0089		1	TENSION SPRING 41490, 0,9X10X23	
500	321141-0183		2	BEARING BUSHING W/O FL, 12X14X15 MM	
B1403	90044-0194		1	PROX.SW. IN5329/IN3002-BPKG	

Pos	Part No	UN	Qty	Description	Page No

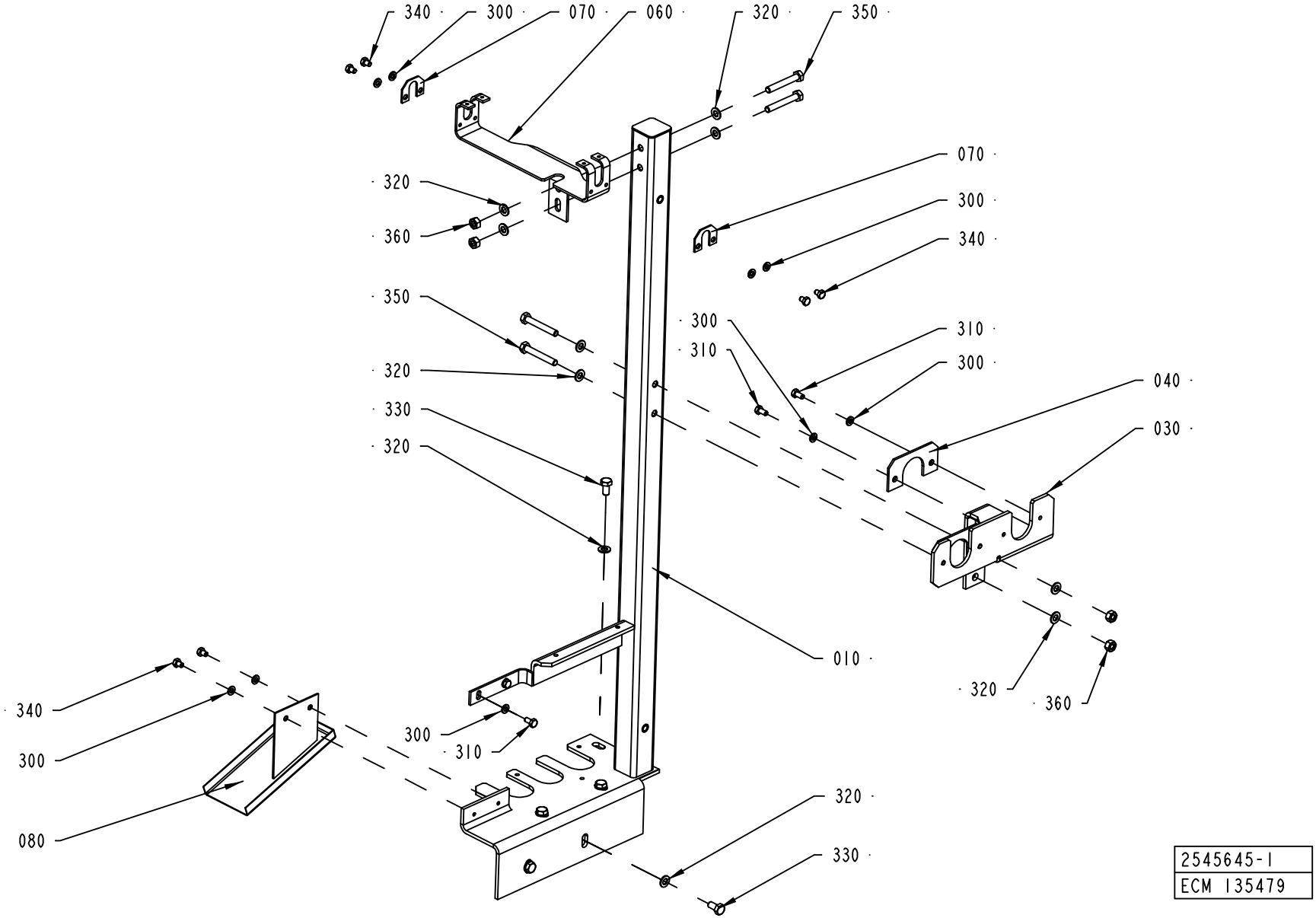
340
300
070
060
320
350
320
360
070
300
340
350
320
330
320
300
310
310
300
040
030
010
320
360
340
300
080
300
310
320
330
2545645-1
ECM 135479

ECM: 146572 - 20031117
Group number: 2545645-0100
Assembly Drawing: 2545645-1_1_AB

Pos	Part No	UN	Qty	Description	Page No
-					
010	2545646-0000		1	BRACKET	
030	2545656-0000		1	PLATE	
040	2545658-0000		2	PLATE	
060	2545653-0000		1	PLATE	
070	2532553-0000		2	PLATE	
080	2545657-0000		1	DROP CHUTE	
300	315105-0153		14	WASHER BRB6,4X12RFR	
310	312105-0366		6	SCREW M6S ISO 4017 M6X12 A480	
320	315105-0165		13	WASHER BRB8,4X16RFR	
330	312105-0449		5	SCREW M6S ISO 4017 M8X16 A480	
340	312105-0362		6	SCREW M6S ISO 4017 M6X8 A480	
350	312105-0462		4	SCREW M6S ISO 4014 M8X55 A480	
360	312605-0318		4	HEXAGON NUT, M6M M8 A280	

Pos	Part No	UN	Qty	Description	Page No

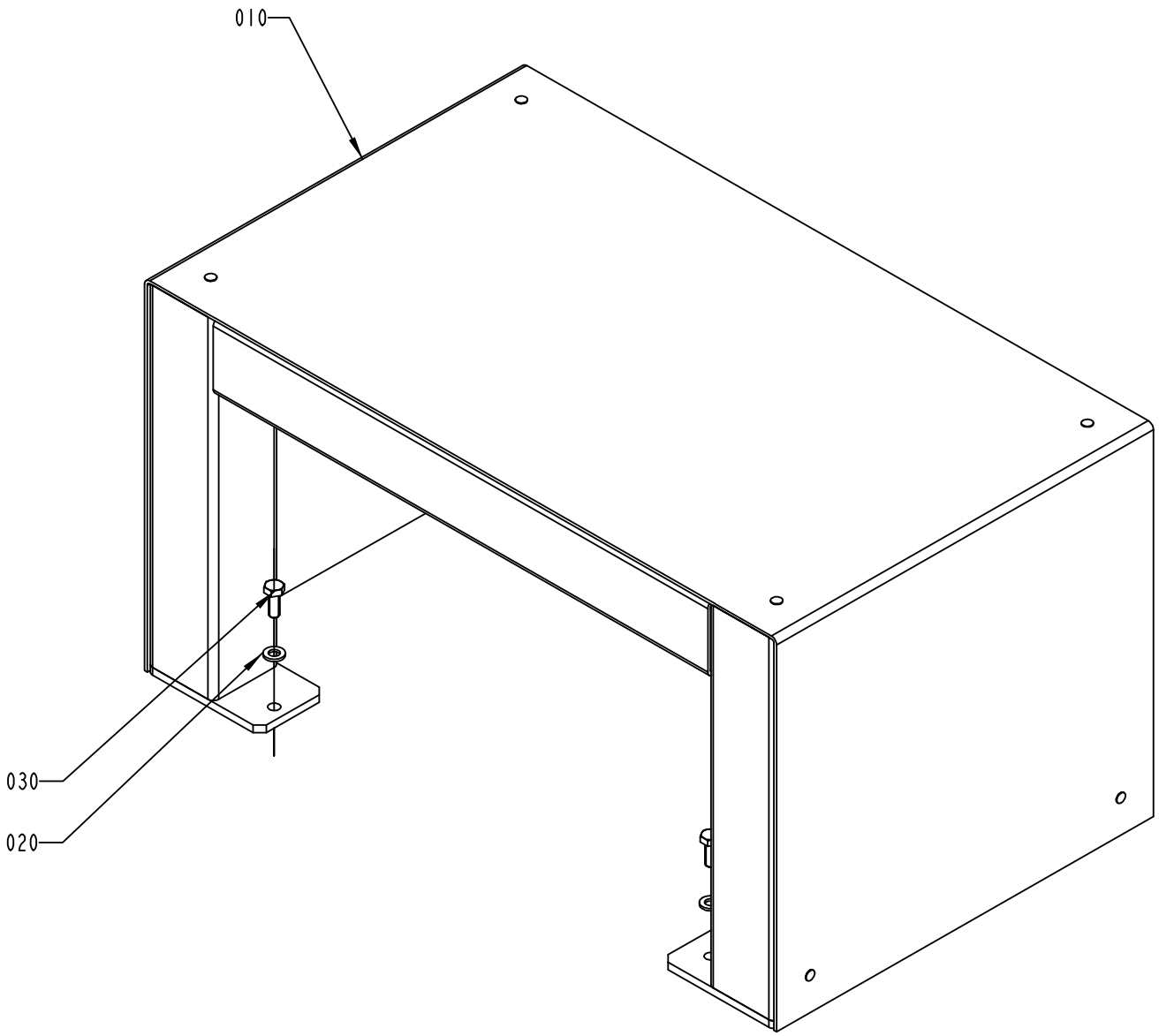

2530188-1
ECM 112991

ECM: 114155 - 20030123
Group number: 2530188-0100
Assembly Drawing: 2530188-1_1_AA

Pos	Part No	UN	Qty	Description	Page No
-					
010	2529925-0000		1	STEP	
020	315105-0153		2	WASHER BRB6,4X12RFR	
030	312105-0368		2	SCREW M6S ISO 4017 M6X16 A480	

Pos	Part No	UN	Qty	Description	Page No

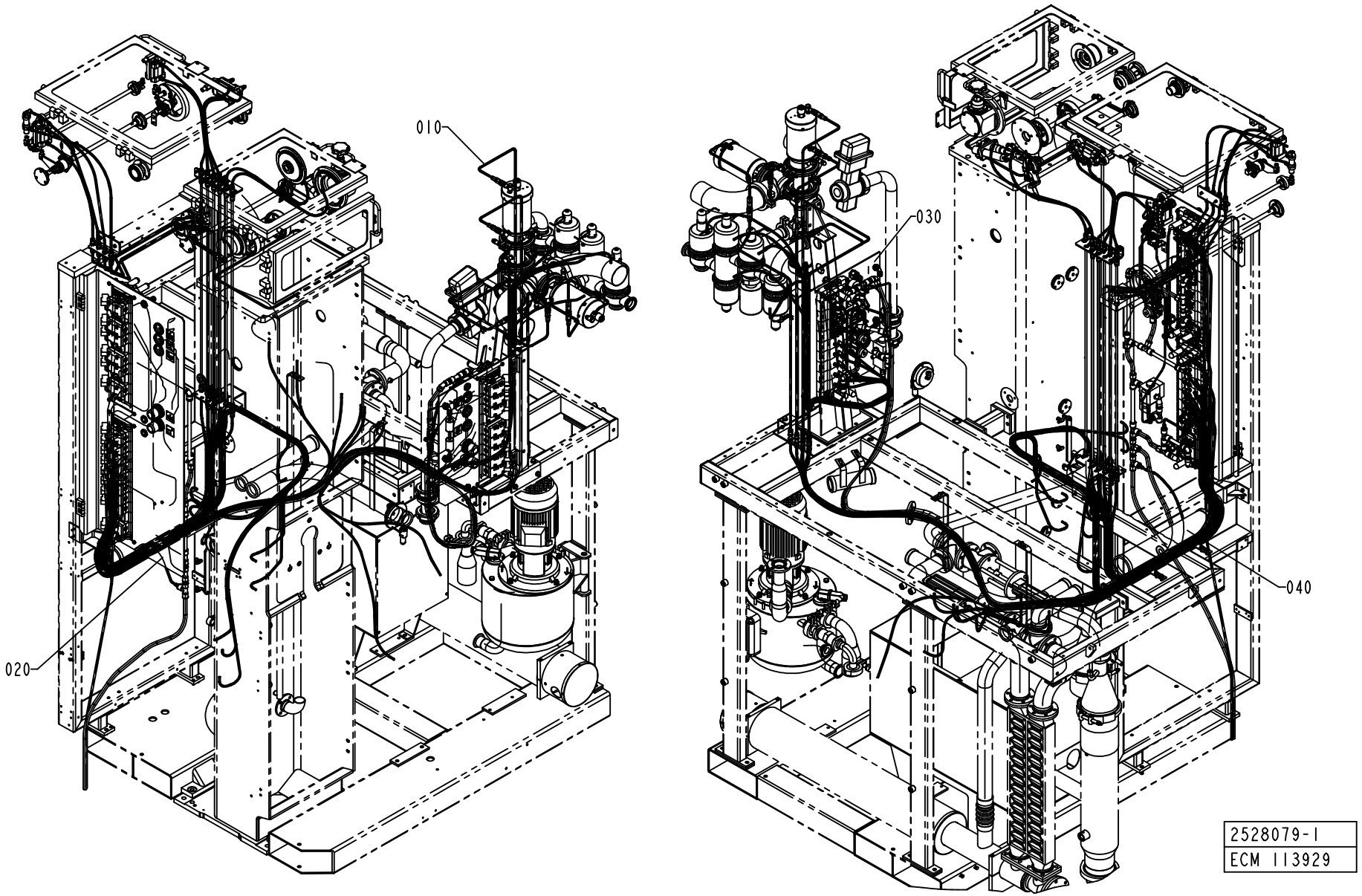
010
020
030
040
2528079-1
ECM 113929

ECM: 113945 - 20030123
Group number: 2528079-0100
Assembly Drawing: 2528079-1_1_AA

Pos	Part No	UN	Qty	Description	Page No
-					
005	2565494-0000		1	PNEUMATIC DIAGRAM	
005	2565493-0000		1	PNEUMATIC DIAGRAM	
005	2565492-0000		1	PNEUMATIC DIAGRAM	
005	2563276-0000		1	PNEUMATIC DIAGRAM	
010	2528080-0100		1	HOSE INSTALLATION	**1-303, 1-305, 1-307, 1-309, 1-311**
				.....	**1-313**
020	2528077-0100		1	PNEUMATIC PANEL	**1-315**
030	2528075-0100		1	PNEUMATIC PANEL	**1-325**
040	2528081-0100		1	HOSE HOLDER	**1-333**

Pos	Part No	UN	Qty	Description	Page No

HOSE INSTALLATION

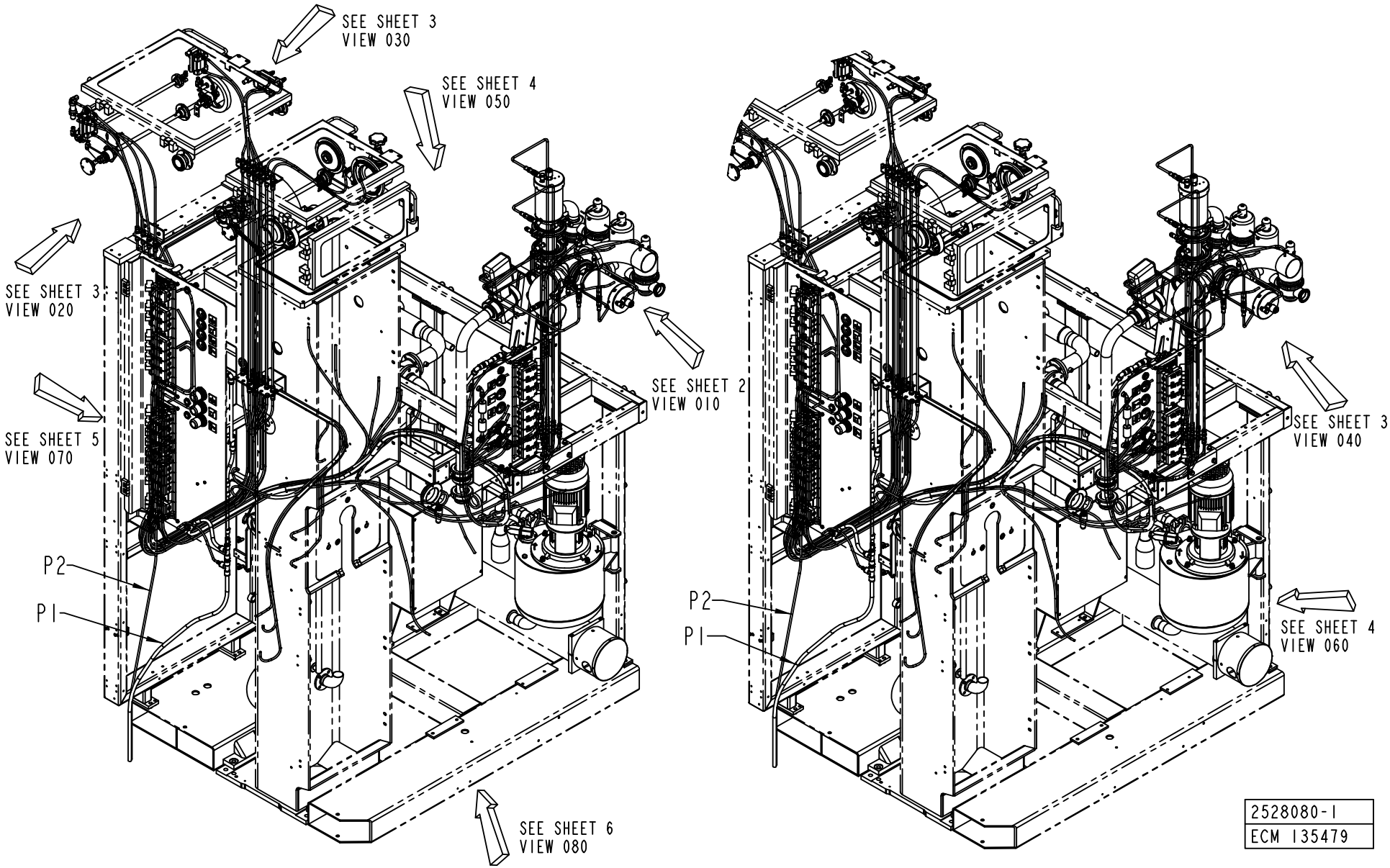

ECM: 146906 - 20031117
Group number: 2528080-0100
Assembly Drawing: 2528080-1_1_AC

This list covers pages from 1-302 to 1-313

Pos	Part No	UN	Qty	Description	Page No
-					
010	1484405-0000		1	PIPE	
020	1524237-0000		1	PIPE	
030	1524238-0000		1	PIPE	
040	1524239-0000		1	PIPE	
050	1524240-0000		1	PIPE	
060	1524241-0000		1	PIPE	
070	1524242-0000		1	PIPE	
080	1528727-0000		2	PIPE	
090	1528728-0000		2	PIPE	
100	1524233-0000		2	PIPE	
110	1524234-0000		6	PIPE	
11072	90166-0193	MM	2600	TUBE 6 MM PUR BLUE	
11074	90166-0193	MM	2600	TUBE 6 MM PUR BLUE	
11082	90166-0193	MM	2600	TUBE 6 MM PUR BLUE	
11084	90166-0193	MM	2600	TUBE 6 MM PUR BLUE	
11112	90166-0193	MM	2800	TUBE 6 MM PUR BLUE	
11114	90166-0193	MM	2800	TUBE 6 MM PUR BLUE	
11122	90166-0193	MM	1900	TUBE 6 MM PUR BLUE	
11122:1	90166-0193	MM	700	TUBE 6 MM PUR BLUE	
11124	90166-0193	MM	1900	TUBE 6 MM PUR BLUE	
11124:1	90166-0193	MM	700	TUBE 6 MM PUR BLUE	
120	1524243-0000		2	PIPE	
1231	90166-0193	MM	3000	TUBE 6 MM PUR BLUE	
12412	90166-0193	MM	3300	TUBE 6 MM PUR BLUE	
12414	90166-0193	MM	3300	TUBE 6 MM PUR BLUE	
12422	90166-0193	MM	3000	TUBE 6 MM PUR BLUE	
12424	90166-0193	MM	2800	TUBE 6 MM PUR BLUE	
130	1523818-0000		1	BRACKET	
13032	90166-0193	MM	3700	TUBE 6 MM PUR BLUE	
13034	90166-0193	MM	3700	TUBE 6 MM PUR BLUE	
13112	90166-0193	MM	1800	TUBE 6 MM PUR BLUE	
13122	90166-0193	MM	3700	TUBE 6 MM PUR BLUE	
13124	90166-0193	MM	3700	TUBE 6 MM PUR BLUE	
13202	90166-0193	MM	1800	TUBE 6 MM PUR BLUE	
13232	90166-0193	MM	3700	TUBE 6 MM PUR BLUE	
13234	90166-0193	MM	3500	TUBE 6 MM PUR BLUE	
13242	90166-0193	MM	1700	TUBE 6 MM PUR BLUE	
13252	90166-0193	MM	1400	TUBE 6 MM PUR BLUE	
13262	90166-0193	MM	1700	TUBE 6 MM PUR BLUE	
140	1523819-0000		1	BRACKET	
14012	90166-0193	MM	3500	TUBE 6 MM PUR BLUE	
14014	90166-0193	MM	3500	TUBE 6 MM PUR BLUE	
150	1523820-0000		1	BRACKET	
15012	90166-0193	MM	2600	TUBE 6 MM PUR BLUE	
15012:1	90166-0193	MM	600	TUBE 6 MM PUR BLUE	
15014	90166-0193	MM	2000	TUBE 6 MM PUR BLUE	
15014:1	90166-0193	MM	600	TUBE 6 MM PUR BLUE	
15022	90166-0193	MM	2600	TUBE 6 MM PUR BLUE	
15022:1	90166-0193	MM	500	TUBE 6 MM PUR BLUE	
15022:2	90166-0193	MM	550	TUBE 6 MM PUR BLUE	
15024	90166-0193	MM	2600	TUBE 6 MM PUR BLUE	
15024:1	90166-0193	MM	500	TUBE 6 MM PUR BLUE	
15024:2	90166-0193	MM	550	TUBE 6 MM PUR BLUE	
15032	90166-0193	MM	2600	TUBE 6 MM PUR BLUE	
15032:1	90166-0193	MM	450	TUBE 6 MM PUR BLUE	
15034	90166-0193	MM	2600	TUBE 6 MM PUR BLUE	
15034:1	90166-0193	MM	450	TUBE 6 MM PUR BLUE	
18022	90166-0193	MM	2000	TUBE 6 MM PUR BLUE	
18032	90166-0193	MM	2500	TUBE 6 MM PUR BLUE	
18102	90166-0193	MM	3700	TUBE 6 MM PUR BLUE	
18104	90166-0193	MM	3700	TUBE 6 MM PUR BLUE	
300	312105-0366		6	SCREW M6S ISO 4017 M6X12 A480	
310	315237-0109		6	WASHER,PL.RND.AL.10/14,H=1,5	
320	342706-0130		28	ACCESSORIES, INSERT SLEEVE 6 MM	
330	342724-0102		1	CONN. STR. PIPE GI 6-G1/8	
340	342797-0121		1	CONN. BANJO, RINGPIECE 6-1/8	
350	342980-0303		4	BANJO-HOLLOW BOLT COUPL,EXT.THR.01-G1/8"	
360	342747-0102		2	CONN. T-PIPE T-6	
370	342748-0109		2	T-CONNECTION 12MM	
380	342716-0210		1	REDUCER 6-12	
400	90163-0057		6	QUICK COUPLING, (M) 5150-1/8	
410	90163-0062		6	QUICK COUPLING, (F) 5053-1/8	
420	90458-1849		6	CONN. STR., 6-R1/8, EXT. THREAD	
430	90224-0308		4	CONN. BANJO, ART. NO. 2023-1/8-1/8	
440	90224-0349		30	CONN. BULKHEAD. 1250-6	
450	90235-0274		1	THROTTLE CHECK VALVE, G1/8", SCU-604-1/8	
460	359000-0400		50	MARKING CO2/4"0"	
470	359000-0401		50	MARKING COLLAR 2/4 "1" YELLOW	
480	359000-0402		50	MARKING COLLAR 2/4 "2" YELLOW	
490	359000-0403		50	MARKING COLLAR PA2/4 "3" YELLOW	
500	359000-0404		50	MARKING COLLAR PA2/4 "4" YELLOW	
510	359000-0405		50	MARKING CO2/4"5"	
520	359000-0406		50	MARKING COLLAR PA2/4 "6" YELLOW	

Machine Type | Group Description | Used-In | Group Number | Page No

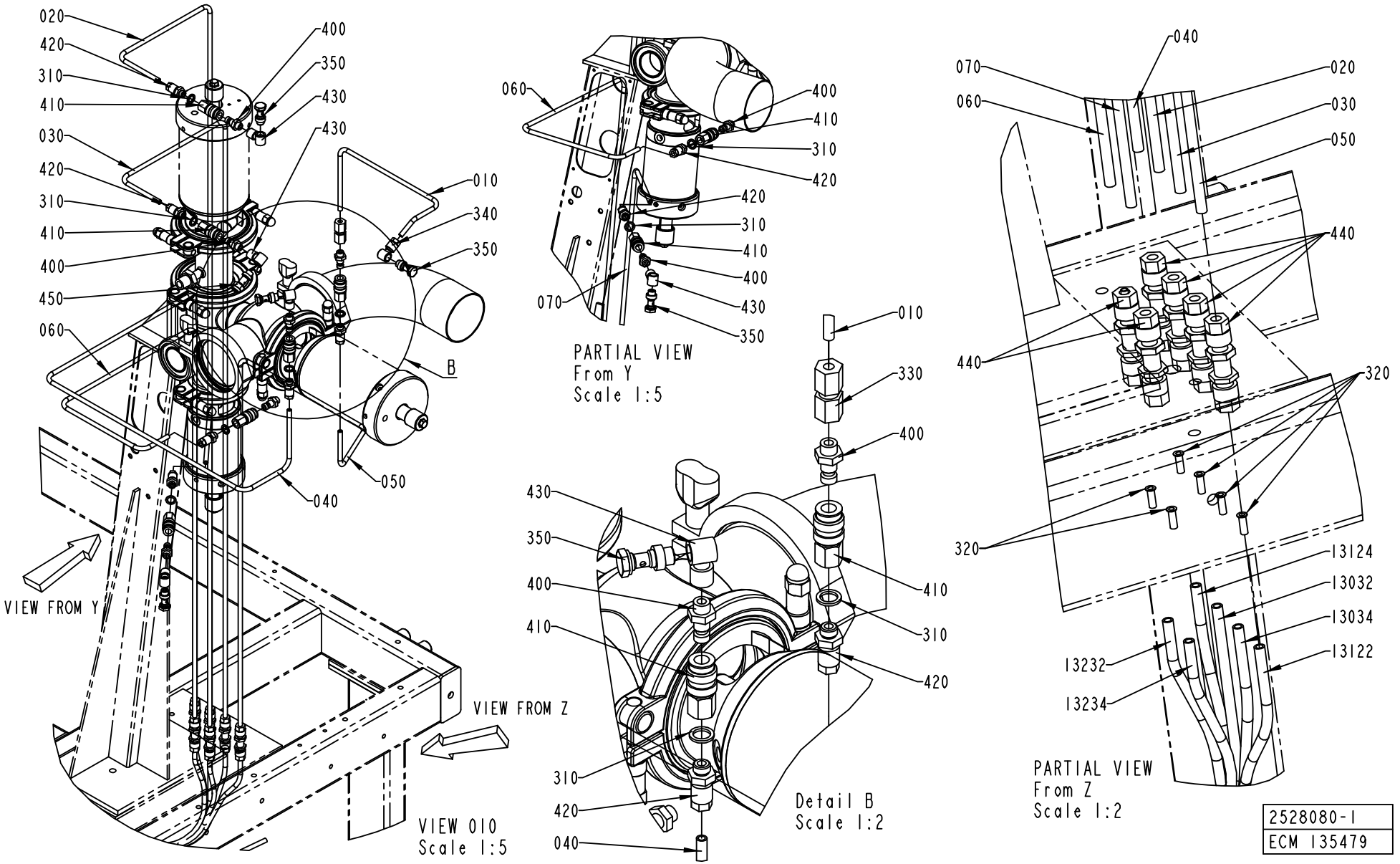
020
420
310
410
030
420
310
410
400
450
060
400
350
430
430
010
340
350
B
050
040
VIEW FROM Y
VIEW FROM Z
VIEW 010
Scale 1:5
060
400
410
310
420
420
310
410
400
430
350
070
PARTIAL VIEW
From Y
Scale 1:5
010
330
400
430
350
400
410
310
420
410
420
310
420
040
Detail B
Scale 1:2
040
070
060
020
030
050
440
440
320
320
13124
13032
13034
13122
13232
13234
PARTIAL VIEW
From Z
Scale 1:2
2528080-1
ECM 135479

Pos	Part No	UN	Qty	Description	Page No
- (Cont'd)					
530	359000-0407		50	MARKING COLLAR PA2/4 "7" YELLOW	
540	359000-0408		50	MARKING COLLAR PA2/4 "8" YELLOW	
550	359000-0409		50	MARKING COLLAR PA2/4 "9" YELLOW	
560	315105-0153		2	WASHER BRB6,4X12RFR	
P1	90166-0195	MM	4000	TUBE 12 MM PA BLUE	
P1:1	90166-0193	MM	2600	TUBE 6 MM PUR BLUE	
P1:2	90166-0195	MM	50	TUBE 12 MM PA BLUE	
P1:3	90166-0195	MM	2700	TUBE 12 MM PA BLUE	
P1:4	90166-0195	MM	50	TUBE 12 MM PA BLUE	
P2	90166-0193	MM	2200	TUBE 6 MM PUR BLUE	

Pos	Part No	UN	Qty	Description	Page No

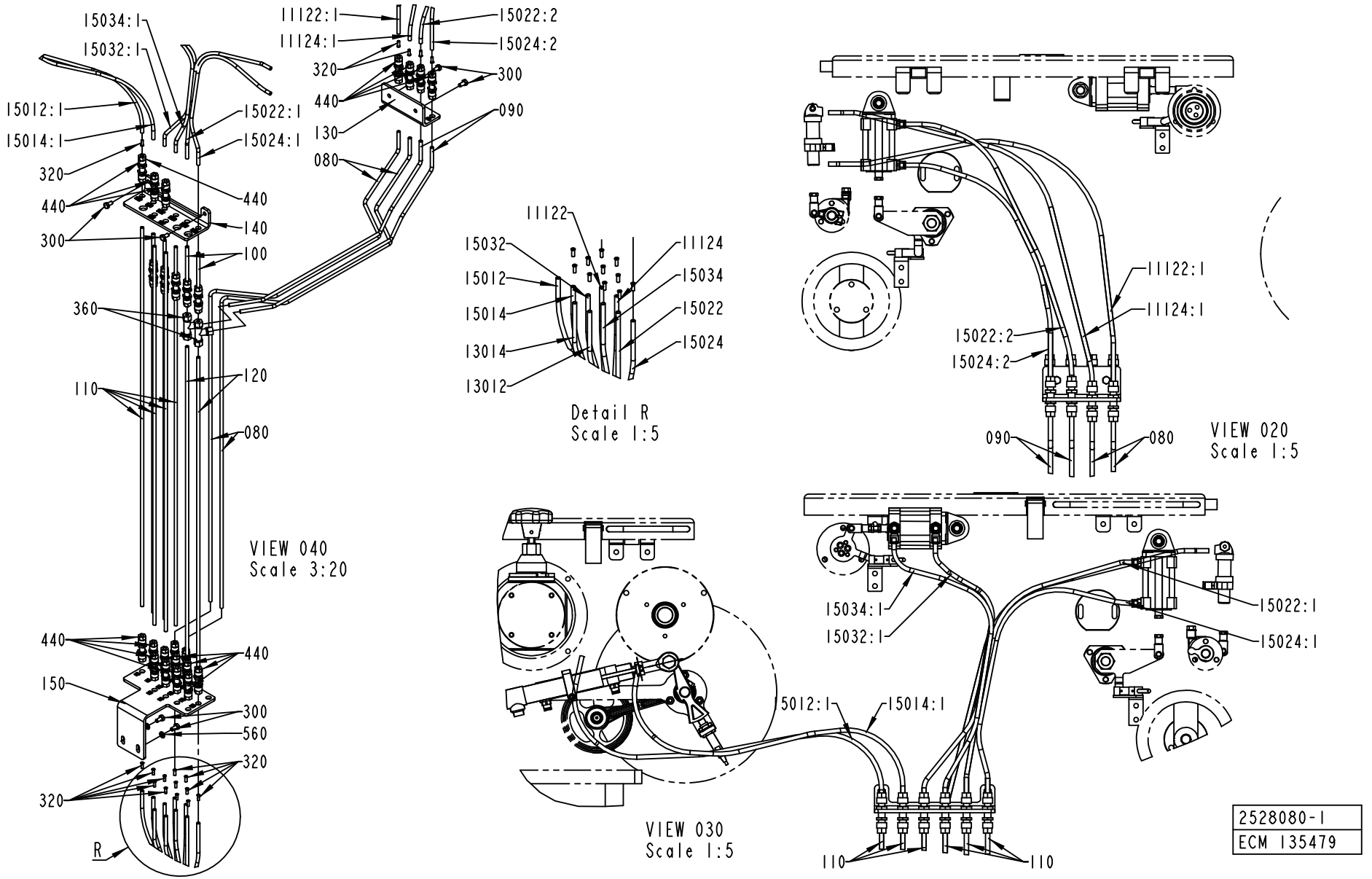
15034:1
15032:1
15012:1
15014:1
320
440
300
11122:1
11124:1
320
440
130
080
15022:2
15024:2
300
090
15022:1
15024:1
440
140
100
360
110
120
080
VIEW 040
Scale 3:20
440
440
150
300
560
320
320
R
11122
15032
15012
15014
13014
13012
11124
15034
15022
15024
Detail R
Scale 1:5
11122:1
11124:1
15022:2
15024:2
090
080
VIEW 020
Scale 1:5
15034:1
15032:1
15022:1
15024:1
5012:1
15014:1
110
110
VIEW 030
Scale 1:5
2528080-1
ECM 135479

Pos	Part No	UN	Qty	Description	Page No	Pos	Part No	UN	Qty	Description	Page No

SEE PREVIOUS LISTS PAGES: 1-303, 1-305.

HOSE INSTALLATION

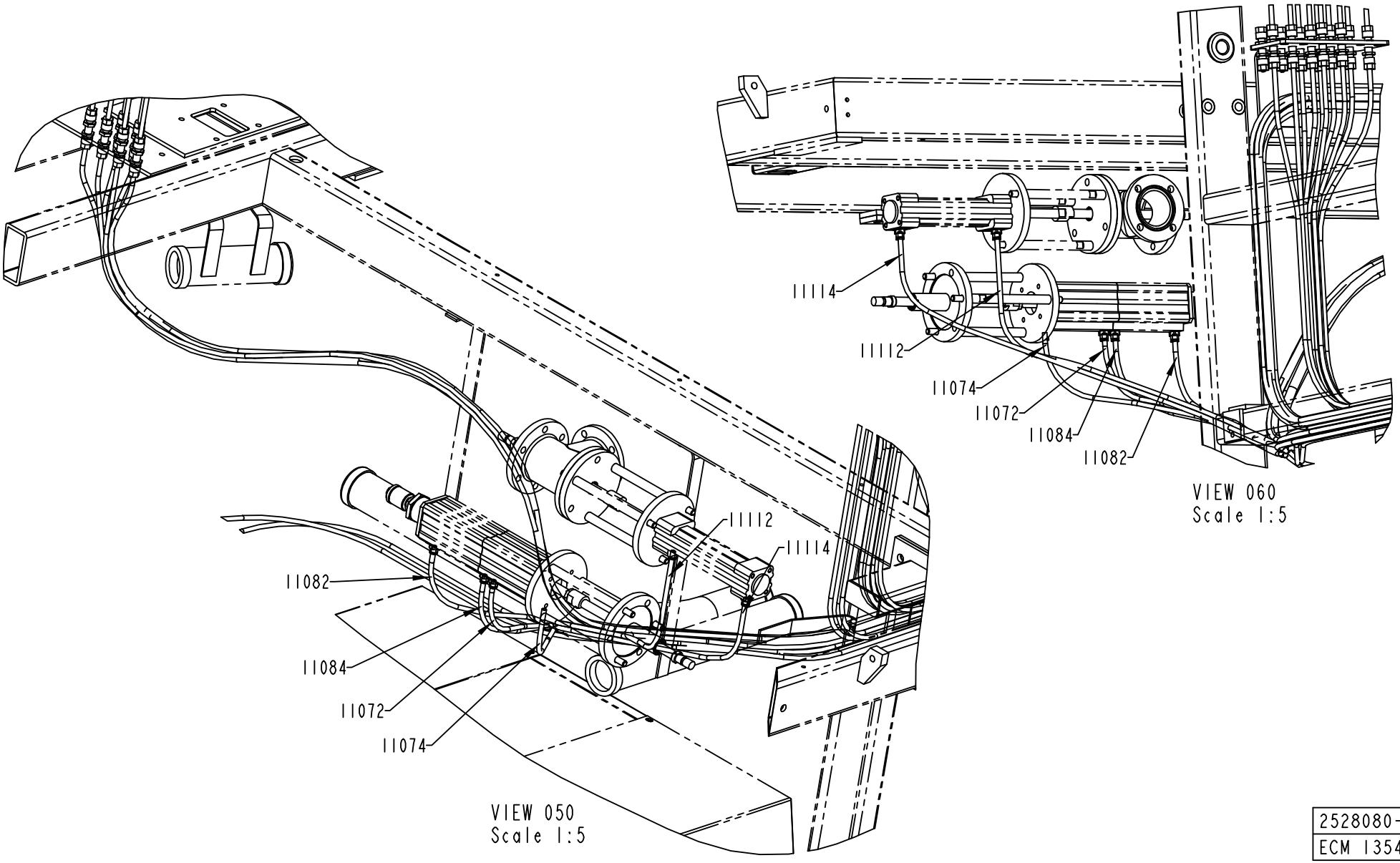

2528080-1
ECM 135479

ECM: 146906 - 20031117
Group number: 2528080-0100
Assembly Drawing: 2528080-1_4_AC

This list covers pages from 1-302 to 1-313

Pos	Part No	UN	Qty	Description	Page No	Pos	Part No	UN	Qty	Description	Page No

SEE PREVIOUS LISTS PAGES: 1-303, 1-305.

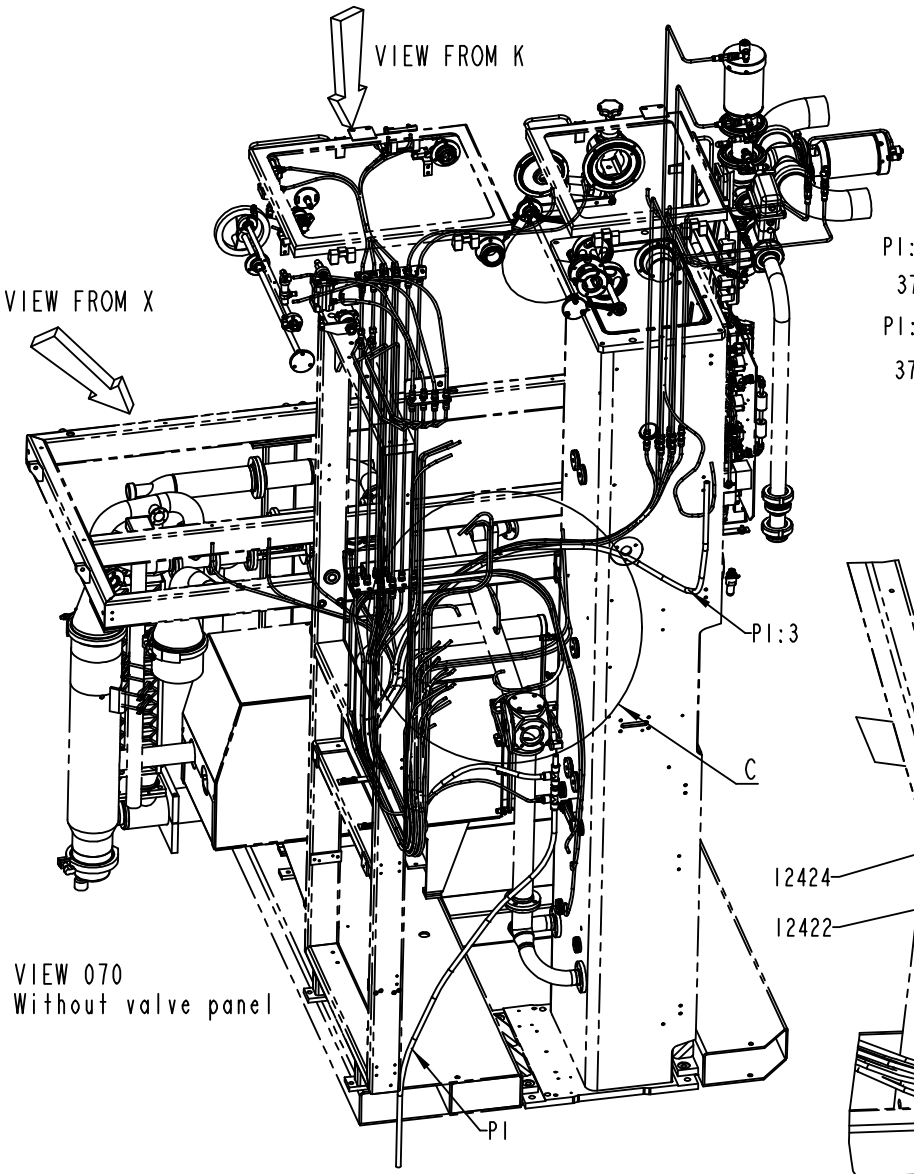

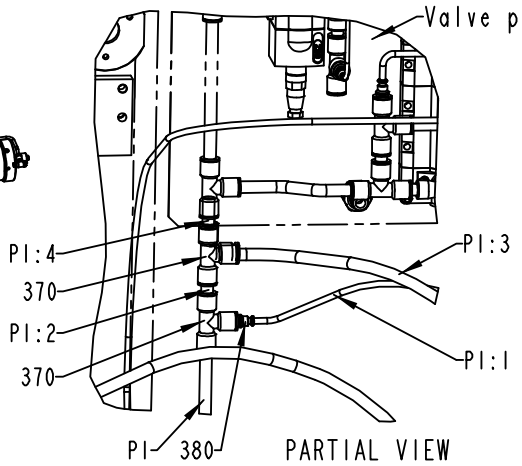

PARTIAL VIEW
From K with valve panel
Scale 1:5

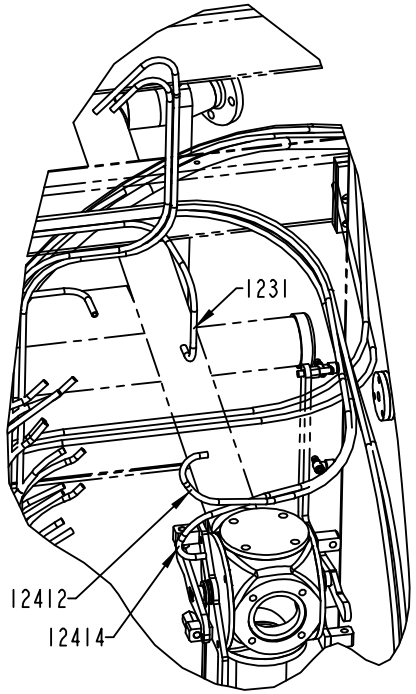

Detail C
Scale 1:5

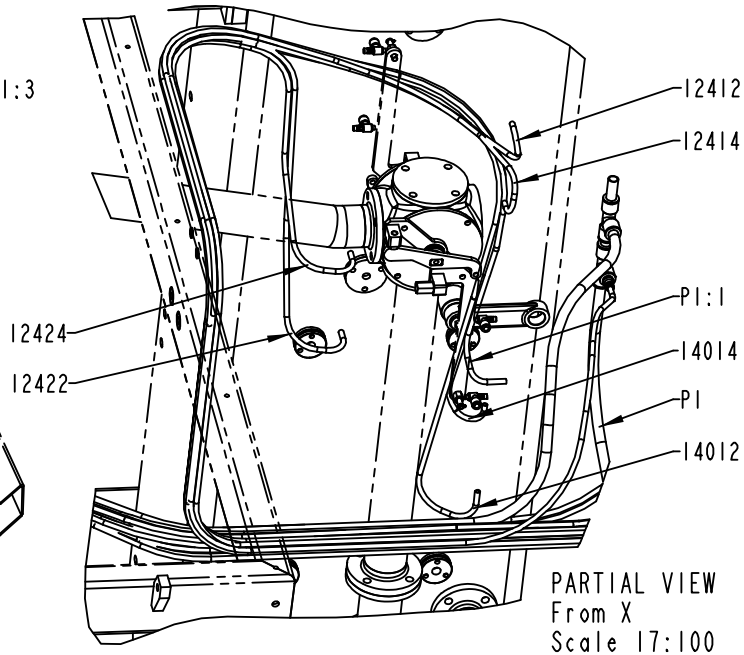

PARTIAL VIEW
From X
Scale 17:100

2528080-1
ECM 135479

Pos	Part No	UN	Qty	Description	Page No	Pos	Part No	UN	Qty	Description	Page No

SEE PREVIOUS LISTS PAGES: 1-303, 1-305.

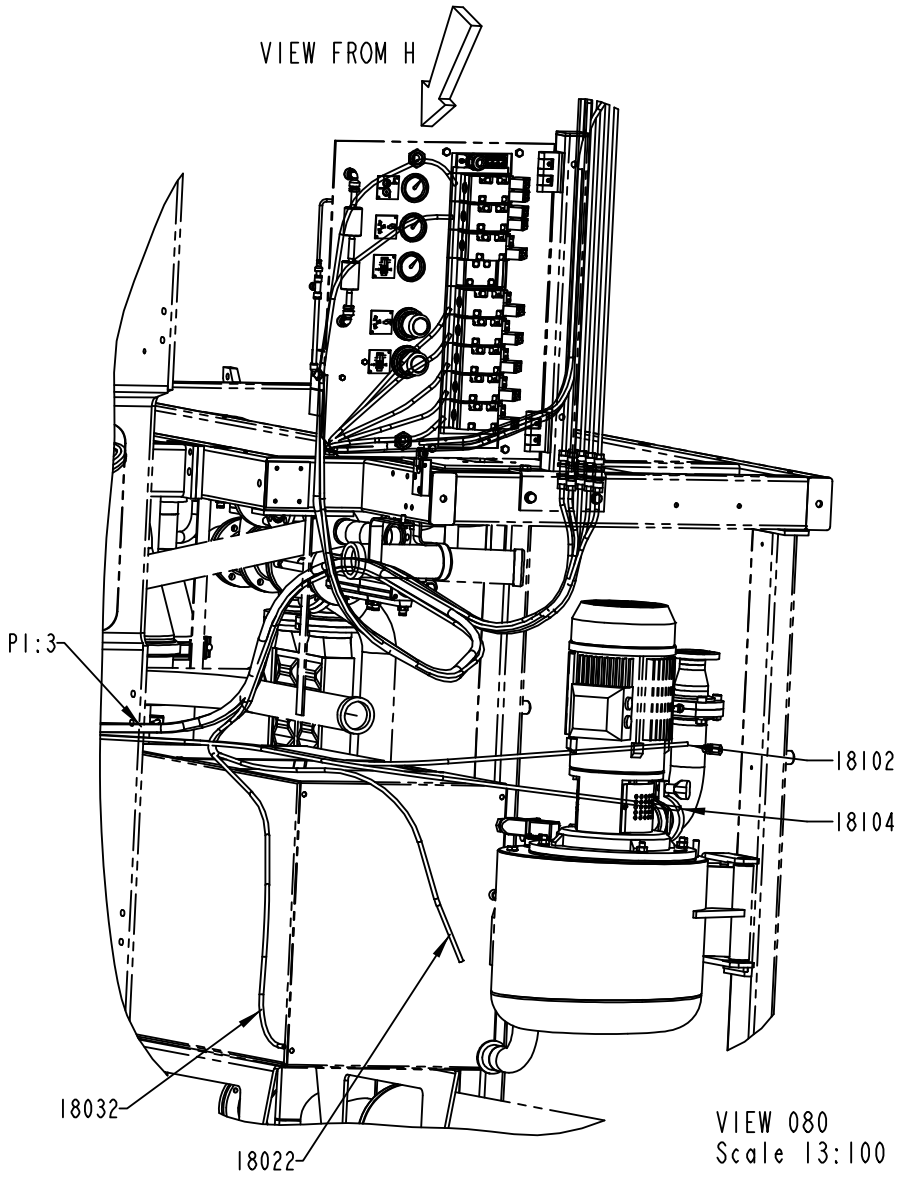

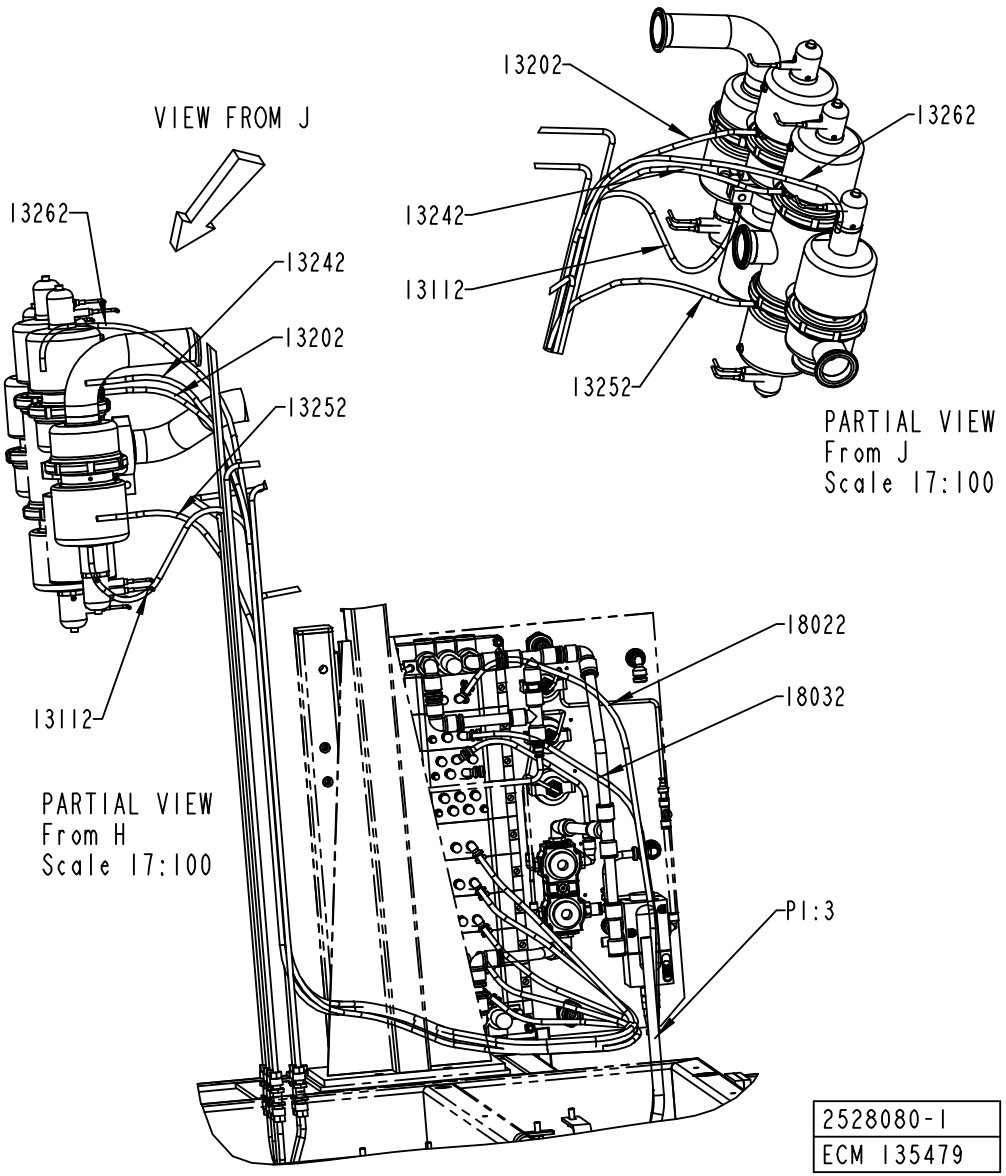

2528080-1
ECM 135479

Pos	Part No	UN	Qty	Description	Page No	Pos	Part No	UN	Qty	Description	Page No

SEE PREVIOUS LISTS PAGES: 1-303, 1-305.

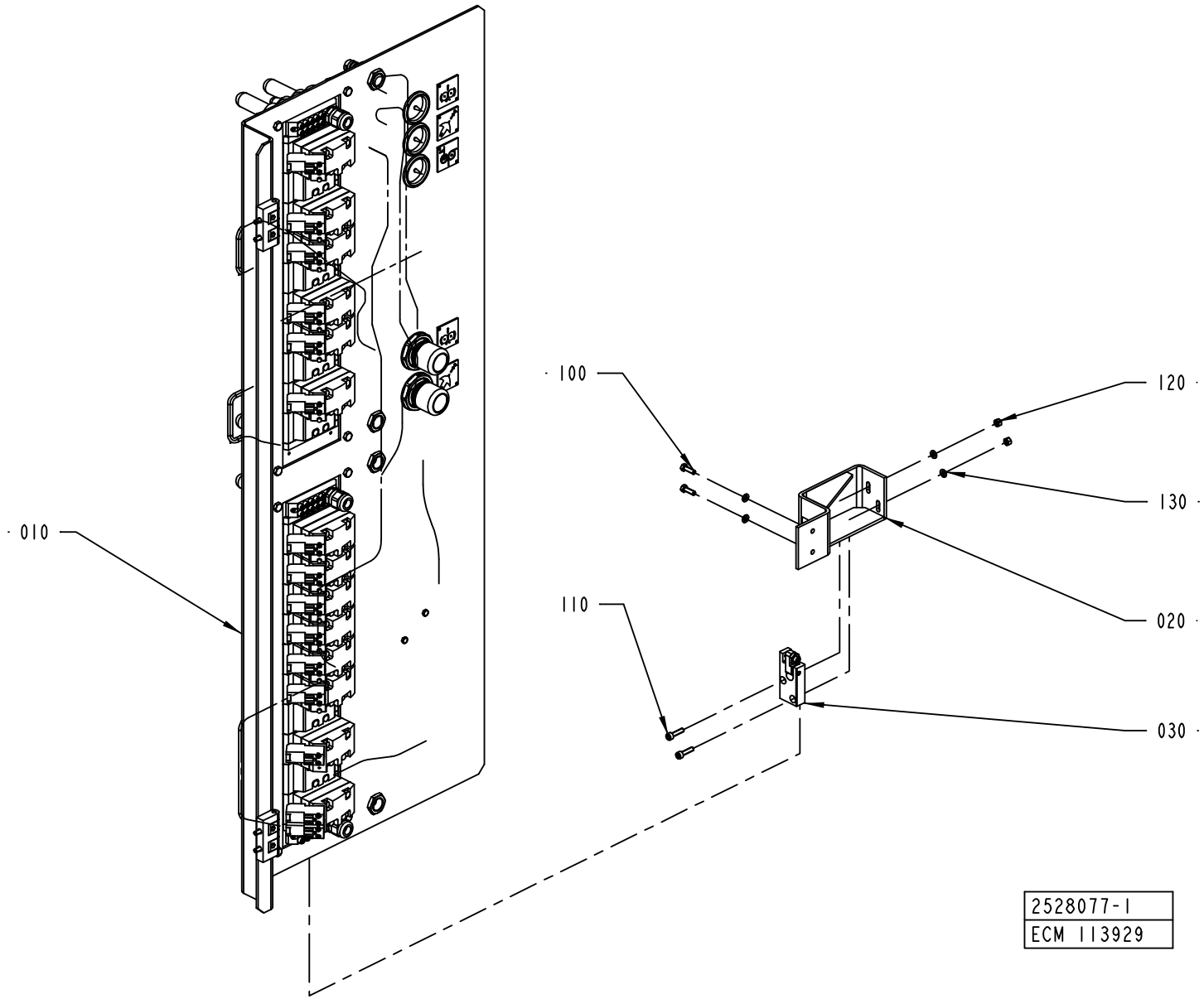
010
100
110
120
130
020
030
2528077-1
ECM 113929

ECM: 113943 - 20030123
Group number: 2528077-0100
Assembly Drawing: 2528077-1_1_AA

Pos	Part No	UN	Qty	Description	Page No
-					
010	2526854-0100		1	VALVE PANEL	**1-317**
020	2528078-0000		1	BRACKET	
030	2531059-0000		1	LOCK PLATE	
100	312105-0329		2	SCREW M6S ISO 4017 M5X16 A480	
110	312115-0331		2	SCREW ISO4762 M5X20 A4	
120	312605-0314		2	HEXAGON NUT, M6M M5 A280	
130	315105-0146		4	WASHER BRB5,3X10RFR	

Pos	Part No	UN	Qty	Description	Page No

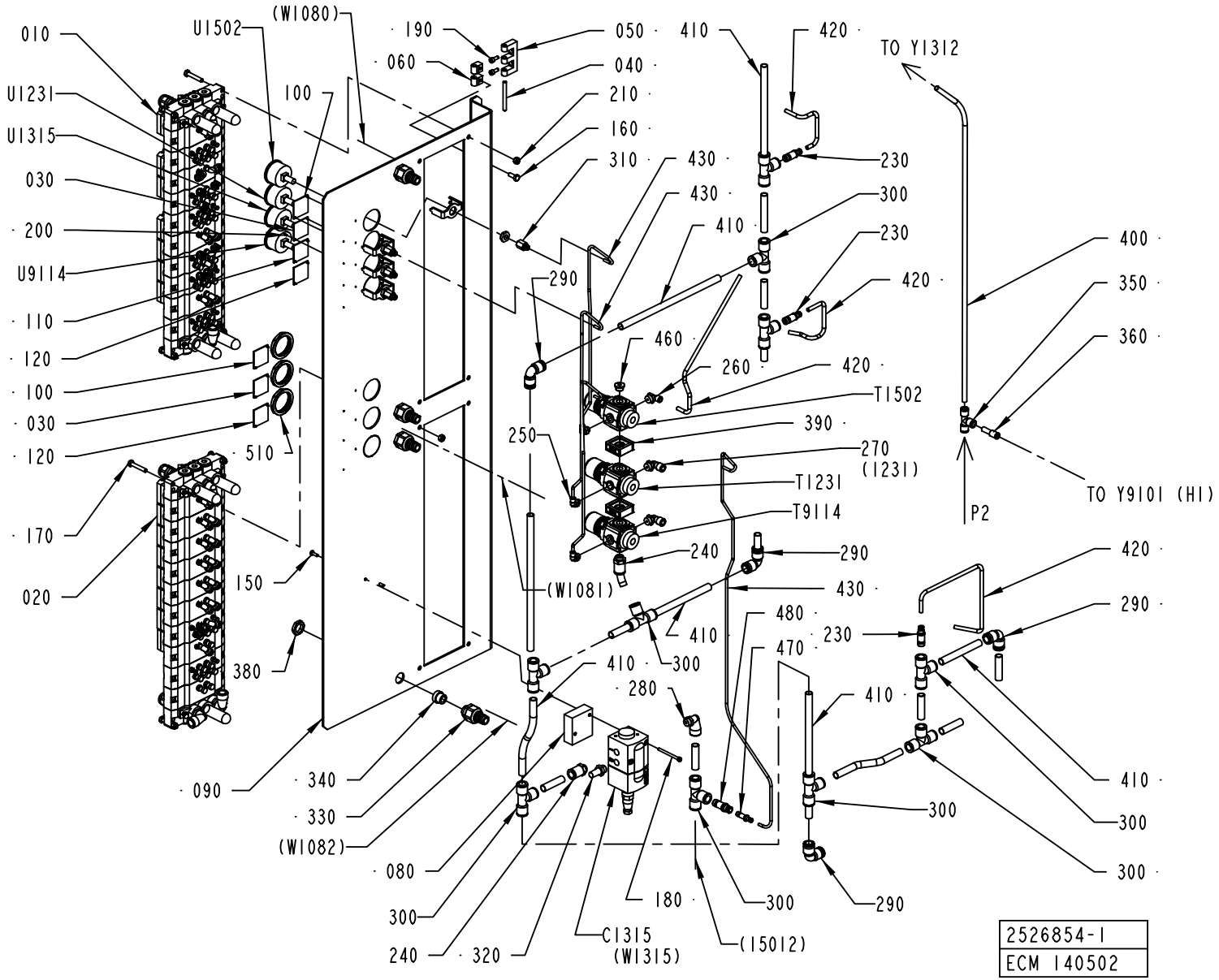
010
U1502
(W1080)
190
060
050
040
210
160
310
430
430
410
420
TO Y1312
230
300
230
420
400
350
360
U1231
U1315
030
200
U9114
110
120
100
030
120
100
290
460
260
420
T1502
390
270
(1231)
T1231
T9114
250
510
170
020
150
380
240
290
420
290
430
480
410
230
470
410
300
280
410
410
300
300
300
090
340
330
(W1082)
080
300
240
320
C1315
(W1315)
180
300
(15012)
290
(W1081)
P2
P2
TO Y9101 (HI)
2526854-1
ECM 140502

ECM: 140521 - 20031121
Group number: 2526854-0100
Assembly Drawing: 2526854-1_1_AC

Pos	Part No	UN	Qty	Description	Page No
HI					
120	2640822-0000		2	SIGN	
200	312502-0120		14	DRIVE SCREW ROUND HEAD KDS 0X5	
250	90458-2955		3	ELBOW PIPE JOINT, EXT.THREAD,	
270	90458-2958		2	ELBOW PIPE JOINT, EXT.THREAD, D=8MM-G1/4	
310	342770-0101		4	STRAIGHT COUPLING INT, D=4 MM - G1/8	
350	342748-0103		1	T-CONNECTION 8MM	
360	350006-0003		1	PUSH-IN FITTING QS-F-8H-6	
390	90113-0140		2	QUICK CLAMP	
400	90166-0013	MM	1000	TUBE 8 MM PA BLUE	
510	90457-0078		3	PANEL NUT	
T9114	90113-0469		1	MANIFOLD REGULATOR 4 BAR	
U9114	90043-0065		1	PRESSURE GAUGE, 2048 D=40 MM	
NOHI					
200	312502-0120		10	DRIVE SCREW ROUND HEAD KDS 0X5	
250	90458-2955		2	ELBOW PIPE JOINT, EXT.THREAD,	
270	90458-2958		1	ELBOW PIPE JOINT, EXT.THREAD, D=8MM-G1/4	
310	342770-0101		3	STRAIGHT COUPLING INT, D=4 MM - G1/8	
390	90113-0140		1	QUICK CLAMP	
510	90457-0078		2	PANEL NUT	
Common Parts					
010	2515324-0100		1	VALVE RAMP	**1-319**
020	2515325-0100		1	VALVE RAMP	**1-321, 1-323**
030	273450-0000		2	SIGN, AIR SPRAY	
040	988685-0000		2	PIN	
050	1035792-0000		2	E-HINGE	
060	1129770-0000		2	BLOCKING PIECE	
080	2511330-0000		1	SPACER	
090	2526855-0000		1	PLATE	
100	273452-0000		2	SIGN, ROLLING MACHINE FOR FABRICS	
110	1041937-0000		1	SIGN	
150	312105-0291		2	SCREW M6S ISO 4017 M4X12 A470	
160	312105-0368		4	SCREW M6S ISO 4017 M6X16 A480	
170	312109-0376		8	SCREW M6S ISO 4017 M6X35 A480	
180	312115-0305		2	SCREW ISO4762 M4X50 A4	
190	312115-0327		4	SCREW ISO4762 M5X12 A4	
210	312605-0316		8	HEXAGON NUT, M6M M6 A280	
230	342716-0210		3	REDUCER 6-12	
240	342722-0209		2	STRAIGHT COUPLING D=12-G1/4"	
260	90458-2957		1	ELBOW PIPE JOINT, EXT.THREAD, D=6MM-G1/4	
280	90458-2959		1	ELBOW PIPE JOINT, EXT.THREAD,D=12MM-G1/4	
290	342735-0109		4	ELBOW PIPE JOINT	
300	342748-0109		10	T-CONNECTION 12MM	
320	346800-0110		1	SILENCER FILTER R1/4"	
330	353243-0003		4	HOSE GLAND W/O INSERT PG11 EXTENDED	
340	353249-0011		4	INSERT, SINGEL HOLE, EK 153/11	
380	90099-0117		4	NUT, PR 18,6 (PG11)	
410	90166-0068	MM	5000	TUBE 12 MM PA BLUE	
420	90166-0081	MM	5000	TUBE 6 MM PA BLUE	
430	90166-0095	MM	4000	TUBE 4 MM PA BLUE	
460	342713-0210		1	PLUG, EXT THREAD HEX SOCKET 8638-00-140	
470	342716-0205		1	REDUCER 4-8	
480	342716-0209		1	REDUCER 8-12	
C1315	90458-1092		1	PROPORTIONAL VALVE 0 - 10V/0-6 BAR	
	90458-1262		*1*	*CONNECTOR 131028001 FOR PROP. VALVE*	
T1231	90113-0469		1	MANIFOLD REGULATOR 4 BAR	
T1502	90113-0469		1	MANIFOLD REGULATOR 4 BAR	
U1231	90043-0065		1	PRESSURE GAUGE, 2048 D=40 MM	
U1315	90043-0065		1	PRESSURE GAUGE, 2048 D=40 MM	
U1502	90043-0065		1	PRESSURE GAUGE, 2048 D=40 MM	

Machine Type | Group Description | Used-In | Group Number | Page No

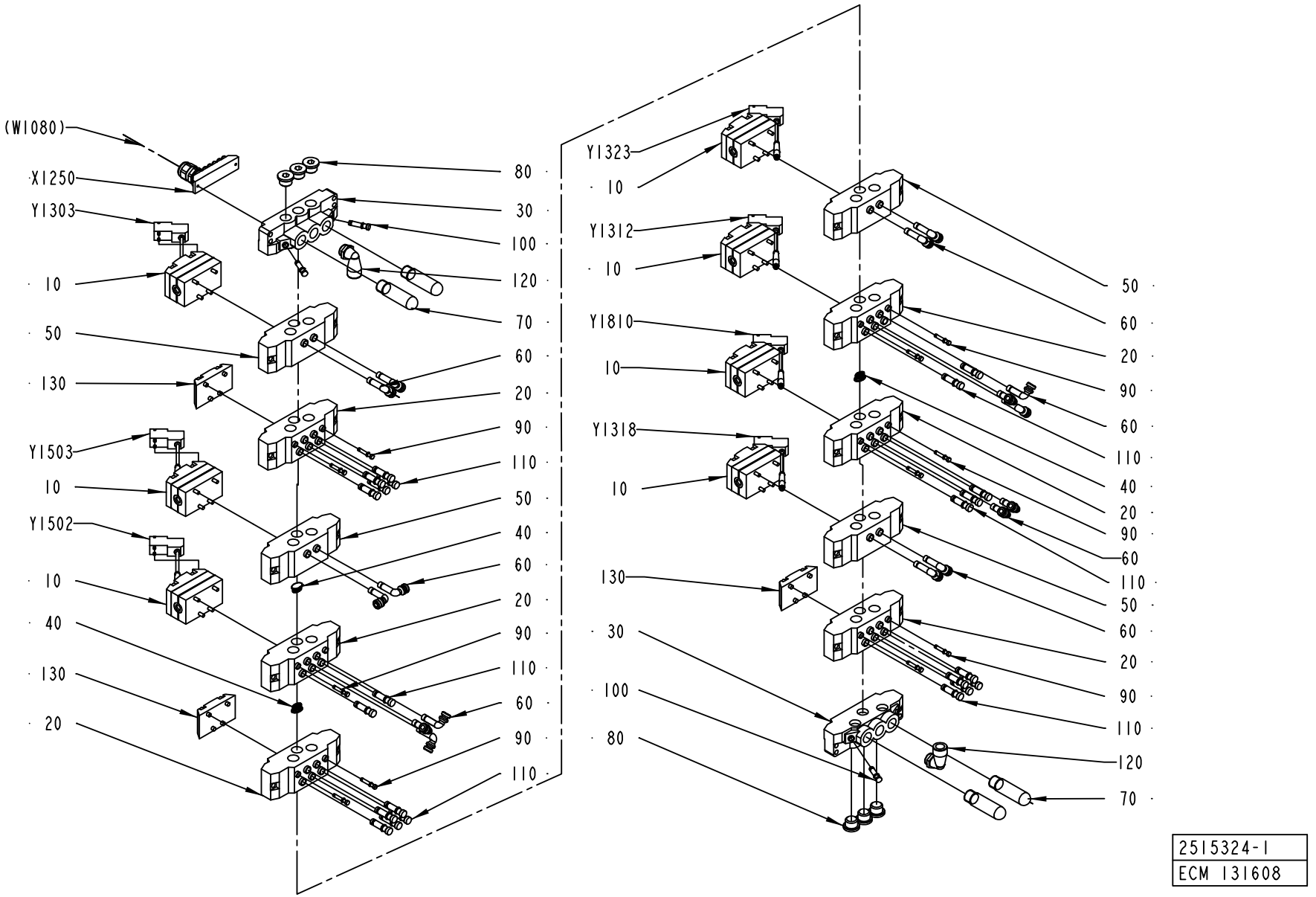
(W1080)
X1250
Y1303
10
50
130
Y1503
10
Y1502
10
40
130
20
80
30
100
120
70
60
20
90
110
50
40
60
20
90
110
60
90
110
Y1323
10
Y1312
10
Y1810
10
Y1318
10
130
30
100
80
50
60
20
90
60
110
40
20
90
60
110
50
60
20
90
110
120
70
2515324-1
ECM 131608

ECM: 132533 - 20030908
Group number: 2515324-0100
Assembly Drawing: 2515324-1_1_AB

Pos	Part No	UN	Qty	Description	Page No
A3/FLEX					
010	90042-0215		7	VALVE BODY 5/2 UNISTABLE	
130	90042-0519		3	BLANK PLATE ISO SIZE 1	
Common Parts					
020	90042-0520		6	BASE PLATE ISO SIZE 1	
030	90042-0522		2	PORTED END PIECE ISO SIZE 1	
040	90042-0528		3	BLANKING KIT SEALS ISO SIZE 1	
050	90042-0532		4	BASE PLATE ISO SIZE 1	
060	90055-0143		16	HOSE,ELBOW 90 COUPLING,FPT,6X8MM	
070	90328-0024		4	SILENCER G3/8	
080	342713-0211		6	PLUG, EXT THREAD HEX SOCKET 8638-00-380	
090	342715-0100		11	BLIND PLUG 4 MM	
100	342715-0102		3	BLIND PLUG 6 MM	
110	342715-0103		22	BLIND PLUG 8 MM	
120	90458-2960		2	ELBOW PIPE JOINT, EXT.THREAD,D=12MM-G3/8	
X1250	90042-0535		1	TERMINAL BOARD 19 CORDS	
Y1303	90042-0538		1	PILOT VALVE L=500MM	
Y1312	90042-0538		1	PILOT VALVE L=500MM	
Y1318	90042-0538		1	PILOT VALVE L=500MM	
Y1323	90042-0538		1	PILOT VALVE L=500MM	
Y1502	90042-0538		1	PILOT VALVE L=500MM	
Y1503	90042-0538		1	PILOT VALVE L=500MM	
Y1810	90042-0538		1	PILOT VALVE L=500MM	

Pos	Part No	UN	Qty	Description	Page No

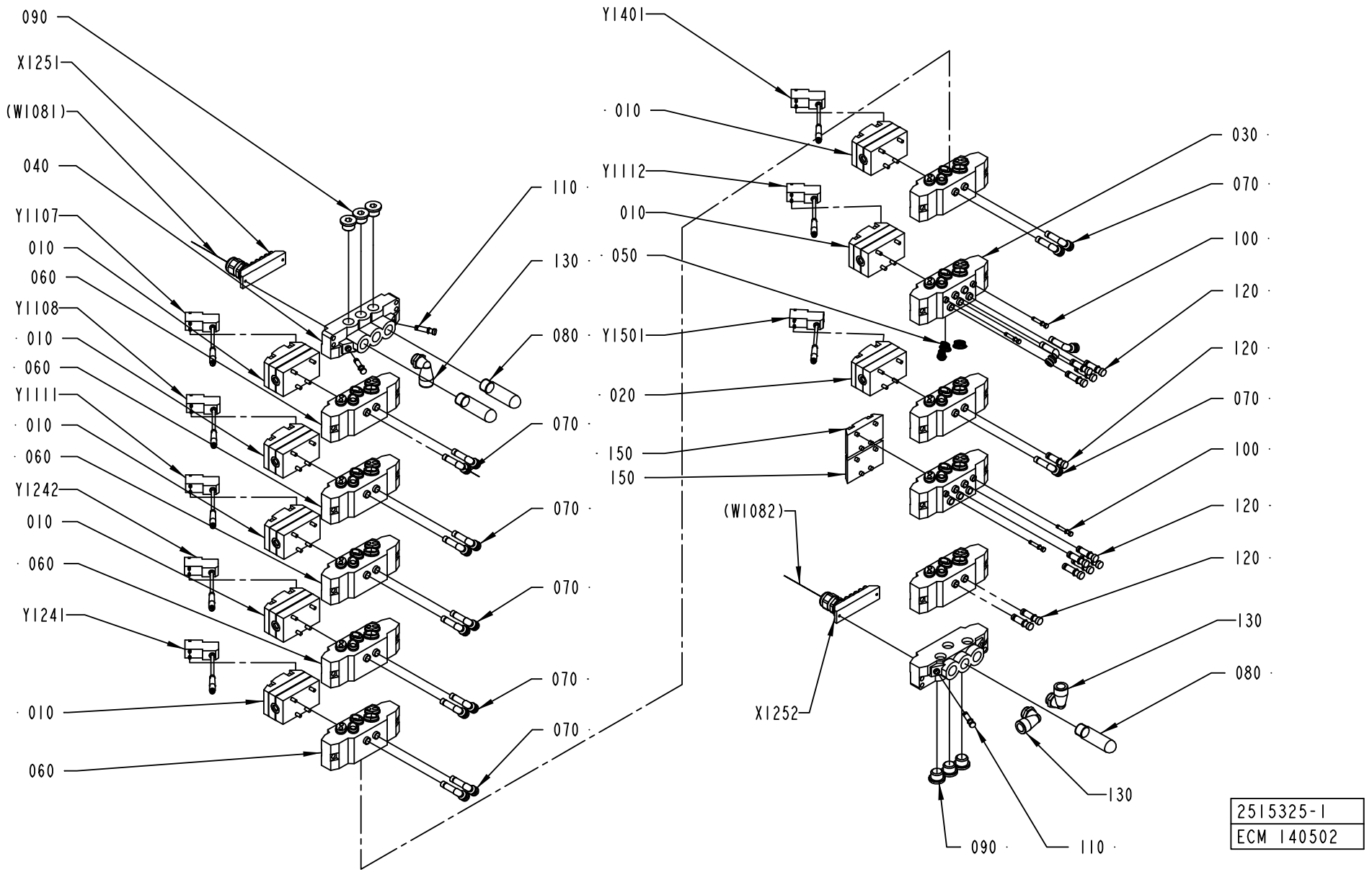
090
X1251
(W1081)
040
Y1107
010
060
Y1108
010
060
Y1111
010
060
Y1242
010
060
Y1241
010
060
110
130
080
070
070
070
070
070
Y1401
010
Y1112
010
050
Y1501
020
150
150
(W1082)
X1252
030
070
100
120
120
070
100
120
120
130
080
130
090
110
2515325-1
ECM 140502

ECM: 140520 - 20031121
Group number: 2515325-0100
Assembly Drawing: 2515325-1_1_AC

This list covers pages from 1-320 to 1-323

Pos	Part No	UN	Qty	Description	Page No
HI (See drawing on page: 1-322)					
020	90042-0271		2	VALVE BODY 2X3/2	
070	90055-0143		16	HOSE,ELBOW 90 COUPLING,FPT,6X8MM	
120	342715-0103		10	BLIND PLUG 8 MM	
150	90042-0519		1	BLANK PLATE ISO SIZE 1	
Y9105	90042-0538		1	PILOT VALVE L=500MM	
Y9106	90042-0538		1	PILOT VALVE L=500MM	
NOHI (See drawing on page: 1-320)					
020	90042-0271		1	VALVE BODY 2X3/2	
070	90055-0143		14	HOSE,ELBOW 90 COUPLING,FPT,6X8MM	
120	342715-0103		12	BLIND PLUG 8 MM	
150	90042-0519		2	BLANK PLATE ISO SIZE 1	
Common Parts					
010	90042-0215		7	VALVE BODY 5/2 UNISTABLE	
030	90042-0520		2	BASE PLATE ISO SIZE 1	
040	90042-0522		2	PORTED END PIECE ISO SIZE 1	
050	90042-0528		3	BLANKING KIT SEALS ISO SIZE 1	
060	90042-0532		8	BASE PLATE ISO SIZE 1	
080	90328-0024		3	SILENCER G3/8	
090	342713-0211		6	PLUG, EXT THREAD HEX SOCKET 8638-00-380	
100	342715-0100		4	BLIND PLUG 4 MM	
110	342715-0102		3	BLIND PLUG 6 MM	
130	90458-2960		3	ELBOW PIPE JOINT, EXT.THREAD,D=12MM-G3/8	
X1251	90042-0535		1	TERMINAL BOARD 19 CORDS	
X1252	90042-0535		1	TERMINAL BOARD 19 CORDS	
Y1107	90042-0538		1	PILOT VALVE L=500MM	
Y1108	90042-0538		1	PILOT VALVE L=500MM	
Y1111	90042-0538		1	PILOT VALVE L=500MM	
Y1112	90042-0538		1	PILOT VALVE L=500MM	
Y1241	90042-0538		1	PILOT VALVE L=500MM	
Y1242	90042-0538		1	PILOT VALVE L=500MM	
Y1401	90042-0538		1	PILOT VALVE L=500MM	
Y1501	90042-0538		1	PILOT VALVE L=500MM	

Pos	Part No	UN	Qty	Description	Page No

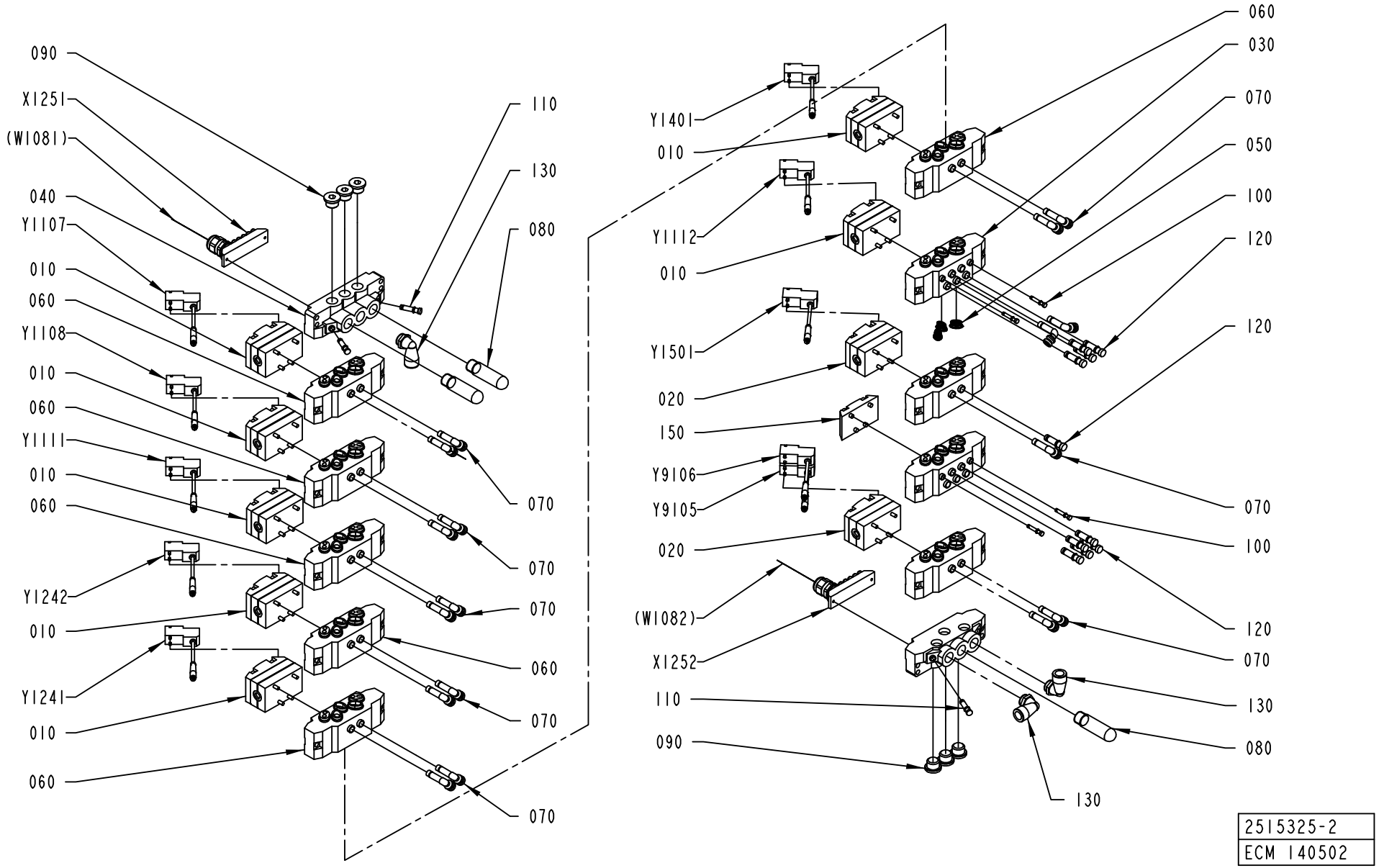
090
X1251
(W1081)
040
Y1107
010
060
Y1108
010
060
Y1111
010
060
Y1242
010
Y1241
010
060
110
130
080
070
070
070
060
070
070
Y1401
010
Y1112
010
Y1501
020
150
Y9106
Y9105
020
(W1082)
X1252
110
090
060
030
070
050
100
120
120
070
100
120
070
130
080
130
2515325-2
ECM 140502

ECM: 140520 - 20031121
Group number: 2515325-0100
Assembly Drawing: 2515325-2_1_AA

This list covers pages from 1-320 to 1-323

Pos	Part No	UN	Qty	Description	Page No
HI (See drawing on page: 1-322)					
020	90042-0271		2	VALVE BODY 2X3/2	
070	90055-0143		16	HOSE,ELBOW 90 COUPLING,FPT,6X8MM	
120	342715-0103		10	BLIND PLUG 8 MM	
150	90042-0519		1	BLANK PLATE ISO SIZE 1	
Y9105	90042-0538		1	PILOT VALVE L=500MM	
Y9106	90042-0538		1	PILOT VALVE L=500MM	
NOHI (See drawing on page: 1-320)					
020	90042-0271		1	VALVE BODY 2X3/2	
070	90055-0143		14	HOSE,ELBOW 90 COUPLING,FPT,6X8MM	
120	342715-0103		12	BLIND PLUG 8 MM	
150	90042-0519		2	BLANK PLATE ISO SIZE 1	
Common Parts					
010	90042-0215		7	VALVE BODY 5/2 UNISTABLE	
030	90042-0520		2	BASE PLATE ISO SIZE 1	
040	90042-0522		2	PORTED END PIECE ISO SIZE 1	
050	90042-0528		3	BLANKING KIT SEALS ISO SIZE 1	
060	90042-0532		8	BASE PLATE ISO SIZE 1	
080	90328-0024		3	SILENCER G3/8	
090	342713-0211		6	PLUG, EXT THREAD HEX SOCKET 8638-00-380	
100	342715-0100		4	BLIND PLUG 4 MM	
110	342715-0102		3	BLIND PLUG 6 MM	
130	90458-2960		3	ELBOW PIPE JOINT, EXT.THREAD,D=12MM-G3/8	
X1251	90042-0535		1	TERMINAL BOARD 19 CORDS	
X1252	90042-0535		1	TERMINAL BOARD 19 CORDS	
Y1107	90042-0538		1	PILOT VALVE L=500MM	
Y1108	90042-0538		1	PILOT VALVE L=500MM	
Y1111	90042-0538		1	PILOT VALVE L=500MM	
Y1112	90042-0538		1	PILOT VALVE L=500MM	
Y1241	90042-0538		1	PILOT VALVE L=500MM	
Y1242	90042-0538		1	PILOT VALVE L=500MM	
Y1401	90042-0538		1	PILOT VALVE L=500MM	
Y1501	90042-0538		1	PILOT VALVE L=500MM	

Pos	Part No	UN	Qty	Description	Page No

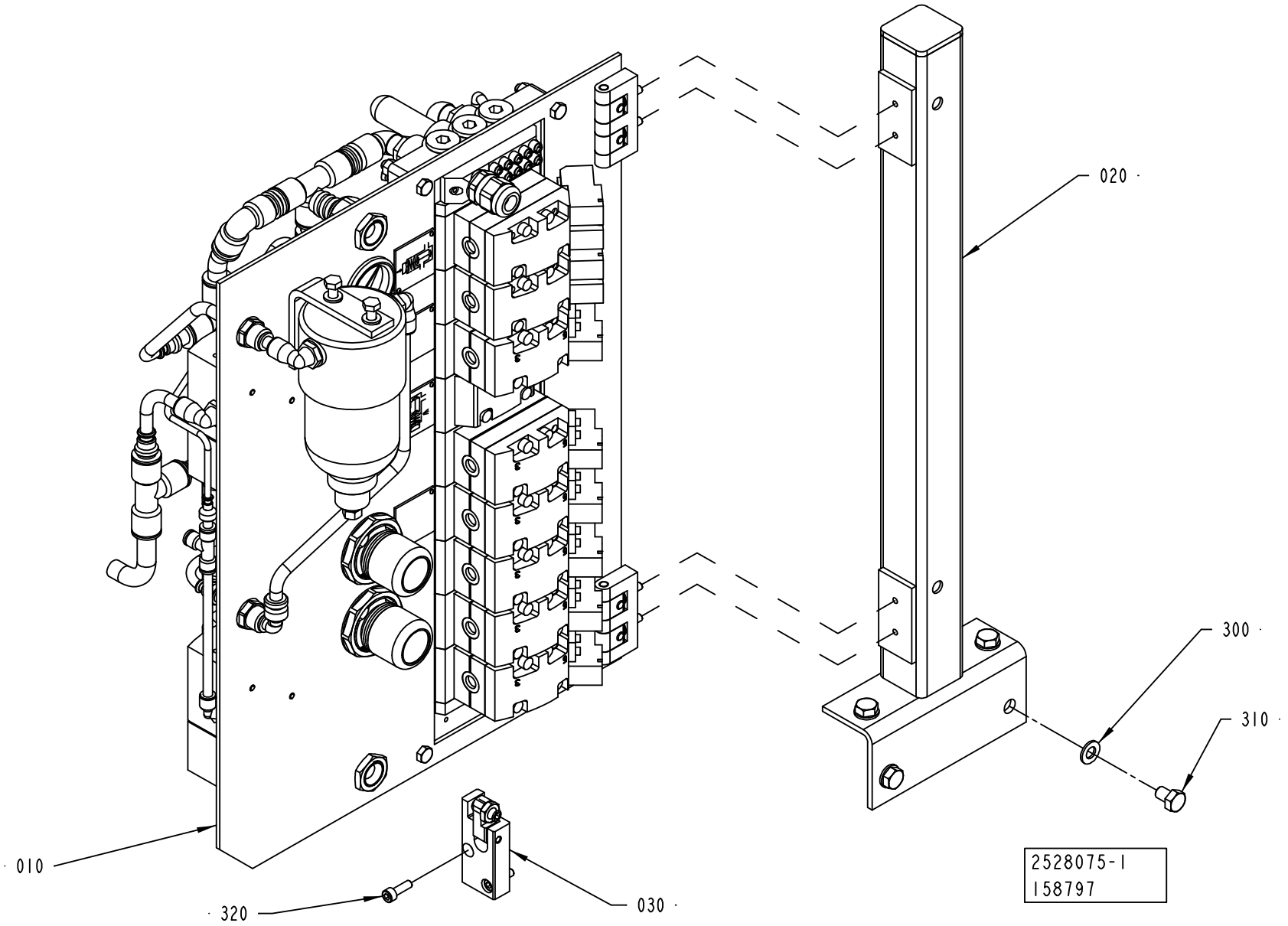
020
300
310
010
320
030
2528075-1
158797

ECM: 164383 - 20040517
Group number: 2528075-0100
Assembly Drawing: 2528075-1_1_AB

Pos	Part No	UN	Qty	Description	Page No
-					
010	2526853-0200		1	VALVE PANEL	**1-327**
020	1558838-0000		1	BEAM	
030	2531059-0000		1	LOCK PLATE	
300	315105-0165		4	WASHER BRB8,4X16RFR	
310	312105-0447		4	SCREW M6S ISO 4017 M8X12 A480	
320	312115-0329		2	SCREW ISO4762 M5X16 A4	

Pos	Part No	UN	Qty	Description	Page No

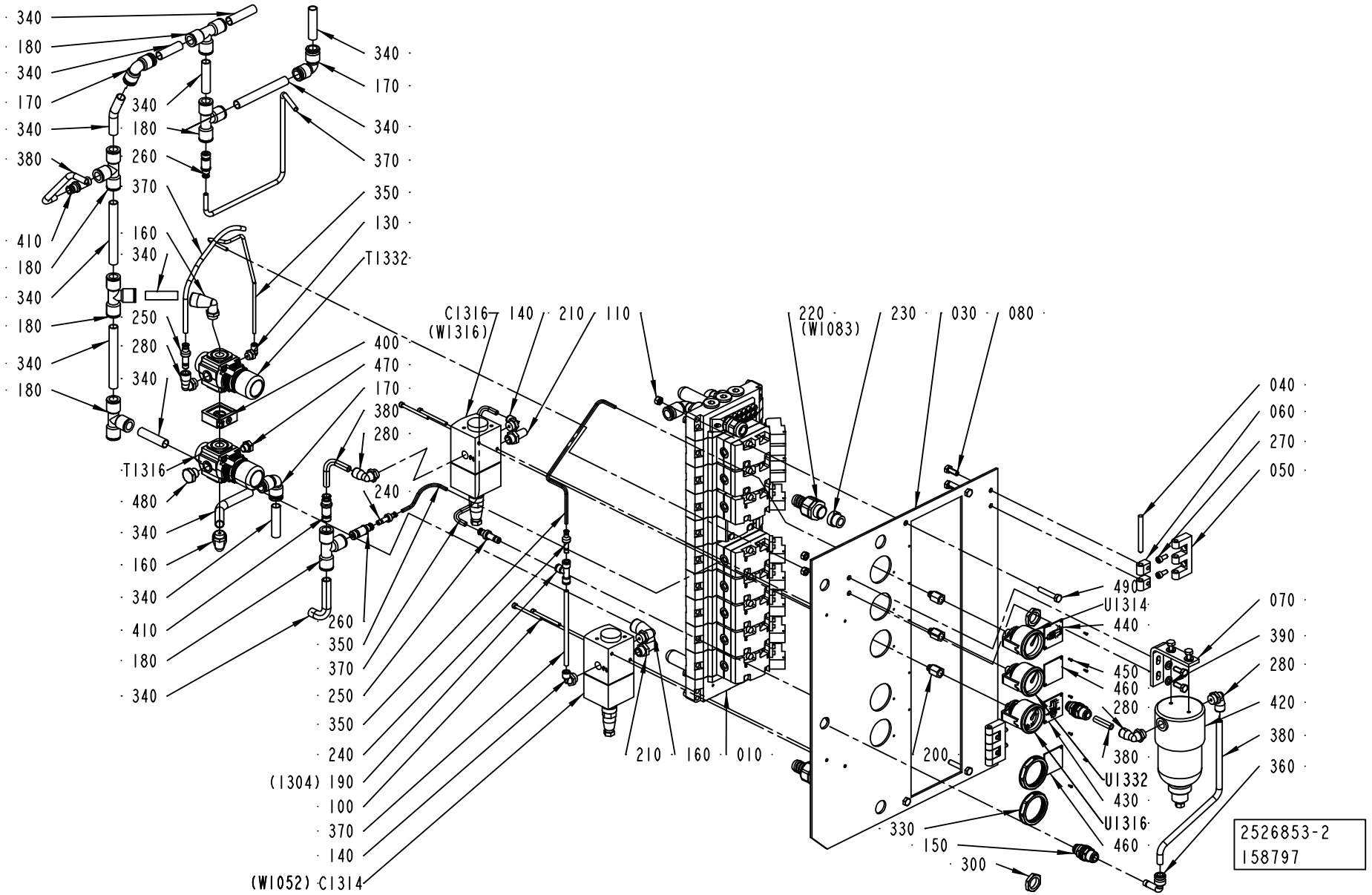
340
180
340
170
340
380
410
180
340
180
340
180
340
180
T1316
480
340
160
340
410
180
340
340
180
170
340
370
350
130
T1332
160
340
250
280
340
400
470
170
380
280
240
260
350
370
250
350
240
(1304) 190
100
370
140
(W1052) C1314
C1316
(W1316)
140
210
110
210
160
010
220
(W1083)
230
030
080
200
330
150
300
040
060
270
050
490
U1314
440
450
460
280
380
U1332
430
U1316
460
070
390
280
420
380
360
2526853-2
158797

ECM: 164382 - 20040517
Group number: 2526853-0200
Assembly Drawing: 2526853-2_1_AA

Pos	Part No	UN	Qty	Description	Page No
-					
010	2515323-0100		1	VALVE RAMP	**1-329, 1-331**
030	2526852-0000		1	PLATE	
040	988685-0000		2	PIN	
050	1035792-0000		2	E-HINGE	
060	1129770-0000		4	BLOCKING PIECE	
080	312105-0368		6	SCREW M6S ISO 4017 M6X16 A480	
090	312109-0376		4	SCREW M6S ISO 4017 M6X35 A480	
100	312115-0305		4	SCREW ISO4762 M4X50 A4	
110	312605-0316		6	HEXAGON NUT, M6M M6 A280	
130	90458-2955		1	ELBOW PIPE JOINT, EXT.THREAD,	
140	90458-2957		2	ELBOW PIPE JOINT, EXT.THREAD, D=6MM-G1/4	
150	342768-0103		2	BULKHEAD CONNECTOR, 8 MM	
160	90458-2959		3	ELBOW PIPE JOINT, EXT.THREAD,D=12MM-G1/4	
170	342735-0109		3	ELBOW PIPE JOINT	
180	342748-0109		6	T-CONNECTION 12MM	
190	342748-0102		1	T-CONNECTION 6MM	
200	342770-0101		3	STRAIGHT COUPLING INT, D=4 MM - G1/8	
210	346800-0110		2	SILENCER FILTER R1/4"	
220	353243-0003		2	HOSE GLAND W/O INSERT PG11 EXTENDED	
230	353249-0011		2	INSERT, SINGEL HOLE, EK 153/11	
240	342716-0202		2	REDUCER 4-6	
250	342716-0203		2	REDUCER 6-8	
260	342716-0210		2	REDUCER 6-12	
270	312115-0327		4	SCREW ISO4762 M5X12 A4	
280	90458-2958		4	ELBOW PIPE JOINT, EXT.THREAD, D=8MM-G1/4	
300	90099-0117		2	NUT, PR 18,6 (PG11)	
330	90457-0078		2	PANEL NUT	
340	90166-0068	MM	2250	TUBE 12 MM PA BLUE	
350	90166-0095	MM	900	TUBE 4 MM PA BLUE	
360	90055-0118		1	ELBOW WITH TAILPIECE 8/8 MM	
370	90166-0081	MM	900	TUBE 6 MM PA BLUE	
380	90166-0013	MM	800	TUBE 8 MM PA BLUE	
390	315105-0153		4	WASHER BRB6,4X12RFR	
400	90113-0140		1	QUICK CLAMP	
410	342716-0209		2	REDUCER 8-12	
420	90277-0116		1	FILTER HOUSING / ART.NO FILTER 58P-S5430	
	90277-0406		*1*	*CARTRIDGE 100-12-BX*	
430	1548001-0000		1	SIGN	
440	2672942-0000		1	SYMBOLSIGN	
450	312502-0120		8	DRIVE SCREW ROUND HEAD KDS 0X5	
460	2634917-0000		2	SIGN	
470	90330-0066		1	PLUG, EXT. G-THREAD, G1/8	
480	90330-0026		1	PLUG, EXT. G-THREAD, G1/4	
490	2685391-0000		1	BRACKET	
C1314	90458-1092		1	PROPORTIONAL VALVE 0 - 10V/0-6 BAR	
	90458-1262		*1*	*CONNECTOR 131028001 FOR PROP. VALVE*	
C1316	90458-1092		1	PROPORTIONAL VALVE 0 - 10V/0-6 BAR	
	90458-1262		*1*	*CONNECTOR 131028001 FOR PROP. VALVE*	
T1316	90457-0144		1	REGULATOR 0,3-2 BAR	
T1332	90113-0469		1	MANIFOLD REGULATOR 4 BAR	
U1314	90043-0065		1	PRESSURE GAUGE, 2048 D=40 MM	
U1316	90459-4991		1	PRESSURE GAUGE, 9063064 D=40 MM	
U1332	90043-0065		1	PRESSURE GAUGE, 2048 D=40 MM	

Machine Type | Group Description | Used-In | Group Number | Page No

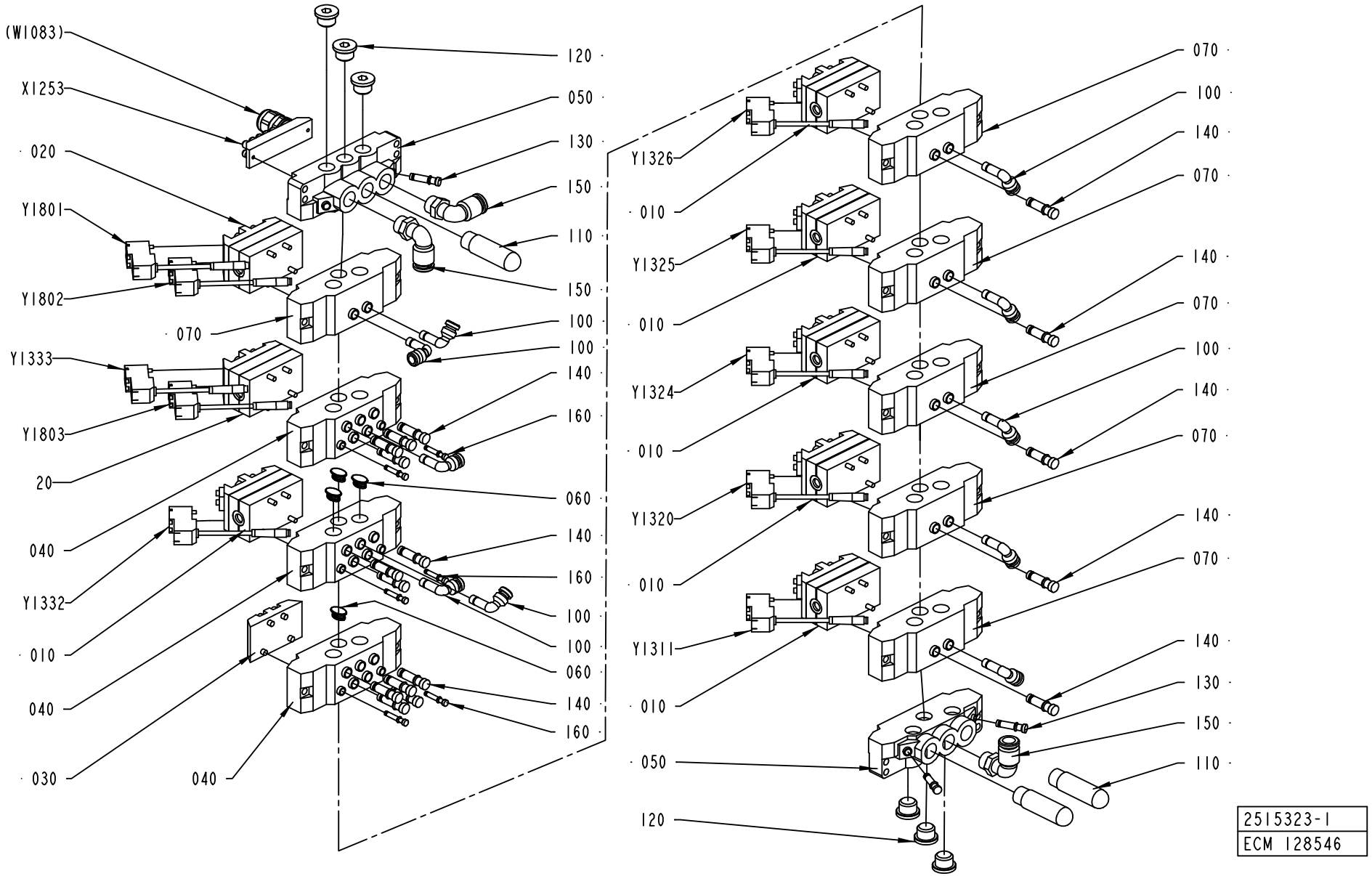
(W1083)
X1253
020
Y1801
Y1802
070
Y1333
Y1803
20
040
Y1332
010
040
030
040
120
050
130
150
110
150
100
100
140
160
060
140
160
100
100
060
140
160
Y1326
010
Y1325
010
Y1324
010
Y1320
010
Y1311
010
050
120
070
100
140
070
140
070
100
140
070
140
070
140
130
150
110
2515323-1
ECM 128546

ECM: 129866 - 20030908
Group number: 2515323-0100
Assembly Drawing: 2515323-1_1_AB

This list covers pages from 1-328 to 1-331

Pos	Part No	UN	Qty	Description	Page No
AUTOMCIP (See drawing on page: 1-328)					
010	90042-0215		6	VALVE BODY 5/2 UNISTABLE	
030	90042-0519		1	BLANK PLATE ISO SIZE 1	
100	90055-0172		10	ELBOW WITH TAILPIECE 8/8 MM	
140	342715-0103		17	BLIND PLUG 8 MM	
Y1311	90042-0538		1	PILOT VALVE L=500MM	
Y1320	90042-0538		1	PILOT VALVE L=500MM	
Y1324	90042-0538		1	PILOT VALVE L=500MM	
Y1325	90042-0538		1	PILOT VALVE L=500MM	
Y1326	90042-0538		1	PILOT VALVE L=500MM	
MANUALCIP (See drawing on page: 1-330)					
010	90042-0215		1	VALVE BODY 5/2 UNISTABLE	
030	90042-0519		6	BLANK PLATE ISO SIZE 1	
100	90055-0172		5	ELBOW WITH TAILPIECE 8/8 MM	
140	342715-0103		22	BLIND PLUG 8 MM	
Common Parts					
020	90042-0271		2	VALVE BODY 2X3/2	
040	90042-0520		3	BASE PLATE ISO SIZE 1	
050	90042-0522		2	PORTED END PIECE ISO SIZE 1	
060	90042-0528		4	BLANKING KIT SEALS ISO SIZE 1	
070	90042-0532		6	BASE PLATE ISO SIZE 1	
110	90328-0024		3	SILENCER G3/8	
120	342713-0211		6	PLUG, EXT THREAD HEX SOCKET 8638-00-380	
130	342715-0102		3	BLIND PLUG 6 MM	
150	90458-2960		3	ELBOW PIPE JOINT, EXT.THREAD,D=12MM-G3/8	
160	342715-0100		6	BLIND PLUG 4 MM	
X1253	90042-0535		1	TERMINAL BOARD 19 CORDS	
Y1332	90042-0538		1	PILOT VALVE L=500MM	
Y1333	90042-0538		1	PILOT VALVE L=500MM	
Y1801	90042-0538		1	PILOT VALVE L=500MM	
Y1802	90042-0538		1	PILOT VALVE L=500MM	
Y1803	90042-0538		1	PILOT VALVE L=500MM	

Pos	Part No	UN	Qty	Description	Page No

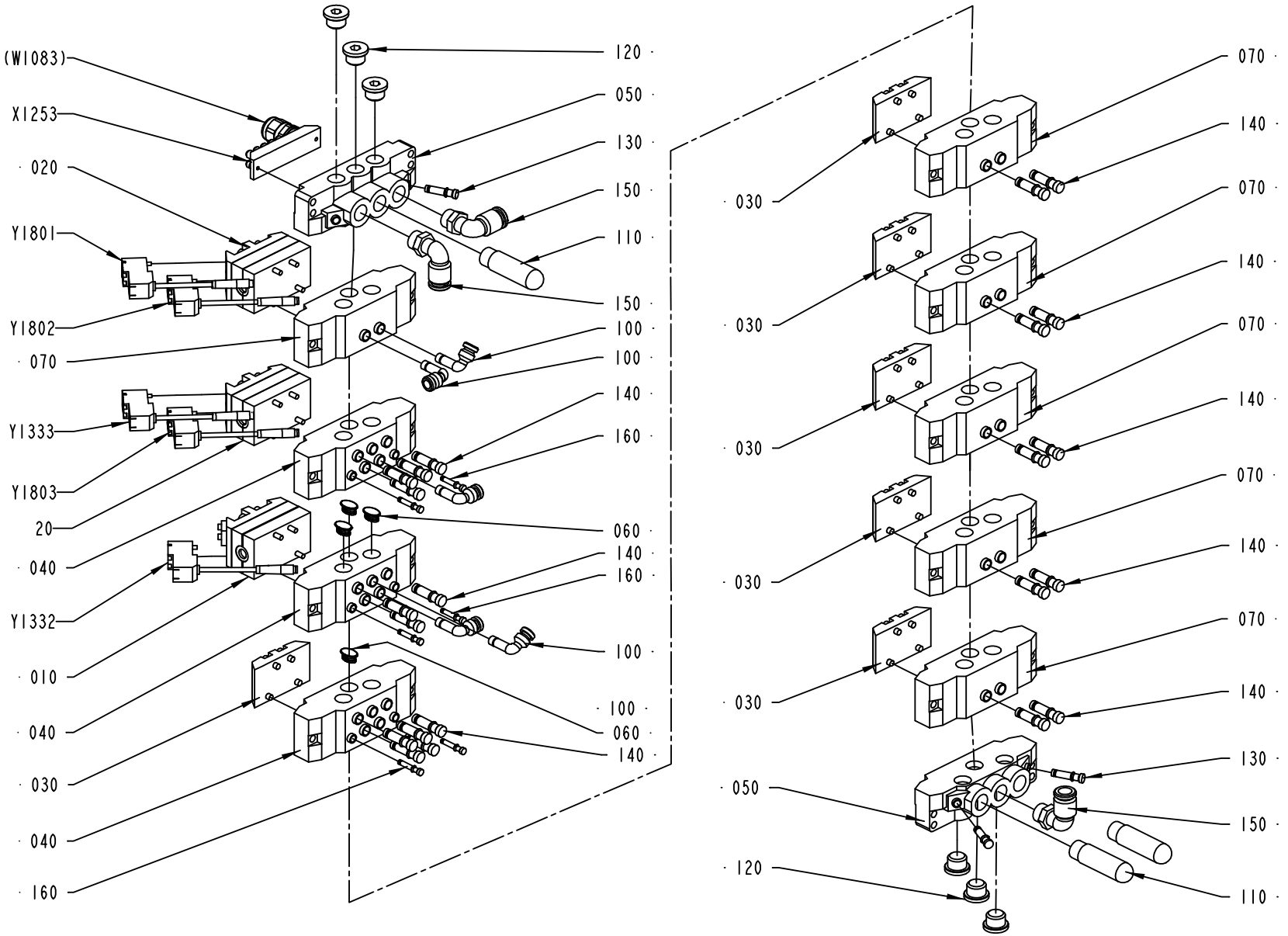

2515323-2
ECM 128546

ECM: 129866 - 20030908
Group number: 2515323-0100
Assembly Drawing: 2515323-2_1_AB

This list covers pages from 1-328 to 1-331

Pos	Part No	UN	Qty	Description	Page No
AUTOMCIP (See drawing on page: 1-328)					
010	90042-0215		6	VALVE BODY 5/2 UNISTABLE	
030	90042-0519		1	BLANK PLATE ISO SIZE 1	
100	90055-0172		10	ELBOW WITH TAILPIECE 8/8 MM	
140	342715-0103		17	BLIND PLUG 8 MM	
Y1311	90042-0538		1	PILOT VALVE L=500MM	
Y1320	90042-0538		1	PILOT VALVE L=500MM	
Y1324	90042-0538		1	PILOT VALVE L=500MM	
Y1325	90042-0538		1	PILOT VALVE L=500MM	
Y1326	90042-0538		1	PILOT VALVE L=500MM	
MANUALCIP (See drawing on page: 1-330)					
010	90042-0215		1	VALVE BODY 5/2 UNISTABLE	
030	90042-0519		6	BLANK PLATE ISO SIZE 1	
100	90055-0172		5	ELBOW WITH TAILPIECE 8/8 MM	
140	342715-0103		22	BLIND PLUG 8 MM	
Common Parts					
020	90042-0271		2	VALVE BODY 2X3/2	
040	90042-0520		3	BASE PLATE ISO SIZE 1	
050	90042-0522		2	PORTED END PIECE ISO SIZE 1	
060	90042-0528		4	BLANKING KIT SEALS ISO SIZE 1	
070	90042-0532		6	BASE PLATE ISO SIZE 1	
110	90328-0024		3	SILENCER G3/8	
120	342713-0211		6	PLUG, EXT THREAD HEX SOCKET 8638-00-380	
130	342715-0102		3	BLIND PLUG 6 MM	
150	90458-2960		3	ELBOW PIPE JOINT, EXT.THREAD,D=12MM-G3/8	
160	342715-0100		6	BLIND PLUG 4 MM	
X1253	90042-0535		1	TERMINAL BOARD 19 CORDS	
Y1332	90042-0538		1	PILOT VALVE L=500MM	
Y1333	90042-0538		1	PILOT VALVE L=500MM	
Y1801	90042-0538		1	PILOT VALVE L=500MM	
Y1802	90042-0538		1	PILOT VALVE L=500MM	
Y1803	90042-0538		1	PILOT VALVE L=500MM	

Pos	Part No	UN	Qty	Description	Page No

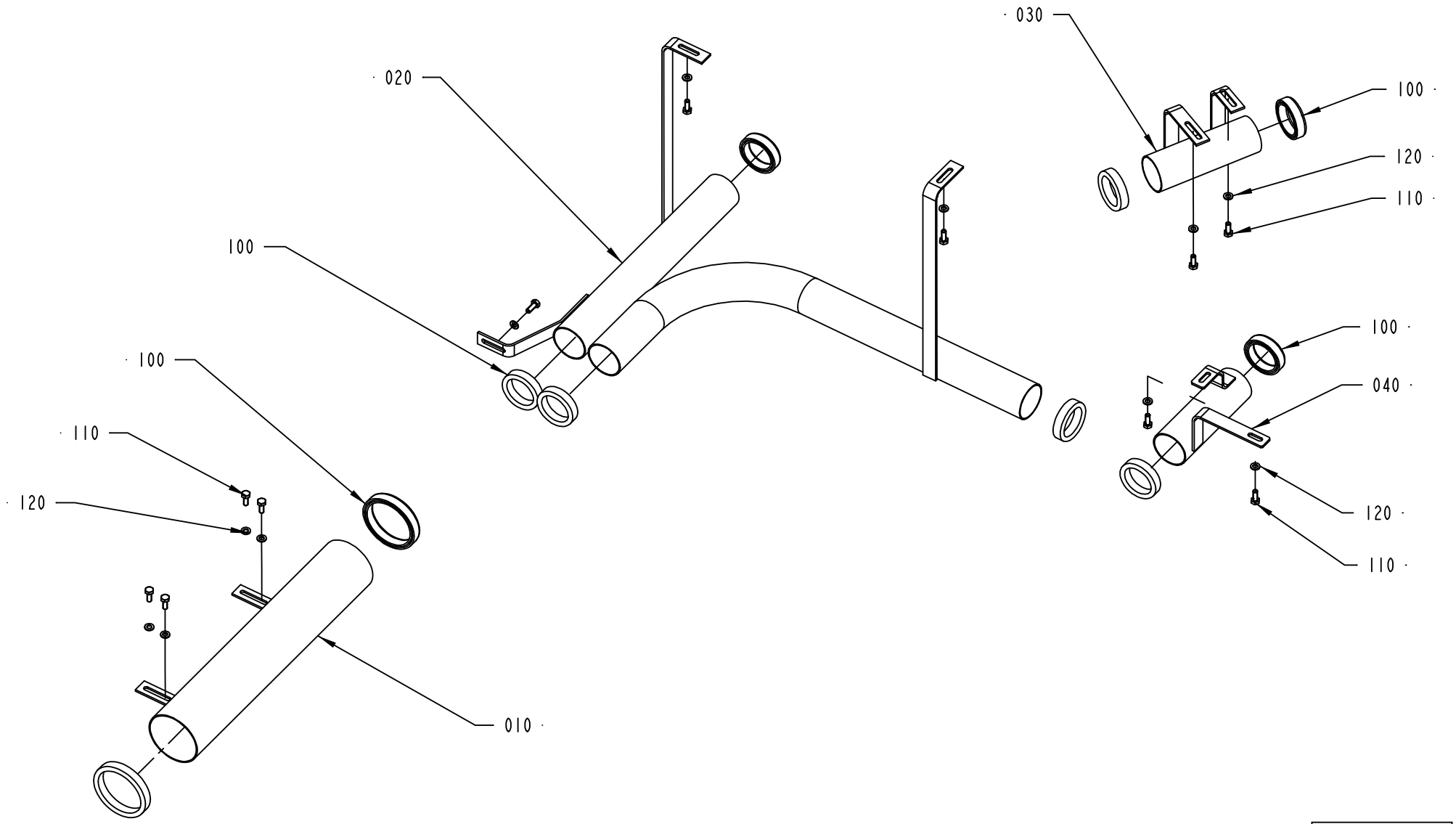

2528081-1
ECM 122050

ECM: 127783 - 20030403
Group number: 2528081-0100
Assembly Drawing: 2528081-1_1_AB

Pos	Part No	UN	Qty	Description	Page No
-					
010	2528082-0000		1	PIPE	
020	2528083-0000		1	TUBE	
030	2528084-0000		1	TUBE	
040	2594600-0000		1	TUBE	
100	90143-0059	MM	1900	SEAL STRIP 4610069	
110	312105-0368		11	SCREW M6S ISO 4017 M6X16 A480	
120	315105-0153		11	WASHER BRB6,4X12RFR	

Pos	Part No	UN	Qty	Description	Page No

CONNECTION BOX

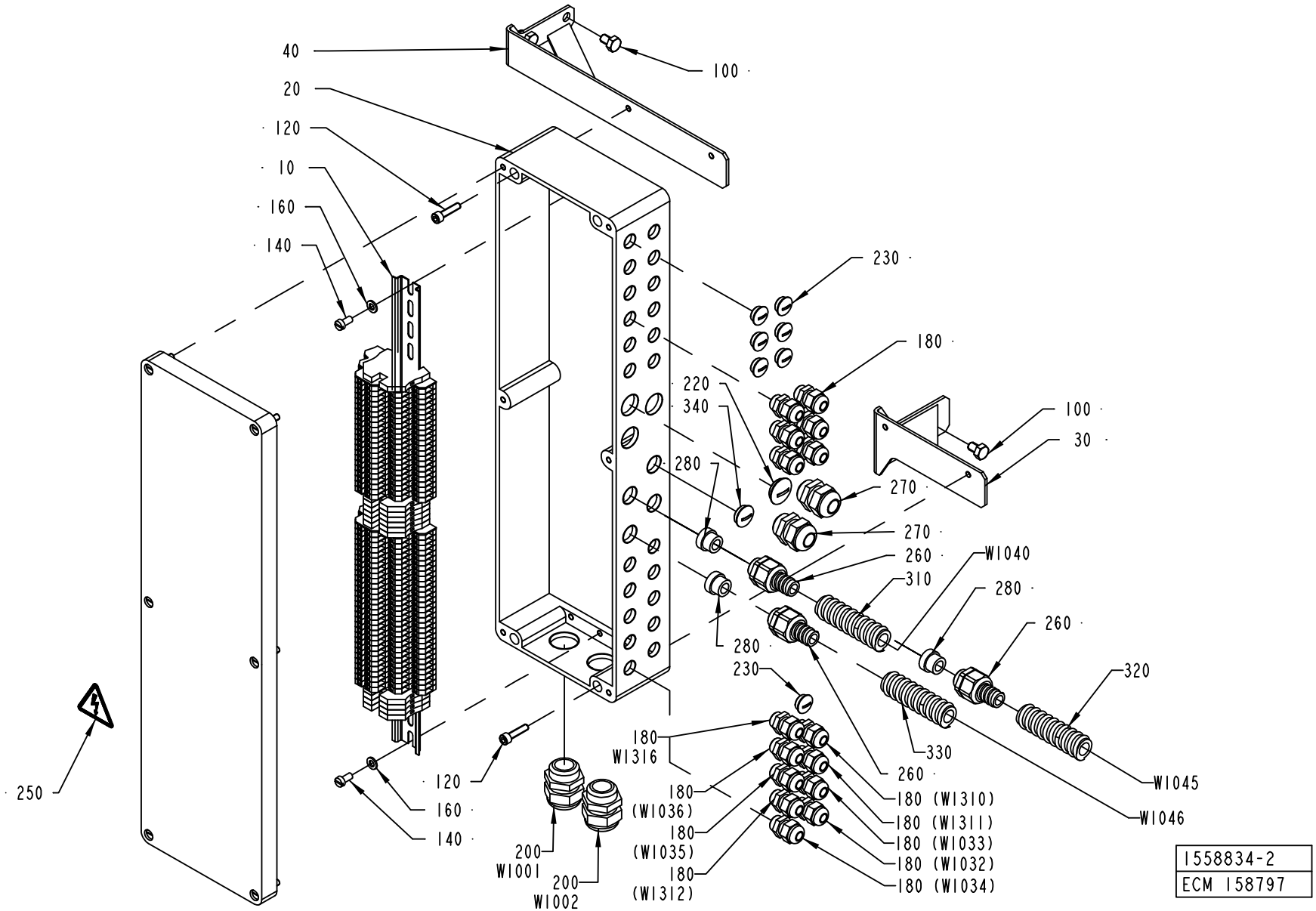

ECM: 158797 - 20040517
Group number: 1558834-0100
Assembly Drawing: 1558834-2_1_AD

Pos	Part No	UN	Qty	Description	Page No
A3/FLEX					
030	2504500-0000		1	BRACKET	
040	2504501-0000		1	BRACKET	
050	2559089-0000		1	CLAMP	
180	352103-0101		15	CABLE GLAND, ST 9, PR15,2/PG9	
220	90002-0004		1	BLANK-OFF PLUG, PR 22,5 SKINDICHT-BLK16	
230	90002-0013		7	BLANK-OFF PLUG, PR 15,2 SKINDICHT-BLK9	
260	353243-0003		3	HOSE GLAND W/O INSERT PG11 EXTENDED	
270	352103-0110		2	CABLE GLAND, STR 16, PR22,5/PG16	
280	353249-0011		3	INSERT, SINGEL HOLE, EK 153/11	
310	90152-0050	M	1	SPIRAL CONDUIT, 20X13, UL 1313	
330	90152-0050	M		SPIRAL CONDUIT, 20X13, UL 1313	
340	90002-0009		1	BLANK-OFF PLUG, PR 18.6 SKINDICHT-BLK11	
W1040	351150-0405	M	3	CABLE OLFLEX 5X0,75 MM2 LIGHT/GREY	
W1801	351150-0404	M	3	CABLE OLFLEX 4X0,75 MM2 LIGHT/GREY	
W1810	351150-0404	M	2	CABLE OLFLEX 4X0,75 MM2 LIGHT/GREY	
Common Parts					
010	1558519-0100		1	TERMINAL BLOCK	**1-337**
020	1558833-0000		1	CONNECTION BOX	
100	312105-0447		4	SCREW M6S ISO 4017 M8X12 A480	
120	312115-0372		4	SCREW ISO4762 M6X25 A4	
140	312125-0366		2	SCREW ISO 1207 M6X12 A4	
160	315105-0153		2	WASHER BRB6,4X12RFR	
200	352103-0116		2	CABLE GLAND, ST 21, PR28,3/PG21	
250	359705-0015		1	WARNING SIGN ISO, RISK OF ELECTRIC SHOCK	
320	90152-0050	M	1	SPIRAL CONDUIT, 20X13, UL 1313	
W1001	351150-0425	M	6	CABLE OLFLEX 25X0,75 MM2 LIGHT/GREY	
W1002	351150-0425	M	6	CABLE OLFLEX 25X0,75 MM2 LIGHT/GREY	
W1045	351150-0405	M	6	CABLE OLFLEX 5X0,75 MM2 LIGHT/GREY	
W1046	351150-0405	M	6	CABLE OLFLEX 5X0,75 MM2 LIGHT/GREY	
W1316	90220-0165	M	2	SCR. CABLE 5X0,34MM2	

Pos	Part No	UN	Qty	Description	Page No

TERMINAL BLOCK

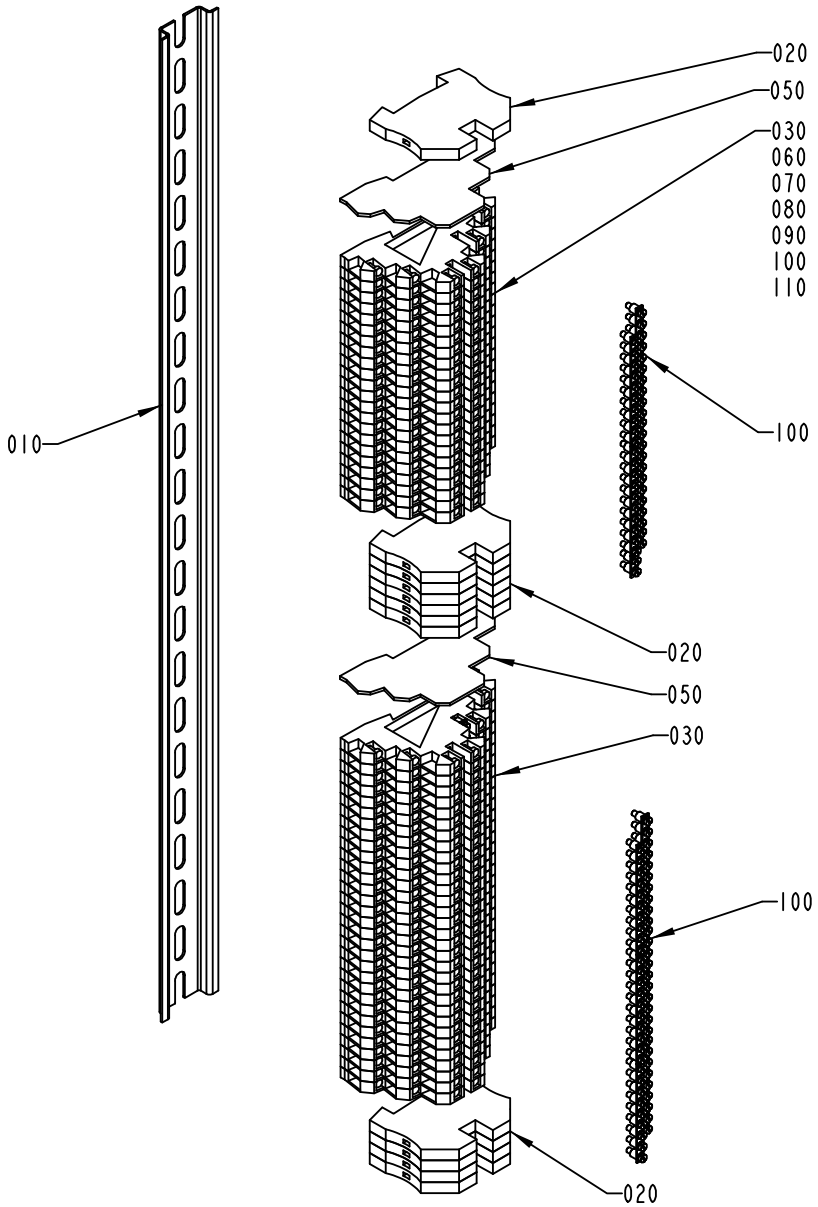

1558519-1
ECM 114362

ECM: 114362 - 20030123
Group number: 1558519-0100
Assembly Drawing: 1558519-1_1_AA

Pos	Part No	UN	Qty	Description	Page No
-					
010	1558832-0000		1	RAIL	
020	353024-0205		11	EARTH TERMINAL, 1010.1	
030	353021-0302		53	TERMINALS,TRIPLE-LEVEL, DLD 2,5/35 PA	
050	353032-0302		2	END PLATE WAP, 13176.6	
060	359011-0834		2	SET OF SIGNS 6-GW(EARTH)	
070	359011-0833		5	SET OF SIGNS 6-GW (-)	
080	359011-0832		5	SET OF SIGNS 6-GW (+)	
090	359011-0823		2	SET OF SIGNS 6-FW 101-150	
100	353034-0404		11	BRIDGE CONNECTOR Q10, 13131.0	
110	359011-0824		2	SET OF SIGNS 6-FW 151-200	

Pos	Part No	UN	Qty	Description	Page No

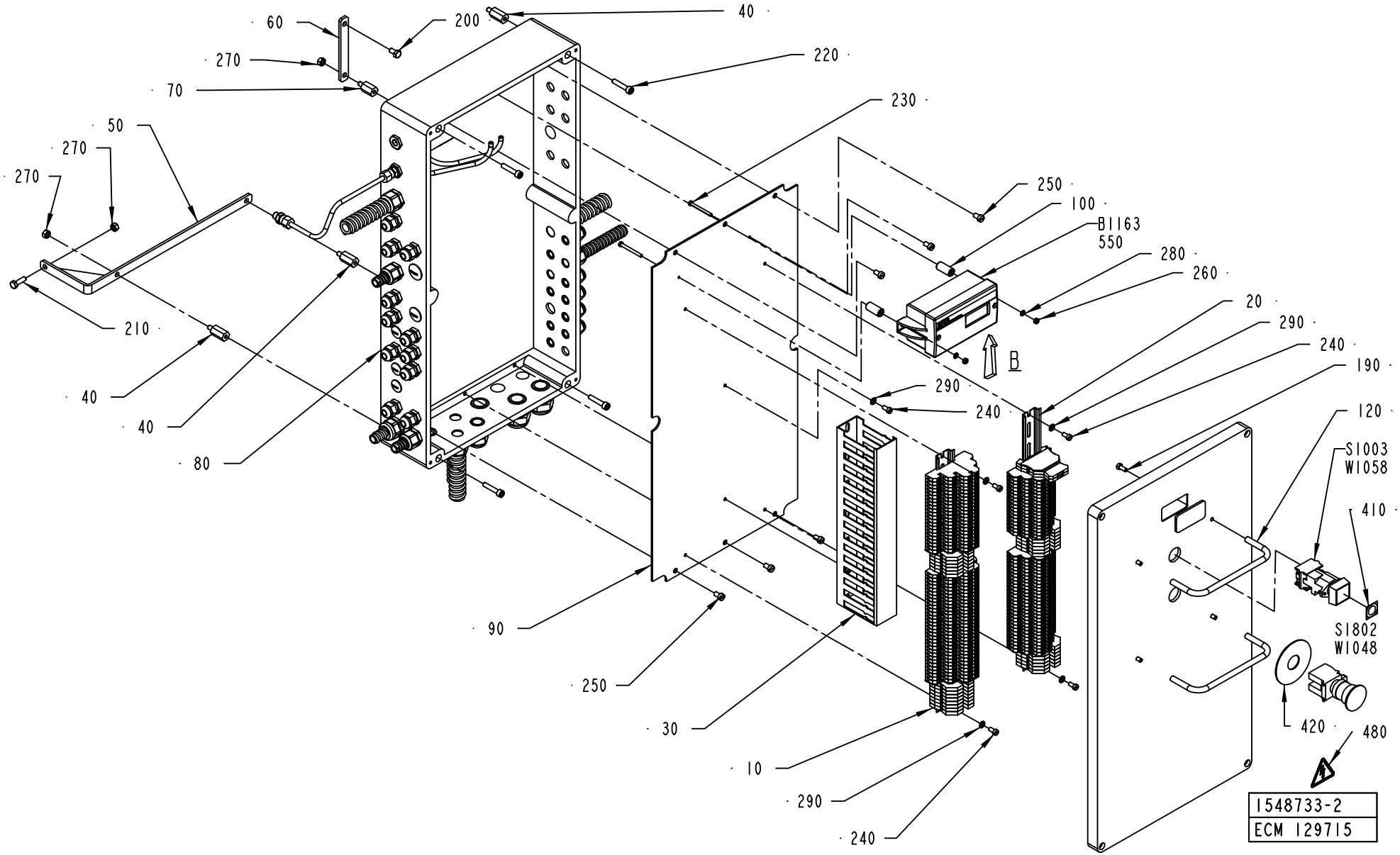
60
200
40
270
220
70
230
50
270
270
250
100
B1163
550
280
260
20
290
240
190
210
40
40
80
B
290
240
120
S1003
W1058
410
90
250
30
10
290
240
S1802
W1048
420
480
1548733-2
ECM 129715

ECM: 170231 - 50001231
Group number: 1548733-0100
Assembly Drawing: 1548733-2_1_AB

This list covers pages from 1-338 to 1-343

Pos	Part No	UN	Qty	Description	Page No
A3/FLEX DIMC/FLEX					
040	1548869-0000		3	SPACER	
060	1519790-0000		1	PLATE	
070	1548870-0000		1	SPACER	
080	1548726-0000		1	CONNECTION BOX	
100	1548730-0000		2	SPACER	
110	1548749-0000		1	PIPE	
200	312105-0366		1	SCREW M6S ISO 4017 M6X12 A480	
210	312105-0370		1	SCREW M6S ISO 4017 M6X20 A480	
230	312125-0303		2	SCREW ISO 1207 M4X40 A4	
260	312605-0312		2	HEXAGON NUT, M6M M4 A280	
270	312605-0316		4	HEXAGON NUT, M6M M6 A280	
280	315105-0136		2	WASHER BRB4,3XRFR	
300	342767-0100		2	CONN. BULKHEAD G1/8	
310	342921-0113		2	STRAIGHT COUPLING,EXT.THREADED 6/4-G1/8"	
320	352103-0101		21	CABLE GLAND, ST 9, PR15,2/PG9	
370	353243-0001		5	HOSE GLAND W/O INSERT PG9 EXTENDED	
380	353243-0003		5	HOSE GLAND W/O INSERT PG11 EXTENDED	
390	353249-0009		2	INSERT, SINGEL HOLE, EK 152/9	
400	353249-0011		4	INSERT, SINGEL HOLE, EK 153/11	
440	90002-0009		1	BLANK-OFF PLUG, PR 18.6 SKINDICHT-BLK11	
450	90002-0013		9	BLANK-OFF PLUG, PR 15,2 SKINDICHT-BLK9	
460	90002-0016		2	BLANK-OFF PLUG PR 20.4 SKINDICHT-BLK13,5	
470	90030-0184		2	CONN. STR. GA-6-G1/8	
490	90166-0176	MM	210	RUBBER HOSE	
500	90166-0176	MM	170	RUBBER HOSE	
510	90152-0050	M	21	SPIRAL CONDUIT, 20X13, UL 1313	
520	90152-0058	M	1	SPIRAL CONDUIT, 15X9, UL 0909	
550	351160-0102	M	4	CABLE (1UNIT = 100M)	
580	353243-0009		1	HOSE GLAND W/O INSERT PG13,5 EXTENDED	
590	353249-0008		1	INSERT, SINGEL HOLE, EK 152/7	
600	353249-0036		2	INSERT, MULTI HOLE, EK152 M 2X4	
610	351160-0102	M	5	CABLE (1UNIT = 100M)	
640	90232-0123		1	PH.CELL WLL170-P135-6011723	
650	90459-3994		1	FIBRE E32T14L	
660	353249-0052		1	INSERT, MULTI HOLE, E152M 4X3	
670	353249-0300		2	SEALING PIN, 3X25	
B1163	90459-0643		1	DIFF. PRESS. TRANSDUCER 2671-10CLD2EG2HD	
W1012	351150-0403	M	5	CABLE OLFLEX 3X0,75 MM2 LIGHT/GREY	
W1013	351150-0403	M	4	CABLE OLFLEX 3X0,75 MM2 LIGHT/GREY	
W1015	351150-0403	M	4	CABLE OLFLEX 3X0,75 MM2 LIGHT/GREY	
W1018	351150-0403	M	4	CABLE OLFLEX 3X0,75 MM2 LIGHT/GREY	
W1041	351150-0405	M	3	CABLE OLFLEX 5X0,75 MM2 LIGHT/GREY	
W1066	351150-0403	M	2	CABLE OLFLEX 3X0,75 MM2 LIGHT/GREY	
W1235	351150-0403	M	2	CABLE OLFLEX 3X0,75 MM2 LIGHT/GREY	
A3/FLEX NODIMC (See drawing on pages: 1-338, 1-340, 1-342)					
040	1548869-0000		3	SPACER	
060	1519790-0000		1	PLATE	
070	1548870-0000		1	SPACER	
080	1548726-0000		1	CONNECTION BOX	
100	1548730-0000		2	SPACER	
110	1548749-0000		1	PIPE	
200	312105-0366		1	SCREW M6S ISO 4017 M6X12 A480	
210	312105-0370		1	SCREW M6S ISO 4017 M6X20 A480	
230	312125-0303		2	SCREW ISO 1207 M4X40 A4	
260	312605-0312		2	HEXAGON NUT, M6M M4 A280	
270	312605-0316		4	HEXAGON NUT, M6M M6 A280	
280	315105-0136		2	WASHER BRB4,3XRFR	
300	342767-0100		2	CONN. BULKHEAD G1/8	
310	342921-0113		2	STRAIGHT COUPLING,EXT.THREADED 6/4-G1/8"	
320	352103-0101		20	CABLE GLAND, ST 9, PR15,2/PG9	
370	353243-0001		4	HOSE GLAND W/O INSERT PG9 EXTENDED	
380	353243-0003		4	HOSE GLAND W/O INSERT PG11 EXTENDED	
390	353249-0009		1	INSERT, SINGEL HOLE, EK 152/9	
400	353249-0011		4	INSERT, SINGEL HOLE, EK 153/11	
440	90002-0009		2	BLANK-OFF PLUG, PR 18.6 SKINDICHT-BLK11	
450	90002-0013		10	BLANK-OFF PLUG, PR 15,2 SKINDICHT-BLK9	
460	90002-0016		2	BLANK-OFF PLUG PR 20.4 SKINDICHT-BLK13,5	
470	90030-0184		2	CONN. STR. GA-6-G1/8	
490	90166-0176	MM	210	RUBBER HOSE	
500	90166-0176	MM	170	RUBBER HOSE	
510	90152-0050	M	19	SPIRAL CONDUIT, 20X13, UL 1313	
520	90152-0058	M	1	SPIRAL CONDUIT, 15X9, UL 0909	
550	351160-0102	M	4	CABLE (1UNIT = 100M)	
580	353243-0009		1	HOSE GLAND W/O INSERT PG13,5 EXTENDED	
590	353249-0008		1	INSERT, SINGEL HOLE, EK 152/7	
600	353249-0036		2	INSERT, MULTI HOLE, EK152 M 2X4	
610	351160-0102	M	5	CABLE (1UNIT = 100M)	
B1163	90459-0643		1	DIFF. PRESS. TRANSDUCER 2671-10CLD2EG2HD	
W1012	351150-0403	M	5	CABLE OLFLEX 3X0,75 MM2 LIGHT/GREY	
W1013	351150-0403	M	4	CABLE OLFLEX 3X0,75 MM2 LIGHT/GREY	
W1015	351150-0403	M	4	CABLE OLFLEX 3X0,75 MM2 LIGHT/GREY	
W1018	351150-0403	M	4	CABLE OLFLEX 3X0,75 MM2 LIGHT/GREY	
W1041	351150-0405	M	3	CABLE OLFLEX 5X0,75 MM2 LIGHT/GREY	

Machine Type | Group Description | Used-In | Group Number | Page No

CONNECTION BOX

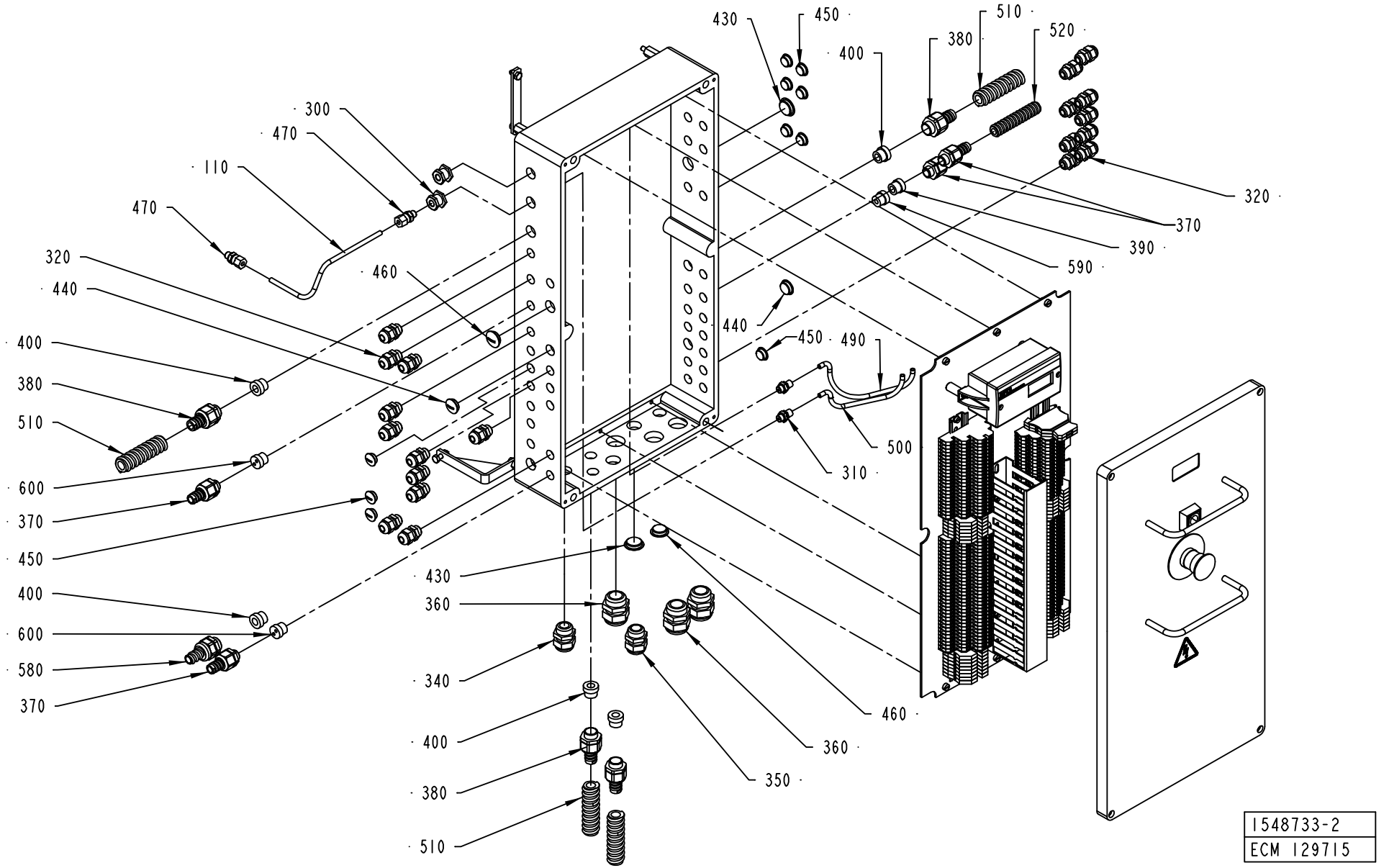

Pos	Part No	UN	Qty	Description	Page No
A3/FLEX NODIMC (Cont'd) (See drawing on pages: 1-338, 1-340, 1-342)					
W1066	351150-0403	M	2	CABLE OLFLEX 3X0,75 MM2 LIGHT/GREY	
Common Parts					
010	1549542-0100		1	TERMINAL BLOCK	**1-345**
020	1548728-0100		1	TERMINAL BLOCK	**1-347**
030	1129480-0000		1	CABLE DUCT	
050	1519789-0000		1	BRACKET	
090	1548727-0000		1	MOUNTING PLATE	
120	2570678-0000		2	HANDLE	
190	312105-0327		4	SCREW M6S ISO 4017 M5X12 A480	
220	312115-0374		4	SCREW ISO4762 M6X30 A4	
240	312125-0325		6	SCREW ISO 1207 M5X10 A4	
250	312125-0364		6	SCREW ISO 1207 M6X10 A4	
290	315105-0146		6	WASHER BRB5,3X10RFR	
340	352103-0110		1	CABLE GLAND, STR 16, PR22,5/PG16	
350	352103-0111		1	CABLE GLAND, ST 16, PR22,5/PG16	
360	352103-0116		3	CABLE GLAND, ST 21, PR28,3/PG21	
410	359301-0110		1	BUTTON SIGN, SHORT STOP	
420	486826-0001		1	SIGN "EMERGENCY STOP"	
430	90002-0004		2	BLANK-OFF PLUG, PR 22,5 SKINDICHT-BLK16	
480	359705-0015		1	WARNING SIGN ISO, RISK OF ELECTRIC SHOCK	
S1003	90064-0084		1	PUSH BUTTON, YELLOW	
S1802	90458-1651		1	EMERGENCY STOP, ZB4-BS-844 ZB4-BZ-104	
W1003	351150-0425	M	7	CABLE OLFLEX 25X0,75 MM2 LIGHT/GREY	
W1004	351150-0425	M	7	CABLE OLFLEX 25X0,75 MM2 LIGHT/GREY	
W1005	351150-0425	M	7	CABLE OLFLEX 25X0,75 MM2 LIGHT/GREY	
W1006	351150-0407	M	6	CABLE OLFLEX 12X0,75 MM2 LIGHT/GREY	
W1011	351150-0405	M	3	CABLE OLFLEX 5X0,75 MM2 LIGHT/GREY	
W1029	351150-0404	M	2	CABLE OLFLEX 4X0,75 MM2 LIGHT/GREY	
W1030	351150-0403	M	3	CABLE OLFLEX 3X0,75 MM2 LIGHT/GREY	
W1031	351150-0403	M	3	CABLE OLFLEX 3X0,75 MM2 LIGHT/GREY	
W1044	351150-0405	M	3	CABLE OLFLEX 5X0,75 MM2 LIGHT/GREY	
W1048	351150-0405	M	1	CABLE OLFLEX 5X0,75 MM2 LIGHT/GREY	
W1058	351150-0403	M	1	CABLE OLFLEX 3X0,75 MM2 LIGHT/GREY	
W1065	351150-0403	M	3	CABLE OLFLEX 3X0,75 MM2 LIGHT/GREY	
W1511	90220-0165	M	1	SCR. CABLE 5X0,34MM2	
W2028	90220-0162	M	9	SCR. CABLE 10X0,25MM2	

Pos	Part No	UN	Qty	Description	Page No

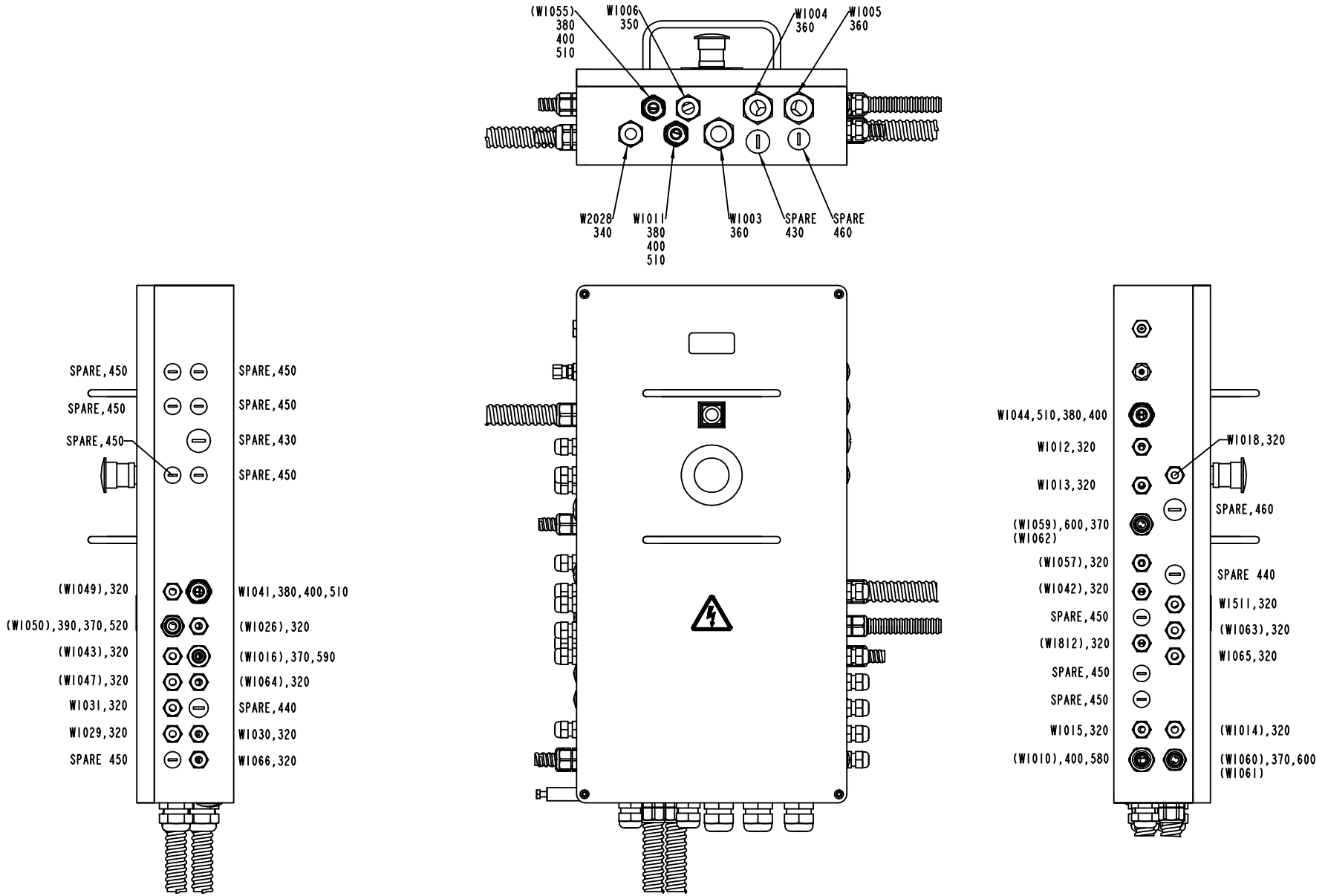
(WI055) 380 400 510
WI006 350
WI004 360
WI005 360
W2028 340
WI011 380 400 510
WI003 360
SPARE 430
SPARE 460
SPARE,450
SPARE,450
SPARE,450
SPARE,450
SPARE,450
SPARE,450
SPARE,430
SPARE,450
(WI049),320
(WI050),390,370,520
(WI043),320
(WI047),320
WI031,320
WI029,320
SPARE 450
WI041,380,400,510
(WI026),320
(WI016),370,590
(WI064),320
SPARE,440
WI030,320
WI066,320
WI044,510,380,400
WI012,320
WI013,320
(WI059),600,370 (WI062)
(WI057),320
(WI042),320
SPARE,450
(WI812),320
SPARE,450
SPARE,450
WI015,320
(WI010),400,580
WI018,320
SPARE,460
SPARE 440
WI511,320
(WI063),320
WI065,320
(WI014),320
(WI060),370,600 (WI061)

Pos	Part No	UN	Qty	Description	Page No	Pos	Part No	UN	Qty	Description	Page No

SEE PREVIOUS LISTS PAGES: 1-339, 1-341.

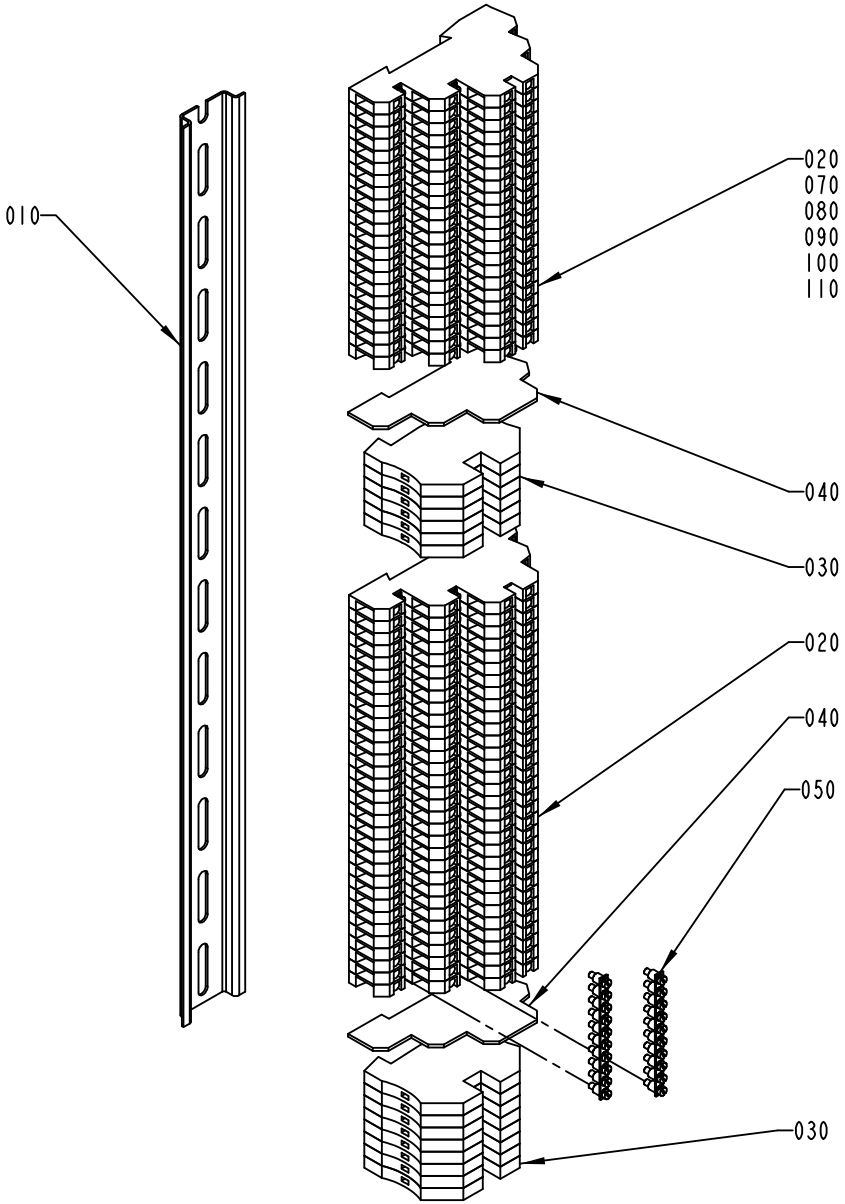

1549542-1
ECM 114362

ECM: 114362 - 20030123
Group number: 1549542-0100
Assembly Drawing: 1549542-1_1_AA

Pos	Part No	UN	Qty	Description	Page No
-					
010	1548729-0000		1	RAIL	
020	353021-0302		54	TERMINALS,TRIPLE-LEVEL, DLD 2,5/35 PA	
030	353024-0205		14	EARTH TERMINAL, 1010.1	
040	353032-0302		2	END PLATE WAP, 13176.6	
050	353034-0404		11	BRIDGE CONNECTOR Q10, 13131.0	
060	359011-0823		1	SET OF SIGNS 6-FW 101-150	
070	359011-0832		1	SET OF SIGNS 6-GW (+)	
080	359011-0833		1	SET OF SIGNS 6-GW (-)	
090	359011-0834		1	SET OF SIGNS 6-GW(EARTH)	
100	359011-0824		1	SET OF SIGNS 6-FW 151-200	
110	359011-0825		1	SET OF SIGNS 6-FW 201-250	

Pos	Part No	UN	Qty	Description	Page No

TERMINAL BLOCK

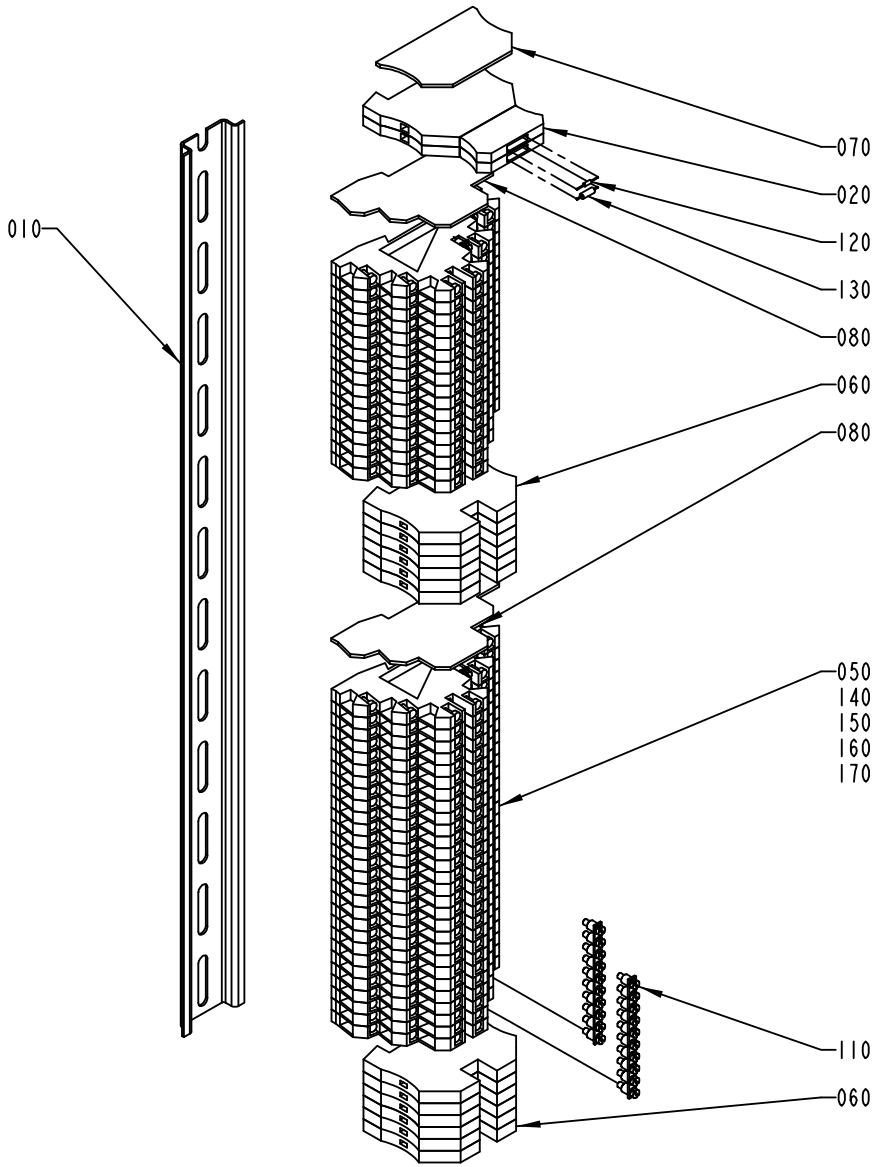

1548728-1
ECN 114362

ECM: 115861 - 20030123
Group number: 1548728-0100
Assembly Drawing: 1548728-1_1_AA

Pos	Part No	UN	Qty	Description	Page No
-					
010	1548729-0000		1	RAIL	
020	353021-0127		2	TERMINAL DISCONNECTBLE, WTR 2,5+WSD 2,5	
050	353021-0302		45	TERMINALS,TRIPLE-LEVEL, DLD 2,5/35 PA	
060	353024-0205		12	EARTH TERMINAL, 1010.1	
070	353032-0004		1	END PLATE WAP 2,5-10 BEIGE	
080	353032-0302		2	END PLATE WAP, 13176.6	
110	353034-0404		10	BRIDGE CONNECTOR Q10, 13131.0	
120	90038-0049		1	DIODE	
130	90121-0127		1	RESISTANCE FIXED, 1,5 KOHM, 0,25 W	
140	359011-0823		1	SET OF SIGNS 6-FW 101-150	
150	359011-0832		1	SET OF SIGNS 6-GW (+)	
160	359011-0833		1	SET OF SIGNS 6-GW (-)	
170	359011-0834		1	SET OF SIGNS 6-GW(EARTH)	

Pos	Part No	UN	Qty	Description	Page No

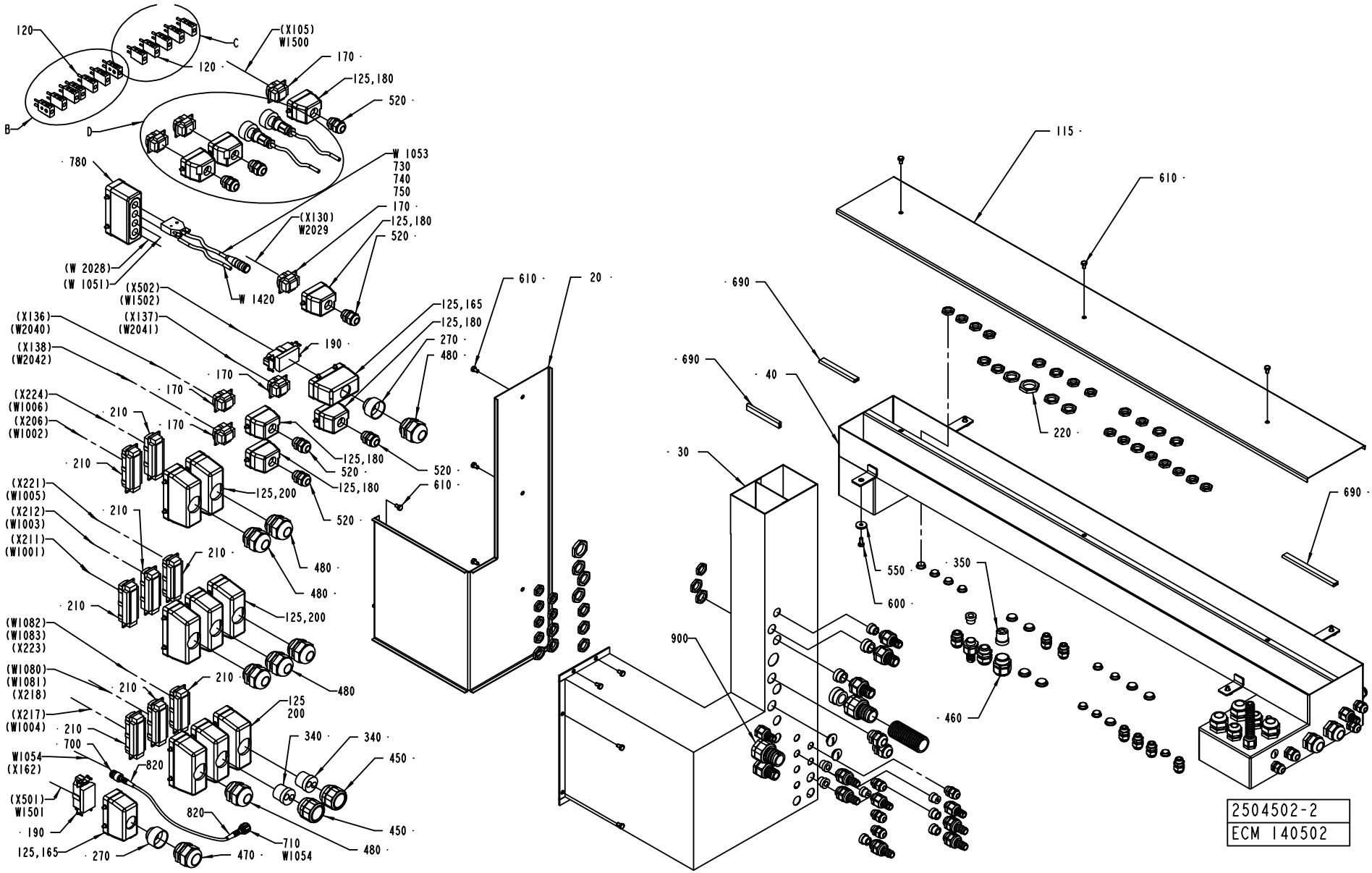
120
C
(X105)
W1500
170
120
125,180
520
B
D
780
W 1053
730
740
750
170
(X130)
W2029
125,180
520
(W 2028)
(W 1051)
W 1420
(X502)
(W1502)
610
20
125,165
125,180
270
480
(X136)
(W2040)
(X137)
(W2041)
190
(X138)
(W2042)
170
170
(X224)
(W1006)
210
170
(X206)
(W1002)
210
125,180
520
520
610
125,200
(X221)
(W1005)
520
210
(X212)
(W1003)
(X211)
(W1001)
210
480
480
210
125,200
(W1082)
(W1083)
(X223)
(W1080)
(W1081)
(X218)
210
210
125
200
(X217)
(W1004)
210
700
340
340
450
W1054
(X162)
820
(X501)
W1501
820
450
190
710
W1054
480
125,165
270
470
690
115
610
690
40
220
30
690
550
350
600
900
460
2504502-2
ECM 140502

ECM: 145534 - 20031121
Group number: 2504502-0100
Assembly Drawing: 2504502-2_1_AC

This list covers pages from 1-348 to 1-363

Pos	Part No	UN	Qty	Description	Page No
A3/FLEX DIMC/FLEX (See drawing on pages: 1-356, 1-358, 1-360, 1-362)					
050	2509652-0000		1	COVER	
060	2509650-0000		1	COVER	
070	2509651-0000		1	COVER	
080	2509649-0000		1	COVER	
090	2509648-0000		1	CABLE DUCT	
100	2509647-0000		1	CABLE DUCT	
110	2509646-0000		1	CABLE DUCT	
125	90110-0385		18	HOLDER	
150	90152-0050	M	2	SPIRAL CONDUIT, 20X13, UL 1313	
155	90152-0050	M	8	SPIRAL CONDUIT, 20X13, UL 1313	
170	90110-0159		8	MALE INSERT 70.310.0640.0	
180	90110-0157		8	CABLE HOOD 6-POL 70.352.0628.1	
240	90099-0117		23	NUT, PR 18,6 (PG11)	
250	90099-0110		8	NUT, PR 22,5 (PG16)	
260	90099-0104		52	NUT, PR 15,2 (PG9)	
290	90002-0013		24	BLANK-OFF PLUG, PR 15,2 SKINDICHT-BLK9	
310	90002-0009		10	BLANK-OFF PLUG, PR 18.6 SKINDICHT-BLK11	
360	353249-0014		3	INSERT, SINGEL HOLE, EK 154/16	
370	353249-0011		16	INSERT, SINGEL HOLE, EK 153/11	
380	353249-0009		1	INSERT, SINGEL HOLE, EK 152/9	
390	353249-0008		4	INSERT, SINGEL HOLE, EK 152/7	
430	353243-0003		10	HOSE GLAND W/O INSERT PG11 EXTENDED	
440	353243-0001		9	HOSE GLAND W/O INSERT PG9 EXTENDED	
510	352103-0110		1	CABLE GLAND, STR 16, PR22,5/PG16	
520	352103-0108		8	CABLE GLAND, ST 13,5 , PR20,4/PG13,5	
530	352103-0101		18	CABLE GLAND, ST 9, PR15,2/PG9	
540	352103-0100		2	CABLE GLAND, STR 9, PR15,2/PG9	
640	353249-0036		4	INSERT, MULTI HOLE, EK152 M 2X4	
760	353243-0005		2	HOSE GLAND W/O INSERT PG16 EXTENDED	
W1240	90220-0105	M	10	SCR. CABLE 4X2,5MM2	
A3/FLEX NODIMC (See drawing on pages: 1-348, 1-350, 1-352, 1-354)					
050	2509652-0000		1	COVER	
060	2509650-0000		1	COVER	
070	2509651-0000		1	COVER	
080	2509649-0000		1	COVER	
090	2509648-0000		1	CABLE DUCT	
100	2509647-0000		1	CABLE DUCT	
110	2509646-0000		1	CABLE DUCT	
125	90110-0385		17	HOLDER	
150	90152-0050	M	2	SPIRAL CONDUIT, 20X13, UL 1313	
170	90110-0159		7	MALE INSERT 70.310.0640.0	
180	90110-0157		7	CABLE HOOD 6-POL 70.352.0628.1	
240	90099-0117		23	NUT, PR 18,6 (PG11)	
250	90099-0110		7	NUT, PR 22,5 (PG16)	
260	90099-0104		54	NUT, PR 15,2 (PG9)	
290	90002-0013		24	BLANK-OFF PLUG, PR 15,2 SKINDICHT-BLK9	
310	90002-0009		10	BLANK-OFF PLUG, PR 18.6 SKINDICHT-BLK11	
320	90002-0004		1	BLANK-OFF PLUG, PR 22,5 SKINDICHT-BLK16	
360	353249-0014		3	INSERT, SINGEL HOLE, EK 154/16	
370	353249-0011		15	INSERT, SINGEL HOLE, EK 153/11	
380	353249-0009		1	INSERT, SINGEL HOLE, EK 152/9	
390	353249-0008		5	INSERT, SINGEL HOLE, EK 152/7	
430	353243-0003		10	HOSE GLAND W/O INSERT PG11 EXTENDED	
440	353243-0001		10	HOSE GLAND W/O INSERT PG9 EXTENDED	
510	352103-0110		1	CABLE GLAND, STR 16, PR22,5/PG16	
520	352103-0108		7	CABLE GLAND, ST 13,5 , PR20,4/PG13,5	
530	352103-0101		18	CABLE GLAND, ST 9, PR15,2/PG9	
540	352103-0100		2	CABLE GLAND, STR 9, PR15,2/PG9	
640	353249-0036		4	INSERT, MULTI HOLE, EK152 M 2X4	
760	353243-0005		2	HOSE GLAND W/O INSERT PG16 EXTENDED	
Common Parts					
010	2504503-0000		1	COVER	
020	2504499-0000		1	LID	
030	2504498-0000		1	CABLE DUCT	
040	2504497-0000		1	CABLE DUCT	
115	1129372-0000		1	LID	
120	90326-0022		12	PLUG, MALE YELLOW CR-AL	
130	90152-0050	M	1	SPIRAL CONDUIT, 20X13, UL 1313	
135	90152-0050	M	1	SPIRAL CONDUIT, 20X13, UL 1313	
140	90152-0050	M	1	SPIRAL CONDUIT, 20X13, UL 1313	
160	90152-0058	M	1	SPIRAL CONDUIT, 15X9, UL 0909	
165	90110-0160		2	CABLE HOOD 6-16-POL 70.352.1628.1	
190	90110-0156		2	MALE INSERT 70.210.0653.0	
200	90110-0152		8	CABLE HOOD 24-POL 70.352.2428.1	
210	90110-0150		8	MALE INSERT 121110 0000	
220	90099-0119		9	NUT, PR 28,3 (PG21)	
230	90099-0118		14	NUT, PR 20,4 (PG13,5)	
270	90089-0015		2	REDUCING SLEEVE, PR37M/PR28,3F	
280	90002-0016		6	BLANK-OFF PLUG PR 20.4 SKINDICHT-BLK13,5	
300	90002-0012		1	BLANK-OFF PLUG, PR 28,3 SKINDICHT-BLK21	
330	353249-0061		1	INSERT, SINGEL HOLE, EK 155/20	
340	353249-0060		2	INSERT, MULTI HOLE, E155M2X13	
350	353249-0051		1	INSERT, MULTI HOLE, E154M4X8	

Machine Type | Group Description | Used-In | Group Number | Page No

CABLE TRENCH

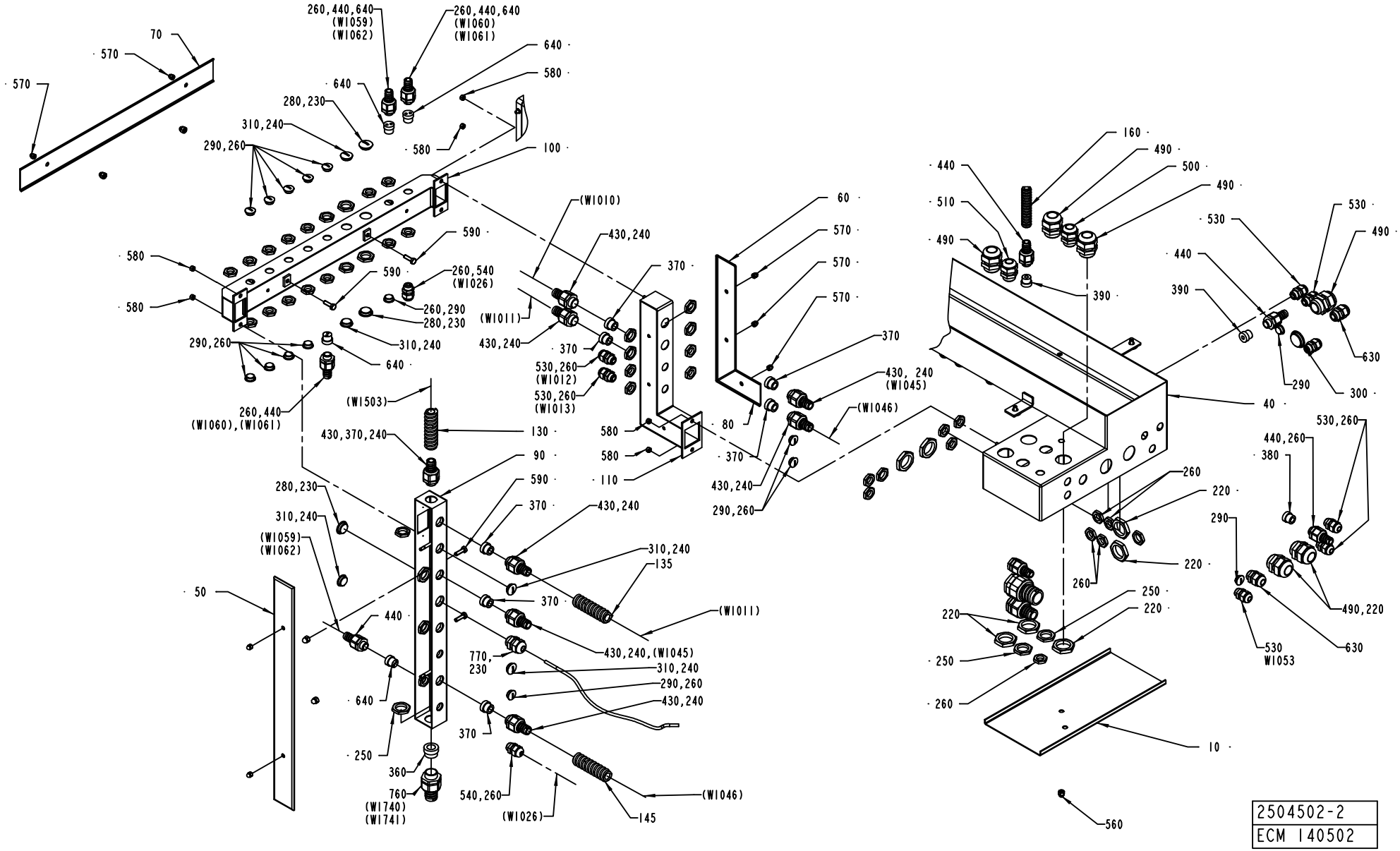

Pos	Part No	UN	Qty	Description	Page No
Common Parts (Cont'd)					
400	353243-0009		5	HOSE GLAND W/O INSERT PG13,5 EXTENDED	
410	353243-0007		1	HOSE GLAND W/O INSERT PG21 EXTENDED	
420	353243-0004		2	HOSE GLAND W/O INSERT PG13,5 EXTENDED	
450	353240-0006		2	GLAND W/O INSERT PG29 NORMAL	
460	353240-0005		1	GLAND W/O INSERT PG21 NORMAL	
470	352103-0121		1	CABLE GLAND, ST 29, PR37,0/PG29	
480	352103-0120		7	CABLE GLAND, STR 29, PR37,0/PG29	
490	352103-0116		6	CABLE GLAND, ST 21, PR28,3/PG21	
500	352103-0111		4	CABLE GLAND, ST 16, PR22,5/PG16	
550	315125-0153		4	WASHER TBRSB 6,4X22X4 A4	
560	312705-0316		5	NUT HEX. DOMED CAP MHM-6 M6 A280	
570	312705-0314		7	NUT HEX. DOMED CAP MHM-6 M5 A280	
580	312605-0314		6	HEXAGON NUT, M6M M5 A280	
590	312105-0370		4	SCREW M6S ISO 4017 M6X20 A480	
600	312105-0367		4	SCREW M6S ISO 4017 M6X14 A480	
610	312105-0364		12	SCREW M6S ISO 4017 M6X10 A480	
630	352103-0106		3	CABLE GLAND, ST 11, PR18,6/PG11	
690	90143-0059	M	1	SEAL STRIP 4610069	
700	90458-2890		1	CONNECTOR, 21N-50N12N133NE	
710	90458-2892		1	CONNECTOR, 11 N-50-3-31/133 NE	
720	90110-0235		2	CABLE CONTACT, PX0739/S	
730	90459-2106		1	CABLE CONNECTOR, C091 31D004 100 2	
740	90110-0144		1	COVER	
750	90110-0147		1	CONTACT UNIT	
770	90012-0049		1	CABLE GLAND, STR13,5, PR20,4/PG13,5	
780	90110-0381		1	COVER	
790	353300-0006	M		SHRINKABLE HOSE	
800	353300-0008	M		SHRINKABLE HOSE	
810	353300-0008	M	1	SHRINKABLE HOSE	
820	90458-2893		2	SLEEVE, 78 Z-0-3-4	
830	90459-1297		2	RESISTANCE FIXED, 120 OHM, 0,25 W	
840	90121-0132		2	RESISTANCE FIXED, 0,51 KOHM, 0,25 W	
850	353001-0116		12	END SLEEVE H0.5/14 ORANGE	
860	90152-0070	M	2	METAL HOSE, 32,5X26, UL 2621	
900	2656905-0100		1	OPTIONAL PARTS	**1-365, 1-367**
W1052	90220-0165	M	7	SCR. CABLE 5X0,34MM2	
W1053	90220-0091	M	10	PAIR TWISTED CABLE 2X2X0,25MM2	
W1054	90458-2895	M	6	COAXIAL CABLE RG 400/U BROWN	
W1300	90220-0034	M	5	THERMOCABLE TEX/SITW-20F-KX 2X0,5MM2	
W1302	90220-0034	M	8	THERMOCABLE TEX/SITW-20F-KX 2X0,5MM2	
W1305	90220-0034	M	8	THERMOCABLE TEX/SITW-20F-KX 2X0,5MM2	
W1307	90220-0034	M	8	THERMOCABLE TEX/SITW-20F-KX 2X0,5MM2	
W1315	90220-0165	M	7	SCR. CABLE 5X0,34MM2	
W1320	90220-0034	M	7	THERMOCABLE TEX/SITW-20F-KX 2X0,5MM2	
W1322	90220-0034	M	7	THERMOCABLE TEX/SITW-20F-KX 2X0,5MM2	
W1323	90220-0034	M	7	THERMOCABLE TEX/SITW-20F-KX 2X0,5MM2	
W1420	90220-0072	M	10	SCR. CABLE 4X0,34MM2	
W1500	351150-0418	M	5	CABLE OLFLEX 4X2,5 MM2 LIGHT/GREY	
W1501	351120-0168	M	5	CABLE SIHF 4X10MM2 GREEN/YELLOW	
W1820	90220-0034	M	8	THERMOCABLE TEX/SITW-20F-KX 2X0,5MM2	
W1830	90220-0104	M	6	SCR. CABLE 4X1,5MM2	
W2029	90220-0104	M	6	SCR. CABLE 4X1,5MM2	
X308	90326-0022		1	PLUG, MALE YELLOW CR-AL	
X312	90326-0022		1	PLUG, MALE YELLOW CR-AL	
X317	90326-0022		1	PLUG, MALE YELLOW CR-AL	
X318	90326-0022		1	PLUG, MALE YELLOW CR-AL	
X600	90110-0381		1	COVER	

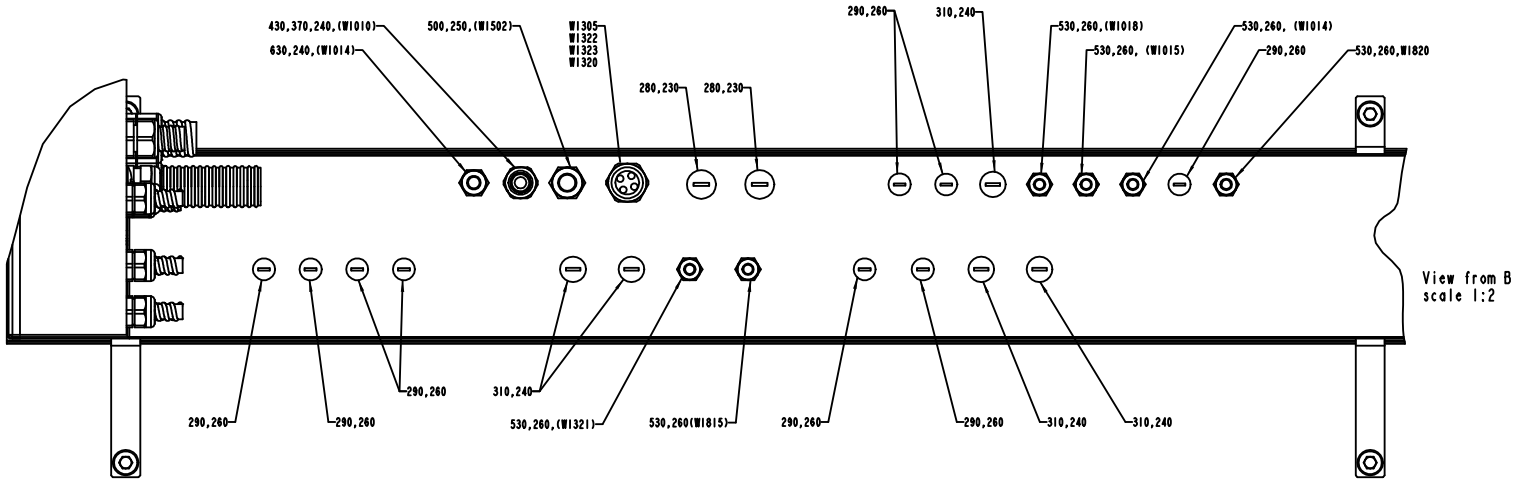
430,370,240,(W1010)
630,240,(W1014)
500,250,(W1502)
W1305
W1322
W1323
W1320
280,230
280,230
290,260
310,240
530,260,(W1018)
530,260, (W1015)
530,260, (W1014)
290,260
530,260,W1820
View from B
scale 1:2
290,260
290,260
290,260
310,240
530,260,(W1321)
530,260(W1815)
290,260
290,260
310,240
310,240

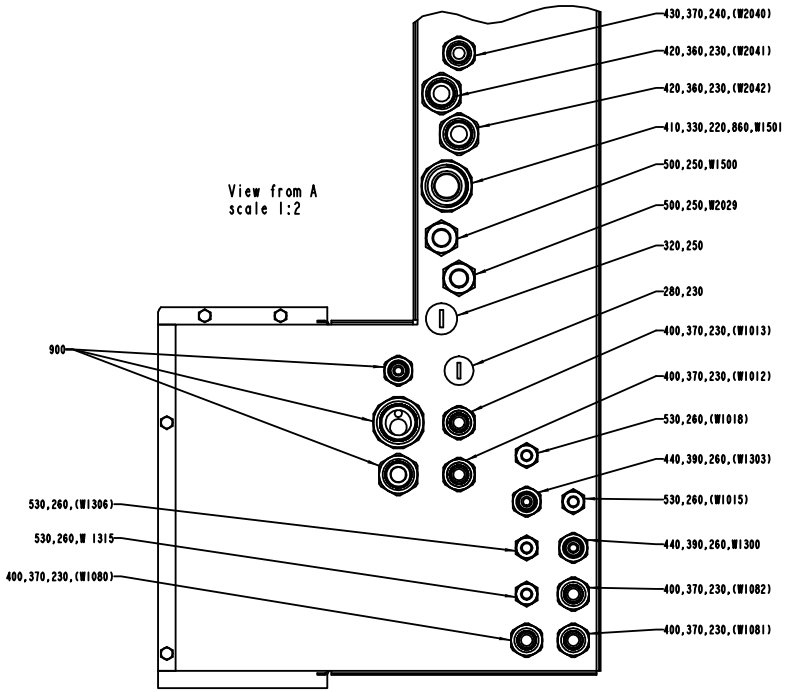
View from A
scale 1:2
900
530,260,(W1306)
530,260,W 1315
400,370,230,(W1080)
430,370,240,(W2040)
420,360,230,(W2041)
420,360,230,(W2042)
410,330,220,860,W1501
500,250,W1500
500,250,W2029
320,250
280,230
400,370,230,(W1013)
400,370,230,(W1012)
530,260,(W1018)
440,390,260,(W1303)
530,260,(W1015)
440,390,260,W1300
400,370,230,(W1082)
400,370,230,(W1081)

Pos	Part No	UN	Qty	Description	Page No	Pos	Part No	UN	Qty	Description	Page No

SEE PREVIOUS LISTS PAGES: 1-349, 1-351.

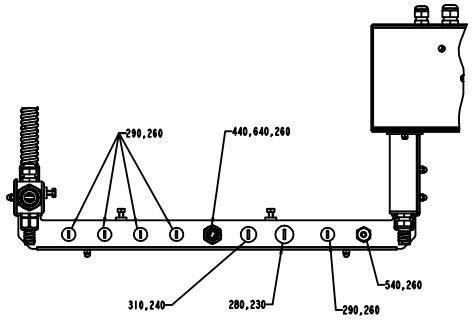

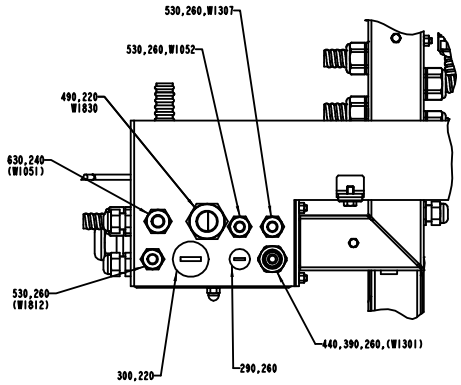

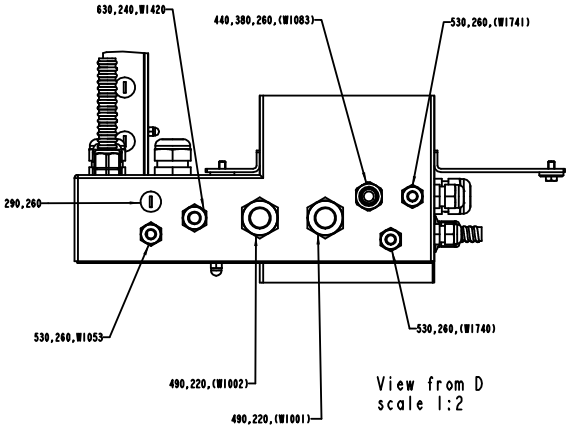

View from D
scale 1:2

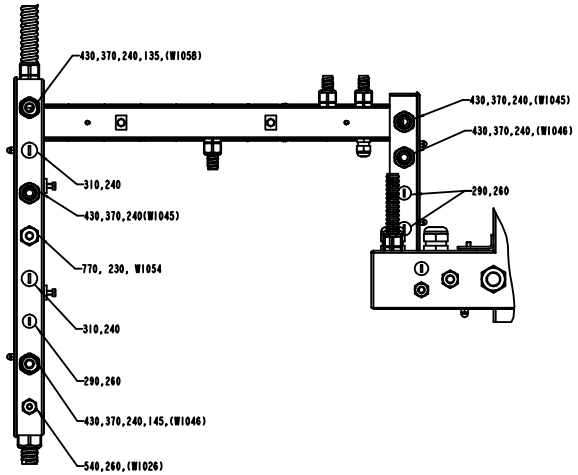

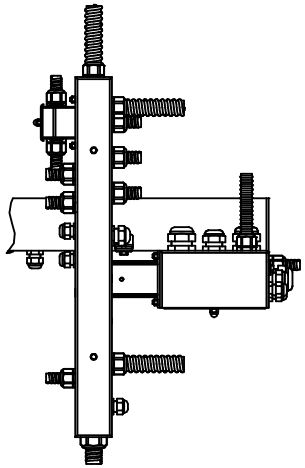

View from E
scale 1:3

View from C
scale 1:2

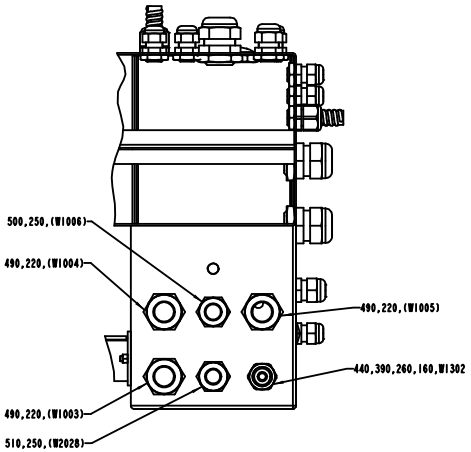

Pos	Part No	UN	Qty	Description	Page No	Pos	Part No	UN	Qty	Description	Page No

SEE PREVIOUS LISTS PAGES: 1-349, 1-351.

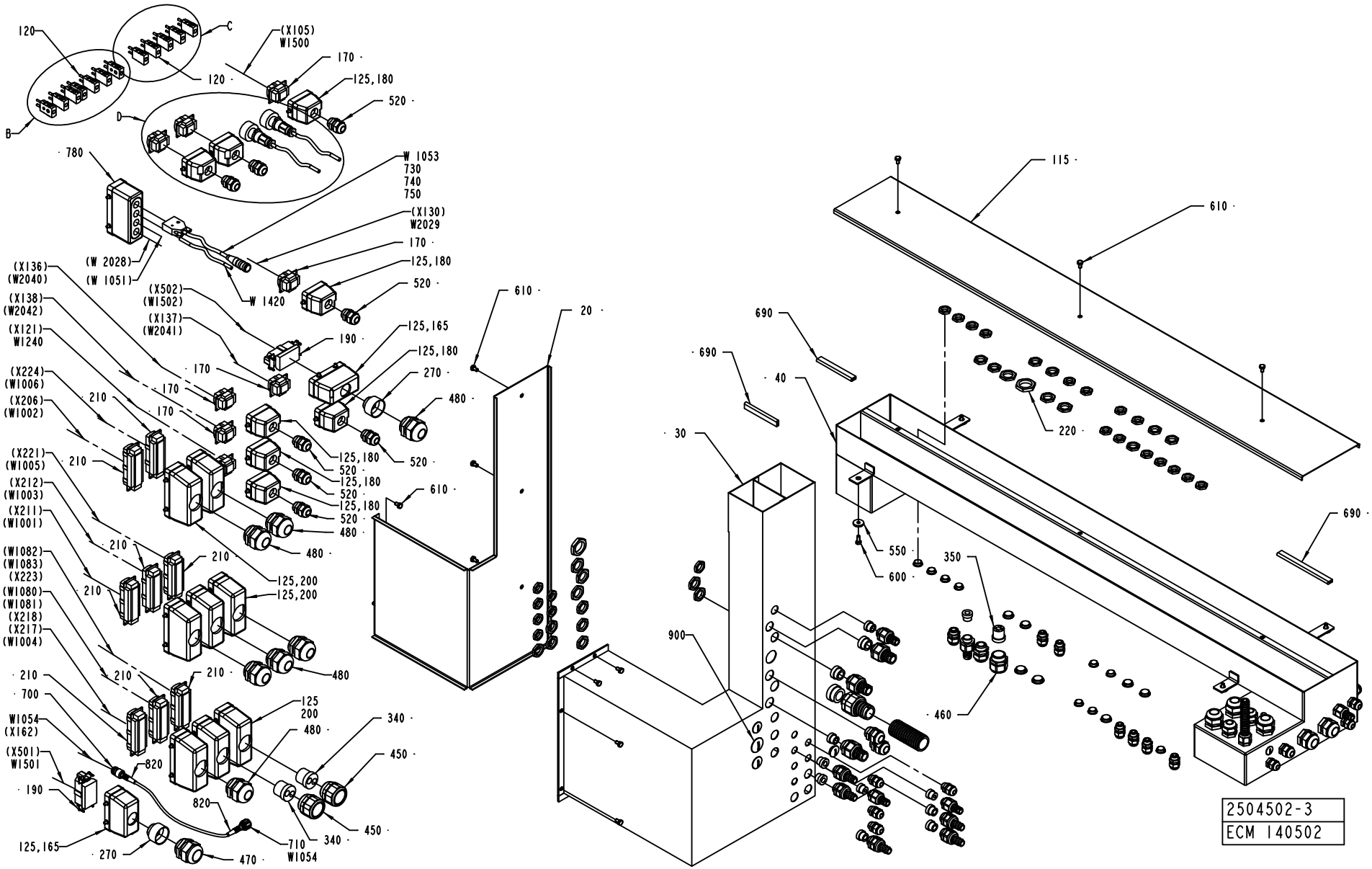
120
C
(X105)
W1500
170
120
125,180
520
D
B
780
W 1053
730
740
750
(X130)
W2029
170
125,180
520
(W 2028)
(W 1051)
W 1420
(X136)
(W2040)
(X138)
(W2042)
(X121)
W1240
(X502)
(W1502)
(X137)
(W2041)
190
125,165
125,180
270
480
610
20
170
(X224)
(W1006)
(X206)
(W1002)
210
520
(X221)
(W1005)
(X212)
(W1003)
(X211)
(W1001)
(W1082)
(W1083)
(X223)
(W1080)
(W1081)
(X218)
(X217)
(W1004)
125,200
700
W1054
(X162)
(X501)
W1501
820
340
450
710
W1054
470
270
125,165
690
40
30
900
115
610
220
550
600
350
460
2504502-3
ECM 140502

Pos	Part No	UN	Qty	Description	Page No	Pos	Part No	UN	Qty	Description	Page No

SEE PREVIOUS LISTS PAGES: 1-349, 1-351.

CABLE TRENCH

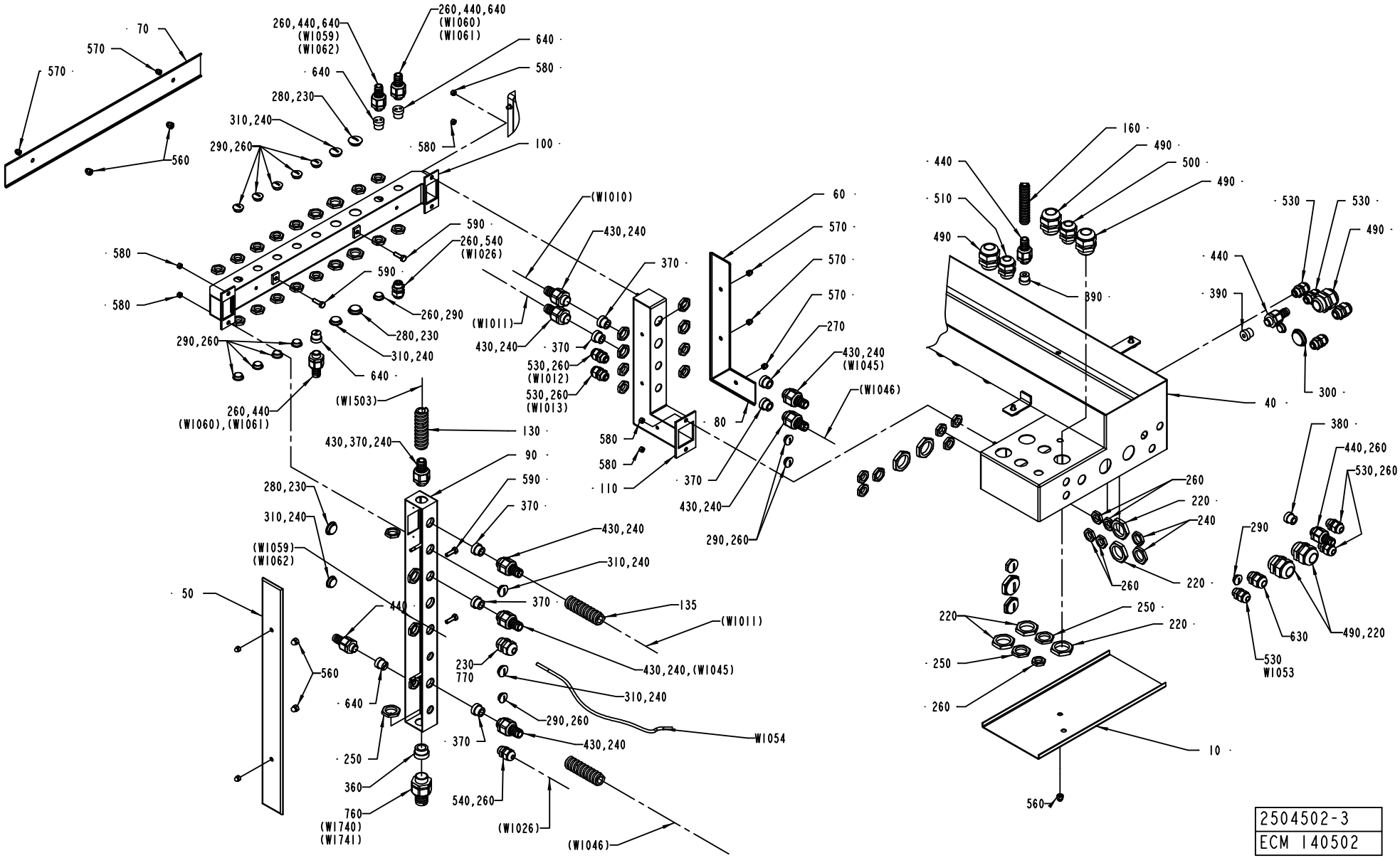

Pos	Part No	UN	Qty	Description	Page No	Pos	Part No	UN	Qty	Description	Page No

SEE PREVIOUS LISTS PAGES: 1-349, 1-351.

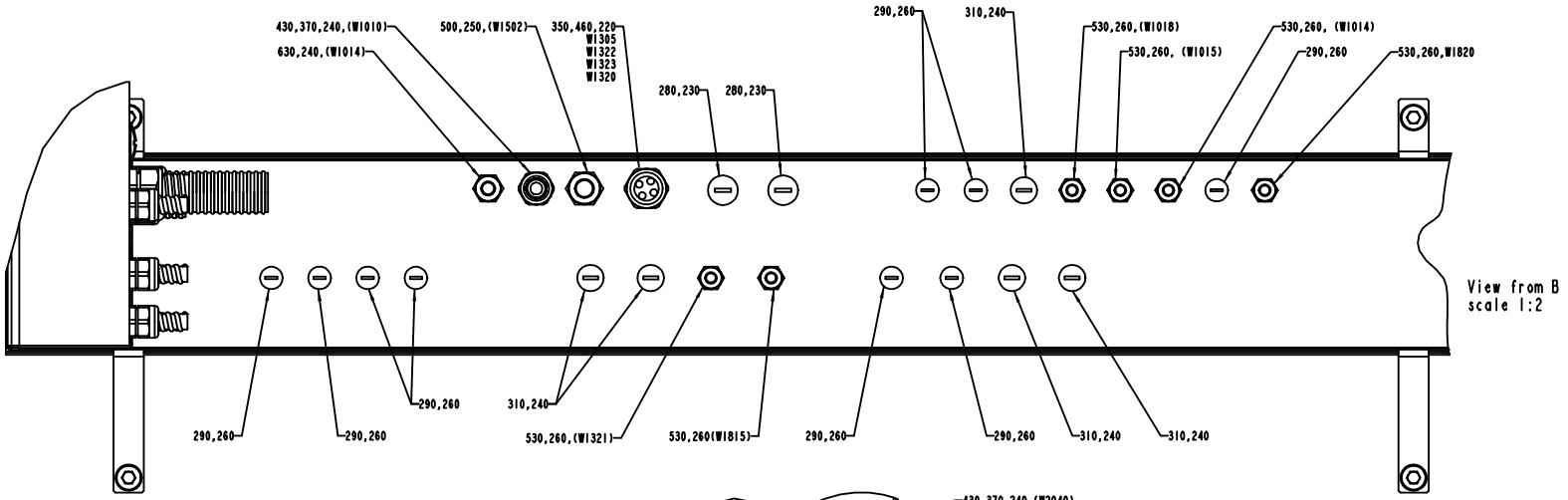
430,370,240,(W1010)
630,240,(W1014)
500,250,(W1502)
350,460,220
W1305
W1322
W1323
W1320
280,230
280,230
290,260
310,240
530,260,(W1018)
530,260, (W1015)
530,260, (W1014)
290,260
530,260,W1820
290,260
290,260
290,260
310,240
530,260,(W1321)
530,260(W1815)
290,260
290,260
310,240
310,240
View from B
scale 1:2

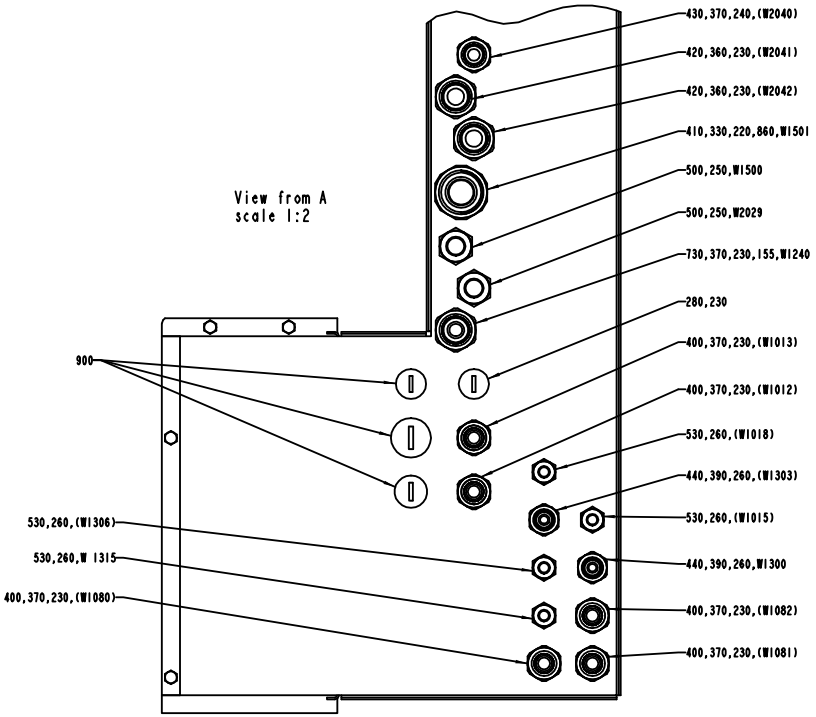
View from A
scale 1:2
900
530,260,(W1306)
530,260,W 1315
400,370,230,(W1080)
430,370,240,(W2040)
420,360,230,(W2041)
420,360,230,(W2042)
410,330,220,860,W1501
500,250,W1500
500,250,W2029
730,370,230,155,W1240
280,230
400,370,230,(W1013)
400,370,230,(W1012)
530,260,(W1018)
440,390,260,(W1303)
530,260,(W1015)
440,390,260,W1300
400,370,230,(W1082)
400,370,230,(W1081)

Pos	Part No	UN	Qty	Description	Page No	Pos	Part No	UN	Qty	Description	Page No

SEE PREVIOUS LISTS PAGES: 1-349, 1-351.

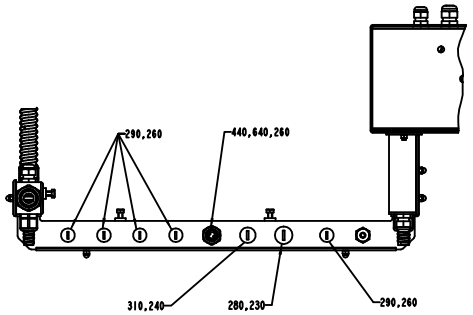

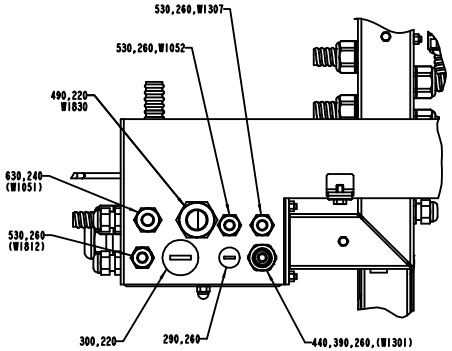

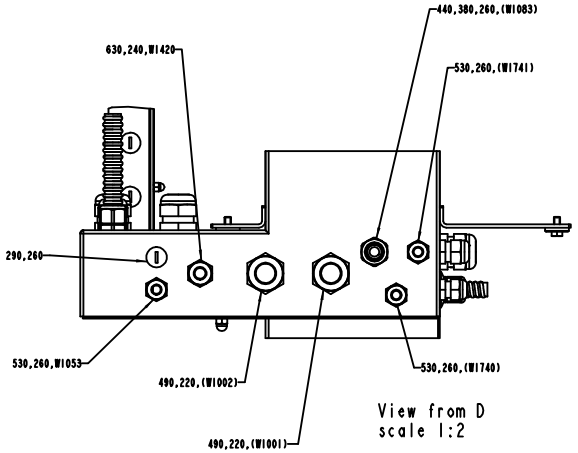

View from D
scale 1:2

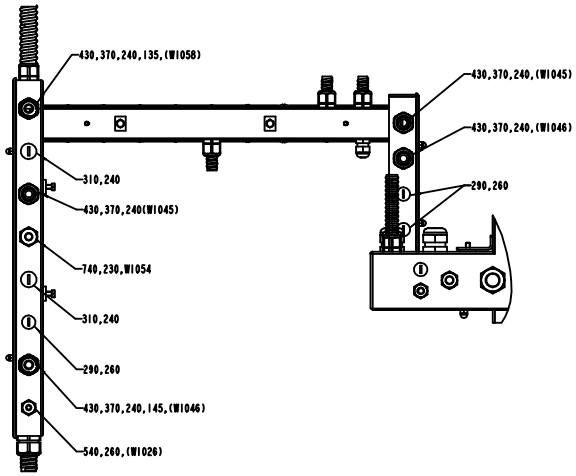

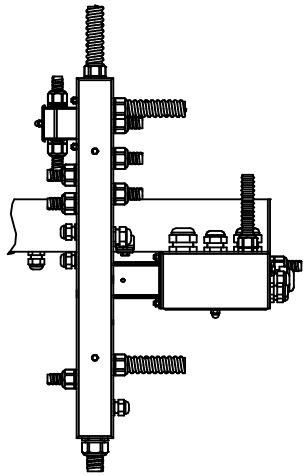

View from E
scale 1:3

View from C
scale 1:2

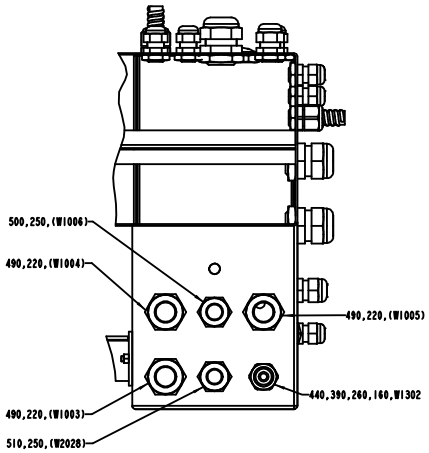

Pos	Part No	UN	Qty	Description	Page No	Pos	Part No	UN	Qty	Description	Page No

SEE PREVIOUS LISTS PAGES: 1-349, 1-351.

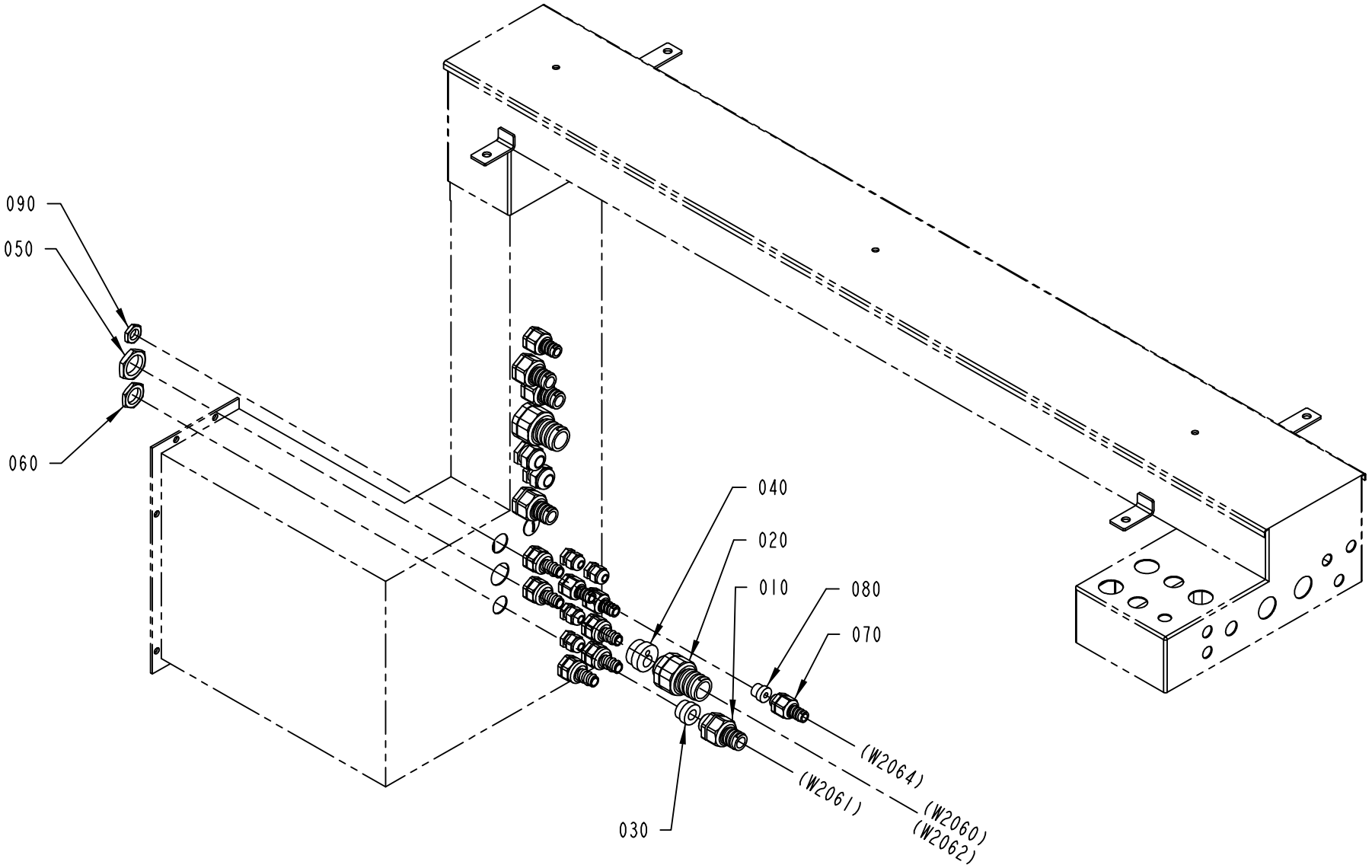

2656905-1
ECM 140502

ECM: 151861 - 20031121
Group number: 2656905-0100
Assembly Drawing: 2656905-1_1_AA

This list covers pages from 1-364 to 1-367

Pos	Part No	UN	Qty	Description	Page No
HI (See drawing on page: 1-364)					
010	353243-0005		1	HOSE GLAND W/O INSERT PG16 EXTENDED	
020	353243-0007		1	HOSE GLAND W/O INSERT PG21 EXTENDED	
030	353249-0013		1	INSERT, SINGEL HOLE, EK 154/13	
040	2649167-0000		1	INSERT	
070	353243-0001		1	HOSE GLAND W/O INSERT PG9 EXTENDED	
080	353249-0008		1	INSERT, SINGEL HOLE, EK 152/7	
NOHI (See drawing on page: 1-366)					
100	90002-0004		1	BLANK-OFF PLUG, PR 22,5 SKINDICHT-BLK16	
110	90002-0012		1	BLANK-OFF PLUG, PR 28,3 SKINDICHT-BLK21	
120	90002-0016		1	BLANK-OFF PLUG PR 20.4 SKINDICHT-BLK13,5	
Common Parts					
050	90099-0119		1	NUT, PR 28,3 (PG21)	
060	90099-0110		1	NUT, PR 22,5 (PG16)	
090	90099-0104		1	NUT, PR 15,2 (PG9)	

Pos	Part No	UN	Qty	Description	Page No

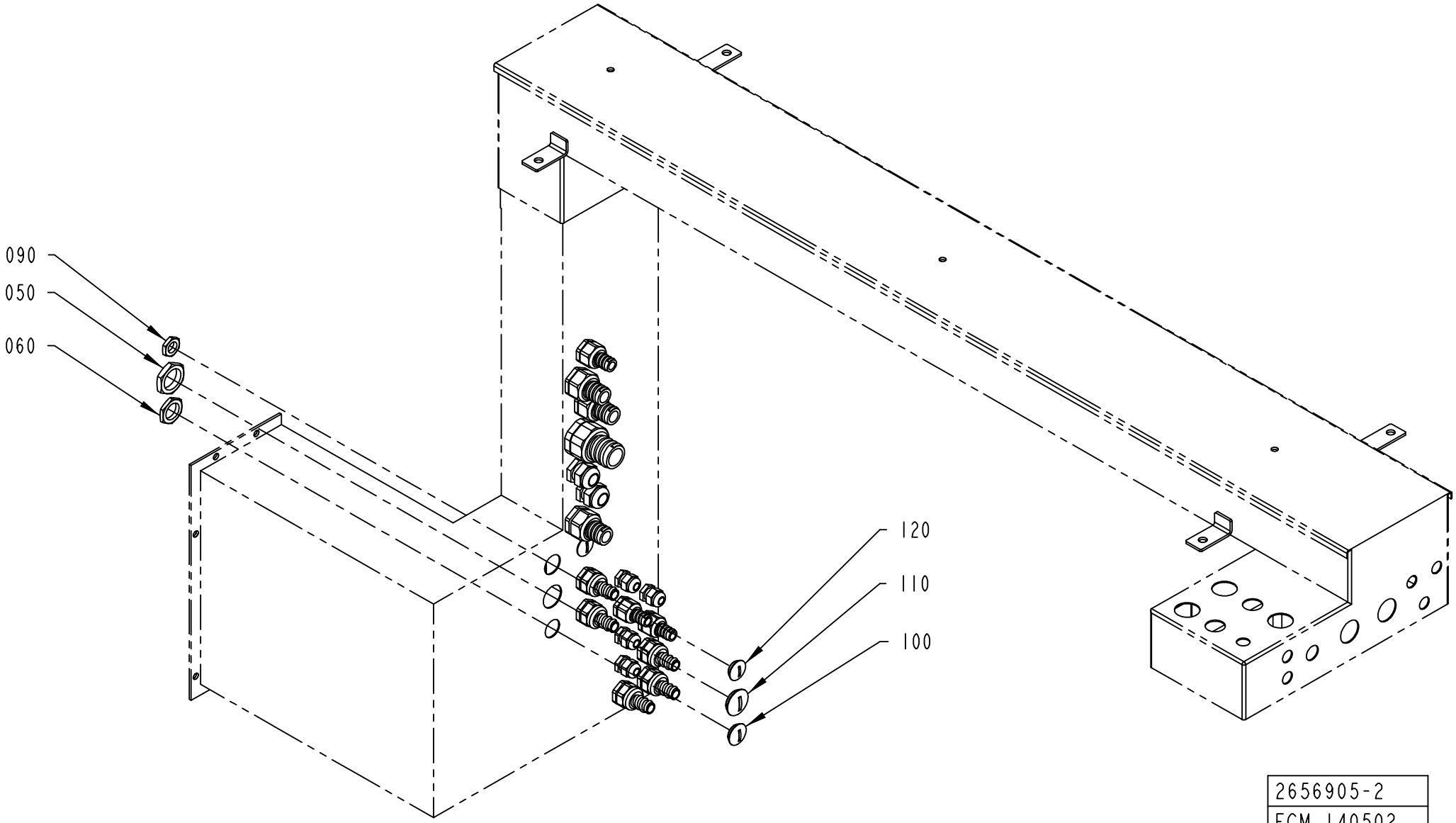
090
050
060
120
110
100
2656905-2
ECM 140502

ECM: 151861 - 20031121
Group number: 2656905-0100
Assembly Drawing: 2656905-2_1_AA

This list covers pages from 1-364 to 1-367

Pos	Part No	UN	Qty	Description	Page No
HI (See drawing on page: 1-364)					
010	353243-0005		1	HOSE GLAND W/O INSERT PG16 EXTENDED	
020	353243-0007		1	HOSE GLAND W/O INSERT PG21 EXTENDED	
030	353249-0013		1	INSERT, SINGEL HOLE, EK 154/13	
040	2649167-0000		1	INSERT	
070	353243-0001		1	HOSE GLAND W/O INSERT PG9 EXTENDED	
080	353249-0008		1	INSERT, SINGEL HOLE, EK 152/7	
NOHI (See drawing on page: 1-366)					
100	90002-0004		1	BLANK-OFF PLUG, PR 22,5 SKINDICHT-BLK16	
110	90002-0012		1	BLANK-OFF PLUG, PR 28,3 SKINDICHT-BLK21	
120	90002-0016		1	BLANK-OFF PLUG PR 20.4 SKINDICHT-BLK13,5	
Common Parts					
050	90099-0119		1	NUT, PR 28,3 (PG21)	
060	90099-0110		1	NUT, PR 22,5 (PG16)	
090	90099-0104		1	NUT, PR 15,2 (PG9)	

Pos	Part No	UN	Qty	Description	Page No

COVERING PANEL

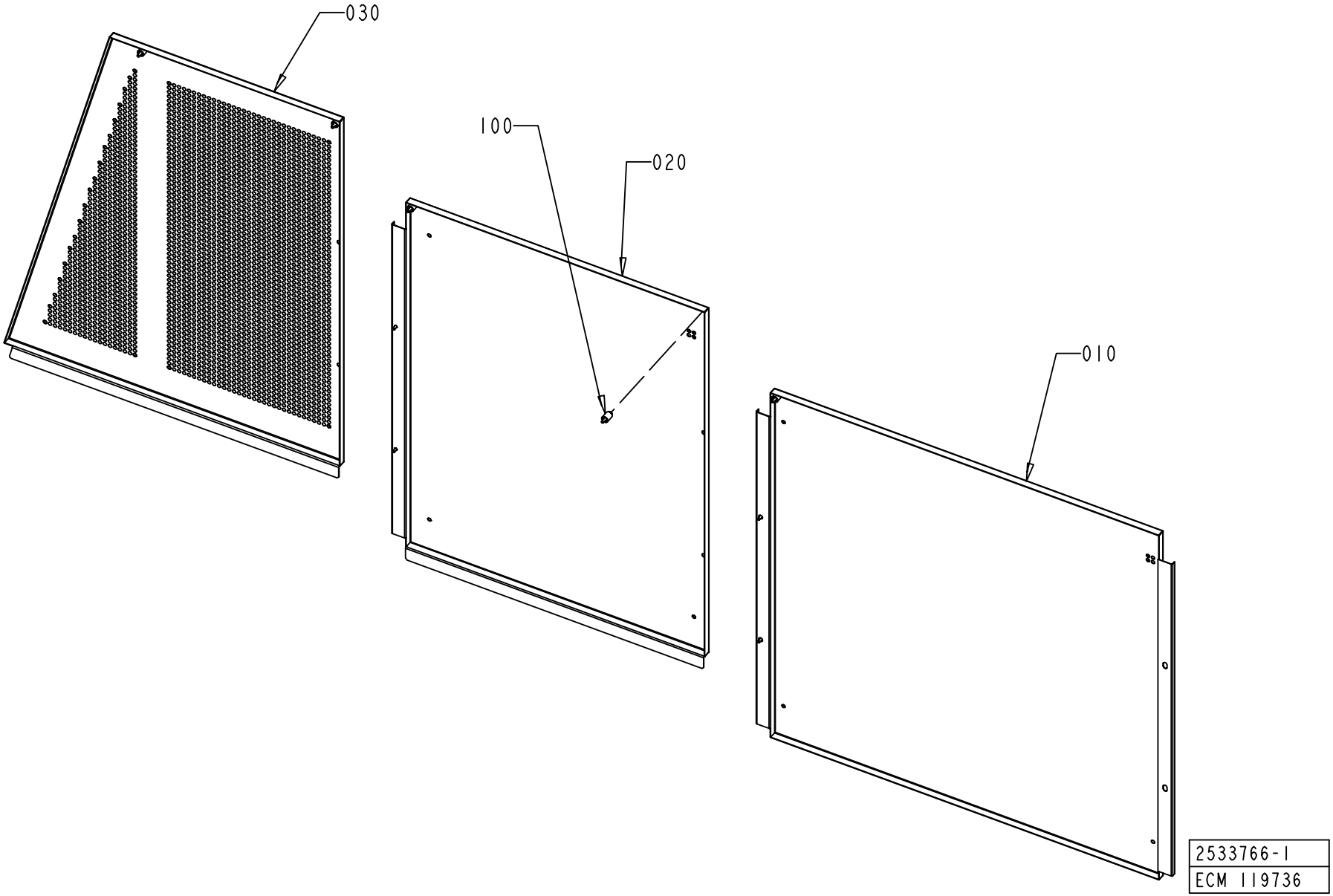

ECM: 139456 - 20030710
Group number: 2533766-0100
Assembly Drawing: 2533766-1_1_AA

Pos	Part No	UN	Qty	Description	Page No
A3/FLEX					
010	2533763-0000		1	COVERING PANEL	
Common Parts					
020	2533768-0000		1	COVERING PLATE	
030	2539471-0000		1	COVERING PLATE	
100	90226-0458		9	MOUNTING SCREW	

Pos	Part No	UN	Qty	Description	Page No

COVERING PANEL

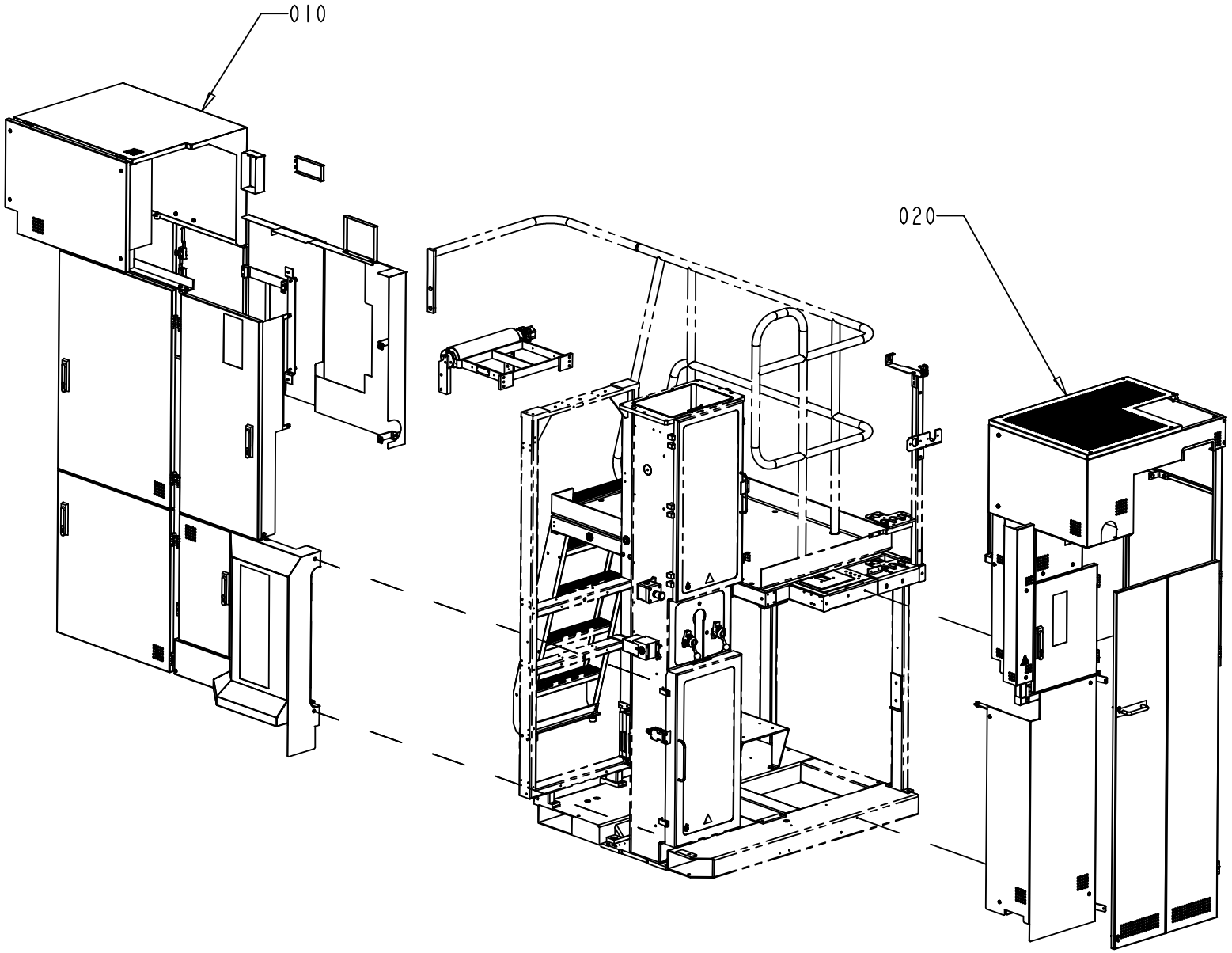

2532909-1
ECM 114120

ECM: 139457 - 20030710
Group number: 2532909-0100
Assembly Drawing: 2532909-1_1_AA

Pos	Part No	UN	Qty	Description	Page No
A3/FLEX					
010	2529760-0100		1	COVERING PANEL	**1-373**
Common Parts					
020	2545639-0100		1	COVERING PANEL	**1-375**

Pos	Part No	UN	Qty	Description	Page No

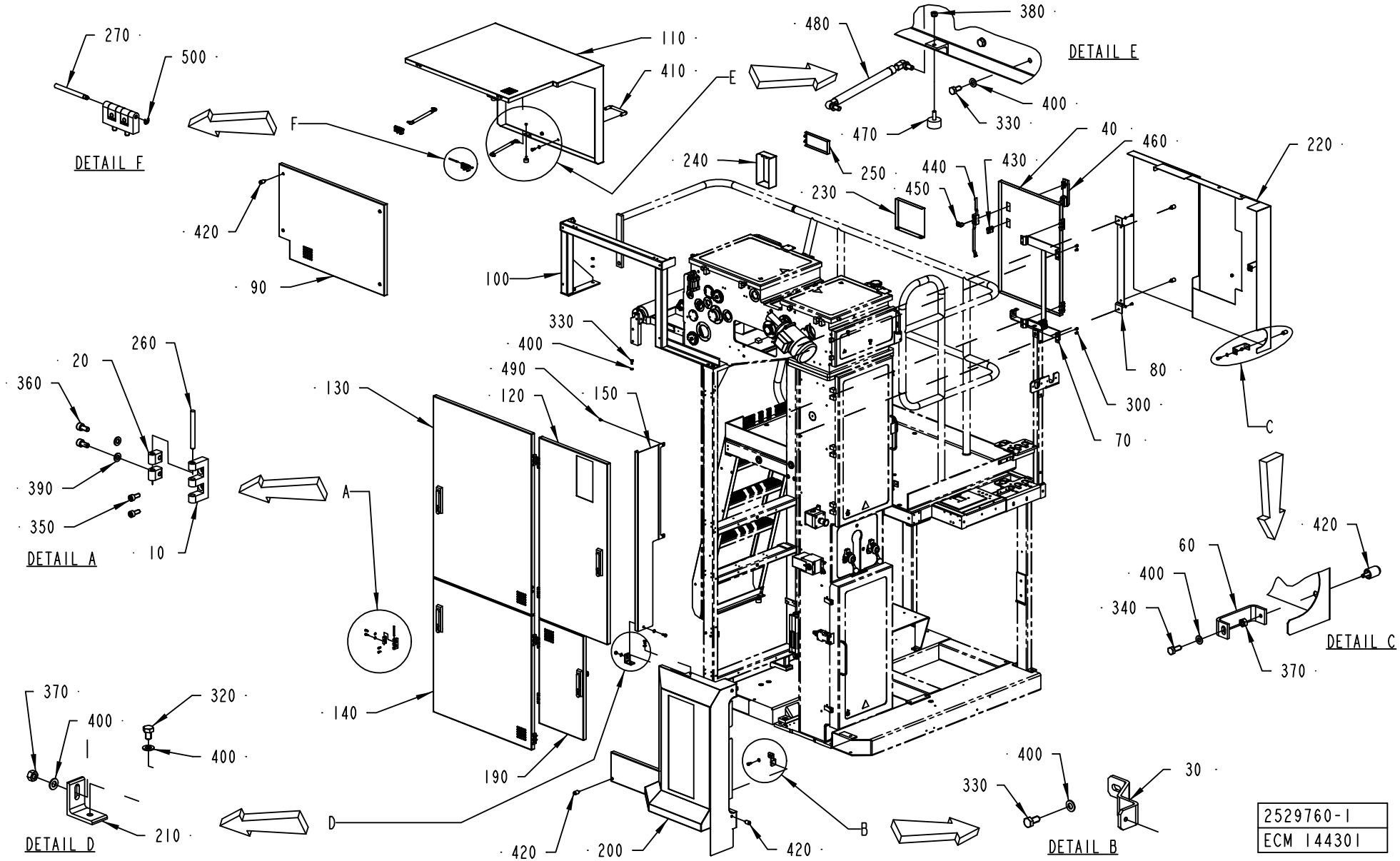
270
500
DETAIL F
110
410
E
F
420
90
480
380
DETAIL E
400
330
470
250
240
230
450
440
430
40
460
220
100
330
400
490
120
150
130
260
20
360
390
350
10
DETAIL A
A
80
300
70
C
420
60
400
340
370
DETAIL C
370
400
320
400
210
DETAIL D
140
190
D
420
200
420
B
400
330
30
DETAIL B
2529760-1
ECM 144301

ECM: 144301 - 20031103
Group number: 2529760-0100
Assembly Drawing: 2529760-1_1_AB

Pos	Part No	UN	Qty	Description	Page No
A3/FLEX					
030	2504506-0000		2	BRACKET	
150	2533753-0000		1	PANEL	
190	2539487-0000		1	DOOR	
200	2551959-0000		1	COVER	
210	2539488-0000		1	ANGLE BRACKET	
320	312105-0447		1	SCREW M6S ISO 4017 M8X12 A480	
330	312105-0449		6	SCREW M6S ISO 4017 M8X16 A480	
340	312105-0451		5	SCREW M6S ISO 4017 M8X20 A480	
370	312605-0318		5	HEXAGON NUT, M6M M8 A280	
390	315105-0153		26	WASHER BRB6,4X12RFR	
400	315105-0165		16	WASHER BRB8,4X16RFR	
420	90226-0458		11	MOUNTING SCREW	
490	312105-0362		2	SCREW M6S ISO 4017 M6X8 A480	
Common Parts					
010	1035792-0000		12	E-HINGE	
020	1129770-0000		24	BLOCKING PIECE	
040	2509642-0000		1	DOOR	
060	2509644-0000		2	BRACKET	
070	2509658-0000		1	BRACKET	
080	2509659-0000		1	PLATE	
090	2551968-0000		1	COVERING PANEL	
100	2551967-0000		1	FRAME	
110	2551966-0000		1	COVERING PANEL	
120	2533749-0000		1	DOOR	
130	2533750-0000		1	DOOR	
140	2533751-0000		1	DOOR	
220	2551961-0000		1	COVERING PANEL	
240	2551963-0000		1	TOUCH GUARD	
250	2551964-0000		1	TOUCH GUARD	
260	988685-0000		10	PIN	
270	1036329-0000		2	PIN	
300	312105-0366		6	SCREW M6S ISO 4017 M6X12 A480	
350	312115-0327		16	SCREW ISO4762 M5X12 A4	
360	312115-0366		28	SCREW ISO4762 M6X12 A4	
380	312812-0316		2	HEXAGON NUT, NY-LOCK M6 A480	
410	90017-0016		1	HANDLE, NO. 14.4012.02.120	
430	90237-0128		5	LOCK CYLINDER, 1109-U3	
440	90237-0153		5	LOCK HOUSING, 1121-U26-0B	
450	90237-0165		5	LATCH	
460	90237-0176		5	TURNING HANDLE, 1125-U190-A	
470	90347-0034		2	VIBRATION DAMPER	
480	90347-0127		2	DAMPER	
500	315755-0106		2	RETAINING RING SHAFT DIN 6799 4 A2	

Machine Type | Group Description | Used-In | Group Number | Page No

COVERING PANEL

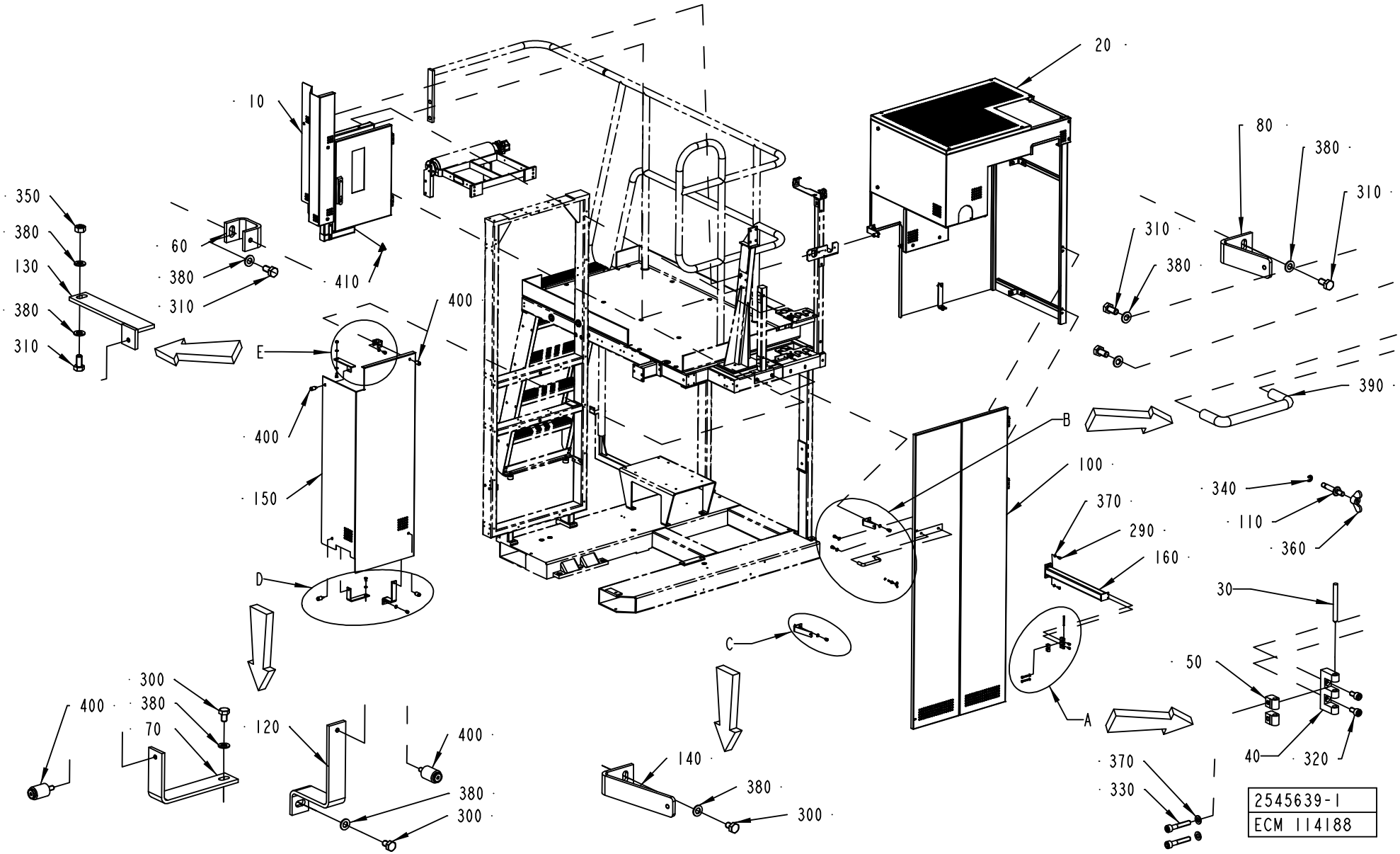

ECM: 139458 - 20030710
Group number: 2545639-0100
Assembly Drawing: 2545639-1_1_AA

Pos	Part No	UN	Qty	Description	Page No
A3/FLEX					
120	2539473-0000		1	LOCK PLATE	
130	2539474-0000		1	HOLDER	
150	2551965-0000		1	COVERING PANEL	
290	312105-0368		2	SCREW M6S ISO 4017 M6X16 A480	
310	312105-0449		5	SCREW M6S ISO 4017 M8X16 A480	
350	312605-0318		1	HEXAGON NUT, M6M M8 A280	
370	315105-0153		8	WASHER BRB6,4X12RFR	
380	315105-0165		9	WASHER BRB8,4X16RFR	
400	90226-0458		4	MOUNTING SCREW	
Common Parts					
010	2551970-0100		1	COVERING PANEL	**1-377**
020	2551971-0100		1	COVERING PANEL	**1-379**
030	988685-0000		3	PIN	
040	1035792-0000		3	E-HINGE	
050	1129770-0000		6	BLOCKING PIECE	
060	2514531-0000		1	SPACER PIECE	
070	2514533-0000		1	HOLDER	
080	2514535-0000		1	HOLDER	
100	2529745-0000		1	DOOR	
110	2529754-0000		2	DOWEL	
140	2539475-0000		1	HOLDER	
160	2528085-0000		1	FRAME	
300	312105-0447		3	SCREW M6S ISO 4017 M8X12 A480	
320	312115-0366		6	SCREW ISO4762 M6X12 A4	
330	312115-0376		6	SCREW ISO4762 M6X35 A4	
340	315755-0106		2	RETAINING RING SHAFT DIN 6799 4 A2	
360	312715-0116		2	WING NUT DIN 315 A2 MVM-K M6	
390	90017-0016		1	HANDLE, NO. 14.4012.02.120	
410	359705-0007		1	WARNING SIGN ISO, HOT SURFACE	

Pos	Part No	UN	Qty	Description	Page No

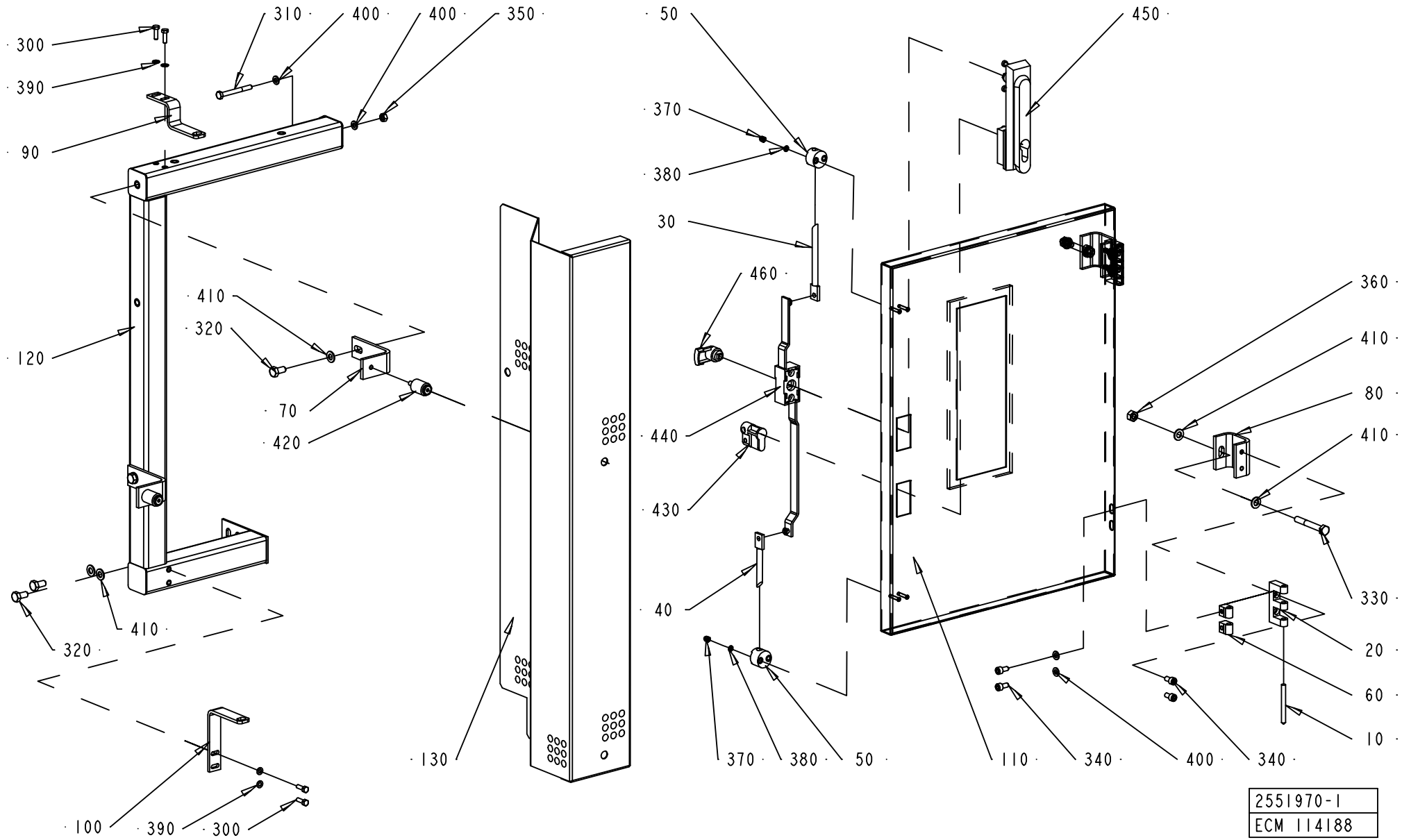
300
390
90
310
400
400
350
120
410
320
70
420
410
320
100
390
300
130
50
370
380
30
460
440
430
40
370
380
50
450
110
340
400
340
360
410
80
410
330
20
60
10
2551970-1
ECM 114188

ECM: 139459 - 20030710
Group number: 2551970-0100
Assembly Drawing: 2551970-1_1_AA

Pos	Part No	UN	Qty	Description	Page No
A3/FLEX					
070	2514532-0000		2	ANGLE BRACKET	
120	2551958-0000		1	FRAME	
130	2539477-0000		1	COVER	
320	312105-0449		4	SCREW M6S ISO 4017 M8X16 A480	
410	315105-0165		8	WASHER BRB8,4X16RFR	
420	90226-0458		2	MOUNTING SCREW	
Common Parts					
010	988685-0000		2	PIN	
020	1035792-0000		2	E-HINGE	
030	1036304-0011		1	LOCKING ARM	
040	1036304-0016		1	LOCKING ARM	
050	1129274-0000		2	GUIDE LUG	
060	1129770-0000		4	BLOCKING PIECE	
080	2514536-0000		2	SPACER PLATE	
090	2529739-0000		1	LOCK PLATE	
100	2529740-0000		1	LOCK PLATE	
110	2529744-0000		1	DOOR	
300	312105-0329		4	SCREW M6S ISO 4017 M5X16 A480	
310	312105-0381		1	SCREW M6S ISO 4014 M6X55 A480	
330	312105-0463		2	SCREW M6S ISO 4014 M8X60 A480	
340	312115-0366		8	SCREW ISO4762 M6X12 A4	
350	312605-0316		1	HEXAGON NUT, M6M M6 A280	
360	312605-0318		2	HEXAGON NUT, M6M M8 A280	
370	312705-0312		4	NUT HEX. DOMED CAP MHM-6 M4 A280	
380	315105-0136		4	WASHER BRB4,3XRFR	
390	315105-0146		4	WASHER BRB5,3X10RFR	
400	315105-0153		6	WASHER BRB6,4X12RFR	
430	90237-0128		1	LOCK CYLINDER, 1109-U3	
440	90237-0153		1	LOCK HOUSING, 1121-U26-0B	
450	90237-0176		1	TURNING HANDLE, 1125-U190-A	
460	90237-0165		1	LATCH	

Pos	Part No	UN	Qty	Description	Page No

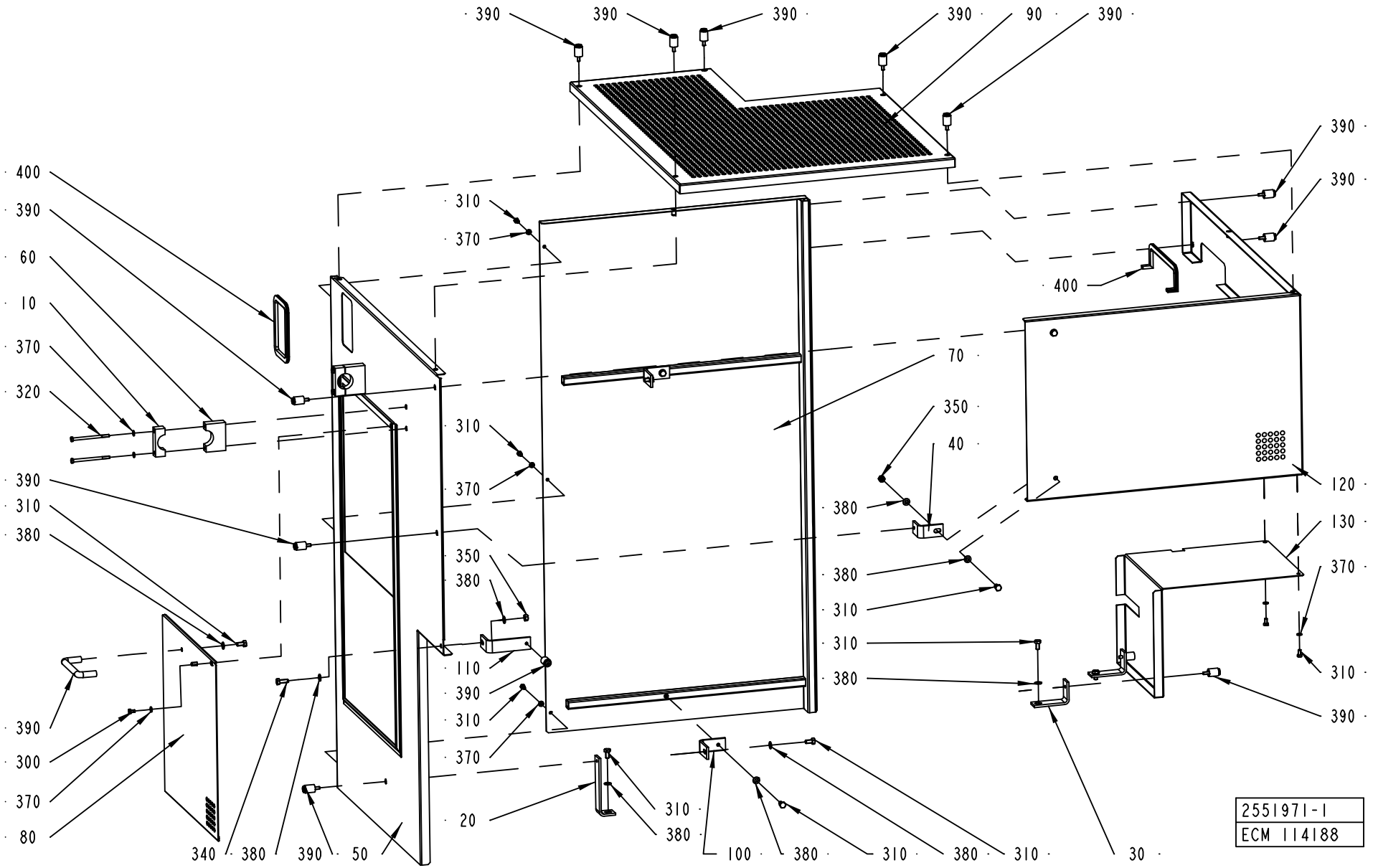
390
390
390
390
90
390
400
390
60
10
370
320
310
370
70
350
40
310
370
380
390
310
380
380
380
310
310
380
350
380
110
390
310
370
20
310
380
390
300
370
80
340
380
390
50
100
380
310
380
310
30
120
130
370
310
390
2551971-1
ECM 114188

ECM: 139460 - 20030710
Group number: 2551971-0100
Assembly Drawing: 2551971-1_1_AA

Pos	Part No	UN	Qty	Description	Page No
A3/FLEX					
050	2529741-0000		1	COVERING PANEL	
090	2529757-0000		1	COVERING PANEL	
110	2539479-0000		1	HOLDER	
120	2539482-0000		1	COVER	
330	312105-0449		11	SCREW M6S ISO 4017 M8X16 A480	
350	312605-0318		3	HEXAGON NUT, M6M M8 A280	
370	315105-0165		15	WASHER BRB8,4X16RFR	
390	90226-0458		13	MOUNTING SCREW	
Common Parts					
010	735041-0000		2	CONNECTION CLAMP	
020	2514530-0000		1	HOLDER	
030	2514532-0000		2	ANGLE BRACKET	
040	2529737-0000		2	ANGLE BRACKET	
060	2529742-0000		2	CLAMP	
070	2529743-0000		1	COVERING PANEL	
080	2529756-0000		1	COVERING PANEL	
100	2539478-0000		2	HOLDER	
130	2539483-0000		1	COVER	
300	312105-0364		1	SCREW M6S ISO 4017 M6X10 A480	
310	312105-0366		5	SCREW M6S ISO 4017 M6X12 A480	
320	312105-0388		4	SCREW M6S ISO 4014 M6X90 A480	
340	312105-0452		1	SCREW M6S ISO 4017 M8X22 A4 80	
360	315105-0153		10	WASHER BRB6,4X12RFR	
380	90017-0016		1	HANDLE, NO. 14.4012.02.120	
400	90143-0059	MM	800	SEAL STRIP 4610069	

Pos	Part No	UN	Qty	Description	Page No

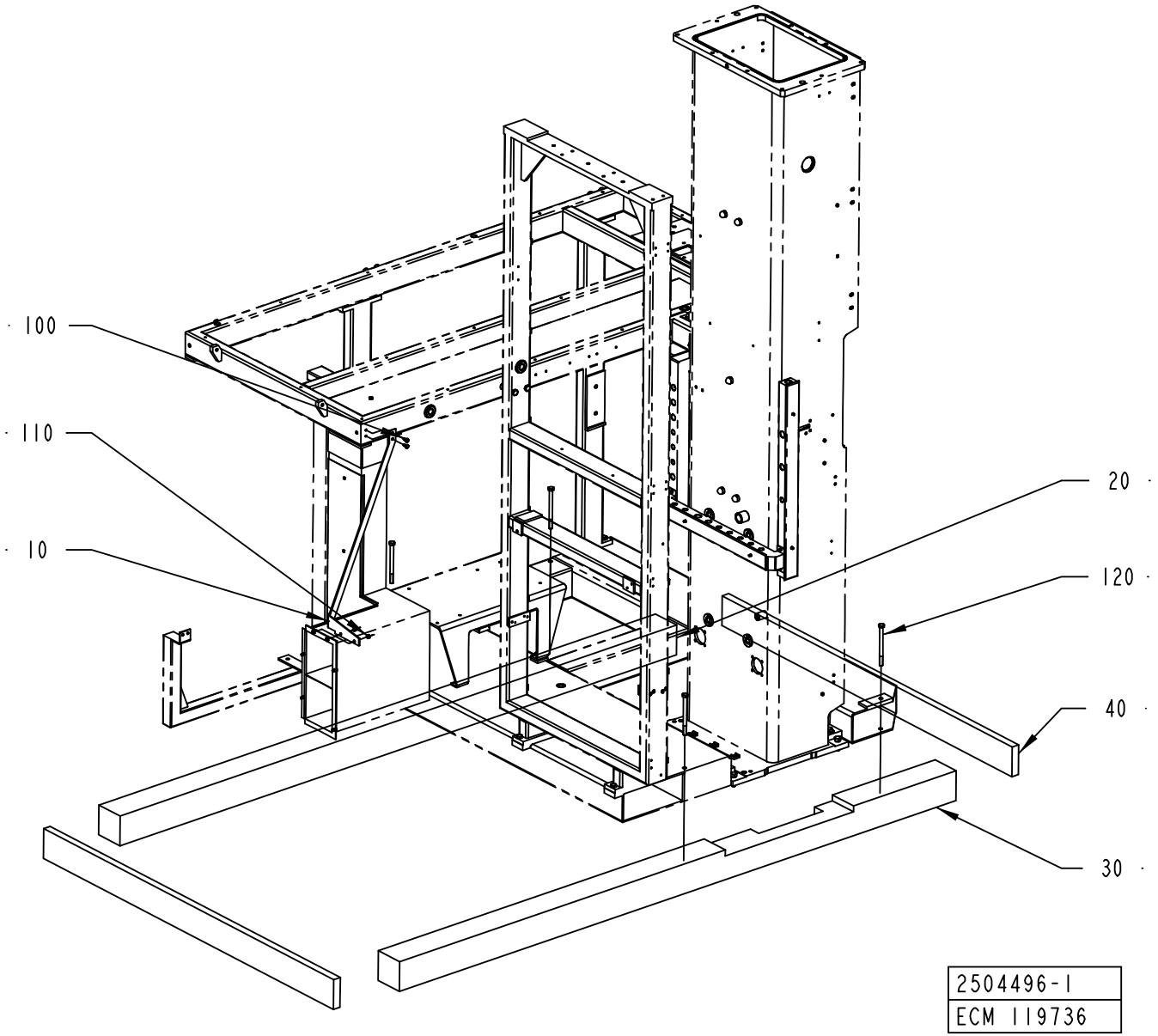
100
110
10
20
120
40
30
2504496-1
ECM 119736

ECM: 120245 - 20030123
Group number: 2504496-0100
Assembly Drawing: 2504496-1_1_AA

Pos	Part No	UN	Qty	Description	Page No
-					
010	1558845-0000		1	BRACKET	
020	1140685-0000		1	BEAM	
030	2541656-0000		1	BEAM	
040	2541657-0000		2	BEAM	
100	312105-0366		2	SCREW M6S ISO 4017 M6X12 A480	
110	312605-0316		2	HEXAGON NUT, M6M M6 A280	
120	312230-0150		4	SCREW HEX.HEAD WOOD T6S 10X160 SS	

Pos	Part No	UN	Qty	Description	Page No

Tetra Pak

SPC
Spare Parts Catalogue

MACHINE BODY

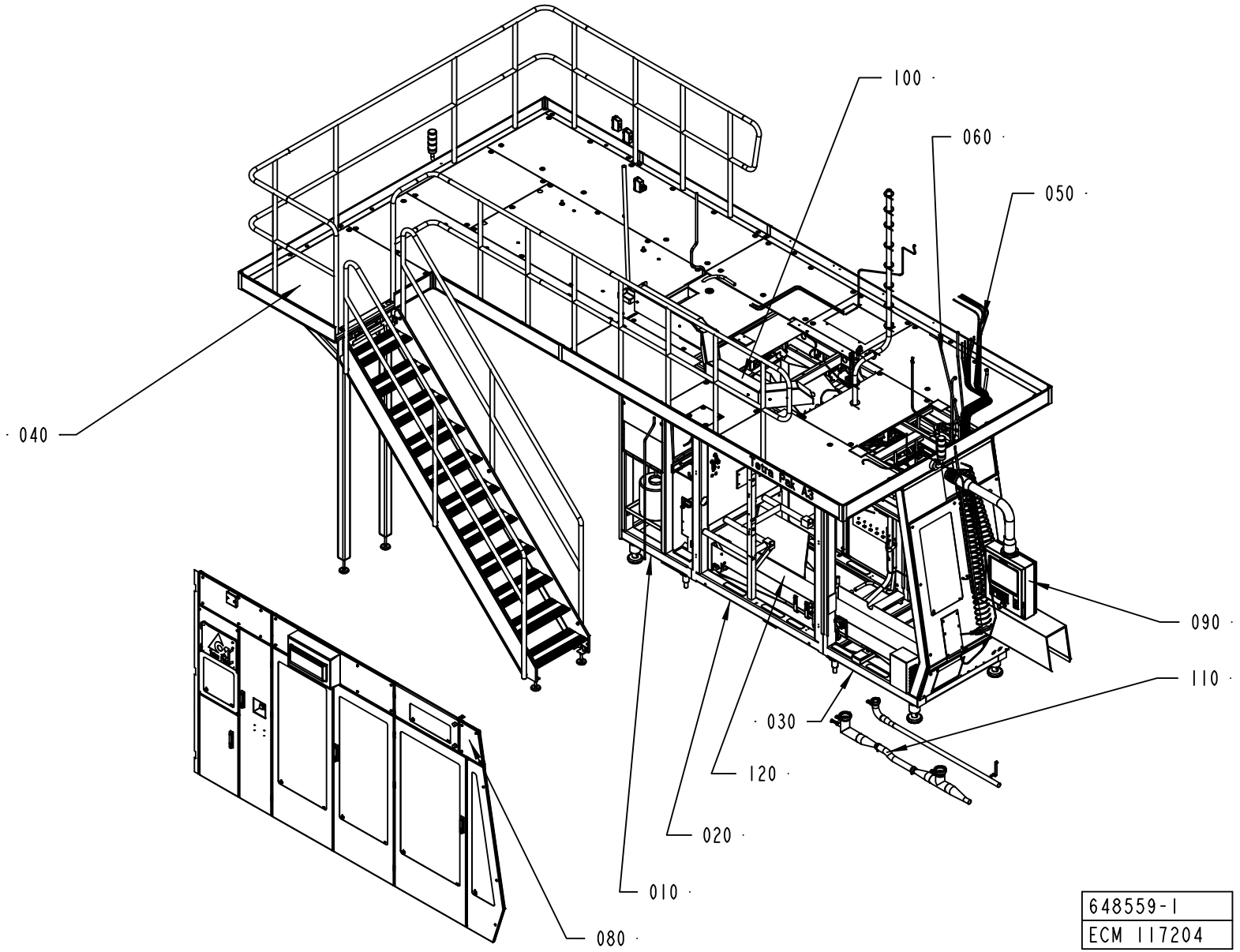

ECM: 139110 - 20030711
Group number: 648559-0100
Assembly Drawing: 648559-1_1_AA

Pos	Part No	UN	Qty	Description	Page No
A3/FLEX					
010	2504779-0100		1	REAR MODULE	**2-5**
Common Parts					
020	2504785-0100		1	CENTRAL MODULE	**2-63**
030	2504793-0100		1	FRONT MODULE	**2-117**
040	2550139-0100		1	PLATFORM	**2-159, 2-161, 2-163, 2-165, 2-167, 2-169**
050	2504917-0100		1	PIPE WORK-WATER	**2-195**
060	2504918-0100		1	PNEUMATIC SYSTEM	**2-209, 2-211**
080	2504920-0100		1	DOORS AND COVERS	**2-213**
090	2518146-0100		1	TPOP PANEL 15"	**2-265**
100	2504791-0100		1	CABLE DUCT	**2-267**
110	2519570-0100		1	DRAINING	**2-269**
120	2542325-0100		1	WASTE CONVEYOR	**2-271, 2-273**

Pos	Part No	UN	Qty	Description	Page No

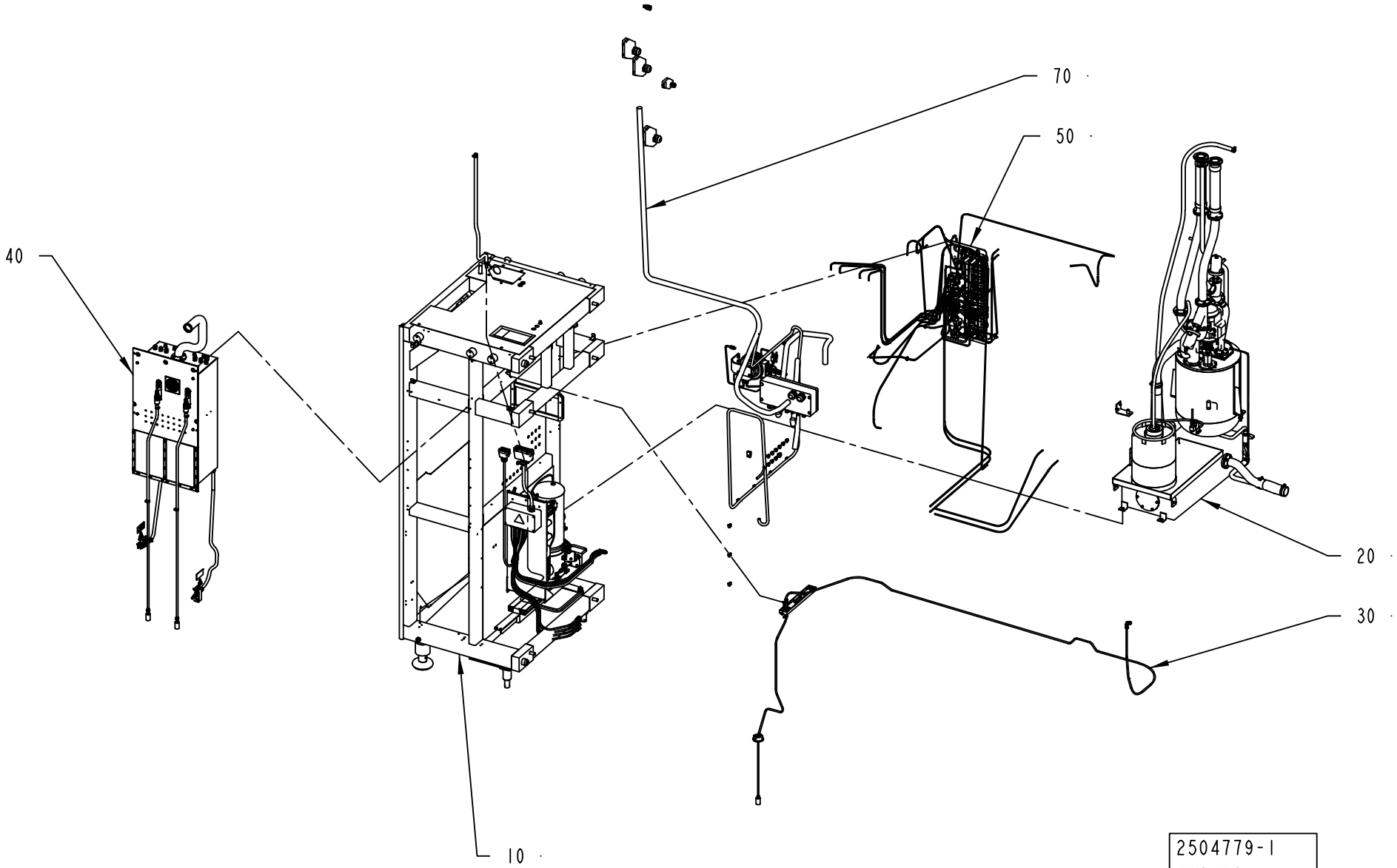
70
50
40
20
30
10
2504779-1
163462

ECM: 165886 - 20040607
Group number: 2504779-0100
Assembly Drawing: 2504779-1_1_AD

Pos	Part No	UN	Qty	Description	Page No
-					
010	2504780-0100		1	MACHINE BODY	**2-7**
020	2504781-0100		1	HYDROGEN PEROXIDE	**2-17**
030	2504782-0100		1	CHEMICALS	**2-37**
040	2544326-0100		1	INTEGRATED CLEANING UNIT	**2-39**
050	2528457-0100		1	PNEUMATIC SYSTEM	**2-43**
070	2528455-0100		1	ELECTRIC EQUIPMENT	**2-53**

Pos	Part No	UN	Qty	Description	Page No

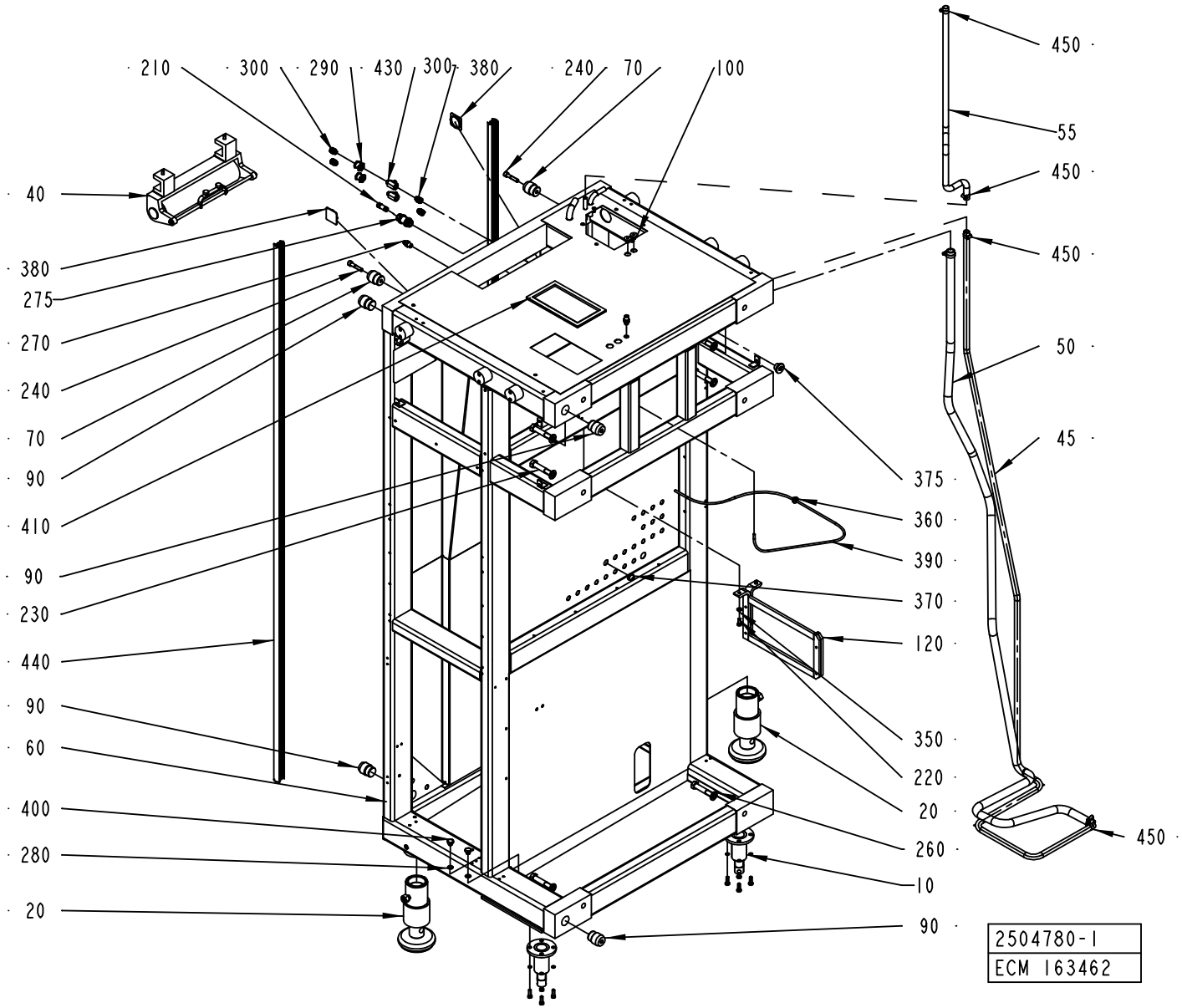
210
300
290
430
300
380
240
70
100
450
55
450
450
50
45
40
380
275
270
240
70
90
410
90
230
440
90
60
400
280
20
375
360
390
370
120
350
220
20
260
10
90
450
2504780-1
ECM 163462

ECM: 180481 - 50001231
Group number: 2504780-0100
Assembly Drawing: 2504780-1_1_AE

Pos	Part No	UN	Qty	Description	Page No
-					
010	1035471-0100		2	LEG	**2-9**
020	1035076-0200		2	LEG	**2-11**
040	2504784-0200		1	BENDING ROLLER	**2-13**
045	90166-0121	MM	3200	HOSE	
050	2514204-0100		1	DRAINING	**2-15**
055	90166-0121	MM	2100	HOSE	
060	2504435-0000		1	MACHINE BODY	
070	591341-0000		2	PIN	
090	2506636-0000		4	PIN	
100	90015-0023		2	LEAD-IN, TET7-10, E-1458019	
120	2510769-0000		1	HOLDER	
210	342715-0106		1	BLIND PLUG 14 MM	
220	312105-0451		2	SCREW M6S ISO 4017 M8X20 A480	
230	312105-0638		6	SCREW M6S ISO 4014 M16X90 A480	
240	312115-0501		2	SCREW ISO4762 M10X50 A4	
260	315105-0186		6	WASHER BRB17X30RFR	
270	342768-0102		2	BULKHEAD CONNECTOR, 6 MM	
275	342768-0110		1	BULKHEAD CONNECTOR, 14 MM	
280	315237-0110		2	WASHER,PL.RND.AL.13,5/18,H=1,5	
290	342767-0104		2	CONN. BULKHEAD G1/4	
300	90055-0274		4	STRAIGHT COUPLING, D=8 MM - G1/4"	
350	315105-0165		2	WASHER BRB8,4X16RFR	
360	90015-0020		1	LEAD-IN, TET5-7, E-1458016	
370	90015-0023		1	LEAD-IN, TET7-10, E-1458019	
375	90015-0022		1	LEAD-IN, TET14-20, E-1458029	
380	90261-0070		2	PLASTIC PLUG SS 0082.31	
390	90166-0081	MM	1320	TUBE 6 MM PA BLUE	
400	90330-0026		2	PLUG, EXT. G-THREAD, G1/4	
410	90143-0059	MM	700	SEAL STRIP 4610069	
430	90187-0158		2	THROTTLE BALL VALVE G1/4, R1/4	
440	90459-1009	MM	4500	RUBBER STRIP, 309Z0475	
450	342991-0102		4	HOSE CLIP,WORM DRIVE TYPE (16)-19	

Pos	Part No	UN	Qty	Description	Page No

Machine Type | Group Description | Used-In | Group Number | Page No

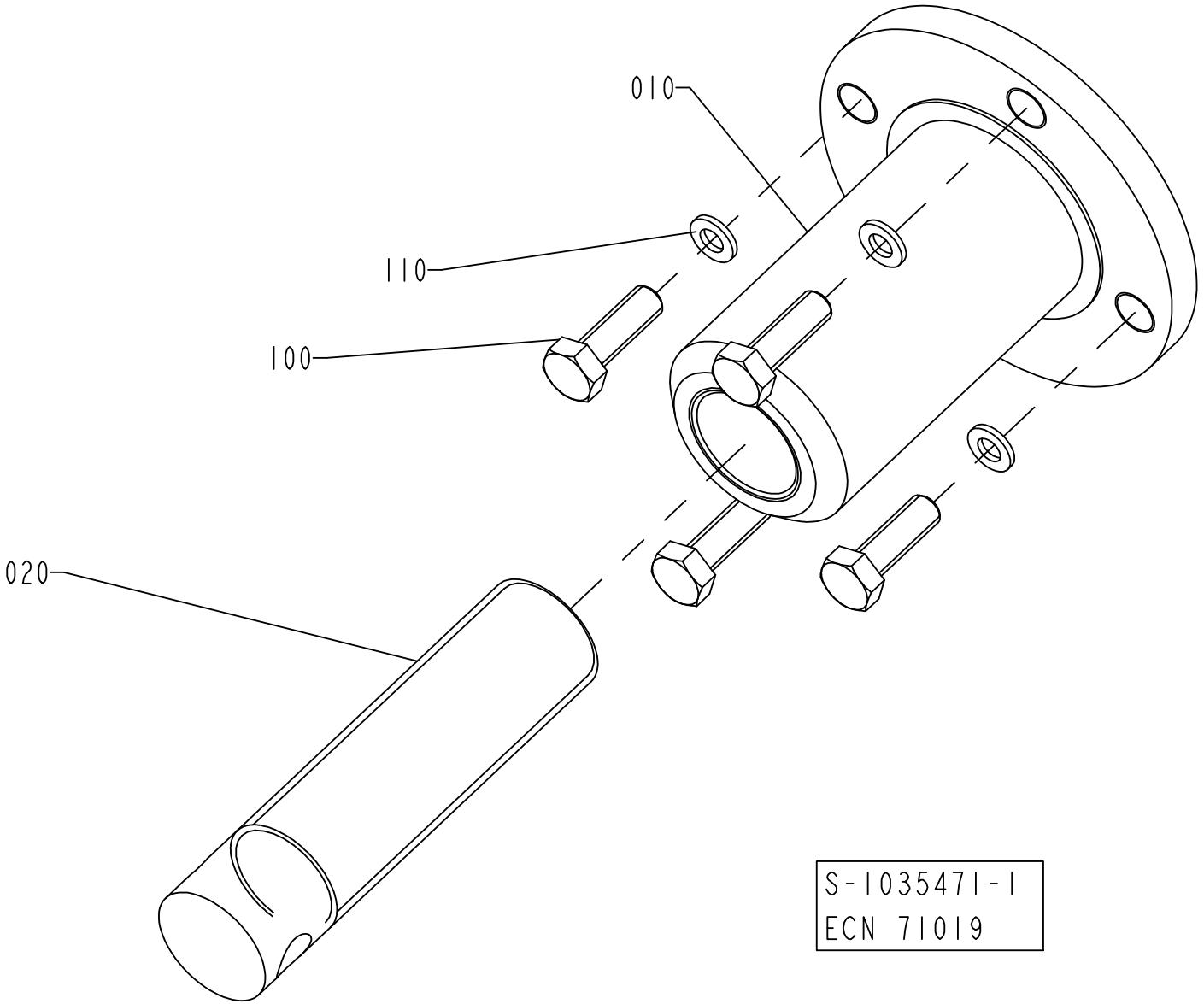
010
110
100
020
S-1035471-1
ECN 71019

ECM: 71870 - 19981029
Group number: 1035471-0100
Assembly Drawing: 1035471-1_1_AB

Pos	Part No	UN	Qty	Description	Page No
-					
010	469095-0000		1	HOLDER	
020	469096-0000		1	LEG	
100	312105-0453		4	SCREW M6S ISO 4017 M8X25 A480	
110	315125-0165		4	WASHER TBRSB 8,4X26X5 A4	

Pos	Part No	UN	Qty	Description	Page No

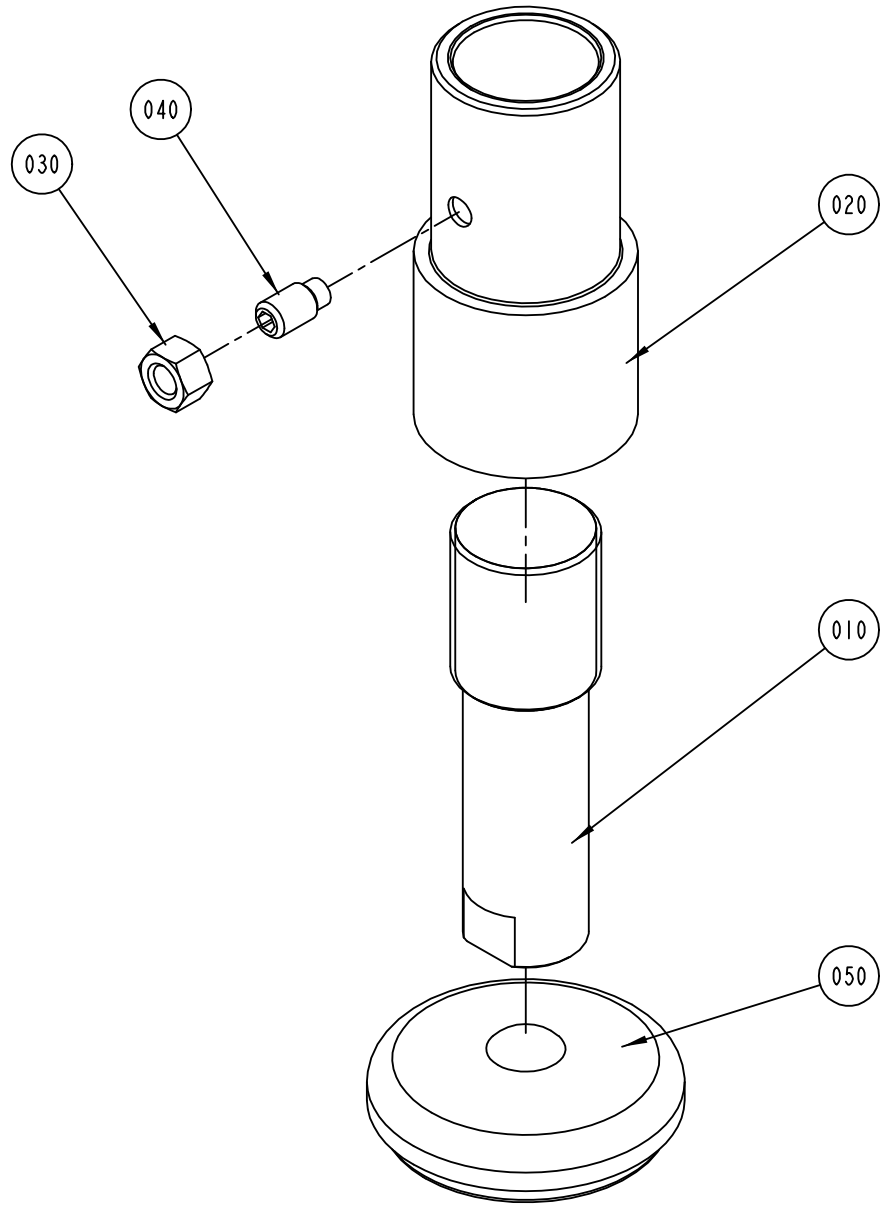

S-1035076-2
ECN 71457

ECM: 71457 - 20000215
Group number: 1035076-0200
Assembly Drawing: 1035076-2_1_AB

Pos	Part No	UN	Qty	Description	Page No
-					
010	1487712-0000		1	LEG	
020	1036120-0000		1	SLEEVE	
030	312605-0324		1	HEXAGON NUT, M6M M16 A280	
040	312311-0624		1	SCREW ISO4028 M16X30 FZB	
050	90347-0175		1	MACHINE SHOE BRIK T 125	

Pos	Part No	UN	Qty	Description	Page No

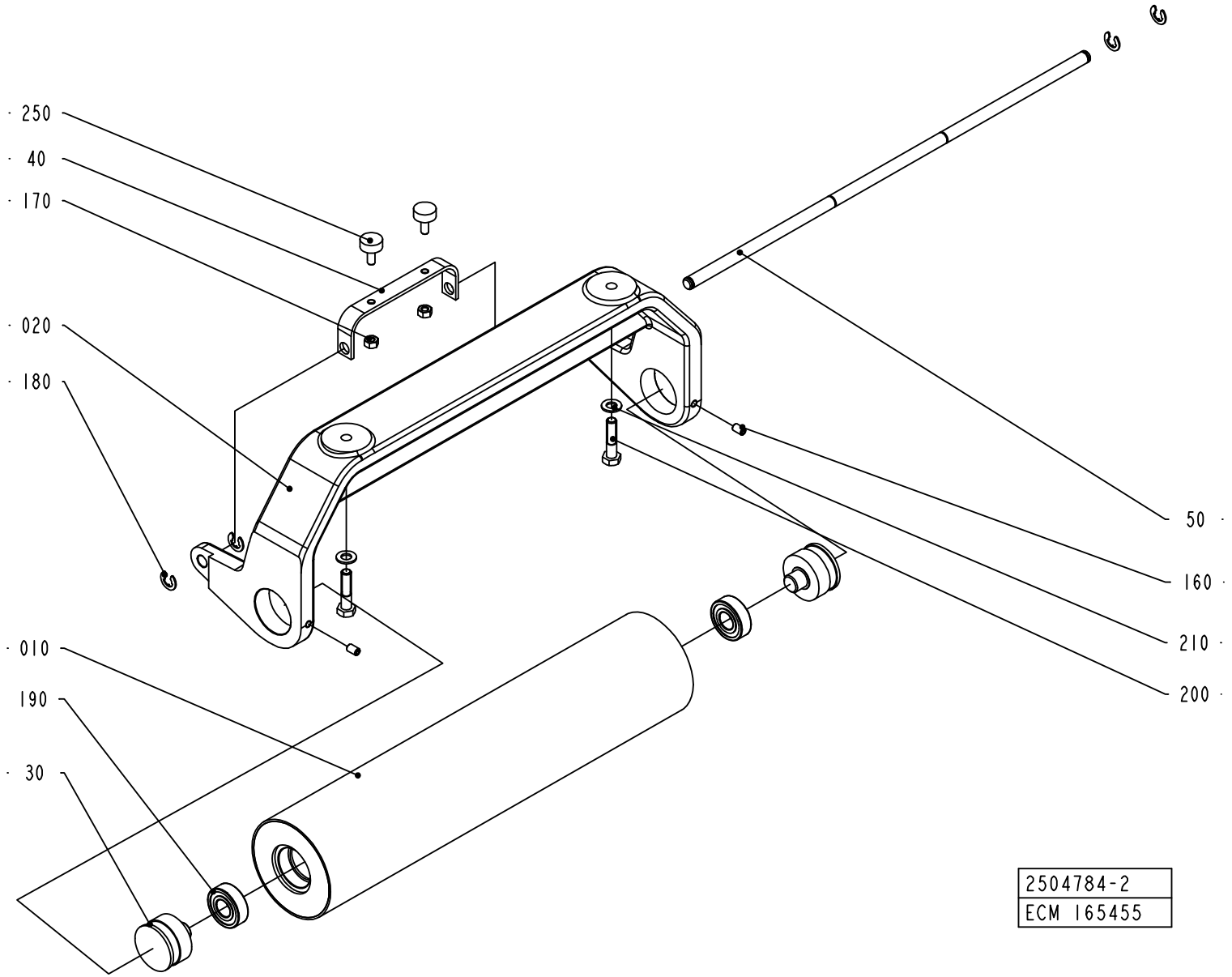
250
40
170
020
180
010
190
30
50
160
210
200
2504784-2
ECM 165455

ECM: 165457 - 20040715
Group number: 2504784-0200
Assembly Drawing: 2504784-2_1_AA

Pos	Part No	UN	Qty	Description	Page No
-					
010	2605877-0000		1	BENDING ROLLER	
020	2605879-0000		1	CANTILEVER	
030	1037012-0000		2	AXLE PIN	
040	1041603-0000		1	BRACKET	
050	2605880-0000		1	SHAFT	
160	312318-0364		2	SCREW ISO4029 M6X10 A4	
170	312605-0316		2	HEXAGON NUT, M6M M6 A280	
180	315755-0801		4	RETAINING RING SHAFT DIN 6799 8 A2	
190	321313-0102		2	BALL BEARING, 15X35X11 MM	
200	312105-0457		2	SCREW M6S ISO 4014 M8X35 A480	
210	315105-0165		2	WASHER BRB8,4X16RFR	
250	90347-0007		2	VIBRATION DAMPER	

Pos	Part No	UN	Qty	Description	Page No

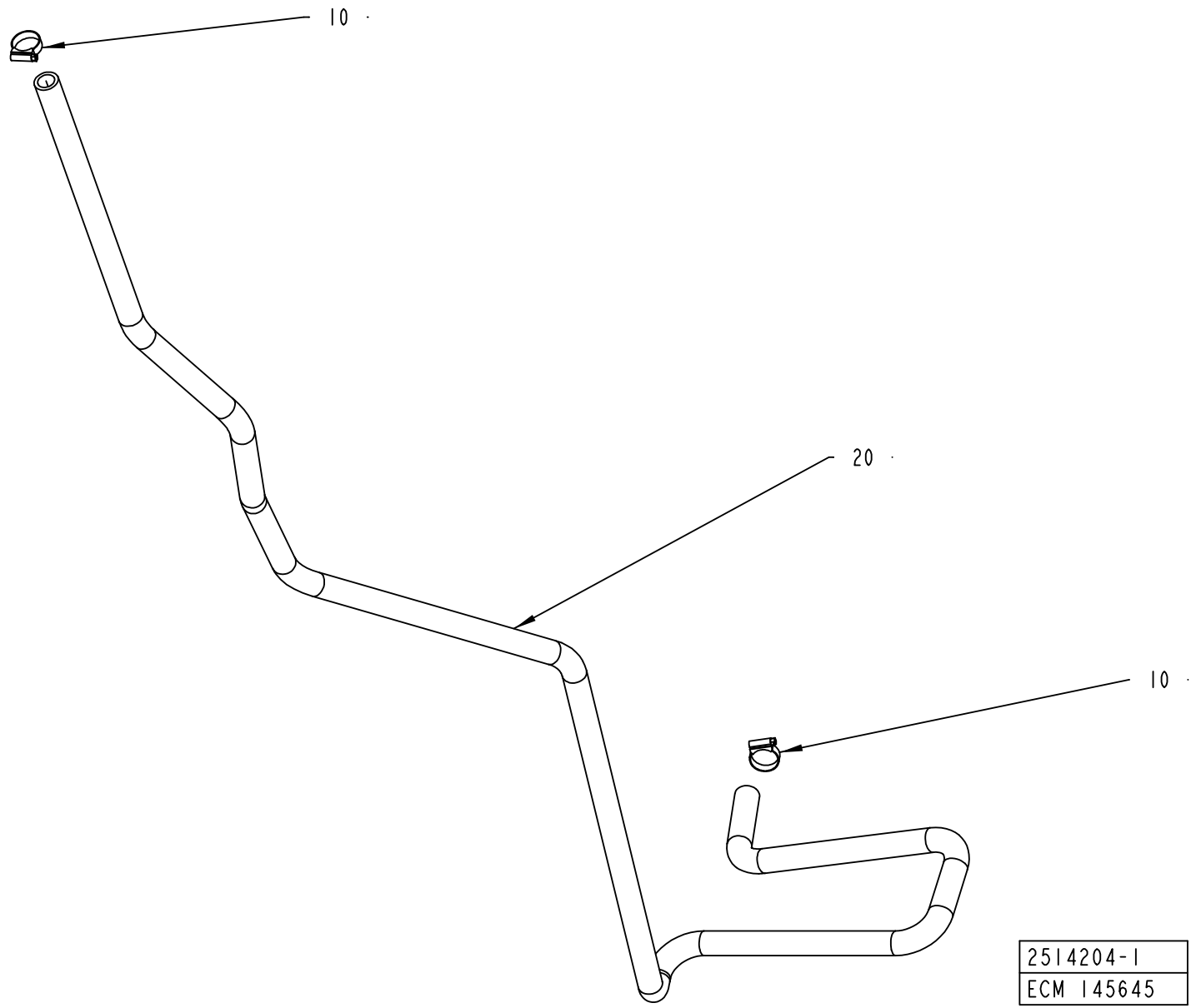
10
20
10
2514204-1
ECM 145645

ECM: 145672 - 20040301
Group number: 2514204-0100
Assembly Drawing: 2514204-1_1_AB

Pos	Part No	UN	Qty	Description	Page No
A3/FLEX					
020	90166-0060	MM	2450	HOSE 19/26-27 REINF.PVC	
Common Parts					
010	342991-0105		2	HOSE CLIP,WORM DRIVE TYPE (27)-30	

Pos	Part No	UN	Qty	Description	Page No

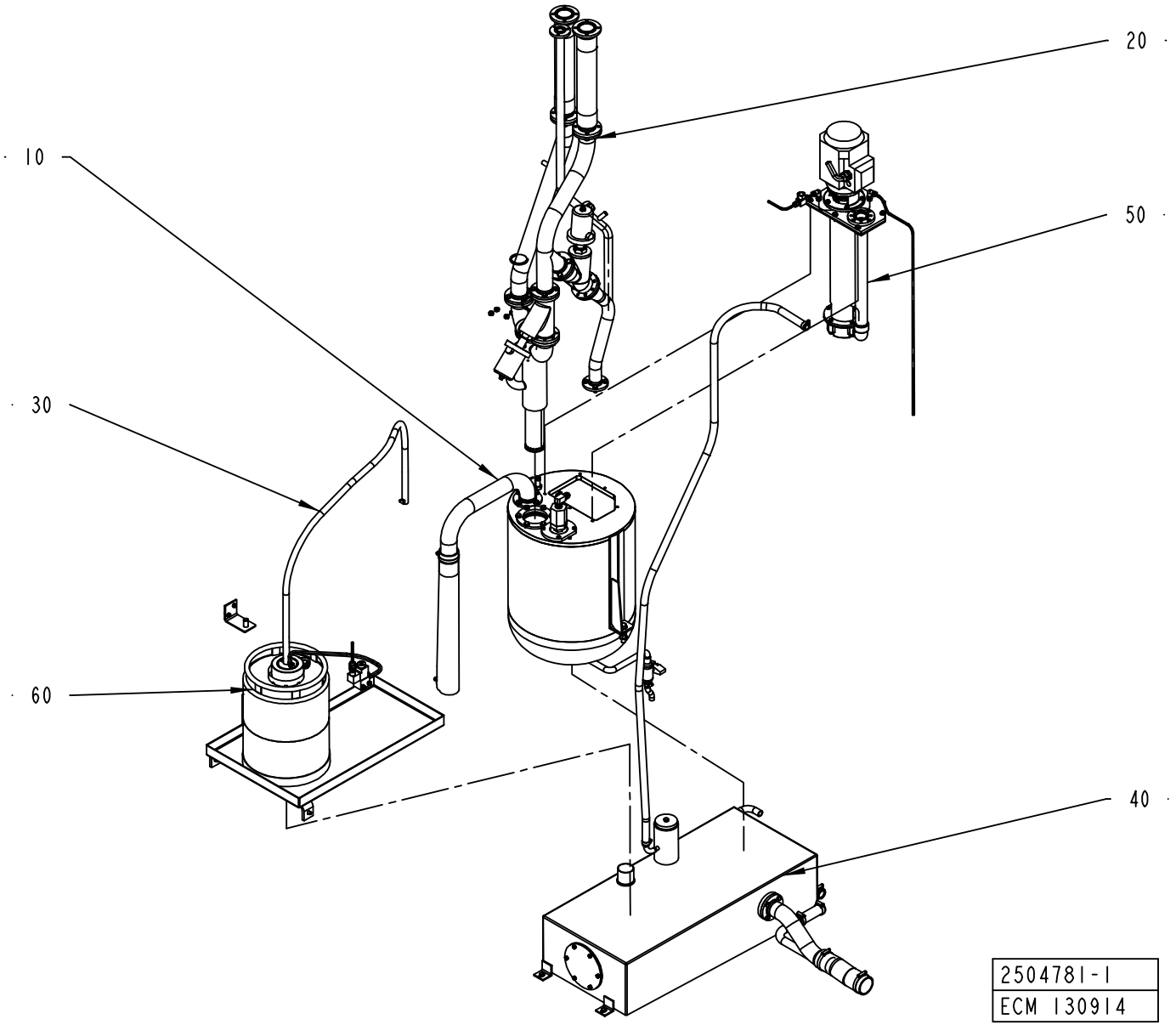
20
10
50
30
60
40
2504781-1
ECM 130914

ECM: 131957 - 20030522
Group number: 2504781-0100
Assembly Drawing: 2504781-1_1_AB

Pos	Part No	UN	Qty	Description	Page No
-					
010	1282894-0100		1	PEROXIDE TANK	**2-19, 2-21**
020	1282895-0200		1	PEROXIDE PIPE	**2-25**
030	2506637-0100		1	AIR PIPE-LINE	**2-27**
040	1282896-0100		1	TANK	**2-29**
050	996388-0500		1	PEROXIDE PUMP	**2-33**
060	527898-0100		1	CONTAINER H2O2	**2-35, 10-63**

Pos	Part No	UN	Qty	Description	Page No

Machine Type | Group Description | Used-In | Group Number | Page No

PEROXIDE TANK

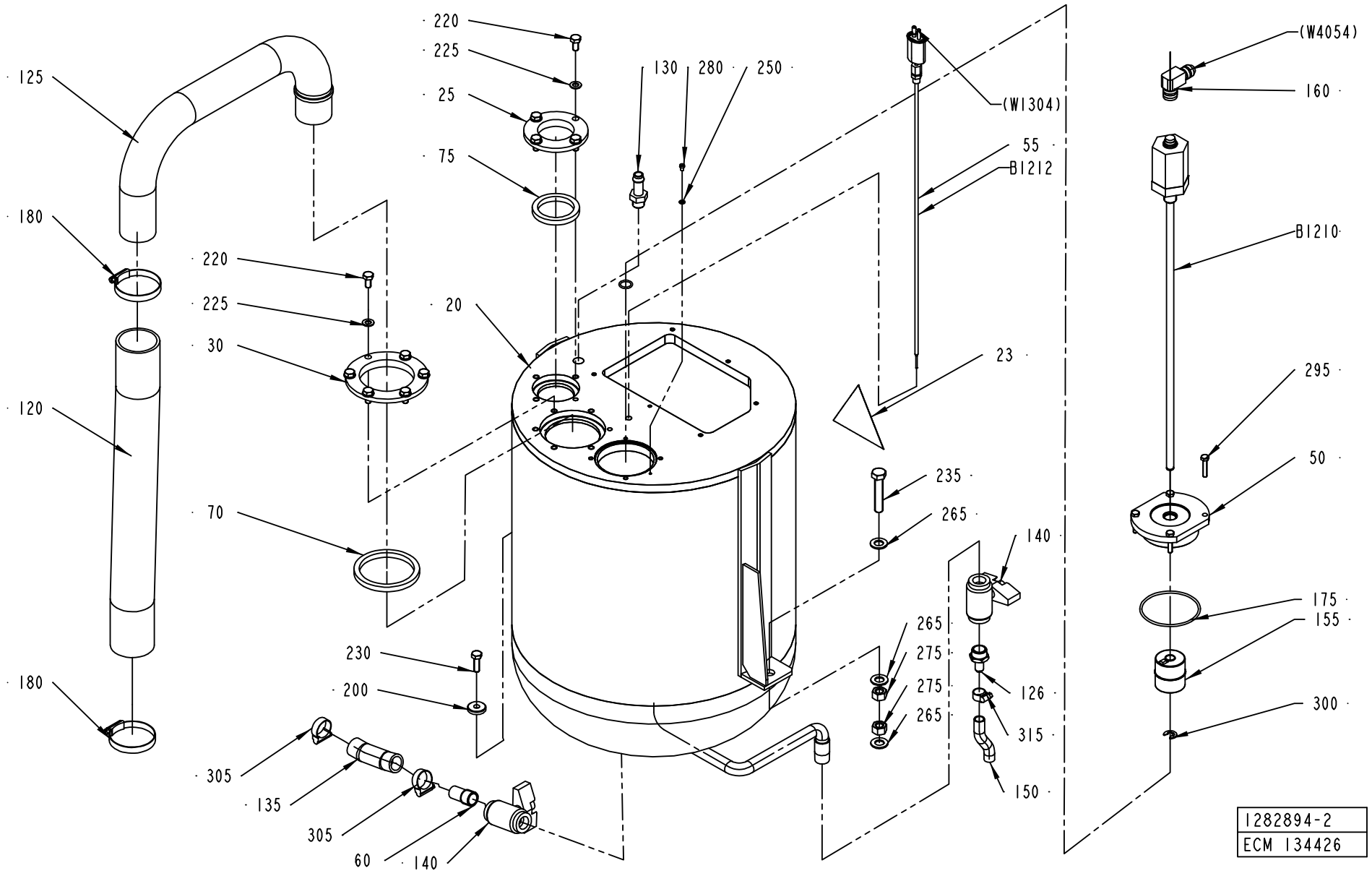

ECM: 178889 - 50001231
Group number: 1282894-0100
Assembly Drawing: 1282894-2_1_AB

This list covers pages from 2-18 to 2-21

Pos	Part No	UN	Qty	Description	Page No
A3/FLEX DIMC/FLEX, A3/FLEX TBA 2000S NODIMC, A3/FLEX TBA 1890S NODIMC (See drawing on page: 2-20)					
127	2623721-0100		1	PEROXIDE REDUCER	**2-23**
A3/FLEX TBA 1000B NODIMC, A3/FLEX TBA 0500B NODIMC, A3/FLEX TBA 1000S NODIMC, A3/FLEX TBA 1000SQ NODIMC, A3/FLEX TBA 0200S NODIMC, A3/FLEX TPA 1000SQ NODIMC, A3/FLEX TBA 1500S NODIMC, A3/FLEX TBA 0200B NODIMC, A3/FLEX TBA 0250B NODIMC, A3/FLEX TBA 0330S NODIMC, A3/FLEX TPA 0330SQ NODIMC, A3/FLEX TPA 0500SQ NODIMC, A3/FLEX TBA 0200M NODIMC, A3/FLEX TBA 0250S NODIMC, A3/FLEX TBA 0500S NODIMC (See drawing on page: 2-18)					
050	1558327-0000		1	LID	
155	90458-2358		1	FLOAT, BTL2-S-4414-4Z	
160	90458-1595		1	CONNECTION, BKS-S 33M-00	
250	315105-0136		1	WASHER BRB4,3XRFR	
300	315755-0110		1	RETAINING RING SHAFT DIN 6799 9 A2	
B1210	90459-0951		1	TRANSDUCER, BTL5-A11-M0400-B-S32	
Common Parts					
020	1255559-0000		1	PEROXIDE TANK	
023	359705-0004		1	WARNING SIGN ISO, DANGEROUS CHEMICALS	
025	1040840-0000		1	FLANGE	
030	1040841-0000		1	FLANGE	
055	1347704-0000		1	THERMOCOUPLE	
	90326-0306		*1*	*GLAND FITTING 9041-45-KS-KR.1/8" D=4,5MM*	
	1040890-0000		*1*	*THERMOCOUPLE*	
060	1037102-0000		1	SPACER PIPE	
070	1040852-0000		1	SEALING RING	
075	1040853-0000		1	SEALING RING	
120	1282899-0000		1	HOSE	
125	1282891-0000		1	PIPE	
126	1282906-0000		1	NIPPLE	
130	90055-0051		1	HOSE NIPPLE, EXT.THR. R3/8X13 MM	
135	90166-0151	MM	140	HOSE	
140	90187-0059		2	BALL VALVE FOR HYDR.PER. G1/2 3MM HOLE	
150	90166-0138	MM	85	HOSE	
175	927422-0016		1	O-RING 79.5X3 SILICON	
180	342991-0110		2	HOSE CLIP,WORM DRIVE TYPE (54)-63	
200	315125-0165		1	WASHER TBRSB 8,4X26X5 A4	
220	312105-0449		10	SCREW M6S ISO 4017 M8X16 A480	
225	315105-0165		10	WASHER BRB8,4X16RFR	
230	312105-0453		1	SCREW M6S ISO 4017 M8X25 A480	
235	312109-0544		1	SCREW M6S ISO 4017 M12X60 A480	
265	315105-0178		3	WASHER BRB13X24RFR	
275	312605-0322		2	HEXAGON NUT, M6M M12 A280	
280	312125-0285		1	SCREW ISO 1207 M4X6 A4	
295	312109-0374		4	SCREW M6S ISO 4017 M6X30 A480	
305	342991-0104		2	HOSE CLIP,WORM DRIVE TYPE (23)-27	
315	342991-0101		1	HOSE CLIP,WORM DRIVE TYPE (13)-16	

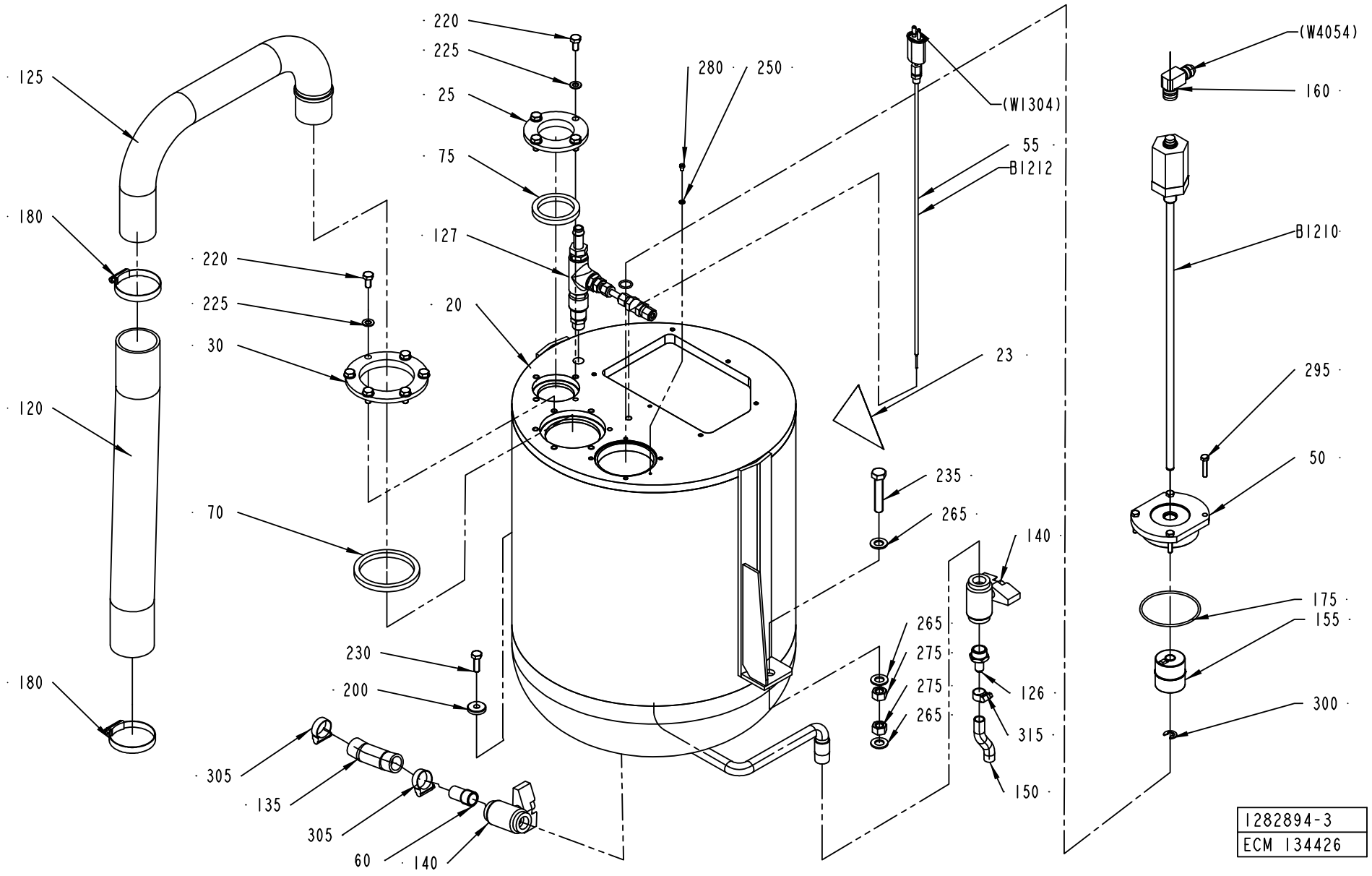
125
180
120
180
220
225
30
70
220
225
25
75
127
20
280
250
(W1304)
55
B1212
23
235
265
140
265
275
275
265
126
315
150
230
200
305
135
305
60
140
(W4054)
160
B1210
295
50
175
155
300
1282894-3
ECM 134426

ECM: 178889 - 50001231
Group number: 1282894-0100
Assembly Drawing: 1282894-3_1_AA

This list covers pages from 2-18 to 2-21

Pos	Part No	UN	Qty	Description	Page No
A3/FLEX DIMC/FLEX, A3/FLEX TBA 2000S NODIMC, A3/FLEX TBA 1890S NODIMC (See drawing on page: 2-20)					
127	2623721-0100		1	PEROXIDE REDUCER	**2-23**
A3/FLEX TBA 1000B NODIMC, A3/FLEX TBA 0500B NODIMC, A3/FLEX TBA 1000S NODIMC, A3/FLEX TBA 1000SQ NODIMC, A3/FLEX TBA 0200S NODIMC, A3/FLEX TPA 1000SQ NODIMC, A3/FLEX TBA 1500S NODIMC, A3/FLEX TBA 0200B NODIMC, A3/FLEX TBA 0250B NODIMC, A3/FLEX TBA 0330S NODIMC, A3/FLEX TPA 0330SQ NODIMC, A3/FLEX TPA 0500SQ NODIMC, A3/FLEX TBA 0200M NODIMC, A3/FLEX TBA 0250S NODIMC, A3/FLEX TBA 0500S NODIMC (See drawing on page: 2-18)					
050	1558327-0000		1	LID	
155	90458-2358		1	FLOAT, BTL2-S-4414-4Z	
160	90458-1595		1	CONNECTION, BKS-S 33M-00	
250	315105-0136		1	WASHER BRB4,3XRFR	
300	315755-0110		1	RETAINING RING SHAFT DIN 6799 9 A2	
B1210	90459-0951		1	TRANSDUCER, BTL5-A11-M0400-B-S32	
Common Parts					
020	1255559-0000		1	PEROXIDE TANK	
023	359705-0004		1	WARNING SIGN ISO, DANGEROUS CHEMICALS	
025	1040840-0000		1	FLANGE	
030	1040841-0000		1	FLANGE	
055	1347704-0000		1	THERMOCOUPLE	
	90326-0306		*1*	*GLAND FITTING 9041-45-KS-KR.1/8" D=4,5MM*	
	1040890-0000		*1*	*THERMOCOUPLE*	
060	1037102-0000		1	SPACER PIPE	
070	1040852-0000		1	SEALING RING	
075	1040853-0000		1	SEALING RING	
120	1282899-0000		1	HOSE	
125	1282891-0000		1	PIPE	
126	1282906-0000		1	NIPPLE	
130	90055-0051		1	HOSE NIPPLE, EXT.THR. R3/8X13 MM	
135	90166-0151	MM	140	HOSE	
140	90187-0059		2	BALL VALVE FOR HYDR.PER. G1/2 3MM HOLE	
150	90166-0138	MM	85	HOSE	
175	927422-0016		1	O-RING 79.5X3 SILICON	
180	342991-0110		2	HOSE CLIP,WORM DRIVE TYPE (54)-63	
200	315125-0165		1	WASHER TBRSB 8,4X26X5 A4	
220	312105-0449		10	SCREW M6S ISO 4017 M8X16 A480	
225	315105-0165		10	WASHER BRB8,4X16RFR	
230	312105-0453		1	SCREW M6S ISO 4017 M8X25 A480	
235	312109-0544		1	SCREW M6S ISO 4017 M12X60 A480	
265	315105-0178		3	WASHER BRB13X24RFR	
275	312605-0322		2	HEXAGON NUT, M6M M12 A280	
280	312125-0285		1	SCREW ISO 1207 M4X6 A4	
295	312109-0374		4	SCREW M6S ISO 4017 M6X30 A480	
305	342991-0104		2	HOSE CLIP,WORM DRIVE TYPE (23)-27	
315	342991-0101		1	HOSE CLIP,WORM DRIVE TYPE (13)-16	

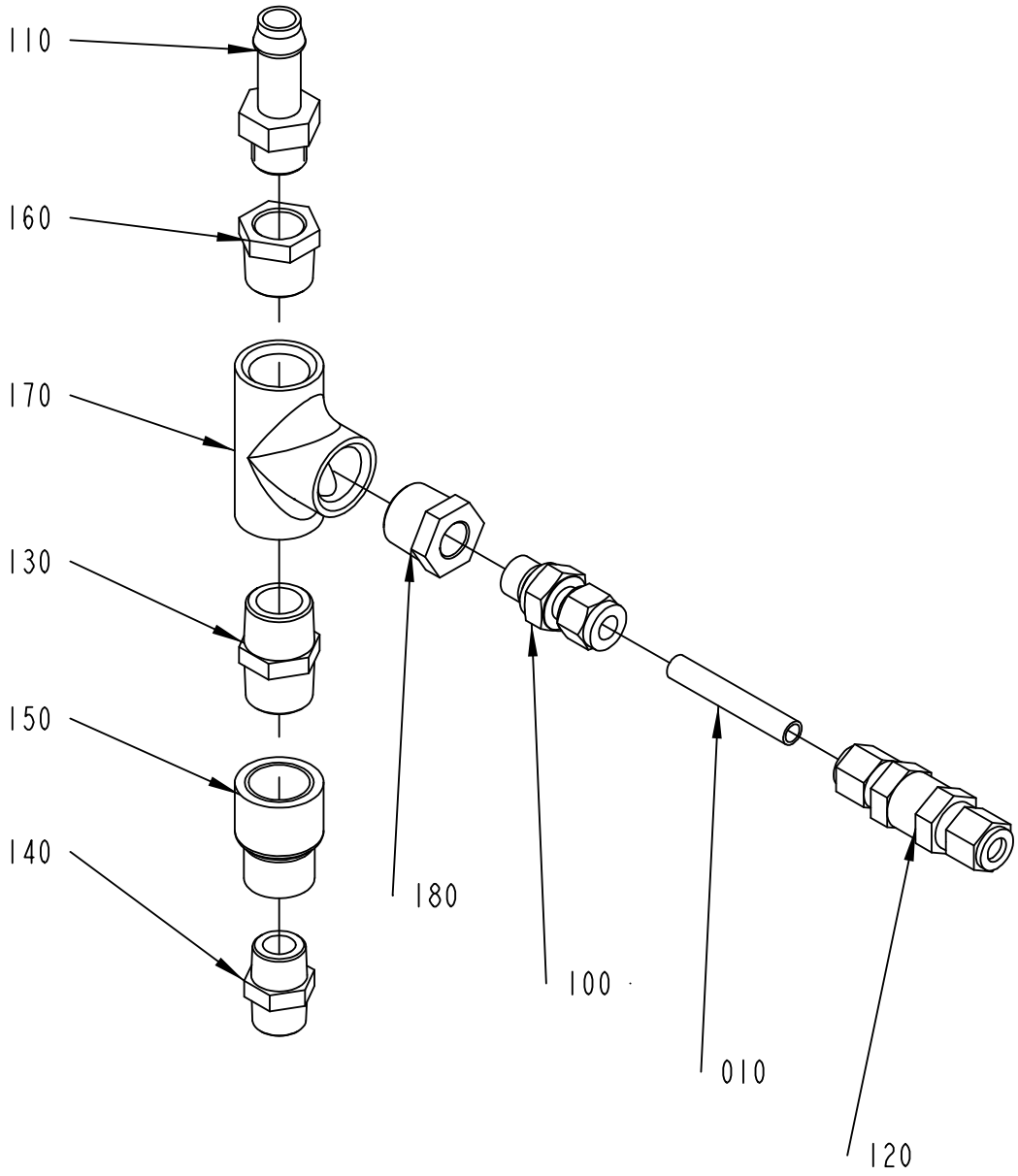

2623721-1
ECM 134426

ECM: 140260 - 20030923
Group number: 2623721-0100
Assembly Drawing: 2623721-1_1_AA

Pos	Part No	UN	Qty	Description	Page No
-					
010	2624539-0000		1	PIPE	
100	90030-0344		1	CONN. STR., 8-G1/4	
110	90055-0051		1	HOSE NIPPLE, EXT.THR. R3/8X13 MM	
120	90230-0032		1	NON-RETURN VALVE, 8MM, L=63,25	
130	90330-0021		1	NIPPLES, EXT. THREAD. R-207R1/2	
140	90330-0028		1	NIPPLES, EXT. THREAD. R-207R3/8	
150	90330-0047		1	SLEEVE, REDUCTION, INT, R-2021/2X3/8	
160	90330-0048		1	BUSHING, INT/EXT. THR. R1/2-RP3/8	
170	90330-0049		1	T-PIPE, INT. THREAD, R-221R1/2	
180	90330-0085		1	BUSHING, INT/EXT. THR. R1/2-RP1/4	

Pos	Part No	UN	Qty	Description	Page No

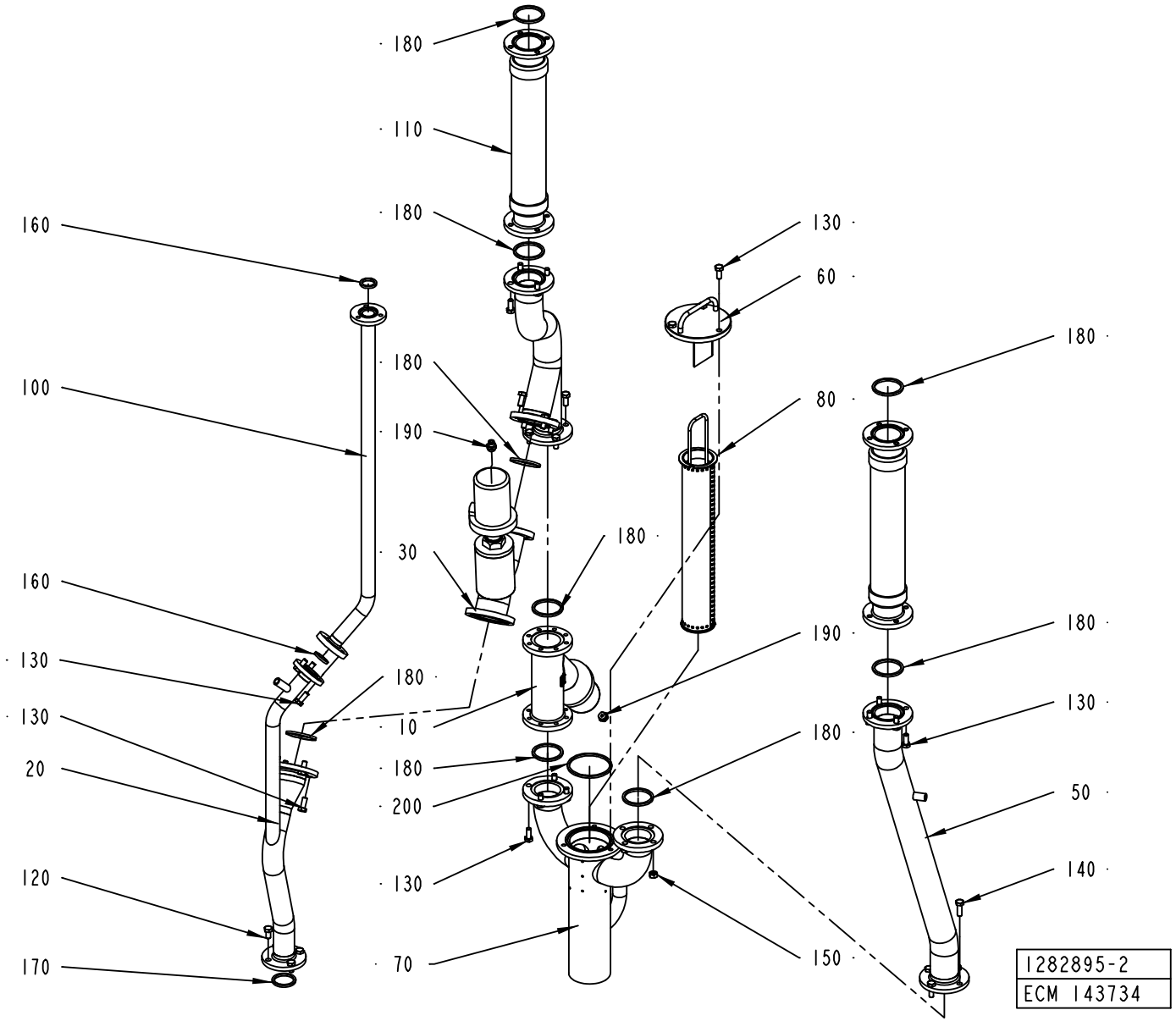
180
110
180
160
100
180
190
30
160
130
130
20
120
170
180
10
180
200
130
70
130
60
80
190
180
180
180
130
50
140
150
1282895-2
ECM 143734

ECM: 143749 - 20031215
Group number: 1282895-0200
Assembly Drawing: 1282895-2_1_AB

Pos	Part No	UN	Qty	Description	Page No
-					
010	978999-0000		1	VALVE	
	90235-0483		*1*	*WASHER,PL.RND.AL, 60/68,H=2,5*	
020	2519554-0000		1	PIPE	
030	1346565-0000		1	VALVE	
	90235-0483		*1*	*WASHER,PL.RND.AL, 60/68,H=2,5*	
040	1282876-0000		1	PIPE	
050	2519555-0000		1	PIPE	
060	1348530-0000		1	LID	
070	1282879-0000		1	CONNECTING PIPE	
080	1348529-0000		1	STRAINER	
100	1282901-0000		1	PIPE	
110	2598689-0000		2	HOSE	
120	312105-0449		4	SCREW M6S ISO 4017 M8X16 A480	
130	312105-0451		30	SCREW M6S ISO 4017 M8X20 A480	
140	312105-0453		4	SCREW M6S ISO 4017 M8X25 A480	
150	312605-0318		4	HEXAGON NUT, M6M M8 A280	
160	315229-0103		2	GASKETS, 23,1X30,1X3,7 MM 1" FDA	
170	315229-0104		1	GASKETS, 35,8X42,8X3,7 MM 1"1/2 FD	
180	315229-0105		9	GASKETS, 48,5X55,5X3,7 MM 2" FDA	
190	342722-0203		2	STRAIGHT COUPLING	
200	315229-0107		1	GASKETS, 73,9X80,9X3,7 MM 2"1/2 FD	

Pos	Part No	UN	Qty	Description	Page No

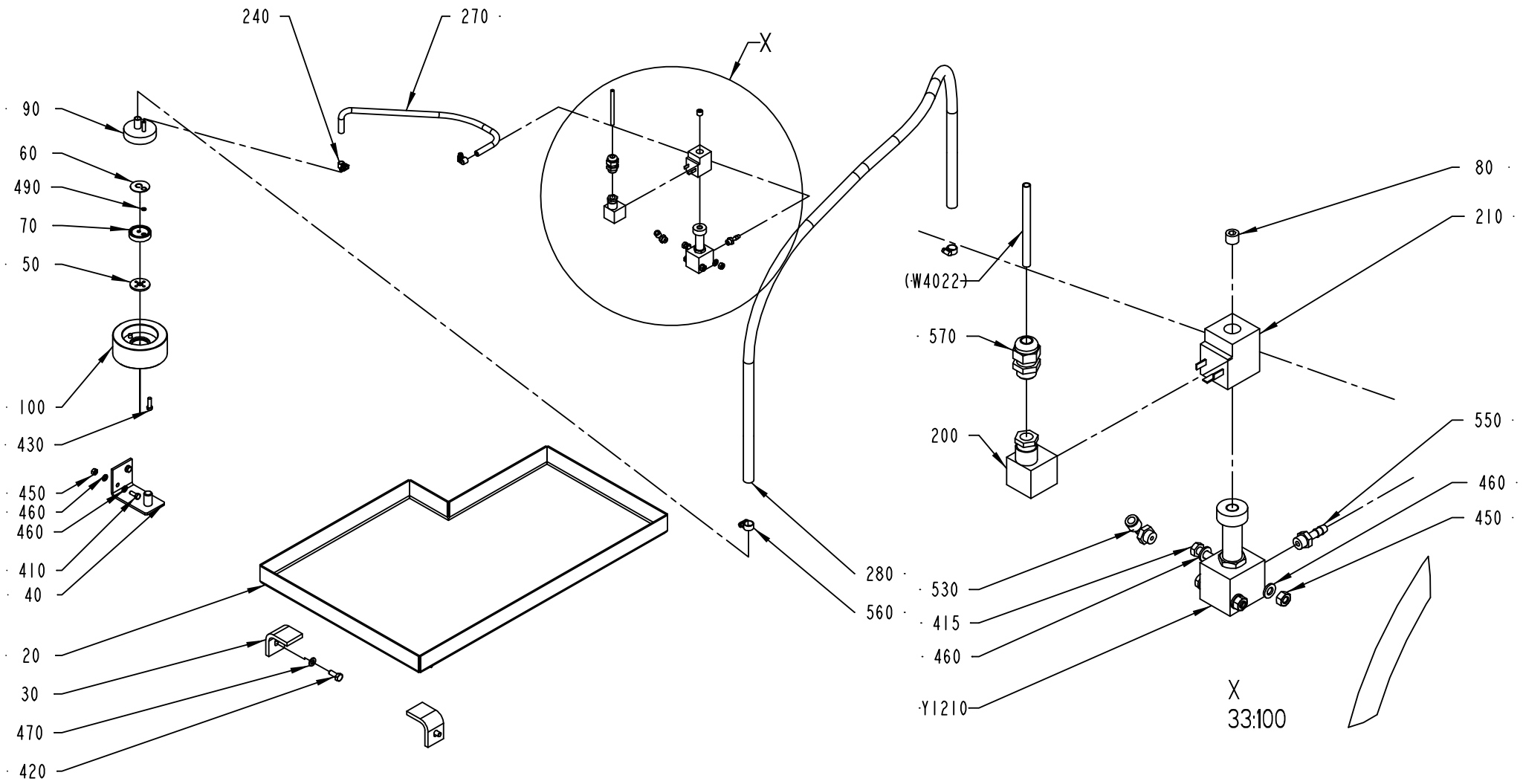

2506637-1
ECM 117202

ECM: 117202 - 20030403
Group number: 2506637-0100
Assembly Drawing: 2506637-1_1_AA

Pos	Part No	UN	Qty	Description	Page No
-					
020	1490950-0000		1	SPLASH PLATE	
030	1037539-0000		2	BRACKET	
040	1317784-0000		1	BRACKET	
050	273981-0000		1	GASKET	
060	527912-0000		1	NON-RETURN VALVE	
070	530551-0000		1	WASHER	
080	563285-0000		1	BLIND PLUG	
090	1129328-0000		1	ATTACHMENT	
100	1317226-0000		1	WEIGHT	
200	90110-0095		1	CONNECTOR 3 POLE + EARTH	
210	90042-0487		1	COIL 24 VDC/15W, 04983 197 18	
240	90132-0021		2	HOSE CLIP 6-10MM	
270	90166-0101	MM	700	HOSE, SILICONE, 60 SHORE, 6/10 MM	
280	90166-0161	MM	1600	HOSE	
410	312105-0368		2	SCREW M6S ISO 4017 M6X16 A480	
415	312105-0379		2	SCREW M6S ISO 4014 M6X45 A480	
420	312105-0451		2	SCREW M6S ISO 4017 M8X20 A480	
430	312125-0370		2	SCREW ISO 1207 M6X20 A4	
450	312605-0316		4	HEXAGON NUT, M6M M6 A280	
460	315105-0153		8	WASHER BRB6,4X12RFR	
470	315105-0165		2	WASHER BRB8,4X16RFR	
490	315204-0103		1	O-RING 5,1X1,6 MM	
530	90458-2956		1	ELBOW PIPE JOINT, EXT.THREAD, D=6MM-G1/8	
550	342901-0101		1	HOSE NIPPLE, EXT.THR. R1/8-7 MM	
560	342991-0101		2	HOSE CLIP,WORM DRIVE TYPE (13)-16	
570	352103-0101		1	CABLE GLAND, ST 9, PR15,2/PG9	
Y1210	90042-0206		1	SOLENID VALVE G1/8, 444-111-000-1	

Pos	Part No	UN	Qty	Description	Page No

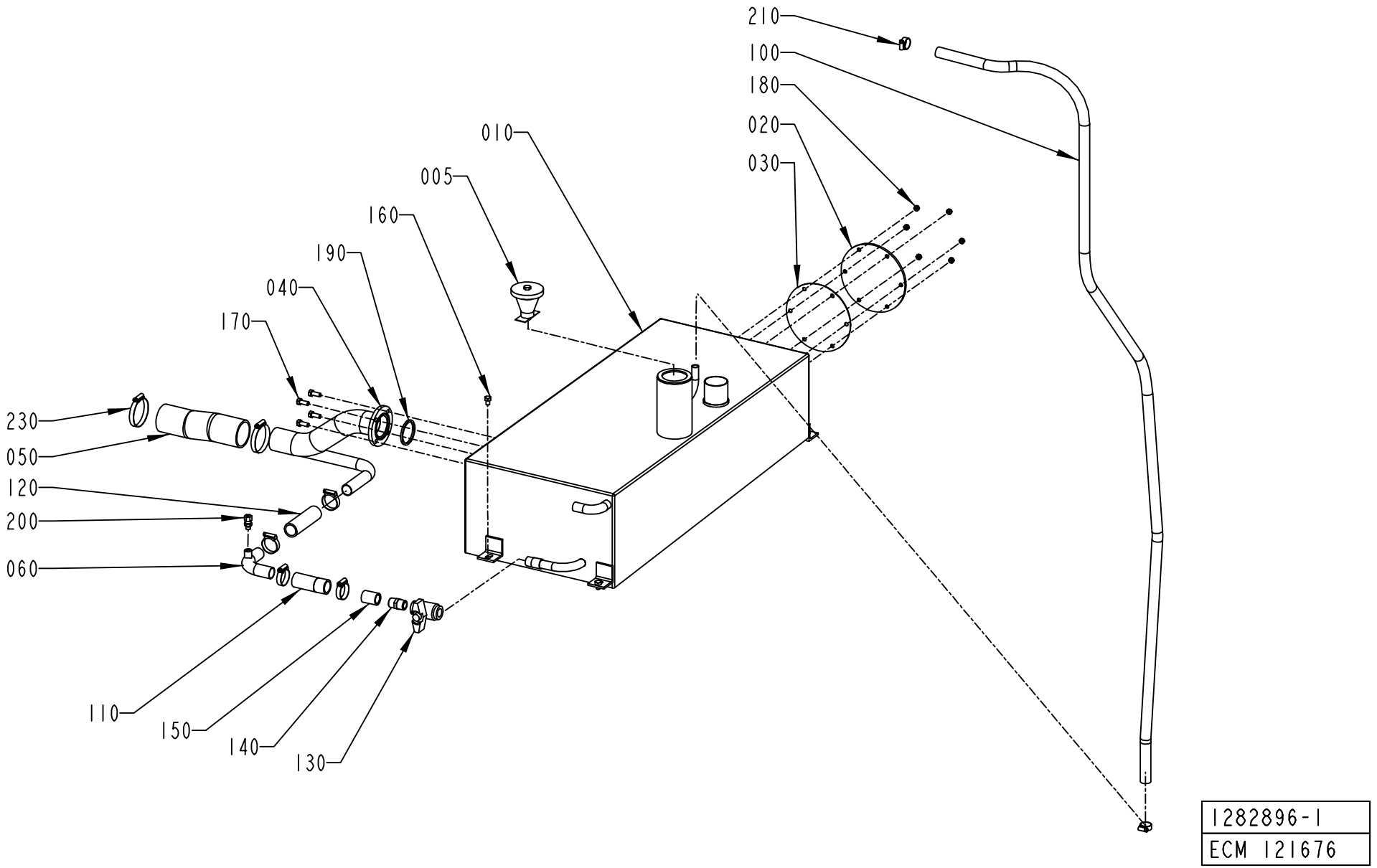
210
100
180
020
030
010
005
160
190
040
170
230
050
120
200
060
110
150
140
130
1282896-1
ECM 121676

ECM: 129825 - 20030630
Group number: 1282896-0100
Assembly Drawing: 1282896-1_1_AB

Pos	Part No	UN	Qty	Description	Page No
-					
005	566196-0100		1	LID WITH WEIGHT	**2-31**
010	1282892-0000		1	TANK	
020	1040807-0000		1	LID	
030	1040808-0000		1	GASKET	
040	1282893-0000		1	PIPE	
050	1282898-0000		1	HOSE	
060	2574421-0000		1	PIPE	
100	90166-0087	MM	2500	HOSE 15/23 REINF.PVC TRANSP.	
110	90166-0158	MM	85	HOSE	
120	90166-0158	MM	105	HOSE	
130	90187-0059		1	BALL VALVE FOR HYDR.PER. G1/2 3MM HOLE	
140	90330-0021		1	NIPPLES, EXT. THREAD. R-207R1/2	
150	90330-0054		1	SLEEVE, INT. THREAD, NO. R-201R1/2	
160	312105-0447		4	SCREW M6S ISO 4017 M8X12 A480	
170	312105-0451		4	SCREW M6S ISO 4017 M8X20 A480	
180	312605-0316		6	HEXAGON NUT, M6M M6 A280	
190	315229-0105		1	GASKETS, 48,5X55,5X3,7 MM 2" FDA	
200	90030-0184		1	CONN. STR. GA-6-G1/8	
210	342991-0103		2	HOSE CLIP,WORM DRIVE TYPE (19)-23	
220	342991-0106		4	HOSE CLIP,WORM DRIVE TYPE (30)-36	
230	342991-0110		2	HOSE CLIP,WORM DRIVE TYPE (54)-63	

Pos	Part No	UN	Qty	Description	Page No

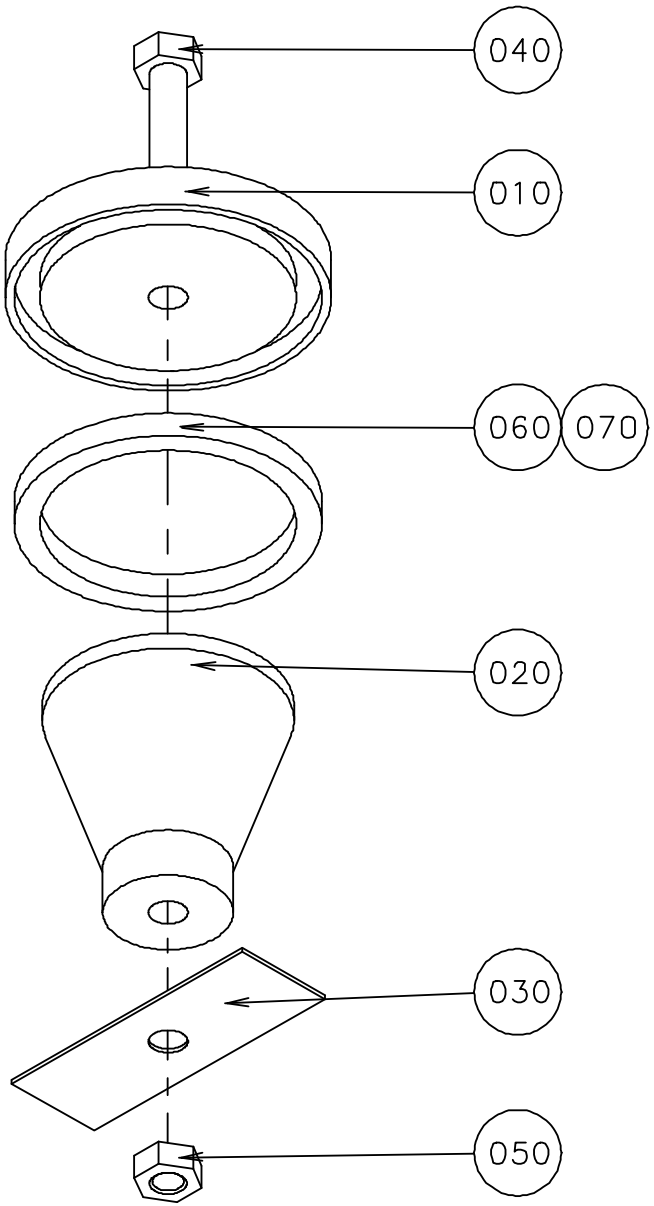

S-566196-1
ECN 70662

ECM: 72091 - 19981216
Group number: 566196-0100
Assembly Drawing: 566196-1_1_AA

Pos	Part No	UN	Qty	Description	Page No
-					
010	566195-0000		1	LID	
020	566194-0000		1	WEIGHT	
030	566171-0000		1	CUP SPRING	
040	312105-0466		1	SCREW M6S ISO 4014 M8X75 A480	
050	312605-0318		1	HEXAGON NUT, M6M M8 A280	
060	90143-0020	MM	190	STRIP	
070	90153-0023		1	ADHESIVE, SILICON 251470 TUB 90CC	

Pos	Part No	UN	Qty	Description	Page No

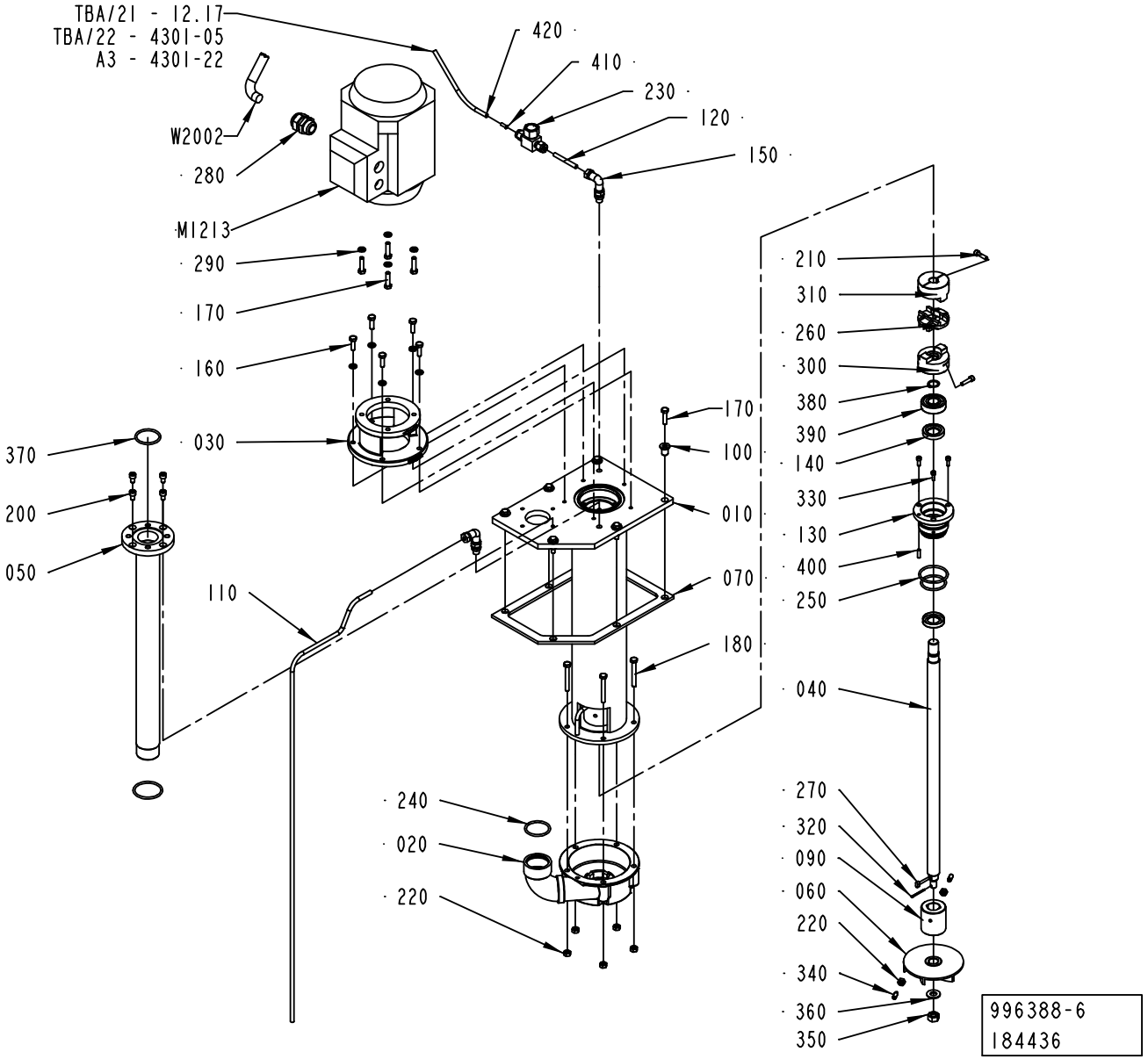
TBA/21 - 12.17
TBA/22 - 4301-05
A3 - 4301-22
W2002
280
M1213
290
170
160
030
370
200
050
110
240
020
220
420
410
230
120
150
210
310
260
300
380
390
140
330
130
400
250
040
270
320
090
060
220
340
360
350
170
100
010
070
180
996388-6
184436

ECM: 184438 - 50001231
Group number: 996388-0500
Assembly Drawing: 996388-6_1_AC

Pos	Part No	UN	Qty	Description	Page No
-					
010	2529413-0000		1	EXTENSION PIPE	
020	2529412-0000		1	PUMP HOUSING	
030	751395-0000		1	FLANGE	
040	2523266-0000		1	PUMP SHAFT	
050	1040796-0000		1	PIPE	
060	491929-0000		1	IMPELLER WHEEL	
070	1255557-0000		1	GASKET	
090	2510372-0000		1	BUSHING	
100	2564342-0000		6	SPACER	
110	2564561-0000		1	PIPE	
120	2564978-0000		1	PIPE	
130	2564225-0000		1	BUSHING	
140	90091-0412		2	SEAL RING	
150	90030-0171		2	ADJUSTABLE ELBOW CONNECTION,EXT 6-G1/8	
160	312105-0370		5	SCREW M6S ISO 4017 M6X20 A480	
170	312105-0372		10	SCREW M6S ISO 4017 M6X25 A480	
180	312109-0380		5	SCREW M6S ISO 4017 M6X50 A480	
200	312115-0364		4	SCREW ISO4762 M6X10 A4	
210	312115-0331		2	SCREW ISO4762 M5X20 A4	
220	312605-0316		7	HEXAGON NUT, M6M M6 A280	
230	90230-0064		1	CHECK VALVE, 6 MM HIGH TEMP.	
240	927422-0005		2	O-RING 36.2X3 SILICON	
250	927422-0006		2	O-RING 42.2X3 SILICON	
260	90458-0274		1	DISC FOR COUPLING, HUCO 236.50T	
270	315705-0196		1	PARALLEL KEY W.ROUND ENDS 5X5X10	
280	352103-0110		1	CABLE GLAND, STR 16, PR22,5/PG16	
290	315105-0153		9	WASHER BRB6,4X12RFR	
300	90459-1535		1	FLEXIBLE COUPLING DISC, 16 MM	
310	90459-1536		1	FLEXIBLE COUPLING DISC, 14 MM	
320	311411-0169		1	SPLIT PIN SP2,5X25RFR	
330	312115-0291		3	SCREW ISO4762 M4X12 A4	
340	90287-0159		2	SCREW, SOCK.SET DOGPOINT M6X16	
350	312605-0320		1	HEXAGON NUT, M6M M10 A280	
360	315105-0173		1	WASHER BRB10,5X22RFR	
370	315204-0222		1	O-RING 36,2X3 MM	
380	315751-0113		1	RETAINING RING FOR SHAFT DIN 471 16 A2	
390	321313-0103		1	BALL BEARING, 17X40X12MM	
400	311103-0270		1	PARALLEL PIN ISO 2338 4M6X16 A1	
410	342706-0130		1	ACCESSORIES, INSERT SLEEVE 6 MM	
420	90166-0081	M	1	TUBE 6 MM PA BLUE	
M 1213	90458-2466		1	MOTOR 3GVA071002-CSB	
W 2002	351150-0418	M	4	CABLE OLFLEX 4X2,5 MM2 LIGHT/GREY	

Machine Type | Group Description | Used-In | Group Number | Page No

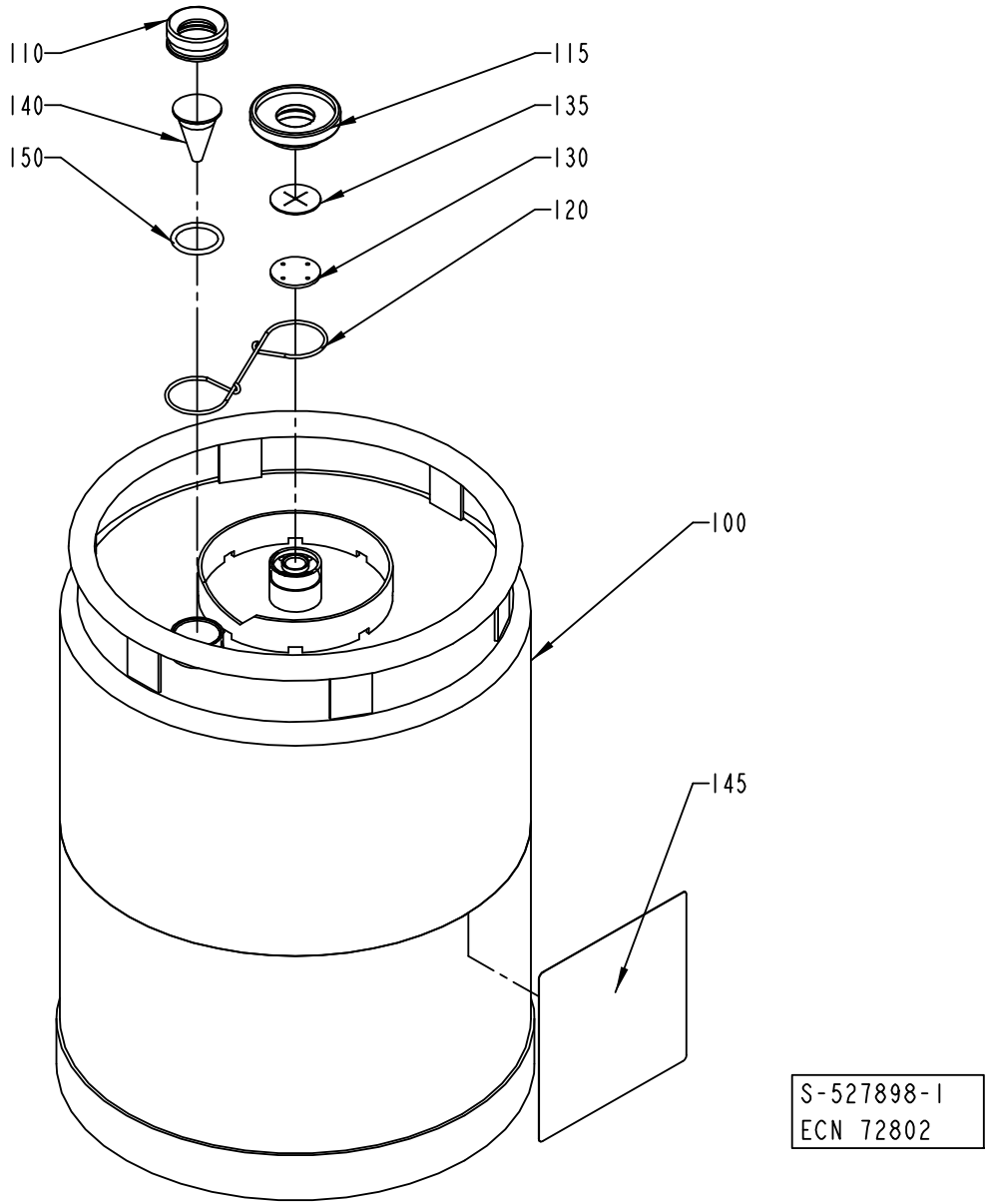
110
140
150
115
135
130
120
100
145
S-527898-1
ECN 72802

ECM: 115873 - 20020930
Group number: 527898-0100
Assembly Drawing: 527898-1_1_AB

Pos	Part No	UN	Qty	Description	Page No
-					
100	561427-0000		1	CONTAINER	
110	273977-0000		1	NUT	
115	273996-0000		1	NUT	
120	273980-0000		1	SPRING	
130	565250-0000		1	WASHER	
135	565251-0000		1	VALVE	
140	273978-0000		1	LEVEL GLASS	
145	532655-0000		1	CAUTION SIGN	
150	927422-0003		1	O.RING 24.2X3 SILICON	

Pos	Part No	UN	Qty	Description	Page No

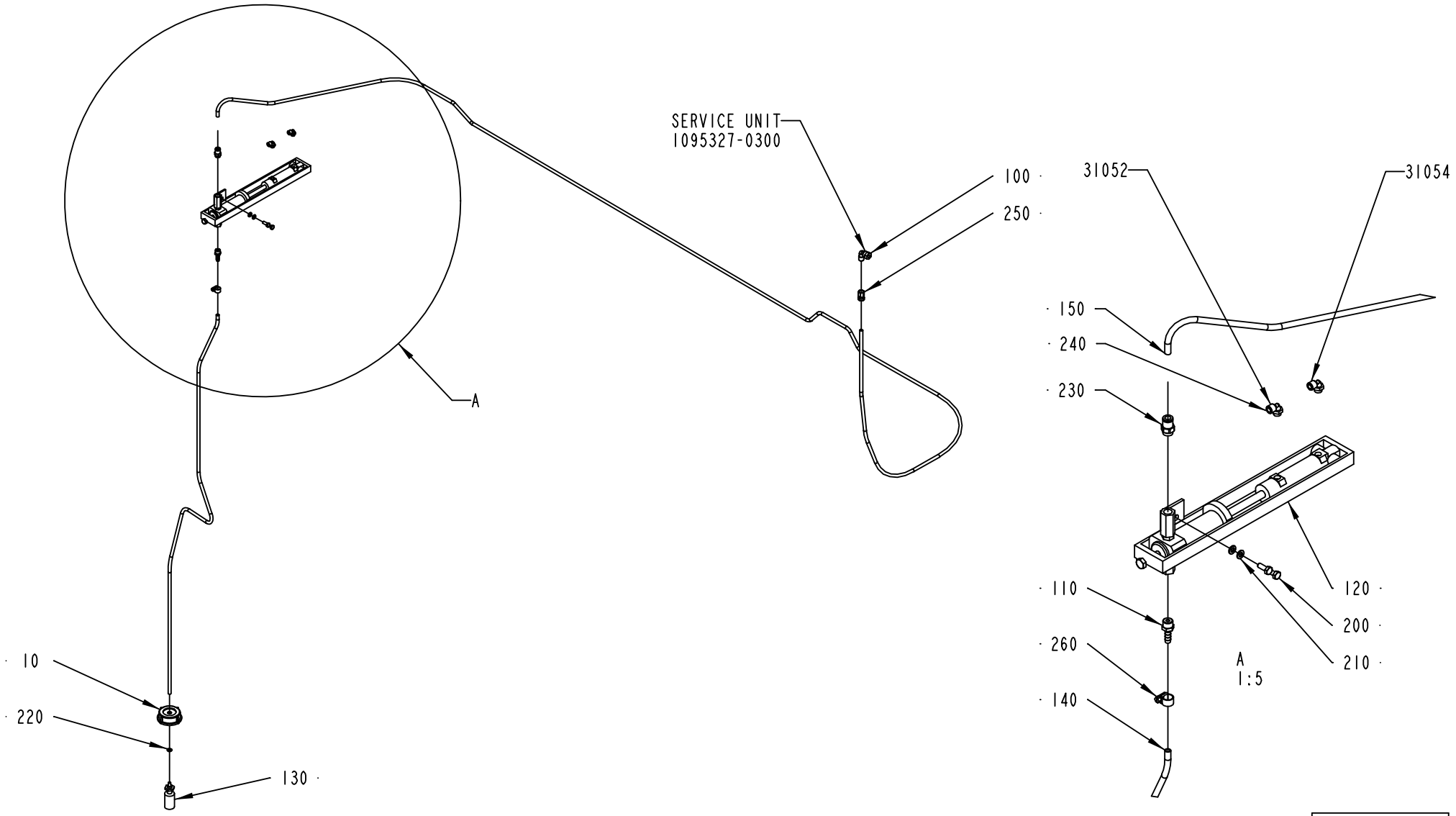
SERVICE UNIT
1095327-0300
100
250
A
10
220
130
31052
31054
150
240
230
110
260
140
120
200
210
A
1:5
2504782-1
ECM 117202

ECM: 117202 - 20030403
Group number: 2504782-0100
Assembly Drawing: 2504782-1_1_AA

Pos	Part No	UN	Qty	Description	Page No
-					
010	1129432-0000		1	LID	
100	90030-0071		1	CONN. ELBOW WA 8-R1/4	
110	90055-0132		1	HOSE NIPPLE, EXT.THR. R1/4X7,8 MM	
120	90321-0128		1	CHEM. PUMP 081778	
130	90415-0052		1	FILTER ART NO 12565 C-340-6E FOTVENTI EP	
140	90166-0008	MM	1700	HOSE 7/10 PVC TRANSP.	
150	90166-0118	MM	4500	TUBE 8 MM PA BLACK	
200	312105-0368		2	SCREW M6S ISO 4017 M6X16 A480	
210	315101-0153		2	WASHER PLAIN, BRB, 6,4/12 H=1,5	
220	315204-0207		1	O-RING 8,3X2,4 MM	
230	342722-0205		1	STRAIGHT COUPLING D=8-G1/4"	
240	90458-2956		2	ELBOW PIPE JOINT, EXT.THREAD, D=6MM-G1/8	
250	342923-0122		1	STRAIGHT COUPL.,INT.THREADED 8/6-G1/4"	
260	342991-0100		1	HOSE CLIP,WORM DRIVE TYPE 10-13	

Pos	Part No	UN	Qty	Description	Page No

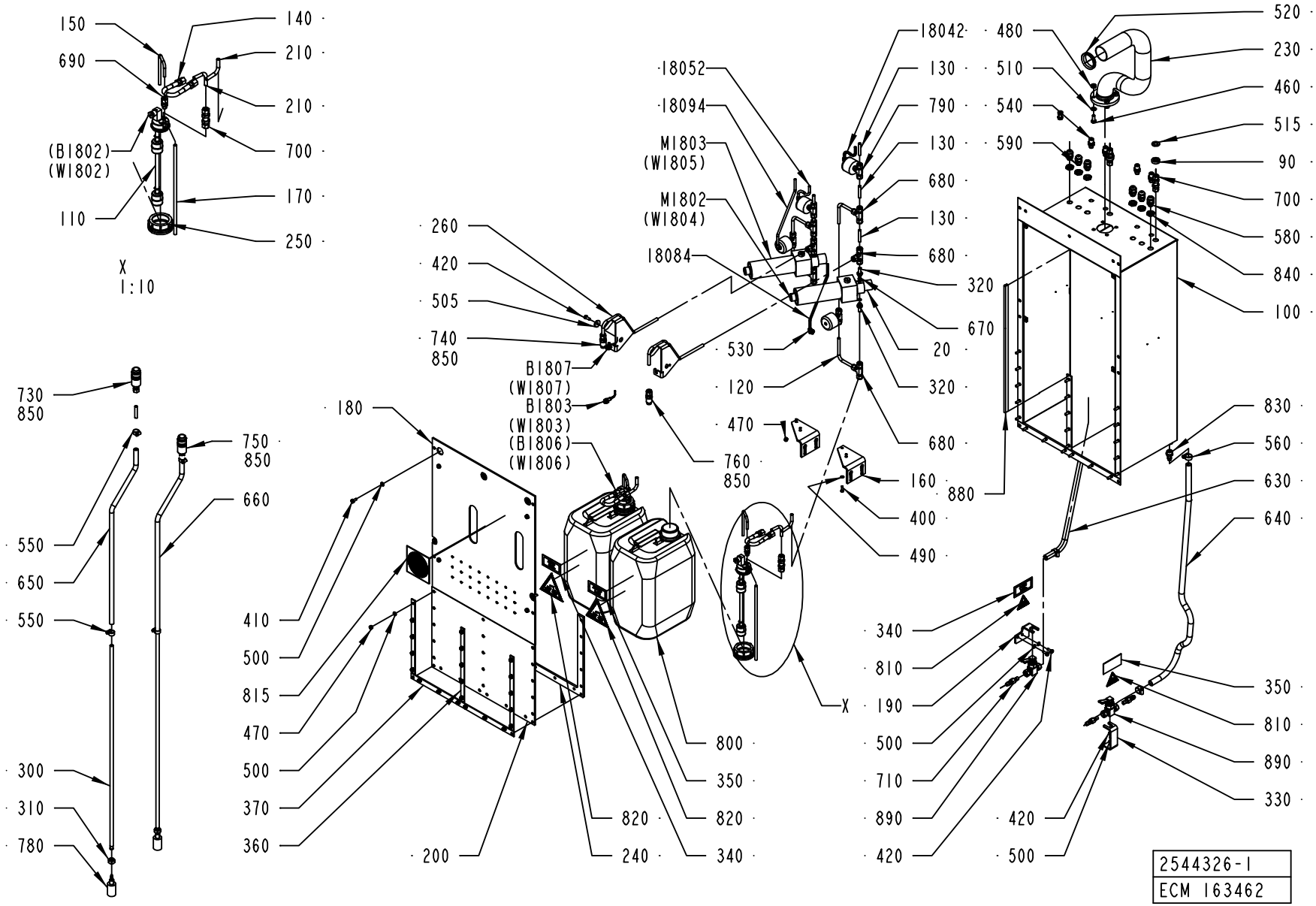
150
140
690
210
210
(B1802)
(W1802)
700
170
110
250
X
1:10
260
420
505
740
850
B1807
(W1807)
B1803
(W1803)
(B1806)
(W1806)
180
410
500
815
470
500
370
360
200
820
240
800
350
820
340
730
850
750
850
660
550
650
550
300
310
780
18052
18094
M1803
(W1805)
M1802
(W1804)
18084
530
120
470
760
850
18042
130
790
130
680
130
680
320
670
20
320
680
160
400
490
X
340
810
190
500
710
890
420
480
510
540
590
520
230
460
515
90
700
580
840
100
880
830
560
630
640
350
810
890
330
420
500
2544326-1
ECM 163462

ECM: 165887 - 20040607
Group number: 2544326-0100
Assembly Drawing: 2544326-1_1_AC

Pos	Part No	UN	Qty	Description	Page No
-					
020	927244-0100		2	PUMP	**2-41**
090	2603387-0000		2	SPACER	
100	2544311-0000		1	BOX	
110	2544312-0000		2	FLOAT	
120	2544313-0000		4	PIPE	
130	2544314-0000		8	PIPE	
140	2559977-0000		2	HOSE	
150	2544316-0000		2	PIPE	
160	2559976-0000		2	BRACKET	
170	2544318-0000		2	PIPE	
180	2544319-0000		1	COVER	
18042	90166-0081	MM	150	TUBE 6 MM PA BLUE	
18052	90166-0081	MM	150	TUBE 6 MM PA BLUE	
18084	90166-0081	MM	300	TUBE 6 MM PA BLUE	
18094	90166-0081	MM	300	TUBE 6 MM PA BLUE	
190	2608104-0000		1	BRACKET	
200	2544321-0000		1	COVER	
210	2559978-0000		4	PIPE	
230	2544324-0000		1	PIPE	
240	2544325-0000		1	GASKET	
250	2544330-0000		2	PLUG	
260	2558826-0000		2	PIPE	
300	927262-0000		2	PIPE	
310	928025-0000		2	PLUG	
320	2559461-0000		4	SPACER	
330	2608103-0000		1	BRACKET	
340	2566211-0000		2	LABEL	
350	2566212-0000		2	LABEL	
360	2566209-0000		3	PLATE	
370	2566210-0000		1	PLATE	
400	312105-0329		4	SCREW M6S ISO 4017 M5X16 A480	
410	312105-0367		9	SCREW M6S ISO 4017 M6X14 A480	
420	312105-0368		5	SCREW M6S ISO 4017 M6X16 A480	
460	312105-0451		4	SCREW M6S ISO 4017 M8X20 A480	
470	312605-0316		25	HEXAGON NUT, M6M M6 A280	
480	312605-0318		4	HEXAGON NUT, M6M M8 A280	
490	315105-0146		4	WASHER BRB5,3X10RFR	
500	315105-0153		33	WASHER BRB6,4X12RFR	
505	315125-0153		2	WASHER TBRSB 6,4X22X4 A4	
510	315105-0165		4	WASHER BRB8,4X16RFR	
515	315105-0178		2	WASHER BRB13X24RFR	
520	315220-0198		1	V-RINGS 45X55X13 MM V-50S	
530	90458-2956		4	ELBOW PIPE JOINT, EXT.THREAD, D=6MM-G1/8	
540	342768-0102		4	BULKHEAD CONNECTOR, 6 MM	
550	342991-0101		4	HOSE CLIP,WORM DRIVE TYPE (13)-16	
560	342991-0102		4	HOSE CLIP,WORM DRIVE TYPE (16)-19	
580	352103-0101		4	CABLE GLAND, ST 9, PR15,2/PG9	
590	352103-0100		2	CABLE GLAND, STR 9, PR15,2/PG9	
630	90166-0198	MM	700	RUBBER HOSE	
640	90166-0198	MM	950	RUBBER HOSE	
650	90166-0225	MM	680	HOSE	
660	90166-0225	MM	680	HOSE	
670	315206-0506		4	O-RING 7,65X1,78 MM	
680	90459-1425		6	CONN. T-PIPE 8	
690	90459-1424		2	CONN. STR., 6-G1/8, EXT. THREAD	
700	90030-0485		4	CONN. BULKHEAD SV 8-	
710	90459-2615		4	HOSE NIPPLE SS-6-HC-A-601	
730	90163-0172		1	QUICK-RELEASE COUPLING SS-QTM2A-B-8M0-K4	
740	90459-1430		1	QUICK-RELEASE COUPLING, SS-QTM2-D-8M0-K4	
750	90163-0141		1	QUICK-RELEASE COUPLING SS-QTM2A-B-8M0-K2	
760	90459-1427		1	QUICK-RELEASE COUPLING, SS-QTM2-D-8M0-K2	
780	90415-0052		2	FILTER ART NO 12565 C-340-6E FOTVENTI EP	
790	90458-2333		4	VALVE, M8A-V4LQ-KZ-11AO-SS PNEUM. OPER.	
800	90459-0462		2	CANISTER LY 500-10	
810	359705-0003		2	WARNING SIGN ISO, DANGEROUS CHEMICALS	
815	359605-0002		1	MANDATORY SIGN ISO, EYE PROTECTION	
820	359705-0004		2	WARNING SIGN ISO, DANGEROUS CHEMICALS	
830	90163-0041		2	HOSE NIPPLE, EXT.THR. 3/8-12 MM	
840	90099-0104		6	NUT, PR 15,2 (PG9)	
850	90144-0073		1	TREBOFLON-TAPE W=13MM	
880	90143-0059	MM	495	SEAL STRIP 4610069	
890	90459-2609		2	BALL VALVE 3/8", SS-1GS6-S1-SPR	
B1803	90458-0138		1	PROX.SW. E2EG-X1R5B1-5M	
B1807	90458-0138		1	PROX.SW. E2EG-X1R5B1-5M	

Machine Type	Group Description	Used-In	Group Number	Page No

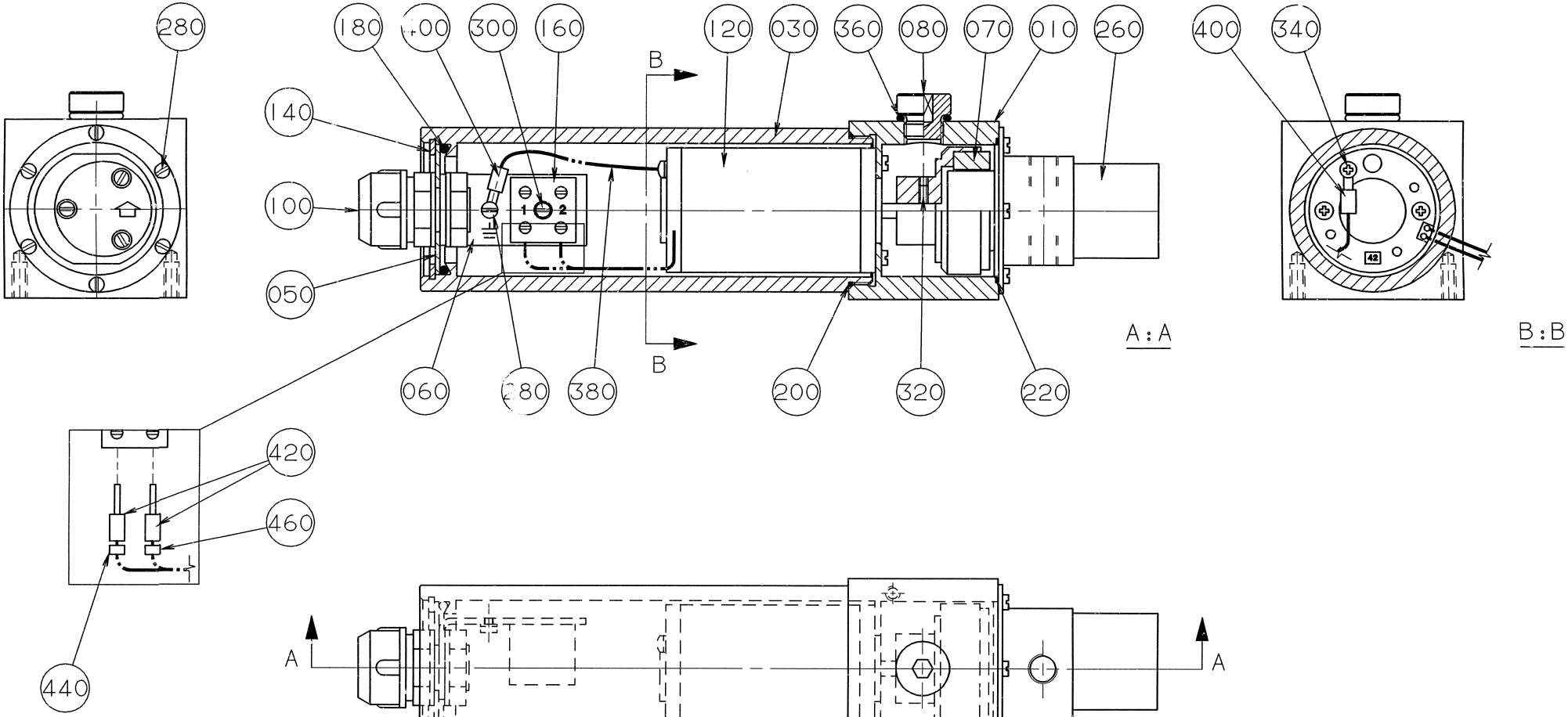
280
180
200
300
160
120
030
360
080
070
010
260
400
340
140
100
050
060
080
380
200
320
220
B
B
A : A
B : B
420
460
440
A
A
42

ECM: - -
Group number: 927244-0100
Assembly Drawing: 927244-1_1_AA

Pos	Part No	UN	Qty	Description	Page No
-					
010	927339-0000		1	ADAPTER	
030	927342-0000		1	CYLINDER	
050	927340-0000		1	DISC	
060	927341-0000		1	HOLDER	
070	927362-0000		1	MAGNET	
080	927363-0000		1	PLUG	
100	90012-0063		1	CABLE GLAND PR 15,2	
120	90045-0162		1	MOTOR G42X25	
140	90141-0020		1	RETAINING RING FOR BORE DIN 472 42 A2	
160	90195-0020		1	TERMINAL BLOCK, 1977.2	
180	90242-0222		1	O-RING 45,36X3,53 MM	
200	90242-0223		1	O-RING 47,35X1,78 MM	
220	90242-0224		1	O-RING 44,17X1,78 MM	
260	90321-0102		1	PUMP	
280	312125-0220		11	SCREW ISO 1207 M3X6 A4	
300	312125-0232		1	SCREW ISO 1207 M3X25 A4	
320	312318-0285		1	SCREW ISO4029 M4X6 A4	
340	312503-0225		1	TAPPING SCREW ISO 7049-ST2,9X9,5-C-Z	
360	315202-0701		1	O-RING 10,82X1,78 MM	
380	351175-0102	MM	300	CABLE AWM 1X 075 MM2 YELLOW-GREEN	
400	353101-0118		2	CABLE SHOE 0,5-1,5MM2 M3 RED	
420	353105-0117		2	PIN CABLE SHOE 0,75-1,5MM2 RED A1519SR	
440	359000-0101		1	MARKING CO01/3"1"	
460	359000-0102		1	MARKING CO01/3"2"	

Pos	Part No	UN	Qty	Description	Page No

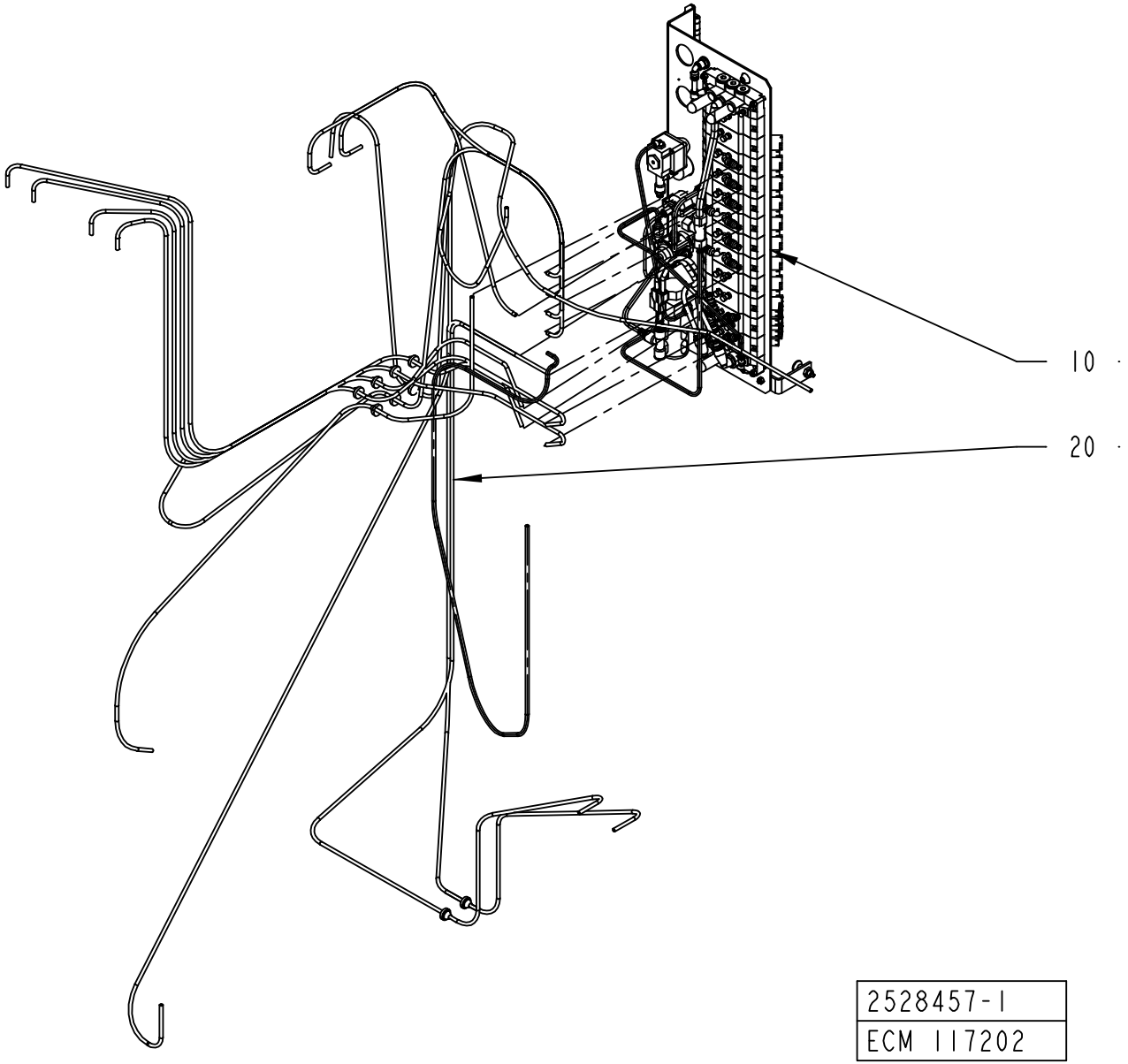
10
20
2528457-1
ECM 117202

ECM: 117202 - 20030403
Group number: 2528457-0100
Assembly Drawing: 2528457-1_1_AA

Pos	Part No	UN	Qty	Description	Page No
A3/FLEX					
020	2552931-0100		1	HOSE INSTALLATION	**2-45, 2-47**
Common Parts					
010	2506359-0100		1	VALVE PANEL	**2-49**

Pos	Part No	UN	Qty	Description	Page No

HOSE INSTALLATION

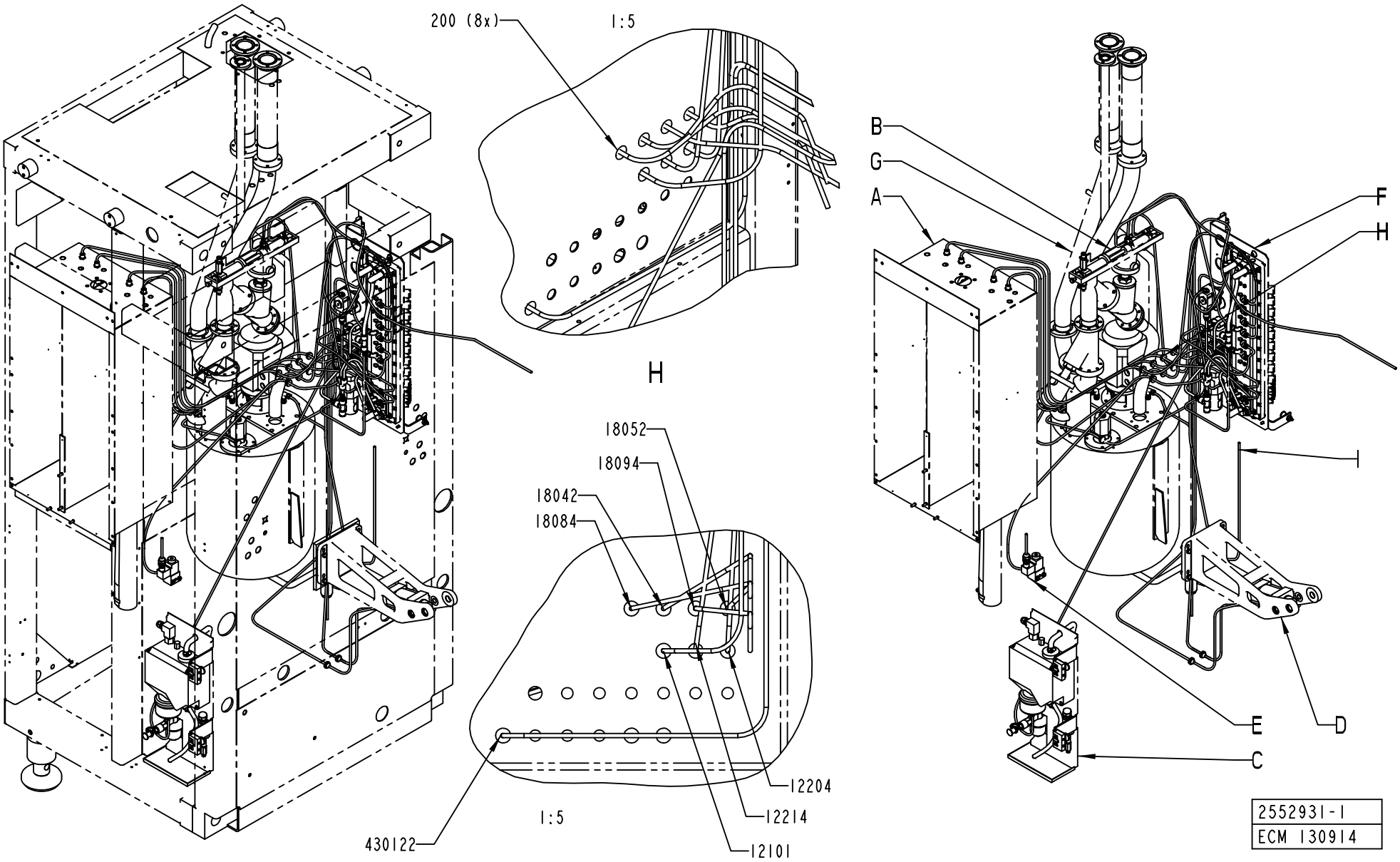

ECM: 131959 - 20030522
Group number: 2552931-0100
Assembly Drawing: 2552931-1_1_AB

This list covers pages from 2-44 to 2-47

Pos	Part No	UN	Qty	Description	Page No
-					
12101	90166-0081	MM	1750	TUBE 6 MM PA BLUE	
12204	90166-0081	MM	2070	TUBE 6 MM PA BLUE	
12214	90166-0081	MM	2010	TUBE 6 MM PA BLUE	
18042	90166-0081	MM	2070	TUBE 6 MM PA BLUE	
18052	90166-0081	MM	2000	TUBE 6 MM PA BLUE	
18084	90166-0081	MM	2210	TUBE 6 MM PA BLUE	
18094	90166-0081	MM	2120	TUBE 6 MM PA BLUE	
200	90015-0020		10	LEAD-IN, TET5-7, E-1458016	
21044	90166-0081	MM	2040	TUBE 6 MM PA BLUE	
24014	90166-0081	MM	2760	TUBE 6 MM PA BLUE	
31052	90166-0081	MM	1230	TUBE 6 MM PA BLUE	
31054	90166-0081	MM	1310	TUBE 6 MM PA BLUE	
43012	90166-0081	MM	1800	TUBE 6 MM PA BLUE	
430122	90166-0081	MM	1800	TUBE 6 MM PA BLUE	
55012	90166-0081	MM	2490	TUBE 6 MM PA BLUE	
55014	90166-0081	MM	2700	TUBE 6 MM PA BLUE	

Pos	Part No	UN	Qty	Description	Page No

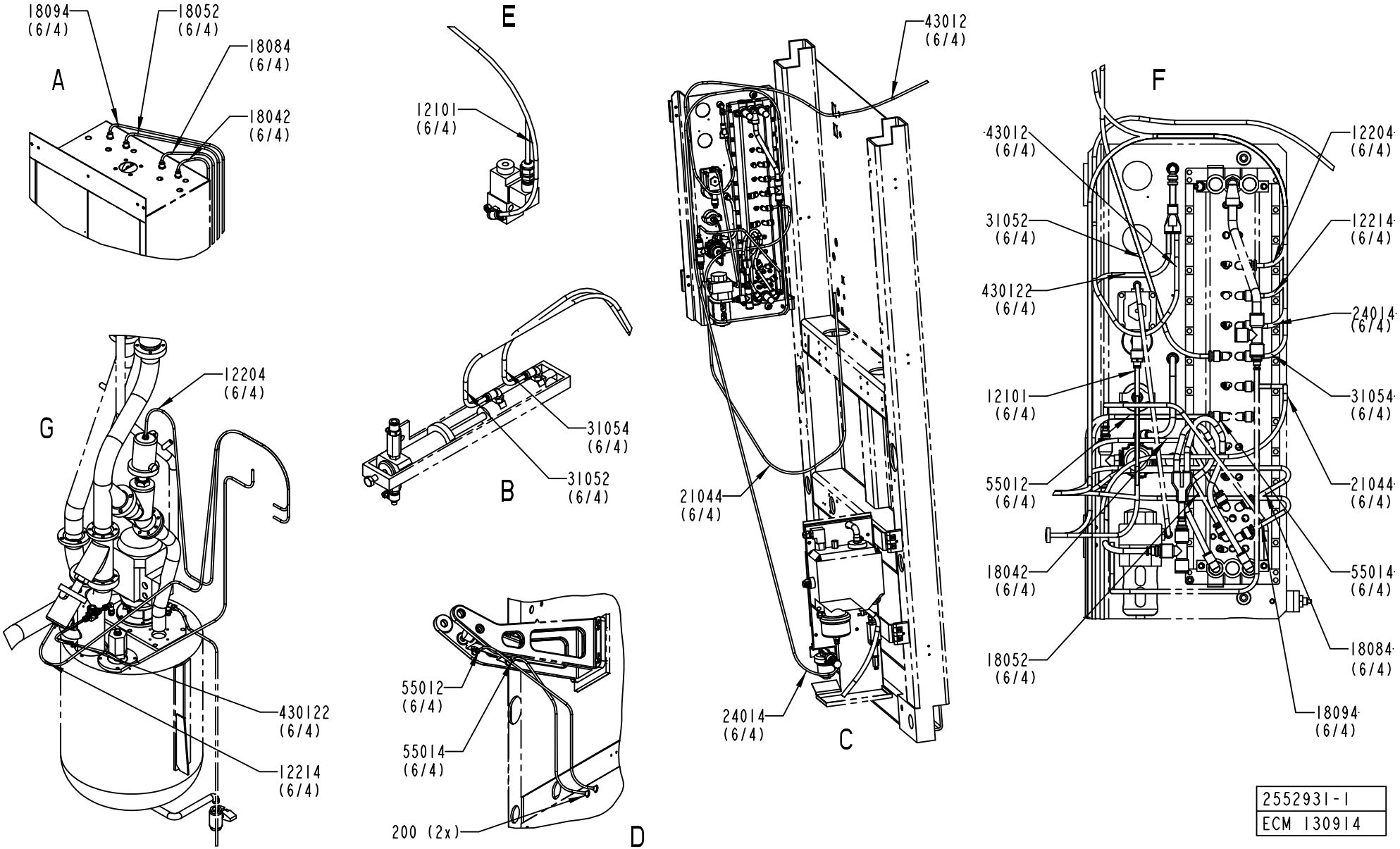
18094 (6/4)
18052 (6/4)
18084 (6/4)
18042 (6/4)
A
E
12101 (6/4)
43012 (6/4)
F
43012 (6/4)
12204 (6/4)
31052 (6/4)
12214 (6/4)
430122 (6/4)
24014 (6/4)
12101 (6/4)
31054 (6/4)
55012 (6/4)
21044 (6/4)
18042 (6/4)
55014 (6/4)
18084 (6/4)
18052 (6/4)
18094 (6/4)
G
12204 (6/4)
430122 (6/4)
12214 (6/4)
B
31054 (6/4)
31052 (6/4)
21044 (6/4)
24014 (6/4)
C
55012 (6/4)
55014 (6/4)
200 (2x)
D
2552931-1
ECM 130914

ECM: 131959 - 20030522
Group number: 2552931-0100
Assembly Drawing: 2552931-1_2_AB

This list covers pages from 2-44 to 2-47

Pos	Part No	UN	Qty	Description	Page No
-					
12101	90166-0081	MM	1750	TUBE 6 MM PA BLUE	
12204	90166-0081	MM	2070	TUBE 6 MM PA BLUE	
12214	90166-0081	MM	2010	TUBE 6 MM PA BLUE	
18042	90166-0081	MM	2070	TUBE 6 MM PA BLUE	
18052	90166-0081	MM	2000	TUBE 6 MM PA BLUE	
18084	90166-0081	MM	2210	TUBE 6 MM PA BLUE	
18094	90166-0081	MM	2120	TUBE 6 MM PA BLUE	
200	90015-0020		10	LEAD-IN, TET5-7, E-1458016	
21044	90166-0081	MM	2040	TUBE 6 MM PA BLUE	
24014	90166-0081	MM	2760	TUBE 6 MM PA BLUE	
31052	90166-0081	MM	1230	TUBE 6 MM PA BLUE	
31054	90166-0081	MM	1310	TUBE 6 MM PA BLUE	
43012	90166-0081	MM	1800	TUBE 6 MM PA BLUE	
430122	90166-0081	MM	1800	TUBE 6 MM PA BLUE	
55012	90166-0081	MM	2490	TUBE 6 MM PA BLUE	
55014	90166-0081	MM	2700	TUBE 6 MM PA BLUE	

Pos	Part No	UN	Qty	Description	Page No

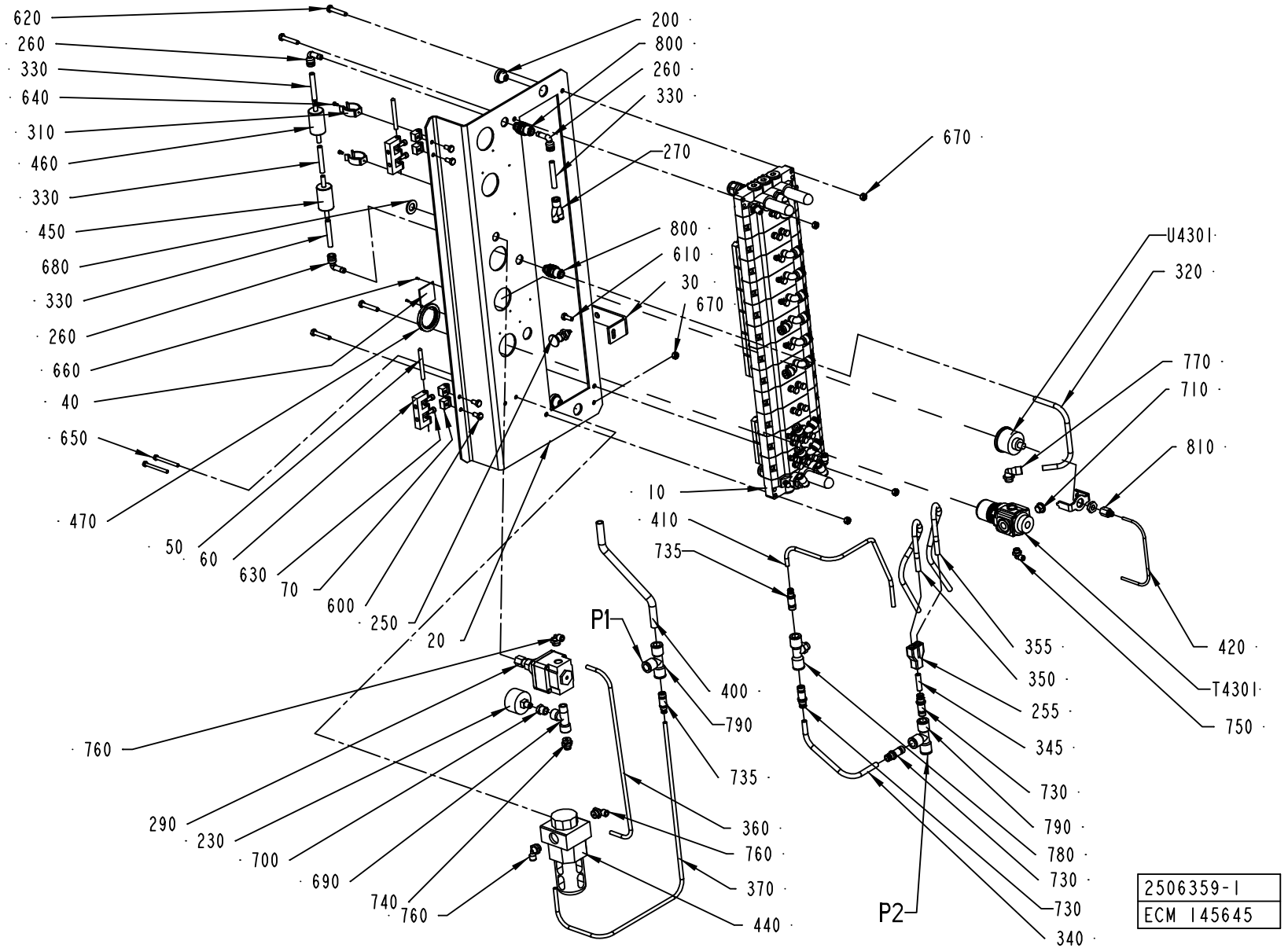
620
260
330
640
310
460
330
450
680
330
260
660
40
650
470
50
60
630
70
600
250
20
760
290
230
700
690
740
760
200
800
260
330
270
800
610
30
670
670
U4301
320
770
710
810
10
410
735
P1
400
790
735
360
760
370
440
355
350
255
345
730
790
780
730
730
340
P2
420
T4301
750
2506359-1
ECM 145645

ECM: 145669 - 20040301
Group number: 2506359-0100
Assembly Drawing: 2506359-1_1_AD

Pos	Part No	UN	Qty	Description	Page No
A3/FLEX					
	2527509-0000		1	PNEUMATIC DIAGRAM	
Common Parts					
	2527368-0000		1	PNEUMATIC DIAGRAM	
010	2506360-0100		1	VALVE RAMP	**2-51**
020	2506361-0000		1	PANEL	
030	2546319-0000		1	HOLDER	
040	978603-0000		1	SIGN	
050	988685-0000		2	PIN	
060	1035792-0000		2	E-HINGE	
070	1129770-0000		4	BLOCKING PIECE	
200	90015-0023		2	LEAD-IN, TET7-10, E-1458019	
230	90043-0021		1	PRESSURE GAUGE, 0-1 BAR 1/8"	
250	90051-0112		1	LOCK KNOB, NO. GN 617 NIK5	
255	90055-0101		1	Y-CONNECTION, 8-8	
260	90055-0172		3	ELBOW WITH TAILPIECE 8/8 MM	
270	90055-0227		1	Y-CONNECTION, 6-8	
290	90113-0056		1	REGULATOR, 11-818-998	
310	90165-0019		2	TOOL CLIP, 81/3, OPEN, 20 - 30 MM	
320	90166-0013	MM	300	TUBE 8 MM PA BLUE	
330	90166-0013	MM	100	TUBE 8 MM PA BLUE	
340	90166-0013	MM	320	TUBE 8 MM PA BLUE	
345	90166-0013	MM	350	TUBE 8 MM PA BLUE	
350	90166-0013	MM	290	TUBE 8 MM PA BLUE	
355	90166-0013	MM	300	TUBE 8 MM PA BLUE	
360	90166-0081	MM	550	TUBE 6 MM PA BLUE	
370	90166-0081	MM	800	TUBE 6 MM PA BLUE	
400	90166-0068	MM	300	TUBE 12 MM PA BLUE	
410	90166-0081	MM	600	TUBE 6 MM PA BLUE	
420	90166-0095	MM	300	TUBE 4 MM PA BLUE	
440	90277-0039		1	FILTER HOUSING, LF -1/4-S-5M-B	
	90234-0328		*1*	*COVER*	
	90277-0346		*1*	*FILTER CATRIDGE, LFP-1/4-S-5M*	
450	90277-0045		1	FILTER / 9900-05-BK	
460	90277-0046		1	FILTER / 9933-05-101	
470	90457-0078		1	PANEL NUT	
600	312105-0366		4	SCREW M6S ISO 4017 M6X12 A480	
610	312105-0368		1	SCREW M6S ISO 4017 M6X16 A480	
620	312109-0376		4	SCREW M6S ISO 4017 M6X35 A480	
630	312115-0327		4	SCREW ISO4762 M5X12 A4	
640	312125-0220		2	SCREW ISO 1207 M3X6 A4	
650	312125-0341		2	SCREW ISO 1207 M5X50 A4	
660	312502-0120		2	DRIVE SCREW ROUND HEAD KDS 0X5	
670	312605-0316		5	HEXAGON NUT, M6M M6 A280	
680	315105-0178		1	WASHER BRB13X24RFR	
690	342245-0102		1	T-PIPE, INT. THREAD, R1/4XKR1/4	
700	342701-0201		1	BUSHING,INT./EXT.G-THREAD G1/4"-G1/8"	
710	342713-0210		1	PLUG, EXT THREAD HEX SOCKET 8638-00-140	
730	342716-0209		3	REDUCER 8-12	
735	342716-0210		2	REDUCER 6-12	
740	342722-0203		1	STRAIGHT COUPLING	
750	90458-2955		1	ELBOW PIPE JOINT, EXT.THREAD,	
760	90458-2957		3	ELBOW PIPE JOINT, EXT.THREAD, D=6MM-G1/4	
770	90458-2958		1	ELBOW PIPE JOINT, EXT.THREAD, D=8MM-G1/4	
780	90055-0278		1	T-COUPLING, ADJ.12-G1/4"	
790	342748-0109		2	T-CONNECTION 12MM	
800	342768-0103		2	BULKHEAD CONNECTOR, 8 MM	
810	342770-0101		1	STRAIGHT COUPLING INT, D=4 MM - G1/8	
T4301	90457-0144		1	REGULATOR 0,3-2 BAR	
U4301	90043-0090		1	PRESSURE GAUGE, 2048 D=40 MM	

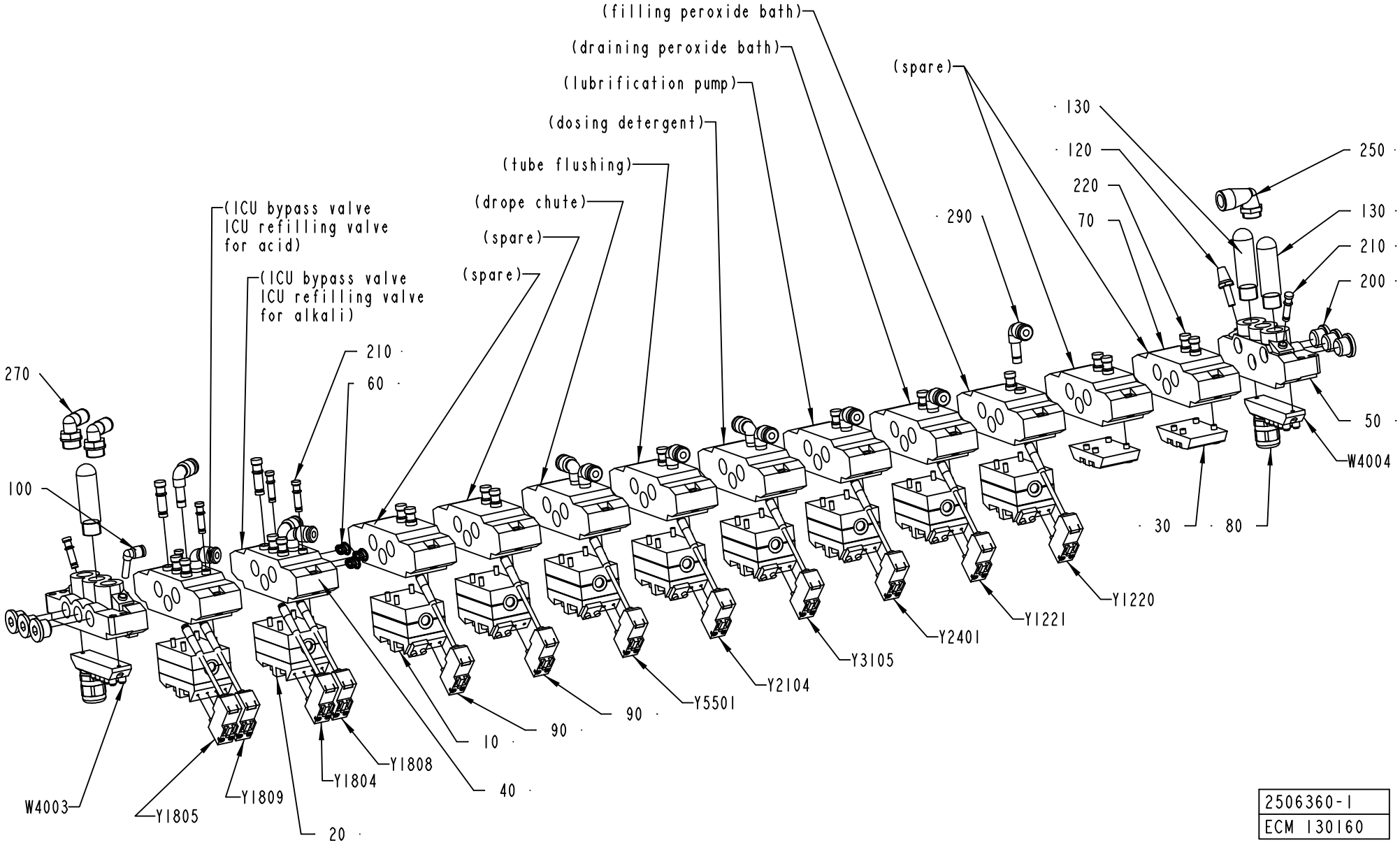
(filling peroxide bath)
(draining peroxide bath)
(lubrification pump)
(dosing detergent)
(tube flushing)
(drope chute)
(spare)
(spare)
(ICU bypass valve ICU refilling valve for acid)
(ICU bypass valve ICU refilling valve for alkali)
(spare)
130
120
220
70
290
250
130
210
200
50
W4004
270
210
60
100
30
80
Y1220
Y1221
Y2401
Y3105
Y2104
Y5501
90
90
10
40
Y1808
Y1804
Y1809
Y1805
W4003
20
2506360-1
ECM 130160

ECM: 169243 - 20040423
Group number: 2506360-0100
Assembly Drawing: 2506360-1_1_AB

Pos	Part No	UN	Qty	Description	Page No
A3/FLEX					
010	90042-0215		8	VALVE BODY 5/2 UNISTABLE	
030	90042-0519		2	BLANK PLATE ISO SIZE 1	
060	90042-0528		3	BLANKING KIT SEALS ISO SIZE 1	
090	90042-0538		2	PILOT VALVE L=500MM	
130	90328-0024		3	SILENCER G3/8	
210	342715-0102		6	BLIND PLUG 6 MM	
220	342715-0103		18	BLIND PLUG 8 MM	
270	350002-0012		2	PUSH-IN L-FITTING QSL-F-G1/8-4	
290	90055-0173		12	ELBOW WITH TAILPIECE 8/6 MM	
Y1220	90042-0538		1	PILOT VALVE L=500MM	
Y1221	90042-0538		1	PILOT VALVE L=500MM	
Y1804	90042-0538		1	PILOT VALVE L=500MM	
Y1805	90042-0538		1	PILOT VALVE L=500MM	
Y1808	90042-0538		1	PILOT VALVE L=500MM	
Y1809	90042-0538		1	PILOT VALVE L=500MM	
Y2401	90042-0538		1	PILOT VALVE L=500MM	
Y5501	90042-0538		1	PILOT VALVE L=500MM	
Common Parts					
010	90042-0215		6	VALVE BODY 5/2 UNISTABLE	
020	90042-0271		2	VALVE BODY 2X3/2	
040	90042-0520		2	BASE PLATE ISO SIZE 1	
050	90042-0522		2	PORTED END PIECE ISO SIZE 1	
070	90042-0532		10	BASE PLATE ISO SIZE 1	
080	90042-0535		2	TERMINAL BOARD 19 CORDS	
100	90055-0217		1	ELBOW PIPE JOINT	
120	90328-0017		1	SILENCER, D=6 MM	
200	342713-0211		6	PLUG, EXT THREAD HEX SOCKET 8638-00-380	
250	90458-2960		1	ELBOW PIPE JOINT, EXT.THREAD,D=12MM-G3/8	
Y2104	90042-0538		1	PILOT VALVE L=500MM	
Y3105	90042-0538		1	PILOT VALVE L=500MM	

Pos	Part No	UN	Qty	Description	Page No

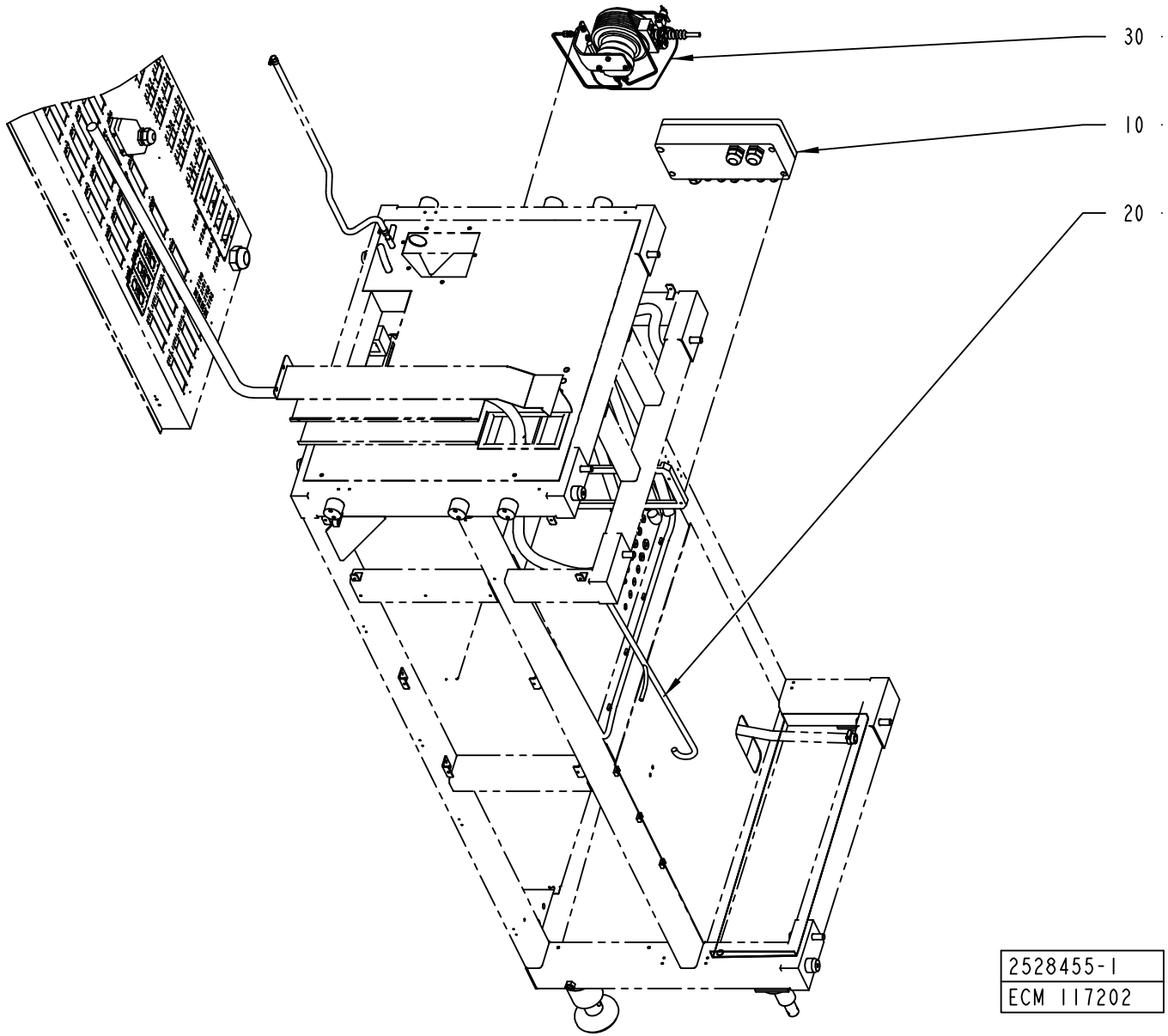
30
10
20
2528455-1
ECM 117202

ECM: 117202 - 20030403
Group number: 2528455-0100
Assembly Drawing: 2528455-1_1_AA

Pos	Part No	UN	Qty	Description	Page No
-					
010	2527253-0100		1	CONNECTION BOX	**2-55**
020	2529499-0100		1	CABLE HARNESS	**2-57, 2-59**
030	2519574-0100		1	HYDROGEN PEROXIDE CONCENTRATION METER	**2-61**

Pos	Part No	UN	Qty	Description	Page No

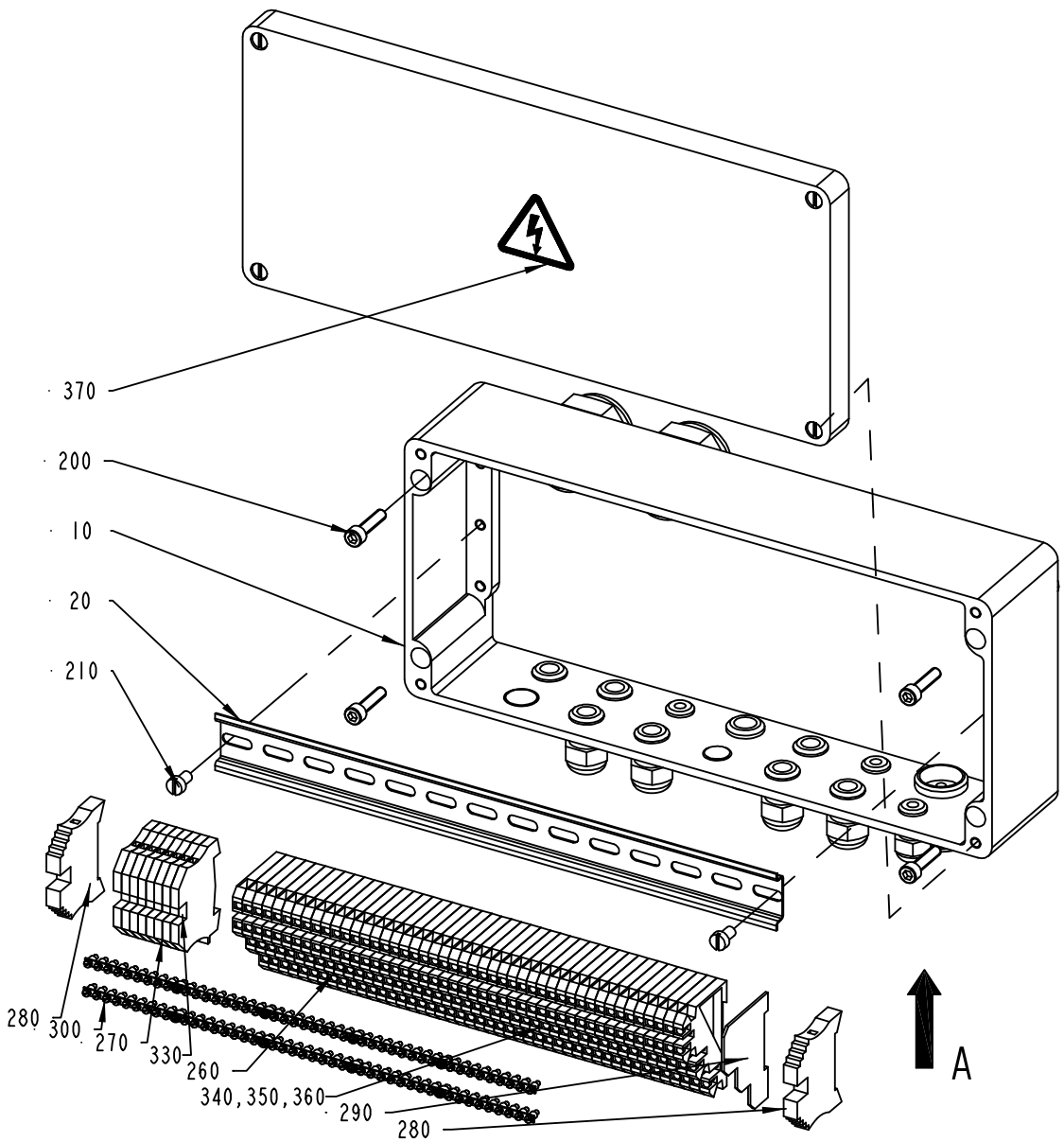

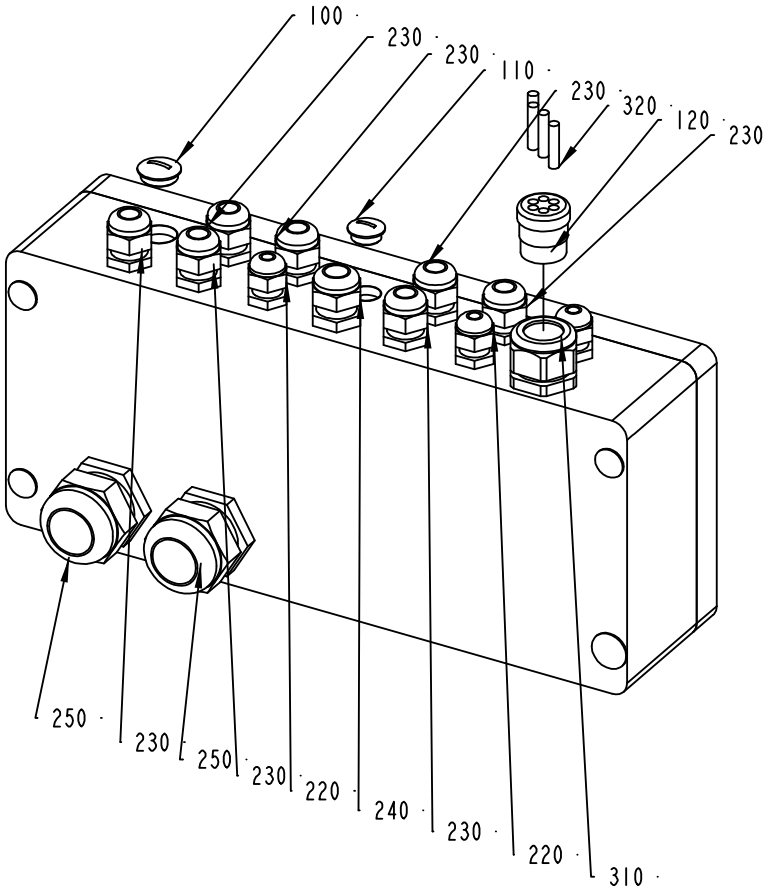

VIEW FROM A

2527253-1
ECM 117202

ECM: 117202 - 20030403
Group number: 2527253-0100
Assembly Drawing: 2527253-1_1_AA

Pos	Part No	UN	Qty	Description	Page No
-					
010	2537112-0000		1	BOX	
020	2546496-0000		1	RAIL	
100	90002-0009		1	BLANK-OFF PLUG, PR 18.6 SKINDICHT-BLK11	
110	90002-0013		1	BLANK-OFF PLUG, PR 15,2 SKINDICHT-BLK9	
120	90012-0125		1	GLAND FITTING	
200	312115-0372		4	SCREW ISO4762 M6X25 A4	
210	312121-0364		2	SCREW ISO 1207 M6X10 4.8 - 5.8 Z.PL.	
220	352103-0100		3	CABLE GLAND, STR 9, PR15,2/PG9	
230	352103-0106		7	CABLE GLAND, ST 11, PR18,6/PG11	
240	352103-0108		1	CABLE GLAND, ST 13,5 , PR20,4/PG13,5	
250	352103-0121		2	CABLE GLAND, ST 29, PR37,0/PG29	
260	353021-0301		46	TERMINALS,TRIPLE-LEVEL, DLI 2,5/35 PA	
270	353024-0204		8	EARTH TERMINAL WPE 2,5	
280	353031-0203		2	END SUPPORT, WEW 35/2	
290	353032-0301		1	END PLATE WAP, 13132.6	
300	353034-0404		10	BRIDGE CONNECTOR Q10, 13131.0	
310	353240-0005		1	GLAND W/O INSERT PG21 NORMAL	
320	353249-0303		4	SEALING PIN, 5,3X25	
330	359011-0834		1	SET OF SIGNS 6-GW(EARTH)	
340	359011-0817		1	SYMBOL 5-GW (+) 50PC	
350	359011-0818		1	SYMBOL 5-GW (-) 50PC	
360	359012-0800		2	TERMINAL MARKING LAB. KIT, BSFW, 101-15	
370	359705-0015		1	WARNING SIGN ISO, RISK OF ELECTRIC SHOCK	

Pos	Part No	UN	Qty	Description	Page No

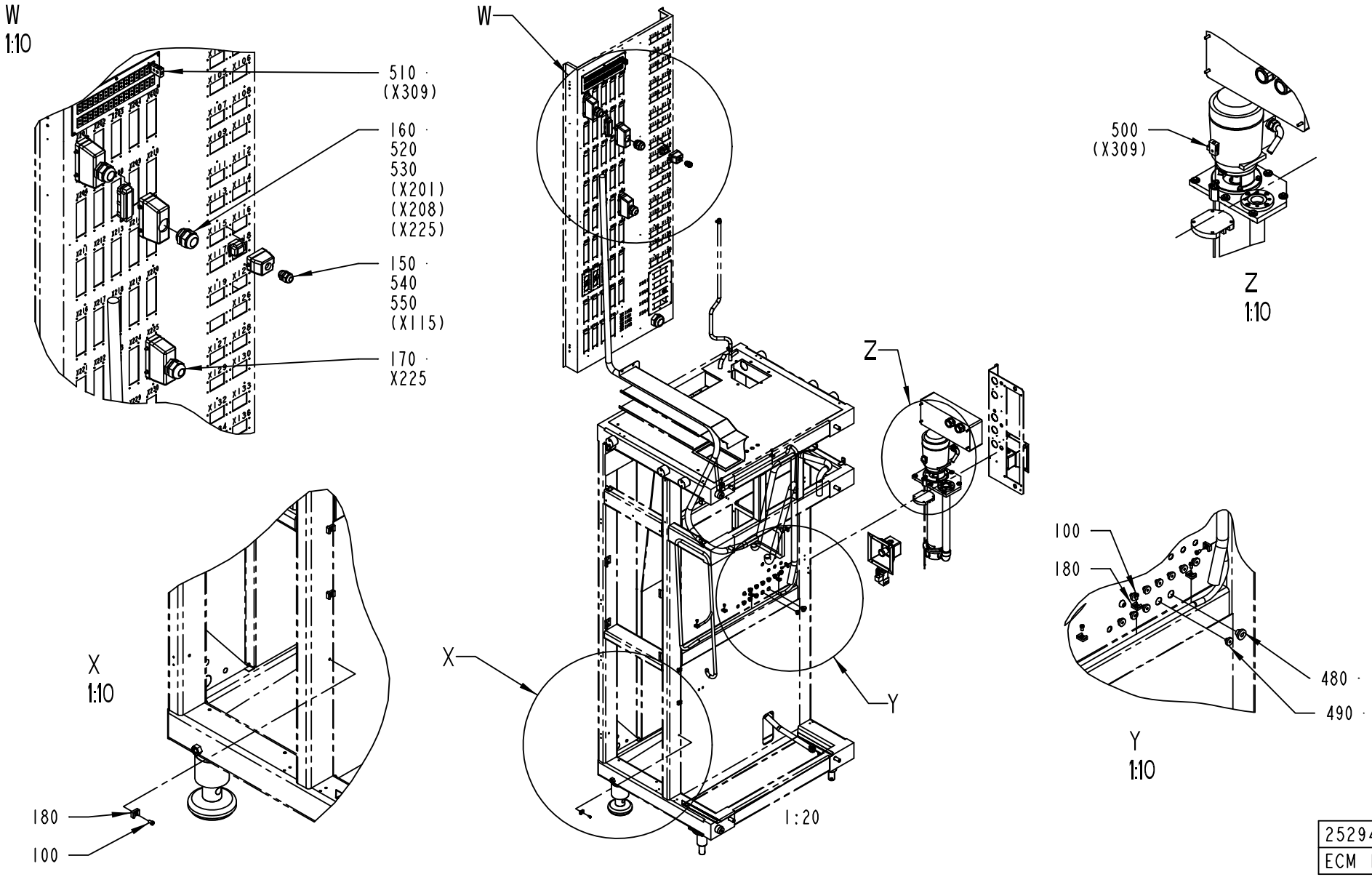

2529499-1
ECM 117202

ECM: 117202 - 20030403
Group number: 2529499-0100
Assembly Drawing: 2529499-1_1_AA

This list covers pages from 2-56 to 2-59

Pos	Part No	UN	Qty	Description	Page No
-					
100	312125-0364		12	SCREW ISO 1207 M6X10 A4	
150	352103-0108		1	CABLE GLAND, ST 13,5 , PR20,4/PG13,5	
160	352103-0121		3	CABLE GLAND, ST 29, PR37,0/PG29	
170	352103-0120		1	CABLE GLAND, STR 29, PR37,0/PG29	
180	352113-0204		12	ANCHOR PLATES FOR STRIPS, TYPE TM3S25-M	
480	90015-0021		1	LEAD-IN, TET10-14, E-1458023	
490	90015-0021		10	LEAD-IN, TET10-14, E-1458023	
500	90326-0020		1	PLUG, FEMALE YELLOW CR-AL	
510	90326-0022		1	PLUG, MALE YELLOW CR-AL	
520	90110-0150		3	MALE INSERT 121110 0000	
530	90110-0152		3	CABLE HOOD 24-POL 70.352.2428.1	
540	90110-0157		1	CABLE HOOD 6-POL 70.352.0628.1	
550	90110-0159		1	MALE INSERT 70.310.0640.0	
560	359005-0010		1	MARKING LABEL KIT 0 - 9, 04.841.2150.0	
570	359005-0050		3	MARKING LABEL KIT X, 04.841.4550.0	
580	90110-0385		3	HOLDER	
W1005	351150-0418	MM	6000	CABLE OLFLEX 4X2,5 MM2 LIGHT/GREY	
W1304	90220-0034	MM	7500	THERMOCABLE TEX/SITW-20F-KX 2X0,5MM2	
W1802	351150-0404	MM	2500	CABLE OLFLEX 4X0,75 MM2 LIGHT/GREY	
W1804	351150-0403	MM	3800	CABLE OLFLEX 3X0,75 MM2 LIGHT/GREY	
W1805	351150-0403	MM	3800	CABLE OLFLEX 3X0,75 MM2 LIGHT/GREY	
W1806	351150-0404	MM	2500	CABLE OLFLEX 4X0,75 MM2 LIGHT/GREY	
W2254	351150-0405	MM	3000	CABLE OLFLEX 5X0,75 MM2 LIGHT/GREY	
W2255	351150-0405	MM	5000	CABLE OLFLEX 5X0,75 MM2 LIGHT/GREY	
W4001	351150-0425	MM	5000	CABLE OLFLEX 25X0,75 MM2 LIGHT/GREY	
W4002	351150-0425	MM	5000	CABLE OLFLEX 25X0,75 MM2 LIGHT/GREY	
W4022	351150-0403	MM	2300	CABLE OLFLEX 3X0,75 MM2 LIGHT/GREY	
W4054	351150-0406	MM	2000	CABLE OLFLEX 7X0,75 MM2 LIGHT/GREY	

Pos	Part No	UN	Qty	Description	Page No

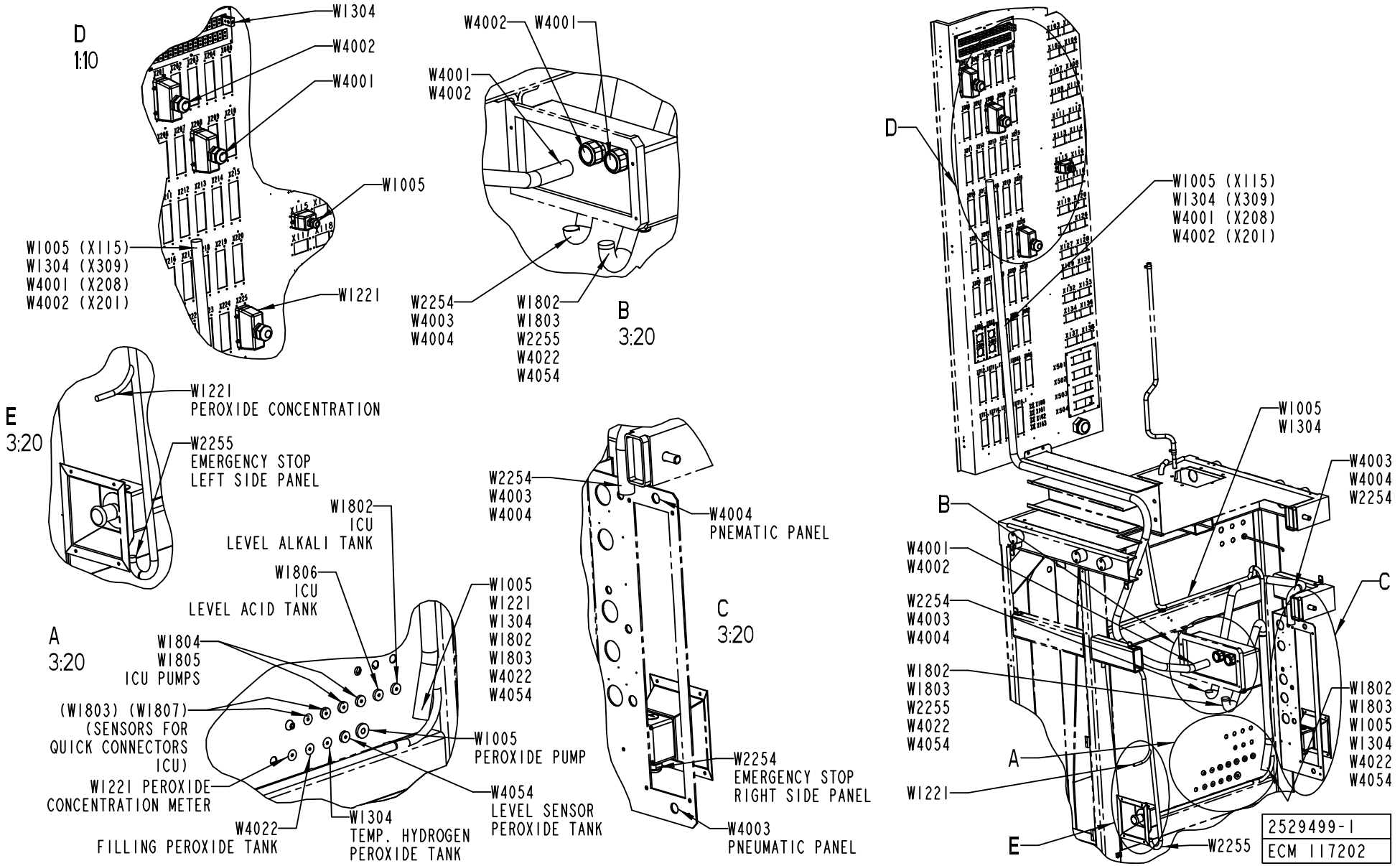
D
1:10
W1304
W4002
W4001
W1005
W1005 (X115)
W1304 (X309)
W4001 (X208)
W4002 (X201)
W1221
W4002
W4001
W4001
W4002
W2254
W4003
W4004
W1802
W1803
W2255
W4022
W4054
B
3:20
E
3:20
W1221
PEROXIDE CONCENTRATION
W2255
EMERGENCY STOP
LEFT SIDE PANEL
W1802
ICU
LEVEL ALKALI TANK
W1806
ICU
LEVEL ACID TANK
A
3:20
W1804
W1805
ICU PUMPS
(W1803) (W1807)
(SENSORS FOR
QUICK CONNECTORS
ICU)
W1221 PEROXIDE
CONCENTRATION METER
W4022
FILLING PEROXIDE TANK
W1304
TEMP. HYDROGEN
PEROXIDE TANK
W1005
W1221
W1304
W1802
W1803
W4022
W4054
W1005
PEROXIDE PUMP
W4054
LEVEL SENSOR
PEROXIDE TANK
W2254
W4003
W4004
W4004
PNEMATIC PANEL
C
3:20
W2254
EMERGENCY STOP
RIGHT SIDE PANEL
W4003
PNEUMATIC PANEL
D
W1005 (X115)
W1304 (X309)
W4001 (X208)
W4002 (X201)
W1005
W1304
W4003
W4004
W2254
B
W4001
W4002
C
W2254
W4003
W4004
W1802
W1803
W2255
W4022
W4054
W1802
W1803
W1005
W1304
W4022
W4054
A
W1221
E
W2255
2529499-1
ECM 117202

ECM: 117202 - 20030403
Group number: 2529499-0100
Assembly Drawing: 2529499-1_2_AA

This list covers pages from 2-56 to 2-59

Pos	Part No	UN	Qty	Description	Page No
-					
100	312125-0364		12	SCREW ISO 1207 M6X10 A4	
150	352103-0108		1	CABLE GLAND, ST 13,5 , PR20,4/PG13,5	
160	352103-0121		3	CABLE GLAND, ST 29, PR37,0/PG29	
170	352103-0120		1	CABLE GLAND, STR 29, PR37,0/PG29	
180	352113-0204		12	ANCHOR PLATES FOR STRIPS, TYPE TM3S25-M	
480	90015-0021		1	LEAD-IN, TET10-14, E-1458023	
490	90015-0021		10	LEAD-IN, TET10-14, E-1458023	
500	90326-0020		1	PLUG, FEMALE YELLOW CR-AL	
510	90326-0022		1	PLUG, MALE YELLOW CR-AL	
520	90110-0150		3	MALE INSERT 121110 0000	
530	90110-0152		3	CABLE HOOD 24-POL 70.352.2428.1	
540	90110-0157		1	CABLE HOOD 6-POL 70.352.0628.1	
550	90110-0159		1	MALE INSERT 70.310.0640.0	
560	359005-0010		1	MARKING LABEL KIT 0 - 9, 04.841.2150.0	
570	359005-0050		3	MARKING LABEL KIT X, 04.841.4550.0	
580	90110-0385		3	HOLDER	
W1005	351150-0418	MM	6000	CABLE OLFLEX 4X2,5 MM2 LIGHT/GREY	
W1304	90220-0034	MM	7500	THERMOCABLE TEX/SITW-20F-KX 2X0,5MM2	
W1802	351150-0404	MM	2500	CABLE OLFLEX 4X0,75 MM2 LIGHT/GREY	
W1804	351150-0403	MM	3800	CABLE OLFLEX 3X0,75 MM2 LIGHT/GREY	
W1805	351150-0403	MM	3800	CABLE OLFLEX 3X0,75 MM2 LIGHT/GREY	
W1806	351150-0404	MM	2500	CABLE OLFLEX 4X0,75 MM2 LIGHT/GREY	
W2254	351150-0405	MM	3000	CABLE OLFLEX 5X0,75 MM2 LIGHT/GREY	
W2255	351150-0405	MM	5000	CABLE OLFLEX 5X0,75 MM2 LIGHT/GREY	
W4001	351150-0425	MM	5000	CABLE OLFLEX 25X0,75 MM2 LIGHT/GREY	
W4002	351150-0425	MM	5000	CABLE OLFLEX 25X0,75 MM2 LIGHT/GREY	
W4022	351150-0403	MM	2300	CABLE OLFLEX 3X0,75 MM2 LIGHT/GREY	
W4054	351150-0406	MM	2000	CABLE OLFLEX 7X0,75 MM2 LIGHT/GREY	

Pos	Part No	UN	Qty	Description	Page No

HYDROGEN PEROXIDE CONCENTRATION METER

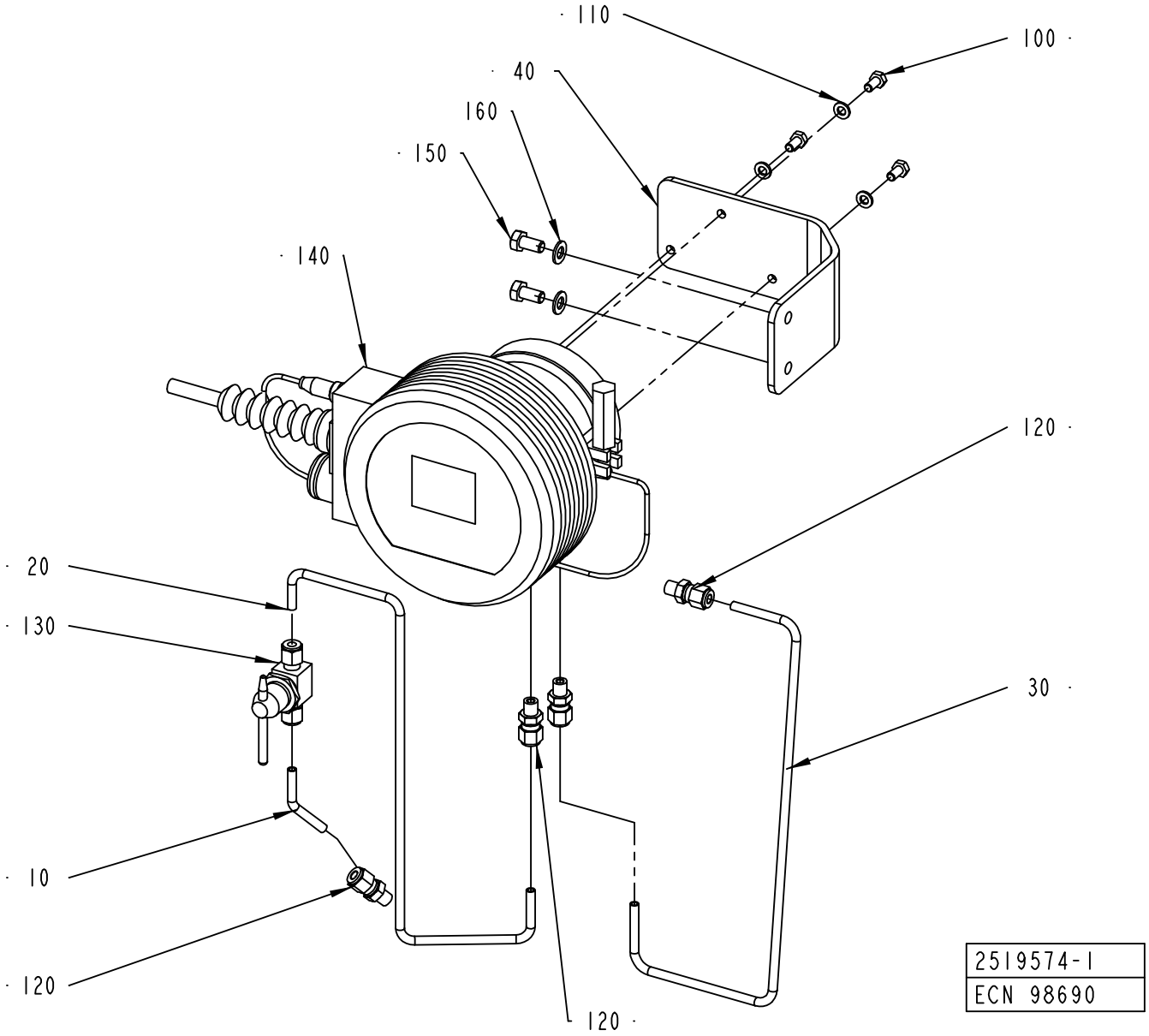

2519574-1
ECN 98690

ECM: 98810 - 20010925
Group number: 2519574-0100
Assembly Drawing: 2519574-1_1_AA

Pos	Part No	UN	Qty	Description	Page No
-					
010	2501378-0000		1	PIPE	
020	2531500-0000		1	PIPE	
030	2531501-0000		1	PIPE	
040	2519556-0000		1	BRACKET	
100	312105-0366		3	SCREW M6S ISO 4017 M6X12 A480	
110	315105-0153		3	WASHER BRB6,4X12RFR	
120	90458-1477		4	CONNECTOR 6-1/8 NPT, EXT. TAPERED	
130	90458-1478		1	BALL VALVE SS-43T6MM-SH-10147	
140	90458-1977		1	REFRACTOMETER SET DA15FC15A DFTP A	
	90458-2269		*1*	*DEFLECTOR A0808137*	
	90458-1980		*1*	*REFRACTOMETER DA16FC16B*	
	90458-1979		*1*	*BELLOWS A0710020*	
	90458-1976		*1*	*CABLE A0804273*	
	90458-1950		*1*	*PROBE A0803021 IPT100 1/8" GAS TRIC-B*	
	90458-1943		*1*	*O-RING A0701145 53,65X2,62 MM*	
	90458-1941		*1*	*O-RING A0701180 10,82X1,78 MM*	
	90458-1940		*1*	*CLAMP A0515170 3" AISI 304*	
	90458-1893		*1*	*FILTER CARTRIDGE A0111004*	
	90458-1892		*1*	*GASKET A0539066 80,5X90,5X2 MM*	
150	312105-0449		2	SCREW M6S ISO 4017 M8X16 A480	
160	315105-0165		2	WASHER BRB8,4X16RFR	

Pos	Part No	UN	Qty	Description	Page No

Machine Type	Group Description	Used-In	Group Number	Page No

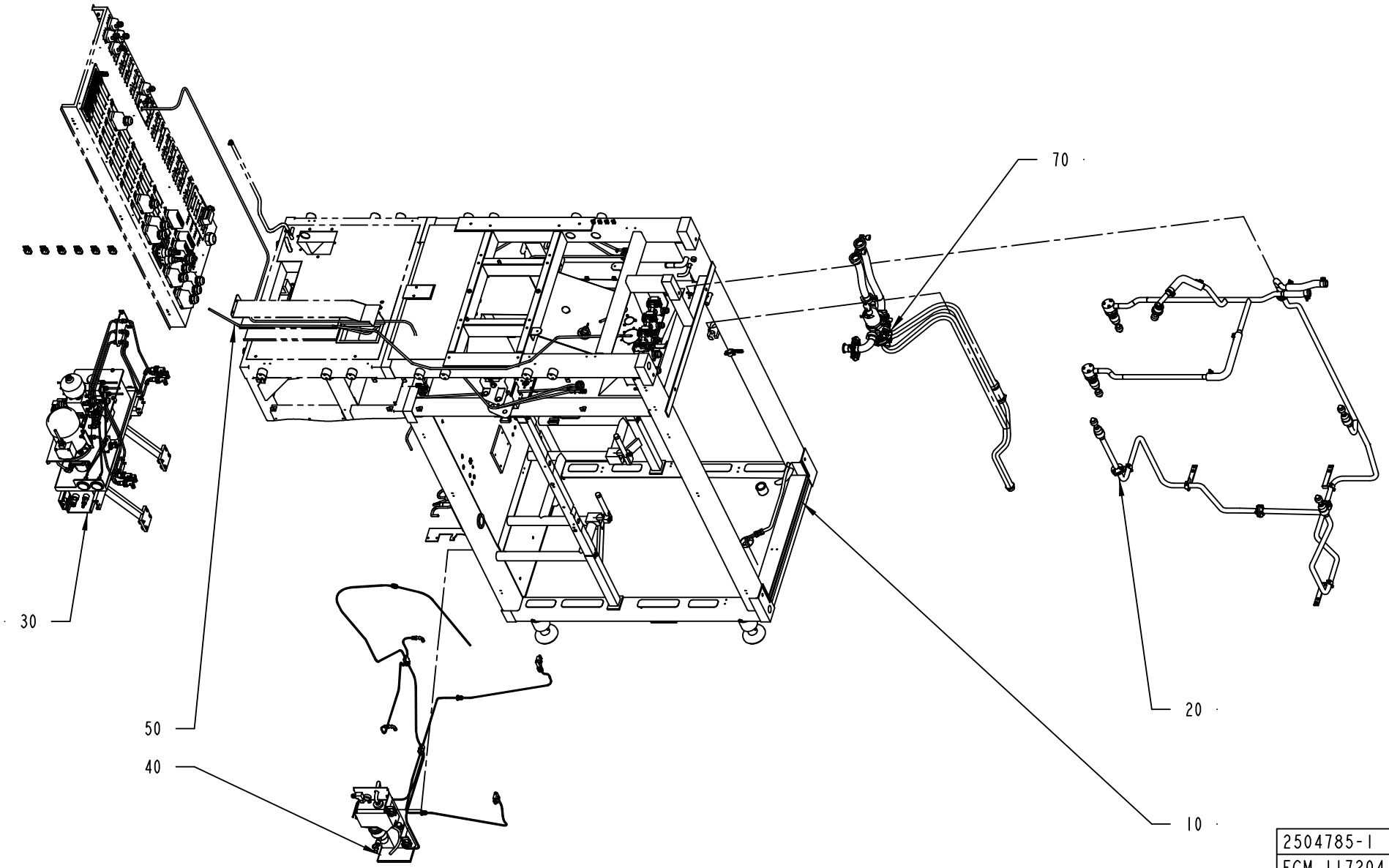
70
30
50
40
20
10
2504785-1
ECM 117204

ECM: 117204 - 20030403
Group number: 2504785-0100
Assembly Drawing: 2504785-1_1_AA

Pos	Part No	UN	Qty	Description	Page No
-					
010	2504786-0100		1	MACHINE BODY	**2-65**
020	2504787-0100		1	CLEANING SYSTEM	**2-69**
030	2546500-0100		1	HYDRAULIC SYSTEM	**2-71**
040	2529167-0100		1	LUBRICATING SYSTEM	**2-85**
050	2529116-0100		1	ELECTRIC EQUIPMENT	**2-91**
070	2504792-0100		1	DRAINING	**2-113**

Pos	Part No	UN	Qty	Description	Page No

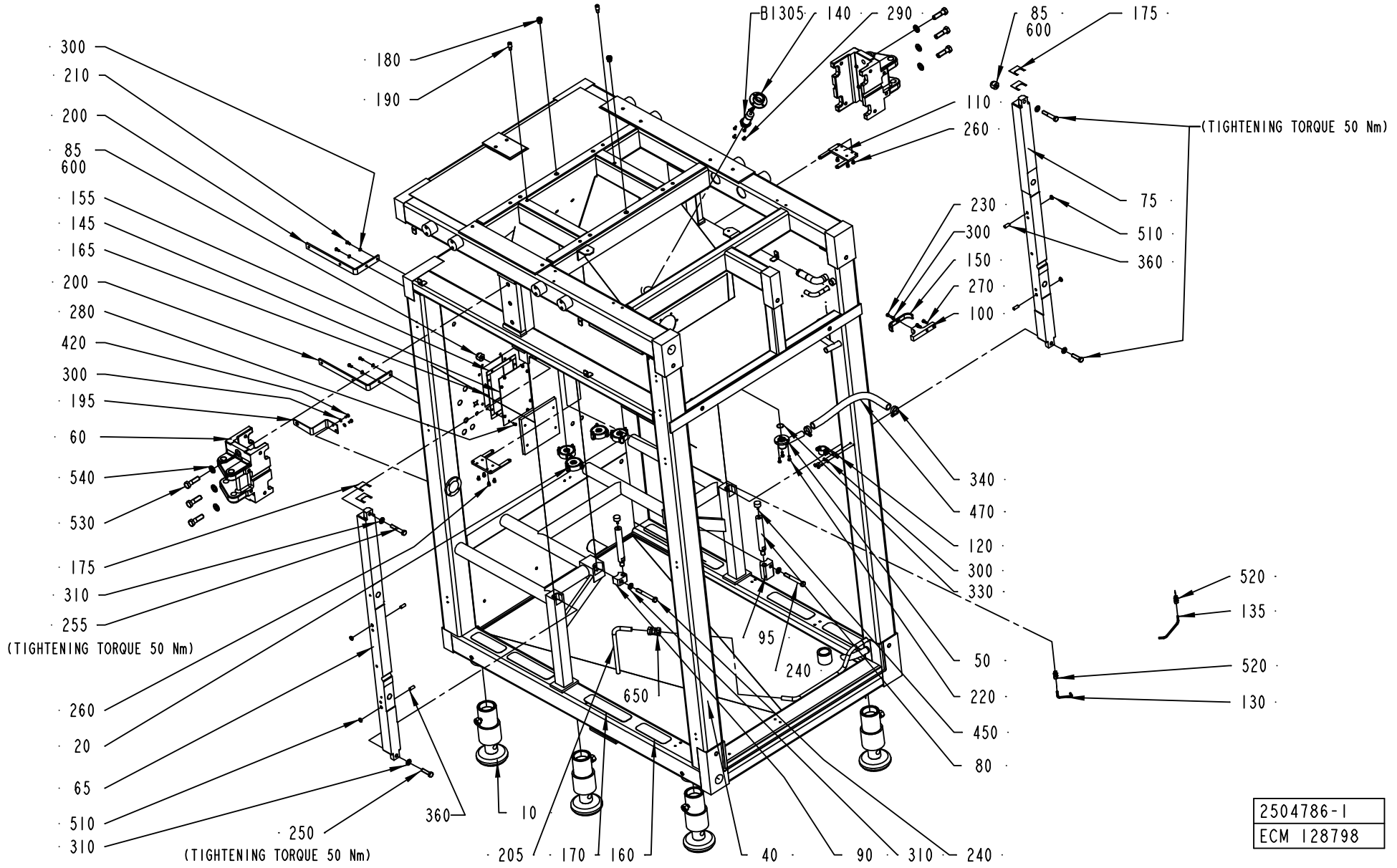
300
210
200
85
600
155
145
165
200
280
420
300
195
60
540
530
175
310
255
(TIGHTENING TORQUE 50 Nm)
260
20
65
510
310
250
(TIGHTENING TORQUE 50 Nm)
180
190
B1305
140
290
85
600
175
110
260
(TIGHTENING TORQUE 50 Nm)
75
510
360
230
300
150
270
100
340
470
120
300
330
50
220
450
80
520
135
520
130
95
240
650
360
10
205
170
160
40
90
310
240
2504786-1
ECM 128798

ECM: 139107 - 20030711
Group number: 2504786-0100
Assembly Drawing: 2504786-1_1_AB

Pos	Part No	UN	Qty	Description	Page No
A3/FLEX					
145	2598844-0000		2	COVER	
Common Parts					
010	1035076-0200		4	LEG	**2-11**
020	2542491-0100		4	HOLDER	**2-67**
040	2504436-0000		1	FRAME	
050	2509552-0000		1	DRAINING	
060	2532854-0000		2	SUPPORT	
065	2542332-0000		1	COLUMN	
075	2542333-0000		1	COLUMN	
080	2542340-0000		2	COLUMN	
085	2542488-0000		2	NUT	
090	2542493-0000		1	BLOCK	
095	2542494-0000		1	BLOCK	
100	2510901-0000		1	BRACKET	
110	2510902-0000		2	BRACKET	
120	2510904-0000		1	HOLDER	
130	2542341-0000		1	DRAINING	
135	2543349-0000		1	DRAINING	
140	450457-0000		1	FLANGE	
150	2537120-0000		1	BRACKET	
155	2529341-0000		4	GASKET	
160	1103298-0000		4	NON-SKID	
165	2529342-0000		4	GASKET	
170	1103300-0000		4	NON-SKID	
175	2545307-0000		4	SHIM	
180	1490046-0000		2	PIN	
190	2514804-0000		2	PIN	
195	2610684-0000		1	HOLDER	
200	2524504-0000		2	BRACKET	
205	2565526-0000		1	PIPE	
210	312105-0367		4	SCREW M6S ISO 4017 M6X14 A480	
220	312105-0368		5	SCREW M6S ISO 4017 M6X16 A480	
230	312105-0370		1	SCREW M6S ISO 4017 M6X20 A480	
240	312105-0552		2	SCREW M6S ISO 4014 M12X100 A480	
250	312109-0541		2	SCREW M6S ISO 4017 M12X45 A480	
255	312105-0546		2	SCREW M6S ISO 4014 M12X70 A480	
260	312115-0362		8	SCREW ISO4762 M6X8 A4	
270	312115-0368		2	SCREW ISO4762 M6X16 A4	
280	312105-0325		16	SCREW M6S ISO 4017 M5X10 A480	
290	312155-0329		4	SCREW EN 10642 MF6S M5X16 A480	
300	315105-0153		9	WASHER BRB6,4X12RFR	
310	315105-0178		6	WASHER BRB13X24RFR	
330	315202-0709		1	O-RING 23,52X1,78 MM	
340	342991-0105		2	HOSE CLIP,WORM DRIVE TYPE (27)-30	
360	311103-0456		4	PARALLELL PIN, M6, 10X25 MM	
420	312105-0366		2	SCREW M6S ISO 4017 M6X12 A480	
450	90347-0034		2	VIBRATION DAMPER	
470	90166-0151	MM	440	HOSE	
510	90261-0057		4	PLUG, BLIND, PLASTIC	
520	90030-0184		2	CONN. STR. GA-6-G1/8	
530	312105-0631		6	SCREW M6S ISO 4014 M16X55 A480	
540	315105-0186		6	WASHER BRB17X30RFR	
600	90157-0016		1	LOCKING FLUID LOCTITE 242 50 ML	
650	342727-0214		1	CONN. PIPE G-15-L/SY	
B1305	90458-0256		1	PROXIMITY SWITCH IIA 3010-BPKG/6M	

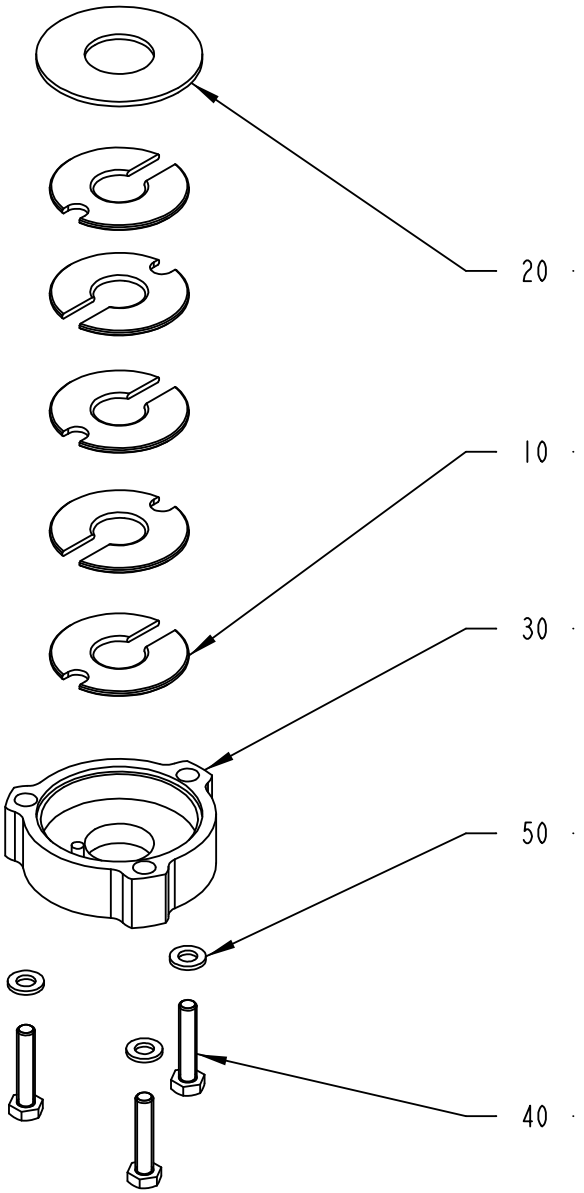

2542491-1
ECM 117204

ECM: 117204 - 20030403
Group number: 2542491-0100
Assembly Drawing: 2542491-1_1_AA

Pos	Part No	UN	Qty	Description	Page No
-					
010	2544303-0000		5	GASKET	
020	2542490-0000		1	LID	
030	2542492-0000		1	LID	
040	312109-0374		3	SCREW M6S ISO 4017 M6X30 A480	
050	315105-0153		3	WASHER BRB6,4X12RFR	

Pos	Part No	UN	Qty	Description	Page No

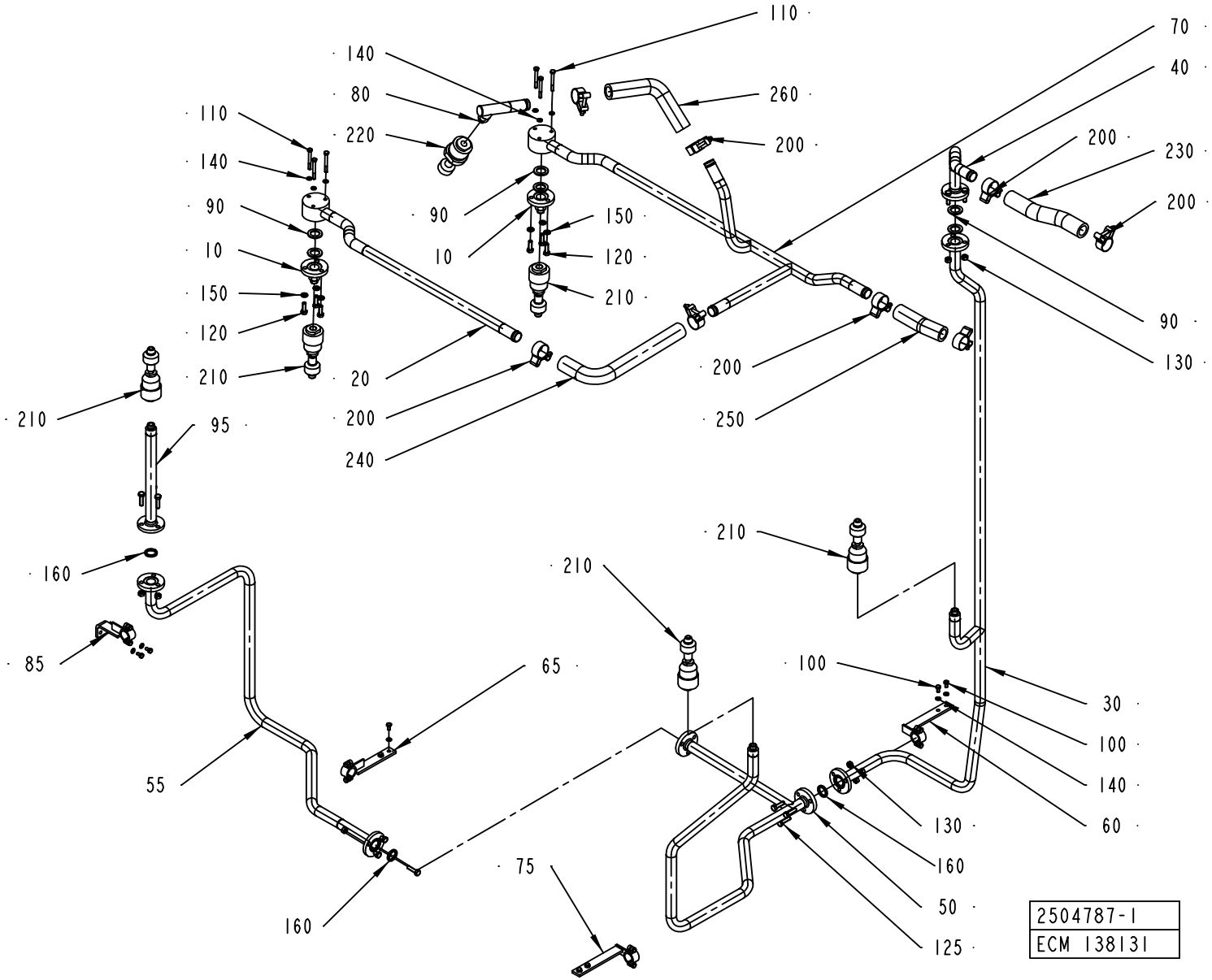
110
140
80
220
260
200
110
140
90
10
150
120
210
90
10
150
120
210
70
40
200
230
200
90
130
20
200
240
200
250
210
95
210
160
85
210
210
100
65
30
100
140
60
55
130
160
50
125
75
160
2504787-1
ECM 138131

ECM: 139111 - 20031007
Group number: 2504787-0100
Assembly Drawing: 2504787-1_1_AB

Pos	Part No	UN	Qty	Description	Page No
-					
010	1511203-0000		2	PIPE	
020	2506653-0000		1	PIPE	
030	2506933-0000		1	PIPE	
040	2506934-0000		1	PIPE	
050	2508424-0000		1	PIPE	
055	2529069-0000		1	PIPE	
060	2508427-0000		1	BRACKET	
065	2529110-0000		1	BRACKET	
070	2508428-0000		1	PIPE	
075	2529111-0000		1	BRACKET	
080	2510833-0000		1	PIPE	
085	2544213-0000		1	BRACKET	
090	1037443-0000		6	GASKET	
095	2544214-0000		1	PIPE	
100	312105-0366		8	SCREW M6S ISO 4017 M6X12 A480	
110	312105-0381		6	SCREW M6S ISO 4014 M6X55 A480	
120	312105-0453		6	SCREW M6S ISO 4017 M8X25 A480	
125	312105-0455		9	SCREW M6S ISO 4017 M8X30 A480	
130	312605-0318		12	HEXAGON NUT, M6M M8 A280	
140	315105-0153		14	WASHER BRB6,4X12RFR	
150	315105-0165		6	WASHER BRB8,4X16RFR	
160	315229-0103		3	GASKETS, 23,1X30,1X3,7 MM 1" FDA	
200	90459-2366		8	HOSE CLIP, (32)-35	
210	90424-0066		5	ROT.SPRAY NOZZLE, D26984-B3/8"-PVDF/4.5	
220	90424-0071		1	ROT.SPRAY NOZZLE, D40140-R3/8-PVDF 4.5	
230	90166-0233	MM	260	HOSE	
240	90166-0233	MM	430	HOSE	
250	90166-0233	MM	175	HOSE	
260	90166-0233	MM	300	HOSE	

Pos	Part No	UN	Qty	Description	Page No

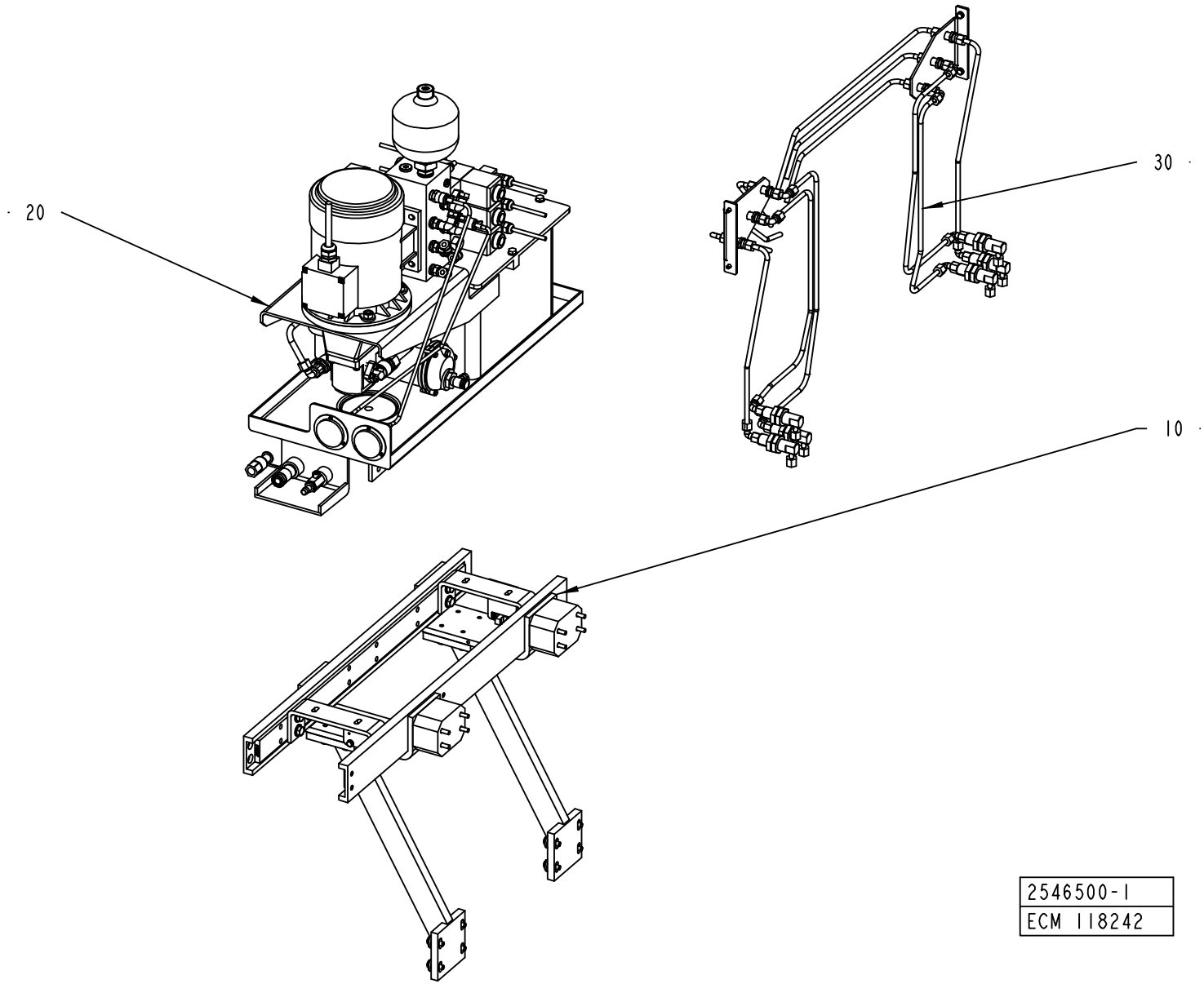
20
30
10
2546500-1
ECM 118242

ECM: 118242 - 20030403
Group number: 2546500-0100
Assembly Drawing: 2546500-1_1_AA

Pos	Part No	UN	Qty	Description	Page No
-					
005	2552001-0000		1	HYDRAULIC DIAGRAM	
010	2546499-0100		1	GUIDE	**2-73**
020	2558947-0100		1	HYDRAULIC UNIT	**2-75**
030	2520484-0100		1	PIPE WORK-HYDRAULIC	**2-83**

Pos	Part No	UN	Qty	Description	Page No

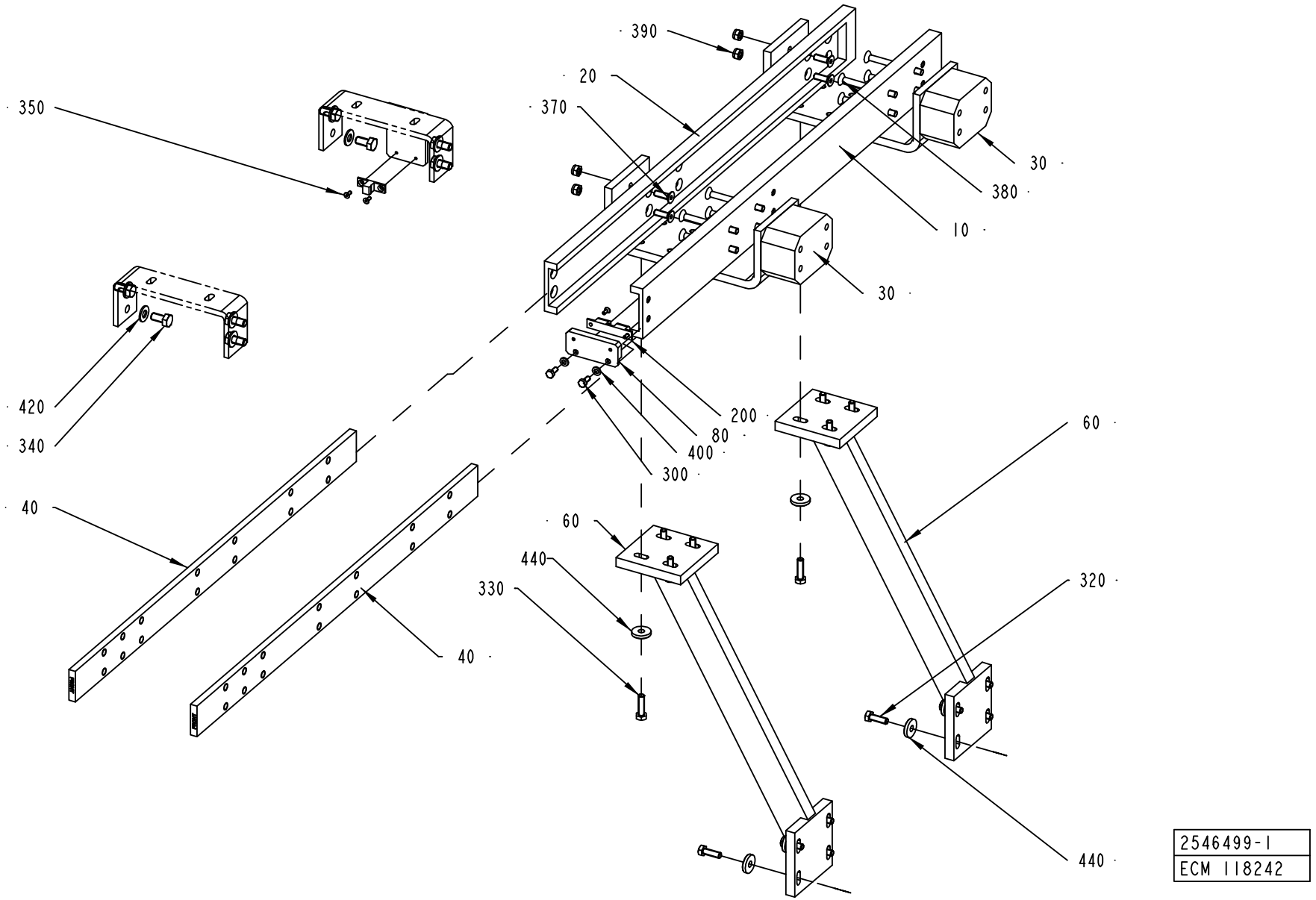
390
20
370
350
30
380
10
30
420
340
200
80
400
300
60
40
60
440
330
320
40
440
2546499-1
ECM 118242

ECM: 118242 - 20030403
Group number: 2546499-0100
Assembly Drawing: 2546499-1_1_AA

Pos	Part No	UN	Qty	Description	Page No
-					
010	2546486-0000		1	GUIDE	
020	2546487-0000		1	GUIDE	
030	2546488-0000		2	BRACKET	
040	2546489-0000		2	GUIDE	
060	2546491-0000		2	SUPPORT	
080	2546493-0000		1	STOP	
200	90237-0070		1	SNAP-IN BALL LOCK, 69X19 MM	
300	312105-0367		2	SCREW M6S ISO 4017 M6X14 A480	
320	312105-0453		8	SCREW M6S ISO 4017 M8X25 A480	
330	312105-0455		8	SCREW M6S ISO 4017 M8X30 A480	
340	312105-0491		8	SCREW M6S ISO 4017 M10X20 A480	
350	312155-0289		4	SCREW EN 10642 MF6S M4X10 A480	
370	312155-0453		4	SCREW EN 10642 MF6S M8X25 A480	
380	90287-0264		8	SCREW	
390	312812-0318		4	HEXAGON NUT, NY-LOCK M8 A480	
400	315105-0153		2	WASHER BRB6,4X12RFR	
420	315105-0173		8	WASHER BRB10,5X22RFR	
440	315125-0165		16	WASHER TBRSB 8,4X26X5 A4	

Pos	Part No	UN	Qty	Description	Page No

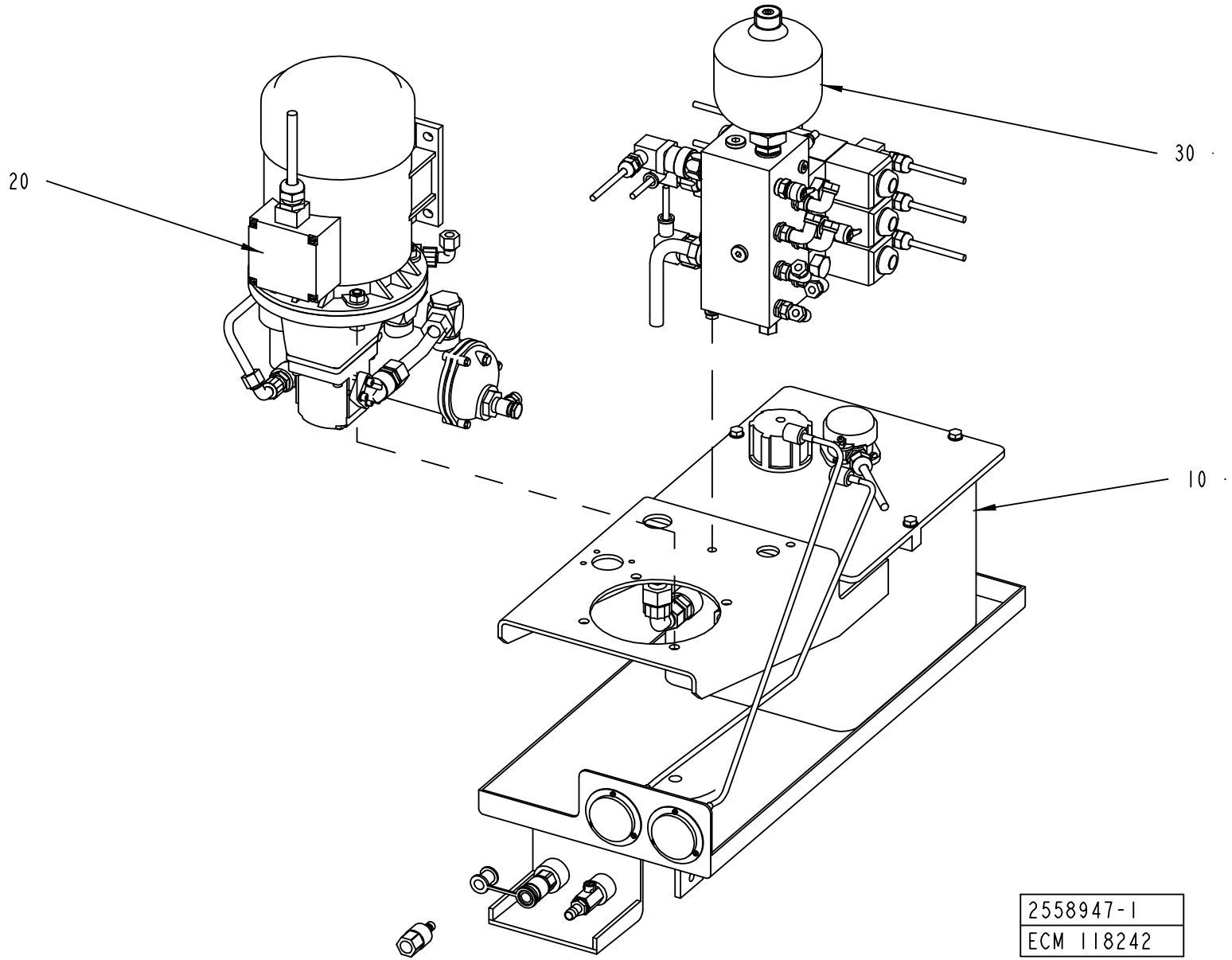
20
30
10
2558947-1
ECM 118242

ECM: 175733 - 50001231
Group number: 2558947-0100
Assembly Drawing: 2558947-1_1_AA

Pos	Part No	UN	Qty	Description	Page No
-					
010	2558845-0100		1	TANK	**2-77**
020	2558930-0100		1	PUMP	**2-79**
030	2559111-0200		1	HYDRAULIC VALVE	**2-81**

Pos	Part No	UN	Qty	Description	Page No

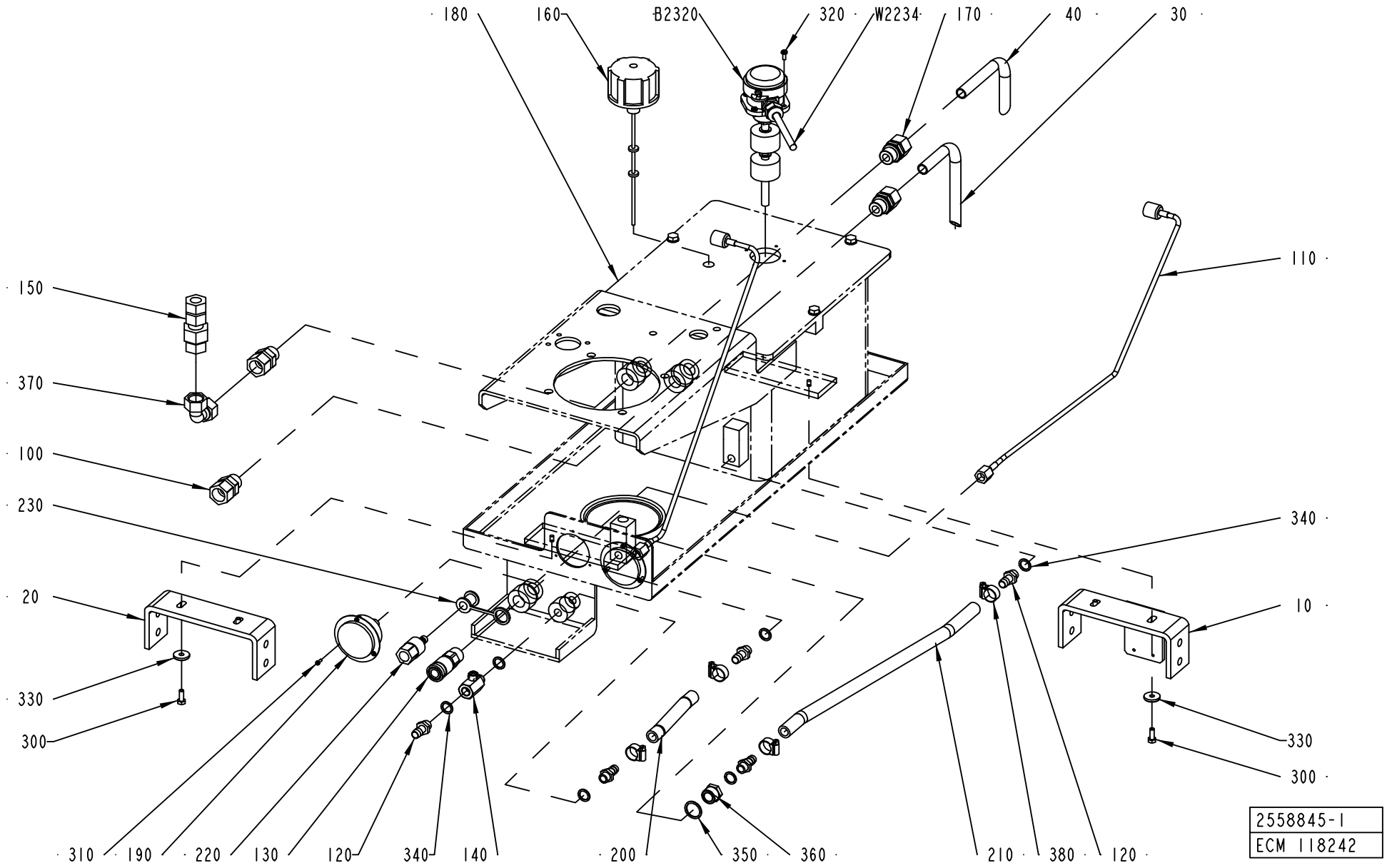
180
160
B2320
320
W2234
170
40
30
110
150
370
100
230
20
330
300
340
10
330
300
310
190
220
130
120
340
140
200
350
360
210
380
120
2558845-1
ECM 118242

ECM: 118242 - 20030403
Group number: 2558845-0100
Assembly Drawing: 2558845-1_1_AA

Pos	Part No	UN	Qty	Description	Page No
-					
010	2546490-0000		1	BRACKET	
020	2546492-0000		1	BRACKET	
030	2569036-0000		1	PIPE	
040	2569037-0000		1	PIPE	
100	90030-0567		2	CONN. STR., 15-R1/2, EXT. THREAD	
110	90148-0101		2	MEASURING HOSE,MINIMESS S110-AC-FA-0063	
120	90163-0052		5	HOSE NIPPLE, EXT.THR. 1/4-12 MM	
130	90163-0076		1	QUICK COUPLING, (F) LP-006-0-WR021	
140	90187-0158		1	THROTTLE BALL VALVE G1/4, R1/4	
150	90230-0023		1	NON RETURN VALVE	
160	90277-0086		1	AIR FILTER / ART NO BK 464125 (70)	
170	90457-0035		2	REDUCING UNIUN	
180	90459-1202		1	TANK AND COVER, A1-17324 + A3-16783	
190	90459-1223		2	PRESSURE GAUGE HYDRAULIC, 1184954.03-11	
200	90166-0121	MM	130	HOSE	
210	90166-0121	MM	440	HOSE	
220	90163-0064		1	QUICK COUPLING, (M) LP-006-2-WR517	
230	90163-0304		1	QUICK COUPLING, LP-006-5-74-KU (DUST CAP	
300	312105-0368		4	SCREW M6S ISO 4017 M6X16 A480	
310	312125-0222		6	SCREW ISO 1207 M3X8 A4	
320	312132-0289		4	SCREW SLOT. PAN HEAD MSCS M4X10	
330	315125-0153		4	WASHER TBRSB 6,4X22X4 A4	
340	315234-0110		6	WASHER,PL.RND.CU.13,5/18 H=1,5	
350	315234-0113		1	WASHER PL.RND.CU.21,3//26 H=1,5	
360	342701-0205		1	BUSHING,INT./EXT.G-THREAD G1/2"-G1/4"	
370	342744-0114		1	CONN. ELBOW ADJ.,INT 15	
380	342991-0102		4	HOSE CLIP,WORM DRIVE TYPE (16)-19	
B2320	90457-0019		1	LEVEL PROBE, HMFB-S=45-0=80-0=90-T70	
W2234	351150-0406	M	4	CABLE OLFLEX 7X0,75 MM2 LIGHT/GREY	

Pos	Part No	UN	Qty	Description	Page No

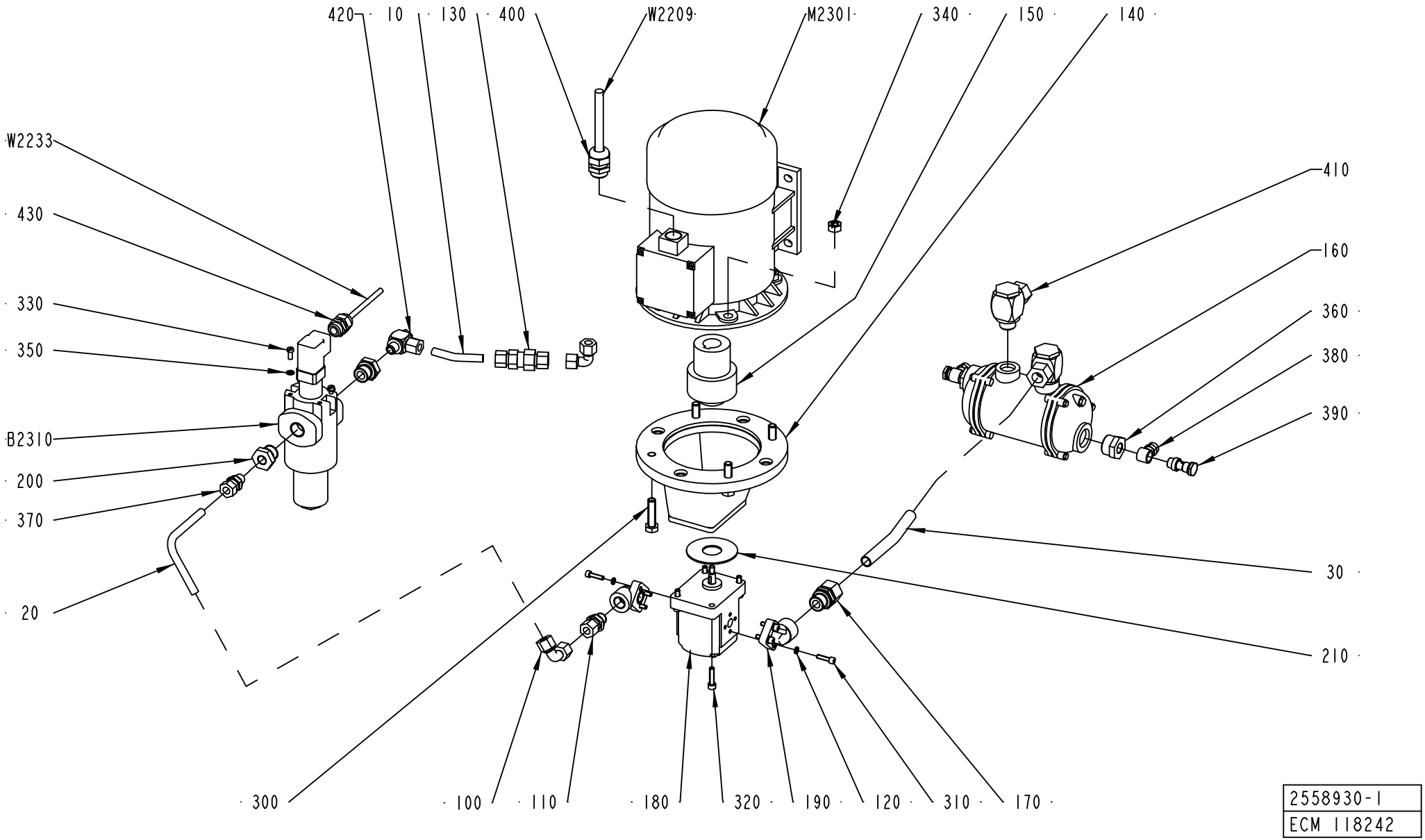
420
10
130
400
W2209
M2301
340
150
140
W2233
430
330
350
B2310
200
370
20
410
160
360
380
390
30
210
300
100
110
180
320
190
120
310
170
2558930-1
ECM 118242

ECM: 118242 - 20030403
Group number: 2558930-0100
Assembly Drawing: 2558930-1_1_AA

Pos	Part No	UN	Qty	Description	Page No
-					
010	2569035-0000		1	PIPE	
020	2569038-0000		1	PIPE	
030	2569039-0000		1	PIPE	
100	90030-0121		2	CONN. ELBOW ADJ.,INT 10	
110	90030-0157		1	CONN. STR. 10-R3/8, EXT. THREAD	
120	90062-0029		6	WASHER LOCK 5,1X 8,6, T= 1,5 DIN 7980	
130	90230-0017		1	NON RETURN VALVE RHD 10-L	
140	90321-0574		1	PUMP BRACKET LSE-201	
150	90321-0575		1	SHAFT COUPLING	
160	90422-0008		1	COOLER	
	315202-0612		*1*	*O-RING 75,80X3,53 MM*	
170	90457-0035		1	REDUCING UNIUN	
180	90457-0037		1	HYDR. PUMP TFP100 3/8-S-C001	
190	90457-0039		2	PUMP CONN. ELBOW FLANGE T-26/12-3/8	
200	90457-0043		2	BUSHING, INT/EXT. G-THREAD NO. 1/2-1/4	
210	90457-0046		1	WASHER PLAIN ROUND 25,4/67,5, H=2	
300	312109-0499		4	SCREW M6S ISO 4017 M10X40 A480	
310	312115-0331		6	SCREW ISO4762 M5X20 A4	
320	312115-0372		4	SCREW ISO4762 M6X25 A4	
330	312125-0327		3	SCREW ISO 1207 M5X12 A4	
340	312605-0320		4	HEXAGON NUT, M6M M10 A280	
350	315105-0146		3	WASHER BRB5,3X10RFR	
360	342701-0208		2	BUSHING, INT/EXT. G-THREAD NO. 3/4-1/4	
370	342752-0104		1	CONN. STR. GA-10-G1/4	
380	342980-0122		2	BANJO-CONNECTION,RING 8/6-G1/4"	
390	342980-0304		2	BANJO-HOLLOW BOLT COUPL,EXT.THR.01-G1/4"	
400	352103-0111		1	CABLE GLAND, ST 16, PR22,5/PG16	
410	342796-0114		2	CONN. BANJO,WH 15-G1/2	
420	342796-0108		1	CONN. BANJO,WH 10-G1/4	
430	352103-0106		1	CABLE GLAND, ST 11, PR18,6/PG11	
B2310	90459-1224		1	FILTER UNIT, MDF-BNHC-30-LB10-C1.0/B6	
M2301	90457-0036		1	3-PHASE MOTOR,FOOT MOUNT.1,1KW,1410 RPM	
W2209	351150-0418	M	4	CABLE OLFLEX 4X2,5 MM2 LIGHT/GREY	
W2233	351150-0403	M	4	CABLE OLFLEX 3X0,75 MM2 LIGHT/GREY	

Pos	Part No	UN	Qty	Description	Page No

Machine Type | Group Description | Used-In | Group Number | Page No

HYDRAULIC VALVE

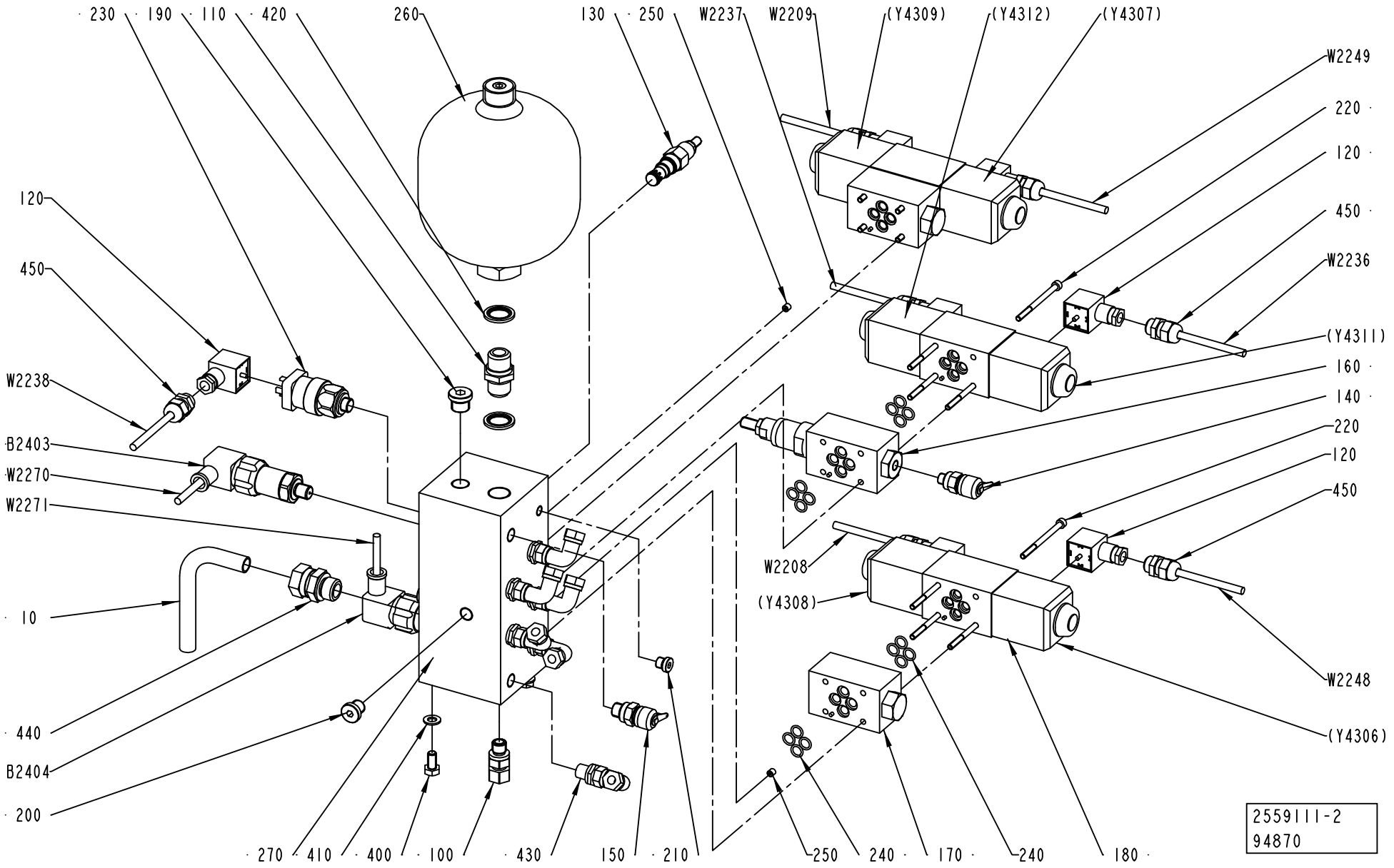

ECM: 106937 - 50001231
Group number: 2559111-0200
Assembly Drawing: 2559111-2_1_AA

Pos	Part No	UN	Qty	Description	Page No
-					
010	2569034-0000		1	PIPE	
100	90030-0178		1	CONN. STR., 10-R1/4, EXT. THREAD	
110	90030-0340		1	NIPPLES, EXT. THREAD, HEXAGON, RA-G1/2A3	
120	90110-0095		7	CONNECTOR 3 POLE + EARTH	
130	90201-0131		1	VALVE	
140	90201-0132		1	VALVE	
150	90201-0133		1	VALVE	
160	90201-0135		1	PRESSURE REDUCING VALVE	
170	90201-0136		2	DIRECT CHECK VALVE, NO. DGMDC-3-Y-PK-41	
180	90459-1690		3	DIRECTIONAL VALVE, DG4V-3-6C-MUH-7-60-EN	
190	90201-0448		1	PLUG	
200	90201-0449		4	PLUG	
210	90201-0450		1	PLUG	
220	90201-0456		12	BOLT KIT, NO. BK 464125M	
230	90274-0124		1	PRESSURE SWITCH	
240	90457-0134		24	O-RING	
250	90457-0177		2	FLOW-RESTRICTOR, 2,0 MM, M6	
260	90459-4032		1	HYDR.ACC., SBO-210-1.4E1/112U-210AK	
270	90459-1227		1	MANIFOLD BLOCK, A1-17351	
400	312105-0449		2	SCREW M6S ISO 4017 M8X16 A480	
410	315105-0165		2	WASHER BRB8,4X16RFR	
420	315211-0111		2	BONDED SEAL SS/NBR90 G1/2	
430	342738-0208		6	ADJUSTABLE ELBOW CONNECTION,EXT 8-G1/4	
440	342752-0114		1	CONN. STR. GA-15-G1/2	
450	352103-0101		7	CABLE GLAND, ST 9, PR15,2/PG9	
B2403	90459-1038		1	PRESSURE TRANSMITTER, 250BAR	
B2404	90459-1038		1	PRESSURE TRANSMITTER, 250BAR	
W2208	351150-0403	M	4	CABLE OLFLEX 3X0,75 MM2 LIGHT/GREY	
W2209	351150-0403	M	4	CABLE OLFLEX 3X0,75 MM2 LIGHT/GREY	
W2236	351150-0403	M	4	CABLE OLFLEX 3X0,75 MM2 LIGHT/GREY	
W2237	351150-0403	M	4	CABLE OLFLEX 3X0,75 MM2 LIGHT/GREY	
W2238	351150-0403	M	4	CABLE OLFLEX 3X0,75 MM2 LIGHT/GREY	
W2248	351150-0403	M	4	CABLE OLFLEX 3X0,75 MM2 LIGHT/GREY	
W2249	351150-0403	M	4	CABLE OLFLEX 3X0,75 MM2 LIGHT/GREY	
W2270	90220-0091	M	4	PAIR TWISTED CABLE 2X2X0,25MM2	
W2271	90220-0091	M	4	PAIR TWISTED CABLE 2X2X0,25MM2	

Pos	Part No	UN	Qty	Description	Page No

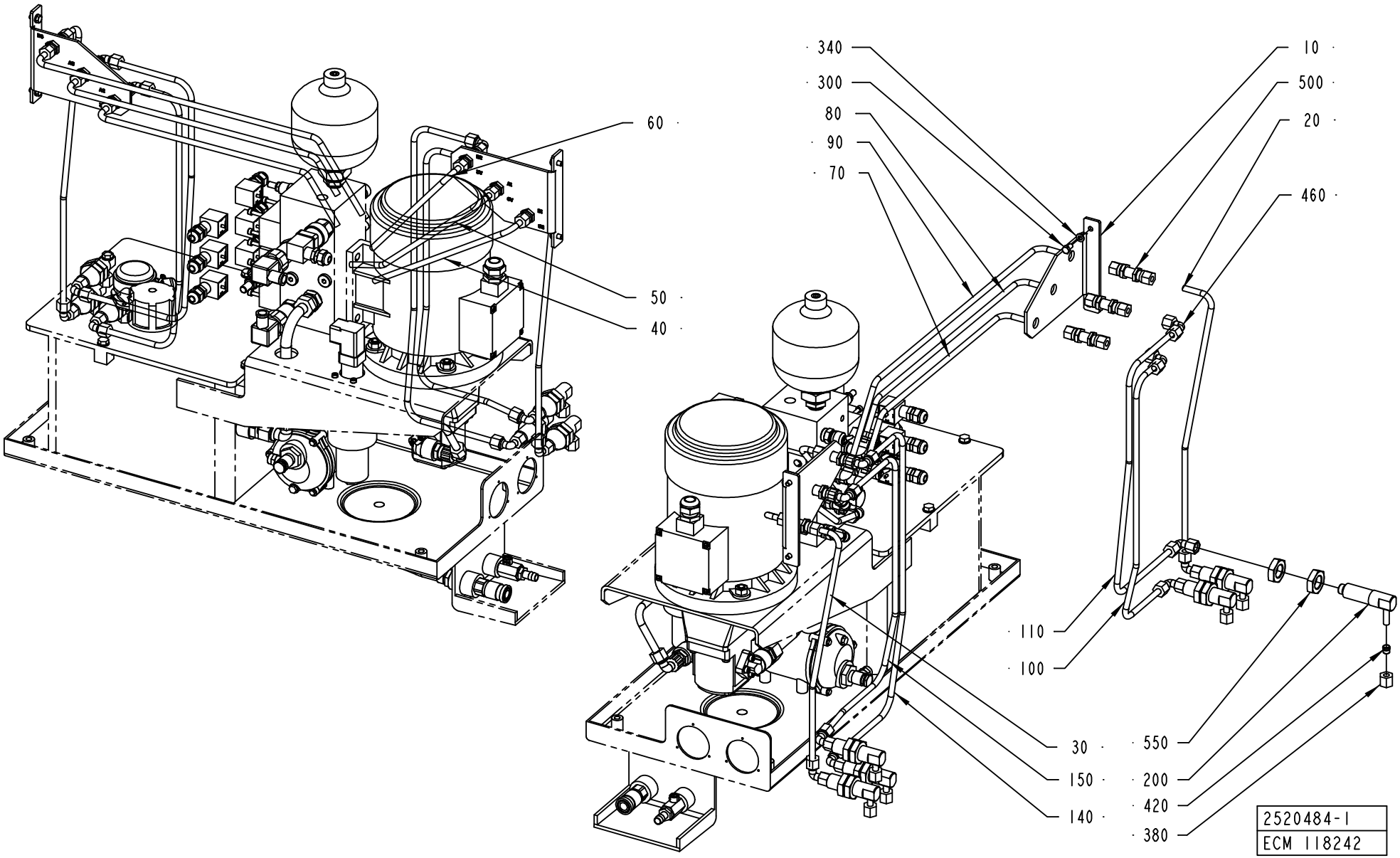
340
300
80
90
70
60
50
40
10
500
20
460
110
100
30
150
140
550
200
420
380
2520484-1
ECM 118242

ECM: 118242 - 20030403
Group number: 2520484-0100
Assembly Drawing: 2520484-1_1_AA

Pos	Part No	UN	Qty	Description	Page No
-					
010	2527525-0000		2	BRACKET	
020	2559310-0000		1	HYDRAULIC PIPE	
030	2559311-0000		1	HYDRAULIC PIPE	
040	2531238-0000		1	HYDRAULIC PIPE	
050	2531237-0000		1	HYDRAULIC PIPE	
060	2531236-0000		1	HYDRAULIC PIPE	
070	2531235-0000		1	HYDRAULIC PIPE	
080	2531234-0000		1	HYDRAULIC PIPE	
090	2531233-0000		1	HYDRAULIC PIPE	
100	2529178-0000		1	HYDRAULIC PIPE	
110	2529179-0000		1	HYDRAULIC PIPE	
140	2529182-0000		1	HYDRAULIC PIPE	
150	2529183-0000		1	HYDRAULIC PIPE	
200	540718-0000		6	ELBOW PIPE JOINT	
300	312105-0366		4	SCREW M6S ISO 4017 M6X12 A480	
340	315105-0153		4	WASHER BRB6,4X12RFR	
380	342703-0208		6	NUT, PIPES & CONNECTORS,NUT M-8 SS	
420	90030-0098		6	ACCESSORIES, FERRULE 8	
460	342738-0208		10	ADJUSTABLE ELBOW CONNECTION,EXT 8-G1/4	
500	90030-0067		6	CONN. BULKHEAD SV 8-L/SY	
550	90330-0093		12	NUT, HEXAGON, G1/2	

Pos	Part No	UN	Qty	Description	Page No

Machine Type | Group Description | Used-In | Group Number | Page No

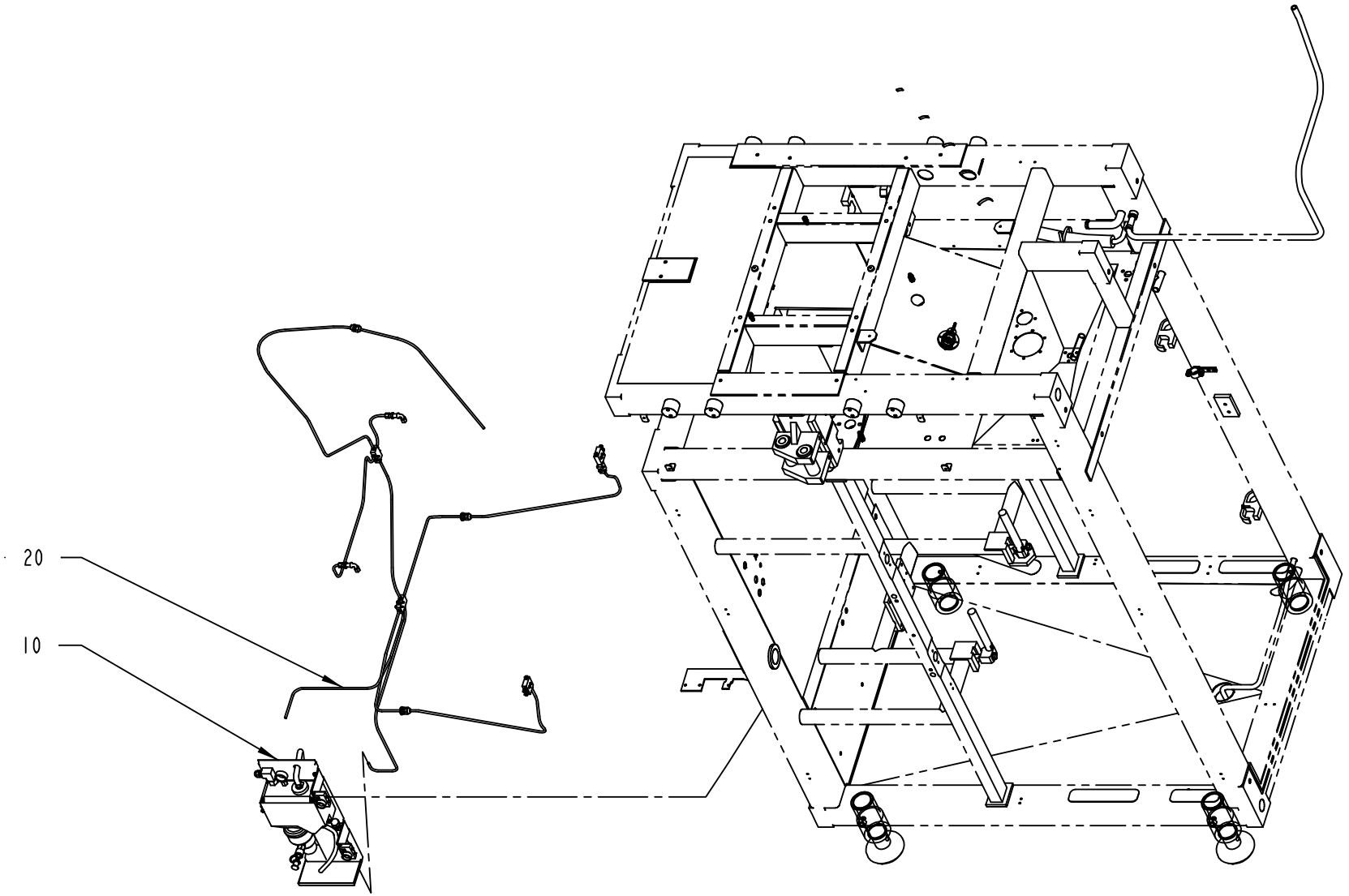

2529167-1
ECM 118242

ECM: 118242 - 20030403
Group number: 2529167-0100
Assembly Drawing: 2529167-1_1_AA

Pos	Part No	UN	Qty	Description	Page No
-					
010	2506776-0100		1	CENTRAL LUBRICATION	**2-87**
020	2504789-0100		1	LUBRICATION UNIT	**2-89**

Pos	Part No	UN	Qty	Description	Page No

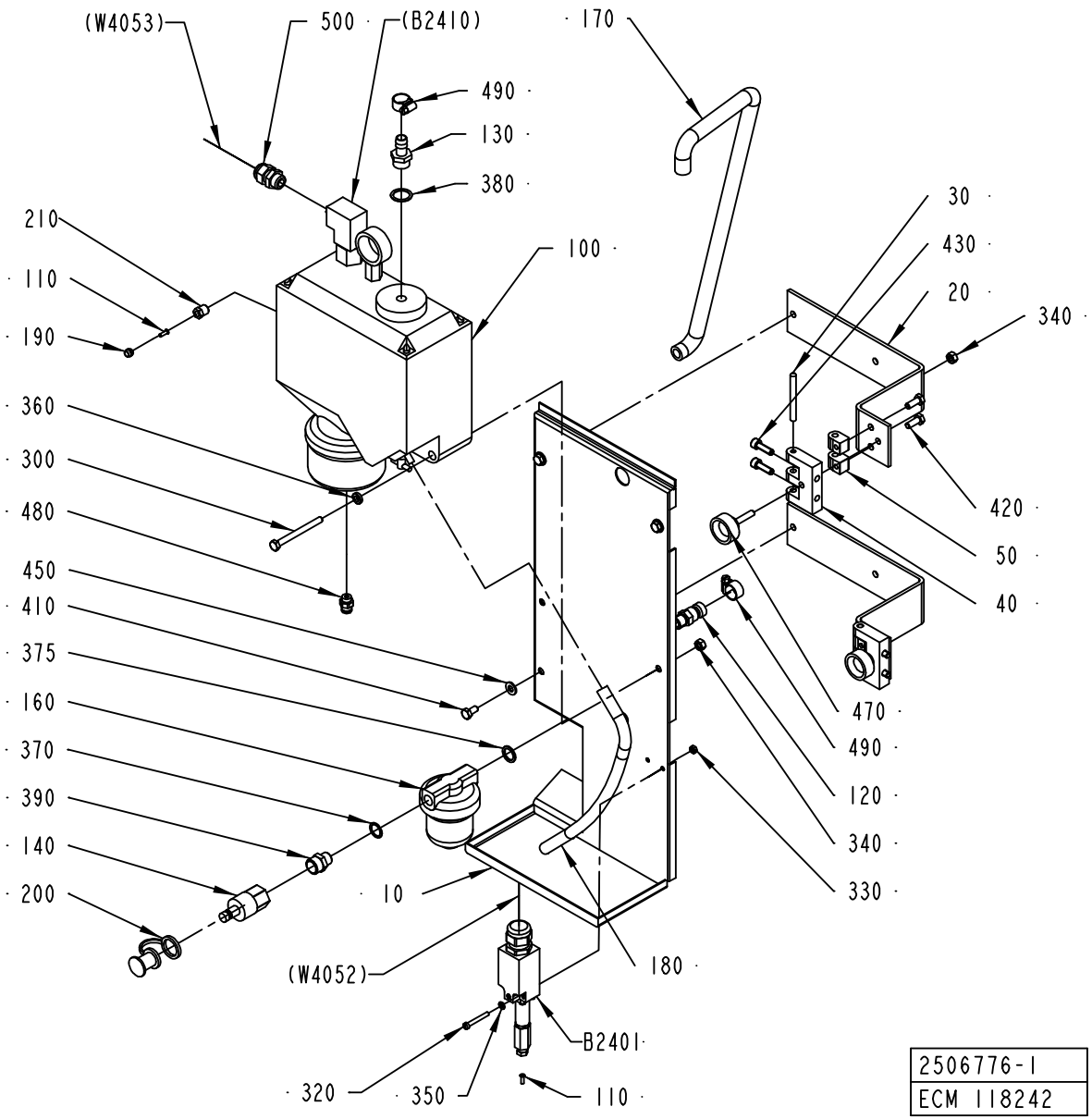
(W4053)
500
(B2410)
170
490
130
380
210
110
190
100
30
430
20
340
360
300
480
420
50
40
450
410
375
160
370
390
140
200
470
490
120
340
330
10
180
(W4052)
B2401
320
350
110
2506776-1
ECM 118242

ECM: 118242 - 20030403
Group number: 2506776-0100
Assembly Drawing: 2506776-1_1_AA

Pos	Part No	UN	Qty	Description	Page No
-					
010	2506928-0000		1	MOUNTING SHEET	
020	2506777-0000		2	BRACKET	
030	988685-0000		2	PIN	
040	2506927-0000		2	HINGE	
050	2506929-0000		4	BLOCKING PIECE	
100	90048-0037		1	OIL PUMP INCL. CONTAINER 1,5 L	
110	90134-0030		2	SLEEVE FOR PLASTIC TUBE	
120	90163-0014		1	QUICK COUPLING, (M) LP-006-1-WR013	
130	90163-0041		1	HOSE NIPPLE, EXT.THR. 3/8-12 MM	
140	90163-0064		1	QUICK COUPLING, (M) LP-006-2-WR517	
160	90415-0033		1	OIL FILTER REFILLING UC-HP-1229-25	
	90415-0330		*1*	*FILTER INSERT ARTNO HR-1229-25UCC*	
170	90166-0113	MM	650	HOSE	
180	90166-0195	MM	300	TUBE 12 MM PA BLUE	
190	90028-0022		1	CONE TUBE 6 MM	
200	90163-0304		1	QUICK COUPLING, LP-006-5-74-KU (DUST CAP	
300	312105-0383		2	SCREW M6S ISO 4014 M6X65 A480	
320	312125-0299		2	SCREW ISO 1207 M4X30 A4	
330	312605-0312		2	HEXAGON NUT, M6M M4 A280	
340	312605-0316		6	HEXAGON NUT, M6M M6 A280	
350	315105-0136		2	WASHER BRB4,3XRFR	
360	315115-0153		2	WASHER PLAIN, TBRB 6,4/12 H=3	
370	315233-0110		1	WASHER CAPTIVE SEALING G1/4	
375	315237-0110		1	WASHER,PL.RND.AL.13,5/18,H=1,5	
380	315233-0111		1	WASHER CAPTIVE SEALING G3/8	
390	342700-0203		1	NIPPLES,HEXAGON,EXT.G-THREAD G3/8"-G1/4"	
410	312105-0366		4	SCREW M6S ISO 4017 M6X12 A480	
420	312105-0368		4	SCREW M6S ISO 4017 M6X16 A480	
430	312105-0370		4	SCREW M6S ISO 4017 M6X20 A480	
450	315105-0156		4	WASHER BRB 6.7X14 RFR	
470	90051-0084		2	KNOB, EXTERNAL THREAD. NO. 8308-1534	
480	342722-0202		1	PIPE COUPLING 1/8" D=6MM	
490	342991-0101		2	HOSE CLIP,WORM DRIVE TYPE (13)-16	
500	352103-0101		1	CABLE GLAND, ST 9, PR15,2/PG9	
B2401	90274-0084		1	PRESSURE GUARD, 1800 KPA	

Pos	Part No	UN	Qty	Description	Page No

Machine Type | Group Description | Used-In | Group Number | Page No

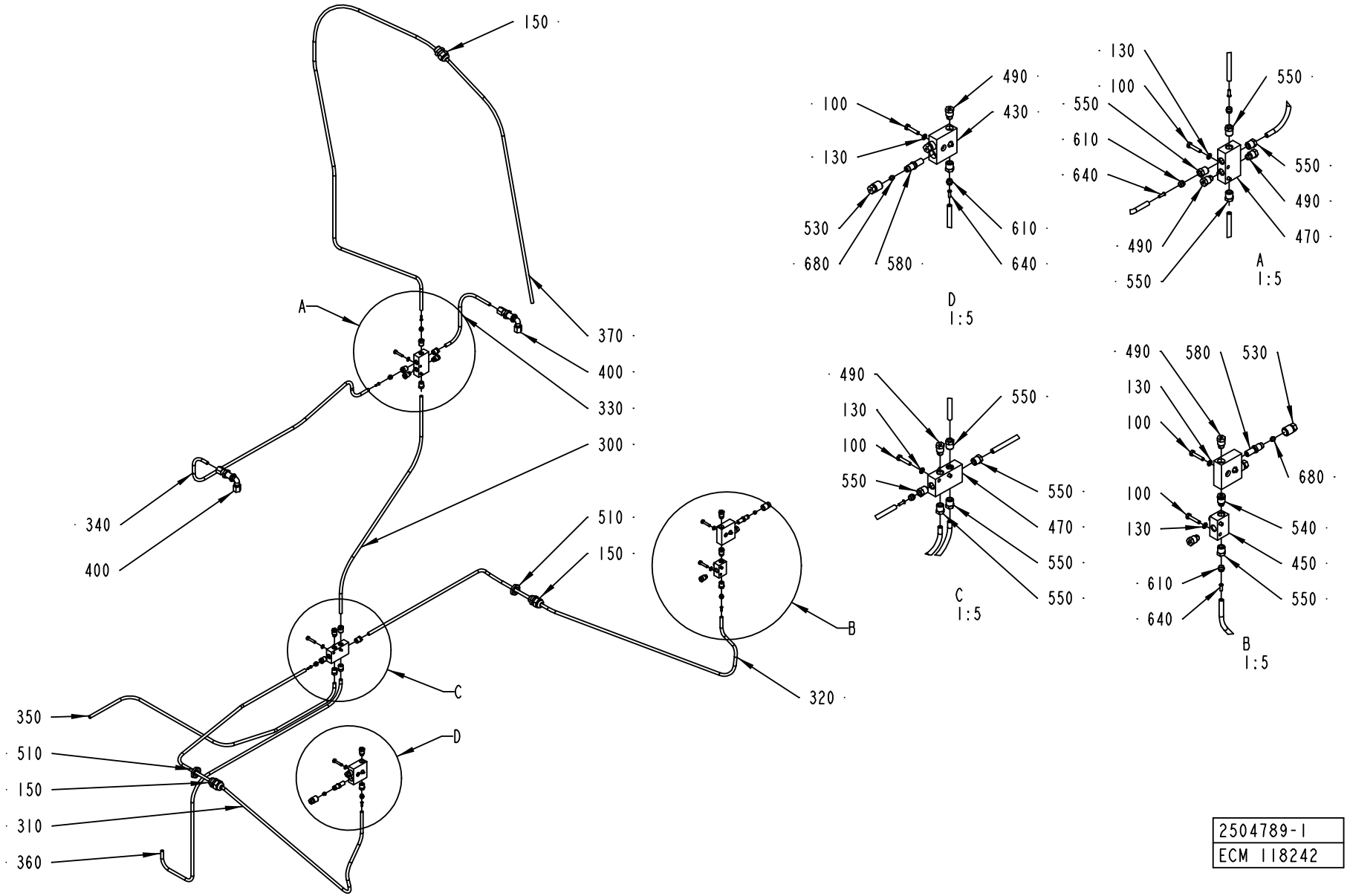

2504789-1
ECM 118242

ECM: 118242 - 20030403
Group number: 2504789-0100
Assembly Drawing: 2504789-1_1_AA

Pos	Part No	UN	Qty	Description	Page No
-					
100	312105-0295		10	SCREW M6S ISO4017 M4X20 A470	
130	315105-0136		10	WASHER BRB4,3XRFR	
150	352103-0101		3	CABLE GLAND, ST 9, PR15,2/PG9	
300	90166-0108	MM	550	TUBE 6 MM PA,TRANSP.	
310	90166-0108	MM	1700	TUBE 6 MM PA,TRANSP.	
320	90166-0108	MM	1100	TUBE 6 MM PA,TRANSP.	
330	90166-0108	MM	400	TUBE 6 MM PA,TRANSP.	
340	90166-0108	MM	1000	TUBE 6 MM PA,TRANSP.	
350	90166-0108	MM	1250	TUBE 6 MM PA,TRANSP.	
360	90166-0108	MM	1400	TUBE 6 MM PA,TRANSP.	
370	90166-0108	MM	2300	TUBE 6 MM PA,TRANSP.	
400	90030-0219		2	CONN. ELBOW BULKHEAD WSV 6	
430	90032-0038		2	BLOCK 2 WAYS	
450	90032-0043		1	DISTRIBUTION BLOCK 3 WAYS	
470	90032-0046		2	DISTRIBUTION BLOCK 6 WAYS	
490	90087-0019		5	PLUG M10X1 STAINLESS	
510	90099-0104		3	NUT, PR 15,2 (PG9)	
530	90134-0040		4	BUSHING VALVE CONNECTION 4 MM	
540	90134-0054		1	BLOCK CONNECTION M10X1	
550	90134-0055		12	BUSHING/NUT INLET/OUTLET 6 MM	
580	90032-0053		4	DISTR. BLOCK 1/4NPT, 1/8	
610	90028-0022		12	CONE TUBE 6 MM	
640	90134-0030		12	SLEEVE FOR PLASTIC TUBE	
680	90028-0021		4	CONE TUBE 4 MM	

Pos	Part No	UN	Qty	Description	Page No

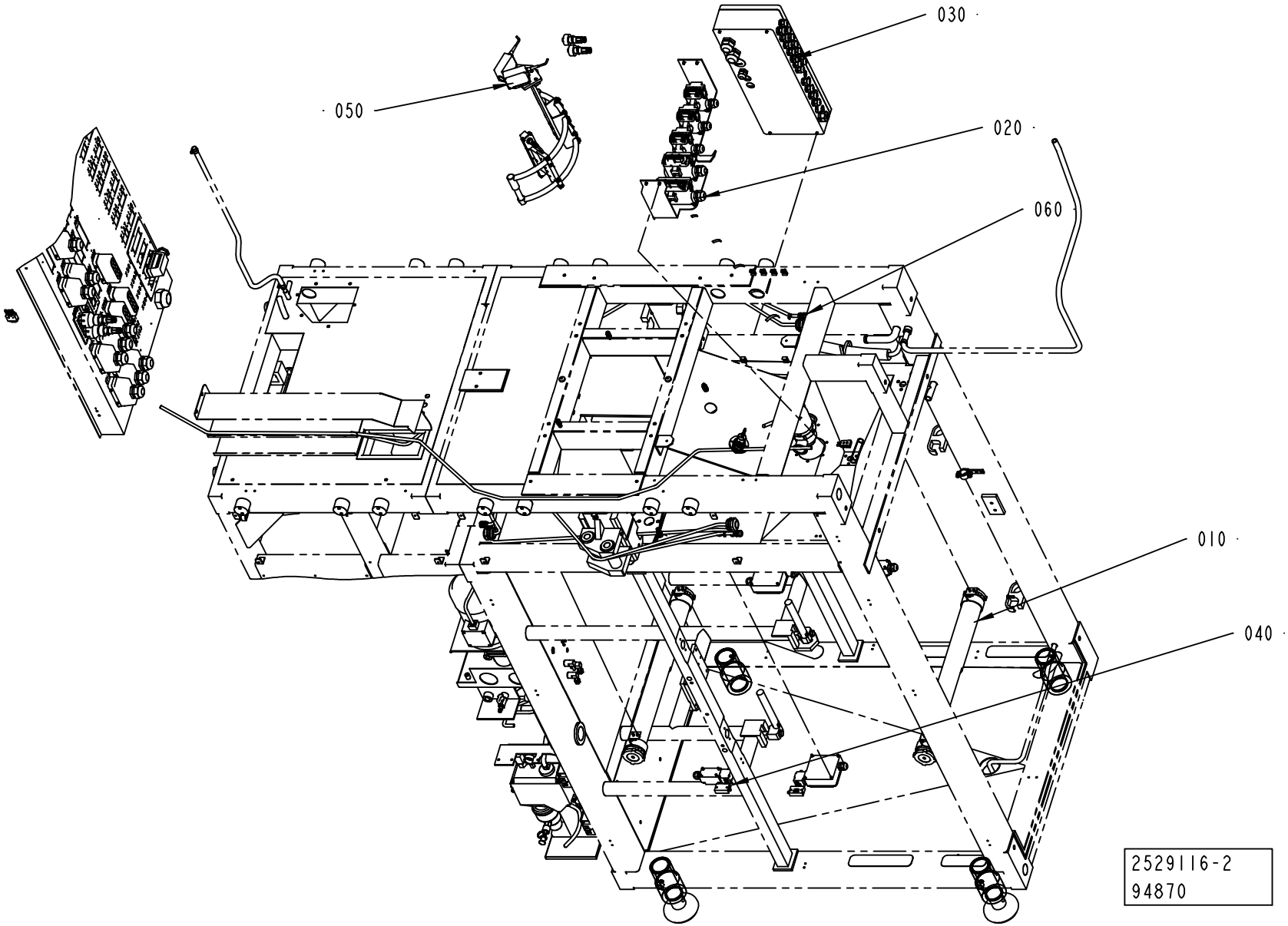
030
050
020
060
010
040
2529116-2
94870

ECM: 176613 - 50001231
Group number: 2529116-0100
Assembly Drawing: 2529116-2_1_AA

Pos	Part No	UN	Qty	Description	Page No
-					
010	2504790-0100		2	LIGHT FIXTURE	**2-93**
020	2506796-0100		1	CABLE CONNECTION	**2-95**
030	2527252-0100		1	CONNECTION BOX	**2-97**
040	2529117-0100		1	DOOR SAFETY SWITCH	**2-99**
050	1523216-0200		1	LEVEL CONTROL DEVICE	**2-101**
060	2529410-0100		1	CABLE HARNESS	**2-107, 2-109, 2-111**

Pos	Part No	UN	Qty	Description	Page No

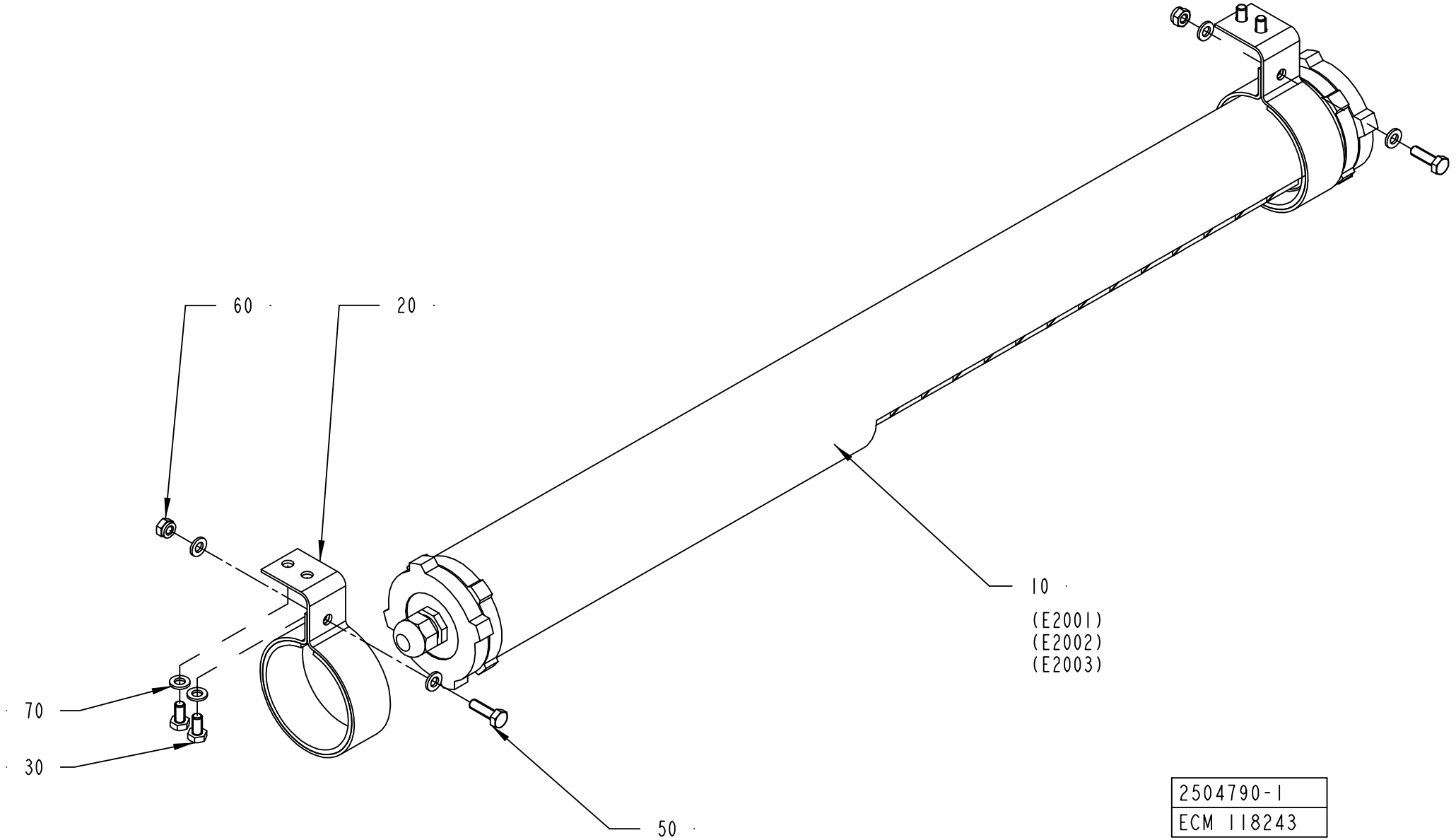
60
20
10
(E2001)
(E2002)
(E2003)
70
30
50
2504790-1
ECM 118243

ECM: 118243 - 20030403
Group number: 2504790-0100
Assembly Drawing: 2504790-1_1_AA

Pos	Part No	UN	Qty	Description	Page No
-					
010	90459-1000		1	LIGHT FIXTURE, RL 70CV-136	
020	1140129-0000		2	HOLDER	
030	312105-0366		4	SCREW M6S ISO 4017 M6X12 A480	
050	312105-0370		2	SCREW M6S ISO 4017 M6X20 A480	
060	312812-0316		2	HEXAGON NUT, NY-LOCK M6 A480	
070	315105-0153		8	WASHER BRB6,4X12RFR	

Pos	Part No	UN	Qty	Description	Page No

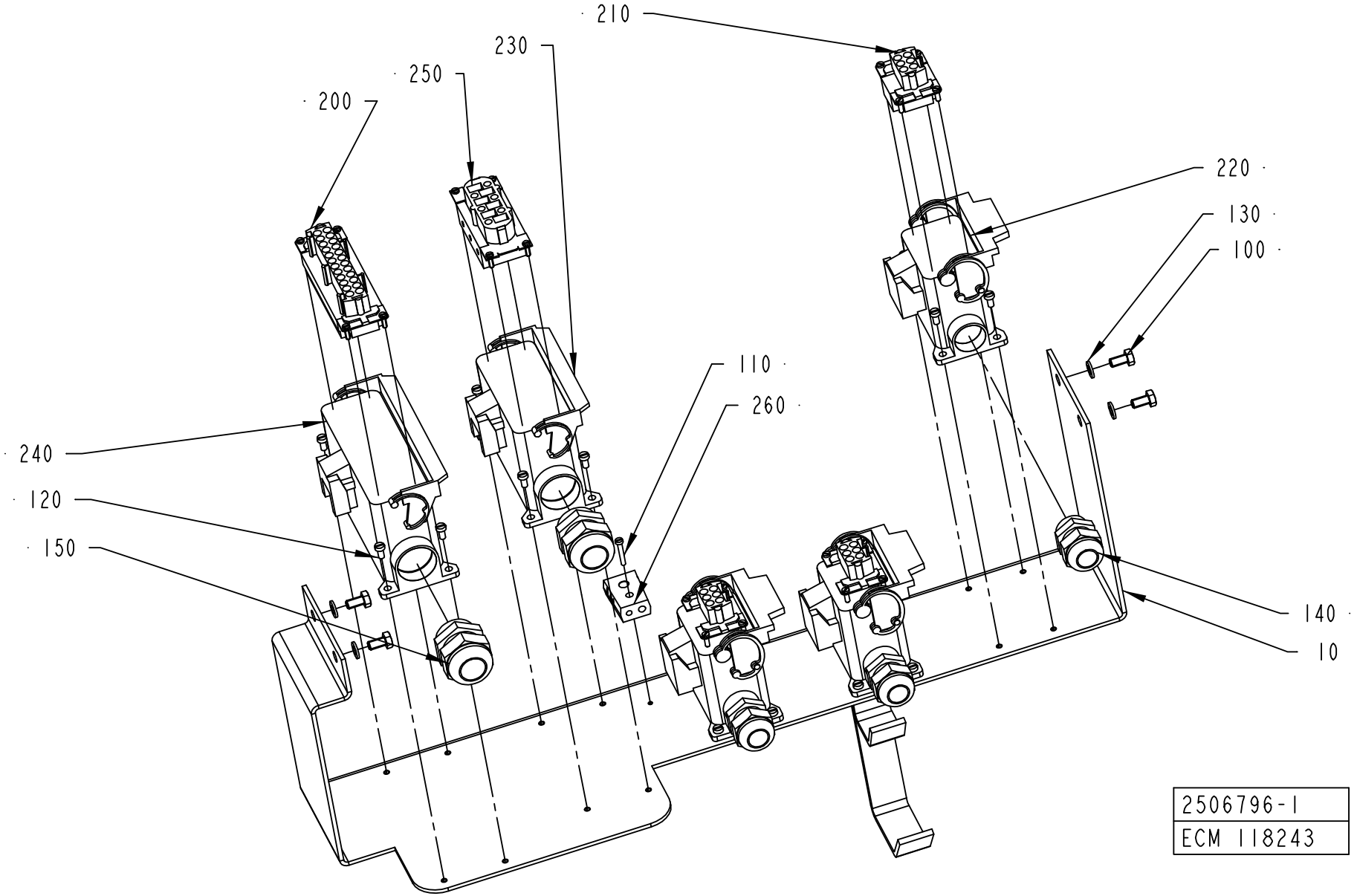
210
230
250
200
220
130
100
110
260
240
120
150
140
10
2506796-1
ECM 118243

ECM: 118243 - 20030403
Group number: 2506796-0100
Assembly Drawing: 2506796-1_1_AA

Pos	Part No	UN	Qty	Description	Page No
-					
010	2506920-0000		1	CANTILEVER	
100	312105-0366		4	SCREW M6S ISO 4017 M6X12 A480	
110	312125-0230		1	SCREW ISO 1207 M3X20 A4	
120	312125-0287		20	SCREW ISO 1207 M4X8 A4	
130	315105-0153		4	WASHER BRB6,4X12RFR	
140	352103-0111		3	CABLE GLAND, ST 16, PR22,5/PG16	
150	352103-0116		2	CABLE GLAND, ST 21, PR28,3/PG21	
200	90110-0151		1	FEMALE INSERT 24-POL 121130 0000	
210	90110-0163		3	FEMALE INSERT 70 300 0640 0	
220	90110-0221		3	CHASSIS HOUSING 310162-33	
230	90110-0224		1	CHASSIS HOUSING 310166-33	
240	90110-0225		1	CHASSIS HOUSING 310168-33	
250	90110-0247		1	FEMALE INSERT 70.200.0653.0	
260	90326-0020		1	PLUG, FEMALE YELLOW CR-AL	

Pos	Part No	UN	Qty	Description	Page No

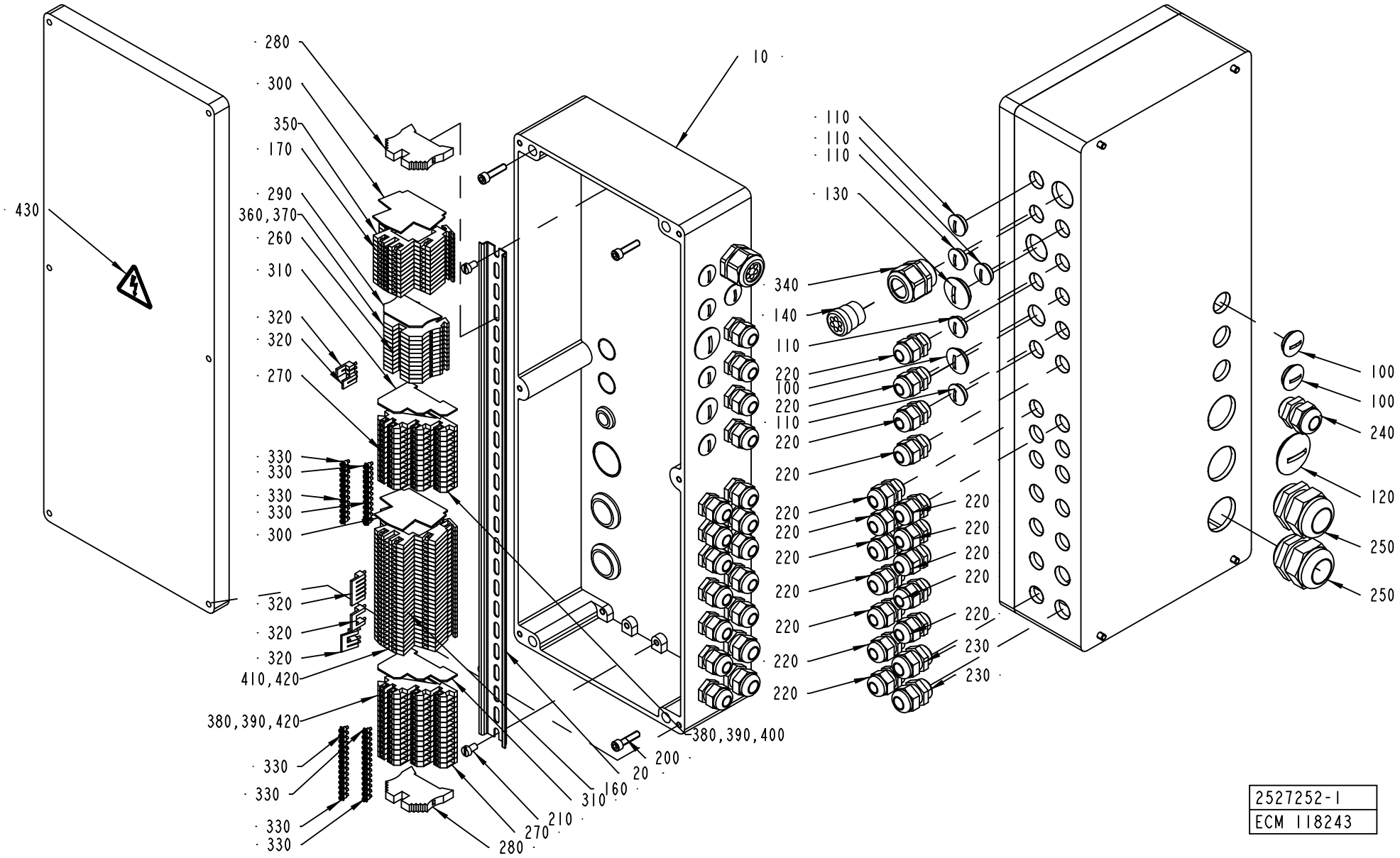
430
280
300
350
170
290
360,370
260
310
320
320
270
330
330
330
330
300
320
320
320
410,420
380,390,420
330
330
330
330
10
110
110
110
130
340
140
110
220
100
220
110
220
220
220
220
220
220
220
220
220
220
220
220
220
220
220
220
220
230
230
100
100
240
120
250
250
380,390,400
200
20
160
310
210
270
280
2527252-1
ECM 118243

ECM: 146928 - 20040301
Group number: 2527252-0100
Assembly Drawing: 2527252-1_1_AA

Pos	Part No	UN	Qty	Description	Page No
A3/FLEX					
100	90002-0004		3	BLANK-OFF PLUG, PR 22,5 SKINDICHT-BLK16	
110	90002-0009		5	BLANK-OFF PLUG, PR 18.6 SKINDICHT-BLK11	
200	312115-0372		4	SCREW ISO4762 M6X25 A4	
220	352103-0106		16	CABLE GLAND, ST 11, PR18,6/PG11	
240	352103-0110		1	CABLE GLAND, STR 16, PR22,5/PG16	
250	352103-0121		2	CABLE GLAND, ST 29, PR37,0/PG29	
270	353021-0301		26	TERMINALS,TRIPLE-LEVEL, DLI 2,5/35 PA	
400	359011-0811		2	MARKING PLATES 5-FW 201-250	
Common Parts					
010	2537111-0000		1	CONNECTION BOX	
020	1347878-0000		1	RAIL	
120	90002-0010		1	BLANK-OFF PLUG, PR 37 SKINDICHT-BLK29	
130	90002-0012		1	BLANK-OFF PLUG, PR 28,3 SKINDICHT-BLK21	
140	90012-0125		1	GLAND FITTING	
160	90077-0113		26	FEED THROUGH TERMINAL, 10-00102150-1	
170	90458-1136		11	TERMINAL BLOCK, 103630	
210	312121-0364		2	SCREW ISO 1207 M6X10 4.8 - 5.8 Z.PL.	
230	352103-0108		2	CABLE GLAND, ST 13,5 , PR20,4/PG13,5	
260	353021-0212		11	FEED THROUGH TERMINAL, 10200.0	
280	353031-0203		2	END SUPPORT, WEW 35/2	
290	353032-0004		1	END PLATE WAP 2,5-10 BEIGE	
300	353032-0009		2	END PLATE, WAP FOR WDK	
310	353032-0301		2	END PLATE WAP, 13132.6	
320	353034-0030		4	BRIDGE CONNECTOR WQV 2,5/10, 10544.6	
330	353034-0404		8	BRIDGE CONNECTOR Q10, 13131.0	
340	353240-0005		1	GLAND W/O INSERT PG21 NORMAL	
350	359011-0834		1	SET OF SIGNS 6-GW(EARTH)	
360	359011-0807		1	MARKING PLATES 5-FW 1-50	
370	359011-0807		1	MARKING PLATES 5-FW 1-50	
380	359011-0817		1	SYMBOL 5-GW (+) 50PC	
390	359011-0818		1	SYMBOL 5-GW (-) 50PC	
410	359011-0824		2	SET OF SIGNS 6-FW 151-200	
420	359012-0800		2	TERMINAL MARKING LAB. KIT, BSFW, 101-15	
430	359705-0015		1	WARNING SIGN ISO, RISK OF ELECTRIC SHOCK	

Pos	Part No	UN	Qty	Description	Page No

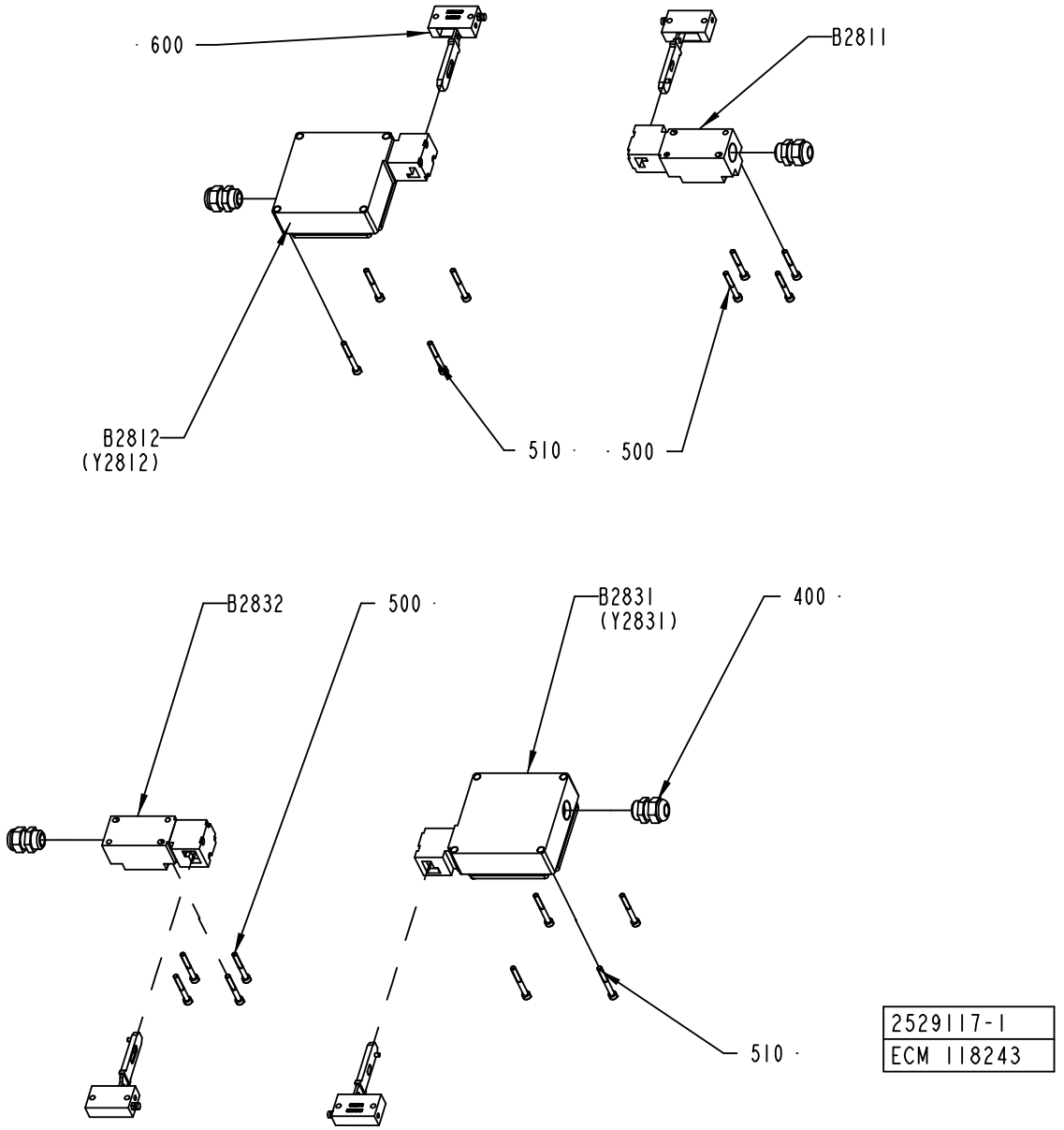

2529117-1
ECM 118243

ECM: 139109 - 20030711
Group number: 2529117-0100
Assembly Drawing: 2529117-1_1_AA

Pos	Part No	UN	Qty	Description	Page No
-					
400	352103-0108		4	CABLE GLAND, ST 13,5 , PR20,4/PG13,5	
500	312115-0339		8	SCREW ISO4762 M5X40 A4	
510	312115-0340		8	SCREW ISO4762 M5X45 A4	
600	90457-0194		4	KEY FOR SAF.SW.048850-C2052	
B2811	90044-0204		1	KEY SAF.SW. NZIVZ-538-E	
B2812	90457-0196		1	KEY SAF.SW. TZ2RE024PG RC1635	
B2831	90457-0196		1	KEY SAF.SW. TZ2RE024PG RC1635	
B2832	90044-0204		1	KEY SAF.SW. NZIVZ-538-E	

Pos	Part No	UN	Qty	Description	Page No

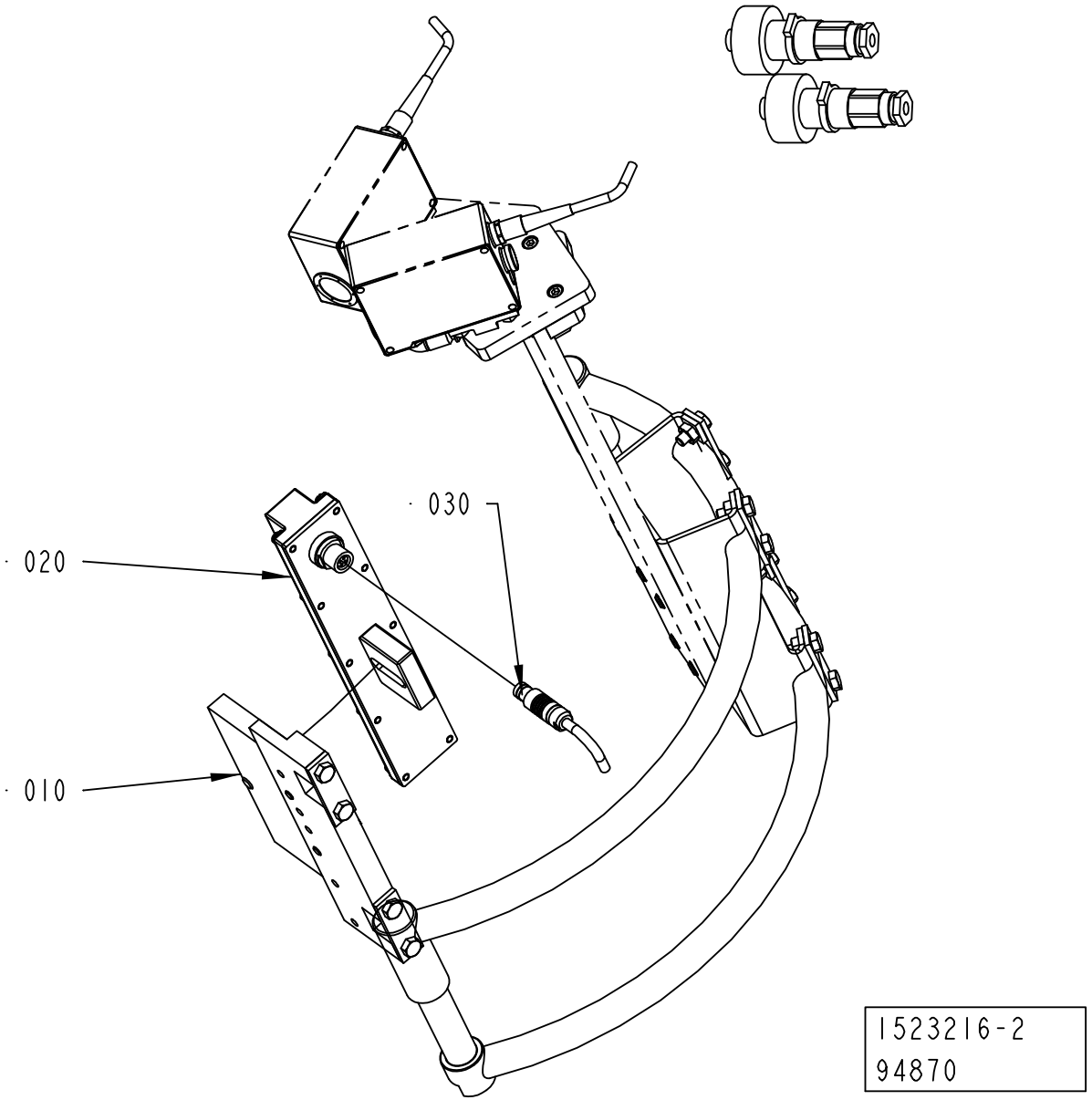
· 020
· 030
· 010
1523216-2
94870

ECM: 106935 - 50001231
Group number: 1523216-0200
Assembly Drawing: 1523216-2_1_AA

Pos	Part No	UN	Qty	Description	Page No
-					
010	1487338-0100		1	SUPPORT LEVEL DETECTOR	**2-103, 2-105**
020	2697704-0000		1	LEVEL PROBE	
030	90459-4705		1	LOCKING DEVICE	

Pos	Part No	UN	Qty	Description	Page No

SUPPORT LEVEL DETECTOR

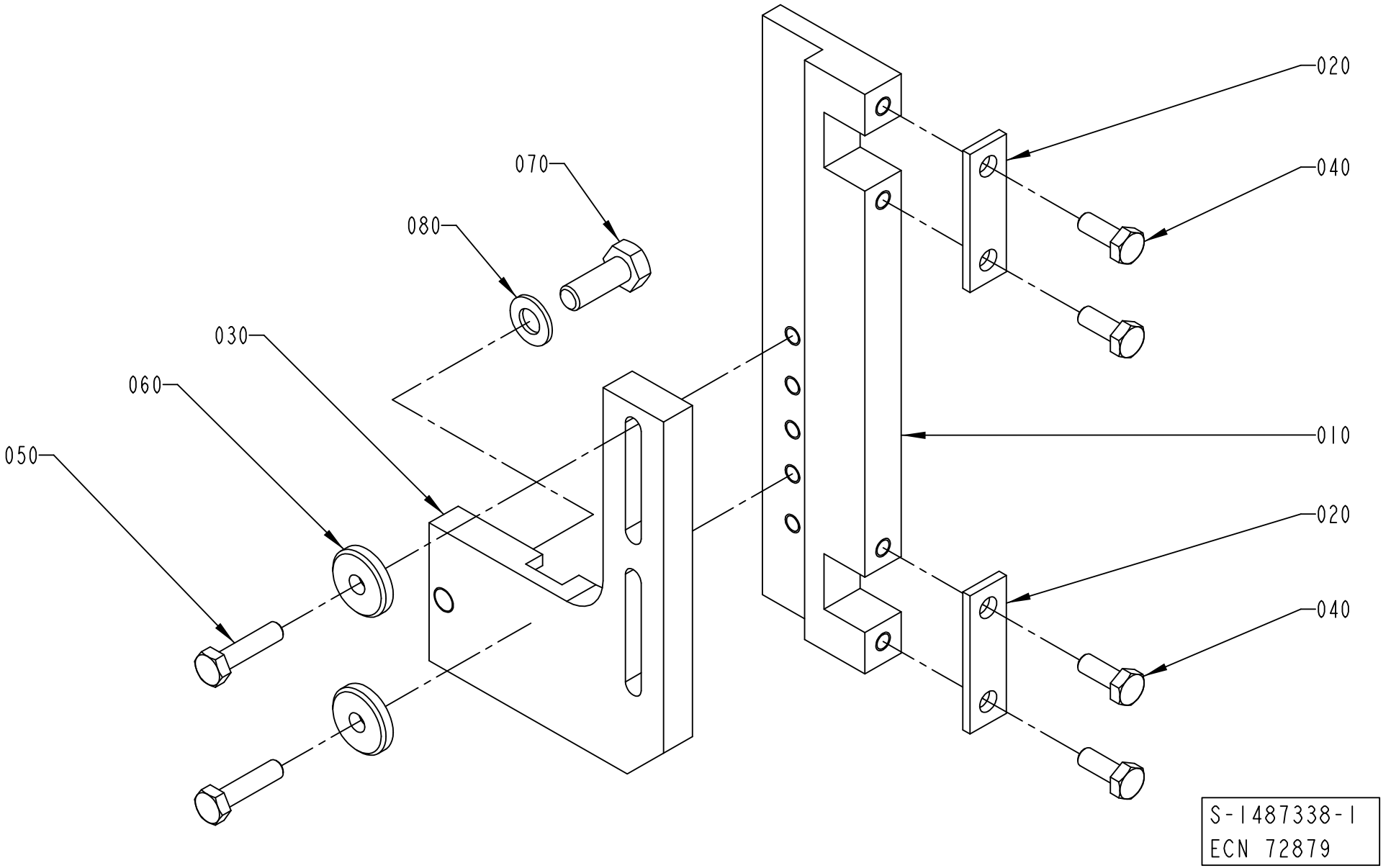

ECM: 173060 - 50001231
Group number: 1487338-0100
Assembly Drawing: 1487338-1_1_AB

This list covers pages from 2-102 to 2-105

Pos	Part No	UN	Qty	Description	Page No
TBA 0330S, TBA 0200B, TBA 0200S, TBA 0250B (See drawing on page: 2-102)					
010	1317476-0000		1	BRACKET	
030	1348359-0000		1	BRACKET	
TBA 0500B, TBA 1000S, TBA 1000SQ, TBA 1000B, TBA 1500S, TPA 1000SQ (See drawing on page: 2-104)					
010	1317476-0000		1	BRACKET	
030	1317475-0000		1	BRACKET	
TBA 1890S, TBA 2000S (See drawing on page: 2-104)					
010	2650813-0000		1	BRACKET	
030	2656899-0000		1	BRACKET	
Common Parts					
020	1036673-0000		2	WASHER	
040	312105-0368		4	SCREW M6S ISO 4017 M6X16 A480	
050	312105-0372		2	SCREW M6S ISO 4017 M6X25 A480	
060	315125-0153		2	WASHER TBRSB 6,4X22X4 A4	
070	312105-0452		1	SCREW M6S ISO 4017 M8X22 A4 80	
080	315105-0165		1	WASHER BRB8,4X16RFR	

Pos	Part No	UN	Qty	Description	Page No

SUPPORT LEVEL DETECTOR

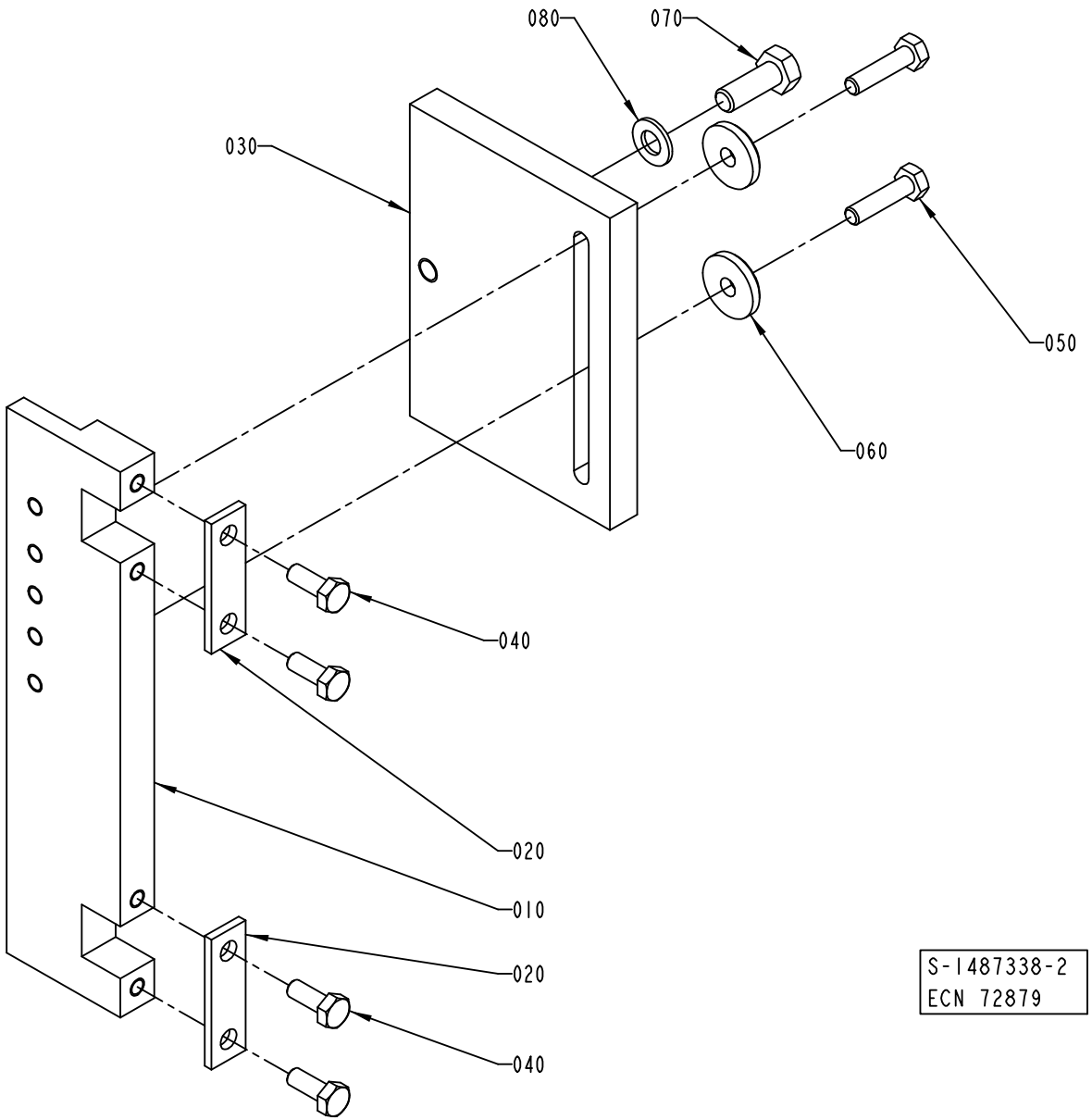

ECM: 173060 - 50001231
Group number: 1487338-0100
Assembly Drawing: 1487338-2_1_AB

This list covers pages from 2-102 to 2-105

Pos	Part No	UN	Qty	Description	Page No
TBA 0330S, TBA 0200B, TBA 0200S, TBA 0250B (See drawing on page: 2-102)					
010	1317476-0000		1	BRACKET	
030	1348359-0000		1	BRACKET	
TBA 0500B, TBA 1000S, TBA 1000SQ, TBA 1000B, TBA 1500S, TPA 1000SQ (See drawing on page: 2-104)					
010	1317476-0000		1	BRACKET	
030	1317475-0000		1	BRACKET	
TBA 1890S, TBA 2000S (See drawing on page: 2-104)					
010	2650813-0000		1	BRACKET	
030	2656899-0000		1	BRACKET	
Common Parts					
020	1036673-0000		2	WASHER	
040	312105-0368		4	SCREW M6S ISO 4017 M6X16 A480	
050	312105-0372		2	SCREW M6S ISO 4017 M6X25 A480	
060	315125-0153		2	WASHER TBRSB 6,4X22X4 A4	
070	312105-0452		1	SCREW M6S ISO 4017 M8X22 A4 80	
080	315105-0165		1	WASHER BRB8,4X16RFR	

Pos	Part No	UN	Qty	Description	Page No

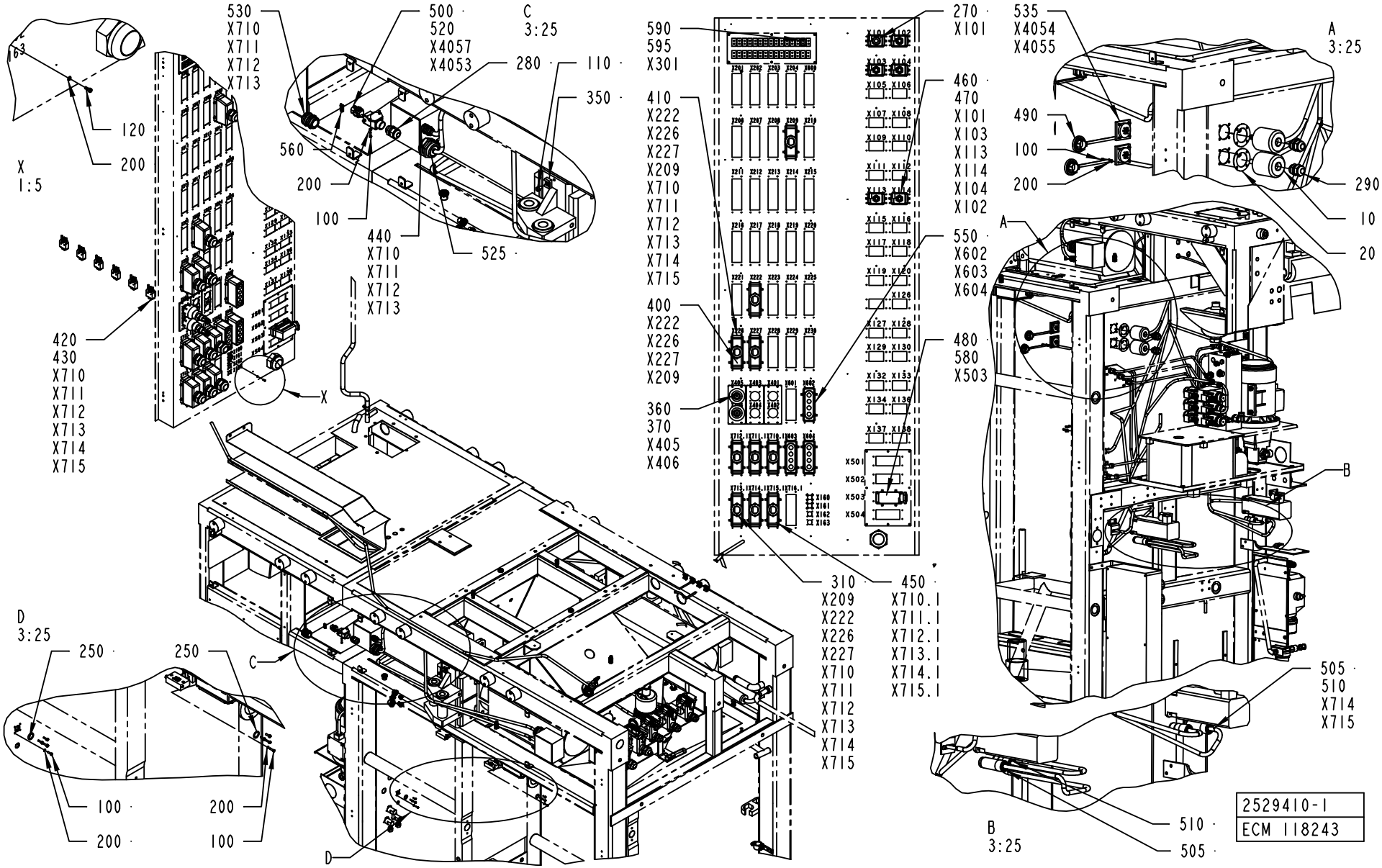
530
X710
X711
X712
X713
500
520
X4057
X4053
C
3:25
280
110
350
560
200
100
440
X710
X711
X712
X713
525
590
595
X301
410
X222
X226
X227
X209
X710
X711
X712
X713
X714
X715
400
X222
X226
X227
X209
360
370
X405
X406
270
X101
460
470
X101
X103
X113
X114
X104
X102
550
X602
X603
X604
480
580
X503
535
X4054
X4055
A
3:25
490
100
200
290
10
20
120
200
X
1:5
420
430
X710
X711
X712
X713
X714
X715
X
A
B
310
X209
X222
X226
X227
X710
X711
X712
X713
X714
X715
450
X710.1
X711.1
X712.1
X713.1
X714.1
X715.1
505
510
X714
X715
D
3:25
250
250
C
100
200
200
100
D
510
505
B
3:25
2529410-1
ECM 118243

ECM: 133336 - 20030922
Group number: 2529410-0100
Assembly Drawing: 2529410-1_1_AA

This list covers pages from 2-106 to 2-111

Pos	Part No	UN	Qty	Description	Page No
-					
010	1037673-0000		2	SLEEVE	
020	2529498-0000		2	GASKET	
100	312125-0226		20	SCREW ISO 1207 M3X12 A4	
110	312125-0364		17	SCREW ISO 1207 M6X10 A4	
120	312115-0222		8	SCREW ISO4762 M3X8 A4	
200	315105-0124		28	WASHER BRB3,2X6RFR	
250	315202-0211		2	O-RING 13,3X2,4 MM	
270	352103-0110		1	CABLE GLAND, STR 16, PR22,5/PG16	
280	352103-0106		2	CABLE GLAND, ST 11, PR18,6/PG11	
290	352103-0108		8	CABLE GLAND, ST 13,5 , PR20,4/PG13,5	
300	352103-0120		6	CABLE GLAND, STR 29, PR37,0/PG29	
310	352103-0121		10	CABLE GLAND, ST 29, PR37,0/PG29	
350	352113-0204		17	ANCHOR PLATES FOR STRIPS, TYPE TM3S25-M	
360	90110-0235		2	CABLE CONTACT, PX0739/S	
370	90110-0348		2	CABLE SEALING, 12033/I, ELFA. 44-625-78	
400	90110-0150		4	MALE INSERT 121110 0000	
410	90110-0152		10	CABLE HOOD 24-POL 70.352.2428.1	
420	90110-0141		6	CONTACT UNIT, DE09P064TX	
430	90110-0144		6	COVER	
440	90100-0052		4	CONNECTOR KIT, FEEDBACK CABLE DRIVE END	
450	90110-0517		6	MALE PLUG	
460	90110-0157		6	CABLE HOOD 6-POL 70.352.0628.1	
470	90110-0159		6	MALE INSERT 70.310.0640.0	
480	90110-0156		1	MALE INSERT 70.210.0653.0	
490	90110-0349		2	COOVER/TOOL PX 0733	
500	90110-0296		2	CONTACT SCREW	
505	90458-0758		2	CONN.KIT MOTOR END WINDING C38/39/40	
510	90458-0759		2	CONN.KIT MOTOR END FEEDBACK C38/C39/C40	
520	90110-0370		2	BASE HOUSING	
525	90458-0757		4	MOTOR END STRAIN RELIEF HPG29 13 20MM	
530	90100-0045		8	CABLE GLAND, MOTOR END 9032 010 806	
535	90110-0236		2	CHASSIS CONTACT PX0767/S	
550	90110-0381		3	COVER	
560	90110-0385		1	HOLDER	
580	90110-0244		1	CABLE HOOD 6-POL 70.350.1628.0	
590	90326-0022		2	PLUG, MALE YELLOW CR-AL	
595	90326-0020		2	PLUG, FEMALE YELLOW CR-AL	
650	359005-0010		11	MARKING LABEL KIT 0 - 9, 04.841.2150.0	
660	359005-0050		11	MARKING LABEL KIT X, 04.841.4550.0	
670	90110-0385		12	HOLDER	
W2001	351150-0425	MM	5500	CABLE OLFLEX 25X0,75 MM2 LIGHT/GREY	
W2002	351150-0425	MM	5500	CABLE OLFLEX 25X0,75 MM2 LIGHT/GREY	
W2003	351150-0166	MM	4500	CABLE OLFLEX 4X4 MM2 LIGHT/GREY	
W2005	351150-0412	MM	7000	CABLE OLFLEX 3X1,5 MM2 LIGHT/GREY	
W2007	351150-0418	MM	6200	CABLE OLFLEX 4X2,5 MM2 LIGHT/GREY	
W2008	351150-0418	MM	6200	CABLE OLFLEX 4X2,5 MM2 LIGHT/GREY	
W2009	351150-0418	MM	7000	CABLE OLFLEX 4X2,5 MM2 LIGHT/GREY	
W2050	351150-0425	MM	5500	CABLE OLFLEX 25X0,75 MM2 LIGHT/GREY	
W2055	90220-0034	MM	7500	THERMOCABLE TEX/SITW-20F-KX 2X0,5MM2	
W2071	351150-0412	MM	4500	CABLE OLFLEX 3X1,5 MM2 LIGHT/GREY	
W2072	351150-0412	MM	4500	CABLE OLFLEX 3X1,5 MM2 LIGHT/GREY	
W2090	2540596-0003		1	COAXIAL CABLE	
W2091	2540596-0003		1	COAXIAL CABLE	
W2211	351150-0412	MM	6000	CABLE OLFLEX 3X1,5 MM2 LIGHT/GREY	
W2225	351150-0405	MM	6500	CABLE OLFLEX 5X0,75 MM2 LIGHT/GREY	
W2226	351150-0406	MM	6500	CABLE OLFLEX 7X0,75 MM2 LIGHT/GREY	
W2230	351150-0405	MM	7500	CABLE OLFLEX 5X0,75 MM2 LIGHT/GREY	
W2231	351150-0406	MM	7500	CABLE OLFLEX 7X0,75 MM2 LIGHT/GREY	
W2232	351150-0406	MM	8000	CABLE OLFLEX 7X0,75 MM2 LIGHT/GREY	
W2235	351150-0403	MM	2500	CABLE OLFLEX 3X0,75 MM2 LIGHT/GREY	
W2244	351150-0412	MM	6000	CABLE OLFLEX 3X1,5 MM2 LIGHT/GREY	
W2270	90220-0091	MM	7000	PAIR TWISTED CABLE 2X2X0,25MM2	
W2271	90220-0091	MM	7000	PAIR TWISTED CABLE 2X2X0,25MM2	
W2710	90220-0125	MM	4400	MOTOR CABLE 4X4,0+2X1,0+2X0,75+SHIELD	
W2711	90220-0125	MM	4200	MOTOR CABLE 4X4,0+2X1,0+2X0,75+SHIELD	
W2712	90220-0125	MM	4100	MOTOR CABLE 4X4,0+2X1,0+2X0,75+SHIELD	
W2713	90220-0125	MM	4300	MOTOR CABLE 4X4,0+2X1,0+2X0,75+SHIELD	
W2714	90220-0116	MM	4600	MOTOR CABLE 4X1,0+2(2X0,5)+SHIELD	
W2715	90220-0116	MM	4700	MOTOR CABLE 4X1,0+2(2X0,5)+SHIELD	
W2720	90220-0131	MM	6600	PAIR TWISTED CABLE 3X2X0,25MM2	
W2721	90220-0131	MM	6500	PAIR TWISTED CABLE 3X2X0,25MM2	
W2722	90220-0131	MM	6500	PAIR TWISTED CABLE 3X2X0,25MM2	
W2723	90220-0131	MM	6600	PAIR TWISTED CABLE 3X2X0,25MM2	
W2724	90220-0131	MM	7100	PAIR TWISTED CABLE 3X2X0,25MM2	
W2725	90220-0131	MM	7100	PAIR TWISTED CABLE 3X2X0,25MM2	
W4016	90220-0165	MM	8200	SCR. CABLE 5X0,34MM2	
W4017	90220-0165	MM	8200	SCR. CABLE 5X0,34MM2	
W4052	351150-0403	MM	3200	CABLE OLFLEX 3X0,75 MM2 LIGHT/GREY	
W4053	351150-0404	MM	3200	CABLE OLFLEX 4X0,75 MM2 LIGHT/GREY	

Machine Type	Group Description	Used-In	Group Number	Page No

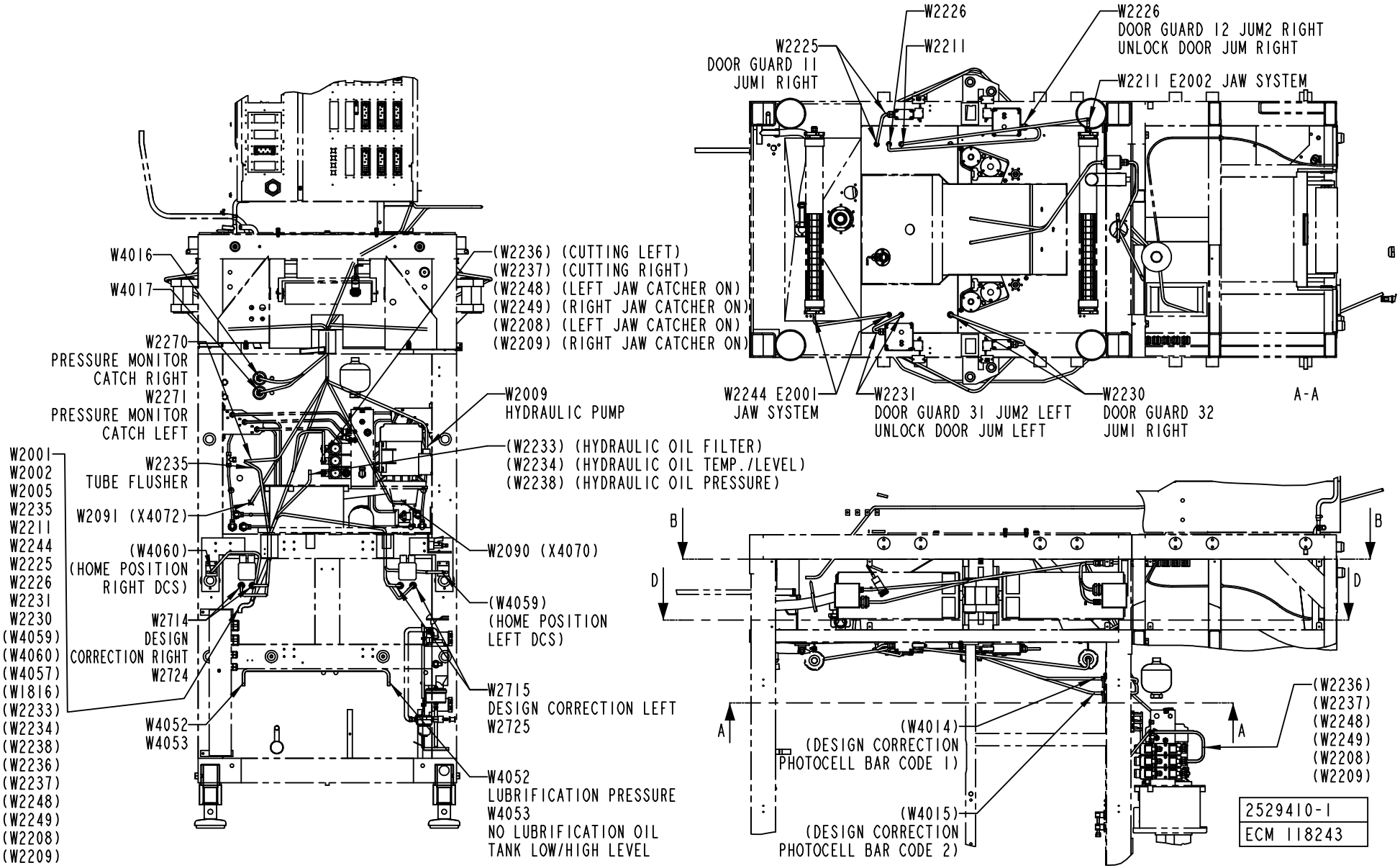
W2226
W2226
DOOR GUARD 12 JUM2 RIGHT
UNLOCK DOOR JUM RIGHT
W2225
DOOR GUARD 11
JUM1 RIGHT
W2211
W2211 E2002 JAW SYSTEM
W4016
W4017
W2270
PRESSURE MONITOR
CATCH RIGHT
W2271
PRESSURE MONITOR
CATCH LEFT
(W2236) (CUTTING LEFT)
(W2237) (CUTTING RIGHT)
(W2248) (LEFT JAW CATCHER ON)
(W2249) (RIGHT JAW CATCHER ON)
(W2208) (LEFT JAW CATCHER ON)
(W2209) (RIGHT JAW CATCHER ON)
W2009
HYDRAULIC PUMP
(W2233) (HYDRAULIC OIL FILTER)
(W2234) (HYDRAULIC OIL TEMP./LEVEL)
(W2238) (HYDRAULIC OIL PRESSURE)
W2001
W2002
W2005
W2235
W2211
W2244
W2225
W2226
W2231
W2230
(W4059)
(W4060)
(W4057)
(W1816)
(W2233)
(W2234)
(W2238)
(W2236)
(W2237)
(W2248)
(W2249)
(W2208)
(W2209)
W2235
TUBE FLUSHER
W2091 (X4072)
(W4060)
(HOME POSITION
RIGHT DCS)
W2714
DESIGN
CORRECTION RIGHT
W2724
W4052
W4053
W2090 (X4070)
(W4059)
(HOME POSITION
LEFT DCS)
W2715
DESIGN CORRECTION LEFT
W2725
W4052
LUBRIFICATION PRESSURE
W4053
NO LUBRIFICATION OIL
TANK LOW/HIGH LEVEL
W2244 E2001
JAW SYSTEM
W2231
DOOR GUARD 31 JUM2 LEFT
UNLOCK DOOR JUM LEFT
W2230
DOOR GUARD 32
JUM1 RIGHT
A-A
B
D
A
(W4014)
(DESIGN CORRECTION
PHOTOCELL BAR CODE 1)
(W4015)
(DESIGN CORRECTION
PHOTOCELL BAR CODE 2)
(W2236)
(W2237)
(W2248)
(W2249)
(W2208)
(W2209)
2529410-1
ECM 118243

ECM: 133336 - 20030922
Group number: 2529410-0100
Assembly Drawing: 2529410-1_2_AA

This list covers pages from 2-106 to 2-111

Pos	Part No	UN	Qty	Description	Page No
-					
010	1037673-0000		2	SLEEVE	
020	2529498-0000		2	GASKET	
100	312125-0226		20	SCREW ISO 1207 M3X12 A4	
110	312125-0364		17	SCREW ISO 1207 M6X10 A4	
120	312115-0222		8	SCREW ISO4762 M3X8 A4	
200	315105-0124		28	WASHER BRB3,2X6RFR	
250	315202-0211		2	O-RING 13,3X2,4 MM	
270	352103-0110		1	CABLE GLAND, STR 16, PR22,5/PG16	
280	352103-0106		2	CABLE GLAND, ST 11, PR18,6/PG11	
290	352103-0108		8	CABLE GLAND, ST 13,5 , PR20,4/PG13,5	
300	352103-0120		6	CABLE GLAND, STR 29, PR37,0/PG29	
310	352103-0121		10	CABLE GLAND, ST 29, PR37,0/PG29	
350	352113-0204		17	ANCHOR PLATES FOR STRIPS, TYPE TM3S25-M	
360	90110-0235		2	CABLE CONTACT, PX0739/S	
370	90110-0348		2	CABLE SEALING, 12033/I, ELFA. 44-625-78	
400	90110-0150		4	MALE INSERT 121110 0000	
410	90110-0152		10	CABLE HOOD 24-POL 70.352.2428.1	
420	90110-0141		6	CONTACT UNIT, DE09P064TX	
430	90110-0144		6	COVER	
440	90100-0052		4	CONNECTOR KIT, FEEDBACK CABLE DRIVE END	
450	90110-0517		6	MALE PLUG	
460	90110-0157		6	CABLE HOOD 6-POL 70.352.0628.1	
470	90110-0159		6	MALE INSERT 70.310.0640.0	
480	90110-0156		1	MALE INSERT 70.210.0653.0	
490	90110-0349		2	COOVER/TOOL PX 0733	
500	90110-0296		2	CONTACT SCREW	
505	90458-0758		2	CONN.KIT MOTOR END WINDING C38/39/40	
510	90458-0759		2	CONN.KIT MOTOR END FEEDBACK C38/C39/C40	
520	90110-0370		2	BASE HOUSING	
525	90458-0757		4	MOTOR END STRAIN RELIEF HPG29 13 20MM	
530	90100-0045		8	CABLE GLAND, MOTOR END 9032 010 806	
535	90110-0236		2	CHASSIS CONTACT PX0767/S	
550	90110-0381		3	COVER	
560	90110-0385		1	HOLDER	
580	90110-0244		1	CABLE HOOD 6-POL 70.350.1628.0	
590	90326-0022		2	PLUG, MALE YELLOW CR-AL	
595	90326-0020		2	PLUG, FEMALE YELLOW CR-AL	
650	359005-0010		11	MARKING LABEL KIT 0 - 9, 04.841.2150.0	
660	359005-0050		11	MARKING LABEL KIT X, 04.841.4550.0	
670	90110-0385		12	HOLDER	
W2001	351150-0425	MM	5500	CABLE OLFLEX 25X0,75 MM2 LIGHT/GREY	
W2002	351150-0425	MM	5500	CABLE OLFLEX 25X0,75 MM2 LIGHT/GREY	
W2003	351150-0166	MM	4500	CABLE OLFLEX 4X4 MM2 LIGHT/GREY	
W2005	351150-0412	MM	7000	CABLE OLFLEX 3X1,5 MM2 LIGHT/GREY	
W2007	351150-0418	MM	6200	CABLE OLFLEX 4X2,5 MM2 LIGHT/GREY	
W2008	351150-0418	MM	6200	CABLE OLFLEX 4X2,5 MM2 LIGHT/GREY	
W2009	351150-0418	MM	7000	CABLE OLFLEX 4X2,5 MM2 LIGHT/GREY	
W2050	351150-0425	MM	5500	CABLE OLFLEX 25X0,75 MM2 LIGHT/GREY	
W2055	90220-0034	MM	7500	THERMOCABLE TEX/SITW-20F-KX 2X0,5MM2	
W2071	351150-0412	MM	4500	CABLE OLFLEX 3X1,5 MM2 LIGHT/GREY	
W2072	351150-0412	MM	4500	CABLE OLFLEX 3X1,5 MM2 LIGHT/GREY	
W2090	2540596-0003		1	COAXIAL CABLE	
W2091	2540596-0003		1	COAXIAL CABLE	
W2211	351150-0412	MM	6000	CABLE OLFLEX 3X1,5 MM2 LIGHT/GREY	
W2225	351150-0405	MM	6500	CABLE OLFLEX 5X0,75 MM2 LIGHT/GREY	
W2226	351150-0406	MM	6500	CABLE OLFLEX 7X0,75 MM2 LIGHT/GREY	
W2230	351150-0405	MM	7500	CABLE OLFLEX 5X0,75 MM2 LIGHT/GREY	
W2231	351150-0406	MM	7500	CABLE OLFLEX 7X0,75 MM2 LIGHT/GREY	
W2232	351150-0406	MM	8000	CABLE OLFLEX 7X0,75 MM2 LIGHT/GREY	
W2235	351150-0403	MM	2500	CABLE OLFLEX 3X0,75 MM2 LIGHT/GREY	
W2244	351150-0412	MM	6000	CABLE OLFLEX 3X1,5 MM2 LIGHT/GREY	
W2270	90220-0091	MM	7000	PAIR TWISTED CABLE 2X2X0,25MM2	
W2271	90220-0091	MM	7000	PAIR TWISTED CABLE 2X2X0,25MM2	
W2710	90220-0125	MM	4400	MOTOR CABLE 4X4,0+2X1,0+2X0,75+SHIELD	
W2711	90220-0125	MM	4200	MOTOR CABLE 4X4,0+2X1,0+2X0,75+SHIELD	
W2712	90220-0125	MM	4100	MOTOR CABLE 4X4,0+2X1,0+2X0,75+SHIELD	
W2713	90220-0125	MM	4300	MOTOR CABLE 4X4,0+2X1,0+2X0,75+SHIELD	
W2714	90220-0116	MM	4600	MOTOR CABLE 4X1,0+2(2X0,5)+SHIELD	
W2715	90220-0116	MM	4700	MOTOR CABLE 4X1,0+2(2X0,5)+SHIELD	
W2720	90220-0131	MM	6600	PAIR TWISTED CABLE 3X2X0,25MM2	
W2721	90220-0131	MM	6500	PAIR TWISTED CABLE 3X2X0,25MM2	
W2722	90220-0131	MM	6500	PAIR TWISTED CABLE 3X2X0,25MM2	
W2723	90220-0131	MM	6600	PAIR TWISTED CABLE 3X2X0,25MM2	
W2724	90220-0131	MM	7100	PAIR TWISTED CABLE 3X2X0,25MM2	
W2725	90220-0131	MM	7100	PAIR TWISTED CABLE 3X2X0,25MM2	
W4016	90220-0165	MM	8200	SCR. CABLE 5X0,34MM2	
W4017	90220-0165	MM	8200	SCR. CABLE 5X0,34MM2	
W4052	351150-0403	MM	3200	CABLE OLFLEX 3X0,75 MM2 LIGHT/GREY	
W4053	351150-0404	MM	3200	CABLE OLFLEX 4X0,75 MM2 LIGHT/GREY	

Machine Type	Group Description	Used-In	Group Number	Page No

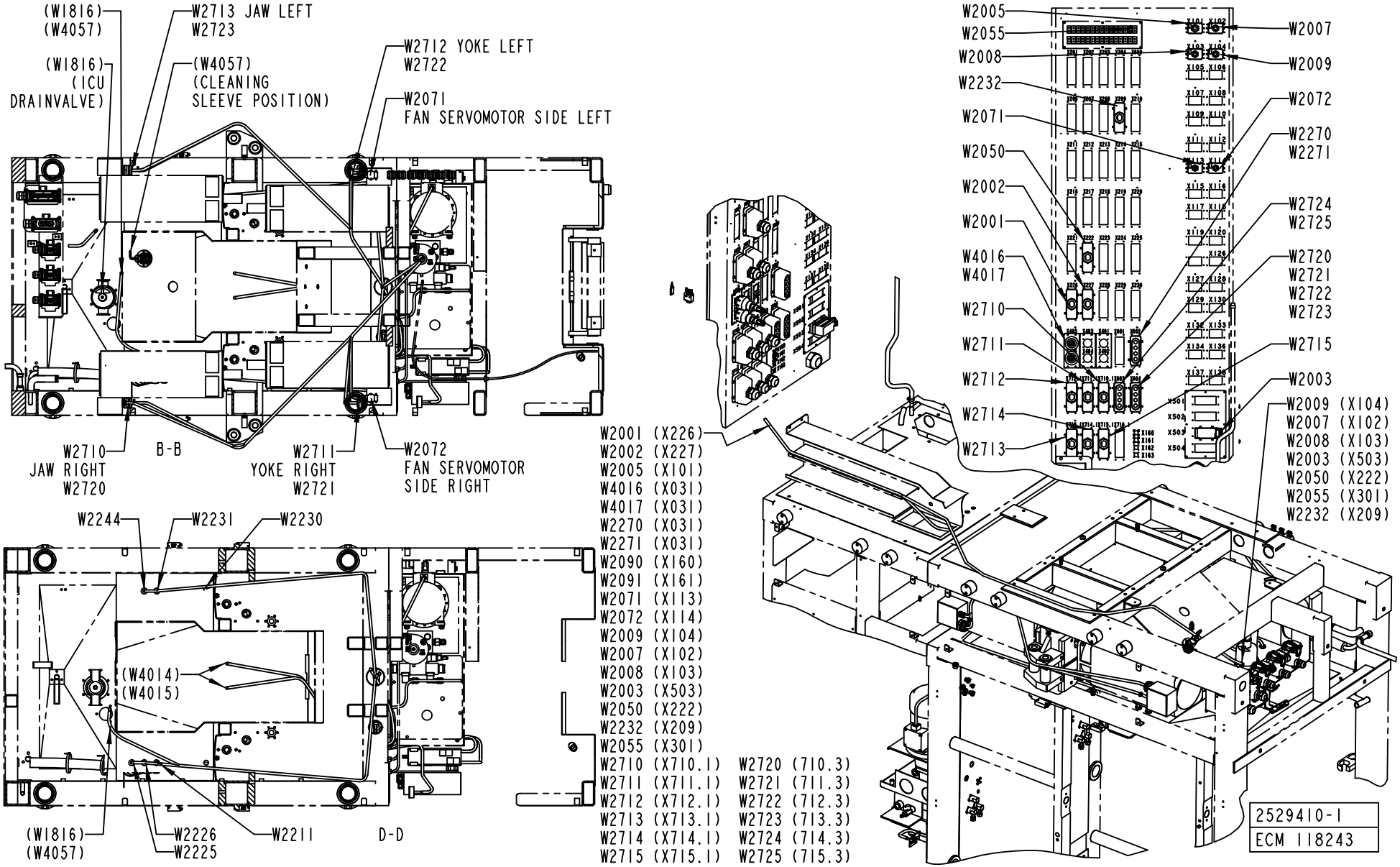
(W1816)
(W4057)
W2713 JAW LEFT
W2723
(W1816)
(ICU
DRAINVALVE)
(W4057)
(CLEANING
SLEEVE POSITION)
W2712 YOKE LEFT
W2722
W2071
FAN SERVOMOTOR SIDE LEFT
W2710
JAW RIGHT
W2720
B-B
W2711
YOKE RIGHT
W2721
W2072
FAN SERVOMOTOR
SIDE RIGHT
W2244
W2231
W2230
(W4014)
(W4015)
(W1816)
(W4057)
W2226
W2225
W2211
D-D
W2001 (X226)
W2002 (X227)
W2005 (X101)
W4016 (X031)
W4017 (X031)
W2270 (X031)
W2271 (X031)
W2090 (X160)
W2091 (X161)
W2071 (X113)
W2072 (X114)
W2009 (X104)
W2007 (X102)
W2008 (X103)
W2003 (X503)
W2050 (X222)
W2232 (X209)
W2055 (X301)
W2710 (X710.1) W2720 (710.3)
W2711 (X711.1) W2721 (711.3)
W2712 (X712.1) W2722 (712.3)
W2713 (X713.1) W2723 (713.3)
W2714 (X714.1) W2724 (714.3)
W2715 (X715.1) W2725 (715.3)
W2005
W2055
W2008
W2232
W2071
W2050
W2002
W2001
W4016
W4017
W2710
W2711
W2712
W2714
W2713
W2007
W2009
W2072
W2270
W2271
W2724
W2725
W2720
W2721
W2722
W2723
W2715
W2003
W2009 (X104)
W2007 (X102)
W2008 (X103)
W2003 (X503)
W2050 (X222)
W2055 (X301)
W2232 (X209)
2529410-1
ECM 118243

ECM: 133336 - 20030922
Group number: 2529410-0100
Assembly Drawing: 2529410-1_3_AA

This list covers pages from 2-106 to 2-111

Pos	Part No	UN	Qty	Description	Page No
-					
010	1037673-0000		2	SLEEVE	
020	2529498-0000		2	GASKET	
100	312125-0226		20	SCREW ISO 1207 M3X12 A4	
110	312125-0364		17	SCREW ISO 1207 M6X10 A4	
120	312115-0222		8	SCREW ISO4762 M3X8 A4	
200	315105-0124		28	WASHER BRB3,2X6RFR	
250	315202-0211		2	O-RING 13,3X2,4 MM	
270	352103-0110		1	CABLE GLAND, STR 16, PR22,5/PG16	
280	352103-0106		2	CABLE GLAND, ST 11, PR18,6/PG11	
290	352103-0108		8	CABLE GLAND, ST 13,5 , PR20,4/PG13,5	
300	352103-0120		6	CABLE GLAND, STR 29, PR37,0/PG29	
310	352103-0121		10	CABLE GLAND, ST 29, PR37,0/PG29	
350	352113-0204		17	ANCHOR PLATES FOR STRIPS, TYPE TM3S25-M	
360	90110-0235		2	CABLE CONTACT, PX0739/S	
370	90110-0348		2	CABLE SEALING, 12033/I, ELFA. 44-625-78	
400	90110-0150		4	MALE INSERT 121110 0000	
410	90110-0152		10	CABLE HOOD 24-POL 70.352.2428.1	
420	90110-0141		6	CONTACT UNIT, DE09P064TX	
430	90110-0144		6	COVER	
440	90100-0052		4	CONNECTOR KIT, FEEDBACK CABLE DRIVE END	
450	90110-0517		6	MALE PLUG	
460	90110-0157		6	CABLE HOOD 6-POL 70.352.0628.1	
470	90110-0159		6	MALE INSERT 70.310.0640.0	
480	90110-0156		1	MALE INSERT 70.210.0653.0	
490	90110-0349		2	COOVER/TOOL PX 0733	
500	90110-0296		2	CONTACT SCREW	
505	90458-0758		2	CONN.KIT MOTOR END WINDING C38/39/40	
510	90458-0759		2	CONN.KIT MOTOR END FEEDBACK C38/C39/C40	
520	90110-0370		2	BASE HOUSING	
525	90458-0757		4	MOTOR END STRAIN RELIEF HPG29 13 20MM	
530	90100-0045		8	CABLE GLAND, MOTOR END 9032 010 806	
535	90110-0236		2	CHASSIS CONTACT PX0767/S	
550	90110-0381		3	COVER	
560	90110-0385		1	HOLDER	
580	90110-0244		1	CABLE HOOD 6-POL 70.350.1628.0	
590	90326-0022		2	PLUG, MALE YELLOW CR-AL	
595	90326-0020		2	PLUG, FEMALE YELLOW CR-AL	
650	359005-0010		11	MARKING LABEL KIT 0 - 9, 04.841.2150.0	
660	359005-0050		11	MARKING LABEL KIT X, 04.841.4550.0	
670	90110-0385		12	HOLDER	
W2001	351150-0425	MM	5500	CABLE OLFLEX 25X0,75 MM2 LIGHT/GREY	
W2002	351150-0425	MM	5500	CABLE OLFLEX 25X0,75 MM2 LIGHT/GREY	
W2003	351150-0166	MM	4500	CABLE OLFLEX 4X4 MM2 LIGHT/GREY	
W2005	351150-0412	MM	7000	CABLE OLFLEX 3X1,5 MM2 LIGHT/GREY	
W2007	351150-0418	MM	6200	CABLE OLFLEX 4X2,5 MM2 LIGHT/GREY	
W2008	351150-0418	MM	6200	CABLE OLFLEX 4X2,5 MM2 LIGHT/GREY	
W2009	351150-0418	MM	7000	CABLE OLFLEX 4X2,5 MM2 LIGHT/GREY	
W2050	351150-0425	MM	5500	CABLE OLFLEX 25X0,75 MM2 LIGHT/GREY	
W2055	90220-0034	MM	7500	THERMOCABLE TEX/SITW-20F-KX 2X0,5MM2	
W2071	351150-0412	MM	4500	CABLE OLFLEX 3X1,5 MM2 LIGHT/GREY	
W2072	351150-0412	MM	4500	CABLE OLFLEX 3X1,5 MM2 LIGHT/GREY	
W2090	2540596-0003		1	COAXIAL CABLE	
W2091	2540596-0003		1	COAXIAL CABLE	
W2211	351150-0412	MM	6000	CABLE OLFLEX 3X1,5 MM2 LIGHT/GREY	
W2225	351150-0405	MM	6500	CABLE OLFLEX 5X0,75 MM2 LIGHT/GREY	
W2226	351150-0406	MM	6500	CABLE OLFLEX 7X0,75 MM2 LIGHT/GREY	
W2230	351150-0405	MM	7500	CABLE OLFLEX 5X0,75 MM2 LIGHT/GREY	
W2231	351150-0406	MM	7500	CABLE OLFLEX 7X0,75 MM2 LIGHT/GREY	
W2232	351150-0406	MM	8000	CABLE OLFLEX 7X0,75 MM2 LIGHT/GREY	
W2235	351150-0403	MM	2500	CABLE OLFLEX 3X0,75 MM2 LIGHT/GREY	
W2244	351150-0412	MM	6000	CABLE OLFLEX 3X1,5 MM2 LIGHT/GREY	
W2270	90220-0091	MM	7000	PAIR TWISTED CABLE 2X2X0,25MM2	
W2271	90220-0091	MM	7000	PAIR TWISTED CABLE 2X2X0,25MM2	
W2710	90220-0125	MM	4400	MOTOR CABLE 4X4,0+2X1,0+2X0,75+SHIELD	
W2711	90220-0125	MM	4200	MOTOR CABLE 4X4,0+2X1,0+2X0,75+SHIELD	
W2712	90220-0125	MM	4100	MOTOR CABLE 4X4,0+2X1,0+2X0,75+SHIELD	
W2713	90220-0125	MM	4300	MOTOR CABLE 4X4,0+2X1,0+2X0,75+SHIELD	
W2714	90220-0116	MM	4600	MOTOR CABLE 4X1,0+2(2X0,5)+SHIELD	
W2715	90220-0116	MM	4700	MOTOR CABLE 4X1,0+2(2X0,5)+SHIELD	
W2720	90220-0131	MM	6600	PAIR TWISTED CABLE 3X2X0,25MM2	
W2721	90220-0131	MM	6500	PAIR TWISTED CABLE 3X2X0,25MM2	
W2722	90220-0131	MM	6500	PAIR TWISTED CABLE 3X2X0,25MM2	
W2723	90220-0131	MM	6600	PAIR TWISTED CABLE 3X2X0,25MM2	
W2724	90220-0131	MM	7100	PAIR TWISTED CABLE 3X2X0,25MM2	
W2725	90220-0131	MM	7100	PAIR TWISTED CABLE 3X2X0,25MM2	
W4016	90220-0165	MM	8200	SCR. CABLE 5X0,34MM2	
W4017	90220-0165	MM	8200	SCR. CABLE 5X0,34MM2	
W4052	351150-0403	MM	3200	CABLE OLFLEX 3X0,75 MM2 LIGHT/GREY	
W4053	351150-0404	MM	3200	CABLE OLFLEX 4X0,75 MM2 LIGHT/GREY	

Machine Type	Group Description	Used-In	Group Number	Page No

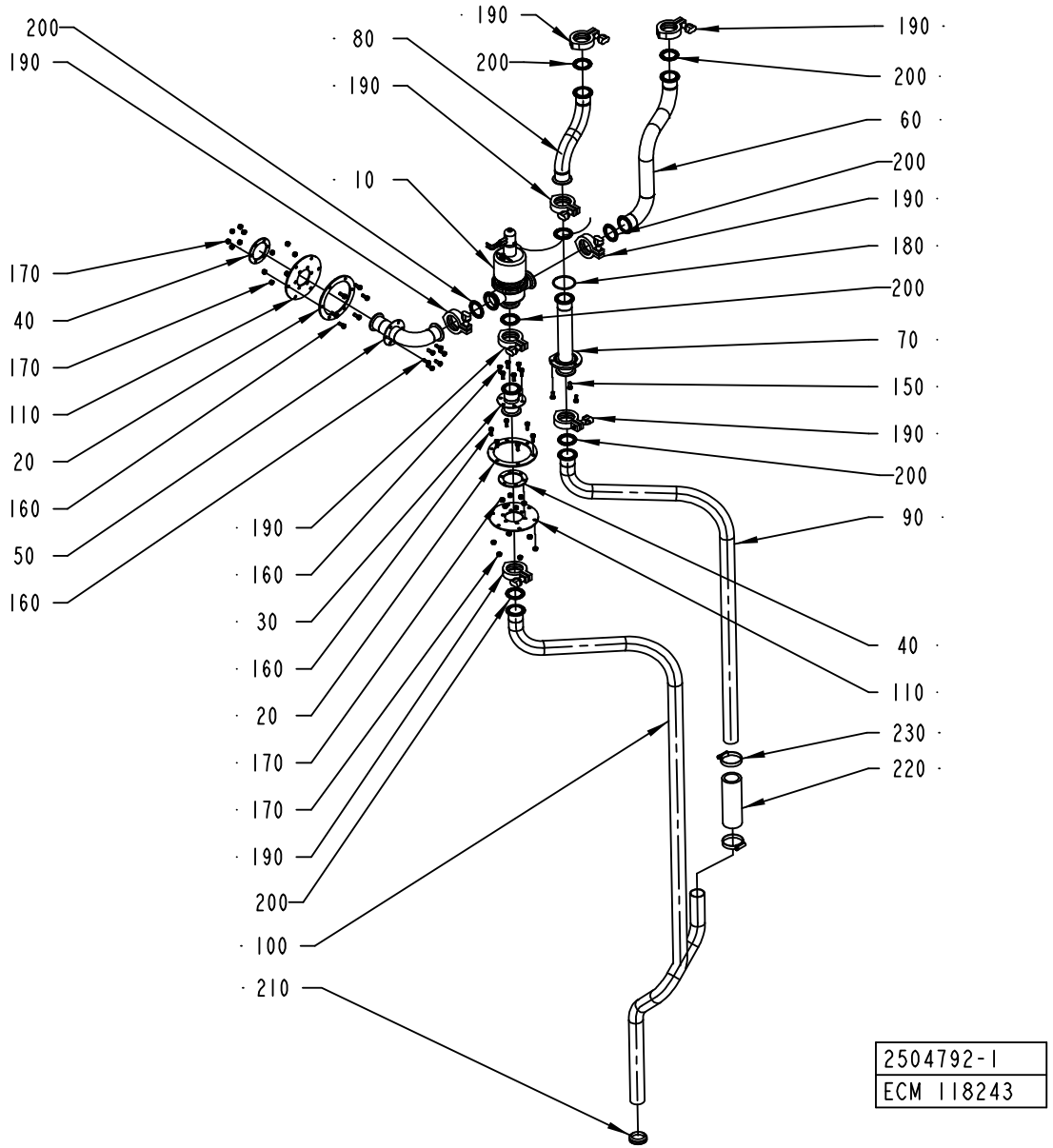
200
190
170
40
170
110
20
160
50
160
80
190
10
190
200
190
160
30
160
20
170
170
190
200
100
210
190
200
60
200
190
180
200
70
150
190
200
90
40
110
230
220
2504792-1
ECM 118243

ECM: 118243 - 20030403
Group number: 2504792-0100
Assembly Drawing: 2504792-1_1_AA

Pos	Part No	UN	Qty	Description	Page No
-					
010	2500088-0100		1	3-WAY VALVE	**2-115**
020	1498856-0000		2	FLANGE	
030	1498857-0000		1	CONNECTION	
040	1498858-0000		2	FLANGE	
050	2509544-0000		1	PIPE	
060	2509545-0000		1	PIPE	
070	2509546-0000		1	CONNECTION	
080	2509547-0000		1	PIPE	
090	2594647-0000		1	PIPE	
100	2594646-0000		1	PIPE	
110	1498855-0000		2	GASKET	
150	312105-0367		3	SCREW M6S ISO 4017 M6X14 A480	
160	312105-0368		24	SCREW M6S ISO 4017 M6X16 A480	
170	312812-0316		24	HEXAGON NUT, NY-LOCK M6 A480	
180	315202-0302		1	O-RING 54,5X3 MM	
190	342840-0103		8	CLAMPING PIECE	
200	342850-0304		8	GASKET 35,4X49,1X5,2 1"1/2 FDA	
210	315220-0183		1	V-RINGS 36X46X13 MM V-40S	
220	90166-0236	M		HOSE, 38/51 REINFORCED RUBBER	
230	342991-0109		2	HOSE CLIP,WORM DRIVE TYPE (48)-50	

Pos	Part No	UN	Qty	Description	Page No

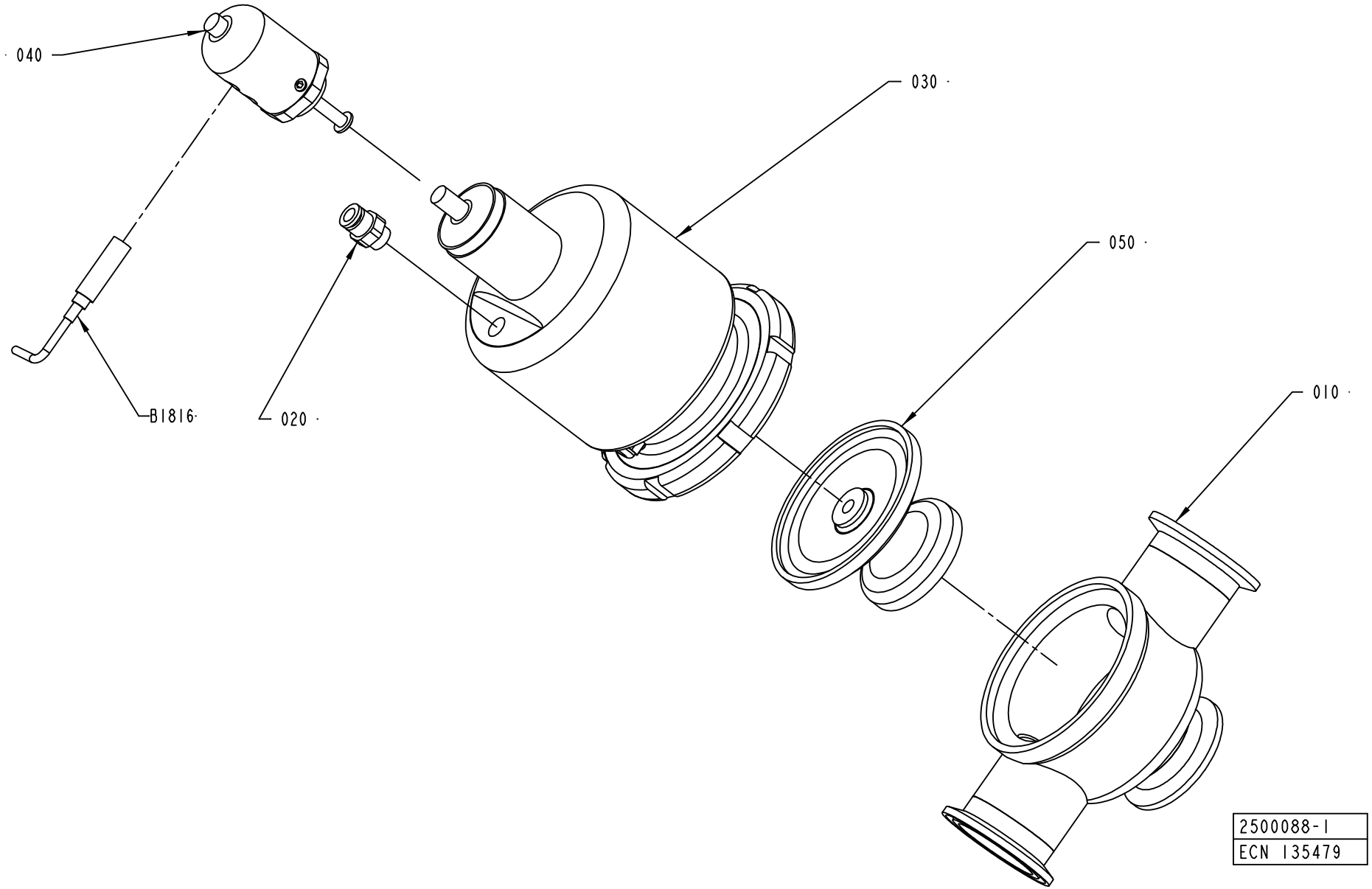
040
030
050
010
B1816
020
2500088-1
ECN 135479

ECM: 146909 - 20031117
Group number: 2500088-0100
Assembly Drawing: 2500088-1_1_AB

Pos	Part No	UN	Qty	Description	Page No
-					
010	2501292-0000		1	VALVE HOUSING	
020	342722-0202		1	PIPE COUPLING 1/8" D=6MM	
030	90458-1531		1	ACTUATOR, N.O., PA 38/100	
	90458-1533		*1*	*LOCKING RING N7-29, FOR PA 38*	
	90458-1534		*1*	*SILENCER N4-23, FOR PA 38/100*	
040	90458-1537		1	HOLDER, FOR INDUCTIVE SENSORS	
050	90458-1541		1	DIAPHRAGM, NA 38/25 PFTE	
	90458-1542		*1*	*SUPPORT FOR NA 38/25 DIAPHRAGM*	
B1816	90458-0138		1	PROX.SW. E2EG-X1R5B1-5M	

Pos	Part No	UN	Qty	Description	Page No

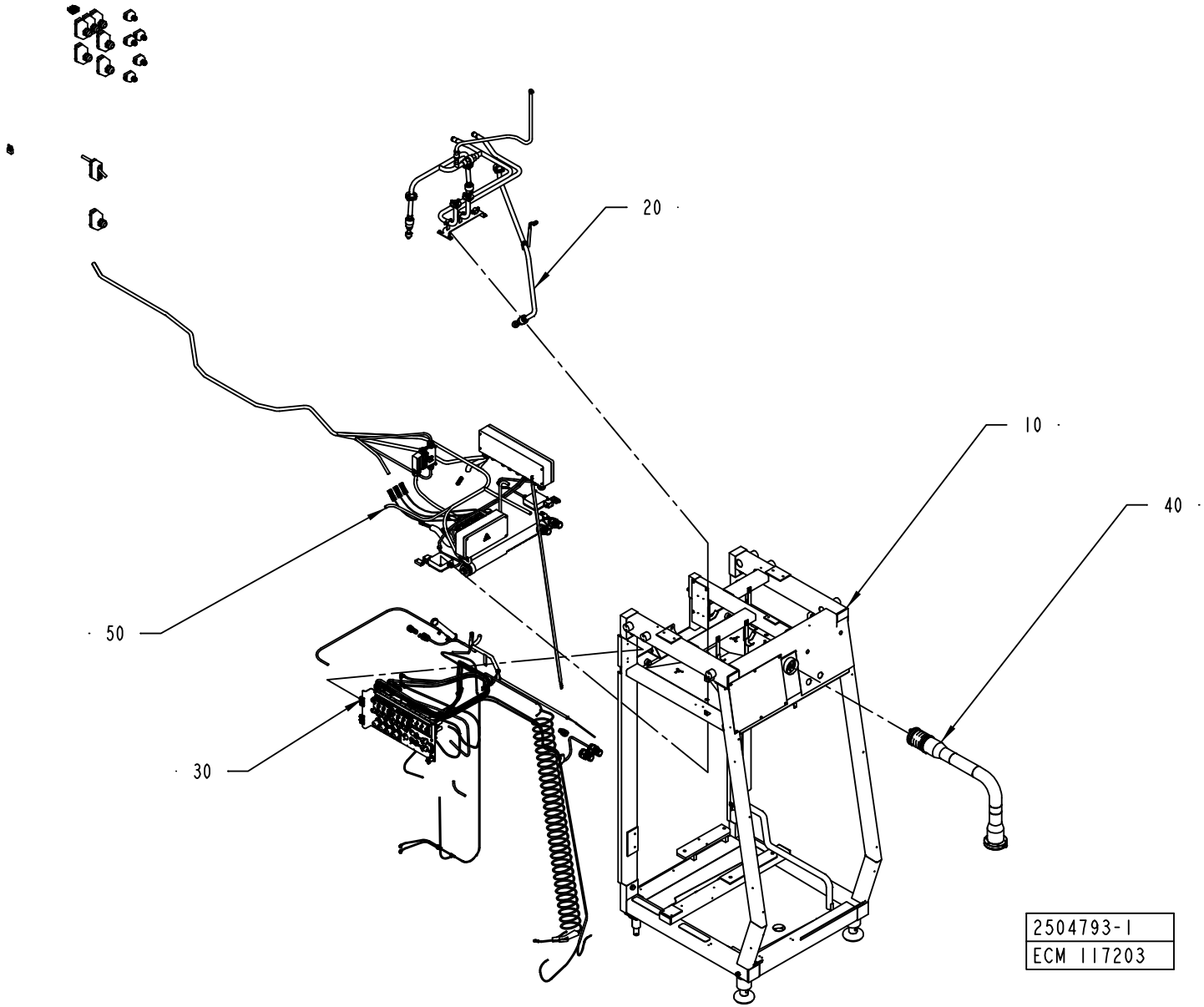
20
10
40
50
30
2504793-1
ECM 117203

ECM: 117203 - 20030403
Group number: 2504793-0100
Assembly Drawing: 2504793-1_1_AA

Pos	Part No	UN	Qty	Description	Page No
-					
010	2504794-0100		1	MACHINE BODY	**2-119**
020	2504795-0100		1	CLEANING SYSTEM	**2-121**
030	2528044-0100		1	PNEUMATIC SYSTEM	**2-123**
040	1095863-0200		1	PIVOT ARM	**2-143**
050	2527300-0100		1	ELECTRIC EQUIPMENT	**2-147**

Pos	Part No	UN	Qty	Description	Page No

MACHINE BODY

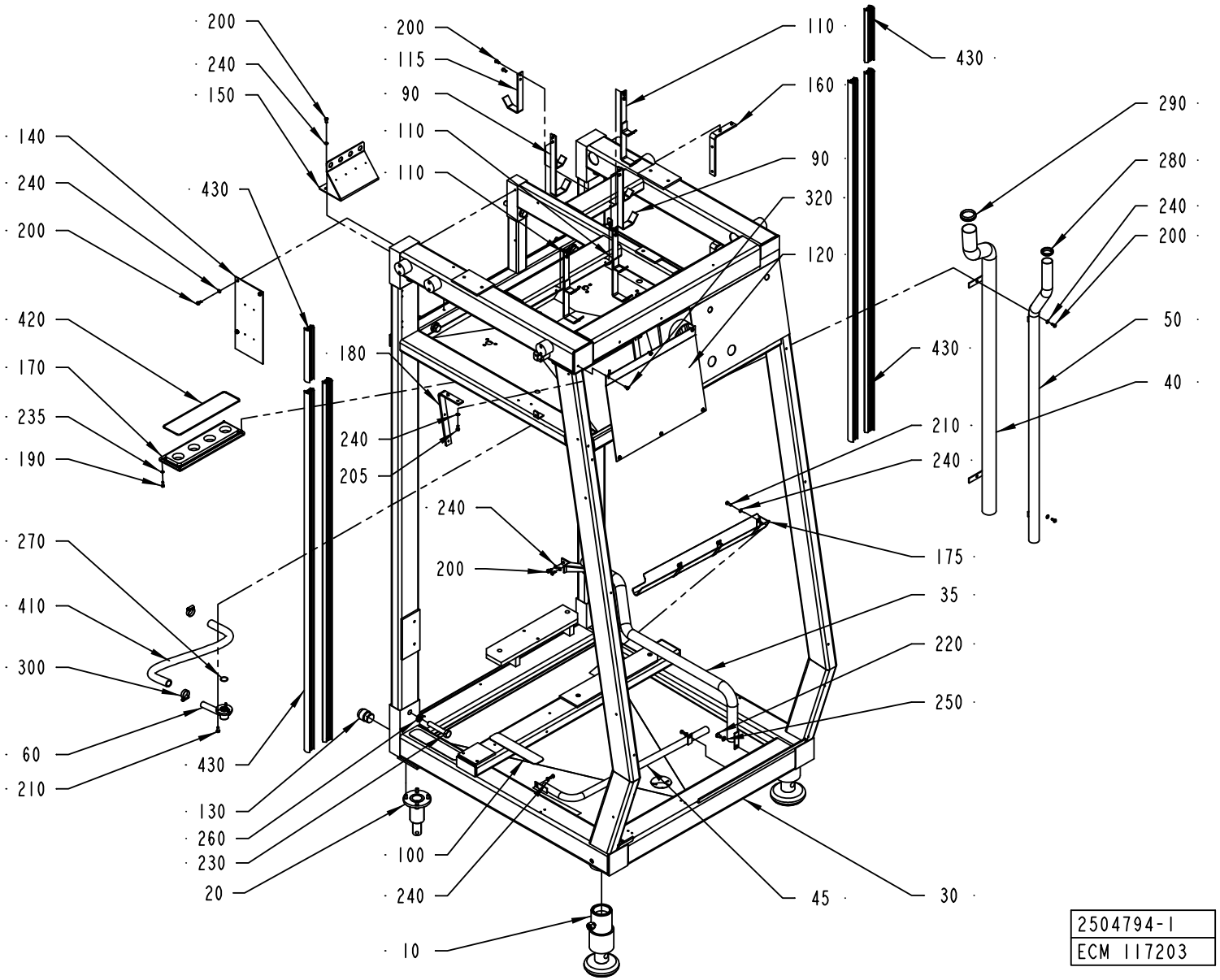

ECM: 139327 - 20030711
Group number: 2504794-0100
Assembly Drawing: 2504794-1_1_AA

Pos	Part No	UN	Qty	Description	Page No
A3/FLEX					
175	2529169-0000		1	HOLDER	
Common Parts					
010	1035076-0200		2	LEG	**2-11**
020	1035471-0100		2	LEG	**2-9**
030	2504437-0000		1	FRAME	
035	2530300-0000		1	PIPE	
040	2530301-0000		1	PIPE	
045	2530303-0000		1	PIPE	
050	2530302-0000		1	PIPE	
060	2509552-0000		1	DRAINING	
090	2515216-0000		2	BRACKET	
100	1103300-0000		3	NON-SKID	
110	2515217-0000		4	BRACKET	
115	2537126-0000		1	BRACKET	
120	2510785-0000		1	COVER PLATE	
130	2506636-0000		2	PIN	
140	2506921-0000		1	SUPPORT	
150	2509941-0000		1	SUPPORT	
160	2520431-0000		2	SUPPORT	
170	2514370-0000		1	PLATE	
180	2520430-0000		2	HOLDER	
190	312105-0329		4	SCREW M6S ISO 4017 M5X16 A480	
200	312105-0366		24	SCREW M6S ISO 4017 M6X12 A480	
205	312105-0367		8	SCREW M6S ISO 4017 M6X14 A480	
210	312105-0368		6	SCREW M6S ISO 4017 M6X16 A480	
220	312105-0447		1	SCREW M6S ISO 4017 M8X12 A480	
230	312105-0638		7	SCREW M6S ISO 4014 M16X90 A480	
235	315105-0146		4	WASHER BRB5,3X10RFR	
240	315105-0153		23	WASHER BRB6,4X12RFR	
250	315105-0165		1	WASHER BRB8,4X16RFR	
260	315105-0186		7	WASHER BRB17X30RFR	
270	315202-0709		1	O-RING 23,52X1,78 MM	
280	315220-0180		1	V-RINGS 34X42X10,5 MM V-38S	
290	315220-0198		1	V-RINGS 45X55X13 MM V-50S	
300	342991-0105		2	HOSE CLIP,WORM DRIVE TYPE (27)-30	
320	90287-0075		6	SCREW SLOT. PAN HEAD LKCS M6X12	
410	90166-0151	MM	610	HOSE	
420	90161-0001	MM	800	O-RING MATERIAL 3 MM	
430	90459-1009	MM	7000	RUBBER STRIP, 309Z0475	

Pos	Part No	UN	Qty	Description	Page No

Machine Type | Group Description | Used-In | Group Number | Page No

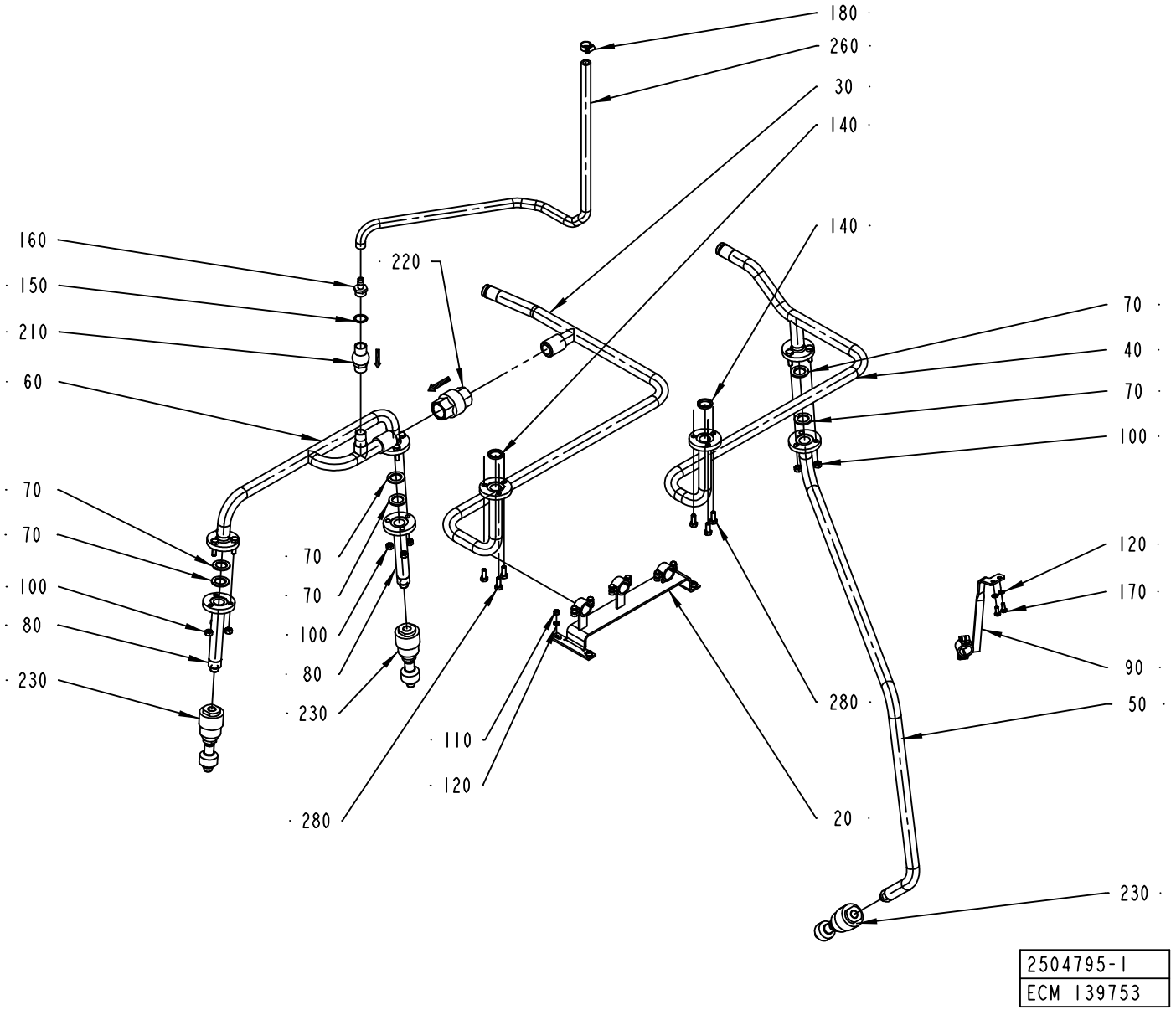
180
260
30
140
140
160
150
210
60
220
70
40
70
100
70
70
100
80
230
70
70
100
80
230
120
170
90
50
280
110
120
280
20
230
2504795-1
ECM 139753

ECM: 169244 - 20040423
Group number: 2504795-0100
Assembly Drawing: 2504795-1_1_AC

Pos	Part No	UN	Qty	Description	Page No
A3/FLEX					
080	2508425-0000		2	PIPE	
100	312605-0318		9	HEXAGON NUT, M6M M8 A280	
140	315229-0103		2	GASKETS, 23,1X30,1X3,7 MM 1" FDA	
230	90424-0066		3	ROT.SPRAY NOZZLE, D26984-B3/8"-PVDF/4.5	
280	312105-0451		6	SCREW M6S ISO 4017 M8X20 A480	
Common Parts					
020	2508426-0000		1	BRACKET	
030	2506922-0000		1	PIPE	
040	2506923-0000		1	PIPE	
050	2506924-0000		1	PIPE	
060	2506925-0000		1	PIPE	
070	1037443-0000		6	GASKET	
090	2519430-0000		1	BRACKET	
110	312605-0316		4	HEXAGON NUT, M6M M6 A280	
120	315105-0153		6	WASHER BRB6,4X12RFR	
150	315233-0113		1	WASHER CAPTIVE SEALING G1/2	
160	342901-0105		1	HOSE NIPPLE, EXT.THR. R1/2-12 MM	
170	312105-0367		2	SCREW M6S ISO 4017 M6X14 A480	
180	342991-0102		1	HOSE CLIP,WORM DRIVE TYPE (16)-19	
210	90230-0042		1	NON-RETURN VALVE 1/2"	
220	90230-0044		1	NON-RETURN VALVE 1"	
	90230-0308		*1*	*GASKET KIT*	
260	90166-0121	MM	1000	HOSE	

Pos	Part No	UN	Qty	Description	Page No

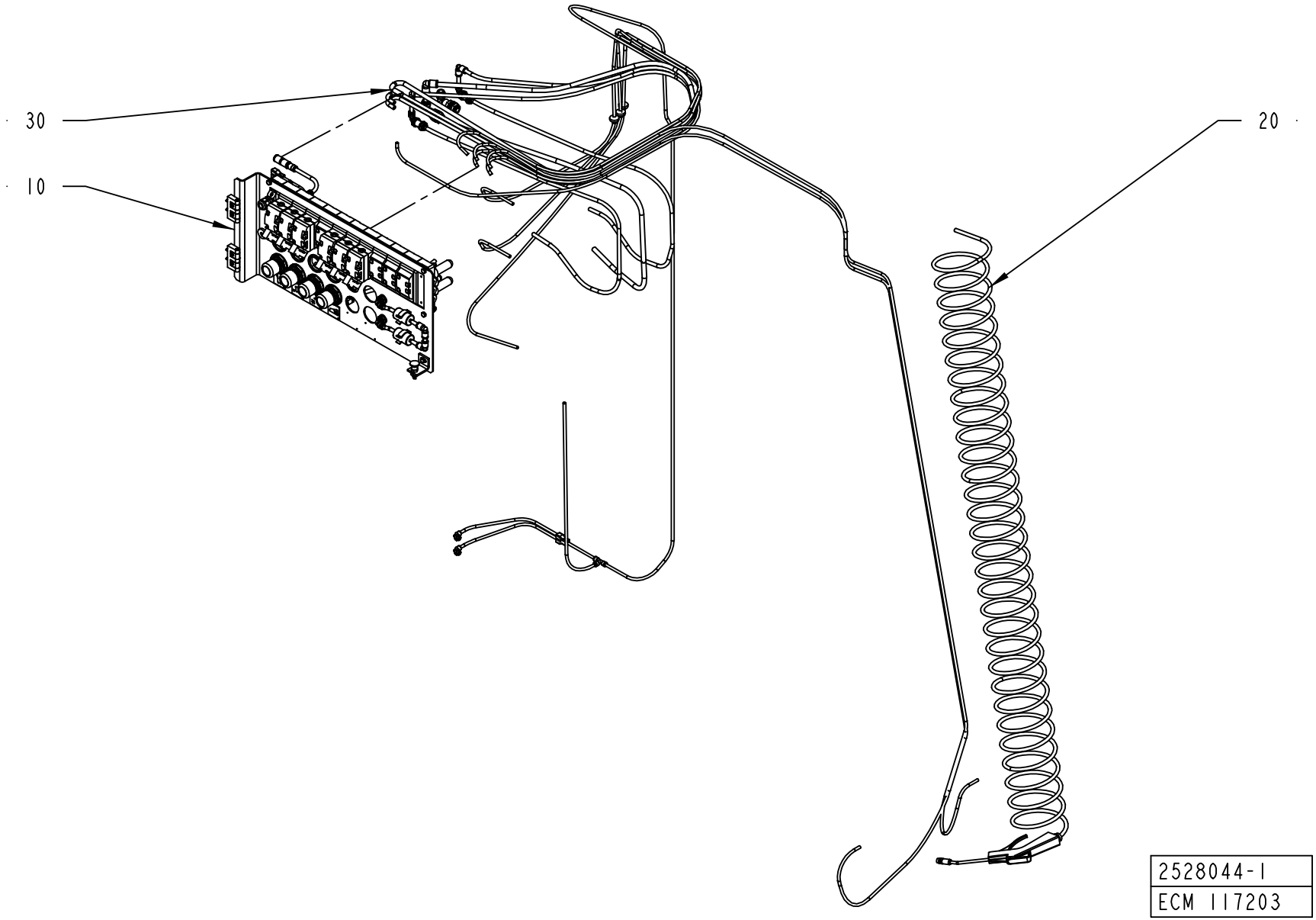
30
10
20
2528044-1
ECM 117203

ECM: 139329 - 20030711
Group number: 2528044-0100
Assembly Drawing: 2528044-1_1_AA

Pos	Part No	UN	Qty	Description	Page No
A3/FLEX					
030	2528046-0100		1	HOSE INSTALLATION	**2-125, 2-127, 2-129**
Common Parts					
010	2506362-0100		1	VALVE PANEL	**2-131, 2-133**
020	1095682-0100		1	AIR JET GUN	**2-141**

Pos	Part No	UN	Qty	Description	Page No

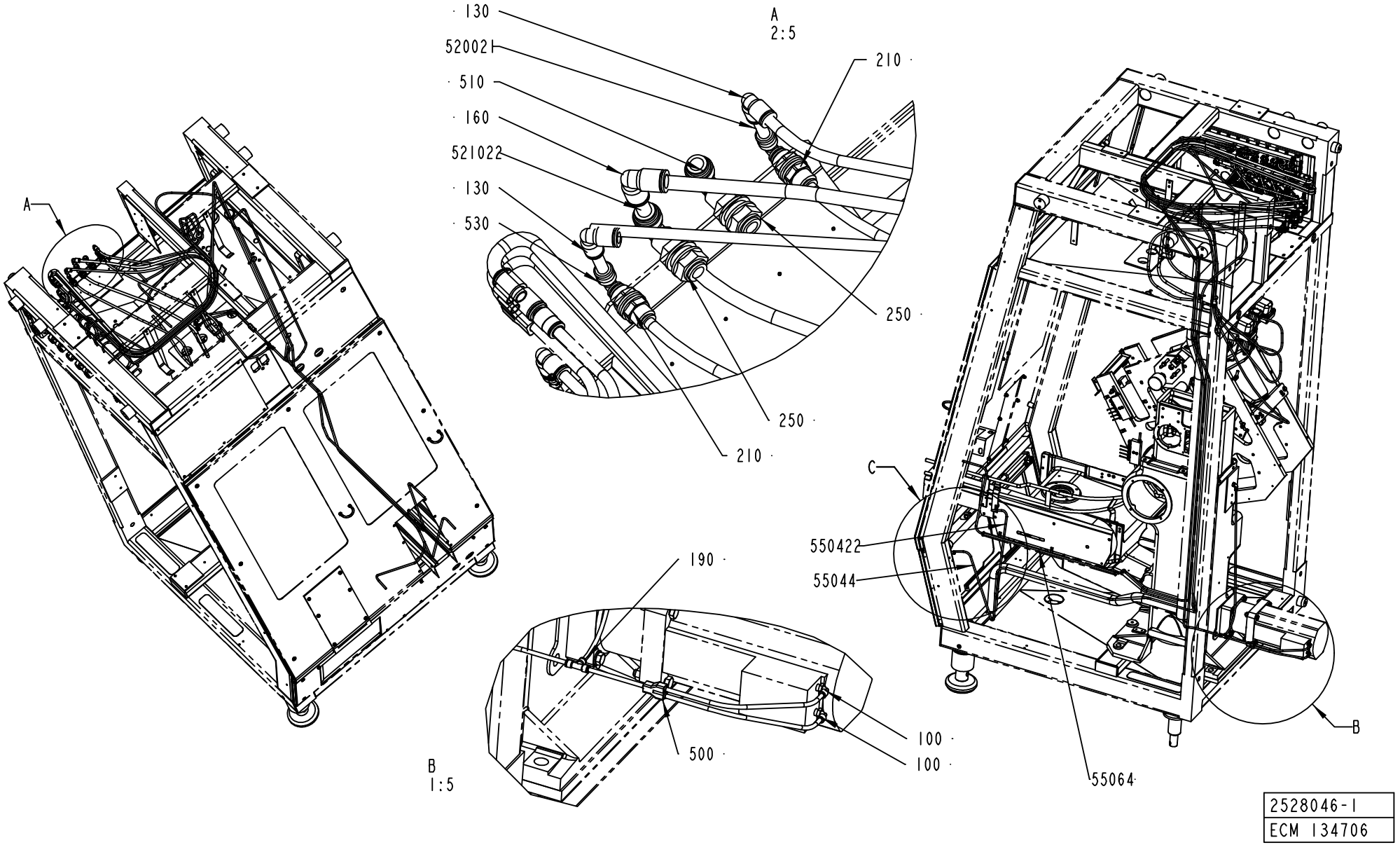

2528046-1
ECM 134706

ECM: 139332 - 20031007
Group number: 2528046-0100
Assembly Drawing: 2528046-1_1_AC

This list covers pages from 2-124 to 2-129

Pos	Part No	UN	Qty	Description	Page No
A3/FLEX DIMC/FLEX (See drawing on pages: 2-124, 2-126, 2-128)					
55064	90166-0081	MM	4300	TUBE 6 MM PA BLUE	
A3/FLEX QC (See drawing on pages: 2-124, 2-126, 2-128)					
55052	90166-0081	MM	2450	TUBE 6 MM PA BLUE	
55054	90166-0081	MM	2300	TUBE 6 MM PA BLUE	
Common Parts					
100	90458-2956		2	ELBOW PIPE JOINT, EXT.THREAD, D=6MM-G1/8	
130	342735-0103		2	ELBOW PIPE JOINT	
160	342735-0104		1	ELBOW PIPE JOINT	
190	342748-0102		1	T-CONNECTION 6MM	
210	342768-0103		2	BULKHEAD CONNECTOR, 8 MM	
250	342768-0104		2	BULKHEAD CONNECTOR, 10 MM	
300	90015-0020		3	LEAD-IN, TET5-7, E-1458016	
500	90055-0100		1	Y-CONNECTION, 6-6	
50011	90166-0081	MM	4200	TUBE 6 MM PA BLUE	
500111	90166-0081	MM	760	TUBE 6 MM PA BLUE	
500112	90166-0081	MM	170	TUBE 6 MM PA BLUE	
500113	90166-0081	MM	310	TUBE 6 MM PA BLUE	
500114	90166-0081	MM	320	TUBE 6 MM PA BLUE	
510	90055-0248		2	ELBOW WITH TAILPIECE 10/10 MM	
520021	90166-0013	MM	140	TUBE 8 MM PA BLUE	
520022	90166-0013	MM	1960	TUBE 8 MM PA BLUE	
5200221	90166-0013	MM	1200	TUBE 8 MM PA BLUE	
520023	90166-0013	MM	2050	TUBE 8 MM PA BLUE	
5200231	90166-0013	MM	1200	TUBE 8 MM PA BLUE	
52102	90166-0216	MM	2600	TUBE 10 MM PUR BLUE	
521021	90166-0216	MM	1150	TUBE 10 MM PUR BLUE	
521022	90166-0216	MM	70	TUBE 10 MM PUR BLUE	
530	90055-0172		2	ELBOW WITH TAILPIECE 8/8 MM	
53154	90166-0081	MM	2800	TUBE 6 MM PA BLUE	
550422	90166-0081	M	4800	TUBE 6 MM PA BLUE	
55044	90166-0081	MM	4800	TUBE 6 MM PA BLUE	

Pos	Part No	UN	Qty	Description	Page No

Machine Type | Group Description | Used-In | Group Number | Page No

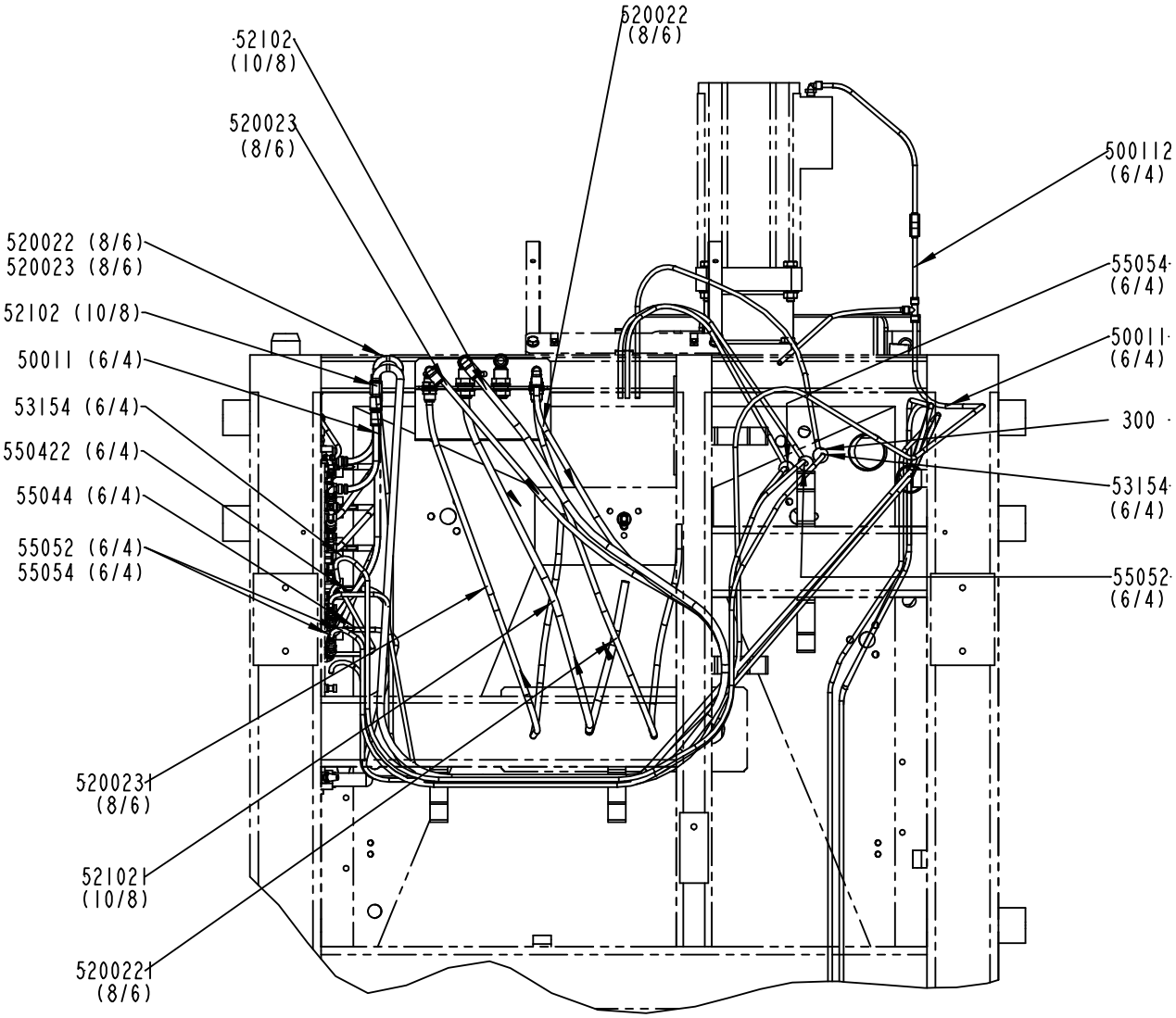

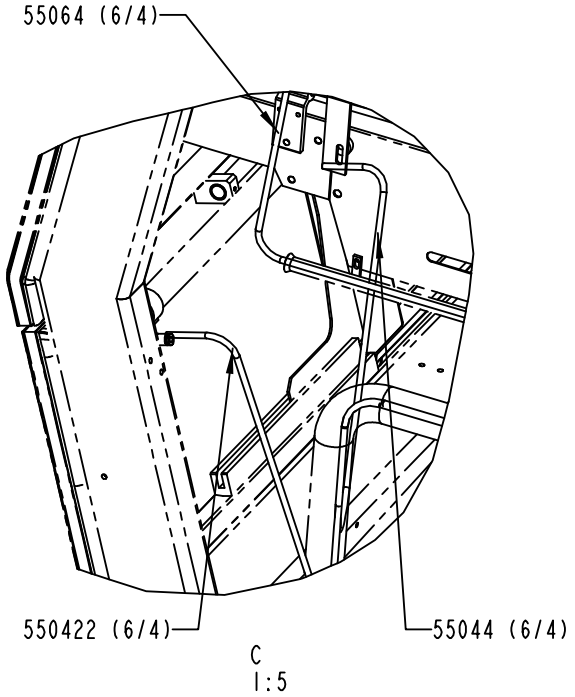

2528046-1
ECM 134706

ECM: 139332 - 20031007
Group number: 2528046-0100
Assembly Drawing: 2528046-1_2_AC

This list covers pages from 2-124 to 2-129

Pos	Part No	UN	Qty	Description	Page No
A3/FLEX DIMC/FLEX (See drawing on pages: 2-124, 2-126, 2-128)					
55064	90166-0081	MM	4300	TUBE 6 MM PA BLUE	
A3/FLEX QC (See drawing on pages: 2-124, 2-126, 2-128)					
55052	90166-0081	MM	2450	TUBE 6 MM PA BLUE	
55054	90166-0081	MM	2300	TUBE 6 MM PA BLUE	
Common Parts					
100	90458-2956		2	ELBOW PIPE JOINT, EXT.THREAD, D=6MM-G1/8	
130	342735-0103		2	ELBOW PIPE JOINT	
160	342735-0104		1	ELBOW PIPE JOINT	
190	342748-0102		1	T-CONNECTION 6MM	
210	342768-0103		2	BULKHEAD CONNECTOR, 8 MM	
250	342768-0104		2	BULKHEAD CONNECTOR, 10 MM	
300	90015-0020		3	LEAD-IN, TET5-7, E-1458016	
500	90055-0100		1	Y-CONNECTION, 6-6	
50011	90166-0081	MM	4200	TUBE 6 MM PA BLUE	
500111	90166-0081	MM	760	TUBE 6 MM PA BLUE	
500112	90166-0081	MM	170	TUBE 6 MM PA BLUE	
500113	90166-0081	MM	310	TUBE 6 MM PA BLUE	
500114	90166-0081	MM	320	TUBE 6 MM PA BLUE	
510	90055-0248		2	ELBOW WITH TAILPIECE 10/10 MM	
520021	90166-0013	MM	140	TUBE 8 MM PA BLUE	
520022	90166-0013	MM	1960	TUBE 8 MM PA BLUE	
5200221	90166-0013	MM	1200	TUBE 8 MM PA BLUE	
520023	90166-0013	MM	2050	TUBE 8 MM PA BLUE	
5200231	90166-0013	MM	1200	TUBE 8 MM PA BLUE	
52102	90166-0216	MM	2600	TUBE 10 MM PUR BLUE	
521021	90166-0216	MM	1150	TUBE 10 MM PUR BLUE	
521022	90166-0216	MM	70	TUBE 10 MM PUR BLUE	
530	90055-0172		2	ELBOW WITH TAILPIECE 8/8 MM	
53154	90166-0081	MM	2800	TUBE 6 MM PA BLUE	
550422	90166-0081	M	4800	TUBE 6 MM PA BLUE	
55044	90166-0081	MM	4800	TUBE 6 MM PA BLUE	

Pos	Part No	UN	Qty	Description	Page No

Machine Type | Group Description | Used-In | Group Number | Page No

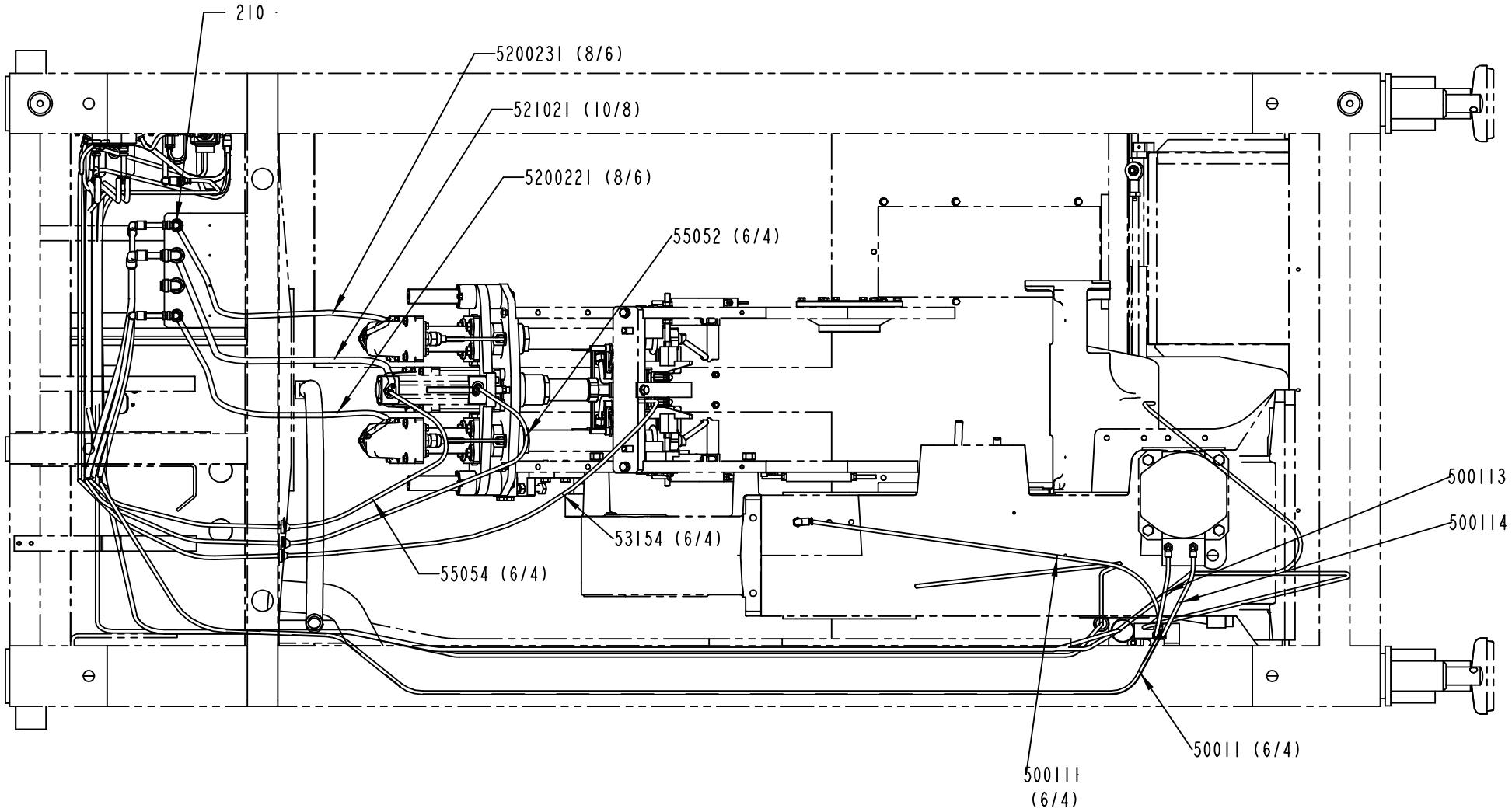

2528046-1
ECM 134706

ECM: 139332 - 20031007
Group number: 2528046-0100
Assembly Drawing: 2528046-1_3_AC

This list covers pages from 2-124 to 2-129

Pos	Part No	UN	Qty	Description	Page No
A3/FLEX DIMC/FLEX (See drawing on pages: 2-124, 2-126, 2-128)					
55064	90166-0081	MM	4300	TUBE 6 MM PA BLUE	
A3/FLEX QC (See drawing on pages: 2-124, 2-126, 2-128)					
55052	90166-0081	MM	2450	TUBE 6 MM PA BLUE	
55054	90166-0081	MM	2300	TUBE 6 MM PA BLUE	
Common Parts					
100	90458-2956		2	ELBOW PIPE JOINT, EXT.THREAD, D=6MM-G1/8	
130	342735-0103		2	ELBOW PIPE JOINT	
160	342735-0104		1	ELBOW PIPE JOINT	
190	342748-0102		1	T-CONNECTION 6MM	
210	342768-0103		2	BULKHEAD CONNECTOR, 8 MM	
250	342768-0104		2	BULKHEAD CONNECTOR, 10 MM	
300	90015-0020		3	LEAD-IN, TET5-7, E-1458016	
500	90055-0100		1	Y-CONNECTION, 6-6	
50011	90166-0081	MM	4200	TUBE 6 MM PA BLUE	
500111	90166-0081	MM	760	TUBE 6 MM PA BLUE	
500112	90166-0081	MM	170	TUBE 6 MM PA BLUE	
500113	90166-0081	MM	310	TUBE 6 MM PA BLUE	
500114	90166-0081	MM	320	TUBE 6 MM PA BLUE	
510	90055-0248		2	ELBOW WITH TAILPIECE 10/10 MM	
520021	90166-0013	MM	140	TUBE 8 MM PA BLUE	
520022	90166-0013	MM	1960	TUBE 8 MM PA BLUE	
5200221	90166-0013	MM	1200	TUBE 8 MM PA BLUE	
520023	90166-0013	MM	2050	TUBE 8 MM PA BLUE	
5200231	90166-0013	MM	1200	TUBE 8 MM PA BLUE	
52102	90166-0216	MM	2600	TUBE 10 MM PUR BLUE	
521021	90166-0216	MM	1150	TUBE 10 MM PUR BLUE	
521022	90166-0216	MM	70	TUBE 10 MM PUR BLUE	
530	90055-0172		2	ELBOW WITH TAILPIECE 8/8 MM	
53154	90166-0081	MM	2800	TUBE 6 MM PA BLUE	
550422	90166-0081	M	4800	TUBE 6 MM PA BLUE	
55044	90166-0081	MM	4800	TUBE 6 MM PA BLUE	

Pos	Part No	UN	Qty	Description	Page No

Machine Type | Group Description | Used-In | Group Number | Page No

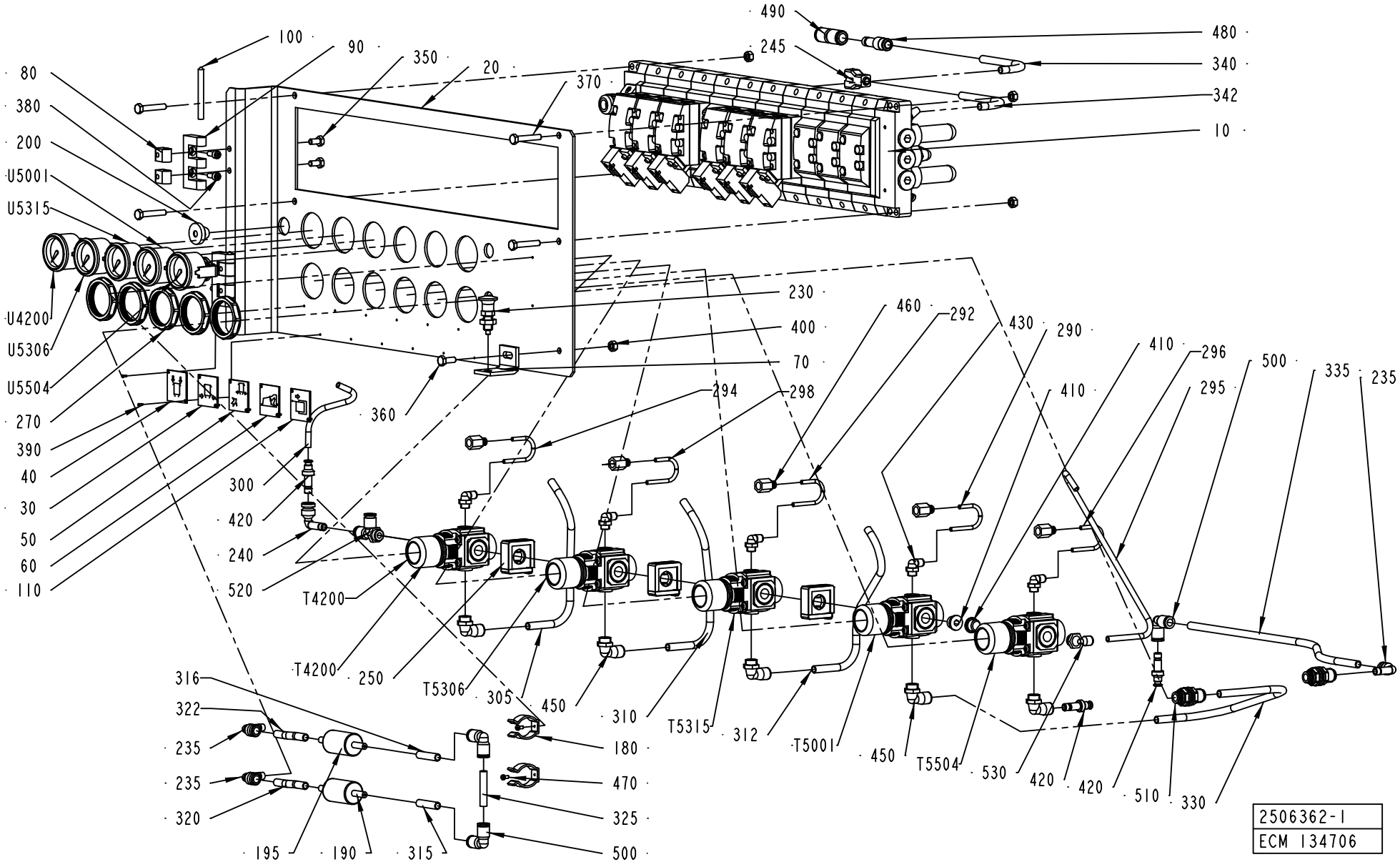
100
90
350
20
370
490
245
480
340
342
10
80
380
200
U5001
U5315
U4200
U5306
U5504
270
390
40
30
50
60
110
230
400
70
460
292
430
290
410
296
500
335
235
294
298
360
300
420
240
520
T4200
T4200
250
T5306
305
450
310
T5315
312
T5001
450
T5504
530
420
420
510
330
316
322
235
235
320
195
190
315
180
470
325
500
2506362-1
ECM 134706

ECM: 139330 - 20031007
Group number: 2506362-0100
Assembly Drawing: 2506362-1_1_AC

This list covers pages from 2-130 to 2-133

Pos	Part No	UN	Qty	Description	Page No
A3/FLEX					
	2512829-0000		1	PNEUMATIC DIAGRAM	
	2527368-0000		1	PNEUMATIC DIAGRAM	
030	1144607-0000		1	SIGN	
040	1144606-0000		1	SIGN	
050	1129370-0000		1	SIGN	
060	479964-0000		1	SIGN	
180	90165-0019		2	TOOL CLIP, 81/3, OPEN, 20 - 30 MM	
190	90277-0045		1	FILTER / 9900-05-BK	
195	90277-0046		1	FILTER / 9933-05-101	
235	90055-0172		3	ELBOW WITH TAILPIECE 8/8 MM	
245	90055-0100		1	Y-CONNECTION, 6-6	
315	90166-0013	MM	40	TUBE 8 MM PA BLUE	
316	90166-0013	MM	40	TUBE 8 MM PA BLUE	
320	90166-0013	MM	60	TUBE 8 MM PA BLUE	
322	90166-0013	MM	60	TUBE 8 MM PA BLUE	
325	90166-0013	MM	40	TUBE 8 MM PA BLUE	
330	90166-0013	MM	325	TUBE 8 MM PA BLUE	
335	90166-0013	MM	450	TUBE 8 MM PA BLUE	
340	90166-0013	MM	350	TUBE 8 MM PA BLUE	
342	90166-0013	MM	80	TUBE 8 MM PA BLUE	
470	312125-0220		2	SCREW ISO 1207 M3X6 A4	
480	342716-0206		1	REDUCER 8-10	
490	342728-0104		1	PIPE COUPLING 10 MM	
500	342735-0103		3	ELBOW PIPE JOINT	
510	342768-0103		2	BULKHEAD CONNECTOR, 8 MM	
T4200	90113-0469		1	MANIFOLD REGULATOR 4 BAR	
T5001	90457-0144		1	REGULATOR 0,3-2 BAR	
T5306	90113-0469		1	MANIFOLD REGULATOR 4 BAR	
T5315	90113-0469		1	MANIFOLD REGULATOR 4 BAR	
U4200	90043-0064		1	PRESSURE GAUGE, 2048 D=40 MM	
U5001	90043-0090		1	PRESSURE GAUGE, 2048 D=40 MM	
U5306	90043-0064		1	PRESSURE GAUGE, 2048 D=40 MM	
U5315	90043-0064		1	PRESSURE GAUGE, 2048 D=40 MM	
Common Parts					
010	2506363-0100		1	VALVE RAMP	**2-135, 2-137, 2-139**
020	2506364-0000		1	PLATE	
070	1348197-0000		1	HOLDER	
080	1129770-0000		4	BLOCKING PIECE	
090	1035792-0000		2	E-HINGE	
100	988685-0000		2	PIN	
110	2598025-0000		1	SIGN	
200	90015-0023		1	LEAD-IN, TET7-10, E-1458019	
230	90051-0112		1	LOCK KNOB, NO. GN 617 NIK5	
240	90055-0118		1	ELBOW WITH TAILPIECE 8/8 MM	
250	90113-0140		3	QUICK CLAMP	
270	90457-0078		5	PANEL NUT	
290	90166-0095	MM	90	TUBE 4 MM PA BLUE	
292	90166-0095	MM	90	TUBE 4 MM PA BLUE	
294	90166-0095	MM	90	TUBE 4 MM PA BLUE	
295	90166-0081	MM	350	TUBE 6 MM PA BLUE	
296	90166-0095	MM	90	TUBE 4 MM PA BLUE	
298	90166-0095	MM	90	TUBE 4 MM PA BLUE	
300	90166-0081	MM	150	TUBE 6 MM PA BLUE	
305	90166-0013	MM	290	TUBE 8 MM PA BLUE	
310	90166-0013	MM	285	TUBE 8 MM PA BLUE	
312	90166-0013	MM	315	TUBE 8 MM PA BLUE	
350	312105-0366		4	SCREW M6S ISO 4017 M6X12 A480	
360	312105-0368		1	SCREW M6S ISO 4017 M6X16 A480	
370	312109-0376		4	SCREW M6S ISO 4017 M6X35 A480	
380	312115-0327		4	SCREW ISO4762 M5X12 A4	
390	312502-0120		10	DRIVE SCREW ROUND HEAD KDS 0X5	
400	312605-0316		5	HEXAGON NUT, M6M M6 A280	
410	342713-0210		2	PLUG, EXT THREAD HEX SOCKET 8638-00-140	
430	90458-2955		5	ELBOW PIPE JOINT, EXT.THREAD,	
450	90458-2958		5	ELBOW PIPE JOINT, EXT.THREAD, D=8MM-G1/4	
460	342770-0101		5	STRAIGHT COUPLING INT, D=4 MM - G1/8	
520	342772-0122		1	ELBOW FITTING, 8 - G1/4	
530	90458-2957		1	ELBOW PIPE JOINT, EXT.THREAD, D=6MM-G1/4	
T5504	90113-0469		1	MANIFOLD REGULATOR 4 BAR	
U5215	90043-0064		1	PRESSURE GAUGE, 2048 D=40 MM	
U5504	90043-0064		1	PRESSURE GAUGE, 2048 D=40 MM	

Machine Type | Group Description | Used-In | Group Number | Page No

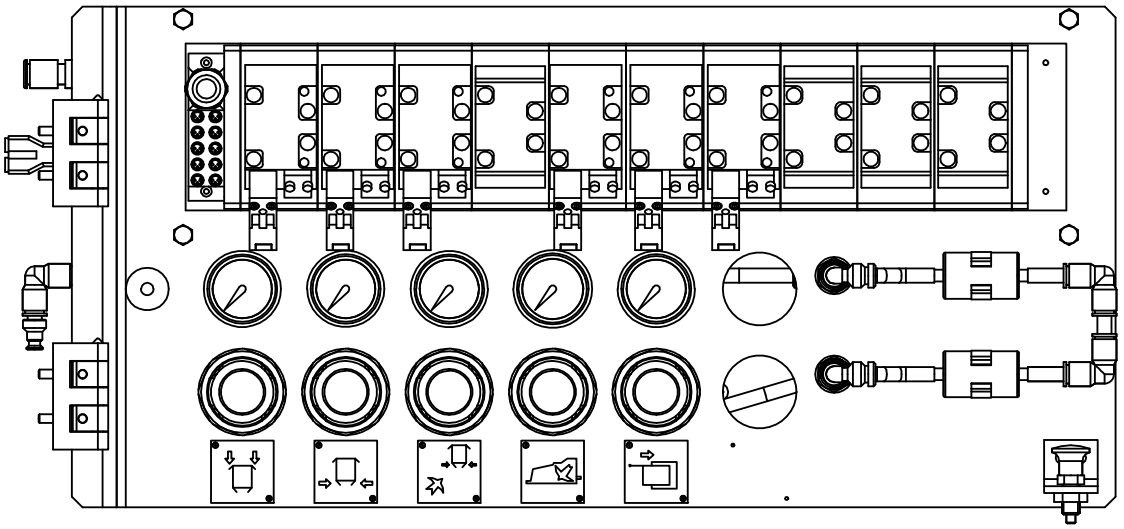

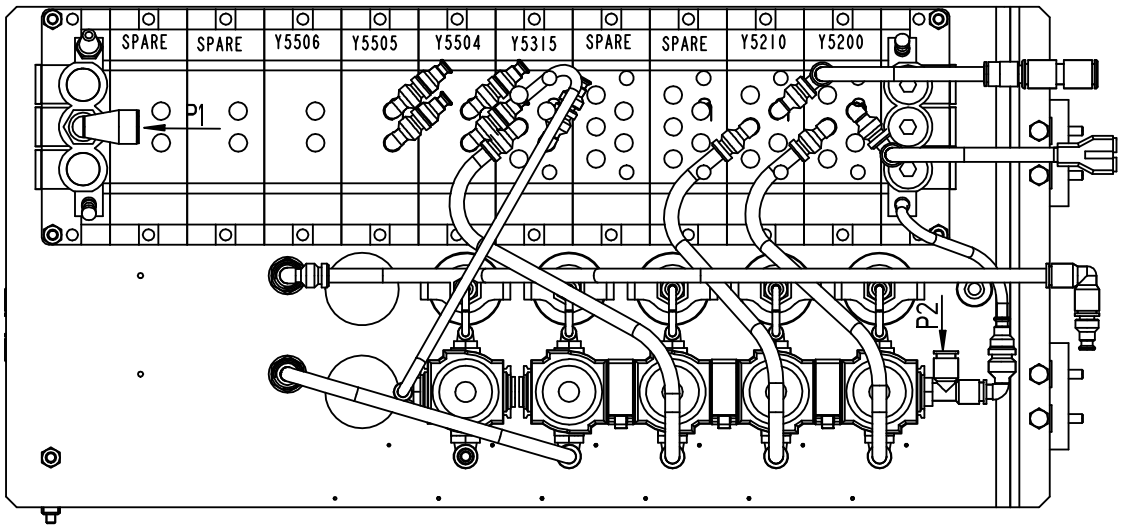

2506362-1
ECM 134706

ECM: 139330 - 20031007
Group number: 2506362-0100
Assembly Drawing: 2506362-1_2_AC

This list covers pages from 2-130 to 2-133

Pos	Part No	UN	Qty	Description	Page No
A3/FLEX					
	2512829-0000		1	PNEUMATIC DIAGRAM	
	2527368-0000		1	PNEUMATIC DIAGRAM	
030	1144607-0000		1	SIGN	
040	1144606-0000		1	SIGN	
050	1129370-0000		1	SIGN	
060	479964-0000		1	SIGN	
180	90165-0019		2	TOOL CLIP, 81/3, OPEN, 20 - 30 MM	
190	90277-0045		1	FILTER / 9900-05-BK	
195	90277-0046		1	FILTER / 9933-05-101	
235	90055-0172		3	ELBOW WITH TAILPIECE 8/8 MM	
245	90055-0100		1	Y-CONNECTION, 6-6	
315	90166-0013	MM	40	TUBE 8 MM PA BLUE	
316	90166-0013	MM	40	TUBE 8 MM PA BLUE	
320	90166-0013	MM	60	TUBE 8 MM PA BLUE	
322	90166-0013	MM	60	TUBE 8 MM PA BLUE	
325	90166-0013	MM	40	TUBE 8 MM PA BLUE	
330	90166-0013	MM	325	TUBE 8 MM PA BLUE	
335	90166-0013	MM	450	TUBE 8 MM PA BLUE	
340	90166-0013	MM	350	TUBE 8 MM PA BLUE	
342	90166-0013	MM	80	TUBE 8 MM PA BLUE	
470	312125-0220		2	SCREW ISO 1207 M3X6 A4	
480	342716-0206		1	REDUCER 8-10	
490	342728-0104		1	PIPE COUPLING 10 MM	
500	342735-0103		3	ELBOW PIPE JOINT	
510	342768-0103		2	BULKHEAD CONNECTOR, 8 MM	
T4200	90113-0469		1	MANIFOLD REGULATOR 4 BAR	
T5001	90457-0144		1	REGULATOR 0,3-2 BAR	
T5306	90113-0469		1	MANIFOLD REGULATOR 4 BAR	
T5315	90113-0469		1	MANIFOLD REGULATOR 4 BAR	
U4200	90043-0064		1	PRESSURE GAUGE, 2048 D=40 MM	
U5001	90043-0090		1	PRESSURE GAUGE, 2048 D=40 MM	
U5306	90043-0064		1	PRESSURE GAUGE, 2048 D=40 MM	
U5315	90043-0064		1	PRESSURE GAUGE, 2048 D=40 MM	
Common Parts					
010	2506363-0100		1	VALVE RAMP	**2-135, 2-137, 2-139**
020	2506364-0000		1	PLATE	
070	1348197-0000		1	HOLDER	
080	1129770-0000		4	BLOCKING PIECE	
090	1035792-0000		2	E-HINGE	
100	988685-0000		2	PIN	
110	2598025-0000		1	SIGN	
200	90015-0023		1	LEAD-IN, TET7-10, E-1458019	
230	90051-0112		1	LOCK KNOB, NO. GN 617 NIK5	
240	90055-0118		1	ELBOW WITH TAILPIECE 8/8 MM	
250	90113-0140		3	QUICK CLAMP	
270	90457-0078		5	PANEL NUT	
290	90166-0095	MM	90	TUBE 4 MM PA BLUE	
292	90166-0095	MM	90	TUBE 4 MM PA BLUE	
294	90166-0095	MM	90	TUBE 4 MM PA BLUE	
295	90166-0081	MM	350	TUBE 6 MM PA BLUE	
296	90166-0095	MM	90	TUBE 4 MM PA BLUE	
298	90166-0095	MM	90	TUBE 4 MM PA BLUE	
300	90166-0081	MM	150	TUBE 6 MM PA BLUE	
305	90166-0013	MM	290	TUBE 8 MM PA BLUE	
310	90166-0013	MM	285	TUBE 8 MM PA BLUE	
312	90166-0013	MM	315	TUBE 8 MM PA BLUE	
350	312105-0366		4	SCREW M6S ISO 4017 M6X12 A480	
360	312105-0368		1	SCREW M6S ISO 4017 M6X16 A480	
370	312109-0376		4	SCREW M6S ISO 4017 M6X35 A480	
380	312115-0327		4	SCREW ISO4762 M5X12 A4	
390	312502-0120		10	DRIVE SCREW ROUND HEAD KDS 0X5	
400	312605-0316		5	HEXAGON NUT, M6M M6 A280	
410	342713-0210		2	PLUG, EXT THREAD HEX SOCKET 8638-00-140	
430	90458-2955		5	ELBOW PIPE JOINT, EXT.THREAD,	
450	90458-2958		5	ELBOW PIPE JOINT, EXT.THREAD, D=8MM-G1/4	
460	342770-0101		5	STRAIGHT COUPLING INT, D=4 MM - G1/8	
520	342772-0122		1	ELBOW FITTING, 8 - G1/4	
530	90458-2957		1	ELBOW PIPE JOINT, EXT.THREAD, D=6MM-G1/4	
T5504	90113-0469		1	MANIFOLD REGULATOR 4 BAR	
U5215	90043-0064		1	PRESSURE GAUGE, 2048 D=40 MM	
U5504	90043-0064		1	PRESSURE GAUGE, 2048 D=40 MM	

Machine Type | Group Description | Used-In | Group Number | Page No

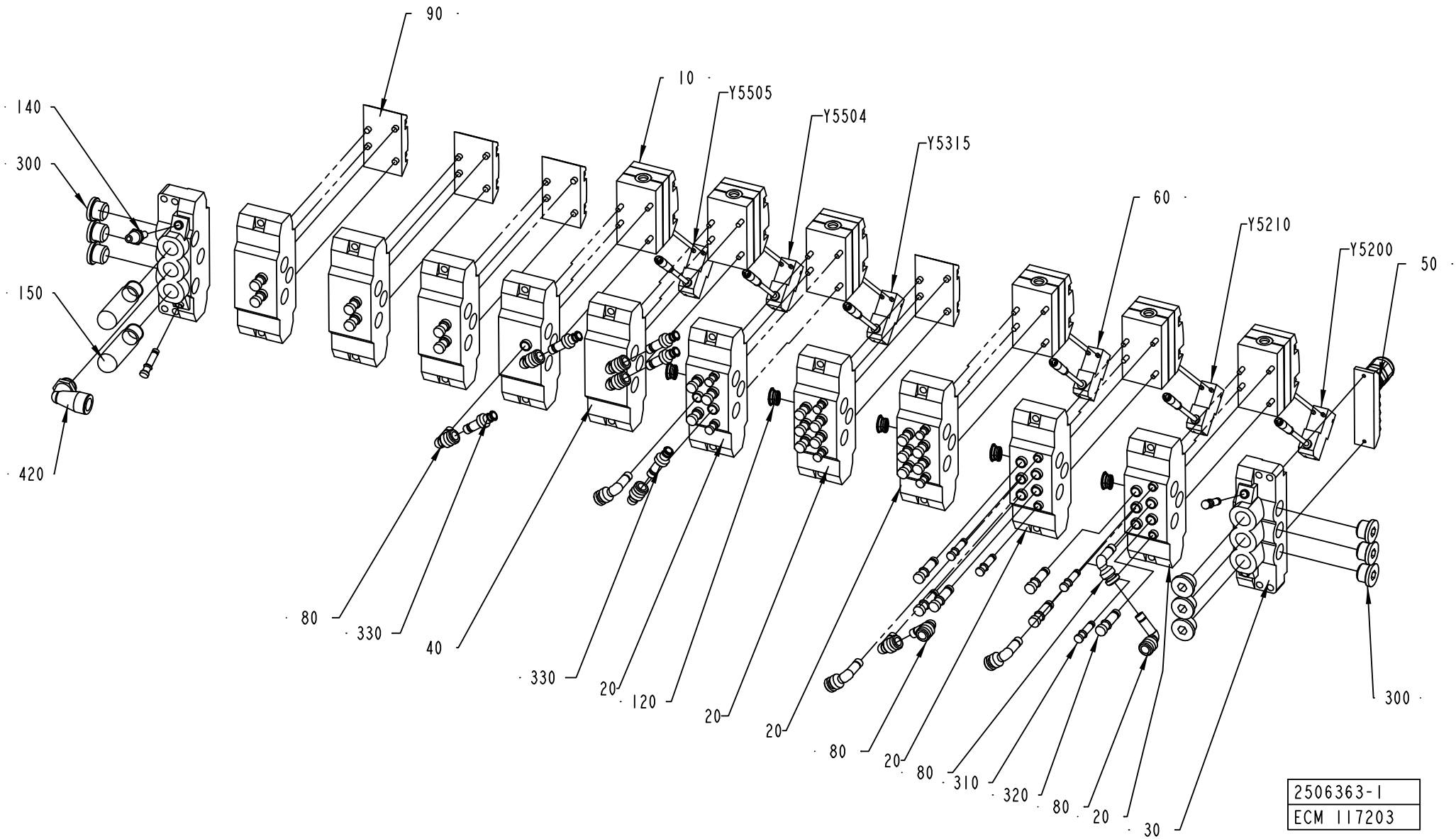
90
10
Y5505
Y5504
Y5315
60
Y5210
Y5200
50
140
300
150
420
80
330
40
330
20
120
20
20
80
20
80
310
320
80
20
30
300
2506363-1
ECM 117203

ECM: 139331 - 20031007
Group number: 2506363-0100
Assembly Drawing: 2506363-1_1_AA

This list covers pages from 2-134 to 2-139

Pos	Part No	UN	Qty	Description	Page No
A3/FLEX NOQC DIMC/FLEX (See drawing on page: 2-138)					
010	90042-0215		6	VALVE BODY 5/2 UNISTABLE	
060	90042-0538		1	PILOT VALVE L=500MM	
080	90055-0172		11	ELBOW WITH TAILPIECE 8/8 MM	
090	90042-0519		4	BLANK PLATE ISO SIZE 1	
320	342715-0103		26	BLIND PLUG 8 MM	
330	342716-0203		4	REDUCER 6-8	
Y5315	90042-0538		1	PILOT VALVE L=500MM	
Y5506	90042-0538		1	PILOT VALVE L=500MM	
A3/FLEX NOQC NODIMC (See drawing on page: 2-136)					
010	90042-0215		5	VALVE BODY 5/2 UNISTABLE	
060	90042-0538		1	PILOT VALVE L=500MM	
080	90055-0172		10	ELBOW WITH TAILPIECE 8/8 MM	
090	90042-0519		5	BLANK PLATE ISO SIZE 1	
320	342715-0103		27	BLIND PLUG 8 MM	
330	342716-0203		3	REDUCER 6-8	
Y5315	90042-0538		1	PILOT VALVE L=500MM	
A3/FLEX QC NODIMC (See drawing on page: 2-134)					
010	90042-0215		6	VALVE BODY 5/2 UNISTABLE	
060	90042-0538		1	PILOT VALVE L=500MM	
080	90055-0172		12	ELBOW WITH TAILPIECE 8/8 MM	
090	90042-0519		4	BLANK PLATE ISO SIZE 1	
320	342715-0103		25	BLIND PLUG 8 MM	
330	342716-0203		5	REDUCER 6-8	
Y5315	90042-0538		1	PILOT VALVE L=500MM	
Y5505	90042-0538		1	PILOT VALVE L=500MM	
Common Parts					
020	90042-0520		5	BASE PLATE ISO SIZE 1	
030	90042-0522		2	PORTED END PIECE ISO SIZE 1	
040	90042-0532		5	BASE PLATE ISO SIZE 1	
050	90042-0535		1	TERMINAL BOARD 19 CORDS	
120	90042-0528		5	BLANKING KIT SEALS ISO SIZE 1	
140	90328-0017		1	SILENCER, D=6 MM	
150	90328-0024		2	SILENCER G3/8	
300	342713-0211		9	PLUG, EXT THREAD HEX SOCKET 8638-00-380	
310	342715-0102		12	BLIND PLUG 6 MM	
420	90458-2960		1	ELBOW PIPE JOINT, EXT.THREAD,D=12MM-G3/8	
Y5200	90042-0538		1	PILOT VALVE L=500MM	
Y5210	90042-0538		1	PILOT VALVE L=500MM	
Y5504	90042-0538		1	PILOT VALVE L=500MM	

Pos	Part No	UN	Qty	Description	Page No

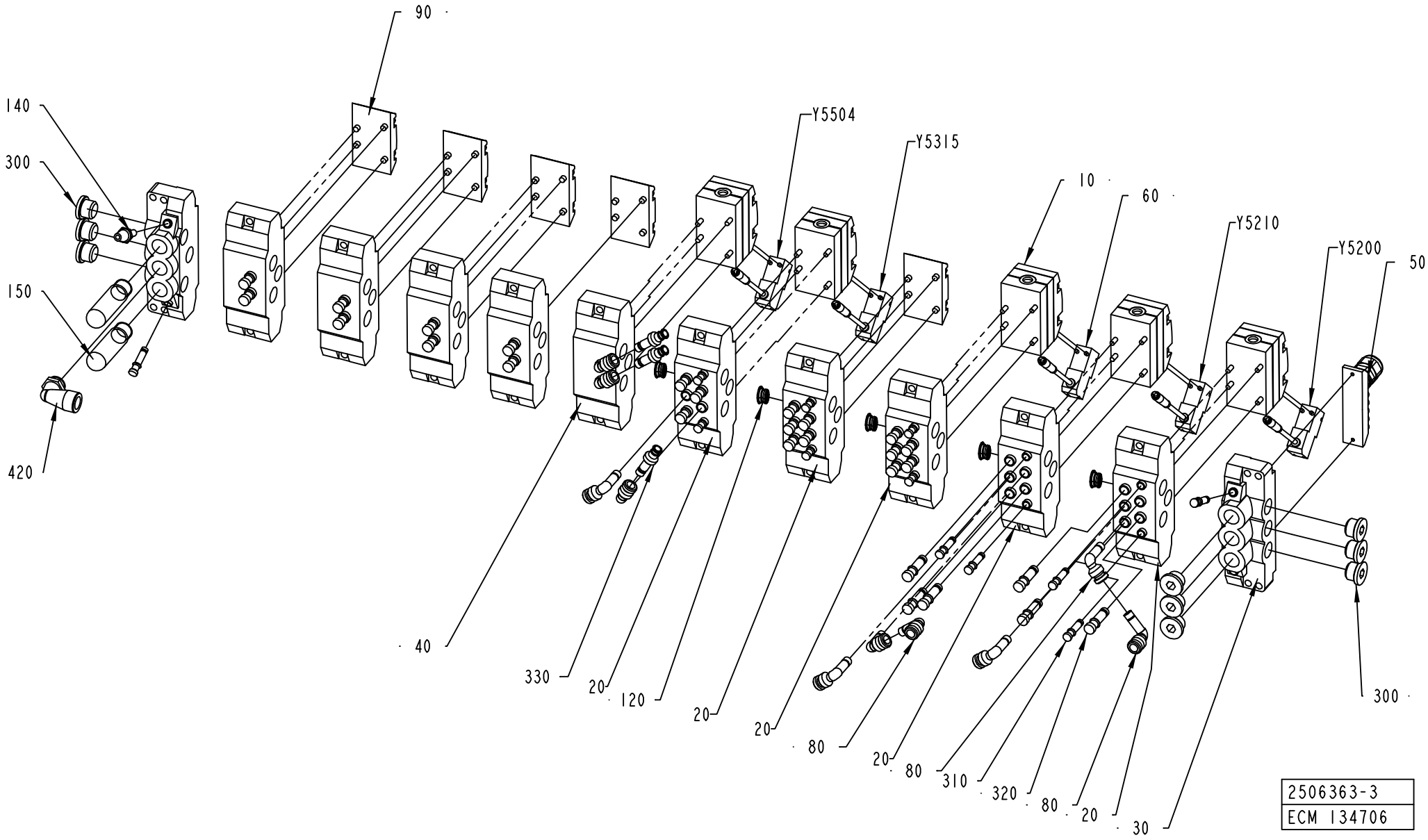
90
140
300
150
420
Y5504
Y5315
10
60
Y5210
Y5200
50
40
330
20
120
20
20
80
20
80
310
320
80
20
30
300
2506363-3
ECM 134706

ECM: 139331 - 20031007
Group number: 2506363-0100
Assembly Drawing: 2506363-3_1_AA

This list covers pages from 2-134 to 2-139

Pos	Part No	UN	Qty	Description	Page No
A3/FLEX NOQC DIMC/FLEX (See drawing on page: 2-138)					
010	90042-0215		6	VALVE BODY 5/2 UNISTABLE	
060	90042-0538		1	PILOT VALVE L=500MM	
080	90055-0172		11	ELBOW WITH TAILPIECE 8/8 MM	
090	90042-0519		4	BLANK PLATE ISO SIZE 1	
320	342715-0103		26	BLIND PLUG 8 MM	
330	342716-0203		4	REDUCER 6-8	
Y5315	90042-0538		1	PILOT VALVE L=500MM	
Y5506	90042-0538		1	PILOT VALVE L=500MM	
A3/FLEX NOQC NODIMC (See drawing on page: 2-136)					
010	90042-0215		5	VALVE BODY 5/2 UNISTABLE	
060	90042-0538		1	PILOT VALVE L=500MM	
080	90055-0172		10	ELBOW WITH TAILPIECE 8/8 MM	
090	90042-0519		5	BLANK PLATE ISO SIZE 1	
320	342715-0103		27	BLIND PLUG 8 MM	
330	342716-0203		3	REDUCER 6-8	
Y5315	90042-0538		1	PILOT VALVE L=500MM	
A3/FLEX QC NODIMC (See drawing on page: 2-134)					
010	90042-0215		6	VALVE BODY 5/2 UNISTABLE	
060	90042-0538		1	PILOT VALVE L=500MM	
080	90055-0172		12	ELBOW WITH TAILPIECE 8/8 MM	
090	90042-0519		4	BLANK PLATE ISO SIZE 1	
320	342715-0103		25	BLIND PLUG 8 MM	
330	342716-0203		5	REDUCER 6-8	
Y5315	90042-0538		1	PILOT VALVE L=500MM	
Y5505	90042-0538		1	PILOT VALVE L=500MM	
Common Parts					
020	90042-0520		5	BASE PLATE ISO SIZE 1	
030	90042-0522		2	PORTED END PIECE ISO SIZE 1	
040	90042-0532		5	BASE PLATE ISO SIZE 1	
050	90042-0535		1	TERMINAL BOARD 19 CORDS	
120	90042-0528		5	BLANKING KIT SEALS ISO SIZE 1	
140	90328-0017		1	SILENCER, D=6 MM	
150	90328-0024		2	SILENCER G3/8	
300	342713-0211		9	PLUG, EXT THREAD HEX SOCKET 8638-00-380	
310	342715-0102		12	BLIND PLUG 6 MM	
420	90458-2960		1	ELBOW PIPE JOINT, EXT.THREAD,D=12MM-G3/8	
Y5200	90042-0538		1	PILOT VALVE L=500MM	
Y5210	90042-0538		1	PILOT VALVE L=500MM	
Y5504	90042-0538		1	PILOT VALVE L=500MM	

Pos	Part No	UN	Qty	Description	Page No

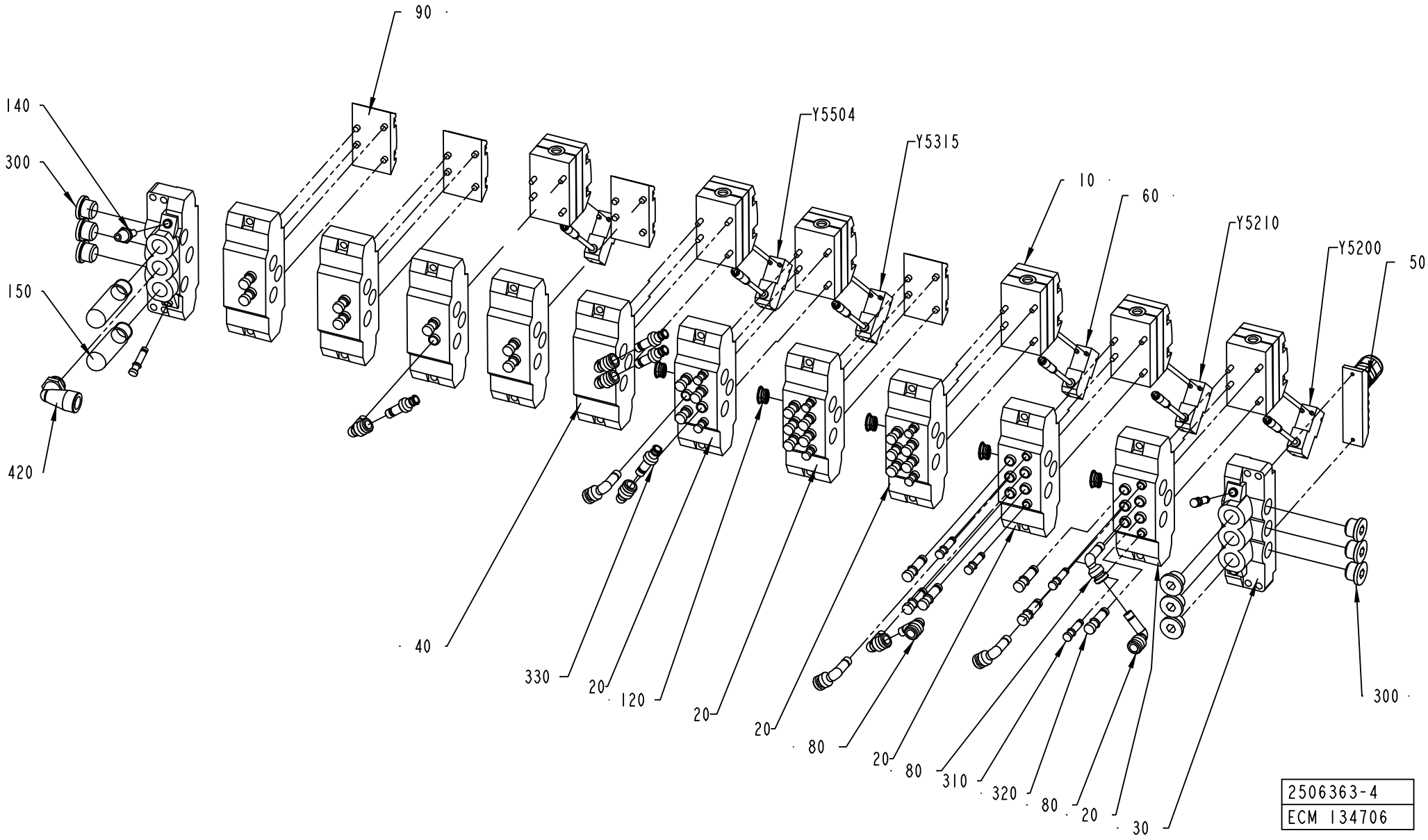
90
140
300
150
420
Y5504
Y5315
10
60
Y5210
Y5200
50
40
330
20
120
20
20
80
20
80
310
320
80
20
30
300
2506363-4
ECM 134706

ECM: 139331 - 20031007
Group number: 2506363-0100
Assembly Drawing: 2506363-4_1_AA

This list covers pages from 2-134 to 2-139

Pos	Part No	UN	Qty	Description	Page No
A3/FLEX NOQC DIMC/FLEX (See drawing on page: 2-138)					
010	90042-0215		6	VALVE BODY 5/2 UNISTABLE	
060	90042-0538		1	PILOT VALVE L=500MM	
080	90055-0172		11	ELBOW WITH TAILPIECE 8/8 MM	
090	90042-0519		4	BLANK PLATE ISO SIZE 1	
320	342715-0103		26	BLIND PLUG 8 MM	
330	342716-0203		4	REDUCER 6-8	
Y5315	90042-0538		1	PILOT VALVE L=500MM	
Y5506	90042-0538		1	PILOT VALVE L=500MM	
A3/FLEX NOQC NODIMC (See drawing on page: 2-136)					
010	90042-0215		5	VALVE BODY 5/2 UNISTABLE	
060	90042-0538		1	PILOT VALVE L=500MM	
080	90055-0172		10	ELBOW WITH TAILPIECE 8/8 MM	
090	90042-0519		5	BLANK PLATE ISO SIZE 1	
320	342715-0103		27	BLIND PLUG 8 MM	
330	342716-0203		3	REDUCER 6-8	
Y5315	90042-0538		1	PILOT VALVE L=500MM	
A3/FLEX QC NODIMC (See drawing on page: 2-134)					
010	90042-0215		6	VALVE BODY 5/2 UNISTABLE	
060	90042-0538		1	PILOT VALVE L=500MM	
080	90055-0172		12	ELBOW WITH TAILPIECE 8/8 MM	
090	90042-0519		4	BLANK PLATE ISO SIZE 1	
320	342715-0103		25	BLIND PLUG 8 MM	
330	342716-0203		5	REDUCER 6-8	
Y5315	90042-0538		1	PILOT VALVE L=500MM	
Y5505	90042-0538		1	PILOT VALVE L=500MM	
Common Parts					
020	90042-0520		5	BASE PLATE ISO SIZE 1	
030	90042-0522		2	PORTED END PIECE ISO SIZE 1	
040	90042-0532		5	BASE PLATE ISO SIZE 1	
050	90042-0535		1	TERMINAL BOARD 19 CORDS	
120	90042-0528		5	BLANKING KIT SEALS ISO SIZE 1	
140	90328-0017		1	SILENCER, D=6 MM	
150	90328-0024		2	SILENCER G3/8	
300	342713-0211		9	PLUG, EXT THREAD HEX SOCKET 8638-00-380	
310	342715-0102		12	BLIND PLUG 6 MM	
420	90458-2960		1	ELBOW PIPE JOINT, EXT.THREAD,D=12MM-G3/8	
Y5200	90042-0538		1	PILOT VALVE L=500MM	
Y5210	90042-0538		1	PILOT VALVE L=500MM	
Y5504	90042-0538		1	PILOT VALVE L=500MM	

Pos	Part No	UN	Qty	Description	Page No

AIR JET GUN

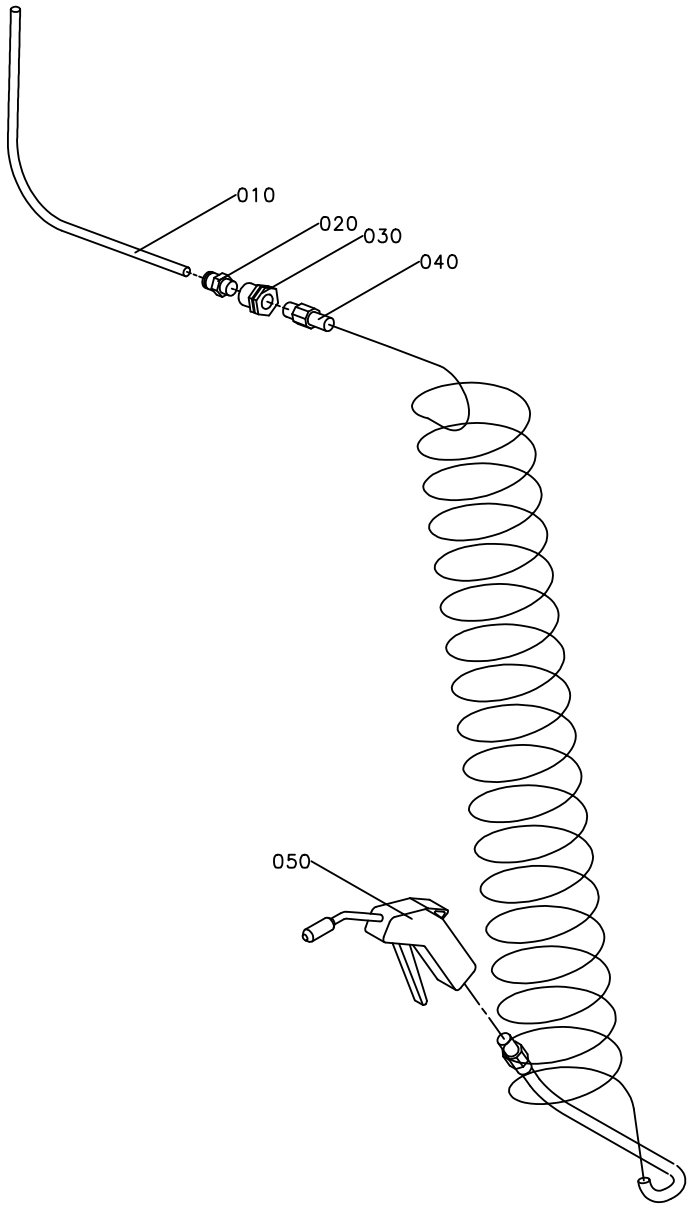

ECN 21193

ECM: 71742 - 19980903
Group number: 1095682-0100
Assembly Drawing: 1095682-1_1_AA

Pos	Part No	UN	Qty	Description	Page No
-					
010	90166-0013	MM	1800	TUBE 8 MM PA BLUE	
020	342920-0122		1	STRAIGHT COUPLING,EXT.THREADED 8/6-R1/4"	
030	342767-0104		1	CONN. BULKHEAD G1/4	
040	90152-0016		1	HOSE (SPIRAL)	
050	90243-0061		1	AIR GUN, CEJN SERIE 204 ED: 90459-0173	

Pos	Part No	UN	Qty	Description	Page No

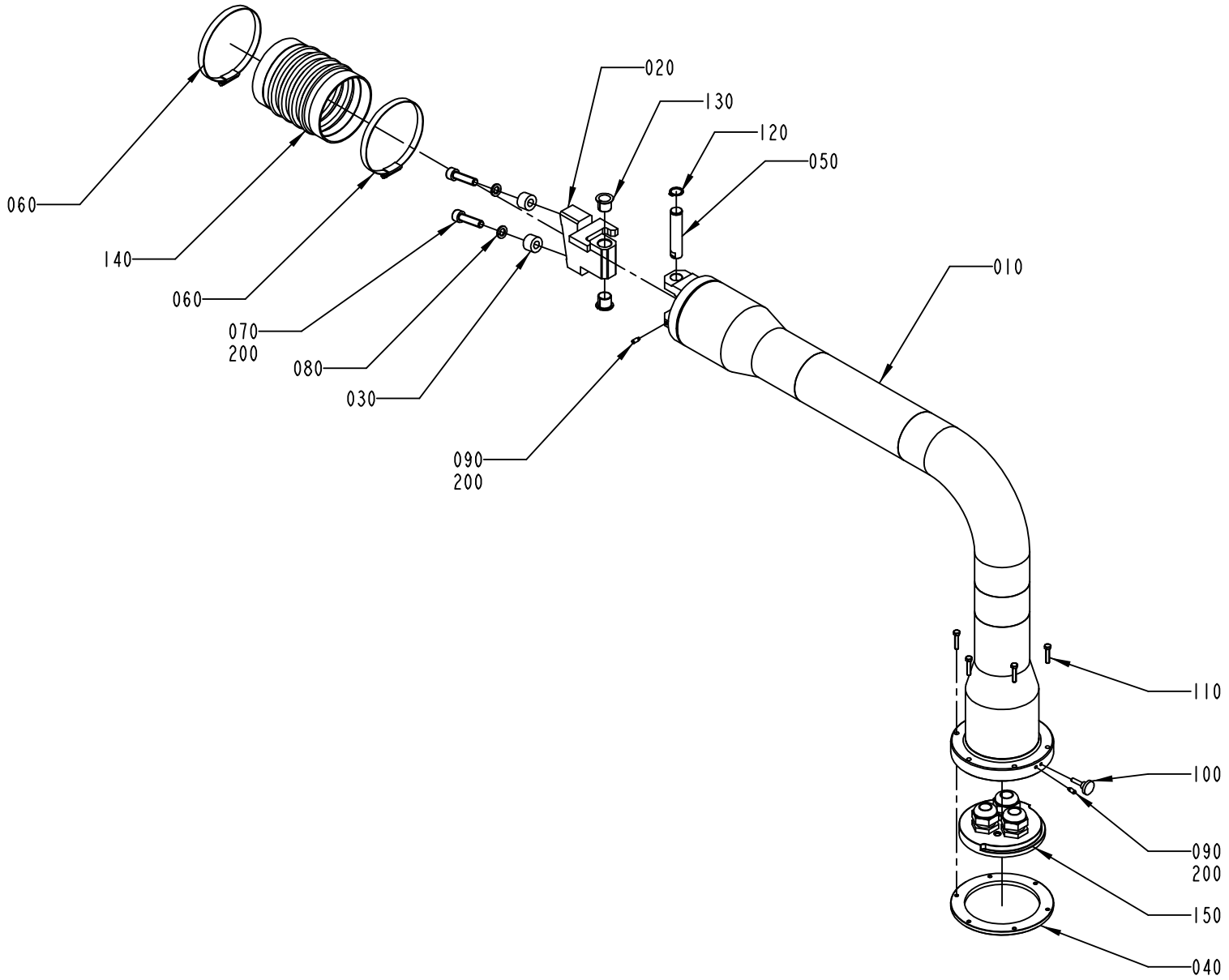

1095863-2
ECM 116300

ECM: 116300 - 20021110
Group number: 1095863-0200
Assembly Drawing: 1095863-2_1_AA

Pos	Part No	UN	Qty	Description	Page No
-					
010	1558974-0000		1	PIPE BRACKET	
020	1558975-0000		1	BLOCKING PIECE	
030	1254494-0000		1	SPACER	
040	1558949-0000		1	PLATE	
050	1558945-0000		1	PIVOT PIN	
060	342991-0114		2	HOSE CLIP,WORM DRIVE TYPE (93)-110	
070	312115-0499		2	SCREW ISO4762 M10X40 A4	
080	315402-0173		2	LOCK WASHER FBB 10,2	
090	312311-0327		2	SCREW ISO4028 M5X12 FZB	
100	318860-0106		1	KNOB, ADJUST.HI.EXT.THREAD, NO 8324-3674	
110	312105-0333		6	SCREW M6S ISO 4017 M5X25 A480	
120	315751-0113		1	RETAINING RING FOR SHAFT DIN 471 16 A2	
130	321161-0221		2	FLANGE BUSHING, 16X18X17 MM	
140	90342-0024		1	RUBBER BELLOWS, 100X100 MM	
150	2570616-0100		1	FASTENING PLATE	**2-145**
200	90157-0021	KG	1	LOCKING FLUID LOCTITE 270	

Pos	Part No	UN	Qty	Description	Page No

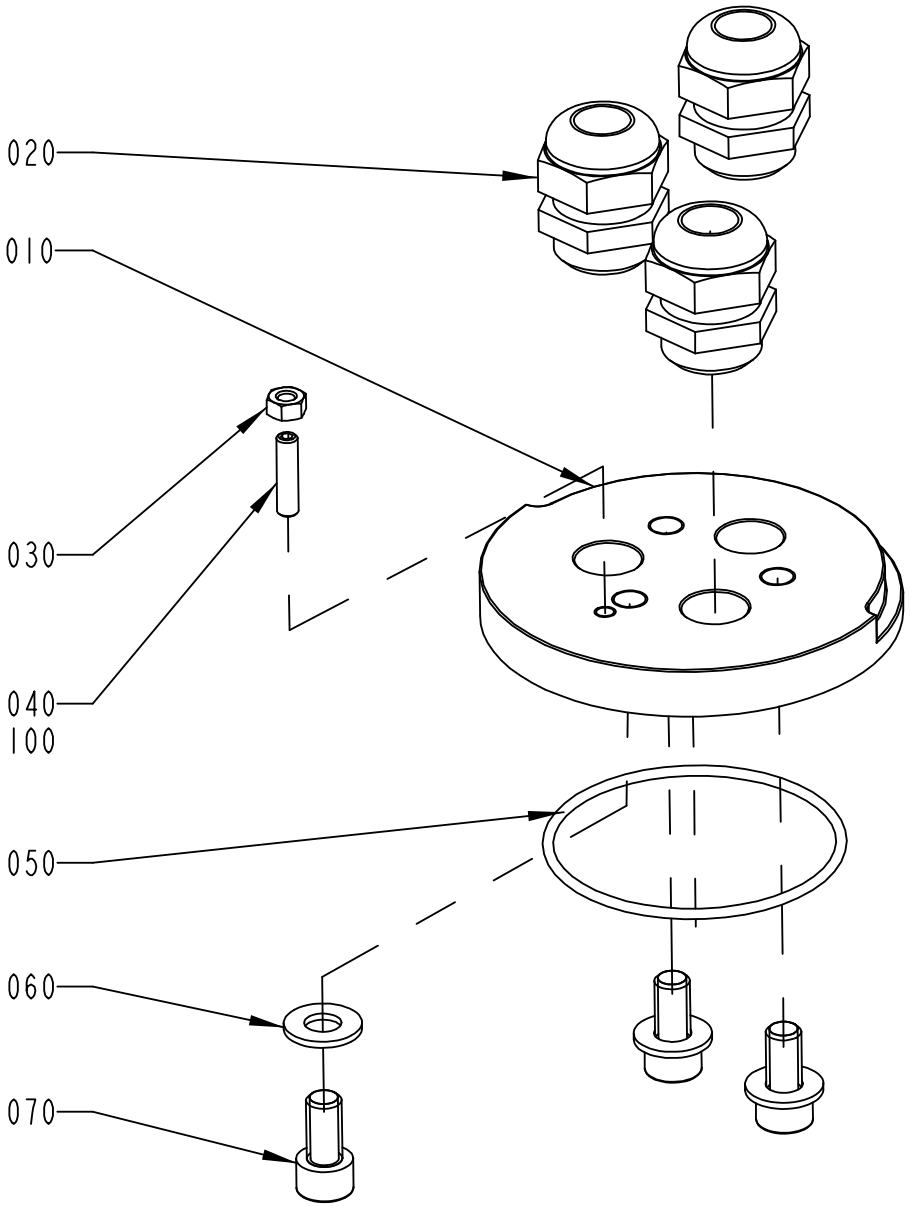

2570616-1
ECM 116300

ECM: 117183 - 20021110
Group number: 2570616-0100
Assembly Drawing: 2570616-1_1_AA

Pos	Part No	UN	Qty	Description	Page No
-					
010	1558948-0000		1	PLATE	
020	352103-0115		3	CABLE GLAND, STR 21, PR28,3/PG21	
030	312605-0316		1	HEXAGON NUT, M6M M6 A280	
040	312318-0372		1	SCREW ISO4029 M6X25 A4	
050	315202-0307		1	O-RING 79,5X3 MM	
060	315105-0173		3	WASHER BRB10,5X22RFR	
070	312115-0491		3	SCREW ISO4762 M10X20 A4	
100	90157-0021		1	LOCKING FLUID LOCTITE 270	

Pos	Part No	UN	Qty	Description	Page No

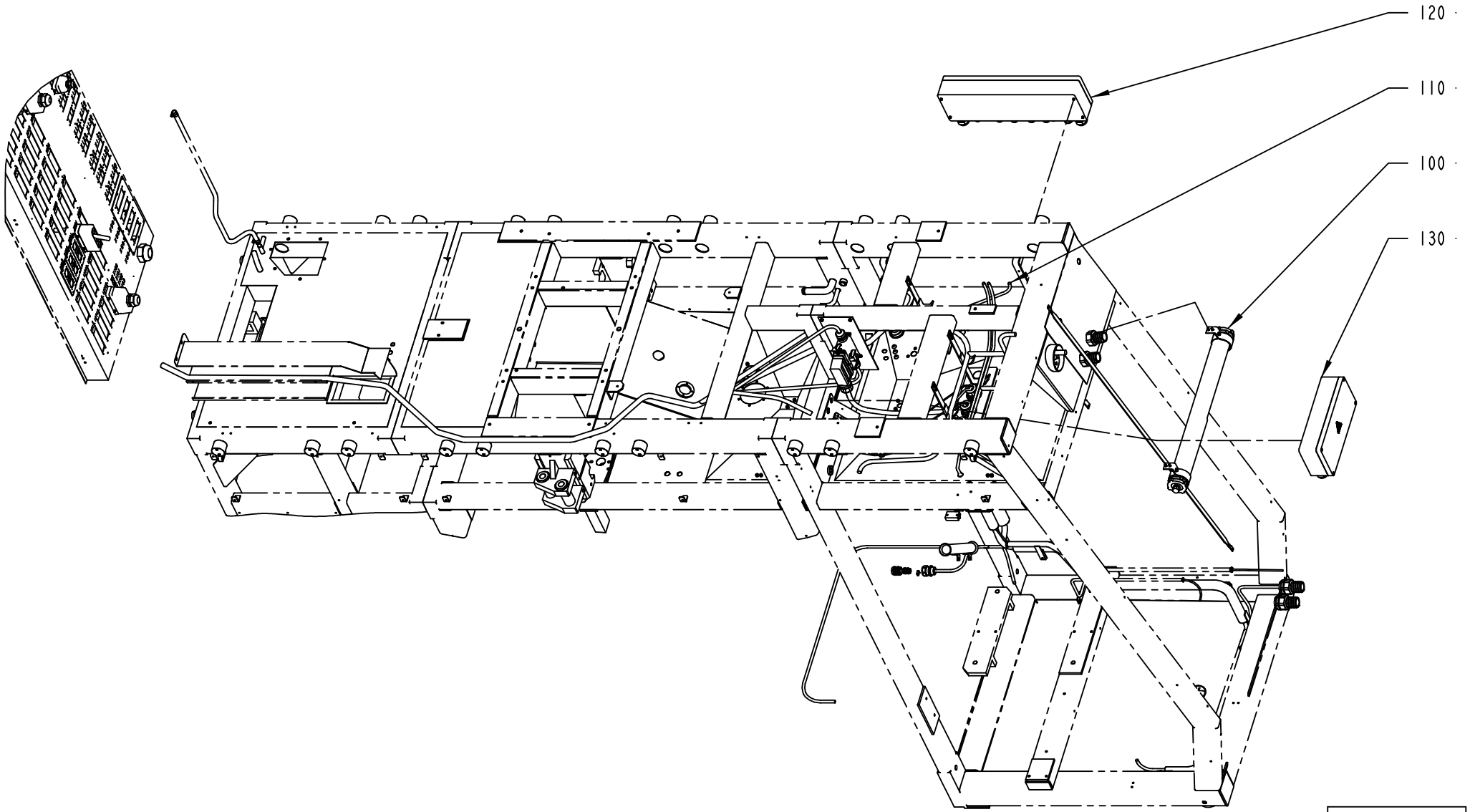
120
110
100
130
2527300-1
ECM 117203

ECM: 139333 - 20030711
Group number: 2527300-0100
Assembly Drawing: 2527300-1_1_AA

Pos	Part No	UN	Qty	Description	Page No
A3/FLEX					
110	2527295-0100		1	CABLE HARNESS	**2-149, 2-151, 2-153**
Common Parts					
100	2504790-0100		1	LIGHT FIXTURE	**2-93**
120	2527297-0100		1	CONNECTION BOX	**2-155**
130	2527299-0100		1	CONNECTION BOX	**2-157**

Pos	Part No	UN	Qty	Description	Page No

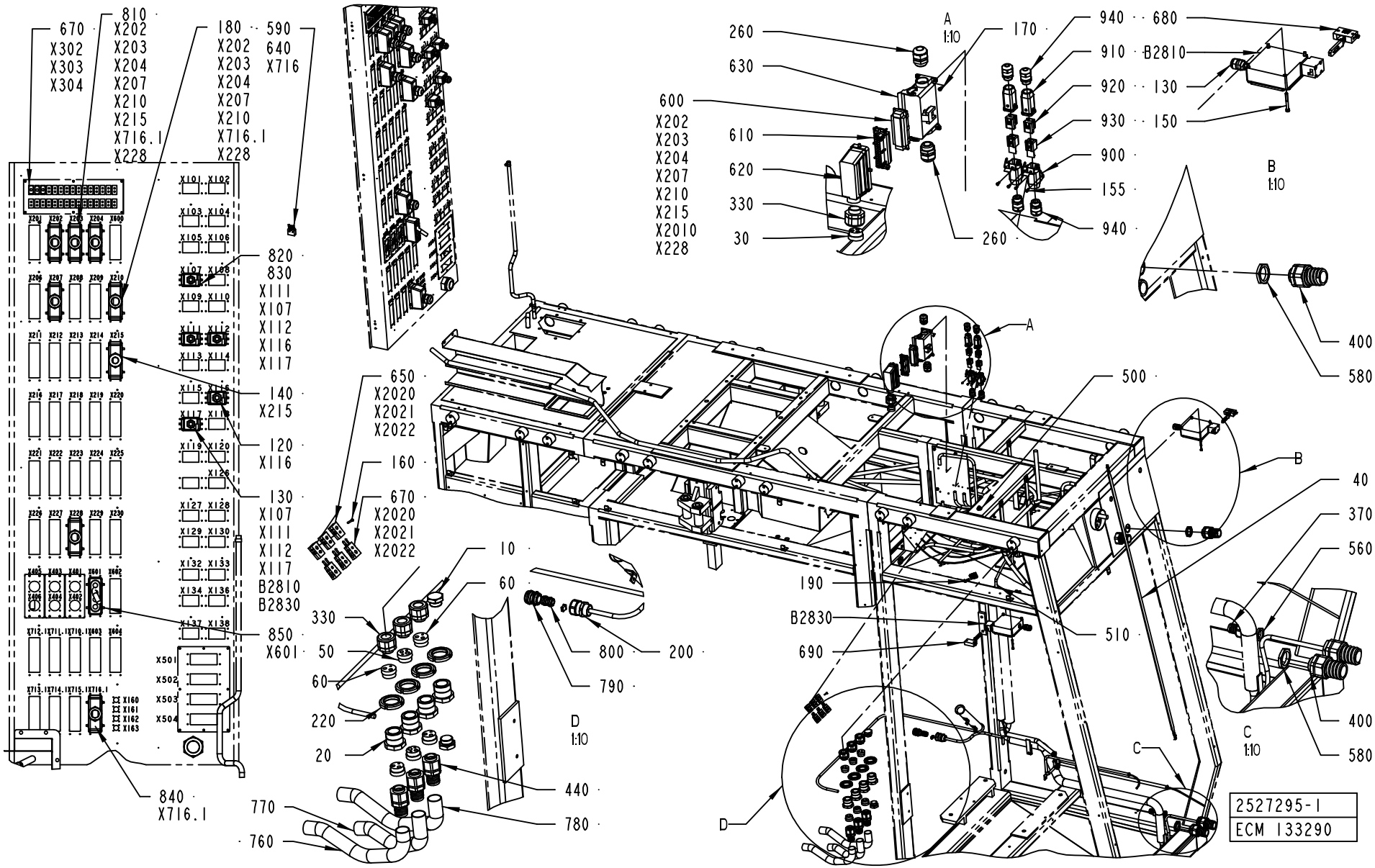
670
X302
X303
X304
810
X202
X203
X204
X207
X210
X215
X716.1
X228
180
X202
X203
X204
X207
X210
X716.1
X228
590
640
X716
820
830
X111
X107
X112
X116
X117
140
X215
120
X116
130
X107
X111
X112
X117
B2810
B2830
850
X601
840
X716.1
650
X2020
X2021
X2022
160
670
X2020
X2021
X2022
10
60
330
50
60
220
20
770
760
440
780
800
200
790
D
1:10
260
630
600
X202
X203
X204
X207
X210
X215
X2010
X228
610
620
330
30
A
1:10
260
170
940
680
910
B2810
920
130
930
150
900
155
940
B
1:10
400
580
A
500
B
40
370
560
190
B2830
690
510
C
1:10
400
580
C
D
2527295-1
ECM 133290

ECM: 145213 - 20031001
Group number: 2527295-0100
Assembly Drawing: 2527295-1_1_AB

This list covers pages from 2-148 to 2-153

Pos	Part No	UN	Qty	Description	Page No
-					
010	2514371-0000		2	PLUG	
020	2514372-0000		4	BUSHING	
030	2527371-0000		1	INSERT	
040	1129600-0000		1	BRAID	
050	1484093-0000		2	INSERT	
060	1484379-0000		4	INSERT	
120	352103-0110		1	CABLE GLAND, STR 16, PR22,5/PG16	
130	352103-0108		6	CABLE GLAND, ST 13,5 , PR20,4/PG13,5	
140	352103-0120		1	CABLE GLAND, STR 29, PR37,0/PG29	
150	312115-0340		8	SCREW ISO4762 M5X45 A4	
155	312125-0222		4	SCREW ISO 1207 M3X8 A4	
160	312125-0228		3	SCREW ISO 1207 M3X16 A4	
170	312125-0287		4	SCREW ISO 1207 M4X8 A4	
180	352103-0121		7	CABLE GLAND, ST 29, PR37,0/PG29	
190	353101-0153		1	CABLE SHOE 4,0-6,0MM2 M6 YELLOW	
200	353245-0006		1	GLAND, EXTENDED WITH INSERT, PG21/PR28,3	
220	312805-0108		4	NUT ROUND WITH SLOTS M40X1,5 FE	
260	352103-0115		2	CABLE GLAND, STR 21, PR28,3/PG21	
330	353241-0003		4	GLAND W/O INSERT PG21 EXTENDED	
370	353243-0005		1	HOSE GLAND W/O INSERT PG16 EXTENDED	
400	353243-0008		4	HOSE GLAND W/O INSERT PG29 EXTENDED	
440	353247-0005		3	HOSE GLAND EMC PG21 EXTENDED	
480	353249-0081		2	INSERT, MULTI HOLE, E155M4X8	
490	353249-0308		4	SEALING PIN, 8X20	
500	90015-0020		3	LEAD-IN, TET5-7, E-1458016	
510	90015-0023		5	LEAD-IN, TET7-10, E-1458019	
560	90099-0110		1	NUT, PR 22,5 (PG16)	
580	90099-0120		4	NUT PR 37 (PG29)	
590	90110-0144		1	COVER	
600	90110-0150		8	MALE INSERT 121110 0000	
610	90110-0151		1	FEMALE INSERT 24-POL 121130 0000	
620	90110-0228		1	CABLE HOOD 24-POL 71.350.2428.0	
630	90110-0513		1	CHASSIS CONTACT	
640	90110-0141		1	CONTACT UNIT, DE09P064TX	
650	90326-0020		6	PLUG, FEMALE YELLOW CR-AL	
670	90326-0022		6	PLUG, MALE YELLOW CR-AL	
680	90457-0194		1	KEY FOR SAF.SW.048850-C2052	
690	90457-0195		1	KEY FOR SAF.SW.TZRE024PG RC1635-057950	
750	90152-0051	M	1	SPIRAL CONDUIT, 25X18, UL 1816	
760	90152-0070	MM	490	METAL HOSE, 32,5X26, UL 2621	
770	90152-0070	MM	360	METAL HOSE, 32,5X26, UL 2621	
780	90152-0070	MM	510	METAL HOSE, 32,5X26, UL 2621	
790	90100-0045		1	CABLE GLAND, MOTOR END 9032 010 806	
800	90100-0052		1	CONNECTOR KIT, FEEDBACK CABLE DRIVE END	
810	90110-0152		8	CABLE HOOD 24-POL 70.352.2428.1	
820	90110-0157		5	CABLE HOOD 6-POL 70.352.0628.1	
830	90110-0159		5	MALE INSERT 70.310.0640.0	
840	90110-0517		1	MALE PLUG	
850	90110-0381		1	COVER	
860	359005-0010		13	MARKING LABEL KIT 0 - 9, 04.841.2150.0	
870	359005-0050		12	MARKING LABEL KIT X, 04.841.4550.0	
890	90110-0385		13	HOLDER	
900	90459-3081		2	HOUSING HAN A 19 20 003 1250	
910	90459-3080		2	HOOD HAN-BRID 3A 19 20 003 1443	
920	90459-3082		2	MALE INSERT HAN-BRID RJ45 09 12 003 3001	
930	90459-3083		2	FEMALE INSERT HAN-BRID RJ45 09 120032790	
940	90458-0315		4	CABLE GLAND, M20X1,5, NO.5311 1120	
B2810	90457-0196		1	KEY SAF.SW. TZ2RE024PG RC1635	
B2830	90457-0196		1	KEY SAF.SW. TZ2RE024PG RC1635	
W0001	351150-0430	M	8	CABLE OLFLEX 5X35 MM2 LIGHT/GREY	
W2010	351150-0425	MM	7400	CABLE OLFLEX 25X0,75 MM2 LIGHT/GREY	
W2011	351150-0425	MM	7000	CABLE OLFLEX 25X0,75 MM2 LIGHT/GREY	
W2014	351150-0413	MM	7000	CABLE OLFLEX 4X1,5 MM2 LIGHT/GREY	
W2015	90220-0104	MM	6900	SCR. CABLE 4X1,5MM2	
W2016	351150-0412	MM	8000	CABLE OLFLEX 3X1,5 MM2 LIGHT/GREY	
W2017	351150-0412	MM	2000	CABLE OLFLEX 3X1,5 MM2 LIGHT/GREY	
W2018	351150-0412	MM	2000	CABLE OLFLEX 3X1,5 MM2 LIGHT/GREY	
W2019	351150-0412	MM	2000	CABLE OLFLEX 3X1,5 MM2 LIGHT/GREY	
W2021	90220-0034	MM	7500	THERMOCABLE TEX/SITW-20F-KX 2X0,5MM2	
W2022	90220-0034	MM	7500	THERMOCABLE TEX/SITW-20F-KX 2X0,5MM2	
W2023	90220-0034	MM	7500	THERMOCABLE TEX/SITW-20F-KX 2X0,5MM2	
W2030	351150-0425	MM	7500	CABLE OLFLEX 25X0,75 MM2 LIGHT/GREY	
W2066	90458-2557	MM	9100	CABLE OLFLEX 25X1 MM2	
W2067	90458-2557	MM	9100	CABLE OLFLEX 25X1 MM2	
W2068	1363297-0000		1	CABLE LVDS 10M	
W2212	351150-0405	MM	4000	CABLE OLFLEX 5X0,75 MM2 LIGHT/GREY	
W2224	351150-0406	MM	1500	CABLE OLFLEX 7X0,75 MM2 LIGHT/GREY	
W2228	351150-0406	MM	2500	CABLE OLFLEX 7X0,75 MM2 LIGHT/GREY	
W2716	90220-0084	MM	8400	MOTOR CABLE 4X2,5+2(2X0.75)+SHIELD	
W2726	90220-0131	M	11	PAIR TWISTED CABLE 3X2X0,25MM2	
W4005	351150-0414	MM	6500	CABLE OLFLEX 5X1,5 MM2 LIGHT/GREY	
W4006	351150-0417	MM	6500	CABLE OLFLEX 3X2,5 MM2 LIGHT/GREY	
W4502	2570004-0001		1	CABLE	

Machine Type	Group Description	Used-In	Group Number	Page No

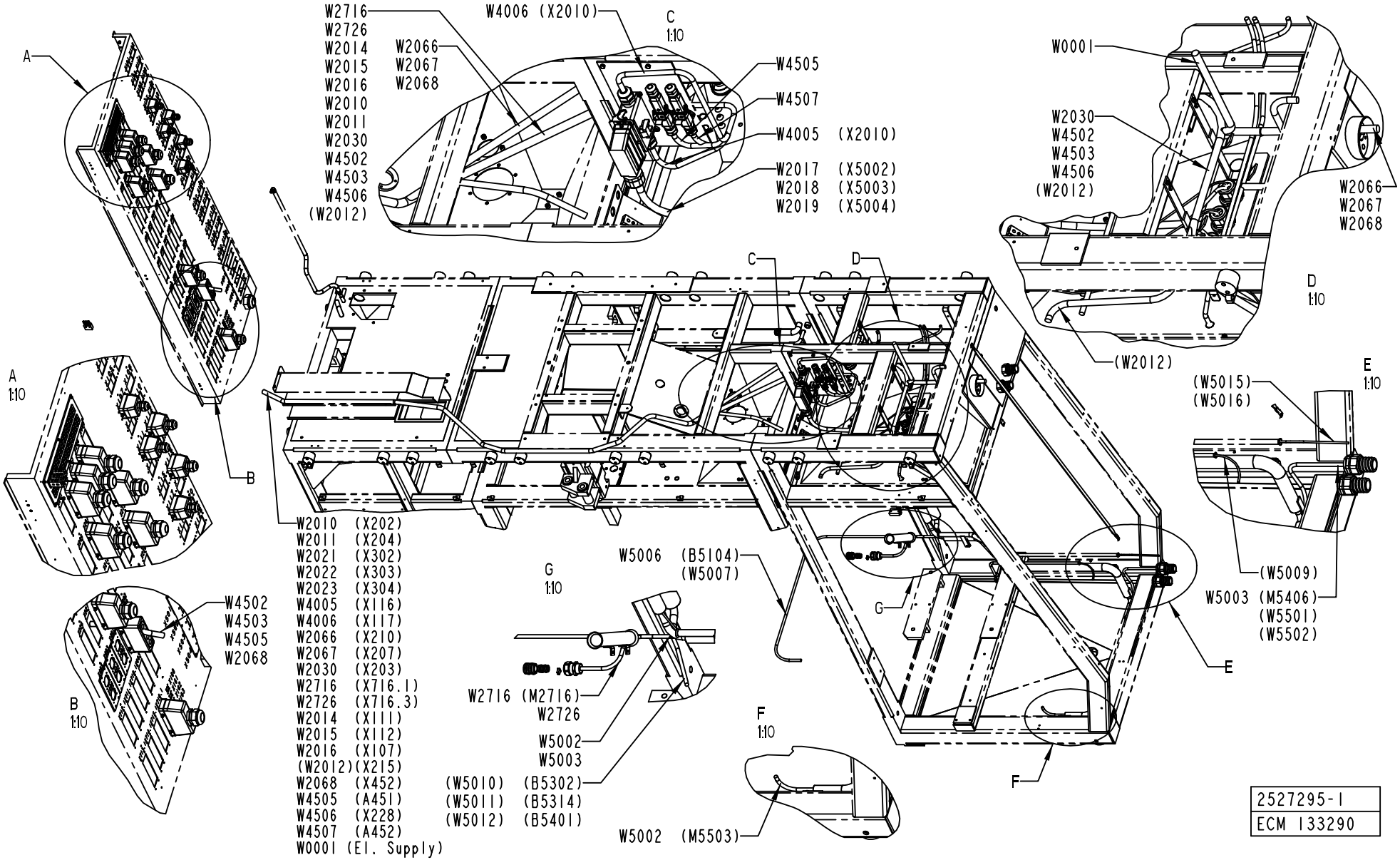
W2716
W2726
W2014
W2015
W2016
W2010
W2011
W2030
W4502
W4503
W4506
(W2012)
W2066
W2067
W2068
W4006 (X2010)
C
1:10
W4505
W4507
W4005 (X2010)
W2017 (X5002)
W2018 (X5003)
W2019 (X5004)
W0001
W2030
W4502
W4503
W4506
(W2012)
W2066
W2067
W2068
D
1:10
(W2012)
A
A
1:10
B
B
1:10
W4502
W4503
W4505
W2068
C
D
W2010 (X202)
W2011 (X204)
W2021 (X302)
W2022 (X303)
W2023 (X304)
W4005 (X116)
W4006 (X117)
W2066 (X210)
W2067 (X207)
W2030 (X203)
W2716 (X716.1)
W2726 (X716.3)
W2014 (X111)
W2015 (X112)
W2016 (X107)
(W2012)(X215)
W2068 (X452)
W4505 (A451)
W4506 (X228)
W4507 (A452)
W0001 (El. Supply)
G
1:10
W2716 (M2716)
W2726
W5002
W5003
W5006 (B5104)
(W5007)
(W5010) (B5302)
(W5011) (B5314)
(W5012) (B5401)
W5002 (M5503)
F
1:10
F
G
E
E
1:10
(W5015)
(W5016)
(W5009)
W5003 (M5406)
(W5501)
(W5502)
2527295-1
ECM 133290

Pos	Part No	UN	Qty	Description	Page No
- (Cont'd)					
W4503	2570004-0001		1	CABLE	
W4505	90459-1812		1	CABLE, ETHERNET RJ 45 CONNECT. 8 M	
W4506	351150-0425	MM	7500	CABLE OLFLEX 25X0,75 MM2 LIGHT/GREY	
W4507	90459-1812		1	CABLE, ETHERNET RJ 45 CONNECT. 8 M	
W5002	351150-0413	MM	5000	CABLE OLFLEX 4X1,5 MM2 LIGHT/GREY	
W5003	90220-0104	MM	7500	SCR. CABLE 4X1,5MM2	
W5004	351150-0412	MM	2500	CABLE OLFLEX 3X1,5 MM2 LIGHT/GREY	
W5021	90220-0034	M	2	THERMOCABLE TEX/SITW-20F-KX 2X0,5MM2	
W5022	90220-0034	M	2	THERMOCABLE TEX/SITW-20F-KX 2X0,5MM2	
W5023	90220-0034	M	2	THERMOCABLE TEX/SITW-20F-KX 2X0,5MM2	
W5700	351150-0403	MM	1500	CABLE OLFLEX 3X0,75 MM2 LIGHT/GREY	

Pos	Part No	UN	Qty	Description	Page No

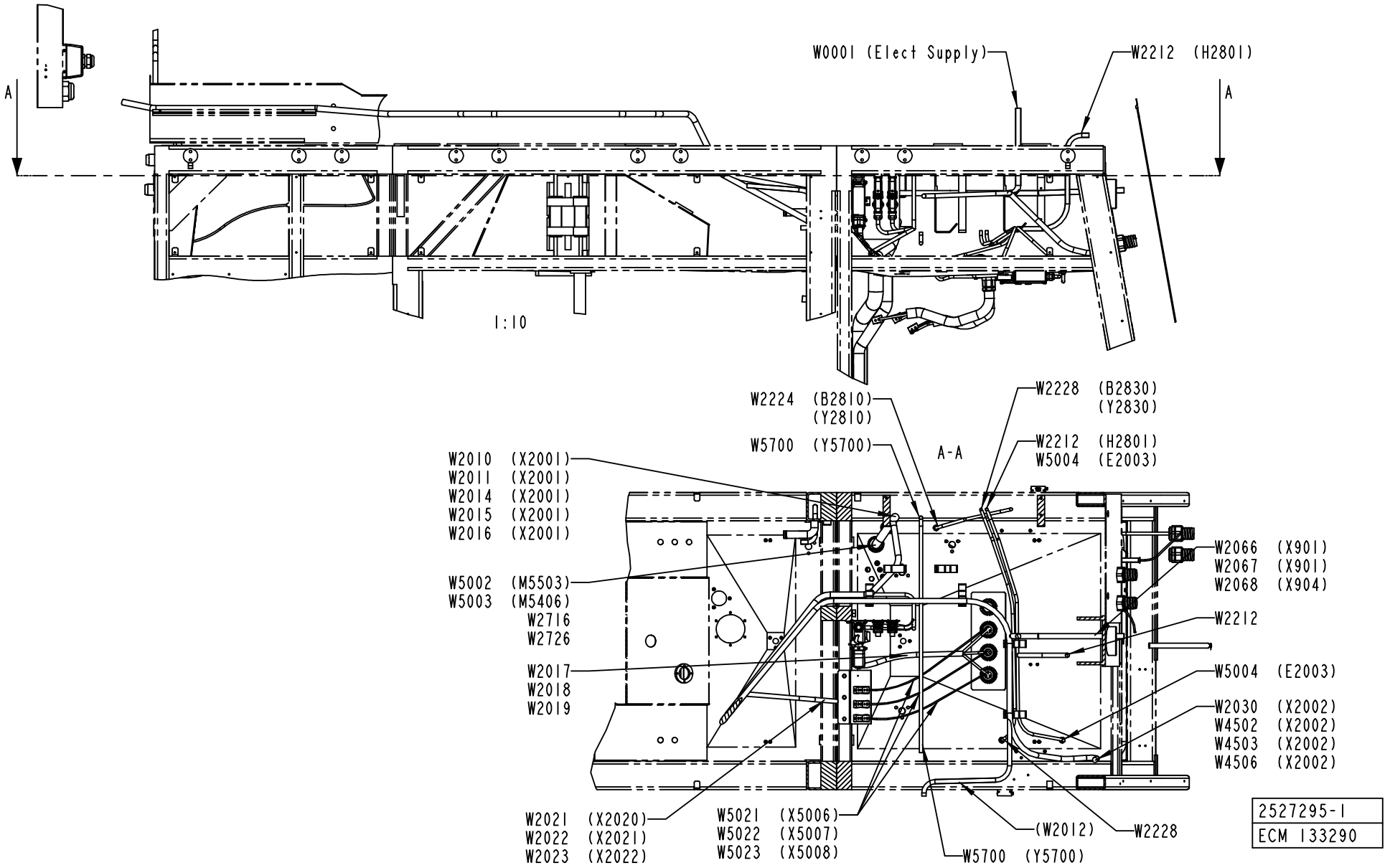
W0001 (Elect Supply)
W2212 (H2801)
A
A
1:10
W2224 (B2810)
(Y2810)
W5700 (Y5700)
A-A
W2228 (B2830)
(Y2830)
W2212 (H2801)
W5004 (E2003)
W2010 (X2001)
W2011 (X2001)
W2014 (X2001)
W2015 (X2001)
W2016 (X2001)
W5002 (M5503)
W5003 (M5406)
W2716
W2726
W2017
W2018
W2019
W2066 (X901)
W2067 (X901)
W2068 (X904)
W2212
W5004 (E2003)
W2030 (X2002)
W4502 (X2002)
W4503 (X2002)
W4506 (X2002)
W2021 (X2020)
W2022 (X2021)
W2023 (X2022)
W5021 (X5006)
W5022 (X5007)
W5023 (X5008)
(W2012)
W2228
W5700 (Y5700)
2527295-1
ECM 133290

Pos	Part No	UN	Qty	Description	Page No	Pos	Part No	UN	Qty	Description	Page No

SEE PREVIOUS LISTS PAGES: 2-149, 2-151.

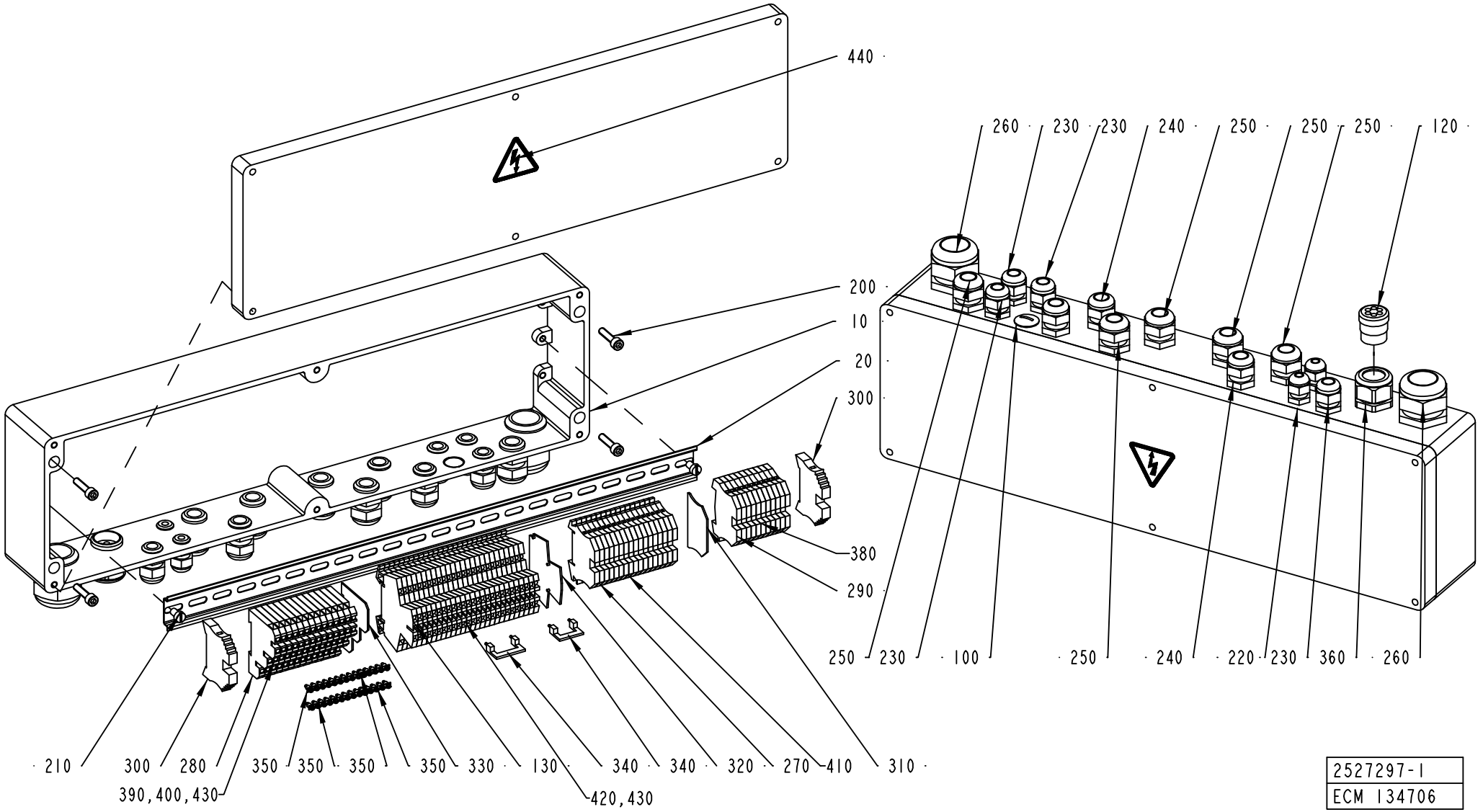

2527297-1
ECM 134706

ECM: 139334 - 20031007
Group number: 2527297-0100
Assembly Drawing: 2527297-1_1_AB

Pos	Part No	UN	Qty	Description	Page No
A3/FLEX					
100	90002-0009		1	BLANK-OFF PLUG, PR 18.6 SKINDICHT-BLK11	
230	352103-0106		4	CABLE GLAND, ST 11, PR18,6/PG11	
Common Parts					
010	2537113-0000		1	CONNECTION BOX	
020	1129504-0000		1	MOUNTING RAIL	
120	90012-0125		1	GLAND FITTING	
130	90077-0113		26	FEED THROUGH TERMINAL, 10-00102150-1	
200	312115-0372		4	SCREW ISO4762 M6X25 A4	
210	312121-0364		2	SCREW ISO 1207 M6X10 4.8 - 5.8 Z.PL.	
220	352103-0100		2	CABLE GLAND, STR 9, PR15,2/PG9	
240	352103-0108		3	CABLE GLAND, ST 13,5 , PR20,4/PG13,5	
250	352103-0110		5	CABLE GLAND, STR 16, PR22,5/PG16	
260	352103-0121		2	CABLE GLAND, ST 29, PR37,0/PG29	
270	353021-0212		17	FEED THROUGH TERMINAL, 10200.0	
280	353021-0301		14	TERMINALS,TRIPLE-LEVEL, DLI 2,5/35 PA	
290	353024-0204		11	EARTH TERMINAL WPE 2,5	
300	353031-0203		2	END SUPPORT, WEW 35/2	
310	353032-0004		1	END PLATE WAP 2,5-10 BEIGE	
320	353032-0009		1	END PLATE, WAP FOR WDK	
330	353032-0301		1	END PLATE WAP, 13132.6	
340	353034-0030		2	BRIDGE CONNECTOR WQV 2,5/10, 10544.6	
350	353034-0404		4	BRIDGE CONNECTOR Q10, 13131.0	
360	353240-0005		1	GLAND W/O INSERT PG21 NORMAL	
380	359011-0834		1	SET OF SIGNS 6-GW(EARTH)	
390	359011-0817		1	SYMBOL 5-GW (+) 50PC	
400	359011-0818		1	SYMBOL 5-GW (-) 50PC	
410	359011-0821		2	SET OF SIGNS 6-FW 1-50	
420	359011-0824		2	SET OF SIGNS 6-FW 151-200	
430	359012-0800		2	TERMINAL MARKING LAB. KIT, BSFW, 101-15	
440	359705-0015		1	WARNING SIGN ISO, RISK OF ELECTRIC SHOCK	

Pos	Part No	UN	Qty	Description	Page No

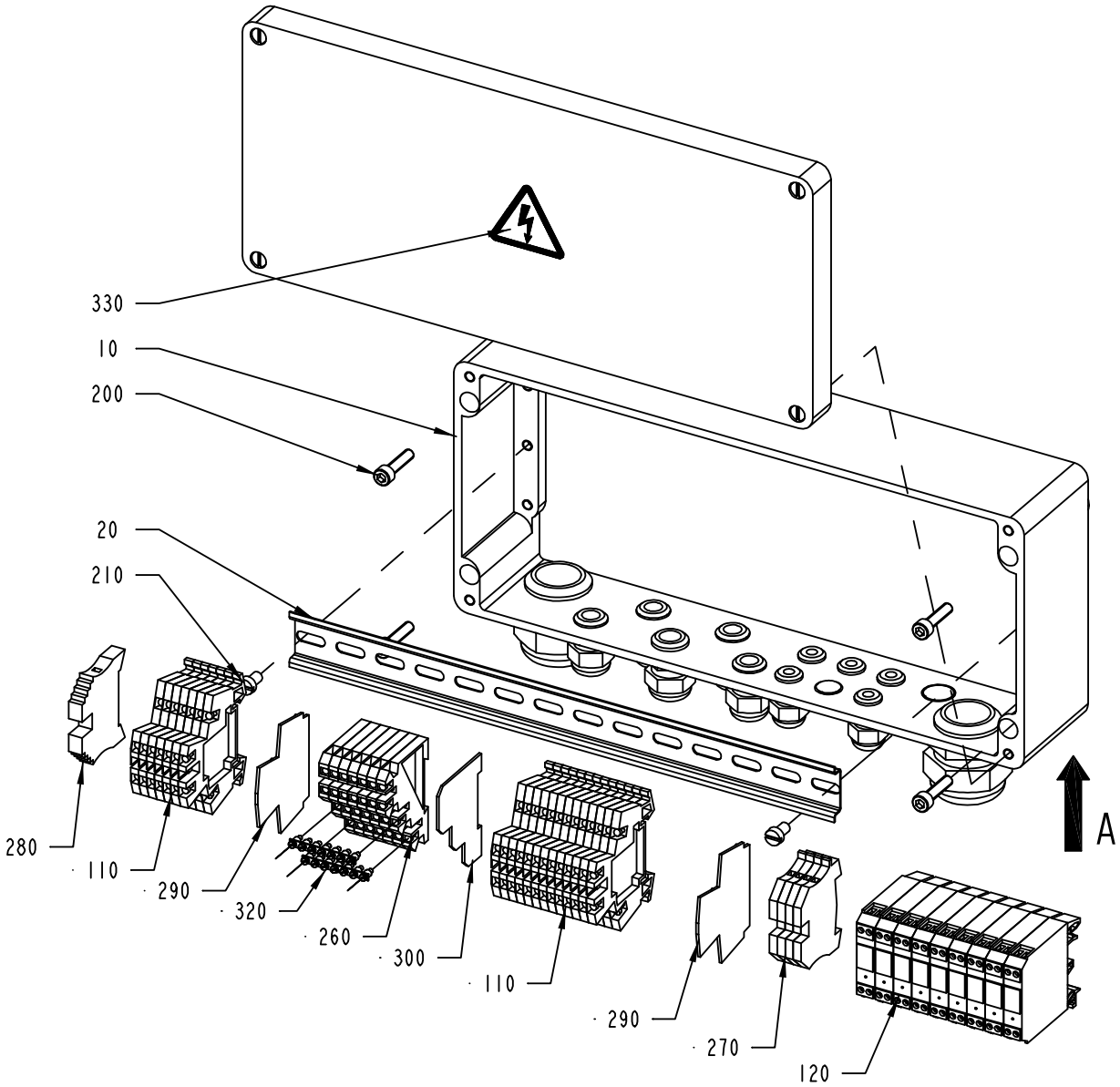

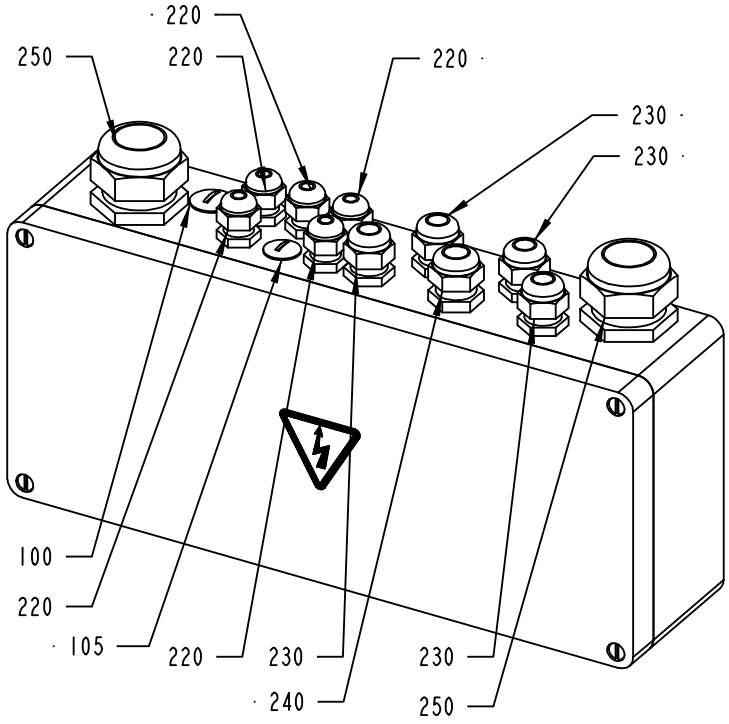

VIEW FROM A

2527299-1
ECM 133290

ECM: 133333 - 20030922
Group number: 2527299-0100
Assembly Drawing: 2527299-1_1_AB

Pos	Part No	UN	Qty	Description	Page No
-					
010	2537114-0000		1	CONNECTION BOX	
020	2546496-0000		1	RAIL	
100	90002-0009		1	BLANK-OFF PLUG, PR 18.6 SKINDICHT-BLK11	
105	90002-0013		1	BLANK-OFF PLUG, PR 15,2 SKINDICHT-BLK9	
110	90077-0113		20	FEED THROUGH TERMINAL, 10-00102150-1	
120	90119-0063		9	OPTO-RELAY, DC/DC AMMS-10-1/30VDC	
130	90459-1617		1	TERMINAL BOX FL CAT5	
200	312115-0372		4	SCREW ISO4762 M6X25 A4	
210	312121-0364		2	SCREW ISO 1207 M6X10 4.8 - 5.8 Z.PL.	
220	352103-0100		5	CABLE GLAND, STR 9, PR15,2/PG9	
230	352103-0106		4	CABLE GLAND, ST 11, PR18,6/PG11	
240	352103-0108		1	CABLE GLAND, ST 13,5 , PR20,4/PG13,5	
250	352103-0121		2	CABLE GLAND, ST 29, PR37,0/PG29	
260	353021-0301		7	TERMINALS,TRIPLE-LEVEL, DLI 2,5/35 PA	
270	353024-0204		4	EARTH TERMINAL WPE 2,5	
280	353031-0203		1	END SUPPORT, WEW 35/2	
290	353032-0009		2	END PLATE, WAP FOR WDK	
300	353032-0301		1	END PLATE WAP, 13132.6	
310	353034-0030		1	BRIDGE CONNECTOR WQV 2,5/10, 10544.6	
320	353034-0404		2	BRIDGE CONNECTOR Q10, 13131.0	
330	359705-0015		1	WARNING SIGN ISO, RISK OF ELECTRIC SHOCK	
340	359011-0834		1	SET OF SIGNS 6-GW(EARTH)	
350	359012-0800		2	TERMINAL MARKING LAB. KIT, BSFW, 101-15	

Pos	Part No	UN	Qty	Description	Page No

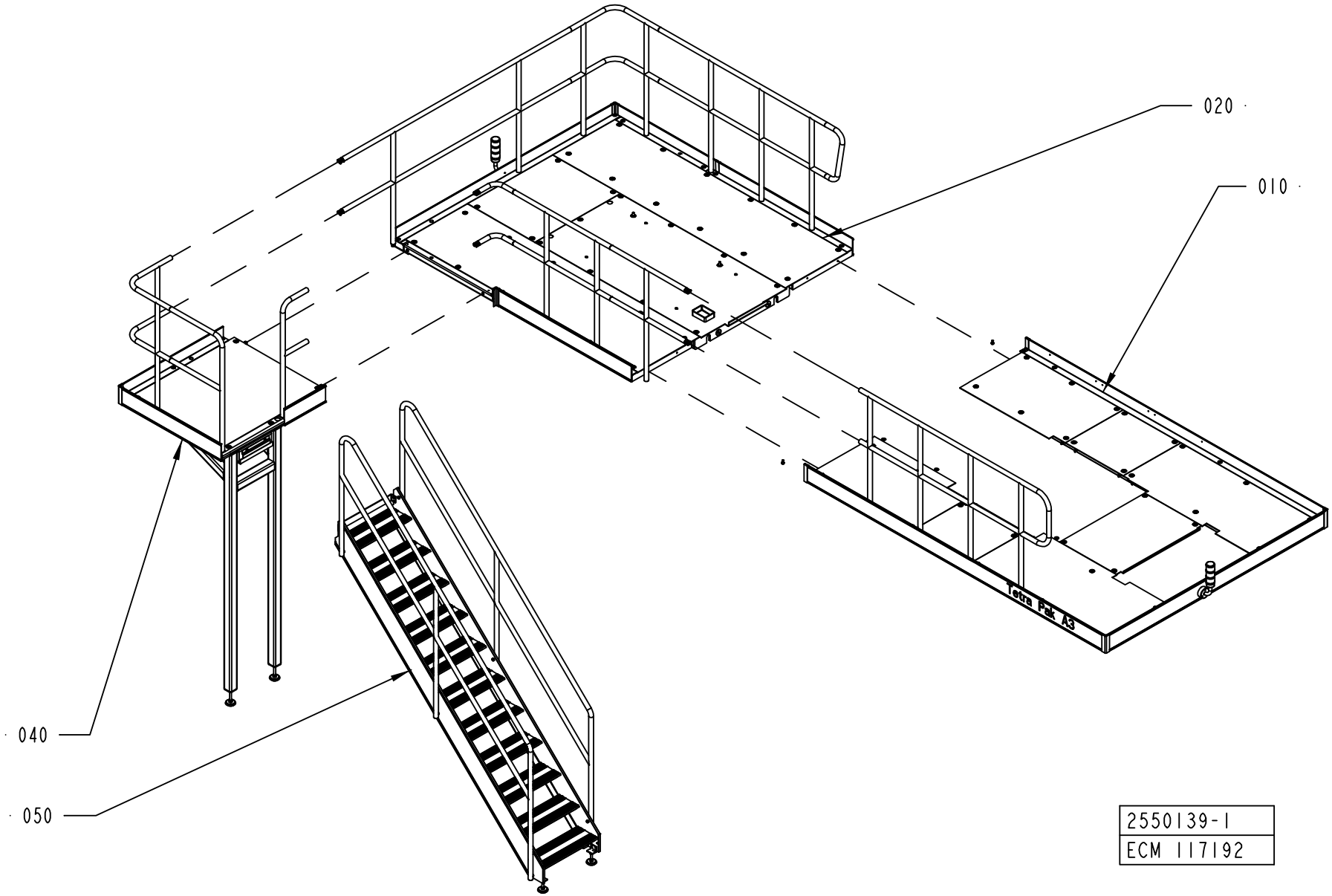
020
010
040
050
Tetra Pak A3
2550139-1
ECM 117192

ECM: 140098 - 20031001
Group number: 2550139-0100
Assembly Drawing: 2550139-1_1_AA

This list covers pages from 2-158 to 2-169

Pos	Part No	UN	Qty	Description	Page No
A3/FLEX DIMC/FLEX LEFTSTAIR (See drawing on page: 2-162)					
010	2508369-0100		1	PLATFORM	**2-171**
020	1528847-0100		1	PLATFORM	**2-175**
030	1528848-0100		1	PLATFORM	**2-177, 2-179**
A3/FLEX DIMC/FLEX RIGHTSTAIR (See drawing on page: 2-168)					
010	2508369-0100		1	PLATFORM	**2-171**
020	1528847-0100		1	PLATFORM	**2-175**
030	1528848-0100		1	PLATFORM	**2-177, 2-179**
A3/FLEX NOPT LEFTSTAIR, A3/FLEX NODIMC LEFTSTAIR (See drawing on page: 2-158)					
010	2508369-0100		1	PLATFORM	**2-171**
020	2550138-0100		1	PLATFORM	**2-181, 2-183, 2-185, 2-187**
A3/FLEX NOPT RIGHTSTAIR, A3/FLEX NODIMC RIGHTSTAIR (See drawing on page: 2-164)					
010	2508369-0100		1	PLATFORM	**2-171**
020	2550138-0100		1	PLATFORM	**2-181, 2-183, 2-185, 2-187**
A3/FLEX PT/FLEX LEFTSTAIR (See drawing on page: 2-160)					
010	2508369-0100		1	PLATFORM	**2-171**
020	2550138-0100		1	PLATFORM	**2-181, 2-183, 2-185, 2-187**
A3/FLEX PT/FLEX RIGHTSTAIR (See drawing on page: 2-166)					
010	2508369-0100		1	PLATFORM	**2-171**
020	2550138-0100		1	PLATFORM	**2-181, 2-183, 2-185, 2-187**
Common Parts					
040	2564546-0100		1	PLATFORM	**2-189, 2-191**
050	1523777-0100		1	STAIR CASE	**2-193**

Pos	Part No	UN	Qty	Description	Page No

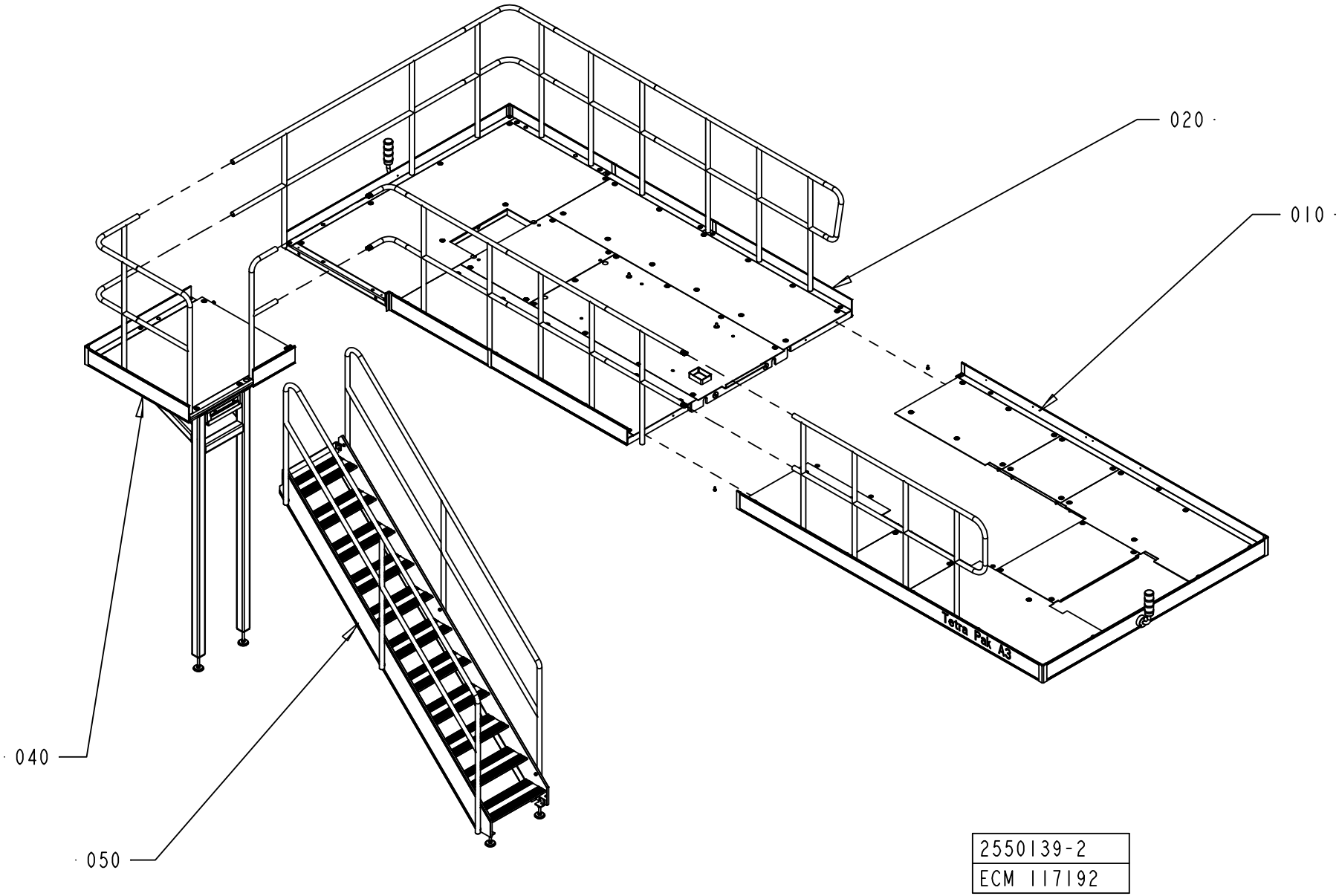

2550139-2
ECM 117192

ECM: 140098 - 20031001
Group number: 2550139-0100
Assembly Drawing: 2550139-2_1_AA

This list covers pages from 2-158 to 2-169

Pos	Part No	UN	Qty	Description	Page No
A3/FLEX DIMC/FLEX LEFTSTAIR (See drawing on page: 2-162)					
010	2508369-0100		1	PLATFORM	**2-171**
020	1528847-0100		1	PLATFORM	**2-175**
030	1528848-0100		1	PLATFORM	**2-177, 2-179**
A3/FLEX DIMC/FLEX RIGHTSTAIR (See drawing on page: 2-168)					
010	2508369-0100		1	PLATFORM	**2-171**
020	1528847-0100		1	PLATFORM	**2-175**
030	1528848-0100		1	PLATFORM	**2-177, 2-179**
A3/FLEX NOPT LEFTSTAIR, A3/FLEX NODIMC LEFTSTAIR (See drawing on page: 2-158)					
010	2508369-0100		1	PLATFORM	**2-171**
020	2550138-0100		1	PLATFORM	**2-181, 2-183, 2-185, 2-187**
A3/FLEX NOPT RIGHTSTAIR, A3/FLEX NODIMC RIGHTSTAIR (See drawing on page: 2-164)					
010	2508369-0100		1	PLATFORM	**2-171**
020	2550138-0100		1	PLATFORM	**2-181, 2-183, 2-185, 2-187**
A3/FLEX PT/FLEX LEFTSTAIR (See drawing on page: 2-160)					
010	2508369-0100		1	PLATFORM	**2-171**
020	2550138-0100		1	PLATFORM	**2-181, 2-183, 2-185, 2-187**
A3/FLEX PT/FLEX RIGHTSTAIR (See drawing on page: 2-166)					
010	2508369-0100		1	PLATFORM	**2-171**
020	2550138-0100		1	PLATFORM	**2-181, 2-183, 2-185, 2-187**
Common Parts					
040	2564546-0100		1	PLATFORM	**2-189, 2-191**
050	1523777-0100		1	STAIR CASE	**2-193**

Pos	Part No	UN	Qty	Description	Page No

Machine Type | Group Description | Used-In | Group Number | Page No

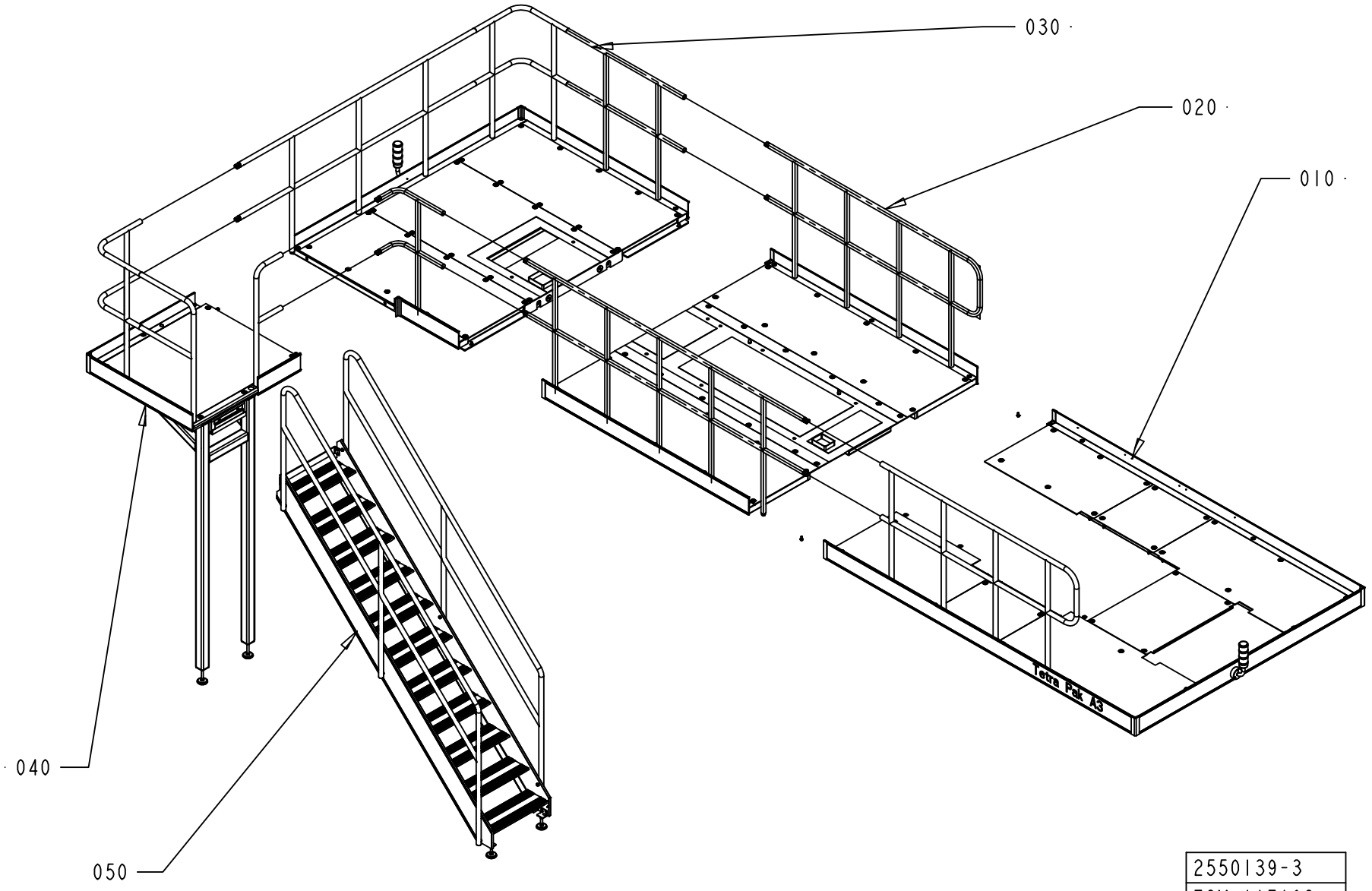

2550139-3
ECM 117192

ECM: 140098 - 20031001
Group number: 2550139-0100
Assembly Drawing: 2550139-3_1_AA

This list covers pages from 2-158 to 2-169

Pos	Part No	UN	Qty	Description	Page No
A3/FLEX DIMC/FLEX LEFTSTAIR (See drawing on page: 2-162)					
010	2508369-0100		1	PLATFORM	**2-171**
020	1528847-0100		1	PLATFORM	**2-175**
030	1528848-0100		1	PLATFORM	**2-177, 2-179**
A3/FLEX DIMC/FLEX RIGHTSTAIR (See drawing on page: 2-168)					
010	2508369-0100		1	PLATFORM	**2-171**
020	1528847-0100		1	PLATFORM	**2-175**
030	1528848-0100		1	PLATFORM	**2-177, 2-179**
A3/FLEX NOPT LEFTSTAIR, A3/FLEX NODIMC LEFTSTAIR (See drawing on page: 2-158)					
010	2508369-0100		1	PLATFORM	**2-171**
020	2550138-0100		1	PLATFORM	**2-181, 2-183, 2-185, 2-187**
A3/FLEX NOPT RIGHTSTAIR, A3/FLEX NODIMC RIGHTSTAIR (See drawing on page: 2-164)					
010	2508369-0100		1	PLATFORM	**2-171**
020	2550138-0100		1	PLATFORM	**2-181, 2-183, 2-185, 2-187**
A3/FLEX PT/FLEX LEFTSTAIR (See drawing on page: 2-160)					
010	2508369-0100		1	PLATFORM	**2-171**
020	2550138-0100		1	PLATFORM	**2-181, 2-183, 2-185, 2-187**
A3/FLEX PT/FLEX RIGHTSTAIR (See drawing on page: 2-166)					
010	2508369-0100		1	PLATFORM	**2-171**
020	2550138-0100		1	PLATFORM	**2-181, 2-183, 2-185, 2-187**
Common Parts					
040	2564546-0100		1	PLATFORM	**2-189, 2-191**
050	1523777-0100		1	STAIR CASE	**2-193**

Pos	Part No	UN	Qty	Description	Page No

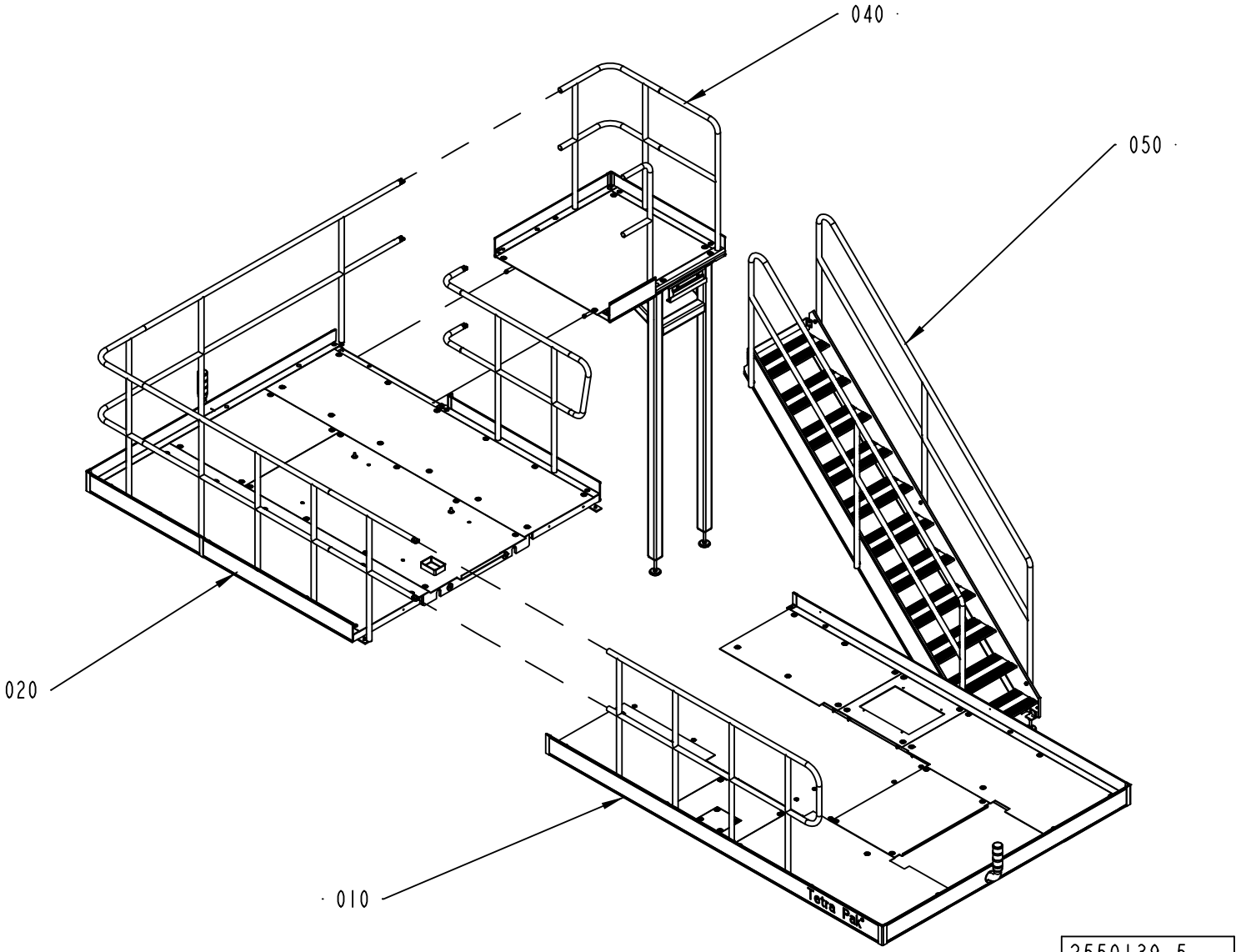

2550139-5
ECM 139753

ECM: 140098 - 20031001
Group number: 2550139-0100
Assembly Drawing: 2550139-5_1_AA

This list covers pages from 2-158 to 2-169

Pos	Part No	UN	Qty	Description	Page No
A3/FLEX DIMC/FLEX LEFTSTAIR (See drawing on page: 2-162)					
010	2508369-0100		1	PLATFORM	**2-171**
020	1528847-0100		1	PLATFORM	**2-175**
030	1528848-0100		1	PLATFORM	**2-177, 2-179**
A3/FLEX DIMC/FLEX RIGHTSTAIR (See drawing on page: 2-168)					
010	2508369-0100		1	PLATFORM	**2-171**
020	1528847-0100		1	PLATFORM	**2-175**
030	1528848-0100		1	PLATFORM	**2-177, 2-179**
A3/FLEX NOPT LEFTSTAIR, A3/FLEX NODIMC LEFTSTAIR (See drawing on page: 2-158)					
010	2508369-0100		1	PLATFORM	**2-171**
020	2550138-0100		1	PLATFORM	**2-181, 2-183, 2-185, 2-187**
A3/FLEX NOPT RIGHTSTAIR, A3/FLEX NODIMC RIGHTSTAIR (See drawing on page: 2-164)					
010	2508369-0100		1	PLATFORM	**2-171**
020	2550138-0100		1	PLATFORM	**2-181, 2-183, 2-185, 2-187**
A3/FLEX PT/FLEX LEFTSTAIR (See drawing on page: 2-160)					
010	2508369-0100		1	PLATFORM	**2-171**
020	2550138-0100		1	PLATFORM	**2-181, 2-183, 2-185, 2-187**
A3/FLEX PT/FLEX RIGHTSTAIR (See drawing on page: 2-166)					
010	2508369-0100		1	PLATFORM	**2-171**
020	2550138-0100		1	PLATFORM	**2-181, 2-183, 2-185, 2-187**
Common Parts					
040	2564546-0100		1	PLATFORM	**2-189, 2-191**
050	1523777-0100		1	STAIR CASE	**2-193**

Pos	Part No	UN	Qty	Description	Page No

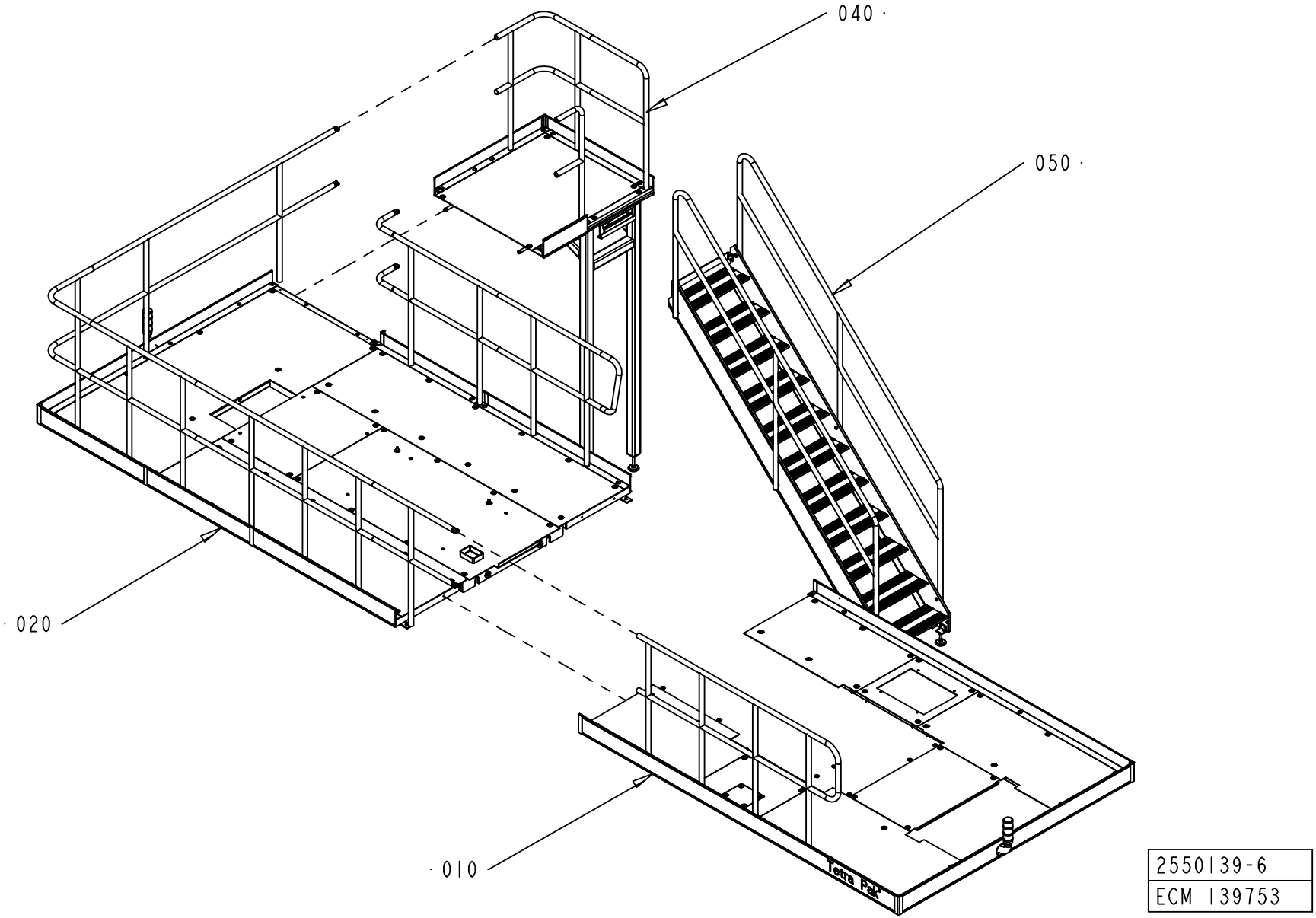

2550139-6
ECM 139753

ECM: 140098 - 20031001
Group number: 2550139-0100
Assembly Drawing: 2550139-6_1_AA

This list covers pages from 2-158 to 2-169

Pos	Part No	UN	Qty	Description	Page No
A3/FLEX DIMC/FLEX LEFTSTAIR (See drawing on page: 2-162)					
010	2508369-0100		1	PLATFORM	**2-171**
020	1528847-0100		1	PLATFORM	**2-175**
030	1528848-0100		1	PLATFORM	**2-177, 2-179**
A3/FLEX DIMC/FLEX RIGHTSTAIR (See drawing on page: 2-168)					
010	2508369-0100		1	PLATFORM	**2-171**
020	1528847-0100		1	PLATFORM	**2-175**
030	1528848-0100		1	PLATFORM	**2-177, 2-179**
A3/FLEX NOPT LEFTSTAIR, A3/FLEX NODIMC LEFTSTAIR (See drawing on page: 2-158)					
010	2508369-0100		1	PLATFORM	**2-171**
020	2550138-0100		1	PLATFORM	**2-181, 2-183, 2-185, 2-187**
A3/FLEX NOPT RIGHTSTAIR, A3/FLEX NODIMC RIGHTSTAIR (See drawing on page: 2-164)					
010	2508369-0100		1	PLATFORM	**2-171**
020	2550138-0100		1	PLATFORM	**2-181, 2-183, 2-185, 2-187**
A3/FLEX PT/FLEX LEFTSTAIR (See drawing on page: 2-160)					
010	2508369-0100		1	PLATFORM	**2-171**
020	2550138-0100		1	PLATFORM	**2-181, 2-183, 2-185, 2-187**
A3/FLEX PT/FLEX RIGHTSTAIR (See drawing on page: 2-166)					
010	2508369-0100		1	PLATFORM	**2-171**
020	2550138-0100		1	PLATFORM	**2-181, 2-183, 2-185, 2-187**
Common Parts					
040	2564546-0100		1	PLATFORM	**2-189, 2-191**
050	1523777-0100		1	STAIR CASE	**2-193**

Pos	Part No	UN	Qty	Description	Page No

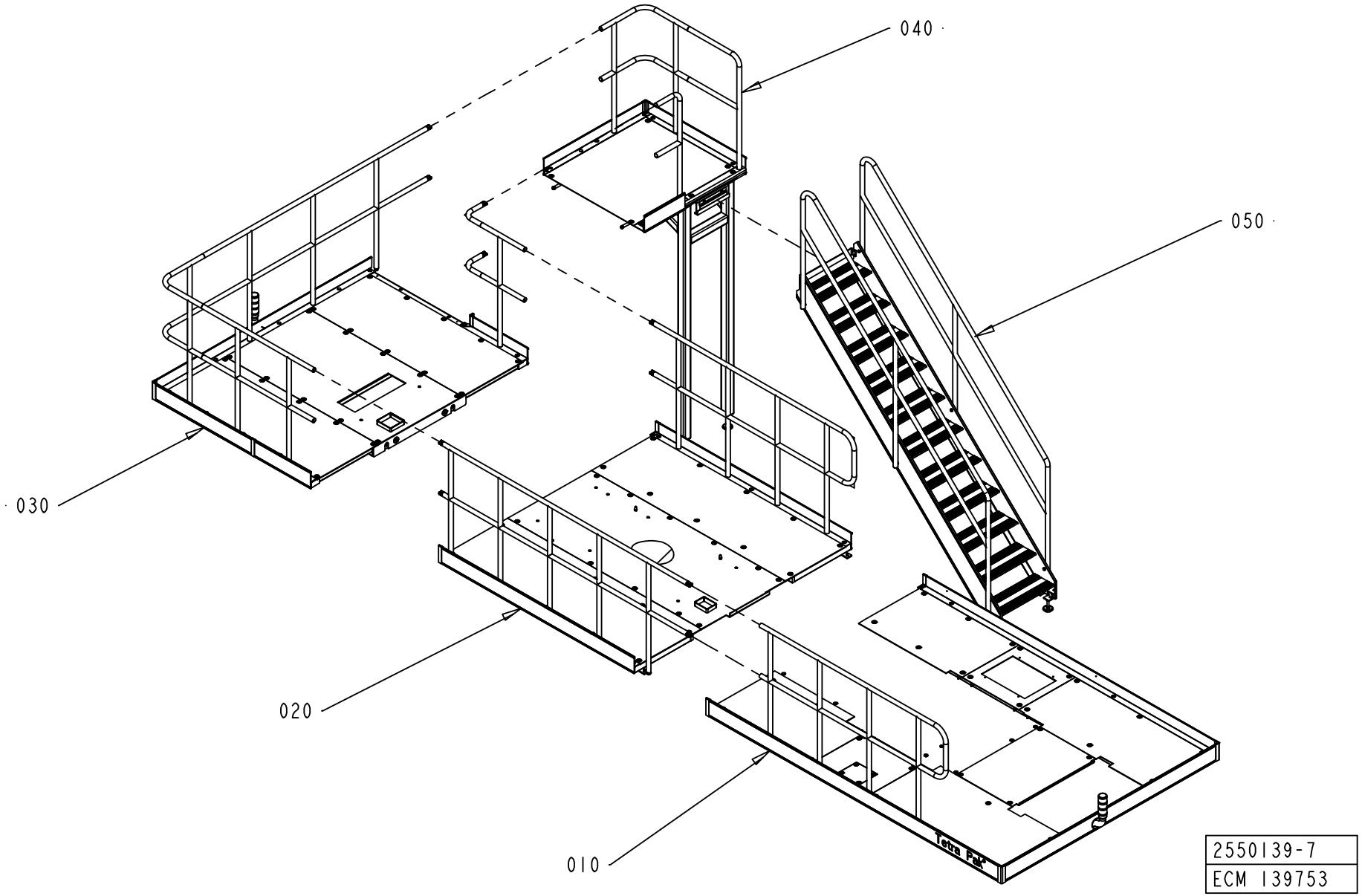
040
050
030
020
010
Tetra Pak
2550139-7
ECM 139753

ECM: 140098 - 20031001
Group number: 2550139-0100
Assembly Drawing: 2550139-7_1_AA

This list covers pages from 2-158 to 2-169

Pos	Part No	UN	Qty	Description	Page No
A3/FLEX DIMC/FLEX LEFTSTAIR (See drawing on page: 2-162)					
010	2508369-0100		1	PLATFORM	**2-171**
020	1528847-0100		1	PLATFORM	**2-175**
030	1528848-0100		1	PLATFORM	**2-177, 2-179**
A3/FLEX DIMC/FLEX RIGHTSTAIR (See drawing on page: 2-168)					
010	2508369-0100		1	PLATFORM	**2-171**
020	1528847-0100		1	PLATFORM	**2-175**
030	1528848-0100		1	PLATFORM	**2-177, 2-179**
A3/FLEX NOPT LEFTSTAIR, A3/FLEX NODIMC LEFTSTAIR (See drawing on page: 2-158)					
010	2508369-0100		1	PLATFORM	**2-171**
020	2550138-0100		1	PLATFORM	**2-181, 2-183, 2-185, 2-187**
A3/FLEX NOPT RIGHTSTAIR, A3/FLEX NODIMC RIGHTSTAIR (See drawing on page: 2-164)					
010	2508369-0100		1	PLATFORM	**2-171**
020	2550138-0100		1	PLATFORM	**2-181, 2-183, 2-185, 2-187**
A3/FLEX PT/FLEX LEFTSTAIR (See drawing on page: 2-160)					
010	2508369-0100		1	PLATFORM	**2-171**
020	2550138-0100		1	PLATFORM	**2-181, 2-183, 2-185, 2-187**
A3/FLEX PT/FLEX RIGHTSTAIR (See drawing on page: 2-166)					
010	2508369-0100		1	PLATFORM	**2-171**
020	2550138-0100		1	PLATFORM	**2-181, 2-183, 2-185, 2-187**
Common Parts					
040	2564546-0100		1	PLATFORM	**2-189, 2-191**
050	1523777-0100		1	STAIR CASE	**2-193**

Pos	Part No	UN	Qty	Description	Page No

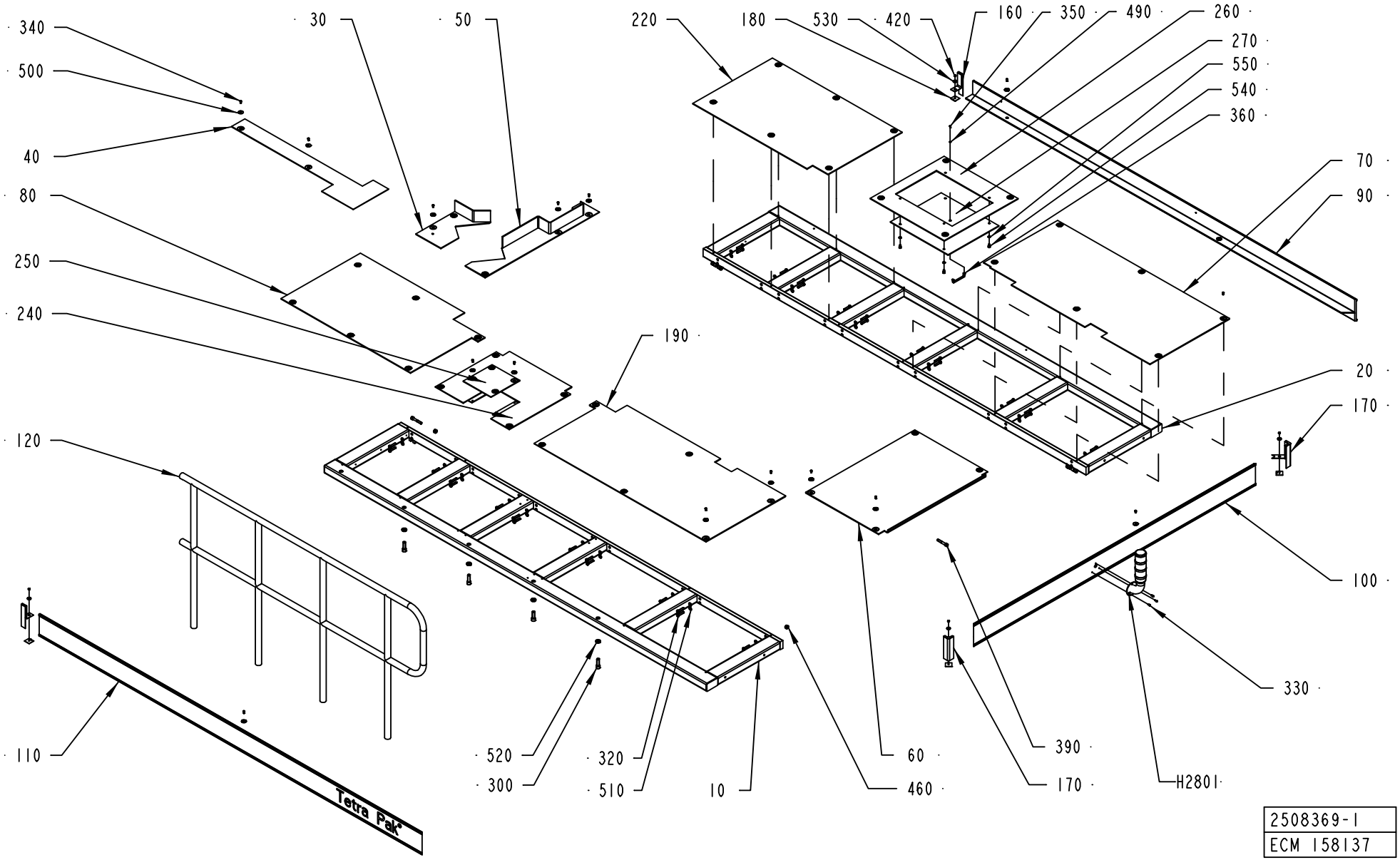

2508369-1
ECM 158137

ECM: 158147 - 20040628
Group number: 2508369-0100
Assembly Drawing: 2508369-1_1_AD

Pos	Part No	UN	Qty	Description	Page No
-					
010	2508370-0000		1	PLATFORM	
020	2508371-0000		1	PLATFORM	
030	2508385-0000		1	CHECKER PLATE	
040	2508380-0000		1	CHECKER PLATE	
050	2508381-0000		1	CHECKER PLATE	
060	1254030-0000		1	CHECKER PLATE	
070	2508374-0000		1	CHECKER PLATE	
080	2508379-0000		1	CHECKER PLATE	
090	2564565-0000		1	TOE PLATE	
100	1523784-0000		1	TOE PLATE	
110	2564566-0000		1	TOE PLATE	
120	1524870-0000		1	RAILING	
130	1036241-0000		52	WASHER	
160	1254025-0000		2	STRIP	
170	1254027-0000		2	CORNER STRIP	
180	1254028-0000		4	FASTENING PLATE	
190	2508375-0000		1	CHECKER PLATE	
220	2508384-0000		1	CHECKER PLATE	
240	2587289-0000		1	CHECKER PLATE	
250	2587290-0000		1	CHECKER PLATE	
260	2587291-0000		1	CHECKER PLATE	
270	2587292-0000		1	CHECKER PLATE	
300	312111-0630		4	SCREW HEX.SOCK.HD.MC6S-TT 16X50 88 FZ	
320	90458-2845		40	SCREW,HEXAGON HEAD M6S ISO 4017 M10X45	
330	312115-0327		3	SCREW ISO4762 M5X12 A4	
340	90458-0072		51	SCREW ISO 7380 S M6X12 A2	
350	312105-0289		2	SCREW M6S ISO 4017 M4X10 A470	
360	90458-2633		1	HANDLE, 1045-05	
390	312115-0546		4	SCREW ISO4762 M12X70 A4	
420	312605-0316		4	HEXAGON NUT, M6M M6 A280	
460	312812-0322		4	HEXAGON NUT, NY-LOCK M12 A480	
490	315105-0136		2	WASHER BRB4,3XRFR	
500	90458-0073		51	WASHER 6,4/30, H=1,5	
510	315105-0173		40	WASHER BRB10,5X22RFR	
520	315111-0186		4	WASHER PLAIN, TBRB 17/30 H=6	
530	315125-0153		4	WASHER TBRSB 6,4X22X4 A4	
540	312115-0447		4	SCREW ISO4762 M8X12 A4	
550	315101-0165		4	WASHER PLAIN, BRB, 8,4/16 H=1,5	
H2801	2540716-0100		1	SIGNAL LAMP	**2-173**

Pos	Part No	UN	Qty	Description	Page No

Machine Type | Group Description | Used-In | Group Number | Page No

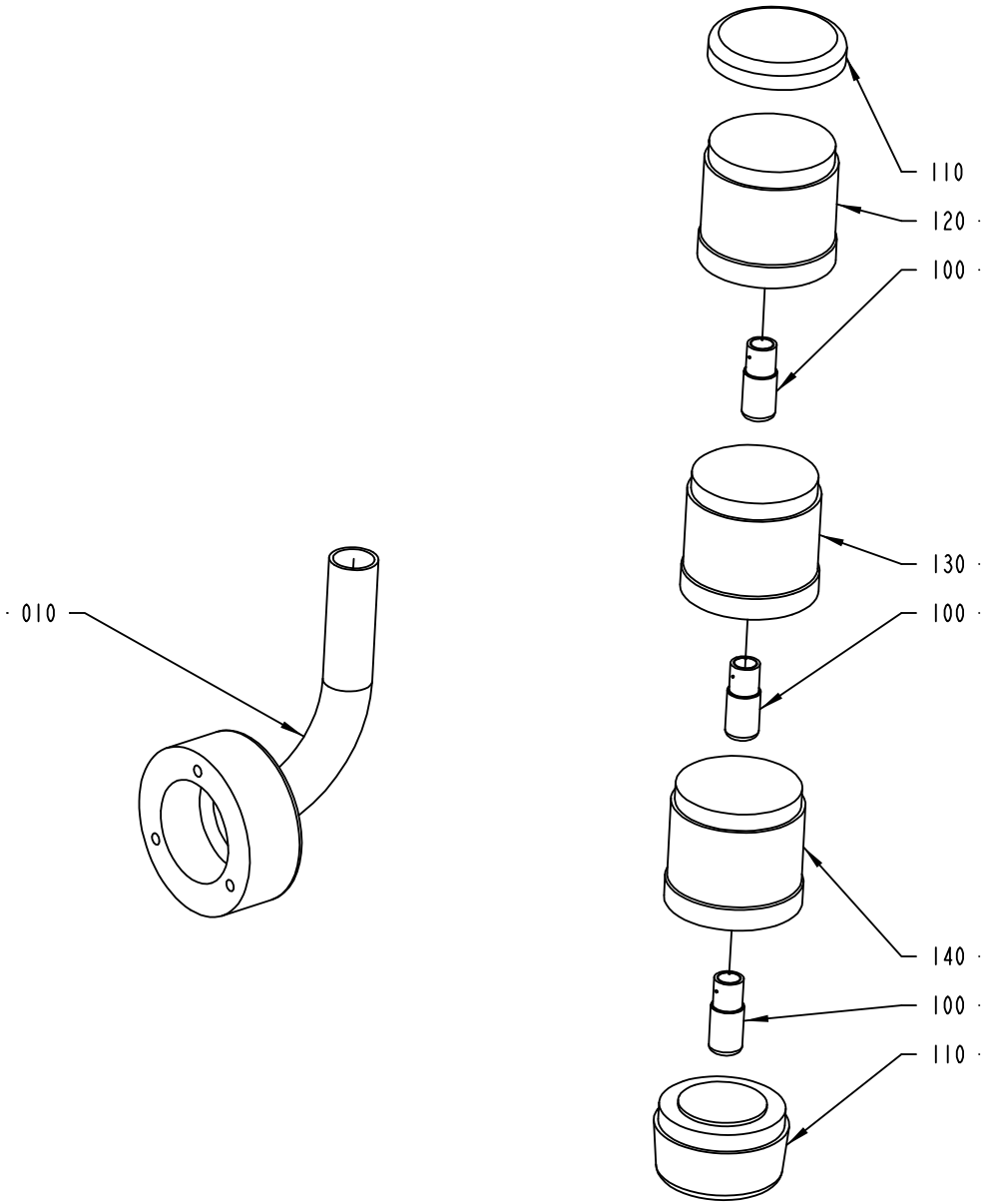

2540716-1
ECM 117192

ECM: 117192 - 20030403
Group number: 2540716-0100
Assembly Drawing: 2540716-1_1_AA

Pos	Part No	UN	Qty	Description	Page No
-					
010	2540767-0000		1	PIPE	
100	90036-0068		3	BULB 6.5W 24V	
110	90458-0292		1	BASE, KT70-1001	
120	90458-0293		1	LIGHT ELEMENT, RED, KL70-401R	
130	90458-0294		1	LIGHT ELEMENT, YELLOW, KL70-401Y	
140	90458-0295		1	LIGHT ELEMENT, BLUE, KL70-401L	

Pos	Part No	UN	Qty	Description	Page No

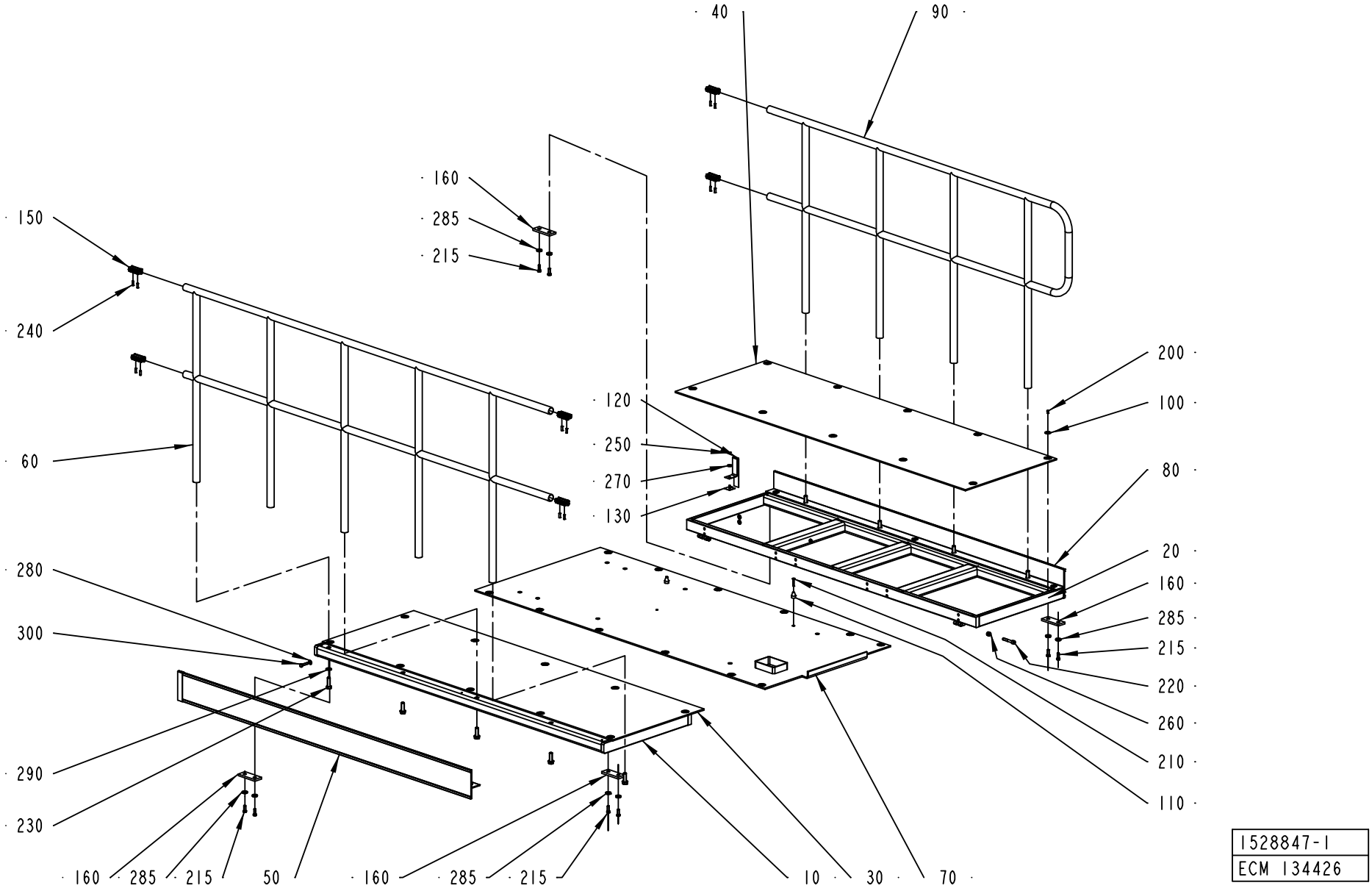

1528847-1
ECM 134426

ECM: 140146 - 20031001
Group number: 1528847-0100
Assembly Drawing: 1528847-1_1_AB

Pos	Part No	UN	Qty	Description	Page No
-					
010	1528552-0000		1	PLATFORM	
020	1528553-0000		1	PLATFORM	
030	1528850-0000		1	CHECKER PLATE	
040	1528855-0000		1	CHECKER PLATE	
050	1528856-0000		1	TOE PLATE	
060	1528858-0000		1	RAILING	
070	1528866-0000		1	CHECKER PLATE	
080	1528867-0000		1	TOE PLATE	
090	1528874-0000		1	RAILING	
100	90458-0073		38	WASHER 6,4/30, H=1,5	
110	1037571-0000		2	GUIDE BUSHING	
120	1254025-0000		2	STRIP	
130	1254028-0000		2	FASTENING PLATE	
150	985328-0000		6	CONNECTION	
160	2632578-0000		4	PLATE	
200	90458-0072		38	SCREW ISO 7380 S M6X12 A2	
210	312109-0378		2	SCREW M6S ISO4017 M6X40 A480	
215	312105-0495		8	SCREW M6S ISO 4017 M10X30 A480	
220	312115-0546		4	SCREW ISO4762 M12X70 A4	
230	312111-0630		9	SCREW HEX.SOCK.HD.MC6S-TT 16X50 88 FZ	
240	312318-0453		12	SCREW ISO4029 M8X25 A4	
250	312605-0316		2	HEXAGON NUT, M6M M6 A280	
260	312812-0322		4	HEXAGON NUT, NY-LOCK M12 A480	
270	315125-0153		2	WASHER TBRSB 6,4X22X4 A4	
280	315105-0173		24	WASHER BRB10,5X22RFR	
285	315125-0173		8	WASHER TBRSB 10,5X28X6 A4	
290	315105-0186		9	WASHER BRB17X30RFR	
300	90458-2845		24	SCREW,HEXAGON HEAD M6S ISO 4017 M10X45	

Pos	Part No	UN	Qty	Description	Page No

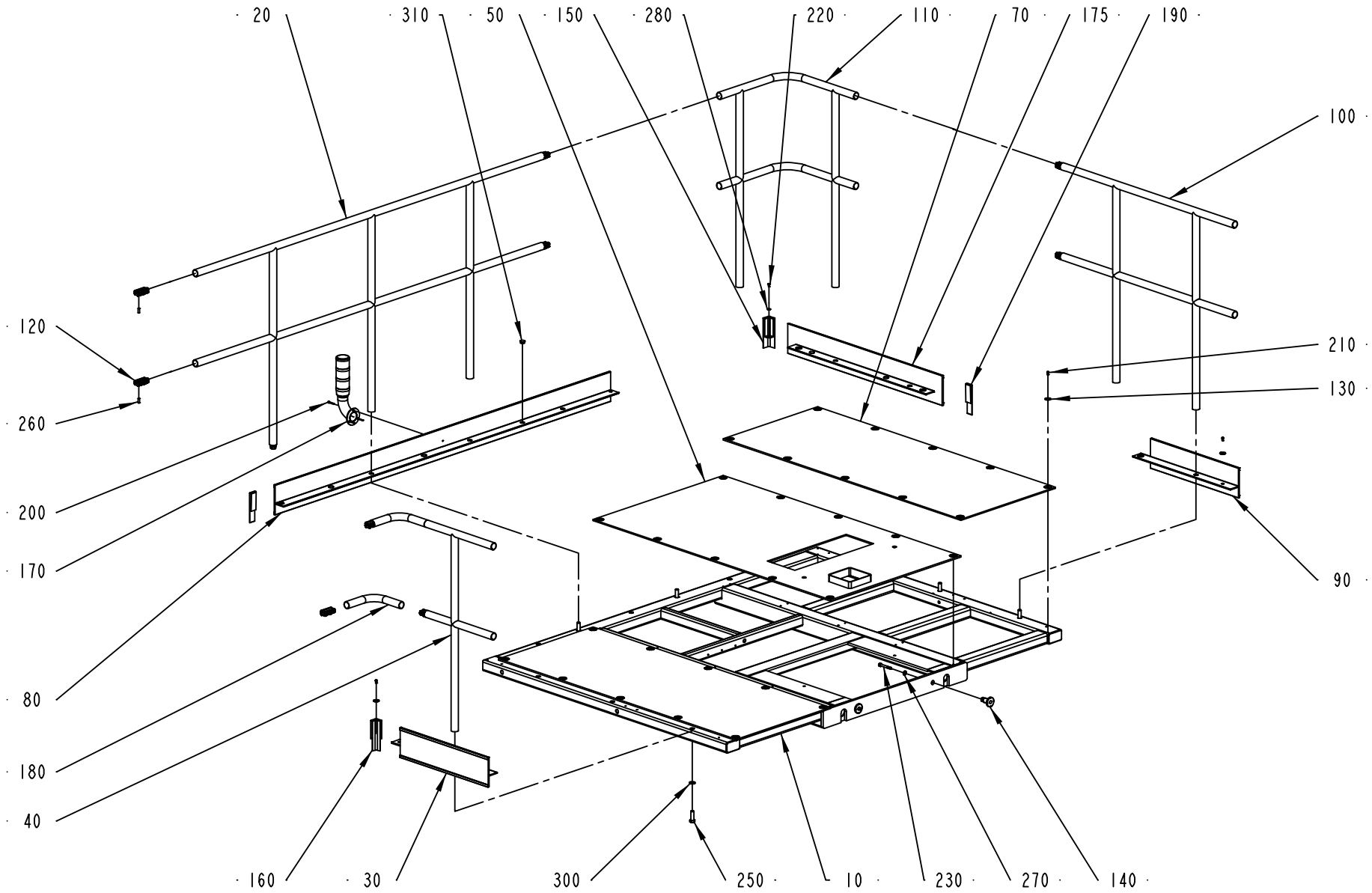

1528848-1
ECM 134426

ECM: 139806 - 20031001
Group number: 1528848-0100
Assembly Drawing: 1528848-1_1_AC

This list covers pages from 2-176 to 2-179

Pos	Part No	UN	Qty	Description	Page No
-					
010	598713-0000		1	PLATFORM	
020	1528849-0000		1	RAILING	
030	1528857-0000		1	TOE PLATE	
040	1528859-0000		1	RAILING	
050	1528868-0000		1	CHECKER PLATE	
070	1528870-0000		2	CHECKER PLATE	
080	1528871-0000		1	TOE PLATE	
090	1528872-0000		1	TOE PLATE	
100	1528873-0000		1	RAILING	
110	1010822-0000		1	RAILING	
120	985328-0000		10	CONNECTION	
130	90458-0073		37	WASHER 6,4/30, H=1,5	
140	2599941-0000		2	SPACER	
150	1524167-0000		1	CORNER STRIP	
160	1524168-0000		1	CORNER STRIP	
170	2540716-0100		1	SIGNAL LAMP	**2-173**
175	2553122-0000		1	PLATE	
180	2551951-0000		2	RAILING	
190	1558947-0000		2	STRIP	
200	312115-0337		3	SCREW ISO4762 M5X35 A4	
210	90458-0072		37	SCREW ISO 7380 S M6X12 A2	
220	312105-0366		1	SCREW M6S ISO 4017 M6X12 A480	
230	312105-0506		2	SCREW M6S ISO 4014 M10X75 A480	
250	312111-0630		8	SCREW HEX.SOCK.HD.MC6S-TT 16X50 88 FZ	
260	312318-0453		20	SCREW ISO4029 M8X25 A4	
270	315105-0173		2	WASHER BRB10,5X22RFR	
280	315105-0165		1	WASHER BRB8,4X16RFR	
300	315105-0186		8	WASHER BRB17X30RFR	
310	90261-0033		5	PLUG, BLIND, PLASTIC GPN300F182	

Pos	Part No	UN	Qty	Description	Page No

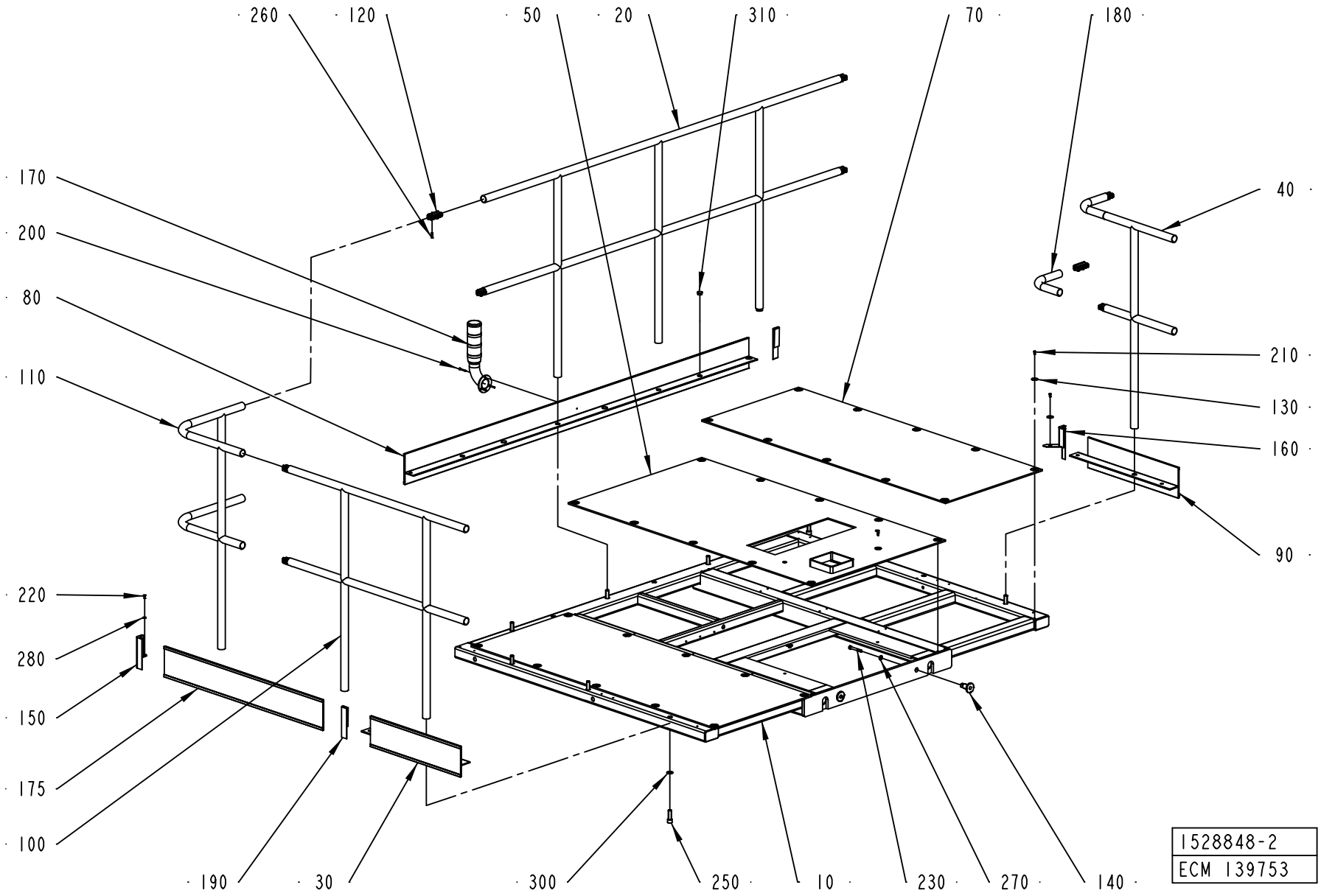
260
120
50
20
310
70
180
170
200
80
110
40
210
130
160
90
220
280
150
175
100
190
30
300
250
10
230
270
140
1528848-2
ECM 139753

ECM: 139806 - 20031001
Group number: 1528848-0100
Assembly Drawing: 1528848-2_1_AA

This list covers pages from 2-176 to 2-179

Pos	Part No	UN	Qty	Description	Page No
-					
010	598713-0000		1	PLATFORM	
020	1528849-0000		1	RAILING	
030	1528857-0000		1	TOE PLATE	
040	1528859-0000		1	RAILING	
050	1528868-0000		1	CHECKER PLATE	
070	1528870-0000		2	CHECKER PLATE	
080	1528871-0000		1	TOE PLATE	
090	1528872-0000		1	TOE PLATE	
100	1528873-0000		1	RAILING	
110	1010822-0000		1	RAILING	
120	985328-0000		10	CONNECTION	
130	90458-0073		37	WASHER 6,4/30, H=1,5	
140	2599941-0000		2	SPACER	
150	1524167-0000		1	CORNER STRIP	
160	1524168-0000		1	CORNER STRIP	
170	2540716-0100		1	SIGNAL LAMP	**2-173**
175	2553122-0000		1	PLATE	
180	2551951-0000		2	RAILING	
190	1558947-0000		2	STRIP	
200	312115-0337		3	SCREW ISO4762 M5X35 A4	
210	90458-0072		37	SCREW ISO 7380 S M6X12 A2	
220	312105-0366		1	SCREW M6S ISO 4017 M6X12 A480	
230	312105-0506		2	SCREW M6S ISO 4014 M10X75 A480	
250	312111-0630		8	SCREW HEX.SOCK.HD.MC6S-TT 16X50 88 FZ	
260	312318-0453		20	SCREW ISO4029 M8X25 A4	
270	315105-0173		2	WASHER BRB10,5X22RFR	
280	315105-0165		1	WASHER BRB8,4X16RFR	
300	315105-0186		8	WASHER BRB17X30RFR	
310	90261-0033		5	PLUG, BLIND, PLASTIC GPN300F182	

Pos	Part No	UN	Qty	Description	Page No

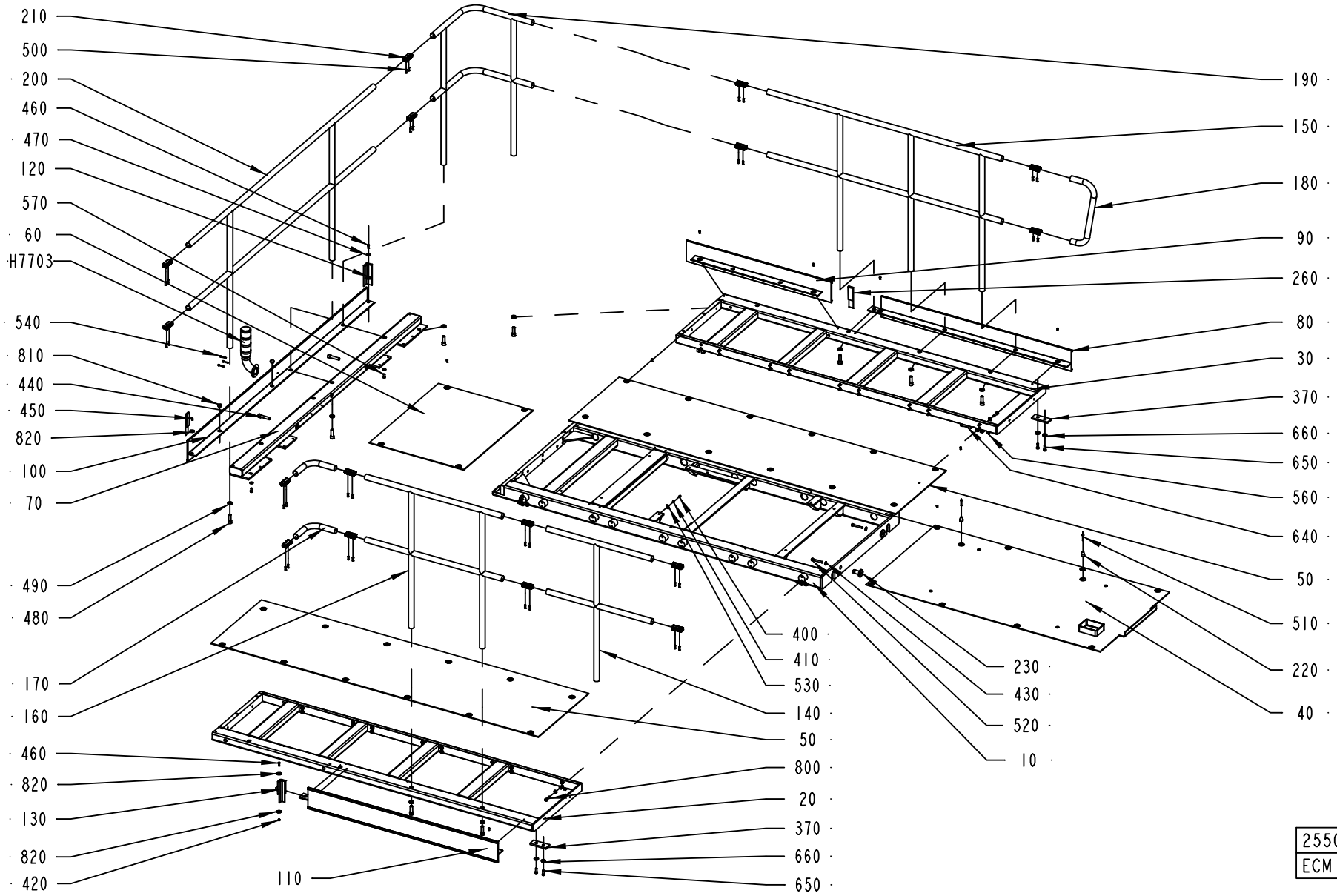

2550138-1
ECM 139753

ECM: 139753 - 20031007
Group number: 2550138-0100
Assembly Drawing: 2550138-1_1_AD

This list covers pages from 2-180 to 2-187

Pos	Part No	UN	Qty	Description	Page No
A3/FLEX NOPT LEFTSTAIR (See drawing on page: 2-180)					
060	2550145-0000		1	RAILING	
070	1524854-0000		1	BEAM	
090	2550193-0000		1	TOE PLATE	
210	985328-0000		16	CONNECTION	
260	1558947-0000		2	STRIP	
400	312125-0366		4	SCREW ISO 1207 M6X12 A4	
410	315105-0153		4	WASHER BRB6,4X12RFR	
420	312812-0316		1	HEXAGON NUT, NY-LOCK M6 A480	
430	315105-0173		40	WASHER BRB10,5X22RFR	
440	312115-0634		2	SCREW ISO4762 M16X70 A4	
450	90458-0072		43	SCREW ISO 7380 S M6X12 A2	
460	312105-0370		2	SCREW M6S ISO 4017 M6X20 A480	
470	315125-0153		1	WASHER TBRSB 6,4X22X4 A4	
480	312111-0630		9	SCREW HEX.SOCK.HD.MC6S-TT 16X50 88 FZ	
490	315111-0186		9	WASHER PLAIN, TBRB 17/30 H=6	
500	312318-0453		32	SCREW ISO4029 M8X25 A4	
530	352113-0204		4	ANCHOR PLATES FOR STRIPS, TYPE TM3S25-M	
570	312105-0491		2	SCREW M6S ISO 4017 M10X20 A480	
810	90261-0033		2	PLUG, BLIND, PLASTIC GPN300F182	
820	90458-0073		45	WASHER 6,4/30, H=1,5	
A3/FLEX NOPT RIGHTSTAIR (See drawing on page: 2-184)					
060	2550145-0000		1	RAILING	
070	1524854-0000		1	BEAM	
090	2550193-0000		1	TOE PLATE	
210	985328-0000		16	CONNECTION	
260	1558947-0000		2	STRIP	
400	312125-0366		4	SCREW ISO 1207 M6X12 A4	
410	315105-0153		4	WASHER BRB6,4X12RFR	
420	312812-0316		1	HEXAGON NUT, NY-LOCK M6 A480	
430	315105-0173		40	WASHER BRB10,5X22RFR	
440	312115-0634		2	SCREW ISO4762 M16X70 A4	
450	90458-0072		43	SCREW ISO 7380 S M6X12 A2	
460	312105-0370		2	SCREW M6S ISO 4017 M6X20 A480	
470	315125-0153		1	WASHER TBRSB 6,4X22X4 A4	
480	312111-0630		9	SCREW HEX.SOCK.HD.MC6S-TT 16X50 88 FZ	
490	315111-0186		9	WASHER PLAIN, TBRB 17/30 H=6	
500	312318-0453		32	SCREW ISO4029 M8X25 A4	
530	352113-0204		4	ANCHOR PLATES FOR STRIPS, TYPE TM3S25-M	
570	312105-0491		2	SCREW M6S ISO 4017 M10X20 A480	
810	90261-0033		2	PLUG, BLIND, PLASTIC GPN300F182	
820	90458-0073		45	WASHER 6,4/30, H=1,5	

Pos	Part No	UN	Qty	Description	Page No
A3/FLEX PT/FLEX LEFTSTAIR (See drawing on page: 2-182)					
090	2566258-0000		1	TOE PLATE	
210	985328-0000		20	CONNECTION	
260	1558947-0000		3	STRIP	
270	2553115-0000		1	PLATFORM	
280	2553116-0000		1	CHECKER PLATE	
290	2553118-0000		1	TOE PLATE	
300	2553119-0000		1	RAILING	
310	2553120-0000		1	RAILING	
330	2553122-0000		1	PLATE	
350	2553124-0000		2	PIN	
360	2553125-0000		1	CHECKER PLATE	
430	315105-0173		38	WASHER BRB10,5X22RFR	
450	90458-0072		56	SCREW ISO 7380 S M6X12 A2	
480	312111-0630		12	SCREW HEX.SOCK.HD.MC6S-TT 16X50 88 FZ	
490	315111-0186		12	WASHER PLAIN, TBRB 17/30 H=6	
500	312318-0453		40	SCREW ISO4029 M8X25 A4	
590	312105-0629		4	SCREW M6S ISO 4017 M16X45 A480	
600	312105-0633		14	SCREW M6S ISO 4014 M16X65 A480	
610	312105-0674		2	SCREW M6S ISO 4017 M20X50 A480	
620	312625-0326		2	HEXAGON THIN NUT, EN 24035 ML6M M20 A4	
630	315105-0186		18	WASHER BRB17X30RFR	
810	90261-0033		4	PLUG, BLIND, PLASTIC GPN300F182	
820	90458-0073		56	WASHER 6,4/30, H=1,5	
A3/FLEX PT/FLEX RIGHTSTAIR (See drawing on page: 2-186)					
090	2566258-0000		1	TOE PLATE	
210	985328-0000		20	CONNECTION	
260	1558947-0000		3	STRIP	
270	2553115-0000		1	PLATFORM	
280	2553116-0000		1	CHECKER PLATE	
290	2553118-0000		1	TOE PLATE	
300	2553119-0000		1	RAILING	
310	2553120-0000		1	RAILING	
330	2553122-0000		1	PLATE	
350	2553124-0000		2	PIN	
360	2553125-0000		1	CHECKER PLATE	
430	315105-0173		38	WASHER BRB10,5X22RFR	
450	90458-0072		56	SCREW ISO 7380 S M6X12 A2	
480	312111-0630		12	SCREW HEX.SOCK.HD.MC6S-TT 16X50 88 FZ	
490	315111-0186		12	WASHER PLAIN, TBRB 17/30 H=6	
500	312318-0453		40	SCREW ISO4029 M8X25 A4	
590	312105-0629		4	SCREW M6S ISO 4017 M16X45 A480	

Machine Type | Group Description | Used-In | Group Number | Page No

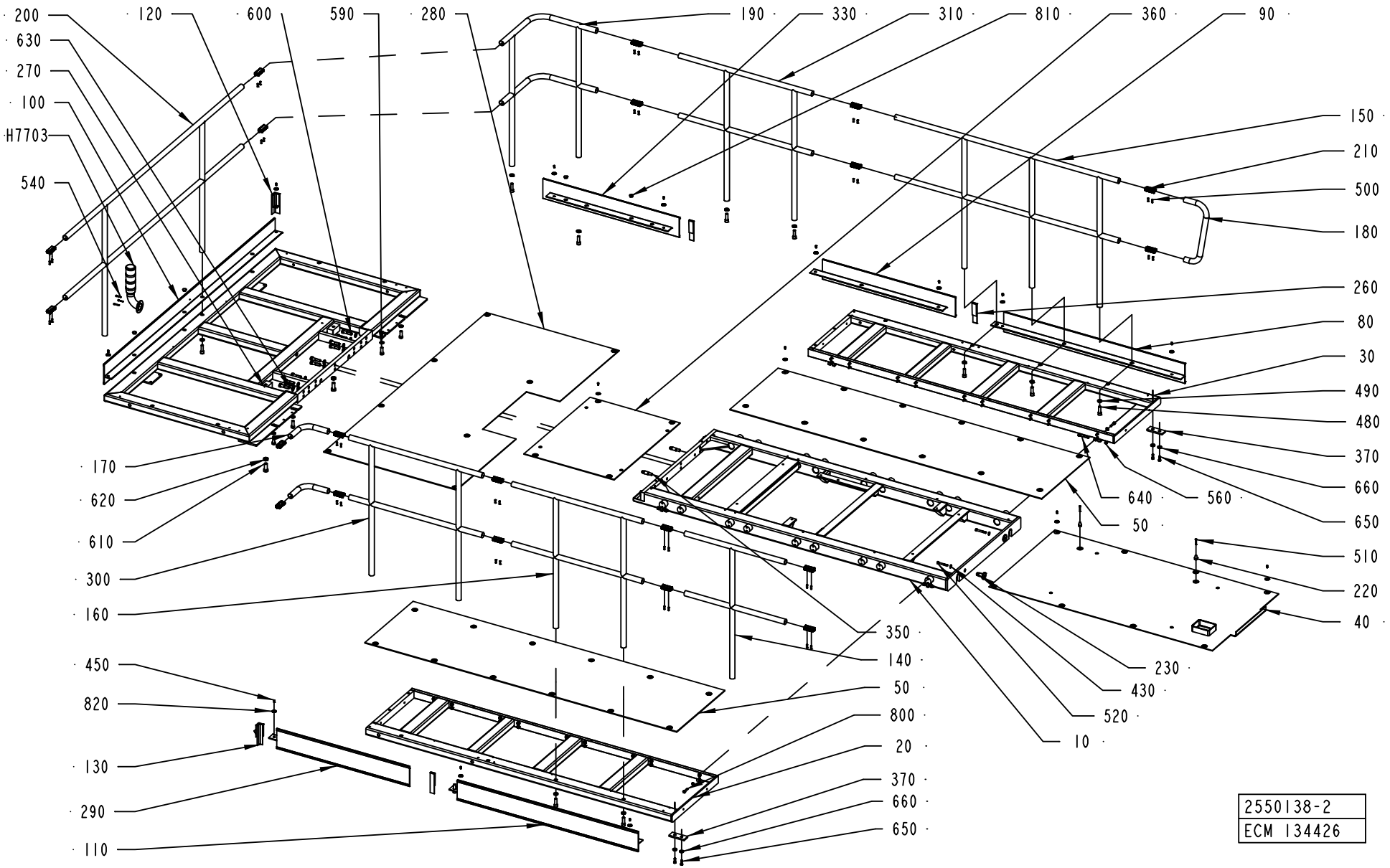
200
120
600
590
280
190
330
310
810
360
90
630
270
100
H7703
540
150
210
500
180
260
80
30
490
480
370
660
650
510
220
40
170
620
610
300
160
450
820
130
290
110
640
560
50
350
140
50
800
20
370
660
650
230
430
520
10
2550138-2
ECM 134426

Pos	Part No	UN	Qty	Description	Page No
A3/FLEX PT/FLEX RIGHTSTAIR (Cont'd) (See drawing on page: 2-186)					
600	312105-0633		14	SCREW M6S ISO 4014 M16X65 A480	
610	312105-0674		2	SCREW M6S ISO 4017 M20X50 A480	
620	312625-0326		2	HEXAGON THIN NUT, EN 24035 ML6M M20 A4	
630	315105-0186		18	WASHER BRB17X30RFR	
810	90261-0033		4	PLUG, BLIND, PLASTIC GPN300F182	
820	90458-0073		56	WASHER 6,4/30, H=1,5	
Common Parts					
010	2550144-0000		1	PLATFORM	
020	2550142-0000		1	PLATFORM	
030	2550143-0000		1	PLATFORM	
040	2550140-0000		1	CHECKER PLATE	
050	2550141-0000		2	CHECKER PLATE	
080	2550192-0000		1	TOE PLATE	
100	1523793-0000		1	TOE PLATE	
110	2550191-0000		1	TOE PLATE	
120	1524167-0000		1	CORNER STRIP	
130	1524168-0000		1	CORNER STRIP	
140	2550146-0000		1	RAILING	
150	2550189-0000		1	RAILING	
160	2550147-0000		1	RAILING	
170	2551951-0000		2	RAILING	
180	1558795-0000		1	RAILING	
190	1010822-0000		1	RAILING	
200	1548211-0000		1	RAILING	
220	1037571-0000		2	GUIDE BUSHING	
230	2599941-0000		2	SPACER	
370	1535036-0000		2	PLATE	
510	312109-0378		2	SCREW M6S ISO4017 M6X40 A480	
520	312105-0506		2	SCREW M6S ISO 4014 M10X75 A480	
540	312115-0337		3	SCREW ISO4762 M5X35 A4	
560	312812-0322		4	HEXAGON NUT, NY-LOCK M12 A480	
640	312115-0546		4	SCREW ISO4762 M12X70 A4	
650	312105-0495		4	SCREW M6S ISO 4017 M10X30 A480	
660	315125-0173		4	WASHER TBRSB 10,5X28X6 A4	
800	90458-2845		36	SCREW,HEXAGON HEAD M6S ISO 4017 M10X45	
H7703	2540716-0100		1	SIGNAL LAMP	**2-173**

Pos	Part No	UN	Qty	Description	Page No

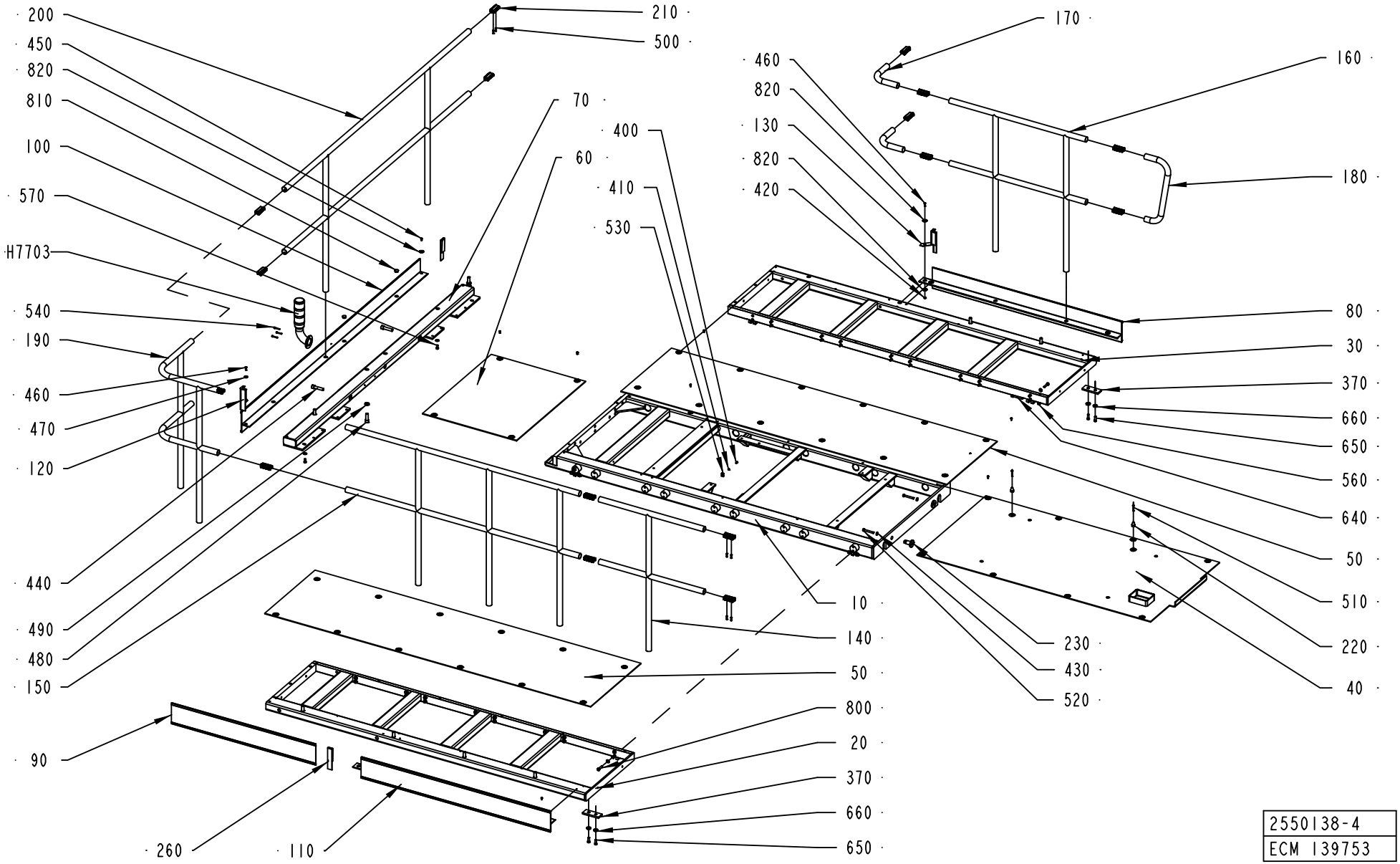

2550138-4
ECM 139753

Pos	Part No	UN	Qty	Description	Page No	Pos	Part No	UN	Qty	Description	Page No

SEE PREVIOUS LISTS PAGES: 2-181, 2-183.

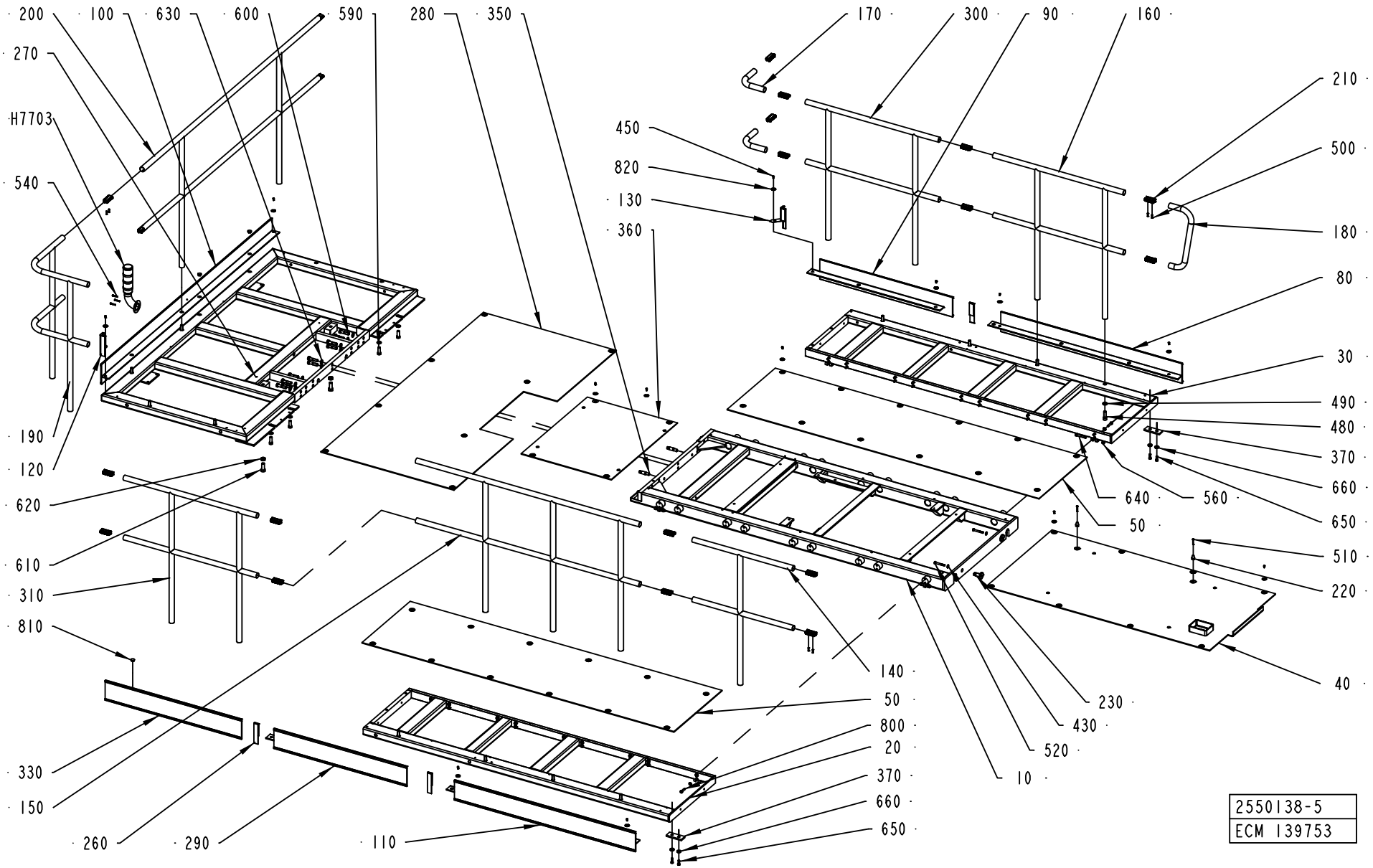
200
100
630
600
590
280
350
170
300
90
160
270
H7703
540
450
820
130
360
210
500
180
80
30
490
480
370
660
650
510
220
40
640
560
50
190
120
620
610
310
810
330
150
260
290
110
140
50
800
20
370
660
650
230
430
520
10
2550138-5
ECM 139753

Pos	Part No	UN	Qty	Description	Page No	Pos	Part No	UN	Qty	Description	Page No

SEE PREVIOUS LISTS PAGES: 2-181, 2-183.

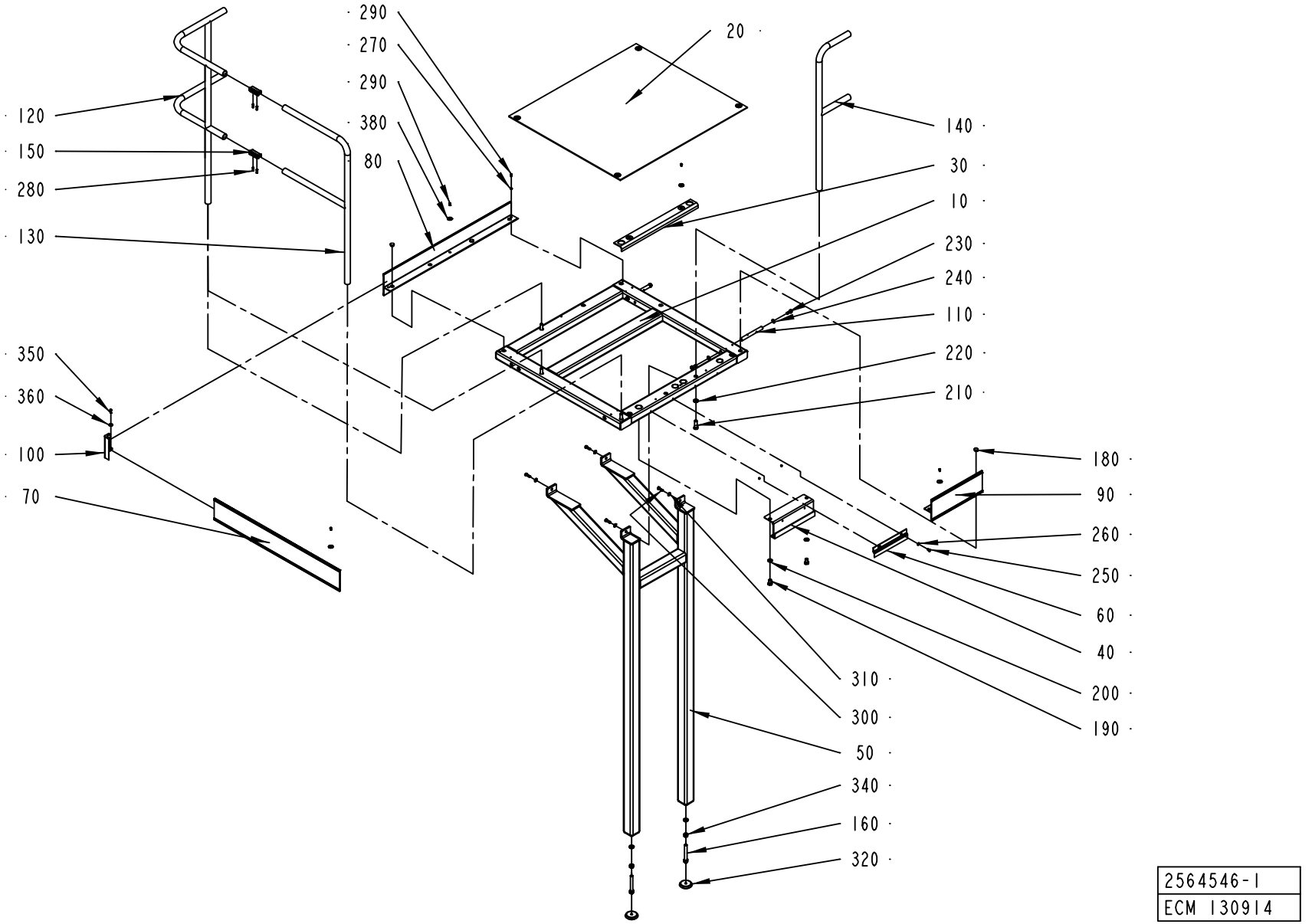
290
270
290
380
80
20
120
150
280
130
140
30
10
230
240
110
220
210
350
360
100
70
180
90
260
250
60
40
200
190
310
300
50
340
160
320
2564546-1
ECM 130914

ECM: 139860 - 20031001
Group number: 2564546-0100
Assembly Drawing: 2564546-1_1_AB

This list covers pages from 2-188 to 2-191

Pos	Part No	UN	Qty	Description	Page No
LEFTSTAIR (See drawing on page: 2-188)					
070	1524177-0000		1	TOE PLATE	
RIGHTSTAIR (See drawing on page: 2-190)					
070	1524180-0000		1	TOE PLATE	
Common Parts					
010	1524171-0000		1	FRAME	
020	1524172-0000		1	CHECKER PLATE	
030	1524173-0000		1	CHECKER PLATE	
040	1524174-0000		1	HOOK	
050	1524175-0000		1	LEG	
060	1524176-0000		1	CLAMP	
080	2564545-0000		1	PLATE	
090	1524179-0000		1	TOE PLATE	
100	1524167-0000		1	CORNER STRIP	
110	1524181-0000		2	PIN	
120	1010822-0000		1	RAILING	
130	1524182-0000		1	RAILING	
140	1524864-0000		1	RAILING	
150	985328-0000		2	CONNECTION	
160	1524185-0000		2	EXTENSION PIECE	
180	90261-0033		3	PLUG, BLIND, PLASTIC GPN300F182	
190	312105-0622		2	SCREW M6S ISO 4017 M16X25 A480	
200	315105-0186		2	WASHER BRB17X30RFR	
210	312111-0630		4	SCREW HEX.SOCK.HD.MC6S-TT 16X50 88 FZ	
220	315111-0186		6	WASHER PLAIN, TBRB 17/30 H=6	
230	312105-0536		4	SCREW M6S ISO 4017 M12X30 A480	
240	315105-0178		4	WASHER BRB13X24RFR	
250	312105-0447		2	SCREW M6S ISO 4017 M8X12 A480	
260	315101-0165		2	WASHER PLAIN, BRB, 8,4/16 H=1,5	
270	315101-0153		1	WASHER PLAIN, BRB, 6,4/12 H=1,5	
280	312318-0453		4	SCREW ISO4029 M8X25 A4	
290	90458-0072		12	SCREW ISO 7380 S M6X12 A2	
300	312105-0495		4	SCREW M6S ISO 4017 M10X30 A480	
310	315105-0173		4	WASHER BRB10,5X22RFR	
320	90347-0009		2	FLOOR PLATE, NO 1256730	
340	312605-0324		2	HEXAGON NUT, M6M M16 A280	
350	312105-0370		1	SCREW M6S ISO 4017 M6X20 A480	
360	315125-0153		1	WASHER TBRSB 6,4X22X4 A4	
380	90458-0073		11	WASHER 6,4/30, H=1,5	

Pos	Part No	UN	Qty	Description	Page No

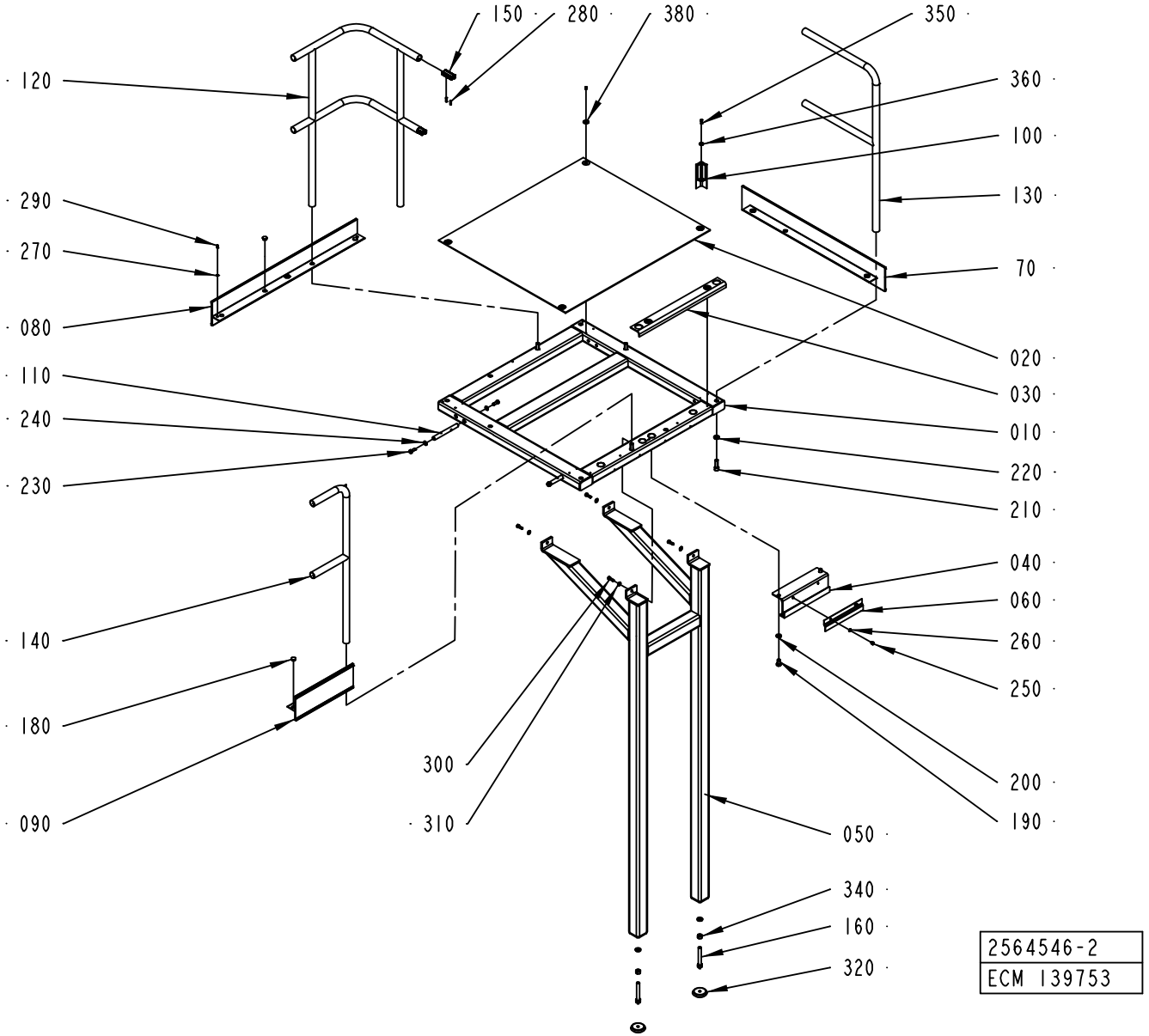
150
280
380
350
120
360
100
290
130
270
70
080
020
110
030
240
010
230
220
210
040
140
060
260
180
250
300
200
310
190
090
050
340
160
320
2564546-2
ECM 139753

ECM: 139860 - 20031001
Group number: 2564546-0100
Assembly Drawing: 2564546-2_1_AA

This list covers pages from 2-188 to 2-191

Pos	Part No	UN	Qty	Description	Page No
LEFTSTAIR (See drawing on page: 2-188)					
070	1524177-0000		1	TOE PLATE	
RIGHTSTAIR (See drawing on page: 2-190)					
070	1524180-0000		1	TOE PLATE	
Common Parts					
010	1524171-0000		1	FRAME	
020	1524172-0000		1	CHECKER PLATE	
030	1524173-0000		1	CHECKER PLATE	
040	1524174-0000		1	HOOK	
050	1524175-0000		1	LEG	
060	1524176-0000		1	CLAMP	
080	2564545-0000		1	PLATE	
090	1524179-0000		1	TOE PLATE	
100	1524167-0000		1	CORNER STRIP	
110	1524181-0000		2	PIN	
120	1010822-0000		1	RAILING	
130	1524182-0000		1	RAILING	
140	1524864-0000		1	RAILING	
150	985328-0000		2	CONNECTION	
160	1524185-0000		2	EXTENSION PIECE	
180	90261-0033		3	PLUG, BLIND, PLASTIC GPN300F182	
190	312105-0622		2	SCREW M6S ISO 4017 M16X25 A480	
200	315105-0186		2	WASHER BRB17X30RFR	
210	312111-0630		4	SCREW HEX.SOCK.HD.MC6S-TT 16X50 88 FZ	
220	315111-0186		6	WASHER PLAIN, TBRB 17/30 H=6	
230	312105-0536		4	SCREW M6S ISO 4017 M12X30 A480	
240	315105-0178		4	WASHER BRB13X24RFR	
250	312105-0447		2	SCREW M6S ISO 4017 M8X12 A480	
260	315101-0165		2	WASHER PLAIN, BRB, 8,4/16 H=1,5	
270	315101-0153		1	WASHER PLAIN, BRB, 6,4/12 H=1,5	
280	312318-0453		4	SCREW ISO4029 M8X25 A4	
290	90458-0072		12	SCREW ISO 7380 S M6X12 A2	
300	312105-0495		4	SCREW M6S ISO 4017 M10X30 A480	
310	315105-0173		4	WASHER BRB10,5X22RFR	
320	90347-0009		2	FLOOR PLATE, NO 1256730	
340	312605-0324		2	HEXAGON NUT, M6M M16 A280	
350	312105-0370		1	SCREW M6S ISO 4017 M6X20 A480	
360	315125-0153		1	WASHER TBRSB 6,4X22X4 A4	
380	90458-0073		11	WASHER 6,4/30, H=1,5	

Pos	Part No	UN	Qty	Description	Page No

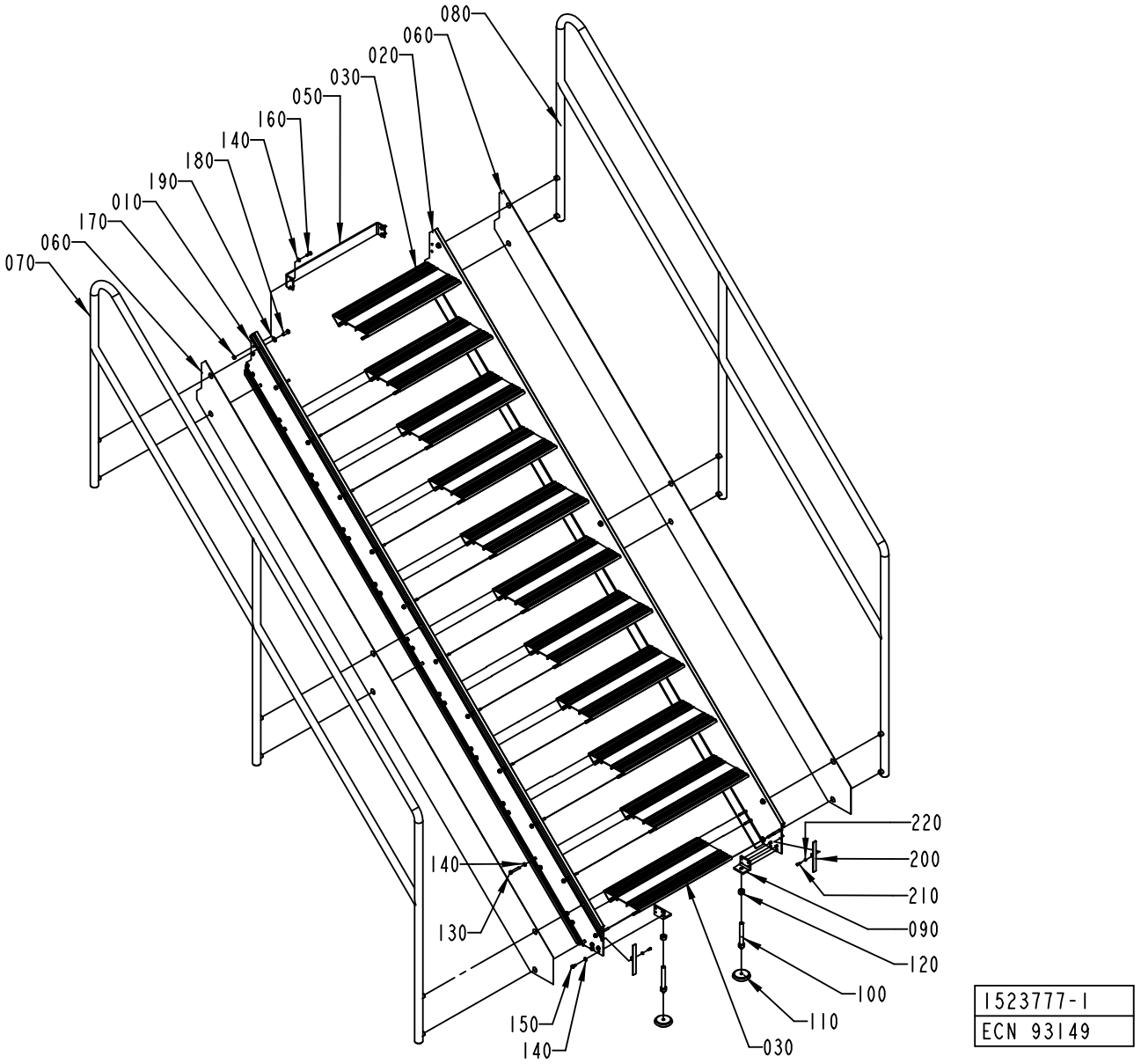
080
060
020
030
050
160
140
180
190
010
170
060
070
220
200
210
090
120
100
110
030
140
130
150
140
1523777-1
ECN 93149

ECM: 93184 - 20010715
Group number: 1523777-0100
Assembly Drawing: 1523777-1_1_AB

Pos	Part No	UN	Qty	Description	Page No
-					
010	1524186-0000		1	PROFILE	
020	1524187-0000		1	PROFILE	
030	1524188-0000		10	STAIR	
050	1524190-0000		1	BRACKET	
060	1524191-0000		2	RIM	
070	1524192-0000		1	RAILING	
080	1524193-0000		1	RAILING	
090	1037391-0000		2	CANTILEVER	
100	1524185-0000		2	EXTENSION PIECE	
110	90347-0009		2	FLOOR PLATE, NO 1256730	
120	312605-0324		2	HEXAGON NUT, M6M M16 A280	
130	312104-0461		88	SCREW M6S M8X50H FZB	
140	315105-0165		94	WASHER BRB8,4X16RFR	
150	312105-0449		8	SCREW M6S ISO 4017 M8X16 A480	
160	312105-0451		6	SCREW M6S ISO 4017 M8X20 A480	
170	312605-0318		4	HEXAGON NUT, M6M M8 A280	
180	312105-0495		12	SCREW M6S ISO 4017 M10X30 A480	
190	315105-0173		12	WASHER BRB10,5X22RFR	
200	1558946-0000		2	PLUG	
210	312115-0327		2	SCREW ISO4762 M5X12 A4	
220	315105-0146		2	WASHER BRB5,3X10RFR	

Pos	Part No	UN	Qty	Description	Page No

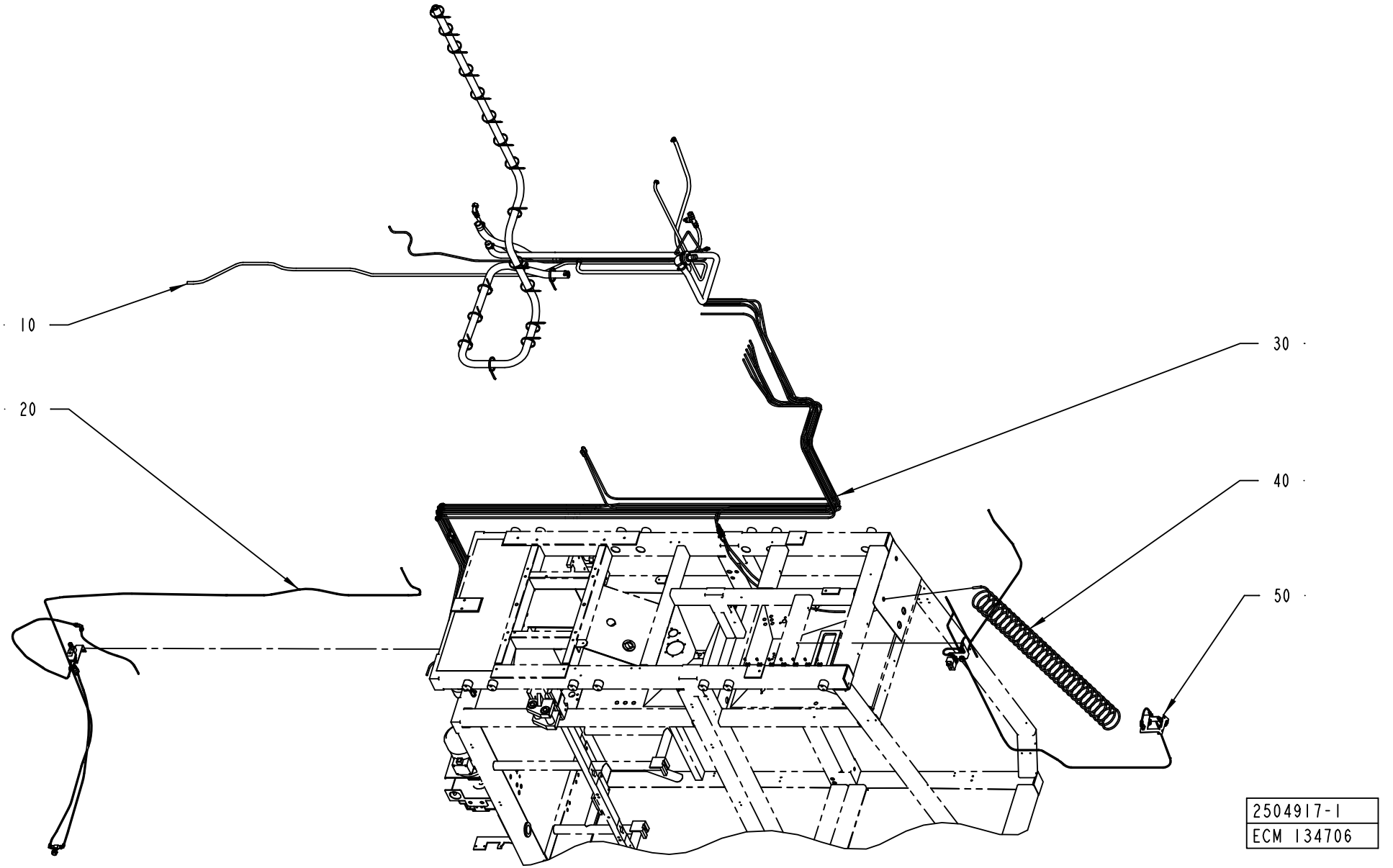
10
20
30
40
50
2504917-1
ECM 134706

ECM: 139369 - 20031007
Group number: 2504917-0100
Assembly Drawing: 2504917-1_1_AB

Pos	Part No	UN	Qty	Description	Page No
A3/FLEX DIMC/FLEX					
030	2514255-0100		1	PIPE WORK-WATER	**2-197, 2-199**
050	2615463-0100		1	FLUSHING DEVICE	**2-201**
A3/FLEX NODIMC					
030	2514255-0100		1	PIPE WORK-WATER	**2-197, 2-199**
Common Parts					
010	2514205-0100		1	PIPE WORK-WATER	**2-203**
020	2514254-0100		1	TUBE FLUSHING	**2-205**
040	1095681-0100		1	SPRAY GUN	**2-207**

Pos	Part No	UN	Qty	Description	Page No

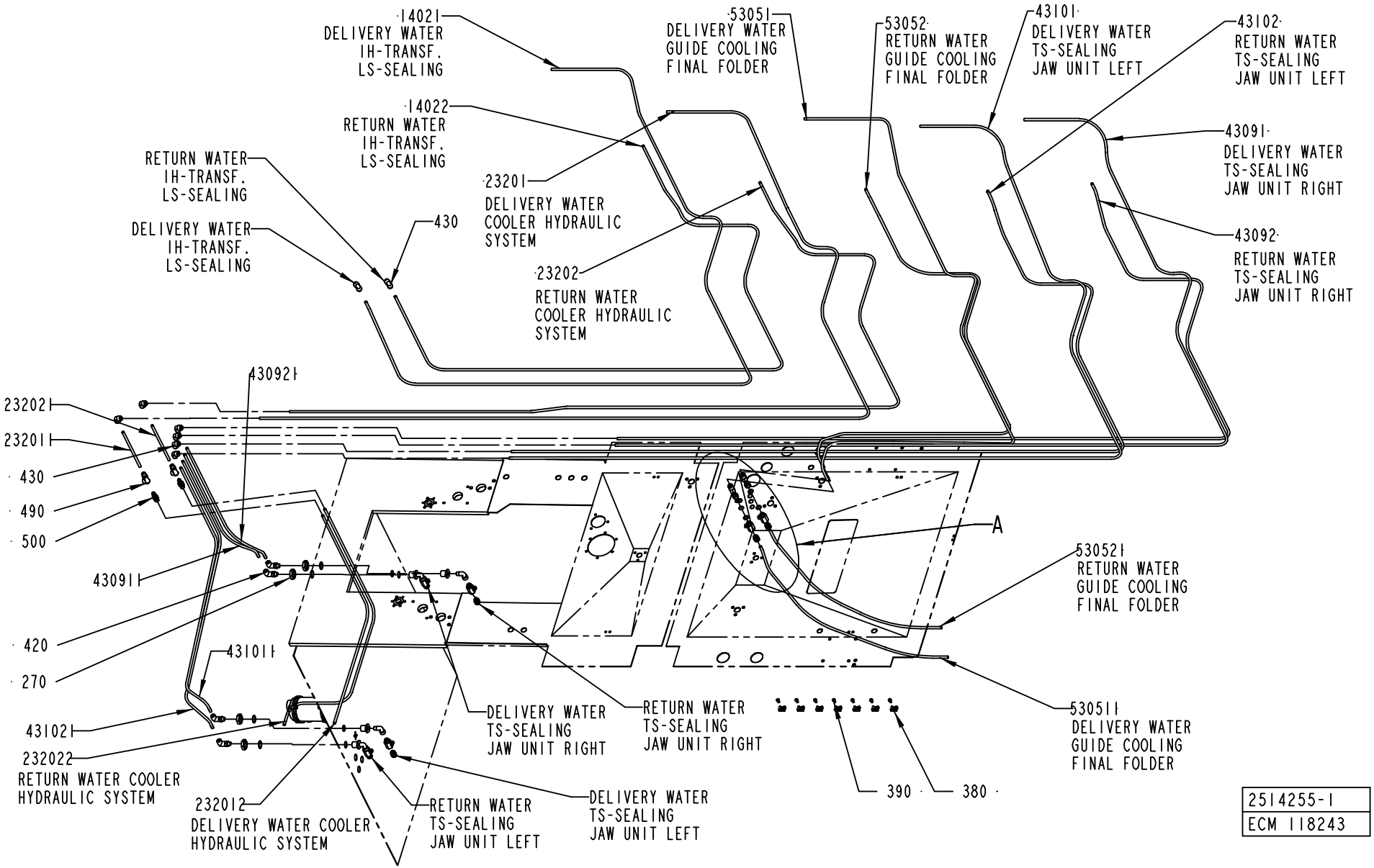
14021
DELIVERY WATER IH-TRANSF. LS-SEALING
14022
RETURN WATER IH-TRANSF. LS-SEALING
RETURN WATER IH-TRANSF. LS-SEALING
DELIVERY WATER IH-TRANSF. LS-SEALING
430
23201
DELIVERY WATER COOLER HYDRAULIC SYSTEM
23202
RETURN WATER COOLER HYDRAULIC SYSTEM
53051
DELIVERY WATER GUIDE COOLING FINAL FOLDER
53052
RETURN WATER GUIDE COOLING FINAL FOLDER
43101
DELIVERY WATER TS-SEALING JAW UNIT LEFT
43102
RETURN WATER TS-SEALING JAW UNIT LEFT
43091
DELIVERY WATER TS-SEALING JAW UNIT RIGHT
43092
RETURN WATER TS-SEALING JAW UNIT RIGHT
43092I
23202I
23201I
430
490
500
43091I
420
270
43101I
43102I
232022
RETURN WATER COOLER HYDRAULIC SYSTEM
232012
DELIVERY WATER COOLER HYDRAULIC SYSTEM
RETURN WATER TS-SEALING JAW UNIT LEFT
DELIVERY WATER TS-SEALING JAW UNIT LEFT
DELIVERY WATER TS-SEALING JAW UNIT RIGHT
RETURN WATER TS-SEALING JAW UNIT RIGHT
A
53052I
RETURN WATER GUIDE COOLING FINAL FOLDER
53051I
DELIVERY WATER GUIDE COOLING FINAL FOLDER
390
380
2514255-1
ECM 118243

ECM: 118243 - 20030403
Group number: 2514255-0100
Assembly Drawing: 2514255-1_1_AA

This list covers pages from 2-196 to 2-199

Pos	Part No	UN	Qty	Description	Page No
-					
010	276398-0000		4	HEXAGON NIPPLE	
100	90140-0013		4	ELBOW, 90 INT/EXT, 2020-1/4-1/4	
14021	90166-0118	MM	3300	TUBE 8 MM PA BLACK	
14022	90166-0118	MM	3900	TUBE 8 MM PA BLACK	
23201	90166-0118	MM	4400	TUBE 8 MM PA BLACK	
232011	90166-0118	MM	200	TUBE 8 MM PA BLACK	
232012	90166-0118	MM	1100	TUBE 8 MM PA BLACK	
23202	90166-0118	MM	4000	TUBE 8 MM PA BLACK	
232021	90166-0118	MM	200	TUBE 8 MM PA BLACK	
232022	90166-0118	MM	1300	TUBE 8 MM PA BLACK	
260	90187-0158		6	THROTTLE BALL VALVE G1/4, R1/4	
270	90330-0093		4	NUT, HEXAGON, G1/2	
280	90030-0166		2	NIPPLE,REDUCING G1/4"-G1/4"	
380	352113-0204		7	ANCHOR PLATES FOR STRIPS, TYPE TM3S25-M	
390	312125-0364		7	SCREW ISO 1207 M6X10 A4	
400	315237-0110		4	WASHER,PL.RND.AL.13,5/18,H=1,5	
410	315233-0113		4	WASHER CAPTIVE SEALING G1/2	
420	90055-0267		4	ELBOW PIPE JOINT,EXT.THREAD,D=8 MM G1/4	
430	90055-0269		8	ELBOW PIPE JOINT 8X8 MM	
43091	90166-0118	MM	4630	TUBE 8 MM PA BLACK	
430911	90166-0118	MM	650	TUBE 8 MM PA BLACK	
43092	90166-0118	MM	4000	TUBE 8 MM PA BLACK	
430921	90166-0118	MM	700	TUBE 8 MM PA BLACK	
43101	90166-0118	MM	5350	TUBE 8 MM PA BLACK	
431011	90166-0118	MM	650	TUBE 8 MM PA BLACK	
43102	90166-0118	MM	4800	TUBE 8 MM PA BLACK	
431021	90166-0118	MM	700	TUBE 8 MM PA BLACK	
440	90055-0266		2	STRAIGHT CONNECTION	
450	90055-0274		6	STRAIGHT COUPLING, D=8 MM - G1/4"	
490	90459-0941		2	QUICK COUPLING, PLCD 130-M8	
500	90459-0960		2	QUICK COUPLING, PLCD 200-M8	
53051	90166-0118	MM	3370	TUBE 8 MM PA BLACK	
530511	90166-0118	MM	980	TUBE 8 MM PA BLACK	
53052	90166-0118	MM	2840	TUBE 8 MM PA BLACK	
530521	90166-0118	MM	940	TUBE 8 MM PA BLACK	

Pos	Part No	UN	Qty	Description	Page No

Machine Type	Group Description	Used-In	Group Number	Page No

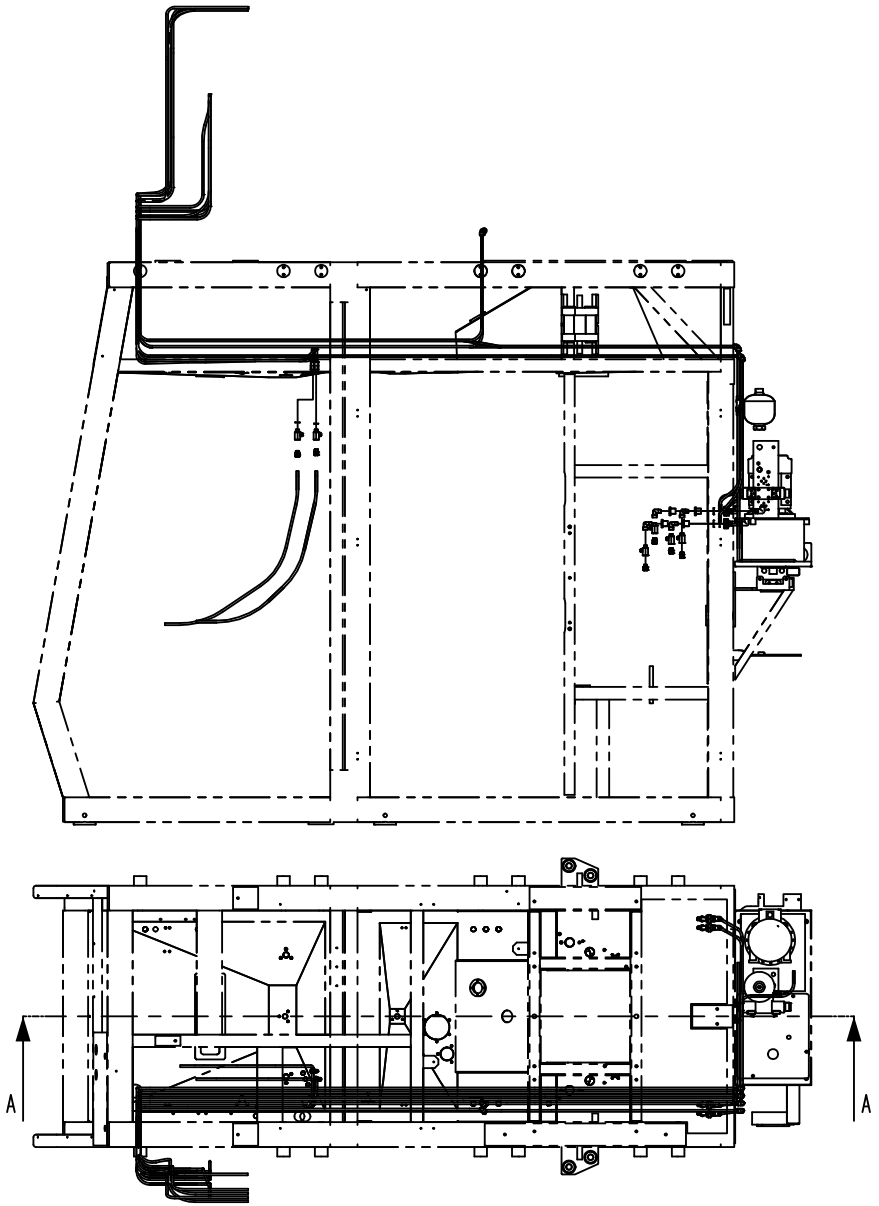

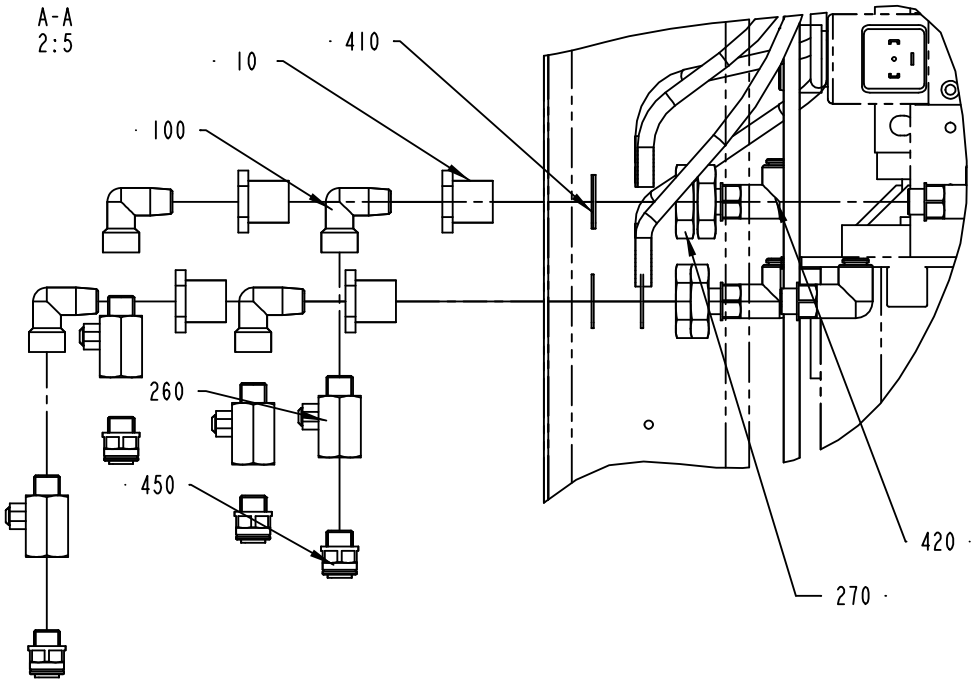

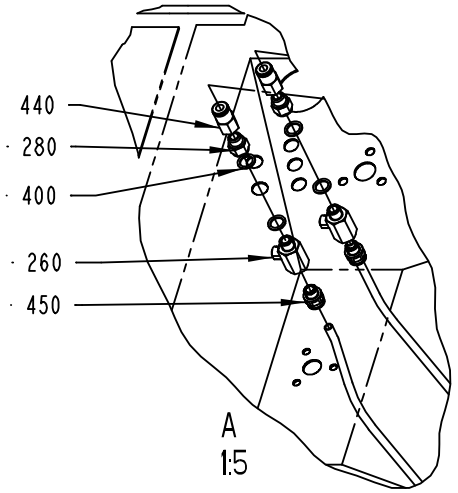

2514255-1
ECM 118243

ECM: 118243 - 20030403
Group number: 2514255-0100
Assembly Drawing: 2514255-1_2_AA

This list covers pages from 2-196 to 2-199

Pos	Part No	UN	Qty	Description	Page No
-					
010	276398-0000		4	HEXAGON NIPPLE	
100	90140-0013		4	ELBOW, 90 INT/EXT, 2020-1/4-1/4	
14021	90166-0118	MM	3300	TUBE 8 MM PA BLACK	
14022	90166-0118	MM	3900	TUBE 8 MM PA BLACK	
23201	90166-0118	MM	4400	TUBE 8 MM PA BLACK	
232011	90166-0118	MM	200	TUBE 8 MM PA BLACK	
232012	90166-0118	MM	1100	TUBE 8 MM PA BLACK	
23202	90166-0118	MM	4000	TUBE 8 MM PA BLACK	
232021	90166-0118	MM	200	TUBE 8 MM PA BLACK	
232022	90166-0118	MM	1300	TUBE 8 MM PA BLACK	
260	90187-0158		6	THROTTLE BALL VALVE G1/4, R1/4	
270	90330-0093		4	NUT, HEXAGON, G1/2	
280	90030-0166		2	NIPPLE,REDUCING G1/4"-G1/4"	
380	352113-0204		7	ANCHOR PLATES FOR STRIPS, TYPE TM3S25-M	
390	312125-0364		7	SCREW ISO 1207 M6X10 A4	
400	315237-0110		4	WASHER,PL.RND.AL.13,5/18,H=1,5	
410	315233-0113		4	WASHER CAPTIVE SEALING G1/2	
420	90055-0267		4	ELBOW PIPE JOINT,EXT.THREAD,D=8 MM G1/4	
430	90055-0269		8	ELBOW PIPE JOINT 8X8 MM	
43091	90166-0118	MM	4630	TUBE 8 MM PA BLACK	
430911	90166-0118	MM	650	TUBE 8 MM PA BLACK	
43092	90166-0118	MM	4000	TUBE 8 MM PA BLACK	
430921	90166-0118	MM	700	TUBE 8 MM PA BLACK	
43101	90166-0118	MM	5350	TUBE 8 MM PA BLACK	
431011	90166-0118	MM	650	TUBE 8 MM PA BLACK	
43102	90166-0118	MM	4800	TUBE 8 MM PA BLACK	
431021	90166-0118	MM	700	TUBE 8 MM PA BLACK	
440	90055-0266		2	STRAIGHT CONNECTION	
450	90055-0274		6	STRAIGHT COUPLING, D=8 MM - G1/4"	
490	90459-0941		2	QUICK COUPLING, PLCD 130-M8	
500	90459-0960		2	QUICK COUPLING, PLCD 200-M8	
53051	90166-0118	MM	3370	TUBE 8 MM PA BLACK	
530511	90166-0118	MM	980	TUBE 8 MM PA BLACK	
53052	90166-0118	MM	2840	TUBE 8 MM PA BLACK	
530521	90166-0118	MM	940	TUBE 8 MM PA BLACK	

Pos	Part No	UN	Qty	Description	Page No

Machine Type | Group Description | Used-In | Group Number | Page No

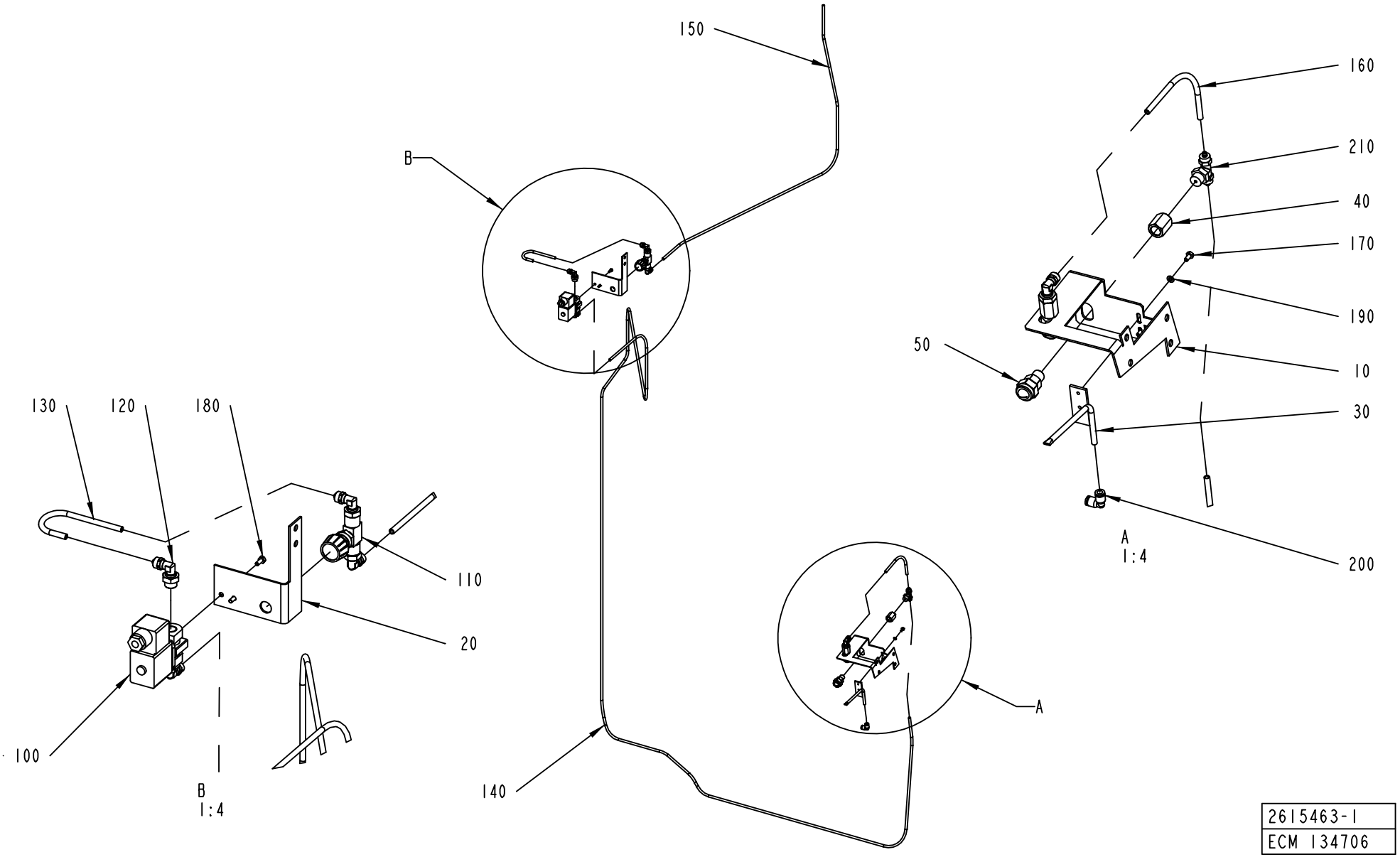

2615463-1
ECM 134706

ECM: 134706 - 20030922
Group number: 2615463-0100
Assembly Drawing: 2615463-1_1_AA

Pos	Part No	UN	Qty	Description	Page No
-					
010	2608273-0000		1	HOLDER	
020	2609365-0000		1	HOLDER	
030	2608274-0000		1	PIPE	
040	1523641-0000		2	SPACER	
050	1523645-0000		2	AIR NOZZLE	
100	90042-0248		1	SOLENOID VALVE OFFICIENE DI ENSINO	
110	90187-0149		1	THROTTLE VALVE, G1/4, G1/4, MALE	
120	90224-0329		5	ELBOW 90 COUPL.,EXT.THREAD 6/4-G1/4"	
130	90166-0266	MM	200	TUBE, 6 MM PA BLACK	
140	90166-0266	MM	4000	TUBE, 6 MM PA BLACK	
150	90166-0266	MM	1200	TUBE, 6 MM PA BLACK	
160	90166-0266	MM	200	TUBE, 6 MM PA BLACK	
170	312105-0287		2	SCREW M6S ISO4017 M4X8 A470	
180	312105-0289		2	SCREW M6S ISO 4017 M4X10 A470	
190	315105-0136		2	WASHER BRB4,3XRFR	
200	342735-0102		1	ELBOW PIPE JOINT	
210	342941-0114		1	T-COUPLING,EXT.THREAD 6/4-G1/4"	

Pos	Part No	UN	Qty	Description	Page No

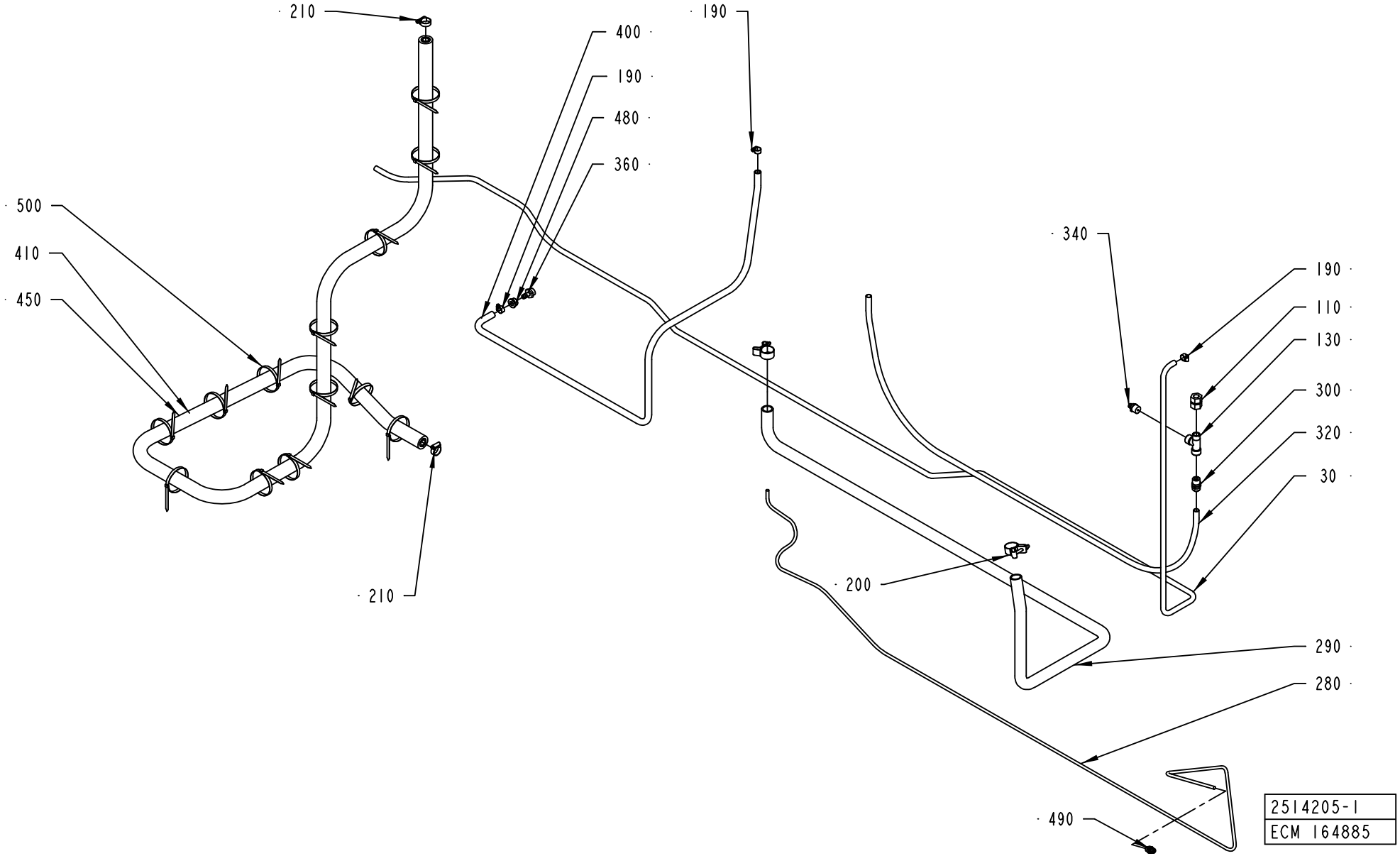
210
400
190
480
360
190
500
410
450
340
190
110
130
300
320
30
210
200
290
280
490
2514205-1
ECM 164885

ECM: 167694 - 20040607
Group number: 2514205-0100
Assembly Drawing: 2514205-1_1_AE

Pos	Part No	UN	Qty	Description	Page No
-					
030	1296750-0000		1	PLASTIC PIPE	
110	342723-0114		1	CONN. STR. PIPE GI-15-G1/2	
130	90140-0011		1	T-PIPE, INT. THREAD, NO. 2070-1/2-1/2	
190	342991-0101		3	HOSE CLIP,WORM DRIVE TYPE (13)-16	
200	90459-2366		2	HOSE CLIP, (32)-35	
210	342991-0104		2	HOSE CLIP,WORM DRIVE TYPE (23)-27	
280	90166-0013	MM	2000	TUBE 8 MM PA BLUE	
290	90166-0049	MM	2500	HOSE PVC 25/33-34	
300	342920-0151		1	STRAIGHT COUPL.,EXT.THREAD.15/12,5-R1/2"	
320	90166-0110	MM	2200	TUBE 15 MM PA,TRANSP.	
340	342920-0116		1	STRAIGHT COUPLING,EXT.THREADED 6/4-R1/2"	
360	342901-0105		1	HOSE NIPPLE, EXT.THR. R1/2-12 MM	
400	90166-0121	MM	1850	HOSE	
410	90166-0260	MM	3300	HOSE	
450	90411-0020	MM	3300	INSULATING TUBE	
480	342713-0213		1	PLUG, EXT THREAD HEX SOCKET 8638-00-120	
490	342921-0122		1	STRAIGHT COUPLING,EXT.THREADED 8/6-G1/4"	
500	352113-0104		13	CLIP STRIP, 300X4,8 MM	

Pos	Part No	UN	Qty	Description	Page No

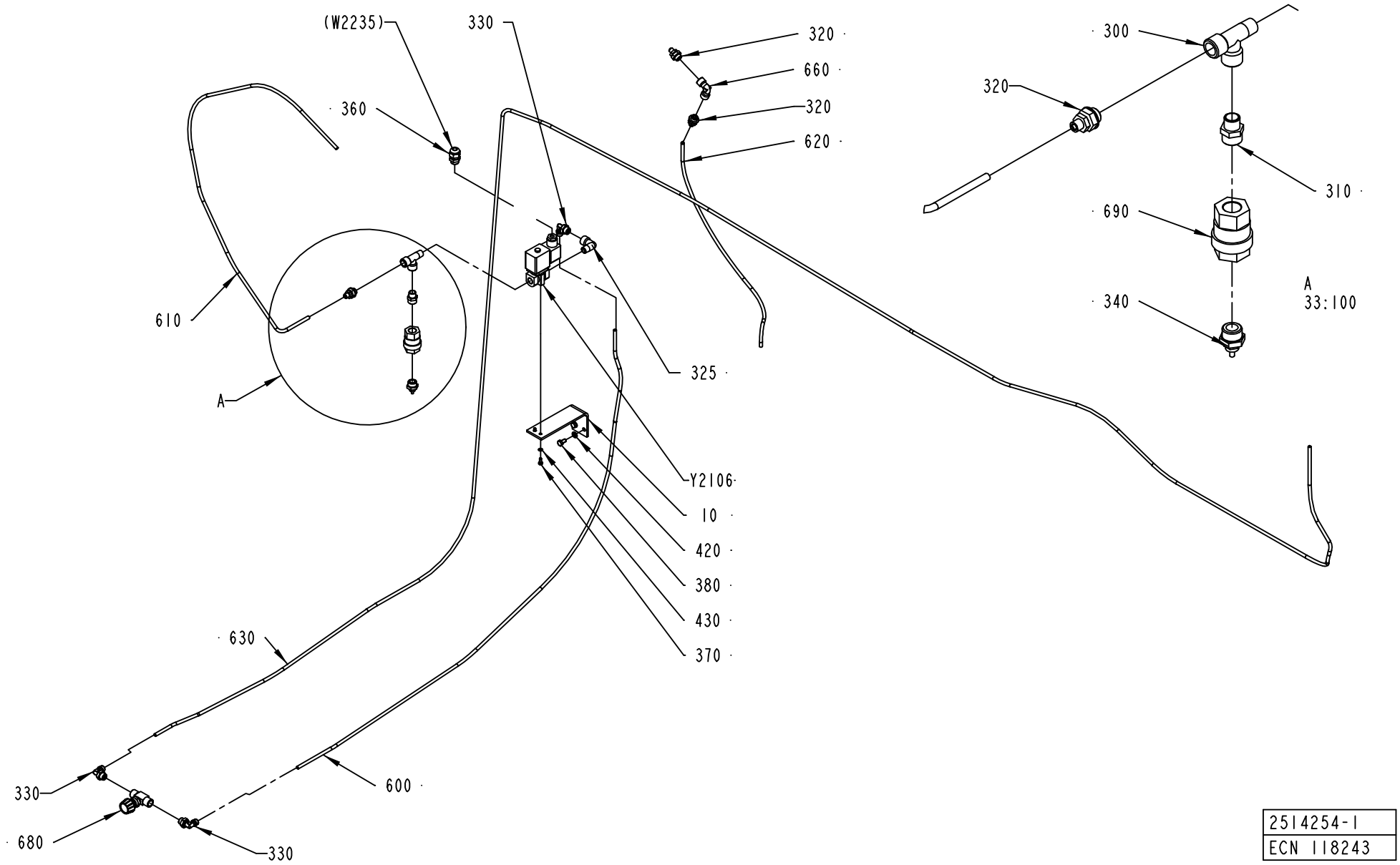

2514254-1
ECN 118243

ECM: 118243 - 20030403
Group number: 2514254-0100
Assembly Drawing: 2514254-1_1_AA

Pos	Part No	UN	Qty	Description	Page No
-					
010	2522165-0000		1	CANTILEVER	
300	342245-0102		1	T-PIPE, INT. THREAD, R1/4XKR1/4	
310	342700-0203		1	NIPPLES,HEXAGON,EXT.G-THREAD G3/8"-G1/4"	
320	342921-0114		3	STRAIGHT COUPLING,EXT.THREADED 6/4-G1/4"	
325	90140-0013		1	ELBOW, 90 INT/EXT, 2020-1/4-1/4	
330	90224-0329		3	ELBOW 90 COUPL.,EXT.THREAD 6/4-G1/4"	
340	342921-0115		1	STRAIGHT COUPLING,EXT.THREADED 6/4-G3/8"	
360	352103-0101		1	CABLE GLAND, ST 9, PR15,2/PG9	
370	312105-0289		2	SCREW M6S ISO 4017 M4X10 A470	
380	312105-0366		2	SCREW M6S ISO 4017 M6X12 A480	
420	315105-0153		2	WASHER BRB6,4X12RFR	
430	315105-0136		2	WASHER BRB4,3XRFR	
600	90166-0132	MM	1600	TUBE 6 MM PA,TRANSP.	
610	90166-0132	MM	1200	TUBE 6 MM PA,TRANSP.	
620	90166-0132	MM	1000	TUBE 6 MM PA,TRANSP.	
630	90166-0132	MM	5000	TUBE 6 MM PA,TRANSP.	
660	90140-0019		1	ELBOW, 90, INT. THREAD, NO. 2013-1/4	
680	90187-0149		1	THROTTLE VALVE, G1/4, G1/4, MALE	
690	90230-0028		1	NON-RETURN VALVE H 151 R 3/8"	
Y2106	90042-0248		1	SOLENOID VALVE OFFICIENE DI ENSINO	

Pos	Part No	UN	Qty	Description	Page No

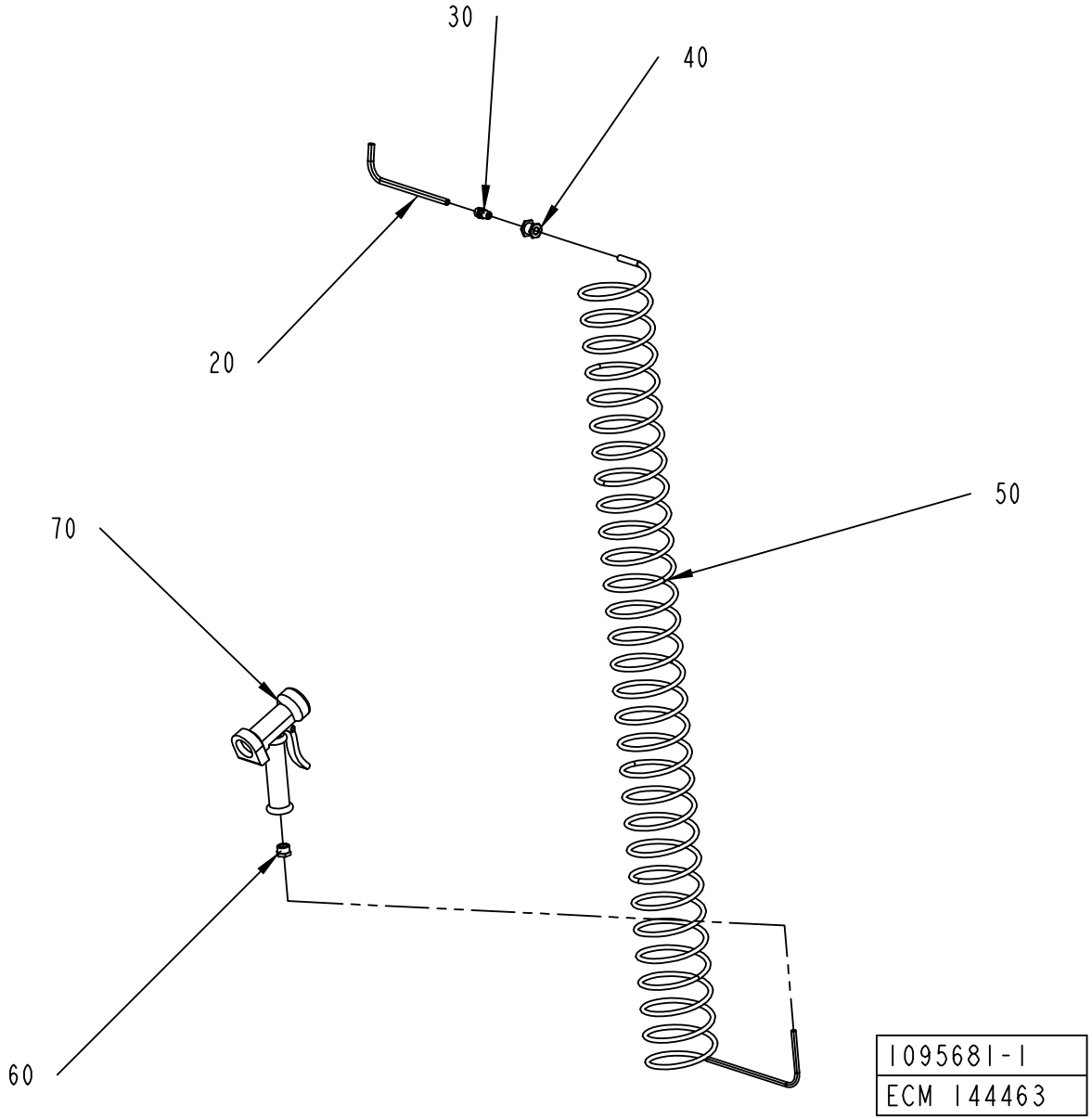
30
40
20
50
70
60
1095681-1
ECM 144463

ECM: 153186 - 20031204
Group number: 1095681-0100
Assembly Drawing: 1095681-1_1_AB

Pos	Part No	UN	Qty	Description	Page No
-					
020	90166-0141	MM	1600	TUBE 10 MM PA,TRANSP.	
030	342920-0132		1	STRAIGHT COUPL.,EXT.THREADED 10/8-R1/4"	
040	342767-0104		1	CONN. BULKHEAD G1/4	
050	90152-0017		1	HOSE (SPIRAL)	
060	342701-0205		1	BUSHING,INT./EXT.G-THREAD G1/2"-G1/4"	
070	90426-0003		1	HAND SHOWER	

Pos	Part No	UN	Qty	Description	Page No

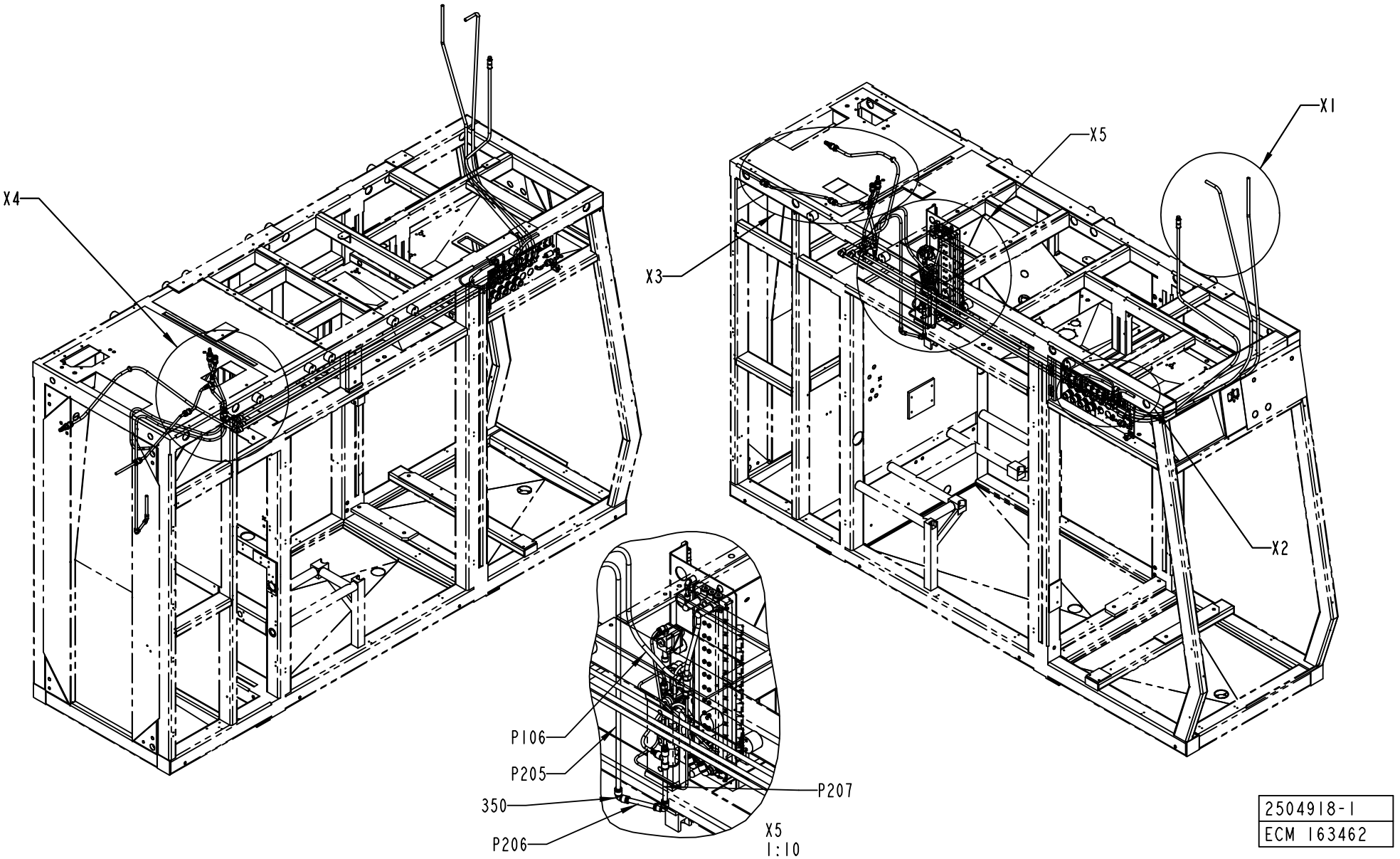
X4
X3
X5
X1
X2
P106
P205
350
P206
P207
X5
1:10
2504918-1
ECM 163462

ECM: 163462 - 20040607
Group number: 2504918-0100
Assembly Drawing: 2504918-1_1_AC

This list covers pages from 2-208 to 2-211

Pos	Part No	UN	Qty	Description	Page No
A3/FLEX (See drawing on pages: 2-208, 2-210)					
300	342715-0106		1	BLIND PLUG 14 MM	
305	342715-0105		1	BLIND PLUG 12 MM	
340	342716-0211		8	REDUCER 12-14	
360	342735-0110		3	ELBOW PIPE	
P103	90166-0196	MM	2350	TUBE 14MM PA BLUE	
P104	90166-0196	MM	120	TUBE 14MM PA BLUE	
P1ASU3	90166-0195	MM	3200	TUBE 12 MM PA BLUE	
P203	90166-0196	MM	2400	TUBE 14MM PA BLUE	
P204	90166-0195	MM	120	TUBE 12 MM PA BLUE	
P2PTDIMC	90166-0196	MM	4800	TUBE 14MM PA BLUE	
P2PTDIMC1	90166-0196	MM	1440	TUBE 14MM PA BLUE	
Common Parts					
330	342716-0209		2	REDUCER 8-12	
345	342728-0110		1	PIPE COUPLING 14 MM	
350	342735-0109		2	ELBOW PIPE JOINT	
440	342748-0110		5	T-CONNECTION 14MM	
500	90015-0021		1	LEAD-IN, TET10-14, E-1458023	
760	90458-2602		4	BULKHEAD CONNECTOR, 12 MM	
765	342768-0110		1	BULKHEAD CONNECTOR, 14 MM	
770	90055-0277		1	ELBOW WITH TAILPIECE 12/12 MM	
780	90157-0034		1	THREAD SEALANT LOCTITE 572 50 ML	
790	359000-0500		16	MARKING COLLAR 3/6 "0" YELLOW	
800	359000-0501		16	MARKING COLLAR 3/6 "1" YELLOW	
810	359000-0502		14	MARKING CO3/6"2"	
820	359000-0503		4	MARKING CO3/6"3"	
830	359000-0504		4	MARKING CO3/6"4"	
840	359000-0505		4	MARKING CO3/6"5"	
850	359000-0506		4	MARKING CO3/6"6"	
860	359000-0507		2	MARKING CO3/6"7"	
870	359000-0800		4	MARKING CO3/6"A"	
880	359000-0802		4	MARKING CO3/6"C"	
890	359000-0803		4	MARKING COLLAR 3/6 "D" YELLOW	
900	359000-0808		4	MARKING CO3/6"I"	
910	359000-0812		4	MARKING CO3/6"M"	
920	359000-0815		30	MARKING CO3/6"P"	
930	359000-0818		8	MARKING CO3/6"S"	
940	359000-0819		4	MARKING CO3/6"T"	
950	359000-0820		8	MARKING CO3/6"U"	
960	359000-0025		30	MARKING CO3/6 "-"	
P101	90166-0196	MM	2410	TUBE 14MM PA BLUE	
P102	90166-0195	MM	2600	TUBE 12 MM PA BLUE	
P105	90166-0196	MM	240	TUBE 14MM PA BLUE	
P106	90166-0195	MM	1300	TUBE 12 MM PA BLUE	
P1ASU1	90166-0195	MM	230	TUBE 12 MM PA BLUE	
P1ASU2	90166-0195	MM	510	TUBE 12 MM PA BLUE	
P1SUP	90166-0195	MM	100	TUBE 12 MM PA BLUE	
P201	90166-0196	MM	2600	TUBE 14MM PA BLUE	
P202	90166-0013	MM	710	TUBE 8 MM PA BLUE	
P205	90166-0195	MM	1700	TUBE 12 MM PA BLUE	
P206	90166-0195	MM	150	TUBE 12 MM PA BLUE	
P207	90166-0195	MM	180	TUBE 12 MM PA BLUE	
P2SUP	90166-0195	MM	370	TUBE 12 MM PA BLUE	

Machine Type | Group Description | Used-In | Group Number | Page No

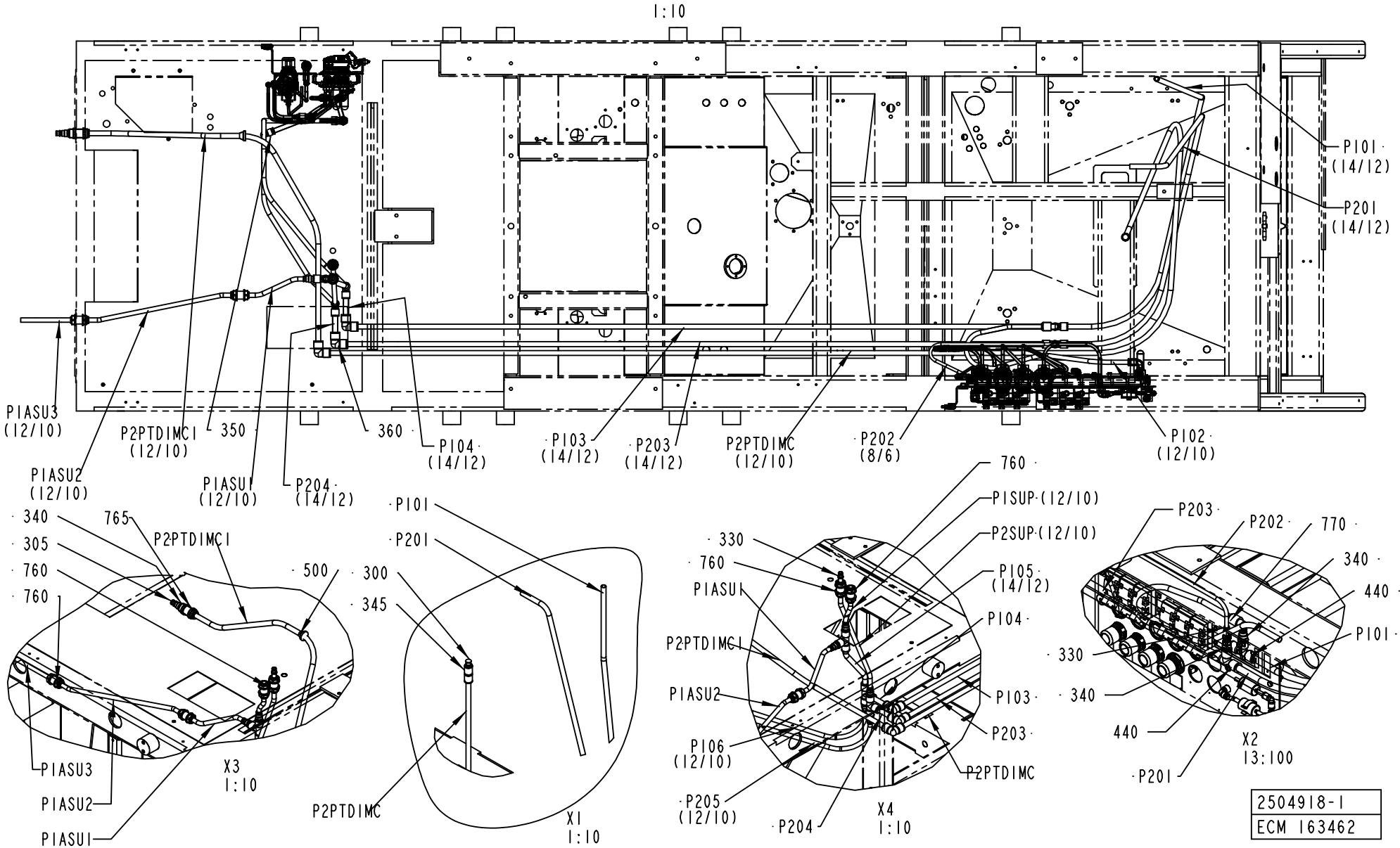
1:10
P101 (14/12)
P201 (14/12)
PIASU3 (12/10)
P2PTDIMC1 (12/10)
350
360
P104 (14/12)
P103 (14/12)
P203 (14/12)
P2PTDIMC (12/10)
P202 (8/6)
P102 (12/10)
PIASU2 (12/10)
PIASU1 (12/10)
P204 (14/12)
340
765
305
760
760
P2PTDIMC1
500
PIASU3
PIASU2
PIASU1
X3 1:10
P101
P201
300
345
P2PTDIMC
X1 1:10
760
PISUP (12/10)
P2SUP (12/10)
330
760
PIASU1
P105 (14/12)
P104
P2PTDIMC1
PIASU2
P103
P203
P106 (12/10)
P205 (12/10)
P204
P2PTDIMC
X4 1:10
P203
P202
770
340
440
P101
330
340
440
P201
X2 13:100
2504918-1
ECM 163462

ECM: 163462 - 20040607
Group number: 2504918-0100
Assembly Drawing: 2504918-1_2_AC

This list covers pages from 2-208 to 2-211

Pos	Part No	UN	Qty	Description	Page No
A3/FLEX (See drawing on pages: 2-208, 2-210)					
300	342715-0106		1	BLIND PLUG 14 MM	
305	342715-0105		1	BLIND PLUG 12 MM	
340	342716-0211		8	REDUCER 12-14	
360	342735-0110		3	ELBOW PIPE	
P103	90166-0196	MM	2350	TUBE 14MM PA BLUE	
P104	90166-0196	MM	120	TUBE 14MM PA BLUE	
P1ASU3	90166-0195	MM	3200	TUBE 12 MM PA BLUE	
P203	90166-0196	MM	2400	TUBE 14MM PA BLUE	
P204	90166-0195	MM	120	TUBE 12 MM PA BLUE	
P2PTDIMC	90166-0196	MM	4800	TUBE 14MM PA BLUE	
P2PTDIMC1	90166-0196	MM	1440	TUBE 14MM PA BLUE	
Common Parts					
330	342716-0209		2	REDUCER 8-12	
345	342728-0110		1	PIPE COUPLING 14 MM	
350	342735-0109		2	ELBOW PIPE JOINT	
440	342748-0110		5	T-CONNECTION 14MM	
500	90015-0021		1	LEAD-IN, TET10-14, E-1458023	
760	90458-2602		4	BULKHEAD CONNECTOR, 12 MM	
765	342768-0110		1	BULKHEAD CONNECTOR, 14 MM	
770	90055-0277		1	ELBOW WITH TAILPIECE 12/12 MM	
780	90157-0034		1	THREAD SEALANT LOCTITE 572 50 ML	
790	359000-0500		16	MARKING COLLAR 3/6 "0" YELLOW	
800	359000-0501		16	MARKING COLLAR 3/6 "1" YELLOW	
810	359000-0502		14	MARKING CO3/6"2"	
820	359000-0503		4	MARKING CO3/6"3"	
830	359000-0504		4	MARKING CO3/6"4"	
840	359000-0505		4	MARKING CO3/6"5"	
850	359000-0506		4	MARKING CO3/6"6"	
860	359000-0507		2	MARKING CO3/6"7"	
870	359000-0800		4	MARKING CO3/6"A"	
880	359000-0802		4	MARKING CO3/6"C"	
890	359000-0803		4	MARKING COLLAR 3/6 "D" YELLOW	
900	359000-0808		4	MARKING CO3/6"I"	
910	359000-0812		4	MARKING CO3/6"M"	
920	359000-0815		30	MARKING CO3/6"P"	
930	359000-0818		8	MARKING CO3/6"S"	
940	359000-0819		4	MARKING CO3/6"T"	
950	359000-0820		8	MARKING CO3/6"U"	
960	359000-0025		30	MARKING CO3/6 "-"	
P101	90166-0196	MM	2410	TUBE 14MM PA BLUE	
P102	90166-0195	MM	2600	TUBE 12 MM PA BLUE	
P105	90166-0196	MM	240	TUBE 14MM PA BLUE	
P106	90166-0195	MM	1300	TUBE 12 MM PA BLUE	
P1ASU1	90166-0195	MM	230	TUBE 12 MM PA BLUE	
P1ASU2	90166-0195	MM	510	TUBE 12 MM PA BLUE	
P1SUP	90166-0195	MM	100	TUBE 12 MM PA BLUE	
P201	90166-0196	MM	2600	TUBE 14MM PA BLUE	
P202	90166-0013	MM	710	TUBE 8 MM PA BLUE	
P205	90166-0195	MM	1700	TUBE 12 MM PA BLUE	
P206	90166-0195	MM	150	TUBE 12 MM PA BLUE	
P207	90166-0195	MM	180	TUBE 12 MM PA BLUE	
P2SUP	90166-0195	MM	370	TUBE 12 MM PA BLUE	

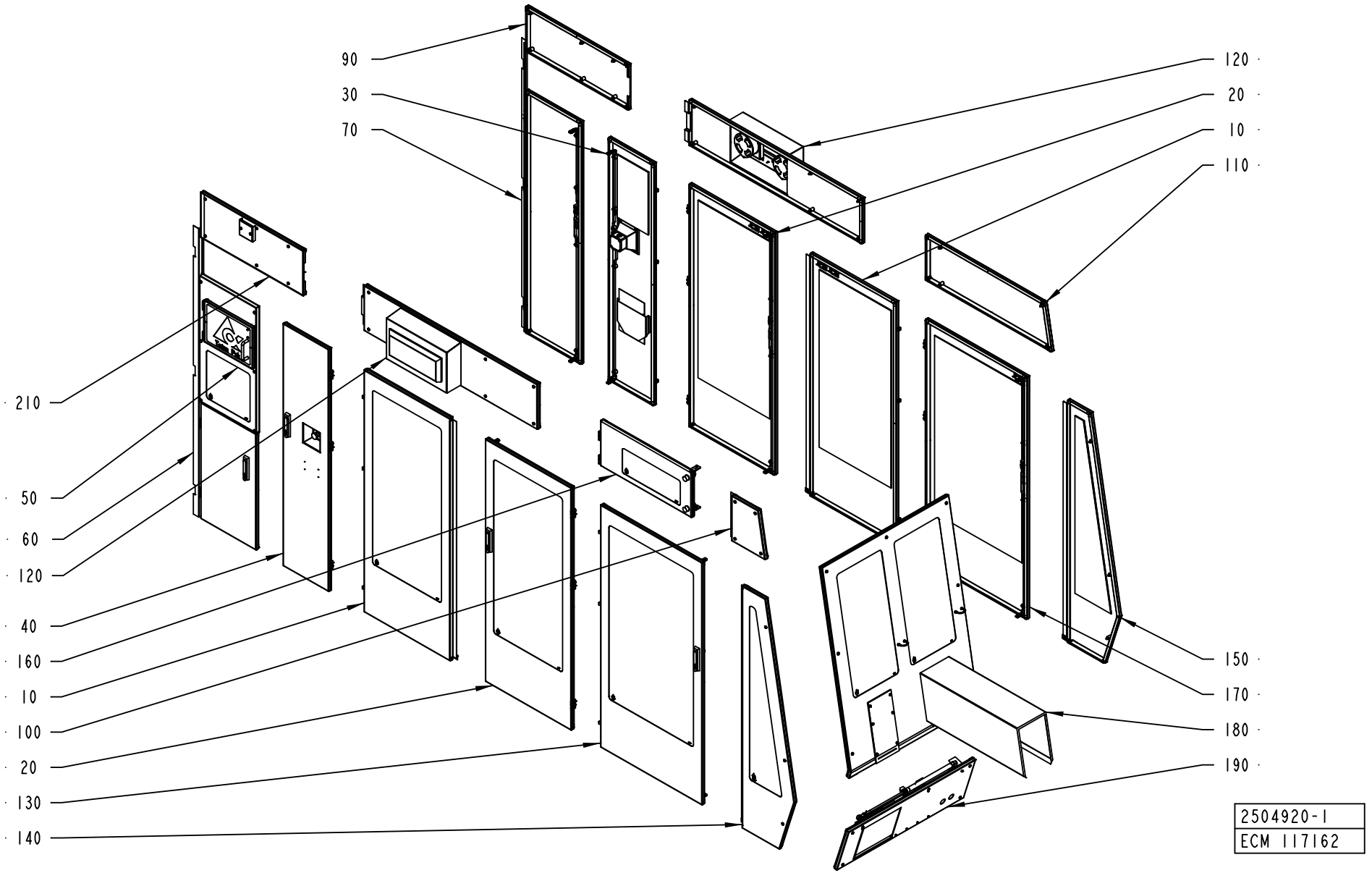
90
30
70
120
20
10
110
210
50
60
120
40
160
10
100
20
130
140
150
170
180
190
2504920-1
ECM 117162

ECM: 139359 - 20030711
Group number: 2504920-0100
Assembly Drawing: 2504920-1_1_AA

Pos	Part No	UN	Qty	Description	Page No
A3/FLEX					
010	2508129-0100		2	DOOR	**2-215**
020	2508135-0100		2	DOOR	**2-217**
040	2508141-0100		1	DOOR	**2-219**
090	2508159-0100		1	COVER	**2-223**
120	2508168-0100		2	COVER	**2-225**
Common Parts					
030	2508138-0100		1	DOOR	**2-229**
050	2544310-0100		1	PROTECTIVE COVER	**2-233**
060	2508149-0100		1	DOOR	**2-235**
070	2529597-0100		1	DOOR	**2-237**
100	2508162-0100		1	COVER	**2-239**
110	2508165-0100		1	COVER	**2-241**
130	2508175-0100		1	DOOR	**2-243**
140	2508177-0100		1	DOOR	**2-245**
150	2508181-0100		1	DOOR	**2-247**
160	2510764-0100		1	COVER	**2-249**
170	2530080-0100		1	DOOR	**2-251**
180	2512830-0100		1	FRONT COVER	**2-253**
190	2510347-0100		1	FRONT GUARD	**2-261**
210	2544333-0100		1	DOOR	**2-263**

Pos	Part No	UN	Qty	Description	Page No

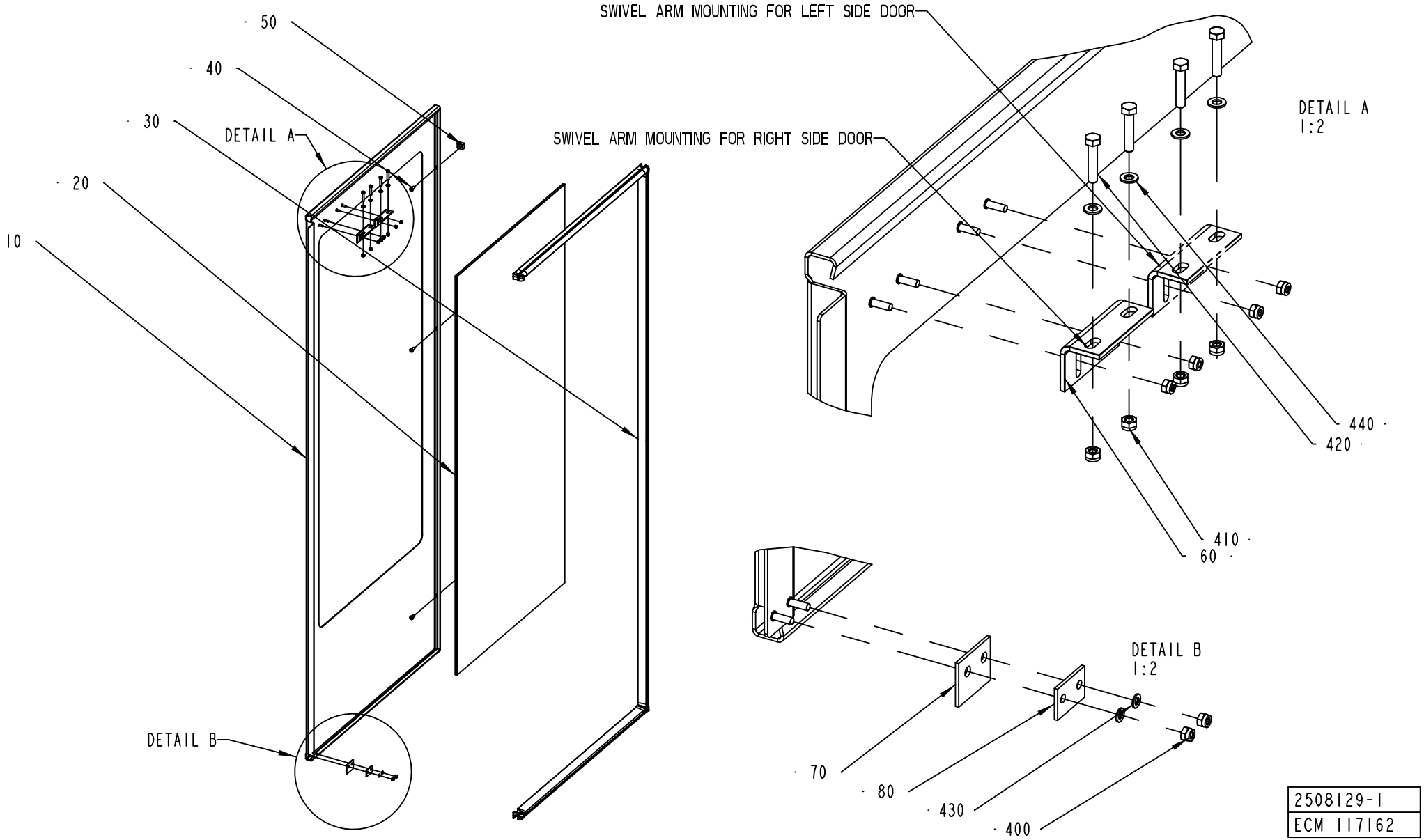

2508129-1
ECM 117162

ECM: 117162 - 20030403
Group number: 2508129-0100
Assembly Drawing: 2508129-1_1_AA

Pos	Part No	UN	Qty	Description	Page No
-					
010	2508130-0000		1	DOOR	
020	2508131-0000		1	GLASS PANE	
030	2508132-0000		1	RUBBER SEAL	
040	1129767-0000		3	SCREW	
050	1129770-0000		3	BLOCKING PIECE	
060	1346885-0000		1	SUPPORT	
070	1129325-0000		1	SEALING FLANGE	
080	1129324-0000		1	WASHER	
300	90153-0049		1	ADHESIVE, LOCTITE 409 20G	
310	90157-0041		1	SEALING COMPOUND, RHODORSEAL 5651	
400	312812-0312		4	HEXAGON NUT, NY-LOCK M4 A480	
410	312812-0314		2	HEXAGON NUT, NY-LOCK M5 A480	
420	312105-0333		2	SCREW M6S ISO 4017 M5X25 A480	
430	315105-0136		2	WASHER BRB4,3XRFR	
440	315105-0146		2	WASHER BRB5,3X10RFR	

Pos	Part No	UN	Qty	Description	Page No

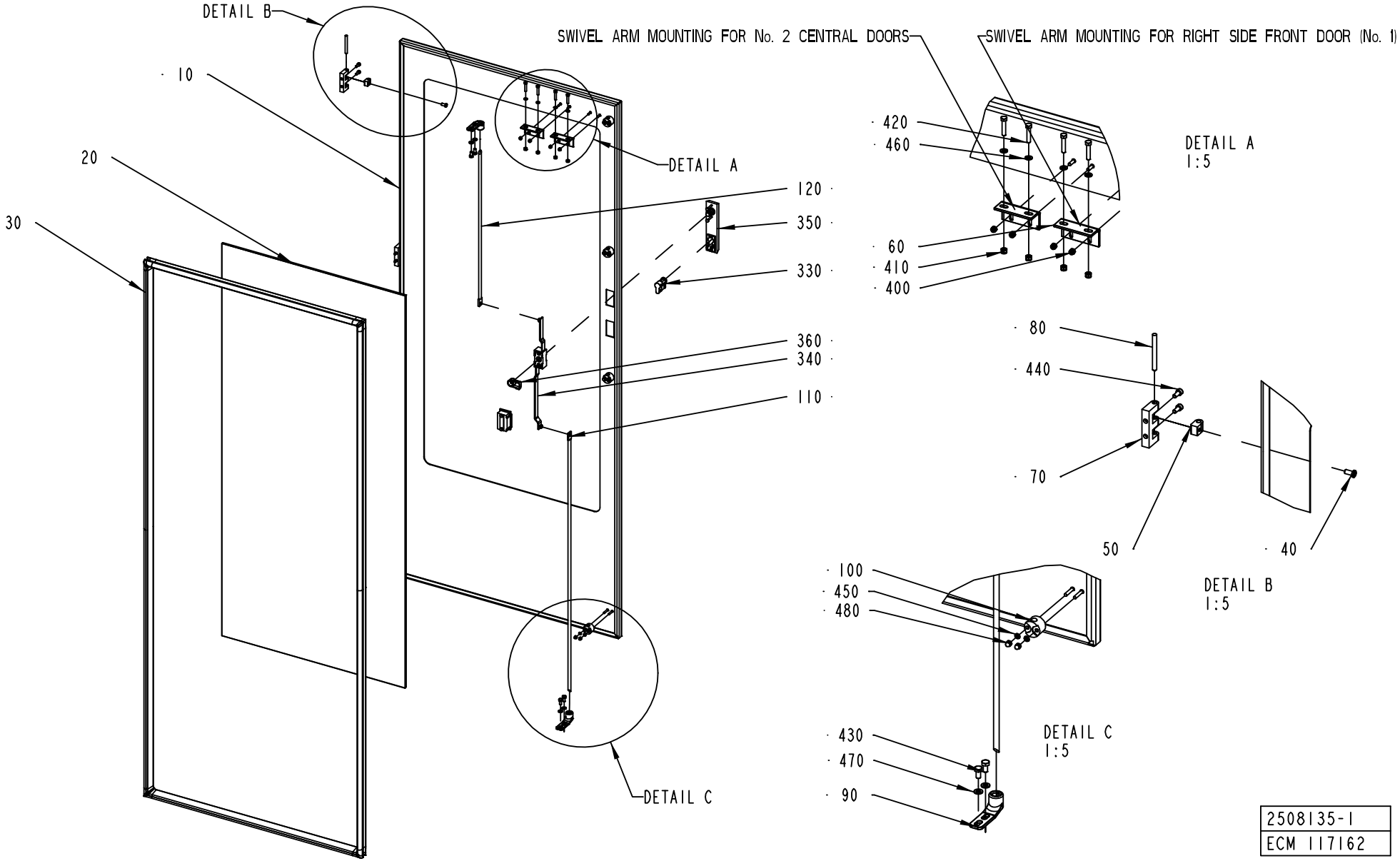
DETAIL B
10
20
30
DETAIL A
120
350
330
360
340
110
DETAIL C
SWIVEL ARM MOUNTING FOR No. 2 CENTRAL DOORS
SWIVEL ARM MOUNTING FOR RIGHT SIDE FRONT DOOR (No. 1)
420
460
60
410
400
DETAIL A
1:5
80
440
70
50
40
DETAIL B
1:5
100
450
480
430
470
90
DETAIL C
1:5
2508135-1
ECM 117162

ECM: 117162 - 20030403
Group number: 2508135-0100
Assembly Drawing: 2508135-1_1_AA

Pos	Part No	UN	Qty	Description	Page No
-					
010	2508136-0000		1	DOOR	
020	2508131-0000		1	GLASS PANE	
030	2508137-0000		1	RUBBER SEAL	
040	1129767-0000		3	SCREW	
050	1129770-0000		3	BLOCKING PIECE	
060	1346885-0000		1	SUPPORT	
070	1035792-0000		3	E-HINGE	
080	988685-0000		3	PIN	
090	1538868-0000		2	BRACKET	
100	1129274-0000		4	GUIDE LUG	
110	2508133-0000		1	LOCKING ARM	
120	2508134-0000		1	LOCKING ARM	
300	90153-0049		1	ADHESIVE, LOCTITE 409 20G	
310	90157-0041		1	SEALING COMPOUND, RHODORSEAL 5651	
330	90237-0128		1	LOCK CYLINDER, 1109-U3	
340	90237-0153		1	LOCK HOUSING, 1121-U26-0B	
350	90237-0176		1	TURNING HANDLE, 1125-U190-A	
360	90237-0165		1	LATCH	
400	312812-0312		2	HEXAGON NUT, NY-LOCK M4 A480	
410	312812-0314		2	HEXAGON NUT, NY-LOCK M5 A480	
420	312105-0333		2	SCREW M6S ISO 4017 M5X25 A480	
430	312105-0366		4	SCREW M6S ISO 4017 M6X12 A480	
440	312115-0327		6	SCREW ISO4762 M5X12 A4	
450	315105-0136		8	WASHER BRB4,3XRFR	
460	315105-0146		2	WASHER BRB5,3X10RFR	
470	315105-0153		4	WASHER BRB6,4X12RFR	
480	312705-0312		8	NUT HEX. DOMED CAP MHM-6 M4 A280	

Pos	Part No	UN	Qty	Description	Page No

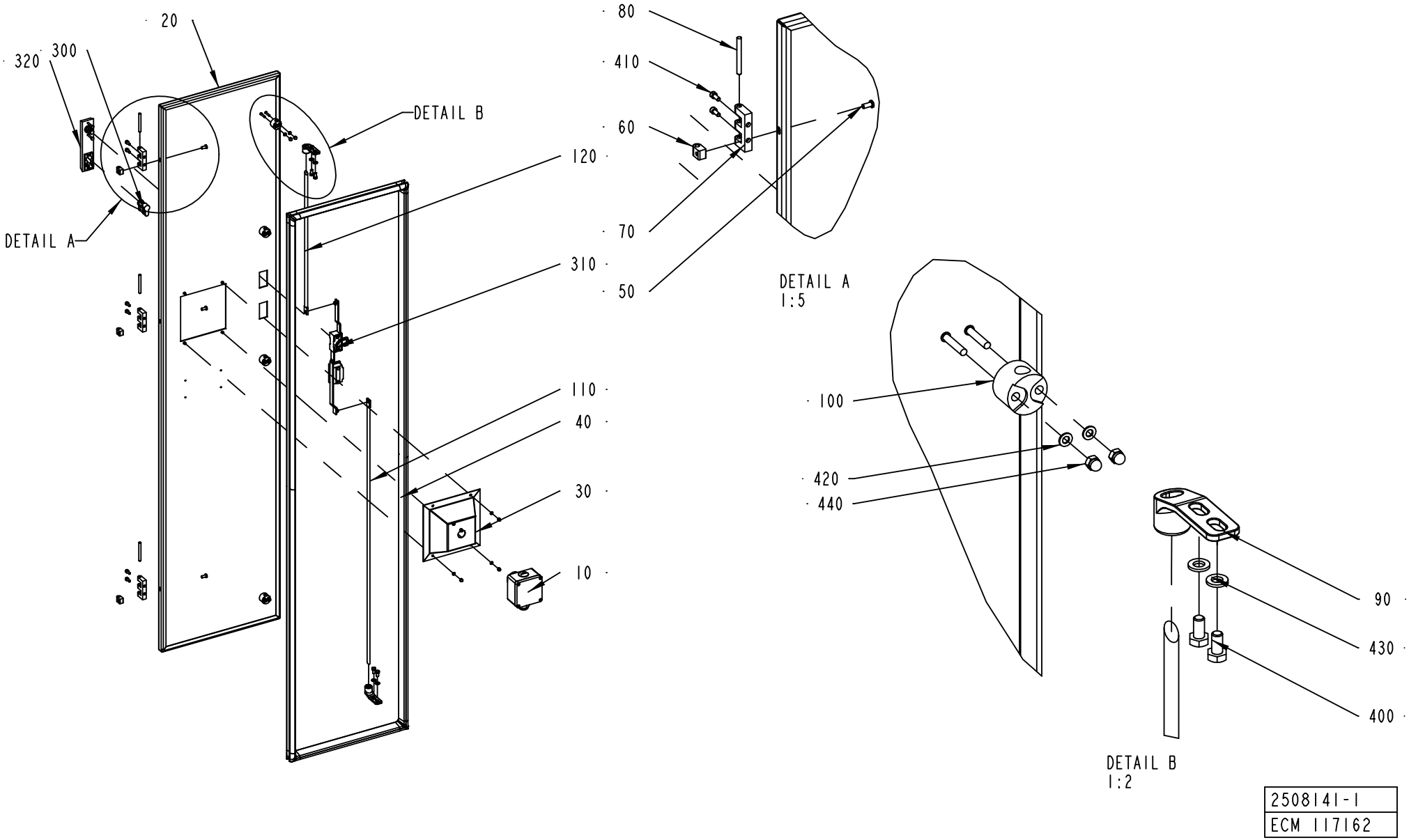

2508141-1
ECM 117162

ECM: 117162 - 20030403
Group number: 2508141-0100
Assembly Drawing: 2508141-1_1_AA

Pos	Part No	UN	Qty	Description	Page No
-					
010	2593851-0100		1	EMERGENCY STOP	**2-221**
020	2508142-0000		1	DOOR	
030	2532619-0000		1	COVER	
040	2508186-0000		1	RUBBER SEAL	
050	1129767-0000		3	SCREW	
060	1129770-0000		3	BLOCKING PIECE	
070	1035792-0000		3	E-HINGE	
080	988685-0000		3	PIN	
090	1538868-0000		2	BRACKET	
100	1129274-0000		4	GUIDE LUG	
110	2508133-0000		1	LOCKING ARM	
120	2508140-0000		1	LOCKING ARM	
300	90237-0128		1	LOCK CYLINDER, 1109-U3	
310	90237-0153		1	LOCK HOUSING, 1121-U26-0B	
320	90237-0176		1	TURNING HANDLE, 1125-U190-A	
400	312105-0366		4	SCREW M6S ISO 4017 M6X12 A480	
410	312115-0327		6	SCREW ISO4762 M5X12 A4	
420	315105-0136		12	WASHER BRB4,3XRFR	
430	315105-0153		4	WASHER BRB6,4X12RFR	
440	312705-0312		12	NUT HEX. DOMED CAP MHM-6 M4 A280	

Pos	Part No	UN	Qty	Description	Page No

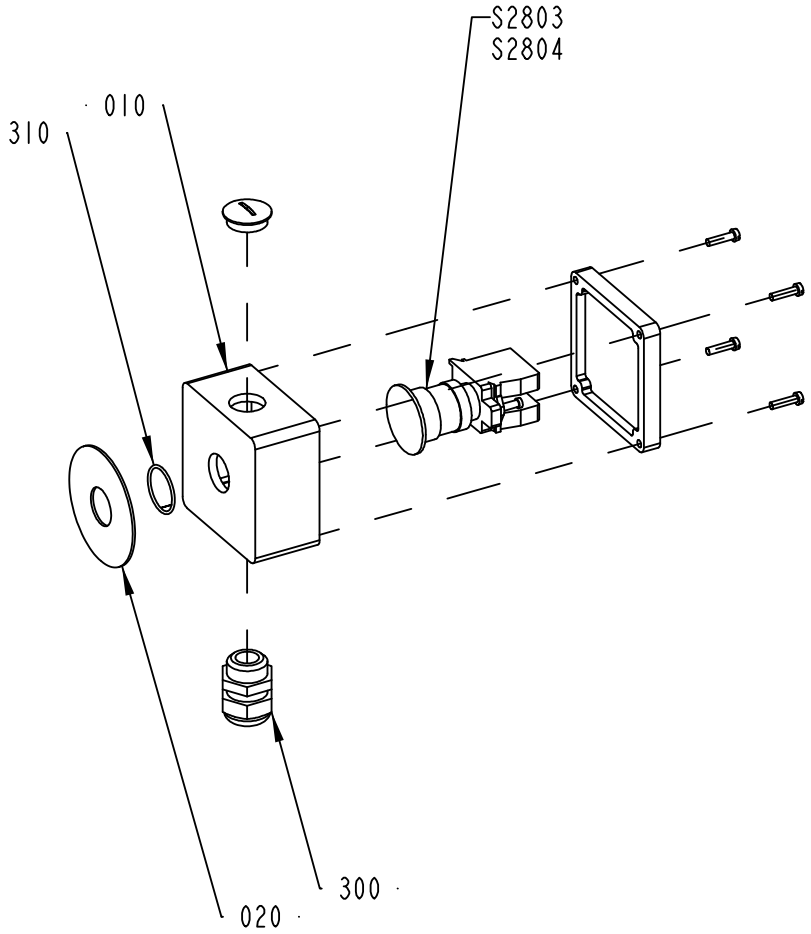

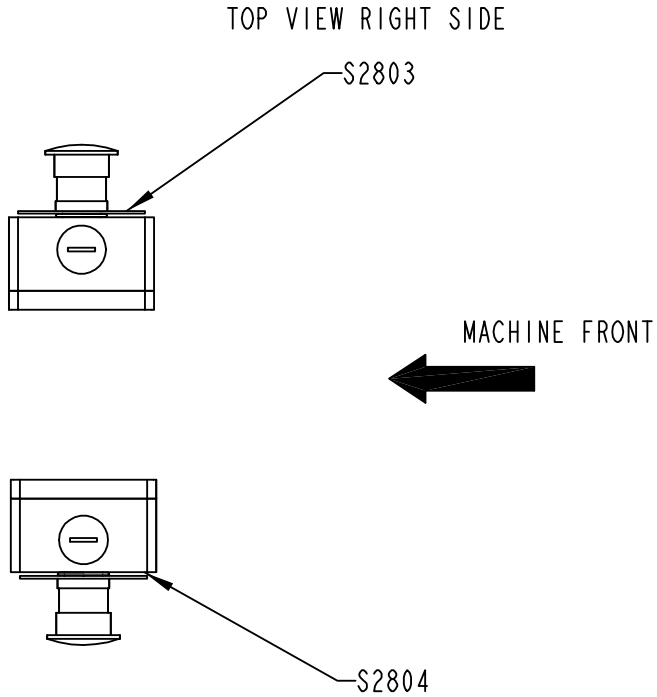

2593851-1
ECM 117744

ECM: 122786 - 20030403
Group number: 2593851-0100
Assembly Drawing: 2593851-1_1_AA

Pos	Part No	UN	Qty	Description	Page No
-					
010	1037130-0000		1	CONNECTION BOX	
020	486826-0001		1	SIGN "EMERGENCY STOP"	
300	352103-0110		1	CABLE GLAND, STR 16, PR22,5/PG16	
310	315202-0119		1	O-RING 25,1X1,6 MM	
S2803	90458-1651		1	EMERGENCY STOP, ZB4-BS-844 ZB4-BZ-104	

Pos	Part No	UN	Qty	Description	Page No

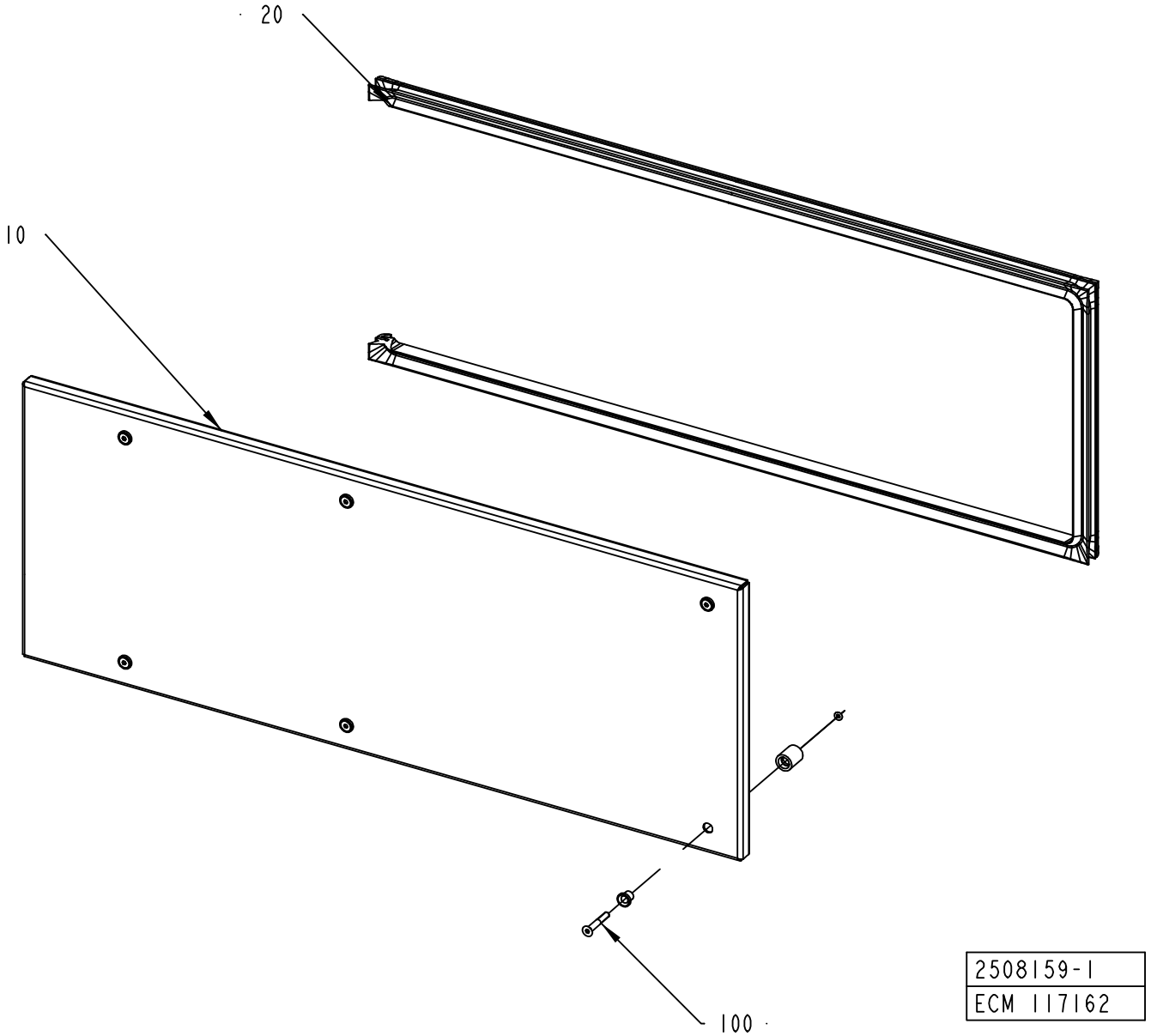

2508159-1
ECM 117162

ECM: 117162 - 20030403
Group number: 2508159-0100
Assembly Drawing: 2508159-1_1_AA

Pos	Part No	UN	Qty	Description	Page No
-					
010	2508160-0000		1	COVER	
020	2508161-0000		1	RUBBER SEAL	
100	90226-0458		6	MOUNTING SCREW	

Pos	Part No	UN	Qty	Description	Page No

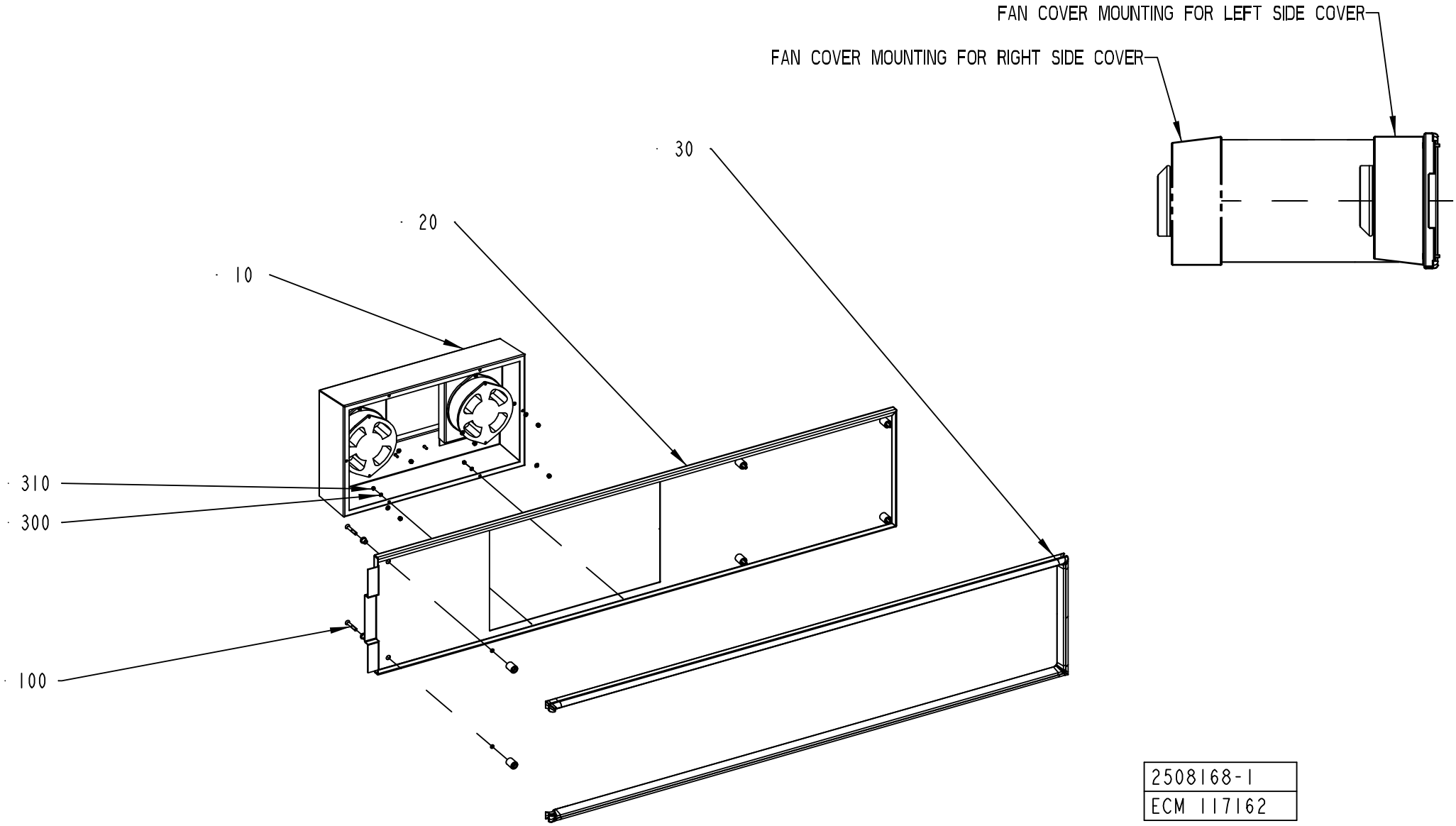

2508168-1
ECM 117162

ECM: 117162 - 20030403
Group number: 2508168-0100
Assembly Drawing: 2508168-1_1_AA

Pos	Part No	UN	Qty	Description	Page No
-					
010	2508170-0100		1	COVER	**2-227**
020	2508169-0000		1	COVER	
030	2508171-0000		1	RUBBER SEAL	
100	90226-0458		6	MOUNTING SCREW	
300	315105-0136		6	WASHER BRB4,3XRFR	
310	312605-0312		6	HEXAGON NUT, M6M M4 A280	

Pos	Part No	UN	Qty	Description	Page No

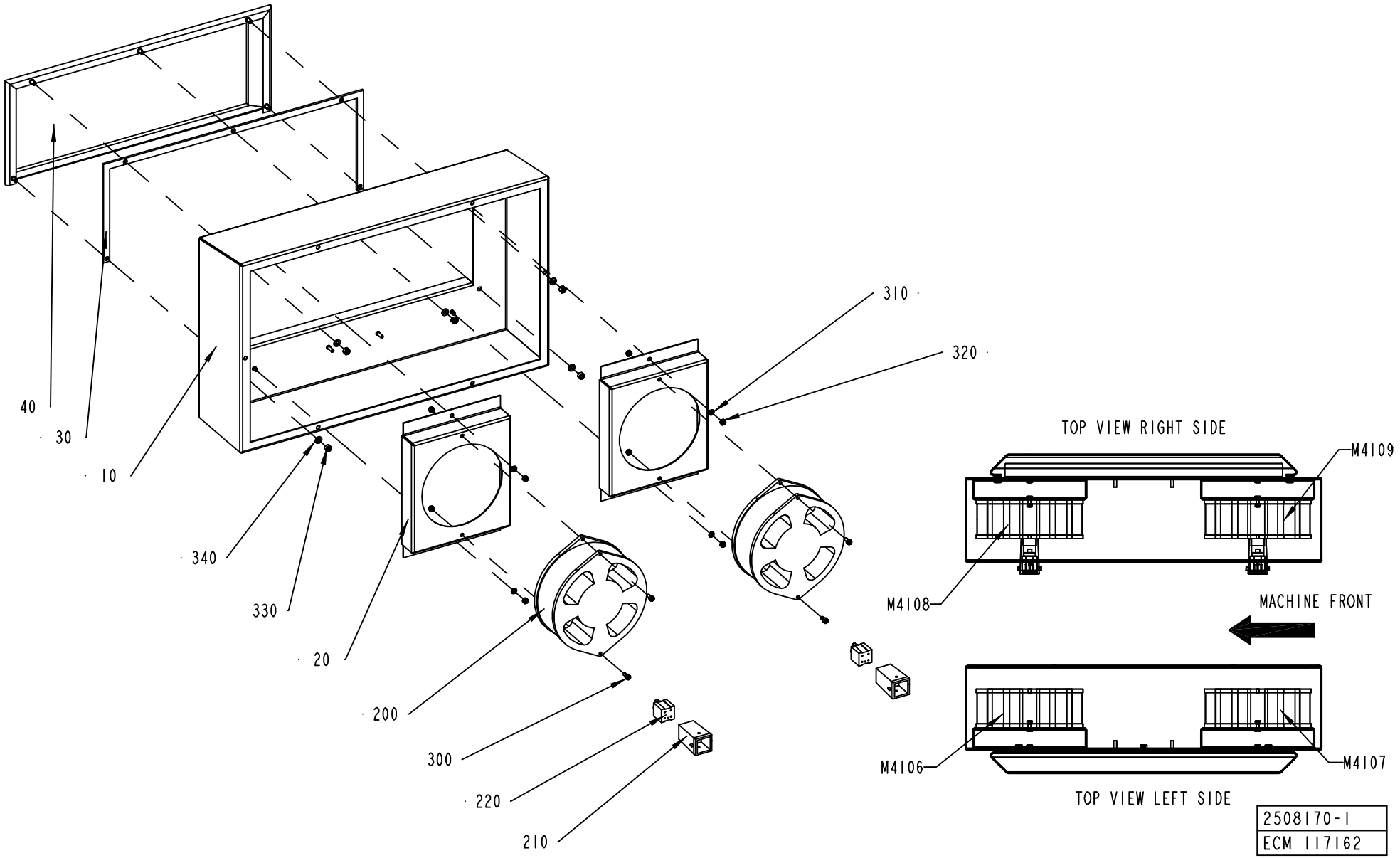
40
30
10
340
330
20
200
300
220
210
310
320
TOP VIEW RIGHT SIDE
M4109
M4108
MACHINE FRONT
M4106
M4107
TOP VIEW LEFT SIDE
2508170-1
ECM 117162

ECM: 117162 - 20030403
Group number: 2508170-0100
Assembly Drawing: 2508170-1_1_AA

Pos	Part No	UN	Qty	Description	Page No
-					
010	2508172-0000		1	COVER	
020	2508153-0000		2	COVER	
030	979206-0000		1	GASKET	
040	979207-0000		1	COVER	
200	90264-0055		2	FAN / W25 130-AA 03-01	
210	90110-0371		2	PLUG HOOD	
220	90110-0295		2	CONNECTOR 4 POLE + EARTH	
300	312115-0287		4	SCREW ISO4762 M4X8 A4	
310	315105-0136		4	WASHER BRB4,3XRFR	
320	312605-0312		8	HEXAGON NUT, M6M M4 A280	
330	312605-0314		5	HEXAGON NUT, M6M M5 A280	
340	315105-0146		5	WASHER BRB5,3X10RFR	

Pos	Part No	UN	Qty	Description	Page No

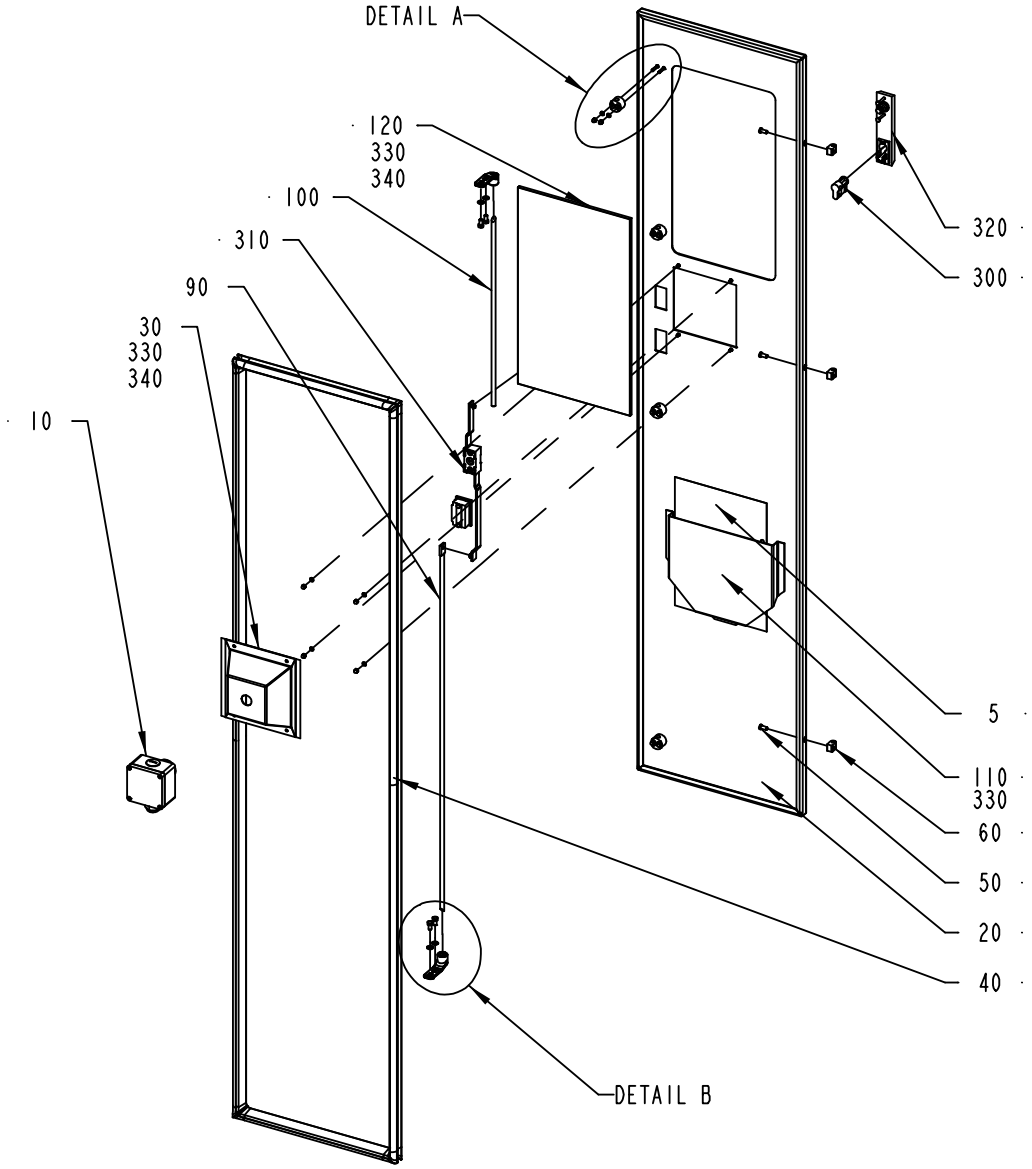

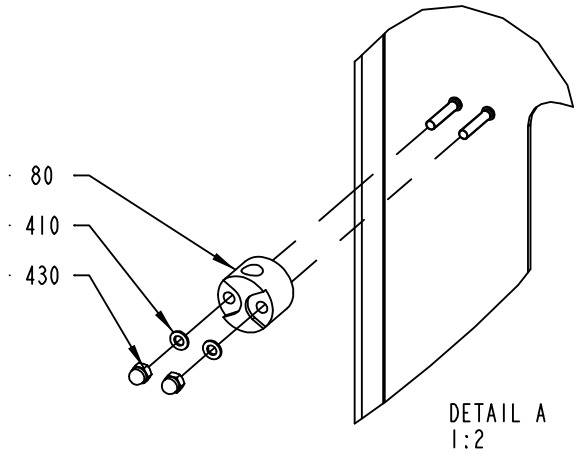

DETAIL A
1:2

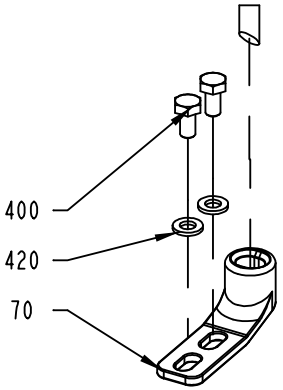

DETAIL B
1:2

2508138-1
ECM 133290

ECM: 139360 - 20031007
Group number: 2508138-0100
Assembly Drawing: 2508138-1_1_AB

Pos	Part No	UN	Qty	Description	Page No
A3/FLEX					
005	2508173-0100		1	DIAGRAM	**2-231**
Common Parts					
010	2593851-0100		1	EMERGENCY STOP	**2-221**
020	2508139-0000		1	DOOR	
030	2532619-0000		1	COVER	
040	2508186-0000		1	RUBBER SEAL	
050	1129767-0000		3	SCREW	
060	1129770-0000		3	BLOCKING PIECE	
070	1538868-0000		2	BRACKET	
080	1129274-0000		4	GUIDE LUG	
090	2508133-0000		1	LOCKING ARM	
100	2508140-0000		1	LOCKING ARM	
110	1129275-0000		1	BOX FOR DIAGRAM	
120	2532620-0000		1	GLASS PANE	
300	90237-0128		1	LOCK CYLINDER, 1109-U3	
310	90237-0153		1	LOCK HOUSING, 1121-U26-0B	
320	90237-0176		1	TURNING HANDLE, 1125-U190-A	
330	90157-0041		1	SEALING COMPOUND, RHODORSEAL 5651	
340	90153-0049		1	ADHESIVE, LOCTITE 409 20G	
400	312105-0366		4	SCREW M6S ISO 4017 M6X12 A480	
410	315105-0136		12	WASHER BRB4,3XRFR	
420	315105-0153		4	WASHER BRB6,4X12RFR	
430	312705-0312		12	NUT HEX. DOMED CAP MHM-6 M4 A280	

Pos	Part No	UN	Qty	Description	Page No

This page is intentionally left blank.

ECM: 145671 - 20040301
Group number: 2508173-0100
Assembly Drawing:

Pos	Part No	UN	Qty	Description	Page No
A3/FLEX					
010	2550945-0000		1	WATER DIAGRAM	
010	2550944-0000		1	WATER DIAGRAM	
020	2552001-0000		1	HYDRAULIC DIAGRAM	
030	2551119-0000		1	PNEUMATIC DIAGRAM	
030	2563276-0000		1	PNEUMATIC DIAGRAM	
030	2527509-0000		1	PNEUMATIC DIAGRAM	
030	2565493-0000		1	PNEUMATIC DIAGRAM	
030	2512829-0000		1	PNEUMATIC DIAGRAM	
040	2512821-0000		1	EXTERNAL CLEANING DIAGRAM	
050	2512826-0000		1	DIAGRAM	
050	2512825-0000		1	DIAGRAM	
Common Parts					
030	2527368-0000		1	PNEUMATIC DIAGRAM	
030	2594393-0000		1	PNEUMATIC DIAGRAM	

Pos	Part No	UN	Qty	Description	Page No

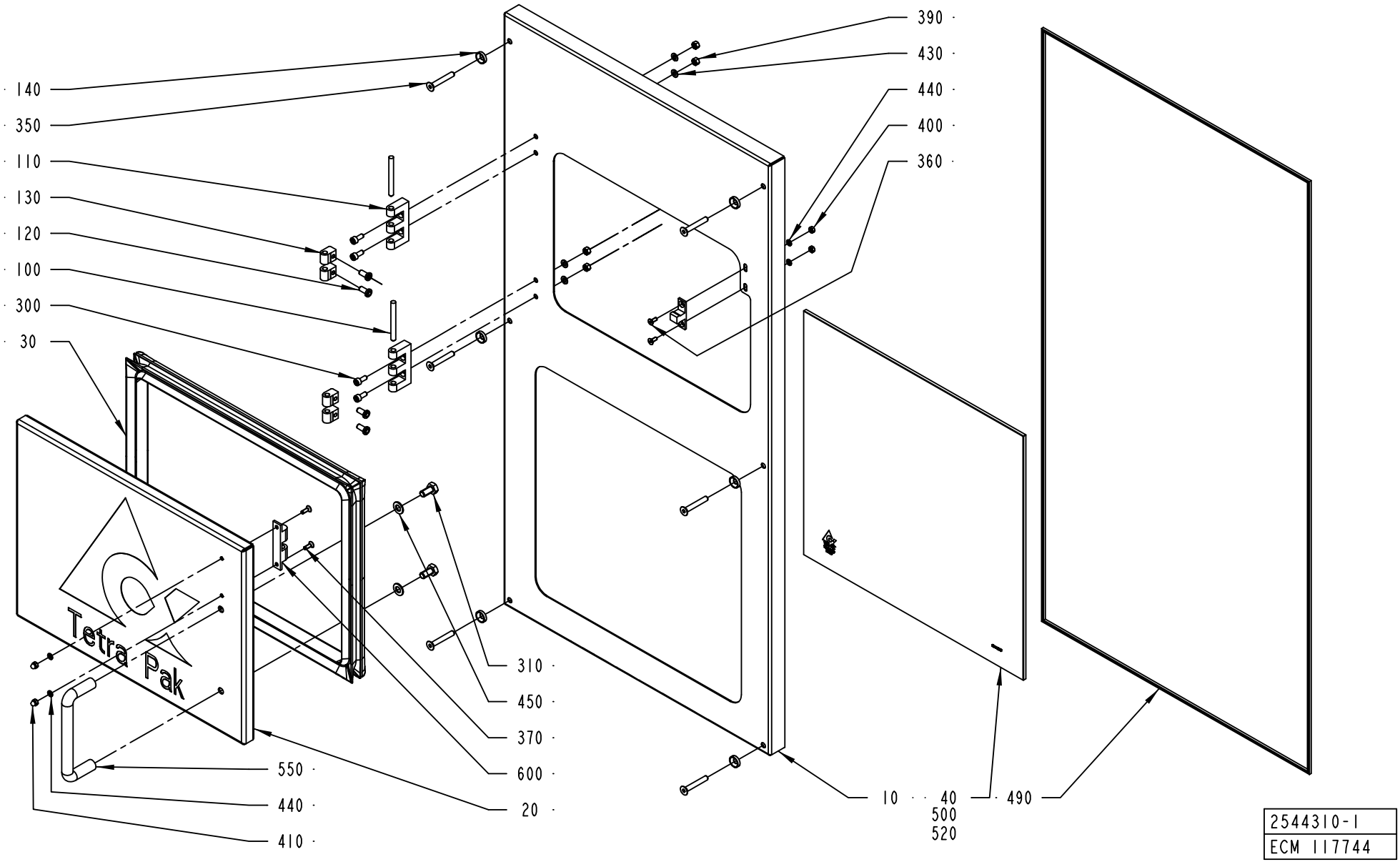
140
350
110
130
120
100
300
30
390
430
440
400
360
310
450
370
600
20
550
440
410
10
40
500
520
490
Tetra Pak
2544310-1
ECM 117744

ECM: 117744 - 20030403
Group number: 2544310-0100
Assembly Drawing: 2544310-1_1_AA

Pos	Part No	UN	Qty	Description	Page No
-					
010	2544305-0000		1	PROTECTION	
020	2544306-0000		1	DOOR	
030	2544307-0000		1	RUBBER SEAL	
040	2544308-0000		1	GLASS PANE	
100	988685-0000		2	PIN	
110	1035792-0000		2	E-HINGE	
120	1129767-0000		4	SCREW	
130	1129770-0000		4	BLOCKING PIECE	
140	1317228-0000		6	WASHER	
300	312115-0327		4	SCREW ISO4762 M5X12 A4	
310	312105-0449		2	SCREW M6S ISO 4017 M8X16 A480	
350	312155-0378		6	SCREW EN 10642 MF6S M6X40 A480	
360	312155-0289		2	SCREW EN 10642 MF6S M4X10 A480	
370	312155-0291		2	SCREW EN 10642 MF6S M4X12 A480	
390	312605-0314		4	HEXAGON NUT, M6M M5 A280	
400	312605-0312		2	HEXAGON NUT, M6M M4 A280	
410	312705-0312		2	NUT HEX. DOMED CAP MHM-6 M4 A280	
430	315105-0146		4	WASHER BRB5,3X10RFR	
440	315105-0136		4	WASHER BRB4,3XRFR	
450	315105-0165		2	WASHER BRB8,4X16RFR	
490	90143-0054	MM	2740	STRIP	
500	90153-0049		1	ADHESIVE, LOCTITE 409 20G	
520	90157-0041		1	SEALING COMPOUND, RHODORSEAL 5651	
550	90017-0016		1	HANDLE, NO. 14.4012.02.120	
600	90237-0070		1	SNAP-IN BALL LOCK, 69X19 MM	

Pos	Part No	UN	Qty	Description	Page No

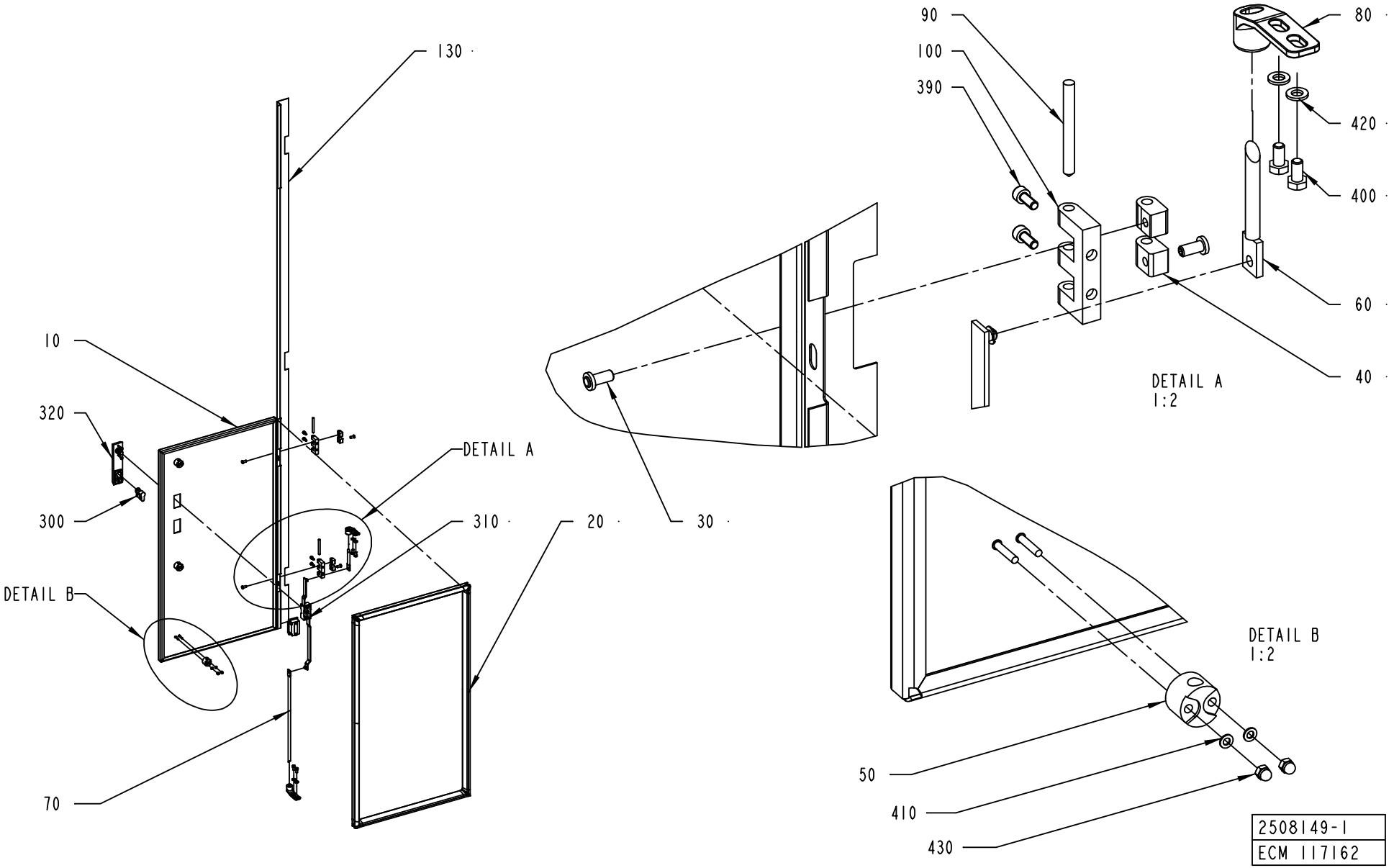
130
10
320
300
DETAIL B
70
DETAIL A
310
20
30
90
100
390
80
420
400
60
40
DETAIL A
1:2
DETAIL B
1:2
50
410
430
2508149-1
ECM 117162

ECM: 139361 - 20030711
Group number: 2508149-0100
Assembly Drawing: 2508149-1_1_AA

Pos	Part No	UN	Qty	Description	Page No
A3/FLEX DIMC/FLEX					
130	2611227-0000		1	COVER STRIP	
A3/FLEX NOPT					
130	2570748-0000		1	COVER STRIP	
A3/FLEX PT/FLEX					
130	2544334-0000		1	COVER STRIP	
Common Parts					
010	2508150-0000		1	DOOR	
020	2508151-0000		1	RUBBER SEAL	
030	1129767-0000		2	SCREW	
040	1129770-0000		2	BLOCKING PIECE	
050	1129274-0000		3	GUIDE LUG	
060	2508147-0000		1	LOCKING ARM	
070	2508152-0000		1	LOCKING ARM	
080	1538868-0000		2	BRACKET	
090	988685-0000		2	PIN	
100	1035792-0000		2	E-HINGE	
110	1129767-0000		2	SCREW	
120	1129770-0000		2	BLOCKING PIECE	
300	90237-0128		1	LOCK CYLINDER, 1109-U3	
310	90237-0153		1	LOCK HOUSING, 1121-U26-0B	
320	90237-0176		1	TURNING HANDLE, 1125-U190-A	
390	312115-0327		4	SCREW ISO4762 M5X12 A4	
400	312105-0366		4	SCREW M6S ISO 4017 M6X12 A480	
410	315105-0136		6	WASHER BRB4,3XRFR	
420	315105-0153		4	WASHER BRB6,4X12RFR	
430	312705-0312		6	NUT HEX. DOMED CAP MHM-6 M4 A280	

Pos	Part No	UN	Qty	Description	Page No

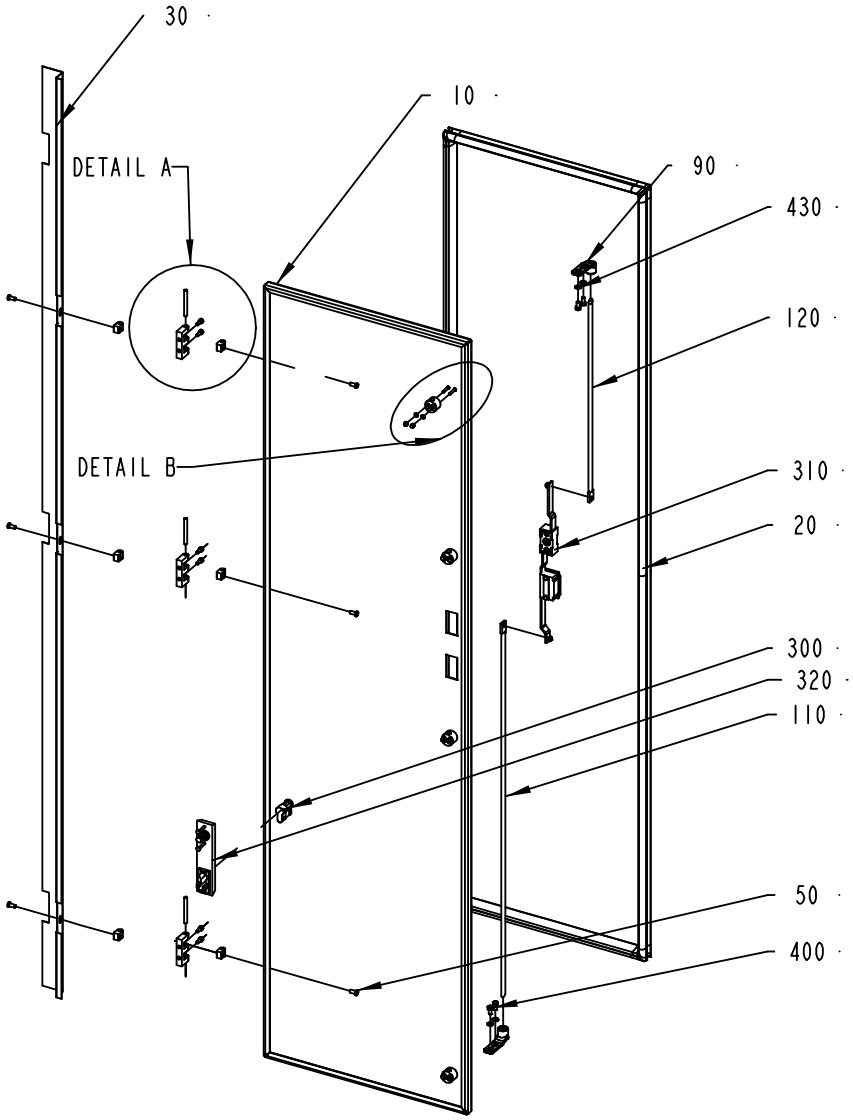

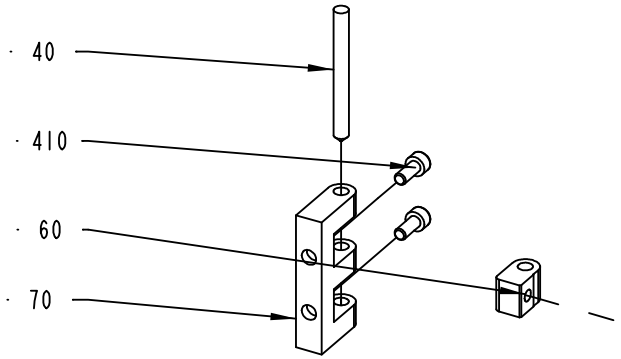

DETAIL A
1:2

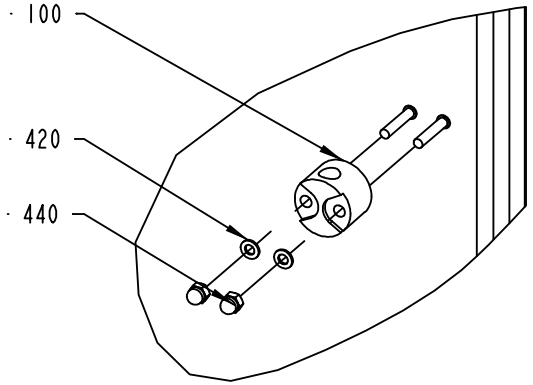

DETAIL B
1:2

2529597-1
ECM 117743

ECM: 139362 - 20030711
Group number: 2529597-0100
Assembly Drawing: 2529597-1_1_AA

Pos	Part No	UN	Qty	Description	Page No
A3/FLEX DIMC/FLEX					
030	2611228-0000		1	COVER STRIP	
A3/FLEX NOPT					
030	2570749-0000		1	COVER STRIP	
A3/FLEX PT/FLEX					
030	2530086-0000		1	COVER STRIP	
Common Parts					
010	2529598-0000		1	DOOR	
020	2529599-0000		1	RUBBER SEAL	
040	988685-0000		3	PIN	
050	1129767-0000		6	SCREW	
060	1129770-0000		6	BLOCKING PIECE	
070	1035792-0000		3	E-HINGE	
090	1538868-0000		2	BRACKET	
100	1129274-0000		4	GUIDE LUG	
110	2508133-0000		1	LOCKING ARM	
120	2508140-0000		1	LOCKING ARM	
300	90237-0128		1	LOCK CYLINDER, 1109-U3	
310	90237-0153		1	LOCK HOUSING, 1121-U26-0B	
320	90237-0176		1	TURNING HANDLE, 1125-U190-A	
400	312115-0327		4	SCREW ISO4762 M5X12 A4	
410	312105-0366		6	SCREW M6S ISO 4017 M6X12 A480	
420	315105-0136		8	WASHER BRB4,3XRFR	
430	315105-0153		4	WASHER BRB6,4X12RFR	
440	312705-0312		8	NUT HEX. DOMED CAP MHM-6 M4 A280	

Pos	Part No	UN	Qty	Description	Page No

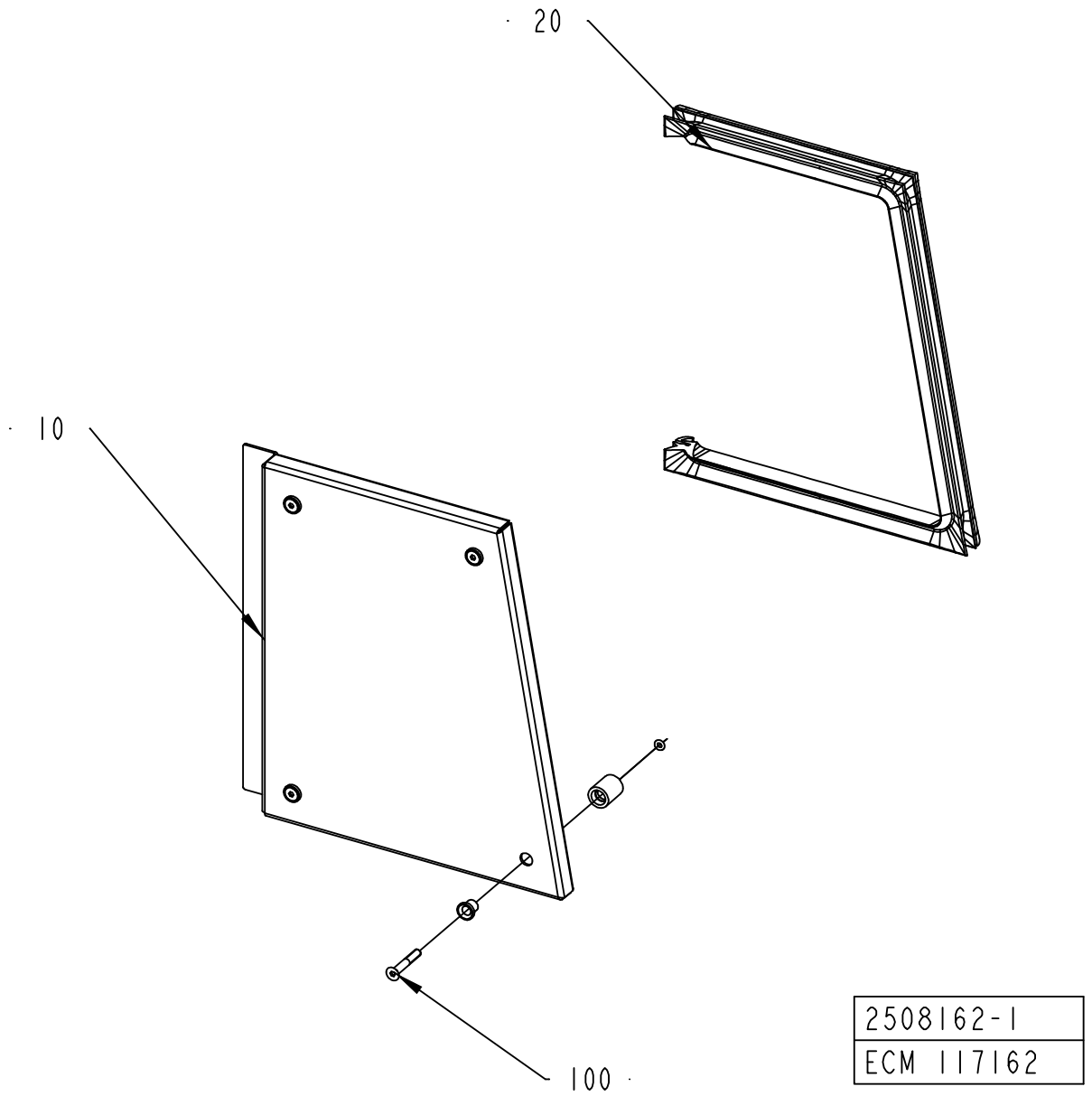

2508162-1
ECM 117162

ECM: 117162 - 20030403
Group number: 2508162-0100
Assembly Drawing: 2508162-1_1_AA

Pos	Part No	UN	Qty	Description	Page No
-					
010	2508163-0000		1	COVER	
020	2508164-0000		1	RUBBER SEAL	
100	90226-0458		4	MOUNTING SCREW	

Pos	Part No	UN	Qty	Description	Page No

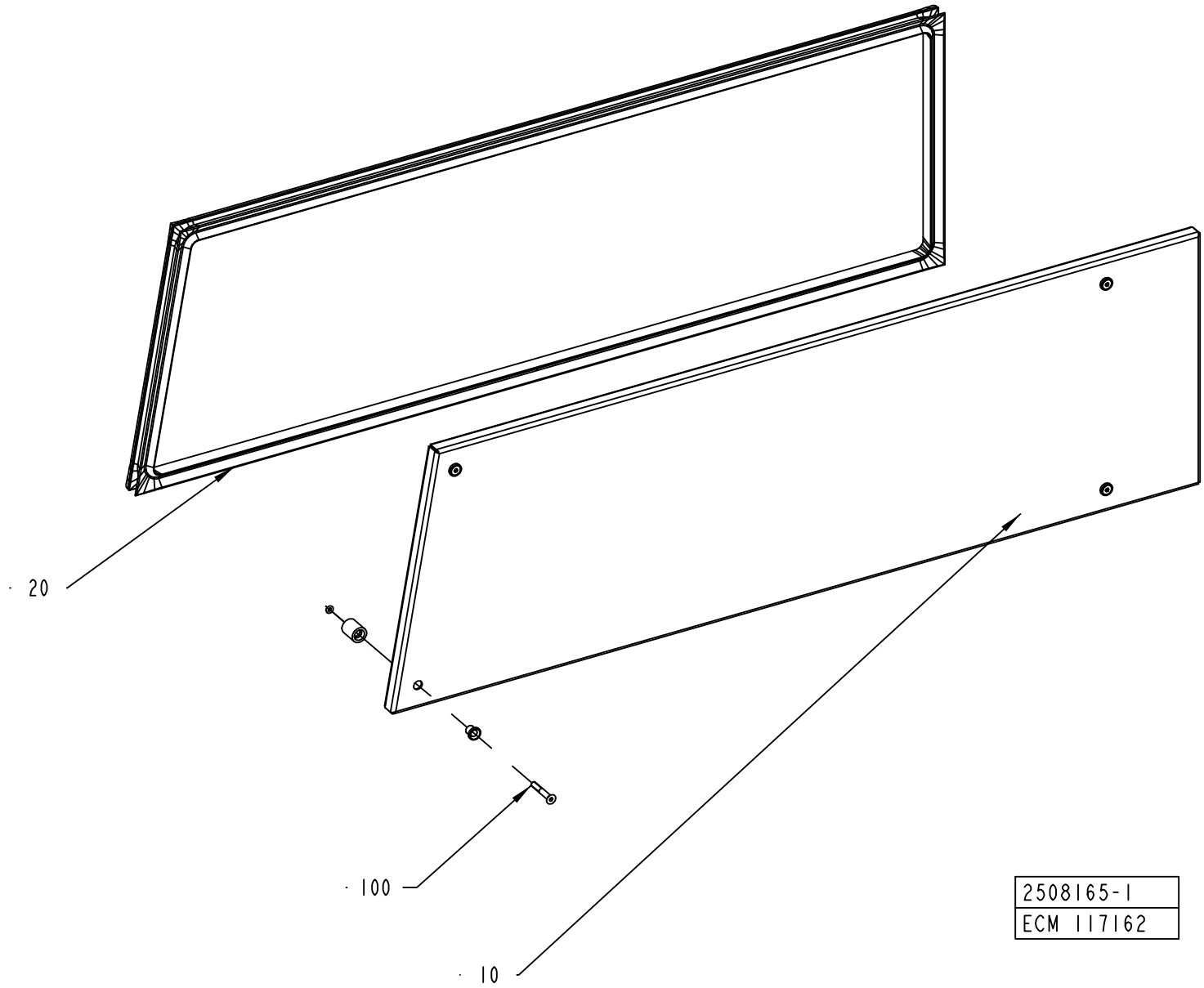
20
100
10
2508165-1
ECM 117162

ECM: 117162 - 20030403
Group number: 2508165-0100
Assembly Drawing: 2508165-1_1_AA

Pos	Part No	UN	Qty	Description	Page No
-					
010	2508166-0000		1	COVER	
020	2508167-0000		1	RUBBER SEAL	
100	90226-0458		4	MOUNTING SCREW	

Pos	Part No	UN	Qty	Description	Page No

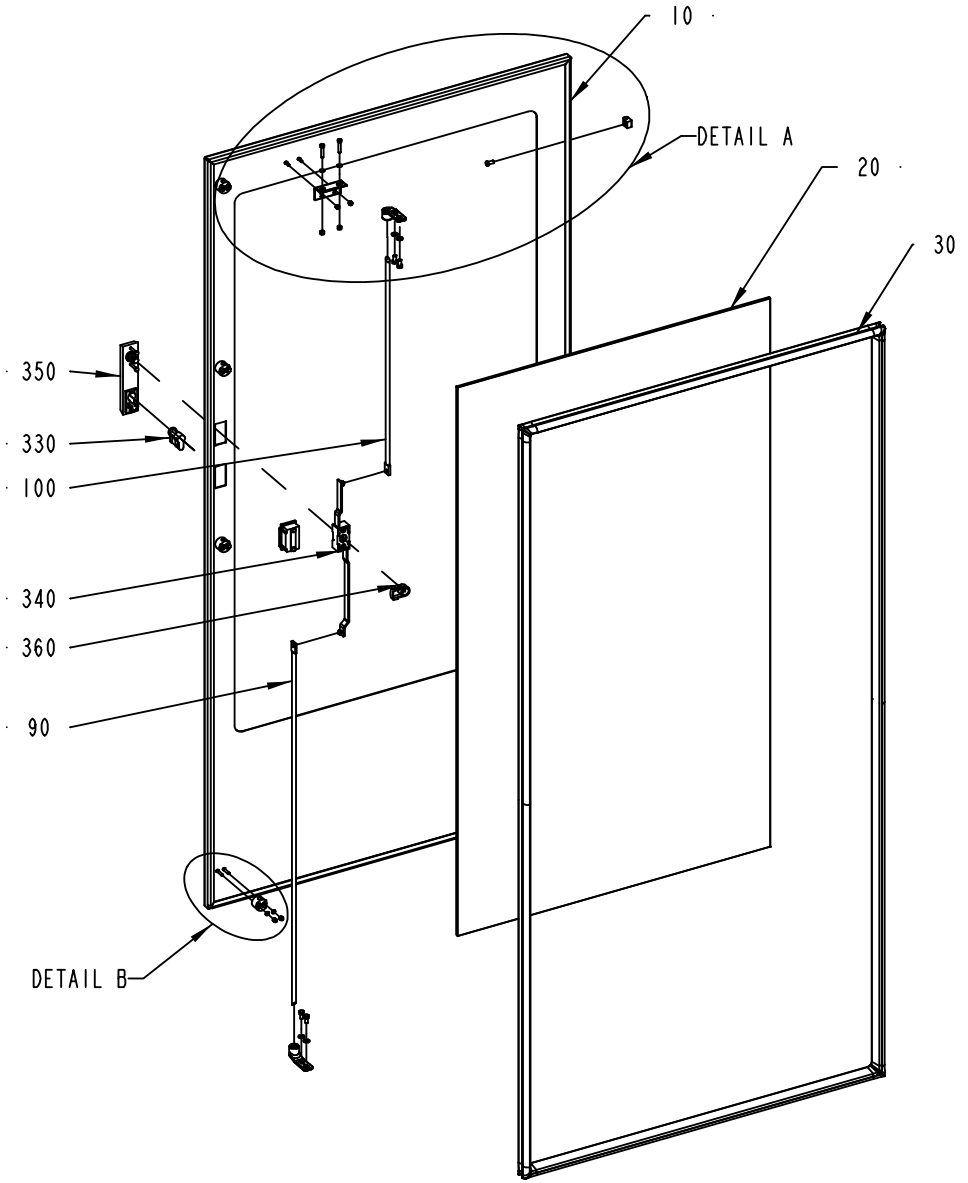

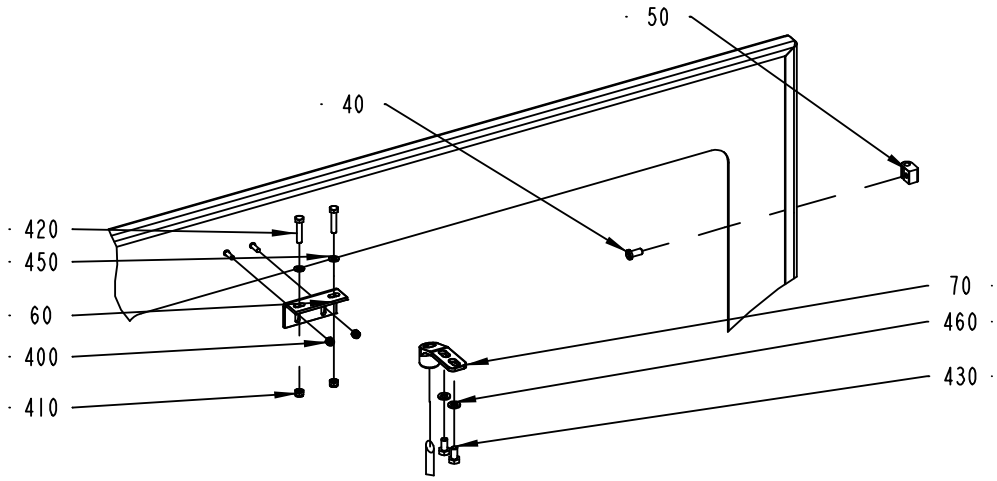

DETAIL A
1:5

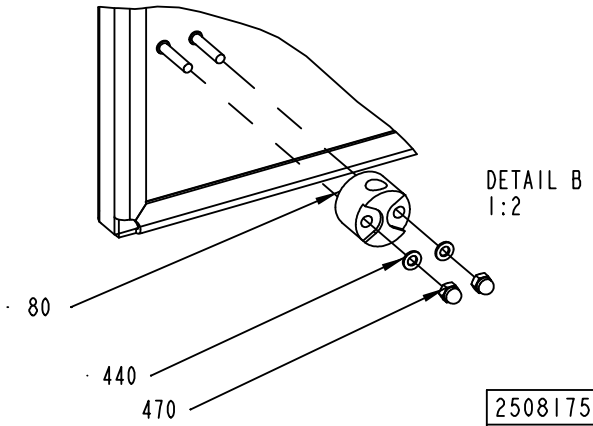

DETAIL B
1:2

2508175-1
ECM 117162

ECM: 117162 - 20030403
Group number: 2508175-0100
Assembly Drawing: 2508175-1_1_AA

Pos	Part No	UN	Qty	Description	Page No
-					
010	2508176-0000		1	DOOR	
020	2527640-0000		1	GLASS PANE	
030	2527639-0000		1	RUBBER SEAL	
040	1129767-0000		3	SCREW	
050	1129770-0000		3	BLOCKING PIECE	
060	1346885-0000		1	SUPPORT	
070	1538868-0000		2	BRACKET	
080	1129274-0000		4	GUIDE LUG	
090	2508133-0000		1	LOCKING ARM	
100	2508134-0000		1	LOCKING ARM	
300	90153-0049		1	ADHESIVE, LOCTITE 409 20G	
310	90157-0041		1	SEALING COMPOUND, RHODORSEAL 5651	
330	90237-0128		1	LOCK CYLINDER, 1109-U3	
340	90237-0153		1	LOCK HOUSING, 1121-U26-0B	
350	90237-0176		1	TURNING HANDLE, 1125-U190-A	
360	90237-0165		1	LATCH	
400	312812-0312		2	HEXAGON NUT, NY-LOCK M4 A480	
410	312812-0314		2	HEXAGON NUT, NY-LOCK M5 A480	
420	312105-0333		2	SCREW M6S ISO 4017 M5X25 A480	
430	312105-0366		4	SCREW M6S ISO 4017 M6X12 A480	
440	315105-0136		8	WASHER BRB4,3XRFR	
450	315105-0146		2	WASHER BRB5,3X10RFR	
460	315105-0153		4	WASHER BRB6,4X12RFR	
470	312705-0312		8	NUT HEX. DOMED CAP MHM-6 M4 A280	

Pos	Part No	UN	Qty	Description	Page No

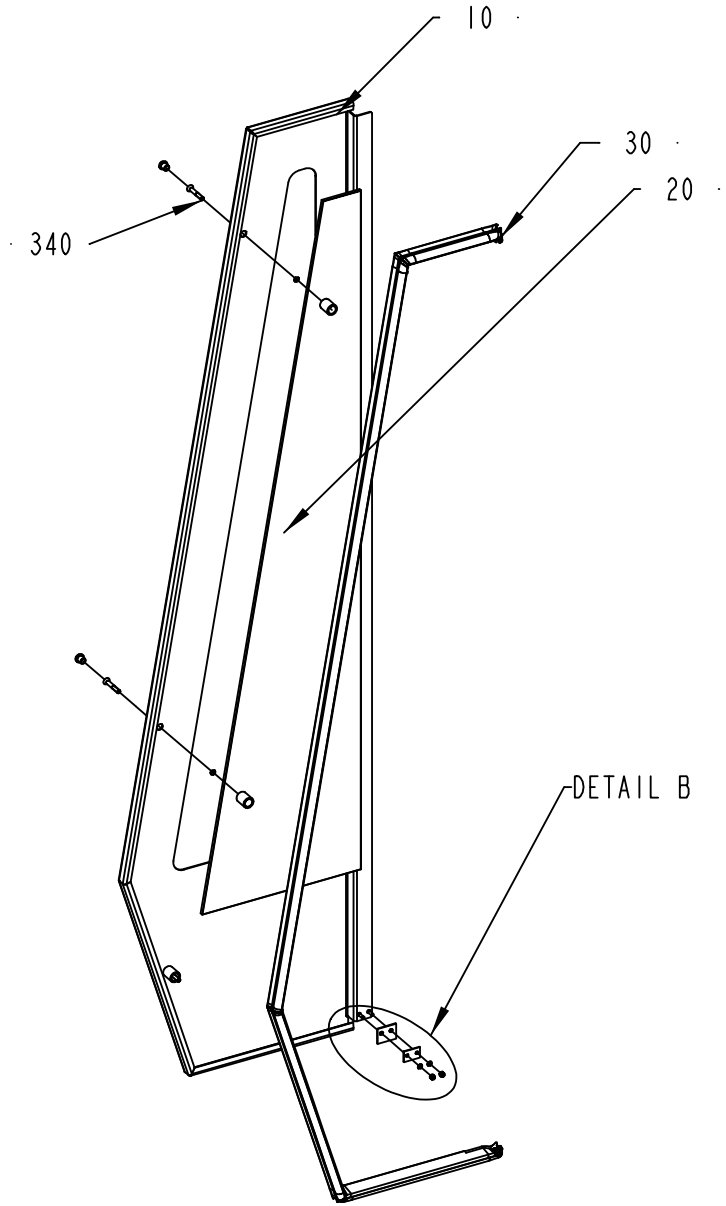

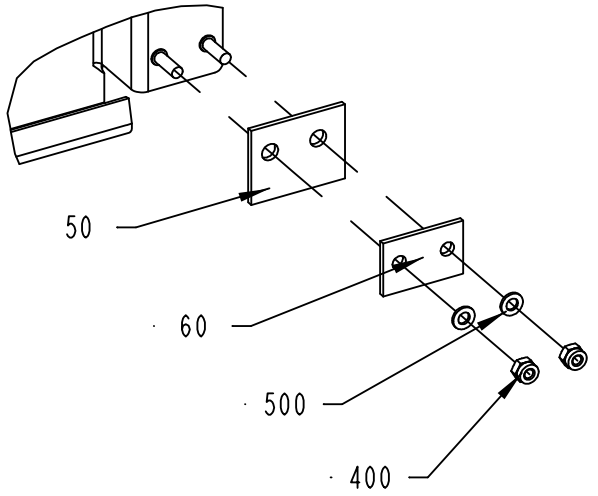

DETAIL B
1:2

2508177-1
ECM 117743

ECM: 117743 - 20030403
Group number: 2508177-0100
Assembly Drawing: 2508177-1_1_AA

Pos	Part No	UN	Qty	Description	Page No
-					
010	2508178-0000		1	DOOR	
020	2508180-0001		1	GLASS PANE	
030	2508179-0000		1	RUBBER SEAL	
050	1129325-0000		1	SEALING FLANGE	
060	1129324-0000		1	WASHER	
300	90153-0049		1	ADHESIVE, LOCTITE 409 20G	
310	90157-0041		1	SEALING COMPOUND, RHODORSEAL 5651	
340	90226-0458		3	MOUNTING SCREW	
400	312812-0312		2	HEXAGON NUT, NY-LOCK M4 A480	
500	315105-0136		2	WASHER BRB4,3XRFR	

Pos	Part No	UN	Qty	Description	Page No

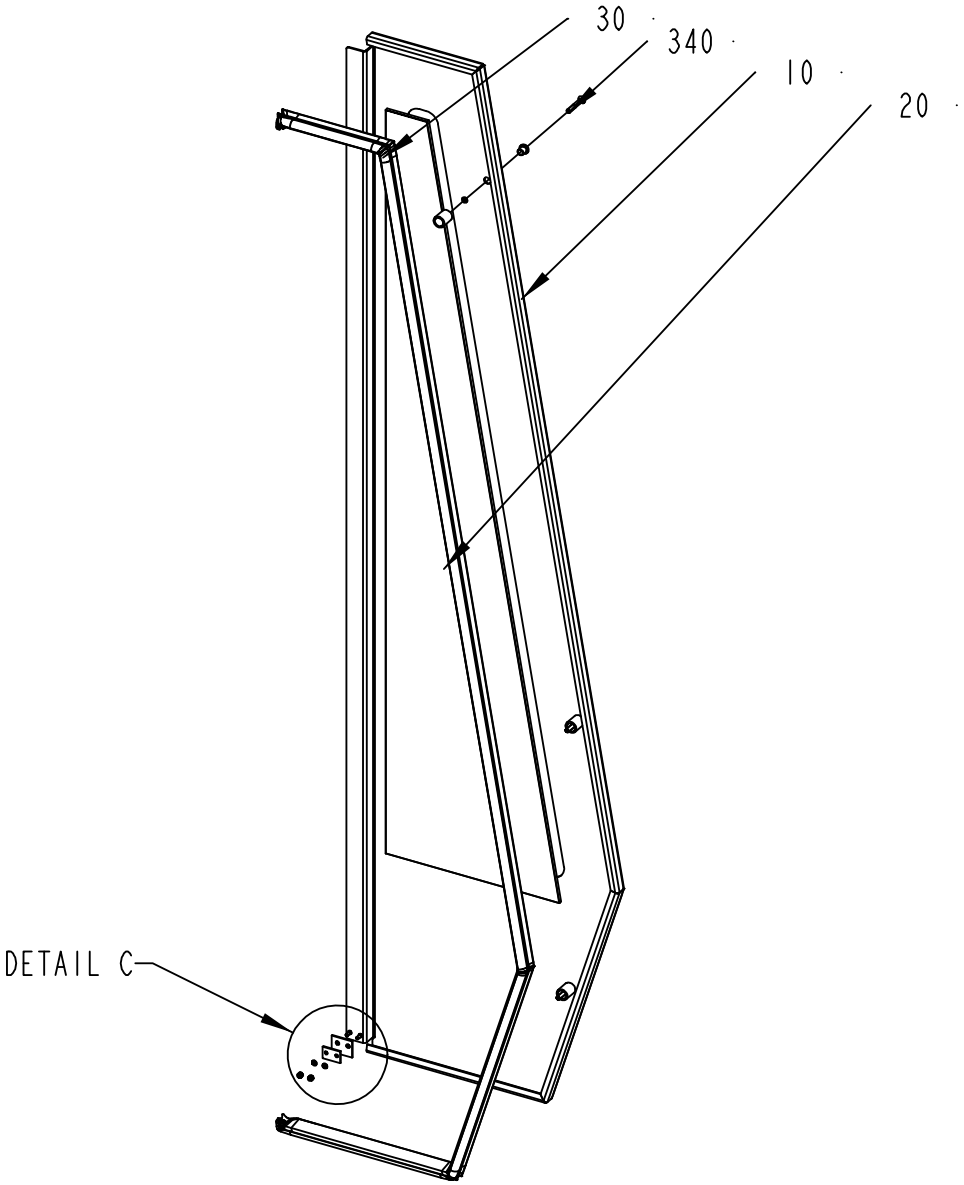

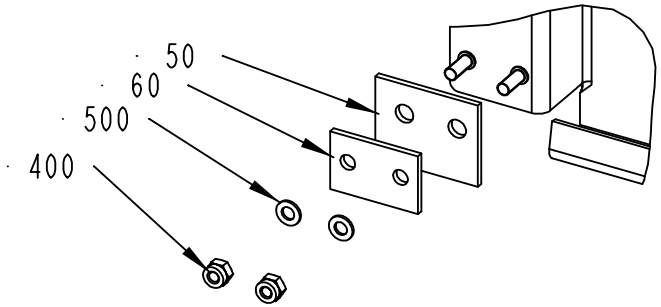

DETAIL C
1:2

2508181-1
ECM 117743

ECM: 117743 - 20030403
Group number: 2508181-0100
Assembly Drawing: 2508181-1_1_AA

Pos	Part No	UN	Qty	Description	Page No
-					
010	2508182-0000		1	DOOR	
020	2508180-0002		1	GLASS PANE	
030	2508183-0000		1	RUBBER SEAL	
050	1129325-0000		1	SEALING FLANGE	
060	1129324-0000		1	WASHER	
300	90153-0049		1	ADHESIVE, LOCTITE 409 20G	
310	90157-0041		1	SEALING COMPOUND, RHODORSEAL 5651	
340	90226-0458		3	MOUNTING SCREW	
400	312812-0312		2	HEXAGON NUT, NY-LOCK M4 A480	
500	315105-0136		2	WASHER BRB4,3XRFR	

Pos	Part No	UN	Qty	Description	Page No

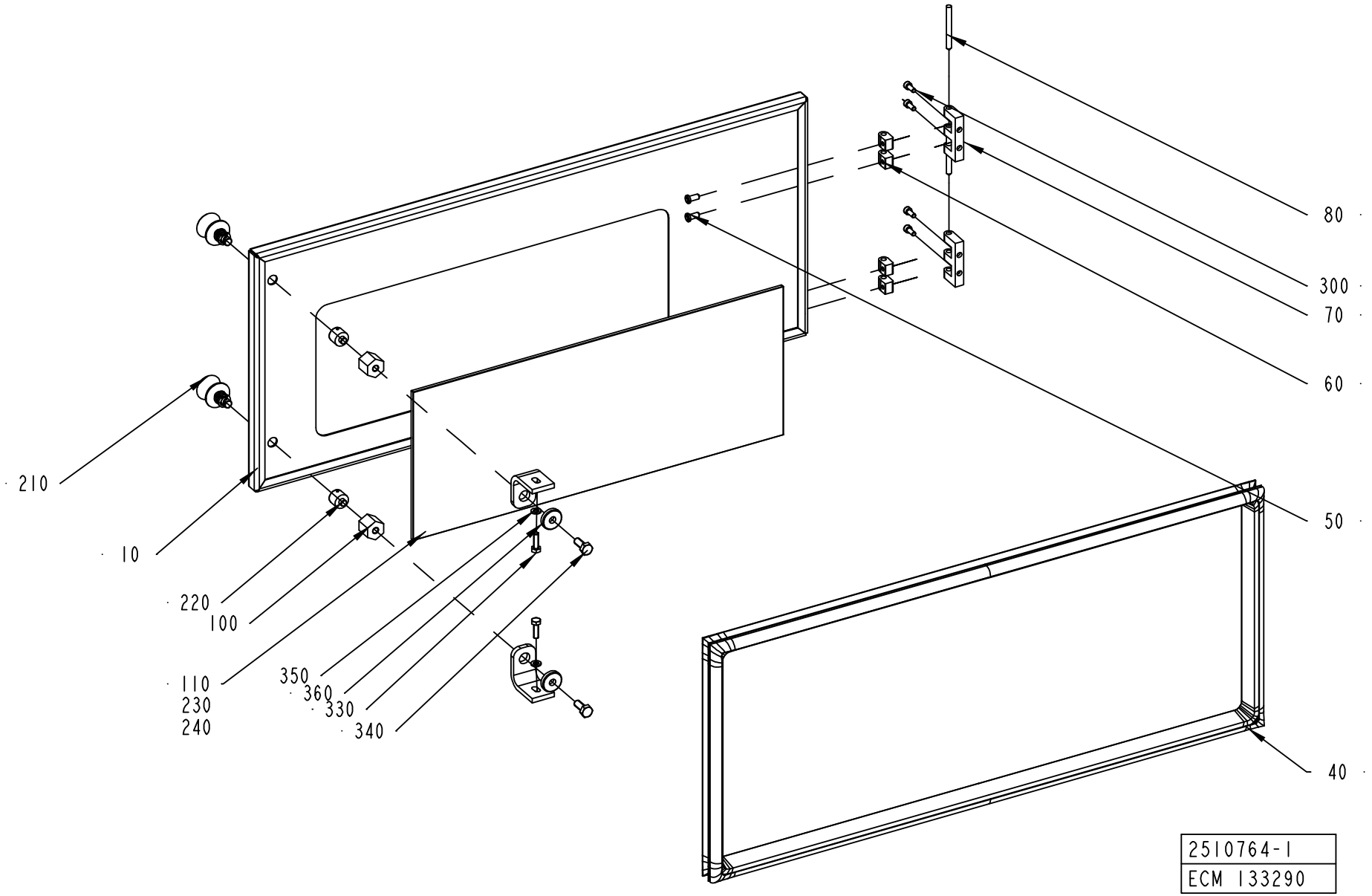
80
300
70
60
50
40
210
10
220
100
110
230
240
350
360
330
340
2510764-1
ECM 133290

ECM: 134929 - 20030922
Group number: 2510764-0100
Assembly Drawing: 2510764-1_1_AB

Pos	Part No	UN	Qty	Description	Page No
-					
010	2510765-0000		1	COVER	
040	2510784-0000		1	RUBBER SEAL	
050	1129767-0000		4	SCREW	
060	1129770-0000		4	BLOCKING PIECE	
070	1035792-0000		2	E-HINGE	
080	988685-0000		2	PIN	
090	1040991-0000		2	ANGLE	
100	1040992-0000		2	SPACER NUT	
110	2530082-0000		1	GLASS PANE	
210	90237-0079		2	FAST LOCKING BOLT, FSQ -M8	
220	90237-0178		2	FAST LOCKING SOCKET,4-28599, M8	
230	90153-0049		1	ADHESIVE, LOCTITE 409 20G	
240	90157-0041		1	SEALING COMPOUND, RHODORSEAL 5651	
300	312115-0327		4	SCREW ISO4762 M5X12 A4	
330	312105-0370		2	SCREW M6S ISO 4017 M6X20 A480	
340	312105-0451		2	SCREW M6S ISO 4017 M8X20 A480	
350	315105-0153		2	WASHER BRB6,4X12RFR	
360	315125-0165		2	WASHER TBRSB 8,4X26X5 A4	

Pos	Part No	UN	Qty	Description	Page No

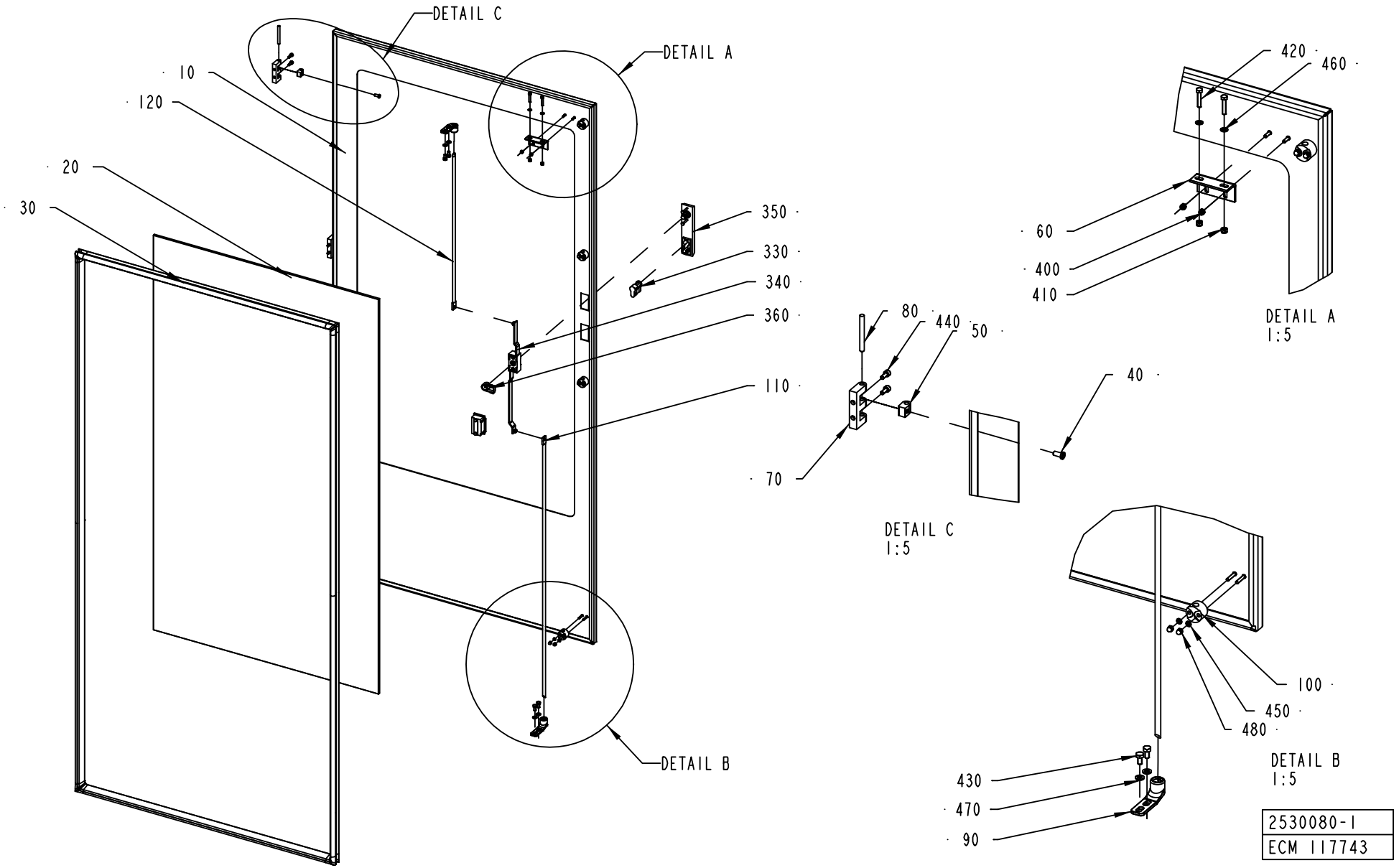
DETAIL C
DETAIL A
10
120
20
30
350
330
340
360
110
DETAIL B
420
460
60
400
410
DETAIL A
1:5
80
440
50
40
70
DETAIL C
1:5
100
450
480
430
470
90
DETAIL B
1:5
2530080-1
ECM 117743

ECM: 117743 - 20030403
Group number: 2530080-0100
Assembly Drawing: 2530080-1_1_AA

Pos	Part No	UN	Qty	Description	Page No
-					
010	2530087-0000		1	DOOR	
020	2527640-0000		1	GLASS PANE	
030	2527639-0000		1	RUBBER SEAL	
040	1129767-0000		3	SCREW	
050	1129770-0000		3	BLOCKING PIECE	
060	1346885-0000		1	SUPPORT	
070	1035792-0000		3	E-HINGE	
080	988685-0000		3	PIN	
090	1538868-0000		2	BRACKET	
100	1129274-0000		4	GUIDE LUG	
110	2508133-0000		1	LOCKING ARM	
120	2508134-0000		1	LOCKING ARM	
300	90153-0049		1	ADHESIVE, LOCTITE 409 20G	
310	90157-0041		1	SEALING COMPOUND, RHODORSEAL 5651	
330	90237-0128		1	LOCK CYLINDER, 1109-U3	
340	90237-0153		1	LOCK HOUSING, 1121-U26-0B	
350	90237-0176		1	TURNING HANDLE, 1125-U190-A	
360	90237-0165		1	LATCH	
400	312812-0312		2	HEXAGON NUT, NY-LOCK M4 A480	
410	312812-0314		2	HEXAGON NUT, NY-LOCK M5 A480	
420	312105-0333		2	SCREW M6S ISO 4017 M5X25 A480	
430	312105-0366		4	SCREW M6S ISO 4017 M6X12 A480	
440	312115-0327		6	SCREW ISO4762 M5X12 A4	
450	315105-0136		8	WASHER BRB4,3XRFR	
460	315105-0146		2	WASHER BRB5,3X10RFR	
470	315105-0153		4	WASHER BRB6,4X12RFR	
480	312705-0312		8	NUT HEX. DOMED CAP MHM-6 M4 A280	

Pos	Part No	UN	Qty	Description	Page No

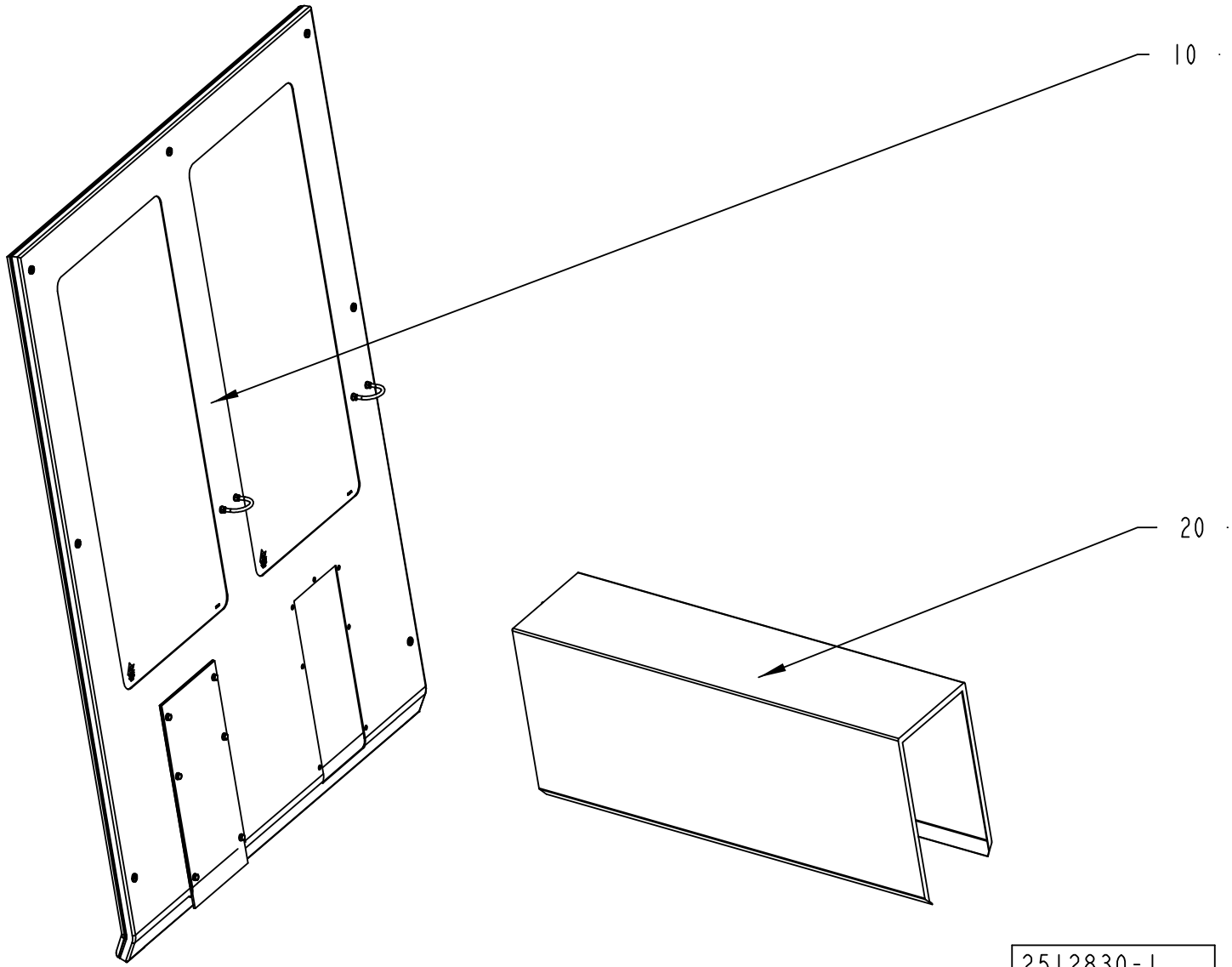

2512830-1
ECM 117743

ECM: 139363 - 20030711
Group number: 2512830-0100
Assembly Drawing: 2512830-1_1_AA

Pos	Part No	UN	Qty	Description	Page No
-					
010	2517062-0100		1	FRONT COVER	**2-255**
020	1095738-0300		1	PROTECTIVE COVER	**2-259**

Pos	Part No	UN	Qty	Description	Page No

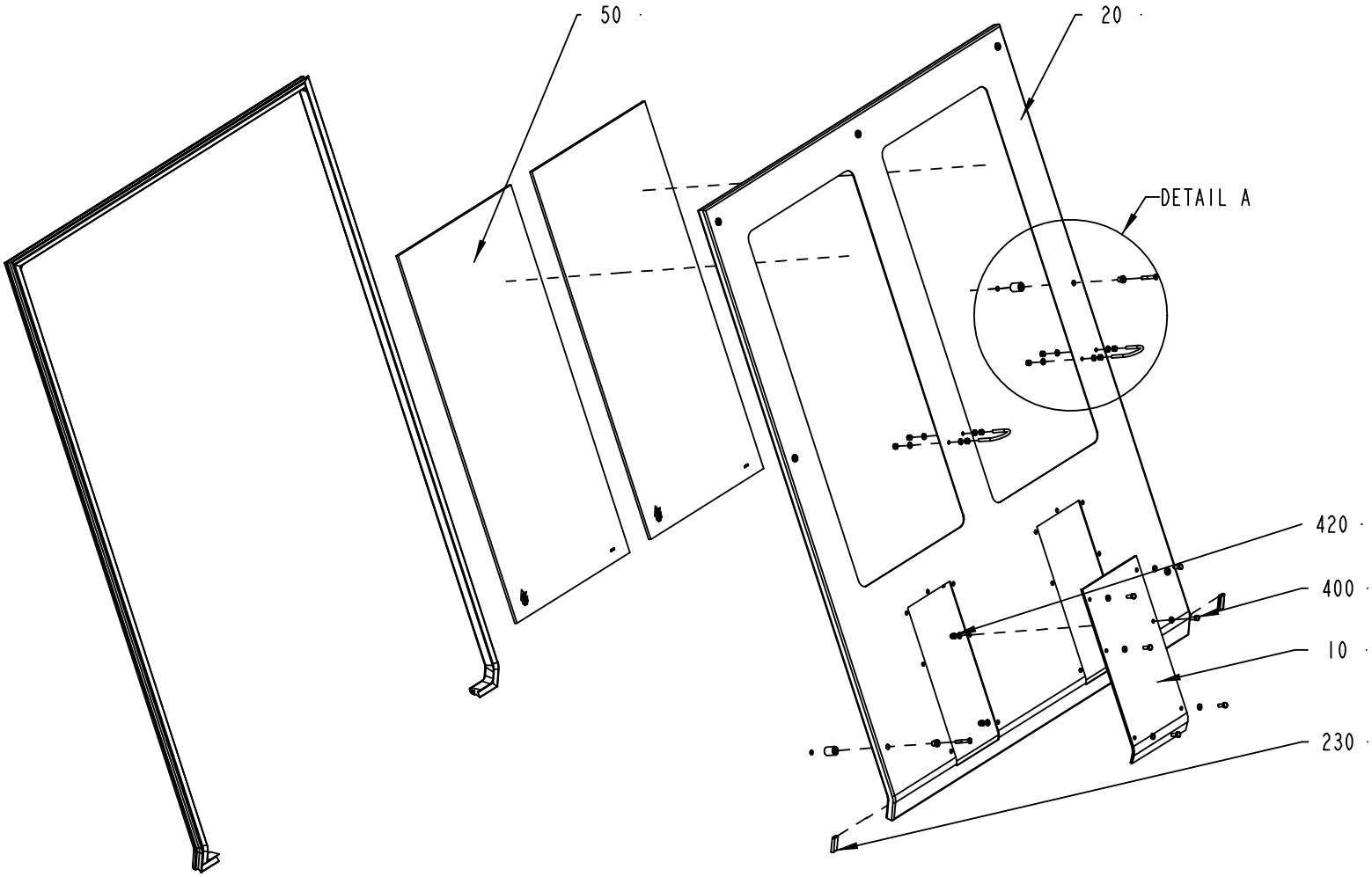

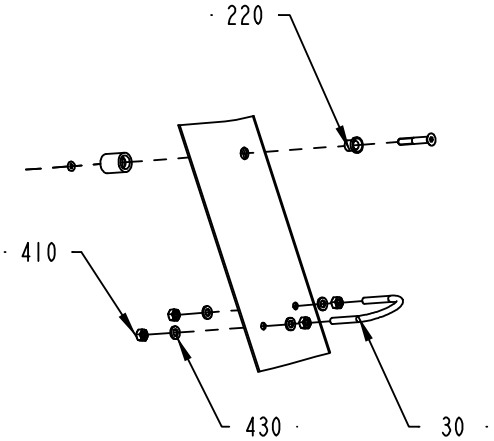

DETAIL A
1:5

2517062-1
ECM 117743

ECM: 139364 - 20030711
Group number: 2517062-0100
Assembly Drawing: 2517062-1_1_AA

Pos	Part No	UN	Qty	Description	Page No
A3/FLEX					
010	1296218-0200		1	LID	**2-257**
020	2514830-0000		1	FRONT COVER	
Common Parts					
030	531616-0000		2	HOLDER	
040	2514831-0000		1	SEALING STRIP	
050	2514832-0000		2	GLASS PANE	
200	90153-0049		1	ADHESIVE, LOCTITE 409 20G	
210	90157-0041	L	1	SEALING COMPOUND, RHODORSEAL 5651	
220	90226-0458		7	MOUNTING SCREW	
230	90143-0059	MM	70	SEAL STRIP 4610069	
400	312105-0368		6	SCREW M6S ISO 4017 M6X16 A480	
410	312605-0316		8	HEXAGON NUT, M6M M6 A280	
420	312705-0316		6	NUT HEX. DOMED CAP MHM-6 M6 A280	
430	315105-0153		20	WASHER BRB6,4X12RFR	

Pos	Part No	UN	Qty	Description	Page No

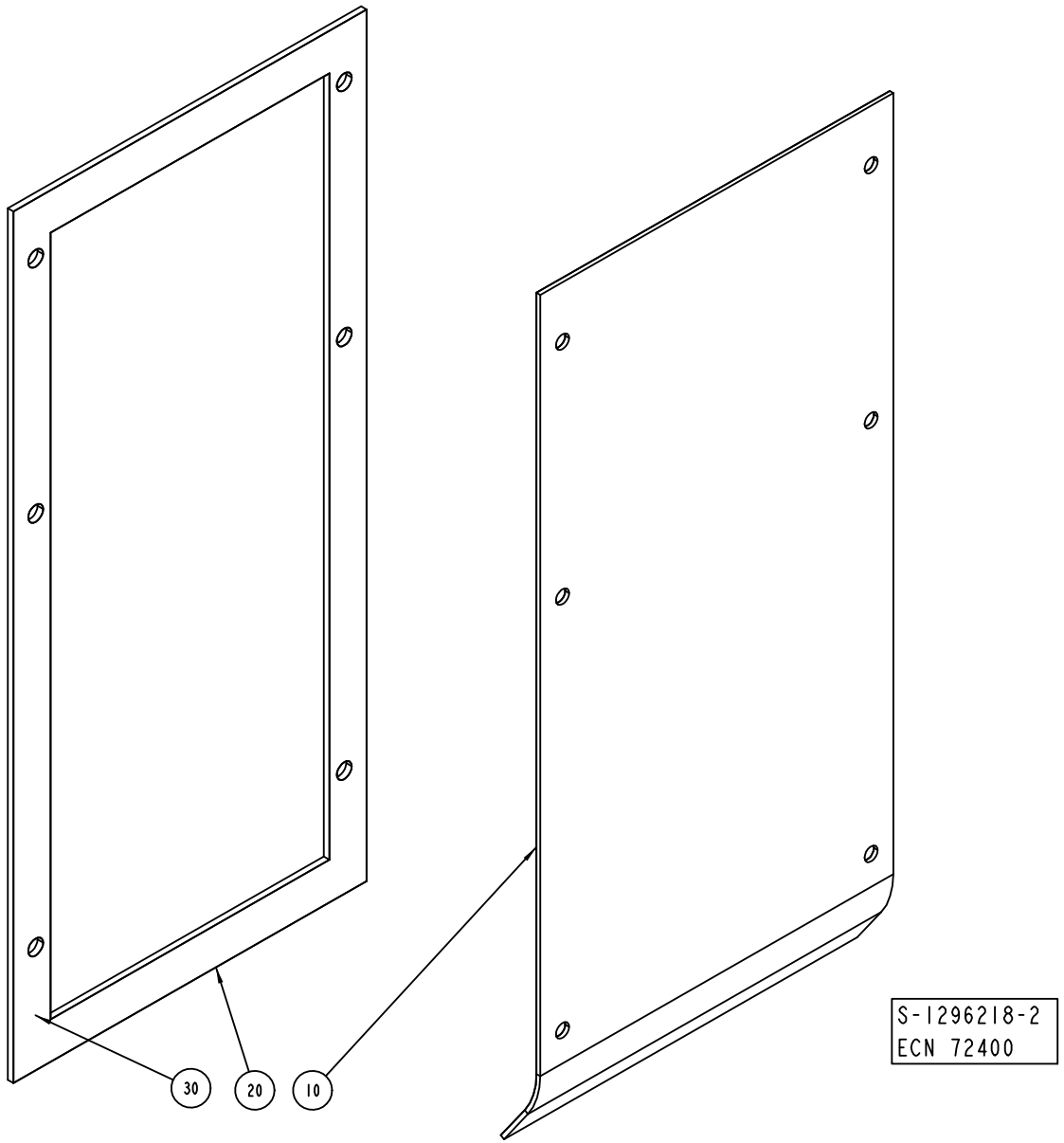
30
20
10
S-1296218-2
ECN 72400

ECM: 72400 - 19990430
Group number: 1296218-0200
Assembly Drawing: 1296218-2_1_AA

Pos	Part No	UN	Qty	Description	Page No
-					
010	1478389-0000		1	COVERING PLATE	
020	1478391-0000		1	GASKET	
030	90157-0041		1	SEALING COMPOUND, RHODORSEAL 5651	

Pos	Part No	UN	Qty	Description	Page No

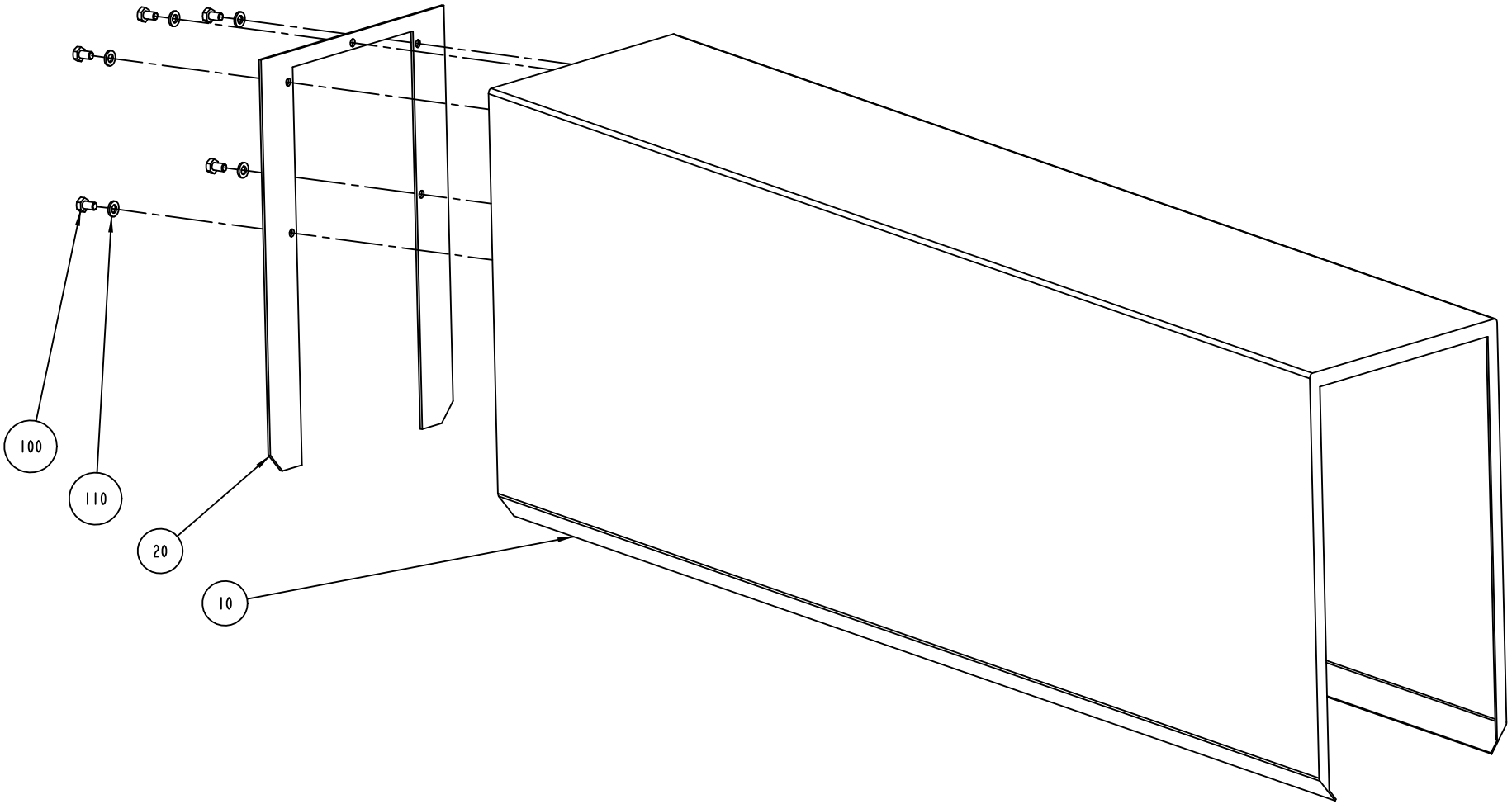

S-1095738-3
ECN 72400

ECM: 72400 - 19990430
Group number: 1095738-0300
Assembly Drawing: 1095738-3_1_AB

Pos	Part No	UN	Qty	Description	Page No
-					
010	1296289-0000		1	TUNNEL	
020	1296290-0000		1	GASKET	
100	312105-0364		5	SCREW M6S ISO 4017 M6X10 A480	
110	315105-0153		5	WASHER BRB6,4X12RFR	

Pos	Part No	UN	Qty	Description	Page No

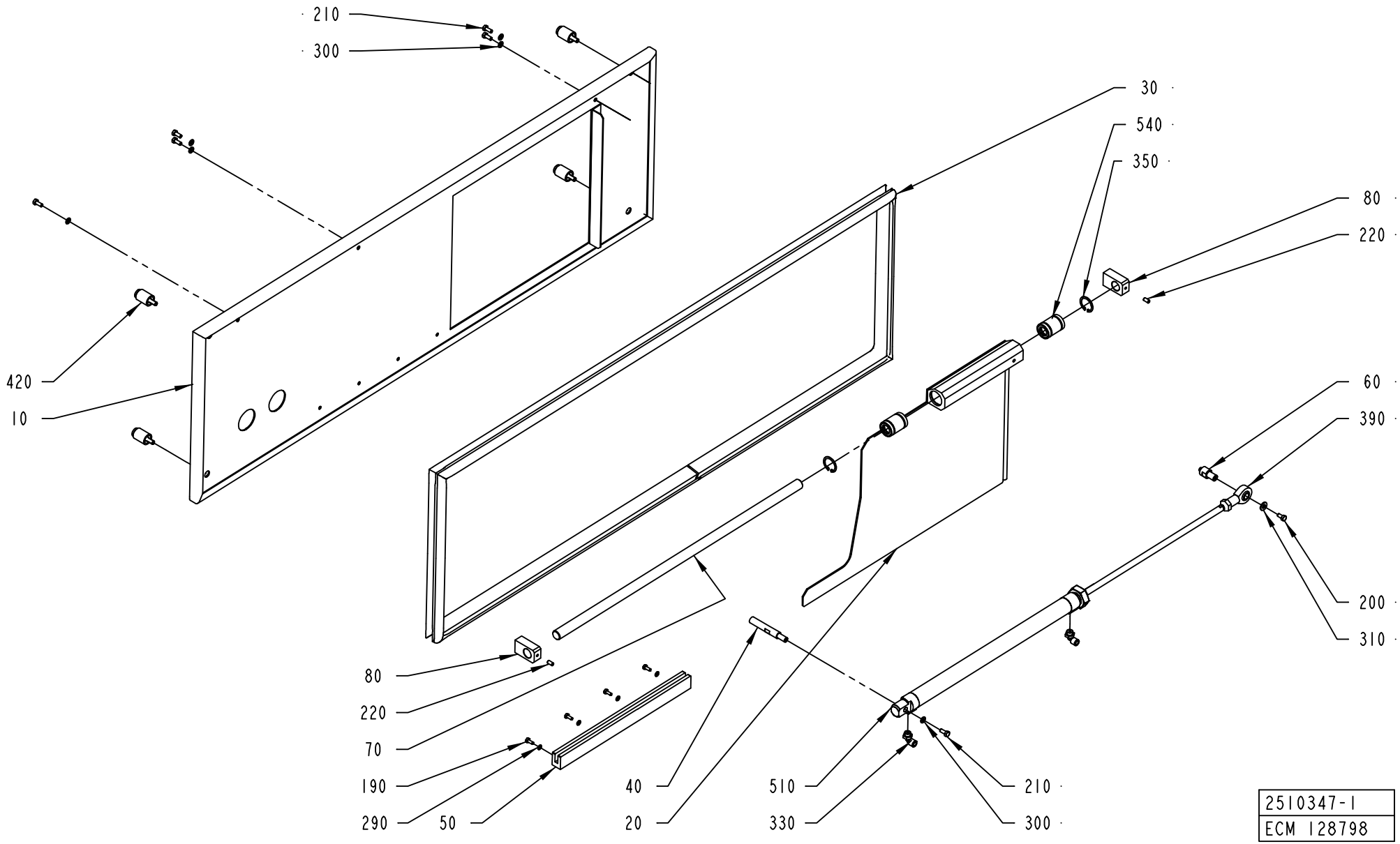
210
300
30
540
350
80
220
420
10
60
390
200
310
80
220
70
190
290
50
40
20
510
330
210
300
2510347-1
ECM 128798

ECM: 129875 - 20030522
Group number: 2510347-0100
Assembly Drawing: 2510347-1_1_AB

Pos	Part No	UN	Qty	Description	Page No
-					
010	2510348-0000		1	COVER	
020	2510352-0000		1	DOOR	
030	2510349-0000		1	SEALING STRIP	
040	2510355-0000		1	SHAFT	
050	2510353-0000		1	GUIDE	
060	2510354-0000		1	PIN	
070	2510351-0000		1	SHAFT	
080	2510350-0000		2	SUPPORT	
190	312105-0289		4	SCREW M6S ISO 4017 M4X10 A470	
200	312101-0325		1	SCREW M6S M5X10 FZB	
210	312105-0327		6	SCREW M6S ISO 4017 M5X12 A480	
220	312318-0325		2	SCREW ISO4029 M5X10 A4	
290	315105-0136		4	WASHER BRB4,3XRFR	
300	315105-0146		10	WASHER BRB5,3X10RFR	
310	315105-0156		1	WASHER BRB 6.7X14 RFR	
330	90458-2956		2	ELBOW PIPE JOINT, EXT.THREAD, D=6MM-G1/8	
350	90458-0506		2	RETAINING RING FOR BORE DIN 472 26 A2	
390	90115-0134		1	ROD END, ID=10 MM, M10X1,25	
420	90226-0458		4	MOUNTING SCREW	
510	90459-0401		1	DOUBLE ACTING, MINI-ISO, CYL. 25-320	
540	90189-0011		2	BALL BUSHING, 16X26X36 MM	

Pos	Part No	UN	Qty	Description	Page No

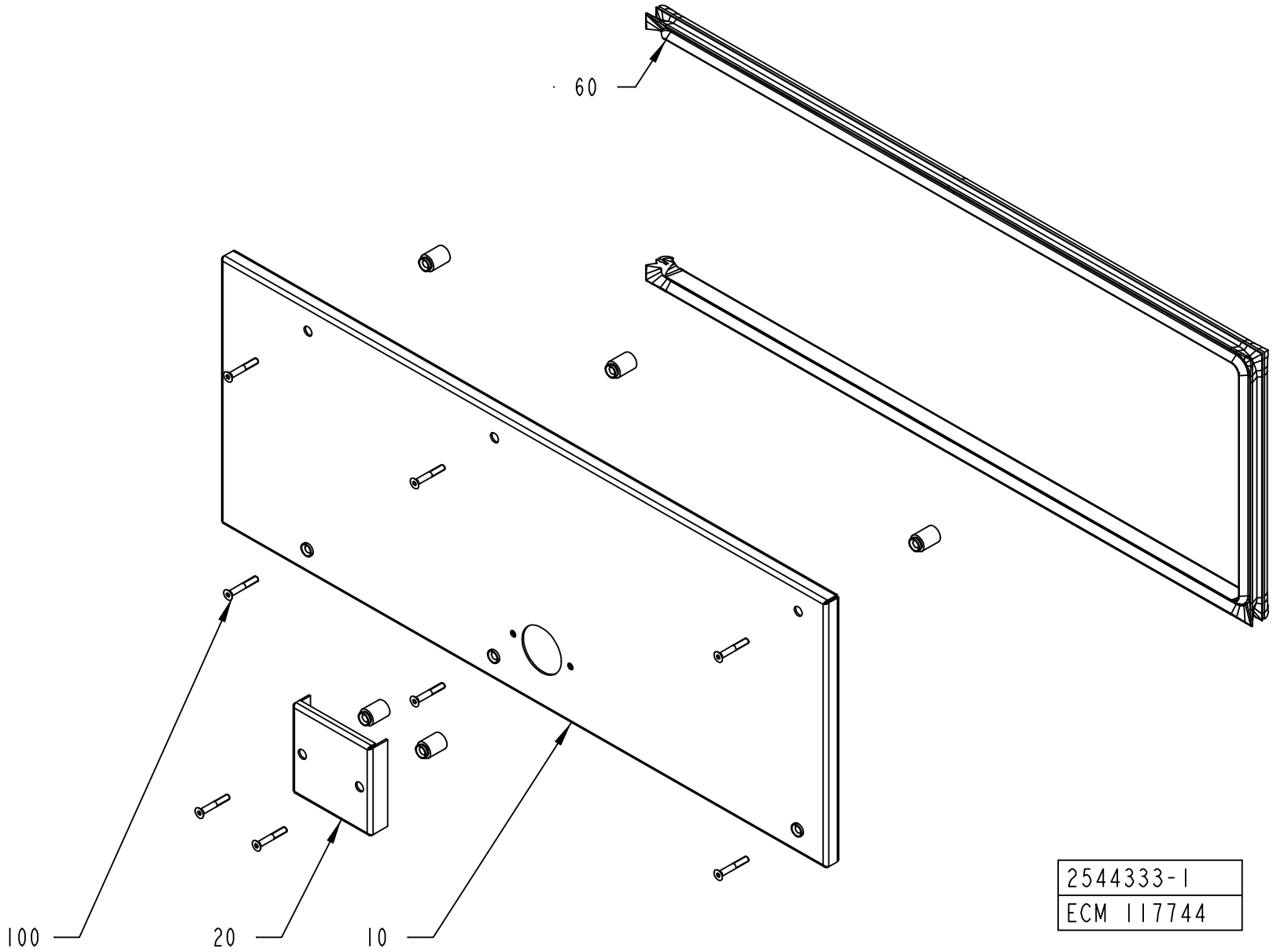
60
100
20
10
2544333-1
ECM 117744

ECM: 117744 - 20030403
Group number: 2544333-0100
Assembly Drawing: 2544333-1_1_AA

Pos	Part No	UN	Qty	Description	Page No
-					
010	2544331-0000		1	COVER	
020	2544332-0000		1	PROTECTION	
060	2508161-0000		1	RUBBER SEAL	
100	90226-0458		8	MOUNTING SCREW	

Pos	Part No	UN	Qty	Description	Page No

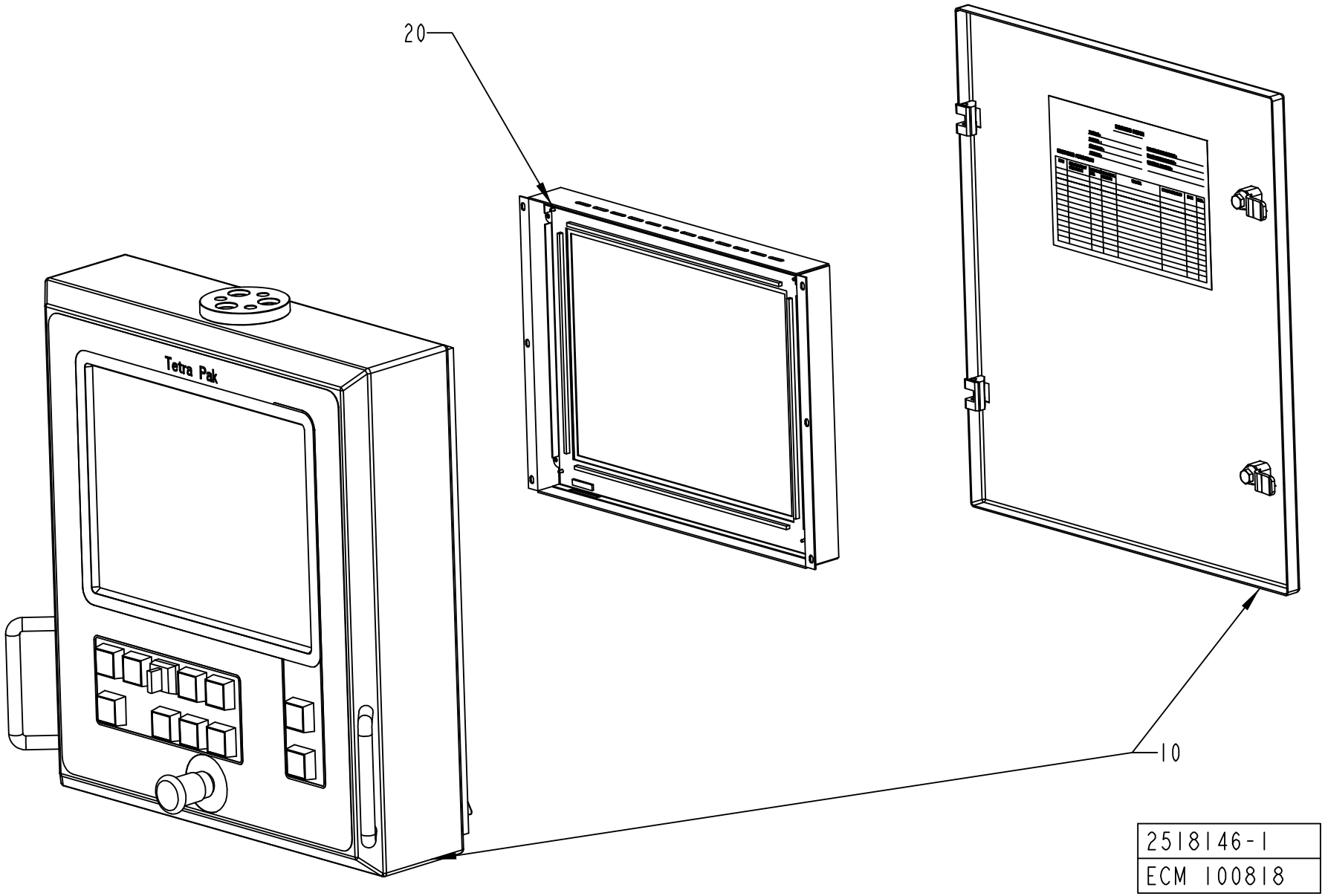
20
Tetra Pak
10
2518146-1
ECM 100818

ECM: 100823 - 20021206
Group number: 2518146-0100
Assembly Drawing: 2518146-1_1_AA

Pos	Part No	UN	Qty	Description	Page No
A3/FLEX					
0010	2518147-0101		1	PANEL UNIT 15"	
Common Parts					
0020	90459-0287		1	DISPLAY UNIT 15", UO36419A	

Pos	Part No	UN	Qty	Description	Page No

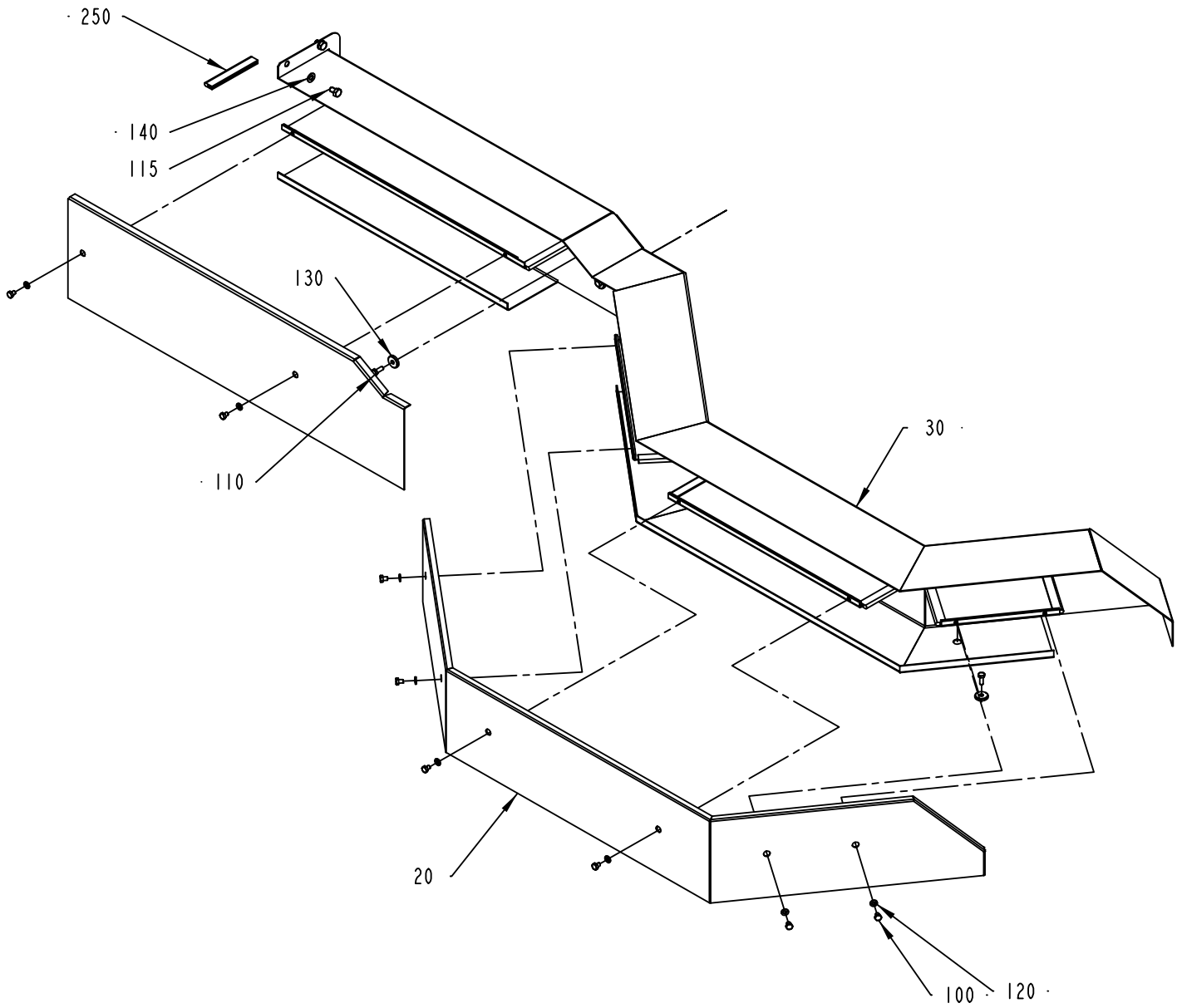

2504791-1
ECM 118243

ECM: 118243 - 20030403
Group number: 2504791-0100
Assembly Drawing: 2504791-1_1_AA

Pos	Part No	UN	Qty	Description	Page No
-					
010	2520181-0000		1	LID	
020	1512145-0000		1	LID	
030	2520180-0000		1	CABLE DUCT	
100	312105-0362		8	SCREW M6S ISO 4017 M6X8 A480	
110	312105-0368		3	SCREW M6S ISO 4017 M6X16 A480	
115	312105-0447		4	SCREW M6S ISO 4017 M8X12 A480	
120	315105-0153		8	WASHER BRB6,4X12RFR	
130	315125-0153		3	WASHER TBRSB 6,4X22X4 A4	
140	315105-0165		4	WASHER BRB8,4X16RFR	
250	90143-0059	MM	1200	SEAL STRIP 4610069	

Pos	Part No	UN	Qty	Description	Page No

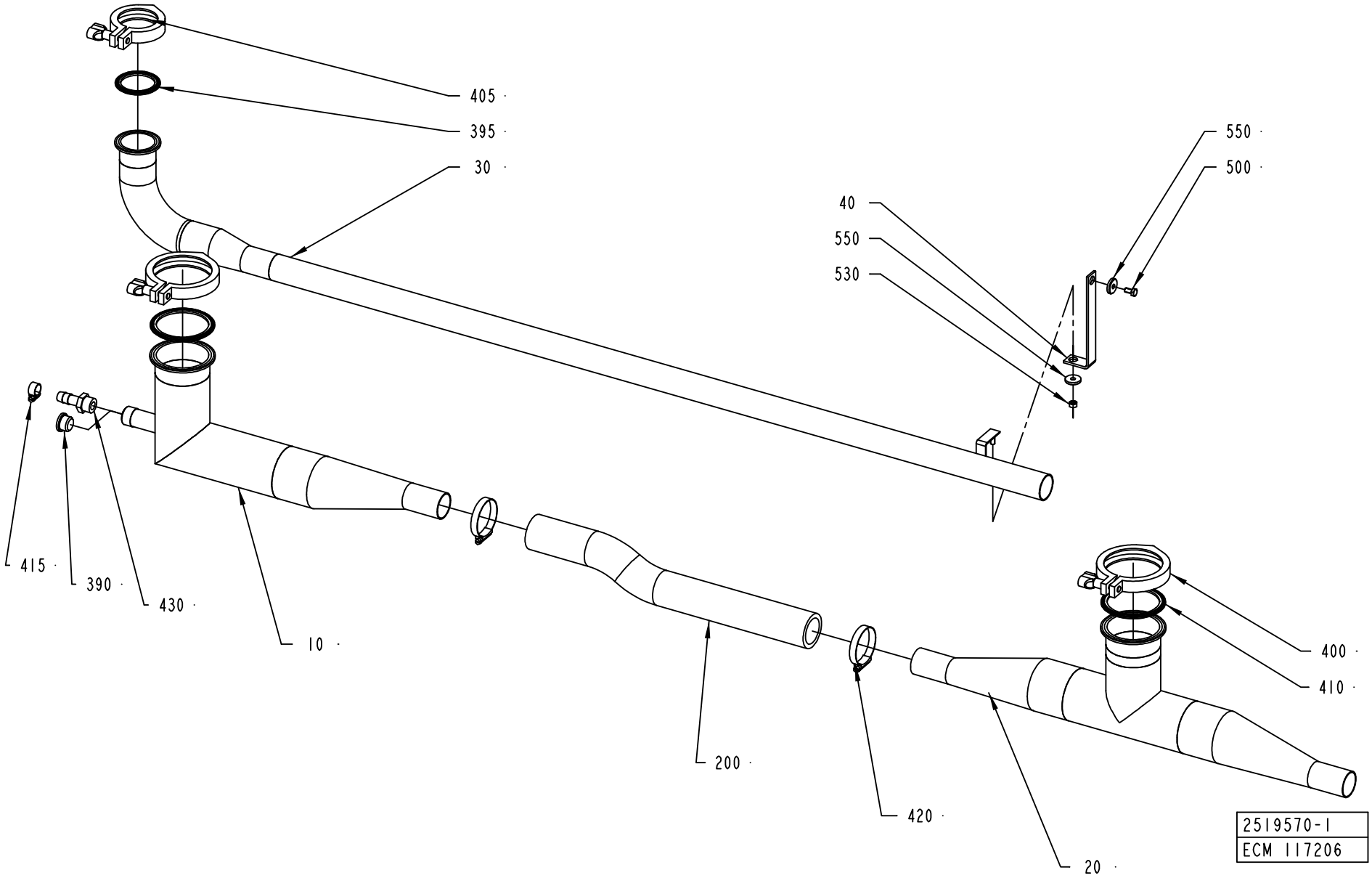
405
395
30
40
550
530
550
500
415
390
430
10
200
420
20
400
410
2519570-1
ECM 117206

ECM: 139367 - 20030711
Group number: 2519570-0100
Assembly Drawing: 2519570-1_1_AA

Pos	Part No	UN	Qty	Description	Page No
A3/FLEX					
200	90166-0236	MM	500	HOSE, 38/51 REINFORCED RUBBER	
Common Parts					
010	2519571-0000		1	PIPE	
020	2519572-0000		1	PIPE	
030	2594567-0000		1	PIPE	
040	2594589-0000		1	BRACKET	
390	342713-0213		1	PLUG, EXT THREAD HEX SOCKET 8638-00-120	
395	342850-0305		1	GASKET 47,8X62,6X5,2 MM 2" FDA	
400	342840-0107		2	CLAMPING PIECE	
405	342840-0105		1	CLAMPING PIECE	
410	342850-0107		2	GASKET, FDA, 3-A, 3	
415	342991-0101		1	HOSE CLIP,WORM DRIVE TYPE (13)-16	
420	342991-0109		2	HOSE CLIP,WORM DRIVE TYPE (48)-50	
430	90055-0033		1	HOSE NIPPLE, EXT.THR. R1/2-13 MM	
500	312105-0366		1	SCREW M6S ISO 4017 M6X12 A480	
530	312605-0316		1	HEXAGON NUT, M6M M6 A280	
550	315125-0153		2	WASHER TBRSB 6,4X22X4 A4	

Pos	Part No	UN	Qty	Description	Page No

WASTE CONVEYOR

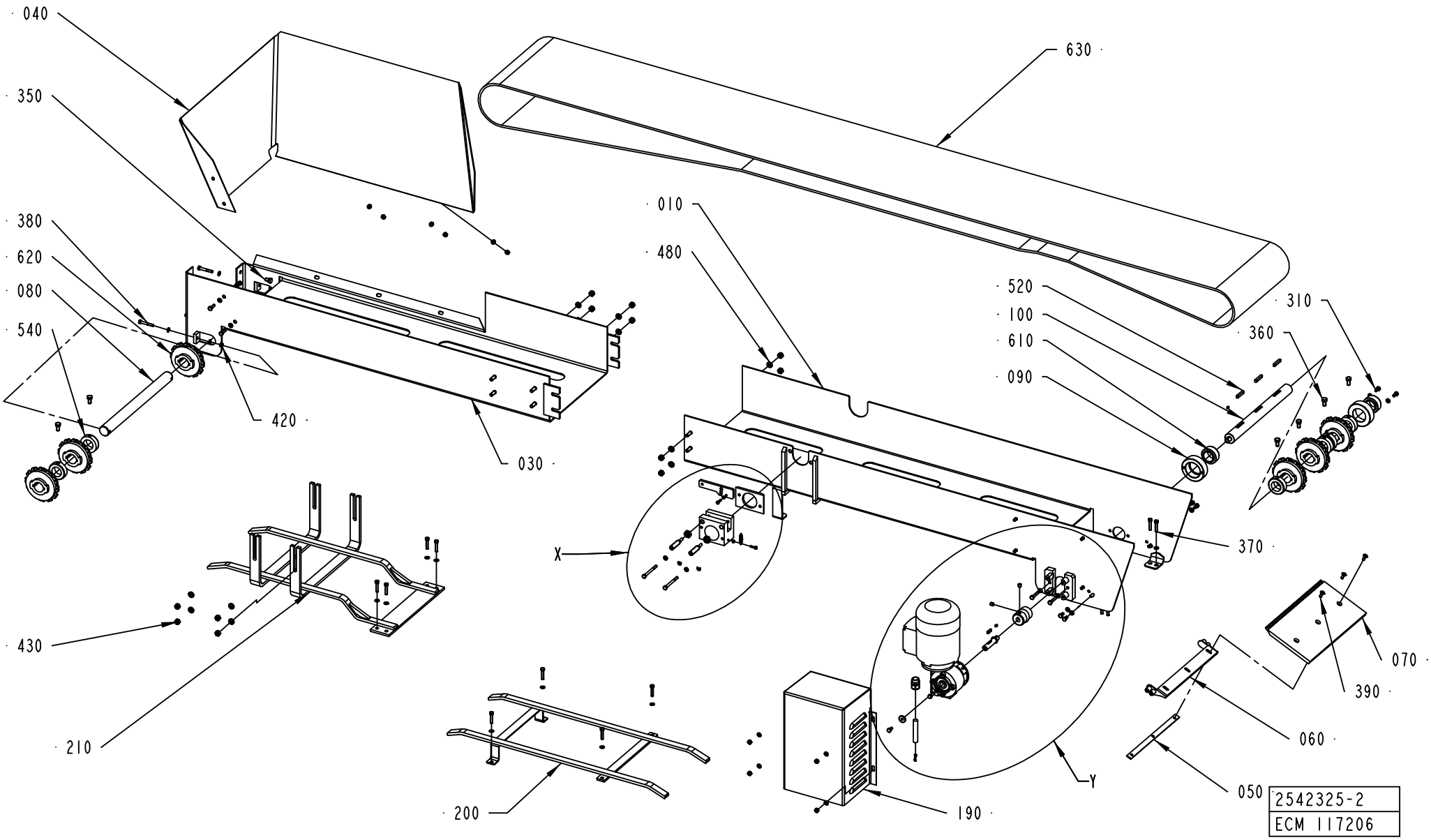

ECM: 117206 - 50001231
Group number: 2542325-0100
Assembly Drawing: 2542325-2_1_AA

This list covers pages from 2-270 to 2-273

Pos	Part No	UN	Qty	Description	Page No
A3/FLEX TBA 0500B, A3/FLEX TBA 1000B, A3/FLEX TBA 1000S, A3/FLEX TBA 1000SQ, A3/FLEX TPA 1000SQ, A3/FLEX TBA 0200S, A3/FLEX TBA 1500S, A3/FLEX TBA 0200B, A3/FLEX TBA 0250B, A3/FLEX TBA 0330S, A3/FLEX TPA 0330SQ, A3/FLEX TPA 0500SQ, A3/FLEX TBA 0200M, A3/FLEX TBA 0250S, A3/FLEX TBA 0500S (See drawing on pages: 2-270, 2-272)					
030	2540813-0000		1	CHUTE	
040	2540814-0000		1	SPLASH PLATE	
110	2508390-0000		1	FASTENING PLATE	
120	1346313-0000		1	PLATE	
130	2508203-0000		1	HOLDER	
140	1349187-0000		1	SPRING	
150	1346312-0000		2	SCREW	
210	2540816-0000		1	BRACKET	
300	312105-0293		2	SCREW M6S ISO 4017 M4X16 A470	
320	312105-0370		6	SCREW M6S ISO 4017 M6X20 A480	
340	312105-0383		2	SCREW M6S ISO 4014 M6X65 A480	
370	312109-0374		12	SCREW M6S ISO 4017 M6X30 A480	
410	312605-0312		2	HEXAGON NUT, M6M M4 A280	
430	312605-0318		12	HEXAGON NUT, M6M M8 A280	
440	312625-0322		2	HEXAGON THIN NUT, EN 24035 ML6M M12 A4	
460	315105-0153		39	WASHER BRB6,4X12RFR	
480	315115-0165		12	WASHER PLAIN, TBRB 8,4/16 H=3	
550	315755-0107		2	RETAINING RING SHAFT DIN 6799 5 A2	
630	2508201-0000		1	CONVEYOR CHAIN	
A3/FLEX TBA 1890S, A3/FLEX TBA 2000S (See drawing on pages: 2-270, 2-272)					
030	2679599-0000		1	CHUTE	
040	2679598-0000		1	SPLASH PLATE	
Common Parts					
010	2540817-0000		1	CHUTE	
050	1129253-0000		1	FASTENING PLATE	
060	1296845-0000		1	BRACKET	
070	2508192-0000		1	GUARD PLATE	
080	1037562-0000		1	SHAFT	
090	1348386-0000		2	BEARING HOUSING	
100	2508196-0000		1	DRIVE SHAFT	
160	445848-0000		1	ELASTIC COUPLING	
170	2508200-0000		1	SHAFT	
180	2529670-0000		1	WASHER	
190	2529579-0000		1	COVER	
200	2540818-0000		1	BRACKET	
310	312105-0366		7	SCREW M6S ISO 4017 M6X12 A480	
330	312105-0374		2	SCREW M6S ISO 4014 M6X30 A480	
350	312105-0447		2	SCREW M6S ISO 4017 M8X12 A480	
360	312105-0449		6	SCREW M6S ISO 4017 M8X16 A480	
380	312109-0378		2	SCREW M6S ISO4017 M6X40 A480	
390	312155-0368		3	SCREW EN 10642 MF6S M6X16 A480	
400	312318-0443		2	SCREW ISO4029 M8X8 A4	
420	312605-0316		11	HEXAGON NUT, M6M M6 A280	
470	315115-0153		2	WASHER PLAIN, TBRB 6,4/12 H=3	
500	315705-0164		2	PARALLEL KEY W. ROUND ENDS 4X4X8 MM	
510	315705-0201		1	PARALLEL KEY W. ROUND ENDS 5X5X20 MM	
520	315705-0238		3	PARALLEL KEY W. ROUND ENDS 6X6X36 MM	
540	315742-0122		6	RETAINING RING 30 SMS 199	
580	353101-0130		1	CABLE SHOE 1,5-2,5MM2 M4 BLUE	
590	353240-0002		1	GLAND W/O INSERT PG11 NORMAL	
610	90240-0315		2	SPHER. BEARING, 30X47X22 PLASTIC MM	
620	90344-0073		6	TOOTHED WHEEL	
M5503	90459-1147		1	GEARS, WORM MOTOR VF30 F1-10 P63 B14 V6	

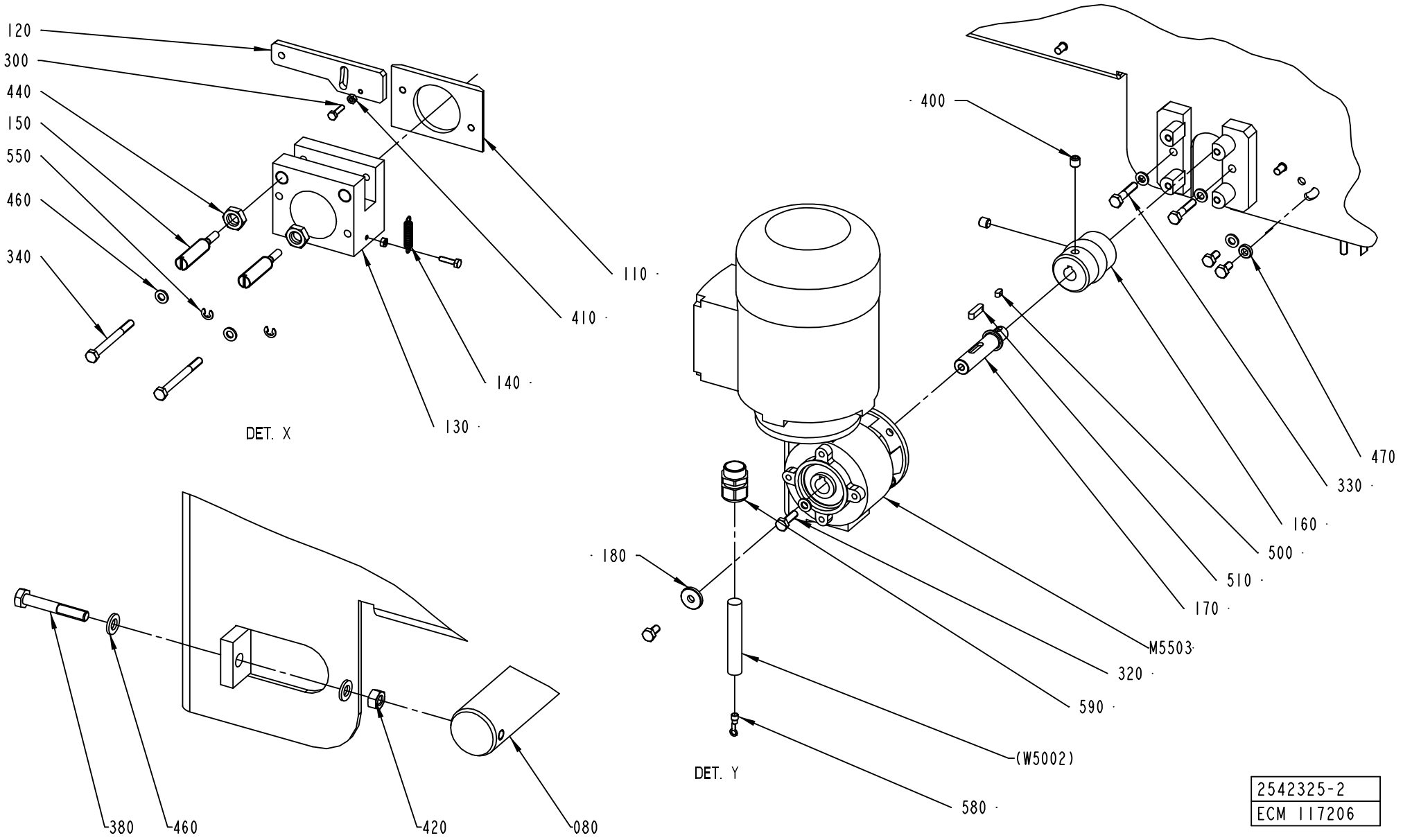
120
300
440
150
550
460
340
110
410
140
130
DET. X
400
470
330
160
500
510
170
180
M5503
320
590
(W5002)
580
DET. Y
380
460
420
080
2542325-2
ECM 117206

Pos	Part No	UN	Qty	Description	Page No
A3/FLEX TBA 0500B, A3/FLEX TBA 1000B, A3/FLEX TBA 1000S, A3/FLEX TBA 1000SQ, A3/FLEX TPA 1000SQ, A3/FLEX TBA 0200S, A3/FLEX TBA 1500S, A3/FLEX TBA 0200B, A3/FLEX TBA 0250B, A3/FLEX TBA 0330S, A3/FLEX TPA 0330SQ, A3/FLEX TPA 0500SQ, A3/FLEX TBA 0200M, A3/FLEX TBA 0250S, A3/FLEX TBA 0500S (See drawing on pages: 2-270, 2-272)					
030	2540813-0000		1	CHUTE	
040	2540814-0000		1	SPLASH PLATE	
110	2508390-0000		1	FASTENING PLATE	
120	1346313-0000		1	PLATE	
130	2508203-0000		1	HOLDER	
140	1349187-0000		1	SPRING	
150	1346312-0000		2	SCREW	
210	2540816-0000		1	BRACKET	
300	312105-0293		2	SCREW M6S ISO 4017 M4X16 A470	
320	312105-0370		6	SCREW M6S ISO 4017 M6X20 A480	
340	312105-0383		2	SCREW M6S ISO 4014 M6X65 A480	
370	312109-0374		12	SCREW M6S ISO 4017 M6X30 A480	
410	312605-0312		2	HEXAGON NUT, M6M M4 A280	
430	312605-0318		12	HEXAGON NUT, M6M M8 A280	
440	312625-0322		2	HEXAGON THIN NUT, EN 24035 ML6M M12 A4	
460	315105-0153		39	WASHER BRB6,4X12RFR	
480	315115-0165		12	WASHER PLAIN, TBRB 8,4/16 H=3	
550	315755-0107		2	RETAINING RING SHAFT DIN 6799 5 A2	
630	2508201-0000		1	CONVEYOR CHAIN	
A3/FLEX TBA 1890S, A3/FLEX TBA 2000S (See drawing on pages: 2-270, 2-272)					
030	2679599-0000		1	CHUTE	
040	2679598-0000		1	SPLASH PLATE	
Common Parts					
010	2540817-0000		1	CHUTE	
050	1129253-0000		1	FASTENING PLATE	
060	1296845-0000		1	BRACKET	
070	2508192-0000		1	GUARD PLATE	
080	1037562-0000		1	SHAFT	
090	1348386-0000		2	BEARING HOUSING	
100	2508196-0000		1	DRIVE SHAFT	
160	445848-0000		1	ELASTIC COUPLING	
170	2508200-0000		1	SHAFT	
180	2529670-0000		1	WASHER	
190	2529579-0000		1	COVER	
200	2540818-0000		1	BRACKET	
310	312105-0366		7	SCREW M6S ISO 4017 M6X12 A480	
330	312105-0374		2	SCREW M6S ISO 4014 M6X30 A480	
350	312105-0447		2	SCREW M6S ISO 4017 M8X12 A480	
360	312105-0449		6	SCREW M6S ISO 4017 M8X16 A480	
380	312109-0378		2	SCREW M6S ISO4017 M6X40 A480	
390	312155-0368		3	SCREW EN 10642 MF6S M6X16 A480	
400	312318-0443		2	SCREW ISO4029 M8X8 A4	
420	312605-0316		11	HEXAGON NUT, M6M M6 A280	
470	315115-0153		2	WASHER PLAIN, TBRB 6,4/12 H=3	
500	315705-0164		2	PARALLEL KEY W. ROUND ENDS 4X4X8 MM	
510	315705-0201		1	PARALLEL KEY W. ROUND ENDS 5X5X20 MM	
520	315705-0238		3	PARALLEL KEY W. ROUND ENDS 6X6X36 MM	
540	315742-0122		6	RETAINING RING 30 SMS 199	
580	353101-0130		1	CABLE SHOE 1,5-2,5MM2 M4 BLUE	
590	353240-0002		1	GLAND W/O INSERT PG11 NORMAL	
610	90240-0315		2	SPHER. BEARING, 30X47X22 PLASTIC MM	
620	90344-0073		6	TOOTHED WHEEL	
M5503	90459-1147		1	GEARS, WORM MOTOR VF30 F1-10 P63 B14 V6	

Tetra Pak

SPC
Spare Parts Catalogue

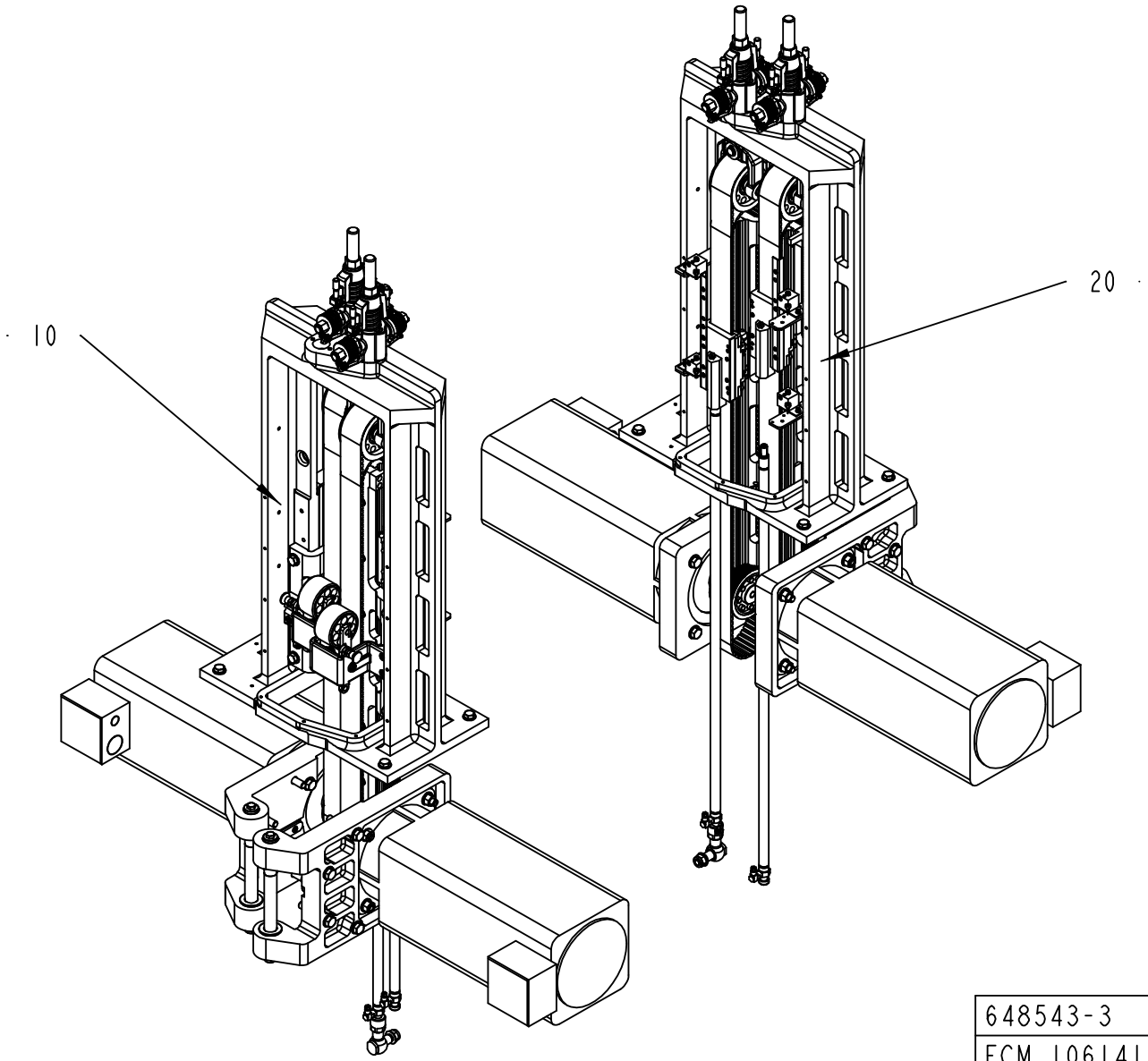

648543-3
ECM 106141

ECM: 112714 - 20021107
Group number: 648543-0300
Assembly Drawing: 648543-3_1_AA

Pos	Part No	UN	Qty	Description	Page No
-					
010	2552077-0100		1	DRIVE UNIT	**3-5**
020	2552078-0100		1	DRIVE UNIT	**3-25**

Pos	Part No	UN	Qty	Description	Page No

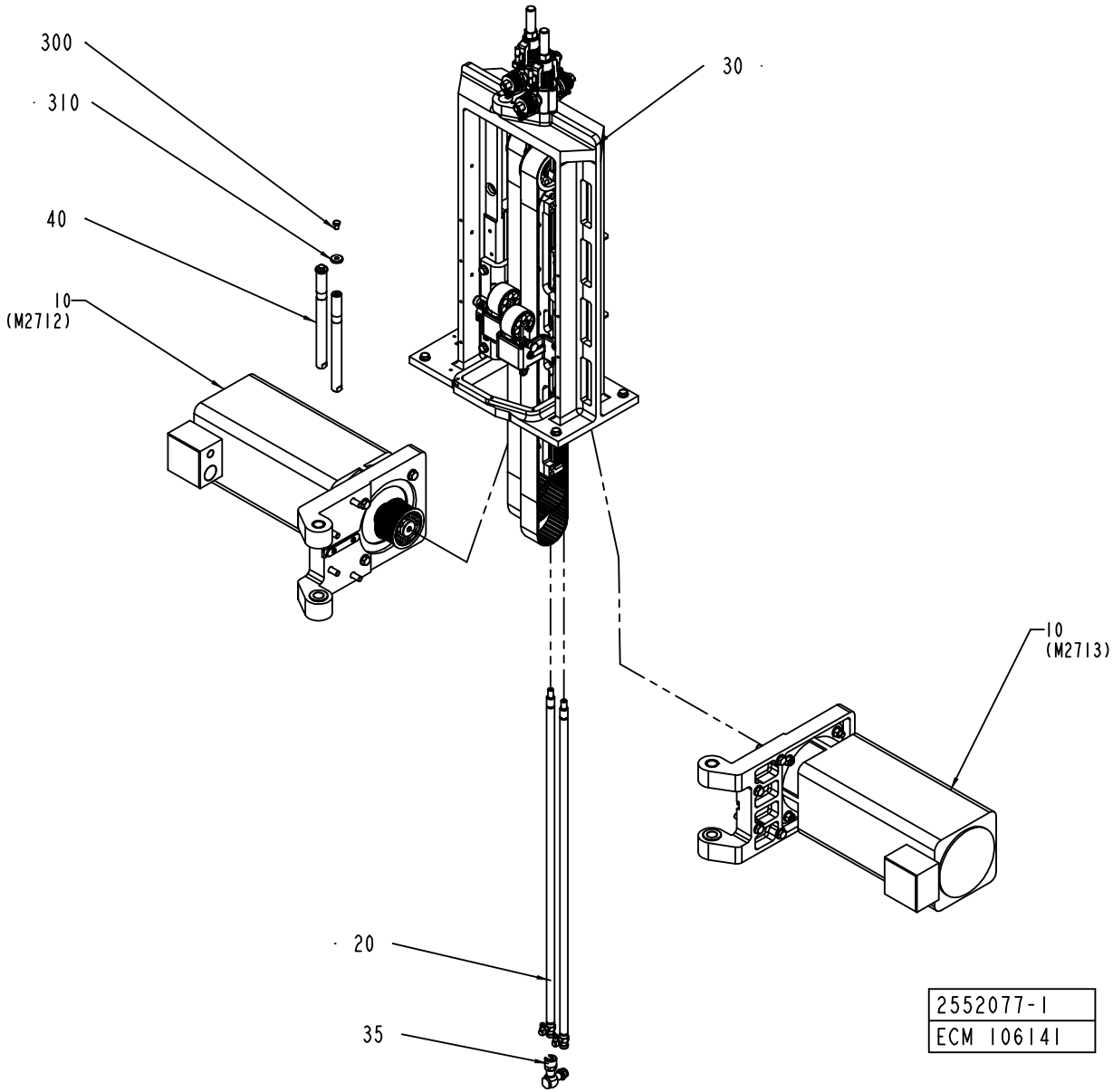
300
310
40
10
(M2712)
30
10
(M2713)
20
35
2552077-1
ECM 106141

ECM: 112415 - 20021107
Group number: 2552077-0100
Assembly Drawing: 2552077-1_1_AA

Pos	Part No	UN	Qty	Description	Page No
-					
010	2552079-0100		2	MOTOR UNIT	**3-7**
020	2552080-0100		2	LINK	**3-9**
030	2552110-0100		1	SUPPORT	**3-11**
035	1490994-0100		1	LINK	**3-23**
040	2533638-0000		2	AXLE PIN	
300	312105-0447		2	SCREW M6S ISO 4017 M8X12 A480	
310	315125-0165		2	WASHER TBRSB 8,4X26X5 A4	

Pos	Part No	UN	Qty	Description	Page No

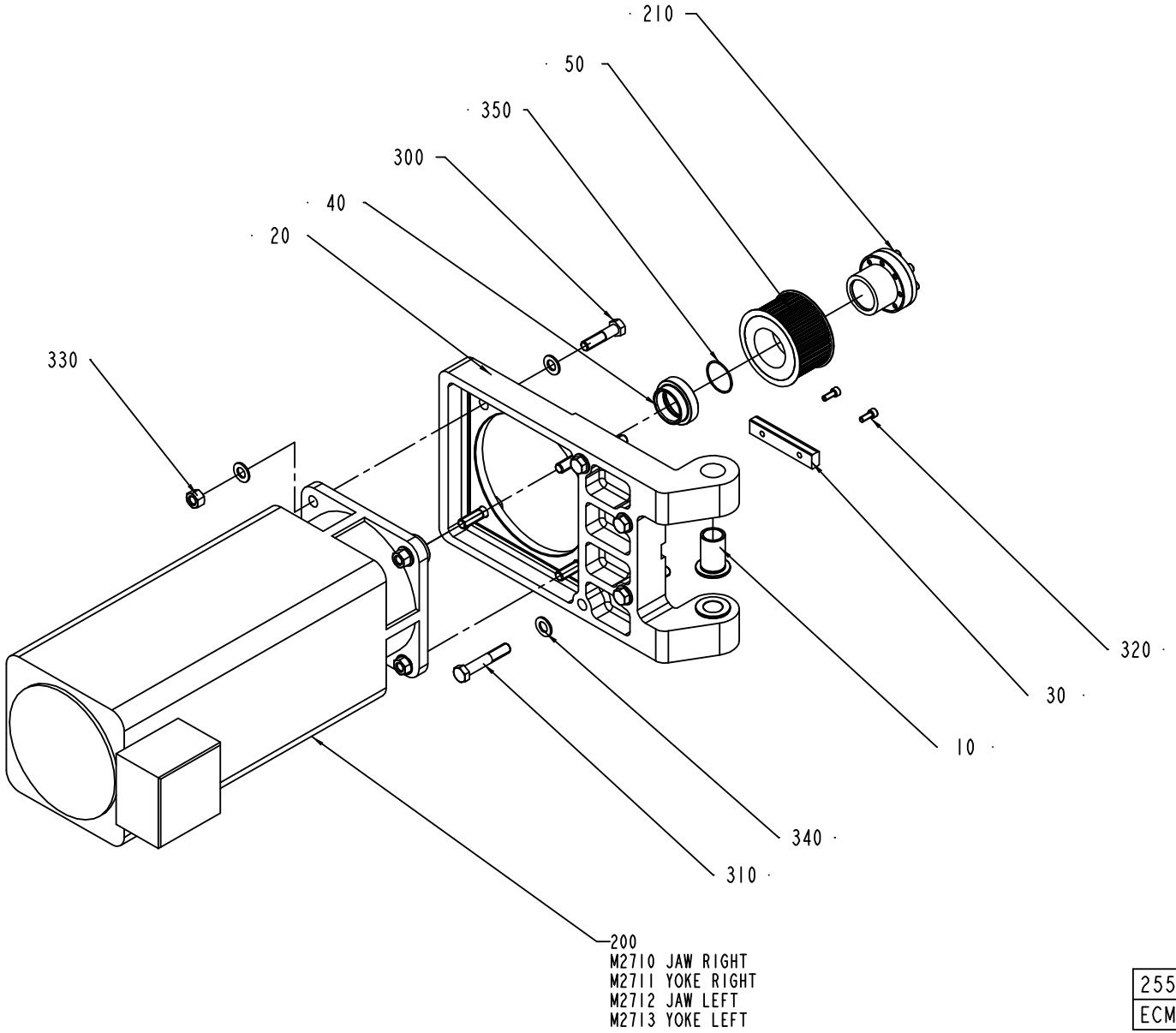

2552079-1
ECM 106141

ECM: 112417 - 20021107
Group number: 2552079-0100
Assembly Drawing: 2552079-1_1_AA

Pos	Part No	UN	Qty	Description	Page No
-					
010	1255233-0000		2	BUSHING	
020	1255261-0000		1	FLANGE	
030	2545017-0000		1	PARALLEL KEYS WITH ROUND ENDS	
040	1346887-0000		1	SPACER	
050	1347839-0000		1	PULLEY	
200	90459-0562		1	SERVO MOT. HR 190J8-520S-F07-R01-K99-B00	
210	90458-2303		1	CLAMPING ELEMENT WITH SLEEVE, 38X50 MM	
300	312105-0542		4	SCREW M6S ISO 4014 M12X50 A480	
310	312105-0546		4	SCREW M6S ISO 4014 M12X70 A480	
320	312115-0368		2	SCREW ISO4762 M6X16 A4	
330	312601-0322		4	NUT M6M 12-8 FZB	
340	315105-0178		12	WASHER BRB13X24RFR	
350	315202-0124		1	O-RING 37,1X1,6 MM	

Pos	Part No	UN	Qty	Description	Page No

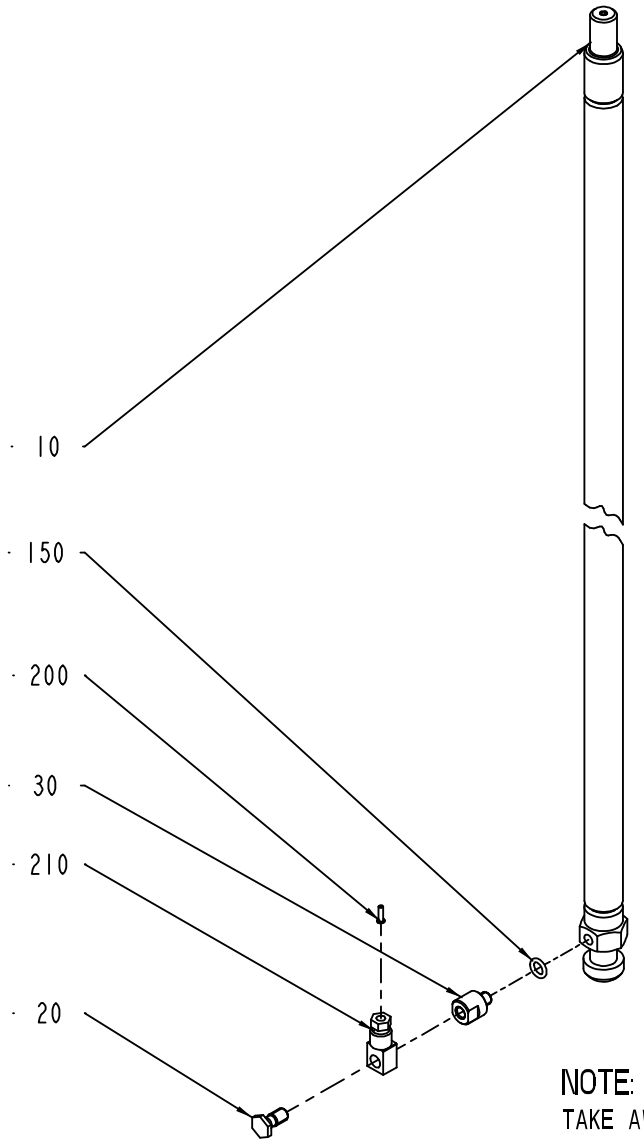

NOTE:
TAKE AWAY STANDARD SCREW
AND MOUNTED SCREW POS.20

2552080-1
ECM 106141

ECM: 112418 - 20021107
Group number: 2552080-0100
Assembly Drawing: 2552080-1_1_AA

Pos	Part No	UN	Qty	Description	Page No
-					
010	1334653-0000		1	LINK	
020	1334659-0000		1	SCREW	
030	2529187-0000		1	SPACER	
150	315202-0505		1	O-RING 6,07X1,78 MM	
200	90134-0031		1	SLEEVE FOR PLASTIC TUBE	
210	90134-0068		1	CONNECTION	

Pos	Part No	UN	Qty	Description	Page No

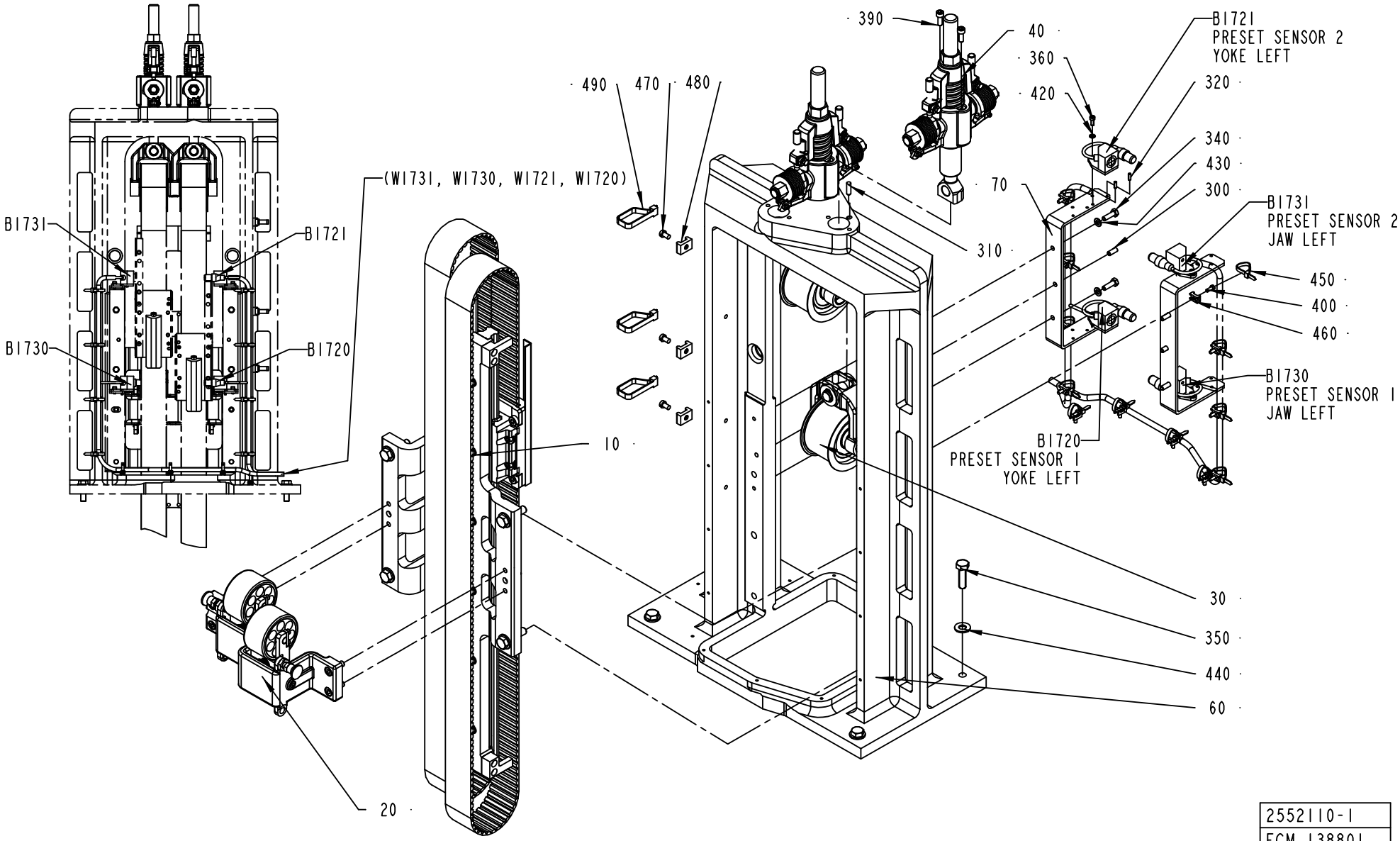

2552110-1
ECM 138801

ECM: 138910 - 20031215
Group number: 2552110-0100
Assembly Drawing: 2552110-1_1_AB

Pos	Part No	UN	Qty	Description	Page No
-					
010	1350217-0100		1	GUIDE	**3-13**
020	1487629-0100		1	DAMPER	**3-17**
030	1511197-0100		2	PULLEY	**3-19**
040	1511198-0100		2	BELT TENSIONER	**3-21**
060	1255222-0000		1	FRAME	
070	1349285-0000		2	SUPPORT	
300	311103-0351		2	PARALLEL PIN ISO 2338 6M6X16 A1	
310	311103-0353		2	PARALLEL PIN ISO 2338 6M6X20 A1	
320	311112-0205		8	SPRING PIN, ISO 8752 3X10-C	
340	312105-0370		4	SCREW M6S ISO 4017 M6X20 A480	
350	312105-0497		4	SCREW M6S ISO 4017 M10X35 A480	
360	312115-0289		4	SCREW ISO4762 M4X10 A4	
390	312115-0368		4	SCREW ISO4762 M6X16 A4	
400	312125-0289		12	SCREW ISO 1207 M4X10 A4	
420	315105-0136		4	WASHER BRB4,3XRFR	
430	315105-0153		4	WASHER BRB6,4X12RFR	
440	315105-0173		4	WASHER BRB10,5X22RFR	
450	352113-0102		12	CLIP-STRIP, BLACK 188X4,8 MM	
460	352113-0205		12	ANCHOR PLATES FOR STRIPS, TYPE TM2S8-C10	
470	312125-0364		3	SCREW ISO 1207 M6X10 A4	
480	352113-0204		3	ANCHOR PLATES FOR STRIPS, TYPE TM3S25-M	
490	352113-0103		3	CLIP STRIP, 290X7,6 MM	
B1720	90044-0195		1	PROX.SW. IO 9922 IOW2010-ARKG/M/UP/80CM	
B1721	90044-0195		1	PROX.SW. IO 9922 IOW2010-ARKG/M/UP/80CM	
B1730	90044-0195		1	PROX.SW. IO 9922 IOW2010-ARKG/M/UP/80CM	
B1731	90044-0195		1	PROX.SW. IO 9922 IOW2010-ARKG/M/UP/80CM	

Pos	Part No	UN	Qty	Description	Page No

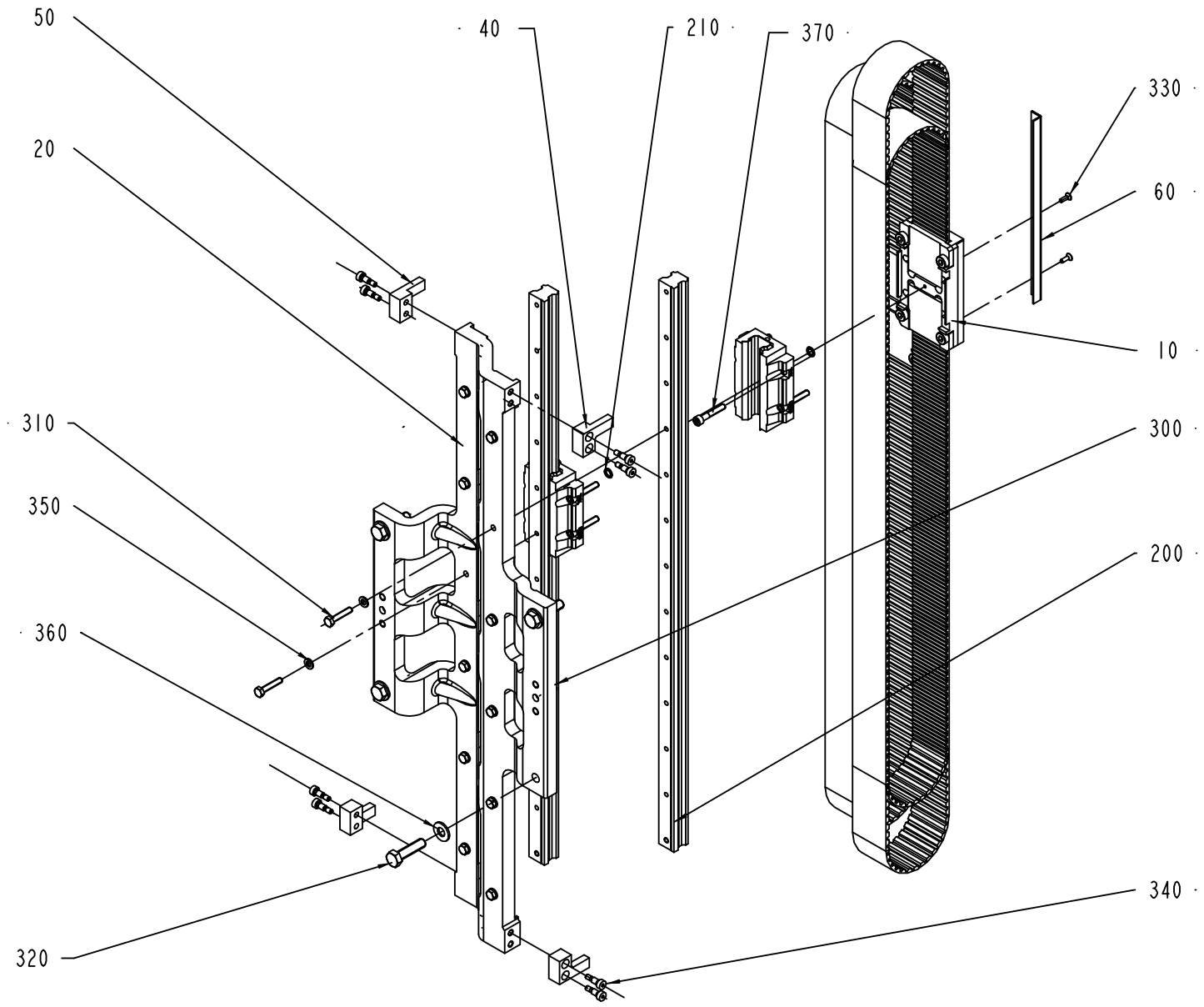

1350217-1
ECM 106141

ECM: 106148 - 20021107
Group number: 1350217-0100
Assembly Drawing: 1350217-1_1_AA

Pos	Part No	UN	Qty	Description	Page No
-					
010	1350210-0100		2	RUNNER	**3-15**
020	1255223-0000		1	HOLDER	
040	1350825-0000		2	LOCK	
050	1350826-0000		2	LOCK	
060	1490935-0000		2	BAR	
200	90458-2307		2	LINEAR UNIT HSR25	
210	90459-1411		2	O-RING 7,8X1,9 MM	
300	311103-0456		2	PARALLELL PIN, M6, 10X25 MM	
310	312109-0374		12	SCREW M6S ISO 4017 M6X30 A480	
320	312109-0499		4	SCREW M6S ISO 4017 M10X40 A480	
330	312155-0291		4	SCREW EN 10642 MF6S M4X12 A480	
340	312180-0364		8	SCREW ISO7379 H6X10	
350	315105-0153		12	WASHER BRB6,4X12RFR	
360	315105-0173		4	WASHER BRB10,5X22RFR	
370	312115-0376		8	SCREW ISO4762 M6X35 A4	

Pos	Part No	UN	Qty	Description	Page No

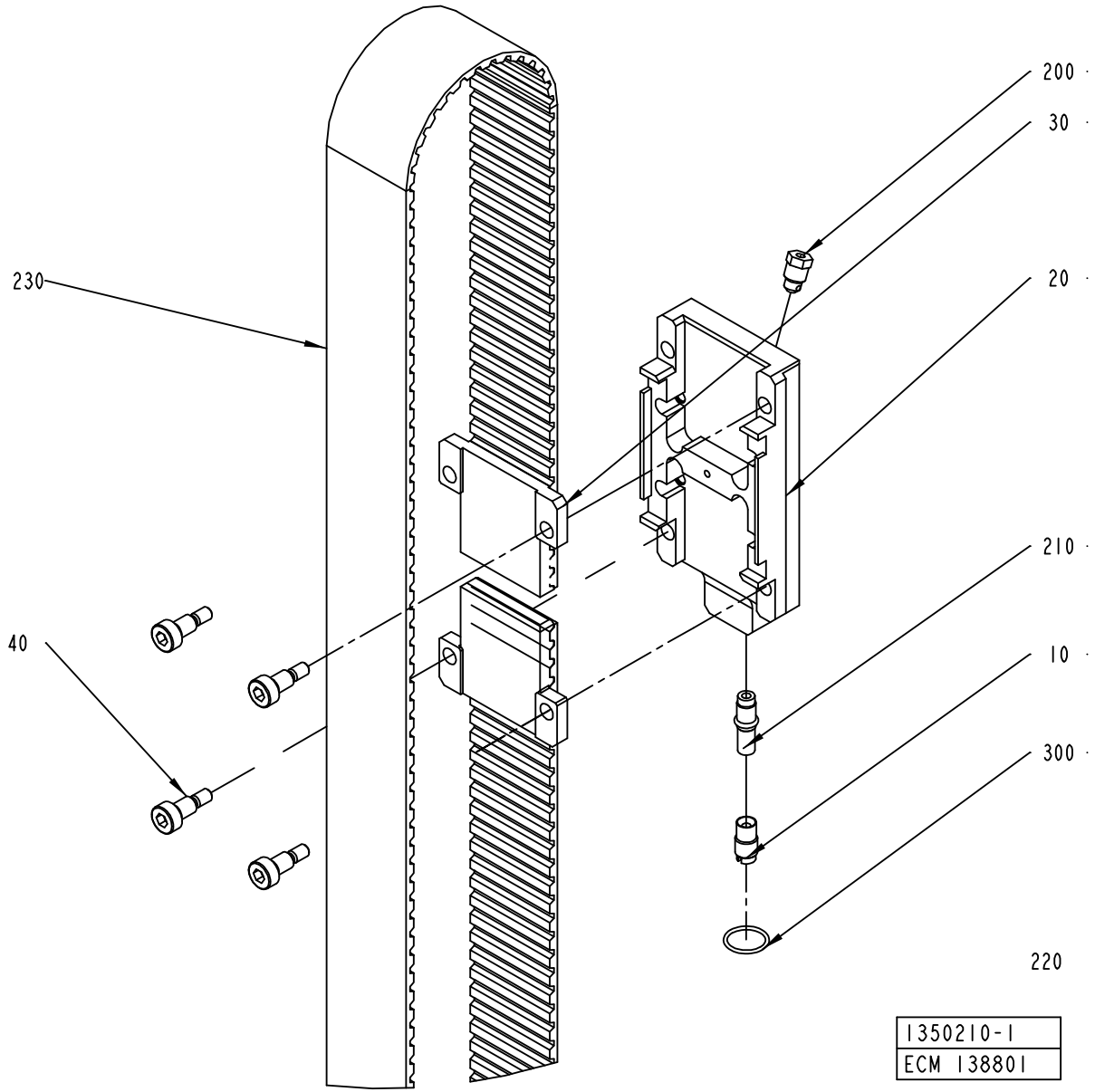
200
30
230
20
210
40
10
300
220
1350210-1
ECM 138801

ECM: 140086 - 20031215
Group number: 1350210-0100
Assembly Drawing: 1350210-1_1_AB

Pos	Part No	UN	Qty	Description	Page No
-					
010	1334939-0000		1	PLUG	
020	1346845-0000		1	PLATE	
030	1346846-0000		2	BELT HOLDER	
040	2640819-0000		4	SCREW	
200	90087-0019		1	PLUG M10X1 STAINLESS	
210	90092-0053		1	METERING VALVE 30 MM3	
220	90296-0068	G	5	GREASE UNIWAY LI62 CARTRID.400GR	
230	90458-2306		1	TIMING BELT ATL10 2020X50 MM	
300	315202-0115		1	O-RING 17,1X1,6 MM	

Pos	Part No	UN	Qty	Description	Page No

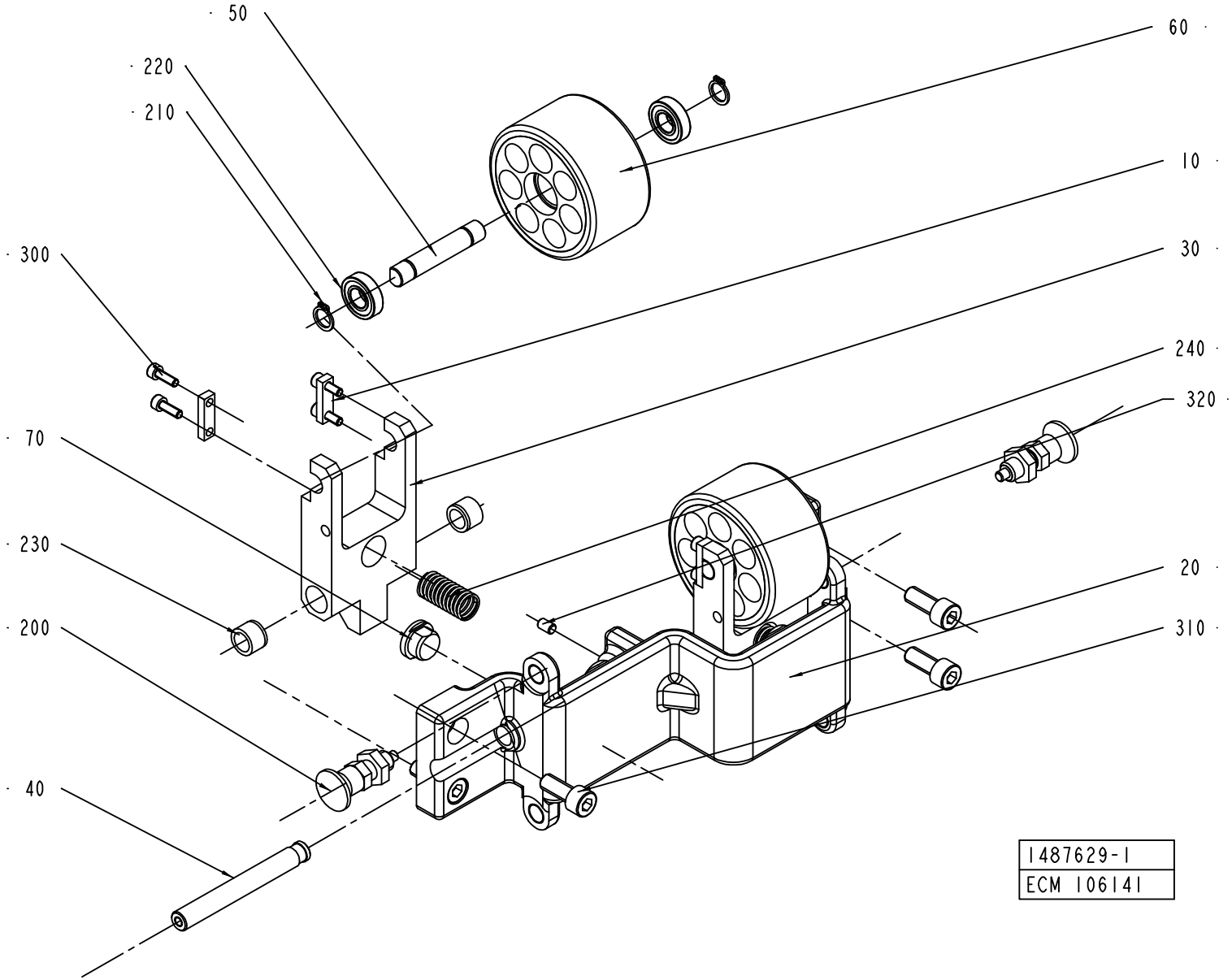
50
220
210
300
70
230
200
40
60
10
30
240
320
20
310
1487629-1
ECM 106141

ECM: 106149 - 20021107
Group number: 1487629-0100
Assembly Drawing: 1487629-1_1_AA

Pos	Part No	UN	Qty	Description	Page No
-					
010	1349266-0000		4	PLATE	
020	1487631-0000		1	BRACKET	
030	1487632-0000		2	FORK	
040	1487633-0000		2	AXLE PIN	
050	1487634-0000		2	AXLE PIN	
060	1487635-0000		2	WHEEL	
070	1487636-0000		2	STOPPER	
200	90051-0112		2	LOCK KNOB, NO. GN 617 NIK5	
210	90141-0016		4	RETAINING RING FOR SHAFT DIN 471 10 A2	
220	90214-0036		4	BALL BEARING, 10X22X6 MM	
230	90240-0119		4	BEAR. BUSHING WITHOUT FL	
240	90458-2305		2	COMP. SPRING D22280	
300	312115-0291		8	SCREW ISO4762 M4X12 A4	
310	312115-0451		4	SCREW ISO4762 M8X20 A4	
320	312318-0323		2	SCREW ISO4029 M5X8 A4	

Pos	Part No	UN	Qty	Description	Page No

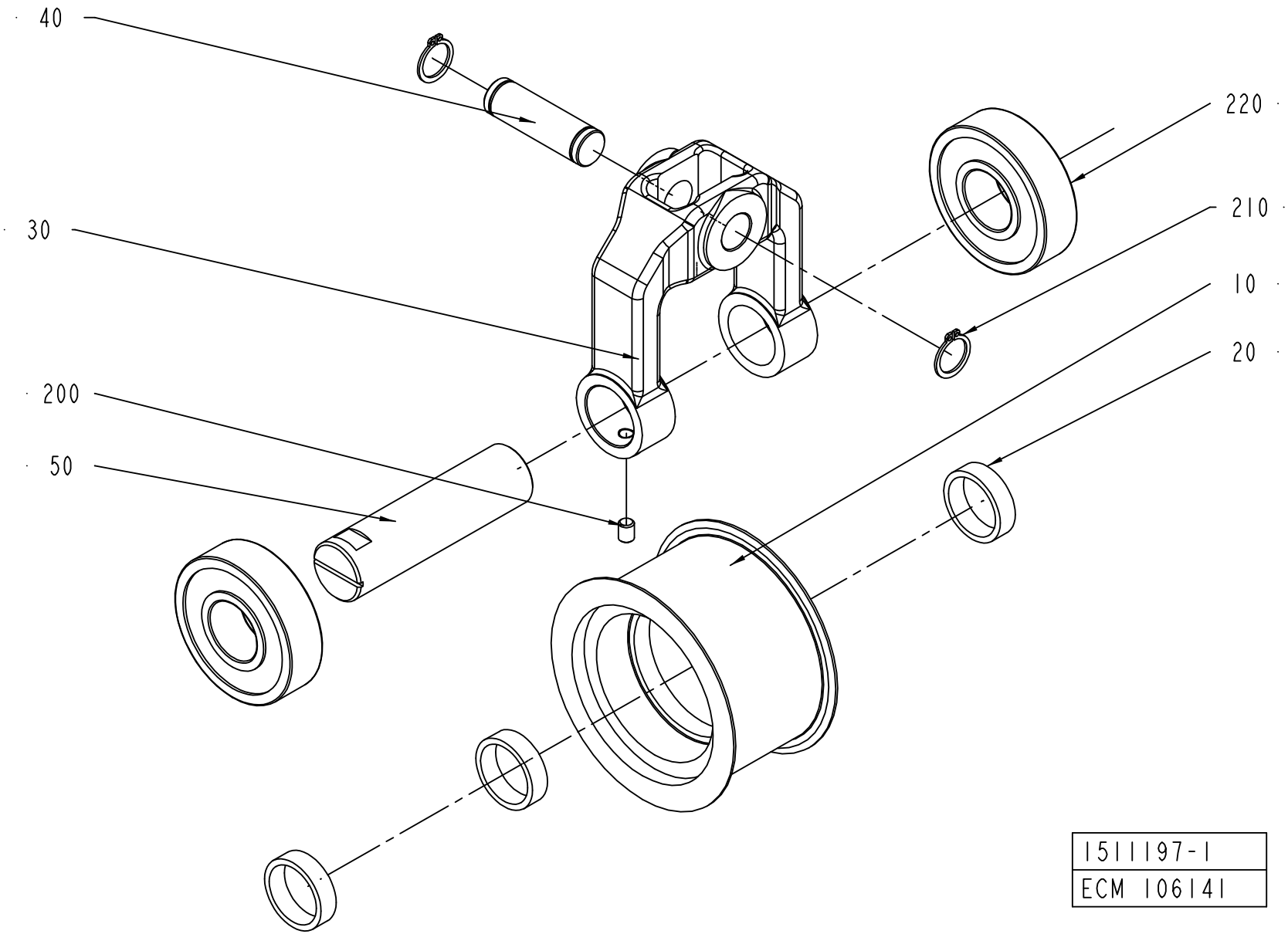
40
30
200
50
220
210
10
20
1511197-1
ECM 106141

ECM: 106150 - 20021107
Group number: 1511197-0100
Assembly Drawing: 1511197-1_1_AA

Pos	Part No	UN	Qty	Description	Page No
-					
010	1255228-0000		1	WHEEL	
020	1346890-0000		3	SPACER	
030	1511193-0000		1	SUPPORT PULLEY	
040	1511194-0000		1	AXLE PIN	
050	1511195-0000		1	SHAFT	
200	312318-0366		1	SCREW ISO4029 M6X12 A4	
210	315751-0112		2	RETAINING RING FOR SHAFT DIN 471 15 A2	
220	321316-0205		2	BALL BEARING, 25X62X17 MM	

Pos	Part No	UN	Qty	Description	Page No

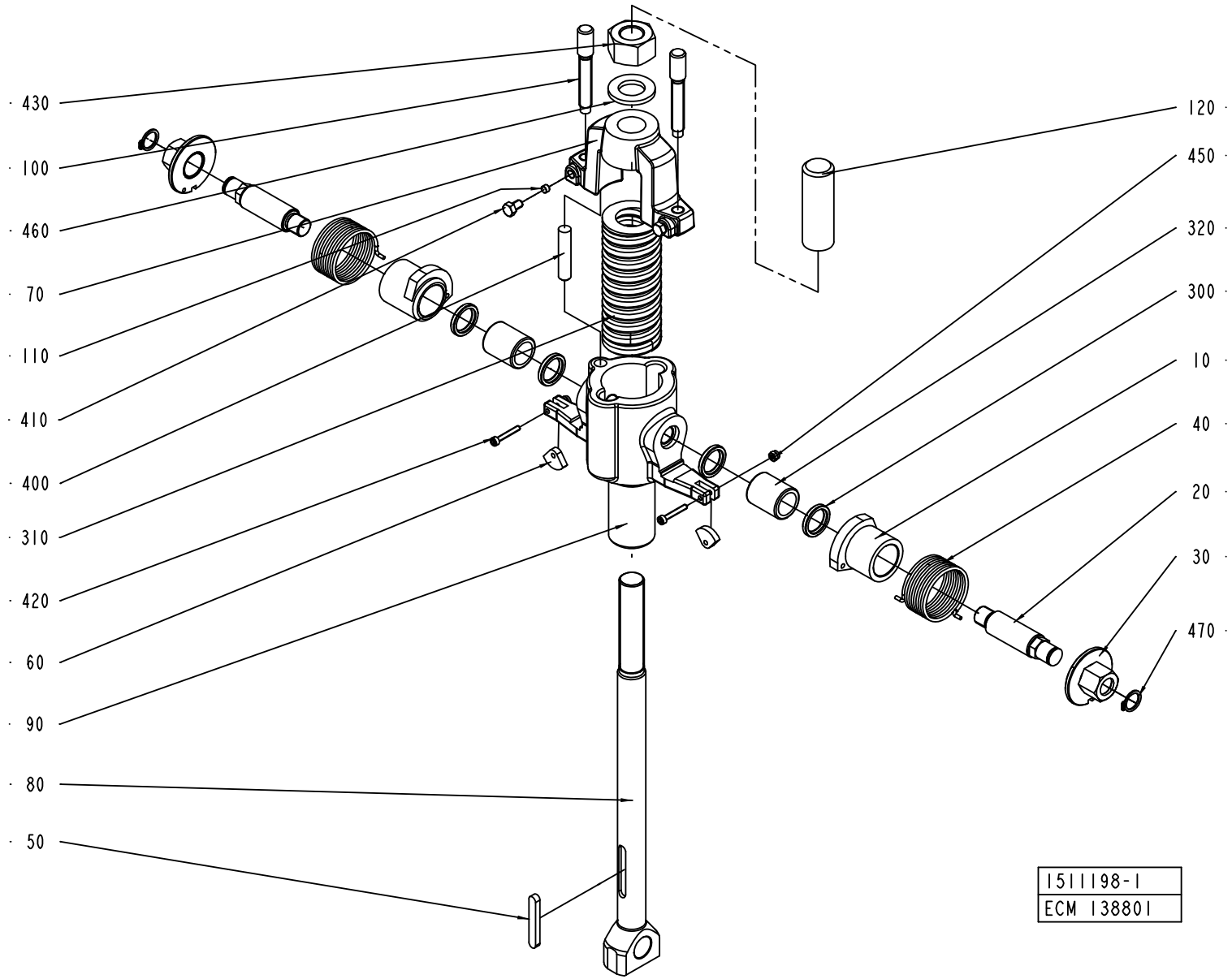
430
100
460
70
110
410
400
310
420
60
90
80
50
120
450
320
300
10
40
20
30
470
1511198-1
ECM 138801

ECM: 138995 - 20031215
Group number: 1511198-0100
Assembly Drawing: 1511198-1_1_AB

Pos	Part No	UN	Qty	Description	Page No
-					
010	1334928-0000		2	CAM	
020	1334929-0000		2	SHAFT	
030	1334932-0000		2	DISC	
040	1334941-0000		2	TORSION SPRING	
050	1334942-0000		1	WEDGE	
060	1334943-0000		2	STOP LUG	
070	1511192-0000		1	ROCKER	
080	1511196-0000		1	SHAFT	
090	1511209-0000		1	BUSHING	
100	1517350-0000		2	BULB	
110	1548454-0000		2	DISC	
120	2525570-0000		1	COVER	
300	90458-2300		4	V-RING 16X22X3 MM	
310	90458-2301		1	COMP. SPRING, YELLOW SPRING G40X115	
320	90458-2302		2	FREE-WHEEL COUPLING, 16X16 MM	
400	311103-0409		1	PARALLEL PIN ISO 2338 8M6X40 A1	
410	312105-0323		2	SCREW M6S ISO 4017 M5X8 A480	
420	312115-0230		2	SCREW ISO4762 M3X20 A4	
430	2640826-0000		1	NUT	
450	312810-0310		2	HEXAGON NUT, NY-LOCK M3 FZB	
460	315105-0186		1	WASHER BRB17X30RFR	
470	315751-0109		2	RETAINING RING FOR SHAFT DIN 471 12 A2	

Pos	Part No	UN	Qty	Description	Page No

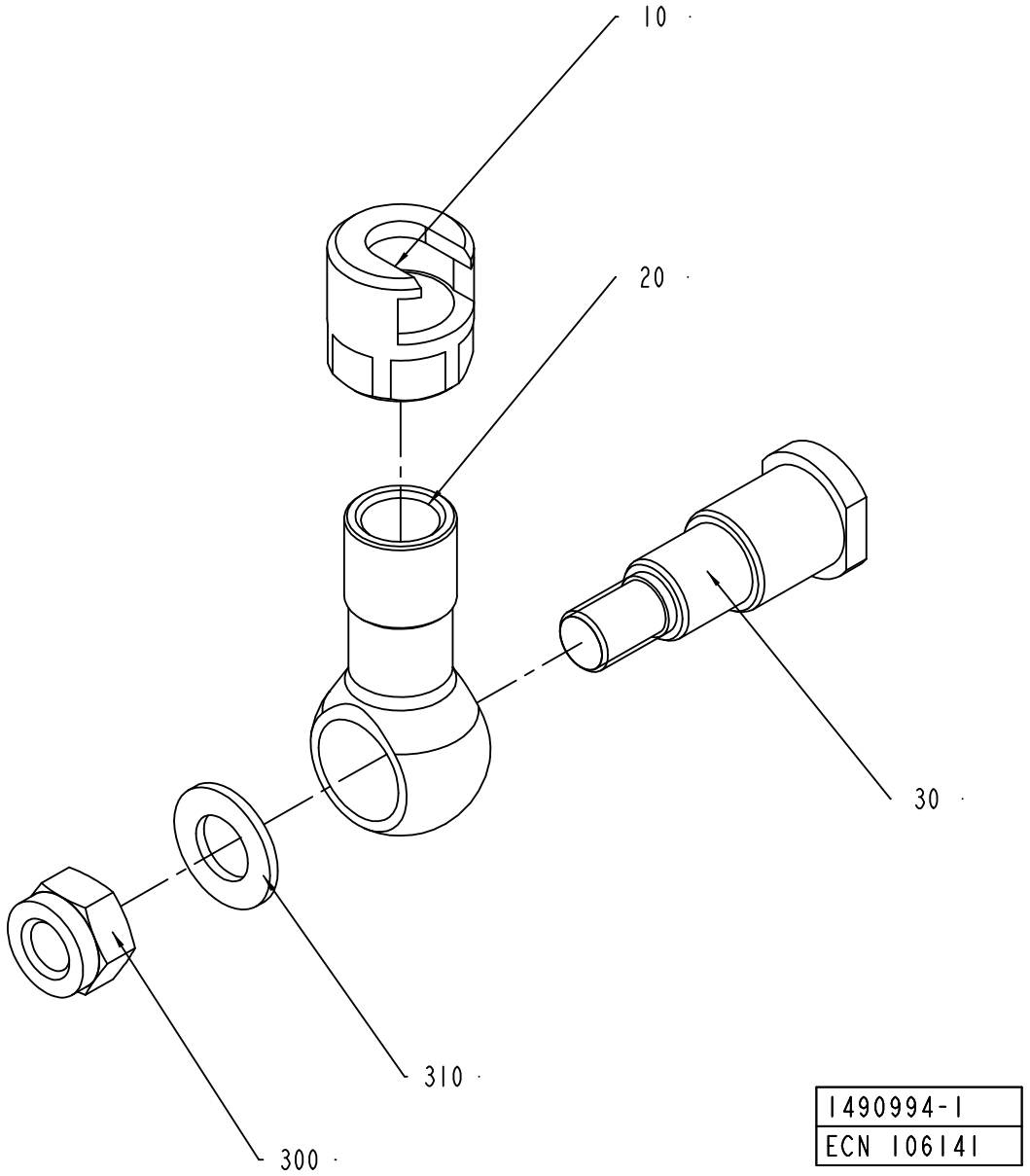
10
20
30
310
300
1490994-1
ECN 106141

ECM: 106141 - 20021107
Group number: 1490994-0100
Assembly Drawing: 1490994-1_1_AA

Pos	Part No	UN	Qty	Description	Page No
-					
010	1334654-0000		1	CONNECTION CLAMP	
020	1334655-0000		1	LINK ROD	
030	1350824-0000		1	AXLE PIN	
040	312812-0322		1	HEXAGON NUT, NY-LOCK M12 A480	
050	315105-0178		1	WASHER BRB13X24RFR	

Pos	Part No	UN	Qty	Description	Page No

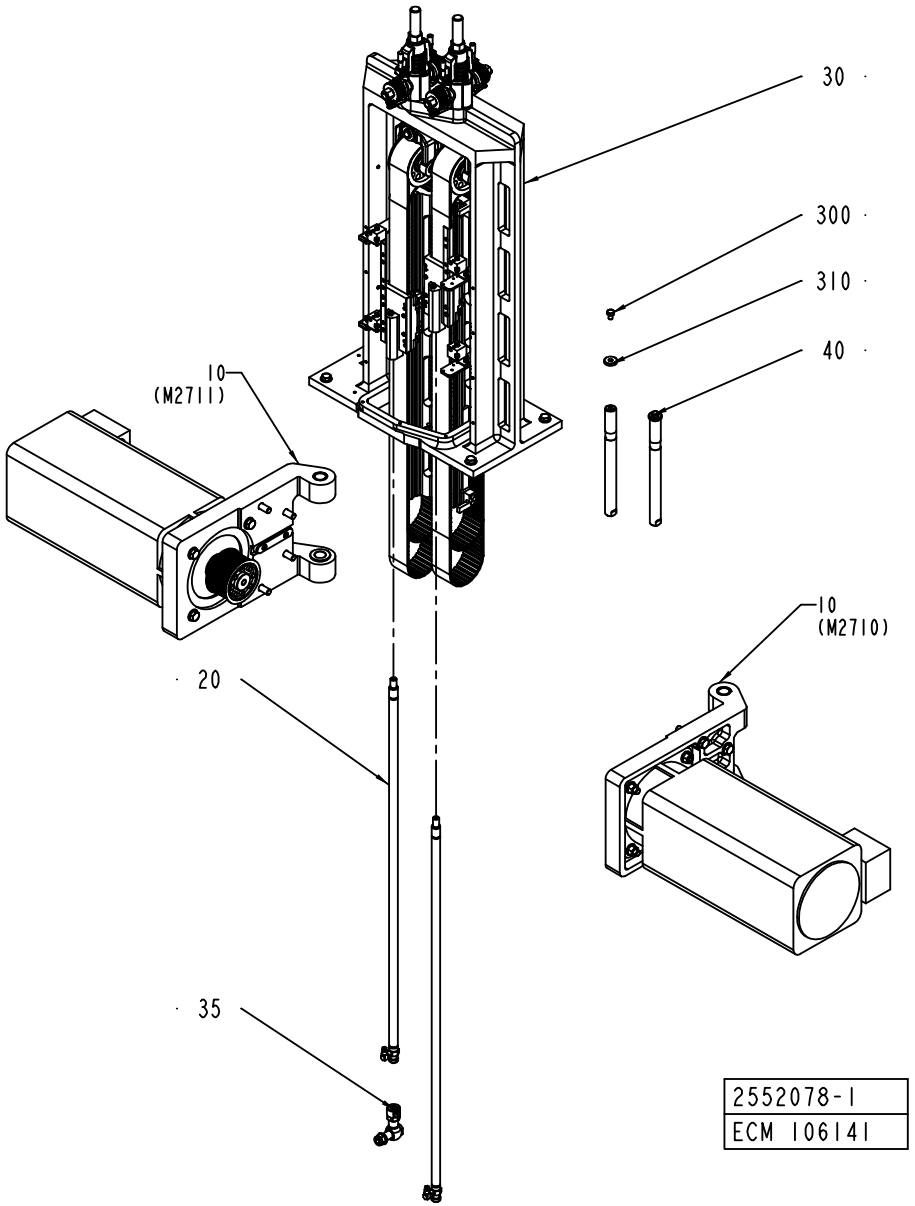
30
300
310
40
10
(M2711)
10
(M2710)
20
35
2552078-1
ECM 106141

ECM: 112416 - 20021107
Group number: 2552078-0100
Assembly Drawing: 2552078-1_1_AA

Pos	Part No	UN	Qty	Description	Page No
-					
010	2552079-0100		2	MOTOR UNIT	**3-7**
020	2552080-0100		2	LINK	**3-9**
030	2552111-0100		1	SUPPORT	**3-27**
035	1490994-0100		1	LINK	**3-23**
040	2533638-0000		2	AXLE PIN	
300	312105-0447		2	SCREW M6S ISO 4017 M8X12 A480	
310	315125-0165		2	WASHER TBRSB 8,4X26X5 A4	

Pos	Part No	UN	Qty	Description	Page No

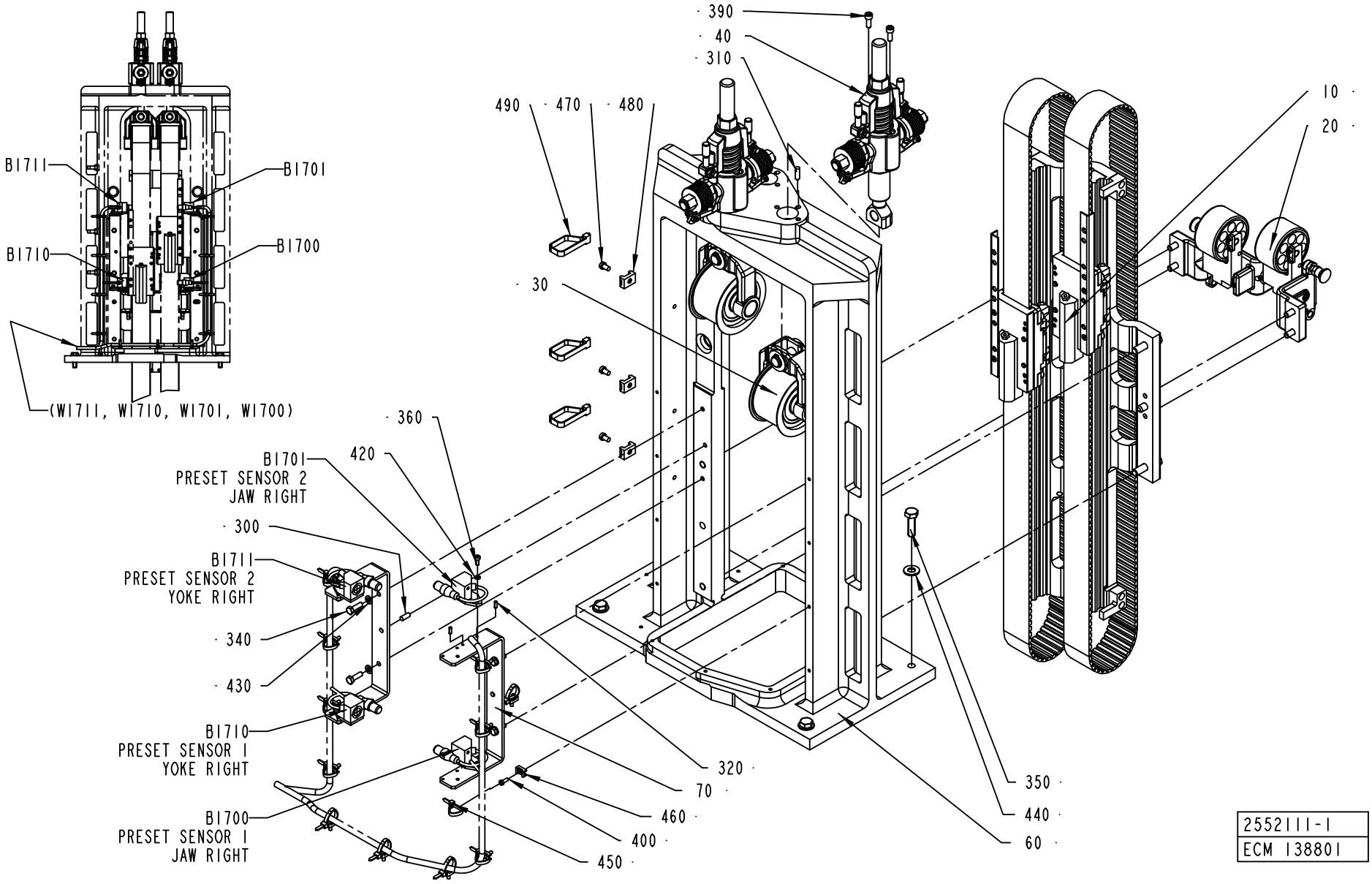
B1711
B1701
B1710
B1700
(W1711, W1710, W1701, W1700)
390
40
310
490
470
480
10
20
30
360
420
B1701
PRESET SENSOR 2
JAW RIGHT
300
B1711
PRESET SENSOR 2
YOKE RIGHT
340
430
B1710
PRESET SENSOR 1
YOKE RIGHT
B1700
PRESET SENSOR 1
JAW RIGHT
320
70
460
400
450
350
440
60
2552111-1
ECM 138801

ECM: 138911 - 20031215
Group number: 2552111-0100
Assembly Drawing: 2552111-1_1_AB

Pos	Part No	UN	Qty	Description	Page No
-					
010	1350218-0100		1	GUIDE	**3-29**
020	1487630-0100		1	DAMPER	**3-31**
030	1511197-0100		2	PULLEY	**3-19**
040	1511198-0100		2	BELT TENSIONER	**3-21**
060	1255222-0000		1	FRAME	
070	1349285-0000		2	SUPPORT	
300	311103-0351		2	PARALLEL PIN ISO 2338 6M6X16 A1	
310	311103-0353		2	PARALLEL PIN ISO 2338 6M6X20 A1	
320	311112-0205		8	SPRING PIN, ISO 8752 3X10-C	
340	312105-0370		4	SCREW M6S ISO 4017 M6X20 A480	
350	312105-0497		4	SCREW M6S ISO 4017 M10X35 A480	
360	312115-0289		4	SCREW ISO4762 M4X10 A4	
390	312115-0368		4	SCREW ISO4762 M6X16 A4	
400	312125-0289		12	SCREW ISO 1207 M4X10 A4	
420	315105-0136		4	WASHER BRB4,3XRFR	
430	315105-0153		4	WASHER BRB6,4X12RFR	
440	315105-0173		4	WASHER BRB10,5X22RFR	
450	352113-0102		12	CLIP-STRIP, BLACK 188X4,8 MM	
460	352113-0205		12	ANCHOR PLATES FOR STRIPS, TYPE TM2S8-C10	
470	312125-0364		3	SCREW ISO 1207 M6X10 A4	
480	352113-0204		3	ANCHOR PLATES FOR STRIPS, TYPE TM3S25-M	
490	352113-0103		3	CLIP STRIP, 290X7,6 MM	
B1700	90044-0195		1	PROX.SW. IO 9922 IOW2010-ARKG/M/UP/80CM	
B1701	90044-0195		1	PROX.SW. IO 9922 IOW2010-ARKG/M/UP/80CM	
B1710	90044-0195		1	PROX.SW. IO 9922 IOW2010-ARKG/M/UP/80CM	
B1711	90044-0195		1	PROX.SW. IO 9922 IOW2010-ARKG/M/UP/80CM	

Pos	Part No	UN	Qty	Description	Page No

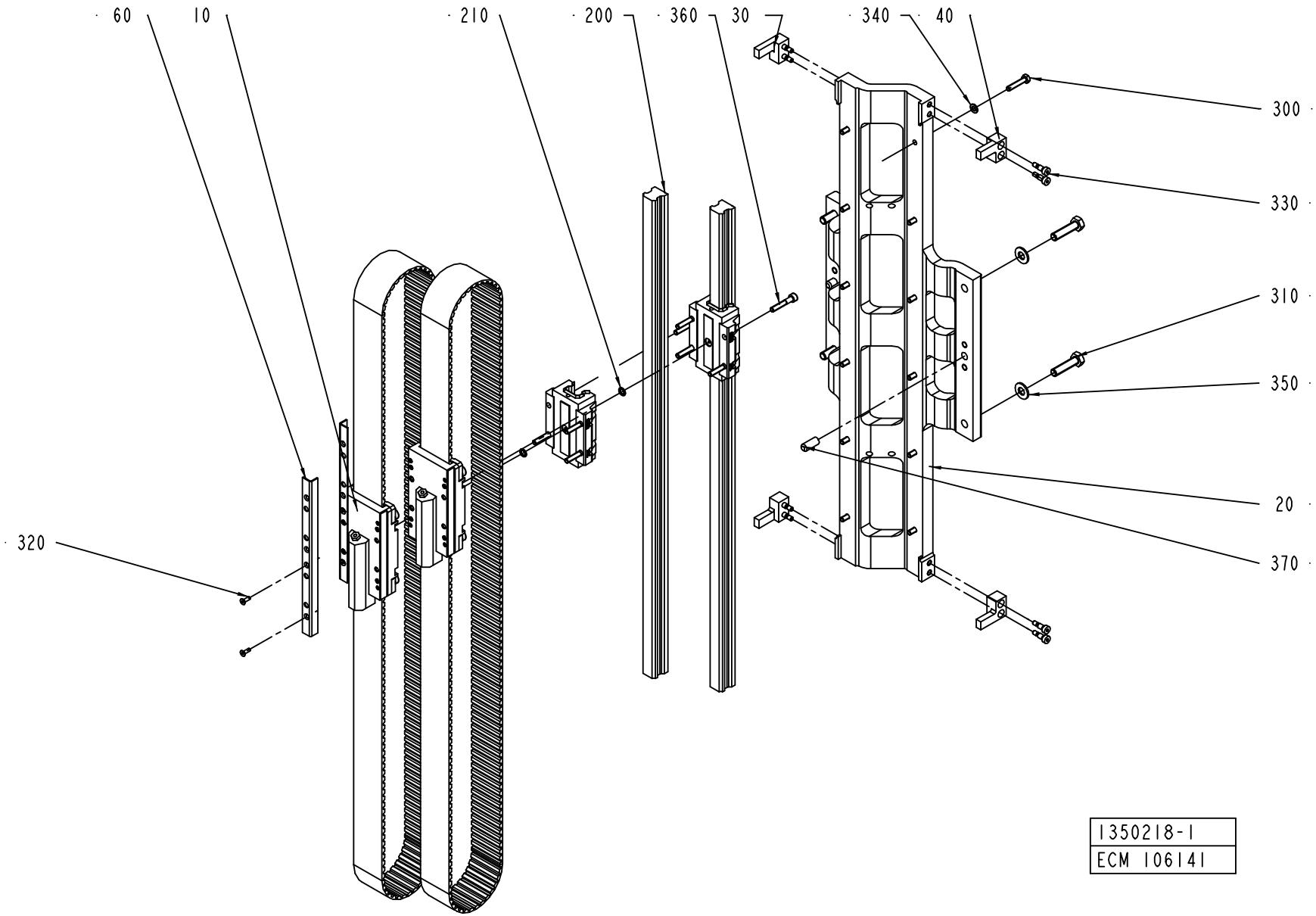
60
10
210
200
360
30
340
40
300
330
310
350
20
370
320
1350218-1
ECM 106141

ECM: 106932 - 20021107
Group number: 1350218-0100
Assembly Drawing: 1350218-1_1_AA

Pos	Part No	UN	Qty	Description	Page No
-					
010	1350210-0100		2	RUNNER	**3-15**
020	1255223-0000		1	HOLDER	
030	1350825-0000		2	LOCK	
040	1350826-0000		2	LOCK	
060	1490935-0000		2	BAR	
200	90458-2307		2	LINEAR UNIT HSR25	
210	90459-1411		2	O-RING 7,8X1,9 MM	
300	312109-0374		12	SCREW M6S ISO 4017 M6X30 A480	
310	312109-0499		4	SCREW M6S ISO 4017 M10X40 A480	
320	312155-0291		4	SCREW EN 10642 MF6S M4X12 A480	
330	312180-0364		8	SCREW ISO7379 H6X10	
340	315105-0153		12	WASHER BRB6,4X12RFR	
350	315105-0173		4	WASHER BRB10,5X22RFR	
360	312115-0376		8	SCREW ISO4762 M6X35 A4	
370	311103-0456		2	PARALLELL PIN, M6, 10X25 MM	

Pos	Part No	UN	Qty	Description	Page No

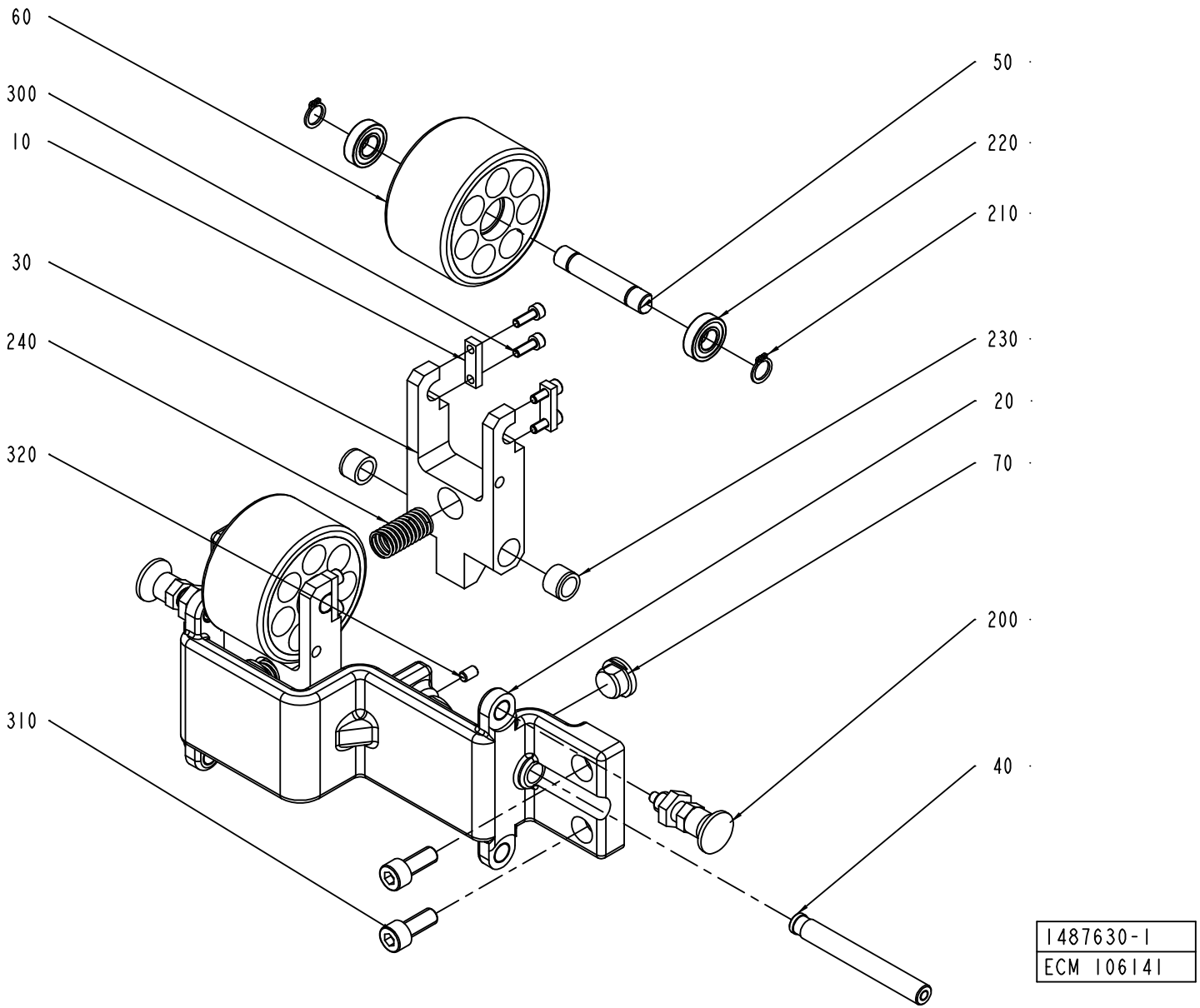
60
300
10
30
240
320
310
50
220
210
230
20
70
200
40
1487630-1
ECM 106141

ECM: 106933 - 20021107
Group number: 1487630-0100
Assembly Drawing: 1487630-1_1_AA

Pos	Part No	UN	Qty	Description	Page No
-					
010	1349266-0000		4	PLATE	
020	1487631-0000		1	BRACKET	
030	1487632-0000		2	FORK	
040	1487633-0000		2	AXLE PIN	
050	1487634-0000		2	AXLE PIN	
060	1487635-0000		2	WHEEL	
070	1487636-0000		2	STOPPER	
200	90051-0112		2	LOCK KNOB, NO. GN 617 NIK5	
210	90141-0016		4	RETAINING RING FOR SHAFT DIN 471 10 A2	
220	90214-0036		4	BALL BEARING, 10X22X6 MM	
230	90240-0119		4	BEAR. BUSHING WITHOUT FL	
240	90458-2305		2	COMP. SPRING D22280	
300	312115-0291		8	SCREW ISO4762 M4X12 A4	
310	312115-0451		4	SCREW ISO4762 M8X20 A4	
320	312318-0323		2	SCREW ISO4029 M5X8 A4	

Pos	Part No	UN	Qty	Description	Page No

Machine Type	Group Description	Used-In	Group Number	Page No

Tetra Pak

SPC
Spare Parts Catalogue

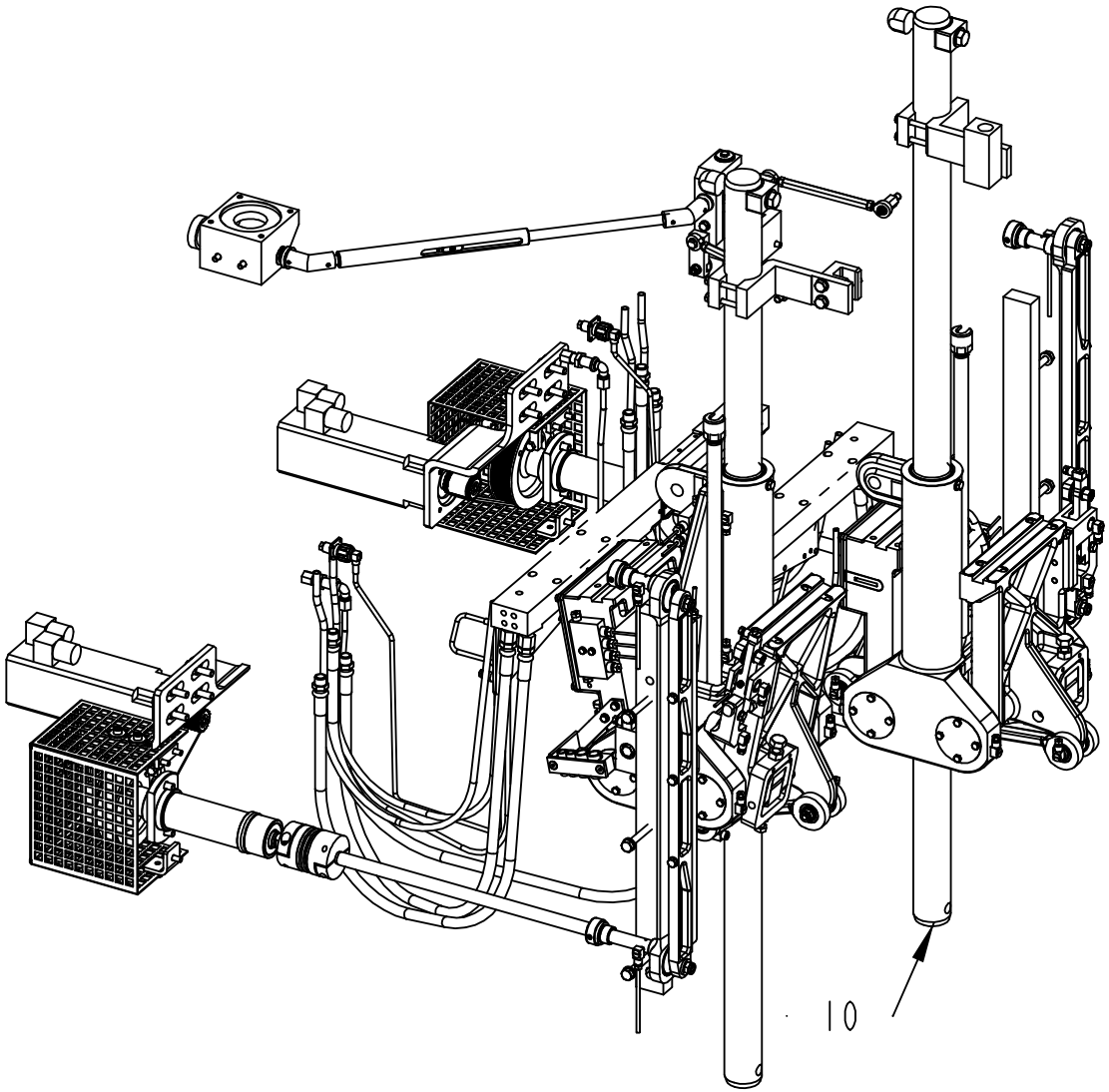

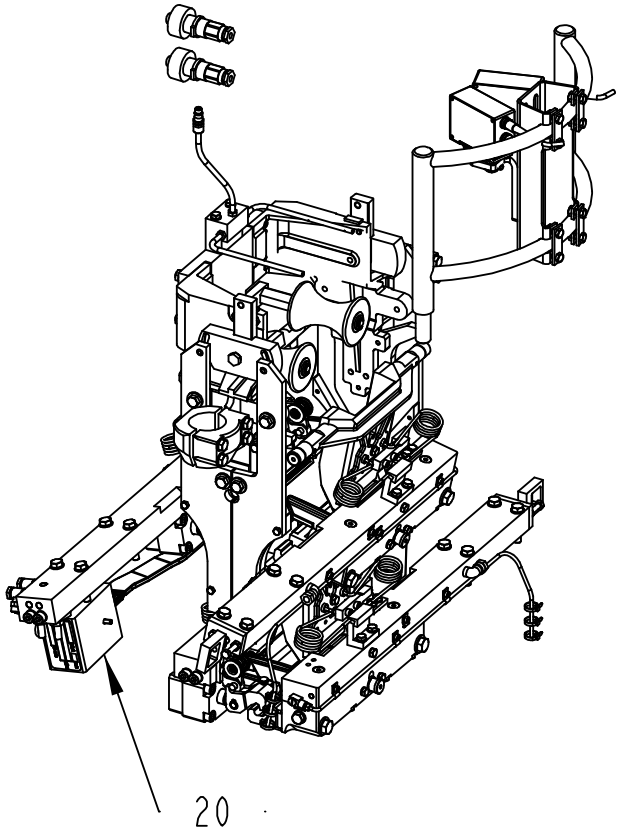

648549-1
ECM 120277

ECM: 177399 - 50001231
Group number: 648549-0300
Assembly Drawing: 648549-1_1_AA

Pos	Part No	UN	Qty	Description	Page No
A3/FLEX					
020	2552003-0100		1	FORMING UNIT	**4-5**
Common Parts					
010	2552002-0200		1	BASE UNIT	**4-147**

Pos	Part No	UN	Qty	Description	Page No

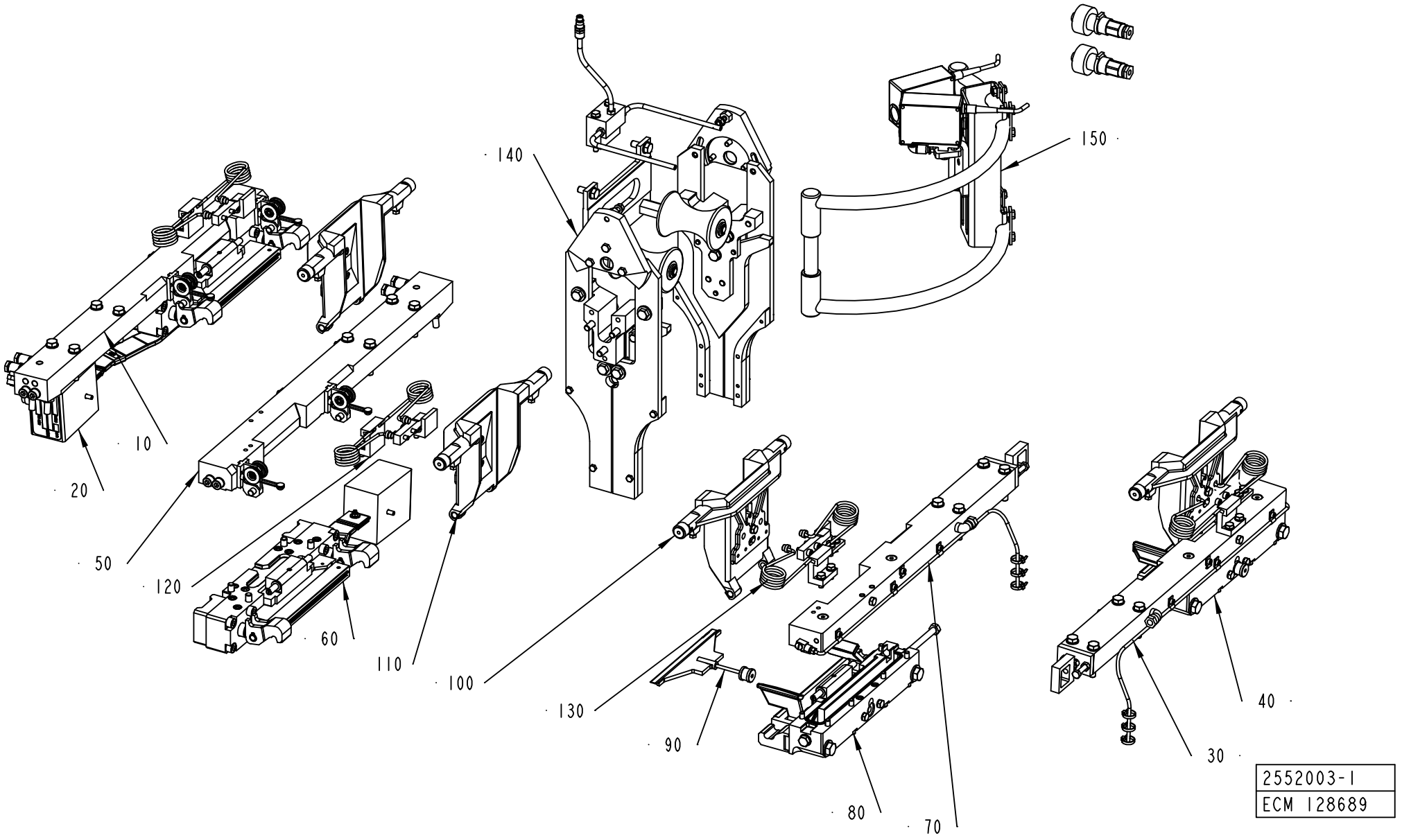
140
150
10
20
50
120
60
110
100
130
90
80
70
40
30
2552003-1
ECM 128689

ECM: 181191 - 50001231
Group number: 2552003-0100
Assembly Drawing: 2552003-1_1_AB

Pos	Part No	UN	Qty	Description	Page No
A3/FLEX NOQC					
100	1334633-0200		2	VOLUME FLAP CUTTING	**4-7, 4-9, 4-11**
110	1334634-0200		2	VOLUME FLAP PRESSURE	**4-13, 4-15, 4-17**
120	1334635-0200		2	SHOCK ABSORBER	**4-19, 4-21, 4-23, 4-25, 4-27**
130	1334636-0200		2	SHOCK ABSORBER	**4-29, 4-31, 4-33, 4-35, 4-37**
A3/FLEX TBA 0500B QC, A3/FLEX TBA 1000B QC, A3/FLEX TBA 0200B QC, A3/FLEX TBA 0250B QC, A3/FLEX TBA 0330S QC, A3/FLEX TBA 0250S QC, A3/FLEX TBA 0200M QC					
100	2594512-0100		2	VOLUME FLAP CUTTING	**4-39, 4-41**
110	1548460-0100		2	VOLUME FLAP PRESSURE	**4-43, 4-45**
A3/FLEX TBA 1890S QC, A3/FLEX TBA 2000S QC					
100	2597325-0100		2	VOLUME FLAP	**4-47**
110	2597324-0100		2	VOLUME FLAP	**4-53**
120	2597326-0100		2	SHOCK ABSORBER	
130	2597326-0100		2	SHOCK ABSORBER	
Common Parts					
010	2514048-0200		1	CARRIER PRESSURE LEFT	**4-57, 4-59**
020	1512563-0200		1	PRESSURE JAW LEFT	**4-61, 4-63**
030	1512564-0200		1	CARRIER CUTTING LEFT	**4-75, 4-77, 4-79**
040	1512565-0200		1	CUTTING JAW LEFT	**4-81**
050	2514050-0200		1	CARRIER PRESSURE RIGHT	**4-97, 4-99**
060	1512568-0200		1	PRESSURE JAW RIGHT	**4-101, 4-103**
070	1512569-0200		1	CARRIER CUTTING RIGHT	**4-111, 4-113, 4-115**
080	1512570-0200		1	CUTTING JAW RIGHT	**4-117**
090	1478768-0100		2	KNIFE	**4-123**
140	2613647-0100		1	VOLUME CURVE PIECE	**4-125**
150	2616224-0100		1	PHOTOCELL UNIT	**4-143, 4-145**

Pos	Part No	UN	Qty	Description	Page No

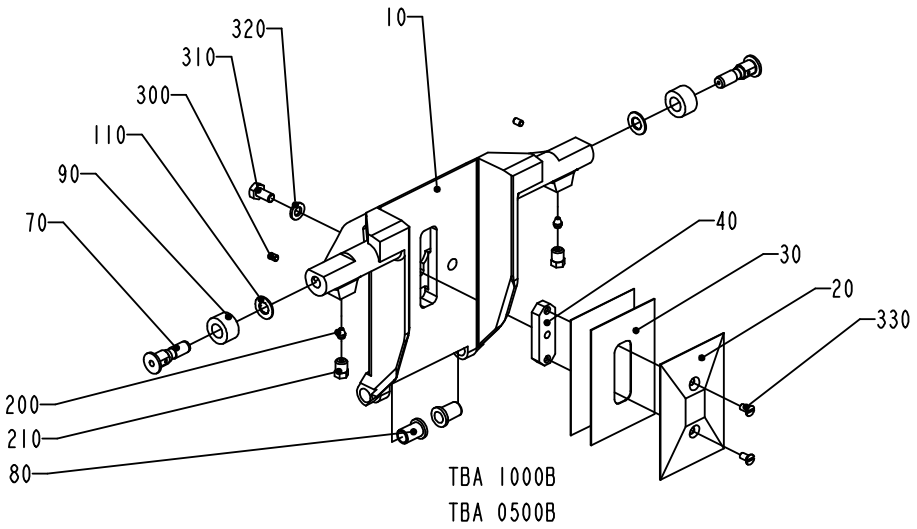
320
10
310
300
110
90
70
40
30
20
330
200
210
80
TBA 1000B
TBA 0500B

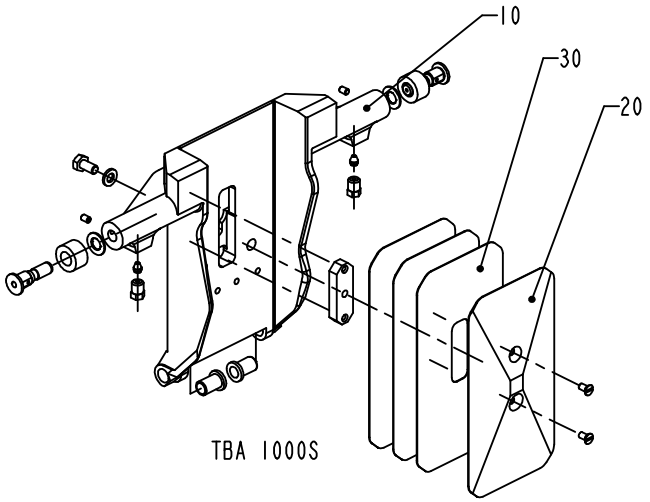
10
30
20
TBA 1000S

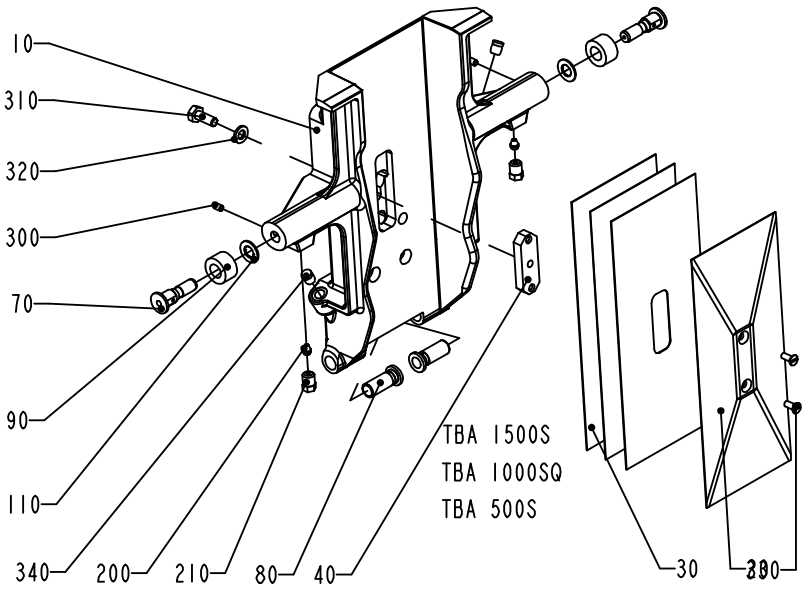
10
310
320
300
70
90
110
340
200
210
80
40
TBA 1500S
TBA 1000SQ
TBA 500S
30
330

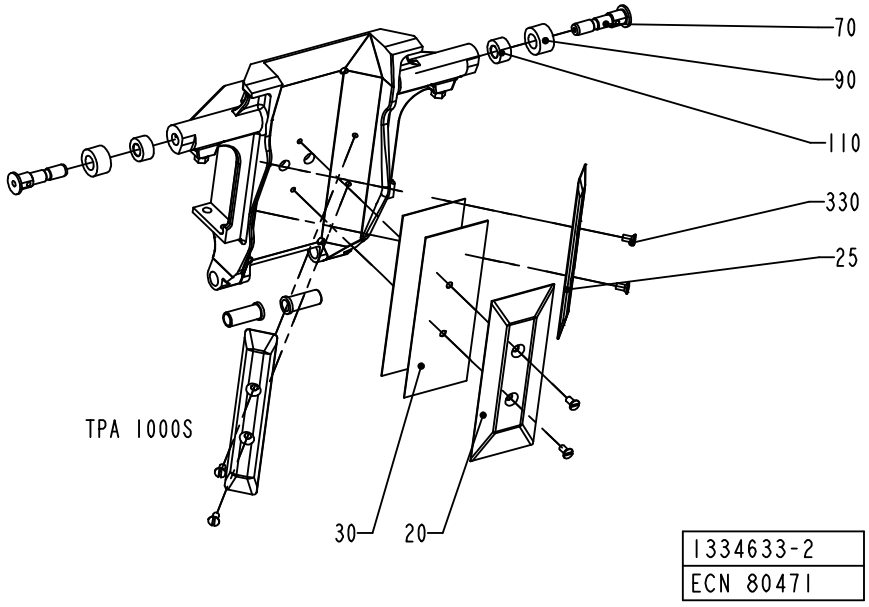
70
90
110
330
25
TPA 1000S
30
20
1334633-2
ECN 80471

ECM: 149723 - 20040224
Group number: 1334633-0200
Assembly Drawing: 1334633-2_1_AD

This list covers pages from 4-6 to 4-11

Pos	Part No	UN	Qty	Description	Page No
TBA 0200B (See drawing on page: 4-8)					
010	1499901-0000		1	VOLUME FLAP	
020	1038638-0000		1	VOLUME BULGE	
030	1038639-0000		2	VOLUME SHIM	
040	1038637-0000		1	WEDGE	
070	434320-0000		2	AXLE PIN	
080	1255541-0000		2	BUSHING	
090	436556-0000		2	CURVE ROLLER	
110	19972-0000		2	WASHER	
310	312105-0327		1	SCREW M6S ISO 4017 M5X12 A480	
320	315105-0146		1	WASHER BRB5,3X10RFR	
330	312145-0287		2	SCREW ISO 2009 MFS M4X8 A4	
TBA 0200S (See drawing on page: 4-8)					
010	1484866-0000		1	VOLUME FLAP	
020	1037733-0000		1	VOLUME BULGE	
030	1037735-0000		2	VOLUME SHIM	
040	1037734-0000		1	WEDGE	
070	434320-0000		2	AXLE PIN	
080	1255541-0000		2	BUSHING	
090	436556-0000		2	CURVE ROLLER	
110	19972-0000		2	WASHER	
310	312105-0327		1	SCREW M6S ISO 4017 M5X12 A480	
320	315105-0146		1	WASHER BRB5,3X10RFR	
330	312145-0287		2	SCREW ISO 2009 MFS M4X8 A4	
TBA 0250B (See drawing on page: 4-8)					
010	1484867-0000		1	VOLUME FLAP	
020	1346157-0000		1	VOLUME BULGE	
030	1346158-0000		2	VOLUME SHIM	
040	1037734-0000		1	WEDGE	
070	434320-0000		2	AXLE PIN	
080	1255541-0000		2	BUSHING	
090	436556-0000		2	CURVE ROLLER	
110	19972-0000		2	WASHER	
310	312105-0327		1	SCREW M6S ISO 4017 M5X12 A480	
320	315105-0146		1	WASHER BRB5,3X10RFR	
330	312145-0287		2	SCREW ISO 2009 MFS M4X8 A4	
TBA 0330S (See drawing on page: 4-8)					
010	2544990-0000		1	VOLUME FLAP	
020	2544992-0000		1	VOLUME BULGE	
030	2544993-0000		3	VOLUME SHIM	
040	1037734-0000		1	WEDGE	
070	434320-0000		2	AXLE PIN	
080	1255541-0000		2	BUSHING	
090	436556-0000		2	CURVE ROLLER	
110	19972-0000		2	WASHER	
310	312105-0328		1	SCREW M6S ISO 4017 M5X14 A480	
320	315105-0146		1	WASHER BRB5,3X10RFR	
330	312145-0287		2	SCREW ISO 2009 MFS M4X8 A4	
TBA 0500B (See drawing on page: 4-6)					
010	1532287-0000		1	VOLUME FLAP	
020	1558817-0000		1	VOLUME BULGE	
030	1532293-0000		2	VOLUME SHIM	
070	434320-0000		2	AXLE PIN	
080	1255541-0000		2	BUSHING	
090	436556-0000		2	CURVE ROLLER	
110	19972-0000		2	WASHER	
310	312105-0327		1	SCREW M6S ISO 4017 M5X12 A480	
320	315105-0146		1	WASHER BRB5,3X10RFR	
TBA 1000B (See drawing on page: 4-6)					
010	1478358-0000		1	VOLUME FLAP	
020	1035828-0000		1	VOLUME BULGE	
030	1035831-0000		2	VOLUME SHIM	
040	1040756-0000		1	WEDGE	
070	434320-0000		2	AXLE PIN	
080	1255541-0000		2	BUSHING	
090	434321-0000		2	CURVE ROLLER	
110	19972-0000		2	WASHER	
310	312105-0366		1	SCREW M6S ISO 4017 M6X12 A480	
320	315105-0153		1	WASHER BRB6,4X12RFR	
330	312145-0287		2	SCREW ISO 2009 MFS M4X8 A4	
TBA 1000S (See drawing on page: 4-6)					
010	1040753-0000		1	VOLUME FLAP	
020	1040754-0000		1	VOLUME BULGE	
030	1040755-0000		3	VOLUME SHIM	
040	1040756-0000		1	WEDGE	
070	434320-0000		2	AXLE PIN	
080	1255541-0000		2	BUSHING	
090	434321-0000		2	CURVE ROLLER	
110	19972-0000		2	WASHER	
310	312105-0366		1	SCREW M6S ISO 4017 M6X12 A480	
320	315105-0153		1	WASHER BRB6,4X12RFR	
330	312145-0287		2	SCREW ISO 2009 MFS M4X8 A4	
TBA 1000SQ (See drawing on page: 4-6)					
010	2606305-0000		1	VOLUME FLAP	

Machine Type | Group Description | Used-In | Group Number | Page No

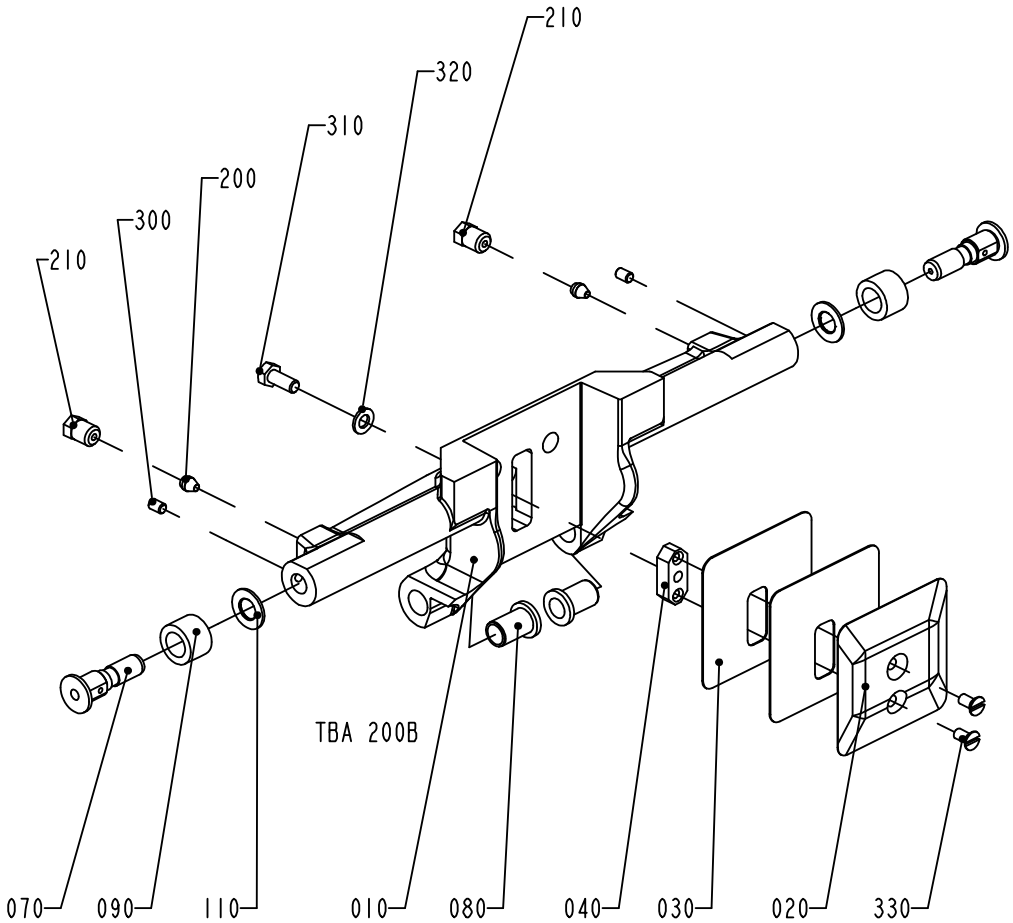

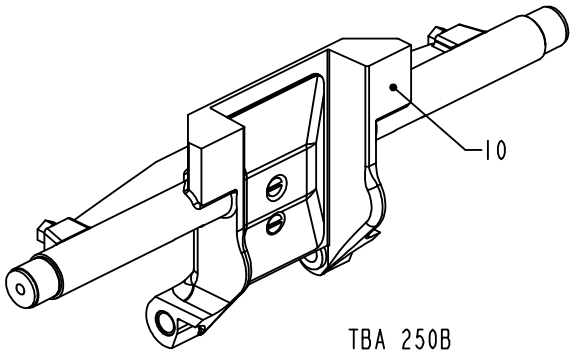

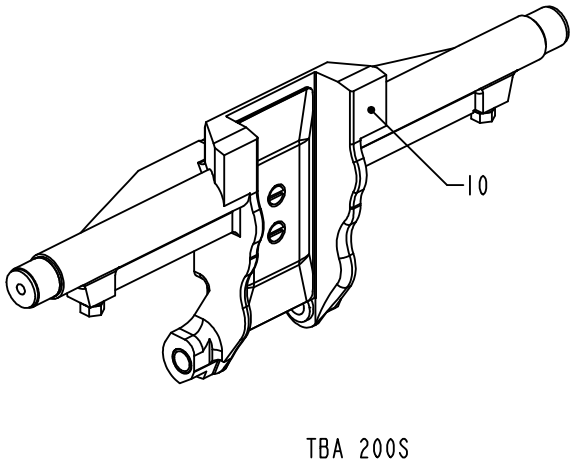

1334633-3
ECN 72770

Pos	Part No	UN	Qty	Description	Page No
TBA 1000SQ (Cont'd) (See drawing on page: 4-6)					
020	1487626-0000		1	VOLUME BULGE	
030	1487627-0000		3	VOLUME SHIM	
040	1040756-0000		1	WEDGE	
070	434320-0000		2	AXLE PIN	
080	1558701-0000		2	BUSHING	
090	434321-0000		2	CURVE ROLLER	
110	19972-0000		2	WASHER	
310	312115-0367		1	SCREW ISO4762 M6X14 A4	
320	315105-0153		1	WASHER BRB6,4X12RFR	
330	312145-0291		2	SCREW ISO 2009 MFS M4X12 A4	
TBA 1500S (See drawing on page: 4-6)					
010	2587236-0000		1	VOLUME FLAP	
020	1499675-0000		1	VOLUME BULGE	
030	1349208-0000		3	VOLUME SHIM	
040	1040756-0000		1	WEDGE	
070	434320-0000		2	AXLE PIN	
080	1558701-0000		2	BUSHING	
090	434321-0000		2	CURVE ROLLER	
110	19972-0000		2	WASHER	
310	312105-0368		1	SCREW M6S ISO 4017 M6X16 A480	
320	315105-0153		1	WASHER BRB6,4X12RFR	
330	312145-0289		2	SCREW ISO 2009 MFS M4X10 A4	
340	90261-0016		2	PLUG, BLIND, PLASTIC GPN300V2	
TPA 1000SQ (See drawing on page: 4-10)					
010	2547011-0000		1	VOLUME FLAP	
025	1539841-0000		2	VOLUME BULGE	
035	1539843-0000		6	VOLUME SHIM	
040	1040756-0000		2	WEDGE	
050	1549125-0000		1	PLUG	
060	2547010-0000		1	BRACKET	
070	434320-0000		2	AXLE PIN	
080	1255541-0000		2	BUSHING	
090	434321-0000		2	CURVE ROLLER	
110	19972-0000		2	WASHER	
320	315105-0153		3	WASHER BRB6,4X12RFR	
360	312105-0368		3	SCREW M6S ISO 4017 M6X16 A480	
370	312155-0289		4	SCREW EN 10642 MF6S M4X10 A480	
Common Parts					
200	90028-0020		2	CONE TUBE 2,5MM	
210	90134-0063		2	BUSHING/NUT M8X1, D=2,5 MM	
300	312318-0285		2	SCREW ISO4029 M4X6 A4	

Pos	Part No	UN	Qty	Description	Page No

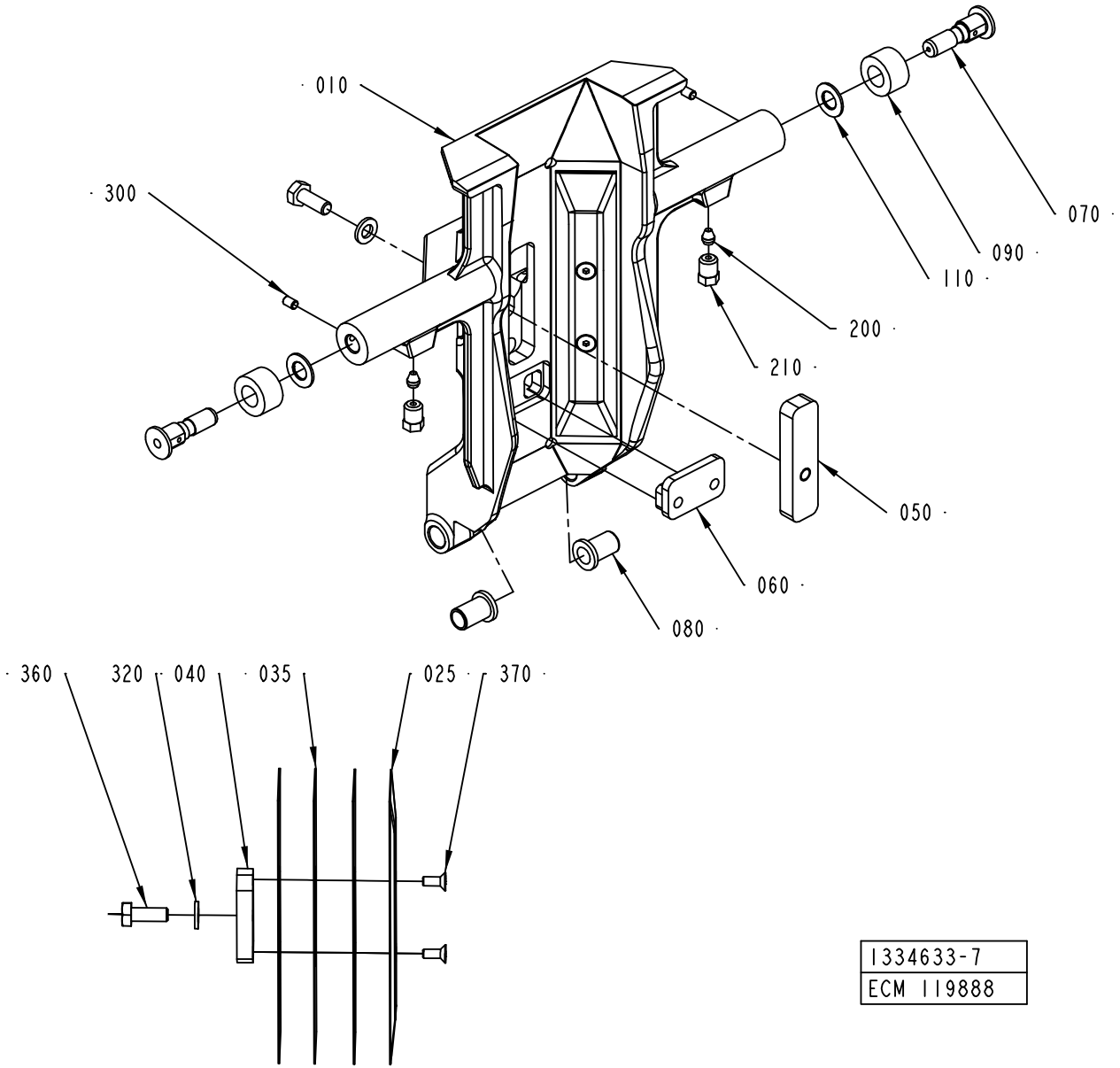
010
300
070
090
110
200
210
050
060
080
360
320
040
035
025
370
1334633-7
ECM 119888

ECM: 149723 - 20040224
Group number: 1334633-0200
Assembly Drawing: 1334633-7_1_AA

This list covers pages from 4-6 to 4-11

Pos	Part No	UN	Qty	Description	Page No	Pos	Part No	UN	Qty	Description	Page No

SEE PREVIOUS LISTS PAGES: 4-7, 4-9.

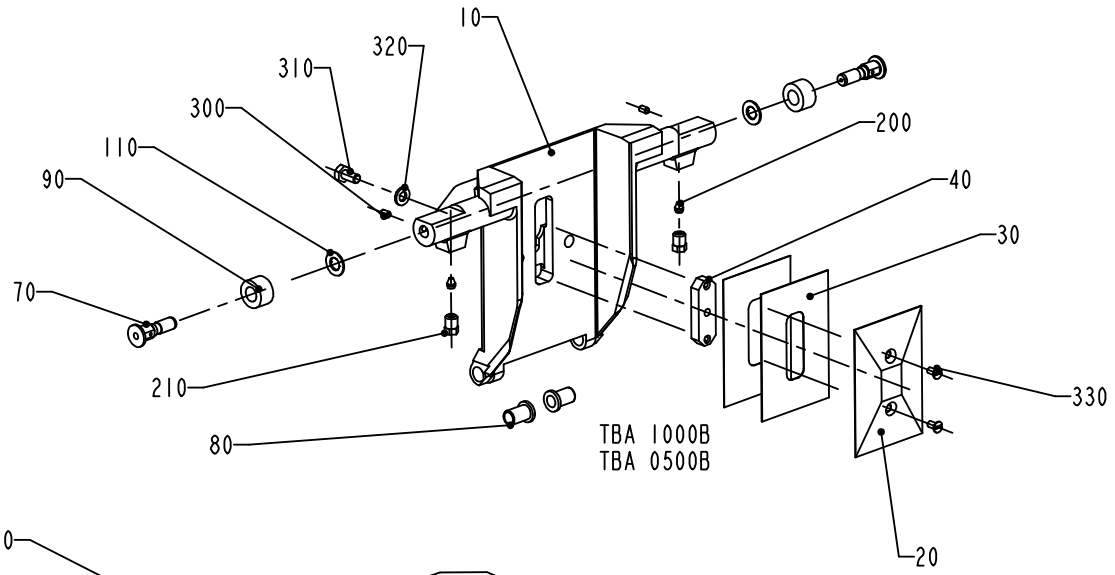

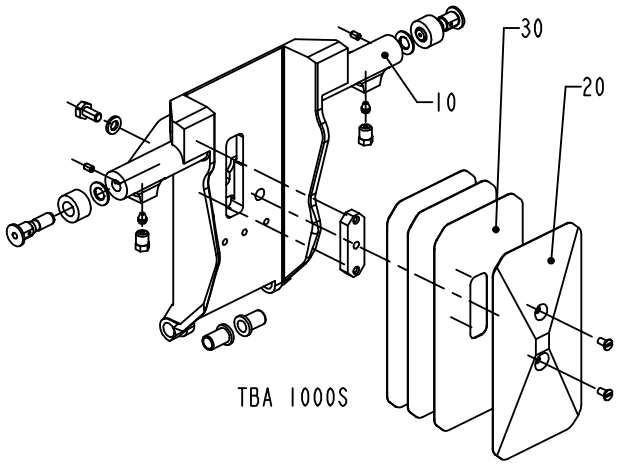

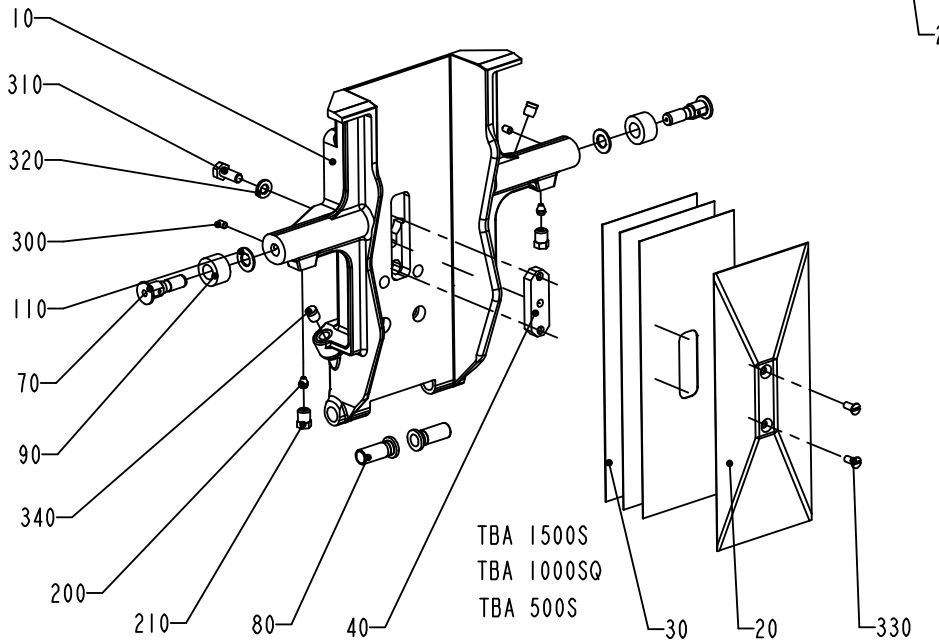

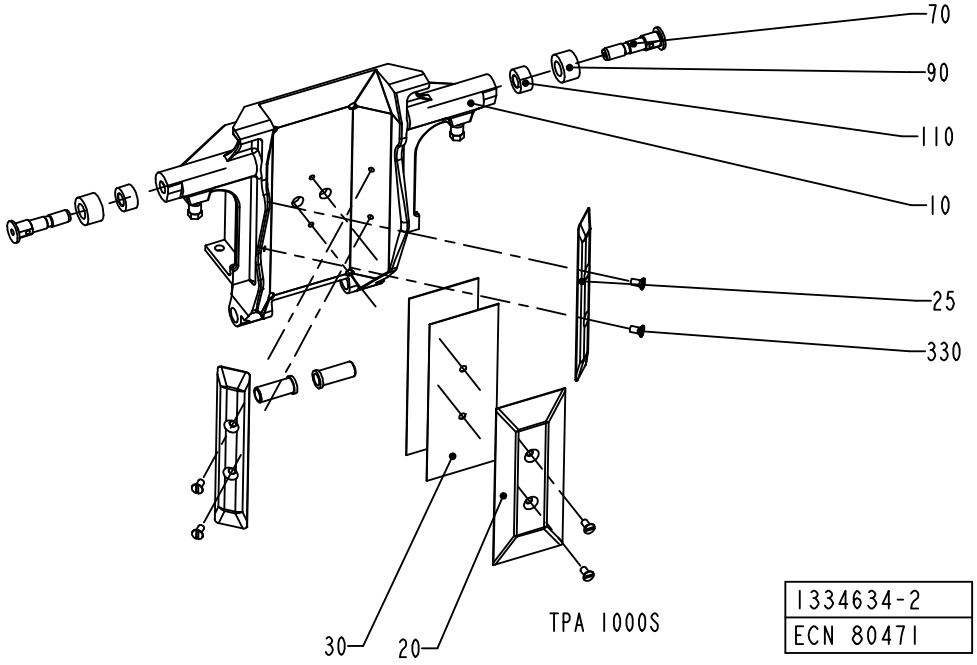

1334634-2
ECN 80471

ECM: 149724 - 20040224
Group number: 1334634-0200
Assembly Drawing: 1334634-2_1_AD

This list covers pages from 4-12 to 4-17

Pos	Part No	UN	Qty	Description	Page No
TPA 1000SQ SMILE (See drawing on page: 4-16)					
010	2582002-0000		1	VOLUME FLAP	
020	1539840-0000		1	VOLUME BULGE	
025	1539841-0000		2	VOLUME BULGE	
030	1539842-0000		3	VOLUME SHIM	
035	1539843-0000		6	VOLUME SHIM	
040	1040756-0000		3	WEDGE	
060	2547010-0000		1	BRACKET	
070	434320-0000		2	AXLE PIN	
080	1255541-0000		2	BUSHING	
090	434321-0000		2	CURVE ROLLER	
110	19972-0000		2	WASHER	
310	312105-0368		3	SCREW M6S ISO 4017 M6X16 A480	
320	315105-0153		3	WASHER BRB6,4X12RFR	
370	312155-0289		6	SCREW EN 10642 MF6S M4X10 A480	
TBA 0200B (See drawing on page: 4-14)					
010	1499902-0000		1	VOLUME FLAP	
020	1038638-0000		1	VOLUME BULGE	
030	1038639-0000		2	VOLUME SHIM	
040	1038637-0000		1	WEDGE	
070	434320-0000		2	AXLE PIN	
080	1255541-0000		2	BUSHING	
090	436556-0000		2	CURVE ROLLER	
110	19972-0000		2	WASHER	
310	312105-0327		1	SCREW M6S ISO 4017 M5X12 A480	
320	315105-0146		1	WASHER BRB5,3X10RFR	
330	312145-0287		2	SCREW ISO 2009 MFS M4X8 A4	
TBA 0200S (See drawing on page: 4-14)					
010	1484865-0000		1	VOLUME FLAP	
020	1037733-0000		1	VOLUME BULGE	
030	1037735-0000		2	VOLUME SHIM	
040	1037734-0000		1	WEDGE	
070	434320-0000		2	AXLE PIN	
080	1255541-0000		2	BUSHING	
090	436556-0000		2	CURVE ROLLER	
110	19972-0000		2	WASHER	
310	312105-0327		1	SCREW M6S ISO 4017 M5X12 A480	
320	315105-0146		1	WASHER BRB5,3X10RFR	
330	312145-0287		2	SCREW ISO 2009 MFS M4X8 A4	
TBA 0250B (See drawing on page: 4-14)					
010	1484868-0000		1	VOLUME FLAP	
020	1346157-0000		1	VOLUME BULGE	
030	1346158-0000		2	VOLUME SHIM	
040	1037734-0000		1	WEDGE	
070	434320-0000		2	AXLE PIN	
080	1255541-0000		2	BUSHING	
090	436556-0000		2	CURVE ROLLER	
110	19972-0000		2	WASHER	
310	312105-0327		1	SCREW M6S ISO 4017 M5X12 A480	
320	315105-0146		1	WASHER BRB5,3X10RFR	
330	312145-0287		2	SCREW ISO 2009 MFS M4X8 A4	
TBA 0330S (See drawing on page: 4-14)					
010	2544991-0000		1	VOLUME FLAP	
020	2544992-0000		1	VOLUME BULGE	
030	2544993-0000		3	VOLUME SHIM	
040	1037734-0000		1	WEDGE	
070	434320-0000		2	AXLE PIN	
080	1255541-0000		2	BUSHING	
090	436556-0000		2	CURVE ROLLER	
110	19972-0000		2	WASHER	
310	312105-0328		1	SCREW M6S ISO 4017 M5X14 A480	
320	315105-0146		1	WASHER BRB5,3X10RFR	
330	312145-0287		2	SCREW ISO 2009 MFS M4X8 A4	
TBA 0500B (See drawing on page: 4-12)					
010	1532287-0000		1	VOLUME FLAP	
020	1558817-0000		1	VOLUME BULGE	
030	1532293-0000		2	VOLUME SHIM	
070	434320-0000		2	AXLE PIN	
080	1255541-0000		2	BUSHING	
090	436556-0000		2	CURVE ROLLER	
110	19972-0000		2	WASHER	
310	312105-0327		1	SCREW M6S ISO 4017 M5X12 A480	
320	315105-0146		1	WASHER BRB5,3X10RFR	
TBA 1000B (See drawing on page: 4-12)					
010	1478358-0000		1	VOLUME FLAP	
020	1035828-0000		1	VOLUME BULGE	
030	1035831-0000		3	VOLUME SHIM	
040	1040756-0000		1	WEDGE	
070	434320-0000		2	AXLE PIN	
080	1255541-0000		2	BUSHING	
090	434321-0000		2	CURVE ROLLER	
110	19972-0000		2	WASHER	
310	312105-0366		1	SCREW M6S ISO 4017 M6X12 A480	
320	315105-0153		1	WASHER BRB6,4X12RFR	

Machine Type | Group Description | Used-In | Group Number | Page No

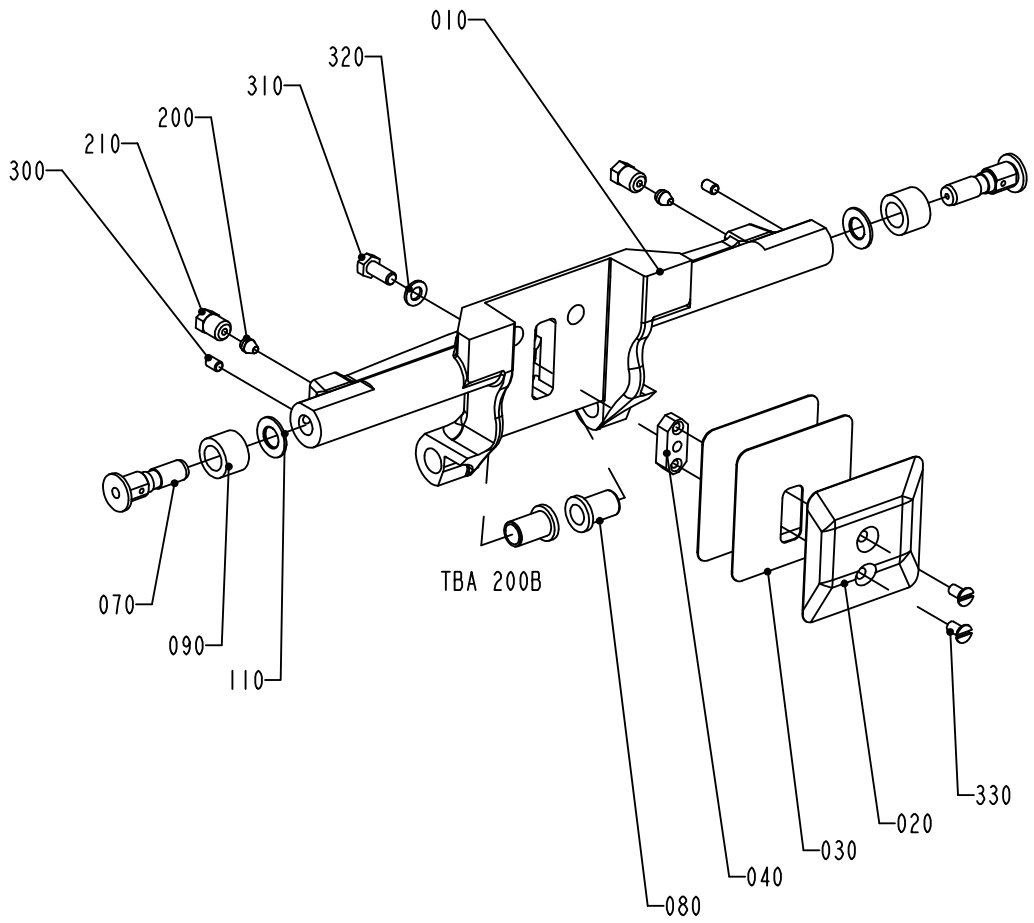

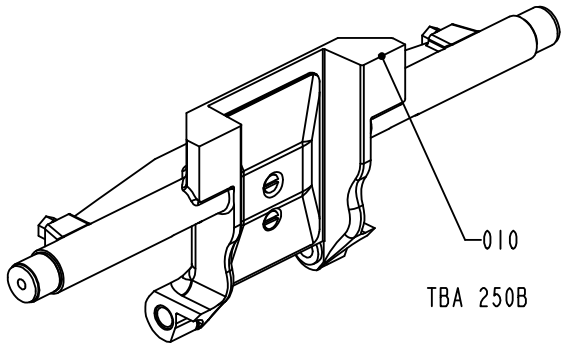

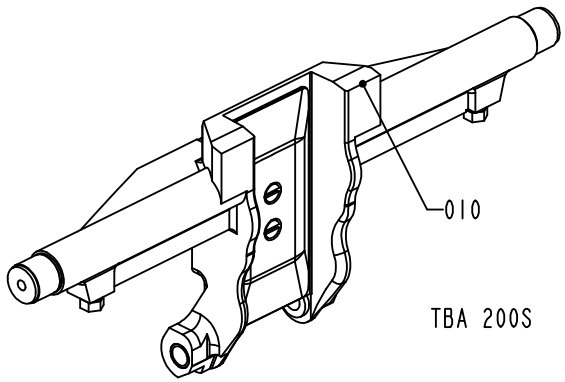

1334634-3
ECN 72770

ECM: 149724 - 20040224
Group number: 1334634-0200
Assembly Drawing: 1334634-3_1_AB

This list covers pages from 4-12 to 4-17

Pos	Part No	UN	Qty	Description	Page No
TBA 1000B (Cont'd) (See drawing on page: 4-12)					
330	312145-0287		2	SCREW ISO 2009 MFS M4X8 A4	
TBA 1000S (See drawing on page: 4-12)					
010	1040753-0000		1	VOLUME FLAP	
020	1040754-0000		1	VOLUME BULGE	
030	1040755-0000		3	VOLUME SHIM	
040	1040756-0000		1	WEDGE	
070	434320-0000		2	AXLE PIN	
080	1255541-0000		2	BUSHING	
090	434321-0000		2	CURVE ROLLER	
110	19972-0000		2	WASHER	
310	312105-0366		1	SCREW M6S ISO 4017 M6X12 A480	
320	315105-0153		1	WASHER BRB6,4X12RFR	
330	312145-0287		2	SCREW ISO 2009 MFS M4X8 A4	
TBA 1000SQ (See drawing on page: 4-12)					
010	2606306-0000		1	VOLUME FLAP	
020	1487626-0000		1	VOLUME BULGE	
030	1487627-0000		3	VOLUME SHIM	
040	1040756-0000		1	WEDGE	
070	434320-0000		2	AXLE PIN	
080	1558701-0000		2	BUSHING	
090	434321-0000		2	CURVE ROLLER	
110	19972-0000		2	WASHER	
310	312115-0367		1	SCREW ISO4762 M6X14 A4	
320	315105-0153		1	WASHER BRB6,4X12RFR	
330	312145-0291		2	SCREW ISO 2009 MFS M4X12 A4	
TBA 1500S (See drawing on page: 4-12)					
010	2587235-0000		1	VOLUME FLAP	
020	1499675-0000		1	VOLUME BULGE	
030	1349208-0000		3	VOLUME SHIM	
040	1040756-0000		1	WEDGE	
070	434320-0000		2	AXLE PIN	
080	1558701-0000		2	BUSHING	
090	434321-0000		2	CURVE ROLLER	
110	19972-0000		2	WASHER	
310	312105-0368		1	SCREW M6S ISO 4017 M6X16 A480	
320	315105-0153		1	WASHER BRB6,4X12RFR	
330	312145-0289		2	SCREW ISO 2009 MFS M4X10 A4	
340	90261-0016		2	PLUG, BLIND, PLASTIC GPN300V2	
TPA 1000SQ FT (See drawing on page: 4-16)					
010	2547012-0000		1	VOLUME FLAP	
020	1539840-0000		1	VOLUME BULGE	
025	1539841-0000		2	VOLUME BULGE	
030	1539842-0000		3	VOLUME SHIM	
035	1539843-0000		6	VOLUME SHIM	
040	1040756-0000		3	WEDGE	
060	2547010-0000		1	BRACKET	
070	434320-0000		2	AXLE PIN	
080	1255541-0000		2	BUSHING	
090	434321-0000		2	CURVE ROLLER	
110	19972-0000		2	WASHER	
320	315105-0153		3	WASHER BRB6,4X12RFR	
360	312105-0368		3	SCREW M6S ISO 4017 M6X16 A480	
370	312155-0289		6	SCREW EN 10642 MF6S M4X10 A480	
Common Parts					
200	90028-0020		2	CONE TUBE 2,5MM	
210	90134-0063		2	BUSHING/NUT M8X1, D=2,5 MM	
300	312318-0285		2	SCREW ISO4029 M4X6 A4	

Machine Type | Group Description | Used-In | Group Number | Page No

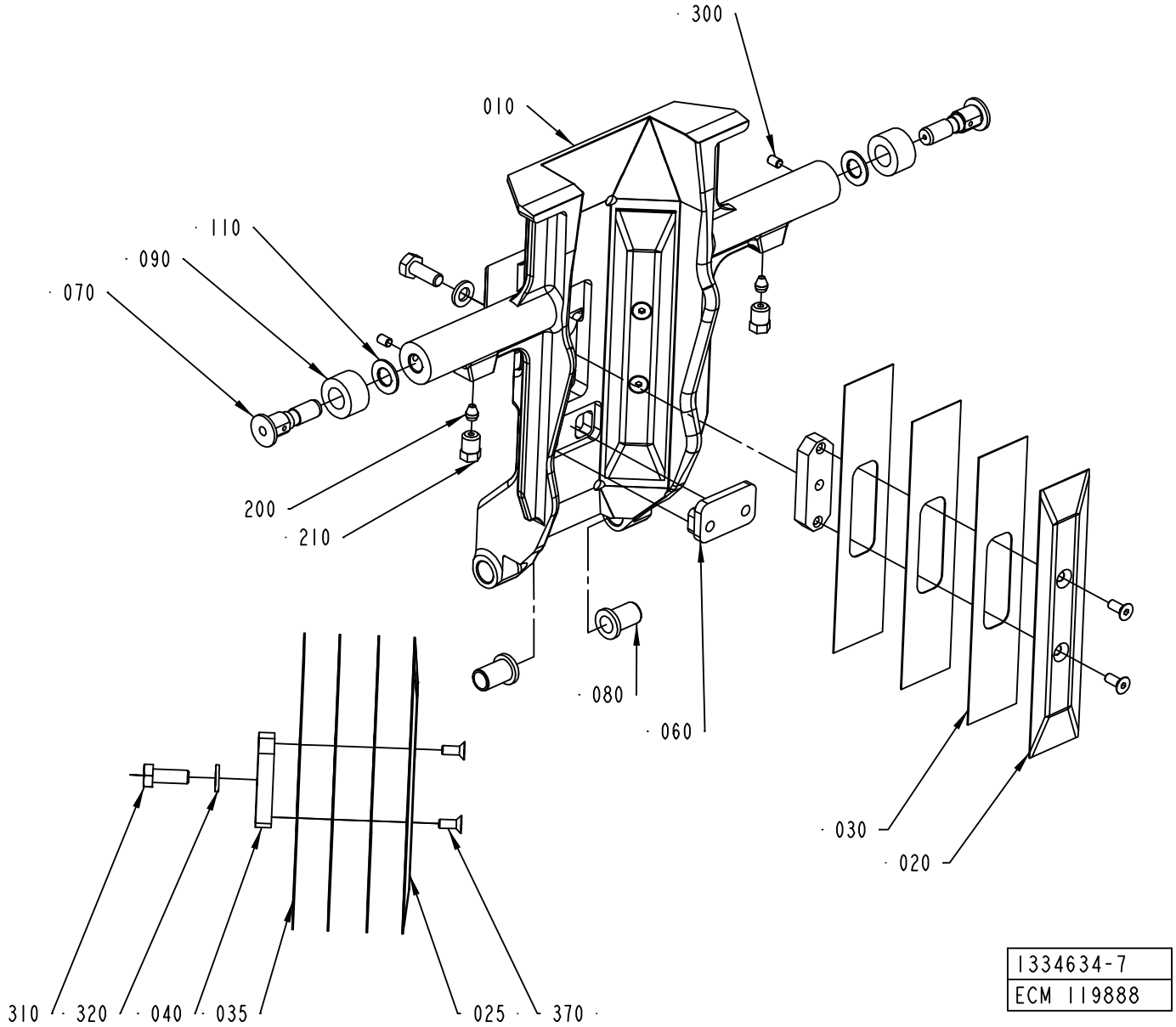
300
010
110
090
070
200
210
080
060
030
020
310
320
040
035
025
370
1334634-7
ECM 119888

Pos	Part No	UN	Qty	Description	Page No	Pos	Part No	UN	Qty	Description	Page No

SEE PREVIOUS LISTS PAGES: 4-13, 4-15.

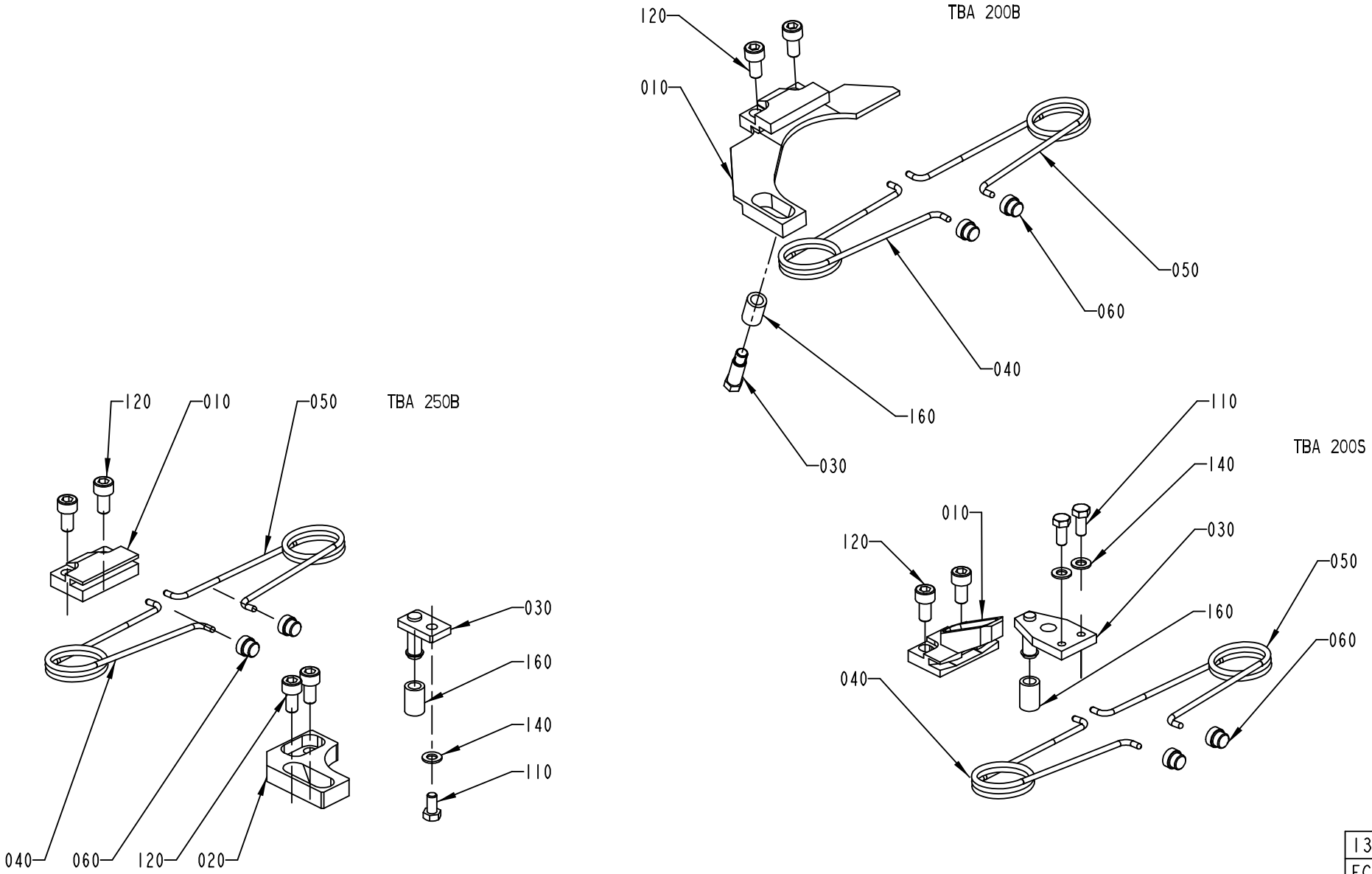

1334635-1
ECN 73647

ECM: 178637 - 50001231
Group number: 1334635-0200
Assembly Drawing: 1334635-1_1_AF

This list covers pages from 4-18 to 4-27

Pos	Part No	UN	Qty	Description	Page No
TBA 0200B (See drawing on page: 4-18)					
010	1512579-0000		1	BRACKET	
030	1346153-0000		1	STOP PIN	
040	1350263-0000		1	SPRING RIGHT	
050	1350264-0000		1	SPRING LEFT	
060	1144601-0000		2	GUIDE STUD	
120	312115-0366		2	SCREW ISO4762 M6X12 A4	
160	1317740-0000		1	RUBBER SLEEVE	
TBA 0200S (See drawing on page: 4-18)					
010	1317823-0000		1	CANTILEVER	
030	1317824-0000		1	CATCH	
040	1350263-0000		1	SPRING RIGHT	
050	1350264-0000		1	SPRING LEFT	
060	1144601-0000		2	GUIDE STUD	
110	312105-0327		2	SCREW M6S ISO 4017 M5X12 A480	
120	312115-0366		2	SCREW ISO4762 M6X12 A4	
140	315105-0146		2	WASHER BRB5,3X10RFR	
160	1317740-0000		1	RUBBER SLEEVE	
TBA 0250B (See drawing on page: 4-18)					
010	1317742-0000		1	CANTILEVER	
020	1317741-0000		1	CATCH	
030	1317440-0000		1	STOP PIN	
040	1350263-0000		1	SPRING RIGHT	
050	1350264-0000		1	SPRING LEFT	
060	1144601-0000		2	GUIDE STUD	
110	312105-0325		1	SCREW M6S ISO 4017 M5X10 A480	
120	312115-0366		4	SCREW ISO4762 M6X12 A4	
140	315105-0146		1	WASHER BRB5,3X10RFR	
160	1317740-0000		1	RUBBER SLEEVE	
TBA 0330S (See drawing on page: 4-22)					
010	1539172-0000		1	CANTILEVER	
030	2527725-0000		1	CATCH	
040	1350263-0000		1	SPRING RIGHT	
050	1350264-0000		1	SPRING LEFT	
060	1144601-0000		2	GUIDE STUD	
110	312105-0328		2	SCREW M6S ISO 4017 M5X14 A480	
120	312115-0368		2	SCREW ISO4762 M6X16 A4	
TBA 0500B (See drawing on page: 4-22)					
010	1539886-0000		1	CANTILEVER	
030	1539887-0000		1	CATCH	
040	1350263-0000		1	SPRING RIGHT	
050	1350264-0000		1	SPRING LEFT	
060	1144601-0000		2	GUIDE STUD	
110	312105-0327		2	SCREW M6S ISO 4017 M5X12 A480	
120	312115-0366		2	SCREW ISO4762 M6X12 A4	
TBA 1000B (See drawing on page: 4-20)					
010	1347526-0000		1	BRACKET	
020	1478396-0000		1	STOP	
030	1478393-0000		1	CATCH	
040	1348483-0000		1	SPRING RIGHT	
050	1348484-0000		1	SPRING LEFT	
060	1144601-0000		2	GUIDE STUD	
100	312105-0368		4	SCREW M6S ISO 4017 M6X16 A480	
110	312115-0329		2	SCREW ISO4762 M5X16 A4	
130	315105-0153		4	WASHER BRB6,4X12RFR	
TBA 1000S (See drawing on page: 4-20)					
010	1347526-0000		1	BRACKET	
020	1478396-0000		1	STOP	
030	1478395-0000		1	CATCH	
040	1348483-0000		1	SPRING RIGHT	
050	1348484-0000		1	SPRING LEFT	
060	1144601-0000		2	GUIDE STUD	
100	312105-0368		4	SCREW M6S ISO 4017 M6X16 A480	
110	312115-0329		2	SCREW ISO4762 M5X16 A4	
130	315105-0153		4	WASHER BRB6,4X12RFR	
TBA 1000SQ (See drawing on page: 4-20)					
010	1349319-0000		1	CANTILEVER	
030	1349320-0000		1	CATCH	
040	1143216-0000		1	SPRING	
050	1143215-0000		1	SPRING	
060	1144601-0000		2	GUIDE STUD	
110	312105-0366		2	SCREW M6S ISO 4017 M6X12 A480	
120	312115-0378		2	SCREW ISO4762 M6X40 A4 80	
170	1511556-0000		1	SET SCREW	
180	312605-0318		1	HEXAGON NUT, M6M M8 A280	
TBA 1500S (See drawing on page: 4-20)					
010	1349319-0000		1	CANTILEVER	
030	1349320-0000		1	CATCH	
040	1143216-0000		1	SPRING	
050	1143215-0000		1	SPRING	
060	1144601-0000		2	GUIDE STUD	
110	312115-0368		2	SCREW ISO4762 M6X16 A4	
120	312115-0378		2	SCREW ISO4762 M6X40 A4 80	
170	1511556-0000		1	SET SCREW	

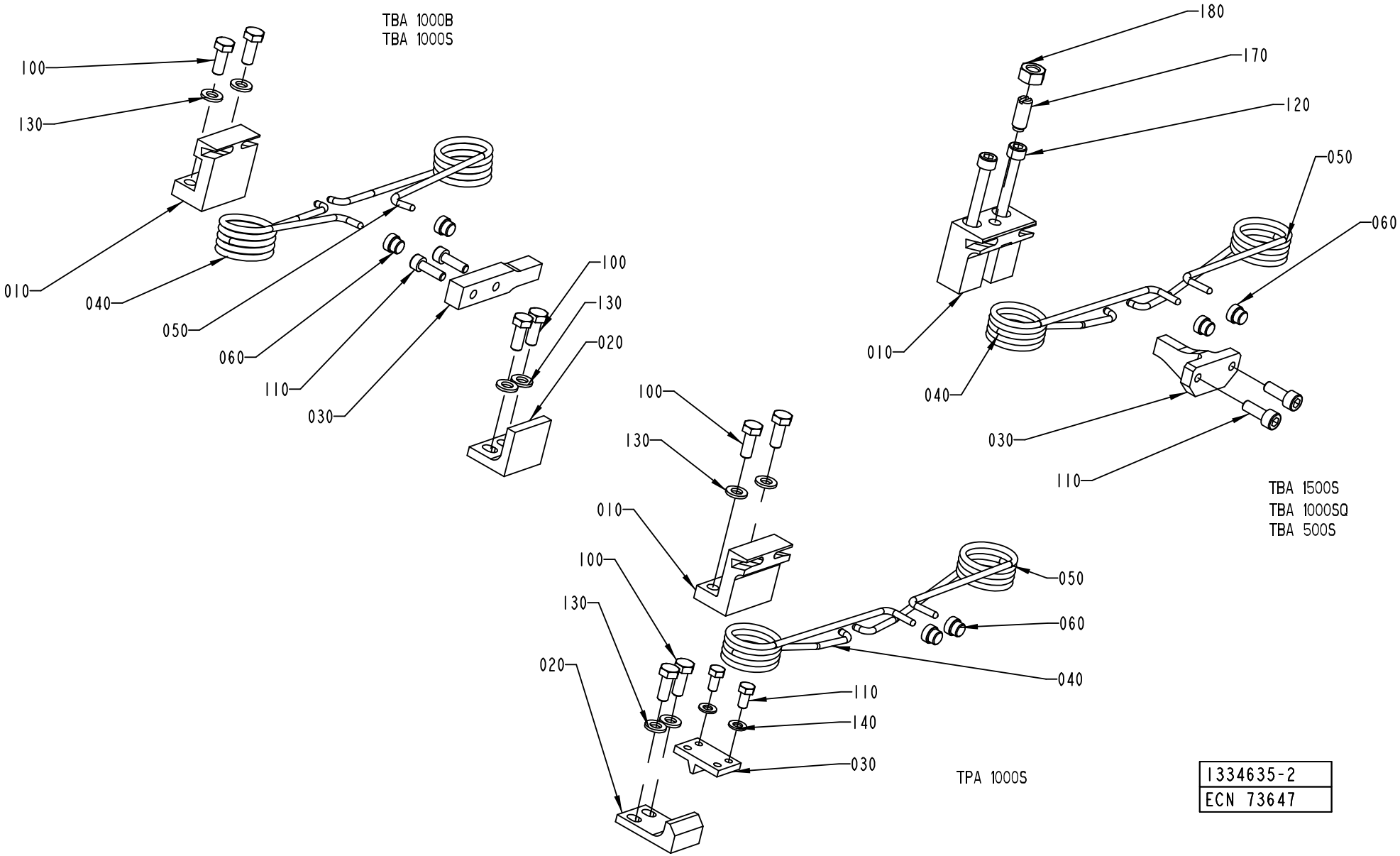

1334635-2
ECN 73647

Pos	Part No	UN	Qty	Description	Page No
TBA 1500S (Cont'd) (See drawing on page: 4-20)					
180	312605-0318		1	HEXAGON NUT, M6M M8 A280	
TBA 1890S, TBA 2000S (See drawing on page: 4-26)					
010	2634515-0000		1	CANTILEVER	
040	2662165-0000		1	SPRING	
050	2662166-0000		1	SPRING	
075	2652896-0000		2	SHAFT	
080	2662167-0000		1	BUSHING	
095	90458-0073		2	WASHER 6,4/30, H=1,5	
100	312115-0368		2	SCREW ISO4762 M6X16 A4	
125	312105-0341		2	SCREW M6S ISO 4014 M5X50 A480	
130	315105-0146		3	WASHER BRB5,3X10RFR	
190	312105-0366		2	SCREW M6S ISO 4017 M6X12 A480	
TPA 1000SQ (See drawing on page: 4-24)					
010	1523475-0000		1	CANTILEVER	
020	2558921-0000		1	STOP	
025	2558923-0000		1	STOP	
040	2557613-0000		1	SPRING	
050	2557612-0000		1	SPRING	
060	1144601-0000		2	GUIDE STUD	
070	2558929-0000		1	BAR	
100	312105-0368		10	SCREW M6S ISO 4017 M6X16 A480	
120	312105-0364		2	SCREW M6S ISO 4017 M6X10 A480	
130	315105-0153		10	WASHER BRB6,4X12RFR	
150	90062-0061		2	LOCK WASHER NORD-LOCK,6,5/10,8, H=2,6	

Pos	Part No	UN	Qty	Description	Page No

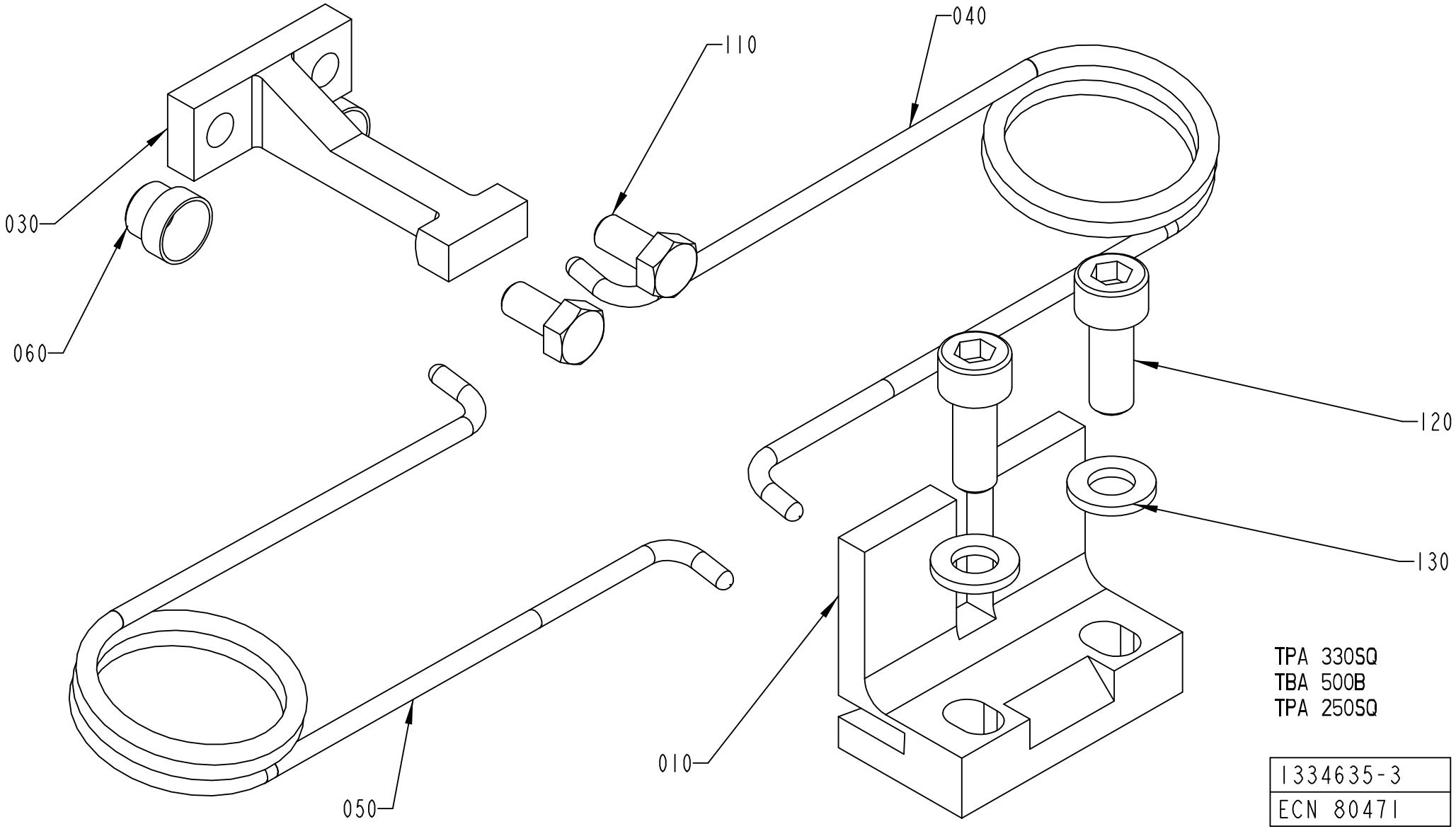
040
110
030
060
120
130
010
050
TPA 330SQ
TBA 500B
TPA 250SQ
1334635-3
ECN 80471

Pos	Part No	UN	Qty	Description	Page No	Pos	Part No	UN	Qty	Description	Page No

SEE PREVIOUS LISTS PAGES: 4-19, 4-21.

SHOCK ABSORBER

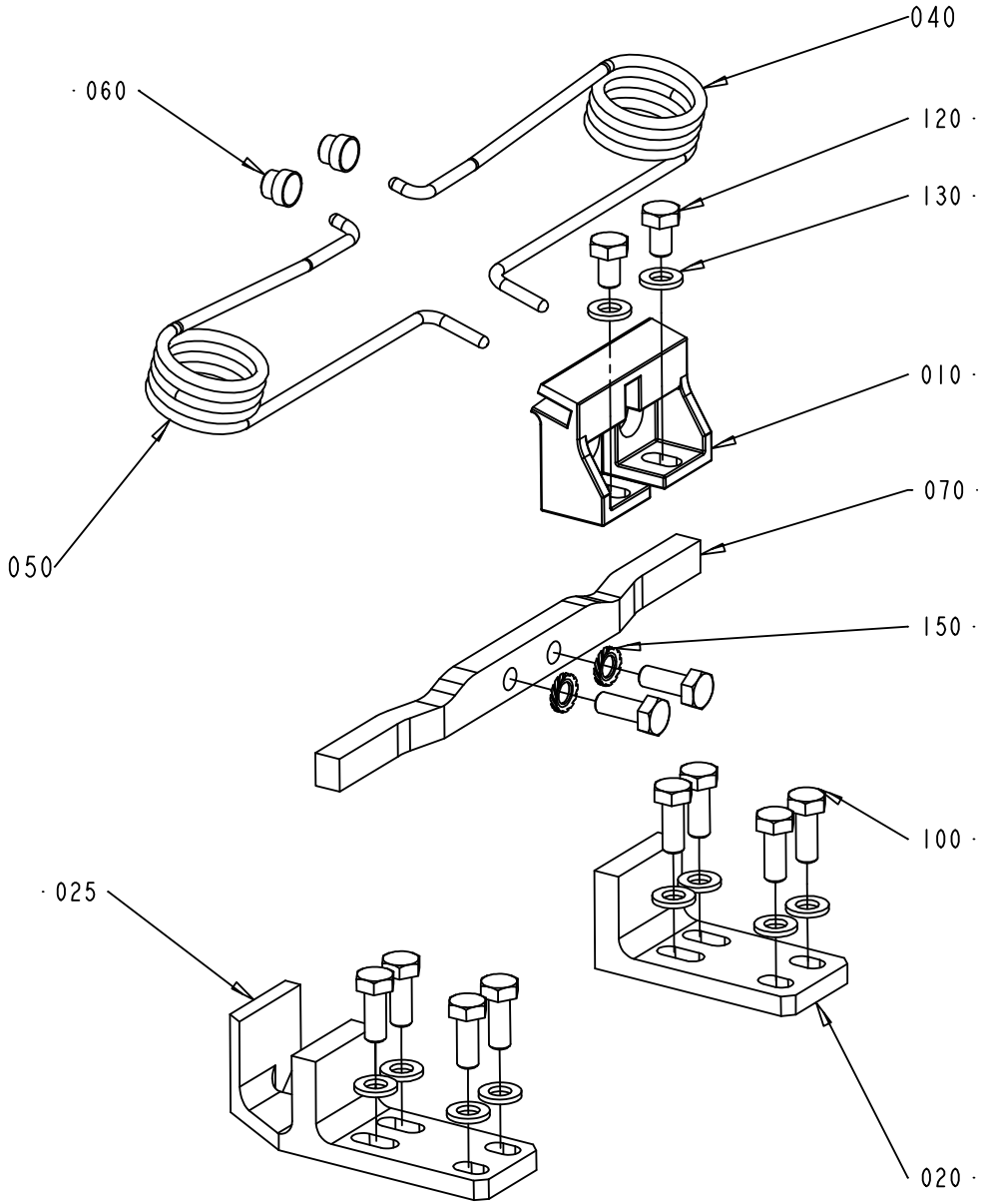

1334635-6
ECM 119888

Pos	Part No	UN	Qty	Description	Page No	Pos	Part No	UN	Qty	Description	Page No

SEE PREVIOUS LISTS PAGES: 4-19, 4-21.

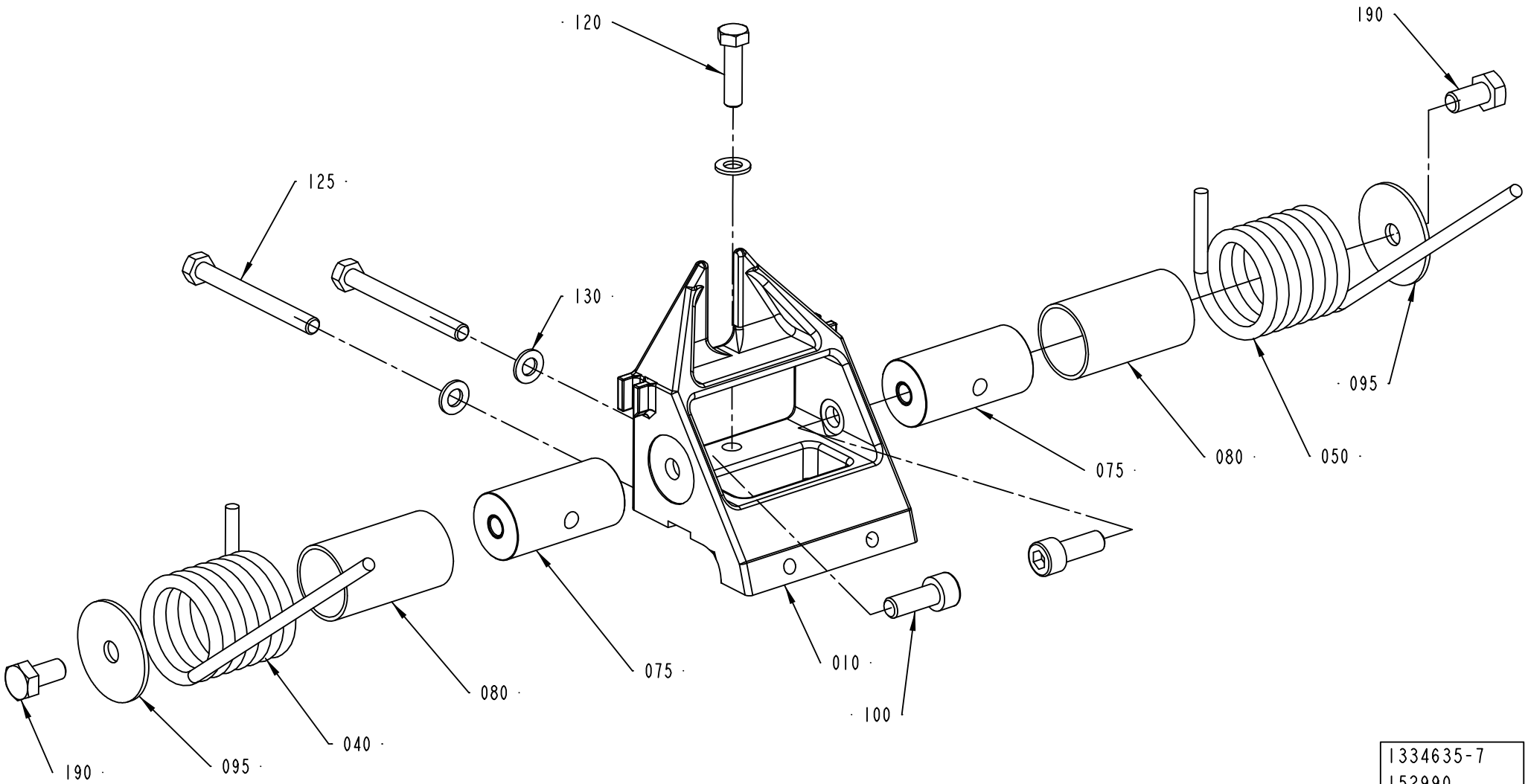
120
190
125
130
095
075
080
050
080
075
010
100
190
095
040
1334635-7
152990

Pos	Part No	UN	Qty	Description	Page No	Pos	Part No	UN	Qty	Description	Page No

SEE PREVIOUS LISTS PAGES: 4-19, 4-21.

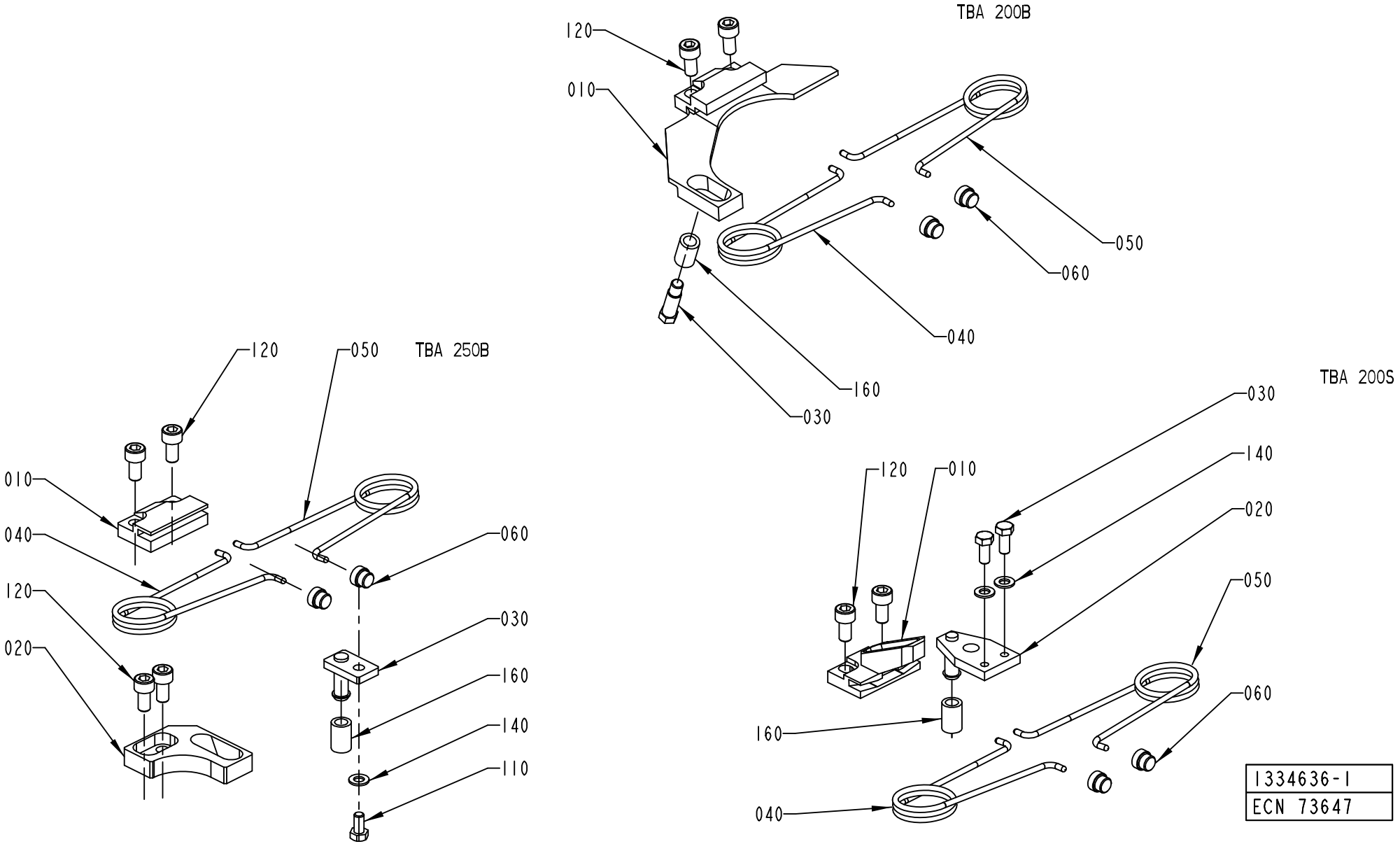
TBA 200B
120
010
050
060
040
160
030
TBA 250B
120
050
010
040
060
120
030
020
160
140
110
TBA 200S
030
140
120
010
020
050
160
060
040
1334636-1
ECN 73647

ECM: 178638 - 50001231
Group number: 1334636-0200
Assembly Drawing: 1334636-1_1_AF

This list covers pages from 4-28 to 4-37

Pos	Part No	UN	Qty	Description	Page No
TBA 0200B (See drawing on page: 4-28)					
010	1512579-0000		1	BRACKET	
030	1346153-0000		1	STOP PIN	
040	1350263-0000		1	SPRING RIGHT	
050	1348484-0000		1	SPRING LEFT	
050	1350264-0000		1	SPRING LEFT	
060	1144601-0000		2	GUIDE STUD	
120	312115-0366		2	SCREW ISO4762 M6X12 A4	
160	1317740-0000		1	RUBBER SLEEVE	
TBA 0200S (See drawing on page: 4-28)					
010	1317823-0000		1	CANTILEVER	
030	1317824-0000		1	CATCH	
040	1350263-0000		1	SPRING RIGHT	
050	1350264-0000		1	SPRING LEFT	
060	1144601-0000		2	GUIDE STUD	
110	312105-0327		2	SCREW M6S ISO 4017 M5X12 A480	
120	312115-0366		2	SCREW ISO4762 M6X12 A4	
140	315105-0146		2	WASHER BRB5,3X10RFR	
160	1317740-0000		1	RUBBER SLEEVE	
TBA 0250B (See drawing on page: 4-28)					
010	1317742-0000		1	CANTILEVER	
020	1317439-0000		1	CATCH	
030	1317440-0000		1	STOP PIN	
040	1350263-0000		1	SPRING RIGHT	
050	1350264-0000		1	SPRING LEFT	
060	1144601-0000		2	GUIDE STUD	
110	312105-0325		1	SCREW M6S ISO 4017 M5X10 A480	
120	312115-0366		4	SCREW ISO4762 M6X12 A4	
140	315105-0146		1	WASHER BRB5,3X10RFR	
160	1317740-0000		1	RUBBER SLEEVE	
TBA 0330S (See drawing on page: 4-32)					
010	1539172-0000		1	CANTILEVER	
030	2527725-0000		1	CATCH	
040	1350263-0000		1	SPRING RIGHT	
050	1350264-0000		1	SPRING LEFT	
060	1144601-0000		2	GUIDE STUD	
110	312105-0328		2	SCREW M6S ISO 4017 M5X14 A480	
120	312115-0368		2	SCREW ISO4762 M6X16 A4	
TBA 0500B (See drawing on page: 4-32)					
010	1539886-0000		1	CANTILEVER	
030	1539887-0000		1	CATCH	
040	1350263-0000		1	SPRING RIGHT	
050	1350264-0000		1	SPRING LEFT	
060	1144601-0000		2	GUIDE STUD	
110	312105-0327		2	SCREW M6S ISO 4017 M5X12 A480	
120	312115-0366		2	SCREW ISO4762 M6X12 A4	
TBA 1000B (See drawing on page: 4-30)					
010	1347526-0000		1	BRACKET	
020	1478396-0000		1	STOP	
030	1478393-0000		1	CATCH	
040	1348483-0000		1	SPRING RIGHT	
050	1348484-0000		1	SPRING LEFT	
060	1144601-0000		2	GUIDE STUD	
100	312105-0368		4	SCREW M6S ISO 4017 M6X16 A480	
110	312115-0329		2	SCREW ISO4762 M5X16 A4	
130	315105-0153		4	WASHER BRB6,4X12RFR	
TBA 1000S (See drawing on page: 4-30)					
010	1347526-0000		1	BRACKET	
020	1478396-0000		1	STOP	
030	1478395-0000		1	CATCH	
040	1348483-0000		1	SPRING RIGHT	
050	1348484-0000		1	SPRING LEFT	
060	1144601-0000		2	GUIDE STUD	
100	312105-0368		4	SCREW M6S ISO 4017 M6X16 A480	
110	312115-0329		2	SCREW ISO4762 M5X16 A4	
130	315105-0153		4	WASHER BRB6,4X12RFR	
TBA 1000SQ (See drawing on page: 4-30)					
010	1349319-0000		1	CANTILEVER	
030	1349320-0000		1	CATCH	
040	1143216-0000		1	SPRING	
050	1143215-0000		1	SPRING	
060	1144601-0000		2	GUIDE STUD	
110	312115-0366		2	SCREW ISO4762 M6X12 A4	
120	312115-0378		2	SCREW ISO4762 M6X40 A4 80	
170	1511556-0000		1	SET SCREW	
180	312605-0318		1	HEXAGON NUT, M6M M8 A280	
TBA 1500S (See drawing on page: 4-30)					
010	1349319-0000		1	CANTILEVER	
030	1349320-0000		1	CATCH	
040	1143216-0000		1	SPRING	
050	1143215-0000		1	SPRING	
060	1144601-0000		2	GUIDE STUD	
110	312115-0368		2	SCREW ISO4762 M6X16 A4	
120	312115-0378		2	SCREW ISO4762 M6X40 A4 80	

Machine Type | Group Description | Used-In | Group Number | Page No

TBA 1000B
TBA 1000S

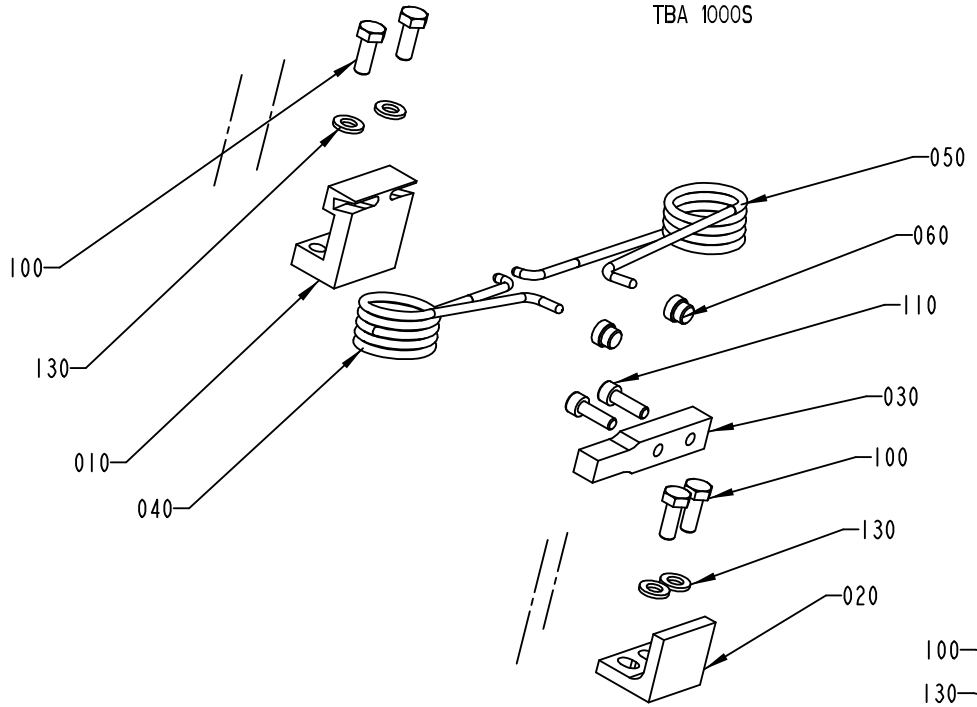

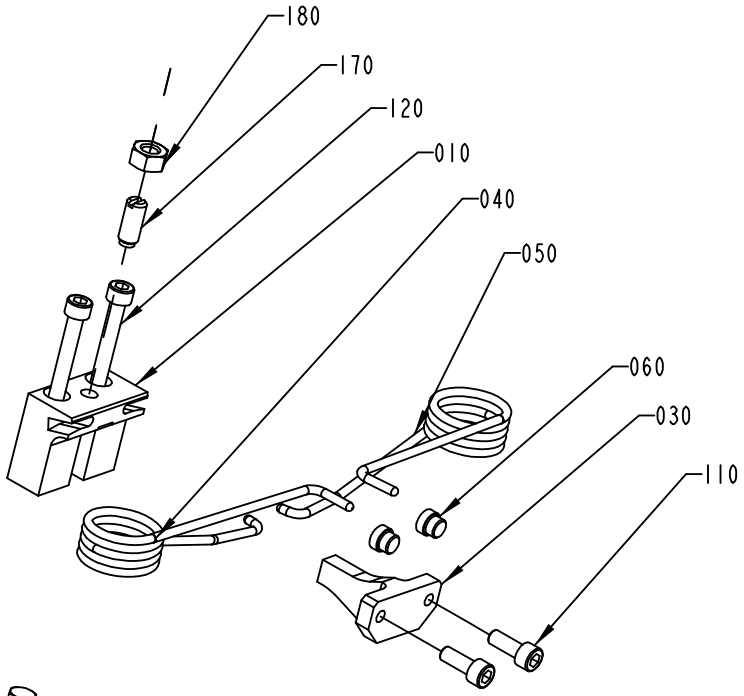

TBA 1500S
TBA 1000SQ
TBA 500S

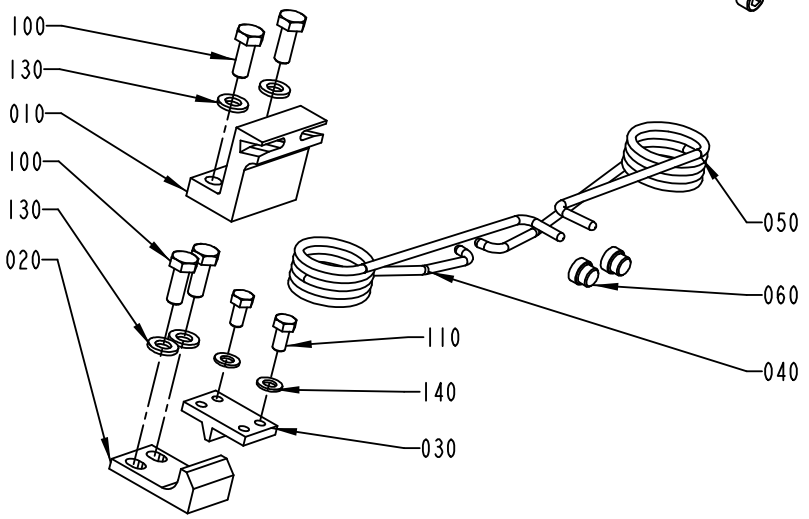

TPA 1000S

1334636-2
ECN 73647

Pos	Part No	UN	Qty	Description	Page No
TBA 1500S (Cont'd) (See drawing on page: 4-30)					
170	1511556-0000		1	SET SCREW	
180	312605-0318		1	HEXAGON NUT, M6M M8 A280	
TBA 1890S, TBA 2000S (See drawing on page: 4-36)					
010	2634515-0000		1	CANTILEVER	
040	2662165-0000		1	SPRING	
050	2662166-0000		1	SPRING	
075	2652896-0000		2	SHAFT	
080	2662167-0000		2	BUSHING	
095	90458-0073		2	WASHER 6,4/30, H=1,5	
100	312115-0368		2	SCREW ISO4762 M6X16 A4	
125	312105-0341		2	SCREW M6S ISO 4014 M5X50 A480	
130	315105-0146		3	WASHER BRB5,3X10RFR	
190	312105-0366		2	SCREW M6S ISO 4017 M6X12 A480	
TPA 1000SQ (See drawing on page: 4-34)					
010	1523475-0000		1	CANTILEVER	
020	2558920-0000		1	STOP	
025	2558922-0000		1	STOP	
040	2557613-0000		1	SPRING	
050	2557612-0000		1	SPRING	
060	1144601-0000		2	GUIDE STUD	
070	2558929-0000		1	BAR	
100	312105-0368		10	SCREW M6S ISO 4017 M6X16 A480	
120	312105-0364		2	SCREW M6S ISO 4017 M6X10 A480	
130	315105-0153		10	WASHER BRB6,4X12RFR	
150	90062-0061		2	LOCK WASHER NORD-LOCK,6,5/10,8, H=2,6	

Pos	Part No	UN	Qty	Description	Page No

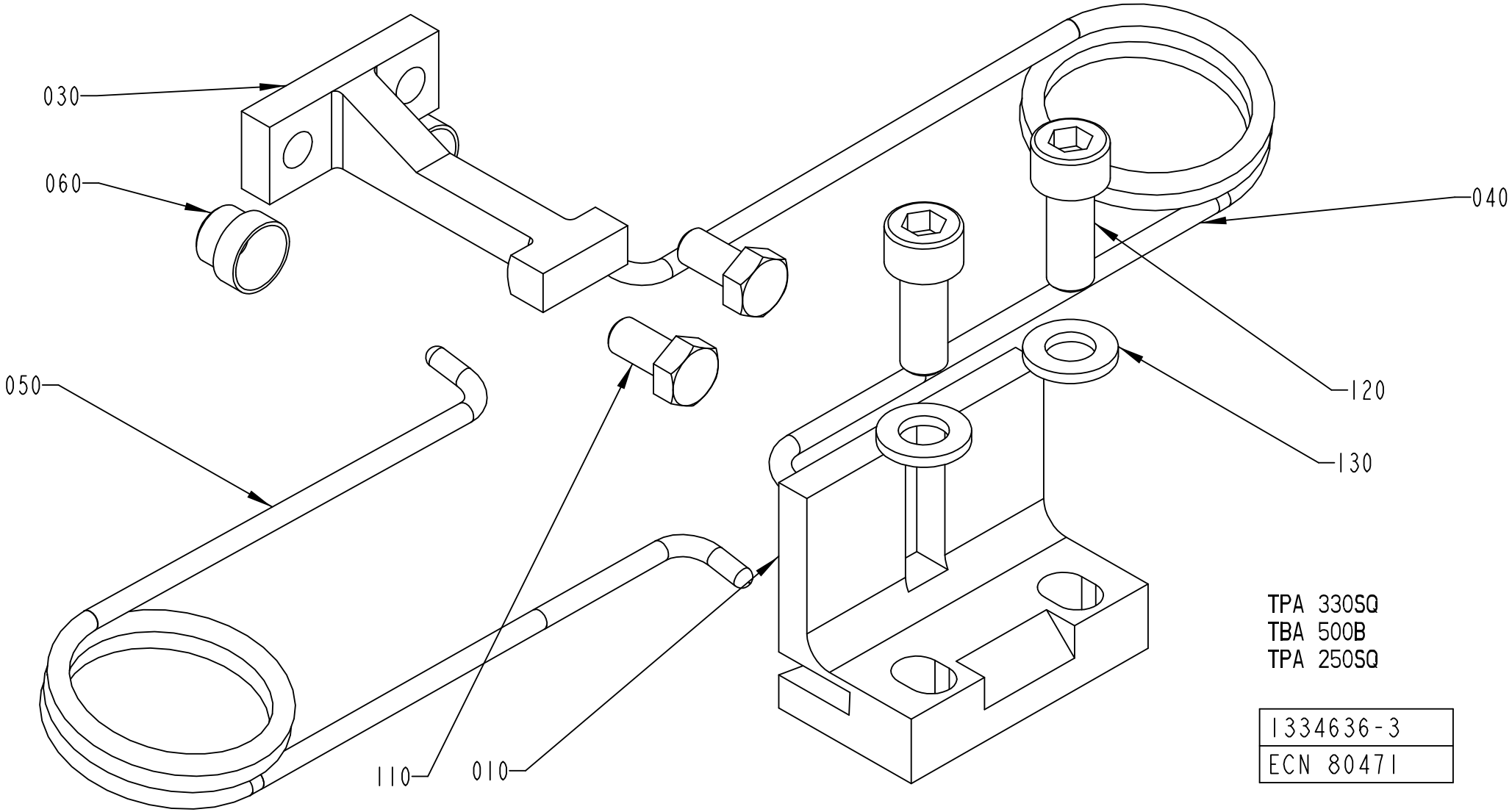
030
060
040
050
120
130
110
010
TPA 330SQ
TBA 500B
TPA 250SQ
1334636-3
ECN 80471

Pos	Part No	UN	Qty	Description	Page No	Pos	Part No	UN	Qty	Description	Page No

SEE PREVIOUS LISTS PAGES: 4-29, 4-31.

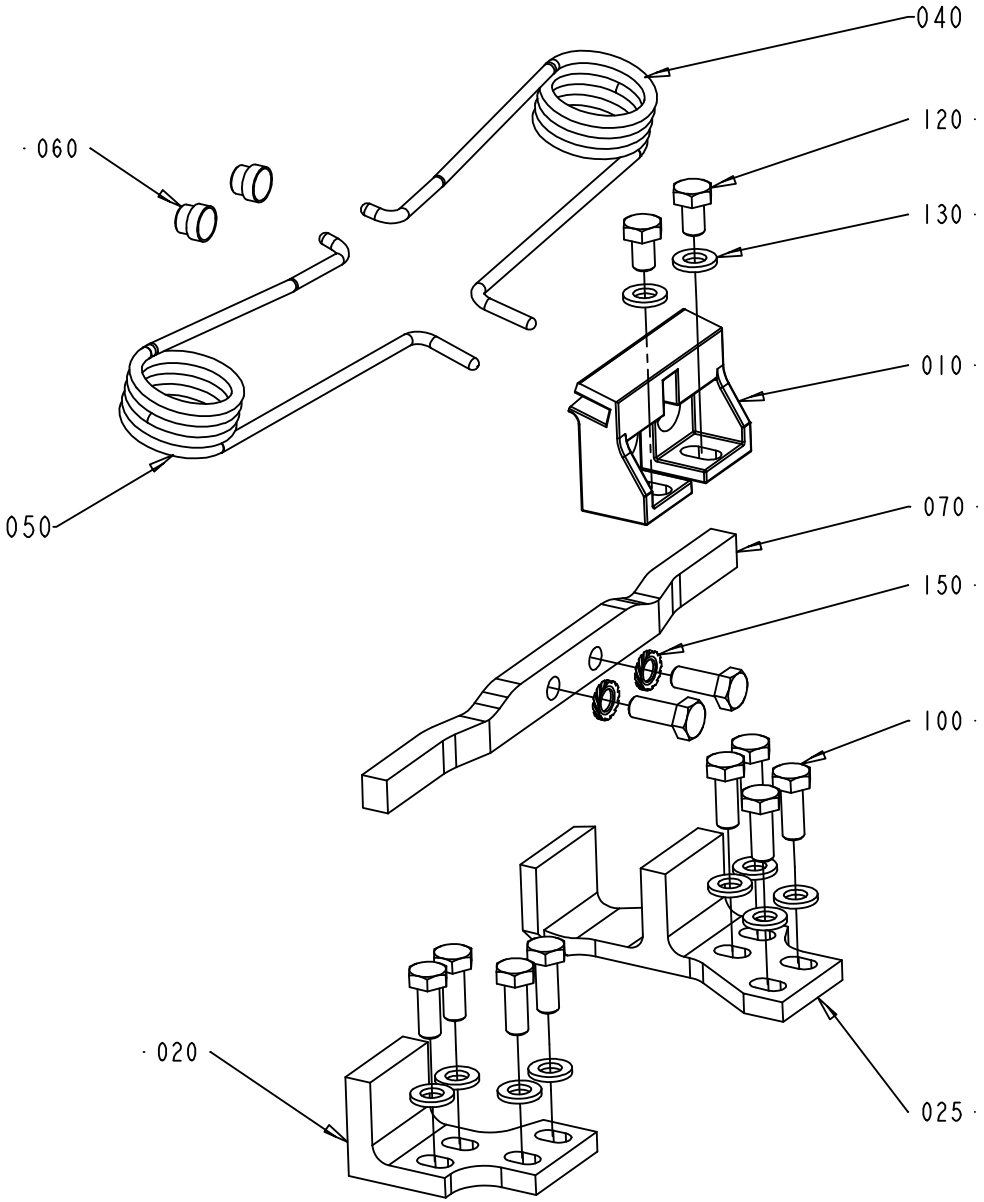

1334636-6
ECM 119888

Pos	Part No	UN	Qty	Description	Page No	Pos	Part No	UN	Qty	Description	Page No

SEE PREVIOUS LISTS PAGES: 4-29, 4-31.

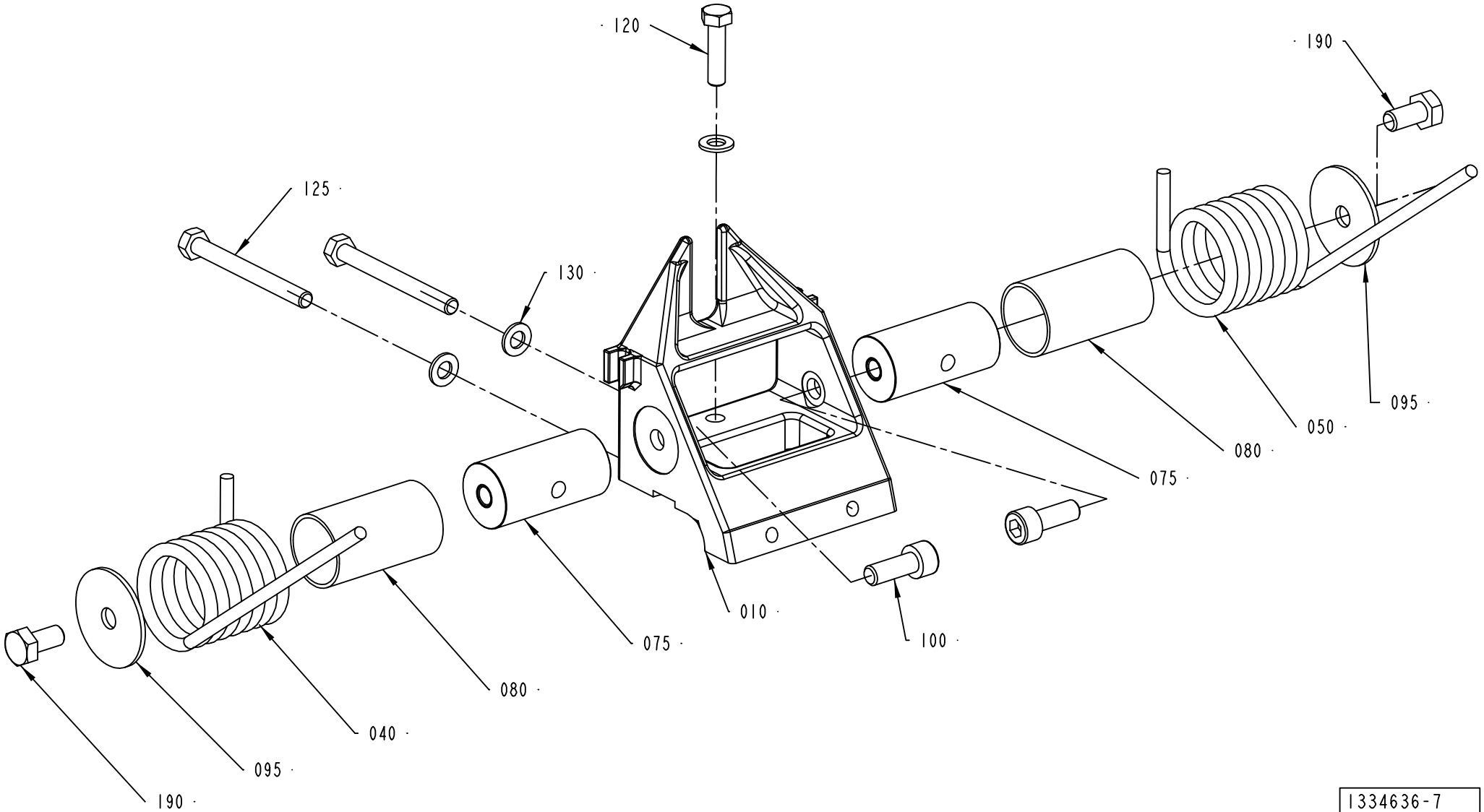
120
190
125
130
095
050
080
075
075
010
100
080
040
095
190
1334636-7
152990

Pos	Part No	UN	Qty	Description	Page No	Pos	Part No	UN	Qty	Description	Page No

SEE PREVIOUS LISTS PAGES: 4-29, 4-31.

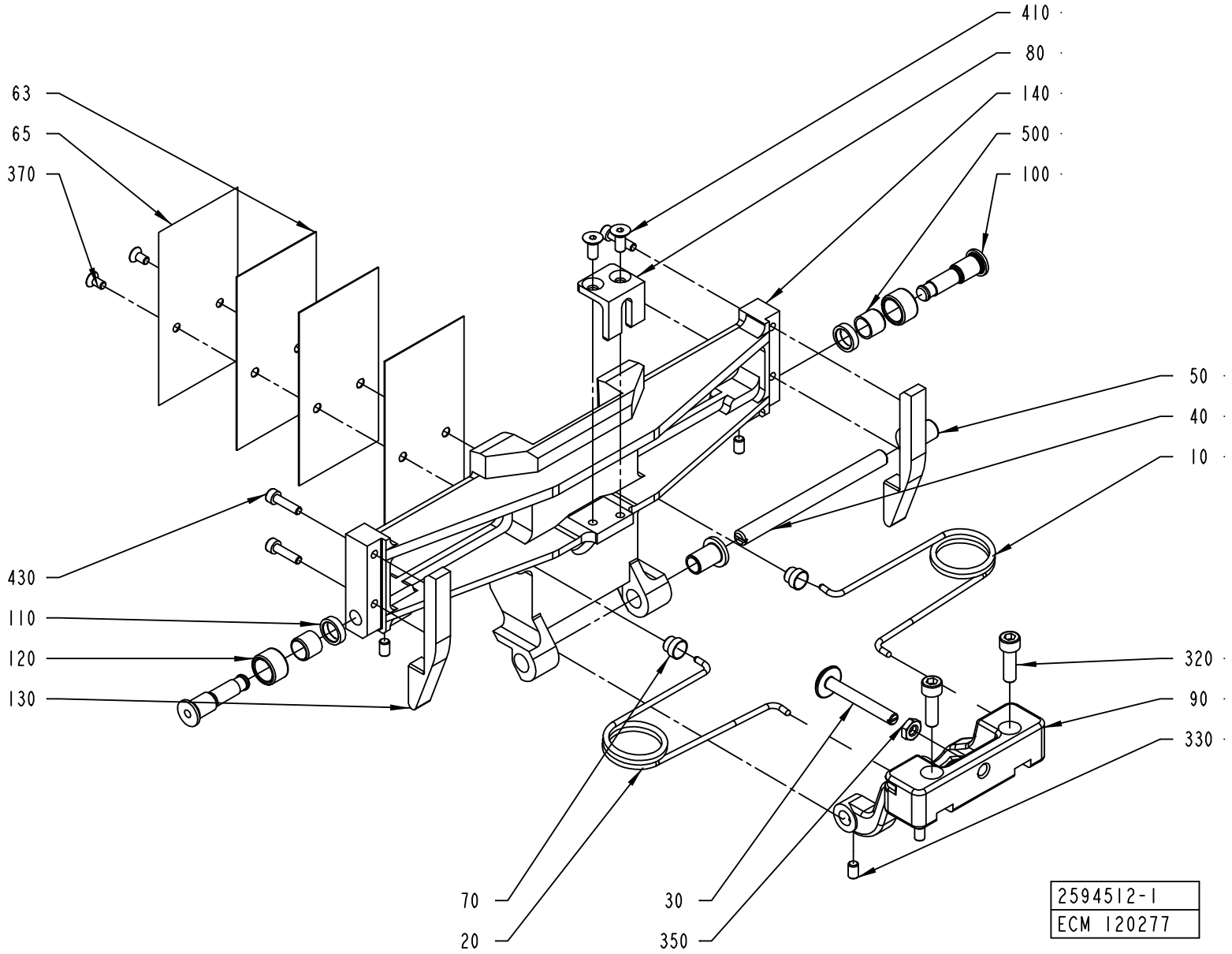
410
80
140
500
100
63
65
370
50
40
10
430
110
120
130
320
90
330
70
20
30
350
2594512-1
ECM 120277

ECM: 180565 - 50001231
Group number: 2594512-0100
Assembly Drawing: 2594512-1_1_AA

This list covers pages from 4-38 to 4-41

Pos	Part No	UN	Qty	Description	Page No
TBA 0200B (See drawing on pages: 4-38, 9-8)					
010	1350263-0000		1	SPRING RIGHT	
020	1350264-0000		1	SPRING LEFT	
030	1511339-0000		1	STOP	
040	1499327-0000		1	SHAFT	
050	2530313-0000		2	BUSHING	
063	1538637-0000		3	VOLUME SHIM	
065	1524310-0000		1	VOLUME BULGE	
080	1499328-0000		1	STOPPER	
090	2605869-0000		1	FLAP HOLDER	
130	2629237-0000		2	CAM	
140	2604493-0000		1	VOLUME FLAP	
320	312115-0368		2	SCREW ISO4762 M6X16 A4	
370	312155-0287		2	SCREW EN 10642 MF6S M4X8 A480	
410	312155-0325		2	SCREW EN 10642 MF6S M5X10 A480	
430	312115-0289		4	SCREW ISO4762 M4X10 A4	
450	315402-0156		1	LOCK WASHER FBB 6,5	
TBA 0250B (See drawing on pages: 4-40, 9-10)					
010	1350263-0000		1	SPRING RIGHT	
020	1350264-0000		1	SPRING LEFT	
030	1511338-0000		1	STOP	
040	1499327-0000		1	SHAFT	
050	2530313-0000		2	BUSHING	
063	2605166-0000		4	VOLUME SHIM	
065	2609925-0000		1	VOLUME BULGE	
080	2693446-0000		1	STOPPER	
090	2606102-0000		1	FLAP HOLDER	
130	2606218-0000		2	CAM	
140	2605191-0000		1	VOLUME FLAP	
320	312115-0368		2	SCREW ISO4762 M6X16 A4	
370	312155-0287		2	SCREW EN 10642 MF6S M4X8 A480	
410	312155-0327		2	SCREW EN 10642 MF6S M5X12 A480	
440	312115-0289		4	SCREW ISO4762 M4X10 A4	
450	315402-0156		1	LOCK WASHER FBB 6,5	
TBA 0330S (See drawing on pages: 4-38, 9-8)					
010	1350263-0000		1	SPRING RIGHT	
020	1350264-0000		1	SPRING LEFT	
030	1511338-0000		1	STOP	
040	1499327-0000		1	SHAFT	
050	2530313-0000		2	BUSHING	
063	2654290-0000		3	VOLUME SHIM	
065	979931-0000		1	VOLUME BULGE	
080	1499336-0000		1	STOPPER	
090	2606102-0000		1	FLAP HOLDER	
130	2629236-0000		2	CAM	
140	2604495-0000		1	VOLUME FLAP	
320	312115-0368		2	SCREW ISO4762 M6X16 A4	
370	312155-0287		2	SCREW EN 10642 MF6S M4X8 A480	
410	312155-0327		2	SCREW EN 10642 MF6S M5X12 A480	
430	312115-0293		4	SCREW ISO4762 M4X16 A4	
450	315402-0156		1	LOCK WASHER FBB 6,5	
TBA 0500B (See drawing on pages: 4-38, 9-8)					
010	1350263-0000		1	SPRING RIGHT	
020	1350264-0000		1	SPRING LEFT	
030	1499348-0000		1	STOP	
040	1487946-0000		1	SHAFT	
050	1487948-0000		2	BUSHING	
063	1511336-0000		3	VOLUME SHIM	
065	1511335-0000		1	VOLUME BULGE	
080	1499349-0000		1	STOPPER	
090	1499346-0000		1	FLAP HOLDER	
130	1499350-0000		2	CAM	
140	1499357-0000		1	VOLUME FLAP	
320	312115-0368		2	SCREW ISO4762 M6X16 A4	
370	312145-0289		2	SCREW ISO 2009 MFS M4X10 A4	
410	312155-0323		2	SCREW EN 10642 MF6S M5X8 A480	
430	312115-0291		4	SCREW ISO4762 M4X12 A4	
TBA 1000B (See drawing on pages: 4-38, 9-8)					
010	1348483-0000		1	SPRING RIGHT	
020	1348484-0000		1	SPRING LEFT	
030	1487945-0000		1	STOP	
040	1487946-0000		1	SHAFT	
050	1487948-0000		2	BUSHING	
063	1511337-0000		3	VOLUME SHIM	
065	26075-0000		1	VOLUME BULGE	
080	1487943-0000		1	STOPPER	
090	1499345-0000		1	FLAP HOLDER	
130	1499356-0000		2	CAM	
140	1499358-0000		1	VOLUME FLAP	
320	312115-0368		2	SCREW ISO4762 M6X16 A4	
370	312141-0222		2	SCREW ISO 2009 MFS M3X8 4.8 EL.PL	
410	312115-0323		2	SCREW ISO4762 M5X8 A4	
430	312115-0287		4	SCREW ISO4762 M4X8 A4	
Common Parts					

Machine Type | Group Description | Used-In | Group Number | Page No

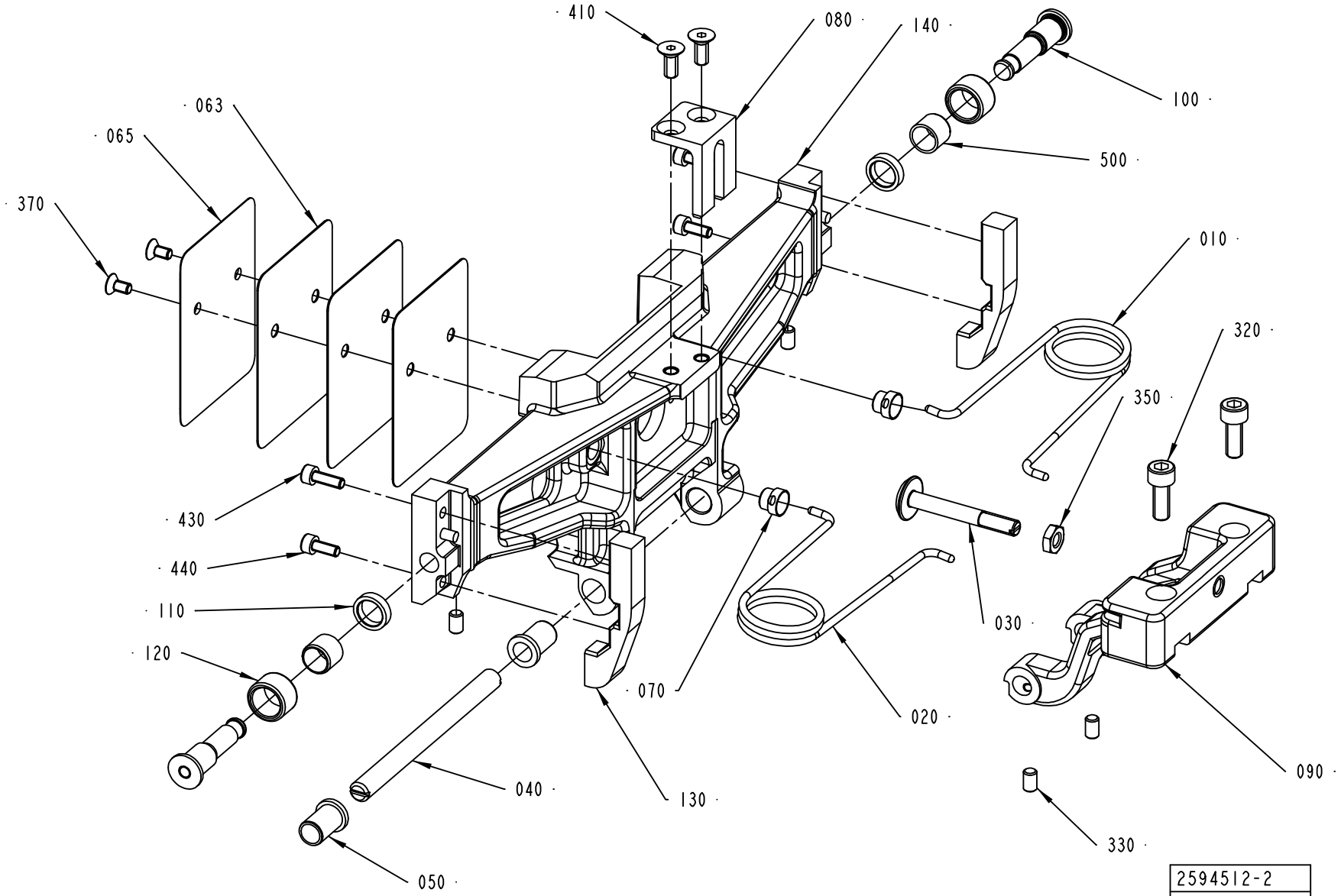
410
080
140
100
063
065
500
370
010
320
350
430
440
110
120
030
070
020
090
040
130
330
050
2594512-2
ECM 149527

Pos	Part No	UN	Qty	Description	Page No
Common Parts (Cont'd)					
070	1144601-0000		2	GUIDE STUD	
100	1512146-0000		2	AXLE PIN	
110	1512147-0000		2	WASHER	
120	1499355-0000		2	ROLLER	
330	312318-0323		4	SCREW ISO4029 M5X8 A4	
350	312625-0316		1	HEXAGON THIN NUT, EN 24035 ML6M M6 A4	
500	321136-0140		2	BUSHING, 10X12X10 MM	

Pos	Part No	UN	Qty	Description	Page No

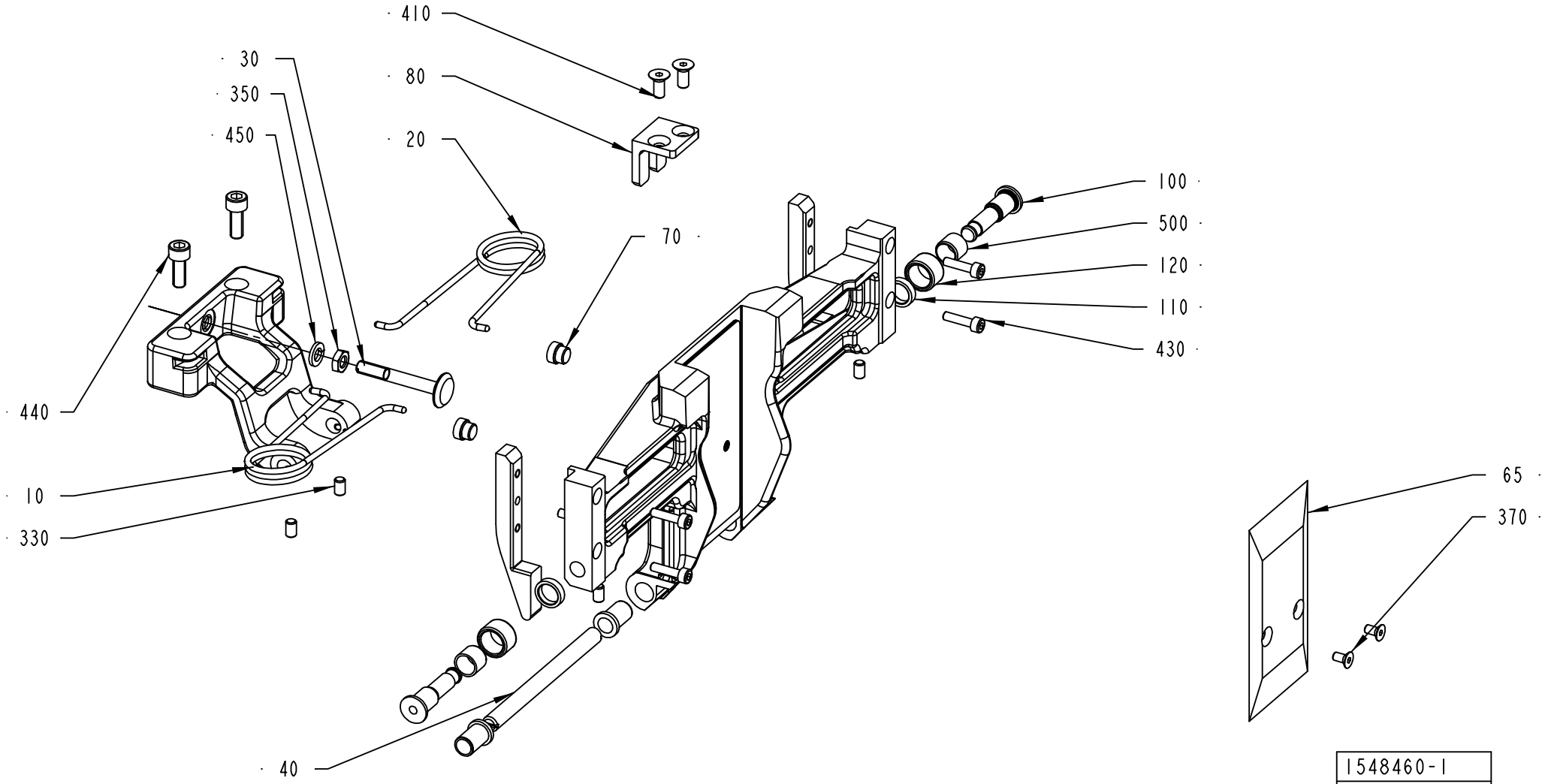
410
30
80
350
20
450
100
500
70
120
110
430
440
65
10
370
330
40
1548460-1
ECM 179873

ECM: 180540 - 50001231
Group number: 1548460-0100
Assembly Drawing: 1548460-1_1_AB

This list covers pages from 4-42 to 4-45

Pos	Part No	UN	Qty	Description	Page No
TBA 0200B (See drawing on page: 4-42)					
010	1350263-0000		1	SPRING RIGHT	
020	1350264-0000		1	SPRING LEFT	
030	1511339-0000		1	STOP	
040	1499327-0000		1	SHAFT	
050	2530313-0000		2	BUSHING	
063	1538637-0000		3	VOLUME SHIM	
065	1524310-0000		1	VOLUME BULGE	
080	1499328-0000		1	STOPPER	
090	2605869-0000		1	FLAP HOLDER	
130	2629237-0000		2	CAM	
140	2604494-0000		1	VOLUME FLAP	
370	312155-0287		2	SCREW EN 10642 MF6S M4X8 A480	
410	312155-0325		2	SCREW EN 10642 MF6S M5X10 A480	
430	312115-0289		4	SCREW ISO4762 M4X10 A4	
450	315402-0156		1	LOCK WASHER FBB 6,5	
TBA 0250B (See drawing on page: 4-44)					
010	1350263-0000		1	SPRING RIGHT	
020	1350264-0000		1	SPRING LEFT	
030	1511338-0000		1	STOP	
040	1499327-0000		1	SHAFT	
050	2530313-0000		2	BUSHING	
063	2605166-0000		4	VOLUME SHIM	
065	2609925-0000		1	VOLUME BULGE	
080	2693446-0000		1	STOPPER	
090	2606102-0000		1	FLAP HOLDER	
130	2606218-0000		2	CAM	
140	2605192-0000		1	VOLUME FLAP	
370	312155-0287		2	SCREW EN 10642 MF6S M4X8 A480	
410	312155-0327		2	SCREW EN 10642 MF6S M5X12 A480	
440	312115-0289		4	SCREW ISO4762 M4X10 A4	
450	315402-0156		1	LOCK WASHER FBB 6,5	
TBA 0330S (See drawing on page: 4-42)					
010	1350263-0000		1	SPRING RIGHT	
020	1350264-0000		1	SPRING LEFT	
030	1511338-0000		1	STOP	
040	1499327-0000		1	SHAFT	
050	2530313-0000		2	BUSHING	
063	2654290-0000		3	VOLUME SHIM	
065	979931-0000		1	VOLUME BULGE	
080	1499336-0000		1	STOPPER	
090	2606102-0000		1	FLAP HOLDER	
130	2629236-0000		2	CAM	
140	2604496-0000		1	VOLUME FLAP	
370	312155-0287		2	SCREW EN 10642 MF6S M4X8 A480	
410	312155-0327		2	SCREW EN 10642 MF6S M5X12 A480	
430	312115-0293		4	SCREW ISO4762 M4X16 A4	
450	315402-0156		1	LOCK WASHER FBB 6,5	
TBA 0500B (See drawing on page: 4-42)					
010	1350263-0000		1	SPRING RIGHT	
020	1350264-0000		1	SPRING LEFT	
030	1499348-0000		1	STOP	
040	1487946-0000		1	SHAFT	
050	1487948-0000		2	BUSHING	
063	1511336-0000		3	VOLUME SHIM	
065	1511335-0000		1	VOLUME BULGE	
080	1499349-0000		1	STOPPER	
090	1499346-0000		1	FLAP HOLDER	
130	1499350-0000		2	CAM	
140	1499357-0000		1	VOLUME FLAP	
370	312145-0289		2	SCREW ISO 2009 MFS M4X10 A4	
410	312155-0323		2	SCREW EN 10642 MF6S M5X8 A480	
430	312115-0291		4	SCREW ISO4762 M4X12 A4	
TBA 1000B (See drawing on page: 4-42)					
010	1348483-0000		1	SPRING RIGHT	
020	1348484-0000		1	SPRING LEFT	
030	1487945-0000		1	STOP	
040	1487946-0000		1	SHAFT	
050	1487948-0000		2	BUSHING	
063	1511337-0000		3	VOLUME SHIM	
065	26075-0000		1	VOLUME BULGE	
080	1487943-0000		1	STOPPER	
090	1499345-0000		1	FLAP HOLDER	
130	1499356-0000		2	CAM	
140	1499358-0000		1	VOLUME FLAP	
370	312141-0222		2	SCREW ISO 2009 MFS M3X8 4.8 EL.PL	
410	312115-0323		2	SCREW ISO4762 M5X8 A4	
430	312115-0287		4	SCREW ISO4762 M4X8 A4	
Common Parts					
070	1144601-0000		2	GUIDE STUD	
100	1512146-0000		2	AXLE PIN	
110	1512147-0000		2	WASHER	
120	1499355-0000		2	ROLLER	
320	312115-0368		2	SCREW ISO4762 M6X16 A4	

Machine Type | Group Description | Used-In | Group Number | Page No

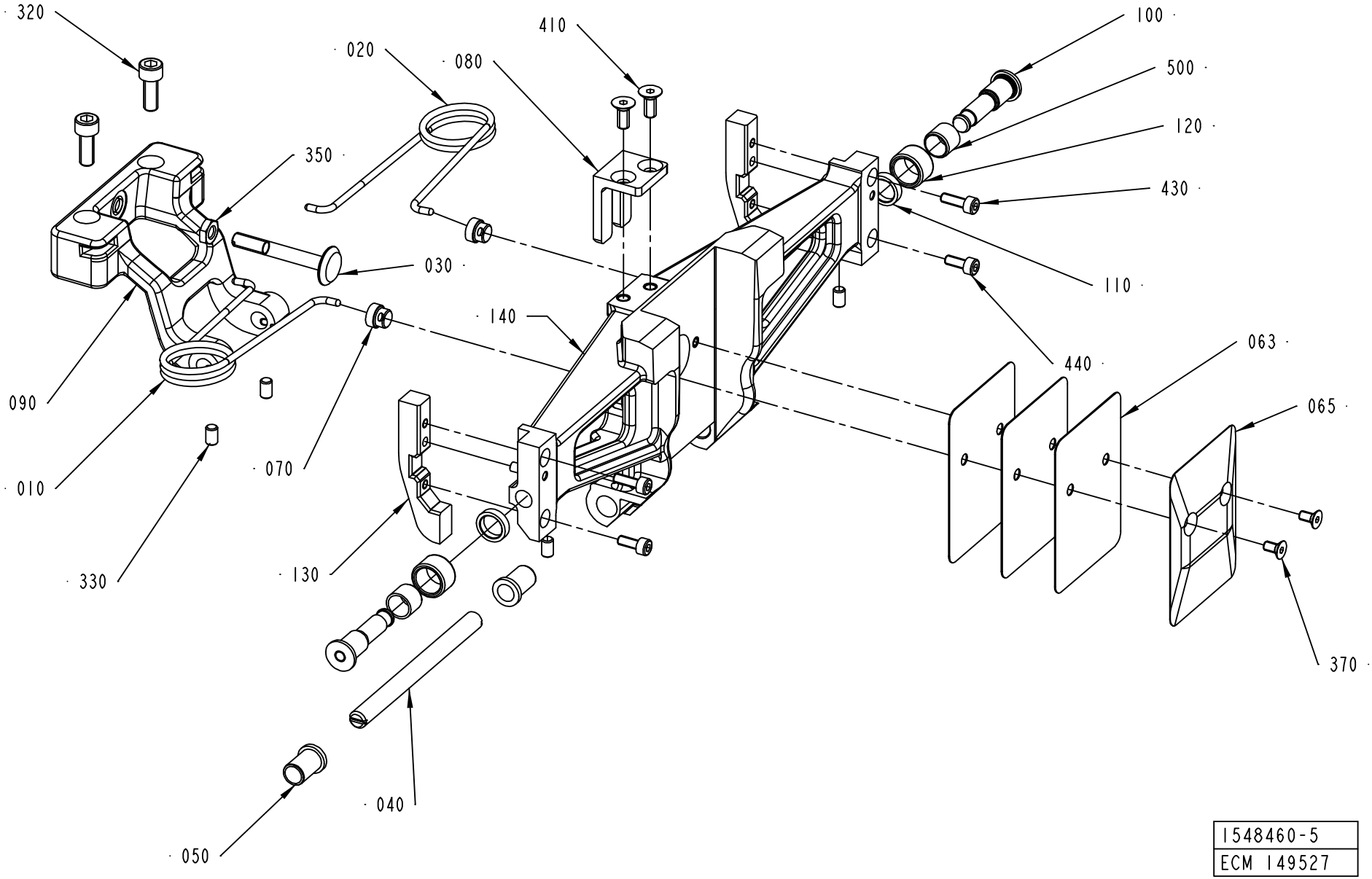
320
020
080
410
100
500
120
430
350
030
110
140
440
063
090
065
010
070
330
130
370
040
050
1548460-5
ECM 149527

Pos	Part No	UN	Qty	Description	Page No	Pos	Part No	UN	Qty	Description	Page No
Common Parts (Cont'd)											
330	312318-0323		4	SCREW ISO4029 M5X8 A4							
350	312625-0316		1	HEXAGON THIN NUT, EN 24035 ML6M M6 A4							
500	321136-0140		2	BUSHING, 10X12X10 MM							

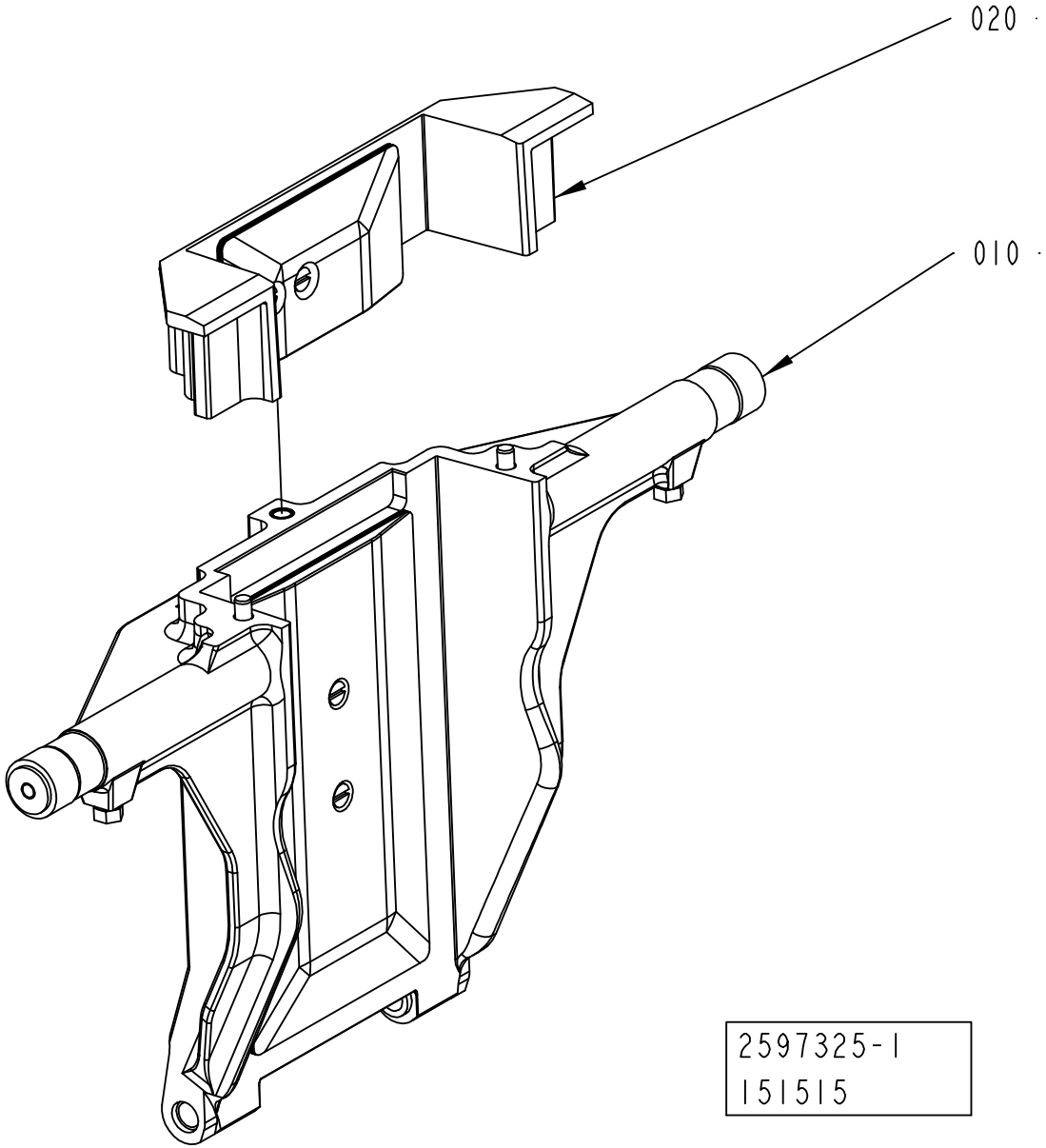
020
010
2597325-1
151515

ECM: 175826 - 50001231
Group number: 2597325-0100
Assembly Drawing: 2597325-1_1_AA

Pos	Part No	UN	Qty	Description	Page No
-					
010	2696182-0100		1	VOLUME FLAP	**4-49**
020	2695955-0100		1	VOLUME FLAP	**4-51**

Pos	Part No	UN	Qty	Description	Page No

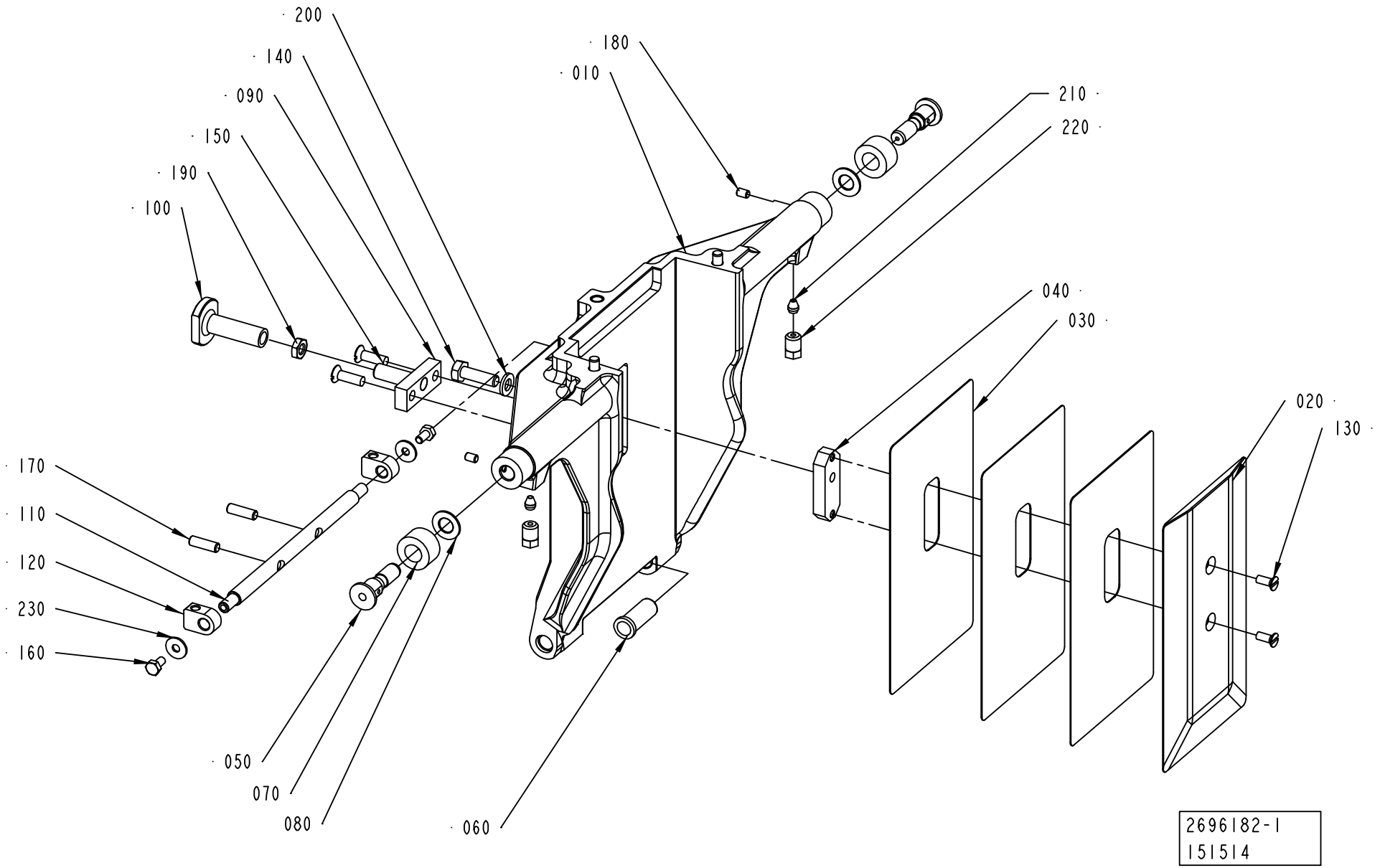
200
140
090
150
190
100
180
010
210
220
040
030
020
130
170
110
120
230
160
050
070
080
060
2696182-1
151514

ECM: 176118 - 50001231
Group number: 2696182-0100
Assembly Drawing: 2696182-1_1_AA

Pos	Part No	UN	Qty	Description	Page No
-					
010	2588304-0000		1	VOLUME FLAP	
020	2594888-0000		1	VOLUME BULGE	
030	2594890-0000		3	VOLUME SHIM	
040	2594893-0000		1	WEDGE	
050	434320-0000		2	AXLE PIN	
060	1255916-0000		2	BUSHING	
070	434321-0000		2	CURVE ROLLER	
080	19972-0000		2	WASHER	
090	2660401-0000		1	CATCH	
100	2660400-0000		1	STOP	
110	2566332-0000		1	SHAFT	
120	2566333-0000		2	HOLDER	
130	312145-0289		2	SCREW ISO 2009 MFS M4X10 A4	
140	312105-0370		1	SCREW M6S ISO 4017 M6X20 A480	
150	312145-0329		2	SCREW ISO 2009 MFS M5X16 A4	
160	312105-0287		2	SCREW M6S ISO4017 M4X8 A470	
170	312318-0329		2	SCREW ISO4029 M5X16 A4	
180	312318-0285		2	SCREW ISO4029 M4X6 A4	
190	312625-0316		1	HEXAGON THIN NUT, EN 24035 ML6M M6 A4	
200	315105-0153		1	WASHER BRB6,4X12RFR	
210	90028-0020		2	CONE TUBE 2,5MM	
220	90134-0063		2	BUSHING/NUT M8X1, D=2,5 MM	
230	90005-0082		2	WASHER PLAIN ROUND 4,3(M4)/12,H=1	

Pos	Part No	UN	Qty	Description	Page No

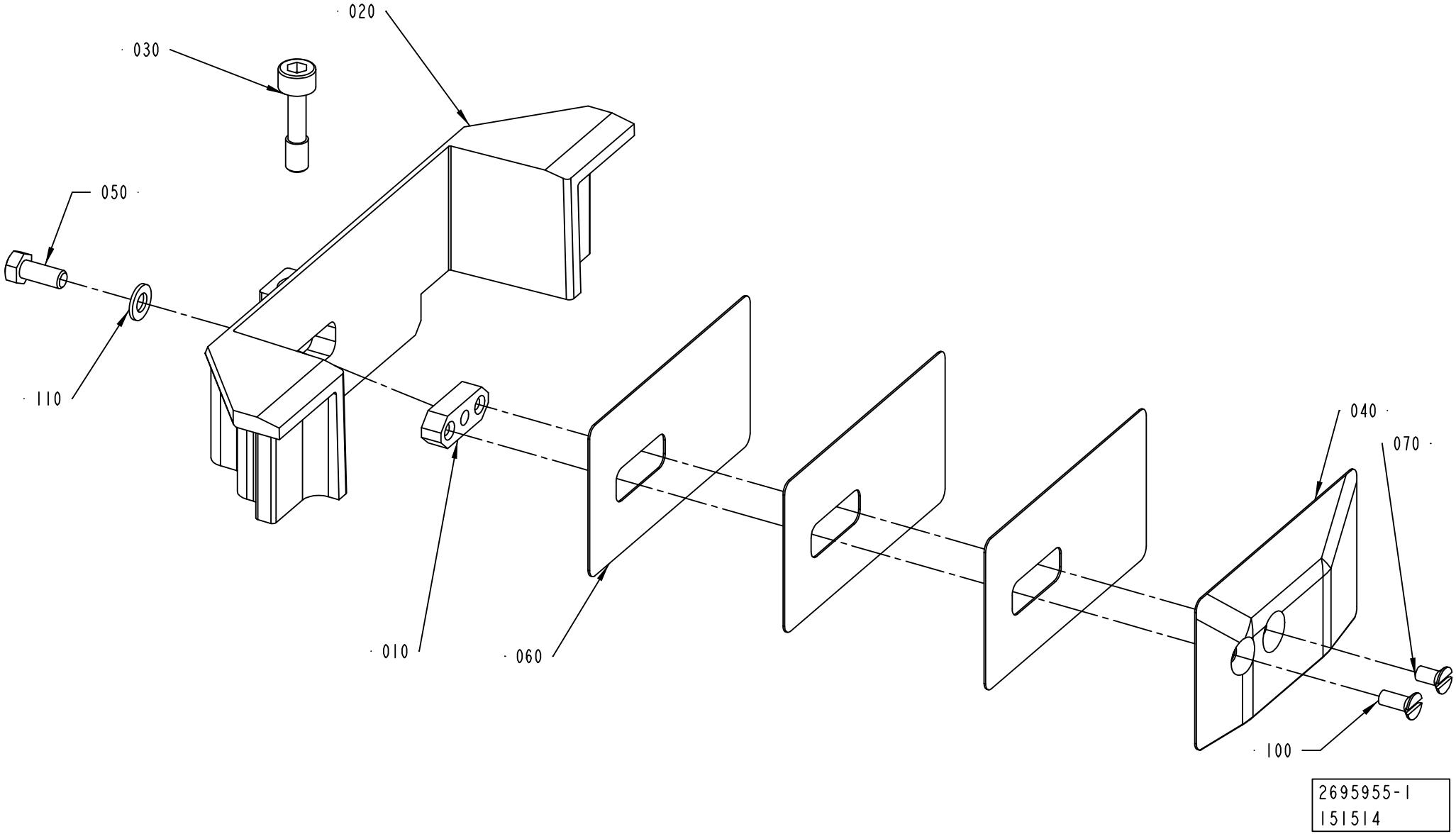
020
030
050
110
010
060
040
070
100
2695955-1
151514

ECM: 176117 - 50001231
Group number: 2695955-0100
Assembly Drawing: 2695955-1_1_AA

Pos	Part No	UN	Qty	Description	Page No
TBA 1890S					
020	2588306-0000		1	VOLUME FLAP	
040	2594889-0000		1	VOLUME BULGE	
060	2594891-0000		3	VOLUME SHIM	
TBA 2000S					
020	2588307-0000		1	VOLUME FLAP	
040	2672746-0000		1	VOLUME BULGE	
060	2672745-0000		3	VOLUME SHIM	
Common Parts					
010	1037734-0000		1	WEDGE	
030	2594896-0000		2	SCREW	
050	312105-0327		1	SCREW M6S ISO 4017 M5X12 A480	
070	312145-0287		1	SCREW ISO 2009 MFS M4X8 A4	
100	312145-0289		1	SCREW ISO 2009 MFS M4X10 A4	
110	315105-0146		1	WASHER BRB5,3X10RFR	

Pos	Part No	UN	Qty	Description	Page No

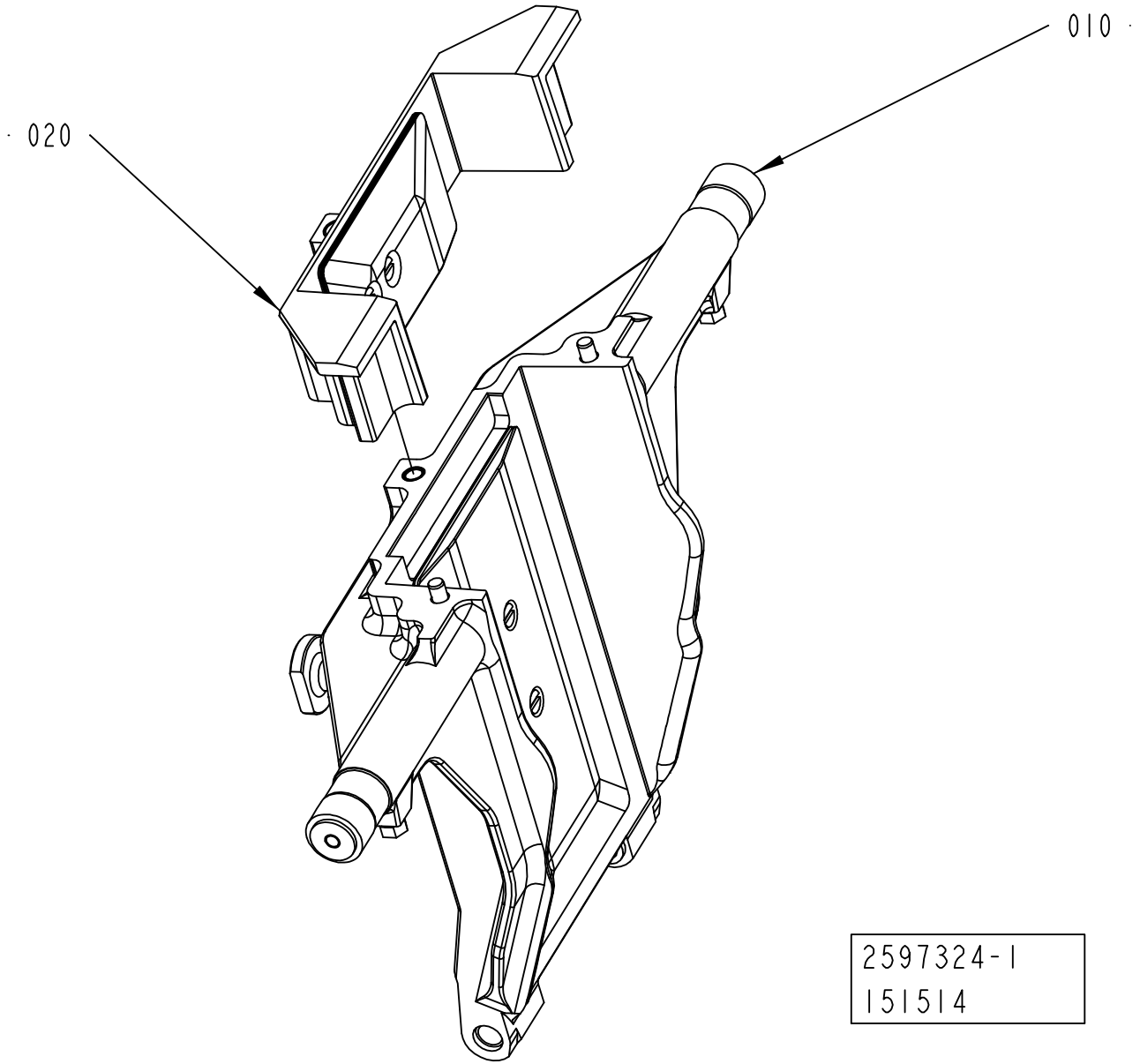
010
020
2597324-1
151514

ECM: 175825 - 50001231
Group number: 2597324-0100
Assembly Drawing: 2597324-1_1_AA

Pos	Part No	UN	Qty	Description	Page No
-					
010	2696156-0100		1	VOLUME FLAP	**4-55**
020	2695955-0100		1	VOLUME FLAP	**4-51**

Pos	Part No	UN	Qty	Description	Page No

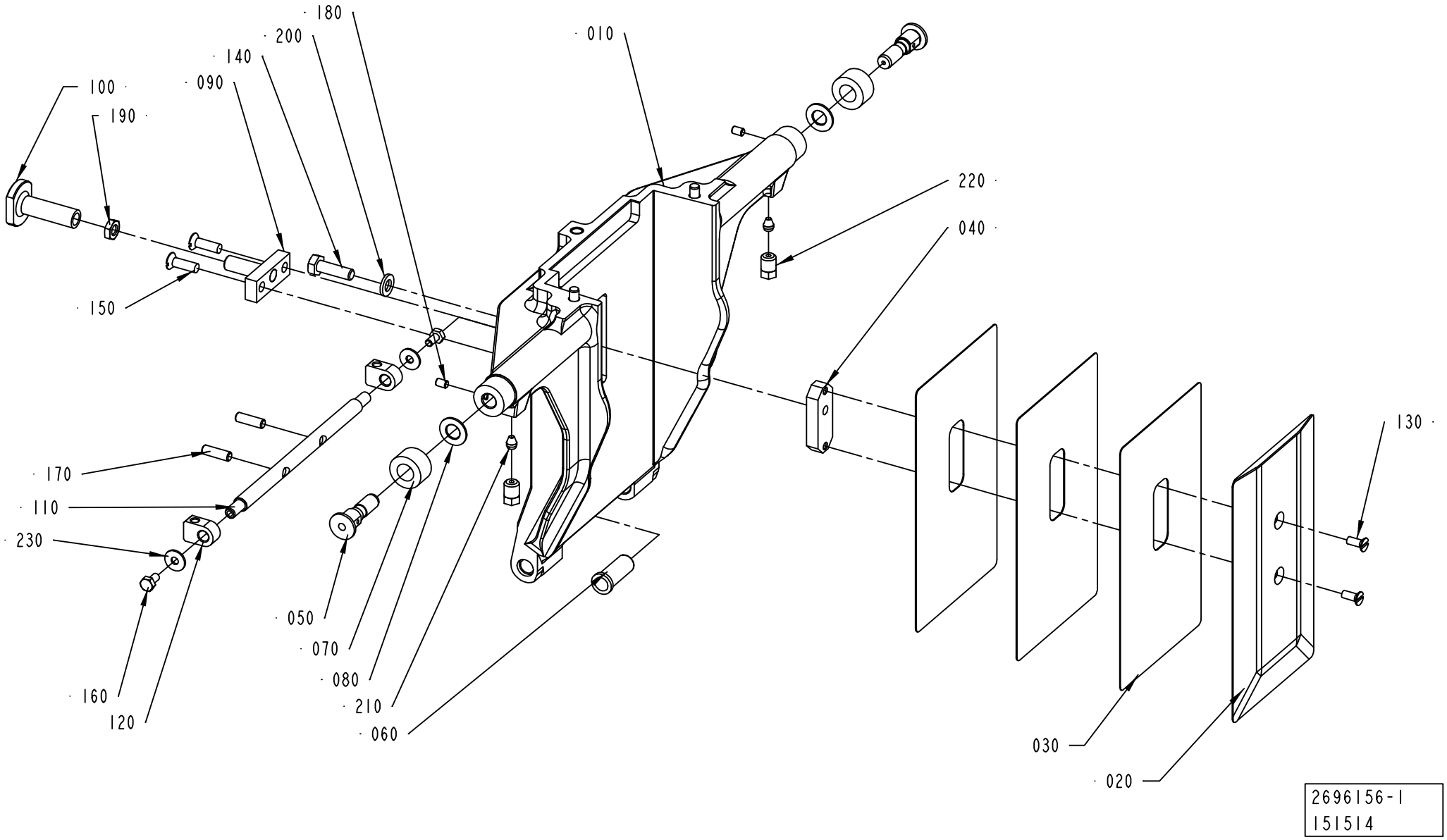
180
200
140
090
100
190
010
220
040
150
170
110
230
050
070
080
210
060
160
120
130
030
020
2696156-1
151514

ECM: 176116 - 50001231
Group number: 2696156-0100
Assembly Drawing: 2696156-1_1_AA

Pos	Part No	UN	Qty	Description	Page No
-					
010	2588305-0000		1	VOLUME FLAP	
020	2594888-0000		1	VOLUME BULGE	
030	2594890-0000		3	VOLUME SHIM	
040	2594893-0000		1	WEDGE	
050	434320-0000		2	AXLE PIN	
060	1255916-0000		2	BUSHING	
070	434321-0000		2	CURVE ROLLER	
080	19972-0000		2	WASHER	
090	2660401-0000		1	CATCH	
100	2660400-0000		1	STOP	
110	2566332-0000		1	SHAFT	
120	2566333-0000		2	HOLDER	
130	312145-0289		2	SCREW ISO 2009 MFS M4X10 A4	
140	312105-0370		1	SCREW M6S ISO 4017 M6X20 A480	
150	312145-0329		2	SCREW ISO 2009 MFS M5X16 A4	
160	312105-0287		2	SCREW M6S ISO4017 M4X8 A470	
170	312318-0329		2	SCREW ISO4029 M5X16 A4	
180	312318-0285		2	SCREW ISO4029 M4X6 A4	
190	312625-0316		1	HEXAGON THIN NUT, EN 24035 ML6M M6 A4	
200	315105-0153		1	WASHER BRB6,4X12RFR	
210	90028-0020		2	CONE TUBE 2,5MM	
220	90134-0063		2	BUSHING/NUT M8X1, D=2,5 MM	
230	90005-0082		2	WASHER PLAIN ROUND 4,3(M4)/12,H=1	

Pos	Part No	UN	Qty	Description	Page No

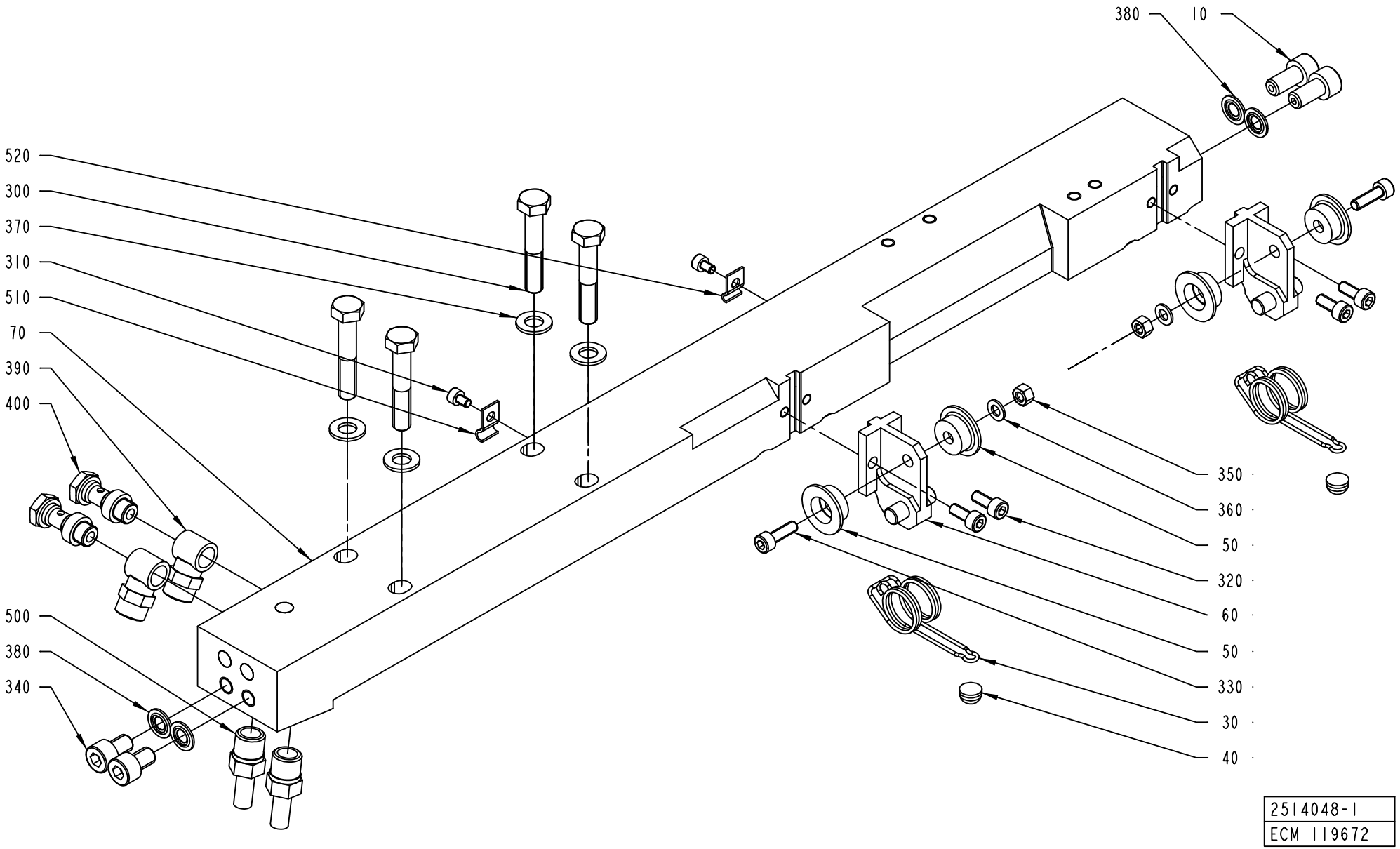
380
10
520
300
370
310
510
70
390
400
500
380
340
350
360
50
320
60
50
330
30
40
2514048-1
ECM 119672

Pos	Part No	UN	Qty	Description	Page No
A3/FLEX NOQC (See drawing on page: 4-56)					
070	2514049-0000		1	CARRIER	
310	312115-0285		2	SCREW ISO4762 M4X6 A4	
510	90165-0056		1	PIPE CLIP FOR TUBE D=4 MM	
520	90165-0058		1	PIPE CLIP FOR TUBE D=25 MM	
TBA 0500B QC, TBA 1000B QC, TBA 0200B QC, TBA 0330S QC, TBA 0250B QC (See drawing on page: 4-58)					
070	2514045-0000		1	CARRIER	
080	1549312-0000		1	INSERT	
410	312155-0323		3	SCREW EN 10642 MF6S M5X8 A480	
TBA 1890S QC, TBA 2000S QC (See drawing on page: 4-56)					
070	2566340-0000		1	CARRIER	
310	312115-0285		2	SCREW ISO4762 M4X6 A4	
510	90165-0056		1	PIPE CLIP FOR TUBE D=4 MM	
520	90165-0058		1	PIPE CLIP FOR TUBE D=25 MM	
Common Parts					
010	1036343-0000		2	SCREW	
030	1549378-0000		2	SPRING	
040	1129552-0000		2	KNOB	
050	1129833-0000		4	GUIDE ROLLER	
060	2588013-0000		2	BRACKET	
300	312105-0460		4	SCREW M6S ISO 4014 M8X45 A480	
320	312115-0327		4	SCREW ISO4762 M5X12 A4	
330	312115-0329		2	SCREW ISO4762 M5X16 A4	
340	312115-0447		2	SCREW ISO4762 M8X12 A4	
350	312605-0314		2	HEXAGON NUT, M6M M5 A280	
360	315105-0146		2	WASHER BRB5,3X10RFR	
370	315105-0165		4	WASHER BRB8,4X16RFR	
380	315211-0104		4	BONDED SEAL SS/NBR90 M8	
390	342980-0121		2	BANJO-CONNECTION,RING 8/6-G1/8"	
400	342980-0303		2	BANJO-HOLLOW BOLT COUPL,EXT.THR.01-G1/8"	
500	90030-0065		2	PIPE CONNECTION	

Pos	Part No	UN	Qty	Description	Page No

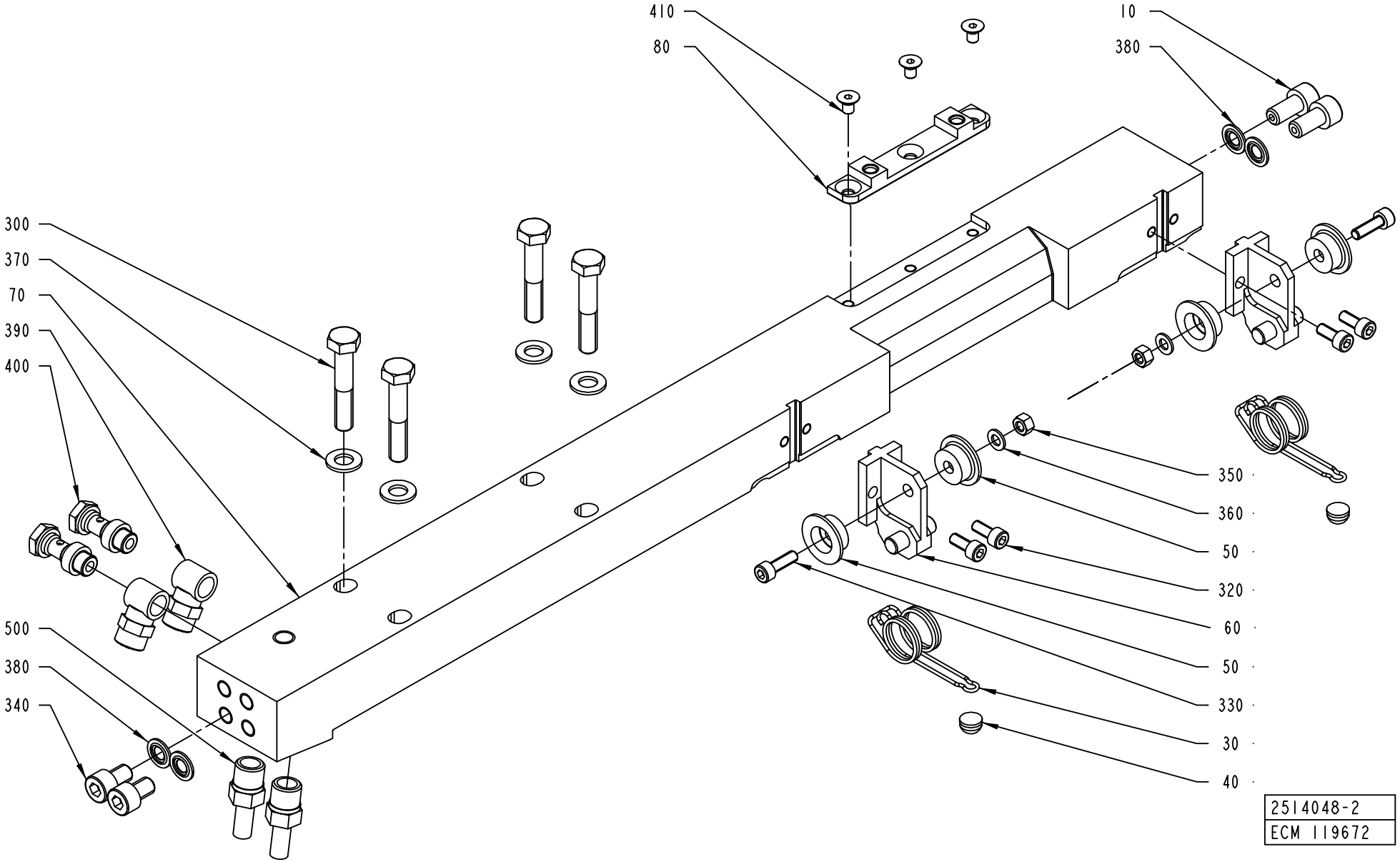
410
80
10
380
300
370
70
390
400
350
360
50
320
60
50
330
30
40
500
380
340
2514048-2
ECM 119672

Pos	Part No	UN	Qty	Description	Page No
A3/FLEX NOQC (See drawing on page: 4-56)					
070	2514049-0000		1	CARRIER	
310	312115-0285		2	SCREW ISO4762 M4X6 A4	
510	90165-0056		1	PIPE CLIP FOR TUBE D=4 MM	
520	90165-0058		1	PIPE CLIP FOR TUBE D=25 MM	
TBA 0500B QC, TBA 1000B QC, TBA 0200B QC, TBA 0330S QC, TBA 0250B QC (See drawing on page: 4-58)					
070	2514045-0000		1	CARRIER	
080	1549312-0000		1	INSERT	
410	312155-0323		3	SCREW EN 10642 MF6S M5X8 A480	
TBA 1890S QC, TBA 2000S QC (See drawing on page: 4-56)					
070	2566340-0000		1	CARRIER	
310	312115-0285		2	SCREW ISO4762 M4X6 A4	
510	90165-0056		1	PIPE CLIP FOR TUBE D=4 MM	
520	90165-0058		1	PIPE CLIP FOR TUBE D=25 MM	
Common Parts					
010	1036343-0000		2	SCREW	
030	1549378-0000		2	SPRING	
040	1129552-0000		2	KNOB	
050	1129833-0000		4	GUIDE ROLLER	
060	2588013-0000		2	BRACKET	
300	312105-0460		4	SCREW M6S ISO 4014 M8X45 A480	
320	312115-0327		4	SCREW ISO4762 M5X12 A4	
330	312115-0329		2	SCREW ISO4762 M5X16 A4	
340	312115-0447		2	SCREW ISO4762 M8X12 A4	
350	312605-0314		2	HEXAGON NUT, M6M M5 A280	
360	315105-0146		2	WASHER BRB5,3X10RFR	
370	315105-0165		4	WASHER BRB8,4X16RFR	
380	315211-0104		4	BONDED SEAL SS/NBR90 M8	
390	342980-0121		2	BANJO-CONNECTION,RING 8/6-G1/8"	
400	342980-0303		2	BANJO-HOLLOW BOLT COUPL,EXT.THR.01-G1/8"	
500	90030-0065		2	PIPE CONNECTION	

Pos	Part No	UN	Qty	Description	Page No

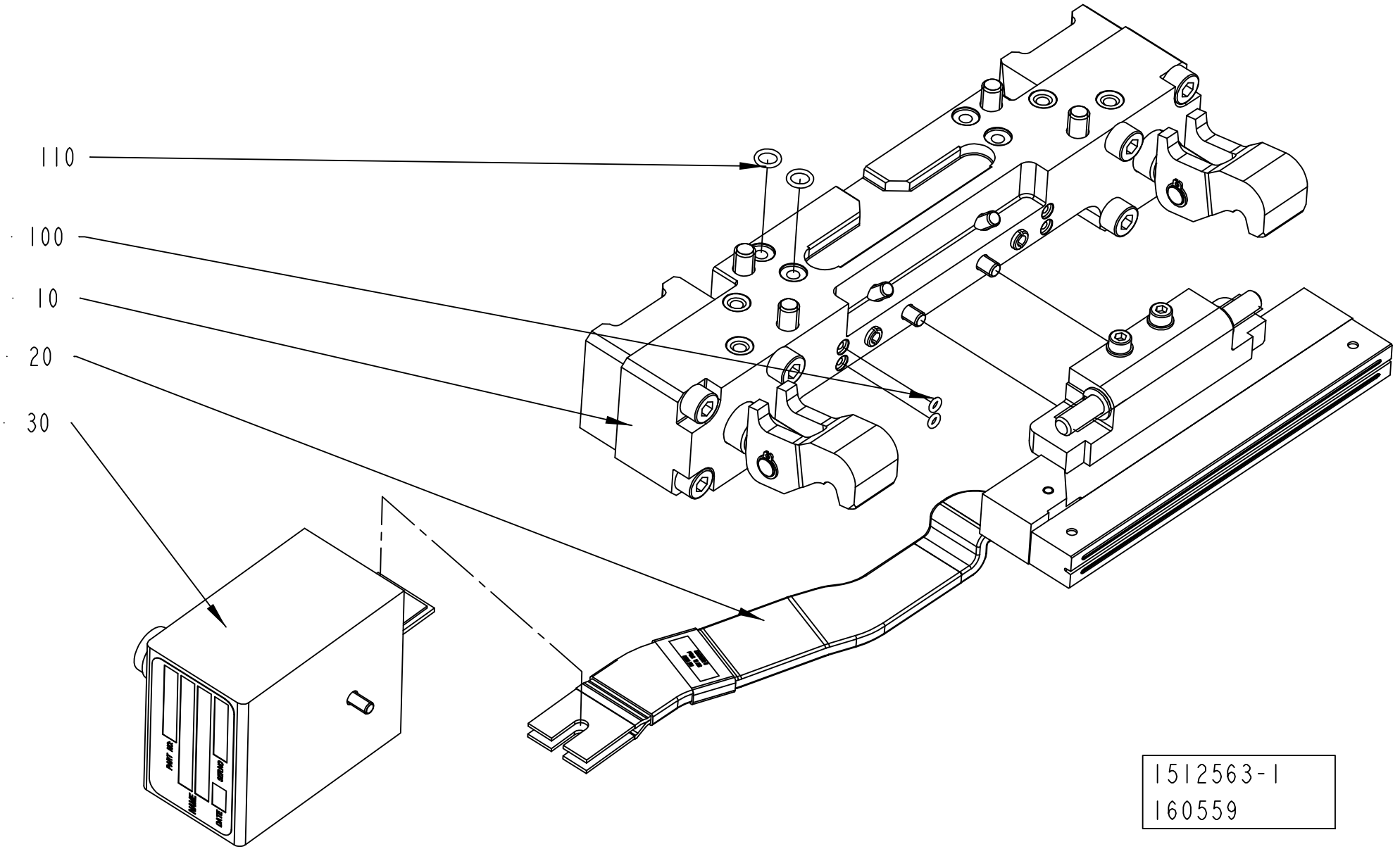
110
100
10
20
30
1512563-1
160559

ECM: 181185 - 50001231
Group number: 1512563-0200
Assembly Drawing: 1512563-1_1_AB

This list covers pages from 4-60 to 4-63

Pos	Part No	UN	Qty	Description	Page No
TBA 1890S QC, TBA 2000S QC (See drawing on pages: 4-60, 4-62)					
120	311103-0267		1	PARALLEL PIN ISO 2338 4M6X10 A1	
Common Parts					
010	2552005-0100		1	PRESSURE JAW	**4-65**
020	2552006-0100		1	INDUCTOR LEFT	**4-67, 4-69, 4-71**
030	2546229-0100		1	ADAPTION TRANSFORMER	**4-73**
100	315202-0101		2	O-RING 3,1X1,6 MM	
110	315202-0105		2	O-RING 7,1X1,6 MM	

Pos	Part No	UN	Qty	Description	Page No

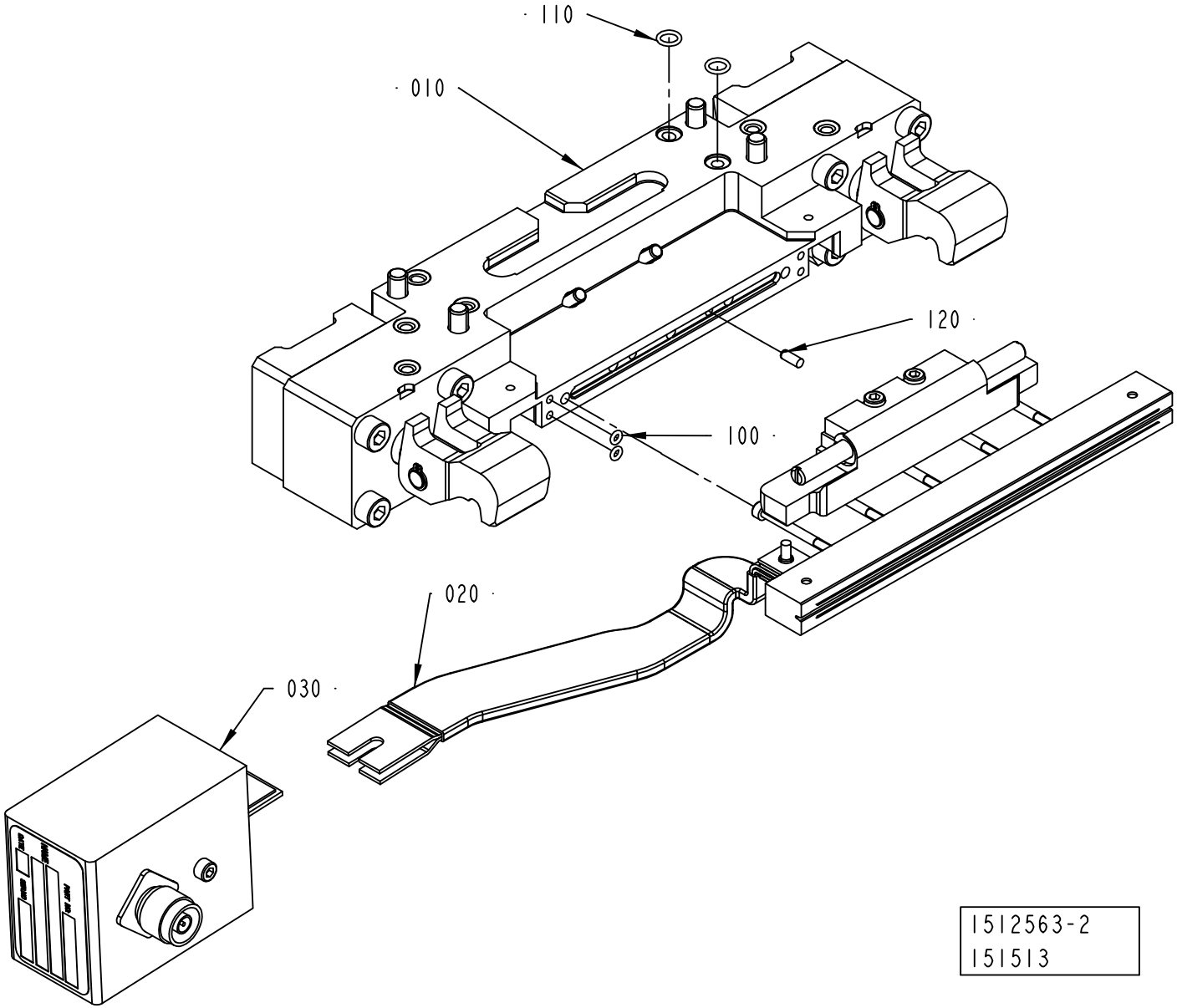
110
010
120
100
020
030
1512563-2
151513

Pos	Part No	UN	Qty	Description	Page No
TBA 1890S QC, TBA 2000S QC (See drawing on pages: 4-60, 4-62)					
120	311103-0267		1	PARALLEL PIN ISO 2338 4M6X10 A1	
Common Parts					
010	2552005-0100		1	PRESSURE JAW	**4-65**
020	2552006-0100		1	INDUCTOR LEFT	**4-67, 4-69, 4-71**
030	2546229-0100		1	ADAPTION TRANSFORMER	**4-73**
100	315202-0101		2	O-RING 3,1X1,6 MM	
110	315202-0105		2	O-RING 7,1X1,6 MM	

Pos	Part No	UN	Qty	Description	Page No

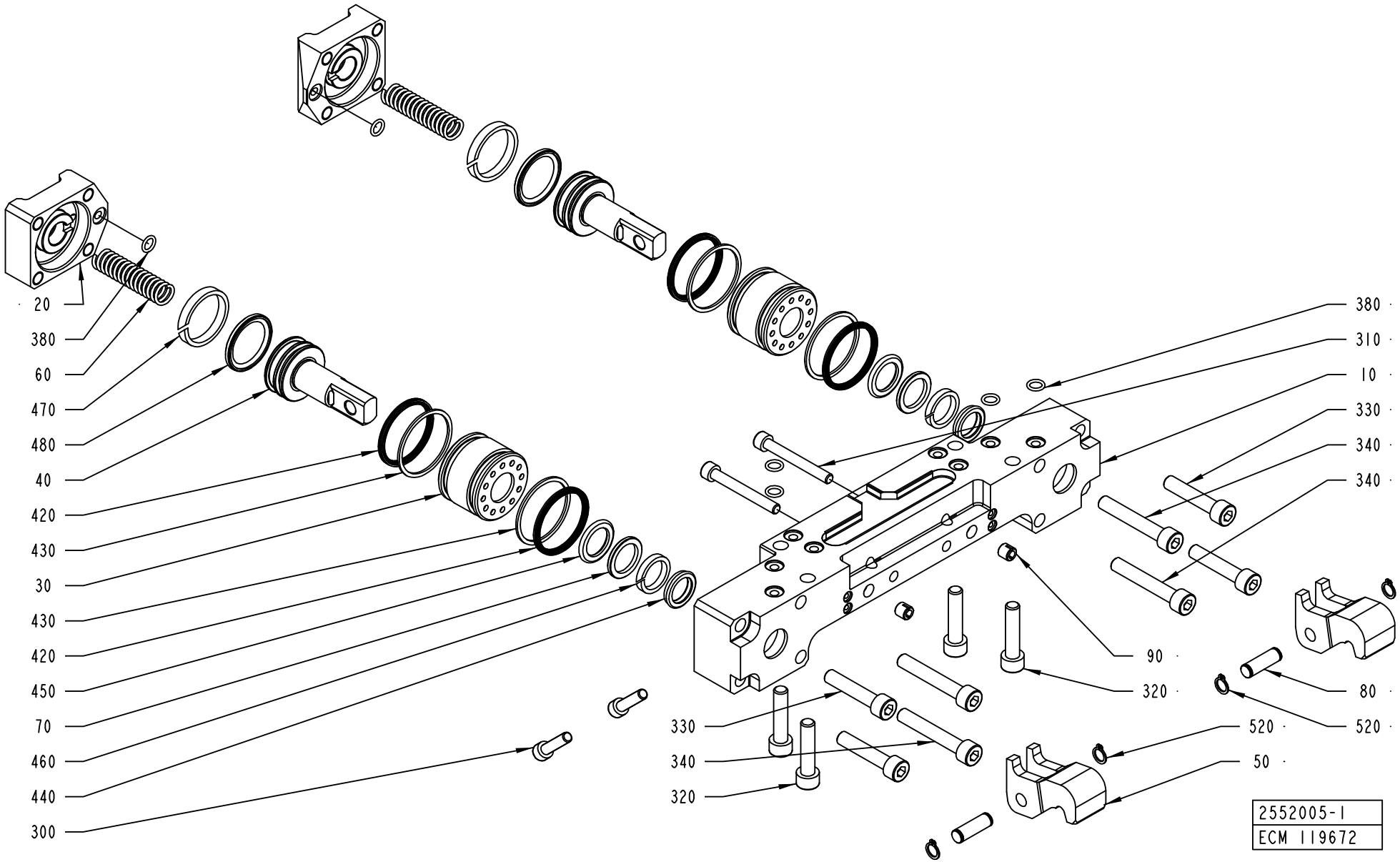
20
380
60
470
480
40
420
430
30
430
420
450
70
460
440
300
380
310
10
330
340
340
90
320
80
520
520
50
330
340
320
2552005-1
ECM 119672

ECM: 180539 - 50001231
Group number: 2552005-0100
Assembly Drawing: 2552005-1_1_AA

Pos	Part No	UN	Qty	Description	Page No
TBA 0330S, TBA 0200B, TBA 0200S, TBA 0250B					
010	2569908-0000		1	HOUSING	
020	2700151-0000		2	LID	
030	1349595-0000		2	SLEEVE	
040	929372-0000		2	PISTON	
050	1538349-0000		2	CATCH	
060	1260328-0000		2	SPRING	
080	950351-0000		2	SHAFT	
090	107426-0000		2	GUIDE SLEEVE	
310	312115-0380		2	SCREW ISO4762 M6X50 A4	
330	312115-0459		4	SCREW ISO4762 M8X40 A4	
420	90091-0359		4	X-SEAL 36,17X2,62 MM	
430	90091-0360		4	BACK-UP RING 37,5X1,4 MM	
470	90091-0391		2	SEAL SLYDRING	
480	90091-0398		2	PISTON SEAL, GLID RING T 20,5X28X3,2 MM	
TBA 0500B, TBA 1000S, TBA 1000SQ, TBA 1000B, TBA 1500S, TPA 1000SQ					
010	2569908-0000		1	HOUSING	
020	2700151-0000		2	LID	
030	1348504-0000		2	SLEEVE	
040	1349612-0000		2	PISTON	
050	1538349-0000		2	CATCH	
060	1260328-0000		2	SPRING	
080	950351-0000		2	SHAFT	
090	107426-0000		2	GUIDE SLEEVE	
310	312115-0380		2	SCREW ISO4762 M6X50 A4	
330	312115-0459		4	SCREW ISO4762 M8X40 A4	
420	90091-0359		4	X-SEAL 36,17X2,62 MM	
430	90091-0360		4	BACK-UP RING 37,5X1,4 MM	
470	90091-0368		2	WEAR RING 30X45X5,3 MM	
480	90091-0428		2	PISTON SEAL, GLID RING T 27,5X34,5X3,2 M	
TBA 1890S, TBA 2000S					
010	2566336-0000		1	BEARING HOUSING	
020	2588294-0000		2	LID	
030	2588295-0000		2	SLEEVE	
040	2588296-0000		2	PISTON	
050	2566338-0000		2	CATCH	
060	2594892-0000		2	SPRING	
080	2588297-0000		2	SHAFT	
420	90459-2146		4	X-SEAL 42,52X2,62 MM	
430	90459-2145		4	BACK-UP RING 43,5X1,4 MM	
470	90091-0074		2	WEAR RING 35X40X5,3 MM	
480	90459-2173		2	SEAL GLYDRING 32,5X40X3,2 MM	

Pos	Part No	UN	Qty	Description	Page No
Common Parts					
070	1038240-0000		2	SPACER	
300	312115-0372		2	SCREW ISO4762 M6X25 A4	
320	312115-0457		4	SCREW ISO4762 M8X35 A4	
340	312115-0461		4	SCREW ISO4762 M8X50 A4	
380	315202-0105		6	O-RING 7,1X1,6 MM	
440	90091-0362		2	SCRAPER, EXCLUDER2 18X22,8X3,7 MM	
450	90091-0364		2	ROD SEAL, STEPSEAL 18X25,3X3,2 MM	
460	90091-0366		2	WEAR RING 18X23X3,9 MM	
520	90141-0015		4	RETAINING RING FOR SHAFT DIN 471 8 A2	

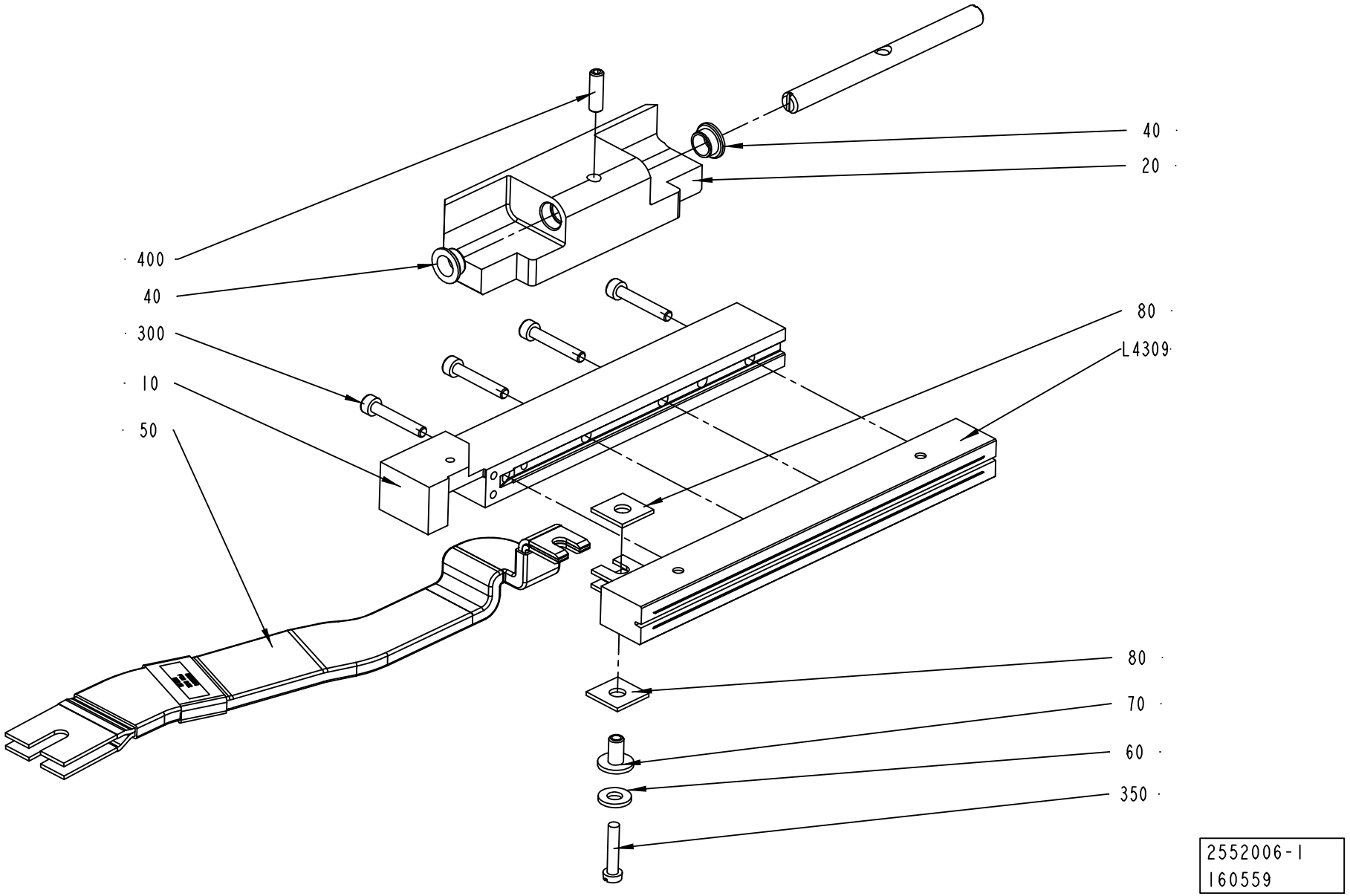
400
40
300
10
50
40
20
80
L4309
80
70
60
350
2552006-1
160559

ECM: 181192 - 50001231
Group number: 2552006-0100
Assembly Drawing: 2552006-1_1_AB

This list covers pages from 4-66 to 4-71

Pos	Part No	UN	Qty	Description	Page No
TPA 1000SQ SMILE (See drawing on page: 4-70)					
010	1558819-0000		1	RAIL	
020	2579991-0000		1	HOLDER	
030	2579990-0000		1	SHAFT	
040	2531703-0000		2	BUSHING	
050	1498849-0000		1	BUSBAR	
090	2503700-0000		1	VOLUME BULGE	
100	2500591-0000		1	VOLUME BULGE	
300	312115-0297		4	SCREW ISO4762 M4X25 A4	
370	312155-0287		2	SCREW EN 10642 MF6S M4X8 A480	
380	312155-0325		2	SCREW EN 10642 MF6S M5X10 A480	
400	312115-0327		2	SCREW ISO4762 M5X12 A4	
L4309	1520052-0000		1	INDUCTOR	
L4309	1520052-0000		1	INDUCTOR	
TBA 0200B NOQC, TBA 0250B NOQC (See drawing on page: 4-66)					
010	1348545-0000		1	RAIL	
020	1349599-0000		1	HOLDER	
030	1349980-0000		1	SHAFT	
040	1349584-0000		2	BUSHING	
050	1498849-0000		1	BUSBAR	
300	312115-0297		3	SCREW ISO4762 M4X25 A4	
400	312318-0329		1	SCREW ISO4029 M5X16 A4	
L4309	1110932-0000		1	INDUCTOR	
L4309	1110932-0000		1	INDUCTOR	
TBA 0200B QC, TBA 0330S QC, TBA 0250B QC (See drawing on page: 4-68)					
010	1348545-0000		1	RAIL	
020	2604565-0000		1	HOLDER	
050	1498849-0000		1	BUSBAR	
300	312115-0297		3	SCREW ISO4762 M4X25 A4	
L4309	1110932-0000		1	INDUCTOR	
L4309	1110932-0000		1	INDUCTOR	
TBA 0200S (See drawing on page: 4-70)					
010	1348545-0000		1	RAIL	
020	2513015-0000		1	HOLDER	
030	2513013-0000		1	SHAFT	
040	2531703-0000		2	BUSHING	
050	1498849-0000		1	BUSBAR	
300	312115-0297		3	SCREW ISO4762 M4X25 A4	
400	312115-0329		2	SCREW ISO4762 M5X16 A4	
L4309	1110930-0000		1	INDUCTOR	
L4309	1110930-0000		1	INDUCTOR	
TBA 0500B QC, TBA 1000B QC (See drawing on page: 4-68)					
010	1558819-0000		1	RAIL	
020	1487955-0000		1	HOLDER	
050	1498849-0000		1	BUSBAR	
090	1558734-0000		1	VOLUME BULGE	
300	312115-0297		4	SCREW ISO4762 M4X25 A4	
370	312155-0287		2	SCREW EN 10642 MF6S M4X8 A480	
L4309	1110938-0000		1	INDUCTOR	
L4309	1110938-0000		1	INDUCTOR	
TBA 1000B NOQC NOMOLDEDCAP (See drawing on page: 4-70)					
010	1348545-0000		1	RAIL	
020	2664280-0000		1	HOLDER	
030	2526812-0000		1	SHAFT	
040	2531703-0000		2	BUSHING	
050	1498849-0000		1	BUSBAR	
300	312115-0297		4	SCREW ISO4762 M4X25 A4	
410	315105-0146		2	WASHER BRB5,3X10RFR	
L4309	1110938-0000		1	INDUCTOR	
L4309	1110938-0000		1	INDUCTOR	
TBA 1000B NOQC STDA7 (See drawing on page: 4-70)					
010	2610954-0000		1	RAIL	
020	2664280-0000		1	HOLDER	
030	2526812-0000		1	SHAFT	
040	2531703-0000		2	BUSHING	
050	1498849-0000		1	BUSBAR	
300	312115-0297		4	SCREW ISO4762 M4X25 A4	
410	315105-0146		2	WASHER BRB5,3X10RFR	
L4309	2610956-0000		1	INDUCTOR	
L4309	2610956-0000		1	INDUCTOR	
TBA 1000S NOMOLDEDCAP (See drawing on page: 4-70)					
010	1348545-0000		1	RAIL	
020	2559425-0000		1	CLAMP HOLDER	
030	2526812-0000		1	SHAFT	
040	2531703-0000		2	BUSHING	
050	1498849-0000		1	BUSBAR	
300	312115-0297		4	SCREW ISO4762 M4X25 A4	
400	312115-0327		2	SCREW ISO4762 M5X12 A4	
L4309	1110937-0000		1	INDUCTOR	
L4309	1110937-0000		1	INDUCTOR	
TBA 1000S STDA7 (See drawing on page: 4-70)					
010	2546475-0000		1	RAIL	
020	2559425-0000		1	CLAMP HOLDER	
030	2526812-0000		1	SHAFT	

Machine Type Group Description Used-In Group Number Page No

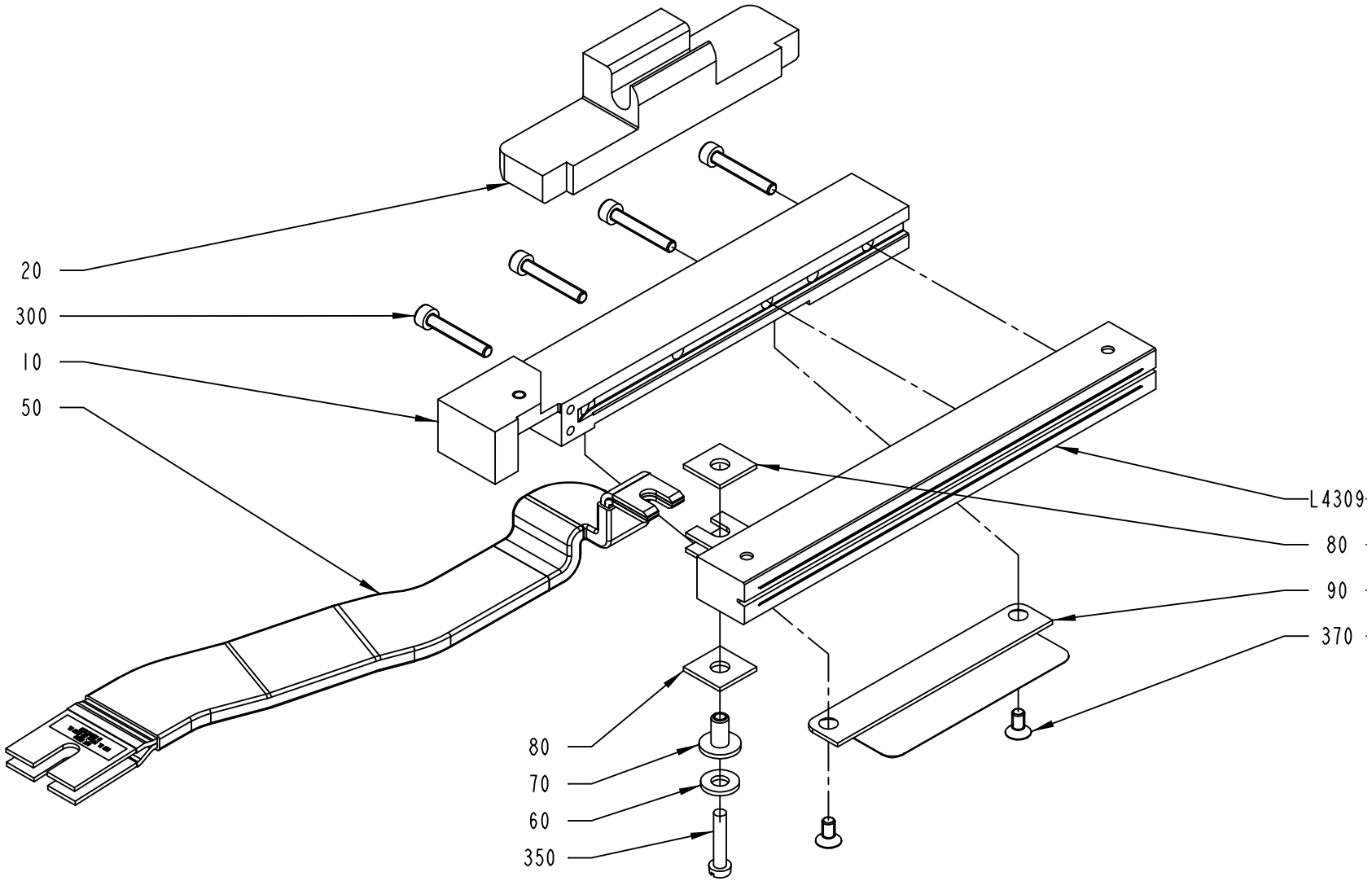

2552006-3
ECM 119672

ECM: 181192 - 50001231
Group number: 2552006-0100
Assembly Drawing: 2552006-3_1_AA

This list covers pages from 4-66 to 4-71

Pos	Part No	UN	Qty	Description	Page No
TBA 1000S STDA7 (Cont'd) (See drawing on page: 4-70)					
040	2531703-0000		2	BUSHING	
050	1498849-0000		1	BUSBAR	
300	312115-0297		4	SCREW ISO4762 M4X25 A4	
400	312115-0327		2	SCREW ISO4762 M5X12 A4	
L4309	2546474-0000		1	INDUCTOR	
L4309	2546474-0000		1	INDUCTOR	
TBA 1000SQ (See drawing on page: 4-70)					
010	1348545-0000		1	RAIL	
020	2526811-0000		1	HOLDER	
030	2526812-0000		1	SHAFT	
040	2531703-0000		2	BUSHING	
050	1498849-0000		1	BUSBAR	
300	312115-0297		4	SCREW ISO4762 M4X25 A4	
400	312115-0327		2	SCREW ISO4762 M5X12 A4	
L4309	1110936-0000		1	INDUCTOR	
L4309	1110936-0000		1	INDUCTOR	
TBA 1500S (See drawing on page: 4-70)					
010	1348545-0000		1	RAIL	
020	2570302-0000		1	CLAMP HOLDER	
030	2526812-0000		1	SHAFT	
040	2531703-0000		2	BUSHING	
050	1498849-0000		1	BUSBAR	
300	312115-0297		4	SCREW ISO4762 M4X25 A4	
400	312115-0327		2	SCREW ISO4762 M5X12 A4	
L4309	1110938-0000		1	INDUCTOR	
L4309	1110938-0000		1	INDUCTOR	
TBA 1890S QC, TBA 2000S QC (See drawing on page: 4-70)					
020	2588293-0000		1	HOLDER	
030	2686144-0000		1	SHAFT	
040	2531703-0000		2	BUSHING	
050	2698011-0000		1	BUSBAR	
300	312115-0305		5	SCREW ISO4762 M4X50 A4	
400	312115-0327		2	SCREW ISO4762 M5X12 A4	
L4309	1533046-0000		1	INDUCTOR	
L4309	1533046-0000		1	INDUCTOR	
TPA 1000SQ FT (See drawing on page: 4-70)					
010	1558819-0000		1	RAIL	
020	2579989-0000		1	HOLDER	
030	2579990-0000		1	SHAFT	
040	2531703-0000		2	BUSHING	
050	1498849-0000		1	BUSBAR	
090	2503700-0000		1	VOLUME BULGE	
300	312115-0297		4	SCREW ISO4762 M4X25 A4	
370	312155-0287		2	SCREW EN 10642 MF6S M4X8 A480	
400	312115-0327		2	SCREW ISO4762 M5X12 A4	
L4309	1520052-0000		1	INDUCTOR	
L4309	1520052-0000		1	INDUCTOR	
Common Parts					
060	28509-0000		1	WASHER	
070	32544-0000		1	INSULATION NUT	
080	1036584-0000		2	WASHER	
350	312125-0295		1	SCREW ISO 1207 M4X20 A4	

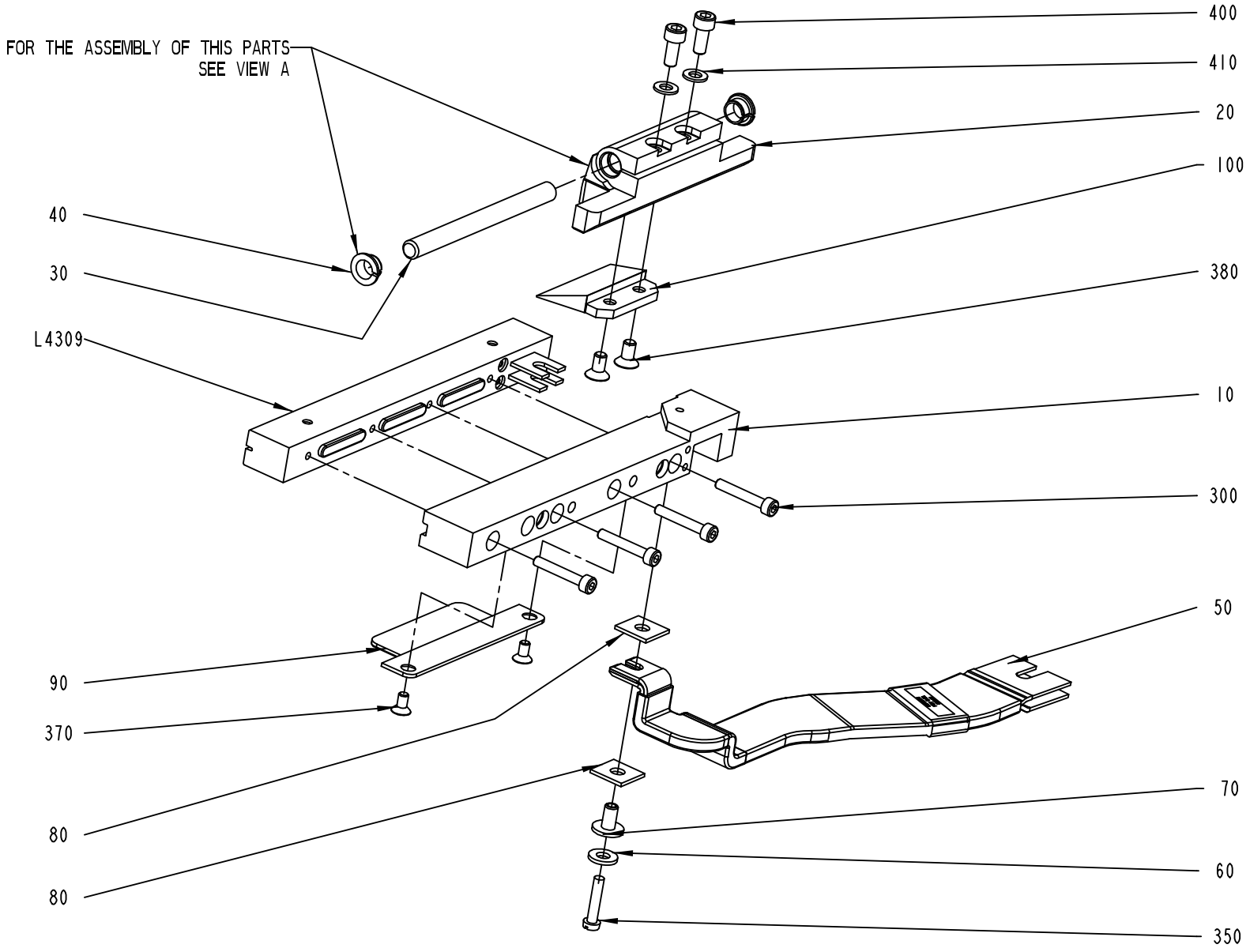

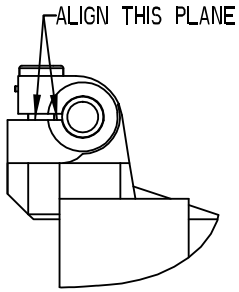

2552006-5
151513

ECM: 181192 - 50001231
Group number: 2552006-0100
Assembly Drawing: 2552006-5_1_AC

This list covers pages from 4-66 to 4-71

Pos	Part No	UN	Qty	Description	Page No
SEE PREVIOUS LISTS PAGES: 4-67, 4-69.					

Pos	Part No	UN	Qty	Description	Page No

ADAPTION TRANSFORMER

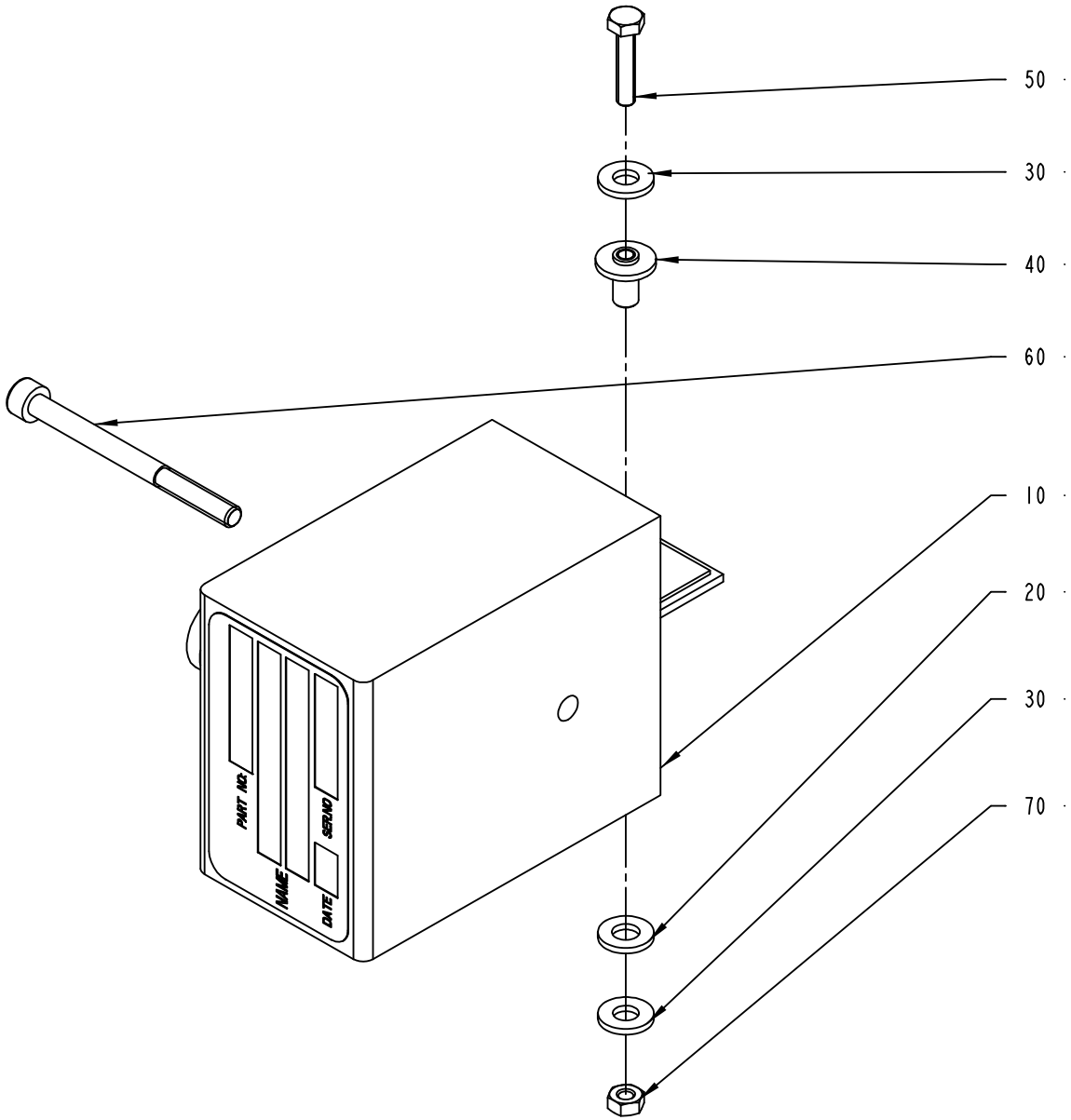

2546229-1
ECM 119672

ECM: 181190 - 50001231
Group number: 2546229-0100
Assembly Drawing: 2546229-1_1_AA

Pos	Part No	UN	Qty	Description	Page No
TBA 0200S					
010	67379-0105		1	TRANSFORMER	
010	67379-0105		1	TRANSFORMER	
TBA 0330S, TBA 0200B, TBA 0250B					
010	67379-0269		1	TRANSFORMER	
010	67379-0269		1	TRANSFORMER	
TBA 0500B, TBA 1000S, TBA 1000SQ, TBA 1000B, TBA 1500S					
010	67379-0101		1	TRANSFORMER	
010	67379-0101		1	TRANSFORMER	
TPA 1000SQ, TBA 1890S, TBA 2000S					
010	67379-0249		1	RANSFORMER	
010	67379-0249		1	RANSFORMER	
Common Parts					
020	32079-0000		1	WASHER	
030	28509-0000		2	WASHER	
040	32544-0000		2	INSULATION NUT	
050	312105-0295		1	SCREW M6S ISO4017 M4X20 A470	
060	90458-0058		1	SCREW M5X60 A280	
070	312605-0312		2	HEXAGON NUT, M6M M4 A280	

Pos	Part No	UN	Qty	Description	Page No

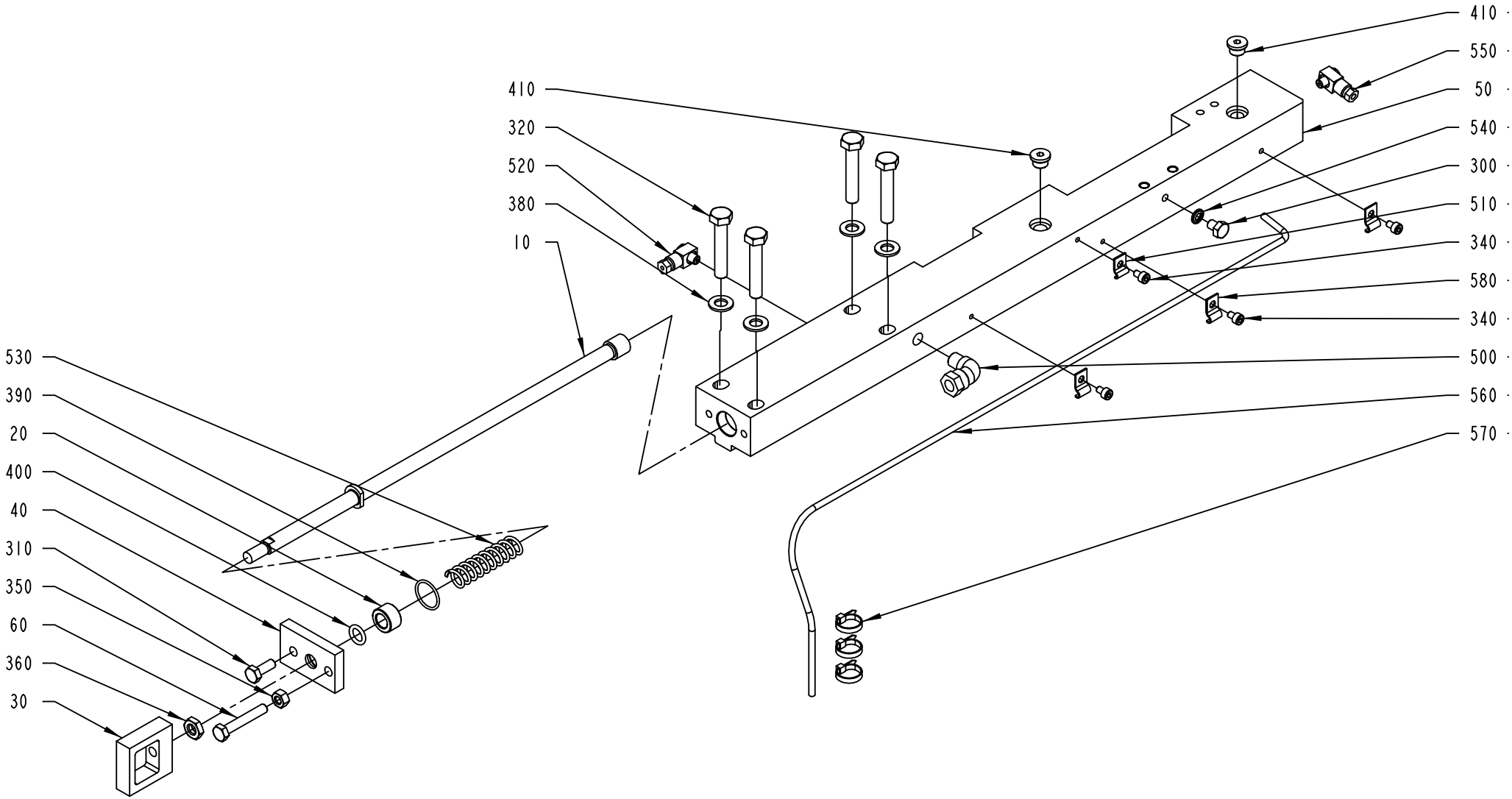

1512564-1
ECM 119672

ECM: 181186 - 50001231
Group number: 1512564-0200
Assembly Drawing: 1512564-1_1_AA

This list covers pages from 4-74 to 4-79

Pos	Part No	UN	Qty	Description	Page No
TBA 0200B QC, TBA 0330S QC, TBA 0250B QC (See drawing on page: 4-76)					
010	2530508-0000		1	TIE ROD	
050	2571843-0000		1	CARRIER	
070	1549312-0000		1	INSERT	
345	312155-0323		3	SCREW EN 10642 MF6S M5X8 A480	
TBA 0500B QC, TBA 1000B QC (See drawing on page: 4-76)					
010	1499320-0000		1	TIE ROD	
050	2571843-0000		1	CARRIER	
070	1549312-0000		1	INSERT	
345	312155-0323		3	SCREW EN 10642 MF6S M5X8 A480	
TBA 0200S, TBA 0200B NOQC, TBA 0250B NOQC (See drawing on page: 4-74)					
010	2530508-0000		1	TIE ROD	
050	2531114-0000		1	CARRIER	
TBA 1000S, TBA 1000SQ, TBA 1500S, TPA 1000SQ, TBA 1000B NOQC (See drawing on page: 4-74)					
010	1499320-0000		1	TIE ROD	
050	2531114-0000		1	CARRIER	
TBA 1890S QC, TBA 2000S QC (See drawing on page: 4-78)					
010	2588291-0000		1	TIE ROD	
050	2566329-0000		1	CARRIER	
070	2566328-0000		1	PLATE	
590	312155-0287		3	SCREW EN 10642 MF6S M4X8 A480	
600	2603151-0000		1	SHIM	
Common Parts					
020	1036495-0000		1	BUSHING	
030	1036585-0000		1	EAR	
040	1036664-0000		1	LID	
060	1523162-0000		1	SCREW	
300	312105-0362		1	SCREW M6S ISO 4017 M6X8 A480	
310	312105-0368		1	SCREW M6S ISO 4017 M6X16 A480	
320	312105-0460		4	SCREW M6S ISO 4014 M8X45 A480	
340	312115-0285		4	SCREW ISO4762 M4X6 A4	
350	312605-0316		1	HEXAGON NUT, M6M M6 A280	
360	312625-0318		1	HEXAGON THIN NUT, EN 24035 ML6M M8 A4	
380	315105-0165		4	WASHER BRB8,4X16RFR	
390	315202-0116		1	O-RING 18,1X1,6 MM	
400	315202-0208		1	O-RING 9,3X2,4 MM	
410	342713-0209		2	PLUG (1UNIT = 10PC)	
500	90030-0257		1	CONN. ELBOW, 8-R1/8, EXT.THREAD	
510	90165-0058		1	PIPE CLIP FOR TUBE D=25 MM	
520	90134-0058		1	CONNECTION	
530	1548940-0000		1	SPRING	
540	315211-0103		1	BONDED SEAL SS/NBR90 M6	
550	90134-0068		1	CONNECTION	
560	90266-0165	MM	800	BRASS PIPE	
570	352113-0101		3	CLIP STRIP, 92X2,5 MM	
580	90165-0056		3	PIPE CLIP FOR TUBE D=4 MM	

Machine Type | Group Description | Used-In | Group Number | Page No

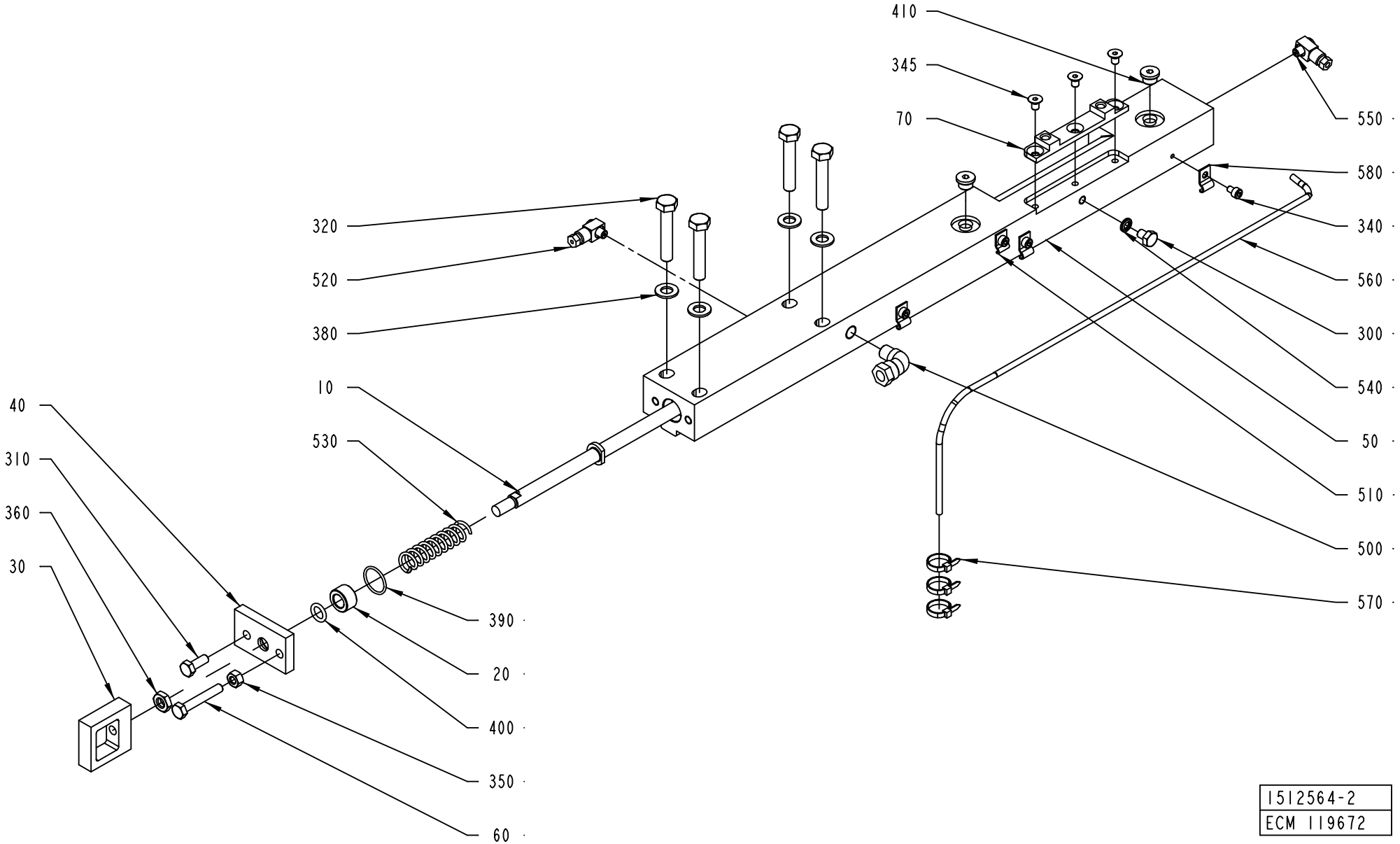
410
345
70
550
580
340
560
300
540
50
510
500
570
320
520
380
10
530
40
310
360
30
390
20
400
350
60
1512564-2
ECM 119672

ECM: 181186 - 50001231
Group number: 1512564-0200
Assembly Drawing: 1512564-2_1_AA

This list covers pages from 4-74 to 4-79

Pos	Part No	UN	Qty	Description	Page No
TBA 0200B QC, TBA 0330S QC, TBA 0250B QC (See drawing on page: 4-76)					
010	2530508-0000		1	TIE ROD	
050	2571843-0000		1	CARRIER	
070	1549312-0000		1	INSERT	
345	312155-0323		3	SCREW EN 10642 MF6S M5X8 A480	
TBA 0500B QC, TBA 1000B QC (See drawing on page: 4-76)					
010	1499320-0000		1	TIE ROD	
050	2571843-0000		1	CARRIER	
070	1549312-0000		1	INSERT	
345	312155-0323		3	SCREW EN 10642 MF6S M5X8 A480	
TBA 0200S, TBA 0200B NOQC, TBA 0250B NOQC (See drawing on page: 4-74)					
010	2530508-0000		1	TIE ROD	
050	2531114-0000		1	CARRIER	
TBA 1000S, TBA 1000SQ, TBA 1500S, TPA 1000SQ, TBA 1000B NOQC (See drawing on page: 4-74)					
010	1499320-0000		1	TIE ROD	
050	2531114-0000		1	CARRIER	
TBA 1890S QC, TBA 2000S QC (See drawing on page: 4-78)					
010	2588291-0000		1	TIE ROD	
050	2566329-0000		1	CARRIER	
070	2566328-0000		1	PLATE	
590	312155-0287		3	SCREW EN 10642 MF6S M4X8 A480	
600	2603151-0000		1	SHIM	
Common Parts					
020	1036495-0000		1	BUSHING	
030	1036585-0000		1	EAR	
040	1036664-0000		1	LID	
060	1523162-0000		1	SCREW	
300	312105-0362		1	SCREW M6S ISO 4017 M6X8 A480	
310	312105-0368		1	SCREW M6S ISO 4017 M6X16 A480	
320	312105-0460		4	SCREW M6S ISO 4014 M8X45 A480	
340	312115-0285		4	SCREW ISO4762 M4X6 A4	
350	312605-0316		1	HEXAGON NUT, M6M M6 A280	
360	312625-0318		1	HEXAGON THIN NUT, EN 24035 ML6M M8 A4	
380	315105-0165		4	WASHER BRB8,4X16RFR	
390	315202-0116		1	O-RING 18,1X1,6 MM	
400	315202-0208		1	O-RING 9,3X2,4 MM	
410	342713-0209		2	PLUG (1UNIT = 10PC)	
500	90030-0257		1	CONN. ELBOW, 8-R1/8, EXT.THREAD	
510	90165-0058		1	PIPE CLIP FOR TUBE D=25 MM	
520	90134-0058		1	CONNECTION	
530	1548940-0000		1	SPRING	
540	315211-0103		1	BONDED SEAL SS/NBR90 M6	
550	90134-0068		1	CONNECTION	
560	90266-0165	MM	800	BRASS PIPE	
570	352113-0101		3	CLIP STRIP, 92X2,5 MM	
580	90165-0056		3	PIPE CLIP FOR TUBE D=4 MM	

Machine Type | Group Description | Used-In | Group Number | Page No

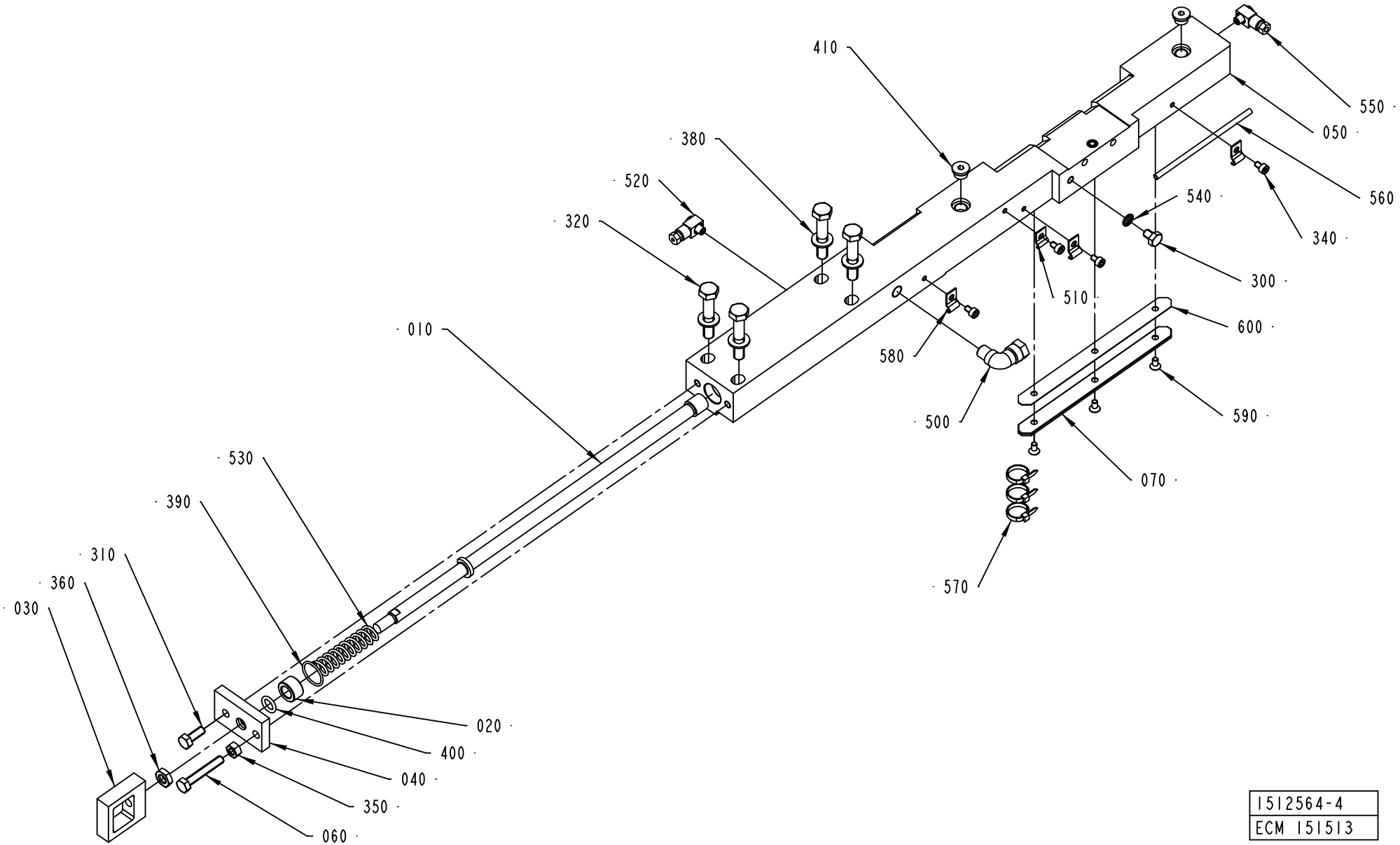

1512564-4
ECM 151513

ECM: 181186 - 50001231
Group number: 1512564-0200
Assembly Drawing: 1512564-4_1_AA

This list covers pages from 4-74 to 4-79

Pos	Part No	UN	Qty	Description	Page No
TBA 0200B QC, TBA 0330S QC, TBA 0250B QC (See drawing on page: 4-76)					
010	2530508-0000		1	TIE ROD	
050	2571843-0000		1	CARRIER	
070	1549312-0000		1	INSERT	
345	312155-0323		3	SCREW EN 10642 MF6S M5X8 A480	
TBA 0500B QC, TBA 1000B QC (See drawing on page: 4-76)					
010	1499320-0000		1	TIE ROD	
050	2571843-0000		1	CARRIER	
070	1549312-0000		1	INSERT	
345	312155-0323		3	SCREW EN 10642 MF6S M5X8 A480	
TBA 0200S, TBA 0200B NOQC, TBA 0250B NOQC (See drawing on page: 4-74)					
010	2530508-0000		1	TIE ROD	
050	2531114-0000		1	CARRIER	
TBA 1000S, TBA 1000SQ, TBA 1500S, TPA 1000SQ, TBA 1000B NOQC (See drawing on page: 4-74)					
010	1499320-0000		1	TIE ROD	
050	2531114-0000		1	CARRIER	
TBA 1890S QC, TBA 2000S QC (See drawing on page: 4-78)					
010	2588291-0000		1	TIE ROD	
050	2566329-0000		1	CARRIER	
070	2566328-0000		1	PLATE	
590	312155-0287		3	SCREW EN 10642 MF6S M4X8 A480	
600	2603151-0000		1	SHIM	
Common Parts					
020	1036495-0000		1	BUSHING	
030	1036585-0000		1	EAR	
040	1036664-0000		1	LID	
060	1523162-0000		1	SCREW	
300	312105-0362		1	SCREW M6S ISO 4017 M6X8 A480	
310	312105-0368		1	SCREW M6S ISO 4017 M6X16 A480	
320	312105-0460		4	SCREW M6S ISO 4014 M8X45 A480	
340	312115-0285		4	SCREW ISO4762 M4X6 A4	
350	312605-0316		1	HEXAGON NUT, M6M M6 A280	
360	312625-0318		1	HEXAGON THIN NUT, EN 24035 ML6M M8 A4	
380	315105-0165		4	WASHER BRB8,4X16RFR	
390	315202-0116		1	O-RING 18,1X1,6 MM	
400	315202-0208		1	O-RING 9,3X2,4 MM	
410	342713-0209		2	PLUG (1UNIT = 10PC)	
500	90030-0257		1	CONN. ELBOW, 8-R1/8, EXT.THREAD	
510	90165-0058		1	PIPE CLIP FOR TUBE D=25 MM	
520	90134-0058		1	CONNECTION	
530	1548940-0000		1	SPRING	
540	315211-0103		1	BONDED SEAL SS/NBR90 M6	
550	90134-0068		1	CONNECTION	
560	90266-0165	MM	800	BRASS PIPE	
570	352113-0101		3	CLIP STRIP, 92X2,5 MM	
580	90165-0056		3	PIPE CLIP FOR TUBE D=4 MM	

Machine Type | Group Description | Used-In | Group Number | Page No

CUTTING JAW LEFT

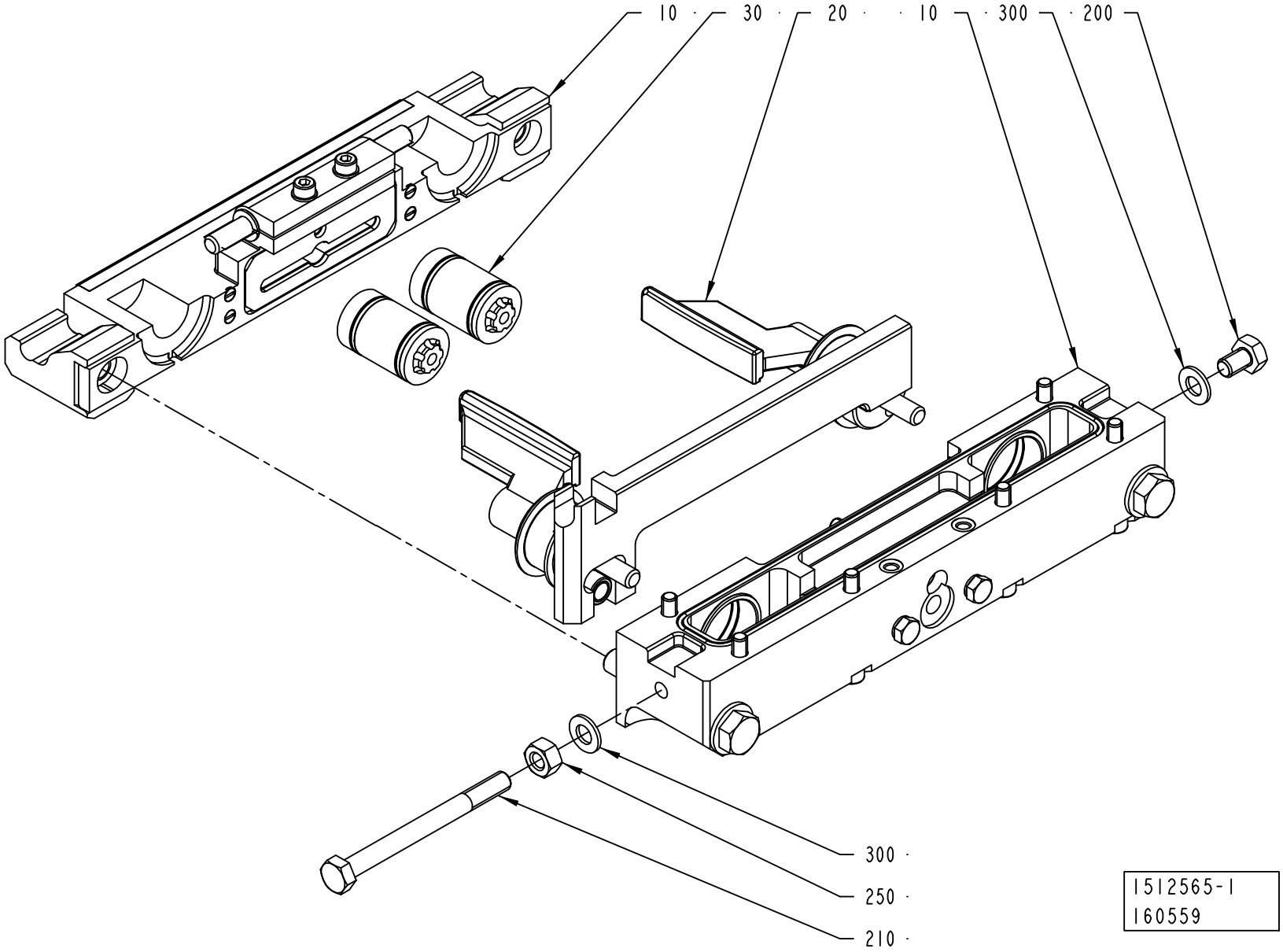

ECM: 181549 - 50001231
Group number: 1512565-0200
Assembly Drawing: 1512565-1_1_AB

Pos	Part No	UN	Qty	Description	Page No
-					
010	2552008-0100		1	CUTTING JAW	**4-83, 4-85, 4-87, 4-89**
020	2552009-0100		1	FOLDING FLAP LEFT	**4-91, 4-93**
030	2552010-0100		2	PISTON	**4-95**
200	312105-0447		1	SCREW M6S ISO 4017 M8X12 A480	
210	312105-0469		1	SCREW M6S ISO 4014 M8X90 A480	
250	312605-0318		1	HEXAGON NUT, M6M M8 A280	
300	315105-0165		2	WASHER BRB8,4X16RFR	

Pos	Part No	UN	Qty	Description	Page No

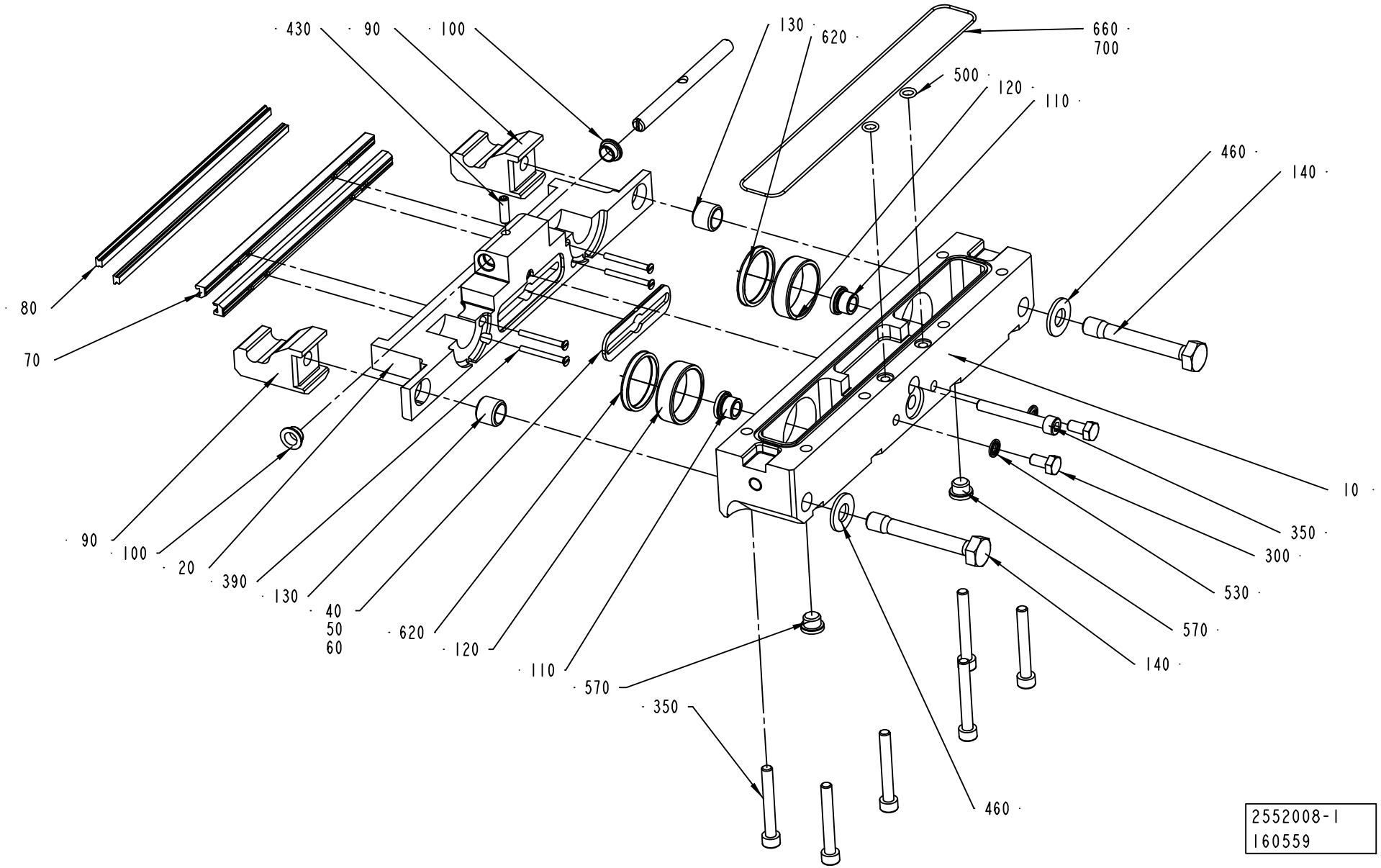
430
90
100
130
620
660
700
500
120
110
460
140
80
70
90
100
20
390
130
40
50
60
620
120
110
570
350
10
350
300
530
570
140
460
2552008-1
160559

ECM: 181409 - 50001231
Group number: 2552008-0100
Assembly Drawing: 2552008-1_1_AB

This list covers pages from 4-82 to 4-89

Pos	Part No	UN	Qty	Description	Page No
TBA 0200B NOQC, TBA 0250B NOQC (See drawing on page: 4-82)					
010	1549806-0000		1	BEARING HOUSING	
020	1349596-0000		1	CUTTING JAW	
030	1349980-0000		1	SHAFT	
050	1484002-0000		1	PLATE	
060	1484003-0000		1	PLATE	
070	1520493-0000		2	CUTTING RAIL	
080	1110083-0002		2	DOLLY	
080	1110083-0002		2	DOLLY	
090	1538348-0000		2	CATCH	
100	1349584-0000		2	BUSHING	
120	1255389-0000		2	BUSHING	
140	1035871-0000		2	SCREW	
390	312145-0234		4	SCREW ISO 2009 MFS M3X30 A4	
430	312318-0329		1	SCREW ISO4029 M5X16 A4	
500	315202-0104		2	O-RING 6,1X1,6 MM	
620	90091-0361		2	SCRAPER, EXCLUDER2 30X34,8X3,7 MM	
660	90242-0093	MM	550	O-RING MATERIAL 1,5 MM	
TBA 0200B QC, TBA 0330S QC, TBA 0250B QC (See drawing on page: 4-86)					
010	2582680-0000		1	BEARING HOUSING	
020	2604564-0000		1	CUTTING JAW	
050	1484002-0000		1	PLATE	
060	1484003-0000		1	PLATE	
070	1520493-0000		2	CUTTING RAIL	
080	1110083-0002		2	DOLLY	
080	1110083-0002		2	DOLLY	
090	1538348-0000		2	CATCH	
120	1255389-0000		2	BUSHING	
140	1035871-0000		2	SCREW	
390	312145-0234		4	SCREW ISO 2009 MFS M3X30 A4	
500	315202-0104		2	O-RING 6,1X1,6 MM	
620	90091-0361		2	SCRAPER, EXCLUDER2 30X34,8X3,7 MM	
660	90242-0093	MM	550	O-RING MATERIAL 1,5 MM	
TBA 0200S (See drawing on page: 4-88)					
010	1549807-0000		1	BEARING HOUSING	
020	2513014-0000		1	CUTTING JAW	
030	2513013-0000		1	SHAFT	
050	1484002-0000		1	PLATE	
060	1484003-0000		1	PLATE	
070	1520493-0000		2	CUTTING RAIL	
080	1110083-0002		2	DOLLY	
080	1110083-0002		2	DOLLY	
090	1538348-0000		2	CATCH	
100	2531703-0000		2	BUSHING	
120	1255389-0000		2	BUSHING	
140	1035871-0000		2	SCREW	
390	312145-0234		4	SCREW ISO 2009 MFS M3X30 A4	
430	312115-0329		2	SCREW ISO4762 M5X16 A4	
500	315202-0104		2	O-RING 6,1X1,6 MM	
620	90091-0361		2	SCRAPER, EXCLUDER2 30X34,8X3,7 MM	
660	90242-0093	MM	550	O-RING MATERIAL 1,5 MM	
TBA 0500B QC, TBA 1000B QC (See drawing on page: 4-86)					
010	1549803-0000		1	BEARING HOUSING	
020	1487954-0000		1	CUTTING JAW	
040	1349925-0000		1	PLATE	
070	1520455-0000		2	CUTTING RAIL	
080	1110083-0002		2	DOLLY	
080	1110083-0002		2	DOLLY	
090	1538348-0000		2	CATCH	
120	1255389-0000		2	BUSHING	
140	1035871-0000		2	SCREW	
150	1558733-0000		1	VOLUME BULGE	
390	312145-0238		4	SCREW COUNTERS.SLOT.HD. MFS M3X40 SS	
410	312155-0285		2	SCREW HEX.SOCK.COUNT.MF6S M4X6 A480	
500	315202-0104		2	O-RING 6,1X1,6 MM	
620	90091-0361		2	SCRAPER, EXCLUDER2 30X34,8X3,7 MM	
660	90242-0093	MM	550	O-RING MATERIAL 1,5 MM	
TBA 1000B NOQC (See drawing on page: 4-88)					
010	1549803-0000		1	BEARING HOUSING	
020	2665188-0000		1	CUTTING JAW	
030	2526812-0000		1	SHAFT	
040	1349925-0000		1	PLATE	
070	1520455-0000		2	CUTTING RAIL	
080	1110083-0002		2	DOLLY	
080	1110083-0002		2	DOLLY	
090	1538348-0000		2	CATCH	
100	2531703-0000		2	BUSHING	
120	1255389-0000		2	BUSHING	
140	1035871-0000		2	SCREW	
390	312145-0238		4	SCREW COUNTERS.SLOT.HD. MFS M3X40 SS	
430	312115-0329		2	SCREW ISO4762 M5X16 A4	
440	315105-0146		2	WASHER BRB5,3X10RFR	
500	315202-0104		2	O-RING 6,1X1,6 MM	
620	90091-0361		2	SCRAPER, EXCLUDER2 30X34,8X3,7 MM	

Machine Type | Group Description | Used-In | Group Number | Page No

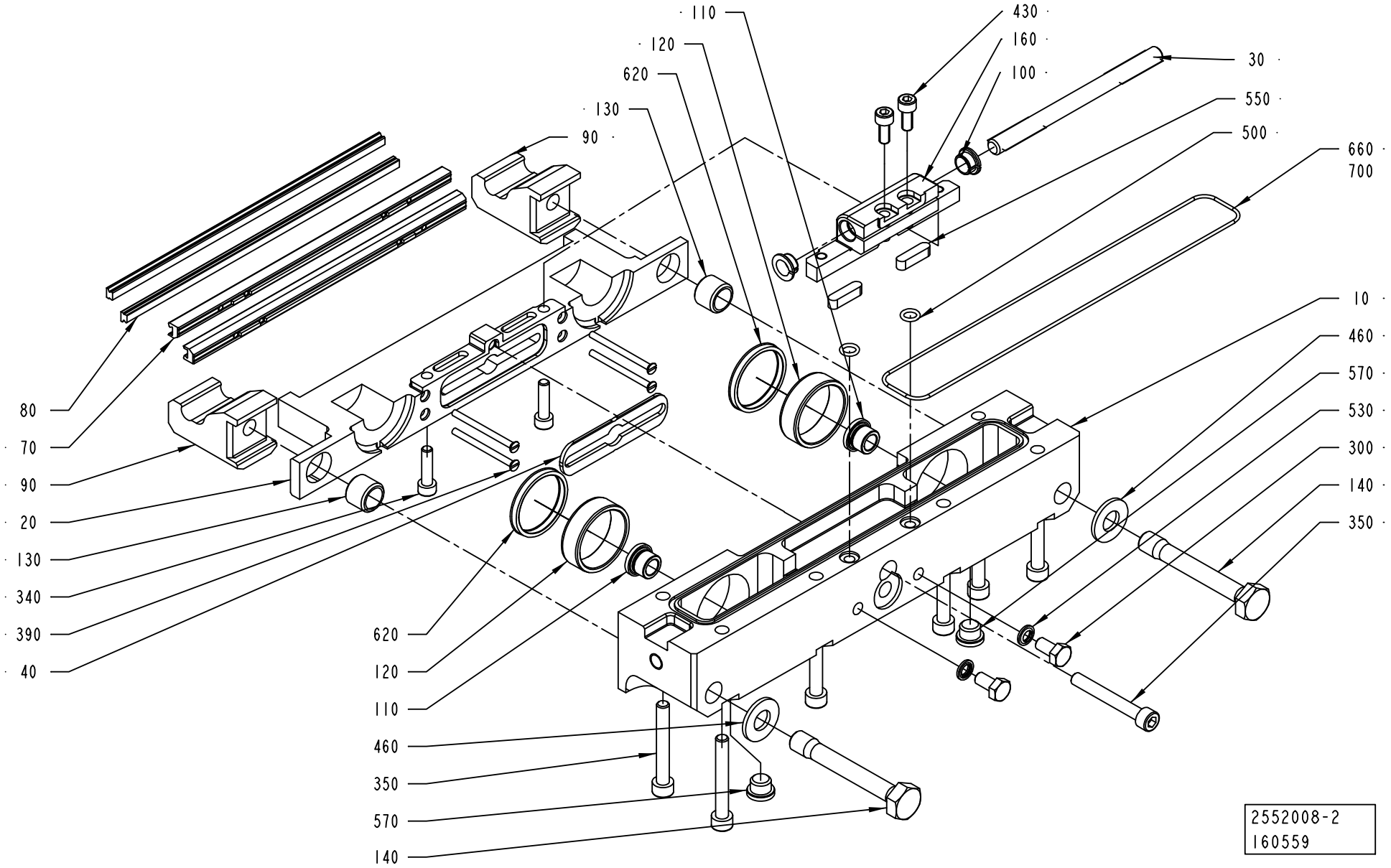
110
120
620
130
90
430
160
100
30
550
500
660
700
10
460
570
530
300
140
350
80
70
90
20
130
340
390
40
620
120
110
460
350
570
140
2552008-2
160559

Pos	Part No	UN	Qty	Description	Page No
TBA 1000B NOQC (Cont'd) (See drawing on page: 4-88)					
660	90242-0093	MM	550	O-RING MATERIAL 1,5 MM	
TBA 1000S (See drawing on page: 4-88)					
010	1549804-0000		1	BEARING HOUSING	
020	2559424-0000		1	CUTTING JAW	
030	2526812-0000		1	SHAFT	
040	1349925-0000		1	PLATE	
070	1520455-0000		2	CUTTING RAIL	
080	1110083-0002		2	DOLLY	
080	1110083-0002		2	DOLLY	
090	1538348-0000		2	CATCH	
100	2531703-0000		2	BUSHING	
120	1255389-0000		2	BUSHING	
140	1035871-0000		2	SCREW	
390	312145-0238		4	SCREW COUNTERS.SLOT.HD. MFS M3X40 SS	
430	312115-0327		2	SCREW ISO4762 M5X12 A4	
500	315202-0104		2	O-RING 6,1X1,6 MM	
620	90091-0361		2	SCRAPER, EXCLUDER2 30X34,8X3,7 MM	
660	90242-0093	MM	550	O-RING MATERIAL 1,5 MM	
TBA 1000SQ (See drawing on page: 4-84)					
010	1549808-0000		1	BEARING HOUSING	
020	1487618-0000		1	CUTTING JAW	
030	2526812-0000		1	SHAFT	
040	1487619-0000		1	PLATE	
070	1520494-0000		2	CUTTING RAIL	
080	1110083-0002		2	DOLLY	
080	1110083-0002		2	DOLLY	
090	1538348-0000		2	CATCH	
100	2531703-0000		2	BUSHING	
120	1255389-0000		2	BUSHING	
140	1035871-0000		2	SCREW	
160	2526810-0000		1	HOLDER	
340	312115-0331		2	SCREW ISO4762 M5X20 A4	
390	312145-0238		4	SCREW COUNTERS.SLOT.HD. MFS M3X40 SS	
430	312115-0327		2	SCREW ISO4762 M5X12 A4	
500	315202-0104		2	O-RING 6,1X1,6 MM	
550	315705-0201		2	PARALLEL KEY W. ROUND ENDS 5X5X20 MM	
620	90091-0361		2	SCRAPER, EXCLUDER2 30X34,8X3,7 MM	
660	90242-0093	MM	550	O-RING MATERIAL 1,5 MM	
TBA 1500S (See drawing on page: 4-88)					
010	1549803-0000		1	BEARING HOUSING	
020	2570301-0000		1	CUTTING JAW	
030	2526812-0000		1	SHAFT	
040	1349925-0000		1	PLATE	
070	1520455-0000		2	CUTTING RAIL	
080	1110083-0002		2	DOLLY	
080	1110083-0002		2	DOLLY	
090	1538348-0000		2	CATCH	
100	2531703-0000		2	BUSHING	
120	1255389-0000		2	BUSHING	
140	1035871-0000		2	SCREW	
390	312145-0238		4	SCREW COUNTERS.SLOT.HD. MFS M3X40 SS	
430	312115-0327		2	SCREW ISO4762 M5X12 A4	
500	315202-0104		2	O-RING 6,1X1,6 MM	
620	90091-0361		2	SCRAPER, EXCLUDER2 30X34,8X3,7 MM	
660	90242-0093	MM	550	O-RING MATERIAL 1,5 MM	
TBA 1890S QC, TBA 2000S QC (See drawing on page: 4-88)					
010	2566325-0000		1	BEARING HOUSING	
020	2664762-0000		1	CUTTING JAW	
030	2686144-0000		1	SHAFT	
040	2588292-0000		1	PLATE	
070	1533051-0000		2	CUTTING RAIL	
080	1520633-0005		2	DOLLY	
080	1520633-0005		2	DOLLY	
090	2566339-0000		2	CATCH	
100	2531703-0000		2	BUSHING	
120	2588299-0000		2	BUSHING	
140	2588303-0000		2	SCREW	
390	312145-0238		4	SCREW COUNTERS.SLOT.HD. MFS M3X40 SS	
430	312115-0327		2	SCREW ISO4762 M5X12 A4	
500	315204-0105		2	O-RING 7,1X1,6 MM	
660	90459-2363		1	O-RING MATERIAL 1,78 MM	
TPA 1000SQ (See drawing on page: 4-88)					
010	1523145-0000		1	BEARING HOUSING	
020	2579988-0000		1	CUTTING JAW	
030	2579990-0000		1	SHAFT	
040	1487619-0000		1	PLATE	
070	1520494-0000		2	CUTTING RAIL	
080	1520633-0002		2	DOLLY	
080	1520633-0002		2	DOLLY	
090	1538348-0000		2	CATCH	
100	2531703-0000		2	BUSHING	
120	1255389-0000		2	BUSHING	
140	1035871-0000		2	SCREW	

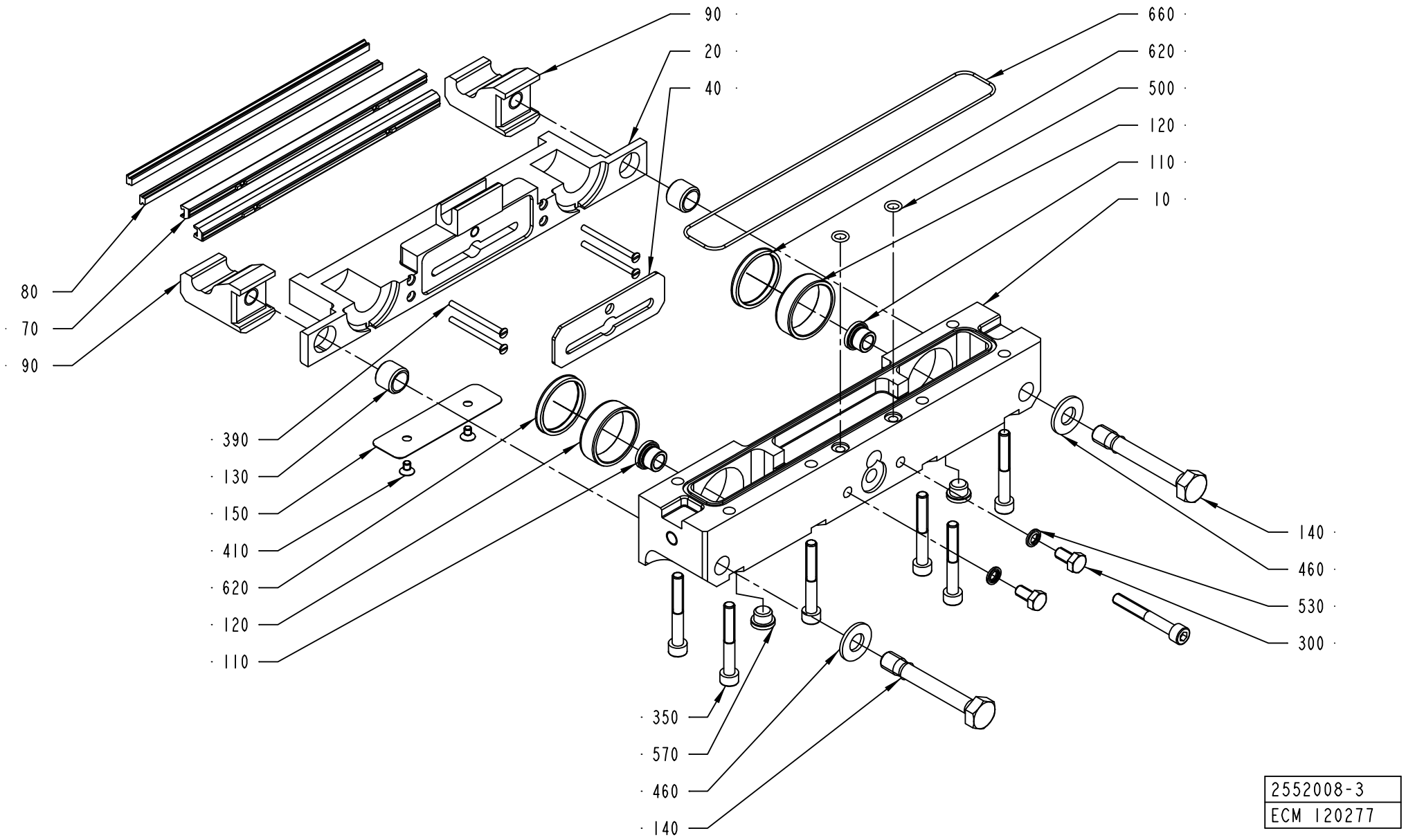

2552008-3
ECM 120277

Pos	Part No	UN	Qty	Description	Page No
TPA 1000SQ (Cont'd) (See drawing on page: 4-88)					
390	312145-0238		2	SCREW COUNTERS.SLOT.HD. MFS M3X40 SS	
400	1523827-0000		2	SCREW	
410	312155-0287		2	SCREW EN 10642 MF6S M4X8 A480	
430	312115-0327		2	SCREW ISO4762 M5X12 A4	
500	315202-0104		2	O-RING 6,1X1,6 MM	
620	90091-0361		2	SCRAPER, EXCLUDER2 30X34,8X3,7 MM	
660	90242-0093	MM	550	O-RING MATERIAL 1,5 MM	
Common Parts					
110	1255390-0000		2	BUSHING	
130	1036494-0000		2	GUIDE BUSHING	
300	312105-0366		2	SCREW M6S ISO 4017 M6X12 A480	
350	312115-0379		7	SCREW ISO4762 M6X45 A4	
460	315105-0173		2	WASHER BRB10,5X22RFR	
530	315211-0103		2	BONDED SEAL SS/NBR90 M6	
570	342713-0209		2	PLUG (1UNIT = 10PC)	
700	90153-0015		1	ADHESIVE,LOCTITE IS 496/CYANOLOT 303	

Pos	Part No	UN	Qty	Description	Page No

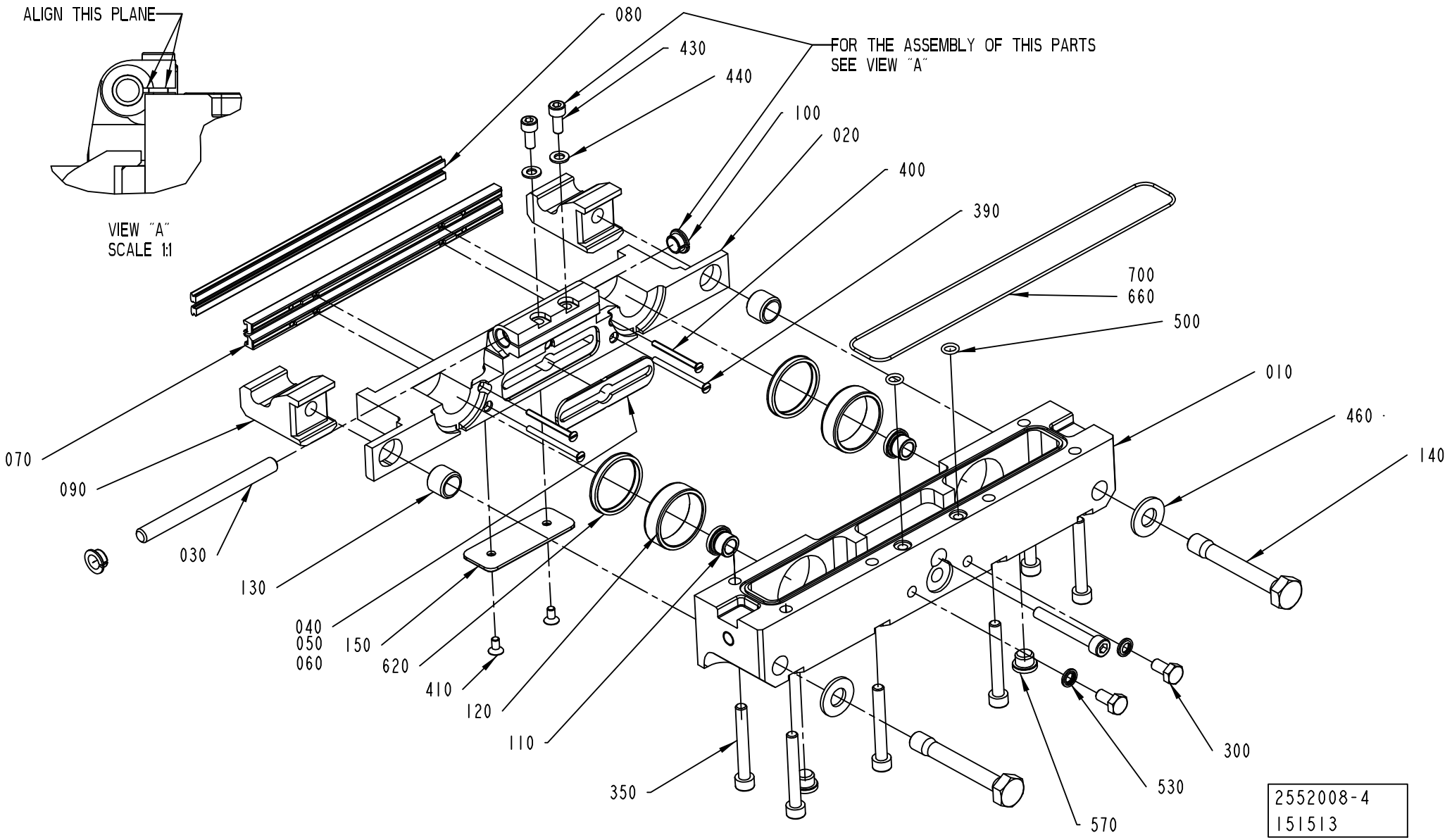
ALIGN THIS PLANE
VIEW "A"
SCALE 1:1
080
430
440
100
020
400
390
FOR THE ASSEMBLY OF THIS PARTS
SEE VIEW "A"
700
660
500
010
460
140
070
090
030
130
040
050
060
150
620
410
120
110
350
300
530
570
2552008-4
151513

Pos	Part No	UN	Qty	Description	Page No	Pos	Part No	UN	Qty	Description	Page No

SEE PREVIOUS LISTS PAGES: 4-83, 4-85, 4-87.

FOLDING FLAP LEFT

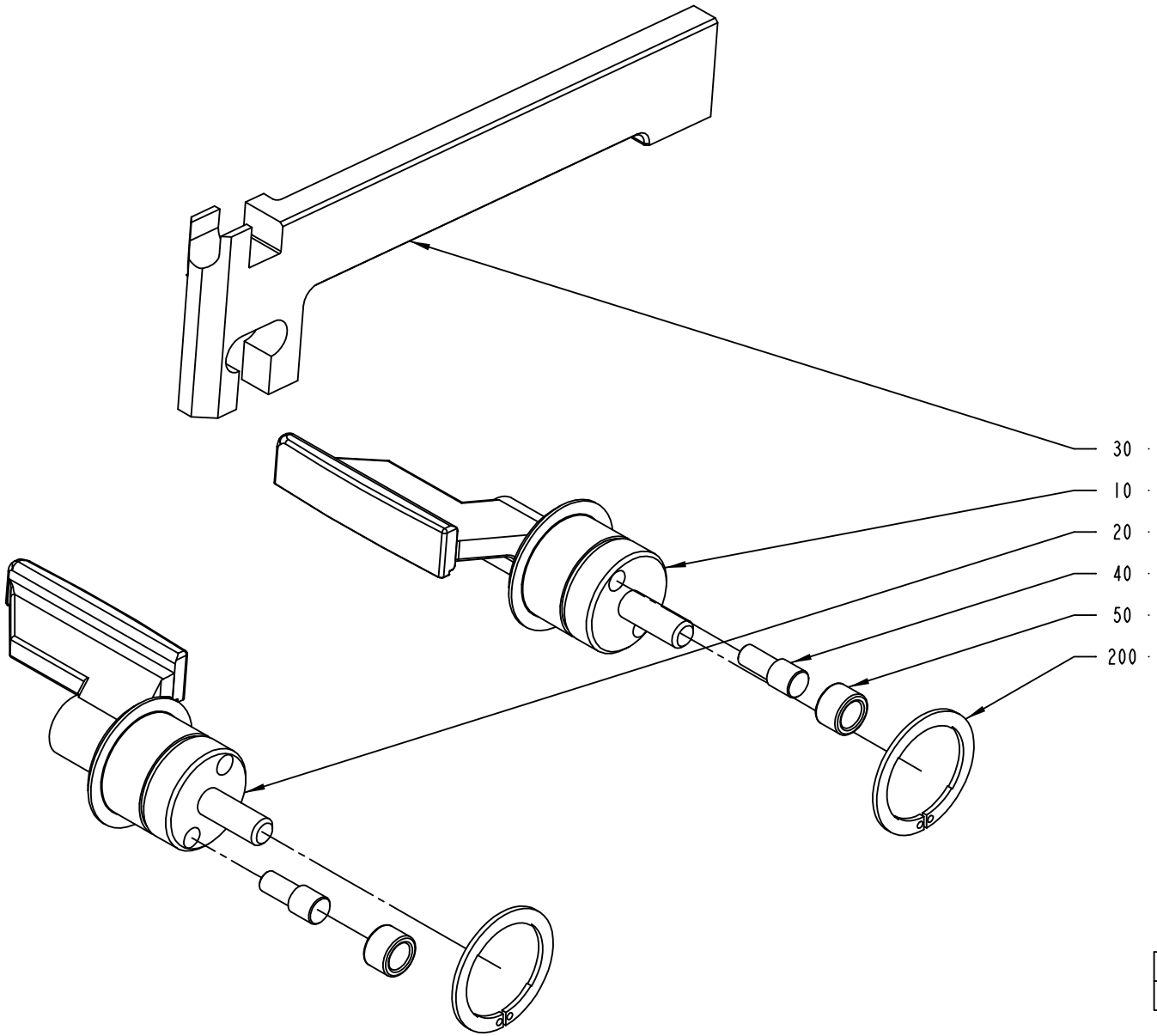

2552009-1
ECM 120277

ECM: 181410 - 50001231
Group number: 2552009-0100
Assembly Drawing: 2552009-1_1_AA

This list covers pages from 4-90 to 4-93

Pos	Part No	UN	Qty	Description	Page No
TPA 1000SQ (See drawing on page: 4-90)					
010	1523146-0000		1	FOLDING FLAP	
020	1523147-0000		1	FOLDING FLAP	
030	1523177-0000		1	CARRIER RULER	
TBA 0200B QC, TBA 0330S QC (See drawing on page: 4-90)					
010	2605875-0000		1	FOLDING FLAP	
020	2605876-0000		1	FOLDING FLAP	
030	1255459-0000		1	CARRIER RULER	
TBA 0200S (See drawing on page: 4-90)					
010	2624554-0000		1	FOLDING FLAP	
020	2624555-0000		1	FOLDING FLAP	
030	1255458-0000		1	CARRIER RULER	
TBA 0250B QC					
010	2605875-0000		1	FOLDING FLAP	
020	2605876-0000		1	FOLDING FLAP	
030	1255459-0000		1	CARRIER RULER	
TBA 0500B NOQC, TBA 1000B NOQC NOMOLDEDCAP (See drawing on page: 4-90)					
010	1511697-0000		1	.FOLDING FLAP	
020	1511698-0000		1	FOLDING FLAP	
030	1255457-0000		1	CARRIER RULER	
TBA 0500B QC, TBA 1000B QC (See drawing on page: 4-90)					
010	1511352-0000		1	FOLDING FLAP	
020	1511351-0000		1	FOLDING FLAP	
030	1255457-0000		1	CARRIER RULER	
TBA 1000B NOQC STDA7 (See drawing on page: 4-90)					
010	1511697-0000		1	.FOLDING FLAP	
020	2610957-0000		1	FOLDING FLAP	
030	1255457-0000		1	CARRIER RULER	
TBA 1000S NOMOLDEDCAP (See drawing on page: 4-90)					
010	1511699-0000		1	FOLDING FLAP	
020	1511700-0000		1	FOLDING FLAP	
030	1255460-0000		1	CARRIER RULER	
TBA 1000S STDA7 (See drawing on page: 4-90)					
010	1511699-0000		1	FOLDING FLAP	
020	2546501-0000		1	FOLDING FLAP	
030	1255460-0000		1	CARRIER RULER	
TBA 1000SQ (See drawing on page: 4-90)					
010	2507076-0000		1	FOLDING FLAP	
020	2507077-0000		1	FOLDING FLAP	
030	1360318-0000		1	CARRIER RULER	
TBA 1500S (See drawing on page: 4-90)					
010	2507092-0000		1	FOLDING FLAP	
020	2507093-0000		1	FOLDING FLAP	
030	1255457-0000		1	CARRIER RULER	
TBA 1890S QC, TBA 2000S QC (See drawing on page: 4-92)					
010	2566319-0000		1	FOLDING FLAP	
020	2566320-0000		1	FOLDING FLAP	
030	2566318-0000		1	CARRIER RULER	
210	90459-2258		2	SEAL GLYDRING 25,1X30X2,2 MM	
Common Parts					
040	22462-0000		2	SHAFT	
050	22463-0000		2	ROLL	
200	90141-0029		2	CIRCLIP	

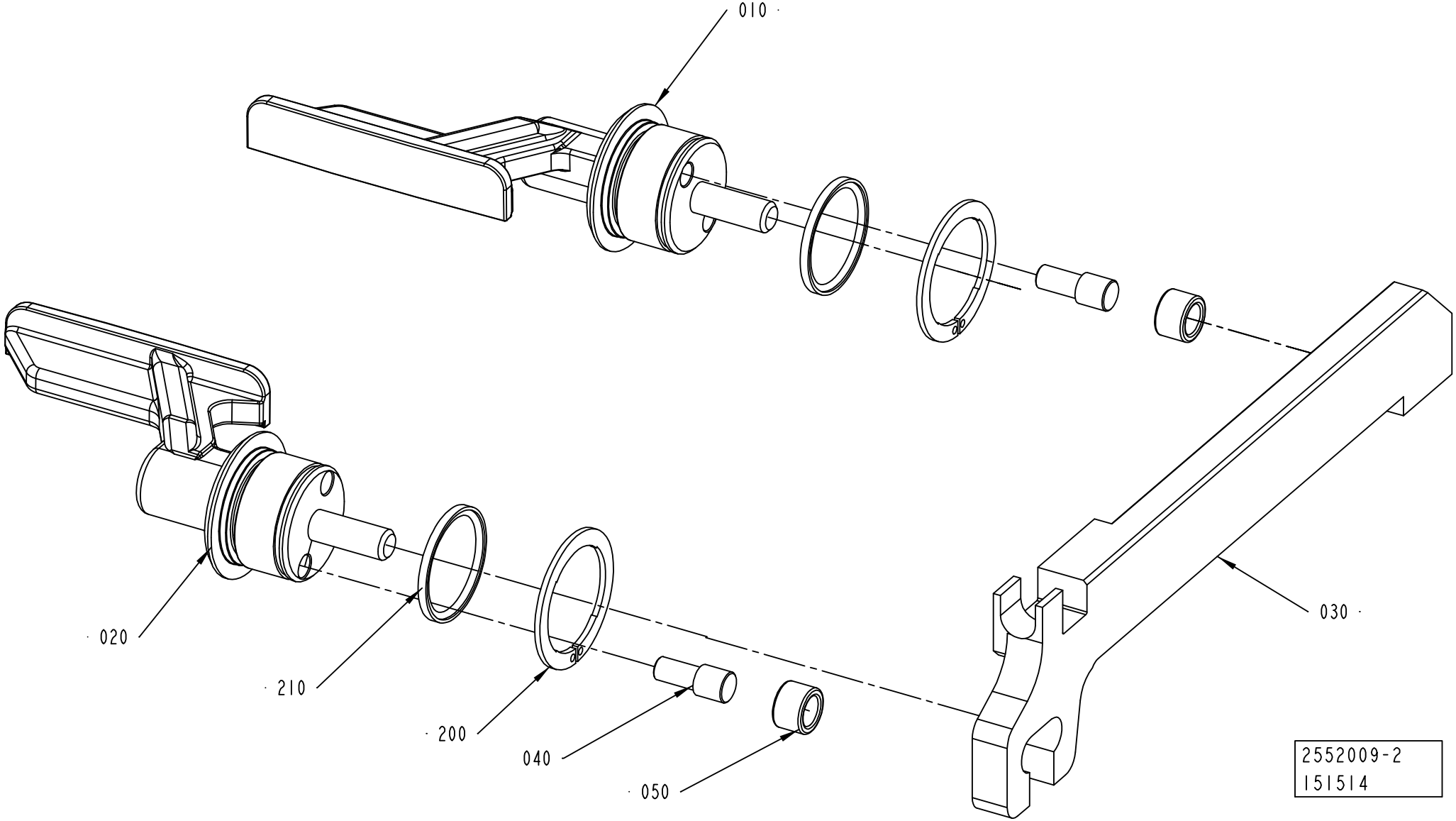
010
020
210
200
040
050
030
2552009-2
151514

Pos	Part No	UN	Qty	Description	Page No
TPA 1000SQ (See drawing on page: 4-90)					
010	1523146-0000		1	FOLDING FLAP	
020	1523147-0000		1	FOLDING FLAP	
030	1523177-0000		1	CARRIER RULER	
TBA 0200B QC, TBA 0330S QC (See drawing on page: 4-90)					
010	2605875-0000		1	FOLDING FLAP	
020	2605876-0000		1	FOLDING FLAP	
030	1255459-0000		1	CARRIER RULER	
TBA 0200S (See drawing on page: 4-90)					
010	2624554-0000		1	FOLDING FLAP	
020	2624555-0000		1	FOLDING FLAP	
030	1255458-0000		1	CARRIER RULER	
TBA 0250B QC					
010	2605875-0000		1	FOLDING FLAP	
020	2605876-0000		1	FOLDING FLAP	
030	1255459-0000		1	CARRIER RULER	
TBA 0500B NOQC, TBA 1000B NOQC NOMOLDEDCAP (See drawing on page: 4-90)					
010	1511697-0000		1	.FOLDING FLAP	
020	1511698-0000		1	FOLDING FLAP	
030	1255457-0000		1	CARRIER RULER	
TBA 0500B QC, TBA 1000B QC (See drawing on page: 4-90)					
010	1511352-0000		1	FOLDING FLAP	
020	1511351-0000		1	FOLDING FLAP	
030	1255457-0000		1	CARRIER RULER	
TBA 1000B NOQC STDA7 (See drawing on page: 4-90)					
010	1511697-0000		1	.FOLDING FLAP	
020	2610957-0000		1	FOLDING FLAP	
030	1255457-0000		1	CARRIER RULER	
TBA 1000S NOMOLDEDCAP (See drawing on page: 4-90)					
010	1511699-0000		1	FOLDING FLAP	
020	1511700-0000		1	FOLDING FLAP	
030	1255460-0000		1	CARRIER RULER	
TBA 1000S STDA7 (See drawing on page: 4-90)					
010	1511699-0000		1	FOLDING FLAP	
020	2546501-0000		1	FOLDING FLAP	
030	1255460-0000		1	CARRIER RULER	
TBA 1000SQ (See drawing on page: 4-90)					
010	2507076-0000		1	FOLDING FLAP	
020	2507077-0000		1	FOLDING FLAP	
030	1360318-0000		1	CARRIER RULER	
TBA 1500S (See drawing on page: 4-90)					
010	2507092-0000		1	FOLDING FLAP	
020	2507093-0000		1	FOLDING FLAP	
030	1255457-0000		1	CARRIER RULER	
TBA 1890S QC, TBA 2000S QC (See drawing on page: 4-92)					
010	2566319-0000		1	FOLDING FLAP	
020	2566320-0000		1	FOLDING FLAP	
030	2566318-0000		1	CARRIER RULER	
210	90459-2258		2	SEAL GLYDRING 25,1X30X2,2 MM	
Common Parts					
040	22462-0000		2	SHAFT	
050	22463-0000		2	ROLL	
200	90141-0029		2	CIRCLIP	

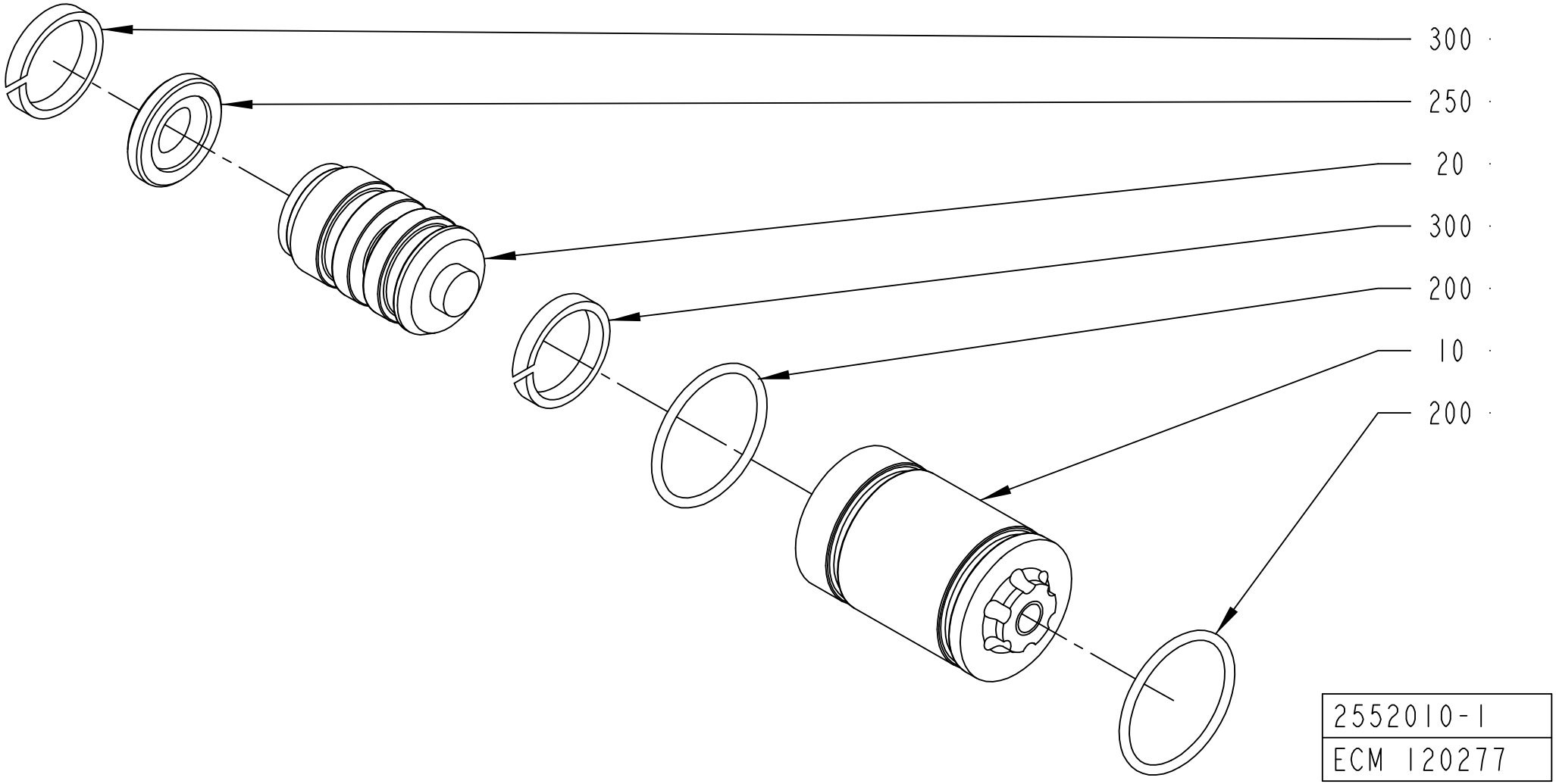
300
250
20
300
200
10
200
2552010-1
ECM 120277

ECM: 181411 - 50001231
Group number: 2552010-0100
Assembly Drawing: 2552010-1_1_AA

Pos	Part No	UN	Qty	Description	Page No
TBA 0330S, TBA 0200B, TBA 0200S, TBA 0250B					
010	752288-0000		1	SLEEVE	
020	752115-0000		1	PLUNGER	
200	315202-0110		1	O-RING 12,1X1,6 MM	
250	90091-0216		1	PISTON SEAL, GLIDORING 7,1X12X2,2 MM	
300	90091-0169		2	WEAR RING 12X15X3,2 MM	
TBA 0500B, TBA 1000S, TBA 1000SQ, TBA 1000B, TBA 1500S, TPA 1000SQ					
010	1036278-0000		1	SLEEVE	
020	1036279-0000		1	PLUNGER	
200	315202-0118		2	O-RING 22,1X1,6 MM	
250	90091-0365		1	SEAL GLIDORING 11,55X19,05X3,2M	
300	90091-0367		2	WEAR RING 16X18X3,1 MM	
TBA 1890S, TBA 2000S					
010	2566330-0000		1	SLEEVE	
020	2566331-0000		1	PLUNGER	
200	315202-0118		2	O-RING 22,1X1,6 MM	
250	90459-2172		1	SEAL GLYDRING 14,55X22X3,2 MM	
300	90459-2132		2	WEAR RING 17X22X5,6 MM	

Pos	Part No	UN	Qty	Description	Page No

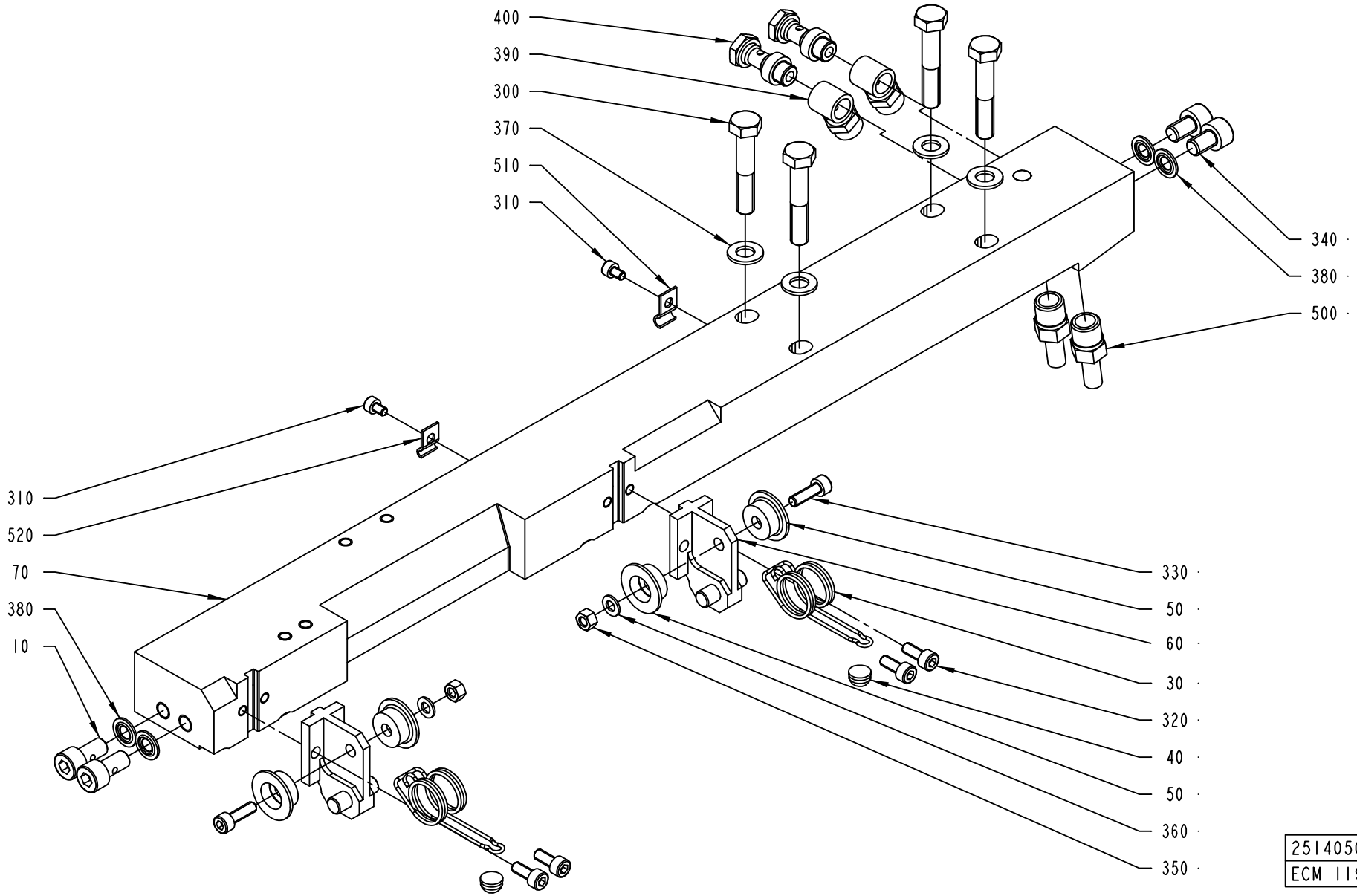
400
390
300
370
510
310
340
380
500
310
520
70
380
10
330
50
60
30
320
40
50
360
350
2514050-1
ECM 119672

ECM: 181189 - 50001231
Group number: 2514050-0200
Assembly Drawing: 2514050-1_1_AA

This list covers pages from 4-96 to 4-99

Pos	Part No	UN	Qty	Description	Page No
A3/FLEX NOQC (See drawing on page: 4-96)					
070	2514051-0000		1	CARRIER	
310	312115-0285		2	SCREW ISO4762 M4X6 A4	
510	90165-0056		1	PIPE CLIP FOR TUBE D=4 MM	
520	90165-0058		1	PIPE CLIP FOR TUBE D=25 MM	
A3/FLEX TBA 0250S QC, A3/FLEX TBA 0200M QC (See drawing on page: 4-98)					
070	2514047-0000		1	CARRIER	
080	2641225-0000		1	INSERT	
410	312155-0323		3	SCREW EN 10642 MF6S M5X8 A480	
A3/FLEX TBA 0500B QC, A3/FLEX TBA 1000B QC, A3/FLEX TBA 0200B QC, A3/FLEX TBA 0250B QC, A3/FLEX TBA 0330S QC (See drawing on page: 4-98)					
070	2514047-0000		1	CARRIER	
080	1549312-0000		1	INSERT	
410	312155-0323		3	SCREW EN 10642 MF6S M5X8 A480	
A3/FLEX TBA 1890S QC, A3/FLEX TBA 2000S QC (See drawing on page: 4-96)					
070	2566341-0000		1	CARRIER	
310	312115-0285		2	SCREW ISO4762 M4X6 A4	
510	90165-0056		1	PIPE CLIP FOR TUBE D=4 MM	
520	90165-0058		1	PIPE CLIP FOR TUBE D=25 MM	
Common Parts					
010	1036343-0000		2	SCREW	
030	1549378-0000		2	SPRING	
040	1129552-0000		2	KNOB	
050	1129833-0000		4	GUIDE ROLLER	
060	2588013-0000		2	BRACKET	
300	312105-0460		4	SCREW M6S ISO 4014 M8X45 A480	
320	312115-0327		4	SCREW ISO4762 M5X12 A4	
330	312115-0329		2	SCREW ISO4762 M5X16 A4	
340	312115-0447		2	SCREW ISO4762 M8X12 A4	
350	312605-0314		2	HEXAGON NUT, M6M M5 A280	
360	315105-0146		2	WASHER BRB5,3X10RFR	
370	315105-0165		4	WASHER BRB8,4X16RFR	
380	315211-0104		4	BONDED SEAL SS/NBR90 M8	
390	342980-0121		2	BANJO-CONNECTION,RING 8/6-G1/8"	
400	342980-0303		2	BANJO-HOLLOW BOLT COUPL,EXT.THR.01-G1/8"	
500	90030-0065		2	PIPE CONNECTION	

Pos	Part No	UN	Qty	Description	Page No

Machine Type | Group Description | Used-In | Group Number | Page No

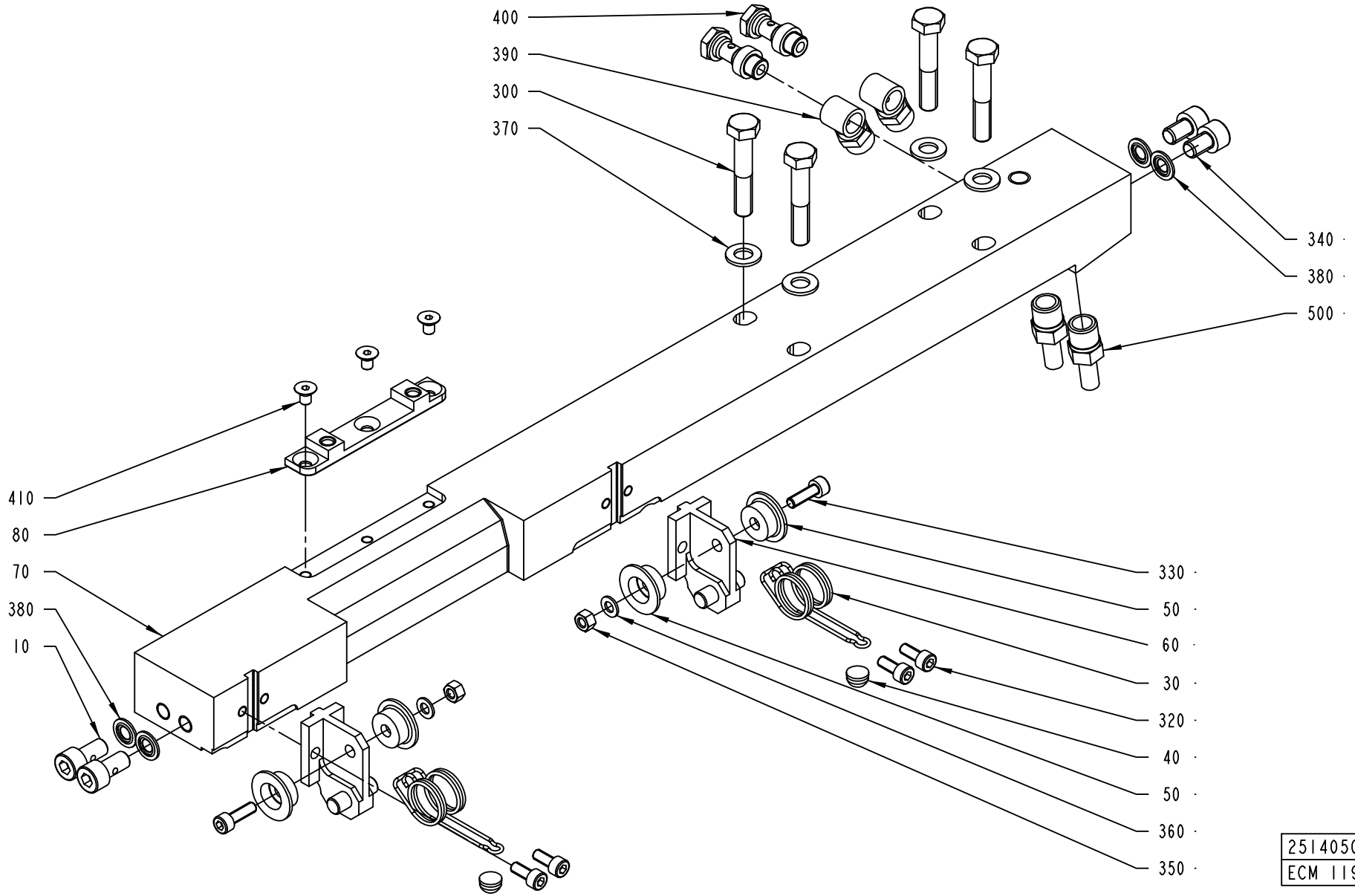
400
390
300
370
340
380
500
410
80
70
380
10
330
50
60
30
320
40
50
360
350
2514050-2
ECM 119672

ECM: 181189 - 50001231
Group number: 2514050-0200
Assembly Drawing: 2514050-2_1_AA

This list covers pages from 4-96 to 4-99

Pos	Part No	UN	Qty	Description	Page No
A3/FLEX NOQC (See drawing on page: 4-96)					
070	2514051-0000		1	CARRIER	
310	312115-0285		2	SCREW ISO4762 M4X6 A4	
510	90165-0056		1	PIPE CLIP FOR TUBE D=4 MM	
520	90165-0058		1	PIPE CLIP FOR TUBE D=25 MM	
A3/FLEX TBA 0250S QC, A3/FLEX TBA 0200M QC (See drawing on page: 4-98)					
070	2514047-0000		1	CARRIER	
080	2641225-0000		1	INSERT	
410	312155-0323		3	SCREW EN 10642 MF6S M5X8 A480	
A3/FLEX TBA 0500B QC, A3/FLEX TBA 1000B QC, A3/FLEX TBA 0200B QC, A3/FLEX TBA 0250B QC, A3/FLEX TBA 0330S QC (See drawing on page: 4-98)					
070	2514047-0000		1	CARRIER	
080	1549312-0000		1	INSERT	
410	312155-0323		3	SCREW EN 10642 MF6S M5X8 A480	
A3/FLEX TBA 1890S QC, A3/FLEX TBA 2000S QC (See drawing on page: 4-96)					
070	2566341-0000		1	CARRIER	
310	312115-0285		2	SCREW ISO4762 M4X6 A4	
510	90165-0056		1	PIPE CLIP FOR TUBE D=4 MM	
520	90165-0058		1	PIPE CLIP FOR TUBE D=25 MM	
Common Parts					
010	1036343-0000		2	SCREW	
030	1549378-0000		2	SPRING	
040	1129552-0000		2	KNOB	
050	1129833-0000		4	GUIDE ROLLER	
060	2588013-0000		2	BRACKET	
300	312105-0460		4	SCREW M6S ISO 4014 M8X45 A480	
320	312115-0327		4	SCREW ISO4762 M5X12 A4	
330	312115-0329		2	SCREW ISO4762 M5X16 A4	
340	312115-0447		2	SCREW ISO4762 M8X12 A4	
350	312605-0314		2	HEXAGON NUT, M6M M5 A280	
360	315105-0146		2	WASHER BRB5,3X10RFR	
370	315105-0165		4	WASHER BRB8,4X16RFR	
380	315211-0104		4	BONDED SEAL SS/NBR90 M8	
390	342980-0121		2	BANJO-CONNECTION,RING 8/6-G1/8"	
400	342980-0303		2	BANJO-HOLLOW BOLT COUPL,EXT.THR.01-G1/8"	
500	90030-0065		2	PIPE CONNECTION	

Pos	Part No	UN	Qty	Description	Page No

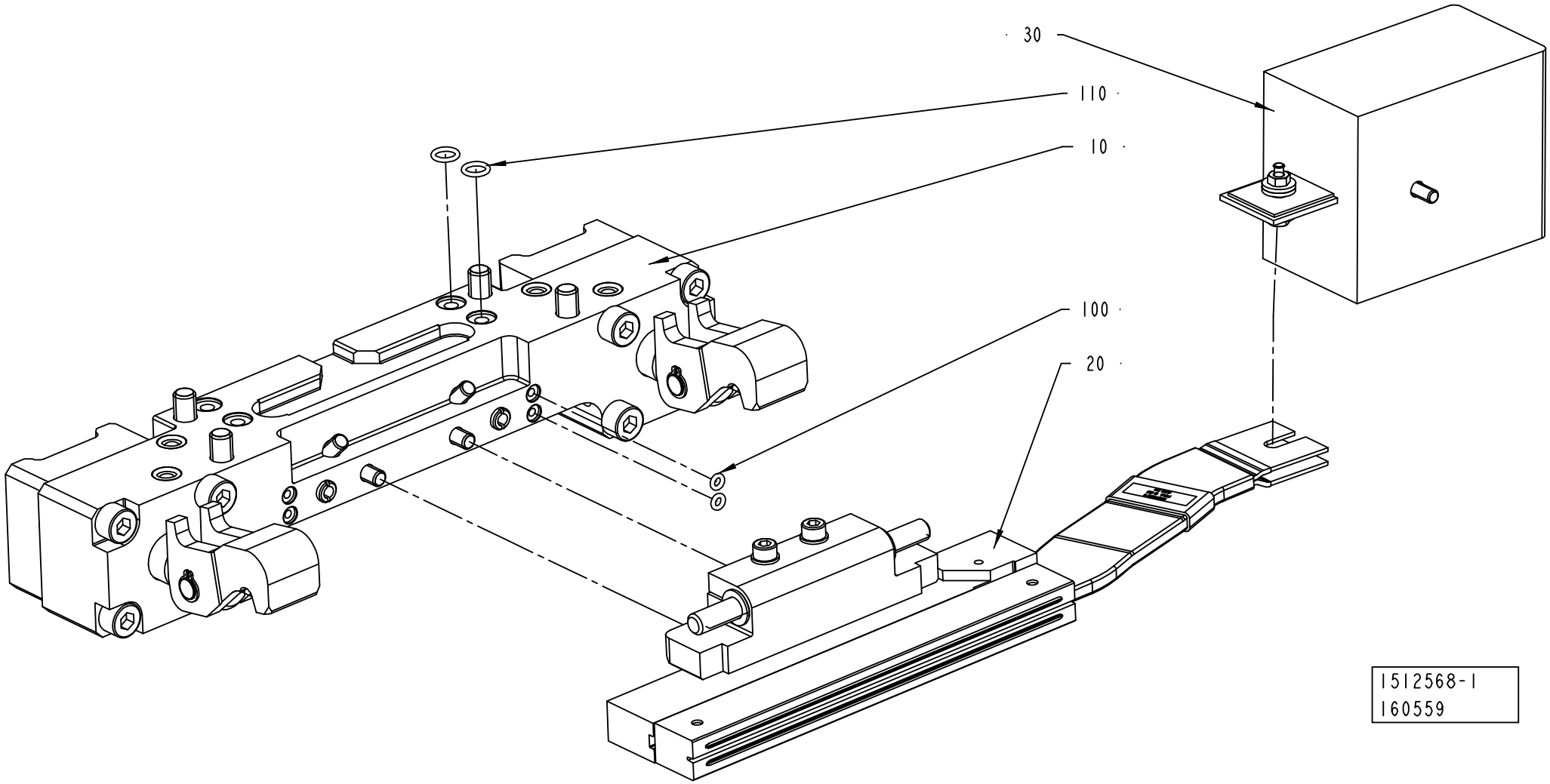
30
110
10
100
20
1512568-1
160559

ECM: 181548 - 50001231
Group number: 1512568-0200
Assembly Drawing: 1512568-1_1_AB

This list covers pages from 4-100 to 4-103

Pos	Part No	UN	Qty	Description	Page No
TBA 1890S QC, TBA 2000S QC (See drawing on pages: 4-100, 4-102)					
120	311103-0267		1	PARALLEL PIN ISO 2338 4M6X10 A1	
Common Parts					
010	2552005-0100		1	PRESSURE JAW	**4-65**
020	2552007-0100		1	INDUCTOR RIGHT	**4-105, 4-107, 4-109**
030	2546229-0100		1	ADAPTION TRANSFORMER	**4-73**
100	315202-0101		2	O-RING 3,1X1,6 MM	
110	315202-0105		2	O-RING 7,1X1,6 MM	

Pos	Part No	UN	Qty	Description	Page No

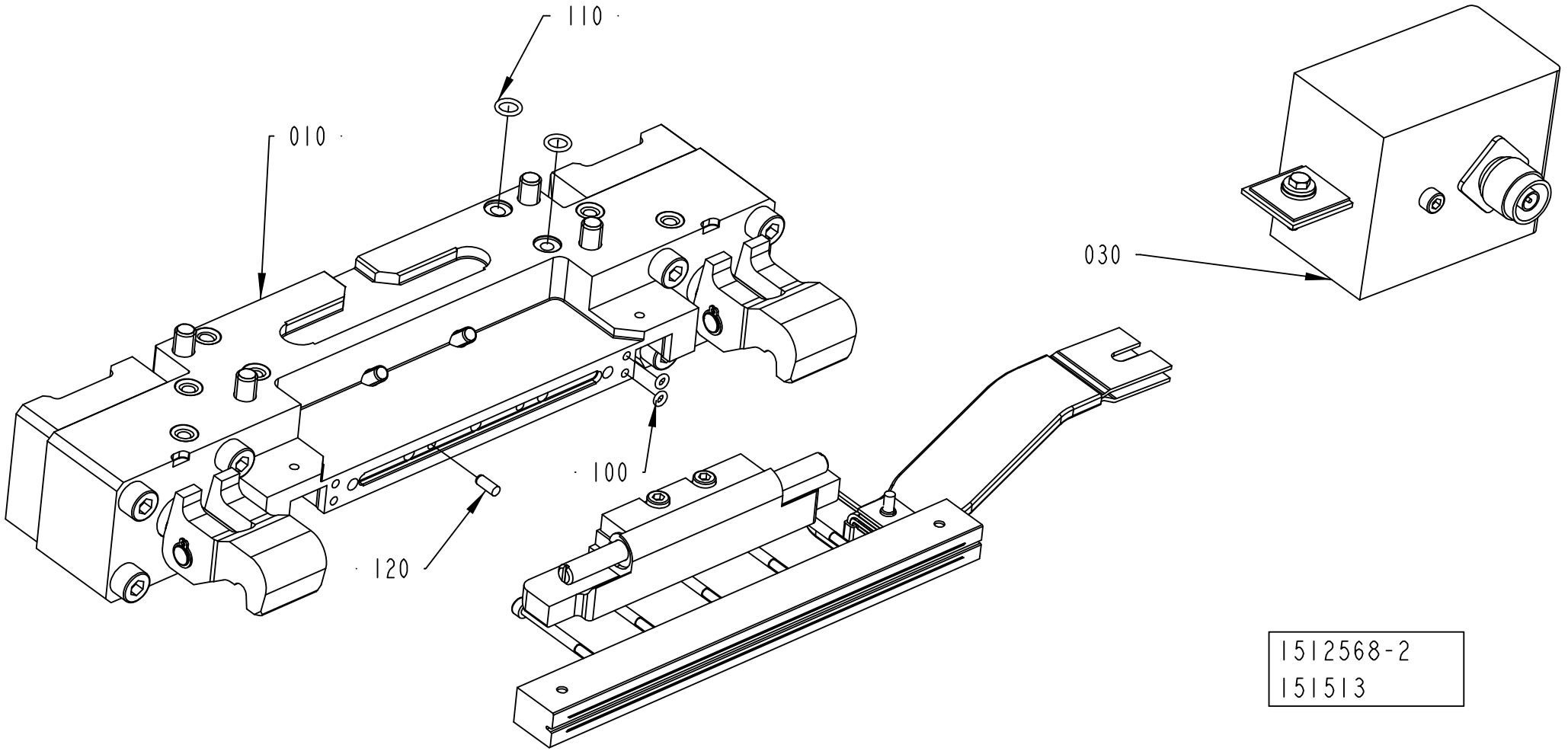
110
010
030
100
120
1512568-2
151513

ECM: 181548 - 50001231
Group number: 1512568-0200
Assembly Drawing: 1512568-2_1_AA

This list covers pages from 4-100 to 4-103

Pos	Part No	UN	Qty	Description	Page No
TBA 1890S QC, TBA 2000S QC (See drawing on pages: 4-100, 4-102)					
120	311103-0267		1	PARALLEL PIN ISO 2338 4M6X10 A1	
Common Parts					
010	2552005-0100		1	PRESSURE JAW	**4-65**
020	2552007-0100		1	INDUCTOR RIGHT	**4-105, 4-107, 4-109**
030	2546229-0100		1	ADAPTION TRANSFORMER	**4-73**
100	315202-0101		2	O-RING 3,1X1,6 MM	
110	315202-0105		2	O-RING 7,1X1,6 MM	

Pos	Part No	UN	Qty	Description	Page No

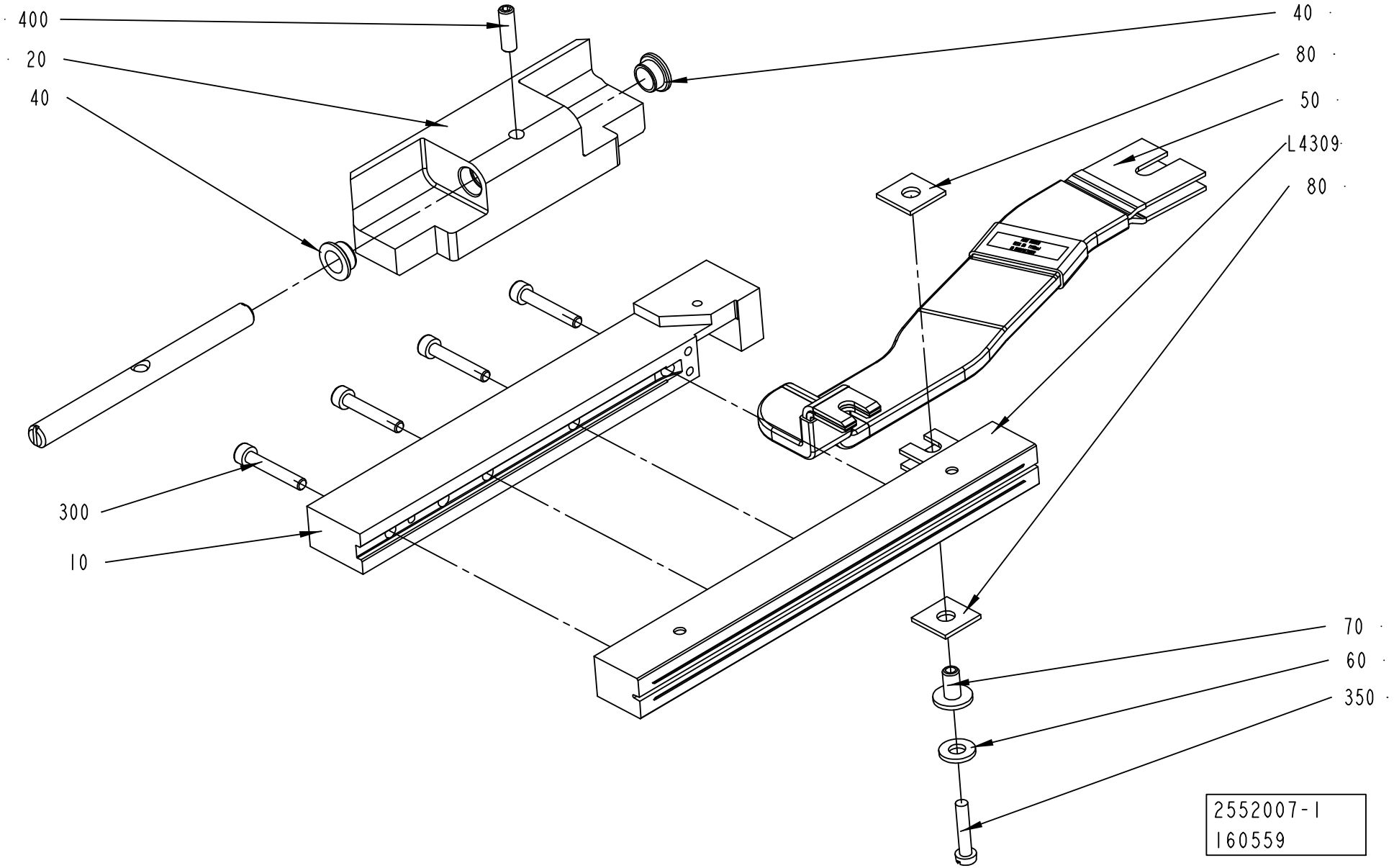
400
20
40
300
10
40
80
50
L4309
80
70
60
350
2552007-1
160559

ECM: 181193 - 50001231
Group number: 2552007-0100
Assembly Drawing: 2552007-1_1_AB

This list covers pages from 4-104 to 4-109

Pos	Part No	UN	Qty	Description	Page No
TPA 1000SQ SMILE (See drawing on page: 4-108)					
010	1558820-0000		1	RAIL	
020	2579991-0000		1	HOLDER	
030	2579990-0000		1	SHAFT	
040	2531703-0000		2	BUSHING	
050	1498850-0000		1	BUSBAR	
090	2503700-0000		1	VOLUME BULGE	
100	2500591-0000		1	VOLUME BULGE	
300	312115-0297		4	SCREW ISO4762 M4X25 A4	
370	312155-0287		2	SCREW EN 10642 MF6S M4X8 A480	
380	312155-0325		2	SCREW EN 10642 MF6S M5X10 A480	
400	312115-0327		2	SCREW ISO4762 M5X12 A4	
L4309	1520052-0000		1	INDUCTOR	
L4309	1520052-0000		1	INDUCTOR	
TBA 0200B NOQC, TBA 0250B NOQC (See drawing on page: 4-104)					
010	1348546-0000		1	RAIL	
020	1349599-0000		1	HOLDER	
030	1349980-0000		1	SHAFT	
040	1349584-0000		2	BUSHING	
050	1498850-0000		1	BUSBAR	
300	312115-0297		3	SCREW ISO4762 M4X25 A4	
400	312318-0329		1	SCREW ISO4029 M5X16 A4	
L4309	1110932-0000		1	INDUCTOR	
L4309	1110932-0000		1	INDUCTOR	
TBA 0200B QC, TBA 0330S QC, TBA 0250B QC (See drawing on page: 4-106)					
010	1348546-0000		1	RAIL	
020	2604565-0000		1	HOLDER	
050	1498850-0000		1	BUSBAR	
300	312115-0297		3	SCREW ISO4762 M4X25 A4	
L4309	1110932-0000		1	INDUCTOR	
L4309	1110932-0000		1	INDUCTOR	
TBA 0200S (See drawing on page: 4-108)					
010	1348546-0000		1	RAIL	
020	2513015-0000		1	HOLDER	
030	2513013-0000		1	SHAFT	
040	2531703-0000		2	BUSHING	
050	1498850-0000		1	BUSBAR	
300	312115-0297		3	SCREW ISO4762 M4X25 A4	
400	312115-0329		2	SCREW ISO4762 M5X16 A4	
L4309	1110930-0000		1	INDUCTOR	
L4309	1110930-0000		1	INDUCTOR	
TBA 0500B QC, TBA 1000B QC (See drawing on page: 4-106)					
010	1558820-0000		1	RAIL	
020	1487955-0000		1	HOLDER	
050	1498850-0000		1	BUSBAR	
090	1558734-0000		1	VOLUME BULGE	
300	312115-0297		4	SCREW ISO4762 M4X25 A4	
370	312155-0287		2	SCREW EN 10642 MF6S M4X8 A480	
L4309	1110938-0000		1	INDUCTOR	
L4309	1110938-0000		1	INDUCTOR	
TBA 1000B NOQC NOMOLDEDCAP (See drawing on page: 4-108)					
010	1348546-0000		1	RAIL	
020	2664280-0000		1	HOLDER	
030	2526812-0000		1	SHAFT	
040	2531703-0000		2	BUSHING	
050	1498850-0000		1	BUSBAR	
300	312115-0297		4	SCREW ISO4762 M4X25 A4	
400	312115-0329		2	SCREW ISO4762 M5X16 A4	
410	315105-0146		2	WASHER BRB5,3X10RFR	
L4309	1110938-0000		1	INDUCTOR	
L4309	1110938-0000		1	INDUCTOR	
TBA 1000B NOQC STDA7 (See drawing on page: 4-108)					
010	2610955-0000		1	RAIL	
020	2664280-0000		1	HOLDER	
030	2526812-0000		1	SHAFT	
040	2531703-0000		2	BUSHING	
050	1498850-0000		1	BUSBAR	
300	312115-0297		4	SCREW ISO4762 M4X25 A4	
400	312115-0329		2	SCREW ISO4762 M5X16 A4	
410	315105-0146		2	WASHER BRB5,3X10RFR	
L4309	2610956-0000		1	INDUCTOR	
L4309	2610956-0000		1	INDUCTOR	
TBA 1000S NOMOLDEDCAP (See drawing on page: 4-108)					
010	1348546-0000		1	RAIL	
020	2559425-0000		1	CLAMP HOLDER	
030	2526812-0000		1	SHAFT	
040	2531703-0000		2	BUSHING	
050	1498850-0000		1	BUSBAR	
300	312115-0297		4	SCREW ISO4762 M4X25 A4	
400	312115-0327		2	SCREW ISO4762 M5X12 A4	
L4309	1110937-0000		1	INDUCTOR	
L4309	1110937-0000		1	INDUCTOR	
TBA 1000S STDA7 (See drawing on page: 4-108)					
010	2546476-0000		1	RAIL	

Machine Type | Group Description | Used-In | Group Number | Page No

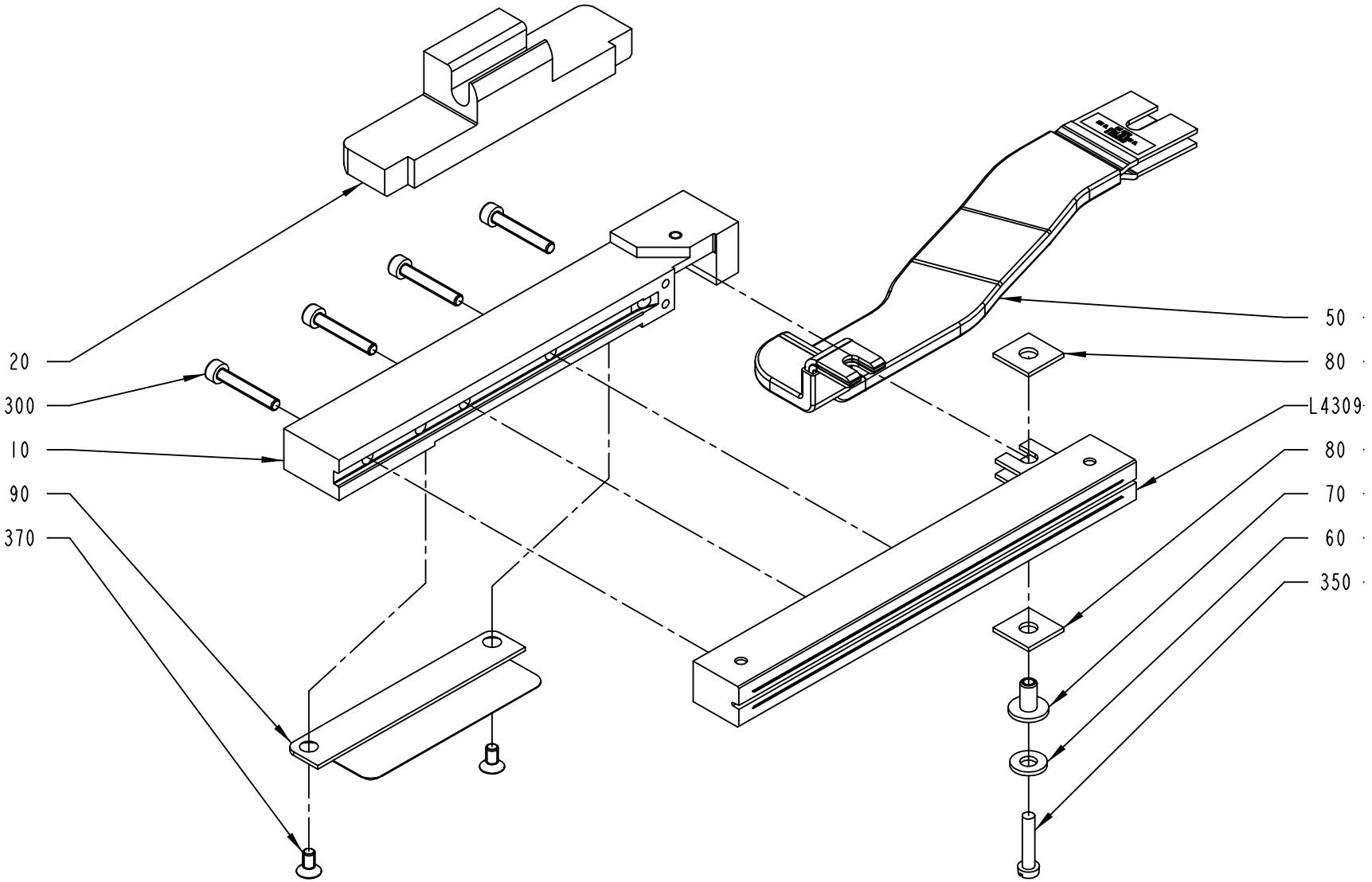

2552007-3
ECM 119672

ECM: 181193 - 50001231
Group number: 2552007-0100
Assembly Drawing: 2552007-3_1_AA

This list covers pages from 4-104 to 4-109

Pos	Part No	UN	Qty	Description	Page No
TBA 1000S STDA7 (Cont'd) (See drawing on page: 4-108)					
020	2559425-0000		1	CLAMP HOLDER	
030	2526812-0000		1	SHAFT	
040	2531703-0000		2	BUSHING	
050	1498850-0000		1	BUSBAR	
300	312115-0297		4	SCREW ISO4762 M4X25 A4	
400	312115-0327		2	SCREW ISO4762 M5X12 A4	
L4309	2546474-0000		1	INDUCTOR	
L4309	2546474-0000		1	INDUCTOR	
TBA 1000SQ (See drawing on page: 4-108)					
010	1348546-0000		1	RAIL	
020	2526811-0000		1	HOLDER	
030	2526812-0000		1	SHAFT	
040	2531703-0000		2	BUSHING	
050	1498850-0000		1	BUSBAR	
300	312115-0297		4	SCREW ISO4762 M4X25 A4	
400	312115-0327		2	SCREW ISO4762 M5X12 A4	
L4309	1110936-0000		1	INDUCTOR	
L4309	1110936-0000		1	INDUCTOR	
TBA 1500S (See drawing on page: 4-108)					
010	1348546-0000		1	RAIL	
020	2570302-0000		1	CLAMP HOLDER	
030	2526812-0000		1	SHAFT	
040	2531703-0000		2	BUSHING	
050	1498850-0000		1	BUSBAR	
300	312115-0297		4	SCREW ISO4762 M4X25 A4	
400	312115-0327		2	SCREW ISO4762 M5X12 A4	
L4309	1110938-0000		1	INDUCTOR	
L4309	1110938-0000		1	INDUCTOR	
TBA 1890S QC, TBA 2000S QC (See drawing on page: 4-108)					
020	2588293-0000		1	HOLDER	
030	2686144-0000		1	SHAFT	
040	2531703-0000		2	BUSHING	
050	2698012-0000		1	BUSBAR	
300	312115-0305		5	SCREW ISO4762 M4X50 A4	
400	312115-0327		2	SCREW ISO4762 M5X12 A4	
L4309	1533046-0000		1	INDUCTOR	
L4309	1533046-0000		1	INDUCTOR	
TPA 1000SQ FT (See drawing on page: 4-108)					
010	1558820-0000		1	RAIL	
020	2579989-0000		1	HOLDER	
030	2579990-0000		1	SHAFT	
040	2531703-0000		2	BUSHING	
050	1498850-0000		1	BUSBAR	
090	2503700-0000		1	VOLUME BULGE	
300	312115-0297		4	SCREW ISO4762 M4X25 A4	
370	312155-0287		2	SCREW EN 10642 MF6S M4X8 A480	
400	312115-0327		2	SCREW ISO4762 M5X12 A4	
L4309	1520052-0000		1	INDUCTOR	
L4309	1520052-0000		1	INDUCTOR	
Common Parts					
060	28509-0000		1	WASHER	
070	32544-0000		1	INSULATION NUT	
080	1036584-0000		2	WASHER	
350	312125-0295		1	SCREW ISO 1207 M4X20 A4	

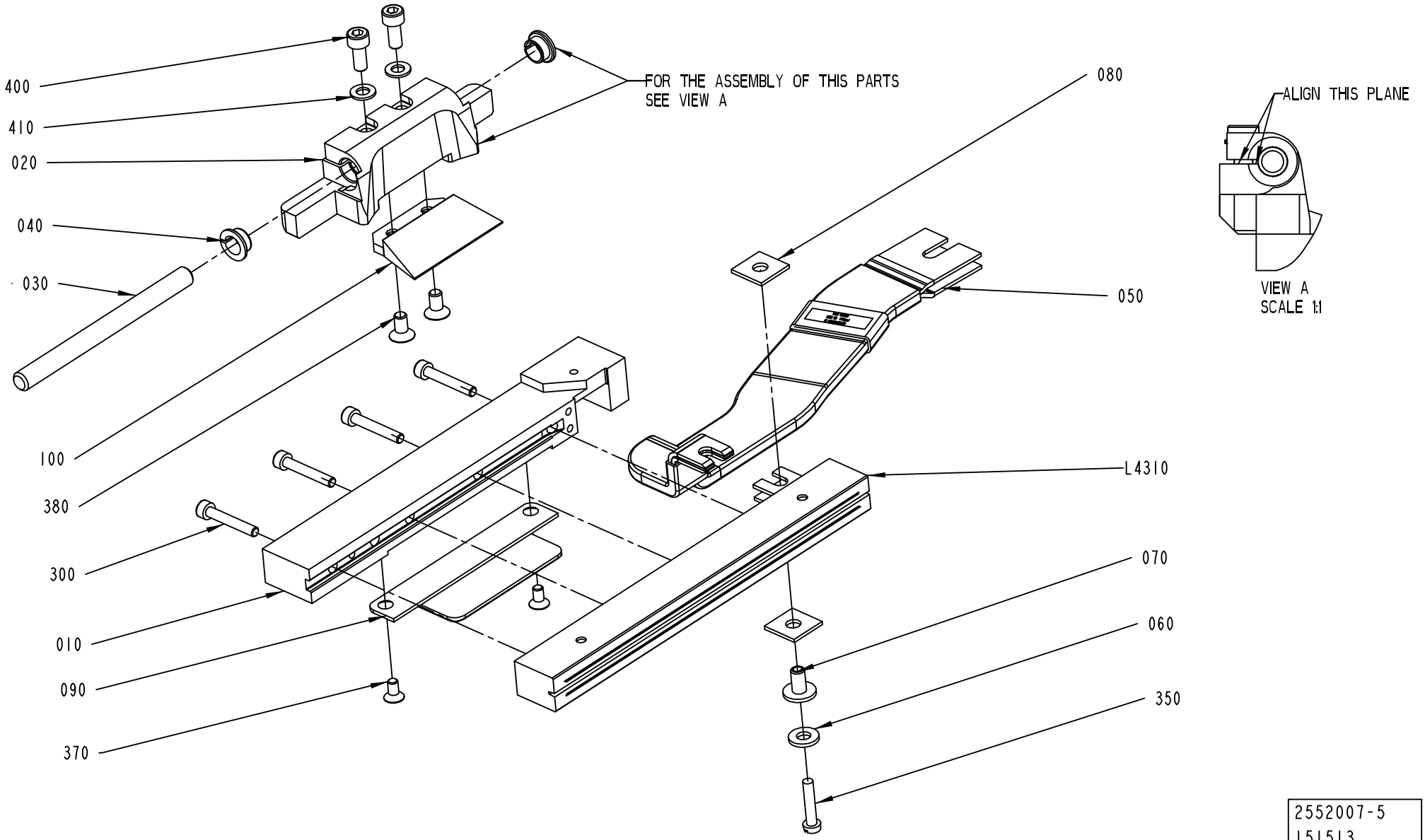
400
410
020
040
030
100
380
300
010
090
370
FOR THE ASSEMBLY OF THIS PARTS
SEE VIEW A
080
050
L4310
070
060
350
ALIGN THIS PLANE
VIEW A
SCALE 1:1
2552007-5
151513

ECM: 181193 - 50001231
Group number: 2552007-0100
Assembly Drawing: 2552007-5_1_AC

This list covers pages from 4-104 to 4-109

Pos	Part No	UN	Qty	Description	Page No	Pos	Part No	UN	Qty	Description	Page No

SEE PREVIOUS LISTS PAGES: 4-105, 4-107.

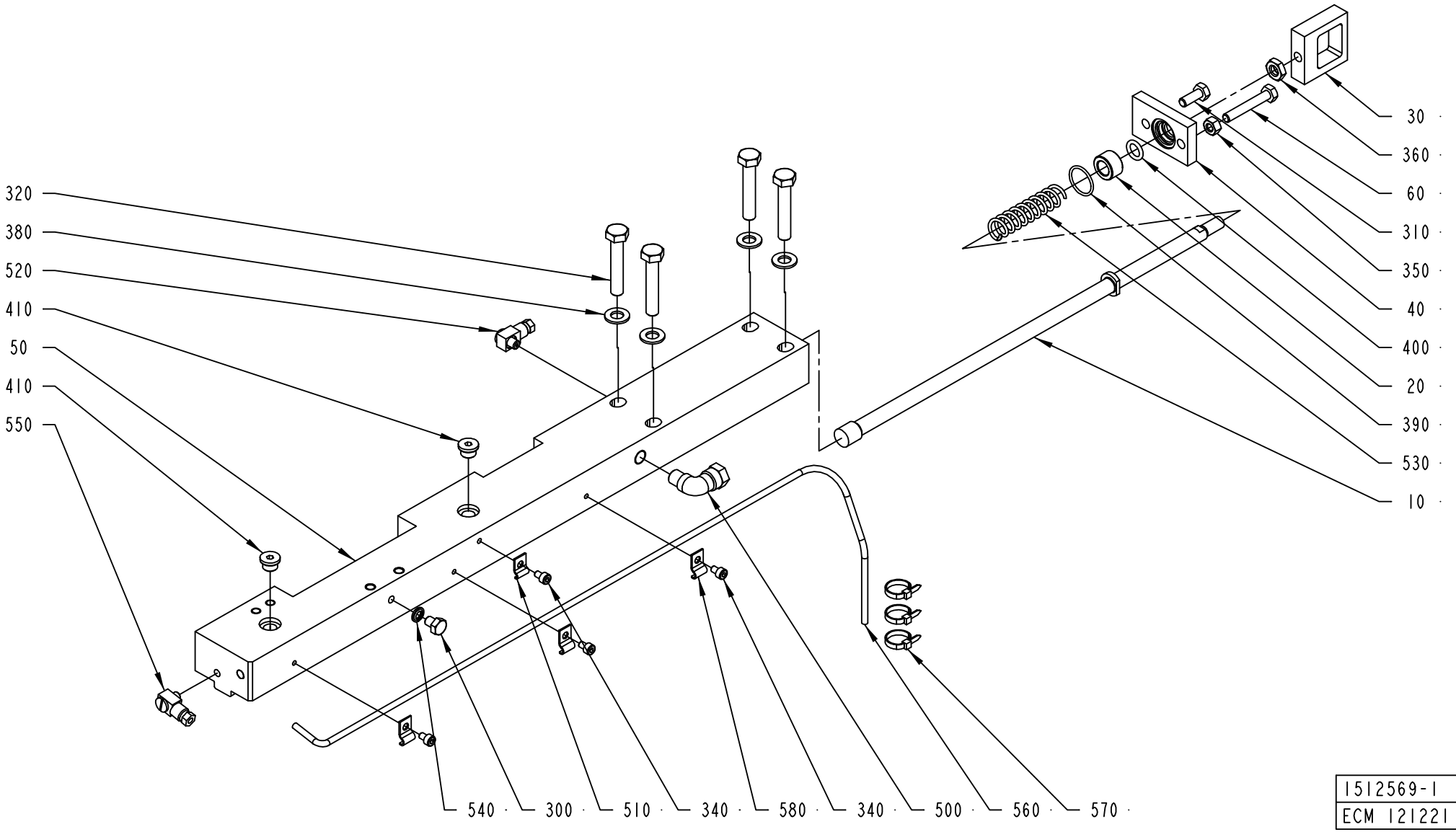

1512569-1
ECM 121221

ECM: 181547 - 50001231
Group number: 1512569-0200
Assembly Drawing: 1512569-1_1_AA

This list covers pages from 4-110 to 4-115

Pos	Part No	UN	Qty	Description	Page No
TBA 0200B QC, TBA 0330S QC, TBA 0250B QC (See drawing on page: 4-112)					
010	2530508-0000		1	TIE ROD	
050	2572248-0000		1	CARRIER	
070	1549312-0000		1	INSERT	
345	312155-0323		3	SCREW EN 10642 MF6S M5X8 A480	
TBA 0500B QC, TBA 1000B QC (See drawing on page: 4-112)					
010	1499320-0000		1	TIE ROD	
050	2572248-0000		1	CARRIER	
070	1549312-0000		1	INSERT	
345	312155-0323		3	SCREW EN 10642 MF6S M5X8 A480	
TBA 0200S, TBA 0200B NOQC, TBA 0250B NOQC (See drawing on page: 4-110)					
010	2530508-0000		1	TIE ROD	
050	2536026-0000		1	CARRIER	
TBA 1000S, TBA 1000SQ, TBA 1500S, TPA 1000SQ, TBA 1000B NOQC (See drawing on page: 4-110)					
010	1499320-0000		1	TIE ROD	
050	2536026-0000		1	CARRIER	
TBA 1890S QC, TBA 2000S QC (See drawing on page: 4-114)					
010	2588291-0000		1	TIE ROD	
050	2566327-0000		1	CARRIER	
070	2566328-0000		1	PLATE	
590	312155-0287		3	SCREW EN 10642 MF6S M4X8 A480	
600	2603151-0000		1	SHIM	
Common Parts					
020	1036495-0000		1	BUSHING	
030	1036585-0000		1	EAR	
040	1036389-0000		1	LID	
060	1523162-0000		1	SCREW	
300	312105-0362		1	SCREW M6S ISO 4017 M6X8 A480	
310	312105-0368		1	SCREW M6S ISO 4017 M6X16 A480	
320	312105-0460		4	SCREW M6S ISO 4014 M8X45 A480	
340	312115-0285		4	SCREW ISO4762 M4X6 A4	
350	312605-0316		1	HEXAGON NUT, M6M M6 A280	
360	312625-0318		1	HEXAGON THIN NUT, EN 24035 ML6M M8 A4	
380	315105-0165		4	WASHER BRB8,4X16RFR	
390	315202-0116		1	O-RING 18,1X1,6 MM	
400	315202-0208		1	O-RING 9,3X2,4 MM	
410	342713-0209		2	PLUG (1UNIT = 10PC)	
500	90030-0257		1	CONN. ELBOW, 8-R1/8, EXT.THREAD	
510	90165-0058		1	PIPE CLIP FOR TUBE D=25 MM	
520	90134-0058		1	CONNECTION	
530	1548940-0000		1	SPRING	
540	315211-0103		1	BONDED SEAL SS/NBR90 M6	
550	90134-0068		1	CONNECTION	
560	90266-0165	MM	800	BRASS PIPE	
570	352113-0101		3	CLIP STRIP, 92X2,5 MM	
580	90165-0056		3	PIPE CLIP FOR TUBE D=4 MM	

Machine Type | Group Description | Used-In | Group Number | Page No

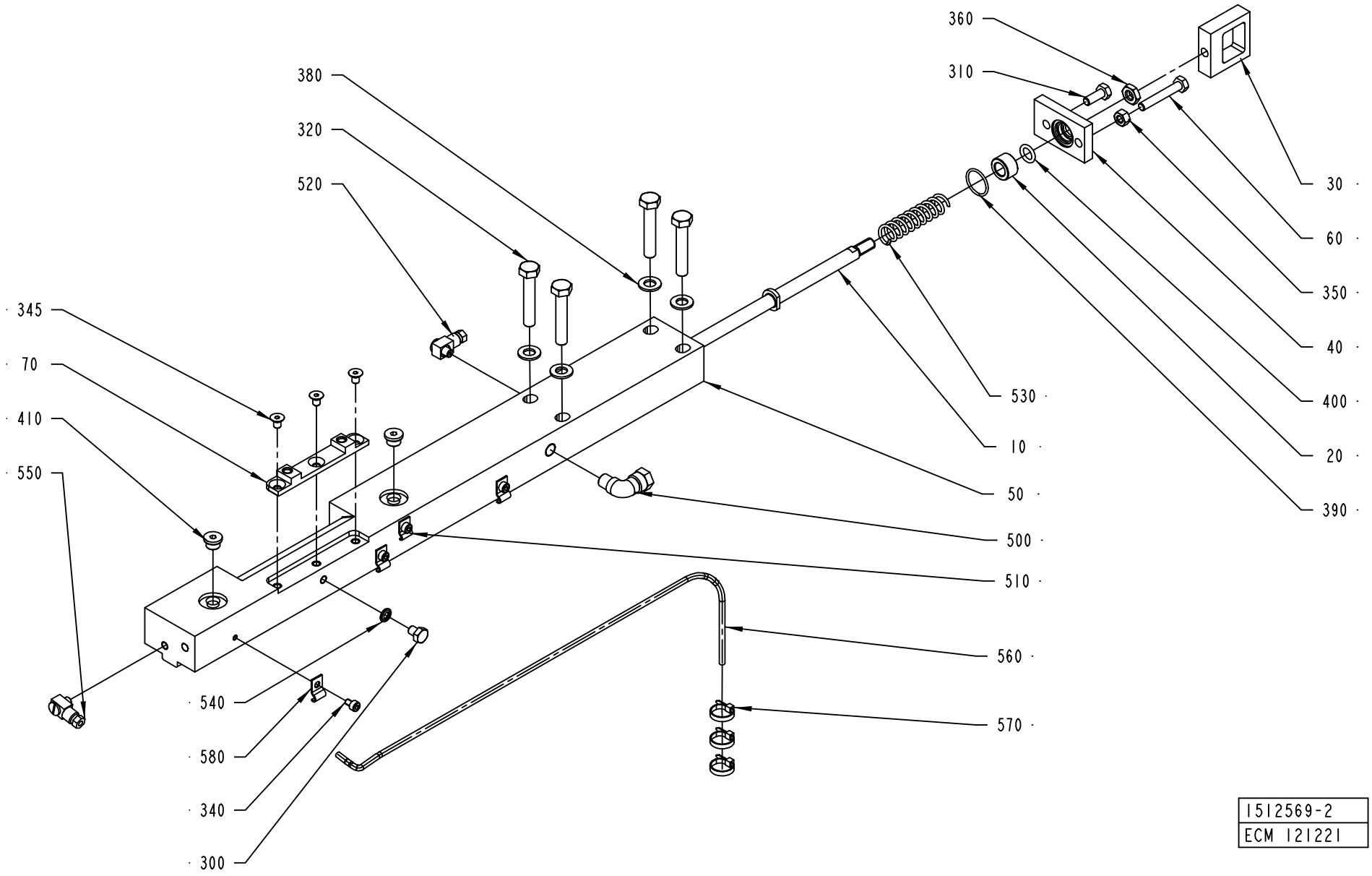
360
310
380
320
520
345
70
410
550
30
60
350
40
400
20
390
530
10
50
500
510
560
570
540
580
340
300
1512569-2
ECM 121221

ECM: 181547 - 50001231
Group number: 1512569-0200
Assembly Drawing: 1512569-2_1_AA

This list covers pages from 4-110 to 4-115

Pos	Part No	UN	Qty	Description	Page No
TBA 0200B QC, TBA 0330S QC, TBA 0250B QC (See drawing on page: 4-112)					
010	2530508-0000		1	TIE ROD	
050	2572248-0000		1	CARRIER	
070	1549312-0000		1	INSERT	
345	312155-0323		3	SCREW EN 10642 MF6S M5X8 A480	
TBA 0500B QC, TBA 1000B QC (See drawing on page: 4-112)					
010	1499320-0000		1	TIE ROD	
050	2572248-0000		1	CARRIER	
070	1549312-0000		1	INSERT	
345	312155-0323		3	SCREW EN 10642 MF6S M5X8 A480	
TBA 0200S, TBA 0200B NOQC, TBA 0250B NOQC (See drawing on page: 4-110)					
010	2530508-0000		1	TIE ROD	
050	2536026-0000		1	CARRIER	
TBA 1000S, TBA 1000SQ, TBA 1500S, TPA 1000SQ, TBA 1000B NOQC (See drawing on page: 4-110)					
010	1499320-0000		1	TIE ROD	
050	2536026-0000		1	CARRIER	
TBA 1890S QC, TBA 2000S QC (See drawing on page: 4-114)					
010	2588291-0000		1	TIE ROD	
050	2566327-0000		1	CARRIER	
070	2566328-0000		1	PLATE	
590	312155-0287		3	SCREW EN 10642 MF6S M4X8 A480	
600	2603151-0000		1	SHIM	
Common Parts					
020	1036495-0000		1	BUSHING	
030	1036585-0000		1	EAR	
040	1036389-0000		1	LID	
060	1523162-0000		1	SCREW	
300	312105-0362		1	SCREW M6S ISO 4017 M6X8 A480	
310	312105-0368		1	SCREW M6S ISO 4017 M6X16 A480	
320	312105-0460		4	SCREW M6S ISO 4014 M8X45 A480	
340	312115-0285		4	SCREW ISO4762 M4X6 A4	
350	312605-0316		1	HEXAGON NUT, M6M M6 A280	
360	312625-0318		1	HEXAGON THIN NUT, EN 24035 ML6M M8 A4	
380	315105-0165		4	WASHER BRB8,4X16RFR	
390	315202-0116		1	O-RING 18,1X1,6 MM	
400	315202-0208		1	O-RING 9,3X2,4 MM	
410	342713-0209		2	PLUG (1UNIT = 10PC)	
500	90030-0257		1	CONN. ELBOW, 8-R1/8, EXT.THREAD	
510	90165-0058		1	PIPE CLIP FOR TUBE D=25 MM	
520	90134-0058		1	CONNECTION	
530	1548940-0000		1	SPRING	
540	315211-0103		1	BONDED SEAL SS/NBR90 M6	
550	90134-0068		1	CONNECTION	
560	90266-0165	MM	800	BRASS PIPE	
570	352113-0101		3	CLIP STRIP, 92X2,5 MM	
580	90165-0056		3	PIPE CLIP FOR TUBE D=4 MM	

Machine Type | Group Description | Used-In | Group Number | Page No

CARRIER CUTTING RIGHT

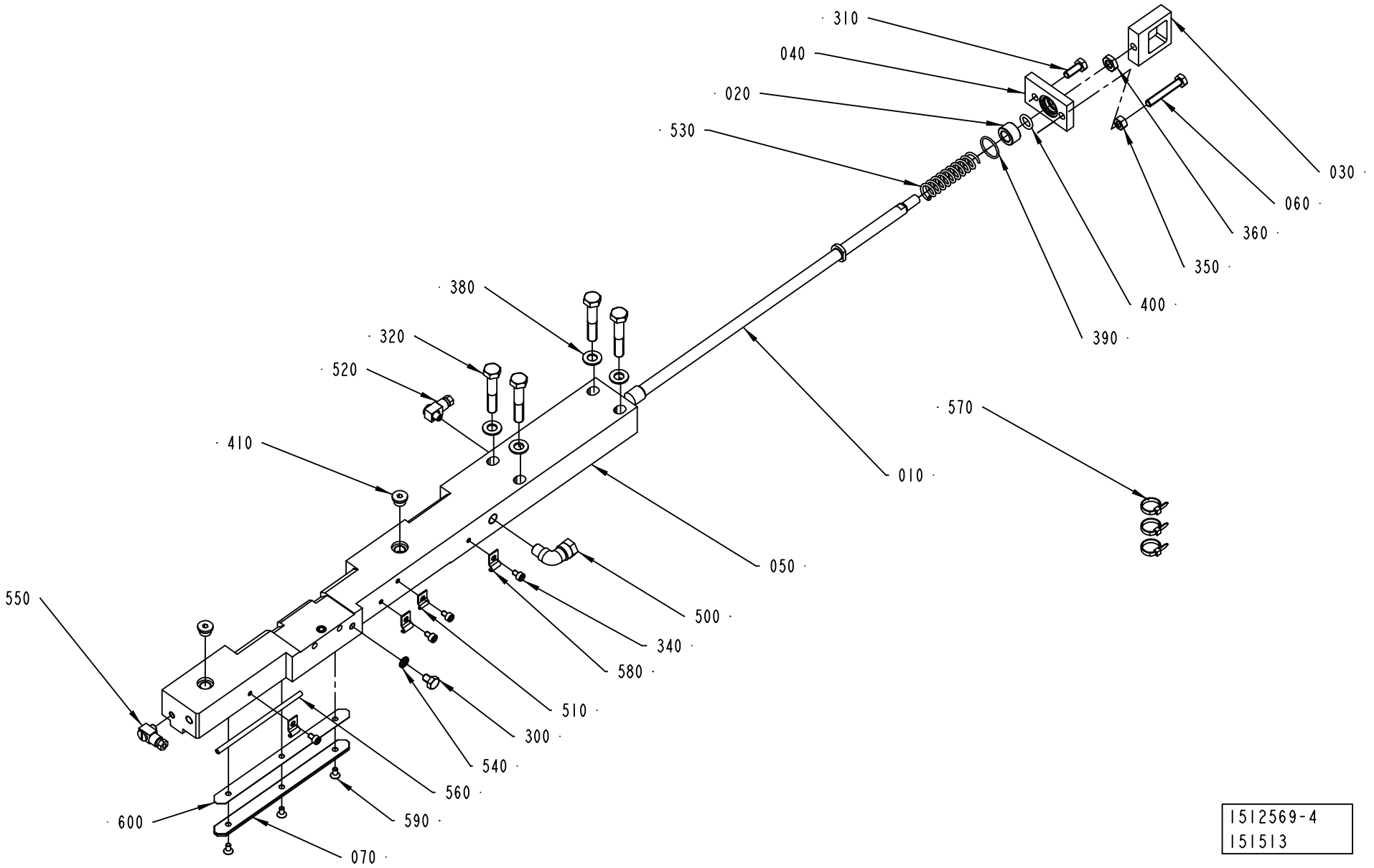

1512569-4
151513

ECM: 181547 - 50001231
Group number: 1512569-0200
Assembly Drawing: 1512569-4_1_AA

This list covers pages from 4-110 to 4-115

Pos	Part No	UN	Qty	Description	Page No
TBA 0200B QC, TBA 0330S QC, TBA 0250B QC (See drawing on page: 4-112)					
010	2530508-0000		1	TIE ROD	
050	2572248-0000		1	CARRIER	
070	1549312-0000		1	INSERT	
345	312155-0323		3	SCREW EN 10642 MF6S M5X8 A480	
TBA 0500B QC, TBA 1000B QC (See drawing on page: 4-112)					
010	1499320-0000		1	TIE ROD	
050	2572248-0000		1	CARRIER	
070	1549312-0000		1	INSERT	
345	312155-0323		3	SCREW EN 10642 MF6S M5X8 A480	
TBA 0200S, TBA 0200B NOQC, TBA 0250B NOQC (See drawing on page: 4-110)					
010	2530508-0000		1	TIE ROD	
050	2536026-0000		1	CARRIER	
TBA 1000S, TBA 1000SQ, TBA 1500S, TPA 1000SQ, TBA 1000B NOQC (See drawing on page: 4-110)					
010	1499320-0000		1	TIE ROD	
050	2536026-0000		1	CARRIER	
TBA 1890S QC, TBA 2000S QC (See drawing on page: 4-114)					
010	2588291-0000		1	TIE ROD	
050	2566327-0000		1	CARRIER	
070	2566328-0000		1	PLATE	
590	312155-0287		3	SCREW EN 10642 MF6S M4X8 A480	
600	2603151-0000		1	SHIM	
Common Parts					
020	1036495-0000		1	BUSHING	
030	1036585-0000		1	EAR	
040	1036389-0000		1	LID	
060	1523162-0000		1	SCREW	
300	312105-0362		1	SCREW M6S ISO 4017 M6X8 A480	
310	312105-0368		1	SCREW M6S ISO 4017 M6X16 A480	
320	312105-0460		4	SCREW M6S ISO 4014 M8X45 A480	
340	312115-0285		4	SCREW ISO4762 M4X6 A4	
350	312605-0316		1	HEXAGON NUT, M6M M6 A280	
360	312625-0318		1	HEXAGON THIN NUT, EN 24035 ML6M M8 A4	
380	315105-0165		4	WASHER BRB8,4X16RFR	
390	315202-0116		1	O-RING 18,1X1,6 MM	
400	315202-0208		1	O-RING 9,3X2,4 MM	
410	342713-0209		2	PLUG (1UNIT = 10PC)	
500	90030-0257		1	CONN. ELBOW, 8-R1/8, EXT.THREAD	
510	90165-0058		1	PIPE CLIP FOR TUBE D=25 MM	
520	90134-0058		1	CONNECTION	
530	1548940-0000		1	SPRING	
540	315211-0103		1	BONDED SEAL SS/NBR90 M6	
550	90134-0068		1	CONNECTION	
560	90266-0165	MM	800	BRASS PIPE	
570	352113-0101		3	CLIP STRIP, 92X2,5 MM	
580	90165-0056		3	PIPE CLIP FOR TUBE D=4 MM	

Machine Type | Group Description | Used-In | Group Number | Page No

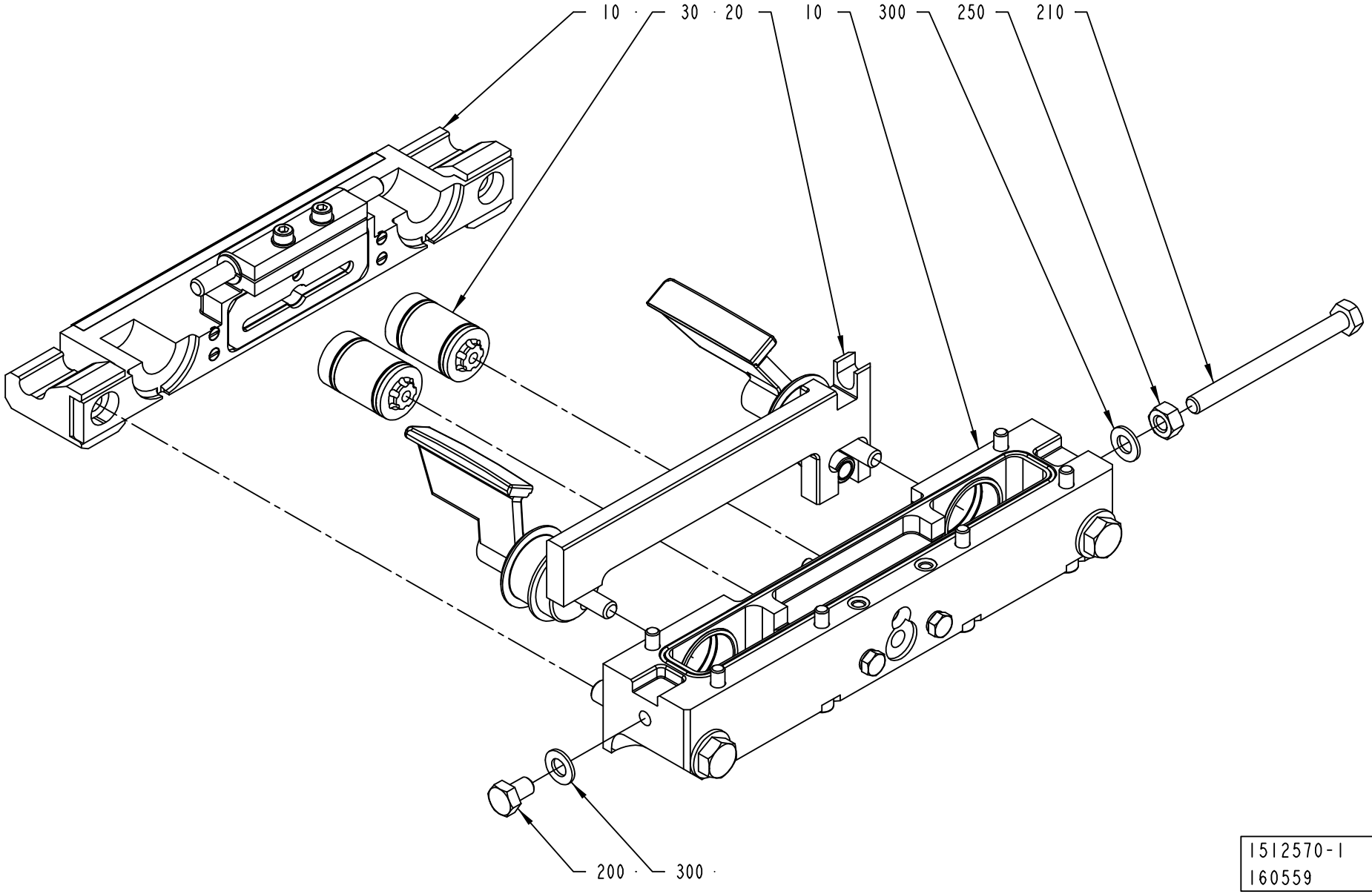
10
30
20
10
300
250
210
200
300
1512570-1
160559

ECM: 181187 - 50001231
Group number: 1512570-0200
Assembly Drawing: 1512570-1_1_AB

Pos	Part No	UN	Qty	Description	Page No
-					
010	2552008-0100		1	CUTTING JAW	**4-83, 4-85, 4-87, 4-89**
020	2552011-0100		1	FOLDING FLAP RIGHT	**4-119, 4-121**
030	2552010-0100		2	PISTON	**4-95**
200	312105-0447		1	SCREW M6S ISO 4017 M8X12 A480	
210	312105-0469		1	SCREW M6S ISO 4014 M8X90 A480	
250	312605-0318		1	HEXAGON NUT, M6M M8 A280	
300	315105-0165		2	WASHER BRB8,4X16RFR	

Pos	Part No	UN	Qty	Description	Page No

FOLDING FLAP RIGHT

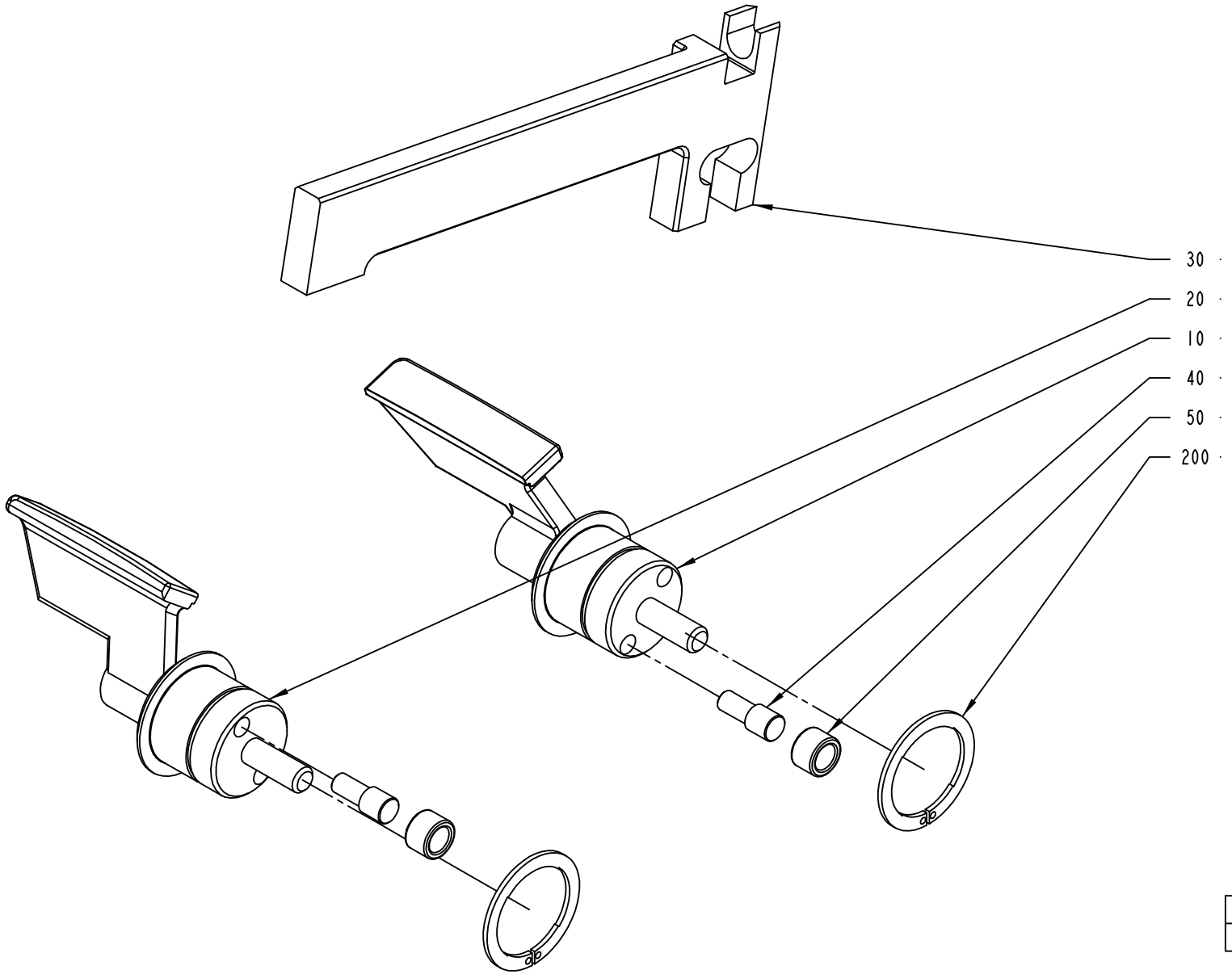

2552011-1
ECM 120277

ECM: 181442 - 50001231
Group number: 2552011-0100
Assembly Drawing: 2552011-1_1_AA

This list covers pages from 4-118 to 4-121

Pos	Part No	UN	Qty	Description	Page No
TBA 0200B QC, TBA 0330S QC, TBA 0250B QC (See drawing on page: 4-118)					
010	2605875-0000		1	FOLDING FLAP	
020	2605876-0000		1	FOLDING FLAP	
030	1255463-0000		1	CARRIER RULER	
TBA 0200S (See drawing on page: 4-118)					
010	2624554-0000		1	FOLDING FLAP	
020	2624555-0000		1	FOLDING FLAP	
030	1255462-0000		1	CARRIER RULER	
TBA 0500B NOQC, TBA 1000B NOQC NOMOLDEDCAP (See drawing on page: 4-118)					
010	1511697-0000		1	.FOLDING FLAP	
020	1511698-0000		1	FOLDING FLAP	
030	1255461-0000		1	CARRIER RULER	
TBA 0500B QC, TBA 1000B QC (See drawing on page: 4-118)					
010	1511352-0000		1	FOLDING FLAP	
020	1511351-0000		1	FOLDING FLAP	
030	1255461-0000		1	CARRIER RULER	
TBA 1000B NOQC STDA7 (See drawing on page: 4-118)					
010	1511697-0000		1	.FOLDING FLAP	
020	2610957-0000		1	FOLDING FLAP	
030	1255461-0000		1	CARRIER RULER	
TBA 1000S NOMOLDEDCAP (See drawing on page: 4-118)					
010	1511699-0000		1	FOLDING FLAP	
020	1511700-0000		1	FOLDING FLAP	
030	1255464-0000		1	CARRIER RULER	
TBA 1000S STDA7 (See drawing on page: 4-118)					
010	1511699-0000		1	FOLDING FLAP	
020	2546501-0000		1	FOLDING FLAP	
030	1255464-0000		1	CARRIER RULER	
TBA 1000SQ (See drawing on page: 4-118)					
010	2507076-0000		1	FOLDING FLAP	
020	2507077-0000		1	FOLDING FLAP	
030	1360319-0000		1	CARRIER RULER	
TBA 1500S (See drawing on page: 4-118)					
010	2507092-0000		1	FOLDING FLAP	
020	2507093-0000		1	FOLDING FLAP	
030	1255461-0000		1	CARRIER RULER	
TBA 1890S QC, TBA 2000S QC (See drawing on page: 4-120)					
010	2566319-0000		1	FOLDING FLAP	
020	2566320-0000		1	FOLDING FLAP	
030	2566317-0000		1	CARRIER RULER	
210	90459-2258		2	SEAL GLYDRING 25,1X30X2,2 MM	
TPA 1000SQ (See drawing on page: 4-118)					
010	1523146-0000		1	FOLDING FLAP	
020	1523147-0000		1	FOLDING FLAP	
030	1523148-0000		1	CARRIER RULER	
Common Parts					
040	22462-0000		2	SHAFT	
050	22463-0000		2	ROLL	
200	90141-0029		2	CIRCLIP	

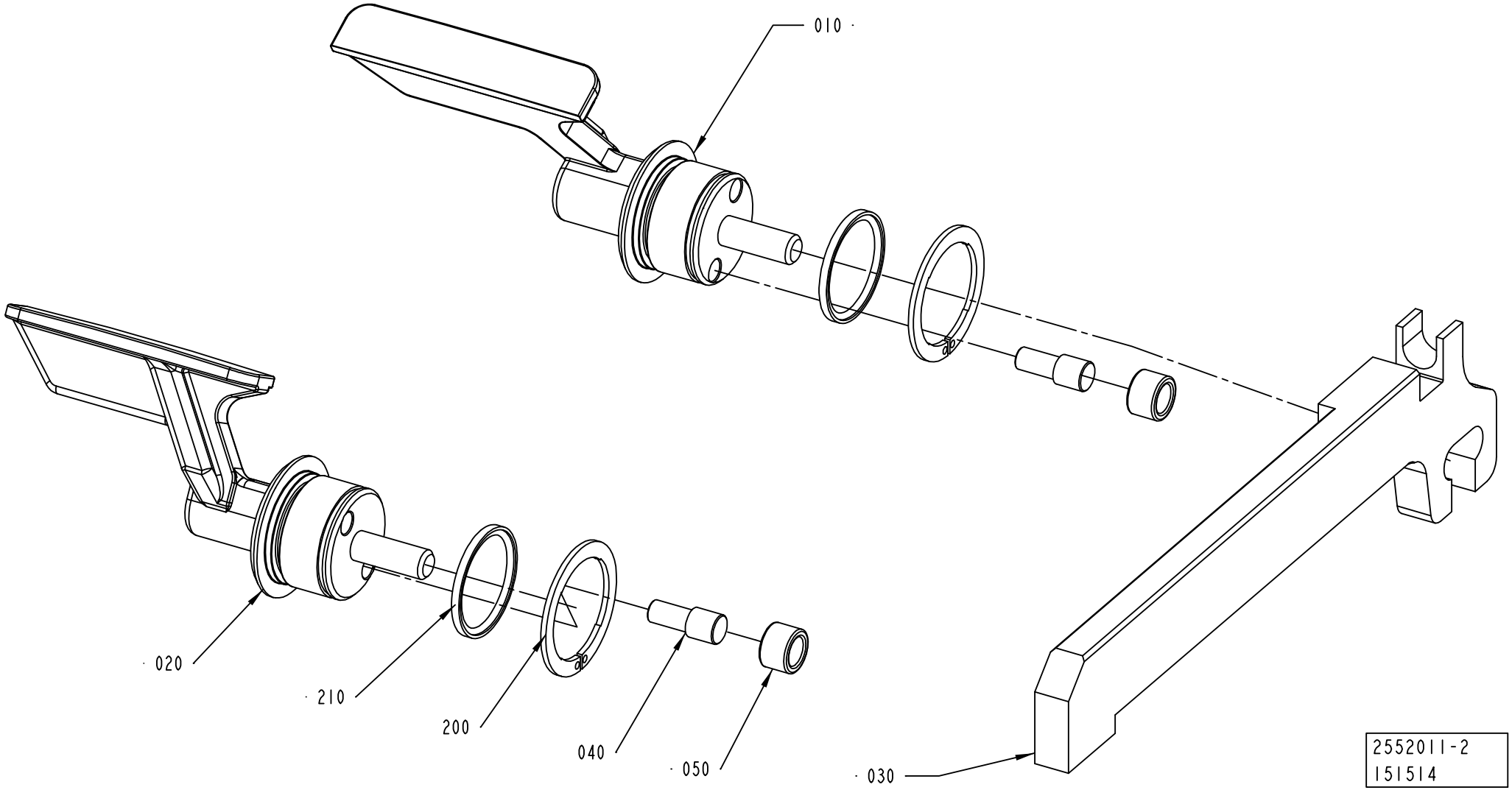
010
020
210
200
040
050
030
2552011-2
151514

ECM: 181442 - 50001231
Group number: 2552011-0100
Assembly Drawing: 2552011-2_1_AA

This list covers pages from 4-118 to 4-121

Pos	Part No	UN	Qty	Description	Page No
TBA 0200B QC, TBA 0330S QC, TBA 0250B QC (See drawing on page: 4-118)					
010	2605875-0000		1	FOLDING FLAP	
020	2605876-0000		1	FOLDING FLAP	
030	1255463-0000		1	CARRIER RULER	
TBA 0200S (See drawing on page: 4-118)					
010	2624554-0000		1	FOLDING FLAP	
020	2624555-0000		1	FOLDING FLAP	
030	1255462-0000		1	CARRIER RULER	
TBA 0500B NOQC, TBA 1000B NOQC NOMOLDEDCAP (See drawing on page: 4-118)					
010	1511697-0000		1	.FOLDING FLAP	
020	1511698-0000		1	FOLDING FLAP	
030	1255461-0000		1	CARRIER RULER	
TBA 0500B QC, TBA 1000B QC (See drawing on page: 4-118)					
010	1511352-0000		1	FOLDING FLAP	
020	1511351-0000		1	FOLDING FLAP	
030	1255461-0000		1	CARRIER RULER	
TBA 1000B NOQC STDA7 (See drawing on page: 4-118)					
010	1511697-0000		1	.FOLDING FLAP	
020	2610957-0000		1	FOLDING FLAP	
030	1255461-0000		1	CARRIER RULER	
TBA 1000S NOMOLDEDCAP (See drawing on page: 4-118)					
010	1511699-0000		1	FOLDING FLAP	
020	1511700-0000		1	FOLDING FLAP	
030	1255464-0000		1	CARRIER RULER	
TBA 1000S STDA7 (See drawing on page: 4-118)					
010	1511699-0000		1	FOLDING FLAP	
020	2546501-0000		1	FOLDING FLAP	
030	1255464-0000		1	CARRIER RULER	
TBA 1000SQ (See drawing on page: 4-118)					
010	2507076-0000		1	FOLDING FLAP	
020	2507077-0000		1	FOLDING FLAP	
030	1360319-0000		1	CARRIER RULER	
TBA 1500S (See drawing on page: 4-118)					
010	2507092-0000		1	FOLDING FLAP	
020	2507093-0000		1	FOLDING FLAP	
030	1255461-0000		1	CARRIER RULER	
TBA 1890S QC, TBA 2000S QC (See drawing on page: 4-120)					
010	2566319-0000		1	FOLDING FLAP	
020	2566320-0000		1	FOLDING FLAP	
030	2566317-0000		1	CARRIER RULER	
210	90459-2258		2	SEAL GLYDRING 25,1X30X2,2 MM	
TPA 1000SQ (See drawing on page: 4-118)					
010	1523146-0000		1	FOLDING FLAP	
020	1523147-0000		1	FOLDING FLAP	
030	1523148-0000		1	CARRIER RULER	
Common Parts					
040	22462-0000		2	SHAFT	
050	22463-0000		2	ROLL	
200	90141-0029		2	CIRCLIP	

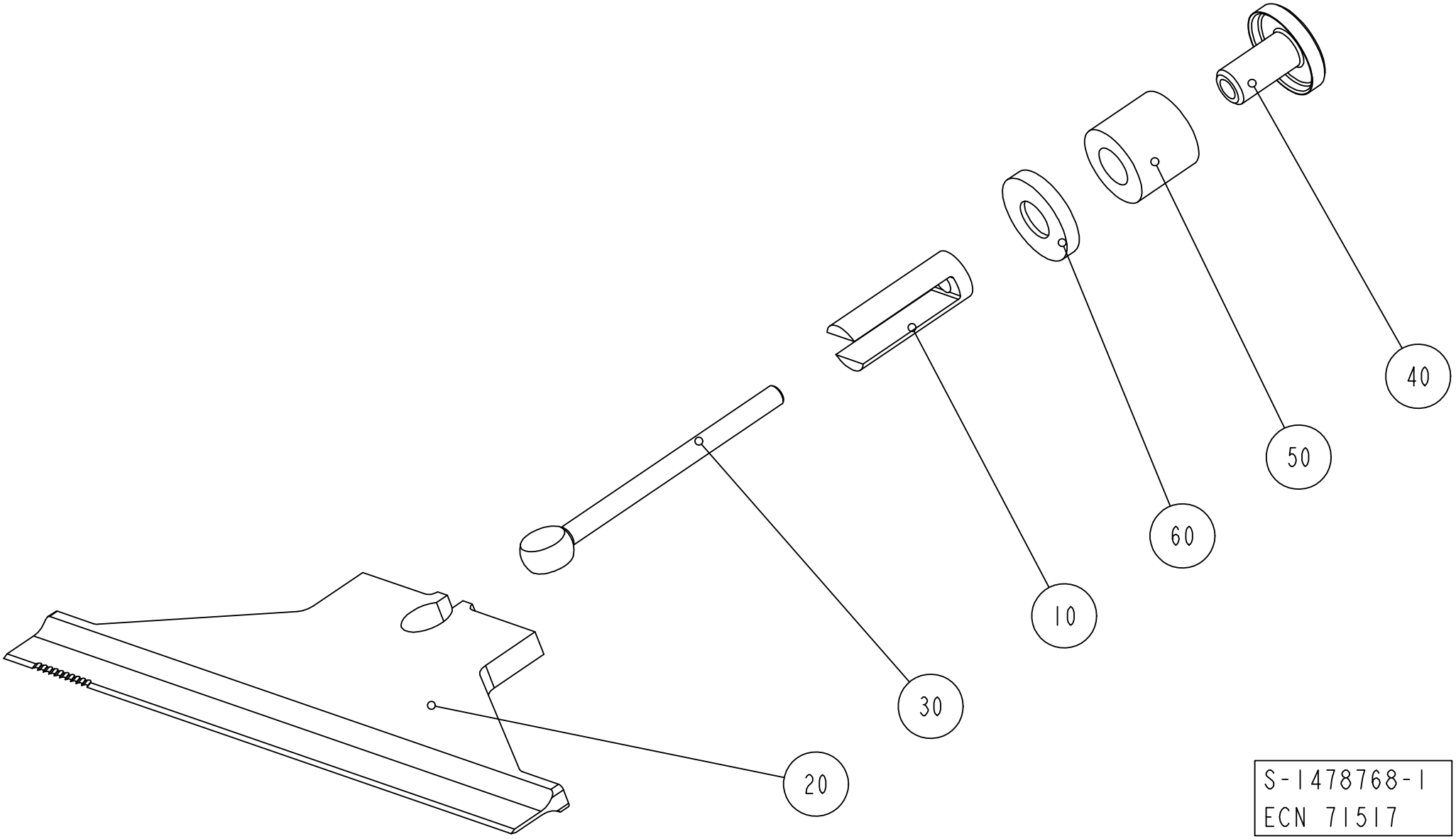
40
50
60
10
30
20
S-1478768-1
ECN 71517

ECM: 181184 - 50001231
Group number: 1478768-0100
Assembly Drawing: 1478768-1_1_AA

Pos	Part No	UN	Qty	Description	Page No
TBA 0330S, TBA 0200B, TBA 0200S, TBA 0250B					
020	1348966-0000		1	KNIFE	
030	1478966-0000		1	LINK	
040	1478967-0000		1	WASHER	
050	1260659-0000		1	SPRING	
060	1484211-0000		1	WASHER	
TBA 0500B, TBA 1000S, TBA 1000SQ, TBA 1000B, TBA 1500S					
020	1348955-0000		1	KNIFE	
030	1478968-0000		1	LINK	
040	1478967-0000		1	WASHER	
050	1260659-0000		1	SPRING	
060	1255540-0000		1	WASHER	
TPA 1000SQ					
020	1348956-0000		1	KNIFE	
030	1478968-0000		1	LINK	
040	1478967-0000		1	WASHER	
050	1260659-0000		1	SPRING	
060	1255540-0000		1	WASHER	
TBA 1890S, TBA 2000S					
020	2664761-0000		1	KNIFE	
030	927440-0000		1	LINK	
040	927441-0000		1	NUT	
050	927252-0000		1	COMPRESSION SPRING	
Common Parts					
010	927323-0000		1	SPACER	

Pos	Part No	UN	Qty	Description	Page No

VOLUME CURVE PIECE

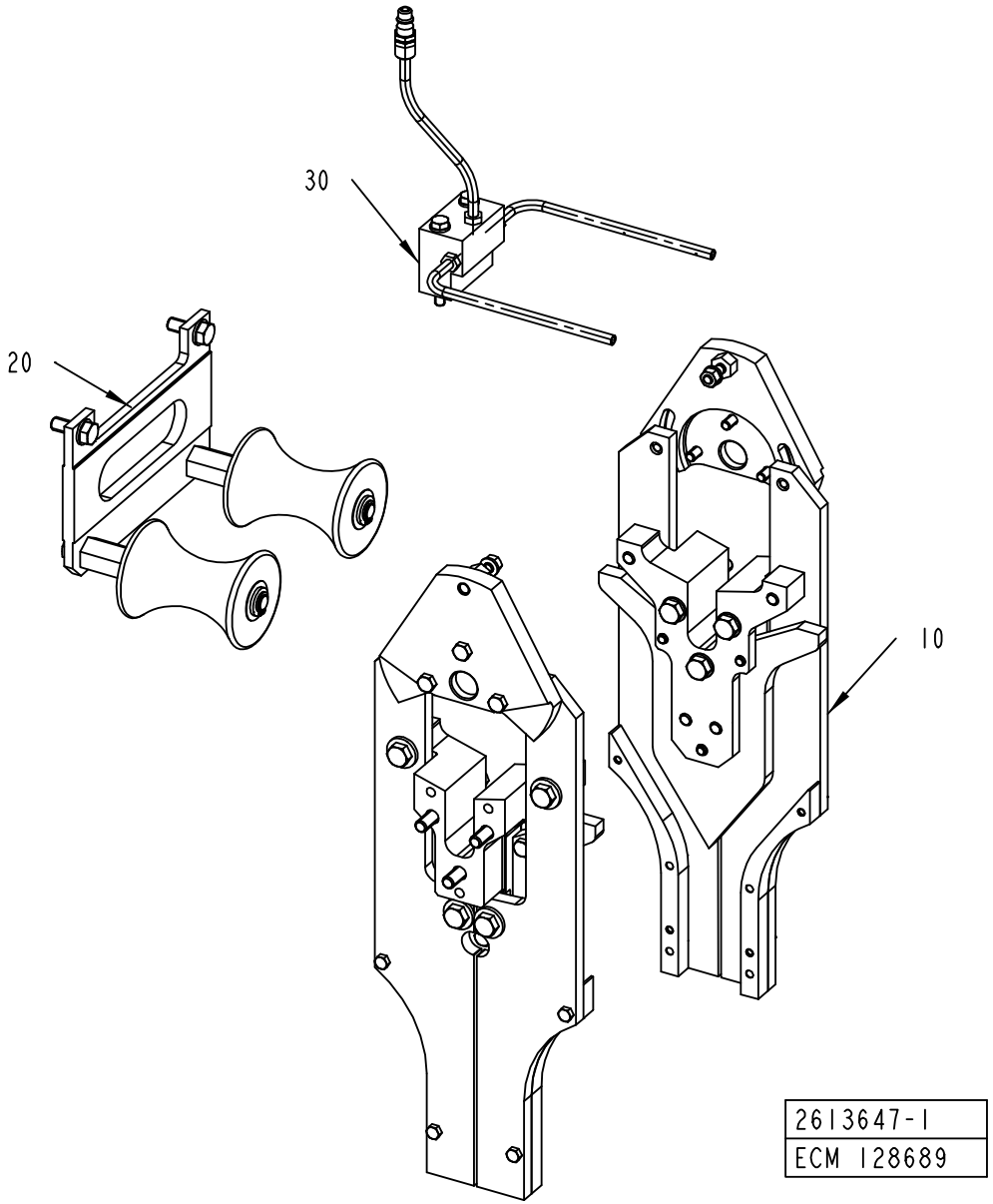

ECM: 181455 - 50001231
Group number: 2613647-0100
Assembly Drawing: 2613647-1_1_AA

Pos	Part No	UN	Qty	Description	Page No
TPA 1000SQ					
010	2597329-0100		1	CURVE UNIT	**4-127, 4-129**
TBA 0200S					
010	2597329-0100		1	CURVE UNIT	**4-127, 4-129**
TBA 0330S, TBA 0200B, TBA 0250B					
010	2613645-0100		1	CURVE UNIT	**4-131**
TBA 0500B QC, TBA 1000B QC					
010	2613645-0100		1	CURVE UNIT	**4-131**
TBA 1000B NOQC NOMOLDEDCAP					
010	2597329-0100		1	CURVE UNIT	**4-127, 4-129**
TBA 1000B NOQC STDA7					
010	2597329-0100		1	CURVE UNIT	**4-127, 4-129**
TBA 1000S NOMOLDEDCAP					
010	2597329-0100		1	CURVE UNIT	**4-127, 4-129**
TBA 1000S STDA7					
010	2597329-0100		1	CURVE UNIT	**4-127, 4-129**
TBA 1000SQ					
010	2597329-0100		1	CURVE UNIT	**4-127, 4-129**
TBA 1500S					
010	2597329-0100		1	CURVE UNIT	**4-127, 4-129**
TBA 1890S QC, TBA 2000S QC					
010	2597329-0100		1	CURVE UNIT	**4-127, 4-129**
Common Parts					
020	2613648-0100		1	SUPPORT ROLLER	**4-137, 4-139**
030	2556893-0100		1	TUBE FLUSHING	**4-141**

Pos	Part No	UN	Qty	Description	Page No

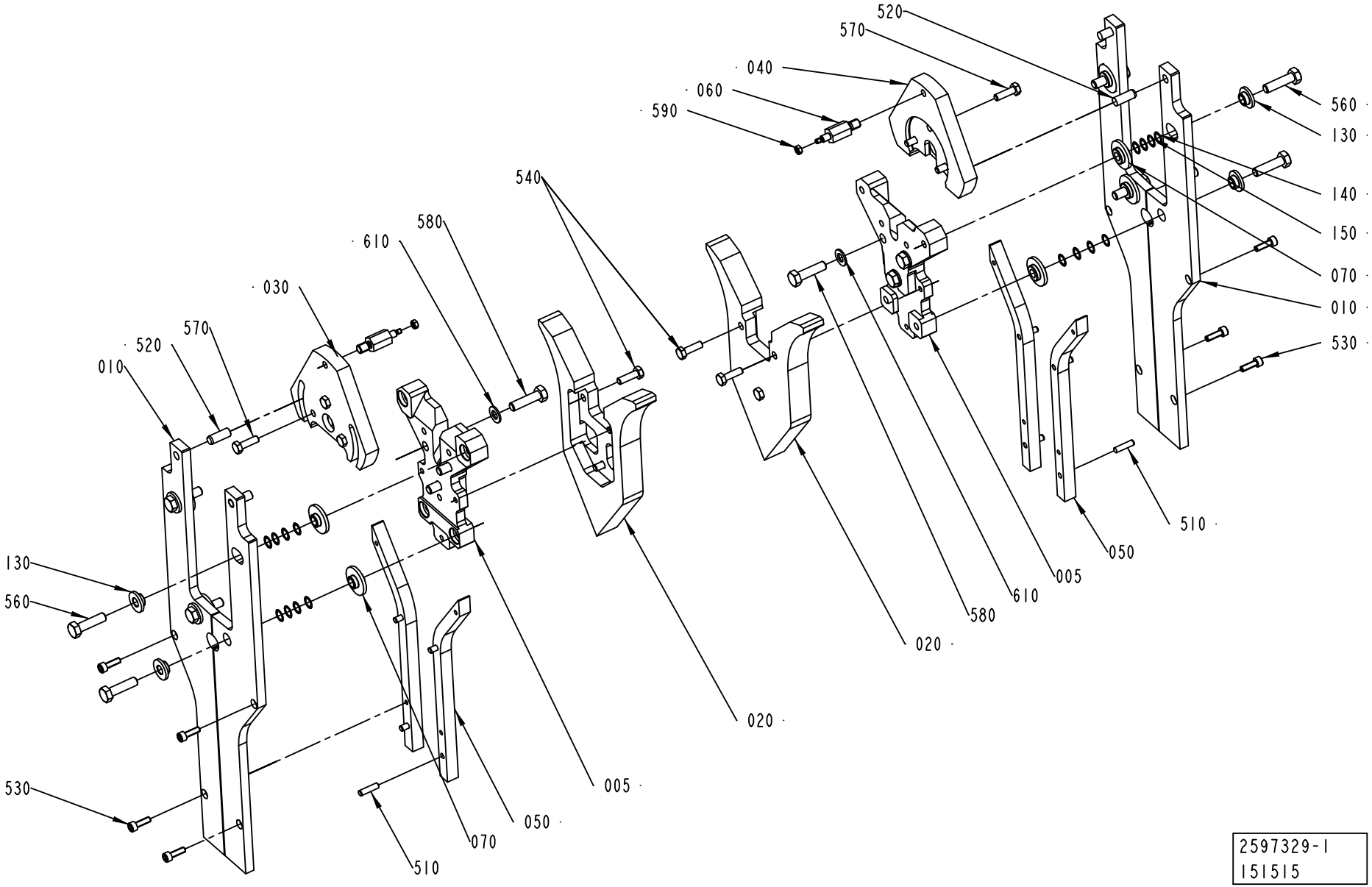
520
570
040
060
590
560
130
140
150
070
010
530
540
580
610
030
570
520
010
130
560
530
005
050
070
510
020
580
610
005
050
510
020
2597329-1
151515

ECM: 175218 - 50001231
Group number: 2597329-0100
Assembly Drawing: 2597329-1_1_AA

This list covers pages from 4-126 to 4-129

Pos	Part No	UN	Qty	Description	Page No
TBA 0200S (See drawing on page: 4-128)					
005	2628598-0000		2	SPACER	
010	2533740-0000		4	RAIL BRACKET	
020	1334081-0000		2	CURVE	
030	2606891-0000		1	ECCENTRIC	
040	2606892-0000		1	ECCENTRIC	
050	1478497-0000		4	VOLUME CAM	
060	2624544-0000		2	PIVOT PIN	
070	2533736-0000		8	SLEEVE	
120	321120-0108		4	BEARBUSHING W/O FL 12X14X8	
130	1487504-0000		8	WASHER	
140	1487505-0001		16	WASHER	
150	1487505-0002		16	WASHER	
520	311103-0399		4	PARALLEL PIN ISO 2338 8M6X16 A1	
530	312105-0331		8	SCREW M6S ISO 4017 M5X20 A480	
560	312105-0457		8	SCREW M6S ISO 4014 M8X35 A480	
570	312105-0368		6	SCREW M6S ISO 4017 M6X16 A480	
580	312105-0464		6	SCREW M6S ISO 4014 M8X65 A480	
590	312605-0316		2	HEXAGON NUT, M6M M6 A280	
600	315105-0153		2	WASHER BRB6,4X12RFR	
TBA 1000B (See drawing on page: 4-128)					
005	2624543-0000		2	SPACER	
010	2533741-0000		4	RAIL BRACKET	
020	1348808-0000		2	CURVE	
030	2618378-0000		1	ECCENTRIC	
040	2618377-0000		1	ECCENTRIC	
050	1484250-0000		4	VOLUME CAM	
060	2624544-0000		2	PIVOT PIN	
070	2533736-0000		8	SLEEVE	
120	321120-0108		4	BEARBUSHING W/O FL 12X14X8	
130	1487504-0000		8	WASHER	
140	1487505-0001		16	WASHER	
150	1487505-0002		16	WASHER	
520	311103-0399		4	PARALLEL PIN ISO 2338 8M6X16 A1	
530	312105-0331		8	SCREW M6S ISO 4017 M5X20 A480	
560	312105-0457		8	SCREW M6S ISO 4014 M8X35 A480	
570	312105-0368		6	SCREW M6S ISO 4017 M6X16 A480	
580	312105-0464		6	SCREW M6S ISO 4014 M8X65 A480	
590	312605-0316		2	HEXAGON NUT, M6M M6 A280	
600	315105-0153		2	WASHER BRB6,4X12RFR	
TBA 1000S (See drawing on page: 4-128)					
005	2624543-0000		2	SPACER	
010	2533742-0000		4	RAIL BRACKET	
020	1348809-0000		2	CURVE	
030	2618378-0000		1	ECCENTRIC	
040	2618377-0000		1	ECCENTRIC	
050	1484251-0000		4	VOLUME CAM	
060	2624544-0000		2	PIVOT PIN	
070	2533736-0000		8	SLEEVE	
120	321120-0108		4	BEARBUSHING W/O FL 12X14X8	
130	1487504-0000		8	WASHER	
140	1487505-0001		16	WASHER	
150	1487505-0002		16	WASHER	
520	311103-0399		4	PARALLEL PIN ISO 2338 8M6X16 A1	
530	312105-0331		8	SCREW M6S ISO 4017 M5X20 A480	
560	312105-0457		8	SCREW M6S ISO 4014 M8X35 A480	
570	312105-0368		6	SCREW M6S ISO 4017 M6X16 A480	
580	312105-0464		6	SCREW M6S ISO 4014 M8X65 A480	
590	312605-0316		2	HEXAGON NUT, M6M M6 A280	
600	315105-0153		2	WASHER BRB6,4X12RFR	
TBA 1000SQ (See drawing on page: 4-128)					
005	2624543-0000		2	SPACER	
010	2533744-0000		4	RAIL BRACKET	
020	2501851-0000		2	CURVE	
030	2618378-0000		1	ECCENTRIC	
040	2618377-0000		1	ECCENTRIC	
050	1499594-0000		4	VOLUME CAM	
060	2624544-0000		2	PIVOT PIN	
070	2533736-0000		8	SLEEVE	
120	321120-0108		4	BEARBUSHING W/O FL 12X14X8	
130	1487504-0000		8	WASHER	
140	1487505-0001		16	WASHER	
150	1487505-0002		16	WASHER	
520	311103-0399		4	PARALLEL PIN ISO 2338 8M6X16 A1	
530	312105-0331		8	SCREW M6S ISO 4017 M5X20 A480	
560	312105-0457		8	SCREW M6S ISO 4014 M8X35 A480	
570	312105-0368		6	SCREW M6S ISO 4017 M6X16 A480	
580	312105-0464		6	SCREW M6S ISO 4014 M8X65 A480	
590	312605-0316		2	HEXAGON NUT, M6M M6 A280	
600	315105-0153		2	WASHER BRB6,4X12RFR	
TBA 1500S (See drawing on page: 4-128)					
005	2633438-0000		2	SPACER	
010	2533737-0000		4	RAIL BRACKET	
020	1349741-0000		2	CURVE	

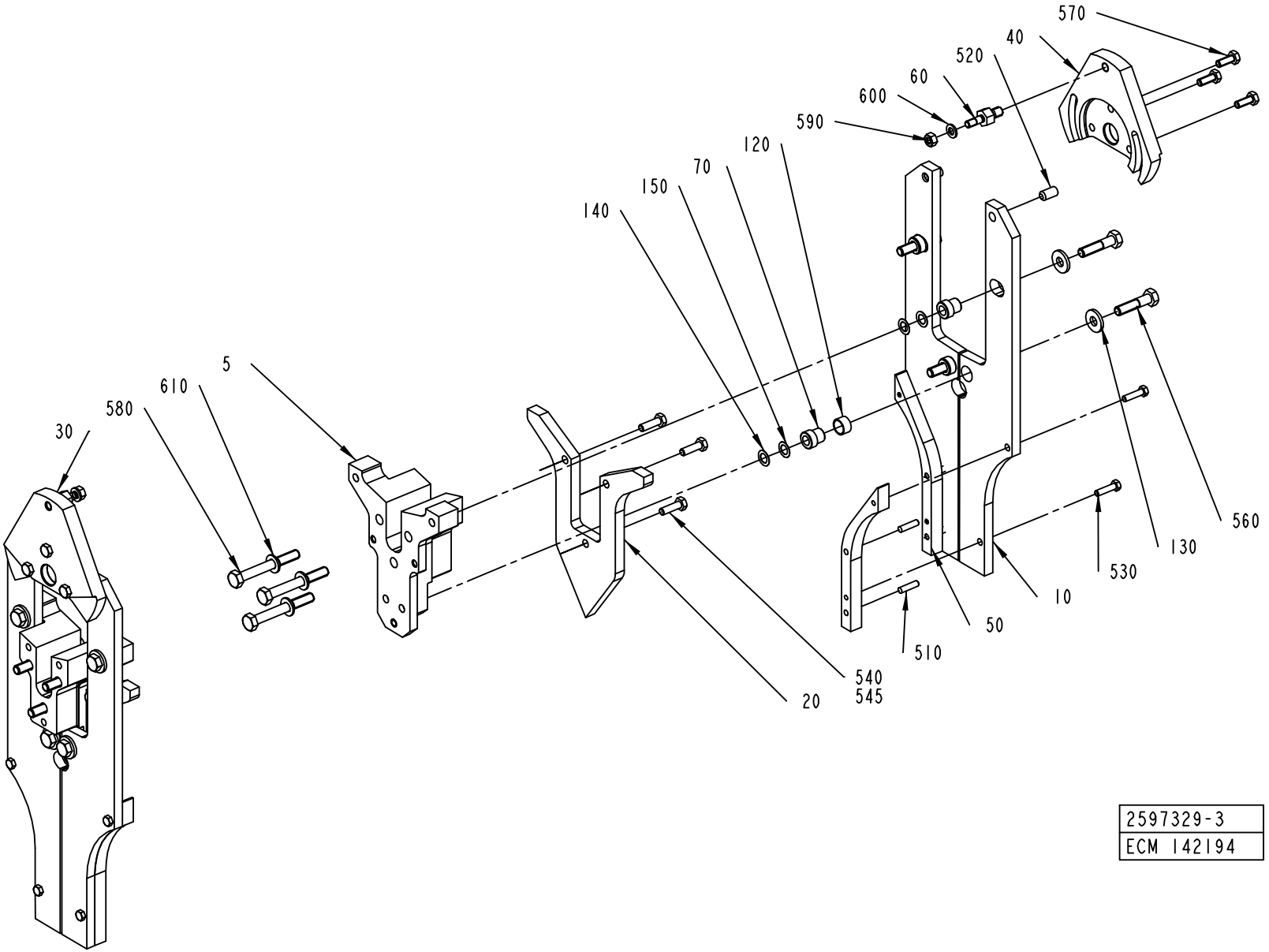

2597329-3
ECM 142194

Pos	Part No	UN	Qty	Description	Page No
TBA 1500S (Cont'd) (See drawing on page: 4-128)					
030	2618378-0000		1	ECCENTRIC	
040	2618377-0000		1	ECCENTRIC	
050	1349744-0000		4	VOLUME CAM	
060	2624544-0000		2	PIVOT PIN	
070	2533736-0000		8	SLEEVE	
120	321120-0108		4	BEARBUSHING W/O FL 12X14X8	
130	1487504-0000		8	WASHER	
140	1487505-0001		16	WASHER	
150	1487505-0002		16	WASHER	
520	311103-0399		4	PARALLEL PIN ISO 2338 8M6X16 A1	
530	312105-0331		8	SCREW M6S ISO 4017 M5X20 A480	
560	312105-0457		8	SCREW M6S ISO 4014 M8X35 A480	
570	312105-0368		6	SCREW M6S ISO 4017 M6X16 A480	
580	312105-0464		6	SCREW M6S ISO 4014 M8X65 A480	
590	312605-0316		2	HEXAGON NUT, M6M M6 A280	
600	315105-0153		2	WASHER BRB6,4X12RFR	
TBA 1890S QC, TBA 2000S QC (See drawing on page: 4-126)					
005	2594887-0000		2	SPACER	
010	2588300-0000		4	RAIL BRACKET	
020	2588301-0000		2	CURVE	
030	2599739-0000		1	ECCENTRIC	
040	2599738-0000		1	ECCENTRIC	
050	2588302-0000		4	VOLUME CAM	
060	2535443-0000		2	PIVOT PIN	
070	2613764-0000		8	SLEEVE	
130	2614372-0000		8	SLEEVE	
140	2614376-0001		32	WASHER	
150	2614376-0002		32	WASHER	
520	311103-0402		4	PARALLEL PIN ISO 2338 8M6X22 A1	
530	312105-0329		8	SCREW M6S ISO 4017 M5X16 A480	
545	90157-0021		1	LOCKING FLUID LOCTITE 270	
560	312105-0455		8	SCREW M6S ISO 4017 M8X30 A480	
570	312105-0370		6	SCREW M6S ISO 4017 M6X20 A480	
580	312105-0455		6	SCREW M6S ISO 4017 M8X30 A480	
590	312605-0312		2	HEXAGON NUT, M6M M4 A280	
TPA 1000SQ (See drawing on page: 4-128)					
005	2633438-0000		2	SPACER	
010	2575631-0000		4	RAIL BRACKET	
020	2564683-0000		2	CURVE	
030	2618378-0000		1	ECCENTRIC	
040	2618377-0000		1	ECCENTRIC	
050	1523490-0000		4	VOLUME BULGE	
060	2624544-0000		2	PIVOT PIN	
070	2533736-0000		8	SLEEVE	
120	321120-0108		4	BEARBUSHING W/O FL 12X14X8	
130	1487504-0000		8	WASHER	
140	1487505-0001		16	WASHER	
150	1487505-0002		16	WASHER	
520	311103-0399		4	PARALLEL PIN ISO 2338 8M6X16 A1	
530	312105-0331		8	SCREW M6S ISO 4017 M5X20 A480	
560	312105-0457		8	SCREW M6S ISO 4014 M8X35 A480	
570	312105-0368		6	SCREW M6S ISO 4017 M6X16 A480	
580	312105-0464		6	SCREW M6S ISO 4014 M8X65 A480	
590	312605-0316		2	HEXAGON NUT, M6M M6 A280	
600	315105-0153		2	WASHER BRB6,4X12RFR	
Common Parts					
510	311103-0310		8	PARALLEL PIN ISO 2338 5M6X20 A1	
540	312105-0370		6	SCREW M6S ISO 4017 M6X20 A480	
610	315105-0165		6	WASHER BRB8,4X16RFR	

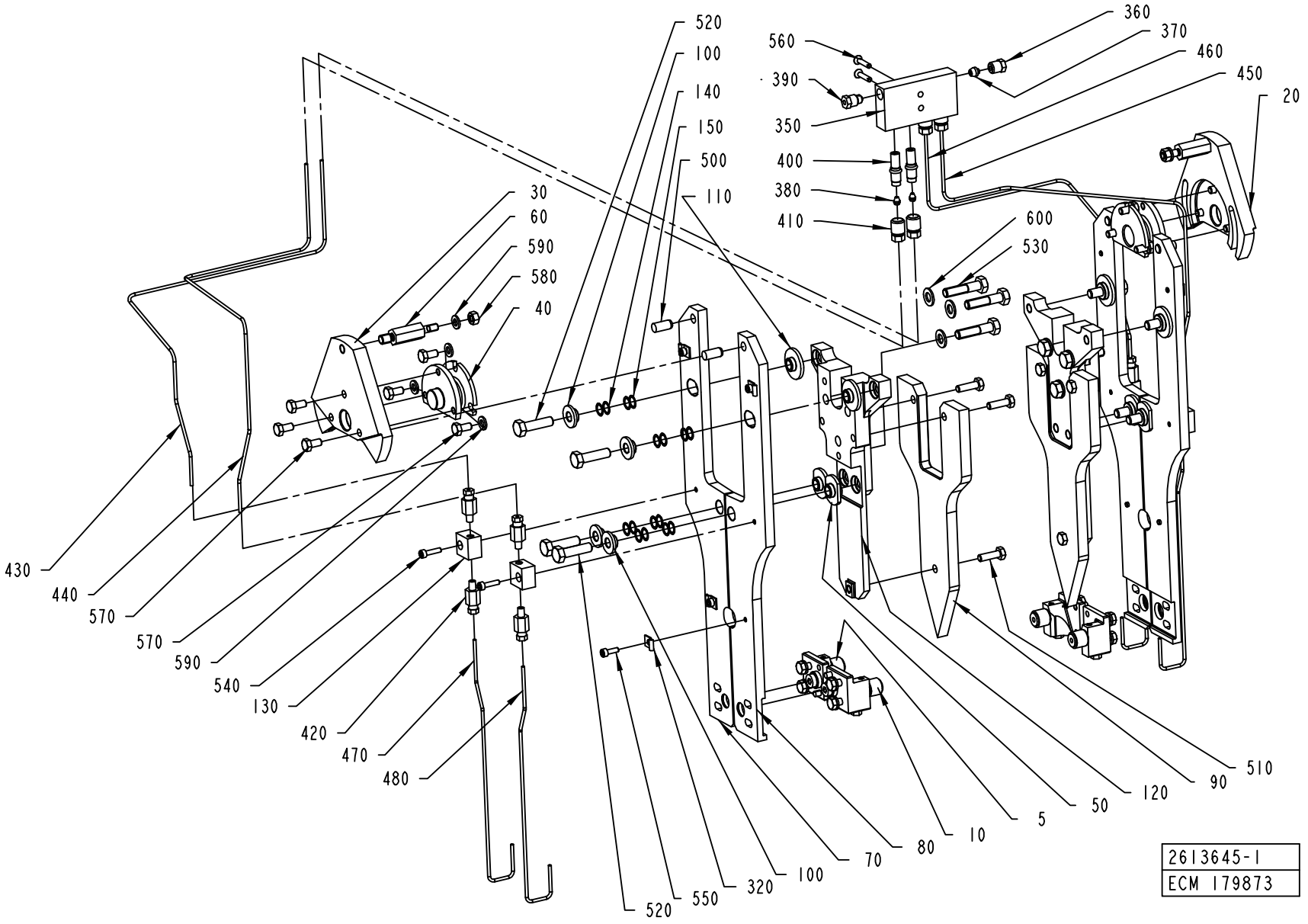
520
100
140
150
500
110
30
60
590
580
40
560
390
350
400
380
410
360
370
460
450
20
600
530
430
440
570
570
590
540
130
420
470
480
520
550
320
100
70
80
10
5
50
120
90
510
2613645-1
ECM 179873

ECM: 180536 - 50001231
Group number: 2613645-0100
Assembly Drawing: 2613645-1_1_AB

Pos	Part No	UN	Qty	Description	Page No
TBA 0330S, TBA 0200B, TBA 0250B					
090	2664603-0000		2	CAM	
TBA 0500B, TBA 1000B					
090	2605066-0000		2	CURVE	
Common Parts					
005	2605226-0200		2	ROLLER UNIT	**4-133**
010	1499351-0200		2	ROLLER UNIT	**4-135**
020	2618377-0000		1	ECCENTRIC	
030	2618378-0000		1	ECCENTRIC	
040	2618259-0000		2	SPACER	
050	2613763-0000		4	SLEEVE	
060	2618302-0000		2	PIVOT PIN	
070	2614371-0000		2	ROLLER BRACKET	
080	2614373-0000		2	ROLLER BRACKET	
100	2614372-0000		8	SLEEVE	
110	2613764-0000		4	SLEEVE	
120	2613809-0000		2	SPACER	
130	2610793-0000		4	BLOCK	
140	2614376-0001		16	WASHER	
150	2614376-0002		16	WASHER	
320	90165-0058		8	PIPE CLIP FOR TUBE D=25 MM	
350	90032-0039		1	BLOCK 4 WAYS	
360	90134-0038		1	BUSHING/NUT INLET/OUTLET 4 MM	
370	90028-0024		1	CONE TUBE 4 MM	
380	90028-0020		4	CONE TUBE 2,5MM	
390	90087-0019		1	PLUG M10X1 STAINLESS	
400	90092-0052		4	METERING VALVE 10 MM3	
410	90134-0039		4	BUSHING VALVE CONNECTION 2,5 MM	
420	90134-0065		8	CONNECTION M6 TUBE 2,5 MM	
430	90166-0143	MM	550	TUBE 2,5 MM PA,TRANSP.	
440	90166-0143	MM	650	TUBE 2,5 MM PA,TRANSP.	
450	90166-0143	MM	600	TUBE 2,5 MM PA,TRANSP.	
460	90166-0143	MM	500	TUBE 2,5 MM PA,TRANSP.	
470	90266-0019	MM	260	PIPE	
480	90266-0019	MM	260	PIPE	
500	311103-0400		4	PARALLEL PIN ISO 2338 8M6X18 A1	
510	312105-0370		6	SCREW M6S ISO 4017 M6X20 A480	
520	312105-0455		8	SCREW M6S ISO 4017 M8X30 A480	
530	312105-0457		6	SCREW M6S ISO 4014 M8X35 A480	
540	312115-0293		4	SCREW ISO4762 M4X16 A4	
550	312115-0291		8	SCREW ISO4762 M4X12 A4	
560	312155-0295		2	SCREW EN 10642 MF6S M4X20 A480	
570	312105-0366		12	SCREW M6S ISO 4017 M6X12 A480	
580	312605-0316		2	HEXAGON NUT, M6M M6 A280	
590	315105-0153		8	WASHER BRB6,4X12RFR	
600	315105-0165		6	WASHER BRB8,4X16RFR	

Machine Type Group Description Used-In Group Number Page No

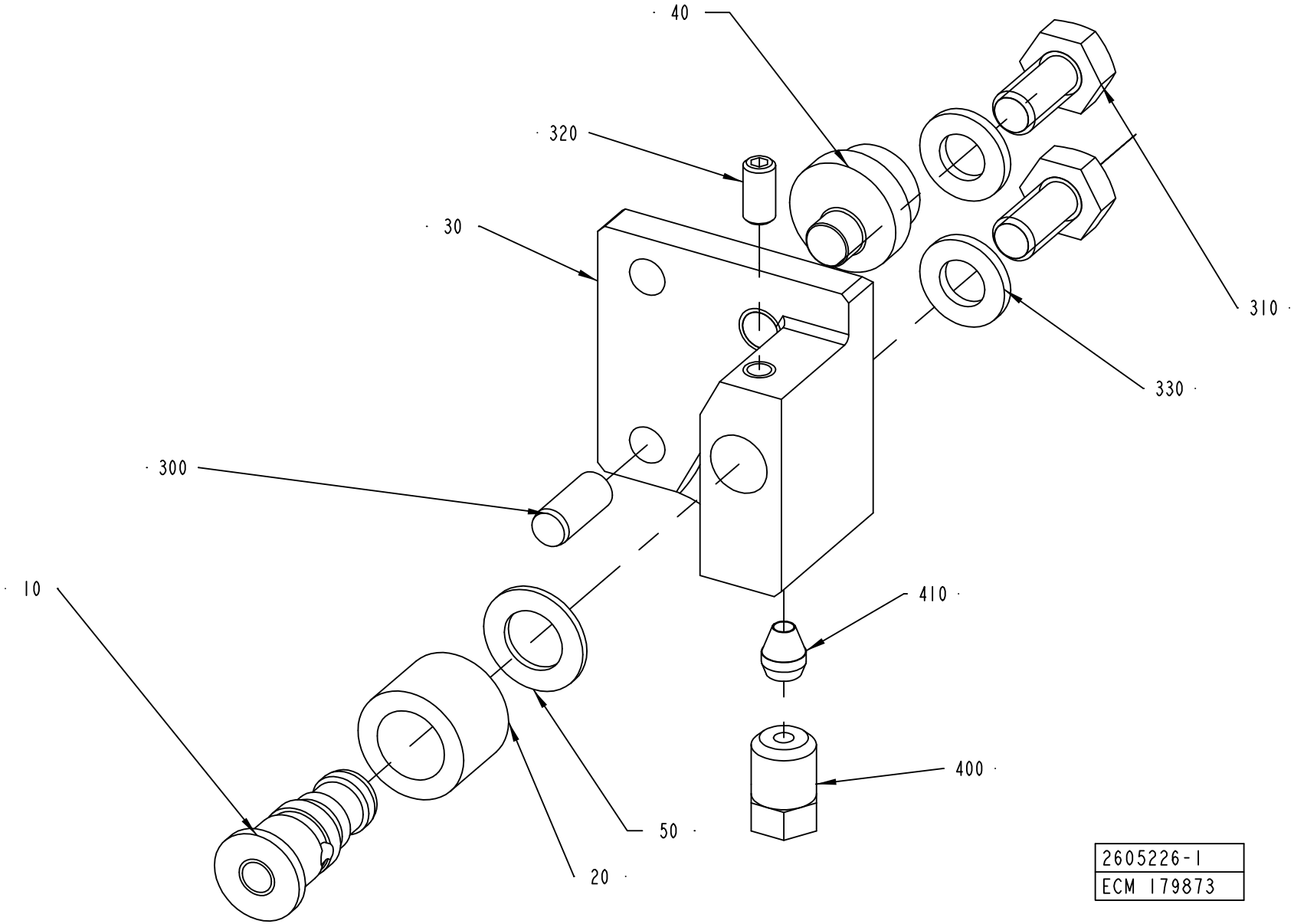
40
320
30
310
330
300
10
410
400
50
20
2605226-1
ECM 179873

ECM: 180537 - 50001231
Group number: 2605226-0200
Assembly Drawing: 2605226-1_1_AB

Pos	Part No	UN	Qty	Description	Page No
-					
010	2603376-0000		1	AXLE PIN	
020	2603378-0000		1	ROLLER	
030	2695409-0000		1	HOLDER	
040	2603374-0000		1	ECCENTRIC	
050	2609923-0000		1	WASHER	
300	311103-0306		1	PARALLEL PIN ISO 2338 5M6X12 A1	
310	312105-0366		2	SCREW M6S ISO 4017 M6X12 A480	
320	312318-0287		1	SCREW ISO4029 M4X8 A4	
330	315105-0153		2	WASHER BRB6,4X12RFR	
400	90134-0063		1	BUSHING/NUT M8X1, D=2,5 MM	
410	90028-0020		1	CONE TUBE 2,5MM	

Pos	Part No	UN	Qty	Description	Page No

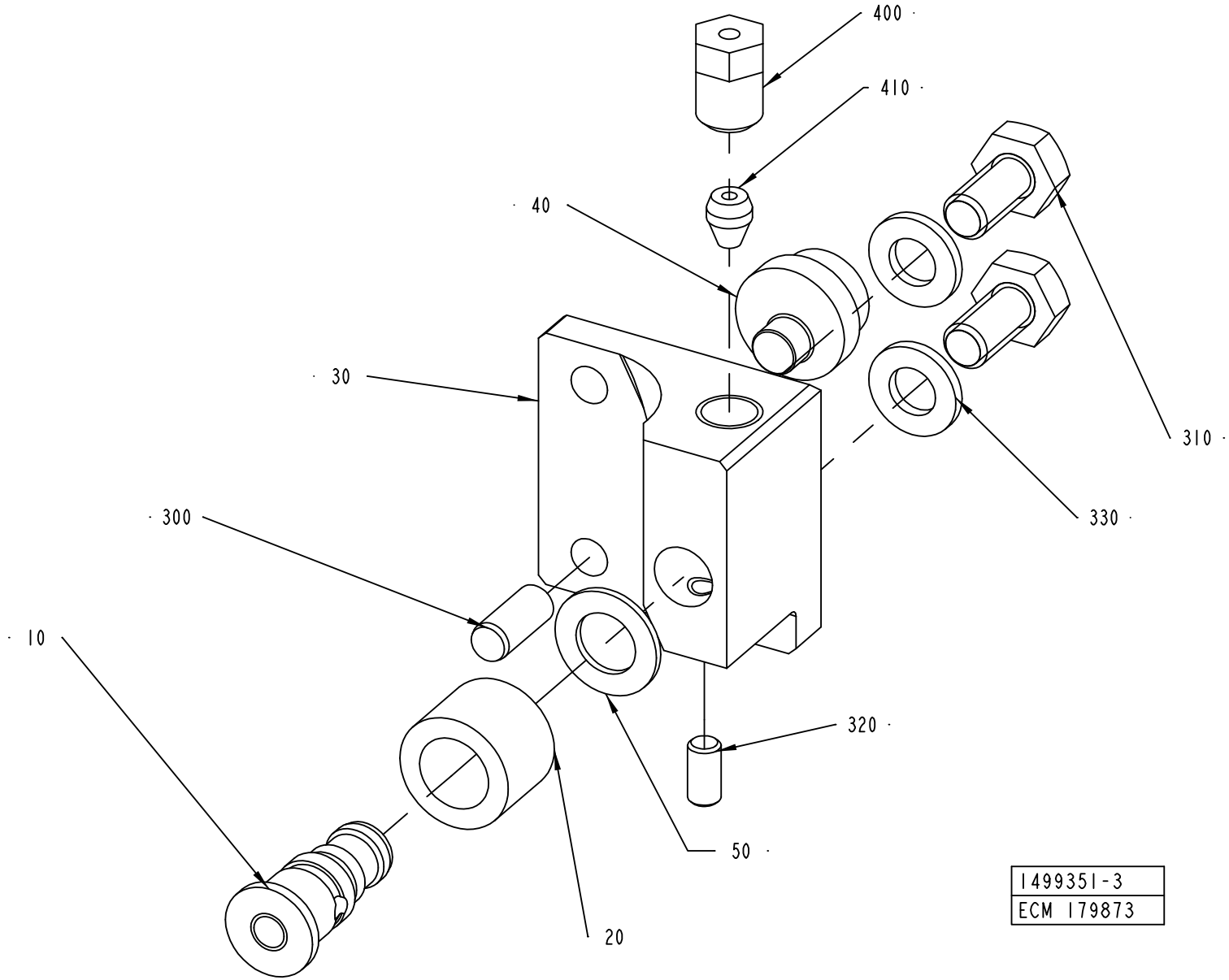
400
410
40
30
310
330
300
10
320
50
20
1499351-3
ECM 179873

ECM: 180538 - 50001231
Group number: 1499351-0200
Assembly Drawing: 1499351-3_1_AB

Pos	Part No	UN	Qty	Description	Page No
-					
010	2603376-0000		1	AXLE PIN	
020	2603378-0000		1	ROLLER	
030	2695408-0000		1	HOLDER	
040	2603374-0000		1	ECCENTRIC	
050	2609923-0000		1	WASHER	
300	311103-0306		1	PARALLEL PIN ISO 2338 5M6X12 A1	
310	312105-0366		2	SCREW M6S ISO 4017 M6X12 A480	
320	312318-0287		1	SCREW ISO4029 M4X8 A4	
330	315105-0153		2	WASHER BRB6,4X12RFR	
400	90134-0063		1	BUSHING/NUT M8X1, D=2,5 MM	
410	90028-0020		1	CONE TUBE 2,5MM	

Pos	Part No	UN	Qty	Description	Page No

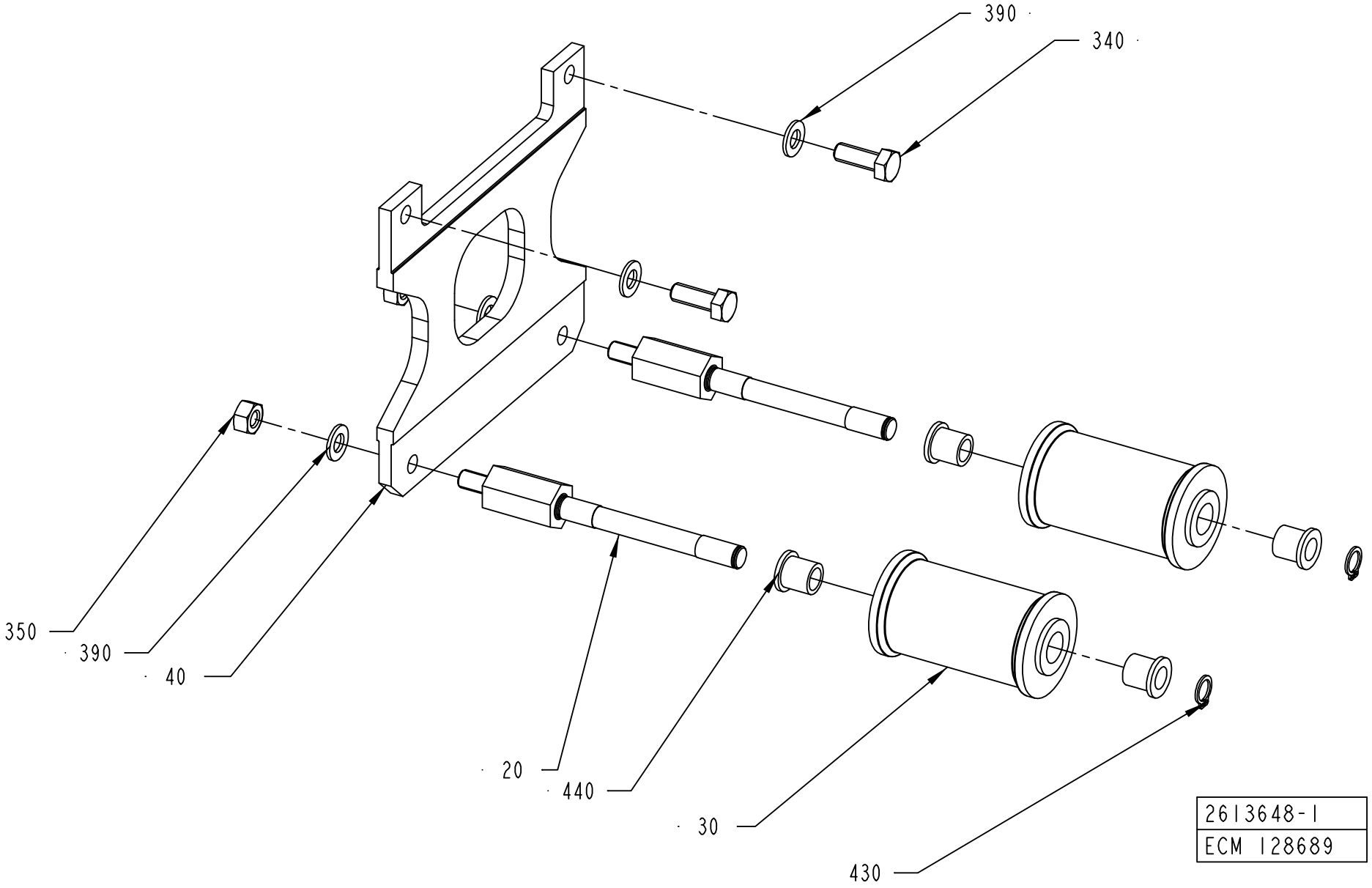
390
340
350
390
40
20
440
30
430
2613648-1
ECM 128689

ECM: 181456 - 50001231
Group number: 2613648-0100
Assembly Drawing: 2613648-1_1_AA

This list covers pages from 4-136 to 4-139

Pos	Part No	UN	Qty	Description	Page No
TPA 1000SQ (See drawing on page: 4-136)					
020	2648846-0000		2	SHAFT	
030	1524421-0000		2	ROLLER	
040	2642097-0000		1	PLATE	
390	315105-0165		2	WASHER BRB8,4X16RFR	
TBA 1000B NOQC NOMOLDEDCAP (See drawing on page: 4-136)					
020	2619198-0000		2	SHAFT	
030	560122-0000		2	SUPPORT ROLLER	
040	2623783-0000		1	PLATE	
350	312605-0318		2	HEXAGON NUT, M6M M8 A280	
390	315105-0165		4	WASHER BRB8,4X16RFR	
TBA 0200B QC, TBA 0330S QC, TBA 0250B QC (See drawing on page: 4-136)					
020	2646345-0000		2	SHAFT	
030	978757-0000		2	ROLLER 180-284ML	
040	2646344-0000		1	PLATE	
350	312605-0318		2	HEXAGON NUT, M6M M8 A280	
390	315105-0165		4	WASHER BRB8,4X16RFR	
TBA 0200S					
020	2632818-0000		2	SHAFT	
030	978760-0000		2	ROLLER TBA200SL	
040	2632817-0000		1	PLATE	
350	312605-0318		2	HEXAGON NUT, M6M M8 A280	
390	315105-0165		4	WASHER BRB8,4X16RFR	
TBA 0500B QC, TBA 1000B QC (See drawing on page: 4-136)					
020	2619198-0000		2	SHAFT	
030	2619199-0000		2	ROLLER	
040	2619200-0000		1	PLATE	
350	312605-0318		2	HEXAGON NUT, M6M M8 A280	
390	315105-0165		4	WASHER BRB8,4X16RFR	
TBA 1000B NOQC STDA7 (See drawing on page: 4-138)					
020	2619198-0000		2	SHAFT	
025	2610974-0000		1	ROLLER	
030	560122-0000		1	SUPPORT ROLLER	
040	2623783-0000		1	PLATE	
350	312605-0318		2	HEXAGON NUT, M6M M8 A280	
390	315105-0165		4	WASHER BRB8,4X16RFR	
TBA 1000S NOMOLDEDCAP (See drawing on page: 4-136)					
020	2619198-0000		2	SHAFT	
030	569058-0000		2	SUPPORT ROLLER	
040	2623783-0000		1	PLATE	
350	312605-0318		2	HEXAGON NUT, M6M M8 A280	
390	315105-0165		4	WASHER BRB8,4X16RFR	
TBA 1000S STDA7 (See drawing on page: 4-138)					
020	2619198-0000		2	SHAFT	
025	2608149-0000		1	ROLLER	
030	2608150-0000		1	ROLLER	
040	2623783-0000		1	PLATE	
350	312605-0318		2	HEXAGON NUT, M6M M8 A280	
390	315105-0165		4	WASHER BRB8,4X16RFR	
TBA 1000SQ (See drawing on page: 4-136)					
020	2619198-0000		2	SHAFT	
030	1499678-0000		2	ROLLER	
040	2623783-0000		1	PLATE	
350	312605-0318		2	HEXAGON NUT, M6M M8 A280	
390	315105-0165		4	WASHER BRB8,4X16RFR	
TBA 1500S (See drawing on page: 4-136)					
020	2648846-0000		2	SHAFT	
030	560122-0000		2	SUPPORT ROLLER	
040	2648847-0000		1	PLATE	
390	315105-0165		2	WASHER BRB8,4X16RFR	
TBA 1890S QC, TBA 2000S QC (See drawing on page: 4-136)					
020	2650812-0000		2	SHAFT	
030	2602655-0000		2	ROLLER	
040	2652892-0000		1	PLATE	
350	312605-0318		2	HEXAGON NUT, M6M M8 A280	
390	315105-0165		4	WASHER BRB8,4X16RFR	
Common Parts					
340	312105-0452		2	SCREW M6S ISO 4017 M8X22 A4 80	
430	90141-0016		2	RETAINING RING FOR SHAFT DIN 471 10 A2	
440	90240-0180		4	FLANGE BUSHING 10X14X15MM	

Machine Type | Group Description | Used-In | Group Number | Page No

SUPPORT ROLLER

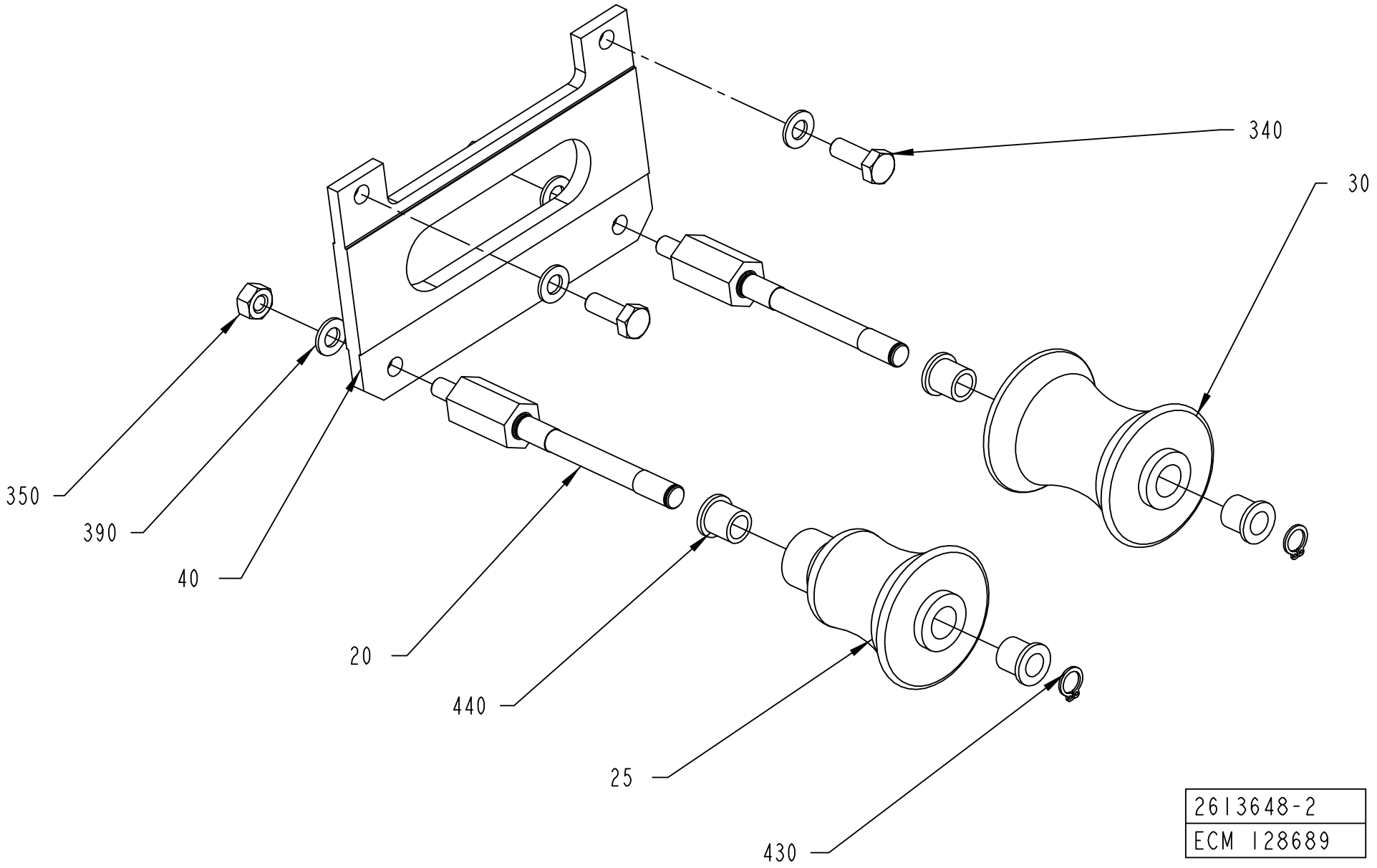

Pos	Part No	UN	Qty	Description	Page No
TPA 1000SQ (See drawing on page: 4-136)					
020	2648846-0000		2	SHAFT	
030	1524421-0000		2	ROLLER	
040	2642097-0000		1	PLATE	
390	315105-0165		2	WASHER BRB8,4X16RFR	
TBA 1000B NOQC NOMOLDEDCAP (See drawing on page: 4-136)					
020	2619198-0000		2	SHAFT	
030	560122-0000		2	SUPPORT ROLLER	
040	2623783-0000		1	PLATE	
350	312605-0318		2	HEXAGON NUT, M6M M8 A280	
390	315105-0165		4	WASHER BRB8,4X16RFR	
TBA 0200B QC, TBA 0330S QC, TBA 0250B QC (See drawing on page: 4-136)					
020	2646345-0000		2	SHAFT	
030	978757-0000		2	ROLLER 180-284ML	
040	2646344-0000		1	PLATE	
350	312605-0318		2	HEXAGON NUT, M6M M8 A280	
390	315105-0165		4	WASHER BRB8,4X16RFR	
TBA 0200S					
020	2632818-0000		2	SHAFT	
030	978760-0000		2	ROLLER TBA200SL	
040	2632817-0000		1	PLATE	
350	312605-0318		2	HEXAGON NUT, M6M M8 A280	
390	315105-0165		4	WASHER BRB8,4X16RFR	
TBA 0500B QC, TBA 1000B QC (See drawing on page: 4-136)					
020	2619198-0000		2	SHAFT	
030	2619199-0000		2	ROLLER	
040	2619200-0000		1	PLATE	
350	312605-0318		2	HEXAGON NUT, M6M M8 A280	
390	315105-0165		4	WASHER BRB8,4X16RFR	
TBA 1000B NOQC STDA7 (See drawing on page: 4-138)					
020	2619198-0000		2	SHAFT	
025	2610974-0000		1	ROLLER	
030	560122-0000		1	SUPPORT ROLLER	
040	2623783-0000		1	PLATE	
350	312605-0318		2	HEXAGON NUT, M6M M8 A280	
390	315105-0165		4	WASHER BRB8,4X16RFR	
TBA 1000S NOMOLDEDCAP (See drawing on page: 4-136)					
020	2619198-0000		2	SHAFT	
030	569058-0000		2	SUPPORT ROLLER	
040	2623783-0000		1	PLATE	
350	312605-0318		2	HEXAGON NUT, M6M M8 A280	
390	315105-0165		4	WASHER BRB8,4X16RFR	
TBA 1000S STDA7 (See drawing on page: 4-138)					
020	2619198-0000		2	SHAFT	
025	2608149-0000		1	ROLLER	
030	2608150-0000		1	ROLLER	
040	2623783-0000		1	PLATE	
350	312605-0318		2	HEXAGON NUT, M6M M8 A280	
390	315105-0165		4	WASHER BRB8,4X16RFR	
TBA 1000SQ (See drawing on page: 4-136)					
020	2619198-0000		2	SHAFT	
030	1499678-0000		2	ROLLER	
040	2623783-0000		1	PLATE	
350	312605-0318		2	HEXAGON NUT, M6M M8 A280	
390	315105-0165		4	WASHER BRB8,4X16RFR	
TBA 1500S (See drawing on page: 4-136)					
020	2648846-0000		2	SHAFT	
030	560122-0000		2	SUPPORT ROLLER	
040	2648847-0000		1	PLATE	
390	315105-0165		2	WASHER BRB8,4X16RFR	
TBA 1890S QC, TBA 2000S QC (See drawing on page: 4-136)					
020	2650812-0000		2	SHAFT	
030	2602655-0000		2	ROLLER	
040	2652892-0000		1	PLATE	
350	312605-0318		2	HEXAGON NUT, M6M M8 A280	
390	315105-0165		4	WASHER BRB8,4X16RFR	
Common Parts					
340	312105-0452		2	SCREW M6S ISO 4017 M8X22 A4 80	
430	90141-0016		2	RETAINING RING FOR SHAFT DIN 471 10 A2	
440	90240-0180		4	FLANGE BUSHING 10X14X15MM	

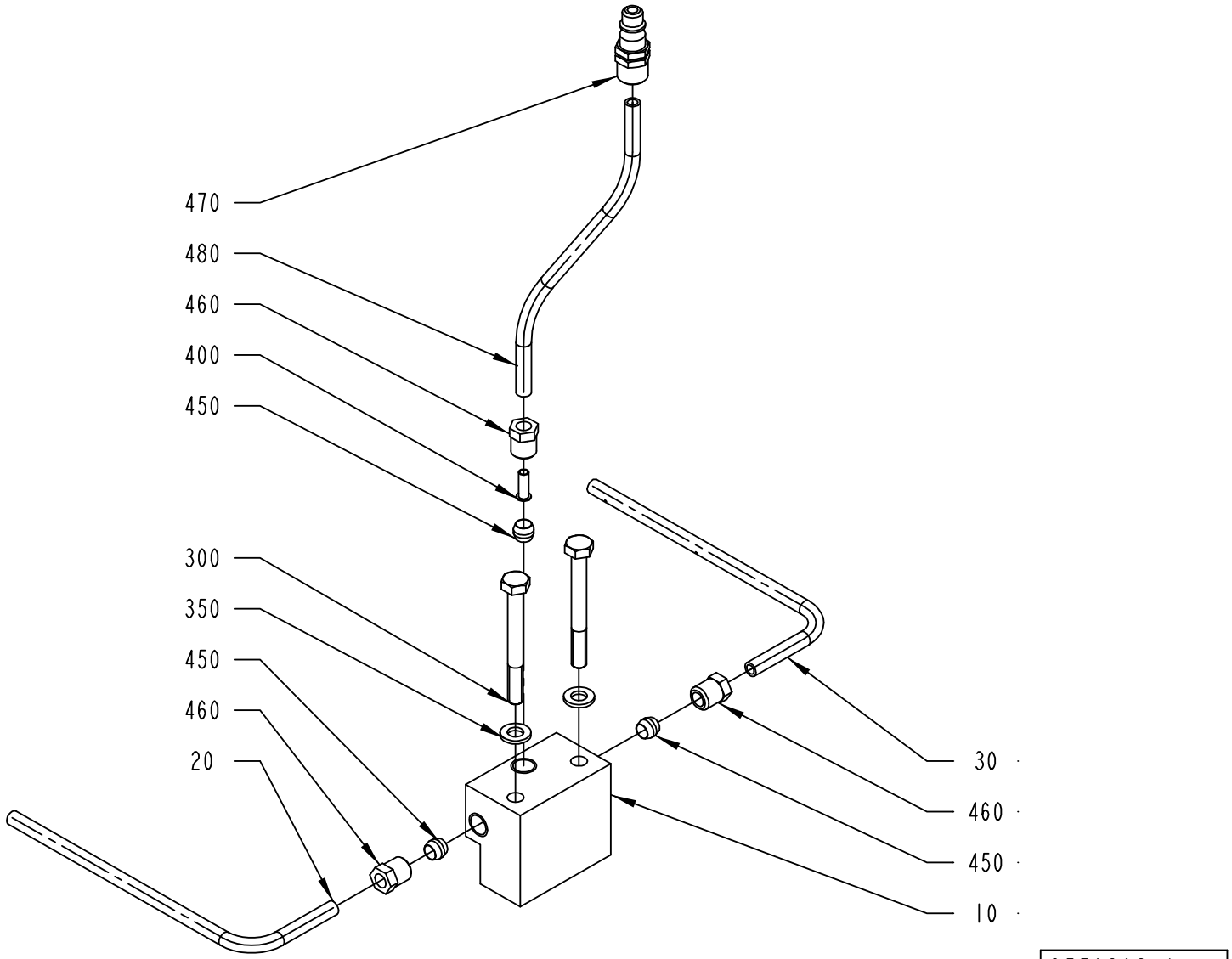
470
480
460
400
450
300
350
450
460
20
30
460
450
10
2556893-1
ECM 120277

ECM: 181443 - 50001231
Group number: 2556893-0100
Assembly Drawing: 2556893-1_1_AA

Pos	Part No	UN	Qty	Description	Page No
TBA 0500B, TBA 1000S, TBA 1000SQ, TBA 1000B, TBA 1500S, TPA 1000SQ					
020	2532837-0000		1	TUBE FLUSHING DEVICE	
030	2532838-0000		1	TUBE FLUSHING DEVICE	
TBA 0330S, TBA 0200B, TBA 0200S, TBA 0250B					
020	2556894-0000		1	TUBE FLUSHING DEVICE	
030	2556895-0000		1	TUBE FLUSHING DEVICE	
TBA 1890S, TBA 2000S					
020	2629240-0000		1	TUBE FLUSHING DEVICE	
030	2629239-0000		1	TUBE FLUSHING DEVICE	
Common Parts					
010	2556615-0000		1	PIPE CONNECTION	
300	312105-0381		2	SCREW M6S ISO 4014 M6X55 A480	
350	315105-0153		2	WASHER BRB6,4X12RFR	
400	342706-0130		1	ACCESSORIES, INSERT SLEEVE 6 MM	
450	90028-0022		3	CONE TUBE 6 MM	
460	90134-0055		3	BUSHING/NUT INLET/OUTLET 6 MM	
470	90163-0063		1	QUICK COUPLING, (M) 5450-6/4	
480	90166-0132	MM	1500	TUBE 6 MM PA,TRANSP.	

Pos	Part No	UN	Qty	Description	Page No

Machine Type | Group Description | Used-In | Group Number | Page No

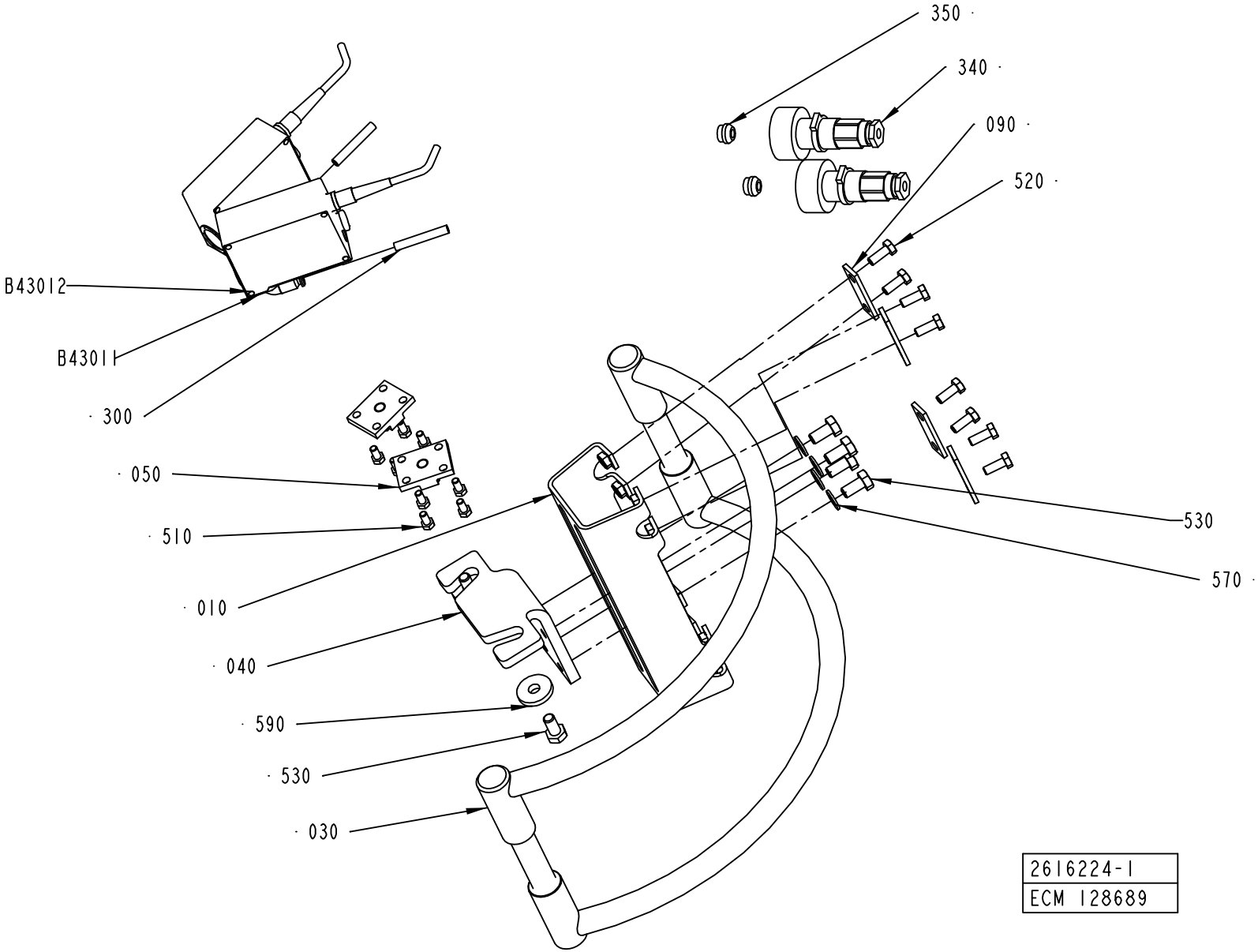
350
340
090
520
B43012
B43011
300
050
510
010
040
590
530
030
530
570
2616224-1
ECM 128689

ECM: 181481 - 50001231
Group number: 2616224-0100
Assembly Drawing: 2616224-1_1_AA

This list covers pages from 4-142 to 4-145

Pos	Part No	UN	Qty	Description	Page No
TBA 0200S (See drawing on page: 4-142)					
010	1036685-0000		1	BRACKET	
030	2616220-0000		1	BOW CLAMP	
040	1254110-0000		1	BRACKET	
590	315125-0165		2	WASHER TBRSB 8,4X26X5 A4	
TBA 0330S, TBA 0200B, TBA 0250B (See drawing on page: 4-144)					
010	2640963-0000		1	BRACKET	
020	2655096-0000		1	SLIDE	
030	2616220-0000		1	BOW CLAMP	
040	2655095-0000		1	BRACKET	
060	2655097-0000		1	KNOB	
070	2655098-0000		1	SHAFT	
080	90335-0024		1	COMP. SPRING 22250, 1,25X13,75X27	
100	90287-0148		4	SCREW SPRINGLOAD. SLOTTED HEAD M5X12	
110	312318-0323		4	SCREW ISO4029 M5X8 A4	
590	315125-0165		2	WASHER TBRSB 8,4X26X5 A4	
TBA 0500B, TBA 1000S, TBA 1000SQ, TBA 1000B, TBA 1500S (See drawing on page: 4-142)					
010	1036685-0000		1	BRACKET	
030	2616220-0000		1	BOW CLAMP	
040	1254109-0000		1	BRACKET	
590	315125-0165		2	WASHER TBRSB 8,4X26X5 A4	
TPA 1000SQ (See drawing on page: 4-142)					
010	1036685-0000		1	BRACKET	
030	2616220-0000		1	BOW CLAMP	
040	1334910-0000		1	BRACKET	
590	315125-0165		2	WASHER TBRSB 8,4X26X5 A4	
TBA 1890S, TBA 2000S (See drawing on page: 4-142)					
010	2650815-0000		1	BRACKET	
030	2650814-0000		1	BOW CLAMP	
040	2611408-0000		1	BRACKET	
590	2677899-0000		2	WASHER	
Common Parts					
050	1036674-0000		2	FASTENING PLATE	
090	1036673-0000		4	WASHER	
300	90166-0081	MM	1500	TUBE 6 MM PA BLUE	
340	90110-0235		2	CABLE CONTACT, PX0739/S	
350	90459-1501		2	CABLE SEALING, 12023/I, ELFA. 44-625-78	
510	312105-0325		8	SCREW M6S ISO 4017 M5X10 A480	
520	312105-0368		8	SCREW M6S ISO 4017 M6X16 A480	
530	312105-0449		6	SCREW M6S ISO 4017 M8X16 A480	
570	315105-0165		4	WASHER BRB8,4X16RFR	
B43011	90458-0601		1	PHOTOCELL, SICK PHOTOCELL 1	
	342732-0102		*1*	*ELBOW PIPE JOINT, EXT.THREAD, D=6MM-G1/8*	
B43012	90458-0601		1	PHOTOCELL, SICK PHOTOCELL 1	
	342732-0102		*1*	*ELBOW PIPE JOINT, EXT.THREAD, D=6MM-G1/8*	

Machine Type | Group Description | Used-In | Group Number | Page No

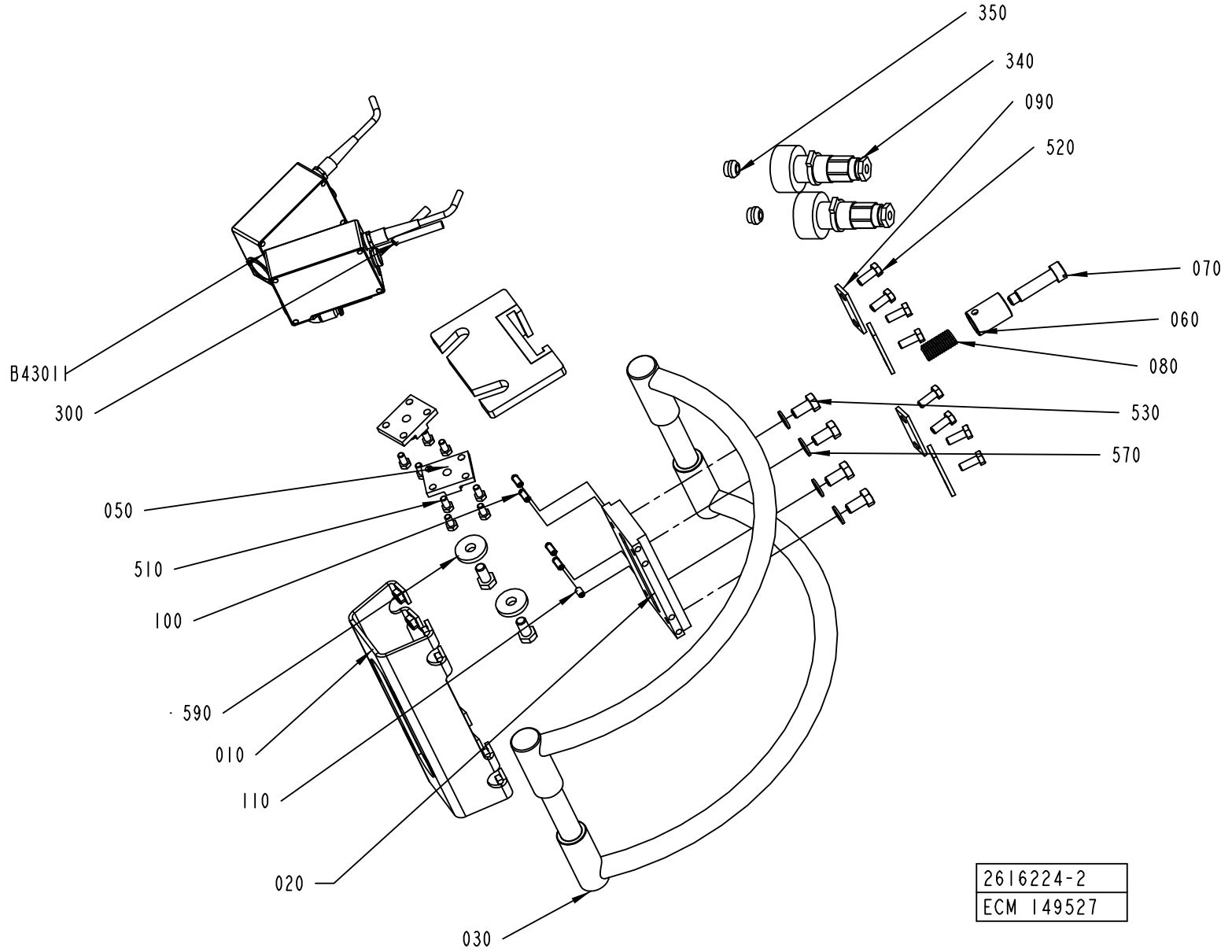
350
340
090
520
070
060
080
530
570
B43011
300
050
510
100
590
010
110
020
030
2616224-2
ECM 149527

ECM: 181481 - 50001231
Group number: 2616224-0100
Assembly Drawing: 2616224-2_1_AA

This list covers pages from 4-142 to 4-145

Pos	Part No	UN	Qty	Description	Page No
TBA 0200S (See drawing on page: 4-142)					
010	1036685-0000		1	BRACKET	
030	2616220-0000		1	BOW CLAMP	
040	1254110-0000		1	BRACKET	
590	315125-0165		2	WASHER TBRSB 8,4X26X5 A4	
TBA 0330S, TBA 0200B, TBA 0250B (See drawing on page: 4-144)					
010	2640963-0000		1	BRACKET	
020	2655096-0000		1	SLIDE	
030	2616220-0000		1	BOW CLAMP	
040	2655095-0000		1	BRACKET	
060	2655097-0000		1	KNOB	
070	2655098-0000		1	SHAFT	
080	90335-0024		1	COMP. SPRING 22250, 1,25X13,75X27	
100	90287-0148		4	SCREW SPRINGLOAD. SLOTTED HEAD M5X12	
110	312318-0323		4	SCREW ISO4029 M5X8 A4	
590	315125-0165		2	WASHER TBRSB 8,4X26X5 A4	
TBA 0500B, TBA 1000S, TBA 1000SQ, TBA 1000B, TBA 1500S (See drawing on page: 4-142)					
010	1036685-0000		1	BRACKET	
030	2616220-0000		1	BOW CLAMP	
040	1254109-0000		1	BRACKET	
590	315125-0165		2	WASHER TBRSB 8,4X26X5 A4	
TPA 1000SQ (See drawing on page: 4-142)					
010	1036685-0000		1	BRACKET	
030	2616220-0000		1	BOW CLAMP	
040	1334910-0000		1	BRACKET	
590	315125-0165		2	WASHER TBRSB 8,4X26X5 A4	
TBA 1890S, TBA 2000S (See drawing on page: 4-142)					
010	2650815-0000		1	BRACKET	
030	2650814-0000		1	BOW CLAMP	
040	2611408-0000		1	BRACKET	
590	2677899-0000		2	WASHER	
Common Parts					
050	1036674-0000		2	FASTENING PLATE	
090	1036673-0000		4	WASHER	
300	90166-0081	MM	1500	TUBE 6 MM PA BLUE	
340	90110-0235		2	CABLE CONTACT, PX0739/S	
350	90459-1501		2	CABLE SEALING, 12023/I, ELFA. 44-625-78	
510	312105-0325		8	SCREW M6S ISO 4017 M5X10 A480	
520	312105-0368		8	SCREW M6S ISO 4017 M6X16 A480	
530	312105-0449		6	SCREW M6S ISO 4017 M8X16 A480	
570	315105-0165		4	WASHER BRB8,4X16RFR	
B43011	90458-0601		1	PHOTOCELL, SICK PHOTOCELL 1	
	342732-0102		*1*	*ELBOW PIPE JOINT, EXT.THREAD, D=6MM-G1/8*	
B43012	90458-0601		1	PHOTOCELL, SICK PHOTOCELL 1	
	342732-0102		*1*	*ELBOW PIPE JOINT, EXT.THREAD, D=6MM-G1/8*	

Machine Type | Group Description | Used-In | Group Number | Page No

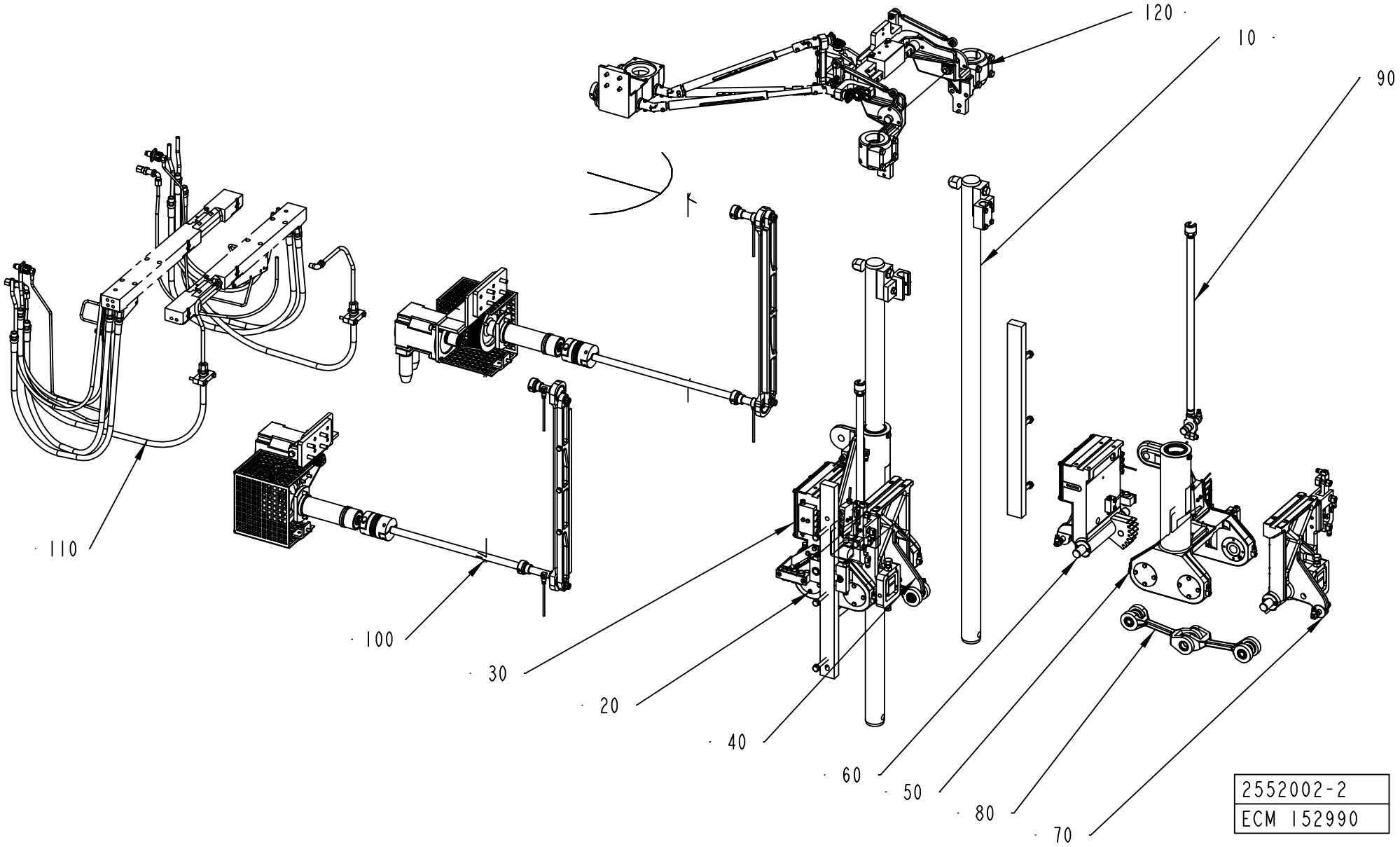
120
10
90
110
100
30
20
40
60
50
80
70
2552002-2
ECM 152990

ECM: 177394 - 50001231
Group number: 2552002-0200
Assembly Drawing: 2552002-2_1_AA

Pos	Part No	UN	Qty	Description	Page No
-					
010	2542489-0100		1	GUIDE	**4-149**
020	1348455-0200		1	YOKE LEFT	**4-151**
030	1348456-0200		1	PRESSURE ARM LEFT	**4-153, 4-155**
040	1348457-0200		1	CUTTING ARM LEFT	**4-157, 4-159**
050	1348460-0200		1	YOKE RIGHT	**4-161**
060	1348461-0200		1	PRESSURE ARM RIGHT	**4-163, 4-165**
070	1348462-0200		1	CUTTING ARM RIGHT	**4-167, 4-169**
080	1348466-0100		4	SCISSOR ARM LINK	**4-171**
090	1334651-0100		2	LINK	**4-173**
100	2650709-0100		1	DESIGN CORRECTION	**4-175**
110	2503661-0100		1	CABLE CONNECTION	**4-185**
120	2613646-0100		1	VOLUME ADJUSTER	**4-187**

Pos	Part No	UN	Qty	Description	Page No

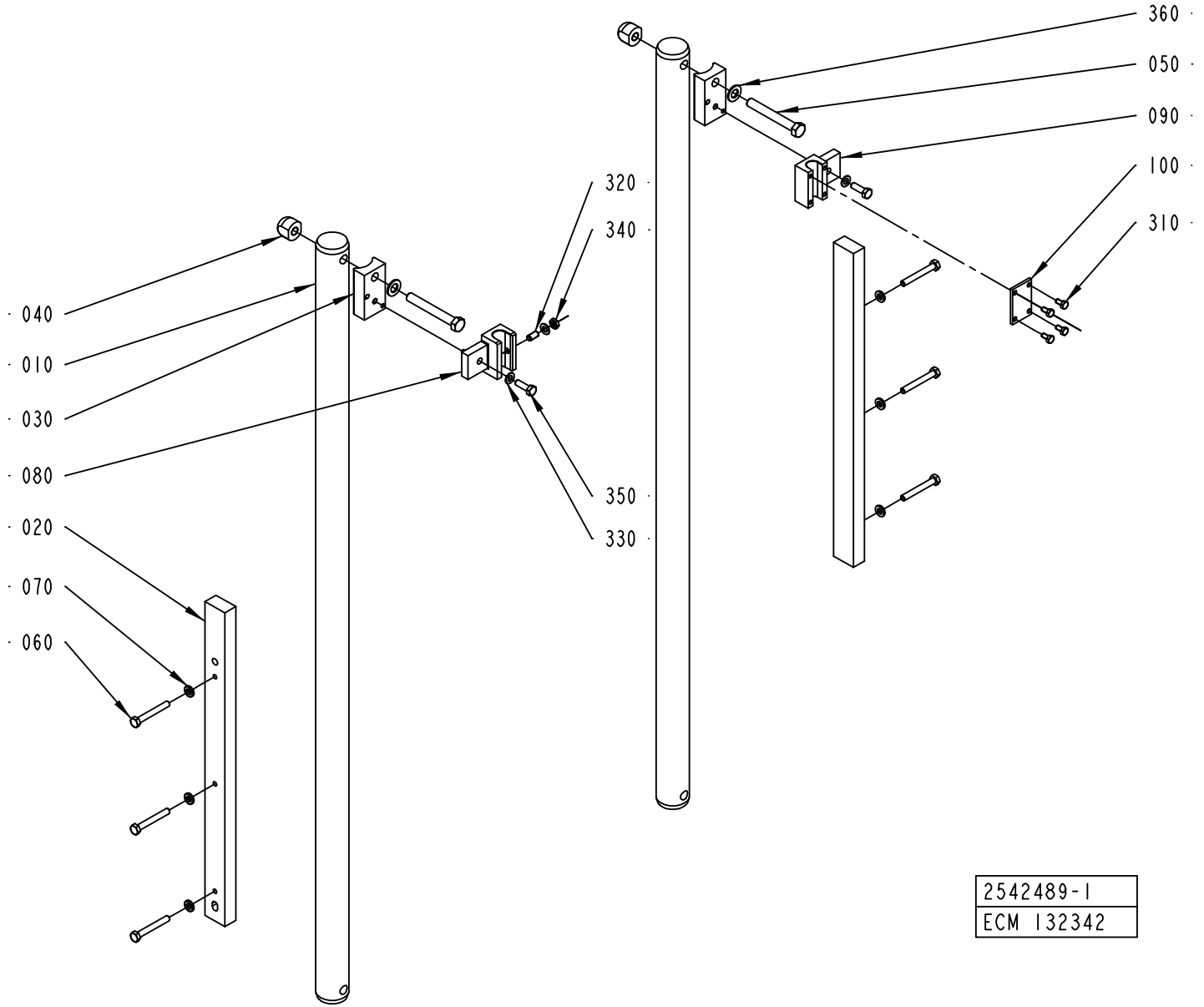
360
050
090
100
310
320
340
040
010
030
080
350
330
020
070
060
2542489-1
ECM 132342

ECM: 134707 - 20030909
Group number: 2542489-0100
Assembly Drawing: 2542489-1_1_AB

Pos	Part No	UN	Qty	Description	Page No
-					
010	2542486-0000		2	GUIDE	
020	1349781-0000		2	RULER	
030	2616225-0000		2	CLAMP	
040	2542488-0000		2	NUT	
050	312105-0550		2	SCREW M6S ISO 4014 M12X90 A480	
060	312105-0463		6	SCREW M6S ISO 4014 M8X60 A480	
070	315115-0165		6	WASHER PLAIN, TBRB 8,4/16 H=3	
080	2616221-0000		1	BRACKET	
090	2616222-0000		1	BRACKET	
100	2616223-0000		1	SUPPORT	
310	312105-0366		4	SCREW M6S ISO 4017 M6X12 A480	
320	90287-0112		1	SCREW SPRINGLOAD. SLOTTED HEAD M8X16	
330	315105-0165		3	WASHER BRB8,4X16RFR	
340	312625-0318		1	HEXAGON THIN NUT, EN 24035 ML6M M8 A4	
350	312105-0453		2	SCREW M6S ISO 4017 M8X25 A480	
360	315105-0178		2	WASHER BRB13X24RFR	

Pos	Part No	UN	Qty	Description	Page No

YOKE LEFT

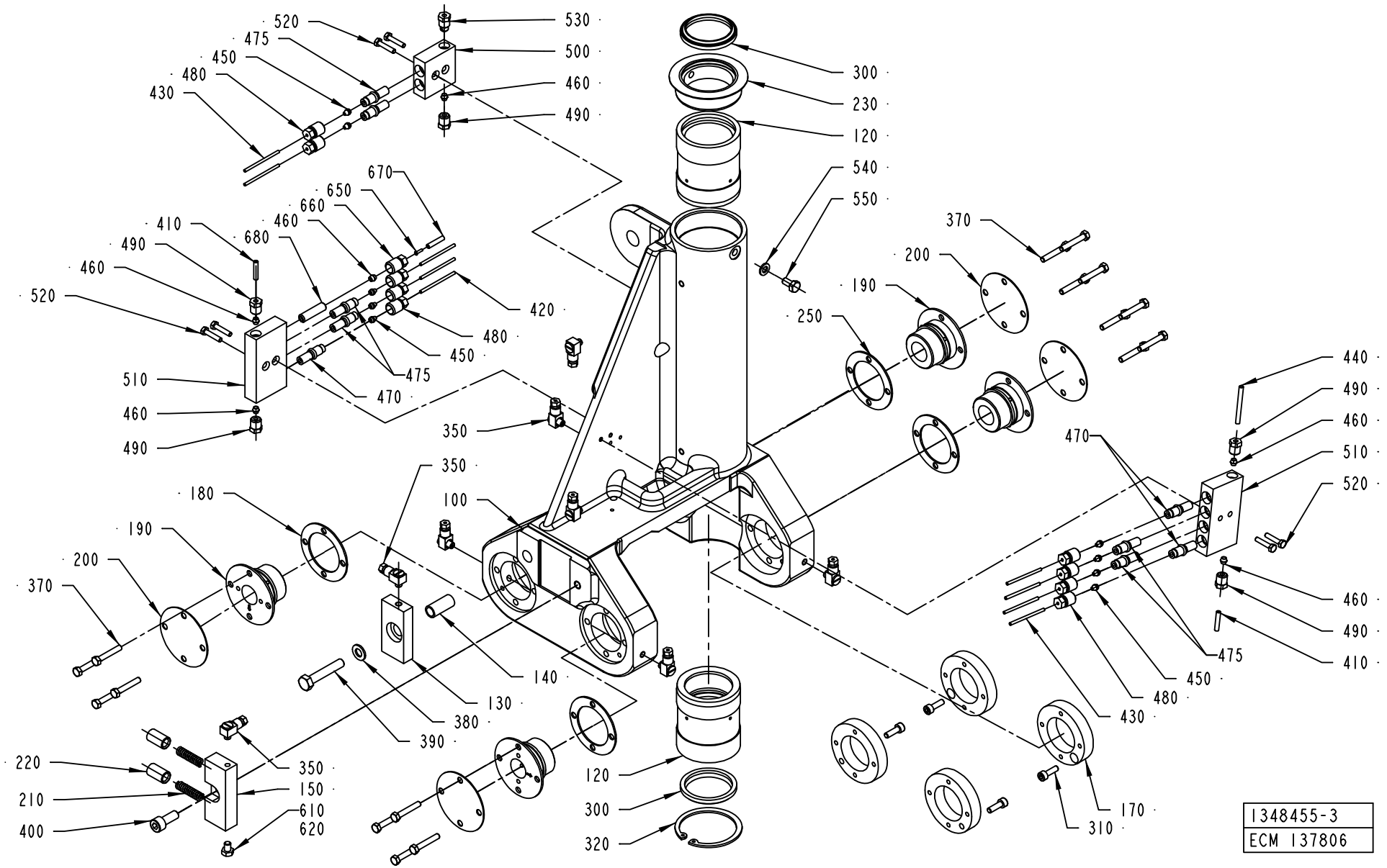
520
475
450
480
430
530
500
460
490
300
230
120
540
550
370
200
190
250
440
490
460
510
520
470
475
450
480
430
460
490
410
670
650
660
460
680
410
490
460
520
420
480
450
475
470
510
460
490
350
350
180
190
200
370
100
140
130
380
390
220
210
400
350
150
610
620
120
300
320
170
310
1348455-3
ECM 137806

ECM: 137806 - 20030910
Group number: 1348455-0200
Assembly Drawing: 1348455-3_1_AB

Pos	Part No	UN	Qty	Description	Page No
A3/FLEX					
450	90028-0020		9	CONE TUBE 2,5MM	
460	90028-0021		6	CONE TUBE 4 MM	
470	90092-0052		3	METERING VALVE 10 MM3	
480	90134-0039		9	BUSHING VALVE CONNECTION 2,5 MM	
650	90134-0031		1	SLEEVE FOR PLASTIC TUBE	
660	90134-0040		1	BUSHING VALVE CONNECTION 4 MM	
670	90166-0109	MM	1000	TUBE 4 MM PA,TRANSP.	
680	90134-0051		1	SPACING COLLAR DOSING BLOCK	
Common Parts					
100	1195360-0000		1	YOKE LEFT	
120	1035954-0000		2	BUSHING	
130	1037104-0000		1	LOCATING PIECE	
140	1037106-0000		1	SLEEVE	
150	1349972-0000		1	SPRING HOUSING	
170	36753-0000		4	RING	
180	29886-0000		2	LACE	
190	246513-0000		4	BEARING	
200	239874-0000		4	WASHER	
210	20494-0000		2	COMPRESSION SPRING	
220	31838-0000		2	PLUNGER	
230	1349780-0000		1	LID	
250	1038509-0000		2	WASHER	
300	90091-0358		2	SCRAPER, ASOB 45X53X7 MM	
310	312115-0329		4	SCREW ISO4762 M5X16 A4	
320	315753-0135		1	RETAINING RING FOR BORE DIN 472 60 A2	
350	90134-0058		8	CONNECTION	
370	312105-0335		16	SCREW M6S ISO 4014 M5X30 A480	
380	315105-0165		1	WASHER BRB8,4X16RFR	
390	312109-0460		1	SCREW M6S ISO 4017 M8X45 A480	
400	312115-0451		1	SCREW ISO4762 M8X20 A4	
410	90166-0109	MM	500	TUBE 4 MM PA,TRANSP.	
420	90166-0143	MM	500	TUBE 2,5 MM PA,TRANSP.	
430	90266-0019	MM	300	PIPE	
440	90266-0165	MM	500	BRASS PIPE	
475	90092-0054		6	METERING VALVE 50 MM3	
490	90134-0038		5	BUSHING/NUT INLET/OUTLET 4 MM	
500	90032-0038		1	BLOCK 2 WAYS	
510	90032-0039		2	BLOCK 4 WAYS	
520	312105-0295		6	SCREW M6S ISO4017 M4X20 A470	
530	90087-0019		1	PLUG M10X1 STAINLESS	
540	315105-0153		1	WASHER BRB6,4X12RFR	
550	312105-0366		1	SCREW M6S ISO 4017 M6X12 A480	
610	312105-0362		1	SCREW M6S ISO 4017 M6X8 A480	
620	90157-0021		1	LOCKING FLUID LOCTITE 270	

Machine Type | Group Description | Used-In | Group Number | Page No

PRESSURE ARM LEFT

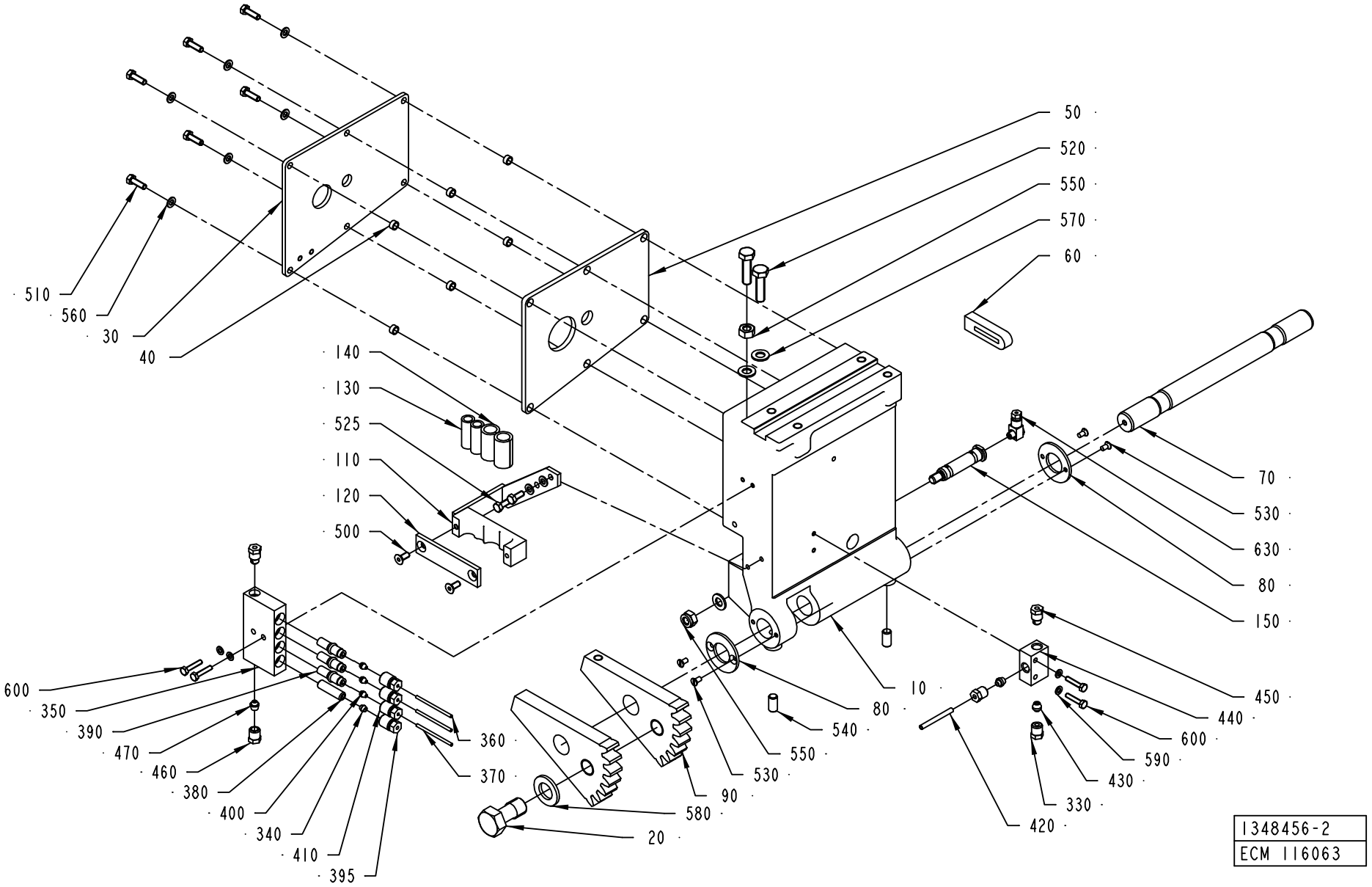

ECM: 133125 - 20030710
Group number: 1348456-0200
Assembly Drawing: 1348456-2_1_AA

This list covers pages from 4-152 to 4-155

Pos	Part No	UN	Qty	Description	Page No
A3/FLEX QC (See drawing on page: 4-154)					
030	1036485-0000		1	COVERING PLATE	
040	1036501-0000		6	SPACER	
050	1036484-0000		1	GASKET	
060	1036483-0000		1	SEAL	
390	90092-0052		1	METERING VALVE 10 MM3	
400	90028-0020		1	CONE TUBE 2,5MM	
510	312105-0329		6	SCREW M6S ISO 4017 M5X16 A480	
560	315105-0146		8	WASHER BRB5,3X10RFR	
650	90134-0052		2	PLUG DOSING BLOCK	
A3/FLEX NOQC (See drawing on page: 4-152)					
030	1036485-0000		1	COVERING PLATE	
040	1036501-0000		6	SPACER	
050	1036484-0000		1	GASKET	
060	1036483-0000		1	SEAL	
390	90092-0052		3	METERING VALVE 10 MM3	
400	90028-0020		3	CONE TUBE 2,5MM	
510	312105-0329		6	SCREW M6S ISO 4017 M5X16 A480	
560	315105-0146		8	WASHER BRB5,3X10RFR	
Common Parts					
010	1035877-0000		1	ARM LEFT	
020	1037069-0000		1	SCREW	
070	1035788-0000		1	SHAFT	
080	536704-0000		2	WASHER	
090	1036156-0000		2	TOOTH PART	
110	1349867-0000		1	FASTENING PLATE	
120	1349868-0000		1	FASTENING PLATE	
130	1478000-0000		2	HOSE	
140	1478001-0000		2	HOSE	
150	1037853-0000		1	SHAFT	
330	90134-0038		2	BUSHING/NUT INLET/OUTLET 4 MM	
340	90028-0021		1	CONE TUBE 4 MM	
350	90032-0039		1	BLOCK 4 WAYS	
360	90166-0143	MM	1500	TUBE 2,5 MM PA,TRANSP.	
370	90266-0019	MM	500	PIPE	
380	90134-0051		1	SPACING COLLAR DOSING BLOCK	
395	90134-0040		1	BUSHING VALVE CONNECTION 4 MM	
400	90028-0020		1	CONE TUBE 2,5MM	
410	90134-0039		3	BUSHING VALVE CONNECTION 2,5 MM	
420	90266-0165	MM	200	BRASS PIPE	
430	90028-0024		2	CONE TUBE 4 MM	
440	90032-0043		1	DISTRIBUTION BLOCK 3 WAYS	
450	90087-0019		2	PLUG M10X1 STAINLESS	
460	90134-0055		1	BUSHING/NUT INLET/OUTLET 6 MM	
470	90028-0025		1	CONE TUBE 6 MM	
500	312155-0327		2	SCREW EN 10642 MF6S M5X12 A480	
520	312105-0455		2	SCREW M6S ISO 4017 M8X30 A480	
525	312105-0327		2	SCREW M6S ISO 4017 M5X12 A480	
530	312145-0287		4	SCREW ISO 2009 MFS M4X8 A4	
540	312318-0449		2	SCREW ISO4029 M8X16 A4	
550	312605-0318		1	HEXAGON NUT, M6M M8 A280	
570	315105-0165		1	WASHER BRB8,4X16RFR	
580	315105-0186		1	WASHER BRB17X30RFR	
590	315105-0136		4	WASHER BRB4,3XRFR	
600	312105-0295		4	SCREW M6S ISO4017 M4X20 A470	
630	90134-0058		1	CONNECTION	
640	312812-0318		1	HEXAGON NUT, NY-LOCK M8 A480	

Machine Type | Group Description | Used-In | Group Number | Page No

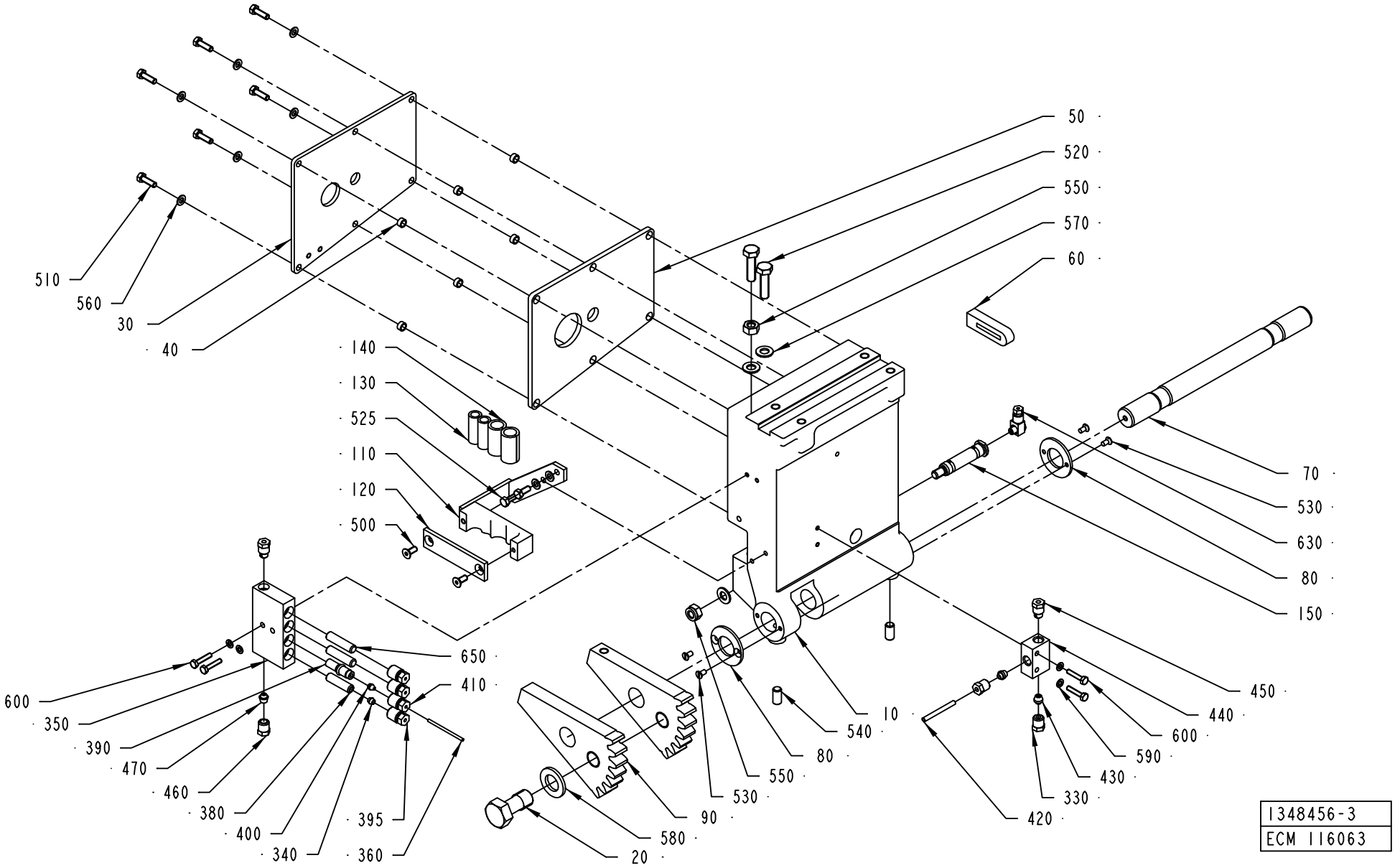
510
560
30
40
140
130
525
110
120
500
50
520
550
570
60
70
530
630
80
150
650
410
600
350
390
470
460
380
400
340
395
360
10
540
80
550
530
90
580
20
450
440
600
590
430
330
420
1348456-3
ECM 116063

ECM: 133125 - 20030710
Group number: 1348456-0200
Assembly Drawing: 1348456-3_1_AA

This list covers pages from 4-152 to 4-155

Pos	Part No	UN	Qty	Description	Page No
A3/FLEX QC (See drawing on page: 4-154)					
030	1036485-0000		1	COVERING PLATE	
040	1036501-0000		6	SPACER	
050	1036484-0000		1	GASKET	
060	1036483-0000		1	SEAL	
390	90092-0052		1	METERING VALVE 10 MM3	
400	90028-0020		1	CONE TUBE 2,5MM	
510	312105-0329		6	SCREW M6S ISO 4017 M5X16 A480	
560	315105-0146		8	WASHER BRB5,3X10RFR	
650	90134-0052		2	PLUG DOSING BLOCK	
A3/FLEX NOQC (See drawing on page: 4-152)					
030	1036485-0000		1	COVERING PLATE	
040	1036501-0000		6	SPACER	
050	1036484-0000		1	GASKET	
060	1036483-0000		1	SEAL	
390	90092-0052		3	METERING VALVE 10 MM3	
400	90028-0020		3	CONE TUBE 2,5MM	
510	312105-0329		6	SCREW M6S ISO 4017 M5X16 A480	
560	315105-0146		8	WASHER BRB5,3X10RFR	
Common Parts					
010	1035877-0000		1	ARM LEFT	
020	1037069-0000		1	SCREW	
070	1035788-0000		1	SHAFT	
080	536704-0000		2	WASHER	
090	1036156-0000		2	TOOTH PART	
110	1349867-0000		1	FASTENING PLATE	
120	1349868-0000		1	FASTENING PLATE	
130	1478000-0000		2	HOSE	
140	1478001-0000		2	HOSE	
150	1037853-0000		1	SHAFT	
330	90134-0038		2	BUSHING/NUT INLET/OUTLET 4 MM	
340	90028-0021		1	CONE TUBE 4 MM	
350	90032-0039		1	BLOCK 4 WAYS	
360	90166-0143	MM	1500	TUBE 2,5 MM PA,TRANSP.	
370	90266-0019	MM	500	PIPE	
380	90134-0051		1	SPACING COLLAR DOSING BLOCK	
395	90134-0040		1	BUSHING VALVE CONNECTION 4 MM	
400	90028-0020		1	CONE TUBE 2,5MM	
410	90134-0039		3	BUSHING VALVE CONNECTION 2,5 MM	
420	90266-0165	MM	200	BRASS PIPE	
430	90028-0024		2	CONE TUBE 4 MM	
440	90032-0043		1	DISTRIBUTION BLOCK 3 WAYS	
450	90087-0019		2	PLUG M10X1 STAINLESS	
460	90134-0055		1	BUSHING/NUT INLET/OUTLET 6 MM	
470	90028-0025		1	CONE TUBE 6 MM	
500	312155-0327		2	SCREW EN 10642 MF6S M5X12 A480	
520	312105-0455		2	SCREW M6S ISO 4017 M8X30 A480	
525	312105-0327		2	SCREW M6S ISO 4017 M5X12 A480	
530	312145-0287		4	SCREW ISO 2009 MFS M4X8 A4	
540	312318-0449		2	SCREW ISO4029 M8X16 A4	
550	312605-0318		1	HEXAGON NUT, M6M M8 A280	
570	315105-0165		1	WASHER BRB8,4X16RFR	
580	315105-0186		1	WASHER BRB17X30RFR	
590	315105-0136		4	WASHER BRB4,3XRFR	
600	312105-0295		4	SCREW M6S ISO4017 M4X20 A470	
630	90134-0058		1	CONNECTION	
640	312812-0318		1	HEXAGON NUT, NY-LOCK M8 A480	

Machine Type | Group Description | Used-In | Group Number | Page No

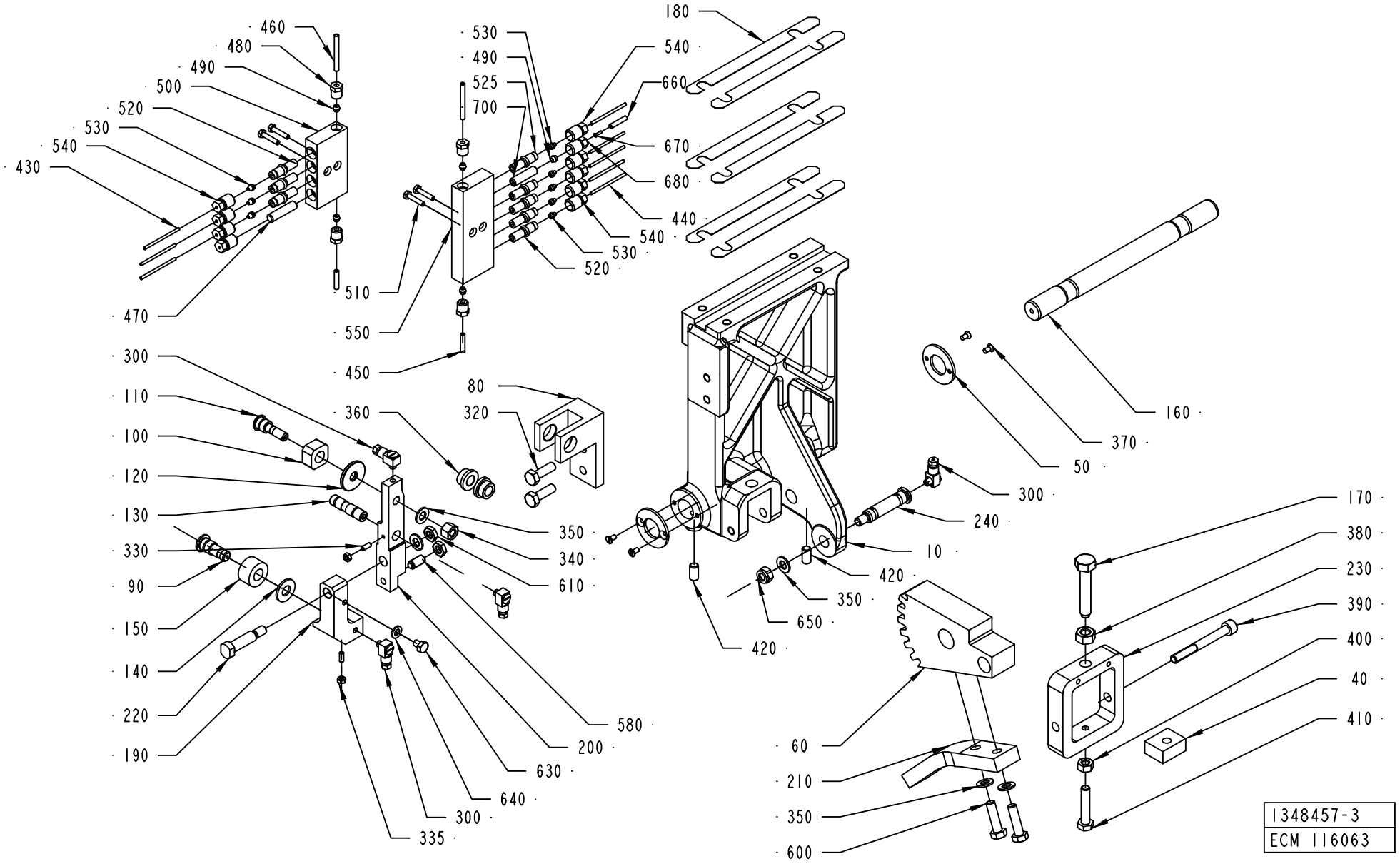
460
480
490
500
520
530
540
430
470
510
550
450
530
490
525
700
180
540
660
670
680
440
540
530
520
300
110
100
120
130
330
90
150
140
220
190
360
80
320
350
340
610
580
200
630
640
300
335
50
370
160
300
240
10
420
350
650
420
60
210
350
600
170
380
230
390
400
40
410
1348457-3
ECM 116063

ECM: 133127 - 20030910
Group number: 1348457-0200
Assembly Drawing: 1348457-3_1_AA

This list covers pages from 4-156 to 4-159

Pos	Part No	UN	Qty	Description	Page No
A3/FLEX NOQC (See drawing on page: 4-156)					
080	1036617-0000		1	BRACKET	
090	1036620-0000		1	SHAFT	
100	256628-0000		1	PIECE	
110	256629-0001		1	AXLE PIN	
120	441706-0000		1	WASHER	
130	1036615-0000		1	SHAFT	
140	1036616-0000		1	WASHER	
150	1036618-0000		1	ROLL	
190	1348671-0000		1	JOINT LEFT	
200	1512316-0000		1	ARM LEFT	
220	1348669-0000		1	SCREW	
300	90134-0058		4	CONNECTION	
320	312105-0453		2	SCREW M6S ISO 4017 M8X25 A480	
330	312318-0289		2	SCREW ISO4029 M4X10 A4	
335	312605-0312		2	HEXAGON NUT, M6M M4 A280	
340	312811-0318		1	NUT HEX.LOCK HELI COIL M8 SS	
350	315105-0165		5	WASHER BRB8,4X16RFR	
360	321101-0163		2	FLANGE BUSHING, 10X16X10 MM	
450	90166-0109	MM	600	TUBE 4 MM PA,TRANSP.	
470	90134-0052		1	PLUG DOSING BLOCK	
490	90028-0021		5	CONE TUBE 4 MM	
520	90092-0052		7	METERING VALVE 10 MM3	
525	90092-0054		1	METERING VALVE 50 MM3	
530	90028-0020		8	CONE TUBE 2,5MM	
540	90134-0039		9	BUSHING VALVE CONNECTION 2,5 MM	
580	90287-0112		1	SCREW SPRINGLOAD. SLOTTED HEAD M8X16	
610	312625-0318		2	HEXAGON THIN NUT, EN 24035 ML6M M8 A4	
630	312105-0362		1	SCREW M6S ISO 4017 M6X8 A480	
640	315105-0153		1	WASHER BRB6,4X12RFR	
660	90166-0109	MM	1000	TUBE 4 MM PA,TRANSP.	
670	90134-0031		1	SLEEVE FOR PLASTIC TUBE	
680	90134-0040		1	BUSHING VALVE CONNECTION 4 MM	
700	90134-0051		1	SPACING COLLAR DOSING BLOCK	
A3/FLEX QC (See drawing on page: 4-158)					
080	1036617-0000		1	BRACKET	
090	1036620-0000		1	SHAFT	
100	256628-0000		1	PIECE	
110	256629-0001		1	AXLE PIN	
120	441706-0000		1	WASHER	
130	1036615-0000		1	SHAFT	
140	1036616-0000		1	WASHER	
150	1036618-0000		1	ROLL	
190	1348671-0000		1	JOINT LEFT	
200	1512316-0000		1	ARM LEFT	
220	1348669-0000		1	SCREW	
300	90134-0058		4	CONNECTION	
320	312105-0453		2	SCREW M6S ISO 4017 M8X25 A480	
330	312318-0289		2	SCREW ISO4029 M4X10 A4	
335	312605-0312		2	HEXAGON NUT, M6M M4 A280	
340	312811-0318		1	NUT HEX.LOCK HELI COIL M8 SS	
350	315105-0165		5	WASHER BRB8,4X16RFR	
360	321101-0163		2	FLANGE BUSHING, 10X16X10 MM	
450	90166-0109	MM	600	TUBE 4 MM PA,TRANSP.	
470	90134-0052		3	PLUG DOSING BLOCK	
490	90028-0021		5	CONE TUBE 4 MM	
520	90092-0052		5	METERING VALVE 10 MM3	
525	90092-0054		1	METERING VALVE 50 MM3	
530	90028-0020		6	CONE TUBE 2,5MM	
540	90134-0039		9	BUSHING VALVE CONNECTION 2,5 MM	
580	90287-0112		1	SCREW SPRINGLOAD. SLOTTED HEAD M8X16	
610	312625-0318		2	HEXAGON THIN NUT, EN 24035 ML6M M8 A4	
630	312105-0362		1	SCREW M6S ISO 4017 M6X8 A480	
640	315105-0153		1	WASHER BRB6,4X12RFR	
660	90166-0109	MM	1000	TUBE 4 MM PA,TRANSP.	
670	90134-0031		1	SLEEVE FOR PLASTIC TUBE	
680	90134-0040		1	BUSHING VALVE CONNECTION 4 MM	
700	90134-0051		1	SPACING COLLAR DOSING BLOCK	
Common Parts					
010	2536048-0000		1	ARM	
040	14729-0000		1	NUT	
050	536704-0000		2	WASHER	
060	1036155-0000		1	TOOTH PART	
160	1035788-0000		1	SHAFT	
170	32957-0000		1	SCREW	
180	1037254-0000		6	SHIM	
210	1484320-0000		1	ROD	
230	1038867-0000		1	BOW CLAMP	
240	1037853-0000		1	SHAFT	
370	312145-0287		4	SCREW ISO 2009 MFS M4X8 A4	
380	312635-0320		1	NUT M6M 10X1 STAINLESS A2 80	
390	312115-0465		1	SCREW ISO4762 M8X70 A4	
400	312605-0318		1	HEXAGON NUT, M6M M8 A280	
410	312109-0459		1	SCREW M6S ISO 4017 M8X40 A480	

Machine Type | Group Description | Used-In | Group Number | Page No

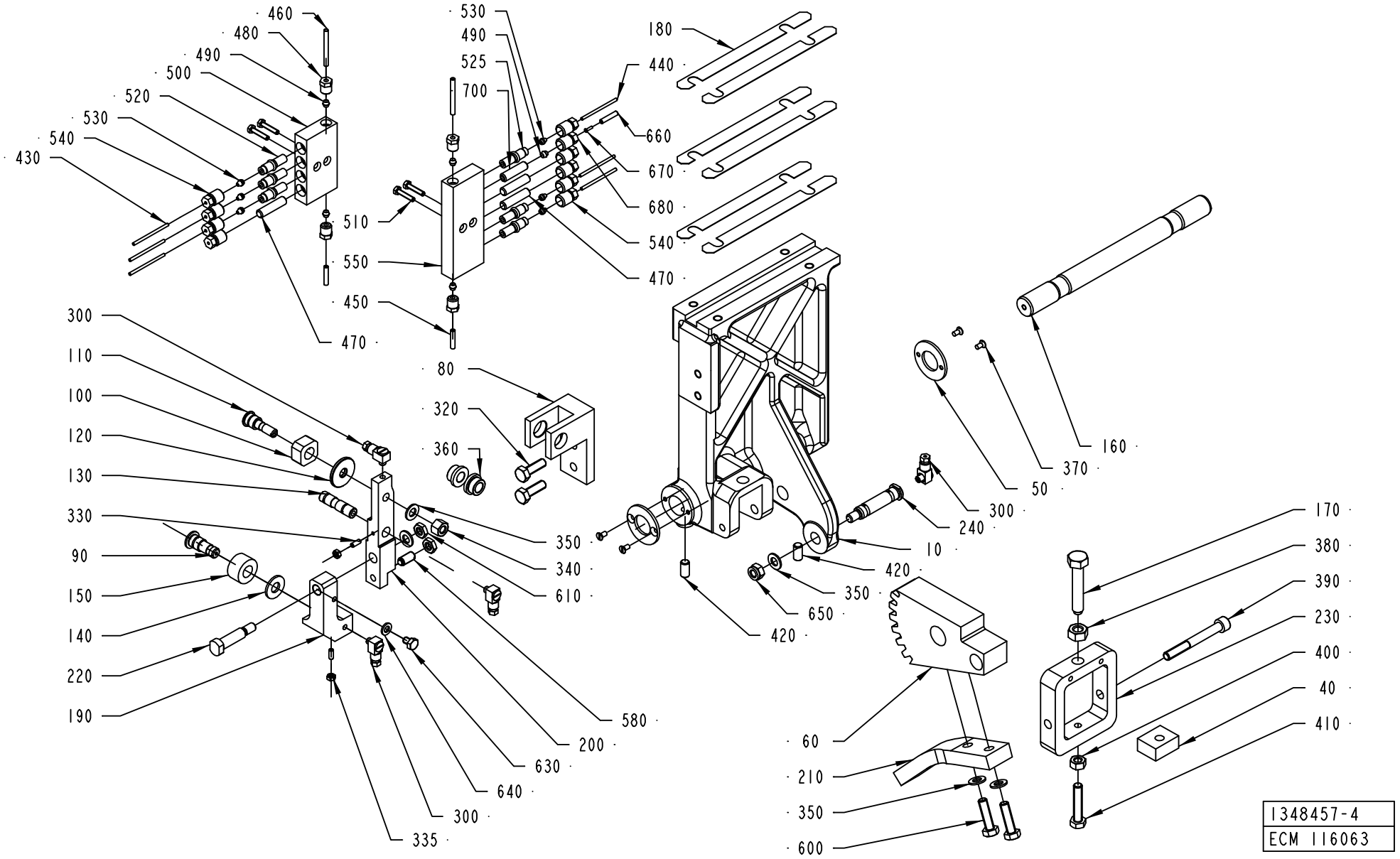
460
480
490
500
520
530
540
430
530
490
525
700
180
440
660
670
680
540
470
510
550
450
470
300
110
100
120
130
330
90
150
140
220
190
80
320
360
350
340
610
580
200
630
640
300
335
420
650
350
420
10
240
300
50
370
160
170
380
390
230
400
40
410
60
210
350
600
1348457-4
ECM 116063

Pos	Part No	UN	Qty	Description	Page No
Common Parts (Cont'd)					
420	312318-0449		2	SCREW ISO4029 M8X16 A4	
430	90166-0143	M	3	TUBE 2,5 MM PA,TRANSP.	
440	90266-0019	MM	200	PIPE	
460	90266-0165	MM	100	BRASS PIPE	
480	90134-0038		4	BUSHING/NUT INLET/OUTLET 4 MM	
500	90032-0039		1	BLOCK 4 WAYS	
510	312105-0295		4	SCREW M6S ISO4017 M4X20 A470	
550	90032-0040		1	BLOCK 6 WAYS	
600	312105-0455		2	SCREW M6S ISO 4017 M8X30 A480	
650	312812-0318		1	HEXAGON NUT, NY-LOCK M8 A480	

Pos	Part No	UN	Qty	Description	Page No

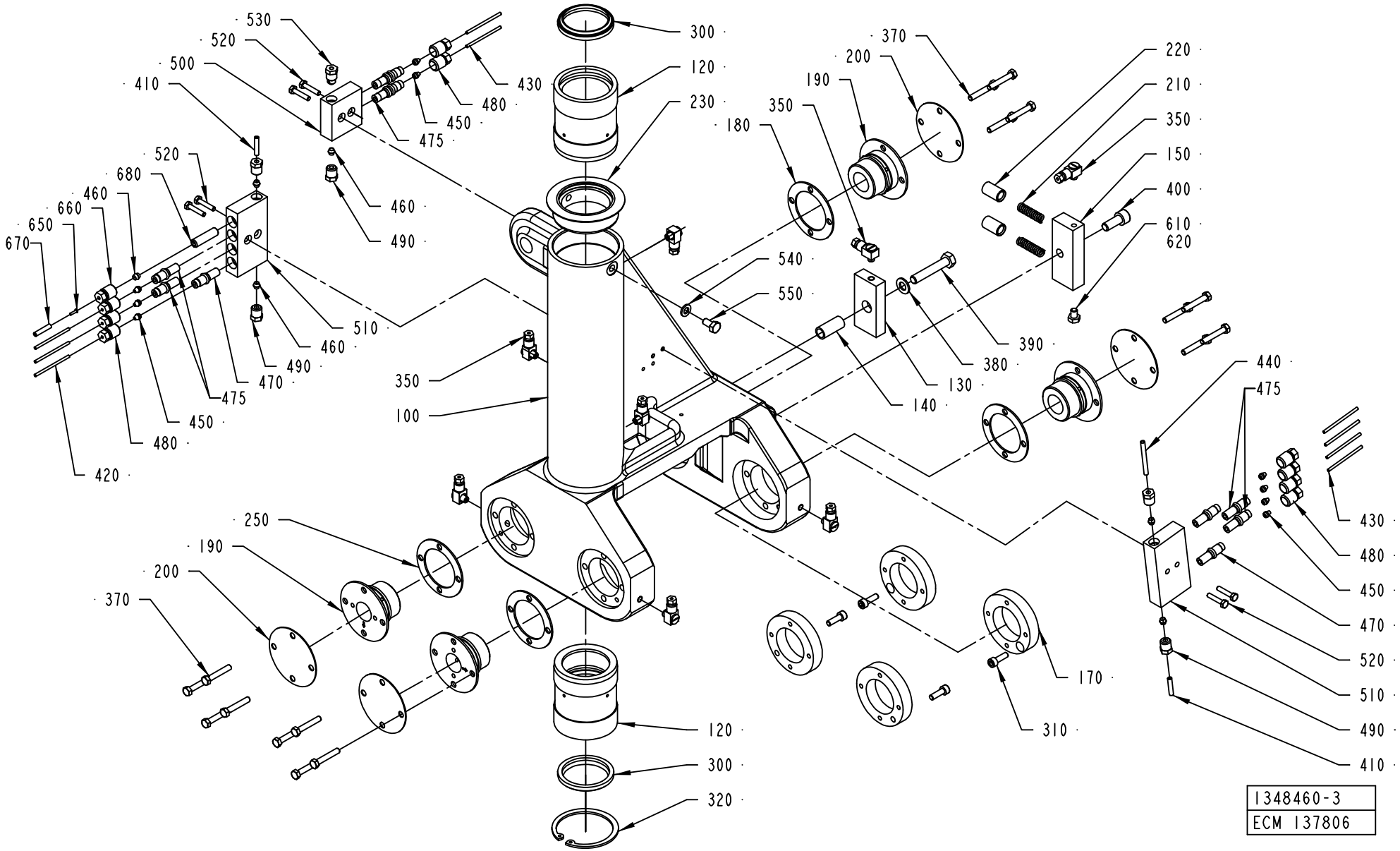
530
520
500
410
680
460
660
650
670
520
460
490
510
460
490
470
475
450
480
420
430
480
450
475
300
120
230
350
100
370
200
190
180
350
540
550
220
210
350
150
400
610
620
390
380
130
140
440
475
430
480
450
470
520
510
490
410
250
190
200
370
120
300
320
170
310
1348460-3
ECM 137806

ECM: 137806 - 20030910
Group number: 1348460-0200
Assembly Drawing: 1348460-3_1_AB

Pos	Part No	UN	Qty	Description	Page No
A3/FLEX					
450	90028-0020		9	CONE TUBE 2,5MM	
460	90028-0021		6	CONE TUBE 4 MM	
470	90092-0052		3	METERING VALVE 10 MM3	
480	90134-0039		9	BUSHING VALVE CONNECTION 2,5 MM	
650	90134-0031		1	SLEEVE FOR PLASTIC TUBE	
660	90134-0040		1	BUSHING VALVE CONNECTION 4 MM	
670	90166-0109	MM	1000	TUBE 4 MM PA,TRANSP.	
680	90134-0051		1	SPACING COLLAR DOSING BLOCK	
Common Parts					
100	1195361-0000		1	YOKE RIGHT	
120	1035954-0000		2	BUSHING	
130	1037104-0000		1	LOCATING PIECE	
140	1037106-0000		1	SLEEVE	
150	1349972-0000		1	SPRING HOUSING	
170	36753-0000		4	RING	
180	29886-0000		2	LACE	
190	246513-0000		4	BEARING	
200	239874-0000		4	WASHER	
210	20494-0000		2	COMPRESSION SPRING	
220	31838-0000		2	PLUNGER	
230	1349780-0000		1	LID	
250	1038509-0000		2	WASHER	
300	90091-0358		2	SCRAPER, ASOB 45X53X7 MM	
310	312115-0329		4	SCREW ISO4762 M5X16 A4	
320	315753-0135		1	RETAINING RING FOR BORE DIN 472 60 A2	
350	90134-0058		8	CONNECTION	
370	312105-0335		16	SCREW M6S ISO 4014 M5X30 A480	
380	315105-0165		1	WASHER BRB8,4X16RFR	
390	312109-0460		1	SCREW M6S ISO 4017 M8X45 A480	
400	312115-0451		1	SCREW ISO4762 M8X20 A4	
410	90166-0109	MM	500	TUBE 4 MM PA,TRANSP.	
420	90166-0143	MM	500	TUBE 2,5 MM PA,TRANSP.	
430	90266-0019	MM	300	PIPE	
440	90266-0165	MM	500	BRASS PIPE	
475	90092-0054		6	METERING VALVE 50 MM3	
490	90134-0038		5	BUSHING/NUT INLET/OUTLET 4 MM	
500	90032-0038		1	BLOCK 2 WAYS	
510	90032-0039		2	BLOCK 4 WAYS	
520	312105-0295		6	SCREW M6S ISO4017 M4X20 A470	
530	90087-0019		1	PLUG M10X1 STAINLESS	
540	315105-0153		1	WASHER BRB6,4X12RFR	
550	312105-0366		1	SCREW M6S ISO 4017 M6X12 A480	
610	312105-0362		1	SCREW M6S ISO 4017 M6X8 A480	
620	90157-0021		1	LOCKING FLUID LOCTITE 270	

Machine Type | Group Description | Used-In | Group Number | Page No

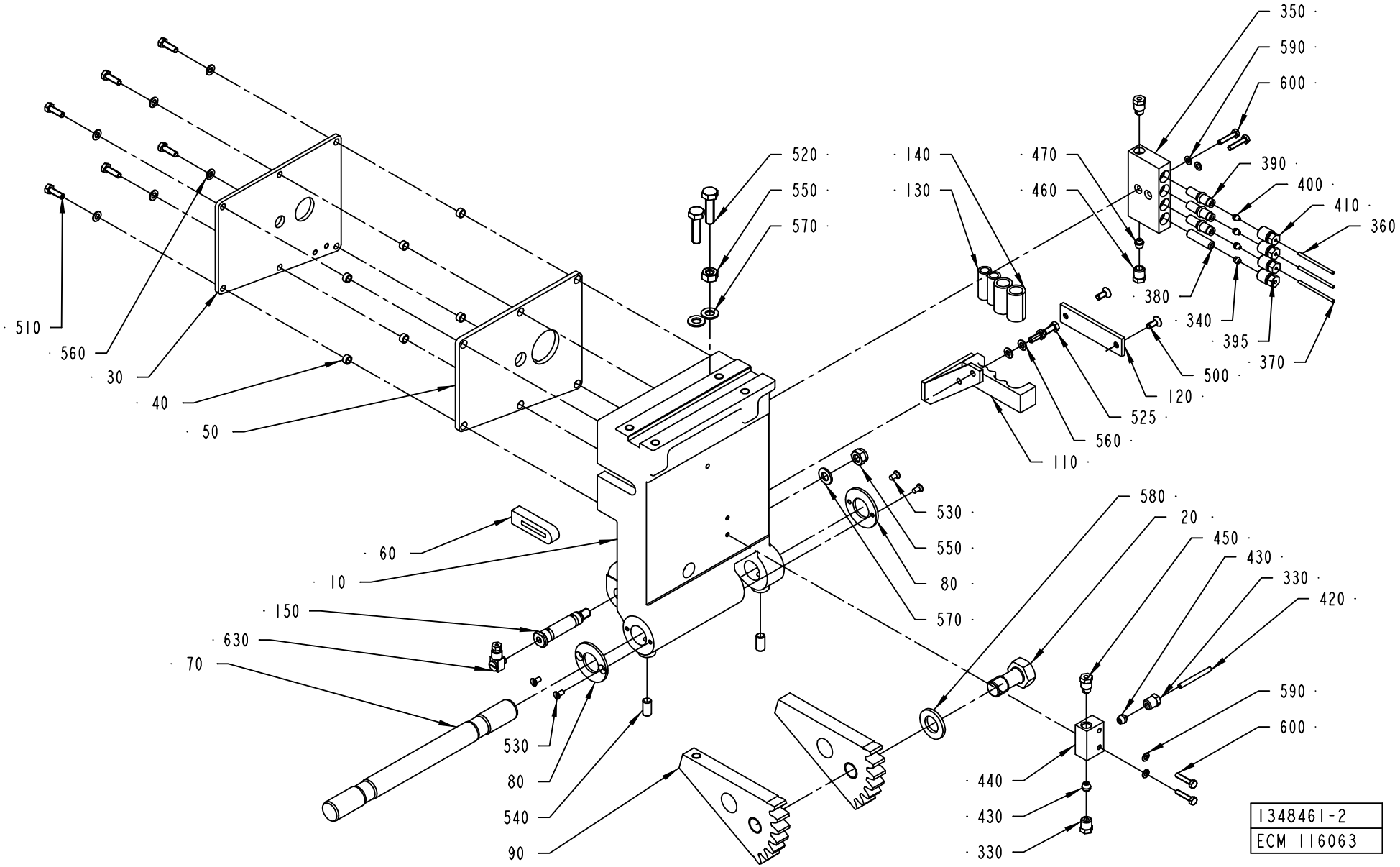
350
590
600
520
550
570
140
130
470
460
390
400
410
360
380
340
395
370
500
120
525
560
110
510
560
30
40
50
530
550
80
570
580
20
450
430
330
420
60
10
150
630
70
530
80
540
90
440
430
330
590
600
1348461-2
ECM 116063

ECM: 133126 - 20030710
Group number: 1348461-0200
Assembly Drawing: 1348461-2_1_AA

This list covers pages from 4-162 to 4-165

Pos	Part No	UN	Qty	Description	Page No
A3/FLEX QC (See drawing on page: 4-164)					
030	1036485-0000		1	COVERING PLATE	
040	1036501-0000		6	SPACER	
050	1036484-0000		1	GASKET	
060	1036483-0000		1	SEAL	
390	90092-0052		1	METERING VALVE 10 MM3	
400	90028-0020		1	CONE TUBE 2,5MM	
510	312105-0329		6	SCREW M6S ISO 4017 M5X16 A480	
560	315105-0146		8	WASHER BRB5,3X10RFR	
650	90134-0052		2	PLUG DOSING BLOCK	
A3/FLEX NOQC (See drawing on page: 4-162)					
030	1036485-0000		1	COVERING PLATE	
040	1036501-0000		6	SPACER	
050	1036484-0000		1	GASKET	
060	1036483-0000		1	SEAL	
390	90092-0052		3	METERING VALVE 10 MM3	
400	90028-0020		3	CONE TUBE 2,5MM	
510	312105-0329		6	SCREW M6S ISO 4017 M5X16 A480	
560	315105-0146		8	WASHER BRB5,3X10RFR	
Common Parts					
010	1035878-0000		1	ARM RIGHT	
020	1037069-0000		1	SCREW	
070	1035788-0000		1	SHAFT	
080	536704-0000		2	WASHER	
090	1036156-0000		2	TOOTH PART	
110	1348196-0000		1	FASTENING PLATE	
120	1349868-0000		1	FASTENING PLATE	
130	1478000-0000		2	HOSE	
140	1478001-0000		2	HOSE	
150	1037853-0000		1	SHAFT	
330	90134-0038		2	BUSHING/NUT INLET/OUTLET 4 MM	
340	90028-0021		1	CONE TUBE 4 MM	
350	90032-0039		1	BLOCK 4 WAYS	
360	90166-0143	MM	1500	TUBE 2,5 MM PA,TRANSP.	
370	90266-0019	MM	500	PIPE	
380	90134-0051		1	SPACING COLLAR DOSING BLOCK	
395	90134-0040		1	BUSHING VALVE CONNECTION 4 MM	
410	90134-0039		3	BUSHING VALVE CONNECTION 2,5 MM	
420	90266-0165	MM	200	BRASS PIPE	
430	90028-0024		2	CONE TUBE 4 MM	
440	90032-0043		1	DISTRIBUTION BLOCK 3 WAYS	
450	90087-0019		2	PLUG M10X1 STAINLESS	
460	90134-0055		1	BUSHING/NUT INLET/OUTLET 6 MM	
470	90028-0025		1	CONE TUBE 6 MM	
500	312155-0327		2	SCREW EN 10642 MF6S M5X12 A480	
520	312105-0455		2	SCREW M6S ISO 4017 M8X30 A480	
525	312105-0327		2	SCREW M6S ISO 4017 M5X12 A480	
530	312145-0287		4	SCREW ISO 2009 MFS M4X8 A4	
540	312318-0449		2	SCREW ISO4029 M8X16 A4	
550	312605-0318		1	HEXAGON NUT, M6M M8 A280	
570	315105-0165		1	WASHER BRB8,4X16RFR	
580	315105-0186		1	WASHER BRB17X30RFR	
590	315105-0136		4	WASHER BRB4,3XRFR	
600	312105-0295		4	SCREW M6S ISO4017 M4X20 A470	
630	90134-0058		1	CONNECTION	
640	312812-0318		1	HEXAGON NUT, NY-LOCK M8 A480	

Machine Type | Group Description | Used-In | Group Number | Page No

PRESSURE ARM RIGHT

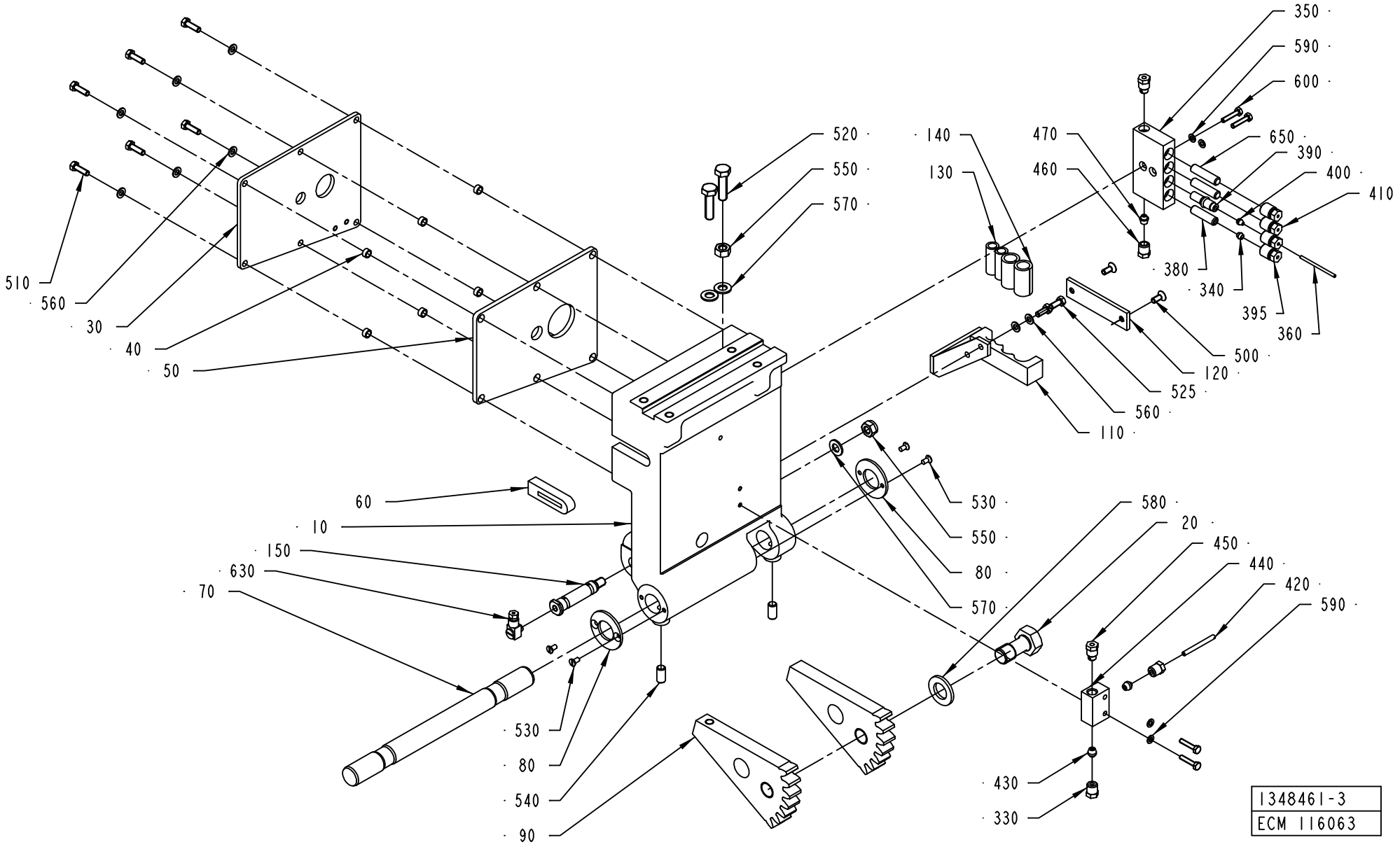

ECM: 133126 - 20030710
Group number: 1348461-0200
Assembly Drawing: 1348461-3_1_AA

This list covers pages from 4-162 to 4-165

Pos	Part No	UN	Qty	Description	Page No
A3/FLEX QC (See drawing on page: 4-164)					
030	1036485-0000		1	COVERING PLATE	
040	1036501-0000		6	SPACER	
050	1036484-0000		1	GASKET	
060	1036483-0000		1	SEAL	
390	90092-0052		1	METERING VALVE 10 MM3	
400	90028-0020		1	CONE TUBE 2,5MM	
510	312105-0329		6	SCREW M6S ISO 4017 M5X16 A480	
560	315105-0146		8	WASHER BRB5,3X10RFR	
650	90134-0052		2	PLUG DOSING BLOCK	
A3/FLEX NOQC (See drawing on page: 4-162)					
030	1036485-0000		1	COVERING PLATE	
040	1036501-0000		6	SPACER	
050	1036484-0000		1	GASKET	
060	1036483-0000		1	SEAL	
390	90092-0052		3	METERING VALVE 10 MM3	
400	90028-0020		3	CONE TUBE 2,5MM	
510	312105-0329		6	SCREW M6S ISO 4017 M5X16 A480	
560	315105-0146		8	WASHER BRB5,3X10RFR	
Common Parts					
010	1035878-0000		1	ARM RIGHT	
020	1037069-0000		1	SCREW	
070	1035788-0000		1	SHAFT	
080	536704-0000		2	WASHER	
090	1036156-0000		2	TOOTH PART	
110	1348196-0000		1	FASTENING PLATE	
120	1349868-0000		1	FASTENING PLATE	
130	1478000-0000		2	HOSE	
140	1478001-0000		2	HOSE	
150	1037853-0000		1	SHAFT	
330	90134-0038		2	BUSHING/NUT INLET/OUTLET 4 MM	
340	90028-0021		1	CONE TUBE 4 MM	
350	90032-0039		1	BLOCK 4 WAYS	
360	90166-0143	MM	1500	TUBE 2,5 MM PA,TRANSP.	
370	90266-0019	MM	500	PIPE	
380	90134-0051		1	SPACING COLLAR DOSING BLOCK	
395	90134-0040		1	BUSHING VALVE CONNECTION 4 MM	
410	90134-0039		3	BUSHING VALVE CONNECTION 2,5 MM	
420	90266-0165	MM	200	BRASS PIPE	
430	90028-0024		2	CONE TUBE 4 MM	
440	90032-0043		1	DISTRIBUTION BLOCK 3 WAYS	
450	90087-0019		2	PLUG M10X1 STAINLESS	
460	90134-0055		1	BUSHING/NUT INLET/OUTLET 6 MM	
470	90028-0025		1	CONE TUBE 6 MM	
500	312155-0327		2	SCREW EN 10642 MF6S M5X12 A480	
520	312105-0455		2	SCREW M6S ISO 4017 M8X30 A480	
525	312105-0327		2	SCREW M6S ISO 4017 M5X12 A480	
530	312145-0287		4	SCREW ISO 2009 MFS M4X8 A4	
540	312318-0449		2	SCREW ISO4029 M8X16 A4	
550	312605-0318		1	HEXAGON NUT, M6M M8 A280	
570	315105-0165		1	WASHER BRB8,4X16RFR	
580	315105-0186		1	WASHER BRB17X30RFR	
590	315105-0136		4	WASHER BRB4,3XRFR	
600	312105-0295		4	SCREW M6S ISO4017 M4X20 A470	
630	90134-0058		1	CONNECTION	
640	312812-0318		1	HEXAGON NUT, NY-LOCK M8 A480	

Machine Type | Group Description | Used-In | Group Number | Page No

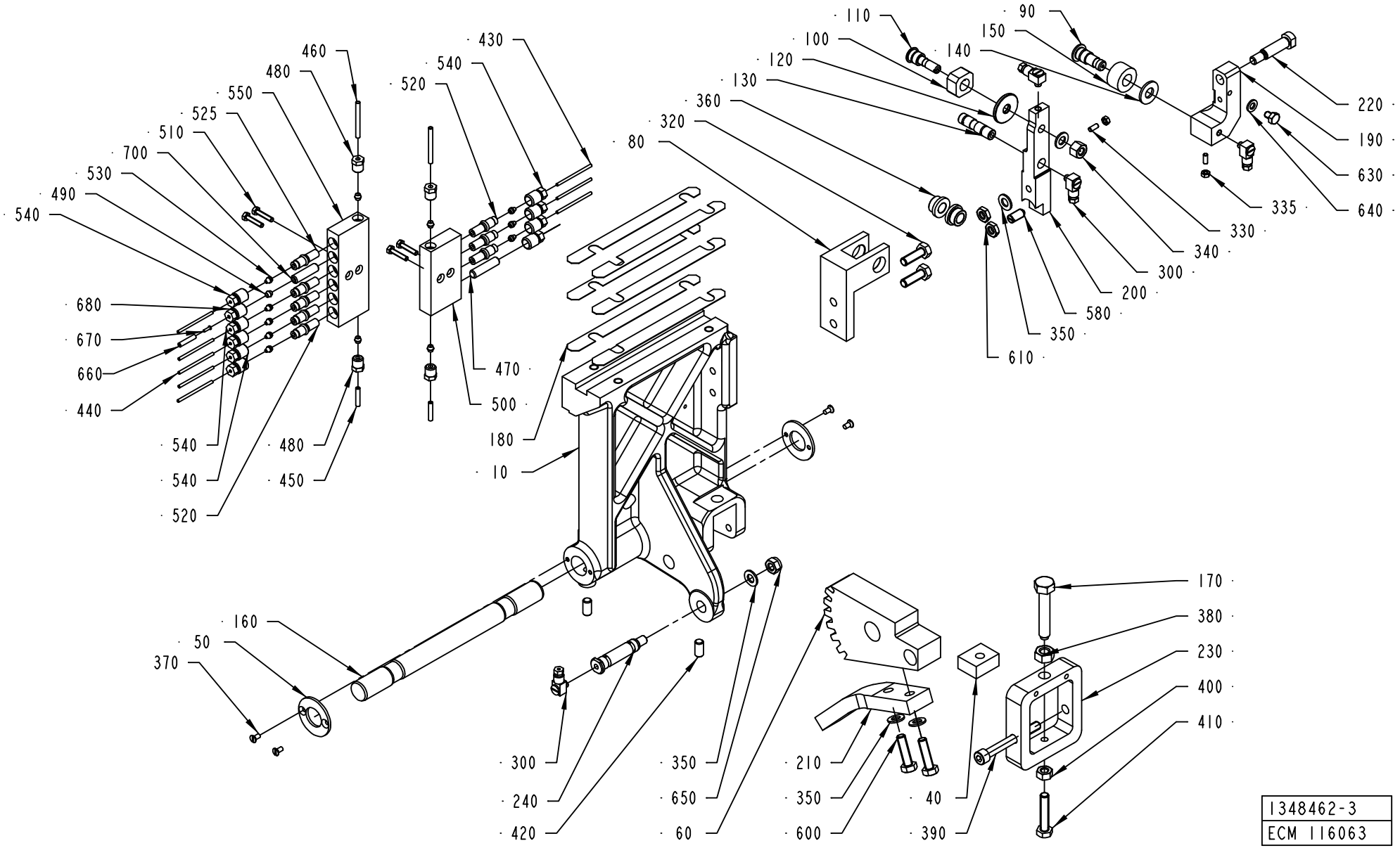

1348462-3
ECM 116063

ECM: 133120 - 20030922
Group number: 1348462-0200
Assembly Drawing: 1348462-3_1_AA

This list covers pages from 4-166 to 4-169

Pos	Part No	UN	Qty	Description	Page No
A3/FLEX NOQC (See drawing on page: 4-166)					
080	1036617-0000		1	BRACKET	
090	1036620-0000		1	SHAFT	
100	256628-0000		1	PIECE	
110	256629-0001		1	AXLE PIN	
120	441706-0000		1	WASHER	
130	1036615-0000		1	SHAFT	
140	1036616-0000		1	WASHER	
150	1036618-0000		1	ROLL	
190	1348672-0000		1	JOINT RIGHT	
200	1512315-0000		1	ARM RIGHT	
220	1348669-0000		1	SCREW	
300	90134-0058		4	CONNECTION	
320	312105-0453		2	SCREW M6S ISO 4017 M8X25 A480	
330	312318-0289		2	SCREW ISO4029 M4X10 A4	
335	312605-0312		2	HEXAGON NUT, M6M M4 A280	
340	312811-0318		1	NUT HEX.LOCK HELI COIL M8 SS	
350	315105-0165		5	WASHER BRB8,4X16RFR	
360	321101-0163		2	FLANGE BUSHING, 10X16X10 MM	
450	90166-0109	MM	600	TUBE 4 MM PA,TRANSP.	
470	90134-0052		1	PLUG DOSING BLOCK	
490	90028-0021		5	CONE TUBE 4 MM	
520	90092-0052		7	METERING VALVE 10 MM3	
525	90092-0054		1	METERING VALVE 50 MM3	
530	90028-0020		8	CONE TUBE 2,5MM	
540	90134-0039		9	BUSHING VALVE CONNECTION 2,5 MM	
580	90287-0112		1	SCREW SPRINGLOAD. SLOTTED HEAD M8X16	
610	312625-0318		2	HEXAGON THIN NUT, EN 24035 ML6M M8 A4	
630	312105-0362		1	SCREW M6S ISO 4017 M6X8 A480	
640	315105-0153		1	WASHER BRB6,4X12RFR	
660	90166-0109	MM	1000	TUBE 4 MM PA,TRANSP.	
670	90134-0031		1	SLEEVE FOR PLASTIC TUBE	
680	90134-0040		1	BUSHING VALVE CONNECTION 4 MM	
700	90134-0051		1	SPACING COLLAR DOSING BLOCK	
A3/FLEX QC (See drawing on page: 4-168)					
080	1036617-0000		1	BRACKET	
090	1036620-0000		1	SHAFT	
100	256628-0000		1	PIECE	
110	256629-0001		1	AXLE PIN	
120	441706-0000		1	WASHER	
130	1036615-0000		1	SHAFT	
140	1036616-0000		1	WASHER	
150	1036618-0000		1	ROLL	
190	1348672-0000		1	JOINT RIGHT	
200	1512315-0000		1	ARM RIGHT	
220	1348669-0000		1	SCREW	
300	90134-0058		4	CONNECTION	
320	312105-0453		2	SCREW M6S ISO 4017 M8X25 A480	
330	312318-0289		2	SCREW ISO4029 M4X10 A4	
335	312605-0312		2	HEXAGON NUT, M6M M4 A280	
340	312811-0318		1	NUT HEX.LOCK HELI COIL M8 SS	
350	315105-0165		5	WASHER BRB8,4X16RFR	
360	321101-0163		2	FLANGE BUSHING, 10X16X10 MM	
450	90166-0109	MM	600	TUBE 4 MM PA,TRANSP.	
470	90134-0052		3	PLUG DOSING BLOCK	
490	90028-0021		5	CONE TUBE 4 MM	
520	90092-0052		5	METERING VALVE 10 MM3	
525	90092-0054		1	METERING VALVE 50 MM3	
530	90028-0020		6	CONE TUBE 2,5MM	
540	90134-0039		9	BUSHING VALVE CONNECTION 2,5 MM	
580	90287-0112		1	SCREW SPRINGLOAD. SLOTTED HEAD M8X16	
610	312625-0318		2	HEXAGON THIN NUT, EN 24035 ML6M M8 A4	
630	312105-0362		1	SCREW M6S ISO 4017 M6X8 A480	
640	315105-0153		1	WASHER BRB6,4X12RFR	
660	90166-0109	MM	1000	TUBE 4 MM PA,TRANSP.	
670	90134-0031		1	SLEEVE FOR PLASTIC TUBE	
680	90134-0040		1	BUSHING VALVE CONNECTION 4 MM	
700	90134-0051		1	SPACING COLLAR DOSING BLOCK	
Common Parts					
010	2536047-0000		1	ARM	
040	14729-0000		1	NUT	
050	536704-0000		2	WASHER	
060	1036155-0000		1	TOOTH PART	
160	1035788-0000		1	SHAFT	
170	32957-0000		1	SCREW	
180	1037254-0000		6	SHIM	
210	1484320-0000		1	ROD	
230	1038867-0000		1	BOW CLAMP	
240	1037853-0000		1	SHAFT	
370	312145-0287		4	SCREW ISO 2009 MFS M4X8 A4	
380	312635-0320		1	NUT M6M 10X1 STAINLESS A2 80	
390	312115-0465		1	SCREW ISO4762 M8X70 A4	
400	312605-0318		1	HEXAGON NUT, M6M M8 A280	
410	312109-0459		1	SCREW M6S ISO 4017 M8X40 A480	

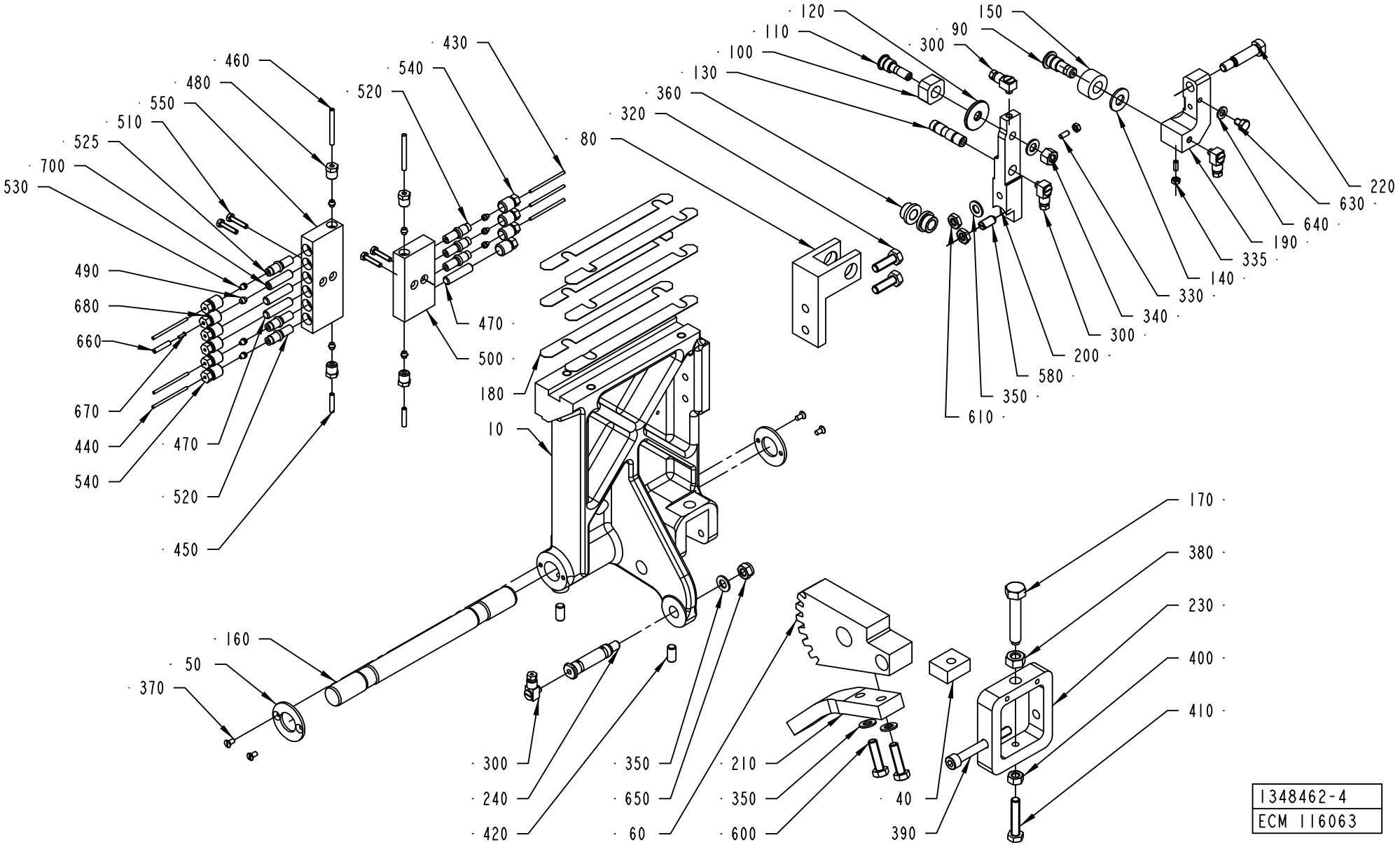
460
480
550
510
525
700
530
490
680
660
670
440
540
470
520
450
430
540
520
470
500
80
180
10
120
110
100
130
360
320
150
90
300
220
630
640
190
335
140
330
340
300
200
580
350
610
160
50
370
300
240
420
350
650
60
210
350
600
40
390
170
380
230
400
410
1348462-4
ECM 116063

ECM: 133120 - 20030922
Group number: 1348462-0200
Assembly Drawing: 1348462-4_1_AA

This list covers pages from 4-166 to 4-169

Pos	Part No	UN	Qty	Description	Page No
Common Parts (Cont'd)					
420	312318-0449		2	SCREW ISO4029 M8X16 A4	
430	90166-0143	M	3	TUBE 2,5 MM PA,TRANSP.	
440	90266-0019	MM	200	PIPE	
460	90266-0165	MM	100	BRASS PIPE	
480	90134-0038		4	BUSHING/NUT INLET/OUTLET 4 MM	
500	90032-0039		1	BLOCK 4 WAYS	
510	312105-0295		4	SCREW M6S ISO4017 M4X20 A470	
550	90032-0040		1	BLOCK 6 WAYS	
600	312105-0455		2	SCREW M6S ISO 4017 M8X30 A480	
650	312812-0318		1	HEXAGON NUT, NY-LOCK M8 A480	

Pos	Part No	UN	Qty	Description	Page No

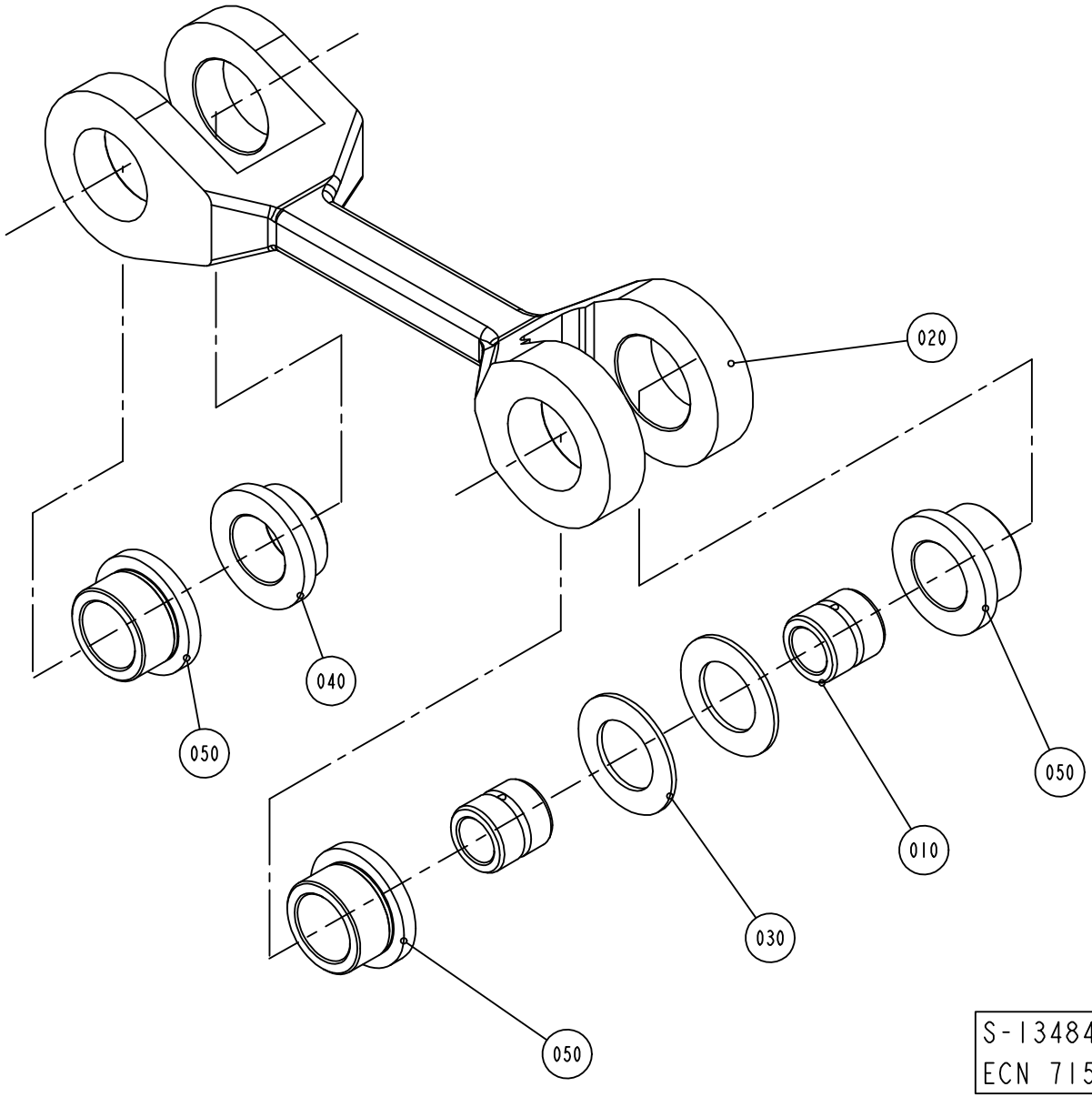
020
040
050
050
030
010
050
050
S-1348466-1
ECN 71517

ECM: 99081 - 20011108
Group number: 1348466-0100
Assembly Drawing: 1348466-1_1_AA

Pos	Part No	UN	Qty	Description	Page No
-					
010	1037849-0000		2	SLEEVE	
020	1037851-0000		1	LINK	
030	1038021-0000		2	WASHER	
040	321101-0222		1	FLANGE BUSHING, 18X25X12	
050	321101-0223		3	FLANGE BUSHING, 18X25X16	

Pos	Part No	UN	Qty	Description	Page No

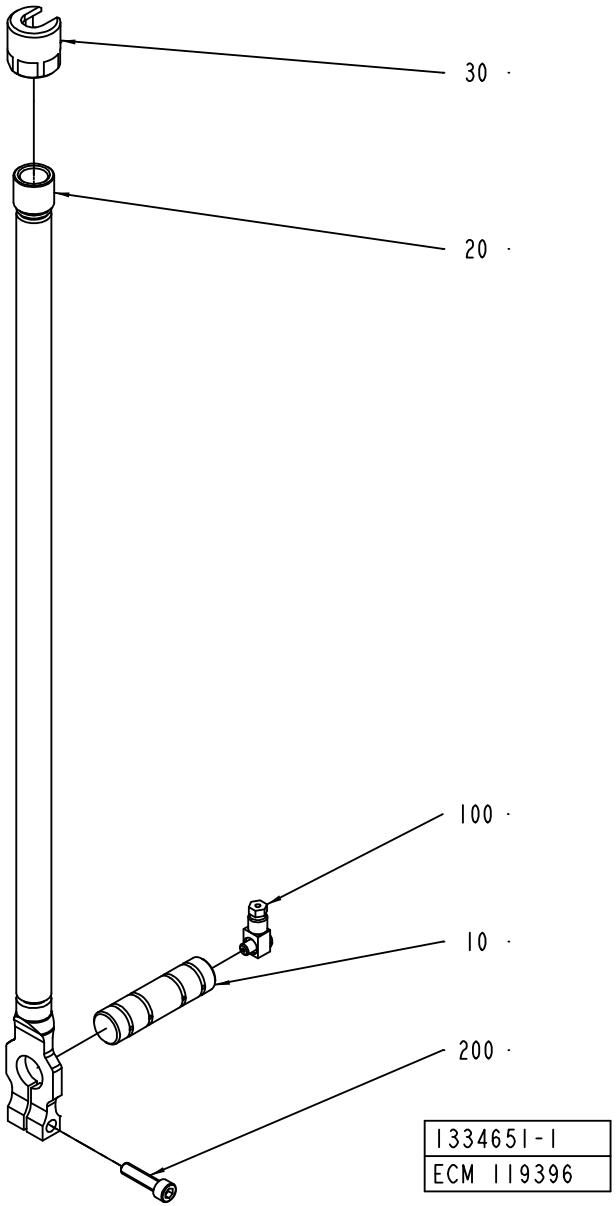
30 ·
20 ·
100 ·
10 ·
200 ·
1334651-1
ECM 119396

ECM: 119396 - 20030121
Group number: 1334651-0100
Assembly Drawing: 1334651-1_1_AA

Pos	Part No	UN	Qty	Description	Page No
-					
010	1037852-0000		1	SHAFT	
020	1334652-0000		1	LINK	
030	1334654-0000		1	CONNECTION CLAMP	
040	312115-0372		1	SCREW ISO4762 M6X25 A4	
050	90134-0058		1	CONNECTION	

Pos	Part No	UN	Qty	Description	Page No

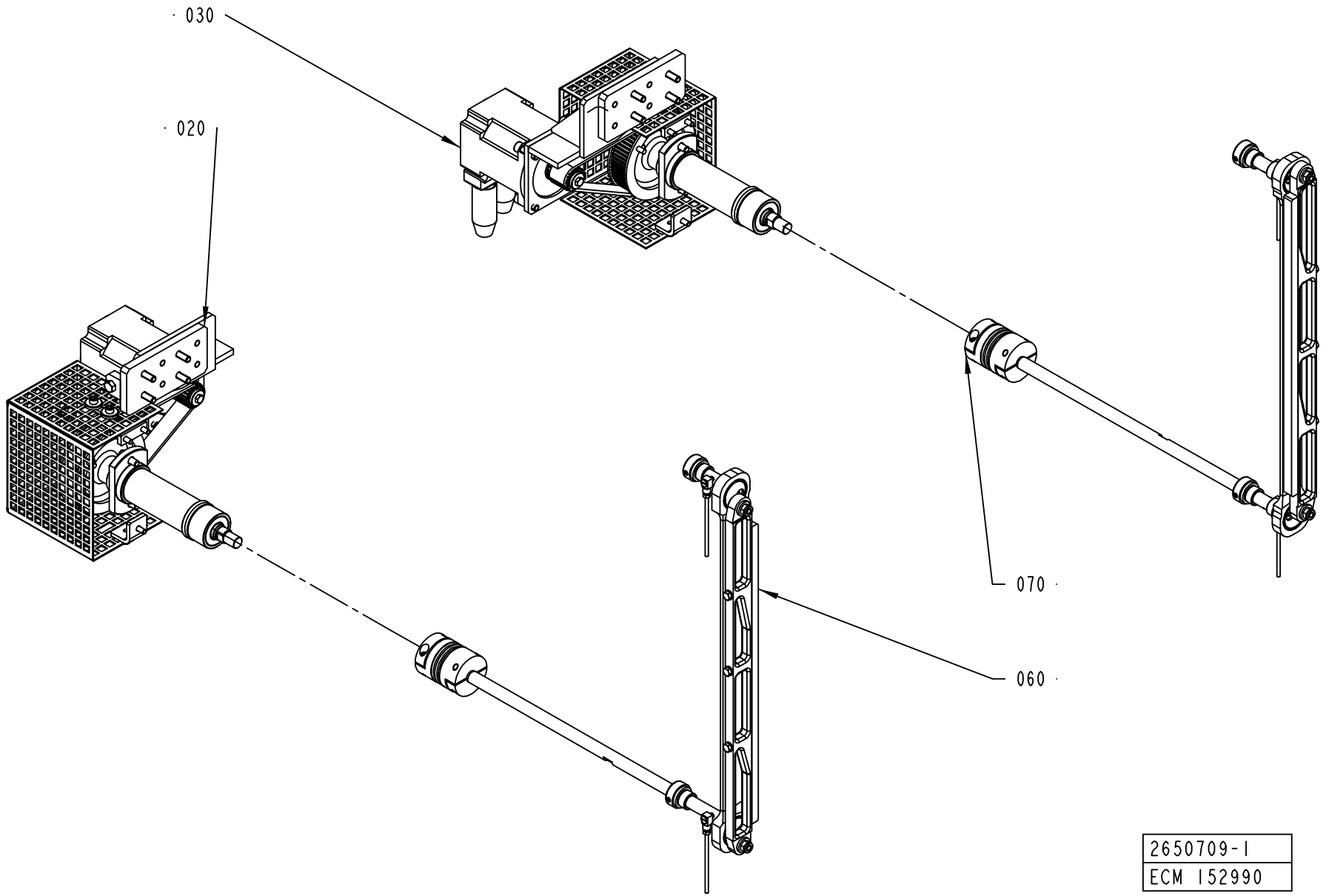
030
020
070
060
2650709-1
ECM 152990

ECM: 152994 - 50001231
Group number: 2650709-0100
Assembly Drawing: 2650709-1_1_AA

Pos	Part No	UN	Qty	Description	Page No
-					
020	2650710-0100		1	DRIVE UNIT	**4-177**
030	2650711-0100		1	DRIVE UNIT	**4-179**
060	2503665-0100		1	DESIGN CORRECTION DEVICE LEFT	**4-181**
070	2503666-0100		1	DESIGN CORRECTION DEVICE RIGHT	**4-183**

Pos	Part No	UN	Qty	Description	Page No

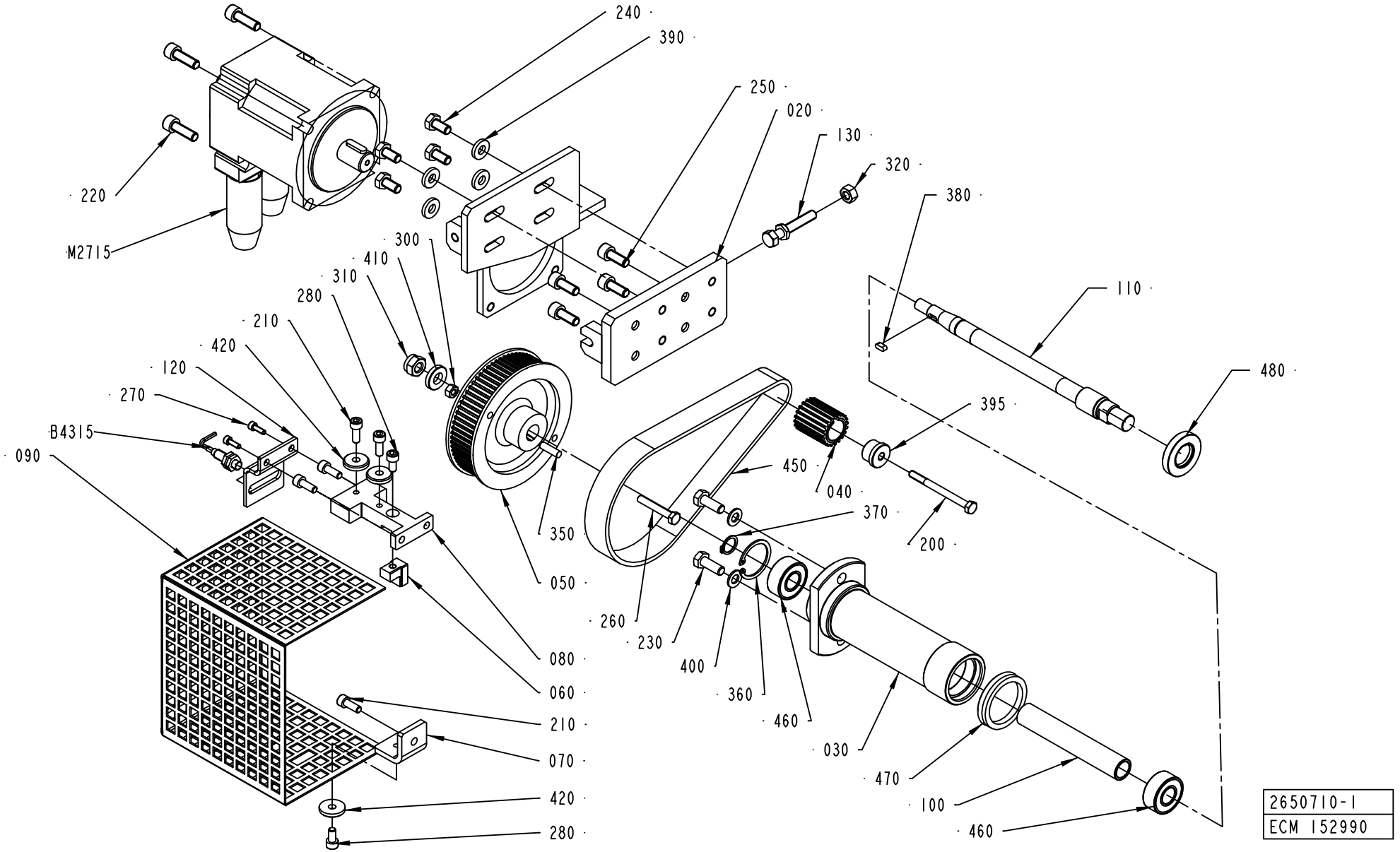
240
390
250
020
130
320
380
220
M2715
300
410
310
280
210
420
120
270
B4315
090
110
480
395
450
040
370
200
350
050
260
230
400
360
460
030
470
100
460
080
060
210
070
420
280
2650710-1
ECM 152990

ECM: 152992 - 50001231
Group number: 2650710-0100
Assembly Drawing: 2650710-1_1_AA

Pos	Part No	UN	Qty	Description	Page No
-					
010	2650712-0000		1	PLATE	
020	2650713-0000		1	PLATE	
030	2506334-0000		1	SUPPORT	
040	2652890-0000		1	TOOTHED PULLEY	
050	2652891-0000		1	TOOTHED PULLEY	
060	2624537-0000		1	STOP	
070	2506337-0000		1	ANGLE BRACKET	
080	2506343-0000		1	SUPPORT	
090	2506336-0000		1	PROTECTIVE COVER	
100	2506392-0000		1	SPACER	
110	2506338-0000		1	SHAFT	
120	2506391-0000		1	SUPPORT	
130	2650717-0000		1	SCREW	
200	312105-0384		1	SCREW M6S ISO 4014 M6X70 A480	
210	312115-0368		5	SCREW ISO4762 M6X16 A4	
220	312115-0453		4	SCREW ISO4762 M8X25 A4	
230	312105-0452		2	SCREW M6S ISO 4017 M8X22 A4 80	
240	312105-0449		4	SCREW M6S ISO 4017 M8X16 A480	
250	312115-0451		4	SCREW ISO4762 M8X20 A4	
260	312109-0378		1	SCREW M6S ISO4017 M6X40 A480	
270	312115-0291		2	SCREW ISO4762 M4X12 A4	
280	312115-0366		2	SCREW ISO4762 M6X12 A4	
300	312605-0316		1	HEXAGON NUT, M6M M6 A280	
310	312812-0320		1	HEXAGON NUT, NY-LOCK M10 A480	
320	312605-0318		1	HEXAGON NUT, M6M M8 A280	
350	311103-0354		1	PARALLEL PIN ISO 2338 6M6X22 A1	
360	315753-0124		1	RETAINING RING FOR BORE DIN 472 35 A2	
370	315751-0112		1	RETAINING RING FOR SHAFT DIN 471 15 A2	
380	315701-0165		1	PARALLEL KEY W. ROUND ENDS 4X4X10 MM	
390	1558447-0000		4	SPACER	
395	2662579-0000		1	SPACER	
400	315105-0165		2	WASHER BRB8,4X16RFR	
410	315115-0173		1	WASHER PLAIN, TBRB 10,5/22 H=4	
420	315125-0153		3	WASHER TBRSB 6,4X22X4 A4	
450	90459-3759		1	TIMING BELT, 5MR-550-25	
460	90214-0194		2	SPHERICAL BALL BEARING, 15X35X1 MM	
470	90091-0138		1	V-RINGS 40X50X9 MM V-45A	
480	90091-0436		1	RADIAL SEAL 20X40X7 MM DUST LIP	
B4315	90458-0138		1	PROX.SW. E2EG-X1R5B1-5M	
M2715	90459-1256		1	SERVO MOTOR HDDB09N-PA-A-A-B-A-AAA	

Pos	Part No	UN	Qty	Description	Page No

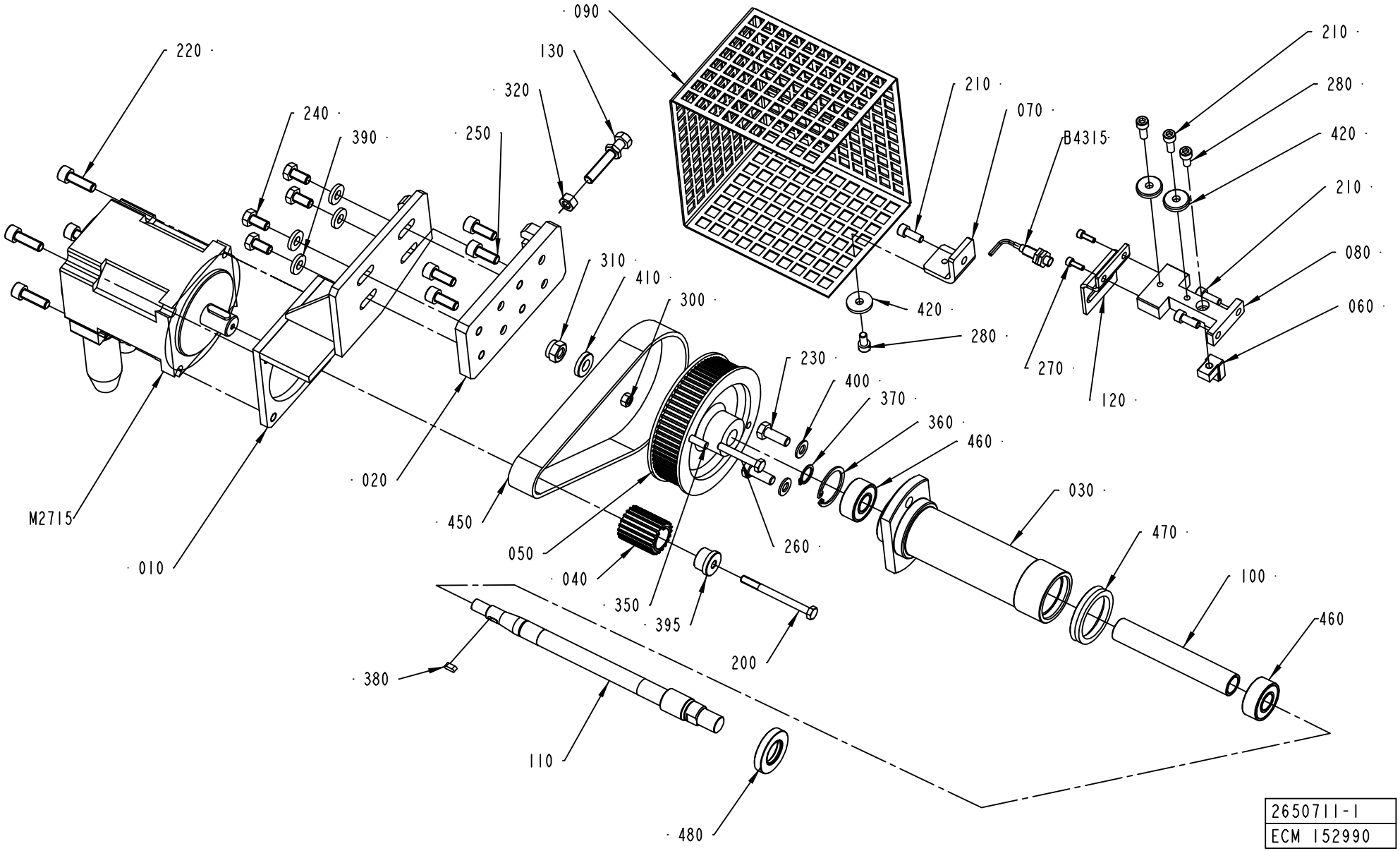
090
220
130
320
240
390
250
210
070
B4315
210
280
420
210
080
060
420
280
310
410
300
230
400
370
360
460
270
120
020
M2715
010
450
050
040
350
395
260
030
470
100
460
200
380
110
480
2650711-1
ECM 152990

ECM: 152993 - 50001231
Group number: 2650711-0100
Assembly Drawing: 2650711-1_1_AA

Pos	Part No	UN	Qty	Description	Page No
-					
010	2650715-0000		1	PLATE	
020	2650713-0000		1	PLATE	
030	2506334-0000		1	SUPPORT	
040	2652890-0000		1	TOOTHED PULLEY	
050	2652891-0000		1	TOOTHED PULLEY	
060	2624537-0000		1	STOP	
070	2506337-0000		1	ANGLE BRACKET	
080	2506343-0000		1	SUPPORT	
090	2506336-0000		1	PROTECTIVE COVER	
100	2506392-0000		1	SPACER	
110	2506338-0000		1	SHAFT	
120	2506391-0000		1	SUPPORT	
130	2650717-0000		1	SCREW	
200	312105-0384		1	SCREW M6S ISO 4014 M6X70 A480	
210	312115-0368		5	SCREW ISO4762 M6X16 A4	
220	312115-0453		4	SCREW ISO4762 M8X25 A4	
230	312105-0452		2	SCREW M6S ISO 4017 M8X22 A4 80	
240	312105-0449		4	SCREW M6S ISO 4017 M8X16 A480	
250	312115-0451		4	SCREW ISO4762 M8X20 A4	
260	312109-0378		1	SCREW M6S ISO4017 M6X40 A480	
270	312115-0291		2	SCREW ISO4762 M4X12 A4	
280	312115-0366		2	SCREW ISO4762 M6X12 A4	
300	312605-0316		1	HEXAGON NUT, M6M M6 A280	
310	312812-0320		1	HEXAGON NUT, NY-LOCK M10 A480	
320	312605-0318		1	HEXAGON NUT, M6M M8 A280	
350	311103-0354		1	PARALLEL PIN ISO 2338 6M6X22 A1	
360	315753-0124		1	RETAINING RING FOR BORE DIN 472 35 A2	
370	315751-0112		1	RETAINING RING FOR SHAFT DIN 471 15 A2	
380	315701-0165		1	PARALLEL KEY W. ROUND ENDS 4X4X10 MM	
390	1558447-0000		4	SPACER	
395	2662579-0000		1	SPACER	
400	315105-0165		2	WASHER BRB8,4X16RFR	
410	315115-0173		1	WASHER PLAIN, TBRB 10,5/22 H=4	
420	315125-0153		3	WASHER TBRSB 6,4X22X4 A4	
450	90459-3759		1	TIMING BELT, 5MR-550-25	
460	90214-0194		2	SPHERICAL BALL BEARING, 15X35X1 MM	
470	90091-0138		1	V-RINGS 40X50X9 MM V-45A	
480	90091-0436		1	RADIAL SEAL 20X40X7 MM DUST LIP	
B4315	90458-0138		1	PROX.SW. E2EG-X1R5B1-5M	
M2715	90459-1256		1	SERVO MOTOR HDDB09N-PA-A-A-B-A-AAA	

Pos	Part No	UN	Qty	Description	Page No

Machine Type	Group Description	Used-In	Group Number	Page No

DESIGN CORRECTION DEVICE LEFT

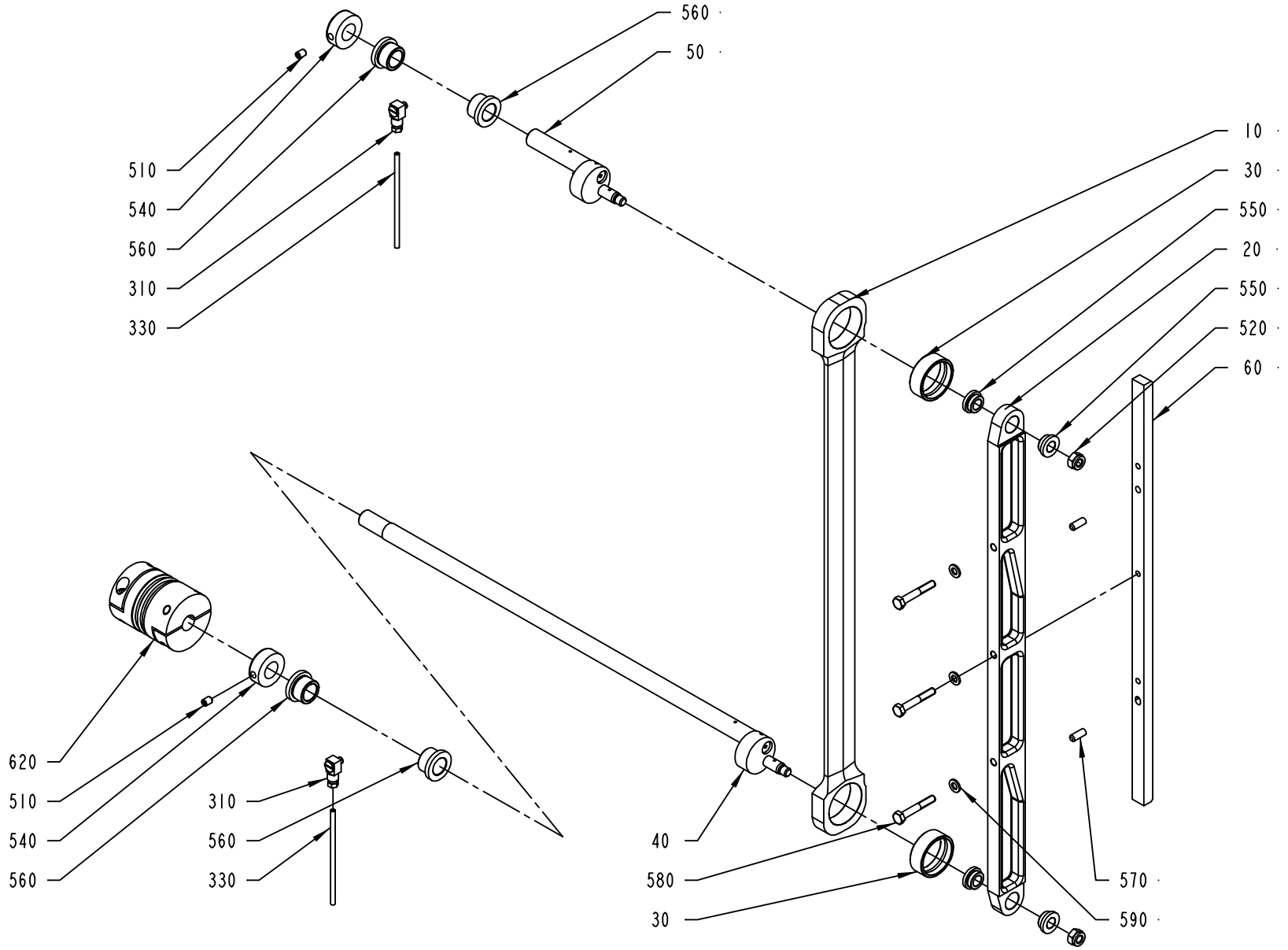

ECM: 119574 - 20030121
Group number: 2503665-0100
Assembly Drawing: 2503665-1_1_AA

Pos	Part No	UN	Qty	Description	Page No
-					
010	2508406-0000		1	STRUT	
020	2534851-0000		1	BAR	
030	1255117-0000		2	PLAIN BEARING	
040	2503669-0000		1	ECCENTRIC SHAFT	
050	2506340-0000		1	ECCENTRIC SHAFT	
060	1512998-0000		1	FOLDING FLAP CAM	
310	90134-0068		2	CONNECTION	
330	90266-0165	MM	1300	BRASS PIPE	
510	312318-0362		2	SCREW ISO4029 M6X8 A4	
520	312812-0318		2	HEXAGON NUT, NY-LOCK M8 A480	
540	315742-0112		2	RETAINING RING 16 SMS 199	
550	321101-0162		4	FLANGE BUSHING, 10X16X8 MM	
560	321101-0203		4	FLANGE BUSHING, 16X22X16 MM	
570	311103-0351		2	PARALLEL PIN ISO 2338 6M6X16 A1	
580	312105-0378		3	SCREW M6S ISO 4014 M6X40 A480	
590	315105-0153		3	WASHER BRB6,4X12RFR	
620	90459-1733		1	BELLOW COUPLING, 15X15 MM	

Pos	Part No	UN	Qty	Description	Page No

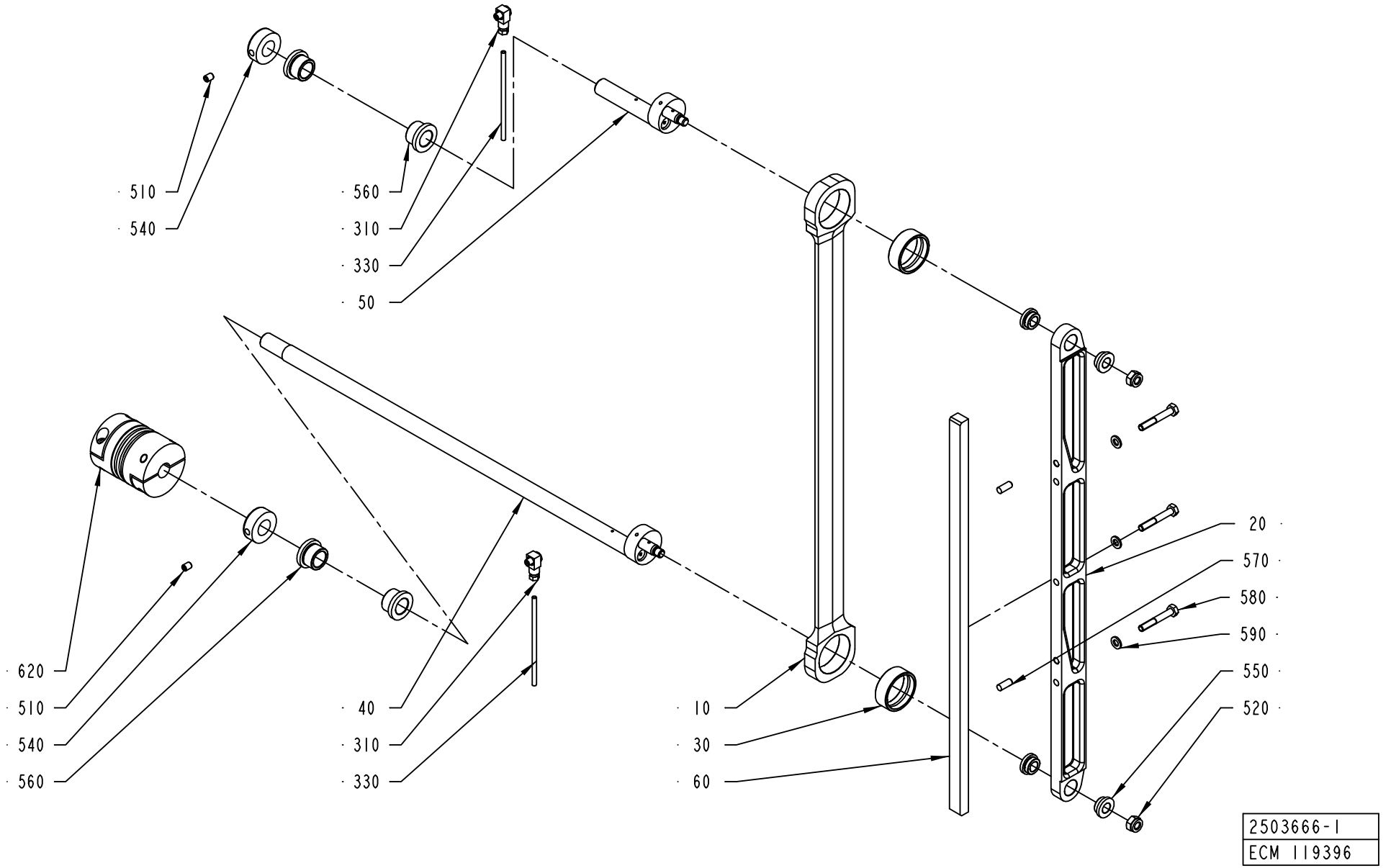
510
540
560
310
330
50
620
510
540
560
40
310
330
10
30
60
20
570
580
590
550
520
2503666-1
ECM 119396

ECM: 119575 - 20030121
Group number: 2503666-0100
Assembly Drawing: 2503666-1_1_AA

Pos	Part No	UN	Qty	Description	Page No
-					
010	2508406-0000		1	STRUT	
020	2534851-0000		1	BAR	
030	1255117-0000		2	PLAIN BEARING	
040	2503669-0000		1	ECCENTRIC SHAFT	
050	2506340-0000		1	ECCENTRIC SHAFT	
060	1512998-0000		1	FOLDING FLAP CAM	
310	90134-0068		2	CONNECTION	
330	90266-0165	MM	1300	BRASS PIPE	
510	312318-0362		2	SCREW ISO4029 M6X8 A4	
520	312812-0318		2	HEXAGON NUT, NY-LOCK M8 A480	
540	315742-0112		2	RETAINING RING 16 SMS 199	
550	321101-0162		4	FLANGE BUSHING, 10X16X8 MM	
560	321101-0203		4	FLANGE BUSHING, 16X22X16 MM	
570	311103-0351		2	PARALLEL PIN ISO 2338 6M6X16 A1	
580	312105-0378		3	SCREW M6S ISO 4014 M6X40 A480	
590	315105-0153		3	WASHER BRB6,4X12RFR	
620	90459-1733		1	BELLOW COUPLING, 15X15 MM	

Pos	Part No	UN	Qty	Description	Page No

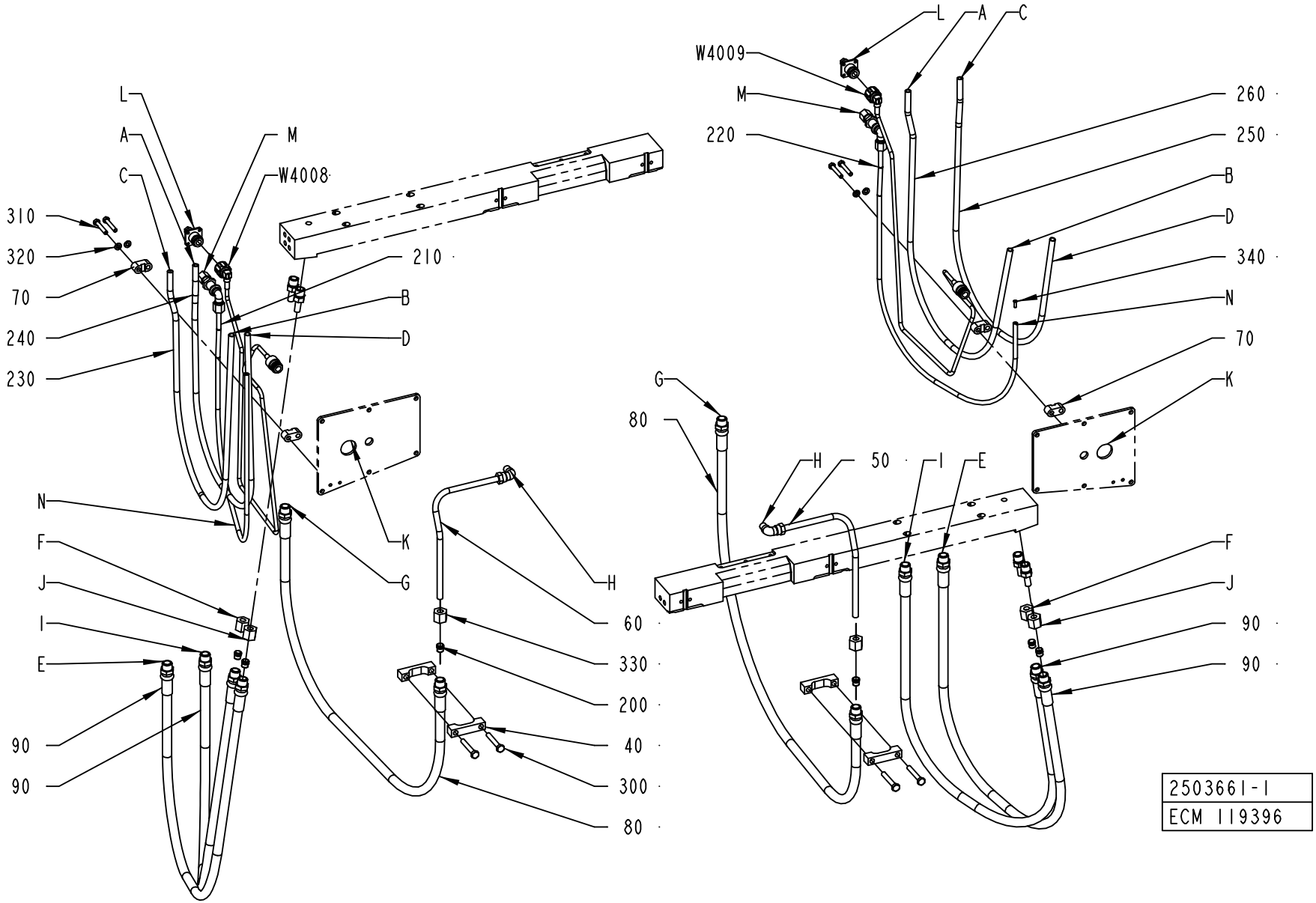
L
A
C
M
W4008
310
320
70
240
230
210
B
D
K
G
N
F
J
I
E
90
90
H
60
330
200
40
300
80
W4009
220
260
250
340
N
G
80
H
50
I
E
2503661-1
ECM 119396

ECM: 133129 - 20030710
Group number: 2503661-0100
Assembly Drawing: 2503661-1_1_AA

Pos	Part No	UN	Qty	Description	Page No
A3/FLEX					
070	464368-0000		4	CRAMP	
230	90166-0123	MM	1440	HOSE	
240	90166-0123	MM	1390	HOSE	
250	90166-0123	MM	1440	HOSE	
260	90166-0123	MM	1390	HOSE	
310	312109-0335		4	SCREW M6S ISO 4017 M5X30 A480	
320	315105-0146		4	WASHER BRB5,3X10RFR	
W4008	2562736-0001		1	COAXIAL CABLE	
W4009	2562736-0001		1	COAXIAL CABLE	
Common Parts					
040	1129599-0000		4	CRAMP	
050	1038828-0000		1	PIPE	
060	1038829-0000		1	PIPE	
080	2510787-0000		2	HOSE	
090	1517348-0000		4	HOSE	
200	90030-0098		12	ACCESSORIES, FERRULE 8	
210	90166-0108	MM	960	TUBE 6 MM PA,TRANSP.	
220	90166-0108	MM	960	TUBE 6 MM PA,TRANSP.	
300	312105-0378		4	SCREW M6S ISO 4014 M6X40 A480	
330	342703-0208		12	NUT, PIPES & CONNECTORS,NUT M-8 SS	
340	90134-0030		4	SLEEVE FOR PLASTIC TUBE	
350	352113-0101		12	CLIP STRIP, 92X2,5 MM	

Pos	Part No	UN	Qty	Description	Page No

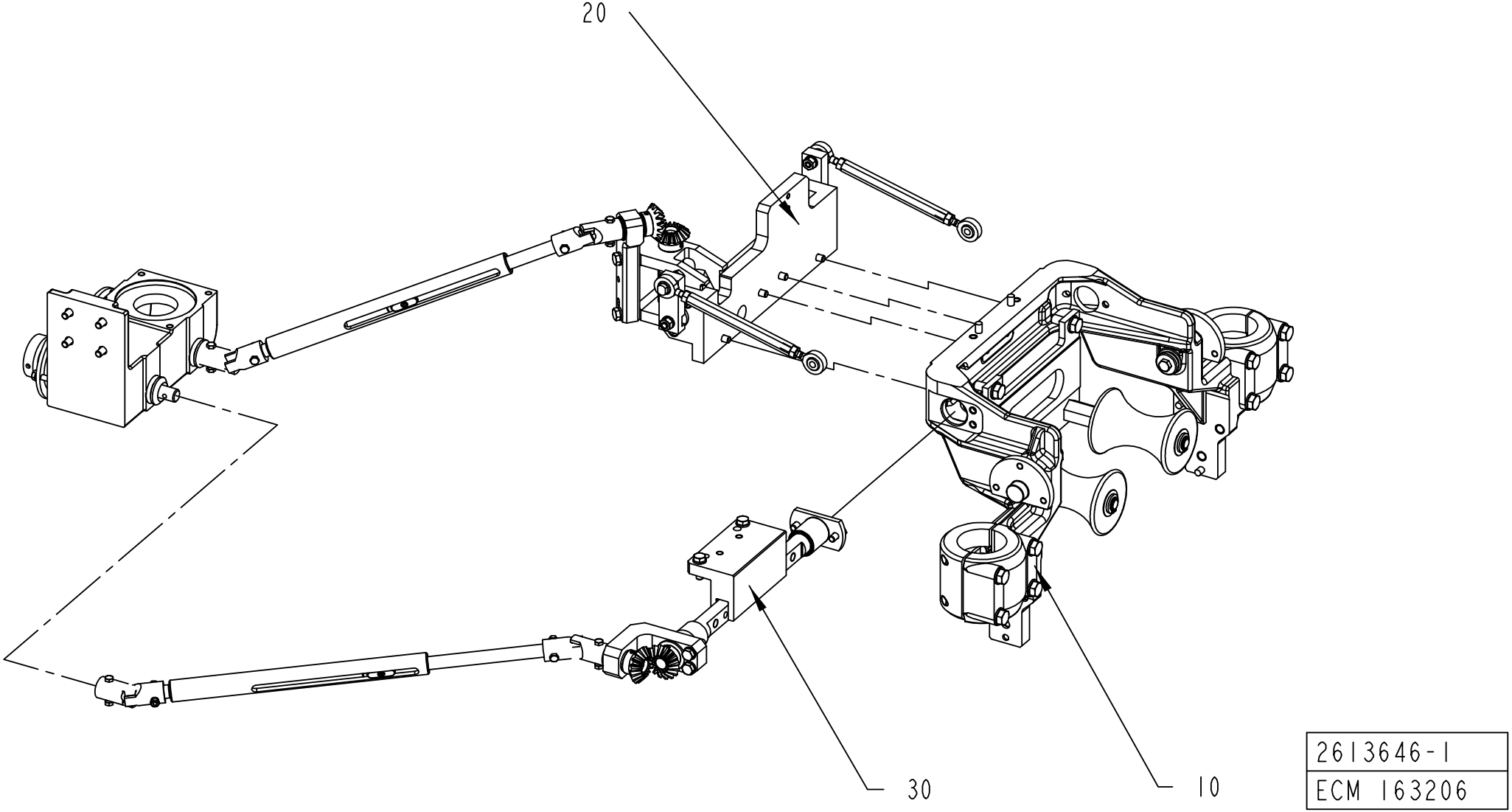
20
30
10
2613646-1
ECM 163206

ECM: 163211 - 50001231
Group number: 2613646-0100
Assembly Drawing: 2613646-1_1_AB

Pos	Part No	UN	Qty	Description	Page No
-					
10	2613644-0100		1	CANTILEVER	**4-189**
20	2597330-0100		1	CONTROL UNIT	**4-191**
30	2597331-0100		1	CENTERING UNIT	**4-193**

Pos	Part No	UN	Qty	Description	Page No

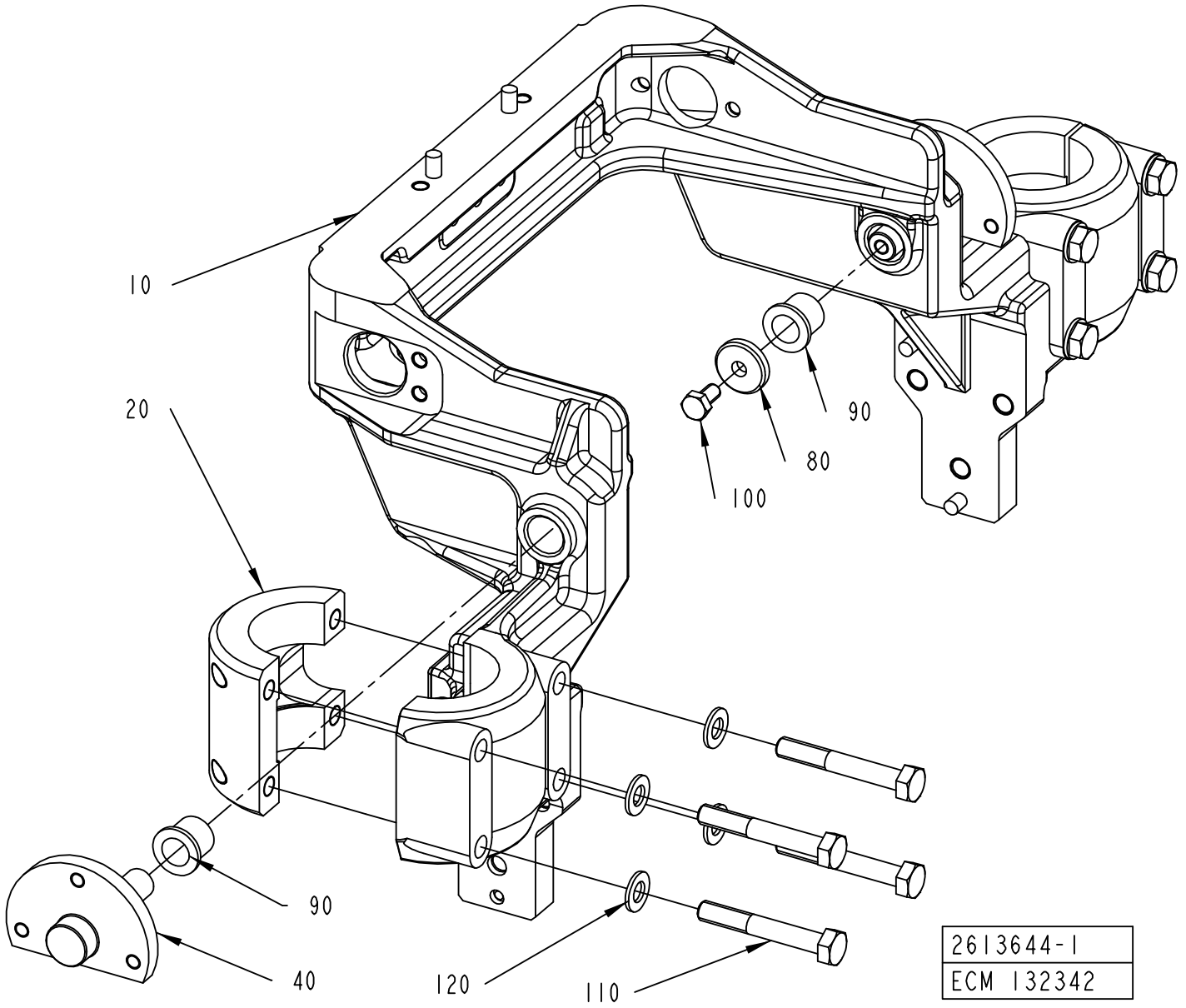
10
20
90
80
100
90
40
120
110
2613644-1
ECM 132342

ECM: 132342 - 20030909
Group number: 2613644-0100
Assembly Drawing: 2613644-1_1_AA

Pos	Part No	UN	Qty	Description	Page No
-					
010	2587464-0000		1	CANTILEVER	
020	2614039-0000		2	CLAMP	
040	2598065-0000		2	SUPPORT	
080	315125-0153		2	WASHER TBRSB 6,4X22X4 A4	
090	90458-1404		4	FLANGE BUSHING, 12X16X16 MM	
100	312105-0366		2	SCREW M6S ISO 4017 M6X12 A480	
110	312105-0462		8	SCREW M6S ISO 4014 M8X55 A480	
120	315105-0165		8	WASHER BRB8,4X16RFR	

Pos	Part No	UN	Qty	Description	Page No

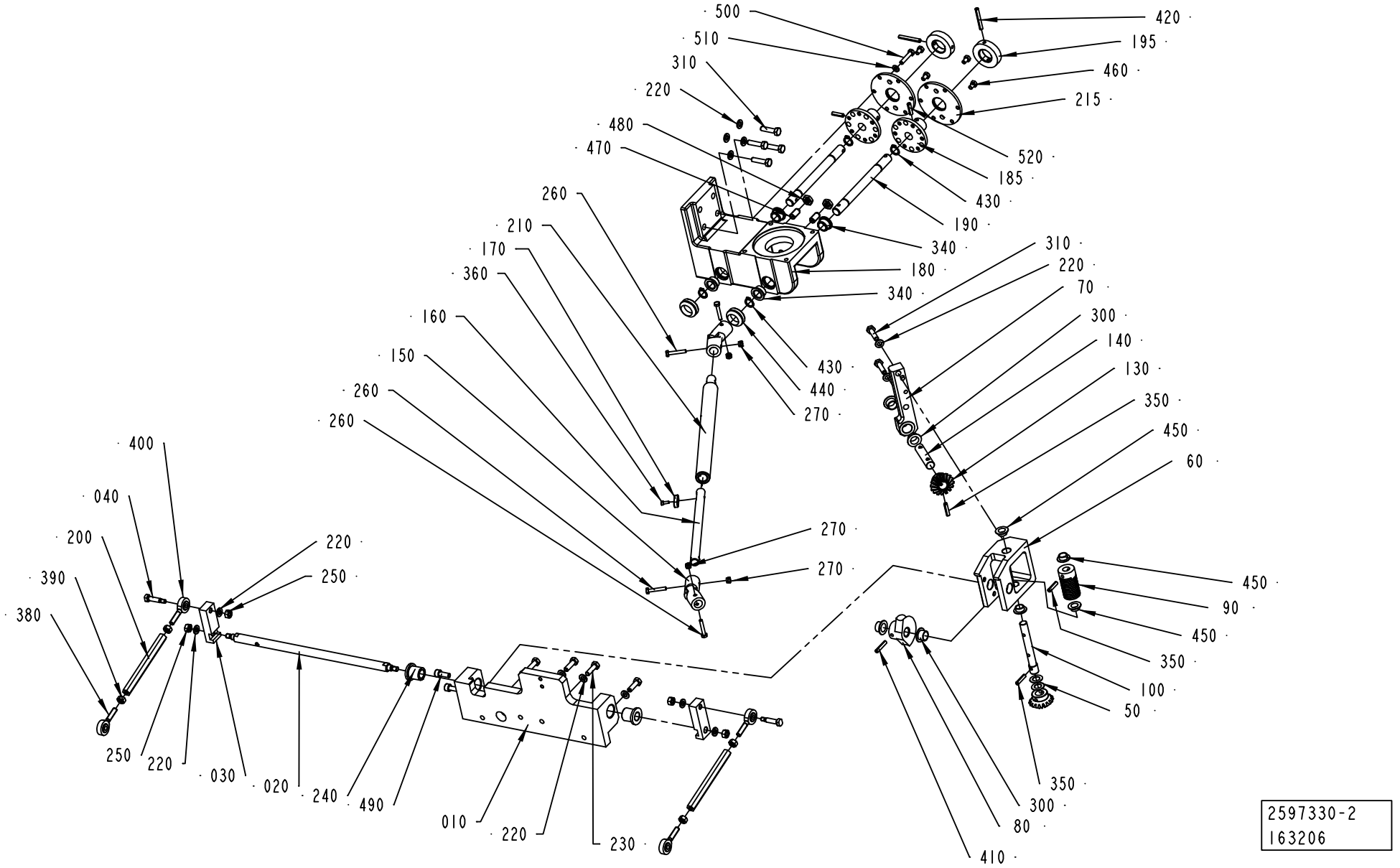
500
510
310
220
480
470
260
210
170
360
160
150
260
260
400
040
200
390
380
250
220
250
220
030
020
240
490
010
220
230
420
195
460
215
520
185
430
190
340
180
340
430
440
270
270
270
310
220
70
300
140
130
350
450
60
450
90
450
350
100
50
350
300
80
410
2597330-2
163206

ECM: 163209 - 50001231
Group number: 2597330-0100
Assembly Drawing: 2597330-2_1_AA

Pos	Part No	UN	Qty	Description	Page No
-					
010	2602657-0000		1	LOCK PLATE	
020	2602658-0000		1	SHAFT	
030	2535441-0000		2	LEVER	
040	2535442-0000		2	PIVOT PIN	
050	2691421-0000		2	SHIM	
060	2665720-0000		1	SUPPORT	
070	2665722-0000		1	SUPPORT	
080	2681618-0000		1	WORM WHEEL	
090	2681619-0000		1	WORM GEAR	
100	2665721-0000		1	SHAFT	
130	2681617-0000		2	GEAR WHEEL	
140	2599742-0000		1	SHAFT	
150	2535455-0000		2	LINK	
160	2602652-0000		1	SHAFT	
170	2535457-0000		1	WOODRUFF KEY	
180	2598502-0000		1	SUPPORT	
185	2618333-0000		2	PLATE	
190	2618332-0000		2	SHAFT	
195	2618330-0000		2	HANDLE	
200	2535461-0000		2	CONNECTING ROD	
210	2535458-0000		1	SHAFT	
215	2618329-0000		2	PLATE	
220	315105-0153		14	WASHER BRB6,4X12RFR	
230	312105-0370		4	SCREW M6S ISO 4017 M6X20 A480	
240	321111-0163		2	FLANGE BUSHING, 12X18X20 MM	
250	312605-0316		6	HEXAGON NUT, M6M M6 A280	
260	312105-0297		4	SCREW M6S ISO 4017 M4X25 A470	
270	312812-0312		4	HEXAGON NUT, NY-LOCK M4 A480	
300	90240-0261		4	FLANGE BUSHING, 12X14X9 MM	
310	312105-0372		6	SCREW M6S ISO 4017 M6X25 A480	
340	90240-0165		4	FLANGE BUSHING, 12X16X10 MM	
350	311112-0256		3	SPRING PIN, ISO 8752 4X20-C	
360	312115-0222		1	SCREW ISO4762 M3X8 A4	
380	90459-4505		2	ROD END, ID=6MM, M6X1 LH	
390	312902-0316		2	NUT HEX. LEFT THREAD, M6 A280	
400	90459-4504		2	ROD END, ID=6MM, M6X1	
410	311112-0258		1	SPRING PIN, ISO 8752 4X24-C	
420	311112-0263		2	SPRING PIN, ISO 8752 4X35-C	
430	315751-0109		4	RETAINING RING FOR SHAFT DIN 471 12 A2	
440	315220-0143		2	V-RINGS 18X26X10,5 MM V-20S	
450	90240-0289		4	FLANGE BUSHING, 10X12X6 MM	
460	312105-0323		4	SCREW M6S ISO 4017 M5X8 A480	
470	90287-0112		2	SCREW SPRINGLOAD. SLOTTED HEAD M8X16	
480	312625-0318		2	HEXAGON THIN NUT, EN 24035 ML6M M8 A4	
490	312115-0368		2	SCREW ISO4762 M6X16 A4	
500	312105-0333		1	SCREW M6S ISO 4017 M5X25 A480	
510	315105-0146		1	WASHER BRB5,3X10RFR	
520	311112-0255		2	SPRING PIN, ISO 8752 4X18-C	

Machine Type | Group Description | Used-In | Group Number | Page No

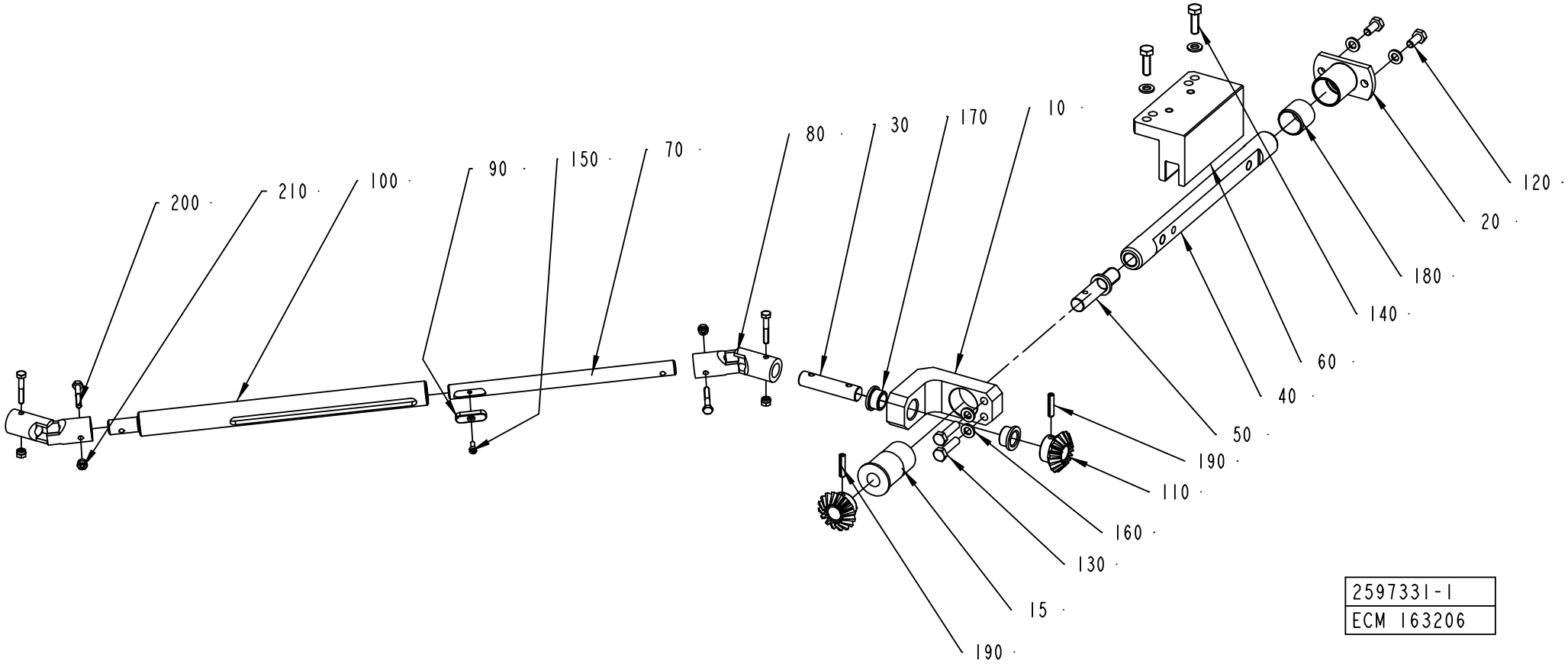
200
210
100
90
150
70
80
30
170
10
120
20
180
140
60
40
50
190
110
160
130
15
190
2597331-1
ECM 163206

ECM: 163210 - 50001231
Group number: 2597331-0100
Assembly Drawing: 2597331-1_1_AC

Pos	Part No	UN	Qty	Description	Page No
-					
010	2623514-0000		1	SUPPORT	
015	2623513-0000		1	BUSHING	
020	2599741-0000		1	SUPPORT	
030	2599742-0000		1	SHAFT	
040	2599743-0000		1	SHAFT	
050	2598067-0000		1	SHAFT	
060	2614038-0000		1	SPACER	
070	2602652-0000		1	SHAFT	
080	2535455-0000		2	LINK	
090	2535457-0000		1	WOODRUFF KEY	
100	2535458-0000		1	SHAFT	
110	2681617-0000		2	GEAR WHEEL	
120	312105-0367		2	SCREW M6S ISO 4017 M6X14 A480	
130	312105-0372		2	SCREW M6S ISO 4017 M6X25 A480	
140	312105-0370		2	SCREW M6S ISO 4017 M6X20 A480	
150	312115-0222		1	SCREW ISO4762 M3X8 A4	
160	315105-0153		6	WASHER BRB6,4X12RFR	
170	90240-0165		2	FLANGE BUSHING, 12X16X10 MM	
180	321133-0260		1	BUSHING, 20X23X20 MM	
190	311112-0256		2	SPRING PIN, ISO 8752 4X20-C	
200	312105-0297		4	SCREW M6S ISO 4017 M4X25 A470	
210	312812-0312		4	HEXAGON NUT, NY-LOCK M4 A480	

Pos	Part No	UN	Qty	Description	Page No

Tetra Pak

SPC
Spare Parts Catalogue

Tetra Pak A3/Flex

648575-0100

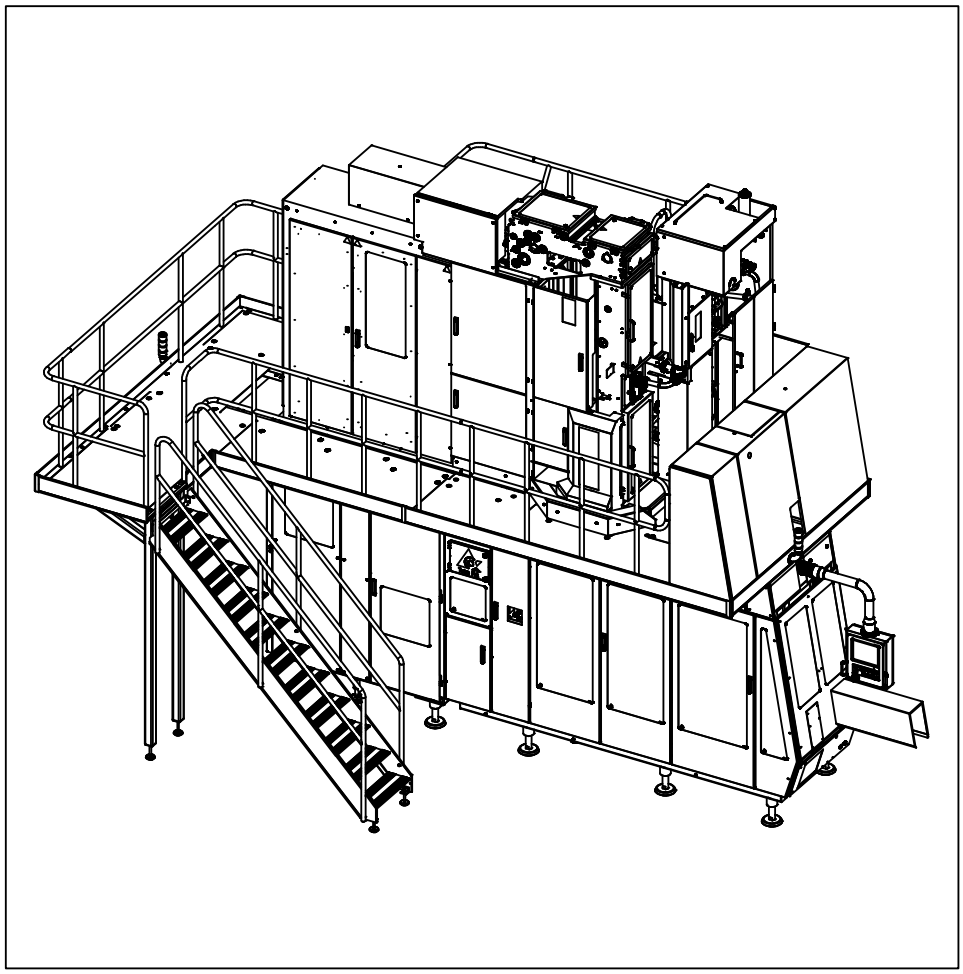

Tetra Pak

Doc. No: SPC-2708464-0101

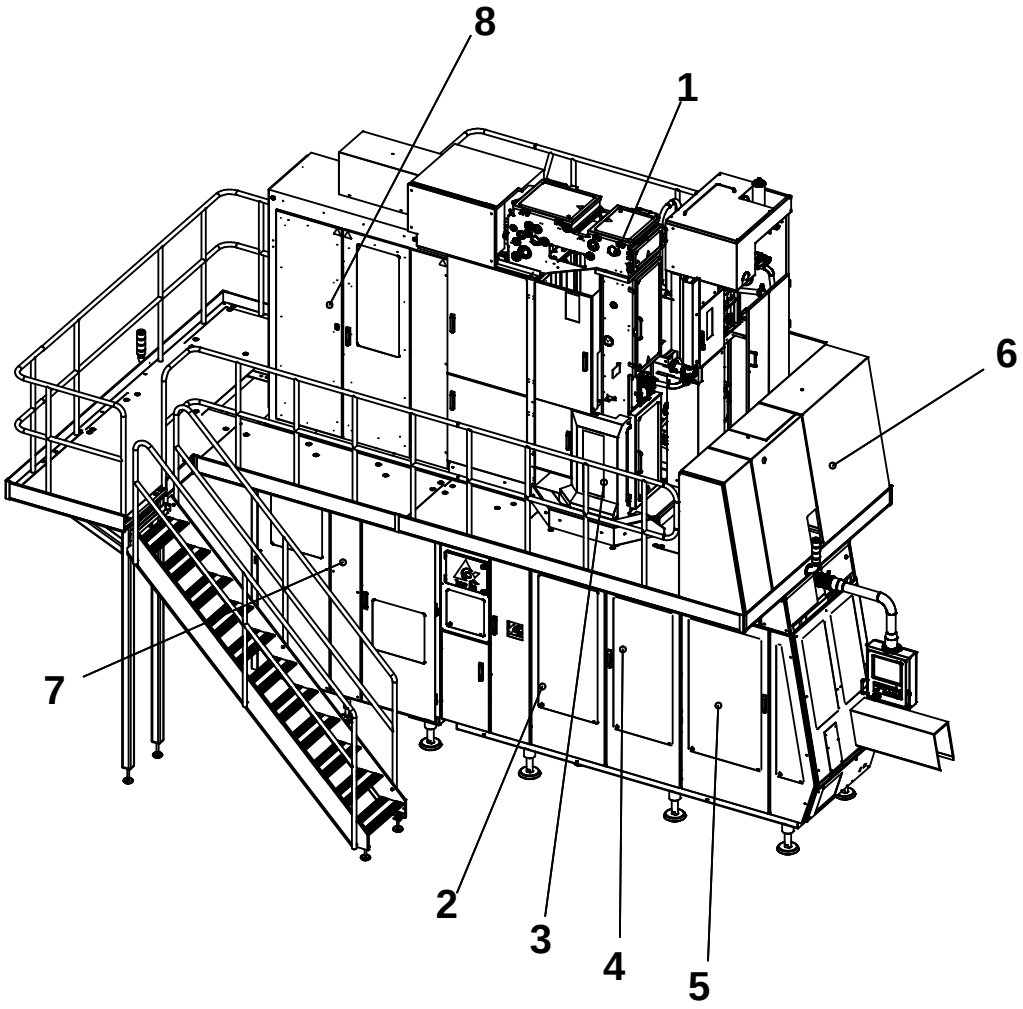

The position numbers in the illustration correspond with the chapter numbers listed on the next page.

Copyright © 2004 Tetra Pak Group

All rights reserved. No part of this document may be reproduced or copied in any form or by any means without written permission from Tetra Pak Carton Ambient S.p.A..

Tetra Pak and all Tetra Pak products are trademarks belonging to the Tetra Pak Group.

The content of this manual is in accordance with the design and construction of the machine or equipment at the time of publishing. Tetra Pak reserves the right to introduce design modifications without prior notice.

This document was produced by:

Tetra Pak Carton Ambient S.p.A.
Technical Publications
Via Delfini 1
41100 Modena /Italy

This Tetra Pak equipment was manufactured by:

Tetra Pak Carton Ambient S.p.A.
Via Delfini 1
41100 Modena /Italy

Additional copies can be ordered from Tetra Pak Parts or the nearest Tetra Pak office. When ordering additional copies, always provide the document number. This can be found in the machine specification document. It is also printed on the front cover and in the footer on each page of the manual.

Doc. No. SPC-2708464-0101

Issue 2004-09

This document is valid for:

21207/00098

Series No/Machine No Sign.

SPC

Spare Parts Catalogue

Tetra Pak A3/Flex
648575-0100

NOTE!!
This document is valid only for Machine Series No.:
21207/00098; 21207/00128
21207/00130; 21207/00135
21207/00144; 21207/00145
21207/00147; 21207/00151
21207/00155

A list of all optional equipment, optional kits, and rebuilding kits that this catalogue is valid for is found on the next page.

BINDER 1

i Introduction

1 Superstructure
B-648555-0100

2 Machine Body
B-648559-0100

3 Drive Unit
B-648543-0300

4 Jaw System
B-648549-0300

BINDER 2

5 Final Folder
B-648552-0100

6 Service Unit
B-648506-0400

7 Automatic Splicing Unit
B-648528-0200

8 Electrical Cabinet
B-648539-0100

9 Regular Accessories
B-648561-0100

10 Optional Accessories
B-648564-0100

ii Part Number Index

iii Electrical Parts Index

Doc. No: SPC-2708464-0101

Issue 2004-09

Tetra Pak

Tetra Pak Carton Ambient S.p.A.

Valid for:

HI - Headspace by Injection
2636960-0100

Stair on RH side
2564231-0100

Tetra Pak DIMC
648553-0100

Tetra Pak PT/Flex
648556-0100

SPC
Spare Parts Catalogue

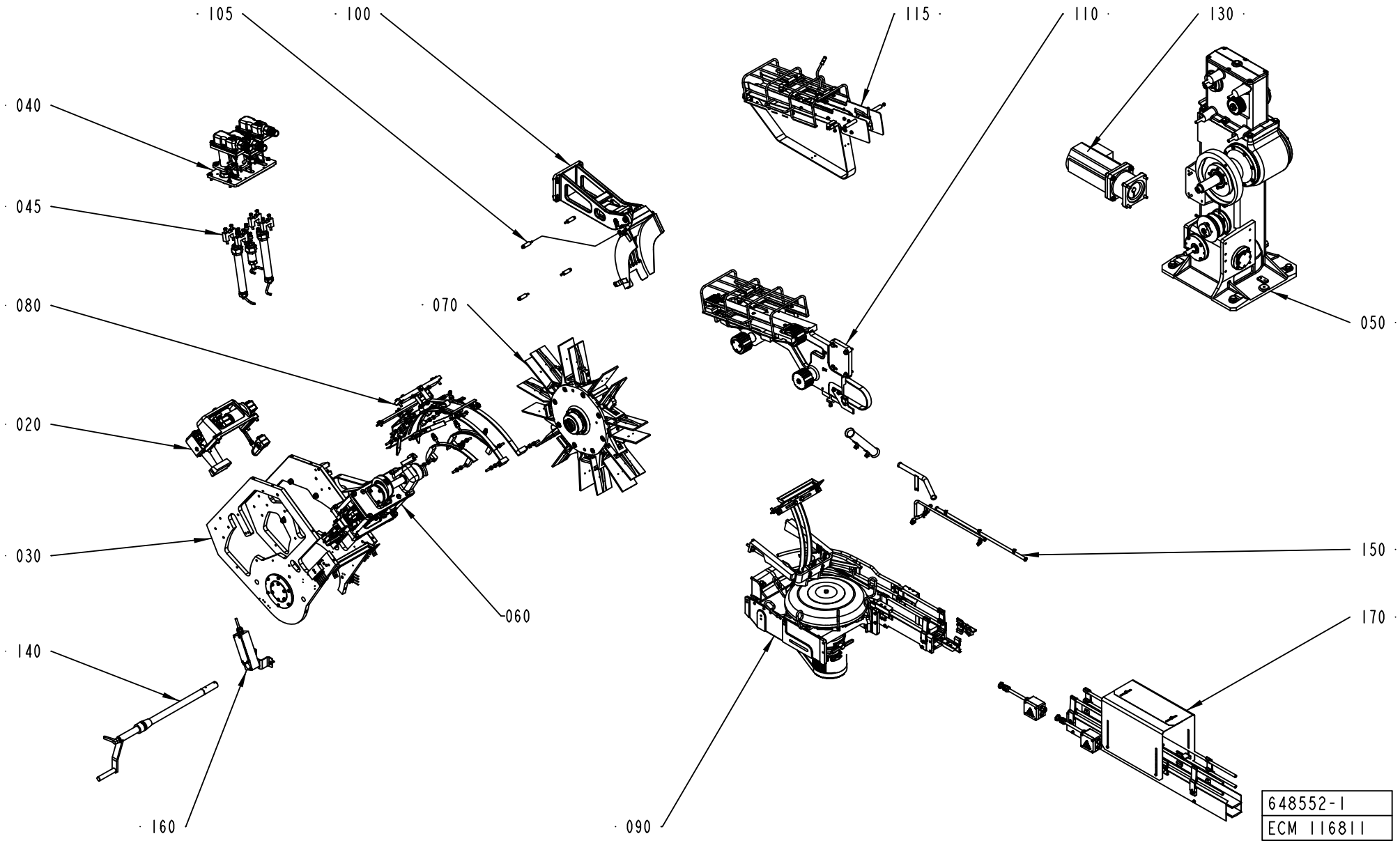
105
100
115
110
130
040
045
080
070
050
020
030
060
150
140
170
160
090
648552-1
ECM 116811

ECM: 145545 - 20031022
Group number: 648552-0100
Assembly Drawing: 648552-1_1_AA

Pos	Part No	UN	Qty	Description	Page No
A3/FLEX NOQC					
020	1144329-0300		1	PULL-DOWN DEVICE	**5-5, 5-7**
070	1361918-0300		1	WHEEL	**5-13, 5-15**
080	1285012-0300		1	FOLDING PART	**5-17**
105	1361922-0200		1	DROP CHUTE VARIANT	**5-45**
115	1361923-0200		1	INFEED CONVEYOR VARIANT	**5-47, 5-49, 5-51**
A3/FLEX QC					
020	1144329-0300		1	PULL-DOWN DEVICE	**5-5, 5-7**
070	2523811-0100		1	WHEEL	**5-53, 5-55, 5-57**
080	2543480-0100		1	FOLDING PART	**5-63**
105	2537128-0100		1	DROP CHUTE VARIANT	**5-85, 5-87**
115	2522129-0100		1	INFEED CONVEYOR VARIANT	**5-89, 5-91, 5-93**
Common Parts					
030	1144324-0300		1	FRAMEWORK	**5-105**
040	2524509-0100		1	FLAP HEATER BODY	**5-107, 5-109, 5-111**
045	1487158-0300		1	FLAP HEATER VARIANT	**5-123, 5-125, 5-127**
050	2594054-0100		1	INDEXING UNIT	**5-129**
060	1144331-0300		1	PRESSURE DEVICE	**5-149, 5-151, 5-153**
090	1285260-0300		1	OUT FEED	**5-155**
100	2541714-0100		1	DROP CHUTE CRADLE	**5-195**
110	1517298-0200		1	INFEED CONVEYOR	**5-197**
130	2522128-0100		1	MOTOR UNIT	**5-209**
140	1260883-0200		1	CRANK	**5-211**
150	2531274-0100		1	ELECTRICAL CONNECTION	**5-213, 5-215**
160	1279677-0100		1	CRANK GUARD	**5-217**
170	2579995-0100		1	LAST POINT DE	**5-219**

Pos	Part No	UN	Qty	Description	Page No

PULL-DOWN DEVICE

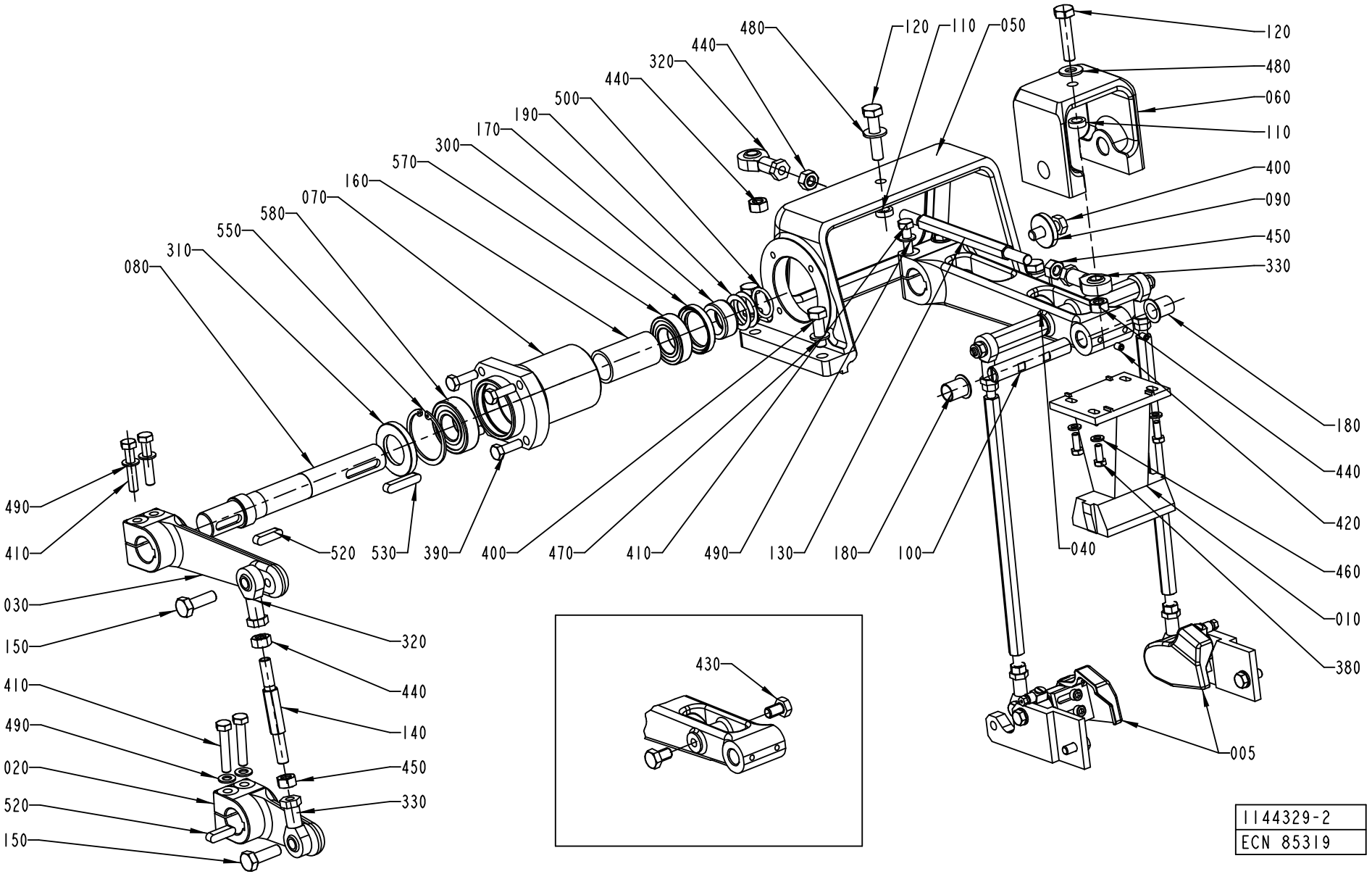

ECM: 180378 - 50001231
Group number: 1144329-0300
Assembly Drawing: 1144329-2_1_AB

This list covers pages from 5-4 to 5-7

Pos	Part No	UN	Qty	Description	Page No
TPA 1000SQ (See drawing on page: 5-4)					
005	1348056-0300		1	FOLDING PART	**5-9, 5-11**
010	1519341-0000		1	BLOCK	
TBA 0200B NOQC, TBA 0330S NOQC, TBA 0250B NOQC (See drawing on page: 5-4)					
010	1350808-0000		1	BLOCK	
430	312105-0489		2	SCREW M6S ISO 4017 M10X16 A480	
TBA 0200B QC, TBA 0330S QC, TBA 0250B QC (See drawing on page: 5-4)					
010	2591790-0000		1	BLOCK	
430	312105-0489		2	SCREW M6S ISO 4017 M10X16 A480	
TBA 0200S (See drawing on page: 5-4)					
010	1260887-0000		1	BLOCK	
430	312105-0489		2	SCREW M6S ISO 4017 M10X16 A480	
TBA 0500B, TBA 1000B NOMOLDEDCAP (See drawing on page: 5-4)					
010	1260700-0000		1	BLOCK	
430	312105-0489		2	SCREW M6S ISO 4017 M10X16 A480	
TBA 1000B STDA7 (See drawing on page: 5-4)					
005	1348056-0300		1	FOLDING PART	**5-9, 5-11**
010	1260700-0000		1	BLOCK	
TBA 1000S NOMOLDEDCAP (See drawing on page: 5-4)					
010	1144933-0000		1	BLOCK	
430	312105-0489		2	SCREW M6S ISO 4017 M10X16 A480	
TBA 1000S STDA7 (See drawing on page: 5-6)					
005	1348056-0300		1	FOLDING PART	**5-9, 5-11**
010	1144933-0000		1	BLOCK	
TBA 1000SQ (See drawing on page: 5-6)					
005	1348056-0300		1	FOLDING PART	**5-9, 5-11**
010	1558008-0000		1	BLOCK	
200	1558020-0000		2	ROD	
590	312125-0234		4	SCREW ISO 1207 M3X30 A4	
600	315105-0124		4	WASHER BRB3,2X6RFR	
TBA 1500S (See drawing on page: 5-4)					
010	1317789-0000		1	BLOCK	
430	312105-0489		2	SCREW M6S ISO 4017 M10X16 A480	
TBA 1890S QC, TBA 2000S QC (See drawing on page: 5-6)					
010	2616229-0000		1	BLOCK	
430	312105-0489		2	SCREW M6S ISO 4017 M10X16 A480	
590	312125-0234		4	SCREW ISO 1207 M3X30 A4	
600	315105-0124		4	WASHER BRB3,2X6RFR	
Common Parts					
020	1144472-0000		1	LEVER	
030	1144473-0000		1	LEVER	
040	1499635-0000		1	LEVER	
050	1144475-0000		1	BRACKET	
060	1144476-0000		1	BRACKET	
070	1144566-0000		1	FLANGE	
080	1144678-0000		1	SHAFT	
090	1144681-0000		1	WASHER	
100	1144683-0000		1	AXLE PIN	
110	1144684-0000		2	SPACER	
120	1144685-0000		2	SCREW	
130	1144686-0000		1	TIE ROD	
140	1144687-0000		1	TIE ROD	
150	1144688-0000		2	SCREW	
160	1260824-0000		1	SPACER RING	
170	1334328-0000		1	SPACER	
180	1260944-0000		2	BUSHING	
190	1334018-0000		4	SHIM	
300	90091-0297		1	RADIAL SEAL 35X47X7 MM DUST LIP	
310	90091-0299		1	RADIAL SEAL 30X52X7 MM DUST LIP	
320	90115-0181		2	ROD END, ID=10 MM M10X1,5	
330	90115-0182		2	ROD END, ID=10 MM M10X1,5LH	
380	312105-0368		4	SCREW M6S ISO 4017 M6X16 A480	
390	312105-0453		4	SCREW M6S ISO 4017 M8X25 A480	
400	312105-0495		5	SCREW M6S ISO 4017 M10X30 A480	
410	312109-0460		6	SCREW M6S ISO 4017 M8X45 A480	
420	312318-0362		2	SCREW ISO4029 M6X8 A4	
440	312605-0320		4	HEXAGON NUT, M6M M10 A280	
450	312902-0320		2	NUT HEX. LEFT THREAD, M10 A280	
460	315105-0153		4	WASHER BRB6,4X12RFR	
470	315105-0171		4	WASHER BRB10X18	
480	315105-0173		2	WASHER BRB10,5X22RFR	
490	315105-0165		6	WASHER BRB8,4X16RFR	
500	315202-0217		1	O-RING 24,2X3 MM	
520	315705-0267		1	PARALLEL KEY W. ROUND ENDS 8X7X30 MM	
530	315705-0270		1	PARALLEL KEY W. ROUND ENDS 8X7X40 MM	
550	315753-0132		1	RETAINING RING FOR BORE DIN 472 52 A2	
570	321308-0205		1	BALL BEARING, 25X47X12MM	
580	321313-0105		1	BALL BEARING, 25X52X15MM	

Machine Type | Group Description | Used-In | Group Number | Page No

PULL-DOWN DEVICE

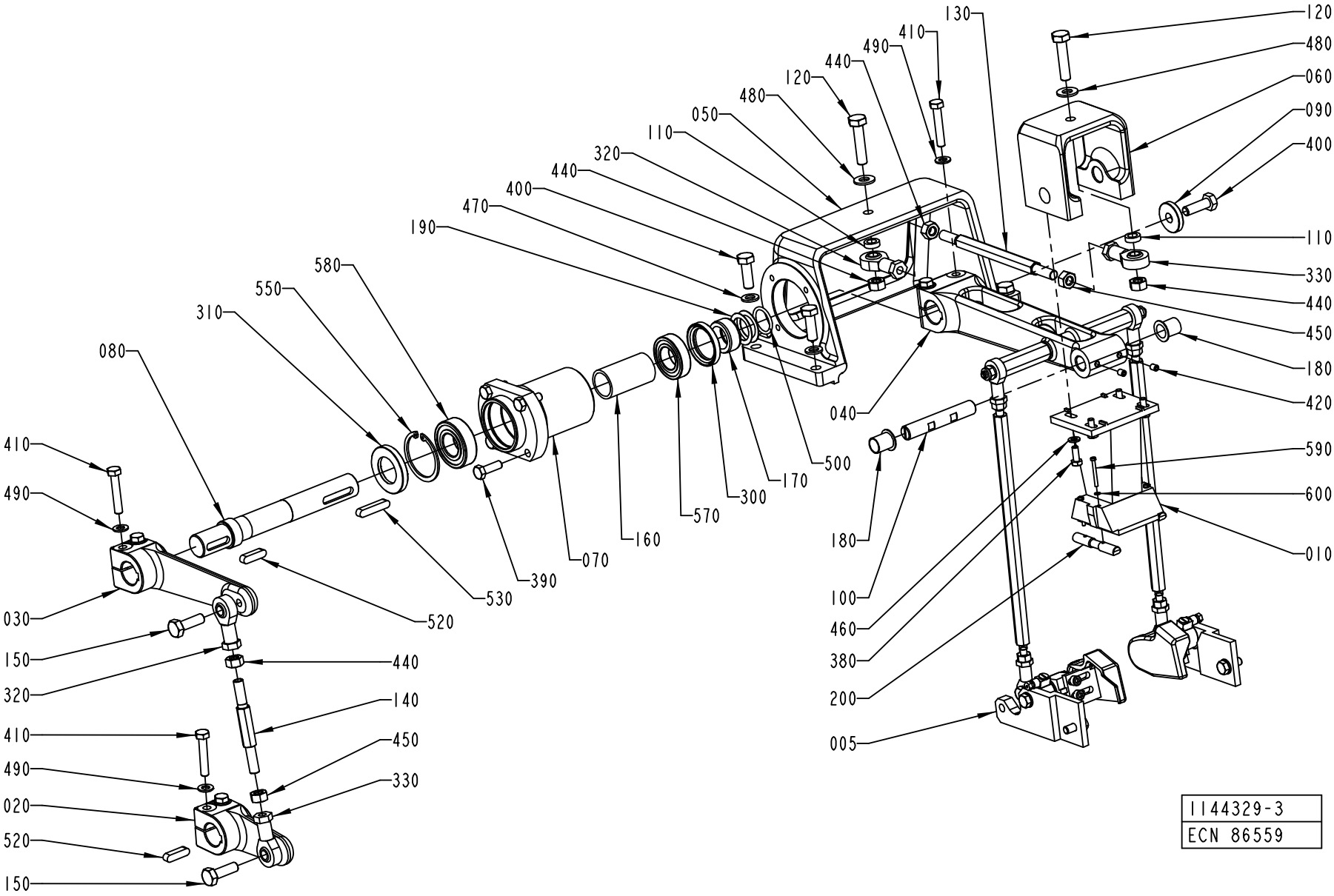

ECM: 180378 - 50001231
Group number: 1144329-0300
Assembly Drawing: 1144329-3_1_AA

This list covers pages from 5-4 to 5-7

Pos	Part No	UN	Qty	Description	Page No
TPA 1000SQ (See drawing on page: 5-4)					
005	1348056-0300		1	FOLDING PART	**5-9, 5-11**
010	1519341-0000		1	BLOCK	
TBA 0200B NOQC, TBA 0330S NOQC, TBA 0250B NOQC (See drawing on page: 5-4)					
010	1350808-0000		1	BLOCK	
430	312105-0489		2	SCREW M6S ISO 4017 M10X16 A480	
TBA 0200B QC, TBA 0330S QC, TBA 0250B QC (See drawing on page: 5-4)					
010	2591790-0000		1	BLOCK	
430	312105-0489		2	SCREW M6S ISO 4017 M10X16 A480	
TBA 0200S (See drawing on page: 5-4)					
010	1260887-0000		1	BLOCK	
430	312105-0489		2	SCREW M6S ISO 4017 M10X16 A480	
TBA 0500B, TBA 1000B NOMOLDEDCAP (See drawing on page: 5-4)					
010	1260700-0000		1	BLOCK	
430	312105-0489		2	SCREW M6S ISO 4017 M10X16 A480	
TBA 1000B STDA7 (See drawing on page: 5-4)					
005	1348056-0300		1	FOLDING PART	**5-9, 5-11**
010	1260700-0000		1	BLOCK	
TBA 1000S NOMOLDEDCAP (See drawing on page: 5-4)					
010	1144933-0000		1	BLOCK	
430	312105-0489		2	SCREW M6S ISO 4017 M10X16 A480	
TBA 1000S STDA7 (See drawing on page: 5-6)					
005	1348056-0300		1	FOLDING PART	**5-9, 5-11**
010	1144933-0000		1	BLOCK	
TBA 1000SQ (See drawing on page: 5-6)					
005	1348056-0300		1	FOLDING PART	**5-9, 5-11**
010	1558008-0000		1	BLOCK	
200	1558020-0000		2	ROD	
590	312125-0234		4	SCREW ISO 1207 M3X30 A4	
600	315105-0124		4	WASHER BRB3,2X6RFR	
TBA 1500S (See drawing on page: 5-4)					
010	1317789-0000		1	BLOCK	
430	312105-0489		2	SCREW M6S ISO 4017 M10X16 A480	
TBA 1890S QC, TBA 2000S QC (See drawing on page: 5-6)					
010	2616229-0000		1	BLOCK	
430	312105-0489		2	SCREW M6S ISO 4017 M10X16 A480	
590	312125-0234		4	SCREW ISO 1207 M3X30 A4	
600	315105-0124		4	WASHER BRB3,2X6RFR	
Common Parts					
020	1144472-0000		1	LEVER	
030	1144473-0000		1	LEVER	
040	1499635-0000		1	LEVER	
050	1144475-0000		1	BRACKET	
060	1144476-0000		1	BRACKET	
070	1144566-0000		1	FLANGE	
080	1144678-0000		1	SHAFT	
090	1144681-0000		1	WASHER	
100	1144683-0000		1	AXLE PIN	
110	1144684-0000		2	SPACER	
120	1144685-0000		2	SCREW	
130	1144686-0000		1	TIE ROD	
140	1144687-0000		1	TIE ROD	
150	1144688-0000		2	SCREW	
160	1260824-0000		1	SPACER RING	
170	1334328-0000		1	SPACER	
180	1260944-0000		2	BUSHING	
190	1334018-0000		4	SHIM	
300	90091-0297		1	RADIAL SEAL 35X47X7 MM DUST LIP	
310	90091-0299		1	RADIAL SEAL 30X52X7 MM DUST LIP	
320	90115-0181		2	ROD END, ID=10 MM M10X1,5	
330	90115-0182		2	ROD END, ID=10 MM M10X1,5LH	
380	312105-0368		4	SCREW M6S ISO 4017 M6X16 A480	
390	312105-0453		4	SCREW M6S ISO 4017 M8X25 A480	
400	312105-0495		5	SCREW M6S ISO 4017 M10X30 A480	
410	312109-0460		6	SCREW M6S ISO 4017 M8X45 A480	
420	312318-0362		2	SCREW ISO4029 M6X8 A4	
440	312605-0320		4	HEXAGON NUT, M6M M10 A280	
450	312902-0320		2	NUT HEX. LEFT THREAD, M10 A280	
460	315105-0153		4	WASHER BRB6,4X12RFR	
470	315105-0171		4	WASHER BRB10X18	
480	315105-0173		2	WASHER BRB10,5X22RFR	
490	315105-0165		6	WASHER BRB8,4X16RFR	
500	315202-0217		1	O-RING 24,2X3 MM	
520	315705-0267		1	PARALLEL KEY W. ROUND ENDS 8X7X30 MM	
530	315705-0270		1	PARALLEL KEY W. ROUND ENDS 8X7X40 MM	
550	315753-0132		1	RETAINING RING FOR BORE DIN 472 52 A2	
570	321308-0205		1	BALL BEARING, 25X47X12MM	
580	321313-0105		1	BALL BEARING, 25X52X15MM	

Machine Type | Group Description | Used-In | Group Number | Page No

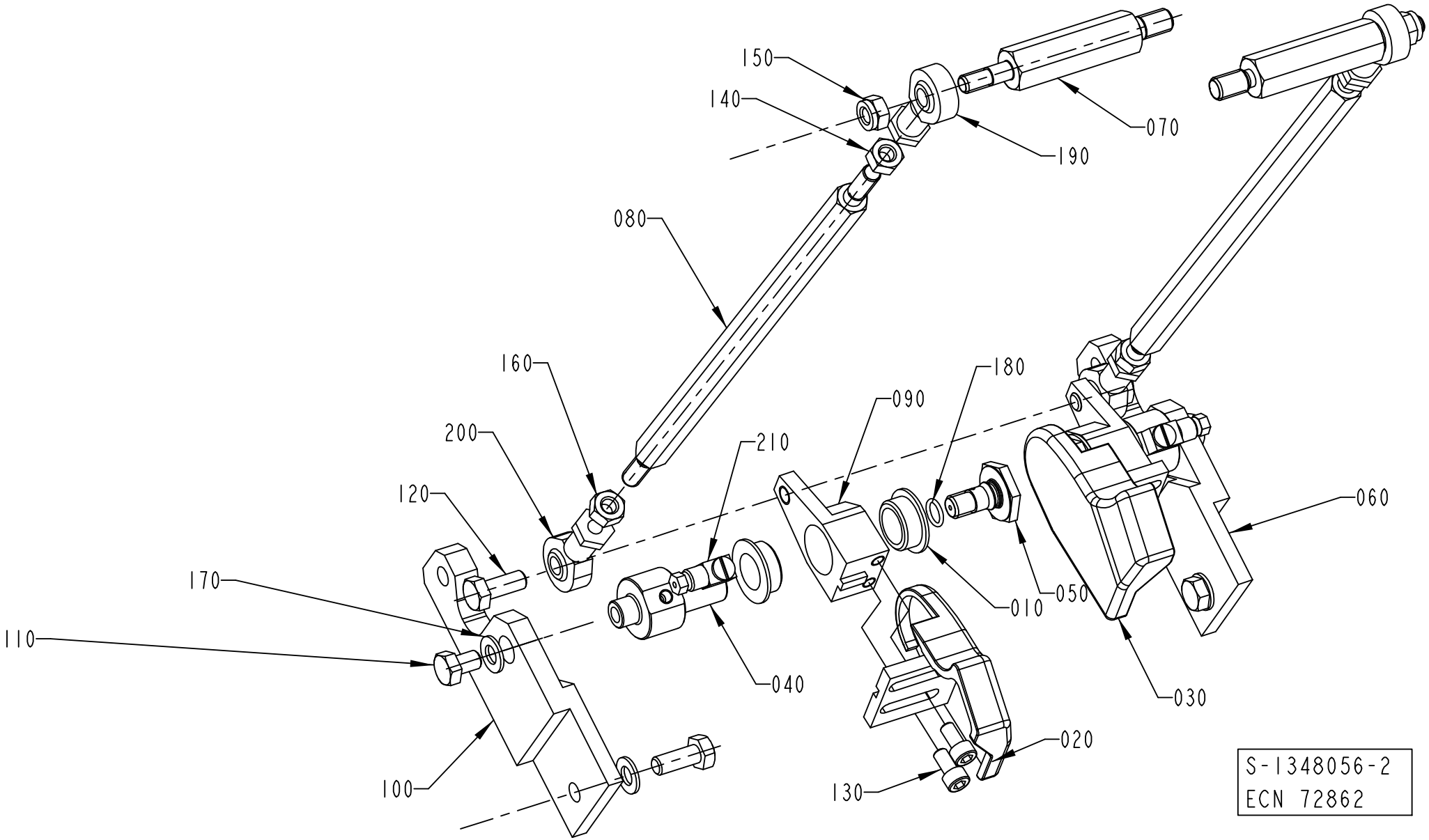
150
140
070
190
080
160
180
090
200
210
120
060
170
010
050
110
040
030
020
100
130
S-1348056-2
ECN 72862

ECM: 168545 - 20040428
Group number: 1348056-0300
Assembly Drawing: 1348056-2_1_AA

This list covers pages from 5-8 to 5-11

Pos	Part No	UN	Qty	Description	Page No
TBA 1000B STDA7 (See drawing on page: 5-8)					
020	1487922-0000		1	FOLDING DEVICE	
030	1487923-0000		1	FOLDING DEVICE	
060	1347600-0000		1	SUPPORT	
070	1499765-0000		2	AXLE LINK	
080	2609368-0000		2	TIE ROD	
090	1350440-0000		2	LEVER	
100	1350441-0000		1	SUPPORT	
TBA 1000SQ, TBA 1000S STDA7 (See drawing on page: 5-8)					
020	1487922-0000		1	FOLDING DEVICE	
030	1487923-0000		1	FOLDING DEVICE	
060	1347600-0000		1	SUPPORT	
070	1499765-0000		2	AXLE LINK	
080	1499103-0000		2	TIE ROD	
090	1350440-0000		2	LEVER	
100	1350441-0000		1	SUPPORT	
TPA 1000SQ (See drawing on page: 5-8)					
020	1296180-0000		1	FOLDING DEVICE	
030	1296181-0000		1	FOLDING DEVICE	
060	1347600-0000		1	SUPPORT	
070	1499765-0000		2	AXLE LINK	
080	1519340-0000		2	TIE ROD	
090	1350440-0000		2	LEVER	
100	1350441-0000		1	SUPPORT	
TPA 1000SQ SMILE (See drawing on page: 5-10)					
020	2529671-0000		1	FOLDING DEVICE	
030	2529672-0000		1	FOLDING DEVICE	
060	2553343-0000		1	SUPPORT	
070	2553346-0000		2	AXLE LINK	
080	2553345-0000		2	TIE ROD	
090	2529676-0000		1	LEVER	
100	2553344-0000		1	SUPPORT	
220	2529675-0000		1	LEVER	
Common Parts					
010	1282708-0000		4	BUSHING	
040	1347495-0000		2	AXLE PIN	
050	1347496-0000		2	SCREW	
110	312105-0447		2	SCREW M6S ISO 4017 M8X12 A480	
120	312105-0451		4	SCREW M6S ISO 4017 M8X20 A480	
130	312115-0366		4	SCREW ISO4762 M6X12 A4	
140	312605-0318		2	HEXAGON NUT, M6M M8 A280	
150	312812-0318		2	HEXAGON NUT, NY-LOCK M8 A480	
160	312902-0318		2	NUT HEX. LEFT THREAD, M8 A280	
170	315105-0165		4	WASHER BRB8,4X16RFR	
180	315202-0107		2	O-RING 9,1X1,6 MM	
190	90115-0139		2	ROD END, ID=8 MM, M8X1,25	
200	90115-0180		2	ROD END, ID=8 MM, M8X1,25 LH	
210	90134-0058		2	CONNECTION	

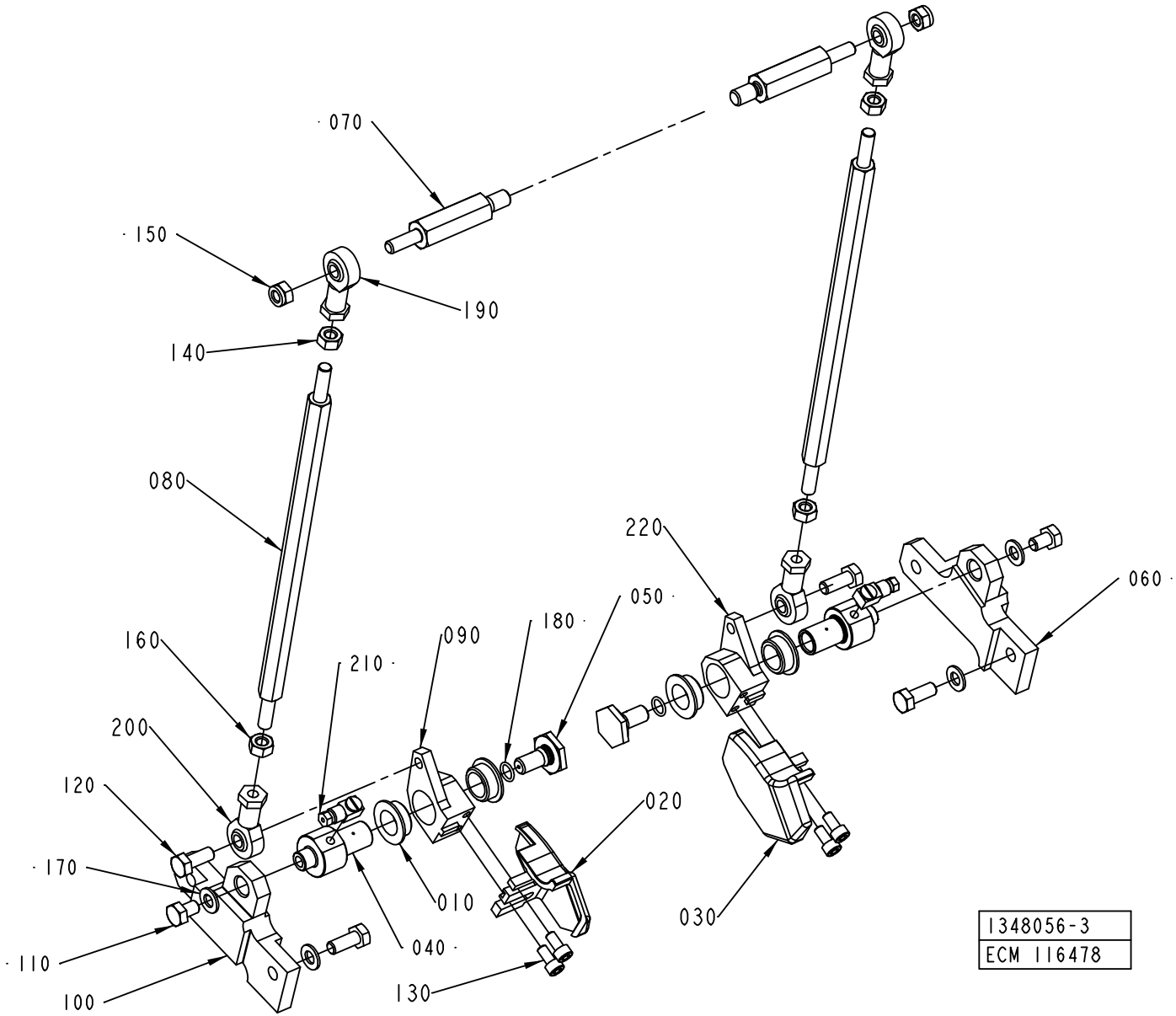
070
150
190
140
080
160
200
120
170
110
100
210
090
180
050
220
060
020
030
010
040
130
1348056-3
ECM 116478

ECM: 168545 - 20040428
Group number: 1348056-0300
Assembly Drawing: 1348056-3_1_AA

This list covers pages from 5-8 to 5-11

Pos	Part No	UN	Qty	Description	Page No
TBA 1000B STDA7 (See drawing on page: 5-8)					
020	1487922-0000		1	FOLDING DEVICE	
030	1487923-0000		1	FOLDING DEVICE	
060	1347600-0000		1	SUPPORT	
070	1499765-0000		2	AXLE LINK	
080	2609368-0000		2	TIE ROD	
090	1350440-0000		2	LEVER	
100	1350441-0000		1	SUPPORT	
TBA 1000SQ, TBA 1000S STDA7 (See drawing on page: 5-8)					
020	1487922-0000		1	FOLDING DEVICE	
030	1487923-0000		1	FOLDING DEVICE	
060	1347600-0000		1	SUPPORT	
070	1499765-0000		2	AXLE LINK	
080	1499103-0000		2	TIE ROD	
090	1350440-0000		2	LEVER	
100	1350441-0000		1	SUPPORT	
TPA 1000SQ (See drawing on page: 5-8)					
020	1296180-0000		1	FOLDING DEVICE	
030	1296181-0000		1	FOLDING DEVICE	
060	1347600-0000		1	SUPPORT	
070	1499765-0000		2	AXLE LINK	
080	1519340-0000		2	TIE ROD	
090	1350440-0000		2	LEVER	
100	1350441-0000		1	SUPPORT	
TPA 1000SQ SMILE (See drawing on page: 5-10)					
020	2529671-0000		1	FOLDING DEVICE	
030	2529672-0000		1	FOLDING DEVICE	
060	2553343-0000		1	SUPPORT	
070	2553346-0000		2	AXLE LINK	
080	2553345-0000		2	TIE ROD	
090	2529676-0000		1	LEVER	
100	2553344-0000		1	SUPPORT	
220	2529675-0000		1	LEVER	
Common Parts					
010	1282708-0000		4	BUSHING	
040	1347495-0000		2	AXLE PIN	
050	1347496-0000		2	SCREW	
110	312105-0447		2	SCREW M6S ISO 4017 M8X12 A480	
120	312105-0451		4	SCREW M6S ISO 4017 M8X20 A480	
130	312115-0366		4	SCREW ISO4762 M6X12 A4	
140	312605-0318		2	HEXAGON NUT, M6M M8 A280	
150	312812-0318		2	HEXAGON NUT, NY-LOCK M8 A480	
160	312902-0318		2	NUT HEX. LEFT THREAD, M8 A280	
170	315105-0165		4	WASHER BRB8,4X16RFR	
180	315202-0107		2	O-RING 9,1X1,6 MM	
190	90115-0139		2	ROD END, ID=8 MM, M8X1,25	
200	90115-0180		2	ROD END, ID=8 MM, M8X1,25 LH	
210	90134-0058		2	CONNECTION	

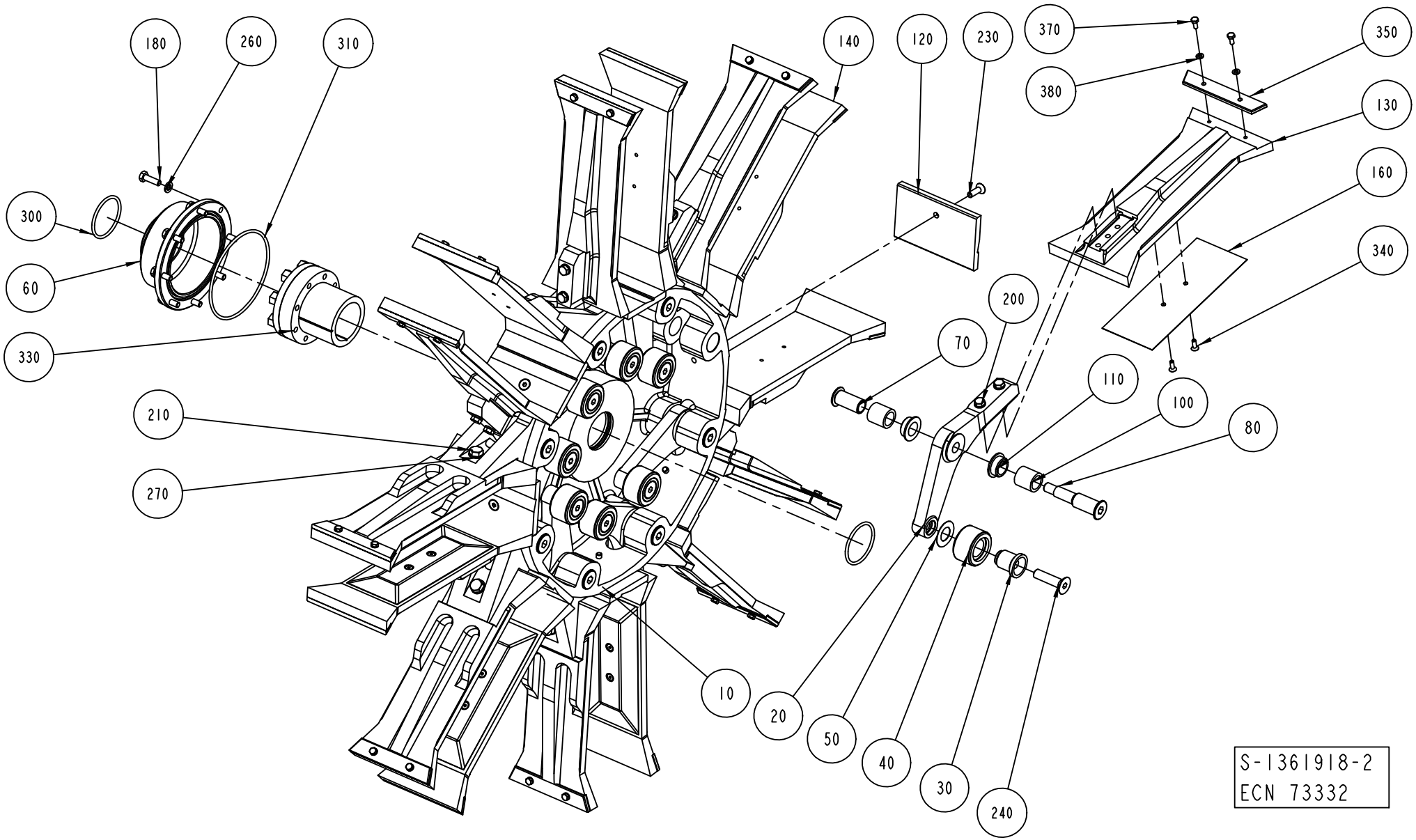
180
260
310
140
120
230
370
350
380
130
160
300
340
60
200
330
70
110
210
100
80
270
10
20
50
40
30
240
S-1361918-2
ECN 73332

ECM: 168546 - 20040428
Group number: 1361918-0300
Assembly Drawing: 1361918-2_1_AB

This list covers pages from 5-12 to 5-15

Pos	Part No	UN	Qty	Description	Page No
A3/FLEX TPA 1000SQ					
010	1144264-0000		1	HUB	
120	1538770-0000		8	BOTTOM	
130	2555404-0000		8	FLAP	
140	1524484-0000		8	FLAP	
160	1523467-0000		8	VOLUME BULGE	
200	312105-0378		16	SCREW M6S ISO 4014 M6X40 A480	
210	312105-0453		8	SCREW M6S ISO 4017 M8X25 A480	
230	312155-0378		8	SCREW EN 10642 MF6S M6X40 A480	
260	315105-0153		24	WASHER BRB6,4X12RFR	
340	312155-0289		16	SCREW EN 10642 MF6S M4X10 A480	
A3/FLEX TBA 1000B STDA7					
010	1144264-0000		1	HUB	
120	2606289-0000		8	BOTTOM	
130	1260704-0000		8	FLAP	
140	1260705-0000		8	FLAP	
200	312105-0376		16	SCREW M6S ISO 4014 M6X35 A480	
210	312105-0453		8	SCREW M6S ISO 4017 M8X25 A480	
230	312155-0380		8	SCREW EN 10642 MF6S M6X50 A480	
260	315105-0153		24	WASHER BRB6,4X12RFR	
A3/FLEX TBA 1000S STDA7					
010	1144264-0000		1	HUB	
120	2509938-0000		8	BOTTOM	
130	1144926-0000		8	FLAP	
140	1144927-0000		8	FLAP	
160	2550211-0000		8	VOLUME BULGE	
200	312105-0376		16	SCREW M6S ISO 4014 M6X35 A480	
210	312105-0453		8	SCREW M6S ISO 4017 M8X25 A480	
230	312155-0370		8	SCREW EN 10642 MF6S M6X20 A480	
260	315105-0153		24	WASHER BRB6,4X12RFR	
340	312155-0287		16	SCREW EN 10642 MF6S M4X8 A480	
A3/FLEX TPA 0500SQ SMILE					
010	1144264-0000		1	HUB	
120	2602614-0000		8	BOTTOM	
130	1549844-0000		8	FLAP	
140	2564347-0000		8	FLAP	
200	312105-0376		16	SCREW M6S ISO 4014 M6X35 A480	
210	312105-0453		8	SCREW M6S ISO 4017 M8X25 A480	
230	312105-0368		8	SCREW M6S ISO 4017 M6X16 A480	
260	315103-0153		32	WASHER, BRB, 6,4/12,H=1,5 NIPL BR	
A3/FLEX TPA 1000SQ SMILE					
010	1144264-0000		1	HUB	
120	2558144-0000		8	BOTTOM	
130	2558145-0000		8	FLAP	
140	1524484-0000		8	FLAP	
160	1523467-0000		8	VOLUME BULGE	
210	312105-0453		8	SCREW M6S ISO 4017 M8X25 A480	
230	312105-0368		8	SCREW M6S ISO 4017 M6X16 A480	
260	315103-0153		32	WASHER, BRB, 6,4/12,H=1,5 NIPL BR	
340	312155-0289		16	SCREW EN 10642 MF6S M4X10 A480	
A3/FLEX TBA 0200S					
010	1144264-0000		1	HUB	
130	1260885-0000		8	FLAP	
140	1260886-0000		8	FLAP	
200	312105-0376		16	SCREW M6S ISO 4014 M6X35 A480	
210	312105-0453		8	SCREW M6S ISO 4017 M8X25 A480	
260	315105-0153		24	WASHER BRB6,4X12RFR	
A3/FLEX TBA 1000B NOMOLDEDCAP					
010	1144264-0000		1	HUB	
120	1260703-0000		8	BOTTOM	
130	1260704-0000		8	FLAP	
140	1260705-0000		8	FLAP	
200	312105-0376		16	SCREW M6S ISO 4014 M6X35 A480	
210	312105-0453		8	SCREW M6S ISO 4017 M8X25 A480	
230	312155-0380		8	SCREW EN 10642 MF6S M6X50 A480	
260	315105-0153		24	WASHER BRB6,4X12RFR	
A3/FLEX TBA 1000S NOMOLDEDCAP					
010	1144264-0000		1	HUB	
120	1144924-0000		8	BOTTOM	
130	1144926-0000		8	FLAP	
140	1144927-0000		8	FLAP	
160	2550211-0000		8	VOLUME BULGE	
200	312105-0376		16	SCREW M6S ISO 4014 M6X35 A480	
210	312105-0453		8	SCREW M6S ISO 4017 M8X25 A480	
230	312155-0370		8	SCREW EN 10642 MF6S M6X20 A480	
260	315105-0153		24	WASHER BRB6,4X12RFR	
340	312155-0287		16	SCREW EN 10642 MF6S M4X8 A480	
A3/FLEX TBA 1000SQ					
010	1144264-0000		1	HUB	
120	1511558-0000		8	BOTTOM	
130	1487739-0000		8	FLAP	
140	1487738-0000		8	FLAP	
200	312105-0376		16	SCREW M6S ISO 4014 M6X35 A480	
210	312105-0453		8	SCREW M6S ISO 4017 M8X25 A480	

Machine Type | Group Description | Used-In | Group Number | Page No

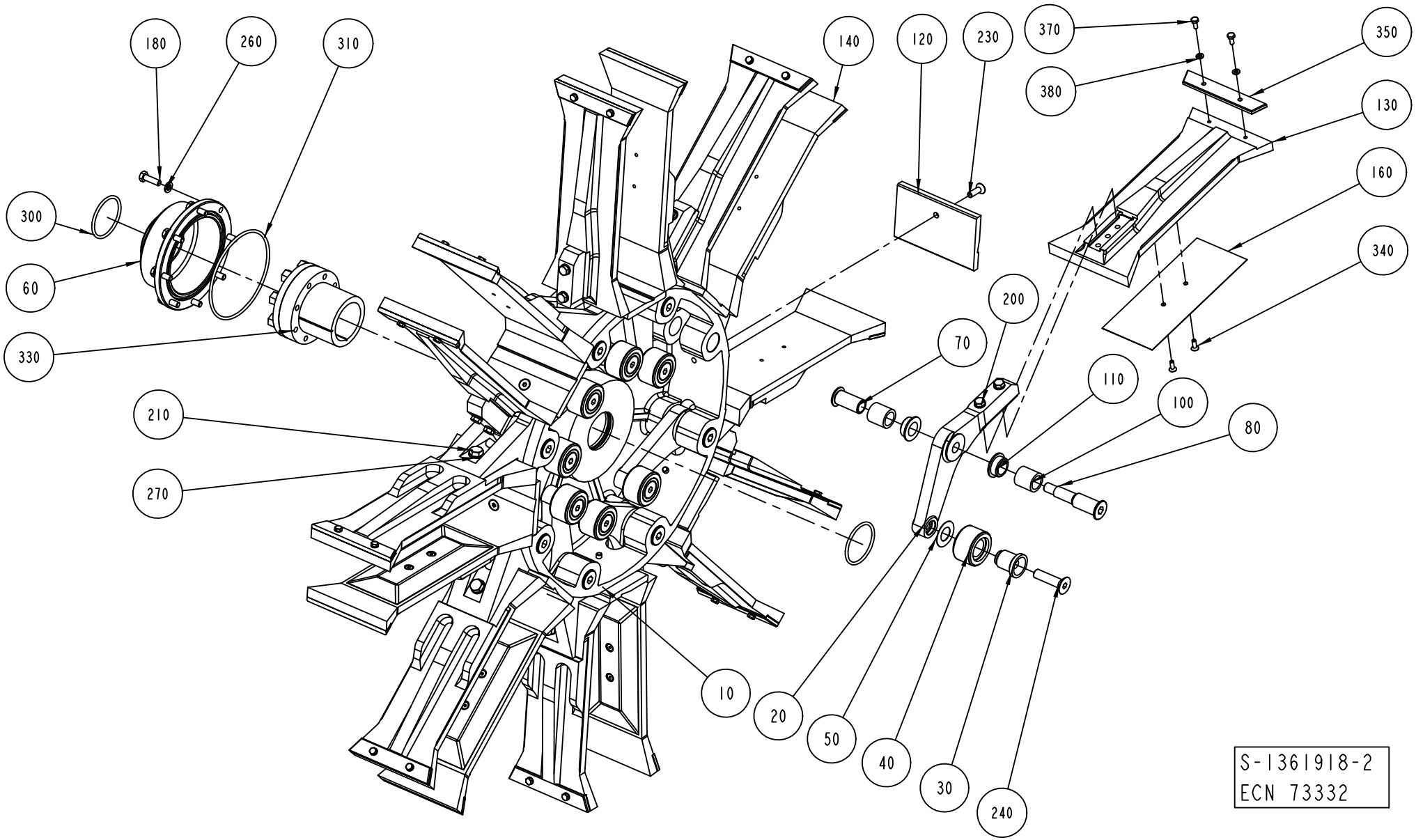
180
260
310
140
120
230
370
350
380
130
160
300
340
60
200
330
70
110
210
100
80
270
10
20
50
40
30
240
S-1361918-2
ECN 73332

ECM: 168546 - 20040428
Group number: 1361918-0300
Assembly Drawing: 1361918-2_1_AB

This list covers pages from 5-12 to 5-15

Pos	Part No	UN	Qty	Description	Page No
A3/FLEX TBA 1000SQ (Cont'd)					
230	312155-0370		8	SCREW EN 10642 MF6S M6X20 A480	
260	315105-0153		24	WASHER BRB6,4X12RFR	
A3/FLEX TBA 1500S					
010	1144264-0000		1	HUB	
120	1317556-0000		8	BOTTOM	
130	1317554-0000		8	FLAP	
140	1317555-0000		8	FLAP	
200	312105-0376		16	SCREW M6S ISO 4014 M6X35 A480	
210	312105-0453		8	SCREW M6S ISO 4017 M8X25 A480	
230	312155-0376		8	SCREW EN 10642 MF6S M6X35 A480	
260	315105-0153		24	WASHER BRB6,4X12RFR	
350	1317656-0000		16	INSERT	
370	312105-0289		32	SCREW M6S ISO 4017 M4X10 A470	
380	315105-0136		32	WASHER BRB4,3XRFR	
A3/FLEX TPA 0330SQ					
010	1144264-0000		1	HUB	
130	1532297-0000		8	FLAP	
140	1532298-0000		8	FLAP	
200	312105-0376		16	SCREW M6S ISO 4014 M6X35 A480	
210	312105-0453		8	SCREW M6S ISO 4017 M8X25 A480	
260	315105-0153		24	WASHER BRB6,4X12RFR	
Common Parts					
020	1279559-0000		8	ARM	
030	1144312-0000		8	AXLE PIN	
040	1144335-0000		8	ROLLER	
050	1144354-0000		8	WASHER	
060	1144356-0000		1	COVER	
070	1296970-0000		8	SCREW BUSHING	
080	1296969-0000		8	SCREW HOLDER	
100	1144417-0000		16	BUSHING	
110	1282708-0000		16	BUSHING	
180	312105-0370		8	SCREW M6S ISO 4017 M6X20 A480	
240	312155-0499		8	SCREW EN 10642 MF6S M10X40 A480	
270	315105-0165		8	WASHER BRB8,4X16RFR	
300	315202-0225		2	O-RING 44,2X3 MM	
310	315202-0311		1	O-RING 99,5X3 MM	
330	90208-0087		1	CLAMPING ELEMENT WITH SLEEVE, 45X59 MM	

Pos	Part No	UN	Qty	Description	Page No

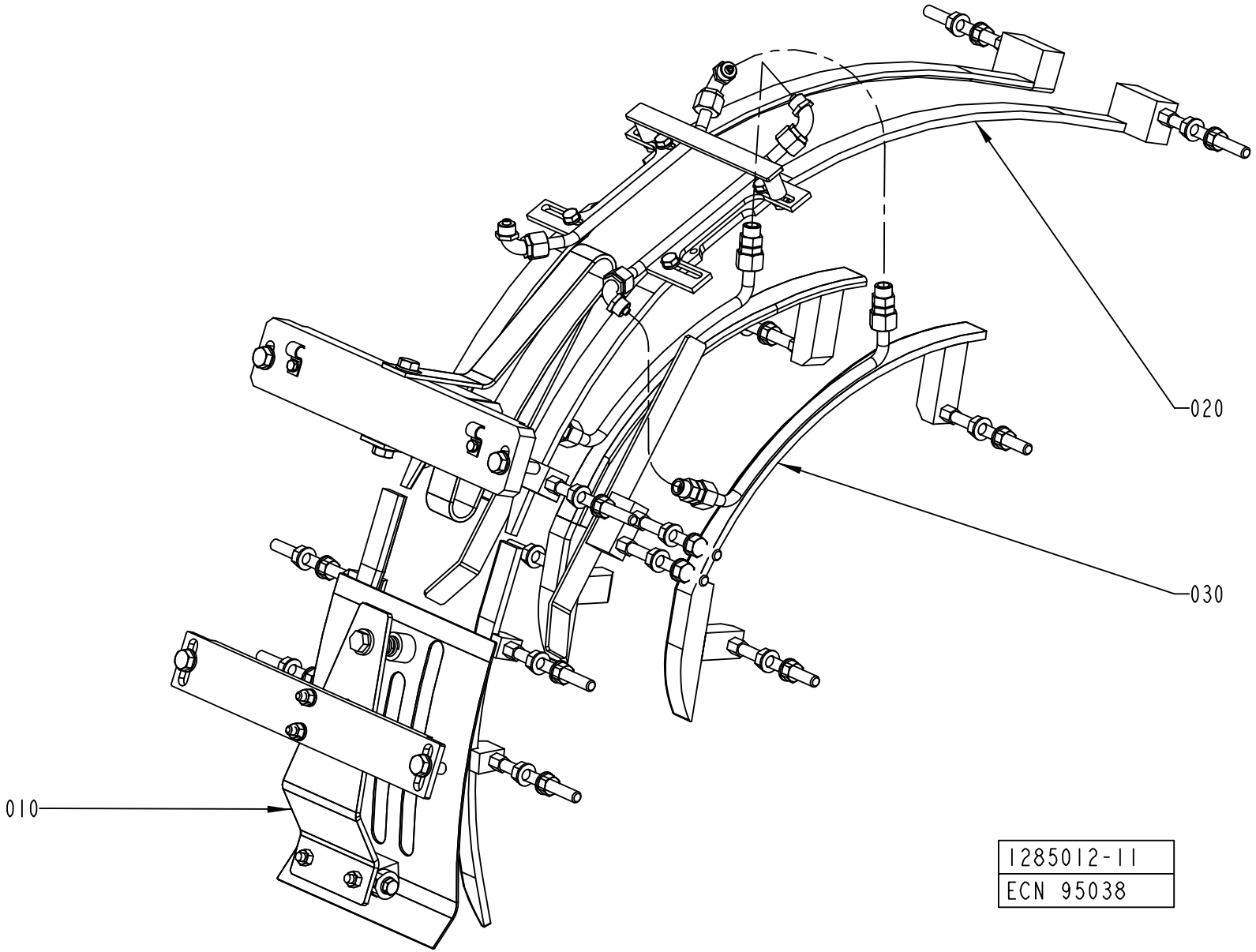
020
030
010
1285012-11
ECN 95038

ECM: 110175 - 20030403
Group number: 1285012-0300
Assembly Drawing: 1285012-11_1_AA

Pos	Part No	UN	Qty	Description	Page No
-					
010	1558932-0100		1	TOP SECTION	**5-19, 5-21, 5-23**
020	1558935-0100		1	TOP RAIL	**5-25, 5-27, 5-29, 5-31**
030	1558940-0200		1	FLAP GUIDE	**5-33, 5-35, 5-37, 5-39, 5-41, 5-43**

Pos	Part No	UN	Qty	Description	Page No

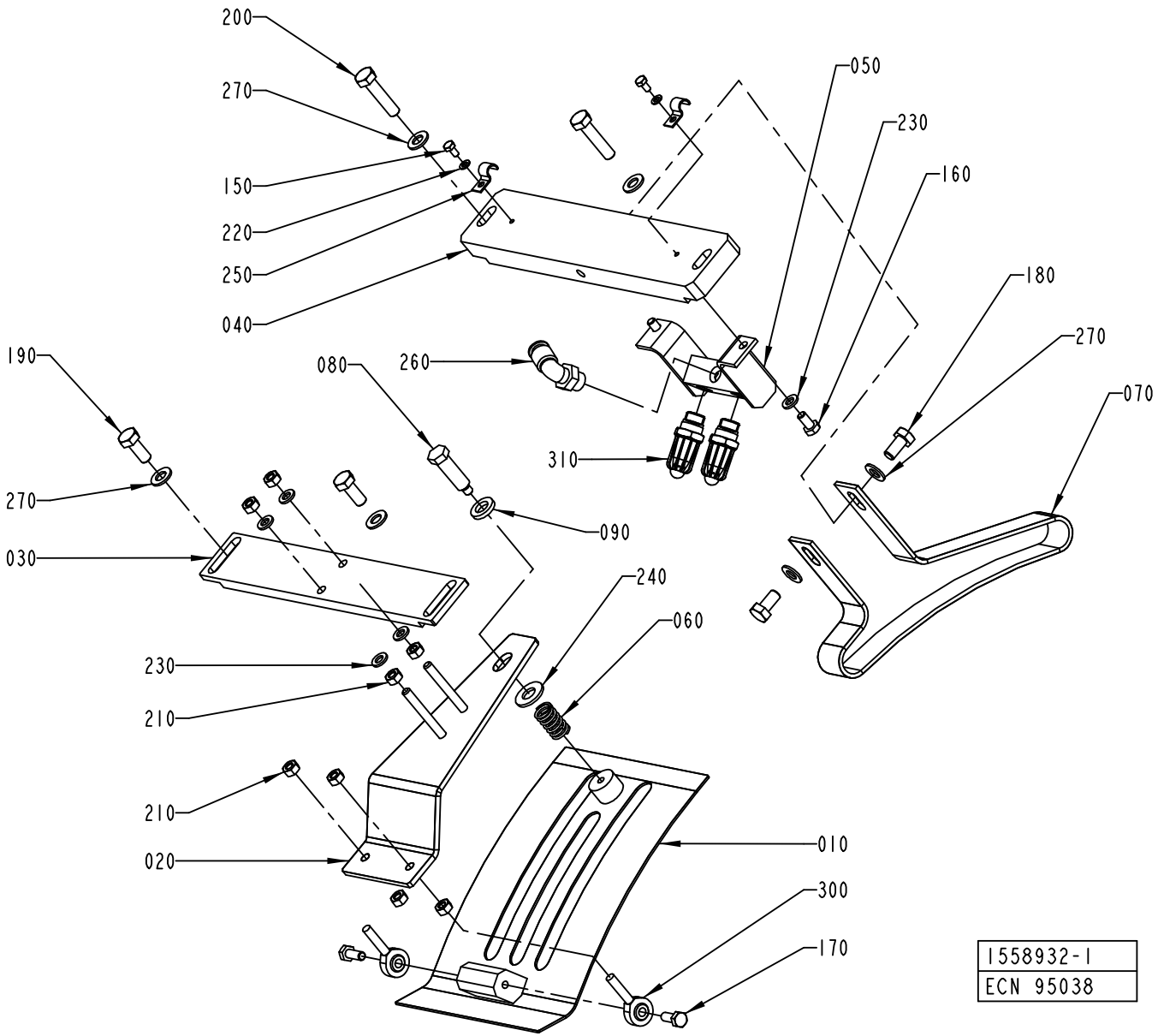
200
270
150
220
250
040
050
230
160
180
270
070
190
080
260
310
270
030
090
240
060
230
210
210
020
010
300
170
1558932-1
ECN 95038

ECM: 161661 - 20040305
Group number: 1558932-0100
Assembly Drawing: 1558932-1_1_AA

This list covers pages from 5-18 to 5-23

Pos	Part No	UN	Qty	Description	Page No
TBA 0200B, TBA 0250B (See drawing on page: 5-18)					
010	1317211-0000		1	COVERING PLATE	
020	1317213-0000		1	ADJUSTING PLATE	
030	1144975-0000		1	ATTACHMENT PLATE	
040	1144902-0000		1	SUPPORT	
060	1317633-0000		1	SPRING	
150	312105-0287		2	SCREW M6S ISO4017 M4X8 A470	
190	312105-0451		2	SCREW M6S ISO 4017 M8X20 A480	
220	315105-0136		2	WASHER BRB4,3XRFR	
230	315105-0153		4	WASHER BRB6,4X12RFR	
250	90165-0057		2	PIPE CLIP FOR TUBE D=6 MM	
270	315105-0165		4	WASHER BRB8,4X16RFR	
TBA 0200S (See drawing on page: 5-18)					
010	1317211-0000		1	COVERING PLATE	
020	1317213-0000		1	ADJUSTING PLATE	
030	1144975-0000		1	ATTACHMENT PLATE	
040	1144902-0000		1	SUPPORT	
060	1317633-0000		1	SPRING	
070	1144901-0000		1	GUIDE	
150	312105-0287		2	SCREW M6S ISO4017 M4X8 A470	
180	312105-0449		2	SCREW M6S ISO 4017 M8X16 A480	
190	312105-0451		2	SCREW M6S ISO 4017 M8X20 A480	
220	315105-0136		2	WASHER BRB4,3XRFR	
230	315105-0153		4	WASHER BRB6,4X12RFR	
250	90165-0057		2	PIPE CLIP FOR TUBE D=6 MM	
270	315105-0165		6	WASHER BRB8,4X16RFR	
TBA 0330S (See drawing on page: 5-22)					
010	1317211-0000		1	COVERING PLATE	
020	1317213-0000		1	ADJUSTING PLATE	
030	1144975-0000		1	ATTACHMENT PLATE	
040	1144902-0000		1	SUPPORT	
050	1349087-0000		1	DISTRIBUTOR	
060	90335-0036		1	COMP. SPRING 22450, 1,6X14,1X24	
070	2552022-0000		1	GUIDE	
150	312105-0287		2	SCREW M6S ISO4017 M4X8 A470	
160	312105-0366		2	SCREW M6S ISO 4017 M6X12 A480	
180	312105-0451		1	SCREW M6S ISO 4017 M8X20 A480	
190	312105-0451		2	SCREW M6S ISO 4017 M8X20 A480	
220	315105-0136		2	WASHER BRB4,3XRFR	
230	315105-0153		6	WASHER BRB6,4X12RFR	
250	90165-0057		2	PIPE CLIP FOR TUBE D=6 MM	
260	342732-0104		1	ELBOW PIPE JOINT, EXT.THREAD, D=8MM-G1/4	
270	315105-0165		6	WASHER BRB8,4X16RFR	
310	90424-0068		1	AIR NOZZLE, G1/4, MOD. 216 BSP	
320	2553284-0000		1	BLOCK	
TBA 0500B, TBA 1000S, TBA 1000B (See drawing on page: 5-18)					
010	1144941-0000		1	COVERING PLATE	
020	1144974-0000		1	ADJUSTING PLATE	
030	1144975-0000		1	ATTACHMENT PLATE	
040	1144902-0000		1	SUPPORT	
050	1285014-0000		1	DISTRIBUTOR	
060	90335-0036		1	COMP. SPRING 22450, 1,6X14,1X24	
070	1144901-0000		1	GUIDE	
150	312105-0287		2	SCREW M6S ISO4017 M4X8 A470	
160	312105-0366		2	SCREW M6S ISO 4017 M6X12 A480	
180	312105-0449		2	SCREW M6S ISO 4017 M8X16 A480	
190	312105-0451		2	SCREW M6S ISO 4017 M8X20 A480	
220	315105-0136		2	WASHER BRB4,3XRFR	
230	315105-0153		6	WASHER BRB6,4X12RFR	
250	90165-0057		2	PIPE CLIP FOR TUBE D=6 MM	
260	342732-0104		1	ELBOW PIPE JOINT, EXT.THREAD, D=8MM-G1/4	
270	315105-0165		6	WASHER BRB8,4X16RFR	
310	90424-0068		2	AIR NOZZLE, G1/4, MOD. 216 BSP	
TBA 1000SQ (See drawing on page: 5-18)					
010	1144941-0000		1	COVERING PLATE	
020	1144974-0000		1	ADJUSTING PLATE	
030	1144975-0000		1	ATTACHMENT PLATE	
040	1144902-0000		1	SUPPORT	
050	1349087-0000		1	DISTRIBUTOR	
060	90335-0036		1	COMP. SPRING 22450, 1,6X14,1X24	
150	312105-0287		2	SCREW M6S ISO4017 M4X8 A470	
160	312105-0366		2	SCREW M6S ISO 4017 M6X12 A480	
190	312105-0451		2	SCREW M6S ISO 4017 M8X20 A480	
220	315105-0136		2	WASHER BRB4,3XRFR	
230	315105-0153		6	WASHER BRB6,4X12RFR	
250	90165-0057		2	PIPE CLIP FOR TUBE D=6 MM	
260	342732-0104		1	ELBOW PIPE JOINT, EXT.THREAD, D=8MM-G1/4	
270	315105-0165		4	WASHER BRB8,4X16RFR	
310	90424-0068		1	AIR NOZZLE, G1/4, MOD. 216 BSP	
TPA 1000SQ (See drawing on page: 5-20)					
010	1548612-0000		1	COVERING PLATE	
020	1144974-0000		1	ADJUSTING PLATE	
030	1285299-0000		1	BRACKET	
040	1334480-0000		1	SUPPORT	

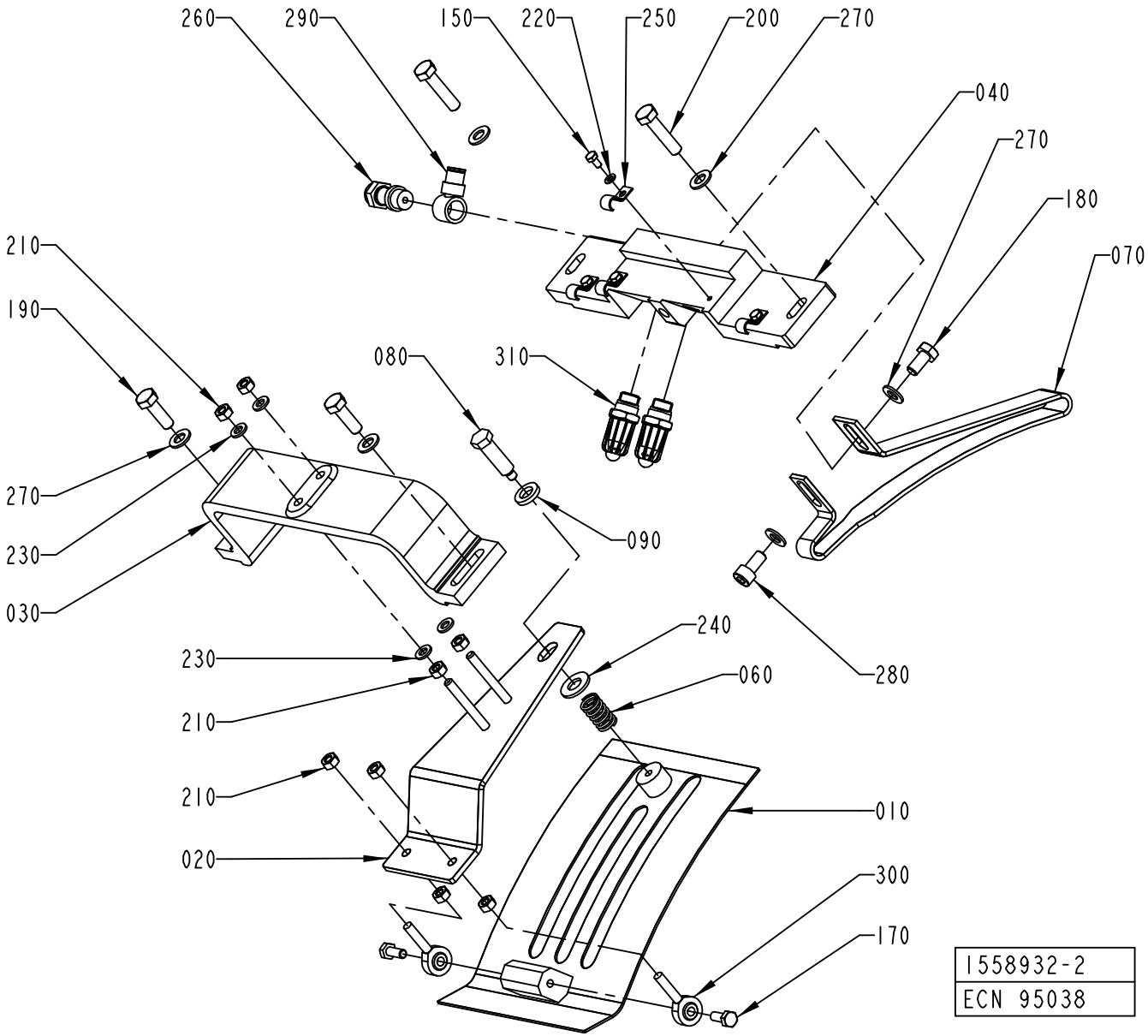
260
290
150
220
250
200
270
040
270
180
070
210
190
080
310
270
230
030
090
240
230
060
280
210
210
010
020
300
170
1558932-2
ECN 95038

Pos	Part No	UN	Qty	Description	Page No
TPA 1000SQ (Cont'd) (See drawing on page: 5-20)					
060	90335-0036		1	COMP. SPRING 22450, 1,6X14,1X24	
070	1519352-0000		1	GUIDE	
150	312105-0287		4	SCREW M6S ISO4017 M4X8 A470	
180	312105-0449		1	SCREW M6S ISO 4017 M8X16 A480	
190	312105-0453		2	SCREW M6S ISO 4017 M8X25 A480	
220	315105-0136		4	WASHER BRB4,3XRFR	
230	315105-0153		4	WASHER BRB6,4X12RFR	
250	90165-0057		4	PIPE CLIP FOR TUBE D=6 MM	
260	90235-0731		1	THROTTLE CHECK VALVE, G1/4", SCO-606-1/4	
270	315105-0165		6	WASHER BRB8,4X16RFR	
280	312115-0449		1	SCREW ISO4762 M8X16 A4	
290	342981-0122		1	BANJO CONNEC,RING,FOR PLAST.TUBE 8-G1/4"	
310	90424-0068		2	AIR NOZZLE, G1/4, MOD. 216 BSP	
TBA 1500S (See drawing on page: 5-20)					
010	1144941-0000		1	COVERING PLATE	
020	1144974-0000		1	ADJUSTING PLATE	
030	1285299-0000		1	BRACKET	
040	1334480-0000		1	SUPPORT	
060	90335-0036		1	COMP. SPRING 22450, 1,6X14,1X24	
070	1347057-0000		1	GUIDE	
150	312105-0287		4	SCREW M6S ISO4017 M4X8 A470	
180	312105-0449		1	SCREW M6S ISO 4017 M8X16 A480	
190	312105-0453		2	SCREW M6S ISO 4017 M8X25 A480	
220	315105-0136		4	WASHER BRB4,3XRFR	
230	315105-0153		4	WASHER BRB6,4X12RFR	
250	90165-0057		4	PIPE CLIP FOR TUBE D=6 MM	
260	90235-0731		1	THROTTLE CHECK VALVE, G1/4", SCO-606-1/4	
270	315105-0165		6	WASHER BRB8,4X16RFR	
280	312115-0449		1	SCREW ISO4762 M8X16 A4	
290	342981-0122		1	BANJO CONNEC,RING,FOR PLAST.TUBE 8-G1/4"	
310	90424-0068		2	AIR NOZZLE, G1/4, MOD. 216 BSP	
Common Parts					
080	1144976-0000		1	STOP SCREW	
090	1144979-0000		1	WASHER	
170	312105-0368		2	SCREW M6S ISO 4017 M6X16 A480	
200	312105-0457		2	SCREW M6S ISO 4014 M8X35 A480	
210	312605-0316		8	HEXAGON NUT, M6M M6 A280	
240	315105-0173		1	WASHER BRB10,5X22RFR	
300	90115-0137		2	ROD END, ID=6 MM, M6X1	

Pos	Part No	UN	Qty	Description	Page No

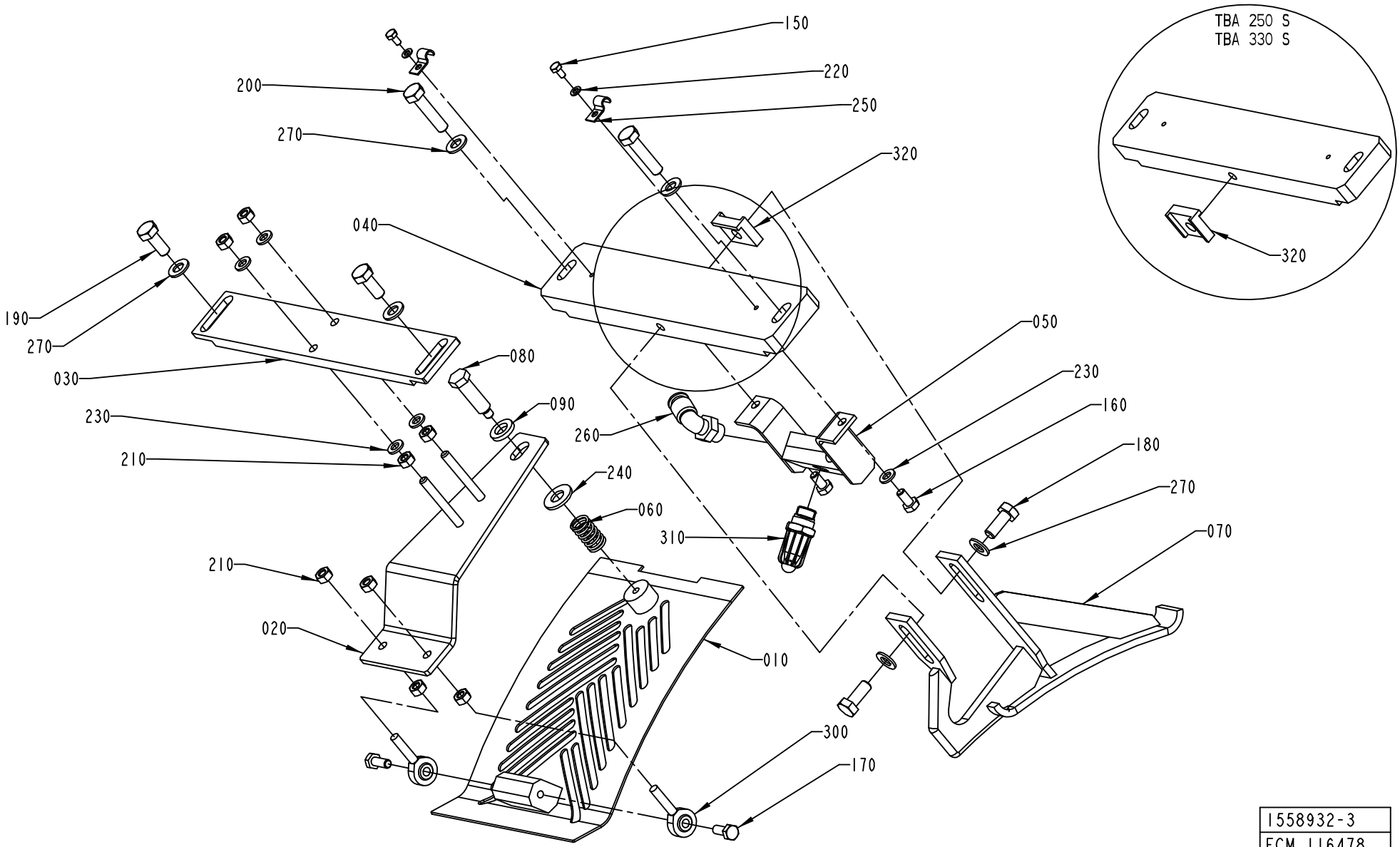

1558932-3
ECM 116478

Pos	Part No	UN	Qty	Description	Page No	Pos	Part No	UN	Qty	Description	Page No

SEE PREVIOUS LISTS PAGES: 5-19, 5-21.

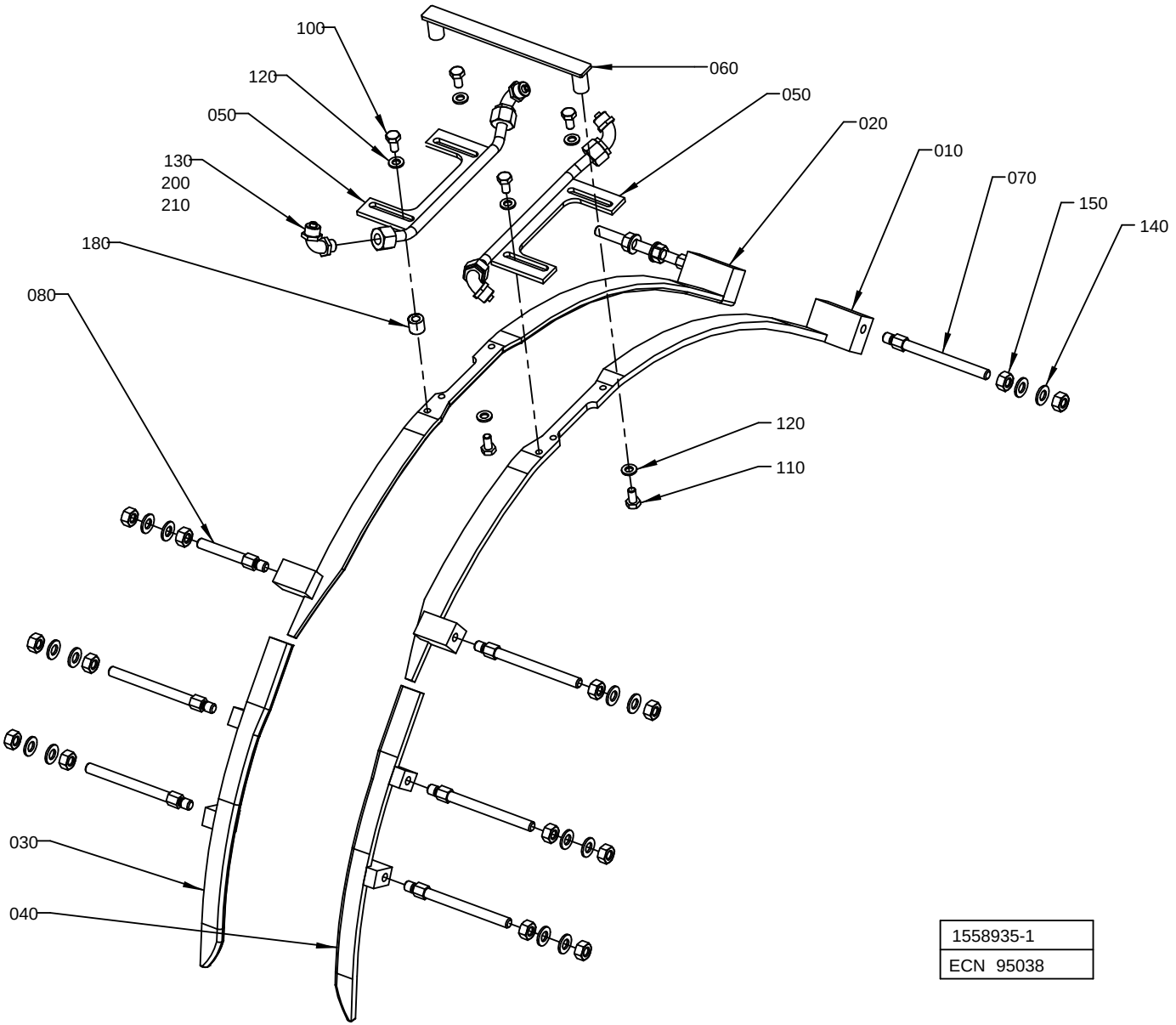
100
120
050
130
200
210
180
080
060
050
020
010
070
150
140
120
110
030
040
1558935-1
ECN 95038

ECM: 161662 - 20040305
Group number: 1558935-0100
Assembly Drawing: 1558935-1_1_AA

This list covers pages from 5-24 to 5-31

Pos	Part No	UN	Qty	Description	Page No
TPA 1000SQ (See drawing on page: 5-26)					
010	1350424-0000		1	GUIDE RIGHT	
020	1350425-0000		1	GUIDE LEFT	
030	1519358-0000		1	GUIDE	
040	1519359-0000		1	GUIDE	
060	1346340-0000		1	BRACKET	
090	1523926-0000		8	SPACER	
100	312105-0368		4	SCREW M6S ISO 4017 M6X16 A480	
140	315105-0165		8	WASHER BRB8,4X16RFR	
160	2541125-0000		8	SCREW	
180	1282705-0000		4	SUPPORT	
TBA 0200B, TBA 0200S, TBA 0250B (See drawing on page: 5-24)					
010	1478926-0000		1	GUIDE RIGHT	
020	1478927-0000		1	GUIDE LEFT	
030	1334013-0000		1	GUIDE UPPER R	
040	1334012-0000		1	GUIDE UPPER L	
060	1346340-0000		1	BRACKET	
070	1144555-0000		7	STUD SCREW	
080	1334523-0000		1	SUPPORT	
100	312105-0366		4	SCREW M6S ISO 4017 M6X12 A480	
140	315105-0165		16	WASHER BRB8,4X16RFR	
150	312605-0318		16	HEXAGON NUT, M6M M8 A280	
TBA 0330S (See drawing on page: 5-24)					
010	1144892-0000		1	GUIDE RIGHT	
020	1144893-0000		1	GUIDE LEFT	
030	1539900-0000		1	RIGHT UPPER GUIDE	
040	1549614-0000		1	LEFT UPPER GUIDE	
060	1346340-0000		1	BRACKET	
070	1144555-0000		8	STUD SCREW	
100	312105-0366		4	SCREW M6S ISO 4017 M6X12 A480	
140	315105-0165		16	WASHER BRB8,4X16RFR	
150	312605-0318		16	HEXAGON NUT, M6M M8 A280	
TBA 0500B (See drawing on page: 5-28)					
010	1144892-0000		1	GUIDE RIGHT	
020	1144893-0000		1	GUIDE LEFT	
030	1539900-0000		1	RIGHT UPPER GUIDE	
040	1549614-0000		1	LEFT UPPER GUIDE	
060	1144905-0000		1	SUPPORT	
090	1539871-0000		4	SPACER	
095	1334447-0000		4	SPACER	
140	315105-0165		8	WASHER BRB8,4X16RFR	
160	312105-0465		8	SCREW M6S ISO 4014 M8X70 A480	
TBA 1000B (See drawing on page: 5-26)					
010	1144892-0000		1	GUIDE RIGHT	
020	1144893-0000		1	GUIDE LEFT	
030	1260709-0000		1	GUIDE UPPER R	
040	1260710-0000		1	GUIDE UPPER L	
060	1144905-0000		1	SUPPORT	
090	2603663-0000		8	SPACER	
100	312105-0366		4	SCREW M6S ISO 4017 M6X12 A480	
140	315105-0165		8	WASHER BRB8,4X16RFR	
160	312105-0465		8	SCREW M6S ISO 4014 M8X70 A480	
TBA 1000S (See drawing on page: 5-24)					
010	1144892-0000		1	GUIDE RIGHT	
020	1144893-0000		1	GUIDE LEFT	
030	1260709-0000		1	GUIDE UPPER R	
040	1260710-0000		1	GUIDE UPPER L	
060	1144905-0000		1	SUPPORT	
070	1144555-0000		7	STUD SCREW	
080	1350721-0000		1	STUD SCREW	
100	312105-0366		4	SCREW M6S ISO 4017 M6X12 A480	
140	315105-0165		16	WASHER BRB8,4X16RFR	
150	312605-0318		16	HEXAGON NUT, M6M M8 A280	
TBA 1000SQ (See drawing on page: 5-26)					
010	1144892-0000		1	GUIDE RIGHT	
020	1144893-0000		1	GUIDE LEFT	
030	1549411-0000		1	PACKAGE GUIDE	
040	1549406-0000		1	PACKAGE GUIDE	
060	1498161-0000		1	SUPPORT	
090	1499071-0000		8	SPACER	
100	312105-0366		4	SCREW M6S ISO 4017 M6X12 A480	
140	315105-0165		8	WASHER BRB8,4X16RFR	
160	312105-0466		8	SCREW M6S ISO 4014 M8X75 A480	
TBA 1500S (See drawing on page: 5-30)					
010	1350424-0000		1	GUIDE RIGHT	
020	1350425-0000		1	GUIDE LEFT	
030	1334559-0000		1	GUIDE UPPER R	
040	1334560-0000		1	GUIDE UPPER L	
060	1285267-0000		1	SUPPORT	
090	1317088-0000		4	SPACER	
095	1348041-0000		2	SPACER	
098	1317088-0000		2	SPACER	
100	312105-0368		4	SCREW M6S ISO 4017 M6X16 A480	
140	315105-0165		8	WASHER BRB8,4X16RFR	

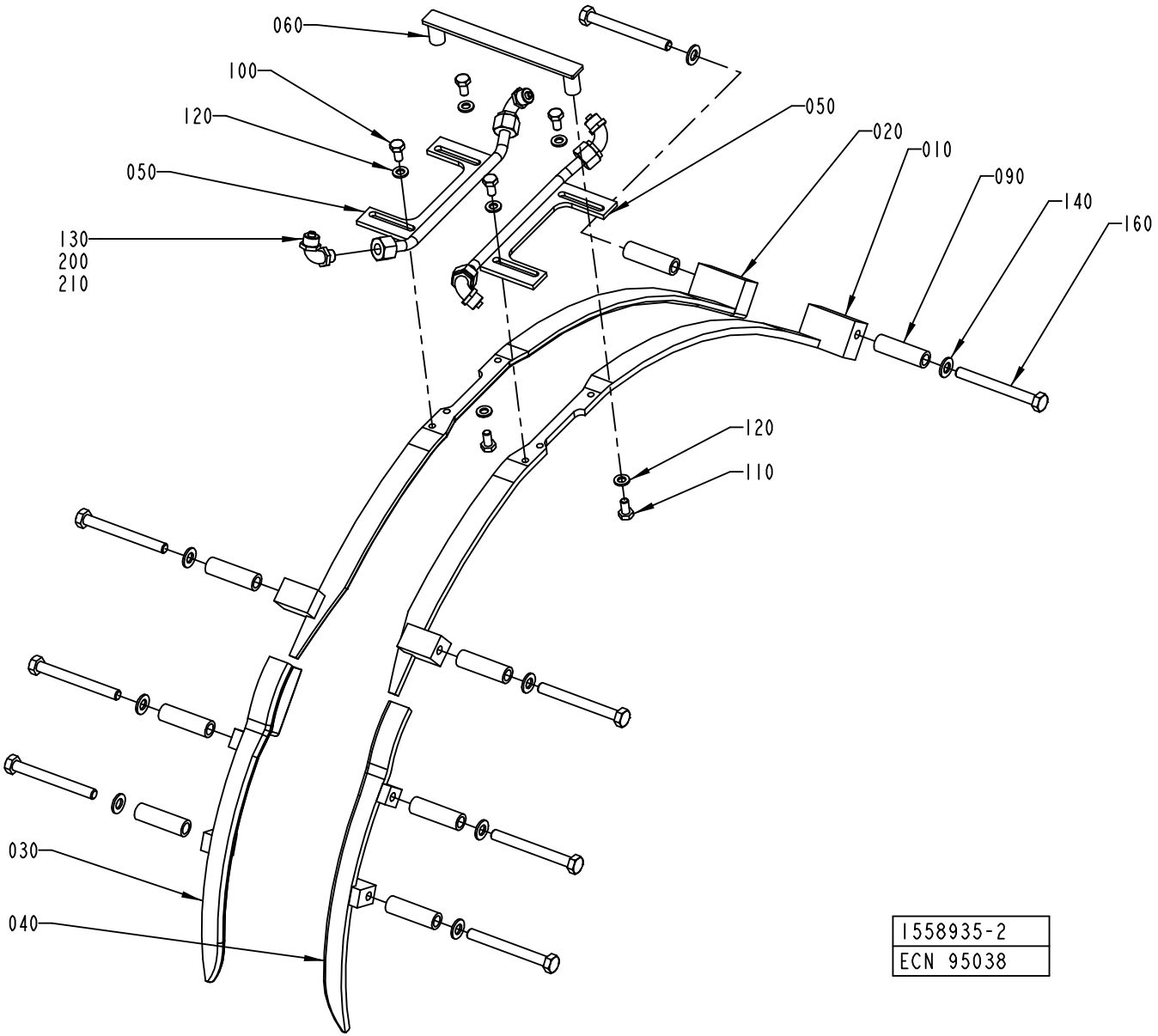
060
100
120
050
130
200
210
050
020
010
090
140
160
120
110
030
040
1558935-2
ECN 95038

Pos	Part No	UN	Qty	Description	Page No
TBA 1500S (Cont'd) (See drawing on page: 5-30)					
160	312105-0465		4	SCREW M6S ISO 4014 M8X70 A480	
165	312105-0465		2	SCREW M6S ISO 4014 M8X70 A480	
170	312105-0467		2	SCREW M6S ISO 4014 M8X80 A480	
180	1282705-0000		4	SUPPORT	
Common Parts					
050	1350423-0000		2	FOLDING BAR	
110	312105-0366		2	SCREW M6S ISO 4017 M6X12 A480	
120	315105-0153		6	WASHER BRB6,4X12RFR	
130	342931-0121		4	ELBOW 90 COUPL.,EXT.THREAD 8/6-G1/8"	
200	90166-0118	MM	1500	TUBE 8 MM PA BLACK	
210	352113-0102		10	CLIP-STRIP, BLACK 188X4,8 MM	

Pos	Part No	UN	Qty	Description	Page No

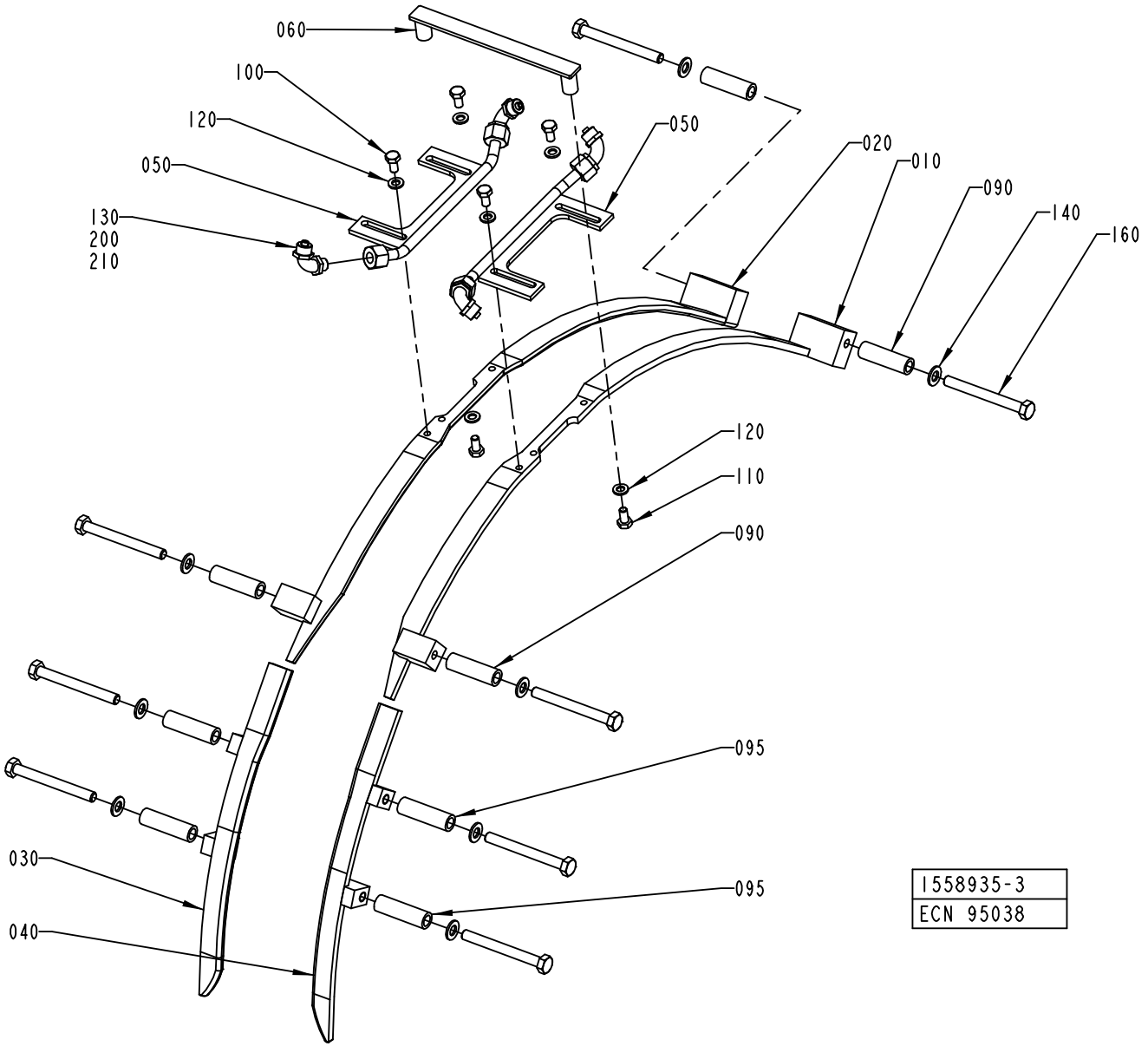
060
100
120
050
130
200
210
050
020
010
090
140
160
120
110
090
095
095
030
040
1558935-3
ECN 95038

Pos	Part No	UN	Qty	Description	Page No	Pos	Part No	UN	Qty	Description	Page No

SEE PREVIOUS LISTS PAGES: 5-25, 5-27.

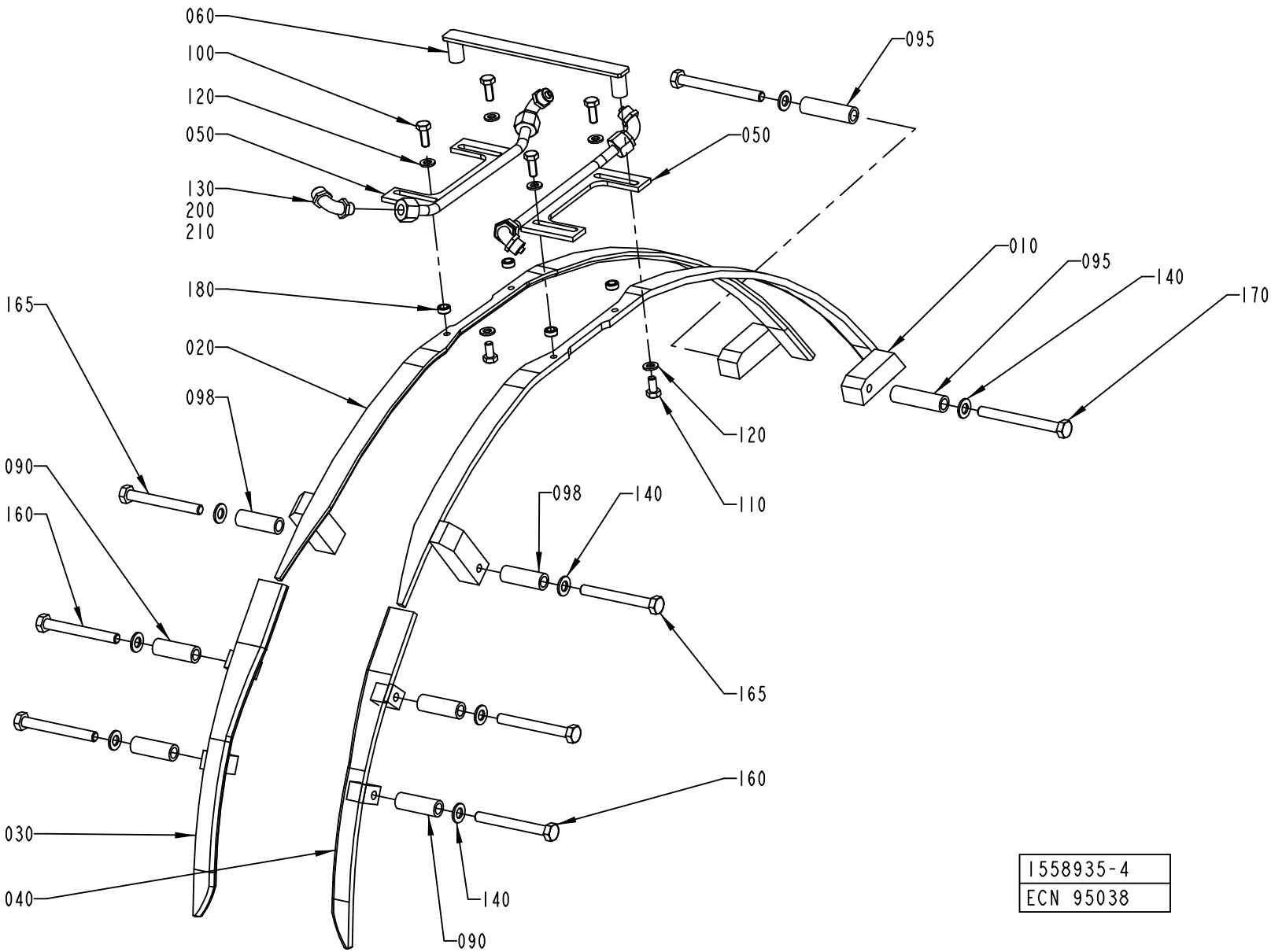
060
100
120
050
130
200
210
180
165
020
098
090
160
030
040
095
050
010
095
140
170
120
110
098
140
165
160
140
090
1558935-4
ECN 95038

ECM: 161662 - 20040305
Group number: 1558935-0100
Assembly Drawing: 1558935-4_1_AA

This list covers pages from 5-24 to 5-31

Pos	Part No	UN	Qty	Description	Page No	Pos	Part No	UN	Qty	Description	Page No

SEE PREVIOUS LISTS PAGES: 5-25, 5-27.

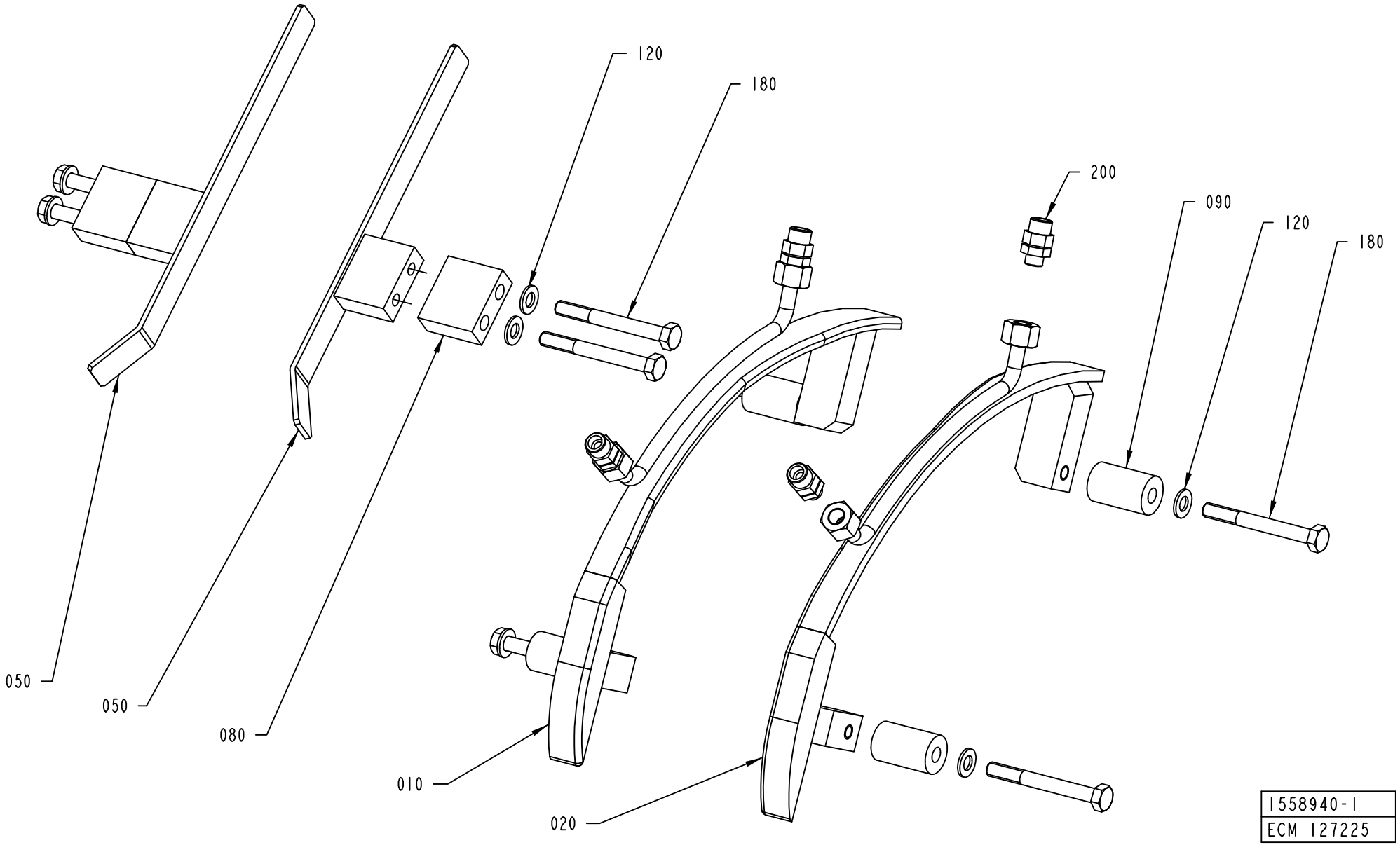
120
180
200
090
120
180
050
050
080
010
020
1558940-1
ECM 127225

ECM: 168551 - 20040428
Group number: 1558940-0200
Assembly Drawing: 1558940-1_1_AB

This list covers pages from 5-32 to 5-43

Pos	Part No	UN	Qty	Description	Page No
TPA 1000SQ (See drawing on page: 5-40)					
010	1548527-0000		1	FOLDING BAR	
020	1548528-0000		1	FOLDING BAR	
030	1317043-0000		2	SUPPORT	
040	1499150-0000		1	RAIL	
050	1499151-0000		1	RAIL	
060	1523927-0000		2	SPACER SCREW	
080	1519355-0000		4	SPACER	
090	1523926-0000		2	SPACER	
100	312109-0457		4	SCREW M6S ISO 4017 M8X35 A480	
110	312105-0462		4	SCREW M6S ISO 4014 M8X55 A480	
120	315105-0165		20	WASHER BRB8,4X16RFR	
130	312605-0318		2	HEXAGON NUT, M6M M8 A280	
160	312155-0459		2	SCREW EN 10642 MF6S M8X40 A480	
170	312105-0453		2	SCREW M6S ISO 4017 M8X25 A480	
180	312105-0467		2	SCREW M6S ISO 4014 M8X80 A480	
200	342921-0121		4	STRAIGHT COUPLING,EXT.THREADED 8/6-G1/8"	
210	1538890-0000		1	RAIL	
220	1538891-0000		1	RAIL	
230	1519355-0000		4	SPACER	
240	1538186-0000		2	BRACKET	
250	312105-0462		4	SCREW M6S ISO 4014 M8X55 A480	
260	312105-0455		2	SCREW M6S ISO 4017 M8X30 A480	
TPA 1000SQ SMILE (See drawing on page: 5-40)					
010	2553347-0000		1	FOLDING BAR	
020	2553348-0000		1	FOLDING BAR	
030	1317043-0000		2	SUPPORT	
040	1499150-0000		1	RAIL	
050	1499151-0000		1	RAIL	
060	1523927-0000		2	SPACER SCREW	
080	1519355-0000		4	SPACER	
090	1523926-0000		2	SPACER	
100	312109-0457		4	SCREW M6S ISO 4017 M8X35 A480	
110	312105-0462		4	SCREW M6S ISO 4014 M8X55 A480	
120	315105-0165		20	WASHER BRB8,4X16RFR	
130	312605-0318		2	HEXAGON NUT, M6M M8 A280	
160	312155-0459		2	SCREW EN 10642 MF6S M8X40 A480	
170	312105-0453		2	SCREW M6S ISO 4017 M8X25 A480	
180	312105-0467		2	SCREW M6S ISO 4014 M8X80 A480	
200	342921-0121		4	STRAIGHT COUPLING,EXT.THREADED 8/6-G1/8"	
210	1538890-0000		1	RAIL	
220	1538891-0000		1	RAIL	
230	1519355-0000		4	SPACER	
240	1538186-0000		2	BRACKET	
250	312105-0462		4	SCREW M6S ISO 4014 M8X55 A480	
260	312105-0455		2	SCREW M6S ISO 4017 M8X30 A480	
TBA 0200B (See drawing on page: 5-34)					
010	1346149-0000		1	FOLDING BAR	
020	1346150-0000		1	FOLDING BAR	
040	1346343-0000		1	RAIL	
050	1346344-0000		1	RAIL	
060	1144555-0000		7	STUD SCREW	
065	1350721-0000		1	STUD SCREW	
070	1144990-0000		2	FOLDING BAR	
120	315105-0165		16	WASHER BRB8,4X16RFR	
130	312605-0318		16	HEXAGON NUT, M6M M8 A280	
140	315105-0153		4	WASHER BRB6,4X12RFR	
150	312105-0364		4	SCREW M6S ISO 4017 M6X10 A480	
200	342931-0121		4	ELBOW 90 COUPL.,EXT.THREAD 8/6-G1/8"	
TBA 0200S (See drawing on page: 5-34)					
010	1282294-0000		1	FOLDING BAR	
020	1282295-0000		1	FOLDING BAR	
040	1346343-0000		1	RAIL	
050	1346344-0000		1	RAIL	
060	1144555-0000		7	STUD SCREW	
065	1350721-0000		1	STUD SCREW	
070	1144990-0000		2	FOLDING BAR	
120	315105-0165		16	WASHER BRB8,4X16RFR	
130	312605-0318		16	HEXAGON NUT, M6M M8 A280	
140	315105-0153		4	WASHER BRB6,4X12RFR	
150	312105-0364		4	SCREW M6S ISO 4017 M6X10 A480	
200	342931-0121		4	ELBOW 90 COUPL.,EXT.THREAD 8/6-G1/8"	
TBA 0250B (See drawing on page: 5-34)					
010	1317217-0000		1	FOLDING BAR	
020	1317216-0000		1	FOLDING BAR	
040	1346343-0000		1	RAIL	
050	1346344-0000		1	RAIL	
060	1144555-0000		7	STUD SCREW	
065	1350721-0000		1	STUD SCREW	
070	1144990-0000		2	FOLDING BAR	
120	315105-0165		16	WASHER BRB8,4X16RFR	
130	312605-0318		16	HEXAGON NUT, M6M M8 A280	
140	315105-0153		4	WASHER BRB6,4X12RFR	
150	312105-0364		4	SCREW M6S ISO 4017 M6X10 A480	

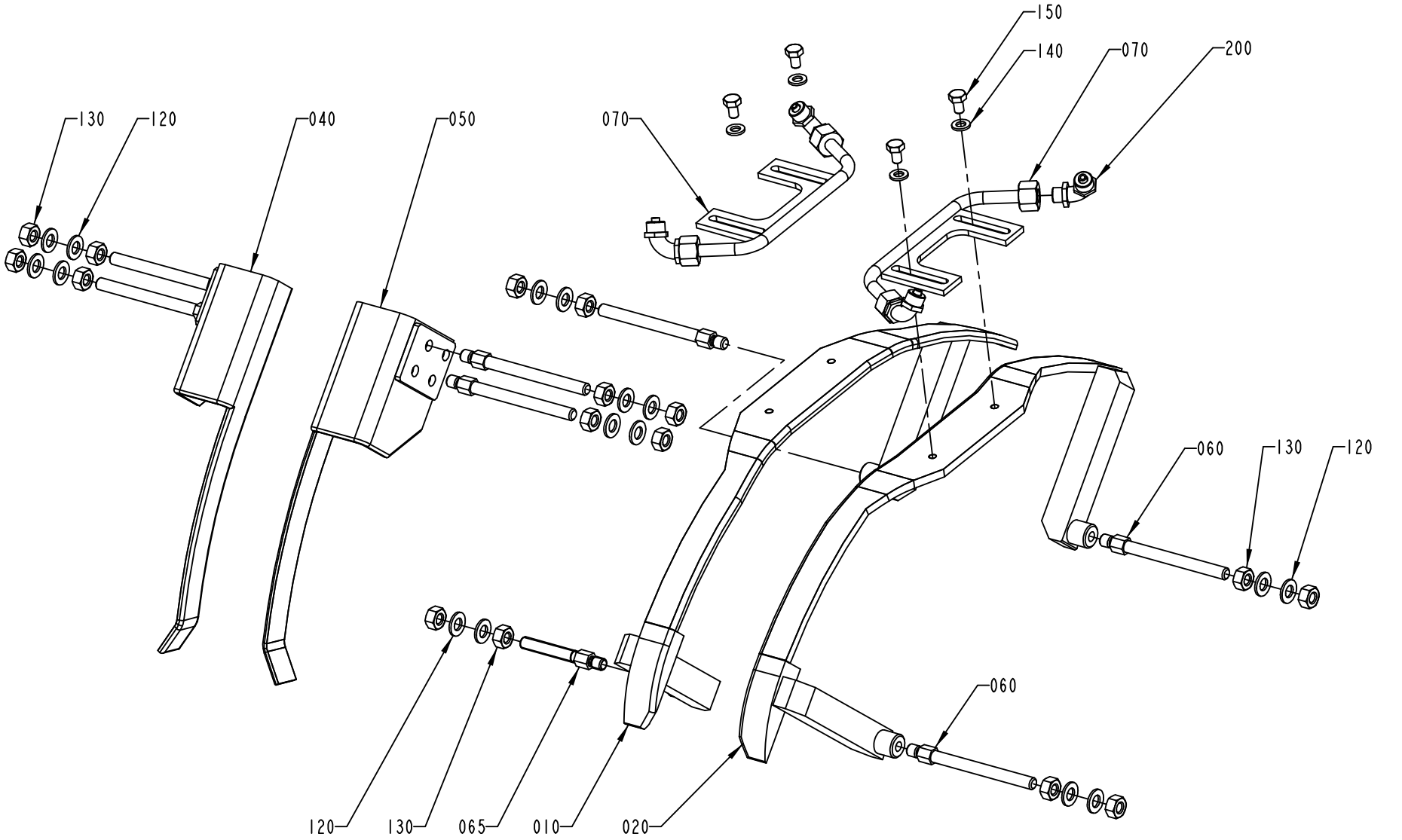

1558940-3
ECN 95038

ECM: 168551 - 20040428
Group number: 1558940-0200
Assembly Drawing: 1558940-3_1_AA

This list covers pages from 5-32 to 5-43

Pos	Part No	UN	Qty	Description	Page No
TBA 0250B (Cont'd) (See drawing on page: 5-34)					
200	342931-0121		4	ELBOW 90 COUPL.,EXT.THREAD 8/6-G1/8"	
TBA 0500B (See drawing on page: 5-38)					
010	1539881-0000		1	FOLDING BAR	
020	1539882-0000		1	FOLDING BAR	
040	1346343-0000		1	RAIL	
050	1346344-0000		1	RAIL	
060	1558713-0000		2	SPACER SCREW	
080	1539873-0000		4	SPACER	
090	1539871-0000		2	SPACER	
110	312109-0461		4	SCREW M6S ISO 4017 M8X50 A480	
120	315105-0165		8	WASHER BRB8,4X16RFR	
130	312605-0318		2	HEXAGON NUT, M6M M8 A280	
180	312105-0464		2	SCREW M6S ISO 4014 M8X65 A480	
200	342921-0121		4	STRAIGHT COUPLING,EXT.THREADED 8/6-G1/8"	
TBA 1000B NOMOLDEDCAP (See drawing on page: 5-32)					
010	2639127-0000		1	FOLDING BAR	
020	2639128-0000		1	FOLDING BAR	
050	1144719-0000		2	RAIL	
080	2639393-0000		2	SPACER	
090	2603663-0000		4	SPACER	
120	315105-0165		8	WASHER BRB8,4X16RFR	
180	312105-0465		8	SCREW M6S ISO 4014 M8X70 A480	
200	342921-0121		4	STRAIGHT COUPLING,EXT.THREADED 8/6-G1/8"	
TBA 1000B STDA7 (See drawing on page: 5-36)					
010	2609370-0000		1	FOLDING BAR	
020	2609369-0000		1	FOLDING BAR	
030	1317043-0000		2	SUPPORT	
040	1499150-0000		1	RAIL	
050	1499151-0000		1	RAIL	
060	2509936-0000		2	SPACER SCREW	
080	2609371-0000		4	SPACER	
090	2603663-0000		2	SPACER	
100	312109-0457		4	SCREW M6S ISO 4017 M8X35 A480	
120	315105-0165		14	WASHER BRB8,4X16RFR	
130	312605-0318		2	HEXAGON NUT, M6M M8 A280	
160	312155-0459		2	SCREW EN 10642 MF6S M8X40 A480	
170	312105-0453		2	SCREW M6S ISO 4017 M8X25 A480	
180	312105-0466		2	SCREW M6S ISO 4014 M8X75 A480	
200	342931-0121		4	ELBOW 90 COUPL.,EXT.THREAD 8/6-G1/8"	
250	312105-0462		4	SCREW M6S ISO 4014 M8X55 A480	
TBA 1000S NOMOLDEDCAP (See drawing on page: 5-42)					
010	1144897-0000		1	FOLDING BAR	
020	1144898-0000		1	FOLDING BAR	
050	1144719-0000		2	RAIL	
060	1144555-0000		8	STUD SCREW	
120	315105-0165		16	WASHER BRB8,4X16RFR	
130	312605-0318		16	HEXAGON NUT, M6M M8 A280	
200	342921-0121		4	STRAIGHT COUPLING,EXT.THREADED 8/6-G1/8"	
TBA 1000S STDA7 (See drawing on page: 5-36)					
010	1498827-0000		1	FOLDING BAR	
020	1498828-0000		1	FOLDING BAR	
030	1317043-0000		2	SUPPORT	
050	1317047-0000		1	RAIL	
060	2509936-0000		2	SPACER SCREW	
080	2509937-0000		4	SPACER	
090	2509935-0000		2	SPACER	
100	312109-0457		4	SCREW M6S ISO 4017 M8X35 A480	
110	312105-0461		4	SCREW M6S ISO 4014 M8X50 A480	
120	315105-0165		14	WASHER BRB8,4X16RFR	
130	312605-0318		2	HEXAGON NUT, M6M M8 A280	
160	312155-0459		2	SCREW EN 10642 MF6S M8X40 A480	
170	312105-0451		2	SCREW M6S ISO 4017 M8X20 A480	
180	312105-0464		2	SCREW M6S ISO 4014 M8X65 A480	
200	342931-0121		4	ELBOW 90 COUPL.,EXT.THREAD 8/6-G1/8"	
TBA 1000SQ (See drawing on page: 5-36)					
010	1498827-0000		1	FOLDING BAR	
020	1498828-0000		1	FOLDING BAR	
030	1317043-0000		2	SUPPORT	
040	1317042-0000		1	RAIL	
050	1317047-0000		1	RAIL	
060	1499094-0000		2	SPACER SCREW	
080	1499072-0000		4	SPACER	
090	1499071-0000		2	SPACER	
100	312109-0457		4	SCREW M6S ISO 4017 M8X35 A480	
110	312105-0463		4	SCREW M6S ISO 4014 M8X60 A480	
120	315105-0165		14	WASHER BRB8,4X16RFR	
130	312605-0318		2	HEXAGON NUT, M6M M8 A280	
160	312155-0459		2	SCREW EN 10642 MF6S M8X40 A480	
170	312105-0451		2	SCREW M6S ISO 4017 M8X20 A480	
180	312105-0466		2	SCREW M6S ISO 4014 M8X75 A480	
200	342931-0121		4	ELBOW 90 COUPL.,EXT.THREAD 8/6-G1/8"	
TBA 1500S (See drawing on page: 5-36)					
010	1317653-0000		1	FOLDING BAR	

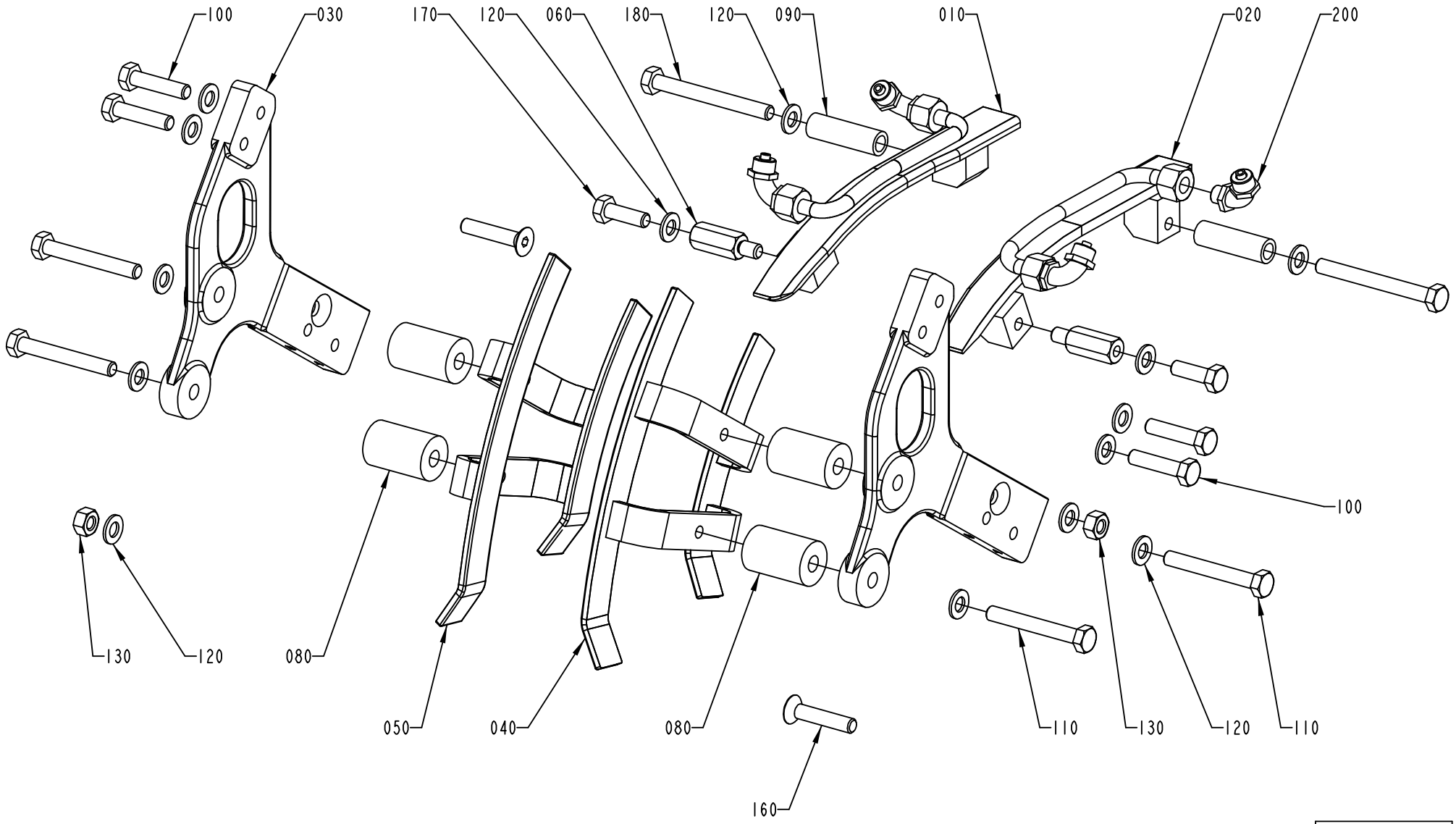

1558940-4
ECN 95038

Pos	Part No	UN	Qty	Description	Page No
TBA 1500S (Cont'd) (See drawing on page: 5-36)					
030	1317043-0000		2	SUPPORT	
040	1317042-0000		1	RAIL	
050	1317047-0000		1	RAIL	
060	1348042-0000		2	SPACER	
080	1334718-0000		4	SPACER	
090	1317088-0000		2	SPACER	
100	312109-0457		4	SCREW M6S ISO 4017 M8X35 A480	
110	312109-0461		4	SCREW M6S ISO 4017 M8X50 A480	
120	315105-0165		12	WASHER BRB8,4X16RFR	
130	312605-0318		2	HEXAGON NUT, M6M M8 A280	
180	312105-0465		2	SCREW M6S ISO 4014 M8X70 A480	
200	342931-0121		4	ELBOW 90 COUPL.,EXT.THREAD 8/6-G1/8"	

Pos	Part No	UN	Qty	Description	Page No

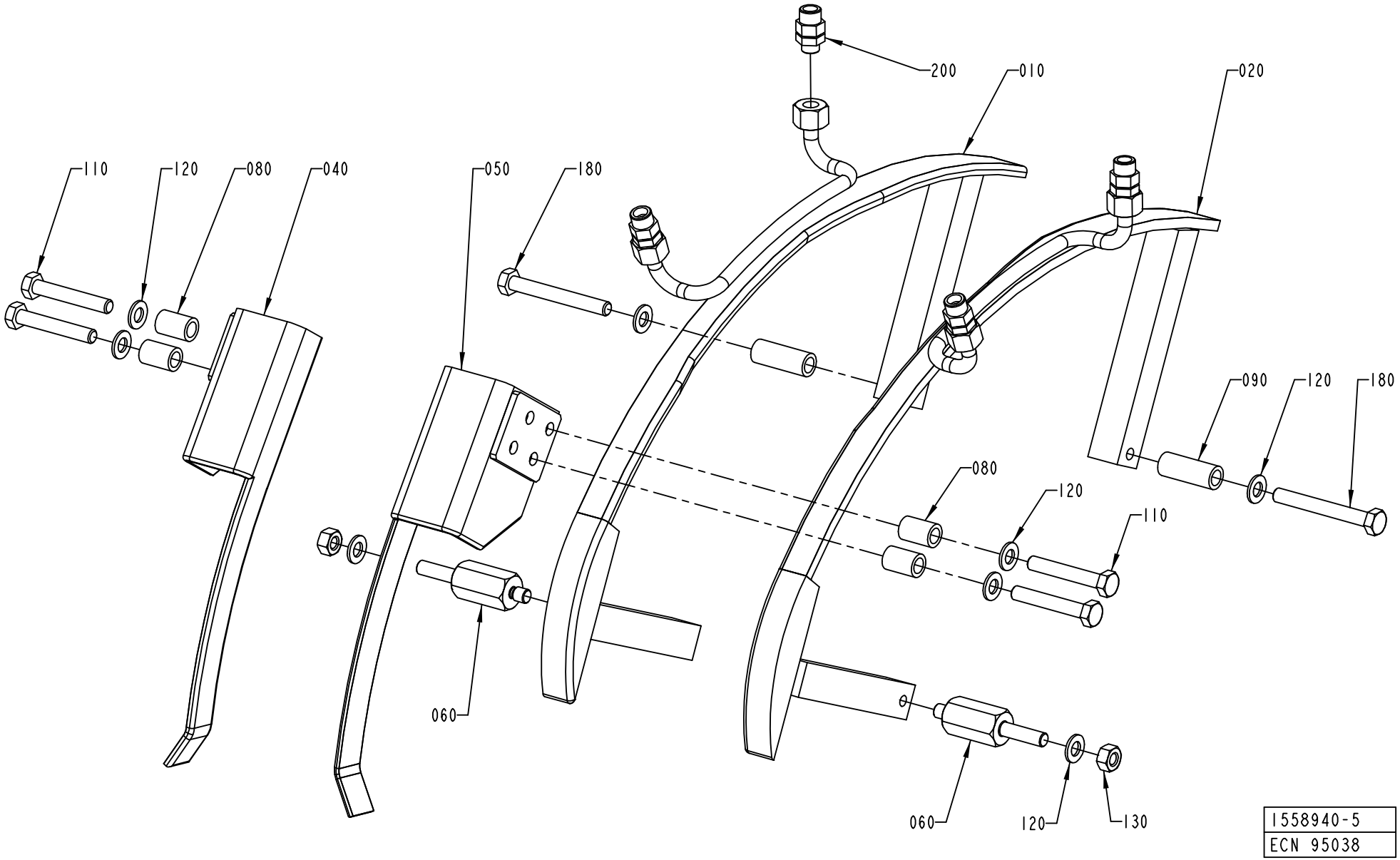
200
010
020
110
120
080
040
050
180
090
120
180
080
120
110
060
060
120
130
1558940-5
ECN 95038

Pos	Part No	UN	Qty	Description	Page No	Pos	Part No	UN	Qty	Description	Page No

SEE PREVIOUS LISTS PAGES: 5-33, 5-35, 5-37.

FLAP GUIDE

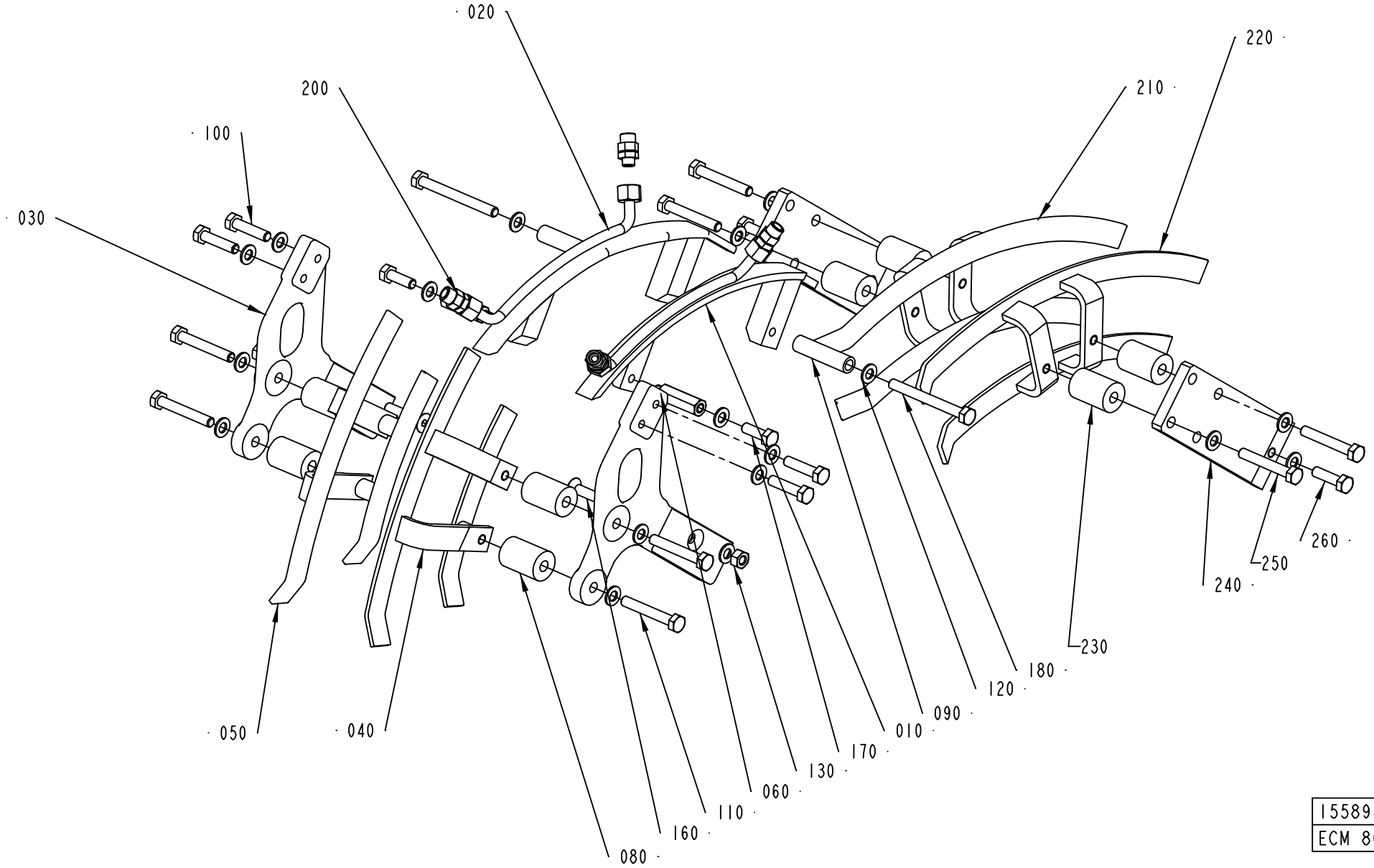

1558940-6
ECM 80646

ECM: 168551 - 20040428
Group number: 1558940-0200
Assembly Drawing: 1558940-6_1_AA

This list covers pages from 5-32 to 5-43

Pos	Part No	UN	Qty	Description	Page No	Pos	Part No	UN	Qty	Description	Page No
SEE PREVIOUS LISTS PAGES: 5-33, 5-35, 5-37.											

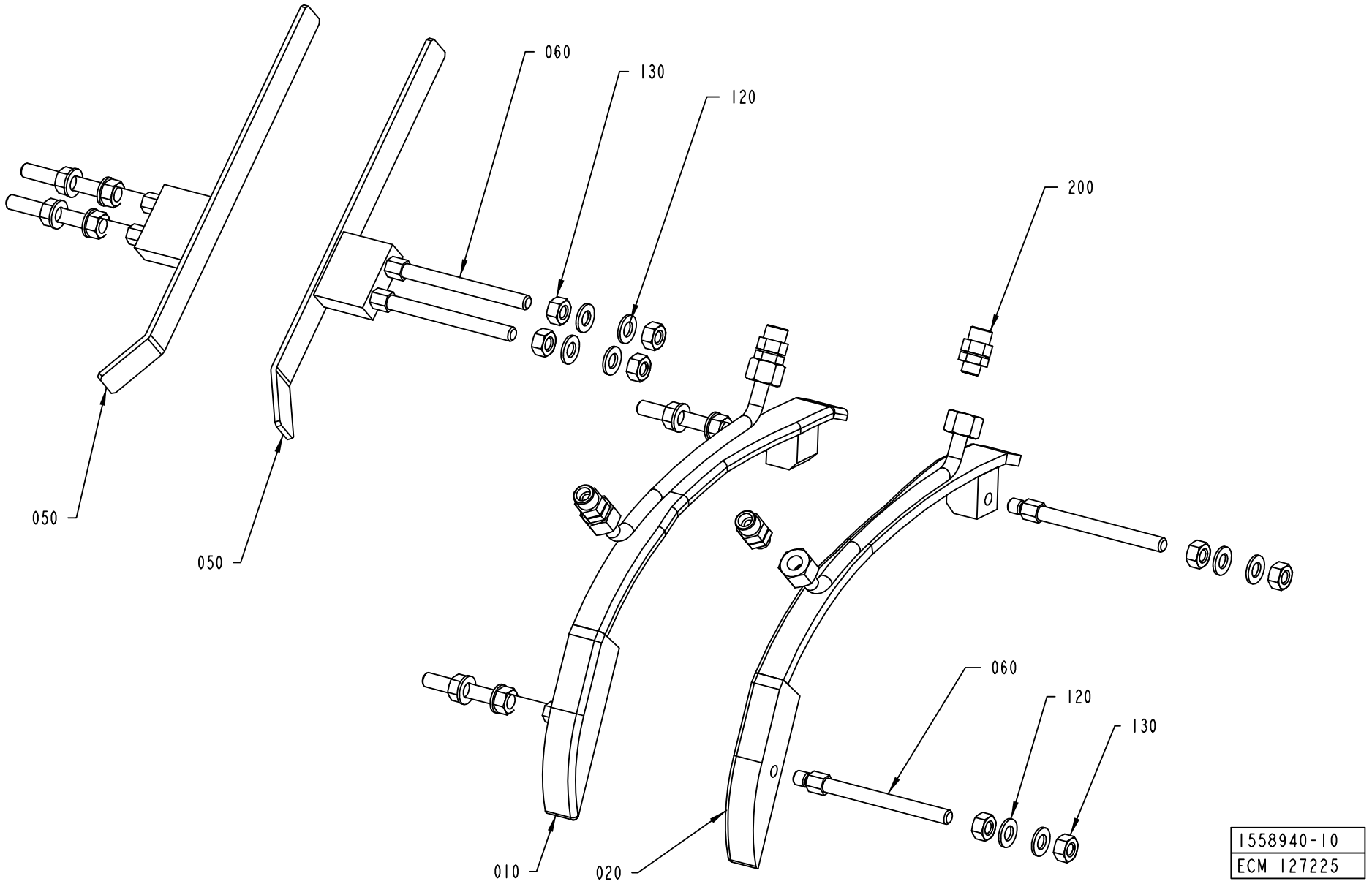
060
130
120
200
050
050
060
120
130
010
020
1558940-10
ECM 127225

ECM: 168551 - 20040428
Group number: 1558940-0200
Assembly Drawing: 1558940-10_1_AA

This list covers pages from 5-32 to 5-43

Pos	Part No	UN	Qty	Description	Page No
SEE PREVIOUS LISTS PAGES: 5-33, 5-35, 5-37.					

Pos	Part No	UN	Qty	Description	Page No

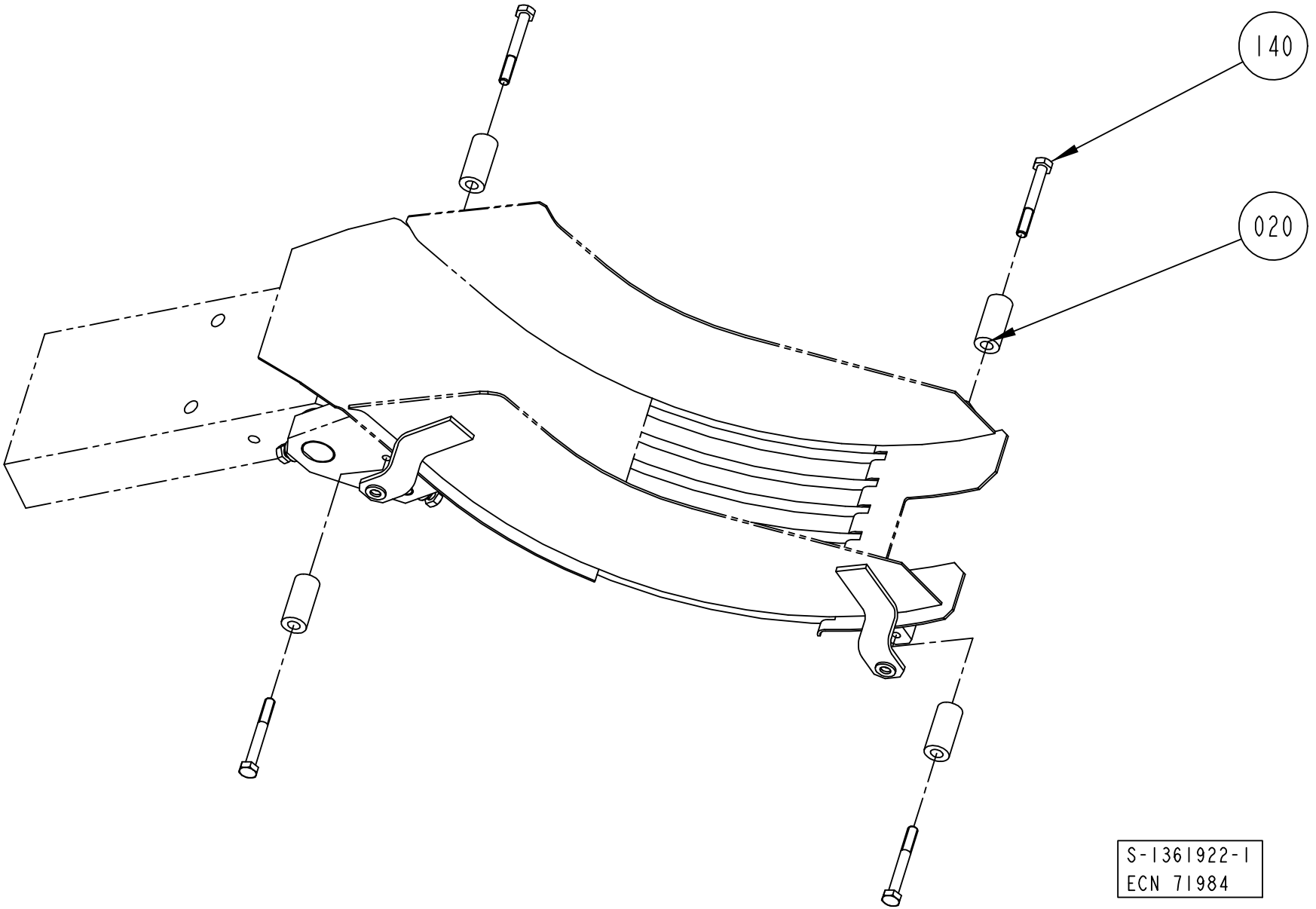
140
020
S-1361922-1
ECN 71984

ECM: 118984 - 20021217
Group number: 1361922-0200
Assembly Drawing: 1361922-1_1_AC

Pos	Part No	UN	Qty	Description	Page No
TBA 0200S					
020	315115-0153		4	WASHER PLAIN, TBRB 6,4/12 H=3	
140	312105-0370		4	SCREW M6S ISO 4017 M6X20 A480	
TBA 0330S, TBA 0200B, TBA 0250B					
020	1317218-0000		4	SPACER	
140	312105-0374		4	SCREW M6S ISO 4014 M6X30 A480	
TBA 0500B, TBA 1000B					
020	1260714-0000		4	SPACER	
140	312105-0382		4	SCREW M6S ISO 4014 M6X60 A480	
TBA 1000S					
020	1279670-0000		4	SPACER	
140	312105-0382		4	SCREW M6S ISO 4014 M6X60 A480	
TBA 1000SQ					
020	1487929-0000		4	SPACER	
140	312105-0379		4	SCREW M6S ISO 4014 M6X45 A480	
TBA 1500S					
140	312105-0366		4	SCREW M6S ISO 4017 M6X12 A480	
TPA 1000SQ					
140	312105-0366		4	SCREW M6S ISO 4017 M6X12 A480	

Pos	Part No	UN	Qty	Description	Page No

INFEED CONVEYOR VARIANT

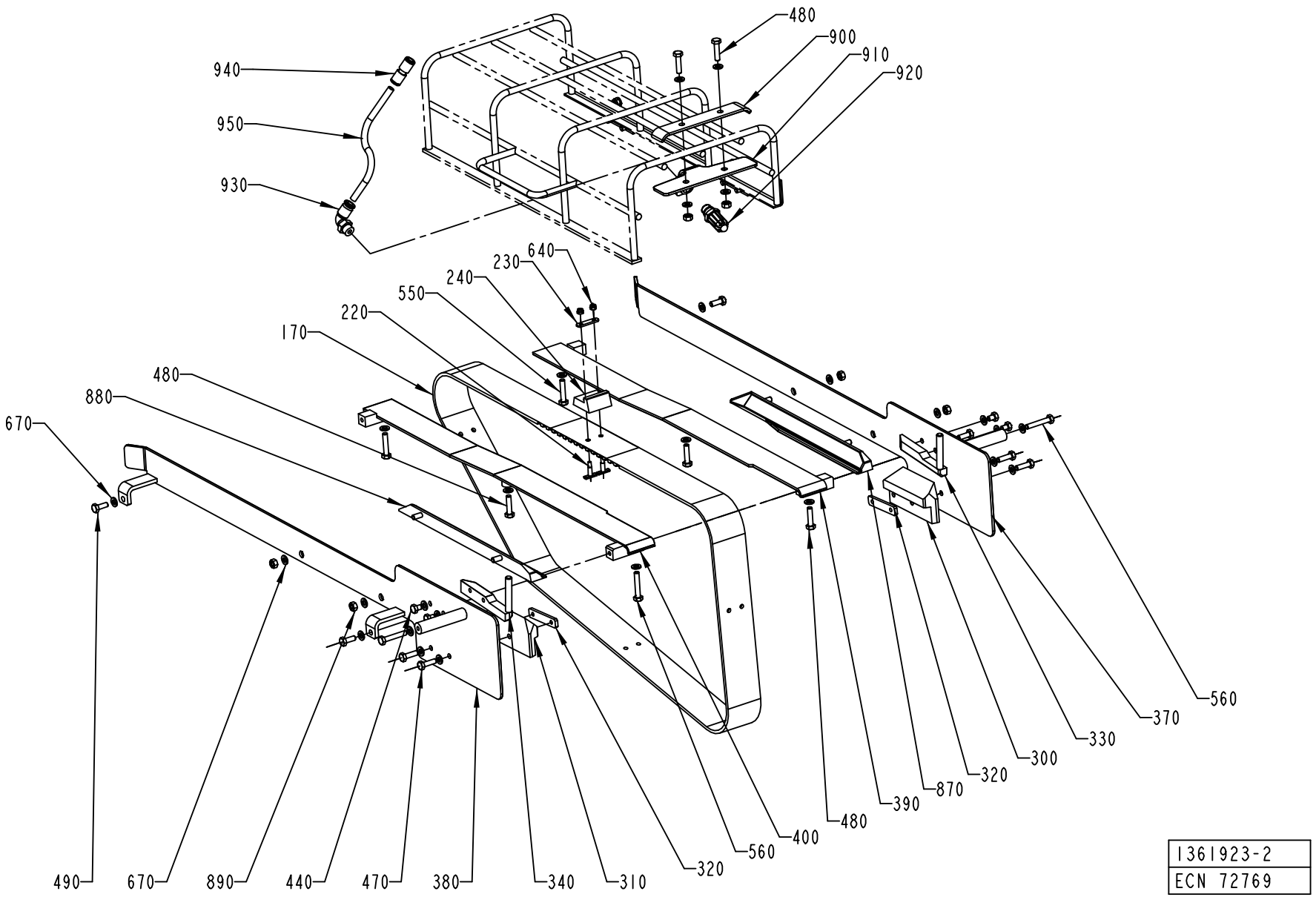

1361923-2
ECN 72769

ECM: 175848 - 20040628
Group number: 1361923-0200
Assembly Drawing: 1361923-2_1_AC

This list covers pages from 5-46 to 5-51

Pos	Part No	UN	Qty	Description	Page No
TPA 1000SQ (See drawing on pages: 5-46, 5-48, 5-50)					
170	1519338-0000		1	TIMING BELT	
220	1517476-0000		6	WEDGE	
230	1517477-0000		3	PLATE	
240	1519344-0000		3	CARRIER	
300	1517481-0000		1	SLIDE	
310	1517480-0000		1	SLIDE	
320	2543242-0000		2	ANGLE BLOCK	
330	1517478-0000		1	BAR	
340	1517479-0000		1	BAR	
370	1517474-0000		1	GUIDE	
380	1517475-0000		1	GUIDE	
390	1519345-0000		1	GUIDE	
400	1519346-0000		1	GUIDE	
440	312105-0366		4	SCREW M6S ISO 4017 M6X12 A480	
470	312105-0368		4	SCREW M6S ISO 4017 M6X16 A480	
480	312105-0372		3	SCREW M6S ISO 4017 M6X25 A480	
500	312105-0364		4	SCREW M6S ISO 4017 M6X10 A480	
550	312109-0376		2	SCREW M6S ISO 4017 M6X35 A480	
560	312105-0376		3	SCREW M6S ISO 4014 M6X35 A480	
640	312812-0312		6	HEXAGON NUT, NY-LOCK M4 A480	
870	1539983-0000		1	GUIDE	
880	1539984-0000		1	GUIDE	
TBA 0200B (See drawing on pages: 5-46, 5-48, 5-50)					
170	1144783-0000		1	TIMING BELT	
390	1282290-0000		1	GUIDE	
400	1282291-0000		1	GUIDE	
440	312105-0362		4	SCREW M6S ISO 4017 M6X8 A480	
470	312105-0370		4	SCREW M6S ISO 4017 M6X20 A480	
550	312109-0374		2	SCREW M6S ISO 4017 M6X30 A480	
560	312105-0376		3	SCREW M6S ISO 4014 M6X35 A480	
670	315105-0153		28	WASHER BRB6,4X12RFR	
890	312605-0316		6	HEXAGON NUT, M6M M6 A280	
900	1499476-0000		1	HOLDER	
910	1499475-0000		1	HOLDER	
920	90424-0068		1	AIR NOZZLE, G1/4, MOD. 216 BSP	
930	342732-0104		1	ELBOW PIPE JOINT, EXT.THREAD, D=8MM-G1/4	
940	342728-0103		1	PIPE COUPLING 8 MM	
950	90166-0013	MM	700	TUBE 8 MM PA BLUE	
TBA 0200S (See drawing on pages: 5-46, 5-48, 5-50)					
170	1144783-0000		1	TIMING BELT	
370	1499136-0000		1	GUIDE	
380	1499135-0000		1	GUIDE	
390	1282290-0000		1	GUIDE	
400	1282291-0000		1	GUIDE	
440	312105-0362		4	SCREW M6S ISO 4017 M6X8 A480	
470	312105-0370		4	SCREW M6S ISO 4017 M6X20 A480	
550	312109-0374		2	SCREW M6S ISO 4017 M6X30 A480	
560	312105-0376		3	SCREW M6S ISO 4014 M6X35 A480	
670	315105-0153		28	WASHER BRB6,4X12RFR	
870	1517524-0000		1	GUIDE	
880	1517525-0000		1	GUIDE	
890	312605-0316		6	HEXAGON NUT, M6M M6 A280	
900	1499476-0000		1	HOLDER	
910	1499475-0000		1	HOLDER	
920	90424-0068		1	AIR NOZZLE, G1/4, MOD. 216 BSP	
930	342732-0104		1	ELBOW PIPE JOINT, EXT.THREAD, D=8MM-G1/4	
940	342728-0103		1	PIPE COUPLING 8 MM	
950	90166-0013	MM	700	TUBE 8 MM PA BLUE	
TBA 0250B (See drawing on pages: 5-46, 5-48, 5-50)					
170	1144783-0000		1	TIMING BELT	
390	1282290-0000		1	GUIDE	
400	1282291-0000		1	GUIDE	
440	312105-0362		4	SCREW M6S ISO 4017 M6X8 A480	
470	312105-0370		4	SCREW M6S ISO 4017 M6X20 A480	
550	312109-0374		2	SCREW M6S ISO 4017 M6X30 A480	
560	312105-0376		3	SCREW M6S ISO 4014 M6X35 A480	
670	315105-0153		28	WASHER BRB6,4X12RFR	
890	312605-0316		6	HEXAGON NUT, M6M M6 A280	
900	1499476-0000		1	HOLDER	
910	1499475-0000		1	HOLDER	
920	90424-0068		1	AIR NOZZLE, G1/4, MOD. 216 BSP	
930	342732-0104		1	ELBOW PIPE JOINT, EXT.THREAD, D=8MM-G1/4	
940	342728-0103		1	PIPE COUPLING 8 MM	
950	90166-0013	MM	700	TUBE 8 MM PA BLUE	
TBA 0330S (See drawing on pages: 5-46, 5-48, 5-50)					
170	1144783-0000		1	TIMING BELT	
300	2544997-0000		1	SLIDE	
310	2544998-0000		1	SLIDE	
330	2545000-0000		1	BAR	
340	2544999-0000		1	BAR	
370	2544996-0000		1	GUIDE	
380	2544995-0000		1	GUIDE	
390	2529610-0000		1	GUIDE	

INFEED CONVEYOR VARIANT

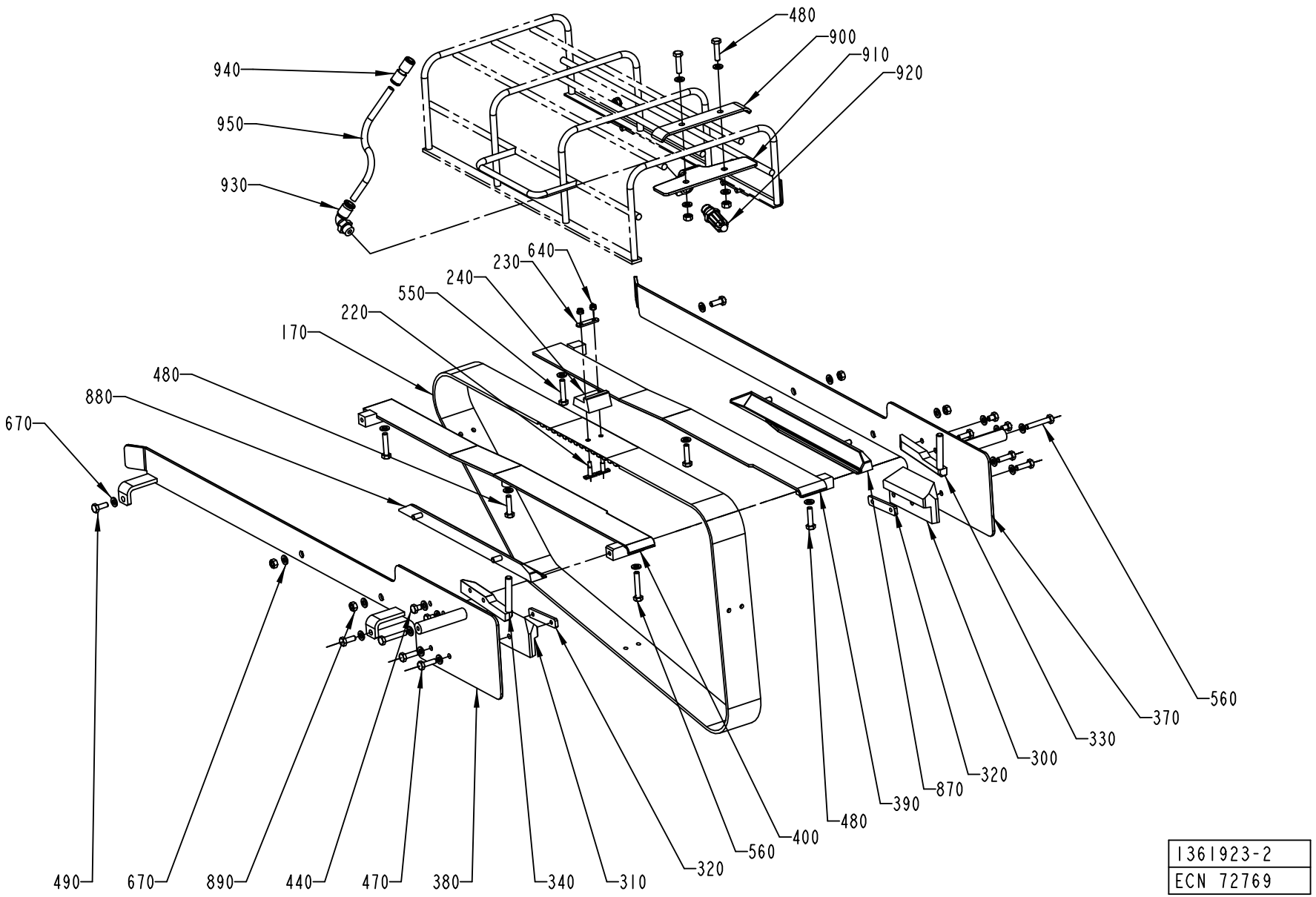

1361923-2
ECN 72769

Pos	Part No	UN	Qty	Description	Page No
TBA 0330S (Cont'd) (See drawing on pages: 5-46, 5-48, 5-50)					
400	2529609-0000		1	GUIDE	
440	312105-0362		4	SCREW M6S ISO 4017 M6X8 A480	
470	312105-0370		4	SCREW M6S ISO 4017 M6X20 A480	
480	312105-0372		3	SCREW M6S ISO 4017 M6X25 A480	
550	312109-0374		2	SCREW M6S ISO 4017 M6X30 A480	
560	312105-0376		3	SCREW M6S ISO 4014 M6X35 A480	
670	315105-0153		16	WASHER BRB6,4X12RFR	
890	312605-0316		2	HEXAGON NUT, M6M M6 A280	
TBA 0500B (See drawing on pages: 5-46, 5-48, 5-50)					
170	1144783-0000		1	TIMING BELT	
470	312105-0370		4	SCREW M6S ISO 4017 M6X20 A480	
480	312105-0372		3	SCREW M6S ISO 4017 M6X25 A480	
550	312109-0374		2	SCREW M6S ISO 4017 M6X30 A480	
560	312105-0376		3	SCREW M6S ISO 4014 M6X35 A480	
TBA 1000B (See drawing on pages: 5-46, 5-48, 5-50)					
170	1144783-0000		1	TIMING BELT	
240	1144919-0000		4	CARRIER	
390	1282290-0000		1	GUIDE	
400	1282291-0000		1	GUIDE	
440	312105-0362		4	SCREW M6S ISO 4017 M6X8 A480	
470	312105-0370		4	SCREW M6S ISO 4017 M6X20 A480	
480	312105-0372		3	SCREW M6S ISO 4017 M6X25 A480	
550	312109-0374		2	SCREW M6S ISO 4017 M6X30 A480	
560	312105-0376		3	SCREW M6S ISO 4014 M6X35 A480	
TBA 1000S (See drawing on pages: 5-46, 5-48, 5-50)					
170	1144783-0000		1	TIMING BELT	
240	1144919-0000		4	CARRIER	
440	312105-0362		4	SCREW M6S ISO 4017 M6X8 A480	
470	312105-0370		4	SCREW M6S ISO 4017 M6X20 A480	
480	312105-0372		3	SCREW M6S ISO 4017 M6X25 A480	
550	312109-0374		2	SCREW M6S ISO 4017 M6X30 A480	
560	312105-0376		3	SCREW M6S ISO 4014 M6X35 A480	
TBA 1000SQ (See drawing on pages: 5-46, 5-48, 5-50)					
170	1144783-0000		1	TIMING BELT	
320	1144621-0000		2	PLATE	
440	312105-0362		4	SCREW M6S ISO 4017 M6X8 A480	
470	312105-0370		4	SCREW M6S ISO 4017 M6X20 A480	
480	312105-0372		3	SCREW M6S ISO 4017 M6X25 A480	
550	312109-0374		2	SCREW M6S ISO 4017 M6X30 A480	
560	312105-0376		3	SCREW M6S ISO 4014 M6X35 A480	
TBA 1500S (See drawing on pages: 5-46, 5-48, 5-50)					
220	1346471-0000		6	WEDGE	
230	1144918-0000		3	PLATE	
300	1334561-0000		1	SLIDE	
310	1334562-0000		1	SLIDE	
320	1144621-0000		2	PLATE	
330	1317805-0000		1	BAR	
340	1334271-0000		1	BAR	
440	312105-0362		4	SCREW M6S ISO 4017 M6X8 A480	
470	312105-0370		4	SCREW M6S ISO 4017 M6X20 A480	
480	312105-0372		3	SCREW M6S ISO 4017 M6X25 A480	
550	312109-0374		2	SCREW M6S ISO 4017 M6X30 A480	
560	312105-0376		3	SCREW M6S ISO 4014 M6X35 A480	
640	312812-0312		6	HEXAGON NUT, NY-LOCK M4 A480	
Common Parts					
170	1349152-0000		1	TIMING BELT	
220	1346471-0000		8	WEDGE	
220	1346736-0000		8	WEDGE	
230	1144918-0000		4	PLATE	
240	1558864-0000		4	CARRIER	
240	1558700-0000		4	CARRIER	
240	1282287-0000		4	CARRIER	
240	1282848-0000		4	CARRIER	
300	1539874-0000		1	SLIDE	
300	1490033-0000		1	SLIDE	
300	1532257-0000		1	SLIDE	
300	1348137-0000		1	SLIDE	
300	1348136-0000		1	SLIDE	
300	1348135-0000		1	SLIDE	
300	1348134-0000		1	SLIDE	
300	1499418-0000		1	SLIDE	
300	1348133-0000		1	SLIDE	
300	1348132-0000		1	SLIDE	
310	1539875-0000		1	SLIDE	
310	1348143-0000		1	SLIDE	
310	1348142-0000		1	SLIDE	
310	1348141-0000		1	SLIDE	
310	1348140-0000		1	SLIDE	
310	1532258-0000		1	SLIDE	
310	1490034-0000		1	SLIDE	
310	1348139-0000		1	SLIDE	
310	1348138-0000		1	SLIDE	
310	1499422-0000		1	SLIDE	

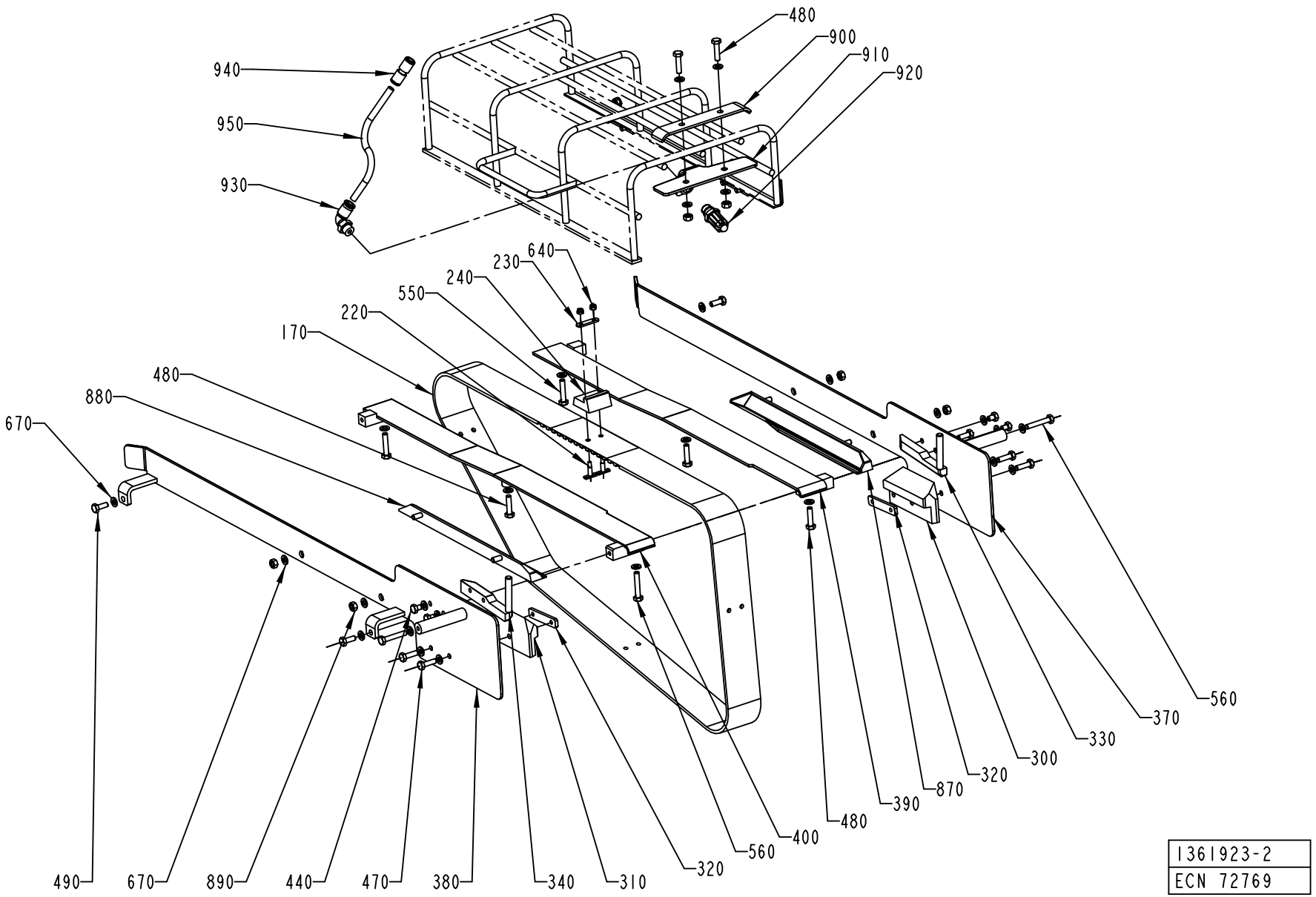

1361923-2
ECN 72769

Pos	Part No	UN	Qty	Description	Page No
Common Parts (Cont'd)					
320	1348169-0000		2	PLATE	
320	1279409-0000		2	PLATE	
320	1539876-0000		2	PLATE	
330	1348146-0000		1	BAR	
330	1348145-0000		1	BAR	
330	1348147-0000		1	BAR	
330	1348148-0000		1	BAR	
330	1348149-0000		1	BAR	
330	1348144-0000		1	BAR	
330	1539877-0000		1	BAR	
330	1490035-0000		1	BAR	
330	1499417-0000		1	BAR	
340	1490036-0000		1	BAR	
340	1499423-0000		1	BAR	
340	1348150-0000		1	BAR	
340	1348151-0000		1	BAR	
340	1348152-0000		1	BAR	
340	1348153-0000		1	BAR	
340	1348154-0000		1	BAR	
340	1348155-0000		1	BAR	
340	1539878-0000		1	BAR	
370	1499401-0000		1	GUIDE	
370	1519089-0000		1	GUIDE	
370	1499427-0000		1	GUIDE	
370	1512308-0000		1	GUIDE	
370	1517242-0000		1	GUIDE	
370	1517244-0000		1	GUIDE	
370	1539879-0000		1	GUIDE	
370	1532261-0000		1	GUIDE	
370	1519093-0000		1	GUIDE	
380	1499400-0000		1	GUIDE	
380	1519094-0000		1	GUIDE	
380	1519090-0000		1	GUIDE	
380	1532262-0000		1	GUIDE	
380	1499426-0000		1	GUIDE	
380	1517245-0000		1	GUIDE	
380	1517243-0000		1	GUIDE	
380	1512307-0000		1	GUIDE	
380	1539880-0000		1	GUIDE	
390	1317651-0000		1	GUIDE	
390	1478215-0000		1	SLIDE	
400	1317650-0000		1	GUIDE	
400	1478214-0000		1	SLIDE	
480	312105-0372		5	SCREW M6S ISO 4017 M6X25 A480	
490	312105-0368		4	SCREW M6S ISO 4017 M6X16 A480	
640	312812-0312		8	HEXAGON NUT, NY-LOCK M4 A480	
670	315105-0153		20	WASHER BRB6,4X12RFR	
870	1532263-0000		1	GUIDE	
870	1517526-0000		1	GUIDE	
880	1532264-0000		1	GUIDE	
880	1517527-0000		1	GUIDE	

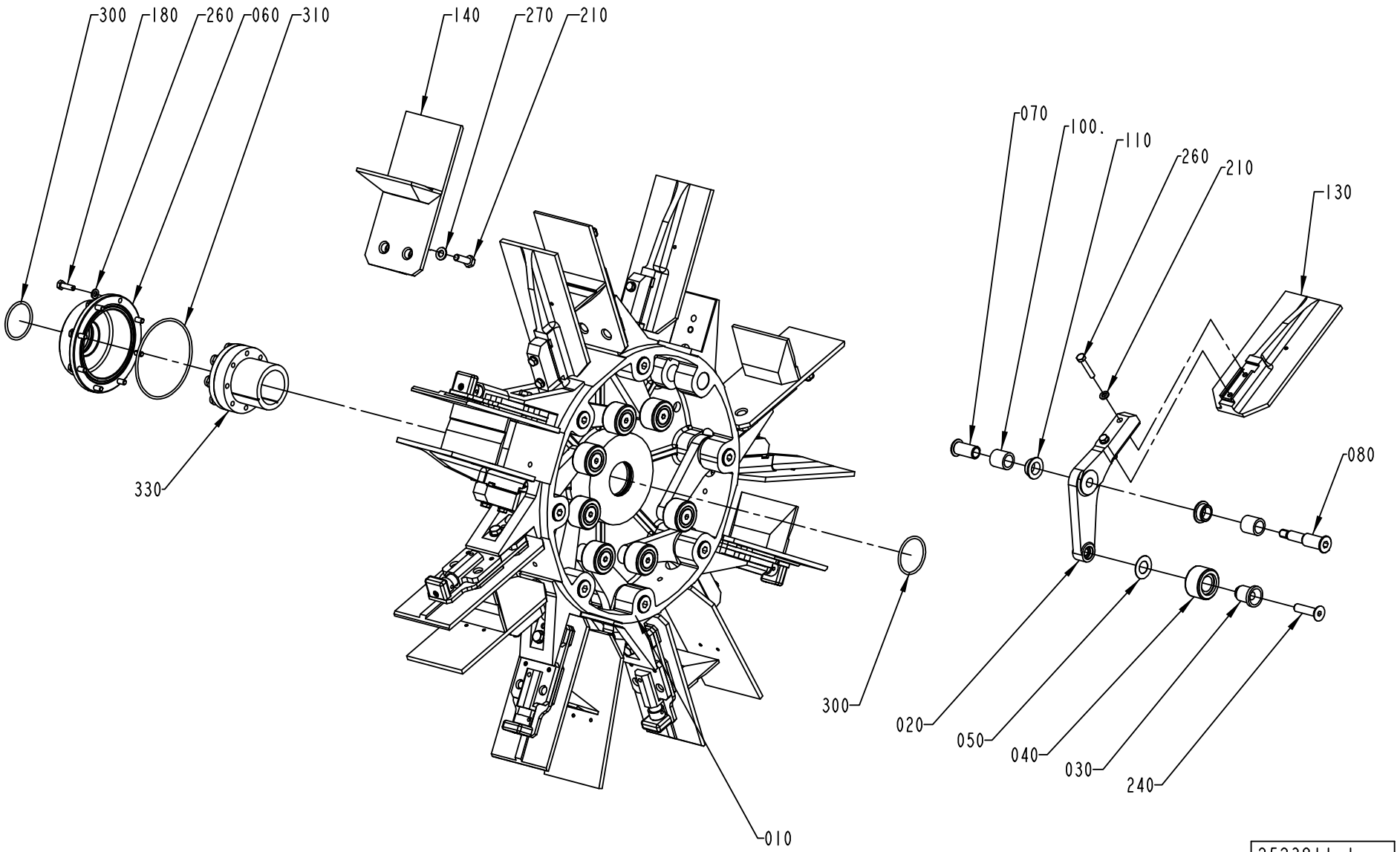

2523811-1
ECM 110155

ECM: 180386 - 50001231
Group number: 2523811-0100
Assembly Drawing: 2523811-1_1_AA

This list covers pages from 5-52 to 5-57

Pos	Part No	UN	Qty	Description	Page No
0500B, 1000B (See drawing on page: 5-52)					
130	1260704-0000		8	FLAP	
190	312155-0370		8	SCREW EN 10642 MF6S M6X20 A480	
200	312105-0376		16	SCREW M6S ISO 4014 M6X35 A480	
260	315105-0153		24	WASHER BRB6,4X12RFR	
1000SQ (See drawing on page: 5-54)					
130	2518035-0000		8	FLAP	
160	1338941-0000		8	BOTTOM	
190	312155-0370		8	SCREW EN 10642 MF6S M6X20 A480	
200	312105-0376		16	SCREW M6S ISO 4014 M6X35 A480	
260	315105-0153		24	WASHER BRB6,4X12RFR	
TBA 0330S, TBA 0200B, TBA 0250B (See drawing on page: 5-52)					
130	2651146-0000		8	FLAP	
190	312155-0370		8	SCREW EN 10642 MF6S M6X20 A480	
200	312105-0376		16	SCREW M6S ISO 4014 M6X35 A480	
260	315105-0153		24	WASHER BRB6,4X12RFR	
TBA 1890S (See drawing on page: 5-56)					
090	2693197-0000		32	INSERT	
130	2566321-0000		8	FLAP	
140	2566323-0000		8	FLAP	
150	2638180-0000		16	INSERT	
160	2658390-0100		8	BOTTOM	**5-59**
170	2588327-0000		8	INSERT	
190	312115-0370		8	SCREW ISO4762 M6X20 A4	
200	2693200-0000		16	SCREW	
205	315115-0153		16	WASHER PLAIN, TBRB 6,4/12 H=3	
250	312155-0287		32	SCREW EN 10642 MF6S M4X8 A480	
260	315105-0153		8	WASHER BRB6,4X12RFR	
TBA 2000S (See drawing on page: 5-56)					
090	2693197-0000		32	INSERT	
130	2566321-0000		8	FLAP	
140	2566323-0000		8	FLAP	
150	2638180-0000		16	INSERT	
160	2658390-0100		8	BOTTOM	**5-59**
170	2588327-0000		8	INSERT	
190	312115-0370		8	SCREW ISO4762 M6X20 A4	
200	2693200-0000		16	SCREW	
205	315115-0153		16	WASHER PLAIN, TBRB 6,4/12 H=3	
250	312155-0287		32	SCREW EN 10642 MF6S M4X8 A480	
260	315105-0153		8	WASHER BRB6,4X12RFR	
Common Parts					
010	1144264-0000		1	HUB	
020	1279559-0000		8	ARM	
030	1144312-0000		8	AXLE PIN	
040	1144335-0000		8	ROLLER	
050	1144354-0000		8	WASHER	
060	1144356-0000		1	COVER	
070	1296970-0000		8	SCREW BUSHING	
080	1296969-0000		8	SCREW HOLDER	
100	1144417-0000		16	BUSHING	
110	1282708-0000		16	BUSHING	
130	2539178-0000		8	FLAP	
130	2619619-0000		8	FLAP	
140	2523812-0100		8	FLAP	**5-61**
160	2619620-0000		8	BOTTOM	
180	312105-0370		8	SCREW M6S ISO 4017 M6X20 A480	
190	312155-0370		8	SCREW EN 10642 MF6S M6X20 A480	
210	312105-0453		8	SCREW M6S ISO 4017 M8X25 A480	
240	312155-0499		8	SCREW EN 10642 MF6S M10X40 A480	
270	315105-0165		8	WASHER BRB8,4X16RFR	
300	315202-0225		2	O-RING 44,2X3 MM	
310	315202-0311		1	O-RING 99,5X3 MM	
330	90208-0087		1	CLAMPING ELEMENT WITH SLEEVE, 45X59 MM	

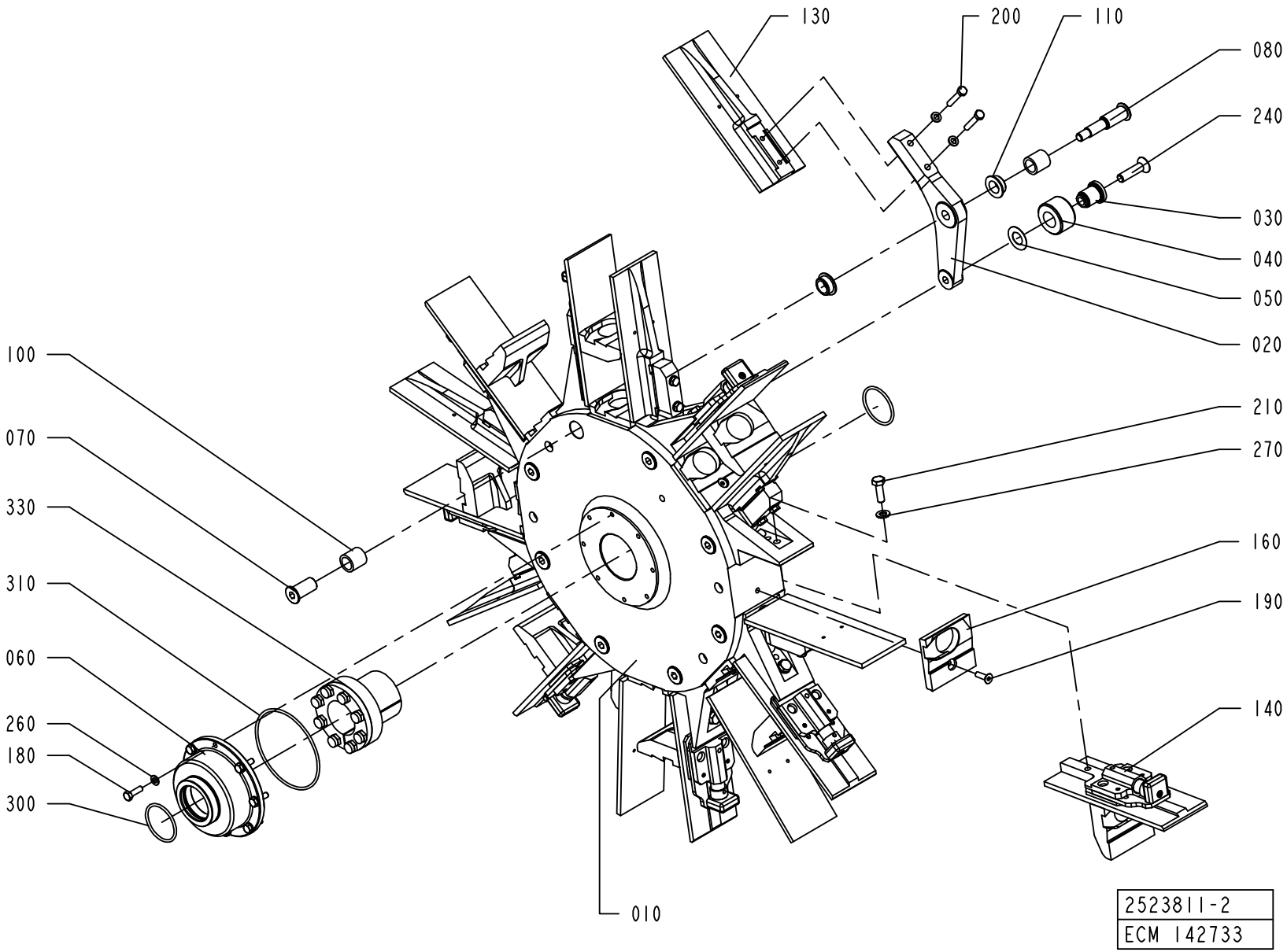
130
200
110
080
240
030
040
050
020
100
070
330
210
270
310
160
190
060
140
260
180
300
010
2523811-2
ECM 142733

ECM: 180386 - 50001231
Group number: 2523811-0100
Assembly Drawing: 2523811-2_1_AA

This list covers pages from 5-52 to 5-57

Pos	Part No	UN	Qty	Description	Page No
0500B, 1000B (See drawing on page: 5-52)					
130	1260704-0000		8	FLAP	
190	312155-0370		8	SCREW EN 10642 MF6S M6X20 A480	
200	312105-0376		16	SCREW M6S ISO 4014 M6X35 A480	
260	315105-0153		24	WASHER BRB6,4X12RFR	
1000SQ (See drawing on page: 5-54)					
130	2518035-0000		8	FLAP	
160	1338941-0000		8	BOTTOM	
190	312155-0370		8	SCREW EN 10642 MF6S M6X20 A480	
200	312105-0376		16	SCREW M6S ISO 4014 M6X35 A480	
260	315105-0153		24	WASHER BRB6,4X12RFR	
TBA 0330S, TBA 0200B, TBA 0250B (See drawing on page: 5-52)					
130	2651146-0000		8	FLAP	
190	312155-0370		8	SCREW EN 10642 MF6S M6X20 A480	
200	312105-0376		16	SCREW M6S ISO 4014 M6X35 A480	
260	315105-0153		24	WASHER BRB6,4X12RFR	
TBA 1890S (See drawing on page: 5-56)					
090	2693197-0000		32	INSERT	
130	2566321-0000		8	FLAP	
140	2566323-0000		8	FLAP	
150	2638180-0000		16	INSERT	
160	2658390-0100		8	BOTTOM	**5-59**
170	2588327-0000		8	INSERT	
190	312115-0370		8	SCREW ISO4762 M6X20 A4	
200	2693200-0000		16	SCREW	
205	315115-0153		16	WASHER PLAIN, TBRB 6,4/12 H=3	
250	312155-0287		32	SCREW EN 10642 MF6S M4X8 A480	
260	315105-0153		8	WASHER BRB6,4X12RFR	
TBA 2000S (See drawing on page: 5-56)					
090	2693197-0000		32	INSERT	
130	2566321-0000		8	FLAP	
140	2566323-0000		8	FLAP	
150	2638180-0000		16	INSERT	
160	2658390-0100		8	BOTTOM	**5-59**
170	2588327-0000		8	INSERT	
190	312115-0370		8	SCREW ISO4762 M6X20 A4	
200	2693200-0000		16	SCREW	
205	315115-0153		16	WASHER PLAIN, TBRB 6,4/12 H=3	
250	312155-0287		32	SCREW EN 10642 MF6S M4X8 A480	
260	315105-0153		8	WASHER BRB6,4X12RFR	
Common Parts					
010	1144264-0000		1	HUB	
020	1279559-0000		8	ARM	
030	1144312-0000		8	AXLE PIN	
040	1144335-0000		8	ROLLER	
050	1144354-0000		8	WASHER	
060	1144356-0000		1	COVER	
070	1296970-0000		8	SCREW BUSHING	
080	1296969-0000		8	SCREW HOLDER	
100	1144417-0000		16	BUSHING	
110	1282708-0000		16	BUSHING	
130	2539178-0000		8	FLAP	
130	2619619-0000		8	FLAP	
140	2523812-0100		8	FLAP	**5-61**
160	2619620-0000		8	BOTTOM	
180	312105-0370		8	SCREW M6S ISO 4017 M6X20 A480	
190	312155-0370		8	SCREW EN 10642 MF6S M6X20 A480	
210	312105-0453		8	SCREW M6S ISO 4017 M8X25 A480	
240	312155-0499		8	SCREW EN 10642 MF6S M10X40 A480	
270	315105-0165		8	WASHER BRB8,4X16RFR	
300	315202-0225		2	O-RING 44,2X3 MM	
310	315202-0311		1	O-RING 99,5X3 MM	
330	90208-0087		1	CLAMPING ELEMENT WITH SLEEVE, 45X59 MM	

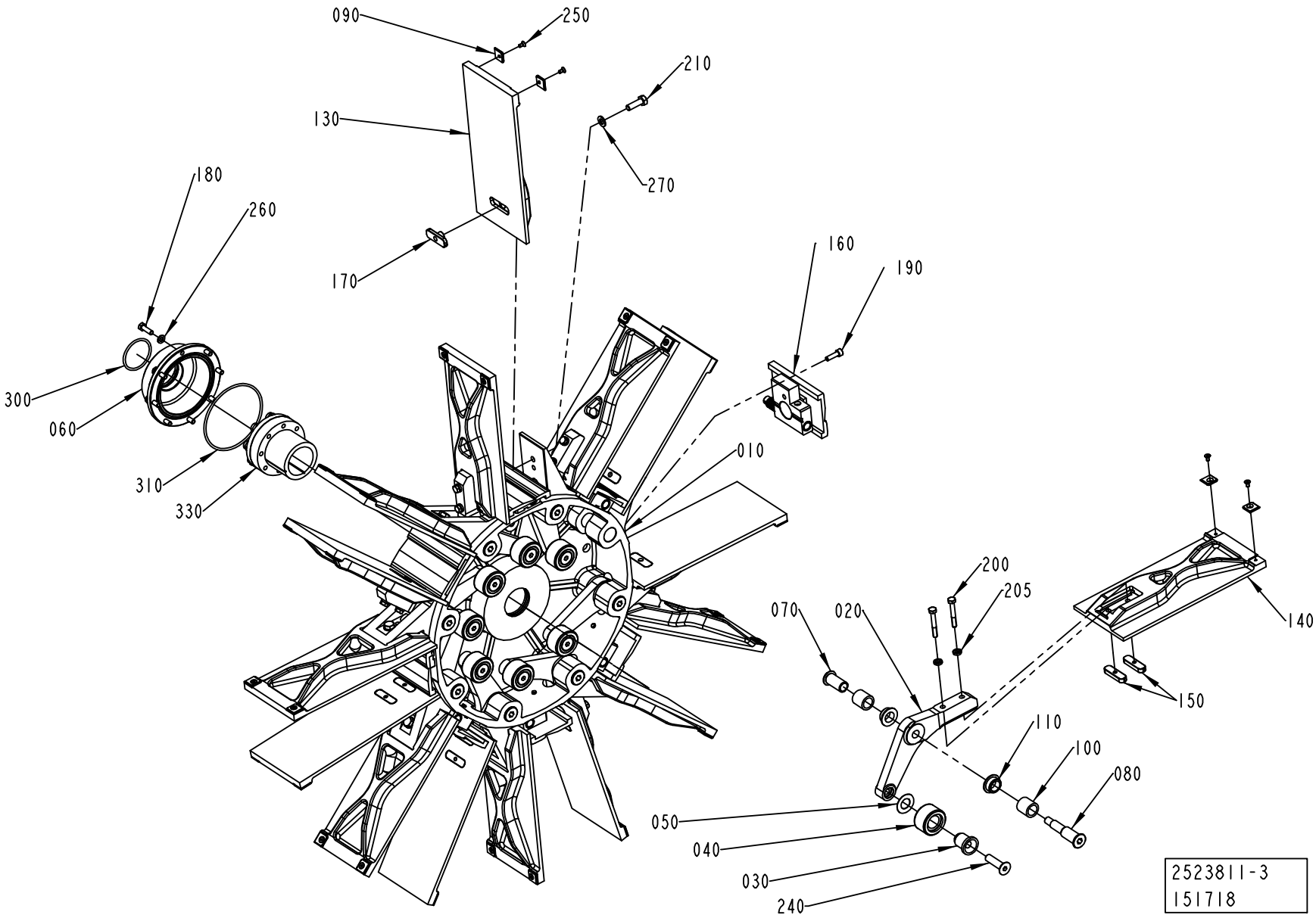
090
250
210
130
270
180
260
170
160
190
300
060
010
310
330
200
205
070
020
140
150
110
100
080
050
040
030
240
2523811-3
151718

ECM: 180386 - 50001231
Group number: 2523811-0100
Assembly Drawing: 2523811-3_1_AA

This list covers pages from 5-52 to 5-57

Pos	Part No	UN	Qty	Description	Page No
0500B, 1000B (See drawing on page: 5-52)					
130	1260704-0000		8	FLAP	
190	312155-0370		8	SCREW EN 10642 MF6S M6X20 A480	
200	312105-0376		16	SCREW M6S ISO 4014 M6X35 A480	
260	315105-0153		24	WASHER BRB6,4X12RFR	
1000SQ (See drawing on page: 5-54)					
130	2518035-0000		8	FLAP	
160	1338941-0000		8	BOTTOM	
190	312155-0370		8	SCREW EN 10642 MF6S M6X20 A480	
200	312105-0376		16	SCREW M6S ISO 4014 M6X35 A480	
260	315105-0153		24	WASHER BRB6,4X12RFR	
TBA 0330S, TBA 0200B, TBA 0250B (See drawing on page: 5-52)					
130	2651146-0000		8	FLAP	
190	312155-0370		8	SCREW EN 10642 MF6S M6X20 A480	
200	312105-0376		16	SCREW M6S ISO 4014 M6X35 A480	
260	315105-0153		24	WASHER BRB6,4X12RFR	
TBA 1890S (See drawing on page: 5-56)					
090	2693197-0000		32	INSERT	
130	2566321-0000		8	FLAP	
140	2566323-0000		8	FLAP	
150	2638180-0000		16	INSERT	
160	2658390-0100		8	BOTTOM	**5-59**
170	2588327-0000		8	INSERT	
190	312115-0370		8	SCREW ISO4762 M6X20 A4	
200	2693200-0000		16	SCREW	
205	315115-0153		16	WASHER PLAIN, TBRB 6,4/12 H=3	
250	312155-0287		32	SCREW EN 10642 MF6S M4X8 A480	
260	315105-0153		8	WASHER BRB6,4X12RFR	
TBA 2000S (See drawing on page: 5-56)					
090	2693197-0000		32	INSERT	
130	2566321-0000		8	FLAP	
140	2566323-0000		8	FLAP	
150	2638180-0000		16	INSERT	
160	2658390-0100		8	BOTTOM	**5-59**
170	2588327-0000		8	INSERT	
190	312115-0370		8	SCREW ISO4762 M6X20 A4	
200	2693200-0000		16	SCREW	
205	315115-0153		16	WASHER PLAIN, TBRB 6,4/12 H=3	
250	312155-0287		32	SCREW EN 10642 MF6S M4X8 A480	
260	315105-0153		8	WASHER BRB6,4X12RFR	
Common Parts					
010	1144264-0000		1	HUB	
020	1279559-0000		8	ARM	
030	1144312-0000		8	AXLE PIN	
040	1144335-0000		8	ROLLER	
050	1144354-0000		8	WASHER	
060	1144356-0000		1	COVER	
070	1296970-0000		8	SCREW BUSHING	
080	1296969-0000		8	SCREW HOLDER	
100	1144417-0000		16	BUSHING	
110	1282708-0000		16	BUSHING	
130	2539178-0000		8	FLAP	
130	2619619-0000		8	FLAP	
140	2523812-0100		8	FLAP	**5-61**
160	2619620-0000		8	BOTTOM	
180	312105-0370		8	SCREW M6S ISO 4017 M6X20 A480	
190	312155-0370		8	SCREW EN 10642 MF6S M6X20 A480	
210	312105-0453		8	SCREW M6S ISO 4017 M8X25 A480	
240	312155-0499		8	SCREW EN 10642 MF6S M10X40 A480	
270	315105-0165		8	WASHER BRB8,4X16RFR	
300	315202-0225		2	O-RING 44,2X3 MM	
310	315202-0311		1	O-RING 99,5X3 MM	
330	90208-0087		1	CLAMPING ELEMENT WITH SLEEVE, 45X59 MM	

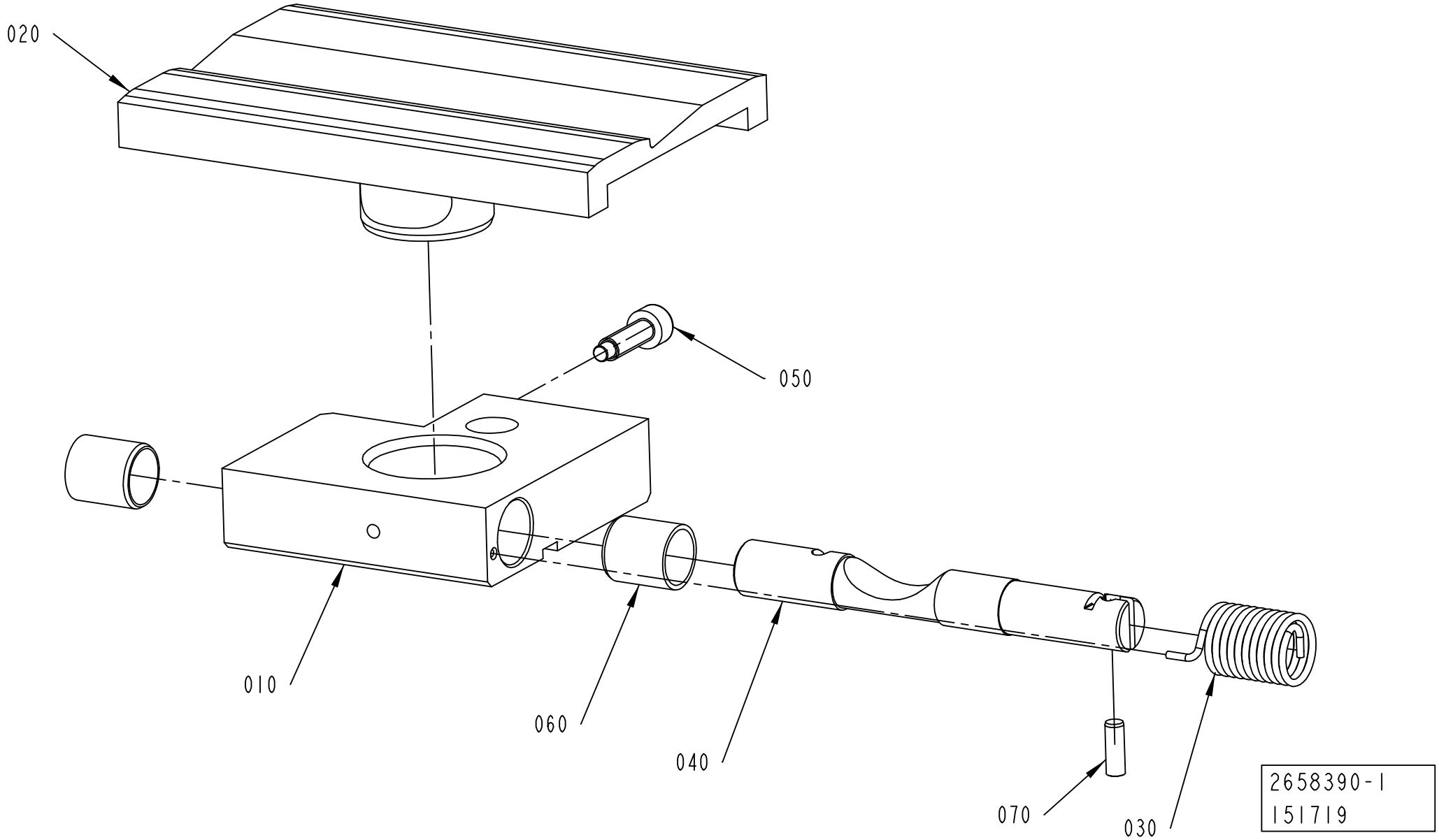
020
050
010
060
040
070
030
2658390-1
151719

ECM: 174307 - 50001231
Group number: 2658390-0100
Assembly Drawing: 2658390-1_1_AA

Pos	Part No	UN	Qty	Description	Page No
TBA 1890S					
020	2616218-0000		1	BOTTOM	
TBA 2000S					
020	2616219-0000		1	BOTTOM	
Common Parts					
010	2616217-0000		1	BOTTOM	
030	2650817-0000		1	SPRING	
040	2652888-0000		1	SHAFT	
050	2652889-0000		1	SCREW	
060	321138-0183		2	BUSHING, 12X14X15 MM	
070	311103-0268		1	PARALLEL PIN ISO 2338 4M6X12 A1	

Pos	Part No	UN	Qty	Description	Page No

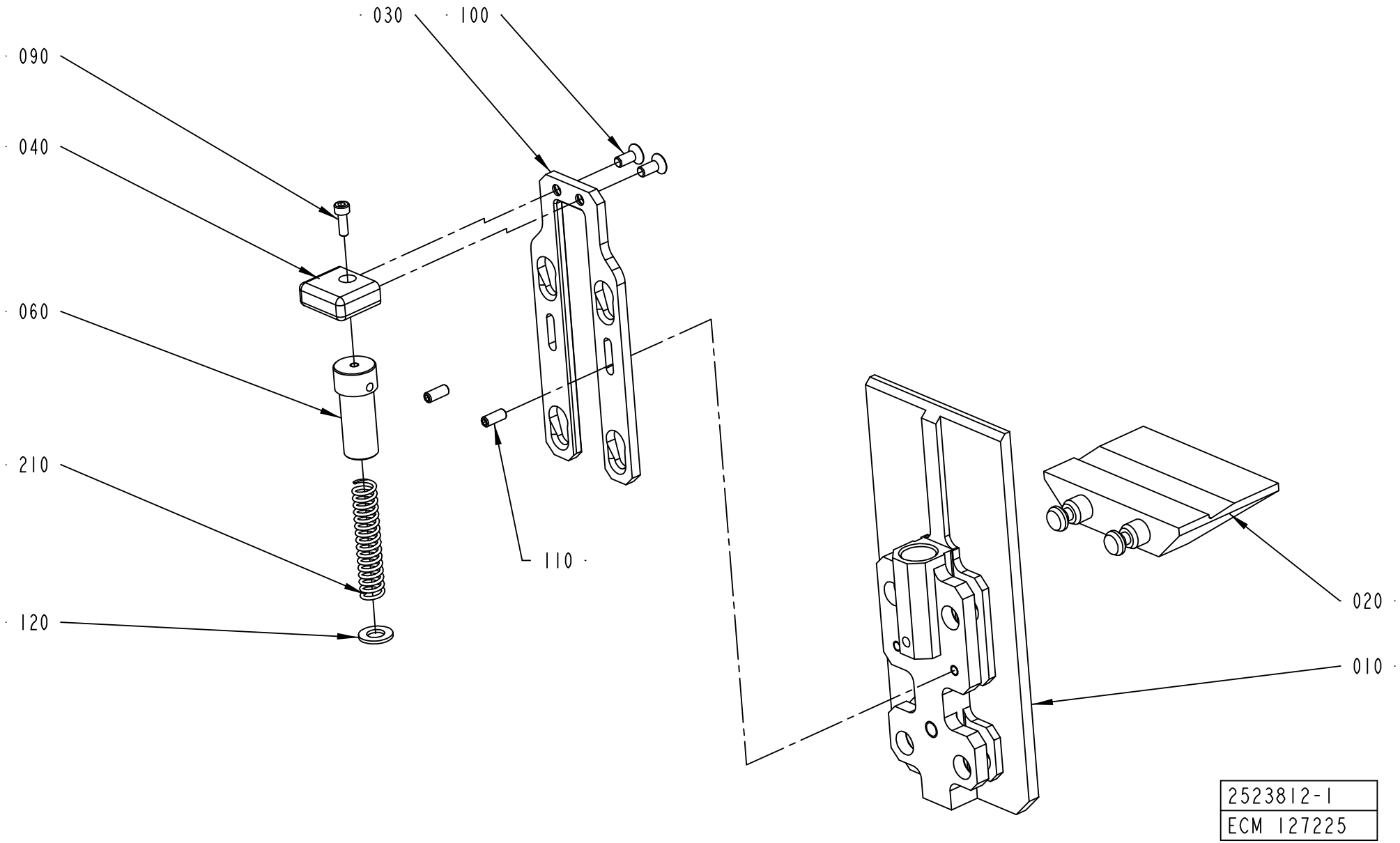
030
100
090
040
060
210
120
110
020
010
2523812-1
ECM 127225

ECM: 181063 - 50001231
Group number: 2523812-0100
Assembly Drawing: 2523812-1_1_AB

Pos	Part No	UN	Qty	Description	Page No
TBA 0200B QC, TBA 0330S QC, TBA 0250B QC					
100	312155-0327		16	SCREW EN 10642 MF6S M5X12 A480	
110	312318-0327		16	SCREW ISO4029 M5X12 A4	
120	315105-0165		8	WASHER BRB8,4X16RFR	
TBA 0500B, TBA 1000B					
010	2520170-0000		1	FLAP	
030	2520168-0000		1	SLIDE	
100	312155-0327		2	SCREW EN 10642 MF6S M5X12 A480	
110	312318-0327		2	SCREW ISO4029 M5X12 A4	
120	315105-0165		1	WASHER BRB8,4X16RFR	
Common Parts					
010	2539173-0000		1	FLAP	
010	2603488-0000		1	FLAP	
010	2553615-0000		1	FLAP	
010	2619618-0000		1	FLAP	
010	2598805-0000		1	FLAP	
020	2603489-0000		1	BOTTOM	
020	2619391-0000		1	BOTTOM	
020	2629336-0000		1	BOTTOM	
020	2674998-0000		1	BOTTOM	
030	2603490-0000		1	SLIDE	
030	2598807-0000		1	SLIDE	
030	2553617-0000		1	SLIDE	
030	2539361-0000		1	SLIDE	
040	2526563-0000		1	HANDLE	
060	2526567-0000		1	CYLINDER	
090	312115-0291		1	SCREW ISO4762 M4X12 A4	
210	90459-0969		1	COMP. SPRING A D22430, 1,6X11,6X58,5	

Pos	Part No	UN	Qty	Description	Page No

Machine Type | Group Description | Used-In | Group Number | Page No

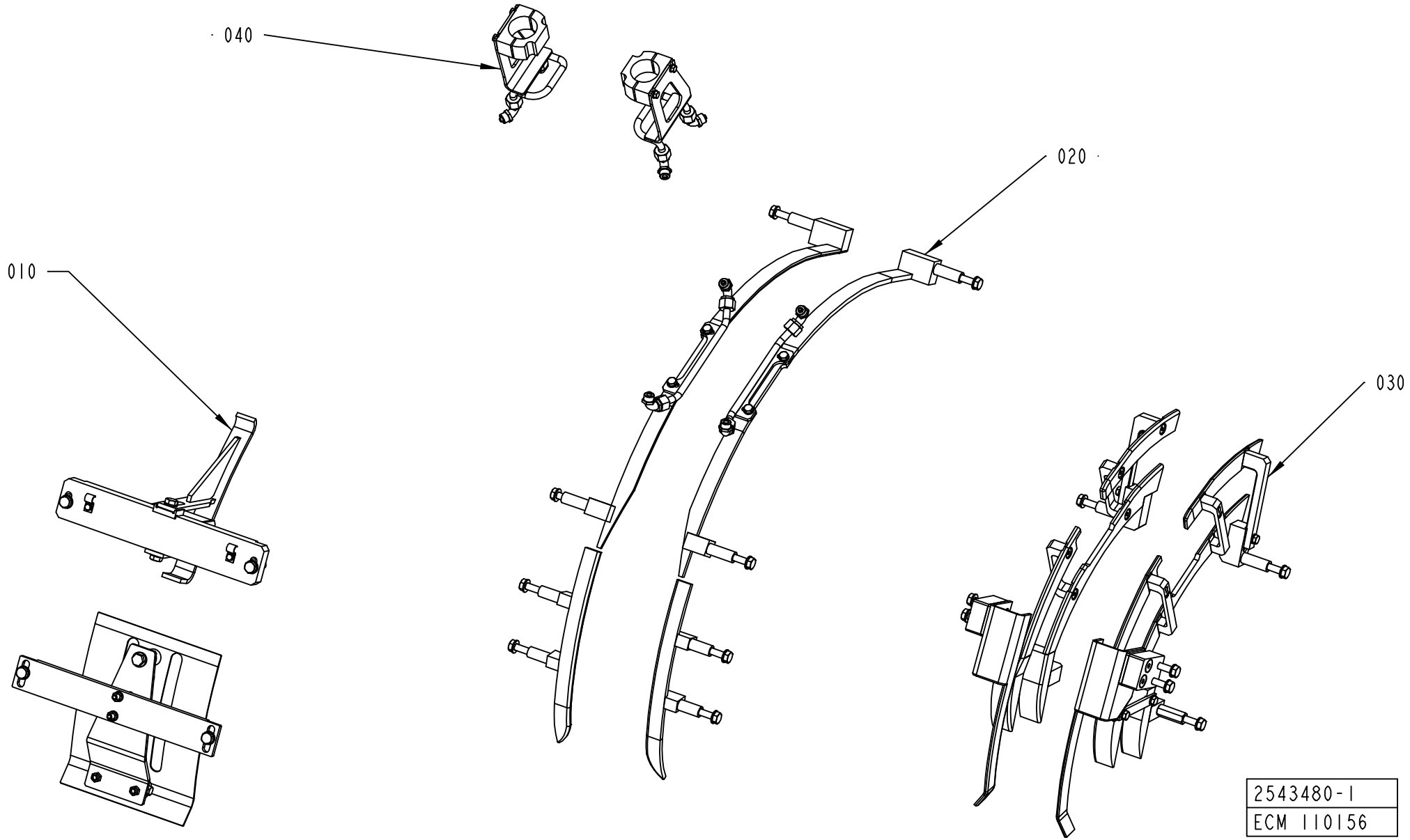
040
020
010
030
2543480-1
ECM 110156

ECM: 127231 - 20031103
Group number: 2543480-0100
Assembly Drawing: 2543480-1_1_AA

Pos	Part No	UN	Qty	Description	Page No
-					
010	2543481-0100		1	TOP SECTION	**5-65, 5-67, 5-69**
020	2543482-0100		1	TOP RAIL	**5-71, 5-73, 5-75**
030	2603827-0100		1	FLAP GUIDE	**5-77, 5-79, 5-81**
040	2603826-0100		1	FOLDING PART	**5-83**

Pos	Part No	UN	Qty	Description	Page No

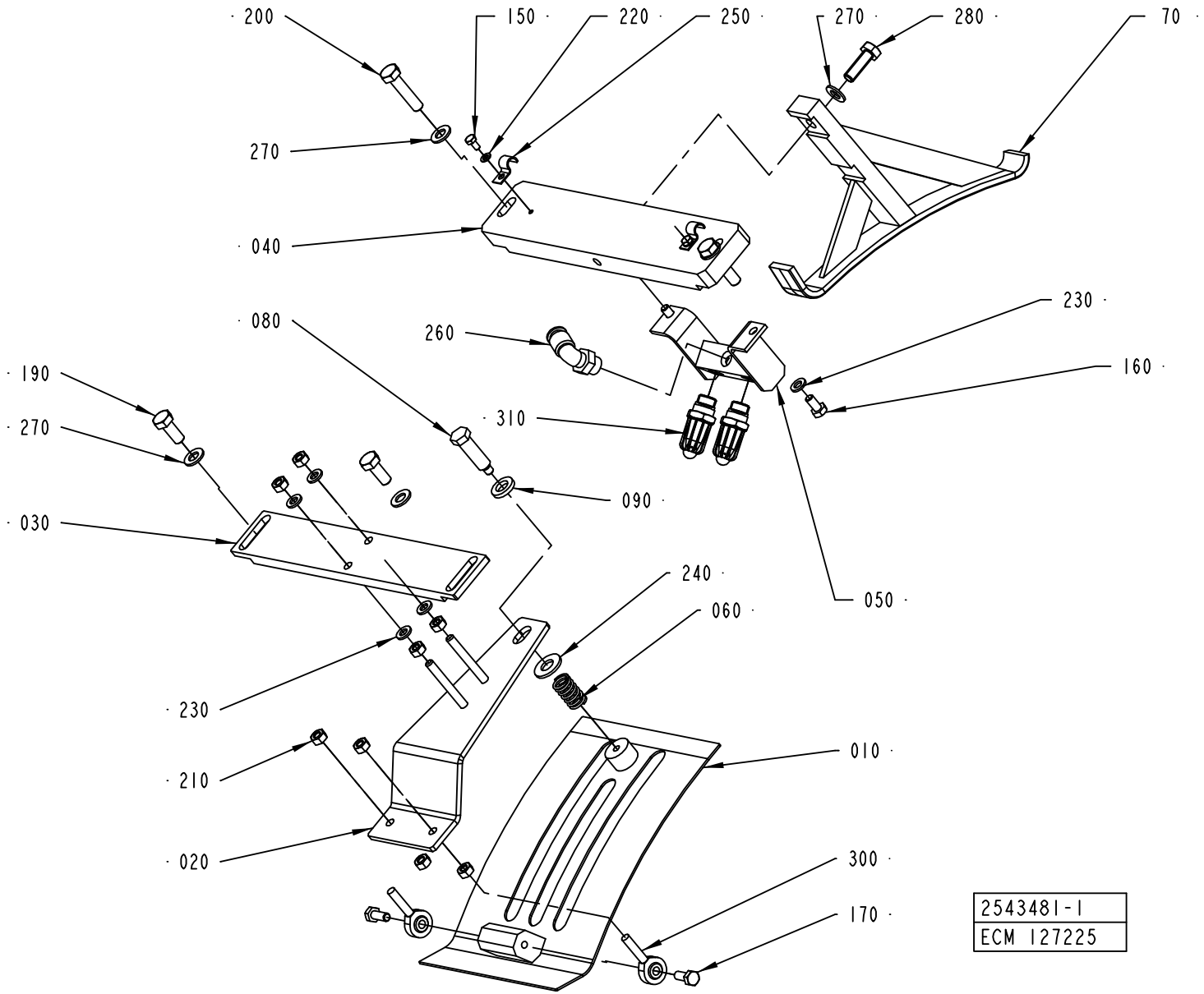
200
150
220
250
270
280
70
270
040
080
260
230
160
190
270
310
090
030
240
060
050
230
210
010
020
300
170
2543481-1
ECM 127225

ECM: 181066 - 50001231
Group number: 2543481-0100
Assembly Drawing: 2543481-1_1_AB

This list covers pages from 5-64 to 5-69

Pos	Part No	UN	Qty	Description	Page No
TBA 0330S, TBA 0200B, TBA 0250B (See drawing on page: 5-68)					
010	1317211-0000		1	COVERING PLATE	
020	1317213-0000		1	ADJUSTING PLATE	
030	1144975-0000		1	ATTACHMENT PLATE	
040	1144902-0000		1	SUPPORT	
050	1349087-0000		1	DISTRIBUTOR	
070	2552022-0000		1	GUIDE	
100	2553284-0000		1	BLOCK	
150	312105-0287		2	SCREW M6S ISO4017 M4X8 A470	
160	312105-0366		2	SCREW M6S ISO 4017 M6X12 A480	
190	312105-0451		2	SCREW M6S ISO 4017 M8X20 A480	
220	315105-0136		2	WASHER BRB4,3XRFR	
230	315105-0153		6	WASHER BRB6,4X12RFR	
250	90165-0057		2	PIPE CLIP FOR TUBE D=6 MM	
260	90458-2958		1	ELBOW PIPE JOINT, EXT.THREAD, D=8MM-G1/4	
270	315105-0165		6	WASHER BRB8,4X16RFR	
280	312105-0451		2	SCREW M6S ISO 4017 M8X20 A480	
310	90424-0068		1	AIR NOZZLE, G1/4, MOD. 216 BSP	
TBA 0500B, TBA 1000B (See drawing on page: 5-64)					
010	1144941-0000		1	COVERING PLATE	
020	1144974-0000		1	ADJUSTING PLATE	
030	1144975-0000		1	ATTACHMENT PLATE	
040	1144902-0000		1	SUPPORT	
050	1285014-0000		1	DISTRIBUTOR	
070	2609372-0000		1	GUIDE	
150	312105-0287		2	SCREW M6S ISO4017 M4X8 A470	
160	312105-0366		2	SCREW M6S ISO 4017 M6X12 A480	
180	312105-0449		1	SCREW M6S ISO 4017 M8X16 A480	
190	312105-0451		2	SCREW M6S ISO 4017 M8X20 A480	
220	315105-0136		2	WASHER BRB4,3XRFR	
230	315105-0153		6	WASHER BRB6,4X12RFR	
250	90165-0057		2	PIPE CLIP FOR TUBE D=6 MM	
260	90458-2958		1	ELBOW PIPE JOINT, EXT.THREAD, D=8MM-G1/4	
270	315105-0165		5	WASHER BRB8,4X16RFR	
280	312105-0453		1	SCREW M6S ISO 4017 M8X25 A480	
310	90424-0068		2	AIR NOZZLE, G1/4, MOD. 216 BSP	
TBA 1890S, TBA 2000S (See drawing on page: 5-66)					
010	1548612-0000		1	COVERING PLATE	
020	1144974-0000		1	ADJUSTING PLATE	
030	1285299-0000		1	BRACKET	
040	1334480-0000		1	SUPPORT	
070	1347057-0000		1	GUIDE	
150	312105-0287		4	SCREW M6S ISO4017 M4X8 A470	
180	312105-0449		1	SCREW M6S ISO 4017 M8X16 A480	
190	312105-0453		2	SCREW M6S ISO 4017 M8X25 A480	
220	315105-0136		4	WASHER BRB4,3XRFR	
230	315105-0153		4	WASHER BRB6,4X12RFR	
250	316810-0106		4	PIPE CLIP FOR TUBE D=8 MM	
270	315105-0165		6	WASHER BRB8,4X16RFR	
280	312115-0449		1	SCREW ISO4762 M8X16 A4	
310	90424-0068		2	AIR NOZZLE, G1/4, MOD. 216 BSP	
320	342981-0122		1	BANJO CONNEC,RING,FOR PLAST.TUBE 8-G1/4"	
330	90235-0731		1	THROTTLE CHECK VALVE, G1/4", SCO-606-1/4	
Common Parts					
060	90335-0036		1	COMP. SPRING 22450, 1,6X14,1X24	
080	1144976-0000		1	STOP SCREW	
090	1144979-0000		1	WASHER	
170	312105-0368		2	SCREW M6S ISO 4017 M6X16 A480	
200	312105-0457		2	SCREW M6S ISO 4014 M8X35 A480	
210	312605-0316		8	HEXAGON NUT, M6M M6 A280	
240	315105-0173		1	WASHER BRB10,5X22RFR	
300	90115-0137		2	ROD END, ID=6 MM, M6X1	

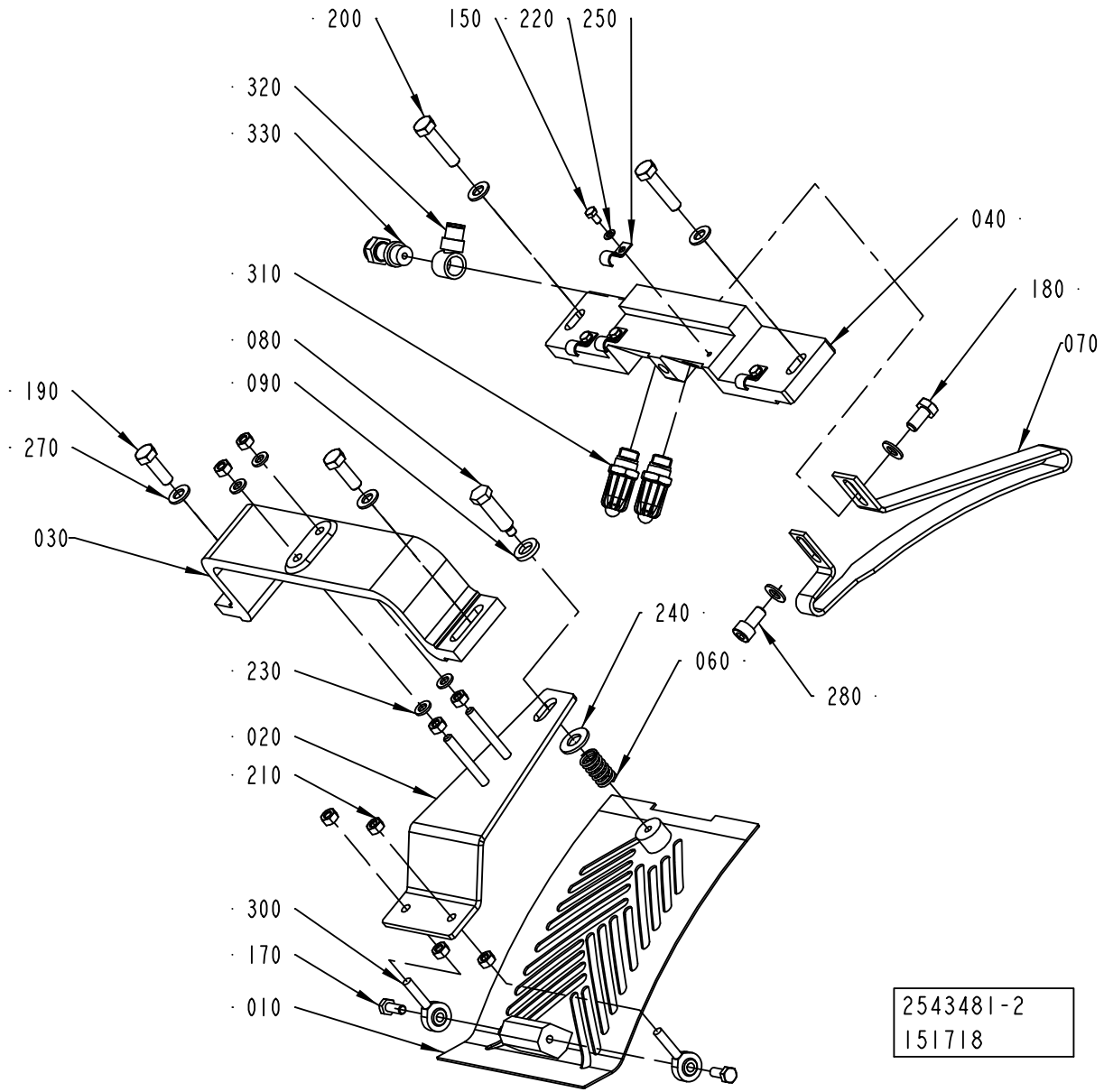
200
150
220
250
320
330
040
310
180
080
070
090
190
270
030
240
060
280
230
020
210
300
170
010
2543481-2
151718

ECM: 181066 - 50001231
Group number: 2543481-0100
Assembly Drawing: 2543481-2_1_AA

This list covers pages from 5-64 to 5-69

Pos	Part No	UN	Qty	Description	Page No
TBA 0330S, TBA 0200B, TBA 0250B (See drawing on page: 5-68)					
010	1317211-0000		1	COVERING PLATE	
020	1317213-0000		1	ADJUSTING PLATE	
030	1144975-0000		1	ATTACHMENT PLATE	
040	1144902-0000		1	SUPPORT	
050	1349087-0000		1	DISTRIBUTOR	
070	2552022-0000		1	GUIDE	
100	2553284-0000		1	BLOCK	
150	312105-0287		2	SCREW M6S ISO4017 M4X8 A470	
160	312105-0366		2	SCREW M6S ISO 4017 M6X12 A480	
190	312105-0451		2	SCREW M6S ISO 4017 M8X20 A480	
220	315105-0136		2	WASHER BRB4,3XRFR	
230	315105-0153		6	WASHER BRB6,4X12RFR	
250	90165-0057		2	PIPE CLIP FOR TUBE D=6 MM	
260	90458-2958		1	ELBOW PIPE JOINT, EXT.THREAD, D=8MM-G1/4	
270	315105-0165		6	WASHER BRB8,4X16RFR	
280	312105-0451		2	SCREW M6S ISO 4017 M8X20 A480	
310	90424-0068		1	AIR NOZZLE, G1/4, MOD. 216 BSP	
TBA 0500B, TBA 1000B (See drawing on page: 5-64)					
010	1144941-0000		1	COVERING PLATE	
020	1144974-0000		1	ADJUSTING PLATE	
030	1144975-0000		1	ATTACHMENT PLATE	
040	1144902-0000		1	SUPPORT	
050	1285014-0000		1	DISTRIBUTOR	
070	2609372-0000		1	GUIDE	
150	312105-0287		2	SCREW M6S ISO4017 M4X8 A470	
160	312105-0366		2	SCREW M6S ISO 4017 M6X12 A480	
180	312105-0449		1	SCREW M6S ISO 4017 M8X16 A480	
190	312105-0451		2	SCREW M6S ISO 4017 M8X20 A480	
220	315105-0136		2	WASHER BRB4,3XRFR	
230	315105-0153		6	WASHER BRB6,4X12RFR	
250	90165-0057		2	PIPE CLIP FOR TUBE D=6 MM	
260	90458-2958		1	ELBOW PIPE JOINT, EXT.THREAD, D=8MM-G1/4	
270	315105-0165		5	WASHER BRB8,4X16RFR	
280	312105-0453		1	SCREW M6S ISO 4017 M8X25 A480	
310	90424-0068		2	AIR NOZZLE, G1/4, MOD. 216 BSP	
TBA 1890S, TBA 2000S (See drawing on page: 5-66)					
010	1548612-0000		1	COVERING PLATE	
020	1144974-0000		1	ADJUSTING PLATE	
030	1285299-0000		1	BRACKET	
040	1334480-0000		1	SUPPORT	
070	1347057-0000		1	GUIDE	
150	312105-0287		4	SCREW M6S ISO4017 M4X8 A470	
180	312105-0449		1	SCREW M6S ISO 4017 M8X16 A480	
190	312105-0453		2	SCREW M6S ISO 4017 M8X25 A480	
220	315105-0136		4	WASHER BRB4,3XRFR	
230	315105-0153		4	WASHER BRB6,4X12RFR	
250	316810-0106		4	PIPE CLIP FOR TUBE D=8 MM	
270	315105-0165		6	WASHER BRB8,4X16RFR	
280	312115-0449		1	SCREW ISO4762 M8X16 A4	
310	90424-0068		2	AIR NOZZLE, G1/4, MOD. 216 BSP	
320	342981-0122		1	BANJO CONNEC,RING,FOR PLAST.TUBE 8-G1/4"	
330	90235-0731		1	THROTTLE CHECK VALVE, G1/4", SCO-606-1/4	
Common Parts					
060	90335-0036		1	COMP. SPRING 22450, 1,6X14,1X24	
080	1144976-0000		1	STOP SCREW	
090	1144979-0000		1	WASHER	
170	312105-0368		2	SCREW M6S ISO 4017 M6X16 A480	
200	312105-0457		2	SCREW M6S ISO 4014 M8X35 A480	
210	312605-0316		8	HEXAGON NUT, M6M M6 A280	
240	315105-0173		1	WASHER BRB10,5X22RFR	
300	90115-0137		2	ROD END, ID=6 MM, M6X1	

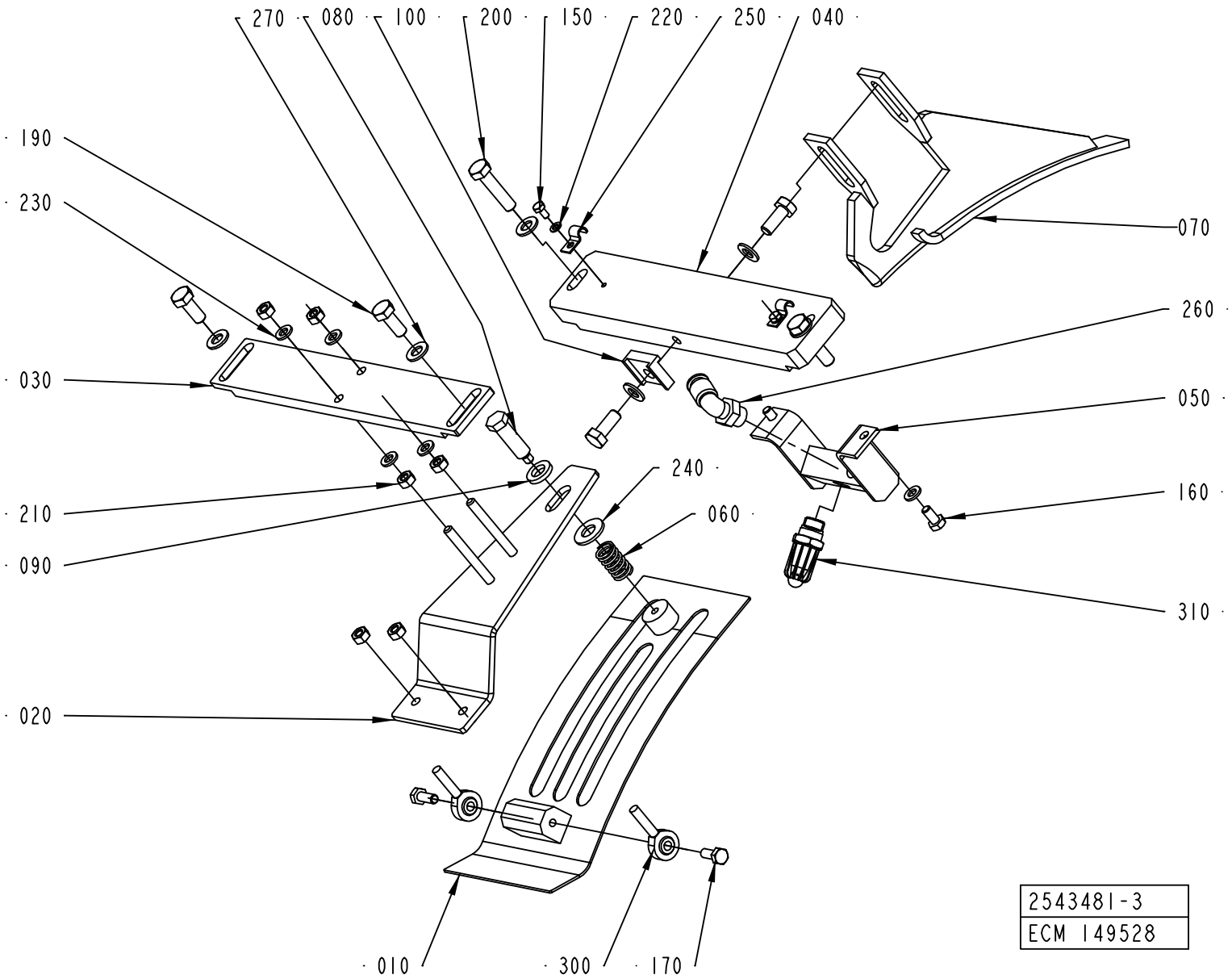
270
080
100
200
150
220
250
040
190
230
070
260
030
050
240
160
060
210
090
310
020
010
300
170
2543481-3
ECM 149528

ECM: 181066 - 50001231
Group number: 2543481-0100
Assembly Drawing: 2543481-3_1_AA

This list covers pages from 5-64 to 5-69

Pos	Part No	UN	Qty	Description	Page No
TBA 0330S, TBA 0200B, TBA 0250B (See drawing on page: 5-68)					
010	1317211-0000		1	COVERING PLATE	
020	1317213-0000		1	ADJUSTING PLATE	
030	1144975-0000		1	ATTACHMENT PLATE	
040	1144902-0000		1	SUPPORT	
050	1349087-0000		1	DISTRIBUTOR	
070	2552022-0000		1	GUIDE	
100	2553284-0000		1	BLOCK	
150	312105-0287		2	SCREW M6S ISO4017 M4X8 A470	
160	312105-0366		2	SCREW M6S ISO 4017 M6X12 A480	
190	312105-0451		2	SCREW M6S ISO 4017 M8X20 A480	
220	315105-0136		2	WASHER BRB4,3XRFR	
230	315105-0153		6	WASHER BRB6,4X12RFR	
250	90165-0057		2	PIPE CLIP FOR TUBE D=6 MM	
260	90458-2958		1	ELBOW PIPE JOINT, EXT.THREAD, D=8MM-G1/4	
270	315105-0165		6	WASHER BRB8,4X16RFR	
280	312105-0451		2	SCREW M6S ISO 4017 M8X20 A480	
310	90424-0068		1	AIR NOZZLE, G1/4, MOD. 216 BSP	
TBA 0500B, TBA 1000B (See drawing on page: 5-64)					
010	1144941-0000		1	COVERING PLATE	
020	1144974-0000		1	ADJUSTING PLATE	
030	1144975-0000		1	ATTACHMENT PLATE	
040	1144902-0000		1	SUPPORT	
050	1285014-0000		1	DISTRIBUTOR	
070	2609372-0000		1	GUIDE	
150	312105-0287		2	SCREW M6S ISO4017 M4X8 A470	
160	312105-0366		2	SCREW M6S ISO 4017 M6X12 A480	
180	312105-0449		1	SCREW M6S ISO 4017 M8X16 A480	
190	312105-0451		2	SCREW M6S ISO 4017 M8X20 A480	
220	315105-0136		2	WASHER BRB4,3XRFR	
230	315105-0153		6	WASHER BRB6,4X12RFR	
250	90165-0057		2	PIPE CLIP FOR TUBE D=6 MM	
260	90458-2958		1	ELBOW PIPE JOINT, EXT.THREAD, D=8MM-G1/4	
270	315105-0165		5	WASHER BRB8,4X16RFR	
280	312105-0453		1	SCREW M6S ISO 4017 M8X25 A480	
310	90424-0068		2	AIR NOZZLE, G1/4, MOD. 216 BSP	
TBA 1890S, TBA 2000S (See drawing on page: 5-66)					
010	1548612-0000		1	COVERING PLATE	
020	1144974-0000		1	ADJUSTING PLATE	
030	1285299-0000		1	BRACKET	
040	1334480-0000		1	SUPPORT	
070	1347057-0000		1	GUIDE	
150	312105-0287		4	SCREW M6S ISO4017 M4X8 A470	
180	312105-0449		1	SCREW M6S ISO 4017 M8X16 A480	
190	312105-0453		2	SCREW M6S ISO 4017 M8X25 A480	
220	315105-0136		4	WASHER BRB4,3XRFR	
230	315105-0153		4	WASHER BRB6,4X12RFR	
250	316810-0106		4	PIPE CLIP FOR TUBE D=8 MM	
270	315105-0165		6	WASHER BRB8,4X16RFR	
280	312115-0449		1	SCREW ISO4762 M8X16 A4	
310	90424-0068		2	AIR NOZZLE, G1/4, MOD. 216 BSP	
320	342981-0122		1	BANJO CONNEC,RING,FOR PLAST.TUBE 8-G1/4"	
330	90235-0731		1	THROTTLE CHECK VALVE, G1/4", SCO-606-1/4	
Common Parts					
060	90335-0036		1	COMP. SPRING 22450, 1,6X14,1X24	
080	1144976-0000		1	STOP SCREW	
090	1144979-0000		1	WASHER	
170	312105-0368		2	SCREW M6S ISO 4017 M6X16 A480	
200	312105-0457		2	SCREW M6S ISO 4014 M8X35 A480	
210	312605-0316		8	HEXAGON NUT, M6M M6 A280	
240	315105-0173		1	WASHER BRB10,5X22RFR	
300	90115-0137		2	ROD END, ID=6 MM, M6X1	

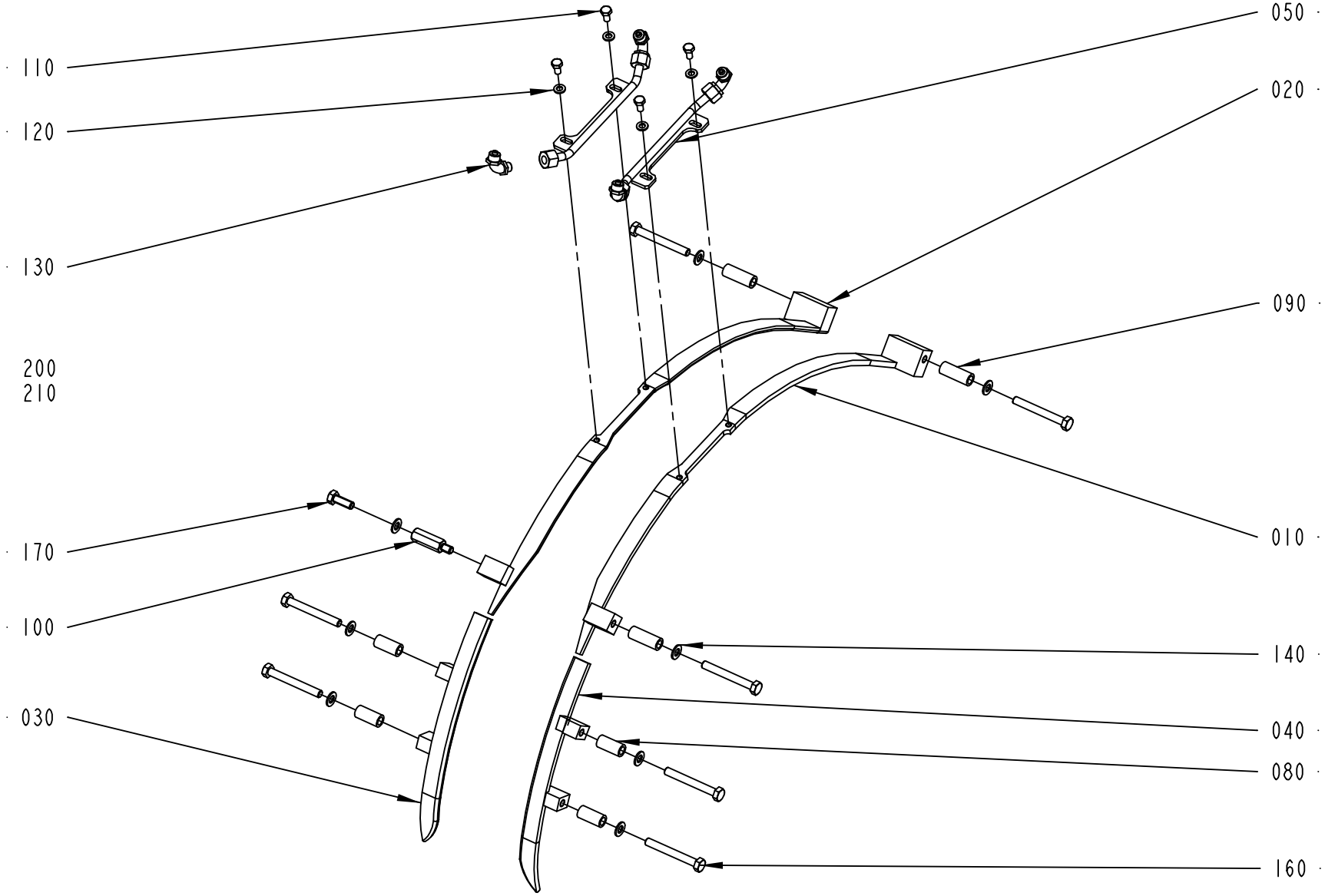

2543482-1
ECM 110156

ECM: 174304 - 50001231
Group number: 2543482-0100
Assembly Drawing: 2543482-1_1_AA

This list covers pages from 5-70 to 5-75

Pos	Part No	UN	Qty	Description	Page No
TBA 0330S, TBA 0200B, TBA 0250B (See drawing on page: 5-74)					
010	1144892-0000		1	GUIDE RIGHT	
020	1144893-0000		1	GUIDE LEFT	
030	2558704-0000		1	GUIDE UPPER R	
040	2558703-0000		1	GUIDE UPPER L	
050	2676815-0000		1	FOLDING BAR	
055	2676816-0000		1	FOLDING BAR	
060	1346340-0000		1	BRACKET	
070	1144555-0000		8	STUD SCREW	
110	312105-0366		6	SCREW M6S ISO 4017 M6X12 A480	
120	315105-0153		6	WASHER BRB6,4X12RFR	
140	315105-0165		16	WASHER BRB8,4X16RFR	
150	312605-0318		16	HEXAGON NUT, M6M M8 A280	
TBA 0500B, TBA 1000B (See drawing on page: 5-70)					
010	2520178-0000		1	GUIDE	
020	2520179-0000		1	GUIDE	
030	1539900-0000		1	RIGHT UPPER GUIDE	
040	1549614-0000		1	LEFT UPPER GUIDE	
050	2526575-0000		2	FOLDING BAR	
080	1334447-0000		4	SPACER	
090	2603663-0000		3	SPACER	
100	2555082-0000		1	SPACER SCREW	
110	312105-0366		4	SCREW M6S ISO 4017 M6X12 A480	
120	315105-0153		4	WASHER BRB6,4X12RFR	
140	315105-0165		8	WASHER BRB8,4X16RFR	
160	312105-0464		7	SCREW M6S ISO 4014 M8X65 A480	
170	312105-0452		1	SCREW M6S ISO 4017 M8X22 A4 80	
TBA 1890S, TBA 2000S (See drawing on page: 5-72)					
010	1350424-0000		1	GUIDE RIGHT	
020	1350425-0000		1	GUIDE LEFT	
030	1334559-0000		1	GUIDE UPPER R	
040	1334560-0000		1	GUIDE UPPER L	
050	1350423-0000		2	FOLDING BAR	
080	1334447-0000		4	SPACER	
090	1334447-0000		4	SPACER	
110	312105-0368		4	SCREW M6S ISO 4017 M6X16 A480	
120	315105-0153		6	WASHER BRB6,4X12RFR	
140	315105-0165		8	WASHER BRB8,4X16RFR	
160	312105-0463		8	SCREW M6S ISO 4014 M8X60 A480	
220	1282705-0000		4	SUPPORT	
230	1285267-0000		1	SUPPORT	
240	312105-0366		2	SCREW M6S ISO 4017 M6X12 A480	

Pos	Part No	UN	Qty	Description	Page No
Common Parts					
130	342931-0121		4	ELBOW 90 COUPL.,EXT.THREAD 8/6-G1/8"	
200	90166-0118	MM	1500	TUBE 8 MM PA BLACK	
210	352113-0102		10	CLIP-STRIP, BLACK 188X4,8 MM	

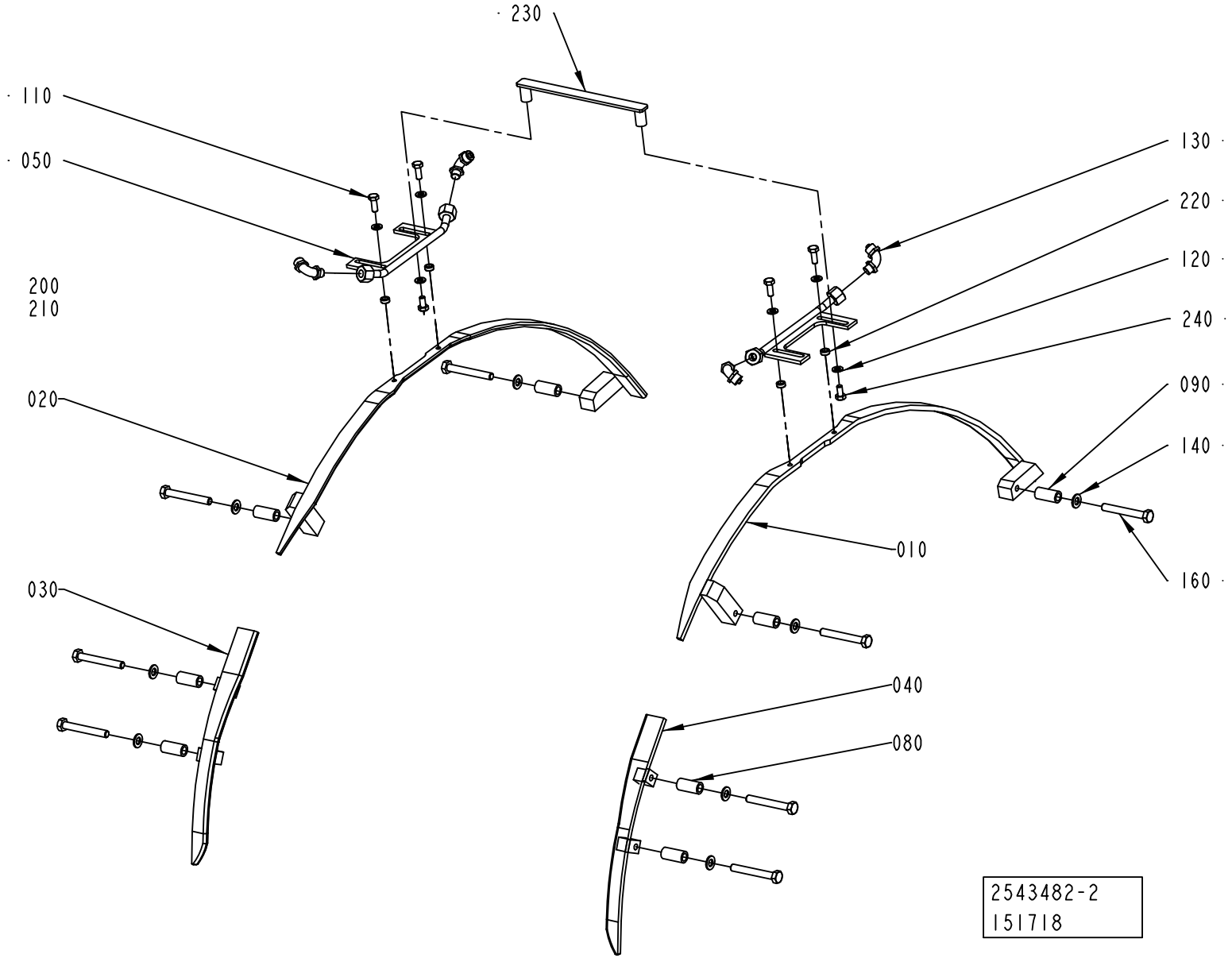
230
110
050
200
210
020
030
130
220
120
240
090
140
010
160
040
080
2543482-2
151718

ECM: 174304 - 50001231
Group number: 2543482-0100
Assembly Drawing: 2543482-2_1_AA

This list covers pages from 5-70 to 5-75

Pos	Part No	UN	Qty	Description	Page No
TBA 0330S, TBA 0200B, TBA 0250B (See drawing on page: 5-74)					
010	1144892-0000		1	GUIDE RIGHT	
020	1144893-0000		1	GUIDE LEFT	
030	2558704-0000		1	GUIDE UPPER R	
040	2558703-0000		1	GUIDE UPPER L	
050	2676815-0000		1	FOLDING BAR	
055	2676816-0000		1	FOLDING BAR	
060	1346340-0000		1	BRACKET	
070	1144555-0000		8	STUD SCREW	
110	312105-0366		6	SCREW M6S ISO 4017 M6X12 A480	
120	315105-0153		6	WASHER BRB6,4X12RFR	
140	315105-0165		16	WASHER BRB8,4X16RFR	
150	312605-0318		16	HEXAGON NUT, M6M M8 A280	
TBA 0500B, TBA 1000B (See drawing on page: 5-70)					
010	2520178-0000		1	GUIDE	
020	2520179-0000		1	GUIDE	
030	1539900-0000		1	RIGHT UPPER GUIDE	
040	1549614-0000		1	LEFT UPPER GUIDE	
050	2526575-0000		2	FOLDING BAR	
080	1334447-0000		4	SPACER	
090	2603663-0000		3	SPACER	
100	2555082-0000		1	SPACER SCREW	
110	312105-0366		4	SCREW M6S ISO 4017 M6X12 A480	
120	315105-0153		4	WASHER BRB6,4X12RFR	
140	315105-0165		8	WASHER BRB8,4X16RFR	
160	312105-0464		7	SCREW M6S ISO 4014 M8X65 A480	
170	312105-0452		1	SCREW M6S ISO 4017 M8X22 A4 80	
TBA 1890S, TBA 2000S (See drawing on page: 5-72)					
010	1350424-0000		1	GUIDE RIGHT	
020	1350425-0000		1	GUIDE LEFT	
030	1334559-0000		1	GUIDE UPPER R	
040	1334560-0000		1	GUIDE UPPER L	
050	1350423-0000		2	FOLDING BAR	
080	1334447-0000		4	SPACER	
090	1334447-0000		4	SPACER	
110	312105-0368		4	SCREW M6S ISO 4017 M6X16 A480	
120	315105-0153		6	WASHER BRB6,4X12RFR	
140	315105-0165		8	WASHER BRB8,4X16RFR	
160	312105-0463		8	SCREW M6S ISO 4014 M8X60 A480	
220	1282705-0000		4	SUPPORT	
230	1285267-0000		1	SUPPORT	
240	312105-0366		2	SCREW M6S ISO 4017 M6X12 A480	

Pos	Part No	UN	Qty	Description	Page No
Common Parts					
130	342931-0121		4	ELBOW 90 COUPL.,EXT.THREAD 8/6-G1/8"	
200	90166-0118	MM	1500	TUBE 8 MM PA BLACK	
210	352113-0102		10	CLIP-STRIP, BLACK 188X4,8 MM	

Machine Type | Group Description | Used-In | Group Number | Page No

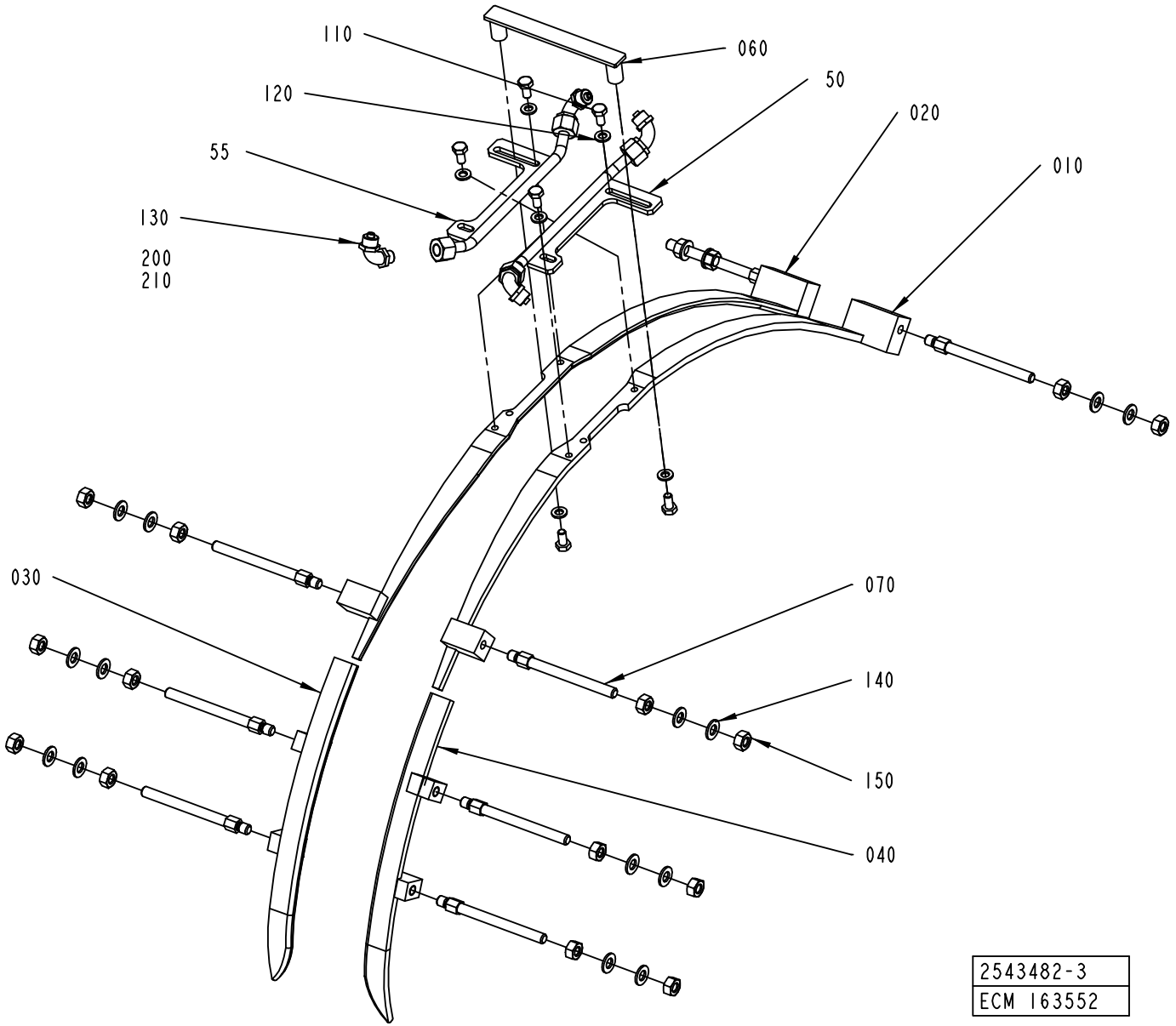

2543482-3
ECM 163552

ECM: 174304 - 50001231
Group number: 2543482-0100
Assembly Drawing: 2543482-3_1_AB

This list covers pages from 5-70 to 5-75

Pos	Part No	UN	Qty	Description	Page No
TBA 0330S, TBA 0200B, TBA 0250B (See drawing on page: 5-74)					
010	1144892-0000		1	GUIDE RIGHT	
020	1144893-0000		1	GUIDE LEFT	
030	2558704-0000		1	GUIDE UPPER R	
040	2558703-0000		1	GUIDE UPPER L	
050	2676815-0000		1	FOLDING BAR	
055	2676816-0000		1	FOLDING BAR	
060	1346340-0000		1	BRACKET	
070	1144555-0000		8	STUD SCREW	
110	312105-0366		6	SCREW M6S ISO 4017 M6X12 A480	
120	315105-0153		6	WASHER BRB6,4X12RFR	
140	315105-0165		16	WASHER BRB8,4X16RFR	
150	312605-0318		16	HEXAGON NUT, M6M M8 A280	
TBA 0500B, TBA 1000B (See drawing on page: 5-70)					
010	2520178-0000		1	GUIDE	
020	2520179-0000		1	GUIDE	
030	1539900-0000		1	RIGHT UPPER GUIDE	
040	1549614-0000		1	LEFT UPPER GUIDE	
050	2526575-0000		2	FOLDING BAR	
080	1334447-0000		4	SPACER	
090	2603663-0000		3	SPACER	
100	2555082-0000		1	SPACER SCREW	
110	312105-0366		4	SCREW M6S ISO 4017 M6X12 A480	
120	315105-0153		4	WASHER BRB6,4X12RFR	
140	315105-0165		8	WASHER BRB8,4X16RFR	
160	312105-0464		7	SCREW M6S ISO 4014 M8X65 A480	
170	312105-0452		1	SCREW M6S ISO 4017 M8X22 A4 80	
TBA 1890S, TBA 2000S (See drawing on page: 5-72)					
010	1350424-0000		1	GUIDE RIGHT	
020	1350425-0000		1	GUIDE LEFT	
030	1334559-0000		1	GUIDE UPPER R	
040	1334560-0000		1	GUIDE UPPER L	
050	1350423-0000		2	FOLDING BAR	
080	1334447-0000		4	SPACER	
090	1334447-0000		4	SPACER	
110	312105-0368		4	SCREW M6S ISO 4017 M6X16 A480	
120	315105-0153		6	WASHER BRB6,4X12RFR	
140	315105-0165		8	WASHER BRB8,4X16RFR	
160	312105-0463		8	SCREW M6S ISO 4014 M8X60 A480	
220	1282705-0000		4	SUPPORT	
230	1285267-0000		1	SUPPORT	
240	312105-0366		2	SCREW M6S ISO 4017 M6X12 A480	

Pos	Part No	UN	Qty	Description	Page No
Common Parts					
130	342931-0121		4	ELBOW 90 COUPL.,EXT.THREAD 8/6-G1/8"	
200	90166-0118	MM	1500	TUBE 8 MM PA BLACK	
210	352113-0102		10	CLIP-STRIP, BLACK 188X4,8 MM	

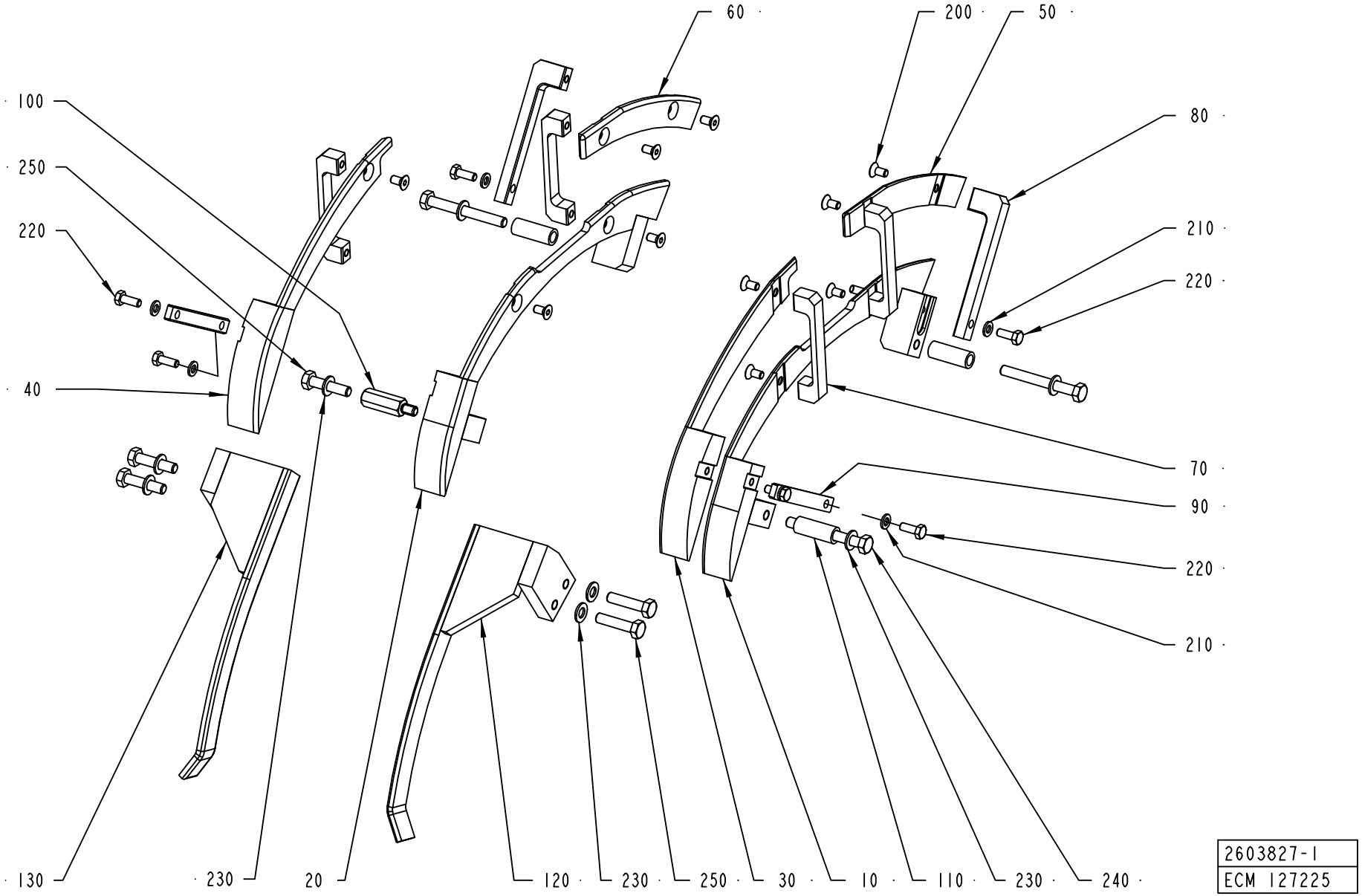
60
200
50
100
80
250
210
220
220
40
70
90
220
210
130
230
20
120
230
250
30
10
110
230
240
2603827-1
ECM 127225

ECM: 181068 - 50001231
Group number: 2603827-0100
Assembly Drawing: 2603827-1_1_AA

This list covers pages from 5-76 to 5-81

Pos	Part No	UN	Qty	Description	Page No
TBA 0330S, TBA 0200B, TBA 0250B (See drawing on page: 5-80)					
010	2595707-0000		1	FOLDING PART	
020	2601445-0000		1	FOLDING PART	
030	2595704-0000		1	FOLDING PART	
040	2601455-0000		1	FOLDING PART	
050	2595705-0000		1	FOLDING PART	
060	2601465-0000		1	FOLDING PART	
070	2595706-0000		8	BRACKET	
110	2599847-0000		3	SPACER	
120	1346344-0000		1	RAIL	
130	1346343-0000		1	RAIL	
140	2595708-0000		1	FOLDING PART	
150	2602592-0000		1	FOLDING PART	
160	2595709-0000		1	FOLDING PART	
170	2601464-0000		1	FOLDING PART	
180	2558127-0000		2	SPACER	
190	2664035-0000		1	SPACER SCREW	
210	315105-0153		24	WASHER BRB6,4X12RFR	
220	312105-0370		24	SCREW M6S ISO 4017 M6X20 A480	
230	315105-0165		8	WASHER BRB8,4X16RFR	
240	312105-0467		3	SCREW M6S ISO 4014 M8X80 A480	
250	312105-0457		4	SCREW M6S ISO 4014 M8X35 A480	
260	312155-0461		4	SCREW EN 10642 MF6S M8X50 A480	
270	312105-0455		1	SCREW M6S ISO 4017 M8X30 A480	
TBA 0500B, TBA 1000B (See drawing on page: 5-76)					
010	2520175-0000		1	FOLDING PART	
020	2520172-0000		1	FOLDING PART	
030	2603659-0000		1	FOLDING PART	
040	2603660-0000		1	FOLDING PART	
050	2603548-0000		1	FOLDING PART	
060	2603547-0000		1	FOLDING PART	
070	2603662-0000		4	BRACKET	
080	2603661-0000		2	BRACKET	
090	2544342-0000		2	BRACKET	
100	2555082-0000		1	SPACER SCREW	
110	1539871-0000		3	SPACER	
120	2603664-0000		1	RAIL	
130	2605213-0000		1	RAIL	
200	312155-0366		10	SCREW EN 10642 MF6S M6X12 A480	
210	315105-0153		6	WASHER BRB6,4X12RFR	
220	312105-0368		6	SCREW M6S ISO 4017 M6X16 A480	
230	315105-0165		8	WASHER BRB8,4X16RFR	
240	312105-0465		3	SCREW M6S ISO 4014 M8X70 A480	
250	312105-0457		5	SCREW M6S ISO 4014 M8X35 A480	
TBA 1890S, TBA 2000S (See drawing on page: 5-78)					
010	2598497-0000		1	FOLDING PART	
020	2598496-0000		1	FOLDING PART	
030	2598495-0000		1	FOLDING PART	
040	2598494-0000		1	FOLDING PART	
050	1499151-0000		1	RAIL	
060	1499150-0000		1	RAIL	
110	2629344-0000		4	SPACER	
120	2598492-0000		1	FOLDING PART	
130	2598491-0000		1	FOLDING PART	
230	315105-0165		12	WASHER BRB8,4X16RFR	
240	312109-0460		4	SCREW M6S ISO 4017 M8X45 A480	
250	312109-0457		6	SCREW M6S ISO 4017 M8X35 A480	
280	1317043-0000		2	SUPPORT	
290	2603147-0000		2	PLATE	
300	2598493-0000		2	BRACKET	
310	315105-0153		14	WASHER BRB6,4X12RFR	
320	312115-0368		4	SCREW ISO4762 M6X16 A4	
340	312105-0366		2	SCREW M6S ISO 4017 M6X12 A480	
350	312115-0449		2	SCREW ISO4762 M8X16 A4	
360	312105-0368		4	SCREW M6S ISO 4017 M6X16 A480	
370	315755-0113		2	RETAINING RING SHAFT DIN 6799 15 A2	
380	321153-0136		4	FLANGE BUSHING, 10X12X6 MM	
390	350002-0006		4	PUSH-IN L-FITTING QSL-F-G1/8-6	
400	315105-0171		2	WASHER BRB10X18	
410	312105-0495		2	SCREW M6S ISO 4017 M10X30 A480	
420	312115-0374		4	SCREW ISO4762 M6X30 A4	
430	312605-0318		2	HEXAGON NUT, M6M M8 A280	
440	312155-0459		2	SCREW EN 10642 MF6S M8X40 A480	
500	90115-0134		2	ROD END, ID=10 MM, M10X1,25	
510	90459-4932		2	REAR CLEVIS FOOT MOUNTING , CRLBN-20/25	
520	90459-1953		2	DOUBLE ACTING, MINI-ISO, CYL. 25-10	

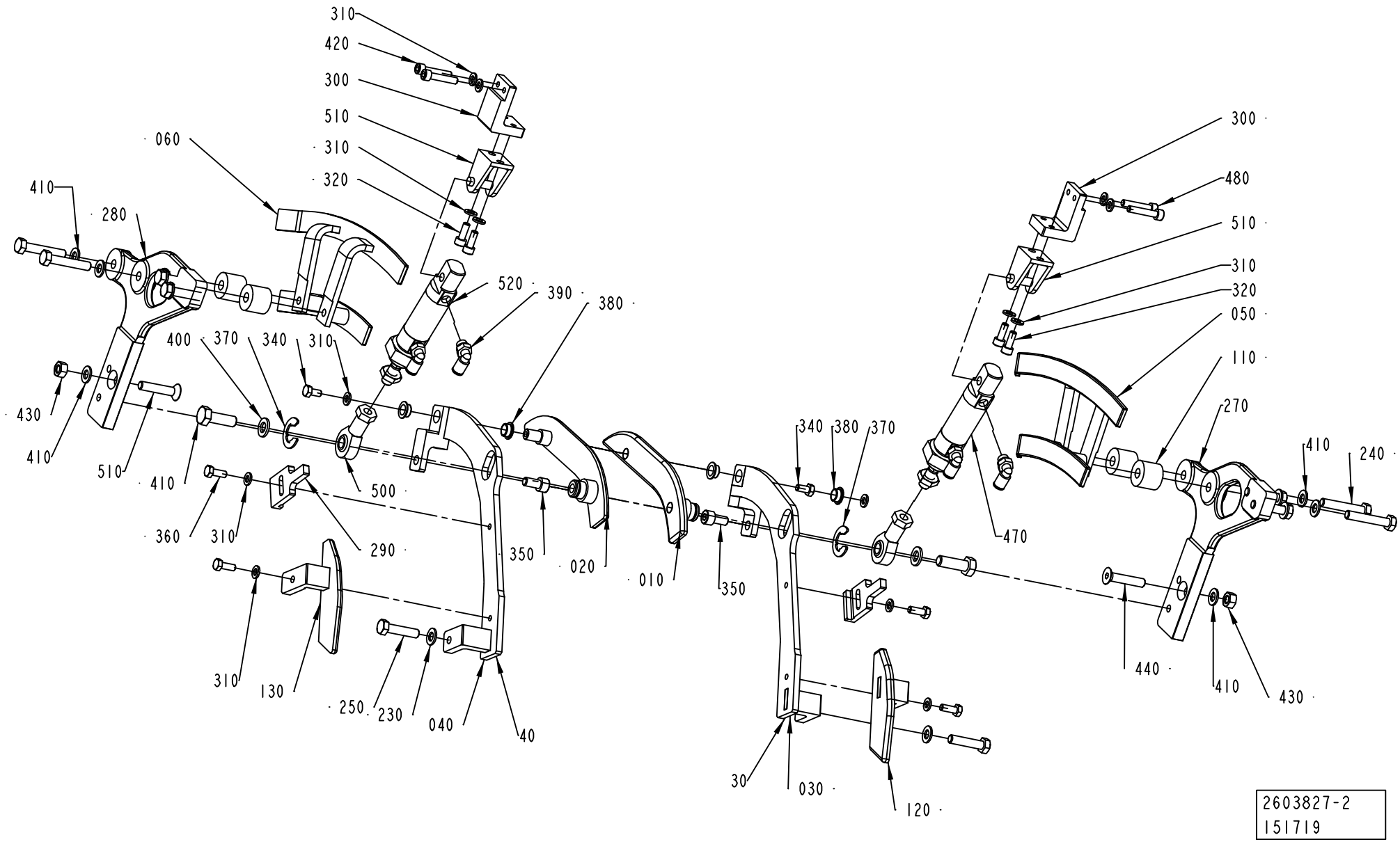
310
420
300
510
310
320
060
410
280
520
390
380
400
370
340
310
430
410
510
410
500
360
310
290
350
020
010
350
340
380
370
300
480
510
310
320
050
110
270
410
240
470
440
410
430
310
130
250
230
040
40
30
030
120
2603827-2
151719

ECM: 181068 - 50001231
Group number: 2603827-0100
Assembly Drawing: 2603827-2_1_AA

This list covers pages from 5-76 to 5-81

Pos	Part No	UN	Qty	Description	Page No
TBA 0330S, TBA 0200B, TBA 0250B (See drawing on page: 5-80)					
010	2595707-0000		1	FOLDING PART	
020	2601445-0000		1	FOLDING PART	
030	2595704-0000		1	FOLDING PART	
040	2601455-0000		1	FOLDING PART	
050	2595705-0000		1	FOLDING PART	
060	2601465-0000		1	FOLDING PART	
070	2595706-0000		8	BRACKET	
110	2599847-0000		3	SPACER	
120	1346344-0000		1	RAIL	
130	1346343-0000		1	RAIL	
140	2595708-0000		1	FOLDING PART	
150	2602592-0000		1	FOLDING PART	
160	2595709-0000		1	FOLDING PART	
170	2601464-0000		1	FOLDING PART	
180	2558127-0000		2	SPACER	
190	2664035-0000		1	SPACER SCREW	
210	315105-0153		24	WASHER BRB6,4X12RFR	
220	312105-0370		24	SCREW M6S ISO 4017 M6X20 A480	
230	315105-0165		8	WASHER BRB8,4X16RFR	
240	312105-0467		3	SCREW M6S ISO 4014 M8X80 A480	
250	312105-0457		4	SCREW M6S ISO 4014 M8X35 A480	
260	312155-0461		4	SCREW EN 10642 MF6S M8X50 A480	
270	312105-0455		1	SCREW M6S ISO 4017 M8X30 A480	
TBA 0500B, TBA 1000B (See drawing on page: 5-76)					
010	2520175-0000		1	FOLDING PART	
020	2520172-0000		1	FOLDING PART	
030	2603659-0000		1	FOLDING PART	
040	2603660-0000		1	FOLDING PART	
050	2603548-0000		1	FOLDING PART	
060	2603547-0000		1	FOLDING PART	
070	2603662-0000		4	BRACKET	
080	2603661-0000		2	BRACKET	
090	2544342-0000		2	BRACKET	
100	2555082-0000		1	SPACER SCREW	
110	1539871-0000		3	SPACER	
120	2603664-0000		1	RAIL	
130	2605213-0000		1	RAIL	
200	312155-0366		10	SCREW EN 10642 MF6S M6X12 A480	
210	315105-0153		6	WASHER BRB6,4X12RFR	
220	312105-0368		6	SCREW M6S ISO 4017 M6X16 A480	
230	315105-0165		8	WASHER BRB8,4X16RFR	
240	312105-0465		3	SCREW M6S ISO 4014 M8X70 A480	
250	312105-0457		5	SCREW M6S ISO 4014 M8X35 A480	
TBA 1890S, TBA 2000S (See drawing on page: 5-78)					
010	2598497-0000		1	FOLDING PART	
020	2598496-0000		1	FOLDING PART	
030	2598495-0000		1	FOLDING PART	
040	2598494-0000		1	FOLDING PART	
050	1499151-0000		1	RAIL	
060	1499150-0000		1	RAIL	
110	2629344-0000		4	SPACER	
120	2598492-0000		1	FOLDING PART	
130	2598491-0000		1	FOLDING PART	
230	315105-0165		12	WASHER BRB8,4X16RFR	
240	312109-0460		4	SCREW M6S ISO 4017 M8X45 A480	
250	312109-0457		6	SCREW M6S ISO 4017 M8X35 A480	
280	1317043-0000		2	SUPPORT	
290	2603147-0000		2	PLATE	
300	2598493-0000		2	BRACKET	
310	315105-0153		14	WASHER BRB6,4X12RFR	
320	312115-0368		4	SCREW ISO4762 M6X16 A4	
340	312105-0366		2	SCREW M6S ISO 4017 M6X12 A480	
350	312115-0449		2	SCREW ISO4762 M8X16 A4	
360	312105-0368		4	SCREW M6S ISO 4017 M6X16 A480	
370	315755-0113		2	RETAINING RING SHAFT DIN 6799 15 A2	
380	321153-0136		4	FLANGE BUSHING, 10X12X6 MM	
390	350002-0006		4	PUSH-IN L-FITTING QSL-F-G1/8-6	
400	315105-0171		2	WASHER BRB10X18	
410	312105-0495		2	SCREW M6S ISO 4017 M10X30 A480	
420	312115-0374		4	SCREW ISO4762 M6X30 A4	
430	312605-0318		2	HEXAGON NUT, M6M M8 A280	
440	312155-0459		2	SCREW EN 10642 MF6S M8X40 A480	
500	90115-0134		2	ROD END, ID=10 MM, M10X1,25	
510	90459-4932		2	REAR CLEVIS FOOT MOUNTING , CRLBN-20/25	
520	90459-1953		2	DOUBLE ACTING, MINI-ISO, CYL. 25-10	

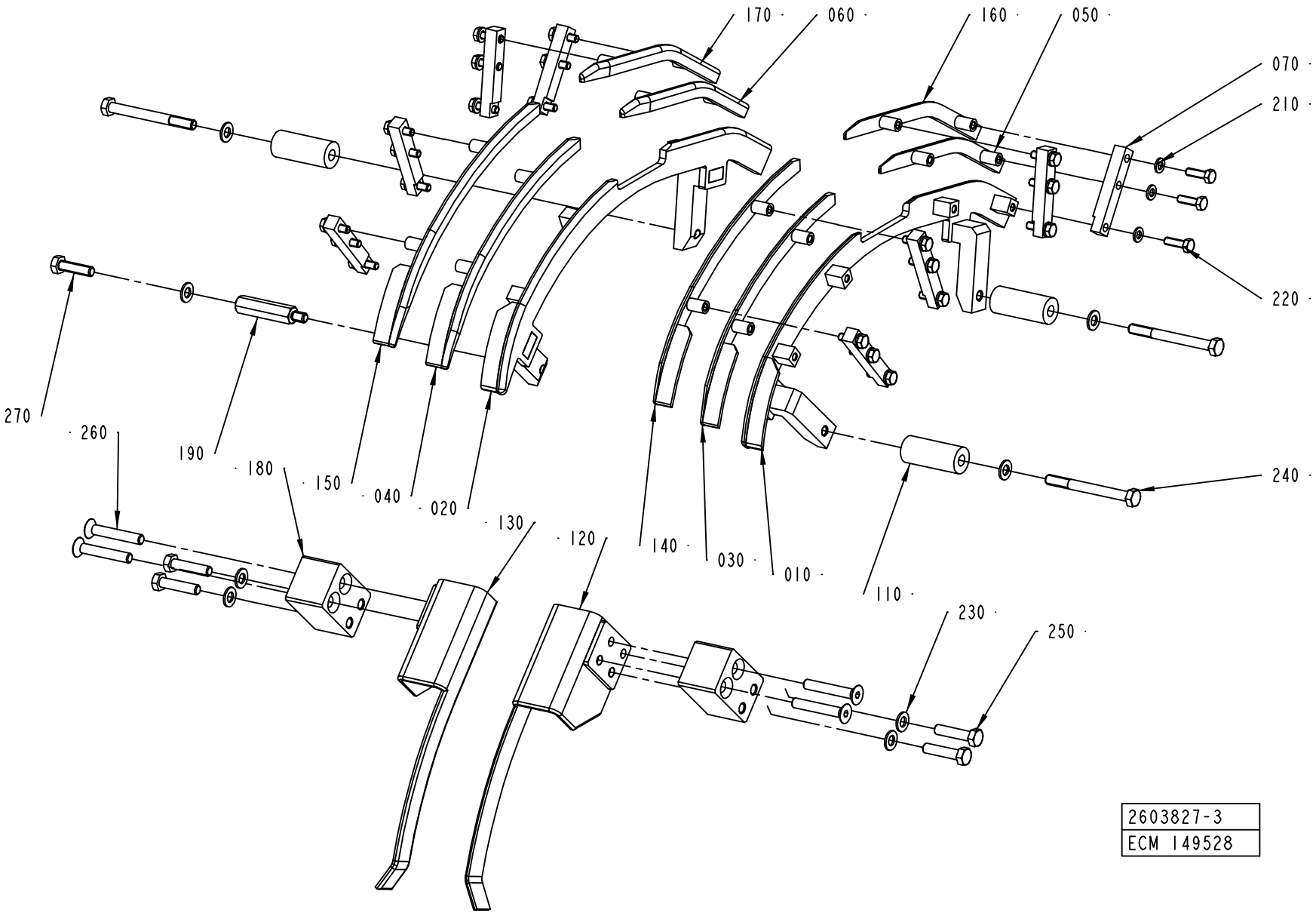
170
060
160
050
070
210
220
240
270
260
190
180
150
040
020
130
120
140
030
010
110
230
250
2603827-3
ECM 149528

ECM: 181068 - 50001231
Group number: 2603827-0100
Assembly Drawing: 2603827-3_1_AA

This list covers pages from 5-76 to 5-81

Pos	Part No	UN	Qty	Description	Page No
TBA 0330S, TBA 0200B, TBA 0250B (See drawing on page: 5-80)					
010	2595707-0000		1	FOLDING PART	
020	2601445-0000		1	FOLDING PART	
030	2595704-0000		1	FOLDING PART	
040	2601455-0000		1	FOLDING PART	
050	2595705-0000		1	FOLDING PART	
060	2601465-0000		1	FOLDING PART	
070	2595706-0000		8	BRACKET	
110	2599847-0000		3	SPACER	
120	1346344-0000		1	RAIL	
130	1346343-0000		1	RAIL	
140	2595708-0000		1	FOLDING PART	
150	2602592-0000		1	FOLDING PART	
160	2595709-0000		1	FOLDING PART	
170	2601464-0000		1	FOLDING PART	
180	2558127-0000		2	SPACER	
190	2664035-0000		1	SPACER SCREW	
210	315105-0153		24	WASHER BRB6,4X12RFR	
220	312105-0370		24	SCREW M6S ISO 4017 M6X20 A480	
230	315105-0165		8	WASHER BRB8,4X16RFR	
240	312105-0467		3	SCREW M6S ISO 4014 M8X80 A480	
250	312105-0457		4	SCREW M6S ISO 4014 M8X35 A480	
260	312155-0461		4	SCREW EN 10642 MF6S M8X50 A480	
270	312105-0455		1	SCREW M6S ISO 4017 M8X30 A480	
TBA 0500B, TBA 1000B (See drawing on page: 5-76)					
010	2520175-0000		1	FOLDING PART	
020	2520172-0000		1	FOLDING PART	
030	2603659-0000		1	FOLDING PART	
040	2603660-0000		1	FOLDING PART	
050	2603548-0000		1	FOLDING PART	
060	2603547-0000		1	FOLDING PART	
070	2603662-0000		4	BRACKET	
080	2603661-0000		2	BRACKET	
090	2544342-0000		2	BRACKET	
100	2555082-0000		1	SPACER SCREW	
110	1539871-0000		3	SPACER	
120	2603664-0000		1	RAIL	
130	2605213-0000		1	RAIL	
200	312155-0366		10	SCREW EN 10642 MF6S M6X12 A480	
210	315105-0153		6	WASHER BRB6,4X12RFR	
220	312105-0368		6	SCREW M6S ISO 4017 M6X16 A480	
230	315105-0165		8	WASHER BRB8,4X16RFR	
240	312105-0465		3	SCREW M6S ISO 4014 M8X70 A480	
250	312105-0457		5	SCREW M6S ISO 4014 M8X35 A480	
TBA 1890S, TBA 2000S (See drawing on page: 5-78)					
010	2598497-0000		1	FOLDING PART	
020	2598496-0000		1	FOLDING PART	
030	2598495-0000		1	FOLDING PART	
040	2598494-0000		1	FOLDING PART	
050	1499151-0000		1	RAIL	
060	1499150-0000		1	RAIL	
110	2629344-0000		4	SPACER	
120	2598492-0000		1	FOLDING PART	
130	2598491-0000		1	FOLDING PART	
230	315105-0165		12	WASHER BRB8,4X16RFR	
240	312109-0460		4	SCREW M6S ISO 4017 M8X45 A480	
250	312109-0457		6	SCREW M6S ISO 4017 M8X35 A480	
280	1317043-0000		2	SUPPORT	
290	2603147-0000		2	PLATE	
300	2598493-0000		2	BRACKET	
310	315105-0153		14	WASHER BRB6,4X12RFR	
320	312115-0368		4	SCREW ISO4762 M6X16 A4	
340	312105-0366		2	SCREW M6S ISO 4017 M6X12 A480	
350	312115-0449		2	SCREW ISO4762 M8X16 A4	
360	312105-0368		4	SCREW M6S ISO 4017 M6X16 A480	
370	315755-0113		2	RETAINING RING SHAFT DIN 6799 15 A2	
380	321153-0136		4	FLANGE BUSHING, 10X12X6 MM	
390	350002-0006		4	PUSH-IN L-FITTING QSL-F-G1/8-6	
400	315105-0171		2	WASHER BRB10X18	
410	312105-0495		2	SCREW M6S ISO 4017 M10X30 A480	
420	312115-0374		4	SCREW ISO4762 M6X30 A4	
430	312605-0318		2	HEXAGON NUT, M6M M8 A280	
440	312155-0459		2	SCREW EN 10642 MF6S M8X40 A480	
500	90115-0134		2	ROD END, ID=10 MM, M10X1,25	
510	90459-4932		2	REAR CLEVIS FOOT MOUNTING , CRLBN-20/25	
520	90459-1953		2	DOUBLE ACTING, MINI-ISO, CYL. 25-10	

Machine Type	Group Description	Used-In	Group Number	Page No

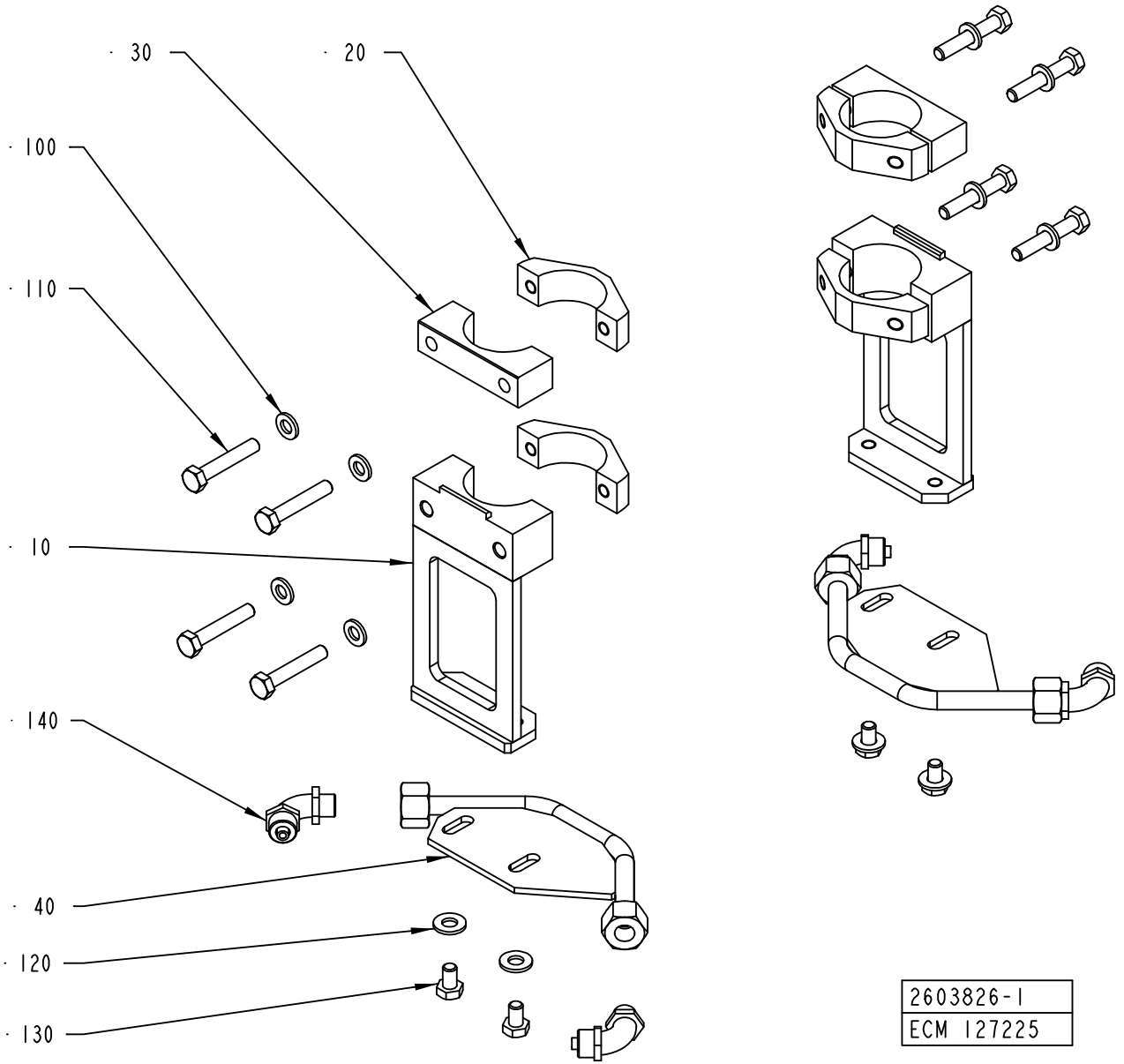

2603826-1
ECM 127225

ECM: 181067 - 50001231
Group number: 2603826-0100
Assembly Drawing: 2603826-1_1_AA

Pos	Part No	UN	Qty	Description	Page No
TBA 0330S, TBA 0200B, TBA 0250B (See drawing on page: 5-82)					
030	2598485-0000		2	CLAMP	
100	315105-0153		8	WASHER BRB6,4X12RFR	
110	312105-0376		8	SCREW M6S ISO 4014 M6X35 A480	
120	315105-0156		4	WASHER BRB 6.7X14 RFR	
130	312105-0364		4	SCREW M6S ISO 4017 M6X10 A480	
TBA 0500B, TBA 1000B (See drawing on page: 5-82)					
030	2598485-0000		2	CLAMP	
100	315105-0153		8	WASHER BRB6,4X12RFR	
110	312105-0376		8	SCREW M6S ISO 4014 M6X35 A480	
120	315105-0156		4	WASHER BRB 6.7X14 RFR	
130	312105-0364		4	SCREW M6S ISO 4017 M6X10 A480	
TBA 1890S, TBA 2000S (See drawing on page: 5-82)					
010	2603138-0000		2	BRACKET	
020	2603148-0000		2	CLAMP	
040	2603140-0000		2	GUIDE	
110	312115-0333		4	SCREW ISO4762 M5X25 A4	
120	315105-0146		4	WASHER BRB5,3X10RFR	
130	312115-0327		4	SCREW ISO4762 M5X12 A4	
Common Parts					
010	2660549-0000		1	BRACKET	
010	2599044-0000		2	BRACKET	
010	2597768-0000		2	BRACKET	
020	2598486-0000		4	CLAMP	
040	2594058-0000		2	GUIDE	
040	2597769-0000		2	GUIDE	
040	2660550-0000		1	GUIDE	
050	2660552-0000		1	BRACKET	
060	2660555-0000		1	GUIDE	
140	342931-0121		4	ELBOW 90 COUPL.,EXT.THREAD 8/6-G1/8"	

Pos	Part No	UN	Qty	Description	Page No

DROP CHUTE VARIANT

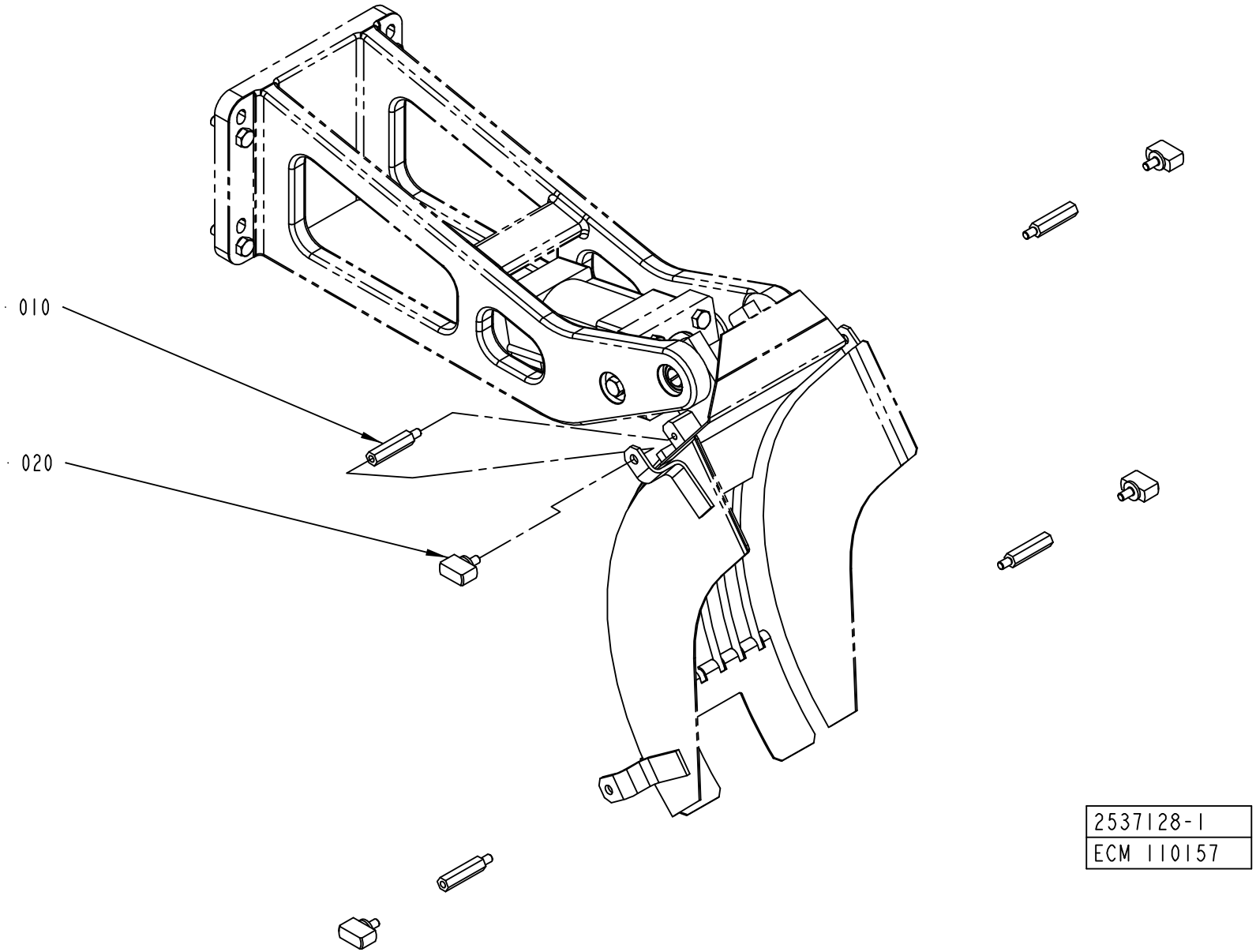

2537128-1
ECM 110157

ECM: 181064 - 50001231
Group number: 2537128-0100
Assembly Drawing: 2537128-1_1_AA

This list covers pages from 5-84 to 5-87

Pos	Part No	UN	Qty	Description	Page No
0500B, 1000B (See drawing on page: 5-84)					
010	2537129-0000		4	SPACER	
1000SQ (See drawing on page: 5-86)					
030	2619574-0000		2	SPACER	
TBA 0330S, TBA 0200B, TBA 0250B (See drawing on page: 5-84)					
010	1317218-0000		4	SPACER	
TBA 1890S, TBA 2000S (See drawing on page: 5-84)					
010	2661153-0000		4	SPACER	
Common Parts					
010	2619678-0000		4	SPACER	
010	2598820-0000		2	SPACER	
010	2598819-0000		4	SPACER	
020	2540609-0000		4	KNOB	

Pos	Part No	UN	Qty	Description	Page No

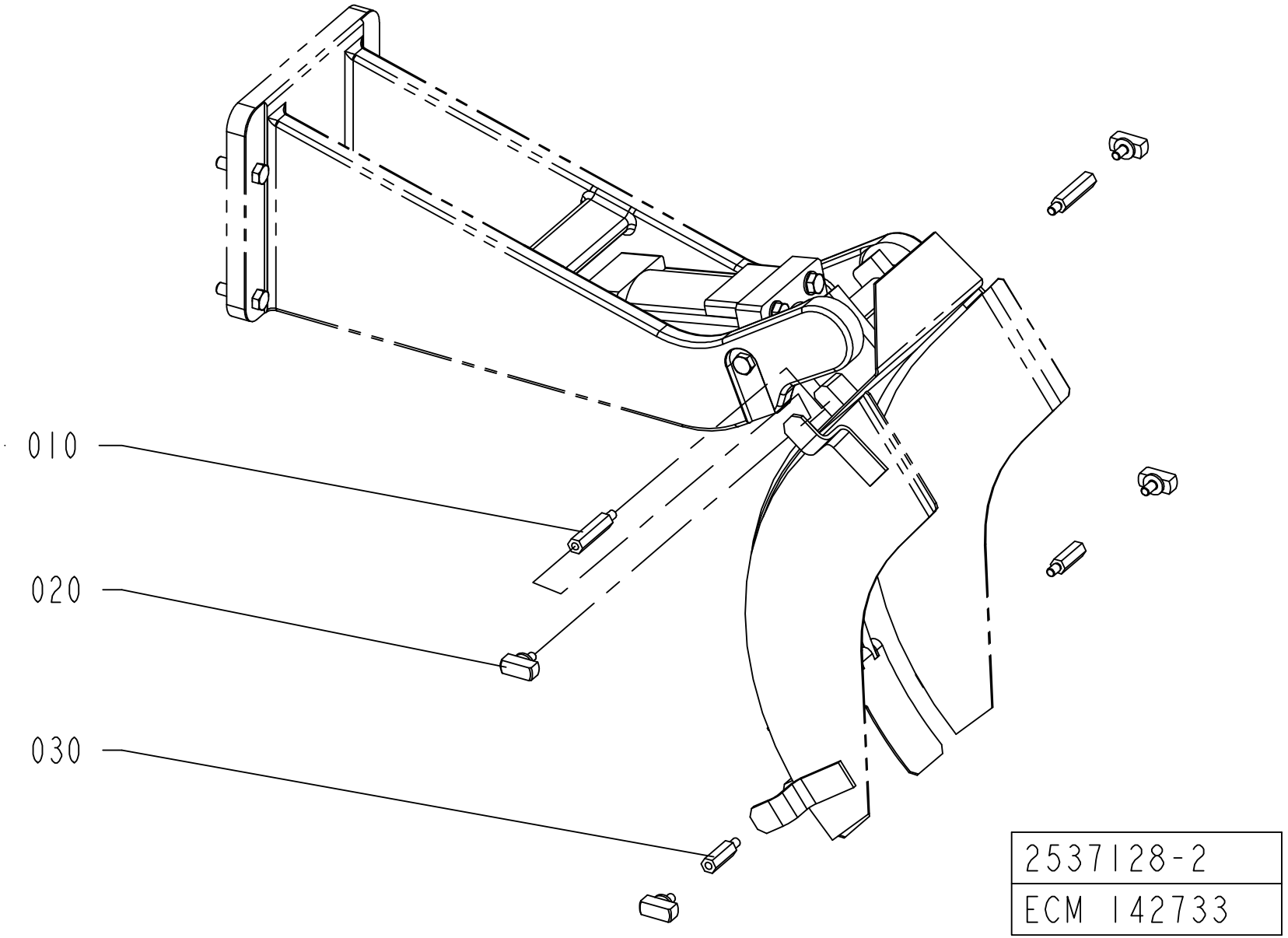
010
020
030
2537128-2
ECM 142733

Pos	Part No	UN	Qty	Description	Page No
0500B, 1000B (See drawing on page: 5-84)					
010	2537129-0000		4	SPACER	
1000SQ (See drawing on page: 5-86)					
030	2619574-0000		2	SPACER	
TBA 0330S, TBA 0200B, TBA 0250B (See drawing on page: 5-84)					
010	1317218-0000		4	SPACER	
TBA 1890S, TBA 2000S (See drawing on page: 5-84)					
010	2661153-0000		4	SPACER	
Common Parts					
010	2619678-0000		4	SPACER	
010	2598820-0000		2	SPACER	
010	2598819-0000		4	SPACER	
020	2540609-0000		4	KNOB	

Pos	Part No	UN	Qty	Description	Page No

INFEED CONVEYOR VARIANT

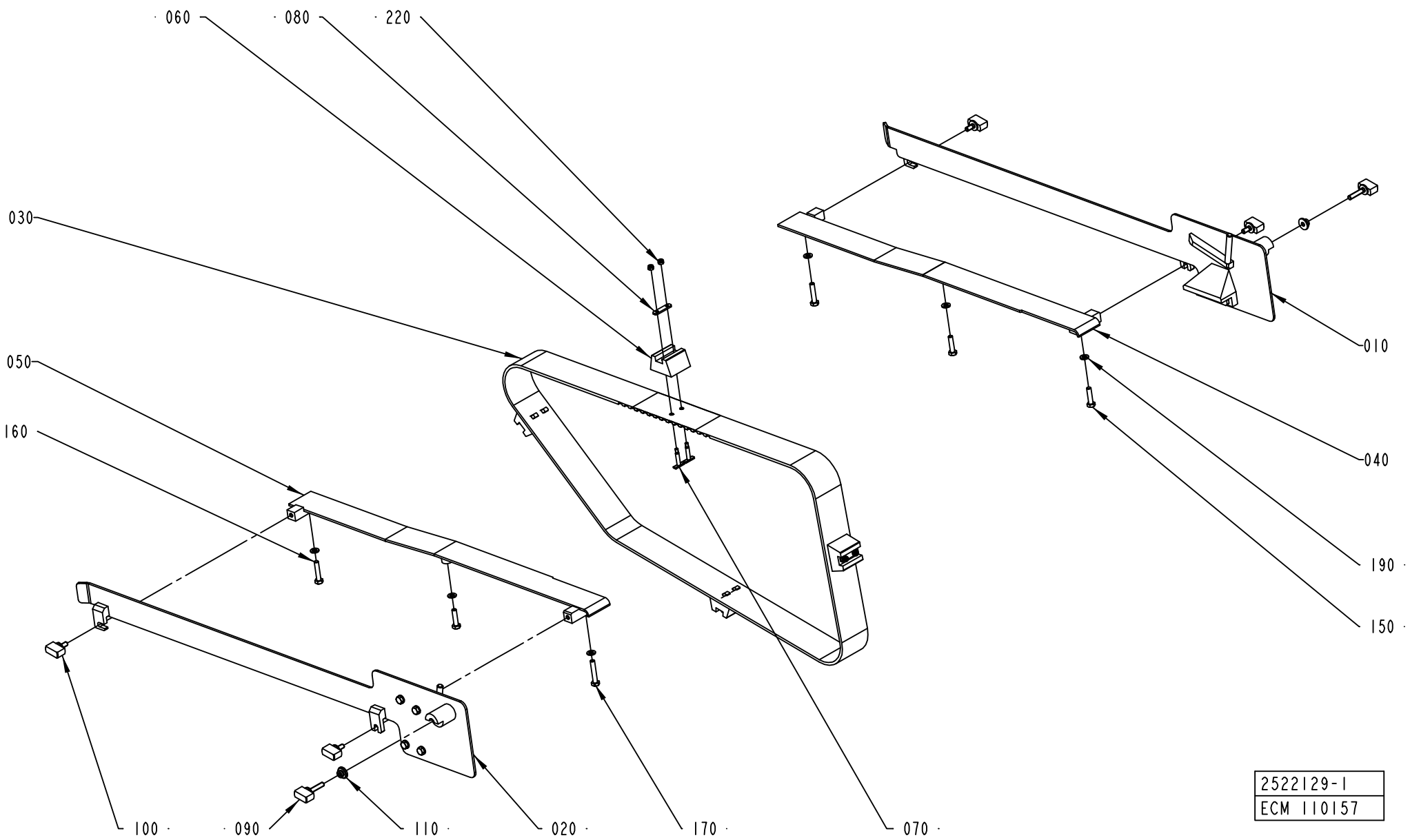

2522129-1
ECM 110157

Pos	Part No	UN	Qty	Description	Page No
TBA 1890S (See drawing on page: 5-90)					
040	2665201-0000		1	GUIDE	
050	2665200-0000		1	GUIDE	
060	1282848-0000		3	CARRIER	
080	1144918-0000		3	PLATE	
090	2529785-0000		2	KNOB	
100	2529786-0000		4	KNOB	
110	2520160-0000		2	CLAMP	
150	312105-0370		4	SCREW M6S ISO 4017 M6X20 A480	
190	315105-0153		6	WASHER BRB6,4X12RFR	
220	312812-0312		6	HEXAGON NUT, NY-LOCK M4 A480	
TBA 2000S (See drawing on page: 5-90)					
040	2665201-0000		1	GUIDE	
050	2665200-0000		1	GUIDE	
060	1282848-0000		3	CARRIER	
080	1144918-0000		3	PLATE	
090	2529785-0000		2	KNOB	
100	2529786-0000		4	KNOB	
110	2520160-0000		2	CLAMP	
150	312105-0370		4	SCREW M6S ISO 4017 M6X20 A480	
190	315105-0153		6	WASHER BRB6,4X12RFR	
220	312812-0312		6	HEXAGON NUT, NY-LOCK M4 A480	
TBA 0200B (See drawing on page: 5-92)					
030	1144783-0000		1	TIMING BELT	
040	1282290-0000		1	GUIDE	
050	1282291-0000		1	GUIDE	
070	1346736-0000		8	WEDGE	
080	1144918-0000		4	PLATE	
090	2652191-0000		2	KNOB	
110	2520160-0000		2	CLAMP	
120	1499476-0000		1	HOLDER	
130	1499475-0000		1	HOLDER	
150	312105-0372		5	SCREW M6S ISO 4017 M6X25 A480	
160	312109-0374		2	SCREW M6S ISO 4017 M6X30 A480	
190	315105-0153		10	WASHER BRB6,4X12RFR	
220	312812-0312		8	HEXAGON NUT, NY-LOCK M4 A480	
230	312605-0316		2	HEXAGON NUT, M6M M6 A280	
250	90424-0068		1	AIR NOZZLE, G1/4, MOD. 216 BSP	
260	90458-2958		1	ELBOW PIPE JOINT, EXT.THREAD, D=8MM-G1/4	
270	342728-0103		1	PIPE COUPLING 8 MM	
280	90166-0013	MM	700	TUBE 8 MM PA BLUE	
TBA 0250B (See drawing on page: 5-92)					
030	1144783-0000		1	TIMING BELT	
040	1282290-0000		1	GUIDE	
050	1282291-0000		1	GUIDE	
070	1346736-0000		8	WEDGE	
080	1144918-0000		4	PLATE	
090	2652191-0000		2	KNOB	
110	2520160-0000		2	CLAMP	
120	1499476-0000		1	HOLDER	
130	1499475-0000		1	HOLDER	
150	312105-0372		5	SCREW M6S ISO 4017 M6X25 A480	
160	312109-0374		2	SCREW M6S ISO 4017 M6X30 A480	
190	315105-0153		10	WASHER BRB6,4X12RFR	
220	312812-0312		8	HEXAGON NUT, NY-LOCK M4 A480	
230	312605-0316		2	HEXAGON NUT, M6M M6 A280	
250	90424-0068		1	AIR NOZZLE, G1/4, MOD. 216 BSP	
260	90458-2958		1	ELBOW PIPE JOINT, EXT.THREAD, D=8MM-G1/4	
270	342728-0103		1	PIPE COUPLING 8 MM	
280	90166-0013	MM	700	TUBE 8 MM PA BLUE	
TBA 0330S (See drawing on page: 5-92)					
030	1144783-0000		1	TIMING BELT	
040	1282290-0000		1	GUIDE	
050	1282291-0000		1	GUIDE	
070	1346736-0000		8	WEDGE	
080	1144918-0000		4	PLATE	
090	2652191-0000		2	KNOB	
110	2520160-0000		2	CLAMP	
120	1499476-0000		1	HOLDER	
130	1499475-0000		1	HOLDER	
150	312105-0372		5	SCREW M6S ISO 4017 M6X25 A480	
160	312109-0374		2	SCREW M6S ISO 4017 M6X30 A480	
190	315105-0153		10	WASHER BRB6,4X12RFR	
220	312812-0312		8	HEXAGON NUT, NY-LOCK M4 A480	
230	312605-0316		2	HEXAGON NUT, M6M M6 A280	
250	90424-0068		1	AIR NOZZLE, G1/4, MOD. 216 BSP	
260	90458-2958		1	ELBOW PIPE JOINT, EXT.THREAD, D=8MM-G1/4	
270	342728-0103		1	PIPE COUPLING 8 MM	
280	90166-0013	MM	700	TUBE 8 MM PA BLUE	
TBA 0500B (See drawing on page: 5-88)					
030	1144783-0000		1	TIMING BELT	
060	1144919-0000		4	CARRIER	
080	1144918-0000		4	PLATE	
090	2529785-0000		2	KNOB	

INFEED CONVEYOR VARIANT

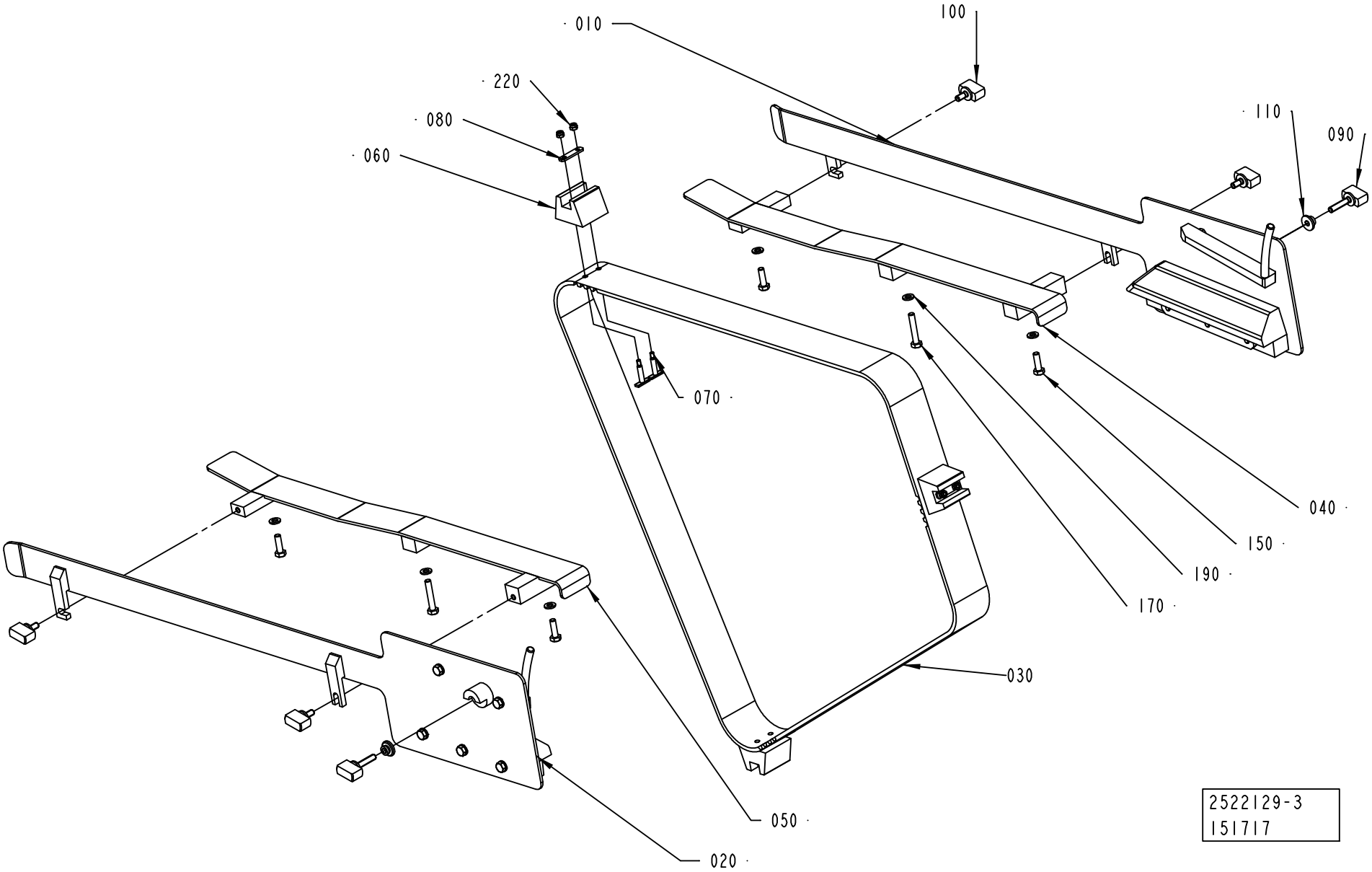

Pos	Part No	UN	Qty	Description	Page No
TBA 0500B (Cont'd) (See drawing on page: 5-88)					
110	2520160-0000		2	CLAMP	
160	312109-0374		2	SCREW M6S ISO 4017 M6X30 A480	
190	315105-0153		6	WASHER BRB6,4X12RFR	
220	312812-0312		8	HEXAGON NUT, NY-LOCK M4 A480	
TBA 1000B (See drawing on page: 5-88)					
030	1144783-0000		1	TIMING BELT	
060	1144919-0000		4	CARRIER	
080	1144918-0000		4	PLATE	
090	2529785-0000		2	KNOB	
110	2520160-0000		2	CLAMP	
160	312109-0374		2	SCREW M6S ISO 4017 M6X30 A480	
190	315105-0153		6	WASHER BRB6,4X12RFR	
220	312812-0312		8	HEXAGON NUT, NY-LOCK M4 A480	
Common Parts					
010	2527704-0100		1	GUIDE	**5-95, 5-97**
020	2527703-0100		1	GUIDE	**5-99, 5-101, 5-103**
030	1349152-0000		1	TIMING BELT	
040	2619679-0000		1	GUIDE	
050	2619680-0000		1	GUIDE	
060	1282287-0000		4	CARRIER	
060	2619577-0000		3	CARRIER	
070	1346471-0000		6	WEDGE	
090	2619737-0000		2	KNOB	
150	312105-0372		3	SCREW M6S ISO 4017 M6X25 A480	
170	312109-0376		1	SCREW M6S ISO 4017 M6X35 A480	

Pos	Part No	UN	Qty	Description	Page No

INFEED CONVEYOR VARIANT

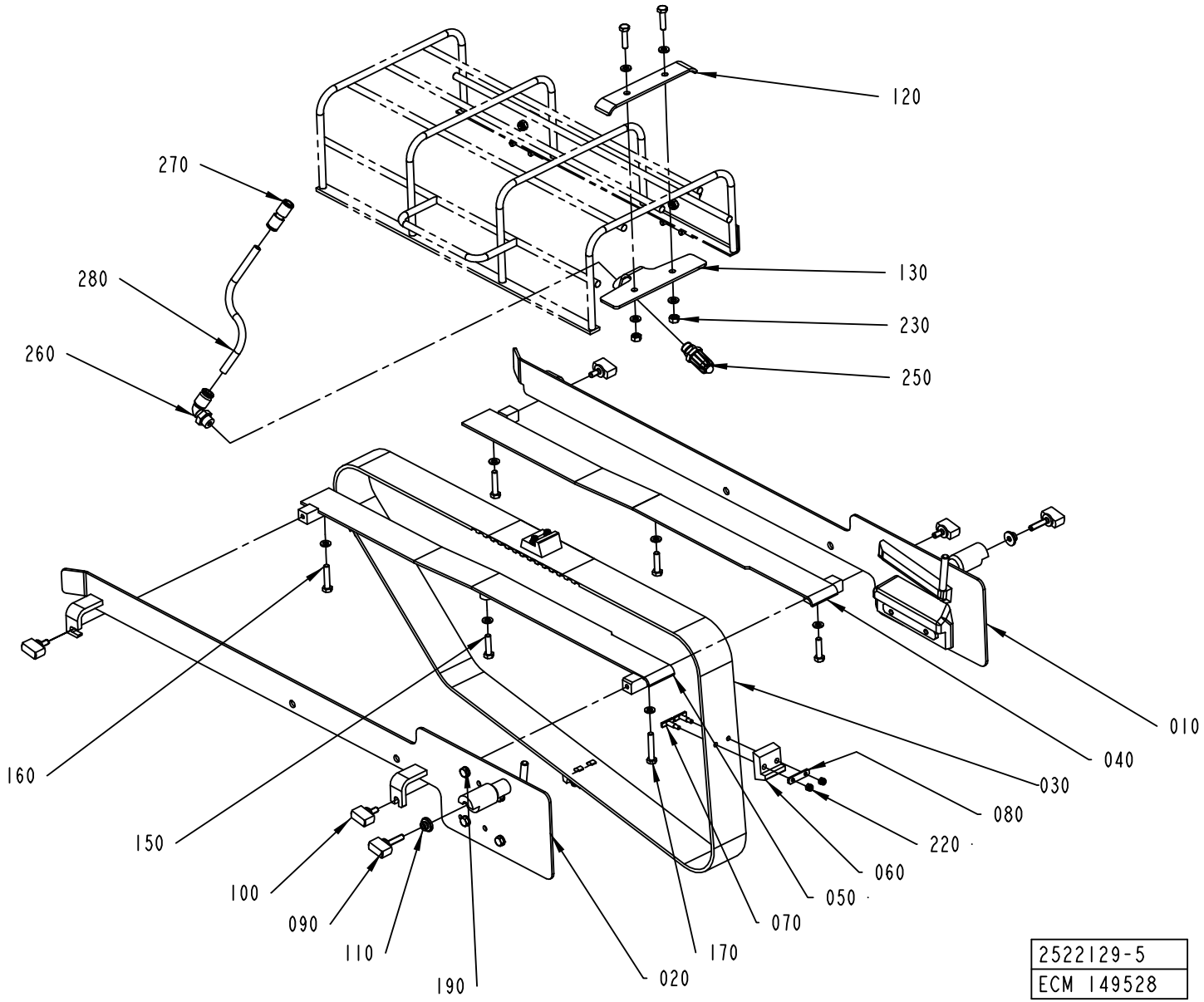

Pos	Part No	UN	Qty	Description	Page No	Pos	Part No	UN	Qty	Description	Page No

SEE PREVIOUS LISTS PAGES: 5-89, 5-91.

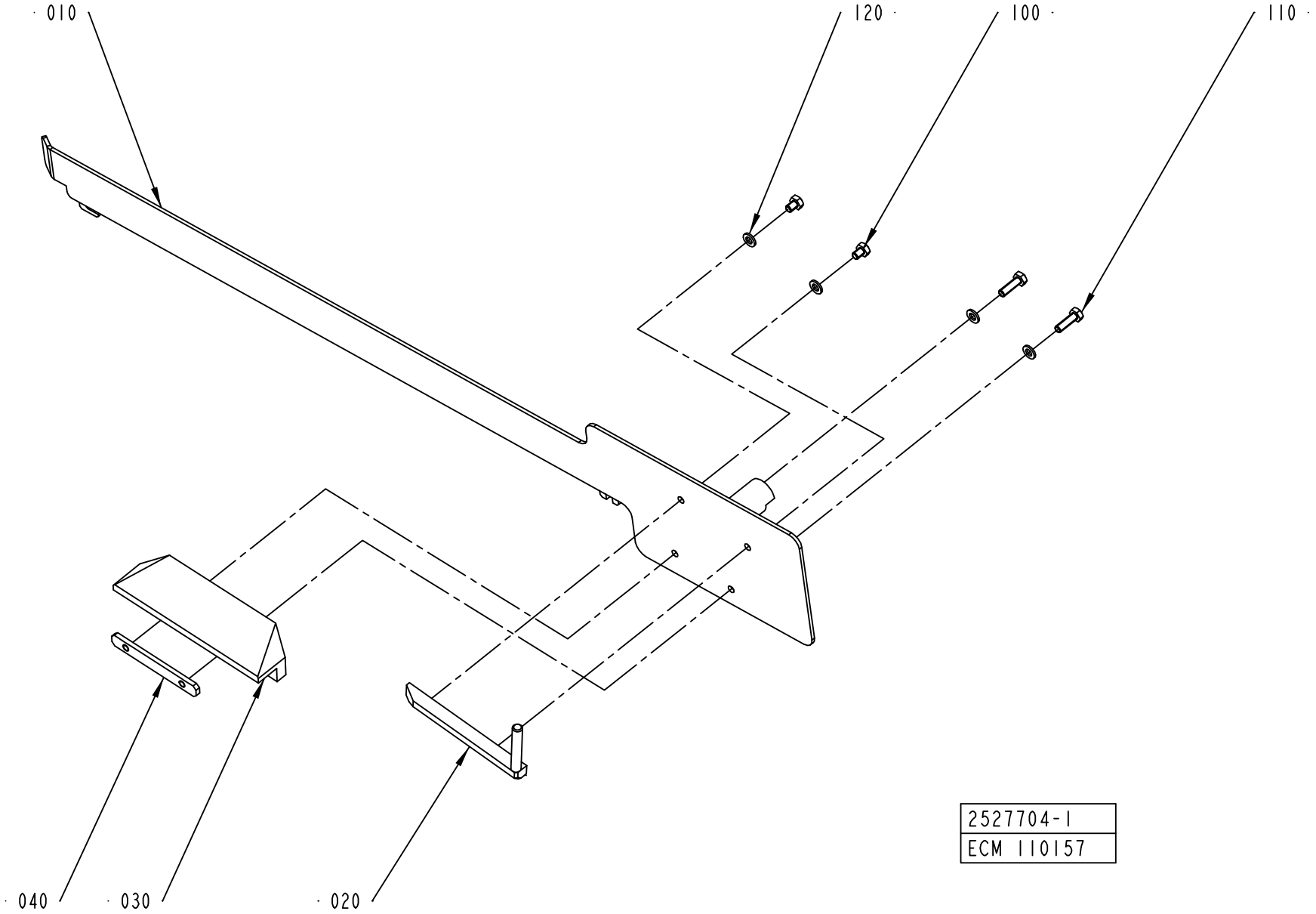
010
120
100
110
040
030
020
2527704-1
ECM 110157

ECM: 180623 - 50001231
Group number: 2527704-0100
Assembly Drawing: 2527704-1_1_AA

This list covers pages from 5-94 to 5-97

Pos	Part No	UN	Qty	Description	Page No
TBA 0200B (See drawing on pages: 5-96, 9-18)					
130	312605-0316		2	HEXAGON NUT, M6M M6 A280	
TBA 0250B (See drawing on pages: 5-96, 9-18)					
130	312605-0316		2	HEXAGON NUT, M6M M6 A280	
TBA 0330S (See drawing on pages: 5-96, 9-18)					
130	312605-0316		2	HEXAGON NUT, M6M M6 A280	
TBA 0500B (See drawing on pages: 5-94, 9-16)					
110	312105-0370		2	SCREW M6S ISO 4017 M6X20 A480	
TBA 1000B (See drawing on pages: 5-94, 9-16)					
010	2518129-0000		1	GUIDE	
020	1348144-0000		1	BAR	
030	1348133-0000		1	SLIDE	
110	312105-0370		2	SCREW M6S ISO 4017 M6X20 A480	
TBA 1890S (See drawing on pages: 5-94, 9-16)					
010	2665202-0000		1	GUIDE	
020	1317805-0000		1	BAR	
030	2594905-0000		1	SLIDE	
040	1144621-0000		1	PLATE	
110	312109-0374		3	SCREW M6S ISO 4017 M6X30 A480	
120	315105-0153		5	WASHER BRB6,4X12RFR	
TBA 2000S (See drawing on pages: 5-94, 9-16)					
010	2678622-0000		1	GUIDE	
020	1317805-0000		1	BAR	
030	2598487-0000		1	SLIDE	
040	1144621-0000		1	PLATE	
110	312109-0374		3	SCREW M6S ISO 4017 M6X30 A480	
120	315105-0153		5	WASHER BRB6,4X12RFR	
Common Parts					
010	2539289-0000		1	GUIDE	
010	2619692-0000		1	GUIDE	
010	2529267-0000		1	GUIDE	
010	2526578-0000		1	GUIDE	
010	2522166-0000		1	GUIDE	
010	2619700-0000		1	GUIDE	
020	1348148-0000		1	BAR	
020	2545000-0000		1	BAR	
020	1348147-0000		1	BAR	
020	2619682-0000		1	BAR	
020	2619698-0000		1	BAR	
020	2675103-0000		1	BAR	
020	1539877-0000		1	BAR	
020	2529277-0000		1	BAR	
020	1490035-0000		1	BAR	
020	2539303-0000		1	BAR	
020	2539305-0000		1	BAR	
030	2544997-0000		1	SLIDE	
030	2619699-0000		1	SLIDE	
030	2529275-0000		1	SLIDE	
030	2619684-0000		1	SLIDE	
030	1539874-0000		1	SLIDE	
030	2619581-0000		1	SLIDE	
030	1348136-0000		1	SLIDE	
030	1348135-0000		1	SLIDE	
030	2539300-0000		1	SLIDE	
030	2539301-0000		1	SLIDE	
030	2539302-0000		1	SLIDE	
040	2675102-0000		1	PLATE	
040	1539876-0000		1	PLATE	
040	2619697-0000		1	PLATE	
040	2529279-0000		1	PLATE	
040	1279409-0000		1	PLATE	
040	1348169-0000		1	PLATE	
050	2619728-0000		1	GUIDE	
050	2619704-0000		1	GUIDE	
050	2664200-0000		1	GUIDE	
100	312105-0362		2	SCREW M6S ISO 4017 M6X8 A480	
110	312105-0370		3	SCREW M6S ISO 4017 M6X20 A480	
120	315105-0153		6	WASHER BRB6,4X12RFR	

Machine Type | Group Description | Used-In | Group Number | Page No

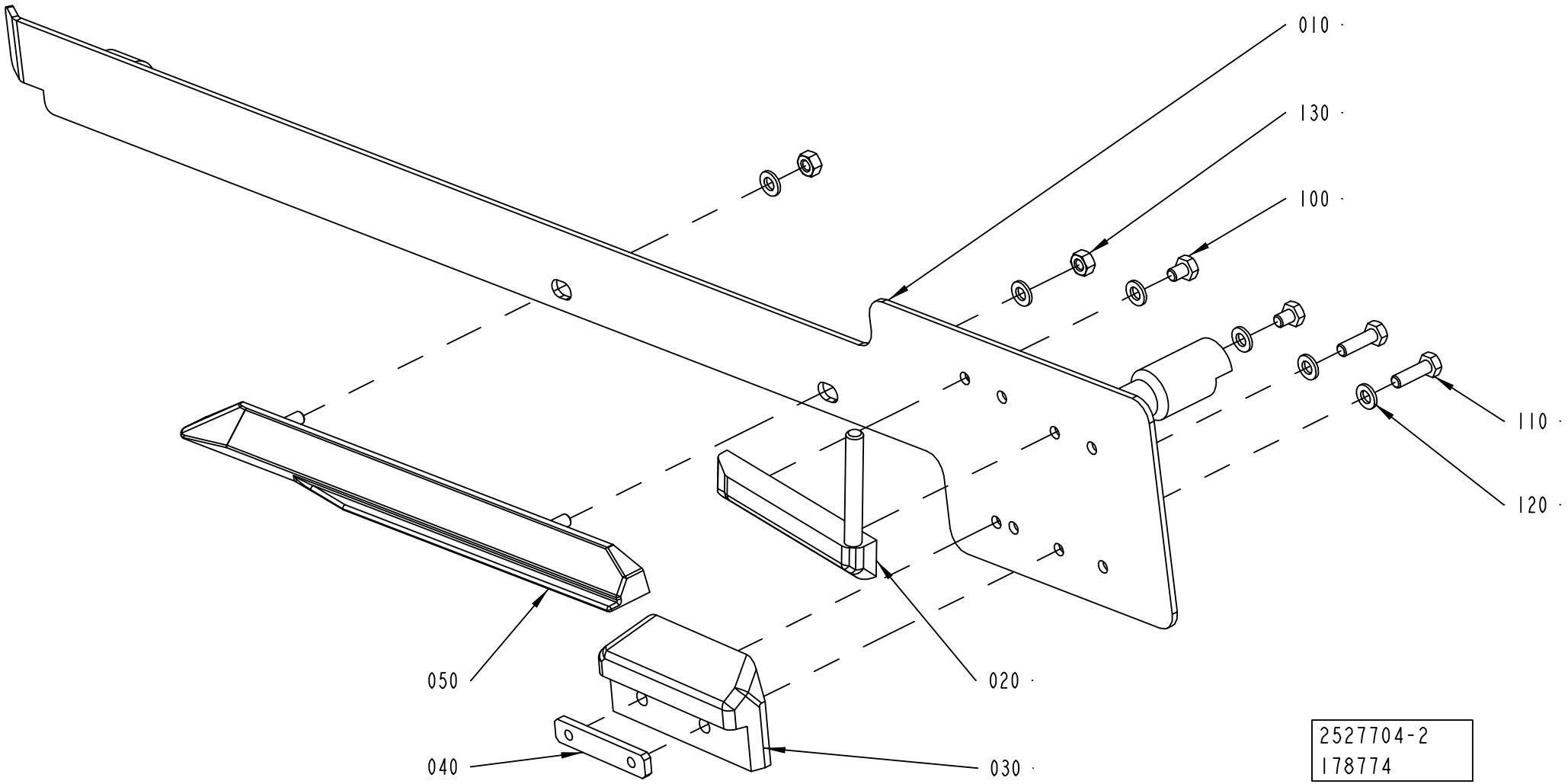
010
130
100
110
120
050
020
040
030
2527704-2
178774

ECM: 180623 - 50001231
Group number: 2527704-0100
Assembly Drawing: 2527704-2_1_AA

This list covers pages from 5-94 to 5-97

Pos	Part No	UN	Qty	Description	Page No
TBA 0200B (See drawing on pages: 5-96, 9-18)					
130	312605-0316		2	HEXAGON NUT, M6M M6 A280	
TBA 0250B (See drawing on pages: 5-96, 9-18)					
130	312605-0316		2	HEXAGON NUT, M6M M6 A280	
TBA 0330S (See drawing on pages: 5-96, 9-18)					
130	312605-0316		2	HEXAGON NUT, M6M M6 A280	
TBA 0500B (See drawing on pages: 5-94, 9-16)					
110	312105-0370		2	SCREW M6S ISO 4017 M6X20 A480	
TBA 1000B (See drawing on pages: 5-94, 9-16)					
010	2518129-0000		1	GUIDE	
020	1348144-0000		1	BAR	
030	1348133-0000		1	SLIDE	
110	312105-0370		2	SCREW M6S ISO 4017 M6X20 A480	
TBA 1890S (See drawing on pages: 5-94, 9-16)					
010	2665202-0000		1	GUIDE	
020	1317805-0000		1	BAR	
030	2594905-0000		1	SLIDE	
040	1144621-0000		1	PLATE	
110	312109-0374		3	SCREW M6S ISO 4017 M6X30 A480	
120	315105-0153		5	WASHER BRB6,4X12RFR	
TBA 2000S (See drawing on pages: 5-94, 9-16)					
010	2678622-0000		1	GUIDE	
020	1317805-0000		1	BAR	
030	2598487-0000		1	SLIDE	
040	1144621-0000		1	PLATE	
110	312109-0374		3	SCREW M6S ISO 4017 M6X30 A480	
120	315105-0153		5	WASHER BRB6,4X12RFR	
Common Parts					
010	2539289-0000		1	GUIDE	
010	2619692-0000		1	GUIDE	
010	2529267-0000		1	GUIDE	
010	2526578-0000		1	GUIDE	
010	2522166-0000		1	GUIDE	
010	2619700-0000		1	GUIDE	
020	1348148-0000		1	BAR	
020	2545000-0000		1	BAR	
020	1348147-0000		1	BAR	
020	2619682-0000		1	BAR	
020	2619698-0000		1	BAR	
020	2675103-0000		1	BAR	
020	1539877-0000		1	BAR	
020	2529277-0000		1	BAR	
020	1490035-0000		1	BAR	
020	2539303-0000		1	BAR	
020	2539305-0000		1	BAR	
030	2544997-0000		1	SLIDE	
030	2619699-0000		1	SLIDE	
030	2529275-0000		1	SLIDE	
030	2619684-0000		1	SLIDE	
030	1539874-0000		1	SLIDE	
030	2619581-0000		1	SLIDE	
030	1348136-0000		1	SLIDE	
030	1348135-0000		1	SLIDE	
030	2539300-0000		1	SLIDE	
030	2539301-0000		1	SLIDE	
030	2539302-0000		1	SLIDE	
040	2675102-0000		1	PLATE	
040	1539876-0000		1	PLATE	
040	2619697-0000		1	PLATE	
040	2529279-0000		1	PLATE	
040	1279409-0000		1	PLATE	
040	1348169-0000		1	PLATE	
050	2619728-0000		1	GUIDE	
050	2619704-0000		1	GUIDE	
050	2664200-0000		1	GUIDE	
100	312105-0362		2	SCREW M6S ISO 4017 M6X8 A480	
110	312105-0370		3	SCREW M6S ISO 4017 M6X20 A480	
120	315105-0153		6	WASHER BRB6,4X12RFR	

Machine Type | Group Description | Used-In | Group Number | Page No

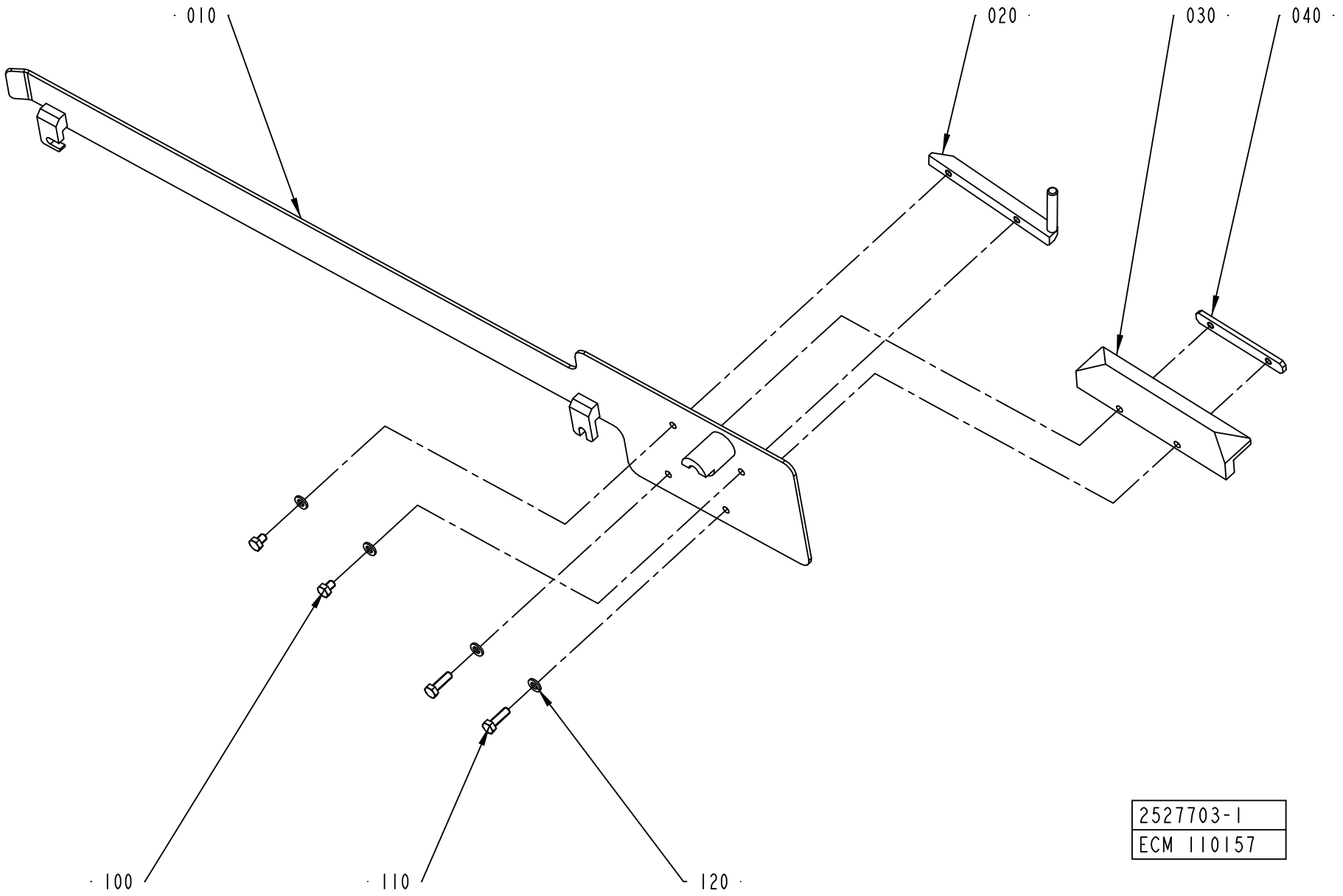
010
020
030
040
100
110
120
2527703-1
ECM 110157

ECM: 180624 - 50001231
Group number: 2527703-0100
Assembly Drawing: 2527703-1_1_AA

This list covers pages from 5-98 to 5-103

Pos	Part No	UN	Qty	Description	Page No
TBA 1000SQ					
120	315105-0153		7	WASHER BRB6,4X12RFR	
TBA 1890S (See drawing on pages: 5-98, 9-12)					
010	2665203-0000		1	GUIDE	
020	1334271-0000		1	BAR	
030	2594906-0000		1	SLIDE	
040	1144621-0000		1	PLATE	
110	312109-0374		3	SCREW M6S ISO 4017 M6X30 A480	
TBA 2000S (See drawing on pages: 5-98, 9-12)					
010	2678621-0000		1	GUIDE	
020	1334271-0000		1	BAR	
030	2598488-0000		1	SLIDE	
040	1144621-0000		1	PLATE	
110	312109-0374		3	SCREW M6S ISO 4017 M6X30 A480	
TBA 0200B (See drawing on pages: 5-100, 9-14)					
010	2526579-0000		1	GUIDE	
020	1348154-0000		1	BAR	
030	1348142-0000		1	SLIDE	
110	312105-0370		2	SCREW M6S ISO 4017 M6X20 A480	
120	315105-0153		6	WASHER BRB6,4X12RFR	
130	312605-0316		2	HEXAGON NUT, M6M M6 A280	
TBA 0250B (See drawing on pages: 5-100, 9-14)					
010	2526579-0000		1	GUIDE	
020	1348153-0000		1	BAR	
030	1348141-0000		1	SLIDE	
110	312105-0370		2	SCREW M6S ISO 4017 M6X20 A480	
120	315105-0153		6	WASHER BRB6,4X12RFR	
130	312605-0316		2	HEXAGON NUT, M6M M6 A280	
TBA 0330S (See drawing on pages: 5-100, 9-14)					
010	2526579-0000		1	GUIDE	
020	2544999-0000		1	BAR	
030	2544998-0000		1	SLIDE	
040	1279409-0000		1	PLATE	
110	312105-0370		2	SCREW M6S ISO 4017 M6X20 A480	
120	315105-0153		6	WASHER BRB6,4X12RFR	
130	312605-0316		2	HEXAGON NUT, M6M M6 A280	
TBA 0500B (See drawing on pages: 5-98, 9-12)					
020	1539878-0000		1	BAR	
030	1539875-0000		1	SLIDE	
040	1539876-0000		1	PLATE	
110	312105-0370		2	SCREW M6S ISO 4017 M6X20 A480	
120	315105-0153		6	WASHER BRB6,4X12RFR	

Pos	Part No	UN	Qty	Description	Page No
TBA 1000B (See drawing on pages: 5-98, 5-102, 9-12)					
010	2518130-0000		1	GUIDE	
020	1348150-0000		1	BAR	
030	1348139-0000		1	SLIDE	
040	1279409-0000		1	PLATE	
110	312105-0370		2	SCREW M6S ISO 4017 M6X20 A480	
120	315105-0153		6	WASHER BRB6,4X12RFR	
Common Parts					
010	2539290-0000		1	GUIDE	
010	2619693-0000		1	GUIDE	
010	2619701-0000		1	GUIDE	
010	2522167-0000		1	GUIDE	
020	2619683-0000		1	BAR	
020	2619711-0000		1	BAR	
020	1490036-0000		1	BAR	
020	2675104-0000		1	BAR	
020	2539306-0000		1	BAR	
020	2539304-0000		1	BAR	
020	2529278-0000		1	BAR	
030	2619712-0000		1	SLIDE	
030	2529276-0000		1	SLIDE	
030	2539297-0000		1	SLIDE	
030	2539298-0000		1	SLIDE	
030	2539299-0000		1	SLIDE	
030	2619576-0000		1	SLIDE	
030	2619685-0000		1	SLIDE	
040	1348169-0000		1	PLATE	
040	2675102-0000		1	PLATE	
040	2619697-0000		1	PLATE	
050	2664201-0000		1	GUIDE	
050	2619705-0000		1	GUIDE	
050	2619727-0000		1	GUIDE	
050	2598916-0000		1	GUIDE	
100	312105-0362		2	SCREW M6S ISO 4017 M6X8 A480	
120	315105-0153		5	WASHER BRB6,4X12RFR	

Machine Type | Group Description | Used-In | Group Number | Page No

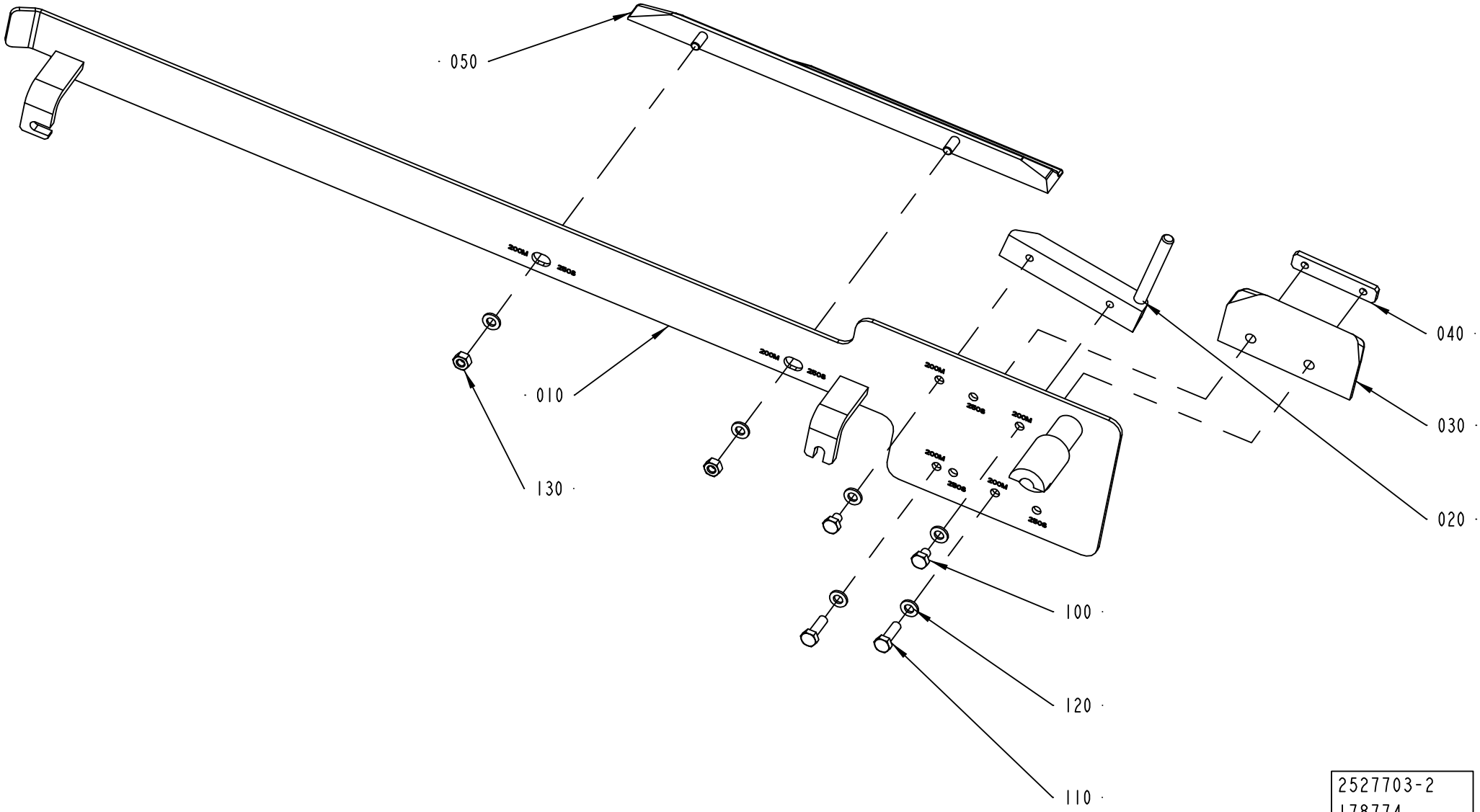
050
010
130
040
030
020
100
120
110
2527703-2
178774

ECM: 180624 - 50001231
Group number: 2527703-0100
Assembly Drawing: 2527703-2_1_AA

This list covers pages from 5-98 to 5-103

Pos	Part No	UN	Qty	Description	Page No
TBA 1000SQ					
120	315105-0153		7	WASHER BRB6,4X12RFR	
TBA 1890S (See drawing on pages: 5-98, 9-12)					
010	2665203-0000		1	GUIDE	
020	1334271-0000		1	BAR	
030	2594906-0000		1	SLIDE	
040	1144621-0000		1	PLATE	
110	312109-0374		3	SCREW M6S ISO 4017 M6X30 A480	
TBA 2000S (See drawing on pages: 5-98, 9-12)					
010	2678621-0000		1	GUIDE	
020	1334271-0000		1	BAR	
030	2598488-0000		1	SLIDE	
040	1144621-0000		1	PLATE	
110	312109-0374		3	SCREW M6S ISO 4017 M6X30 A480	
TBA 0200B (See drawing on pages: 5-100, 9-14)					
010	2526579-0000		1	GUIDE	
020	1348154-0000		1	BAR	
030	1348142-0000		1	SLIDE	
110	312105-0370		2	SCREW M6S ISO 4017 M6X20 A480	
120	315105-0153		6	WASHER BRB6,4X12RFR	
130	312605-0316		2	HEXAGON NUT, M6M M6 A280	
TBA 0250B (See drawing on pages: 5-100, 9-14)					
010	2526579-0000		1	GUIDE	
020	1348153-0000		1	BAR	
030	1348141-0000		1	SLIDE	
110	312105-0370		2	SCREW M6S ISO 4017 M6X20 A480	
120	315105-0153		6	WASHER BRB6,4X12RFR	
130	312605-0316		2	HEXAGON NUT, M6M M6 A280	
TBA 0330S (See drawing on pages: 5-100, 9-14)					
010	2526579-0000		1	GUIDE	
020	2544999-0000		1	BAR	
030	2544998-0000		1	SLIDE	
040	1279409-0000		1	PLATE	
110	312105-0370		2	SCREW M6S ISO 4017 M6X20 A480	
120	315105-0153		6	WASHER BRB6,4X12RFR	
130	312605-0316		2	HEXAGON NUT, M6M M6 A280	
TBA 0500B (See drawing on pages: 5-98, 9-12)					
020	1539878-0000		1	BAR	
030	1539875-0000		1	SLIDE	
040	1539876-0000		1	PLATE	
110	312105-0370		2	SCREW M6S ISO 4017 M6X20 A480	
120	315105-0153		6	WASHER BRB6,4X12RFR	

Pos	Part No	UN	Qty	Description	Page No
TBA 1000B (See drawing on pages: 5-98, 5-102, 9-12)					
010	2518130-0000		1	GUIDE	
020	1348150-0000		1	BAR	
030	1348139-0000		1	SLIDE	
040	1279409-0000		1	PLATE	
110	312105-0370		2	SCREW M6S ISO 4017 M6X20 A480	
120	315105-0153		6	WASHER BRB6,4X12RFR	
Common Parts					
010	2539290-0000		1	GUIDE	
010	2619693-0000		1	GUIDE	
010	2619701-0000		1	GUIDE	
010	2522167-0000		1	GUIDE	
020	2619683-0000		1	BAR	
020	2619711-0000		1	BAR	
020	1490036-0000		1	BAR	
020	2675104-0000		1	BAR	
020	2539306-0000		1	BAR	
020	2539304-0000		1	BAR	
020	2529278-0000		1	BAR	
030	2619712-0000		1	SLIDE	
030	2529276-0000		1	SLIDE	
030	2539297-0000		1	SLIDE	
030	2539298-0000		1	SLIDE	
030	2539299-0000		1	SLIDE	
030	2619576-0000		1	SLIDE	
030	2619685-0000		1	SLIDE	
040	1348169-0000		1	PLATE	
040	2675102-0000		1	PLATE	
040	2619697-0000		1	PLATE	
050	2664201-0000		1	GUIDE	
050	2619705-0000		1	GUIDE	
050	2619727-0000		1	GUIDE	
050	2598916-0000		1	GUIDE	
100	312105-0362		2	SCREW M6S ISO 4017 M6X8 A480	
120	315105-0153		5	WASHER BRB6,4X12RFR	

Machine Type | Group Description | Used-In | Group Number | Page No

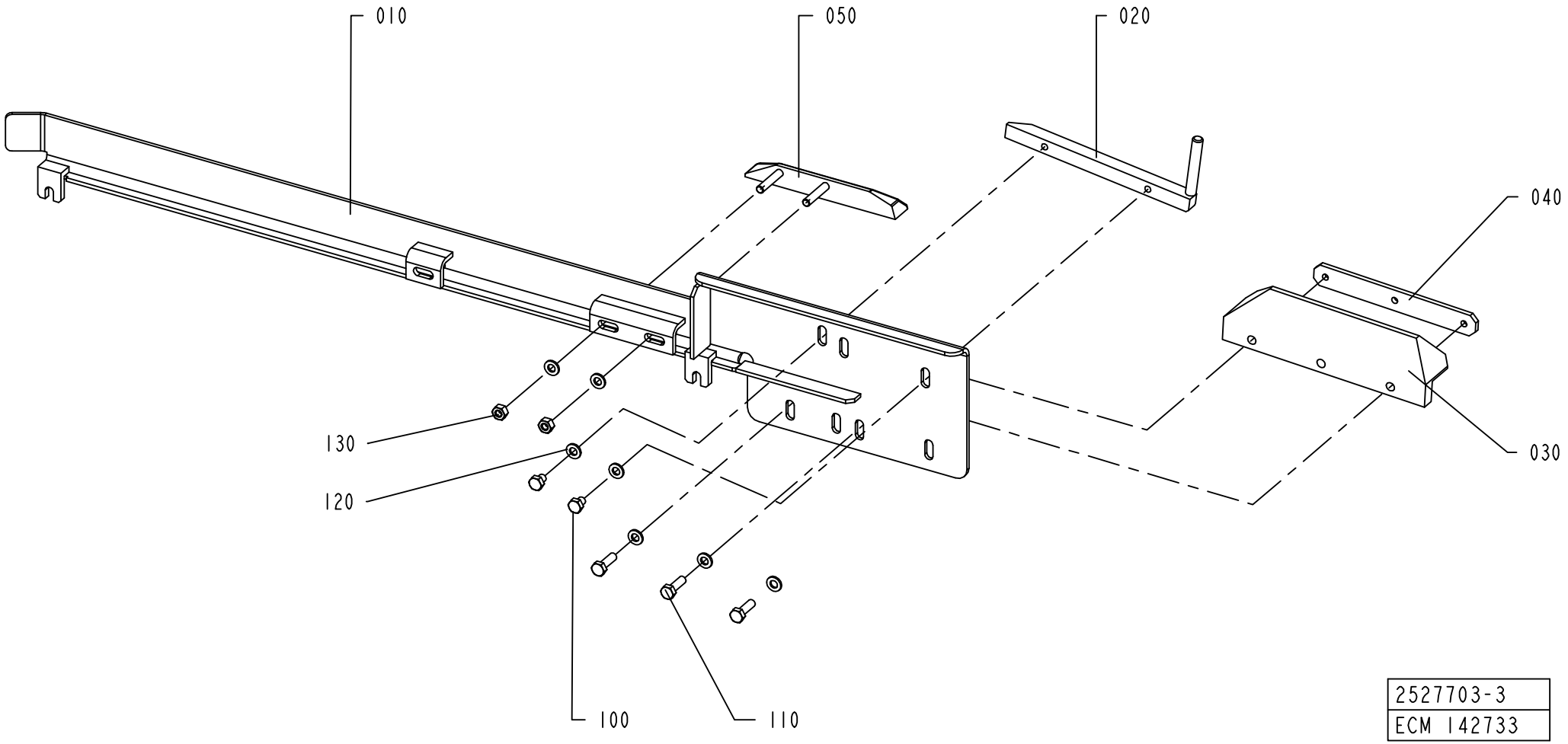
010
050
020
040
030
130
120
100
110
2527703-3
ECM 142733

ECM: 180624 - 50001231
Group number: 2527703-0100
Assembly Drawing: 2527703-3_1_AA

This list covers pages from 5-98 to 5-103

Pos	Part No	UN	Qty	Description	Page No
TBA 1000SQ					
120	315105-0153		7	WASHER BRB6,4X12RFR	
TBA 1890S (See drawing on pages: 5-98, 9-12)					
010	2665203-0000		1	GUIDE	
020	1334271-0000		1	BAR	
030	2594906-0000		1	SLIDE	
040	1144621-0000		1	PLATE	
110	312109-0374		3	SCREW M6S ISO 4017 M6X30 A480	
TBA 2000S (See drawing on pages: 5-98, 9-12)					
010	2678621-0000		1	GUIDE	
020	1334271-0000		1	BAR	
030	2598488-0000		1	SLIDE	
040	1144621-0000		1	PLATE	
110	312109-0374		3	SCREW M6S ISO 4017 M6X30 A480	
TBA 0200B (See drawing on pages: 5-100, 9-14)					
010	2526579-0000		1	GUIDE	
020	1348154-0000		1	BAR	
030	1348142-0000		1	SLIDE	
110	312105-0370		2	SCREW M6S ISO 4017 M6X20 A480	
120	315105-0153		6	WASHER BRB6,4X12RFR	
130	312605-0316		2	HEXAGON NUT, M6M M6 A280	
TBA 0250B (See drawing on pages: 5-100, 9-14)					
010	2526579-0000		1	GUIDE	
020	1348153-0000		1	BAR	
030	1348141-0000		1	SLIDE	
110	312105-0370		2	SCREW M6S ISO 4017 M6X20 A480	
120	315105-0153		6	WASHER BRB6,4X12RFR	
130	312605-0316		2	HEXAGON NUT, M6M M6 A280	
TBA 0330S (See drawing on pages: 5-100, 9-14)					
010	2526579-0000		1	GUIDE	
020	2544999-0000		1	BAR	
030	2544998-0000		1	SLIDE	
040	1279409-0000		1	PLATE	
110	312105-0370		2	SCREW M6S ISO 4017 M6X20 A480	
120	315105-0153		6	WASHER BRB6,4X12RFR	
130	312605-0316		2	HEXAGON NUT, M6M M6 A280	
TBA 0500B (See drawing on pages: 5-98, 9-12)					
020	1539878-0000		1	BAR	
030	1539875-0000		1	SLIDE	
040	1539876-0000		1	PLATE	
110	312105-0370		2	SCREW M6S ISO 4017 M6X20 A480	
120	315105-0153		6	WASHER BRB6,4X12RFR	
TBA 1000B (See drawing on pages: 5-98, 5-102, 9-12)					
010	2518130-0000		1	GUIDE	
020	1348150-0000		1	BAR	
030	1348139-0000		1	SLIDE	
040	1279409-0000		1	PLATE	
110	312105-0370		2	SCREW M6S ISO 4017 M6X20 A480	
120	315105-0153		6	WASHER BRB6,4X12RFR	
Common Parts					
010	2539290-0000		1	GUIDE	
010	2619693-0000		1	GUIDE	
010	2619701-0000		1	GUIDE	
010	2522167-0000		1	GUIDE	
020	2619683-0000		1	BAR	
020	2619711-0000		1	BAR	
020	1490036-0000		1	BAR	
020	2675104-0000		1	BAR	
020	2539306-0000		1	BAR	
020	2539304-0000		1	BAR	
020	2529278-0000		1	BAR	
030	2619712-0000		1	SLIDE	
030	2529276-0000		1	SLIDE	
030	2539297-0000		1	SLIDE	
030	2539298-0000		1	SLIDE	
030	2539299-0000		1	SLIDE	
030	2619576-0000		1	SLIDE	
030	2619685-0000		1	SLIDE	
040	1348169-0000		1	PLATE	
040	2675102-0000		1	PLATE	
040	2619697-0000		1	PLATE	
050	2664201-0000		1	GUIDE	
050	2619705-0000		1	GUIDE	
050	2619727-0000		1	GUIDE	
050	2598916-0000		1	GUIDE	
100	312105-0362		2	SCREW M6S ISO 4017 M6X8 A480	
120	315105-0153		5	WASHER BRB6,4X12RFR	

Machine Type | Group Description | Used-In | Group Number | Page No

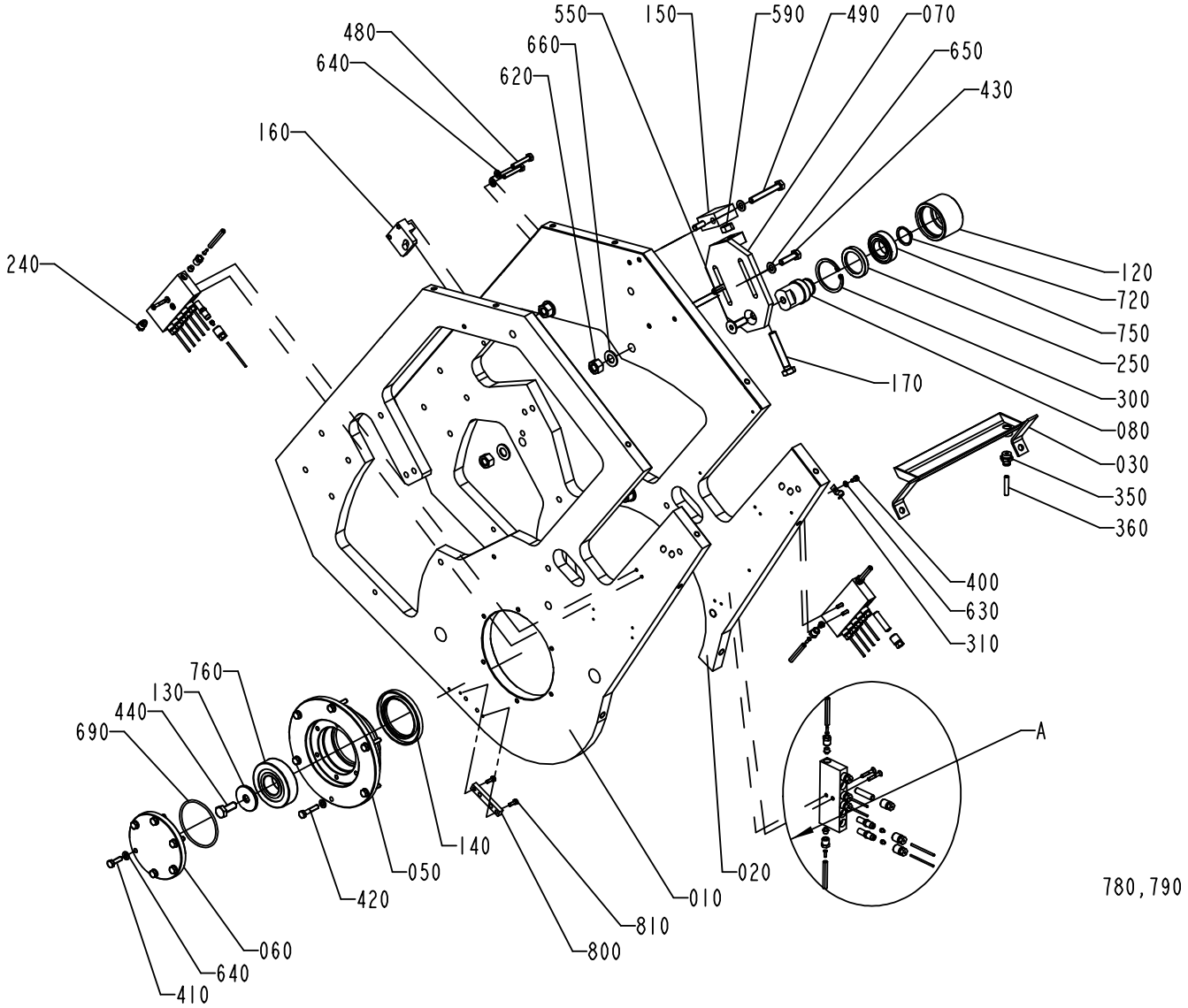

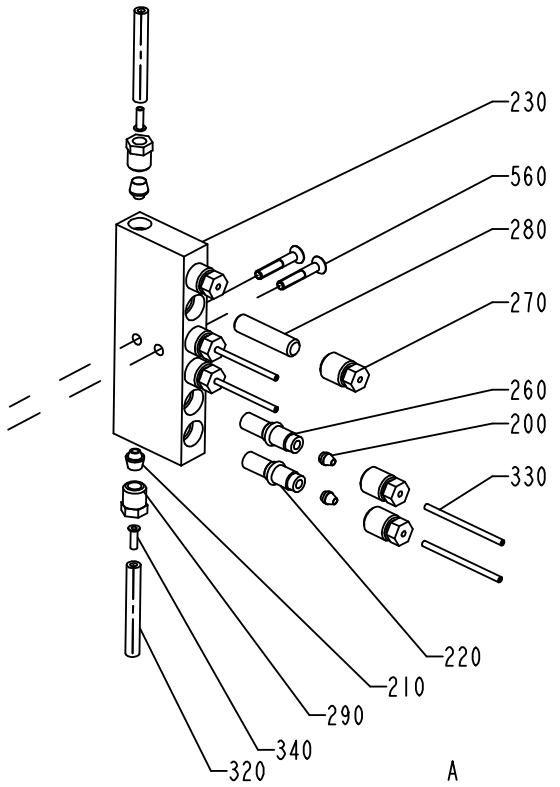

S-1144324-2
ECN 73332

ECM: 180377 - 50001231
Group number: 1144324-0300
Assembly Drawing: 1144324-2_1_AC

Pos	Part No	UN	Qty	Description	Page No
A3/FLEX TBA 1890S QC, A3/FLEX TBA 2000S QC					
260	90092-0052		13	METERING VALVE 10 MM3	
A3/FLEX TBA 1000B, A3/FLEX TBA 1000S, A3/FLEX TBA 0200S, A3/FLEX TBA 1500S, A3/FLEX TBA 0200B QC, A3/FLEX TBA 0250B QC, A3/FLEX TBA 0330S QC, A3/FLEX TBA 0250S QC, A3/FLEX TBA 0200M QC					
160	1144900-0000		1	SUPPORT	
A3/FLEX TBA 1000SQ, A3/FLEX TPA 1000SQ, A3/FLEX TPA 0330SQ, A3/FLEX TPA 0500SQ					
260	90092-0052		16	METERING VALVE 10 MM3	
280	90134-0052		2	PLUG DOSING BLOCK	
Common Parts					
010	1347109-0000		1	PLATE	
020	1347108-0000		1	PLATE	
050	598101-0000		1	BEARING HOUSING	
060	1144618-0000		1	FLANGE	
070	1144797-0000		1	SUPPORT	
080	1478418-0000		1	AXLE BOLT	
120	1478417-0000		1	ROLLER	
130	1144620-0000		1	WASHER	
140	1144665-0000		1	SEAL RING	
150	1144839-0000		1	BLOCK	
160	1282844-0000		1	SUPPORT	
170	1260931-0000		1	SCREW	
200	90028-0020		14	CONE TUBE 2,5MM	
210	90028-0025		5	CONE TUBE 6 MM	
220	90092-0054		1	METERING VALVE 50 MM3	
230	90032-0040		3	BLOCK 6 WAYS	
240	90087-0019		1	PLUG M10X1 STAINLESS	
250	90091-0297		1	RADIAL SEAL 35X47X7 MM DUST LIP	
260	90092-0052		14	METERING VALVE 10 MM3	
270	90134-0039		18	BUSHING VALVE CONNECTION 2,5 MM	
280	90134-0052		4	PLUG DOSING BLOCK	
290	90134-0055		5	BUSHING/NUT INLET/OUTLET 6 MM	
300	90141-0019		1	RETAINING RING FOR BORE DIN 472 50 A2	
310	316810-0106		5	PIPE CLIP FOR TUBE D=8 MM	
320	90166-0108	M	4	TUBE 6 MM PA,TRANSP.	
330	90166-0143	M	4	TUBE 2,5 MM PA,TRANSP.	
340	90134-0030		5	SLEEVE FOR PLASTIC TUBE	
400	312105-0287		5	SCREW M6S ISO4017 M4X8 A470	
410	312105-0370		6	SCREW M6S ISO 4017 M6X20 A480	
420	312105-0374		6	SCREW M6S ISO 4014 M6X30 A480	
430	312105-0455		2	SCREW M6S ISO 4017 M8X30 A480	
440	312105-0493		1	SCREW M6S ISO 4017 M10X25 A480	
480	312109-0376		2	SCREW M6S ISO 4017 M6X35 A480	
490	312109-0463		2	SCREW M6S ISO 4017 M8X60 A480	
550	312155-0495		1	SCREW EN 10642 MF6S M10X30 A480	
560	312155-0297		6	SCREW EN 10642 MF6S M4X25 A480	
590	312605-0320		1	HEXAGON NUT, M6M M10 A280	
620	312605-0322		4	HEXAGON NUT, M6M M12 A280	
630	315105-0136		5	WASHER BRB4,3XRFR	
640	315105-0153		14	WASHER BRB6,4X12RFR	
650	315105-0165		4	WASHER BRB8,4X16RFR	
660	315105-0178		4	WASHER BRB13X24RFR	
690	315202-0305		1	O-RING 69,5X3 MM	
720	315751-0119		1	RETAINING RING FOR SHAFT DIN 471 25 A2	
750	321308-0205		1	BALL BEARING, 25X47X12MM	
760	321316-0206		1	BALL BEARING, 30X72X19 MM	
780	352113-0102		3	CLIP-STRIP, BLACK 188X4,8 MM	
790	352113-0101		7	CLIP STRIP, 92X2,5 MM	
800	1487821-0000		1	SPACER	
810	312105-0291		2	SCREW M6S ISO 4017 M4X12 A470	

Machine Type | Group Description | Used-In | Group Number | Page No

FLAP HEATER BODY

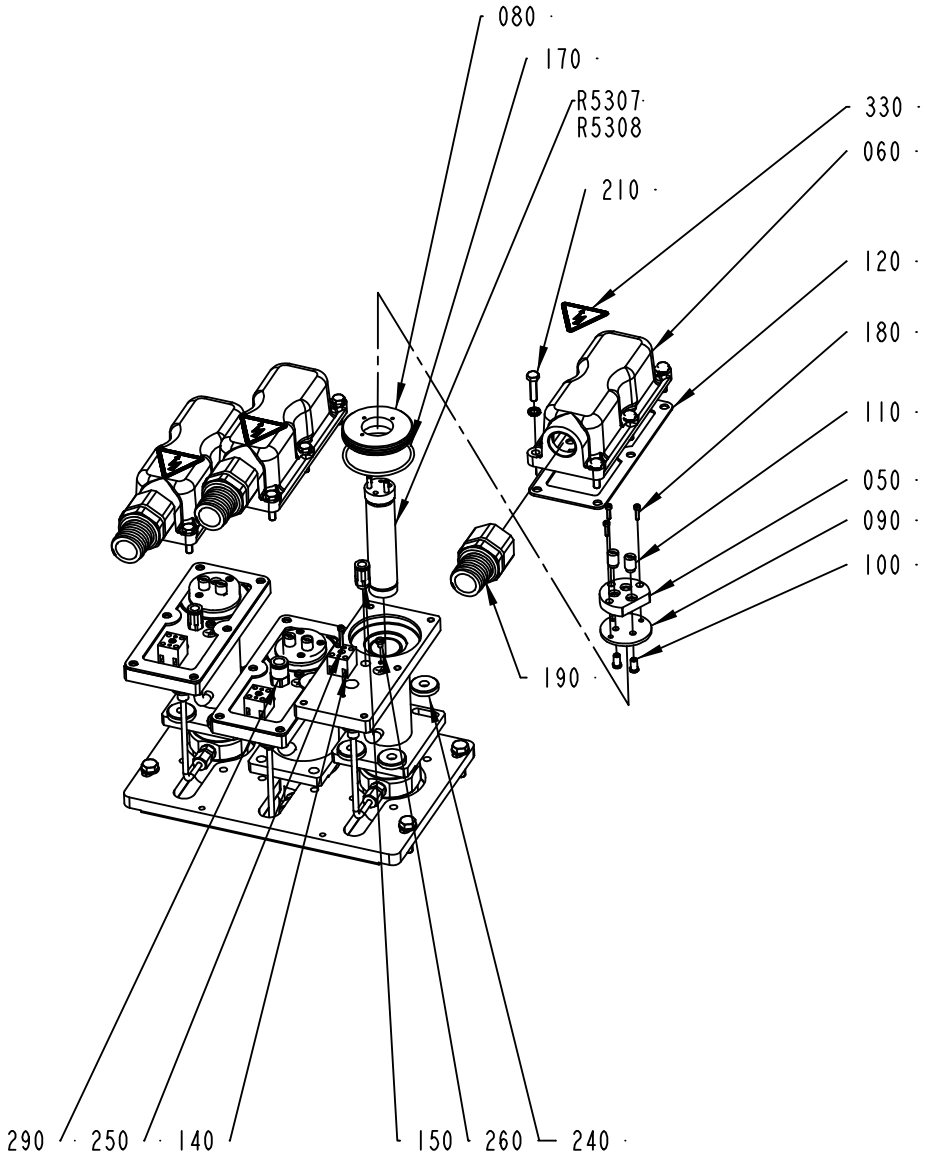

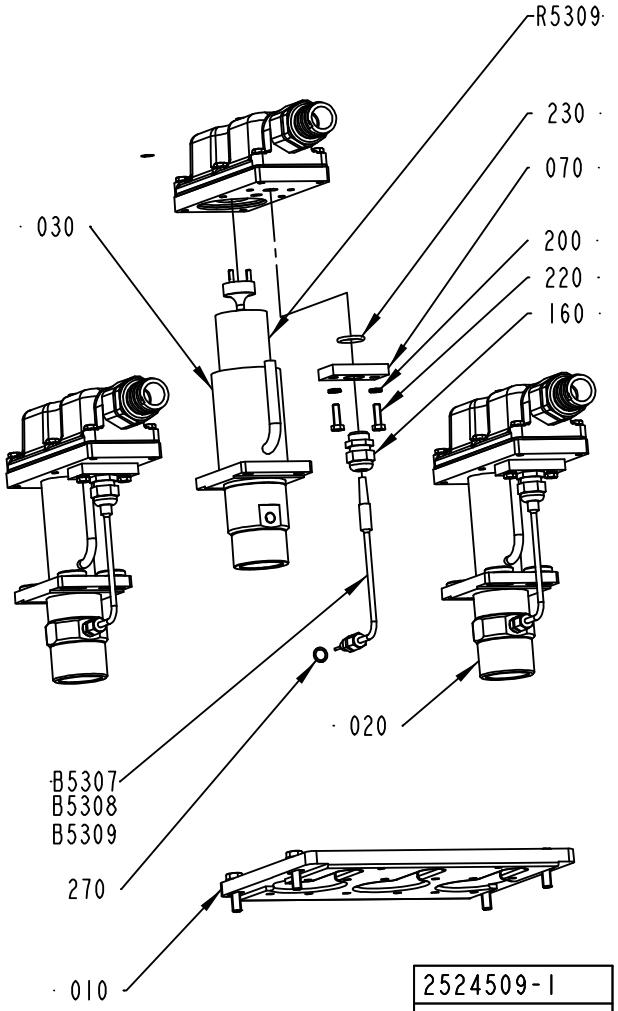

2524509-1
ECM 116811

ECM: 173946 - 20040528
Group number: 2524509-0100
Assembly Drawing: 2524509-1_1_AA

This list covers pages from 5-106 to 5-111

Pos	Part No	UN	Qty	Description	Page No
A3/FLEX NOQC (See drawing on page: 5-106)					
020	1296070-0000		2	HEATING PIPE	
A3/FLEX QC (See drawing on pages: 5-108, 5-110)					
010	2535538-0100		1	FRAME	**5-113, 5-115, 5-117**
020	1296070-0000		2	HEATING PIPE	
Common Parts					
010	2544339-0100		1	FRAME	**5-121**
030	1285293-0000		1	HEATING PIPE	
050	294464-0000		3	BASE PLATE	
060	1484096-0000		3	COVER	
070	1285311-0000		3	PLATE	
080	1285307-0000		3	SPACER	
090	1285308-0000		3	GASKET	
100	270927-0000		6	SCREW	
110	266739-0000		6	CABLE GLAND	
120	1285312-0000		3	GASKET	
140	90195-0020		3	TERMINAL BLOCK, 1977.2	
150	342722-0204		2	PIPE COUPLING	
160	352103-0106		3	CABLE GLAND, ST 11, PR18,6/PG11	
170	315204-0303		3	O-RING 59,5X3 MM	
180	312115-0226		9	SCREW ISO4762 M3X12 A4	
190	353247-0005		3	HOSE GLAND EMC PG21 EXTENDED	
200	90062-0015		24	LOCK WASHER SERRAT.EXT.GEAR,6,4/11 H=0,7	
210	312105-0372		18	SCREW M6S ISO 4017 M6X25 A480	
220	312105-0370		6	SCREW M6S ISO 4017 M6X20 A480	
230	315204-0215		3	O-RING 19,2X3 MM	
240	315125-0165		8	WASHER TBRSB 8,4X26X5 A4	
250	312115-0230		3	SCREW ISO4762 M3X20 A4	
260	312132-0284		3	SCREW SLOT. PAN HEAD MSCS M4X5	
270	315234-0109		3	WASHER,PL.RND.CU.10,3/13,5 H=1,0	
290	342722-0211		1	STRAIGHT COUPLING D=10-G1/4"	
330	359705-0015		3	WARNING SIGN ISO, RISK OF ELECTRIC SHOCK	
B5307	90326-0081		1	THERMOCOUPLE, ISA TYPE K.	
B5308	90326-0081		1	THERMOCOUPLE, ISA TYPE K.	
B5309	90326-0081		1	THERMOCOUPLE, ISA TYPE K.	
R5307	2514149-0000		1	HEATING ELEMENT	
R5308	2514149-0000		1	HEATING ELEMENT	
R5309	90206-0030		1	HEATING ELEMENT, 3000W, 220V	

Pos	Part No	UN	Qty	Description	Page No

FLAP HEATER BODY

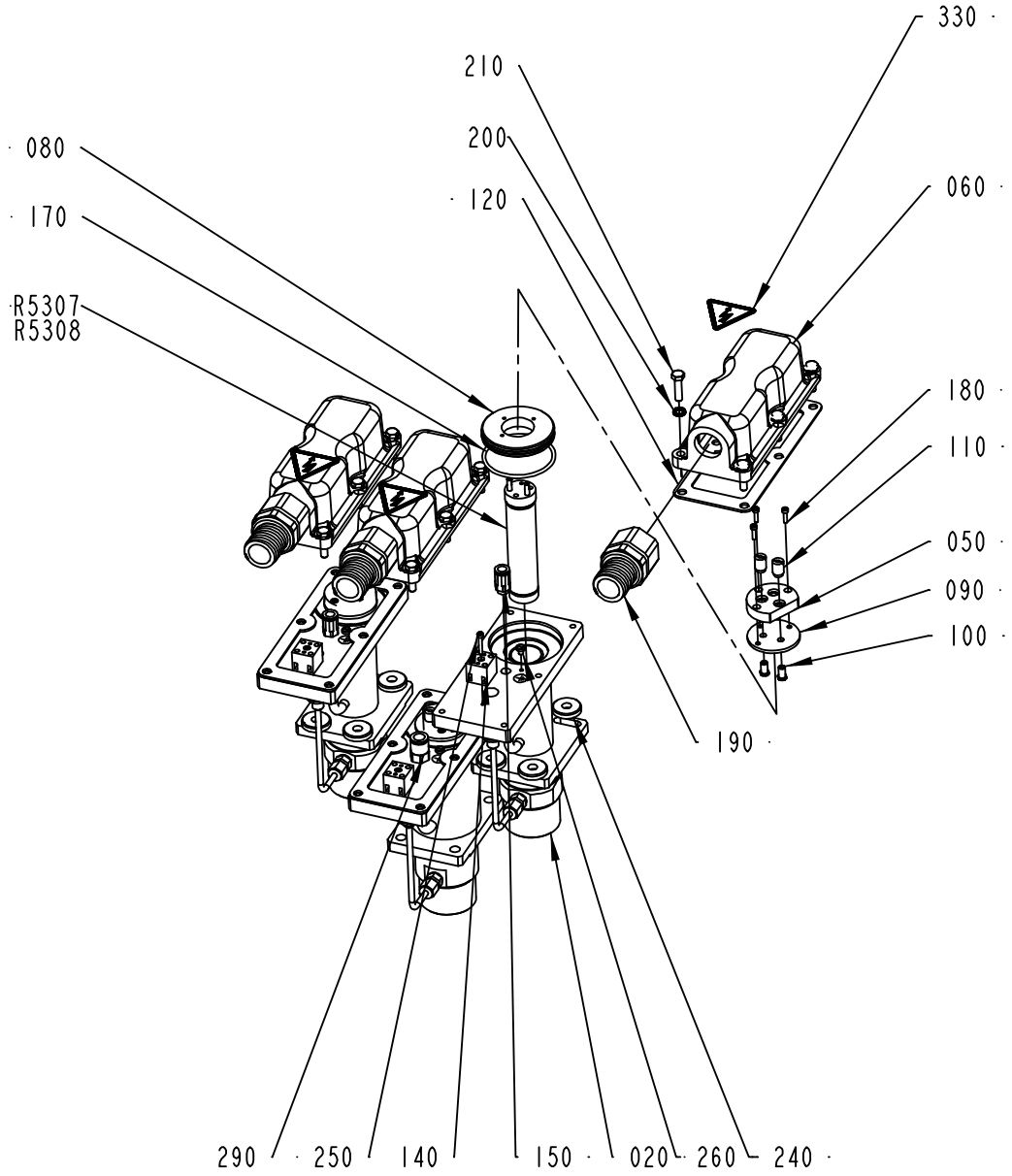

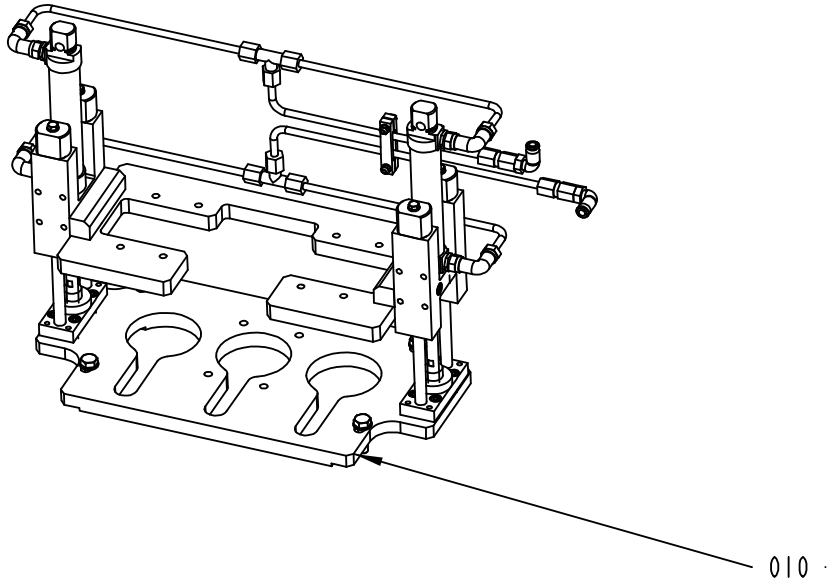

2524509-2
ECM 110155

ECM: 173946 - 20040528
Group number: 2524509-0100
Assembly Drawing: 2524509-2_1_AA

This list covers pages from 5-106 to 5-111

Pos	Part No	UN	Qty	Description	Page No
A3/FLEX NOQC (See drawing on page: 5-106)					
020	1296070-0000		2	HEATING PIPE	
A3/FLEX QC (See drawing on pages: 5-108, 5-110)					
010	2535538-0100		1	FRAME	**5-113, 5-115, 5-117**
020	1296070-0000		2	HEATING PIPE	
Common Parts					
010	2544339-0100		1	FRAME	**5-121**
030	1285293-0000		1	HEATING PIPE	
050	294464-0000		3	BASE PLATE	
060	1484096-0000		3	COVER	
070	1285311-0000		3	PLATE	
080	1285307-0000		3	SPACER	
090	1285308-0000		3	GASKET	
100	270927-0000		6	SCREW	
110	266739-0000		6	CABLE GLAND	
120	1285312-0000		3	GASKET	
140	90195-0020		3	TERMINAL BLOCK, 1977.2	
150	342722-0204		2	PIPE COUPLING	
160	352103-0106		3	CABLE GLAND, ST 11, PR18,6/PG11	
170	315204-0303		3	O-RING 59,5X3 MM	
180	312115-0226		9	SCREW ISO4762 M3X12 A4	
190	353247-0005		3	HOSE GLAND EMC PG21 EXTENDED	
200	90062-0015		24	LOCK WASHER SERRAT.EXT.GEAR,6,4/11 H=0,7	
210	312105-0372		18	SCREW M6S ISO 4017 M6X25 A480	
220	312105-0370		6	SCREW M6S ISO 4017 M6X20 A480	
230	315204-0215		3	O-RING 19,2X3 MM	
240	315125-0165		8	WASHER TBRSB 8,4X26X5 A4	
250	312115-0230		3	SCREW ISO4762 M3X20 A4	
260	312132-0284		3	SCREW SLOT. PAN HEAD MSCS M4X5	
270	315234-0109		3	WASHER,PL.RND.CU.10,3/13,5 H=1,0	
290	342722-0211		1	STRAIGHT COUPLING D=10-G1/4"	
330	359705-0015		3	WARNING SIGN ISO, RISK OF ELECTRIC SHOCK	
B5307	90326-0081		1	THERMOCOUPLE, ISA TYPE K.	
B5308	90326-0081		1	THERMOCOUPLE, ISA TYPE K.	
B5309	90326-0081		1	THERMOCOUPLE, ISA TYPE K.	
R5307	2514149-0000		1	HEATING ELEMENT	
R5308	2514149-0000		1	HEATING ELEMENT	
R5309	90206-0030		1	HEATING ELEMENT, 3000W, 220V	

Pos	Part No	UN	Qty	Description	Page No

FLAP HEATER BODY

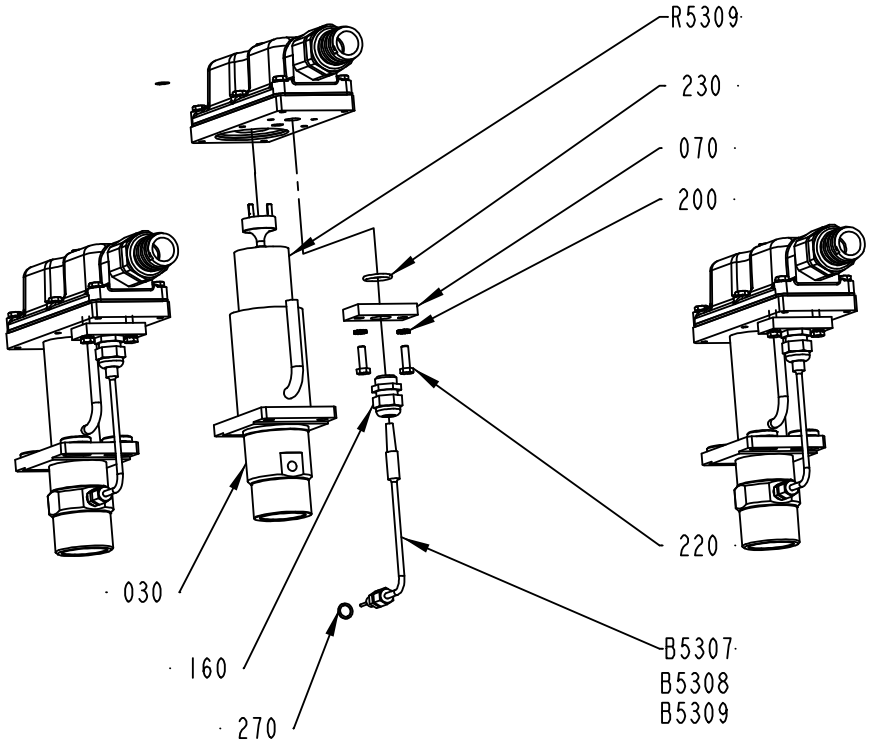

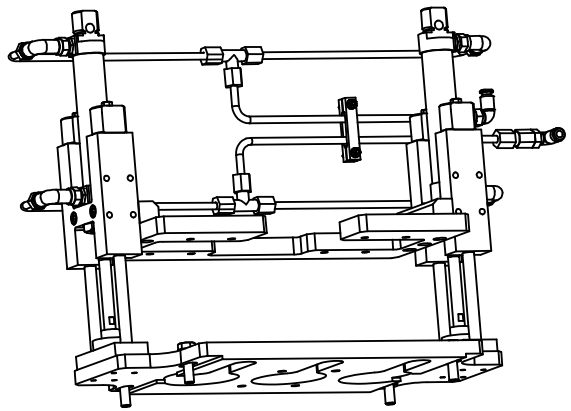

2524509-2
ECM 110155

ECM: 173946 - 20040528
Group number: 2524509-0100
Assembly Drawing: 2524509-2_2_AA

This list covers pages from 5-106 to 5-111

Pos	Part No	UN	Qty	Description	Page No
A3/FLEX NOQC (See drawing on page: 5-106)					
020	1296070-0000		2	HEATING PIPE	
A3/FLEX QC (See drawing on pages: 5-108, 5-110)					
010	2535538-0100		1	FRAME	**5-113, 5-115, 5-117**
020	1296070-0000		2	HEATING PIPE	
Common Parts					
010	2544339-0100		1	FRAME	**5-121**
030	1285293-0000		1	HEATING PIPE	
050	294464-0000		3	BASE PLATE	
060	1484096-0000		3	COVER	
070	1285311-0000		3	PLATE	
080	1285307-0000		3	SPACER	
090	1285308-0000		3	GASKET	
100	270927-0000		6	SCREW	
110	266739-0000		6	CABLE GLAND	
120	1285312-0000		3	GASKET	
140	90195-0020		3	TERMINAL BLOCK, 1977.2	
150	342722-0204		2	PIPE COUPLING	
160	352103-0106		3	CABLE GLAND, ST 11, PR18,6/PG11	
170	315204-0303		3	O-RING 59,5X3 MM	
180	312115-0226		9	SCREW ISO4762 M3X12 A4	
190	353247-0005		3	HOSE GLAND EMC PG21 EXTENDED	
200	90062-0015		24	LOCK WASHER SERRAT.EXT.GEAR,6,4/11 H=0,7	
210	312105-0372		18	SCREW M6S ISO 4017 M6X25 A480	
220	312105-0370		6	SCREW M6S ISO 4017 M6X20 A480	
230	315204-0215		3	O-RING 19,2X3 MM	
240	315125-0165		8	WASHER TBRSB 8,4X26X5 A4	
250	312115-0230		3	SCREW ISO4762 M3X20 A4	
260	312132-0284		3	SCREW SLOT. PAN HEAD MSCS M4X5	
270	315234-0109		3	WASHER,PL.RND.CU.10,3/13,5 H=1,0	
290	342722-0211		1	STRAIGHT COUPLING D=10-G1/4"	
330	359705-0015		3	WARNING SIGN ISO, RISK OF ELECTRIC SHOCK	
B5307	90326-0081		1	THERMOCOUPLE, ISA TYPE K.	
B5308	90326-0081		1	THERMOCOUPLE, ISA TYPE K.	
B5309	90326-0081		1	THERMOCOUPLE, ISA TYPE K.	
R5307	2514149-0000		1	HEATING ELEMENT	
R5308	2514149-0000		1	HEATING ELEMENT	
R5309	90206-0030		1	HEATING ELEMENT, 3000W, 220V	

Pos	Part No	UN	Qty	Description	Page No

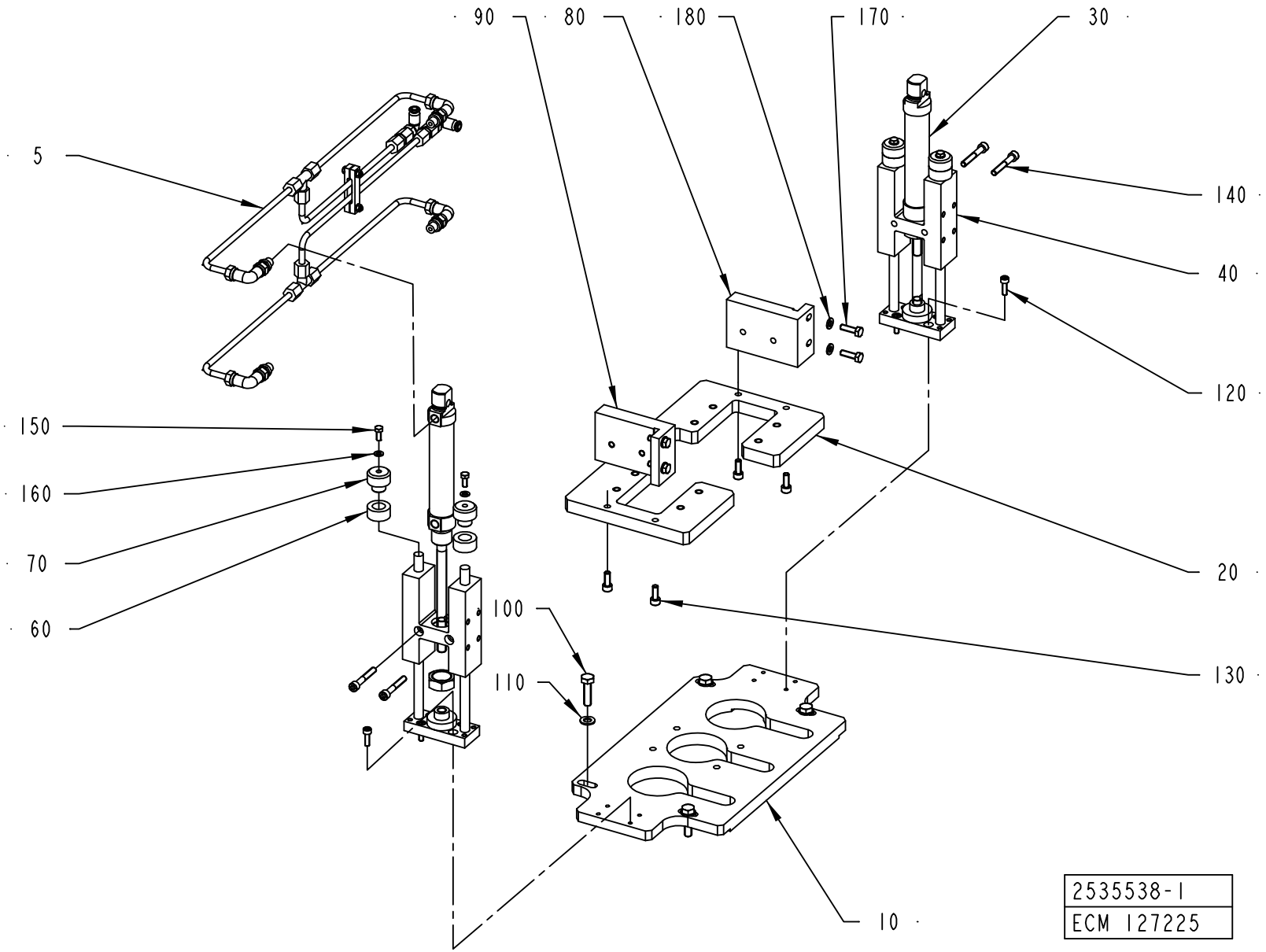
90
80
180
170
30
5
140
40
120
150
160
70
60
20
100
110
130
10
2535538-1
ECM 127225

ECM: 181069 - 50001231
Group number: 2535538-0100
Assembly Drawing: 2535538-1_1_AB

This list covers pages from 5-112 to 5-117

Pos	Part No	UN	Qty	Description	Page No
A3/FLEX TBA 0200B, A3/FLEX TBA 0250B, A3/FLEX TBA 0330S (See drawing on page: 5-114)					
010	2520163-0000		1	PLATE	
020	2520165-0000		1	GUIDE PLATE	
030	90459-0953		2	DOUBLE ACTING, ROUND, CYL 25-80	
040	90459-0952		2	LINEAR GUIDE UNIT, BORE 25-STROKE 80	
060	2599020-0000		4	STOP	
065	2604507-0000		2	SPACER	
075	2604508-0000		2	SPACER	
120	90458-0058		8	SCREW M5X60 A280	
190	90335-0178		2	COMP. SPRING 22060, 1X13,5X36,5	
200	2604509-0000		2	KNOB	
A3/FLEX TBA 0200M, A3/FLEX TBA 0250S (See drawing on page: 5-116)					
010	2520163-0000		1	PLATE	
020	2520165-0000		1	GUIDE PLATE	
030	90459-0953		2	DOUBLE ACTING, ROUND, CYL 25-80	
040	90459-0952		2	LINEAR GUIDE UNIT, BORE 25-STROKE 80	
060	2646470-0000		4	RUBBER DAMPER	
065	2656985-0000		2	SPACER	
120	90458-0058		8	SCREW M5X60 A280	
170	312105-0370		8	SCREW M6S ISO 4017 M6X20 A480	
A3/FLEX TBA 0500B, A3/FLEX TBA 1000B (See drawing on page: 5-112)					
010	2520163-0000		1	PLATE	
020	2520165-0000		1	GUIDE PLATE	
030	90459-0953		2	DOUBLE ACTING, ROUND, CYL 25-80	
040	90459-0952		2	LINEAR GUIDE UNIT, BORE 25-STROKE 80	
120	312115-0329		8	SCREW ISO4762 M5X16 A4	
A3/FLEX TBA 1890S, A3/FLEX TBA 2000S (See drawing on page: 5-112)					
010	2520163-0000		1	PLATE	
020	2520165-0000		1	GUIDE PLATE	
030	90459-0953		2	DOUBLE ACTING, ROUND, CYL 25-80	
040	90459-0952		2	LINEAR GUIDE UNIT, BORE 25-STROKE 80	
120	312115-0333		8	SCREW ISO4762 M5X25 A4	
Common Parts					
005	2535540-0100		1	PNEUMATIC CIRCUIT	**5-119**
010	2660573-0000		1	BASIC PLATE	
020	2660575-0000		1	GUIDE PLATE	
060	2660737-0000		4	STOP	
060	2660610-0000		4	RUBBER DAMPER	
060	2623870-0000		4	RUBBER DAMPER	
070	2623869-0000		4	RUBBER HOLDER	
075	2660732-0000		2	SPACER	
080	2623623-0000		1	CYLINDER BRACKET	
090	2623624-0000		1	CYLINDER BRACKET	
100	312105-0327		4	SCREW M6S ISO 4017 M5X12 A480	
110	312105-0455		4	SCREW M6S ISO 4017 M8X30 A480	
130	312115-0368		4	SCREW ISO4762 M6X16 A4	
140	312115-0378		4	SCREW ISO4762 M6X40 A4 80	
150	315105-0146		4	WASHER BRB5,3X10RFR	
160	315105-0165		4	WASHER BRB8,4X16RFR	
170	312105-0370		4	SCREW M6S ISO 4017 M6X20 A480	
180	315105-0153		4	WASHER BRB6,4X12RFR	
210	2675077-0000		2	SUPPORT	
210	2604510-0000		2	SHAFT	
240	312105-0372		8	SCREW M6S ISO 4017 M6X25 A480	
250	315111-0156		8	WASHER PLAIN, TBRB 6,7/14 H=3	

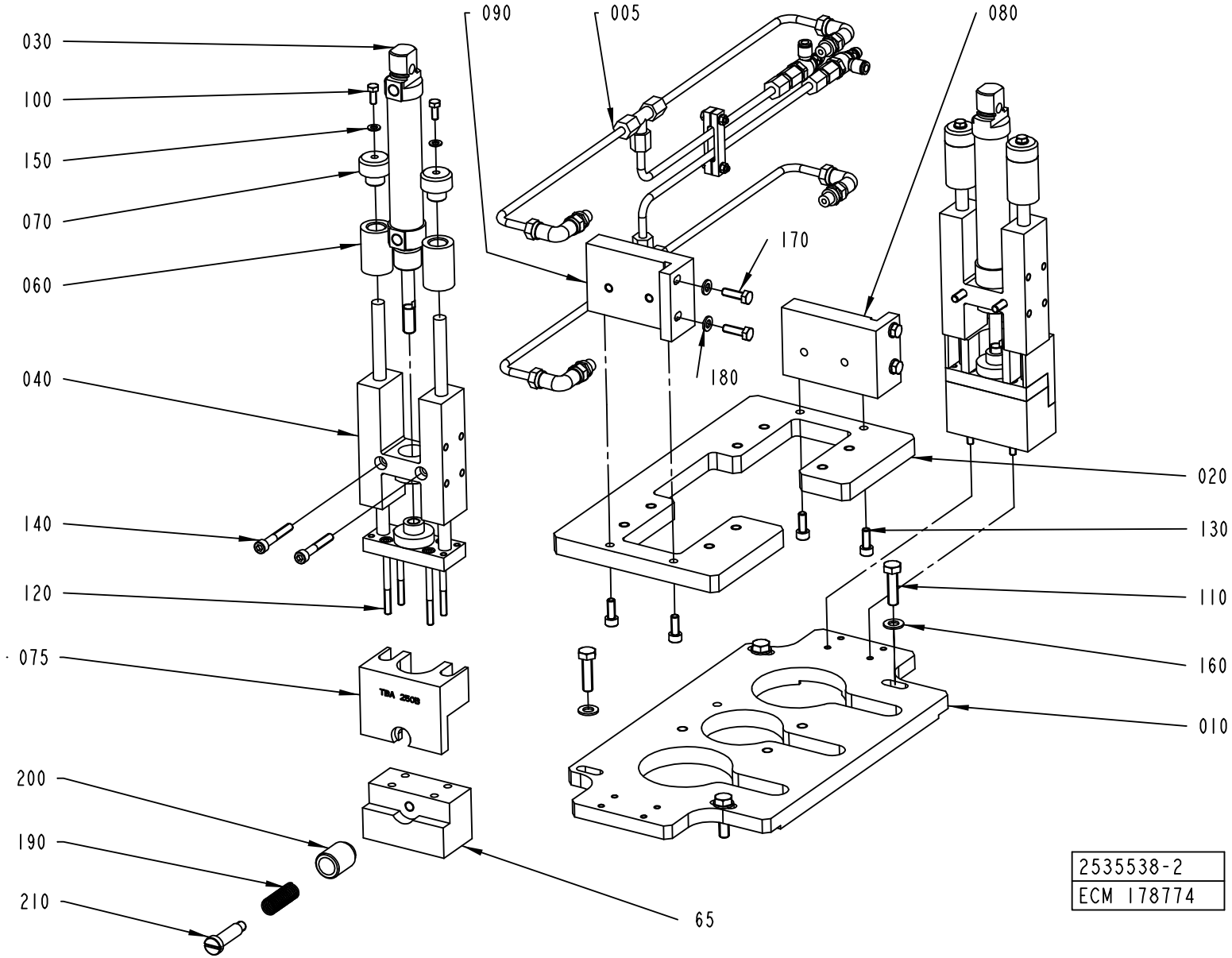
090
005
080
030
100
150
070
060
170
180
040
020
140
130
120
110
075
160
010
200
190
210
65
2535538-2
ECM 178774

ECM: 181069 - 50001231
Group number: 2535538-0100
Assembly Drawing: 2535538-2_1_AB

This list covers pages from 5-112 to 5-117

Pos	Part No	UN	Qty	Description	Page No
A3/FLEX TBA 0200B, A3/FLEX TBA 0250B, A3/FLEX TBA 0330S (See drawing on page: 5-114)					
010	2520163-0000		1	PLATE	
020	2520165-0000		1	GUIDE PLATE	
030	90459-0953		2	DOUBLE ACTING, ROUND, CYL 25-80	
040	90459-0952		2	LINEAR GUIDE UNIT, BORE 25-STROKE 80	
060	2599020-0000		4	STOP	
065	2604507-0000		2	SPACER	
075	2604508-0000		2	SPACER	
120	90458-0058		8	SCREW M5X60 A280	
190	90335-0178		2	COMP. SPRING 22060, 1X13,5X36,5	
200	2604509-0000		2	KNOB	
A3/FLEX TBA 0200M, A3/FLEX TBA 0250S (See drawing on page: 5-116)					
010	2520163-0000		1	PLATE	
020	2520165-0000		1	GUIDE PLATE	
030	90459-0953		2	DOUBLE ACTING, ROUND, CYL 25-80	
040	90459-0952		2	LINEAR GUIDE UNIT, BORE 25-STROKE 80	
060	2646470-0000		4	RUBBER DAMPER	
065	2656985-0000		2	SPACER	
120	90458-0058		8	SCREW M5X60 A280	
170	312105-0370		8	SCREW M6S ISO 4017 M6X20 A480	
A3/FLEX TBA 0500B, A3/FLEX TBA 1000B (See drawing on page: 5-112)					
010	2520163-0000		1	PLATE	
020	2520165-0000		1	GUIDE PLATE	
030	90459-0953		2	DOUBLE ACTING, ROUND, CYL 25-80	
040	90459-0952		2	LINEAR GUIDE UNIT, BORE 25-STROKE 80	
120	312115-0329		8	SCREW ISO4762 M5X16 A4	
A3/FLEX TBA 1890S, A3/FLEX TBA 2000S (See drawing on page: 5-112)					
010	2520163-0000		1	PLATE	
020	2520165-0000		1	GUIDE PLATE	
030	90459-0953		2	DOUBLE ACTING, ROUND, CYL 25-80	
040	90459-0952		2	LINEAR GUIDE UNIT, BORE 25-STROKE 80	
120	312115-0333		8	SCREW ISO4762 M5X25 A4	
Common Parts					
005	2535540-0100		1	PNEUMATIC CIRCUIT	**5-119**
010	2660573-0000		1	BASIC PLATE	
020	2660575-0000		1	GUIDE PLATE	
060	2660737-0000		4	STOP	
060	2660610-0000		4	RUBBER DAMPER	
060	2623870-0000		4	RUBBER DAMPER	
070	2623869-0000		4	RUBBER HOLDER	
075	2660732-0000		2	SPACER	
080	2623623-0000		1	CYLINDER BRACKET	
090	2623624-0000		1	CYLINDER BRACKET	
100	312105-0327		4	SCREW M6S ISO 4017 M5X12 A480	
110	312105-0455		4	SCREW M6S ISO 4017 M8X30 A480	
130	312115-0368		4	SCREW ISO4762 M6X16 A4	
140	312115-0378		4	SCREW ISO4762 M6X40 A4 80	
150	315105-0146		4	WASHER BRB5,3X10RFR	
160	315105-0165		4	WASHER BRB8,4X16RFR	
170	312105-0370		4	SCREW M6S ISO 4017 M6X20 A480	
180	315105-0153		4	WASHER BRB6,4X12RFR	
210	2675077-0000		2	SUPPORT	
210	2604510-0000		2	SHAFT	
240	312105-0372		8	SCREW M6S ISO 4017 M6X25 A480	
250	315111-0156		8	WASHER PLAIN, TBRB 6,7/14 H=3	

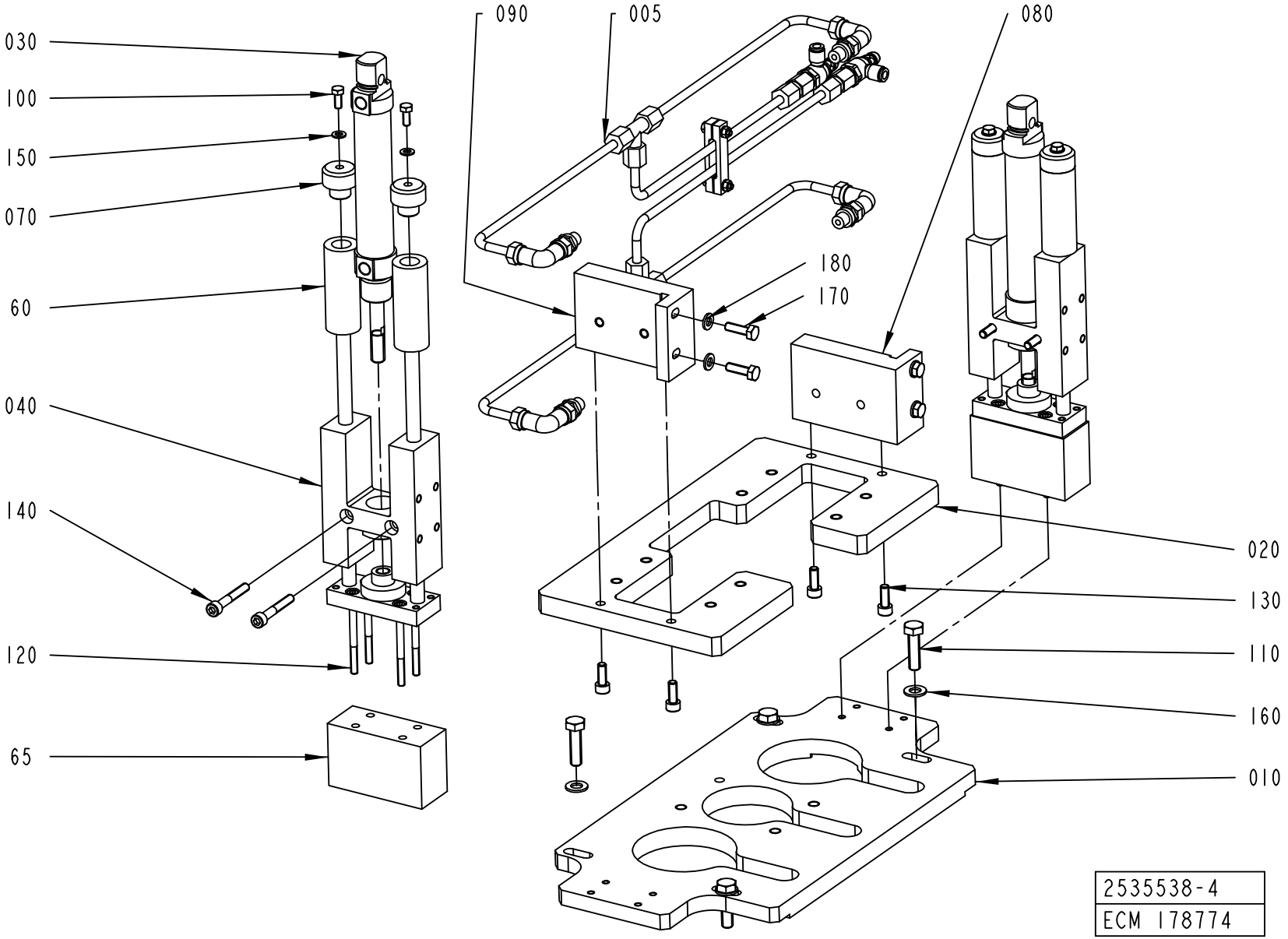
030
100
150
070
60
040
140
120
65
090
005
080
180
170
020
130
110
160
010
2535538-4
ECM 178774

ECM: 181069 - 50001231
Group number: 2535538-0100
Assembly Drawing: 2535538-4_1_AA

This list covers pages from 5-112 to 5-117

Pos	Part No	UN	Qty	Description	Page No
A3/FLEX TBA 0200B, A3/FLEX TBA 0250B, A3/FLEX TBA 0330S (See drawing on page: 5-114)					
010	2520163-0000		1	PLATE	
020	2520165-0000		1	GUIDE PLATE	
030	90459-0953		2	DOUBLE ACTING, ROUND, CYL 25-80	
040	90459-0952		2	LINEAR GUIDE UNIT, BORE 25-STROKE 80	
060	2599020-0000		4	STOP	
065	2604507-0000		2	SPACER	
075	2604508-0000		2	SPACER	
120	90458-0058		8	SCREW M5X60 A280	
190	90335-0178		2	COMP. SPRING 22060, 1X13,5X36,5	
200	2604509-0000		2	KNOB	
A3/FLEX TBA 0200M, A3/FLEX TBA 0250S (See drawing on page: 5-116)					
010	2520163-0000		1	PLATE	
020	2520165-0000		1	GUIDE PLATE	
030	90459-0953		2	DOUBLE ACTING, ROUND, CYL 25-80	
040	90459-0952		2	LINEAR GUIDE UNIT, BORE 25-STROKE 80	
060	2646470-0000		4	RUBBER DAMPER	
065	2656985-0000		2	SPACER	
120	90458-0058		8	SCREW M5X60 A280	
170	312105-0370		8	SCREW M6S ISO 4017 M6X20 A480	
A3/FLEX TBA 0500B, A3/FLEX TBA 1000B (See drawing on page: 5-112)					
010	2520163-0000		1	PLATE	
020	2520165-0000		1	GUIDE PLATE	
030	90459-0953		2	DOUBLE ACTING, ROUND, CYL 25-80	
040	90459-0952		2	LINEAR GUIDE UNIT, BORE 25-STROKE 80	
120	312115-0329		8	SCREW ISO4762 M5X16 A4	
A3/FLEX TBA 1890S, A3/FLEX TBA 2000S (See drawing on page: 5-112)					
010	2520163-0000		1	PLATE	
020	2520165-0000		1	GUIDE PLATE	
030	90459-0953		2	DOUBLE ACTING, ROUND, CYL 25-80	
040	90459-0952		2	LINEAR GUIDE UNIT, BORE 25-STROKE 80	
120	312115-0333		8	SCREW ISO4762 M5X25 A4	
Common Parts					
005	2535540-0100		1	PNEUMATIC CIRCUIT	**5-119**
010	2660573-0000		1	BASIC PLATE	
020	2660575-0000		1	GUIDE PLATE	
060	2660737-0000		4	STOP	
060	2660610-0000		4	RUBBER DAMPER	
060	2623870-0000		4	RUBBER DAMPER	
070	2623869-0000		4	RUBBER HOLDER	
075	2660732-0000		2	SPACER	
080	2623623-0000		1	CYLINDER BRACKET	
090	2623624-0000		1	CYLINDER BRACKET	
100	312105-0327		4	SCREW M6S ISO 4017 M5X12 A480	
110	312105-0455		4	SCREW M6S ISO 4017 M8X30 A480	
130	312115-0368		4	SCREW ISO4762 M6X16 A4	
140	312115-0378		4	SCREW ISO4762 M6X40 A4 80	
150	315105-0146		4	WASHER BRB5,3X10RFR	
160	315105-0165		4	WASHER BRB8,4X16RFR	
170	312105-0370		4	SCREW M6S ISO 4017 M6X20 A480	
180	315105-0153		4	WASHER BRB6,4X12RFR	
210	2675077-0000		2	SUPPORT	
210	2604510-0000		2	SHAFT	
240	312105-0372		8	SCREW M6S ISO 4017 M6X25 A480	
250	315111-0156		8	WASHER PLAIN, TBRB 6,7/14 H=3	

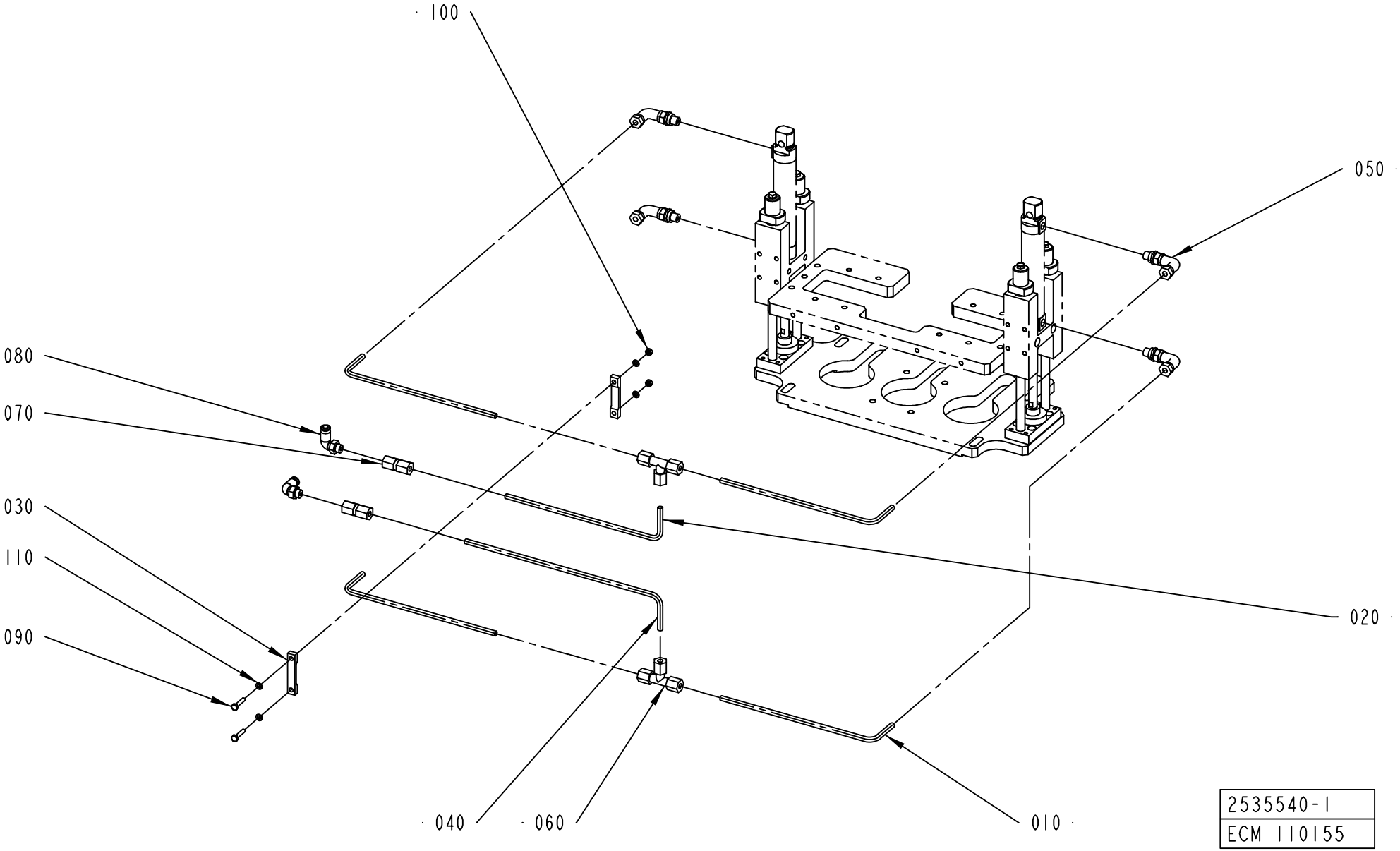
100
050
080
070
030
110
090
020
040
060
010
2535540-1
ECM 110155

ECM: 174292 - 20040528
Group number: 2535540-0100
Assembly Drawing: 2535540-1_1_AA

Pos	Part No	UN	Qty	Description	Page No
A3/FLEX					
020	2535758-0000		1	PIPE	
040	2535937-0000		1	PIPE	
Common Parts					
010	2535757-0000		4	PIPE	
020	2598941-0000		1	PIPE	
030	2535759-0000		2	BRACKET	
040	2660604-0000		1	PIPE	
050	90030-0171		4	ADJUSTABLE ELBOW CONNECTION,EXT 6-G1/8	
060	90030-0076		2	CONN. T-PIPE T-6	
070	342725-0102		2	CONN. STR. PIPE GI-6-G1/8	
080	90458-2956		2	ELBOW PIPE JOINT, EXT.THREAD, D=6MM-G1/8	
090	312105-0295		2	SCREW M6S ISO4017 M4X20 A470	
100	312605-0312		2	HEXAGON NUT, M6M M4 A280	
110	315105-0136		4	WASHER BRB4,3XRFR	

Pos	Part No	UN	Qty	Description	Page No

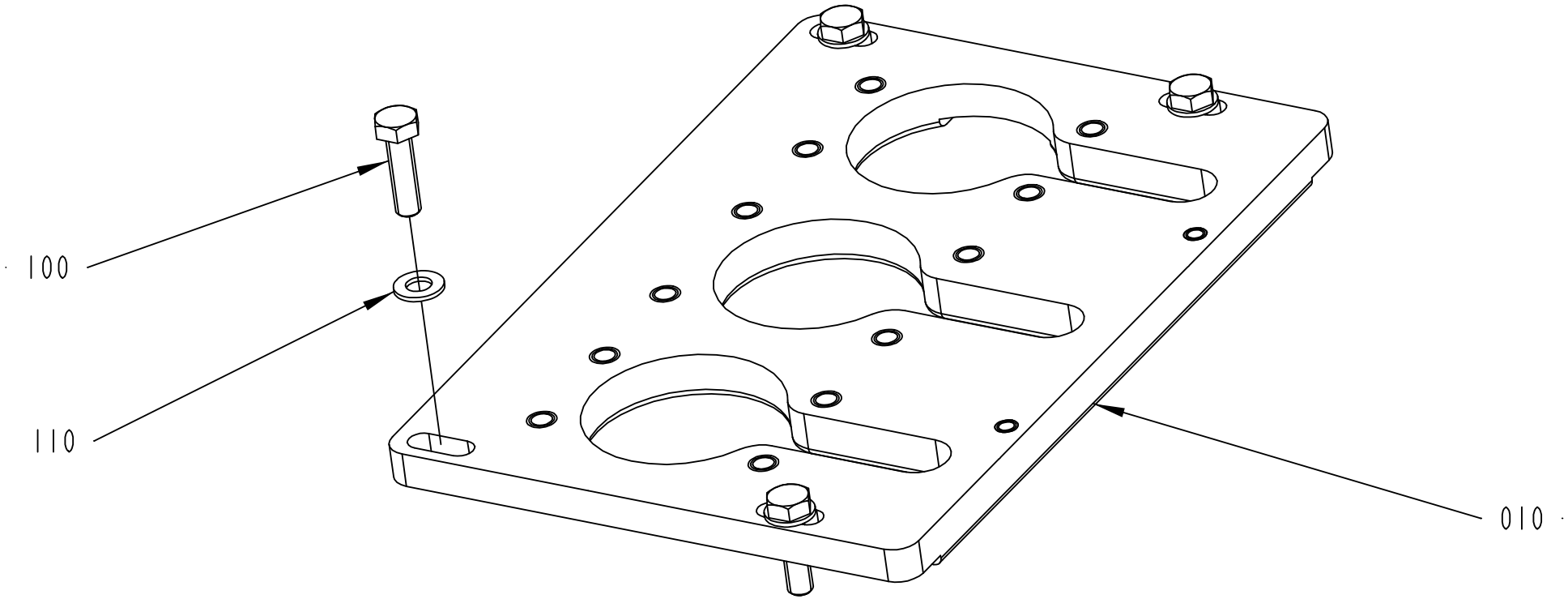

2544339-1
ECM 116811

ECM: 116811 - 20030403
Group number: 2544339-0100
Assembly Drawing: 2544339-1_1_AA

Pos	Part No	UN	Qty	Description	Page No
-					
010	1285291-0000		1	PLATE	
100	315105-0165		4	WASHER BRB8,4X16RFR	
110	312105-0453		4	SCREW M6S ISO 4017 M8X25 A480	

Pos	Part No	UN	Qty	Description	Page No

FLAP HEATER VARIANT

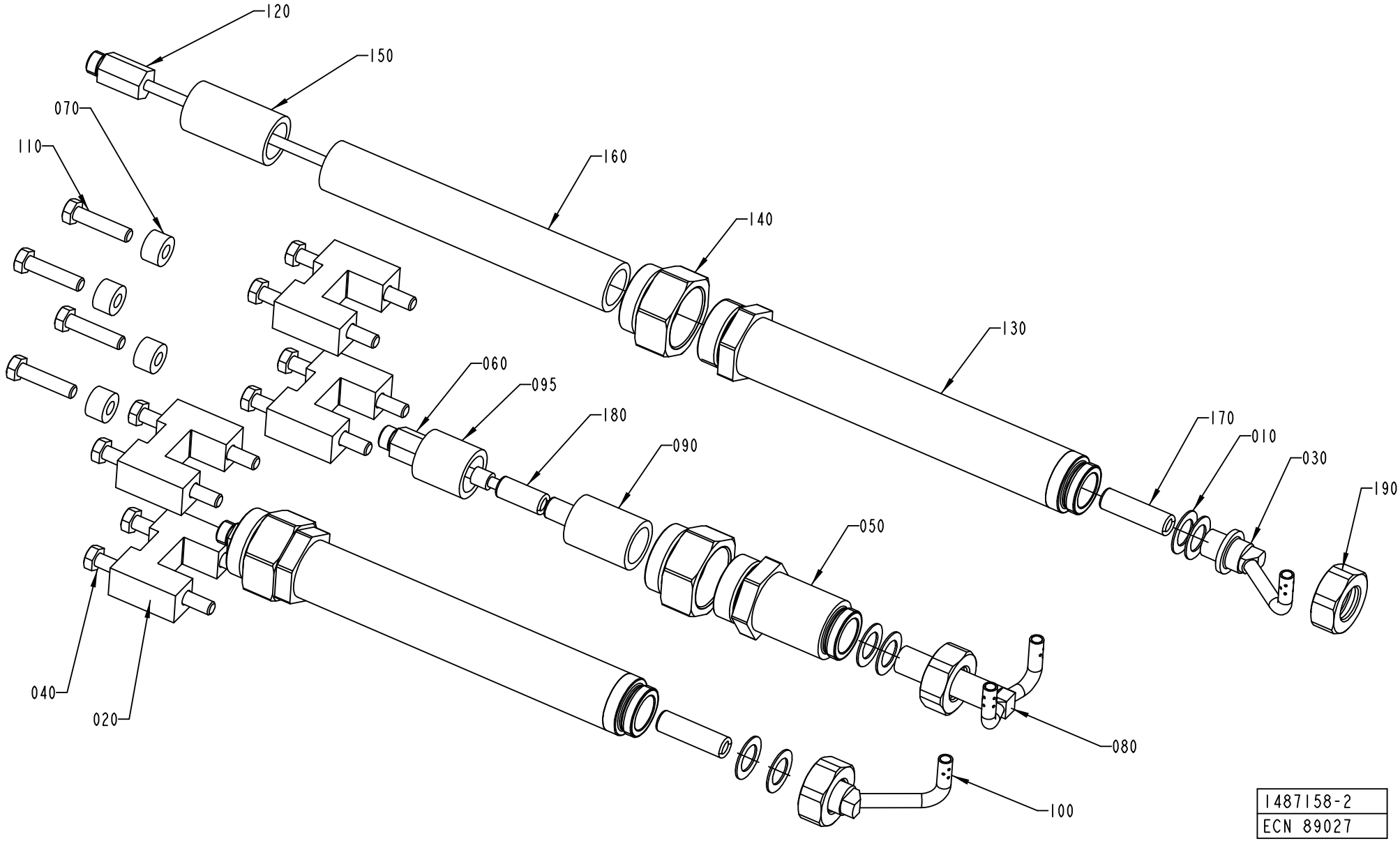

Pos	Part No	UN	Qty	Description	Page No
TPA 1000SQ (See drawing on page: 5-122)					
020	1519339-0000		8	SPACER	
030	1549127-0000		1	NOZZLE	
040	312105-0465		8	SCREW M6S ISO 4014 M8X70 A480	
060	1285870-0000		1	EXTENSION	
080	1519336-0000		1	NOZZLE	
100	1549126-0000		1	NOZZLE	
120	1285310-0000		2	EXTENSION	
140	1549390-0000		3	NUT	
150	23765-0003		2	INSULATING PIPE	
160	23765-0001		2	INSULATING PIPE	
190	1317085-0000		2	NUT	
200	359710-0001		3	WARNING SIGN ISO, HOT SURFACE	
TBA 0500B QC, TBA 1000B QC (See drawing on page: 5-126)					
010	263673-0000		6	GASKET	
120	1285310-0000		2	EXTENSION	
140	1549390-0000		3	NUT	
150	23765-0003		2	INSULATING PIPE	
160	23765-0001		2	INSULATING PIPE	
190	1317085-0000		2	NUT	
200	359710-0001		3	WARNING SIGN ISO, HOT SURFACE	
TBA 0200B NOQC (See drawing on page: 5-122)					
010	263673-0000		6	GASKET	
070	1285874-0000		4	SPACER	
095	23765-0004		1	INSULATING PIPE	
130	1549388-0000		2	SPACER	
140	1549390-0000		3	NUT	
150	23765-0003		2	INSULATING PIPE	
170	252766-0001		2	INSULATING PIPE	
190	1317085-0000		2	NUT	
200	359710-0001		3	WARNING SIGN ISO, HOT SURFACE	
TBA 0200B QC, TBA 0330S QC, TBA 0250B QC (See drawing on page: 5-122)					
010	263673-0000		6	GASKET	
040	312105-0457		4	SCREW M6S ISO 4014 M8X35 A480	
070	2545006-0000		4	SPACER	
095	23765-0004		1	INSULATING PIPE	
120	1285310-0000		2	EXTENSION	
140	1549390-0000		3	NUT	
150	23765-0003		2	INSULATING PIPE	
160	23765-0001		2	INSULATING PIPE	
190	1317085-0000		2	NUT	
200	359710-0001		3	WARNING SIGN ISO, HOT SURFACE	
TBA 0200S (See drawing on page: 5-122)					
010	263673-0000		6	GASKET	
070	1285874-0000		4	SPACER	
095	23765-0004		1	INSULATING PIPE	
130	1549388-0000		2	SPACER	
140	1549390-0000		3	NUT	
150	23765-0003		2	INSULATING PIPE	
170	252766-0001		2	INSULATING PIPE	
180	252766-0001		1	INSULATING PIPE	
190	1317085-0000		2	NUT	
200	359710-0001		3	WARNING SIGN ISO, HOT SURFACE	
TBA 0250B NOQC (See drawing on page: 5-122)					
010	263673-0000		6	GASKET	
070	1285874-0000		4	SPACER	
095	23765-0004		1	INSULATING PIPE	
130	1549388-0000		2	SPACER	
140	1549390-0000		3	NUT	
150	23765-0003		2	INSULATING PIPE	
170	252766-0001		2	INSULATING PIPE	
190	1317085-0000		2	NUT	
200	359710-0001		3	WARNING SIGN ISO, HOT SURFACE	
TBA 0500B NOQC (See drawing on page: 5-122)					
010	263673-0000		6	GASKET	
130	1549388-0000		2	SPACER	
140	1549390-0000		3	NUT	
150	23765-0003		2	INSULATING PIPE	
170	252766-0001		2	INSULATING PIPE	
190	1317085-0000		2	NUT	
200	359710-0001		3	WARNING SIGN ISO, HOT SURFACE	
TBA 1000B NOQC (See drawing on page: 5-122)					
010	263673-0000		6	GASKET	
120	1285310-0000		2	EXTENSION	
140	1549390-0000		3	NUT	
150	23765-0003		2	INSULATING PIPE	
160	23765-0001		2	INSULATING PIPE	
190	1317085-0000		2	NUT	
200	359710-0001		3	WARNING SIGN ISO, HOT SURFACE	
TBA 1000S (See drawing on page: 5-122)					
010	263673-0000		6	GASKET	
030	1296068-0000		1	NOZZLE	
080	1296066-0000		1	NOZZLE	
100	1296067-0000		1	NOZZLE	

FLAP HEATER VARIANT

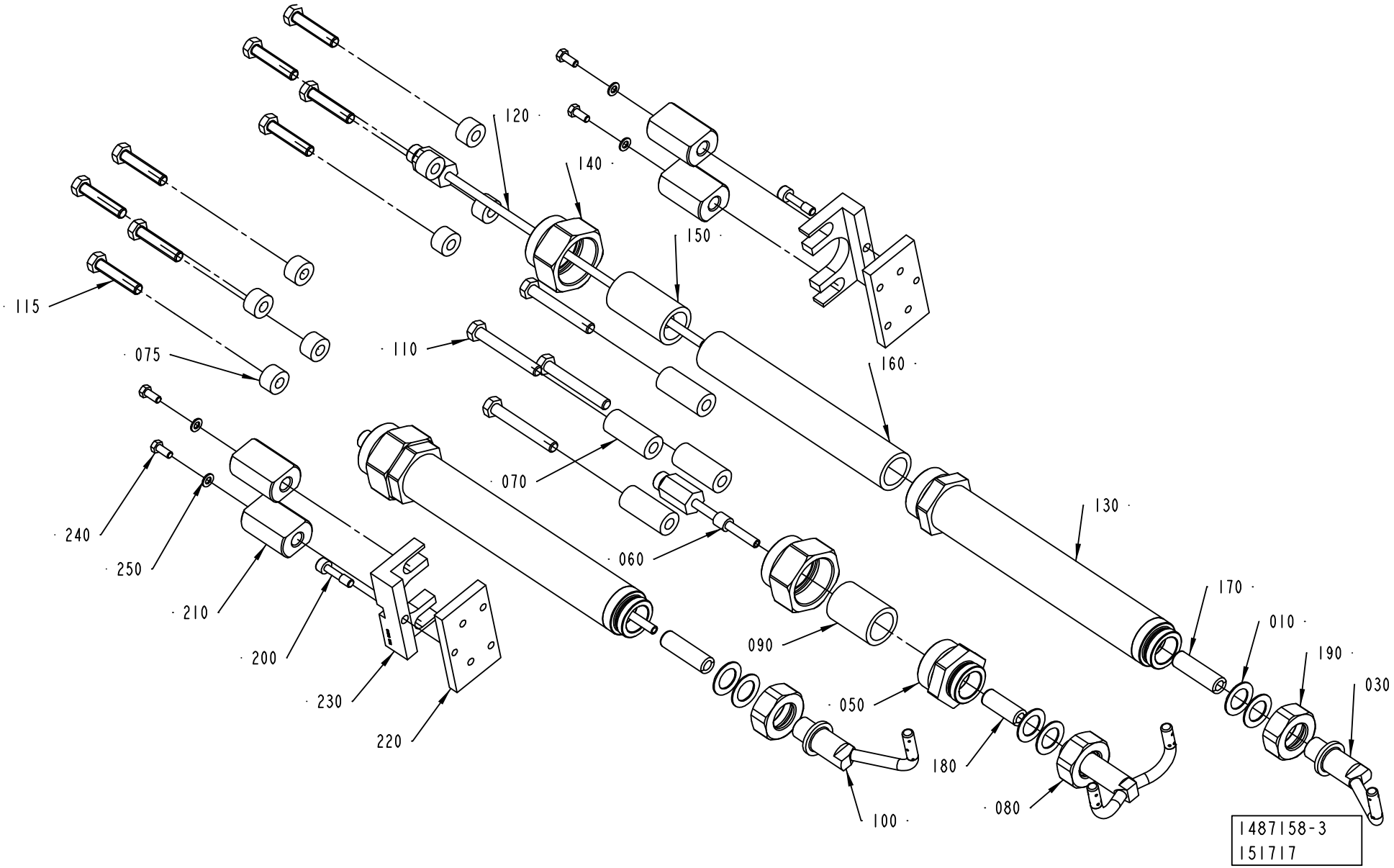

ECM: 180622 - 50001231
Group number: 1487158-0300
Assembly Drawing: 1487158-3_1_AA

This list covers pages from 5-122 to 5-127

Pos	Part No	UN	Qty	Description	Page No
TBA 1000S (Cont'd) (See drawing on page: 5-122)					
120	1285310-0000		2	EXTENSION	
140	1549390-0000		3	NUT	
150	23765-0003		2	INSULATING PIPE	
160	23765-0001		2	INSULATING PIPE	
190	1317085-0000		2	NUT	
200	359710-0001		3	WARNING SIGN ISO, HOT SURFACE	
TBA 1000SQ (See drawing on page: 5-122)					
010	263673-0000		6	GASKET	
070	1285874-0000		4	SPACER	
120	1285310-0000		2	EXTENSION	
140	1549390-0000		3	NUT	
150	23765-0003		2	INSULATING PIPE	
160	23765-0001		2	INSULATING PIPE	
190	1317085-0000		2	NUT	
200	359710-0001		3	WARNING SIGN ISO, HOT SURFACE	
TBA 1500S (See drawing on page: 5-122)					
060	1285870-0000		1	EXTENSION	
120	1285310-0000		2	EXTENSION	
140	1549390-0000		3	NUT	
150	23765-0003		2	INSULATING PIPE	
160	23765-0001		2	INSULATING PIPE	
190	1317085-0000		2	NUT	
200	359710-0001		3	WARNING SIGN ISO, HOT SURFACE	
TBA 1890S QC, TBA 2000S QC (See drawing on page: 5-124)					
030	2598500-0000		1	NOZZLE	
070	2618683-0000		4	SPACER	
075	1498163-0000		8	SPACER	
080	2598498-0000		1	NOZZLE	
100	2598499-0000		1	NOZZLE	
115	312109-0459		8	SCREW M6S ISO 4017 M8X40 A480	
120	2598503-0000		2	EXTENSION	
140	1549390-0000		3	NUT	
150	23765-0003		2	INSULATING PIPE	
160	23765-0001		2	INSULATING PIPE	
180	252766-0004		1	INSULATING PIPE	
190	1317085-0000		2	NUT	
200	2594896-0000		2	SCREW	
210	2598504-0000		4	STOP	
220	2598505-0000		2	SPACER	
230	2598506-0000		2	SPACER	
240	312105-0327		4	SCREW M6S ISO 4017 M5X12 A480	
250	315105-0146		4	WASHER BRB5,3X10RFR	
Common Parts					
010	263673-0000		9	GASKET	
020	1317804-0000		8	SPACER	
020	1511692-0000		8	SPACER	
020	1296153-0000		4	GUIDE	
020	1346641-0000		4	SPACER	
020	1346642-0000		4	SPACER	
020	1285874-0000		8	SPACER	
020	1498163-0000		8	SPACER	
020	1348043-0000		8	SPACER	
030	1317802-0000		1	NOZZLE	
030	1346679-0000		1	NOZZLE	
030	1350422-0000		1	NOZZLE	
030	1346644-0000		1	NOZZLE	
030	1498147-0000		1	NOZZLE	
030	1499446-0000		1	NOZZLE	
030	1532284-0000		1	NOZZLE	
040	312105-0464		8	SCREW M6S ISO 4014 M8X65 A480	
040	312105-0455		4	SCREW M6S ISO 4017 M8X30 A480	
040	312105-0466		8	SCREW M6S ISO 4014 M8X75 A480	
040	312105-0471		8	SCREW M6S ISO 4014 M8X100 A480	
040	312109-0457		8	SCREW M6S ISO 4017 M8X35 A480	
040	312105-0459		8	SCREW M6S ISO 4014 M8X40 A480	
040	312109-0460		8	SCREW M6S ISO 4017 M8X45 A480	
040	312109-0461		8	SCREW M6S ISO 4017 M8X50 A480	
050	2545433-0000		1	SPACER	
050	1549389-0000		1	SPACER	
060	2660597-0000		1	EXTENSION	
060	1296072-0000		1	EXTENSION	
070	2660596-0000		4	SPACER	
070	1523497-0000		4	SPACER	
070	2545537-0000		4	SPACER	
070	1498163-0000		12	SPACER	
070	1334632-0000		4	SPACER	
080	2660566-0000		1	NOZZLE	
080	1296387-0000		1	NOZZLE	
080	1317801-0000		1	NOZZLE	
080	1532285-0000		1	NOZZLE	
080	1346580-0000		1	NOZZLE	
080	1346581-0000		1	NOZZLE	
080	1499445-0000		1	NOZZLE	

Machine Type | Group Description | Used-In | Group Number | Page No

FLAP HEATER VARIANT

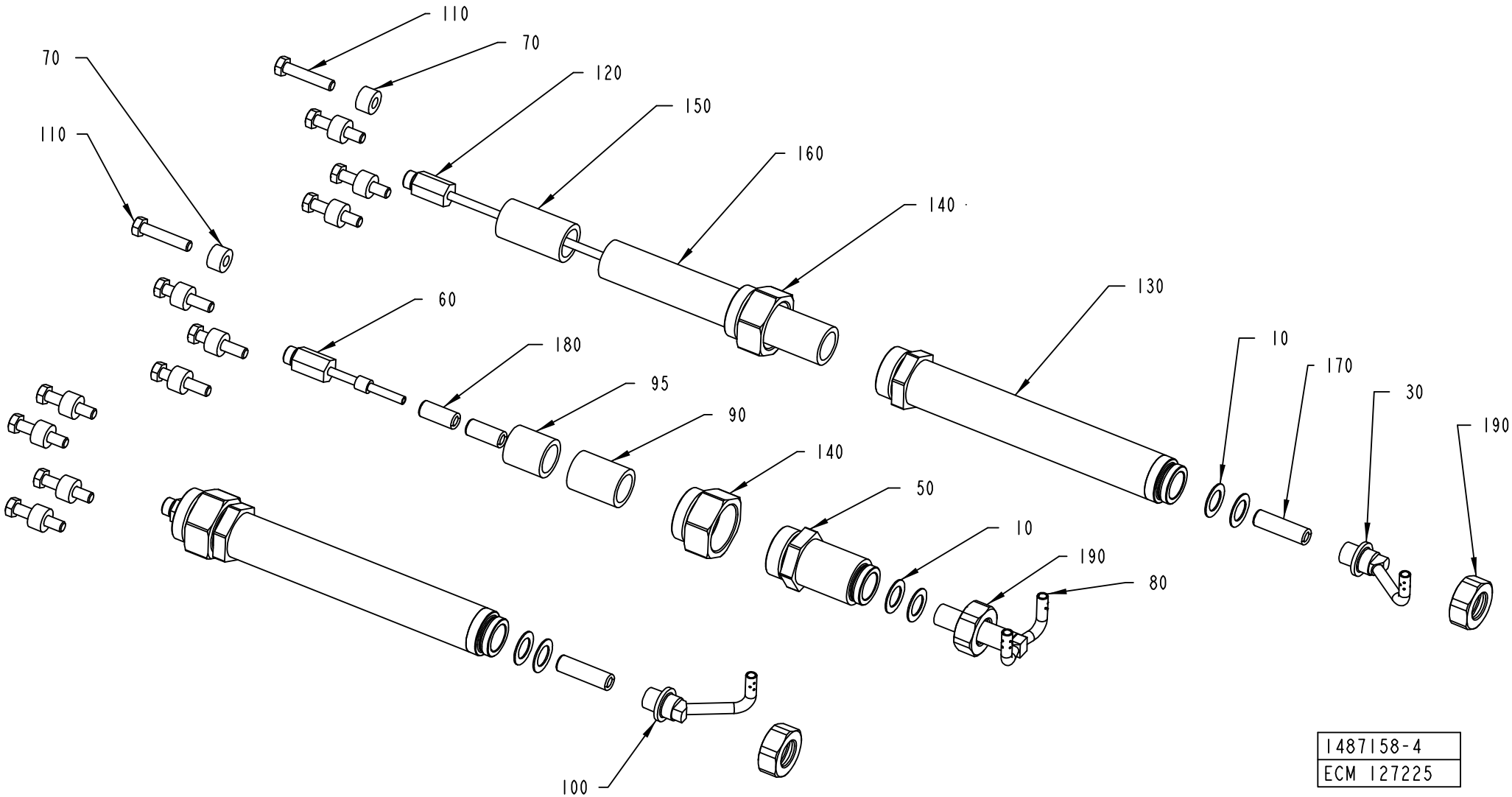

Pos	Part No	UN	Qty	Description	Page No
Common Parts (Cont'd)					
080	1490039-0000		1	NOZZLE	
090	23765-0004		1	INSULATING PIPE	
090	23765-0005		1	INSULATING PIPE	
095	23765-0005		1	INSULATING PIPE	
095	23765-0004		3	INSULATING PIPE	
100	1346678-0000		1	NOZZLE	
100	1350421-0000		1	NOZZLE	
100	1499444-0000		1	NOZZLE	
100	1498146-0000		1	NOZZLE	
100	1532286-0000		1	NOZZLE	
100	1346643-0000		1	NOZZLE	
100	1317803-0000		1	NOZZLE	
110	312105-0459		12	SCREW M6S ISO 4014 M8X40 A480	
110	312105-0464		4	SCREW M6S ISO 4014 M8X65 A480	
110	312109-0457		4	SCREW M6S ISO 4017 M8X35 A480	
110	312109-0461		4	SCREW M6S ISO 4017 M8X50 A480	
110	312109-0463		4	SCREW M6S ISO 4017 M8X60 A480	
120	2517967-0000		2	EXTENSION	
120	1346646-0000		2	EXTENSION	
120	2660588-0000		2	EXTENSION	
120	2539189-0000		2	EXTENSION	
130	2660587-0000		2	SPACER	
130	2539186-0000		2	SPACER	
130	2598967-0000		2	SPACER	
130	2545135-0000		2	SPACER	
150	252766-0004		1	INSULATING PIPE	
160	23765-0002		2	INSULATING PIPE	
170	252766-0002		2	INSULATING PIPE	
170	252766-0004		2	INSULATING PIPE	
180	252766-0001		2	INSULATING PIPE	
180	252766-0002		1	INSULATING PIPE	

Pos	Part No	UN	Qty	Description	Page No

INDEXING UNIT

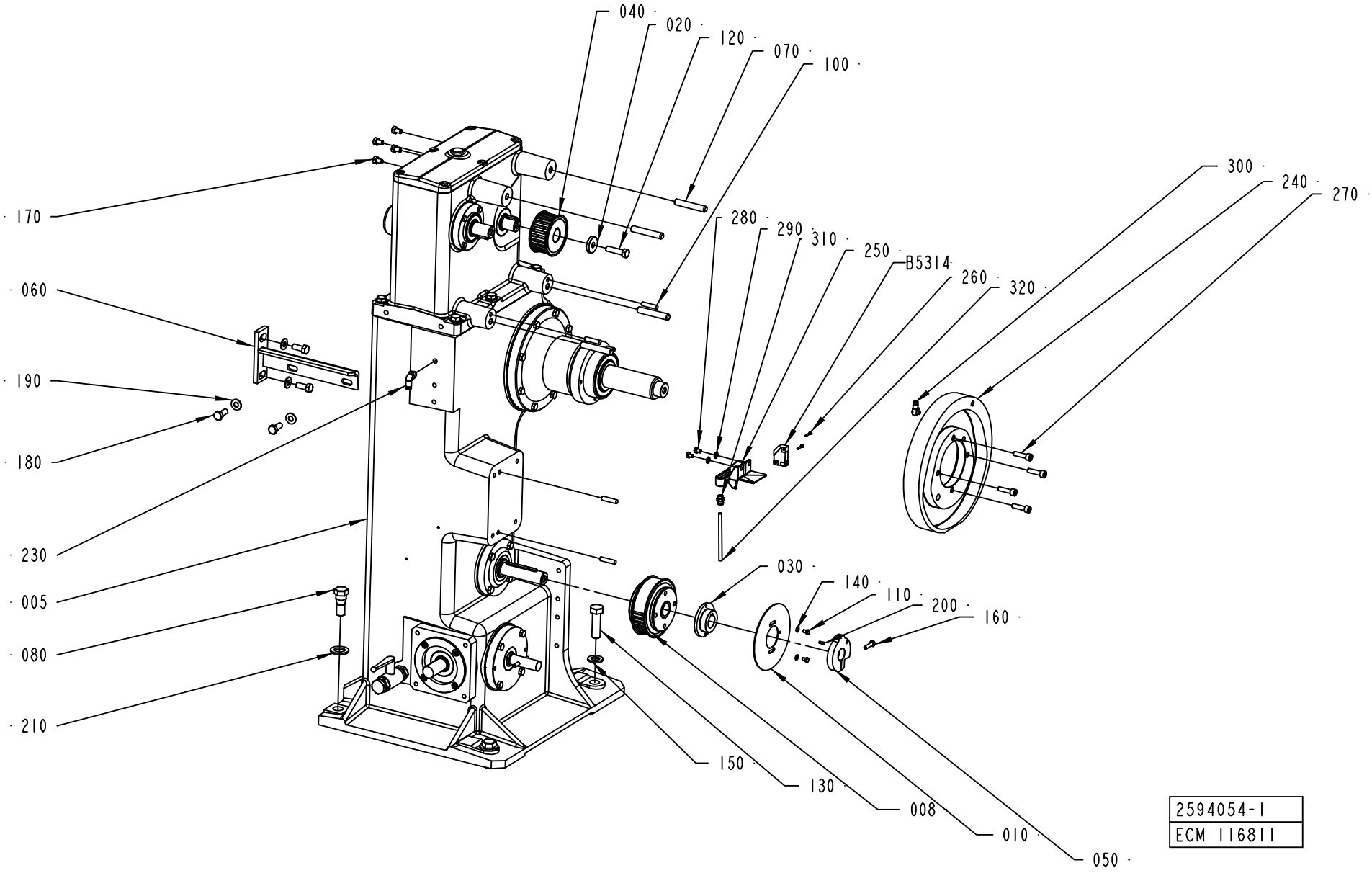

ECM: 177677 - 20040705
Group number: 2594054-0100
Assembly Drawing: 2594054-1_1_AA

Pos	Part No	UN	Qty	Description	Page No
-					
005	2680390-0000		1	INDEXING DEVICE	**5-131, 5-133, 5-135, 5-137, 5-139 ..... 5-141**
008	2552794-0000		1	PULLEY	
010	2604539-0000		1	PROTRACTOR	
020	1144681-0000		1	WASHER	
030	2634894-0000		1	FLANGE	
040	1347017-0000		1	PULLEY	
050	1144849-0000		1	SWITCH	
060	2544902-0000		1	BRACKET	
070	1348303-0000		4	STUD SCREW	
080	598549-0000		2	SCREW	
100	311103-0407		4	PARALLEL PIN ISO 2338 8M6X35 A1	
110	90287-0199		2	SCREW M6S ISO 4017 M5X6 A480	
120	312105-0499		1	SCREW M6S ISO 4014 M10X40 A480	
130	312105-0631		2	SCREW M6S ISO 4014 M16X55 A480	
140	315105-0146		2	WASHER BRB5,3X10RFR	
150	315105-0186		2	WASHER BRB17X30RFR	
160	312105-0370		1	SCREW M6S ISO 4017 M6X20 A480	
170	312105-0451		4	SCREW M6S ISO 4017 M8X20 A480	
180	312105-0453		4	SCREW M6S ISO 4017 M8X25 A480	
190	315105-0165		8	WASHER BRB8,4X16RFR	
200	311112-0251		1	SPRING PIN, ISO 8752 4X10-C	
210	315105-0192		2	WASHER BRB21X36RFR	
230	90458-2956		1	ELBOW PIPE JOINT, EXT.THREAD, D=6MM-G1/8	
240	1548002-0000		1	CAM	
250	1348072-0000		1	DRIP PLATE	
260	312125-0228		2	SCREW ISO 1207 M3X16 A4	
270	312115-0455		4	SCREW ISO4762 M8X30 A4	
280	312105-0362		2	SCREW M6S ISO 4017 M6X8 A480	
290	315105-0153		2	WASHER BRB6,4X12RFR	
300	90134-0058		1	CONNECTION	
310	342722-0202		1	PIPE COUPLING 1/8" D=6MM	
320	90266-0166	MM	1500	PIPE	
B5314	90044-0194		1	PROX.SW. IN5329/IN3002-BPKG	

Pos	Part No	UN	Qty	Description	Page No

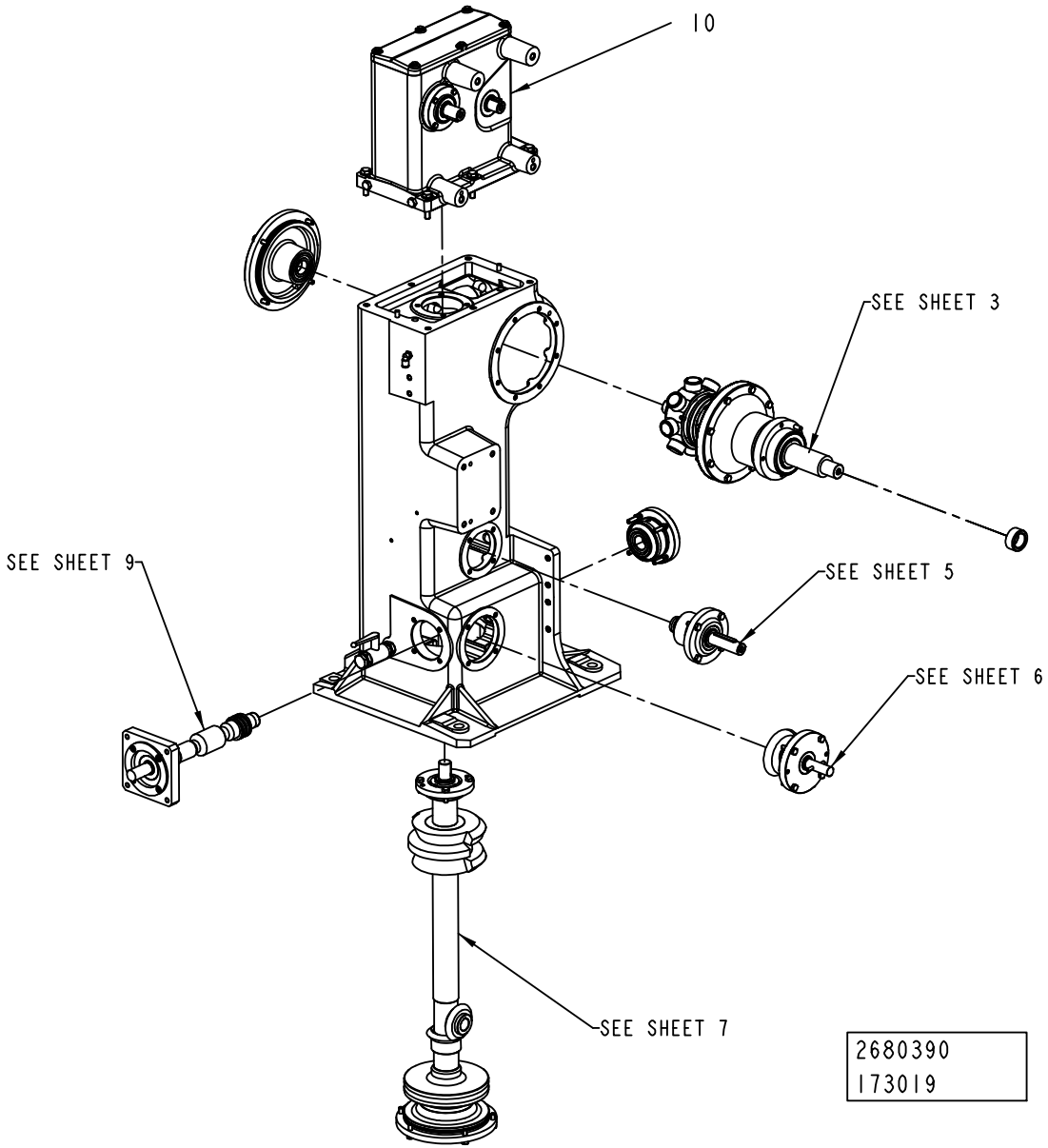
10
SEE SHEET 3
SEE SHEET 9
SEE SHEET 5
SEE SHEET 6
SEE SHEET 7
2680390
173019

ECM: 177676 - 20040705
Group number: 2680390-0000
Assembly Drawing: 2680390_2_AA

This list covers pages from 5-130 to 5-141

Pos	Part No	UN	Qty	Description	Page No
-					
010	2680391-0000		1	HEAD	**5-143, 5-145, 5-147**
020	315202-0225		1	O-RING 44,2X3 MM	
030	90459-4580		3	O-RING 165X4 MM	
040	90459-4588		1	RADIAL SEAL 60X85X8 MM DUST LIP	
050	1498929-0000		12	SPRING	
060	312805-0107		1	NUT ROUND WITH SLOTS M35X1,5 FE	
070	312805-0110		1	NUT ROUND WITH SLOTS M50X1,5 FE	
080	2687110-0000		1	LOCK WASHER	
090	2687111-0000		1	LOCK WASHER	
100	90459-4578		3	O-RING 78X3 MM	
110	90459-4587		1	RADIAL SEAL 35X52X7 MM DUST LIP	
120	90459-4579		1	O-RING 94X3 MM	
130	90091-0148		1	RADIAL SEAL 25X47X7 MM DUST LIP	
140	2680401-0000		1	SPRING	
150	90459-4577		1	O-RING 64X3 MM	
160	90091-0306		1	RADIAL SEAL 30X47X7 MM DUST LIP	
170	90459-4585		1	RADIAL SEAL 25X52X7 MM DUST LIP	
180	315202-0302		1	O-RING 54,5X3 MM	

Pos	Part No	UN	Qty	Description	Page No

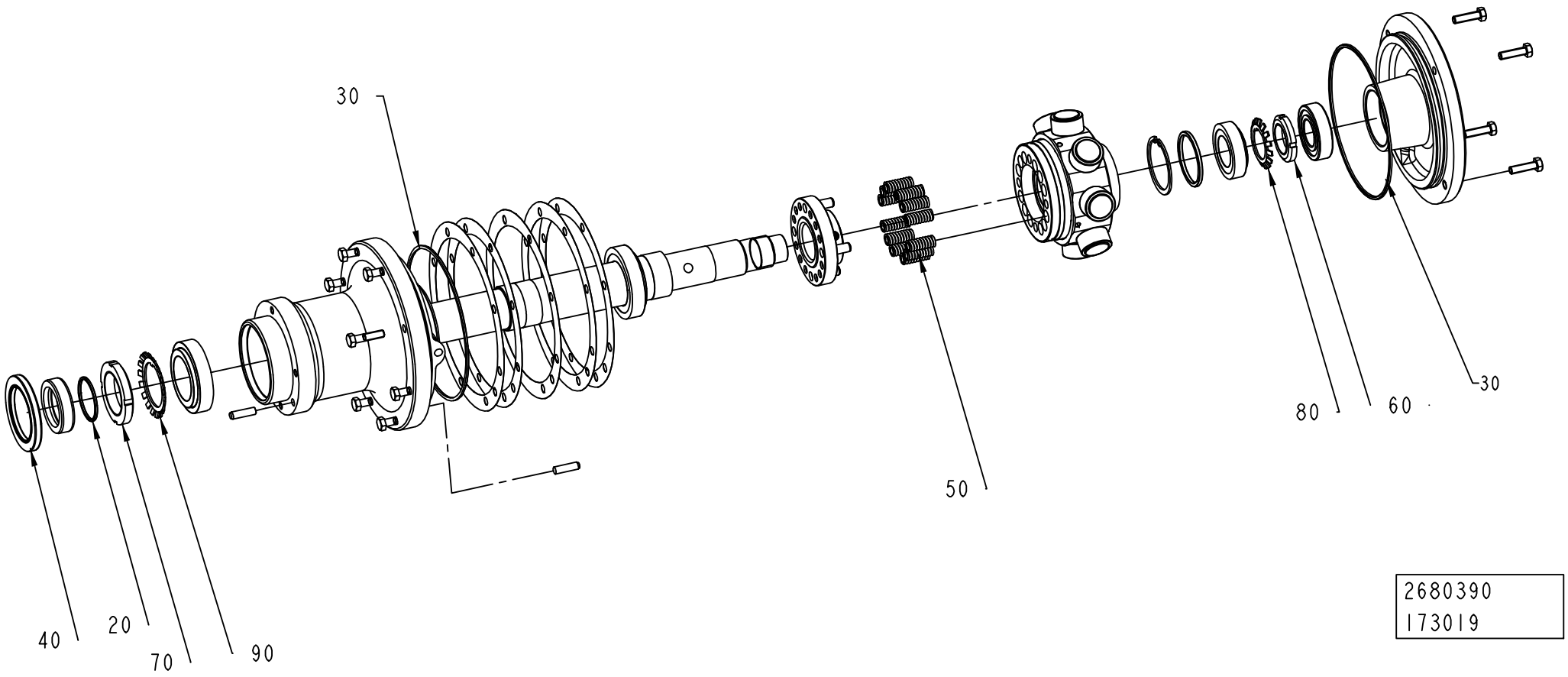
30
40
20
70
90
50
80
60
30
2680390
173019

ECM: 177676 - 20040705
Group number: 2680390-0000
Assembly Drawing: 2680390_3_AA

This list covers pages from 5-130 to 5-141

Pos	Part No	UN	Qty	Description	Page No
-					
010	2680391-0000		1	HEAD	**5-143, 5-145, 5-147**
020	315202-0225		1	O-RING 44,2X3 MM	
030	90459-4580		3	O-RING 165X4 MM	
040	90459-4588		1	RADIAL SEAL 60X85X8 MM DUST LIP	
050	1498929-0000		12	SPRING	
060	312805-0107		1	NUT ROUND WITH SLOTS M35X1,5 FE	
070	312805-0110		1	NUT ROUND WITH SLOTS M50X1,5 FE	
080	2687110-0000		1	LOCK WASHER	
090	2687111-0000		1	LOCK WASHER	
100	90459-4578		3	O-RING 78X3 MM	
110	90459-4587		1	RADIAL SEAL 35X52X7 MM DUST LIP	
120	90459-4579		1	O-RING 94X3 MM	
130	90091-0148		1	RADIAL SEAL 25X47X7 MM DUST LIP	
140	2680401-0000		1	SPRING	
150	90459-4577		1	O-RING 64X3 MM	
160	90091-0306		1	RADIAL SEAL 30X47X7 MM DUST LIP	
170	90459-4585		1	RADIAL SEAL 25X52X7 MM DUST LIP	
180	315202-0302		1	O-RING 54,5X3 MM	

Pos	Part No	UN	Qty	Description	Page No

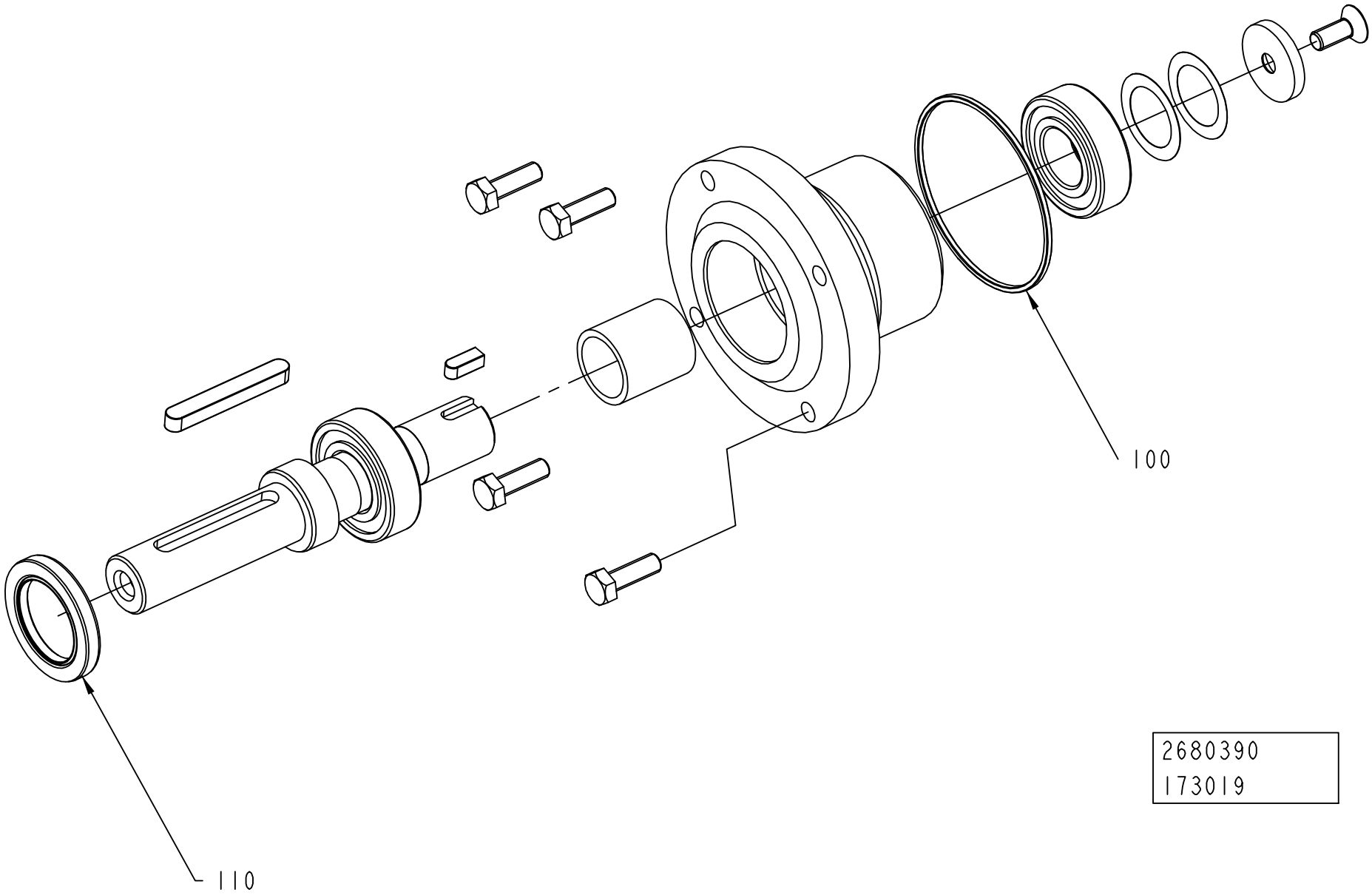
100
110
2680390
173019

ECM: 177676 - 20040705
Group number: 2680390-0000
Assembly Drawing: 2680390_5_AA

This list covers pages from 5-130 to 5-141

Pos	Part No	UN	Qty	Description	Page No
-					
010	2680391-0000		1	HEAD	**5-143, 5-145, 5-147**
020	315202-0225		1	O-RING 44,2X3 MM	
030	90459-4580		3	O-RING 165X4 MM	
040	90459-4588		1	RADIAL SEAL 60X85X8 MM DUST LIP	
050	1498929-0000		12	SPRING	
060	312805-0107		1	NUT ROUND WITH SLOTS M35X1,5 FE	
070	312805-0110		1	NUT ROUND WITH SLOTS M50X1,5 FE	
080	2687110-0000		1	LOCK WASHER	
090	2687111-0000		1	LOCK WASHER	
100	90459-4578		3	O-RING 78X3 MM	
110	90459-4587		1	RADIAL SEAL 35X52X7 MM DUST LIP	
120	90459-4579		1	O-RING 94X3 MM	
130	90091-0148		1	RADIAL SEAL 25X47X7 MM DUST LIP	
140	2680401-0000		1	SPRING	
150	90459-4577		1	O-RING 64X3 MM	
160	90091-0306		1	RADIAL SEAL 30X47X7 MM DUST LIP	
170	90459-4585		1	RADIAL SEAL 25X52X7 MM DUST LIP	
180	315202-0302		1	O-RING 54,5X3 MM	

Pos	Part No	UN	Qty	Description	Page No

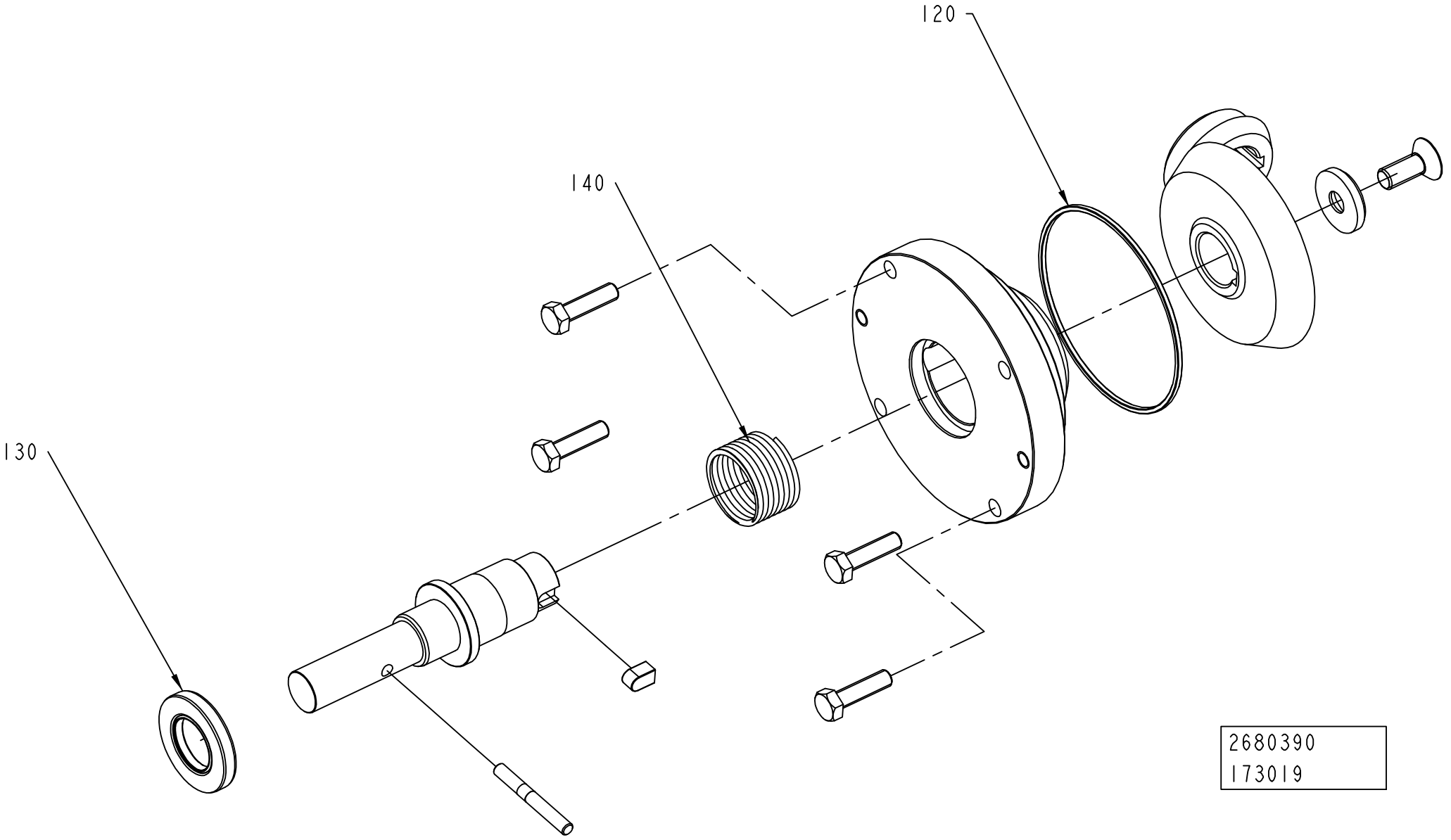
120
140
130
2680390
173019

ECM: 177676 - 20040705
Group number: 2680390-0000
Assembly Drawing: 2680390_6_AA

This list covers pages from 5-130 to 5-141

Pos	Part No	UN	Qty	Description	Page No
-					
010	2680391-0000		1	HEAD	**5-143, 5-145, 5-147**
020	315202-0225		1	O-RING 44,2X3 MM	
030	90459-4580		3	O-RING 165X4 MM	
040	90459-4588		1	RADIAL SEAL 60X85X8 MM DUST LIP	
050	1498929-0000		12	SPRING	
060	312805-0107		1	NUT ROUND WITH SLOTS M35X1,5 FE	
070	312805-0110		1	NUT ROUND WITH SLOTS M50X1,5 FE	
080	2687110-0000		1	LOCK WASHER	
090	2687111-0000		1	LOCK WASHER	
100	90459-4578		3	O-RING 78X3 MM	
110	90459-4587		1	RADIAL SEAL 35X52X7 MM DUST LIP	
120	90459-4579		1	O-RING 94X3 MM	
130	90091-0148		1	RADIAL SEAL 25X47X7 MM DUST LIP	
140	2680401-0000		1	SPRING	
150	90459-4577		1	O-RING 64X3 MM	
160	90091-0306		1	RADIAL SEAL 30X47X7 MM DUST LIP	
170	90459-4585		1	RADIAL SEAL 25X52X7 MM DUST LIP	
180	315202-0302		1	O-RING 54,5X3 MM	

Pos	Part No	UN	Qty	Description	Page No

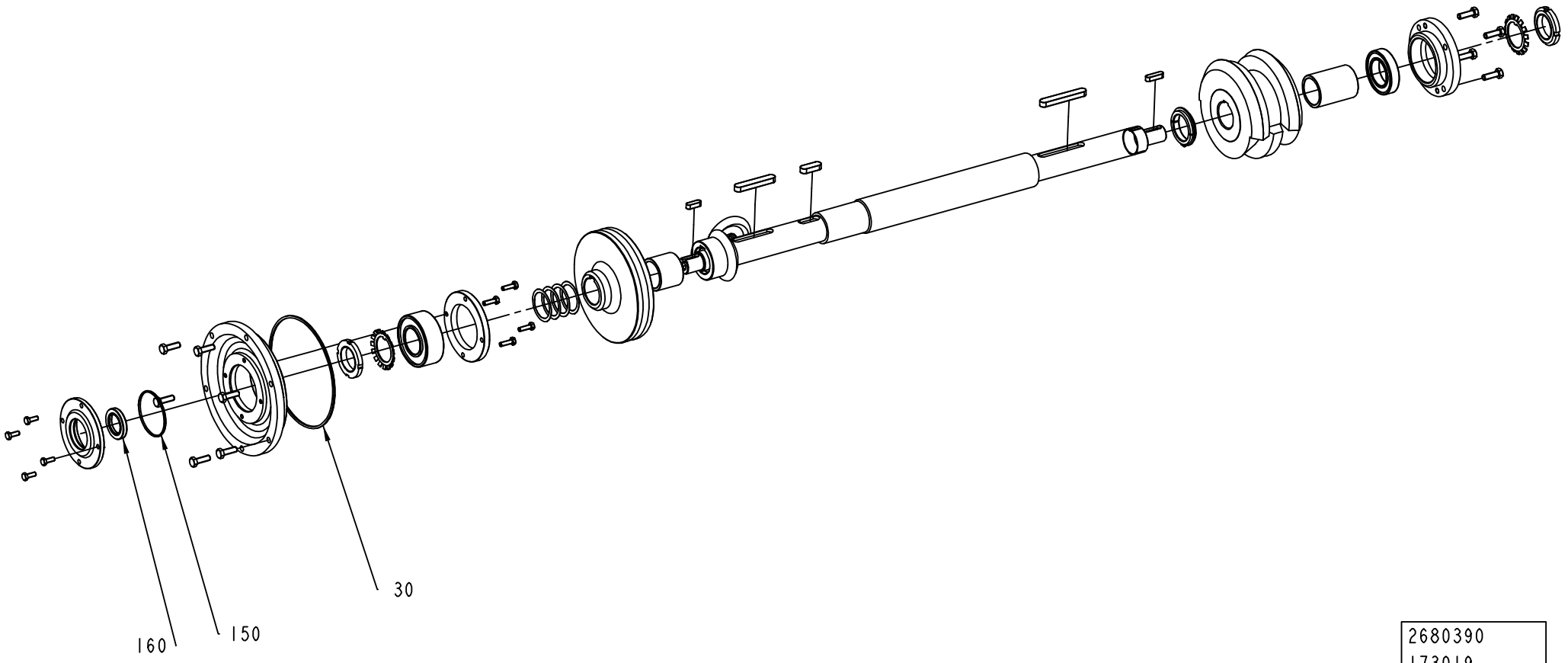

2680390
173019

ECM: 177676 - 20040705
Group number: 2680390-0000
Assembly Drawing: 2680390_7_AA

This list covers pages from 5-130 to 5-141

Pos	Part No	UN	Qty	Description	Page No
-					
010	2680391-0000		1	HEAD	**5-143, 5-145, 5-147**
020	315202-0225		1	O-RING 44,2X3 MM	
030	90459-4580		3	O-RING 165X4 MM	
040	90459-4588		1	RADIAL SEAL 60X85X8 MM DUST LIP	
050	1498929-0000		12	SPRING	
060	312805-0107		1	NUT ROUND WITH SLOTS M35X1,5 FE	
070	312805-0110		1	NUT ROUND WITH SLOTS M50X1,5 FE	
080	2687110-0000		1	LOCK WASHER	
090	2687111-0000		1	LOCK WASHER	
100	90459-4578		3	O-RING 78X3 MM	
110	90459-4587		1	RADIAL SEAL 35X52X7 MM DUST LIP	
120	90459-4579		1	O-RING 94X3 MM	
130	90091-0148		1	RADIAL SEAL 25X47X7 MM DUST LIP	
140	2680401-0000		1	SPRING	
150	90459-4577		1	O-RING 64X3 MM	
160	90091-0306		1	RADIAL SEAL 30X47X7 MM DUST LIP	
170	90459-4585		1	RADIAL SEAL 25X52X7 MM DUST LIP	
180	315202-0302		1	O-RING 54,5X3 MM	

Pos	Part No	UN	Qty	Description	Page No

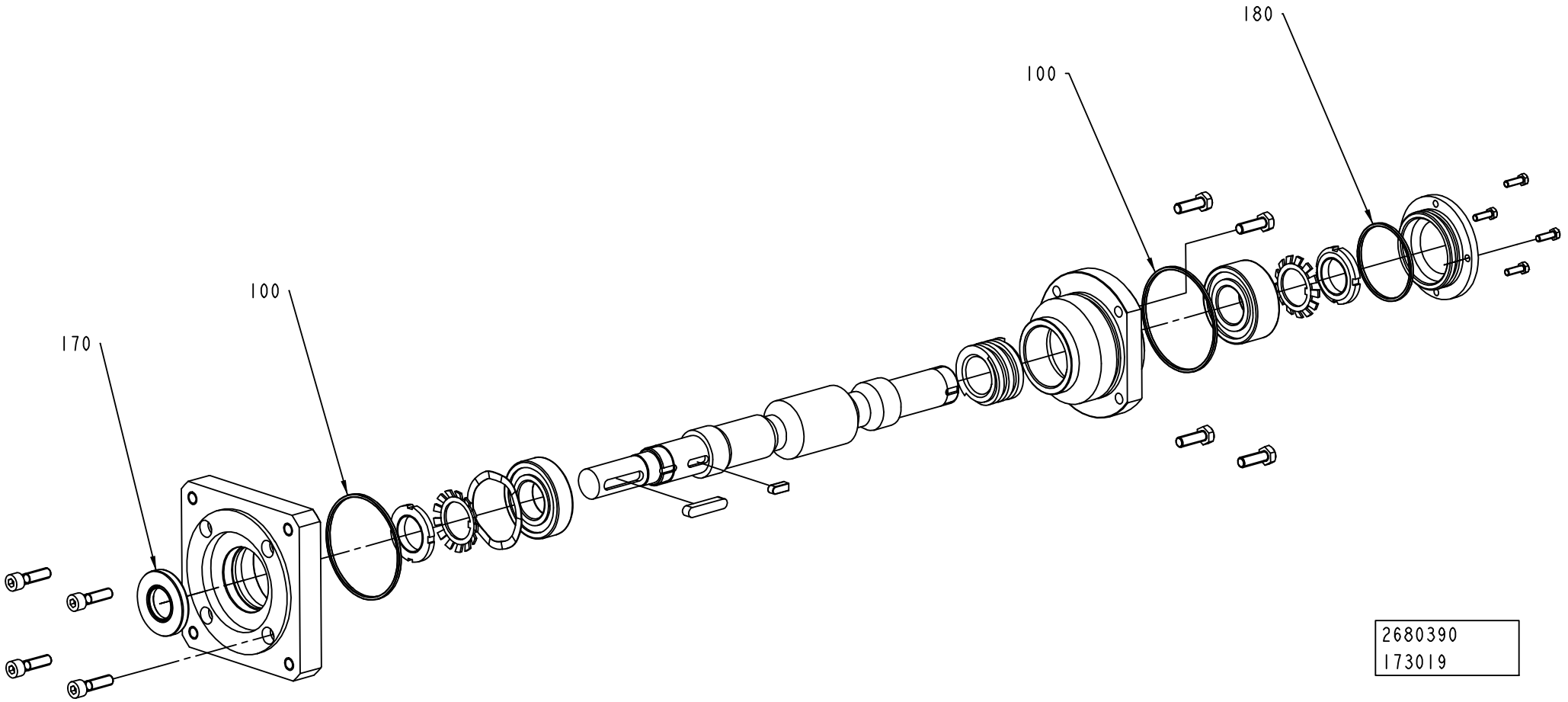
180
100
100
170
2680390
173019

ECM: 177676 - 20040705
Group number: 2680390-0000
Assembly Drawing: 2680390_9_AA

This list covers pages from 5-130 to 5-141

Pos	Part No	UN	Qty	Description	Page No
-					
010	2680391-0000		1	HEAD	**5-143, 5-145, 5-147**
020	315202-0225		1	O-RING 44,2X3 MM	
030	90459-4580		3	O-RING 165X4 MM	
040	90459-4588		1	RADIAL SEAL 60X85X8 MM DUST LIP	
050	1498929-0000		12	SPRING	
060	312805-0107		1	NUT ROUND WITH SLOTS M35X1,5 FE	
070	312805-0110		1	NUT ROUND WITH SLOTS M50X1,5 FE	
080	2687110-0000		1	LOCK WASHER	
090	2687111-0000		1	LOCK WASHER	
100	90459-4578		3	O-RING 78X3 MM	
110	90459-4587		1	RADIAL SEAL 35X52X7 MM DUST LIP	
120	90459-4579		1	O-RING 94X3 MM	
130	90091-0148		1	RADIAL SEAL 25X47X7 MM DUST LIP	
140	2680401-0000		1	SPRING	
150	90459-4577		1	O-RING 64X3 MM	
160	90091-0306		1	RADIAL SEAL 30X47X7 MM DUST LIP	
170	90459-4585		1	RADIAL SEAL 25X52X7 MM DUST LIP	
180	315202-0302		1	O-RING 54,5X3 MM	

Pos	Part No	UN	Qty	Description	Page No

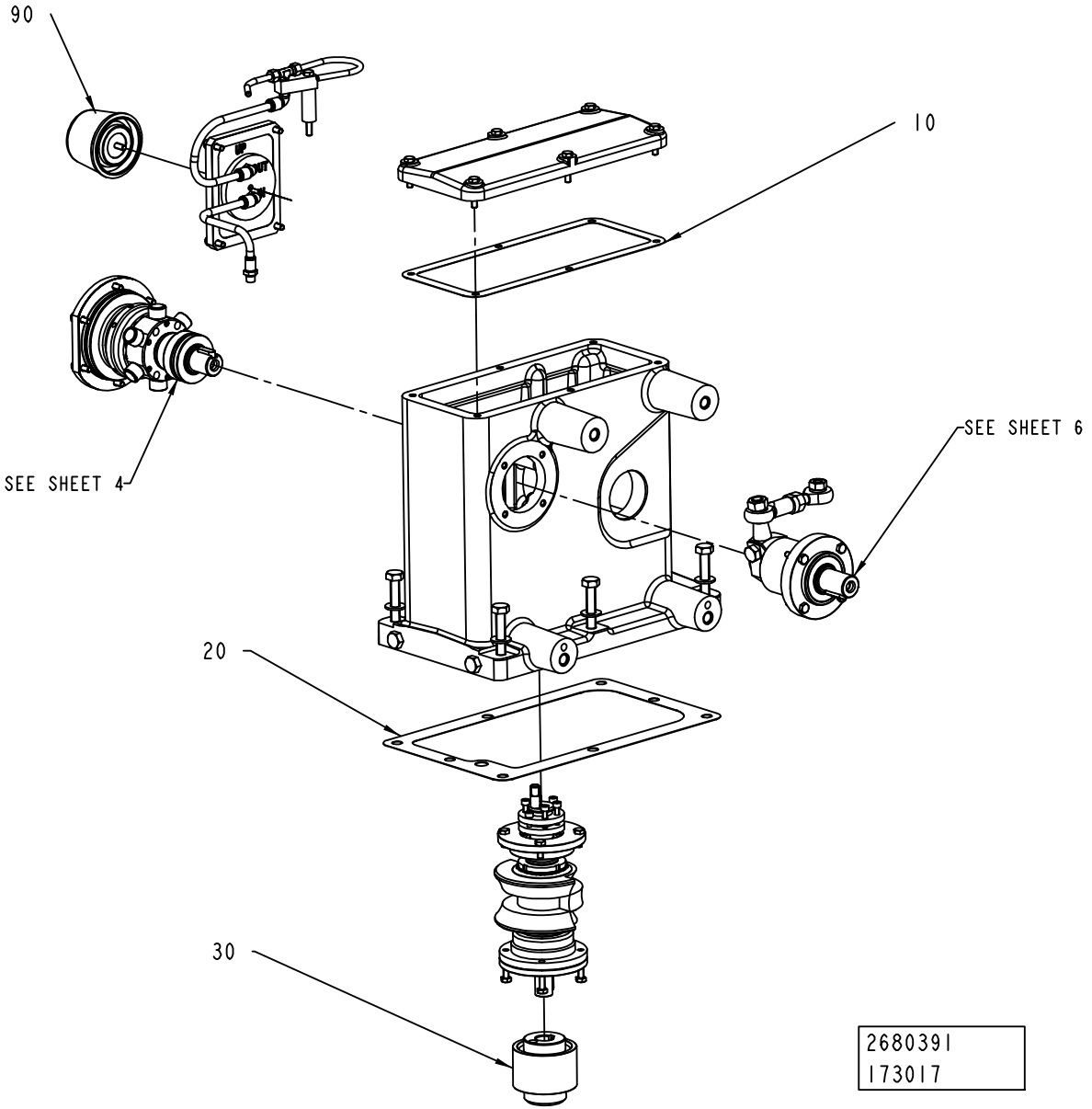
90
10
SEE SHEET 4
SEE SHEET 6
20
30
2680391
173017

ECM: 177675 - 20040705
Group number: 2680391-0000
Assembly Drawing: 2680391_3_AA

This list covers pages from 5-142 to 5-147

Pos	Part No	UN	Qty	Description	Page No
-					
010	1350042-0000		1	GASKET	
020	2680394-0000		1	GASKET	
030	2687109-0000		1	COUPLING	
040	90459-4576		1	O-RING 55X3 MM	
050	90459-4586		1	RADIAL SEAL 30X55X7 MM DUST LIP	
060	2680393-0000		1	LEVER	
070	90242-0281		1	O-RING 58X3 MM	
080	90091-0299		1	RADIAL SEAL 30X52X7 MM DUST LIP	
090	2680392-0000		1	FILTER	

Pos	Part No	UN	Qty	Description	Page No

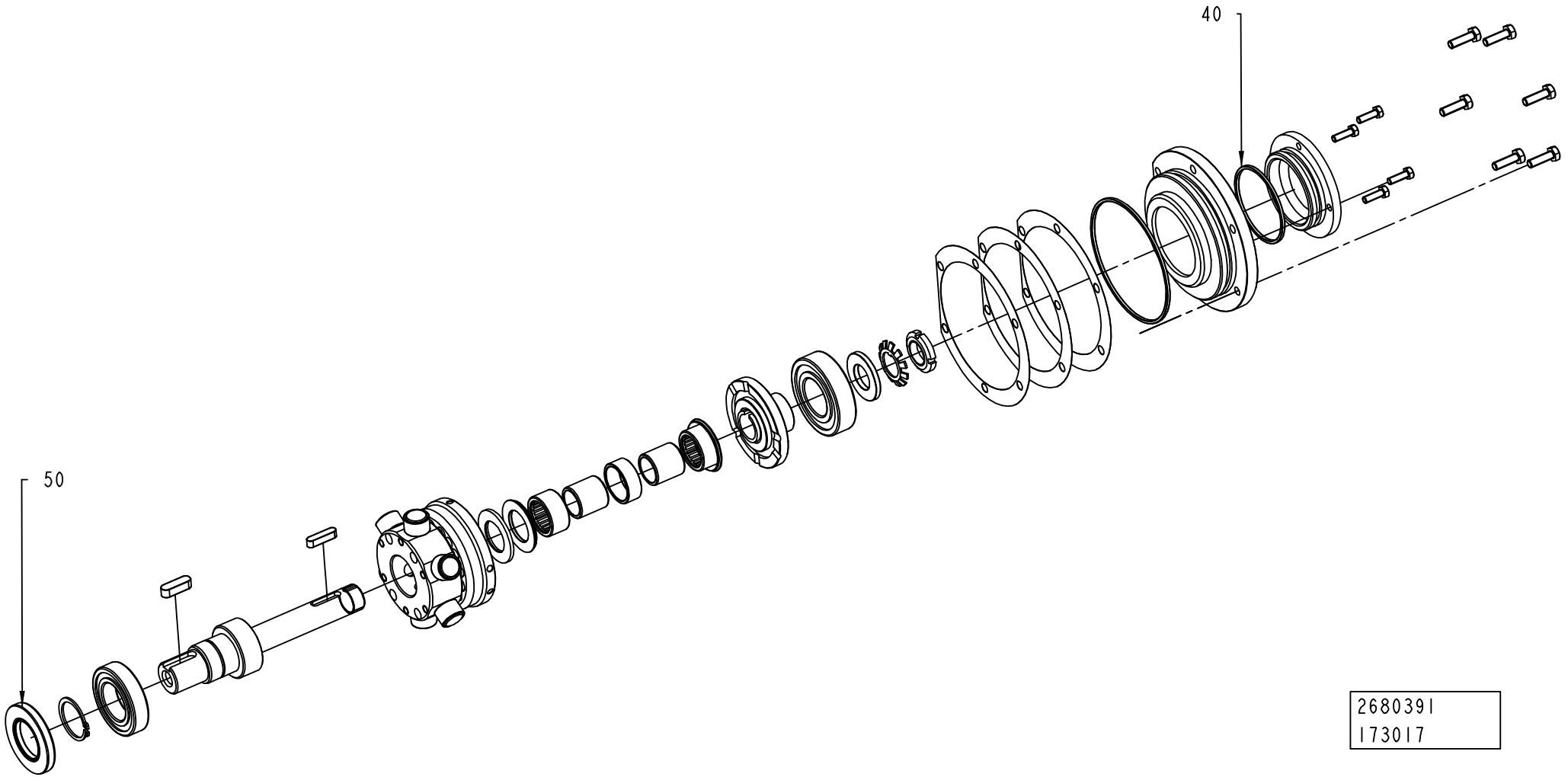
40
50
2680391
173017

ECM: 177675 - 20040705
Group number: 2680391-0000
Assembly Drawing: 2680391_4_AA

This list covers pages from 5-142 to 5-147

Pos	Part No	UN	Qty	Description	Page No
-					
010	1350042-0000		1	GASKET	
020	2680394-0000		1	GASKET	
030	2687109-0000		1	COUPLING	
040	90459-4576		1	O-RING 55X3 MM	
050	90459-4586		1	RADIAL SEAL 30X55X7 MM DUST LIP	
060	2680393-0000		1	LEVER	
070	90242-0281		1	O-RING 58X3 MM	
080	90091-0299		1	RADIAL SEAL 30X52X7 MM DUST LIP	
090	2680392-0000		1	FILTER	

Pos	Part No	UN	Qty	Description	Page No

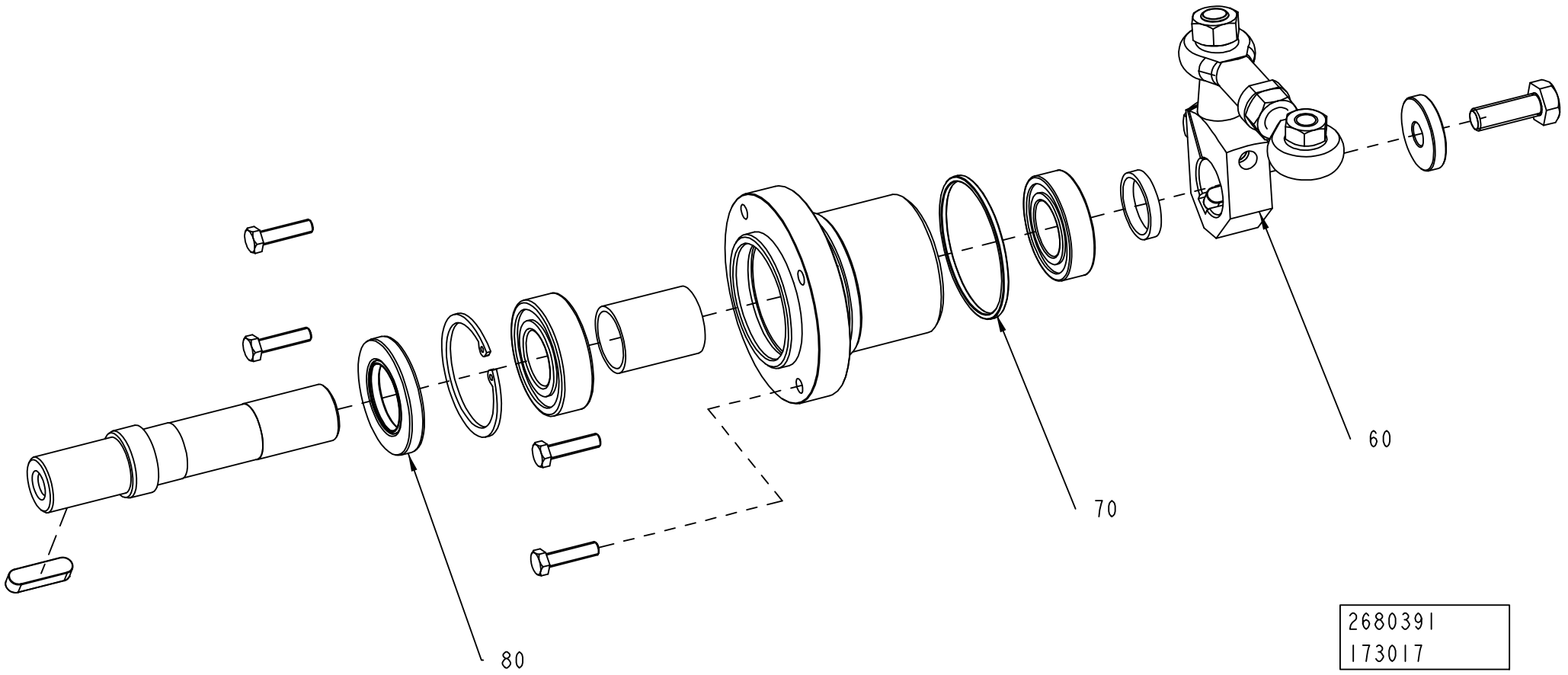
60
70
80
2680391
173017

ECM: 177675 - 20040705
Group number: 2680391-0000
Assembly Drawing: 2680391_6_AA

This list covers pages from 5-142 to 5-147

Pos	Part No	UN	Qty	Description	Page No
-					
010	1350042-0000		1	GASKET	
020	2680394-0000		1	GASKET	
030	2687109-0000		1	COUPLING	
040	90459-4576		1	O-RING 55X3 MM	
050	90459-4586		1	RADIAL SEAL 30X55X7 MM DUST LIP	
060	2680393-0000		1	LEVER	
070	90242-0281		1	O-RING 58X3 MM	
080	90091-0299		1	RADIAL SEAL 30X52X7 MM DUST LIP	
090	2680392-0000		1	FILTER	

Pos	Part No	UN	Qty	Description	Page No

PRESSURE DEVICE

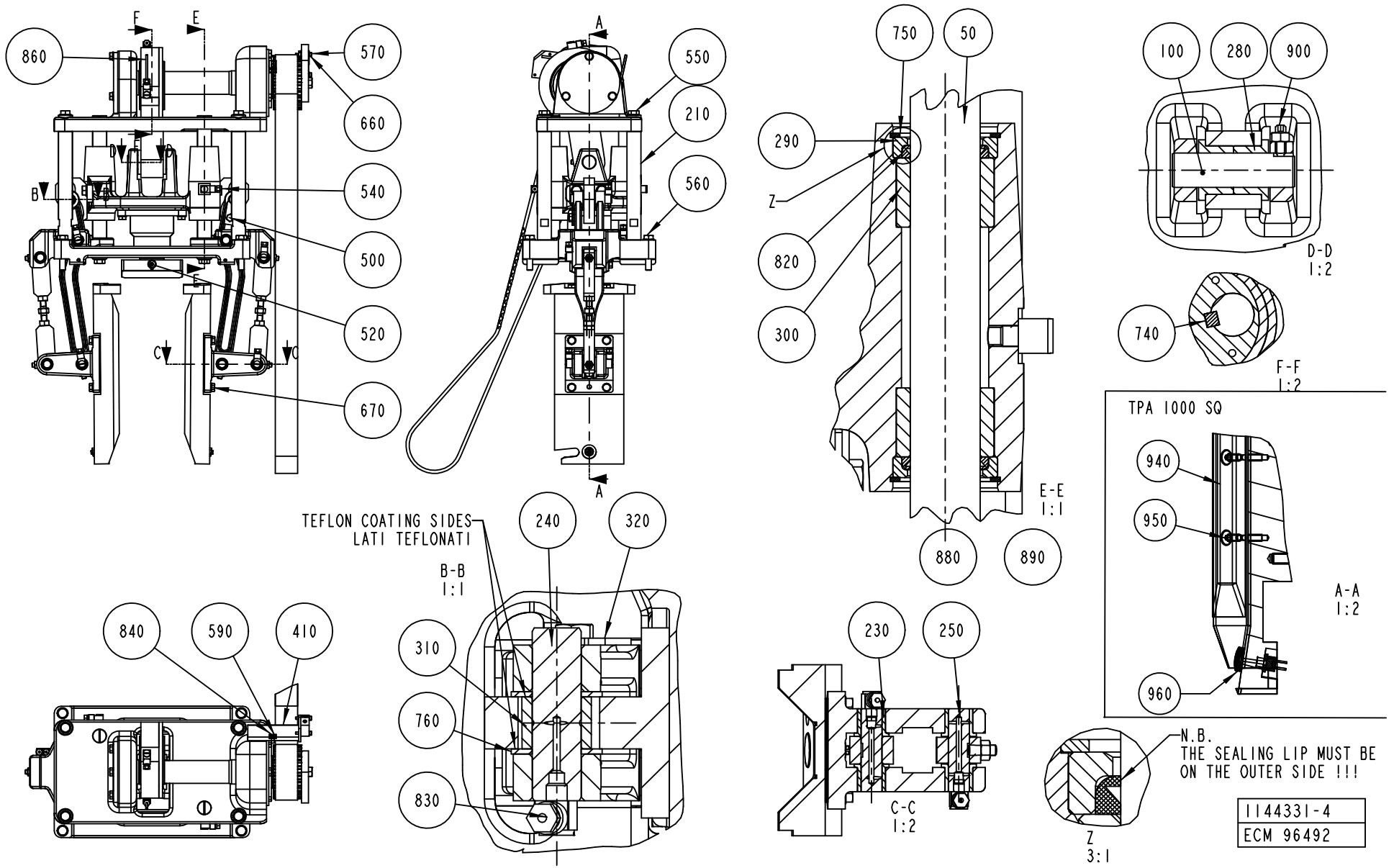

ECM: 180621 - 50001231
Group number: 1144331-0300
Assembly Drawing: 1144331-4_1_AE

This list covers pages from 5-148 to 5-153

Pos	Part No	UN	Qty	Description	Page No
TBA 1890S QC, TBA 2000S QC					
080	2662142-0000		1	SPRING	
470	2661429-0000		1	PUSHER	
475	2661429-0000		1	PUSHER	
480	2660841-0000		1	PUSHER	
500	312105-0366		7	SCREW M6S ISO 4017 M6X12 A480	
530	312605-0316		8	HEXAGON NUT, M6M M6 A280	
580	312115-0370		5	SCREW ISO4762 M6X20 A4	
630	312605-0316		9	HEXAGON NUT, M6M M6 A280	
655	2594902-0000		2	CATCH	
670	315105-0153		14	WASHER BRB6,4X12RFR	
TPA 1000SQ					
045	2541877-0000		2	NAIL	
080	1143530-0000		1	SPRING	
450	1144486-0000		2	CAM	
475	1523885-0000		1	PUSHER	
500	312105-0366		8	SCREW M6S ISO 4017 M6X12 A480	
580	312115-0370		1	SCREW ISO4762 M6X20 A4	
670	315105-0153		15	WASHER BRB6,4X12RFR	
940	1523467-0000		4	VOLUME BULGE	
950	312155-0289		8	SCREW EN 10642 MF6S M4X10 A480	
960	2541878-0000		6	WASHER	
TBA 0500B QC, TBA 1000B QC					
080	1144492-0000		1	SPRING	
500	312105-0366		8	SCREW M6S ISO 4017 M6X12 A480	
520	312105-0370		11	SCREW M6S ISO 4017 M6X20 A480	
580	312115-0370		1	SCREW ISO4762 M6X20 A4	
630	312605-0316		9	HEXAGON NUT, M6M M6 A280	
670	315105-0153		15	WASHER BRB6,4X12RFR	
TBA 0200B NOQC					
500	312105-0366		8	SCREW M6S ISO 4017 M6X12 A480	
520	312105-0370		11	SCREW M6S ISO 4017 M6X20 A480	
580	312115-0370		1	SCREW ISO4762 M6X20 A4	
630	312605-0316		9	HEXAGON NUT, M6M M6 A280	
670	315105-0153		15	WASHER BRB6,4X12RFR	
TBA 0200B QC, TBA 0330S QC, TBA 0250B QC					
080	1144492-0000		1	SPRING	
470	2605125-0000		1	PUSHER	
475	2605125-0000		1	PUSHER	
480	2651145-0000		1	BLOCK	
500	312105-0366		8	SCREW M6S ISO 4017 M6X12 A480	
520	312105-0370		11	SCREW M6S ISO 4017 M6X20 A480	
580	312115-0370		1	SCREW ISO4762 M6X20 A4	
630	312605-0316		9	HEXAGON NUT, M6M M6 A280	
670	315105-0153		15	WASHER BRB6,4X12RFR	
TBA 0200S					
500	312105-0366		8	SCREW M6S ISO 4017 M6X12 A480	
520	312105-0370		11	SCREW M6S ISO 4017 M6X20 A480	
580	312115-0370		1	SCREW ISO4762 M6X20 A4	
630	312605-0316		9	HEXAGON NUT, M6M M6 A280	
670	315105-0153		15	WASHER BRB6,4X12RFR	
TBA 0250B NOQC					
500	312105-0366		8	SCREW M6S ISO 4017 M6X12 A480	
520	312105-0370		11	SCREW M6S ISO 4017 M6X20 A480	
580	312115-0370		1	SCREW ISO4762 M6X20 A4	
630	312605-0316		9	HEXAGON NUT, M6M M6 A280	
670	315105-0153		15	WASHER BRB6,4X12RFR	
TBA 0500B NOQC					
080	1144492-0000		1	SPRING	
500	312105-0366		8	SCREW M6S ISO 4017 M6X12 A480	
520	312105-0370		11	SCREW M6S ISO 4017 M6X20 A480	
580	312115-0370		1	SCREW ISO4762 M6X20 A4	
630	312605-0316		9	HEXAGON NUT, M6M M6 A280	
670	315105-0153		15	WASHER BRB6,4X12RFR	
TBA 1000B NOQC					
080	1144492-0000		1	SPRING	
500	312105-0366		8	SCREW M6S ISO 4017 M6X12 A480	
520	312105-0370		11	SCREW M6S ISO 4017 M6X20 A480	
580	312115-0370		1	SCREW ISO4762 M6X20 A4	
630	312605-0316		9	HEXAGON NUT, M6M M6 A280	
670	315105-0153		15	WASHER BRB6,4X12RFR	
TBA 1000S					
080	1144492-0000		1	SPRING	
500	312105-0366		8	SCREW M6S ISO 4017 M6X12 A480	
520	312105-0370		11	SCREW M6S ISO 4017 M6X20 A480	
580	312115-0370		1	SCREW ISO4762 M6X20 A4	
630	312605-0316		9	HEXAGON NUT, M6M M6 A280	
670	315105-0153		15	WASHER BRB6,4X12RFR	
TBA 1000SQ					
080	1144492-0000		1	SPRING	
500	312105-0366		8	SCREW M6S ISO 4017 M6X12 A480	
580	312115-0370		1	SCREW ISO4762 M6X20 A4	
630	312605-0316		9	HEXAGON NUT, M6M M6 A280	
670	315105-0153		15	WASHER BRB6,4X12RFR	

PRESSURE DEVICE

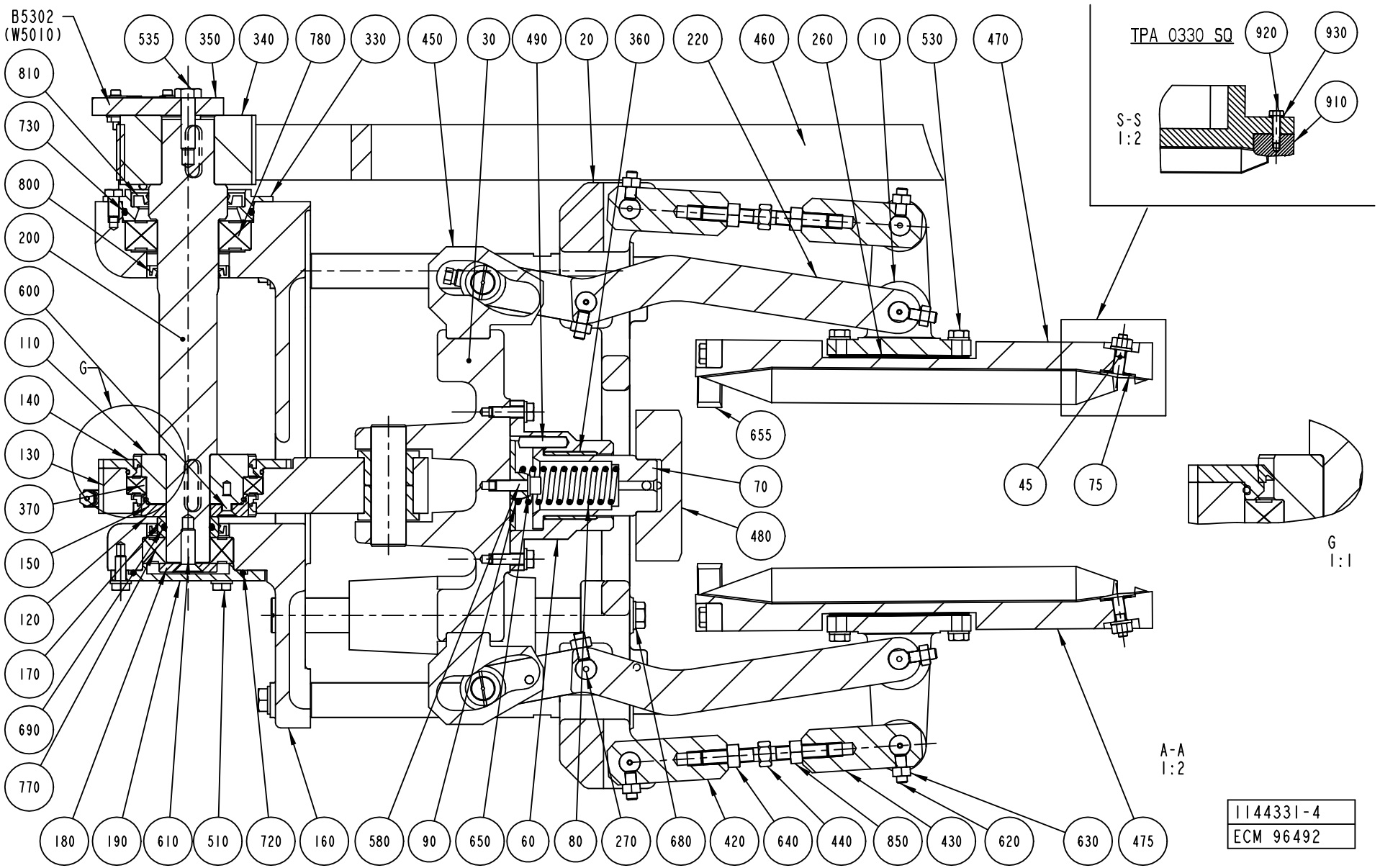

ECM: 180621 - 50001231
Group number: 1144331-0300
Assembly Drawing: 1144331-4_2_AE

This list covers pages from 5-148 to 5-153

Pos	Part No	UN	Qty	Description	Page No
TBA 1500S (Cont'd)					
080	1144492-0000		1	SPRING	
500	312105-0366		8	SCREW M6S ISO 4017 M6X12 A480	
580	312115-0370		1	SCREW ISO4762 M6X20 A4	
630	312605-0316		9	HEXAGON NUT, M6M M6 A280	
670	315105-0153		15	WASHER BRB6,4X12RFR	
Common Parts					
010	1144482-0000		2	SUPPORT	
020	1144483-0000		1	PLATE	
030	1144485-0000		1	SUPPORT	
045	1350428-0000		2	NAIL	
050	1144488-0000		2	COLUMN	
060	1144489-0000		1	FLANGE	
070	1478189-0000		1	SUPPORT	
080	1260895-0000		1	SPRING	
090	1144493-0000		1	WASHER	
100	1144494-0000		1	AXLE PIN	
110	1144495-0000		1	ECCENTRIC	
120	1144496-0000		1	ECCENTRIC	
130	1346539-0000		1	CONNECTING ROD	
140	1144498-0000		1	FLANGE	
150	90091-0408		2	BEARING SEAL 70X78X5	
160	1144500-0000		1	SUPPORT	
170	1144501-0000		1	SPACER	
180	1144502-0000		1	WASHER	
190	1144503-0000		1	FLANGE	
200	1349516-0000		1	SHAFT	
210	1144505-0000		4	COLUMN	
220	1144506-0000		2	LEVER	
230	1144507-0000		16	BUSHING	
240	1144508-0000		2	AXLE PIN	
250	1317362-0000		6	SHAFT	
260	1144511-0000		6	SHIM	
270	1317363-0000		2	SHAFT	
280	1144514-0000		2	BUSHING	
290	1144515-0000		4	INSERT	
300	1144517-0000		4	BUSHING	
310	1144520-0000		2	ROLLER	
320	1144521-0000		2	CLAMP	
330	1347018-0000		1	PLUG	
340	1349517-0000		1	TOOTHED PULLEY	
350	1349519-0000		1	ACTIVATOR	
360	90240-0317		1	BUSHING, 35X39X30 MM	
370	90214-0229		1	BALL BEARING, 65X85X10 MM	
380	90242-0271		1	O-RING 63,22X1,78 MM	
390	90242-0270		1	O-RING 82,27X1,78 MM	
410	1349518-0000		1	SUPPORT	
420	1144914-0000		2	LEVER	
430	1144915-0000		2	LEVER	
440	1144916-0000		2	ADJUSTING SCREW	
450	1144978-0000		2	CAM	
460	1348537-0000		1	TIMING BELT	
470	1317654-0000		1	PUSHER	
470	1334999-0000		1	PUSHER	
470	2529289-0000		2	PUSHER	
470	2674953-0000		2	PUSHER	
470	2524512-0000		1	PUSHER	
470	1350810-0000		1	PUSHER	
470	1490032-0000		2	PUSHER	
470	1499144-0000		2	PUSHER	
470	1523884-0000		1	FLAP	
470	2619732-0000		2	PUSHER	
470	1532289-0000		1	PUSHER	
470	1539872-0000		1	PUSHER	
470	1549847-0000		1	PUSHER	
470	1282712-0000		1	PUSHER	
470	1144928-0000		1	PUSHER	
470	1260889-0000		1	PUSHER	
470	1144936-0000		1	PUSHER	
470	1260701-0000		1	PUSHER	
475	1260701-0000		1	PUSHER	
475	1532290-0000		1	PUSHER	
475	1539872-0000		1	PUSHER	
475	1499144-0000		1	PUSHER	
475	1260889-0000		1	PUSHER	
475	1490032-0000		1	PUSHER	
475	1350810-0000		1	PUSHER	
475	1549848-0000		1	PUSHER	
475	1317654-0000		1	PUSHER	
475	1334999-0000		1	PUSHER	
475	1282715-0000		1	PUSHER	
475	2524512-0000		1	PUSHER	
475	1144928-0000		1	PUSHER	
475	1144996-0000		1	PUSHER	

Machine Type | Group Description | Used-In | Group Number | Page No

See previous drawings pages: 5-148, 5-150.

ECM: 180621 - 50001231
Group number: 1144331-0300
Assembly Drawing: 1144331-4_2_AE

This list covers pages from 5-148 to 5-153

Pos	Part No	UN	Qty	Description	Page No
Common Parts (Cont'd)					
480	1144932-0000		1	PLATE	
480	1317655-0000		1	PLATE	
480	1532291-0000		1	PLATE	
480	1260702-0000		1	PLATE	
480	1260888-0000		1	BLOCK	
480	2539359-0000		1	BLOCK	
480	1523826-0000		1	PUSHER	
480	2619730-0000		1	PUSHER	
480	1549940-0000		1	PUSHER	
480	1350809-0000		1	BLOCK	
480	1499143-0000		1	PLATE	
480	1282714-0000		1	PLATE	
480	1490031-0000		1	PLATE	
480	1549849-0000		1	PLATE	
480	1144484-0000		1	PLATE	
490	1498029-0000		1	PIN	
510	312105-0368		3	SCREW M6S ISO 4017 M6X16 A480	
520	312105-0370		15	SCREW M6S ISO 4017 M6X20 A480	
530	312105-0372		8	SCREW M6S ISO 4017 M6X25 A480	
535	312105-0455		1	SCREW M6S ISO 4017 M8X30 A480	
540	312105-0451		4	SCREW M6S ISO 4017 M8X20 A480	
550	312105-0457		6	SCREW M6S ISO 4014 M8X35 A480	
560	312109-0460		4	SCREW M6S ISO 4017 M8X45 A480	
570	312115-0230		2	SCREW ISO4762 M3X20 A4	
590	312125-0287		1	SCREW ISO 1207 M4X8 A4	
600	312155-0327		6	SCREW EN 10642 MF6S M5X12 A480	
610	312155-0453		1	SCREW EN 10642 MF6S M8X25 A480	
620	312318-0368		9	SCREW ISO4029 M6X16 A4	
630	312605-0316		11	HEXAGON NUT, M6M M6 A280	
640	312605-0318		2	HEXAGON NUT, M6M M8 A280	
650	315103-0153		3	WASHER, BRB, 6,4/12,H=1,5 NIPL BR	
655	1317787-0000		2	CATCH	
660	315105-0124		2	WASHER BRB3,2X6RFR	
680	315105-0165		14	WASHER BRB8,4X16RFR	
690	315202-0217		1	O-RING 24,2X3 MM	
720	315202-0303		1	O-RING 59,5X3 MM	
730	315202-0305		1	O-RING 69,5X3 MM	
740	315705-0267		2	PARALLEL KEY W. ROUND ENDS 8X7X30 MM	
750	315753-0122		4	RETAINING RING FOR BORE DIN 472 30 A2	
760	321130-0200		4	THRUST WASHER, 14X26X1,5 MM	
770	321313-0105		1	BALL BEARING, 25X52X15MM	
780	321313-0107		1	BALL BEARING, 35X72X17MM	
800	90091-0297		2	RADIAL SEAL 35X47X7 MM DUST LIP	
810	90091-0298		1	RADIAL SEAL 45X65X8 MM DUST LIP	
820	90091-0380		4	SCRAPER, EXCLUDER 20X24,8X3,7 MM	
830	90134-0058		14	CONNECTION	
840	90165-0056		1	PIPE CLIP FOR TUBE D=4 MM	
850	312902-0318		2	NUT HEX. LEFT THREAD, M8 A280	
880	352113-0102		5	CLIP-STRIP, BLACK 188X4,8 MM	
890	352113-0101		8	CLIP STRIP, 92X2,5 MM	
900	312311-0370		1	SCREW ISO4028 M6X20 FZB	
B5302	90044-0194		1	PROX.SW. IN5329/IN3002-BPKG	

Machine Type	Group Description	Used-In	Group Number	Page No

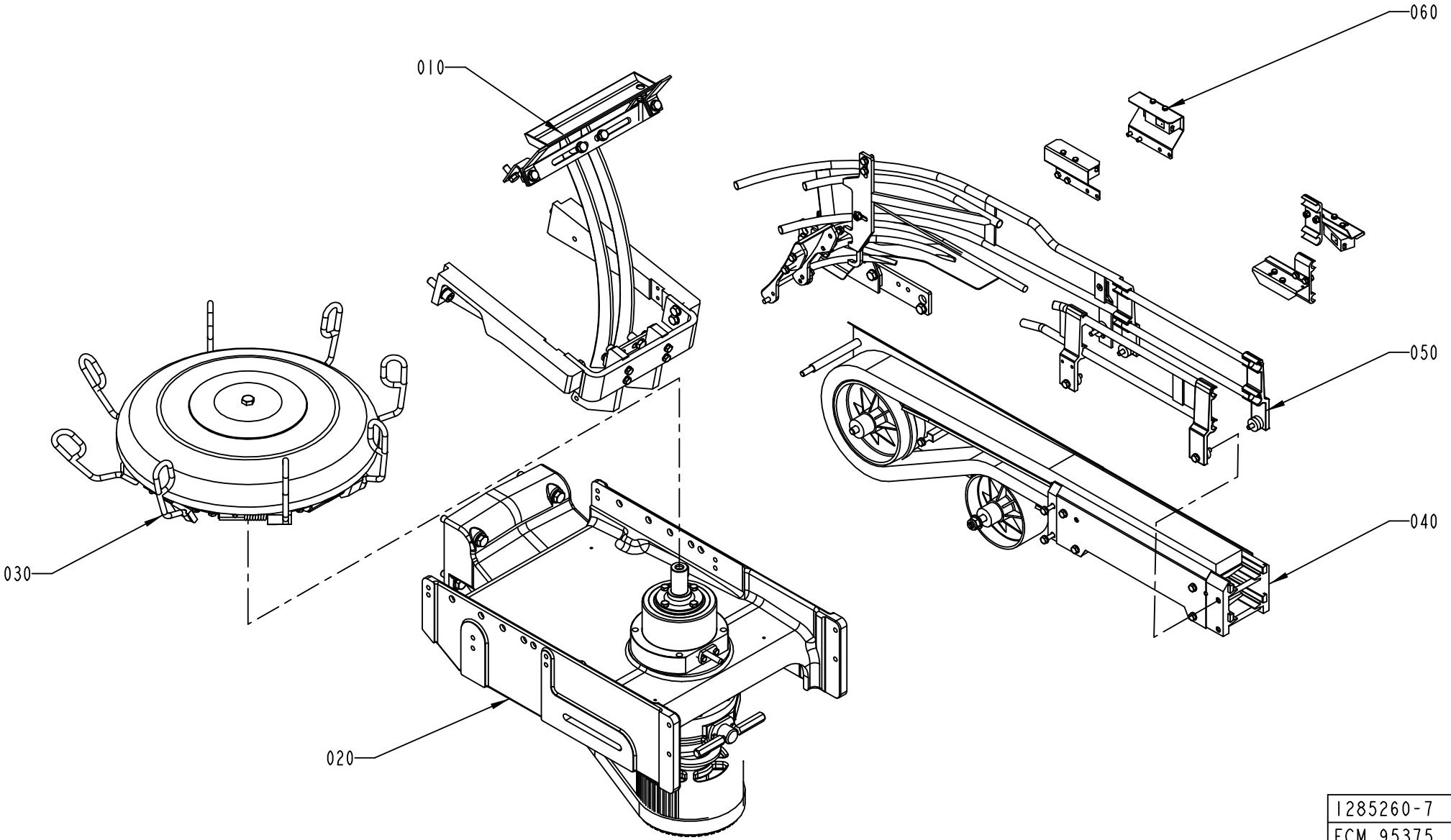

1285260-7
ECM 95375

ECM: 174300 - 50001231
Group number: 1285260-0300
Assembly Drawing: 1285260-7_1_AA

Pos	Part No	UN	Qty	Description	Page No
A3/FLEX TBA 0500B, A3/FLEX TBA 1000B, A3/FLEX TBA 1000S, A3/FLEX TBA 1000SQ, A3/FLEX TPA 1000SQ, A3/FLEX TBA 0200S, A3/FLEX TBA 1500S, A3/FLEX TBA 0200B, A3/FLEX TBA 0250B, A3/FLEX TBA 0330S, A3/FLEX TPA 0330SQ, A3/FLEX TPA 0500SQ					
040	1490112-0100		1	OUTFEED CONVEYOR	**5-157, 5-159**
A3/FLEX TBA 1890S, A3/FLEX TBA 2000S					
040	2598508-0100		1	INFEED/OUTFEED CONVEYOR	**5-161**
Common Parts					
010	1487825-0200		1	RAIL	**5-163, 5-165**
020	1484210-0200		1	OUT FEED DRIVING SYSTEM	**5-167**
030	1487038-0200		1	OUTFEED WHEEL	**5-173, 5-175, 5-177, 5-179**
050	1361920-0400		1	RAIL OUTFEED	**5-181, 5-183, 5-185, 5-187**
060	1512339-0100		1	PHOTOCELL OUTFEED	**5-193**

Pos	Part No	UN	Qty	Description	Page No

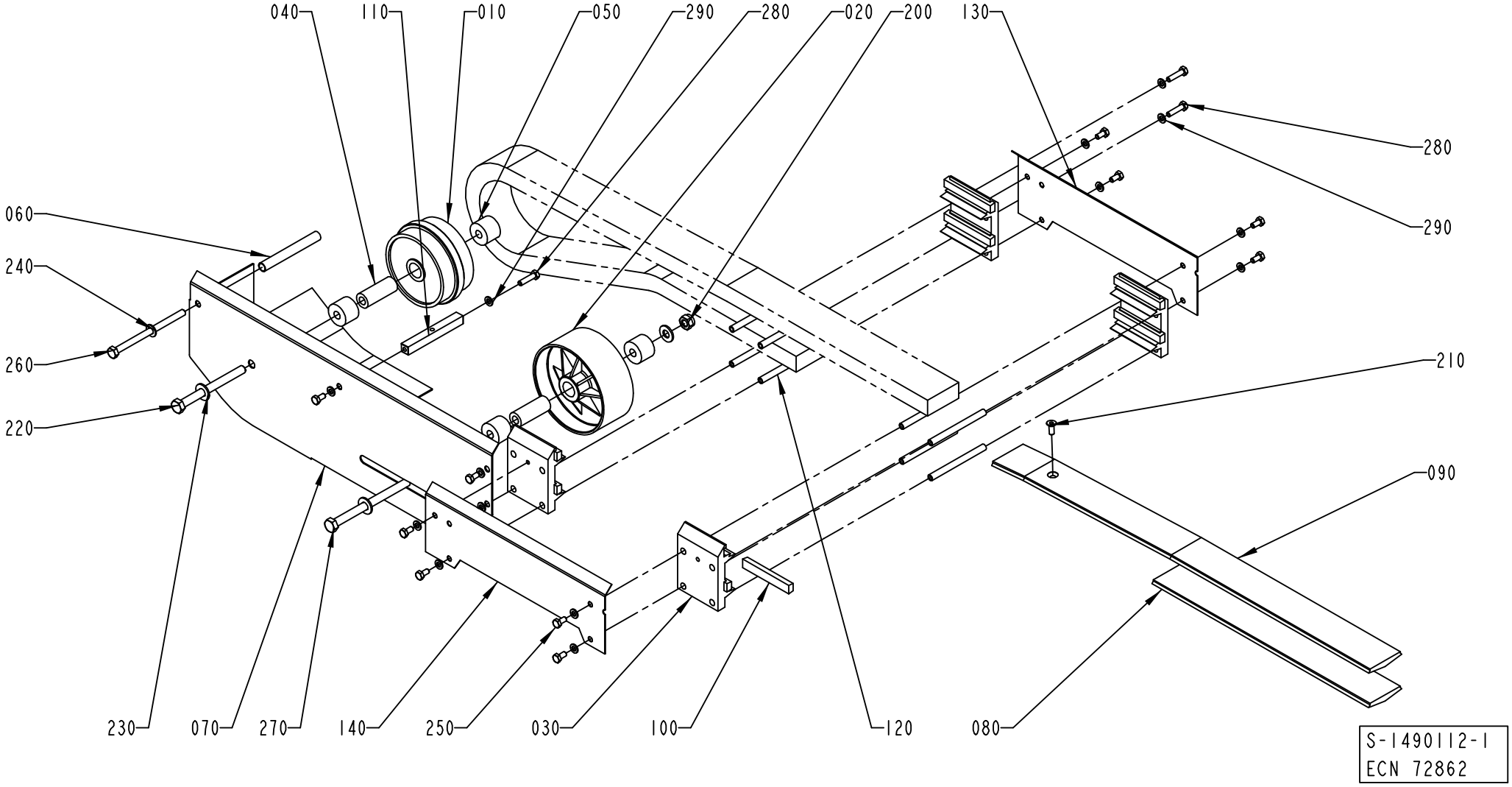
040
110
010
050
290
280
020
200
130
280
290
060
240
260
220
210
090
230
070
270
140
250
030
100
120
080
S-1490112-1
ECN 72862

Pos	Part No	UN	Qty	Description	Page No
TBA 0500B, TBA 0330S, TBA 1000S, TBA 1000B, TBA 0200B, TBA 0200S, TBA 0250B, TBA 1500S (See drawing on page: 5-158)					
010	245039-0000		1	GUIDE WHEEL	
070	1285265-0000		1	PLATE	
090	1279573-0000		1	SLIDE RAIL U	
TBA 1000SQ (See drawing on page: 5-156)					
090	1279573-0000		1	SLIDE RAIL U	
Common Parts					
010	1348118-0000		1	WHEEL	
020	476975-0000		1	WHEEL	
030	457696-0001		4	JOINT PIECE	
040	229207-0000		2	BEARING SLEEVE	
050	1144943-0000		4	SPACER	
060	1285306-0000		1	SPACER	
070	1548354-0000		1	COVER	
070	1296081-0000		1	PLATE	
080	1279587-0000		1	SLIDE RAIL U	
090	1548353-0000		1	SLIDE RAIL	
100	466074-0002		8	SLIDER	
110	1285266-0000		1	SPACER	
120	476220-0000		8	SPACER	
130	1279585-0000		1	SUPPORT	
140	1279586-0000		1	SUPPORT	
150	90165-0056		3	PIPE CLIP FOR TUBE D=4 MM	
200	312812-0320		1	HEXAGON NUT, NY-LOCK M10 A480	
210	312155-0368		1	SCREW EN 10642 MF6S M6X16 A480	
220	312105-0513		1	SCREW M6S ISO 4014 M10X110 A480	
230	315105-0173		3	WASHER BRB10,5X22RFR	
240	315105-0165		1	WASHER BRB8,4X16RFR	
250	312105-0366		11	SCREW M6S ISO 4017 M6X12 A480	
260	312105-0475		1	SCREW M6S ISO 4014 M8X120 A480	
270	312105-0517		1	SCREW M6S ISO 4014 M10X130 A480	
280	312105-0372		3	SCREW M6S ISO 4017 M6X25 A480	
285	312105-0323		3	SCREW M6S ISO 4017 M5X8 A480	
290	315105-0153		14	WASHER BRB6,4X12RFR	
300	315105-0146		3	WASHER BRB5,3X10RFR	
310	312605-0314		3	HEXAGON NUT, M6M M5 A280	

Pos	Part No	UN	Qty	Description	Page No

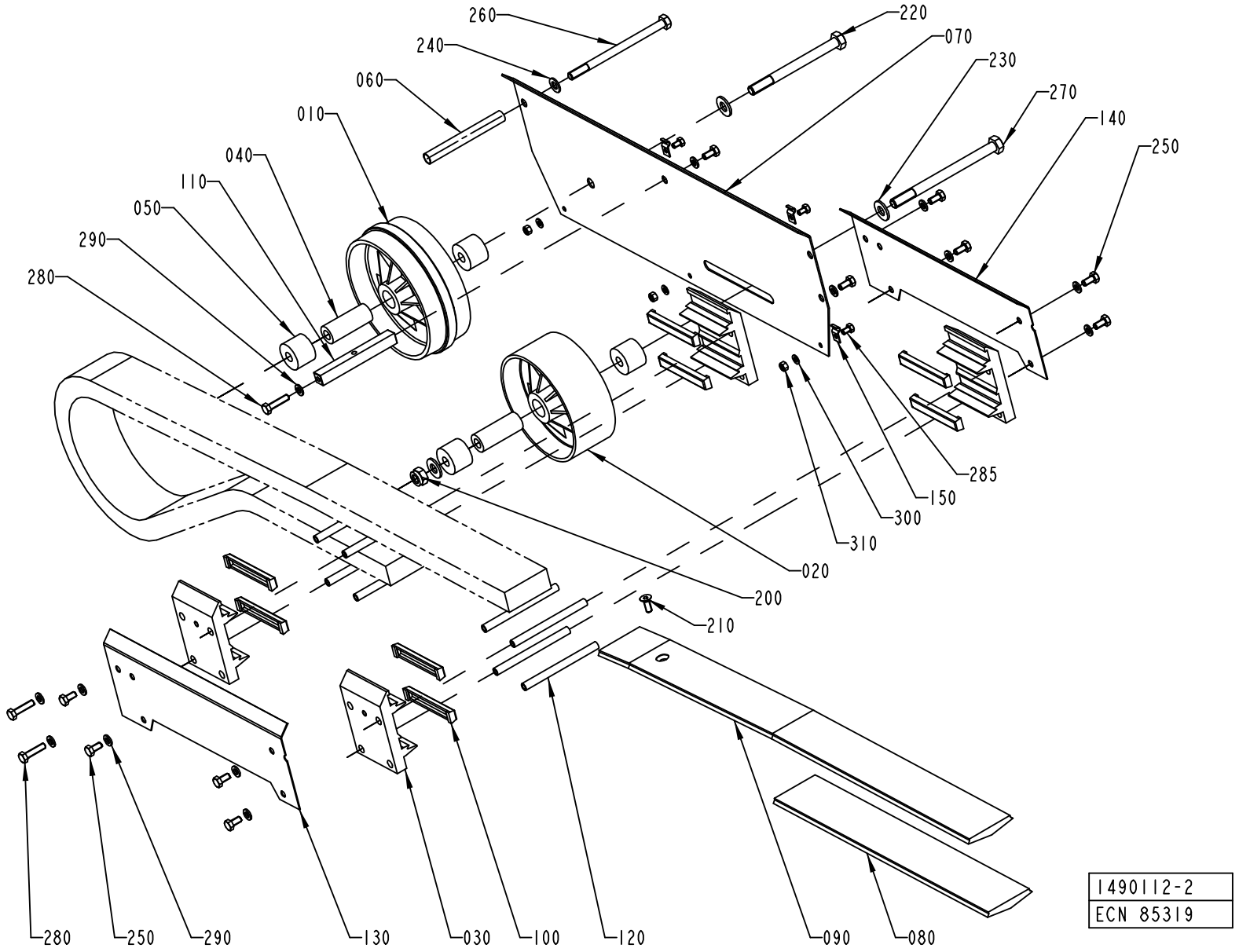
260
240
060
010
040
110
050
290
280
220
070
230
270
140
250
285
150
300
310
020
200
210
280
250
290
130
030
100
120
090
080
1490112-2
ECN 85319

Pos	Part No	UN	Qty	Description	Page No
TBA 0500B, TBA 0330S, TBA 1000S, TBA 1000B, TBA 0200B, TBA 0200S, TBA 0250B, TBA 1500S (See drawing on page: 5-158)					
010	245039-0000		1	GUIDE WHEEL	
070	1285265-0000		1	PLATE	
090	1279573-0000		1	SLIDE RAIL U	
TBA 1000SQ (See drawing on page: 5-156)					
090	1279573-0000		1	SLIDE RAIL U	
Common Parts					
010	1348118-0000		1	WHEEL	
020	476975-0000		1	WHEEL	
030	457696-0001		4	JOINT PIECE	
040	229207-0000		2	BEARING SLEEVE	
050	1144943-0000		4	SPACER	
060	1285306-0000		1	SPACER	
070	1548354-0000		1	COVER	
070	1296081-0000		1	PLATE	
080	1279587-0000		1	SLIDE RAIL U	
090	1548353-0000		1	SLIDE RAIL	
100	466074-0002		8	SLIDER	
110	1285266-0000		1	SPACER	
120	476220-0000		8	SPACER	
130	1279585-0000		1	SUPPORT	
140	1279586-0000		1	SUPPORT	
150	90165-0056		3	PIPE CLIP FOR TUBE D=4 MM	
200	312812-0320		1	HEXAGON NUT, NY-LOCK M10 A480	
210	312155-0368		1	SCREW EN 10642 MF6S M6X16 A480	
220	312105-0513		1	SCREW M6S ISO 4014 M10X110 A480	
230	315105-0173		3	WASHER BRB10,5X22RFR	
240	315105-0165		1	WASHER BRB8,4X16RFR	
250	312105-0366		11	SCREW M6S ISO 4017 M6X12 A480	
260	312105-0475		1	SCREW M6S ISO 4014 M8X120 A480	
270	312105-0517		1	SCREW M6S ISO 4014 M10X130 A480	
280	312105-0372		3	SCREW M6S ISO 4017 M6X25 A480	
285	312105-0323		3	SCREW M6S ISO 4017 M5X8 A480	
290	315105-0153		14	WASHER BRB6,4X12RFR	
300	315105-0146		3	WASHER BRB5,3X10RFR	
310	312605-0314		3	HEXAGON NUT, M6M M5 A280	

Pos	Part No	UN	Qty	Description	Page No

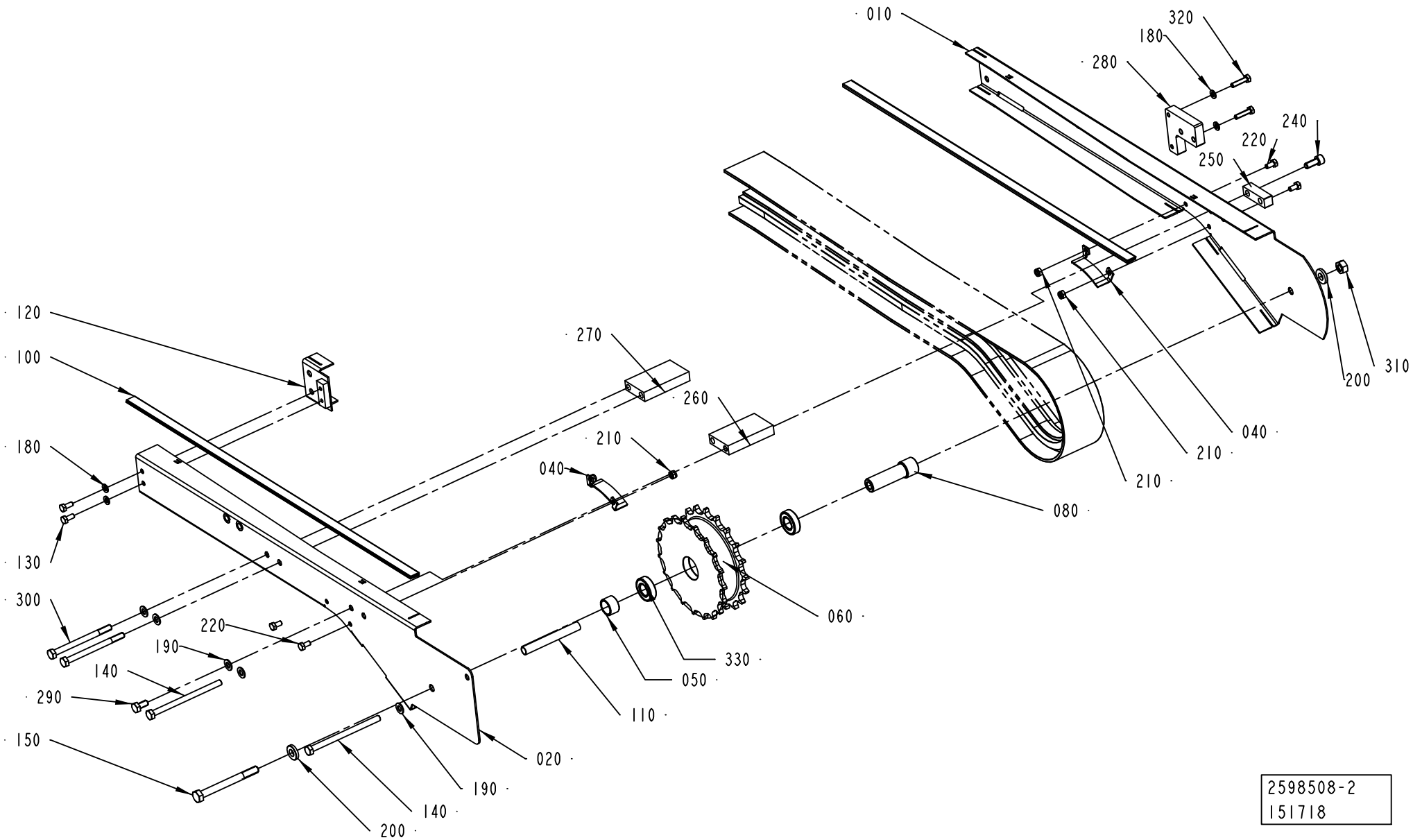
010
320
180
280
240
220
250
310
200
040
210
210
120
100
270
260
210
040
180
080
130
300
060
220
190
330
140
050
290
110
150
020
190
140
200
2598508-2
151718

ECM: 174305 - 50001231
Group number: 2598508-0100
Assembly Drawing: 2598508-2_1_AA

Pos	Part No	UN	Qty	Description	Page No
-					
010	2699107-0000		1	SIDE PLATE	
020	2699106-0000		1	SIDE PLATE	
040	2652311-0000		1	PLATE	
050	2699109-0000		1	SPACER	
060	2656672-0000		1	SPROCKET	
080	2699108-0000		1	SHAFT	
100	1550595-6740		2	SLIDING STRIP	
110	2598513-0000		2	SPACER	
120	2598514-0000		1	COVER	
130	312105-0367		2	SCREW M6S ISO 4017 M6X14 A480	
140	312105-0475		2	SCREW M6S ISO 4014 M8X120 A480	
150	312105-0511		1	SCREW M6S ISO 4014 M10X100 A480	
180	315105-0153		4	WASHER BRB6,4X12RFR	
190	315105-0165		5	WASHER BRB8,4X16RFR	
200	315111-0173		2	WASHER PLAIN, TBRB 10,5/22 H=4	
220	312105-0366		4	SCREW M6S ISO 4017 M6X12 A480	
240	312115-0451		1	SCREW ISO4762 M8X20 A4	
250	2619210-0000		1	SPACER	
260	2619211-0000		1	SPACER	
270	2619212-0000		1	SPACER	
280	2619213-0000		1	SPACER	
290	312105-0449		1	SCREW M6S ISO 4017 M8X16 A480	
300	312105-0471		2	SCREW M6S ISO 4014 M8X100 A480	
310	312605-0320		1	HEXAGON NUT, M6M M10 A280	
320	312105-0372		2	SCREW M6S ISO 4017 M6X25 A480	
330	1550348-0002		2	BEARING	

Pos	Part No	UN	Qty	Description	Page No

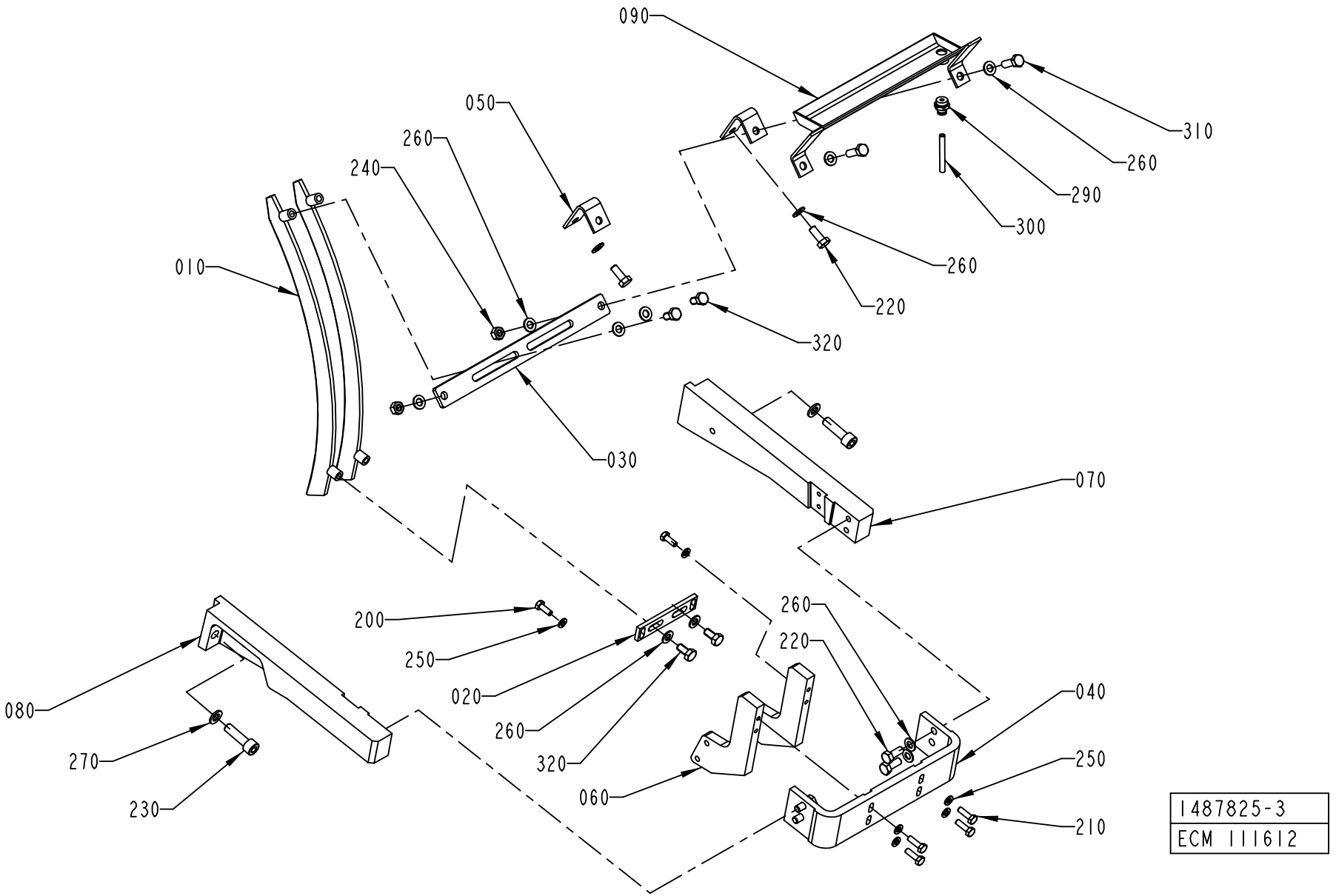
090
050
260
240
010
310
260
290
300
260
220
320
030
070
200
250
020
260
320
080
270
230
260
220
040
250
060
210
1487825-3
ECM 111612

ECM: 180382 - 50001231
Group number: 1487825-0200
Assembly Drawing: 1487825-3_1_AB

This list covers pages from 5-162 to 5-165

Pos	Part No	UN	Qty	Description	Page No
TBA 0500B, TBA 0330S, TBA 1000S, TBA 1000SQ, TBA 1000B, TBA 0200B, TBA 0200S, TBA 0250B (See drawing on page: 5-162)					
050	1144899-0000		2	SUPPORT	
080	2512834-0000		1	SUPPORTING ARM	
090	1478127-0000		1	DRIP PLATE	
220	312105-0451		6	SCREW M6S ISO 4017 M8X20 A480	
240	312605-0318		2	HEXAGON NUT, M6M M8 A280	
260	315105-0165		14	WASHER BRB8,4X16RFR	
310	312105-0453		2	SCREW M6S ISO 4017 M8X25 A480	
320	312105-0449		4	SCREW M6S ISO 4017 M8X16 A480	
TBA 1500S, TPA 1000SQ, TBA 1890S, TBA 2000S (See drawing on page: 5-164)					
010	1538963-0000		2	RAIL	
070	1517564-0000		1	SUPPORTING ARM	
080	1517568-0000		1	SUPPORTING ARM	
240	312605-0318		2	HEXAGON NUT, M6M M8 A280	
260	315105-0165		14	WASHER BRB8,4X16RFR	
Common Parts					
010	1558941-0000		2	RAIL	
020	1517567-0000		1	PLATE	
030	1144552-0000		1	PLATE	
040	1517563-0000		1	BRACKET	
050	1346588-0000		1	DRIP PLATE	
060	1517302-0000		2	SUPPORT PLATE	
070	2512817-0000		1	SUPPORTING ARM	
200	312105-0368		2	SCREW M6S ISO 4017 M6X16 A480	
210	312105-0370		4	SCREW M6S ISO 4017 M6X20 A480	
220	312105-0451		10	SCREW M6S ISO 4017 M8X20 A480	
230	312115-0497		2	SCREW ISO4762 M10X35 A4	
240	312605-0318		4	HEXAGON NUT, M6M M8 A280	
250	315105-0153		6	WASHER BRB6,4X12RFR	
270	315105-0171		2	WASHER BRB10X18	
290	342722-0203		1	STRAIGHT COUPLING	
300	90166-0132	MM	2000	TUBE 6 MM PA,TRANSP.	
320	312105-0449		2	SCREW M6S ISO 4017 M8X16 A480	

Pos	Part No	UN	Qty	Description	Page No

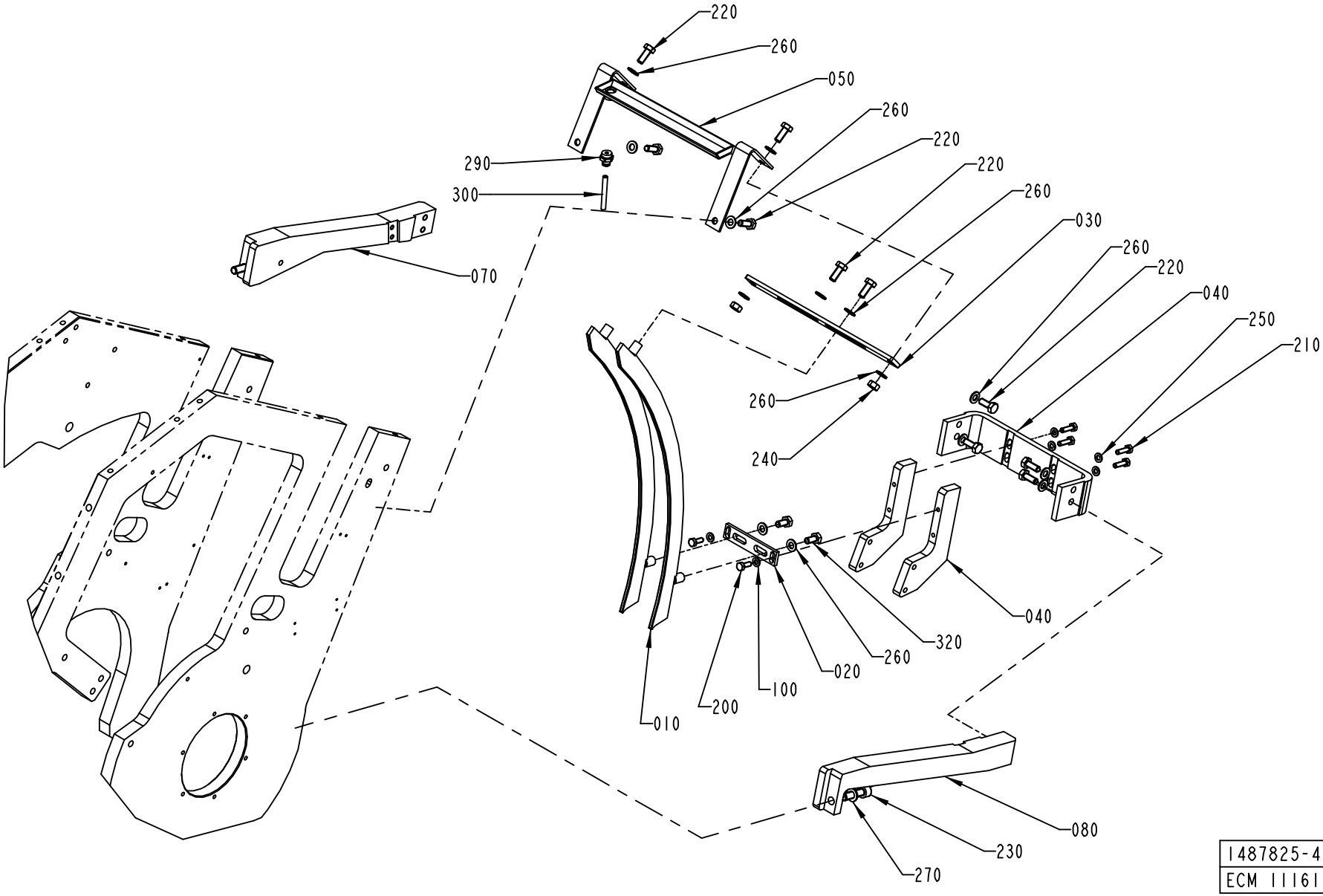
220
260
050
260
220
220
260
030
260
220
040
250
210
290
300
070
260
240
320
040
260
020
100
200
010
080
230
270
1487825-4
ECM 111612

ECM: 180382 - 50001231
Group number: 1487825-0200
Assembly Drawing: 1487825-4_1_AB

This list covers pages from 5-162 to 5-165

Pos	Part No	UN	Qty	Description	Page No
TBA 0500B, TBA 0330S, TBA 1000S, TBA 1000SQ, TBA 1000B, TBA 0200B, TBA 0200S, TBA 0250B (See drawing on page: 5-162)					
050	1144899-0000		2	SUPPORT	
080	2512834-0000		1	SUPPORTING ARM	
090	1478127-0000		1	DRIP PLATE	
220	312105-0451		6	SCREW M6S ISO 4017 M8X20 A480	
240	312605-0318		2	HEXAGON NUT, M6M M8 A280	
260	315105-0165		14	WASHER BRB8,4X16RFR	
310	312105-0453		2	SCREW M6S ISO 4017 M8X25 A480	
320	312105-0449		4	SCREW M6S ISO 4017 M8X16 A480	
TBA 1500S, TPA 1000SQ, TBA 1890S, TBA 2000S (See drawing on page: 5-164)					
010	1538963-0000		2	RAIL	
070	1517564-0000		1	SUPPORTING ARM	
080	1517568-0000		1	SUPPORTING ARM	
240	312605-0318		2	HEXAGON NUT, M6M M8 A280	
260	315105-0165		14	WASHER BRB8,4X16RFR	
Common Parts					
010	1558941-0000		2	RAIL	
020	1517567-0000		1	PLATE	
030	1144552-0000		1	PLATE	
040	1517563-0000		1	BRACKET	
050	1346588-0000		1	DRIP PLATE	
060	1517302-0000		2	SUPPORT PLATE	
070	2512817-0000		1	SUPPORTING ARM	
200	312105-0368		2	SCREW M6S ISO 4017 M6X16 A480	
210	312105-0370		4	SCREW M6S ISO 4017 M6X20 A480	
220	312105-0451		10	SCREW M6S ISO 4017 M8X20 A480	
230	312115-0497		2	SCREW ISO4762 M10X35 A4	
240	312605-0318		4	HEXAGON NUT, M6M M8 A280	
250	315105-0153		6	WASHER BRB6,4X12RFR	
270	315105-0171		2	WASHER BRB10X18	
290	342722-0203		1	STRAIGHT COUPLING	
300	90166-0132	MM	2000	TUBE 6 MM PA,TRANSP.	
320	312105-0449		2	SCREW M6S ISO 4017 M8X16 A480	

Pos	Part No	UN	Qty	Description	Page No

OUT FEED DRIVING SYSTEM

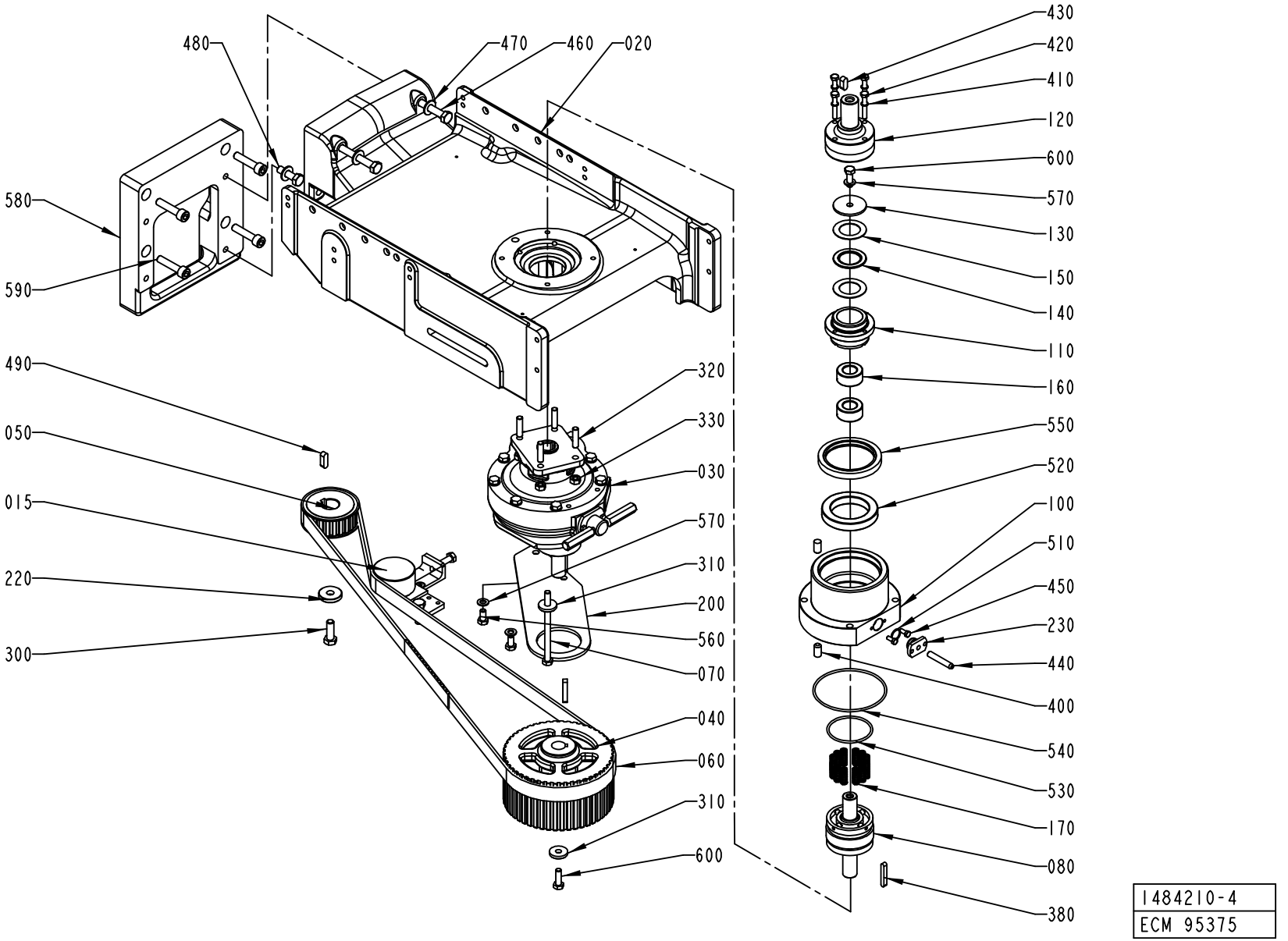

1484210-4
ECM 95375

ECM: 180380 - 50001231
Group number: 1484210-0200
Assembly Drawing: 1484210-4_1_AA

Pos	Part No	UN	Qty	Description	Page No
TBA 0200S					
050	1144802-0000		1	PULLEY	
080	1282343-0000		1	BLOCK	
110	1350564-0000		1	CLAMP HUB	
TBA 0500B, TBA 0330S, TBA 1000S, TBA 1000SQ, TBA 1000B, TBA 0200B, TBA 0250B					
040	1498620-0000		1	PULLEY	
050	1144802-0000		1	PULLEY	
080	1282343-0000		1	BLOCK	
110	1350564-0000		1	CLAMP HUB	
TBA 1500S, TPA 1000SQ					
040	1498620-0000		1	PULLEY	
050	1144802-0000		1	PULLEY	
060	1498528-0000		1	TIMING BELT	
080	1282343-0000		1	BLOCK	
110	1350564-0000		1	CLAMP HUB	
580	1349160-0000		1	SPACER	
590	312115-0500		4	SCREW ISO4762 M10X45 A4	
TBA 1890S, TBA 2000S					
040	2588329-0000		1	PULLEY	
050	2588328-0000		1	PULLEY	
060	2616227-0000		1	TIMING BELT	
080	2644178-0000		1	BLOCK	
110	2644177-0000		1	CLAMP HUB	
580	1349160-0000		1	SPACER	
590	312115-0500		4	SCREW ISO4762 M10X45 A4	
Common Parts					
015	1285875-0200		1	BELT TENSIONER	**5-169**
020	1478908-0000		1	SUPPORT	
030	1490085-0000		1	GEAR BOX	**5-171**
040	1499064-0000		1	PULLEY	
060	1498529-0000		1	TIMING BELT	
060	1499059-0000		1	TIMING BELT	
070	312105-0475		1	SCREW M6S ISO 4014 M8X120 A480	
100	1478905-0000		1	FLANGE	
120	1478753-0000		1	SHAFT	
130	1260832-0000		1	WASHER	
140	90083-0052		1	THRUST NEEDLE BEARING, 30X47X2 MM	
150	90083-0053		2	PLATE FOR 90083-0052	
160	1484448-0000		2	BEARING ROLLER	
170	1282345-0000		12	SPRING	
200	1499043-0000		1	BRACKET	
220	1144681-0000		1	WASHER	
230	1282335-0000		1	FLANGE	
300	312105-0495		1	SCREW M6S ISO 4017 M10X30 A480	
310	315125-0165		2	WASHER TBRSB 8,4X26X5 A4	
320	1490442-0000		4	STUD SCREW 8X20	
330	312605-0318		4	HEXAGON NUT, M6M M8 A280	
380	315705-0239		2	PARALLEL KEY W. ROUND ENDS 6X6X40 MM	
400	311103-0454		2	PARALLEL PIN ISO 2338 10M6X20 A1	
410	315211-0103		4	BONDED SEAL SS/NBR90 M6	
420	312109-0378		4	SCREW M6S ISO4017 M6X40 A480	
430	315705-0263		1	PARALLEL KEY W. ROUND ENDS 8X7X20 MM	
440	90044-0117		1	PROX.SW. IX 0208	
450	312105-0327		2	SCREW M6S ISO 4017 M5X12 A480	
460	312105-0507		2	SCREW M6S ISO 4014 M10X80 A480	
470	315105-0173		4	WASHER BRB10,5X22RFR	
480	312115-0497		2	SCREW ISO4762 M10X35 A4	
490	315705-0265		1	PARALLEL KEY W. ROUND ENDS 8X7X25 MM	
510	315202-0113		1	O-RING 15,1X1,6 MM	
520	1484447-0000		1	BALL BEARING	
530	315202-0303		1	O-RING 59,5X3 MM	
540	315202-0311		1	O-RING 99,5X3 MM	
550	90091-0416		1	RADIAL SEAL 70X90X10 MM DUST LIP	
560	312105-0449		2	SCREW M6S ISO 4017 M8X16 A480	
570	315105-0165		3	WASHER BRB8,4X16RFR	
600	312105-0453		2	SCREW M6S ISO 4017 M8X25 A480	

Machine Type | Group Description | Used-In | Group Number | Page No

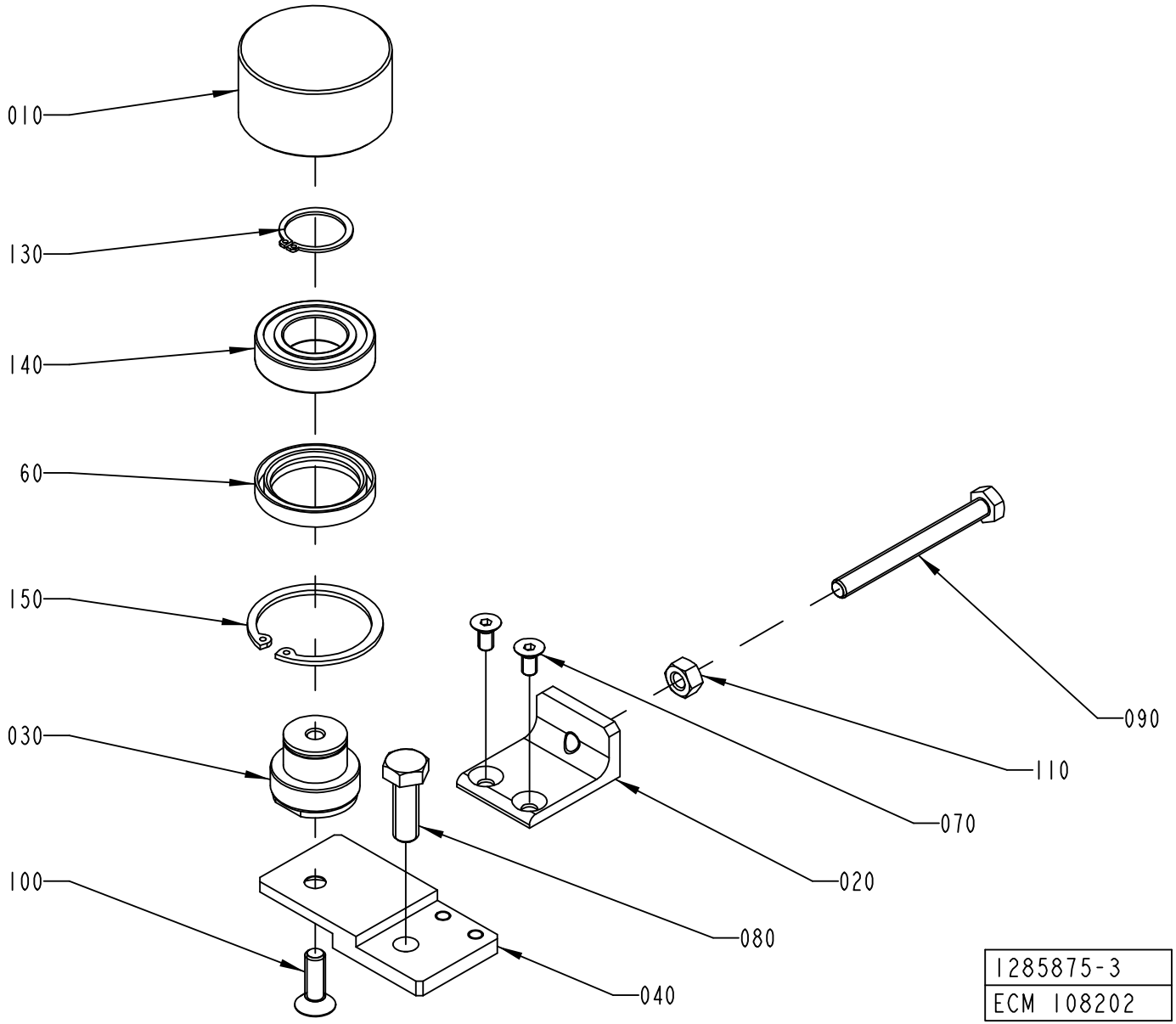
010
130
140
60
150
030
100
080
040
020
070
110
090
1285875-3
ECM 108202

ECM: 108202 - 20021110
Group number: 1285875-0200
Assembly Drawing: 1285875-3_1_AA

Pos	Part No	UN	Qty	Description	Page No
-					
010	1144581-0000		1	ROLLER	
020	1498064-0000		1	BLOCK	
030	1478302-0000		1	AXLE BOLT	
040	1498067-0000		1	PLATE	
060	1350305-0000		1	SEALING RING	
070	312155-0366		2	SCREW EN 10642 MF6S M6X12 A480	
080	312105-0495		1	SCREW M6S ISO 4017 M10X30 A480	
090	1498066-0000		1	SCREW	
100	312155-0453		1	SCREW EN 10642 MF6S M8X25 A480	
110	312605-0318		1	HEXAGON NUT, M6M M8 A280	
130	315751-0119		1	RETAINING RING FOR SHAFT DIN 471 25 A2	
140	321308-0205		1	BALL BEARING, 25X47X12MM	
150	90141-0019		1	RETAINING RING FOR BORE DIN 472 50 A2	

Pos	Part No	UN	Qty	Description	Page No

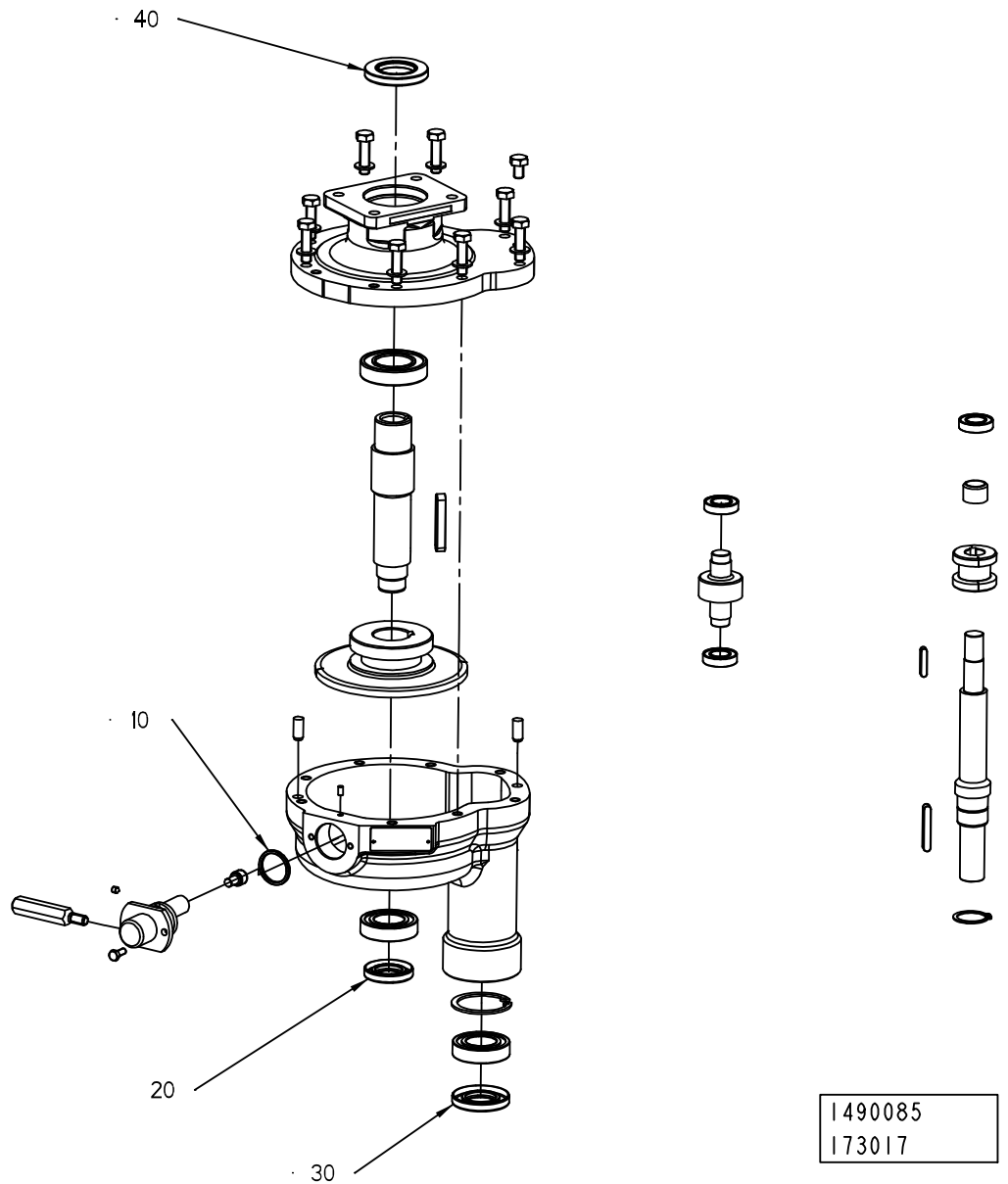
40
10
20
30
1490085
173017

ECM: 177674 - 20040705
Group number: 1490085-0000
Assembly Drawing: 1490085_2_AB

Pos	Part No	UN	Qty	Description	Page No
-					
010	315202-0217		1	O-RING 24,2X3 MM	
020	90091-0404		1	RADIAL SEAL 22X40X7 MM DUST LIP	
030	90091-0148		1	RADIAL SEAL 25X47X7 MM DUST LIP	
040	90091-0299		1	RADIAL SEAL 30X52X7 MM DUST LIP	

Pos	Part No	UN	Qty	Description	Page No

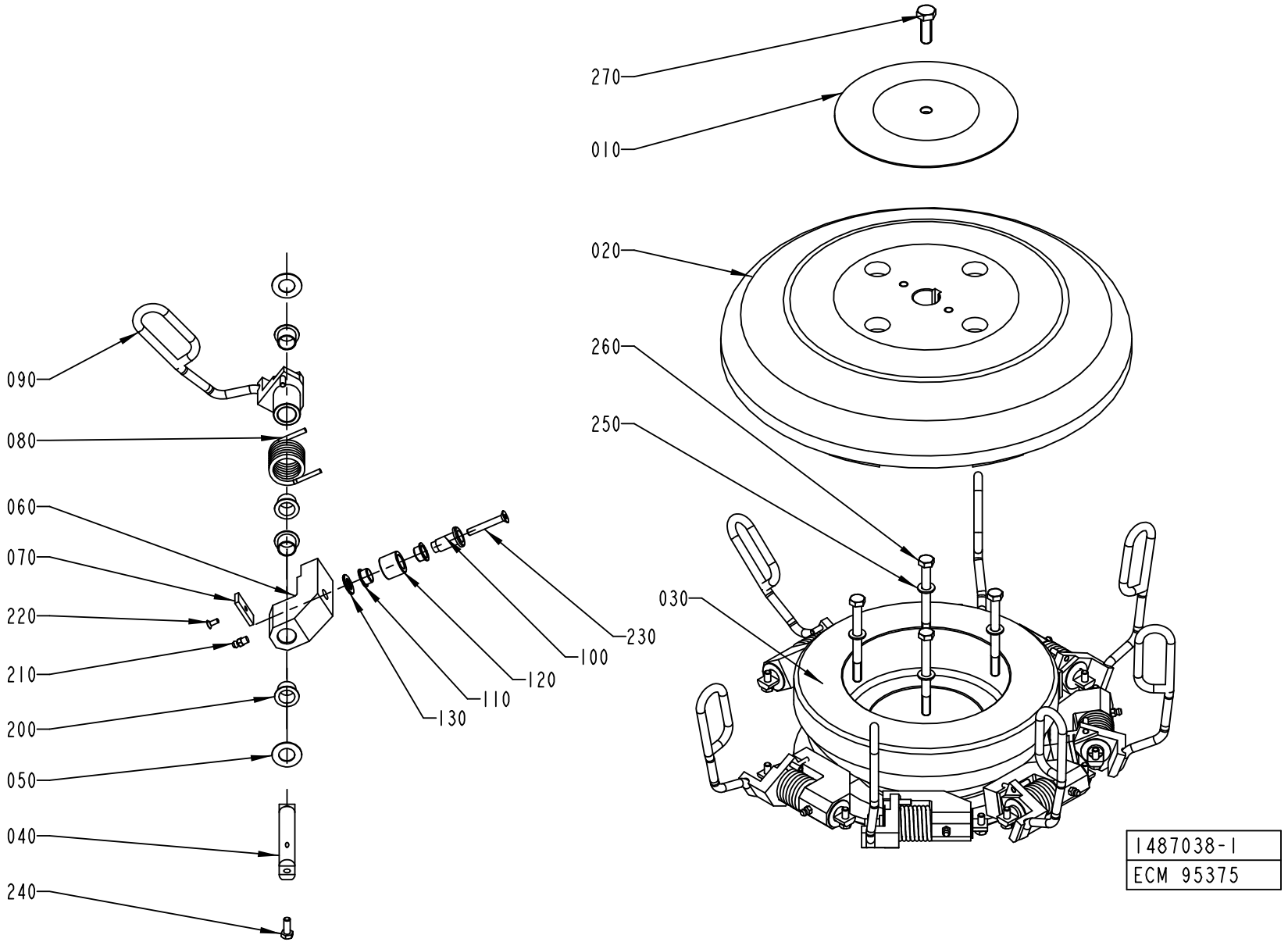
270
010
020
260
250
030
090
080
060
070
220
210
200
050
040
240
230
100
120
110
130
1487038-1
ECM 95375

ECM: 180381 - 50001231
Group number: 1487038-0200
Assembly Drawing: 1487038-1_1_AB

This list covers pages from 5-172 to 5-179

Pos	Part No	UN	Qty	Description	Page No
TBA 0200B NOQC, TBA 0250B NOQC (See drawing on page: 5-174)					
030	1478228-0000		1	CAM	
040	1348540-0000		8	PIVOT AXLE	
050	1260852-0000		16	WASHER	
060	1348538-0000		8	LEVER	
070	1348631-0000		8	PLATE	
080	1282864-0000		8	SPRING	
100	1260851-0000		8	AXLE PIN	
110	1144662-0000		16	BUSHING	
130	1285254-0000		8	WASHER	
200	90240-0263		32	FLANGE BUSHING, 15X17X12 MM	
210	344502-0021		8	GREASE NIPPLE STRAIGHT M6	
220	312155-0289		8	SCREW EN 10642 MF6S M4X10 A480	
230	312155-0378		8	SCREW EN 10642 MF6S M6X40 A480	
TBA 0200B QC, TBA 0330S QC, TBA 0330S NOQC, TBA 0250B QC (See drawing on page: 5-178)					
050	1260852-0000		16	WASHER	
100	1260851-0000		8	AXLE PIN	
110	1144662-0000		16	BUSHING	
130	1285254-0000		8	WASHER	
210	344502-0021		8	GREASE NIPPLE STRAIGHT M6	
230	312155-0378		8	SCREW EN 10642 MF6S M6X40 A480	
280	2545245-0000		8	BUSHING	
290	90240-0258		8	BUSHING, 15X17X15 MM	
TBA 0200S (See drawing on page: 5-176)					
020	1478925-0000		1	HATCH	
120	1260853-0000		12	RING	
240	312105-0368		12	SCREW M6S ISO 4017 M6X16 A480	
TBA 0500B, TBA 1000S, TBA 1000B (See drawing on page: 5-174)					
030	1478228-0000		1	CAM	
040	1348540-0000		8	PIVOT AXLE	
050	1260852-0000		16	WASHER	
060	1348538-0000		8	LEVER	
070	1348631-0000		8	PLATE	
080	1282864-0000		8	SPRING	
100	1260851-0000		8	AXLE PIN	
110	1144662-0000		16	BUSHING	
130	1285254-0000		8	WASHER	
200	90240-0263		32	FLANGE BUSHING, 15X17X12 MM	
210	344502-0021		8	GREASE NIPPLE STRAIGHT M6	
220	312155-0289		8	SCREW EN 10642 MF6S M4X10 A480	
230	312155-0378		8	SCREW EN 10642 MF6S M6X40 A480	
TBA 1000SQ (See drawing on page: 5-172)					
030	1478228-0000		1	CAM	
040	1348540-0000		8	PIVOT AXLE	
050	1260852-0000		16	WASHER	
060	1348538-0000		8	LEVER	
070	1348631-0000		8	PLATE	
100	1260851-0000		8	AXLE PIN	
110	1144662-0000		16	BUSHING	
130	1285254-0000		8	WASHER	
200	90240-0263		32	FLANGE BUSHING, 15X17X12 MM	
210	344502-0021		8	GREASE NIPPLE STRAIGHT M6	
220	312155-0289		8	SCREW EN 10642 MF6S M4X10 A480	
230	312155-0378		8	SCREW EN 10642 MF6S M6X40 A480	
TBA 1500S (See drawing on page: 5-174)					
030	1478228-0000		1	CAM	
040	1348540-0000		8	PIVOT AXLE	
050	1260852-0000		16	WASHER	
060	1348538-0000		8	LEVER	
070	1348631-0000		8	PLATE	
080	1282864-0000		8	SPRING	
100	1260851-0000		8	AXLE PIN	
110	1144662-0000		16	BUSHING	
130	1285254-0000		8	WASHER	
200	90240-0263		32	FLANGE BUSHING, 15X17X12 MM	
210	344502-0021		8	GREASE NIPPLE STRAIGHT M6	
220	312155-0289		8	SCREW EN 10642 MF6S M4X10 A480	
230	312155-0378		8	SCREW EN 10642 MF6S M6X40 A480	
TBA 1890S QC, TBA 2000S QC (See drawing on page: 5-178)					
020	2594911-0000		1	HATCH	
040	1348540-0000		6	PIVOT AXLE	
050	1260852-0000		12	WASHER	
060	2594910-0000		6	LEVER	
080	1349985-0000		6	SPRING	
090	2664596-0000		6	CARRIER	
100	1260851-0000		6	AXLE PIN	
110	1144662-0000		12	BUSHING	
120	1260853-0000		6	RING	
130	1285254-0000		6	WASHER	
200	90240-0263		12	FLANGE BUSHING, 15X17X12 MM	
210	344502-0021		6	GREASE NIPPLE STRAIGHT M6	
230	312155-0378		6	SCREW EN 10642 MF6S M6X40 A480	
240	312105-0368		12	SCREW M6S ISO 4017 M6X16 A480	
280	2545245-0000		6	BUSHING	

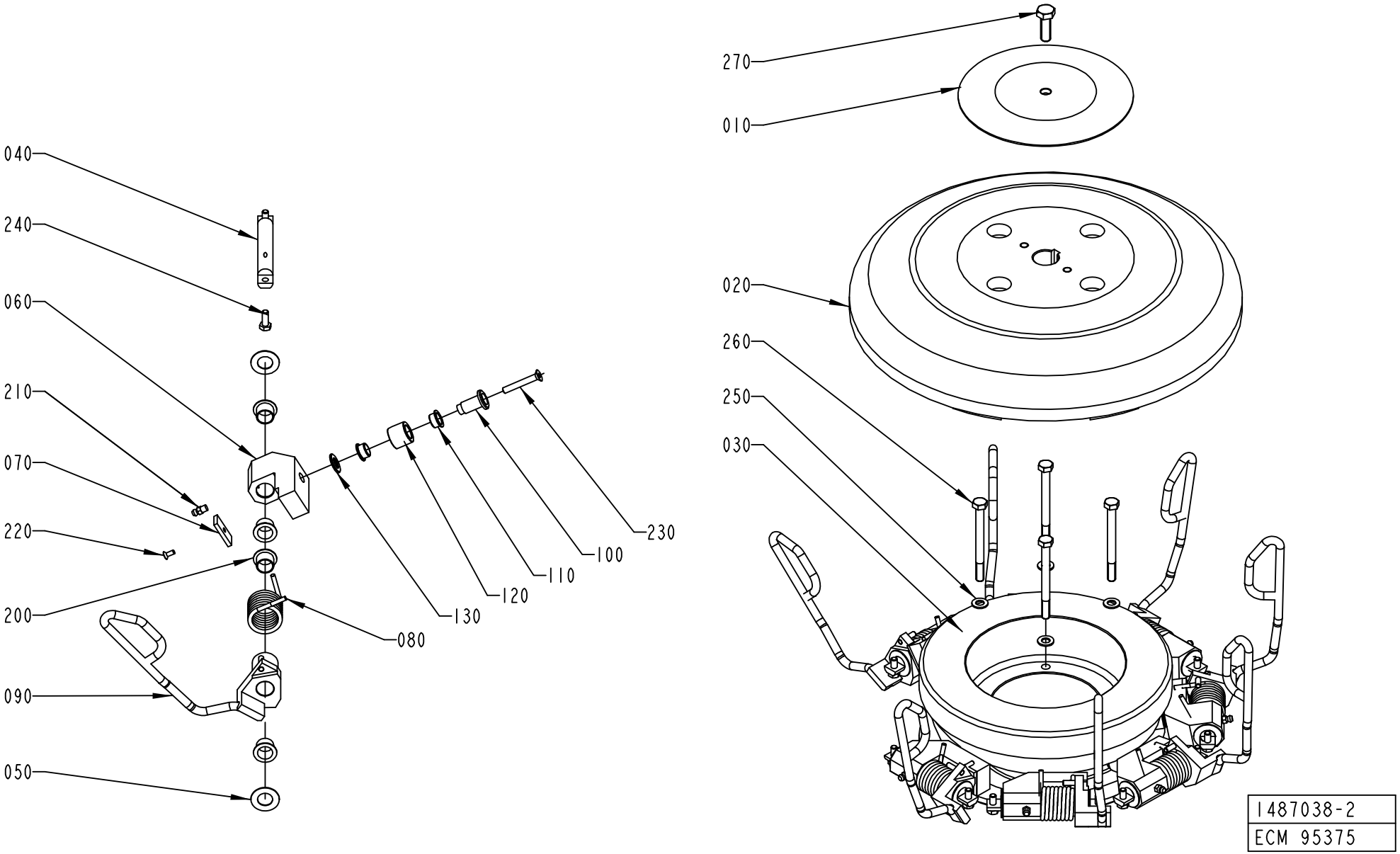
040
240
060
210
070
220
200
090
050
080
130
120
110
100
230
270
010
020
260
250
030
1487038-2
ECM 95375

Pos	Part No	UN	Qty	Description	Page No
TBA 1890S QC, TBA 2000S QC (Cont'd) (See drawing on page: 5-178)					
290	90240-0258		6	BUSHING, 15X17X15 MM	
TPA 1000SQ (See drawing on page: 5-178)					
050	1260852-0000		16	WASHER	
100	1260851-0000		8	AXLE PIN	
110	1144662-0000		16	BUSHING	
130	1285254-0000		8	WASHER	
210	344502-0021		8	GREASE NIPPLE STRAIGHT M6	
230	312155-0378		8	SCREW EN 10642 MF6S M6X40 A480	
280	2545245-0000		8	BUSHING	
290	90240-0258		8	BUSHING, 15X17X15 MM	
Common Parts					
010	1478558-0000		1	WASHER	
020	2532580-0000		1	HATCH	
020	1484289-0000		1	HATCH	
030	2540593-0000		1	CAM	
030	2540594-0000		1	CAM	
040	1350543-0000		8	AXLE PIN	
050	1260852-0000		24	WASHER	
060	2556526-0000		12	LEVER	
060	2556525-0000		12	LEVER	
080	1349985-0000		8	SPRING	
080	1296176-0000		8	SPRING	
080	1549615-0000		12	SPRING	
090	2563274-0000		8	CARRIER	
090	2543231-0000		8	CARRIER	
090	2552018-0000		12	CARRIER	
090	2545382-0000		12	CARRIER	
090	1478227-0000		8	CARRIER	
090	2529664-0000		8	CARRIER	
090	1532516-0000		8	CARRIER	
090	1511225-0000		8	CARRIER	
090	1487159-0000		8	CARRIER	
090	1349997-0000		8	CARRIER	
100	1260851-0000		12	AXLE PIN	
110	1144662-0000		24	BUSHING	
120	1260853-0000		8	RING	
130	1285254-0000		12	WASHER	
200	90240-0263		24	FLANGE BUSHING, 15X17X12 MM	
210	344502-0021		12	GREASE NIPPLE STRAIGHT M6	
230	312155-0378		12	SCREW EN 10642 MF6S M6X40 A480	
240	312105-0368		16	SCREW M6S ISO 4017 M6X16 A480	
250	315105-0165		4	WASHER BRB8,4X16RFR	
260	312105-0469		4	SCREW M6S ISO 4014 M8X90 A480	
270	312105-0495		1	SCREW M6S ISO 4017 M10X30 A480	
280	2545245-0000		12	BUSHING	
290	90240-0258		12	BUSHING, 15X17X15 MM	

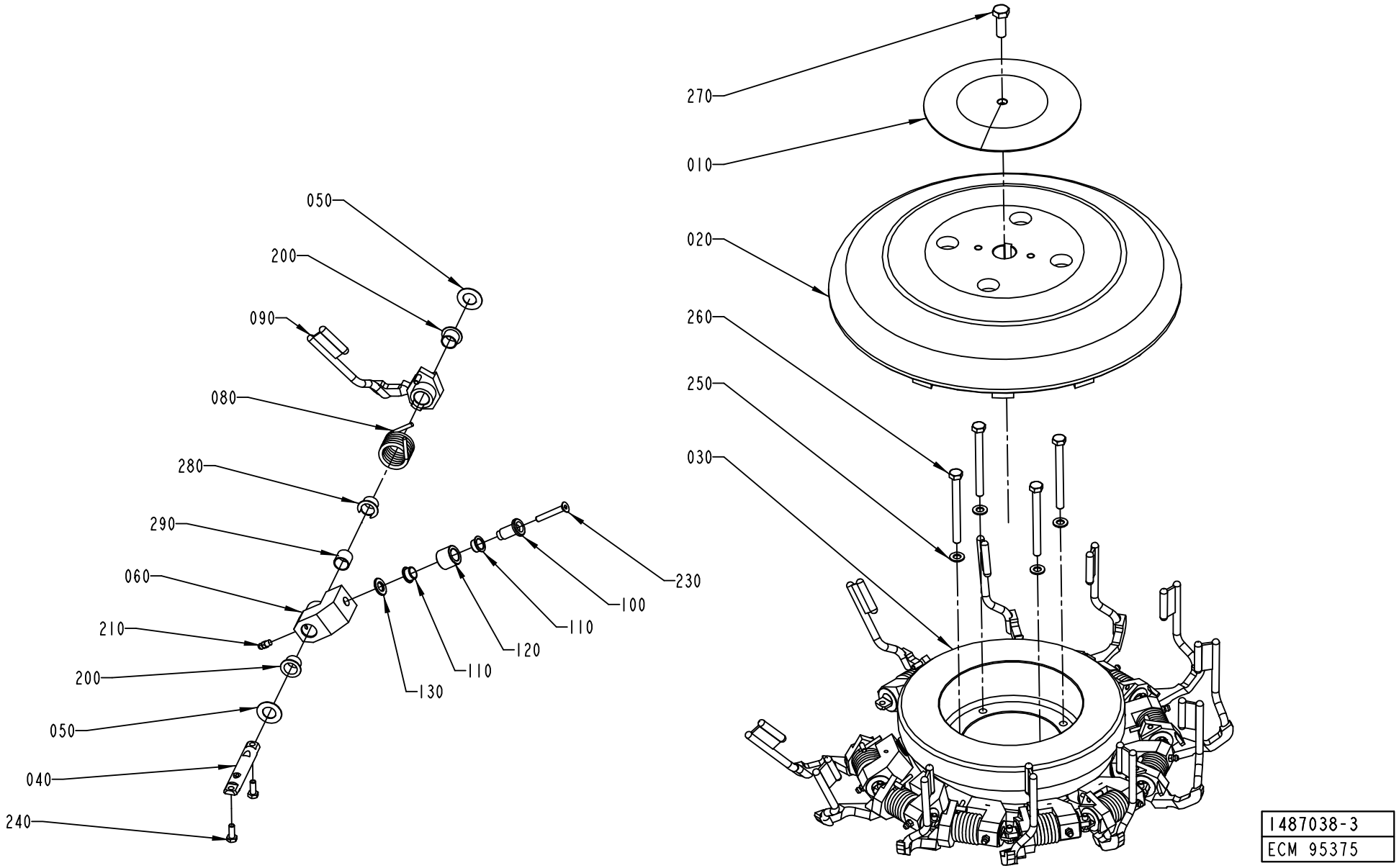
270
010
020
260
250
030
050
200
090
080
280
290
060
210
200
050
040
240
230
100
110
120
110
130
1487038-3
ECM 95375

Pos	Part No	UN	Qty	Description	Page No	Pos	Part No	UN	Qty	Description	Page No

SEE PREVIOUS LISTS PAGES: 5-173, 5-175.

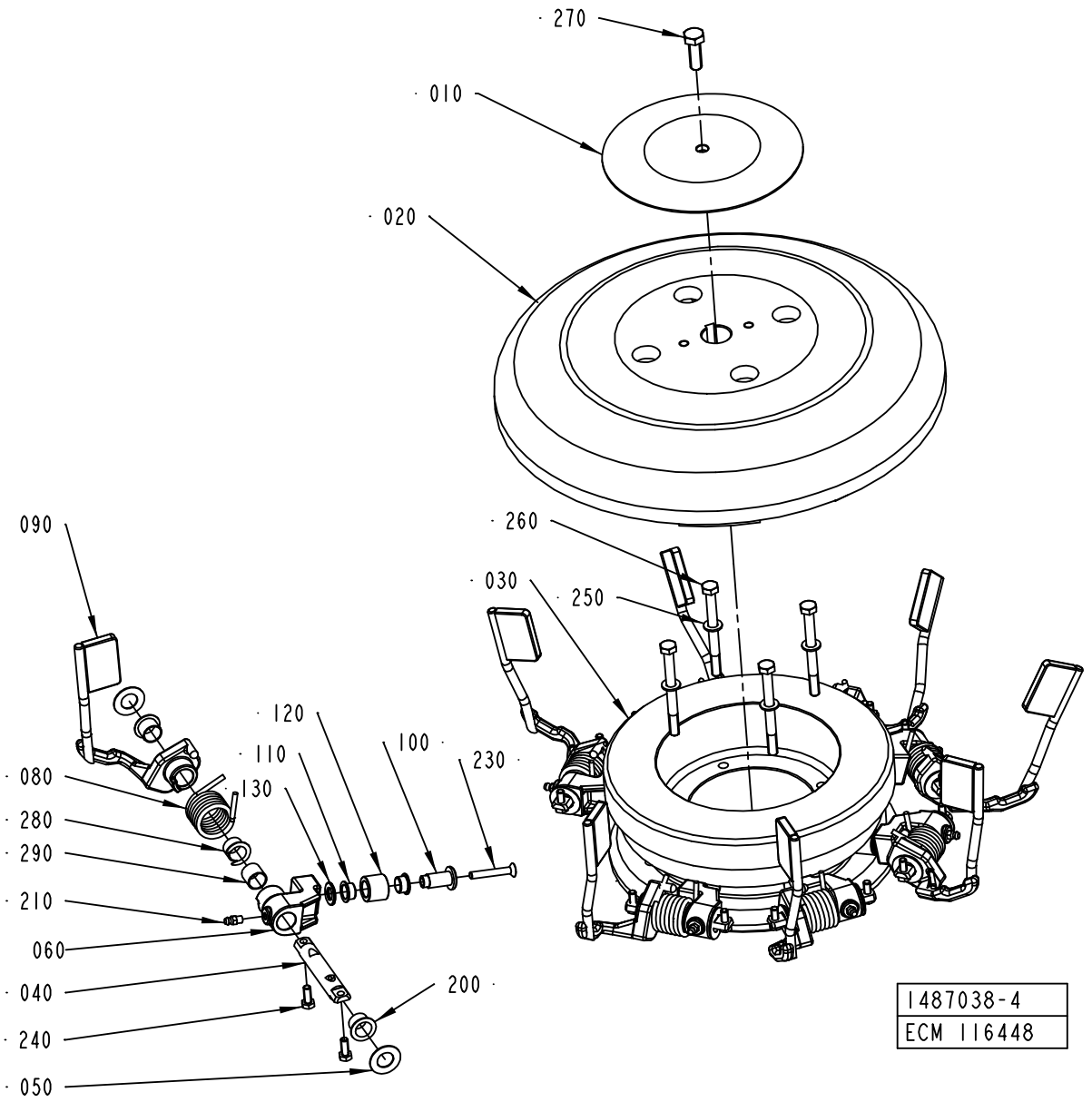
270
010
020
090
260
030
250
120
110
100
230
130
080
280
290
210
060
040
240
050
200
1487038-4
ECM 116448

Pos	Part No	UN	Qty	Description	Page No	Pos	Part No	UN	Qty	Description	Page No

SEE PREVIOUS LISTS PAGES: 5-173, 5-175.

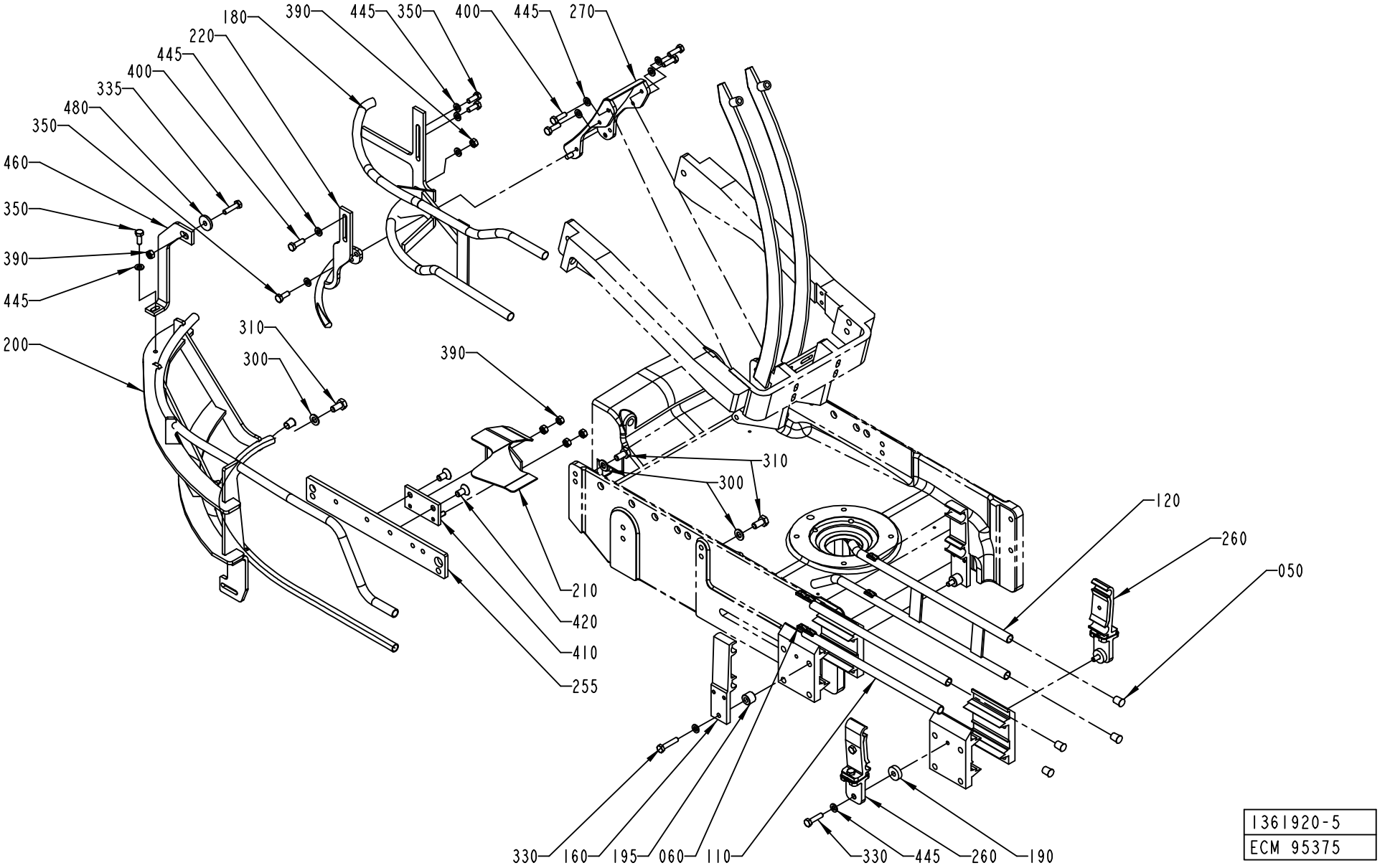
180
390
445
350
400
445
270
220
445
400
335
480
350
460
350
390
445
200
310
300
390
310
300
120
260
050
210
420
410
255
330
160
195
060
110
330
445
260
190
1361920-5
ECM 95375

ECM: 180379 - 50001231
Group number: 1361920-0400
Assembly Drawing: 1361920-5_1_AA

This list covers pages from 5-180 to 5-187

Pos	Part No	UN	Qty	Description	Page No
TPA 1000SQ (See drawing on page: 5-180)					
060	1020146-0000		6	LOCKING BLOCK REPL BY 1020290-101	
110	1279582-0000		2	RAIL	
180	1548114-0000		1	RAIL	
195	1317218-0000		2	SPACER	
200	2527766-0000		1	RAIL	
210	1548348-0000		1	GUIDE	
220	1548349-0000		1	RAIL	
300	315105-0165		3	WASHER BRB8,4X16RFR	
310	312105-0449		3	SCREW M6S ISO 4017 M8X16 A480	
335	312105-0372		3	SCREW M6S ISO 4017 M6X25 A480	
350	312105-0368		4	SCREW M6S ISO 4017 M6X16 A480	
390	312605-0316		6	HEXAGON NUT, M6M M6 A280	
410	1548551-0000		1	SPACER	
420	312155-0449		2	SCREW EN 10642 MF6S M8X16 A480	
445	315105-0153		14	WASHER BRB6,4X12RFR	
460	2532864-0000		1	BRACKET	
480	315125-0153		1	WASHER TBRSB 6,4X22X4 A4	
TBA 0500B QC, TBA 0500B NOQC, TBA 1000B QC (See drawing on page: 5-182)					
110	1279582-0000		2	RAIL	
150	1499413-0000		1	HOLDER	
160	1285009-0000		2	HOLDER	
190	1285253-0000		10	SPACER	
260	1020142-0002		2	RAIL HOLDER, B55 WIDTH 30 MM	
310	312105-0449		5	SCREW M6S ISO 4017 M8X16 A480	
350	312105-0368		4	SCREW M6S ISO 4017 M6X16 A480	
360	312155-0329		1	SCREW EN 10642 MF6S M5X16 A480	
370	315105-0146		1	WASHER BRB5,3X10RFR	
380	312605-0314		1	HEXAGON NUT, M6M M5 A280	
445	315105-0153		14	WASHER BRB6,4X12RFR	
TBA 0200B NOQC, TBA 0250B NOQC (See drawing on page: 5-182)					
110	1279582-0000		2	RAIL	
160	1285009-0000		2	HOLDER	
260	1020142-0002		2	RAIL HOLDER, B55 WIDTH 30 MM	
310	312105-0449		5	SCREW M6S ISO 4017 M8X16 A480	
330	312105-0370		4	SCREW M6S ISO 4017 M6X20 A480	
350	312105-0368		4	SCREW M6S ISO 4017 M6X16 A480	
400	312105-0370		9	SCREW M6S ISO 4017 M6X20 A480	
TBA 0200B QC, TBA 0330S QC, TBA 0250B QC (See drawing on page: 5-182)					
050	484701-0000		13	SHUTTER	
110	1279582-0000		2	RAIL	
120	2558754-0000		1	RAIL	
160	1285009-0000		2	HOLDER	
180	2537127-0000		1	RAIL	
200	2559052-0000		1	RAIL	
210	2538110-0000		1	RAIL	
260	1020142-0002		2	RAIL HOLDER, B55 WIDTH 30 MM	
310	312105-0449		5	SCREW M6S ISO 4017 M8X16 A480	
330	312105-0370		4	SCREW M6S ISO 4017 M6X20 A480	
350	312105-0368		4	SCREW M6S ISO 4017 M6X16 A480	
TBA 0200S (See drawing on page: 5-182)					
110	1279582-0000		2	RAIL	
160	1285009-0000		2	HOLDER	
180	2537127-0000		1	RAIL	
200	2537819-0000		1	RAIL	
210	2538110-0000		1	RAIL	
260	1020142-0002		2	RAIL HOLDER, B55 WIDTH 30 MM	
310	312105-0449		5	SCREW M6S ISO 4017 M8X16 A480	
330	312105-0370		4	SCREW M6S ISO 4017 M6X20 A480	
350	312105-0368		4	SCREW M6S ISO 4017 M6X16 A480	
TBA 1000S, TBA 1000B NOQC (See drawing on page: 5-182)					
110	1279582-0000		2	RAIL	
150	1499413-0000		1	HOLDER	
160	1285009-0000		2	HOLDER	
190	1285253-0000		10	SPACER	
200	1285258-0000		1	RAIL	
260	1020142-0002		2	RAIL HOLDER, B55 WIDTH 30 MM	
310	312105-0449		5	SCREW M6S ISO 4017 M8X16 A480	
350	312105-0368		4	SCREW M6S ISO 4017 M6X16 A480	
360	312155-0329		1	SCREW EN 10642 MF6S M5X16 A480	
370	315105-0146		1	WASHER BRB5,3X10RFR	
380	312605-0314		1	HEXAGON NUT, M6M M5 A280	
445	315105-0153		14	WASHER BRB6,4X12RFR	
TBA 1000SQ (See drawing on page: 5-184)					
110	1279582-0000		2	RAIL	
160	1285009-0000		2	HOLDER	
210	1349806-0000		1	GUIDE	
260	1020142-0002		2	RAIL HOLDER, B55 WIDTH 30 MM	
310	312105-0449		5	SCREW M6S ISO 4017 M8X16 A480	
350	312105-0368		4	SCREW M6S ISO 4017 M6X16 A480	
TBA 1500S (See drawing on page: 5-182)					
050	484701-0000		16	SHUTTER	
110	1279582-0000		2	RAIL	
150	1499413-0000		1	HOLDER	

Machine Type | Group Description | Used-In | Group Number | Page No

RAIL OUTFEED

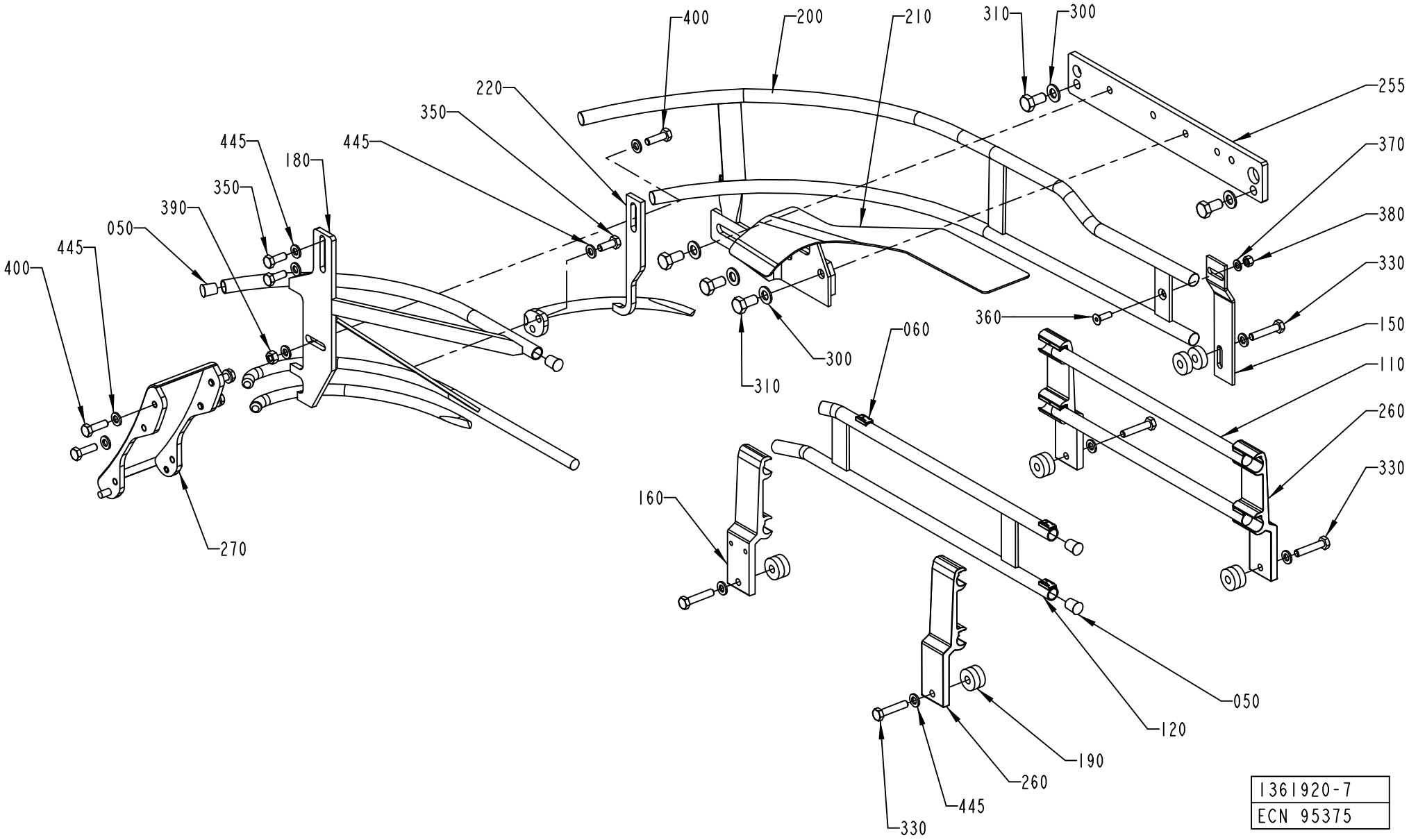

ECM: 180379 - 50001231
Group number: 1361920-0400
Assembly Drawing: 1361920-7_1_AA

This list covers pages from 5-180 to 5-187

Pos	Part No	UN	Qty	Description	Page No
TBA 1500S (Cont'd) (See drawing on page: 5-182)					
160	1285009-0000		2	HOLDER	
180	2504412-0000		1	RAIL	
200	1285258-0000		1	RAIL	
260	1020142-0002		2	RAIL HOLDER, B55 WIDTH 30 MM	
310	312105-0449		5	SCREW M6S ISO 4017 M8X16 A480	
350	312105-0368		4	SCREW M6S ISO 4017 M6X16 A480	
360	312155-0329		1	SCREW EN 10642 MF6S M5X16 A480	
370	315105-0146		1	WASHER BRB5,3X10RFR	
380	312605-0314		1	HEXAGON NUT, M6M M5 A280	
445	315105-0153		14	WASHER BRB6,4X12RFR	
TBA 1890S QC, TBA 2000S QC (See drawing on page: 5-186)					
050	484701-0000		18	SHUTTER	
110	2640076-0000		2	RAIL	
120	2639832-0000		1	RAIL	
160	1550743-0100		2	RAIL HOLDER	**5-189**
180	2635406-0000		1	RAIL	
200	2635543-0000		1	RAIL	
210	2652206-0000		1	GUIDE	
220	2654985-0000		1	RAIL	
260	1550743-0100		2	RAIL HOLDER	**5-189**
300	315105-0165		4	WASHER BRB8,4X16RFR	
305	2655500-0000		1	WASHER	
310	312105-0449		4	SCREW M6S ISO 4017 M8X16 A480	
315	312105-0451		1	SCREW M6S ISO 4017 M8X20 A480	
350	312105-0368		3	SCREW M6S ISO 4017 M6X16 A480	
445	315105-0153		9	WASHER BRB6,4X12RFR	
Common Parts					
050	484701-0000		11	SHUTTER	
060	1020146-0000		10	LOCKING BLOCK REPL BY 1020290-101	
120	1487684-0000		1	RAIL	
120	2675105-0000		1	RAIL	
120	1296079-0000		1	RAIL	
120	1548550-0000		1	RAIL	
160	1334113-0000		2	HOLDER	
180	2598925-0000		1	RAIL	
180	2539229-0000		1	RAIL	
180	2517495-0000		1	RAIL	
180	2520183-0000		1	RAIL	
180	2522145-0000		1	RAIL	
180	2520346-0000		1	RAIL	
190	1317218-0000		5	SPACER	
190	1285253-0000		8	SPACER	
200	1532294-0000		1	RAIL	
200	1539869-0000		1	RAIL	
200	1519540-0000		1	RAIL	
200	1346739-0000		1	GUIDE	
200	2660715-0000		1	GUIDE	
200	1524349-0000		1	GUIDE	
200	2517965-0000		1	GUIDE	
210	1532965-0000		1	GUIDE	
210	1487177-0000		1	GUIDE	
220	2531558-0000		1	RAIL	
220	2518100-0000		1	RAIL	
220	2619602-0000		1	RAIL	
220	2522181-0000		1	RAIL	
220	2545232-0000		1	RAIL	
220	2504414-0000		1	RAIL	
255	1478235-0000		1	PLATE	
260	1366777-0101		2	ANGLED RAIL HOLDER TPC21	**5-191**
260	1020816-0002		2	RAIL HOLDER, B68/R68 WIDTH 30 MM	
270	2523480-0000		1	SLIDE	
270	1538970-0000		1	SLIDE	
300	315105-0165		5	WASHER BRB8,4X16RFR	
330	312105-0374		5	SCREW M6S ISO 4014 M6X30 A480	
335	312105-0372		4	SCREW M6S ISO 4017 M6X25 A480	
390	312605-0316		1	HEXAGON NUT, M6M M6 A280	
400	312105-0370		5	SCREW M6S ISO 4017 M6X20 A480	
445	315105-0153		13	WASHER BRB6,4X12RFR	
460	2543234-0000		1	BRACKET	

Machine Type | Group Description | Used-In | Group Number | Page No

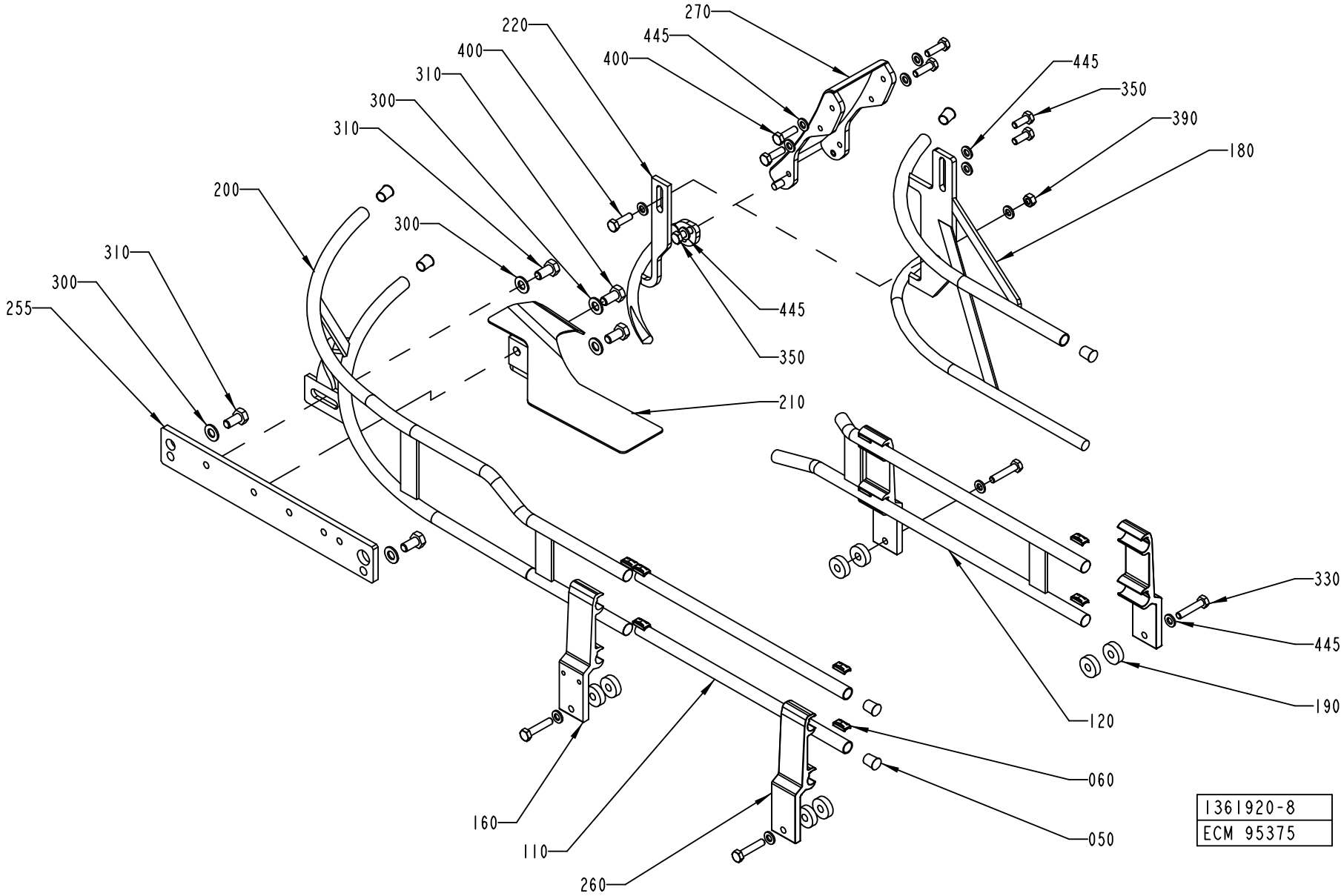
270
220
445
400
400
310
300
310
445
350
390
180
200
300
310
300
255
445
350
210
330
445
190
120
060
050
160
110
260
1361920-8
ECM 95375

Pos	Part No	UN	Qty	Description	Page No	Pos	Part No	UN	Qty	Description	Page No

SEE PREVIOUS LISTS PAGES: 5-181, 5-183.

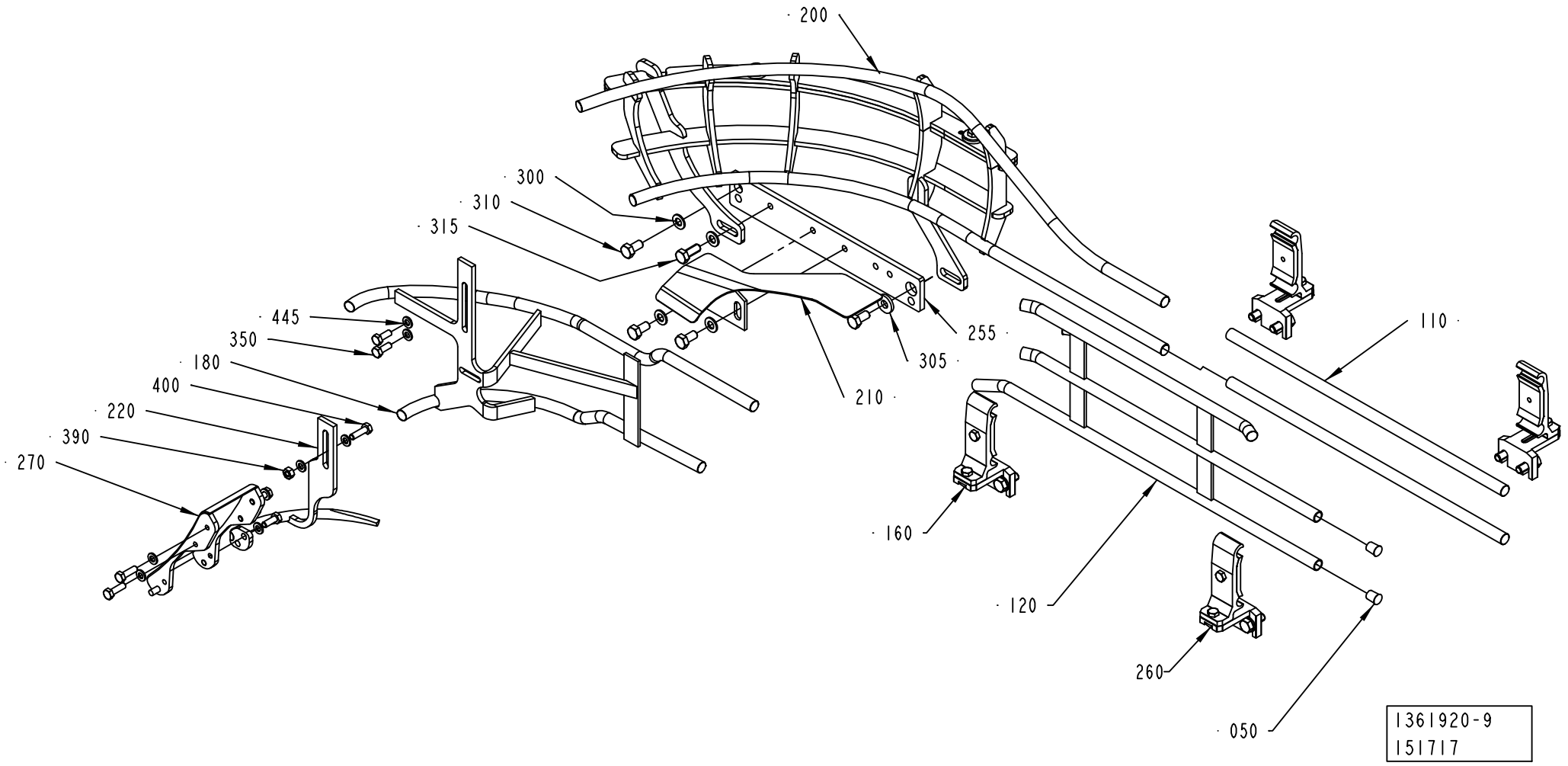
200
300
310
315
445
350
180
400
220
390
270
255
305
210
110
160
120
260
050
1361920-9
151717

Pos	Part No	UN	Qty	Description	Page No	Pos	Part No	UN	Qty	Description	Page No

SEE PREVIOUS LISTS PAGES: 5-181, 5-183.

RAIL HOLDER

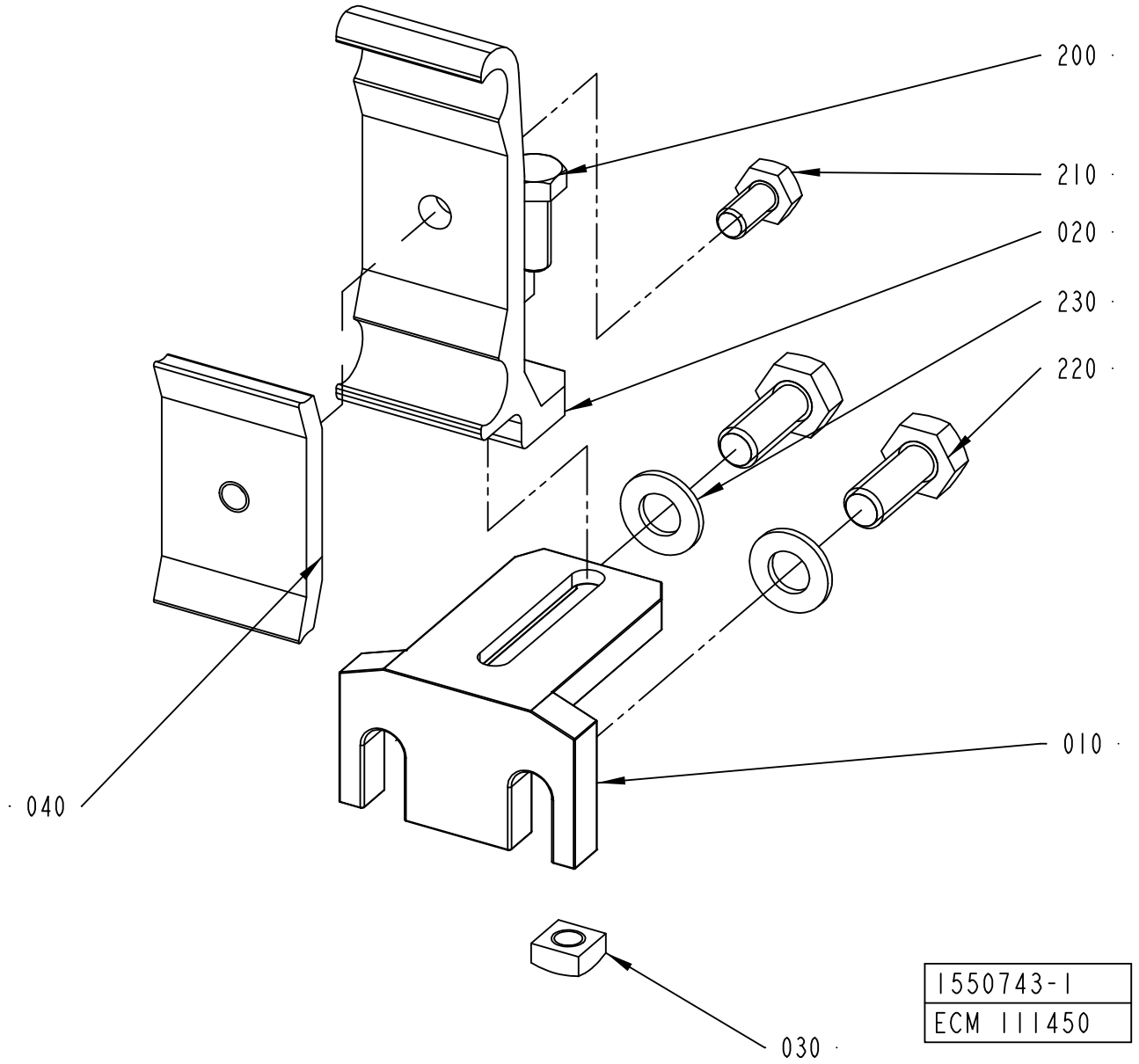

ECM: 129860 - 20031113
Group number: 1550743-0100
Assembly Drawing: 1550743-1_1_AB

Pos	Part No	UN	Qty	Description	Page No
-					
010	1550772-0000		1	HOLDER	
020	1550773-0000		1	RAIL HOLDER	
030	1359565-0000		1	NUT	
040	1366727-0000		1	CLAMP	
200	312105-0368		1	SCREW M6S ISO 4017 M6X16 A480	
210	312105-0366		1	SCREW M6S ISO 4017 M6X12 A480	
220	312105-0451		2	SCREW M6S ISO 4017 M8X20 A480	
230	315105-0165		2	WASHER BRB8,4X16RFR	

Pos	Part No	UN	Qty	Description	Page No

ANGLED RAIL HOLDER TPC21

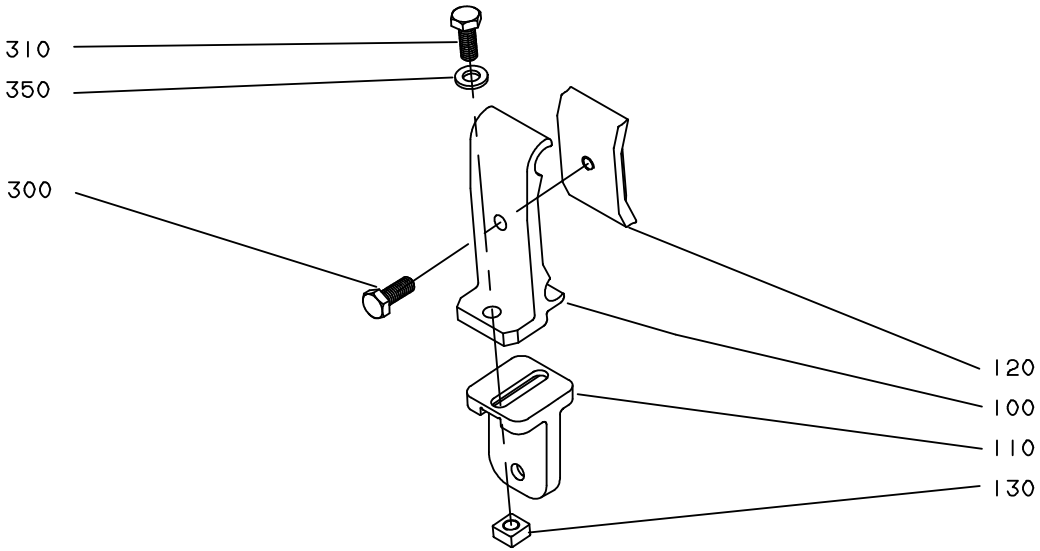

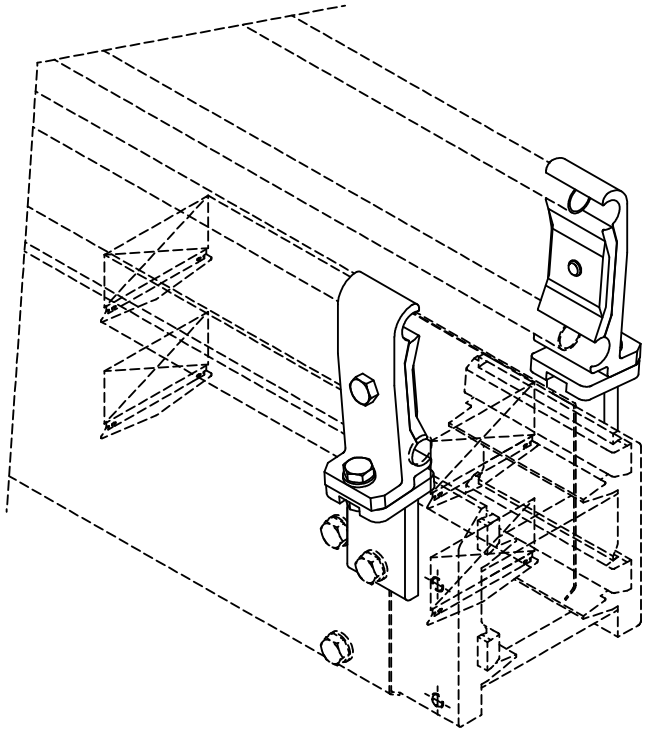

S-1366777-1
ECN 81455

ECM: 81687 - 20001204
Group number: 1366777-0101
Assembly Drawing: 1366777-1_1_AA

Pos	Part No	UN	Qty	Description	Page No
-					
100	1366726-0000		1	HOLDER	
110	1359085-0000		1	T-HOLDER	
120	1366727-0000		1	CLAMP	
130	1359565-0000		1	NUT	
300	312105-0366		1	SCREW M6S ISO 4017 M6X12 A480	
310	312105-0368		1	SCREW M6S ISO 4017 M6X16 A480	
350	315105-0153		1	WASHER BRB6,4X12RFR	

Pos	Part No	UN	Qty	Description	Page No

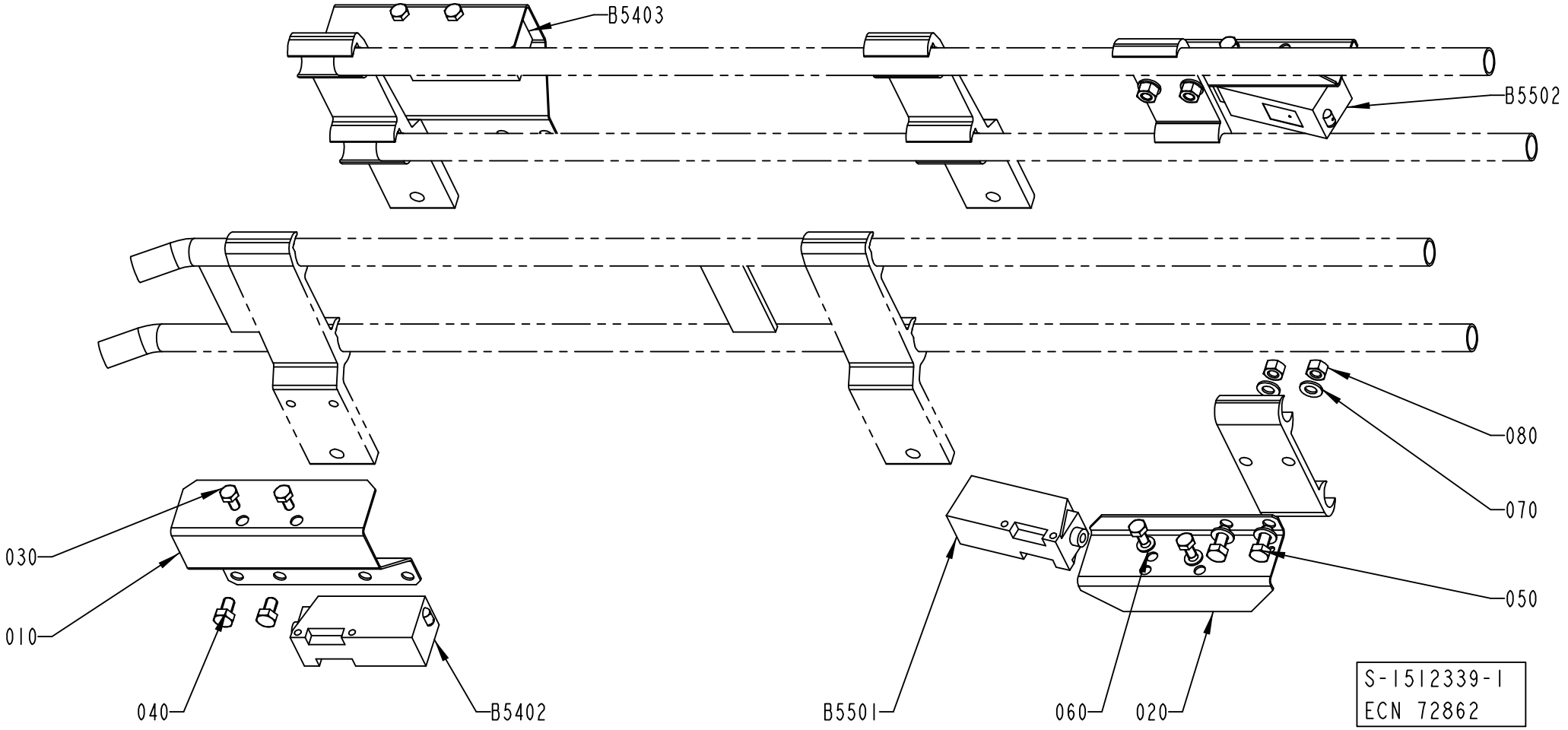
B5403
B5502
080
070
050
030
010
040
B5402
B5501
060
020
S-1512339-1
ECN 72862

ECM: 72862 - 20000310
Group number: 1512339-0100
Assembly Drawing: 1512339-1_1_AA

Pos	Part No	UN	Qty	Description	Page No
-					
010	1285010-0000		2	HOLDER	
020	1086889-0000		2	COVER	
025	1020637-0000		2	HOLDER	
030	312105-0287		8	SCREW M6S ISO4017 M4X8 A470	
040	312105-0323		4	SCREW M6S ISO 4017 M5X8 A480	
050	312105-0327		4	SCREW M6S ISO 4017 M5X12 A480	
060	315105-0136		4	WASHER BRB4,3XRFR	
070	315105-0146		8	WASHER BRB5,3X10RFR	
080	312605-0314		4	HEXAGON NUT, M6M M5 A280	
B5402	90232-0104		1	PH.CELL E3S-CT61-D-5M	
B5403	90232-0103		1	PH.CELL E3S-CT61-L-5M	
B5501	90232-0104		1	PH.CELL E3S-CT61-D-5M	
B5502	90232-0103		1	PH.CELL E3S-CT61-L-5M	

Pos	Part No	UN	Qty	Description	Page No

DROP CHUTE CRADLE

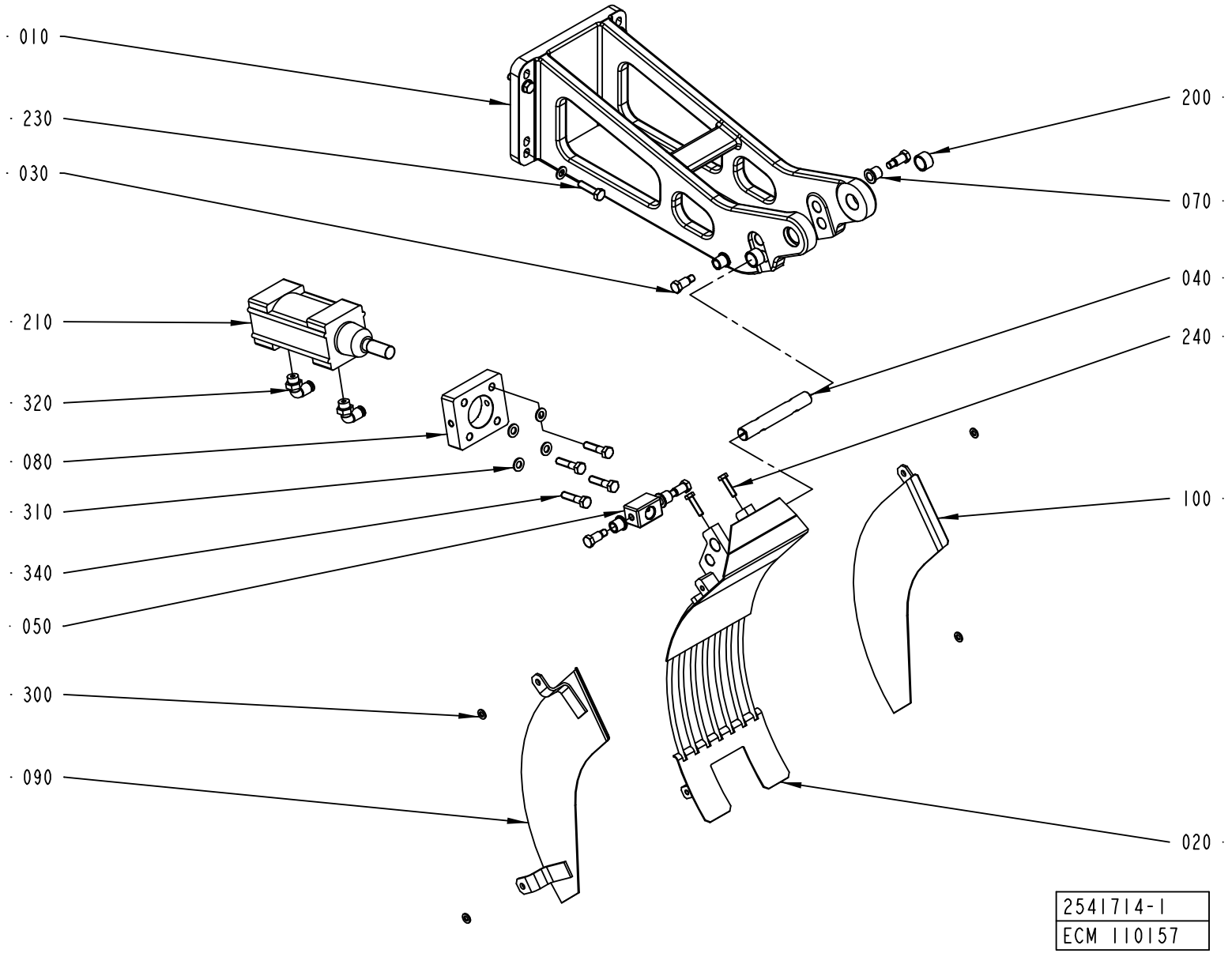

ECM: 181065 - 50001231
Group number: 2541714-0100
Assembly Drawing: 2541714-1_1_AA

Pos	Part No	UN	Qty	Description	Page No
TBA 1000B QC					
090	1285023-0000		1	SIDE PLATE	
100	1285022-0000		1	SIDE PLATE	
TBA 0200B QC, TBA 0330S QC, TBA 0250B QC					
090	2650807-0000		1	SIDE PLATE	
100	2650808-0000		1	SIDE PLATE	
300	315105-0153		4	WASHER BRB6,4X12RFR	
TBA 1000S, TBA 1000SQ, TBA 0200S, TBA 0500B NOQC, TBA 1000B NOQC, TBA 0200B NOQC, TBA 0330S NOQC, TBA 0250B NOQC					
090	1285023-0000		1	SIDE PLATE	
100	1285022-0000		1	SIDE PLATE	
300	315105-0153		4	WASHER BRB6,4X12RFR	
TBA 1500S					
020	1348920-0000		1	CRADLE	
300	315105-0153		4	WASHER BRB6,4X12RFR	
TBA 1890S QC, TBA 2000S QC					
020	2665204-0000		1	CRADLE	
090	2665205-0000		1	PLATE	
100	2665206-0000		1	PLATE	
TPA 1000SQ					
020	1348920-0000		1	CRADLE	
300	315105-0153		4	WASHER BRB6,4X12RFR	
Common Parts					
010	2540823-0000		1	BRACKET	
020	1484258-0000		1	CRADLE	
030	449190-0000		4	SHAFT	
040	1144579-0000		1	AXLE	
050	1144577-0000		1	BLOCK	
070	1478928-0000		4	BUSHING	
080	2594886-0000		1	PLATE	
090	1348854-0000		1	PLATE	
090	2619675-0000		1	PLATE	
090	2605993-0000		1	SIDE PLATE	
090	1517472-0000		1	SIDE PLATE	
100	1517473-0000		1	SIDE PLATE	
100	2605994-0000		1	SIDE PLATE	
100	2619674-0000		1	PLATE	
100	1349017-0000		1	PLATE	
200	321116-0234		2	BEAR. BUSH. WITHOUT FL, 16X20X12 MM	
210	90450-0504		1	DOUBLE ACTING, PROFILE, CYL 50-25	
230	312105-0455		4	SCREW M6S ISO 4017 M8X30 A480	
240	312105-0372		2	SCREW M6S ISO 4017 M6X25 A480	
310	315105-0165		8	WASHER BRB8,4X16RFR	
320	90458-2957		2	ELBOW PIPE JOINT, EXT.THREAD, D=6MM-G1/4	
340	312105-0457		4	SCREW M6S ISO 4014 M8X35 A480	

Machine Type | Group Description | Used-In | Group Number | Page No

This page is intentionally left blank.

ECM: 180384 - 50001231
Group number: 1517298-0200
Assembly Drawing:

Pos	Part No	UN	Qty	Description	Page No
TBA 0500B, TBA 1000S, TBA 1000SQ, TBA 1000B, TBA 0200B, TBA 0200S, TBA 0250B					
010	1517299-0200		1	INFEED CONVEYOR LONG	**5-199**
TBA 1500S, TPA 1000SQ					
020	1517300-0300		1	INFEED CONVEYOR SHORT	**5-203**
TBA 1890S, TBA 2000S					
030	2678710-0100		1	INFEED CONVEYOR SHORT	**5-205**

Pos	Part No	UN	Qty	Description	Page No

INFEED CONVEYOR LONG

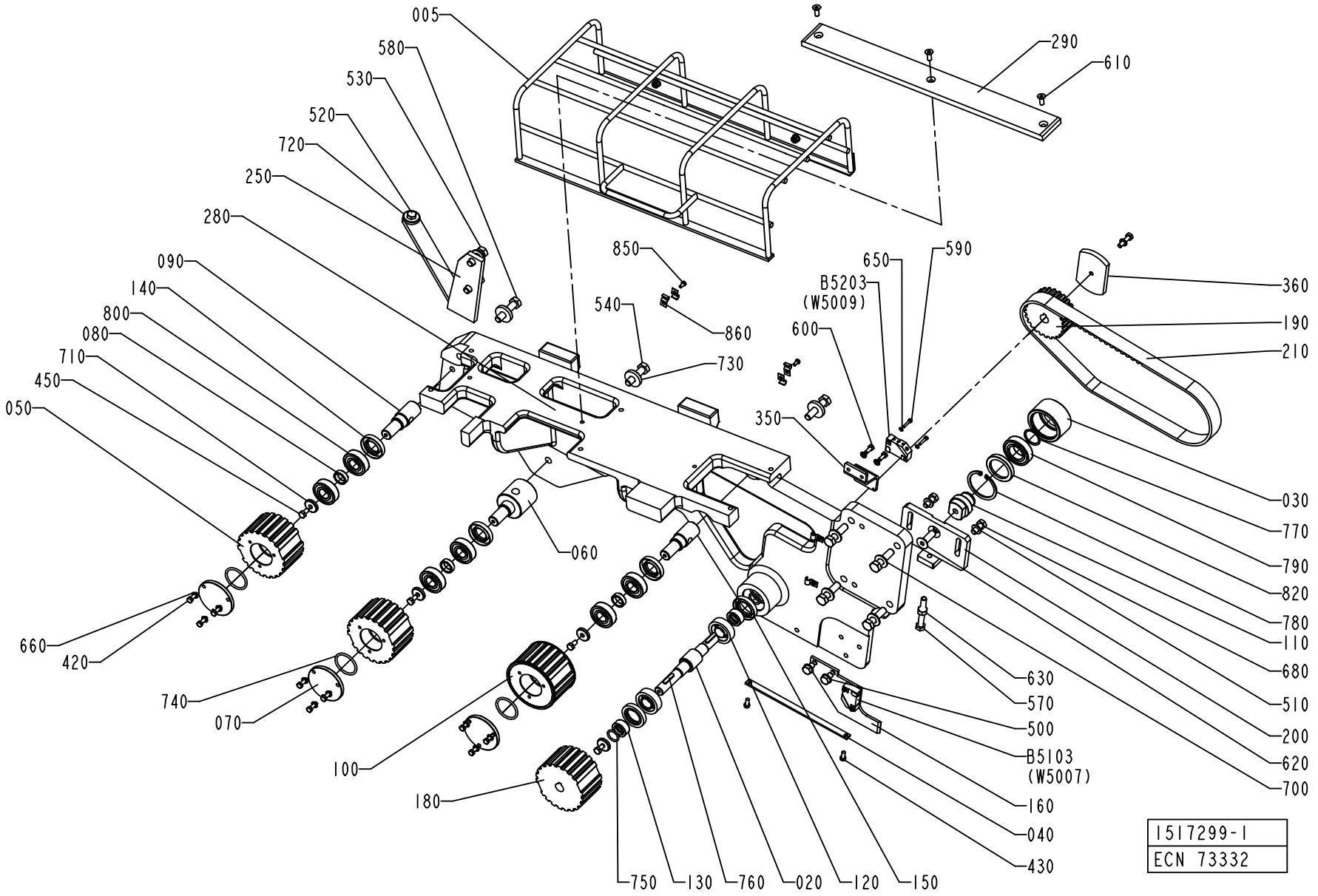

ECM: 141269 - 20031022
Group number: 1517299-0200
Assembly Drawing: 1517299-1_1_AA

Pos	Part No	UN	Qty	Description	Page No
-					
005	1144645-0200		1	PROTECTIVE COVER	**5-201**
020	1144470-0000		1	SHAFT	
030	1144581-0000		1	ROLLER	
040	1144593-0000		1	PLATE	
050	1348921-0000		2	TOOTHED PULLEY	
060	1144595-0000		1	ECCENTRIC SHAFT	
070	1144596-0000		3	PLUG	
080	1144597-0000		3	SPACER	
090	1484620-0000		2	SHAFT	
100	1348922-0000		1	TOOTHED PULLEY	
110	1144619-0000		1	SHAFT	
120	90214-0219		2	CYL.ROLLER BEARING, 17X40X12 MM	
130	1144625-0000		2	SPACER	
140	90091-0440		3	RADIAL SEAL 22X40X7 MM DUST LIP	
150	1498068-0000		2	SEAL RING	
160	1144760-0000		1	PLATE	
180	1144784-0000		1	TOOTHED PULLEY	
190	1144788-0000		1	TOOTHED PULLEY	
200	1144794-0000		1	SUPPORT	
210	1144841-0000		1	TIMING BELT	
250	2552445-0000		1	SUPPORT	
280	1347699-0000		1	PLATE	
290	1260941-0000		1	SLIDE	
350	1279688-0000		1	SUPPORT	
360	1347410-0000		1	ACTIVATOR	
420	312105-0329		9	SCREW M6S ISO 4017 M5X16 A480	
430	312105-0327		2	SCREW M6S ISO 4017 M5X12 A480	
450	312105-0366		4	SCREW M6S ISO 4017 M6X12 A480	
500	312105-0447		2	SCREW M6S ISO 4017 M8X12 A480	
510	312105-0451		2	SCREW M6S ISO 4017 M8X20 A480	
520	312105-0453		1	SCREW M6S ISO 4017 M8X25 A480	
530	312105-0495		2	SCREW M6S ISO 4017 M10X30 A480	
540	312109-0499		5	SCREW M6S ISO 4017 M10X40 A480	
570	312109-0463		1	SCREW M6S ISO 4017 M8X60 A480	
580	312109-0500		2	SCREW M6S ISO 4017 M10X45 A480	
590	312115-0228		4	SCREW ISO4762 M3X16 A4	
600	312125-0327		2	SCREW ISO 1207 M5X12 A4	
610	312151-0368		3	SCREW EN 10642 MF6S M6X16 10.9 EL.PL	
620	312155-0495		1	SCREW EN 10642 MF6S M10X30 A480	
630	312605-0318		1	HEXAGON NUT, M6M M8 A280	
650	315105-0124		4	WASHER BRB3,2X6RFR	
660	315105-0146		11	WASHER BRB5,3X10RFR	
680	315105-0165		4	WASHER BRB8,4X16RFR	
700	315105-0173		6	WASHER BRB10,5X22RFR	
710	315125-0153		4	WASHER TBRSB 6,4X22X4 A4	
720	315125-0165		1	WASHER TBRSB 8,4X26X5 A4	
730	315125-0173		3	WASHER TBRSB 10,5X28X6 A4	
740	315202-0221		3	O-RING 34,2X3 MM	
750	315202-0267		2	O-RING 16,3X2,4 MM	
760	315705-0202		2	PARALLEL KEY W ROUND ENDS 5X5X25MM	
770	315751-0119		1	RETAINING RING FOR SHAFT DIN 471 25 A2	
780	90141-0019		1	RETAINING RING FOR BORE DIN 472 50 A2	
790	321308-0205		1	BALL BEARING, 25X47X12MM	
800	321313-0103		6	BALL BEARING, 17X40X12MM	
820	90091-0297		1	RADIAL SEAL 35X47X7 MM DUST LIP	
850	312125-0287		4	SCREW ISO 1207 M4X8 A4	
860	90165-0057		6	PIPE CLIP FOR TUBE D=6 MM	
B5103	90044-0194		1	PROX.SW. IN5329/IN3002-BPKG	
B5203	90044-0194		1	PROX.SW. IN5329/IN3002-BPKG	

Machine Type	Group Description	Used-In	Group Number	Page No

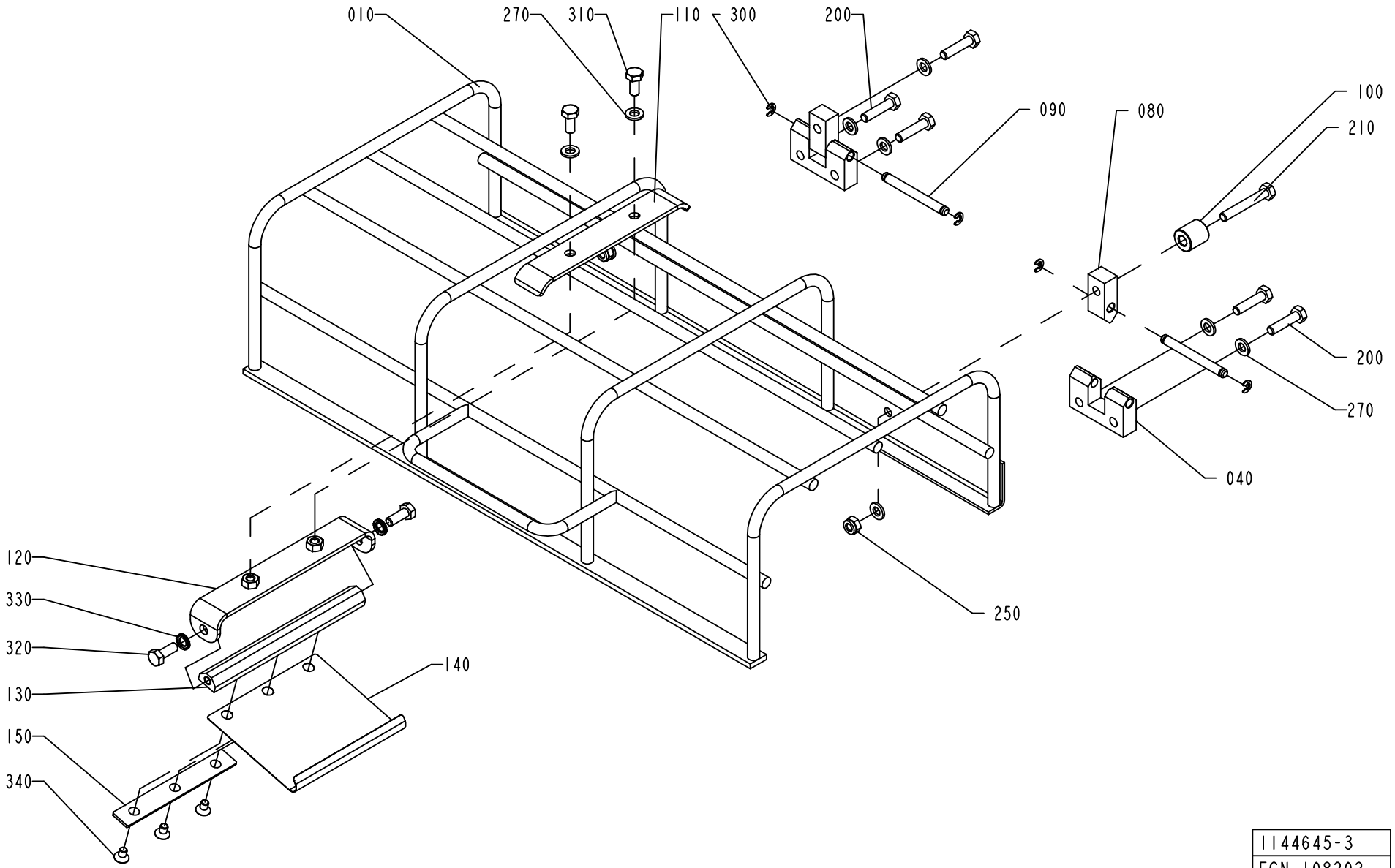

1144645-3
ECN 108202

ECM: 108864 - 20021110
Group number: 1144645-0200
Assembly Drawing: 1144645-3_1_AC

Pos	Part No	UN	Qty	Description	Page No
-					
010	1260894-0000		1	PROTECTION	
040	1144667-0000		2	HINGE	
080	1144668-0000		2	HINGE	
090	1144669-0000		2	PIN	
100	1360149-0000		1	SPACER	
110	1499476-0000		1	HOLDER	
120	2527792-0000		1	SUPPORT	
130	2527793-0000		1	SHAFT	
140	2530418-0000		1	SPRING	
150	2540612-0000		1	PLATE	
200	312105-0372		5	SCREW M6S ISO 4017 M6X25 A480	
210	312105-0378		1	SCREW M6S ISO 4014 M6X40 A480	
250	312812-0316		2	HEXAGON NUT, NY-LOCK M6 A480	
270	315105-0153		9	WASHER BRB6,4X12RFR	
300	315755-0106		4	RETAINING RING SHAFT DIN 6799 4 A2	
310	312105-0367		2	SCREW M6S ISO 4017 M6X14 A480	
320	312105-0368		2	SCREW M6S ISO 4017 M6X16 A480	
330	90062-0061		2	LOCK WASHER NORD-LOCK,6,5/10,8, H=2,6	
340	312155-0323		3	SCREW EN 10642 MF6S M5X8 A480	

Pos	Part No	UN	Qty	Description	Page No

INFEED CONVEYOR SHORT

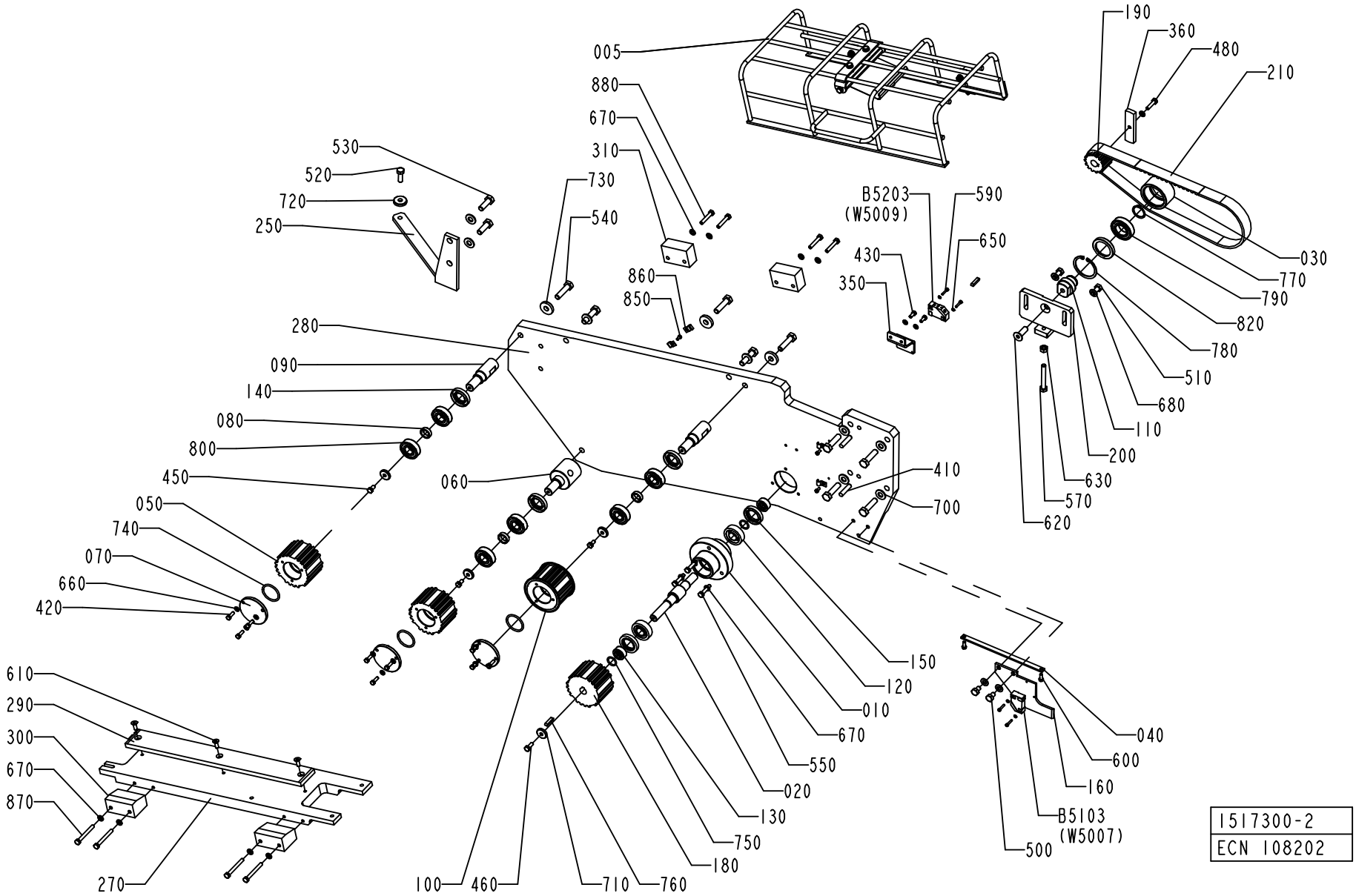

ECM: 141270 - 20031022
Group number: 1517300-0300
Assembly Drawing: 1517300-2_1_AA

Pos	Part No	UN	Qty	Description	Page No
-					
005	1144645-0200		1	PROTECTIVE COVER	**5-201**
010	1144468-0000		1	BEARING HOUSING	
020	1144470-0000		1	SHAFT	
030	1144581-0000		1	ROLLER	
040	1144593-0000		1	PLATE	
050	2547015-0000		2	TOOTHED PULLEY	
060	1144595-0000		1	ECCENTRIC SHAFT	
070	1144596-0000		3	PLUG	
080	1144597-0000		3	SPACER	
090	1144598-0000		2	SHAFT	
100	2547017-0000		1	TOOTHED PULLEY	
110	1144619-0000		1	SHAFT	
120	90214-0219		2	CYL.ROLLER BEARING, 17X40X12 MM	
130	1144625-0000		2	SPACER	
140	90091-0404		3	RADIAL SEAL 22X40X7 MM DUST LIP	
150	90091-0406		2	RADIAL SEAL 25X40X7 MM DUST LIP	
160	1144760-0000		1	PLATE	
180	927859-0000		1	TOOTHED PULLY	
190	1282681-0000		1	TOOTHED PULLEY	
200	1144794-0000		1	SUPPORT	
210	1144841-0000		1	TIMING BELT	
250	2572563-0000		1	SUPPORT	
270	1348957-0000		1	BRACKET	
280	2547187-0000		1	PLATE	
290	1348963-0000		1	SLIDE	
300	1285956-0000		2	BLOCK	
310	1285955-0000		2	PLATE	
350	1279688-0000		1	SUPPORT	
360	1279689-0000		1	ACTIVATOR	
410	311103-0407		2	PARALLEL PIN ISO 2338 8M6X35 A1	
420	312105-0329		9	SCREW M6S ISO 4017 M5X16 A480	
430	312105-0327		2	SCREW M6S ISO 4017 M5X12 A480	
450	312105-0366		3	SCREW M6S ISO 4017 M6X12 A480	
460	312105-0368		1	SCREW M6S ISO 4017 M6X16 A480	
480	312105-0372		1	SCREW M6S ISO 4017 M6X25 A480	
500	312105-0447		2	SCREW M6S ISO 4017 M8X12 A480	
510	312105-0451		2	SCREW M6S ISO 4017 M8X20 A480	
520	312105-0453		1	SCREW M6S ISO 4017 M8X25 A480	
530	312105-0495		2	SCREW M6S ISO 4017 M10X30 A480	
540	312109-0499		9	SCREW M6S ISO 4017 M10X40 A480	
550	312109-0374		3	SCREW M6S ISO 4017 M6X30 A480	
570	312109-0463		1	SCREW M6S ISO 4017 M8X60 A480	
590	312115-0228		4	SCREW ISO4762 M3X16 A4	
600	312125-0327		2	SCREW ISO 1207 M5X12 A4	
610	312151-0368		3	SCREW EN 10642 MF6S M6X16 10.9 EL.PL	
620	312155-0495		1	SCREW EN 10642 MF6S M10X30 A480	
630	312605-0318		1	HEXAGON NUT, M6M M8 A280	
650	315105-0124		4	WASHER BRB3,2X6RFR	
660	315105-0146		11	WASHER BRB5,3X10RFR	
670	315105-0153		12	WASHER BRB6,4X12RFR	
680	315105-0165		4	WASHER BRB8,4X16RFR	
700	315105-0173		8	WASHER BRB10,5X22RFR	
710	315125-0153		4	WASHER TBRSB 6,4X22X4 A4	
720	315125-0165		1	WASHER TBRSB 8,4X26X5 A4	
730	315125-0173		3	WASHER TBRSB 10,5X28X6 A4	
740	315202-0221		3	O-RING 34,2X3 MM	
750	315202-0267		2	O-RING 16,3X2,4 MM	
760	315705-0202		2	PARALLEL KEY W ROUND ENDS 5X5X25MM	
770	315751-0119		1	RETAINING RING FOR SHAFT DIN 471 25 A2	
780	90141-0019		1	RETAINING RING FOR BORE DIN 472 50 A2	
790	321308-0205		1	BALL BEARING, 25X47X12MM	
800	321313-0103		6	BALL BEARING, 17X40X12MM	
820	90091-0297		1	RADIAL SEAL 35X47X7 MM DUST LIP	
850	312125-0287		4	SCREW ISO 1207 M4X8 A4	
860	90165-0057		6	PIPE CLIP FOR TUBE D=6 MM	
870	312105-0381		4	SCREW M6S ISO 4014 M6X55 A480	
880	312105-0376		4	SCREW M6S ISO 4014 M6X35 A480	
B5103	90044-0194		1	PROX.SW. IN5329/IN3002-BPKG	
B5203	90044-0194		1	PROX.SW. IN5329/IN3002-BPKG	

Machine Type | Group Description | Used-In | Group Number | Page No

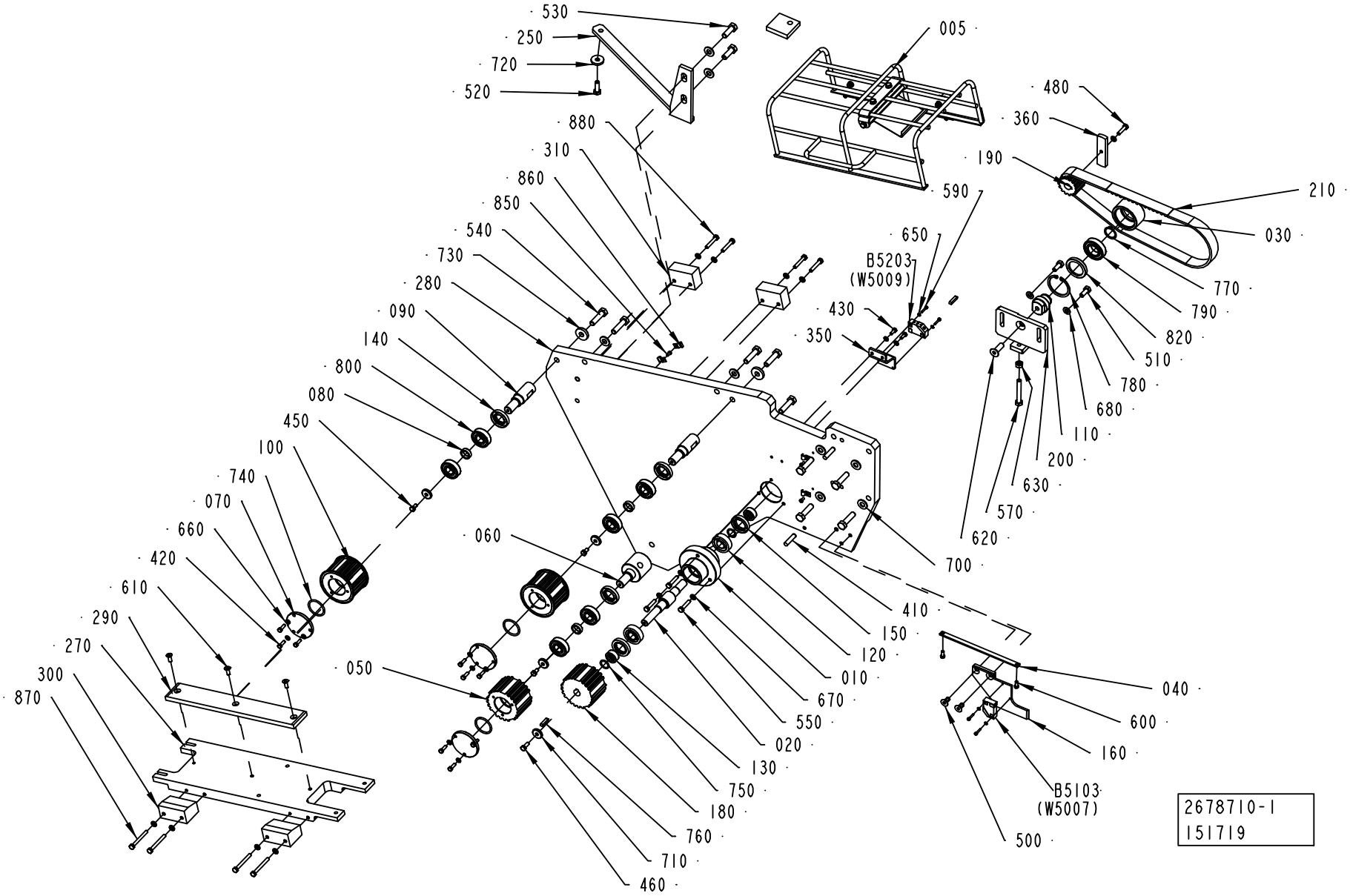
530
250
720
520
880
310
860
850
540
730
280
090
140
800
080
450
100
740
070
660
420
610
290
270
300
870
005
480
360
190
590
650
B5203
(W5009)
430
350
210
030
770
790
820
510
780
680
110
200
630
570
620
700
410
150
120
010
670
550
020
130
750
180
760
710
460
060
050
040
600
160
B5103
(W5007)
500
2678710-1
151719

ECM: 174309 - 50001231
Group number: 2678710-0100
Assembly Drawing: 2678710-1_1_AA

Pos	Part No	UN	Qty	Description	Page No
A3/FLEX					
250	2678708-0000		1	SUPPORT	
Common Parts					
005	2678709-0100		1	PROTECTIVE COVER	**5-207**
010	1144468-0000		1	BEARING HOUSING	
020	1144470-0000		1	SHAFT	
030	1144581-0000		1	ROLLER	
040	1144593-0000		1	PLATE	
050	2547015-0000		1	TOOTHED PULLEY	
060	1144595-0000		1	ECCENTRIC SHAFT	
070	1144596-0000		3	PLUG	
080	1144597-0000		3	SPACER	
090	1144598-0000		2	SHAFT	
100	2547017-0000		2	TOOTHED PULLEY	
110	1144619-0000		1	SHAFT	
120	90214-0219		2	CYL.ROLLER BEARING, 17X40X12 MM	
130	1144625-0000		2	SPACER	
140	90091-0404		3	RADIAL SEAL 22X40X7 MM DUST LIP	
150	90091-0406		2	RADIAL SEAL 25X40X7 MM DUST LIP	
160	2610764-0000		1	PLATE	
180	927859-0000		1	TOOTHED PULLY	
190	1282681-0000		1	TOOTHED PULLEY	
200	1144794-0000		1	SUPPORT	
210	1144841-0000		1	TIMING BELT	
270	2665197-0000		1	BRACKET	
280	2678753-0000		1	PLATE	
290	2665199-0000		1	SLIDE	
300	1285956-0000		2	BLOCK	
310	1285955-0000		2	PLATE	
350	1279688-0000		1	SUPPORT	
360	1279689-0000		1	ACTIVATOR	
410	311103-0407		2	PARALLEL PIN ISO 2338 8M6X35 A1	
420	312105-0329		9	SCREW M6S ISO 4017 M5X16 A480	
430	312105-0327		2	SCREW M6S ISO 4017 M5X12 A480	
450	312105-0366		3	SCREW M6S ISO 4017 M6X12 A480	
460	312105-0368		1	SCREW M6S ISO 4017 M6X16 A480	
480	312105-0372		1	SCREW M6S ISO 4017 M6X25 A480	
500	312155-0449		2	SCREW EN 10642 MF6S M8X16 A480	
510	312105-0451		2	SCREW M6S ISO 4017 M8X20 A480	
520	312105-0453		1	SCREW M6S ISO 4017 M8X25 A480	
530	312105-0495		2	SCREW M6S ISO 4017 M10X30 A480	
540	312109-0499		9	SCREW M6S ISO 4017 M10X40 A480	
550	312109-0374		3	SCREW M6S ISO 4017 M6X30 A480	
570	312109-0463		1	SCREW M6S ISO 4017 M8X60 A480	
590	312115-0228		4	SCREW ISO4762 M3X16 A4	
600	312125-0327		2	SCREW ISO 1207 M5X12 A4	
610	312151-0368		3	SCREW EN 10642 MF6S M6X16 10.9 EL.PL	
620	312155-0495		1	SCREW EN 10642 MF6S M10X30 A480	
630	312605-0318		1	HEXAGON NUT, M6M M8 A280	
650	315105-0124		4	WASHER BRB3,2X6RFR	
660	315105-0146		11	WASHER BRB5,3X10RFR	
670	315105-0153		12	WASHER BRB6,4X12RFR	
680	315105-0165		2	WASHER BRB8,4X16RFR	
700	315105-0173		8	WASHER BRB10,5X22RFR	
710	315125-0153		4	WASHER TBRSB 6,4X22X4 A4	
720	315125-0165		1	WASHER TBRSB 8,4X26X5 A4	
730	315125-0173		3	WASHER TBRSB 10,5X28X6 A4	
740	315202-0221		3	O-RING 34,2X3 MM	
750	315202-0267		2	O-RING 16,3X2,4 MM	
760	315705-0202		2	PARALLEL KEY W ROUND ENDS 5X5X25MM	
770	315751-0119		1	RETAINING RING FOR SHAFT DIN 471 25 A2	
780	90141-0019		1	RETAINING RING FOR BORE DIN 472 50 A2	
790	321308-0205		1	BALL BEARING, 25X47X12MM	
800	321313-0103		6	BALL BEARING, 17X40X12MM	
820	90091-0297		1	RADIAL SEAL 35X47X7 MM DUST LIP	
850	312125-0287		4	SCREW ISO 1207 M4X8 A4	
860	90165-0057		6	PIPE CLIP FOR TUBE D=6 MM	
870	312105-0381		4	SCREW M6S ISO 4014 M6X55 A480	
880	312105-0376		4	SCREW M6S ISO 4014 M6X35 A480	
B5103	90044-0194		1	PROX.SW. IN5329/IN3002-BPKG	
B5203	90044-0194		1	PROX.SW. IN5329/IN3002-BPKG	

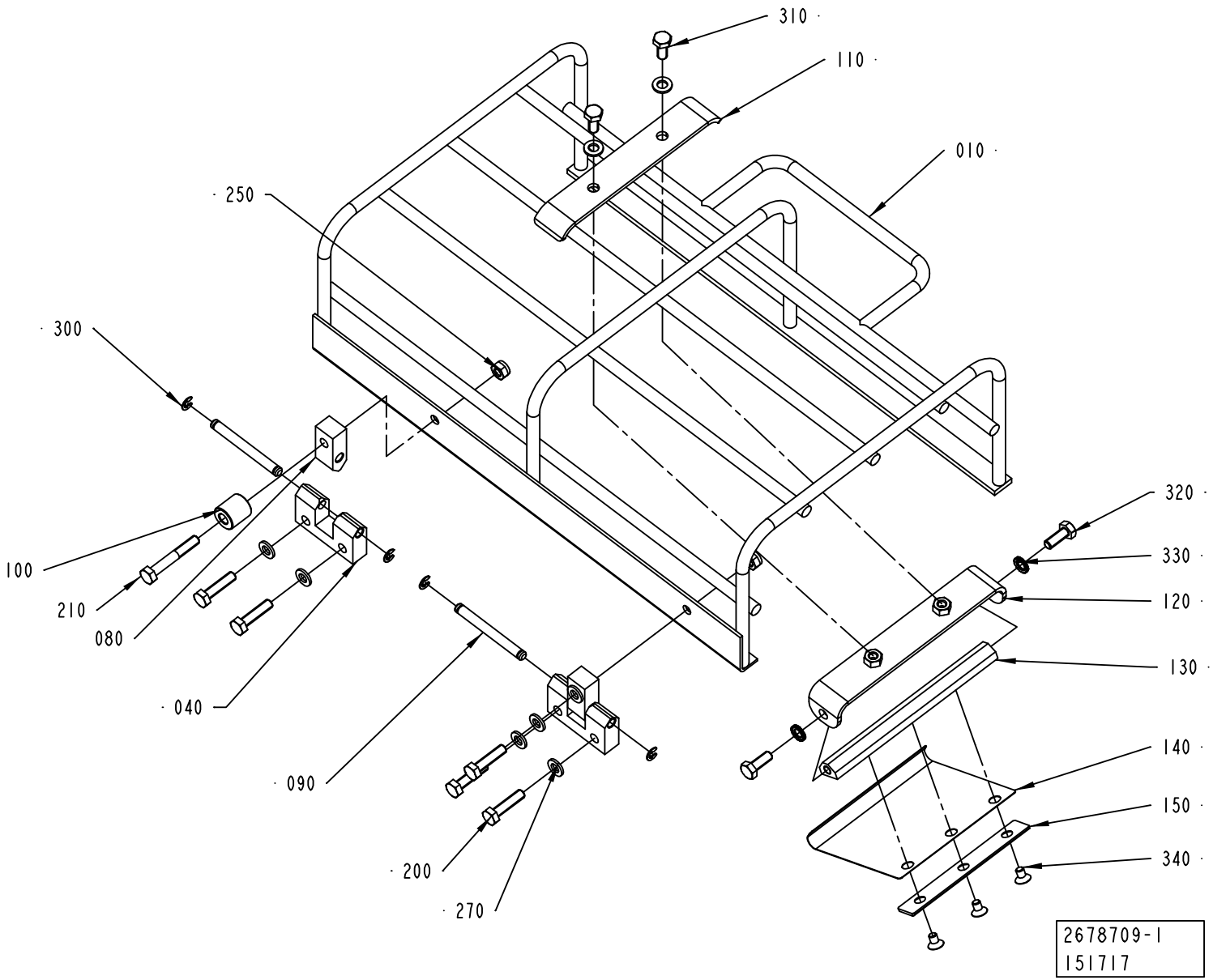
310
110
010
250
300
320
330
120
130
100
210
080
040
140
150
090
340
200
270
2678709-1
151717

ECM: 174308 - 50001231
Group number: 2678709-0100
Assembly Drawing: 2678709-1_1_AA

Pos	Part No	UN	Qty	Description	Page No
-					
010	2665198-0000		1	PROTECTION	
040	1144667-0000		2	HINGE	
080	1144668-0000		2	HINGE	
090	1144669-0000		2	PIN	
100	1360149-0000		1	SPACER	
110	1499476-0000		1	HOLDER	
120	2527792-0000		1	SUPPORT	
130	2527793-0000		1	SHAFT	
140	2530418-0000		1	SPRING	
150	2540612-0000		1	PLATE	
200	312105-0372		5	SCREW M6S ISO 4017 M6X25 A480	
210	312105-0378		1	SCREW M6S ISO 4014 M6X40 A480	
250	312812-0316		2	HEXAGON NUT, NY-LOCK M6 A480	
270	315105-0153		9	WASHER BRB6,4X12RFR	
300	315755-0106		4	RETAINING RING SHAFT DIN 6799 4 A2	
310	312105-0367		2	SCREW M6S ISO 4017 M6X14 A480	
320	312105-0368		2	SCREW M6S ISO 4017 M6X16 A480	
330	90062-0061		2	LOCK WASHER NORD-LOCK,6,5/10,8, H=2,6	
340	312155-0323		3	SCREW EN 10642 MF6S M5X8 A480	

Pos	Part No	UN	Qty	Description	Page No

MOTOR UNIT

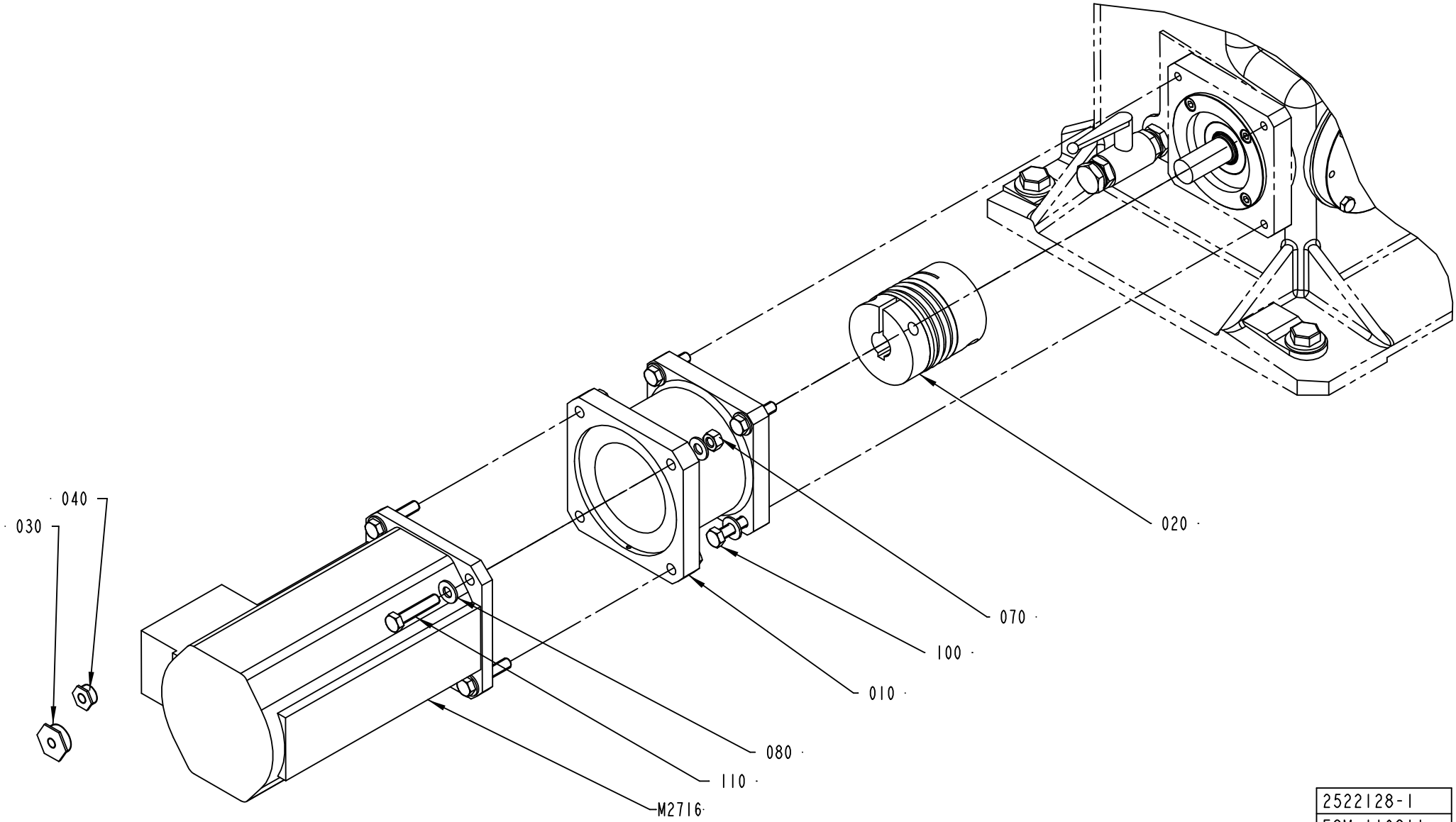

2522128-1
ECM 116811

ECM: 118694 - 20030403
Group number: 2522128-0100
Assembly Drawing: 2522128-1_1_AA

Pos	Part No	UN	Qty	Description	Page No
-					
010	1346882-0000		1	FLANGE	
020	90459-1566		1	BELLOW COUPLING, 24X24 MM	
030	2543473-0000		1	PLUG	
040	2543474-0000		1	PLUG	
070	312605-0320		4	HEXAGON NUT, M6M M10 A280	
080	315105-0173		12	WASHER BRB10,5X22RFR	
100	312109-0499		4	SCREW M6S ISO 4017 M10X40 A480	
110	312109-0501		4	SCREW M6S ISO 4017 M10X50 A480	
M2716	90458-0761		1	SERVO MOTOR EP 165-090-62L3B-X-C33	

Pos	Part No	UN	Qty	Description	Page No

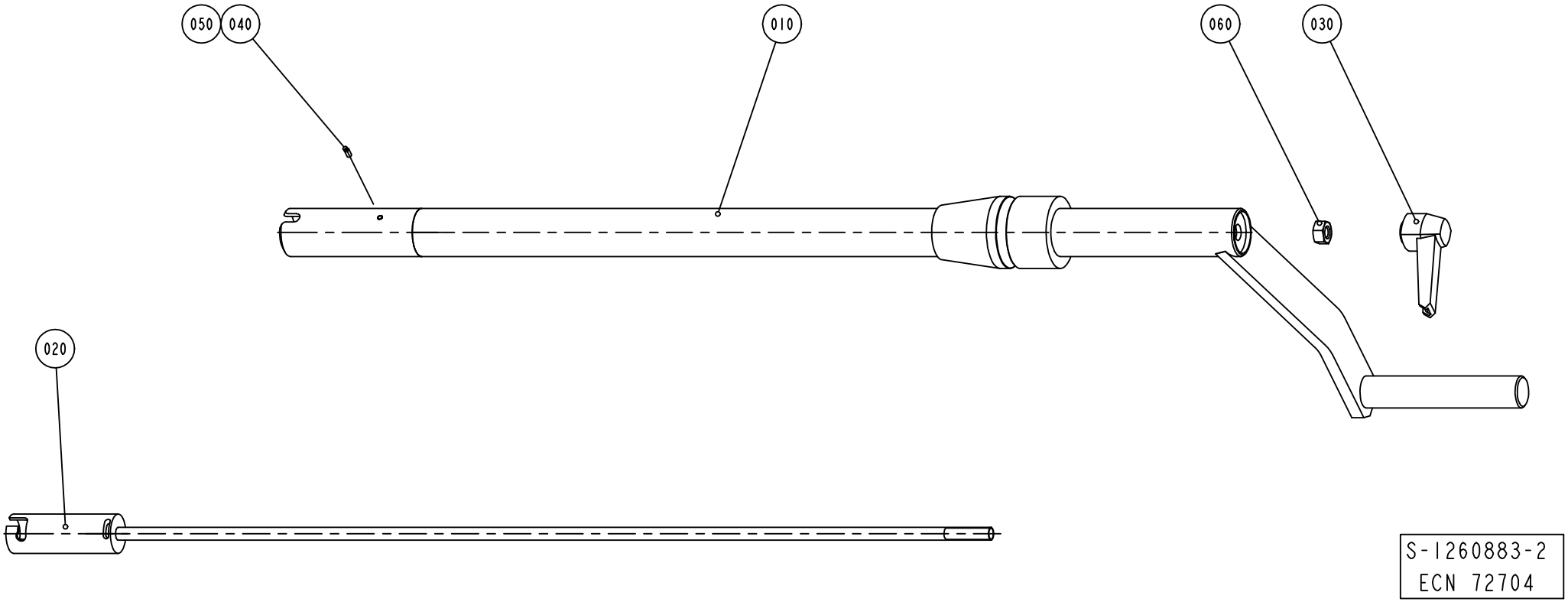
050
040
010
060
030
020
S-1260883-2
ECN 72704

ECM: 72704 - 19991007
Group number: 1260883-0200
Assembly Drawing: 1260883-2_1_AA

Pos	Part No	UN	Qty	Description	Page No
-					
010	1260712-0000		1	CRANK	
020	1140082-0000		1	LOCK SHAFT	
030	90117-0030		1	LOCKING HANDLE, M8/F	
040	90157-0016		1	LOCKING FLUID LOCTITE 242 50 ML	
050	312318-0220		1	SCREW ISO4029 M3X6 A4	
060	312605-0318		1	HEXAGON NUT, M6M M8 A280	

Pos	Part No	UN	Qty	Description	Page No

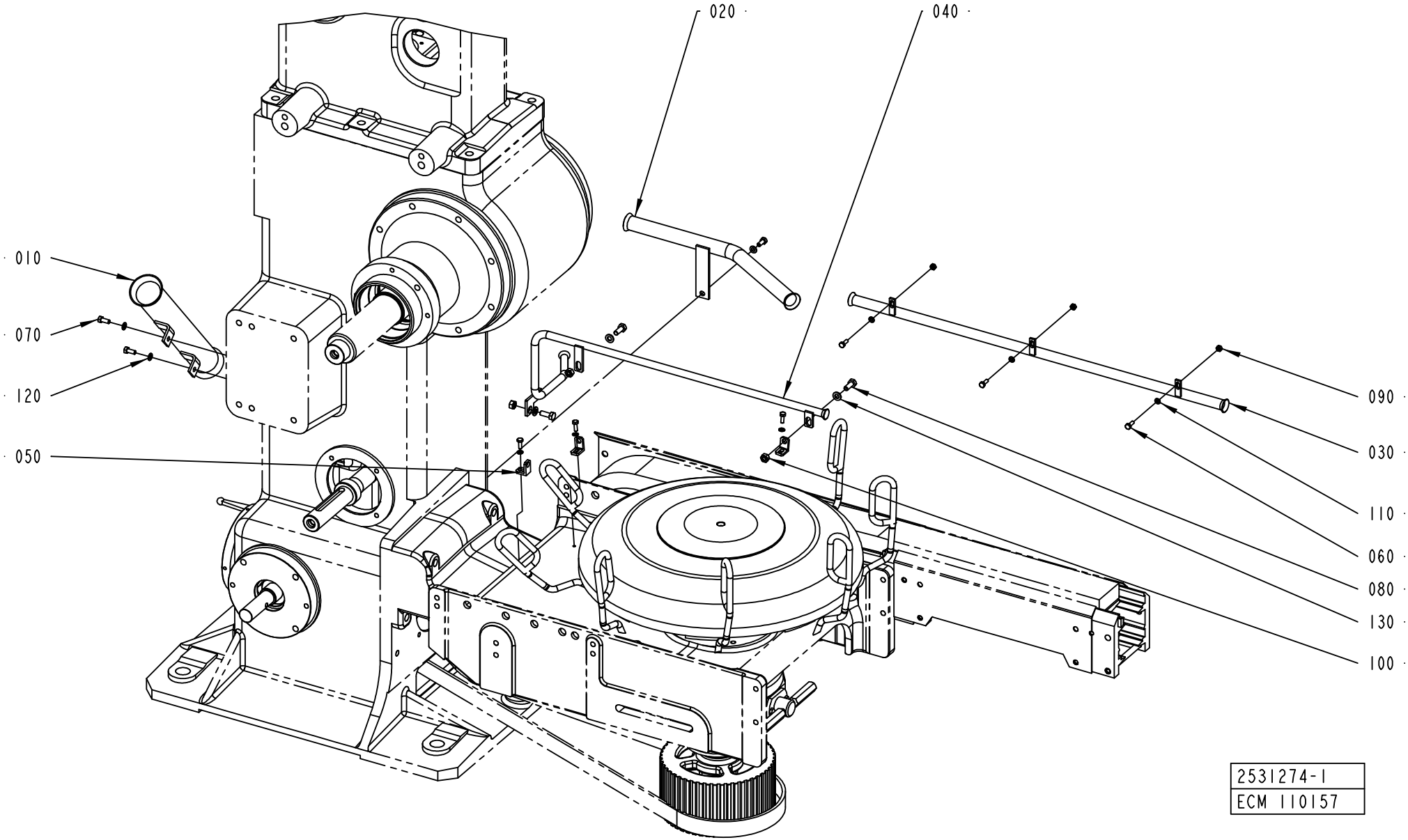
020
040
010
070
120
050
090
030
110
060
080
130
100
2531274-1
ECM 110157

ECM: 168552 - 20040428
Group number: 2531274-0100
Assembly Drawing: 2531274-1_1_AA

This list covers pages from 5-212 to 5-215

Pos	Part No	UN	Qty	Description	Page No
TBA 1000SQ, TPA 1000SQ (See drawing on pages: 5-212, 5-214)					
040	2531277-0000		1	PIPE	
060	312105-0291		7	SCREW M6S ISO 4017 M4X12 A470	
110	315105-0136		7	WASHER BRB4,3XRFR	
140	312105-0449		2	SCREW M6S ISO 4017 M8X16 A480	
150	315105-0165		2	WASHER BRB8,4X16RFR	
160	2553227-0000		1	PIPE	
170	2633441-0000		1	BRACKET	
Common Parts					
010	1279680-0000		1	PIPE	
020	2633439-0000		1	PIPE	
030	2633440-0000		1	PIPE	
040	2531278-0000		1	PIPE	
050	2531276-0000		3	BRACKET	
060	312105-0291		5	SCREW M6S ISO 4017 M4X12 A470	
070	312105-0327		3	SCREW M6S ISO 4017 M5X12 A480	
080	312105-0368		3	SCREW M6S ISO 4017 M6X16 A480	
090	312605-0312		2	HEXAGON NUT, M6M M4 A280	
100	312605-0316		3	HEXAGON NUT, M6M M6 A280	
110	315105-0136		5	WASHER BRB4,3XRFR	
120	315105-0146		3	WASHER BRB5,3X10RFR	
130	315105-0153		3	WASHER BRB6,4X12RFR	

Pos	Part No	UN	Qty	Description	Page No

Machine Type	Group Description	Used-In	Group Number	Page No

ELECTRICAL CONNECTION

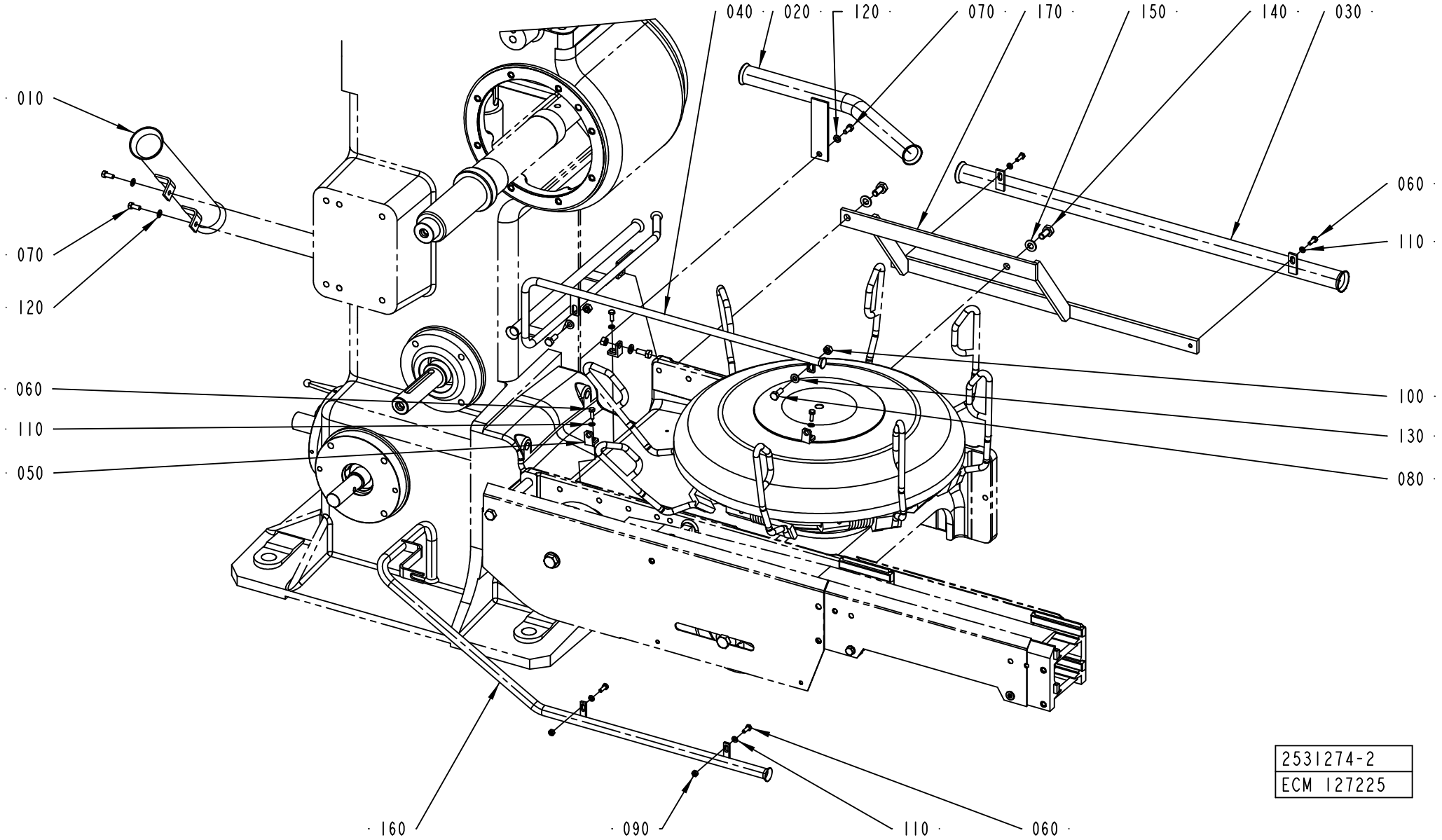

ECM: 168552 - 20040428
Group number: 2531274-0100
Assembly Drawing: 2531274-2_1_AB

This list covers pages from 5-212 to 5-215

Pos	Part No	UN	Qty	Description	Page No
TBA 1000SQ, TPA 1000SQ (See drawing on pages: 5-212, 5-214)					
040	2531277-0000		1	PIPE	
060	312105-0291		7	SCREW M6S ISO 4017 M4X12 A470	
110	315105-0136		7	WASHER BRB4,3XRFR	
140	312105-0449		2	SCREW M6S ISO 4017 M8X16 A480	
150	315105-0165		2	WASHER BRB8,4X16RFR	
160	2553227-0000		1	PIPE	
170	2633441-0000		1	BRACKET	
Common Parts					
010	1279680-0000		1	PIPE	
020	2633439-0000		1	PIPE	
030	2633440-0000		1	PIPE	
040	2531278-0000		1	PIPE	
050	2531276-0000		3	BRACKET	
060	312105-0291		5	SCREW M6S ISO 4017 M4X12 A470	
070	312105-0327		3	SCREW M6S ISO 4017 M5X12 A480	
080	312105-0368		3	SCREW M6S ISO 4017 M6X16 A480	
090	312605-0312		2	HEXAGON NUT, M6M M4 A280	
100	312605-0316		3	HEXAGON NUT, M6M M6 A280	
110	315105-0136		5	WASHER BRB4,3XRFR	
120	315105-0146		3	WASHER BRB5,3X10RFR	
130	315105-0153		3	WASHER BRB6,4X12RFR	

Pos	Part No	UN	Qty	Description	Page No

CRANK GUARD

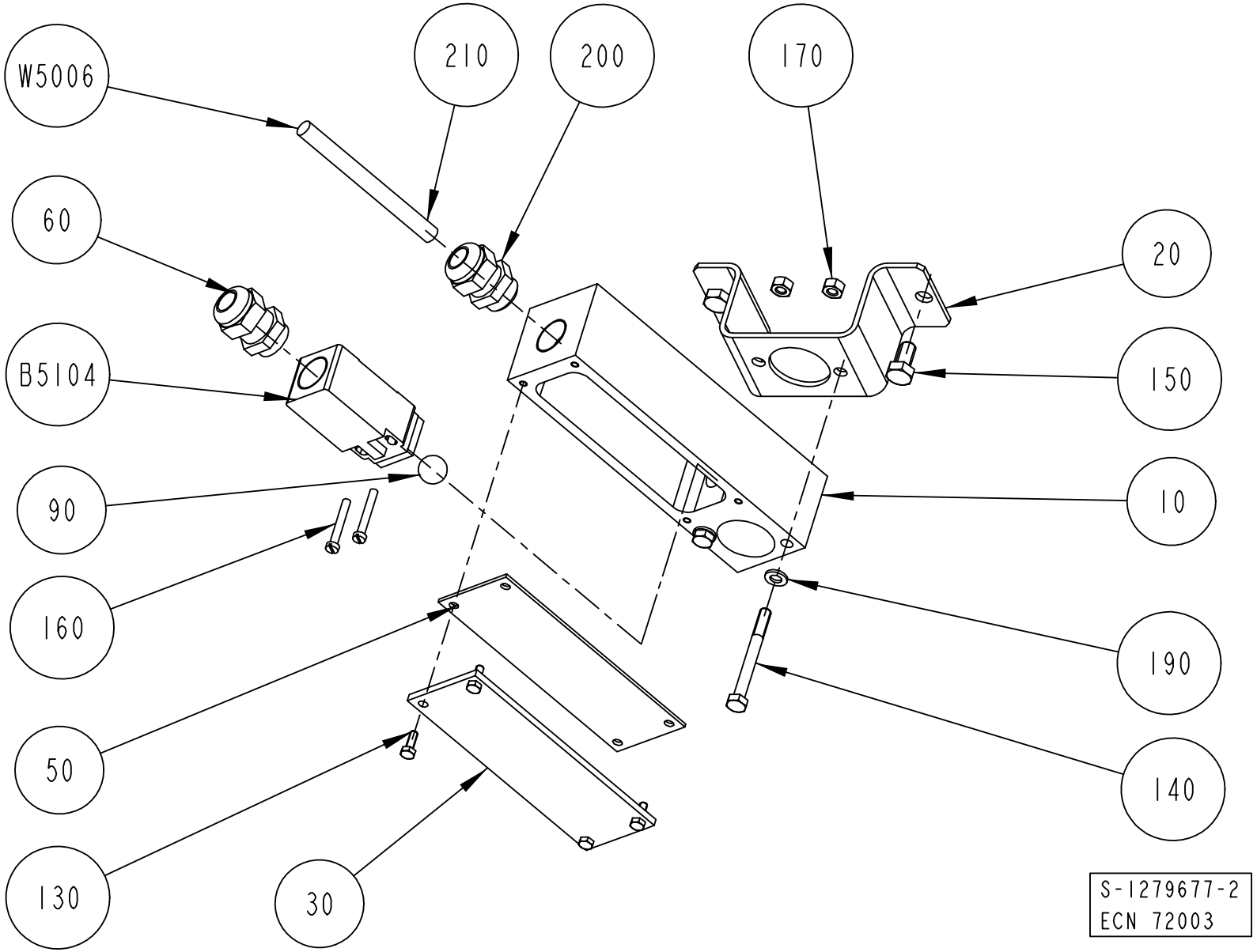
W5006
210
200
170
60
20
B5104
150
90
10
160
190
50
140
130
30
S-1279677-2
ECN 72003

ECM: 72003 - 19981216
Group number: 1279677-0100
Assembly Drawing: 1279677-2_1_AB

Pos	Part No	UN	Qty	Description	Page No
-					
010	1346307-0000		1	HOLDER	
020	1348990-0000		1	SUPPORT	
030	1348663-0000		1	PLATE	
050	1348635-0000		1	RUBBER SEAL	
060	1349020-0000		1	GLAND FITTING	
090	90090-0016		1	BALL, D=15 MM	
130	312105-0291		4	SCREW M6S ISO 4017 M4X12 A470	
140	312105-0382		2	SCREW M6S ISO 4014 M6X60 A480	
150	312105-0449		2	SCREW M6S ISO 4017 M8X16 A480	
160	312125-0299		2	SCREW ISO 1207 M4X30 A4	
170	312605-0316		2	HEXAGON NUT, M6M M6 A280	
190	315105-0153		2	WASHER BRB6,4X12RFR	
200	352103-0108		1	CABLE GLAND, ST 13,5 , PR20,4/PG13,5	
210	353001-0103		4	END SLEEVE 0,75 MM2	
B 5104	1144653-0000		1	SWITCH	
W 5006	351150-0405	MM	5000	CABLE OLFLEX 5X0,75 MM2 LIGHT/GREY	

Pos	Part No	UN	Qty	Description	Page No

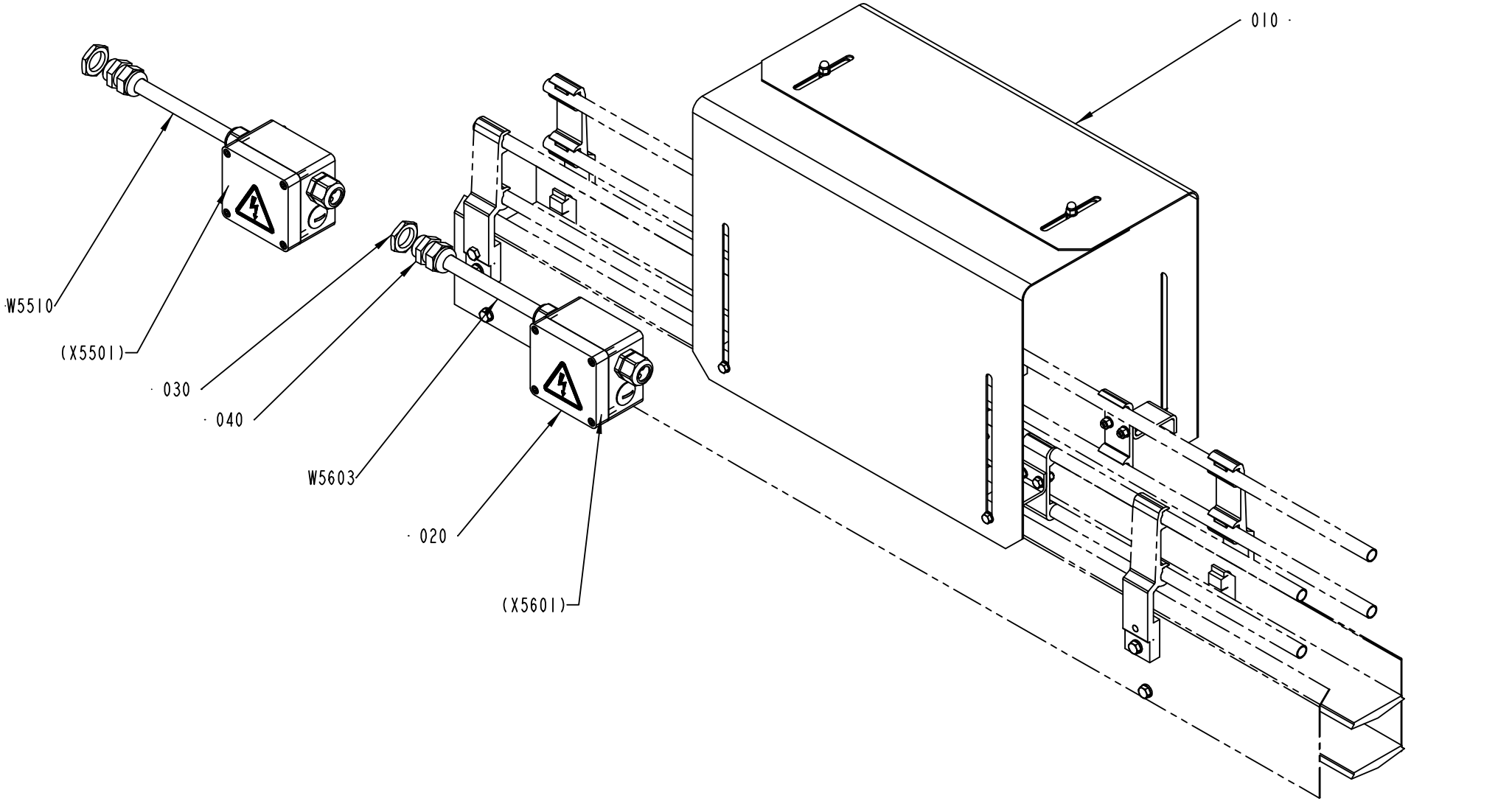
010
W5510
(X5501)
030
040
W5603
020
(X5601)
2579995-1
ECM 116811

ECM: 119512 - 20030403
Group number: 2579995-0100
Assembly Drawing: 2579995-1_1_AA

Pos	Part No	UN	Qty	Description	Page No
-					
010	1484196-0100		1	PACK COUNTER	**5-221**
020	1484197-0100		2	CONNECTION BOX	**5-223**
030	90099-0118		2	NUT, PR 20,4 (PG13,5)	
040	352103-0108		2	CABLE GLAND, ST 13,5 , PR20,4/PG13,5	
W5510	351150-0405	M	10	CABLE OLFLEX 5X0,75 MM2 LIGHT/GREY	
W5603	351150-0405	M	100	CABLE OLFLEX 5X0,75 MM2 LIGHT/GREY	

Pos	Part No	UN	Qty	Description	Page No

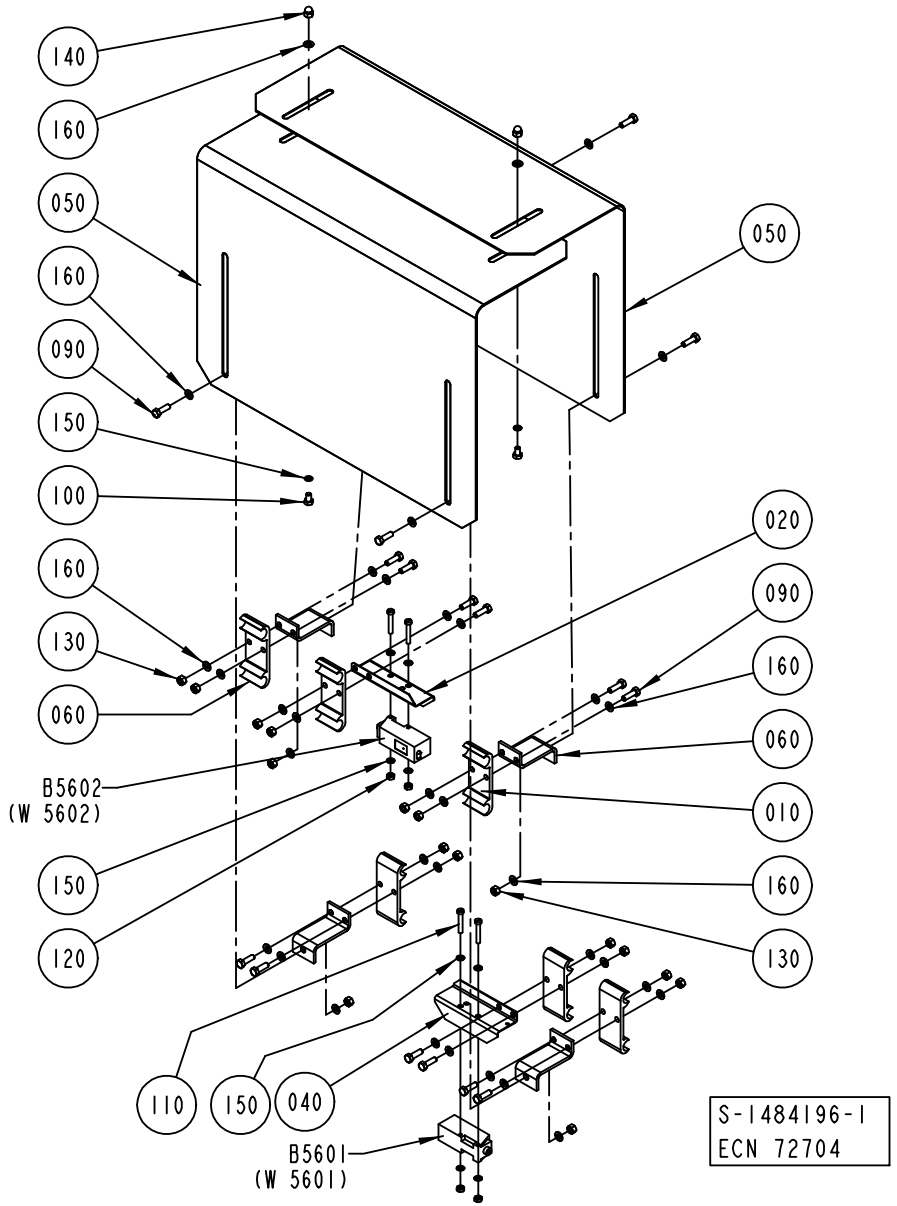
140
160
050
160
090
150
100
160
130
060
B5602
(W 5602)
150
120
110
150
040
B5601
(W 5601)
050
020
090
160
060
010
160
130
S-1484196-1
ECN 72704

ECM: 72704 - 19991007
Group number: 1484196-0100
Assembly Drawing: 1484196-1_1_AA

Pos	Part No	UN	Qty	Description	Page No
-					
010	1020637-0000		6	HOLDER	
020	1086889-0000		1	COVER	
030	1020638-0000		6	HOLDER	
040	1086888-0000		1	COVER	
050	1349566-0000		2	COVER	
060	1478659-0000		4	BRACKET	
090	312105-0329		16	SCREW M6S ISO 4017 M5X16 A480	
100	312105-0323		2	SCREW M6S ISO 4017 M5X8 A480	
110	312125-0297		4	SCREW ISO 1207 M4X25 A4	
120	312605-0312		4	HEXAGON NUT, M6M M4 A280	
130	312605-0314		16	HEXAGON NUT, M6M M5 A280	
140	312705-0314		2	NUT HEX. DOMED CAP MHM-6 M5 A280	
150	315105-0136		8	WASHER BRB4,3XRFR	
160	315105-0146		42	WASHER BRB5,3X10RFR	
B5601	90232-0103		1	PH.CELL E3S-CT61-L-5M	
B5602	90232-0104		1	PH.CELL E3S-CT61-D-5M	

Pos	Part No	UN	Qty	Description	Page No

CONNECTION BOX

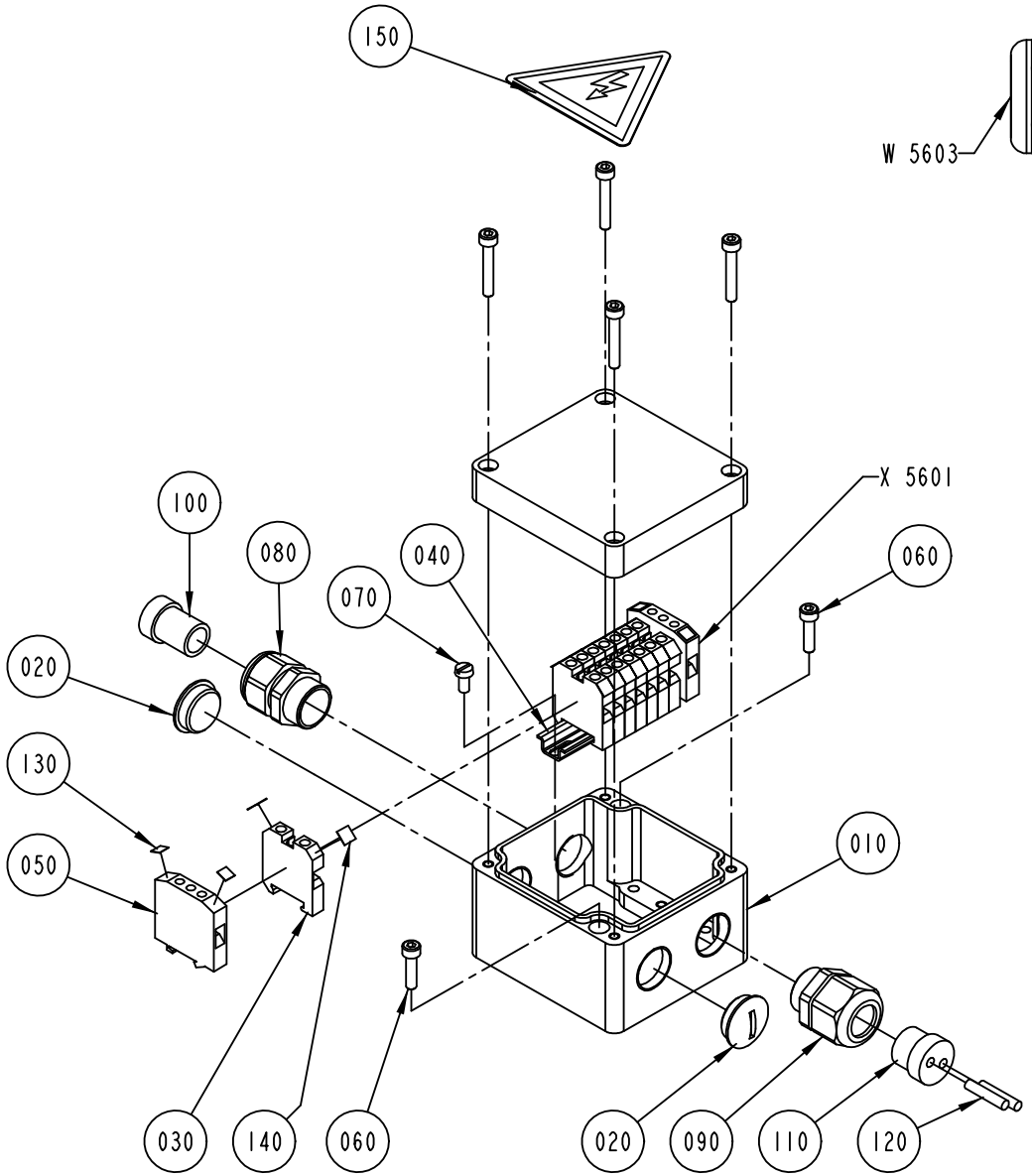

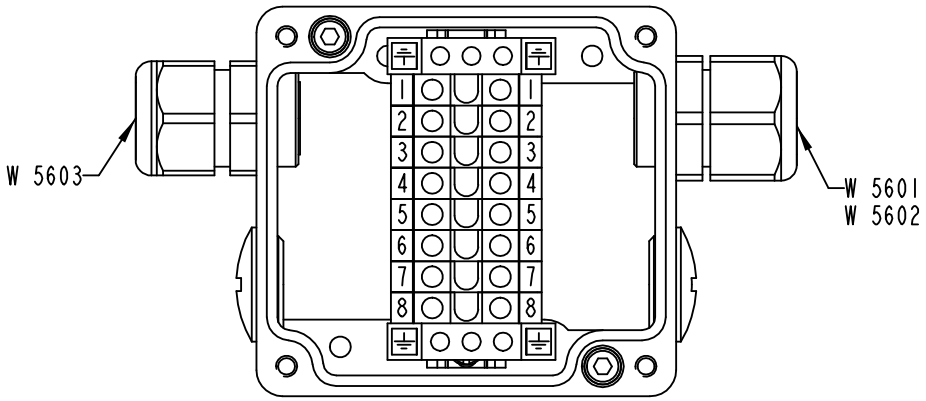

S-1484197-1
ECN 72704

ECM: 72704 - 19991007
Group number: 1484197-0100
Assembly Drawing: 1484197-1_1_AA

Pos	Part No	UN	Qty	Description	Page No
-					
010	1349568-0000		1	CONNECTION BOX	
020	90002-0009		2	BLANK-OFF PLUG, PR 18.6 SKINDICHT-BLK11	
030	90077-0079		8	FEED THROUGH TERMINAL, 02943.6	
040	90077-0328	MM	65	RAIL TS15/5	
050	90135-0026		2	EARTH TERMINAL, 3802.6	
060	312115-0293		2	SCREW ISO4762 M4X16 A4	
070	312125-0287		2	SCREW ISO 1207 M4X8 A4	
080	353240-0002		1	GLAND W/O INSERT PG11 NORMAL	
090	353241-0002		1	GLAND W/O INSERT PG11 EXTENDED	
100	353249-0003		1	INSERT, SINGEL HOLE, E151/11	
110	353249-0036		1	INSERT, MULTI HOLE, EK152 M 2X4	
120	353249-0301		2	SEALING PIN, 4X20	
130	359011-0819		4	MARKING PLATES 5-GW (EARTH)	
140	359011-0821		2	SET OF SIGNS 6-FW 1-50	
150	359705-0015		1	WARNING SIGN ISO, RISK OF ELECTRIC SHOCK	

Pos	Part No	UN	Qty	Description	Page No

Tetra Pak

SPC
Spare Parts Catalogue

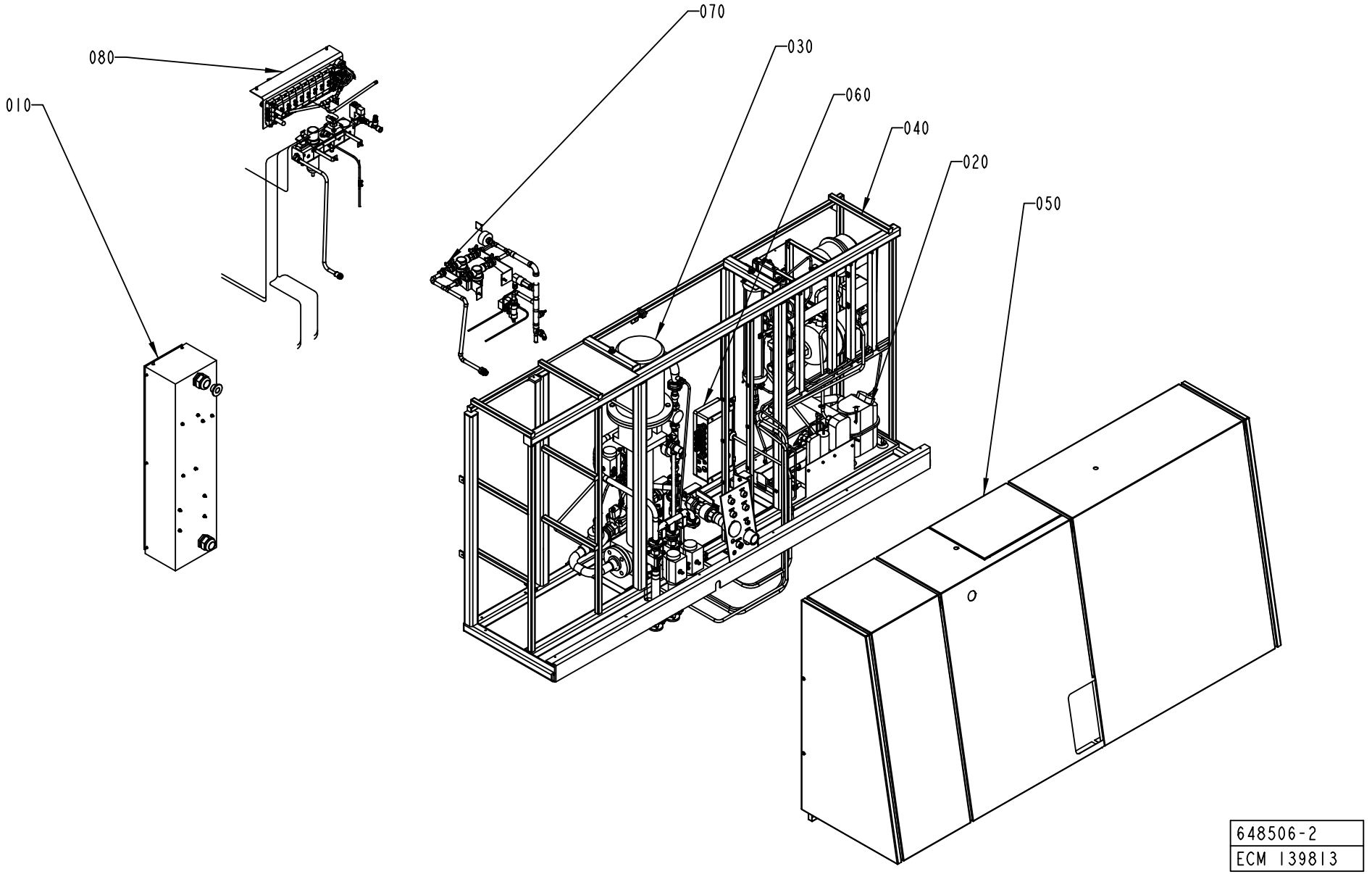
070
030
060
040
020
050
080
010
648506-2
ECM 139813

ECM: 150121 - 50001231
Group number: 648506-0400
Assembly Drawing: 648506-2_1_AD

This list covers pages from 6-2 to 6-5

Pos	Part No	UN	Qty	Description	Page No
A3/FLEX DIMC/FLEX, A3/FLEX TBA 2000S NODIMC, A3/FLEX TBA 1890S NODIMC (See drawing on page: 6-4)					
090	2623714-0100		1	PEROXIDE REDUCER	**6-7**
100	2623718-0100		1	PEROXIDE REDUCER	**6-9**
Common Parts					
010	1095610-0300		1	MAIN SWITCH	**6-11**
020	1095612-0300		1	COOLING WATER SYSTEM	**6-13, 6-15**
030	1095627-0300		1	FOAM CLEANING UNIT	**6-31**
040	2613034-0100		1	MACHINE BODY	**6-47**
050	1095607-0200		1	COVERING PANEL	**6-49**
060	1095630-0200		1	CONNECTION BOX	**6-65**
070	1095608-0100		1	WATER PANEL	**6-67, 6-69**
080	1095714-0300		1	SUPPLY SYSTEM	**6-71**

Pos	Part No	UN	Qty	Description	Page No

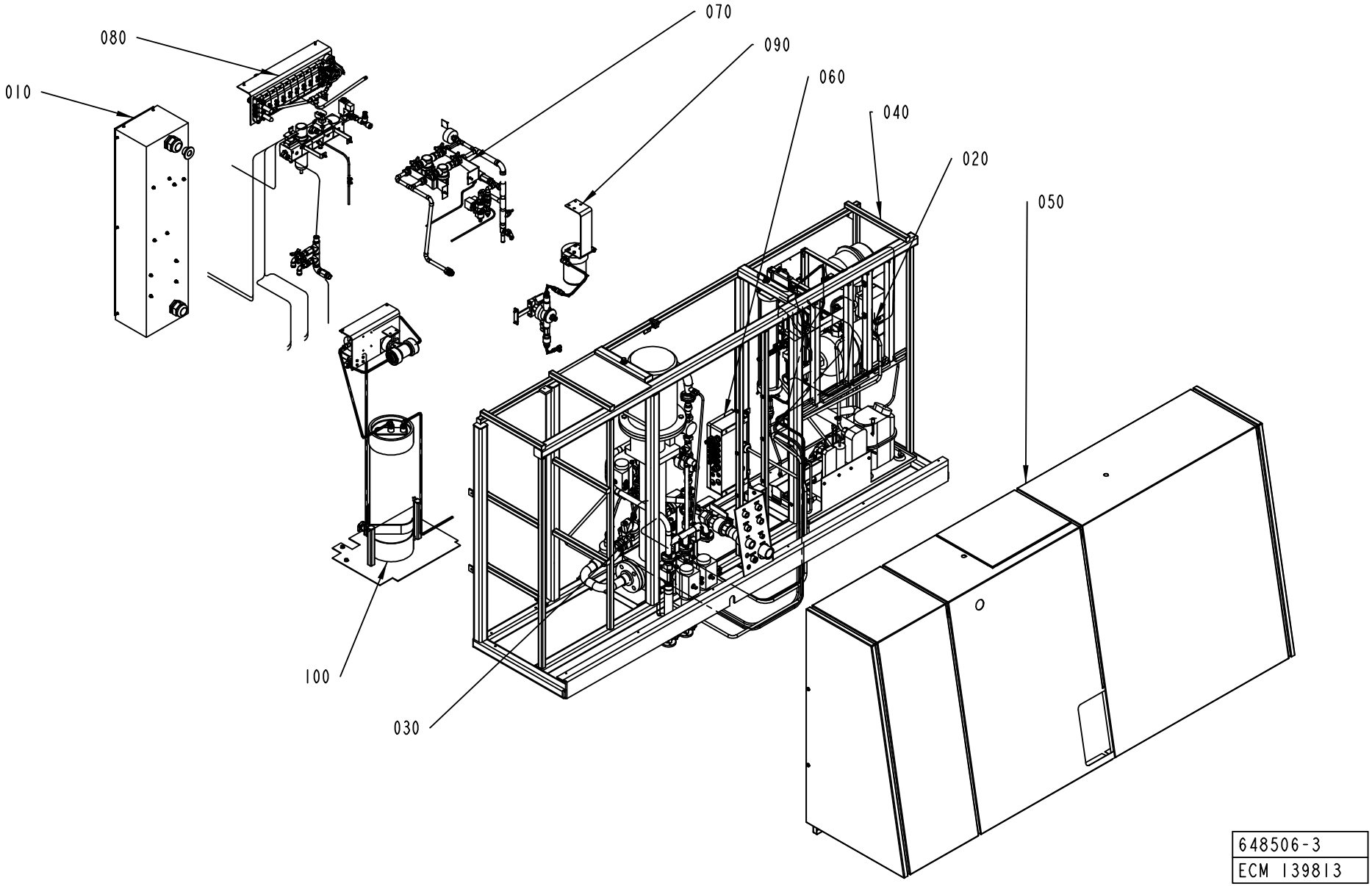
070
080
090
060
040
010
020
050
100
030
648506-3
ECM 139813

ECM: 150121 - 50001231
Group number: 648506-0400
Assembly Drawing: 648506-3_1_AB

This list covers pages from 6-2 to 6-5

Pos	Part No	UN	Qty	Description	Page No
A3/FLEX DIMC/FLEX, A3/FLEX TBA 2000S NODIMC, A3/FLEX TBA 1890S NODIMC (See drawing on page: 6-4)					
090	2623714-0100		1	PEROXIDE REDUCER	**6-7**
100	2623718-0100		1	PEROXIDE REDUCER	**6-9**
Common Parts					
010	1095610-0300		1	MAIN SWITCH	**6-11**
020	1095612-0300		1	COOLING WATER SYSTEM	**6-13, 6-15**
030	1095627-0300		1	FOAM CLEANING UNIT	**6-31**
040	2613034-0100		1	MACHINE BODY	**6-47**
050	1095607-0200		1	COVERING PANEL	**6-49**
060	1095630-0200		1	CONNECTION BOX	**6-65**
070	1095608-0100		1	WATER PANEL	**6-67, 6-69**
080	1095714-0300		1	SUPPLY SYSTEM	**6-71**

Pos	Part No	UN	Qty	Description	Page No

PEROXIDE REDUCER

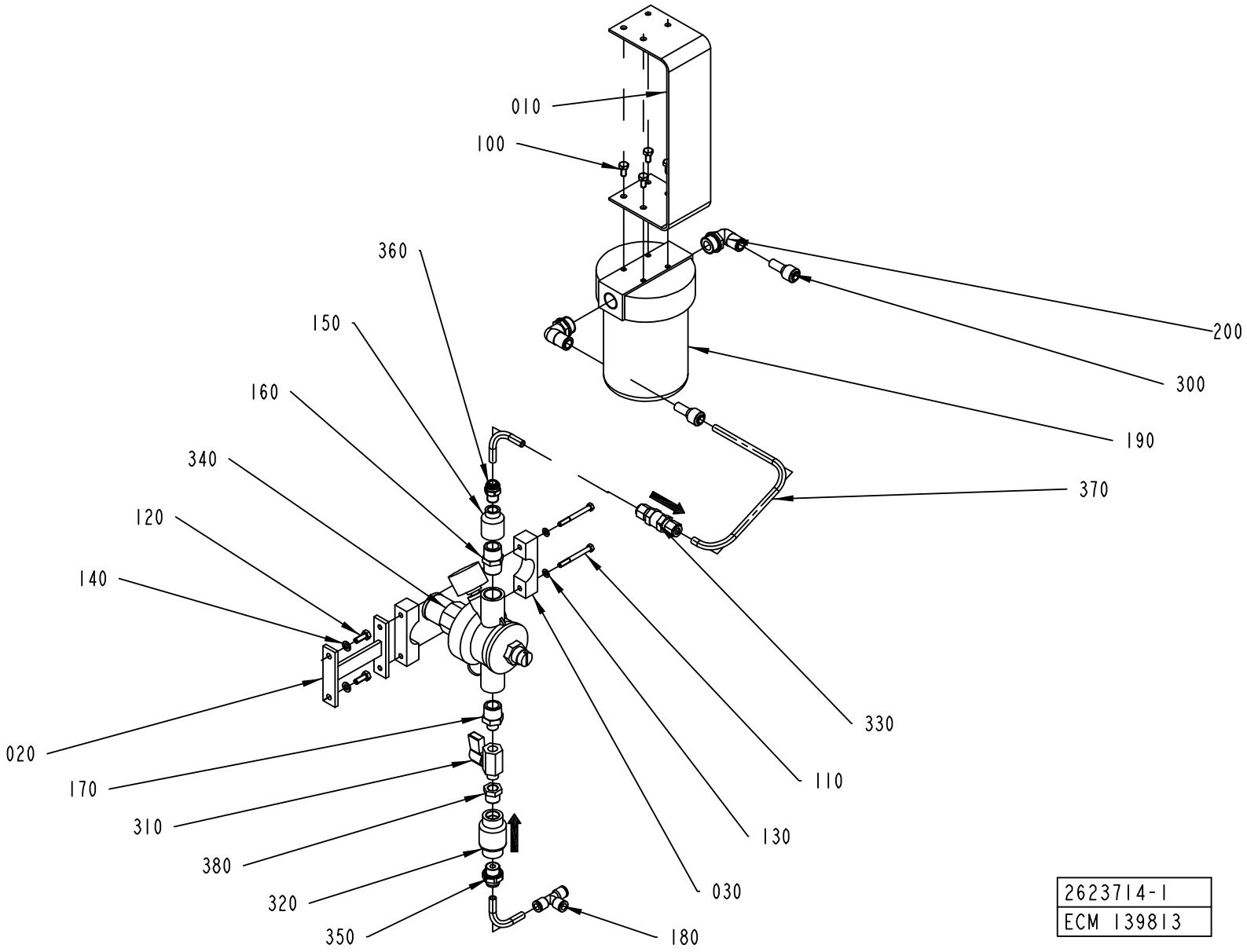

2623714-1
ECM 139813

ECM: 140258 - 20030923
Group number: 2623714-0100
Assembly Drawing: 2623714-1_1_AB

Pos	Part No	UN	Qty	Description	Page No
-					
010	2604069-0000		1	BRACKET	
020	2623715-0000		1	HOLDER	
030	2623717-0000		2	HOLDER	
100	312105-0366		4	SCREW M6S ISO 4017 M6X12 A480	
110	312105-0341		2	SCREW M6S ISO 4014 M5X50 A480	
120	312105-0368		2	SCREW M6S ISO 4017 M6X16 A480	
130	315105-0146		2	WASHER BRB5,3X10RFR	
140	315105-0153		2	WASHER BRB6,4X12RFR	
150	342217-0103		1	SLEEVE, REDUCTION, INT, R-2021/2X1/4	
160	90330-0021		1	NIPPLES, EXT. THREAD. R-207R1/2	
170	342203-0107		1	NIPPLES, EXT. THREAD, HEXAGON,ÿNO. 209	
180	90055-0276		1	T-CONNECTION 8 MM	
190	90415-0065		1	FILTER	
010	*90415-0357*		*1*	*FILTER INSERT*	
200	90459-2769		2	ELBOW PIPE JOINT, EXT.THREAD,D=10MM-G1/2	
300	90055-0249		2	REDUCER 8-10	
310	90187-0045		1	BALL VALVE G1/4 CR PL	
320	90230-0040		1	NON-RETURN VALVE, R3/8, L=55	
330	90230-0032		1	NON-RETURN VALVE, 8MM, L=63,25	
340	90458-0201		1	FLUID AUT. FEEDER, ALINOX 1/2 46.04.00	
350	90458-1963		1	STRAIGHT COUPLING D=8-G3/8"	
360	90459-0997		1	STRAIGHT COUPLING D=8-R1/4"	
370	90166-0188	MM	700	PLASTIC HOSE	
380	90330-0042		1	BUSHING, INT/EXT. THR. R3/8-RP1/4	

Pos	Part No	UN	Qty	Description	Page No

PEROXIDE REDUCER

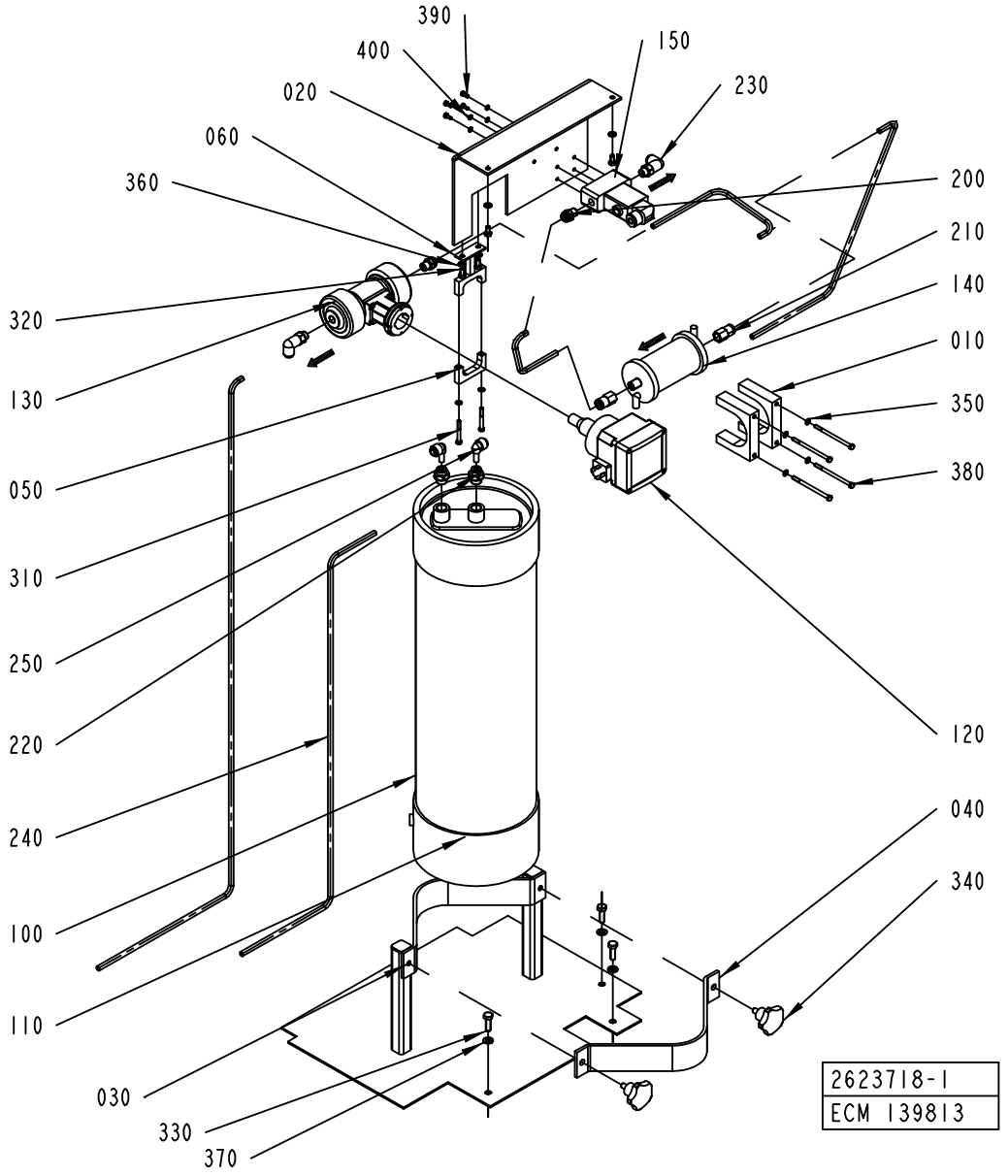

ECM: 140259 - 20030923
Group number: 2623718-0100
Assembly Drawing: 2623718-1_1_AB

Pos	Part No	UN	Qty	Description	Page No
-					
010	2623712-0000		2	HANGER	
020	2623713-0000		1	HOLDER	
030	2623719-0000		1	HOLDER	
040	2623720-0000		1	HOLDER	
050	1549344-0000		1	HOLDER	
060	2510755-0000		1	BRACKET	
100	90459-1996		1	FILTER CULLIGAN REFILL LINE 10 760664	
	90459-2004		*1*	*FILTER CATRIDGE ION-EXCHANGE, 759807*	
110	90459-2004		1	FILTER CATRIDGE ION-EXCHANGE, 759807	
120	90458-2174		1	CONDUCTIVITY TRANSMITTER, 418962Z	
130	90458-2173		1	PIPE CONNECTION, 552608M	
140	90459-1472		1	FILTER, KW0604NP3	
150	90042-0170		1	SOLENOID VALVE BURKERT	
200	90459-0997		2	STRAIGHT COUPLING D=8-R1/4"	
210	90055-0266		2	STRAIGHT CONNECTION	
220	90458-1963		2	STRAIGHT COUPLING D=8-G3/8"	
230	90055-0267		2	ELBOW PIPE JOINT,EXT.THREAD,D=8 MM G1/4	
240	90166-0118	M	10	TUBE 8 MM PA BLACK	
250	90055-0250		2	ELBOW WITH TAILPIECE 8/8 MM	
310	312105-0339		2	SCREW M6S ISO 4014 M5X40 A480	
320	312105-0366		4	SCREW M6S ISO 4017 M6X12 A480	
330	312105-0453		3	SCREW M6S ISO 4017 M8X25 A480	
340	318856-0112		2	KNOB, EXTERNAL THREAD. NO. 8306-0227	
350	315105-0146		6	WASHER BRB5,3X10RFR	
360	315105-0153		4	WASHER BRB6,4X12RFR	
370	315105-0165		3	WASHER BRB8,4X16RFR	
380	90458-1614		4	SCREW M6S ISO 4014 M5X80 A480	
390	312105-0289		4	SCREW M6S ISO 4017 M4X10 A470	
400	315105-0136		4	WASHER BRB4,3XRFR	

Pos	Part No	UN	Qty	Description	Page No

Machine Type	Group Description	Used-In	Group Number	Page No

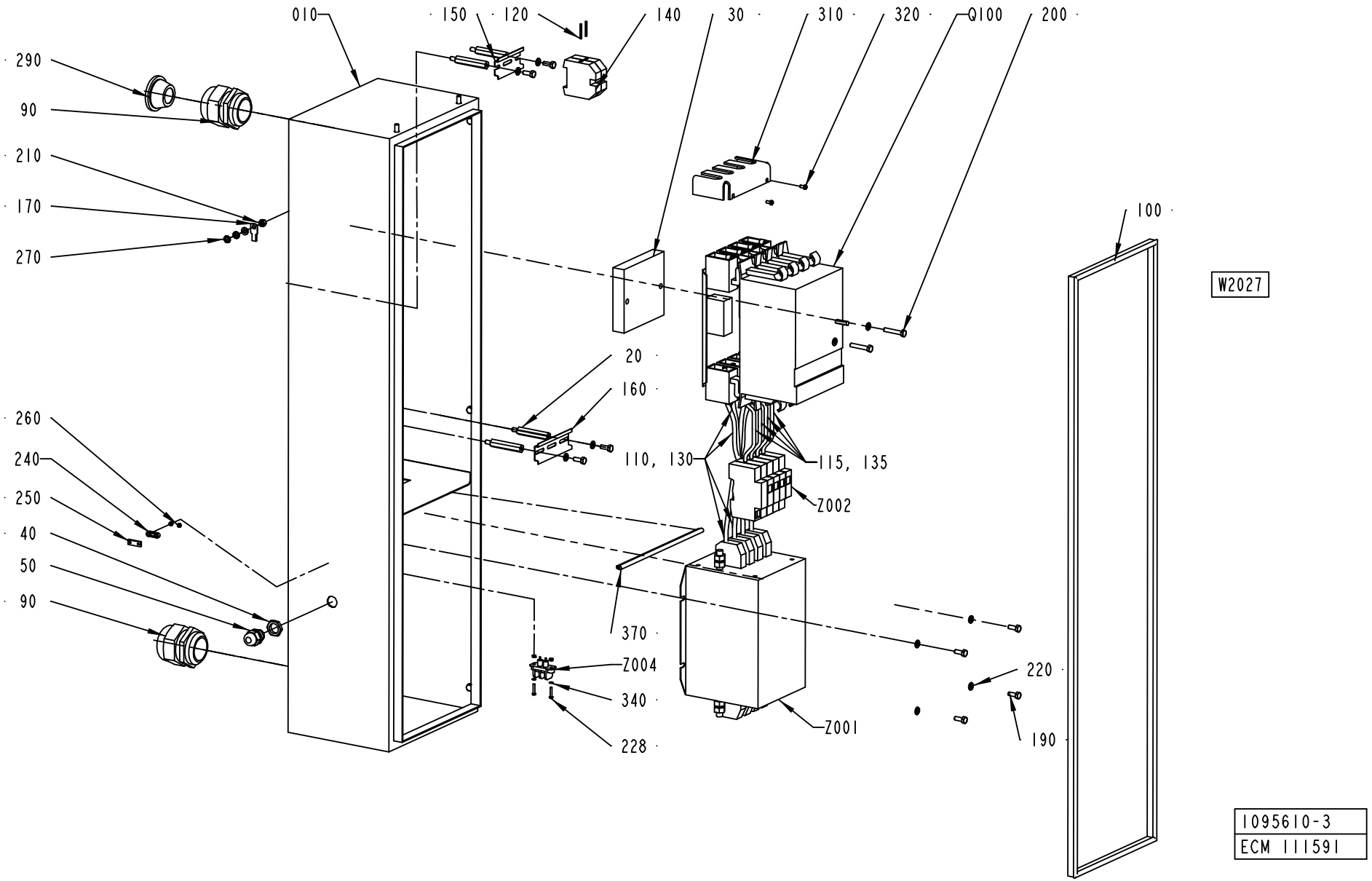
010
150
120
140
30
310
320
Q100
200
290
90
210
170
270
100
W2027
20
160
260
240
250
40
50
90
110, 130
115, 135
Z002
370
Z004
340
228
Z001
220
190
1095610-3
ECM 111591

ECM: 117187 - 20030403
Group number: 1095610-0300
Assembly Drawing: 1095610-3_1_AC

Pos	Part No	UN	Qty	Description	Page No
-					
010	2524515-0000		1	CABINET	
020	1037184-0000		4	SPACER SCREW	
030	1037531-0000		1	SPACER PLATE	
040	90099-0117		1	NUT, PR 18,6 (PG11)	
050	352103-0106		1	CABLE GLAND, ST 11, PR18,6/PG11	
060	90099-0085		1	NUT	
070	90099-0096		1	NUT	
090	352103-0123		2	CABLE GLAND, ST 42, PR54,0/PG42	
100	90143-0057	MM	2600	STRIP EMKA 1011-05 21X11MM	
110	351161-0110	MM	2400	CABLE AWM 1X25 MM2 LIGHTBLUE	
115	351161-0111	MM	240	CABLE AWM 1X35 MM2 LIGHTBLUE	
120	351162-0109	MM	850	CABLE AWM 1X16 MM2 YELLOW-GREEN	
130	351164-0110	MM	6000	CABLE AWM 1X25 MM2 BLACK	
135	351164-0111	MM	600	8ABLE AWM 1X35 MM2 BLACK	
140	353024-0209		2	EARTH TERMINAL, 1010.5	
150	353042-0005	MM	75	RAIL TS 35/7.5	
160	353042-0005	MM	100	RAIL TS 35/7.5	
170	353104-0168		1	CABLE SHOE YAV 16 M6*	
180	353105-0200		9	PIN CABLE SKO A4630SR	
190	312105-0368		13	SCREW M6S ISO 4017 M6X16 A480	
200	312105-0376		2	SCREW M6S ISO 4014 M6X35 A480	
210	312605-0316		1	HEXAGON NUT, M6M M6 A280	
220	315105-0153		16	WASHER BRB6,4X12RFR	
230	90143-0060	MM	600	EDGE STRIP 9,5X6,3MM BLACK PVC	
240	90220-0303		1	CLAMP FOR SCR.CABLE, 10MM, 55-016-22	
250	90220-0305		1	CLAMP FOR SCR.CABLE, 16MM,	
260	312605-0310		2	HEXAGON NUT, M6M M3 A280	
270	90062-0015		2	LOCK WASHER SERRAT.EXT.GEAR,6,4/11 H=0,7	
280	90166-0232	MM	500	SHRINKABLE HOSE	
290	90015-0025		1	LEAD-IN, TET26-35, E-1458041	
300	1129402-0000		4	SPACER SCREW	
310	1255866-0000		1	PROTECTION	
320	312125-0287		2	SCREW ISO 1207 M4X8 A4	
340	315105-0124		4	WASHER BRB3,2X6RFR	
370	90143-0060	MM	250	EDGE STRIP 9,5X6,3MM BLACK PVC	
Q100	90111-0173		1	MAIN SW.NZM64-100/ZM64-100-760+AS4-NZM64	
W2027	90220-0095	MM	3000	SCR. CABLE 3X0,75MM2	
Z001	90024-0060		1	POWER LINE FILTER, 80 A 250/440 VAC	
Z002	90082-0013		1	OVER VOLT. PROTECT. PU 4C-R 230 VAC	
	90082-0301		*3*	*OVER VOLT. PROTECT. PU 0 C 833951*	
Z004	90024-0036		1	FILTERED TERMINAL BLOCK	

Pos	Part No	UN	Qty	Description	Page No

Machine Type | Group Description | Used-In | Group Number | Page No

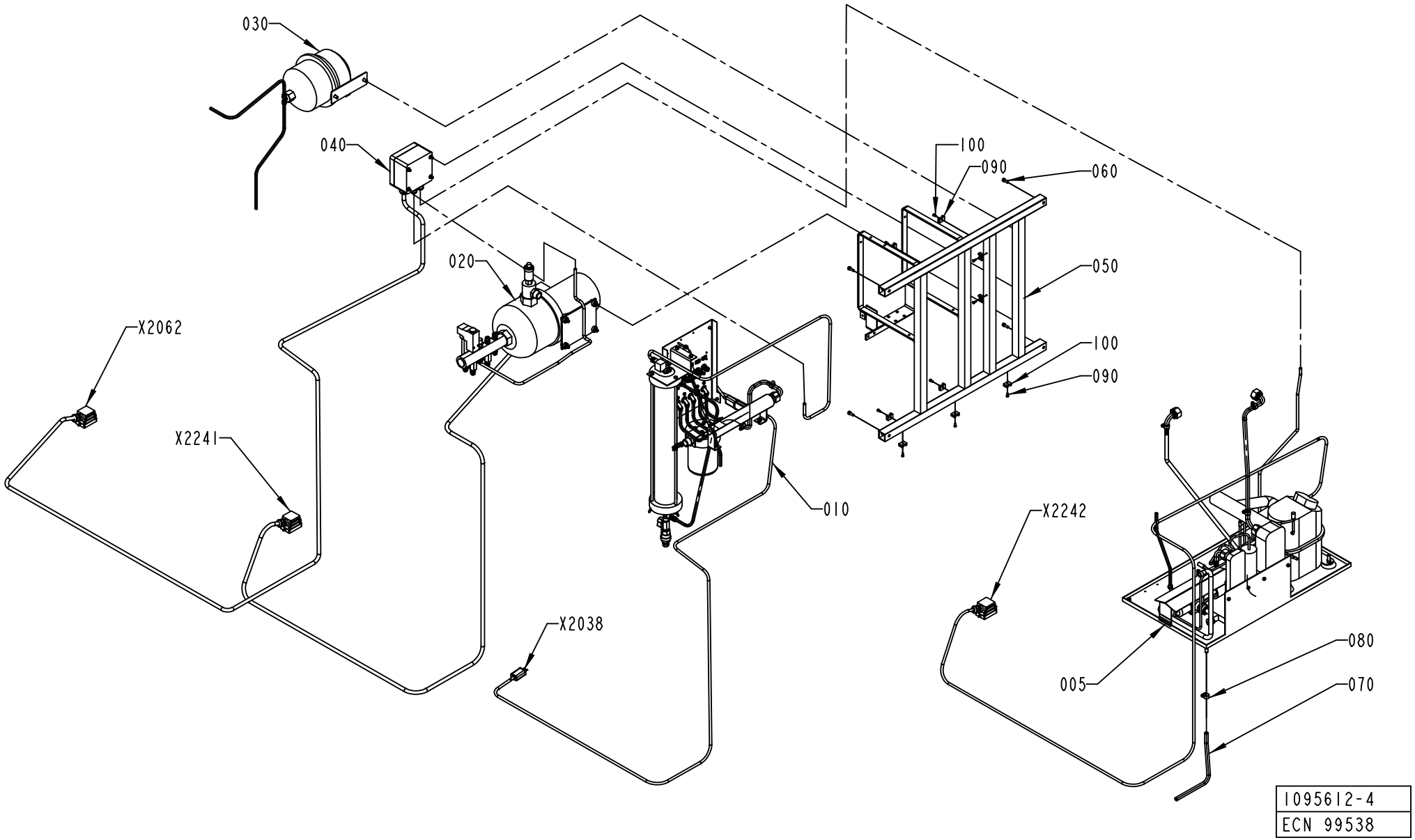
030
040
020
X2062
X2241
X2038
010
100
090
060
050
100
090
X2242
005
080
070
1095612-4
ECN 99538

ECM: 139554 - 20030711
Group number: 1095612-0300
Assembly Drawing: 1095612-4_1_AC

This list covers pages from 6-12 to 6-15

Pos	Part No	UN	Qty	Description	Page No
A3/FLEX COMPRESSOR (See drawing on page: 6-12)					
005	1095710-0300		1	COMPRESSOR UNIT	**6-17**
010	2552113-0100		1	FLOW METER	**6-19**
A3/FLEX ICE-WATER (See drawing on page: 6-14)					
007	1260547-0100		1	ICE WATER UNIT	**6-21**
010	2552113-0100		1	FLOW METER	**6-19**
Common Parts					
020	1095706-0300		1	COOLING WATER PUMP	**6-25**
030	2514077-0100		1	EXPANSION VESSEL	**6-27**
040	1095709-0200		1	CONNECTION BOX	**6-29**
050	1129141-0000		1	MACHINE BODY	
060	312115-0368		4	SCREW ISO4762 M6X16 A4	
070	90166-0121	MM	1000	HOSE	
080	342991-0101		1	HOSE CLIP,WORM DRIVE TYPE (13)-16	
090	352113-0203		9	ANCHOR PLATES FOR STRIPS, TYPE TM3S8-M0	
100	312125-0289		9	SCREW ISO 1207 M4X10 A4	

Pos	Part No	UN	Qty	Description	Page No

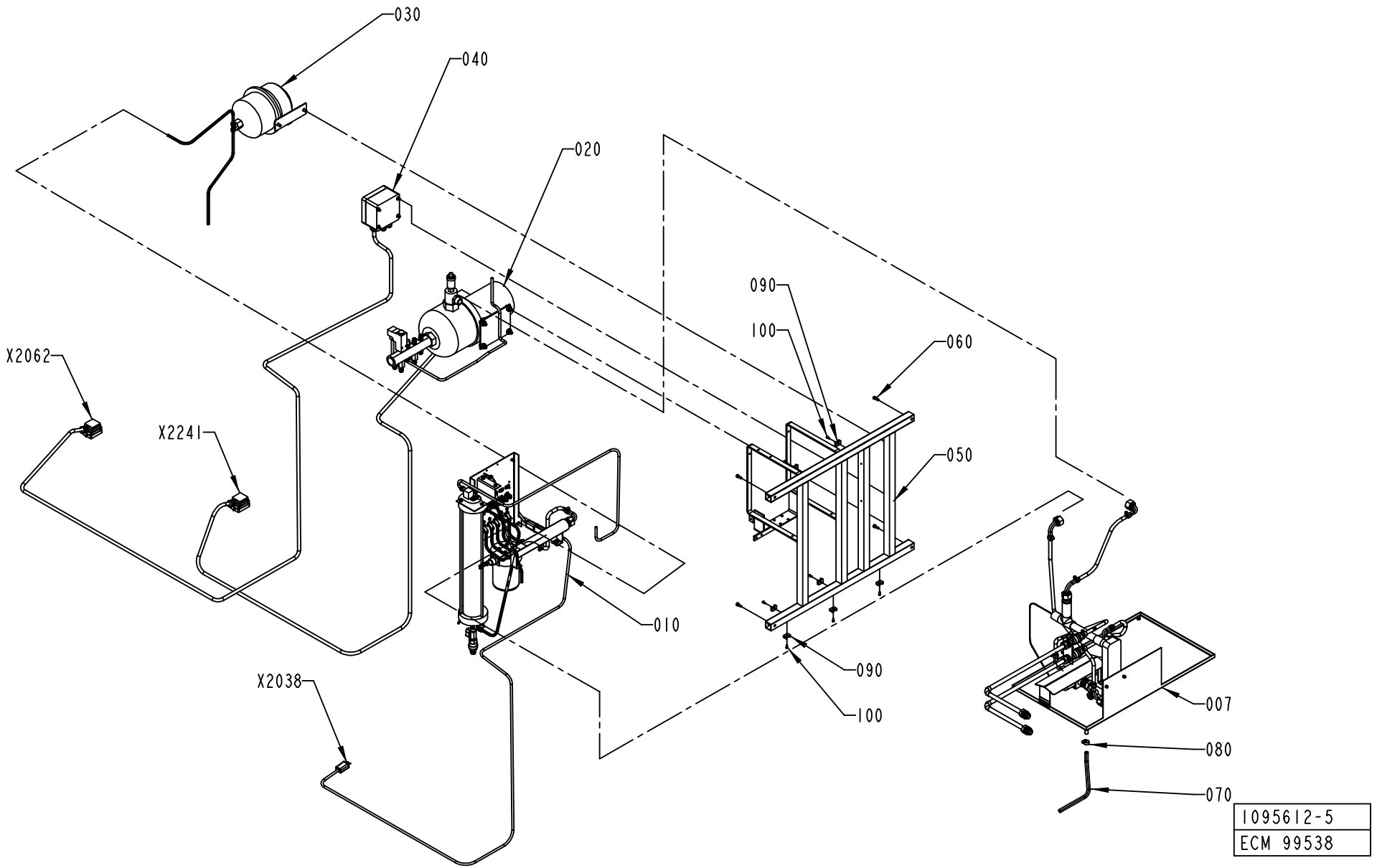
030
040
020
090
100
060
X2062
X2241
050
010
090
100
X2038
007
080
070
1095612-5
ECM 99538

ECM: 139554 - 20030711
Group number: 1095612-0300
Assembly Drawing: 1095612-5_1_AC

This list covers pages from 6-12 to 6-15

Pos	Part No	UN	Qty	Description	Page No
A3/FLEX COMPRESSOR (See drawing on page: 6-12)					
005	1095710-0300		1	COMPRESSOR UNIT	**6-17**
010	2552113-0100		1	FLOW METER	**6-19**
A3/FLEX ICE-WATER (See drawing on page: 6-14)					
007	1260547-0100		1	ICE WATER UNIT	**6-21**
010	2552113-0100		1	FLOW METER	**6-19**
Common Parts					
020	1095706-0300		1	COOLING WATER PUMP	**6-25**
030	2514077-0100		1	EXPANSION VESSEL	**6-27**
040	1095709-0200		1	CONNECTION BOX	**6-29**
050	1129141-0000		1	MACHINE BODY	
060	312115-0368		4	SCREW ISO4762 M6X16 A4	
070	90166-0121	MM	1000	HOSE	
080	342991-0101		1	HOSE CLIP,WORM DRIVE TYPE (13)-16	
090	352113-0203		9	ANCHOR PLATES FOR STRIPS, TYPE TM3S8-M0	
100	312125-0289		9	SCREW ISO 1207 M4X10 A4	

Pos	Part No	UN	Qty	Description	Page No

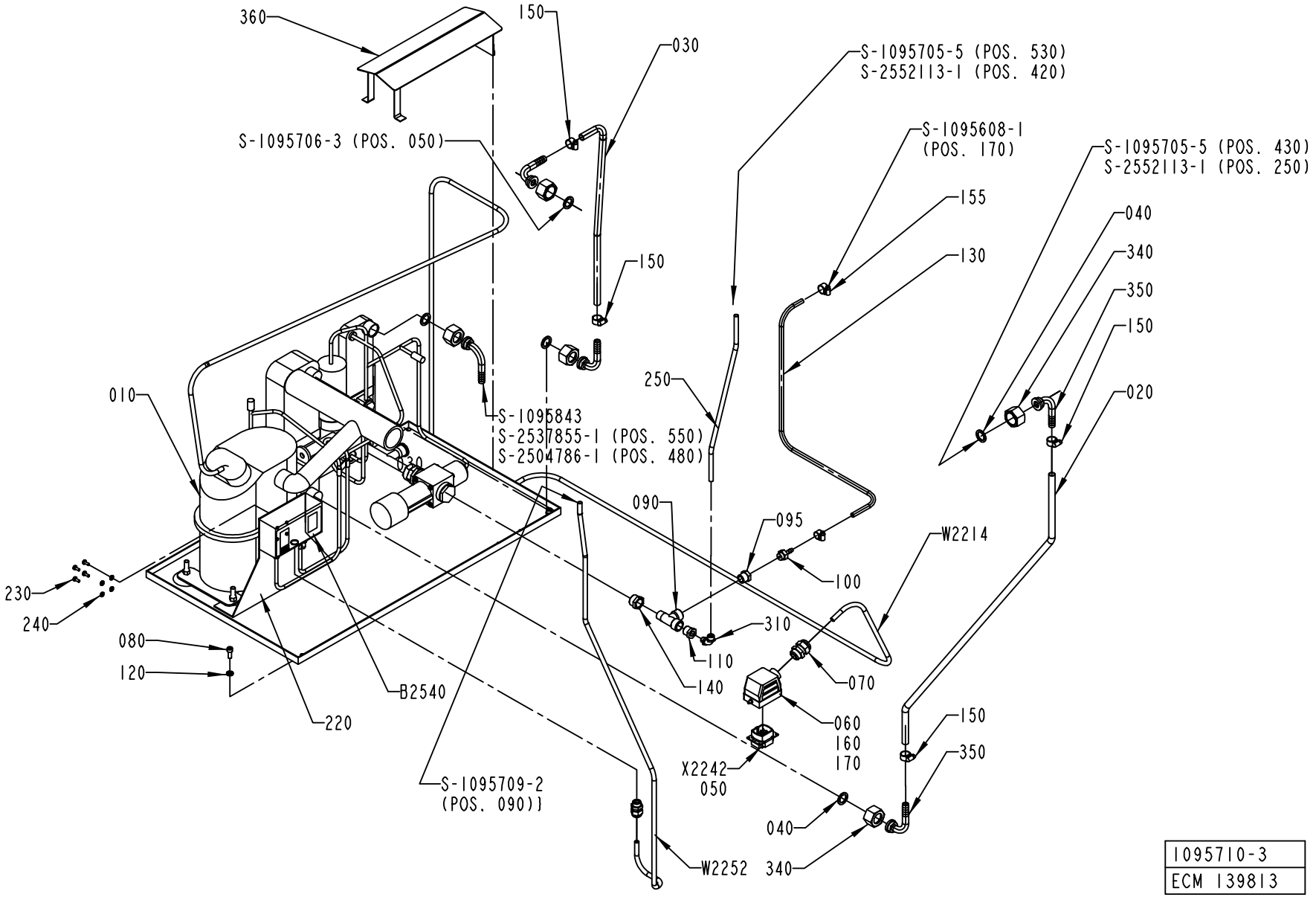

1095710-3
ECM 139813

ECM: 139859 - 20030923
Group number: 1095710-0300
Assembly Drawing: 1095710-3_1_AE

Pos	Part No	UN	Qty	Description	Page No
A3/FLEX					
010	1140603-0000		1	COMPRESSOR UNIT	
W 2214	351150-0418	MM	4000	CABLE OLFLEX 4X2,5 MM2 LIGHT/GREY	
Common Parts					
020	90166-0121	MM	930	HOSE	
030	90166-0121	MM	840	HOSE	
040	90459-3339		5	GASKET NBR/PTFE 17X24X2 MM 3/4"	
050	90110-0159		1	MALE INSERT 70.310.0640.0	
060	90110-0226		1	CABLE HOOD 6-POL 70.350.0628.0	
070	352103-0108		1	CABLE GLAND, ST 13,5 , PR20,4/PG13,5	
080	312115-0368		2	SCREW ISO4762 M6X16 A4	
090	90140-0023		1	T-PIPE, INT. THREAD, NO. 2070-3/8-3/8	
095	90330-0042		1	BUSHING, INT/EXT. THR. R3/8-RP1/4	
100	342901-0102		1	HOSE NIPPLE, EXT.THR. R1/4-7 MM	
110	342701-0202		1	BUSHING,INT./EXT.G-THREAD G3/8"-G1/8"	
120	315115-0153		2	WASHER PLAIN, TBRB 6,4/12 H=3	
130	90166-0045	MM	705	HOSE PVC TRANSP. 6/12	
140	342701-0206		1	BUSHING,INT./EXT.G-THREAD G1/2"-G3/8"	
150	342991-0101		4	HOSE CLIP,WORM DRIVE TYPE (13)-16	
155	342991-0100		2	HOSE CLIP,WORM DRIVE TYPE 10-13	
160	359005-0050		1	MARKING LABEL KIT X, 04.841.4550.0	
170	359005-0010		1	MARKING LABEL KIT 0 - 9, 04.841.2150.0	
220	1361560-0000		1	PLATE	
230	312132-0289		4	SCREW SLOT. PAN HEAD MSCS M4X10	
240	90062-0029		4	WASHER LOCK 5,1X 8,6, T= 1,5 DIN 7980	
250	90166-0118	MM	500	TUBE 8 MM PA BLACK	
310	342931-0121		1	ELBOW 90 COUPL.,EXT.THREAD 8/6-G1/8"	
340	2531423-0000		5	NUT	
350	2531245-0000		5	HOSE NIPPLE	
360	2532574-0000		1	COVER	
B2540	90274-0108		1	DUAL PRESSURE GUARD, -20 - 2800 KPA	
W2252	351150-0431	MM	1000	CABLE OLFLEX 2X0,75 MM2 LIGHT/GREY	

Pos	Part No	UN	Qty	Description	Page No

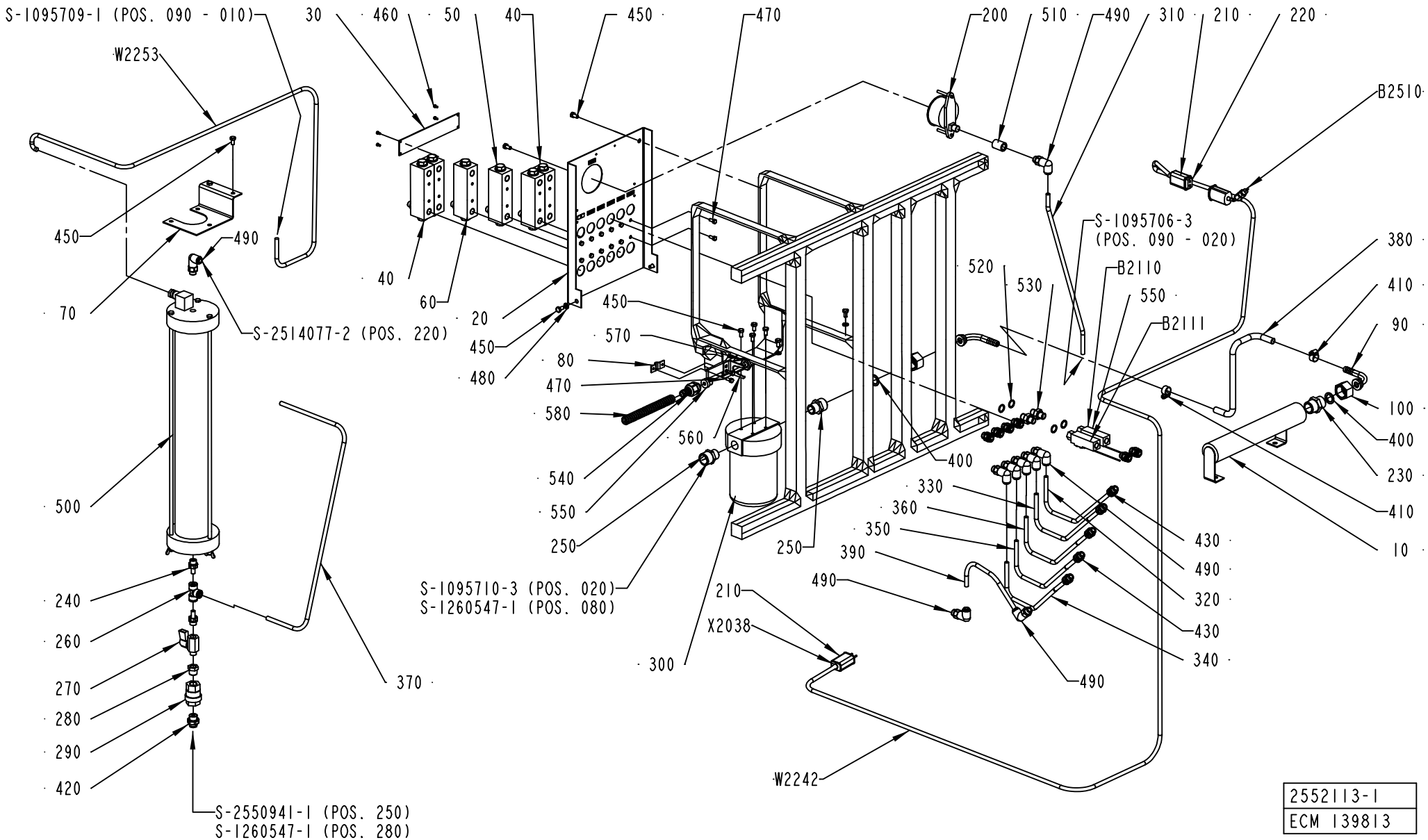

2552113-1
ECM 139813

ECM: 148827 - 20031208
Group number: 2552113-0100
Assembly Drawing: 2552113-1_1_AC

Pos	Part No	UN	Qty	Description	Page No
A3/FLEX					
020	2579861-0003		1	PIVOT BRACKET	
030	2547474-0000		1	SIGN LANGUAGE INDEPENDENT	
040	1129079-0000		4	FLOW METER	
050	1041046-0000		1	FLOW METER	
060	1129079-0000		1	FLOW METER	
320	90166-0118	MM	255	TUBE 8 MM PA BLACK	
330	90166-0118	MM	255	TUBE 8 MM PA BLACK	
450	312105-0366		12	SCREW M6S ISO 4017 M6X12 A480	
470	312105-0327		14	SCREW M6S ISO 4017 M5X12 A480	
490	90055-0267		9	ELBOW PIPE JOINT,EXT.THREAD,D=8 MM G1/4	
520	315233-0110		4	WASHER CAPTIVE SEALING G1/4	
530	90055-0042		2	NIPPLES, EXT. THREAD, HEXAGON, NO. 6835-	
540	353242-0005		1	HOSE GLAND W/O INSERT PG9 NORMAL	
550	353249-0067		1	INSERT, SINGEL HOLE, E150/7	
560	977527-0000		1	BRACKET	
570	90099-0104		1	NUT, PR 15,2 (PG9)	
580	90152-0058	M	1	SPIRAL CONDUIT, 15X9, UL 0909	
B2110	90459-0180		1	FLOW SWITCH, 0,1 - 2,5 L/MIN	
B2111	90459-0180		1	FLOW SWITCH, 0,1 - 2,5 L/MIN	
Common Parts					
010	1041984-0000		1	ATTACHMENT PIPE	
070	1041944-0000		1	BRACKET	
080	1260248-0000		1	CLAMP	
090	2531245-0000		2	HOSE NIPPLE	
100	2531423-0000		2	NUT	
200	90043-0100		1	PRESSURE GAUGE, 2948 D=63 MM	
210	90326-0012		2	PROTECTIVE COVER, T31A4618	
220	90326-0020		1	PLUG, FEMALE YELLOW CR-AL	
230	90330-0004		1	NIPPLES,HEXAGON,EXT.R-THREAD R3/4"-R3/4"	
240	90055-0260		2	NIPPLE-8 MM G1/4"	
250	90358-0091		2	REDUCING NIPPLE	
260	90055-0276		1	T-CONNECTION 8 MM	
270	90187-0045		1	BALL VALVE G1/4 CR PL	
280	90330-0042		1	BUSHING, INT/EXT. THR. R3/8-RP1/4	
290	90230-0028		1	NON-RETURN VALVE H 151 R 3/8"	
300	90415-0065		1	FILTER	
010	*90415-0357*		*1*	*FILTER INSERT*	
310	90166-0118	MM	490	TUBE 8 MM PA BLACK	
340	90166-0118	MM	255	TUBE 8 MM PA BLACK	
350	90166-0118	MM	255	TUBE 8 MM PA BLACK	
360	90166-0118	MM	255	TUBE 8 MM PA BLACK	
370	90166-0118	MM	800	TUBE 8 MM PA BLACK	
380	90166-0121	MM	400	HOSE	
390	90166-0118	MM	700	TUBE 8 MM PA BLACK	
400	315229-0102		2	GASKETS, 16,8X23,8X3,7 MM 3/4" FDA	
410	342991-0101		2	HOSE CLIP,WORM DRIVE TYPE (13)-16	
420	90458-1963		1	STRAIGHT COUPLING D=8-G3/8"	
430	90055-0274		11	STRAIGHT COUPLING, D=8 MM - G1/4"	
460	312125-0220		4	SCREW ISO 1207 M3X6 A4	
480	315105-0153		4	WASHER BRB6,4X12RFR	
500	90415-0060		1	DEIONIZER FILTER, 190035	
	90415-0354		*1*	*DEIONIZER CATRIDGE ART.NO.190055*	
510	90330-0102		1	SLEEVE, INT, THREAD, NO., R-201R1/4	
B2510	90326-0057		1	THERMOCOUPLE, CR-AL	
W2242	90220-0034	MM	3700	THERMOCABLE TEX/SITW-20F-KX 2X0,5MM2	
W2253	351150-0431	MM	1400	CABLE OLFLEX 2X0,75 MM2 LIGHT/GREY	
X2038	90326-0022		1	PLUG, MALE YELLOW CR-AL	

Machine Type | Group Description | Used-In | Group Number | Page No

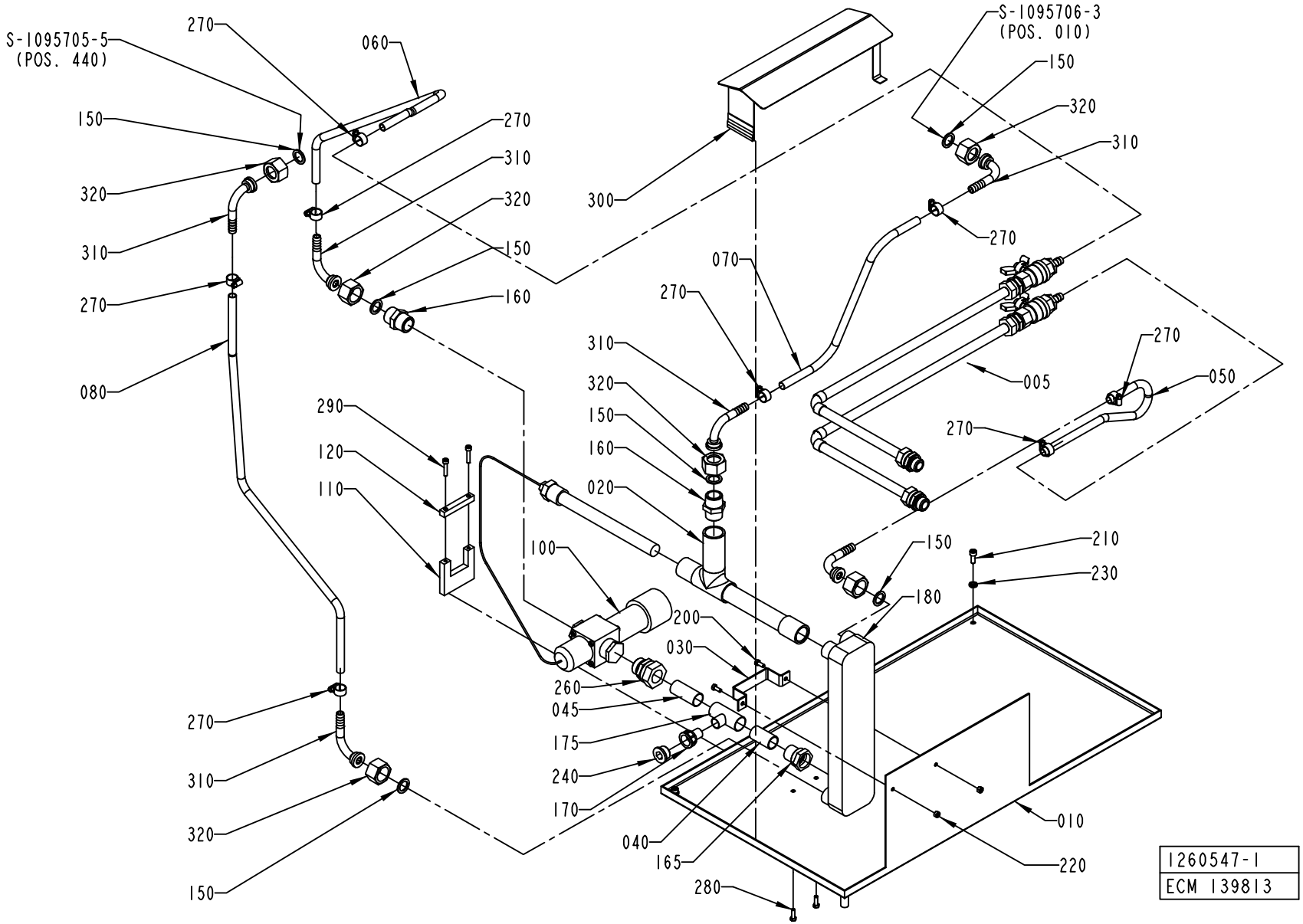
S-1095705-5
(POS. 440)
270
060
150
320
310
270
080
270
310
320
150
160
300
S-1095706-3
(POS. 010)
150
320
310
270
070
270
310
320
150
160
020
005
270
050
270
290
120
110
100
150
210
230
180
200
030
260
045
175
240
170
040
165
280
270
310
320
150
010
220
1260547-1
ECM 139813

ECM: 139858 - 20030923
Group number: 1260547-0100
Assembly Drawing: 1260547-1_1_AG

Pos	Part No	UN	Qty	Description	Page No
-					
005	1095715-0100		1	ICE WATER	**6-23**
010	1255365-0000		1	MOUNTING PLATE	
020	1511680-0000		1	TUBE	
030	1260247-0000		1	CLIP	
040	1260327-0000		1	TUBE	
045	1285363-0000		1	TUBE	
050	90166-0121	MM	400	HOSE	
060	90166-0121	MM	550	HOSE	
070	90166-0121	MM	600	HOSE	
080	90166-0121	MM	850	HOSE	
100	90187-0130		1	TEMP. CONTR. VALVE, R3/4 0-30øC	
110	1511615-0000		1	BRACKET	
120	1511616-0000		1	BRACKET	
150	90459-3339		6	GASKET NBR/PTFE 17X24X2 MM 3/4"	
160	90330-0004		2	NIPPLES,HEXAGON,EXT.R-THREAD R3/4"-R3/4"	
165	90418-0045		1	ADAPTER, INT. CONN. NO. 7272CU/22-G3/4	
170	90418-0057		1	ADAPTER, EXT. CONN. NO. 7276CU / 15-G1/2	
175	90418-0062		1	T-PIPE, REDUCTION, INT, NO. 7130-22X15X2	
180	90422-0037		1	HEAT EXCHANGER	
200	312105-0327		2	SCREW M6S ISO 4017 M5X12 A480	
210	312105-0368		2	SCREW M6S ISO 4017 M6X16 A480	
220	312605-0314		2	HEXAGON NUT, M6M M5 A280	
230	315115-0153		2	WASHER PLAIN, TBRB 6,4/12 H=3	
240	342713-0213		1	PLUG, EXT THREAD HEX SOCKET 8638-00-120	
260	342720-0119		1	CONN. STR., GA-22-G3/4	
270	342991-0101		8	HOSE CLIP,WORM DRIVE TYPE (13)-16	
280	312105-0329		2	SCREW M6S ISO 4017 M5X16 A480	
290	312115-0333		2	SCREW ISO4762 M5X25 A4	
300	2532574-0000		1	COVER	
310	2531245-0000		6	HOSE NIPPLE	
320	2531423-0000		6	NUT	

Pos	Part No	UN	Qty	Description	Page No

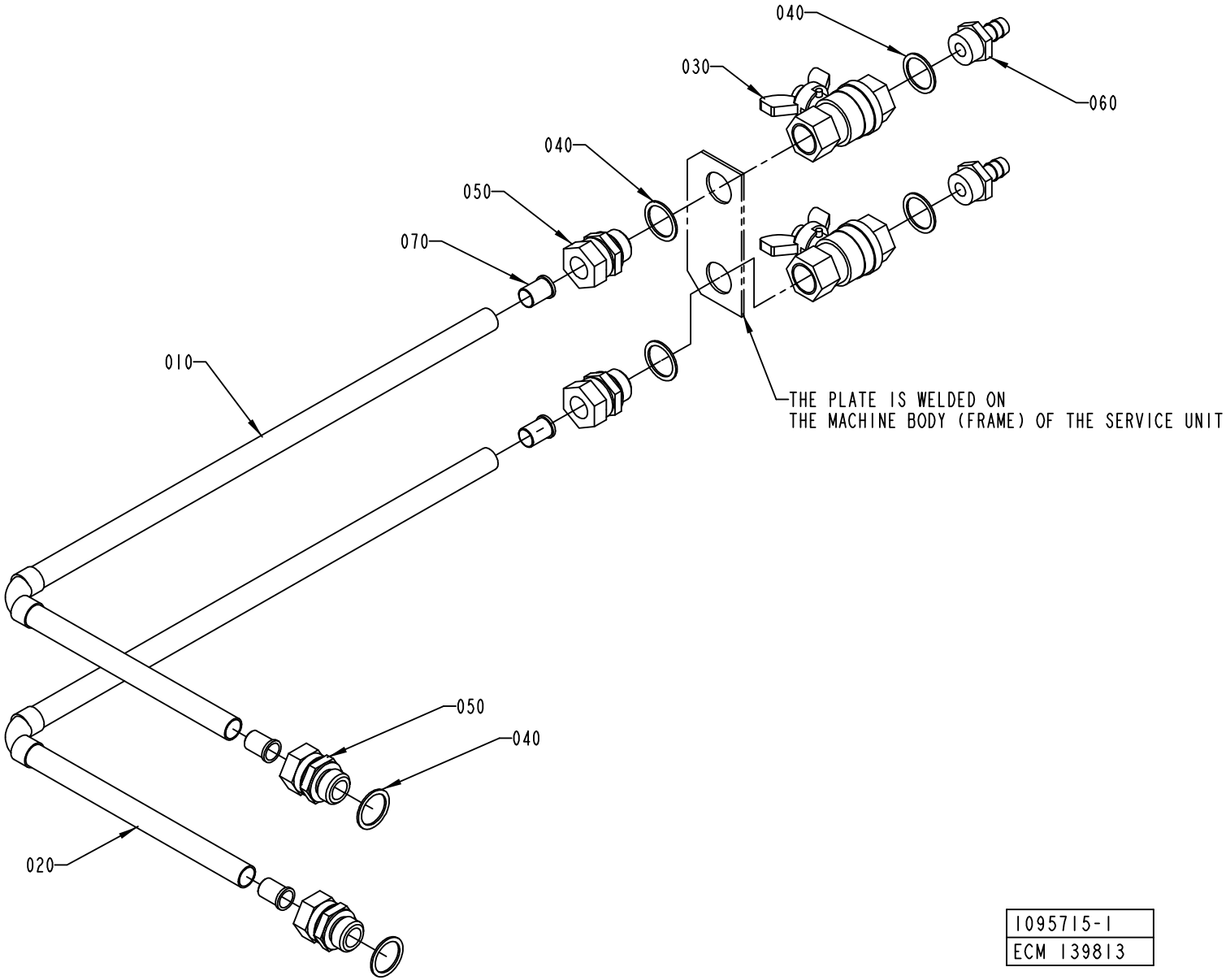

1095715-1
ECM 139813

ECM: 139817 - 20030923
Group number: 1095715-0100
Assembly Drawing: 1095715-1_1_AD

Pos	Part No	UN	Qty	Description	Page No
-					
010	1041930-0000		1	PIPE	
020	1041931-0000		1	PIPE	
030	90187-0029		2	BALL VALVE G1/2, NPBR	
040	315233-0113		6	WASHER CAPTIVE SEALING G1/2	
050	342720-0114		4	CONN. STR. GA-15-G1/2	
060	342901-0105		2	HOSE NIPPLE, EXT.THR. R1/2-12 MM	
070	342708-0109		4	REINFORCING RING VSH 15X1 MM	

Pos	Part No	UN	Qty	Description	Page No

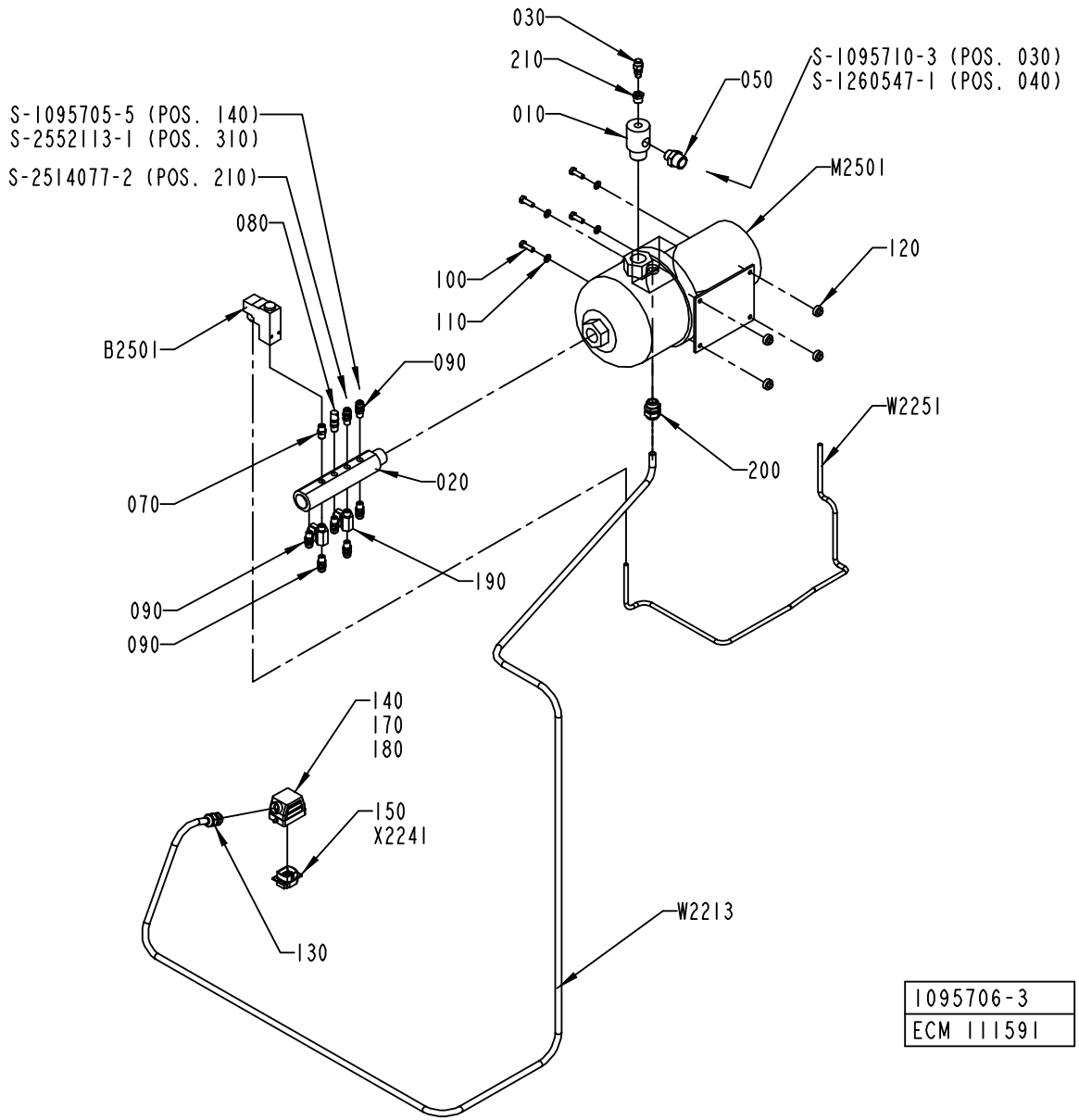
030
210
010
050
S-1095710-3 (POS. 030)
S-1260547-1 (POS. 040)
M2501
120
S-1095705-5 (POS. 140)
S-2552113-1 (POS. 310)
S-2514077-2 (POS. 210)
080
100
110
B2501
090
W2251
200
020
070
190
090
090
140
170
180
150
X2241
130
W2213
1095706-3
ECM 111591

ECM: 148827 - 20031208
Group number: 1095706-0300
Assembly Drawing: 1095706-3_1_AD

Pos	Part No	UN	Qty	Description	Page No
A3/FLEX					
090	90055-0274		7	STRAIGHT COUPLING, D=8 MM - G1/4"	
190	90187-0045		2	BALL VALVE G1/4 CR PL	
220	90330-0026		1	PLUG, EXT. G-THREAD, G1/4	
W 2213	351150-0418	MM	3500	CABLE OLFLEX 4X2,5 MM2 LIGHT/GREY	
Common Parts					
010	2532806-0000		1	ATTACHMENT PIPE	
020	1129066-0000		1	RETURN PIPE	
030	90459-1736		1	PURGE VALVE, 2RM-PG4L-SS	
050	90330-0080		1	NIPPLES, EXT. THREAD. R3/4-R1/2	
070	90330-0043		1	NIPPLES, EXT. THREAD. R-207R1/4	
080	90230-0041		1	OVERPRESSURE VALVE SS-4 CPA2-RTDG-3	
100	312105-0453		4	SCREW M6S ISO 4017 M8X25 A480	
110	315105-0165		4	WASHER BRB8,4X16RFR	
120	90015-0037		4	RUBBER BUSHING	
130	352103-0108		1	CABLE GLAND, ST 13,5 , PR20,4/PG13,5	
140	90110-0226		1	CABLE HOOD 6-POL 70.350.0628.0	
150	90110-0159		1	MALE INSERT 70.310.0640.0	
170	359005-0050		1	MARKING LABEL KIT X, 04.841.4550.0	
180	359005-0010		1	MARKING LABEL KIT 0 - 9, 04.841.2150.0	
200	352103-0110		1	CABLE GLAND, STR 16, PR22,5/PG16	
210	342701-0202		1	BUSHING,INT./EXT.G-THREAD G3/8"-G1/8"	
B 2501	90274-0056		1	PRESSURE SWITCH, 100 - 1200 KPA	
M 2501	90321-0116		1	PUMP GRUNDFOSS CHI 2-60	
	90321-0618		*1*	*SEAL KIT FOR REPAIR OF PUMP*	
W 2251	351150-0431	MM	1000	CABLE OLFLEX 2X0,75 MM2 LIGHT/GREY	

Pos	Part No	UN	Qty	Description	Page No

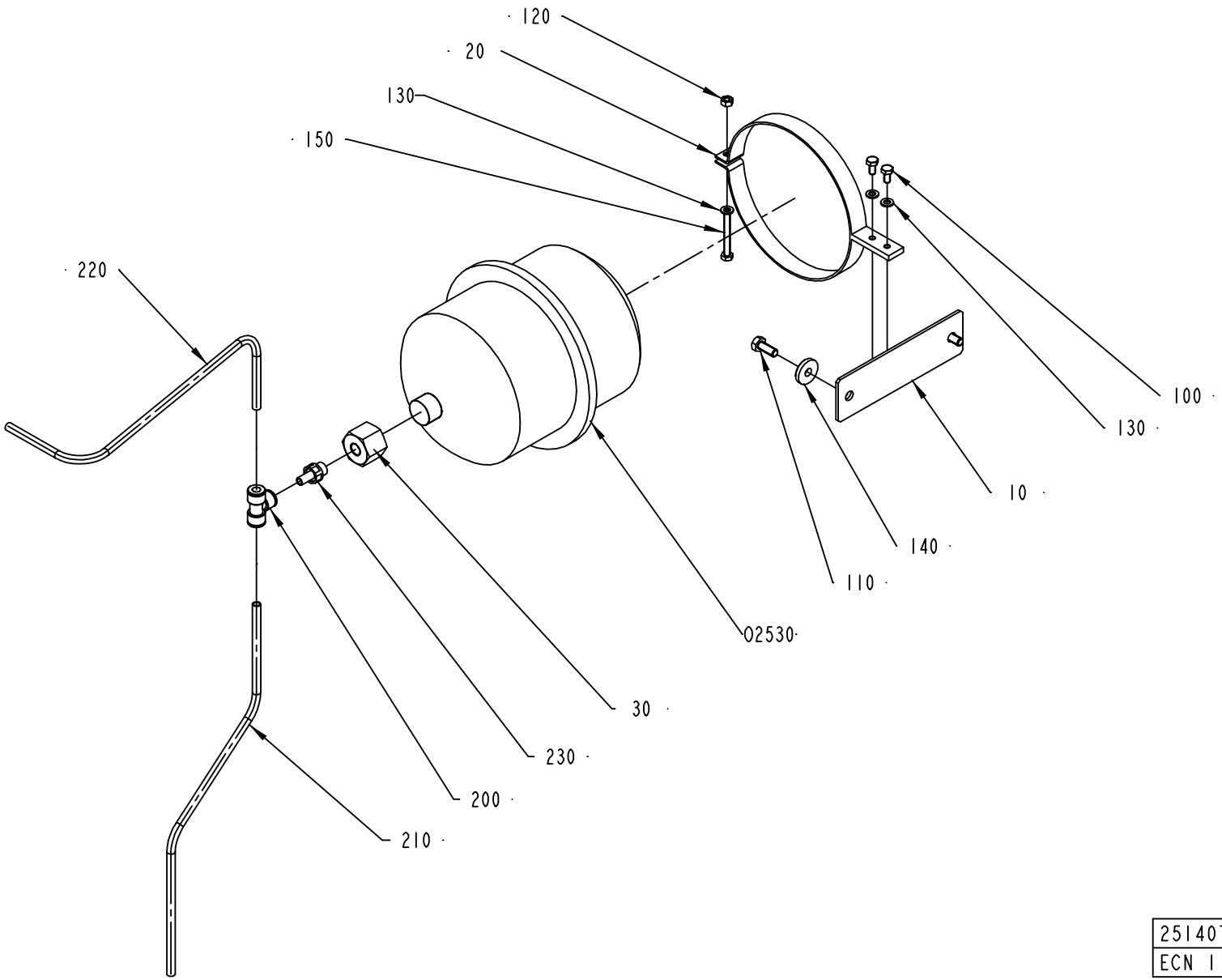

2514077-2
ECN 111591

ECM: 139557 - 20030711
Group number: 2514077-0100
Assembly Drawing: 2514077-2_1_AA

Pos	Part No	UN	Qty	Description	Page No
A3/FLEX					
200	90055-0276		1	T-CONNECTION 8 MM	
230	90055-0260		1	NIPPLE-8 MM G1/4"	
Common Parts					
010	2514087-0000		1	PLATE	
020	1484081-0000		1	BRACKET	
030	2514083-0000		1	REDUCTION NIPPLE	
100	312105-0366		2	SCREW M6S ISO 4017 M6X12 A480	
110	312105-0451		2	SCREW M6S ISO 4017 M8X20 A480	
120	312605-0316		1	HEXAGON NUT, M6M M6 A280	
130	315105-0153		3	WASHER BRB6,4X12RFR	
140	315125-0165		2	WASHER TBRSB 8,4X26X5 A4	
150	312109-0380		1	SCREW M6S ISO 4017 M6X50 A480	
210	90166-0118	MM	450	TUBE 8 MM PA BLACK	
220	90166-0118	MM	500	TUBE 8 MM PA BLACK	
O2530	90304-0020		1	LIQUID CONTAINER	

Pos	Part No	UN	Qty	Description	Page No

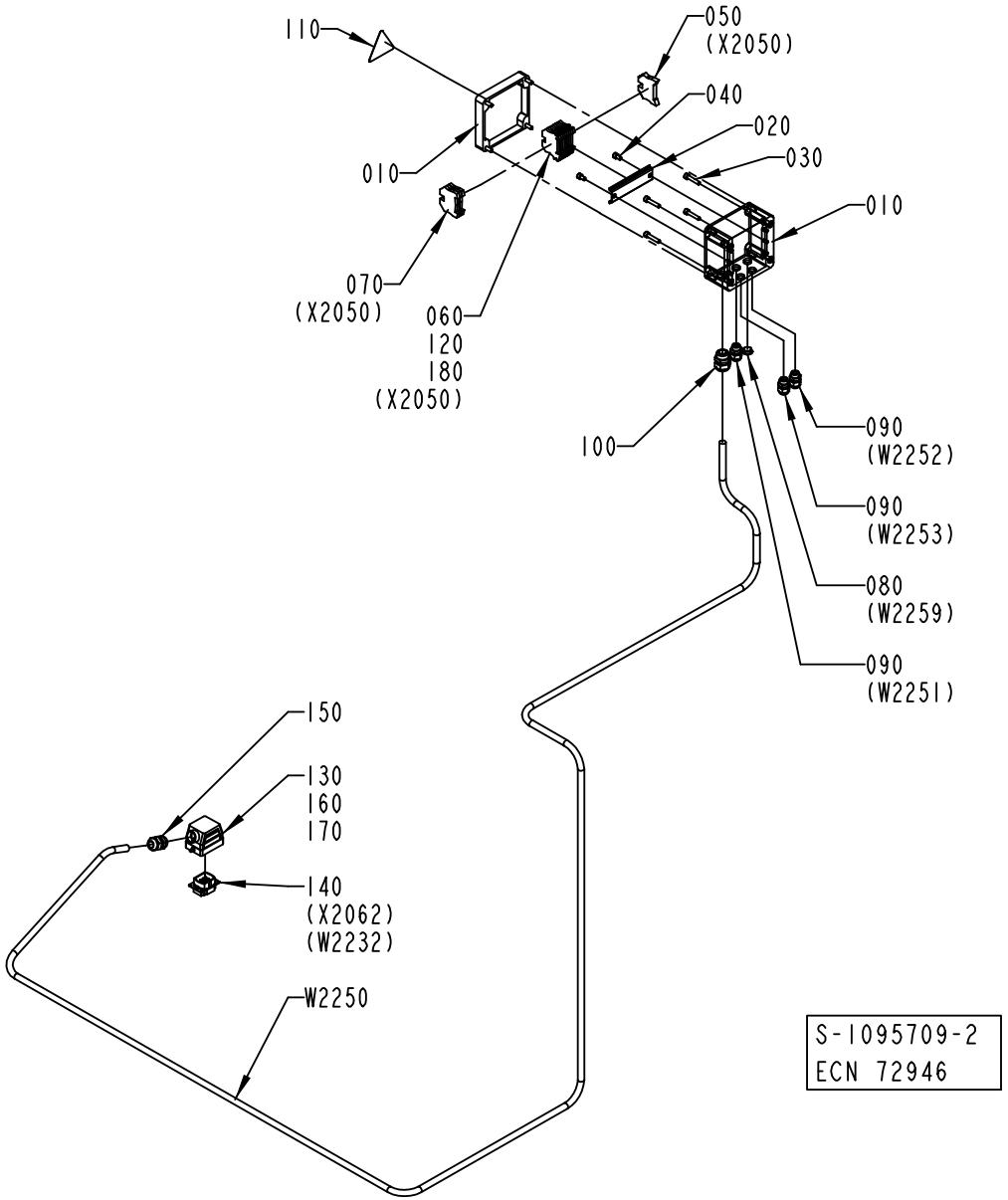
110
050
(X2050)
040
020
030
010
010
070
(X2050)
060
120
180
(X2050)
100
090
(W2252)
090
(W2253)
080
(W2259)
090
(W2251)
150
130
160
170
140
(X2062)
(W2232)
W2250
S-1095709-2
ECN 72946

ECM: 139556 - 20030711
Group number: 1095709-0200
Assembly Drawing: 1095709-2_1_AB

Pos	Part No	UN	Qty	Description	Page No
A3/FLEX					
W2250	351150-0406	MM	4000	CABLE OLFLEX 7X0,75 MM2 LIGHT/GREY	
Common Parts					
010	1041943-0000		1	CONNECTION BOX	
020	1129210-0000		1	MOUNTING RAIL	
030	312115-0374		4	SCREW ISO4762 M6X30 A4	
040	312115-0364		2	SCREW ISO4762 M6X10 A4	
050	353031-0203		1	END SUPPORT, WEW 35/2	
060	353021-0216		8	FEED THROUGH TERMINAL, 10200.8	
070	353024-0205		3	EARTH TERMINAL, 1010.1	
080	90002-0013		1	BLANK-OFF PLUG, PR 15,2 SKINDICHT-BLK9	
090	352103-0101		3	CABLE GLAND, ST 9, PR15,2/PG9	
100	352103-0110		1	CABLE GLAND, STR 16, PR22,5/PG16	
110	90194-0016		1	WARNING SIGN, RISK OF ELECTRIC SHOCK	
120	359011-0809		1	MARKING PLATES 5-FW 101-150	
130	90110-0226		1	CABLE HOOD 6-POL 70.350.0628.0	
140	90110-0159		1	MALE INSERT 70.310.0640.0	
150	352103-0108		1	CABLE GLAND, ST 13,5 , PR20,4/PG13,5	
160	359005-0050		1	MARKING LABEL KIT X, 04.841.4550.0	
170	359005-0010		1	MARKING LABEL KIT 0 - 9, 04.841.2150.0	
180	353034-0030		1	BRIDGE CONNECTOR WQV 2,5/10, 10544.6	

Pos	Part No	UN	Qty	Description	Page No

FOAM CLEANING UNIT

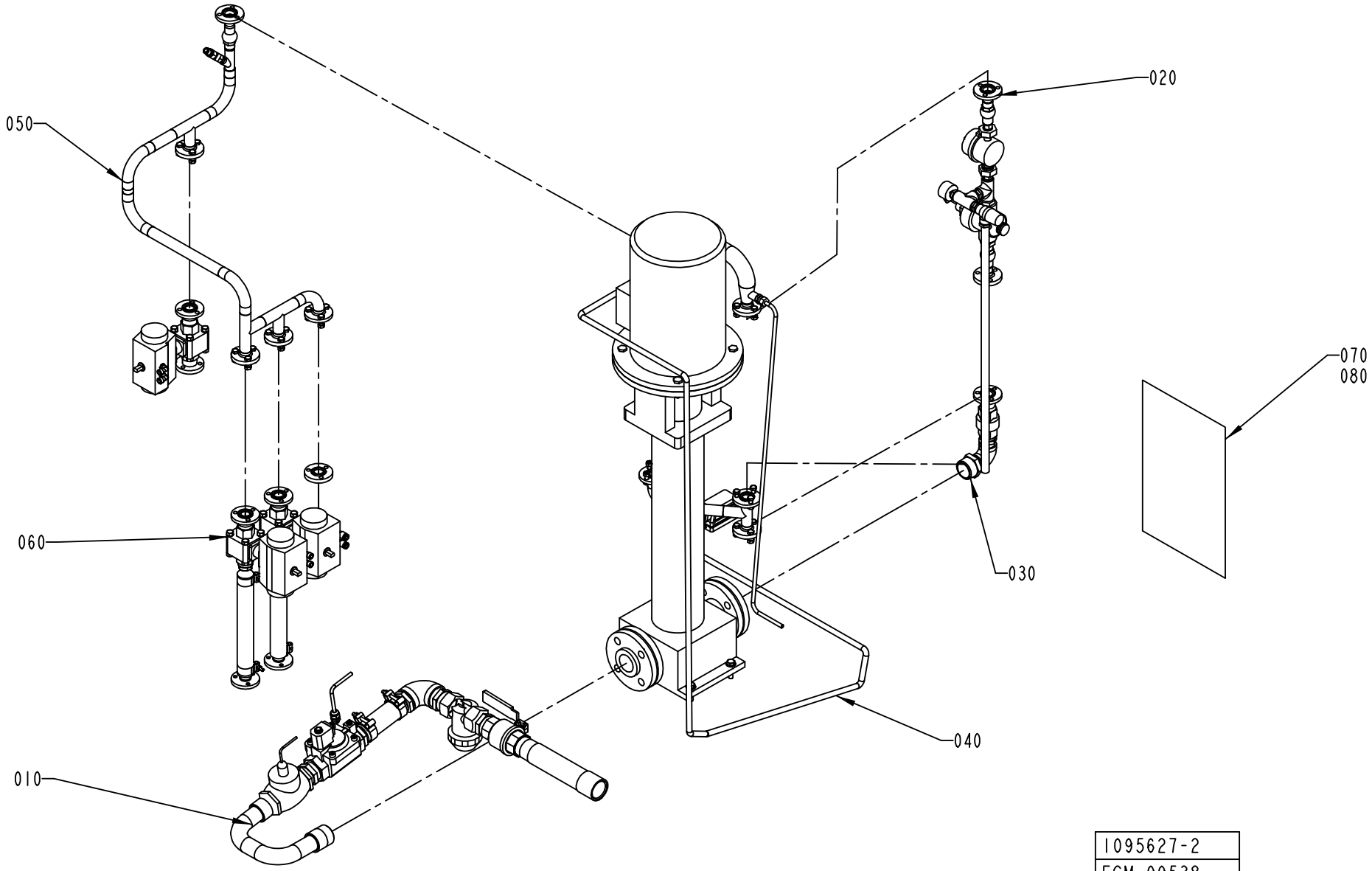

1095627-2
ECM 99538

ECM: 139558 - 20030711
Group number: 1095627-0300
Assembly Drawing: 1095627-2_1_AB

Pos	Part No	UN	Qty	Description	Page No
A3/FLEX 50HZ					
080	2512821-0000		1	EXTERNAL CLEANING DIAGRAM	
A3/FLEX 60HZ					
080	2512821-0000		1	EXTERNAL CLEANING DIAGRAM	
Common Parts					
010	1095672-0100		1	PIPE	**6-33**
020	1095673-0100		1	SIDE	**6-35**
030	1095675-0100		1	PIPE	**6-37**
040	1095676-0100		1	PUMP	**6-39, 6-41**
050	1095677-0100		1	BRANCHING PIPE	**6-43**
060	1095678-0300		1	BALL VALVE	**6-45**

Pos	Part No	UN	Qty	Description	Page No

Machine Type | Group Description | Used-In | Group Number | Page No

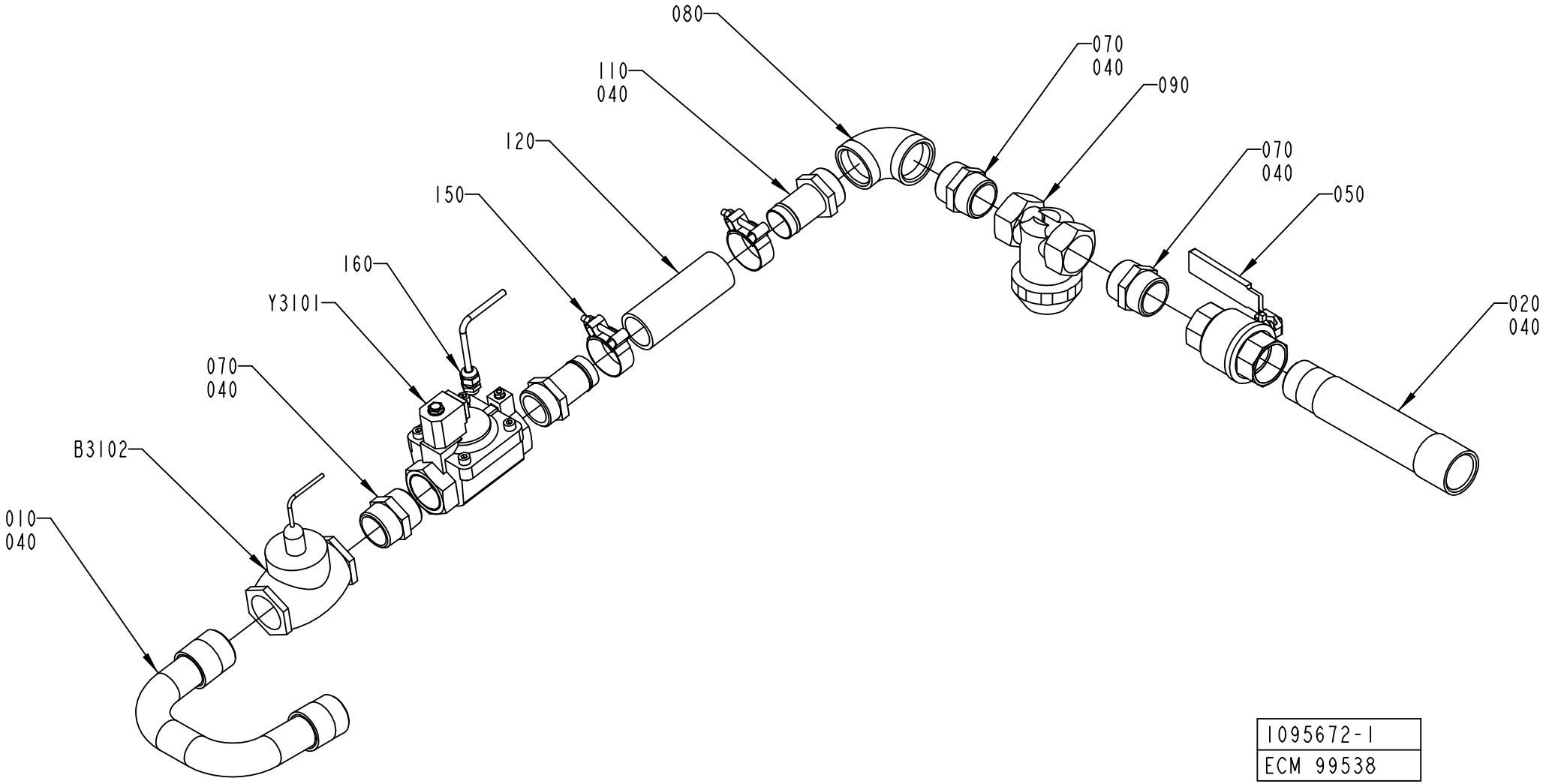
080
070
040
110
040
090
120
070
040
150
050
160
Y3101
020
040
070
040
B3102
010
040
1095672-1
ECM 99538

ECM: 102579 - 20020812
Group number: 1095672-0100
Assembly Drawing: 1095672-1_1_AD

Pos	Part No	UN	Qty	Description	Page No
-					
010	1041925-0000		1	PIPE	
020	1041926-0000		1	PIPE	
040	90144-0007	MM	1	TAPE	
050	90187-0147		1	BALL VALVE G11/2	
070	90330-0056		3	NIPPLES, EXT. THREAD. R-207 KR11/2	
080	90330-0057		1	ELBOW, 90 INT. THREAD, R-222R11/2	
090	90415-0032		1	FILTER / 3-02-00-1 1/2"	
	90415-0328		*1*	*FILTER INSERT*	
110	90055-0166		2	HOSE NIPPLE, EXT.THR. R11/2X38 MM	
120	90166-0236	MM	150	HOSE, 38/51 REINFORCED RUBBER	
150	90458-2850		2	HOSE CLIP , 51 MM	
160	352103-0101		1	CABLE GLAND, ST 9, PR15,2/PG9	
B3102	90274-0082		1	FLOW SWITCH, 2 - 3 L/MIN	
	90274-0322		*1*	*SPARE PART KIT*	
W2222	351150-0403	M	2	CABLE OLFLEX 3X0,75 MM2 LIGHT/GREY	
Y3101	90042-0254		1	SOLENOID VALVE, R1 1/2	
	90042-0557		*1*	*COIL V24DC-N3*	
	90458-2575		*1*	*DIAPHRAGM, R450466/B FOR 90042-0254*	

Pos	Part No	UN	Qty	Description	Page No

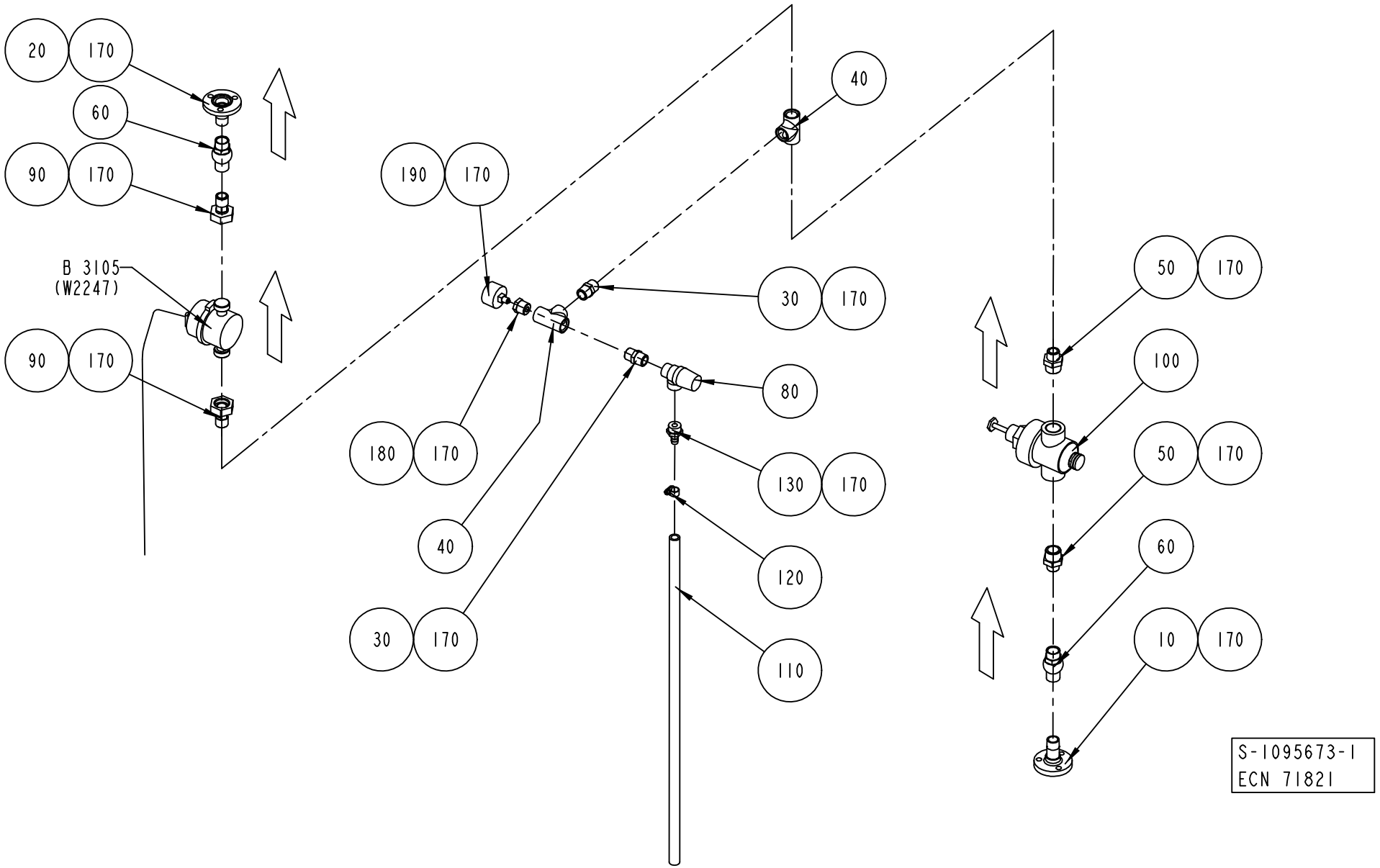
20
170
60
90
170
B 3105
(W2247)
90
170
190
170
40
30
170
80
180
170
130
170
40
120
30
170
110
50
170
100
50
170
60
10
170
S-1095673-1
ECN 71821

ECM: 89430 - 20010203
Group number: 1095673-0100
Assembly Drawing: 1095673-1_1_AD

Pos	Part No	UN	Qty	Description	Page No
-					
010	1036826-0000		1	PIPE	
020	1036827-0000		1	PIPE	
030	90330-0021		2	NIPPLES, EXT. THREAD. R-207R1/2	
040	90330-0049		2	T-PIPE, INT. THREAD, R-221R1/2	
050	90330-0080		2	NIPPLES, EXT. THREAD. R3/4-R1/2	
060	90230-0042		2	NON-RETURN VALVE 1/2"	
080	90187-0133		1	SAFETY VALVE, 10 BARS, R1/2, R1/2	
090	90030-0465		2	STRAIGHT CONNECTION, MAD DN 15	
	90005-0156		*1*	*WASHER PLAIN ROUND 16/24, H=1,5*	
100	90113-0098		1	PRESSURE REGULATOR	
110	90166-0121	MM	700	HOSE	
120	342991-0100		1	HOSE CLIP,WORM DRIVE TYPE 10-13	
130	342901-0105		1	HOSE NIPPLE, EXT.THR. R1/2-12 MM	
170	90144-0007	MM	1	TAPE	
180	90330-0036		1	BUSHING, INT/EXT. THR. RP1/8-RP1/2	
190	90043-0043		1	PRESSURE GAUGE, 0-10 BAR 1/8"	
B3105	90243-0245		1	MEASURING INSTRUMENT	

Pos	Part No	UN	Qty	Description	Page No

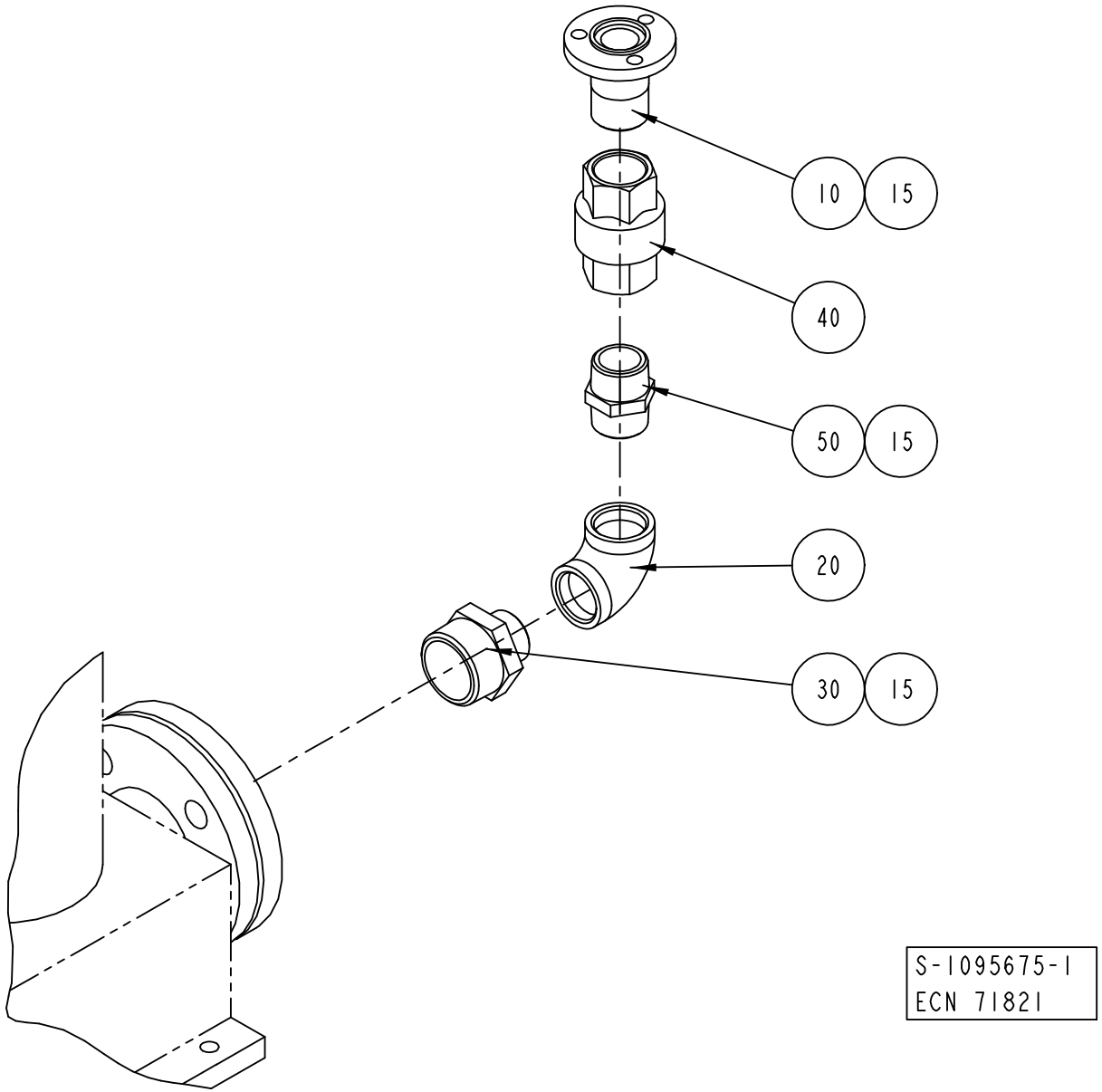
10
15
40
50
15
20
30
15
S-1095675-1
ECN 71821

ECM: 89431 - 20010203
Group number: 1095675-0100
Assembly Drawing: 1095675-1_1_AB

Pos	Part No	UN	Qty	Description	Page No
-					
010	1036794-0000		1	PIPE	
015	90144-0007	MM	1	TAPE	
020	90330-0014		1	ELBOW, 90 INT. THREAD, R-222R1	
030	90330-0045		1	NIPPLES, EXT. THREAD. R-209 KR11/2- KR1	
040	90230-0044		1	NON-RETURN VALVE 1"	
	90230-0308		*1*	*GASKET KIT*	
050	342203-0120		1	NIPPLES, EXT. THREAD, HEXAGON,ÿNO. 209	

Pos	Part No	UN	Qty	Description	Page No

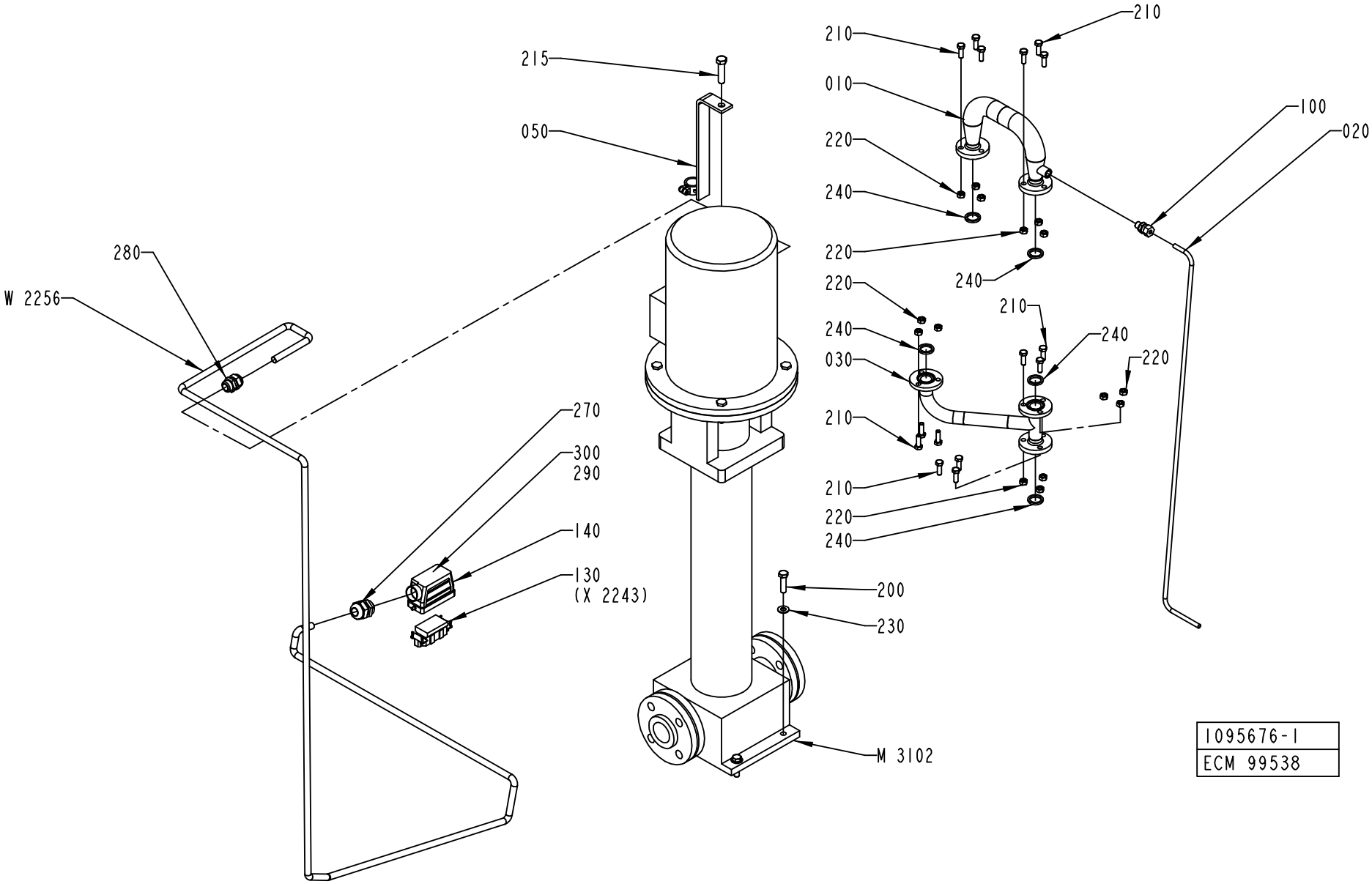
210
210
215
010
050
220
240
100
020
280
220
240
W 2256
220
210
240
240
030
220
270
210
300
290
140
210
130
(X 2243)
220
240
200
230
M 3102
1095676-1
ECM 99538

ECM: 139559 - 20030711
Group number: 1095676-0100
Assembly Drawing: 1095676-1_1_AC

This list covers pages from 6-38 to 6-41

Pos	Part No	UN	Qty	Description	Page No
A3/FLEX 50HZ (See drawing on page: 6-38)					
020	1140642-0000		1	PIPE	
050	1140670-0000		1	BRACKET	
M3102	90321-0117		1	PUMP LOWARA SV8-14 F75T	
	90321-0593		*1*	*SEAL*	
W2256	351150-0166	MM	4000	CABLE OLFLEX 4X4 MM2 LIGHT/GREY	
A3/FLEX 60HZ (See drawing on page: 6-40)					
020	1140642-0000		1	PIPE	
050	1499786-0000		1	BRACKET	
M3102	90321-0120		1	PUMP SV8-09 F756T, 380V60HZ	
	90321-0593		*1*	*SEAL*	
W2256	351150-0166	MM	4000	CABLE OLFLEX 4X4 MM2 LIGHT/GREY	
Common Parts					
010	1036828-0000		1	TANK	
030	1041946-0000		1	PIPE	
100	90030-0185		1	CONN. STR. GA-8-G1/4	
130	90110-0156		1	MALE INSERT 70.210.0653.0	
140	90110-0227		1	CABLE HOOD 6-16-POL 71.350.1628.0	
200	312105-0499		4	SCREW M6S ISO 4014 M10X40 A480	
210	312105-0453		15	SCREW M6S ISO 4017 M8X25 A480	
215	312105-0542		1	SCREW M6S ISO 4014 M12X50 A480	
220	312605-0318		15	HEXAGON NUT, M6M M8 A280	
230	315105-0173		4	WASHER BRB10,5X22RFR	
240	315229-0103		5	GASKETS, 23,1X30,1X3,7 MM 1" FDA	
270	352103-0115		1	CABLE GLAND, STR 21, PR28,3/PG21	
280	352103-0111		1	CABLE GLAND, ST 16, PR22,5/PG16	
290	359005-0010		2	MARKING LABEL KIT 0 - 9, 04.841.2150.0	
300	359005-0050		1	MARKING LABEL KIT X, 04.841.4550.0	

Pos	Part No	UN	Qty	Description	Page No

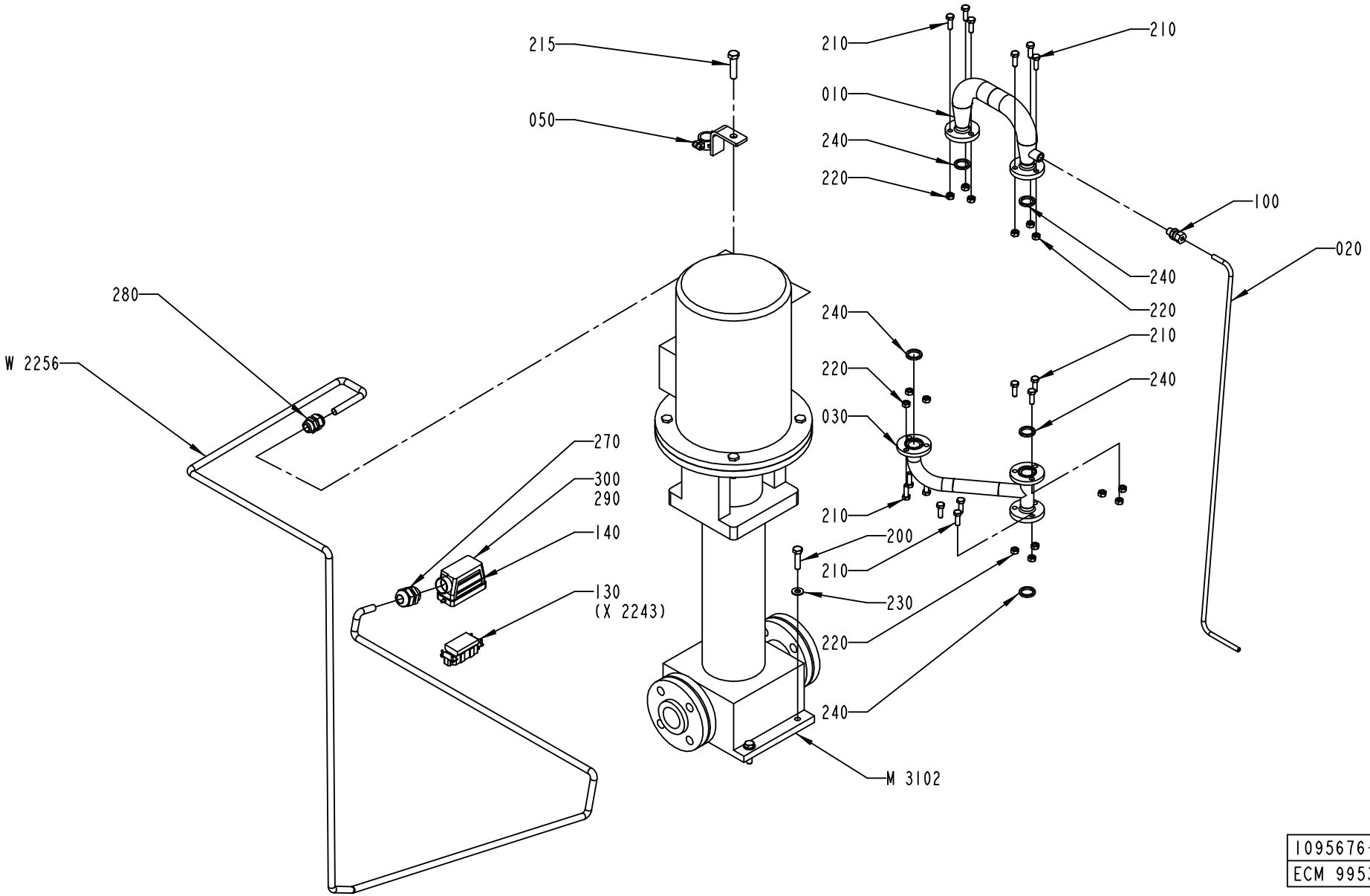

1095676-2
ECM 99538

ECM: 139559 - 20030711
Group number: 1095676-0100
Assembly Drawing: 1095676-2_1_AA

This list covers pages from 6-38 to 6-41

Pos	Part No	UN	Qty	Description	Page No
A3/FLEX 50HZ (See drawing on page: 6-38)					
020	1140642-0000		1	PIPE	
050	1140670-0000		1	BRACKET	
M3102	90321-0117		1	PUMP LOWARA SV8-14 F75T	
	90321-0593		*1*	*SEAL*	
W2256	351150-0166	MM	4000	CABLE OLFLEX 4X4 MM2 LIGHT/GREY	
A3/FLEX 60HZ (See drawing on page: 6-40)					
020	1140642-0000		1	PIPE	
050	1499786-0000		1	BRACKET	
M3102	90321-0120		1	PUMP SV8-09 F756T, 380V60HZ	
	90321-0593		*1*	*SEAL*	
W2256	351150-0166	MM	4000	CABLE OLFLEX 4X4 MM2 LIGHT/GREY	
Common Parts					
010	1036828-0000		1	TANK	
030	1041946-0000		1	PIPE	
100	90030-0185		1	CONN. STR. GA-8-G1/4	
130	90110-0156		1	MALE INSERT 70.210.0653.0	
140	90110-0227		1	CABLE HOOD 6-16-POL 71.350.1628.0	
200	312105-0499		4	SCREW M6S ISO 4014 M10X40 A480	
210	312105-0453		15	SCREW M6S ISO 4017 M8X25 A480	
215	312105-0542		1	SCREW M6S ISO 4014 M12X50 A480	
220	312605-0318		15	HEXAGON NUT, M6M M8 A280	
230	315105-0173		4	WASHER BRB10,5X22RFR	
240	315229-0103		5	GASKETS, 23,1X30,1X3,7 MM 1" FDA	
270	352103-0115		1	CABLE GLAND, STR 21, PR28,3/PG21	
280	352103-0111		1	CABLE GLAND, ST 16, PR22,5/PG16	
290	359005-0010		2	MARKING LABEL KIT 0 - 9, 04.841.2150.0	
300	359005-0050		1	MARKING LABEL KIT X, 04.841.4550.0	

Pos	Part No	UN	Qty	Description	Page No

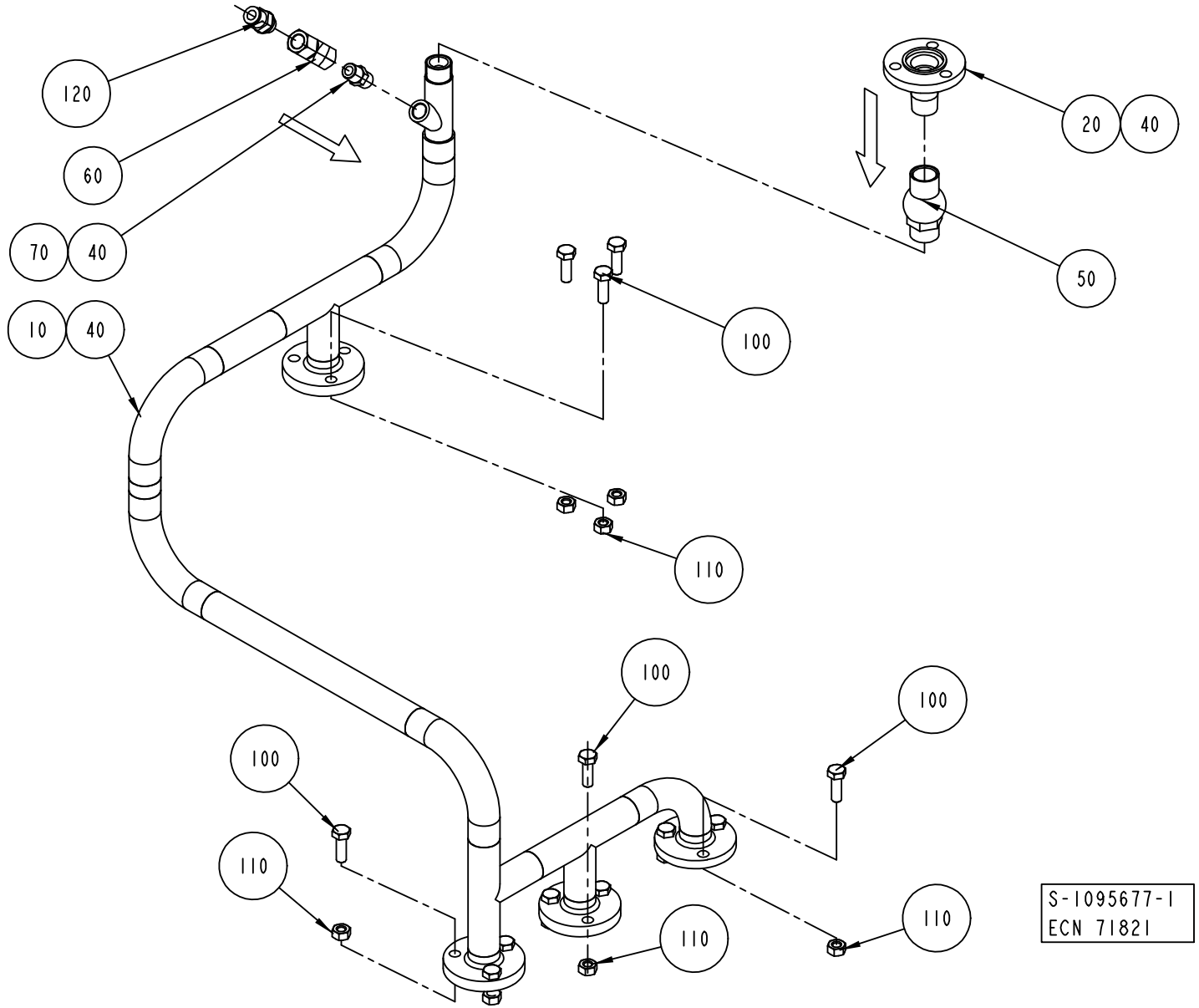
120
60
70
40
10
40
20
40
50
100
110
100
100
100
110
110
110
S-1095677-1
ECN 71821

ECM: 89433 - 20010203
Group number: 1095677-0100
Assembly Drawing: 1095677-1_1_AB

Pos	Part No	UN	Qty	Description	Page No
-					
010	1041934-0000		1	PIPE	
020	1036827-0000		1	PIPE	
040	90144-0007	MM	1	TAPE	
050	90230-0042		1	NON-RETURN VALVE 1/2"	
060	90235-0151		1	NON-RETURN VALVE, 346-020-000	
070	90330-0043		1	NIPPLES, EXT. THREAD. R-207R1/4	
100	312115-0453		12	SCREW ISO4762 M8X25 A4	
110	312605-0318		12	HEXAGON NUT, M6M M8 A280	
120	342722-0205		1	STRAIGHT COUPLING D=8-G1/4"	

Pos	Part No	UN	Qty	Description	Page No

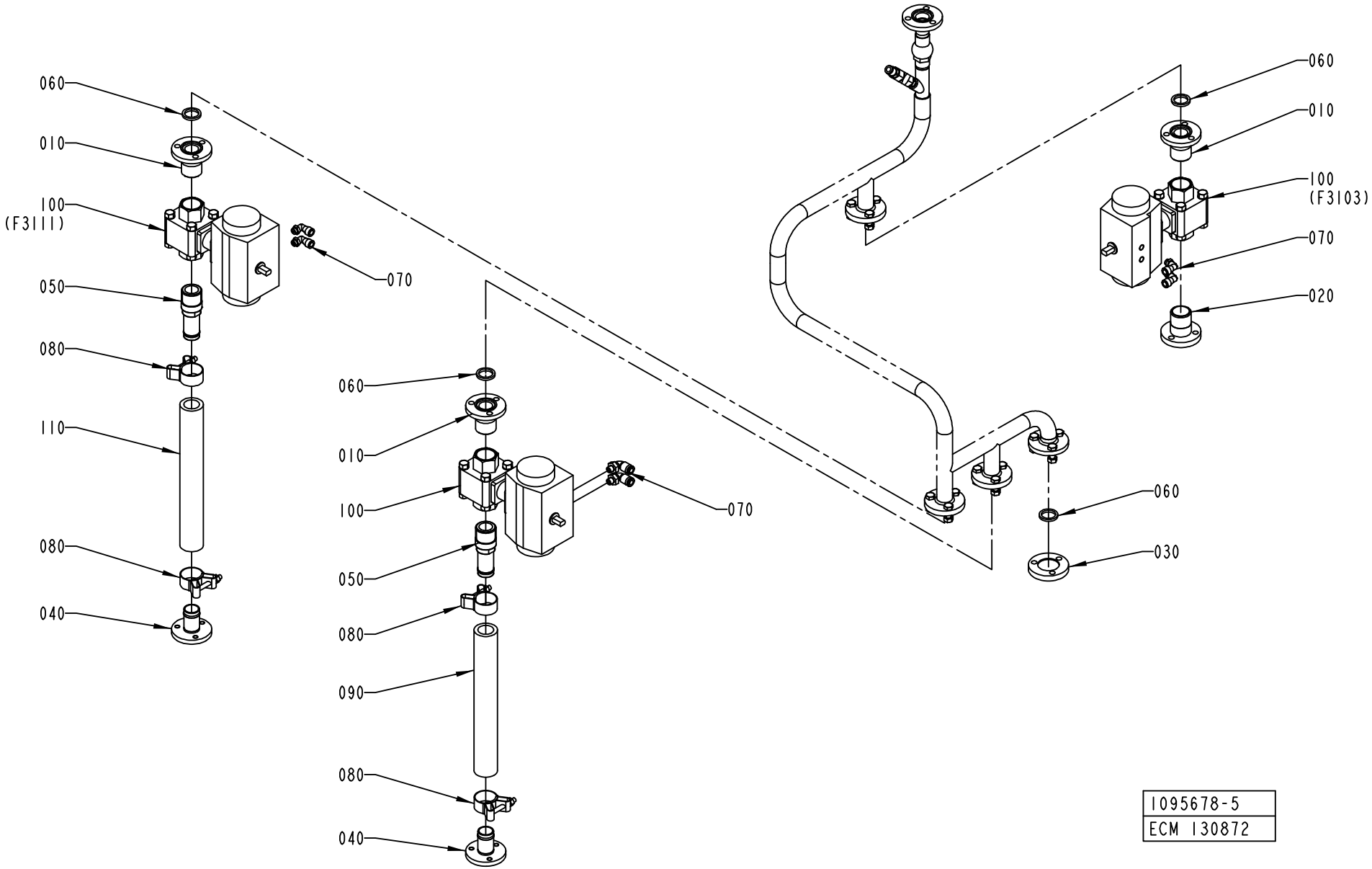
060
010
100
(F3111)
050
080
110
080
040
070
060
010
100
050
080
090
080
040
070
060
010
100
(F3103)
070
020
060
030
1095678-5
ECM 130872

ECM: 148670 - 20031208
Group number: 1095678-0300
Assembly Drawing: 1095678-5_1_AC

Pos	Part No	UN	Qty	Description	Page No
A3/FLEX					
010	2522148-0000		3	PIPE	
020	2522184-0000		1	PIPE	
030	1037129-0000		1	LID	
040	1195466-0000		2	PIPE	
050	1487023-0000		2	PIPE	
070	90458-2964		6	ELBOW PIPE JOINT, EXT.THREAD, D=8MM-G1/8	
080	90459-2366		4	HOSE CLIP, (32)-35	
100	90187-0148		3	BALL VALVE G1	
	90187-0319		*1*	*GASKET UNIT*	
Common Parts					
060	315229-0103		4	GASKETS, 23,1X30,1X3,7 MM 1" FDA	
090	90166-0233	MM	300	HOSE	
110	90166-0233	MM	300	HOSE	

Pos	Part No	UN	Qty	Description	Page No

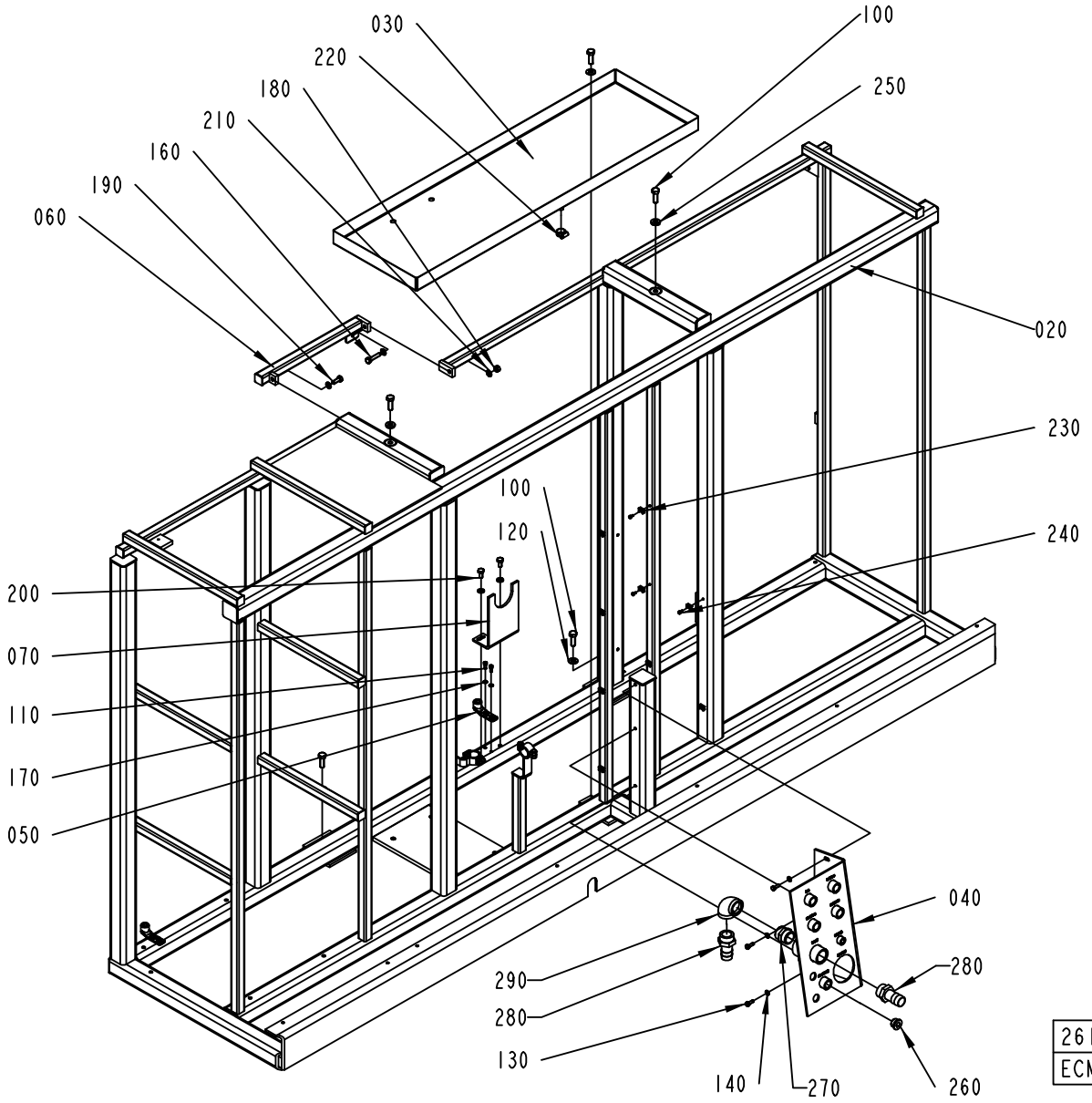
030
220
180
210
160
190
060
100
250
020
230
240
100
120
200
070
110
170
050
040
280
290
280
130
140
270
260
2613034-2
ECM 164885

ECM: 167693 - 20040607
Group number: 2613034-0100
Assembly Drawing: 2613034-2_1_AA

Pos	Part No	UN	Qty	Description	Page No
A3/FLEX					
270	342700-0116		1	NIPPLES,HEXAGON,EXT.G-THREAD G1"-G1"	
280	90055-0053		2	HOSE NIPPLE, EXT.THR. R1-25 MM	
290	90330-0014		1	ELBOW, 90 INT. THREAD, R-222R1	
Common Parts					
020	2613033-0000		1	MACHINE BODY	
030	1041963-0000		1	WASTE BOX	
040	1129387-0000		1	CONNECTION TABLE	
050	1538868-0000		3	BRACKET	
060	1255293-0000		1	CROSS BAR	
070	2524363-0000		1	HANGER	
100	312105-0495		5	SCREW M6S ISO 4017 M10X30 A480	
110	312115-0327		6	SCREW ISO4762 M5X12 A4	
120	315105-0173		3	WASHER BRB10,5X22RFR	
130	312105-0368		3	SCREW M6S ISO 4017 M6X16 A480	
140	315105-0153		3	WASHER BRB6,4X12RFR	
150	90261-0069		1	PLUG, BLIND, PLASTIC, NO. 055-0615	
160	312109-0457		1	SCREW M6S ISO 4017 M8X35 A480	
170	315105-0146		6	WASHER BRB5,3X10RFR	
180	312605-0318		1	HEXAGON NUT, M6M M8 A280	
190	312105-0451		1	SCREW M6S ISO 4017 M8X20 A480	
200	312105-0449		2	SCREW M6S ISO 4017 M8X16 A480	
210	315105-0165		5	WASHER BRB8,4X16RFR	
220	342991-0102		1	HOSE CLIP,WORM DRIVE TYPE (16)-19	
230	352113-0205		15	ANCHOR PLATES FOR STRIPS, TYPE TM2S8-C10	
240	312125-0287		15	SCREW ISO 1207 M4X8 A4	
250	315115-0173		2	WASHER PLAIN, TBRB 10,5/22 H=4	
260	342713-0213		1	PLUG, EXT THREAD HEX SOCKET 8638-00-120	

Pos	Part No	UN	Qty	Description	Page No

Machine Type | Group Description | Used-In | Group Number | Page No

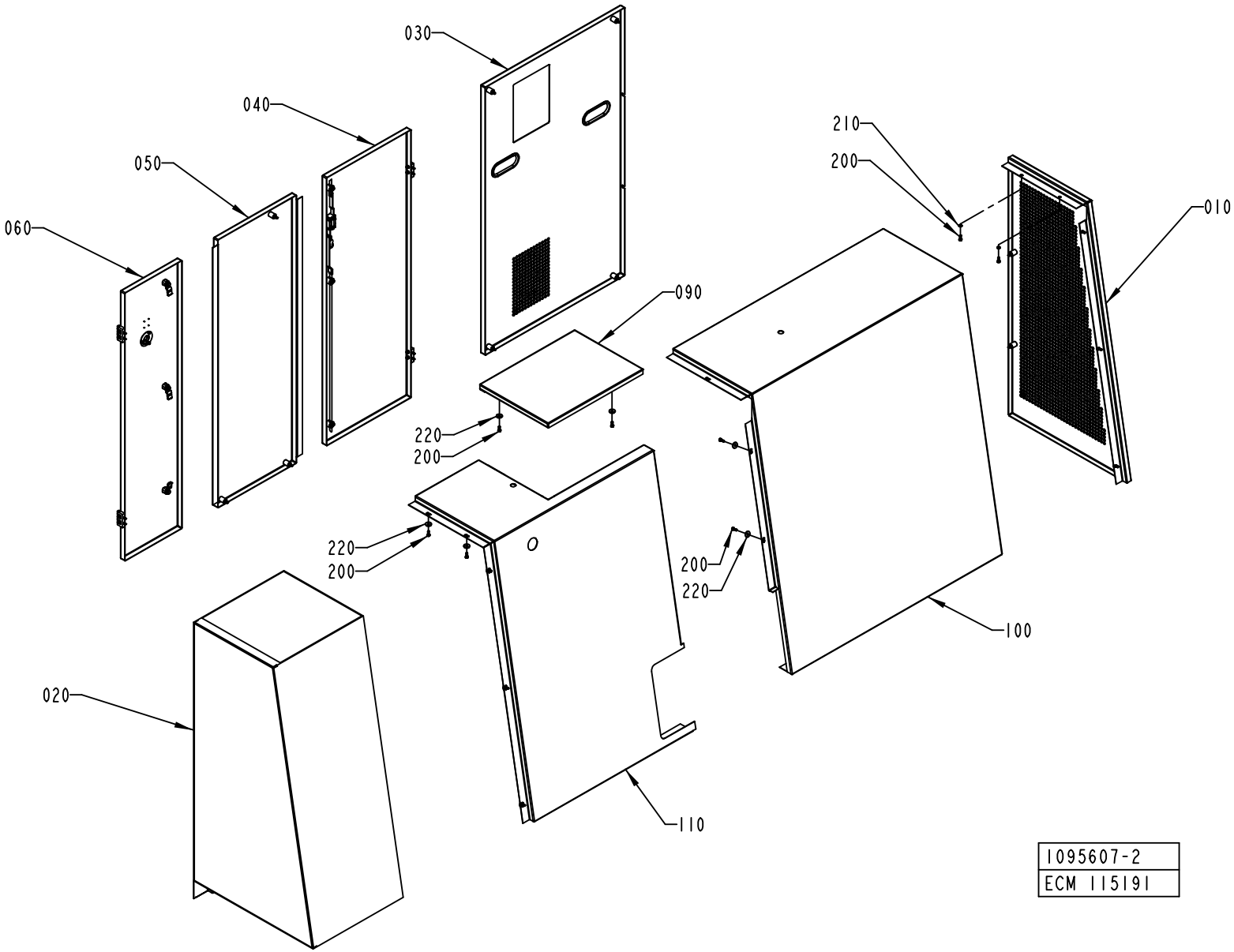
030
040
050
060
210
200
010
090
220
200
220
200
200
220
100
020
110
1095607-2
ECM 115191

ECM: 115191 - 20030403
Group number: 1095607-0200
Assembly Drawing: 1095607-2_1_AC

Pos	Part No	UN	Qty	Description	Page No
-					
010	1095883-0200		1	GABLE PLATE	**6-51**
020	1095886-0200		1	COVERING PANEL	**6-53**
030	1095888-0200		1	HATCH	**6-57**
040	1095889-0100		1	DOOR	**6-59**
050	1095890-0200		1	HATCH	**6-61**
060	1095891-0200		1	DOOR	**6-63**
090	1255637-0000		1	COVER	
100	1255636-0000		1	COVERING PANEL	
110	1255638-0000		1	COVERING PANEL	
200	312105-0368		19	SCREW M6S ISO 4017 M6X16 A480	
210	315105-0153		5	WASHER BRB6,4X12RFR	
220	315125-0153		14	WASHER TBRSB 6,4X22X4 A4	

Pos	Part No	UN	Qty	Description	Page No

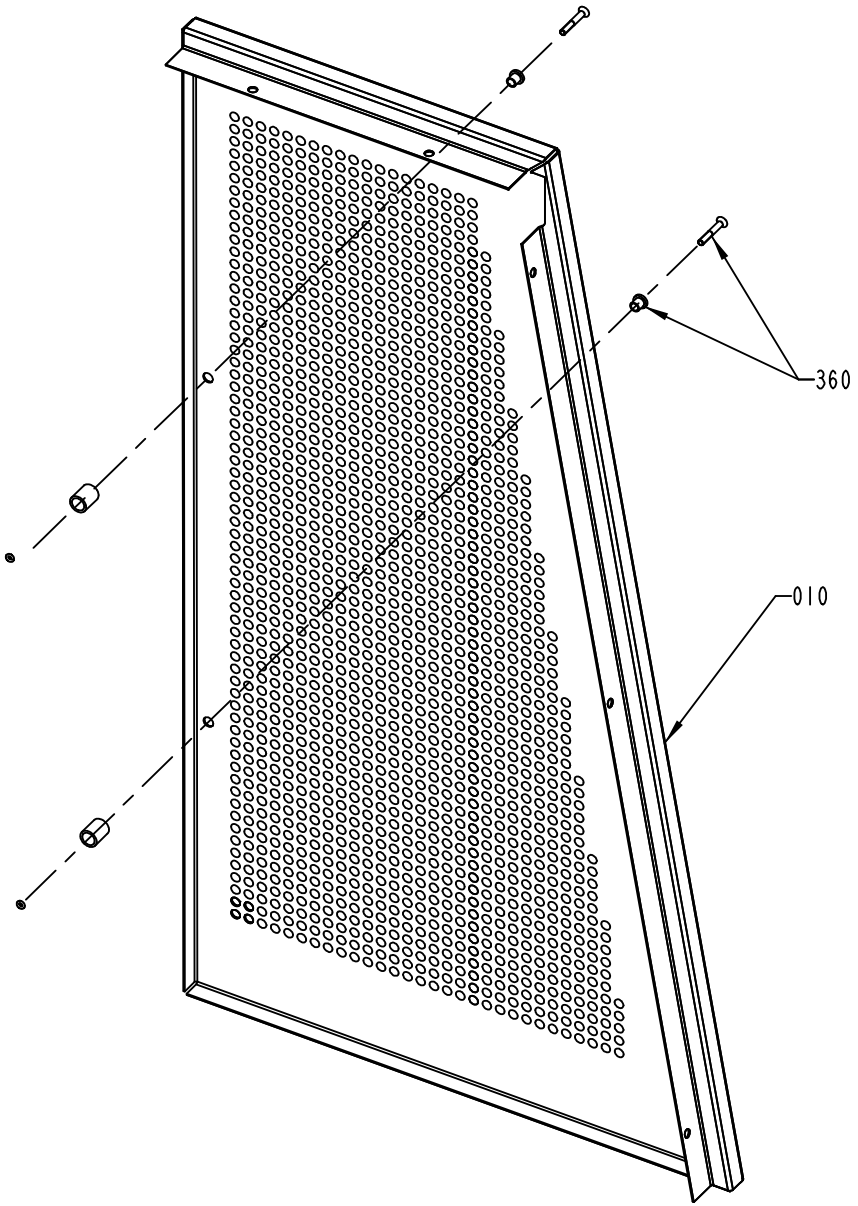
360
010

ECM: 70233 - 19960523
Group number: 1095883-0200
Assembly Drawing: 1095883-2_1_AA

Pos	Part No	UN	Qty	Description	Page No
-					
010	1255671-0000		1	GABLE PLATE	
360	90226-0458		2	MOUNTING SCREW	

Pos	Part No	UN	Qty	Description	Page No

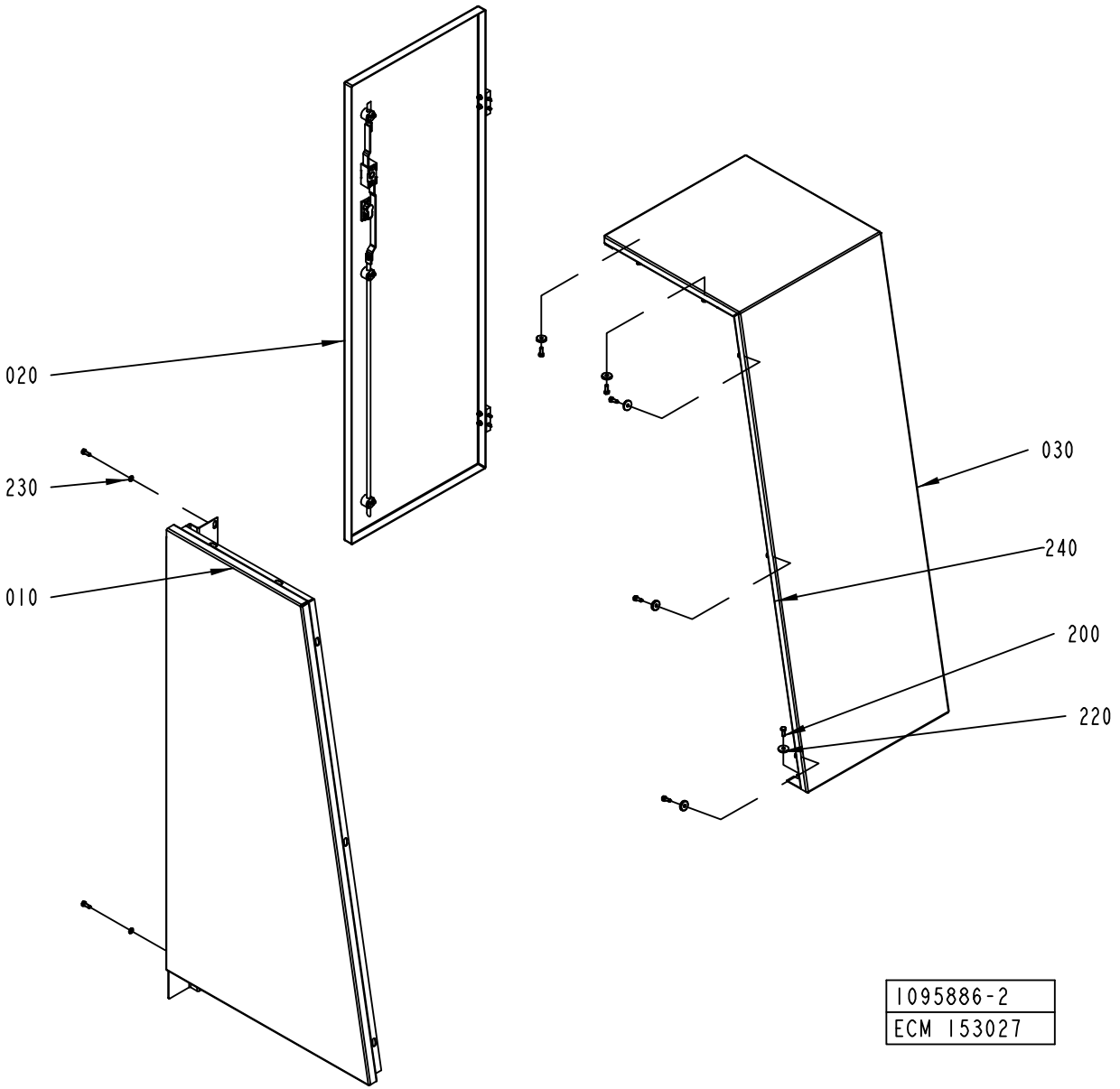
020
230
010
030
240
200
220
1095886-2
ECM 153027

ECM: 153027 - 20031117
Group number: 1095886-0200
Assembly Drawing: 1095886-2_1_AF

Pos	Part No	UN	Qty	Description	Page No
-					
010	2665129-0000		1	GABLE PLATE	
020	1484889-0100		1	DOOR	**6-55**
030	1041967-0000		1	COVERING PANEL	
200	312105-0368		7	SCREW M6S ISO 4017 M6X16 A480	
220	315125-0153		7	WASHER TBRSB 6,4X22X4 A4	
230	315105-0153		2	WASHER BRB6,4X12RFR	
240	90143-0060	MM	1120	EDGE STRIP 9,5X6,3MM BLACK PVC	

Pos	Part No	UN	Qty	Description	Page No

Machine Type | Group Description | Used-In | Group Number | Page No

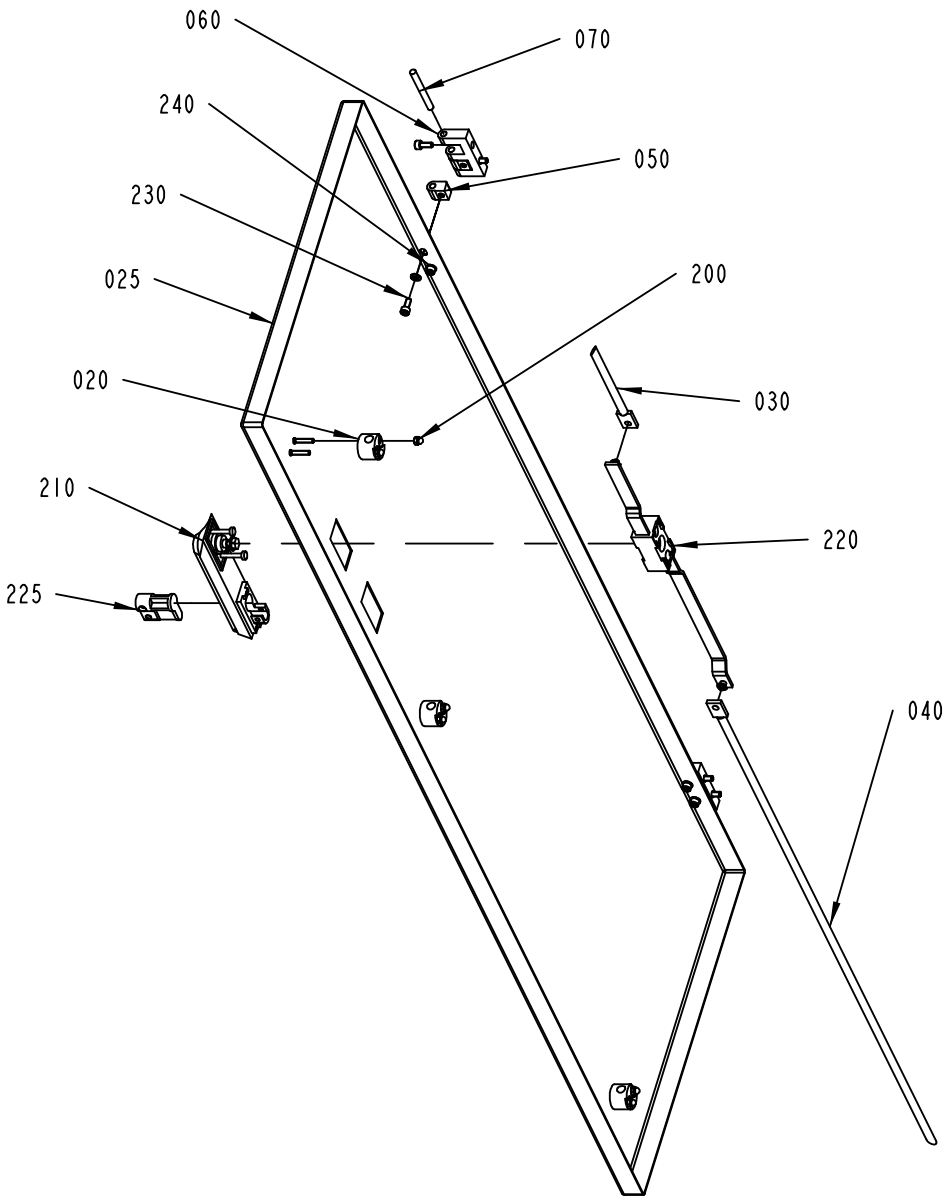

1484889-1
ECM 153027

ECM: 154958 - 20031117
Group number: 1484889-0100
Assembly Drawing: 1484889-1_1_AB

Pos	Part No	UN	Qty	Description	Page No
-					
020	1129274-0000		3	GUIDE LUG	
025	1484890-0000		1	DOOR	
030	2665132-0000		1	LOCKING ARM	
040	2665131-0000		1	LOCKING ARM	
050	1035794-0000		4	BLOCKING PIECE	
060	1035792-0000		2	E-HINGE	
070	988685-0000		2	PIN	
200	312705-0312		6	NUT HEX. DOMED CAP MHM-6 M4 A280	
210	90237-0126		1	TURNING HANDLE "REPBY 90237-175"	
220	90237-0153		1	LOCK HOUSING, 1121-U26-0B	
225	90237-0128		1	LOCK CYLINDER, 1109-U3	
230	312115-0327		8	SCREW ISO4762 M5X12 A4	
240	315105-0146		4	WASHER BRB5,3X10RFR	

Pos	Part No	UN	Qty	Description	Page No

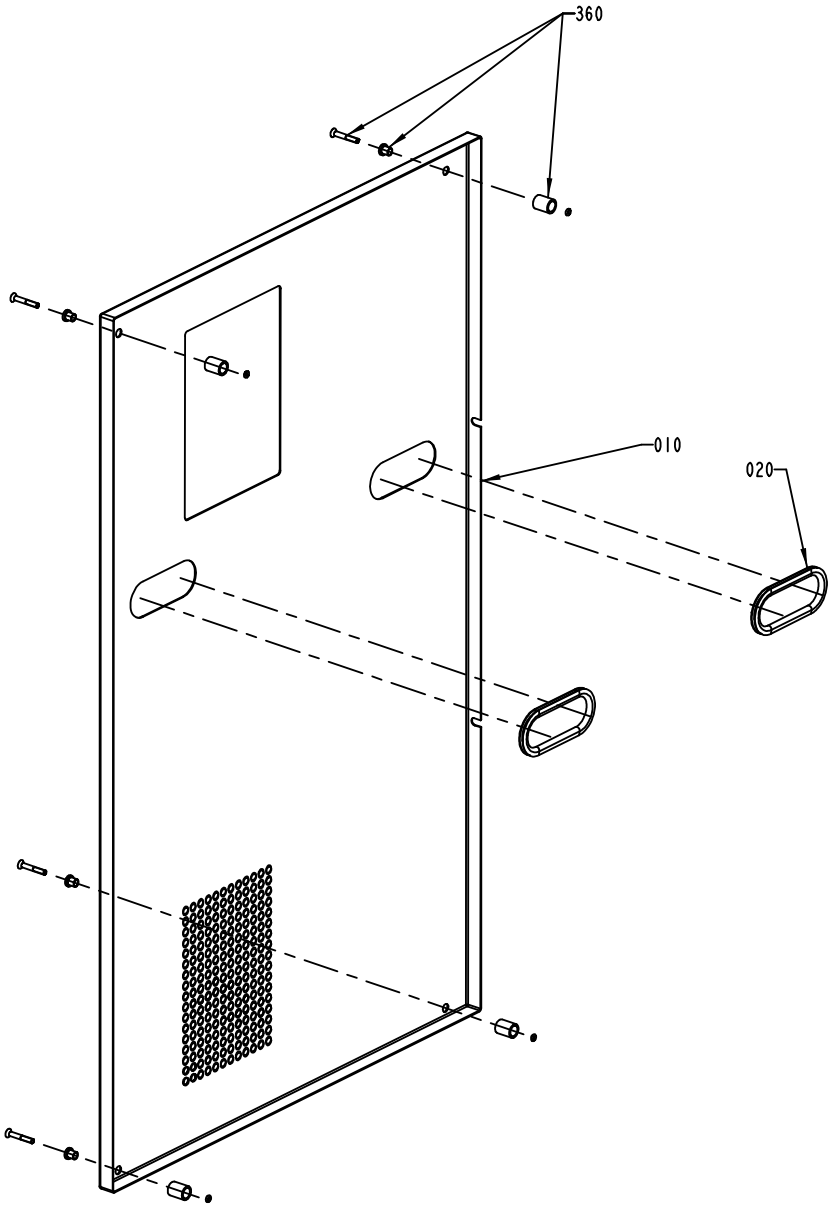
360
010
020

ECM: 70357 - 19970613
Group number: 1095888-0200
Assembly Drawing: 1095888-2_1_AB

Pos	Part No	UN	Qty	Description	Page No
-					
010	1255633-0000		1	HATCH	
020	90143-0060	M	1	EDGE STRIP 9,5X6,3MM BLACK PVC	
360	90226-0458		4	MOUNTING SCREW	

Pos	Part No	UN	Qty	Description	Page No

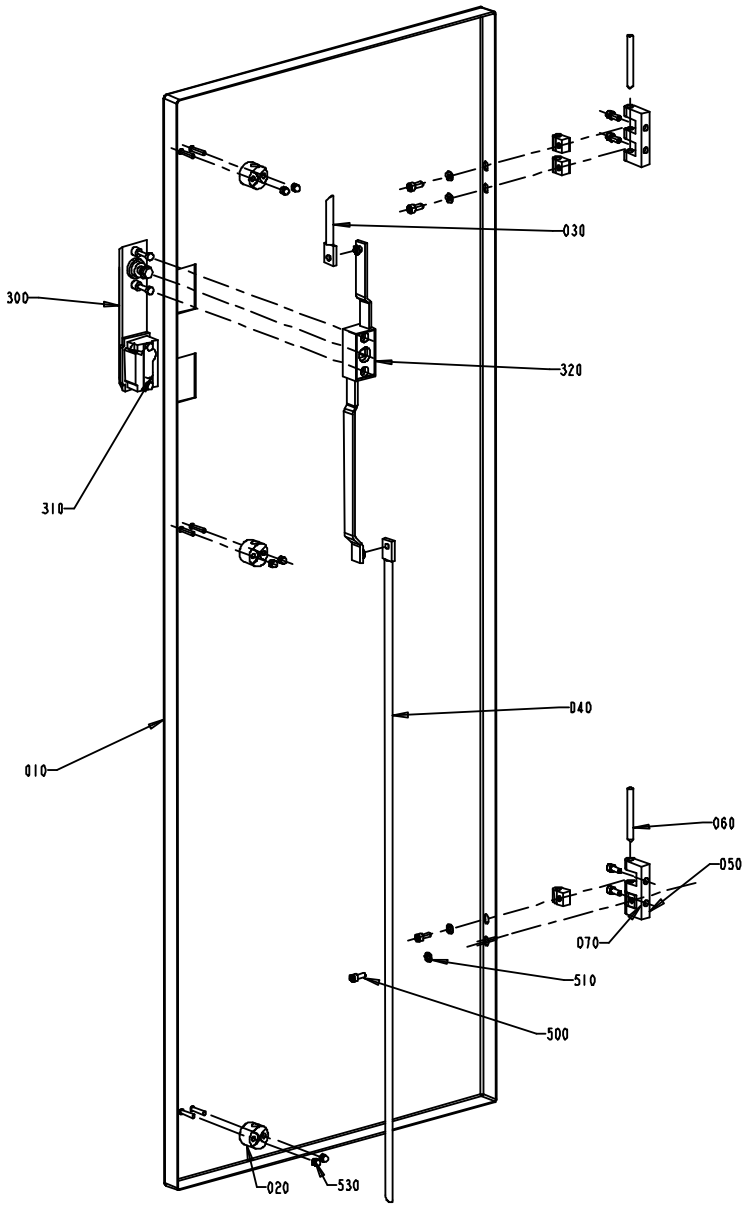
030
300
320
310
040
010
060
050
070
510
500
020
530

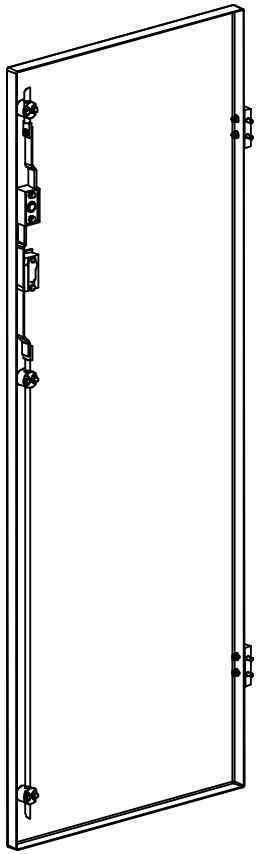

ECM: 116234 - 20030403
Group number: 1095889-0100
Assembly Drawing: 1095889-1_1_AA

Pos	Part No	UN	Qty	Description	Page No
-					
010	1041970-0000		1	DOOR	
020	1129274-0000		1	GUIDE LUG	
030	1036304-0001		1	LOCKING ARM	
040	1036304-0014		1	LOCKING ARM	
050	1035792-0000		2	E-HINGE	
060	988685-0000		2	PIN	
070	1035794-0000		4	BLOCKING PIECE	
300	90237-0126		1	TURNING HANDLE "REPBY 90237-175"	
310	90237-0128		1	LOCK CYLINDER, 1109-U3	
320	90237-0153		1	LOCK HOUSING, 1121-U26-0B	
500	312115-0327		8	SCREW ISO4762 M5X12 A4	
510	315105-0146		4	WASHER BRB5,3X10RFR	
530	312705-0312		6	NUT HEX. DOMED CAP MHM-6 M4 A280	

Pos	Part No	UN	Qty	Description	Page No

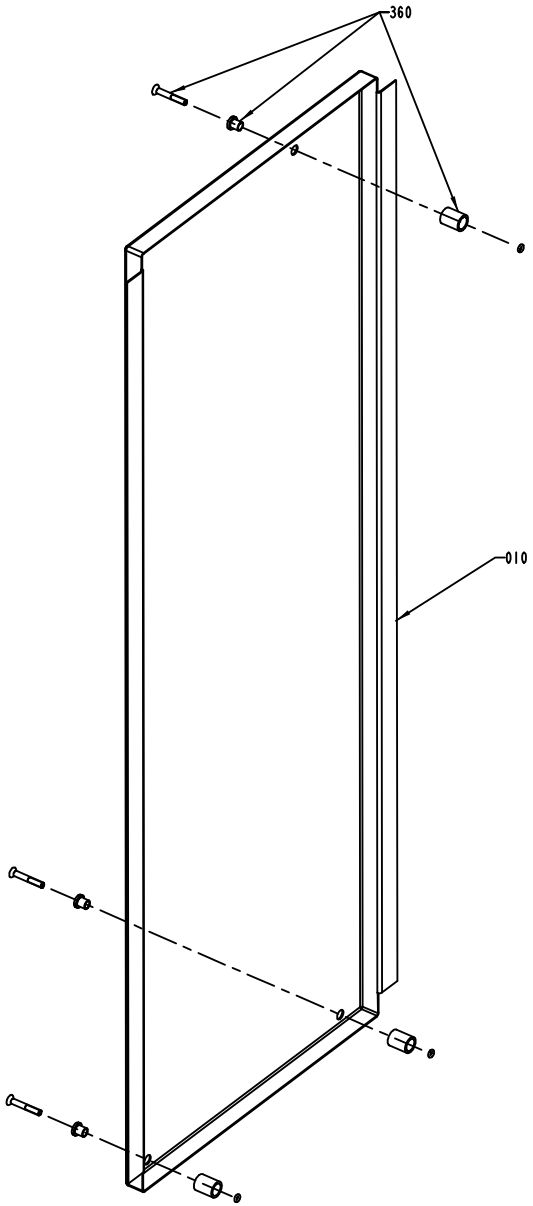
360
010

ECM: 70233 - 19960523
Group number: 1095890-0200
Assembly Drawing: 1095890-2_1_AA

Pos	Part No	UN	Qty	Description	Page No
-					
010	1255635-0000		1	HATCH	
360	90226-0458		3	MOUNTING SCREW	

Pos	Part No	UN	Qty	Description	Page No

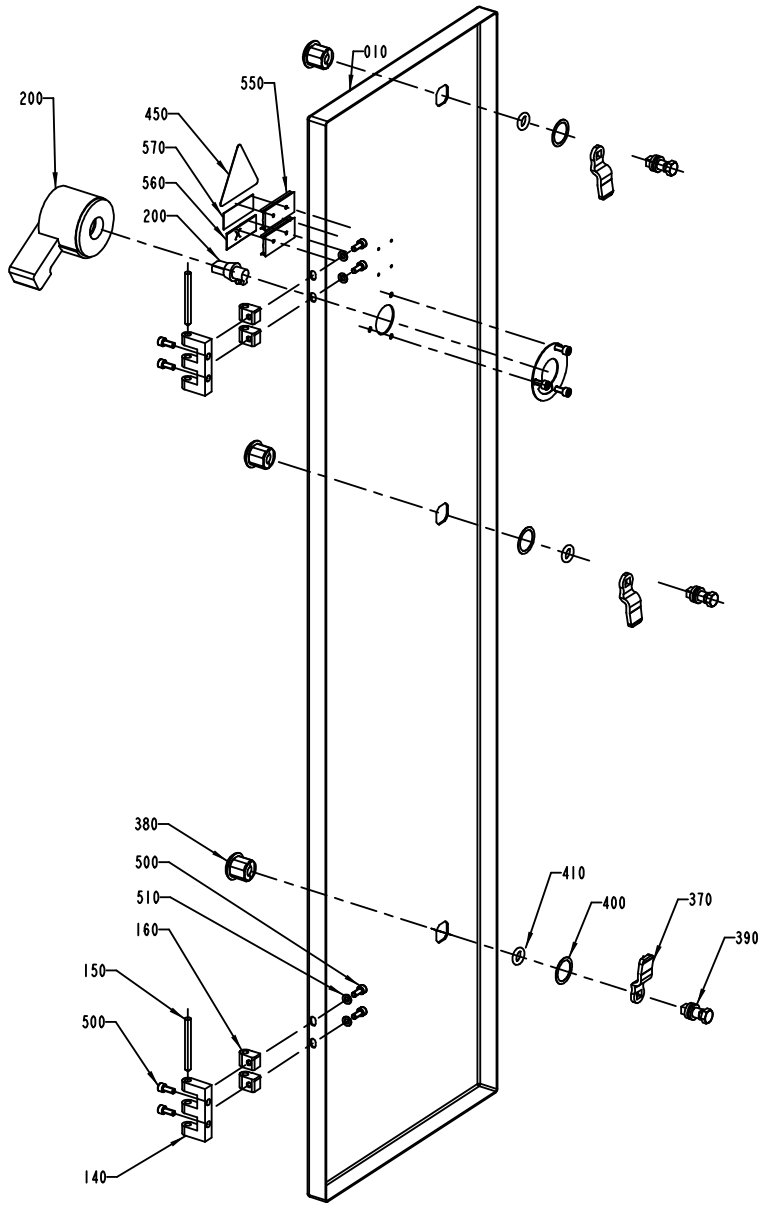
010
550
200
450
570
560
200
380
500
510
160
150
500
140
410
400
370
390

ECM: 116233 - 20030403
Group number: 1095891-0200
Assembly Drawing: 1095891-1_1_AB

Pos	Part No	UN	Qty	Description	Page No
50HZ					
570	359243-0917		1	SIGN"400V, 50HZ, 100A"	
60HZ					
570	359243-0918		1	SIGN"400V, 60HZ, 100A"	
Common Parts					
010	1041972-0000		1	DOOR	
140	1035792-0000		2	E-HINGE	
150	988685-0000		2	PIN	
160	1035794-0000		4	BLOCKING PIECE	
200	90051-0106		1	COCK HANDLE, NO. H6	
370	90237-0157		3	LOCK BOLT, 1000-230	
380	90237-0319		3	LOCK HOUSING, 1000-U134	
390	90237-0320		3	LOCK HOUSING, 1000-U136	
400	90237-0322		3	LOCK GASKET, 1000-U137	
410	90237-0323		3	LOCK O-RING, 1000-24	
450	90194-0016		1	WARNING SIGN, RISK OF ELECTRIC SHOCK	
490	311520-0329		4	RIVET, BLANK 2,4X8	
500	312115-0327		8	SCREW ISO4762 M5X12 A4	
510	315105-0146		4	WASHER BRB5,3X10RFR	
550	359240-0100		2	SIGN HOLDER FOR 359240-0001	
560	359241-0431		1	SIGN: " MAIN SWITCH"	

Pos	Part No	UN	Qty	Description	Page No

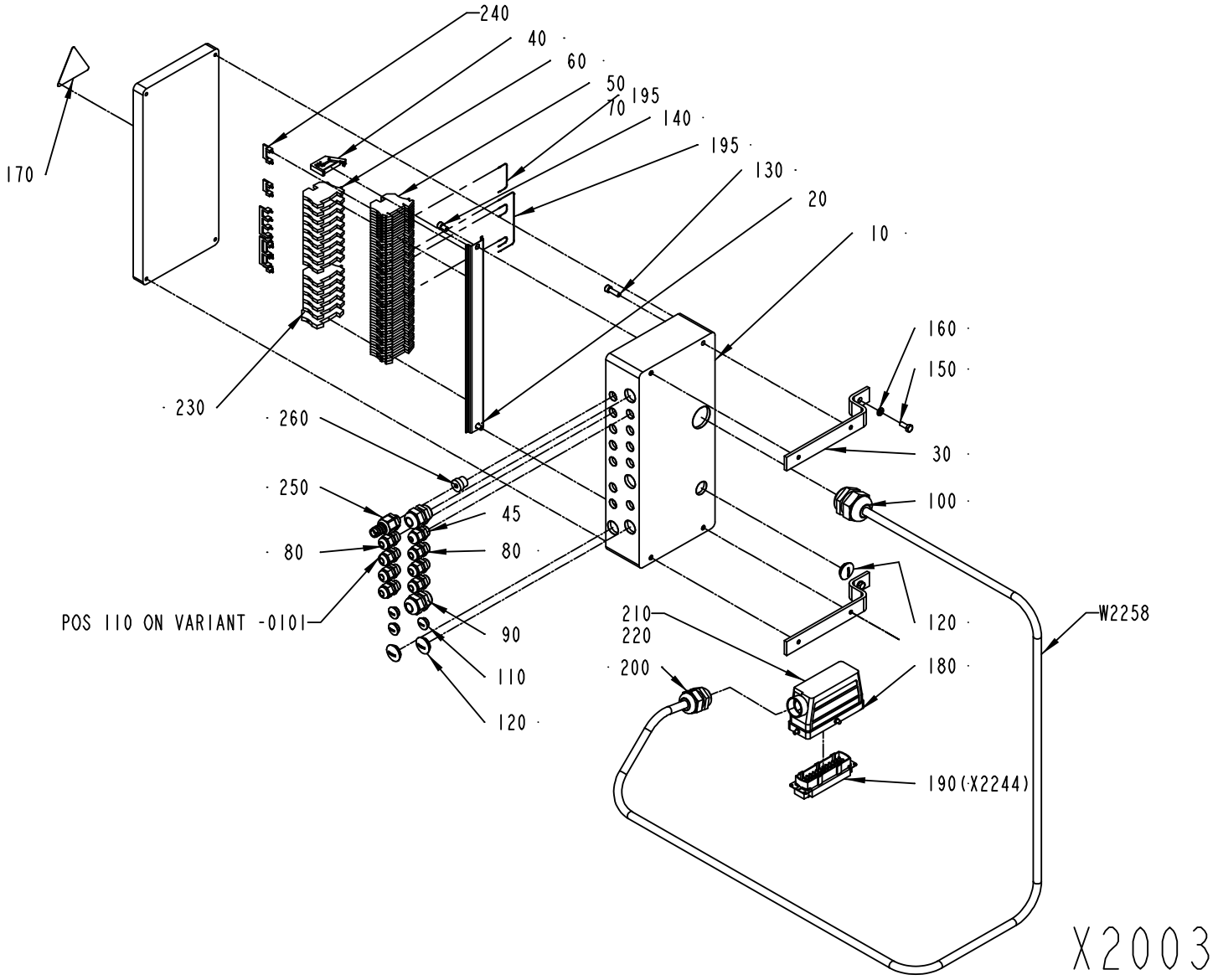

1095630-3
ECM 139813

ECM: 148827 - 20031208
Group number: 1095630-0200
Assembly Drawing: 1095630-3_1_AC

Pos	Part No	UN	Qty	Description	Page No
A3/FLEX					
080	352103-0101		7	CABLE GLAND, ST 9, PR15,2/PG9	
110	90002-0013		3	BLANK-OFF PLUG, PR 15,2 SKINDICHT-BLK9	
250	353242-0005		1	HOSE GLAND W/O INSERT PG9 NORMAL	
260	353249-0067		1	INSERT, SINGEL HOLE, E150/7	
W2258	351150-0425	MM	3000	CABLE OLFLEX 25X0,75 MM2 LIGHT/GREY	
Common Parts					
010	1129202-0000		1	CONNECTION BOX	
020	1129209-0000		1	MOUNTING RAIL	
030	1129182-0000		2	BRACKET	
040	353031-0201		1	END BRACKET EW35	
045	352103-0100		1	CABLE GLAND, STR 9, PR15,2/PG9	
050	353021-0216		40	FEED THROUGH TERMINAL, 10200.8	
060	353024-0204		14	EARTH TERMINAL WPE 2,5	
070	359011-0809		2	MARKING PLATES 5-FW 101-150	
090	352103-0110		2	CABLE GLAND, STR 16, PR22,5/PG16	
100	352103-0120		1	CABLE GLAND, STR 29, PR37,0/PG29	
120	90002-0004		3	BLANK-OFF PLUG, PR 22,5 SKINDICHT-BLK16	
130	312115-0370		4	SCREW ISO4762 M6X20 A4	
140	312115-0364		2	SCREW ISO4762 M6X10 A4	
150	312105-0368		2	SCREW M6S ISO 4017 M6X16 A480	
160	315105-0153		2	WASHER BRB6,4X12RFR	
170	90194-0016		1	WARNING SIGN, RISK OF ELECTRIC SHOCK	
180	90110-0228		1	CABLE HOOD 24-POL 71.350.2428.0	
190	90110-0150		1	MALE INSERT 121110 0000	
195	351172-0102	M	1	CABLE AWM 1X 0,75 MM2 DARK-BLUE	
200	352103-0116		1	CABLE GLAND, ST 21, PR28,3/PG21	
210	359005-0050		1	MARKING LABEL KIT X, 04.841.4550.0	
220	359005-0010		1	MARKING LABEL KIT 0 - 9, 04.841.2150.0	
230	353024-0205		1	EARTH TERMINAL, 1010.1	
240	353034-0030		4	BRIDGE CONNECTOR WQV 2,5/10, 10544.6	

Pos	Part No	UN	Qty	Description	Page No

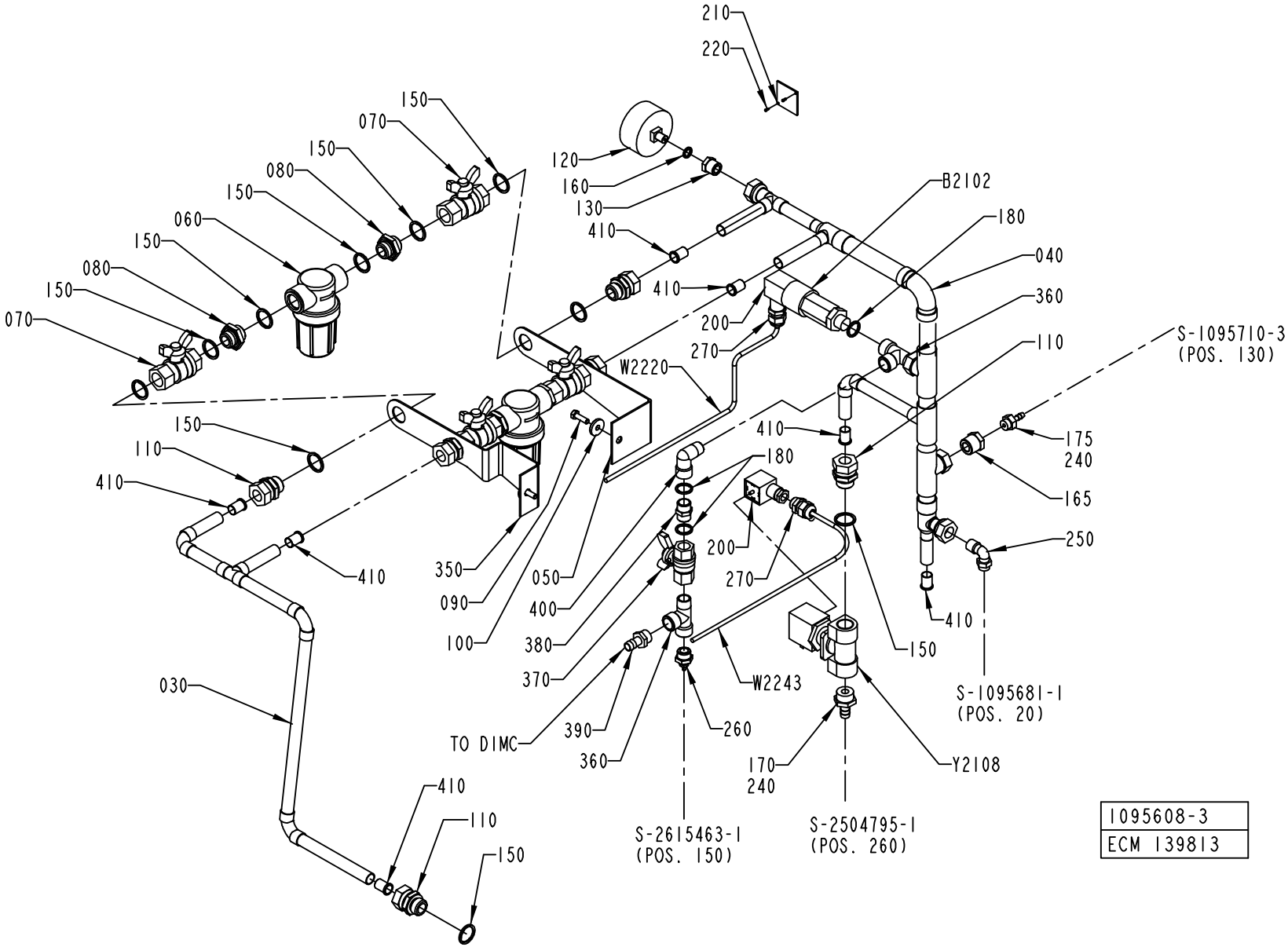
210
220
150
070
150
080
150
060
150
080
150
070
120
160
130
410
410
200
270
B2102
180
040
360
110
S-1095710-3
(POS. 130)
W2220
410
175
240
165
250
180
200
270
410
150
W2243
S-1095681-1
(POS. 20)
150
110
410
410
350
090
100
050
400
380
370
TO DIMC
390
360
260
S-2615463-1
(POS. 150)
170
240
S-2504795-1
(POS. 260)
Y2108
030
410
110
150
1095608-3
ECM 139813

ECM: 148672 - 20031208
Group number: 1095608-0100
Assembly Drawing: 1095608-3_1_AC

This list covers pages from 6-66 to 6-69

Pos	Part No	UN	Qty	Description	Page No
A3/FLEX COMPRESSOR (See drawing on page: 6-66)					
165	342901-0102		1	HOSE NIPPLE, EXT.THR. R1/4-7 MM	
175	90330-0085		1	BUSHING, INT/EXT. THR. R1/2-RP1/4	
180	315239-0111		3	NYLON WASHER G3/8	
260	342921-0115		1	STRAIGHT COUPLING,EXT.THREADED 6/4-G3/8"	
330	2550944-0000		1	WATER DIAGRAM	
360	90140-0023		2	T-PIPE, INT. THREAD, NO. 2070-3/8-3/8	
370	90187-0089		1	BALL VALVE G3/8, NPBR	
380	342700-0111		1	NIPPLES,HEXAGON,EXT.G-THREAD G3/8"-G3/8"	
390	90163-0041		1	HOSE NIPPLE, EXT.THR. 3/8-12 MM	
400	90140-0020		1	ELBOW, 90, INT/EXT. THREAD, NO. 2020-3/8	
A3/FLEX ICE-WATER (See drawing on page: 6-68)					
180	315239-0111		3	NYLON WASHER G3/8	
235	342920-0124		1	STRAIGHT COUPLING,EXT.THREADED 8/6-R1/2"	
260	342921-0115		1	STRAIGHT COUPLING,EXT.THREADED 6/4-G3/8"	
320	90166-0118	MM	900	TUBE 8 MM PA BLACK	
330	2550945-0000		1	WATER DIAGRAM	
360	90140-0023		2	T-PIPE, INT. THREAD, NO. 2070-3/8-3/8	
370	90187-0089		1	BALL VALVE G3/8, NPBR	
380	342700-0111		1	NIPPLES,HEXAGON,EXT.G-THREAD G3/8"-G3/8"	
390	90163-0041		1	HOSE NIPPLE, EXT.THR. 3/8-12 MM	
400	90140-0020		1	ELBOW, 90, INT/EXT. THREAD, NO. 2020-3/8	
Common Parts					
030	1041932-0000		1	PIPE	
040	1041933-0000		1	PIPE	
050	1037583-0000		1	HOLDER	
060	90458-0921		2	FILTER SP 122-200	
	90458-2541		*1*	*FILTER, CP23174-7-304SS*	
070	90187-0029		4	BALL VALVE G1/2, NPBR	
080	479261-0000		4	NIPPLE	
090	312105-0370		2	SCREW M6S ISO 4017 M6X20 A480	
100	315125-0153		2	WASHER TBRSB 6,4X22X4 A4	
110	342720-0114		6	CONN. STR. GA-15-G1/2	
120	90043-0006		1	PRESSURE GAUGE, 2041 D=63 MM	
130	342701-0202		1	BUSHING,INT./EXT.G-THREAD G3/8"-G1/8"	
150	315239-0113		18	NYLON WASHER G1/2	
160	315239-0109		1	NYLON WASHER G1/8	
170	342901-0105		1	HOSE NIPPLE, EXT.THR. R1/2-12 MM	
200	90110-0095		1	CONNECTOR 3 POLE + EARTH	
210	273455-0000		1	SIGN, COLD WATER	
220	312502-0120		2	DRIVE SCREW ROUND HEAD KDS 0X5	
240	90157-0016		1	LOCKING FLUID LOCTITE 242 50 ML	
250	342930-0133		1	ELBOW 90 COUPL.,EXT.THREAD 10/8-R3/8"	
270	352103-0101		2	CABLE GLAND, ST 9, PR15,2/PG9	
350	2547061-0000		1	HOLDER	
410	342708-0109		7	REINFORCING RING VSH 15X1 MM	
B 2102	90274-0042		1	PRESSURE GUARD, 200 KPA	
W 2220	351150-0403	MM	2000	CABLE OLFLEX 3X0,75 MM2 LIGHT/GREY	
W 2243	351150-0403	MM	2000	CABLE OLFLEX 3X0,75 MM2 LIGHT/GREY	
Y 2108	90042-0249		1	SOLENOID VALVE OFFICINE DI ENSINO	

Machine Type | Group Description | Used-In | Group Number | Page No

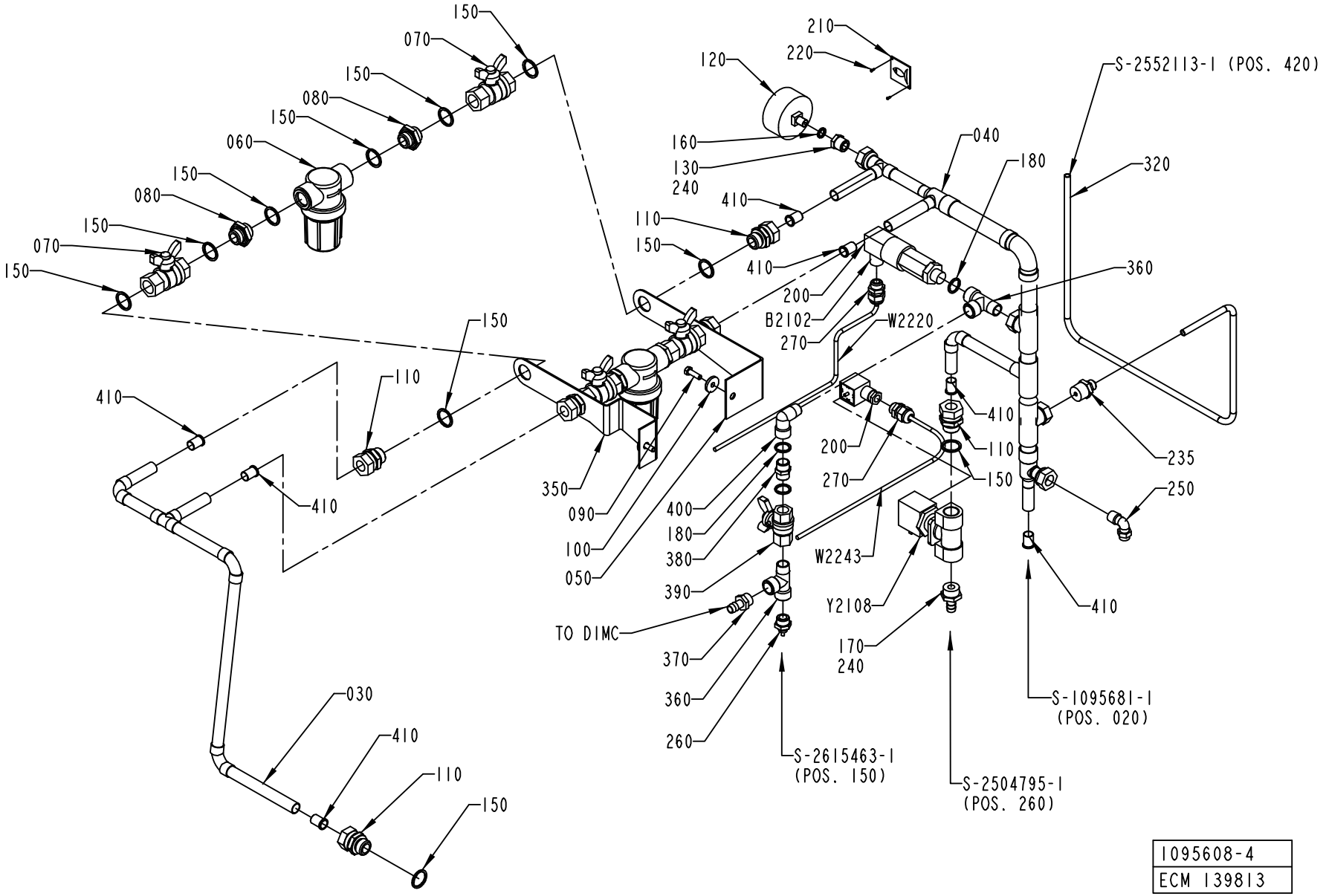

1095608-4
ECM 139813

ECM: 148672 - 20031208
Group number: 1095608-0100
Assembly Drawing: 1095608-4_1_AC

This list covers pages from 6-66 to 6-69

Pos	Part No	UN	Qty	Description	Page No
A3/FLEX COMPRESSOR (See drawing on page: 6-66)					
165	342901-0102		1	HOSE NIPPLE, EXT.THR. R1/4-7 MM	
175	90330-0085		1	BUSHING, INT/EXT. THR. R1/2-RP1/4	
180	315239-0111		3	NYLON WASHER G3/8	
260	342921-0115		1	STRAIGHT COUPLING,EXT.THREADED 6/4-G3/8"	
330	2550944-0000		1	WATER DIAGRAM	
360	90140-0023		2	T-PIPE, INT. THREAD, NO. 2070-3/8-3/8	
370	90187-0089		1	BALL VALVE G3/8, NPBR	
380	342700-0111		1	NIPPLES,HEXAGON,EXT.G-THREAD G3/8"-G3/8"	
390	90163-0041		1	HOSE NIPPLE, EXT.THR. 3/8-12 MM	
400	90140-0020		1	ELBOW, 90, INT/EXT. THREAD, NO. 2020-3/8	
A3/FLEX ICE-WATER (See drawing on page: 6-68)					
180	315239-0111		3	NYLON WASHER G3/8	
235	342920-0124		1	STRAIGHT COUPLING,EXT.THREADED 8/6-R1/2"	
260	342921-0115		1	STRAIGHT COUPLING,EXT.THREADED 6/4-G3/8"	
320	90166-0118	MM	900	TUBE 8 MM PA BLACK	
330	2550945-0000		1	WATER DIAGRAM	
360	90140-0023		2	T-PIPE, INT. THREAD, NO. 2070-3/8-3/8	
370	90187-0089		1	BALL VALVE G3/8, NPBR	
380	342700-0111		1	NIPPLES,HEXAGON,EXT.G-THREAD G3/8"-G3/8"	
390	90163-0041		1	HOSE NIPPLE, EXT.THR. 3/8-12 MM	
400	90140-0020		1	ELBOW, 90, INT/EXT. THREAD, NO. 2020-3/8	
Common Parts					
030	1041932-0000		1	PIPE	
040	1041933-0000		1	PIPE	
050	1037583-0000		1	HOLDER	
060	90458-0921		2	FILTER SP 122-200	
	90458-2541		*1*	*FILTER, CP23174-7-304SS*	
070	90187-0029		4	BALL VALVE G1/2, NPBR	
080	479261-0000		4	NIPPLE	
090	312105-0370		2	SCREW M6S ISO 4017 M6X20 A480	
100	315125-0153		2	WASHER TBRSB 6,4X22X4 A4	
110	342720-0114		6	CONN. STR. GA-15-G1/2	
120	90043-0006		1	PRESSURE GAUGE, 2041 D=63 MM	
130	342701-0202		1	BUSHING,INT./EXT.G-THREAD G3/8"-G1/8"	
150	315239-0113		18	NYLON WASHER G1/2	
160	315239-0109		1	NYLON WASHER G1/8	
170	342901-0105		1	HOSE NIPPLE, EXT.THR. R1/2-12 MM	
200	90110-0095		1	CONNECTOR 3 POLE + EARTH	
210	273455-0000		1	SIGN, COLD WATER	
220	312502-0120		2	DRIVE SCREW ROUND HEAD KDS 0X5	
240	90157-0016		1	LOCKING FLUID LOCTITE 242 50 ML	
250	342930-0133		1	ELBOW 90 COUPL.,EXT.THREAD 10/8-R3/8"	
270	352103-0101		2	CABLE GLAND, ST 9, PR15,2/PG9	
350	2547061-0000		1	HOLDER	
410	342708-0109		7	REINFORCING RING VSH 15X1 MM	
B 2102	90274-0042		1	PRESSURE GUARD, 200 KPA	
W 2220	351150-0403	MM	2000	CABLE OLFLEX 3X0,75 MM2 LIGHT/GREY	
W 2243	351150-0403	MM	2000	CABLE OLFLEX 3X0,75 MM2 LIGHT/GREY	
Y 2108	90042-0249		1	SOLENOID VALVE OFFICINE DI ENSINO	

Machine Type	Group Description	Used-In	Group Number	Page No

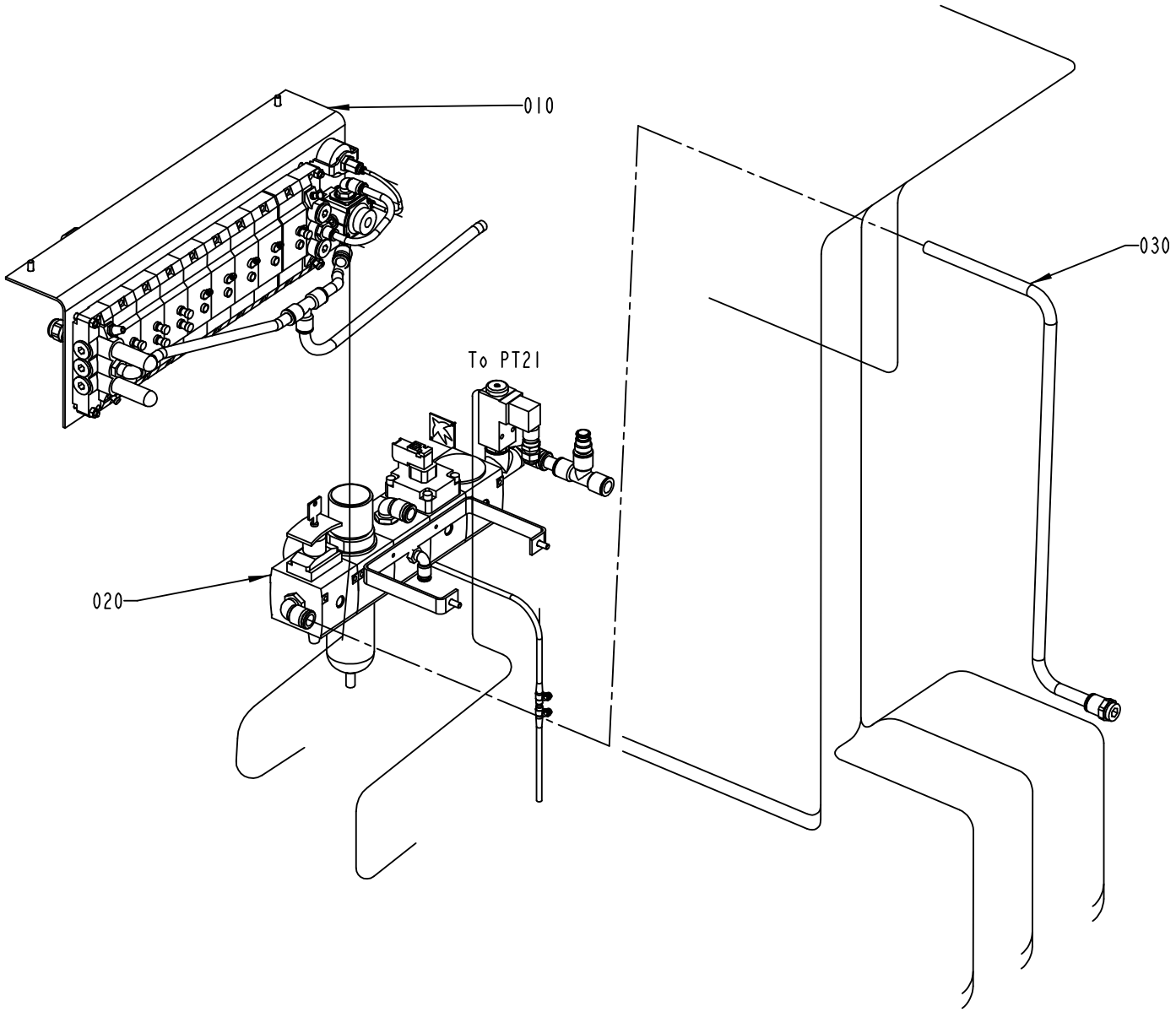

1095714-2
ECM 115191

ECM: 139561 - 20030711
Group number: 1095714-0300
Assembly Drawing: 1095714-2_1_AD

Pos	Part No	UN	Qty	Description	Page No
-					
010	1095611-0300		1	VALVE PANEL	**6-73**
020	1095609-0200		1	PNEUMATIC UNIT	**6-75**
030	1095716-0100		1	PIPE WORK-AIR	**6-77**

Pos	Part No	UN	Qty	Description	Page No

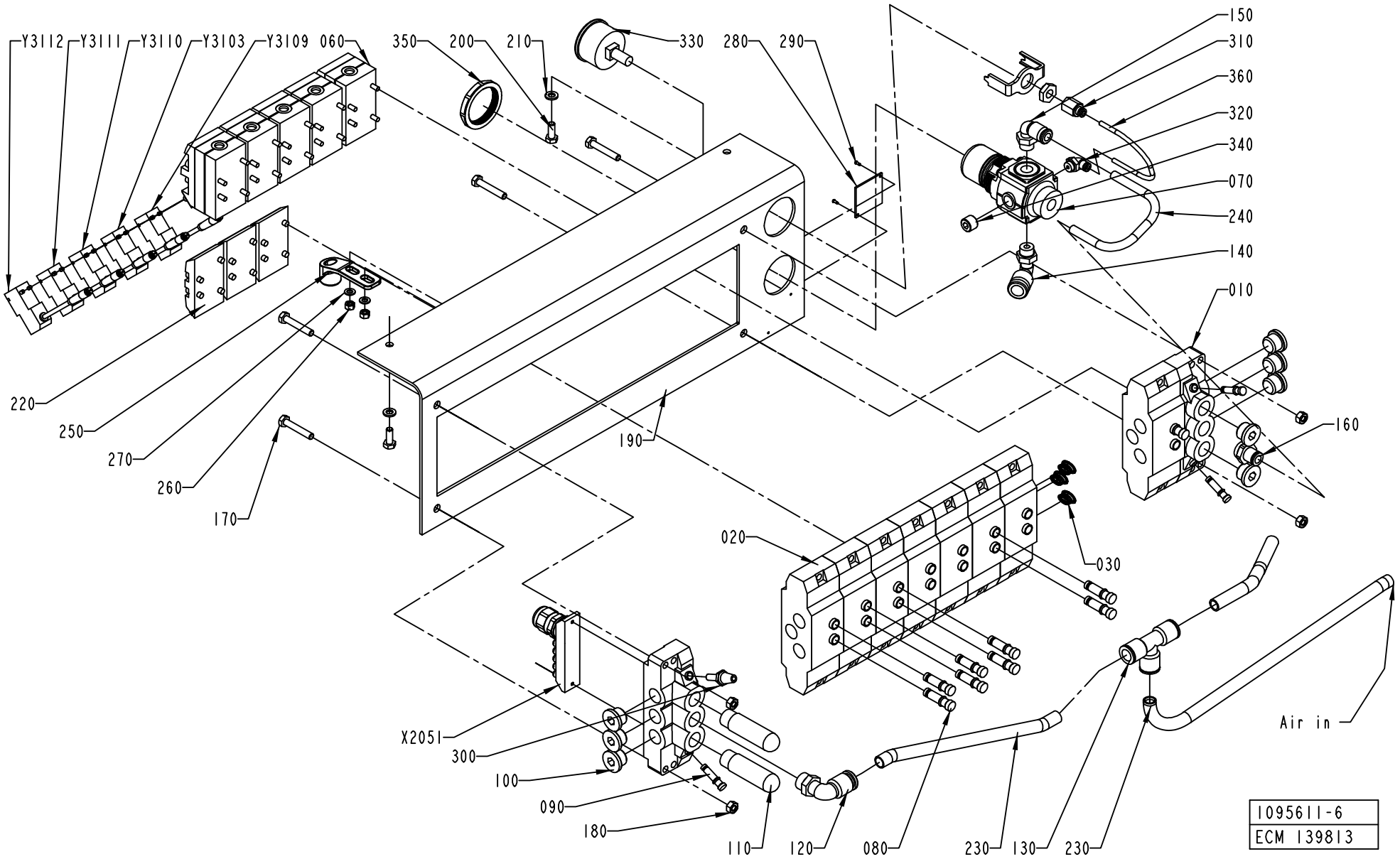
Y3112
Y3111
Y3110
Y3103
Y3109
060
350
200
210
330
280
290
150
310
360
320
340
070
240
140
010
160
220
250
270
260
170
190
020
030
X2051
300
100
090
180
110
120
080
230
130
230
Air in
1095611-6
ECM 139813

ECM: 148673 - 20031208
Group number: 1095611-0300
Assembly Drawing: 1095611-6_1_AC

Pos	Part No	UN	Qty	Description	Page No
A3/FLEX					
005	2551119-0000		1	PNEUMATIC DIAGRAM	
060	90042-0215		5	VALVE BODY 5/2 UNISTABLE	
080	342715-0103		11	BLIND PLUG 8 MM	
220	90042-0519		3	BLANK PLATE ISO SIZE 1	
250	1538868-0000		1	BRACKET	
Y3110	90042-0538		1	PILOT VALVE L=500MM	
Common Parts					
010	90042-0522		2	PORTED END PIECE ISO SIZE 1	
020	90042-0532		8	BASE PLATE ISO SIZE 1	
030	90042-0528		1	BLANKING KIT SEALS ISO SIZE 1	
050	90042-0526		5	PROTECTIVE SLEEVE MECMAN, 04938 294 08	
070	90113-0470		1	MANIFOLD REGULATOR 10 BAR	
090	342715-0102		3	BLIND PLUG 6 MM	
100	342713-0211		8	PLUG, EXT THREAD HEX SOCKET 8638-00-380	
110	90328-0024		2	SILENCER G3/8	
120	342732-0110		1	ELBOW PIPE JOINT, EXT.THREAD,D=12MM-G3/8	
130	342748-0109		1	T-CONNECTION 12MM	
140	342732-0109		1	ELBOW PIPE JOINT, EXT.THREAD, D=1MM-G1/4	
150	342732-0104		1	ELBOW PIPE JOINT, EXT.THREAD, D=8MM-G1/4	
160	342722-0206		1	STRAIGHT COUPLING D=8-G3/8"	
170	312105-0376		4	SCREW M6S ISO 4014 M6X35 A480	
180	312605-0316		4	HEXAGON NUT, M6M M6 A280	
190	1517295-0000		1	SHEET	
200	312105-0368		2	SCREW M6S ISO 4017 M6X16 A480	
210	315105-0153		2	WASHER BRB6,4X12RFR	
230	90166-0068	MM	1000	TUBE 12 MM PA BLUE	
240	90166-0194	MM	400	TUBE 8 MM PUR BLUE	
260	312605-0314		2	HEXAGON NUT, M6M M5 A280	
270	315105-0146		2	WASHER BRB5,3X10RFR	
280	1041938-0000		1	SIGN	
290	312502-0120		2	DRIVE SCREW ROUND HEAD KDS 0X5	
300	90328-0017		1	SILENCER, D=6 MM	
310	342770-0101		1	STRAIGHT COUPLING INT, D=4 MM - G1/8	
320	342732-0100		1	ELBOW PIPE JOINT, EXT.THREAD, D=4MM-G1/8	
330	90043-0065		1	PRESSURE GAUGE, 2048 D=40 MM	
340	90087-0036		1	PLUG, KR 1/4	
350	90457-0078		1	PANEL NUT	
360	90166-0095	MM	200	TUBE 4 MM PA BLUE	
X2051	90042-0535		1	TERMINAL BOARD 19 CORDS	
Y3103	90042-0538		1	PILOT VALVE L=500MM	
Y3109	90042-0538		1	PILOT VALVE L=500MM	
Y3111	90042-0538		1	PILOT VALVE L=500MM	
Y3112	90042-0538		1	PILOT VALVE L=500MM	

Machine Type | Group Description | Used-In | Group Number | Page No

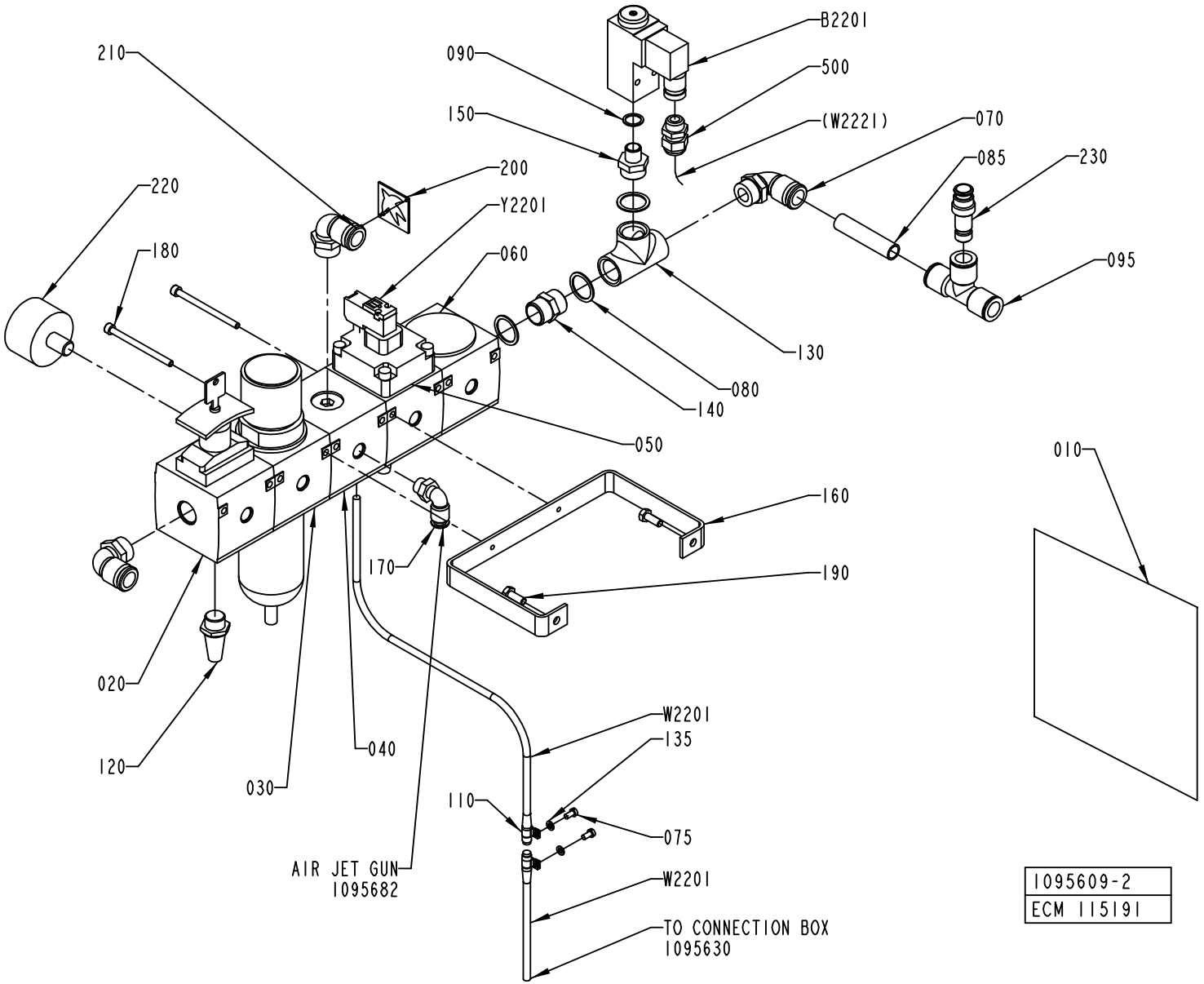
B2201
210
090
500
150
(W2221)
070
085
230
200
220
Y2201
180
060
095
130
080
140
050
010
160
170
190
020
W2201
135
040
120
030
110
075
AIR JET GUN
1095682
W2201
TO CONNECTION BOX
1095630
1095609-2
ECM 115191

ECM: 139562 - 20031208
Group number: 1095609-0200
Assembly Drawing: 1095609-2_1_AF

Pos	Part No	UN	Qty	Description	Page No
A3/FLEX					
010	2527368-0000		1	PNEUMATIC DIAGRAM	
Common Parts					
020	90113-0377		1	SHUT OFF VALVE G1/2, 915-331053	
030	90113-0072		1	FILTER REGULATOR 40µ, 915-331242	
	90113-0459		*1*	*O-RING*	
	90113-0387		*1*	*FILTER ELEMENT 40æM FOR 90113-0094*	
040	90113-0375		1	PRESSURE DISTRIBUTION	
050	90113-0423		1	HIGH SPEED VENTING VALVE G1/2, R40403053	
060	90113-0374		1	SLOW STARTING VALVE	
070	342732-0161		3	ELBOW PIPE JOINT,EXT.THREAD,D=14 MM-G1/2	
075	312125-0287		2	SCREW ISO 1207 M4X8 A4	
080	315233-0113		3	WASHER CAPTIVE SEALING G1/2	
085	90166-0196	MM	70	TUBE 14MM PA BLUE	
090	315233-0110		1	WASHER CAPTIVE SEALING G1/4	
095	342748-0110		1	T-CONNECTION 14MM	
110	90074-0025		2	CLIPS, CABLE CLIPS DI=8 MM	
120	90328-0007		1	SILENCER, 338/125 B140-00-380	
130	90330-0049		1	T-PIPE, INT. THREAD, R-221R1/2	
135	315105-0136		2	WASHER BRB4,3XRFR	
140	342700-0113		1	NIPPLES,HEXAGON,EXT.G-THREAD G1/2"-G1/2"	
150	342700-0205		1	NIPPLES,HEXAGON,EXT.G-THREAD G1/2"-G1/4"	
160	1041921-0000		1	HOLDER	
170	342732-0104		1	ELBOW PIPE JOINT, EXT.THREAD, D=8MM-G1/4	
180	90287-0073		2	SCREW MC6S M5X70 129	
190	312105-0368		2	SCREW M6S ISO 4017 M6X16 A480	
200	273458-0000		1	SIGN, AIR	
210	312502-0120		2	DRIVE SCREW ROUND HEAD KDS 0X5	
220	90043-0107		1	PRESSURE GAUGE	
230	342716-0211		1	REDUCER 12-14	
500	352103-0101		1	CABLE GLAND, ST 9, PR15,2/PG9	
B2201	90274-0074		1	PRESSURE GUARD, 530 KPA	
W2201	90042-0583		1	CABLE MECMAN 440-827 000-1	
Y2201	90042-0585		1	PILOT VALVE L=5M	

Pos	Part No	UN	Qty	Description	Page No

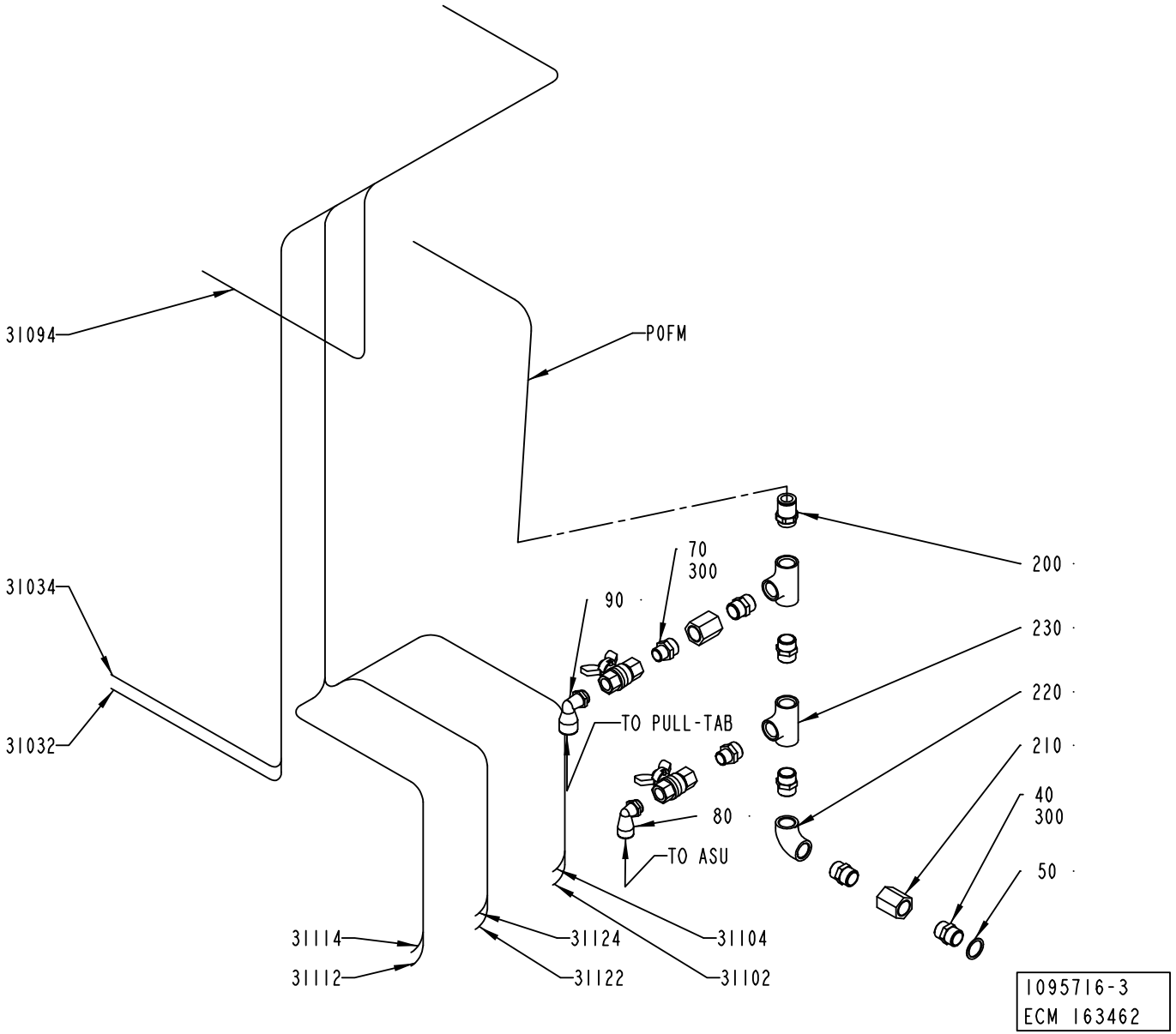
31094
POFM
31034
31032
70
300
90
200
230
220
210
40
300
50
TO PULL-TAB
80
TO ASU
31114
31112
31124
31122
31104
31102
1095716-3
ECM 163462

ECM: 163462 - 20040607
Group number: 1095716-0100
Assembly Drawing: 1095716-3_1_AB

Pos	Part No	UN	Qty	Description	Page No
A3/FLEX					
040	342700-0113		5	NIPPLES,HEXAGON,EXT.G-THREAD G1/2"-G1/2"	
050	315233-0113		1	WASHER CAPTIVE SEALING G1/2	
070	342700-0206		2	NIPPLES,HEXAGON,EXT.G-THREAD G1/2"-G3/8"	
080	90458-2960		1	ELBOW PIPE JOINT, EXT.THREAD,D=12MM-G3/8	
090	90458-2963		1	ELBOW PIPE JOINT, EXT.THREAD,D=14MM-G3/8	
200	90055-0097		1	STRAIGHT COUPLING	
210	90140-0079		2	SLEEVE, INT. THREAD, NO. 501-08	
220	90330-0020		1	ELBOW, 90 INT. THREAD, R-2221/2	
230	90330-0049		2	T-PIPE, INT. THREAD, R-221R1/2	
300	90144-0007		1	TAPE	
P0FM	90166-0196	MM	770	TUBE 14MM PA BLUE	
Common Parts					
31032	90166-0013	MM	1400	TUBE 8 MM PA BLUE	
31034	90166-0013	MM	1400	TUBE 8 MM PA BLUE	
31094	90166-0013	MM	1400	TUBE 8 MM PA BLUE	
31112	90166-0013	MM	1500	TUBE 8 MM PA BLUE	
31114	90166-0013	MM	1500	TUBE 8 MM PA BLUE	
31122	90166-0013	MM	1500	TUBE 8 MM PA BLUE	
31124	90166-0013	MM	1500	TUBE 8 MM PA BLUE	

Pos	Part No	UN	Qty	Description	Page No

Tetra Pak

SPC
Spare Parts Catalogue

AUTOMATIC SPLICING UNIT

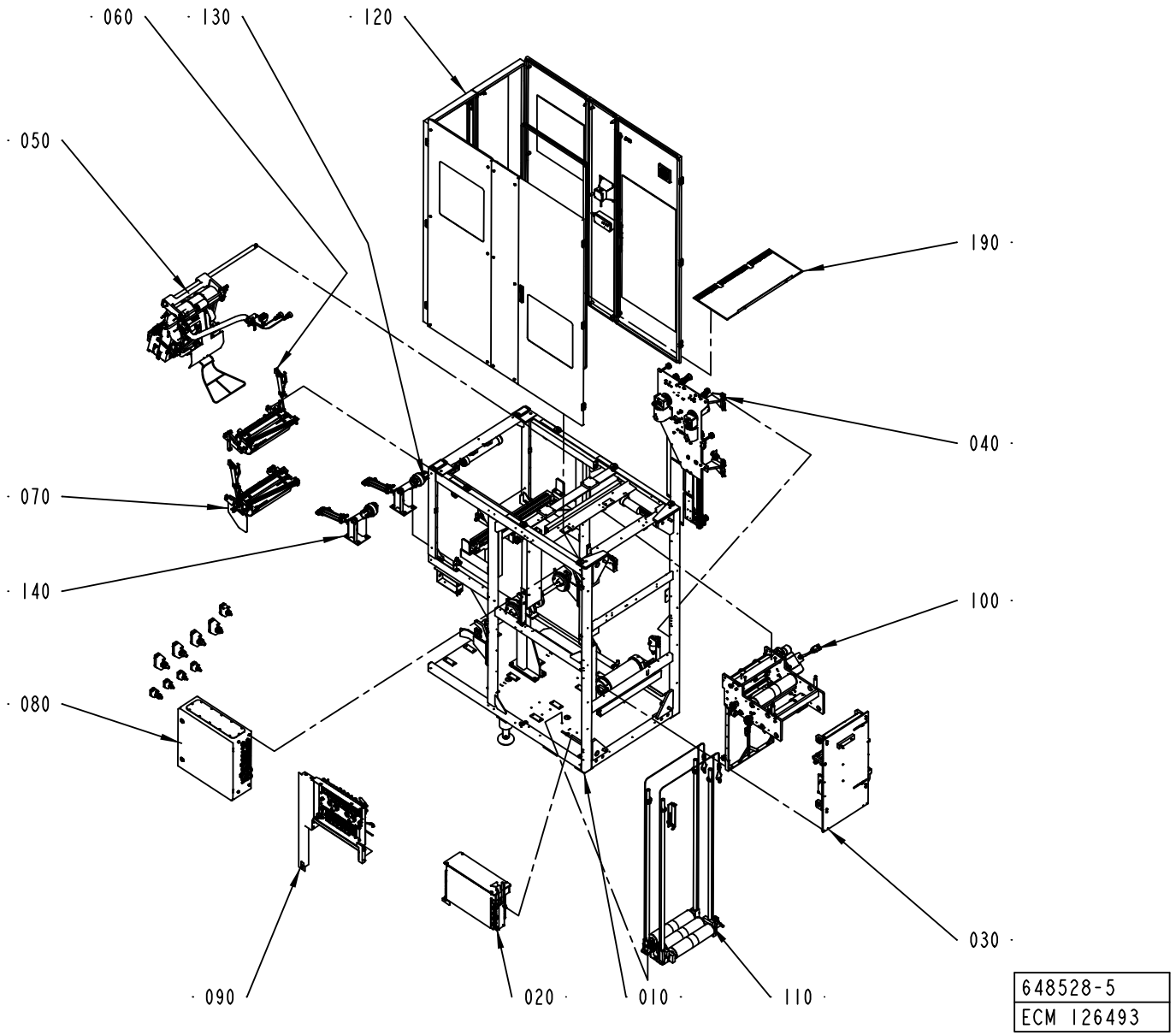

ECM: 180482 - 50001231
Group number: 648528-0200
Assembly Drawing: 648528-5_1_AC

This list covers pages from 7-2 to 7-5

Pos	Part No	UN	Qty	Description	Page No
A3/FLEX WITH ARL (See drawing on page: 7-4)					
020	2501222-0100		1	GENERATOR CABINET	**7-7**
030	2506668-0200		1	STRIP APPLICATOR	**7-9**
190	2613749-0100		1	COVER	**7-29**
210	2538072-0100		1	AUTOMATIC REEL LOADING	**7-31**
A3/FLEX WITHOUT ARL (See drawing on page: 7-2)					
020	2501222-0100		1	GENERATOR CABINET	**7-7**
030	2506668-0200		1	STRIP APPLICATOR	**7-9**
130	2506614-0100		1	BOBBIN BRAKE	**7-39**
140	2506615-0100		1	BOBBIN BRAKE	**7-41**
190	2613749-0100		1	COVER	**7-29**
Common Parts					
010	1487560-0200		1	MACHINE BODY	**7-43, 7-45, 7-47, 7-49**
040	1484707-0200		1	STRIP MAGAZINE	**7-75**
050	2588946-0100		1	SPLICING DEVICE	**7-91, 7-93**
060	2588422-0100		1	MATERIAL HOLDER L1	**7-119**
070	2588423-0100		1	MATERIAL HOLDER L2	**7-127**
080	1548491-0200		1	ELECTRICAL CABINET	**7-135, 7-137, 7-139, 7-141, 7-143**
090	2564633-0100		1	VALVE PANEL	**7-157**
100	1487808-0200		1	BRACKET	**7-167**
110	1490831-0200		1	MAGAZINE	**7-177, 7-179**
120	1490215-0200		1	COVERING PANEL	**7-183, 7-185**

Pos	Part No	UN	Qty	Description	Page No

AUTOMATIC SPLICING UNIT

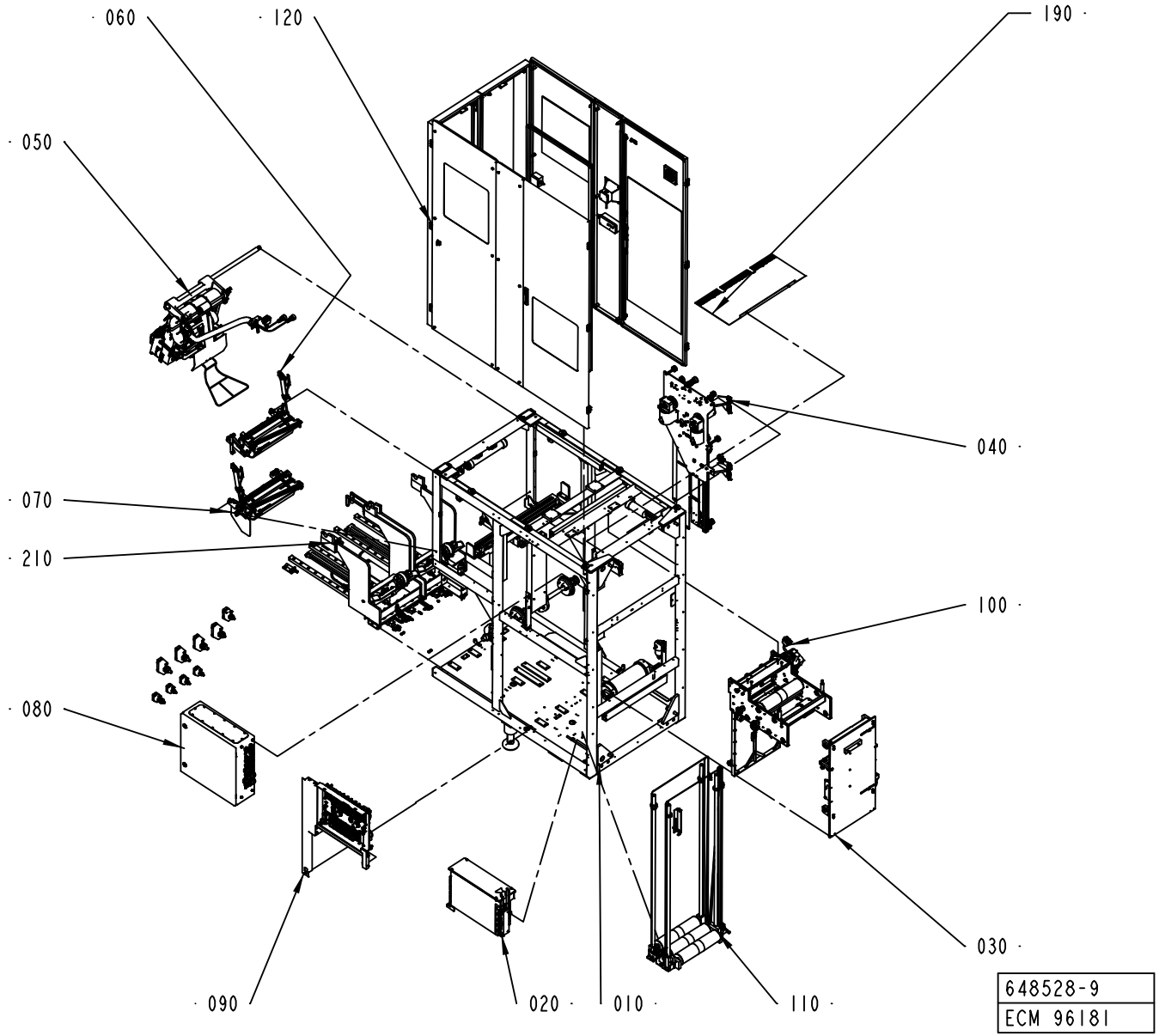

ECM: 180482 - 50001231
Group number: 648528-0200
Assembly Drawing: 648528-9_1_AA

This list covers pages from 7-2 to 7-5

Pos	Part No	UN	Qty	Description	Page No
A3/FLEX WITH ARL (See drawing on page: 7-4)					
020	2501222-0100		1	GENERATOR CABINET	**7-7**
030	2506668-0200		1	STRIP APPLICATOR	**7-9**
190	2613749-0100		1	COVER	**7-29**
210	2538072-0100		1	AUTOMATIC REEL LOADING	**7-31**
A3/FLEX WITHOUT ARL (See drawing on page: 7-2)					
020	2501222-0100		1	GENERATOR CABINET	**7-7**
030	2506668-0200		1	STRIP APPLICATOR	**7-9**
130	2506614-0100		1	BOBBIN BRAKE	**7-39**
140	2506615-0100		1	BOBBIN BRAKE	**7-41**
190	2613749-0100		1	COVER	**7-29**
Common Parts					
010	1487560-0200		1	MACHINE BODY	**7-43, 7-45, 7-47, 7-49**
040	1484707-0200		1	STRIP MAGAZINE	**7-75**
050	2588946-0100		1	SPLICING DEVICE	**7-91, 7-93**
060	2588422-0100		1	MATERIAL HOLDER L1	**7-119**
070	2588423-0100		1	MATERIAL HOLDER L2	**7-127**
080	1548491-0200		1	ELECTRICAL CABINET	**7-135, 7-137, 7-139, 7-141, 7-143**
090	2564633-0100		1	VALVE PANEL	**7-157**
100	1487808-0200		1	BRACKET	**7-167**
110	1490831-0200		1	MAGAZINE	**7-177, 7-179**
120	1490215-0200		1	COVERING PANEL	**7-183, 7-185**

Pos	Part No	UN	Qty	Description	Page No

GENERATOR CABINET

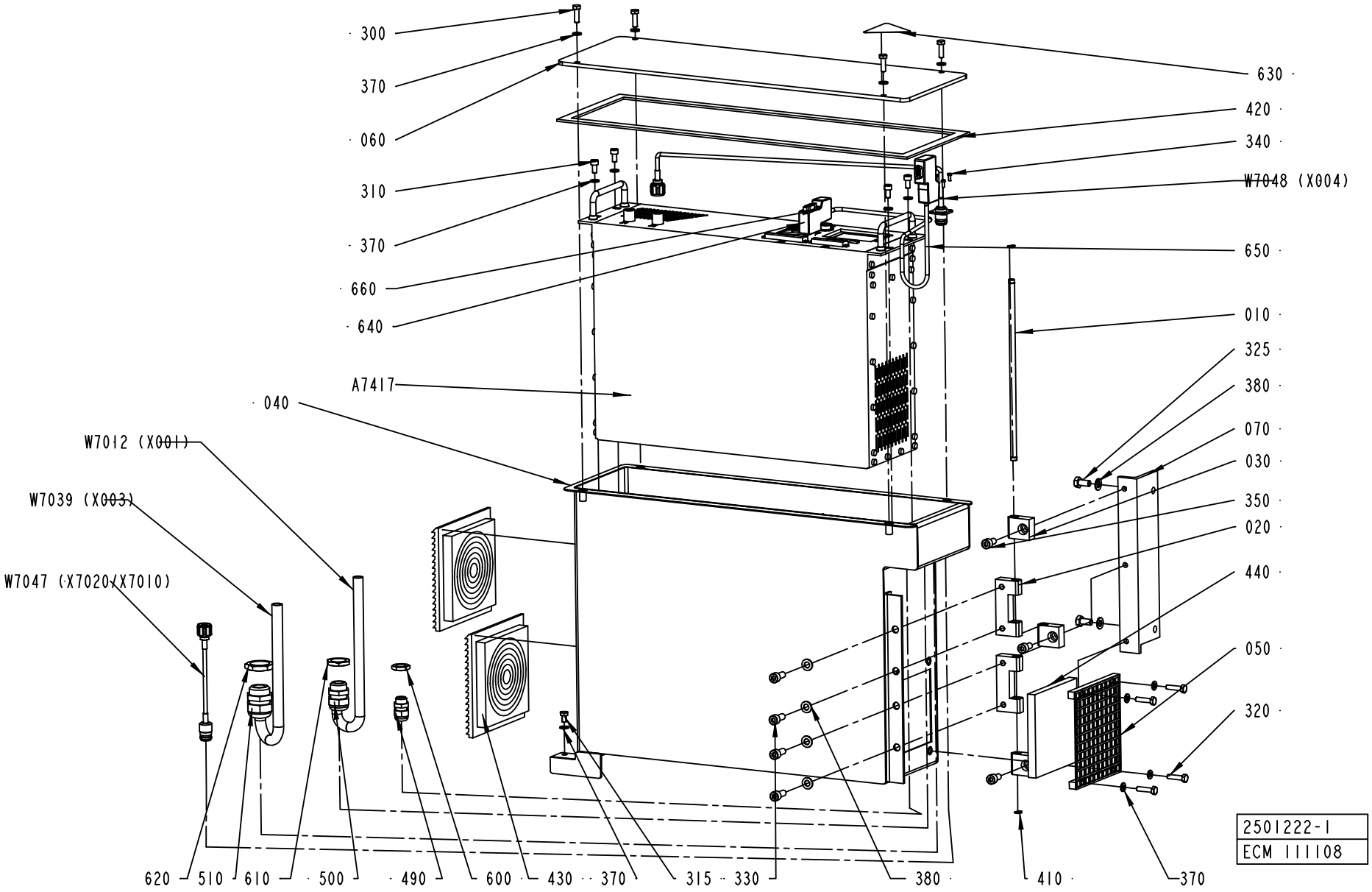

ECM: 111559 - 20021219
Group number: 2501222-0100
Assembly Drawing: 2501222-1_1_AB

Pos	Part No	UN	Qty	Description	Page No
-					
010	1558485-0000		1	AXLE PIN	
020	1334189-0000		2	BLOCK	
030	1334190-0000		3	BLOCK	
040	1548587-0000		1	APPLIANCE BOX	
050	1548588-0000		1	GRID ELEMENT	
060	1548592-0000		1	LID	
070	2510393-0000		1	BRACKET	
300	312105-0370		4	SCREW M6S ISO 4017 M6X20 A480	
310	312115-0366		4	SCREW ISO4762 M6X12 A4	
315	312105-0364		1	SCREW M6S ISO 4017 M6X10 A480	
320	312105-0372		4	SCREW M6S ISO 4017 M6X25 A480	
325	312105-0449		2	SCREW M6S ISO 4017 M8X16 A480	
330	312115-0451		4	SCREW ISO4762 M8X20 A4	
340	312125-0222		4	SCREW ISO 1207 M3X8 A4	
350	312115-0449		3	SCREW ISO4762 M8X16 A4	
370	315105-0153		13	WASHER BRB6,4X12RFR	
380	315105-0165		6	WASHER BRB8,4X16RFR	
410	90141-0015		2	RETAINING RING FOR SHAFT DIN 471 8 A2	
420	90143-0073	MM	1600	RUBBER STRIP	
430	90277-0129		2	EXHAUST FILTER / SK 3322.200	
440	90458-2395		1	FILTER INSERT, SK 3171 100	
490	352103-0101		1	CABLE GLAND, ST 9, PR15,2/PG9	
500	352103-0111		1	CABLE GLAND, ST 16, PR22,5/PG16	
510	352103-0115		1	CABLE GLAND, STR 21, PR28,3/PG21	
600	90099-0104		1	NUT, PR 15,2 (PG9)	
610	90099-0110		1	NUT, PR 22,5 (PG16)	
620	90099-0119		1	NUT, PR 28,3 (PG21)	
630	90194-0016		1	WARNING SIGN, RISK OF ELECTRIC SHOCK	
640	90459-0184		2	INTERFACE CONNECTOR FOR TPIH 2500 GENER.	
650	90458-2894	MM	8000	PAIR TWISTED CABLE 1X2X0,2MM2	
660	90459-1297		1	RESISTANCE FIXED, 120 OHM, 0,25 W	
A7417	1499642-0101		1	TPIH 2500 HORIZONTAL MOUNTING	
W7012	90220-0105	MM	2200	SCR. CABLE 4X2,5MM2	
W7039	90220-0115	MM	2200	SCR. CABLE 12X0,75MM2	
W7047	2540595-0001		1	COAXIAL CABLE	
W7048	2540596-0001		1	COAXIAL CABLE	

Pos	Part No	UN	Qty	Description	Page No

STRIP APPLICATOR

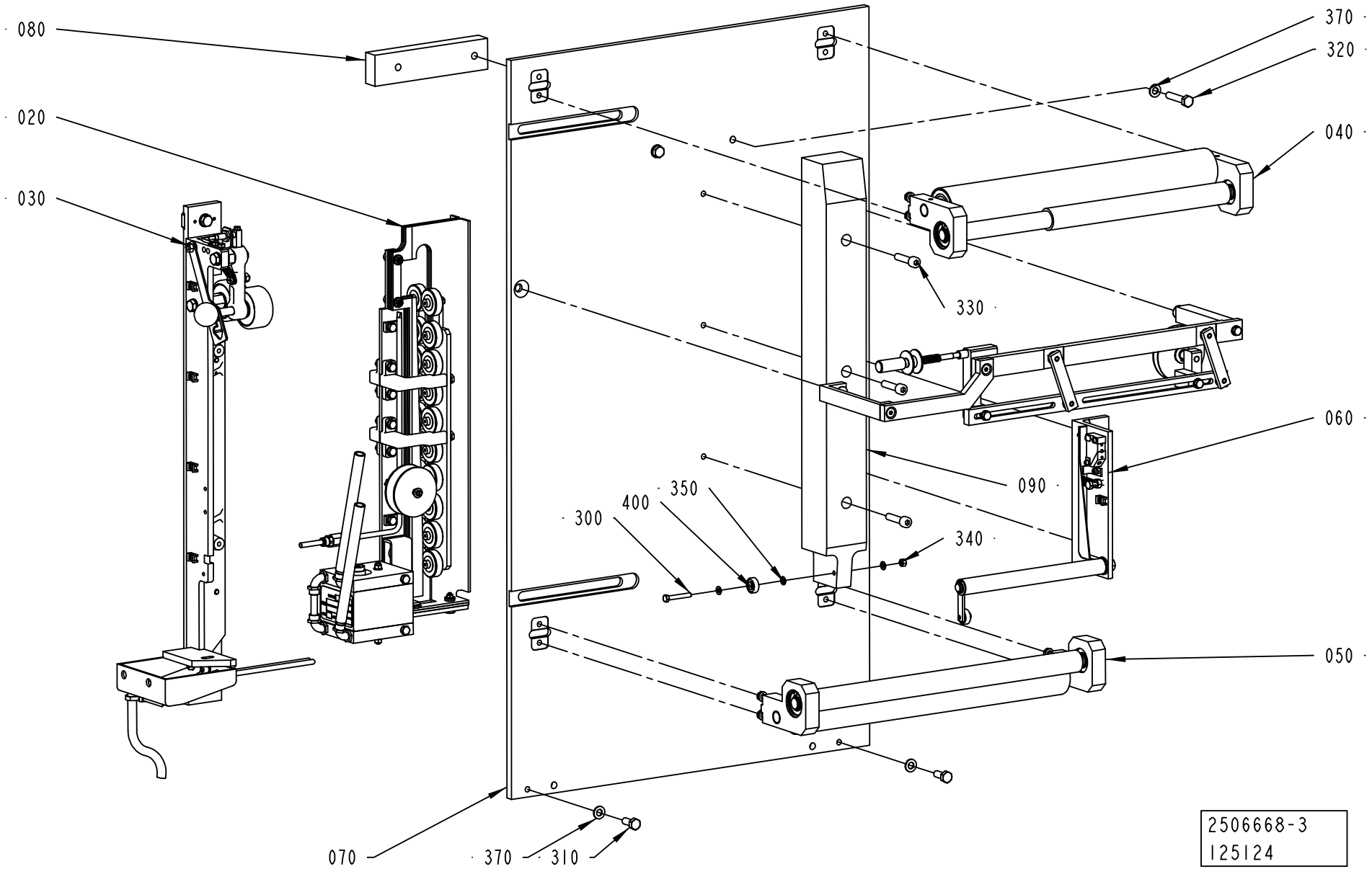

ECM: 163226 - 20040319
Group number: 2506668-0200
Assembly Drawing: 2506668-3_1_AA

Pos	Part No	UN	Qty	Description	Page No
-					
010	2530410-0200		1	STRIP GUIDE	**7-11**
020	2529569-0100		1	INDUCTOR	**7-13**
030	2529571-0100		1	PRESSURE ROLLER	**7-21**
040	2507019-0100		1	ROLLER	**7-23**
050	2507020-0100		1	ROLLER	**7-25**
060	2507022-0200		1	SPLICE DETECTOR	**7-27**
070	2602990-0000		1	SHEET	
080	2506660-0000		1	SPACER	
090	2506664-0000		1	STEERING	
300	312105-0337		1	SCREW M6S ISO 4014 M5X35 A480	
310	312105-0451		2	SCREW M6S ISO 4017 M8X20 A480	
320	312109-0459		2	SCREW M6S ISO 4017 M8X40 A480	
330	312115-0457		3	SCREW ISO4762 M8X35 A4	
340	312605-0314		1	HEXAGON NUT, M6M M5 A280	
350	315105-0146		3	WASHER BRB5,3X10RFR	
370	315105-0165		4	WASHER BRB8,4X16RFR	
400	90214-0138		1	BALL BEARING, 5X19X6 MM	

Pos	Part No	UN	Qty	Description	Page No

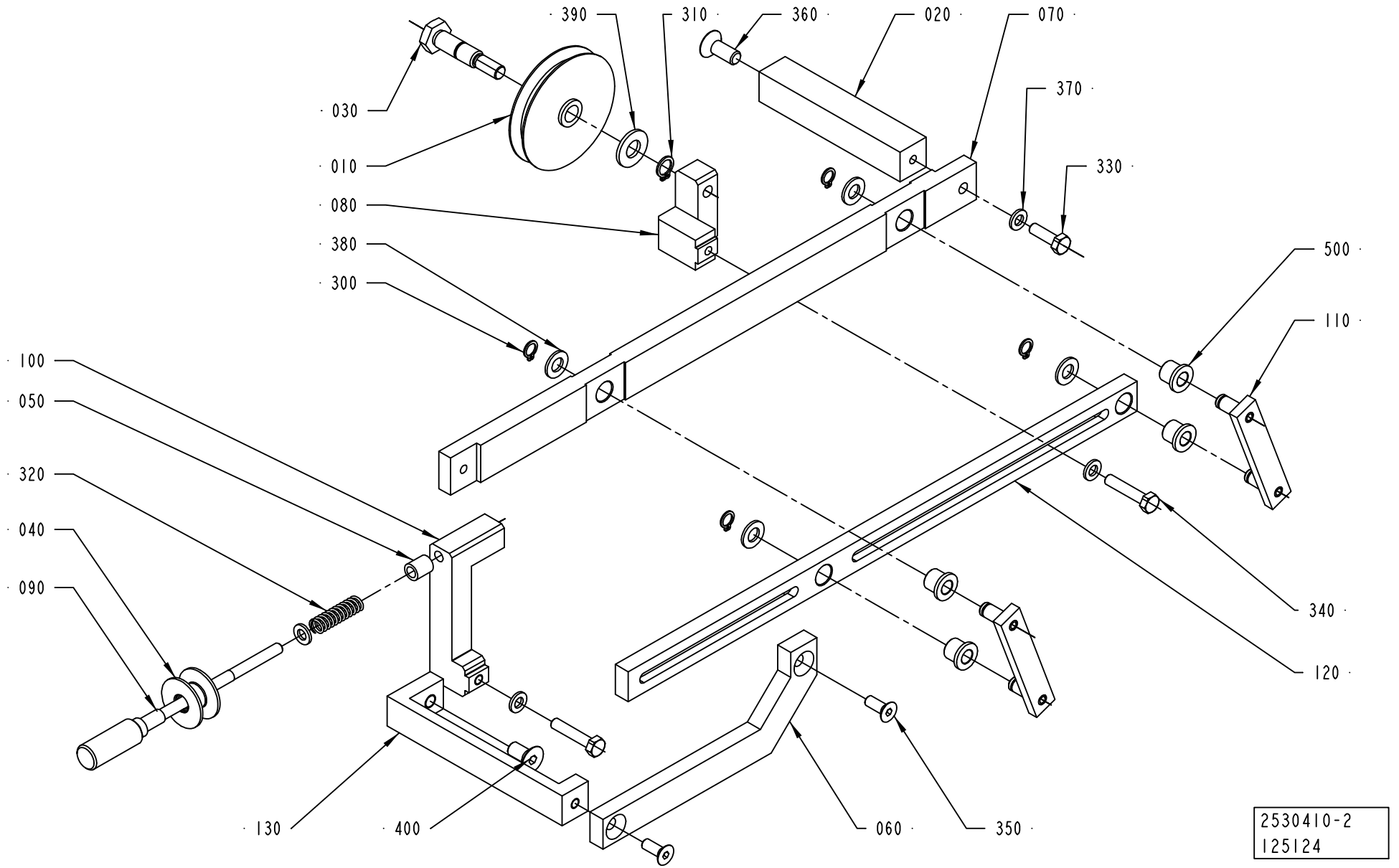
390
310
360
020
070
030
370
010
330
080
380
500
300
110
100
050
320
340
040
090
120
130
400
060
350
2530410-2
125124

ECM: 163225 - 20040319
Group number: 2530410-0200
Assembly Drawing: 2530410-2_1_AA

Pos	Part No	UN	Qty	Description	Page No
-					
010	282635-0000		1	GUIDE WHEEL	
020	2504801-0000		1	BRACKET	
030	2504807-0000		1	AXLE PIN	
040	2504809-0000		1	ROLLER	
050	2527326-0000		1	SPACER	
060	2530399-0000		1	HANGER	
070	2602992-0000		1	ROD	
080	2530405-0000		1	BRACKET	
090	2530406-0000		1	ADJUSTING SCREW	
100	2530407-0000		1	BRACKET	
110	2530408-0000		2	LEVER	
120	2530409-0000		1	ROD	
130	2602991-0000		1	ROD	
300	90141-0015		4	RETAINING RING FOR SHAFT DIN 471 8 A2	
310	90141-0016		1	RETAINING RING FOR SHAFT DIN 471 10 A2	
320	90335-0027		1	COMP. SPRING 22170, 1,25X9,25X33	
330	312105-0370		1	SCREW M6S ISO 4017 M6X20 A480	
340	312109-0374		2	SCREW M6S ISO 4017 M6X30 A480	
350	312155-0368		2	SCREW EN 10642 MF6S M6X16 A480	
360	312155-0451		1	SCREW EN 10642 MF6S M8X20 A480	
370	315105-0153		4	WASHER BRB6,4X12RFR	
380	315105-0165		4	WASHER BRB8,4X16RFR	
390	315105-0173		1	WASHER BRB10,5X22RFR	
400	312155-0449		1	SCREW EN 10642 MF6S M8X16 A480	
500	321111-0097		4	FLANGE BUSHING, 8X12X12 MM	

Pos	Part No	UN	Qty	Description	Page No

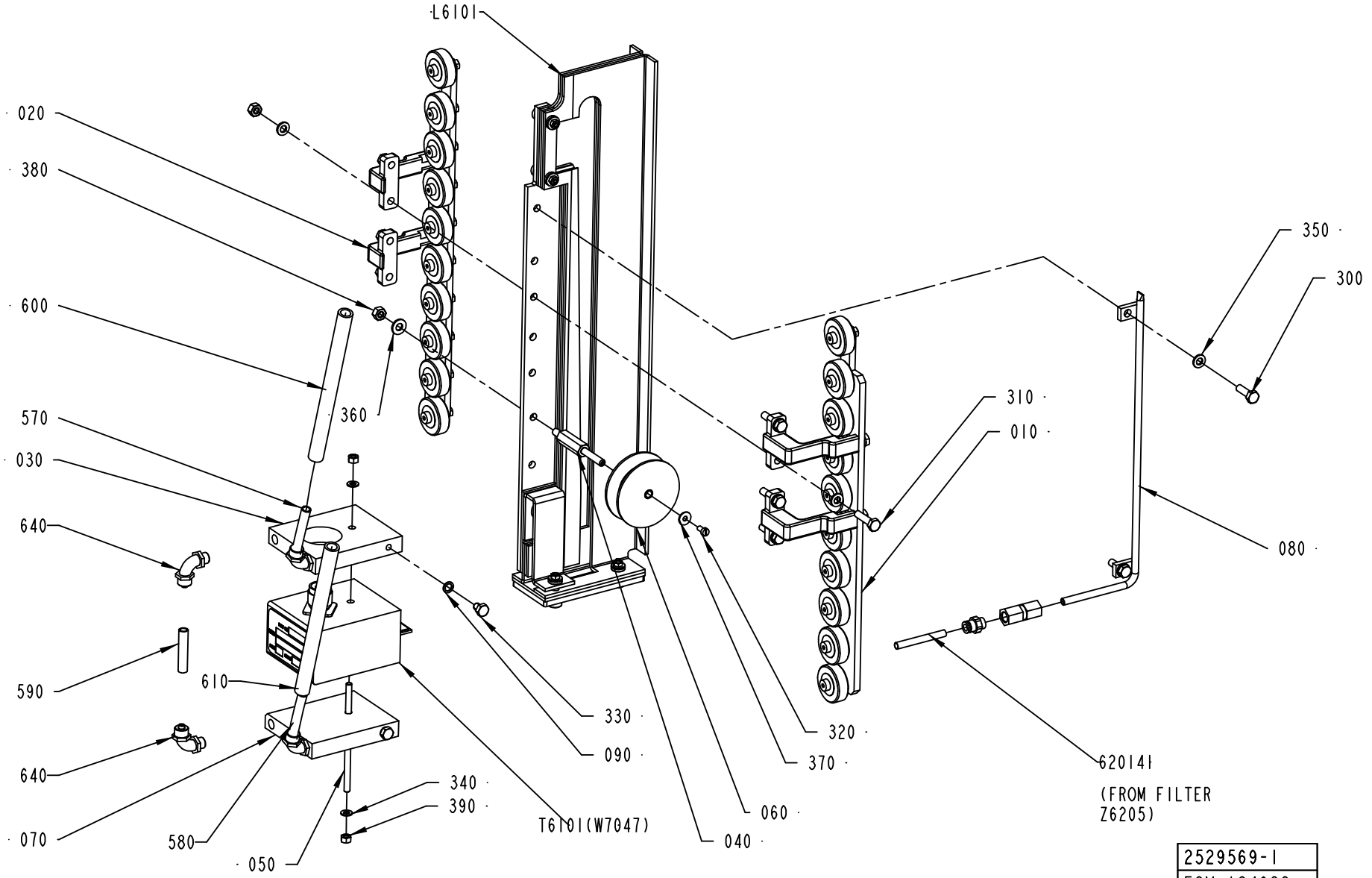
L6101
020
380
600
570
030
640
640
070
590
610
580
050
360
340
390
T6101(W7047)
330
090
040
060
370
320
310
010
350
300
080
620141
(FROM FILTER Z6205)
2529569-1
ECM 124683

ECM: 176256 - 50001231
Group number: 2529569-0100
Assembly Drawing: 2529569-1_1_AC

Pos	Part No	UN	Qty	Description	Page No
A3/FLEX TBA 0200B, A3/FLEX TBA 0250B, A3/FLEX TBA 0330S					
T6101	67380-0214		1	TRANSFORMER	
T6101	67380-0214		1	TRANSFORMER	
A3/FLEX TPA 1000SQ					
T6101	67380-0213		1	TRANSFORMER	
T6101	67380-0213		1	TRANSFORMER	
T6101	67380-0207		1	TRANSFORMER	
T6101	67380-0207		1	TRANSFORMER	
A3/FLEX TBA 0500B, A3/FLEX TBA 1000B, A3/FLEX TBA 1000S, A3/FLEX TBA 1000SQ, A3/FLEX TBA 0200S, A3/FLEX TBA 1500S					
T6101	67380-0207		1	TRANSFORMER	
T6101	67380-0207		1	TRANSFORMER	
Common Parts					
010	2506496-0100		1	PRESSURE ROLLER	**7-15**
020	2506497-0100		1	PRESSURE ROLLER	**7-17**
030	1129839-0000		1	COOLING PLATE	
040	2510366-0000		1	SHAFT	
050	1498430-0000		1	ROD	
060	2510365-0000		1	ROLLER	
070	1129869-0000		1	COOLING PLATE	
080	2529930-0000		1	AIR NOZZLE	
090	1140077-0000		2	RING	
300	312105-0370		2	SCREW M6S ISO 4017 M6X20 A480	
310	312105-0372		4	SCREW M6S ISO 4017 M6X25 A480	
320	312125-0287		1	SCREW ISO 1207 M4X8 A4	
330	312105-0362		2	SCREW M6S ISO 4017 M6X8 A480	
340	315105-0146		2	WASHER BRB5,3X10RFR	
350	315105-0153		10	WASHER BRB6,4X12RFR	
360	315105-0156		1	WASHER BRB 6.7X14 RFR	
370	90005-0082		1	WASHER PLAIN ROUND 4,3(M4)/12,H=1	
380	312605-0316		5	HEXAGON NUT, M6M M6 A280	
390	312605-0314		2	HEXAGON NUT, M6M M5 A280	
570	90166-0118	MM	1600	TUBE 8 MM PA BLACK	
580	90166-0118	MM	1600	TUBE 8 MM PA BLACK	
590	90166-0118	MM	70	TUBE 8 MM PA BLACK	
600	90458-2329	MM	1600	HOSE, SILICONE, 50 SHORE, 9/13 MM	
610	90458-2329	MM	1600	HOSE, SILICONE, 50 SHORE, 9/13 MM	
620141	90166-0193	MM	850	TUBE 6 MM PUR BLUE	
640	342931-0121		4	ELBOW 90 COUPL.,EXT.THREAD 8/6-G1/8"	
650	342722-0202		1	PIPE COUPLING 1/8" D=6MM	
660	342725-0102		1	CONN. STR. PIPE GI-6-G1/8	
L6101	2509617-0100		1	INDUCTOR	**7-19**

Machine Type	Group Description	Used-In	Group Number	Page No

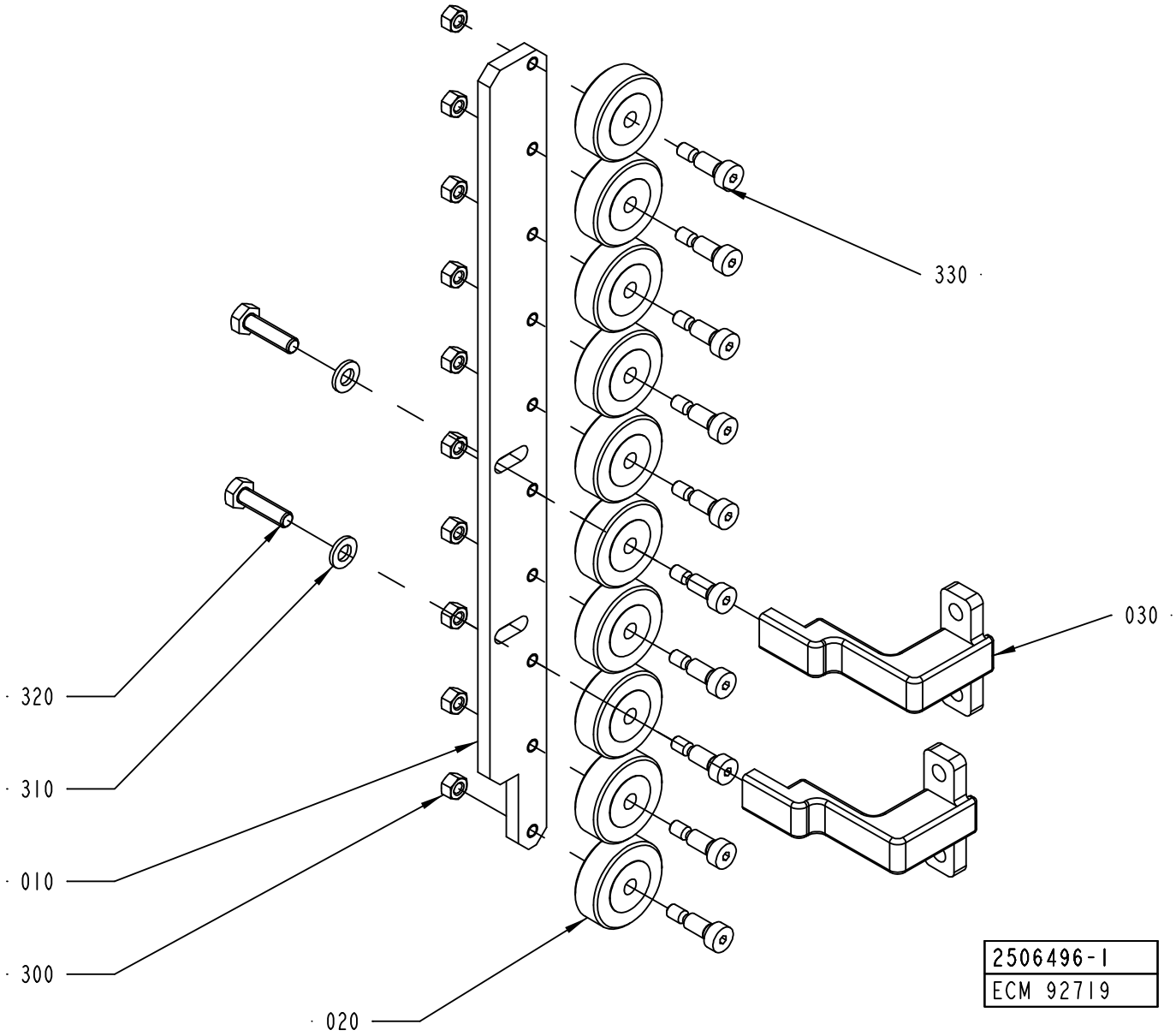
330
030
320
310
010
300
020
2506496-1
ECM 92719

ECM: 122815 - 20021218
Group number: 2506496-0100
Assembly Drawing: 2506496-1_1_AA

Pos	Part No	UN	Qty	Description	Page No
-					
010	1558914-0000		1	ROLLER BRACKET	
020	1558911-0000		10	PRESSURE ROLLER	
030	2529573-0000		2	BRACKET	
300	312605-0314		10	HEXAGON NUT, M6M M5 A280	
310	315105-0153		2	WASHER BRB6,4X12RFR	
320	312105-0371		2	SCREW M6S ISO 4017 M6X22 A480	
330	312180-0366		10	SCREW ISO7379 H6X12	

Pos	Part No	UN	Qty	Description	Page No

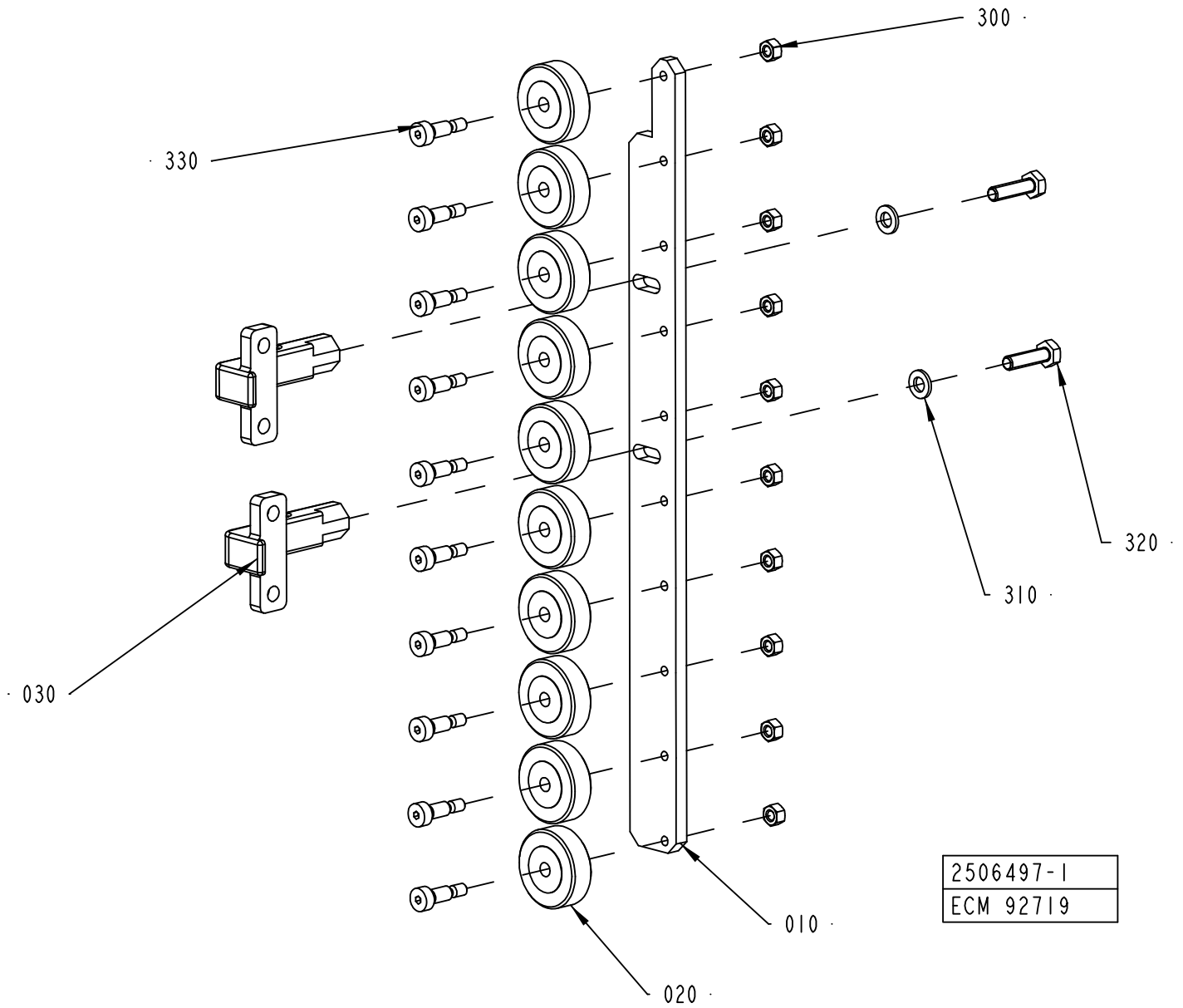
300
330
320
310
030
010
020
2506497-1
ECM 92719

ECM: 122816 - 20021218
Group number: 2506497-0100
Assembly Drawing: 2506497-1_1_AA

Pos	Part No	UN	Qty	Description	Page No
-					
010	1558914-0000		1	ROLLER BRACKET	
020	1558911-0000		10	PRESSURE ROLLER	
030	2529572-0000		2	BRACKET	
300	312605-0314		10	HEXAGON NUT, M6M M5 A280	
310	315105-0153		2	WASHER BRB6,4X12RFR	
320	312105-0371		2	SCREW M6S ISO 4017 M6X22 A480	
330	312180-0366		10	SCREW ISO7379 H6X12	

Pos	Part No	UN	Qty	Description	Page No

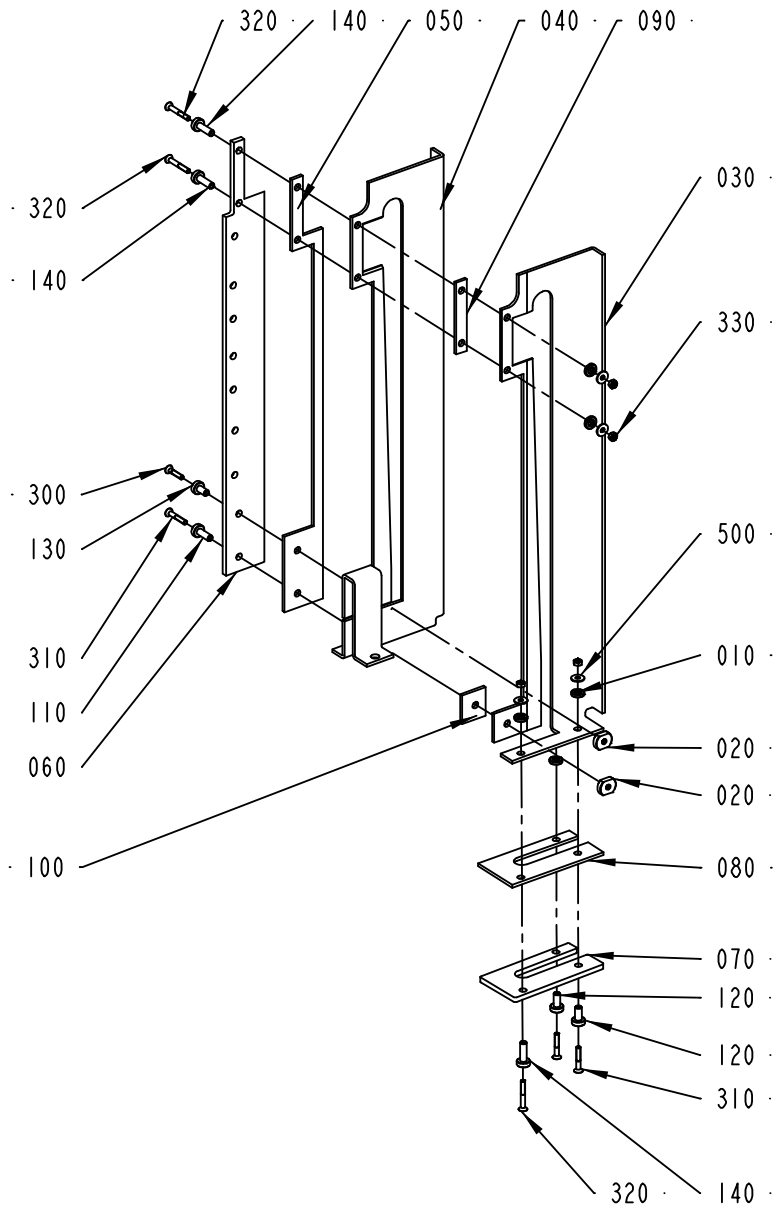

2509617-1
ECM 124683

ECM: 125420 - 20040109
Group number: 2509617-0100
Assembly Drawing: 2509617-1_1_AB

Pos	Part No	UN	Qty	Description	Page No
-					
010	1558917-0000		5	SPACER DISC	
020	1558918-0000		2	TIGHTENING NUT	
030	2506498-0000		1	SEALING PLATE	
040	2506499-0000		1	SEALING PLATE	
050	2506500-0000		1	PLATE	
060	2506501-0000		1	PLATE	
070	2506502-0000		1	PLATE	
080	2506503-0000		1	PLATE	
090	2506504-0000		1	PLATE	
100	2506505-0000		1	PLATE	
110	2509613-0000		1	BUSHING	
120	2509614-0000		2	BUSHING	
130	2529578-0000		1	BUSHING	
140	2597600-0000		3	BUSHING	
300	312155-0295		1	SCREW EN 10642 MF6S M4X20 A480	
310	312155-0297		3	SCREW EN 10642 MF6S M4X25 A480	
320	312155-0299		3	SCREW EN 10642 MF6S M4X30 A480	
330	312605-0312		5	HEXAGON NUT, M6M M4 A280	
500	90005-0082		5	WASHER PLAIN ROUND 4,3(M4)/12,H=1	

Pos	Part No	UN	Qty	Description	Page No

Machine Type	Group Description	Used-In	Group Number	Page No

PRESSURE ROLLER

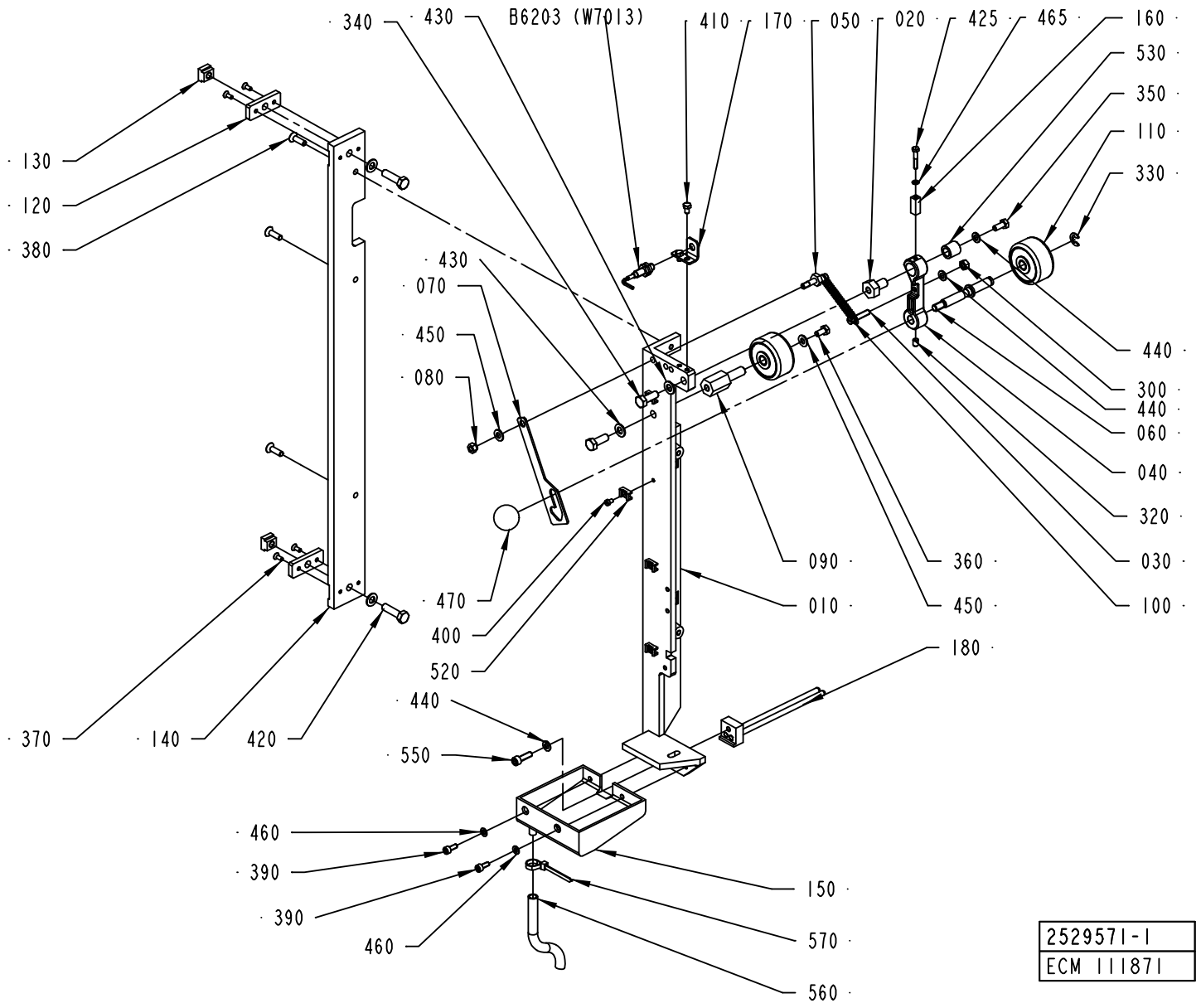

ECM: 152038 - 20040109
Group number: 2529571-0100
Assembly Drawing: 2529571-1_1_AB

Pos	Part No	UN	Qty	Description	Page No
-					
010	2510359-0000		1	FASTENING BRACKET	
020	2510360-0000		1	SHAFT	
030	2510362-0000		1	SHAFT	
040	2510361-0000		1	CONNECTING ROD	
050	2510363-0000		1	SHAFT	
060	2510364-0000		1	SHAFT	
070	1349432-0000		1	CATCH	
080	1349994-0000		1	NUT	
090	1035895-0000		1	SHAFT	
100	1478303-0000		1	TENSION SPRING	
110	1346988-0000		2	ROLL	
010	*90166-0056*	*MM*	*40*	*SHRINKABLE HOSE*	
020	*321120-0104*		*2*	*BEARBUSHING W/O FL,ANGE 10/12X10*	
120	2506656-0000		2	PLATE	
130	2506654-0000		2	BLOCK	
140	2506657-0000		1	SPACER	
150	2529550-0000		1	SUPPORT	
160	2535932-0000		1	CAM	
170	2564504-0000		1	SUPPORT	
180	1349672-0000		1	GUIDE	
300	312605-0316		1	HEXAGON NUT, M6M M6 A280	
320	312318-0362		1	SCREW ISO4029 M6X8 A4	
330	315755-0801		1	RETAINING RING SHAFT DIN 6799 8 A2	
340	312105-0452		2	SCREW M6S ISO 4017 M8X22 A4 80	
350	312105-0367		1	SCREW M6S ISO 4017 M6X14 A480	
360	312105-0366		1	SCREW M6S ISO 4017 M6X12 A480	
370	312155-0289		4	SCREW EN 10642 MF6S M4X10 A480	
380	312155-0370		3	SCREW EN 10642 MF6S M6X20 A480	
390	312115-0327		2	SCREW ISO4762 M5X12 A4	
400	312125-0285		4	SCREW ISO 1207 M4X6 A4	
410	312105-0323		2	SCREW M6S ISO 4017 M5X8 A480	
420	312105-0455		2	SCREW M6S ISO 4017 M8X30 A480	
425	312105-0297		1	SCREW M6S ISO 4017 M4X25 A470	
430	315105-0165		4	WASHER BRB8,4X16RFR	
440	315105-0153		3	WASHER BRB6,4X12RFR	
450	315105-0156		2	WASHER BRB 6.7X14 RFR	
460	315105-0146		2	WASHER BRB5,3X10RFR	
465	315105-0136		1	WASHER BRB4,3XRFR	
470	318800-0104		1	HANDLE,SPHERICAL KNOB,INT.THRE.,D.30-M8	
520	352113-0205		4	ANCHOR PLATES FOR STRIPS, TYPE TM2S8-C10	
530	321105-0164		1	BEAR. BUSH. WITHOUT FL, 10X16X16 MM	
550	312115-0370		1	SCREW ISO4762 M6X20 A4	
560	90459-1126	MM	3000	PLASTIC HOSE PVC TRANSPARENT, 8X11MM	
570	352113-0102		1	CLIP-STRIP, BLACK 188X4,8 MM	
B6203	90458-0138		1	PROX.SW. E2EG-X1R5B1-5M	

Machine Type | Group Description | Used-In | Group Number | Page No

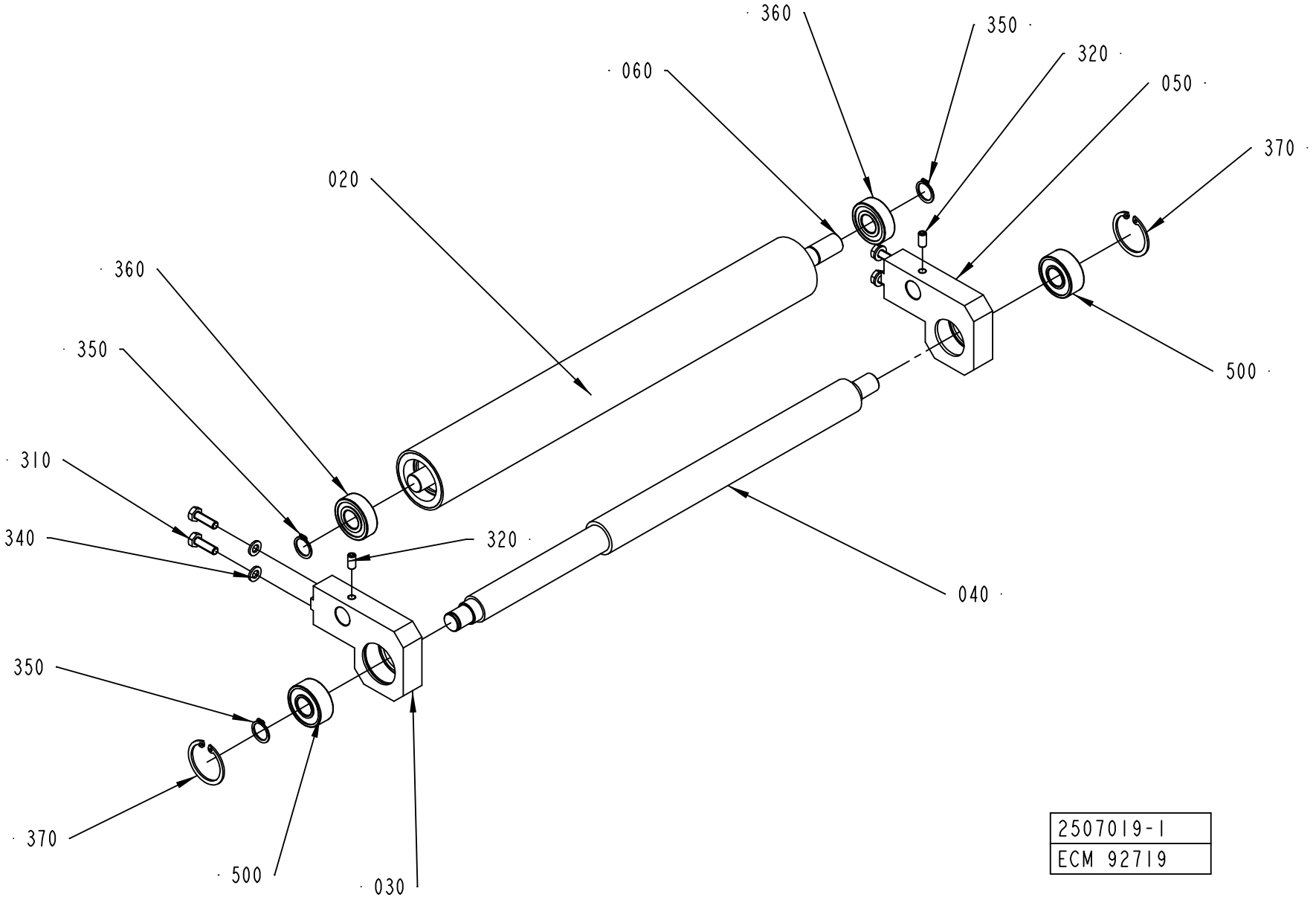
360
350
320
060
050
370
020
360
350
500
310
340
320
040
350
370
500
030
2507019-1
ECM 92719

ECM: 122818 - 20021218
Group number: 2507019-0100
Assembly Drawing: 2507019-1_1_AA

Pos	Part No	UN	Qty	Description	Page No
-					
020	2506661-0000		1	ROLLER	
030	2510404-0000		1	SUPPORT	
040	2506663-0000		1	SUPPORT	
050	2510405-0000		1	SUPPORT	
060	2506666-0000		1	AXEL	
310	312105-0370		4	SCREW M6S ISO 4017 M6X20 A480	
320	312318-0366		2	SCREW ISO4029 M6X12 A4	
340	315105-0153		4	WASHER BRB6,4X12RFR	
350	315751-0112		3	RETAINING RING FOR SHAFT DIN 471 15 A2	
360	321313-0102		2	BALL BEARING, 15X35X11 MM	
370	315753-0124		2	RETAINING RING FOR BORE DIN 472 35 A2	
500	90458-2737		2	SPHERICAL BALL BEARING, 15X35X14 MM	

Pos	Part No	UN	Qty	Description	Page No

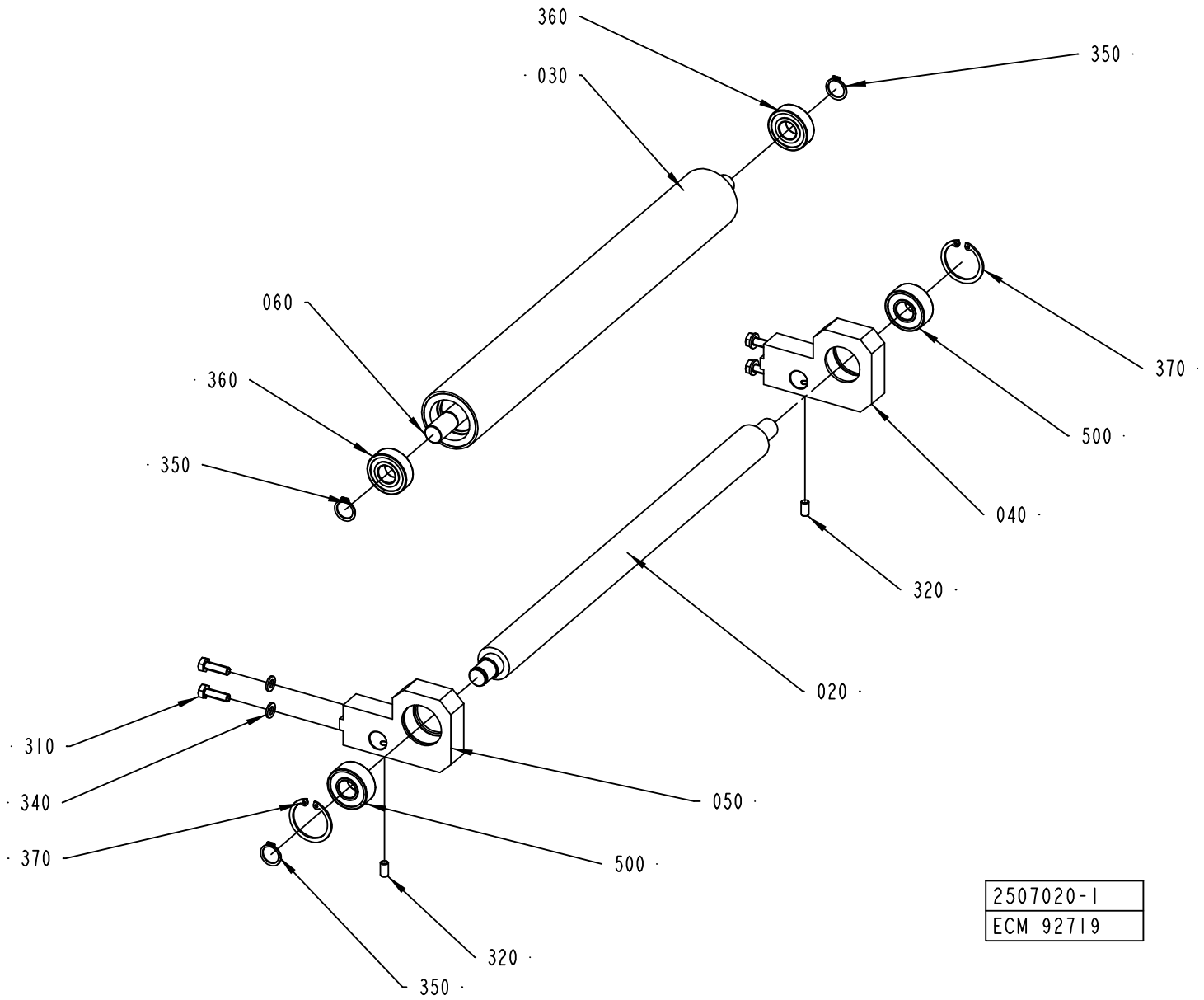
360
030
350
060
360
350
370
500
040
320
020
310
340
370
050
500
320
350
2507020-1
ECM 92719

ECM: 122819 - 20021218
Group number: 2507020-0100
Assembly Drawing: 2507020-1_1_AA

Pos	Part No	UN	Qty	Description	Page No
-					
020	2506659-0000		1	ROLLER	
030	2506661-0000		1	ROLLER	
040	2510404-0000		1	SUPPORT	
050	2510405-0000		1	SUPPORT	
060	2506666-0000		1	AXEL	
310	312105-0370		4	SCREW M6S ISO 4017 M6X20 A480	
320	312318-0366		2	SCREW ISO4029 M6X12 A4	
340	315105-0153		4	WASHER BRB6,4X12RFR	
350	315751-0112		3	RETAINING RING FOR SHAFT DIN 471 15 A2	
360	321313-0102		2	BALL BEARING, 15X35X11 MM	
370	315753-0124		2	RETAINING RING FOR BORE DIN 472 35 A2	
500	90458-2737		2	SPHERICAL BALL BEARING, 15X35X14 MM	

Pos	Part No	UN	Qty	Description	Page No

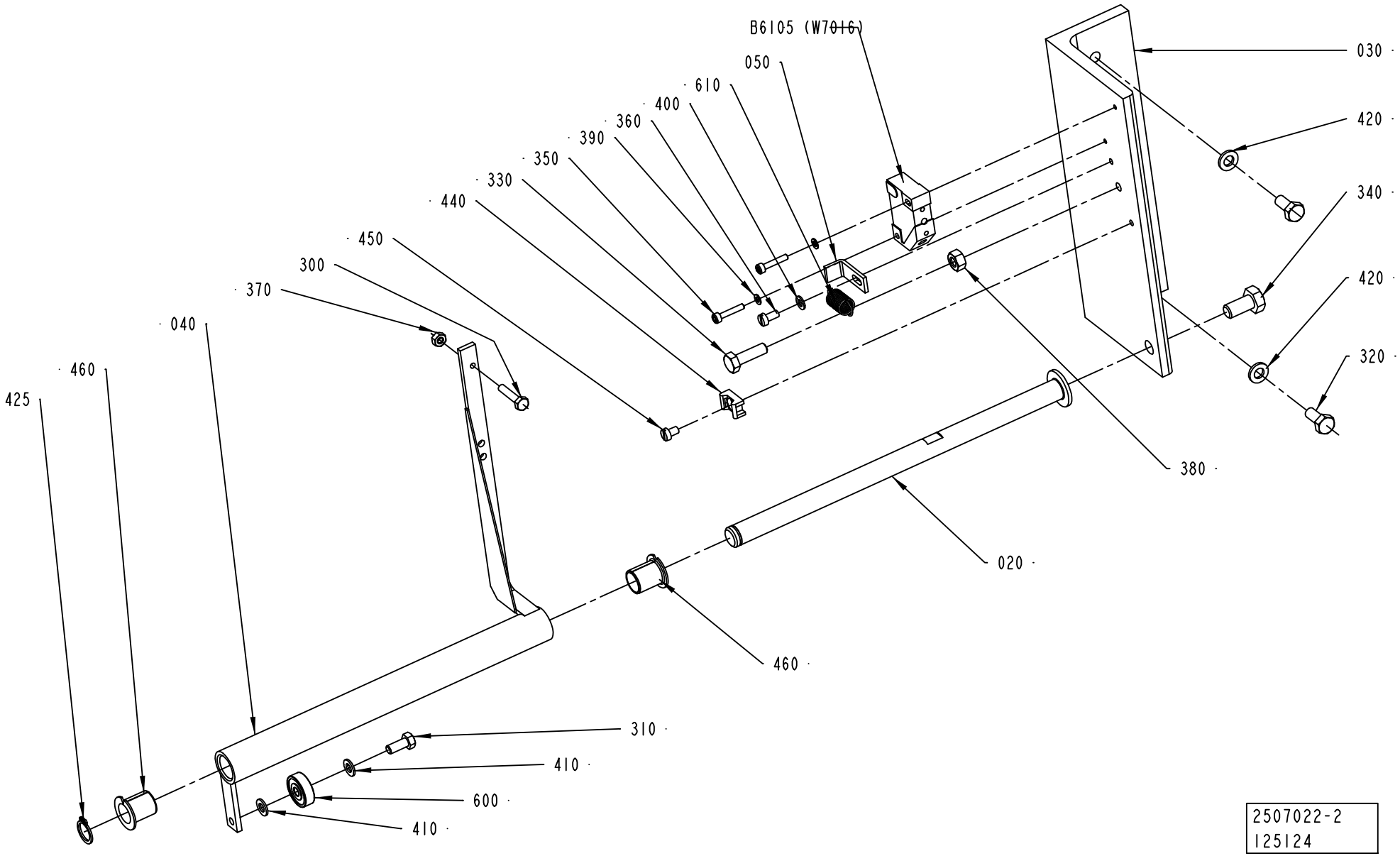
B6105 (W7016)
050
610
400
360
390
350
330
440
450
300
370
040
460
425
030
420
340
420
320
380
020
460
310
410
600
410
2507022-2
125124

ECM: 163224 - 20040319
Group number: 2507022-0200
Assembly Drawing: 2507022-2_1_AA

Pos	Part No	UN	Qty	Description	Page No
-					
020	2602995-0000		1	AXLE	
030	2602994-0000		1	BRACKET	
040	2602993-0000		1	LEVER	
050	2504812-0000		1	BLOCK	
300	312105-0295		1	SCREW M6S ISO4017 M4X20 A470	
310	312105-0327		1	SCREW M6S ISO 4017 M5X12 A480	
320	312105-0367		2	SCREW M6S ISO 4017 M6X14 A480	
330	312105-0370		1	SCREW M6S ISO 4017 M6X20 A480	
340	312105-0449		1	SCREW M6S ISO 4017 M8X16 A480	
350	312115-0228		2	SCREW ISO4762 M3X16 A4	
360	312125-0287		1	SCREW ISO 1207 M4X8 A4	
370	312605-0312		1	HEXAGON NUT, M6M M4 A280	
380	312605-0316		1	HEXAGON NUT, M6M M6 A280	
390	315105-0124		2	WASHER BRB3,2X6RFR	
400	315105-0136		1	WASHER BRB4,3XRFR	
410	315105-0146		2	WASHER BRB5,3X10RFR	
420	315105-0153		2	WASHER BRB6,4X12RFR	
425	315751-0109		1	RETAINING RING FOR SHAFT DIN 471 12 A2	
440	352113-0205		1	ANCHOR PLATES FOR STRIPS, TYPE TM2S8-C10	
450	312121-0285		1	SCREW ISO 1207 M4X6 4.8 - 5.8 Z.PL.	
460	321161-0185		2	FLANGE BUSHING, 12X14X17 MM	
600	90214-0138		1	BALL BEARING, 5X19X6 MM	
610	90335-0089		1	TENSION SPRING 41490, 0,9X10X23	
B6105	90044-0194		1	PROX.SW. IN5329/IN3002-BPKG	

Pos	Part No	UN	Qty	Description	Page No

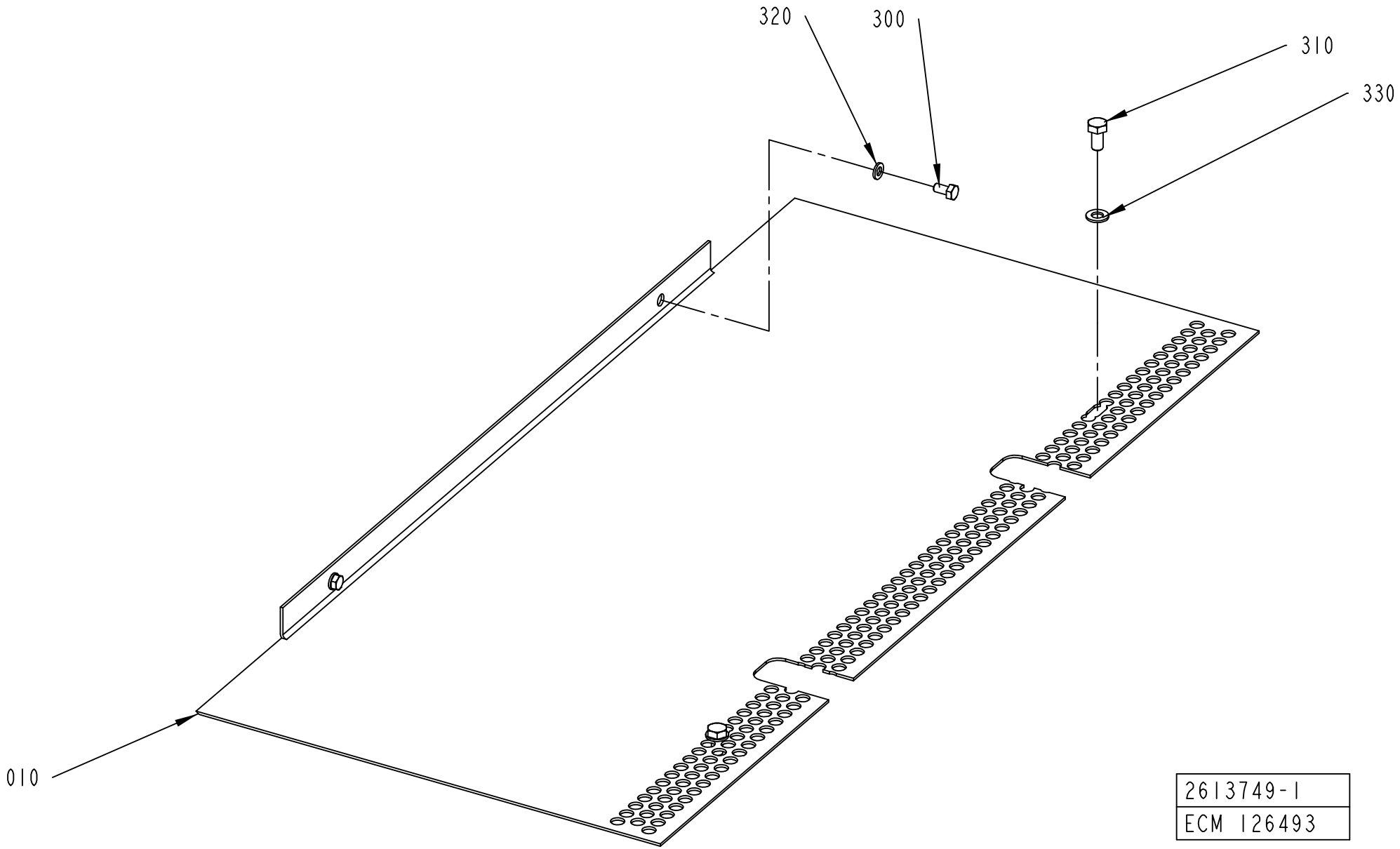
320
300
310
330
010
2613749-1
ECM 126493

ECM: 131598 - 20030908
Group number: 2613749-0100
Assembly Drawing: 2613749-1_1_AA

Pos	Part No	UN	Qty	Description	Page No
-					
010	2579996-0000		1	PLATE	
300	312105-0366		2	SCREW M6S ISO 4017 M6X12 A480	
310	312105-0449		2	SCREW M6S ISO 4017 M8X16 A480	
320	315105-0153		2	WASHER BRB6,4X12RFR	
330	315105-0165		2	WASHER BRB8,4X16RFR	

Pos	Part No	UN	Qty	Description	Page No

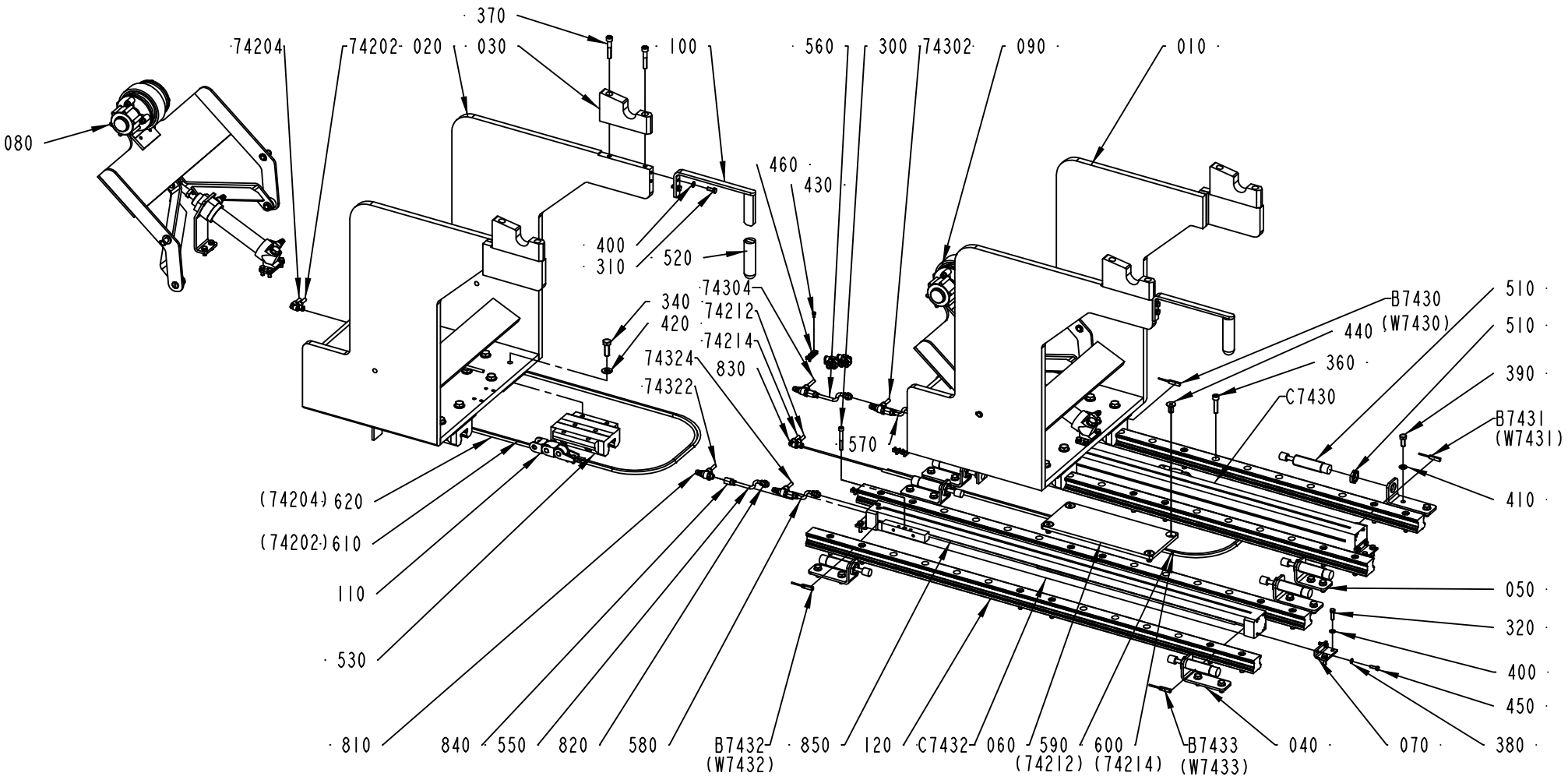

2538072-1
ECM 96181

ECM: 174269 - 50001231
Group number: 2538072-0100
Assembly Drawing: 2538072-1_1_AA

Pos	Part No	UN	Qty	Description	Page No
-					
010	2556496-0000		1	CARRIAGE	
020	2556497-0000		1	CARRIAGE	
030	2660776-0000		4	BEARING BLOCK	
040	2556499-0000		7	BRACKET	
050	2623883-0000		1	BRACKET	
060	2623884-0000		1	PLATE	
070	2556512-0000		4	BRACKET	
080	2629315-0100		1	PAPER BRAKE	**7-33**
090	2556503-0100		1	PAPER BRAKE	**7-35**
100	2564623-0000		2	HANDLE	
110	2564630-0100		2	CABLE DRAG CHAIN	**7-37**
120	2629338-0000		4	GUIDE RAIL	
300	312115-0380		2	SCREW ISO4762 M6X50 A4	
310	312105-0368		4	SCREW M6S ISO 4017 M6X16 A480	
320	312105-0370		8	SCREW M6S ISO 4017 M6X20 A480	
340	312105-0495		32	SCREW M6S ISO 4017 M10X30 A480	
360	312115-0457		24	SCREW ISO4762 M8X35 A4	
370	312115-0460		8	SCREW ISO4762 M8X45 A4	
380	315105-0146		8	WASHER BRB5,3X10RFR	
390	312105-0451		16	SCREW M6S ISO 4017 M8X20 A480	
400	315105-0153		12	WASHER BRB6,4X12RFR	
410	315105-0165		16	WASHER BRB8,4X16RFR	
420	315105-0173		32	WASHER BRB10,5X22RFR	
430	312125-0287		11	SCREW ISO 1207 M4X8 A4	
440	312155-0491		4	SCREW EN 10642 MF6S M10X20 A480	
450	312105-0329		8	SCREW M6S ISO 4017 M5X16 A480	
460	352113-0205		11	ANCHOR PLATES FOR STRIPS, TYPE TM2S8-C10	
510	90347-0182		8	SHOCK ABSORBER, YSR-16-20-C	
520	90459-1544		2	HANDLE, GR/10	
530	90459-1545		8	CARRIAGE, 1653-314-20	
550	90166-0193	MM	500	TUBE 6 MM PUR BLUE	
560	90166-0193	MM	500	TUBE 6 MM PUR BLUE	
570	90166-0193	MM	500	TUBE 6 MM PUR BLUE	
580	90166-0193	MM	500	TUBE 6 MM PUR BLUE	
590	90166-0193	MM	1800	TUBE 6 MM PUR BLUE	
600	90166-0193	MM	1800	TUBE 6 MM PUR BLUE	
610	90166-0193	MM	1800	TUBE 6 MM PUR BLUE	
620	90166-0193	MM	1800	TUBE 6 MM PUR BLUE	
74202	90166-0193	MM	4000	TUBE 6 MM PUR BLUE	
74204	90166-0193	MM	4000	TUBE 6 MM PUR BLUE	
74212	90166-0193	MM	4000	TUBE 6 MM PUR BLUE	
74214	90166-0193	MM	4000	TUBE 6 MM PUR BLUE	
74302	90166-0193	MM	4000	TUBE 6 MM PUR BLUE	
74304	90166-0193	MM	4000	TUBE 6 MM PUR BLUE	
74322	90166-0193	MM	4000	TUBE 6 MM PUR BLUE	
74324	90166-0193	MM	4000	TUBE 6 MM PUR BLUE	
810	90235-0846		4	THROTTLE CHECK VALVE G1/8", MANUAL, 6	
820	342722-0202		4	PIPE COUPLING 1/8" D=6MM	
830	342735-0102		12	ELBOW PIPE JOINT	
840	342770-0105		4	STRAIGHT COUPLING INT, D=6 MM - G1/8	
850	90458-0273		4	COVER STRIP	
B7430	90044-0165		1	SENSOR, SME-8-K5-LED-24	
B7431	90044-0165		1	SENSOR, SME-8-K5-LED-24	
B7432	90044-0165		1	SENSOR, SME-8-K5-LED-24	
B7433	90044-0165		1	SENSOR, SME-8-K5-LED-24	
C7430	90459-2647		1	DOUBLE ACTING, SHUTTLE, CYL. 25-780	
C7432	90459-2647		1	DOUBLE ACTING, SHUTTLE, CYL. 25-780	

Machine Type | Group Description | Used-In | Group Number | Page No

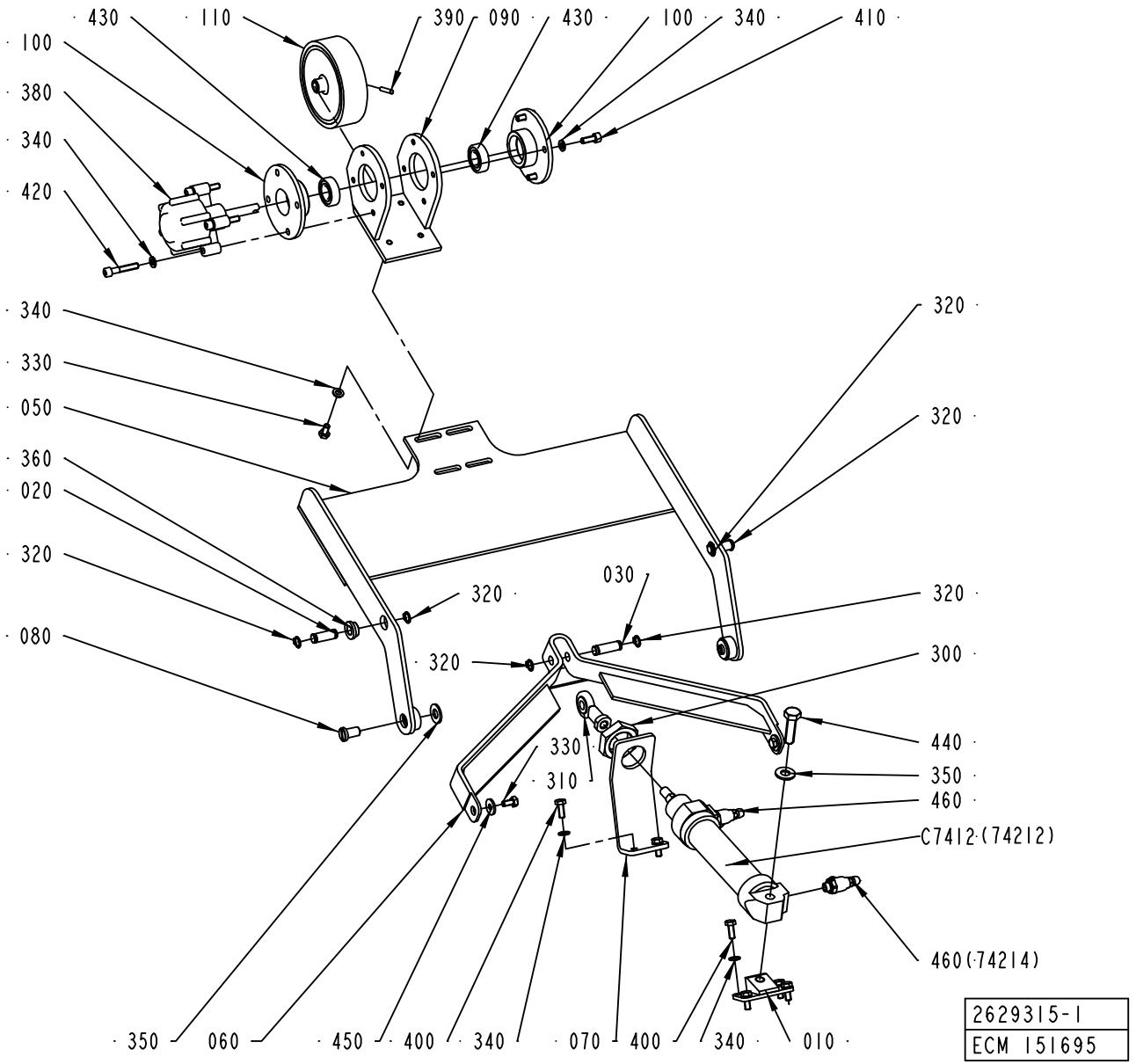
430
110
390
090
430
100
340
410
100
380
340
420
340
330
050
360
020
320
080
320
320
320
030
320
320
300
440
330
310
350
460
C7412 (74212)
460 (74214)
350
060
450
400
340
070
400
340
010
2629315-1
ECM 151695

ECM: 151695 - 20040115
Group number: 2629315-0100
Assembly Drawing: 2629315-1_1_AA

Pos	Part No	UN	Qty	Description	Page No
-					
010	2556504-0000		1	BRACKET	
020	2556505-0002		2	PIN	
030	2556505-0003		1	PIN	
050	2556507-0000		1	LEVER	
060	2556506-0000		1	LINK	
070	2556508-0000		1	BRACKET	
080	2556509-0000		2	SHAFT	
090	2556510-0000		1	BRACKET	
100	1512363-0000		2	BEARING HOUSING	
110	1523483-0000		1	ROLLER	
310	90239-0405		1	ROD END,BALL JOINT EYE M10X1,25	
320	90141-0016		6	RETAINING RING FOR SHAFT DIN 471 10 A2	
330	312105-0366		6	SCREW M6S ISO 4017 M6X12 A480	
340	315105-0153		18	WASHER BRB6,4X12RFR	
350	315105-0173		3	WASHER BRB10,5X22RFR	
360	321101-0162		2	FLANGE BUSHING, 10X16X8 MM	
380	90347-0054		1	DAMPER	
390	311103-1274		1	PARALLEL PIN ISO 2338 4M6X24 A1	
400	312105-0368		6	SCREW M6S ISO 4017 M6X16 A480	
410	312115-0368		4	SCREW ISO4762 M6X16 A4	
420	312115-0376		4	SCREW ISO4762 M6X35 A4	
430	321308-0202		2	BALL BEARING, 15X32X9 MM	
440	312105-0497		1	SCREW M6S ISO 4017 M10X35 A480	
450	6278-0000		2	WASHER	
460	90235-0846		2	THROTTLE CHECK VALVE G1/8", MANUAL, 6	
C7412	90239-0861		1	DOUBLE ACTING, MINI-ISO, CYL. 32-125	

Pos	Part No	UN	Qty	Description	Page No

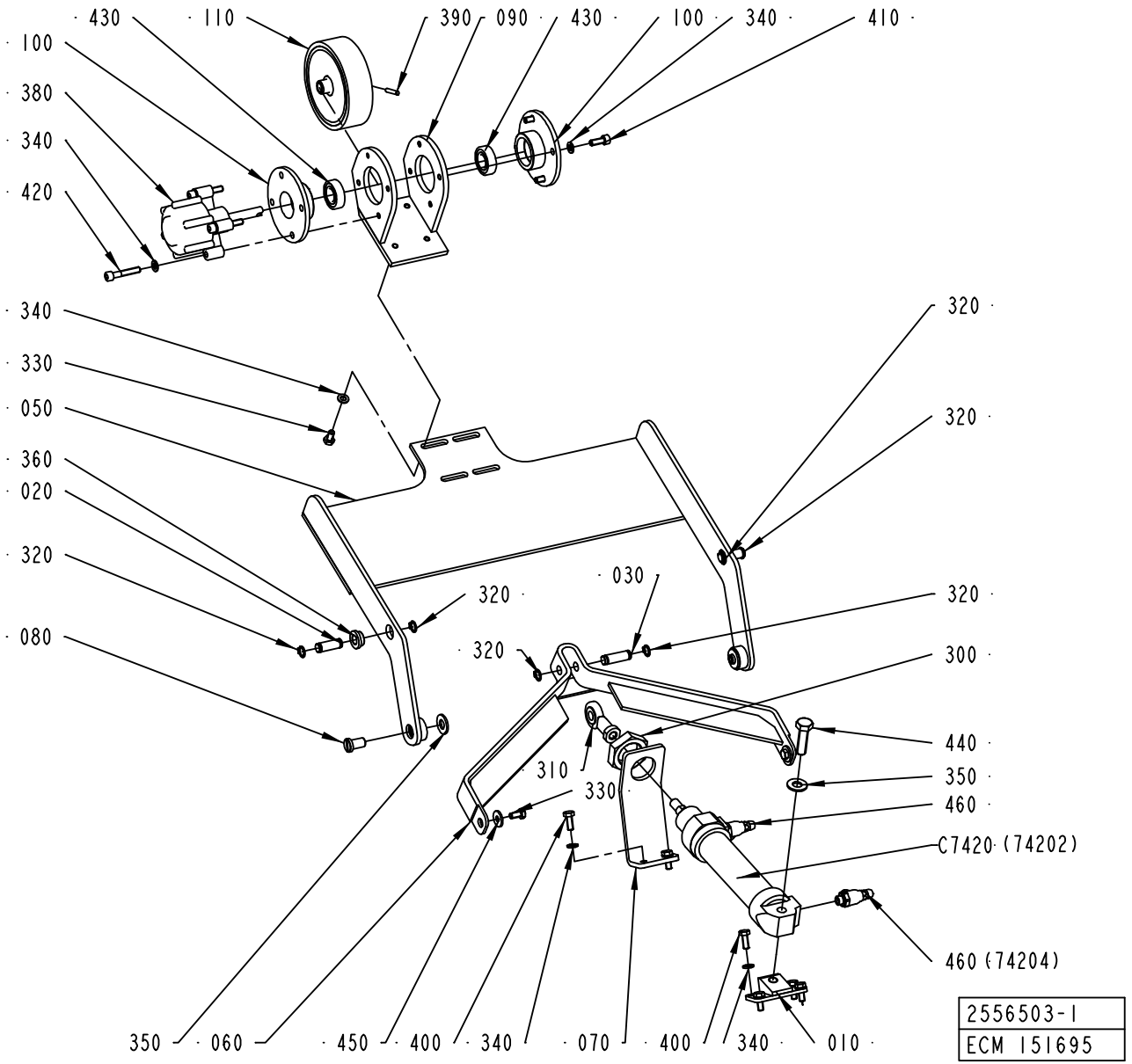
430
110
390
090
430
100
340
410
100
380
340
420
340
330
050
360
020
320
080
320
320
030
320
320
320
300
440
350
460
C7420 (74202)
460 (74204)
310
330
350
060
450
400
340
070
400
340
010
2556503-1
ECM 151695

ECM: 151695 - 20040115
Group number: 2556503-0100
Assembly Drawing: 2556503-1_1_AA

Pos	Part No	UN	Qty	Description	Page No
-					
010	2556504-0000		1	BRACKET	
020	2556505-0002		2	PIN	
030	2556505-0003		1	PIN	
050	2556507-0000		1	LEVER	
060	2556506-0000		1	LINK	
070	2556508-0000		1	BRACKET	
080	2556509-0000		2	SHAFT	
090	2556510-0000		1	BRACKET	
100	1512363-0000		2	BEARING HOUSING	
110	1523483-0000		1	ROLLER	
310	90239-0405		1	ROD END,BALL JOINT EYE M10X1,25	
320	90141-0016		6	RETAINING RING FOR SHAFT DIN 471 10 A2	
330	312105-0366		6	SCREW M6S ISO 4017 M6X12 A480	
340	315105-0153		18	WASHER BRB6,4X12RFR	
350	315105-0173		3	WASHER BRB10,5X22RFR	
360	321101-0162		2	FLANGE BUSHING, 10X16X8 MM	
380	90347-0054		1	DAMPER	
390	311103-1274		4	PARALLEL PIN ISO 2338 4M6X24 A1	
400	312105-0368		6	SCREW M6S ISO 4017 M6X16 A480	
410	312115-0368		4	SCREW ISO4762 M6X16 A4	
420	312115-0376		4	SCREW ISO4762 M6X35 A4	
430	321308-0202		2	BALL BEARING, 15X32X9 MM	
440	312105-0497		1	SCREW M6S ISO 4017 M10X35 A480	
450	6278-0000		2	WASHER	
460	90235-0846		2	THROTTLE CHECK VALVE G1/8", MANUAL, 6	
C7420	90239-0861		1	DOUBLE ACTING, MINI-ISO, CYL. 32-125	

Pos	Part No	UN	Qty	Description	Page No

This page is intentionally left blank.

ECM: 119801 - 20040115
Group number: 2564630-0100
Assembly Drawing:

Pos	Part No	UN	Qty	Description	Page No
-					
300	312105-0366		4	SCREW M6S ISO 4017 M6X12 A480	
310	312115-0378		2	SCREW ISO4762 M6X40 A4 80	
320	315105-0153		4	WASHER BRB6,4X12RFR	
500	90181-0199		1	FLEXIBLE CHAIN, LINK 15	
510	90181-0202		1	FLEXIBLE CHAIN, BRACKET 1015. 1PZ	
520	90181-0203		1	FLEXIBLE CHAIN, BRACKET 1015. 2PZ	

Pos	Part No	UN	Qty	Description	Page No

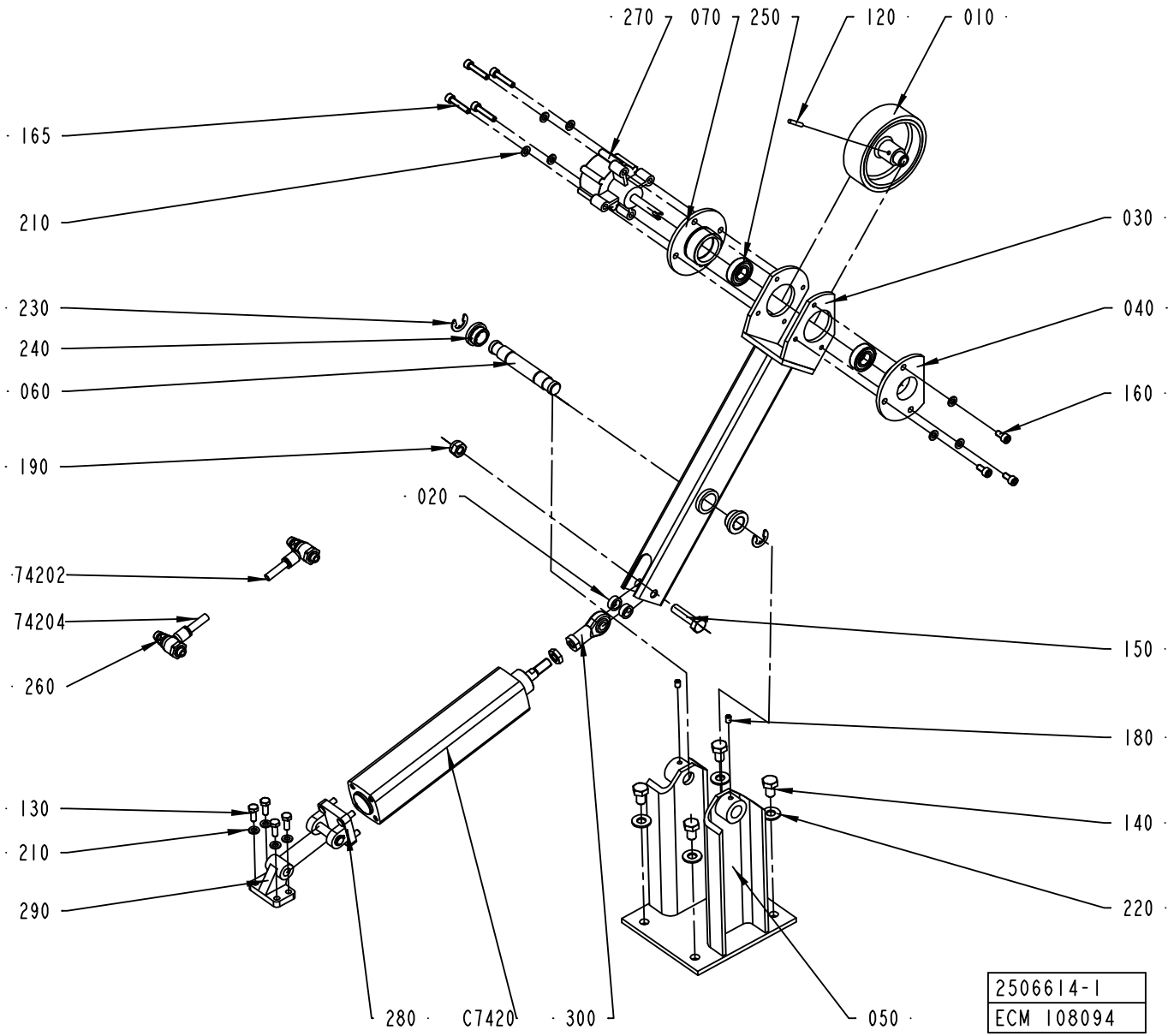
270
070
250
120
010
165
210
030
230
240
040
060
160
190
020
74202
74204
150
260
180
130
140
210
220
290
280
C7420
300
050
2506614-1
ECM 108094

ECM: 108365 - 20030908
Group number: 2506614-0100
Assembly Drawing: 2506614-1_1_AB

Pos	Part No	UN	Qty	Description	Page No
-					
010	1523483-0000		1	ROLLER	
020	1523486-0000		2	SPACER	
030	2506647-0000		1	LEVER	
040	2506649-0000		1	BEARING FLANGE	
050	2506650-0000		1	FRAME	
060	2506652-0000		1	AXLE PIN	
070	2507103-0000		1	BEARING FLANGE	
120	311103-1274		1	PARALLEL PIN ISO 2338 4M6X24 A1	
130	312105-0370		4	SCREW M6S ISO 4017 M6X20 A480	
140	312105-0491		4	SCREW M6S ISO 4017 M10X20 A480	
150	312105-0499		1	SCREW M6S ISO 4014 M10X40 A480	
160	312115-0366		3	SCREW ISO4762 M6X12 A4	
165	312115-0374		4	SCREW ISO4762 M6X30 A4	
180	312318-0362		2	SCREW ISO4029 M6X8 A4	
190	312812-0320		1	HEXAGON NUT, NY-LOCK M10 A480	
210	315105-0153		11	WASHER BRB6,4X12RFR	
220	315105-0173		4	WASHER BRB10,5X22RFR	
230	315755-0112		2	RETAINING RING SHAFT DIN 6799 12 A2	
240	321101-0202		2	FLANGE BUSHING, 16X22X12 MM	
250	321308-0202		2	BALL BEARING, 15X32X9 MM	
260	90235-0848		2	THROTTLE CHECK VALVE, G1/8", MANUAL,8	
270	90347-0054		1	DAMPER	
280	90450-0654		1	BRACKET,REAR,EYE WITH AXLE 32	
290	90450-0655		1	BRACKET,REAR,CLEVIS FLANGE WITH FOOT 32	
300	90450-0723		1	ROD END,BALL JOINT EYE M10X1,25	
74202	90166-0194	MM	8000	TUBE 8 MM PUR BLUE	
74204	90166-0194	MM	8000	TUBE 8 MM PUR BLUE	
C7420	90459-3370		1	DOUBLE ACTING, PROFILE,CYL 32-140	

Pos	Part No	UN	Qty	Description	Page No

BOBBIN BRAKE

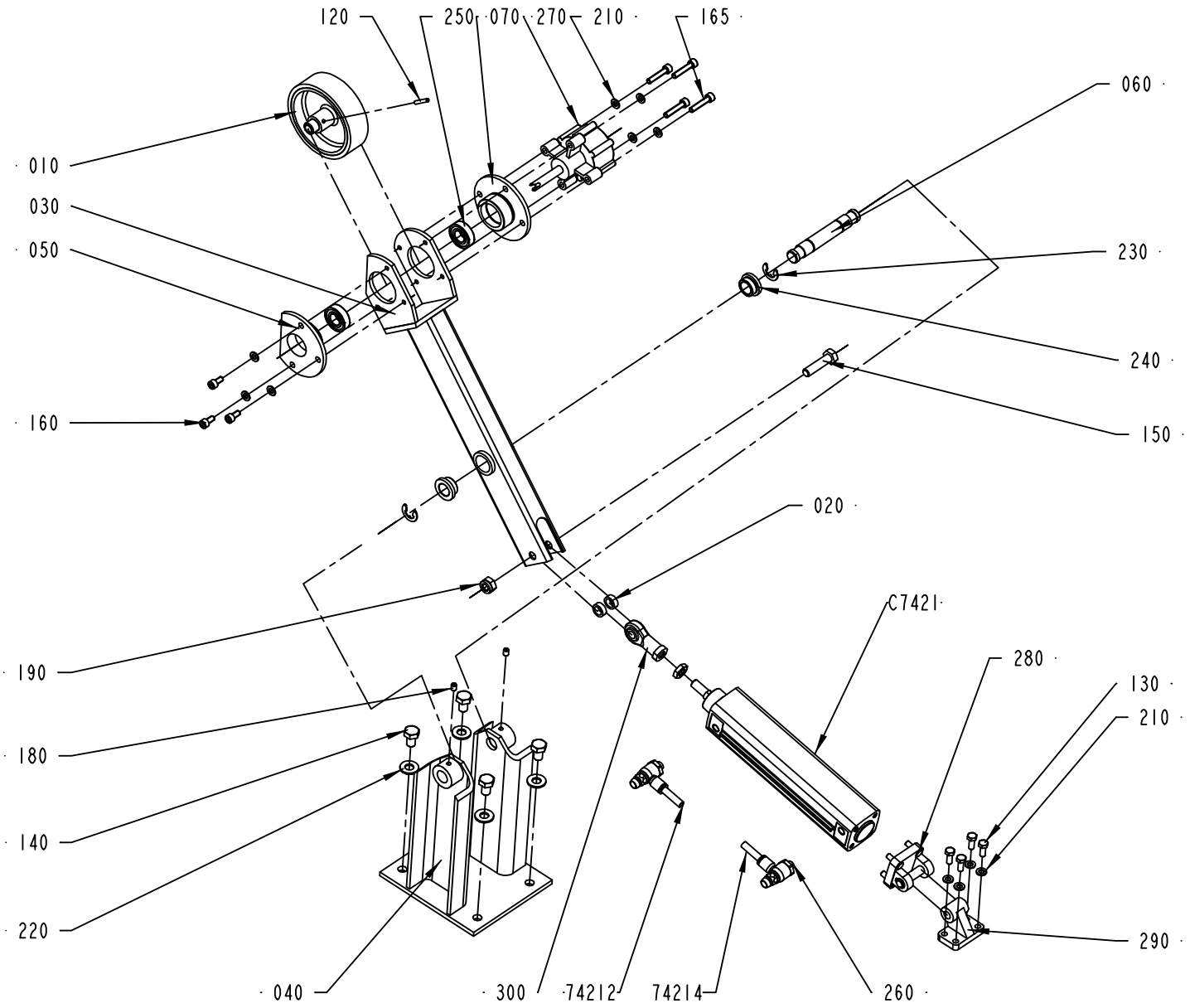

2506615-1
ECM 108094

ECM: 108366 - 20030908
Group number: 2506615-0100
Assembly Drawing: 2506615-1_1_AB

Pos	Part No	UN	Qty	Description	Page No
-					
010	1523483-0000		1	ROLLER	
020	1523486-0000		2	SPACER	
030	2506648-0000		1	LEVER	
040	2506650-0000		1	FRAME	
050	2506651-0000		1	BEARING FLANGE	
060	2506652-0000		1	AXLE PIN	
070	2507103-0000		1	BEARING FLANGE	
120	311103-1274		1	PARALLEL PIN ISO 2338 4M6X24 A1	
130	312105-0370		4	SCREW M6S ISO 4017 M6X20 A480	
140	312105-0491		4	SCREW M6S ISO 4017 M10X20 A480	
150	312105-0499		1	SCREW M6S ISO 4014 M10X40 A480	
160	312115-0366		3	SCREW ISO4762 M6X12 A4	
165	312115-0374		4	SCREW ISO4762 M6X30 A4	
180	312318-0362		2	SCREW ISO4029 M6X8 A4	
190	312812-0320		1	HEXAGON NUT, NY-LOCK M10 A480	
210	315105-0153		11	WASHER BRB6,4X12RFR	
220	315105-0173		4	WASHER BRB10,5X22RFR	
230	315755-0112		2	RETAINING RING SHAFT DIN 6799 12 A2	
240	321101-0202		2	FLANGE BUSHING, 16X22X12 MM	
250	321308-0202		2	BALL BEARING, 15X32X9 MM	
260	90235-0848		2	THROTTLE CHECK VALVE, G1/8", MANUAL,8	
270	90347-0054		1	DAMPER	
280	90450-0654		1	BRACKET,REAR,EYE WITH AXLE 32	
290	90450-0655		1	BRACKET,REAR,CLEVIS FLANGE WITH FOOT 32	
300	90450-0723		1	ROD END,BALL JOINT EYE M10X1,25	
74212	90166-0194	MM	4500	TUBE 8 MM PUR BLUE	
74214	90166-0194	MM	4500	TUBE 8 MM PUR BLUE	
C7421	90459-3370		1	DOUBLE ACTING, PROFILE,CYL 32-140	

Pos	Part No	UN	Qty	Description	Page No

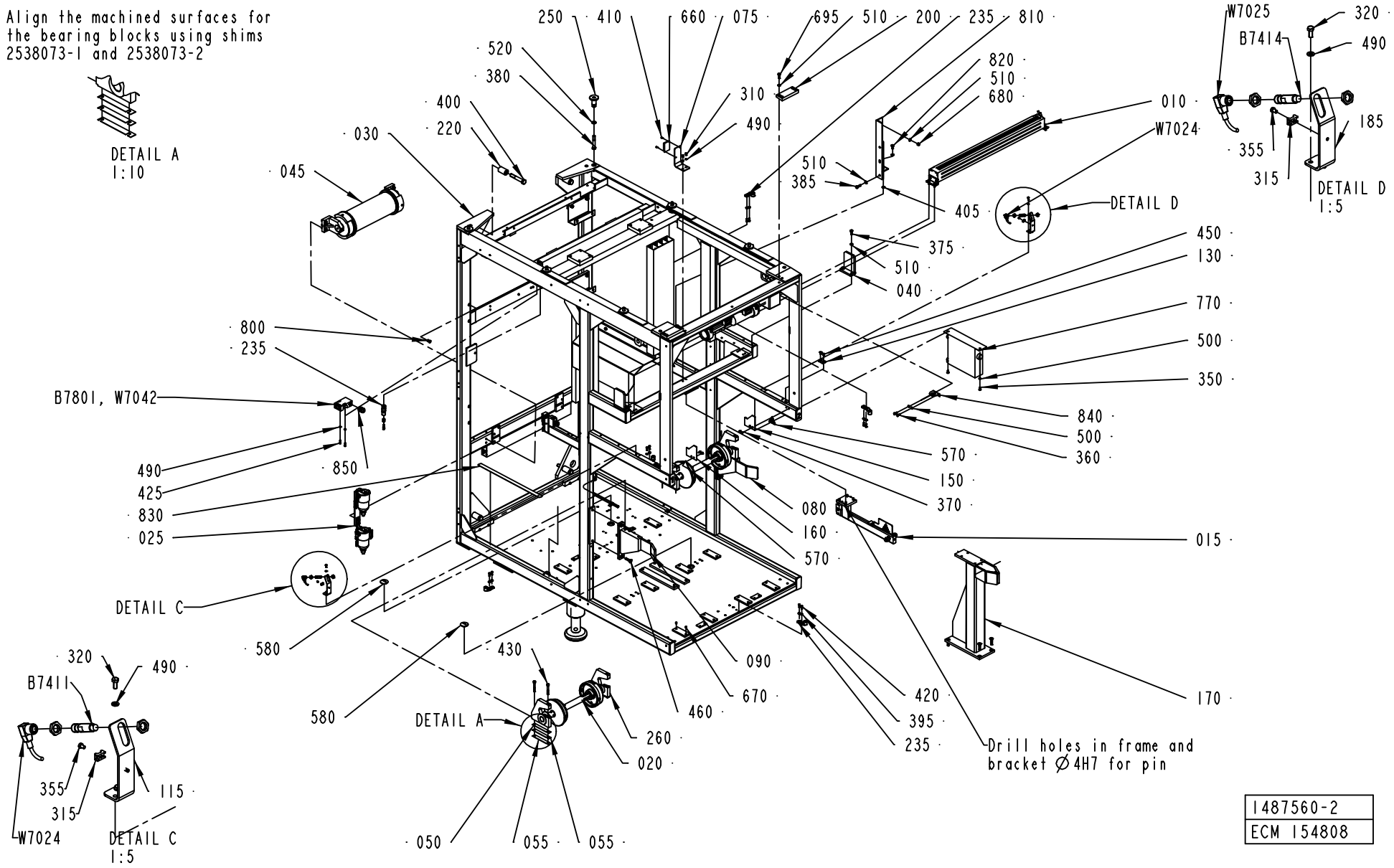

1487560-2
ECM 154808

ECM: 174642 - 50001231
Group number: 1487560-0200
Assembly Drawing: 1487560-2_1_AG

This list covers pages from 7-42 to 7-49

Pos	Part No	UN	Qty	Description	Page No
A3/FLEX WITH ARL (See drawing on pages: 7-46, 7-48)					
025	2541891-0100		1	FILTER	**7-51**
045	2541083-0100		1	BENDING ROLLER	**7-53**
200	985756-0000		2	KEY	
250	2599941-0000		6	SPACER	
380	312105-0548		6	SCREW M6S ISO 4014 M12X80 A480	
500	315105-0153		16	WASHER BRB6,4X12RFR	
510	315105-0165		14	WASHER BRB8,4X16RFR	
520	315105-0178		6	WASHER BRB13X24RFR	
695	312105-0452		2	SCREW M6S ISO 4017 M8X22 A4 80	
780	1558270-0100		2	LEG	**7-55**
790	90347-0175		2	MACHINE SHOE BRIK T 125	
860	2690494-0100		1	PNEUMATIC SYSTEM	**7-57**
A3/FLEX WITHOUT ARL (See drawing on pages: 7-42, 7-44)					
025	2541891-0100		1	FILTER	**7-51**
045	2541083-0100		1	BENDING ROLLER	**7-53**
050	2538073-0001		4	SHIMS	
055	2538073-0002		8	SHIMS	
080	2553107-0000		1	HOLDER	
090	2553108-0000		1	HOLDER	
170	2553109-0000		1	HOLDER	
200	985756-0000		2	KEY	
250	2599941-0000		6	SPACER	
380	312105-0548		6	SCREW M6S ISO 4014 M12X80 A480	
460	312155-0499		8	SCREW EN 10642 MF6S M10X40 A480	
500	315105-0153		16	WASHER BRB6,4X12RFR	
510	315105-0165		14	WASHER BRB8,4X16RFR	
520	315105-0178		6	WASHER BRB13X24RFR	
695	312105-0452		2	SCREW M6S ISO 4017 M8X22 A4 80	
780	1558270-0100		2	LEG	**7-55**
790	90347-0175		2	MACHINE SHOE BRIK T 125	
Common Parts					
010	1487544-0200		1	SIDE FEEDER	**7-63**
015	2541890-0100		1	BRACKET	**7-65**
020	1499571-0100		2	PAPER REEL HOLDER	**7-67**
030	1512279-0200		1	MACHINE BODY	**7-69, 7-71, 7-73**
040	2552821-0000		2	BRACKET	
070	1558487-0000		2	SUPPORT	
075	1548200-0000		1	BRACKET	
100	1499570-0000		1	HOLDER	
115	2538076-0000		1	BRACKET	
130	1512420-0000		2	PLATE	
140	1517101-0000		1	PIPE	
150	1558484-0000		1	PROTECTION PLATE	
160	2529551-0000		1	PROTECTION PLATE	
185	2538075-0000		1	BRACKET	
190	1519588-0000		1	PROTECTION PLATE	
220	1038865-0000		4	SPACER DISC	
235	1538868-0000		6	BRACKET	
260	1488005-0000		4	BEARING BLOCK	
310	312105-0323		5	SCREW M6S ISO 4017 M5X8 A480	
315	352113-0205		2	ANCHOR PLATES FOR STRIPS, TYPE TM2S8-C10	
320	312105-0327		4	SCREW M6S ISO 4017 M5X12 A480	
350	312105-0366		4	SCREW M6S ISO 4017 M6X12 A480	
355	312125-0285		2	SCREW ISO 1207 M4X6 A4	
360	312105-0368		8	SCREW M6S ISO 4017 M6X16 A480	
370	312145-0327		4	SCREW ISO 2009 MFS M5X12 A4	
375	312105-0451		4	SCREW M6S ISO 4017 M8X20 A480	
385	312105-0453		1	SCREW M6S ISO 4017 M8X25 A480	
395	315115-0153		12	WASHER PLAIN, TBRB 6,4/12 H=3	
400	312105-0640		4	SCREW M6S ISO 4014 M16X100 A480	
405	90062-0016		5	LOCK WASHER SERRAT.EXT.GEAR,8,4/15 H=0,8	
410	312115-0222		2	SCREW ISO4762 M3X8 A4	
420	312105-0329		12	SCREW M6S ISO 4017 M5X16 A480	
425	312115-0329		10	SCREW ISO4762 M5X16 A4	
430	312115-0463		8	SCREW ISO4762 M8X60 A4	
450	312155-0366		4	SCREW EN 10642 MF6S M6X12 A480	
470	312318-0455		4	SCREW ISO4029 M8X30 A4	
490	315105-0146		19	WASHER BRB5,3X10RFR	
565	352103-0108		1	CABLE GLAND, ST 13,5 , PR20,4/PG13,5	
570	359705-0005		2	WARNING SIGN ISO, MOVING PART	
580	90002-0010		2	BLANK-OFF PLUG, PR 37 SKINDICHT-BLK29	
590	90099-0118		1	NUT, PR 20,4 (PG13,5)	
630	90164-0303		4	BRACKET SK2202 WALDMANN	
640	90165-0009		3	PIPE CLIP FOR TUBE D=12 MM	
660	90232-0333		1	REFLECTOR E39-R1	
670	90261-0016		24	PLUG, BLIND, PLASTIC GPN300V2	
680	312605-0318		6	HEXAGON NUT, M6M M8 A280	
770	90459-3832		1	VENTING BOX, P9852	
800	312927-0150		4	RIVET NUT M8, CLAMP. LENGTH 3,0 - 4,5	
810	1549324-0000		1	BRACKET	
820	312105-0449		1	SCREW M6S ISO 4017 M8X16 A480	
830	90459-1848		1	TAPE, SAFETY WALK R25MM X 18,3M	
840	1558798-0000		1	BRACKET	

Machine Type | Group Description | Used-In | Group Number | Page No

MACHINE BODY

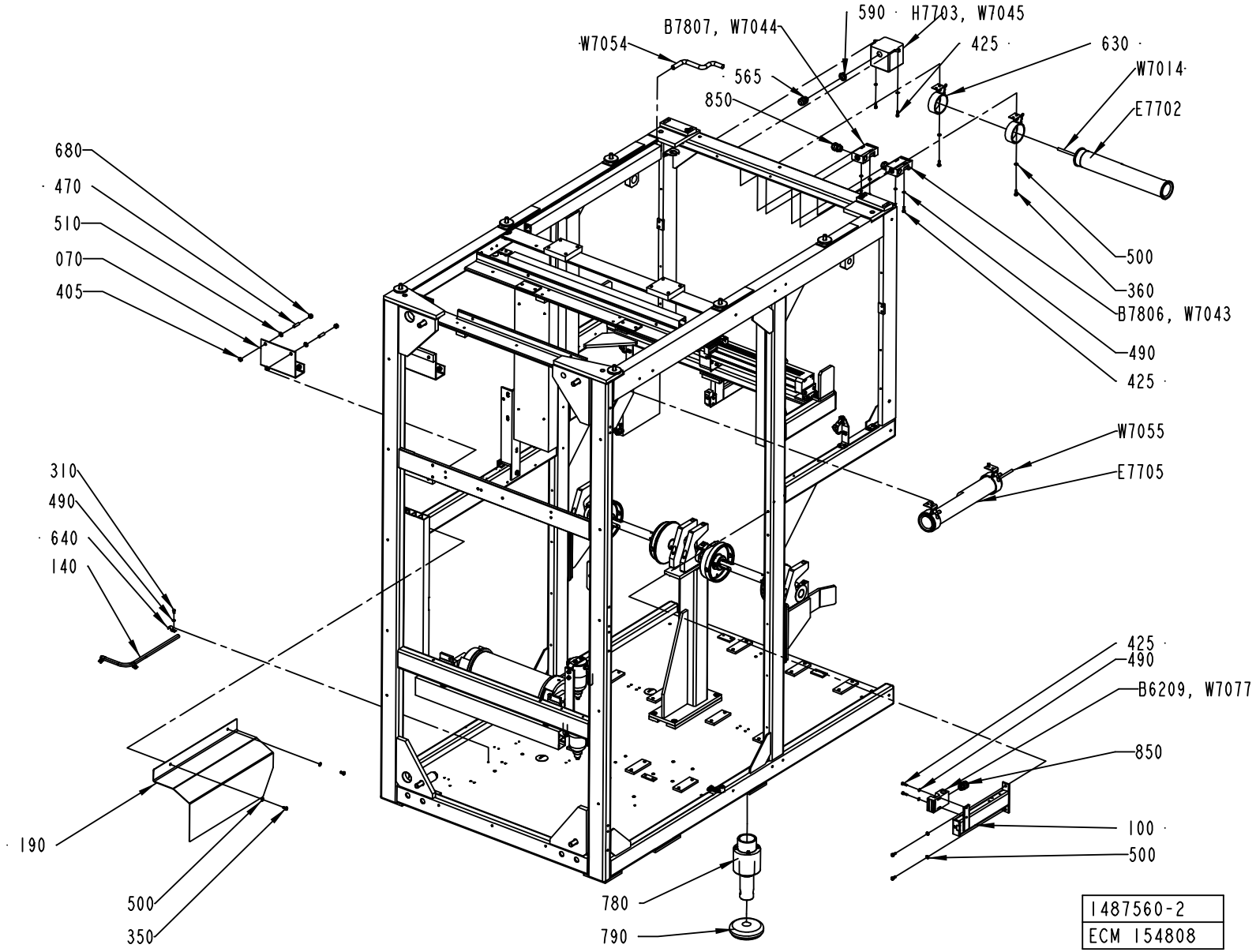

Pos	Part No	UN	Qty	Description	Page No
Common Parts (Cont'd)					
850	90458-0315		4	CABLE GLAND, M20X1,5, NO.5311 1120	
B6209	90459-0472		1	KEY SAF.SW. AZ 16 02ZVRK-M20-2152-2254	
B7411	90458-0677		1	PROXIMITY SWITCH, E2EG-X5MB1-M1	
B7414	90458-0677		1	PROXIMITY SWITCH, E2EG-X5MB1-M1	
B7801	90459-0472		1	KEY SAF.SW. AZ 16 02ZVRK-M20-2152-2254	
B7806	90459-0472		1	KEY SAF.SW. AZ 16 02ZVRK-M20-2152-2254	
B7807	90459-0472		1	KEY SAF.SW. AZ 16 02ZVRK-M20-2152-2254	
E7702	90164-0015		1	LIGHT FIXTURE, DWDCV111B/230V 50HZ	
	90297-0007		*1*	*FLUORESCENT TUBE, PLS 11*	
E7705	90164-0015		1	LIGHT FIXTURE, DWDCV111B/230V 50HZ	
	90297-0007		*1*	*FLUORESCENT TUBE, PLS 11*	
H7703	90052-0011		1	HORN HOOTERT 24:48VDC.PT NO.1YA030221	
W7014	351150-0412	MM	4000	CABLE OLFLEX 3X1,5 MM2 LIGHT/GREY	
W7024	90458-1076		1	L-SHAPED CONNECTOR CABLE 933 235-042	
W7025	90458-1076		1	L-SHAPED CONNECTOR CABLE 933 235-042	
W7042	351150-0405	MM	4000	CABLE OLFLEX 5X0,75 MM2 LIGHT/GREY	
W7043	351150-0405	MM	4000	CABLE OLFLEX 5X0,75 MM2 LIGHT/GREY	
W7044	351150-0405	MM	4000	CABLE OLFLEX 5X0,75 MM2 LIGHT/GREY	
W7045	351150-0431	MM	4000	CABLE OLFLEX 2X0,75 MM2 LIGHT/GREY	
W7054	351150-0406	MM	8000	CABLE OLFLEX 7X0,75 MM2 LIGHT/GREY	
W7055	351150-0412	MM	4000	CABLE OLFLEX 3X1,5 MM2 LIGHT/GREY	
W7077	351150-0405	MM	5000	CABLE OLFLEX 5X0,75 MM2 LIGHT/GREY	

Pos	Part No	UN	Qty	Description	Page No

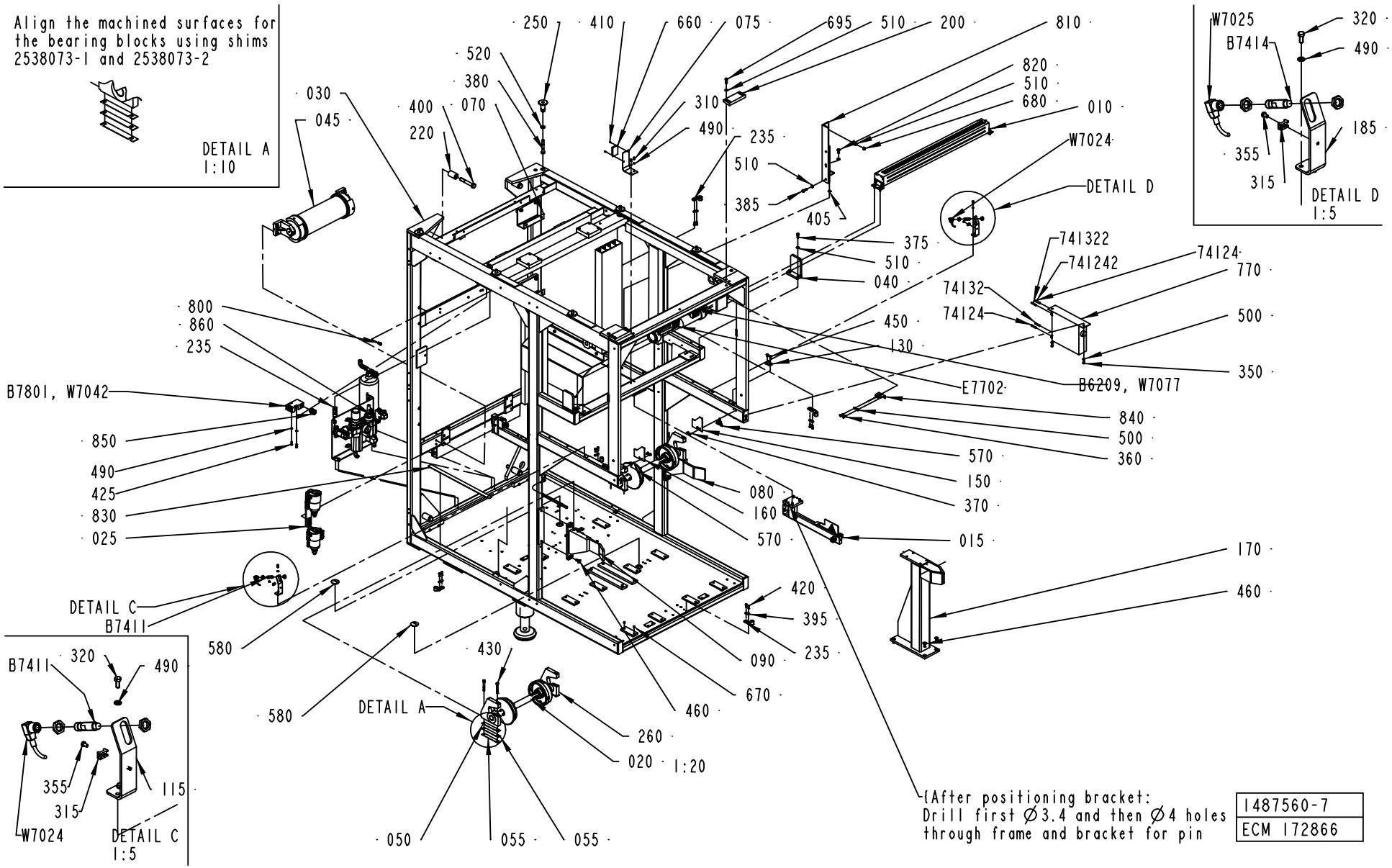
Align the machined surfaces for the bearing blocks using shims 2538073-1 and 2538073-2
DETAIL A 1:10
030
045
400
070
220
520
380
250
410
660
075
695
510
200
810
820
510
680
010
W7024
DETAIL D
310
490
235
510
385
405
375
510
040
450
130
E7702
B6209, W7077
741322
741242
74124
770
74132
74124
500
350
840
500
360
570
150
370
080
160
570
015
170
460
420
395
235
090
670
460
260
020
1:20
DETAIL A
430
580
580
800
860
235
B7801, W7042
850
490
425
830
025
DETAIL C
B7411
B7411
320
490
355
315
115
W7024
DETAIL C 1:5
050
055
055
W7025
B7414
320
490
185
355
315
DETAIL D 1:5
(After positioning bracket: Drill first Ø3.4 and then Ø4 holes through frame and bracket for pin
1487560-7
ECM 172866

Pos	Part No	UN	Qty	Description	Page No	Pos	Part No	UN	Qty	Description	Page No

SEE PREVIOUS LISTS PAGES: 7-43, 7-45.

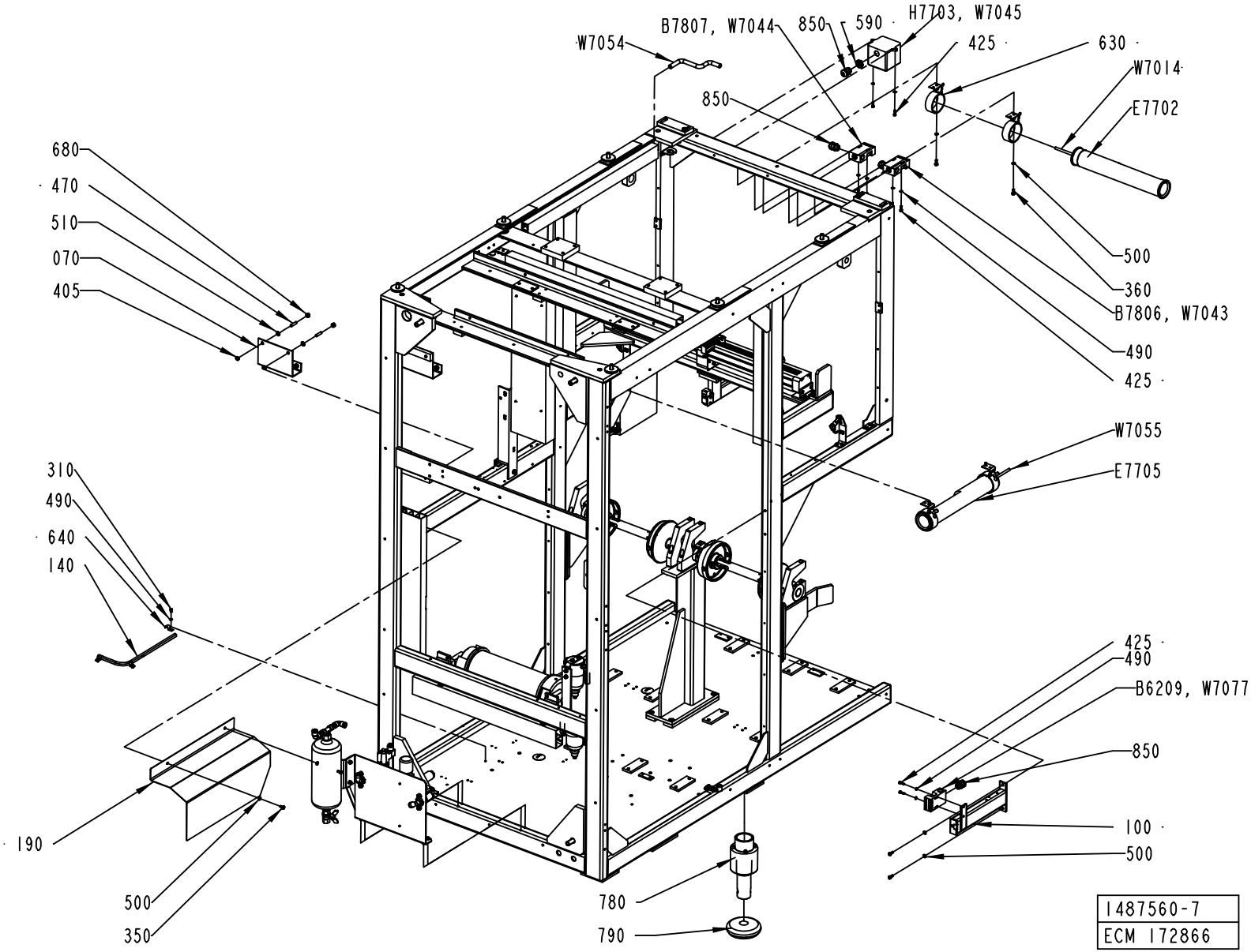
B7807, W7044
850
590
H7703, W7045
W7054
425
630
W7014
850
E7702
680
470
510
070
405
500
360
B7806, W7043
490
425
W7055
E7705
310
490
640
140
425
490
B6209, W7077
850
190
100
500
500
350
780
790
1487560-7
ECM 172866

Pos	Part No	UN	Qty	Description	Page No	Pos	Part No	UN	Qty	Description	Page No

SEE PREVIOUS LISTS PAGES: 7-43, 7-45.

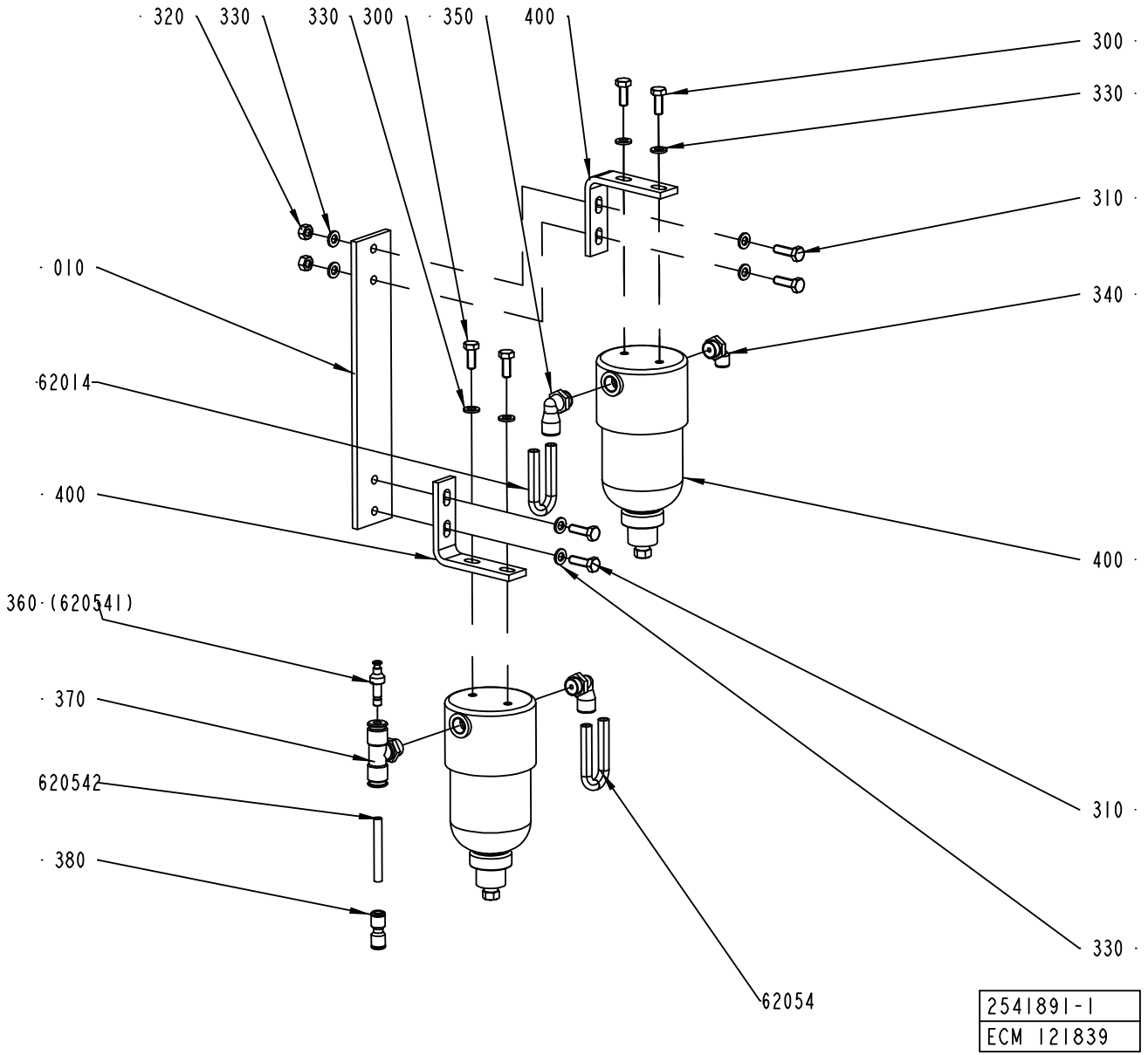
320
330
330
300
350
400
300
330
310
340
010
62014
400
400
360 (620541)
370
620542
380
310
330
62054
2541891-1
ECM 121839

ECM: 125133 - 20040112
Group number: 2541891-0100
Assembly Drawing: 2541891-1_1_AB

Pos	Part No	UN	Qty	Description	Page No
-					
010	2518119-0000		1	PLATE	
300	312105-0368		4	SCREW M6S ISO 4017 M6X16 A480	
310	312105-0370		4	SCREW M6S ISO 4017 M6X20 A480	
320	312605-0316		2	HEXAGON NUT, M6M M6 A280	
330	315105-0153		10	WASHER BRB6,4X12RFR	
340	90458-2957		1	ELBOW PIPE JOINT, EXT.THREAD, D=6MM-G1/4	
350	90458-2958		2	ELBOW PIPE JOINT, EXT.THREAD, D=8MM-G1/4	
360	342716-0202		1	REDUCER 4-6	
370	342742-0103		1	T-COUPLING,ADJUST,F.PLASTIC TUBE 6-G1/4"	
380	342728-0102		1	PIPE COUPLING 6 MM	
400	90277-0116		2	FILTER HOUSING / ART.NO FILTER 58P-S5430	
	90277-0406		*1*	*CARTRIDGE 100-12-BX*	
62014	90166-0194	MM	3500	TUBE 8 MM PUR BLUE	
62054	90166-0194	MM	3500	TUBE 8 MM PUR BLUE	
620542	90166-0193	MM	2000	TUBE 6 MM PUR BLUE	

Pos	Part No	UN	Qty	Description	Page No

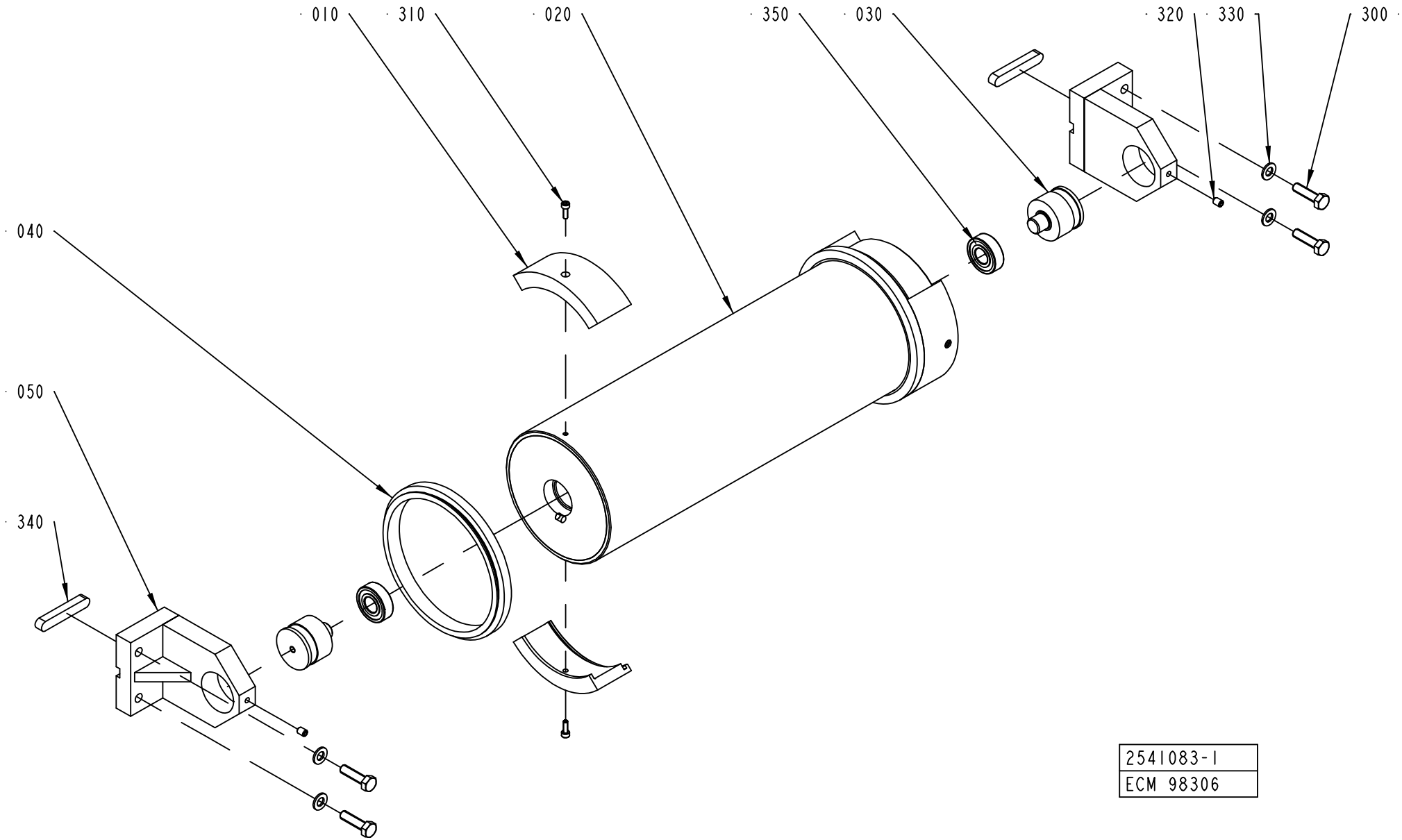
010
310
020
350
030
320
330
300
040
050
340
2541083-1
ECM 98306

ECM: 163509 - 20040309
Group number: 2541083-0100
Assembly Drawing: 2541083-1_1_AA

Pos	Part No	UN	Qty	Description	Page No
TBA 0200S					
010	2523766-0010		4	BRACKET	
TBA 0330S, TBA 0200B, TBA 0250B					
010	2523766-0007		4	BRACKET	
TBA 1000B, TBA 1500S					
010	2523766-0001		4	BRACKET	
TBA 1000S					
010	2523766-0002		4	BRACKET	
TBA 1000SQ					
010	2523766-0003		4	BRACKET	
TPA 1000SQ					
010	2523766-0012		4	BRACKET	
Common Parts					
020	2523765-0000		1	BENDING ROLLER	
030	1499584-0000		2	AXLE PIN	
040	2523767-0000		2	FLANGE	
050	2506328-0000		2	BRACKET	
300	312105-0455		4	SCREW M6S ISO 4017 M8X30 A480	
310	312115-0291		4	SCREW ISO4762 M4X12 A4	
320	312318-0362		2	SCREW ISO4029 M6X8 A4	
330	315105-0165		4	WASHER BRB8,4X16RFR	
340	315705-0305		2	PARALLEL KEY W. ROUND ENDS 10X8X60 MM	
350	321313-0102		2	BALL BEARING, 15X35X11 MM	

Pos	Part No	UN	Qty	Description	Page No

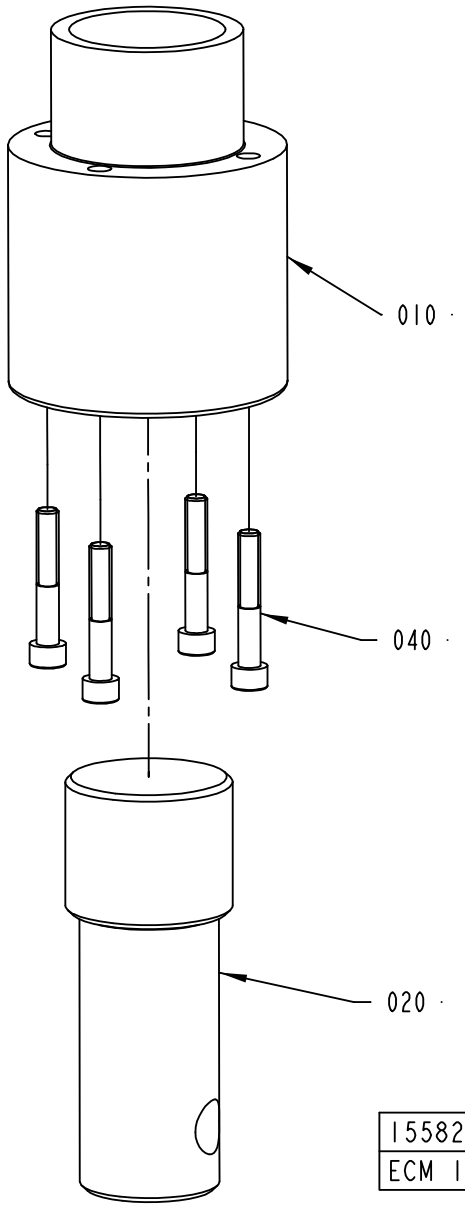
010
040
020
1558270-1
ECM 121839

ECM: 125743 - 20040112
Group number: 1558270-0100
Assembly Drawing: 1558270-1_1_AB

Pos	Part No	UN	Qty	Description	Page No
-					
010	1558269-0000		1	SLEEVE	
020	1558268-0000		1	LEG	
040	312115-0461		4	SCREW ISO4762 M8X50 A4	

Pos	Part No	UN	Qty	Description	Page No

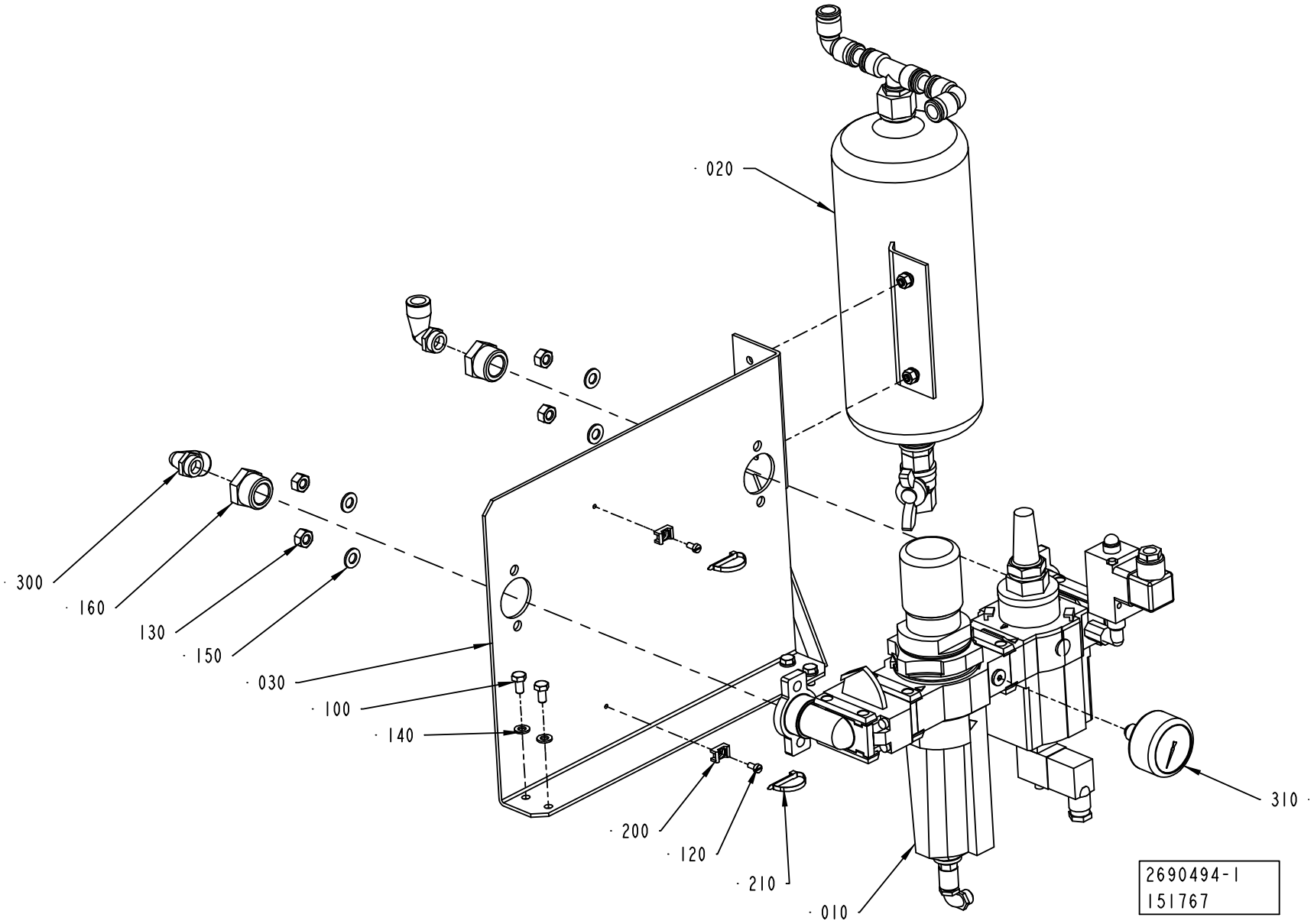
· 020
· 300
· 160
130
· 150
· 030
· 100
· 140
· 200
· 120
· 210
· 010
· 310
2690494-1
151767

ECM: 172989 - 50001231
Group number: 2690494-0100
Assembly Drawing: 2690494-1_1_AA

Pos	Part No	UN	Qty	Description	Page No
TBA 1890S, TBA 2000S					
010	2564054-0100		1	AIR INLET	**7-59**
020	2506578-0100		1	TANK	**7-61**
030	1558221-0000		1	BRACKET	
100	312105-0366		4	SCREW M6S ISO 4017 M6X12 A480	
110	312105-0451		4	SCREW M6S ISO 4017 M8X20 A480	
120	312125-0287		2	SCREW ISO 1207 M4X8 A4	
130	312605-0318		4	HEXAGON NUT, M6M M8 A280	
140	315105-0153		4	WASHER BRB6,4X12RFR	
150	315105-0165		8	WASHER BRB8,4X16RFR	
160	342701-0209		2	BUSHING,INT./EXT.G-THREAD G3/4"-G3/8"	
200	352113-0205		2	ANCHOR PLATES FOR STRIPS, TYPE TM2S8-C10	
210	352113-0102		2	CLIP-STRIP, BLACK 188X4,8 MM	
300	90458-2960		2	ELBOW PIPE JOINT, EXT.THREAD,D=12MM-G3/8	

Pos	Part No	UN	Qty	Description	Page No

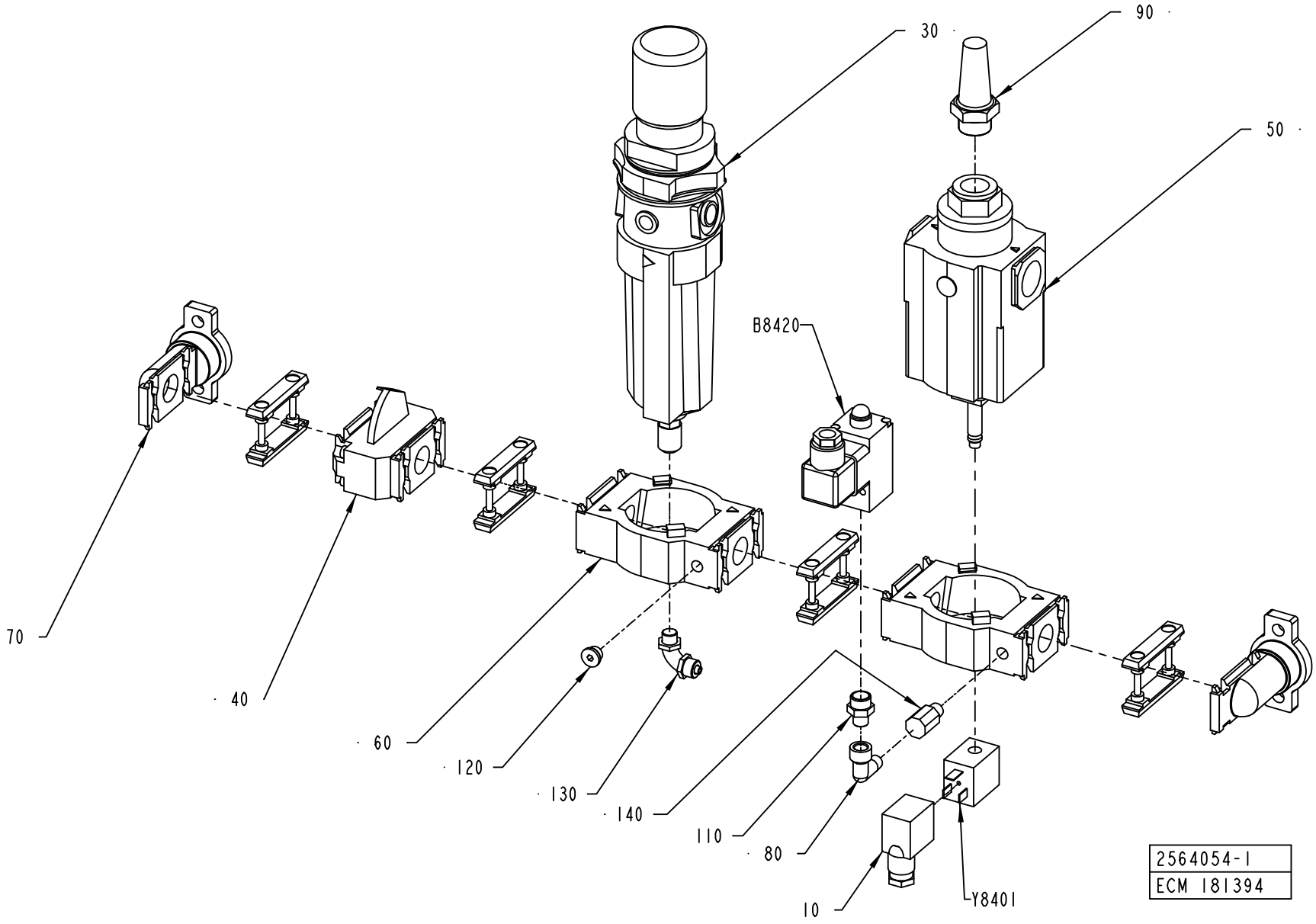
30
90
50
B8420
70
40
60
120
130
140
110
80
10
Y8401
2564054-1
ECM 181394

ECM: 181400 - 20040823
Group number: 2564054-0100
Assembly Drawing: 2564054-1_1_AC

Pos	Part No	UN	Qty	Description	Page No
-					
010	90042-0392		1	CONTACT 2 POLE + EARTH	
030	90113-0113		1	FILTER REGULATOR, B64G-NNK-AD3-RMN	
040	90113-0427		1	SHUT OFF VALVE G1/8, T64T-NNS-001	
050	90113-0155		1	SOFT START VALVE	
060	90113-0407		2	YOKE SINGLE, Y64A-4GA-N1N	
070	90113-0413		2	END CONNECTOR G3/4, 18-026-981	
080	90140-0021		1	ELBOW, 90 INT/EXT, 20201/8-1/8	
090	90328-0001		1	SILENCER, 338/130 B140-00-120	
110	342700-0201		1	NIPPLES,HEXAGON,EXT.G-THREAD G1/4"-G1/8"	
120	342713-0209		1	PLUG (1UNIT = 10PC)	
130	342931-0121		1	ELBOW 90 COUPL.,EXT.THREAD 8/6-G1/8"	
140	90330-0185		1	NIPPLES,REDUCING,INT THR, RC1/8 - R 1/8	
B8420	90458-2241		1	PRESSURE SWITCH 0,5-10 BAR ADJUSTABLE	
Y8401	90042-0582		1	COIL NORGREN QM/48/127/21	

Pos	Part No	UN	Qty	Description	Page No

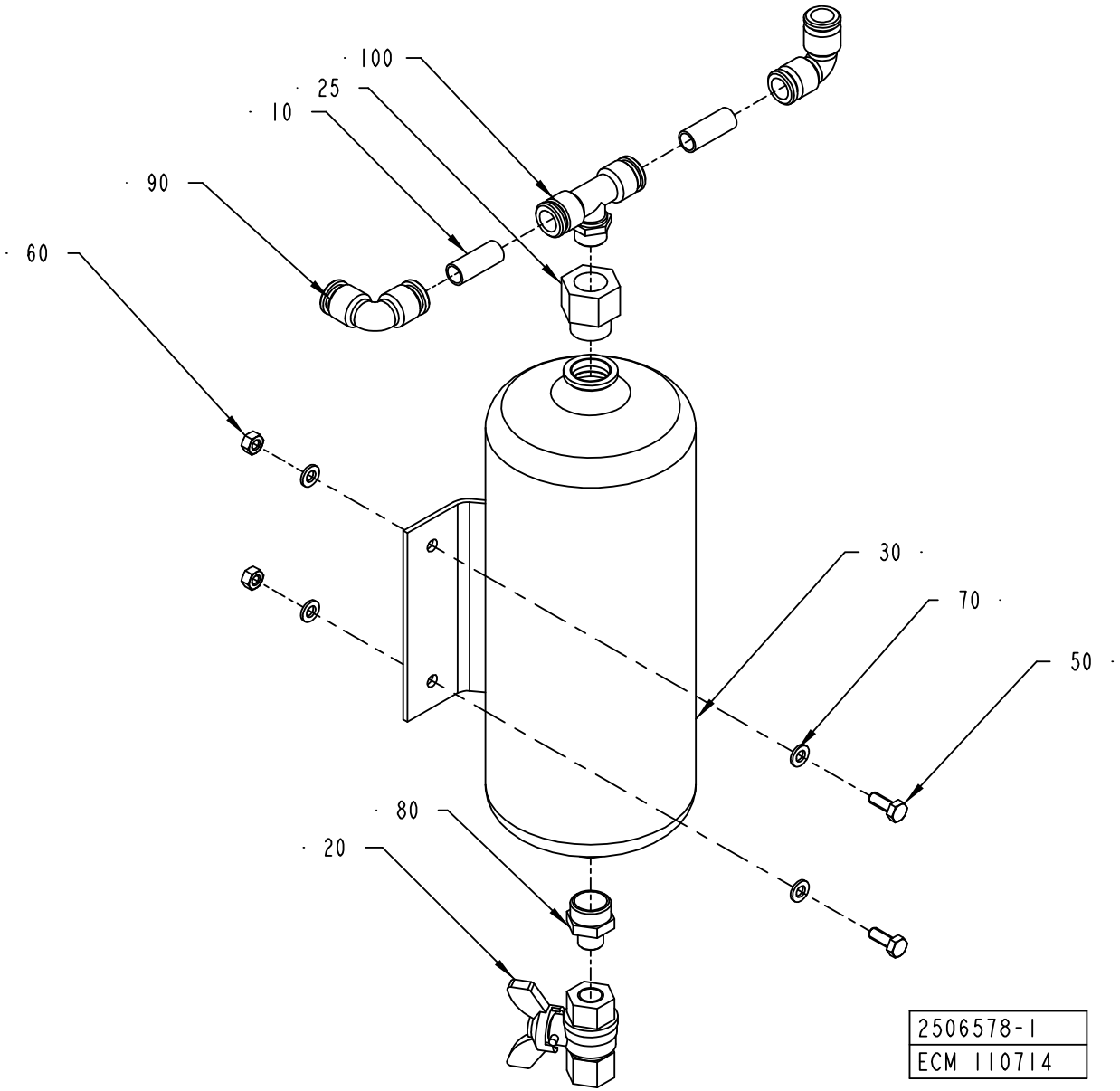
100
25
10
90
60
30
70
50
80
20
2506578-1
ECM 110714

ECM: 111370 - 20021122
Group number: 2506578-0100
Assembly Drawing: 2506578-1_1_AA

Pos	Part No	UN	Qty	Description	Page No
-					
010	90166-0068	MM	150	TUBE 12 MM PA BLUE	
020	90187-0088		1	BALL VALVE G1/4, NPBR	
025	90224-0229		1	REDUCER, ART.NO RMM 1238	
030	90457-0100		1	RESERVATORVZS-2	
050	312105-0368		2	SCREW M6S ISO 4017 M6X16 A480	
060	312605-0316		2	HEXAGON NUT, M6M M6 A280	
070	315105-0153		4	WASHER BRB6,4X12RFR	
080	342700-0205		1	NIPPLES,HEXAGON,EXT.G-THREAD G1/2"-G1/4"	
090	342735-0109		2	ELBOW PIPE JOINT	
100	342742-0110		1	T-COUPLING,ADJUST,F.PLAST.TUBE 12-G3/8"	

Pos	Part No	UN	Qty	Description	Page No

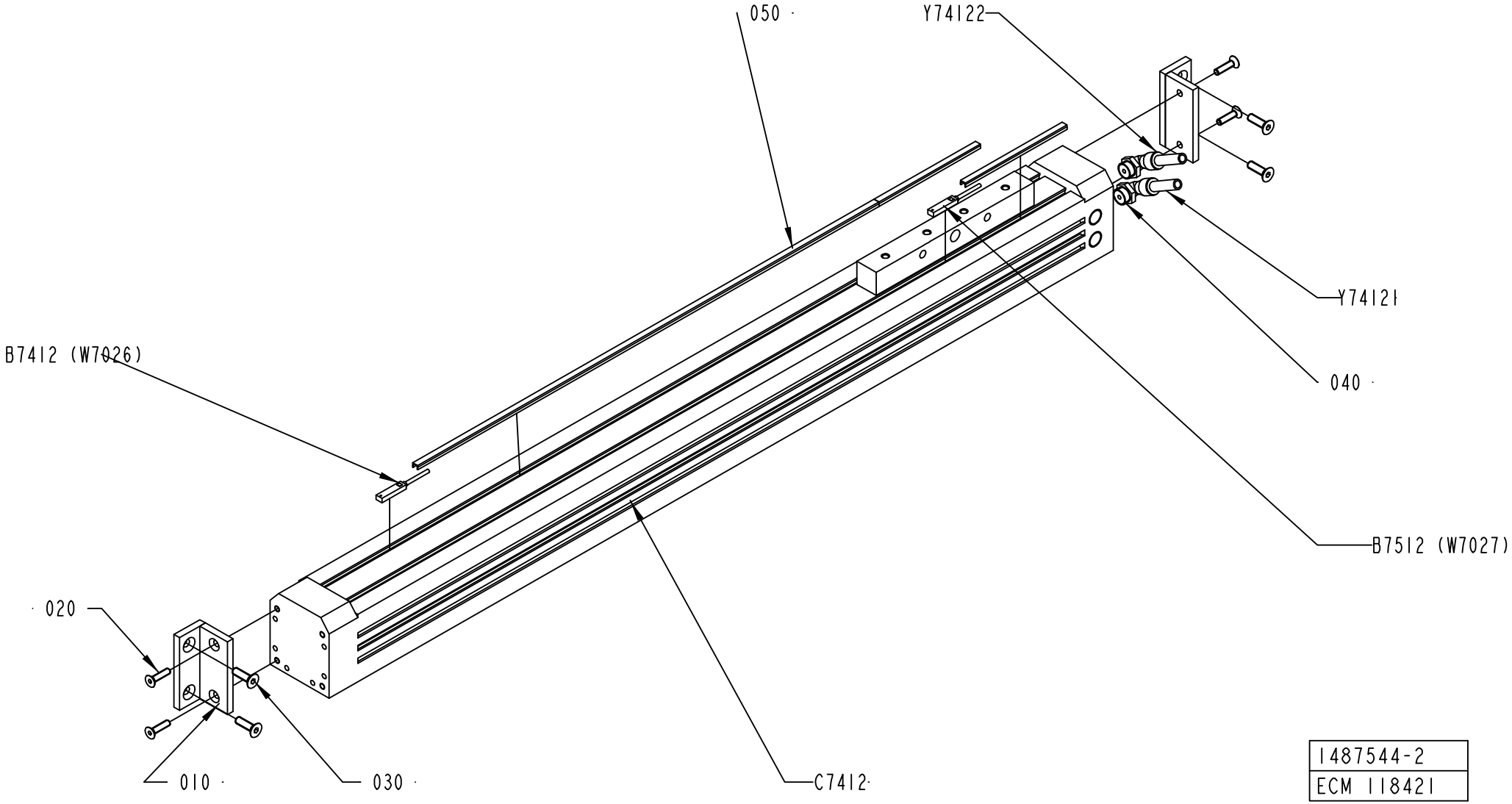

1487544-2
ECM 118421

ECM: 119263 - 20021216
Group number: 1487544-0200
Assembly Drawing: 1487544-2_1_AA

Pos	Part No	UN	Qty	Description	Page No
-					
010	1498457-0000		2	BRACKET	
020	312155-0331		4	SCREW EN 10642 MF6S M5X20 A480	
030	312155-0370		4	SCREW EN 10642 MF6S M6X20 A480	
040	90458-2958		2	ELBOW PIPE JOINT, EXT.THREAD, D=8MM-G1/4	
050	90458-0273		1	COVER STRIP	
B7412	90044-0165		1	SENSOR, SME-8-K5-LED-24	
B7512	90044-0165		1	SENSOR, SME-8-K5-LED-24	
C7412	90459-1849		1	DOUBLE ACTING SHUTTLE CYL. 40-550 MM	
Y74121	90166-0194	MM	2500	TUBE 8 MM PUR BLUE	
Y74122	90166-0194	MM	2500	TUBE 8 MM PUR BLUE	

Pos	Part No	UN	Qty	Description	Page No

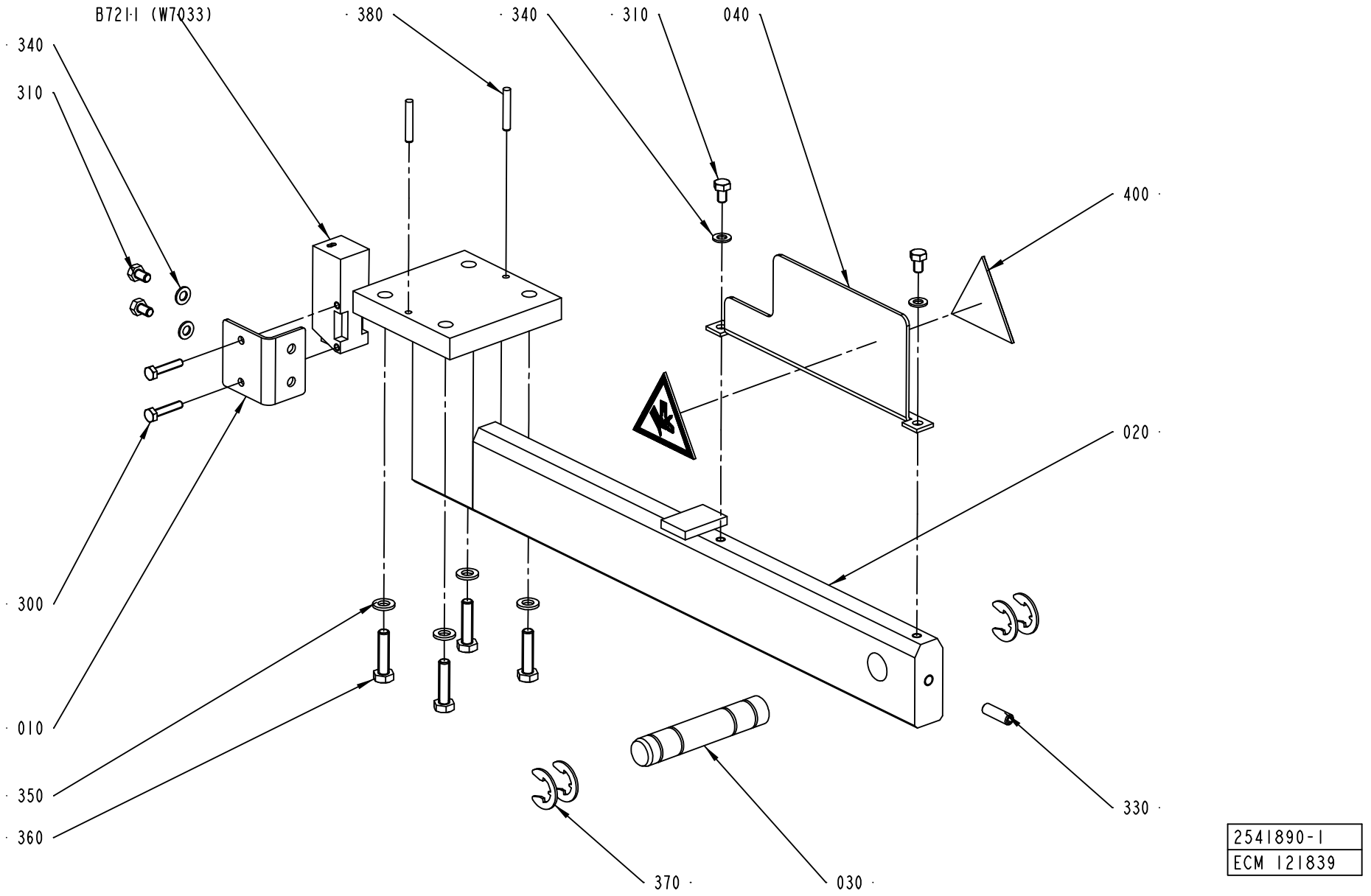
B721I (W7033)
380
340
310
040
340
310
400
020
300
010
350
360
330
370
030
2541890-1
ECM 121839

ECM: 125575 - 20040112
Group number: 2541890-0100
Assembly Drawing: 2541890-1_1_AB

Pos	Part No	UN	Qty	Description	Page No
-					
010	1490210-0000		1	PLATE	
020	1490219-0000		1	BRACKET	
030	1499573-0000		1	PIN	
040	1512275-0000		1	PROTECTION PLATE	
300	312105-0295		2	SCREW M6S ISO4017 M4X20 A470	
310	312105-0323		4	SCREW M6S ISO 4017 M5X8 A480	
330	312318-0370		1	SCREW ISO4029 M6X20 A4	
340	315105-0146		4	WASHER BRB5,3X10RFR	
350	315105-0153		4	WASHER BRB6,4X12RFR	
360	312105-0372		4	SCREW M6S ISO 4017 M6X25 A480	
370	315755-0112		4	RETAINING RING SHAFT DIN 6799 12 A2	
380	311103-0274		2	PARALLELL PIN, M6, 4X25 MM	
400	359705-0005		2	WARNING SIGN ISO, MOVING PART	
B7211	90232-0129		1	PH.CELL E3S-CR61-5M	

Pos	Part No	UN	Qty	Description	Page No

PAPER REEL HOLDER

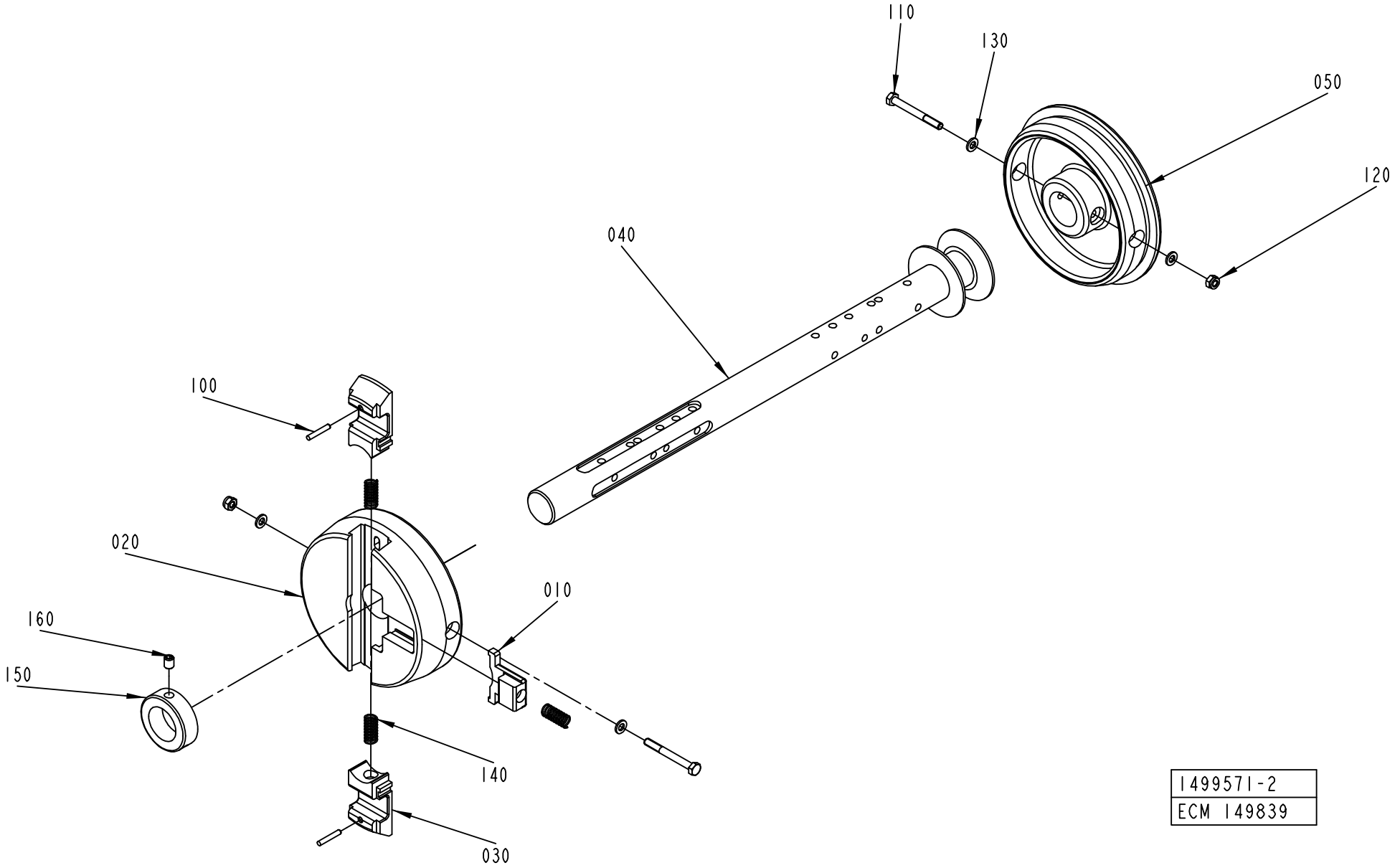

1499571-2
ECM 149839

ECM: 151708 - 20040112
Group number: 1499571-0100
Assembly Drawing: 1499571-2_1_AE

Pos	Part No	UN	Qty	Description	Page No
A3/FLEX					
040	2656299-0000		1	SHAFT	
150	315742-0123		1	RETAINING RING 32 SMS 199	
160	312318-0445		1	SCREW ISO4029 M8X10 A4	
Common Parts					
010	272728-0000		1	BARRIER	
020	1512265-0000		1	SLEEVE	
030	575002-0000		2	PLUNGER	
050	1512266-0000		1	SLEEVE	
100	311103-0274		2	PARALLELL PIN, M6, 4X25 MM	
110	312105-0381		2	SCREW M6S ISO 4014 M6X55 A480	
120	312812-0316		2	HEXAGON NUT, NY-LOCK M6 A480	
130	315105-0153		4	WASHER BRB6,4X12RFR	
140	90335-0025		3	COMP. SPRING 22010, 1X11X26	

Pos	Part No	UN	Qty	Description	Page No

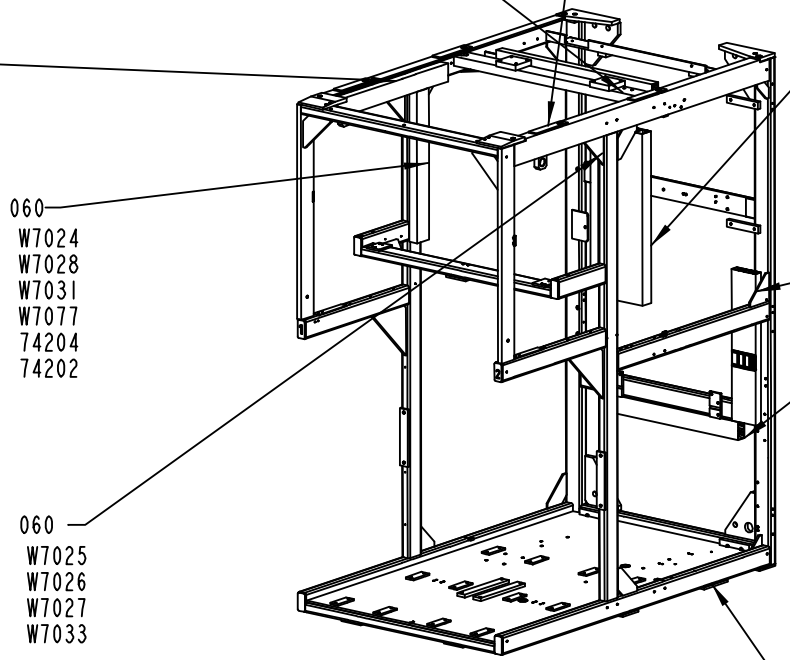

080
W7011
W7020
W7024
W7028
W7031
W7042
W7055
W7077
74202
74204
73032
73034
74142
74144

050
W7014
W7025
W7026
W7027
W7029
W7033
W7043
W7044
W7045
W7054
74154
74152
73154
73152

030

W7010	W7028	W7042	74204	74074
W7011	W7029	W7043	74202	74084
W7014	W7030	W7044	74154	74104
W7020	W7031	W7045	74152	74142
W7023	W7033	W7054	73034	74144
W7024	W7035	W7055	73032	620542
W7025	W7036	W7074	73154	
W7026	W7040	W7075	73152	
W7027	W7041	W7077		

040
W7024
W7028
W7031
W7077
73034
73032
74204
74202
74144
74142

060
W7024
W7028
W7031
W7077
74204
74202

100
W7046 62034
W7049 62032
W7013 62054
W7012 62014
W7015 MAIN AIR
W7017 620542
W7018
W7022
W7038
W7034
W7039
W7050
W7056
W7072
W7073
W7019
W7417

020
W7013
W7046
W7049
W7017
W7018
W7022
W7050
W7047
W7072
W7073
W7019
62034
62032
62054
62014
620542

060
W7025
W7026
W7027
W7033

010

INSIDE CABLE CONDUIT:

620542	W7010
74074	W7040
74104	W7041
74084	W7074
	W7075

1512279-2
ECM 126493

ECM: 144797 - 20040112
Group number: 1512279-0200
Assembly Drawing: 1512279-2_1_AC

This list covers pages from 7-68 to 7-73

Pos	Part No	UN	Qty	Description	Page No
-					
010	2529990-0000		1	FRAME	
010	2529990-0000		1	FRAME	
020	1512421-0000		1	CABLE DUCT	
030	2524606-0000		1	CABLE DUCT	
040	1512423-0000		1	CABLE DUCT	
050	2524607-0000		1	CABLE DUCT	
060	1512425-0000		2	CABLE DUCT	
080	1512426-0000		1	CABLE DUCT	
100	2529544-0000		1	CABLE DUCT	
110	312105-0364		2	SCREW M6S ISO 4017 M6X10 A480	
120	312115-0364		16	SCREW ISO4762 M6X10 A4	
130	312503-0275		4	TAPPING SCREW ISO 7049-ST3,5X6,5-C-Z	
150	90143-0060	MM	2600	EDGE STRIP 9,5X6,3MM BLACK PVC	
160	315125-0153		2	WASHER TBRSB 6,4X22X4 A4	
170	352113-0205		25	ANCHOR PLATES FOR STRIPS, TYPE TM2S8-C10	
180	312125-0285		25	SCREW ISO 1207 M4X6 A4	
190	352113-0102		25	CLIP-STRIP, BLACK 188X4,8 MM	

Pos	Part No	UN	Qty	Description	Page No

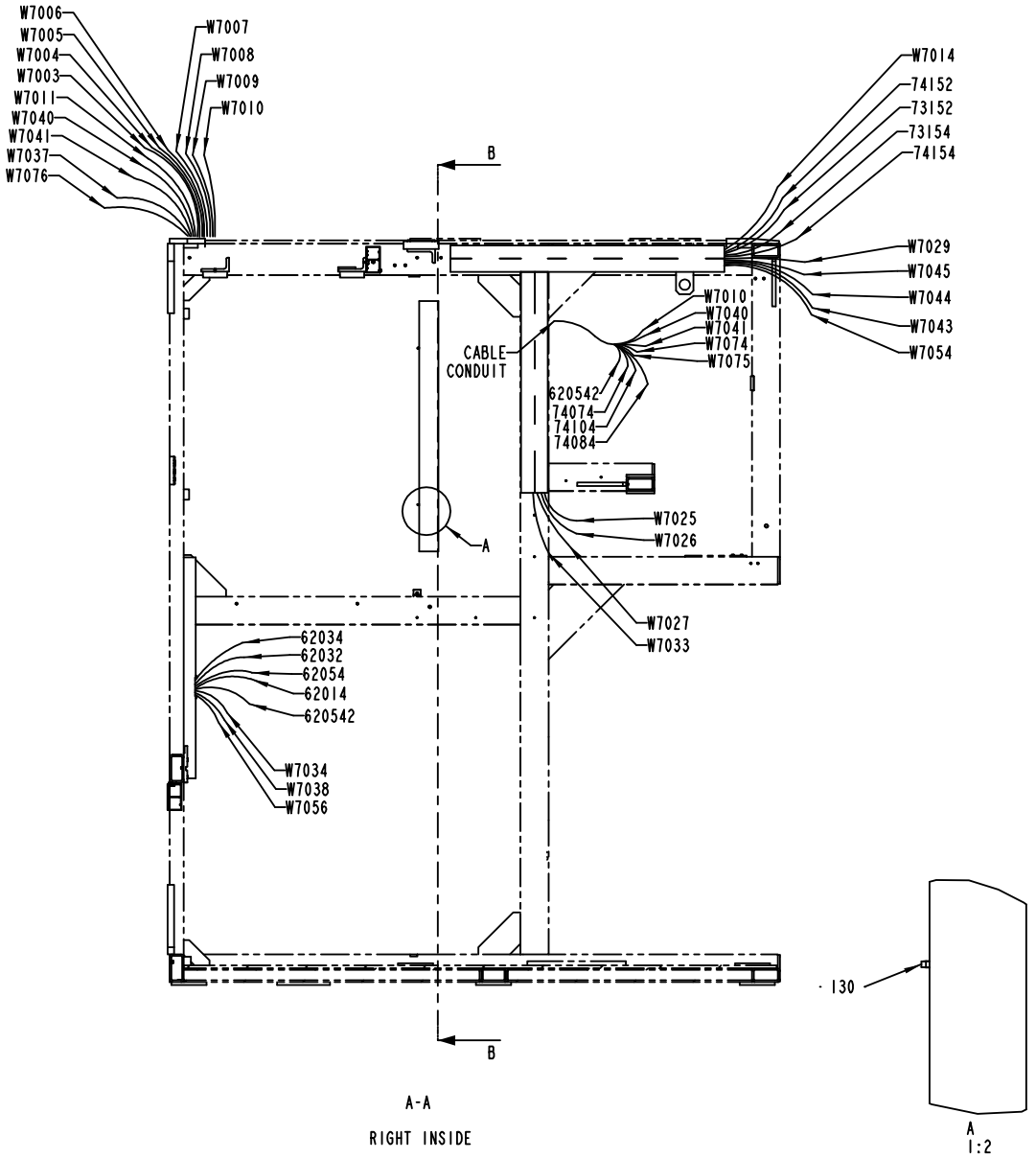
W7006
W7005
W7004
W7003
W7011
W7040
W7041
W7037
W7076
W7007
W7008
W7009
W7010
W7014
74152
73152
73154
74154
W7029
W7045
W7044
W7043
W7054
B
CABLE CONDUIT
W7010
W7040
W7041
W7074
W7075
620542
74074
74104
74084
A
W7025
W7026
W7027
W7033
62034
62032
62054
62014
620542
W7034
W7038
W7056
B
A-A
RIGHT INSIDE
130
A
1:2

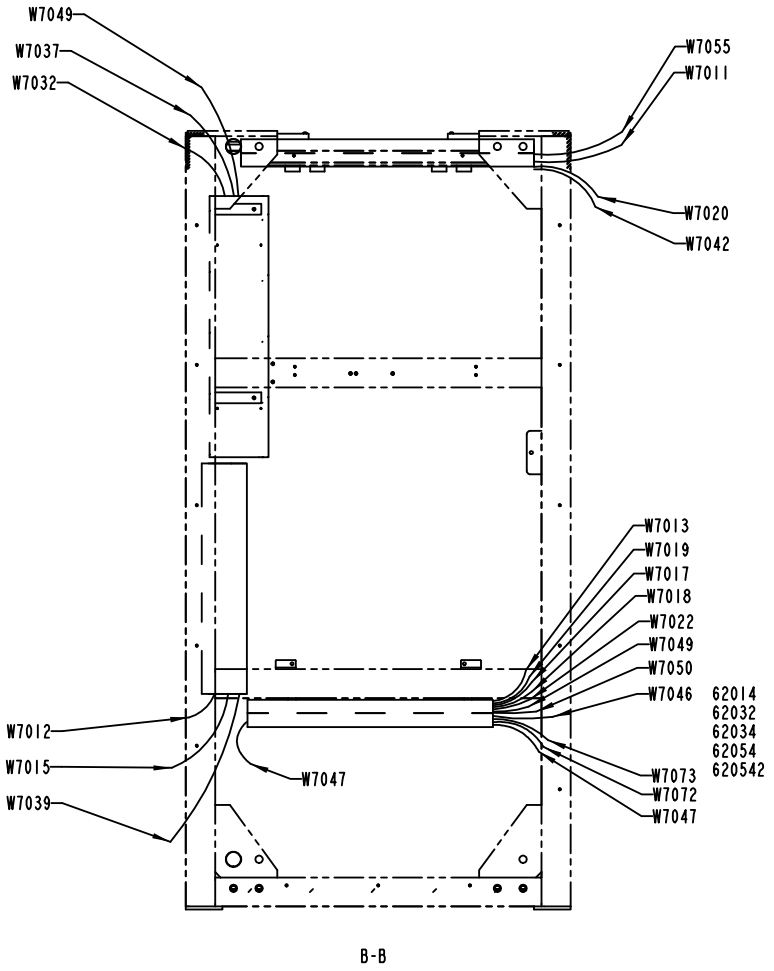
W7049
W7037
W7032
W7055
W7011
W7020
W7042
W7013
W7019
W7017
W7018
W7022
W7049
W7050
W7046
62014
62032
62034
62054
620542
W7012
W7015
W7039
W7047
W7073
W7072
W7047
B-B

ECM: 144797 - 20040112
Group number: 1512279-0200
Assembly Drawing: 1512279-2_2_AC

This list covers pages from 7-68 to 7-73

Pos	Part No	UN	Qty	Description	Page No
-					
010	2529990-0000		1	FRAME	
010	2529990-0000		1	FRAME	
020	1512421-0000		1	CABLE DUCT	
030	2524606-0000		1	CABLE DUCT	
040	1512423-0000		1	CABLE DUCT	
050	2524607-0000		1	CABLE DUCT	
060	1512425-0000		2	CABLE DUCT	
080	1512426-0000		1	CABLE DUCT	
100	2529544-0000		1	CABLE DUCT	
110	312105-0364		2	SCREW M6S ISO 4017 M6X10 A480	
120	312115-0364		16	SCREW ISO4762 M6X10 A4	
130	312503-0275		4	TAPPING SCREW ISO 7049-ST3,5X6,5-C-Z	
150	90143-0060	MM	2600	EDGE STRIP 9,5X6,3MM BLACK PVC	
160	315125-0153		2	WASHER TBRSB 6,4X22X4 A4	
170	352113-0205		25	ANCHOR PLATES FOR STRIPS, TYPE TM2S8-C10	
180	312125-0285		25	SCREW ISO 1207 M4X6 A4	
190	352113-0102		25	CLIP-STRIP, BLACK 188X4,8 MM	

Pos	Part No	UN	Qty	Description	Page No

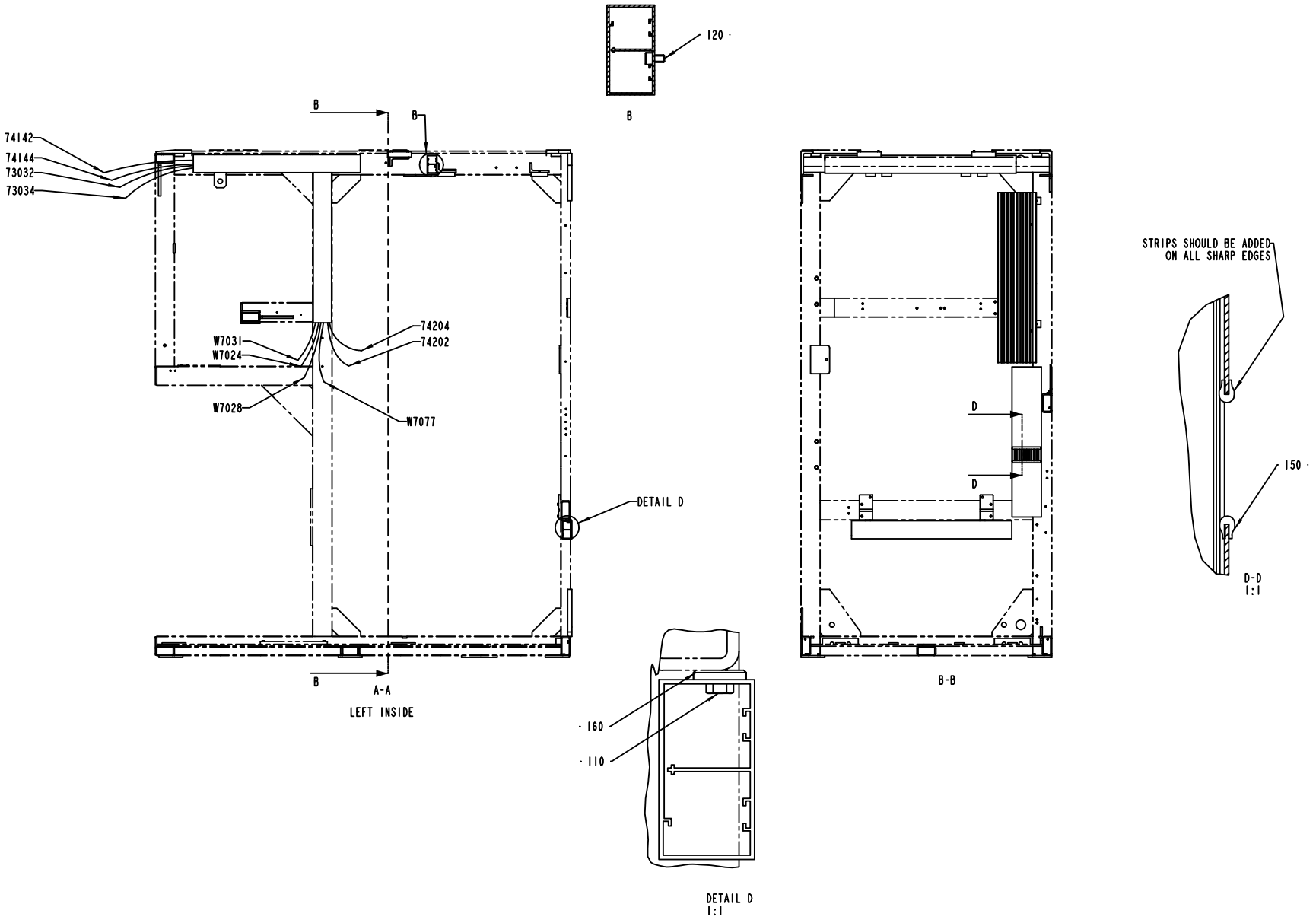
120
B
B
B
74142
74144
73032
73034
74204
74202
W7031
W7024
W7028
W7077
DETAIL D
B
A-A
LEFT INSIDE
D
D
B-B
STRIPS SHOULD BE ADDED ON ALL SHARP EDGES
150
D-D
1:1
160
110
DETAIL D
1:1

ECM: 144797 - 20040112
Group number: 1512279-0200
Assembly Drawing: 1512279-2_3_AC

This list covers pages from 7-68 to 7-73

Pos	Part No	UN	Qty	Description	Page No
-					
010	2529990-0000		1	FRAME	
010	2529990-0000		1	FRAME	
020	1512421-0000		1	CABLE DUCT	
030	2524606-0000		1	CABLE DUCT	
040	1512423-0000		1	CABLE DUCT	
050	2524607-0000		1	CABLE DUCT	
060	1512425-0000		2	CABLE DUCT	
080	1512426-0000		1	CABLE DUCT	
100	2529544-0000		1	CABLE DUCT	
110	312105-0364		2	SCREW M6S ISO 4017 M6X10 A480	
120	312115-0364		16	SCREW ISO4762 M6X10 A4	
130	312503-0275		4	TAPPING SCREW ISO 7049-ST3,5X6,5-C-Z	
150	90143-0060	MM	2600	EDGE STRIP 9,5X6,3MM BLACK PVC	
160	315125-0153		2	WASHER TBRSB 6,4X22X4 A4	
170	352113-0205		25	ANCHOR PLATES FOR STRIPS, TYPE TM2S8-C10	
180	312125-0285		25	SCREW ISO 1207 M4X6 A4	
190	352113-0102		25	CLIP-STRIP, BLACK 188X4,8 MM	

Pos	Part No	UN	Qty	Description	Page No

STRIP MAGAZINE

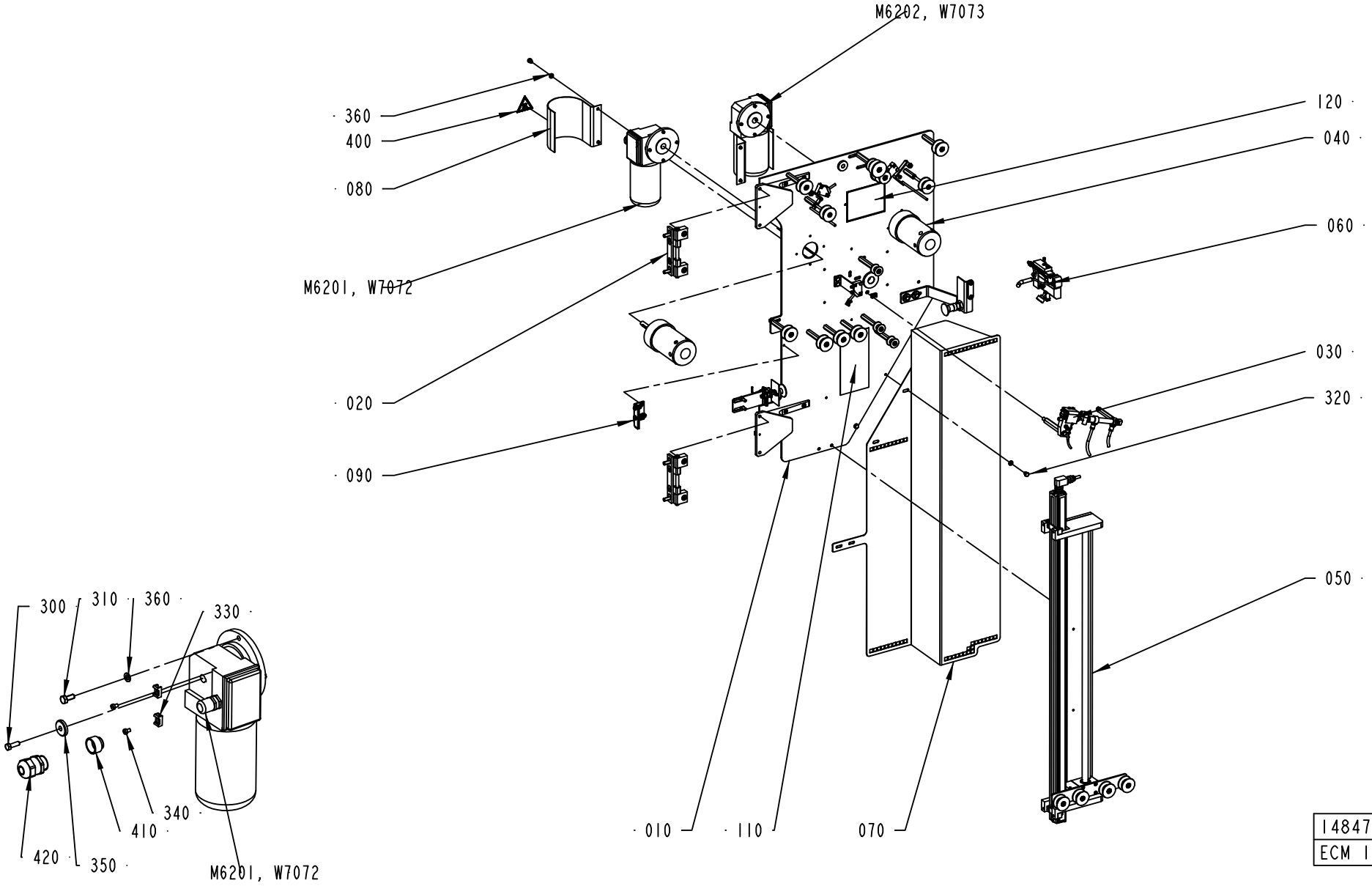

1484707-3
ECM 124222

ECM: 125863 - 20040109
Group number: 1484707-0200
Assembly Drawing: 1484707-3_1_AD

Pos	Part No	UN	Qty	Description	Page No
-					
010	1512428-0200		1	MOUNTING SHEET	**7-77**
020	1484720-0100		2	HINGE	**7-79**
030	1490806-0200		1	HEATING DEVICE	**7-81**
040	1484725-0100		2	HUB	**7-83**
050	1511585-0200		1	STRIP GUIDE	**7-85**
060	1524477-0200		1	CUTTING TABLE	**7-87**
070	1517107-0000		1	PROTECTION	
080	1498445-0000		2	COVER	
090	2510401-0100		1	HOLDER	**7-89**
110	2558879-0000		1	SIGN	
120	2558878-0000		1	SIGN	
300	312105-0329		2	SCREW M6S ISO 4017 M5X16 A480	
310	312105-0367		8	SCREW M6S ISO 4017 M6X14 A480	
320	312105-0362		6	SCREW M6S ISO 4017 M6X8 A480	
330	352113-0205		4	ANCHOR PLATES FOR STRIPS, TYPE TM2S8-C10	
340	312125-0285		4	SCREW ISO 1207 M4X6 A4	
350	315125-0153		2	WASHER TBRSB 6,4X22X4 A4	
360	315105-0153		14	WASHER BRB6,4X12RFR	
400	359705-0007		2	WARNING SIGN ISO, HOT SURFACE	
410	90458-1155		2	ENLARGING SLEEVE, 7216220	
420	90458-0307		2	CABLE GLAND, M20X1,5, NO.5311 1020	
430	312125-0285		4	SCREW ISO 1207 M4X6 A4	
440	352113-0205		4	ANCHOR PLATES FOR STRIPS, TYPE TM2S8-C10	
M6201	90069-0614		1	GEARS, WORM MOTOR MC320P2T	
M6202	90457-0921		1	WORM GEAR MOTOR MC320P2TB5/D	
W7072	90220-0104	MM	4000	SCR. CABLE 4X1,5MM2	
W7073	90220-0104	MM	4000	SCR. CABLE 4X1,5MM2	

Pos	Part No	UN	Qty	Description	Page No

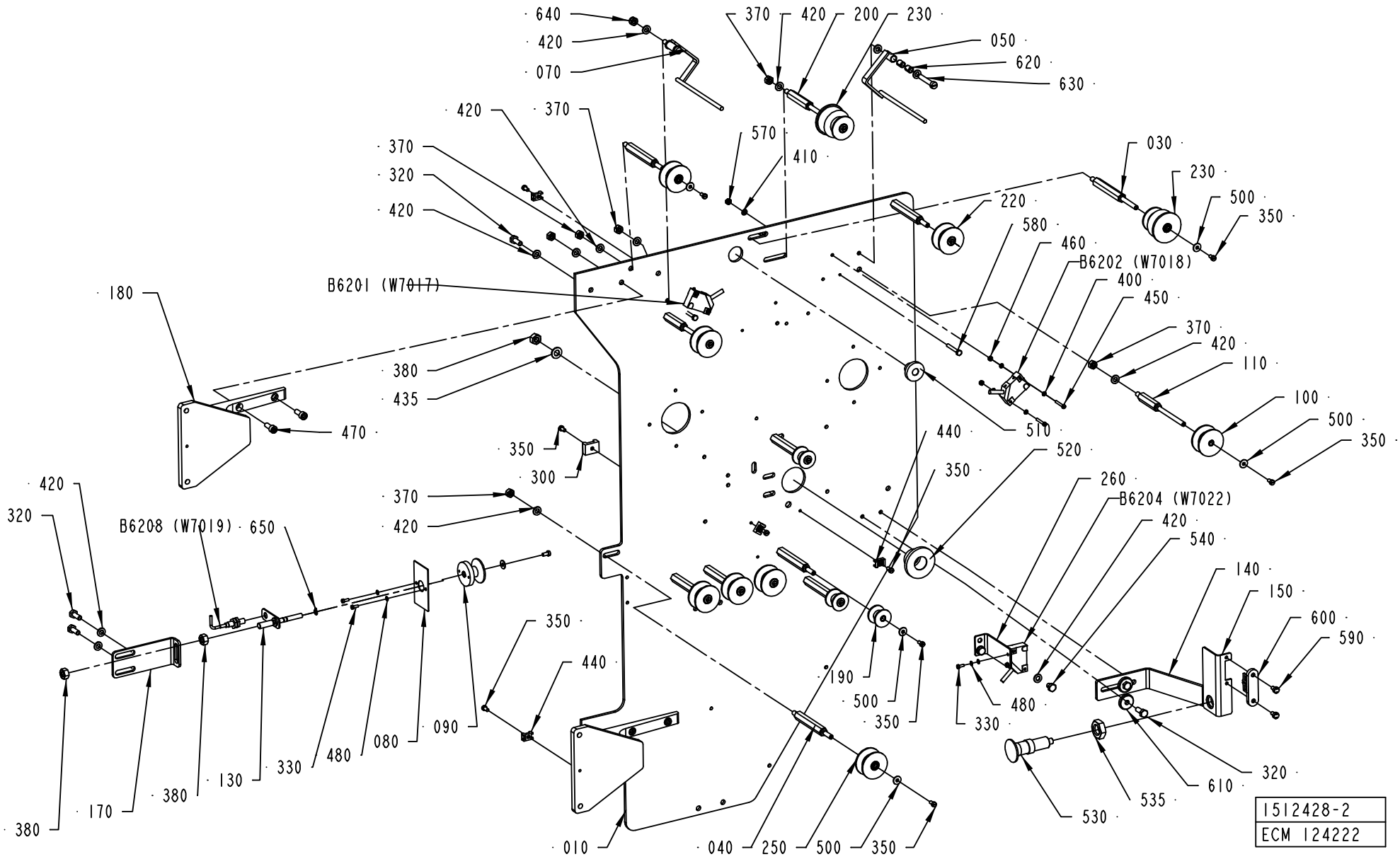
640
420
070
370
420
200
230
050
620
630
420
370
570
410
370
320
420
030
230
500
350
220
580
460
400
450
370
420
110
100
500
350
510
440
520
350
260
B6204 (W7022)
420
540
140
150
600
590
B6202 (W7018)
B6201 (W7017)
180
380
435
470
350
300
420
320
B6208 (W7019)
650
370
420
350
440
190
500
350
480
330
610
320
535
530
380
170
380
130
330
480
080
090
010
040
250
500
350
1512428-2
ECM 124222

ECM: 163297 - 20040419
Group number: 1512428-0200
Assembly Drawing: 1512428-2_1_AC

Pos	Part No	UN	Qty	Description	Page No
A3/FLEX					
170	2525339-0000		1	BRACKET	
Common Parts					
010	1484708-0000		1	MOUNTING PLATE	
030	590402-0000		1	AXLE PIN	
040	536916-0000		9	AXLE PIN	
050	1490818-0000		1	ARM	
070	1490187-0000		1	ROCKER ARM	
080	1349581-0000		1	FLAG	
090	1349986-0000		1	ROLLER	
100	583986-0000		2	ROLL	
110	544725-0000		2	AXLE PIN	
130	1484718-0000		1	AXLE PIN	
140	1499569-0000		1	BRACKET	
150	1484740-0000		1	BRACKET	
180	1517087-0000		2	HINGE	
190	1548197-0000		3	ROLL	
200	1538202-0000		1	AXLE PIN	
220	1548195-0000		2	ROLL	
230	1548196-0000		2	ROLL	
250	1523487-0000		4	ROLL	
260	2515289-0000		1	BRACKET	
300	352113-0203		4	ANCHOR PLATES FOR STRIPS, TYPE TM3S8-M0	
320	312105-0366		6	SCREW M6S ISO 4017 M6X12 A480	
330	312125-0222		4	SCREW ISO 1207 M3X8 A4	
350	312125-0287		22	SCREW ISO 1207 M4X8 A4	
370	312605-0316		16	HEXAGON NUT, M6M M6 A280	
380	312605-0318		3	HEXAGON NUT, M6M M8 A280	
400	315103-0124		8	WASHER, BRB, 3,2/6,H=0,5 NI PL BR	
410	315105-0136		2	WASHER BRB4,3XRFR	
420	315105-0153		28	WASHER BRB6,4X12RFR	
435	315105-0165		1	WASHER BRB8,4X16RFR	
440	352113-0205		4	ANCHOR PLATES FOR STRIPS, TYPE TM2S8-C10	
450	312125-0230		4	SCREW ISO 1207 M3X20 A4	
460	312605-0310		4	HEXAGON NUT, M6M M3 A280	
470	312115-0368		4	SCREW ISO4762 M6X16 A4	
480	315105-0124		6	WASHER BRB3,2X6RFR	
500	90005-0082		14	WASHER PLAIN ROUND 4,3(M4)/12,H=1	
510	90015-0021		1	LEAD-IN, TET10-14, E-1458023	
520	90015-0024		1	LEAD-IN, TET20-26, E-1458035	
530	90051-0088		1	ADJUSTMENT SCREW	
535	90099-0131		1	NUT HEX. M16X2 SS	
540	312105-0362		2	SCREW M6S ISO 4017 M6X8 A480	
570	312605-0312		2	HEXAGON NUT, M6M M4 A280	
580	312105-0299		2	SCREW M6S ISO 4017 M4X30 A470	
590	1539387-0000		2	SCREW	
600	90044-0310		1	KEY FOR SAFETY SWITCH, AZ 15/16 B1	
610	315125-0153		2	WASHER TBRSB 6,4X22X4 A4	
620	321141-0064		4	BEARING BUSHING W/O FL, 6X8X10 MM	
630	312125-0376		2	SCREW ISO 1207 M6X35 A4	
640	312812-0316		2	HEXAGON NUT, NY-LOCK M6 A480	
650	315751-0103		1	RETAINING RING FOR SHAFT DIN 471 6 A2	
B6201	90044-0194		1	PROX.SW. IN5329/IN3002-BPKG	
B6202	90044-0194		1	PROX.SW. IN5329/IN3002-BPKG	
B6204	90044-0194		1	PROX.SW. IN5329/IN3002-BPKG	
B6208	90458-0138		1	PROX.SW. E2EG-X1R5B1-5M	

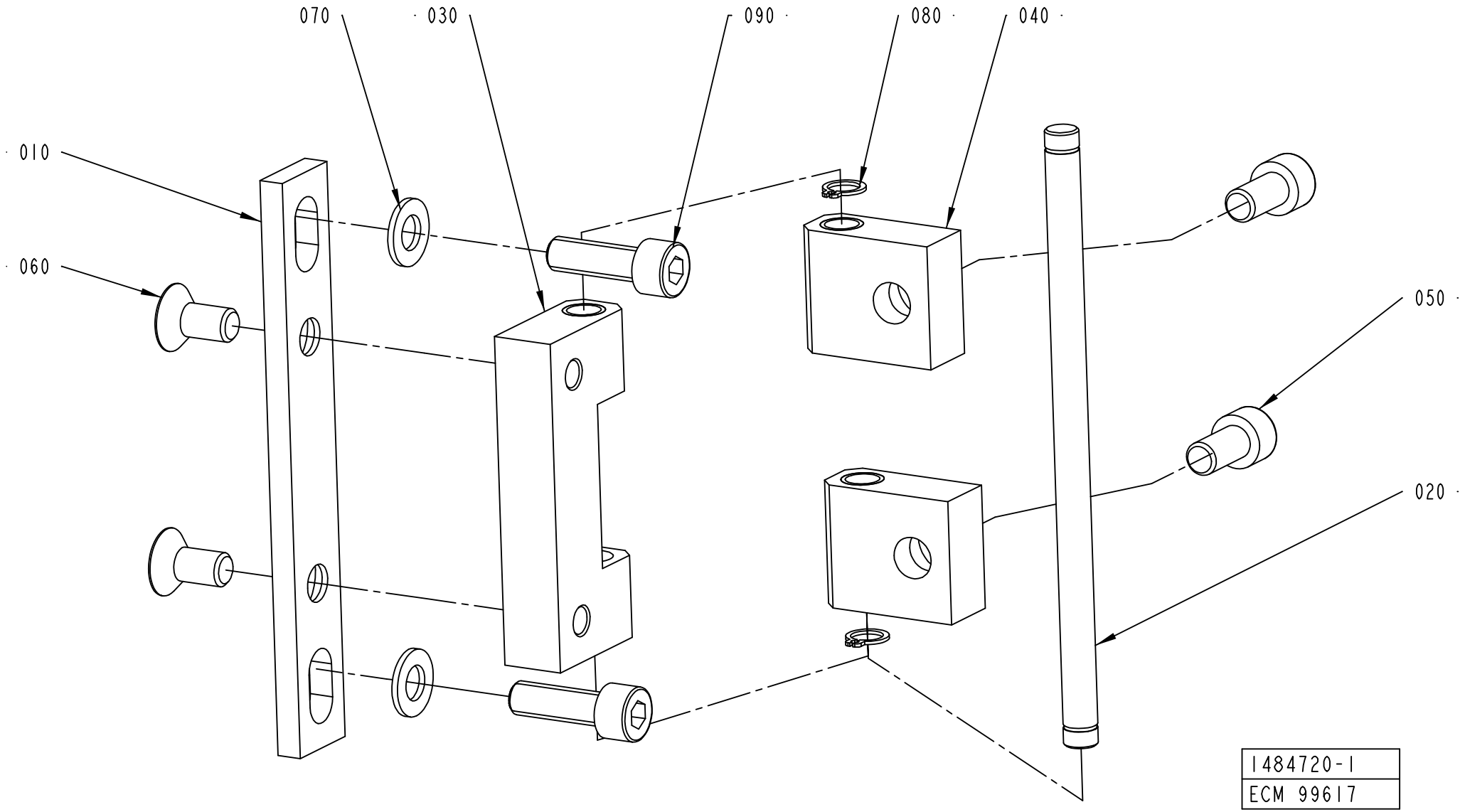
070
030
090
080
040
010
060
050
020
1484720-1
ECM 99617

ECM: 120512 - 20021218
Group number: 1484720-0100
Assembly Drawing: 1484720-1_1_AB

Pos	Part No	UN	Qty	Description	Page No
-					
010	1334187-0000		1	PLATE	
020	1334188-0000		1	AXLE PIN	
030	1334189-0000		1	BLOCK	
040	1334190-0000		2	BLOCK	
050	312115-0449		2	SCREW ISO4762 M8X16 A4	
060	312155-0449		2	SCREW EN 10642 MF6S M8X16 A480	
070	315105-0165		2	WASHER BRB8,4X16RFR	
080	90141-0015		2	RETAINING RING FOR SHAFT DIN 471 8 A2	
090	312115-0453		2	SCREW ISO4762 M8X25 A4	

Pos	Part No	UN	Qty	Description	Page No

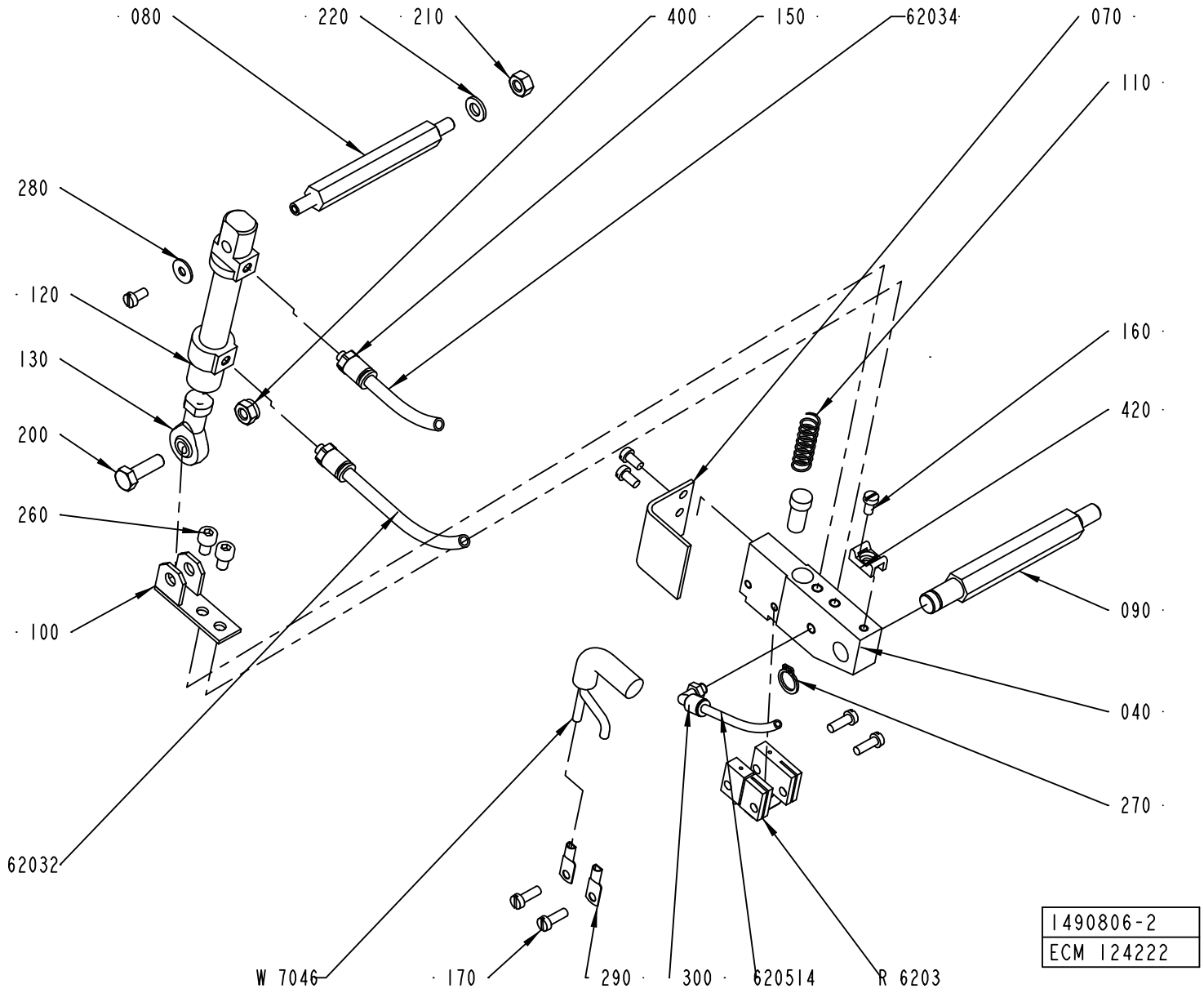
080
220
210
400
150
62034
070
110
280
120
130
200
260
100
160
420
090
040
270
62032
W 7046
170
290
300
620514
R 6203
1490806-2
ECM 124222

ECM: 152055 - 20040109
Group number: 1490806-0200
Assembly Drawing: 1490806-2_1_AB

Pos	Part No	UN	Qty	Description	Page No
-					
040	1490804-0000		1	HOLDER	
050	400833-0000		1	PLUNGER	
070	1349181-0000		1	TOUCH GUARD	
080	1037121-0000		1	SHAFT	
090	1037120-0000		1	SHAFT	
100	1037124-0000		1	HOLDER	
110	400828-0000		1	SPRING	
120	90450-0306		1	DOUBLE ACTING, MINI-ISO, CYL. 12-25	
130	90239-0491		1	ROD END,BALL JOINT EYE,MINI-ISO M6	
150	342722-0197		2	STRAIGHT COUPLING	
160	312125-0287		4	SCREW ISO 1207 M4X8 A4	
170	312125-0291		4	SCREW ISO 1207 M4X12 A4	
200	312105-0370		1	SCREW M6S ISO 4017 M6X20 A480	
210	312605-0316		1	HEXAGON NUT, M6M M6 A280	
220	315105-0153		1	WASHER BRB6,4X12RFR	
260	312115-0323		2	SCREW ISO4762 M5X8 A4	
270	90141-0016		1	RETAINING RING FOR SHAFT DIN 471 10 A2	
280	90005-0082		1	WASHER PLAIN ROUND 4,3(M4)/12,H=1	
290	353104-0140		2	CABLE SHOE YAV 06 M 4*	
300	90458-2954		1	ELBOW PIPE JOINT, EXT.THREAD, D=4MM M5	
400	312812-0316		1	HEXAGON NUT, NY-LOCK M6 A480	
420	352113-0205		1	ANCHOR PLATES FOR STRIPS, TYPE TM2S8-C10	
6203:2	90166-0193	MM	4500	TUBE 6 MM PUR BLUE	
6203:4	90166-0193	MM	4500	TUBE 6 MM PUR BLUE	
62051:4	90166-0095	MM	1500	TUBE 4 MM PA BLUE	
R6203	1498047-0000		1	SEALING BLOCK	
W7046	351120-0126	MM	4000	CABLE SIHF 2X4MM2 GREEN/YELLOW	

Pos	Part No	UN	Qty	Description	Page No

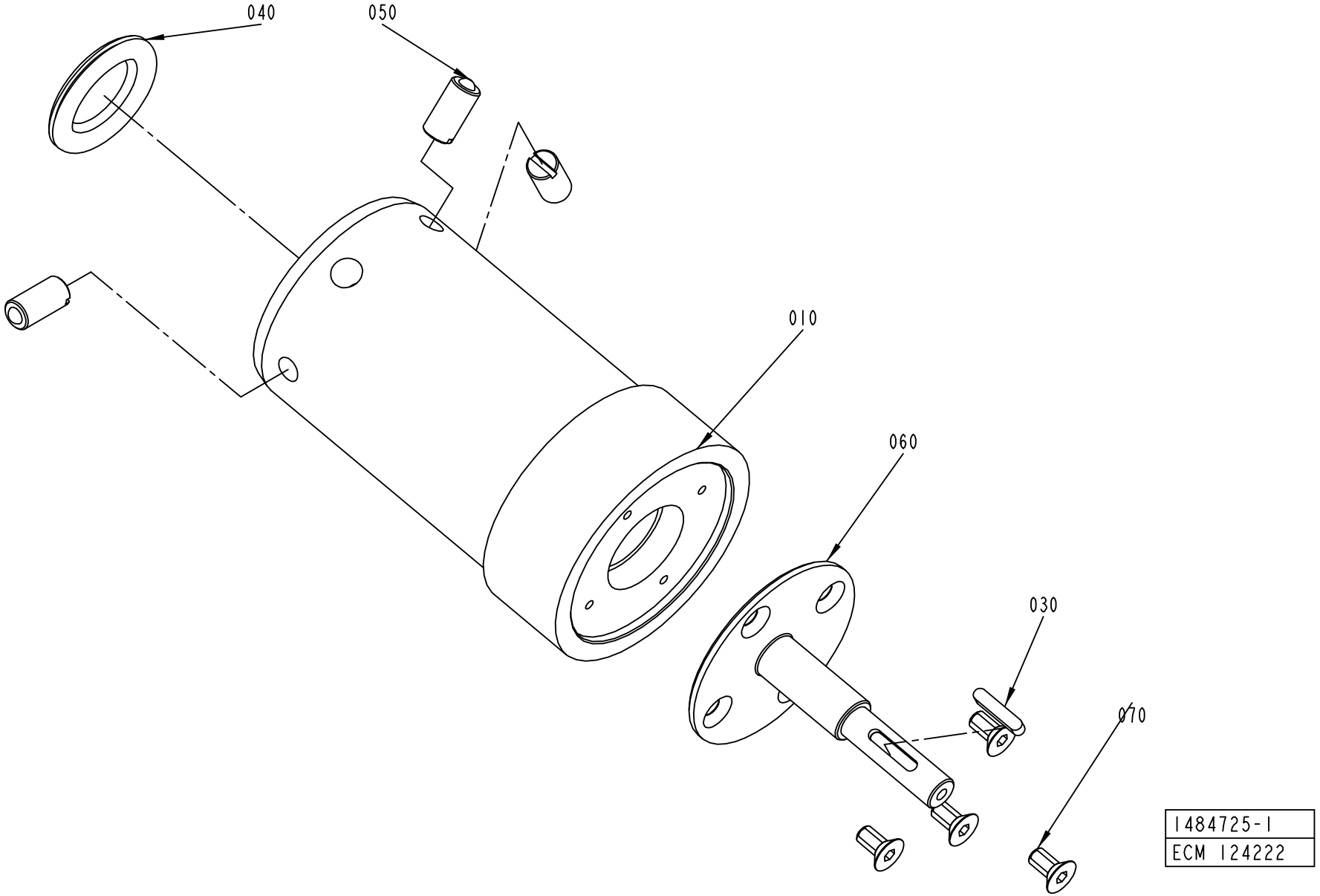
040
050
010
060
030
070
1484725-1
ECM 124222

ECM: 150573 - 20040109
Group number: 1484725-0100
Assembly Drawing: 1484725-1_1_AD

Pos	Part No	UN	Qty	Description	Page No
-					
010	1484724-0000		1	HUB	
030	315701-0170		1	PARALLEL KEY W. ROUND ENDS 4X4X20 MM	
040	90261-0049		1	PLUG, BLIND, PLASTIC, NO. SR1750	
050	90287-0106		3	SCREW SPRINGLOAD. SLOTTED HEAD M10X21	
060	1484726-0000		1	SHAFT	
070	312155-0366		4	SCREW EN 10642 MF6S M6X12 A480	

Pos	Part No	UN	Qty	Description	Page No

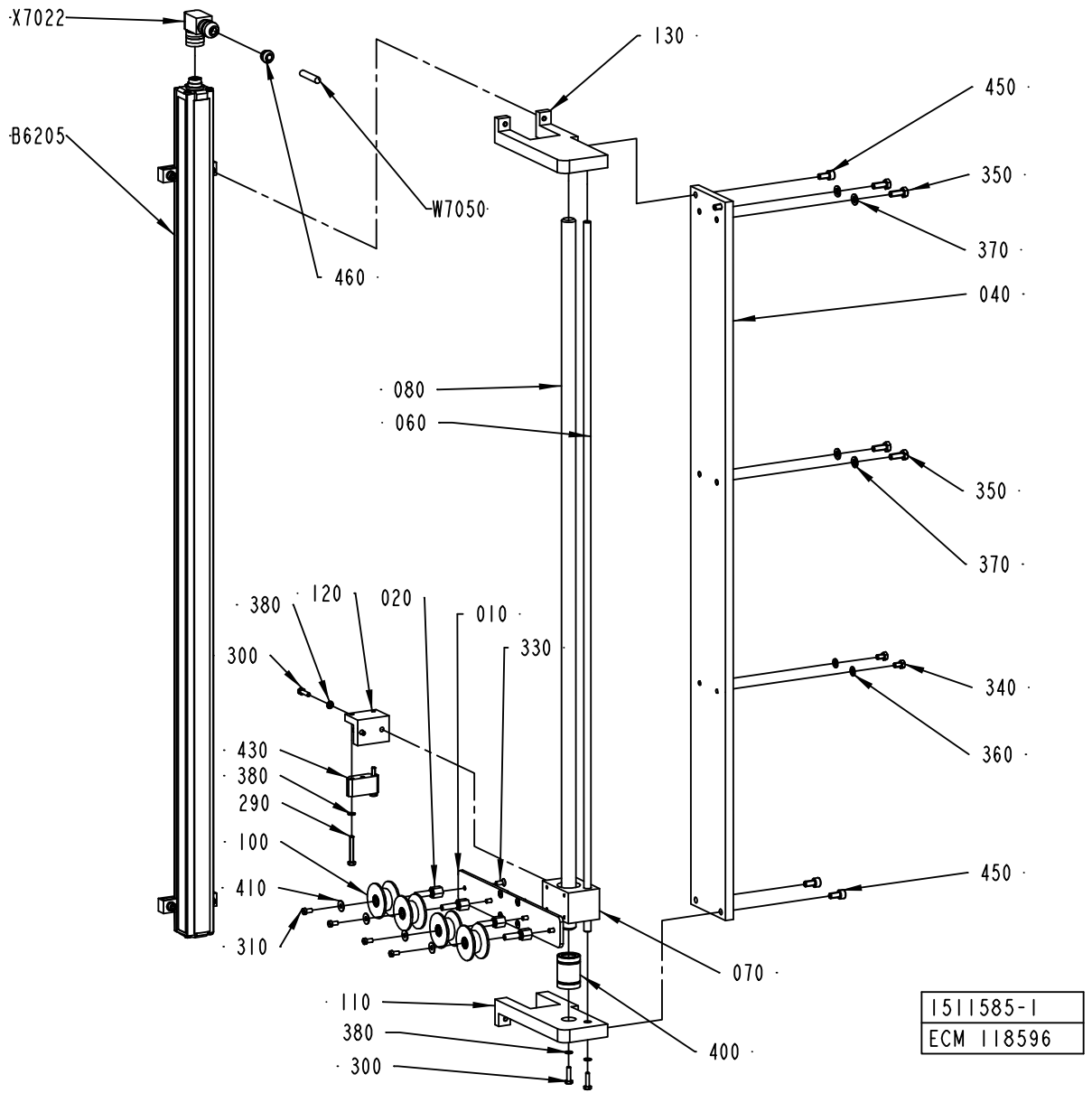
X7022
B6205
W7050
460
130
450
350
370
040
080
060
350
370
380
120
020
010
330
300
340
360
430
380
290
100
410
310
450
070
110
380
300
400
1511585-1
ECM 118596

ECM: 150574 - 20040109
Group number: 1511585-0200
Assembly Drawing: 1511585-1_1_AB

Pos	Part No	UN	Qty	Description	Page No
-					
010	1484711-0000		1	BRACKET	
020	1484719-0000		4	AXLE PIN	
040	1498450-0001		1	PLATE	
060	1498451-0001		1	SHAFT	
070	1511587-0000		1	BUSHING BLOCK	
080	1511586-0001		1	BAR	
100	1523487-0000		4	ROLL	
110	2501220-0000		1	BRACKET	
120	2501221-0000		1	BRACKET	
130	2501219-0000		1	BRACKET	
290	312105-0299		2	SCREW M6S ISO 4017 M4X30 A470	
300	312105-0293		4	SCREW M6S ISO 4017 M4X16 A470	
310	312125-0287		4	SCREW ISO 1207 M4X8 A4	
330	312155-0289		8	SCREW EN 10642 MF6S M4X10 A480	
340	312105-0323		2	SCREW M6S ISO 4017 M5X8 A480	
350	312105-0368		4	SCREW M6S ISO 4017 M6X16 A480	
360	315105-0146		2	WASHER BRB5,3X10RFR	
370	315105-0153		4	WASHER BRB6,4X12RFR	
380	315105-0136		6	WASHER BRB4,3XRFR	
400	90189-0011		1	BALL BUSHING, 16X26X36 MM	
410	90005-0082		4	WASHER PLAIN ROUND 4,3(M4)/12,H=1	
430	90458-1592		1	FLOATING MAGNET, BTL5-P-3800-2	
450	312115-0366		4	SCREW ISO4762 M6X12 A4	
460	90459-1501		1	CABLE SEALING, 12023/I, ELFA. 44-625-78	
B6205	90458-1535		1	TRANSDUCER, BTL5-A11-M0850-P-S32	
W7050	90220-0092	MM	4000	PAIR TWISTED CABLE 3X2X0,25MM2	
X7022	90458-1595		1	CONNECTION, BKS-S 33M-00	

Pos	Part No	UN	Qty	Description	Page No

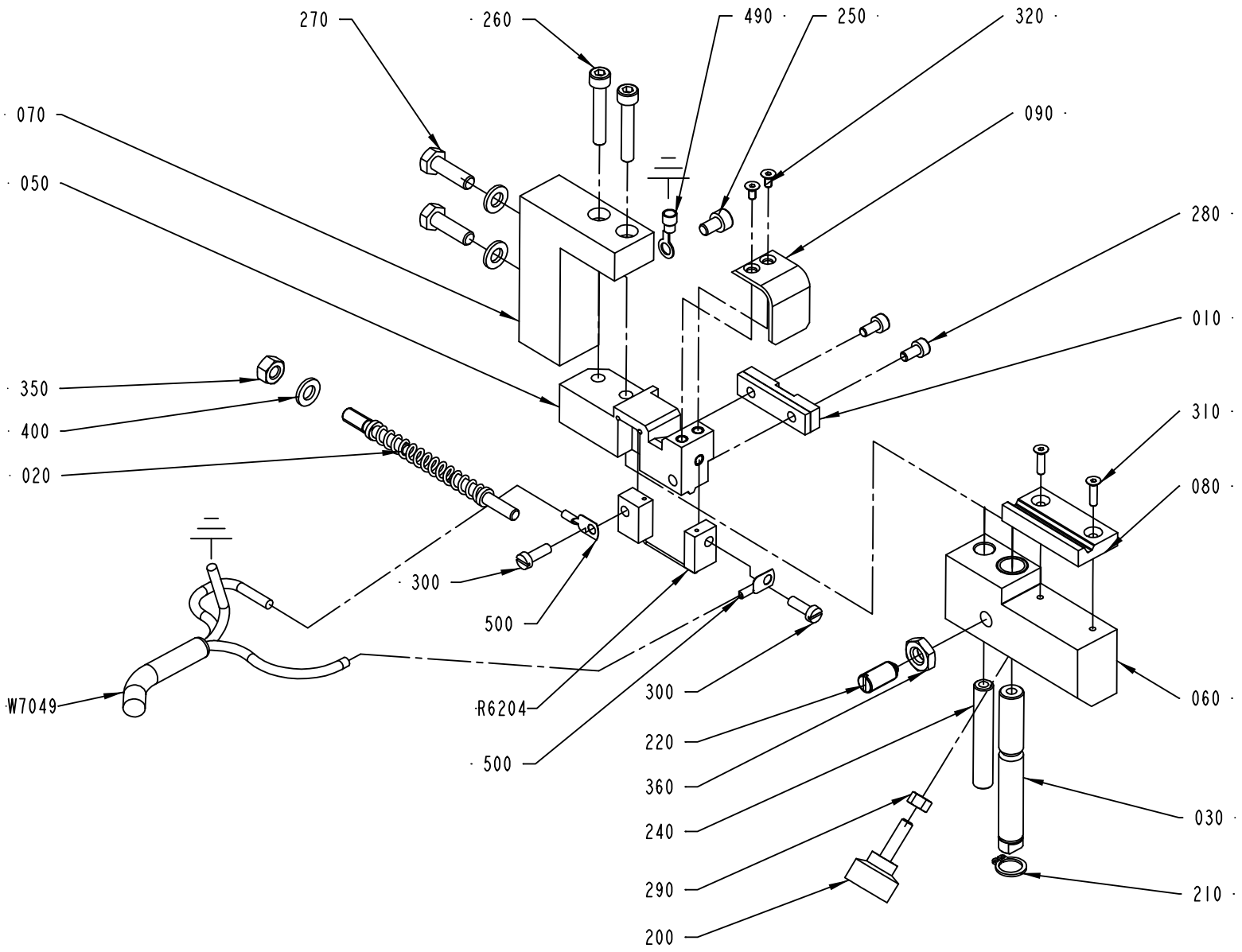

1524477-2
ECM 118596

ECM: 120696 - 20021218
Group number: 1524477-0200
Assembly Drawing: 1524477-2_1_AB

Pos	Part No	UN	Qty	Description	Page No
-					
010	1349014-0000		1	PAD	
020	1538194-0000		1	FINGER	
030	1517751-0000		1	SHAFT	
050	2523598-0000		1	SPLICING TABLE	
060	2523597-0000		1	SLIDER	
070	2531493-0000		1	BRACKET	
080	2523601-0000		1	PAD	
090	2579838-0000		1	TOUCH GUARD	
200	90051-0035		1	KNOB, EXTERNAL THREAD. NO. 8308-1135	
210	90141-0016		1	RETAINING RING FOR SHAFT DIN 471 10 A2	
220	90287-0112		1	SCREW SPRINGLOAD. SLOTTED HEAD M8X16	
240	2523600-0000		1	PIN	
250	312115-0323		1	SCREW ISO4762 M5X8 A4	
260	312115-0335		2	SCREW ISO4762 M5X30 A4	
270	312105-0370		2	SCREW M6S ISO 4017 M6X20 A480	
280	312115-0287		2	SCREW ISO4762 M4X8 A4	
290	312605-0314		1	HEXAGON NUT, M6M M5 A280	
300	312125-0291		2	SCREW ISO 1207 M4X12 A4	
310	312155-0226		2	SCREW EN 10642 MF6S M3X12 A480	
320	312155-0220		2	SCREW EN 10642 MF6S M3X6 A480	
350	312605-0316		1	HEXAGON NUT, M6M M6 A280	
360	312625-0318		1	HEXAGON THIN NUT, EN 24035 ML6M M8 A4	
400	315105-0153		3	WASHER BRB6,4X12RFR	
490	353101-0132		1	CABLE SHOE 1,5-2,5MM2 M5 BLUE	
500	353104-0130		2	CABLE SHOE YAV 025 M 4*	
R6204	1524481-0000		1	SEALING BLOCK	
W7049	351120-0145	MM	4000	CABLE SIHF 3X2,5MM2 GREEN/YELLOW	

Pos	Part No	UN	Qty	Description	Page No

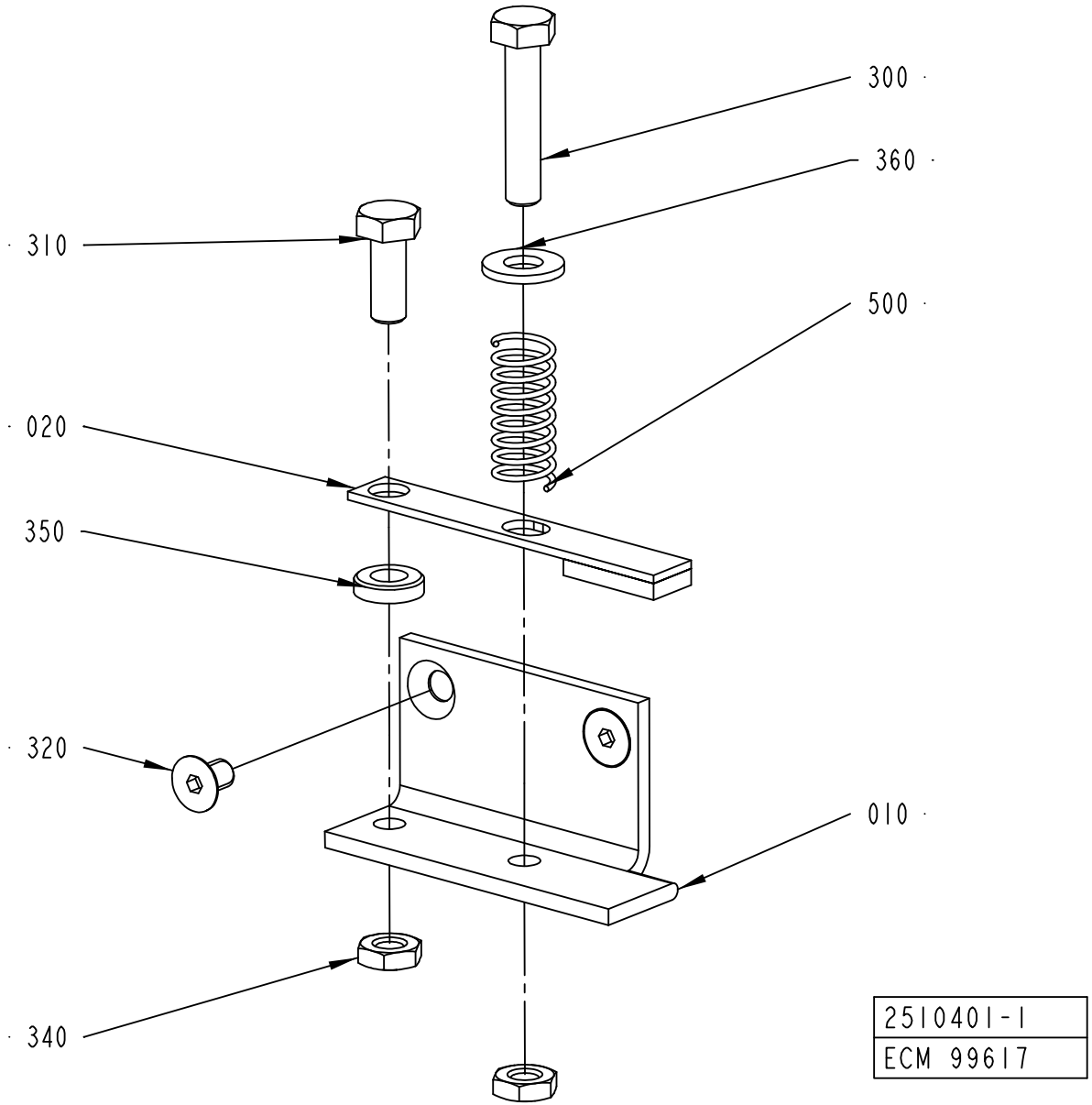
300
360
310
500
020
350
320
010
340
2510401-1
ECM 99617

ECM: 122822 - 20021218
Group number: 2510401-0100
Assembly Drawing: 2510401-1_1_AA

Pos	Part No	UN	Qty	Description	Page No
-					
010	2510399-0000		1	BRACKET	
020	2510400-0000		1	HOLDER	
300	312109-0374		1	SCREW M6S ISO 4017 M6X30 A480	
310	312105-0368		1	SCREW M6S ISO 4017 M6X16 A480	
320	312155-0323		2	SCREW EN 10642 MF6S M5X8 A480	
340	312625-0316		2	HEXAGON THIN NUT, EN 24035 ML6M M6 A4	
350	315115-0153		1	WASHER PLAIN, TBRB 6,4/12 H=3	
360	315105-0156		1	WASHER BRB 6.7X14 RFR	
500	90335-0025		1	COMP. SPRING 22010, 1X11X26	

Pos	Part No	UN	Qty	Description	Page No

SPLICING DEVICE

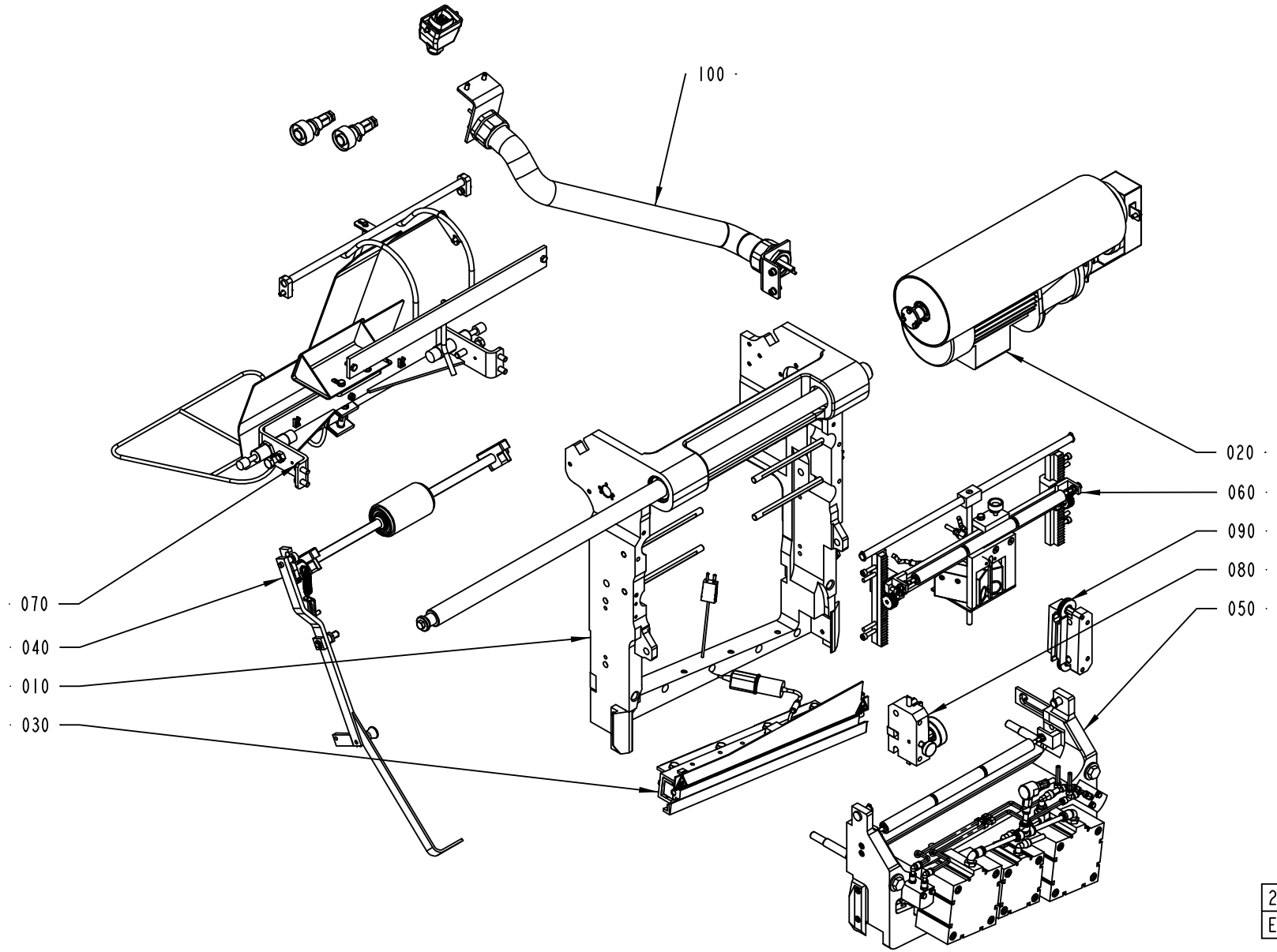

ECM: 175558 - 50001231
Group number: 2588946-0100
Assembly Drawing: 2588946-1_1_AB

This list covers pages from 7-90 to 7-93

Pos	Part No	UN	Qty	Description	Page No
-					
010	2589104-0100		1	FRAME	**7-95**
020	2589105-0100		1	DRIVE UNIT	**7-97**
030	2589106-0100		1	HEATING UNIT	**7-99**
040	2524600-0100		1	PRESSURE ROLLER	**7-101, 7-103**
050	2592567-0100		1	PRESSURE JAW	**7-105**
060	2592568-0100		1	BAR CODE READER	**7-107**
070	2582003-0100		1	GUIDE RAIL	**7-109, 7-111**
080	1484745-0100		1	WEB GUIDE	**7-113**
090	2529547-0100		1	PAPER GUIDE	**7-115**
100	1499578-0300		1	CABLE CONDUIT	**7-117**

Pos	Part No	UN	Qty	Description	Page No

SPLICING DEVICE

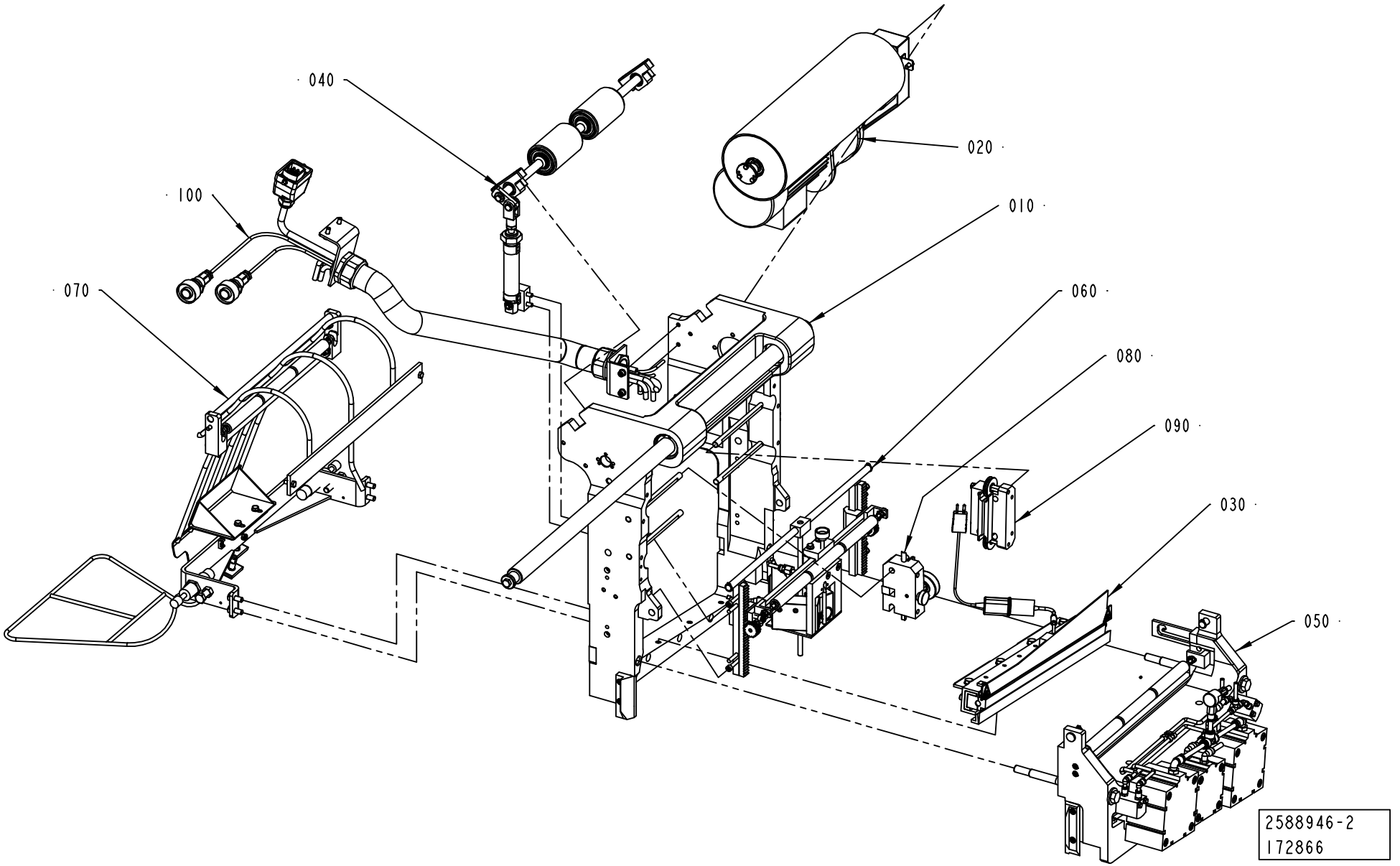

ECM: 175558 - 50001231
Group number: 2588946-0100
Assembly Drawing: 2588946-2_1_AA

This list covers pages from 7-90 to 7-93

Pos	Part No	UN	Qty	Description	Page No
-					
010	2589104-0100		1	FRAME	**7-95**
020	2589105-0100		1	DRIVE UNIT	**7-97**
030	2589106-0100		1	HEATING UNIT	**7-99**
040	2524600-0100		1	PRESSURE ROLLER	**7-101, 7-103**
050	2592567-0100		1	PRESSURE JAW	**7-105**
060	2592568-0100		1	BAR CODE READER	**7-107**
070	2582003-0100		1	GUIDE RAIL	**7-109, 7-111**
080	1484745-0100		1	WEB GUIDE	**7-113**
090	2529547-0100		1	PAPER GUIDE	**7-115**
100	1499578-0300		1	CABLE CONDUIT	**7-117**

Pos	Part No	UN	Qty	Description	Page No

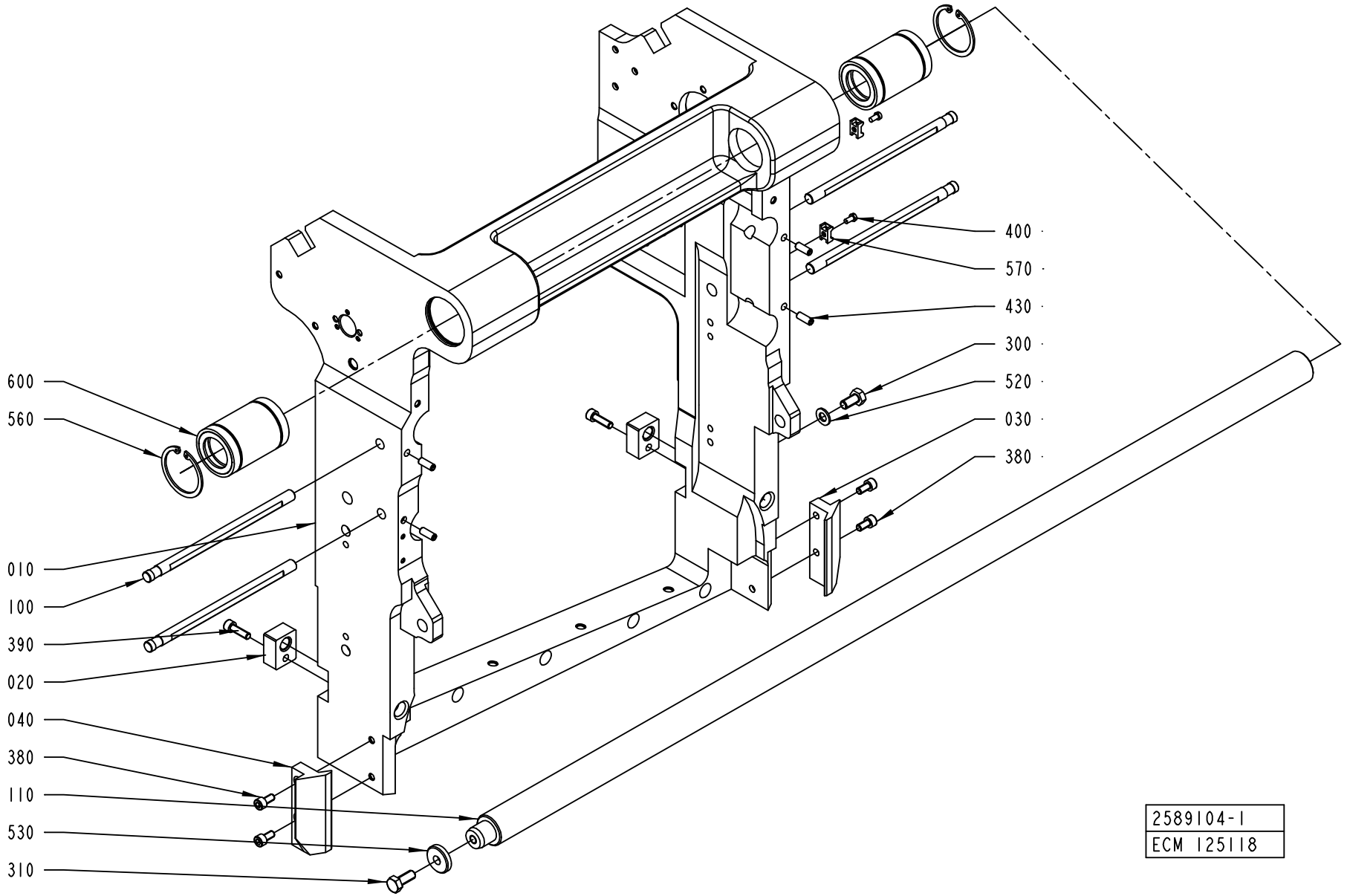
600
560
010
100
390
020
040
380
110
530
310
400
570
430
300
520
030
380
2589104-1
ECM 125118

ECM: 175559 - 50001231
Group number: 2589104-0100
Assembly Drawing: 2589104-1_1_AB

Pos	Part No	UN	Qty	Description	Page No
A3/FLEX TBA 1890S, A3/FLEX TBA 2000S					
010	2687960-0000		1	FRAME	
A3/FLEX TBA 0500B, A3/FLEX TBA 1000B, A3/FLEX TBA 1000S, A3/FLEX TBA 1000SQ, A3/FLEX TPA 1000SQ, A3/FLEX TBA 0200S, A3/FLEX TBA 1500S, A3/FLEX TBA 0200B, A3/FLEX TBA 0250B, A3/FLEX TBA 0330S, A3/FLEX TPA 0330SQ, A3/FLEX TPA 0500SQ, A3/FLEX TBA 0200M, A3/FLEX TBA 0250S, A3/FLEX TBA 0500S					
010	2574401-0000		1	FRAME	
Common Parts					
020	2589119-0000		2	NUT	
030	2562551-0000		1	SLIDE PLANE	
040	2562552-0000		1	SLIDE PLANE	
100	1484704-0000		4	SHAFT	
110	1490820-0000		1	SHAFT	
300	312105-0449		1	SCREW M6S ISO 4017 M8X16 A480	
310	312105-0451		1	SCREW M6S ISO 4017 M8X20 A480	
380	312115-0366		4	SCREW ISO4762 M6X12 A4	
390	312115-0370		2	SCREW ISO4762 M6X20 A4	
400	312125-0287		2	SCREW ISO 1207 M4X8 A4	
430	312318-0368		4	SCREW ISO4029 M6X16 A4	
520	315105-0165		1	WASHER BRB8,4X16RFR	
530	315125-0165		1	WASHER TBRSB 8,4X26X5 A4	
560	315753-0130		2	RETAINING RING FOR BORE DIN 472 47 A2	
570	352113-0205		2	ANCHOR PLATES FOR STRIPS, TYPE TM2S8-C10	
600	90189-0005		2	BALL BUSHING, 30X47X68 MM	

Pos	Part No	UN	Qty	Description	Page No

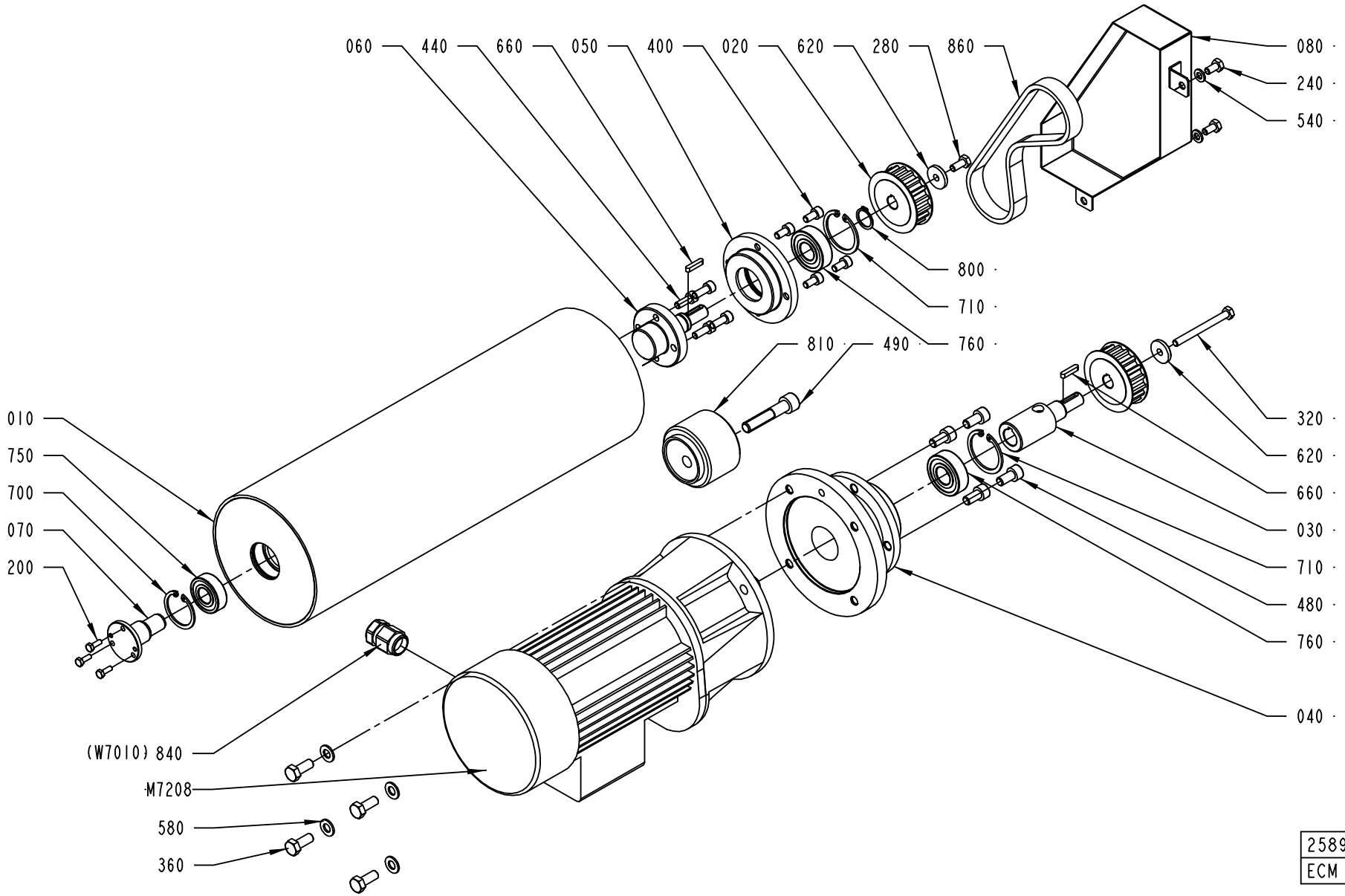

2589105-2
ECM 125118

ECM: 175560 - 50001231
Group number: 2589105-0100
Assembly Drawing: 2589105-2_1_AA

Pos	Part No	UN	Qty	Description	Page No
A3/FLEX TBA 1890S, A3/FLEX TBA 2000S					
010	2665624-0000		1	BENDING ROLLER	
A3/FLEX TBA 0500B, A3/FLEX TBA 1000B, A3/FLEX TBA 1000S, A3/FLEX TBA 1000SQ, A3/FLEX TPA 1000SQ, A3/FLEX TBA 0200S, A3/FLEX TBA 1500S, A3/FLEX TBA 0200B, A3/FLEX TBA 0250B, A3/FLEX TBA 0330S, A3/FLEX TPA 0330SQ, A3/FLEX TPA 0500SQ, A3/FLEX TBA 0200M, A3/FLEX TBA 0250S, A3/FLEX TBA 0500S					
010	2589108-0000		1	BENDING ROLLER	
Common Parts					
020	2589109-0000		2	TOOTHED PULLEY	
030	2589110-0000		1	SHAFT	
040	2589111-0000		1	FLANGE	
050	2589112-0000		1	FLANGE	
060	2589113-0000		1	SHAFT	
070	2589114-0000		1	SHAFT	
080	2589115-0000		1	COVER	
200	312105-0291		3	SCREW M6S ISO 4017 M4X12 A470	
240	312105-0366		2	SCREW M6S ISO 4017 M6X12 A480	
280	312105-0367		1	SCREW M6S ISO 4017 M6X14 A480	
320	312105-0383		1	SCREW M6S ISO 4014 M6X65 A480	
360	312105-0451		4	SCREW M6S ISO 4017 M8X20 A480	
400	312115-0366		4	SCREW ISO4762 M6X12 A4	
440	312115-0368		4	SCREW ISO4762 M6X16 A4	
480	312115-0449		4	SCREW ISO4762 M8X16 A4	
490	312115-0501		1	SCREW ISO4762 M10X50 A4	
540	315105-0153		2	WASHER BRB6,4X12RFR	
580	315105-0165		4	WASHER BRB8,4X16RFR	
620	315125-0153		2	WASHER TBRSB 6,4X22X4 A4	
660	315701-0170		2	PARALLEL KEY W. ROUND ENDS 4X4X20 MM	
700	315753-0124		1	RETAINING RING FOR BORE DIN 472 35 A2	
710	315753-0127		2	RETAINING RING FOR BORE DIN 472 40 A2	
750	321313-0102		1	BALL BEARING, 15X35X11 MM	
760	321313-0103		2	BALL BEARING, 17X40X12MM	
800	90141-0017		1	RETAINING RING SHAFT DIN 471 17 A2	
810	90344-0078		1	PULLEY	
840	90458-0438		1	GLAND, EXTENDED WITH INSERT, M20X1,5	
860	90459-2198		1	TIMING BELT T10X480X16 POLYURETHANE	
M7208	90459-2826		1	GEARS, HELICAL MOTOR ME0102210012	

Pos	Part No	UN	Qty	Description	Page No

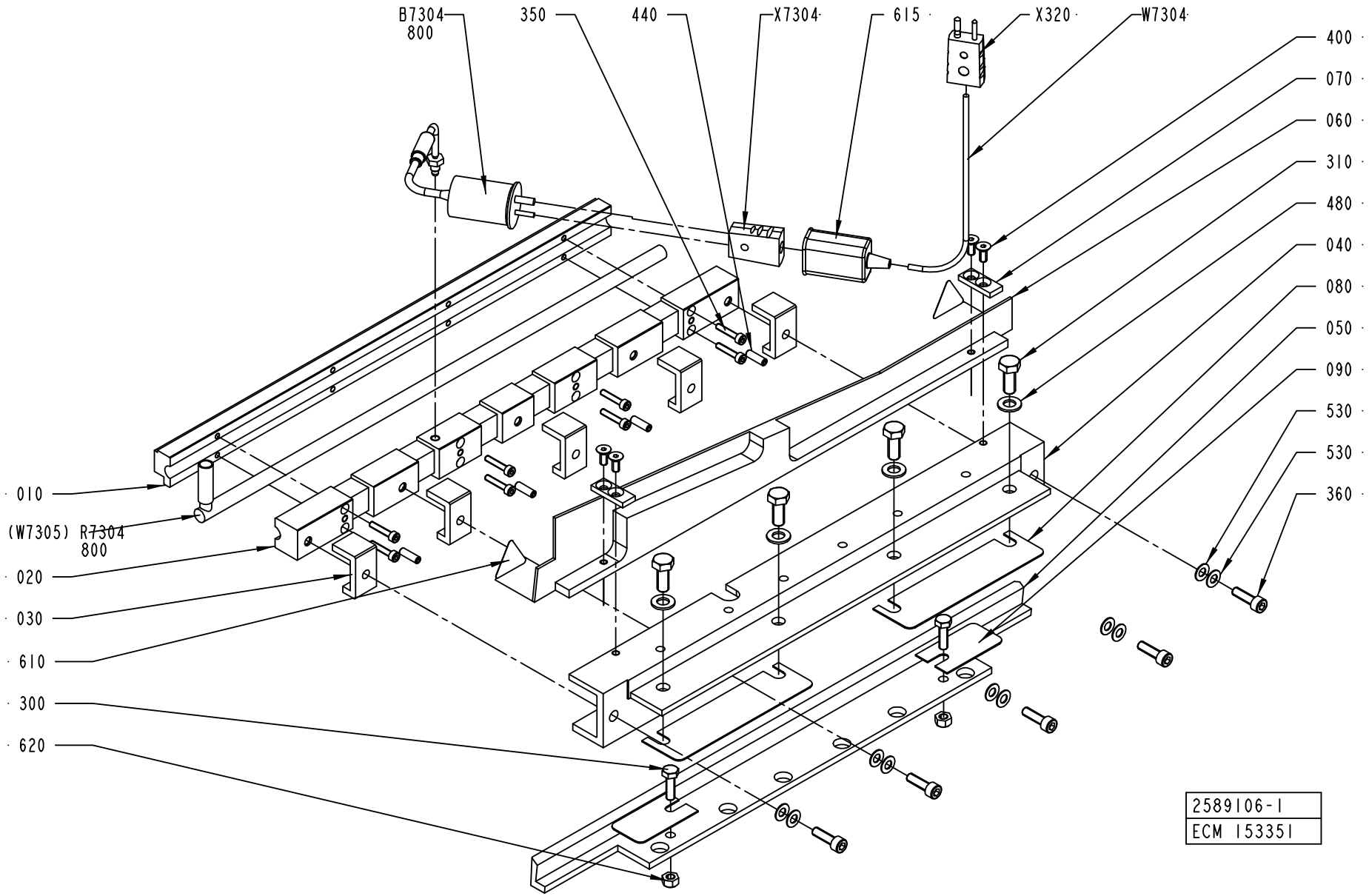
B7304
800
350
440
X7304
615
X320
W7304
400
070
060
310
480
040
080
050
090
530
530
360
010
(W7305) R7304
800
020
030
610
300
620
2589106-1
ECM 153351

ECM: 170527 - 20040419
Group number: 2589106-0100
Assembly Drawing: 2589106-1_1_AC

Pos	Part No	UN	Qty	Description	Page No
A3/FLEX					
X320	90326-0022		1	PLUG, MALE YELLOW CR-AL	
Common Parts					
010	2559986-0000		1	SEALING PLATE	
020	2559987-0000		1	SEALING PLATE	
030	2566127-0000		5	SPACER	
040	2566128-0000		1	HOUSING	
050	2566129-0000		1	ADJUSTMENT ANGLE	
060	2566130-0000		1	PLATE	
070	2576396-0000		2	PLATE	
080	2588947-0000		2	SHIMS	
090	2588948-0000		2	SHIMS	
300	312105-0370		2	SCREW M6S ISO 4017 M6X20 A480	
310	312105-0451		4	SCREW M6S ISO 4017 M8X20 A480	
350	312115-0295		8	SCREW ISO4762 M4X20 A4	
360	312115-0370		5	SCREW ISO4762 M6X20 A4	
400	312155-0327		4	SCREW EN 10642 MF6S M5X12 A480	
440	312318-0329		4	SCREW ISO4029 M5X16 A4	
480	315105-0165		4	WASHER BRB8,4X16RFR	
530	319030-0125		10	DISC SPRING, CONICAL 12,5X6,2X0,5 MM	
610	90194-0143		2	WARNING SIGN ISO, HOT SURFACE	
615	90326-0012		1	PROTECTIVE COVER, T31A4618	
620	90459-2635		2	NUT, HEX.LOCK "CONELOCK" M6 DIN 980V	
800	90296-0051	G	1	PASTE	
B7304	90326-0054		1	THERMOCOUPLE, CR-AL STD.GR, 12826-36	
R7304	90459-2843		1	HEATING CARTRIDGE, 800W 240V	
W7304	90220-0034	MM	9500	THERMOCABLE TEX/SITW-20F-KX 2X0,5MM2	
X7304	90326-0020		1	PLUG, FEMALE YELLOW CR-AL	

Pos	Part No	UN	Qty	Description	Page No

PRESSURE ROLLER

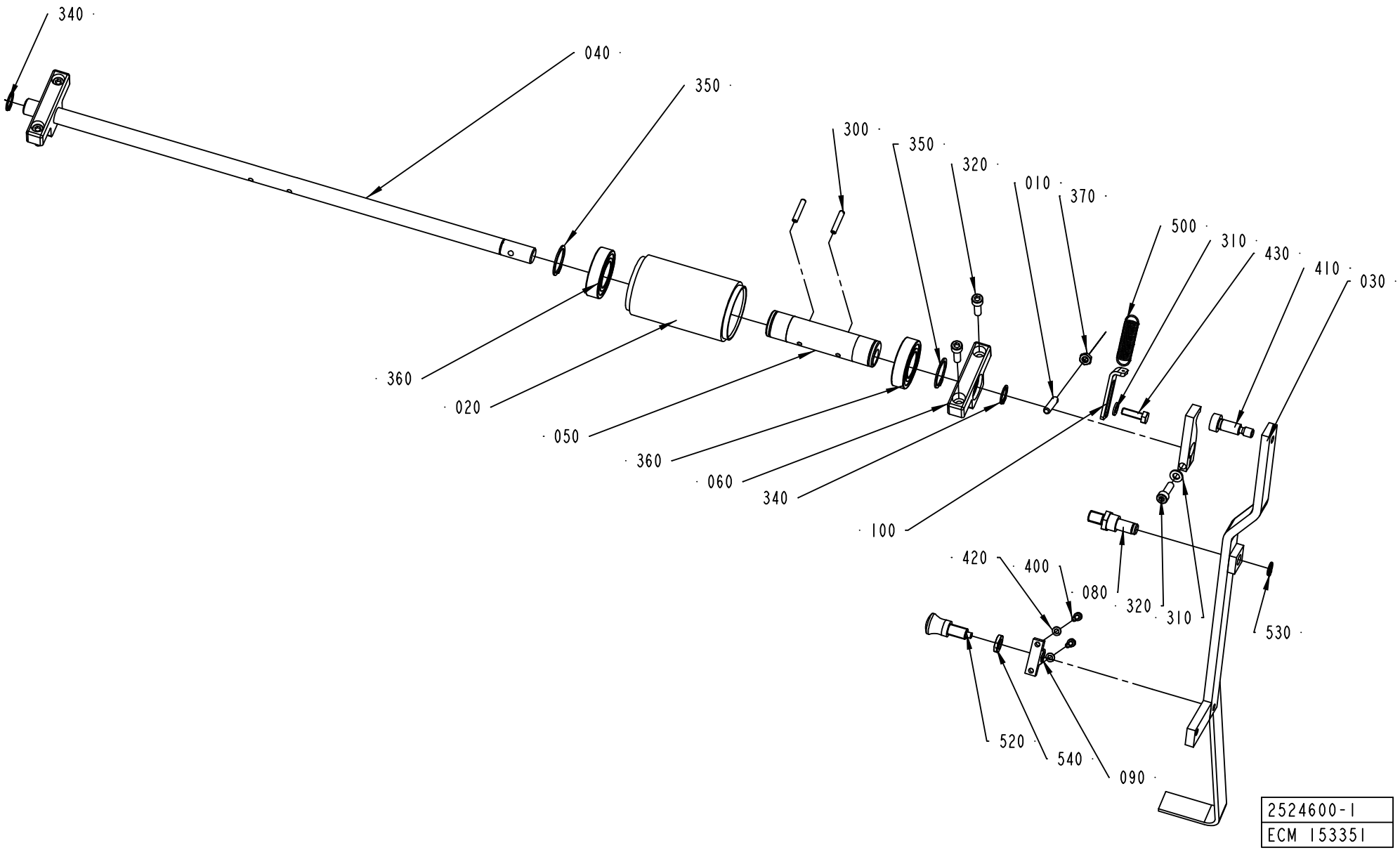

ECM: 175556 - 50001231
Group number: 2524600-0100
Assembly Drawing: 2524600-1_1_AB

This list covers pages from 7-100 to 7-103

Pos	Part No	UN	Qty	Description	Page No
A3/FLEX TBA 1890S, A3/FLEX TBA 2000S (See drawing on page: 7-102)					
020	906254-0000		2	ROLLER	
030	90459-2103		1	SINGLE ACTING, MINI-ISO, CYL 25-25	
040	2681261-0000		1	SHAFT	
050	1512267-0000		2	ECCENTRIC BUSHING	
060	2681262-0000		2	BRACKET	
070	2681264-0000		1	ROCKER ARM	
080	2681265-0000		1	SUPPORT	
090	2681263-0000		2	BUSHING	
100	2681266-0000		1	WASHER	
300	311112-0258		4	SPRING PIN, ISO 8752 4X24-C	
310	315755-0109		1	RETAINING RING SHAFT DIN 6799 7 A2	
320	312115-0374		2	SCREW ISO4762 M6X30 A4	
350	315751-0119		4	RETAINING RING FOR SHAFT DIN 471 25 A2	
360	321308-0205		4	BALL BEARING, 25X47X12MM	
370	315105-0165		1	WASHER BRB8,4X16RFR	
400	312105-0367		1	SCREW M6S ISO 4017 M6X14 A480	
410	90239-0516		1	ROD END, CLEVIS WITH AXLE M10X1,25	
420	312115-0370		4	SCREW ISO4762 M6X20 A4	
A3/FLEX TBA 0500B, A3/FLEX TBA 1000B, A3/FLEX TBA 1000S, A3/FLEX TBA 1000SQ, A3/FLEX TPA 1000SQ, A3/FLEX TBA 0200S, A3/FLEX TBA 1500S, A3/FLEX TBA 0200B, A3/FLEX TBA 0250B, A3/FLEX TBA 0330S, A3/FLEX TPA 0330SQ, A3/FLEX TPA 0500SQ, A3/FLEX TBA 0200M, A3/FLEX TBA 0250S, A3/FLEX TBA 0500S (See drawing on page: 7-100)					
010	578684-0000		1	SPRING BRACKET	
020	906254-0000		1	ROLLER	
030	2524602-0000		1	HANDLE	
040	1487763-0000		1	SHAFT	
050	1512267-0000		1	ECCENTRIC BUSHING	
060	1519583-0000		2	BRACKET	
070	2524604-0000		1	ROCKER ARM	
080	2524601-0000		1	AXLE PIN	
090	2524603-0000		1	HOLDER	
100	2529549-0000		1	PLATE	
300	311112-0258		2	SPRING PIN, ISO 8752 4X24-C	
310	315105-0153		2	WASHER BRB6,4X12RFR	
320	312115-0370		5	SCREW ISO4762 M6X20 A4	
350	315751-0119		2	RETAINING RING FOR SHAFT DIN 471 25 A2	
360	321308-0205		2	BALL BEARING, 25X47X12MM	
370	312625-0316		1	HEXAGON THIN NUT, EN 24035 ML6M M6 A4	
400	312115-0291		2	SCREW ISO4762 M4X12 A4	
410	312180-0491		1	SCREW ISO7379 H10X20	
420	315105-0136		2	WASHER BRB4,3XRFR	
430	312105-0370		1	SCREW M6S ISO 4017 M6X20 A480	
500	90335-0091		1	TENSION SPRING 41890, 1,2X13X48,2	
520	90051-0087		1	LOCK KNOB, NO. GN 617 A5	
530	90141-0016		1	RETAINING RING FOR SHAFT DIN 471 10 A2	
540	90099-0007		1	HEXAGON NUT, M10X1, E 63 137 10	
Common Parts					
340	315751-0112		2	RETAINING RING FOR SHAFT DIN 471 15 A2	
390	312318-0287		2	SCREW ISO4029 M4X8 A4	

Machine Type	Group Description	Used-In	Group Number	Page No

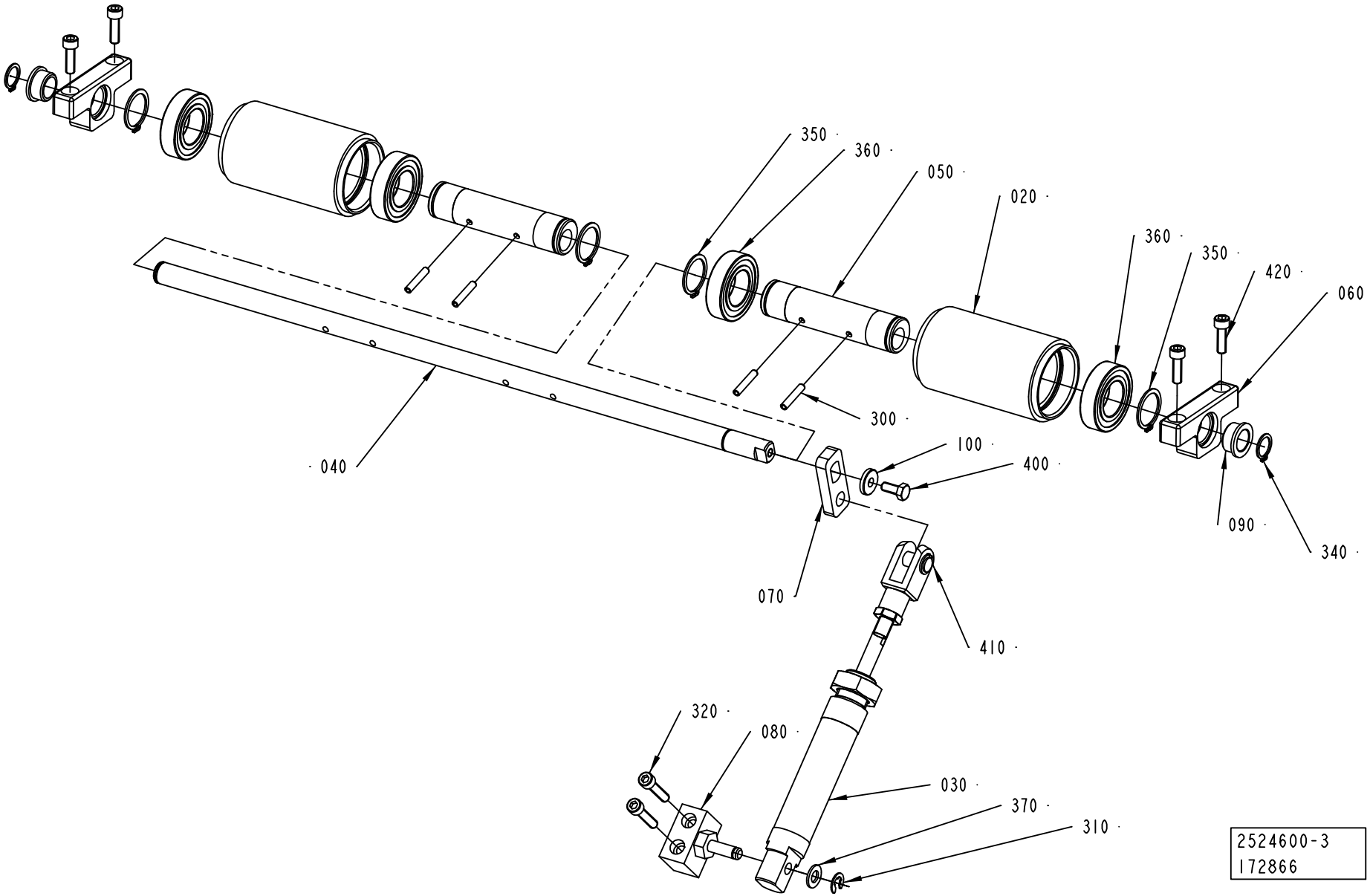
350
360
050
020
360
350
420
060
300
040
100
400
090
340
070
410
320
080
030
370
310
2524600-3
172866

ECM: 175556 - 50001231
Group number: 2524600-0100
Assembly Drawing: 2524600-3_1_AA

This list covers pages from 7-100 to 7-103

Pos	Part No	UN	Qty	Description	Page No
A3/FLEX TBA 1890S, A3/FLEX TBA 2000S (See drawing on page: 7-102)					
020	906254-0000		2	ROLLER	
030	90459-2103		1	SINGLE ACTING, MINI-ISO, CYL 25-25	
040	2681261-0000		1	SHAFT	
050	1512267-0000		2	ECCENTRIC BUSHING	
060	2681262-0000		2	BRACKET	
070	2681264-0000		1	ROCKER ARM	
080	2681265-0000		1	SUPPORT	
090	2681263-0000		2	BUSHING	
100	2681266-0000		1	WASHER	
300	311112-0258		4	SPRING PIN, ISO 8752 4X24-C	
310	315755-0109		1	RETAINING RING SHAFT DIN 6799 7 A2	
320	312115-0374		2	SCREW ISO4762 M6X30 A4	
350	315751-0119		4	RETAINING RING FOR SHAFT DIN 471 25 A2	
360	321308-0205		4	BALL BEARING, 25X47X12MM	
370	315105-0165		1	WASHER BRB8,4X16RFR	
400	312105-0367		1	SCREW M6S ISO 4017 M6X14 A480	
410	90239-0516		1	ROD END, CLEVIS WITH AXLE M10X1,25	
420	312115-0370		4	SCREW ISO4762 M6X20 A4	
A3/FLEX TBA 0500B, A3/FLEX TBA 1000B, A3/FLEX TBA 1000S, A3/FLEX TBA 1000SQ, A3/FLEX TPA 1000SQ, A3/FLEX TBA 0200S, A3/FLEX TBA 1500S, A3/FLEX TBA 0200B, A3/FLEX TBA 0250B, A3/FLEX TBA 0330S, A3/FLEX TPA 0330SQ, A3/FLEX TPA 0500SQ, A3/FLEX TBA 0200M, A3/FLEX TBA 0250S, A3/FLEX TBA 0500S (See drawing on page: 7-100)					
010	578684-0000		1	SPRING BRACKET	
020	906254-0000		1	ROLLER	
030	2524602-0000		1	HANDLE	
040	1487763-0000		1	SHAFT	
050	1512267-0000		1	ECCENTRIC BUSHING	
060	1519583-0000		2	BRACKET	
070	2524604-0000		1	ROCKER ARM	
080	2524601-0000		1	AXLE PIN	
090	2524603-0000		1	HOLDER	
100	2529549-0000		1	PLATE	
300	311112-0258		2	SPRING PIN, ISO 8752 4X24-C	
310	315105-0153		2	WASHER BRB6,4X12RFR	
320	312115-0370		5	SCREW ISO4762 M6X20 A4	
350	315751-0119		2	RETAINING RING FOR SHAFT DIN 471 25 A2	
360	321308-0205		2	BALL BEARING, 25X47X12MM	
370	312625-0316		1	HEXAGON THIN NUT, EN 24035 ML6M M6 A4	
400	312115-0291		2	SCREW ISO4762 M4X12 A4	
410	312180-0491		1	SCREW ISO7379 H10X20	
420	315105-0136		2	WASHER BRB4,3XRFR	
430	312105-0370		1	SCREW M6S ISO 4017 M6X20 A480	
500	90335-0091		1	TENSION SPRING 41890, 1,2X13X48,2	
520	90051-0087		1	LOCK KNOB, NO. GN 617 A5	
530	90141-0016		1	RETAINING RING FOR SHAFT DIN 471 10 A2	
540	90099-0007		1	HEXAGON NUT, M10X1, E 63 137 10	
Common Parts					
340	315751-0112		2	RETAINING RING FOR SHAFT DIN 471 15 A2	
390	312318-0287		2	SCREW ISO4029 M4X8 A4	

Machine Type | Group Description | Used-In | Group Number | Page No

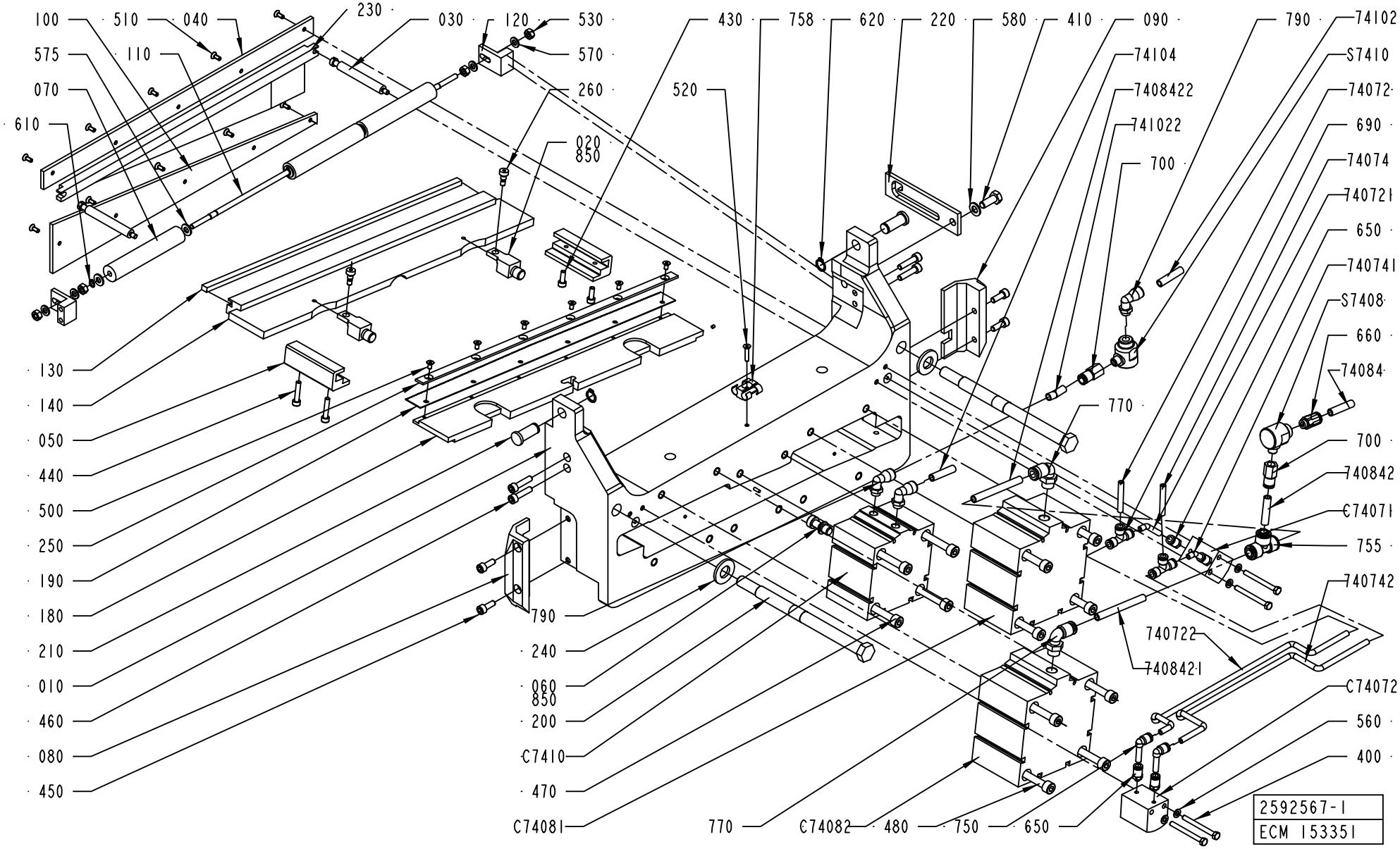
100
510
040
230
030
120
530
575
110
570
070
260
610
020
850
520
430
758
620
220
580
410
090
790
74102
74104
S7410
7408422
74072
741022
690
700
74074
740721
650
740741
S7408
660
74084
770
700
740842
C74071
755
740742
740722
740842I
C74072
560
400
130
140
050
440
500
250
190
180
210
010
460
080
450
790
240
060
850
200
C7410
470
C74081
770
C74082
480
750
650
2592567-1
ECM 153351

ECM: 153429 - 20040405
Group number: 2592567-0100
Assembly Drawing: 2592567-1_1_AD

Pos	Part No	UN	Qty	Description	Page No
-					
010	2574402-0000		1	PRESSURE JAW	
020	2549829-0000		2	SPACER	
030	2552798-0000		2	COMPRESSION ROD	
040	2552802-0000		1	SLIDE PLATE	
050	2558148-0000		2	SLIDING STRIP	
060	2559439-0000		1	COUPLING BOLT	
070	2564562-0000		3	ROLLER	
080	2566123-0000		1	SLIDE PLANE	
090	2566124-0000		1	SLIDE PLANE	
100	2566125-0000		1	SLIDE PLATE	
110	2588046-0000		1	SHAFT	
120	2588290-0000		2	BRACKET	
130	2592780-0000		1	DOLLY	
140	2546463-0000		1	PRESSURE RAIL	
180	1484693-0000		1	KNIFE HOLDER	
190	1484695-0000		1	KNIFE	
200	1484703-0000		2	TIE ROD	
210	1484781-0000		2	PIN	
220	1487517-0000		1	CATCH	
230	2658058-0000		1	RAIL	
240	1519955-0000		2	WASHER	
250	1519967-0000		1	CLAMP	
260	1558801-0000		2	SHOULDER SCREW	
400	312105-0341		4	SCREW M6S ISO 4014 M5X50 A480	
410	312105-0451		1	SCREW M6S ISO 4017 M8X20 A480	
430	312115-0328		2	SCREW ISO4762 M5X14 A4	
440	312115-0333		2	SCREW ISO4762 M5X25 A4	
450	312115-0368		4	SCREW ISO4762 M6X16 A4	
460	312115-0372		4	SCREW ISO4762 M6X25 A4	
470	312115-0465		4	SCREW ISO4762 M8X70 A4	
480	312115-0467		8	SCREW ISO4762 M8X80 A4	
500	312155-0287		6	SCREW EN 10642 MF6S M4X8 A480	
510	312155-0289		10	SCREW EN 10642 MF6S M4X10 A480	
520	312155-0295		1	SCREW EN 10642 MF6S M4X20 A480	
530	312605-0316		4	HEXAGON NUT, M6M M6 A280	
560	315105-0146		4	WASHER BRB5,3X10RFR	
570	315105-0153		4	WASHER BRB6,4X12RFR	
575	315105-0156		6	WASHER BRB 6.7X14 RFR	
580	315105-0165		1	WASHER BRB8,4X16RFR	
610	315751-0103		4	RETAINING RING FOR SHAFT DIN 471 6 A2	
620	315751-0109		2	RETAINING RING FOR SHAFT DIN 471 12 A2	
650	342722-0197		4	STRAIGHT COUPLING	
660	342722-0204		1	PIPE COUPLING	
690	342748-0102		2	T-CONNECTION 6MM	
700	342770-0107		2	STRAIGHT COUPLING INT, D=8 MM - G1/8	
74072	90166-0193	MM	5500	TUBE 6 MM PUR BLUE	
740721	90166-0193	MM	60	TUBE 6 MM PUR BLUE	
740722	90166-0193	MM	400	TUBE 6 MM PUR BLUE	
74074	90166-0193	MM	5500	TUBE 6 MM PUR BLUE	
740741	90166-0193	MM	80	TUBE 6 MM PUR BLUE	
740742	90166-0193	MM	400	TUBE 6 MM PUR BLUE	
74084	90166-0194	MM	5500	TUBE 8 MM PUR BLUE	
740842	90166-0194	MM	40	TUBE 8 MM PUR BLUE	
7408421	90166-0194	MM	150	TUBE 8 MM PUR BLUE	
7408422	90166-0194	MM	150	TUBE 8 MM PUR BLUE	
74102	90166-0194	MM	5500	TUBE 8 MM PUR BLUE	
741022	90166-0194	MM	200	TUBE 8 MM PUR BLUE	
74104	90166-0194	MM	5500	TUBE 8 MM PUR BLUE	
750	90055-0217		2	ELBOW PIPE JOINT	
755	90055-0276		1	T-CONNECTION 8 MM	
758	90165-0076		1	T-CLIP T8 FOR TUBE D=8 - 9 MM	
770	90458-2448		2	ELBOW PIPE JOINT,EXT.THREAD,D=8 MM G1/4	
790	90458-2964		3	ELBOW PIPE JOINT, EXT.THREAD, D=8MM-G1/8	
800	90459-0205		1	QUICK EXHAUST VALVE, SE-1/4-B	
850	90157-0016	ML	1	LOCKING FLUID LOCTITE 242 50 ML	
C74071	90459-1509		1	CYLINDER, ADVC-20-20-I-P	
C74072	90459-1509		1	CYLINDER, ADVC-20-20-I-P	
C74081	90459-2102		1	CYLINDER, AEVC 100-25-I-P	
C74082	90459-2102		1	CYLINDER, AEVC 100-25-I-P	
C7410	90459-2101		1	CYLINDER, ADVC-80-25-I-P	
S7408	90235-0206		1	QUICK EXHAUST VALVE, SEU-1/8	
S7410	90235-0206		1	QUICK EXHAUST VALVE, SEU-1/8	

Machine Type	Group Description	Used-In	Group Number	Page No

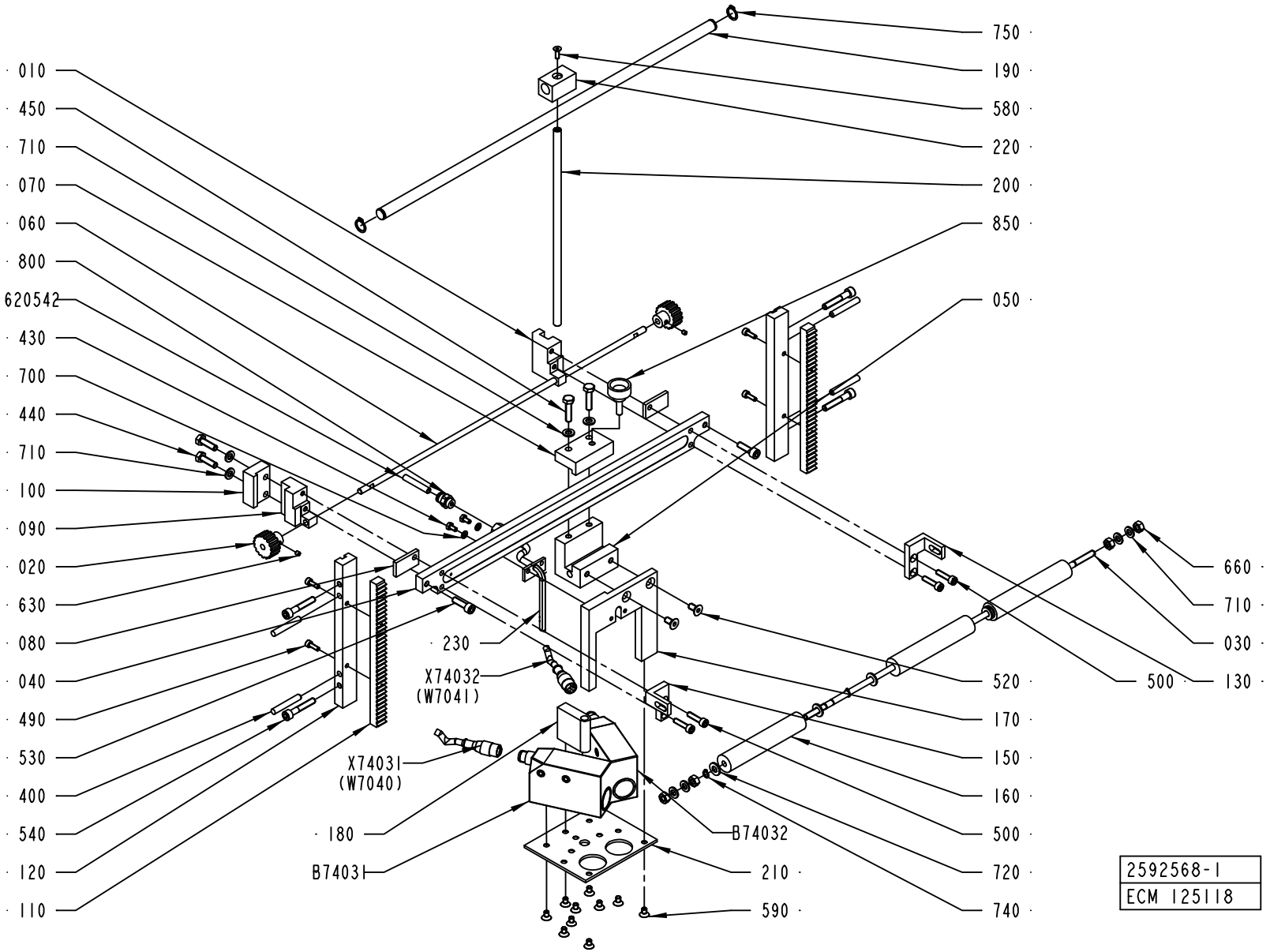
750
190
580
220
200
850
050
010
450
710
070
060
800
620542
430
700
440
710
100
090
020
630
080
040
490
530
400
540
120
110
660
710
030
130
500
520
170
150
160
500
720
740
230
X74032
(W7041)
X74031
(W7040)
180
B74031
B74032
210
590
2592568-1
ECM 125118

ECM: 156917 - 20040419
Group number: 2592568-0100
Assembly Drawing: 2592568-1_1_AB

Pos	Part No	UN	Qty	Description	Page No
A3/FLEX					
X74031	90458-0603		1	CONNECTOR FEMALE 5 PINS	
X74032	90458-0603		1	CONNECTOR FEMALE 5 PINS	
Common Parts					
010	1484705-0000		1	SLIDER	
020	1484706-0000		2	GEAR WHEEL	
030	2588046-0000		1	SHAFT	
040	1484776-0000		1	RAIL	
050	1484777-0000		1	SLIDER	
060	1484779-0000		1	ROD	
070	1484782-0000		1	CLAMP BLOCK	
080	1484783-0000		2	CLAMPING ELEMENT	
090	1484784-0000		1	LOCATING PIECE	
100	1484785-0000		1	LOCATING PIECE	
110	1487510-0000		2	RACK GEAR	
120	1487511-0000		2	BRACKET	
130	2588044-0000		1	BRACKET	
150	2588045-0000		1	BRACKET	
160	2564562-0000		3	ROLLER	
170	1487554-0000		1	BRACKET	
180	1487555-0000		1	BUSHING	
190	1487556-0000		1	BAR	
200	1487557-0000		1	BAR	
210	1487558-0000		1	FASTENING PLATE	
220	1487559-0000		1	SLIDER	
230	1519580-0000		1	GUIDE FINGER	
400	311103-0361		4	PARALLEL PIN ISO 2338 6M6X40 A1	
430	312105-0287		2	SCREW M6S ISO4017 M4X8 A470	
440	312105-0370		2	SCREW M6S ISO 4017 M6X20 A480	
450	312105-0372		2	SCREW M6S ISO 4017 M6X25 A480	
490	312115-0291		4	SCREW ISO4762 M4X12 A4	
500	312115-0331		4	SCREW ISO4762 M5X20 A4	
520	312155-0366		2	SCREW EN 10642 MF6S M6X12 A480	
530	312115-0370		2	SCREW ISO4762 M6X20 A4	
540	312115-0376		4	SCREW ISO4762 M6X35 A4	
580	312155-0291		1	SCREW EN 10642 MF6S M4X12 A480	
590	312155-0323		10	SCREW EN 10642 MF6S M5X8 A480	
620542	90166-0193	MM	4500	TUBE 6 MM PUR BLUE	
630	312318-0283		2	SCREW ISO4029 M4X4 A4	
660	312605-0316		4	HEXAGON NUT, M6M M6 A280	
700	315105-0136		2	WASHER BRB4,3XRFR	
710	315105-0153		8	WASHER BRB6,4X12RFR	
720	315105-0156		6	WASHER BRB 6.7X14 RFR	
740	315751-0103		4	RETAINING RING FOR SHAFT DIN 471 6 A2	
750	315751-0109		2	RETAINING RING FOR SHAFT DIN 471 12 A2	
800	342722-0202		1	PIPE COUPLING 1/8" D=6MM	
850	90051-0083		1	KNOB, EXTERNAL THREAD. NO. 8308-1321	
B74031	90458-0602		1	PHOTOCELL,	
B74032	90458-0602		1	PHOTOCELL,	

Machine Type | Group Description | Used-In | Group Number | Page No

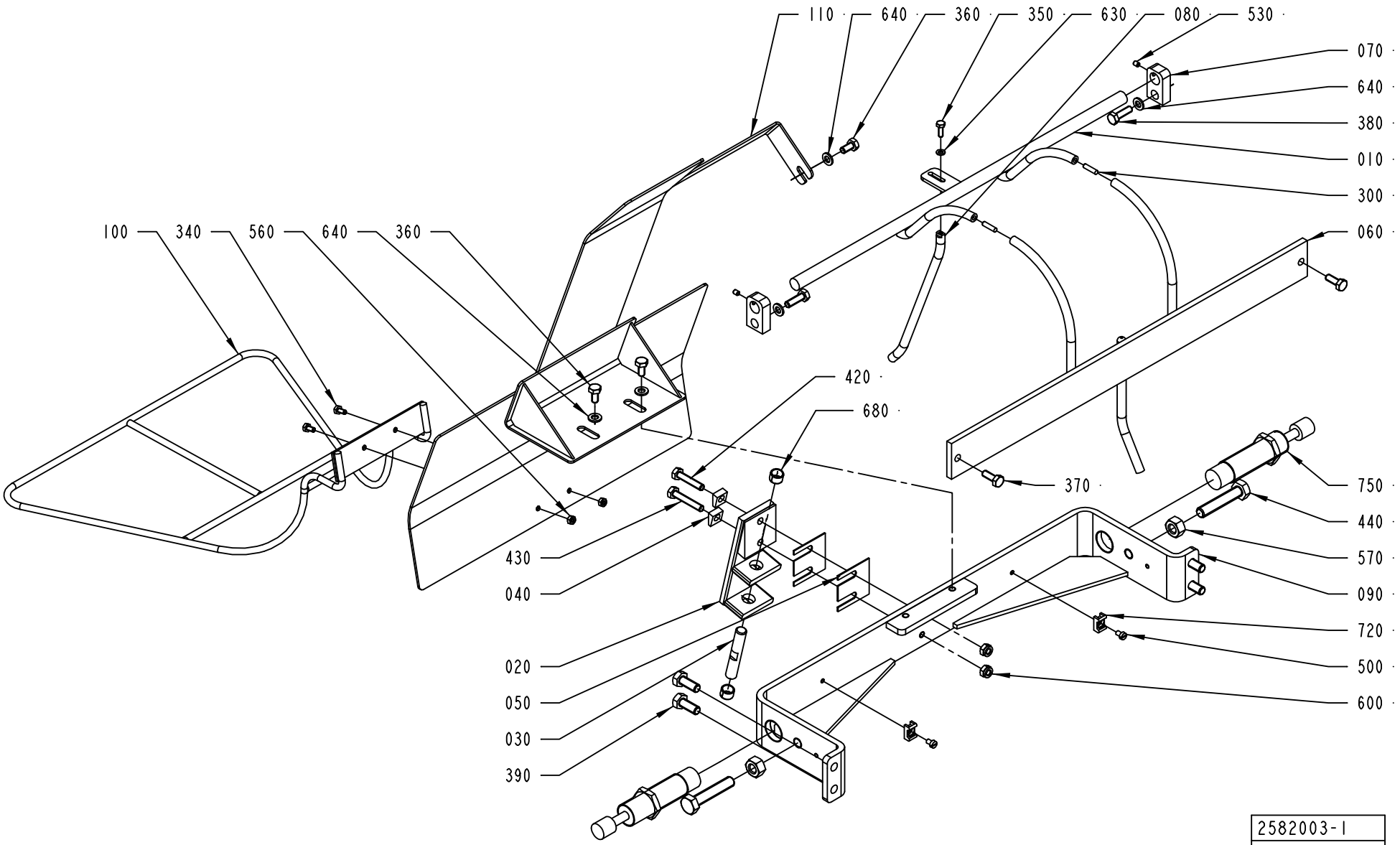
110
640
360
350
630
080
530
070
640
380
010
300
060
100
340
560
640
360
420
680
370
750
440
570
090
720
500
600
430
040
020
050
030
390
2582003-1
ECM 125118

ECM: 175557 - 50001231
Group number: 2582003-0100
Assembly Drawing: 2582003-1_1_AB

This list covers pages from 7-108 to 7-111

Pos	Part No	UN	Qty	Description	Page No
A3/FLEX TBA 1890S, A3/FLEX TBA 2000S (See drawing on page: 7-110)					
010	2681260-0000		1	RAIL	
060	2681259-0000		1	RAIL	
070	2689138-0000		1	MOUNTING BLOCK	
080	2689173-0000		1	MOUNTING BLOCK	
110	2681267-0000		1	PLATE	
130	2564562-0000		3	ROLLER	
170	2693199-0000		2	PLATE	
180	2681535-0000		1	SHAFT	
300	311103-0270		3	PARALLEL PIN ISO 2338 4M6X16 A1	
310	315105-0156		6	WASHER BRB 6.7X14 RFR	
330	315751-0103		4	RETAINING RING FOR SHAFT DIN 471 6 A2	
350	312605-0316		4	HEXAGON NUT, M6M M6 A280	
360	312115-0366		4	SCREW ISO4762 M6X12 A4	
390	312105-0451		4	SCREW M6S ISO 4017 M8X20 A480	
400	312105-0366		2	SCREW M6S ISO 4017 M6X12 A480	
640	315105-0153		18	WASHER BRB6,4X12RFR	
A3/FLEX TBA 0500B, A3/FLEX TBA 1000B, A3/FLEX TBA 1000S, A3/FLEX TBA 1000SQ, A3/FLEX TPA 1000SQ, A3/FLEX TBA 0200S, A3/FLEX TBA 1500S, A3/FLEX TBA 0200B, A3/FLEX TBA 0250B, A3/FLEX TBA 0330S, A3/FLEX TPA 0330SQ, A3/FLEX TPA 0500SQ, A3/FLEX TBA 0200M, A3/FLEX TBA 0250S, A3/FLEX TBA 0500S (See drawing on page: 7-108)					
010	1484697-0000		1	RAIL	
060	1517113-0000		1	RAIL	
070	1519578-0000		2	MOUNTING BLOCK	
080	1519591-0000		1	RAIL PIN	
110	2582668-0000		1	PLATE	
300	311103-0270		2	PARALLEL PIN ISO 2338 4M6X16 A1	
350	312105-0291		1	SCREW M6S ISO 4017 M4X12 A470	
360	312105-0366		3	SCREW M6S ISO 4017 M6X12 A480	
390	312105-0451		4	SCREW M6S ISO 4017 M8X20 A480	
630	315105-0136		1	WASHER BRB4,3XRFR	
640	315105-0153		5	WASHER BRB6,4X12RFR	
Common Parts					
020	1490220-0000		1	ANGLE BRACKET	
030	1494664-0000		1	AXLE LINK	
040	1499566-0000		2	WASHER	
050	1512430-0000		2	VOLUME SHIM	
090	1519944-0000		1	BRACKET	
100	2563183-0000		1	GUIDE RAIL	
340	312105-0287		2	SCREW M6S ISO4017 M4X8 A470	
370	312105-0368		2	SCREW M6S ISO 4017 M6X16 A480	
380	312105-0370		2	SCREW M6S ISO 4017 M6X20 A480	
420	312109-0374		1	SCREW M6S ISO 4017 M6X30 A480	
430	312109-0376		1	SCREW M6S ISO 4017 M6X35 A480	
440	312109-0501		2	SCREW M6S ISO 4017 M10X50 A480	
500	312125-0285		2	SCREW ISO 1207 M4X6 A4	
530	312318-0284		2	SCREW ISO4029 M4X5 A4	
560	312605-0312		2	HEXAGON NUT, M6M M4 A280	
570	312605-0320		2	HEXAGON NUT, M6M M10 A280	
600	312812-0316		2	HEXAGON NUT, NY-LOCK M6 A480	
680	321141-0138		2	BEARING BUSHING W/O FL, 10X12X8 MM	
720	352113-0205		2	ANCHOR PLATES FOR STRIPS, TYPE TM2S8-C10	
750	90347-0182		2	SHOCK ABSORBER, YSR-16-20-C	

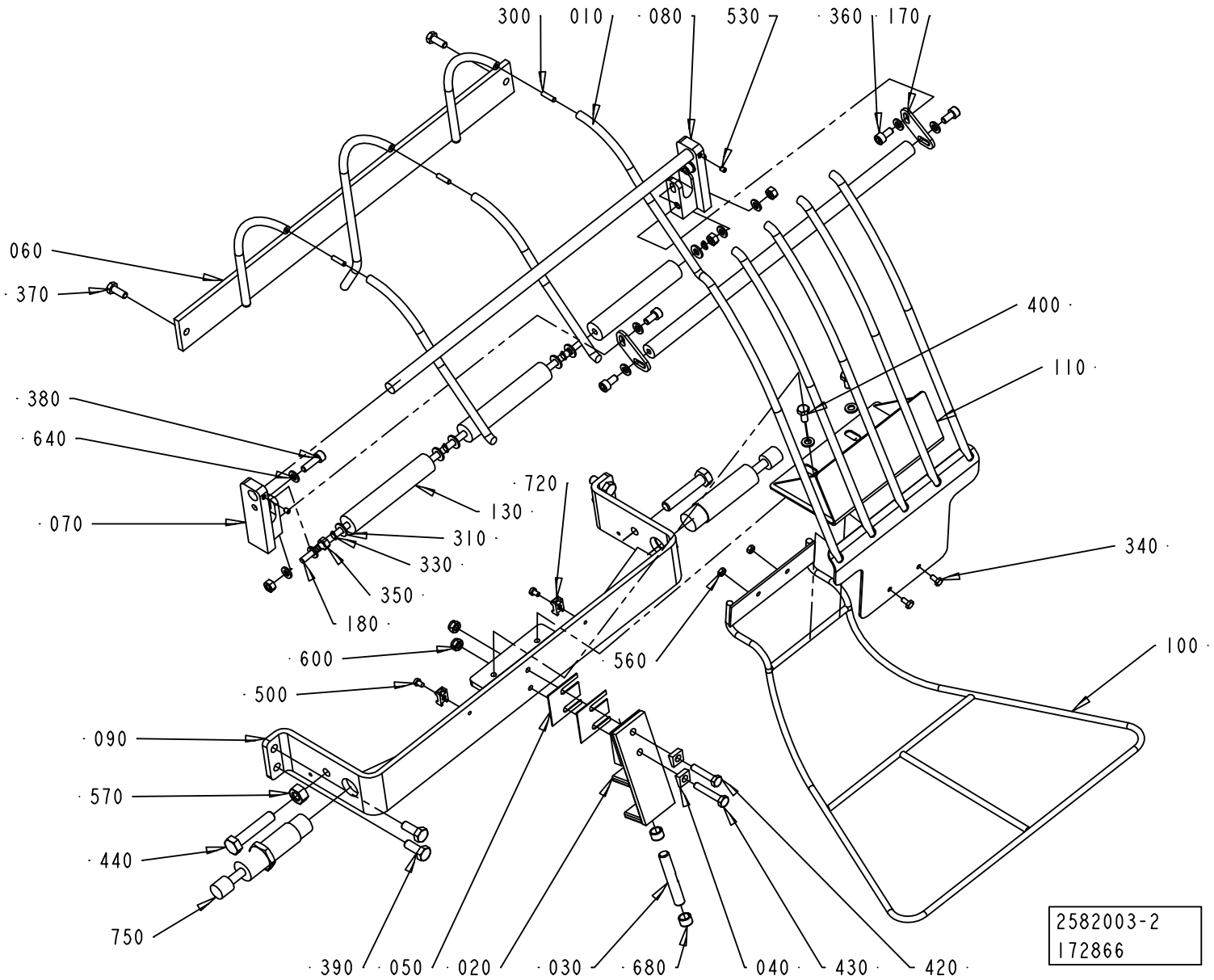
300
010
080
530
360
170
060
370
400
110
380
640
720
130
070
310
330
340
350
180
600
560
100
500
090
570
440
750
390
050
020
030
680
040
430
420
2582003-2
172866

ECM: 175557 - 50001231
Group number: 2582003-0100
Assembly Drawing: 2582003-2_1_AA

This list covers pages from 7-108 to 7-111

Pos	Part No	UN	Qty	Description	Page No
A3/FLEX TBA 1890S, A3/FLEX TBA 2000S (See drawing on page: 7-110)					
010	2681260-0000		1	RAIL	
060	2681259-0000		1	RAIL	
070	2689138-0000		1	MOUNTING BLOCK	
080	2689173-0000		1	MOUNTING BLOCK	
110	2681267-0000		1	PLATE	
130	2564562-0000		3	ROLLER	
170	2693199-0000		2	PLATE	
180	2681535-0000		1	SHAFT	
300	311103-0270		3	PARALLEL PIN ISO 2338 4M6X16 A1	
310	315105-0156		6	WASHER BRB 6.7X14 RFR	
330	315751-0103		4	RETAINING RING FOR SHAFT DIN 471 6 A2	
350	312605-0316		4	HEXAGON NUT, M6M M6 A280	
360	312115-0366		4	SCREW ISO4762 M6X12 A4	
390	312105-0451		4	SCREW M6S ISO 4017 M8X20 A480	
400	312105-0366		2	SCREW M6S ISO 4017 M6X12 A480	
640	315105-0153		18	WASHER BRB6,4X12RFR	
A3/FLEX TBA 0500B, A3/FLEX TBA 1000B, A3/FLEX TBA 1000S, A3/FLEX TBA 1000SQ, A3/FLEX TPA 1000SQ, A3/FLEX TBA 0200S, A3/FLEX TBA 1500S, A3/FLEX TBA 0200B, A3/FLEX TBA 0250B, A3/FLEX TBA 0330S, A3/FLEX TPA 0330SQ, A3/FLEX TPA 0500SQ, A3/FLEX TBA 0200M, A3/FLEX TBA 0250S, A3/FLEX TBA 0500S (See drawing on page: 7-108)					
010	1484697-0000		1	RAIL	
060	1517113-0000		1	RAIL	
070	1519578-0000		2	MOUNTING BLOCK	
080	1519591-0000		1	RAIL PIN	
110	2582668-0000		1	PLATE	
300	311103-0270		2	PARALLEL PIN ISO 2338 4M6X16 A1	
350	312105-0291		1	SCREW M6S ISO 4017 M4X12 A470	
360	312105-0366		3	SCREW M6S ISO 4017 M6X12 A480	
390	312105-0451		4	SCREW M6S ISO 4017 M8X20 A480	
630	315105-0136		1	WASHER BRB4,3XRFR	
640	315105-0153		5	WASHER BRB6,4X12RFR	
Common Parts					
020	1490220-0000		1	ANGLE BRACKET	
030	1494664-0000		1	AXLE LINK	
040	1499566-0000		2	WASHER	
050	1512430-0000		2	VOLUME SHIM	
090	1519944-0000		1	BRACKET	
100	2563183-0000		1	GUIDE RAIL	
340	312105-0287		2	SCREW M6S ISO4017 M4X8 A470	
370	312105-0368		2	SCREW M6S ISO 4017 M6X16 A480	
380	312105-0370		2	SCREW M6S ISO 4017 M6X20 A480	
420	312109-0374		1	SCREW M6S ISO 4017 M6X30 A480	
430	312109-0376		1	SCREW M6S ISO 4017 M6X35 A480	
440	312109-0501		2	SCREW M6S ISO 4017 M10X50 A480	
500	312125-0285		2	SCREW ISO 1207 M4X6 A4	
530	312318-0284		2	SCREW ISO4029 M4X5 A4	
560	312605-0312		2	HEXAGON NUT, M6M M4 A280	
570	312605-0320		2	HEXAGON NUT, M6M M10 A280	
600	312812-0316		2	HEXAGON NUT, NY-LOCK M6 A480	
680	321141-0138		2	BEARING BUSHING W/O FL, 10X12X8 MM	
720	352113-0205		2	ANCHOR PLATES FOR STRIPS, TYPE TM2S8-C10	
750	90347-0182		2	SHOCK ABSORBER, YSR-16-20-C	

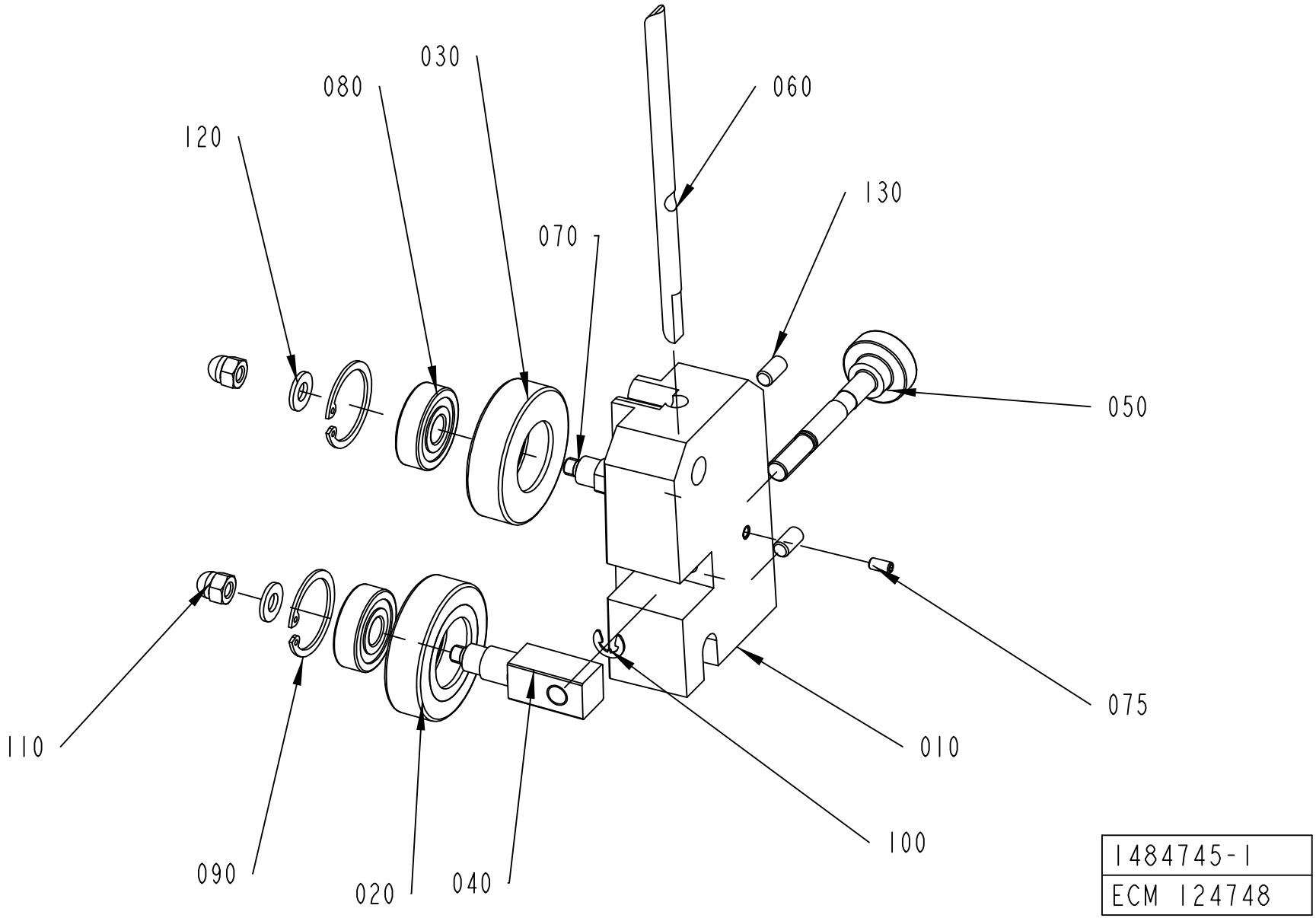

1484745-1
ECM 124748

ECM: 180546 - 20040910
Group number: 1484745-0100
Assembly Drawing: 1484745-1_1_AD

Pos	Part No	UN	Qty	Description	Page No
-					
010	1484750-0000		1	BRACKET	
020	1036623-0000		1	GUIDE ROLLER	
030	1036622-0000		1	GUIDE ROLLER	
040	1317711-0000		1	SHAFT	
050	1317712-0000		1	SHAFT	
060	1512526-0000		1	STEERING	
070	583727-0000		1	SHAFT	
075	312318-0287		1	SCREW ISO4029 M4X8 A4	
080	321313-0100		2	BALL BEARING, 10X30X9 MM	
090	315753-0122		2	RETAINING RING FOR BORE DIN 472 30 A2	
100	315755-0108		1	RETAINING RING SHAFT DIN 6799 6 A2	
110	312705-0316		2	NUT HEX. DOMED CAP MHM-6 M6 A280	
120	315105-0156		2	WASHER BRB 6.7X14 RFR	
130	312318-0366		2	SCREW ISO4029 M6X12 A4	

Pos	Part No	UN	Qty	Description	Page No

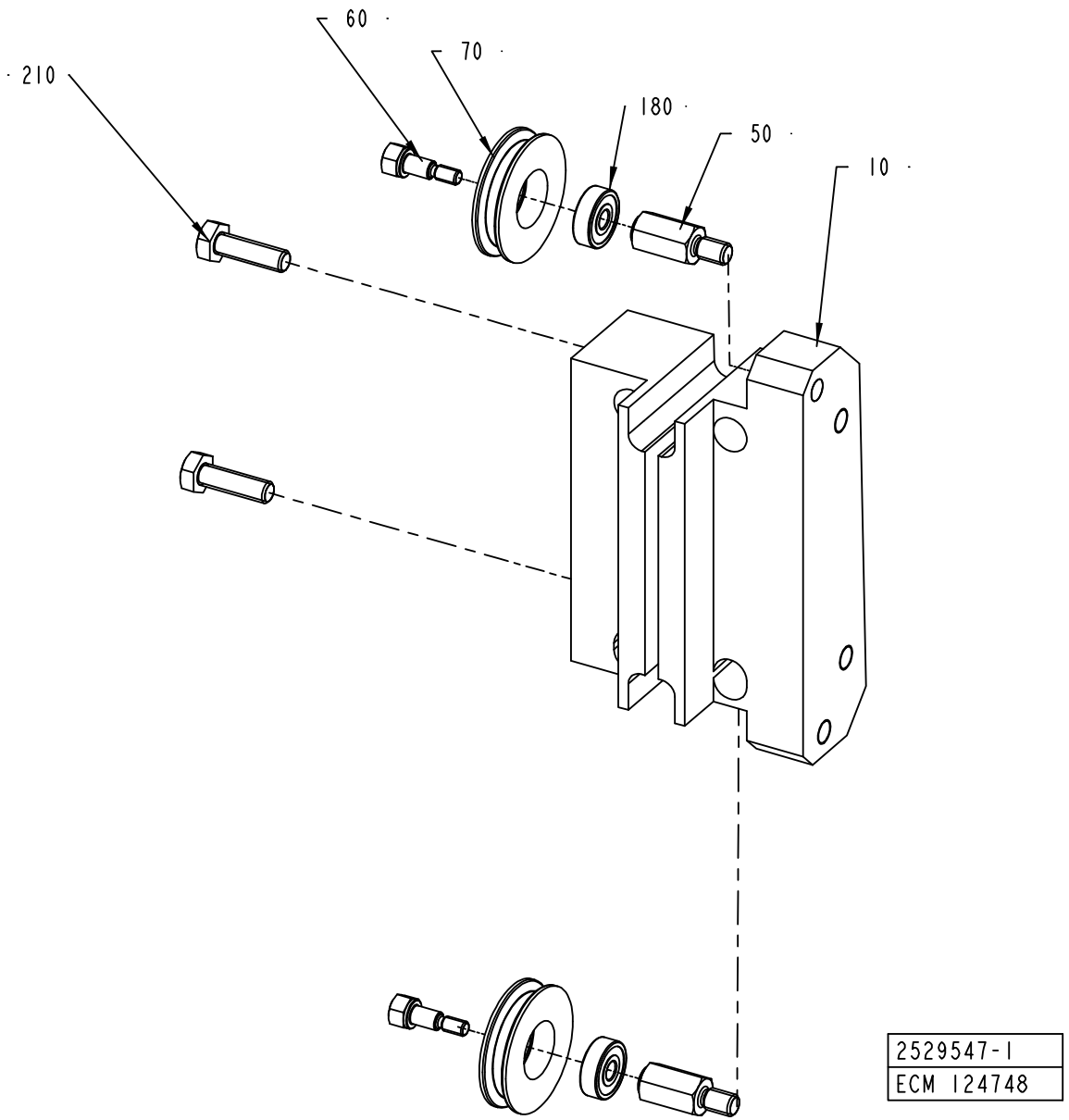
60
70
180
50
10
210
2529547-1
ECM 124748

ECM: 126414 - 20040109
Group number: 2529547-0100
Assembly Drawing: 2529547-1_1_AB

Pos	Part No	UN	Qty	Description	Page No
-					
010	2529546-0000		1	SUPPORT	
050	1558251-0000		2	SHAFT	
060	1558252-0000		2	SCREW	
070	1558253-0000		2	ROLLER	
180	90458-2950		2	BALL BEARING, 5X16X5 MM	
210	312105-0370		2	SCREW M6S ISO 4017 M6X20 A480	

Pos	Part No	UN	Qty	Description	Page No

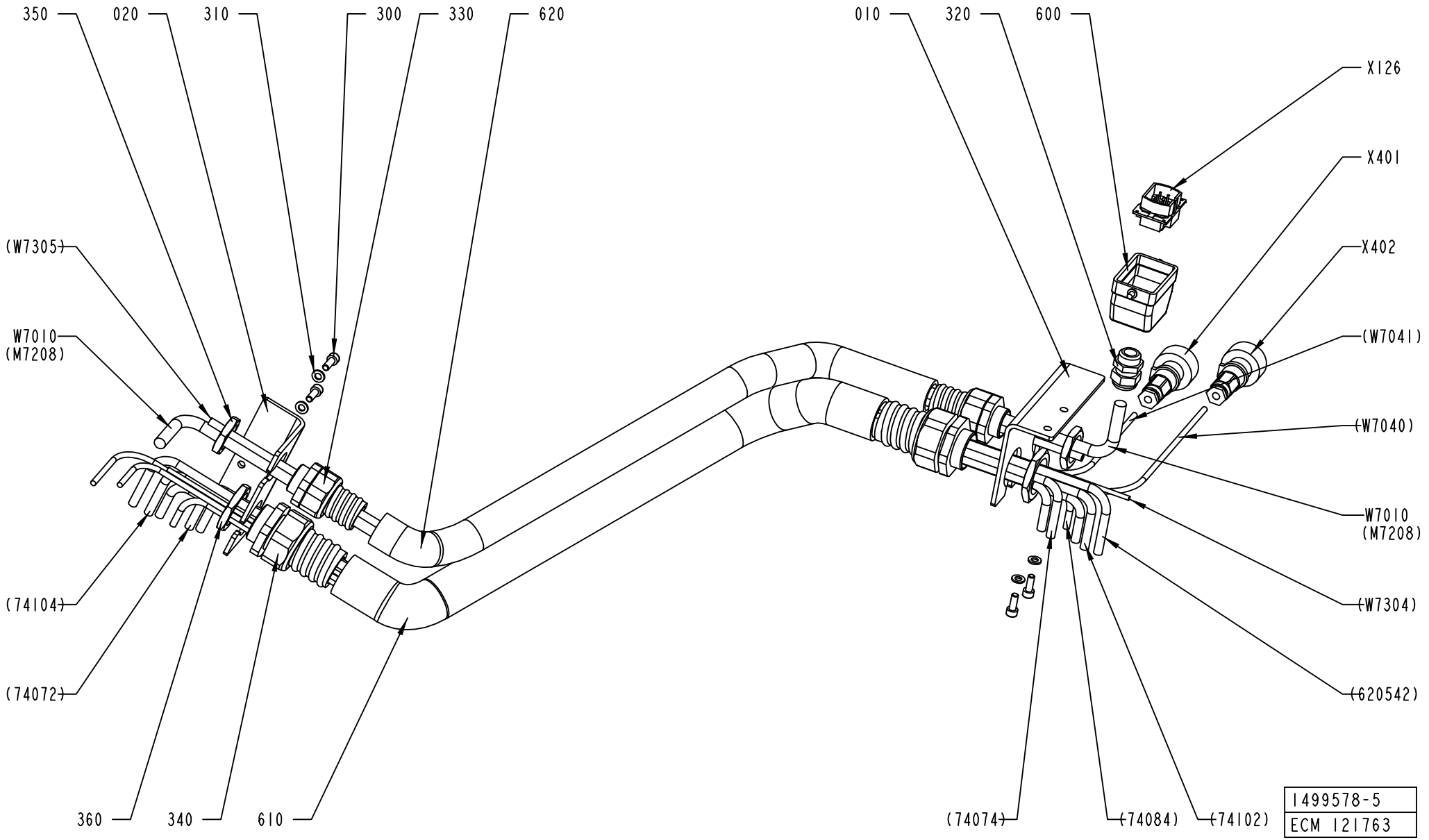
350
020
310
300
330
620
010
320
600
X126
X401
X402
(W7041)
(W7040)
W7010
(M7208)
(W7304)
(620542)
(W7305)
W7010
(M7208)
(74104)
(74072)
360
340
610
(74074)
(74084)
(74102)
1499578-5
ECM 121763

ECM: 156918 - 20040419
Group number: 1499578-0300
Assembly Drawing: 1499578-5_1_AA

Pos	Part No	UN	Qty	Description	Page No
A3/FLEX					
W7010	90220-0104	M	8	SCR. CABLE 4X1,5MM2	
Common Parts					
010	2628989-0000		1	BRACKET	
020	2628990-0000		1	BRACKET	
300	312115-0368		4	SCREW ISO4762 M6X16 A4	
310	315105-0153		4	WASHER BRB6,4X12RFR	
320	352103-0108		1	CABLE GLAND, ST 13,5 , PR20,4/PG13,5	
330	353243-0007		2	HOSE GLAND W/O INSERT PG21 EXTENDED	
340	353243-0008		2	HOSE GLAND W/O INSERT PG29 EXTENDED	
350	90099-0119		2	NUT, PR 28,3 (PG21)	
360	90099-0120		2	NUT PR 37 (PG29)	
600	90110-0157		1	CABLE HOOD 6-POL 70.352.0628.1	
610	90152-0060	MM	850	SPIRAL CONDUIT, 42X35, UL3529	
620	90152-0070	MM	850	METAL HOSE, 32,5X26, UL 2621	
X126	90110-0159		1	MALE INSERT 70.310.0640.0	
X401	90110-0235		1	CABLE CONTACT, PX0739/S	
X402	90110-0235		1	CABLE CONTACT, PX0739/S	

Pos	Part No	UN	Qty	Description	Page No

MATERIAL HOLDER L1

Drawing file: 2588422-1_1_AC.hpgl

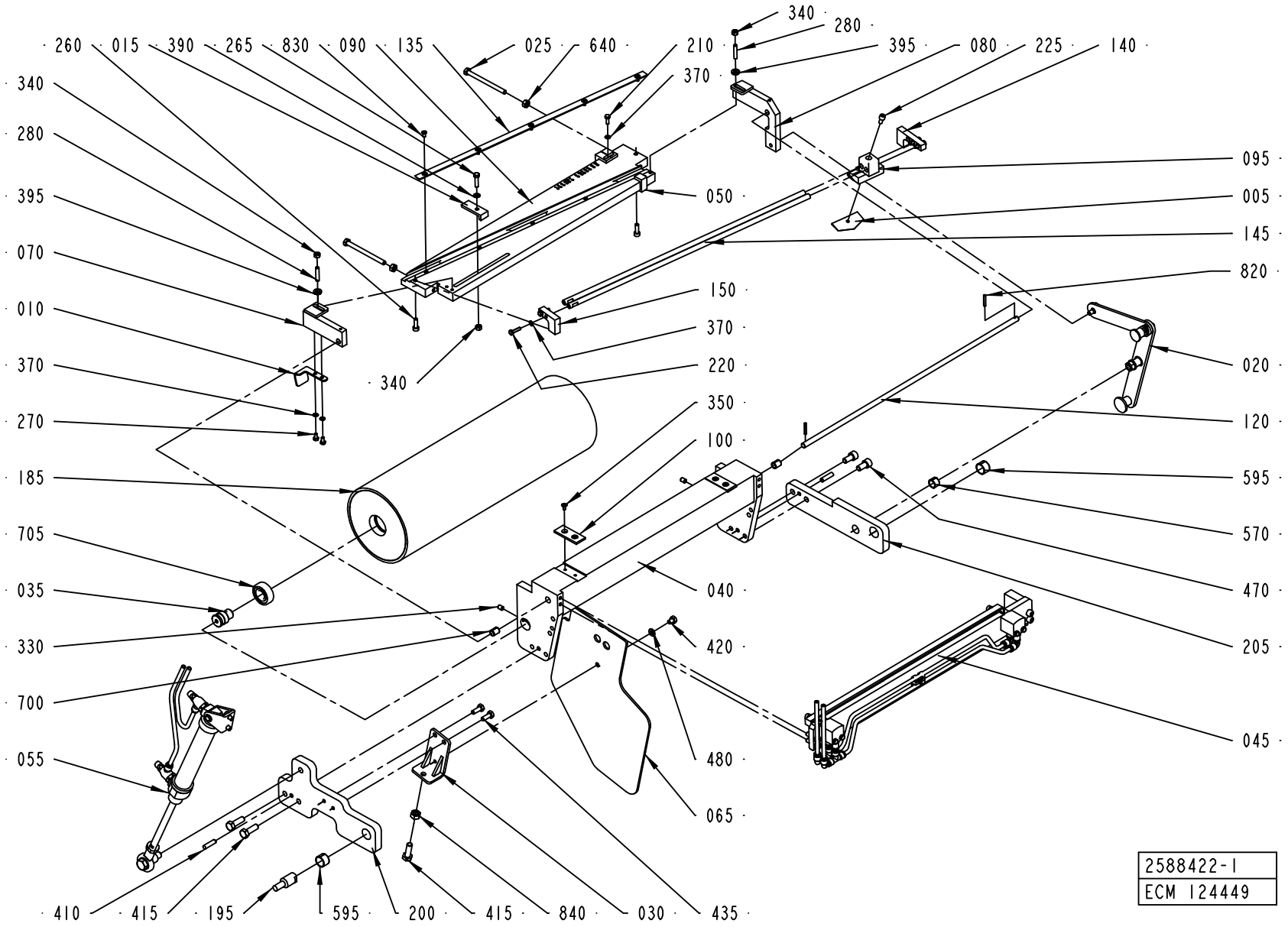

ECM: 172281 - 20040510
Group number: 2588422-0100
Assembly Drawing: 2588422-1_1_AC

Pos	Part No	UN	Qty	Description	Page No
-					
005	596678-0000		1	KNIFE	
010	2538065-0000		1	REFLECTOR	
015	1490821-0000		1	ANGLE PIECE	
020	1524398-0100		1	HANDLE	**7-121**
025	312109-0386		2	SCREW M6S ISO 4017 M6X80 A480	
030	1490199-0000		1	BRACKET	
035	1499582-0000		2	AXLE PIN	
040	1487770-0000		1	BRACKET	
045	2588383-0100		1	MATERIAL HOLDER	**7-123**
050	2587251-0000		1	ANGLE PIECE	
055	1524394-0100		1	CYLINDER	**7-125**
065	1512276-0000		1	PROTECTION PLATE	
070	2559438-0000		1	ROCKER ARM	
080	2559437-0000		1	ROCKER ARM	
090	2566117-0000		1	CUTTING TABLE	
095	2589791-0000		1	KNIFE HOLDER	
100	2553275-0000		2	SLIDE PLATE	
120	1487779-0000		1	SHAFT	
135	1487518-0000		1	RULER	
140	1487781-0000		1	BRACKET	
145	1487782-0000		2	SHAFT	
150	2566118-0000		1	BRACKET	
185	1499588-0000		1	BENDING ROLLER	
195	1511568-0000		1	PIN	
200	2587250-0000		1	ARM	
205	1511575-0000		1	ARM	
210	312105-0291		1	SCREW M6S ISO 4017 M4X12 A470	
220	312105-0293		4	SCREW M6S ISO 4017 M4X16 A470	
225	312115-0327		1	SCREW ISO4762 M5X12 A4	
260	312115-0329		2	SCREW ISO4762 M5X16 A4	
265	312105-0331		1	SCREW M6S ISO 4017 M5X20 A480	
270	312105-0287		2	SCREW M6S ISO4017 M4X8 A470	
280	312318-0333		2	SCREW ISO4029 M5X25 A4	
330	312318-0362		2	SCREW ISO4029 M6X8 A4	
340	312605-0314		3	HEXAGON NUT, M6M M5 A280	
350	312155-0287		4	SCREW EN 10642 MF6S M4X8 A480	
370	315105-0136		7	WASHER BRB4,3XRFR	
390	315105-0146		1	WASHER BRB5,3X10RFR	
395	315115-0153		2	WASHER PLAIN, TBRB 6,4/12 H=3	
410	311103-1355		2	PARALLEL PIN ISO 2338 6M6X24 A1	
415	312105-0453		3	SCREW M6S ISO 4017 M8X25 A480	
420	312105-0362		1	SCREW M6S ISO 4017 M6X8 A480	
435	312105-0368		2	SCREW M6S ISO 4017 M6X16 A480	
470	312115-0449		2	SCREW ISO4762 M8X16 A4	
480	315105-0153		1	WASHER BRB6,4X12RFR	
570	321141-0178		1	BEARING BUSHING W/O FL, 12X14X10 MM	
595	321141-0216		2	BEARING BUSHING W/O FL, 16X18X12 MM	
640	312605-0316		2	HEXAGON NUT, M6M M6 A280	
700	321141-0104		2	BEARING BUSHING W/O FL, 8X10X12 MM	
705	321313-0102		2	BALL BEARING, 15X35X11 MM	
820	90258-0031		2	PIN, STRAIGHT SLOTTED SPRING FRP 3X20	
830	312145-0287		5	SCREW ISO 2009 MFS M4X8 A4	
840	312605-0318		1	HEXAGON NUT, M6M M8 A280	

Machine Type | Group Description | Used-In | Group Number | Page No

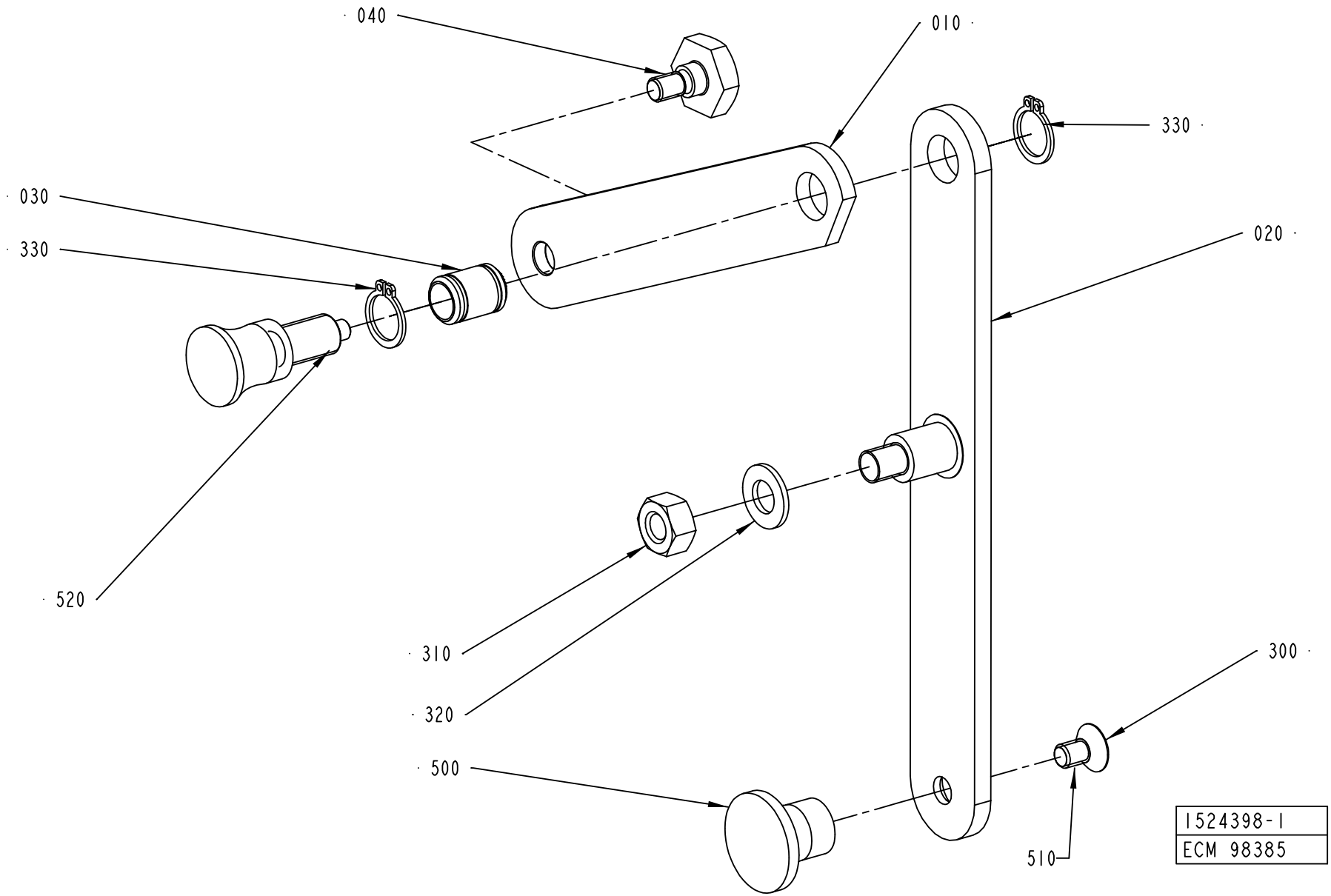
040
010
330
030
330
020
520
310
320
300
500
510
1524398-1
ECM 98385

ECM: 180696 - 20040910
Group number: 1524398-0100
Assembly Drawing: 1524398-1_1_AC

Pos	Part No	UN	Qty	Description	Page No
-					
010	1490809-0000		1	ARM	
020	1490810-0000		1	ARM	
030	1490812-0000		1	AXLE	
040	1490813-0000		1	SCREW	
300	312155-0364		1	SCREW EN 10642 MF6S M6X10 A480	
310	312605-0318		1	HEXAGON NUT, M6M M8 A280	
320	315105-0165		1	WASHER BRB8,4X16RFR	
330	315751-0109		2	RETAINING RING FOR SHAFT DIN 471 12 A2	
500	90051-0082		1	KNOB, CIRCUL, THREADED BUSH, M6 25X21 MM	
510	90157-0016		1	LOCKING FLUID LOCTITE 242 50 ML	
520	90051-0087		1	LOCK KNOB, NO. GN 617 A5	

Pos	Part No	UN	Qty	Description	Page No

MATERIAL HOLDER

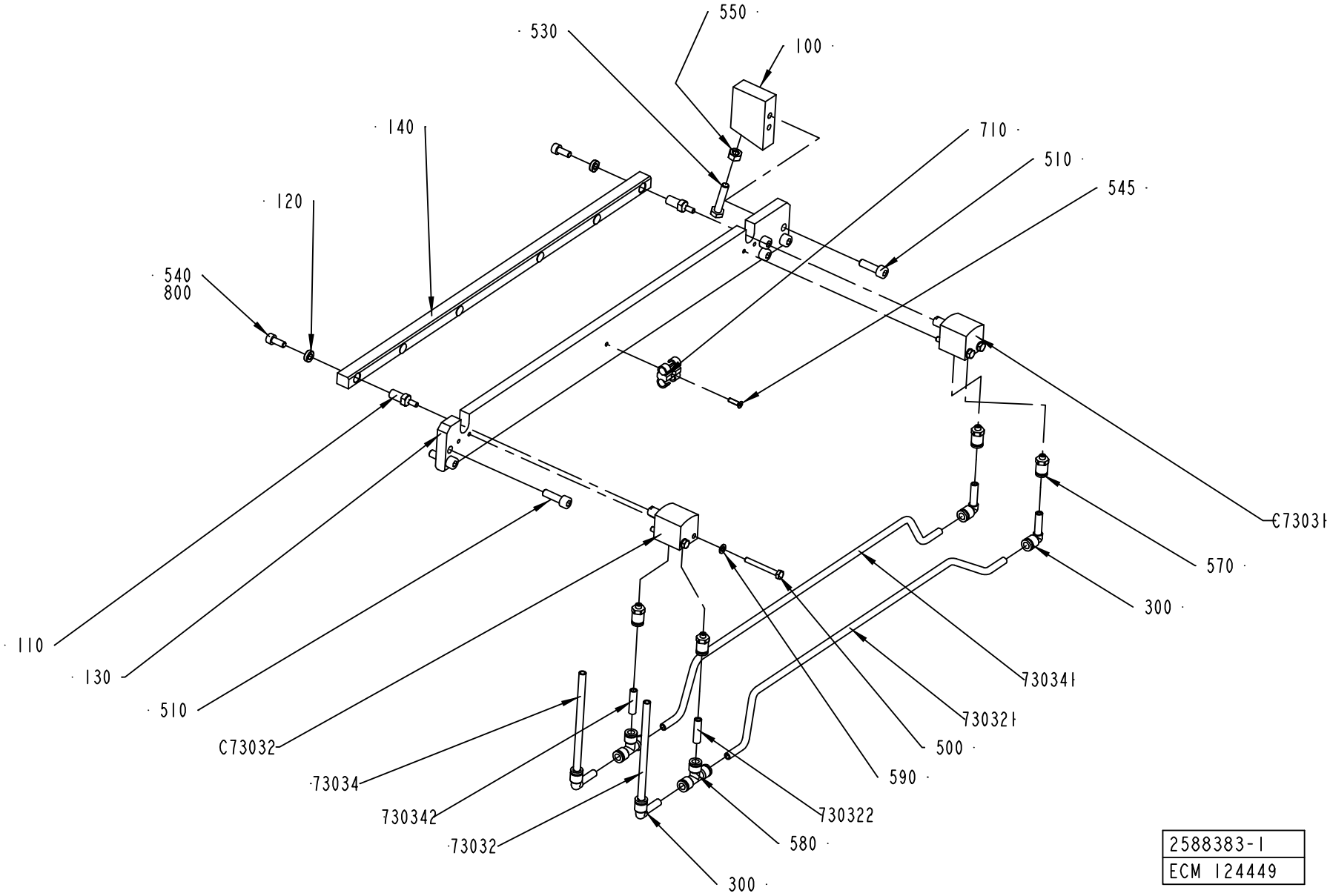

2588383-1
ECM 124449

ECM: 153338 - 20031217
Group number: 2588383-0100
Assembly Drawing: 2588383-1_1_AC

Pos	Part No	UN	Qty	Description	Page No
-					
100	2553272-0000		1	SUPPORT BLOCK	
110	2553273-0000		2	AXLE PIN	
120	2553799-0000		2	WASHER	
130	2582558-0000		1	BASE PLATE	
140	2582559-0000		1	RAIL	
300	90055-0217		4	ELBOW PIPE JOINT	
500	312105-0301		4	SCREW M6S ISO 4017 M4X35 A470	
510	312115-0370		6	SCREW ISO4762 M6X20 A4	
530	312109-0374		1	SCREW M6S ISO 4017 M6X30 A480	
540	312115-0327		2	SCREW ISO4762 M5X12 A4	
545	312155-0226		1	SCREW EN 10642 MF6S M3X12 A480	
550	312605-0316		1	HEXAGON NUT, M6M M6 A280	
570	342722-0197		4	STRAIGHT COUPLING	
580	342748-0102		2	T-CONNECTION 6MM	
590	315105-0136		4	WASHER BRB4,3XRFR	
710	90165-0087		1	T-CLIP T6 FOR TUBE D=6 - 7 MM	
73032	90166-0193	MM	6500	TUBE 6 MM PUR BLUE	
730321	90166-0193	MM	400	TUBE 6 MM PUR BLUE	
730322	90166-0193	MM	30	TUBE 6 MM PUR BLUE	
73034	90166-0193	MM	6500	TUBE 6 MM PUR BLUE	
730341	90166-0193	MM	400	TUBE 6 MM PUR BLUE	
730342	90166-0193	MM	30	TUBE 6 MM PUR BLUE	
800	90157-0016	ML	1	LOCKING FLUID LOCTITE 242 50 ML	
C73031	90459-0503		1	CYLINDER, ADVC-16-10-I-P	
C73032	90459-0503		1	CYLINDER, ADVC-16-10-I-P	

Pos	Part No	UN	Qty	Description	Page No

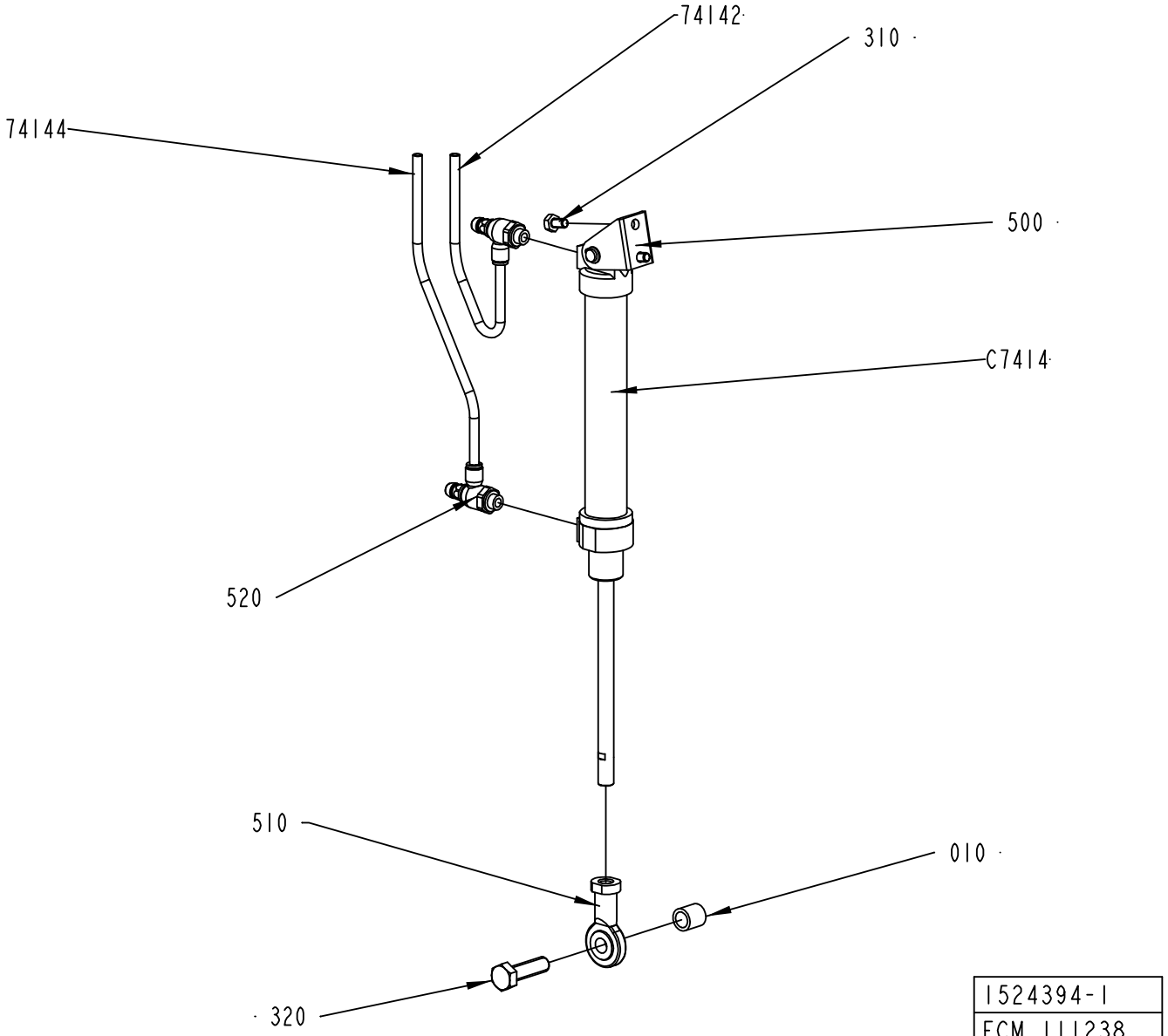
74142
310
74144
500
C7414
520
510
010
320
1524394-1
ECM 111238

ECM: 180694 - 20040910
Group number: 1524394-0100
Assembly Drawing: 1524394-1_1_AE

Pos	Part No	UN	Qty	Description	Page No
A3/FLEX					
74142	90166-0193	MM	6000	TUBE 6 MM PUR BLUE	
74144	90166-0193	MM	6000	TUBE 6 MM PUR BLUE	
C7414	90239-0832		1	DOUBLE ACTING, MINI-ISO, CYL. 25-125	
Common Parts					
010	1511569-0000		1	SPACER	
310	312105-0364		2	SCREW M6S ISO 4017 M6X10 A480	
320	312105-0497		1	SCREW M6S ISO 4017 M10X35 A480	
500	90239-0487		1	REAR,CLEVIS,MINI-ISO 20-25	
510	90239-0405		1	ROD END,BALL JOINT EYE M10X1,25	
520	90235-0846		2	THROTTLE CHECK VALVE G1/8", MANUAL, 6	

Pos	Part No	UN	Qty	Description	Page No

MATERIAL HOLDER L2

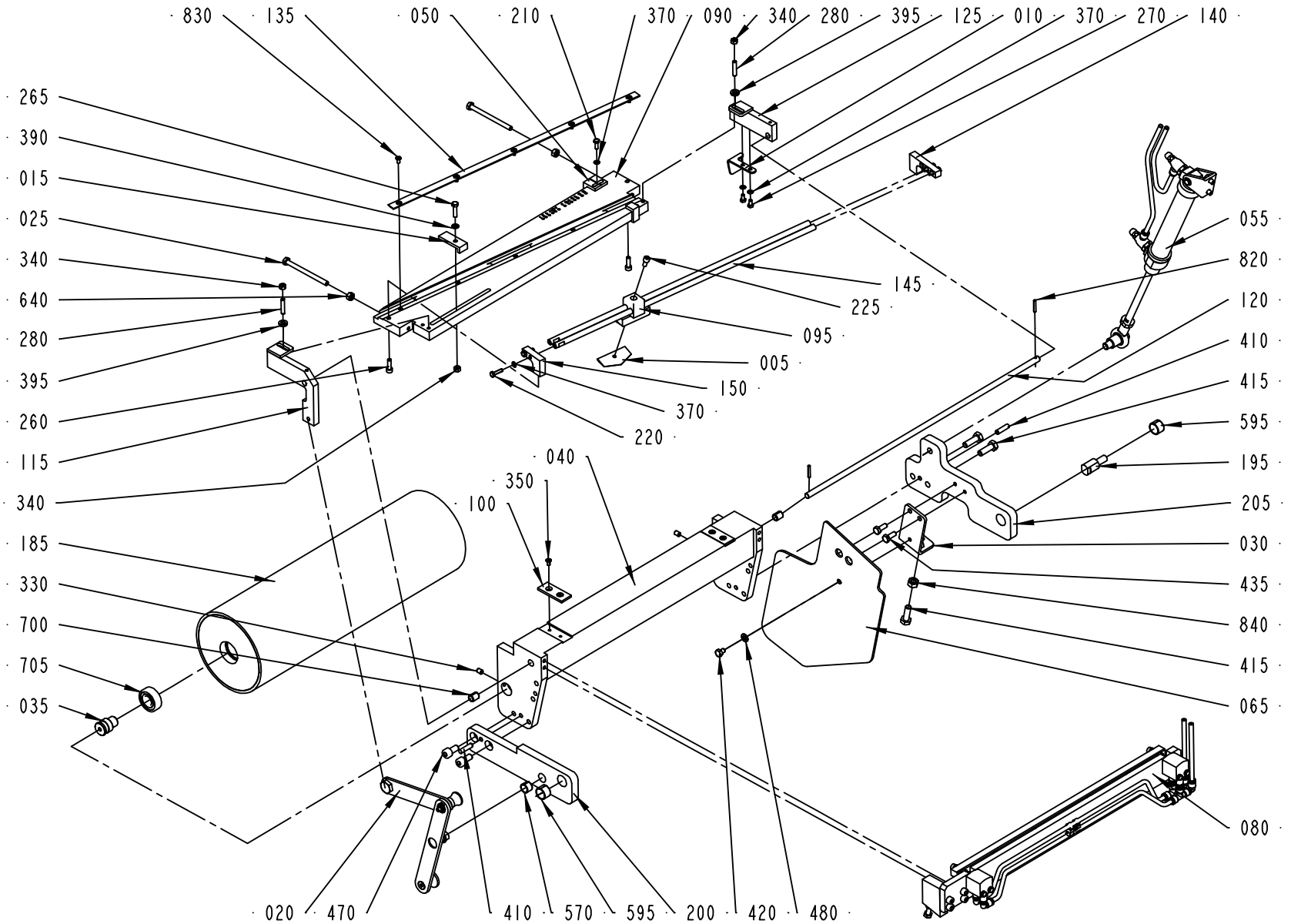

2588423-1
ECM 124449

ECM: 172282 - 20040510
Group number: 2588423-0100
Assembly Drawing: 2588423-1_1_AC

Pos	Part No	UN	Qty	Description	Page No
-					
005	596678-0000		1	KNIFE	
010	2538064-0000		1	REFLECTOR	
015	1490821-0000		1	ANGLE PIECE	
020	1519589-0100		1	HANDLE	**7-129**
025	312109-0386		2	SCREW M6S ISO 4017 M6X80 A480	
030	1490199-0000		1	BRACKET	
035	1499582-0000		2	AXLE PIN	
040	1487770-0000		1	BRACKET	
050	2587251-0000		1	ANGLE PIECE	
055	1487528-0100		1	CYLINDER	**7-131**
065	1512276-0000		1	PROTECTION PLATE	
080	2588379-0100		1	MATERIAL HOLDER	**7-133**
090	2566117-0000		1	CUTTING TABLE	
095	2589791-0000		1	KNIFE HOLDER	
100	2553275-0000		2	SLIDE PLATE	
115	2553276-0000		1	ROCKER ARM	
120	1487779-0000		1	SHAFT	
125	2553277-0000		1	ROCKER ARM	
135	1487518-0000		1	RULER	
140	1487781-0000		1	BRACKET	
145	1487782-0000		2	SHAFT	
150	2566118-0000		1	BRACKET	
185	1499588-0000		1	BENDING ROLLER	
195	1511568-0000		1	PIN	
200	1499577-0000		1	ARM	
205	2587250-0000		1	ARM	
210	312105-0291		1	SCREW M6S ISO 4017 M4X12 A470	
220	312105-0293		4	SCREW M6S ISO 4017 M4X16 A470	
225	312115-0327		1	SCREW ISO4762 M5X12 A4	
260	312115-0329		2	SCREW ISO4762 M5X16 A4	
265	312105-0331		1	SCREW M6S ISO 4017 M5X20 A480	
270	312105-0287		2	SCREW M6S ISO4017 M4X8 A470	
280	312318-0333		2	SCREW ISO4029 M5X25 A4	
330	312318-0362		2	SCREW ISO4029 M6X8 A4	
340	312605-0314		3	HEXAGON NUT, M6M M5 A280	
350	312155-0287		4	SCREW EN 10642 MF6S M4X8 A480	
370	315105-0136		7	WASHER BRB4,3XRFR	
390	315105-0146		1	WASHER BRB5,3X10RFR	
395	315115-0153		2	WASHER PLAIN, TBRB 6,4/12 H=3	
410	311103-1355		2	PARALLEL PIN ISO 2338 6M6X24 A1	
415	312105-0453		3	SCREW M6S ISO 4017 M8X25 A480	
420	312105-0362		1	SCREW M6S ISO 4017 M6X8 A480	
435	312105-0368		2	SCREW M6S ISO 4017 M6X16 A480	
470	312115-0449		2	SCREW ISO4762 M8X16 A4	
480	315105-0153		1	WASHER BRB6,4X12RFR	
570	321141-0178		1	BEARING BUSHING W/O FL, 12X14X10 MM	
595	321141-0216		2	BEARING BUSHING W/O FL, 16X18X12 MM	
640	312605-0316		2	HEXAGON NUT, M6M M6 A280	
700	321141-0104		2	BEARING BUSHING W/O FL, 8X10X12 MM	
705	321313-0102		2	BALL BEARING, 15X35X11 MM	
820	90258-0031		2	PIN, STRAIGHT SLOTTED SPRING FRP 3X20	
830	312145-0287		5	SCREW ISO 2009 MFS M4X8 A4	
840	312605-0318		1	HEXAGON NUT, M6M M8 A280	

Machine Type | Group Description | Used-In | Group Number | Page No

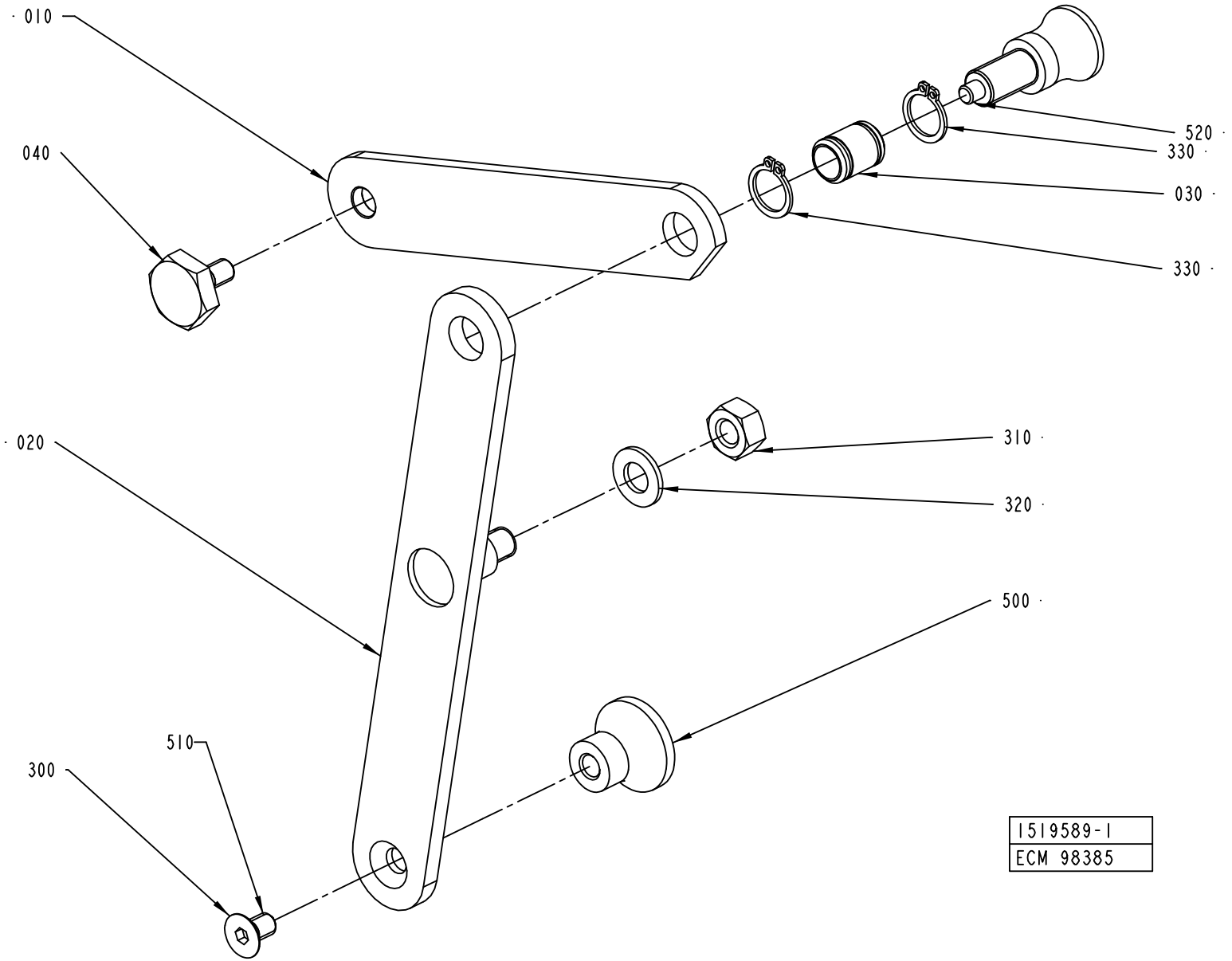
010
040
020
300
510
520
330
030
330
310
320
500
1519589-1
ECM 98385

ECM: 180681 - 20040910
Group number: 1519589-0100
Assembly Drawing: 1519589-1_1_AC

Pos	Part No	UN	Qty	Description	Page No
-					
010	1490809-0000		1	ARM	
020	1490810-0000		1	ARM	
030	1490812-0000		1	AXLE	
040	1490813-0000		1	SCREW	
300	312155-0364		1	SCREW EN 10642 MF6S M6X10 A480	
310	312605-0318		1	HEXAGON NUT, M6M M8 A280	
320	315105-0165		1	WASHER BRB8,4X16RFR	
330	315751-0109		2	RETAINING RING FOR SHAFT DIN 471 12 A2	
500	90051-0082		1	KNOB, CIRCUL, THREADED BUSH, M6 25X21 MM	
510	90157-0016		1	LOCKING FLUID LOCTITE 242 50 ML	
520	90051-0087		1	LOCK KNOB, NO. GN 617 A5	

Pos	Part No	UN	Qty	Description	Page No

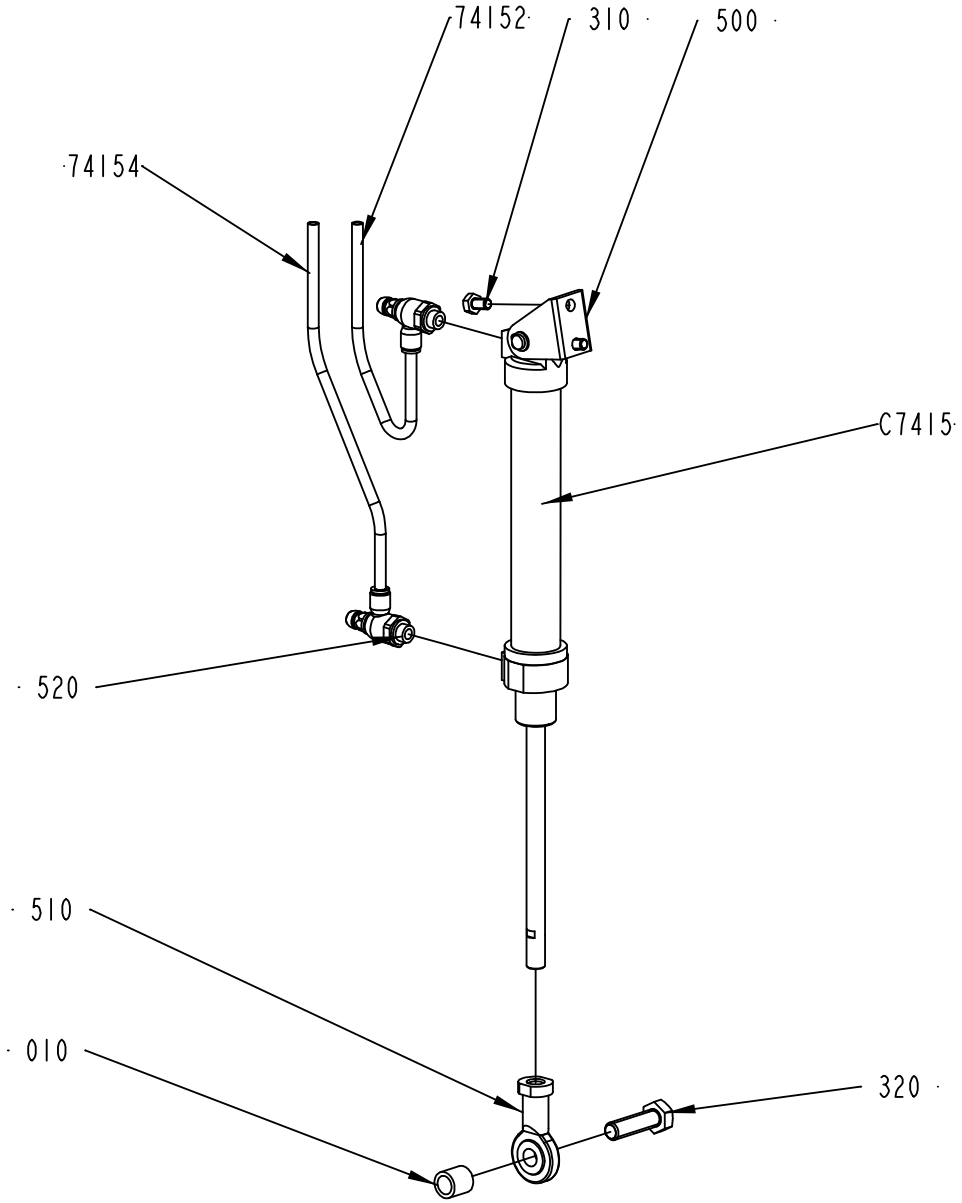

1487528-1
ECM 111238

ECM: 180547 - 20040910
Group number: 1487528-0100
Assembly Drawing: 1487528-1_1_AE

Pos	Part No	UN	Qty	Description	Page No
A3/FLEX					
74152	90166-0193	MM	5000	TUBE 6 MM PUR BLUE	
74154	90166-0193	MM	5000	TUBE 6 MM PUR BLUE	
C7415	90239-0832		1	DOUBLE ACTING, MINI-ISO, CYL. 25-125	
Common Parts					
010	1511569-0000		1	SPACER	
310	312105-0364		2	SCREW M6S ISO 4017 M6X10 A480	
320	312105-0497		1	SCREW M6S ISO 4017 M10X35 A480	
500	90239-0487		1	REAR,CLEVIS,MINI-ISO 20-25	
510	90239-0405		1	ROD END,BALL JOINT EYE M10X1,25	
520	90235-0846		2	THROTTLE CHECK VALVE G1/8", MANUAL, 6	

Pos	Part No	UN	Qty	Description	Page No

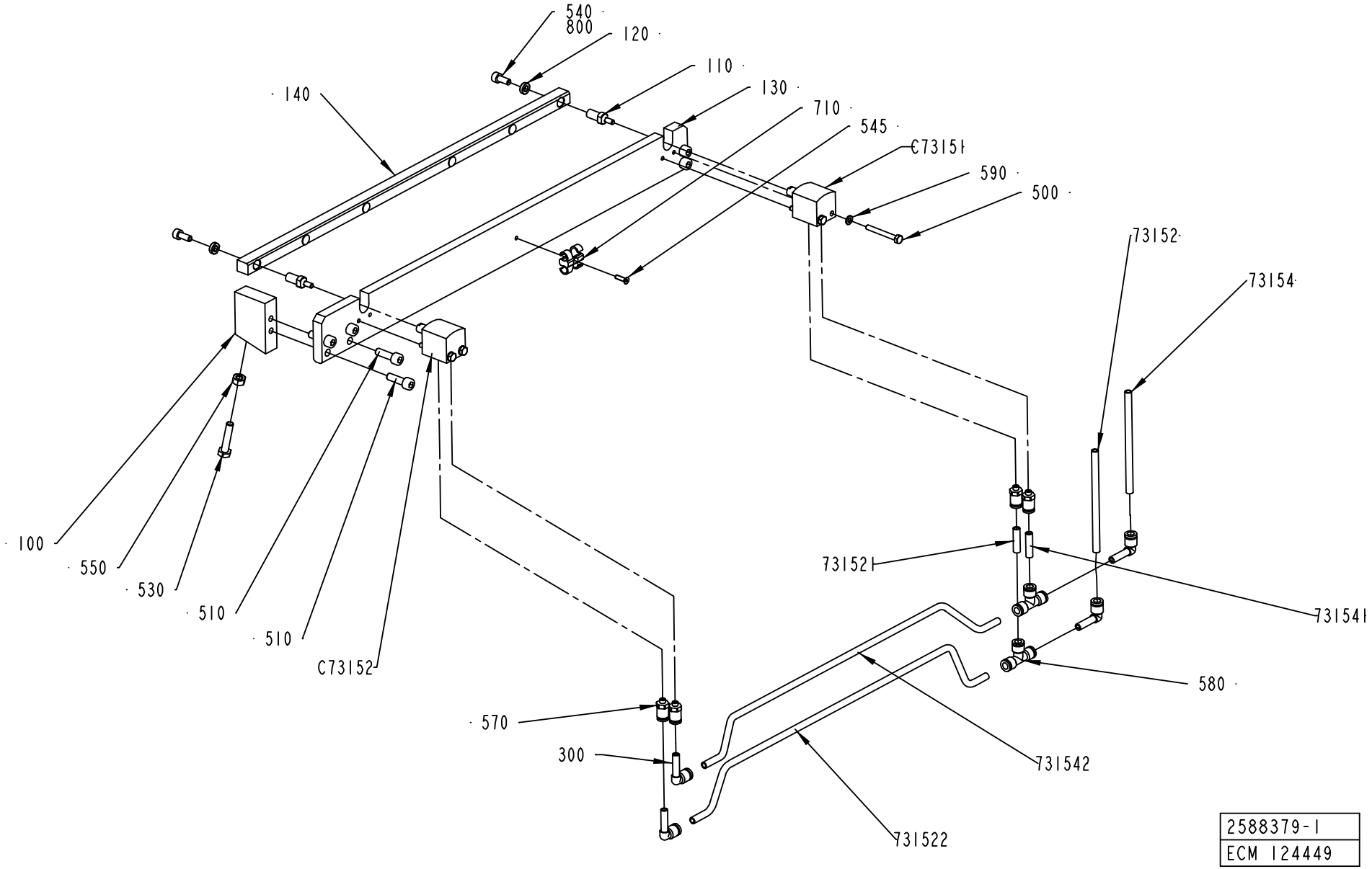
540
800
120
110
130
710
545
C73151
590
500
140
73152
73154
100
550
530
510
510
C73152
731521
731541
580
570
300
731542
731522
2588379-1
ECM 124449

ECM: 153337 - 20031217
Group number: 2588379-0100
Assembly Drawing: 2588379-1_1_AC

Pos	Part No	UN	Qty	Description	Page No
-					
100	2553272-0000		1	SUPPORT BLOCK	
110	2553273-0000		2	AXLE PIN	
120	2553799-0000		2	WASHER	
130	2582558-0000		1	BASE PLATE	
140	2582559-0000		1	RAIL	
300	90055-0217		4	ELBOW PIPE JOINT	
500	312105-0301		4	SCREW M6S ISO 4017 M4X35 A470	
510	312115-0370		6	SCREW ISO4762 M6X20 A4	
530	312109-0374		1	SCREW M6S ISO 4017 M6X30 A480	
540	312115-0327		2	SCREW ISO4762 M5X12 A4	
545	312155-0226		1	SCREW EN 10642 MF6S M3X12 A480	
550	312605-0316		1	HEXAGON NUT, M6M M6 A280	
570	342722-0197		4	STRAIGHT COUPLING	
580	342748-0102		2	T-CONNECTION 6MM	
590	315105-0136		4	WASHER BRB4,3XRFR	
710	90165-0087		1	T-CLIP T6 FOR TUBE D=6 - 7 MM	
73152	90166-0193	MM	5500	TUBE 6 MM PUR BLUE	
731521	90166-0193	MM	30	TUBE 6 MM PUR BLUE	
731522	90166-0193	MM	400	TUBE 6 MM PUR BLUE	
73154	90166-0193	MM	5500	TUBE 6 MM PUR BLUE	
731541	90166-0193	MM	30	TUBE 6 MM PUR BLUE	
731542	90166-0193	MM	400	TUBE 6 MM PUR BLUE	
800	90157-0016	ML	1	LOCKING FLUID LOCTITE 242 50 ML	
C73151	90459-0503		1	CYLINDER, ADVC-16-10-I-P	
C73152	90459-0503		1	CYLINDER, ADVC-16-10-I-P	

Pos	Part No	UN	Qty	Description	Page No

ELECTRICAL CABINET

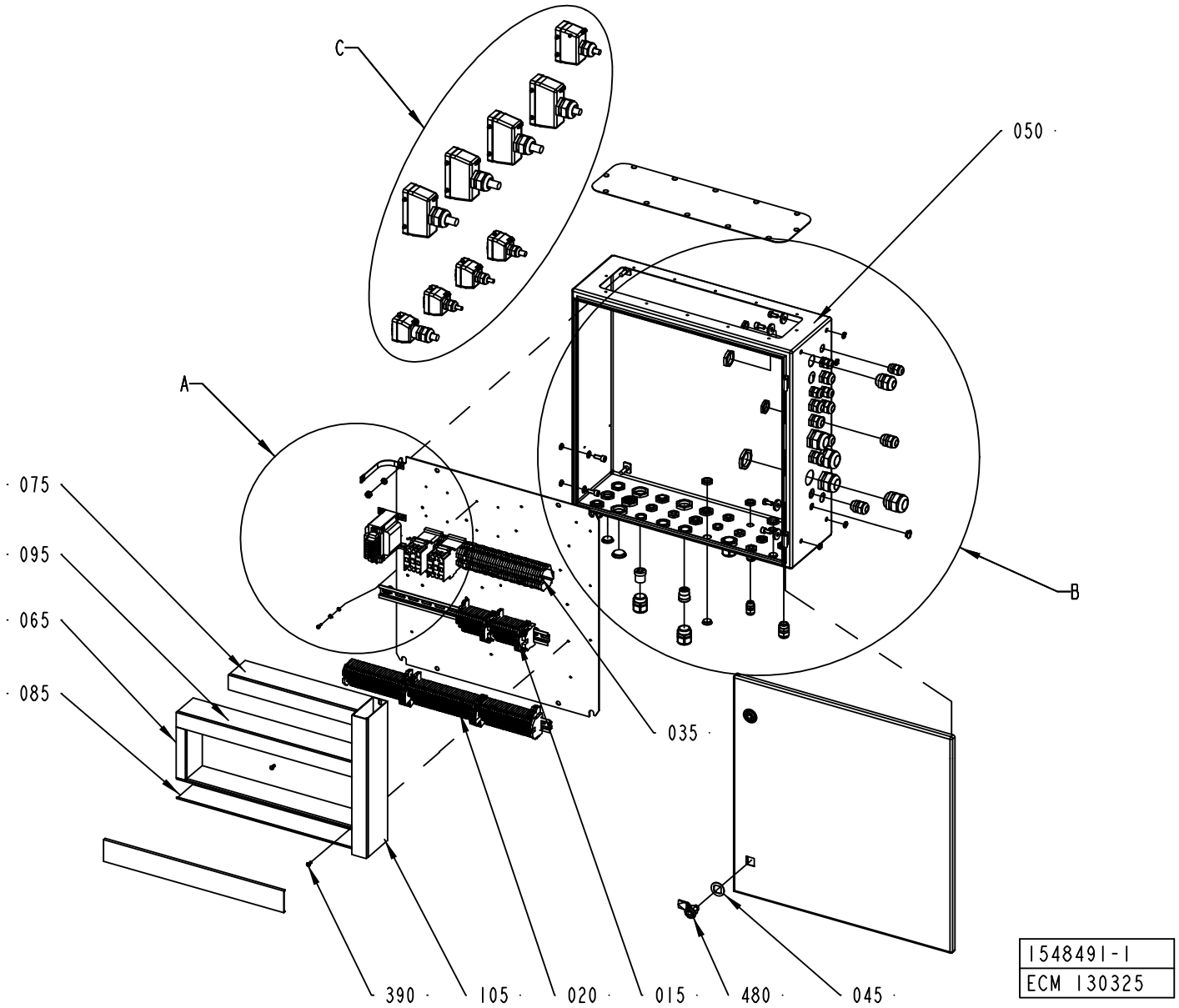

ECM: 167456 - 20040420
Group number: 1548491-0200
Assembly Drawing: 1548491-1_1_AC

This list covers pages from 7-134 to 7-143

Pos	Part No	UN	Qty	Description	Page No
A3/FLEX (See drawing on pages: 7-134, 7-136, 7-138, 7-140, 7-142)					
180	352103-0101		3	CABLE GLAND, ST 9, PR15,2/PG9	
200	352103-0111		10	CABLE GLAND, ST 16, PR22,5/PG16	
215	352103-0116		1	CABLE GLAND, ST 21, PR28,3/PG21	
230	353240-0005		4	GLAND W/O INSERT PG21 NORMAL	
250	90002-0004		5	BLANK-OFF PLUG, PR 22,5 SKINDICHT-BLK16	
270	90002-0012		1	BLANK-OFF PLUG, PR 28,3 SKINDICHT-BLK21	
280	90002-0013		2	BLANK-OFF PLUG, PR 15,2 SKINDICHT-BLK9	
450	90110-0157		4	CABLE HOOD 6-POL 70.352.0628.1	
W7003	351150-0420	M	5	CABLE OLFLEX 7X2,5 MM2 LIGHT/GREY	
W7004	351150-0413	M	5	CABLE OLFLEX 4X1,5 MM2 LIGHT/GREY	
W7005	351150-0412	M	5	CABLE OLFLEX 3X1,5 MM2 LIGHT/GREY	
W7006	351150-0425	M	6	CABLE OLFLEX 25X0,75 MM2 LIGHT/GREY	
W7007	351150-0425	M	6500	CABLE OLFLEX 25X0,75 MM2 LIGHT/GREY	
W7008	351150-0425	M	6500	CABLE OLFLEX 25X0,75 MM2 LIGHT/GREY	
W7009	351150-0425	M	6	CABLE OLFLEX 25X0,75 MM2 LIGHT/GREY	
W7037	351150-0415	M	6	CABLE OLFLEX 7X1,5 MM2 LIGHT/GREY	
W7076	90220-0104	M	6	SCR. CABLE 4X1,5MM2	
X128	90110-0159		1	MALE INSERT 70.310.0640.0	
X134	90110-0159		1	MALE INSERT 70.310.0640.0	
X213	90110-0150		1	MALE INSERT 121110 0000	
X214	90110-0150		1	MALE INSERT 121110 0000	
X219	90110-0150		1	MALE INSERT 121110 0000	
Common Parts					
015	2611462-0100		1	TERMINAL BLOCK	**7-145, 7-147**
020	1548496-0100		1	TERMINAL	**7-149, 7-151**
035	2611463-0100		1	TERMINAL BLOCK	**7-153, 7-155**
045	2503895-0000		2	WASHER	
050	1548492-0000		1	ELECTRICAL CABINET	
065	2611461-0000		1	CABLE DUCT	
075	2611458-0000		1	CABLE DUCT	
085	2611460-0000		1	CABLE DUCT	
095	2611459-0000		1	CABLE DUCT	
105	2611457-0000		1	CABLE DUCT	
115	312115-0449		2	SCREW ISO4762 M8X16 A4	
120	312115-0291		4	SCREW ISO4762 M4X12 A4	
135	312105-0449		2	SCREW M6S ISO 4017 M8X16 A480	
145	312115-0451		2	SCREW ISO4762 M8X20 A4	
150	312605-0318		2	HEXAGON NUT, M6M M8 A280	
160	315105-0136		4	WASHER BRB4,3XRFR	
170	315105-0165		2	WASHER BRB8,4X16RFR	
175	315125-0165		4	WASHER TBRSB 8,4X26X5 A4	
190	352103-0106		12	CABLE GLAND, ST 11, PR18,6/PG11	
195	352103-0108		4	CABLE GLAND, ST 13,5 , PR20,4/PG13,5	
210	352103-0115		2	CABLE GLAND, STR 21, PR28,3/PG21	
220	352103-0121		8	CABLE GLAND, ST 29, PR37,0/PG29	
240	353249-0051		1	INSERT, MULTI HOLE, E154M4X8	
260	90002-0009		4	BLANK-OFF PLUG, PR 18.6 SKINDICHT-BLK11	
290	90012-0125		2	GLAND FITTING	
310	90062-0016		8	LOCK WASHER SERRAT.EXT.GEAR,8,4/15 H=0,8	
320	90062-0059		4	LOCK WASHER SERRAT.EXT.GEAR,4,3/8 H=0,5	
330	90099-0104		5	NUT, PR 15,2 (PG9)	
340	90099-0110		18	NUT, PR 22,5 (PG16)	
350	90099-0117		12	NUT, PR 18,6 (PG11)	
355	90099-0118		2	NUT, PR 20,4 (PG13,5)	
360	90099-0119		6	NUT, PR 28,3 (PG21)	
370	90099-0120		4	NUT PR 37 (PG29)	
380	90135-0040		1	EARTH WIRE, L=150 MM 16 MM2	
390	90181-0313		12	RIVET DUCTAFIX R4	
400	359005-0010		9	MARKING LABEL KIT 0 - 9, 04.841.2150.0	
410	359005-0050		1	MARKING LABEL KIT X, 04.841.4550.0	
420	90089-0028		1	MUFF	
440	90110-0152		4	CABLE HOOD 24-POL 70.352.2428.1	
460	90110-0385		9	HOLDER	
470	90110-0160		1	CABLE HOOD 6-16-POL 70.352.1628.1	
480	90237-0206		2	LOCK, 1000-U45/U2/17/23/24/991	
T6203	90458-0258		1	TRANSFORMER, 220VAC/6-9-12VAC	
X132	90110-0159		1	MALE INSERT 70.310.0640.0	
X133	90110-0159		1	MALE INSERT 70.310.0640.0	
X220	90110-0150		1	MALE INSERT 121110 0000	
X504	90110-0156		1	MALE INSERT 70.210.0653.0	

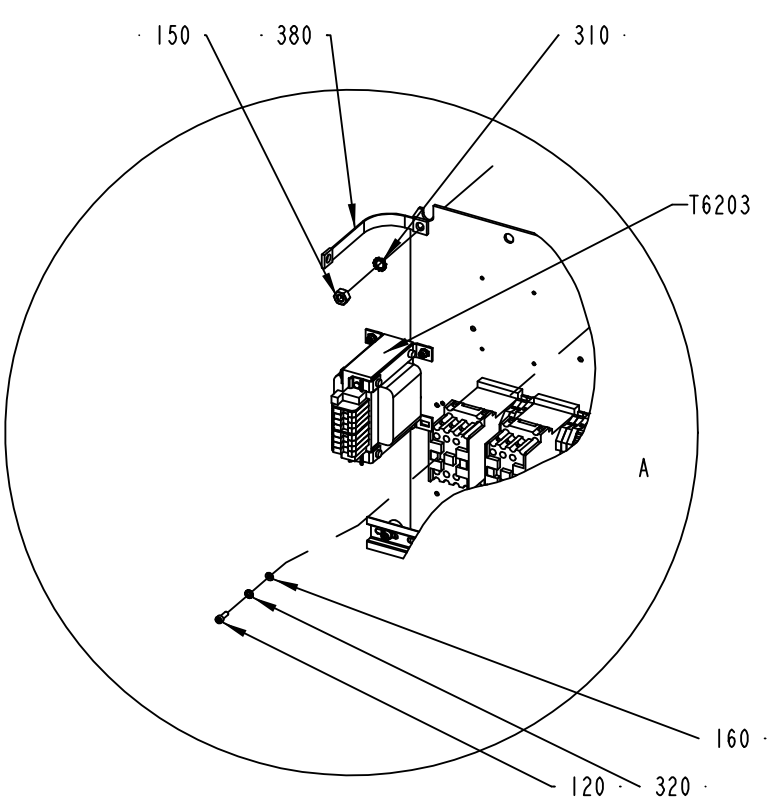
150
380
310
T6203
A
160
120
320

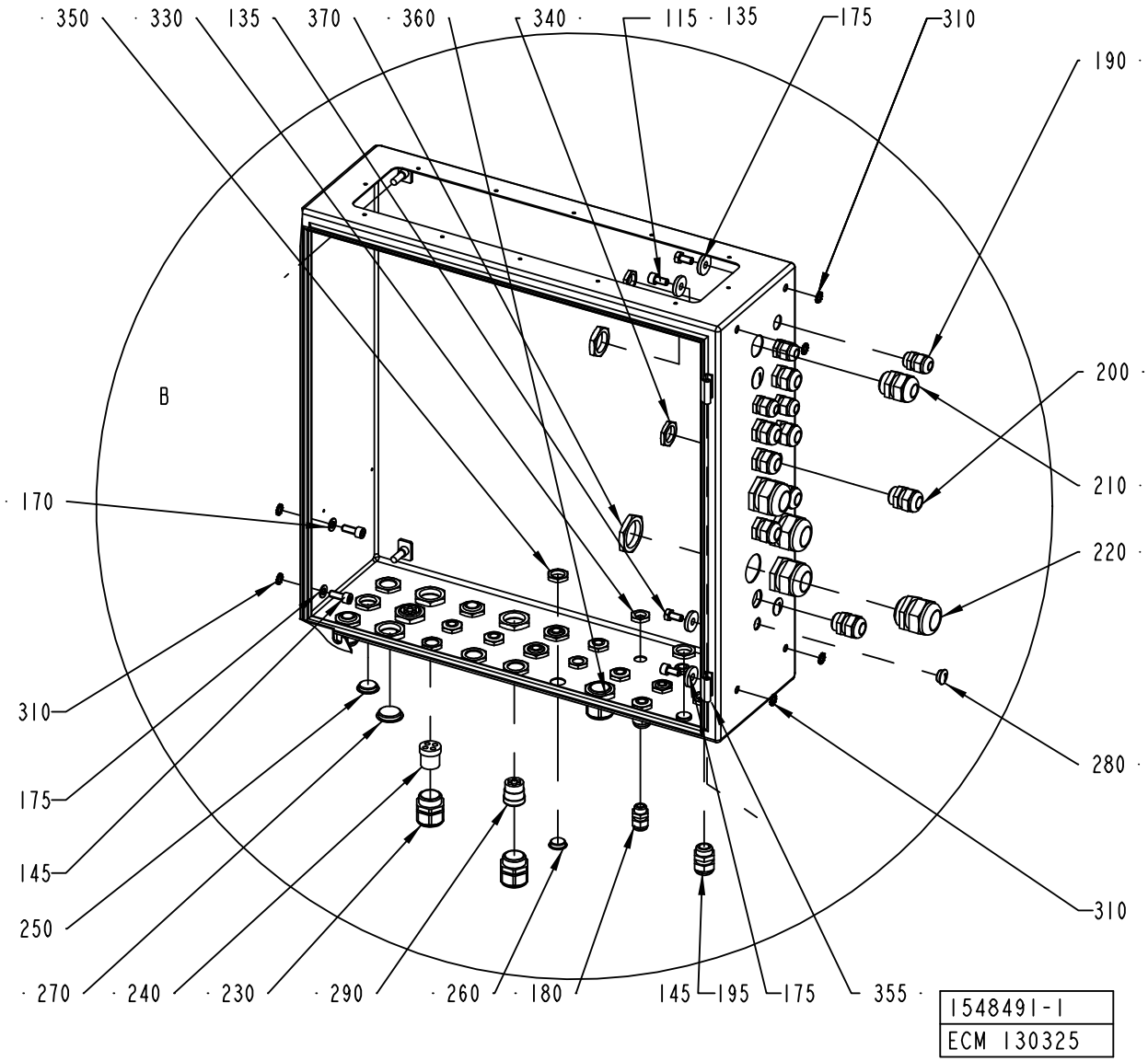
350
330
135
370
360
340
115
135
175
310
190
B
200
210
220
170
310
175
145
250
280
310
270
240
230
290
260
180
145
195
175
355
1548491-1
ECM 130325

ECM: 167456 - 20040420
Group number: 1548491-0200
Assembly Drawing: 1548491-1_2_AC

This list covers pages from 7-134 to 7-143

Pos	Part No	UN	Qty	Description	Page No
A3/FLEX (See drawing on pages: 7-134, 7-136, 7-138, 7-140, 7-142)					
180	352103-0101		3	CABLE GLAND, ST 9, PR15,2/PG9	
200	352103-0111		10	CABLE GLAND, ST 16, PR22,5/PG16	
215	352103-0116		1	CABLE GLAND, ST 21, PR28,3/PG21	
230	353240-0005		4	GLAND W/O INSERT PG21 NORMAL	
250	90002-0004		5	BLANK-OFF PLUG, PR 22,5 SKINDICHT-BLK16	
270	90002-0012		1	BLANK-OFF PLUG, PR 28,3 SKINDICHT-BLK21	
280	90002-0013		2	BLANK-OFF PLUG, PR 15,2 SKINDICHT-BLK9	
450	90110-0157		4	CABLE HOOD 6-POL 70.352.0628.1	
W7003	351150-0420	M	5	CABLE OLFLEX 7X2,5 MM2 LIGHT/GREY	
W7004	351150-0413	M	5	CABLE OLFLEX 4X1,5 MM2 LIGHT/GREY	
W7005	351150-0412	M	5	CABLE OLFLEX 3X1,5 MM2 LIGHT/GREY	
W7006	351150-0425	M	6	CABLE OLFLEX 25X0,75 MM2 LIGHT/GREY	
W7007	351150-0425	M	6500	CABLE OLFLEX 25X0,75 MM2 LIGHT/GREY	
W7008	351150-0425	M	6500	CABLE OLFLEX 25X0,75 MM2 LIGHT/GREY	
W7009	351150-0425	M	6	CABLE OLFLEX 25X0,75 MM2 LIGHT/GREY	
W7037	351150-0415	M	6	CABLE OLFLEX 7X1,5 MM2 LIGHT/GREY	
W7076	90220-0104	M	6	SCR. CABLE 4X1,5MM2	
X128	90110-0159		1	MALE INSERT 70.310.0640.0	
X134	90110-0159		1	MALE INSERT 70.310.0640.0	
X213	90110-0150		1	MALE INSERT 121110 0000	
X214	90110-0150		1	MALE INSERT 121110 0000	
X219	90110-0150		1	MALE INSERT 121110 0000	
Common Parts					
015	2611462-0100		1	TERMINAL BLOCK	**7-145, 7-147**
020	1548496-0100		1	TERMINAL	**7-149, 7-151**
035	2611463-0100		1	TERMINAL BLOCK	**7-153, 7-155**
045	2503895-0000		2	WASHER	
050	1548492-0000		1	ELECTRICAL CABINET	
065	2611461-0000		1	CABLE DUCT	
075	2611458-0000		1	CABLE DUCT	
085	2611460-0000		1	CABLE DUCT	
095	2611459-0000		1	CABLE DUCT	
105	2611457-0000		1	CABLE DUCT	
115	312115-0449		2	SCREW ISO4762 M8X16 A4	
120	312115-0291		4	SCREW ISO4762 M4X12 A4	
135	312105-0449		2	SCREW M6S ISO 4017 M8X16 A480	
145	312115-0451		2	SCREW ISO4762 M8X20 A4	
150	312605-0318		2	HEXAGON NUT, M6M M8 A280	
160	315105-0136		4	WASHER BRB4,3XRFR	
170	315105-0165		2	WASHER BRB8,4X16RFR	
175	315125-0165		4	WASHER TBRSB 8,4X26X5 A4	
190	352103-0106		12	CABLE GLAND, ST 11, PR18,6/PG11	
195	352103-0108		4	CABLE GLAND, ST 13,5 , PR20,4/PG13,5	
210	352103-0115		2	CABLE GLAND, STR 21, PR28,3/PG21	
220	352103-0121		8	CABLE GLAND, ST 29, PR37,0/PG29	
240	353249-0051		1	INSERT, MULTI HOLE, E154M4X8	
260	90002-0009		4	BLANK-OFF PLUG, PR 18.6 SKINDICHT-BLK11	
290	90012-0125		2	GLAND FITTING	
310	90062-0016		8	LOCK WASHER SERRAT.EXT.GEAR,8,4/15 H=0,8	
320	90062-0059		4	LOCK WASHER SERRAT.EXT.GEAR,4,3/8 H=0,5	
330	90099-0104		5	NUT, PR 15,2 (PG9)	
340	90099-0110		18	NUT, PR 22,5 (PG16)	
350	90099-0117		12	NUT, PR 18,6 (PG11)	
355	90099-0118		2	NUT, PR 20,4 (PG13,5)	
360	90099-0119		6	NUT, PR 28,3 (PG21)	
370	90099-0120		4	NUT PR 37 (PG29)	
380	90135-0040		1	EARTH WIRE, L=150 MM 16 MM2	
390	90181-0313		12	RIVET DUCTAFIX R4	
400	359005-0010		9	MARKING LABEL KIT 0 - 9, 04.841.2150.0	
410	359005-0050		1	MARKING LABEL KIT X, 04.841.4550.0	
420	90089-0028		1	MUFF	
440	90110-0152		4	CABLE HOOD 24-POL 70.352.2428.1	
460	90110-0385		9	HOLDER	
470	90110-0160		1	CABLE HOOD 6-16-POL 70.352.1628.1	
480	90237-0206		2	LOCK, 1000-U45/U2/17/23/24/991	
T6203	90458-0258		1	TRANSFORMER, 220VAC/6-9-12VAC	
X132	90110-0159		1	MALE INSERT 70.310.0640.0	
X133	90110-0159		1	MALE INSERT 70.310.0640.0	
X220	90110-0150		1	MALE INSERT 121110 0000	
X504	90110-0156		1	MALE INSERT 70.210.0653.0	

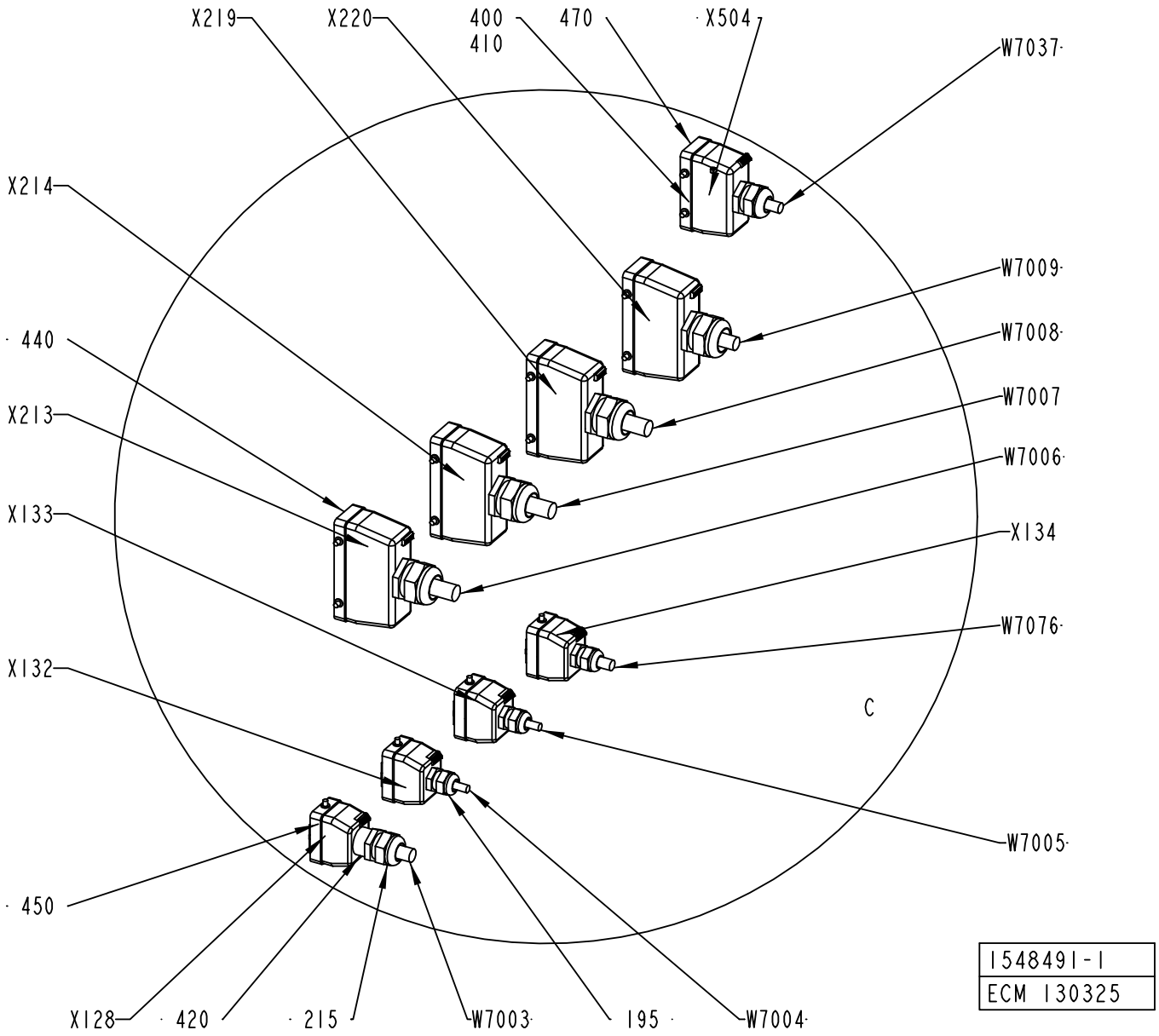
X219
X220
400
410
470
X504
W7037
X214
W7009
440
W7008
X213
W7007
W7006
X133
X134
W7076
X132
C
W7005
450
X128
420
215
W7003
195
W7004
1548491-1
ECM 130325

ECM: 167456 - 20040420
Group number: 1548491-0200
Assembly Drawing: 1548491-1_3_AC

This list covers pages from 7-134 to 7-143

Pos	Part No	UN	Qty	Description	Page No
A3/FLEX (See drawing on pages: 7-134, 7-136, 7-138, 7-140, 7-142)					
180	352103-0101		3	CABLE GLAND, ST 9, PR15,2/PG9	
200	352103-0111		10	CABLE GLAND, ST 16, PR22,5/PG16	
215	352103-0116		1	CABLE GLAND, ST 21, PR28,3/PG21	
230	353240-0005		4	GLAND W/O INSERT PG21 NORMAL	
250	90002-0004		5	BLANK-OFF PLUG, PR 22,5 SKINDICHT-BLK16	
270	90002-0012		1	BLANK-OFF PLUG, PR 28,3 SKINDICHT-BLK21	
280	90002-0013		2	BLANK-OFF PLUG, PR 15,2 SKINDICHT-BLK9	
450	90110-0157		4	CABLE HOOD 6-POL 70.352.0628.1	
W7003	351150-0420	M	5	CABLE OLFLEX 7X2,5 MM2 LIGHT/GREY	
W7004	351150-0413	M	5	CABLE OLFLEX 4X1,5 MM2 LIGHT/GREY	
W7005	351150-0412	M	5	CABLE OLFLEX 3X1,5 MM2 LIGHT/GREY	
W7006	351150-0425	M	6	CABLE OLFLEX 25X0,75 MM2 LIGHT/GREY	
W7007	351150-0425	M	6500	CABLE OLFLEX 25X0,75 MM2 LIGHT/GREY	
W7008	351150-0425	M	6500	CABLE OLFLEX 25X0,75 MM2 LIGHT/GREY	
W7009	351150-0425	M	6	CABLE OLFLEX 25X0,75 MM2 LIGHT/GREY	
W7037	351150-0415	M	6	CABLE OLFLEX 7X1,5 MM2 LIGHT/GREY	
W7076	90220-0104	M	6	SCR. CABLE 4X1,5MM2	
X128	90110-0159		1	MALE INSERT 70.310.0640.0	
X134	90110-0159		1	MALE INSERT 70.310.0640.0	
X213	90110-0150		1	MALE INSERT 121110 0000	
X214	90110-0150		1	MALE INSERT 121110 0000	
X219	90110-0150		1	MALE INSERT 121110 0000	
Common Parts					
015	2611462-0100		1	TERMINAL BLOCK	**7-145, 7-147**
020	1548496-0100		1	TERMINAL	**7-149, 7-151**
035	2611463-0100		1	TERMINAL BLOCK	**7-153, 7-155**
045	2503895-0000		2	WASHER	
050	1548492-0000		1	ELECTRICAL CABINET	
065	2611461-0000		1	CABLE DUCT	
075	2611458-0000		1	CABLE DUCT	
085	2611460-0000		1	CABLE DUCT	
095	2611459-0000		1	CABLE DUCT	
105	2611457-0000		1	CABLE DUCT	
115	312115-0449		2	SCREW ISO4762 M8X16 A4	
120	312115-0291		4	SCREW ISO4762 M4X12 A4	
135	312105-0449		2	SCREW M6S ISO 4017 M8X16 A480	
145	312115-0451		2	SCREW ISO4762 M8X20 A4	
150	312605-0318		2	HEXAGON NUT, M6M M8 A280	
160	315105-0136		4	WASHER BRB4,3XRFR	
170	315105-0165		2	WASHER BRB8,4X16RFR	
175	315125-0165		4	WASHER TBRSB 8,4X26X5 A4	
190	352103-0106		12	CABLE GLAND, ST 11, PR18,6/PG11	
195	352103-0108		4	CABLE GLAND, ST 13,5 , PR20,4/PG13,5	
210	352103-0115		2	CABLE GLAND, STR 21, PR28,3/PG21	
220	352103-0121		8	CABLE GLAND, ST 29, PR37,0/PG29	
240	353249-0051		1	INSERT, MULTI HOLE, E154M4X8	
260	90002-0009		4	BLANK-OFF PLUG, PR 18.6 SKINDICHT-BLK11	
290	90012-0125		2	GLAND FITTING	
310	90062-0016		8	LOCK WASHER SERRAT.EXT.GEAR,8,4/15 H=0,8	
320	90062-0059		4	LOCK WASHER SERRAT.EXT.GEAR,4,3/8 H=0,5	
330	90099-0104		5	NUT, PR 15,2 (PG9)	
340	90099-0110		18	NUT, PR 22,5 (PG16)	
350	90099-0117		12	NUT, PR 18,6 (PG11)	
355	90099-0118		2	NUT, PR 20,4 (PG13,5)	
360	90099-0119		6	NUT, PR 28,3 (PG21)	
370	90099-0120		4	NUT PR 37 (PG29)	
380	90135-0040		1	EARTH WIRE, L=150 MM 16 MM2	
390	90181-0313		12	RIVET DUCTAFIX R4	
400	359005-0010		9	MARKING LABEL KIT 0 - 9, 04.841.2150.0	
410	359005-0050		1	MARKING LABEL KIT X, 04.841.4550.0	
420	90089-0028		1	MUFF	
440	90110-0152		4	CABLE HOOD 24-POL 70.352.2428.1	
460	90110-0385		9	HOLDER	
470	90110-0160		1	CABLE HOOD 6-16-POL 70.352.1628.1	
480	90237-0206		2	LOCK, 1000-U45/U2/17/23/24/991	
T6203	90458-0258		1	TRANSFORMER, 220VAC/6-9-12VAC	
X132	90110-0159		1	MALE INSERT 70.310.0640.0	
X133	90110-0159		1	MALE INSERT 70.310.0640.0	
X220	90110-0150		1	MALE INSERT 121110 0000	
X504	90110-0156		1	MALE INSERT 70.210.0653.0	

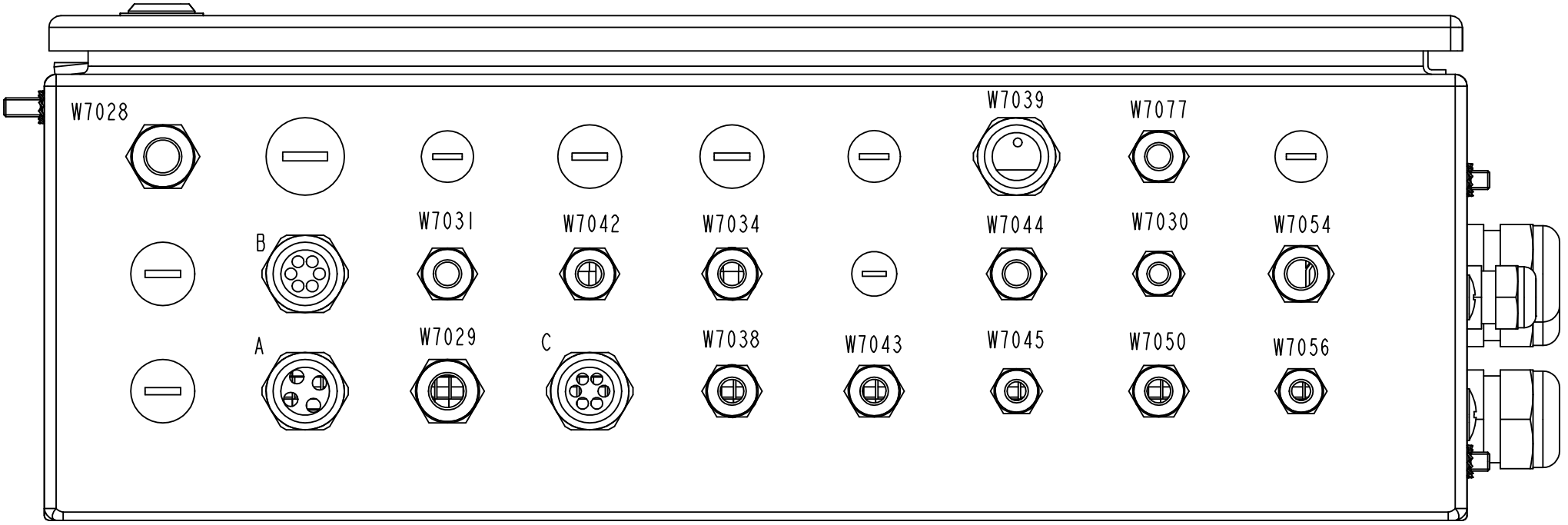

A*	B*	C*
W7016	W7020	W7015
W7017	W7023	W7019
W7018	W7024	W7013
W7022	W7025	W7033
	W7026	W7035
	W7027	W7036

1548491-1
ECM 130325

ECM: 167456 - 20040420
Group number: 1548491-0200
Assembly Drawing: 1548491-1_4_AC

This list covers pages from 7-134 to 7-143

Pos	Part No	UN	Qty	Description	Page No
A3/FLEX (See drawing on pages: 7-134, 7-136, 7-138, 7-140, 7-142)					
180	352103-0101		3	CABLE GLAND, ST 9, PR15,2/PG9	
200	352103-0111		10	CABLE GLAND, ST 16, PR22,5/PG16	
215	352103-0116		1	CABLE GLAND, ST 21, PR28,3/PG21	
230	353240-0005		4	GLAND W/O INSERT PG21 NORMAL	
250	90002-0004		5	BLANK-OFF PLUG, PR 22,5 SKINDICHT-BLK16	
270	90002-0012		1	BLANK-OFF PLUG, PR 28,3 SKINDICHT-BLK21	
280	90002-0013		2	BLANK-OFF PLUG, PR 15,2 SKINDICHT-BLK9	
450	90110-0157		4	CABLE HOOD 6-POL 70.352.0628.1	
W7003	351150-0420	M	5	CABLE OLFLEX 7X2,5 MM2 LIGHT/GREY	
W7004	351150-0413	M	5	CABLE OLFLEX 4X1,5 MM2 LIGHT/GREY	
W7005	351150-0412	M	5	CABLE OLFLEX 3X1,5 MM2 LIGHT/GREY	
W7006	351150-0425	M	6	CABLE OLFLEX 25X0,75 MM2 LIGHT/GREY	
W7007	351150-0425	M	6500	CABLE OLFLEX 25X0,75 MM2 LIGHT/GREY	
W7008	351150-0425	M	6500	CABLE OLFLEX 25X0,75 MM2 LIGHT/GREY	
W7009	351150-0425	M	6	CABLE OLFLEX 25X0,75 MM2 LIGHT/GREY	
W7037	351150-0415	M	6	CABLE OLFLEX 7X1,5 MM2 LIGHT/GREY	
W7076	90220-0104	M	6	SCR. CABLE 4X1,5MM2	
X128	90110-0159		1	MALE INSERT 70.310.0640.0	
X134	90110-0159		1	MALE INSERT 70.310.0640.0	
X213	90110-0150		1	MALE INSERT 121110 0000	
X214	90110-0150		1	MALE INSERT 121110 0000	
X219	90110-0150		1	MALE INSERT 121110 0000	
Common Parts					
015	2611462-0100		1	TERMINAL BLOCK	**7-145, 7-147**
020	1548496-0100		1	TERMINAL	**7-149, 7-151**
035	2611463-0100		1	TERMINAL BLOCK	**7-153, 7-155**
045	2503895-0000		2	WASHER	
050	1548492-0000		1	ELECTRICAL CABINET	
065	2611461-0000		1	CABLE DUCT	
075	2611458-0000		1	CABLE DUCT	
085	2611460-0000		1	CABLE DUCT	
095	2611459-0000		1	CABLE DUCT	
105	2611457-0000		1	CABLE DUCT	
115	312115-0449		2	SCREW ISO4762 M8X16 A4	
120	312115-0291		4	SCREW ISO4762 M4X12 A4	
135	312105-0449		2	SCREW M6S ISO 4017 M8X16 A480	
145	312115-0451		2	SCREW ISO4762 M8X20 A4	
150	312605-0318		2	HEXAGON NUT, M6M M8 A280	
160	315105-0136		4	WASHER BRB4,3XRFR	
170	315105-0165		2	WASHER BRB8,4X16RFR	
175	315125-0165		4	WASHER TBRSB 8,4X26X5 A4	
190	352103-0106		12	CABLE GLAND, ST 11, PR18,6/PG11	
195	352103-0108		4	CABLE GLAND, ST 13,5 , PR20,4/PG13,5	
210	352103-0115		2	CABLE GLAND, STR 21, PR28,3/PG21	
220	352103-0121		8	CABLE GLAND, ST 29, PR37,0/PG29	
240	353249-0051		1	INSERT, MULTI HOLE, E154M4X8	
260	90002-0009		4	BLANK-OFF PLUG, PR 18.6 SKINDICHT-BLK11	
290	90012-0125		2	GLAND FITTING	
310	90062-0016		8	LOCK WASHER SERRAT.EXT.GEAR,8,4/15 H=0,8	
320	90062-0059		4	LOCK WASHER SERRAT.EXT.GEAR,4,3/8 H=0,5	
330	90099-0104		5	NUT, PR 15,2 (PG9)	
340	90099-0110		18	NUT, PR 22,5 (PG16)	
350	90099-0117		12	NUT, PR 18,6 (PG11)	
355	90099-0118		2	NUT, PR 20,4 (PG13,5)	
360	90099-0119		6	NUT, PR 28,3 (PG21)	
370	90099-0120		4	NUT PR 37 (PG29)	
380	90135-0040		1	EARTH WIRE, L=150 MM 16 MM2	
390	90181-0313		12	RIVET DUCTAFIX R4	
400	359005-0010		9	MARKING LABEL KIT 0 - 9, 04.841.2150.0	
410	359005-0050		1	MARKING LABEL KIT X, 04.841.4550.0	
420	90089-0028		1	MUFF	
440	90110-0152		4	CABLE HOOD 24-POL 70.352.2428.1	
460	90110-0385		9	HOLDER	
470	90110-0160		1	CABLE HOOD 6-16-POL 70.352.1628.1	
480	90237-0206		2	LOCK, 1000-U45/U2/17/23/24/991	
T6203	90458-0258		1	TRANSFORMER, 220VAC/6-9-12VAC	
X132	90110-0159		1	MALE INSERT 70.310.0640.0	
X133	90110-0159		1	MALE INSERT 70.310.0640.0	
X220	90110-0150		1	MALE INSERT 121110 0000	
X504	90110-0156		1	MALE INSERT 70.210.0653.0	

ELECTRICAL CABINET

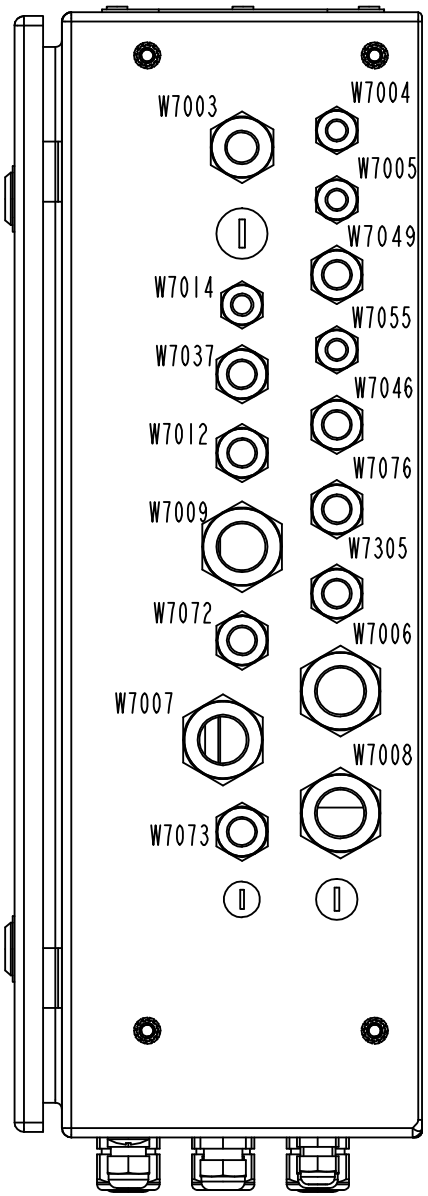

1548491-1
ECM 130325

ECM: 167456 - 20040420
Group number: 1548491-0200
Assembly Drawing: 1548491-1_5_AC

This list covers pages from 7-134 to 7-143

Pos	Part No	UN	Qty	Description	Page No
A3/FLEX (See drawing on pages: 7-134, 7-136, 7-138, 7-140, 7-142)					
180	352103-0101		3	CABLE GLAND, ST 9, PR15,2/PG9	
200	352103-0111		10	CABLE GLAND, ST 16, PR22,5/PG16	
215	352103-0116		1	CABLE GLAND, ST 21, PR28,3/PG21	
230	353240-0005		4	GLAND W/O INSERT PG21 NORMAL	
250	90002-0004		5	BLANK-OFF PLUG, PR 22,5 SKINDICHT-BLK16	
270	90002-0012		1	BLANK-OFF PLUG, PR 28,3 SKINDICHT-BLK21	
280	90002-0013		2	BLANK-OFF PLUG, PR 15,2 SKINDICHT-BLK9	
450	90110-0157		4	CABLE HOOD 6-POL 70.352.0628.1	
W7003	351150-0420	M	5	CABLE OLFLEX 7X2,5 MM2 LIGHT/GREY	
W7004	351150-0413	M	5	CABLE OLFLEX 4X1,5 MM2 LIGHT/GREY	
W7005	351150-0412	M	5	CABLE OLFLEX 3X1,5 MM2 LIGHT/GREY	
W7006	351150-0425	M	6	CABLE OLFLEX 25X0,75 MM2 LIGHT/GREY	
W7007	351150-0425	M	6500	CABLE OLFLEX 25X0,75 MM2 LIGHT/GREY	
W7008	351150-0425	M	6500	CABLE OLFLEX 25X0,75 MM2 LIGHT/GREY	
W7009	351150-0425	M	6	CABLE OLFLEX 25X0,75 MM2 LIGHT/GREY	
W7037	351150-0415	M	6	CABLE OLFLEX 7X1,5 MM2 LIGHT/GREY	
W7076	90220-0104	M	6	SCR. CABLE 4X1,5MM2	
X128	90110-0159		1	MALE INSERT 70.310.0640.0	
X134	90110-0159		1	MALE INSERT 70.310.0640.0	
X213	90110-0150		1	MALE INSERT 121110 0000	
X214	90110-0150		1	MALE INSERT 121110 0000	
X219	90110-0150		1	MALE INSERT 121110 0000	
Common Parts					
015	2611462-0100		1	TERMINAL BLOCK	**7-145, 7-147**
020	1548496-0100		1	TERMINAL	**7-149, 7-151**
035	2611463-0100		1	TERMINAL BLOCK	**7-153, 7-155**
045	2503895-0000		2	WASHER	
050	1548492-0000		1	ELECTRICAL CABINET	
065	2611461-0000		1	CABLE DUCT	
075	2611458-0000		1	CABLE DUCT	
085	2611460-0000		1	CABLE DUCT	
095	2611459-0000		1	CABLE DUCT	
105	2611457-0000		1	CABLE DUCT	
115	312115-0449		2	SCREW ISO4762 M8X16 A4	
120	312115-0291		4	SCREW ISO4762 M4X12 A4	
135	312105-0449		2	SCREW M6S ISO 4017 M8X16 A480	
145	312115-0451		2	SCREW ISO4762 M8X20 A4	
150	312605-0318		2	HEXAGON NUT, M6M M8 A280	
160	315105-0136		4	WASHER BRB4,3XRFR	
170	315105-0165		2	WASHER BRB8,4X16RFR	
175	315125-0165		4	WASHER TBRSB 8,4X26X5 A4	
190	352103-0106		12	CABLE GLAND, ST 11, PR18,6/PG11	
195	352103-0108		4	CABLE GLAND, ST 13,5 , PR20,4/PG13,5	
210	352103-0115		2	CABLE GLAND, STR 21, PR28,3/PG21	
220	352103-0121		8	CABLE GLAND, ST 29, PR37,0/PG29	
240	353249-0051		1	INSERT, MULTI HOLE, E154M4X8	
260	90002-0009		4	BLANK-OFF PLUG, PR 18.6 SKINDICHT-BLK11	
290	90012-0125		2	GLAND FITTING	
310	90062-0016		8	LOCK WASHER SERRAT.EXT.GEAR,8,4/15 H=0,8	
320	90062-0059		4	LOCK WASHER SERRAT.EXT.GEAR,4,3/8 H=0,5	
330	90099-0104		5	NUT, PR 15,2 (PG9)	
340	90099-0110		18	NUT, PR 22,5 (PG16)	
350	90099-0117		12	NUT, PR 18,6 (PG11)	
355	90099-0118		2	NUT, PR 20,4 (PG13,5)	
360	90099-0119		6	NUT, PR 28,3 (PG21)	
370	90099-0120		4	NUT PR 37 (PG29)	
380	90135-0040		1	EARTH WIRE, L=150 MM 16 MM2	
390	90181-0313		12	RIVET DUCTAFIX R4	
400	359005-0010		9	MARKING LABEL KIT 0 - 9, 04.841.2150.0	
410	359005-0050		1	MARKING LABEL KIT X, 04.841.4550.0	
420	90089-0028		1	MUFF	
440	90110-0152		4	CABLE HOOD 24-POL 70.352.2428.1	
460	90110-0385		9	HOLDER	
470	90110-0160		1	CABLE HOOD 6-16-POL 70.352.1628.1	
480	90237-0206		2	LOCK, 1000-U45/U2/17/23/24/991	
T6203	90458-0258		1	TRANSFORMER, 220VAC/6-9-12VAC	
X132	90110-0159		1	MALE INSERT 70.310.0640.0	
X133	90110-0159		1	MALE INSERT 70.310.0640.0	
X220	90110-0150		1	MALE INSERT 121110 0000	
X504	90110-0156		1	MALE INSERT 70.210.0653.0	

TERMINAL BLOCK

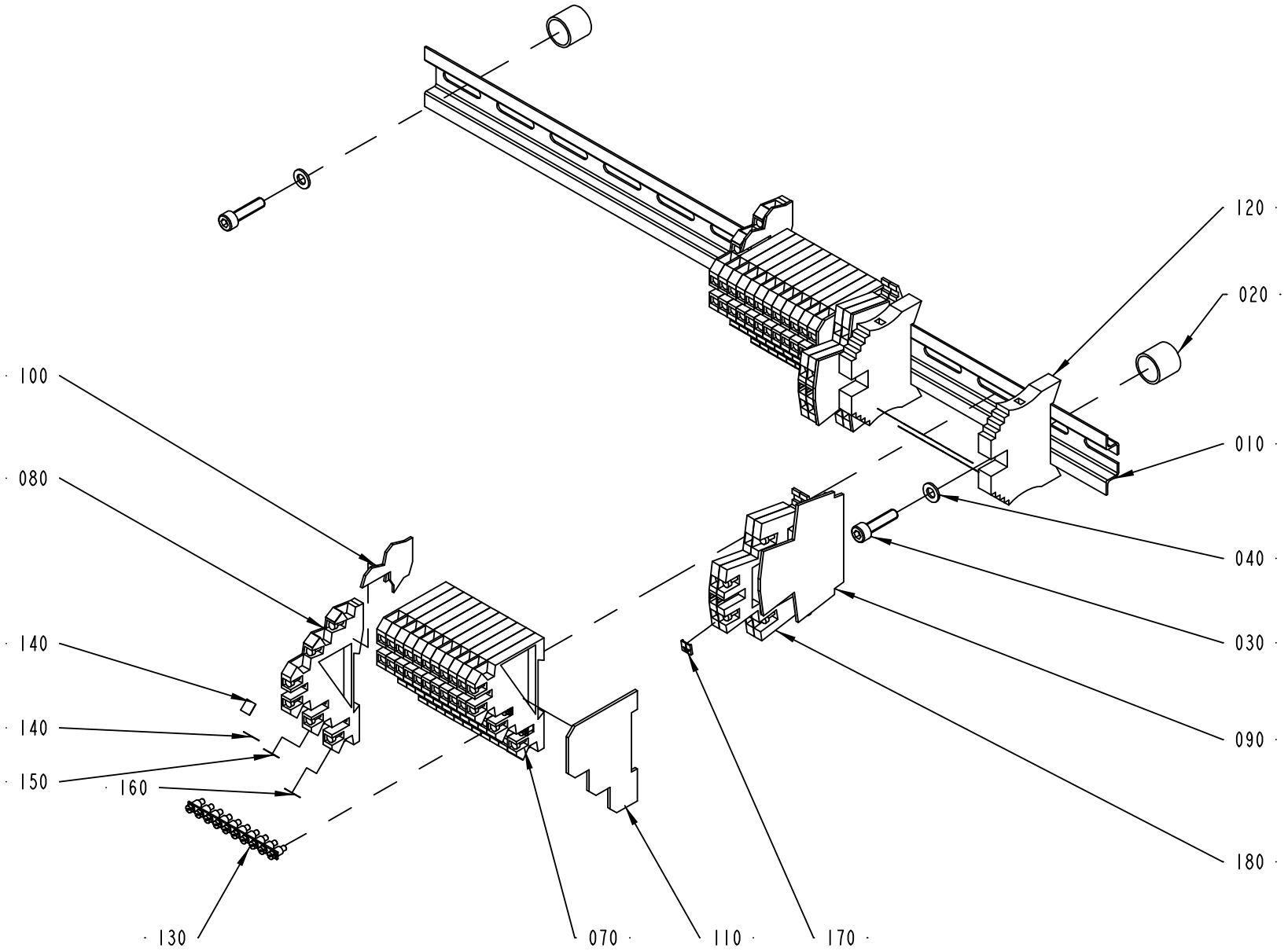

2611462-1
ECM 130325

ECM: 130640 - 20030519
Group number: 2611462-0100
Assembly Drawing: 2611462-1_1_AA

This list covers pages from 7-144 to 7-147

Pos	Part No	UN	Qty	Description	Page No
-					
010	2611464-0000		1	RAIL	
020	495118-0014		2	DISTANCE PIPE L=14 MM	
030	312115-0331		2	SCREW ISO4762 M5X20 A4	
040	315105-0146		2	WASHER BRB5,3X10RFR	
070	353021-0301		22	TERMINALS,TRIPLE-LEVEL, DLI 2,5/35 PA	
080	353021-0302		2	TERMINALS,TRIPLE-LEVEL, DLD 2,5/35 PA	
090	353032-0009		2	END PLATE, WAP FOR WDK	
100	353032-0013		2	END PLATE, 13818.6	
110	353032-0301		2	END PLATE WAP, 13132.6	
120	353031-0203		2	END SUPPORT, WEW 35/2	
130	353034-0404		4	BRIDGE CONNECTOR Q10, 13131.0	
140	359011-0824		2	SET OF SIGNS 6-FW 151-200	
150	359011-0832		26	SET OF SIGNS 6-GW (+)	
160	359011-0833		26	SET OF SIGNS 6-GW (-)	
170	359011-0834		1	SET OF SIGNS 6-GW(EARTH)	
180	90458-1136		4	TERMINAL BLOCK, 103630	
190	359011-0825		2	SET OF SIGNS 6-FW 201-250	

Pos	Part No	UN	Qty	Description	Page No

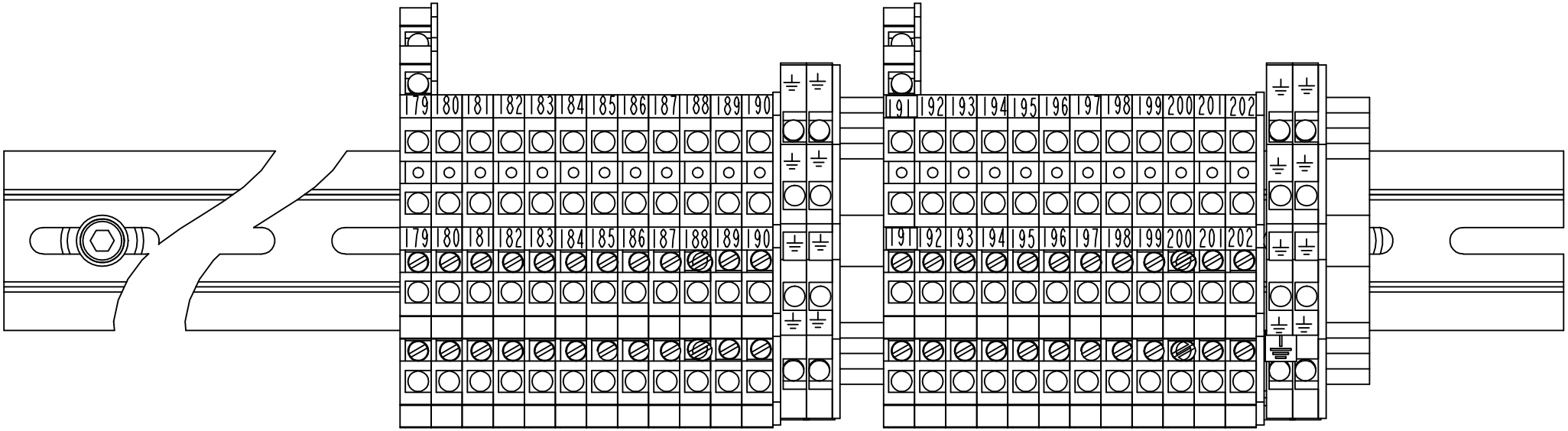

2611462-1
ECM 130325

ECM: 130640 - 20030519
Group number: 2611462-0100
Assembly Drawing: 2611462-1_2_AA

This list covers pages from 7-144 to 7-147

Pos	Part No	UN	Qty	Description	Page No
-					
010	2611464-0000		1	RAIL	
020	495118-0014		2	DISTANCE PIPE L=14 MM	
030	312115-0331		2	SCREW ISO4762 M5X20 A4	
040	315105-0146		2	WASHER BRB5,3X10RFR	
070	353021-0301		22	TERMINALS,TRIPLE-LEVEL, DLI 2,5/35 PA	
080	353021-0302		2	TERMINALS,TRIPLE-LEVEL, DLD 2,5/35 PA	
090	353032-0009		2	END PLATE, WAP FOR WDK	
100	353032-0013		2	END PLATE, 13818.6	
110	353032-0301		2	END PLATE WAP, 13132.6	
120	353031-0203		2	END SUPPORT, WEW 35/2	
130	353034-0404		4	BRIDGE CONNECTOR Q10, 13131.0	
140	359011-0824		2	SET OF SIGNS 6-FW 151-200	
150	359011-0832		26	SET OF SIGNS 6-GW (+)	
160	359011-0833		26	SET OF SIGNS 6-GW (-)	
170	359011-0834		1	SET OF SIGNS 6-GW(EARTH)	
180	90458-1136		4	TERMINAL BLOCK, 103630	
190	359011-0825		2	SET OF SIGNS 6-FW 201-250	

Pos	Part No	UN	Qty	Description	Page No

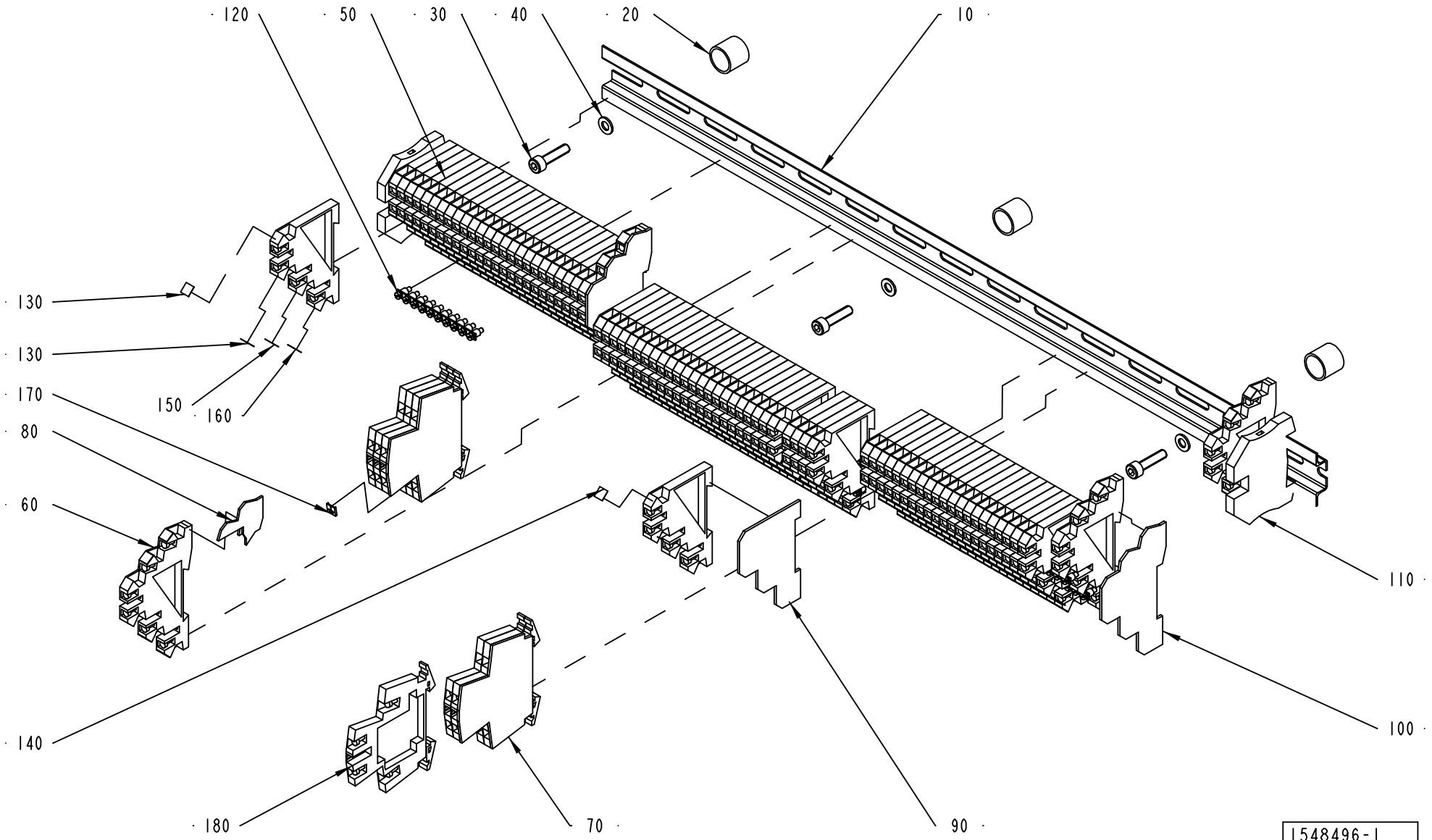
120
50
30
40
20
10
130
130
170
150
160
80
60
140
180
70
90
110
100
1548496-1
ECM 130325

ECM: 132198 - 20030519
Group number: 1548496-0100
Assembly Drawing: 1548496-1_1_AB

This list covers pages from 7-148 to 7-151

Pos	Part No	UN	Qty	Description	Page No
-					
010	2503654-0000		1	RAIL	
020	495118-0014		3	DISTANCE PIPE L=14 MM	
030	312115-0331		3	SCREW ISO4762 M5X20 A4	
040	315105-0146		3	WASHER BRB5,3X10RFR	
050	353021-0301		74	TERMINALS,TRIPLE-LEVEL, DLI 2,5/35 PA	
060	353021-0302		4	TERMINALS,TRIPLE-LEVEL, DLD 2,5/35 PA	
070	353032-0009		2	END PLATE, WAP FOR WDK	
080	353032-0013		1	END PLATE, 13818.6	
090	353032-0301		1	END PLATE WAP, 13132.6	
100	353032-0302		2	END PLATE WAP, 13176.6	
110	353024-0205		2	EARTH TERMINAL, 1010.1	
120	353034-0404		17	BRIDGE CONNECTOR Q10, 13131.0	
130	359011-0823		2	SET OF SIGNS 6-FW 101-150	
140	359011-0824		2	SET OF SIGNS 6-FW 151-200	
150	359011-0832		2	SET OF SIGNS 6-GW (+)	
160	359011-0833		2	SET OF SIGNS 6-GW (-)	
170	359011-0834		1	SET OF SIGNS 6-GW(EARTH)	
180	90458-1136		6	TERMINAL BLOCK, 103630	

Pos	Part No	UN	Qty	Description	Page No

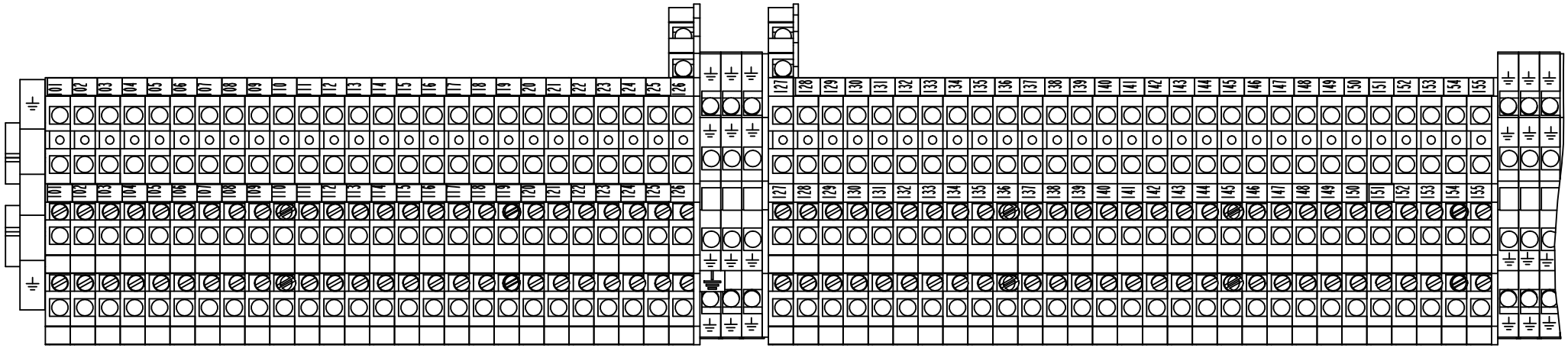

X7001

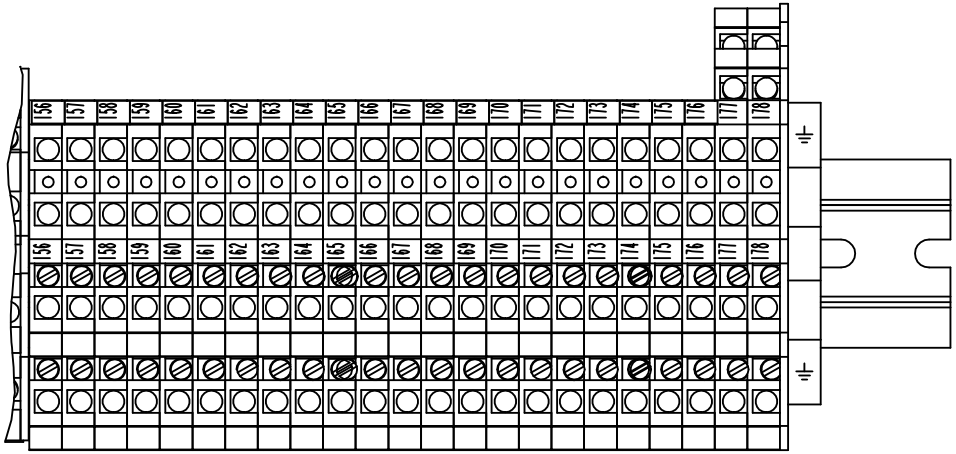

1548496-1
ECM 130325

ECM: 132198 - 20030519
Group number: 1548496-0100
Assembly Drawing: 1548496-1_2_AB

This list covers pages from 7-148 to 7-151

Pos	Part No	UN	Qty	Description	Page No
-					
010	2503654-0000		1	RAIL	
020	495118-0014		3	DISTANCE PIPE L=14 MM	
030	312115-0331		3	SCREW ISO4762 M5X20 A4	
040	315105-0146		3	WASHER BRB5,3X10RFR	
050	353021-0301		74	TERMINALS,TRIPLE-LEVEL, DLI 2,5/35 PA	
060	353021-0302		4	TERMINALS,TRIPLE-LEVEL, DLD 2,5/35 PA	
070	353032-0009		2	END PLATE, WAP FOR WDK	
080	353032-0013		1	END PLATE, 13818.6	
090	353032-0301		1	END PLATE WAP, 13132.6	
100	353032-0302		2	END PLATE WAP, 13176.6	
110	353024-0205		2	EARTH TERMINAL, 1010.1	
120	353034-0404		17	BRIDGE CONNECTOR Q10, 13131.0	
130	359011-0823		2	SET OF SIGNS 6-FW 101-150	
140	359011-0824		2	SET OF SIGNS 6-FW 151-200	
150	359011-0832		2	SET OF SIGNS 6-GW (+)	
160	359011-0833		2	SET OF SIGNS 6-GW (-)	
170	359011-0834		1	SET OF SIGNS 6-GW(EARTH)	
180	90458-1136		6	TERMINAL BLOCK, 103630	

Pos	Part No	UN	Qty	Description	Page No

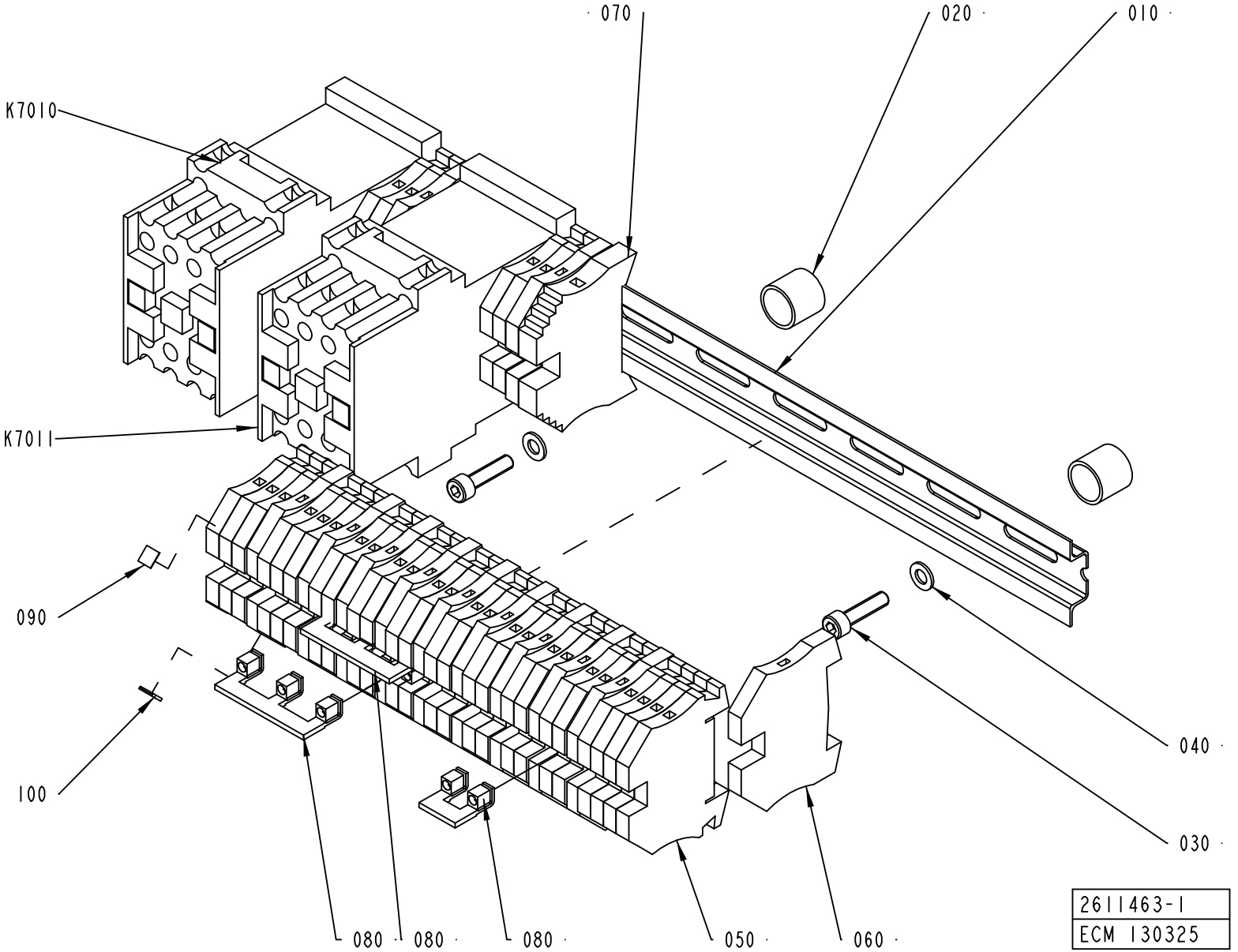
070
020
010
K7010
K7011
090
100
040
030
080
080
080
050
060
2611463-1
ECM 130325

ECM: 130639 - 20030519
Group number: 2611463-0100
Assembly Drawing: 2611463-1_1_AA

This list covers pages from 7-152 to 7-155

Pos	Part No	UN	Qty	Description	Page No
-					
010	2611465-0000		1	RAIL	
020	495118-0014		2	DISTANCE PIPE L=14 MM	
030	312115-0331		2	SCREW ISO4762 M5X20 A4	
040	315105-0146		2	WASHER BRB5,3X10RFR	
050	353021-0213		28	FEED THROUGH TERMINAL, 10201.0	
060	353024-0205		12	EARTH TERMINAL, 1010.1	
070	353031-0203		1	END SUPPORT, WEW 35/2	
080	353034-0031		3	BRIDGE CONNECTOR, WQV 4/10, 10520.6	
090	359011-0821		2	SET OF SIGNS 6-FW 1-50	
100	359011-0834		1	SET OF SIGNS 6-GW(EARTH)	
K7010	90075-0127		1	CONTACTOR, 4KW 24VDC	
K7011	90075-0127		1	CONTACTOR, 4KW 24VDC	

Pos	Part No	UN	Qty	Description	Page No

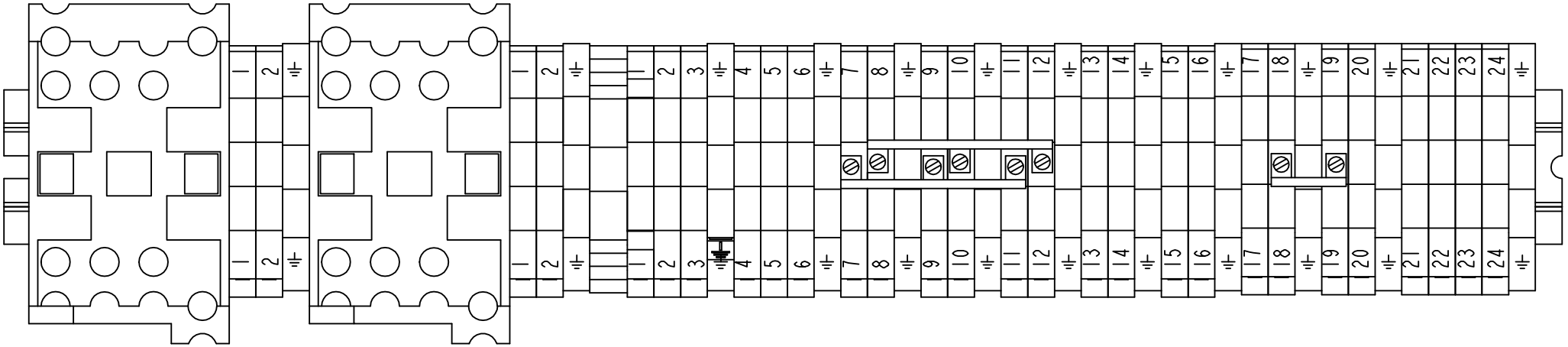

2611463-1
ECM 130325

ECM: 130639 - 20030519
Group number: 2611463-0100
Assembly Drawing: 2611463-1_2_AA

This list covers pages from 7-152 to 7-155

Pos	Part No	UN	Qty	Description	Page No
-					
010	2611465-0000		1	RAIL	
020	495118-0014		2	DISTANCE PIPE L=14 MM	
030	312115-0331		2	SCREW ISO4762 M5X20 A4	
040	315105-0146		2	WASHER BRB5,3X10RFR	
050	353021-0213		28	FEED THROUGH TERMINAL, 10201.0	
060	353024-0205		12	EARTH TERMINAL, 1010.1	
070	353031-0203		1	END SUPPORT, WEW 35/2	
080	353034-0031		3	BRIDGE CONNECTOR, WQV 4/10, 10520.6	
090	359011-0821		2	SET OF SIGNS 6-FW 1-50	
100	359011-0834		1	SET OF SIGNS 6-GW(EARTH)	
K7010	90075-0127		1	CONTACTOR, 4KW 24VDC	
K7011	90075-0127		1	CONTACTOR, 4KW 24VDC	

Pos	Part No	UN	Qty	Description	Page No

VALVE PANEL

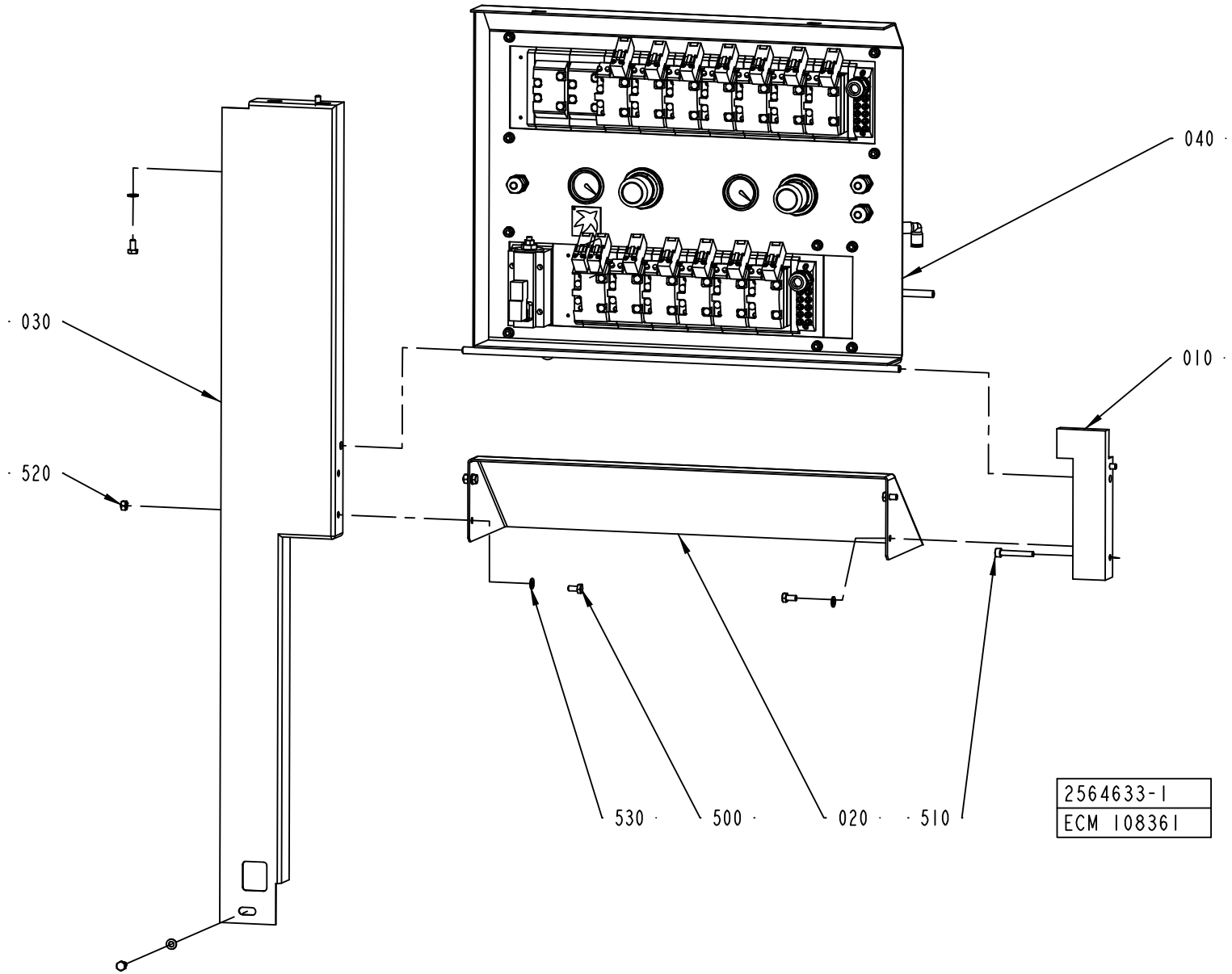

ECM: 122171 - 20030908
Group number: 2564633-0100
Assembly Drawing: 2564633-1_1_AA

Pos	Part No	UN	Qty	Description	Page No
-					
010	2564634-0000		1	BEARING BLOCK	
020	2570834-0000		1	PROTECTIVE CASING	
030	2570836-0000		1	PROTECTION PLATE	
040	2564632-0100		1	VALVE PANEL	**7-159, 7-161, 7-163, 7-165**
500	312105-0366		7	SCREW M6S ISO 4017 M6X12 A480	
510	312115-0378		2	SCREW ISO4762 M6X40 A4 80	
520	312605-0316		2	HEXAGON NUT, M6M M6 A280	
530	315105-0153		7	WASHER BRB6,4X12RFR	

Pos	Part No	UN	Qty	Description	Page No

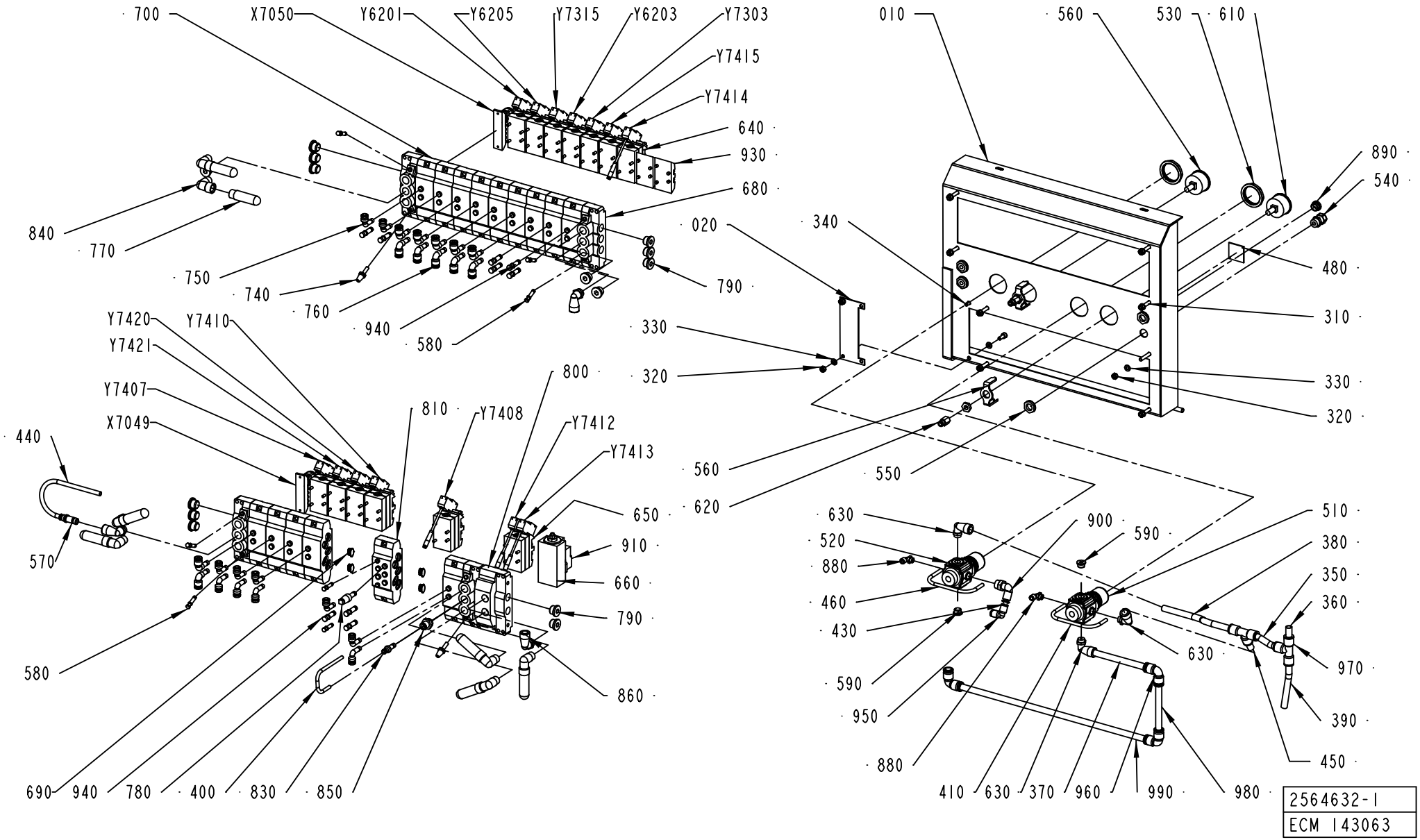
700
X7050
Y6201
Y6205
Y7315
Y6203
Y7303
Y7415
Y7414
640
930
680
840
770
750
740
760
940
580
790
020
010
560
530
610
890
540
340
480
310
330
320
550
Y7420
Y7410
Y7421
Y7407
X7049
800
810
Y7408
Y7412
Y7413
440
650
910
660
790
570
580
860
690
940
780
400
830
850
630
520
880
460
430
590
950
880
900
590
510
380
350
360
970
390
450
410
630
370
960
990
980
2564632-1
ECM 143063

ECM: 180803 - 50001231
Group number: 2564632-0100
Assembly Drawing: 2564632-1_1_AB

This list covers pages from 7-158 to 7-165

Pos	Part No	UN	Qty	Description	Page No
A3/FLEX TBA 1890S WITH ARL, A3/FLEX TBA 2000S WITH ARL (See drawing on pages: 7-162, 7-164)					
020	2616034-0000		1	COVER PLATE	
100	2691105-0000		1	PNEUMATIC DIAGRAM	
320	312605-0316		10	HEXAGON NUT, M6M M6 A280	
340	312115-0367		2	SCREW ISO4762 M6X14 A4	
540	90458-0306		4	CABLE GLAND, M16X1,5, NO.5311 1010	
570	342716-0209		1	REDUCER 8-12	
580	342715-0102		7	BLIND PLUG 6 MM	
640	90042-0215		12	VALVE BODY 5/2 UNISTABLE	
670	90042-0230		2	VALVE BODY 5/3 OPEN CENTRE	
690	90042-0528		4	BLANKING KIT SEALS ISO SIZE 1	
750	90055-0172		11	ELBOW WITH TAILPIECE 8/8 MM	
760	90055-0173		16	ELBOW WITH TAILPIECE 8/6 MM	
790	342713-0211		14	PLUG, EXT THREAD HEX SOCKET 8638-00-380	
810	90042-0520		1	BASE PLATE ISO SIZE 1	
860	90458-2960		3	ELBOW PIPE JOINT, EXT.THREAD,D=12MM-G3/8	
940	342715-0103		9	BLIND PLUG 8 MM	
X7051	90042-0535		1	TERMINAL BOARD 19 CORDS	
Y6201	90042-0591		1	PILOT VALVE, 04938-333-08	
Y7425	90042-0585		1	PILOT VALVE L=5M	
Y7430	90042-0538		1	PILOT VALVE L=500MM	
Y7431	90042-0538		1	PILOT VALVE L=500MM	
Y7432	90042-0538		1	PILOT VALVE L=500MM	
Y7433	90042-0538		1	PILOT VALVE L=500MM	
A3/FLEX WITHOUT ARL (See drawing on pages: 7-158, 7-160)					
020	2616034-0000		1	COVER PLATE	
100	2594393-0000		1	PNEUMATIC DIAGRAM	
320	312605-0316		10	HEXAGON NUT, M6M M6 A280	
340	312115-0367		2	SCREW ISO4762 M6X14 A4	
540	90458-0306		3	CABLE GLAND, M16X1,5, NO.5311 1010	
570	342716-0209		1	REDUCER 8-12	
580	342715-0102		7	BLIND PLUG 6 MM	
640	90042-0215		12	VALVE BODY 5/2 UNISTABLE	
690	90042-0528		4	BLANKING KIT SEALS ISO SIZE 1	
750	90055-0172		11	ELBOW WITH TAILPIECE 8/8 MM	
760	90055-0173		12	ELBOW WITH TAILPIECE 8/6 MM	
790	342713-0211		14	PLUG, EXT THREAD HEX SOCKET 8638-00-380	
810	90042-0520		1	BASE PLATE ISO SIZE 1	
860	90458-2960		3	ELBOW PIPE JOINT, EXT.THREAD,D=12MM-G3/8	
890	90458-1307		1	BLIND PLUG CIRCULAR, M16X1,5 514GFK/216	
930	90042-0519		2	BLANK PLATE ISO SIZE 1	
940	342715-0103		9	BLIND PLUG 8 MM	
Y6201	90042-0591		1	PILOT VALVE, 04938-333-08	
Y7425	90042-0585		1	PILOT VALVE L=5M	
A3/FLEX TBA 0200B WITH ARL, A3/FLEX TBA 0200S WITH ARL, A3/FLEX TBA 0250B WITH ARL, A3/FLEX TBA 0250S WITH ARL, A3/FLEX TBA 0330S WITH ARL, A3/FLEX TBA 0500B WITH ARL, A3/FLEX TBA 0500S WITH ARL, A3/FLEX TBA 1000B WITH ARL, A3/FLEX TBA 1000S WITH ARL, A3/FLEX TBA 1000SQ WITH ARL, A3/FLEX TBA 1500S WITH ARL, A3/FLEX TPA 0330SQ WITH ARL, A3/FLEX TPA 0500SQ WITH ARL, A3/FLEX TPA 1000SQ WITH ARL (See drawing on pages: 7-162, 7-164)					
020	2616034-0000		1	COVER PLATE	
320	312605-0316		10	HEXAGON NUT, M6M M6 A280	
340	312115-0367		2	SCREW ISO4762 M6X14 A4	
540	90458-0306		4	CABLE GLAND, M16X1,5, NO.5311 1010	
570	342716-0209		1	REDUCER 8-12	
580	342715-0102		7	BLIND PLUG 6 MM	
640	90042-0215		12	VALVE BODY 5/2 UNISTABLE	
670	90042-0230		2	VALVE BODY 5/3 OPEN CENTRE	
690	90042-0528		4	BLANKING KIT SEALS ISO SIZE 1	
750	90055-0172		11	ELBOW WITH TAILPIECE 8/8 MM	
760	90055-0173		16	ELBOW WITH TAILPIECE 8/6 MM	
790	342713-0211		14	PLUG, EXT THREAD HEX SOCKET 8638-00-380	
810	90042-0520		1	BASE PLATE ISO SIZE 1	
860	90458-2960		3	ELBOW PIPE JOINT, EXT.THREAD,D=12MM-G3/8	
940	342715-0103		9	BLIND PLUG 8 MM	
X7051	90042-0535		1	TERMINAL BOARD 19 CORDS	
Y6201	90042-0591		1	PILOT VALVE, 04938-333-08	
Y7425	90042-0585		1	PILOT VALVE L=5M	
Y7430	90042-0538		1	PILOT VALVE L=500MM	
Y7431	90042-0538		1	PILOT VALVE L=500MM	
Y7432	90042-0538		1	PILOT VALVE L=500MM	
Y7433	90042-0538		1	PILOT VALVE L=500MM	
Common Parts					
010	2570821-0000		1	SHEET	
100	2618430-0000		1	PNEUMATIC DIAGRAM	
100	2633328-0000		1	PNEUMATIC DIAGRAM	
310	312115-0376		8	SCREW ISO4762 M6X35 A4	
330	315105-0153		20	WASHER BRB6,4X12RFR	
350	90166-0068	MM	100	TUBE 12 MM PA BLUE	
360	90166-0068	MM	30	TUBE 12 MM PA BLUE	
370	90166-0068	MM	200	TUBE 12 MM PA BLUE	
380	90166-0068	MM	250	TUBE 12 MM PA BLUE	
390	90166-0068	MM	160	TUBE 12 MM PA BLUE	
400	90166-0117	MM	200	HOSE 4/6 PVC BLUE	
410	90166-0117	MM	220	HOSE 4/6 PVC BLUE	

Machine Type | Group Description | Used-In | Group Number | Page No

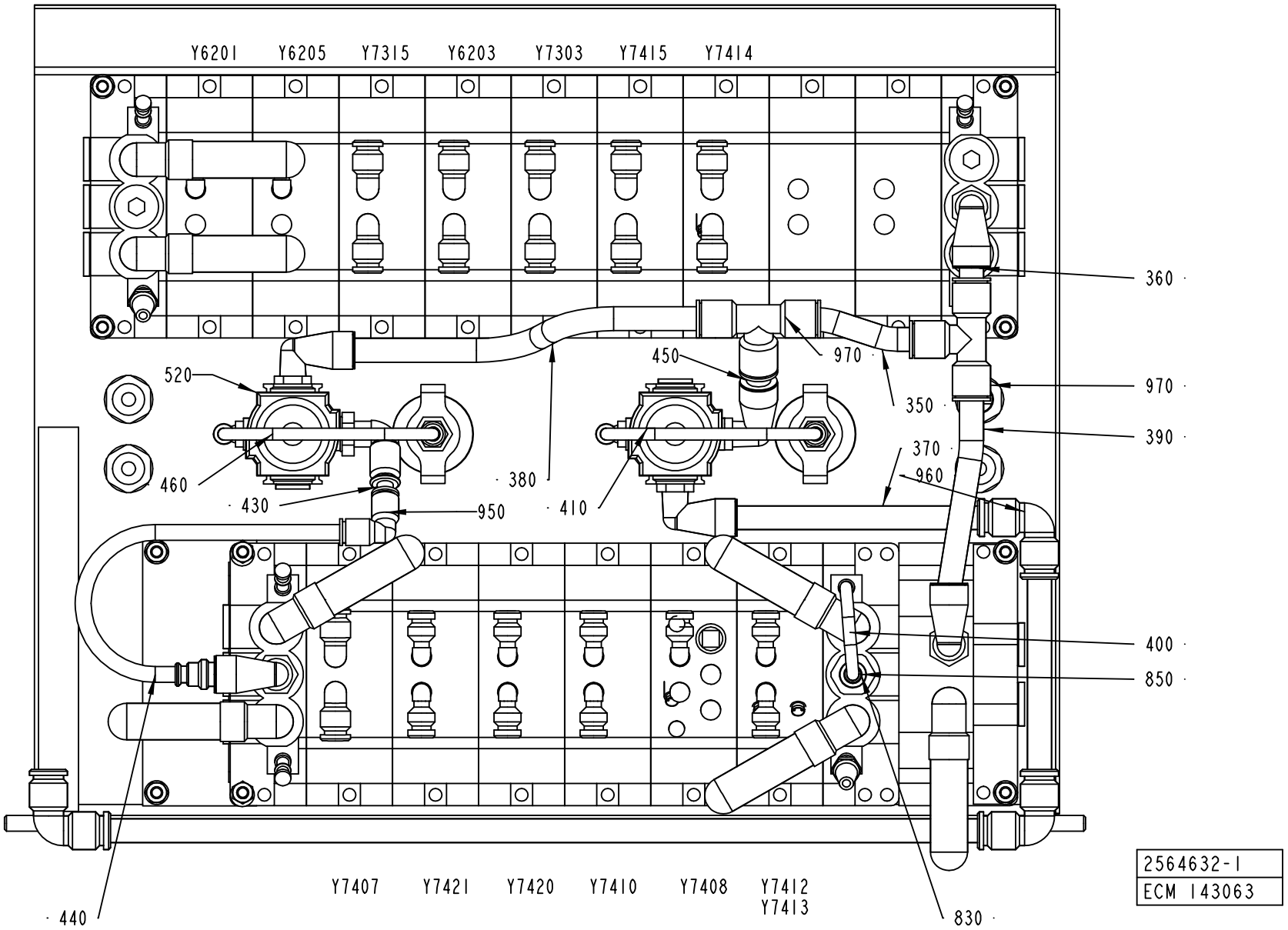
Y6201
Y6205
Y7315
Y6203
Y7303
Y7415
Y7414
360
970
450
970
520
350
390
370
460
380
960
430
950
410
400
850
440
830
Y7407
Y7421
Y7420
Y7410
Y7408
Y7412
Y7413
2564632-1
ECM 143063

ECM: 180803 - 50001231
Group number: 2564632-0100
Assembly Drawing: 2564632-1_2_AB

This list covers pages from 7-158 to 7-165

Pos	Part No	UN	Qty	Description	Page No
Common Parts (Cont'd)					
430	90166-0194	MM	30	TUBE 8 MM PUR BLUE	
440	90166-0194	MM	270	TUBE 8 MM PUR BLUE	
450	90166-0068	MM	30	TUBE 12 MM PA BLUE	
460	90166-0117	MM	220	HOSE 4/6 PVC BLUE	
480	273458-0000		1	SIGN, AIR	
510	90113-0470		1	MANIFOLD REGULATOR 10 BAR	
520	90457-0144		1	REGULATOR 0,3-2 BAR	
530	90457-0078		2	PANEL NUT	
550	90458-0322		4	NUT, M16X1,5	
560	90043-0064		1	PRESSURE GAUGE, 2048 D=40 MM	
580	342715-0102		9	BLIND PLUG 6 MM	
590	342713-0209		2	PLUG (1UNIT = 10PC)	
610	90043-0065		1	PRESSURE GAUGE, 2048 D=40 MM	
620	342770-0105		2	STRAIGHT COUPLING INT, D=6 MM - G1/8	
630	90458-2959		3	ELBOW PIPE JOINT, EXT.THREAD,D=12MM-G1/4	
650	90042-0221		1	VALVE BODY 5/2 BISTABLE	
660	90042-0265		1	HIGH SPEED VENTING VALVE 583-590-000-1	
680	90042-0522		4	PORTED END PIECE ISO SIZE 1	
700	90042-0532		14	BASE PLATE ISO SIZE 1	
740	90328-0017		2	SILENCER, D=6 MM	
770	90328-0024		7	SILENCER G3/8	
780	90328-0038		1	SILENCER, D=8 MM	
800	90042-0545		1	SUB-BASE SOFT START ISO 1 AND VDMA 01	
830	342716-0203		1	REDUCER 6-8	
840	90140-0020		7	ELBOW, 90, INT/EXT. THREAD, NO. 2020-3/8	
850	342722-0206		1	STRAIGHT COUPLING D=8-G3/8"	
880	90458-2956		2	ELBOW PIPE JOINT, EXT.THREAD, D=6MM-G1/8	
900	342732-0105		1	ELBOW PIPE JOINT ,EXT.THREAD,D=8 MM R3/8	
950	342735-0103		1	ELBOW PIPE JOINT	
960	342735-0109		3	ELBOW PIPE JOINT	
970	342748-0109		2	T-CONNECTION 12MM	
980	90166-0068	MM	200	TUBE 12 MM PA BLUE	
X7049	90042-0535		1	TERMINAL BOARD 19 CORDS	
X7050	90042-0535		1	TERMINAL BOARD 19 CORDS	
Y6203	90042-0539		1	PILOT VALVE L=350MM	
Y6205	90042-0591		1	PILOT VALVE, 04938-333-08	
Y7303	90042-0539		1	PILOT VALVE L=350MM	
Y7315	90042-0591		1	PILOT VALVE, 04938-333-08	
Y7407	90042-0591		1	PILOT VALVE, 04938-333-08	
Y7408	90042-0538		1	PILOT VALVE L=500MM	
Y7410	90042-0539		1	PILOT VALVE L=350MM	
Y7412	90042-0538		1	PILOT VALVE L=500MM	
Y7413	90042-0538		1	PILOT VALVE L=500MM	
Y7414	90042-0538		1	PILOT VALVE L=500MM	
Y7415	90042-0538		1	PILOT VALVE L=500MM	
Y7420	90042-0591		1	PILOT VALVE, 04938-333-08	
Y7421	90042-0591		1	PILOT VALVE, 04938-333-08	

Machine Type | Group Description | Used-In | Group Number | Page No

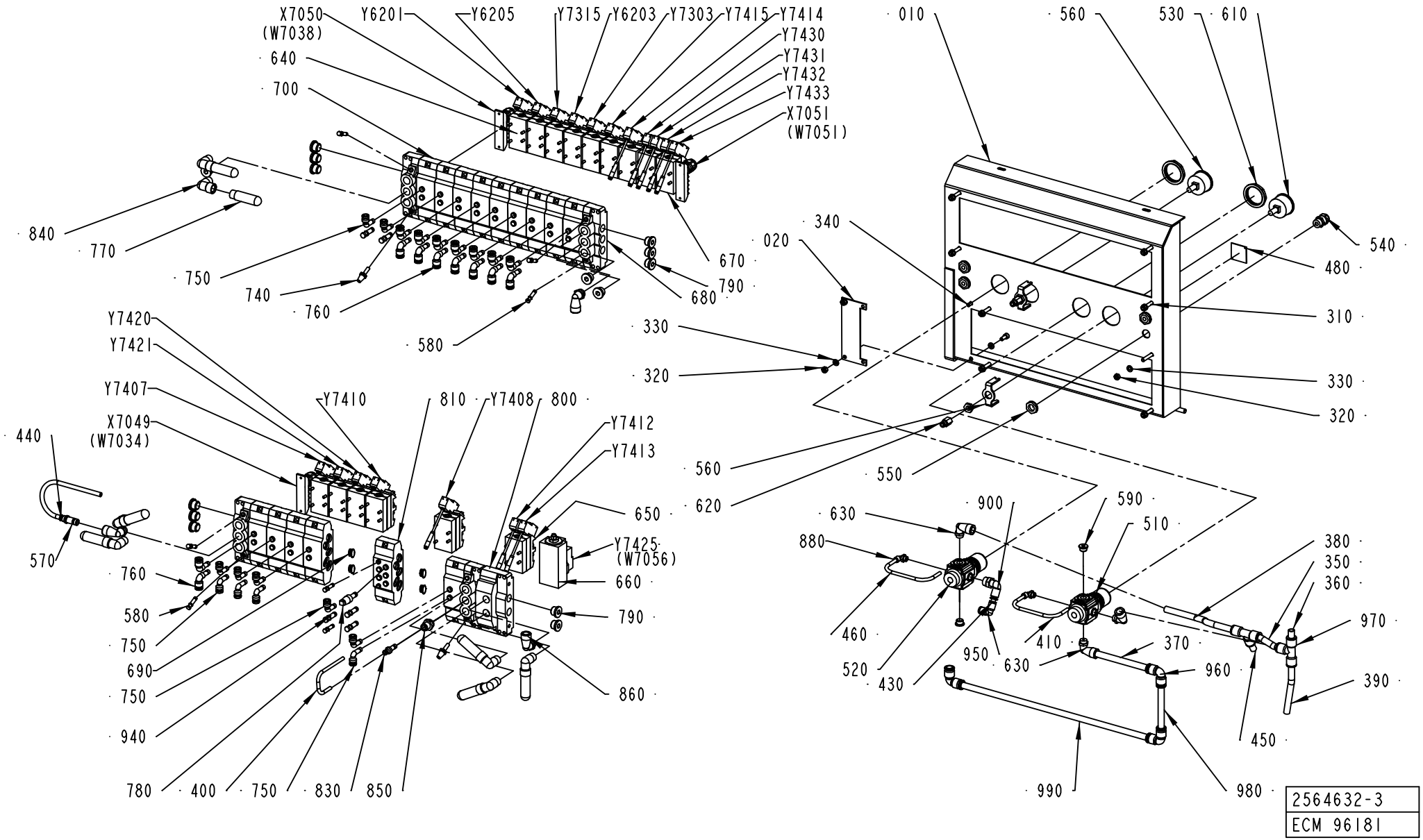

2564632-3
ECM 96181

Pos	Part No	UN	Qty	Description	Page No	Pos	Part No	UN	Qty	Description	Page No

SEE PREVIOUS LISTS PAGES: 7-159, 7-161.

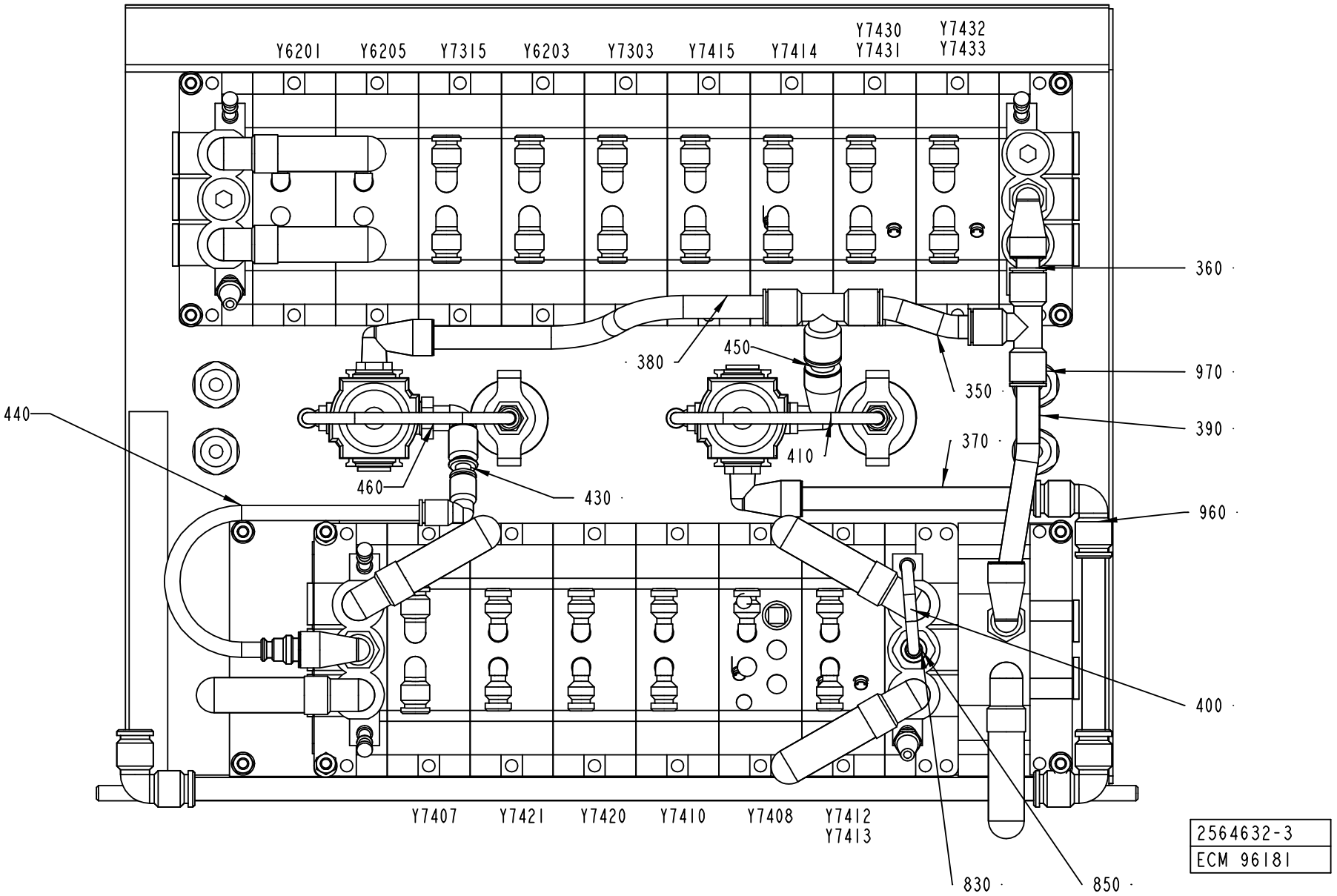
Y6201
Y6205
Y7315
Y6203
Y7303
Y7415
Y7414
Y7430
Y7431
Y7432
Y7433
360
970
390
960
400
850
830
350
370
450
380
410
440
460
430
Y7407
Y7421
Y7420
Y7410
Y7408
Y7412
Y7413
2564632-3
ECM 96181

Pos	Part No	UN	Qty	Description	Page No	Pos	Part No	UN	Qty	Description	Page No

SEE PREVIOUS LISTS PAGES: 7-159, 7-161.

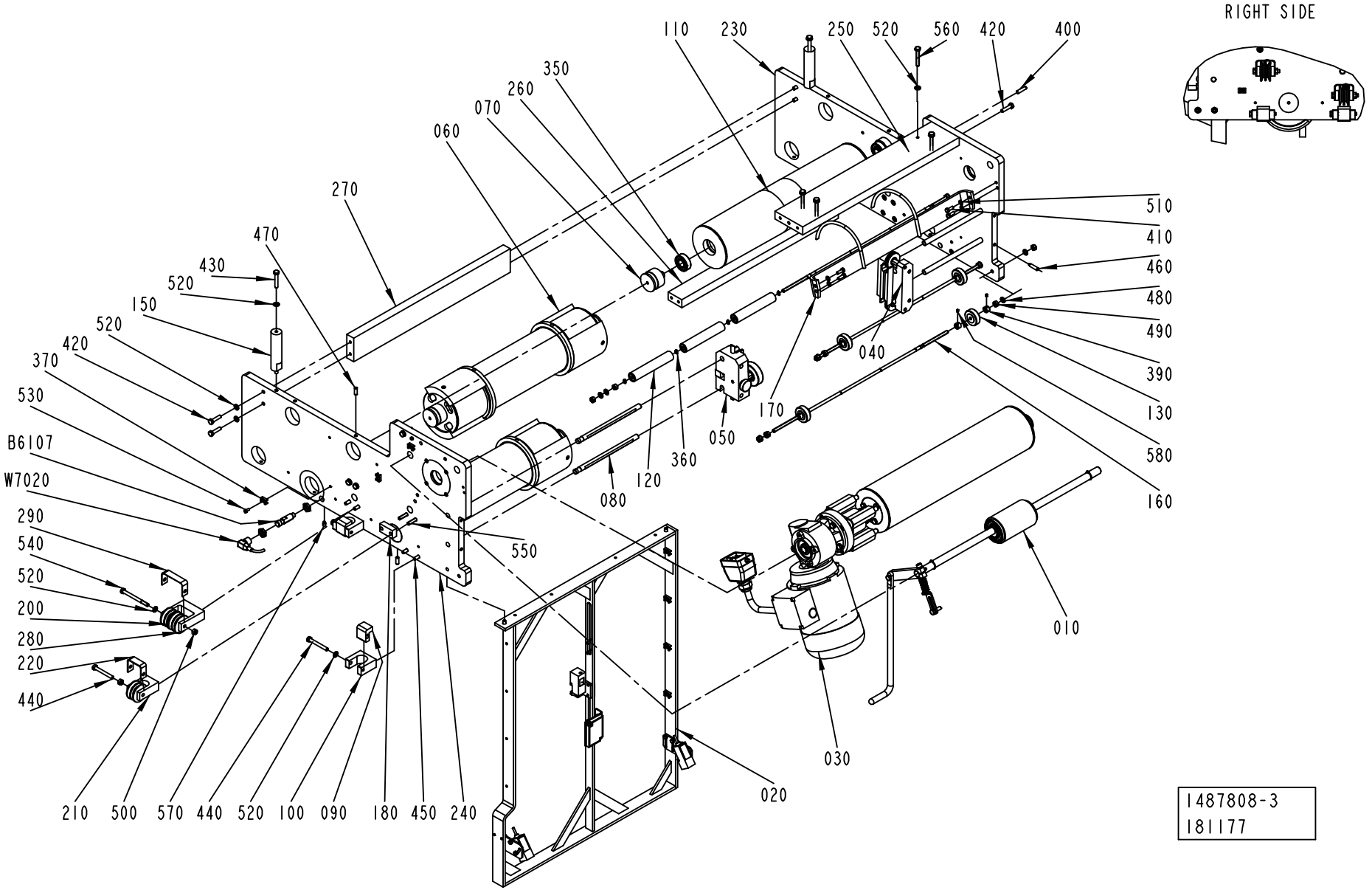
RIGHT SIDE
110
230
250
520
560
420
400
350
260
070
060
270
470
430
520
150
520
420
370
530
B6107
W7020
290
540
520
200
280
220
440
210
500
570
440
520
100
090
180
450
240
550
080
120
360
050
170
040
510
410
460
480
490
390
130
580
160
010
030
020
1487808-3
181177

ECM: 181515 - 50001231
Group number: 1487808-0200
Assembly Drawing: 1487808-3_1_AD

Pos	Part No	UN	Qty	Description	Page No
A3/FLEX					
070	1499584-0000		2	AXLE PIN	
120	1145391-0000		3	ROLLER	
130	1558911-0000		4	PRESSURE ROLLER	
160	2701319-0000		3	GUIDE PIN	
350	321313-0102		2	BALL BEARING, 15X35X11 MM	
360	315751-0103		4	RETAINING RING FOR SHAFT DIN 471 6 A2	
390	315741-0102		8	RETAINING RING DIN 705 A2 6	
480	315103-0153		12	WASHER, BRB, 6,4/12,H=1,5 NIPL BR	
490	312607-0316		12	HEXAGON NUT, EN 24032 M6M M6 A480	
580	312318-0283		8	SCREW ISO4029 M4X4 A4	
Common Parts					
010	1512429-0100		1	PRESSURE ROLLER	**7-169**
020	1524731-0200		1	BRACKET	**7-171**
030	1524732-0200		1	DRIVE UNIT	**7-173**
040	2529547-0100		1	PAPER GUIDE	**7-115**
050	1484745-0100		1	WEB GUIDE	**7-113**
060	2605228-0100		2	BENDING ROLLER	**7-175**
080	1484704-0000		4	SHAFT	
090	1484728-0000		4	BRACKET	
100	1484738-0000		4	BRACKET	
110	1484766-0000		1	DANCE ROLLER	
150	1487802-0000		2	SPACER	
170	2550896-0000		1	RAIL	
180	1519960-0000		1	SPACER	
200	1519581-0000		5	ROLLER BAR	
210	1519586-0000		3	BRACKET	
220	1519592-0000		4	BOW	
230	1490814-0000		1	PLATE	
240	1490815-0000		1	PLATE	
250	1487795-0000		1	PLATE	
260	1487796-0000		1	PLATE	
270	1487800-0000		1	PLATE	
280	1538192-0000		1	BRACKET	
290	1539396-0000		1	BOW CLAMP	
370	352113-0205		6	ANCHOR PLATES FOR STRIPS, TYPE TM2S8-C10	
400	311103-0355		2	PARALLELL PIN, M6, 6X25 MM	
410	312105-0328		4	SCREW M6S ISO 4017 M5X14 A480	
420	312105-0372		11	SCREW M6S ISO 4017 M6X25 A480	
430	312105-0376		2	SCREW M6S ISO 4014 M6X35 A480	
440	312105-0380		8	SCREW M6S ISO 4014 M6X50 A480	
450	312115-0370		14	SCREW ISO4762 M6X20 A4	
460	312311-0372		4	SCREW ISO4028 M6X25 FZB	
470	312318-0368		5	SCREW ISO4029 M6X16 A4	
500	312605-0316		5	HEXAGON NUT, M6M M6 A280	
510	315105-0146		4	WASHER BRB5,3X10RFR	
520	315105-0153		25	WASHER BRB6,4X12RFR	
530	312125-0287		6	SCREW ISO 1207 M4X8 A4	
540	312105-0384		1	SCREW M6S ISO 4014 M6X70 A480	
550	312115-0374		2	SCREW ISO4762 M6X30 A4	
560	312109-0378		4	SCREW M6S ISO4017 M6X40 A480	
570	90287-0154		1	SCREW, SOCK.SET DOGPOINT M6X10	
B6107	90458-0677		1	PROXIMITY SWITCH, E2EG-X5MB1-M1	
W7020	90458-1076		1	L-SHAPED CONNECTOR CABLE 933 235-042	

PRESSURE ROLLER

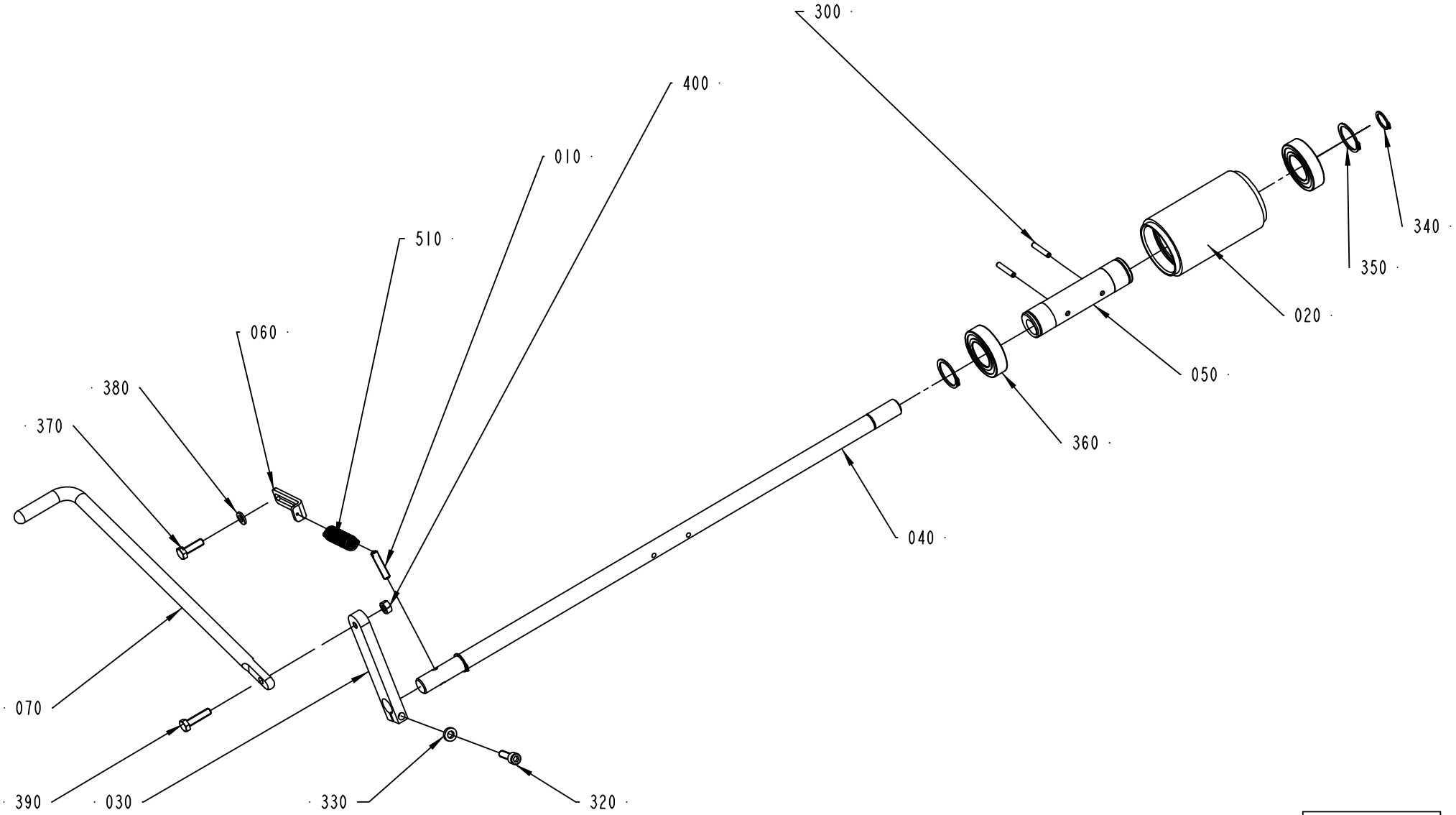

1512429-1
ECM 118625

ECM: 120907 - 20021219
Group number: 1512429-0100
Assembly Drawing: 1512429-1_1_AC

Pos	Part No	UN	Qty	Description	Page No
-					
010	578684-0000		1	SPRING BRACKET	
020	906254-0000		1	ROLLER	
030	2576379-0000		1	ROCKER ARM	
040	1487521-0000		1	SHAFT	
050	1512267-0000		1	ECCENTRIC BUSHING	
060	2529549-0000		1	PLATE	
070	2578455-0000		1	LIFTING HANDLE	
300	311112-0258		2	SPRING PIN, ISO 8752 4X24-C	
310	312105-0368		1	SCREW M6S ISO 4017 M6X16 A480	
320	312115-0370		1	SCREW ISO4762 M6X20 A4	
330	315115-0153		1	WASHER PLAIN, TBRB 6,4/12 H=3	
340	315751-0112		2	RETAINING RING FOR SHAFT DIN 471 15 A2	
350	315751-0119		2	RETAINING RING FOR SHAFT DIN 471 25 A2	
360	321308-0205		2	BALL BEARING, 25X47X12MM	
370	312105-0370		1	SCREW M6S ISO 4017 M6X20 A480	
380	315105-0153		1	WASHER BRB6,4X12RFR	
390	312105-0372		1	SCREW M6S ISO 4017 M6X25 A480	
400	312605-0316		1	HEXAGON NUT, M6M M6 A280	
500	90051-0082		1	KNOB, CIRCUL, THREADED BUSH, M6 25X21 MM	
510	90335-0091		1	TENSION SPRING 41890, 1,2X13X48,2	

Pos	Part No	UN	Qty	Description	Page No

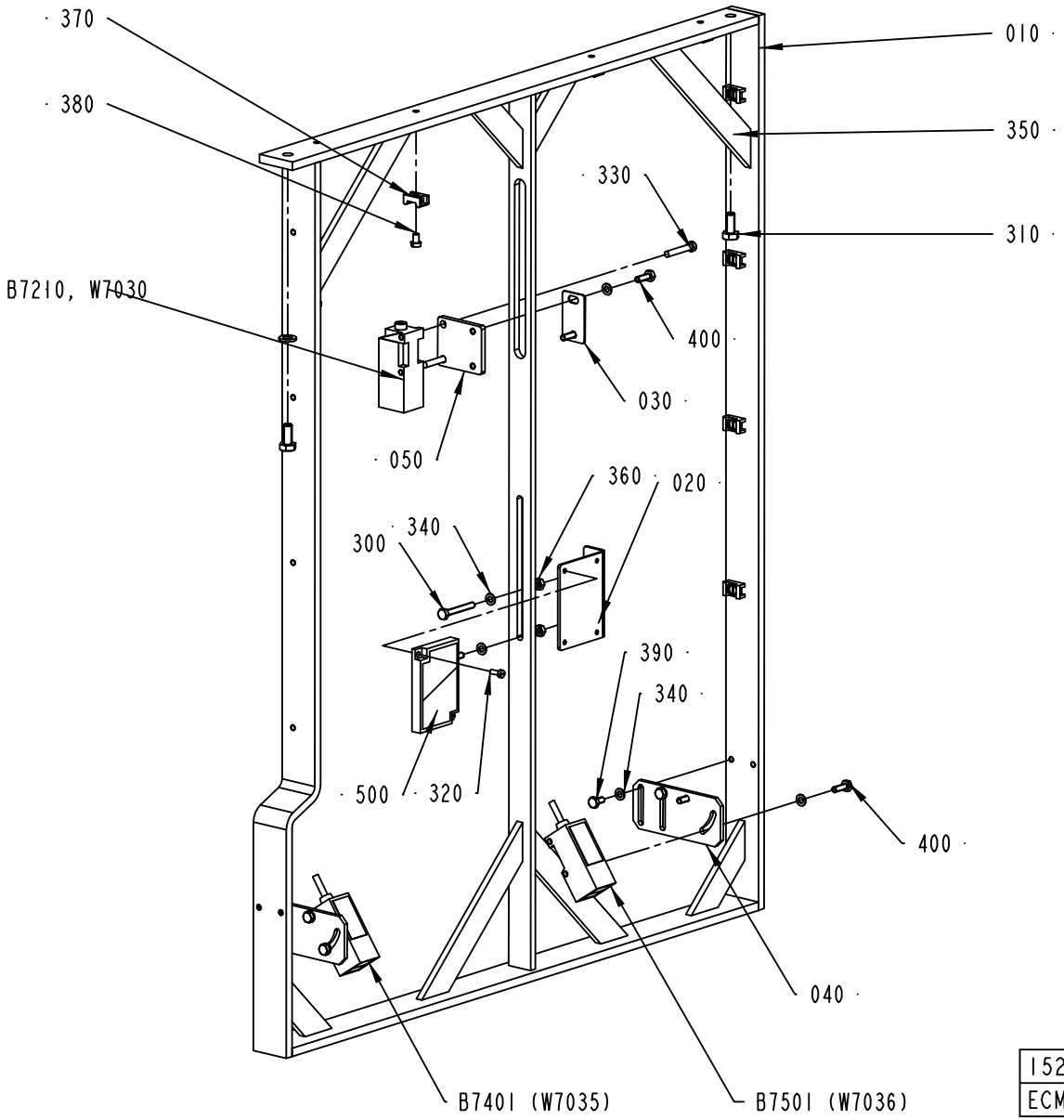

1524731-2
ECM 149840

ECM: 149840 - 20040112
Group number: 1524731-0200
Assembly Drawing: 1524731-2_1_AB

Pos	Part No	UN	Qty	Description	Page No
-					
010	2541942-0000		1	BRACKET	
020	1487784-0000		1	BRACKET	
030	1517105-0000		1	PLATE	
040	2542496-0000		2	BRACKET	
050	2651925-0000		1	PLATE	
300	312105-0299		2	SCREW M6S ISO 4017 M4X30 A470	
310	312105-0367		2	SCREW M6S ISO 4017 M6X14 A480	
320	312125-0222		2	SCREW ISO 1207 M3X8 A4	
330	312125-0297		2	SCREW ISO 1207 M4X25 A4	
340	315105-0136		14	WASHER BRB4,3XRFR	
350	315105-0153		2	WASHER BRB6,4X12RFR	
360	312605-0312		4	HEXAGON NUT, M6M M4 A280	
370	352113-0205		12	ANCHOR PLATES FOR STRIPS, TYPE TM2S8-C10	
380	312125-0285		12	SCREW ISO 1207 M4X6 A4	
390	312105-0287		4	SCREW M6S ISO4017 M4X8 A470	
400	312105-0291		6	SCREW M6S ISO 4017 M4X12 A470	
500	90232-0333		1	REFLECTOR E39-R1	
B7210	90232-0129		1	PH.CELL E3S-CR61-5M	
B7401	90232-0106		1	PH.CELL E3S-CR11-5M	
B7501	90232-0106		1	PH.CELL E3S-CR11-5M	

Pos	Part No	UN	Qty	Description	Page No

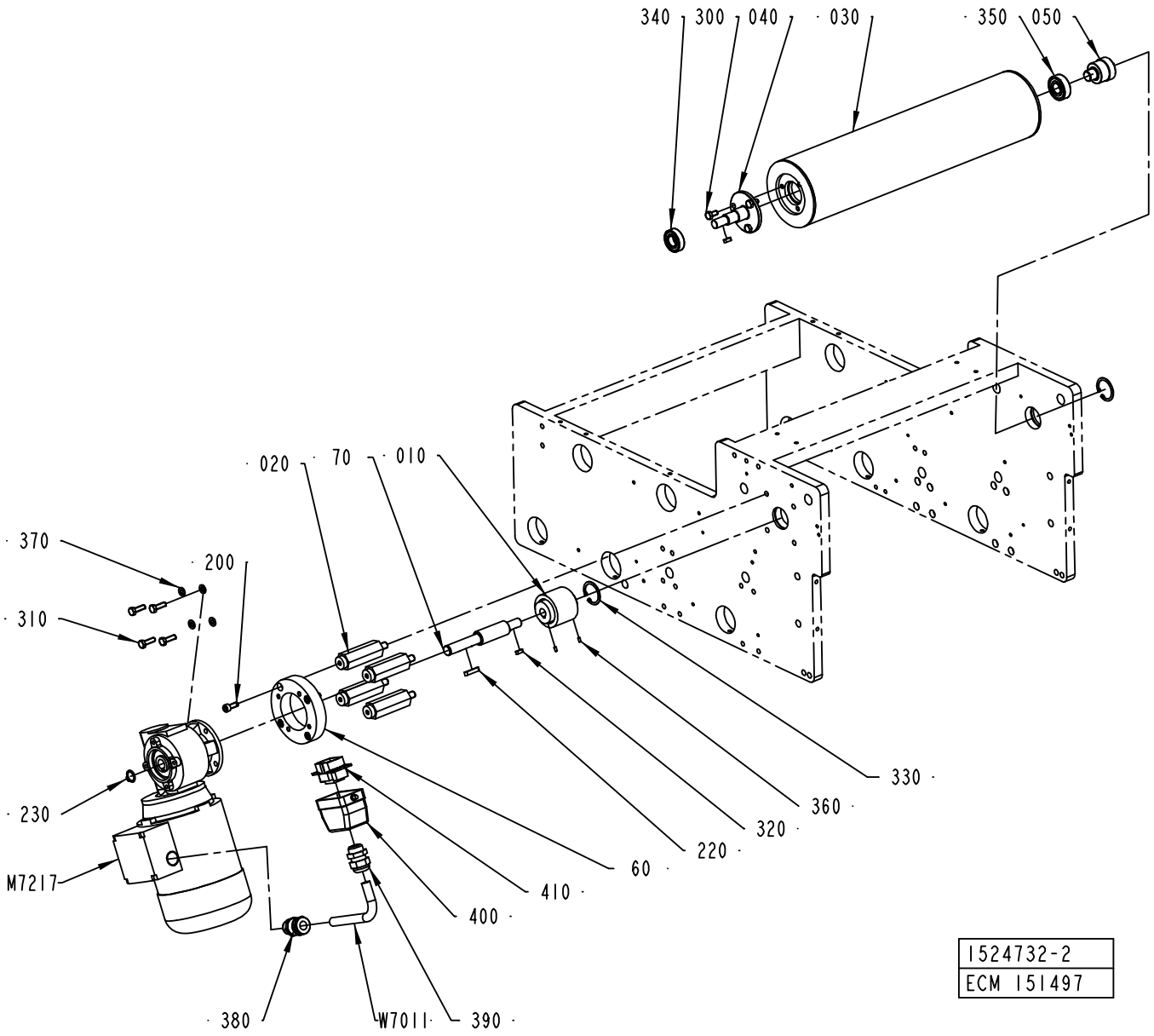
340
300
040
030
350
050
020
70
010
370
200
310
330
360
320
220
230
60
M7217
410
400
380
W7011
390
1524732-2
ECM 151497

ECM: 163296 - 20040419
Group number: 1524732-0200
Assembly Drawing: 1524732-2_1_AC

Pos	Part No	UN	Qty	Description	Page No
A3/FLEX					
W7011	90220-0104	M	8	SCR. CABLE 4X1,5MM2	
Common Parts					
010	979847-0000		1	SHAFT COUPLING	
020	1487788-0000		4	SPACER	
030	2523497-0000		1	BENDING ROLLER	
040	2523499-0000		1	SHAFT	
050	2523500-0000		1	AXLE PIN	
060	2532561-0000		1	SPACER	
070	2588067-0000		1	SHAFT	
200	312115-0368		4	SCREW ISO4762 M6X16 A4	
220	315705-0202		1	PARALLEL KEY W ROUND ENDS 5X5X25MM	
230	315751-0111		1	RETAINING RING FOR SHAFT DIN 471 14 A2	
300	312105-0366		3	SCREW M6S ISO 4017 M6X12 A480	
310	312105-0370		4	SCREW M6S ISO 4017 M6X20 A480	
320	315701-0166		2	PARALLEL KEY W. ROUND ENDS 4X4X12 MM	
330	315753-0123		2	RETAINING RING FOR BORE DIN 472 32 A2	
340	321308-0202		1	BALL BEARING, 15X32X9 MM	
350	321313-0102		1	BALL BEARING, 15X35X11 MM	
360	312318-0220		2	SCREW ISO4029 M3X6 A4	
370	315105-0153		4	WASHER BRB6,4X12RFR	
380	90012-0137		1	GLAND, EXTENDED WITH INSERT, PG11	
390	352103-0108		1	CABLE GLAND, ST 13,5 , PR20,4/PG13,5	
400	90110-0157		1	CABLE HOOD 6-POL 70.352.0628.1	
410	90110-0159		1	MALE INSERT 70.310.0640.0	
M7217	90459-2096		1	GEARS, WORM MOTOR F2 15 P63 B14 B8 PV 75	

Pos	Part No	UN	Qty	Description	Page No

BENDING ROLLER

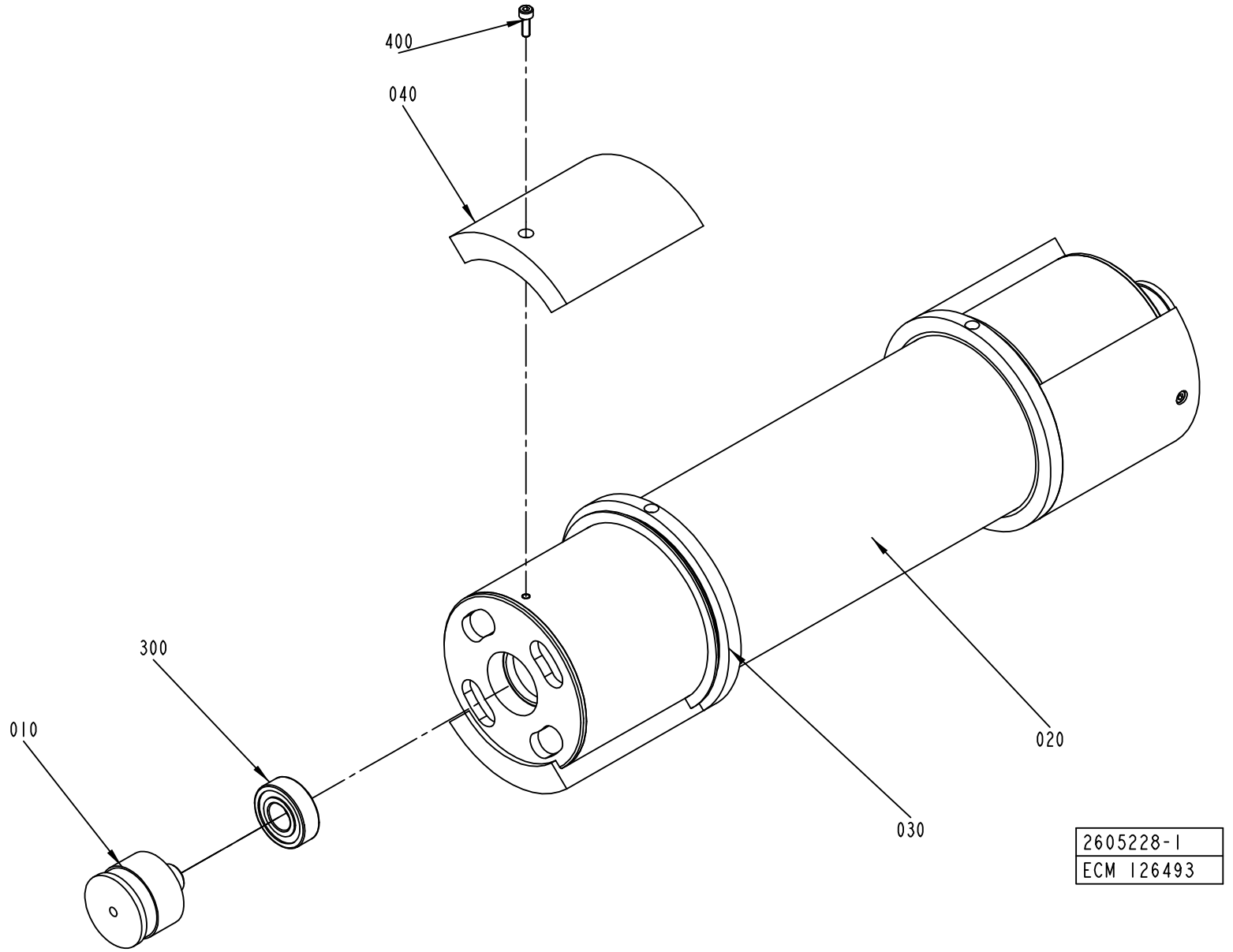

ECM: 178377 - 50001231
Group number: 2605228-0100
Assembly Drawing: 2605228-1_1_AA

Pos	Part No	UN	Qty	Description	Page No
TBA 0200S					
040	2508205-0010		4	BRACKET	
TBA 0330S, TBA 0200B, TBA 0250B					
040	2508205-0007		4	BRACKET	
TBA 1000B, TBA 1500S					
040	2508205-0001		4	BRACKET	
TBA 1000S					
040	2508205-0002		4	BRACKET	
TBA 1000SQ					
040	2508205-0003		4	BRACKET	
TPA 1000SQ					
040	2508205-0012		4	BRACKET	
Common Parts					
010	1499584-0000		2	AXLE PIN	
020	2508206-0000		1	BENDING ROLLER	
030	2508204-0000		2	FLANGE	
300	321313-0102		2	BALL BEARING, 15X35X11 MM	
400	312115-0291		4	SCREW ISO4762 M4X12 A4	

Pos	Part No	UN	Qty	Description	Page No

Machine Type | Group Description | Used-In | Group Number | Page No

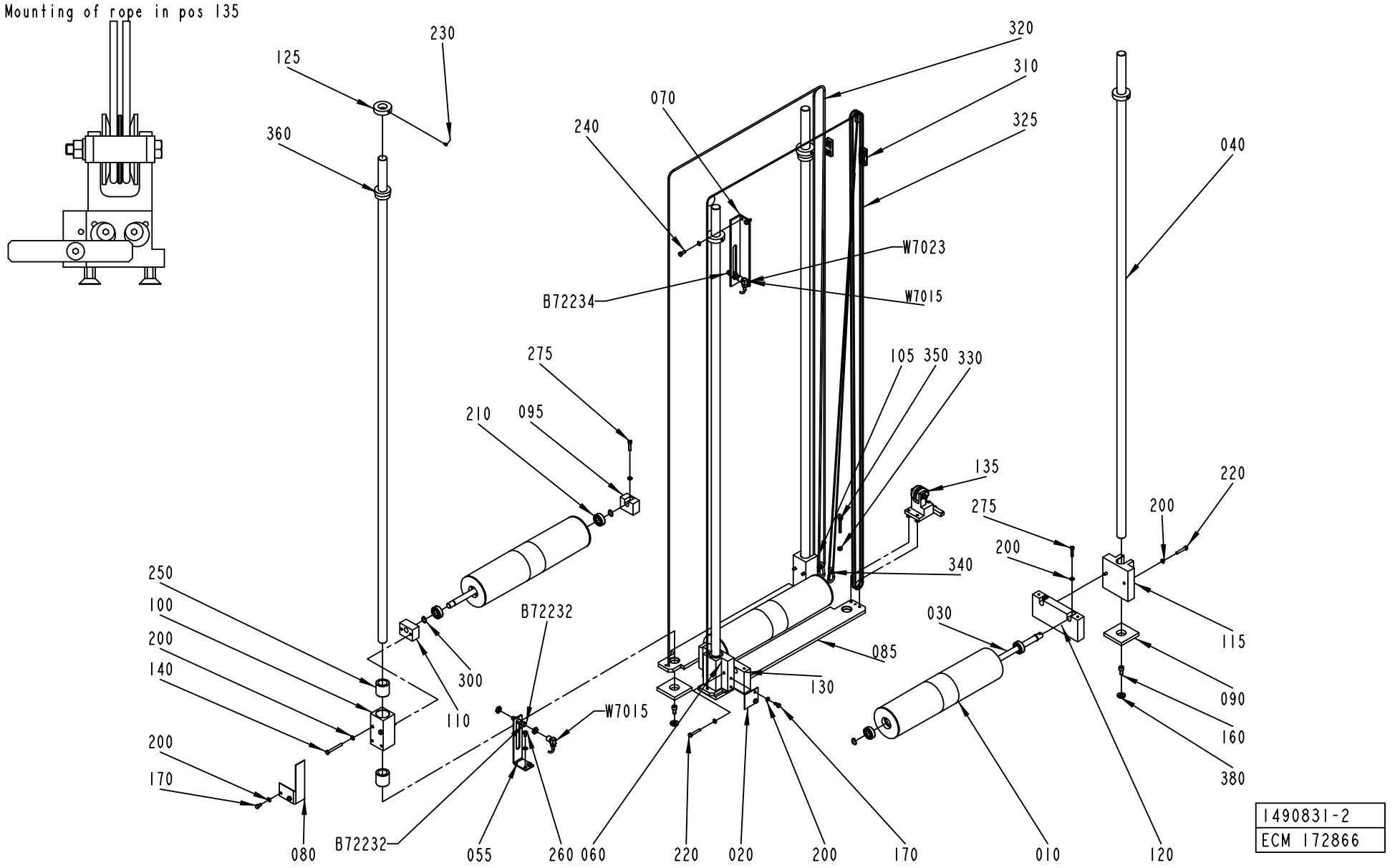
Mounting of rope in pos 135
230
125
360
320
310
325
070
240
040
W7023
B72234
W7015
275
105 350 330
210
095
135
220
275
200
200
340
250
100
200
140
B72232
030
085
300
130
115
110
W7015
090
160
380
200
170
080
B72232
055
260 060
220
020
200
170
010
120
1490831-2
ECM 172866

ECM: 174268 - 50001231
Group number: 1490831-0200
Assembly Drawing: 1490831-2_1_AD

This list covers pages from 7-176 to 7-179

Pos	Part No	UN	Qty	Description	Page No
TBA 1890S, TBA 2000S (See drawing on pages: 7-176, 7-178)					
150	2609303-0000		2	WEIGHT	
290	90287-0261		4	SCREW MC6S M5X55 A270	
Common Parts					
010	1484766-0000		3	DANCE ROLLER	
020	1484778-0000		1	PLATE	
030	1487519-0000		3	SHAFT	
040	1487530-0001		4	GUIDE ROD	
055	1484761-0000		1	ANGLE BRACKET	
060	1487536-0000		1	GUIDE BRACKET	
070	1487550-0000		1	ANGLE BRACKET	
080	1487551-0000		1	PLATE	
085	1519942-0000		2	PLATE	
090	1487765-0000		4	SPACER	
095	1511579-0000		1	BRACKET	
100	1484752-0000		1	SLIDER	
105	1484760-0000		1	SLIDER	
110	1490183-0000		1	BRACKET	
115	1511564-0000		1	BRACKET	
120	1487537-0000		1	BRACKET	
125	1487769-0000		4	SPACER	
130	1487538-0000		1	BRACKET	
135	1548210-0100		1	LOCKING DEVICE	**7-181**
140	312105-0381		4	SCREW M6S ISO 4014 M6X55 A480	
160	312115-0489		4	SCREW ISO4762 M10X16 A4	
170	312105-0366		4	SCREW M6S ISO 4017 M6X12 A480	
200	315105-0153		19	WASHER BRB6,4X12RFR	
210	321313-0102		6	BALL BEARING, 15X35X11 MM	
220	312105-0376		4	SCREW M6S ISO 4014 M6X35 A480	
230	90287-0154		4	SCREW, SOCK.SET DOGPOINT M6X10	
240	312105-0368		2	SCREW M6S ISO 4017 M6X16 A480	
250	90189-0025		4	BALL BUSHING, 25X37X37 MM	
260	312105-0364		2	SCREW M6S ISO 4017 M6X10 A480	
275	312115-0372		3	SCREW ISO4762 M6X25 A4	
300	315751-0112		6	RETAINING RING FOR SHAFT DIN 471 15 A2	
310	90211-0002		2	WIRE LOCK, 5 MM	
320	90319-0013	M	12	ROPE 4MM BLUE 3700N	
325	90319-0013	M	8	ROPE 4MM BLUE 3700N	
330	312605-0316		1	HEXAGON NUT, M6M M6 A280	
340	90459-2704		2	SNAP HOOK STAINLESS 50X5MM	
350	90459-2705		1	LIFTING EYE BOLT, M6X40MM	
360	353249-0054		2	INSERT, SINGEL HOLE, EK 156/25	
380	315115-0173		4	WASHER PLAIN, TBRB 10,5/22 H=4	
B72232	90458-0677		1	PROXIMITY SWITCH, E2EG-X5MB1-M1	
B72234	90458-0677		1	PROXIMITY SWITCH, E2EG-X5MB1-M1	
W7015	90458-1076		1	L-SHAPED CONNECTOR CABLE 933 235-042	
W7023	90458-1076		1	L-SHAPED CONNECTOR CABLE 933 235-042	

Mounting of rope in pos 135

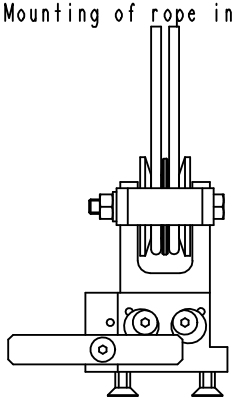

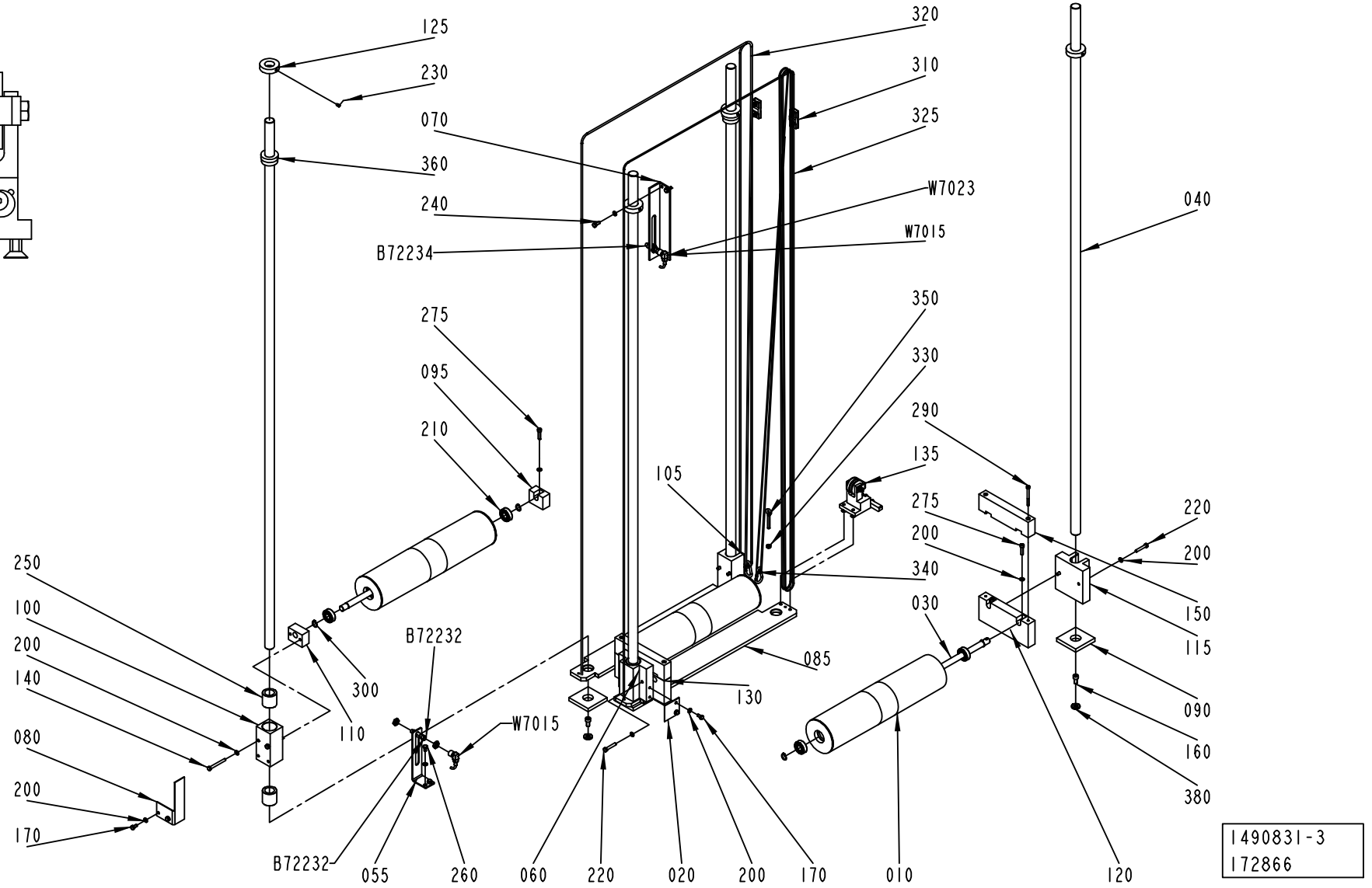

ECM: 174268 - 50001231
Group number: 1490831-0200
Assembly Drawing: 1490831-3_1_AA

This list covers pages from 7-176 to 7-179

Pos	Part No	UN	Qty	Description	Page No
TBA 1890S, TBA 2000S (See drawing on pages: 7-176, 7-178)					
150	2609303-0000		2	WEIGHT	
290	90287-0261		4	SCREW MC6S M5X55 A270	
Common Parts					
010	1484766-0000		3	DANCE ROLLER	
020	1484778-0000		1	PLATE	
030	1487519-0000		3	SHAFT	
040	1487530-0001		4	GUIDE ROD	
055	1484761-0000		1	ANGLE BRACKET	
060	1487536-0000		1	GUIDE BRACKET	
070	1487550-0000		1	ANGLE BRACKET	
080	1487551-0000		1	PLATE	
085	1519942-0000		2	PLATE	
090	1487765-0000		4	SPACER	
095	1511579-0000		1	BRACKET	
100	1484752-0000		1	SLIDER	
105	1484760-0000		1	SLIDER	
110	1490183-0000		1	BRACKET	
115	1511564-0000		1	BRACKET	
120	1487537-0000		1	BRACKET	
125	1487769-0000		4	SPACER	
130	1487538-0000		1	BRACKET	
135	1548210-0100		1	LOCKING DEVICE	**7-181**
140	312105-0381		4	SCREW M6S ISO 4014 M6X55 A480	
160	312115-0489		4	SCREW ISO4762 M10X16 A4	
170	312105-0366		4	SCREW M6S ISO 4017 M6X12 A480	
200	315105-0153		19	WASHER BRB6,4X12RFR	
210	321313-0102		6	BALL BEARING, 15X35X11 MM	
220	312105-0376		4	SCREW M6S ISO 4014 M6X35 A480	
230	90287-0154		4	SCREW, SOCK.SET DOGPOINT M6X10	
240	312105-0368		2	SCREW M6S ISO 4017 M6X16 A480	
250	90189-0025		4	BALL BUSHING, 25X37X37 MM	
260	312105-0364		2	SCREW M6S ISO 4017 M6X10 A480	
275	312115-0372		3	SCREW ISO4762 M6X25 A4	
300	315751-0112		6	RETAINING RING FOR SHAFT DIN 471 15 A2	
310	90211-0002		2	WIRE LOCK, 5 MM	
320	90319-0013	M	12	ROPE 4MM BLUE 3700N	
325	90319-0013	M	8	ROPE 4MM BLUE 3700N	
330	312605-0316		1	HEXAGON NUT, M6M M6 A280	
340	90459-2704		2	SNAP HOOK STAINLESS 50X5MM	
350	90459-2705		1	LIFTING EYE BOLT, M6X40MM	
360	353249-0054		2	INSERT, SINGEL HOLE, EK 156/25	
380	315115-0173		4	WASHER PLAIN, TBRB 10,5/22 H=4	
B72232	90458-0677		1	PROXIMITY SWITCH, E2EG-X5MB1-M1	
B72234	90458-0677		1	PROXIMITY SWITCH, E2EG-X5MB1-M1	
W7015	90458-1076		1	L-SHAPED CONNECTOR CABLE 933 235-042	
W7023	90458-1076		1	L-SHAPED CONNECTOR CABLE 933 235-042	

LOCKING DEVICE

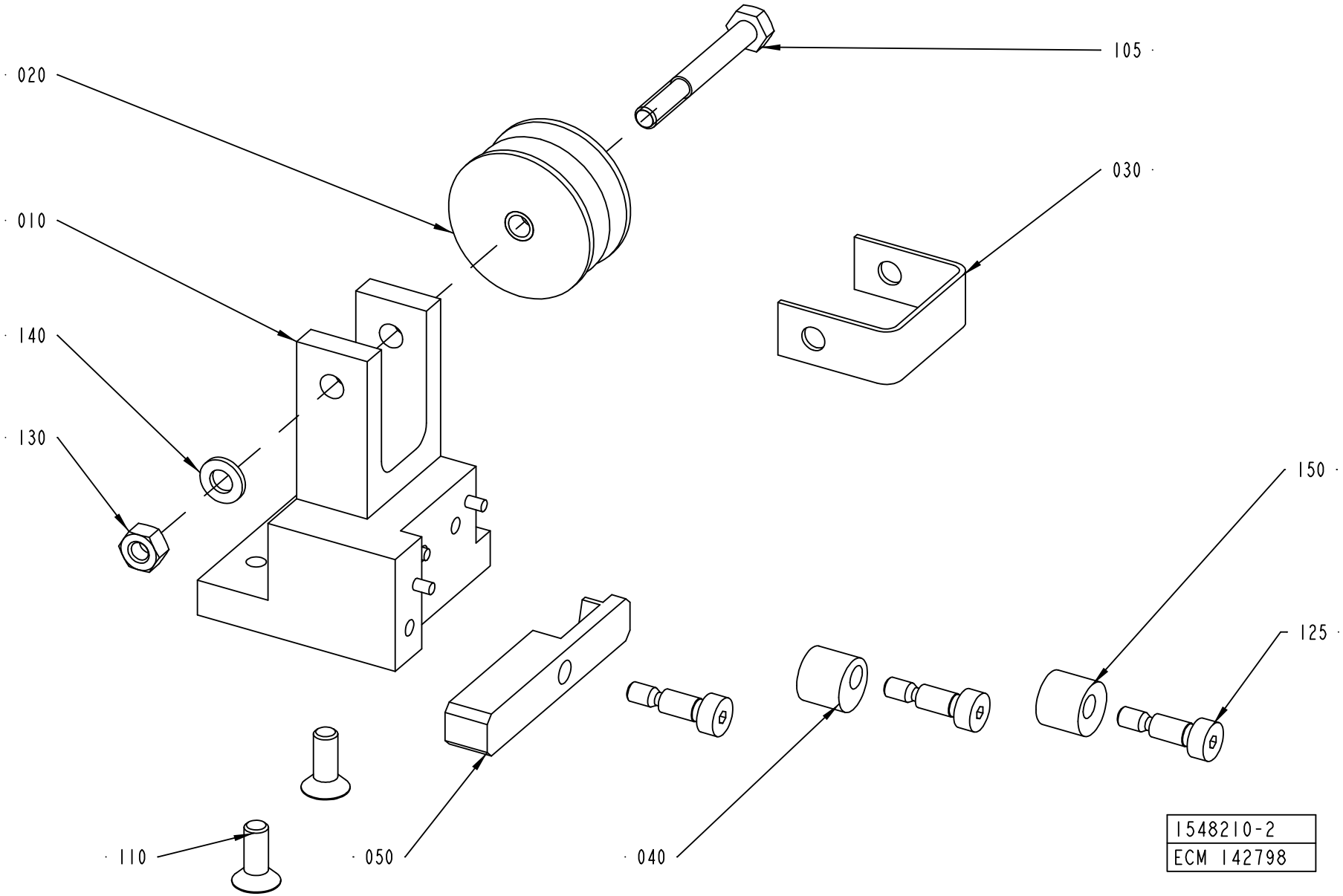

ECM: 142798 - 20030908
Group number: 1548210-0100
Assembly Drawing: 1548210-2_1_AB

Pos	Part No	UN	Qty	Description	Page No
-					
010	2576244-0000		1	BRACKET	
020	1519581-0000		1	ROLLER BAR	
030	1519592-0000		1	BOW	
040	1539397-0000		1	ROLLER	
050	2576245-0000		1	ARM	
105	312105-0380		1	SCREW M6S ISO 4014 M6X50 A480	
110	312155-0368		2	SCREW EN 10642 MF6S M6X16 A480	
125	312180-0366		3	SCREW ISO7379 H6X12	
130	312605-0316		1	HEXAGON NUT, M6M M6 A280	
140	315105-0153		1	WASHER BRB6,4X12RFR	
150	1549332-0000		1	ROLLER	

Pos	Part No	UN	Qty	Description	Page No

COVERING PANEL

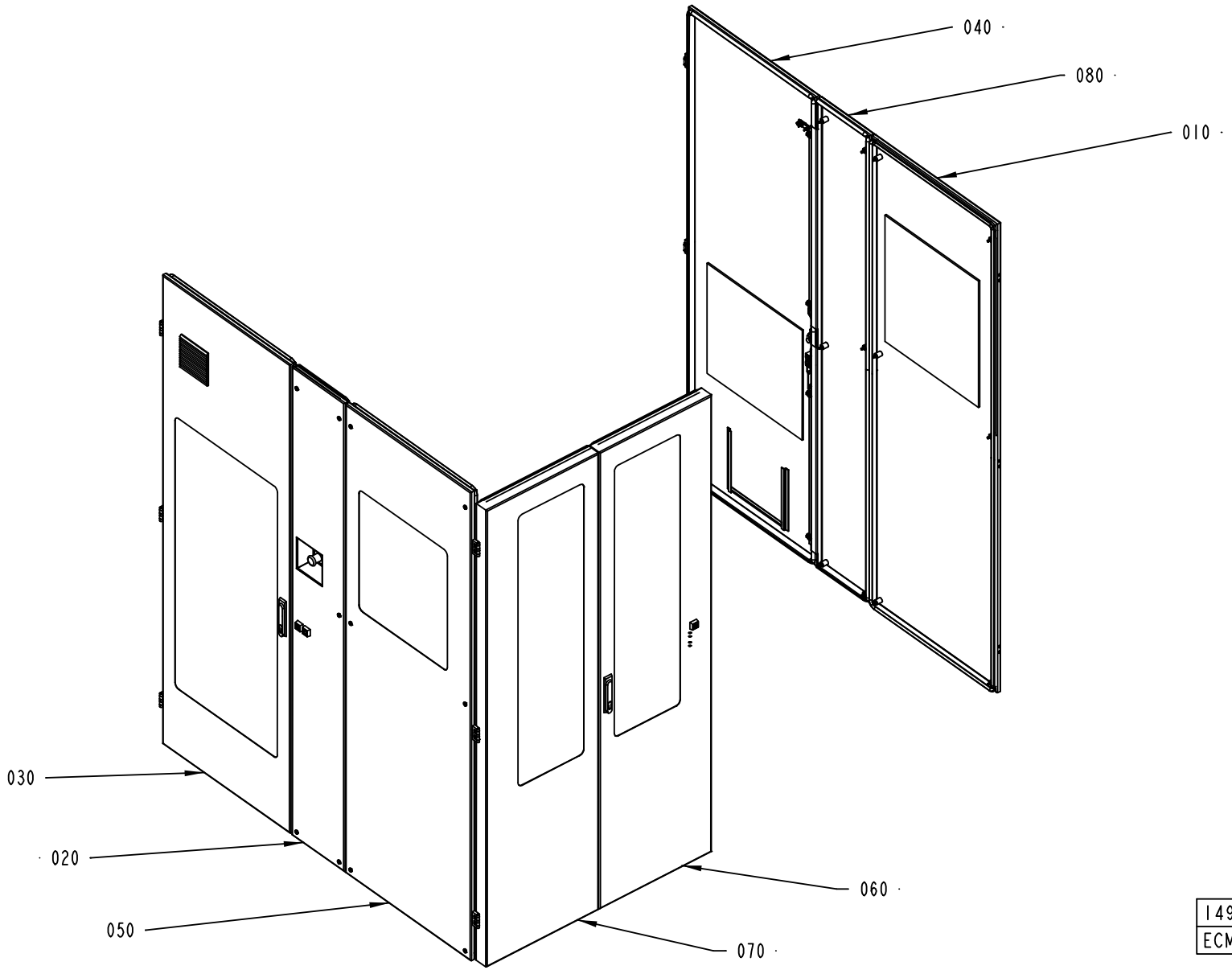

1490215-1
ECM 115190

ECM: 162983 - 20040419
Group number: 1490215-0200
Assembly Drawing: 1490215-1_1_AC

This list covers pages from 7-182 to 7-185

Pos	Part No	UN	Qty	Description	Page No
A3/FLEX WITH ARL (See drawing on page: 7-184)					
085	2591680-0100		1	HOLDER	**7-187**
Common Parts					
010	1499564-0100		1	COVER	**7-189, 7-191**
020	1490190-0200		1	HATCH	**7-195**
030	1490191-0100		1	DOOR	**7-201**
040	1558988-0100		1	DOOR	**7-203**
050	1490193-0100		1	COVER	**7-205, 7-207**
060	1498453-0200		1	DOOR	**7-211**
070	1498454-0200		1	DOOR	**7-215**
080	1490188-0100		1	COVER	**7-217**
110	1524404-0100		2	COVER	**7-219**

Pos	Part No	UN	Qty	Description	Page No

COVERING PANEL

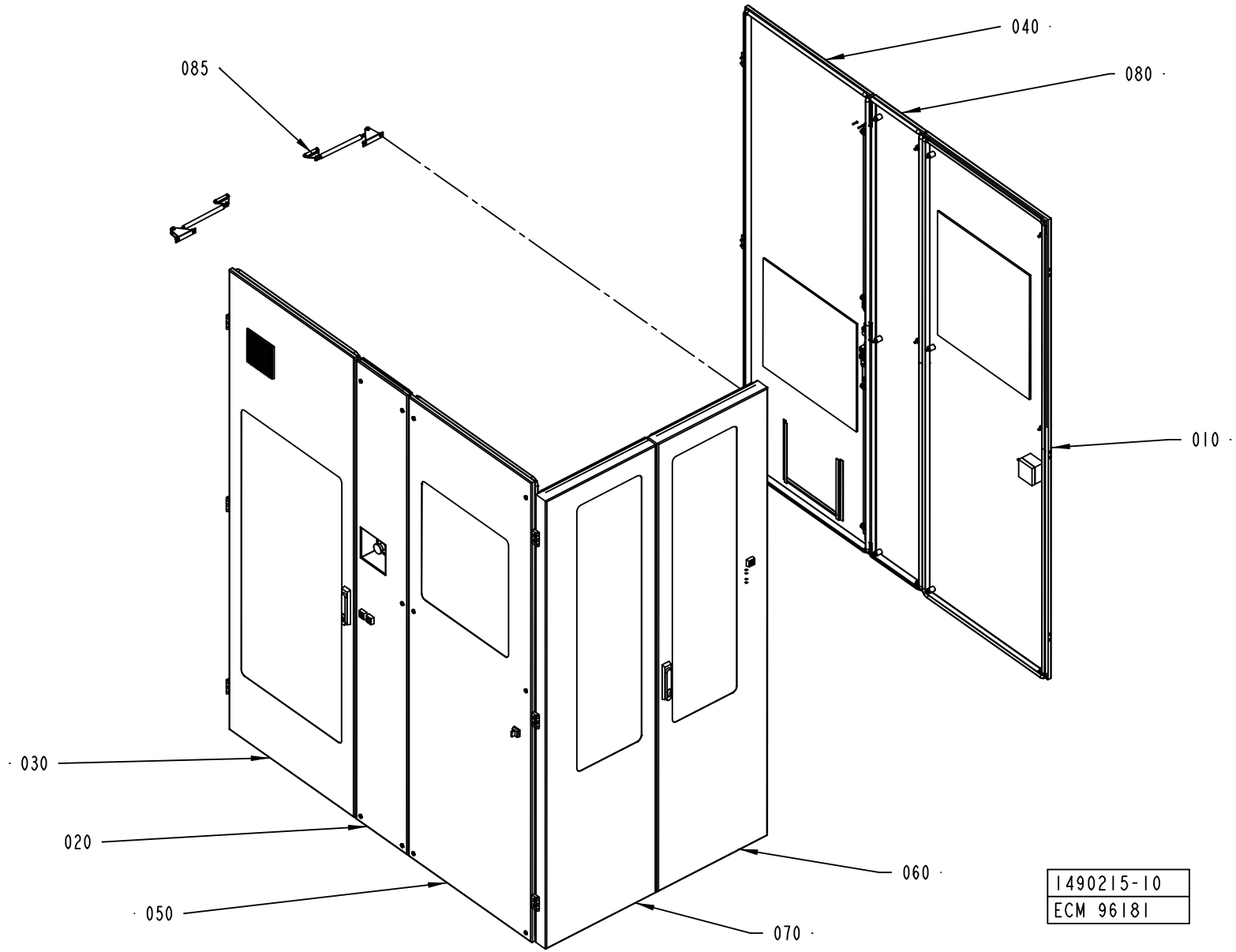

ECM: 162983 - 20040419
Group number: 1490215-0200
Assembly Drawing: 1490215-10_1_AA

This list covers pages from 7-182 to 7-185

Pos	Part No	UN	Qty	Description	Page No
A3/FLEX WITH ARL (See drawing on page: 7-184)					
085	2591680-0100		1	HOLDER	**7-187**
Common Parts					
010	1499564-0100		1	COVER	**7-189, 7-191**
020	1490190-0200		1	HATCH	**7-195**
030	1490191-0100		1	DOOR	**7-201**
040	1558988-0100		1	DOOR	**7-203**
050	1490193-0100		1	COVER	**7-205, 7-207**
060	1498453-0200		1	DOOR	**7-211**
070	1498454-0200		1	DOOR	**7-215**
080	1490188-0100		1	COVER	**7-217**
110	1524404-0100		2	COVER	**7-219**

Pos	Part No	UN	Qty	Description	Page No

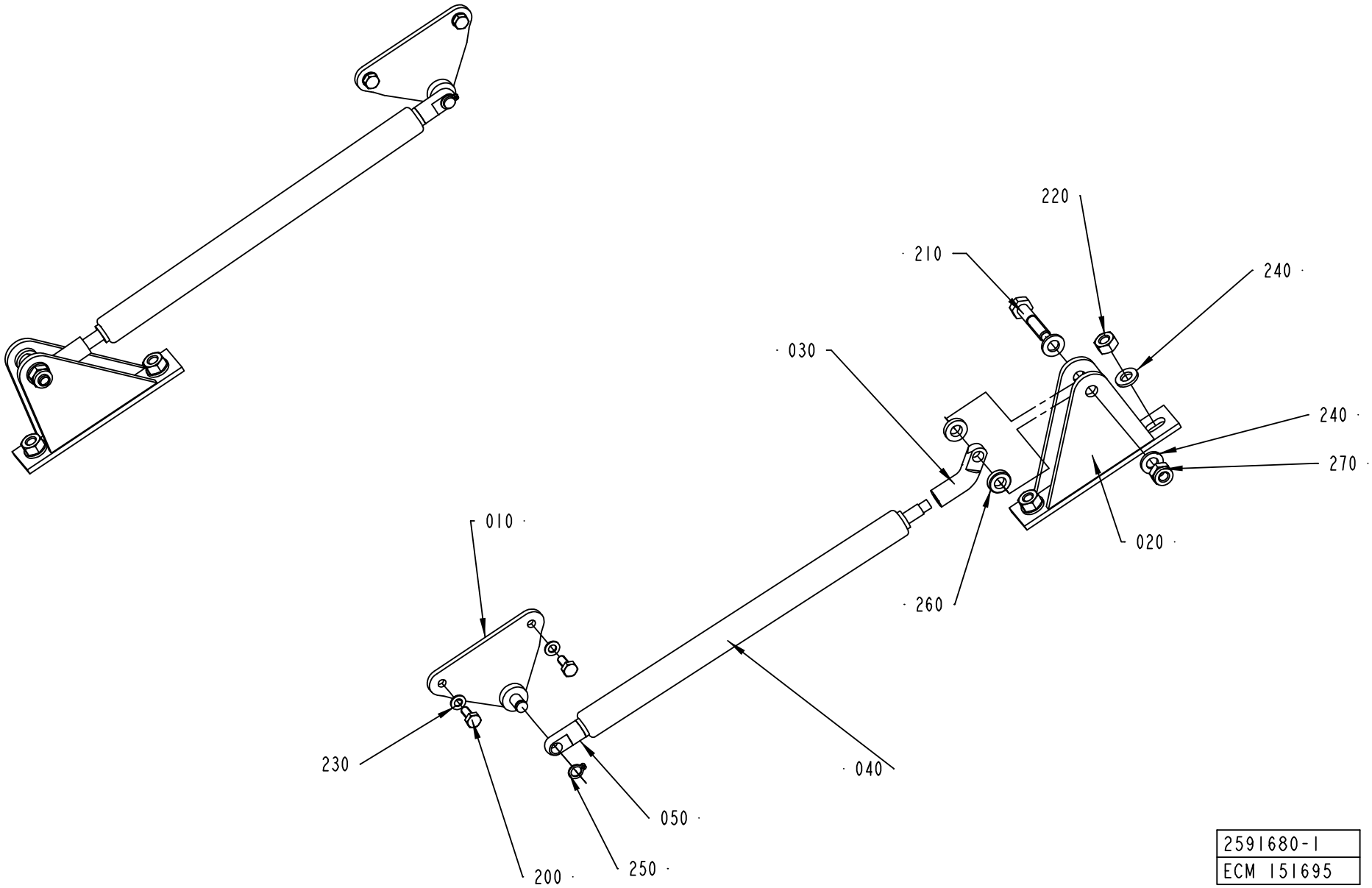

2591680-1
ECM 151695

ECM: 151695 - 20040115
Group number: 2591680-0100
Assembly Drawing: 2591680-1_1_AA

Pos	Part No	UN	Qty	Description	Page No
-					
010	90459-3179		2	GAS SPRING BRACKET, BES/AUG/06/001	
020	2589786-0000		2	BRACKET	
030	2589787-0000		2	FITTING	
040	90459-3181		2	GAS SPRING, G15-150-50N STAINLESS STEEL	
050	90459-3182		2	GAS SPRING FITTNG, AU16 STAINLESS STEEL	
200	312105-0289		4	SCREW M6S ISO 4017 M4X10 A470	
210	312105-0374		2	SCREW M6S ISO 4014 M6X30 A480	
220	312605-0316		4	HEXAGON NUT, M6M M6 A280	
230	315105-0136		4	WASHER BRB4,3XRFR	
240	315105-0153		8	WASHER BRB6,4X12RFR	
250	315751-0103		2	RETAINING RING FOR SHAFT DIN 471 6 A2	
260	315115-0153		4	WASHER PLAIN, TBRB 6,4/12 H=3	
270	312812-0316		2	HEXAGON NUT, NY-LOCK M6 A480	

Pos	Part No	UN	Qty	Description	Page No

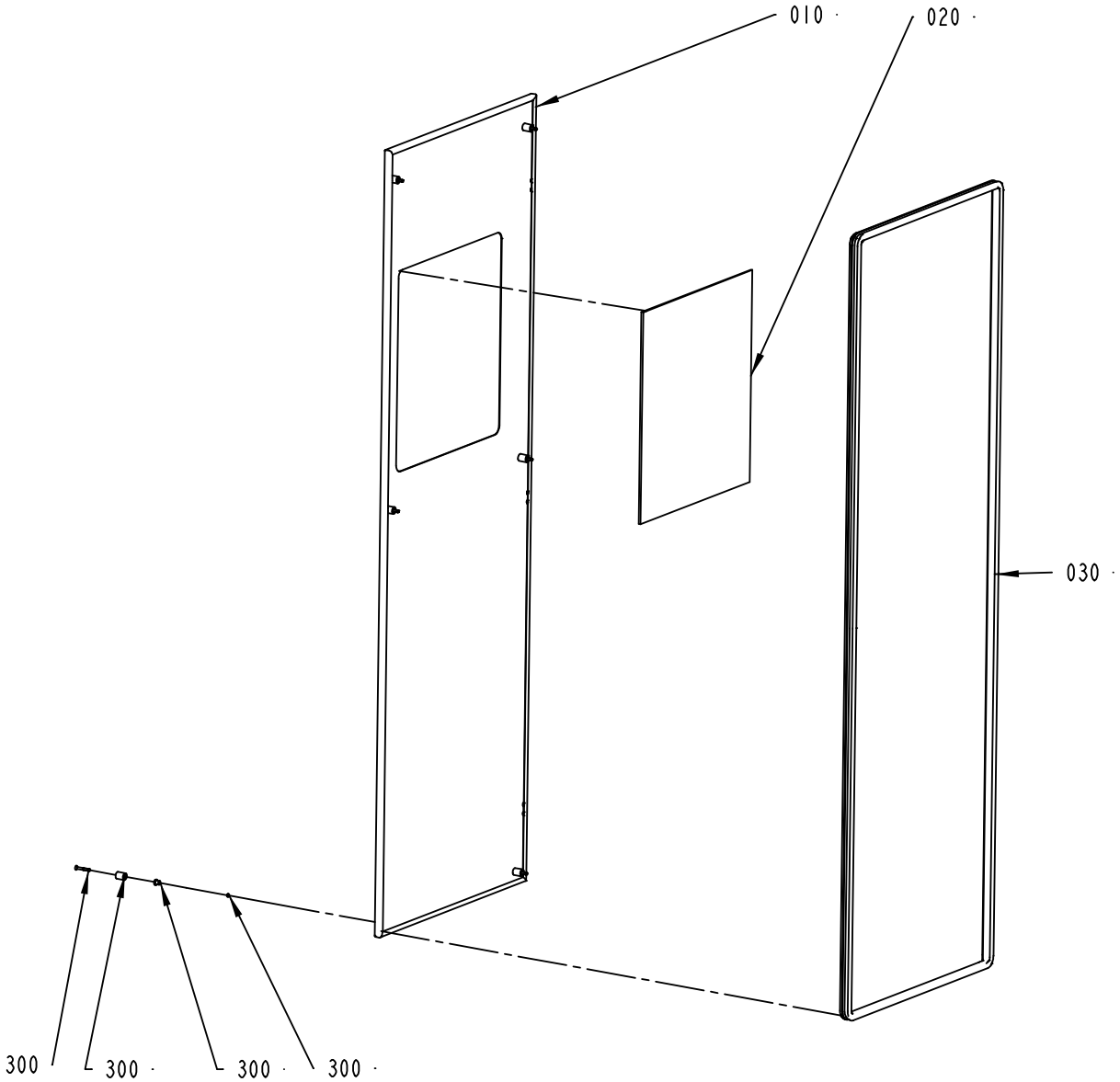

1499564-1
ECN 80701

ECM: 172279 - 20040510
Group number: 1499564-0100
Assembly Drawing: 1499564-1_1_AB

This list covers pages from 7-188 to 7-191

Pos	Part No	UN	Qty	Description	Page No
With ARL (See drawing on page: 7-190)					
010	2632542-0000		1	HATCH	
040	2632543-0100		1	CONTROL PANEL	**7-193**
Without ARL (See drawing on page: 7-188)					
010	1487995-0000		1	HATCH	
Common Parts					
020	1498459-0003		1	GLASS PANE	
030	1498461-0002		1	SEALING STRIP	
300	90226-0458		6	MOUNTING SCREW	

Pos	Part No	UN	Qty	Description	Page No

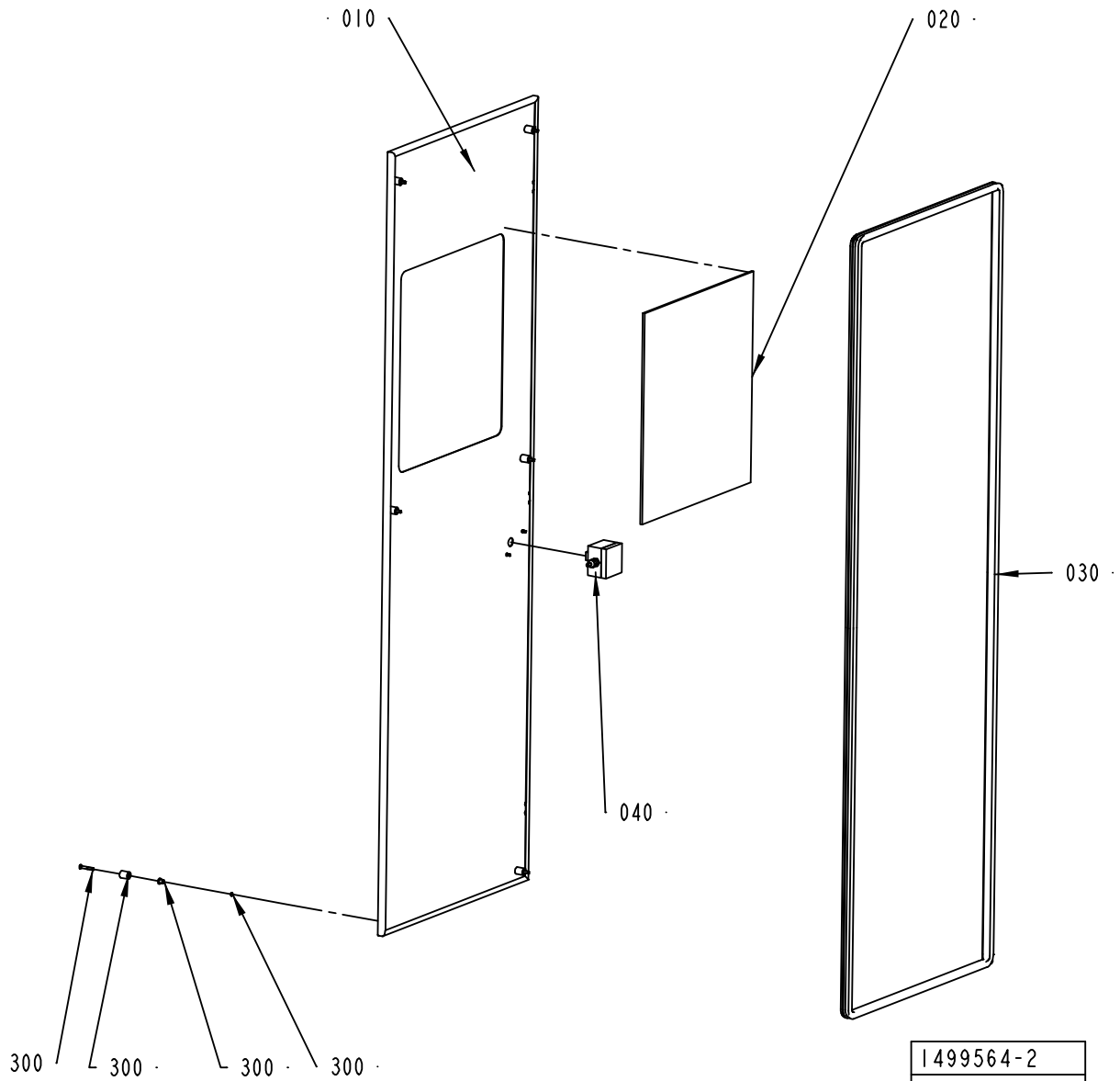
010
020
030
040
300
300
300
300
1499564-2
ECM 96181

ECM: 172279 - 20040510
Group number: 1499564-0100
Assembly Drawing: 1499564-2_1_AA

This list covers pages from 7-188 to 7-191

Pos	Part No	UN	Qty	Description	Page No
With ARL (See drawing on page: 7-190)					
010	2632542-0000		1	HATCH	
040	2632543-0100		1	CONTROL PANEL	**7-193**
Without ARL (See drawing on page: 7-188)					
010	1487995-0000		1	HATCH	
Common Parts					
020	1498459-0003		1	GLASS PANE	
030	1498461-0002		1	SEALING STRIP	
300	90226-0458		6	MOUNTING SCREW	

Pos	Part No	UN	Qty	Description	Page No

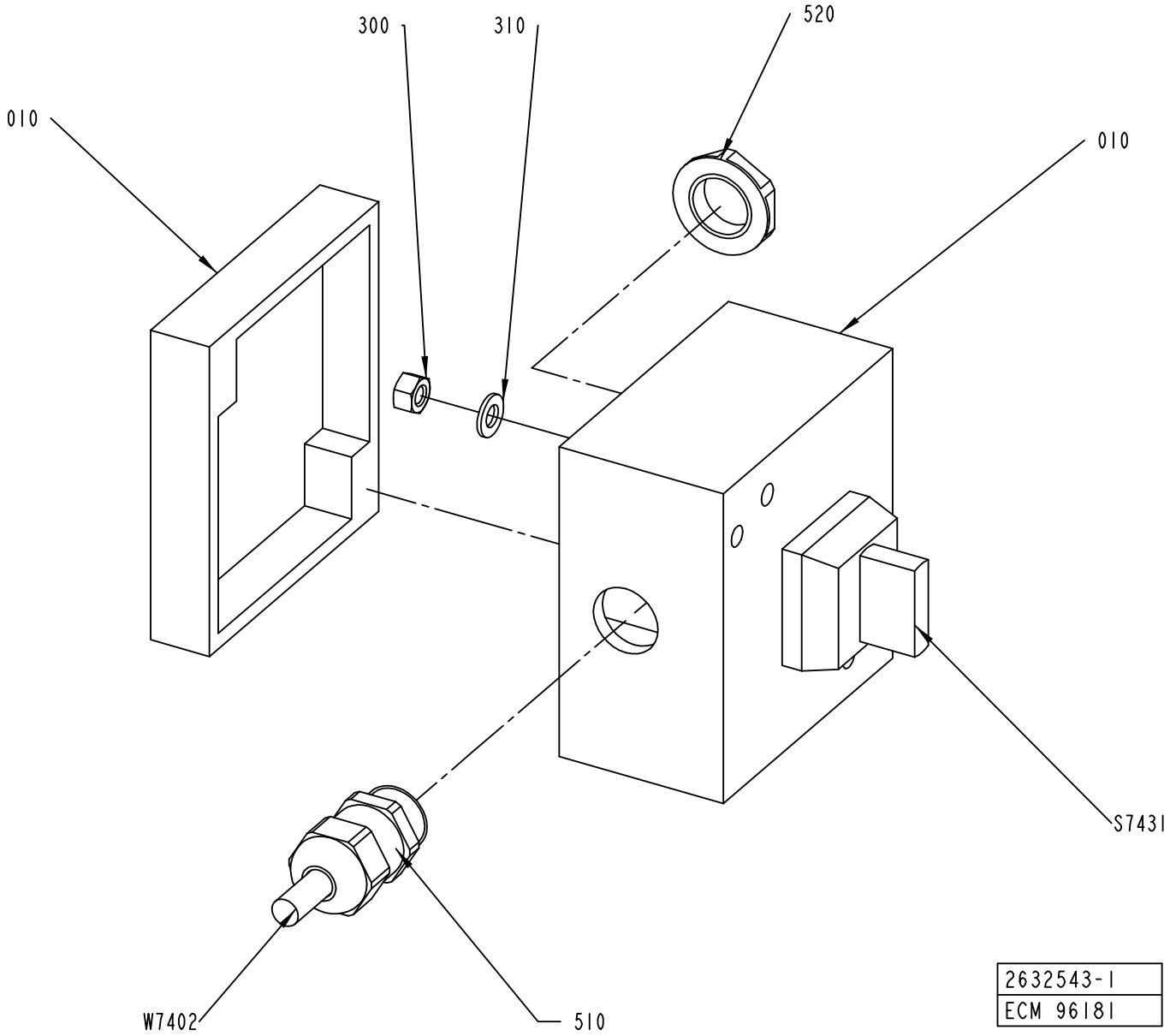
300
310
520
010
010
S7431
W7402
510
2632543-1
ECM 96181

ECM: 135496 - 20040115
Group number: 2632543-0100
Assembly Drawing: 2632543-1_1_AA

Pos	Part No	UN	Qty	Description	Page No
-					
010	2632535-0000		1	CONNECTION BOX	
300	312605-0314		2	HEXAGON NUT, M6M M5 A280	
310	315105-0146		2	WASHER BRB5,3X10RFR	
510	90458-0306		1	CABLE GLAND, M16X1,5, NO.5311 1010	
520	90458-0322		1	NUT, M16X1,5	
S7431	90111-0120		1	SWITCH, 2 POS.704.510 .0A+704.901.5/A	
W7402	351150-0403	MM	8000	CABLE OLFLEX 3X0,75 MM2 LIGHT/GREY	

Pos	Part No	UN	Qty	Description	Page No

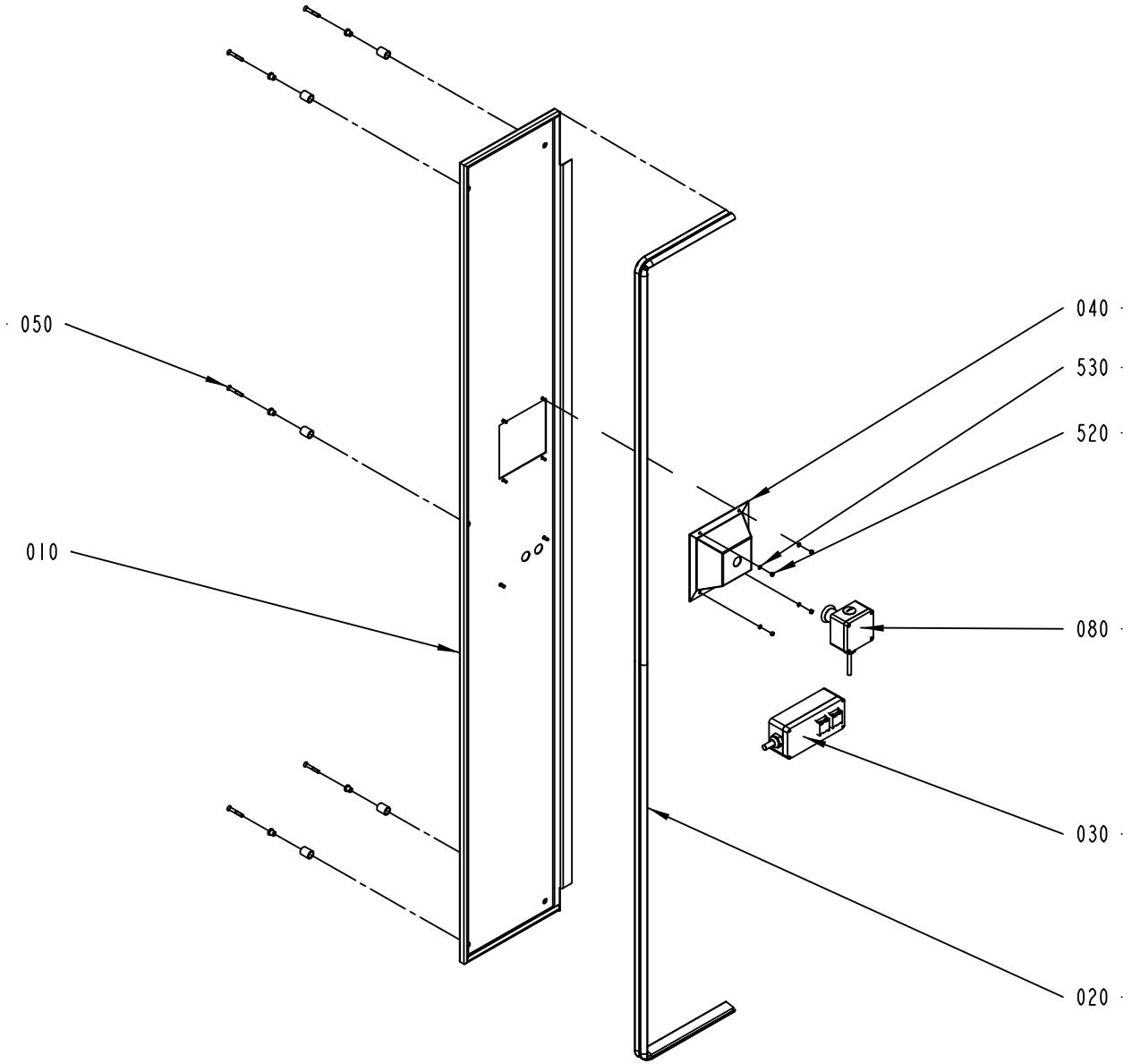

1490190-5
ECM 115190

ECM: 163293 - 20040419
Group number: 1490190-0200
Assembly Drawing: 1490190-5_1_AB

Pos	Part No	UN	Qty	Description	Page No
A3/FLEX					
010	2532535-0000		1	HATCH	
Common Parts					
020	1512414-0000		1	SEALING STRIP	
030	1512413-0200		1	CONTROL PANEL	**7-197**
040	1484363-0000		1	COVER	
050	90226-0458		5	MOUNTING SCREW	
080	2508187-0100		1	EMERGENCY STOP	**7-199**
520	312605-0312		4	HEXAGON NUT, M6M M4 A280	
530	315105-0136		4	WASHER BRB4,3XRFR	

Pos	Part No	UN	Qty	Description	Page No

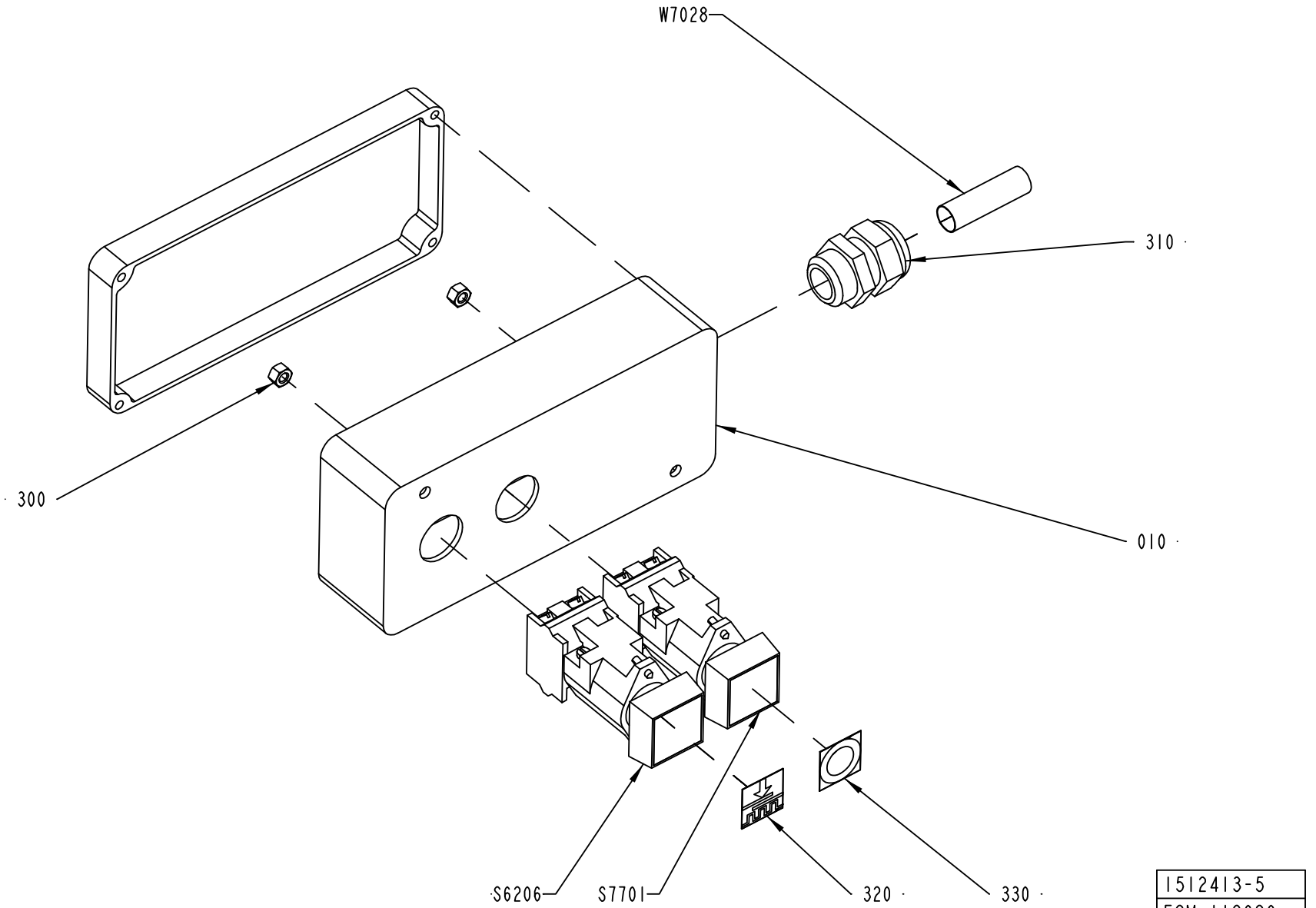

1512413-5
ECM 118629

ECM: 163294 - 20040419
Group number: 1512413-0200
Assembly Drawing: 1512413-5_1_AA

Pos	Part No	UN	Qty	Description	Page No
A3/FLEX					
010	2578785-0000		1	PUSH BUTTON BOX	
Common Parts					
300	312605-0314		2	HEXAGON NUT, M6M M5 A280	
310	352103-0111		1	CABLE GLAND, ST 16, PR22,5/PG16	
320	359301-0101		1	BUTTON SIGN, STRIP SPLICING ON	
330	359301-0110		1	BUTTON SIGN, SHORT STOP	
S6206	90064-0082		1	PUSH BUTTON, WHITE	
	90036-0057		*1*	*LIGHT BULB, BA9S 28V*	
S7701	90064-0084		1	PUSH BUTTON, YELLOW	
W7028	351150-0407	MM	5000	CABLE OLFLEX 12X0,75 MM2 LIGHT/GREY	

Pos	Part No	UN	Qty	Description	Page No

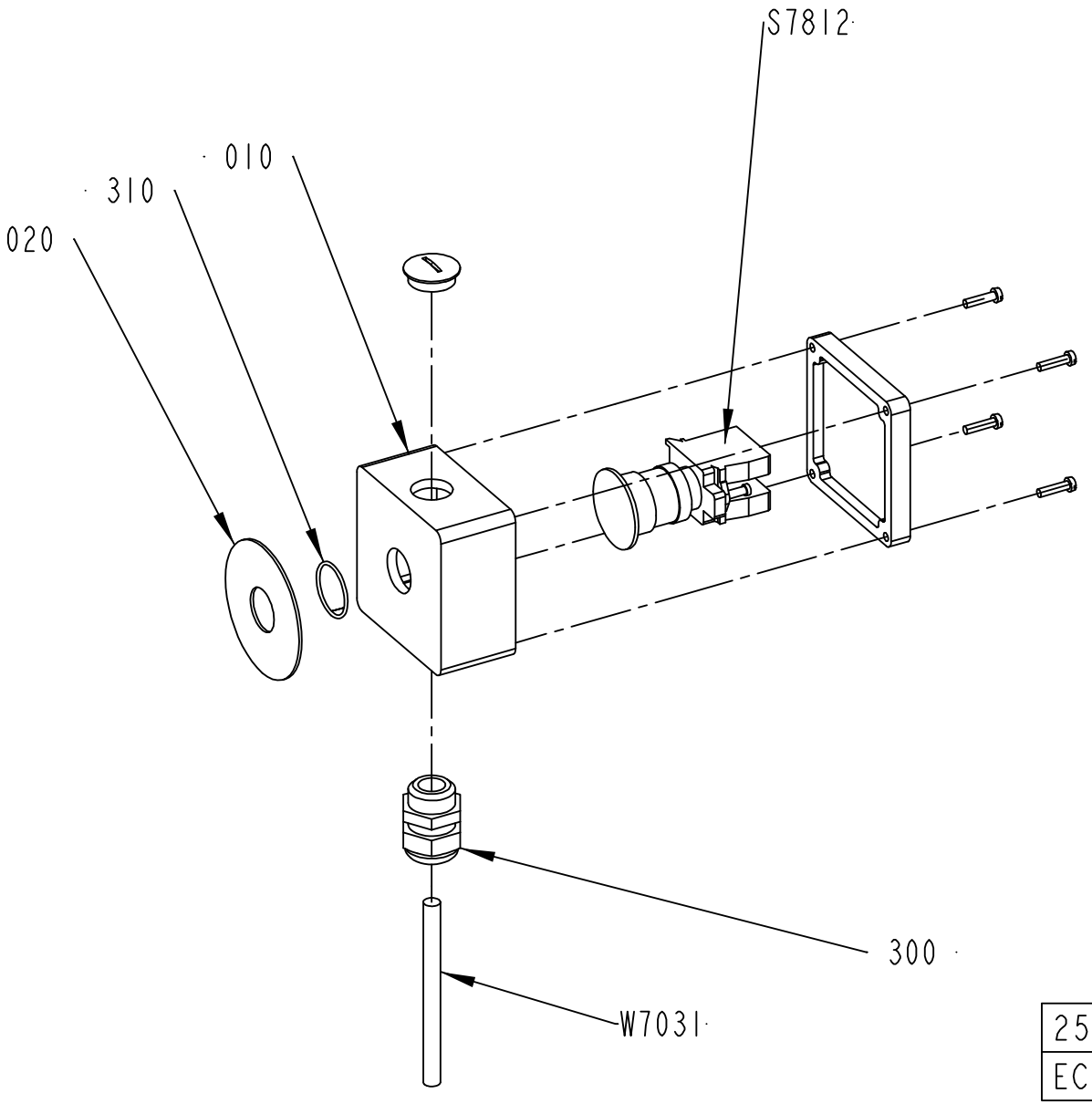

2508187-2
ECM 115190

ECM: 120687 - 20021217
Group number: 2508187-0100
Assembly Drawing: 2508187-2_1_AB

Pos	Part No	UN	Qty	Description	Page No
-					
010	1037130-0000		1	CONNECTION BOX	
020	486826-0001		1	SIGN "EMERGENCY STOP"	
300	352103-0110		1	CABLE GLAND, STR 16, PR22,5/PG16	
310	315202-0119		1	O-RING 25,1X1,6 MM	
S7812	90458-1651		1	EMERGENCY STOP, ZB4-BS-844 ZB4-BZ-104	
W7031	351150-0405	MM	5000	CABLE OLFLEX 5X0,75 MM2 LIGHT/GREY	

Pos	Part No	UN	Qty	Description	Page No

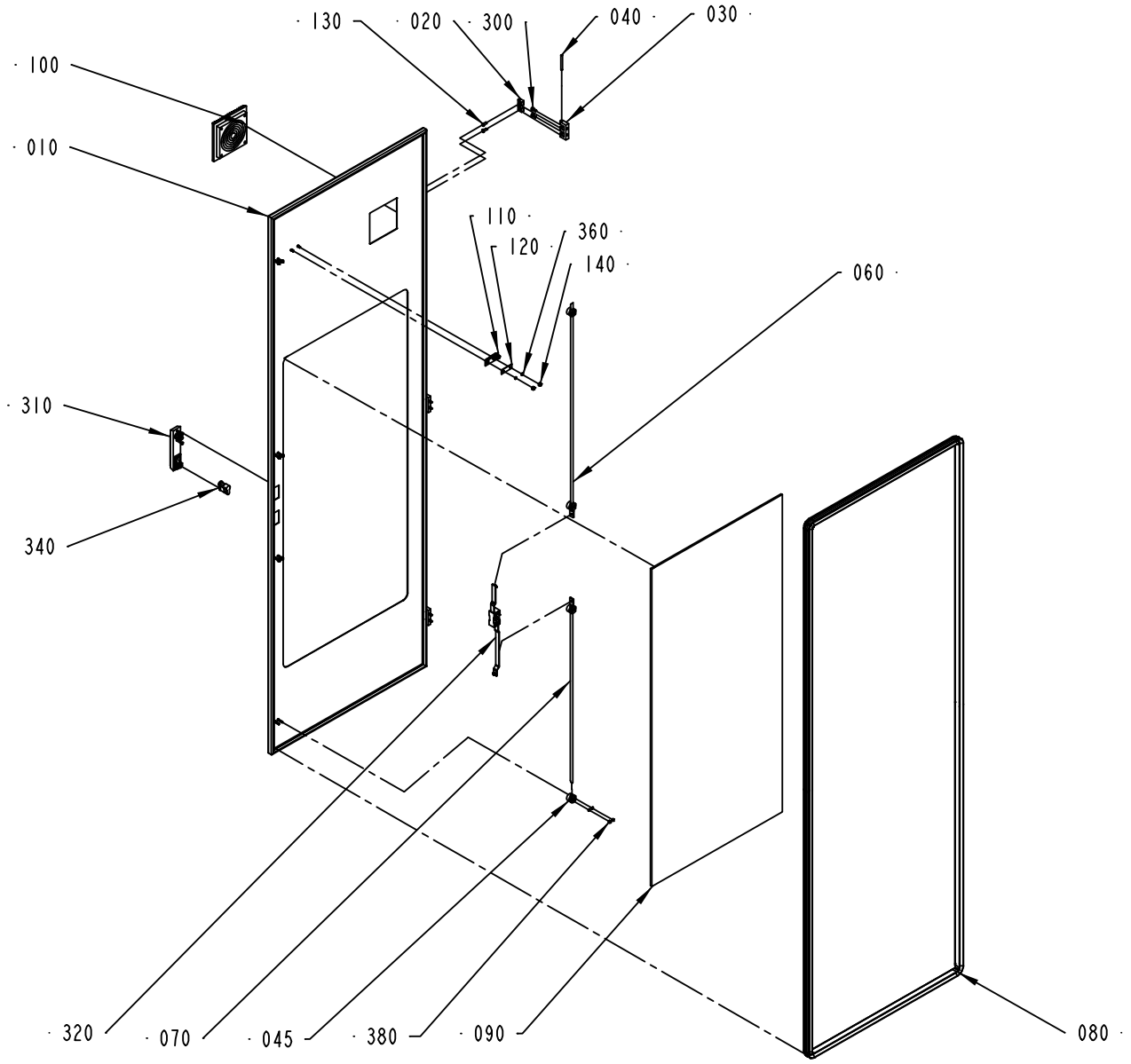

1490191-2
ECM 118629

ECM: 119369 - 20030929
Group number: 1490191-0100
Assembly Drawing: 1490191-2_1_AF

Pos	Part No	UN	Qty	Description	Page No
-					
010	1488000-0000		1	DOOR	
020	1129770-0000		6	BLOCKING PIECE	
030	1035792-0000		3	E-HINGE	
040	988685-0000		3	PIN	
045	2550333-0000		4	GUIDE LUG	
060	1499562-0003		1	LOCKING ARM	
070	1499562-0004		1	LOCKING ARM	
080	1498461-0005		1	SEALING STRIP	
090	1498459-0002		1	GLASS PANE	
100	1490226-0000		1	FILTER	
110	975917-0000		1	KEY FOR SAFETY SWITCH 90044-103	
120	1036563-0000		1	WASHER	
130	1129767-0000		6	SCREW	
140	1539391-0000		2	ROUND NUT	
300	312115-0327		6	SCREW ISO4762 M5X12 A4	
310	90237-0175		1	TURNING HANDLE, 1125-U185-0A	
320	90237-0153		1	LOCK HOUSING, 1121-U26-0B	
340	90237-0128		1	LOCK CYLINDER, 1109-U3	
360	315105-0136		10	WASHER BRB4,3XRFR	
380	312705-0312		8	NUT HEX. DOMED CAP MHM-6 M4 A280	

Pos	Part No	UN	Qty	Description	Page No

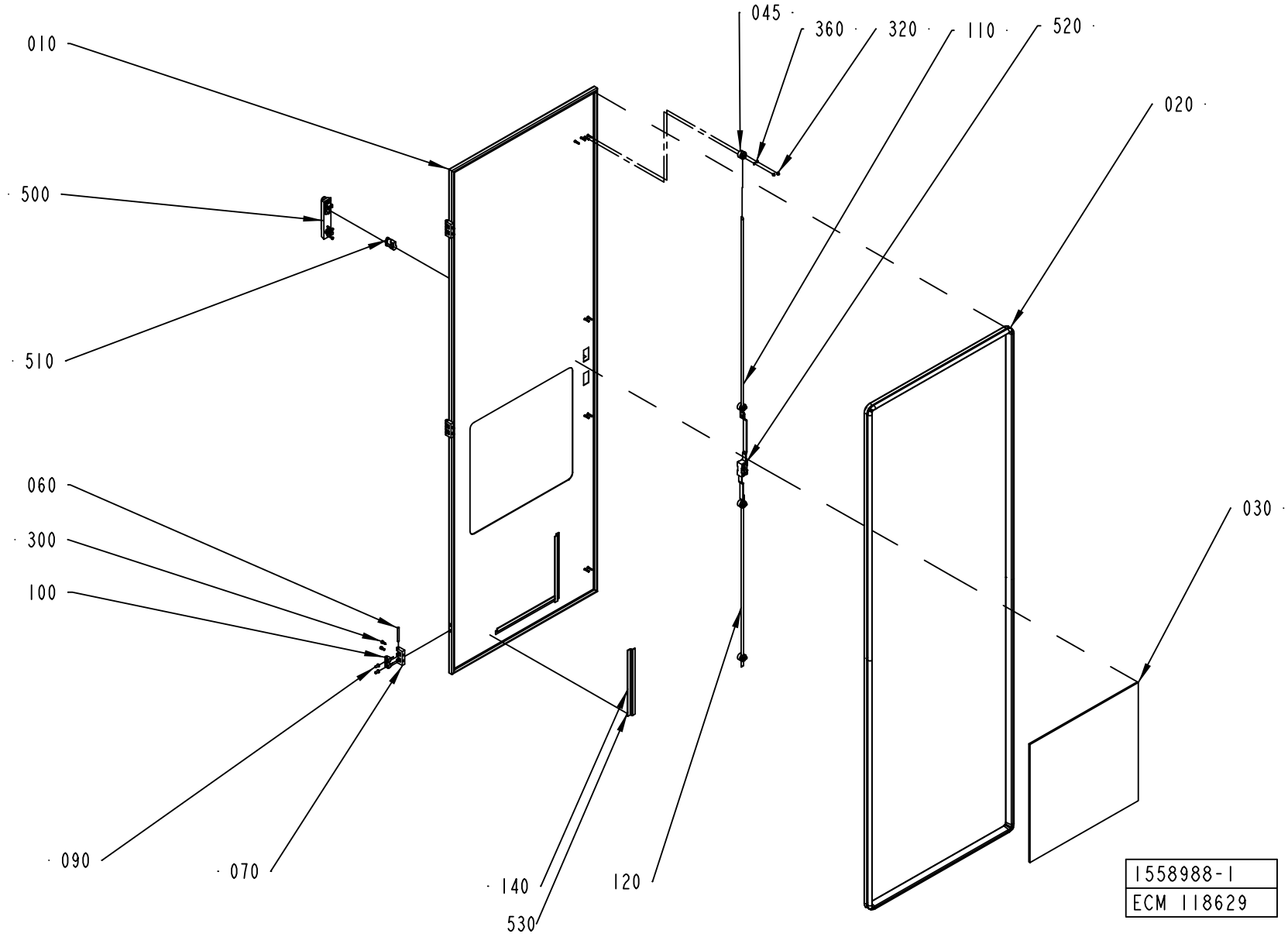
010
500
510
060
300
100
090
070
140
530
120
045
360
320
110
520
020
030
1558988-1
ECM 118629

ECM: 136218 - 20030929
Group number: 1558988-0100
Assembly Drawing: 1558988-1_1_AD

Pos	Part No	UN	Qty	Description	Page No
-					
010	1558983-0000		1	DOOR	
020	1498461-0005		1	SEALING STRIP	
030	1498459-0004		1	GLASS PANE	
045	2550333-0000		4	GUIDE LUG	
060	988685-0000		3	PIN	
070	1035792-0000		3	E-HINGE	
090	1129767-0000		6	SCREW	
100	1129770-0000		6	BLOCKING PIECE	
110	1499562-0003		1	LOCKING ARM	
120	1499562-0004		1	LOCKING ARM	
140	988690-0000		3	RIM	
300	312115-0327		6	SCREW ISO4762 M5X12 A4	
320	312705-0312		8	NUT HEX. DOMED CAP MHM-6 M4 A280	
360	315105-0136		8	WASHER BRB4,3XRFR	
500	90237-0175		1	TURNING HANDLE, 1125-U185-0A	
510	90237-0128		1	LOCK CYLINDER, 1109-U3	
520	90237-0153		1	LOCK HOUSING, 1121-U26-0B	
530	90144-0072	MM	840	TAPE SCOTCH VHBS 4945 W=12,7MM	

Pos	Part No	UN	Qty	Description	Page No

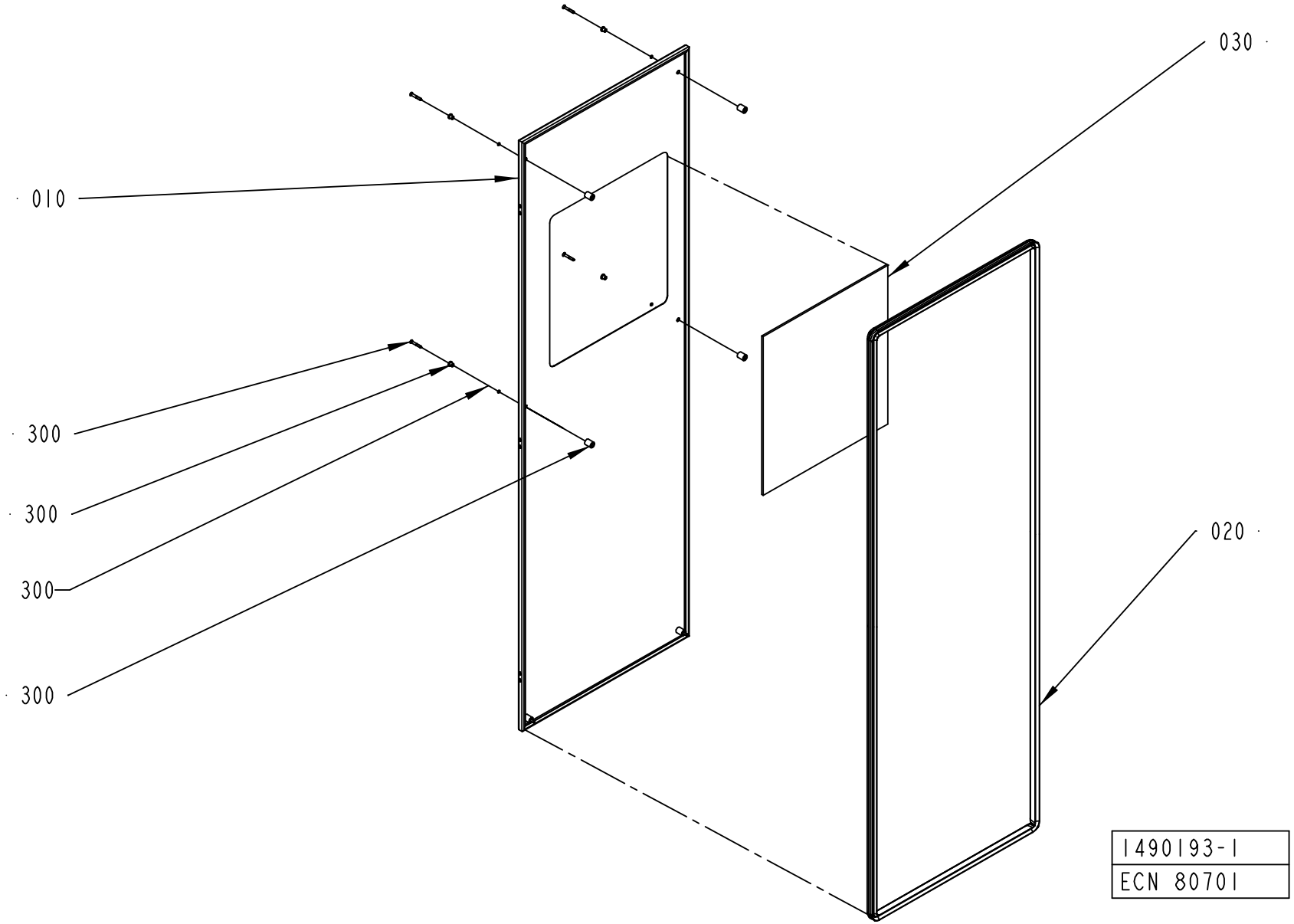
030
010
300
300
300
300
020
1490193-1
ECN 80701

ECM: 172280 - 20040510
Group number: 1490193-0100
Assembly Drawing: 1490193-1_1_AB

This list covers pages from 7-204 to 7-207

Pos	Part No	UN	Qty	Description	Page No
With ARL (See drawing on page: 7-206)					
010	2632534-0000		1	HATCH	
040	2632536-0100		1	CONTROL PANEL	**7-209**
Without ARL (See drawing on page: 7-204)					
010	1498460-0000		1	HATCH	
Common Parts					
020	1498461-0002		1	SEALING STRIP	
030	1498459-0003		1	GLASS PANE	
300	90226-0458		6	MOUNTING SCREW	

Pos	Part No	UN	Qty	Description	Page No

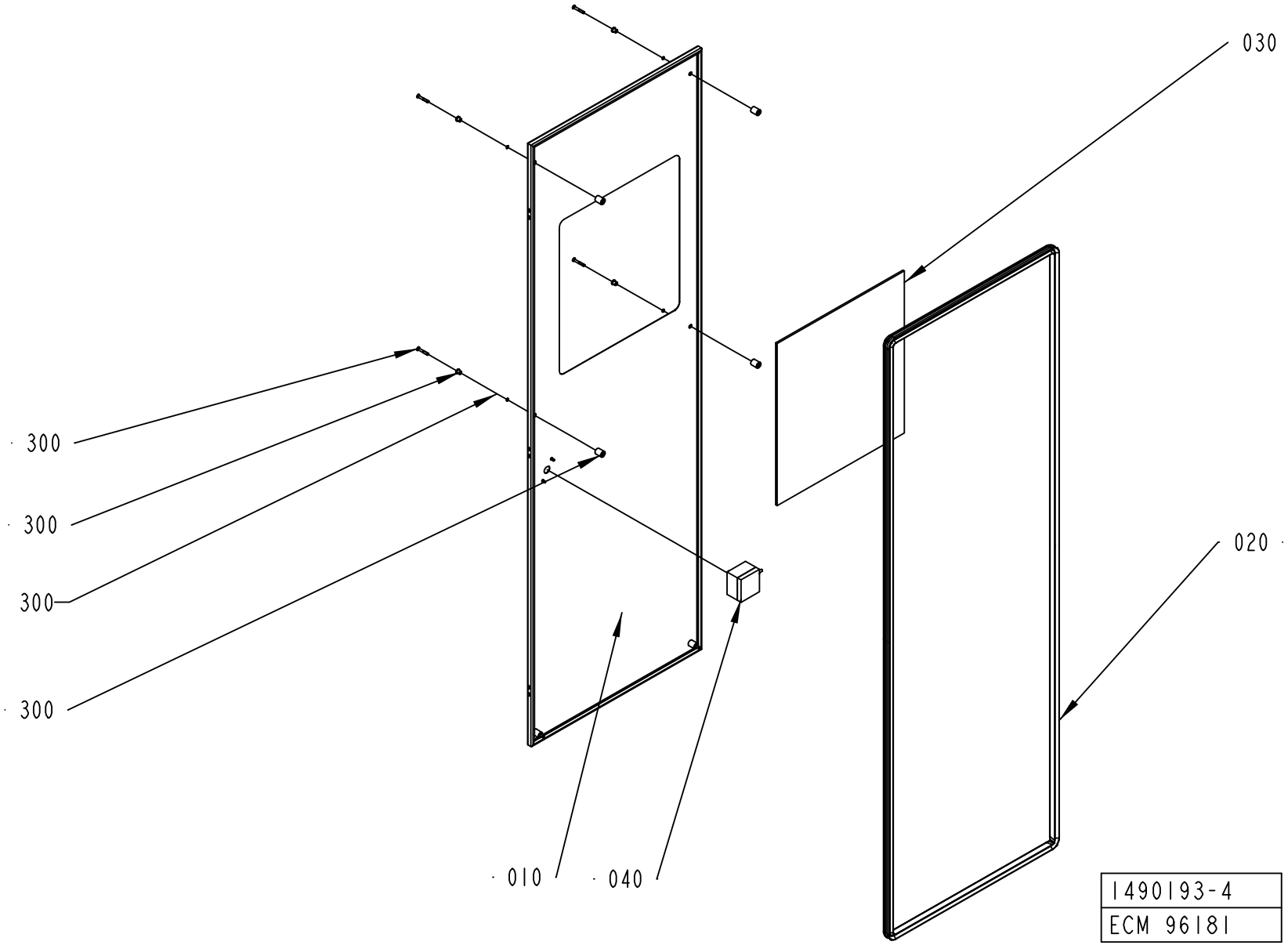
030
020
300
300
300
300
010
040
1490193-4
ECM 96181

ECM: 172280 - 20040510
Group number: 1490193-0100
Assembly Drawing: 1490193-4_1_AA

This list covers pages from 7-204 to 7-207

Pos	Part No	UN	Qty	Description	Page No
With ARL (See drawing on page: 7-206)					
010	2632534-0000		1	HATCH	
040	2632536-0100		1	CONTROL PANEL	**7-209**
Without ARL (See drawing on page: 7-204)					
010	1498460-0000		1	HATCH	
Common Parts					
020	1498461-0002		1	SEALING STRIP	
030	1498459-0003		1	GLASS PANE	
300	90226-0458		6	MOUNTING SCREW	

Pos	Part No	UN	Qty	Description	Page No

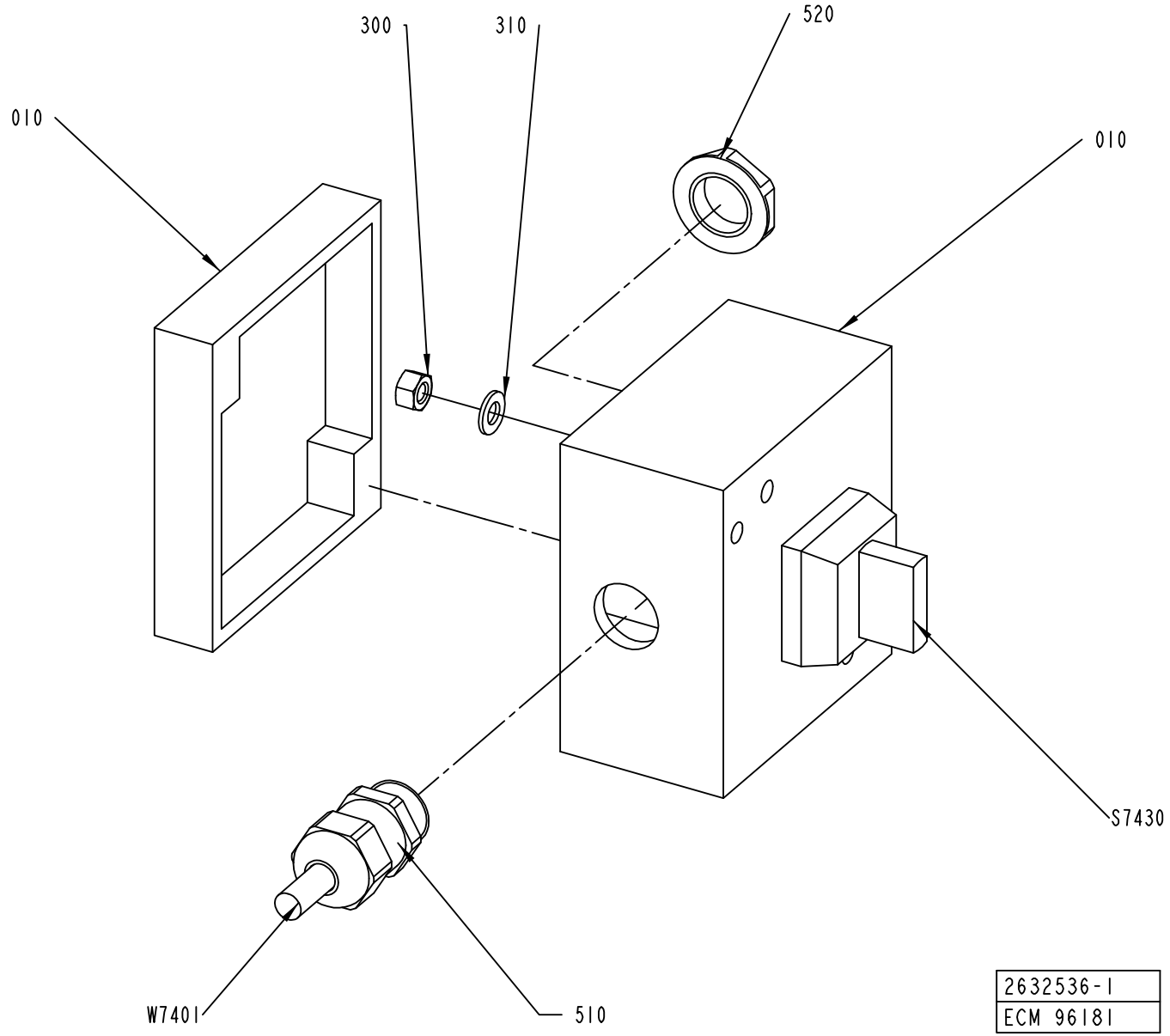
300
310
520
010
010
S7430
W7401
510
2632536-1
ECM 96181

ECM: 135495 - 20040115
Group number: 2632536-0100
Assembly Drawing: 2632536-1_1_AA

Pos	Part No	UN	Qty	Description	Page No
-					
010	2632535-0000		1	CONNECTION BOX	
300	312605-0314		2	HEXAGON NUT, M6M M5 A280	
310	315105-0146		2	WASHER BRB5,3X10RFR	
510	90458-0306		1	CABLE GLAND, M16X1,5, NO.5311 1010	
520	90458-0322		1	NUT, M16X1,5	
S7430	90111-0120		1	SWITCH, 2 POS.704.510 .0A+704.901.5/A	
W7401	351150-0403	MM	8000	CABLE OLFLEX 3X0,75 MM2 LIGHT/GREY	

Pos	Part No	UN	Qty	Description	Page No

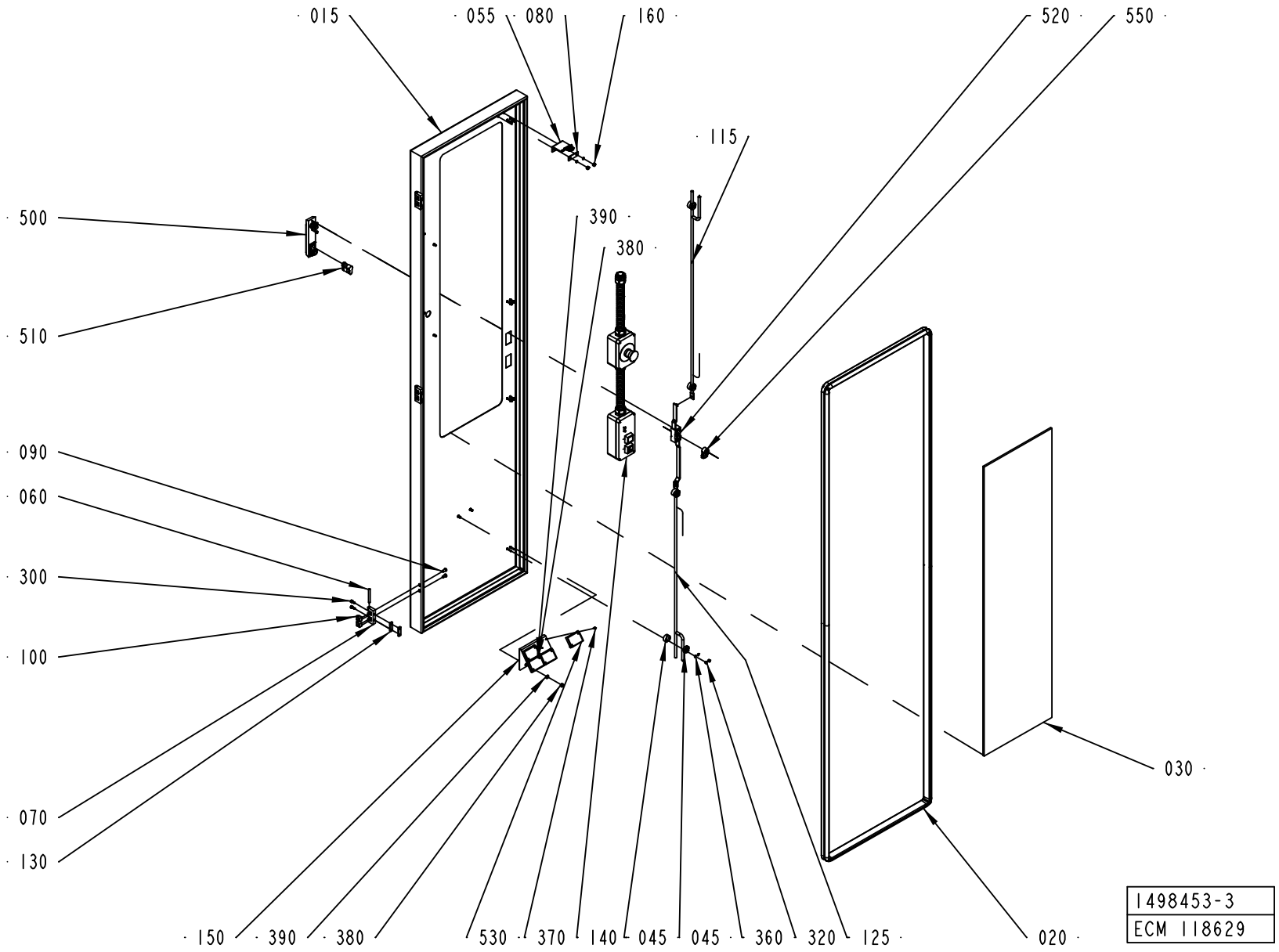
015
055
080
160
520
550
115
500
390
380
510
090
060
300
100
030
070
130
150
390
380
530
370
140
045
045
360
320
125
020
1498453-3
ECM 118629

ECM: 135878 - 20030929
Group number: 1498453-0200
Assembly Drawing: 1498453-3_1_AD

Pos	Part No	UN	Qty	Description	Page No
-					
015	2547666-0000		1	DOOR	
020	1498461-0001		1	SEALING STRIP	
030	1498459-0001		1	GLASS PANE	
045	2550333-0000		4	GUIDE LUG	
055	2553072-0000		1	KEY FOR SAFETY SWITCH	
060	988685-0000		3	PIN	
070	1035792-0000		3	E-HINGE	
080	1036563-0000		1	WASHER	
090	1129767-0000		6	SCREW	
100	1129770-0000		6	BLOCKING PIECE	
115	2550269-0001		1	LOCKING ARM	
125	2550269-0002		1	LOCKING ARM	
130	1147253-0000		3	NUT	
140	1517088-0200		1	CONTROL PANEL	**7-213**
150	2541943-0000		1	BRACKET	
160	1539391-0000		2	ROUND NUT	
300	312115-0327		6	SCREW ISO4762 M5X12 A4	
320	312705-0312		8	NUT HEX. DOMED CAP MHM-6 M4 A280	
360	315105-0136		10	WASHER BRB4,3XRFR	
370	312125-0222		8	SCREW ISO 1207 M3X8 A4	
380	312605-0316		2	HEXAGON NUT, M6M M6 A280	
390	315105-0153		2	WASHER BRB6,4X12RFR	
500	90237-0175		1	TURNING HANDLE, 1125-U185-0A	
510	90237-0128		1	LOCK CYLINDER, 1109-U3	
520	90237-0153		1	LOCK HOUSING, 1121-U26-0B	
530	90232-0333		4	REFLECTOR E39-R1	
550	90237-0165		1	LATCH	

Pos	Part No	UN	Qty	Description	Page No

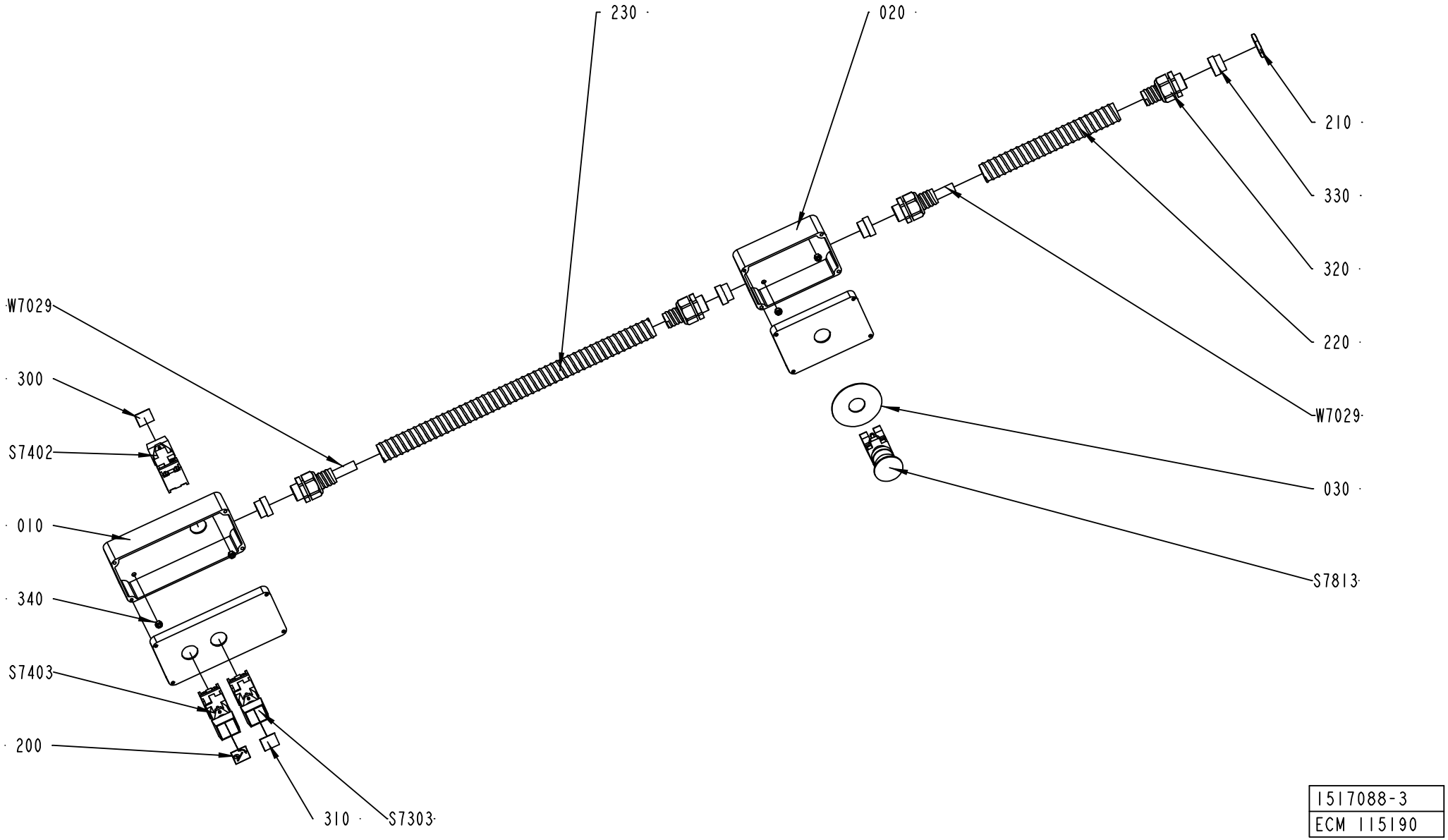

1517088-3
ECM 115190

ECM: 135885 - 20030929
Group number: 1517088-0200
Assembly Drawing: 1517088-3_1_AC

Pos	Part No	UN	Qty	Description	Page No
-					
010	2523482-0000		1	PUSH BUTTON BOX	
020	2523483-0000		1	PUSH BUTTON BOX	
030	486826-0001		1	SIGN "EMERGENCY STOP"	
200	90457-0920		1	BUTTON SIGN, ROTATION OF MATERIAL HOLDER	
210	90099-0110		1	NUT, PR 22,5 (PG16)	
220	90152-0051	MM	500	SPIRAL CONDUIT, 25X18, UL 1816	
230	90152-0051	MM	170	SPIRAL CONDUIT, 25X18, UL 1816	
300	359301-0100		1	BUTTON SIGN, SPLICING	
310	359301-0488		1	BUTTON SIGN, MATERIAL LOCKING	
320	353243-0005		4	HOSE GLAND W/O INSERT PG16 EXTENDED	
330	353249-0014		4	INSERT, SINGEL HOLE, EK 154/16	
340	312605-0314		4	HEXAGON NUT, M6M M5 A280	
S7303	90064-0082		1	PUSH BUTTON, WHITE	
	90036-0057		*1*	*LIGHT BULB, BA9S 28V*	
S7402	90064-0082		1	PUSH BUTTON, WHITE	
	90036-0057		*1*	*LIGHT BULB, BA9S 28V*	
S7403	90064-0082		1	PUSH BUTTON, WHITE	
	90036-0057		*1*	*LIGHT BULB, BA9S 28V*	
S7813	90458-1651		1	EMERGENCY STOP, ZB4-BS-844 ZB4-BZ-104	
W7029	351150-0407	MM	5000	CABLE OLFLEX 12X0,75 MM2 LIGHT/GREY	

Pos	Part No	UN	Qty	Description	Page No

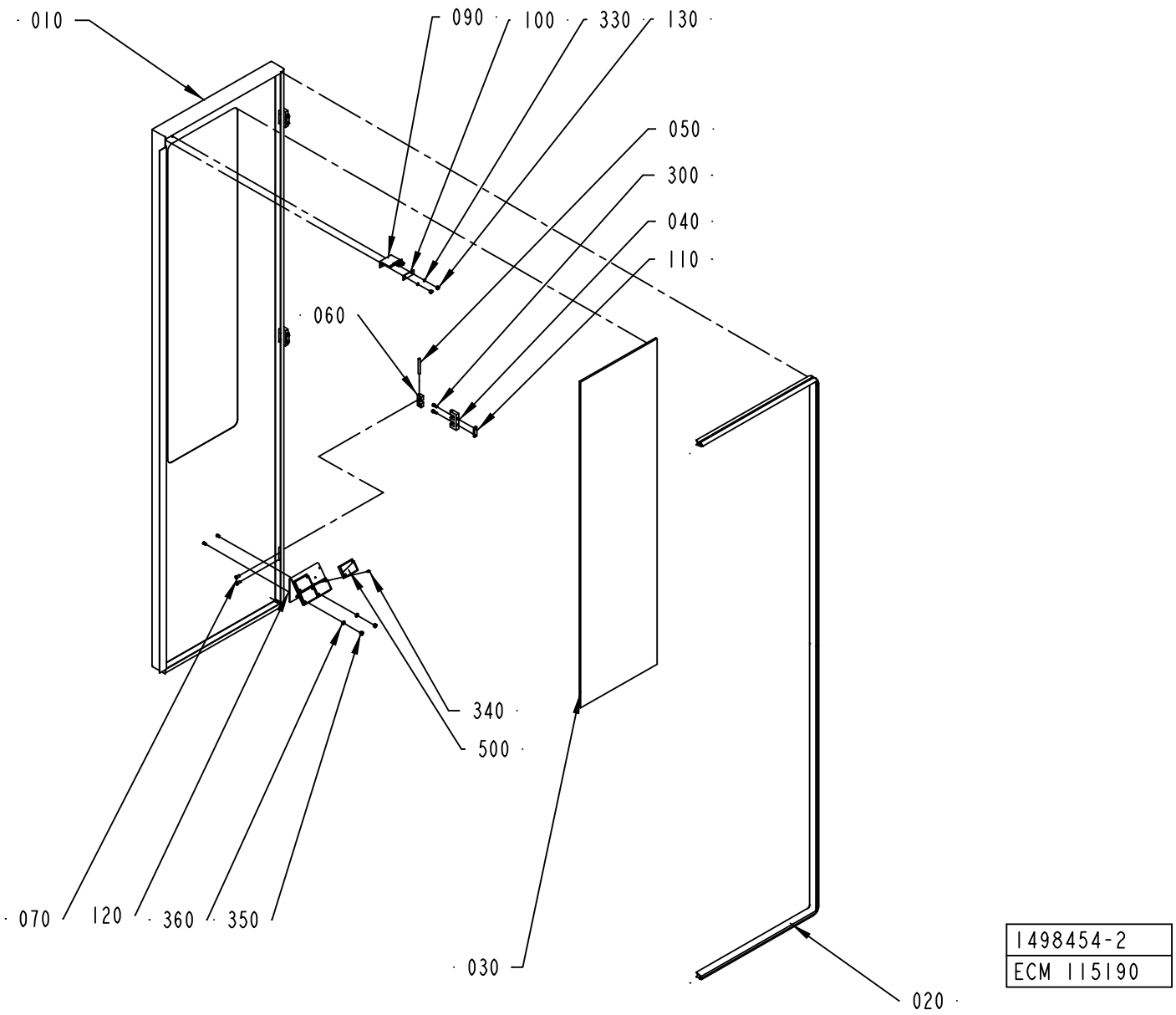
010
090
100
330
130
050
300
040
110
060
340
500
070
120
360
350
030
020
1498454-2
ECM 115190

ECM: 129713 - 20030929
Group number: 1498454-0200
Assembly Drawing: 1498454-2_1_AB

Pos	Part No	UN	Qty	Description	Page No
-					
010	2547667-0000		1	DOOR	
020	1499579-0000		1	SEALING STRIP	
030	1498459-0001		1	GLASS PANE	
040	1035792-0000		3	E-HINGE	
050	988685-0000		3	PIN	
060	1129770-0000		6	BLOCKING PIECE	
070	1129767-0000		6	SCREW	
090	2553072-0000		1	KEY FOR SAFETY SWITCH	
100	1036563-0000		1	WASHER	
110	1147253-0000		3	NUT	
120	2541943-0000		1	BRACKET	
130	1539391-0000		2	ROUND NUT	
300	312115-0327		6	SCREW ISO4762 M5X12 A4	
330	315105-0136		2	WASHER BRB4,3XRFR	
340	312125-0222		8	SCREW ISO 1207 M3X8 A4	
350	312605-0316		2	HEXAGON NUT, M6M M6 A280	
360	315105-0153		2	WASHER BRB6,4X12RFR	
500	90232-0333		4	REFLECTOR E39-R1	

Pos	Part No	UN	Qty	Description	Page No

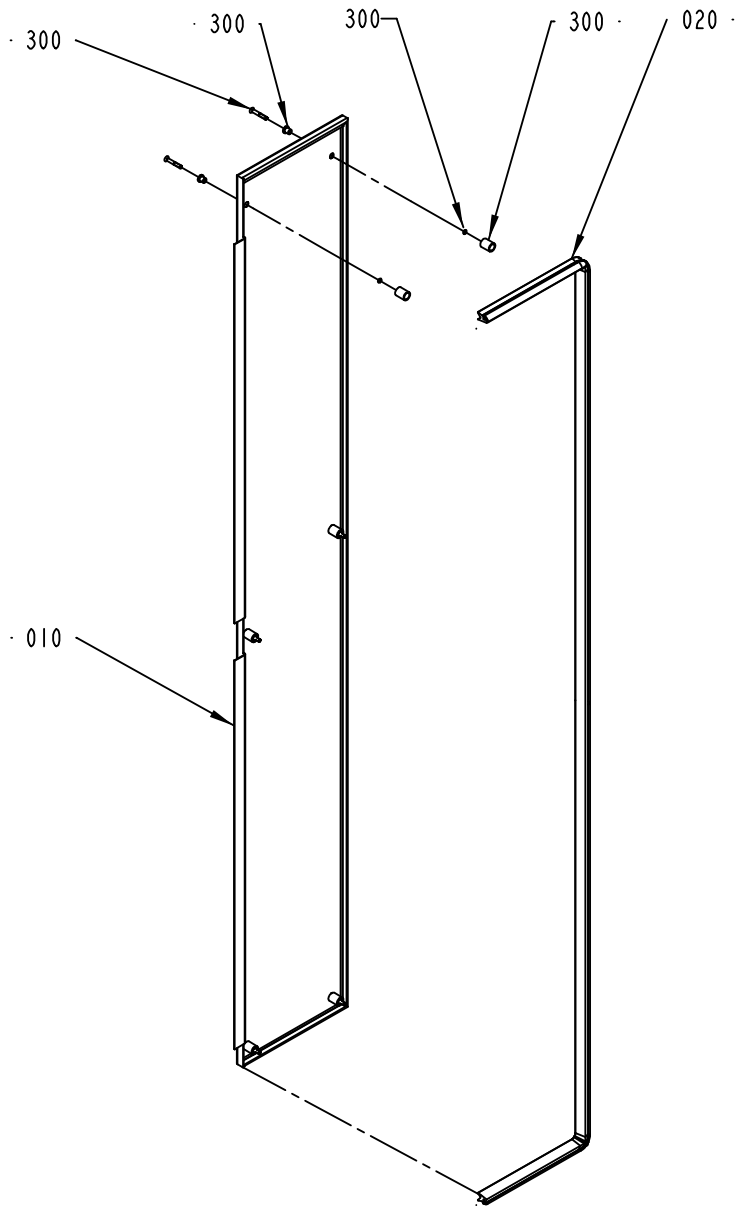

1490188-1
ECN 80701

ECM: 85420 - 20010306
Group number: 1490188-0100
Assembly Drawing: 1490188-1_1_AB

Pos	Part No	UN	Qty	Description	Page No
-					
010	1499568-0000		1	HATCH	
020	1512278-0000		1	SEALING STRIP	
300	90226-0458		6	MOUNTING SCREW	

Pos	Part No	UN	Qty	Description	Page No

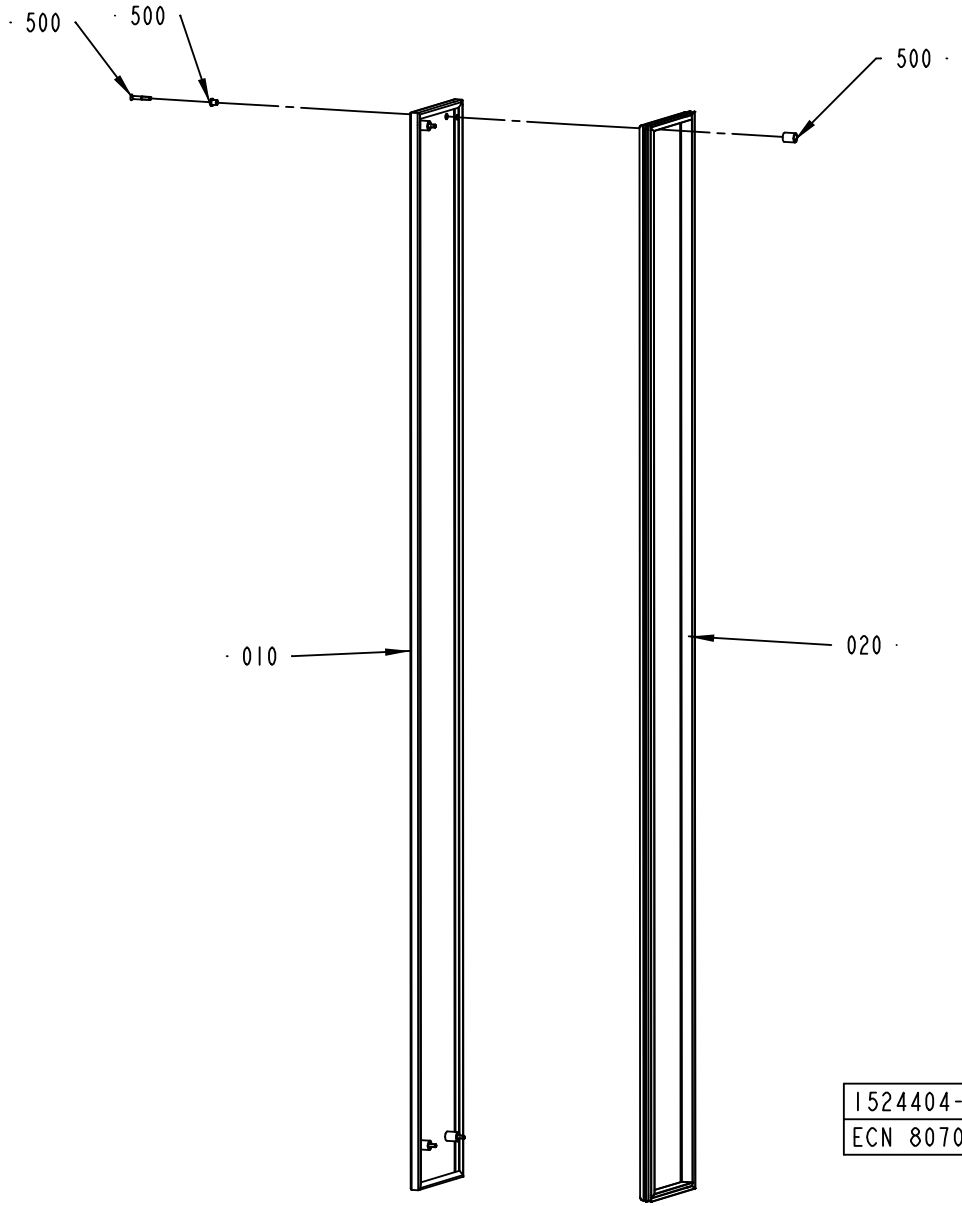
500
500
500
010
020
1524404-1
ECN 80701

ECM: 85423 - 20010306
Group number: 1524404-0100
Assembly Drawing: 1524404-1_1_AA

Pos	Part No	UN	Qty	Description	Page No
-					
010	1524405-0000		1	COVER PLATE	
020	1524406-0000		1	SEALING STRIP	
500	90226-0458		4	MOUNTING SCREW	

Pos	Part No	UN	Qty	Description	Page No

Tetra Pak

SPC
Spare Parts Catalogue

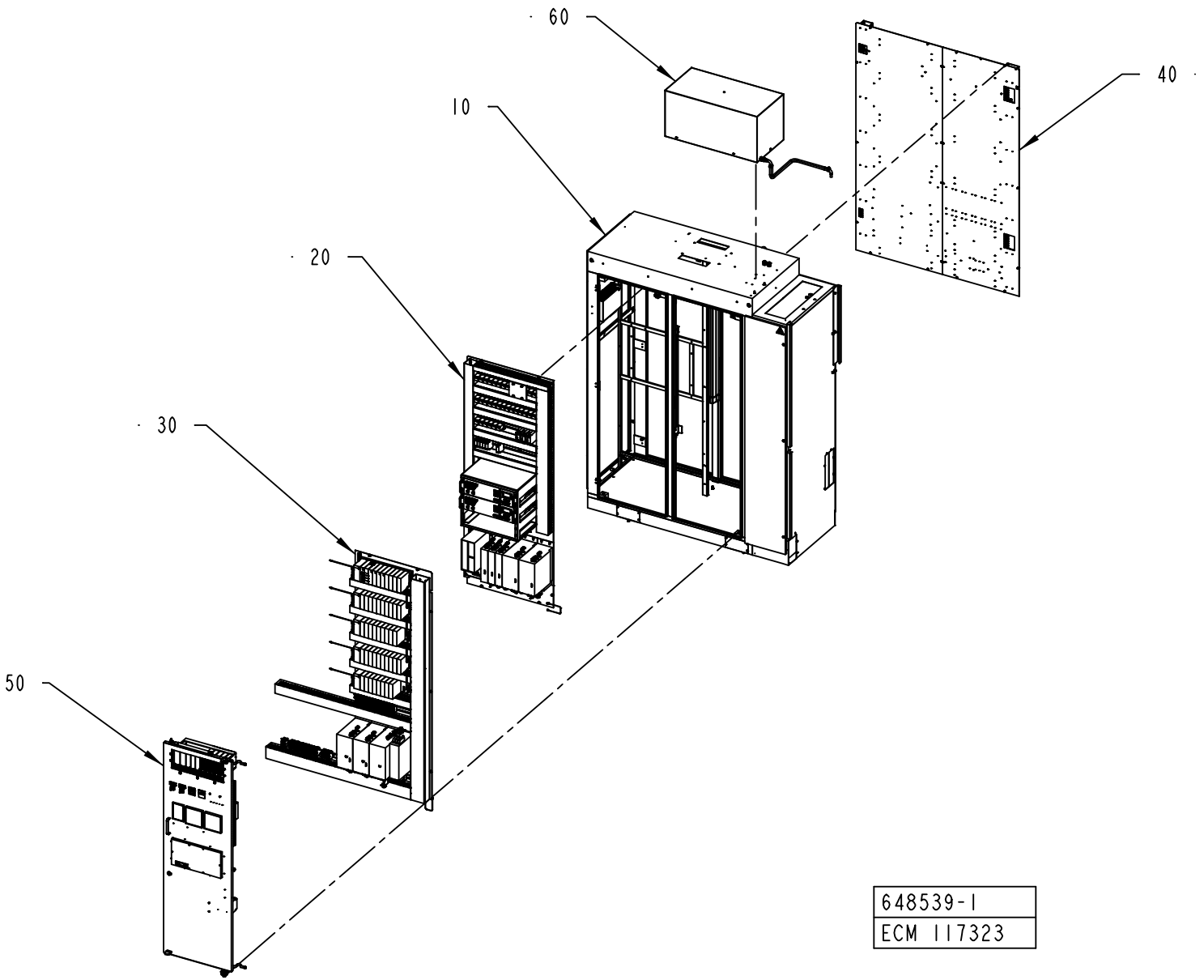
60
40
10
20
30
50
648539-1
ECM 117323

ECM: 143177 - 20040107
Group number: 648539-0100
Assembly Drawing: 648539-1_1_AA

Pos	Part No	UN	Qty	Description	Page No
A3/FLEX					
080	2576335-0100		1	TPOP LINE SUPERVISION	**8-5**
090	2565624-0100		1	SOFTWARE	**8-7**
Common Parts					
	2635131-0100		1	CABLE SET	**8-19**
010	1532902-0100		1	CABINET	**8-21**
020	1532908-0100		1	CONTROL BOARD LEFT	**8-49, 8-51**
030	1548123-0100		1	CONTROL BOARD RIGHT	**8-61, 8-63**
040	1548127-0100		1	POWER SUPPLY UNIT	**8-71**
050	1548136-0100		1	DOOR	**8-91, 8-93**
060	2550125-0100		1	COOLING UNIT	**8-105**
070	2576334-0100		1	TPOP DATA COLLECTION	**8-107**

Pos	Part No	UN	Qty	Description	Page No

This page is intentionally left blank.

ECM: 119200 - 20030220
Group number: 2576335-0100
Assembly Drawing:

Pos	Part No	UN	Qty	Description	Page No
-					
010	90220-0091	M	200	PAIR TWISTED CABLE 2X2X0,25MM2	
020	90110-0518		5	PLINTH 15 PIN	
030	90110-0383		5	CONTACT COVER 15 PIN	

Pos	Part No	UN	Qty	Description	Page No

This page is intentionally left blank.

ECM: 137121 - 20040107
Group number: 2565624-0100
Assembly Drawing:

Pos	Part No	UN	Qty	Description	Page No
-					
0010	2633186-0100		1	SOFTWARE TPOP	**8-9**
0020	2633187-0100		1	SOFTWARE TMCC	**8-11**
0030	2633188-0100		1	SOFTWARE PLC	**8-13**
0040	2633189-0100		1	SOFTWARE PAM-SAM	**8-15**
0050	2639498-0100		1	SOFTWARE RECORDER	**8-17**

Pos	Part No	UN	Qty	Description	Page No

This page is intentionally left blank.

ECM: 176353 - 50001231
Group number: 2633186-0100
Assembly Drawing:

Pos	Part No	UN	Qty	Description	Page No
-					
0010	2565563-0003		1	TPOP HMI	
0020	2565566-0003		1	PLMS CONFIG	
0030	2547125-0001		1	WINDOWS OEM W2000 PROGRAM	
0020	*2547127-0000*		*1*	*DOCUMENTATION DISKETTE*	
0030	*2547128-0000*		*1*	*LABEL CD*	
0040	*2547129-0000*		*1*	*LABEL FLEXBOX*	
0050	*2547130-0000*		*1*	*SHORT FORM INSTRUCTION*	
0040	2589391-0001		1	TPOP BASIC START PROGRAM	
0020	*2589393-0000*		*1*	*DOCUMENTATION DISKETTE*	
0030	*2589394-0000*		*1*	*LABEL DISKETTE*	
0040	*2589425-0000*		*1*	*LABEL FLEXBOX*	
0050	*2589395-0000*		*1*	*SHORT FORM INSTRUCTION*	
0060	*2589391-1001*		*1*	*MASTER DISKETTE, TPOP BASIC START*	
0050	2545065-0001		1	TPOP BASIC PROGRAM	
0020	*2545067-0000*		*1*	*DOCUMENTATION DISKETTE*	
0030	*2545068-0000*		*1*	*LABEL CD*	
0040	*2545069-0000*		*1*	*LABEL DISKETTE*	
0050	*2545070-0000*		*1*	*LABEL FLEXBOX*	
0060	*2545071-0000*		*1*	*SHORT FORM INSTRUCTION*	
0070	*2545065-1001*		*1*	*MASTER CD, TPOP BASIC*	
0060	2547131-0004		1	PLMS PERFORMANCE/PROCESS RUNTIME	
0020	*2690047-0000*		*1*	*DOCUMENTATION DISKETTE*	
0030	*2690048-0000*		*1*	*LABEL DISKETTE*	
0040	*2690049-0000*		*1*	*LABEL FLEXBOX*	
0050	*2690050-0000*		*1*	*SHORT FORM INSTRUCTIONS*	
0060	*2547131-1004*		*1*	*PLMS PERFORMANCE/PROCESS RUNTIME SW*	
0070	1190006-0402		1	PLMS SEND	

Pos	Part No	UN	Qty	Description	Page No

Machine Type | Group Description | Used-In | Group Number | Page No

This page is intentionally left blank.

ECM: 172133 - 50001231
Group number: 2633187-0100
Assembly Drawing:

Pos	Part No	UN	Qty	Description	Page No
-					
A400	2565569-0002		1	TMCC PROGRAMME	
A401	2634683-0002		1	TMCC PROGRAMME	
A402	2565577-0003		1	TMCC PROGRAMME	
A403	2565573-0003		1	TMCC PROGRAMME	

Pos	Part No	UN	Qty	Description	Page No

This page is intentionally left blank.

ECM: 169933 - 50001231
Group number: 2633188-0100
Assembly Drawing:

Pos	Part No	UN	Qty	Description	Page No	Pos	Part No	UN	Qty	Description	Page No
-											
0010	2565555-0002		1	PLC-PROGRAMME LIST							

Machine Type	Group Description	Used-In	Group Number	Page No

This page is intentionally left blank.

ECM: 168227 - 20040429
Group number: 2633189-0100
Assembly Drawing:

Pos	Part No	UN	Qty	Description	Page No
TBA 0200B QC NOPT, TBA 0250B QC NOPT, TBA 0330S QC NOPT					
0150	2674566-0001		1	PAM - SAM EASY DOWNLOAD	
TBA 0200B QC PT/FLEX, TBA 0250B QC PT/FLEX, TBA 0330S QC PT/FLEX					
0160	2675580-0001		1	PAM - SAM EASY DOWNLOAD	
TBA 0200S NOPT					
0090	2634581-0001		1	PAM - SAM EASY DOWNLOAD	
TBA 0200S PT/FLEX					
0100	2634583-0001		1	PAM - SAM EASY DOWNLOAD	
TBA 0500B QC NOPT, TBA 1000B QC NOPT					
0070	2634577-0001		1	PAM - SAM EASY DOWNLOAD	
TBA 0500B QC PT/FLEX, TBA 1000B QC PT/FLEX					
0080	2634579-0001		1	PAM - SAM EASY DOWNLOAD	
TBA 1000B NOQC NOPT					
0010	2634565-0001		1	PAM - SAM EASY DOWNLOAD	
TBA 1000B NOQC PT/FLEX					
0020	2634567-0001		1	PAM - SAM EASY DOWNLOAD	
TBA 1000S NOPT					
0030	2634569-0001		1	PAM - SAM EASY DOWNLOAD	
TBA 1000S PT/FLEX					
0040	2634571-0001		1	PAM - SAM EASY DOWNLOAD	
TBA 1000SQ NOPT					
0050	2634573-0001		1	PAM - SAM EASY DOWNLOAD	
TBA 1000SQ PT/FLEX					
0060	2634575-0001		1	PAM - SAM EASY DOWNLOAD	
TBA 1500S NOPT					
0130	2652199-0001		1	PAM - SAM EASY DOWNLOAD	
TBA 1500S PT/FLEX					
0140	2652202-0001		1	PAM - SAM EASY DOWNLOAD	
TPA 1000SQ NOPT					
0110	2634585-0001		1	PAM - SAM EASY DOWNLOAD	
TPA 1000SQ PT/FLEX					
0120	2565561-0001		1	PAM - SAM EASY DOWNLOAD	

Pos	Part No	UN	Qty	Description	Page No

Machine Type | Group Description | Used-In | Group Number | Page No

This page is intentionally left blank.

ECM: 139482 - 20040107
Group number: 2639498-0100
Assembly Drawing:

Pos	Part No	UN	Qty	Description	Page No
HI					
0020	2636079-0001		1	RECORDER	
NOHI					
0010	2635168-0001		1	RECORDER	

Pos	Part No	UN	Qty	Description	Page No

Machine Type | Group Description | Used-In | Group Number | Page No

This page is intentionally left blank.

ECM: 170715 - 20040920
Group number: 2635131-0100
Assembly Drawing:

Pos	Part No	UN	Qty	Description	Page No
A3/FLEX					
	351161-0104	M	75	CABLE AWM LIGTH BLUE 1,5MM2	
	351161-0105	M	6	CABLE AWM 1X2,5 MM2 LIGHTBLUE	
	351161-0111	M	8	CABLE AWM 1X35 MM2 LIGHTBLUE	
	351162-0102	M	120	CABLE AWM 1X0,75 MM2 YELLOW-GREEN	
	351162-0104	M	70	CABLE AWM 1X1,5 MM2 YELLOW-GREEN	
	351162-0105	M	54	CABLE AWM 1X2,5 MM2 YELLOW-GREEN	
	351162-0106	M	5	CABLE AWM 1X4 MM2 YELLOW-GREEN	
	351162-0107	M	34	CABLE AWM 1X6 MM2 YELLOW-GREEN	
	351162-0109	M	7	CABLE AWM 1X16 MM2 YELLOW-GREEN	
	351164-0102	M	75	CABLE AWM 1X0,75 MM2 BLACK	
	351164-0104	M	120	CABLE AWM 1X1,5 MM2 BLACK	
	351164-0105	M	130	CABLE (1UNIT = 100M)	
	351164-0106	M	41	CABLE AWM 1X4 MM2 BLACK	
	351164-0107	M	78	CABLE AWM 1X6 MM2 BLACK	
	351160-0106	M	15	CABLE AWM 1X4 MM2 DARKBLUE	
	351160-0102	M	2645	CABLE (1UNIT = 100M)	
	351160-0104	M	15	CABLE AWM 1X1,5 MM2 DARKBLUE	
	351161-0102	M	35	CABLE (1UNIT = 100M)	
	351160-0105	M	25	CABLE AWM 1X2,5 MM2 DARKBLUE	
Common Parts					
	351164-0111	M	15	8ABLE AWM 1X35 MM2 BLACK	

Pos	Part No	UN	Qty	Description	Page No

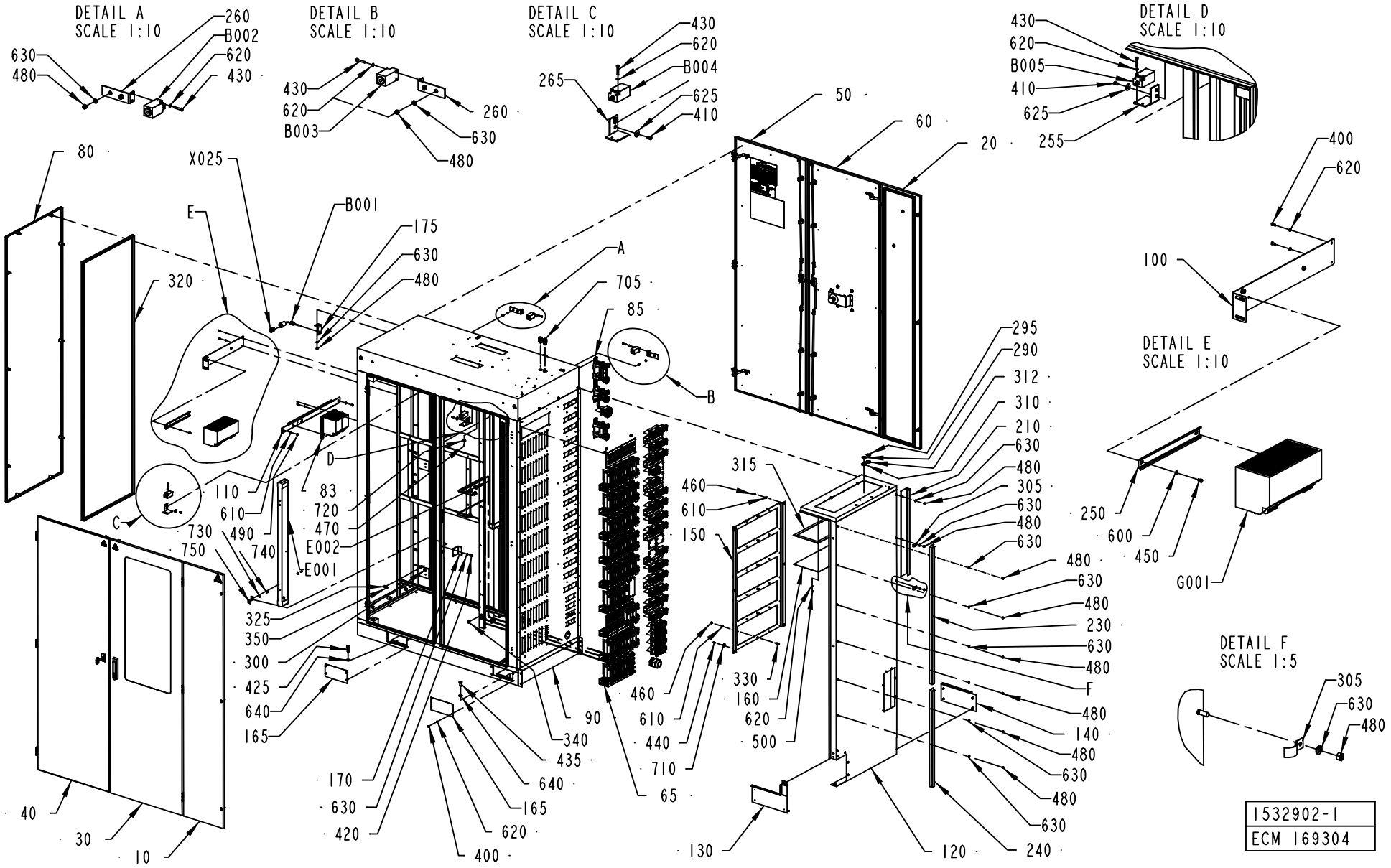
DETAIL A
SCALE 1:10
DETAIL B
SCALE 1:10
DETAIL C
SCALE 1:10
DETAIL D
SCALE 1:10
DETAIL E
SCALE 1:10
DETAIL F
SCALE 1:5
1532902-1
ECM 169304

ECM: 170094 - 20040920
Group number: 1532902-0100
Assembly Drawing: 1532902-1_1_AD

Pos	Part No	UN	Qty	Description	Page No
A3/FLEX					
065	2563166-0100		1	CONNECTOR	**8-23, 8-25, 8-27, 8-29**
090	1532903-0001		1	WELDED CABINET	
120	1532914-0001		1	COVERING PANEL	
290	90002-0004		1	BLANK-OFF PLUG, PR 22,5 SKINDICHT-BLK16	
295	90002-0016		1	BLANK-OFF PLUG PR 20.4 SKINDICHT-BLK13,5	
470	312605-0312		9	HEXAGON NUT, M6M M4 A280	
705	352103-0108		2	CABLE GLAND, ST 13,5 , PR20,4/PG13,5	
720	352113-0205		6	ANCHOR PLATES FOR STRIPS, TYPE TM2S8-C10	
Common Parts					
010	1095634-0100		1	DOOR	**8-31**
020	1095637-0100		1	DOOR	**8-33**
030	1532920-0100		1	DOOR	**8-35**
040	1532923-0100		1	DOOR	**8-37**
050	1532932-0100		1	DOOR	**8-39**
060	1532935-0100		1	DOOR	**8-41**
080	1532904-0100		1	DOOR	**8-43**
083	2624549-0100		1	POWER SUPPLY UNIT	**8-45**
085	2624551-0100		1	CONNECTION DEVICE	**8-47**
100	1532927-0000		1	FASTENING PLATE	
110	2530287-0000		1	PLATE	
130	1532928-0000		1	COVERING PLATE	
140	1532929-0000		1	COVERING PLATE	
150	1532911-0000		1	FASTENING PLATE	
160	1532909-0000		1	PLATE	
165	1038408-0000		4	COVERING PLATE	
170	1140769-0000		1	DOOR STOPPER	
175	1129318-0000		1	BRACKET	
210	2509643-0000		1	BRACKET	
230	2533754-0000		1	BRACKET	
240	2533755-0000		1	BRACKET	
250	2530286-0000		1	RAIL	
255	2606215-0000		1	BRACKET	
260	2608106-0000		2	BRACKET	
265	2608107-0000		1	BRACKET	
300	90062-0015		11	LOCK WASHER SERRAT.EXT.GEAR,6,4/11 H=0,7	
305	90074-0011		2	CABLE CLIPS, D=14 MM	
310	90099-0110		3	NUT, PR 22,5 (PG16)	
312	90099-0118		1	NUT, PR 20,4 (PG13,5)	
315	1532926-0000		1	GASKET	
320	90143-0057	M	36	STRIP EMKA 1011-05 21X11MM	
325	90194-0152		14	SIGN, EARTH	
330	90287-0137		6	SPACER BOLT DSSM60100	
340	90287-0157		2	SCREW M6SF FLAT HEAD M6X10 88	
350	2608177-0000		11	SIGN	
400	312105-0287		20	SCREW M6S ISO4017 M4X8 A470	
410	312105-0323		4	SCREW M6S ISO 4017 M5X8 A480	
420	312105-0364		2	SCREW M6S ISO 4017 M6X10 A480	
425	312105-0538		2	SCREW M6S ISO 4017 M12X35 A480	
430	312111-0297		8	SCREW HEX.SOCK.HD.MC6S-TT 4X25 88 FZB	
435	312105-0534		2	SCREW M6S ISO 4017 M12X25 A480	
440	312121-0289		24	SCREW ISO 1207 M4X10 4.8 - 5.8 Z.PL.	
450	312121-0323		2	SCREW ISO 1207 M5X8 4.8 - 5.8 Z.PL.	
460	312601-0316		12	NUT M6M 6-8 FZB	
480	312605-0316		37	HEXAGON NUT, M6M M6 A280	
490	312810-0316		6	HEXAGON NUT, NY-LOCK M6 FZB	
500	312812-0312		6	HEXAGON NUT, NY-LOCK M4 A480	
600	315101-0146		2	WASHER PLAIN, BRB, 5,3/10 H=1	
610	315101-0153		18	WASHER PLAIN, BRB, 6,4/12 H=1,5	
620	315105-0136		34	WASHER BRB4,3XRFR	
625	90005-0060		4	WASHER PLAIN, RBS 6,4/M6)/18,H=1,5	
630	315105-0153		39	WASHER BRB6,4X12RFR	
640	315105-0178		4	WASHER BRB13X24RFR	
710	352113-0203		27	ANCHOR PLATES FOR STRIPS, TYPE TM3S8-M0	
730	90005-0082		8	WASHER PLAIN ROUND 4,3(M4)/12,H=1	
740	312125-0289		8	SCREW ISO 1207 M4X10 A4	
750	2675516-0000		4	BRACKET	
B001	90326-0053		1	THERMOCOUPLE, 12826-35	
B002	90044-0192		1	LIMIT SW. SZ2586.000	
B003	90044-0192		1	LIMIT SW. SZ2586.000	
B004	90044-0192		1	LIMIT SW. SZ2586.000	
B005	90044-0192		1	LIMIT SW. SZ2586.000	
E001	90459-2560		1	LIGHT FIXTURE, TMS121 1XTL-D30W/830 IP	
E002	90459-2560		1	LIGHT FIXTURE, TMS121 1XTL-D30W/830 IP	
G001	90459-2938		1	POWER SUPPLY, 6EP1437-3BA00	
X025	90326-0020		1	PLUG, FEMALE YELLOW CR-AL	

Machine Type | Group Description | Used-In | Group Number | Page No

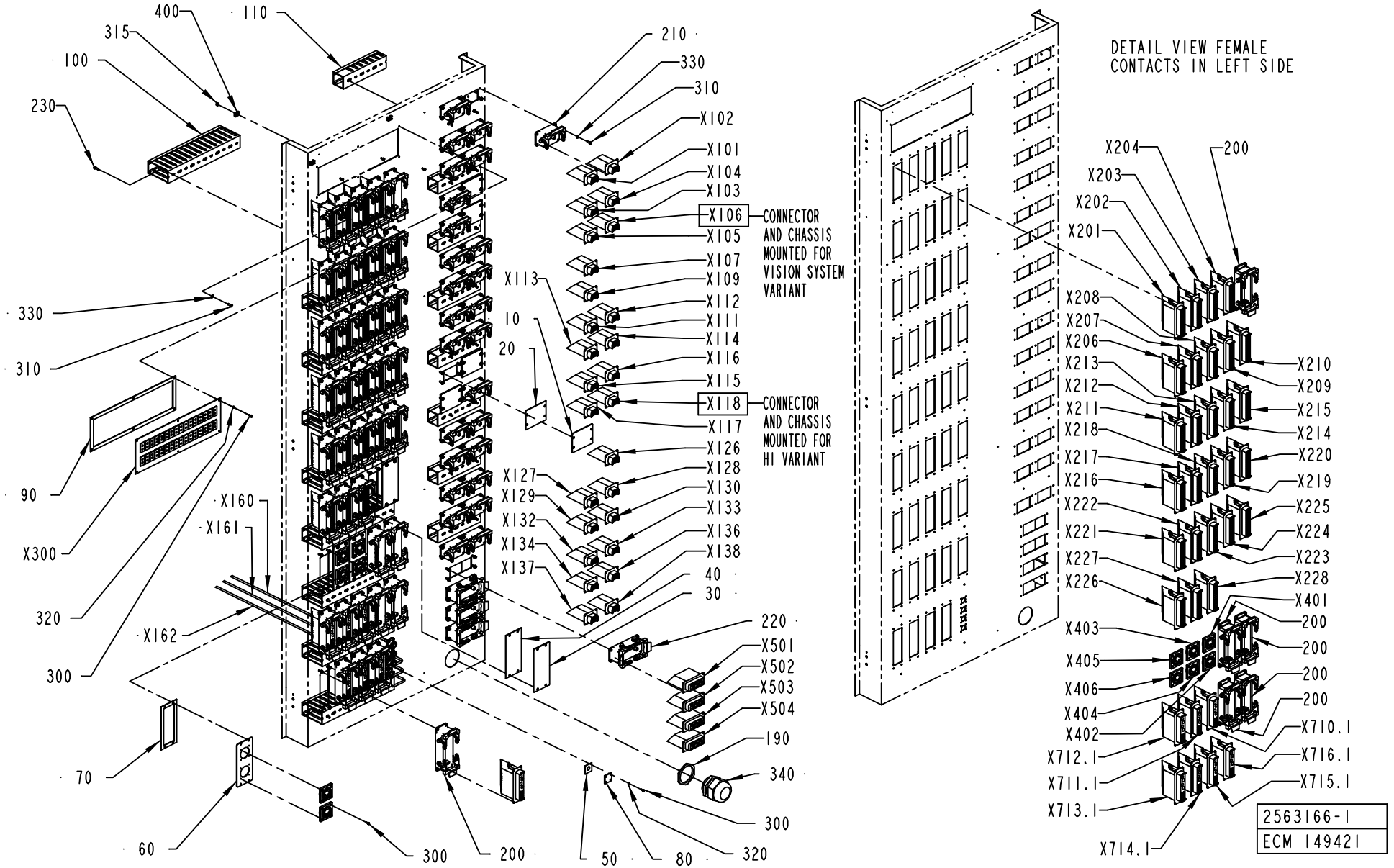
400
110
315
100
230
210
330
310
X102
X101
X104
X103
X106
CONNECTOR AND CHASSIS MOUNTED FOR VISION SYSTEM VARIANT
X105
X107
X109
X112
X111
X114
X116
X115
X118
CONNECTOR AND CHASSIS MOUNTED FOR HI VARIANT
X117
X126
X128
X130
X133
X136
X138
40
30
X113
10
20
X127
X129
X132
X134
X137
330
310
90
X300
320
300
X160
X161
X162
220
X501
X502
X503
X504
190
340
300
70
60
300
200
50
80
320
DETAIL VIEW FEMALE CONTACTS IN LEFT SIDE
X204
200
X203
X202
X201
X208
X207
X206
X213
X212
X211
X218
X217
X216
X222
X221
X227
X226
X210
X209
X215
X214
X220
X219
X225
X224
X223
X228
X401
200
X403
200
X405
200
X406
200
X404
X710.1
X402
X712.1
X716.1
X711.1
X715.1
X713.1
X714.1
2563166-1
ECM 149421

ECM: 169595 - 20040920
Group number: 2563166-0100
Assembly Drawing: 2563166-1_1_AC

This list covers pages from 8-22 to 8-29

Pos	Part No	UN	Qty	Description	Page No
A3/FLEX HI NOVISION SYS (See drawing on pages: 8-22, 8-24, 8-26, 8-28)					
010	1037572-0000		6	COVER PLATE	
020	1037573-0000		6	GASKET	
030	1037574-0000		2	COVER PLATE	
040	1037575-0000		2	GASKET	
050	1129276-0000		1	GASKET	
080	1548139-0000		1	COVER PLATE	
200	90110-0153		39	CHASSIS HOUSING 24-P CHI 24, 121240 0000	
210	90110-0166		26	CHASSIS HOUSING 310144-33	
220	90110-0167		4	CHASSIS HOUSING 310133-33	
300	312125-0222		46	SCREW ISO 1207 M3X8 A4	
310	312125-0289		320	SCREW ISO 1207 M4X10 A4	
320	315105-0124		22	WASHER BRB3,2X6RFR	
330	315105-0136		321	WASHER BRB4,3XRFR	
W106	90220-0183	MM	3200	SCR. CABLE 2X0,34MM2	
W120	90220-0183	MM	3500	SCR. CABLE 2X0,34MM2	
W121	90220-0183	MM	3500	SCR. CABLE 2X0,34MM2	
W122	90220-0183	MM	3600	SCR. CABLE 2X0,34MM2	
W124	90220-0183	MM	2400	SCR. CABLE 2X0,34MM2	
W125	90220-0183	MM	2400	SCR. CABLE 2X0,34MM2	
W126	90220-0183	MM	2200	SCR. CABLE 2X0,34MM2	
W127	90220-0183	MM	2200	SCR. CABLE 2X0,34MM2	
W130	90220-0183	MM	2700	SCR. CABLE 2X0,34MM2	
W133	90220-0183	MM	3500	SCR. CABLE 2X0,34MM2	
W135	90220-0183	MM	2100	SCR. CABLE 2X0,34MM2	
W138	90220-0183	MM	2500	SCR. CABLE 2X0,34MM2	
W139	90220-0183	MM	2400	SCR. CABLE 2X0,34MM2	
W213	90220-0104	MM	1150	SCR. CABLE 4X1,5MM2	
W300	90220-0034	MM	1200	THERMOCABLE TEX/SITW-20F-KX 2X0,5MM2	
W301	90220-0034	MM	1200	THERMOCABLE TEX/SITW-20F-KX 2X0,5MM2	
W302	90220-0034	MM	1200	THERMOCABLE TEX/SITW-20F-KX 2X0,5MM2	
W303	90220-0034	MM	1200	THERMOCABLE TEX/SITW-20F-KX 2X0,5MM2	
W304	90220-0034	MM	1200	THERMOCABLE TEX/SITW-20F-KX 2X0,5MM2	
W305	90220-0034	MM	1200	THERMOCABLE TEX/SITW-20F-KX 2X0,5MM2	
W313	90220-0034	MM	1200	THERMOCABLE TEX/SITW-20F-KX 2X0,5MM2	
W314	90220-0034	MM	1200	THERMOCABLE TEX/SITW-20F-KX 2X0,5MM2	
W316	90220-0034	MM	1200	THERMOCABLE TEX/SITW-20F-KX 2X0,5MM2	
W318	90220-0034	MM	1000	THERMOCABLE TEX/SITW-20F-KX 2X0,5MM2	
W319	90220-0034	MM	1000	THERMOCABLE TEX/SITW-20F-KX 2X0,5MM2	
W320	90220-0034	MM	1000	THERMOCABLE TEX/SITW-20F-KX 2X0,5MM2	
W321	90220-0034	MM	3000	THERMOCABLE TEX/SITW-20F-KX 2X0,5MM2	
W322	90220-0034	MM	3000	THERMOCABLE TEX/SITW-20F-KX 2X0,5MM2	
W323	90220-0034	MM	3000	THERMOCABLE TEX/SITW-20F-KX 2X0,5MM2	
W331	90220-0034	MM	1000	THERMOCABLE TEX/SITW-20F-KX 2X0,5MM2	
W332	90220-0034	MM	1000	THERMOCABLE TEX/SITW-20F-KX 2X0,5MM2	
W333	90220-0034	MM	1000	THERMOCABLE TEX/SITW-20F-KX 2X0,5MM2	
W382	90220-0034	MM	3000	THERMOCABLE TEX/SITW-20F-KX 2X0,5MM2	
X105	90110-0161		1	FEMALE INSERT 70 105 0653 0	
X118	90110-0161		1	FEMALE INSERT 70 105 0653 0	
X137	90110-0161		1	FEMALE INSERT 70 105 0653 0	
X138	90110-0161		1	FEMALE INSERT 70 105 0653 0	
X160	2540596-0002		1	COAXIAL CABLE	
X161	2540596-0002		1	COAXIAL CABLE	
X162	2540596-0002		1	COAXIAL CABLE	
X221	90110-0164		1	FEMALE INSERT 70 105 2453 3	
X225	90110-0164		1	FEMALE INSERT 70 105 2453 3	
X501	90110-0165		1	FEMALE INSERT 70.005.0653.0	
X502	90110-0165		1	FEMALE INSERT 70.005.0653.0	
A3/FLEX HI VISION SYS (See drawing on pages: 8-22, 8-24, 8-26, 8-28)					
010	1037572-0000		5	COVER PLATE	
020	1037573-0000		5	GASKET	
030	1037574-0000		2	COVER PLATE	
040	1037575-0000		2	GASKET	
050	1129276-0000		1	GASKET	
080	1548139-0000		1	COVER PLATE	
200	90110-0153		39	CHASSIS HOUSING 24-P CHI 24, 121240 0000	
210	90110-0166		27	CHASSIS HOUSING 310144-33	
220	90110-0167		4	CHASSIS HOUSING 310133-33	
300	312125-0222		46	SCREW ISO 1207 M3X8 A4	
310	312125-0289		320	SCREW ISO 1207 M4X10 A4	
320	315105-0124		22	WASHER BRB3,2X6RFR	
330	315105-0136		321	WASHER BRB4,3XRFR	
W106	90220-0183	MM	3200	SCR. CABLE 2X0,34MM2	
W120	90220-0183	MM	3500	SCR. CABLE 2X0,34MM2	
W121	90220-0183	MM	3500	SCR. CABLE 2X0,34MM2	
W122	90220-0183	MM	3600	SCR. CABLE 2X0,34MM2	
W124	90220-0183	MM	2400	SCR. CABLE 2X0,34MM2	
W125	90220-0183	MM	2400	SCR. CABLE 2X0,34MM2	
W126	90220-0183	MM	2200	SCR. CABLE 2X0,34MM2	
W127	90220-0183	MM	2200	SCR. CABLE 2X0,34MM2	
W130	90220-0183	MM	2700	SCR. CABLE 2X0,34MM2	
W133	90220-0183	MM	3500	SCR. CABLE 2X0,34MM2	
W135	90220-0183	MM	2100	SCR. CABLE 2X0,34MM2	
W138	90220-0183	MM	2500	SCR. CABLE 2X0,34MM2	

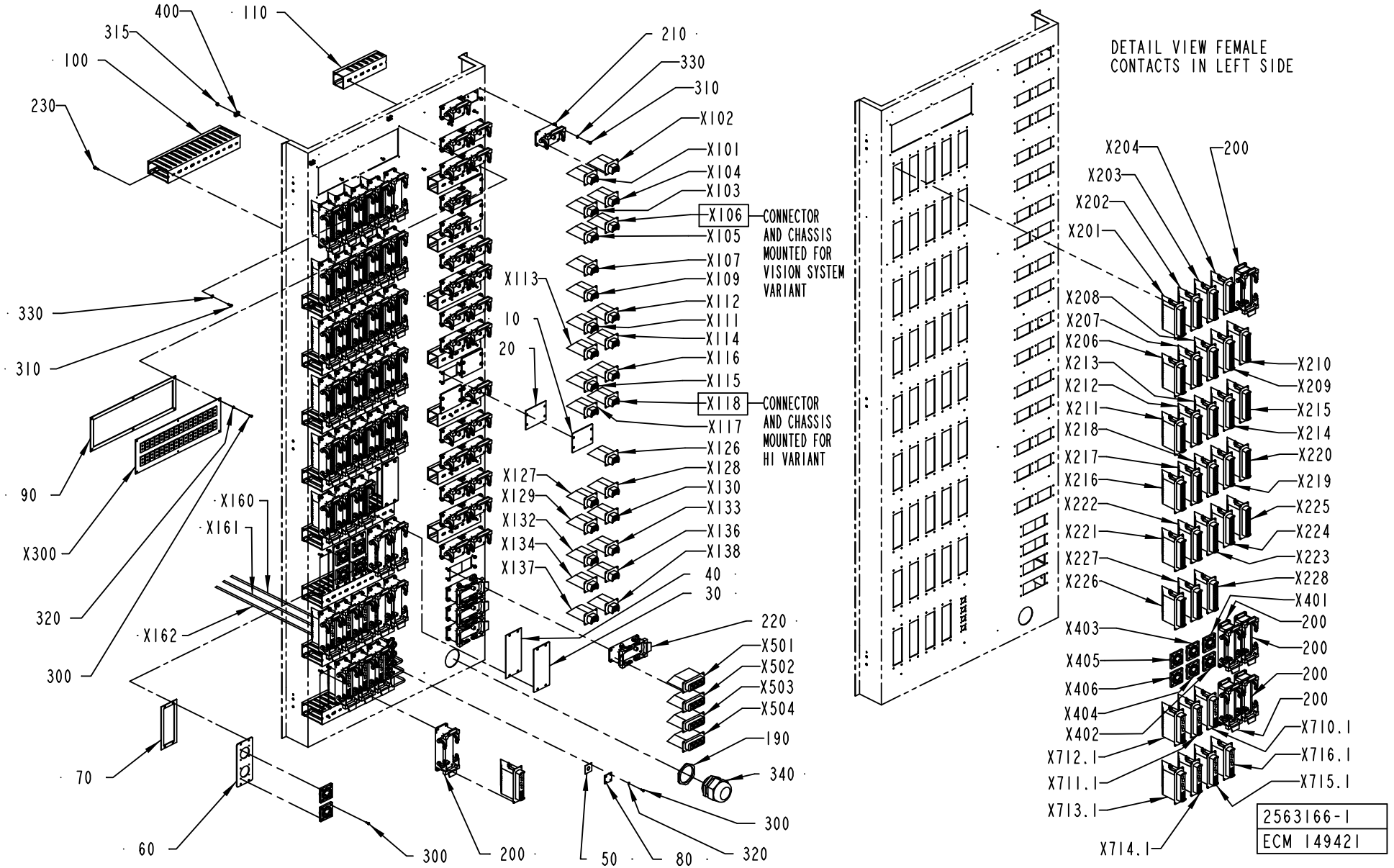
400
110
315
100
230
210
330
310
X102
X101
X104
X103
X106
CONNECTOR AND CHASSIS MOUNTED FOR VISION SYSTEM VARIANT
X105
X107
X109
X112
X111
X114
X116
X115
X118
CONNECTOR AND CHASSIS MOUNTED FOR HI VARIANT
X117
X126
X128
X130
X133
X136
X138
40
30
X113
10
20
X127
X129
X132
X134
X137
330
310
90
X300
320
300
X160
X161
X162
220
X501
X502
X503
X504
190
340
300
70
60
300
200
50
80
320
DETAIL VIEW FEMALE CONTACTS IN LEFT SIDE
X204
200
X203
X202
X201
X208
X207
X206
X213
X212
X211
X218
X217
X216
X222
X221
X227
X226
X210
X209
X215
X214
X220
X219
X225
X224
X223
X228
X401
200
X403
200
X405
200
X406
200
X404
X402
X710.1
X712.1
X716.1
X711.1
X715.1
X713.1
X714.1
2563166-1
ECM 149421

ECM: 169595 - 20040920
Group number: 2563166-0100
Assembly Drawing: 2563166-1_1_AC

This list covers pages from 8-22 to 8-29

Pos	Part No	UN	Qty	Description	Page No
A3/FLEX HI VISION SYS (Cont'd) (See drawing on pages: 8-22, 8-24, 8-26, 8-28)					
W139	90220-0183	MM	2400	SCR. CABLE 2X0,34MM2	
W213	90220-0104	MM	1150	SCR. CABLE 4X1,5MM2	
W300	90220-0034	MM	1200	THERMOCABLE TEX/SITW-20F-KX 2X0,5MM2	
W301	90220-0034	MM	1200	THERMOCABLE TEX/SITW-20F-KX 2X0,5MM2	
W302	90220-0034	MM	1200	THERMOCABLE TEX/SITW-20F-KX 2X0,5MM2	
W303	90220-0034	MM	1200	THERMOCABLE TEX/SITW-20F-KX 2X0,5MM2	
W304	90220-0034	MM	1200	THERMOCABLE TEX/SITW-20F-KX 2X0,5MM2	
W305	90220-0034	MM	1200	THERMOCABLE TEX/SITW-20F-KX 2X0,5MM2	
W313	90220-0034	MM	1200	THERMOCABLE TEX/SITW-20F-KX 2X0,5MM2	
W314	90220-0034	MM	1200	THERMOCABLE TEX/SITW-20F-KX 2X0,5MM2	
W316	90220-0034	MM	1200	THERMOCABLE TEX/SITW-20F-KX 2X0,5MM2	
W318	90220-0034	MM	1000	THERMOCABLE TEX/SITW-20F-KX 2X0,5MM2	
W319	90220-0034	MM	1000	THERMOCABLE TEX/SITW-20F-KX 2X0,5MM2	
W320	90220-0034	MM	1000	THERMOCABLE TEX/SITW-20F-KX 2X0,5MM2	
W321	90220-0034	MM	3000	THERMOCABLE TEX/SITW-20F-KX 2X0,5MM2	
W322	90220-0034	MM	3000	THERMOCABLE TEX/SITW-20F-KX 2X0,5MM2	
W323	90220-0034	MM	3000	THERMOCABLE TEX/SITW-20F-KX 2X0,5MM2	
W331	90220-0034	MM	1000	THERMOCABLE TEX/SITW-20F-KX 2X0,5MM2	
W332	90220-0034	MM	1000	THERMOCABLE TEX/SITW-20F-KX 2X0,5MM2	
W333	90220-0034	MM	1000	THERMOCABLE TEX/SITW-20F-KX 2X0,5MM2	
W382	90220-0034	MM	3000	THERMOCABLE TEX/SITW-20F-KX 2X0,5MM2	
X105	90110-0161		1	FEMALE INSERT 70 105 0653 0	
X106	90110-0161		1	FEMALE INSERT 70 105 0653 0	
X118	90110-0161		1	FEMALE INSERT 70 105 0653 0	
X137	90110-0161		1	FEMALE INSERT 70 105 0653 0	
X138	90110-0161		1	FEMALE INSERT 70 105 0653 0	
X160	2540596-0002		1	COAXIAL CABLE	
X161	2540596-0002		1	COAXIAL CABLE	
X162	2540596-0002		1	COAXIAL CABLE	
X221	90110-0164		1	FEMALE INSERT 70 105 2453 3	
X225	90110-0164		1	FEMALE INSERT 70 105 2453 3	
X501	90110-0165		1	FEMALE INSERT 70.005.0653.0	
X502	90110-0165		1	FEMALE INSERT 70.005.0653.0	
A3/FLEX NOHI NOVISION SYS (See drawing on pages: 8-22, 8-24, 8-26, 8-28)					
010	1037572-0000		7	COVER PLATE	
020	1037573-0000		7	GASKET	
030	1037574-0000		2	COVER PLATE	
040	1037575-0000		2	GASKET	
050	1129276-0000		1	GASKET	
080	1548139-0000		1	COVER PLATE	
200	90110-0153		39	CHASSIS HOUSING 24-P CHI 24, 121240 0000	
210	90110-0166		25	CHASSIS HOUSING 310144-33	
220	90110-0167		4	CHASSIS HOUSING 310133-33	
300	312125-0222		46	SCREW ISO 1207 M3X8 A4	
310	312125-0289		320	SCREW ISO 1207 M4X10 A4	
320	315105-0124		22	WASHER BRB3,2X6RFR	
330	315105-0136		321	WASHER BRB4,3XRFR	
W106	90220-0183	MM	3200	SCR. CABLE 2X0,34MM2	
W120	90220-0183	MM	3500	SCR. CABLE 2X0,34MM2	
W121	90220-0183	MM	3500	SCR. CABLE 2X0,34MM2	
W122	90220-0183	MM	3600	SCR. CABLE 2X0,34MM2	
W124	90220-0183	MM	2400	SCR. CABLE 2X0,34MM2	
W125	90220-0183	MM	2400	SCR. CABLE 2X0,34MM2	
W126	90220-0183	MM	2200	SCR. CABLE 2X0,34MM2	
W127	90220-0183	MM	2200	SCR. CABLE 2X0,34MM2	
W130	90220-0183	MM	2700	SCR. CABLE 2X0,34MM2	
W133	90220-0183	MM	3500	SCR. CABLE 2X0,34MM2	
W135	90220-0183	MM	2100	SCR. CABLE 2X0,34MM2	
W138	90220-0183	MM	2500	SCR. CABLE 2X0,34MM2	
W139	90220-0183	MM	2400	SCR. CABLE 2X0,34MM2	
W213	90220-0104	MM	1150	SCR. CABLE 4X1,5MM2	
W300	90220-0034	MM	1200	THERMOCABLE TEX/SITW-20F-KX 2X0,5MM2	
W301	90220-0034	MM	1200	THERMOCABLE TEX/SITW-20F-KX 2X0,5MM2	
W302	90220-0034	MM	1200	THERMOCABLE TEX/SITW-20F-KX 2X0,5MM2	
W303	90220-0034	MM	1200	THERMOCABLE TEX/SITW-20F-KX 2X0,5MM2	
W304	90220-0034	MM	1200	THERMOCABLE TEX/SITW-20F-KX 2X0,5MM2	
W305	90220-0034	MM	1200	THERMOCABLE TEX/SITW-20F-KX 2X0,5MM2	
W313	90220-0034	MM	1200	THERMOCABLE TEX/SITW-20F-KX 2X0,5MM2	
W314	90220-0034	MM	1200	THERMOCABLE TEX/SITW-20F-KX 2X0,5MM2	
W316	90220-0034	MM	1200	THERMOCABLE TEX/SITW-20F-KX 2X0,5MM2	
W318	90220-0034	MM	1000	THERMOCABLE TEX/SITW-20F-KX 2X0,5MM2	
W319	90220-0034	MM	1000	THERMOCABLE TEX/SITW-20F-KX 2X0,5MM2	
W320	90220-0034	MM	1000	THERMOCABLE TEX/SITW-20F-KX 2X0,5MM2	
W321	90220-0034	MM	3000	THERMOCABLE TEX/SITW-20F-KX 2X0,5MM2	
W322	90220-0034	MM	3000	THERMOCABLE TEX/SITW-20F-KX 2X0,5MM2	
W323	90220-0034	MM	3000	THERMOCABLE TEX/SITW-20F-KX 2X0,5MM2	
W331	90220-0034	MM	1000	THERMOCABLE TEX/SITW-20F-KX 2X0,5MM2	
W332	90220-0034	MM	1000	THERMOCABLE TEX/SITW-20F-KX 2X0,5MM2	
W333	90220-0034	MM	1000	THERMOCABLE TEX/SITW-20F-KX 2X0,5MM2	
W382	90220-0034	MM	3000	THERMOCABLE TEX/SITW-20F-KX 2X0,5MM2	
X105	90110-0161		1	FEMALE INSERT 70 105 0653 0	
X137	90110-0161		1	FEMALE INSERT 70 105 0653 0	
X138	90110-0161		1	FEMALE INSERT 70 105 0653 0	

Machine Type | Group Description | Used-In | Group Number | Page No

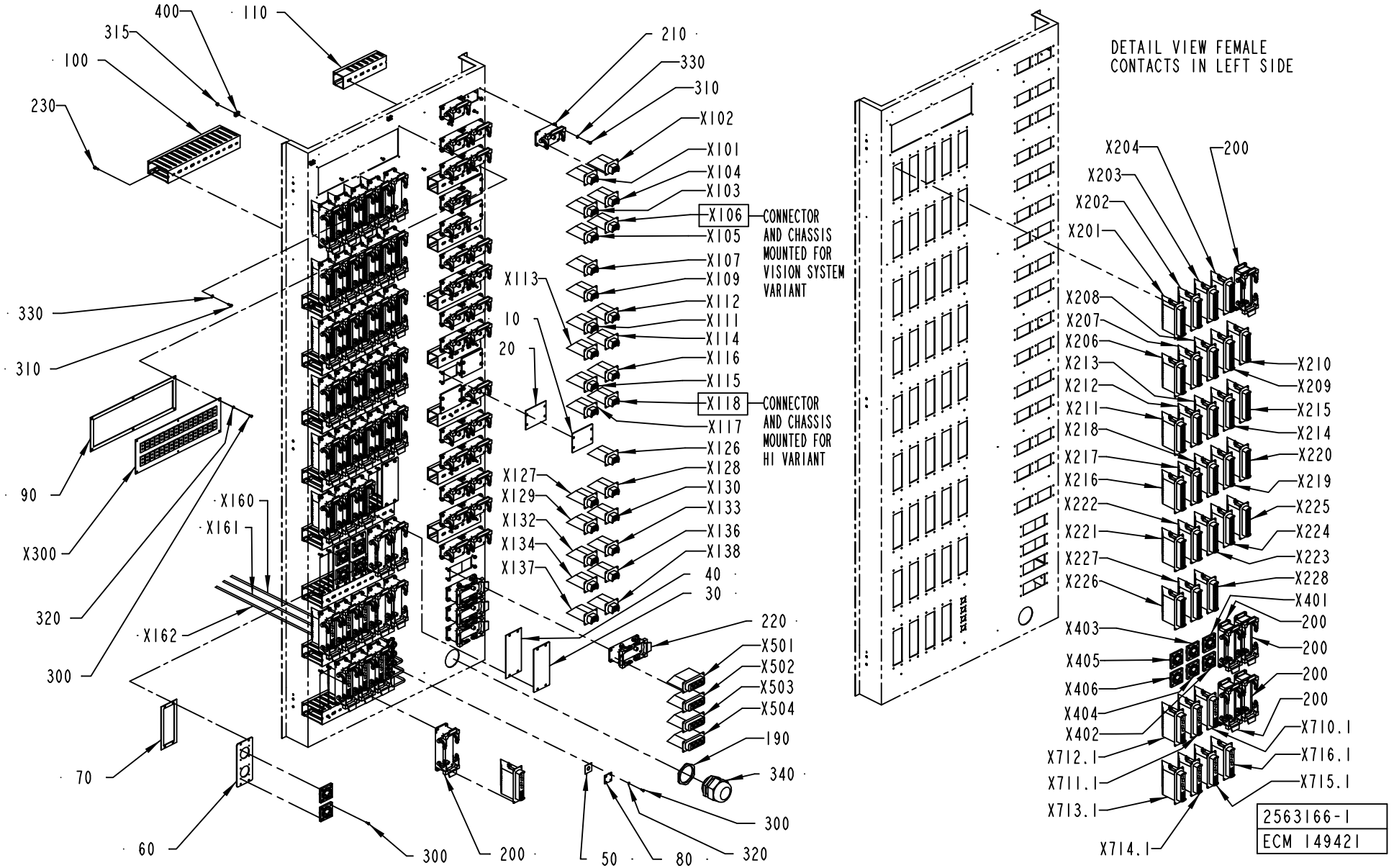
400
110
315
100
230
210
330
310
X102
X101
X104
X103
X106
CONNECTOR AND CHASSIS MOUNTED FOR VISION SYSTEM VARIANT
X105
X107
X109
X113
10
20
X112
X111
X114
X116
X115
X118
CONNECTOR AND CHASSIS MOUNTED FOR HI VARIANT
X117
X126
X128
X127
X129
X130
X132
X133
X134
X136
X137
X138
40
30
220
X501
X502
X503
X504
190
340
300
320
50
80
200
300
60
70
90
X300
320
300
X160
X161
X162
DETAIL VIEW FEMALE CONTACTS IN LEFT SIDE
X204
X203
X202
X201
200
X208
X207
X206
X213
X212
X211
X218
X217
X216
X222
X221
X227
X226
X210
X209
X215
X214
X220
X219
X225
X224
X223
X228
X401
200
X403
X405
X406
X404
X402
X712.1
X711.1
X713.1
X714.1
200
200
200
X710.1
X716.1
X715.1
2563166-1
ECM 149421

ECM: 169595 - 20040920
Group number: 2563166-0100
Assembly Drawing: 2563166-1_1_AC

This list covers pages from 8-22 to 8-29

Pos	Part No	UN	Qty	Description	Page No
A3/FLEX NOHI NOVISION SYS (Cont'd) (See drawing on pages: 8-22, 8-24, 8-26, 8-28)					
X160	2540596-0002		1	COAXIAL CABLE	
X161	2540596-0002		1	COAXIAL CABLE	
X162	2540596-0002		1	COAXIAL CABLE	
X221	90110-0164		1	FEMALE INSERT 70 105 2453 3	
X225	90110-0164		1	FEMALE INSERT 70 105 2453 3	
X501	90110-0165		1	FEMALE INSERT 70.005.0653.0	
X502	90110-0165		1	FEMALE INSERT 70.005.0653.0	
A3/FLEX NOHI VISION SYS (See drawing on pages: 8-22, 8-24, 8-26, 8-28)					
010	1037572-0000		6	COVER PLATE	
020	1037573-0000		6	GASKET	
030	1037574-0000		2	COVER PLATE	
040	1037575-0000		2	GASKET	
050	1129276-0000		1	GASKET	
080	1548139-0000		1	COVER PLATE	
200	90110-0153		39	CHASSIS HOUSING 24-P CHI 24, 121240 0000	
210	90110-0166		26	CHASSIS HOUSING 310144-33	
220	90110-0167		4	CHASSIS HOUSING 310133-33	
300	312125-0222		46	SCREW ISO 1207 M3X8 A4	
310	312125-0289		320	SCREW ISO 1207 M4X10 A4	
320	315105-0124		22	WASHER BRB3,2X6RFR	
330	315105-0136		321	WASHER BRB4,3XRFR	
W106	90220-0183	MM	3200	SCR. CABLE 2X0,34MM2	
W120	90220-0183	MM	3500	SCR. CABLE 2X0,34MM2	
W121	90220-0183	MM	3500	SCR. CABLE 2X0,34MM2	
W122	90220-0183	MM	3600	SCR. CABLE 2X0,34MM2	
W124	90220-0183	MM	2400	SCR. CABLE 2X0,34MM2	
W125	90220-0183	MM	2400	SCR. CABLE 2X0,34MM2	
W126	90220-0183	MM	2200	SCR. CABLE 2X0,34MM2	
W127	90220-0183	MM	2200	SCR. CABLE 2X0,34MM2	
W130	90220-0183	MM	2700	SCR. CABLE 2X0,34MM2	
W133	90220-0183	MM	3500	SCR. CABLE 2X0,34MM2	
W135	90220-0183	MM	2100	SCR. CABLE 2X0,34MM2	
W138	90220-0183	MM	2500	SCR. CABLE 2X0,34MM2	
W139	90220-0183	MM	2400	SCR. CABLE 2X0,34MM2	
W213	90220-0104	MM	1150	SCR. CABLE 4X1,5MM2	
W300	90220-0034	MM	1200	THERMOCABLE TEX/SITW-20F-KX 2X0,5MM2	
W301	90220-0034	MM	1200	THERMOCABLE TEX/SITW-20F-KX 2X0,5MM2	
W302	90220-0034	MM	1200	THERMOCABLE TEX/SITW-20F-KX 2X0,5MM2	
W303	90220-0034	MM	1200	THERMOCABLE TEX/SITW-20F-KX 2X0,5MM2	
W304	90220-0034	MM	1200	THERMOCABLE TEX/SITW-20F-KX 2X0,5MM2	
W305	90220-0034	MM	1200	THERMOCABLE TEX/SITW-20F-KX 2X0,5MM2	
W313	90220-0034	MM	1200	THERMOCABLE TEX/SITW-20F-KX 2X0,5MM2	
W314	90220-0034	MM	1200	THERMOCABLE TEX/SITW-20F-KX 2X0,5MM2	
W316	90220-0034	MM	1200	THERMOCABLE TEX/SITW-20F-KX 2X0,5MM2	
W318	90220-0034	MM	1000	THERMOCABLE TEX/SITW-20F-KX 2X0,5MM2	
W319	90220-0034	MM	1000	THERMOCABLE TEX/SITW-20F-KX 2X0,5MM2	
W320	90220-0034	MM	1000	THERMOCABLE TEX/SITW-20F-KX 2X0,5MM2	
W321	90220-0034	MM	3000	THERMOCABLE TEX/SITW-20F-KX 2X0,5MM2	
W322	90220-0034	MM	3000	THERMOCABLE TEX/SITW-20F-KX 2X0,5MM2	
W323	90220-0034	MM	3000	THERMOCABLE TEX/SITW-20F-KX 2X0,5MM2	
W331	90220-0034	MM	1000	THERMOCABLE TEX/SITW-20F-KX 2X0,5MM2	
W332	90220-0034	MM	1000	THERMOCABLE TEX/SITW-20F-KX 2X0,5MM2	
W333	90220-0034	MM	1000	THERMOCABLE TEX/SITW-20F-KX 2X0,5MM2	
W382	90220-0034	MM	3000	THERMOCABLE TEX/SITW-20F-KX 2X0,5MM2	
X105	90110-0161		1	FEMALE INSERT 70 105 0653 0	
X106	90110-0161		1	FEMALE INSERT 70 105 0653 0	
X137	90110-0161		1	FEMALE INSERT 70 105 0653 0	
X138	90110-0161		1	FEMALE INSERT 70 105 0653 0	
X160	2540596-0002		1	COAXIAL CABLE	
X161	2540596-0002		1	COAXIAL CABLE	
X162	2540596-0002		1	COAXIAL CABLE	
X221	90110-0164		1	FEMALE INSERT 70 105 2453 3	
X225	90110-0164		1	FEMALE INSERT 70 105 2453 3	
X501	90110-0165		1	FEMALE INSERT 70.005.0653.0	
X502	90110-0165		1	FEMALE INSERT 70.005.0653.0	
Common Parts					
060	1129549-0000		3	SHEET	
070	1129550-0000		3	GASKET	
090	2539532-0000		1	GASKET	
100	2551988-0000		9	CABLE DUCT	
110	2551989-0000		8	CABLE DUCT	
190	90099-0096		1	NUT	
230	90287-0124		34	SCREW PAN HEAD MSCS M4X12 NYLON	
315	312605-0312		4	HEXAGON NUT, M6M M4 A280	
340	352103-0123		1	CABLE GLAND, ST 42, PR54,0/PG42	
400	352113-0205		4	ANCHOR PLATES FOR STRIPS, TYPE TM2S8-C10	
W118	90220-0183	MM	3700	SCR. CABLE 2X0,34MM2	
W119	90220-0183	MM	3100	SCR. CABLE 2X0,34MM2	
W123	90220-0183	MM	3500	SCR. CABLE 2X0,34MM2	
W137	90220-0183	MM	3000	SCR. CABLE 2X0,34MM2	
W210	90220-0104	MM	1050	SCR. CABLE 4X1,5MM2	
W211	90220-0104	MM	1000	SCR. CABLE 4X1,5MM2	
W212	90220-0104	MM	1000	SCR. CABLE 4X1,5MM2	

Machine Type | Group Description | Used-In | Group Number | Page No

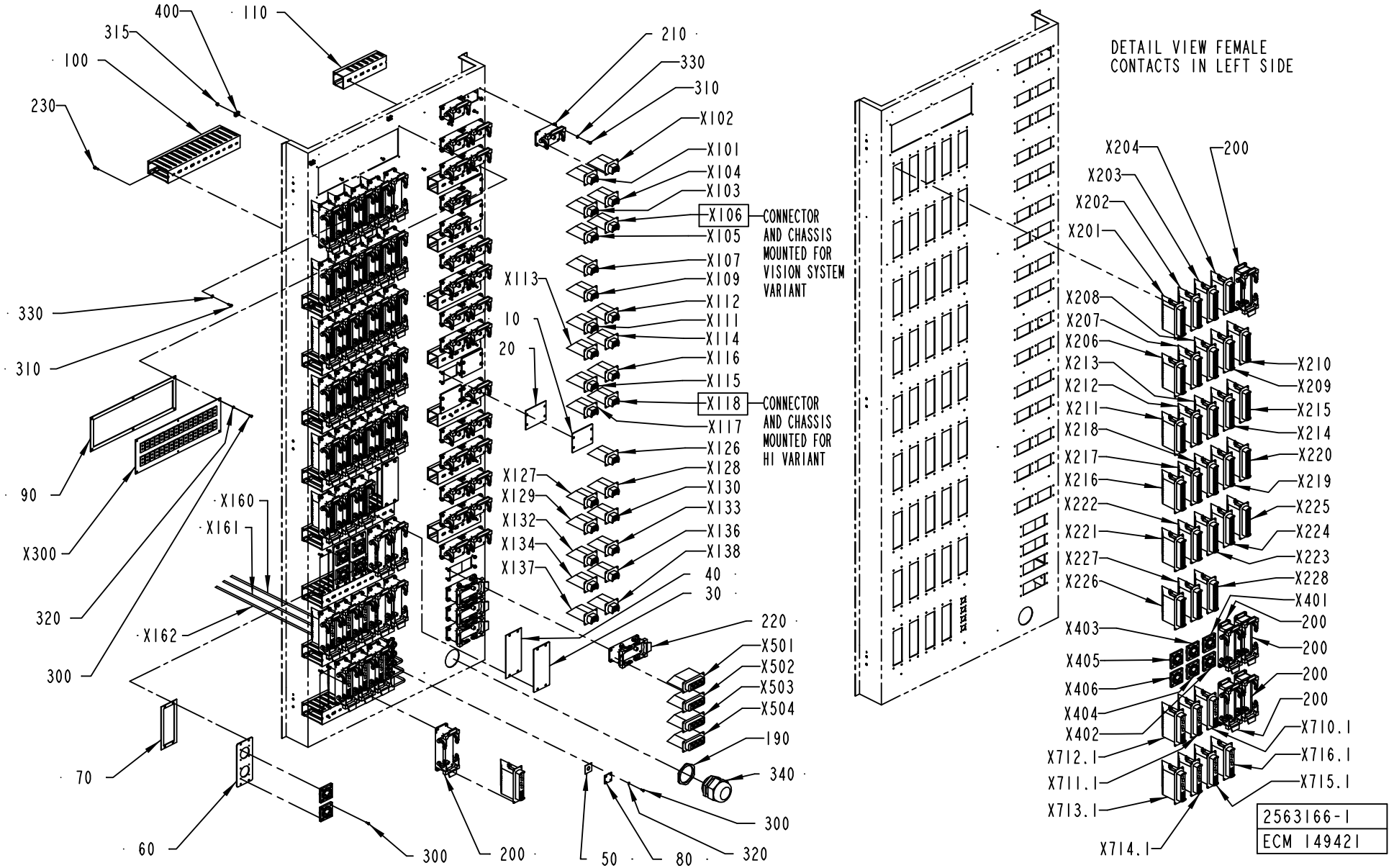
400
110
315
100
230
210
330
310
X102
X101
X104
X103
X106
CONNECTOR AND CHASSIS MOUNTED FOR VISION SYSTEM VARIANT
X105
X107
X109
X112
X111
X114
X116
X115
X118
CONNECTOR AND CHASSIS MOUNTED FOR HI VARIANT
X117
X126
X128
X130
X133
X136
X138
40
30
X113
10
20
X127
X129
X132
X134
X137
330
310
90
X300
320
300
X160
X161
X162
220
X501
X502
X503
X504
190
340
300
70
60
300
200
50
80
320
DETAIL VIEW FEMALE CONTACTS IN LEFT SIDE
X204
200
X203
X202
X201
X208
X207
X206
X213
X212
X211
X218
X217
X216
X222
X221
X227
X226
X210
X209
X215
X214
X220
X219
X225
X224
X223
X228
X401
200
X403
200
X405
200
X406
200
X404
X710.1
X402
X716.1
X712.1
X715.1
X711.1
X713.1
X714.1
2563166-1
ECM 149421

Pos	Part No	UN	Qty	Description	Page No
Common Parts (Cont'd)					
W214	90220-0104	MM	1950	SCR. CABLE 4X1,5MM2	
W215	90220-0104	MM	1200	SCR. CABLE 4X1,5MM2	
W306	90220-0034	MM	1200	THERMOCABLE TEX/SITW-20F-KX 2X0,5MM2	
W307	90220-0034	MM	2200	THERMOCABLE TEX/SITW-20F-KX 2X0,5MM2	
W308	90220-0034	MM	1200	THERMOCABLE TEX/SITW-20F-KX 2X0,5MM2	
W309	90220-0034	MM	1200	THERMOCABLE TEX/SITW-20F-KX 2X0,5MM2	
W310	90220-0034	MM	1200	THERMOCABLE TEX/SITW-20F-KX 2X0,5MM2	
W312	90220-0034	MM	1200	THERMOCABLE TEX/SITW-20F-KX 2X0,5MM2	
W315	90220-0034	MM	1200	THERMOCABLE TEX/SITW-20F-KX 2X0,5MM2	
W317	90220-0034	MM	1200	THERMOCABLE TEX/SITW-20F-KX 2X0,5MM2	
W710	90220-0125	MM	1250	MOTOR CABLE 4X4,0+2X1,0+2X0,75+SHIELD	
W711	90220-0125	MM	1500	MOTOR CABLE 4X4,0+2X1,0+2X0,75+SHIELD	
W712	90220-0125	MM	1650	MOTOR CABLE 4X4,0+2X1,0+2X0,75+SHIELD	
W713	90220-0125	MM	1850	MOTOR CABLE 4X4,0+2X1,0+2X0,75+SHIELD	
W714	90220-0116	MM	1900	MOTOR CABLE 4X1,0+2(2X0,5)+SHIELD	
W715	90220-0116	MM	1950	MOTOR CABLE 4X1,0+2(2X0,5)+SHIELD	
W716	90220-0084	MM	1900	MOTOR CABLE 4X2,5+2(2X0.75)+SHIELD	
X101	90110-0161		1	FEMALE INSERT 70 105 0653 0	
X102	90110-0161		1	FEMALE INSERT 70 105 0653 0	
X103	90110-0161		1	FEMALE INSERT 70 105 0653 0	
X104	90110-0161		1	FEMALE INSERT 70 105 0653 0	
X107	90110-0161		1	FEMALE INSERT 70 105 0653 0	
X109	90110-0161		1	FEMALE INSERT 70 105 0653 0	
X111	90110-0161		1	FEMALE INSERT 70 105 0653 0	
X112	90110-0161		1	FEMALE INSERT 70 105 0653 0	
X113	90110-0161		1	FEMALE INSERT 70 105 0653 0	
X114	90110-0161		1	FEMALE INSERT 70 105 0653 0	
X115	90110-0161		1	FEMALE INSERT 70 105 0653 0	
X116	90110-0161		1	FEMALE INSERT 70 105 0653 0	
X117	90110-0161		1	FEMALE INSERT 70 105 0653 0	
X126	90110-0161		1	FEMALE INSERT 70 105 0653 0	
X127	90110-0161		1	FEMALE INSERT 70 105 0653 0	
X128	90110-0161		1	FEMALE INSERT 70 105 0653 0	
X129	90110-0161		1	FEMALE INSERT 70 105 0653 0	
X130	90110-0161		1	FEMALE INSERT 70 105 0653 0	
X132	90110-0161		1	FEMALE INSERT 70 105 0653 0	
X133	90110-0161		1	FEMALE INSERT 70 105 0653 0	
X134	90110-0161		1	FEMALE INSERT 70 105 0653 0	
X136	90110-0161		1	FEMALE INSERT 70 105 0653 0	
X201	90110-0164		1	FEMALE INSERT 70 105 2453 3	
X202	90110-0164		1	FEMALE INSERT 70 105 2453 3	
X203	90110-0164		1	FEMALE INSERT 70 105 2453 3	
X204	90110-0164		1	FEMALE INSERT 70 105 2453 3	
X206	90110-0164		1	FEMALE INSERT 70 105 2453 3	
X207	90110-0164		1	FEMALE INSERT 70 105 2453 3	
X208	90110-0164		1	FEMALE INSERT 70 105 2453 3	
X209	90110-0164		1	FEMALE INSERT 70 105 2453 3	
X210	90110-0164		1	FEMALE INSERT 70 105 2453 3	
X211	90110-0164		1	FEMALE INSERT 70 105 2453 3	
X212	90110-0164		1	FEMALE INSERT 70 105 2453 3	
X213	90110-0164		1	FEMALE INSERT 70 105 2453 3	
X214	90110-0164		1	FEMALE INSERT 70 105 2453 3	
X215	90110-0164		1	FEMALE INSERT 70 105 2453 3	
X216	90110-0164		1	FEMALE INSERT 70 105 2453 3	
X217	90110-0164		1	FEMALE INSERT 70 105 2453 3	
X218	90110-0164		1	FEMALE INSERT 70 105 2453 3	
X219	90110-0164		1	FEMALE INSERT 70 105 2453 3	
X220	90110-0164		1	FEMALE INSERT 70 105 2453 3	
X222	90110-0164		1	FEMALE INSERT 70 105 2453 3	
X223	90110-0164		1	FEMALE INSERT 70 105 2453 3	
X224	90110-0164		1	FEMALE INSERT 70 105 2453 3	
X226	90110-0164		1	FEMALE INSERT 70 105 2453 3	
X227	90110-0164		1	FEMALE INSERT 70 105 2453 3	
X228	90110-0164		1	FEMALE INSERT 70 105 2453 3	
X300	90459-0835		1	THERMO CONTACT PANEL, 16 CONTACTS 2 ROWS	
X401	90110-0236		1	CHASSIS CONTACT PX0767/S	
X402	90110-0236		1	CHASSIS CONTACT PX0767/S	
X403	90110-0236		1	CHASSIS CONTACT PX0767/S	
X404	90110-0236		1	CHASSIS CONTACT PX0767/S	
X405	90110-0236		1	CHASSIS CONTACT PX0767/S	
X406	90110-0236		1	CHASSIS CONTACT PX0767/S	
X503	90110-0165		1	FEMALE INSERT 70.005.0653.0	
X504	90110-0165		1	FEMALE INSERT 70.005.0653.0	
X710.1	90110-0516		1	SOCKET	
X711.1	90110-0516		1	SOCKET	
X712.1	90110-0516		1	SOCKET	
X713.1	90110-0516		1	SOCKET	
X714.1	90110-0516		1	SOCKET	
X715.1	90110-0516		1	SOCKET	
X716.1	90110-0516		1	SOCKET	

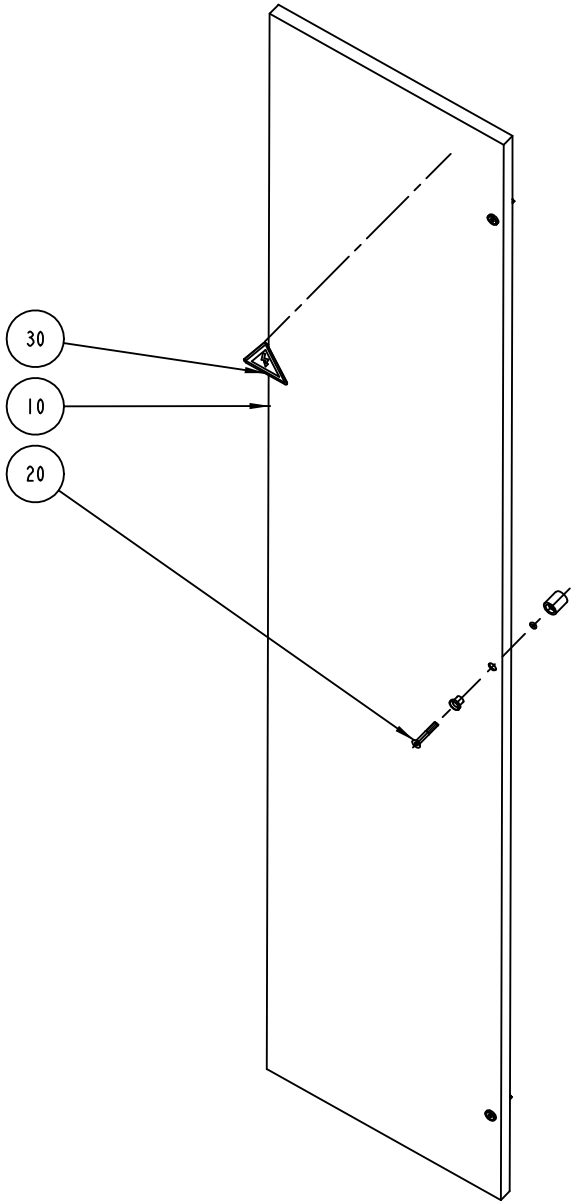
30
10
20

ECM: - -
Group number: 1095634-0100
Assembly Drawing: 1095634-1_1_AA

Pos	Part No	UN	Qty	Description	Page No
-					
010	1041939-0000		1	DOOR	
020	90226-0458		3	MOUNTING SCREW	
030	90194-0016		1	WARNING SIGN, RISK OF ELECTRIC SHOCK	

Pos	Part No	UN	Qty	Description	Page No

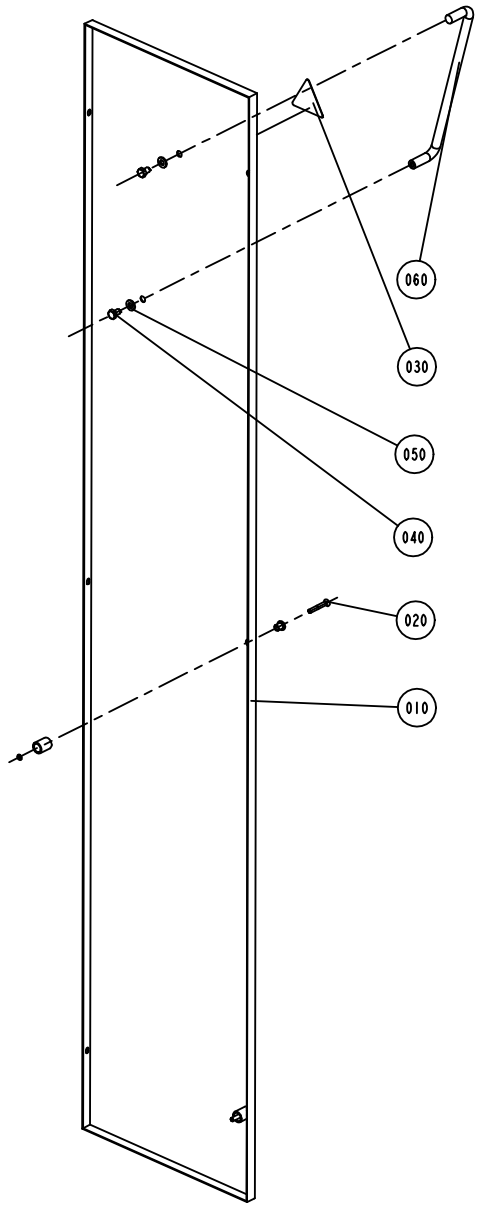
060
030
050
040
020
010

ECM: - -
Group number: 1095637-0100
Assembly Drawing: 1095637-1_1_AA

Pos	Part No	UN	Qty	Description	Page No
-					
010	1041948-0000		1	DOOR	
020	90226-0458		3	MOUNTING SCREW	
030	90194-0016		1	WARNING SIGN, RISK OF ELECTRIC SHOCK	
040	312105-0447		2	SCREW M6S ISO 4017 M8X12 A480	
050	90005-0077		2	WASHER PL.RND.NYL.8,4/7, H=2	
060	90017-0015		1	HANDLE, NO. 14.4012.02.308	

Pos	Part No	UN	Qty	Description	Page No

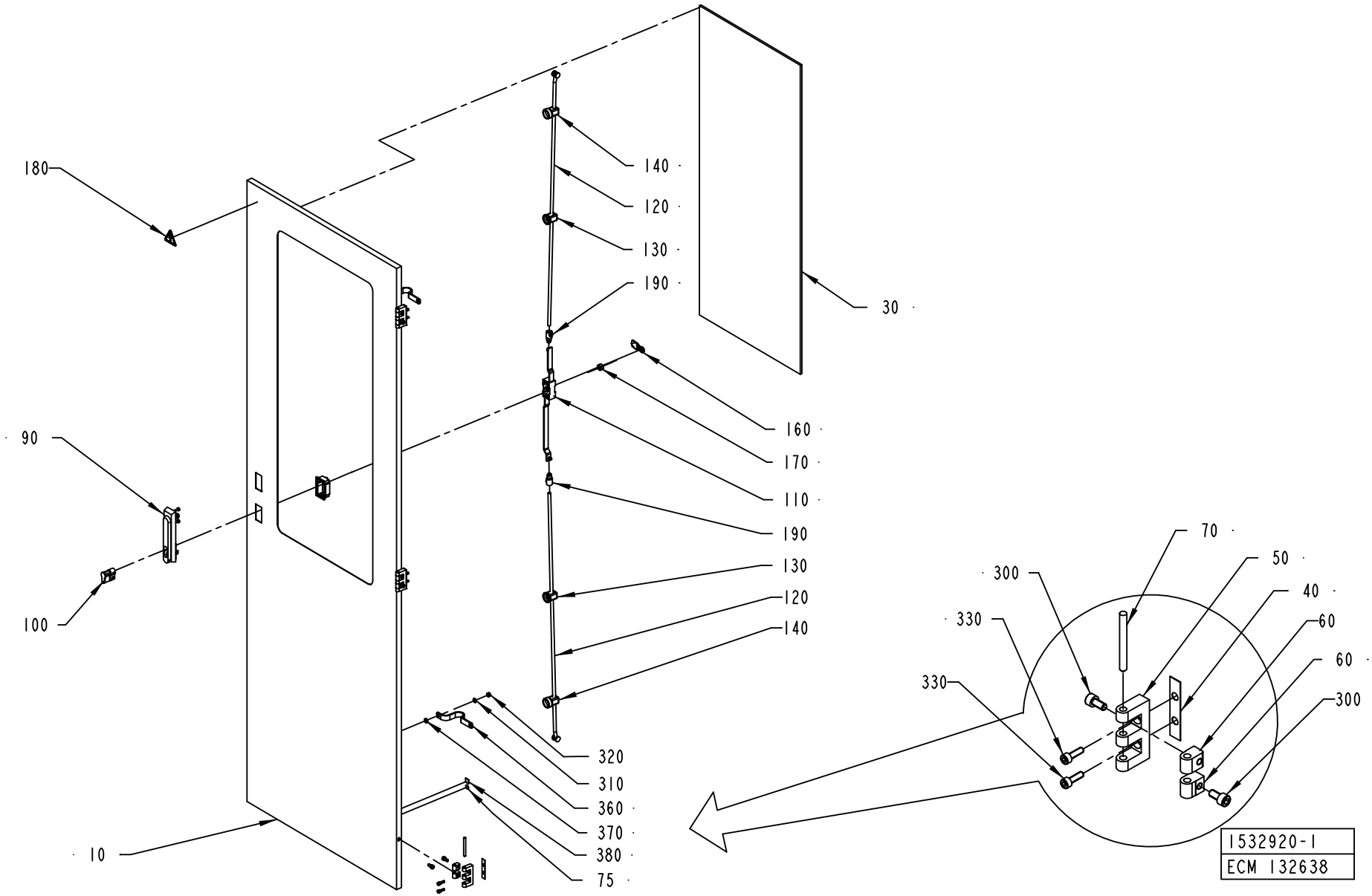
180
140
120
130
190
30
90
160
170
110
190
130
120
140
100
320
310
360
370
380
75
10
70
50
40
60
60
300
330
330
300
1532920-1
ECM 132638

ECM: 134432 - 20030305
Group number: 1532920-0100
Assembly Drawing: 1532920-1_1_AB

Pos	Part No	UN	Qty	Description	Page No
-					
010	1532921-0000		1	DOOR	
030	2530288-0000		1	GLASS PANE	
040	988666-0000		3	GASKET	
050	1035792-0000		3	E-HINGE	
060	1129770-0000		6	BLOCKING PIECE	
070	988685-0000		3	PIN	
075	2608177-0000		2	SIGN	
090	90237-0176		1	TURNING HANDLE, 1125-U190-A	
100	90237-0128		1	LOCK CYLINDER, 1109-U3	
110	90237-0153		1	LOCK HOUSING, 1121-U26-0B	
120	90237-0168		2	ROUND BAR WITH END WHEEL, 1049-U5	
130	90237-0151		2	GUIDE, 1001-U11	
140	90237-0152		2	GUIDE, 1001-U12	
160	90237-0156		1	LOCK BOLT, 1000-16	
170	90237-0155		1	LOCK ADAPTER, 1121-U40	
180	359705-0015		1	WARNING SIGN ISO, RISK OF ELECTRIC SHOCK	
190	90237-0169		2	LOCK ADAPTER, 1000-U49	
300	312115-0366		6	SCREW ISO4762 M6X12 A4	
310	315105-0153		2	WASHER BRB6,4X12RFR	
320	312605-0316		2	HEXAGON NUT, M6M M6 A280	
330	312115-0329		6	SCREW ISO4762 M5X16 A4	
360	90135-0035		2	EARTH WIRE, L=250 MM 16 MM2	
370	90062-0015		2	LOCK WASHER SERRAT.EXT.GEAR,6,4/11 H=0,7	
380	90194-0152		2	SIGN, EARTH	

Pos	Part No	UN	Qty	Description	Page No

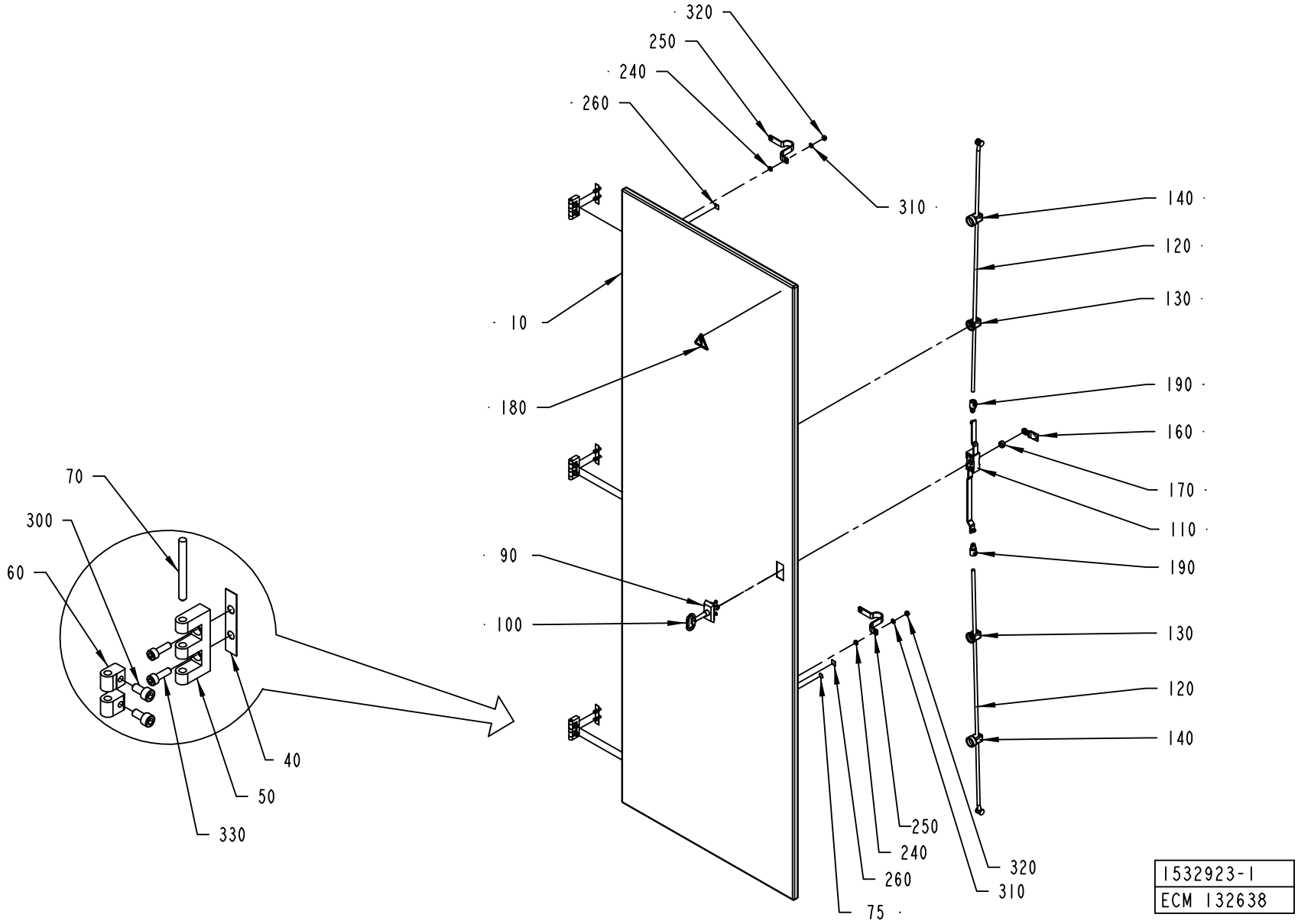
320
250
240
260
310
140
120
130
10
180
190
160
170
110
90
190
100
130
120
140
70
300
60
40
50
330
250
240
260
320
310
75
1532923-1
ECM 132638

ECM: 134433 - 20030305
Group number: 1532923-0100
Assembly Drawing: 1532923-1_1_AB

Pos	Part No	UN	Qty	Description	Page No
-					
010	1532924-0000		1	DOOR	
040	988666-0000		3	GASKET	
050	1035792-0000		3	E-HINGE	
060	1129770-0000		6	BLOCKING PIECE	
070	988685-0000		1	PIN	
075	2608177-0000		2	SIGN	
090	90237-0160		1	ESCUTCHEON WITH SQUARE, 1121-U23/U13	
100	90237-0324		1	KEY, 1104-02 FOR SQUARE 8 MM	
110	90237-0153		1	LOCK HOUSING, 1121-U26-0B	
120	90237-0168		2	ROUND BAR WITH END WHEEL, 1049-U5	
130	90237-0151		2	GUIDE, 1001-U11	
140	90237-0152		2	GUIDE, 1001-U12	
160	90237-0156		1	LOCK BOLT, 1000-16	
170	90237-0155		1	LOCK ADAPTER, 1121-U40	
180	359705-0015		1	WARNING SIGN ISO, RISK OF ELECTRIC SHOCK	
190	90237-0169		2	LOCK ADAPTER, 1000-U49	
240	90062-0015		2	LOCK WASHER SERRAT.EXT.GEAR,6,4/11 H=0,7	
250	90135-0035		2	EARTH WIRE, L=250 MM 16 MM2	
260	90194-0152		2	SIGN, EARTH	
300	312115-0366		6	SCREW ISO4762 M6X12 A4	
310	315105-0153		2	WASHER BRB6,4X12RFR	
320	312605-0316		2	HEXAGON NUT, M6M M6 A280	
330	312115-0329		6	SCREW ISO4762 M5X16 A4	

Pos	Part No	UN	Qty	Description	Page No

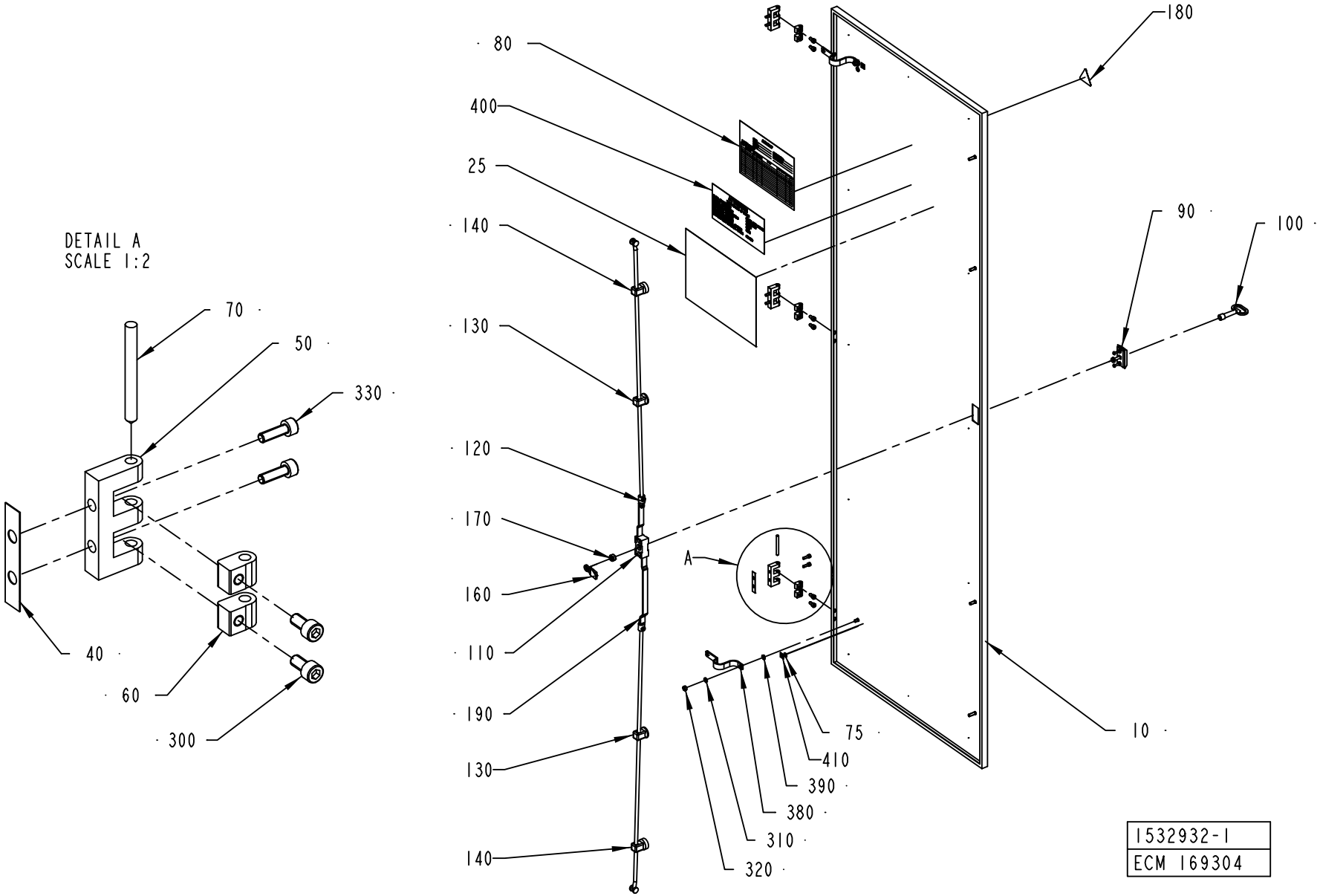
DETAIL A
SCALE 1:2
70
50
330
40
60
300
80
400
25
140
130
120
170
160
110
190
130
140
180
90
100
A
75
410
390
380
310
320
10
1532932-1
ECM 169304

ECM: 169974 - 20040920
Group number: 1532932-0100
Assembly Drawing: 1532932-1_1_AC

Pos	Part No	UN	Qty	Description	Page No
A3/FLEX					
025	2563172-0000		1	FUSE BOARD	
Common Parts					
010	1532933-0000		1	DOOR	
040	988666-0000		3	GASKET	
050	1035792-0000		3	E-HINGE	
060	1129770-0000		6	BLOCKING PIECE	
070	988685-0000		3	PIN	
075	2608177-0000		2	SIGN	
080	90194-0133		1	SIGN "DELIVERED DESIGN"	
090	90237-0160		1	ESCUTCHEON WITH SQUARE, 1121-U23/U13	
100	90237-0324		1	KEY, 1104-02 FOR SQUARE 8 MM	
110	90237-0153		1	LOCK HOUSING, 1121-U26-0B	
120	90237-0168		2	ROUND BAR WITH END WHEEL, 1049-U5	
130	90237-0151		2	GUIDE, 1001-U11	
140	90237-0152		2	GUIDE, 1001-U12	
160	90237-0156		1	LOCK BOLT, 1000-16	
170	90237-0155		1	LOCK ADAPTER, 1121-U40	
180	359705-0015		1	WARNING SIGN ISO, RISK OF ELECTRIC SHOCK	
190	90237-0169		2	LOCK ADAPTER, 1000-U49	
300	312115-0366		6	SCREW ISO4762 M6X12 A4	
310	315105-0153		2	WASHER BRB6,4X12RFR	
320	312605-0316		2	HEXAGON NUT, M6M M6 A280	
330	312115-0329		6	SCREW ISO4762 M5X16 A4	
380	90135-0035		2	EARTH WIRE, L=250 MM 16 MM2	
390	90062-0015		2	LOCK WASHER SERRAT.EXT.GEAR,6,4/11 H=0,7	
400	90194-0080		1	SIGN, IDENTIFICATION OF WIRING	
410	90194-0152		2	SIGN, EARTH	

Pos	Part No	UN	Qty	Description	Page No

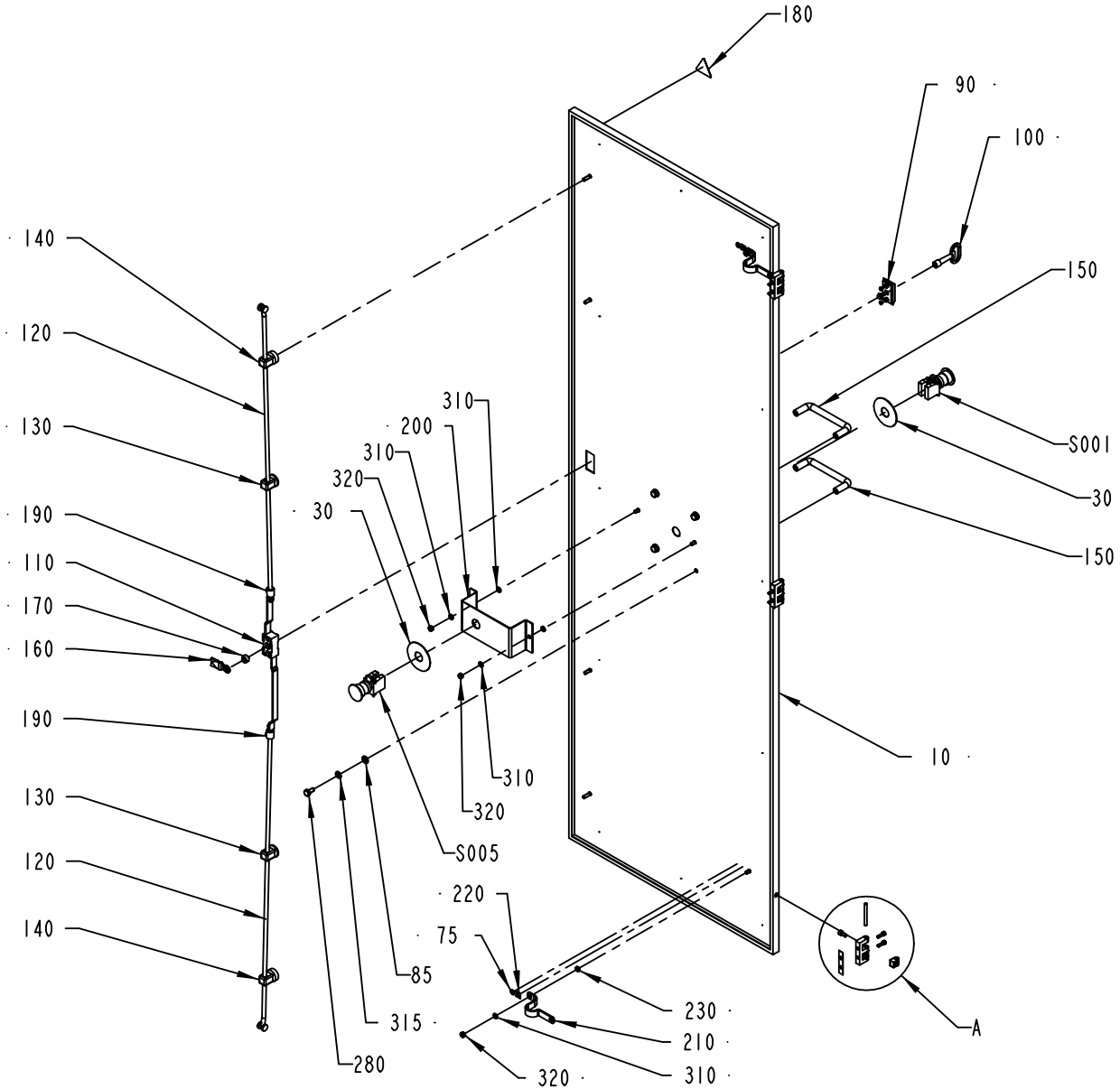

DETAIL A
SCALE 1:2

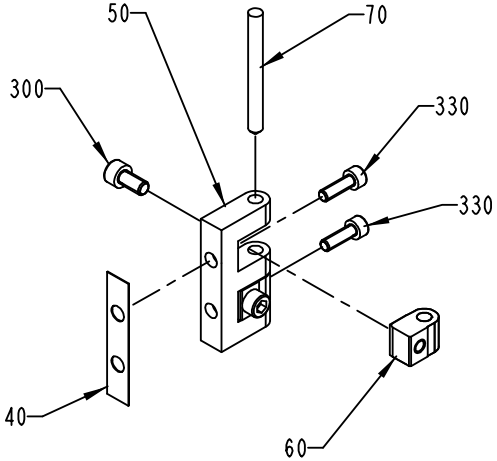

1532935-1
ECM 132638

ECM: 134435 - 20030305
Group number: 1532935-0100
Assembly Drawing: 1532935-1_1_AB

Pos	Part No	UN	Qty	Description	Page No
-					
010	1532936-0000		1	DOOR	
030	486826-0001		2	SIGN "EMERGENCY STOP"	
040	988666-0000		3	GASKET	
050	1035792-0000		3	E-HINGE	
060	1129770-0000		6	BLOCKING PIECE	
070	988685-0000		3	PIN	
075	2608177-0000		2	SIGN	
085	90005-0077		4	WASHER PL.RND.NYL.8,4/7, H=2	
090	90237-0160		1	ESCUTCHEON WITH SQUARE, 1121-U23/U13	
100	90237-0324		1	KEY, 1104-02 FOR SQUARE 8 MM	
110	90237-0153		1	LOCK HOUSING, 1121-U26-0B	
120	90237-0168		2	ROUND BAR WITH END WHEEL, 1049-U5	
130	90237-0151		2	GUIDE, 1001-U11	
140	90237-0152		2	GUIDE, 1001-U12	
150	90017-0016		2	HANDLE, NO. 14.4012.02.120	
160	90237-0156		1	LOCK BOLT, 1000-16	
170	90237-0155		1	LOCK ADAPTER, 1121-U40	
180	359705-0015		1	WARNING SIGN ISO, RISK OF ELECTRIC SHOCK	
190	90237-0169		2	LOCK ADAPTER, 1000-U49	
200	1038699-0000		1	BRACKET	
210	90135-0035		2	EARTH WIRE, L=250 MM 16 MM2	
220	90194-0152		2	SIGN, EARTH	
230	90062-0015		2	LOCK WASHER SERRAT.EXT.GEAR,6,4/11 H=0,7	
280	312105-0449		4	SCREW M6S ISO 4017 M8X16 A480	
300	312115-0366		6	SCREW ISO4762 M6X12 A4	
310	315105-0153		6	WASHER BRB6,4X12RFR	
315	315105-0165		4	WASHER BRB8,4X16RFR	
320	312605-0316		4	HEXAGON NUT, M6M M6 A280	
330	312115-0329		6	SCREW ISO4762 M5X16 A4	
S001	90458-1651		1	EMERGENCY STOP, ZB4-BS-844 ZB4-BZ-104	
S005	90458-1651		1	EMERGENCY STOP, ZB4-BS-844 ZB4-BZ-104	

Pos	Part No	UN	Qty	Description	Page No

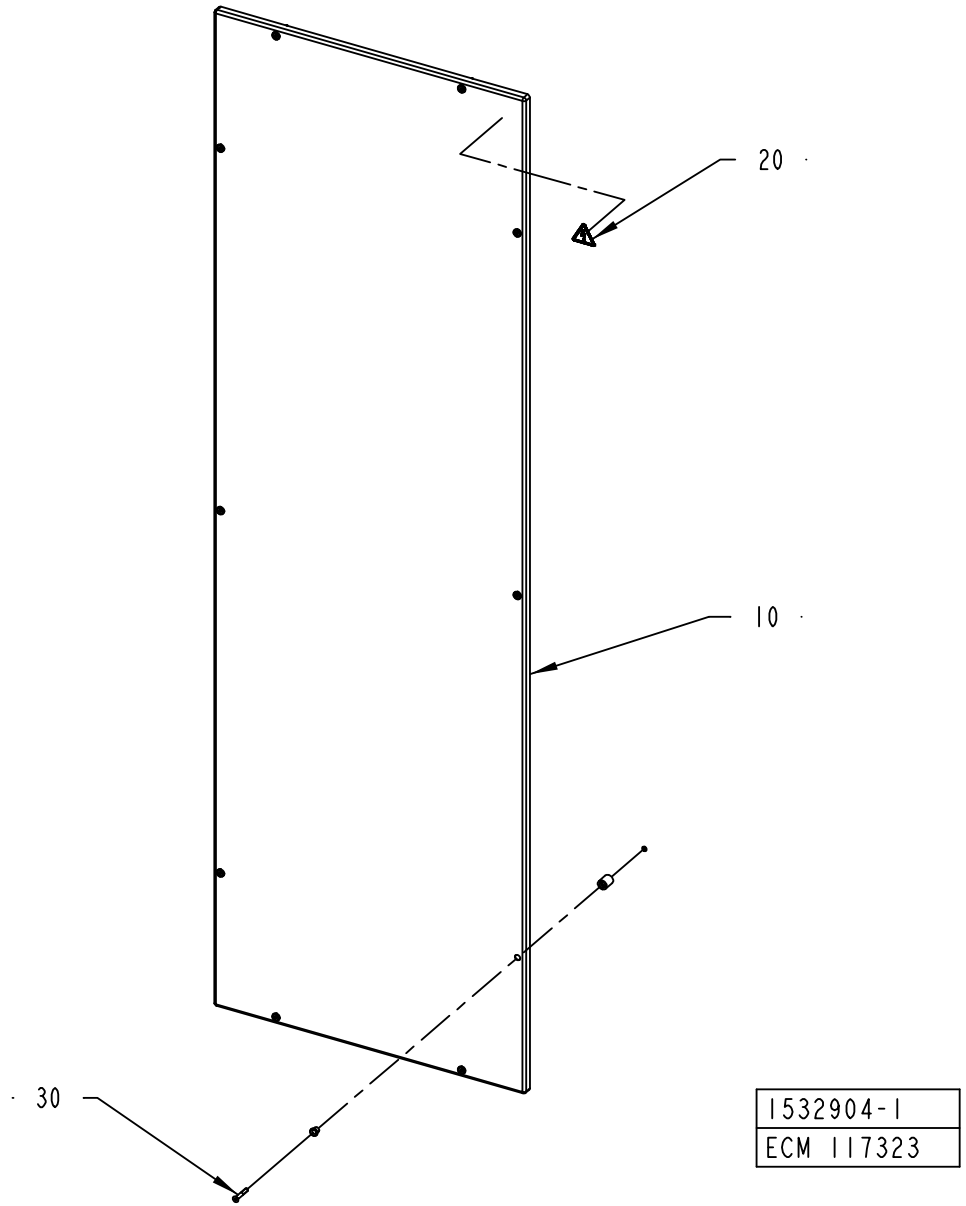
20
10
30
1532904-1
ECM 117323

ECM: 117890 - 20030220
Group number: 1532904-0100
Assembly Drawing: 1532904-1_1_AA

Pos	Part No	UN	Qty	Description	Page No
-					
010	1532905-0000		1	PLATE	
020	359705-0015		1	WARNING SIGN ISO, RISK OF ELECTRIC SHOCK	
030	90226-0458		10	MOUNTING SCREW	

Pos	Part No	UN	Qty	Description	Page No

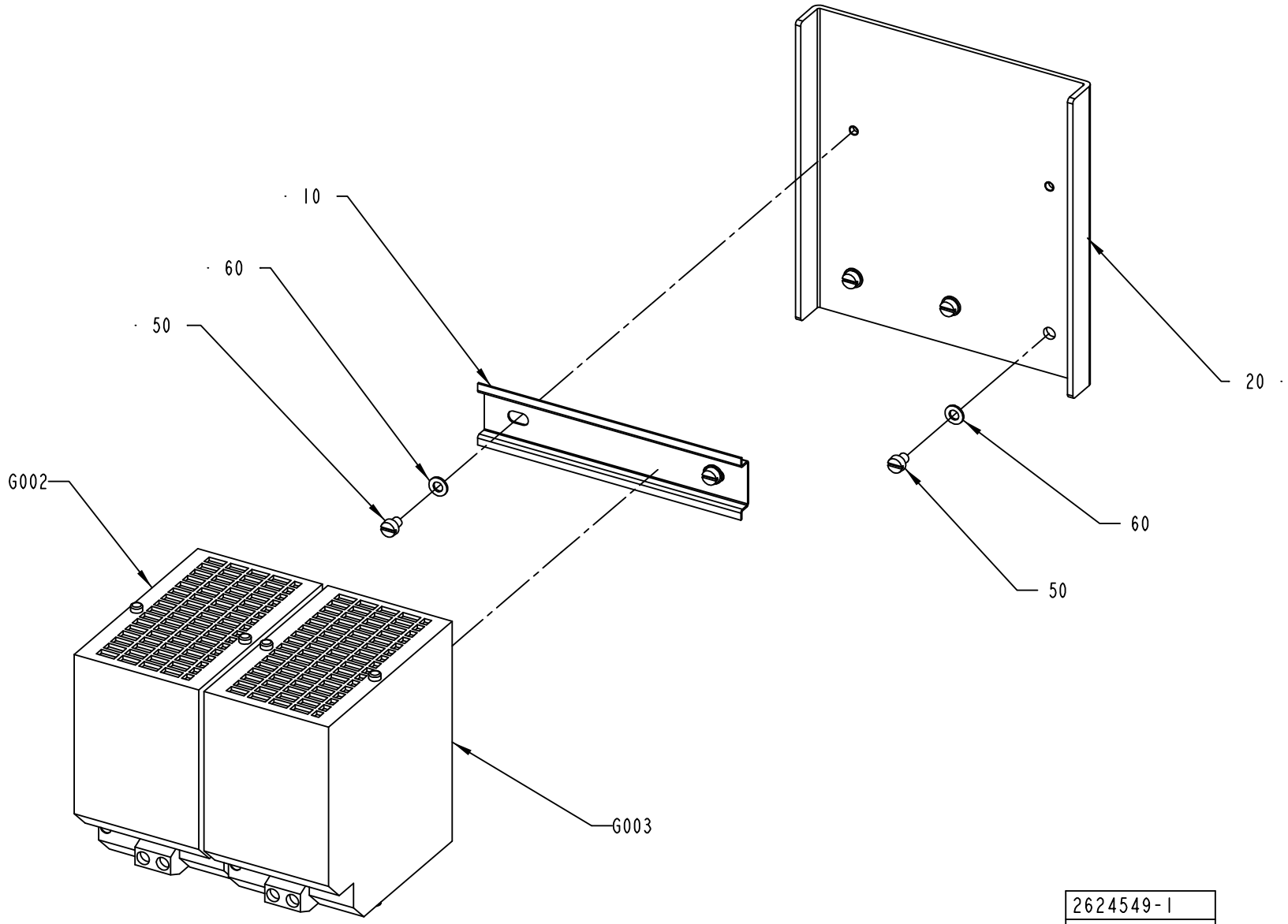

2624549-1
ECM 132638

ECM: 135366 - 20030305
Group number: 2624549-0100
Assembly Drawing: 2624549-1_1_AA

Pos	Part No	UN	Qty	Description	Page No
-					
010	2624550-0000		1	RAIL	
020	2619170-0000		1	PLATE	
050	312121-0321		5	SCREW ISO 1207 M5X6 4.8 - 5.8 Z.PL.	
060	315101-0146		5	WASHER PLAIN, BRB, 5,3/10 H=1	
G002	90459-2939		1	POWER SUPPLY UNIT, 6EP1961-3BA00	
G003	90459-2939		1	POWER SUPPLY UNIT, 6EP1961-3BA00	

Pos	Part No	UN	Qty	Description	Page No

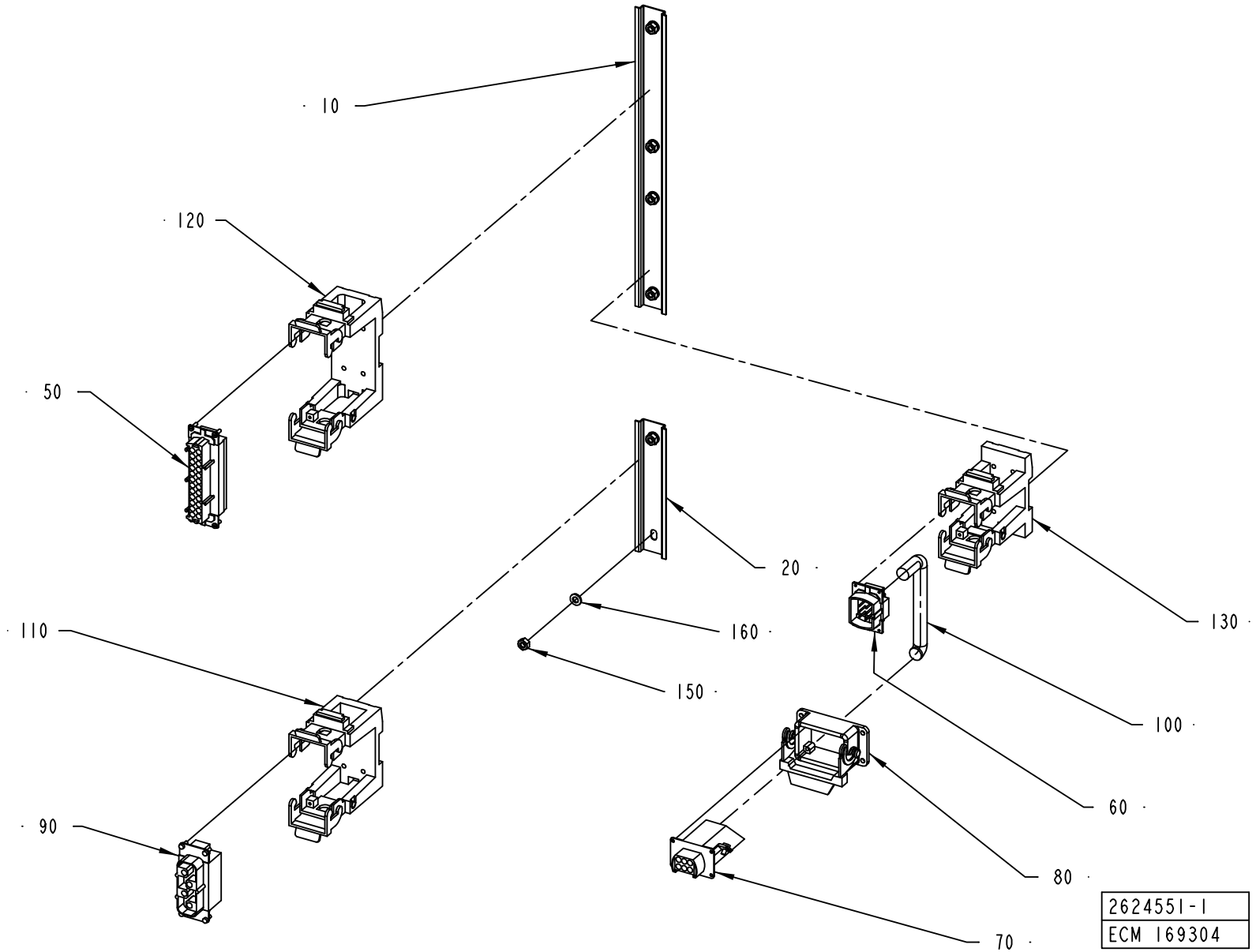
10
120
50
20
130
160
110
150
100
60
90
80
70
2624551-1
ECM 169304

ECM: 169596 - 20040920
Group number: 2624551-0100
Assembly Drawing: 2624551-1_1_AC

Pos	Part No	UN	Qty	Description	Page No
DIMC/FLEX					
060	90110-0159		1	MALE INSERT 70.310.0640.0	
070	90110-0161		1	FEMALE INSERT 70 105 0653 0	
080	90110-0166		1	CHASSIS HOUSING 310144-33	
100	90220-0105	MM	2250	SCR. CABLE 4X2,5MM2	
130	90459-2937		1	CHASSIS HOUSING 6-P COB 06 BC	
Common Parts					
010	2601231-0000		1	RAIL	
020	2601233-0000		1	RAIL	
050	90110-0151		1	FEMALE INSERT 24-POL 121130 0000	
090	90459-4046		1	FEMALE INSERT 72.208.0453.0	
110	90459-2935		1	CHASSIS HOUSING 16-P COB 16 BC	
120	90459-2936		1	CHASSIS HOUSING 24-P COB 24 BC	
150	312605-0316		6	HEXAGON NUT, M6M M6 A280	
160	315105-0153		6	WASHER BRB6,4X12RFR	

Pos	Part No	UN	Qty	Description	Page No

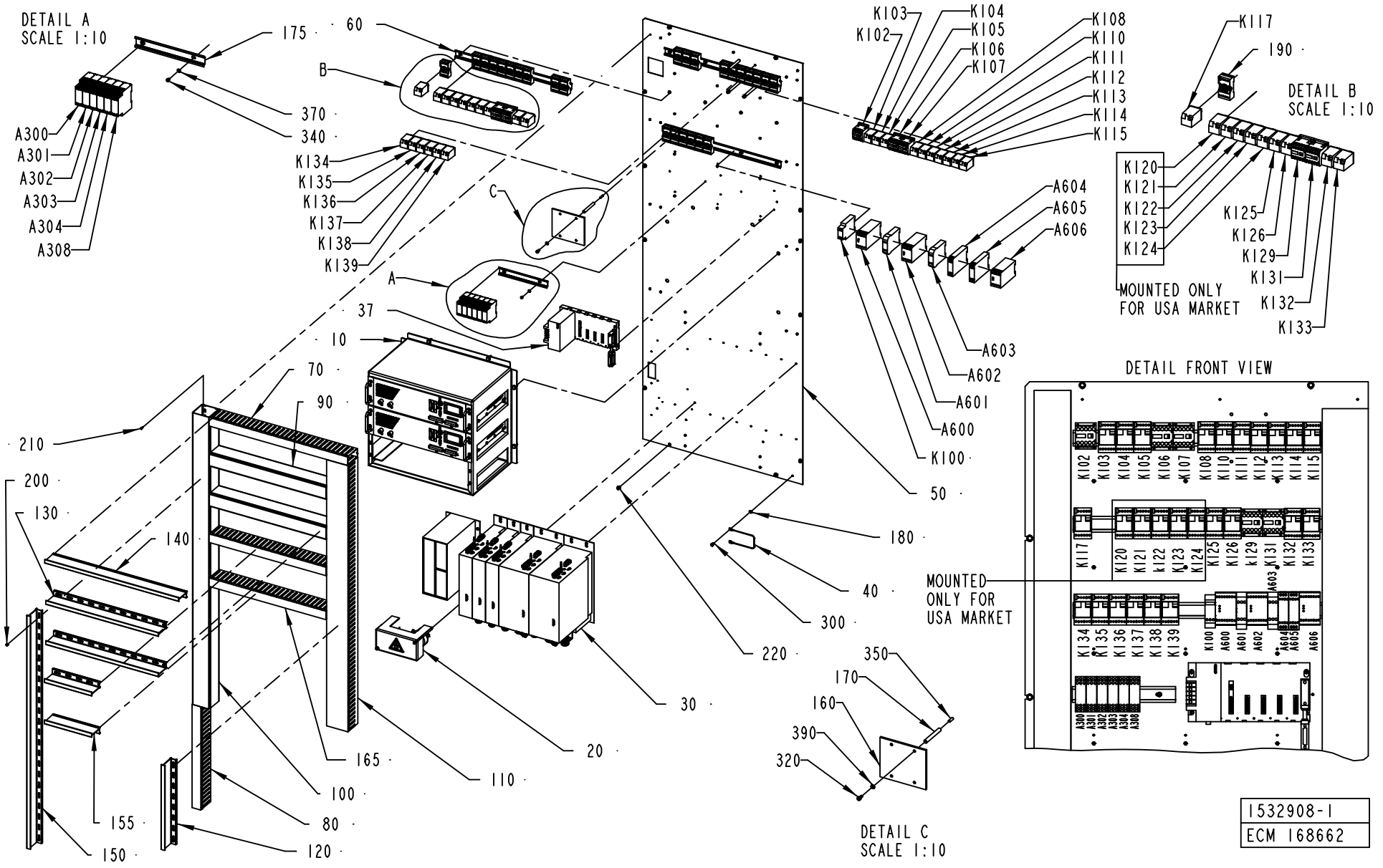
DETAIL A
SCALE 1:10
DETAIL B
SCALE 1:10
DETAIL C
SCALE 1:10
DETAIL FRONT VIEW
MOUNTED ONLY FOR USA MARKET
MOUNTED ONLY FOR USA MARKET
1532908-1
ECM 168662

ECM: 169975 - 20040920
Group number: 1532908-0100
Assembly Drawing: 1532908-1_1_AD

This list covers pages from 8-48 to 8-51

Pos	Part No	UN	Qty	Description	Page No
A3/FLEX OTHER COUNTRIES (See drawing on pages: 8-48, 8-50)					
010	2533651-0100		1	IH EQUIPMENT	**8-53**
020	2563167-0100		1	MOTOR DRIVE CONTROL	**8-55**
030	2563168-0100		1	MOTOR DRIVE CONTROL	**8-57**
037	2675518-0100		1	PLC	**8-59**
050	1532916-0000		1	MOUNTING PLATE	
060	2550126-0000		3	RAIL	
090	2550129-0000		2	CABLE DUCT	
130	2550133-0000		2	DIVIDER	
155	2557591-0000		2	DIVIDER	
160	2533655-0000		1	PROTECTION	
165	2675519-0000		2	CABLE DUCT	
170	1038275-0012		4	SPACER	
175	2675520-0000		1	RAIL	
190	90129-0006		21	BASE, S3-B	
200	90181-0064		20	LOCK ZP1 FOR CHANNEL T1	
210	90287-0124		42	SCREW PAN HEAD MSCS M4X12 NYLON	
320	312111-0366		4	SCREW HEX.SOCK.HD.MC6S-TT 6X12 88 FZB	
340	312121-0321		14	SCREW ISO 1207 M5X6 4.8 - 5.8 Z.PL.	
350	312318-0370		4	SCREW ISO4029 M6X20 A4	
370	315101-0146		14	WASHER PLAIN, BRB, 5,3/10 H=1	
390	315101-0153		4	WASHER PLAIN, BRB, 6,4/12 H=1,5	
A300	90458-2580		1	LEVEL CONTROL RELAY RM4-LA32M	
A302	90458-2580		1	LEVEL CONTROL RELAY RM4-LA32M	
A600	90119-0072		1	SAFETY RELAY, JSBR4	
A601	90119-0105		1	SAFETY RELAY JOKAB JSR 3T	
A602	90119-0072		1	SAFETY RELAY, JSBR4	
A603	90119-0105		1	SAFETY RELAY JOKAB JSR 3T	
A605	90457-0092		1	SAFETY RELAY RT9-24VDC	
A606	90119-0089		1	SAFETY RELAY, JSBT4 24VDC	
K100	90060-0080		1	RELAY, TIME H3DE-S1 24VDC	
K103	90119-0056		1	RELAY, AUXILIARY MK3P5-S 24VDC	
K103	90119-0056		1	RELAY, AUXILIARY MK3P5-S 24VDC	
K104	90119-0056		1	RELAY, AUXILIARY MK3P5-S 24VDC	
K104	90119-0056		1	RELAY, AUXILIARY MK3P5-S 24VDC	
K105	90119-0056		1	RELAY, AUXILIARY MK3P5-S 24VDC	
K105	90119-0056		1	RELAY, AUXILIARY MK3P5-S 24VDC	
K106	90075-0141		1	CONTACTOR, 4KW 24VDC	
K107	90075-0141		1	CONTACTOR, 4KW 24VDC	
K110	90119-0056		1	RELAY, AUXILIARY MK3P5-S 24VDC	
K110	90119-0056		1	RELAY, AUXILIARY MK3P5-S 24VDC	
K111	90119-0056		1	RELAY, AUXILIARY MK3P5-S 24VDC	
K111	90119-0056		1	RELAY, AUXILIARY MK3P5-S 24VDC	
K112	90119-0056		1	RELAY, AUXILIARY MK3P5-S 24VDC	
K112	90119-0056		1	RELAY, AUXILIARY MK3P5-S 24VDC	
K113	90119-0056		1	RELAY, AUXILIARY MK3P5-S 24VDC	
K113	90119-0056		1	RELAY, AUXILIARY MK3P5-S 24VDC	
K114	90119-0056		1	RELAY, AUXILIARY MK3P5-S 24VDC	
K114	90119-0056		1	RELAY, AUXILIARY MK3P5-S 24VDC	
K115	90119-0056		1	RELAY, AUXILIARY MK3P5-S 24VDC	
K115	90119-0056		1	RELAY, AUXILIARY MK3P5-S 24VDC	
K117	90119-0056		1	RELAY, AUXILIARY MK3P5-S 24VDC	
K117	90119-0056		1	RELAY, AUXILIARY MK3P5-S 24VDC	
K129	90075-0141		1	CONTACTOR, 4KW 24VDC	
K131	90075-0141		1	CONTACTOR, 4KW 24VDC	
K134	90119-0056		1	RELAY, AUXILIARY MK3P5-S 24VDC	
K134	90119-0056		1	RELAY, AUXILIARY MK3P5-S 24VDC	
K135	90119-0056		1	RELAY, AUXILIARY MK3P5-S 24VDC	
K135	90119-0056		1	RELAY, AUXILIARY MK3P5-S 24VDC	
A3/FLEX USA (See drawing on pages: 8-48, 8-50)					
010	2533651-0100		1	IH EQUIPMENT	**8-53**
020	2563167-0100		1	MOTOR DRIVE CONTROL	**8-55**
030	2563168-0100		1	MOTOR DRIVE CONTROL	**8-57**
037	2675518-0100		1	PLC	**8-59**
050	1532916-0000		1	MOUNTING PLATE	
060	2550126-0000		3	RAIL	
090	2550129-0000		2	CABLE DUCT	
130	2550133-0000		2	DIVIDER	
155	2557591-0000		2	DIVIDER	
160	2533655-0000		1	PROTECTION	
165	2675519-0000		2	CABLE DUCT	
170	1038275-0012		4	SPACER	
175	2675520-0000		1	RAIL	
190	90129-0006		26	BASE, S3-B	
200	90181-0064		20	LOCK ZP1 FOR CHANNEL T1	
210	90287-0124		42	SCREW PAN HEAD MSCS M4X12 NYLON	
320	312111-0366		4	SCREW HEX.SOCK.HD.MC6S-TT 6X12 88 FZB	
340	312121-0321		14	SCREW ISO 1207 M5X6 4.8 - 5.8 Z.PL.	
350	312318-0370		4	SCREW ISO4029 M6X20 A4	
370	315101-0146		14	WASHER PLAIN, BRB, 5,3/10 H=1	
390	315101-0153		4	WASHER PLAIN, BRB, 6,4/12 H=1,5	
A300	90458-2580		1	LEVEL CONTROL RELAY RM4-LA32M	
A302	90458-2580		1	LEVEL CONTROL RELAY RM4-LA32M	
A600	90119-0072		1	SAFETY RELAY, JSBR4	

Machine Type | Group Description | Used-In | Group Number | Page No

CONTROL BOARD LEFT

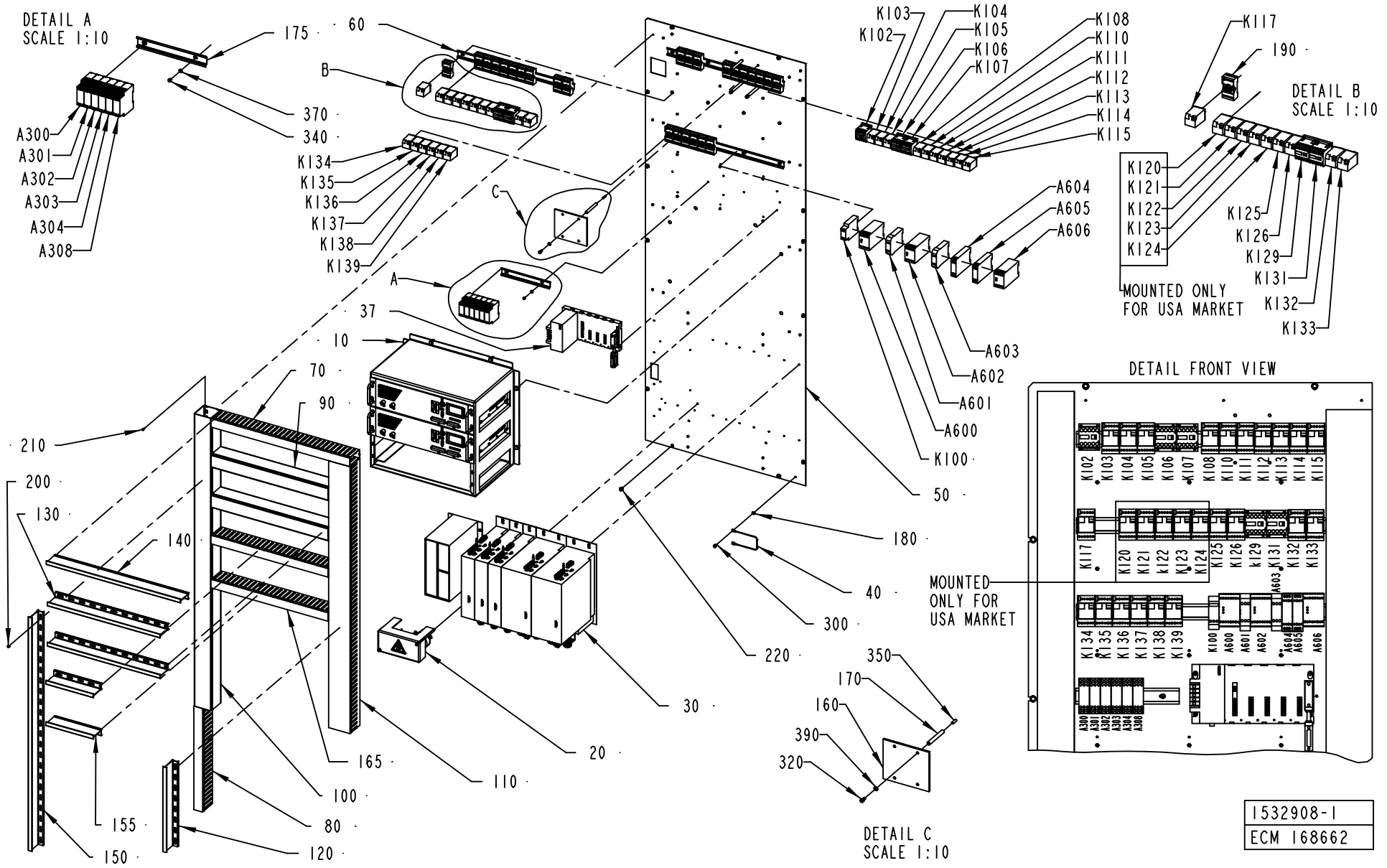

ECM: 169975 - 20040920
Group number: 1532908-0100
Assembly Drawing: 1532908-1_1_AD

This list covers pages from 8-48 to 8-51

Pos	Part No	UN	Qty	Description	Page No
A3/FLEX USA (Cont'd) (See drawing on pages: 8-48, 8-50)					
A601	90119-0105		1	SAFETY RELAY JOKAB JSR 3T	
A602	90119-0072		1	SAFETY RELAY, JSBR4	
A603	90119-0105		1	SAFETY RELAY JOKAB JSR 3T	
A605	90457-0092		1	SAFETY RELAY RT9-24VDC	
A606	90119-0089		1	SAFETY RELAY, JSBT4 24VDC	
K100	90060-0080		1	RELAY, TIME H3DE-S1 24VDC	
K103	90119-0056		1	RELAY, AUXILIARY MK3P5-S 24VDC	
K103	90119-0056		1	RELAY, AUXILIARY MK3P5-S 24VDC	
K104	90119-0056		1	RELAY, AUXILIARY MK3P5-S 24VDC	
K104	90119-0056		1	RELAY, AUXILIARY MK3P5-S 24VDC	
K105	90119-0056		1	RELAY, AUXILIARY MK3P5-S 24VDC	
K105	90119-0056		1	RELAY, AUXILIARY MK3P5-S 24VDC	
K106	90075-0141		1	CONTACTOR, 4KW 24VDC	
K107	90075-0141		1	CONTACTOR, 4KW 24VDC	
K110	90119-0056		1	RELAY, AUXILIARY MK3P5-S 24VDC	
K110	90119-0056		1	RELAY, AUXILIARY MK3P5-S 24VDC	
K111	90119-0056		1	RELAY, AUXILIARY MK3P5-S 24VDC	
K111	90119-0056		1	RELAY, AUXILIARY MK3P5-S 24VDC	
K112	90119-0056		1	RELAY, AUXILIARY MK3P5-S 24VDC	
K112	90119-0056		1	RELAY, AUXILIARY MK3P5-S 24VDC	
K113	90119-0056		1	RELAY, AUXILIARY MK3P5-S 24VDC	
K113	90119-0056		1	RELAY, AUXILIARY MK3P5-S 24VDC	
K114	90119-0056		1	RELAY, AUXILIARY MK3P5-S 24VDC	
K114	90119-0056		1	RELAY, AUXILIARY MK3P5-S 24VDC	
K115	90119-0056		1	RELAY, AUXILIARY MK3P5-S 24VDC	
K115	90119-0056		1	RELAY, AUXILIARY MK3P5-S 24VDC	
K117	90119-0056		1	RELAY, AUXILIARY MK3P5-S 24VDC	
K117	90119-0056		1	RELAY, AUXILIARY MK3P5-S 24VDC	
K120	90119-0056		1	RELAY, AUXILIARY MK3P5-S 24VDC	
K120	90119-0056		1	RELAY, AUXILIARY MK3P5-S 24VDC	
K121	90119-0056		1	RELAY, AUXILIARY MK3P5-S 24VDC	
K121	90119-0056		1	RELAY, AUXILIARY MK3P5-S 24VDC	
K122	90119-0056		1	RELAY, AUXILIARY MK3P5-S 24VDC	
K122	90119-0056		1	RELAY, AUXILIARY MK3P5-S 24VDC	
K123	90119-0056		1	RELAY, AUXILIARY MK3P5-S 24VDC	
K123	90119-0056		1	RELAY, AUXILIARY MK3P5-S 24VDC	
K124	90119-0056		1	RELAY, AUXILIARY MK3P5-S 24VDC	
K124	90119-0056		1	RELAY, AUXILIARY MK3P5-S 24VDC	
K129	90075-0141		1	CONTACTOR, 4KW 24VDC	
K131	90075-0141		1	CONTACTOR, 4KW 24VDC	
K134	90119-0056		1	RELAY, AUXILIARY MK3P5-S 24VDC	
K134	90119-0056		1	RELAY, AUXILIARY MK3P5-S 24VDC	
K135	90119-0056		1	RELAY, AUXILIARY MK3P5-S 24VDC	
K135	90119-0056		1	RELAY, AUXILIARY MK3P5-S 24VDC	
Common Parts					
040	1038714-0000		1	CABLE	
070	2550127-0000		1	CABLE DUCT	
080	2550128-0000		1	CABLE DUCT	
100	2550130-0000		1	CABLE DUCT	
110	2550131-0000		1	CABLE DUCT	
120	2550132-0000		1	DIVIDER	
140	2550134-0000		1	DIVIDER	
150	2550135-0000		1	DIVIDER	
180	90062-0022		1	LOCKING WASHER D=6,4/11	
220	90287-0157		13	SCREW M6SF FLAT HEAD M6X10 88	
300	312101-0364		1	SCREW M6S M6X10 FZB	
A301	90458-2580		1	LEVEL CONTROL RELAY RM4-LA32M	
A303	90458-2580		1	LEVEL CONTROL RELAY RM4-LA32M	
A304	90458-2580		1	LEVEL CONTROL RELAY RM4-LA32M	
A308	90458-2580		1	LEVEL CONTROL RELAY RM4-LA32M	
A604	90457-0092		1	SAFETY RELAY RT9-24VDC	
K102	90075-0143		1	CONTACTOR, 4KW 24VDC	
K108	90119-0056		1	RELAY, AUXILIARY MK3P5-S 24VDC	
K108	90119-0056		1	RELAY, AUXILIARY MK3P5-S 24VDC	
K125	90119-0056		1	RELAY, AUXILIARY MK3P5-S 24VDC	
K125	90119-0056		1	RELAY, AUXILIARY MK3P5-S 24VDC	
K126	90119-0056		1	RELAY, AUXILIARY MK3P5-S 24VDC	
K126	90119-0056		1	RELAY, AUXILIARY MK3P5-S 24VDC	
K132	90119-0056		1	RELAY, AUXILIARY MK3P5-S 24VDC	
K132	90119-0056		1	RELAY, AUXILIARY MK3P5-S 24VDC	
K133	90119-0056		1	RELAY, AUXILIARY MK3P5-S 24VDC	
K133	90119-0056		1	RELAY, AUXILIARY MK3P5-S 24VDC	
K136	90119-0056		1	RELAY, AUXILIARY MK3P5-S 24VDC	
K136	90119-0056		1	RELAY, AUXILIARY MK3P5-S 24VDC	
K137	90119-0056		1	RELAY, AUXILIARY MK3P5-S 24VDC	
K137	90119-0056		1	RELAY, AUXILIARY MK3P5-S 24VDC	
K138	90119-0056		1	RELAY, AUXILIARY MK3P5-S 24VDC	
K138	90119-0056		1	RELAY, AUXILIARY MK3P5-S 24VDC	
K139	90119-0056		1	RELAY, AUXILIARY MK3P5-S 24VDC	
K139	90119-0056		1	RELAY, AUXILIARY MK3P5-S 24VDC	

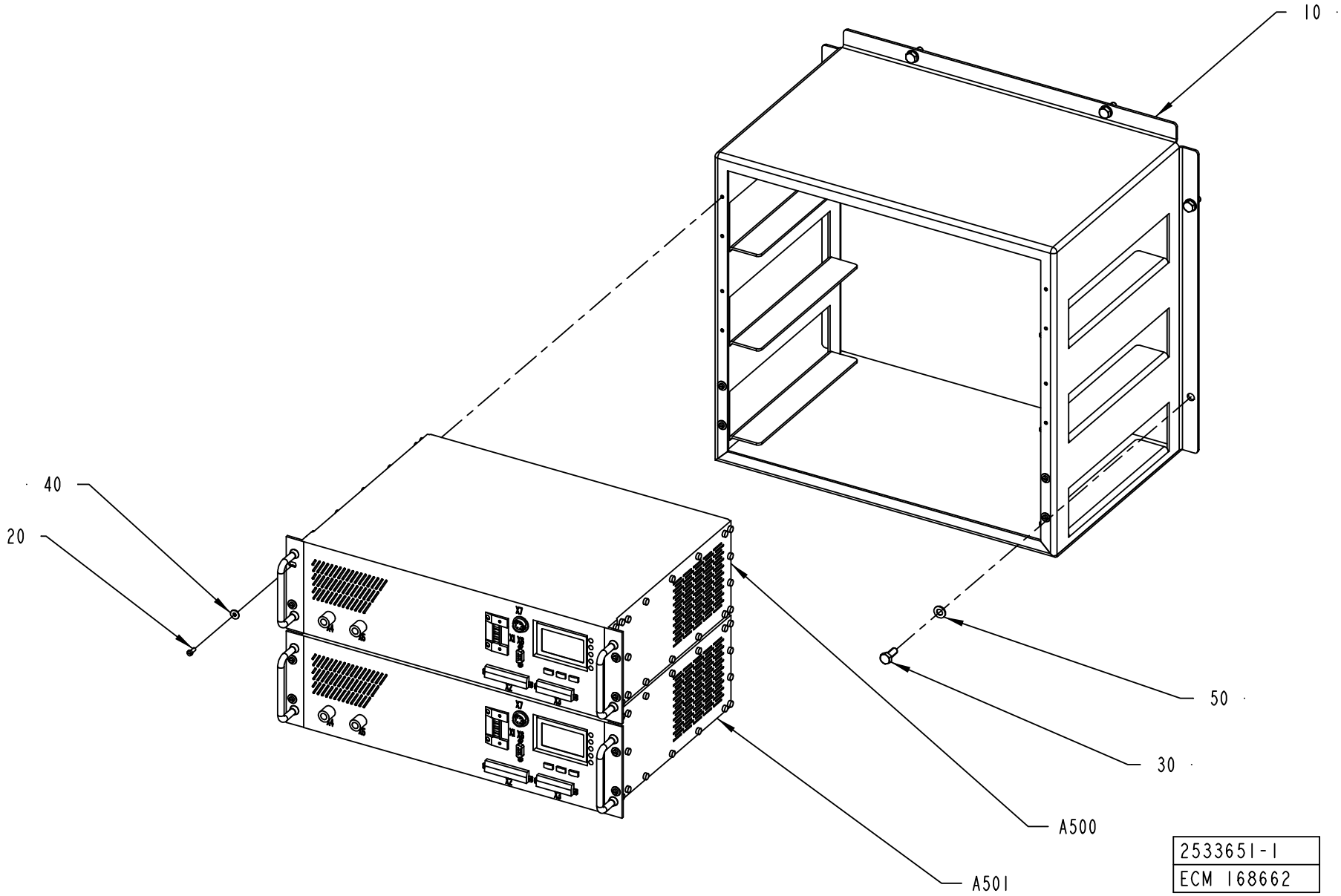
10
40
20
50
30
A500
A501
2533651-1
ECM 168662

ECM: 169978 - 20040920
Group number: 2533651-0100
Assembly Drawing: 2533651-1_1_AB

Pos	Part No	UN	Qty	Description	Page No
-					
010	1532912-0000		1	FRAME	
020	312125-0289		12	SCREW ISO 1207 M4X10 A4	
030	312105-0451		6	SCREW M6S ISO 4017 M8X20 A480	
040	90005-0082		12	WASHER PLAIN ROUND 4,3(M4)/12,H=1	
050	315105-0165		6	WASHER BRB8,4X16RFR	
A500	1499642-0101		1	TPIH 2500 HORIZONTAL MOUNTING	
A501	1499642-0101		1	TPIH 2500 HORIZONTAL MOUNTING	

Pos	Part No	UN	Qty	Description	Page No

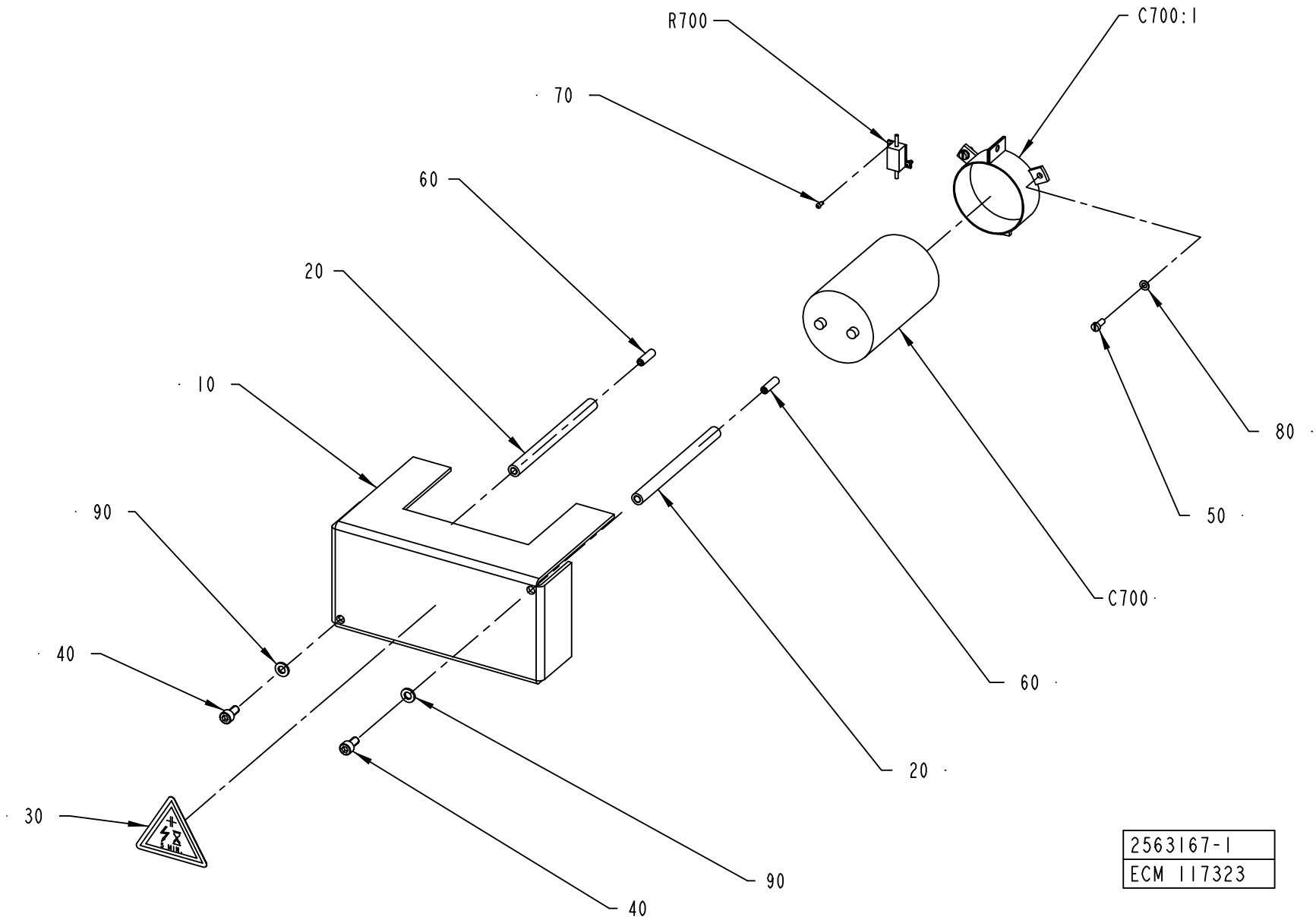
R700
C700:1
70
60
20
10
80
50
90
C700
40
60
30
20
90
40
2563167-1
ECM 117323

ECM: 117383 - 20030220
Group number: 2563167-0100
Assembly Drawing: 2563167-1_1_AA

Pos	Part No	UN	Qty	Description	Page No
-					
010	1548121-0000		1	PROTECTION	
020	1038275-0021		2	SPACER	
030	90194-0118		1	SIGN, RESIDUAL VOLTAGE, WAIT 5 MIN.	
040	312111-0366		2	SCREW HEX.SOCK.HD.MC6S-TT 6X12 88 FZB	
050	312121-0289		3	SCREW ISO 1207 M4X10 4.8 - 5.8 Z.PL.	
060	312318-0370		2	SCREW ISO4029 M6X20 A4	
070	312502-0171		2	DRIVE SCREW ROUND HEAD KDS 2X6	
080	315101-0136		3	WASHER BRB, 4,3/8 H=0,8	
090	315101-0153		2	WASHER PLAIN, BRB, 6,4/12 H=1,5	
C700	90159-0100		1	CAPACITOR, 100000 æF 40 V	
C700:1	90159-0304		1	HOLDER	
R700	90121-0137		1	RESISTANCE FIXED, 2,2 OHM, 15 W	

Pos	Part No	UN	Qty	Description	Page No

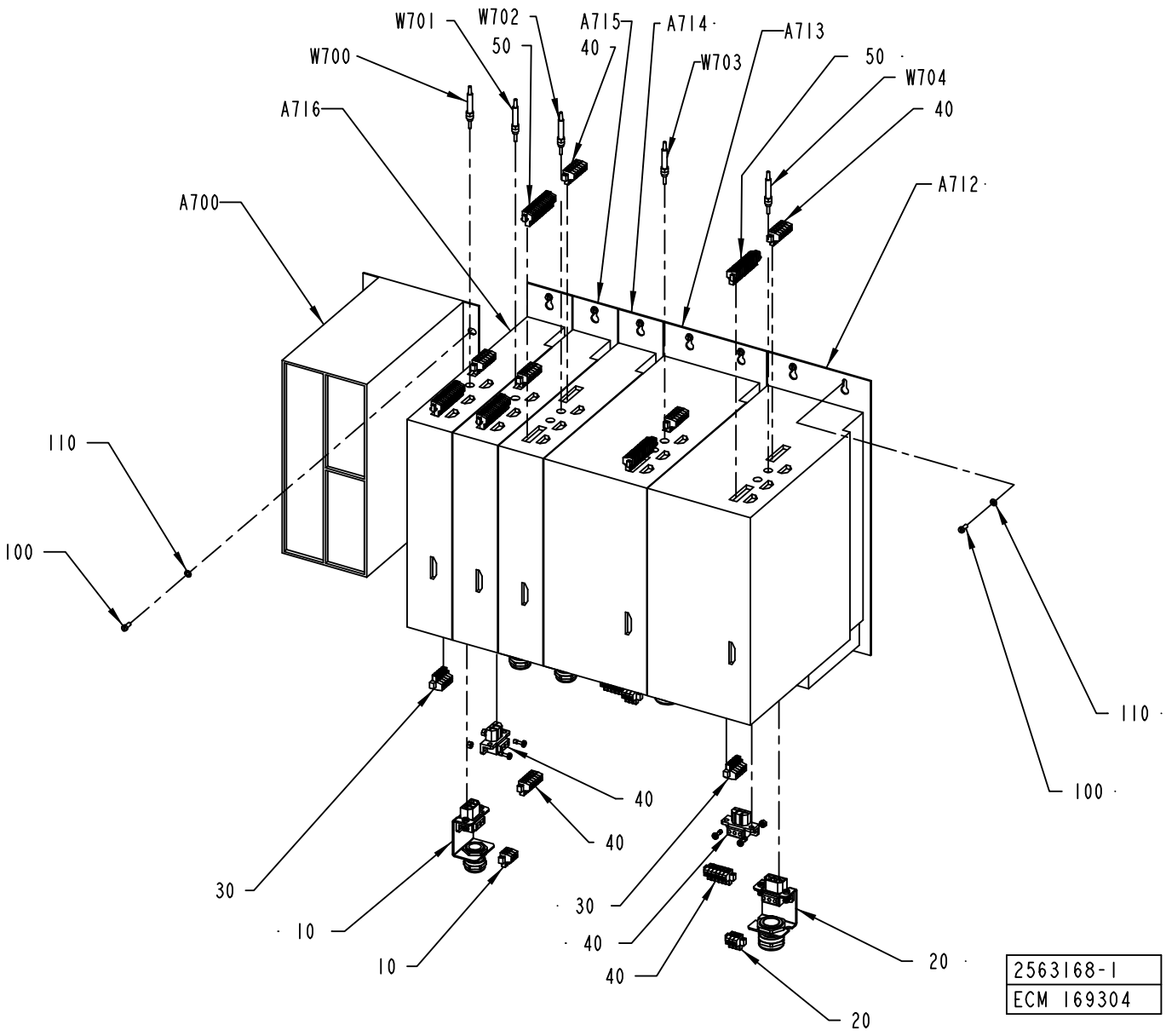
W701
W702
A715
A714
A713
W700
50
40
50
W703
W704
A716
40
A712
A700
110
100
110
100
40
40
30
10
10
30
40
40
20
20
2563168-1
ECM 169304

ECM: 176046 - 20040920
Group number: 2563168-0100
Assembly Drawing: 2563168-1_1_AC

Pos	Part No	UN	Qty	Description	Page No
-					
010	90100-0047		3	CONNECTOR, DRIVE END SAM 4/7/14,10-14MM	
020	90100-0048		2	CONNECTOR, DRIVE END SAM 4/7/14, 9-16MM	
030	90100-0051		5	CONNECTOR KIT, BRAKE	
040	90100-0054		5	CONNECTOR KIT, SUPPLY (SAM 4-7-14)	
050	90100-0056		5	CONNECTOR KIT, OPTION	
100	312121-0289		18	SCREW ISO 1207 M4X10 4.8 - 5.8 Z.PL.	
110	315101-0136		18	WASHER BRB, 4,3/8 H=0,8	
A700	90100-0069		1	SERVO CONTROLLER PAM-P1R-H8F-AP-P, F26	
A712	90100-0042		1	SERVO DRIVE SAM-DA-400-014B-P4N-F	
A713	90100-0042		1	SERVO DRIVE SAM-DA-400-014B-P4N-F	
A714	90100-0041		1	SERVO DRIVE SAM-DA-400-07B-P4N-F	
A715	90100-0041		1	SERVO DRIVE SAM-DA-400-07B-P4N-F	
A716	90100-0041		1	SERVO DRIVE SAM-DA-400-07B-P4N-F	
W700	90100-0075		1	EASYBUS SAM 2,0M	
W701	90100-0072		1	EASYBUS SAM 0,3M	
W702	90100-0072		1	EASYBUS SAM 0,3M	
W703	90100-0072		1	EASYBUS SAM 0,3M	
W704	90100-0072		1	EASYBUS SAM 0,3M	

Pos	Part No	UN	Qty	Description	Page No

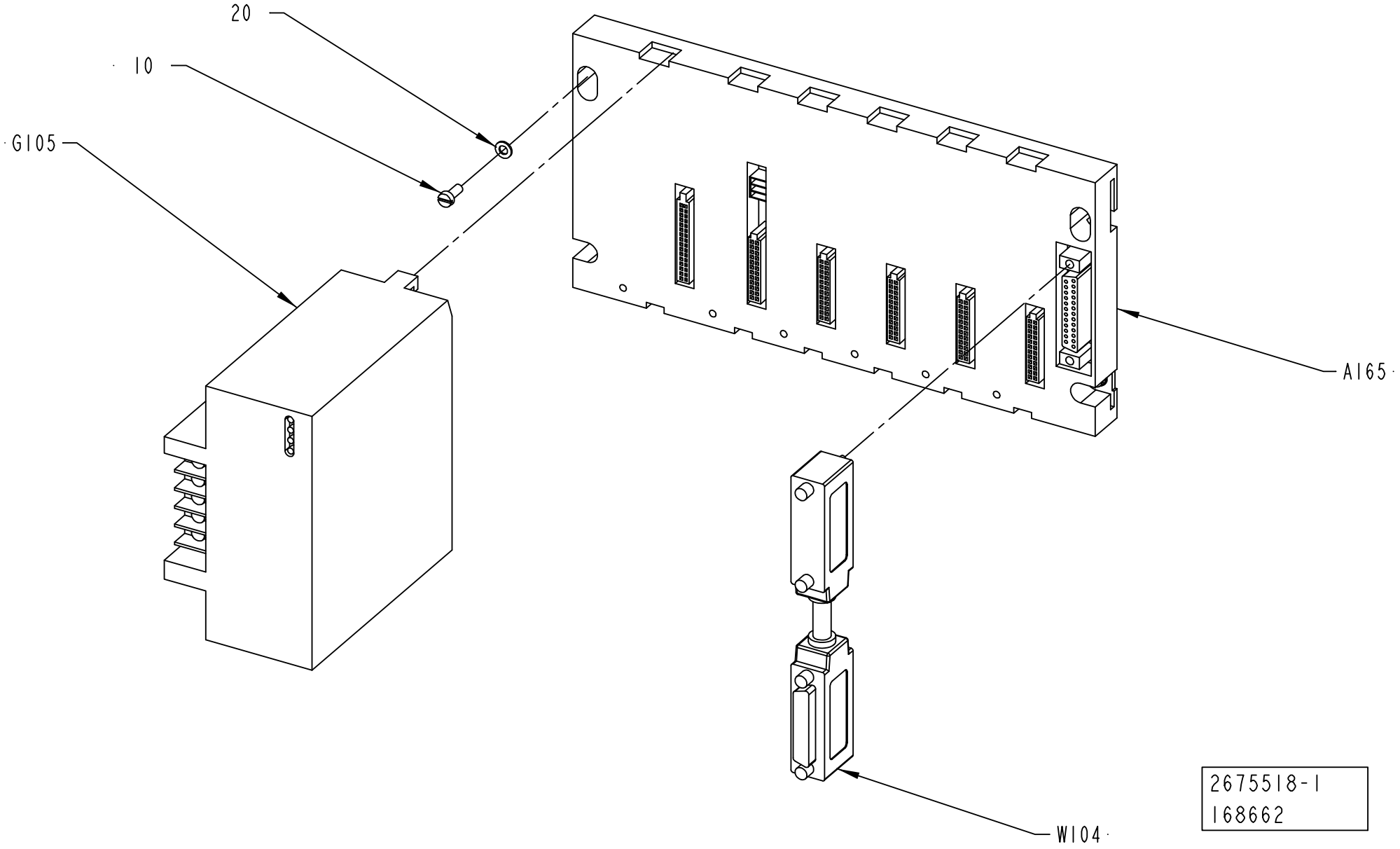
20
10
G105
A165
W104
2675518-1
168662

ECM: 168813 - 20040920
Group number: 2675518-0100
Assembly Drawing: 2675518-1_1_AA

Pos	Part No	UN	Qty	Description	Page No
-					
010	312121-0289		4	SCREW ISO 1207 M4X10 4.8 - 5.8 Z.PL.	
020	315101-0136		4	WASHER BRB, 4,3/8 H=0,8	
A165	90031-0052		1	BASEPLATE, 5-SLOT	
	90031-0302		*1*	*I/O BUS TERMINATION PLUG*	
G105	90031-0068		1	PLC, POWER SUPPLY	
	90031-0301		*1*	*SPARE BATTERY CPU,PCM,2PCS*	
	352551-0134		*1*	*FINE-WIRE FUSE 2 A SLOW,5X20MM*	
W104	90458-1314		1	I/O EXPANSION CABLE	

Pos	Part No	UN	Qty	Description	Page No

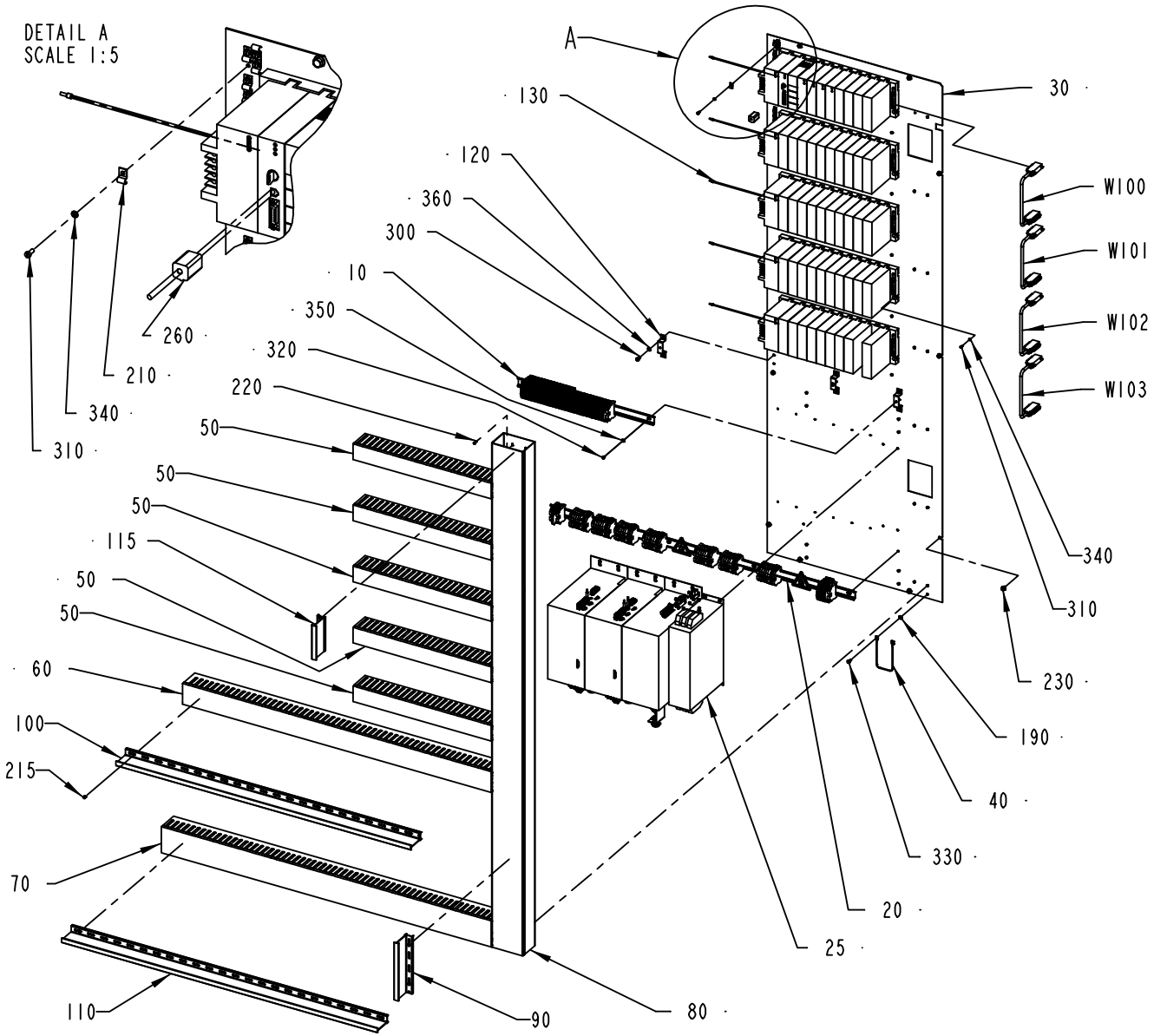

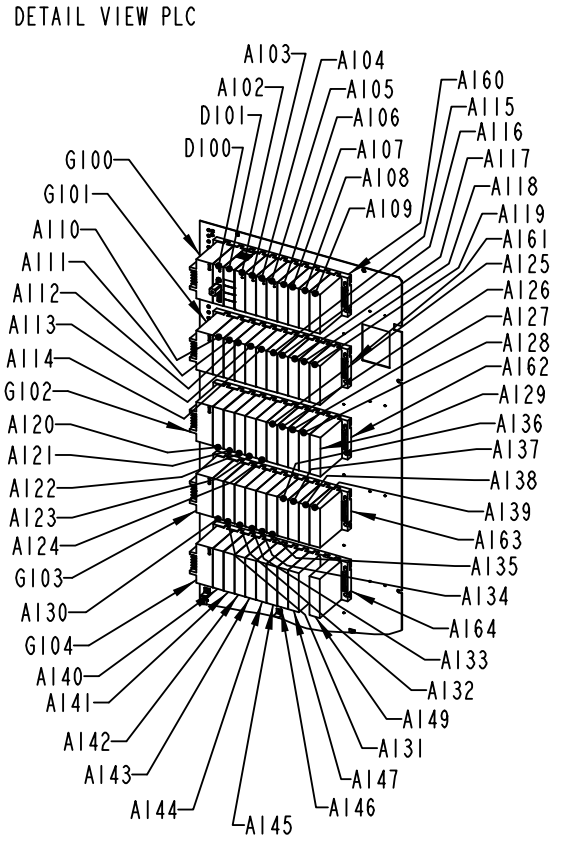

1548123-1
ECM 168662

ECM: 169976 - 20040920
Group number: 1548123-0100
Assembly Drawing: 1548123-1_1_AD

This list covers pages from 8-60 to 8-63

Pos	Part No	UN	Qty	Description	Page No
A3/FLEX					
020	1548124-0100		1	PLINTH	**8-65**
025	2563169-0100		1	MOTOR DRIVE CONTROL	**8-67**
030	1532917-0000		1	MOUNTING PLATE	
120	90458-1447		3	MOUNTING RAIL SUPPORT TST 128660	
260	90458-1170		1	FERRITE, SFC-6	
310	312121-0289		54	SCREW ISO 1207 M4X10 4.8 - 5.8 Z.PL.	
340	315101-0136		54	WASHER BRB, 4,3/8 H=0,8	
A149	90031-0059		1	PLC, DIGITAL OUTPUT MODULE	
D100	90031-0076		1	CPU364, ETHERNET COMMUNICATION	
D101	90031-0031		1	ENHANCED GENIUS COMMUNICATION MODULE	
Common Parts					
010	1548125-0100		1	PLINTH	**8-69**
040	1038714-0000		1	CABLE	
050	2557587-0000		5	CABLE DUCT	
060	2557588-0000		1	CABLE DUCT	
070	2557589-0000		1	CABLE DUCT	
080	2557590-0000		1	CABLE DUCT	
090	2557591-0000		1	DIVIDER	
100	2557592-0000		1	DIVIDER	
110	2557593-0000		1	DIVIDER	
115	2675522-0000		1	DIVIDER	
130	1512322-0000		5	COPPER BRAID	
190	90062-0022		1	LOCKING WASHER D=6,4/11	
210	90165-0060		25	PIPE CLIP FOR TUBE D=5 MM	
215	90181-0064		12	LOCK ZP1 FOR CHANNEL T1	
220	90287-0124		37	SCREW PAN HEAD MSCS M4X12 NYLON	
230	90287-0157		11	SCREW M6SF FLAT HEAD M6X10 88	
300	312111-0366		6	SCREW HEX.SOCK.HD.MC6S-TT 6X12 88 FZB	
320	312121-0321		3	SCREW ISO 1207 M5X6 4.8 - 5.8 Z.PL.	
330	312121-0366		1	SCREW ISO 1207 M6X12 4.8 - 5.8 Z.PL.	
350	315101-0146		3	WASHER PLAIN, BRB, 5,3/10 H=1	
360	315101-0153		6	WASHER PLAIN, BRB, 6,4/12 H=1,5	
A102	90031-0062		1	PLC, ANALOG OUTPUT MODULE 8PT/CURR/VOLT	
A103	90031-0062		1	PLC, ANALOG OUTPUT MODULE 8PT/CURR/VOLT	
A104	90031-0061		1	PLC,ANALOG INPUT MODULE 16 PT/CURRENT	
A105	90031-0060		1	PLC,ANALOG INPUT MODULE 16 PT/VOLTAGE	
A106	90031-0065		1	PLC,TEMPERATUR CONTROL,INPUT MODULE 8 PT	
A107	90031-0065		1	PLC,TEMPERATUR CONTROL,INPUT MODULE 8 PT	
A108	90031-0065		1	PLC,TEMPERATUR CONTROL,INPUT MODULE 8 PT	
A109	90031-0058		1	PLC, DIGITAL INPUT MODULE	
A110	90031-0057		1	PLC, DIGITAL INPUT MODULE	
A111	90031-0057		1	PLC, DIGITAL INPUT MODULE	
A112	90031-0057		1	PLC, DIGITAL INPUT MODULE	
A113	90031-0057		1	PLC, DIGITAL INPUT MODULE	
A114	90031-0057		1	PLC, DIGITAL INPUT MODULE	
A115	90031-0057		1	PLC, DIGITAL INPUT MODULE	
A116	90031-0057		1	PLC, DIGITAL INPUT MODULE	
A117	90031-0057		1	PLC, DIGITAL INPUT MODULE	
A118	90031-0057		1	PLC, DIGITAL INPUT MODULE	
A119	90031-0057		1	PLC, DIGITAL INPUT MODULE	
A120	90031-0057		1	PLC, DIGITAL INPUT MODULE	
A121	90031-0057		1	PLC, DIGITAL INPUT MODULE	
A122	90031-0057		1	PLC, DIGITAL INPUT MODULE	
A123	90031-0057		1	PLC, DIGITAL INPUT MODULE	
A124	90031-0057		1	PLC, DIGITAL INPUT MODULE	
A125	90031-0057		1	PLC, DIGITAL INPUT MODULE	
A126	90031-0057		1	PLC, DIGITAL INPUT MODULE	
A127	90031-0057		1	PLC, DIGITAL INPUT MODULE	
A128	90031-0058		1	PLC, DIGITAL INPUT MODULE	
A129	90031-0058		1	PLC, DIGITAL INPUT MODULE	
A130	90031-0059		1	PLC, DIGITAL OUTPUT MODULE	
A131	90031-0059		1	PLC, DIGITAL OUTPUT MODULE	
A132	90031-0059		1	PLC, DIGITAL OUTPUT MODULE	
A133	90031-0059		1	PLC, DIGITAL OUTPUT MODULE	
A134	90031-0059		1	PLC, DIGITAL OUTPUT MODULE	
A135	90031-0059		1	PLC, DIGITAL OUTPUT MODULE	
A136	90031-0059		1	PLC, DIGITAL OUTPUT MODULE	
A137	90031-0059		1	PLC, DIGITAL OUTPUT MODULE	
A138	90031-0059		1	PLC, DIGITAL OUTPUT MODULE	
A139	90031-0059		1	PLC, DIGITAL OUTPUT MODULE	
A140	90031-0059		1	PLC, DIGITAL OUTPUT MODULE	
A141	90031-0059		1	PLC, DIGITAL OUTPUT MODULE	
A142	90031-0059		1	PLC, DIGITAL OUTPUT MODULE	
A143	90031-0059		1	PLC, DIGITAL OUTPUT MODULE	
A144	90031-0059		1	PLC, DIGITAL OUTPUT MODULE	
A145	90031-0059		1	PLC, DIGITAL OUTPUT MODULE	
A146	90031-0059		1	PLC, DIGITAL OUTPUT MODULE	
A147	90031-0059		1	PLC, DIGITAL OUTPUT MODULE	
A160	90031-0051		1	BASEPLATE, 10-SLOT	
A161	90031-0053		1	BASEPLATE,10-SLOT	
	90031-0302		*1*	*I/O BUS TERMINATION PLUG*	
A162	90031-0053		1	BASEPLATE,10-SLOT	
	90031-0302		*1*	*I/O BUS TERMINATION PLUG*	

Machine Type | Group Description | Used-In | Group Number | Page No

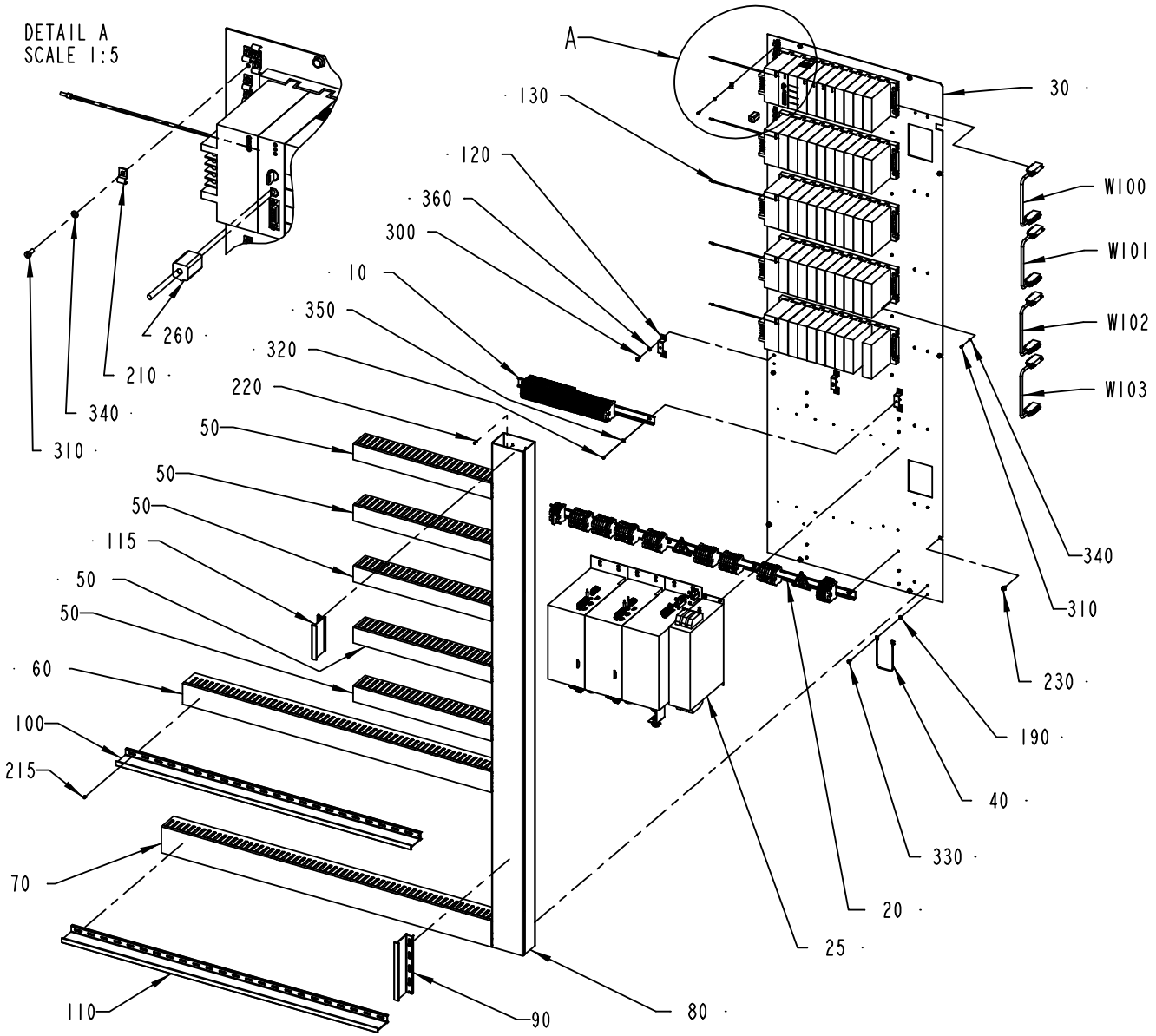

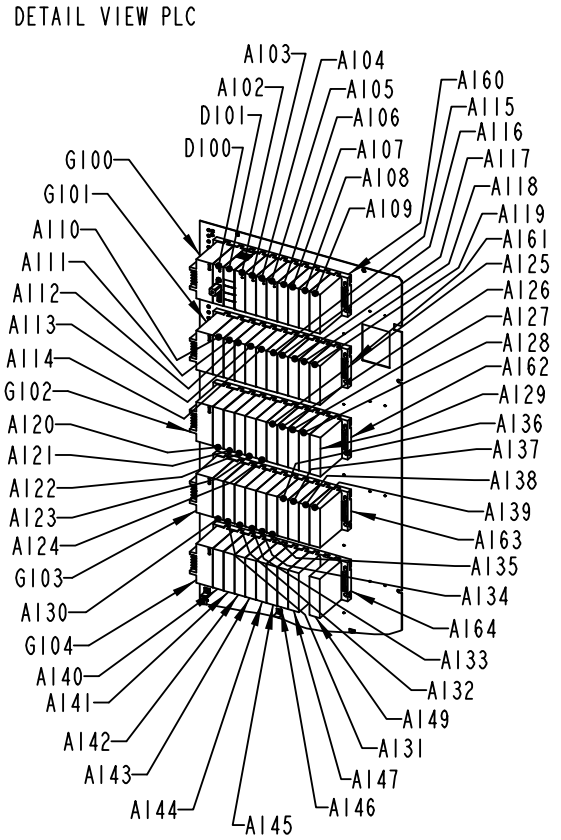

1548123-1
ECM 168662

Pos	Part No	UN	Qty	Description	Page No
Common Parts (Cont'd)					
A163	90031-0053		1	BASEPLATE,10-SLOT	
	90031-0302		*1*	*I/O BUS TERMINATION PLUG*	
A164	90031-0053		1	BASEPLATE,10-SLOT	
	90031-0302		*1*	*I/O BUS TERMINATION PLUG*	
G100	90031-0068		1	PLC, POWER SUPPLY	
	90031-0301		*1*	*SPARE BATTERY CPU,PCM,2PCS*	
	352551-0134		*1*	*FINE-WIRE FUSE 2 A SLOW,5X20MM*	
G101	90031-0068		1	PLC, POWER SUPPLY	
	90031-0301		*1*	*SPARE BATTERY CPU,PCM,2PCS*	
	352551-0134		*1*	*FINE-WIRE FUSE 2 A SLOW,5X20MM*	
G102	90031-0068		1	PLC, POWER SUPPLY	
	90031-0301		*1*	*SPARE BATTERY CPU,PCM,2PCS*	
	352551-0134		*1*	*FINE-WIRE FUSE 2 A SLOW,5X20MM*	
G103	90031-0068		1	PLC, POWER SUPPLY	
	90031-0301		*1*	*SPARE BATTERY CPU,PCM,2PCS*	
	352551-0134		*1*	*FINE-WIRE FUSE 2 A SLOW,5X20MM*	
G104	90031-0068		1	PLC, POWER SUPPLY	
	90031-0301		*1*	*SPARE BATTERY CPU,PCM,2PCS*	
	352551-0134		*1*	*FINE-WIRE FUSE 2 A SLOW,5X20MM*	
W100	90031-0305		1	I/O EXPANSION CABLE	
W101	90031-0305		1	I/O EXPANSION CABLE	
W102	90031-0305		1	I/O EXPANSION CABLE	
W103	90031-0305		1	I/O EXPANSION CABLE	

Pos	Part No	UN	Qty	Description	Page No

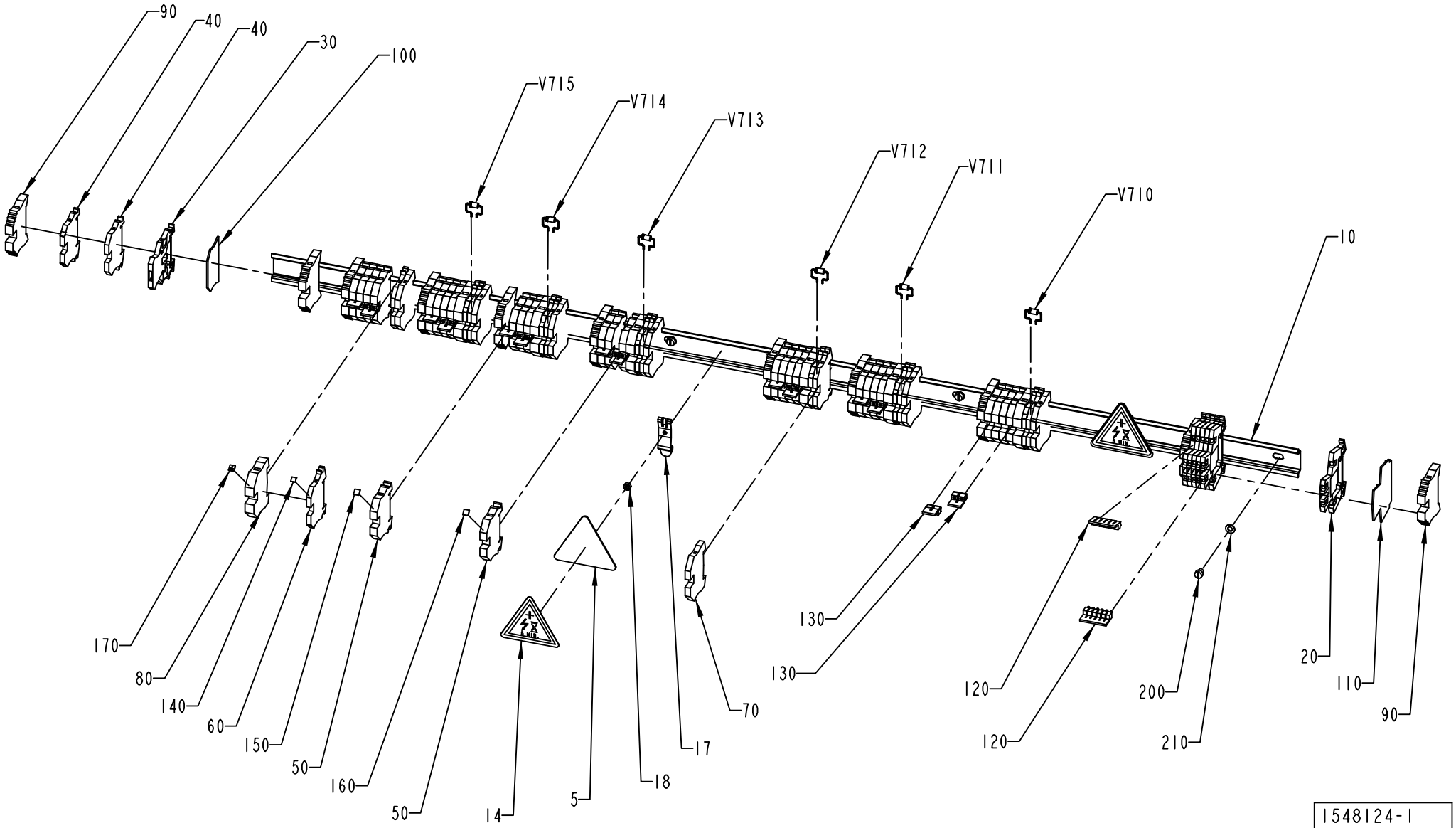

1548124-1
ECM 149421

ECM: 151096 - 20040107
Group number: 1548124-0100
Assembly Drawing: 1548124-1_1_AD

Pos	Part No	UN	Qty	Description	Page No
-					
005	2563175-0000		2	BRACKET	
010	2563171-0000		1	RAIL	
014	90194-0118		2	SIGN, RESIDUAL VOLTAGE, WAIT 5 MIN.	
017	90459-2563		2	BRACKET FOR RAIL, TYPE FM 4	
018	312605-0312		2	HEXAGON NUT, M6M M4 A280	
020	90077-0113		6	FEED THROUGH TERMINAL, 10-00102150-1	
030	353021-0122		1	TERMINAL DISCONNECTBLE, WTR 2,5 D	
040	353021-0212		2	FEED THROUGH TERMINAL, 10200.0	
050	353021-0214		28	FEED THROUGH TERMINAL, 10202.0	
060	353021-0216		14	FEED THROUGH TERMINAL, 10200.8	
070	353024-0205		7	EARTH TERMINAL, 1010.1	
080	353024-0207		7	EARTH TERMINAL, 1010.3	
090	353031-0203		11	END SUPPORT, WEW 35/2	
100	353032-0004		1	END PLATE WAP 2,5-10 BEIGE	
110	353032-0009		1	END PLATE, WAP FOR WDK	
120	353034-0030		2	BRIDGE CONNECTOR WQV 2,5/10, 10544.6	
130	353034-0018		14	BRIDGE CONNECTOR WQV 6/2	
140	359011-0807		17	MARKING PLATES 5-FW 1-50	
150	359011-0832		1	SET OF SIGNS 6-GW (+)	
160	359011-0833		1	SET OF SIGNS 6-GW (-)	
170	359011-0834		1	SET OF SIGNS 6-GW(EARTH)	
200	312121-0321		4	SCREW ISO 1207 M5X6 4.8 - 5.8 Z.PL.	
210	315101-0146		4	WASHER PLAIN, BRB, 5,3/10 H=1	
V710	90459-1620		1	DIODE, 3A 100V	
V711	90459-1620		1	DIODE, 3A 100V	
V712	90459-1620		1	DIODE, 3A 100V	
V713	90459-1620		1	DIODE, 3A 100V	
V714	90459-1620		1	DIODE, 3A 100V	
V715	90459-1620		1	DIODE, 3A 100V	

Pos	Part No	UN	Qty	Description	Page No

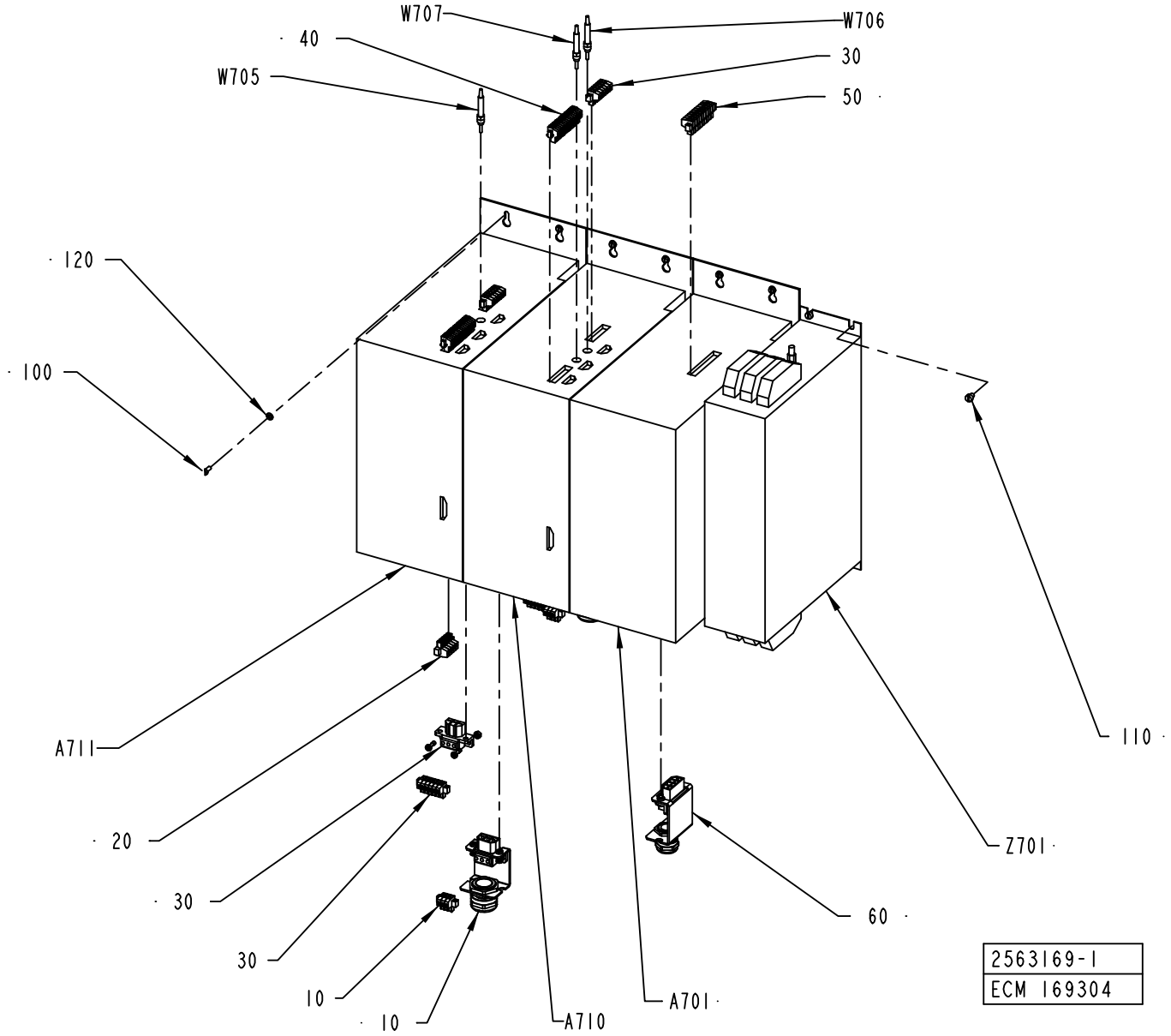
W707
W706
40
30
W705
50
120
100
110
A711
20
30
30
10
10
A710
A701
Z701
60
2563169-1
ECM 169304

ECM: 176047 - 20040920
Group number: 2563169-0100
Assembly Drawing: 2563169-1_1_AC

Pos	Part No	UN	Qty	Description	Page No
-					
010	90100-0048		2	CONNECTOR, DRIVE END SAM 4/7/14, 9-16MM	
020	90100-0051		2	CONNECTOR KIT, BRAKE	
030	90100-0054		2	CONNECTOR KIT, SUPPLY (SAM 4-7-14)	
040	90100-0056		2	CONNECTOR KIT, OPTION	
050	90100-0064		1	CONNECTOR SAM-P_-30, 4MM2	
060	90459-1619		1	CONNECTOR 9-032-001-0698	
100	312121-0289		12	SCREW ISO 1207 M4X10 4.8 - 5.8 Z.PL.	
110	312121-0321		4	SCREW ISO 1207 M5X6 4.8 - 5.8 Z.PL.	
120	315101-0136		12	WASHER BRB, 4,3/8 H=0,8	
A701	90100-0059		1	SAM SUPPLY SAM-PA-400-80-E	
A710	90100-0042		1	SERVO DRIVE SAM-DA-400-014B-P4N-F	
A711	90100-0042		1	SERVO DRIVE SAM-DA-400-014B-P4N-F	
W705	90100-0072		1	EASYBUS SAM 0,3M	
W706	90100-0072		1	EASYBUS SAM 0,3M	
W707	90100-0075		1	EASYBUS SAM 2,0M	
Z701	90100-0068		1	EMC FILTER 90A, 258-75-34	

Pos	Part No	UN	Qty	Description	Page No

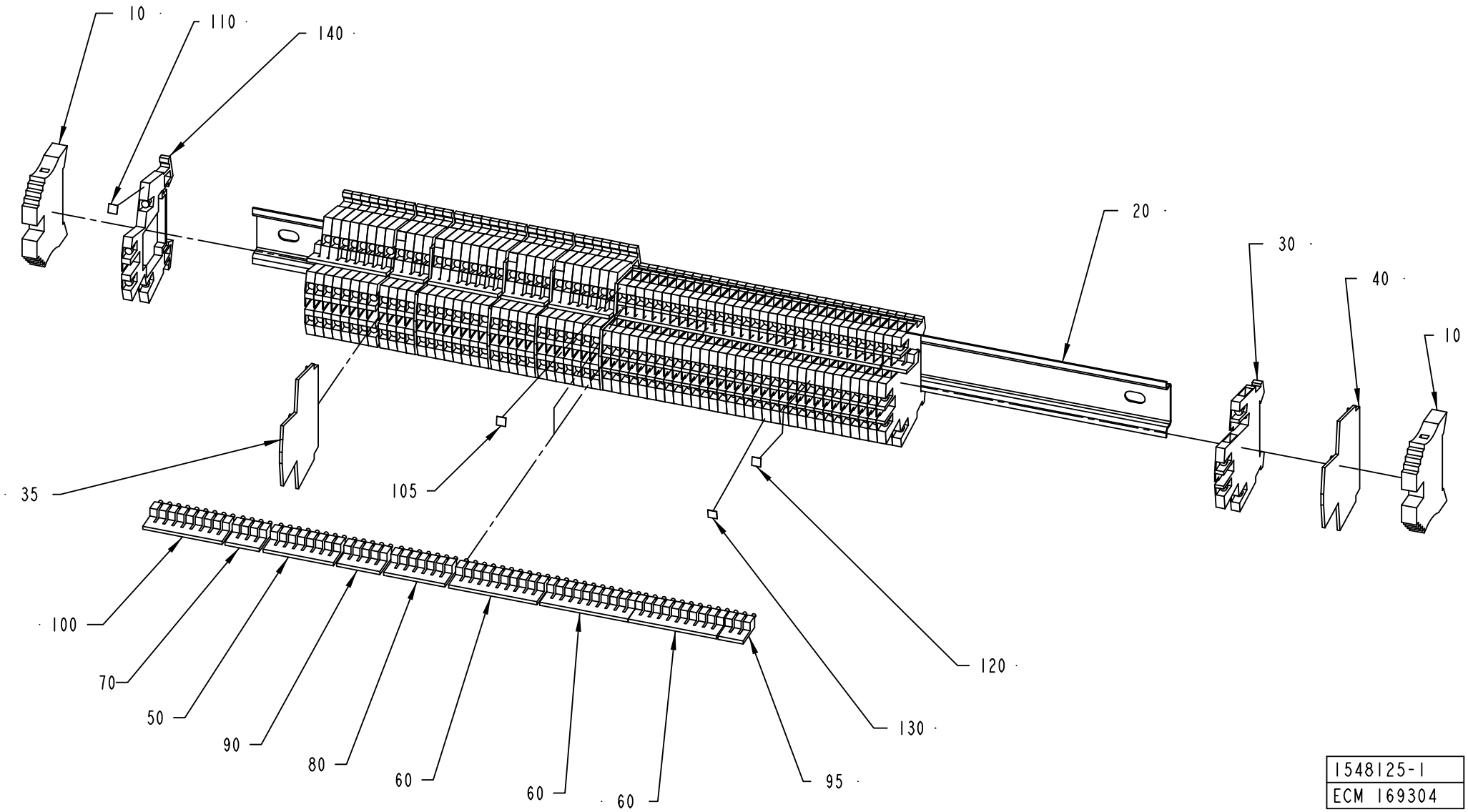
10
110
140
20
30
40
10
35
105
100
70
50
90
80
60
60
60
95
120
130
1548125-1
ECM 169304

ECM: 176045 - 20040920
Group number: 1548125-0100
Assembly Drawing: 1548125-1_1_AC

Pos	Part No	UN	Qty	Description	Page No
-					
010	353031-0203		2	END SUPPORT, WEW 35/2	
020	2557594-0000		1	RAIL	
030	353021-0120		33	FEED THROUGH TERMINAL, 10215.8	
035	353032-0009		5	END PLATE, WAP FOR WDK	
040	353032-0010		1	END PLATE WAP	
050	353034-0030		2	BRIDGE CONNECTOR WQV 2,5/10, 10544.6	
060	353034-0030		6	BRIDGE CONNECTOR WQV 2,5/10, 10544.6	
070	353034-0030		2	BRIDGE CONNECTOR WQV 2,5/10, 10544.6	
080	353034-0030		2	BRIDGE CONNECTOR WQV 2,5/10, 10544.6	
090	353034-0030		2	BRIDGE CONNECTOR WQV 2,5/10, 10544.6	
095	353034-0030		2	BRIDGE CONNECTOR WQV 2,5/10, 10544.6	
100	353034-0030		2	BRIDGE CONNECTOR WQV 2,5/10, 10544.6	
105	359011-0808		1	MARKING PLATES 5-FW 51-100	
110	359011-0809		6	MARKING PLATES 5-FW 101-150	
120	359011-0810		1	MARKING PLATES 5-FW 151-200	
130	359011-0811		1	MARKING PLATES 5-FW 201-250	
140	90077-0113		33	FEED THROUGH TERMINAL, 10-00102150-1	

Pos	Part No	UN	Qty	Description	Page No

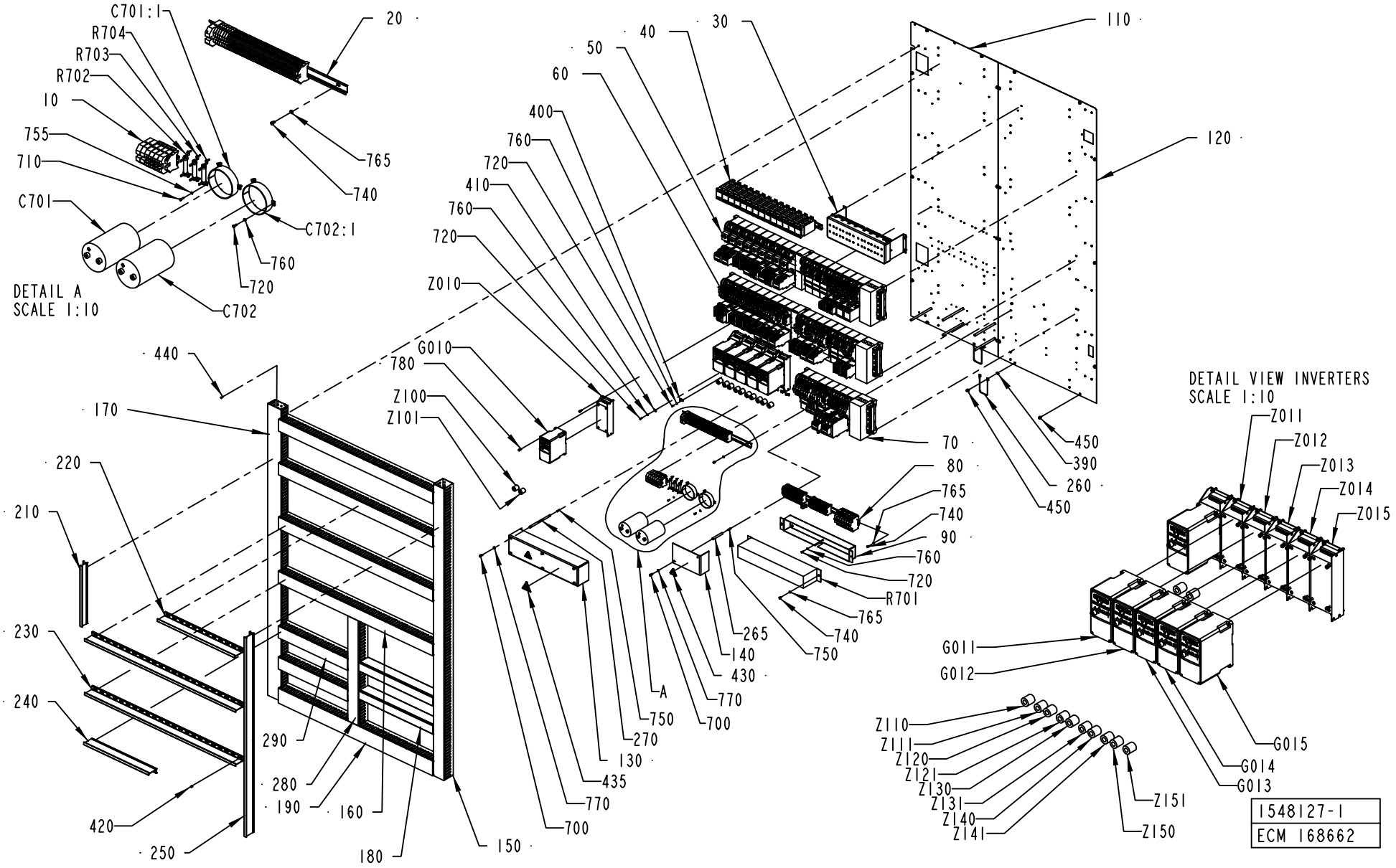
C701:1
R704
R703
R702
10
755
710
C701
20
765
740
C702:1
760
720
C702
DETAIL A
SCALE 1:10
110
40
30
50
60
400
760
720
410
760
720
Z010
120
G010
780
Z100
Z101
440
170
220
210
230
240
420
250
290
280
190
160
180
150
700
770
435
130
270
750
A
700
770
430
140
265
750
740
765
R701
720
760
90
80
70
450
390
260
450
DETAIL VIEW INVERTERS
SCALE 1:10
Z011
Z012
Z013
Z014
Z015
G011
G012
G015
G014
G013
Z110
Z111
Z120
Z121
Z130
Z131
Z140
Z141
Z151
Z150
1548127-1
ECM 168662

ECM: 169946 - 20040920
Group number: 1548127-0100
Assembly Drawing: 1548127-1_1_AC

Pos	Part No	UN	Qty	Description	Page No
A3/FLEX					
030	1548129-0100		1	RELAY UNIT 2	**8-73**
040	2563170-0100		1	RELAY UNIT 1	**8-75**
050	1548130-0100		1	FUSE BOARD 1	**8-77**
060	1548131-0100		1	FUSE BOARD 2	**8-79, 8-81**
070	1548132-0100		1	FUSE BOARD 3	**8-83**
080	1548134-0100		1	PLINTH	**8-85**
090	1548138-0000		1	BRACKET	
110	1532918-0000		1	MOUNTING PLATE	
120	1532919-0000		1	MOUNTING PLATE	
180	2558764-0000		2	CABLE DUCT	
290	2558765-0000		2	CABLE DUCT	
435	90194-0118		1	SIGN, RESIDUAL VOLTAGE, WAIT 5 MIN.	
720	312121-0289		24	SCREW ISO 1207 M4X10 4.8 - 5.8 Z.PL.	
740	312121-0323		8	SCREW ISO 1207 M5X8 4.8 - 5.8 Z.PL.	
760	315101-0136		24	WASHER BRB, 4,3/8 H=0,8	
765	315101-0146		12	WASHER PLAIN, BRB, 5,3/10 H=1	
C701	90159-0101		1	CAPACITOR, 6800 æF 400 V	
C701:1	90159-0305		1	CLAMP	
C702	90159-0101		1	CAPACITOR, 6800 æF 400 V	
C702:1	90159-0305		1	CLAMP	
R701	90457-0193		1	EXTERNAL DB RESISTOR 800W 7,9 OHM	
Common Parts					
010	1095778-0100		1	PLINTH	**8-87**
020	1548133-0100		1	PLINTH	**8-89**
130	1532913-0000		1	PROTECTION	
140	1532930-0000		1	PROTECTION	
150	2558761-0000		1	CABLE DUCT	
160	2558762-0000		4	CABLE DUCT	
170	2558760-0000		1	CABLE DUCT	
190	2558766-0000		1	CABLE DUCT	
210	2558769-0000		1	DIVIDER	
220	2558770-0000		1	DIVIDER	
230	2558771-0000		2	DIVIDER	
240	2558772-0000		1	DIVIDER	
250	2558773-0000		1	DIVIDER	
260	1038714-0000		2	CABLE	
265	1038275-0012		2	SPACER	
270	1038275-0030		6	SPACER	
280	2558763-0000		1	CABLE DUCT	
390	90062-0015		2	LOCK WASHER SERRAT.EXT.GEAR,6,4/11 H=0,7	
400	90165-0007		6	PIPE CLIP FOR TUBE D=8 MM	
410	90165-0022		6	PIPE CLIP, FOR TUBE D=2,5 MM, B-3570	
420	90181-0064		20	LOCK ZP1 FOR CHANNEL T1	
430	359705-0015		2	WARNING SIGN ISO, RISK OF ELECTRIC SHOCK	
440	90287-0124		86	SCREW PAN HEAD MSCS M4X12 NYLON	
450	90287-0157		22	SCREW M6SF FLAT HEAD M6X10 88	
700	312111-0366		8	SCREW HEX.SOCK.HD.MC6S-TT 6X12 88 FZB	
710	312121-0226		6	SCREW ISO 1207 M3X12 4.8 - 5.8 Z.PL.	
750	312318-0370		8	SCREW ISO4029 M6X20 A4	
755	315101-0124		6	WASHER PLAIN, BRB, 3,2/6 H=0,5	
770	315101-0153		8	WASHER PLAIN, BRB, 6,4/12 H=1,5	
780	312115-0327		48	SCREW ISO4762 M5X12 A4	
G010	90459-3449		1	VARIABLE FREQUENCY DRIVE 22A-A2P3N104	
G011	90459-3449		1	VARIABLE FREQUENCY DRIVE 22A-A2P3N104	
G012	90459-3449		1	VARIABLE FREQUENCY DRIVE 22A-A2P3N104	
G013	90459-3450		1	VARIABLE FREQUENCY DRIVE 22A-A4P5N104	
G014	90459-3450		1	VARIABLE FREQUENCY DRIVE 22A-A4P5N104	
G015	90459-3451		1	VARIABLE FREQUENCY DRIVE 22A-D4P0N104	
R702	90121-0114		1	RESISTANCE FIXED, 0,22 KOHM, 25 W	
R703	90121-0114		1	RESISTANCE FIXED, 0,22 KOHM, 25 W	
R704	90121-0114		1	RESISTANCE FIXED, 0,22 KOHM, 25 W	
Z010	90459-3460		1	FOOTPRINT FILTER 22-RF010-AL	
Z011	90459-3460		1	FOOTPRINT FILTER 22-RF010-AL	
Z012	90459-3460		1	FOOTPRINT FILTER 22-RF010-AL	
Z013	90459-3460		1	FOOTPRINT FILTER 22-RF010-AL	
Z014	90459-3460		1	FOOTPRINT FILTER 22-RF010-AL	
Z015	90459-3461		1	FOOTPRINT FILTER 22-RF5P7-AL	
Z100	90458-1140		1	FERRITE, RI-26-28-13	
Z101	90458-1140		1	FERRITE, RI-26-28-13	
Z110	90458-1140		1	FERRITE, RI-26-28-13	
Z111	90458-1140		1	FERRITE, RI-26-28-13	
Z120	90458-1140		1	FERRITE, RI-26-28-13	
Z121	90458-1140		1	FERRITE, RI-26-28-13	
Z130	90458-1140		1	FERRITE, RI-26-28-13	
Z131	90458-1140		1	FERRITE, RI-26-28-13	
Z140	90458-1140		1	FERRITE, RI-26-28-13	
Z141	90458-1140		1	FERRITE, RI-26-28-13	
Z150	90458-1140		1	FERRITE, RI-26-28-13	
Z151	90458-1140		1	FERRITE, RI-26-28-13	

Machine Type | Group Description | Used-In | Group Number | Page No

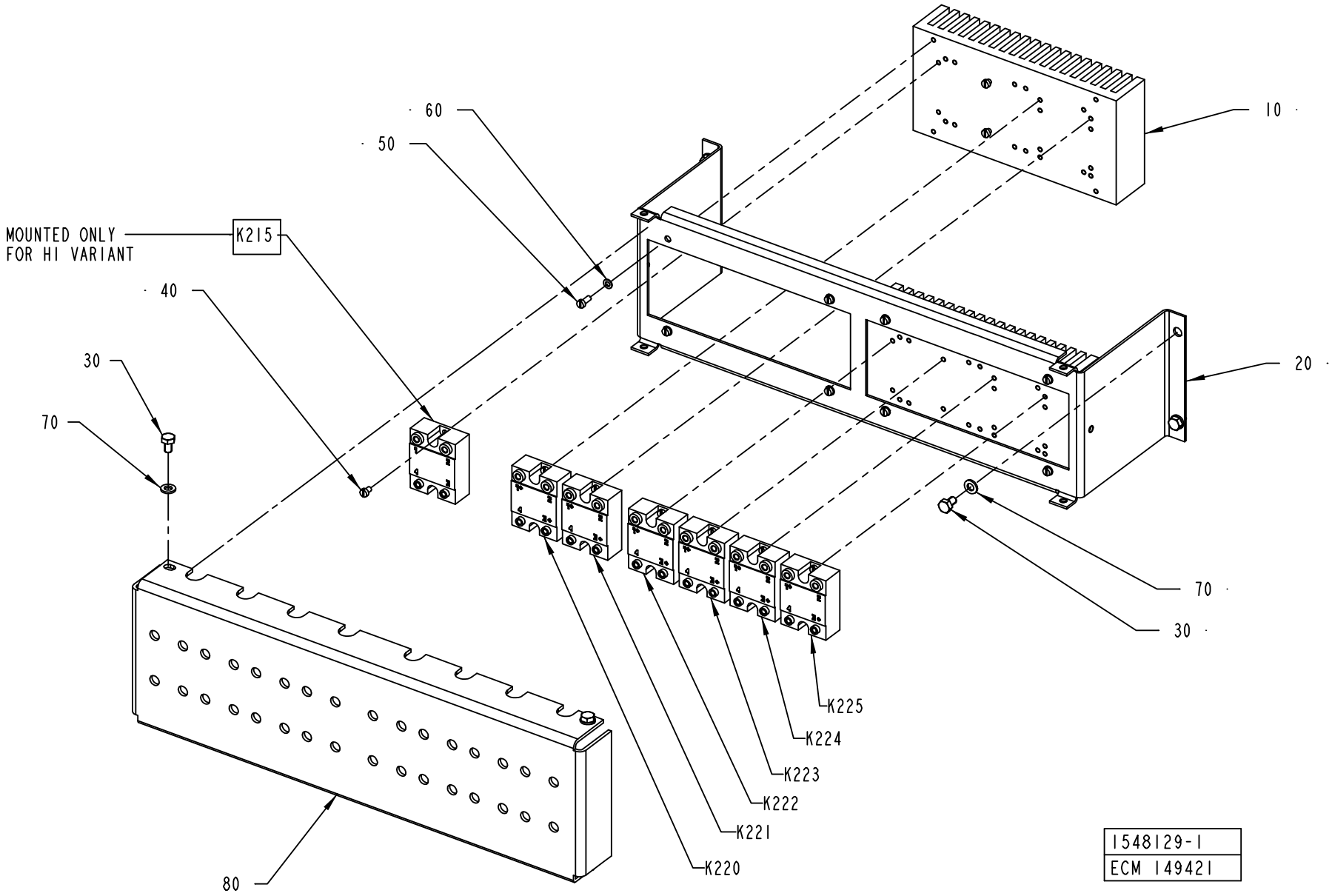
60
50
10
MOUNTED ONLY
FOR HI VARIANT
K215
40
30
70
20
70
30
K225
K224
K223
K222
K221
K220
80
1548129-1
ECM 149421

ECM: 150166 - 20040107
Group number: 1548129-0100
Assembly Drawing: 1548129-1_1_AB

Pos	Part No	UN	Qty	Description	Page No
A3/FLEX HI (See drawing on page: 8-72)					
K215	90119-0067		1	SOLID-STATE RELAY, H12WD4850	
Common Parts					
010	495495-0000		2	COOLING ELEMENT SSR	
020	1347673-0000		1	BRACKET	
030	312101-0364		8	SCREW M6S M6X10 FZB	
040	312121-0285		16	SCREW ISO 1207 M4X6 4.8 - 5.8 Z.PL.	
050	312121-0289		8	SCREW ISO 1207 M4X10 4.8 - 5.8 Z.PL.	
060	315101-0136		8	WASHER BRB, 4,3/8 H=0,8	
070	315101-0153		8	WASHER PLAIN, BRB, 6,4/12 H=1,5	
080	1129342-0000		1	PROTECTION	
K220	90119-0043		1	OPTO-RELAY, 22DC 60S-3/32VDC	
K221	90119-0043		1	OPTO-RELAY, 22DC 60S-3/32VDC	
K222	90119-0043		1	OPTO-RELAY, 22DC 60S-3/32VDC	
K223	90119-0043		1	OPTO-RELAY, 22DC 60S-3/32VDC	
K224	90119-0043		1	OPTO-RELAY, 22DC 60S-3/32VDC	
K225	90119-0043		1	OPTO-RELAY, 22DC 60S-3/32VDC	

Pos	Part No	UN	Qty	Description	Page No

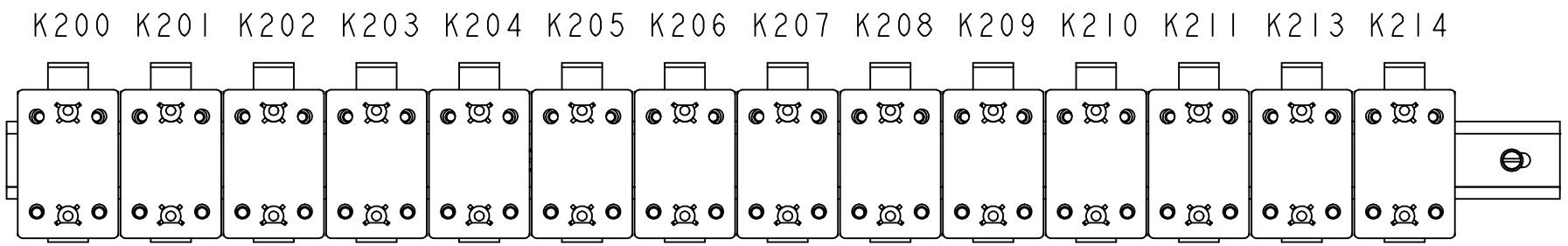

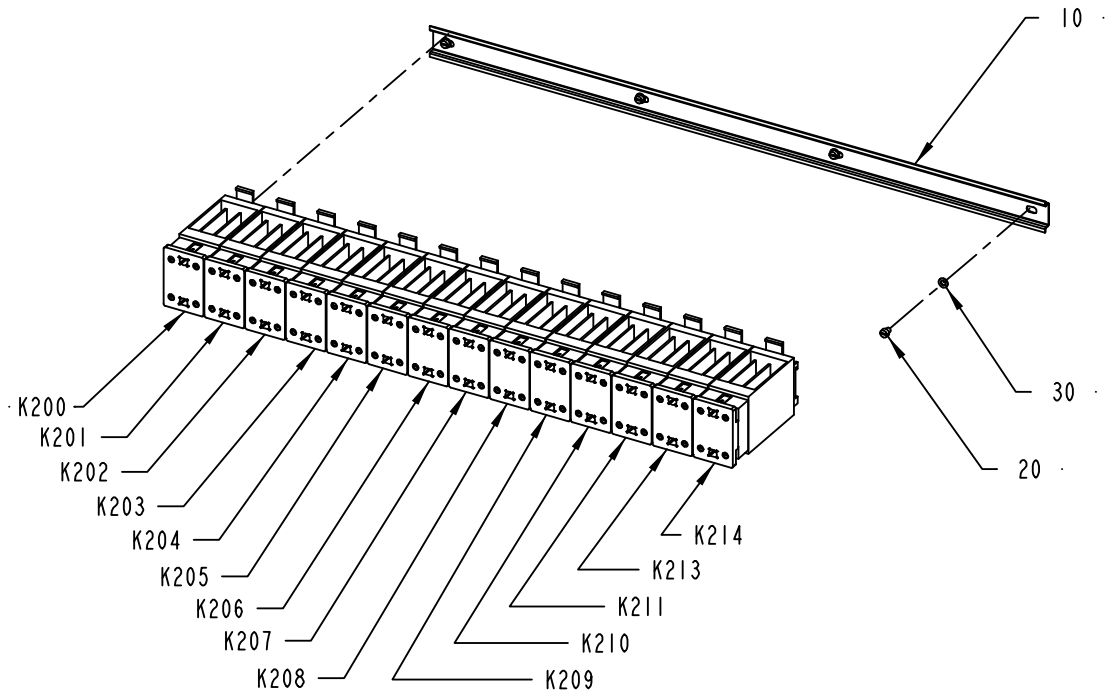

2563170-1
ECM 117324

ECM: 143184 - 20031030
Group number: 2563170-0100
Assembly Drawing: 2563170-1_1_AA

Pos	Part No	UN	Qty	Description	Page No
A3/FLEX					
K200	90119-0082		1	SSR 90119-67 + HEAT SINK	
K201	90119-0082		1	SSR 90119-67 + HEAT SINK	
K202	90119-0082		1	SSR 90119-67 + HEAT SINK	
K203	90119-0082		1	SSR 90119-67 + HEAT SINK	
K204	90119-0082		1	SSR 90119-67 + HEAT SINK	
K205	90119-0082		1	SSR 90119-67 + HEAT SINK	
K206	90119-0082		1	SSR 90119-67 + HEAT SINK	
K207	90119-0082		1	SSR 90119-67 + HEAT SINK	
K213	90119-0082		1	SSR 90119-67 + HEAT SINK	
K214	90119-0082		1	SSR 90119-67 + HEAT SINK	
Common Parts					
010	2558932-0000		1	RAIL	
020	312121-0321		4	SCREW ISO 1207 M5X6 4.8 - 5.8 Z.PL.	
030	315105-0146		4	WASHER BRB5,3X10RFR	
K208	90119-0082		1	SSR 90119-67 + HEAT SINK	
K209	90119-0082		1	SSR 90119-67 + HEAT SINK	
K210	90119-0082		1	SSR 90119-67 + HEAT SINK	
K211	90119-0082		1	SSR 90119-67 + HEAT SINK	

Pos	Part No	UN	Qty	Description	Page No

	Q001 Q001:1	Q002 Q002:1	Q003 Q003:1	Q004 Q004:1	Q005 Q005:1	Q006 Q006:1	Q007 Q007:1	Q008 Q008:1	Q009 Q009:1						F020	F021	F022	F023		
	K001	K002	K003	K004	K005	K006 K006:1	K007	K008 K008:1	K009						K020 K020:1	K021 K021:1	K022	K023		

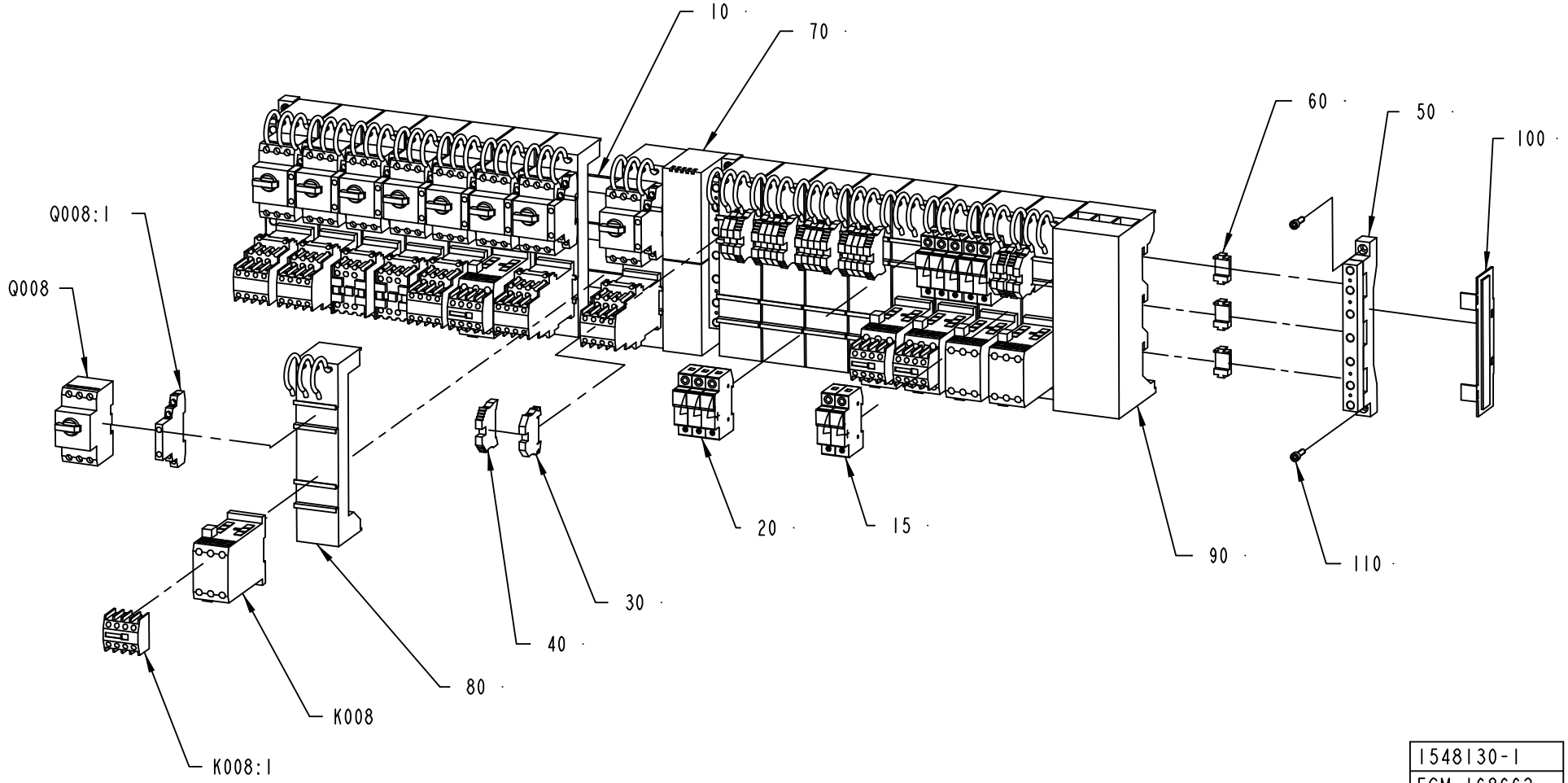

1548130-1
ECM 168662

ECM: 169883 - 20040920
Group number: 1548130-0100
Assembly Drawing: 1548130-1_1_AB

Pos	Part No	UN	Qty	Description	Page No
A3/FLEX					
015	90459-4553		2	FUSE HOLDER, MSC 10 2-POLE C250150	
020	90459-3800		2	FUSE HOLDER, MSC 10 3-POLE D250151	
030	353021-0214		14	FEED THROUGH TERMINAL, 10202.0	
040	353031-0203		10	END SUPPORT, WEW 35/2	
F020	90233-0028		3	TUBE FUSE, 10A	
F021	90233-0028		3	TUBE FUSE, 10A	
F022	90233-0029		2	TUBE FUSE, 25A	
F023	90233-0029		2	TUBE FUSE, 25A	
K007	90075-0124		1	CONTACTOR, 4KW 24VDC	
	90075-0313		*1*	*AUXILIARY CONTACT K&M 22 DILM.2NO;2NC*	
K008	90075-0128		1	CONTACTOR, 7,5KW 24VDC	
K008:1	90075-0313		1	AUXILIARY CONTACT K&M 22 DILM.2NO;2NC	
K009	90075-0124		1	CONTACTOR, 4KW 24VDC	
	90075-0313		*1*	*AUXILIARY CONTACT K&M 22 DILM.2NO;2NC*	
K020	90075-0128		1	CONTACTOR, 7,5KW 24VDC	
K020:1	90075-0313		1	AUXILIARY CONTACT K&M 22 DILM.2NO;2NC	
K021	90075-0128		1	CONTACTOR, 7,5KW 24VDC	
K021:1	90075-0313		1	AUXILIARY CONTACT K&M 22 DILM.2NO;2NC	
K022	90075-0128		1	CONTACTOR, 7,5KW 24VDC	
K023	90075-0128		1	CONTACTOR, 7,5KW 24VDC	
Q004	90095-0074		1	OVERLOAD PROTECTION, PKZM 2,5 A	
Q007	90095-0073		1	OVERLOAD PROTECTION, PKZM 1,6 A	
Q007:1	90259-0313		1	AUX. CONTACT K&M NHI21-PKZM0	
Q008	90095-0077		1	OVERLOAD PROTECTION, PKZM 6-10 A	
Q008:1	90259-0313		1	AUX. CONTACT K&M NHI21-PKZM0	
Q009	90095-0072		1	OVERLOAD PROTECTION, PKZM 1,0 A	
Q009:1	90259-0313		1	AUX. CONTACT K&M NHI21-PKZM0	
Common Parts					
010	1548118-0000		3	BUSBAR	
050	353042-0010		3	BUSBAR, SV 30001	
060	353042-0012		9	ADJUSTMENTPLATTA	
070	353042-0013		1	PROTECTIVE CASING	
080	353042-0014		17	CONNECTION ADAPTER, AD25/5-1	
090	353042-0016		1	CONNECTIONSADAPTER	
100	353042-0019		2	SIDE GUARD	
110	312111-0370		6	SCREW HEX.SOCK.HD.MC6S-TT 6X20 88 FZB	
K001	90075-0124		1	CONTACTOR, 4KW 24VDC	
	90075-0313		*1*	*AUXILIARY CONTACT K&M 22 DILM.2NO;2NC*	
K002	90075-0124		1	CONTACTOR, 4KW 24VDC	
	90075-0313		*1*	*AUXILIARY CONTACT K&M 22 DILM.2NO;2NC*	
K003	90075-0127		1	CONTACTOR, 4KW 24VDC	
K004	90075-0127		1	CONTACTOR, 4KW 24VDC	
K005	90075-0124		1	CONTACTOR, 4KW 24VDC	
	90075-0313		*1*	*AUXILIARY CONTACT K&M 22 DILM.2NO;2NC*	
K006	90075-0128		1	CONTACTOR, 7,5KW 24VDC	
K006:1	90075-0313		1	AUXILIARY CONTACT K&M 22 DILM.2NO;2NC	
Q001	90095-0073		1	OVERLOAD PROTECTION, PKZM 1,6 A	
Q001:1	90259-0313		1	AUX. CONTACT K&M NHI21-PKZM0	
Q002	90095-0075		1	OVERLOAD PROTECTION, PKZM 4 A	
Q002:1	90259-0313		1	AUX. CONTACT K&M NHI21-PKZM0	
Q003	90095-0074		1	OVERLOAD PROTECTION, PKZM 2,5 A	
Q003:1	90259-0313		1	AUX. CONTACT K&M NHI21-PKZM0	
Q004:1	90259-0313		1	AUX. CONTACT K&M NHI21-PKZM0	
Q005	90095-0075		1	OVERLOAD PROTECTION, PKZM 4 A	
Q005:1	90259-0313		1	AUX. CONTACT K&M NHI21-PKZM0	
Q006	90095-0078		1	OVERLOAD PROTECTION, PKZM0-16	
Q006:1	90259-0313		1	AUX. CONTACT K&M NHI21-PKZM0	

Machine Type	Group Description	Used-In	Group Number	Page No

F024	F025	F027 F026	F028	F029	F030	F031 F032 F033	F034	F035		F036	F037	F038	F039			F042	F070	
K024	K025 K025:1	K026	K028	K029	K030	K031	K034	K035		K036	K037	K038	K039			K042	K070	

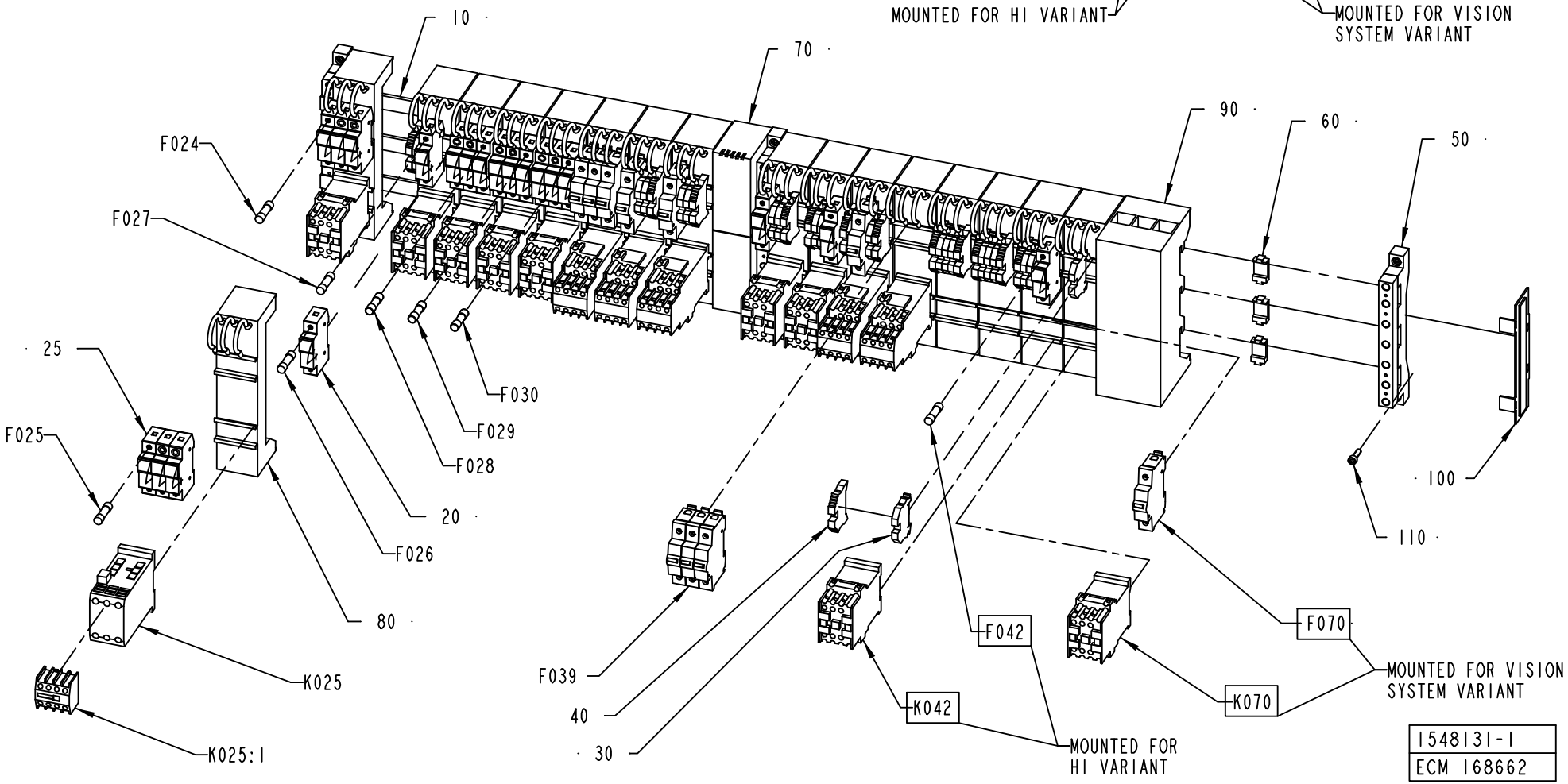

ECM: 169882 - 20040920
Group number: 1548131-0100
Assembly Drawing: 1548131-1_1_AD

This list covers pages from 8-78 to 8-81

Pos	Part No	UN	Qty	Description	Page No
A3/FLEX HI NOVISION SYS (See drawing on pages: 8-78, 8-80)					
020	90459-3799		5	FUSE HOLDER, MSC 10 1-POLE A250148	
025	90459-3800		5	FUSE HOLDER, MSC 10 3-POLE D250151	
030	353021-0214		22	FEED THROUGH TERMINAL, 10202.0	
040	353031-0203		14	END SUPPORT, WEW 35/2	
F024	90233-0028		3	TUBE FUSE, 10A	
F025	90233-0029		3	TUBE FUSE, 25A	
F028	90459-1254		3	TUBE FUSE, 4A 500V	
F029	90459-1254		3	TUBE FUSE, 4A 500V	
F030	90459-1254		3	TUBE FUSE, 4A 500V	
F042	90233-0027		1	TUBE FUSE, 16A	
	90233-0305		*1*	*INDICATOR*	
K024	90075-0127		1	CONTACTOR, 4KW 24VDC	
K025	90075-0128		1	CONTACTOR, 7,5KW 24VDC	
K025:1	90075-0313		1	AUXILIARY CONTACT K&M 22 DILM.2NO;2NC	
K028	90075-0127		1	CONTACTOR, 4KW 24VDC	
K029	90075-0127		1	CONTACTOR, 4KW 24VDC	
K030	90075-0127		1	CONTACTOR, 4KW 24VDC	
K037	90075-0127		1	CONTACTOR, 4KW 24VDC	
K042	90075-0127		1	CONTACTOR, 4KW 24VDC	
A3/FLEX HI VISION SYS (See drawing on pages: 8-78, 8-80)					
020	90459-3799		5	FUSE HOLDER, MSC 10 1-POLE A250148	
025	90459-3800		5	FUSE HOLDER, MSC 10 3-POLE D250151	
030	353021-0214		21	FEED THROUGH TERMINAL, 10202.0	
040	353031-0203		13	END SUPPORT, WEW 35/2	
F024	90233-0028		3	TUBE FUSE, 10A	
F025	90233-0029		3	TUBE FUSE, 25A	
F028	90459-1254		3	TUBE FUSE, 4A 500V	
F029	90459-1254		3	TUBE FUSE, 4A 500V	
F030	90459-1254		3	TUBE FUSE, 4A 500V	
F042	90233-0027		1	TUBE FUSE, 16A	
	90233-0305		*1*	*INDICATOR*	
F070	90007-0155		1	CIRCUIT BREAKER, 1P 0,5 A K	
K024	90075-0127		1	CONTACTOR, 4KW 24VDC	
K025	90075-0128		1	CONTACTOR, 7,5KW 24VDC	
K025:1	90075-0313		1	AUXILIARY CONTACT K&M 22 DILM.2NO;2NC	
K028	90075-0127		1	CONTACTOR, 4KW 24VDC	
K029	90075-0127		1	CONTACTOR, 4KW 24VDC	
K030	90075-0127		1	CONTACTOR, 4KW 24VDC	
K037	90075-0127		1	CONTACTOR, 4KW 24VDC	
K042	90075-0127		1	CONTACTOR, 4KW 24VDC	
K070	90075-0127		1	CONTACTOR, 4KW 24VDC	

Pos	Part No	UN	Qty	Description	Page No
A3/FLEX NOHI NOVISION SYS (See drawing on pages: 8-78, 8-80)					
020	90459-3799		4	FUSE HOLDER, MSC 10 1-POLE A250148	
025	90459-3800		5	FUSE HOLDER, MSC 10 3-POLE D250151	
030	353021-0214		23	FEED THROUGH TERMINAL, 10202.0	
040	353031-0203		15	END SUPPORT, WEW 35/2	
F024	90233-0028		3	TUBE FUSE, 10A	
F025	90233-0029		3	TUBE FUSE, 25A	
F028	90459-1254		3	TUBE FUSE, 4A 500V	
F029	90459-1254		3	TUBE FUSE, 4A 500V	
F030	90459-1254		3	TUBE FUSE, 4A 500V	
K024	90075-0127		1	CONTACTOR, 4KW 24VDC	
K025	90075-0128		1	CONTACTOR, 7,5KW 24VDC	
K025:1	90075-0313		1	AUXILIARY CONTACT K&M 22 DILM.2NO;2NC	
K028	90075-0127		1	CONTACTOR, 4KW 24VDC	
K029	90075-0127		1	CONTACTOR, 4KW 24VDC	
K030	90075-0127		1	CONTACTOR, 4KW 24VDC	
K037	90075-0127		1	CONTACTOR, 4KW 24VDC	
A3/FLEX NOHI VISION SYS (See drawing on pages: 8-78, 8-80)					
020	90459-3799		4	FUSE HOLDER, MSC 10 1-POLE A250148	
025	90459-3800		5	FUSE HOLDER, MSC 10 3-POLE D250151	
030	353021-0214		22	FEED THROUGH TERMINAL, 10202.0	
040	353031-0203		14	END SUPPORT, WEW 35/2	
F024	90233-0028		3	TUBE FUSE, 10A	
F025	90233-0029		3	TUBE FUSE, 25A	
F028	90459-1254		3	TUBE FUSE, 4A 500V	
F029	90459-1254		3	TUBE FUSE, 4A 500V	
F030	90459-1254		3	TUBE FUSE, 4A 500V	
F070	90007-0155		1	CIRCUIT BREAKER, 1P 0,5 A K	
K024	90075-0127		1	CONTACTOR, 4KW 24VDC	
K025	90075-0128		1	CONTACTOR, 7,5KW 24VDC	
K025:1	90075-0313		1	AUXILIARY CONTACT K&M 22 DILM.2NO;2NC	
K028	90075-0127		1	CONTACTOR, 4KW 24VDC	
K029	90075-0127		1	CONTACTOR, 4KW 24VDC	
K030	90075-0127		1	CONTACTOR, 4KW 24VDC	
K037	90075-0127		1	CONTACTOR, 4KW 24VDC	
K070	90075-0127		1	CONTACTOR, 4KW 24VDC	
Common Parts					
010	1548118-0000		3	BUSBAR	
050	353042-0010		3	BUSBAR, SV 30001	
060	353042-0012		9	ADJUSTMENTPLATTA	
070	353042-0013		1	PROTECTIVE CASING	
080	353042-0014		17	CONNECTION ADAPTER, AD25/5-1	

Machine Type | Group Description | Used-In | Group Number | Page No

F024	F025	F027 F026	F028	F029	F030	F031 F032 F033	F034	F035		F036	F037	F038	F039			F042	F070	
K024	K025 K025:1	K026	K028	K029	K030	K031	K034	K035		K036	K037	K038	K039			K042	K070	

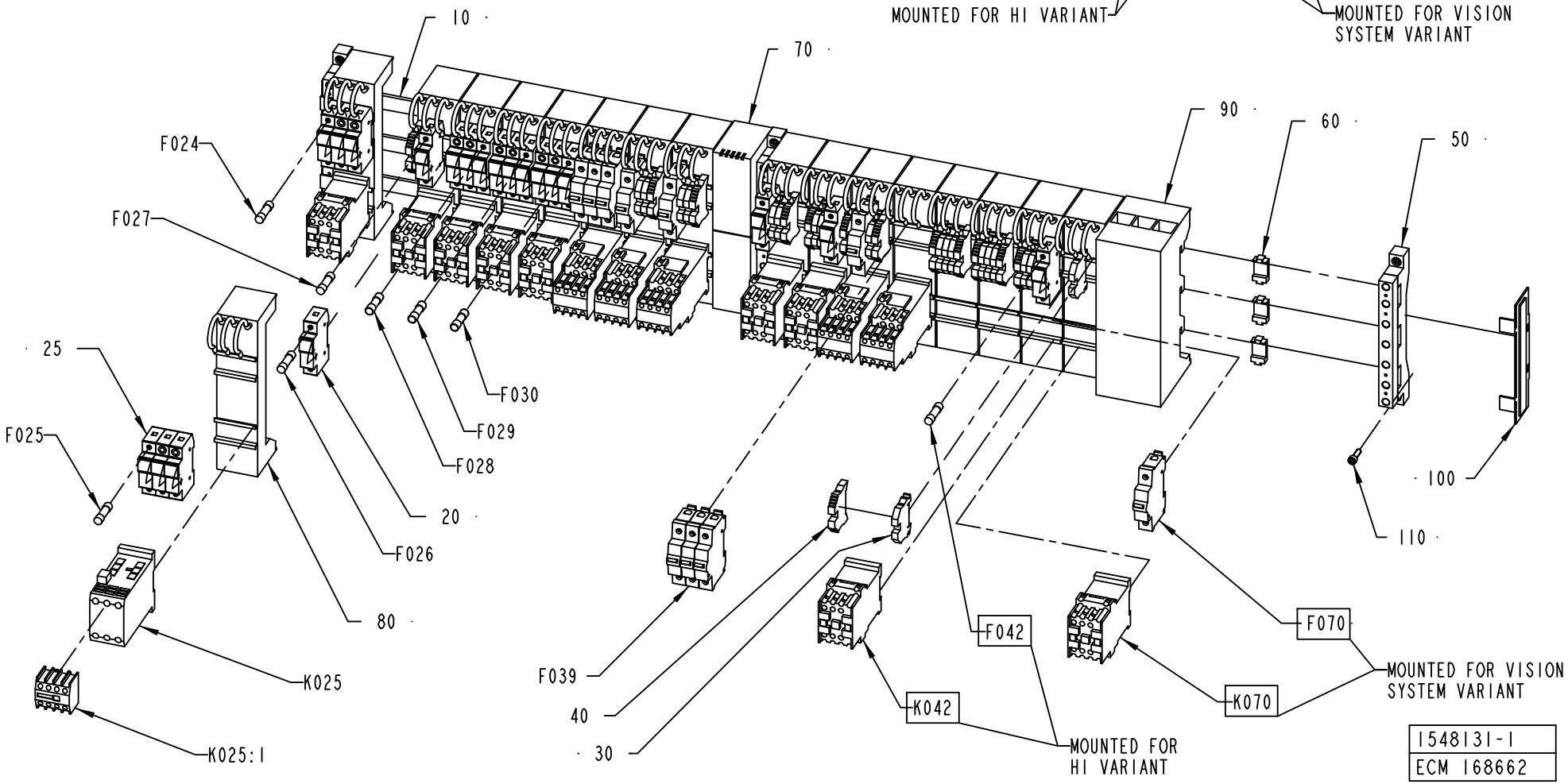

ECM: 169882 - 20040920
Group number: 1548131-0100
Assembly Drawing: 1548131-1_1_AD

This list covers pages from 8-78 to 8-81

Pos	Part No	UN	Qty	Description	Page No
Common Parts (Cont'd)					
090	353042-0016		1	CONNECTIONSADAPTER	
100	353042-0019		2	SIDE GUARD	
110	312111-0370		6	SCREW HEX.SOCK.HD.MC6S-TT 6X20 88 FZB	
F026	90233-0027		1	TUBE FUSE, 16A	
	90233-0305		*1*	*INDICATOR*	
F027	90233-0027		1	TUBE FUSE, 16A	
	90233-0305		*1*	*INDICATOR*	
F031	90007-0129		1	CIRCUIT BREAKER, 1P 10 A K	
F032	90007-0129		1	CIRCUIT BREAKER, 1P 10 A K	
F033	90007-0129		1	CIRCUIT BREAKER, 1P 10 A K	
F034	90007-0129		1	CIRCUIT BREAKER, 1P 10 A K	
F035	90007-0129		1	CIRCUIT BREAKER, 1P 10 A K	
F036	90233-0034		1	TUBE FUSE, 1 A	
F037	90233-0062		1	TUBE FUSE, 4A 600V	
F038	90007-0129		1	CIRCUIT BREAKER, 1P 10 A K	
F039	90007-0147		1	CIRCUIT BREAKER, 3P 10 A K	
K026	90075-0127		1	CONTACTOR, 4KW 24VDC	
K031	90075-0124		1	CONTACTOR, 4KW 24VDC	
	90075-0313		*1*	*AUXILIARY CONTACT K&M 22 DILM.2NO;2NC*	
K034	90075-0124		1	CONTACTOR, 4KW 24VDC	
	90075-0313		*1*	*AUXILIARY CONTACT K&M 22 DILM.2NO;2NC*	
K035	90075-0124		1	CONTACTOR, 4KW 24VDC	
	90075-0313		*1*	*AUXILIARY CONTACT K&M 22 DILM.2NO;2NC*	
K036	90075-0127		1	CONTACTOR, 4KW 24VDC	
K038	90075-0124		1	CONTACTOR, 4KW 24VDC	
	90075-0313		*1*	*AUXILIARY CONTACT K&M 22 DILM.2NO;2NC*	
K039	90075-0124		1	CONTACTOR, 4KW 24VDC	
	90075-0313		*1*	*AUXILIARY CONTACT K&M 22 DILM.2NO;2NC*	

Pos	Part No	UN	Qty	Description	Page No

F050	F051	F052 F053	F055			F700 F700:1	
				K700	K701		

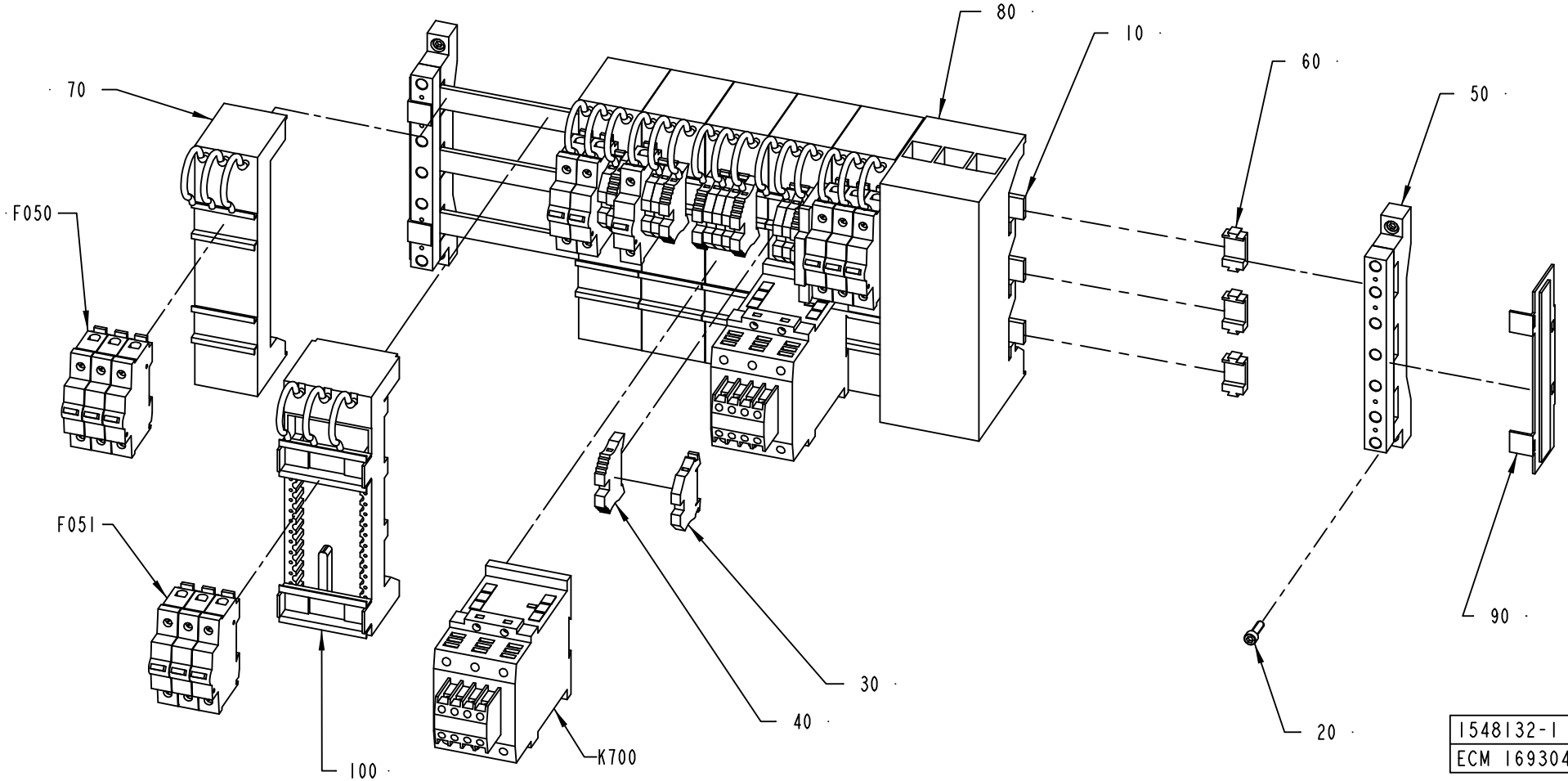

ECM: 172954 - 20040920
Group number: 1548132-0100
Assembly Drawing: 1548132-1_1_AC

Pos	Part No	UN	Qty	Description	Page No
A3/FLEX (See drawing on page: 8-82)					
030	353021-0214		9	FEED THROUGH TERMINAL, 10202.0	
F051	90007-0148		1	CIRCUIT BREAKER, 3P 16 A K	
A3/FLEX DIMC/FLEX (See drawing on page: 8-82)					
030	353021-0214		9	FEED THROUGH TERMINAL, 10202.0	
F051	90007-0151		1	CIRCUIT BREAKER, 3P 40 A K	
Common Parts					
010	2623587-0000		3	BUSBAR	
020	312111-0370		4	SCREW HEX.SOCK.HD.MC6S-TT 6X20 88 FZB	
040	353031-0203		6	END SUPPORT, WEW 35/2	
050	353042-0010		2	BUSBAR, SV 30001	
060	353042-0012		6	ADJUSTMENTPLATTA	
070	353042-0014		6	CONNECTION ADAPTER, AD25/5-1	
080	353042-0016		1	CONNECTIONSADAPTER	
090	353042-0019		2	SIDE GUARD	
100	353042-0021		1	BUSBAR ADAPTER AD40/5-1	
F050	90007-0146		1	CIRCUIT BREAKER, 3P 6 A K	
F052	90007-0128		1	CIRCUIT BREAKER, 1P 6 A K	
F053	90007-0129		1	CIRCUIT BREAKER, 1P 10 A K	
F055	90007-0127		1	CIRCUIT BREAKER, 1P 2 A K	
F700	90007-0150		1	CIRCUIT BREAKER, 3P 25 A K	
F700:1	90007-0312		1	AUXILIARY CONTACT	
K700	90075-0126		1	CONTACTOR, 22KW 24VDC	
	90075-0313		*1*	*AUXILIARY CONTACT K&M 22 DILM.2NO;2NC*	
K701	90075-0126		1	CONTACTOR, 22KW 24VDC	
	90075-0313		*1*	*AUXILIARY CONTACT K&M 22 DILM.2NO;2NC*	

Pos	Part No	UN	Qty	Description	Page No

Machine Type | Group Description | Used-In | Group Number | Page No

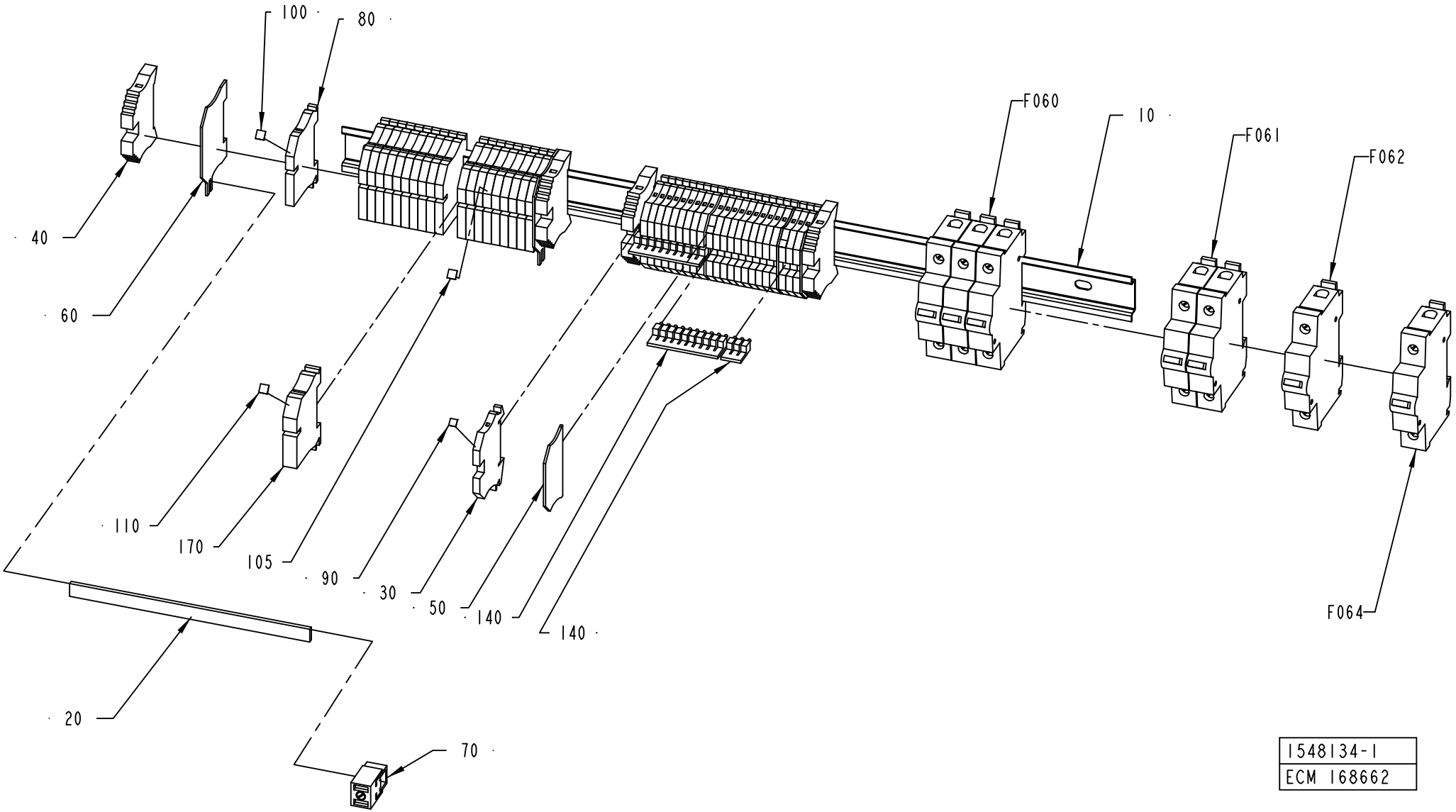

1548134-1
ECM 168662

ECM: 170529 - 20040920
Group number: 1548134-0100
Assembly Drawing: 1548134-1_1_AD

Pos	Part No	UN	Qty	Description	Page No
A3/FLEX					
105	359011-0823		1	SET OF SIGNS 6-FW 101-150	
Common Parts					
010	2558933-0000		1	RAIL	
020	353041-0001	MM	170	RAIL 10X3MM SSCH	
030	353021-0212		23	FEED THROUGH TERMINAL, 10200.0	
040	353031-0203		4	END SUPPORT, WEW 35/2	
050	353032-0004		3	END PLATE WAP 2,5-10 BEIGE	
060	353033-0104		2	END PLATE, 10502.8	
070	353041-0106		1	HOLDER ZB35 K 5026.8	
080	353022-0002		20	NEUTRAL TERMINAL, 10107.8	
090	359011-0807		3	MARKING PLATES 5-FW 1-50	
100	359011-0821		1	SET OF SIGNS 6-FW 1-50	
110	359011-0822		1	SET OF SIGNS 6-FW 51-100	
140	353034-0030		3	BRIDGE CONNECTOR WQV 2,5/10, 10544.6	
170	353022-0004		1	NEUTRAL TERMINAL, 10109.8	
F060	90007-0147		1	CIRCUIT BREAKER, 3P 10 A K	
F061	90007-0138		1	CIRCUIT BREAKER, 2P 10 A K	
F062	90007-0131		1	CIRCUIT BREAKER, 1P 16 A K	
F064	90007-0156		1	CIRCUIT BREAKER, 1P 4 A K	

Pos	Part No	UN	Qty	Description	Page No

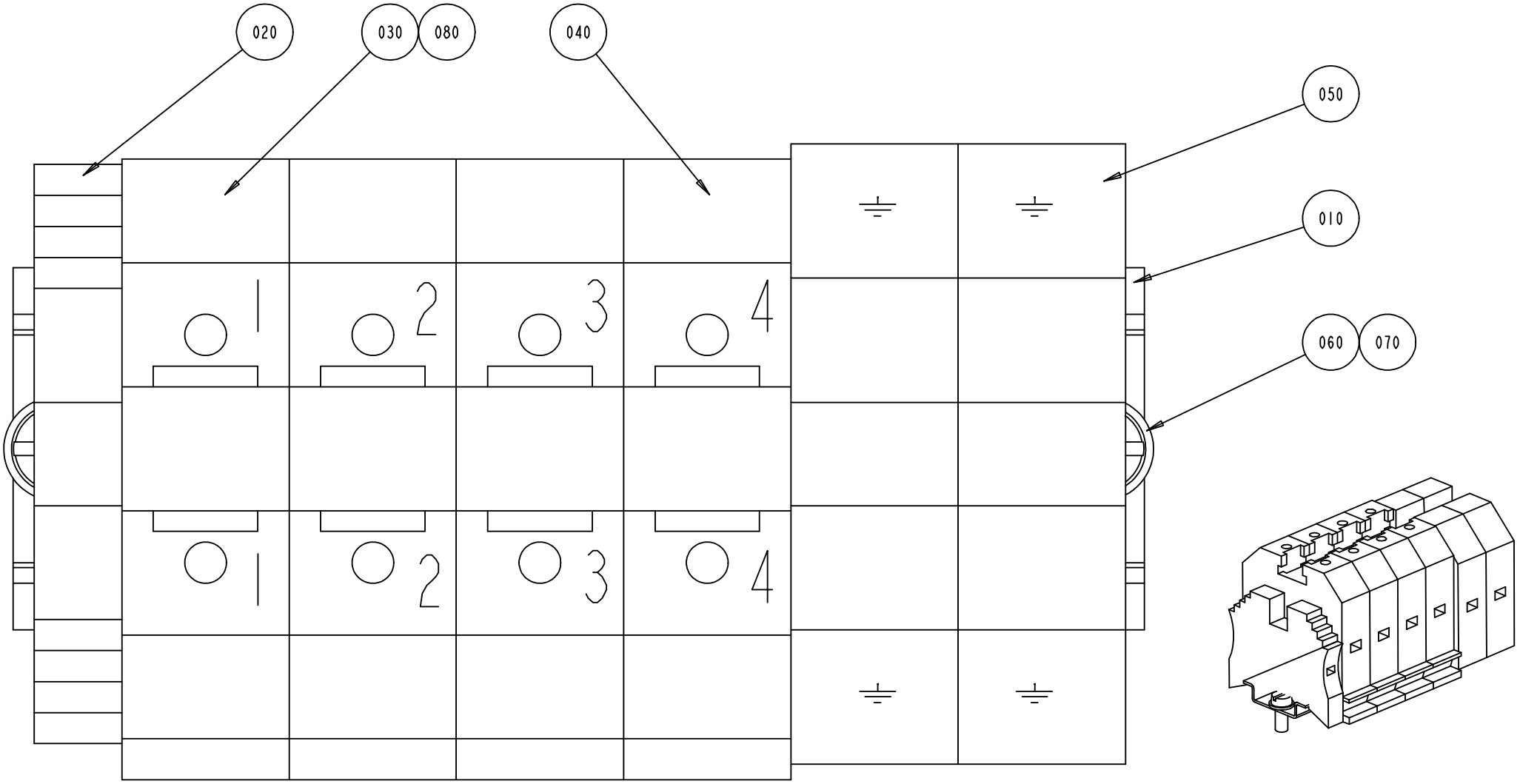
020
030
080
040
050
010
060
070
1
2
3
4
1
2
3
4

ECM: 71142 -
Group number: 1095778-0100
Assembly Drawing: 1095778-1_1_AA

Pos	Part No	UN	Qty	Description	Page No
-					
010	353042-0005	MM	130	RAIL TS 35/7.5	
020	353031-0203		1	END SUPPORT, WEW 35/2	
030	353021-0219		3	FEED THROUGH TERMINAL, 10205.0	
040	353021-0226		1	BY-PASS TERMINAL WDU 35	
050	353024-0209		2	EARTH TERMINAL, 1010.5	
060	312125-0327		2	SCREW ISO 1207 M5X12 A4	
070	315105-0146		2	WASHER BRB5,3X10RFR	
080	359011-0807		2	MARKING PLATES 5-FW 1-50	

Pos	Part No	UN	Qty	Description	Page No

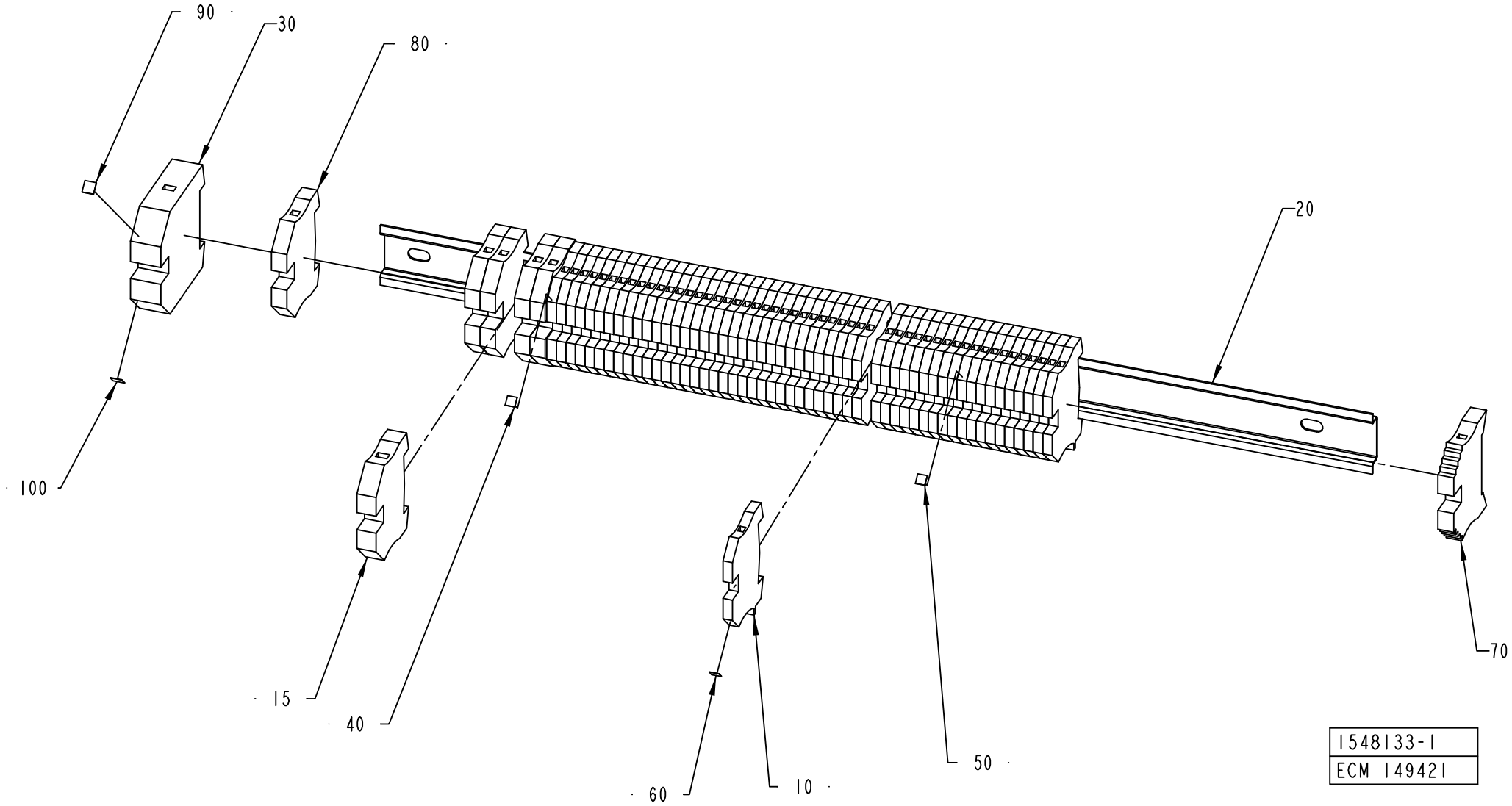
90
30
80
20
100
15
40
60
10
50
70
1548133-1
ECM 149421

ECM: 150164 - 20040107
Group number: 1548133-0100
Assembly Drawing: 1548133-1_1_AB

Pos	Part No	UN	Qty	Description	Page No
A3/FLEX					
040	359011-0807		1	MARKING PLATES 5-FW 1-50	
070	353031-0203		1	END SUPPORT, WEW 35/2	
090	359011-0821		1	SET OF SIGNS 6-FW 1-50	
Common Parts					
010	353024-0204		53	EARTH TERMINAL WPE 2,5	
015	353024-0207		1	EARTH TERMINAL, 1010.3	
020	2558934-0000		1	RAIL	
030	353024-0209		1	EARTH TERMINAL, 1010.5	
050	359011-0808		1	MARKING PLATES 5-FW 51-100	
060	359011-0809		1	MARKING PLATES 5-FW 101-150	
080	353024-0206		5	EARTH TERMINAL, 1010.2	
100	359011-0822		1	SET OF SIGNS 6-FW 51-100	

Pos	Part No	UN	Qty	Description	Page No

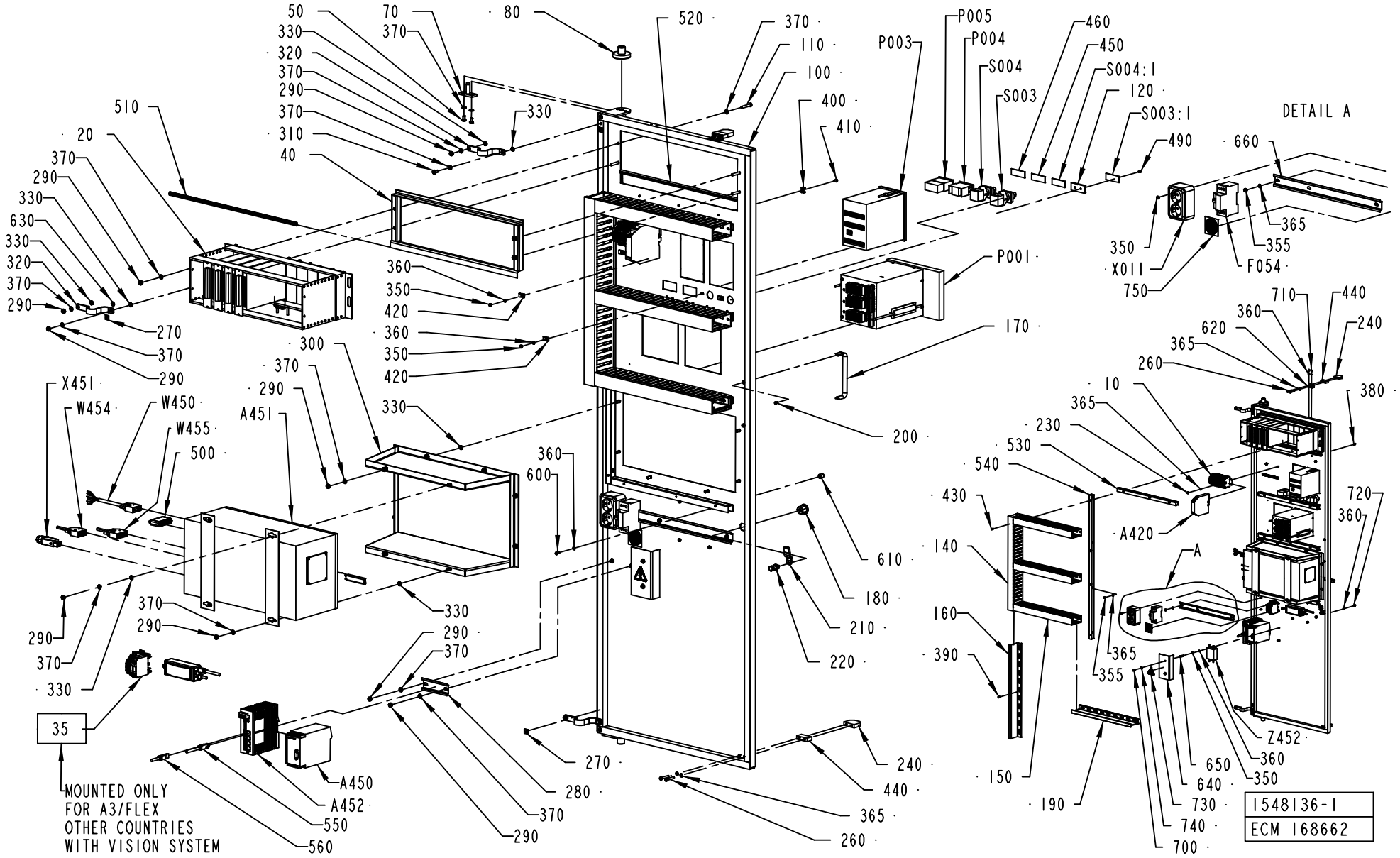
50
70
370
330
320
370
290
370
310
40
80
520
370
110
100
400
410
330
510
20
370
290
330
630
330
320
370
290
270
370
290
360
350
420
360
350
420
300
370
290
A451
330
X451
W454
W450
W455
500
360
600
610
180
210
220
200
170
P003
P001
P005
P004
S004
S003
460
450
S004:1
120
S003:1
490
DETAIL A
660
365
355
F054
350
X011
750
710
440
360
620
240
365
260
380
10
365
230
530
540
430
140
160
390
720
360
A420
A
365
355
Z452
650
640
730
740
700
360
350
150
190
370
290
330
370
290
290
370
330
35
MOUNTED ONLY
FOR A3/FLEX
OTHER COUNTRIES
WITH VISION SYSTEM
A450
A452
550
560
270
280
370
290
240
440
365
260
1548136-1
ECM 168662

ECM: 171482 - 20040920
Group number: 1548136-0100
Assembly Drawing: 1548136-1_1_AD

This list covers pages from 8-90 to 8-93

Pos	Part No	UN	Qty	Description	Page No
A3/FLEX OTHER COUNTRIES (See drawing on page: 8-90)					
35	2658743-0100		1	ELECTRICAL CONNECTION	**8-95**
A420	90459-0183		1	TRANSMITTER , TRANS T02 PCP	
P001	90459-1615		1	RECORDER, 95.5010/11-888,888-54-01/020,2	
A3/FLEX USA (See drawing on page: 8-92)					
A420	90459-0183		1	TRANSMITTER , TRANS T02 PCP	
P900	90332-0020		1	RECORDER, 6 CHANNELS 85-264VAC/DC	
	90332-0324		*1*	*INK WHEEL*	
	90332-0325		*1*	*PAPER FOR RECORDER 90332-20*	
	90332-0326		*1*	*DOWNLOADE INTRFACE FOR RECORDER 90332-20*	
	90332-0328		*1*	*RECORDER CASSETTE PAPER ROLL FOR 90332-2*	
P901	90332-0020		1	RECORDER, 6 CHANNELS 85-264VAC/DC	
	90332-0324		*1*	*INK WHEEL*	
	90332-0325		*1*	*PAPER FOR RECORDER 90332-20*	
	90332-0326		*1*	*DOWNLOADE INTRFACE FOR RECORDER 90332-20*	
	90332-0328		*1*	*RECORDER CASSETTE PAPER ROLL FOR 90332-2*	
Common Parts					
010	1532901-0100		1	PLINTH	**8-97**
020	1532906-0100		1	RACK	**8-99**
040	1038355-0000		1	FRAME	
050	312105-0364		4	SCREW M6S ISO 4017 M6X10 A480	
070	971346-0000		2	GUIDE PIN	
080	495377-0000		2	BUSH	
100	1532907-0000		1	SWING FRAME	
110	312125-0376		4	SCREW ISO 1207 M6X35 A4	
120	359240-0100		4	SIGN HOLDER FOR 359240-0001	
140	2558939-0000		1	CABLE DUCT	
150	2558938-0000		3	CABLE DUCT	
160	2558941-0000		1	DIVIDER	
170	90017-0017		1	HANDLE, NO. 547-128	
180	90237-0319		1	LOCK HOUSING, 1000-U134	
190	2558940-0000		1	DIVIDER	
200	312125-0285		2	SCREW ISO 1207 M4X6 A4	
210	90237-0157		1	LOCK BOLT, 1000-230	
220	90237-0320		1	LOCK HOUSING, 1000-U136	
230	312605-0314		2	HEXAGON NUT, M6M M5 A280	
240	970215-0000		2	STOP BLOCK	
260	312125-0335		4	SCREW ISO 1207 M5X30 A4	
270	90194-0152		3	SIGN, EARTH	
280	2558942-0000		1	RAIL	
290	312605-0316		21	HEXAGON NUT, M6M M6 A280	
300	2601232-0000		1	FRAME	
310	312105-0366		2	SCREW M6S ISO 4017 M6X12 A480	
320	90135-0035		3	EARTH WIRE, L=250 MM 16 MM2	
330	90062-0022		18	LOCKING WASHER D=6,4/11	
350	312605-0312		11	HEXAGON NUT, M6M M4 A280	
355	312605-0314		19	HEXAGON NUT, M6M M5 A280	
360	315105-0136		19	WASHER BRB4,3XRFR	
365	315105-0146		25	WASHER BRB5,3X10RFR	
370	315105-0153		34	WASHER BRB6,4X12RFR	
380	312125-0325		2	SCREW ISO 1207 M5X10 A4	
390	90181-0064		6	LOCK ZP1 FOR CHANNEL T1	
400	352113-0205		3	ANCHOR PLATES FOR STRIPS, TYPE TM2S8-C10	
410	312132-0287		3	SCREW SLOT. PAN HEAD MSCS M4X8	
420	90165-0060		7	PIPE CLIP FOR TUBE D=5 MM	
430	90287-0124		12	SCREW PAN HEAD MSCS M4X12 NYLON	
440	1548116-0000		2	SPACER	
450	359241-0201		1	SIGN: " HOUR METER"	
460	359241-0482		1	SIGN "PACKAGE COUNTER"	
490	311520-0320		8	RIVET, BLANK 2,4X6	
500	90458-1102		1	INTOUCH OEM 2000 V.7.0/7.1 HW KEY	
510	2530284-0000		1	GASKET	
520	2530285-0000		1	GASKET	
530	2563173-0000		4	PROFILE	
540	2563174-0000		1	PROFILE	
550	90220-0180		1	CABLE, ETHERNET RJ 45 CONNECT. 3 M	
560	90459-1621		1	CABLE, ETHERNET RJ 45 CONNECT. 1 M	
600	312125-0289		4	SCREW ISO 1207 M4X10 A4	
610	2601230-0000		4	BRACKET	
620	2606216-0000		1	BRACKET	
630	2608177-0000		3	SIGN	
640	2623588-0000		1	PROTECTION	
650	2623589-0000		2	NUT	
660	2675521-0000		1	RAIL	
700	312115-0291		2	SCREW ISO4762 M4X12 A4	
710	312125-0285		2	SCREW ISO 1207 M4X6 A4	
720	312125-0293		2	SCREW ISO 1207 M4X16 A4	
730	359705-0015		1	WARNING SIGN ISO, RISK OF ELECTRIC SHOCK	
740	90005-0082		2	WASHER PLAIN ROUND 4,3(M4)/12,H=1	
750	90459-1738		1	MANDATORY ACTION SIGN ISO, READ MAINTENA	
A450	90453-0002		1	MODEM MD-12 DC	
A451	2518145-0101		1	FLEXBOX TETRA BRIK	**8-101**
A452	90458-1190		1	ETHERNET RAIL SWITCH, RS2-TX	
F054	90111-0172		1	EARTH FAULT BREAKER, F 362-25/0.03	

Machine Type | Group Description | Used-In | Group Number | Page No

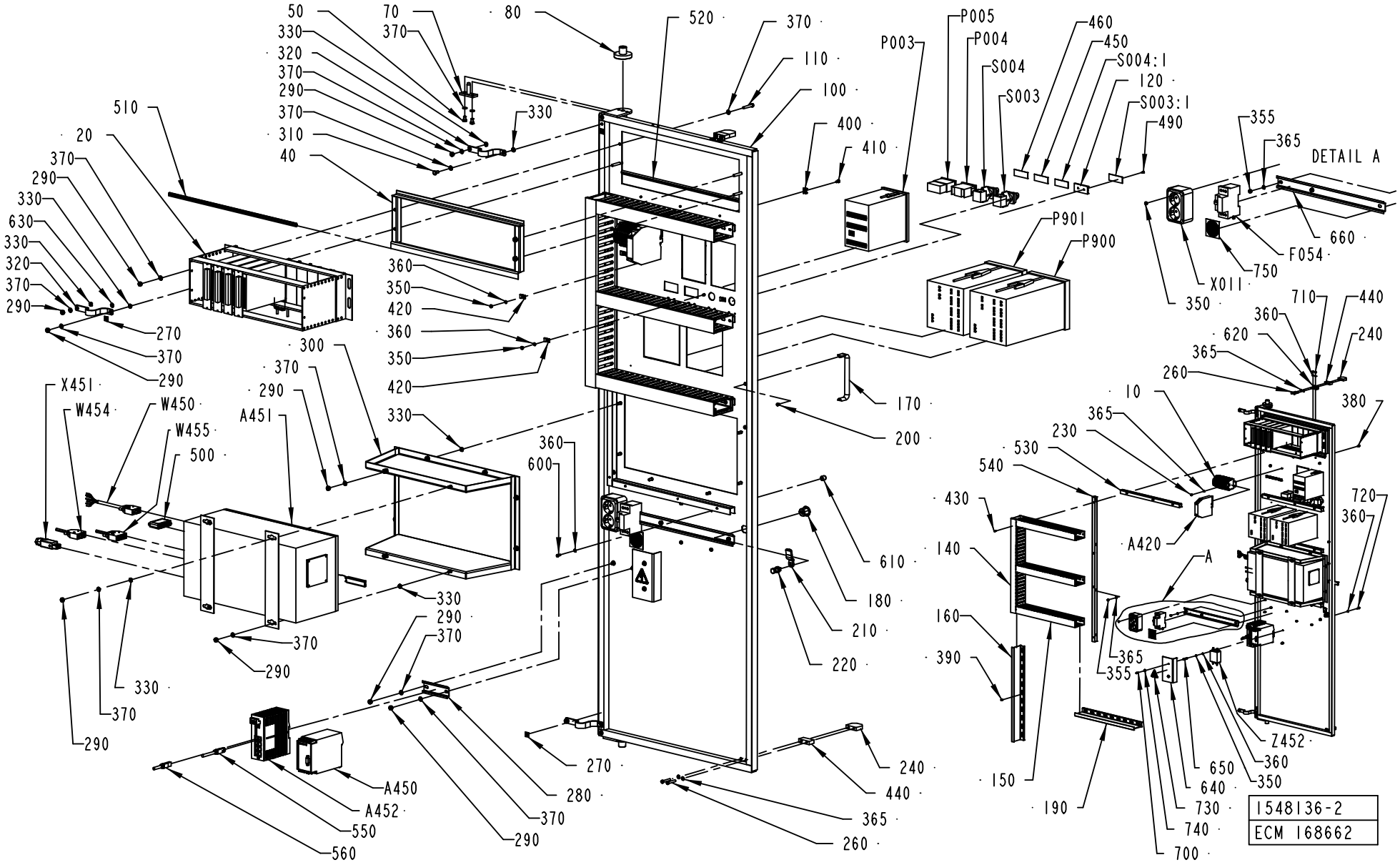
50
70
80
520
370
330
320
370
290
370
310
40
330
110
100
400
410
P003
P005
P004
S004
S003
460
450
S004:1
120
S003:1
490
355
365
DETAIL A
660
F054
750
X011
350
P901
P900
510
20
370
290
330
630
330
320
370
290
270
370
290
360
350
420
360
350
420
300
370
290
330
170
200
X451
W454
W450
W455
500
A451
360
600
610
180
210
220
330
290
370
290
370
330
370
290
A450
A452
550
560
280
370
290
270
240
440
365
260
710
440
360
620
240
365
260
10
380
365
230
530
540
720
360
430
140
160
390
A420
A
365
355
Z452
650
640
730
740
700
360
350
150
190
1548136-2
ECM 168662

Pos	Part No	UN	Qty	Description	Page No
Common Parts (Cont'd)					
P003	90243-0214		1	CONDUCTIVITY METER	
P004	90053-0031		1	HOUR COUNTER, B 609.10 10-50VDC	
P005	90053-0029		1	COUNTER, F524.800FA3C 24VDC	
S003	90111-0122		1	KEY SWITCH, 2 NO CONTACTS	
S003:1	359241-0133		1	SIGN: " SERVICE SWITCH"	
S004	90111-0124		1	KEY SWITCH, 1NO,1NC CONTACT	
S004:1	359241-0122		1	SIGN: " CLEANING STEAM BARRIER SPACE"	
W450	1254442-0000		1	CABLE SERIAL	
W454	2623591-0000		1	CABLE	
W455	2623590-0000		1	CABLE	
X011	90001-0033		1	WALL SOCKET OUTLET	
X451	90110-0028		1	CONTACT UNIT 4-POLEADAPTER	
Z452	90458-2381		1	POWER LINE FILTER 5 A 250 VAC	

Pos	Part No	UN	Qty	Description	Page No

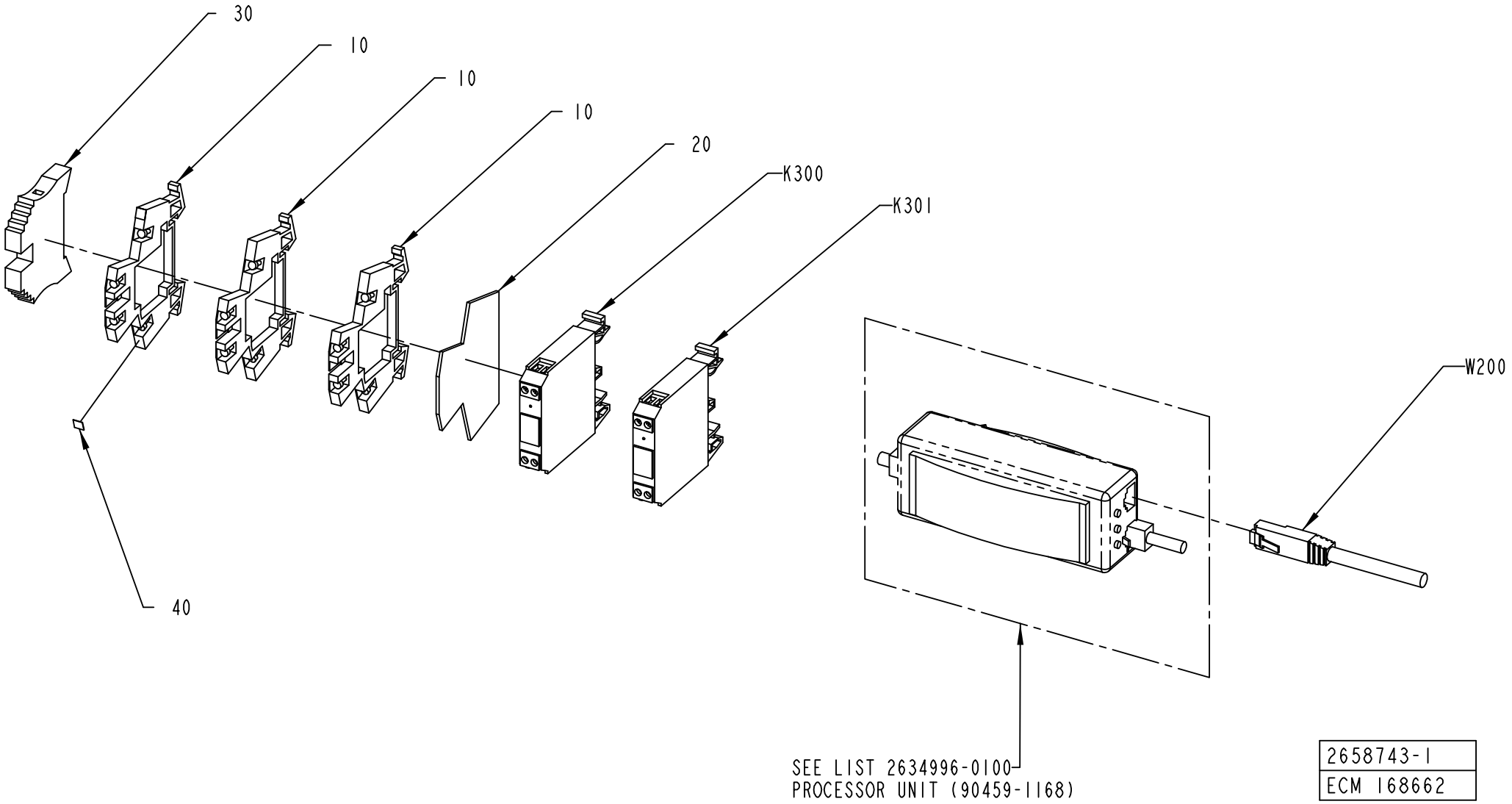
30
10
10
10
20
K300
K301
40
W200
SEE LIST 2634996-0100
PROCESSOR UNIT (90459-1168)
2658743-1
ECM 168662

ECM: 171481 - 20040920
Group number: 2658743-0100
Assembly Drawing: 2658743-1_1_AB

Pos	Part No	UN	Qty	Description	Page No
VISION SYSTEM					
010	90077-0113		3	FEED THROUGH TERMINAL, 10-00102150-1	
020	90077-0114		1	END PLATE, WAP/WDK 2,5	
030	353031-0203		1	END SUPPORT, WEW 35/2	
040	359011-0807		2	MARKING PLATES 5-FW 1-50	
K300	90119-0063		1	OPTO-RELAY, DC/DC AMMS-10-1/30VDC	
K301	90119-0063		1	OPTO-RELAY, DC/DC AMMS-10-1/30VDC	
W200	90459-1621		1	CABLE, ETHERNET RJ 45 CONNECT. 1 M	

Pos	Part No	UN	Qty	Description	Page No

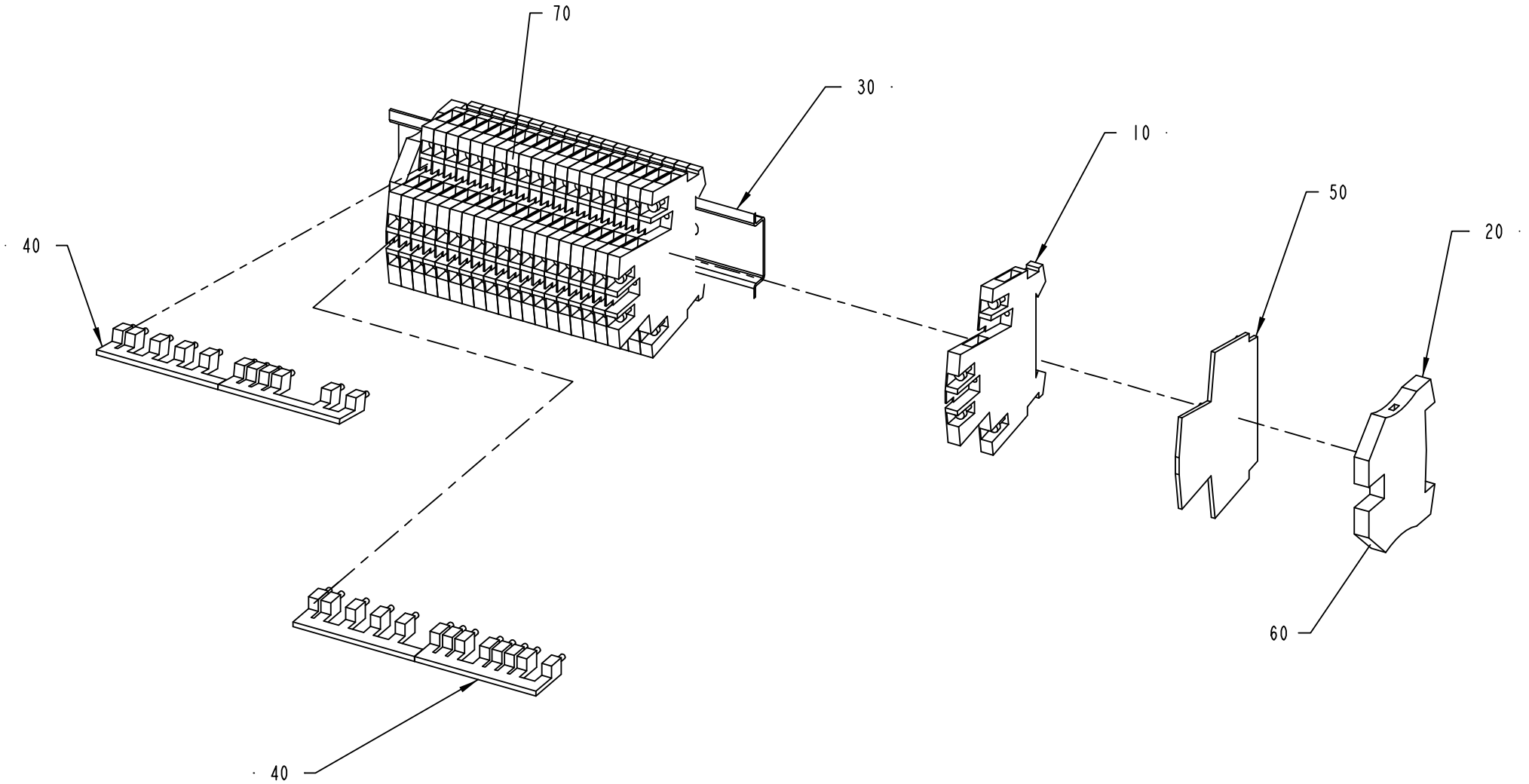

1532901-1
ECM 117324

ECM: 117896 - 20030220
Group number: 1532901-0100
Assembly Drawing: 1532901-1_1_AA

Pos	Part No	UN	Qty	Description	Page No
-					
010	353021-0120		20	FEED THROUGH TERMINAL, 10215.8	
020	353024-0205		2	EARTH TERMINAL, 1010.1	
030	2558937-0000		1	RAIL	
040	353034-0030		4	BRIDGE CONNECTOR WQV 2,5/10, 10544.6	
050	353032-0010		1	END PLATE WAP	
060	359011-0834		1	SET OF SIGNS 6-GW(EARTH)	
070	359011-0807		2	MARKING PLATES 5-FW 1-50	

Pos	Part No	UN	Qty	Description	Page No

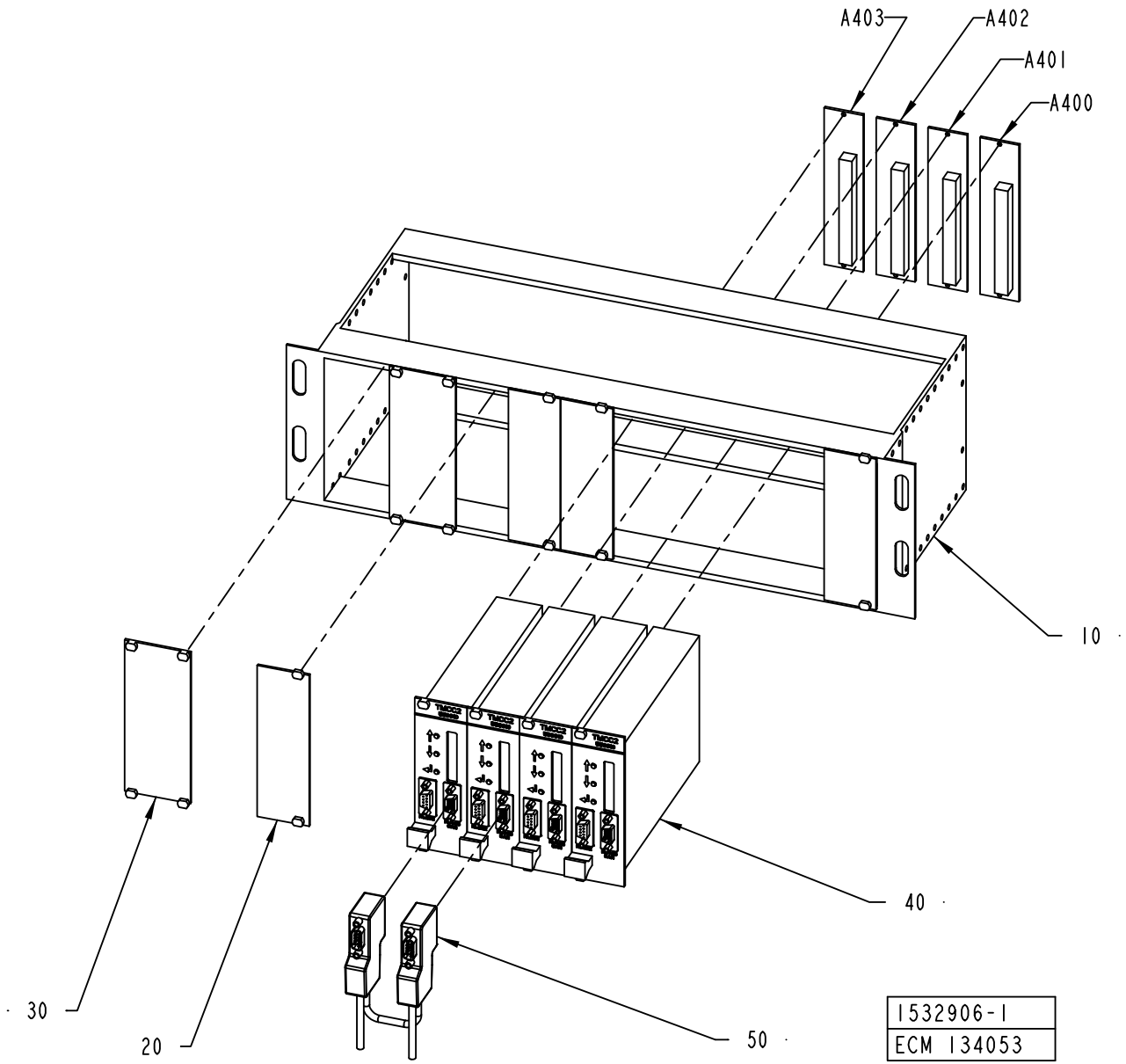
A403
A402
A401
A400
10
40
30
20
50
1532906-1
ECM 134053

ECM: 169594 - 20040920
Group number: 1532906-0100
Assembly Drawing: 1532906-1_1_AA

Pos	Part No	UN	Qty	Description	Page No
A3/FLEX					
020	68445-0104		4	FRONT PLATE 8 TE	
010 4	*543921-0004*		*1*	*COMPONENTS WITHOUT TP-NO*	
030	68445-0105		2	FRONT PLATE 10TE	
010 5	*543921-0005*		*1*	*COMPONENTS WITHOUT TP-NO*	
040	559810-0101		4	TMCC2 CONTROLLER	
010	*559809-0101*		*1*	*CIRCUIT BOARD*	
150	*559807-0000*		*1*	*PRINTED CIRCUIT BOARD*	
180	*559811-0101*		*1*	*CIRCUIT BOARD*	
130	*559808-0000*		*1*	*PRINTED CIRCUIT BOARD*	
020	*2524654-0000*		*1*	*PLATE*	
030	*2524660-0000*		*1*	*CASING*	
070	*2524662-0000*		*1*	*COOLING BLOCK*	
100	*2524658-0000*		*1*	*COVER*	
170	*2524659-0000*		*1*	*CABLE*	
220	*2524664-0000*		*1*	*ASSEMBLY DRAWING*	
050	2624552-0000		1	CABLE	
A400	68262-0101		1	BACKPLANE FRONT RACK 8TE	
100	*543371-0000*		*1*	*CIRCUIT BOARD 8TE*	
110	*551927-0001*		*1*	*COMPONENTS WITHOUT TP-NO*	
120	*551928-0000*		*1*	*TERMINAL LABELS 8TE*	
A401	68262-0101		1	BACKPLANE FRONT RACK 8TE	
100	*543371-0000*		*1*	*CIRCUIT BOARD 8TE*	
110	*551927-0001*		*1*	*COMPONENTS WITHOUT TP-NO*	
120	*551928-0000*		*1*	*TERMINAL LABELS 8TE*	
A402	68262-0101		1	BACKPLANE FRONT RACK 8TE	
100	*543371-0000*		*1*	*CIRCUIT BOARD 8TE*	
110	*551927-0001*		*1*	*COMPONENTS WITHOUT TP-NO*	
120	*551928-0000*		*1*	*TERMINAL LABELS 8TE*	
A403	68262-0101		1	BACKPLANE FRONT RACK 8TE	
100	*543371-0000*		*1*	*CIRCUIT BOARD 8TE*	
110	*551927-0001*		*1*	*COMPONENTS WITHOUT TP-NO*	
120	*551928-0000*		*1*	*TERMINAL LABELS 8TE*	
Common Parts					
010	67388-0102		1	RACK FRONTMOUNTED 84TE	
020 2	*542038-0002*		*1*	*COMPONENTS WITHOUT TP-NO*	

Pos	Part No	UN	Qty	Description	Page No

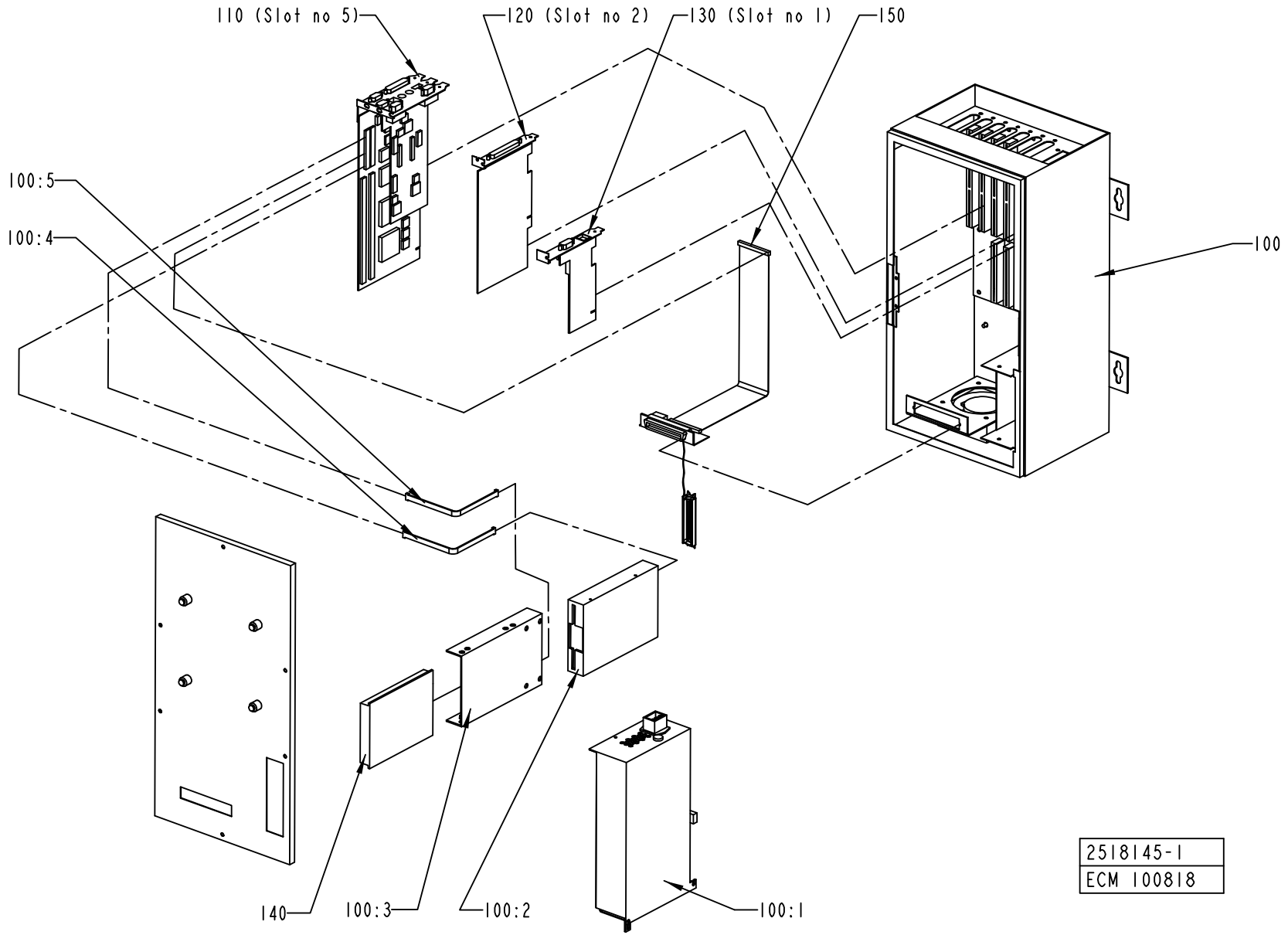
110 (Slot no 5)
120 (Slot no 2)
130 (Slot no 1)
150
100:5
100:4
100
140
100:3
100:2
100:1
2518145-1
ECM 100818

ECM: 100822 - 20021206
Group number: 2518145-0101
Assembly Drawing: 2518145-1_1_AA

Pos	Part No	UN	Qty	Description	Page No
-					
	2547117-0000		1	JUMPER SETTINGS CPU	
	2547118-0000		1	JUMPER SETTINGS PCI	
100	90459-0275		1	PC ENCLOSURE FLEX BOX ISC E100008A	**8-103**
110	90459-0284		1	PROCESSOR BOARD CLIPS V, UO36418C	
120	90459-1352		1	PCI COMMUNICATION INTERFACE PCI-1612B-A	
130	90459-0261		1	ETHERNET NETWORK INTERFACE CARD 50101034	
140	90041-0090		1	HARD DISC 2,5" , U036403A	
150	90459-0291		1	CABLE CD UNIT 50400002	

Pos	Part No	UN	Qty	Description	Page No

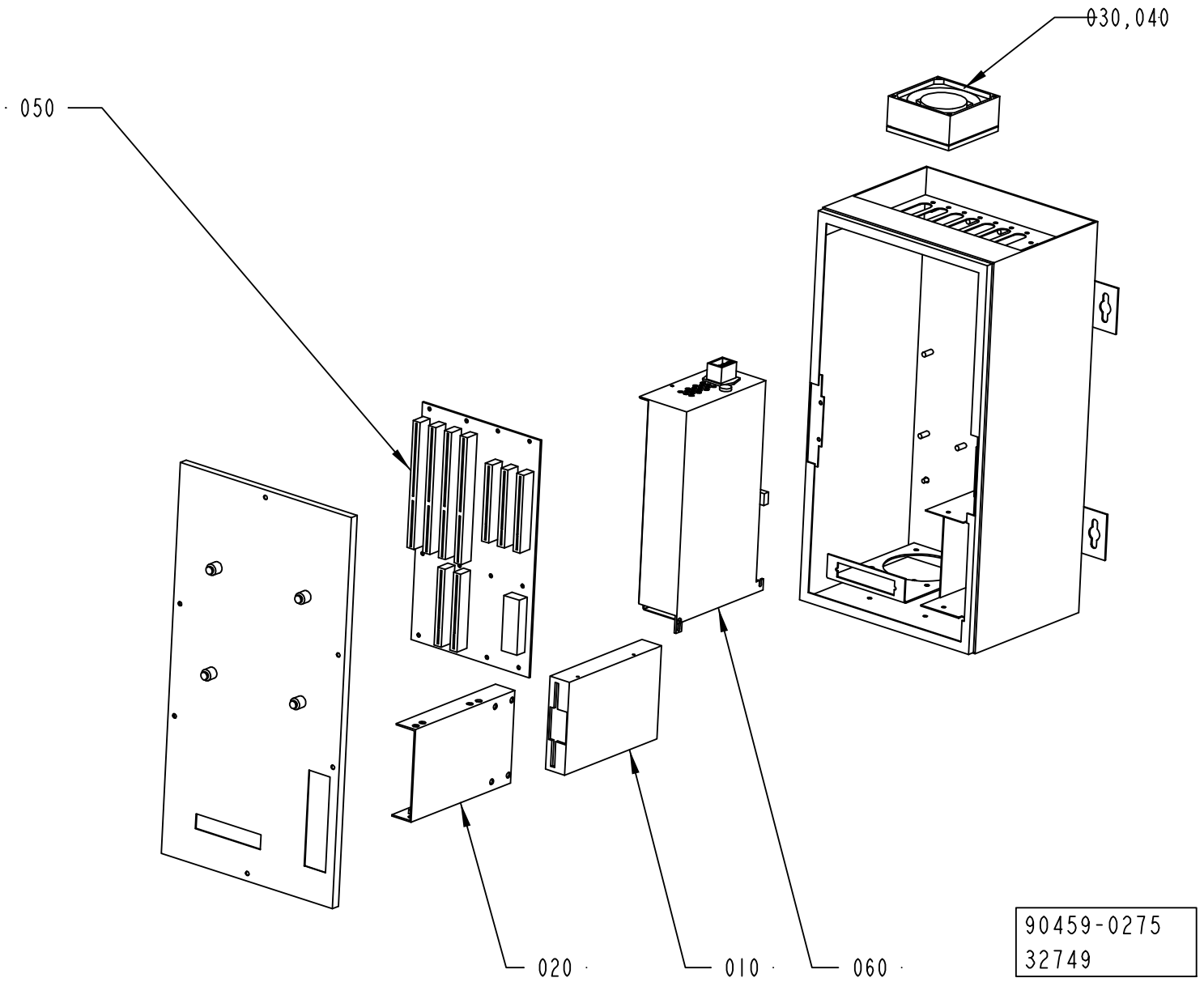
030,040
050
020
010
060
90459-0275
32749

ECM: 175658 - 20040614
Group number: 90459-0275
Assembly Drawing: 90459-0275_1_AB

Pos	Part No	UN	Qty	Description	Page No
-					
010	90041-0029		1	FLOPPY DISC UNIT FD-235HF 1,4MB	
020	90041-0091		1	PC 2,5" HD BAY, 3016-0028-013	
030	90264-0064		1	FAN / FL 12G308	
040	90264-0350		1	FILTER / 554141	
050	90459-0262		1	BACKPLANE CARD AR-MB7P	
060	90459-0283		1	POWER SUPPLY UNIT UO36422A	

Pos	Part No	UN	Qty	Description	Page No

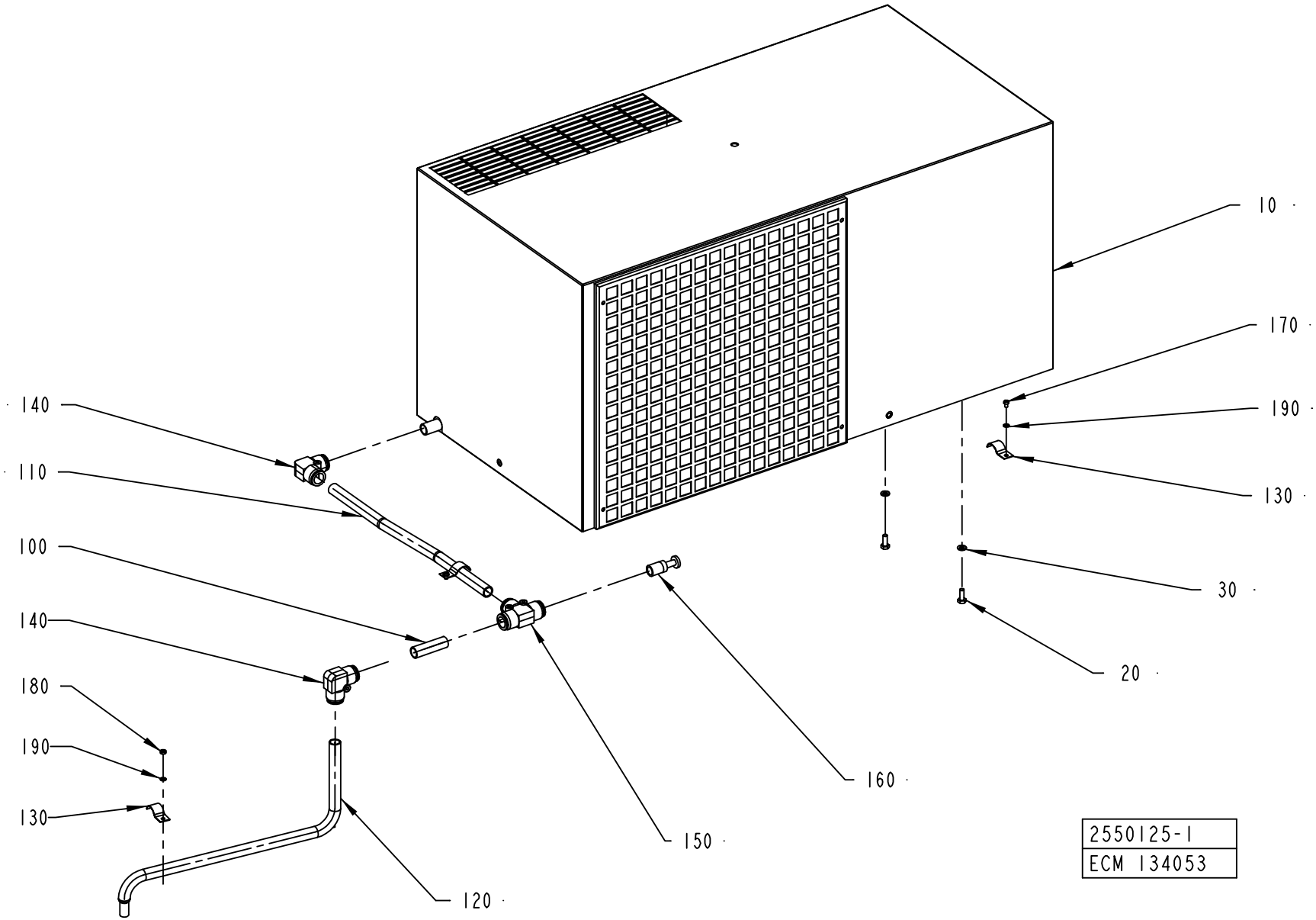
10
170
190
130
30
20
140
110
100
140
180
190
130
120
150
160
2550125-1
ECM 134053

ECM: 144506 - 20031030
Group number: 2550125-0100
Assembly Drawing: 2550125-1_1_AB

Pos	Part No	UN	Qty	Description	Page No
A3/FLEX					
100	2601580-0000		1	HOSE	
120	2601582-0000		1	HOSE	
130	90074-0011		3	CABLE CLIPS, D=14 MM	
140	90459-2553		2	ELBOW PIPE JOINT 16 MM	
180	312605-0312		1	HEXAGON NUT, M6M M4 A280	
190	315105-0136		3	WASHER BRB4,3XRFR	
Common Parts					
010	90459-0363		1	COOLING UNIT, KB40A0721.03	
	90459-0364		*1*	*FILTER KB20/30/40 POLYURETH. FILTER 2001*	
020	312105-0368		6	SCREW M6S ISO 4017 M6X16 A480	
030	315105-0153		6	WASHER BRB6,4X12RFR	
110	2601581-0000		1	HOSE	
150	90459-2555		1	T-CONNECTION 16MM	
160	90459-2557		1	BLIND PLUG 16 MM	
170	312125-0285		2	SCREW ISO 1207 M4X6 A4	

Pos	Part No	UN	Qty	Description	Page No

This page is intentionally left blank.

ECM: 173993 - 20040220
Group number: 2576334-0100
Assembly Drawing:

Pos	Part No	UN	Qty	Description	Page No
-					
010	90453-0001		1	MODEM MA-12	
020	90041-0068		1	DATACABLE MODEM PC	
030	90220-0091	M	200	PAIR TWISTED CABLE 2X2X0,25MM2	
040	1190007-0402		1	PLMS RECEIVE	
050	82197-0103		1	UM DOCUMENT SERIAL COMUNICATION ONLY EN	
060	47937-0410		1	PLMS OFF-LINE PROGRAM	
070	82351-0106		1	USER MANUAL PLMS OFF-LINE	

Pos	Part No	UN	Qty	Description	Page No

Tetra Pak

SPC
Spare Parts Catalogue

This page is intentionally left blank.

ECM: 143224 - 20031001
Group number: 648561-0100
Assembly Drawing:

Pos	Part No	UN	Qty	Description	Page No
A3/FLEX DIMC/FLEX					
	2575102-0001		1	INSTALLATION DRAWING	
	2645542-0001		1	INSTALLATION DRAWING	
130	1558933-0000		1	FRAME	
140	90458-2138		2	SCREW M6S M12X120 A280	
150	312605-0322		4	HEXAGON NUT, M6M M12 A280	
160	315105-0178		4	WASHER BRB13X24RFR	
A3/FLEX NOPT, A3/FLEX NODIMC					
	2575100-0001		1	INSTALLATION DRAWING	
	2603853-0001		1	INSTALLATION DRAWING	
130	1558933-0000		1	FRAME	
140	90458-2138		2	SCREW M6S M12X120 A280	
150	312605-0322		4	HEXAGON NUT, M6M M12 A280	
160	315105-0178		4	WASHER BRB13X24RFR	
A3/FLEX PT/FLEX					
	2603853-0001		1	INSTALLATION DRAWING	
	2575101-0001		1	INSTALLATION DRAWING	
130	1558933-0000		2	FRAME	
140	90458-2138		4	SCREW M6S M12X120 A280	
150	312605-0322		8	HEXAGON NUT, M6M M12 A280	
160	315105-0178		8	WASHER BRB13X24RFR	
Common Parts					
	2603855-0001		1	INSTALLATION DRAWING	
010	2555393-0100		1	START-UP KIT	**9-5**
030	531345-0200		1	PERSONAL PROTECT. EQ H2O2	**9-33**
040	2574483-0100		1	TOOLS AND TEMPLATES	**9-35**
050	2544873-0100		1	CONNECTION PIPE	**9-39**
100	598878-0000		1	MACHINE SIGN 2 ADR. EEA	
110	311521-0142		4	BLANK RIVET 3,2X6	
120	2550979-0000		1	TRANSPORT EQUIPMENT	
170	312105-0503		2	SCREW M6S ISO 4014 M10X60 A480	
180	315105-0173		2	WASHER BRB10,5X22RFR	
200	90100-0303		1	SAM TO PC TEST MONITORING CABLE	

Pos	Part No	UN	Qty	Description	Page No

This page is intentionally left blank.

ECM: 129589 - 20030505
Group number: 2555393-0100
Assembly Drawing:

Pos	Part No	UN	Qty	Description	Page No
A3/FLEX QC					
020	2593831-0100		1	VOLUME KIT	**9-7**
Common Parts					
010	2555394-0100		1	START-UP KIT	**9-23, 9-25**
100	90296-0009		1	SILICONE GREASE TUBE 100 GR.	
AS010	1484695-0000		1	KNIFE	
AS020	2592780-0000		1	DOLLY	
DS010	90296-0068		1	GREASE UNIWAY LI62 CARTRID.400GR	
DS020	1548454-0000		8	DISC	
EC010	90233-0028		10	TUBE FUSE, 10A	
EC020	90233-0029		3	TUBE FUSE, 25A	
EC030	90233-0027		3	TUBE FUSE, 16A	
	90233-0305		*1*	*INDICATOR*	
EC040	90459-1254		10	TUBE FUSE, 4A 500V	
JS010	28509-0000		2	WASHER	
JS020	32544-0000		2	INSULATION NUT	
JS030	107426-0000		4	GUIDE SLEEVE	
JS040	1036584-0000		4	WASHER	
JS050	315211-0104		4	BONDED SEAL SS/NBR90 M8	
JS060	312115-0297		8	SCREW ISO4762 M4X25 A4	
JS070	312125-0295		2	SCREW ISO 1207 M4X20 A4	
JS080	315211-0103		4	BONDED SEAL SS/NBR90 M6	
JS090	315202-0101		8	O-RING 3,1X1,6 MM	
MB010	315229-0105		5	GASKETS, 48,5X55,5X3,7 MM 2" FDA	
MB020	315229-0104		2	GASKETS, 35,8X42,8X3,7 MM 1"1/2 FD	
MB030	315229-0103		2	GASKETS, 23,1X30,1X3,7 MM 1" FDA	
MB040	315229-0107		1	GASKETS, 73,9X80,9X3,7 MM 2"1/2 FD	
MB050	90036-0057		3	LIGHT BULB, BA9S 28V	
SA010	1498047-0000		1	SEALING BLOCK	
SU010	1296877-0100		1	SEAL KIT	**9-27**
SU020	1296878-0100		1	SEAL KIT	**9-29**
SU030	1296879-0100		1	SEAL KIT	**9-31**
SU040	90217-0348		4	GASKET 35,4X46,8X4 MM	
SU050	342850-0304		5	GASKET 35,4X49,1X5,2 1"1/2 FDA	
SU060	925998-0000		2	DIAPHRAGM	
SU070	342850-0306		4	GASKET 60,3X76,1X5,2 MM 2"1/2 FDA	
SU080	342850-0304		4	GASKET 35,4X49,1X5,2 1"1/2 FDA	

Pos	Part No	UN	Qty	Description	Page No

This page is intentionally left blank.

ECM: 182049 - 50001231
Group number: 2593831-0100
Assembly Drawing:

Pos	Part No	UN	Qty	Description	Page No
TBA 0200B					
010	2594512-0103		2	VOLUME FLAP	
010	2594512-0105		2	VOLUME FLAP	
020	1548460-0103		2	VOLUME FLAP	
020	1548460-0105		2	VOLUME FLAP	
030	2527703-0103		1	GUIDE	
030	2527703-0104		1	GUIDE	
040	2527704-0103		1	GUIDE	
040	2527704-0104		1	GUIDE	
TBA 0250B					
010	2594512-0103		2	VOLUME FLAP	
010	2594512-0104		2	VOLUME FLAP	**9-9, 9-11**
020	1548460-0103		2	VOLUME FLAP	
020	1548460-0104		2	VOLUME FLAP	
030	2527703-0103		1	GUIDE	
030	2527703-0105		1	GUIDE	**9-13, 9-15**
040	2527704-0103		1	GUIDE	
040	2527704-0105		1	GUIDE	**9-17, 9-19**
TBA 0330S					
010	2594512-0104		2	VOLUME FLAP	**9-9, 9-11**
010	2594512-0105		2	VOLUME FLAP	
020	1548460-0104		2	VOLUME FLAP	
020	1548460-0105		2	VOLUME FLAP	
030	2527703-0104		1	GUIDE	
030	2527703-0105		1	GUIDE	**9-13, 9-15**
040	2527704-0104		1	GUIDE	
040	2527704-0105		1	GUIDE	**9-17, 9-19**
080	2603489-0000		8	BOTTOM	
TBA 0500B					
010	2594512-0101		2	VOLUME FLAP	
020	1548460-0101		2	VOLUME FLAP	
030	2527703-0101		1	GUIDE	
040	2527704-0101		1	GUIDE	
050	1285023-0000		1	SIDE PLATE	
060	1285022-0000		1	SIDE PLATE	
TBA 1000B					
010	2594512-0102		2	VOLUME FLAP	
020	1548460-0102		2	VOLUME FLAP	
030	2527703-0102		1	GUIDE	
040	2527704-0102		1	GUIDE	
050	2605993-0000		1	SIDE PLATE	
060	2605994-0000		1	SIDE PLATE	

Pos	Part No	UN	Qty	Description	Page No
TBA 1890S					
010	2695955-0102		2	VOLUME FLAP	**9-21**
020	2695955-0102		2	VOLUME FLAP	**9-21**
030	2527703-0109		1	GUIDE	
040	2527704-0109		1	GUIDE	
080	2616219-0000		8	BOTTOM	
TBA 2000S					
010	2695955-0101		2	VOLUME FLAP	
020	2695955-0101		2	VOLUME FLAP	
030	2527703-0108		1	GUIDE	
040	2527704-0108		1	GUIDE	
080	2616218-0000		8	BOTTOM	
090	2598506-0000		2	SPACER	

Machine Type | Group Description | Used-In | Group Number | Page No

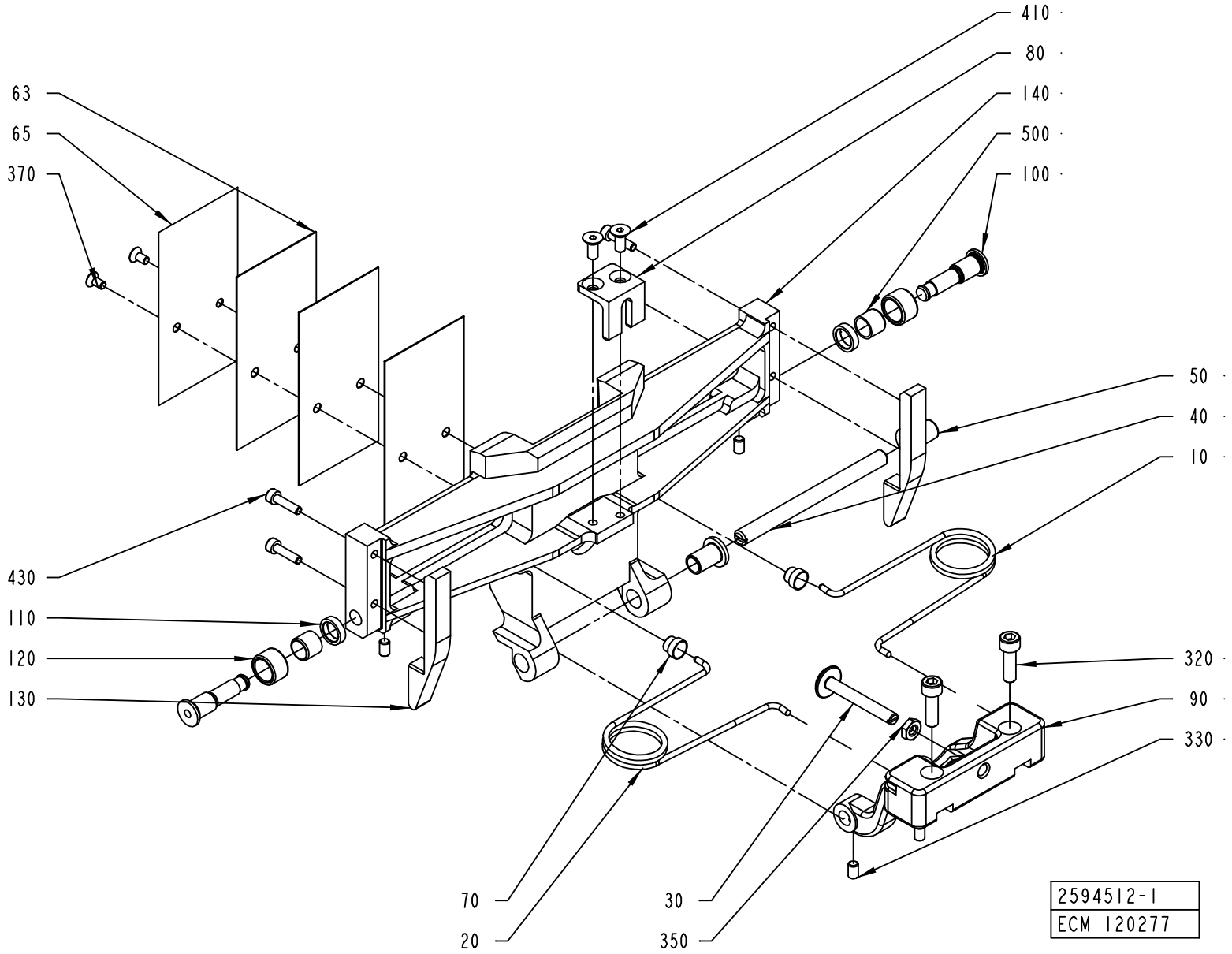
410
80
140
500
100
63
65
370
50
40
10
430
110
120
130
320
90
330
70
20
30
350
2594512-1
ECM 120277

ECM: 149527 -
Group number: 2594512-0104
Assembly Drawing: 2594512-1_1_AA

This list covers pages from 9-8 to 9-11

Pos	Part No	UN	Qty	Description	Page No
TBA 0200B (See drawing on pages: 4-38, 9-8)					
010	1350263-0000		1	SPRING RIGHT	
020	1350264-0000		1	SPRING LEFT	
030	1511339-0000		1	STOP	
040	1499327-0000		1	SHAFT	
050	2530313-0000		2	BUSHING	
063	1538637-0000		3	VOLUME SHIM	
065	1524310-0000		1	VOLUME BULGE	
080	1499328-0000		1	STOPPER	
090	2605869-0000		1	FLAP HOLDER	
130	2629237-0000		2	CAM	
140	2604493-0000		1	VOLUME FLAP	
320	312115-0368		2	SCREW ISO4762 M6X16 A4	
370	312155-0287		2	SCREW EN 10642 MF6S M4X8 A480	
410	312155-0325		2	SCREW EN 10642 MF6S M5X10 A480	
430	312115-0289		4	SCREW ISO4762 M4X10 A4	
450	315402-0156		1	LOCK WASHER FBB 6,5	
TBA 0250B (See drawing on pages: 4-40, 9-10)					
010	1350263-0000		1	SPRING RIGHT	
020	1350264-0000		1	SPRING LEFT	
030	1511338-0000		1	STOP	
040	1499327-0000		1	SHAFT	
050	2530313-0000		2	BUSHING	
063	2605166-0000		4	VOLUME SHIM	
065	2609925-0000		1	VOLUME BULGE	
080	2693446-0000		1	STOPPER	
090	2606102-0000		1	FLAP HOLDER	
130	2606218-0000		2	CAM	
140	2605191-0000		1	VOLUME FLAP	
320	312115-0368		2	SCREW ISO4762 M6X16 A4	
370	312155-0287		2	SCREW EN 10642 MF6S M4X8 A480	
410	312155-0327		2	SCREW EN 10642 MF6S M5X12 A480	
440	312115-0289		4	SCREW ISO4762 M4X10 A4	
450	315402-0156		1	LOCK WASHER FBB 6,5	
TBA 0330S (See drawing on pages: 4-38, 9-8)					
010	1350263-0000		1	SPRING RIGHT	
020	1350264-0000		1	SPRING LEFT	
030	1511338-0000		1	STOP	
040	1499327-0000		1	SHAFT	
050	2530313-0000		2	BUSHING	
080	1499336-0000		1	STOPPER	
090	2606102-0000		1	FLAP HOLDER	
320	312115-0368		2	SCREW ISO4762 M6X16 A4	
370	312155-0287		2	SCREW EN 10642 MF6S M4X8 A480	
410	312155-0327		2	SCREW EN 10642 MF6S M5X12 A480	
430	312115-0293		4	SCREW ISO4762 M4X16 A4	
450	315402-0156		1	LOCK WASHER FBB 6,5	
TBA 0500B (See drawing on pages: 4-38, 9-8)					
010	1350263-0000		1	SPRING RIGHT	
020	1350264-0000		1	SPRING LEFT	
030	1499348-0000		1	STOP	
040	1487946-0000		1	SHAFT	
050	1487948-0000		2	BUSHING	
063	1511336-0000		3	VOLUME SHIM	
065	1511335-0000		1	VOLUME BULGE	
080	1499349-0000		1	STOPPER	
090	1499346-0000		1	FLAP HOLDER	
130	1499350-0000		2	CAM	
140	1499357-0000		1	VOLUME FLAP	
320	312115-0368		2	SCREW ISO4762 M6X16 A4	
370	312145-0289		2	SCREW ISO 2009 MFS M4X10 A4	
410	312155-0323		2	SCREW EN 10642 MF6S M5X8 A480	
430	312115-0291		4	SCREW ISO4762 M4X12 A4	
TBA 1000B (See drawing on pages: 4-38, 9-8)					
010	1348483-0000		1	SPRING RIGHT	
020	1348484-0000		1	SPRING LEFT	
030	1487945-0000		1	STOP	
040	1487946-0000		1	SHAFT	
050	1487948-0000		2	BUSHING	
063	1511337-0000		3	VOLUME SHIM	
065	26075-0000		1	VOLUME BULGE	
080	1487943-0000		1	STOPPER	
090	1499345-0000		1	FLAP HOLDER	
130	1499356-0000		2	CAM	
140	1499358-0000		1	VOLUME FLAP	
320	312115-0368		2	SCREW ISO4762 M6X16 A4	
370	312141-0222		2	SCREW ISO 2009 MFS M3X8 4.8 EL.PL	
410	312115-0323		2	SCREW ISO4762 M5X8 A4	
430	312115-0287		4	SCREW ISO4762 M4X8 A4	
Common Parts					
063	2654290-0000		3	VOLUME SHIM	
063	2662169-0000		3	VOLUME SHIM	
065	2662168-0000		1	VOLUME BULGE	
065	979931-0000		1	VOLUME BULGE	

Machine Type | Group Description | Used-In | Group Number | Page No

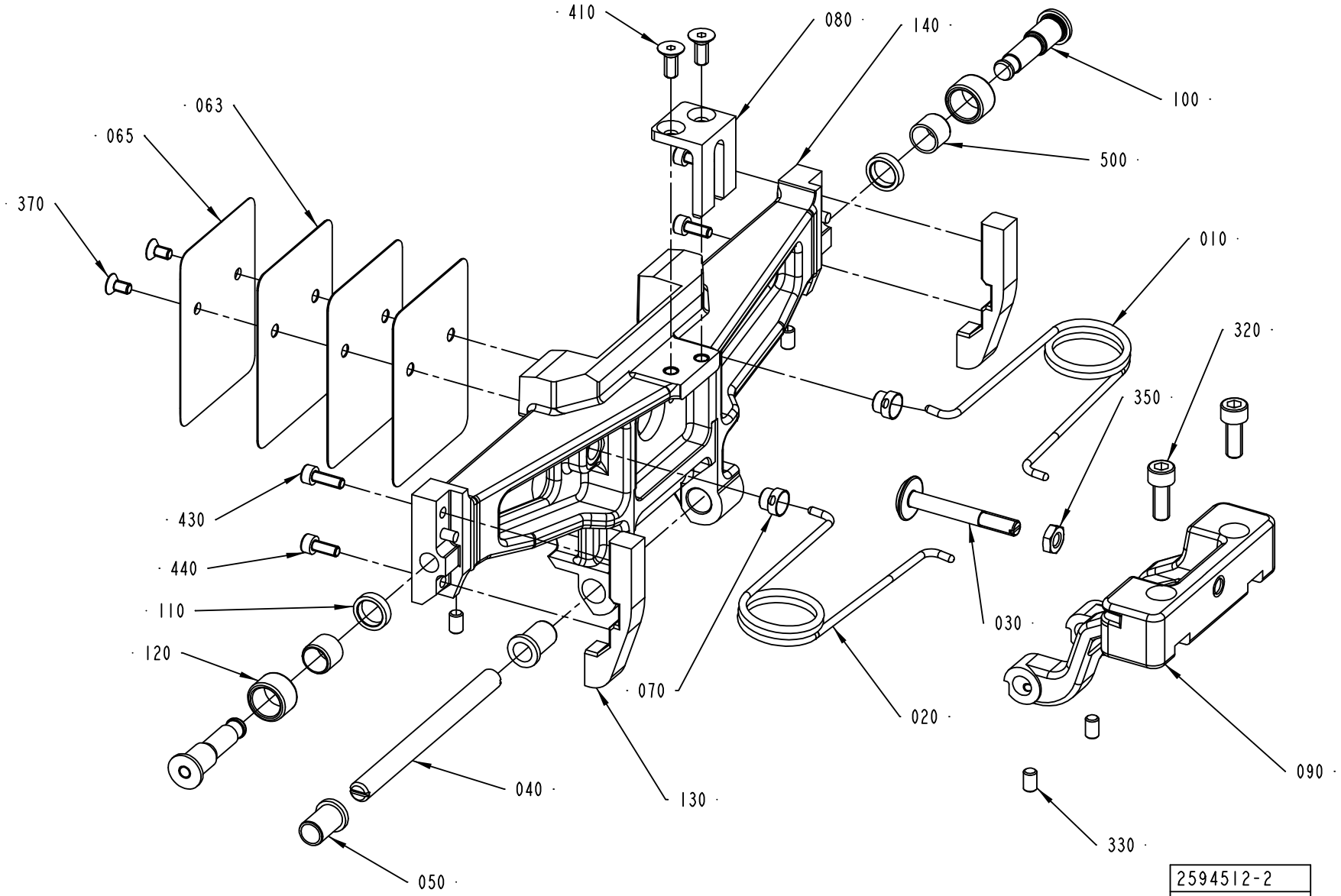
410
080
140
100
063
065
500
370
010
320
350
430
440
110
120
030
070
020
090
040
130
330
050
2594512-2
ECM 149527

ECM: 149527 -
Group number: 2594512-0104
Assembly Drawing: 2594512-2_1_AA

This list covers pages from 9-8 to 9-11

Pos	Part No	UN	Qty	Description	Page No
Common Parts (Cont'd)					
070	1144601-0000		2	GUIDE STUD	
100	1512146-0000		2	AXLE PIN	
110	1512147-0000		2	WASHER	
120	1499355-0000		2	ROLLER	
130	2629236-0000		2	CAM	
130	2662431-0000		2	CAM	
140	2604495-0000		1	VOLUME FLAP	
140	2661451-0000		1	VOLUME FLAP	
330	312318-0323		4	SCREW ISO4029 M5X8 A4	
350	312625-0316		1	HEXAGON THIN NUT, EN 24035 ML6M M6 A4	
500	321136-0140		2	BUSHING, 10X12X10 MM	

Pos	Part No	UN	Qty	Description	Page No

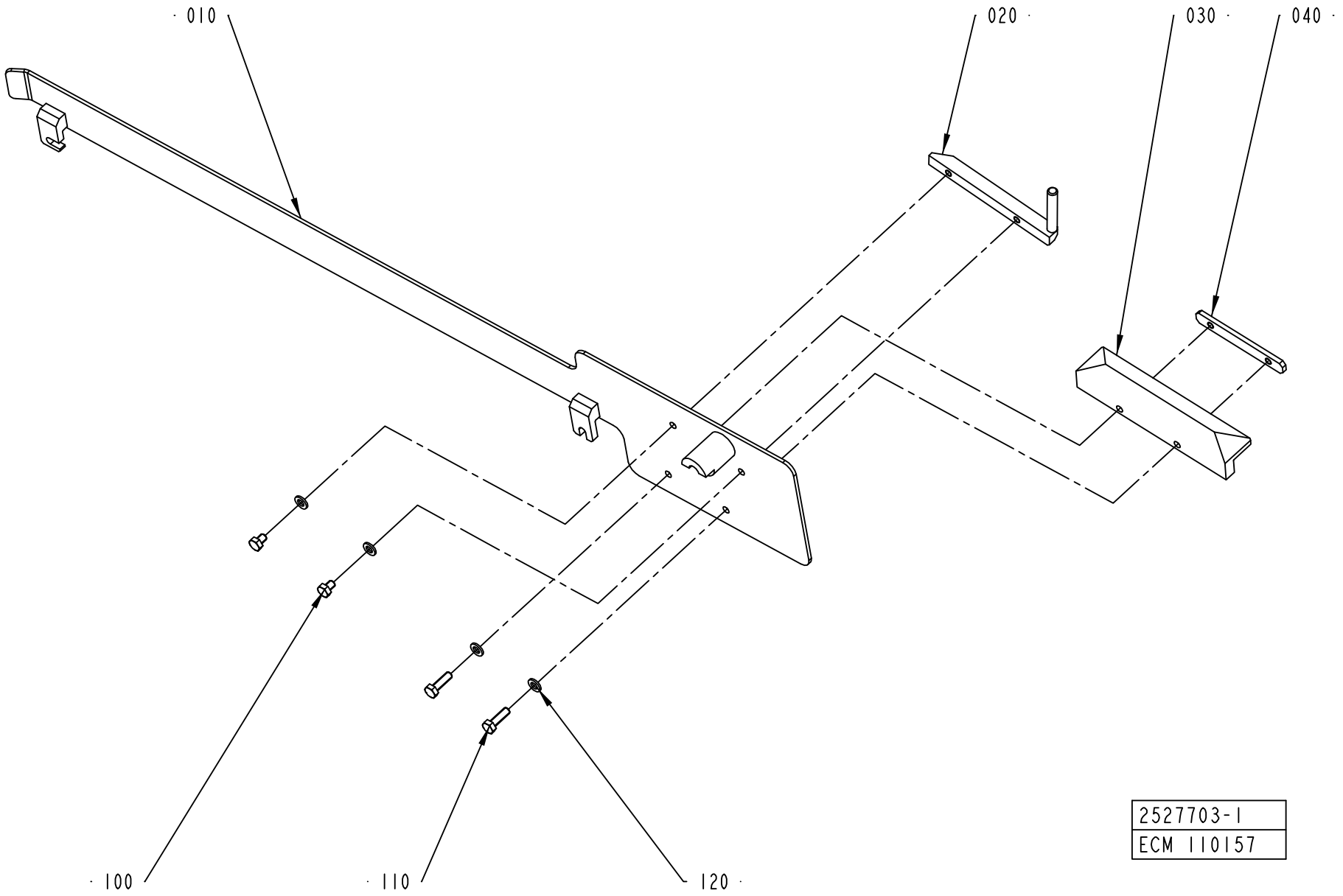
010
020
030
040
100
110
120
2527703-1
ECM 110157

ECM: 178774 -
Group number: 2527703-0105
Assembly Drawing: 2527703-1_1_AA

This list covers pages from 9-12 to 9-15

Pos	Part No	UN	Qty	Description	Page No
TBA 0200B (See drawing on pages: 5-100, 9-14)					
010	2526579-0000		1	GUIDE	
020	1348154-0000		1	BAR	
030	1348142-0000		1	SLIDE	
040	1348169-0000		1	PLATE	
050	2664201-0000		1	GUIDE	
110	312105-0370		2	SCREW M6S ISO 4017 M6X20 A480	
120	315105-0153		6	WASHER BRB6,4X12RFR	
130	312605-0316		2	HEXAGON NUT, M6M M6 A280	
TBA 0250B (See drawing on pages: 5-100, 9-14)					
010	2526579-0000		1	GUIDE	
040	1348169-0000		1	PLATE	
050	2664201-0000		1	GUIDE	
110	312105-0370		2	SCREW M6S ISO 4017 M6X20 A480	
120	315105-0153		6	WASHER BRB6,4X12RFR	
130	312605-0316		2	HEXAGON NUT, M6M M6 A280	
TBA 0330S (See drawing on pages: 5-100, 9-14)					
010	2526579-0000		1	GUIDE	
040	1279409-0000		1	PLATE	
050	2664201-0000		1	GUIDE	
110	312105-0370		2	SCREW M6S ISO 4017 M6X20 A480	
120	315105-0153		6	WASHER BRB6,4X12RFR	
130	312605-0316		2	HEXAGON NUT, M6M M6 A280	
TBA 0500B, TBA 1000B					
110	312105-0370		2	SCREW M6S ISO 4017 M6X20 A480	
120	315105-0153		6	WASHER BRB6,4X12RFR	
Common Parts					
010	2678621-0000		1	GUIDE	
010	2665203-0000		1	GUIDE	
020	1334271-0000		1	BAR	
030	2598488-0000		1	SLIDE	
030	2594906-0000		1	SLIDE	
100	312105-0362		2	SCREW M6S ISO 4017 M6X8 A480	
110	312109-0374		3	SCREW M6S ISO 4017 M6X30 A480	
120	315105-0153		5	WASHER BRB6,4X12RFR	

Pos	Part No	UN	Qty	Description	Page No

Machine Type | Group Description | Used-In | Group Number | Page No

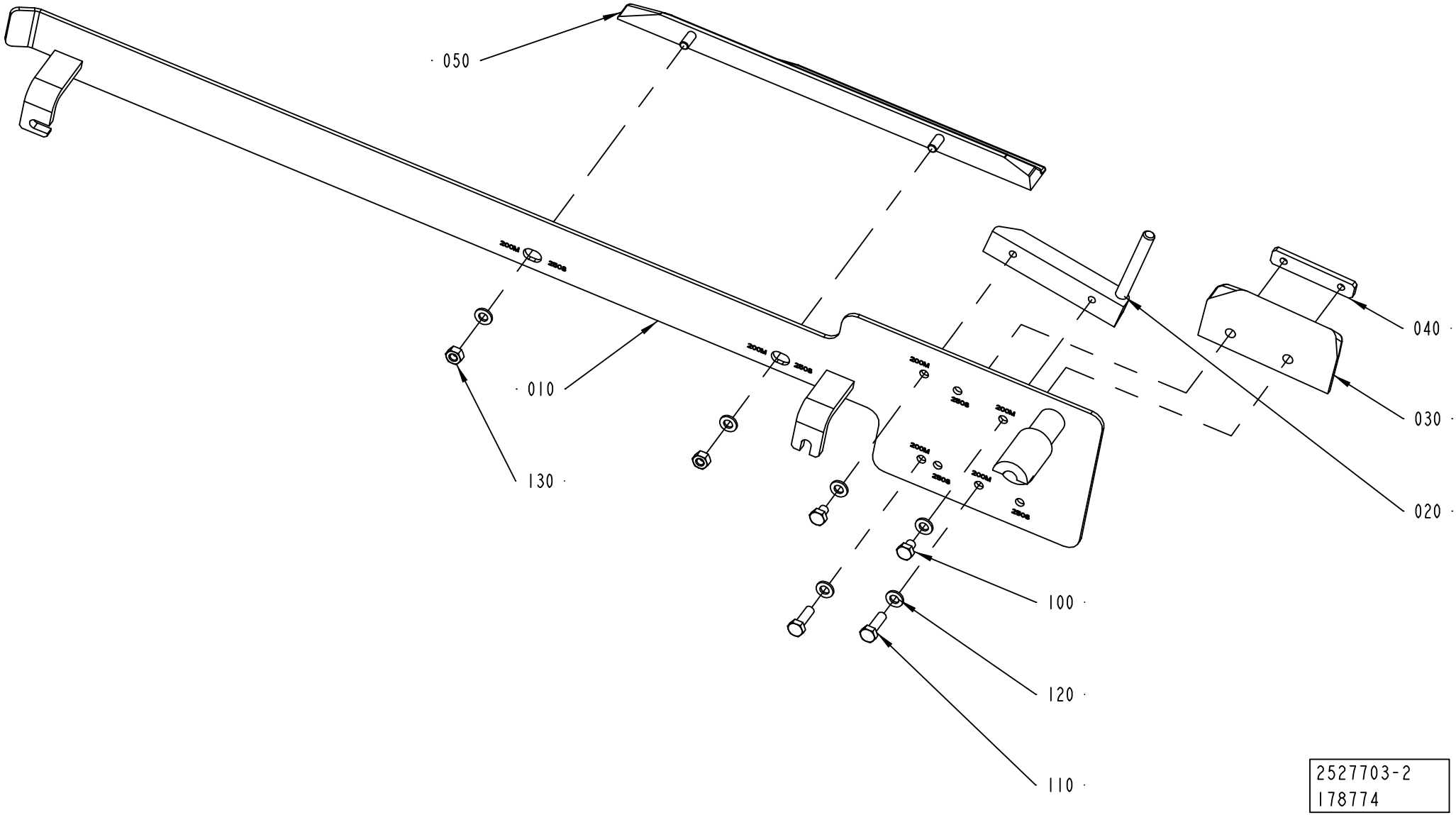
050
010
130
040
030
020
100
120
110
2527703-2
178774

ECM: 178774 -
Group number: 2527703-0105
Assembly Drawing: 2527703-2_1_AA

This list covers pages from 9-12 to 9-15

Pos	Part No	UN	Qty	Description	Page No
TBA 0200B (See drawing on pages: 5-100, 9-14)					
010	2526579-0000		1	GUIDE	
020	1348154-0000		1	BAR	
030	1348142-0000		1	SLIDE	
040	1348169-0000		1	PLATE	
050	2664201-0000		1	GUIDE	
110	312105-0370		2	SCREW M6S ISO 4017 M6X20 A480	
120	315105-0153		6	WASHER BRB6,4X12RFR	
130	312605-0316		2	HEXAGON NUT, M6M M6 A280	
TBA 0250B (See drawing on pages: 5-100, 9-14)					
010	2526579-0000		1	GUIDE	
040	1348169-0000		1	PLATE	
050	2664201-0000		1	GUIDE	
110	312105-0370		2	SCREW M6S ISO 4017 M6X20 A480	
120	315105-0153		6	WASHER BRB6,4X12RFR	
130	312605-0316		2	HEXAGON NUT, M6M M6 A280	
TBA 0330S (See drawing on pages: 5-100, 9-14)					
010	2526579-0000		1	GUIDE	
040	1279409-0000		1	PLATE	
050	2664201-0000		1	GUIDE	
110	312105-0370		2	SCREW M6S ISO 4017 M6X20 A480	
120	315105-0153		6	WASHER BRB6,4X12RFR	
130	312605-0316		2	HEXAGON NUT, M6M M6 A280	
TBA 0500B, TBA 1000B					
110	312105-0370		2	SCREW M6S ISO 4017 M6X20 A480	
120	315105-0153		6	WASHER BRB6,4X12RFR	
Common Parts					
010	2678621-0000		1	GUIDE	
010	2665203-0000		1	GUIDE	
020	1334271-0000		1	BAR	
030	2598488-0000		1	SLIDE	
030	2594906-0000		1	SLIDE	
100	312105-0362		2	SCREW M6S ISO 4017 M6X8 A480	
110	312109-0374		3	SCREW M6S ISO 4017 M6X30 A480	
120	315105-0153		5	WASHER BRB6,4X12RFR	

Pos	Part No	UN	Qty	Description	Page No

Machine Type | Group Description | Used-In | Group Number | Page No

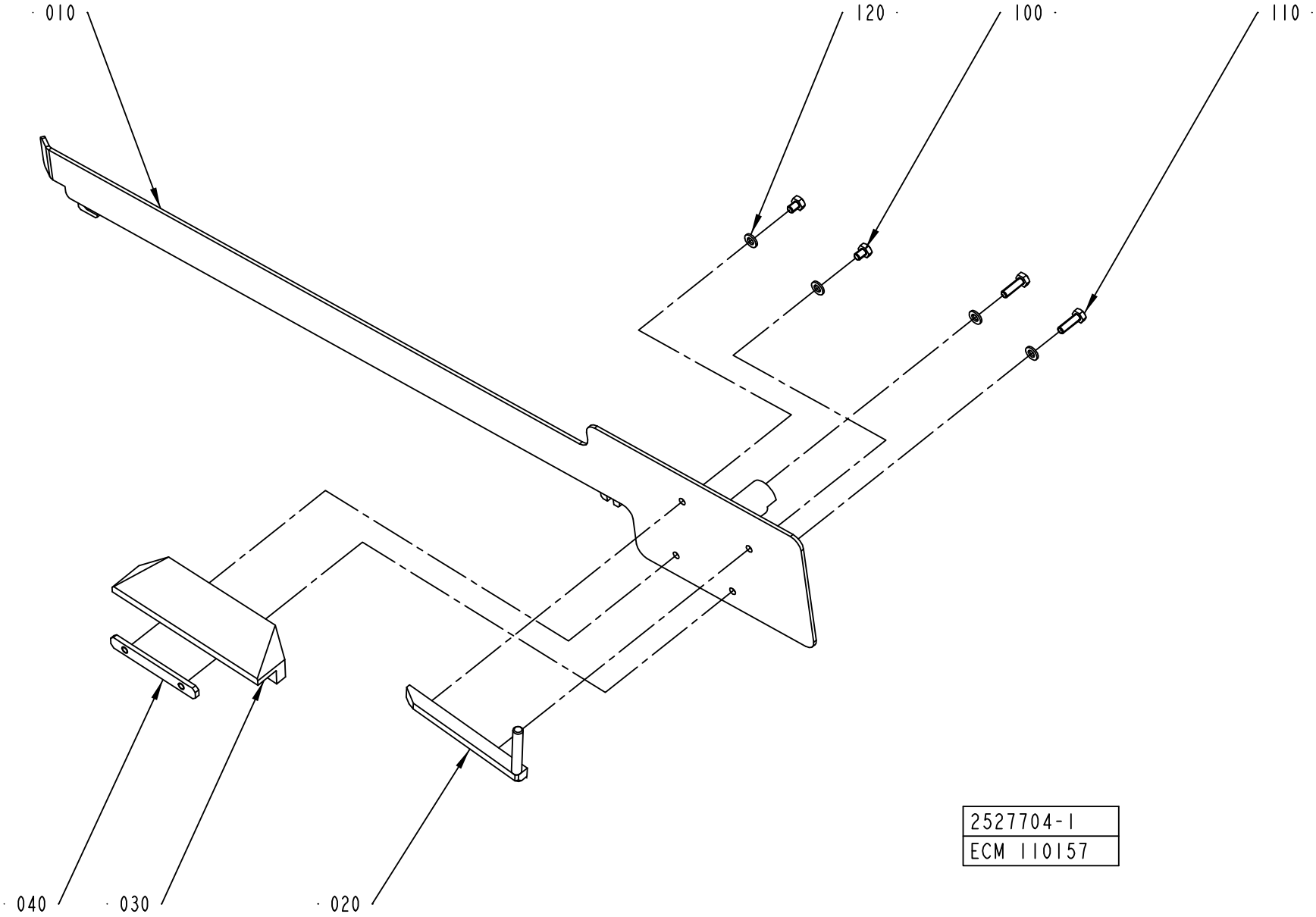
010
120
100
110
040
030
020
2527704-1
ECM 110157

ECM: 178774 -
Group number: 2527704-0105
Assembly Drawing: 2527704-1_1_AA

This list covers pages from 9-16 to 9-19

Pos	Part No	UN	Qty	Description	Page No
TBA 0200B (See drawing on pages: 5-96, 9-18)					
010	2526578-0000		1	GUIDE	
020	1348148-0000		1	BAR	
030	1348136-0000		1	SLIDE	
040	1348169-0000		1	PLATE	
050	2664200-0000		1	GUIDE	
120	315105-0153		6	WASHER BRB6,4X12RFR	
130	312605-0316		2	HEXAGON NUT, M6M M6 A280	
TBA 0250B (See drawing on pages: 5-96, 9-18)					
010	2526578-0000		1	GUIDE	
040	1348169-0000		1	PLATE	
050	2664200-0000		1	GUIDE	
120	315105-0153		6	WASHER BRB6,4X12RFR	
130	312605-0316		2	HEXAGON NUT, M6M M6 A280	
TBA 0330S (See drawing on pages: 5-96, 9-18)					
010	2526578-0000		1	GUIDE	
040	1279409-0000		1	PLATE	
050	2664200-0000		1	GUIDE	
120	315105-0153		6	WASHER BRB6,4X12RFR	
130	312605-0316		2	HEXAGON NUT, M6M M6 A280	
TBA 0500B, TBA 1000B (See drawing on pages: 5-94, 9-16)					
110	312105-0370		2	SCREW M6S ISO 4017 M6X20 A480	
120	315105-0153		6	WASHER BRB6,4X12RFR	
Common Parts					
010	2678622-0000		1	GUIDE	
010	2665202-0000		1	GUIDE	
020	1317805-0000		1	BAR	
030	2594905-0000		1	SLIDE	
030	2598487-0000		1	SLIDE	
100	312105-0362		2	SCREW M6S ISO 4017 M6X8 A480	
110	312109-0374		3	SCREW M6S ISO 4017 M6X30 A480	
120	315105-0153		5	WASHER BRB6,4X12RFR	

Pos	Part No	UN	Qty	Description	Page No

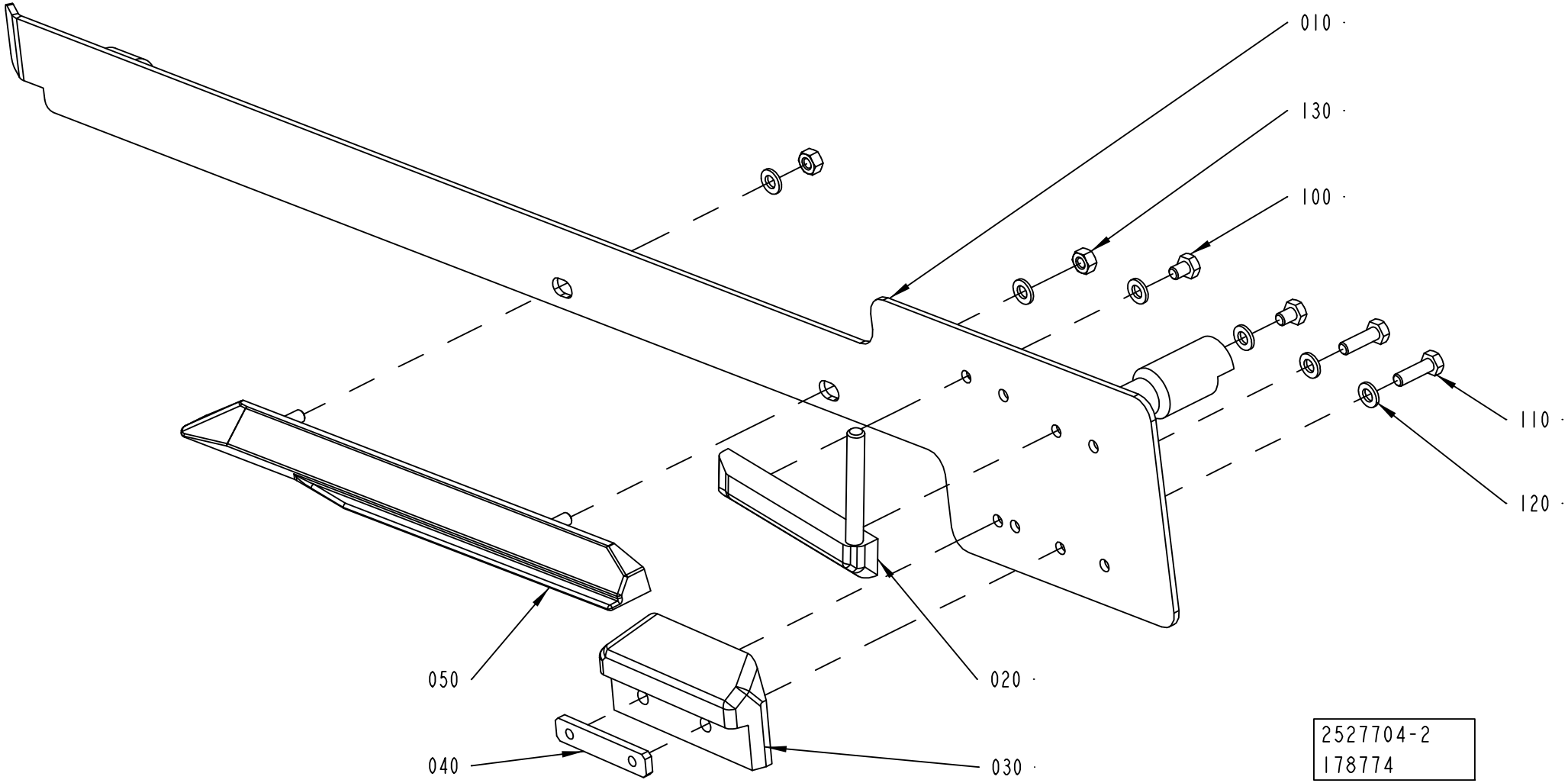
010
130
100
110
120
050
020
040
030
2527704-2
178774

ECM: 178774 -
Group number: 2527704-0105
Assembly Drawing: 2527704-2_1_AA

This list covers pages from 9-16 to 9-19

Pos	Part No	UN	Qty	Description	Page No
TBA 0200B (See drawing on pages: 5-96, 9-18)					
010	2526578-0000		1	GUIDE	
020	1348148-0000		1	BAR	
030	1348136-0000		1	SLIDE	
040	1348169-0000		1	PLATE	
050	2664200-0000		1	GUIDE	
120	315105-0153		6	WASHER BRB6,4X12RFR	
130	312605-0316		2	HEXAGON NUT, M6M M6 A280	
TBA 0250B (See drawing on pages: 5-96, 9-18)					
010	2526578-0000		1	GUIDE	
040	1348169-0000		1	PLATE	
050	2664200-0000		1	GUIDE	
120	315105-0153		6	WASHER BRB6,4X12RFR	
130	312605-0316		2	HEXAGON NUT, M6M M6 A280	
TBA 0330S (See drawing on pages: 5-96, 9-18)					
010	2526578-0000		1	GUIDE	
040	1279409-0000		1	PLATE	
050	2664200-0000		1	GUIDE	
120	315105-0153		6	WASHER BRB6,4X12RFR	
130	312605-0316		2	HEXAGON NUT, M6M M6 A280	
TBA 0500B, TBA 1000B (See drawing on pages: 5-94, 9-16)					
110	312105-0370		2	SCREW M6S ISO 4017 M6X20 A480	
120	315105-0153		6	WASHER BRB6,4X12RFR	
Common Parts					
010	2678622-0000		1	GUIDE	
010	2665202-0000		1	GUIDE	
020	1317805-0000		1	BAR	
030	2594905-0000		1	SLIDE	
030	2598487-0000		1	SLIDE	
100	312105-0362		2	SCREW M6S ISO 4017 M6X8 A480	
110	312109-0374		3	SCREW M6S ISO 4017 M6X30 A480	
120	315105-0153		5	WASHER BRB6,4X12RFR	

Pos	Part No	UN	Qty	Description	Page No

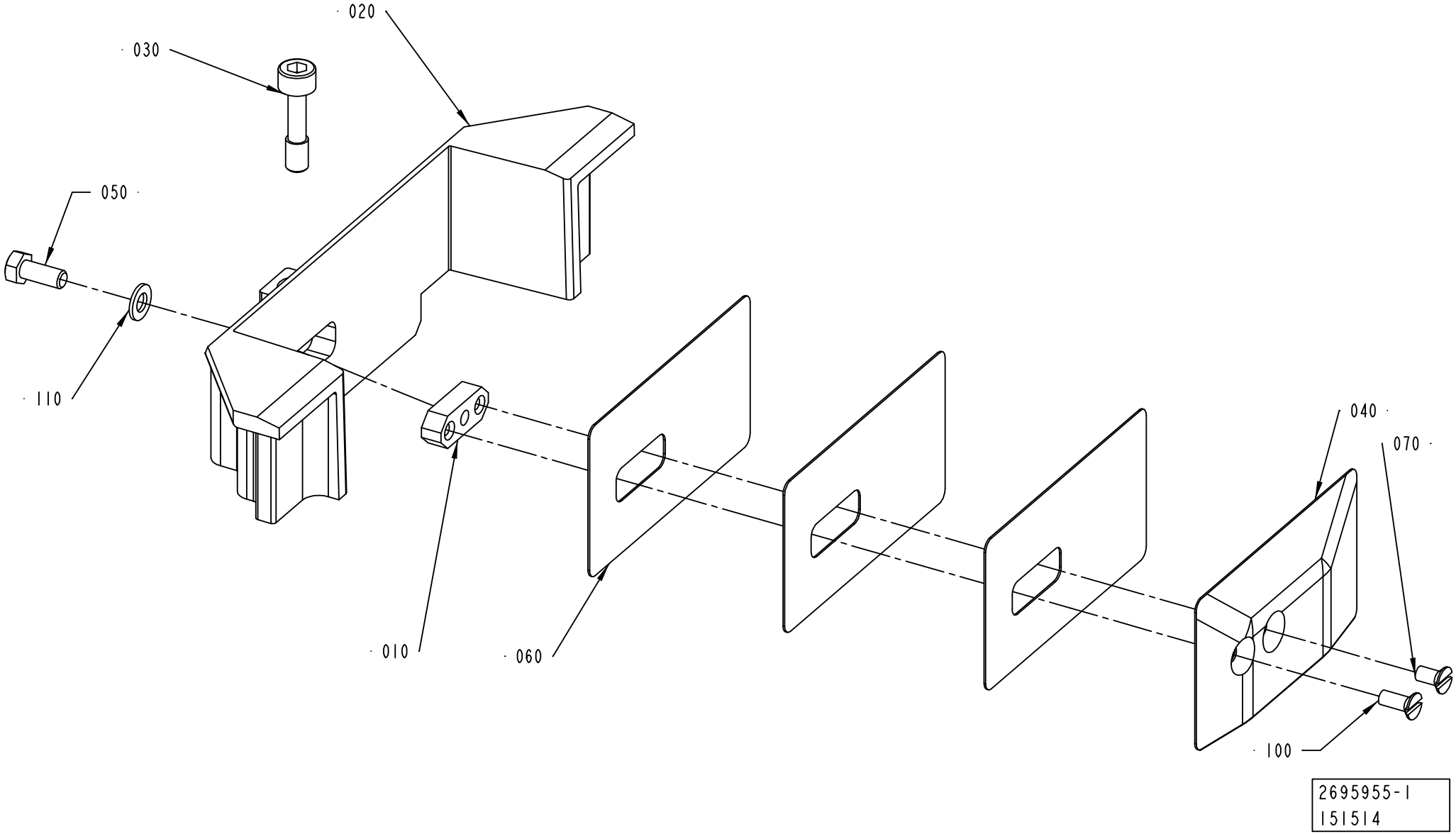
020
030
050
110
010
060
040
070
100
2695955-1
151514

ECM: 151514 -
Group number: 2695955-0102
Assembly Drawing: 2695955-1_1_AA

Pos	Part No	UN	Qty	Description	Page No
TBA 2000S					
020	2588307-0000		1	VOLUME FLAP	
040	2672746-0000		1	VOLUME BULGE	
060	2672745-0000		3	VOLUME SHIM	
Common Parts					
010	1037734-0000		1	WEDGE	
020	2588306-0000		1	VOLUME FLAP	
030	2594896-0000		2	SCREW	
040	2594889-0000		1	VOLUME BULGE	
050	312105-0327		1	SCREW M6S ISO 4017 M5X12 A480	
060	2594891-0000		3	VOLUME SHIM	
070	312145-0287		1	SCREW ISO 2009 MFS M4X8 A4	
100	312145-0289		1	SCREW ISO 2009 MFS M4X10 A4	
110	315105-0146		1	WASHER BRB5,3X10RFR	

Pos	Part No	UN	Qty	Description	Page No

This page is intentionally left blank.

ECM: 182041 - 50001231
Group number: 2555394-0100
Assembly Drawing:

This list covers pages from 9-22 to 9-25

Pos	Part No	UN	Qty	Description	Page No
TPA 1000SQ					
JS010	1520633-0005		12	DOLLY	
JS010	1520633-0005		12	DOLLY	
JS020	1520052-0000		8	INDUCTOR	
JS020	1520052-0000		8	INDUCTOR	
JS035	1539843-0000		6	VOLUME SHIM	
JS040	1348956-0000		2	KNIFE	
JS060	1260659-0000		2	SPRING	
SU010	257330-0000		2	PRESSURE ROLLER	
SU020	2529420-0000		1	SHAFT	
SU030	315204-0219		2	O-RING 29,2X3 MM	
TBA 0200S					
JS010	1110083-0002		12	DOLLY	
JS010	1110083-0002		12	DOLLY	
JS020	1110930-0000		2	INDUCTOR	
JS020	1110930-0000		2	INDUCTOR	
JS030	1037735-0000		8	VOLUME SHIM	
JS040	1348966-0000		2	KNIFE	
JS060	1260659-0000		2	SPRING	
SU010	272479-0000		3	PRESSURE ROLLER	
SU020	2529416-0000		1	SHAFT	
SU030	315204-0215		2	O-RING 19,2X3 MM	
TBA 0250B					
JS010	1110083-0002		12	DOLLY	
JS010	1110083-0002		12	DOLLY	
JS020	1110932-0000		2	INDUCTOR	
JS020	1110932-0000		2	INDUCTOR	
JS030	2654290-0000		8	VOLUME SHIM	
JS030	1538637-0000		8	VOLUME SHIM	
JS030	1346158-0000		8	VOLUME SHIM	
JS030	2605166-0000		8	VOLUME SHIM	
JS040	1348966-0000		2	KNIFE	
JS060	1260659-0000		2	SPRING	
SU010	257330-0000		3	PRESSURE ROLLER	
SU020	2529418-0000		1	SHAFT	
SU030	315204-0215		2	O-RING 19,2X3 MM	
TBA 0330S, TBA 0200B					
JS010	1110083-0002		12	DOLLY	
JS010	1110083-0002		12	DOLLY	
JS020	1110932-0000		2	INDUCTOR	
JS020	1110932-0000		2	INDUCTOR	
JS030	2605166-0000		8	VOLUME SHIM	
JS030	2654290-0000		8	VOLUME SHIM	
JS030	1538637-0000		8	VOLUME SHIM	
JS040	1348966-0000		2	KNIFE	
JS060	1260659-0000		2	SPRING	
SU010	257330-0000		3	PRESSURE ROLLER	
SU020	2529418-0000		1	SHAFT	
SU030	315204-0215		2	O-RING 19,2X3 MM	
TBA 0500B NOQC					
JS010	1110083-0002		12	DOLLY	
JS010	1110083-0002		12	DOLLY	
JS020	1110938-0000		2	INDUCTOR	
JS020	1110938-0000		2	INDUCTOR	
JS030	1532293-0000		8	VOLUME SHIM	
JS040	1348955-0000		2	KNIFE	
JS060	1260659-0000		2	SPRING	
SU010	232979-0000		3	PRESSURE ROLLER	
SU020	2523268-0000		1	SHAFT	
SU030	315204-0219		2	O-RING 29,2X3 MM	
TBA 0500B QC, TBA 1000B QC					
JS010	1110083-0002		12	DOLLY	
JS010	1110083-0002		12	DOLLY	
JS020	1110938-0000		2	INDUCTOR	
JS020	1110938-0000		2	INDUCTOR	
JS030	1511337-0000		8	VOLUME SHIM	
JS030	1511336-0000		8	VOLUME SHIM	
JS040	1348955-0000		2	KNIFE	
JS060	1260659-0000		2	SPRING	
SU010	232979-0000		3	PRESSURE ROLLER	
SU020	2523268-0000		1	SHAFT	
SU030	315204-0219		2	O-RING 29,2X3 MM	
TBA 1000B NOQC					
JS010	1110083-0002		12	DOLLY	
JS010	1110083-0002		12	DOLLY	
JS020	1110938-0000		2	INDUCTOR	
JS020	1110938-0000		2	INDUCTOR	
JS030	1035831-0000		8	VOLUME SHIM	
JS040	1348955-0000		2	KNIFE	
JS060	1260659-0000		2	SPRING	
SU010	232979-0000		3	PRESSURE ROLLER	
SU020	2523268-0000		1	SHAFT	
SU030	315204-0219		2	O-RING 29,2X3 MM	
TBA 1000S NOMOLDEDCAP					

Machine Type | Group Description | Used-In | Group Number | Page No

This page is intentionally left blank.

Pos	Part No	UN	Qty	Description	Page No
TBA 1000S NOMOLDEDCAP (Cont'd)					
JS010	1110083-0002		12	DOLLY	
JS010	1110083-0002		12	DOLLY	
JS020	1110937-0000		2	INDUCTOR	
JS020	1110937-0000		2	INDUCTOR	
JS030	1040755-0000		8	VOLUME SHIM	
JS040	1348955-0000		2	KNIFE	
JS060	1260659-0000		2	SPRING	
SU010	499387-0000		3	PRESSURE ROLLER	
SU020	2529419-0000		1	SHAFT	
SU030	315204-0219		2	O-RING 29,2X3 MM	
TBA 1000S STDA7					
JS010	1110083-0002		12	DOLLY	
JS010	1110083-0002		12	DOLLY	
JS020	2546474-0000		2	INDUCTOR	
JS020	2546474-0000		2	INDUCTOR	
JS030	1040755-0000		8	VOLUME SHIM	
JS040	1348955-0000		2	KNIFE	
JS060	1260659-0000		2	SPRING	
SU010	499387-0000		3	PRESSURE ROLLER	
SU020	2529419-0000		1	SHAFT	
SU030	315204-0219		2	O-RING 29,2X3 MM	
TBA 1000SQ					
JS010	1110083-0002		12	DOLLY	
JS010	1110083-0002		12	DOLLY	
JS020	1110936-0000		2	INDUCTOR	
JS020	1110936-0000		2	INDUCTOR	
JS030	1487627-0000		8	VOLUME SHIM	
JS040	1348955-0000		2	KNIFE	
JS060	1260659-0000		2	SPRING	
SU010	257330-0000		3	PRESSURE ROLLER	
SU020	2529420-0000		1	SHAFT	
SU030	315204-0219		2	O-RING 29,2X3 MM	
TBA 1500S					
JS010	1110083-0002		12	DOLLY	
JS010	1110083-0002		12	DOLLY	
JS020	1110938-0000		2	INDUCTOR	
JS020	1110938-0000		2	INDUCTOR	
JS030	1349208-0000		8	VOLUME SHIM	
JS040	1348955-0000		2	KNIFE	
JS060	1260659-0000		2	SPRING	
SU010	232979-0000		3	PRESSURE ROLLER	
SU020	2523268-0000		1	SHAFT	
SU030	315204-0219		2	O-RING 29,2X3 MM	
TBA 1890S					
FF010	2662142-0000		1	SPRING	
FF020	2650817-0000		4	SPRING	
FF030	2664596-0000		2	CARRIER	
JS010	1520633-0005		12	DOLLY	
JS010	1520633-0005		12	DOLLY	
JS020	1533046-0000		2	INDUCTOR	
JS020	1533046-0000		2	INDUCTOR	
JS030	2594891-0000		8	VOLUME SHIM	
JS035	2594890-0000		8	VOLUME SHIM	
JS040	2664761-0000		2	KNIFE	
JS060	927252-0000		2	COMPRESSION SPRING	
JS070	2662165-0000		2	SPRING	
JS080	2662166-0000		2	SPRING	
JS090	1549378-0000		2	SPRING	
SU010	232979-0000		6	PRESSURE ROLLER	
SU030	315204-0223		2	O-RING 39,2X3 MM	
TBA 2000S					
FF010	2662142-0000		1	SPRING	
FF020	2650817-0000		4	SPRING	
FF030	2664596-0000		2	CARRIER	
JS010	1520633-0005		12	DOLLY	
JS010	1520633-0005		12	DOLLY	
JS020	1533046-0000		2	INDUCTOR	
JS020	1533046-0000		2	INDUCTOR	
JS030	2672745-0000		8	VOLUME SHIM	
JS035	2594890-0000		8	VOLUME SHIM	
JS040	2664761-0000		2	KNIFE	
JS060	927252-0000		2	COMPRESSION SPRING	
JS070	2662165-0000		2	SPRING	
JS080	2662166-0000		2	SPRING	
JS090	1549378-0000		2	SPRING	
SU010	232979-0000		6	PRESSURE ROLLER	
SU030	315204-0223		2	O-RING 39,2X3 MM	
Common Parts					
JS050	1037254-0000		12	SHIM	

This page is intentionally left blank.

ECM: 70850 - 19970729
Group number: 1296877-0100
Assembly Drawing:

Pos	Part No	UN	Qty	Description	Page No
-					
010	530589-0000		4	SEAL RING	
020	530588-0000		1	SEAL RING	
030	533169-0000		1	DIAPHRAGM	
040	539212-0000		1	GASKET	
050	90091-0266		2	SEAL RING 10,4X16,3X2,5 MM	
060	90207-0363		1	GASKET	
070	90207-0365		1	GASKET	
100	315204-0215		1	O-RING 19,2X3 MM	
110	315204-0301		1	O-RING 49,5X3 MM	

Pos	Part No	UN	Qty	Description	Page No

Machine Type	Group Description	Used-In	Group Number	Page No

This page is intentionally left blank.

ECM: 70850 - 19970729
Group number: 1296878-0100
Assembly Drawing:

Pos	Part No	UN	Qty	Description	Page No
-					
080	90030-0336		2	CONN. STRAIGHT, 316L-12M-BVCO-3	
090	90091-0237		5	ROD SEAL, GLIDORING 20X27,5X3 MM	
100	315204-0215		2	O-RING 19,2X3 MM	
120	90091-0238		4	WEAR RING 20X22X10 MM	
140	315204-0308		2	O-RING 84,5X3 MM	

Pos	Part No	UN	Qty	Description	Page No

Machine Type | Group Description | Used-In | Group Number | Page No

This page is intentionally left blank.

ECM: 70850 - 19970729
Group number: 1296879-0100
Assembly Drawing:

Pos	Part No	UN	Qty	Description	Page No
-					
090	90091-0237		3	ROD SEAL, GLIDORING 20X27,5X3 MM	
100	315204-0215		1	O-RING 19,2X3 MM	
120	90091-0238		2	WEAR RING 20X22X10 MM	
130	90091-0335		1	PISTON SEAL,GLIDORING 62,5X70X3 MM	
150	90091-0304		1	RADIAL SEAL 45X65X8 MM DUST LIP	

Pos	Part No	UN	Qty	Description	Page No

This page is intentionally left blank.

ECM: 72190 - 19990628
Group number: 531345-0200
Assembly Drawing:

Pos	Part No	UN	Qty	Description	Page No	Pos	Part No	UN	Qty	Description	Page No
-											
	90303-0011		1	PROTECTIVE GOGGLES							
	90303-0012		1	PROTECTIVE GLOVES							
	90303-0013		1	APRON							

Machine Type | Group Description | Used-In | Group Number | Page No

This page is intentionally left blank.

ECM: 181470 - 50001231
Group number: 2574483-0100
Assembly Drawing:

Pos	Part No	UN	Qty	Description	Page No
TBA 0200S					
SU010	2582622-0000		1	TEMPLATE	
TBA 0330S, TBA 0200B, TBA 0250B					
SU010	2582620-0000		1	TEMPLATE	
TBA 0500B, TBA 1000B, TBA 1500S					
SU010	2582617-0000		1	TEMPLATE	
TBA 1000S					
SU010	2582618-0000		1	TEMPLATE	
TBA 1000SQ					
SU010	2582619-0000		1	TEMPLATE	
TBA 1890S, TBA 2000S					
SU010	2657884-0000		1	TEMPLATE	
TPA 1000SQ					
SU010	2582621-0000		1	TEMPLATE	
Common Parts					
SU020	1349914-0100		1	TEMPLATE FILLING PIPE	**9-37**

Pos	Part No	UN	Qty	Description	Page No

Machine Type | Group Description | Used-In | Group Number | Page No

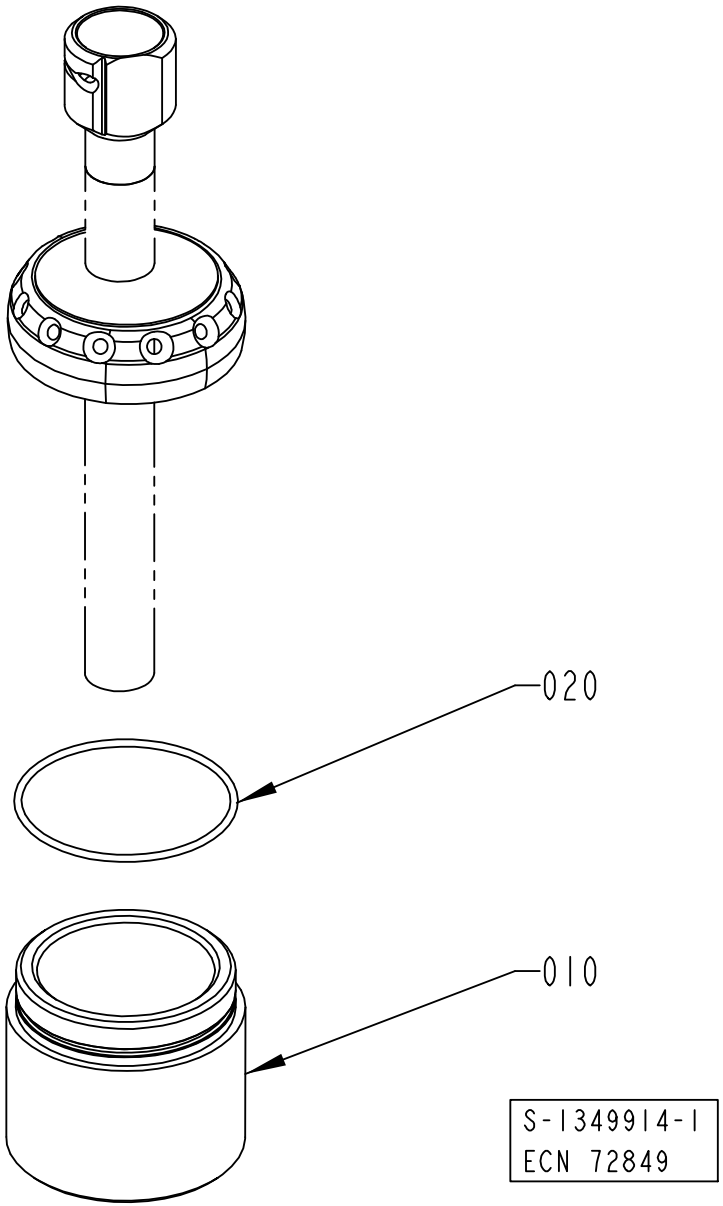
020
010
S-1349914-1
ECN 72849

ECM: 119000 - 20021217
Group number: 1349914-0100
Assembly Drawing: 1349914-1_1_AA

Pos	Part No	UN	Qty	Description	Page No
TBA 0200S					
010	1558304-0000		1	TEMPLATE	
020	315202-0214		1	O-RING 17,3X2,4 MM	
TBA 0330S, TBA 0200B, TBA 0250B					
010	1498149-0000		1	TEMPLATE	
020	315202-0217		1	O-RING 24,2X3 MM	
TBA 0500B, TBA 1000B, TBA 1500S					
010	1498150-0000		1	TEMPLATE	
020	315202-0308		1	O-RING 84,5X3 MM	
TBA 1000S					
010	1498151-0000		1	TEMPLATE	
020	315202-0307		1	O-RING 79,5X3 MM	
TBA 1000SQ					
010	1517987-0000		1	TEMPLATE	
020	315202-0305		1	O-RING 69,5X3 MM	
TPA 1000SQ					
010	1524841-0000		1	TEMPLATE	
020	315202-0303		1	O-RING 59,5X3 MM	

Pos	Part No	UN	Qty	Description	Page No

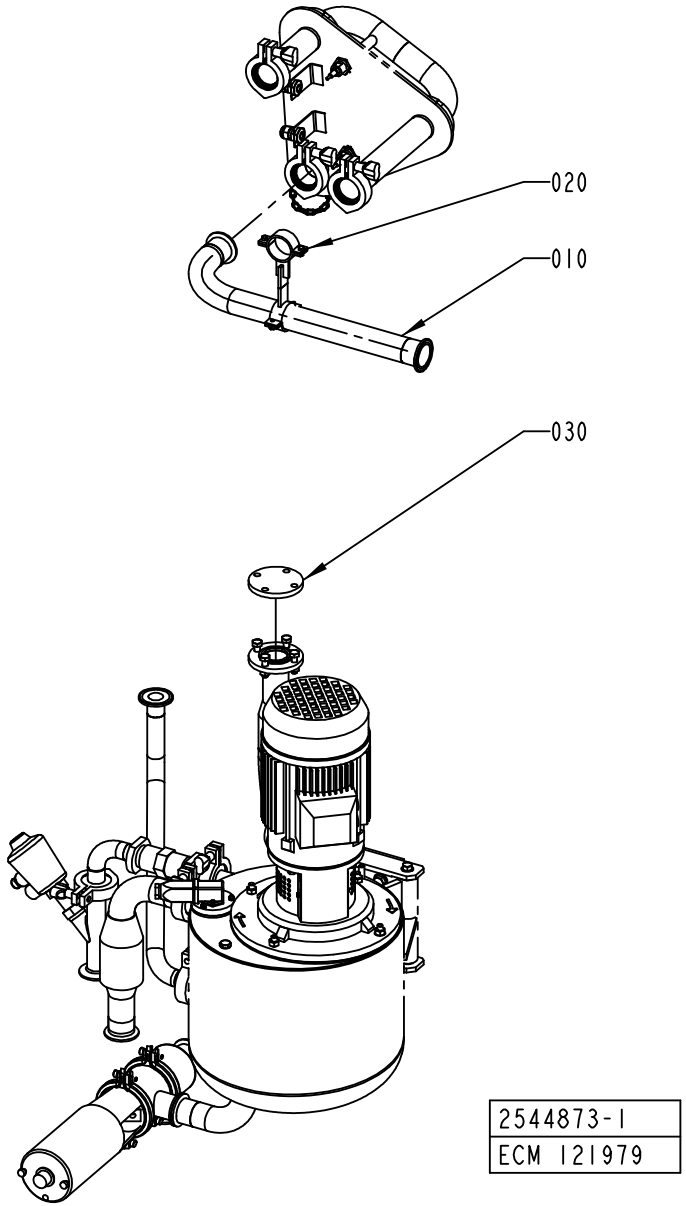
020
010
030
2544873-1
ECM 121979

ECM: 121994 - 20030403
Group number: 2544873-0100
Assembly Drawing: 2544873-1_1_AA

Pos	Part No	UN	Qty	Description	Page No
-					
010	2500089-0000		1	PIPE	
020	2539459-0000		1	HOLDER	
030	2539457-0000		1	LID	

Pos	Part No	UN	Qty	Description	Page No

Tetra Pak

SPC
Spare Parts Catalogue

This page is intentionally left blank.

ECM: 124583 - 20030403
Group number: 648564-0100
Assembly Drawing:

Pos	Part No	UN	Qty	Description	Page No
-					
010	2556260-0100		1	TOOLS AND TEMPLATES	**10-5**
020	2556261-0100		1	ACCESSORIES	**10-61**

Pos	Part No	UN	Qty	Description	Page No

Machine Type | Group Description | Used-In | Group Number | Page No

This page is intentionally left blank.

ECM: 182035 - 50001231
Group number: 2556260-0100
Assembly Drawing:

Pos	Part No	UN	Qty	Description	Page No
TBA 0330S, TBA 0200B, TBA 0200S, TBA 0250B					
SU070	2552154-0000		1	BRACKET	
TBA 0500B					
SU070	2552151-0000		1	BRACKET	
TBA 1000B					
DC020	2641204-0000		1	TEMPLATE	
SU070	2552151-0000		1	BRACKET	
TBA 1000S					
DC010	2641203-0000		1	TEMPLATE	
SU070	2552152-0000		1	BRACKET	
TBA 1000SQ					
SU070	2552153-0000		1	BRACKET	
TBA 1500S					
SU070	2552152-0000		1	BRACKET	
TPA 1000SQ					
SU070	2582613-0000		1	BRACKET	
Common Parts					
AS010	2564232-0100		1	LEG STAND	**10-7**
DC030	2642146-0000		1	TEMPLATE	
DC040	2503720-0100		1	OPENING FORCE TESTER	**10-9**
DS010	90459-2181		1	BELT TENSION METER, TSM 4	
DS020	2646428-0100		1	LIFTING UNIT	**10-17, 10-19**
EC010	90243-0203		1	MEASURING INSTRUMENT	
EC020	2559112-0100		1	CALIBRATION EQUIPMENT	**10-21**
FF010	1478583-0100		1	PRESSURE GAUGE	**10-23**
FF020	1350497-0000		1	ASSEMBLY TOOL	
FF030	1350498-0000		1	ASSEMBLY TOOL	
JS010	2556544-0100		1	SETTING TOOL	**10-25**
JS020	1035362-0100		1	MEASURING DEVICE	**10-27**
JS030	72846-0101		1	COMPRESSION SPRING	**10-29**
JS040	90243-0146		1	TOOL	
JS050	90206-0330		1	SOCKET WRENCH 2"9	
JS060	1095884-0100		1	ASSEMBLY TOOL	**10-31**
JS070	2637599-0100		1	ALIGNMENT TOOL	**10-33**
JS080	2637602-0100		1	DRILLING JIG	**10-35**
MB030	90459-1037		1	CRIMP TOOL FOR COAX. CONN. HTG 58-901200	
MB040	2588426-0100		1	ALIGNMENT TEMPLATE	**10-37**
PT010	2564074-0100		1	TOOLS AND TEMPLATES	**10-39**
SU010	1349738-0100		1	PRESSURE TEST EQUIPMENT	**10-45**
SU010	90243-0447		1	LASER EQUIPMENT	
	90243-0450		*1*	*RIDGE BED*	
	90243-0449		*1*	*ANGLE PLATE*	
	90243-0448		*1*	*ANGLE PLATE*	
	90243-0330		*1*	*CABLE*	
	90243-0329		*1*	*CABLE*	
	90243-0328		*1*	*PAPER ROLL*	
SU020	74305-0100		1	PULLER	**10-47**
SU030	777200-0101		1	PIPE WRENCEL	
SU040	449969-0100		1	TOOL DISMOUNTING	**10-49**
SU050	533014-0100		1	LEAK FINDING EQUIPMENT (SUPERSTRUCTURE)	**10-51** **10-53**
SU060	90459-1467		1	FORCE GAUGE 0-250N, AFG 250N	
SU080	2532974-0000		1	SETTING TOOL	
SU120	2569982-0100		1	SETTING TOOL	**10-57**
SU130	90243-0328		1	PAPER ROLL	
SU140	90243-0329		1	CABLE	
SU150	90243-0330		1	CABLE	
SU160	2579687-0100		1	SETTING TOOL	**10-59**

Machine Type | Group Description | Used-In | Group Number | Page No

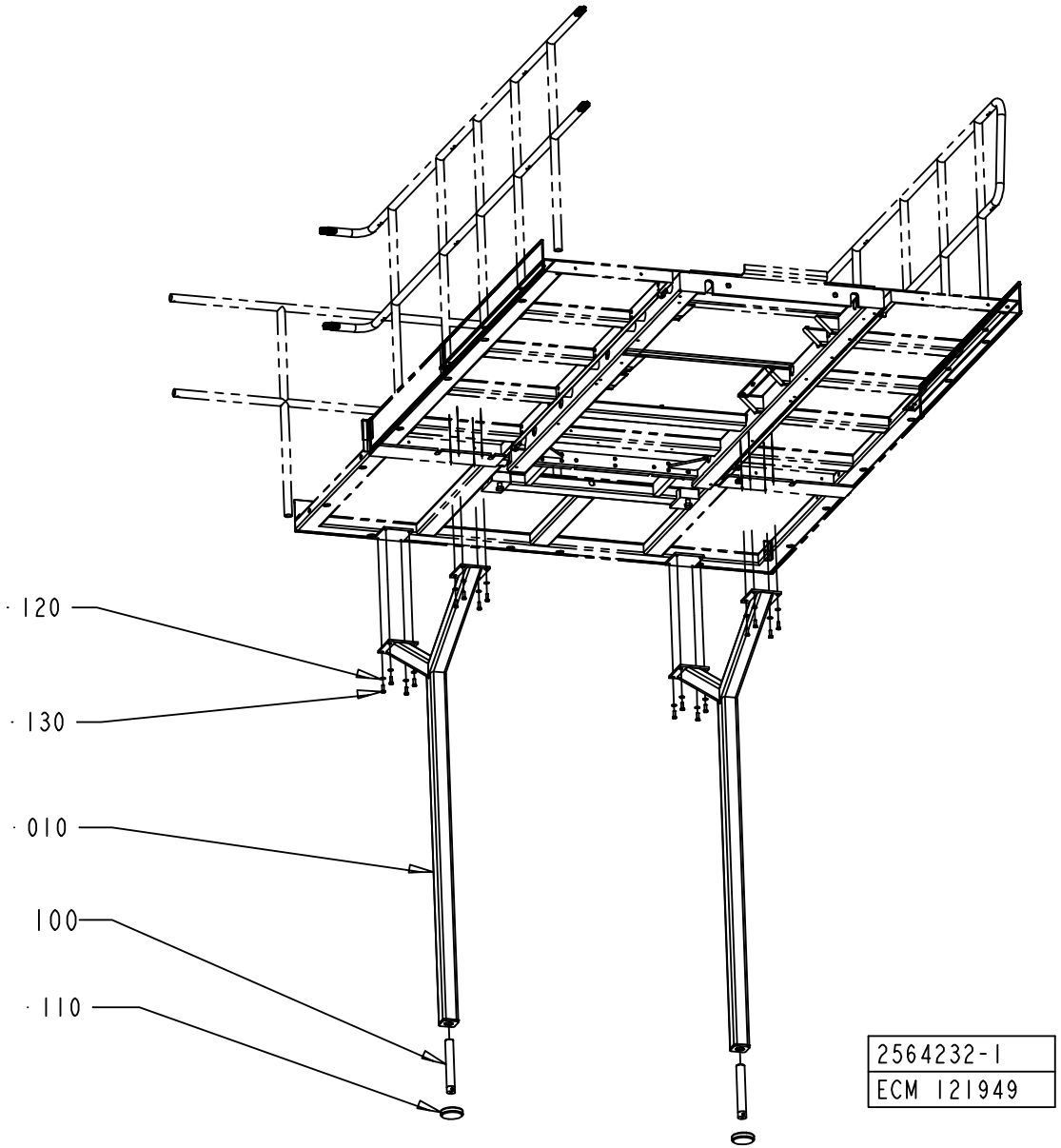
120
130
010
100
110
2564232-1
ECM 121949

ECM: 121959 - 20030403
Group number: 2564232-0100
Assembly Drawing: 2564232-1_1_AA

Pos	Part No	UN	Qty	Description	Page No
-					
10	2553117-0000		2	LEG	
100	90347-0080		2	DAMPER TFE 1201	
110	905373-0000		2	SCREW - LEG	
120	315105-0173		16	WASHER BRB10,5X22RFR	
130	312105-0495		16	SCREW M6S ISO 4017 M10X30 A480	

Pos	Part No	UN	Qty	Description	Page No

OPENING FORCE TESTER

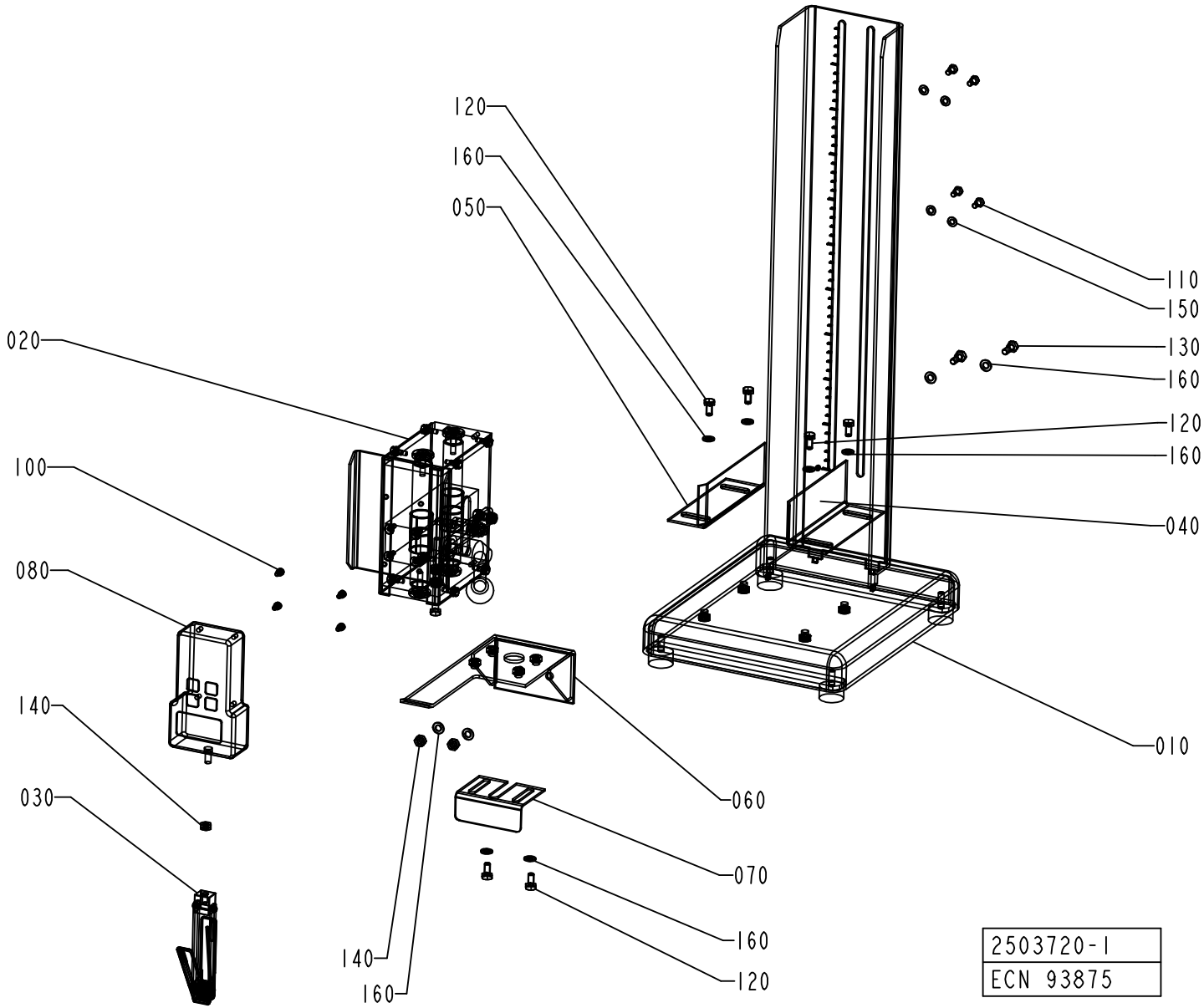

ECM: 94503 - 20010621
Group number: 2503720-0100
Assembly Drawing: 2503720-1_1_AA

Pos	Part No	UN	Qty	Description	Page No
-					
010	2503735-0100		1	FRAME	**10-11**
020	2503722-0100		1	HOLDER	**10-13**
030	2503721-0100		1	GRIPPING DEVICE	**10-15**
040	1338402-0000		1	GUIDE	
050	1338403-0000		1	GUIDE	
060	1338404-0000		1	BRACKET	
070	1338405-0000		1	BRACKET	
080	90243-0456		1	FORCE GAUGE	
100	312155-0285		4	SCREW HEX.SOCK.COUNT.MF6S M4X6 A480	
110	312105-0325		4	SCREW M6S ISO 4017 M5X10 A480	
120	312105-0366		6	SCREW M6S ISO 4017 M6X12 A480	
130	312105-0368		2	SCREW M6S ISO 4017 M6X16 A480	
140	312605-0316		3	HEXAGON NUT, M6M M6 A280	
150	315105-0146		4	WASHER BRB5,3X10RFR	
160	315105-0153		10	WASHER BRB6,4X12RFR	

Pos	Part No	UN	Qty	Description	Page No

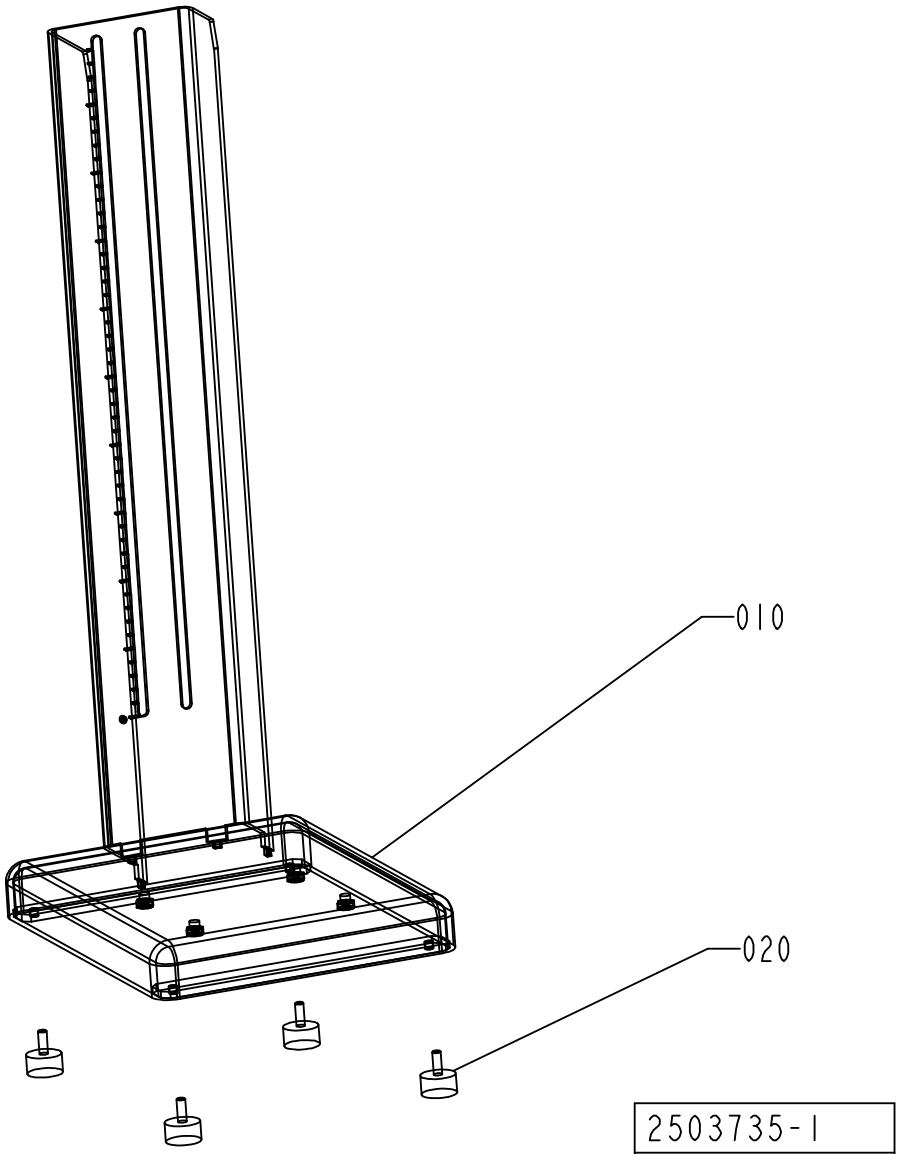
010
020
2503735-1
ECN 93875

ECM: 94506 - 20010621
Group number: 2503735-0100
Assembly Drawing: 2503735-1_1_AA

Pos	Part No	UN	Qty	Description	Page No	Pos	Part No	UN	Qty	Description	Page No
-											
010	2503719-0000		1	FRAME							
020	90347-0034		4	VIBRATION DAMPER							

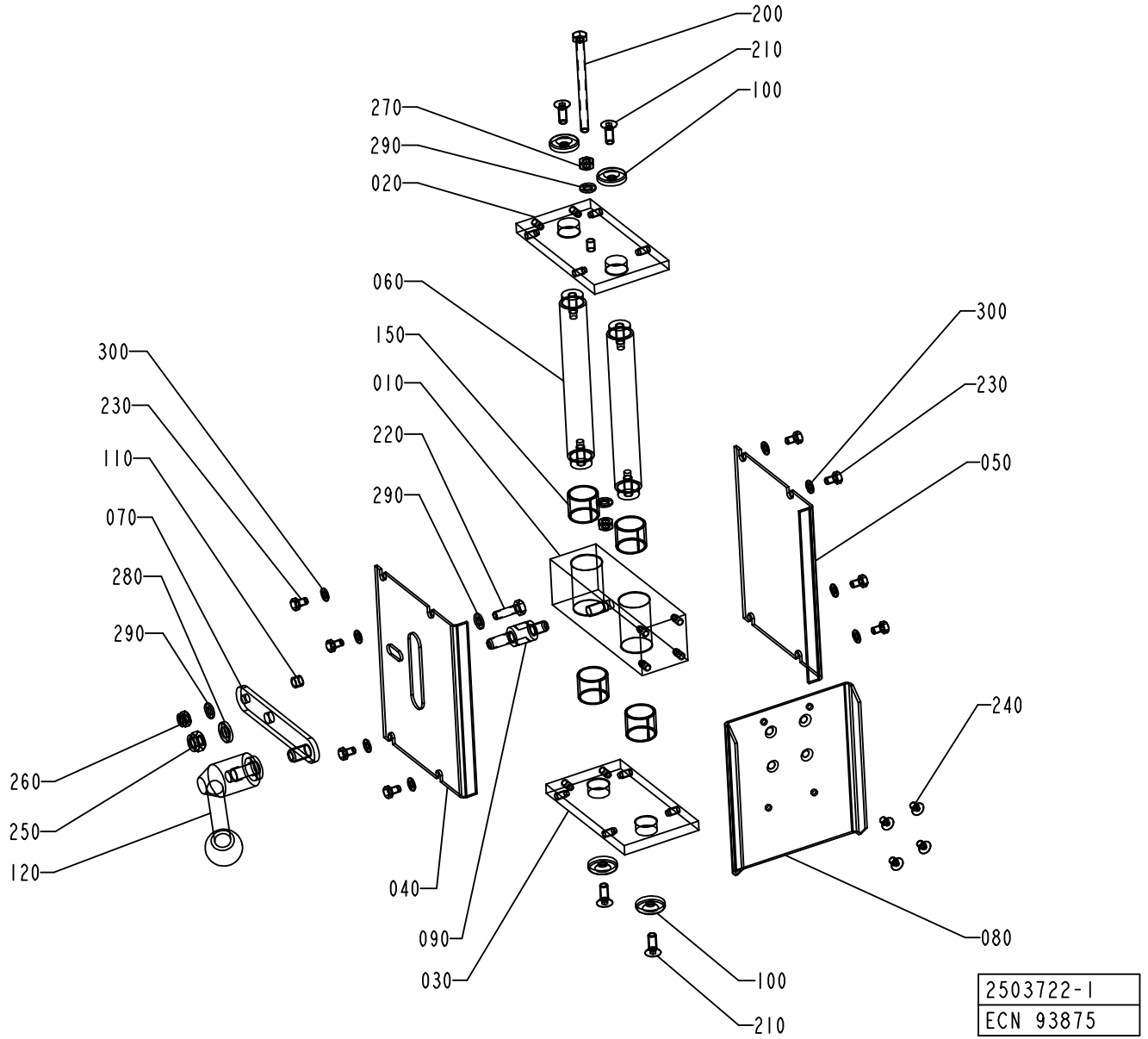
200
210
100
270
290
020
060
150
010
220
290
300
230
110
070
280
290
260
250
120
040
090
030
300
230
050
240
080
100
210
2503722-1
ECN 93875

ECM: 94505 - 20010621
Group number: 2503722-0100
Assembly Drawing: 2503722-1_1_AA

Pos	Part No	UN	Qty	Description	Page No
-					
010	2503723-0000		1	BLOCK	
020	2503725-0000		1	END PLATE	
030	2503724-0000		1	END PLATE	
040	2503727-0000		1	PLATE	
050	2503726-0000		1	PLATE	
060	2503732-0000		2	SHAFT	
070	2503728-0000		1	ARM	
080	2503729-0000		1	MOUNTING PLATE	
090	2503730-0000		1	SPACER	
100	2503734-0000		4	WASHER	
110	2503731-0000		1	SLEEVE	
120	2503733-0000		1	HANDLE	
150	321141-0260		4	BEARING BUSHING W/O FL, 20X23X20 MM	
200	312109-0386		1	SCREW M6S ISO 4017 M6X80 A480	
210	312155-0368		4	SCREW EN 10642 MF6S M6X16 A480	
220	312105-0370		1	SCREW M6S ISO 4017 M6X20 A480	
230	312105-0323		8	SCREW M6S ISO 4017 M5X8 A480	
240	312155-0323		4	SCREW EN 10642 MF6S M5X8 A480	
250	312812-0318		1	HEXAGON NUT, NY-LOCK M8 A480	
260	312812-0316		1	HEXAGON NUT, NY-LOCK M6 A480	
270	312605-0316		2	HEXAGON NUT, M6M M6 A280	
280	315115-0165		1	WASHER PLAIN, TBRB 8,4/16 H=3	
290	315105-0153		4	WASHER BRB6,4X12RFR	
300	315105-0146		8	WASHER BRB5,3X10RFR	

Pos	Part No	UN	Qty	Description	Page No

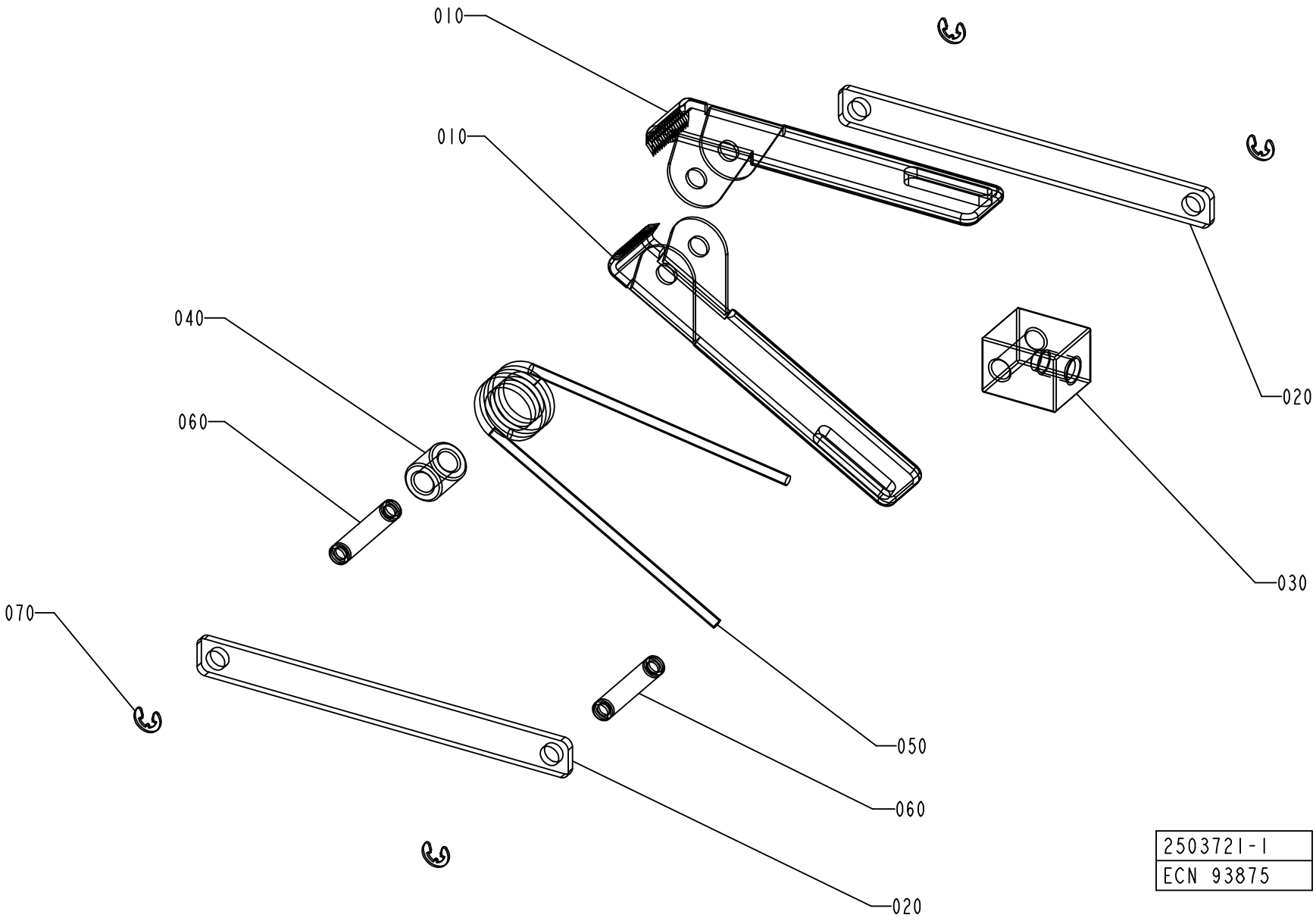
010
010
040
060
070
020
030
050
060
020
2503721-1
ECN 93875

ECM: 94504 - 20010621
Group number: 2503721-0100
Assembly Drawing: 2503721-1_1_AA

Pos	Part No	UN	Qty	Description	Page No
-					
010	1528838-0000		2	CLAMP	
020	1528840-0000		2	LEVER	
030	1528841-0000		1	HOLDER	
040	1528839-0000		1	SLEEVE	
050	1528887-0000		1	TORSION SPRING	
060	1528842-0000		2	PIN	
070	315755-0105		4	RETAINING RING SHAFT DIN 6799 3,2 A2	

Pos	Part No	UN	Qty	Description	Page No

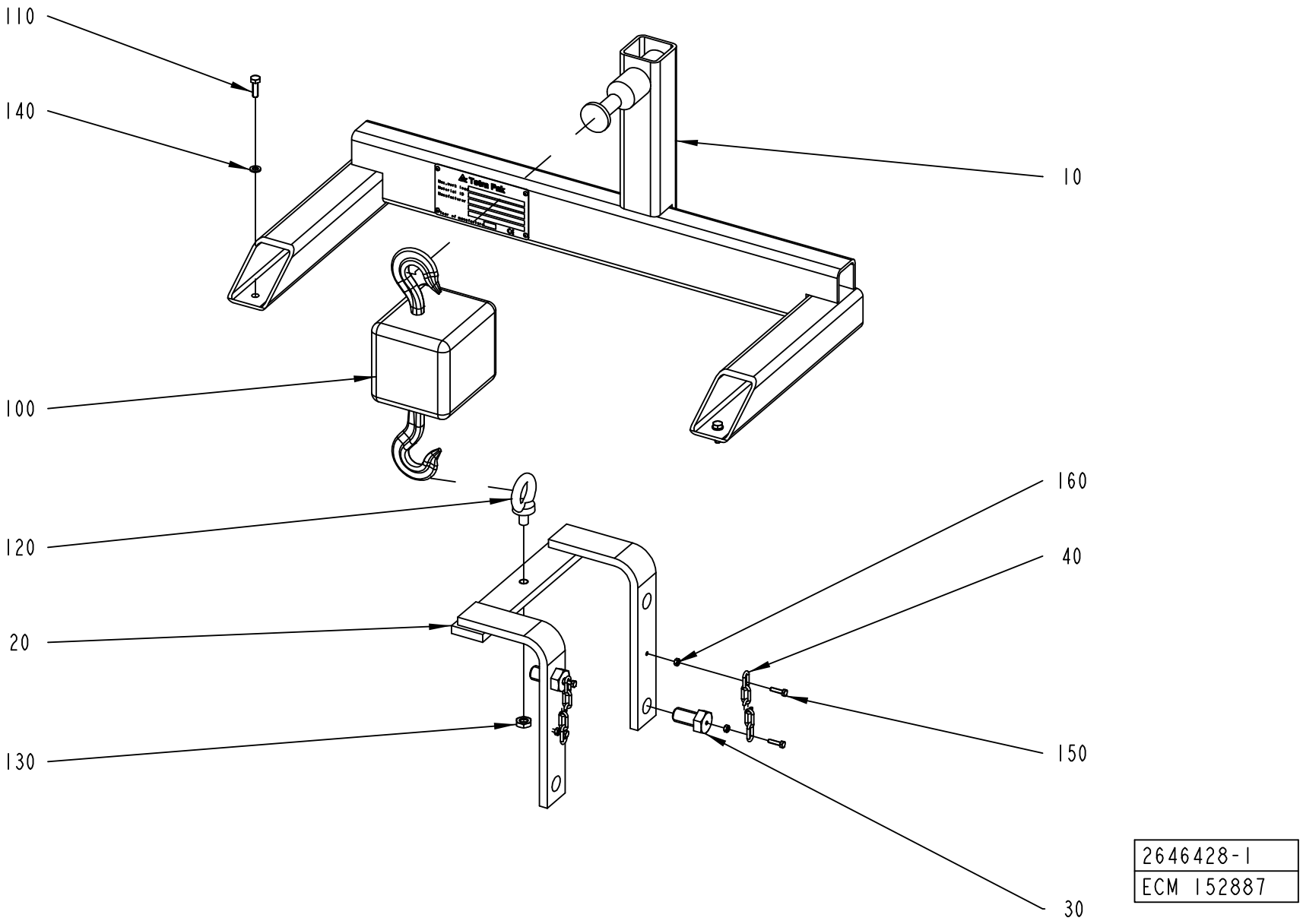
110
140
10
100
160
120
40
20
150
130
30
2646428-1
ECM 152887

ECM: 153155 - 20040511
Group number: 2646428-0100
Assembly Drawing: 2646428-1_1_AA

This list covers pages from 10-16 to 10-19

Pos	Part No	UN	Qty	Description	Page No
-					
010	2587286-0000		1	HOLDER	
020	2630482-0000		1	BRACKET	
030	2661094-0000		2	SCREW	
040	2662211-0000		2	CHAIN	
050	2675434-0000		1	SUPPORT	
100	90459-3618		1	HAND OPERATED CHAIN-HOIST, P.H.D. 250KG	
110	312105-0370		2	SCREW M6S ISO 4017 M6X20 A480	
120	318301-0120		1	LIFTING EYE BOLT, TYPE, LT, M10	
130	312625-0320		1	HEXAGON THIN NUT, EN 24035 ML6M M10 A4	
140	315105-0153		2	WASHER BRB6,4X12RFR	
150	312101-0293		4	SCREW M6S M4X16 FZB	
160	312607-0312		4	HEXAGON NUT, EN 24032 M6M M4 A480	
170	312105-0455		2	SCREW M6S ISO 4017 M8X30 A480	
200	2690557-0101		1	DOCUMENT FOLDER	

Pos	Part No	UN	Qty	Description	Page No

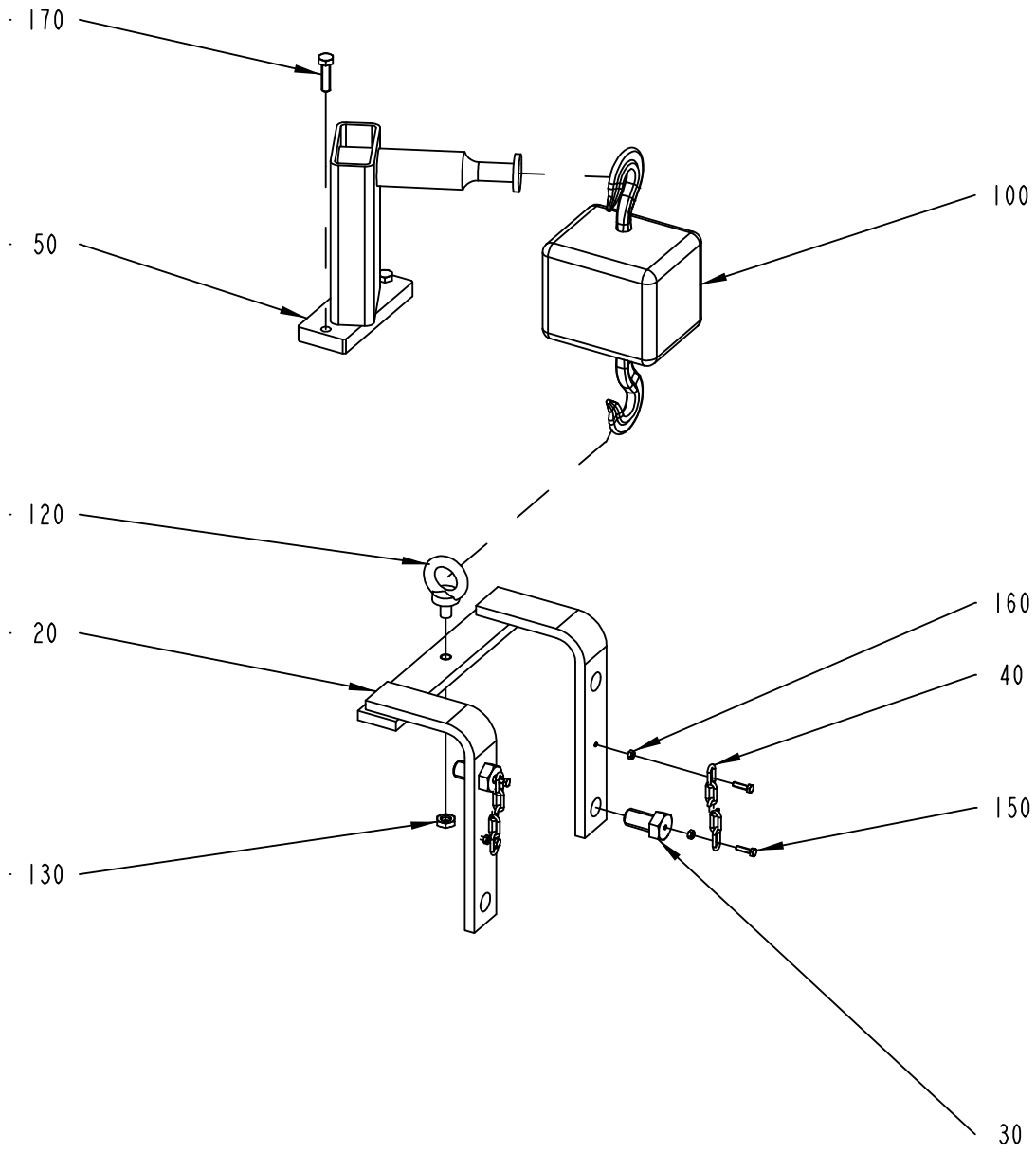

2646428-2
ECM 152887

ECM: 153155 - 20040511
Group number: 2646428-0100
Assembly Drawing: 2646428-2_1_AA

This list covers pages from 10-16 to 10-19

Pos	Part No	UN	Qty	Description	Page No
-					
010	2587286-0000		1	HOLDER	
020	2630482-0000		1	BRACKET	
030	2661094-0000		2	SCREW	
040	2662211-0000		2	CHAIN	
050	2675434-0000		1	SUPPORT	
100	90459-3618		1	HAND OPERATED CHAIN-HOIST, P.H.D. 250KG	
110	312105-0370		2	SCREW M6S ISO 4017 M6X20 A480	
120	318301-0120		1	LIFTING EYE BOLT, TYPE, LT, M10	
130	312625-0320		1	HEXAGON THIN NUT, EN 24035 ML6M M10 A4	
140	315105-0153		2	WASHER BRB6,4X12RFR	
150	312101-0293		4	SCREW M6S M4X16 FZB	
160	312607-0312		4	HEXAGON NUT, EN 24032 M6M M4 A480	
170	312105-0455		2	SCREW M6S ISO 4017 M8X30 A480	
200	2690557-0101		1	DOCUMENT FOLDER	

Pos	Part No	UN	Qty	Description	Page No

This page is intentionally left blank.

ECM: 121958 - 20030403
Group number: 2559112-0100
Assembly Drawing:

Pos	Part No	UN	Qty	Description	Page No
-					
10	90410-0338		1	PORTABLE INDICATOR, MICROMITE II	
20	90326-0308		1	THERMOCOUPLE CABLE FOR CE-557793/MALE 5M	
30	90326-0309		1	THERMOCOUPLE CABLE FOR CE-557793/FEMALE	
40	90194-0113		1	ADHESIVE LABEL, CALIBRATED & DATE	
50	90410-0337		1	CALIBRATION INSTRUMENT 5100071-001	
60	90326-0310		1	THERMOCOUPLE, 5130020-000	

Pos	Part No	UN	Qty	Description	Page No

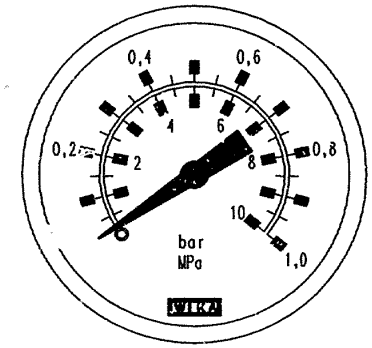
0,4
0,6
0,2
0,8
2
4
6
8
10
bar
MPa
1,0
WIKA

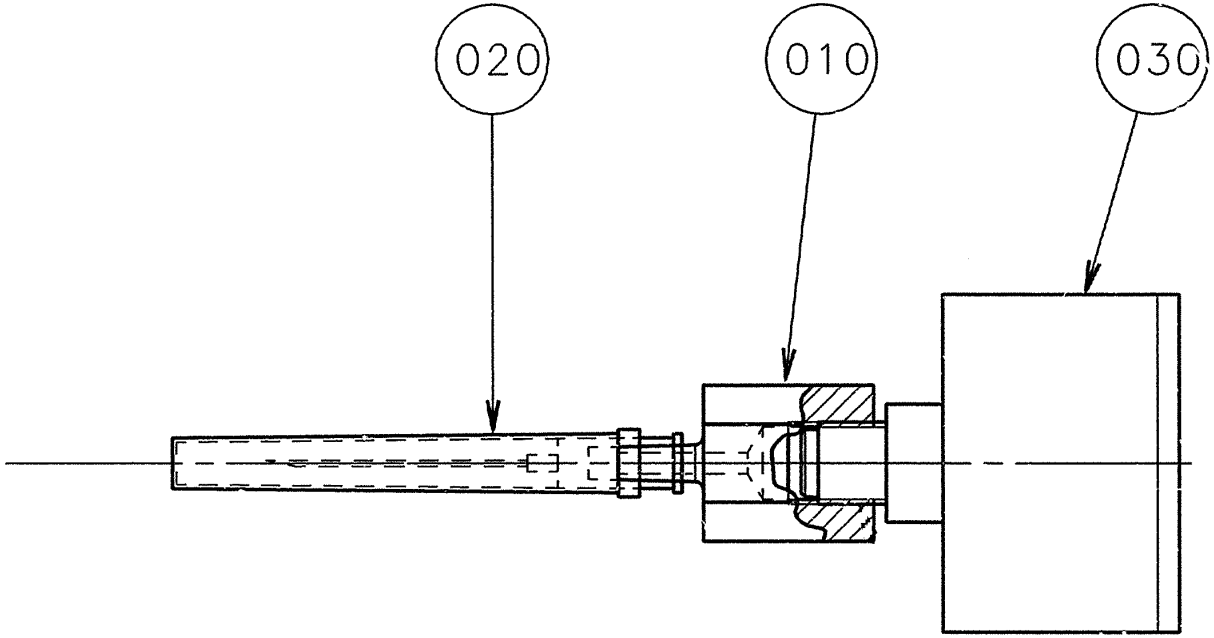
020
010
030

ECM: 110000 - 20030514
Group number: 1478583-0100
Assembly Drawing: 1478583-1_1_AA

Pos	Part No	UN	Qty	Description	Page No
-					
010	1478584-0000		1	NIPPLE	
020	1478585-0000		1	NEEDLE	
030	90043-0043		1	PRESSURE GAUGE, 0-10 BAR 1/8"	

Pos	Part No	UN	Qty	Description	Page No

Machine Type | Group Description | Used-In | Group Number | Page No

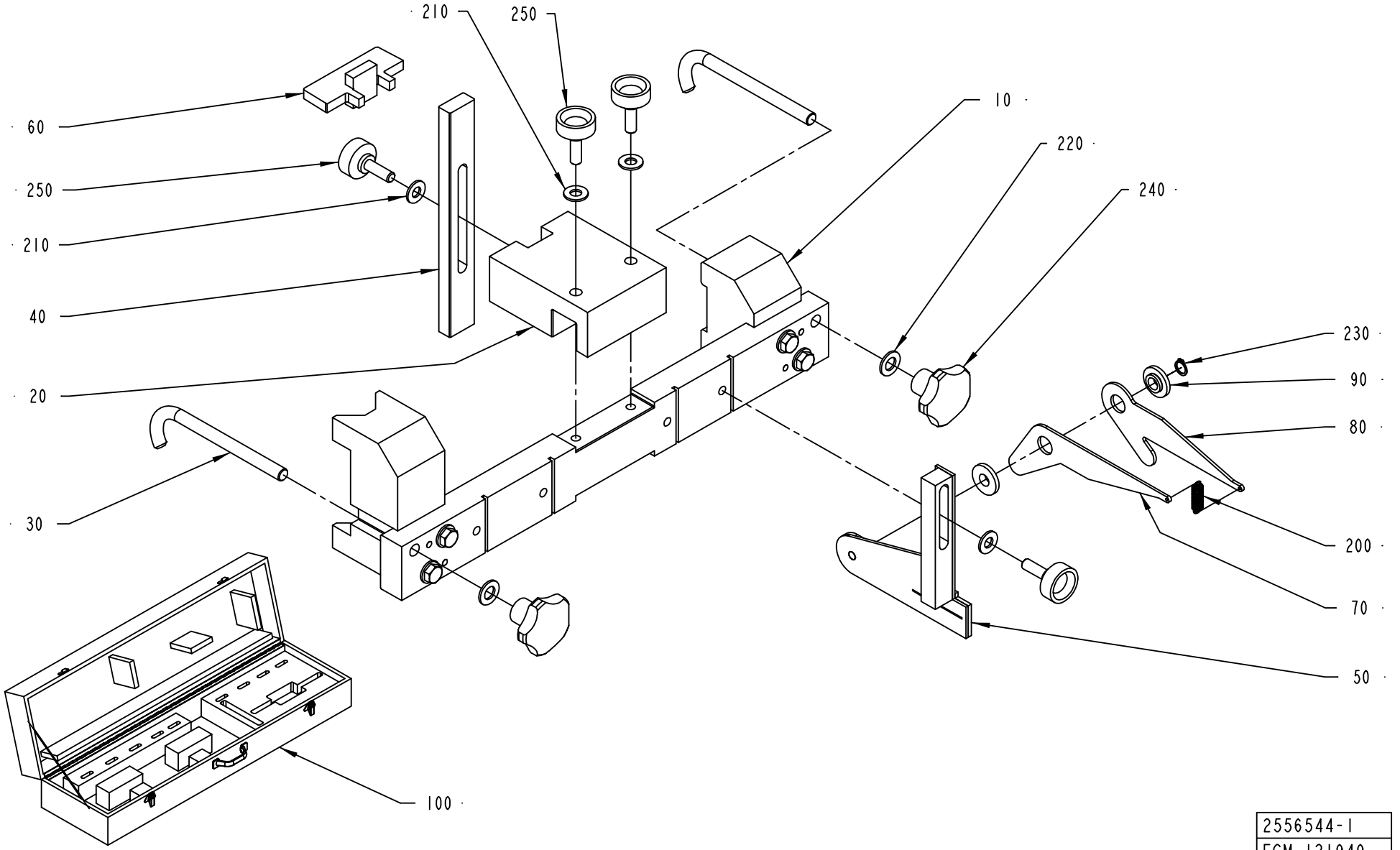
210
250
60
250
210
40
20
30
10
220
240
230
90
80
200
70
50
100
2556544-1
ECM 121949

ECM: 182036 - 50001231
Group number: 2556544-0100
Assembly Drawing: 2556544-1_1_AA

Pos	Part No	UN	Qty	Description	Page No
TBA 0200S (See drawing on page: 10-24)					
060	1140283-0000		1	TEMPLATE	
070	1140433-0000		1	SHEET	
080	1140434-0000		1	SHEET	
TBA 0330S, TBA 0200B, TBA 0250B (See drawing on page: 10-24)					
060	1523091-0000		1	TEMPLATE	
070	1140433-0000		1	SHEET	
080	1140434-0000		1	SHEET	
TBA 0500B, TBA 1000B (See drawing on page: 10-24)					
060	1140268-0000		1	TEMPLATE	
070	1140433-0000		1	SHEET	
080	1140434-0000		1	SHEET	
TBA 1000S (See drawing on page: 10-24)					
060	1140320-0000		1	TEMPLATE	
070	1140433-0000		1	SHEET	
080	1140434-0000		1	SHEET	
TBA 1000SQ (See drawing on page: 10-24)					
060	1498117-0000		1	TEMPLATE	
070	1140433-0000		1	SHEET	
080	1140434-0000		1	SHEET	
TBA 1500S (See drawing on page: 10-24)					
060	1478190-0000		1	TEMPLATE	
070	1140433-0000		1	SHEET	
080	1140434-0000		1	SHEET	
TPA 1000SQ (See drawing on page: 10-24)					
060	2503694-0000		1	TEMPLATE	
070	1140433-0000		1	SHEET	
080	1140434-0000		1	SHEET	
Common Parts					
010	2556298-0000		1	BRACKET	
020	2556391-0000		1	BRACKET	
030	1037691-0000		2	HOOK	
040	1140431-0000		1	RULER	
050	1140432-0000		1	BRACKET	
090	1140414-0000		1	BEARING	
100	2556473-0000		1	TOOL BOX	
200	90335-0089		1	TENSION SPRING 41490, 0,9X10X23	
210	315105-0173		4	WASHER BRB10,5X22RFR	
220	315105-0178		2	WASHER BRB13X24RFR	
230	315751-0109		1	RETAINING RING FOR SHAFT DIN 471 12 A2	
240	318850-0113		2	STELLAR KNOB, INT. THREAD, NO. 8306-0367	
250	318856-0109		4	KNOB, EXTERNAL THREAD. NO. 8308-1658	

Pos	Part No	UN	Qty	Description	Page No

Machine Type | Group Description | Used-In | Group Number | Page No

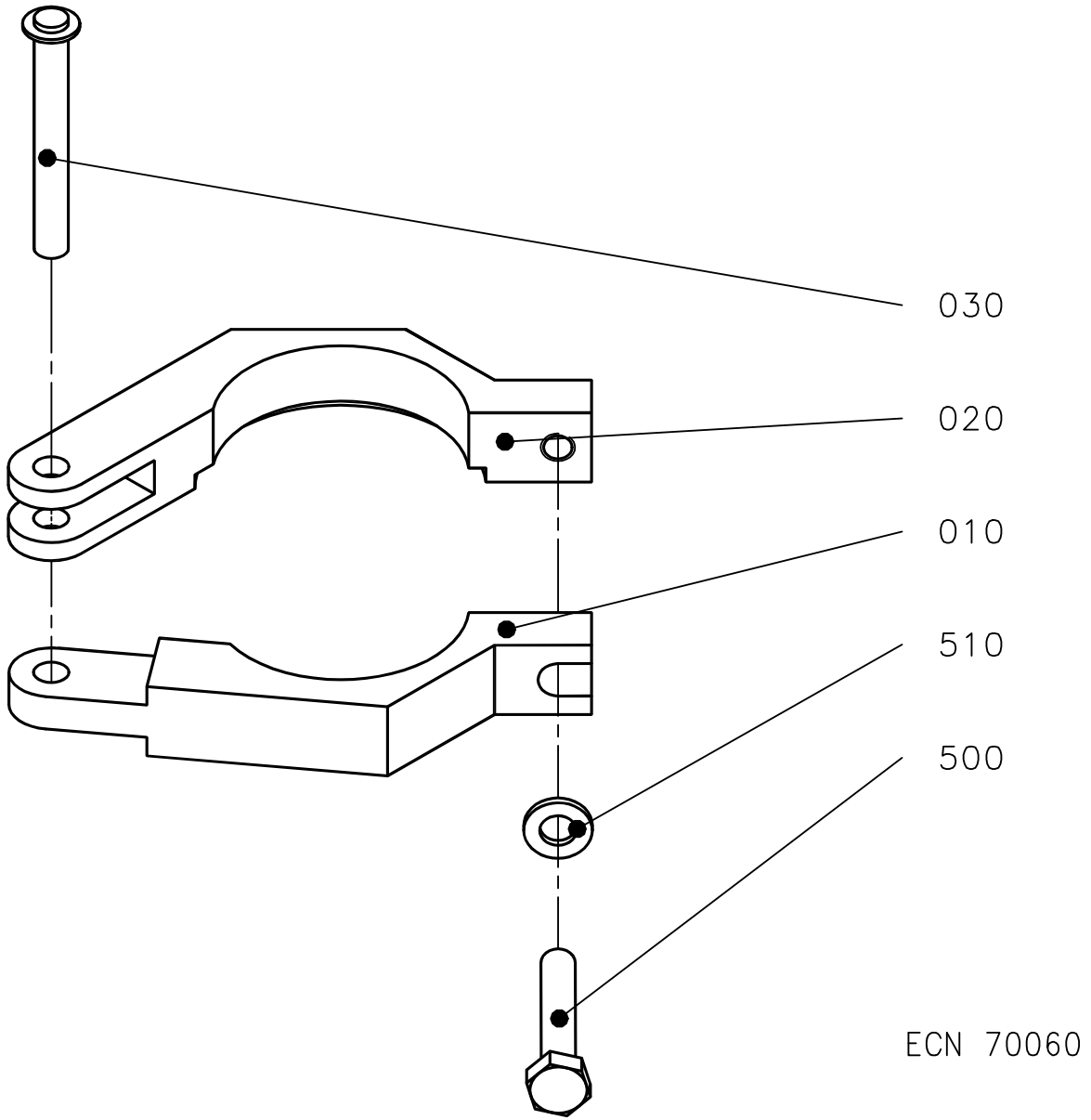
030
020
010
510
500
ECN 70060

ECM: 70060 - 19960315
Group number: 1035362-0100
Assembly Drawing: 1035362-1_1_AA

Pos	Part No	UN	Qty	Description	Page No
-					
010	1037696-0000		1	CLAMPING PIECE	
020	1037697-0000		1	CLAMPING PIECE	
030	74655-0000		1	SHAFT	
500	312105-0374		1	SCREW M6S ISO 4014 M6X30 A480	
510	315105-0153		1	WASHER BRB6,4X12RFR	

Pos	Part No	UN	Qty	Description	Page No

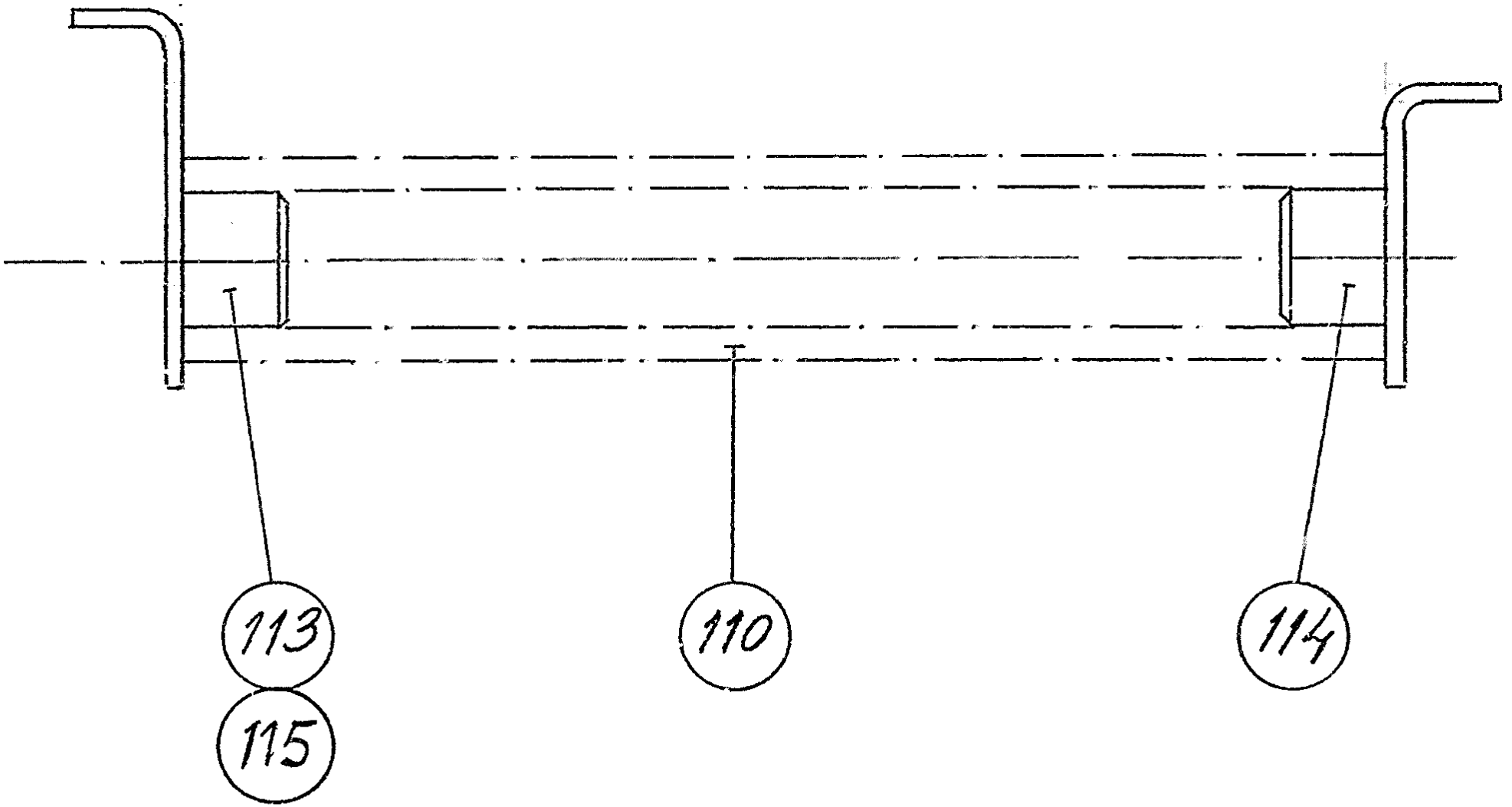
113
115
110
114

ECM: 71001 - 19970802
Group number: 72846-0101
Assembly Drawing: 72846-1_1_AA

Pos	Part No	UN	Qty	Description	Page No
-					
110	72887-0000		1	COMPRESSION SPRING	
113	72888-0001		1	SPRING BRACKET	
114	72888-0002		1	SPRING BRACKET	

Pos	Part No	UN	Qty	Description	Page No

This page is intentionally left blank.

ECM: 182034 - 50001231
Group number: 1095884-0100
Assembly Drawing:

Pos	Part No	UN	Qty	Description	Page No
TBA 0330S, TBA 0200B, TBA 0200S, TBA 0250B					
010	76131-0000		1	ASSEMBLY CONE	
011	76132-0000		1	ASSEMBLY TOOL	
012	78801-0000		1	CALIBRATION TOOL	
030	90091-0387		1	ASSEMBLY TOOL	
TBA 0500B, TBA 1000S, TBA 1000SQ, TBA 1000B, TBA 1500S, TPA 1000SQ					
020	90091-0377		1	ASSEMBLY TOOL SLEEVE GLYD RING	
040	90091-0378		1	ASSEMBLY TOOL SLEEVE AQ-SEAL	

Pos	Part No	UN	Qty	Description	Page No

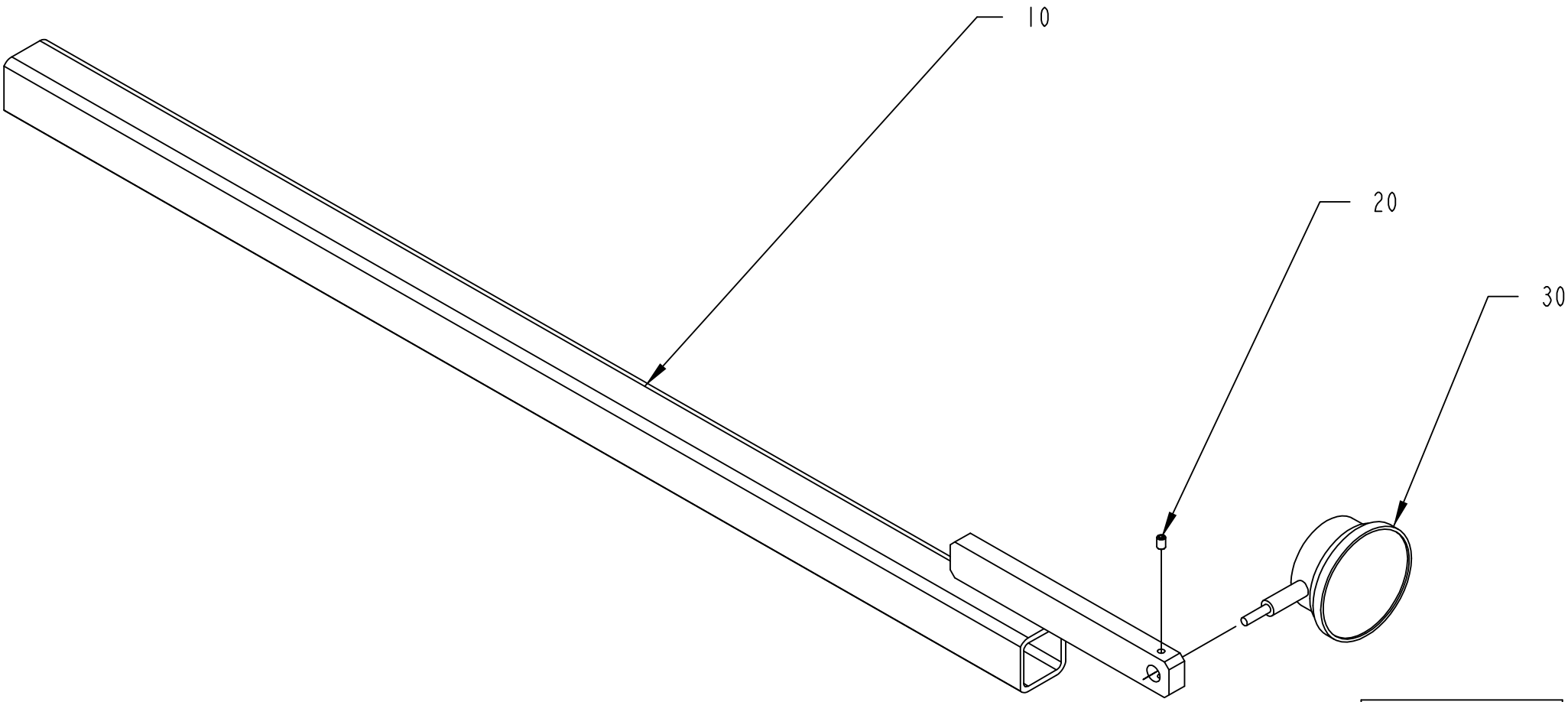

2637599-1
ECM 139936

ECM: 139936 - 20031001
Group number: 2637599-0100
Assembly Drawing: 2637599-1_1_AA

Pos	Part No	UN	Qty	Description	Page No	Pos	Part No	UN	Qty	Description	Page No
-											
010	2637600-0000		1	TOOL							
020	312318-0285		1	SCREW ISO4029 M4X6 A4							
030	90243-0461		1	MEASURE GAUGE,6916-0109							

Machine Type | Group Description | Used-In | Group Number | Page No

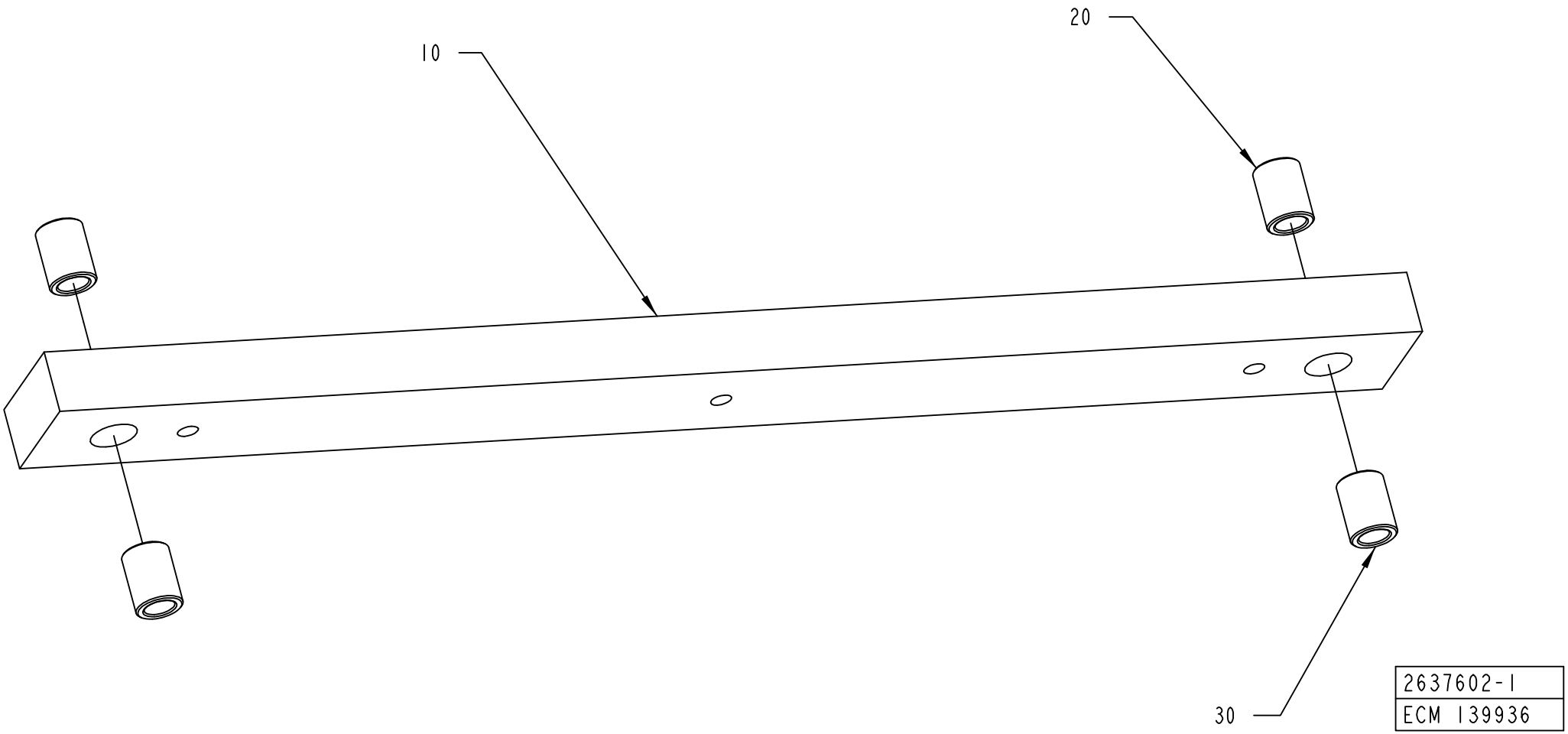
10
20
30
2637602-1
ECM 139936

ECM: 139936 - 20031001
Group number: 2637602-0100
Assembly Drawing: 2637602-1_1_AA

Pos	Part No	UN	Qty	Description	Page No
-					
010	2637603-0000		1	TOOL	
020	2637604-0000		2	BUSHING	
030	2637605-0000		2	BUSHING	

Pos	Part No	UN	Qty	Description	Page No

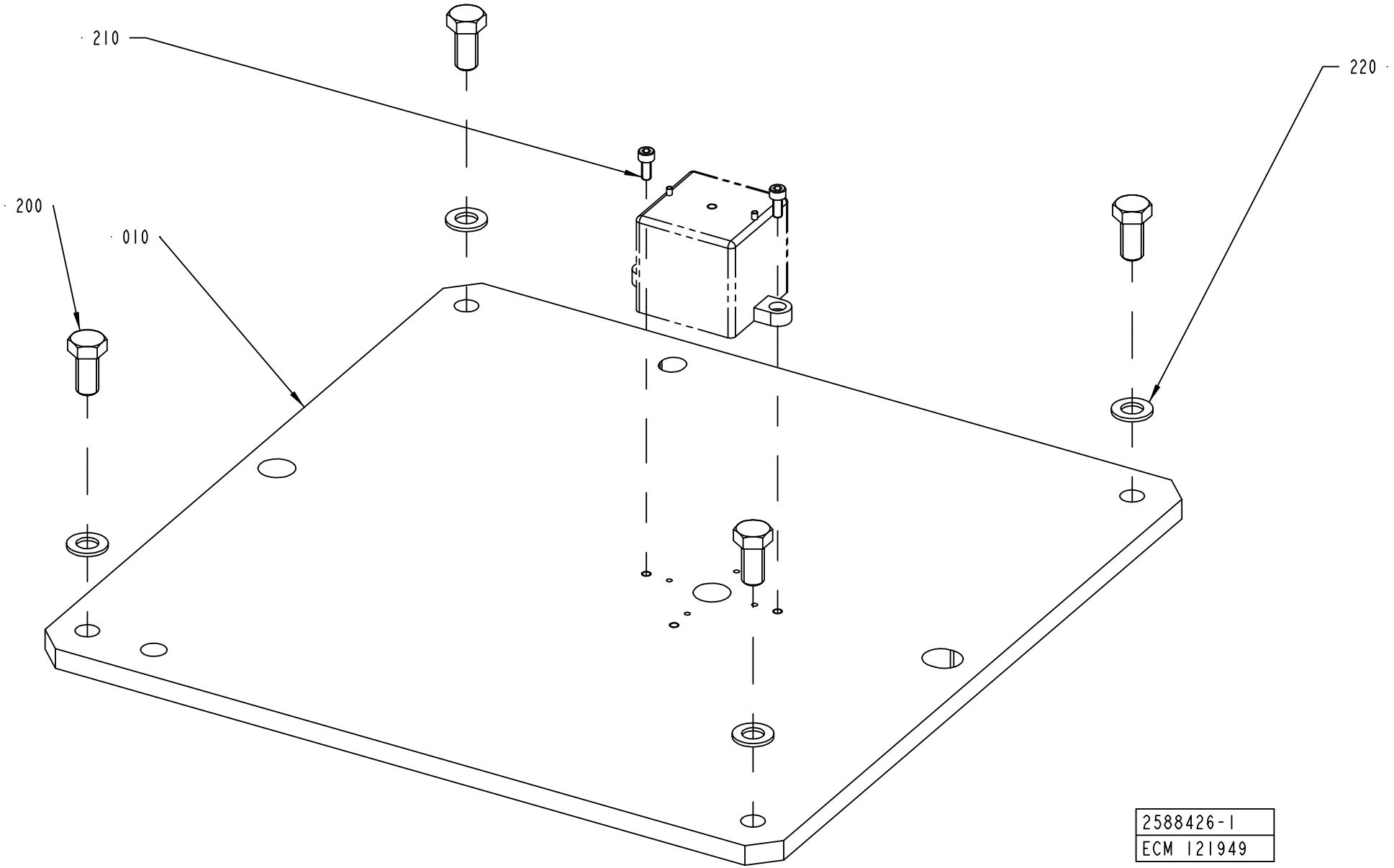
210
220
200
010
2588426-1
ECM 121949

ECM: 121961 - 20030403
Group number: 2588426-0100
Assembly Drawing: 2588426-1_1_AA

Pos	Part No	UN	Qty	Description	Page No
-					
010	2588425-0000		1	PLATE	
200	312105-0534		4	SCREW M6S ISO 4017 M12X25 A480	
210	312115-0327		2	SCREW ISO4762 M5X12 A4	
220	315101-0176		4	WASHER PLAIN, BRB, 12/22 H=2	

Pos	Part No	UN	Qty	Description	Page No

This page is intentionally left blank.

ECM: 142522 - 20030930
Group number: 2564074-0100
Assembly Drawing:

Pos	Part No	UN	Qty	Description	Page No
-					
010	1532459-0100		1	SETTING TOOL	**10-41**
020	2644202-0100		1	SETTING TOOL	**10-43**
100	777170-0107		1	HOOK SPANNER	

Pos	Part No	UN	Qty	Description	Page No

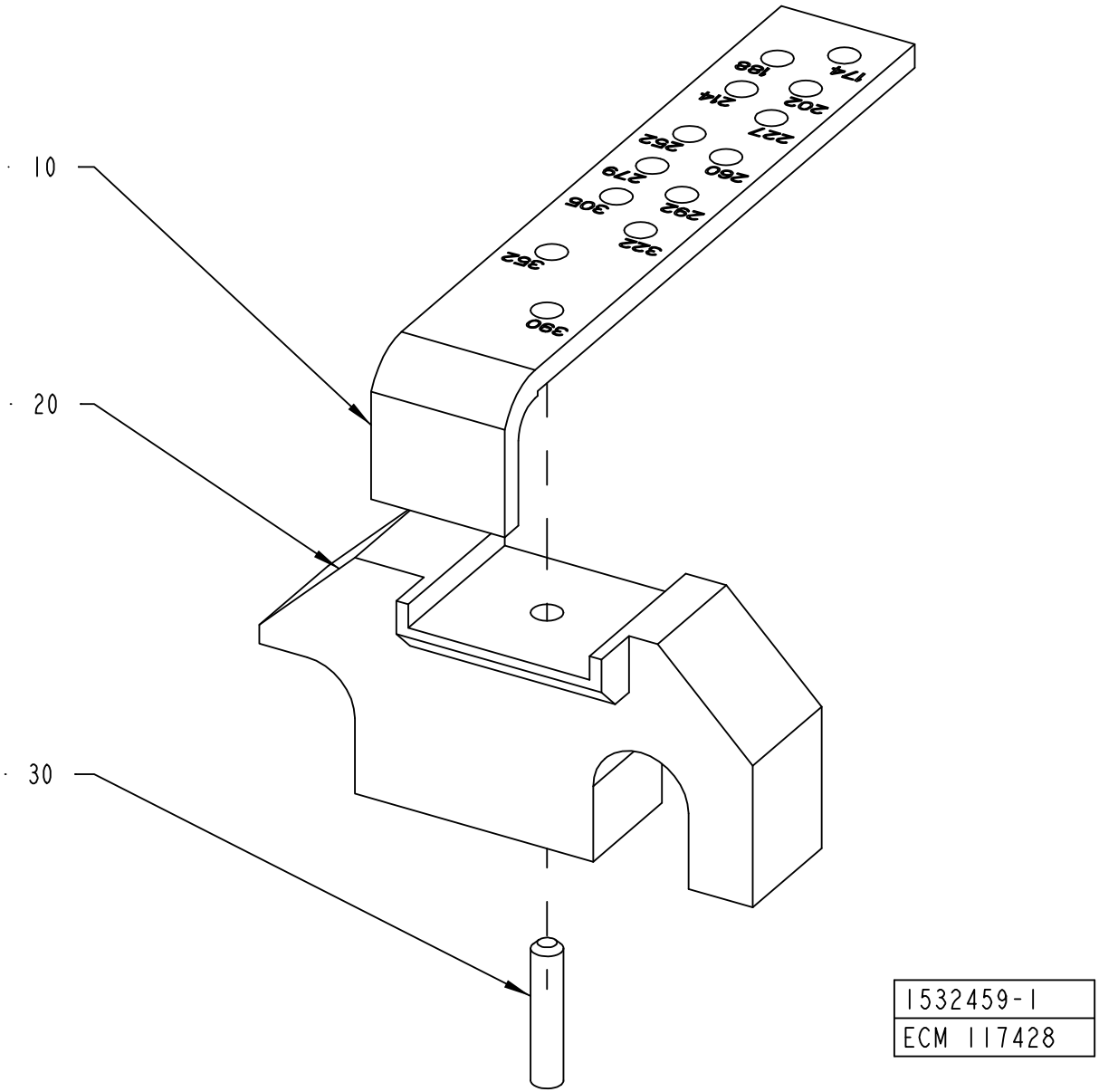

1532459-1
ECM 117428

ECM: 118729 - 20021216
Group number: 1532459-0100
Assembly Drawing: 1532459-1_1_AB

Pos	Part No	UN	Qty	Description	Page No
-					
010	1538234-0000		1	SPACER	
020	1532466-0000		1	BRACKET	
030	311103-0351		1	PARALLEL PIN ISO 2338 6M6X16 A1	

Pos	Part No	UN	Qty	Description	Page No

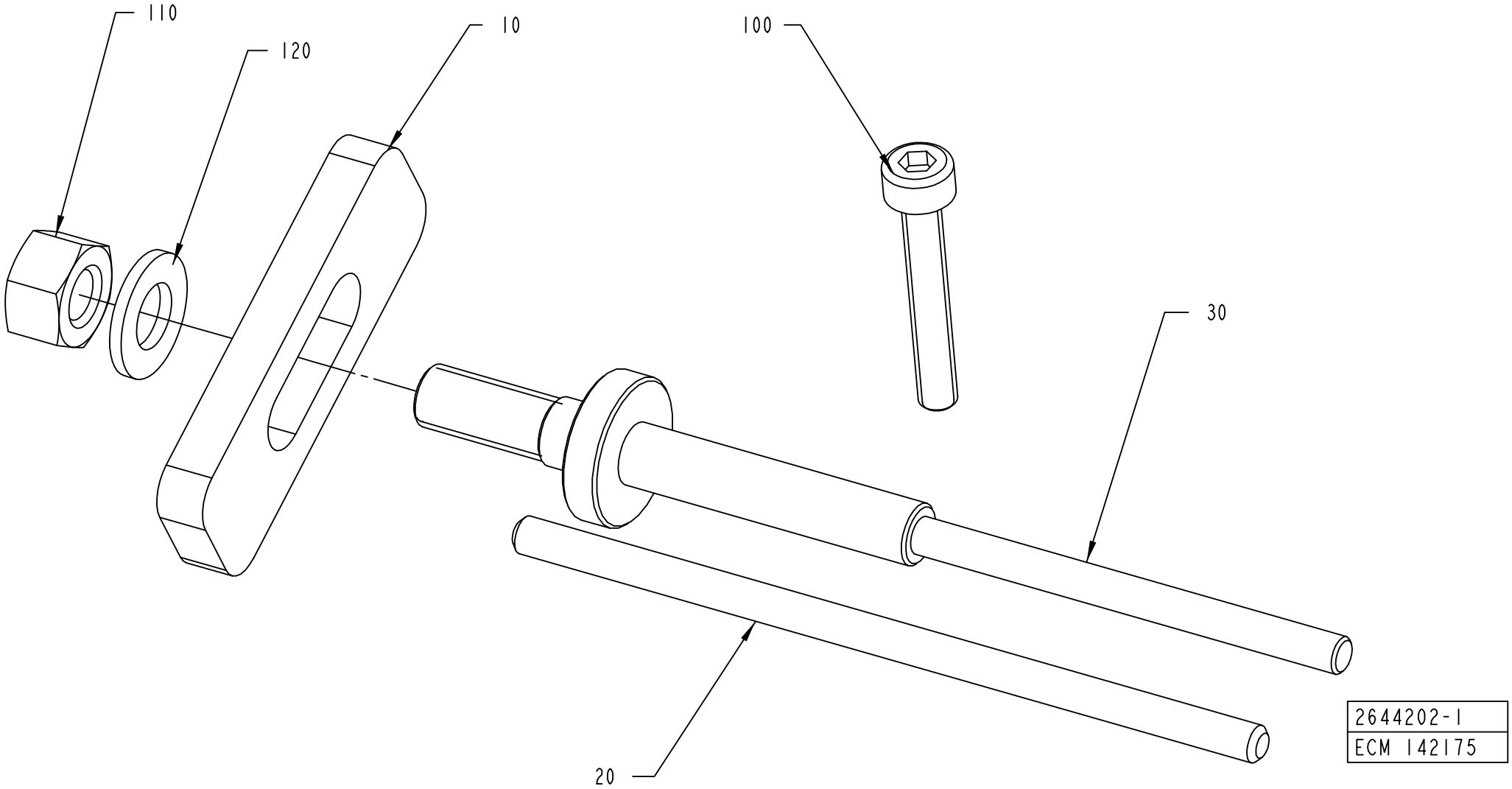
110
120
10
100
30
20
2644202-1
ECM 142175

ECM: 142523 - 20030930
Group number: 2644202-0100
Assembly Drawing: 2644202-1_1_AA

Pos	Part No	UN	Qty	Description	Page No
-					
010	2644203-0000		1	PLATE	
020	2644204-0000		1	SPINDLE	
030	2644205-0000		1	SPINDLE	
100	312115-0230		1	SCREW ISO4762 M3X20 A4	
110	312605-0314		1	HEXAGON NUT, M6M M5 A280	
120	315105-0146		1	WASHER BRB5,3X10RFR	

Pos	Part No	UN	Qty	Description	Page No

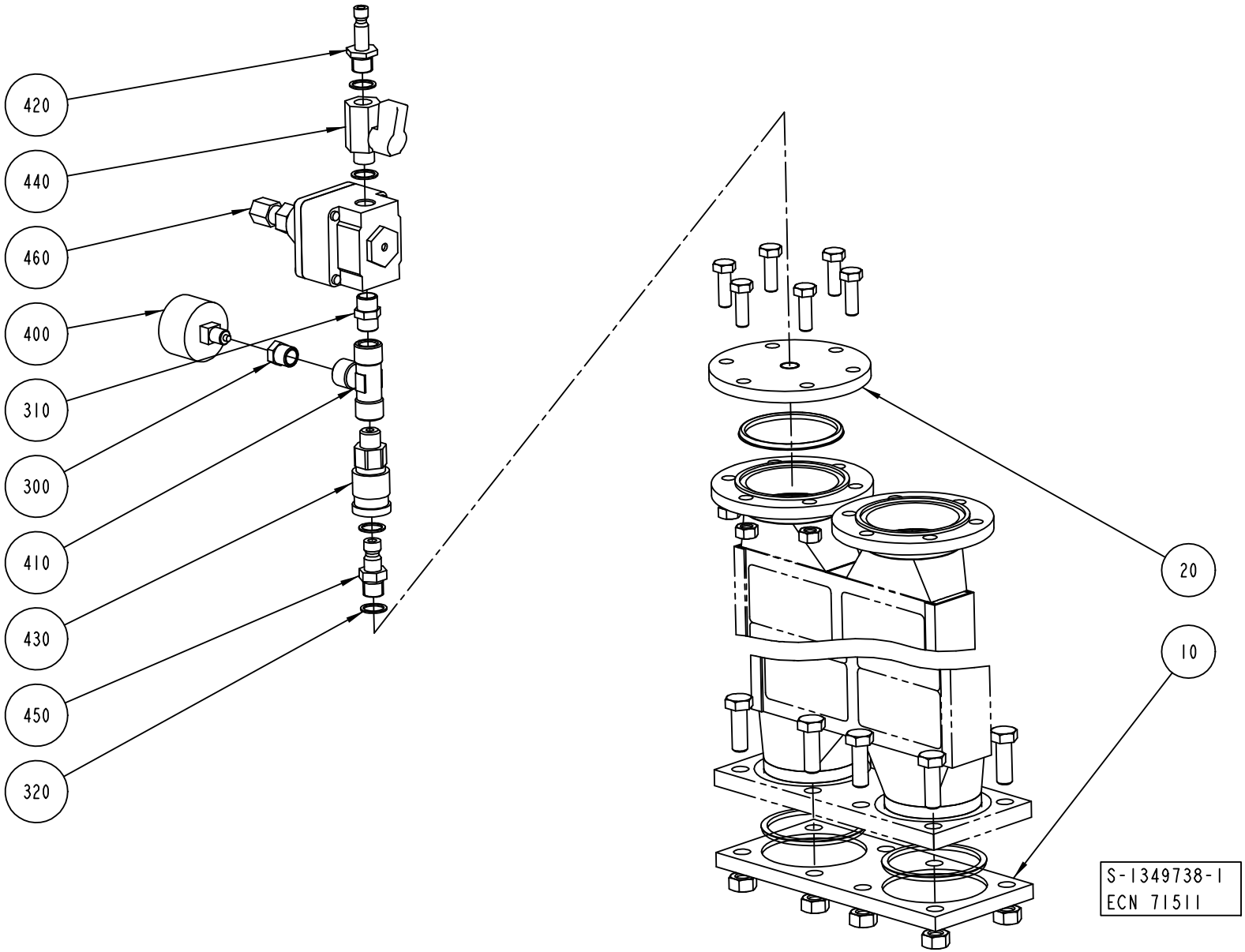
420
440
460
400
310
300
410
430
450
320
20
10
S-1349738-1
ECN 71511

ECM: 71511 - 19981102
Group number: 1349738-0100
Assembly Drawing: 1349738-1_1_AA

Pos	Part No	UN	Qty	Description	Page No
-					
010	1348263-0000		1	FLANGE	
020	979951-0000		1	FLANGE	
300	342701-0201		1	BUSHING,INT./EXT.G-THREAD G1/4"-G1/8"	
310	342700-0110		1	NIPPLES,HEXAGON,EXT.G-THREAD G1/4"-G1/4"	
320	315233-0110		4	WASHER CAPTIVE SEALING G1/4	
400	90043-0021		1	PRESSURE GAUGE, 0-1 BAR 1/8"	
410	90140-0018		1	T-PIPE, INT. THREAD, 2003-1/4	
420	90163-0007		1	CONNECTION	
430	90163-0016		1	QUICK COUPLING, (F) LP 006-0-WR013	
440	90187-0045		1	BALL VALVE G1/4 CR PL	
450	90163-0113		1	QUICK COUPLING, (M) LP-006-1-WR013-22	
460	90113-0056		1	REGULATOR, 11-818-998	
500	567372-0000		1	INSTRUCTION FOR USE	

Pos	Part No	UN	Qty	Description	Page No

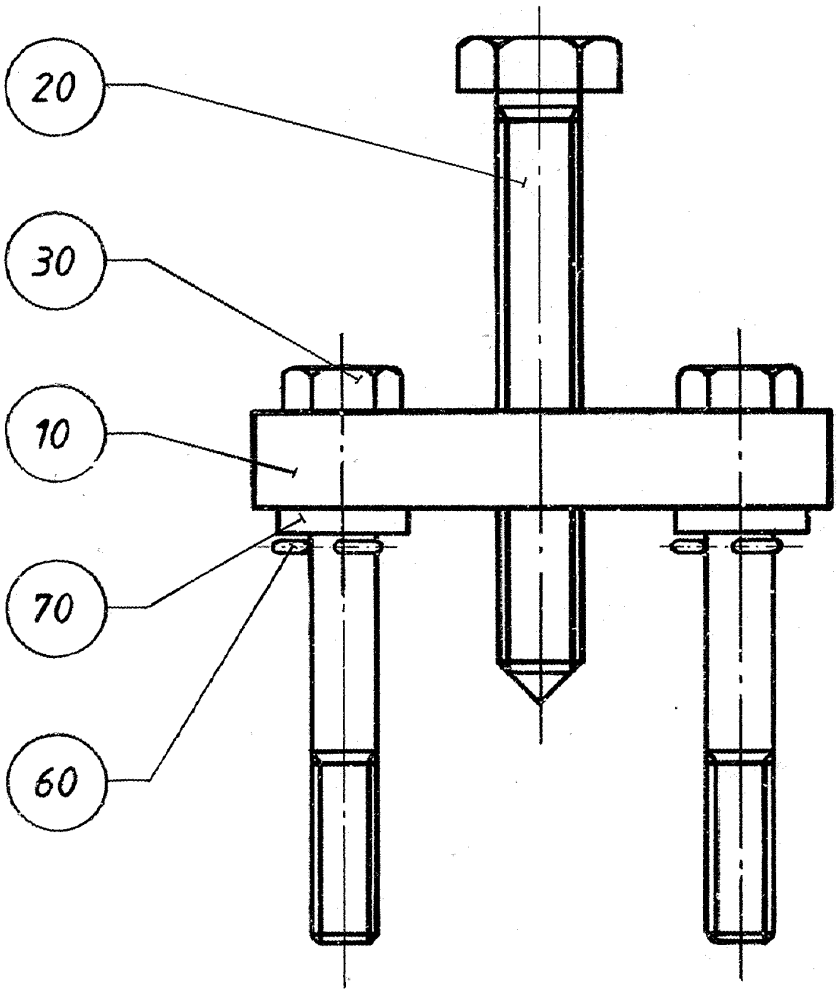
20
30
10
70
60

ECM: - -
Group number: 74305-0100
Assembly Drawing: 74305-1_1_AA

Pos	Part No	UN	Qty	Description	Page No
-					
010	74363-0000		1	FASTENING PLATE	
020	74364-0000		1	EXTRACTOR BOLT	
030	74365-0000		2	SCREW	
060	311411-0152		2	SPLIT PIN SP2X16RFR	
070	315115-0165		2	WASHER PLAIN, TBRB 8,4/16 H=3	

Pos	Part No	UN	Qty	Description	Page No

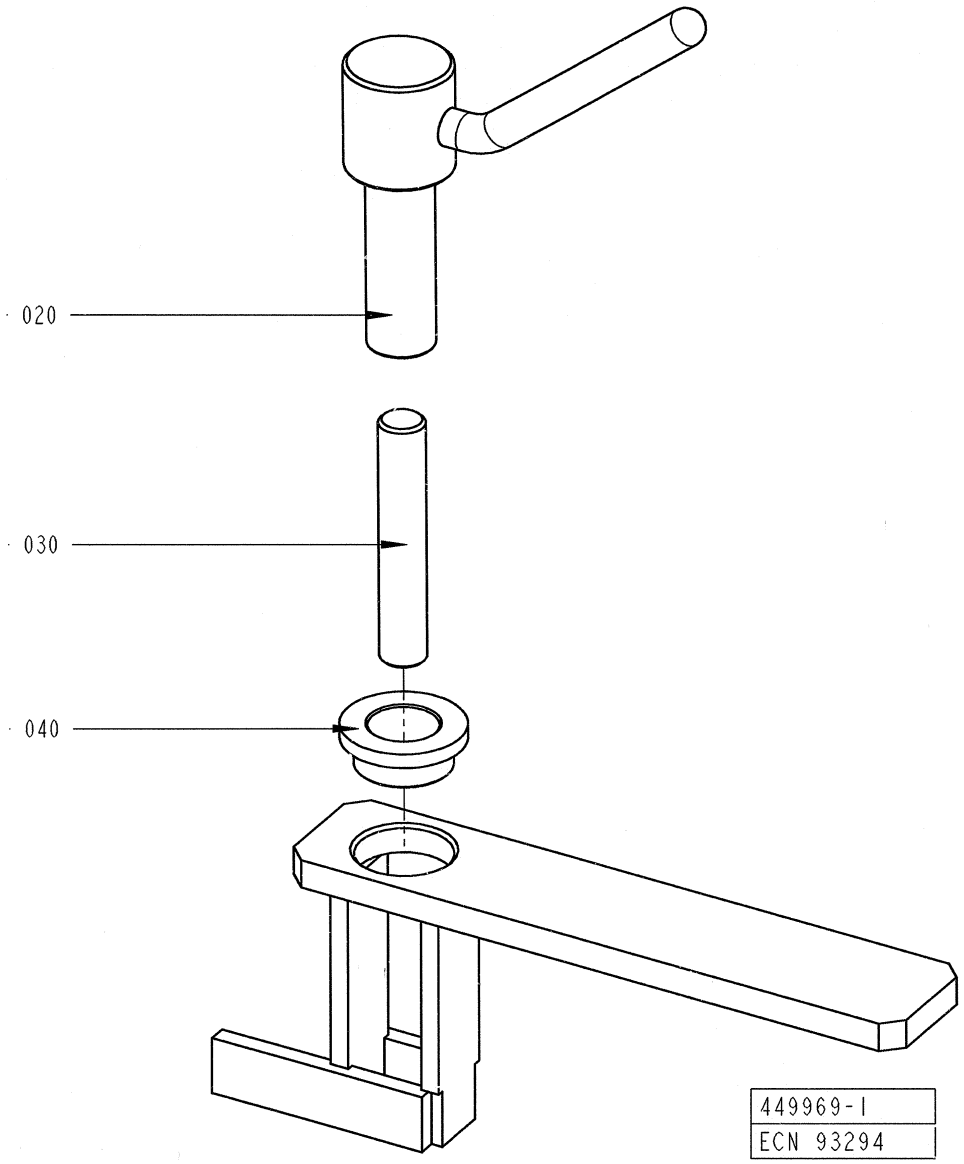
020
030
040
449969-I
ECN 93294

ECM: 6514 -
Group number: 449969-0100
Assembly Drawing: 449969-1_1_AA

Pos	Part No	UN	Qty	Description	Page No
-					
010	449970-0000		1	HOLDER	
020	449971-0000		1	SPINDLE	
030	312306-0546		1	SCREW ISO4026 M12X70 FZB	
040	321101-0222		1	FLANGE BUSHING, 18X25X12	

Pos	Part No	UN	Qty	Description	Page No

Machine Type | Group Description | Used-In | Group Number | Page No

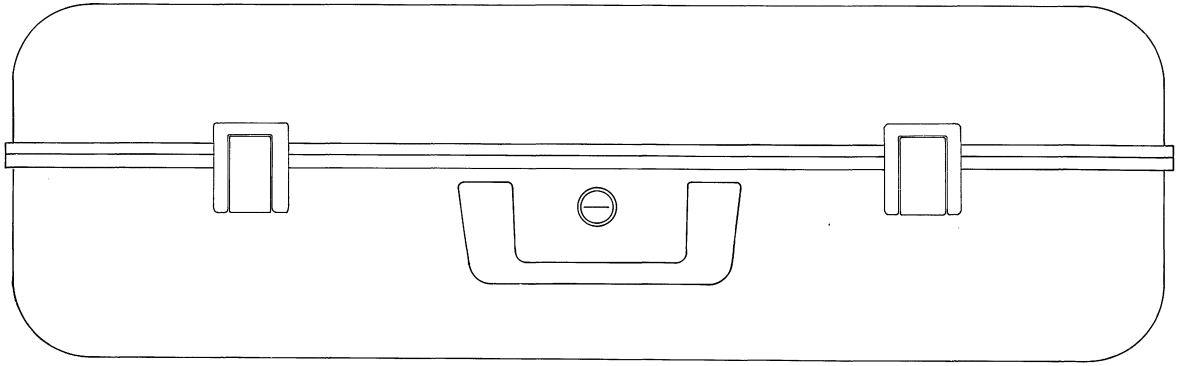

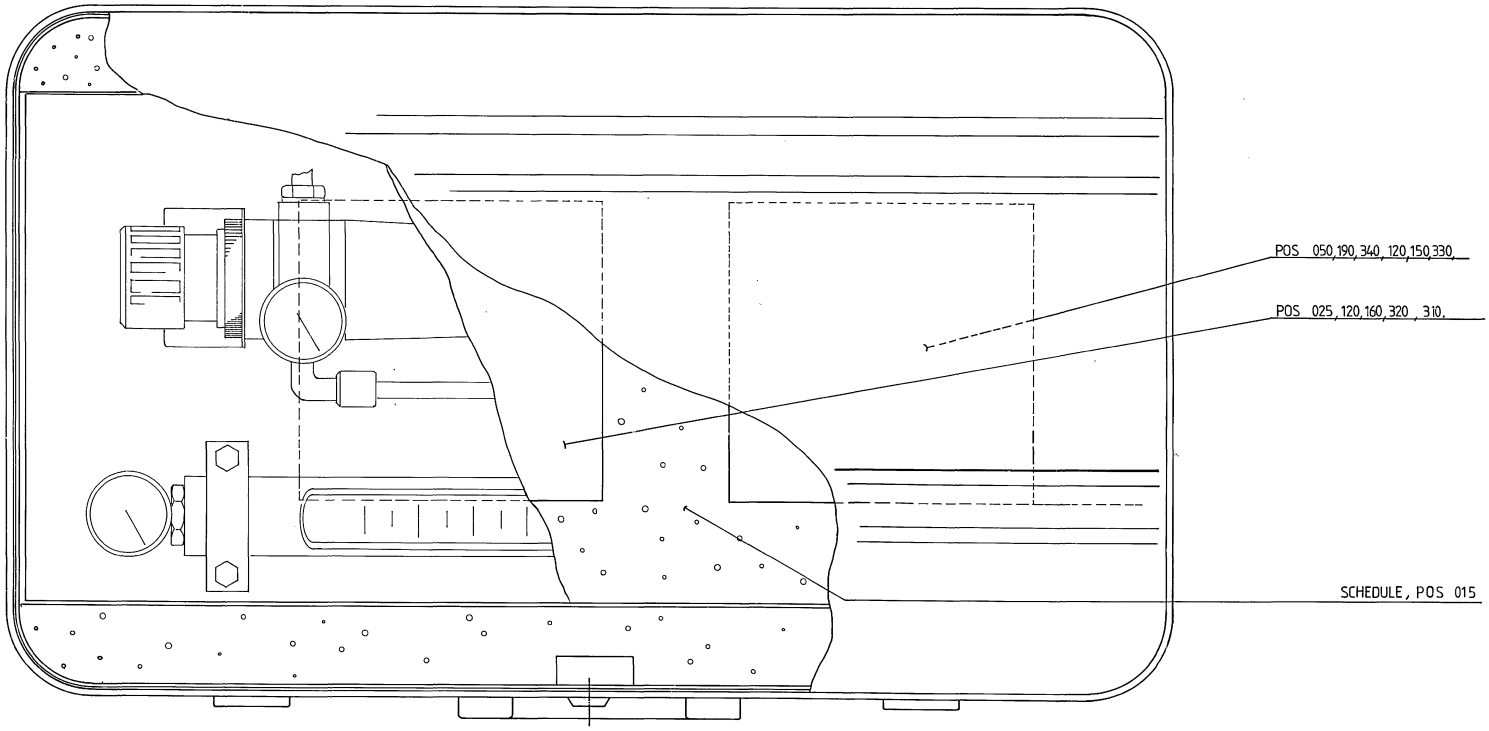
POS 050,190,340, 120,150,330,
POS 025,120,160,320 , 310,
SCHEDULE, POS 015

ECM: 71889 - 19980924
Group number: 533014-0100
Assembly Drawing: 533014-1_1_AA

This list covers pages from 10-50 to 10-53

Pos	Part No	UN	Qty	Description	Page No
-					
010	533905-0100		1	PONCH	**10-55**
010	532676-0000		1	SHEET	
015	533015-0000		1	WIRING DIAGRAM	
020	1360399-0000		4	PIPE HOLDER	
025	493735-0000		1	NIPPLE	
030	532677-0000		1	PIPE	
040	532678-0000		1	DOWEL	
050	532679-0000		1	PLATE	
060	90030-0223		1	BUSHING, INT/EXT. G-THREAD NO. 2531	
070	90030-0224		1	NIPPLES, EXT. THREAD, HEXAGON, NO. 2511	
075	90030-0225		2	BUSHING, INT/EXT. R-THREAD 1/4X3/8	
080	90043-0021		1	PRESSURE GAUGE, 0-1 BAR 1/8"	
090	90043-0043		1	PRESSURE GAUGE, 0-10 BAR 1/8"	
100	90113-0059		1	FILTER REGULATOR 50UM, B08-396-A3MG	
110	90140-0015		1	T-PIPE, INT. THREAD, 2003-1/8	
120	90163-0056		2	QUICK COUPLING, (F) 5054-6/4	
130	90163-0057		1	QUICK COUPLING, (M) 5150-1/8	
140	90163-0087		1	QUICK COUPLING, (M) 5150-1/4	
150	90166-0124	MM	1250	TUBE 6 MM PA,TRANSP.	
160	90166-0124	MM	1250	TUBE 6 MM PA,TRANSP.	
170	90224-0303		2	CONN. ELBOW 1020-8-1/4	
172	90113-0384		1	BRACKET FOR R11, 5203-06	
175	90243-0137		1	MEASURING INSTRUMENT	
180	90243-0147		1	FLOW METER	
190	90330-0029		1	PLUG, EXT. G-THREAD, R-236R3/8	
200	312105-0325		2	SCREW M6S ISO 4017 M5X10 A480	
210	312105-0383		4	SCREW M6S ISO 4014 M6X65 A480	
220	312602-0312		1	HEXAGON NUT, EN 24032 M6M M4 NIPLBR	
230	312605-0314		2	HEXAGON NUT, M6M M5 A280	
240	312605-0316		4	HEXAGON NUT, M6M M6 A280	
250	315103-0136		1	WASHER PLAIN, BRB, 4,3/8,H=0,8 NI PL BR	
260	315105-0146		4	WASHER BRB5,3X10RFR	
270	315105-0153		8	WASHER BRB6,4X12RFR	
280	315233-0109		2	WASHER CAPTIVE SEALING G1/8	
290	315233-0110		1	WASHER CAPTIVE SEALING G1/4	
295	315233-0111		2	WASHER CAPTIVE SEALING G3/8	
300	315233-0113		2	WASHER CAPTIVE SEALING G1/2	
310	342921-0113		1	STRAIGHT COUPLING,EXT.THREADED 6/4-G1/8"	
320	342921-0114		1	STRAIGHT COUPLING,EXT.THREADED 6/4-G1/4"	
330	342980-0114		1	BANJO-CONNECTION,RING 6/4-G1/4"	
340	342980-0314		1	BANJO-HOLLOW BOLT COUPL,EXT.THR.02-G1/4"	
350	342701-0201		1	BUSHING,INT./EXT.G-THREAD G1/4"-G1/8"	

Machine Type	Group Description	Used-In	Group Number	Page No

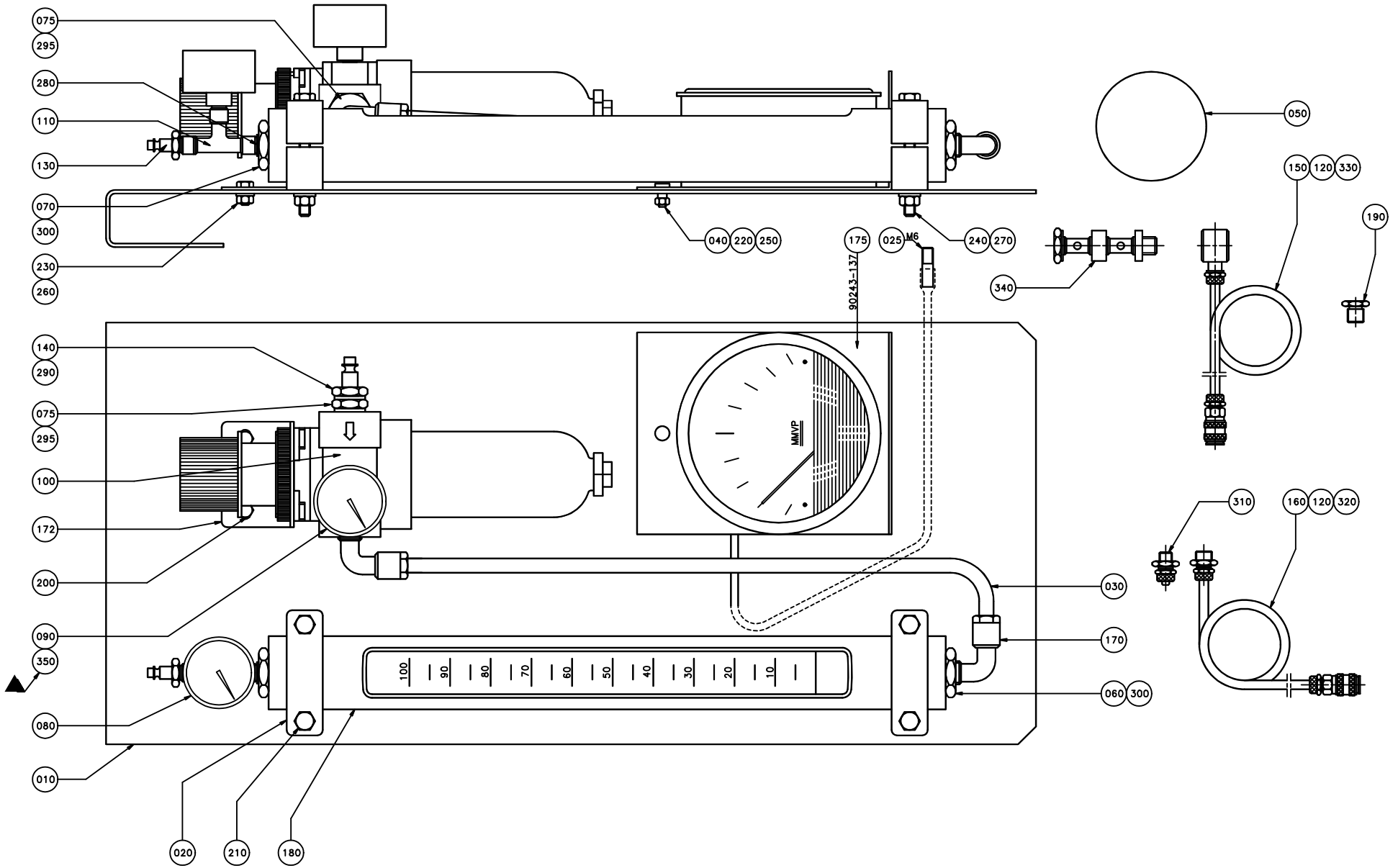
075
295
280
110
130
070
300
230
260
040
220
250
175
025
M6
240
270
90243-137
050
150
120
330
190
340
140
290
075
295
100
172
200
090
350
080
010
020
210
180
MMVP
100
90
80
70
60
50
40
30
20
10
030
170
060
300
310
160
120
320

ECM: 71889 - 19980924
Group number: 533014-0100
Assembly Drawing: 533014-2_1_AB

This list covers pages from 10-50 to 10-53

Pos	Part No	UN	Qty	Description	Page No
-					
010	533905-0100		1	PONCH	**10-55**
010	532676-0000		1	SHEET	
015	533015-0000		1	WIRING DIAGRAM	
020	1360399-0000		4	PIPE HOLDER	
025	493735-0000		1	NIPPLE	
030	532677-0000		1	PIPE	
040	532678-0000		1	DOWEL	
050	532679-0000		1	PLATE	
060	90030-0223		1	BUSHING, INT/EXT. G-THREAD NO. 2531	
070	90030-0224		1	NIPPLES, EXT. THREAD, HEXAGON, NO. 2511	
075	90030-0225		2	BUSHING, INT/EXT. R-THREAD 1/4X3/8	
080	90043-0021		1	PRESSURE GAUGE, 0-1 BAR 1/8"	
090	90043-0043		1	PRESSURE GAUGE, 0-10 BAR 1/8"	
100	90113-0059		1	FILTER REGULATOR 50UM, B08-396-A3MG	
110	90140-0015		1	T-PIPE, INT. THREAD, 2003-1/8	
120	90163-0056		2	QUICK COUPLING, (F) 5054-6/4	
130	90163-0057		1	QUICK COUPLING, (M) 5150-1/8	
140	90163-0087		1	QUICK COUPLING, (M) 5150-1/4	
150	90166-0124	MM	1250	TUBE 6 MM PA,TRANSP.	
160	90166-0124	MM	1250	TUBE 6 MM PA,TRANSP.	
170	90224-0303		2	CONN. ELBOW 1020-8-1/4	
172	90113-0384		1	BRACKET FOR R11, 5203-06	
175	90243-0137		1	MEASURING INSTRUMENT	
180	90243-0147		1	FLOW METER	
190	90330-0029		1	PLUG, EXT. G-THREAD, R-236R3/8	
200	312105-0325		2	SCREW M6S ISO 4017 M5X10 A480	
210	312105-0383		4	SCREW M6S ISO 4014 M6X65 A480	
220	312602-0312		1	HEXAGON NUT, EN 24032 M6M M4 NIPLBR	
230	312605-0314		2	HEXAGON NUT, M6M M5 A280	
240	312605-0316		4	HEXAGON NUT, M6M M6 A280	
250	315103-0136		1	WASHER PLAIN, BRB, 4,3/8,H=0,8 NI PL BR	
260	315105-0146		4	WASHER BRB5,3X10RFR	
270	315105-0153		8	WASHER BRB6,4X12RFR	
280	315233-0109		2	WASHER CAPTIVE SEALING G1/8	
290	315233-0110		1	WASHER CAPTIVE SEALING G1/4	
295	315233-0111		2	WASHER CAPTIVE SEALING G3/8	
300	315233-0113		2	WASHER CAPTIVE SEALING G1/2	
310	342921-0113		1	STRAIGHT COUPLING,EXT.THREADED 6/4-G1/8"	
320	342921-0114		1	STRAIGHT COUPLING,EXT.THREADED 6/4-G1/4"	
330	342980-0114		1	BANJO-CONNECTION,RING 6/4-G1/4"	
340	342980-0314		1	BANJO-HOLLOW BOLT COUPL,EXT.THR.02-G1/4"	
350	342701-0201		1	BUSHING,INT./EXT.G-THREAD G1/4"-G1/8"	

Machine Type | Group Description | Used-In | Group Number | Page No

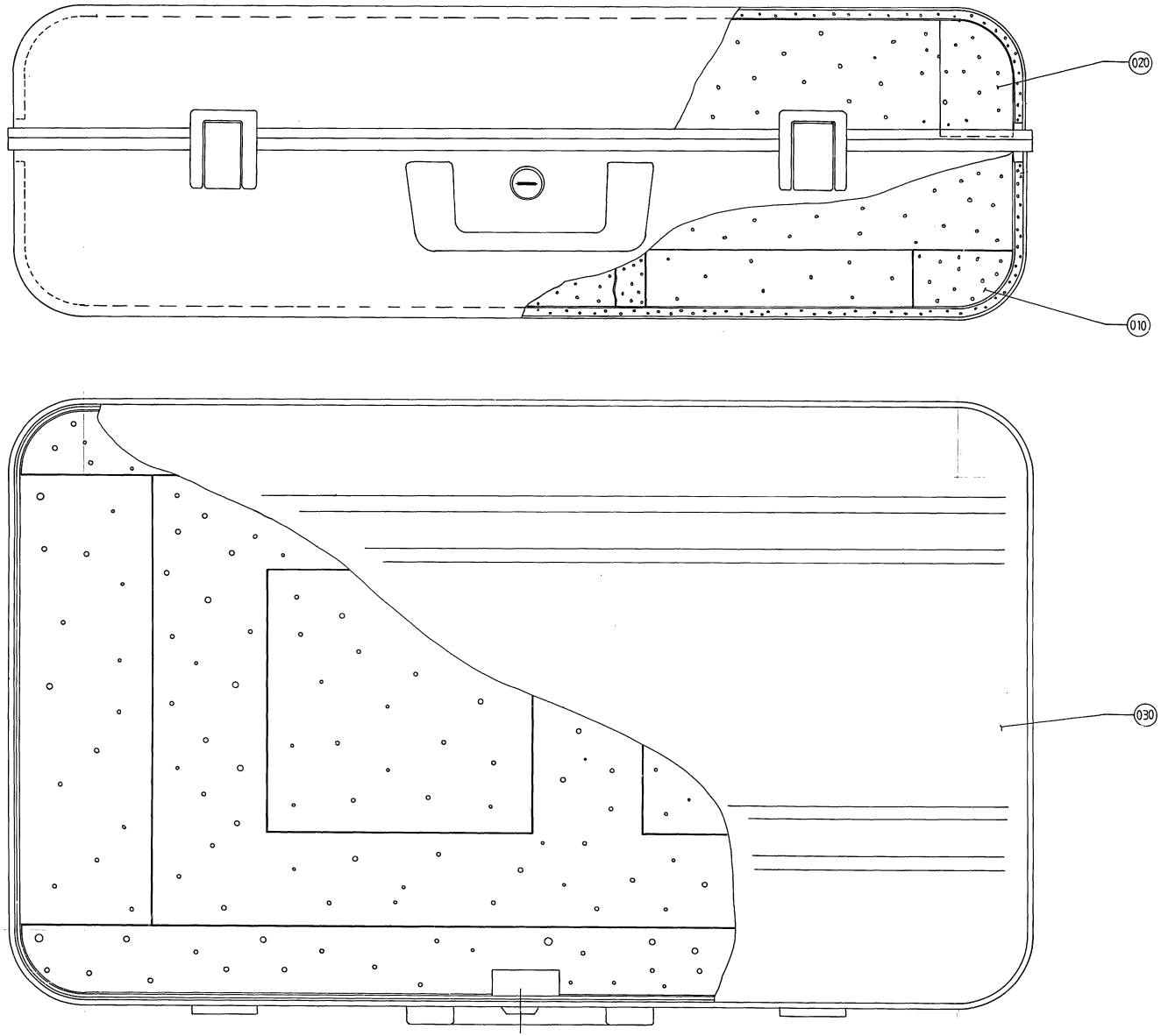
020
010
030

ECM: - -
Group number: 533905-0100
Assembly Drawing: 533905-1_1_AA

Pos	Part No	UN	Qty	Description	Page No
-					
010	533374-0000		1	FITMENT BOTTOM	
020	533906-0000		1	FITMENT COVER	
030	90243-0118		1	TOOL BOX, NO. ZERO 105X-SI	

Pos	Part No	UN	Qty	Description	Page No

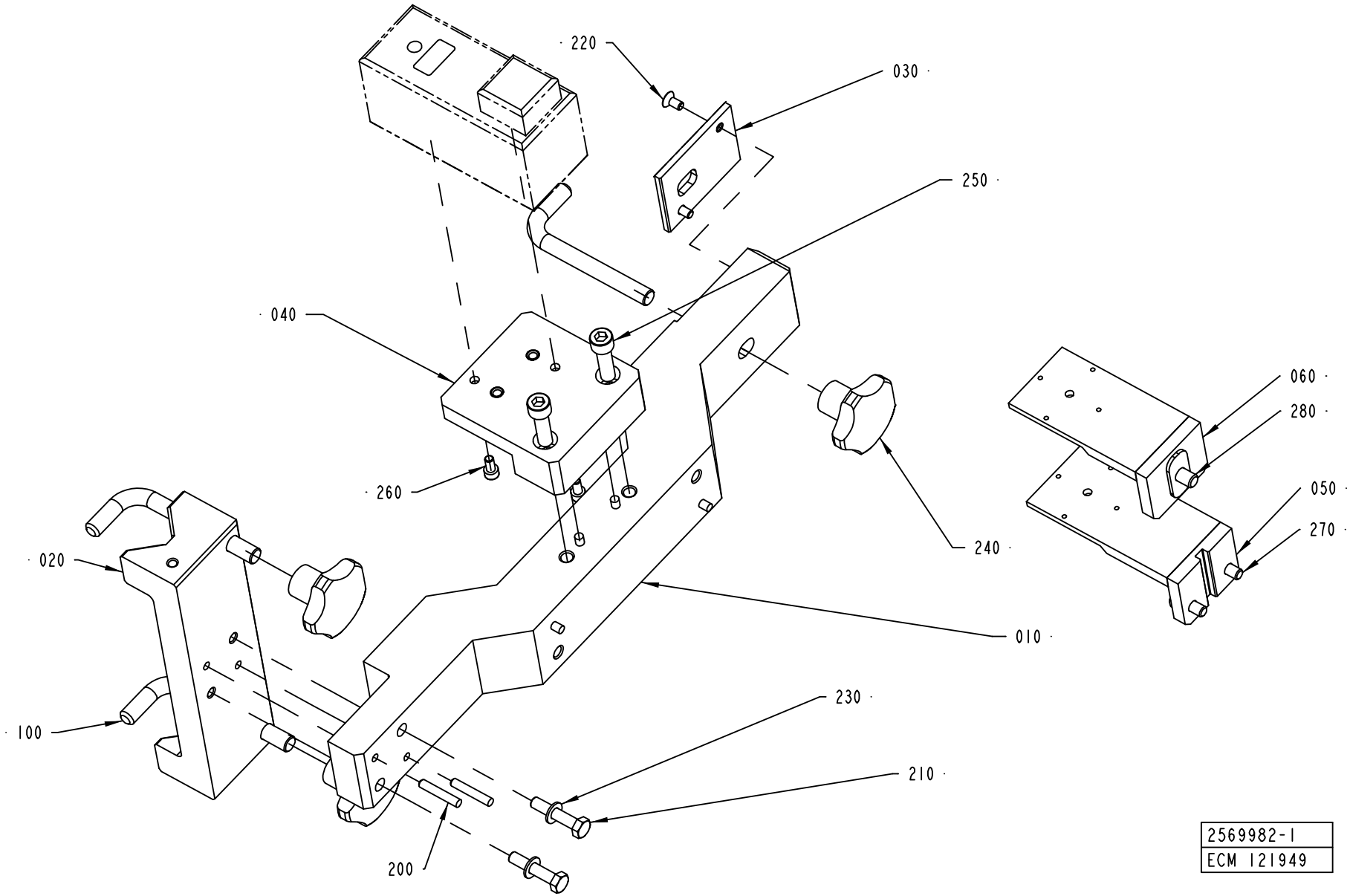
220
030
250
040
060
280
260
050
270
240
020
010
100
230
210
200
2569982-1
ECM 121949

ECM: 121962 - 20030403
Group number: 2569982-0100
Assembly Drawing: 2569982-1_1_AA

Pos	Part No	UN	Qty	Description	Page No
-					
010	2570741-0000		1	HOLDER	
020	2570746-0000		1	BRACKET	
030	2570747-0000		1	PLATE	
040	2570743-0000		1	BRACKET	
050	2515291-0000		1	BRACKET	
060	2515292-0000		1	BRACKET	
100	2523265-0000		3	HOOK	
200	311103-0359		2	PARALLEL PIN ISO 2338 6M6X35 A1	
210	312109-0459		2	SCREW M6S ISO 4017 M8X40 A480	
220	312155-0366		2	SCREW EN 10642 MF6S M6X12 A480	
230	315105-0165		2	WASHER BRB8,4X16RFR	
240	318850-0113		3	STELLAR KNOB, INT. THREAD, NO. 8306-0367	
250	312111-0497		2	SCREW HEX.SOCK.HD.MC6S-TT 10X35 88 FZ	
260	312111-0366		2	SCREW HEX.SOCK.HD.MC6S-TT 6X12 88 FZB	
270	312105-0451		2	SCREW M6S ISO 4017 M8X20 A480	
280	312105-0493		1	SCREW M6S ISO 4017 M10X25 A480	

Pos	Part No	UN	Qty	Description	Page No

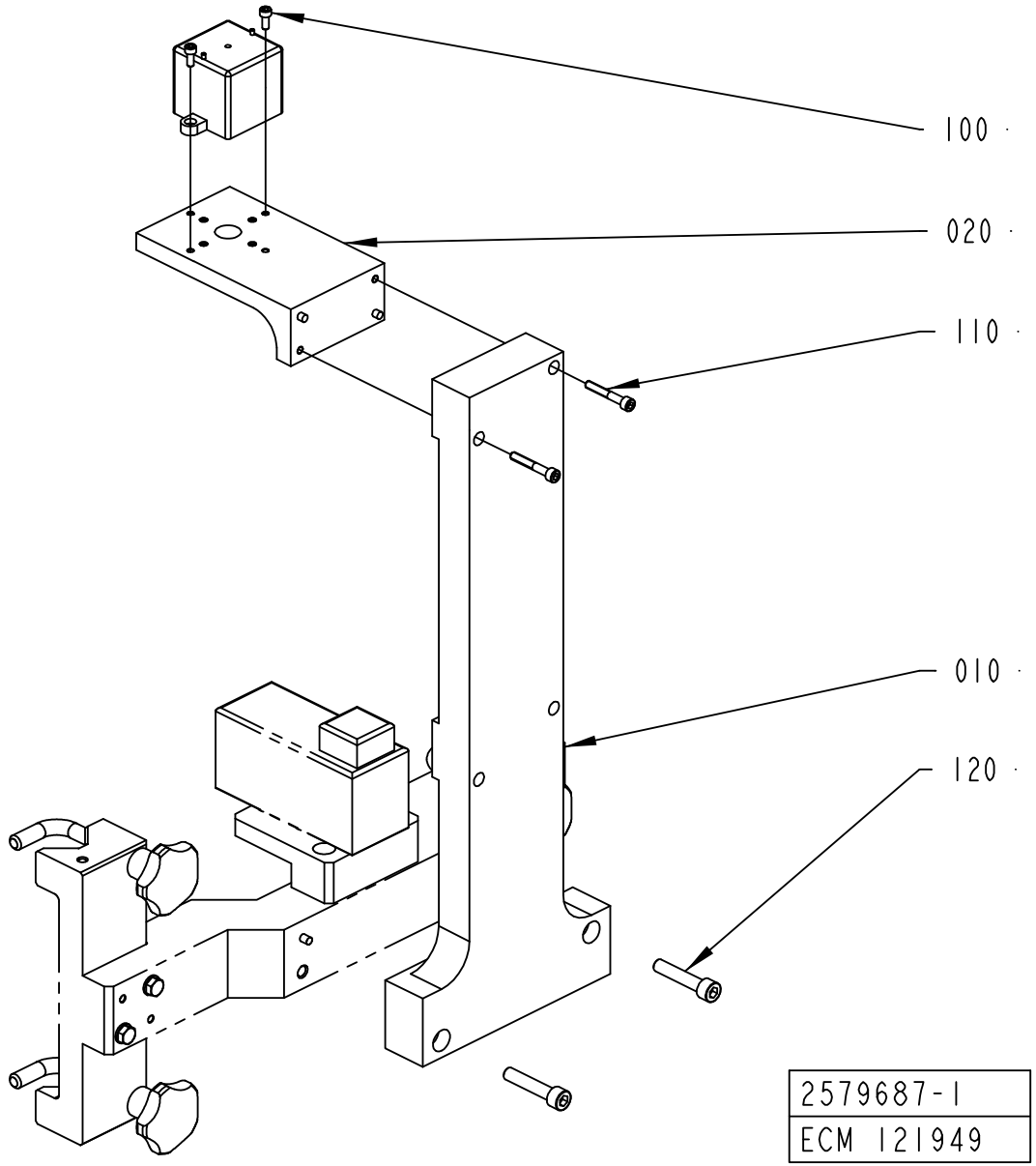
100
020
110
010
120
2579687-1
ECM 121949

ECM: 124333 - 20030403
Group number: 2579687-0100
Assembly Drawing: 2579687-1_1_AA

Pos	Part No	UN	Qty	Description	Page No
-					
010	2570744-0000		1	HOLDER	
020	2579688-0000		1	HOLDER	
100	312111-0327		2	SCREW HEX.SOCK.HD.MC6S-TT 5X12 88 FZB	
110	312115-0378		2	SCREW ISO4762 M6X40 A4 80	
120	312111-0501		2	SCREW HEX.SOCK.HD.MC6S-TT 10X50 88 FZ	

Pos	Part No	UN	Qty	Description	Page No

This page is intentionally left blank.

ECM: 138267 - 20030704
Group number: 2556261-0100
Assembly Drawing:

Pos	Part No	UN	Qty	Description	Page No
-					
010	527898-0100		1	CONTAINER H2O2	**2-35, 10-63**
020	529345-0100		1	FILLING STATION H2O2	**10-65**
030	532210-0100		1	PEROXIDE CONTAINER TROLLEY	**10-67**
040	1035201-0100		1	PAPER REEL HOLDER	**10-69**
050	1538186-0100		1	PAPER TROLLEY	**10-71**
070	2565443-0100		1	LIFTING DEVICE	**10-83**
080	2514392-0100		1	MACHINE CARRIAGE	**10-85**
090	90031-0300		1	PLC,COMM.CABLE AND ADAPTER	
100	90427-0014		1	INK JET PRINTER A300 STD 3M CONDUIT	
110	90459-0285		1	CD UNIT E100009A	
120	1369439-0102		1	PLMS ON-LINE	**10-89**
130	1520633-0002		12	DOLLY	
130	1520633-0002		12	DOLLY	
140	2587326-0000		2	BRACKET	
150	312105-0489		8	SCREW M6S ISO 4017 M10X16 A480	

Pos	Part No	UN	Qty	Description	Page No

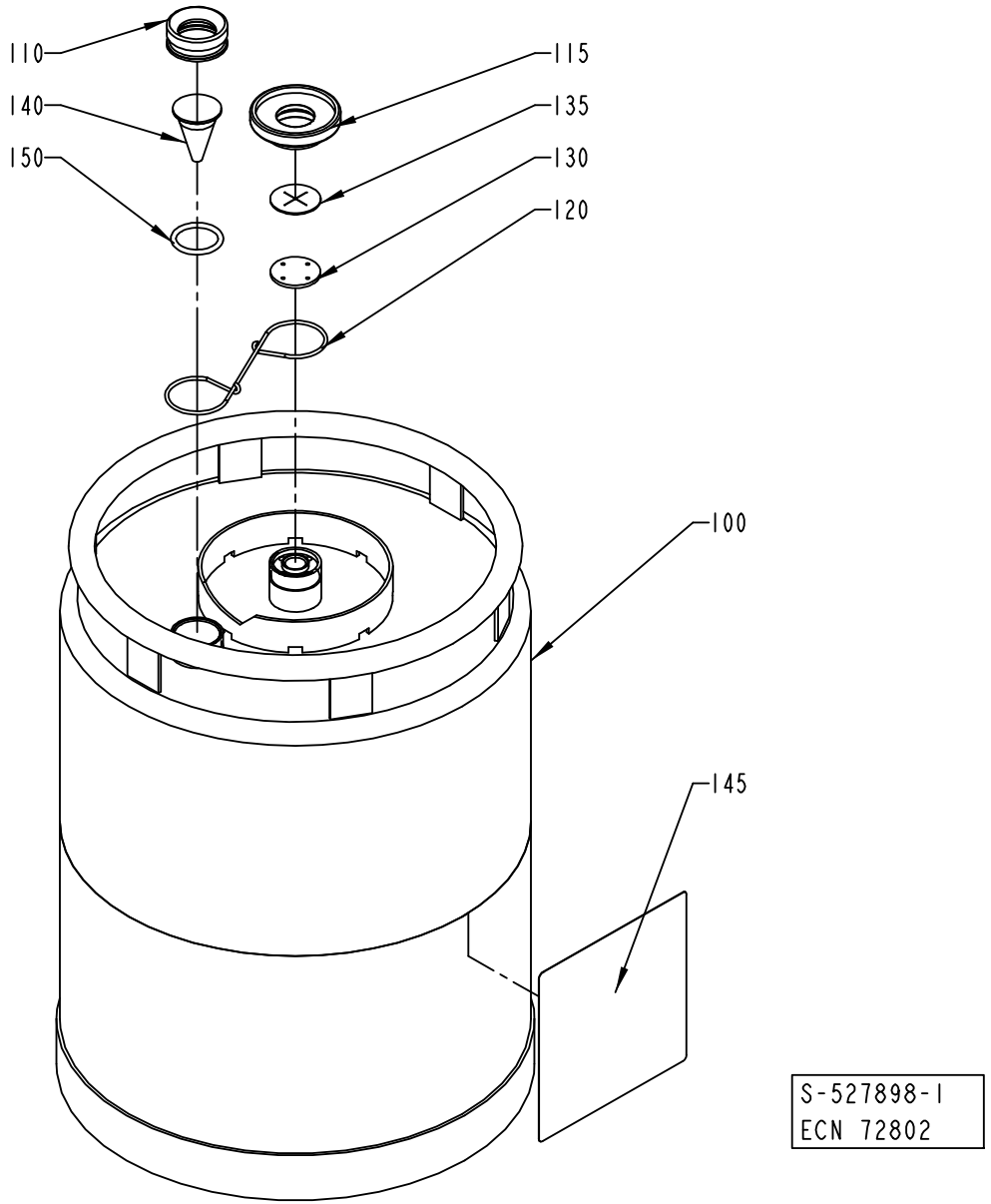
110
115
140
135
150
130
120
100
145
S-527898-1
ECN 72802

ECM: 115873 - 20020930
Group number: 527898-0100
Assembly Drawing: 527898-1_1_AB

Pos	Part No	UN	Qty	Description	Page No
-					
100	561427-0000		1	CONTAINER	
110	273977-0000		1	NUT	
115	273996-0000		1	NUT	
120	273980-0000		1	SPRING	
130	565250-0000		1	WASHER	
135	565251-0000		1	VALVE	
140	273978-0000		1	LEVEL GLASS	
145	532655-0000		1	CAUTION SIGN	
150	927422-0003		1	O.RING 24.2X3 SILICON	

Pos	Part No	UN	Qty	Description	Page No

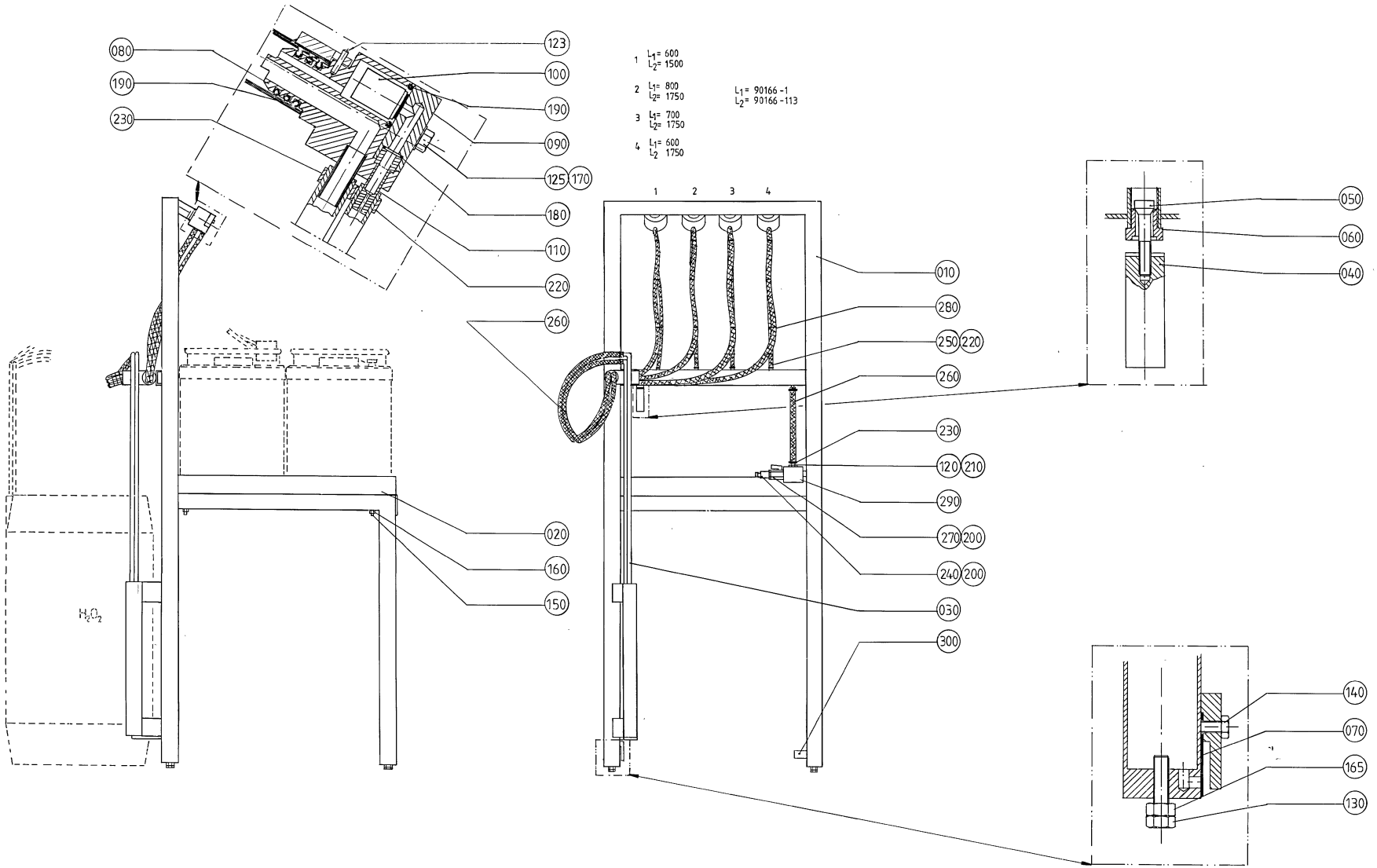
080
190
230
123
100
190
090
125
170
180
110
220
260
1 L1= 600 L2= 1500
2 L1= 800 L2= 1750
3 L1= 700 L2= 1750
4 L1= 600 L2 1750
L1= 90166 -1
L2= 90166 -113
1 2 3 4
010
280
250 220
260
230
120 210
290
270 200
240 200
030
300
050
060
040
140
070
165
130
020
160
150
H2O2

ECM: - -
Group number: 529345-0100
Assembly Drawing: 529345-1_1_AA

Pos	Part No	UN	Qty	Description	Page No
-					
010	534692-0000		1	FRAME SECTION	
020	534693-0000		1	PLATE	
030	534694-0000		1	SUCTIONPIPE	
040	534695-0000		1	WEIGHT	
050	534696-0000		1	VALVE	
060	534697-0000		1	VALVE HOUSING	
070	534691-0000		1	DIAPHRAGM	
080	534637-0000		4	ATTACHMENT	
090	534636-0000		4	LEVEL GLASS	
100	534635-0000		4	VALVE	
110	534634-0000		4	PIPE	
120	534698-0000		1	NIPPLE	
123	311103-0235		1	PARALLEL PIN ISO 2338 3M6X14	
125	312105-0374		8	SCREW M6S ISO 4014 M6X30 A480	
130	312105-0455		4	SCREW M6S ISO 4017 M8X30 A480	
140	312125-0327		1	SCREW ISO 1207 M5X12 A4	
150	312145-0380		4	SCREW ISO 2009 MFS M6X50 A4	
160	312812-0316		4	HEXAGON NUT, NY-LOCK M6 A480	
165	312605-0318		4	HEXAGON NUT, M6M M8 A280	
170	315105-0153		8	WASHER BRB6,4X12RFR	
180	927421-0005		4	O-RING 7.3X2.4 SILICON	
190	927422-0001		16	O-RING 19.2X3 SILICON	
200	315233-0110		2	WASHER CAPTIVE SEALING G1/4	
210	315233-0113		2	WASHER CAPTIVE SEALING G1/2	
220	342991-0100		8	HOSE CLIP,WORM DRIVE TYPE 10-13	
230	342991-0101		10	HOSE CLIP,WORM DRIVE TYPE (13)-16	
240	90163-0007		1	CONNECTION	
250	90166-0045	MM	3500	HOSE PVC TRANSP. 6/12	
260	90166-0113	MM	7500	HOSE	
270	90187-0045		1	BALL VALVE G1/4 CR PL	
280	352113-0102		30	CLIP-STRIP, BLACK 188X4,8 MM	
290	90425-0016		1	MECMAN TYPE E120 735-120-000	
300	90328-0025		1	SILENCER G1/2	

Pos	Part No	UN	Qty	Description	Page No

Machine Type | Group Description | Used-In | Group Number | Page No

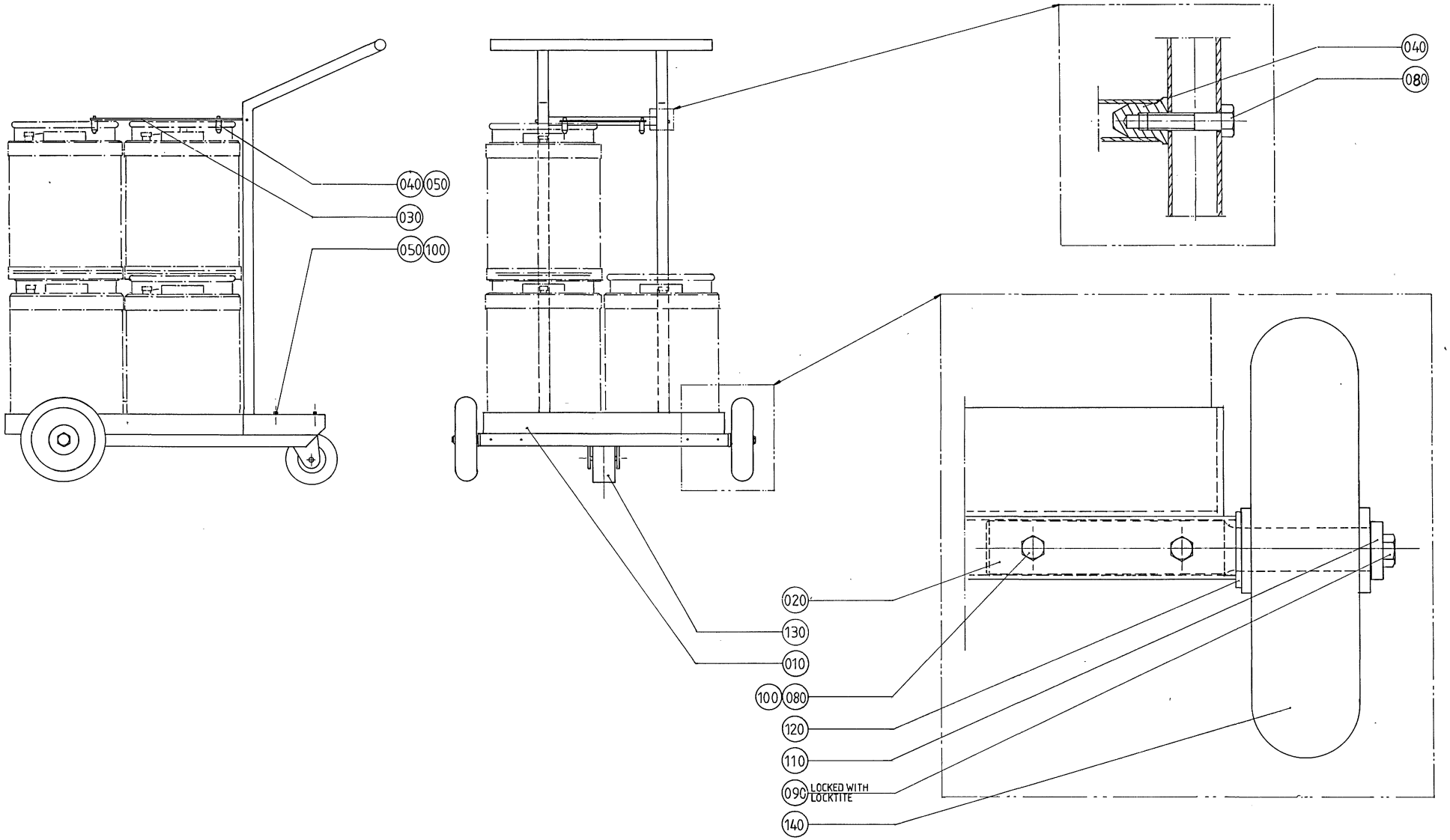
040
050
030
050
100
040
080
020
130
010
100
080
120
110
090
LOCKED WITH LOCKTITE
140

ECM: - -
Group number: 532210-0100
Assembly Drawing: 532210-1_1_AA

Pos	Part No	UN	Qty	Description	Page No
-					
010	273985-0000		1	CARRIAGE	
020	532208-0000		2	SHAFT	
030	532209-0000		1	SHEET	
040	532211-0000		6	DOWEL	
050	312105-0449		8	SCREW M6S ISO 4017 M8X16 A480	
080	312105-0459		6	SCREW M6S ISO 4014 M8X40 A480	
090	312105-0491		2	SCREW M6S ISO 4017 M10X20 A480	
100	312605-0318		4	HEXAGON NUT, M6M M8 A280	
110	315115-0173		2	WASHER PLAIN, TBRB 10,5/22 H=4	
120	315105-0192		2	WASHER BRB21X36RFR	
130	90191-0060		1	CASTOR WHEEL, NO. 1599PRT	
140	90191-0047		2	WHEEL, NO. 442-200-113	

Pos	Part No	UN	Qty	Description	Page No

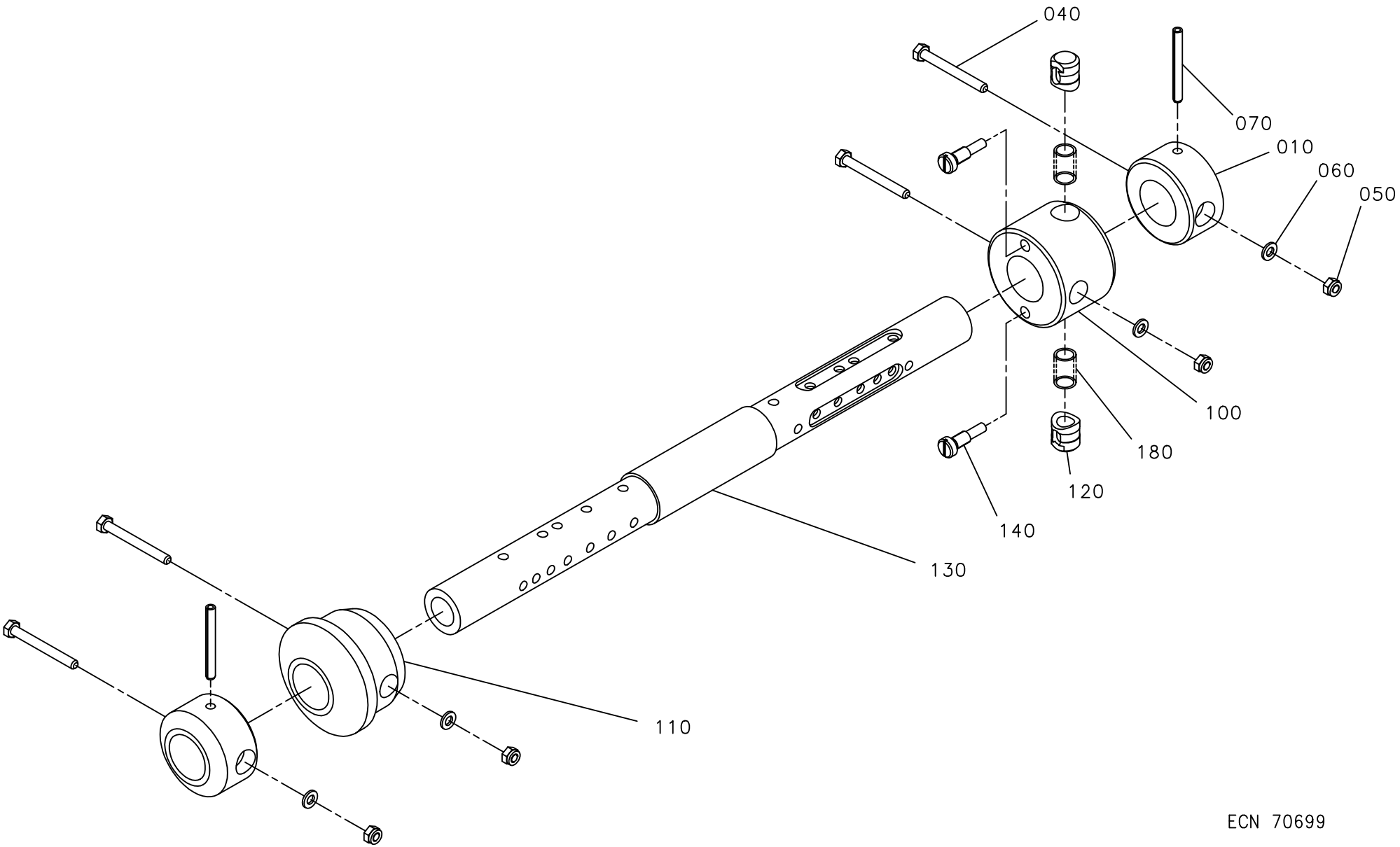

ECN 70699

ECM: 93834 - 20010709
Group number: 1035201-0100
Assembly Drawing: 1035201-1_1_AA

Pos	Part No	UN	Qty	Description	Page No
0200S, 0200B, 0250B					
010	440259-0000		2	RETAINING RING	
040	312101-0381		4	SCREW M6S M6X55 FZB	
050	312812-0316		4	HEXAGON NUT, NY-LOCK M6 A480	
060	315101-0153		4	WASHER PLAIN, BRB, 6,4/12 H=1,5	
100	271239-0000		1	SLEEVE	
110	272810-0001		1	SLEEVE	
0500B, 1000B					
040	312101-0381		2	SCREW M6S M6X55 FZB	
050	312812-0316		2	HEXAGON NUT, NY-LOCK M6 A480	
060	315101-0153		2	WASHER PLAIN, BRB, 6,4/12 H=1,5	
100	271239-0000		1	SLEEVE	
110	272810-0001		1	SLEEVE	
1000S					
040	312101-0381		2	SCREW M6S M6X55 FZB	
050	312812-0316		2	HEXAGON NUT, NY-LOCK M6 A480	
060	315101-0153		2	WASHER PLAIN, BRB, 6,4/12 H=1,5	
100	569942-0000		1	SLEEVE	
110	569943-0000		1	SLEEVE	
1000SQ					
010	574051-0000		2	RETAINING RING	
040	312101-0381		2	SCREW M6S M6X55 FZB	
050	312812-0316		2	HEXAGON NUT, NY-LOCK M6 A480	
060	315101-0153		2	WASHER PLAIN, BRB, 6,4/12 H=1,5	
070	311112-0350		2	SPRING PIN, ISO 8752 6X55-C	
100	271239-0000		1	SLEEVE	
110	272810-0001		1	SLEEVE	
Common Parts					
120	272813-0000		2	PLUNGER	
130	1538597-0000		1	SHAFT	
140	271241-0000		2	SCREW	
180	90335-0025		2	COMP. SPRING 22010, 1X11X26	

Pos	Part No	UN	Qty	Description	Page No

Machine Type | Group Description | Used-In | Group Number | Page No

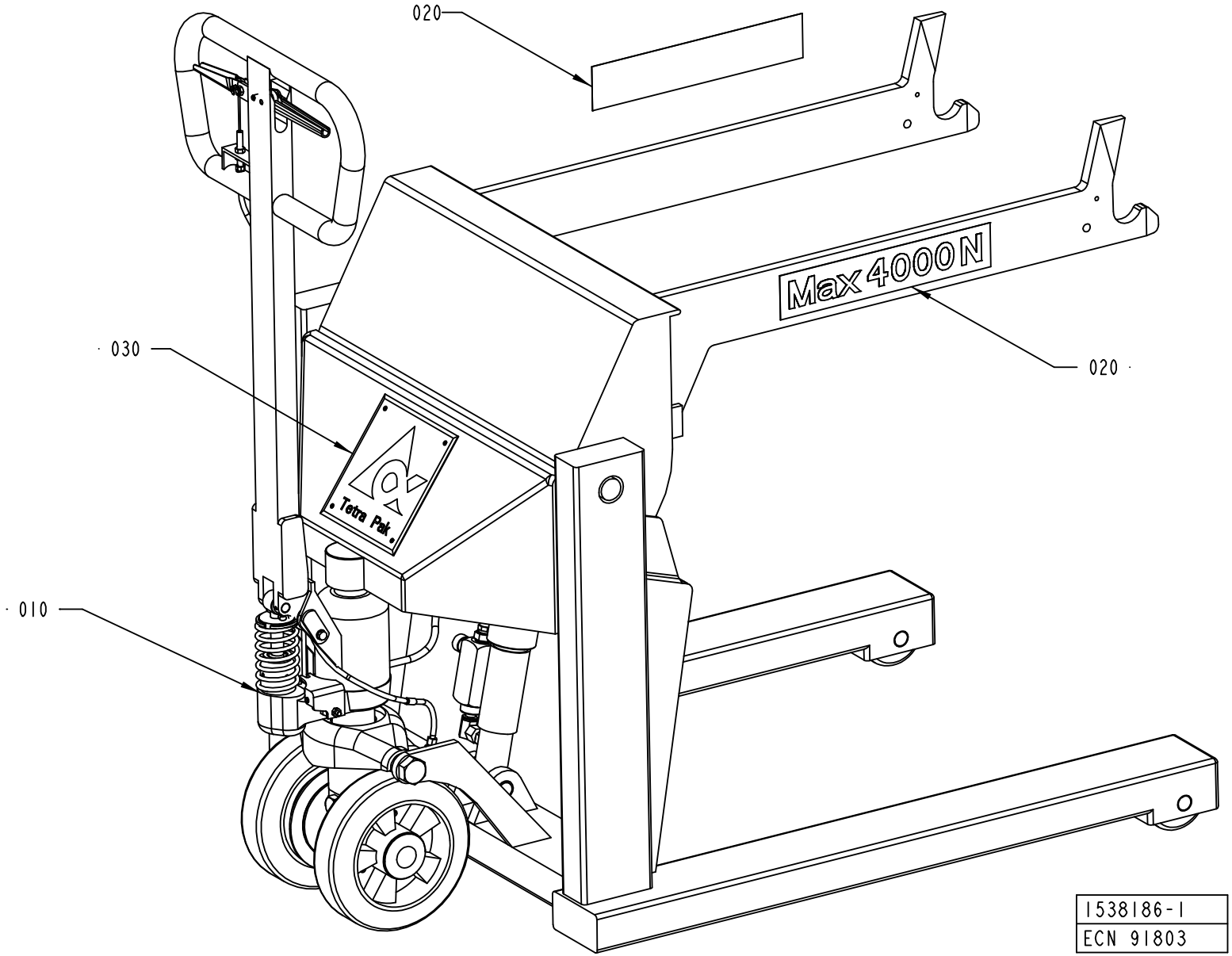
020
Max 4000N
020
030
Tetra Pak
010
1538186-1
ECN 91803

ECM: 133714 - 20030513
Group number: 1538186-0100
Assembly Drawing: 1538186-1_1_AA

Pos	Part No	UN	Qty	Description	Page No
-					
010	90458-1474		1	PAPER TROLLEY, 32 04 192 3	**10-73**
020	522308-0000		2	SIGN	
030	574658-0000		1	LOGOTYPE TP	

Pos	Part No	UN	Qty	Description	Page No

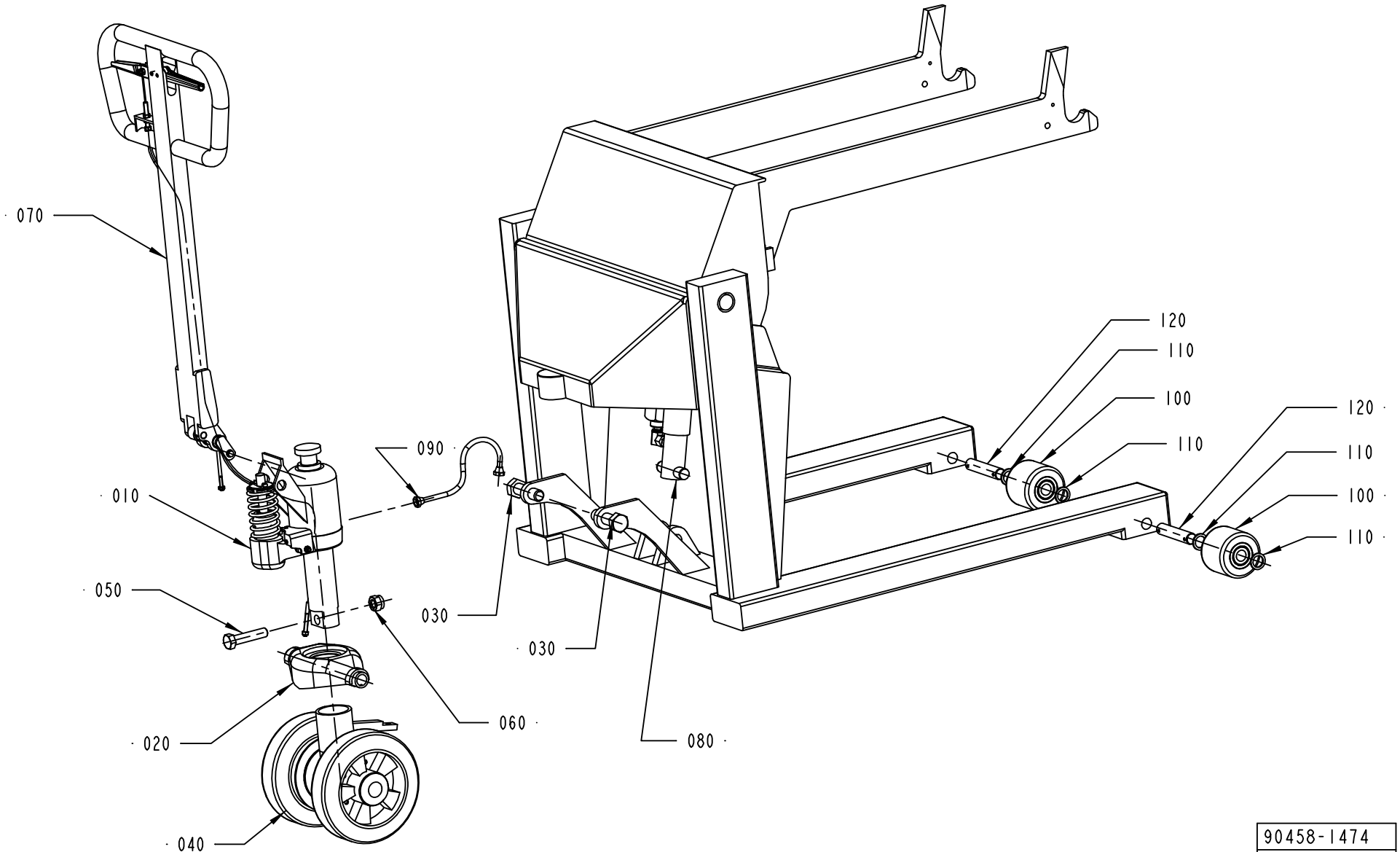

90458-1474
ECM 133556

ECM: 133556 - 20030513
Group number: 90458-1474
Assembly Drawing: 90458-1474_1_AB

Pos	Part No	UN	Qty	Description	Page No
-					
010	90458-1473		1	PUMP, 34 73 521 7	**10-75**
020	90067-0368		1	YOKE	
030	312101-0678		2	SCREW M6S M20X70 FZB	
040	1558477-0100		1	WHEEL	**10-77**
050	312105-0634		1	SCREW M6S ISO 4014 M16X70 A480	
060	312812-0324		1	HEXAGON NUT, NY-LOCK M16 A480	
070	1558479-0100		1	HANDLE	**10-79**
080	1558480-0100		1	LIFTING CYLINDER	**10-81**
090	90067-0365		1	HYDRAULIC HOSE, 32 04 169 1	
100	90067-0370		2	WHEEL, 32 04 176 6	
110	90067-0371		4	SLEEVE, 32 04 175 8	
120	90067-0372		2	SHAFT, 32 04 174 1	

Pos	Part No	UN	Qty	Description	Page No

PUMP, 34 73 521 7

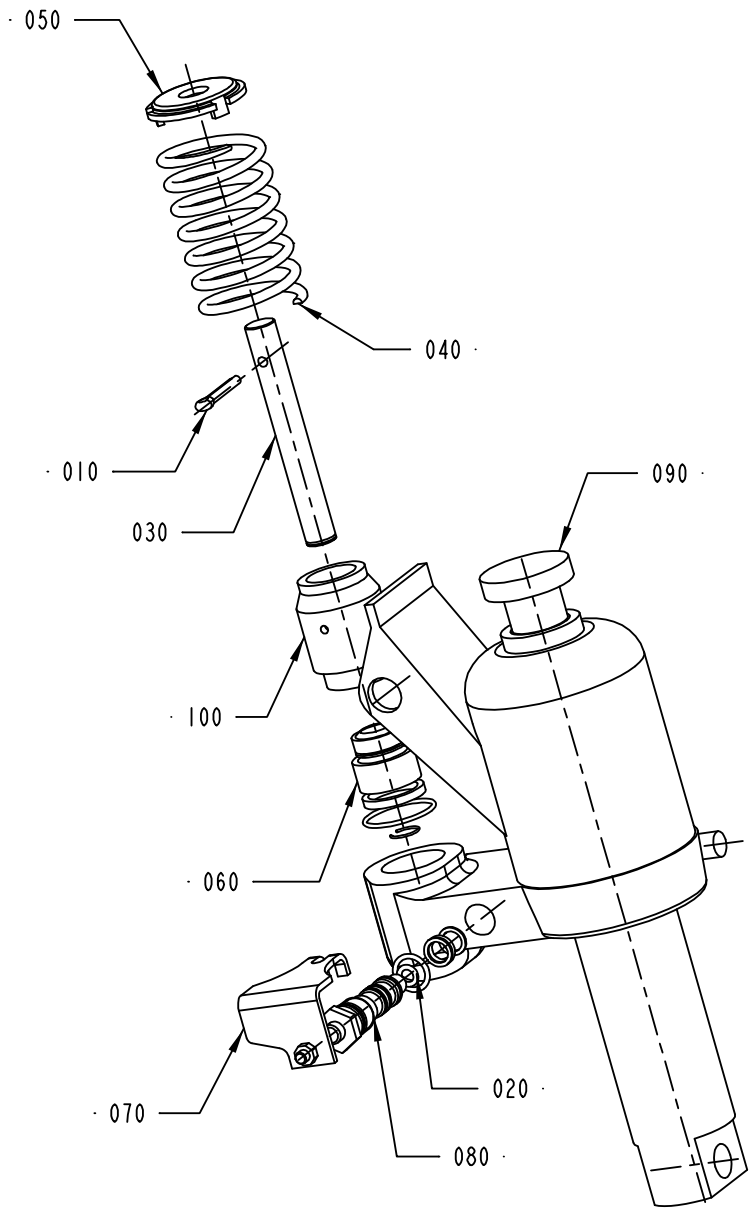

90458-1473
ECM 133556

ECM: 133556 - 20030513
Group number: 90458-1473
Assembly Drawing: 90458-1473_1_AB

Pos	Part No	UN	Qty	Description	Page No
-					
010	90458-1468		1	SPLIT PIN, 43 71 234 8	
020	90067-0351		1	SEAL KIT	
030	90067-0354		1	PUMP PISTON	
040	90067-0355		1	COMPRESSION SPRING	
050	90067-0356		1	TOP WASHER	
060	90067-0357		1	REPAIR KIT	
070	90067-0369		1	VALVE ARM	
080	90458-1470		1	SINK VALVE COMPL, 34 73 094 5	
090	90458-1469		1	PUMP HOUSING, 34 73 517 5	
100	90458-1393		1	PUMP CYLINDER, 34 73 522 5	

Pos	Part No	UN	Qty	Description	Page No

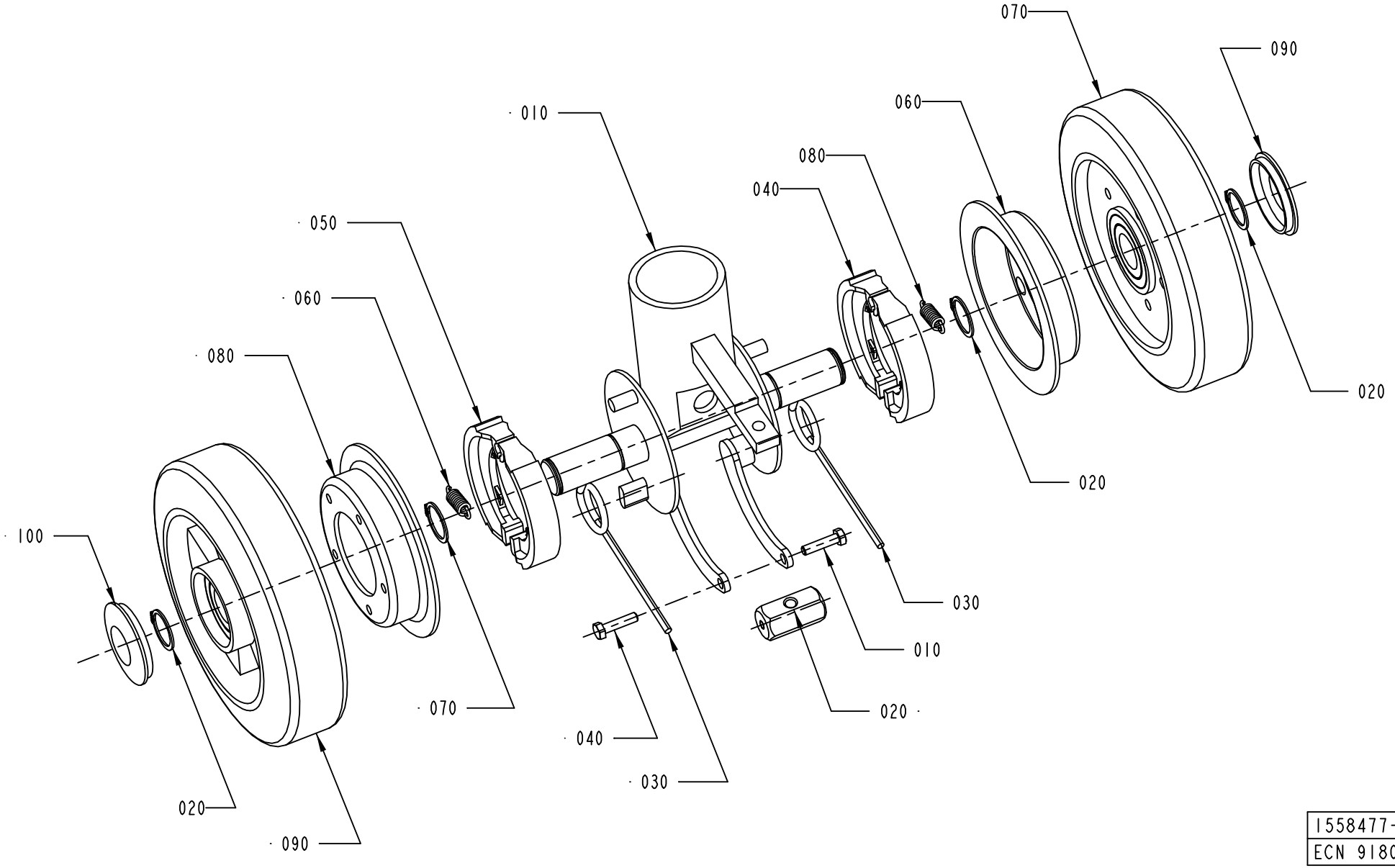

1558477-1
ECN 91803

ECM: 91832 - 20010504
Group number: 1558477-0100
Assembly Drawing: 1558477-1_1_AA

Pos	Part No	UN	Qty	Description	Page No
-					
010	90067-0336		1	GUIDE SHAFT UNIT, 32 82 123 3	
030	90067-0302		2	TORSION SPRING	
040	312105-0372		2	SCREW M6S ISO 4017 M6X25 A480	
050	90067-0317		2	BRAKE LINING	
060	90067-0342		2	TENSION SPRING	
070	315750-0119		4	RETAINING RING SHAFT DIN 471 ST 25	
080	90067-0337		2	BRAKE DRUM	
090	90067-0338		2	GUIDE ROLLER 32 44 117 2	
100	90458-1467		2	CAP, 32 44 129 7	

Pos	Part No	UN	Qty	Description	Page No

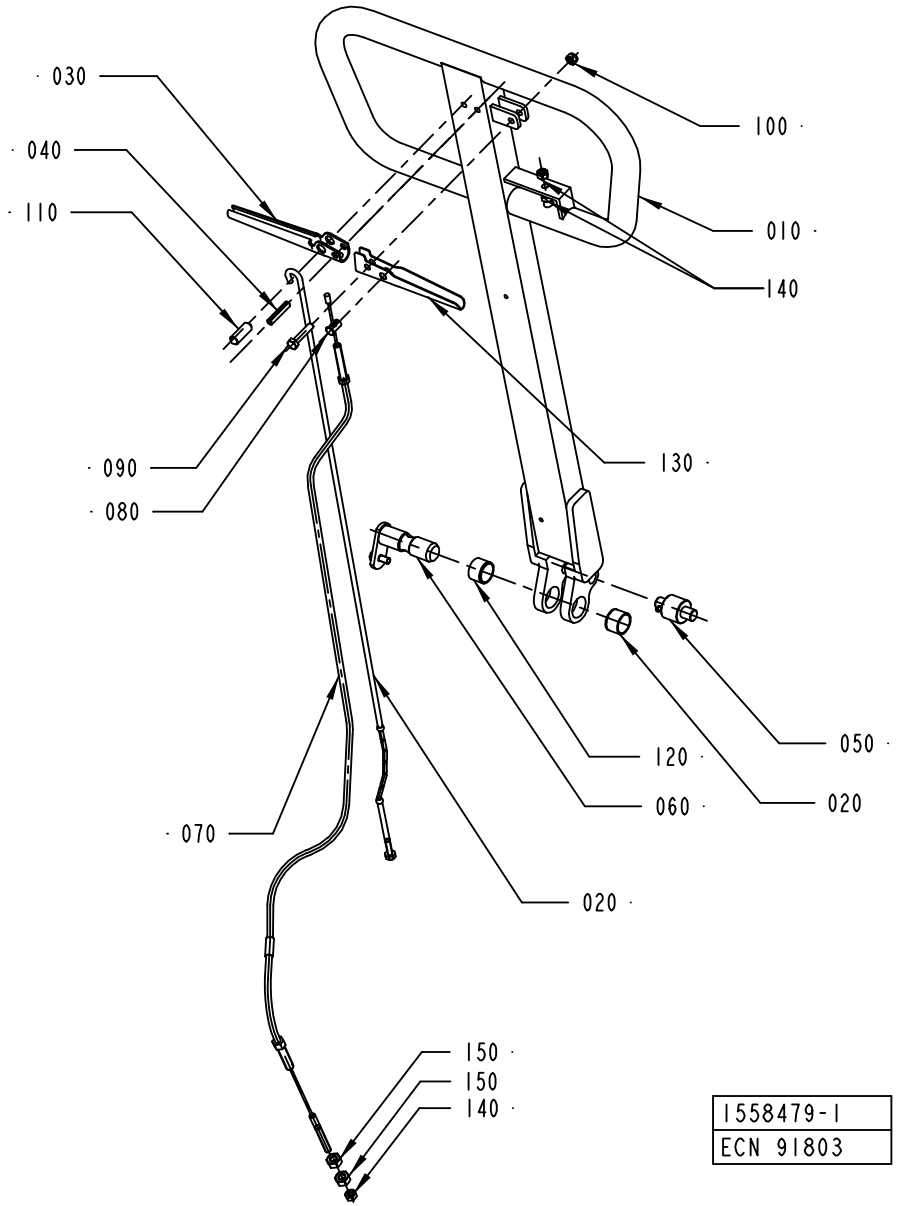
· 030
· 040
· 110
· 090
· 080
· 070
100 ·
010 ·
140
130 ·
120 ·
060 ·
050 ·
020
020 ·
150 ·
150
140 ·
1558479-1
ECN 91803

ECM: 91830 - 20010504
Group number: 1558479-0100
Assembly Drawing: 1558479-1_1_AA

Pos	Part No	UN	Qty	Description	Page No
-					
010	90067-0361		1	TIE ROD	
020	90067-0359		1	SINK ROD, 34 74 021 7	
030	90067-0358		1	SINK HANDLE	
040	311111-0345		1	SPRING PIN ISO 8752 6X32-ST	
050	90067-0349		1	ROLLER KIT, 34 73 050 7	
060	90067-0350		1	AXLE PIN	
070	90067-0301		1	BRAKE WIRE, 32 82 138 1	
080	90067-0320		1	COTTER FOR 90067-301	
090	312109-0374		1	SCREW M6S ISO 4017 M6X30 A480	
100	312812-0316		1	HEXAGON NUT, NY-LOCK M6 A480	
110	90067-0360		1	MOUNTING KIT, 34 74 022 5	
120	321120-0137		2	BEARING BUSHING W/O FLANGE,20/23X15	
130	90067-0364		1	BRAKE HANDLE	
140	312602-0316		3	NUT, EN 24032 M6M M6 NIPLBR	
150	312602-0318		2	HEXAGON NUT, EN 24032 M6M M8 NIPLBR	

Pos	Part No	UN	Qty	Description	Page No

LIFTING CYLINDER

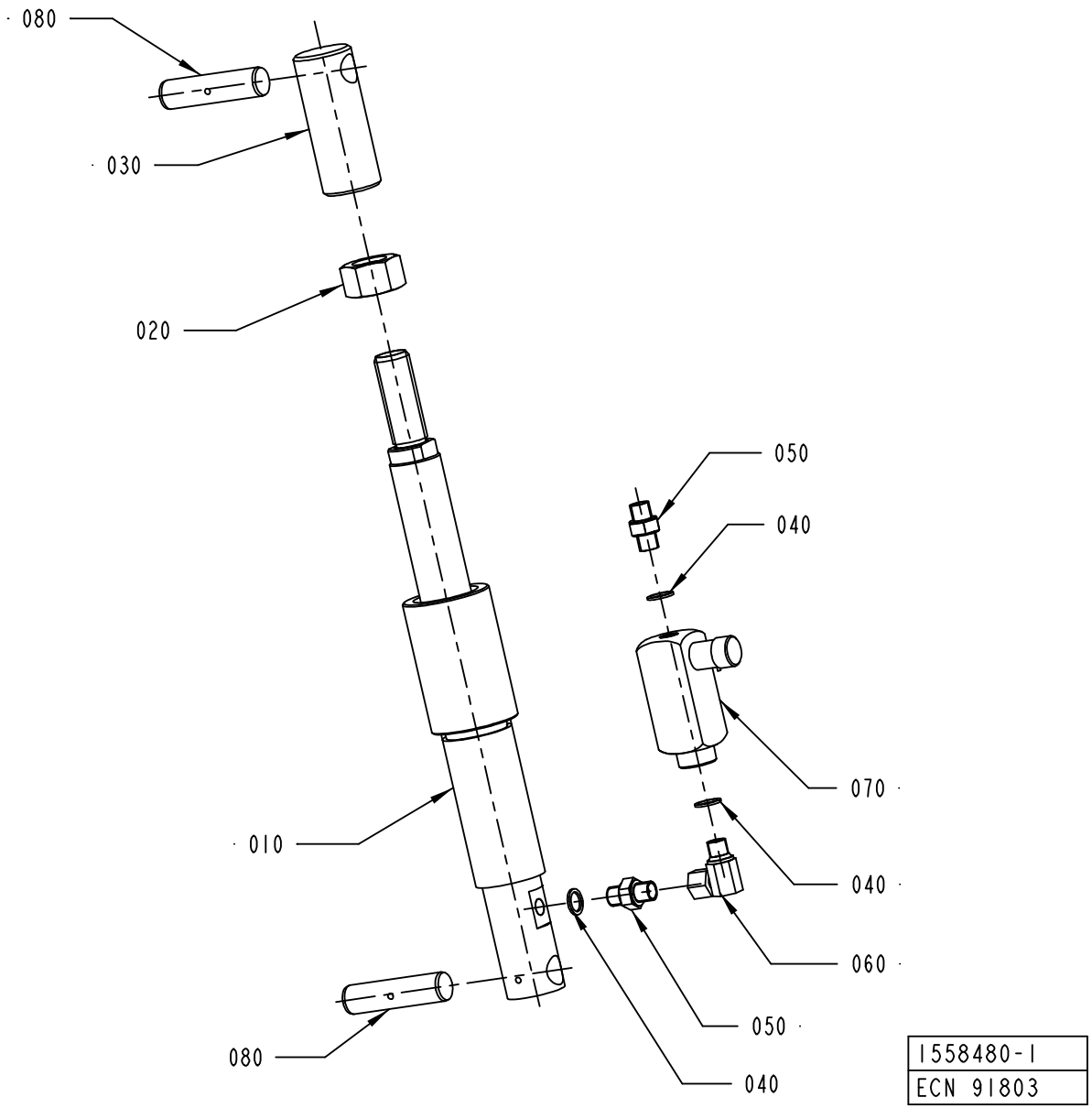

ECM: 91831 - 20010504
Group number: 1558480-0100
Assembly Drawing: 1558480-1_1_AA

Pos	Part No	UN	Qty	Description	Page No
-					
020	312605-0328		1	HEXAGON NUT, M6M M24 A280	
040	315234-0110		3	WASHER,PL.RND.CU.13,5/18 H=1,5	
050	90055-0042		2	NIPPLES, EXT. THREAD, HEXAGON, NO. 6835-	
060	90055-0145		1	ELBOW ADAPTOR-R1/4	
070	90201-0098		1	ADJ. FLOW CON. VALVE, NO. 9 PCCM 400SF	

Pos	Part No	UN	Qty	Description	Page No

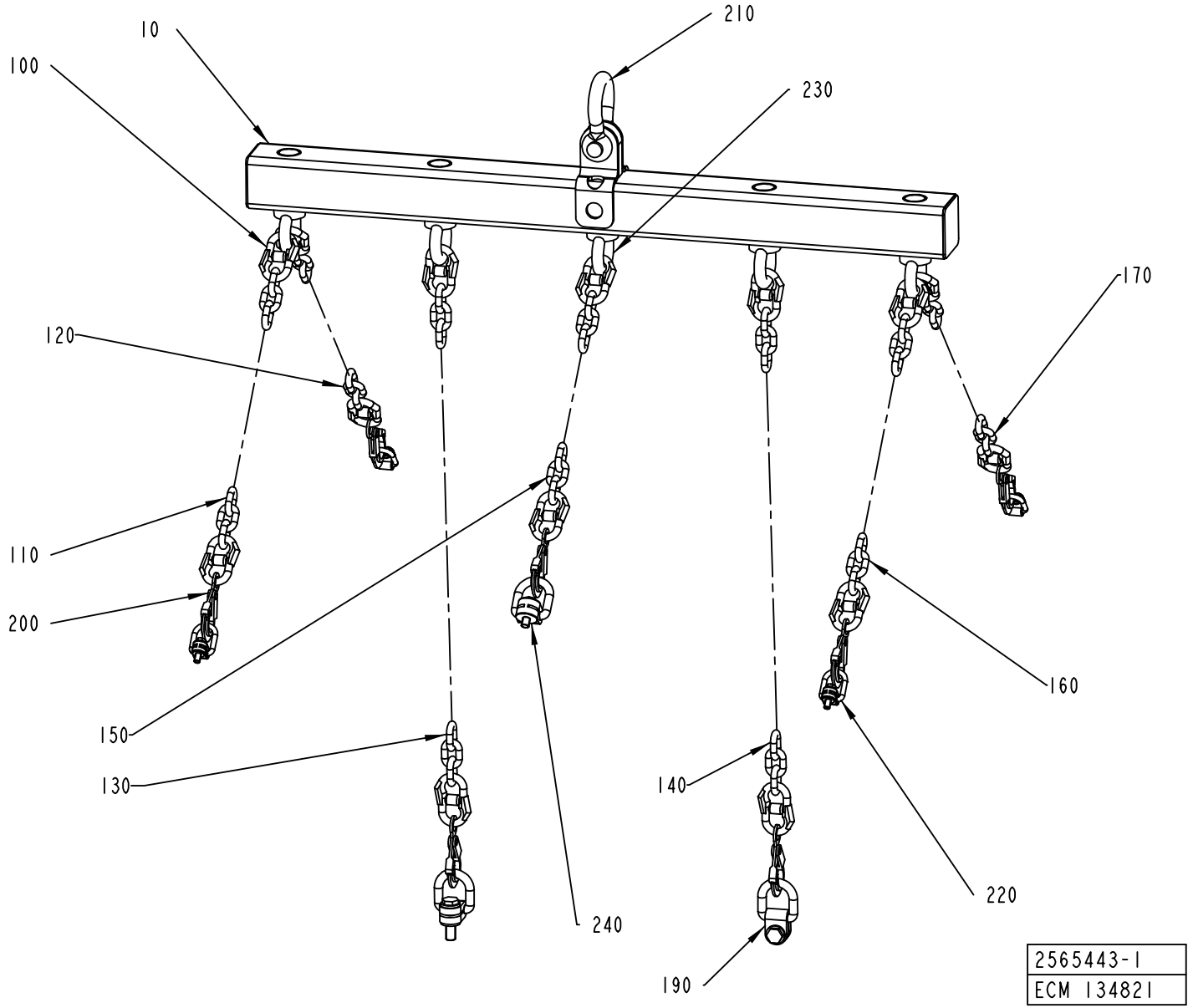
10
100
210
230
170
120
110
200
160
150
130
140
220
240
190
2565443-1
ECM 134821

ECM: 136886 - 20030704
Group number: 2565443-0100
Assembly Drawing: 2565443-1_1_AB

Pos	Part No	UN	Qty	Description	Page No
-					
010	2562706-0000		1	LIFTING DEVICE	
100	90459-1900		14	CHAIN LINK, G-13-8	
110	90459-1899	MM	530	CHAIN, KLU-13-8	
120	90459-1899	MM	670	CHAIN, KLU-13-8	
130	90459-1899	MM	1200	CHAIN, KLU-13-8	
140	90459-1899	MM	1200	CHAIN, KLU-13-8	
150	90459-1899	MM	370	CHAIN, KLU-13-8	
160	90459-1899	MM	530	CHAIN, KLU-13-8	
170	90459-1899	MM	670	CHAIN, KLU-13-8	
190	90040-0011		2	LIFTING EYE BOLT, VLBG(4)2.5T M20	
200	90155-0309		7	SECURITY HOOK	
210	90459-3130		1	BOW SHACKLE, D=32 MM - 9500 KG	
220	90459-1898		4	LIFTING EYE BOLT, VLBG(1)1.0T M12 TURN.	
230	318301-0130		5	LIFTING EYE BOLT, TYPE, LT, M30	
240	90459-2290		1	LIFTING EYE BOLT, LBG M16 RS 1T	

Pos	Part No	UN	Qty	Description	Page No

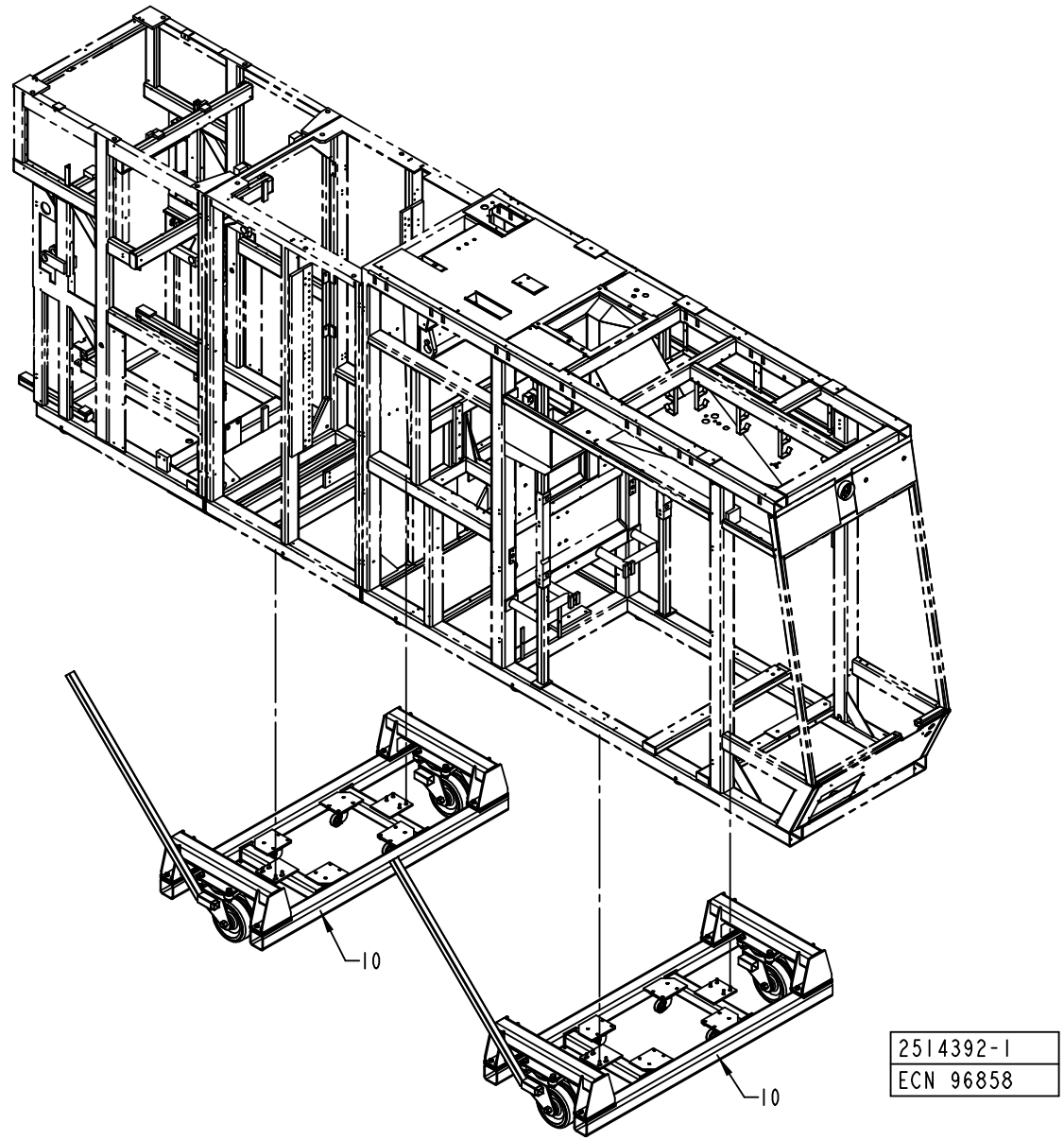
10
10
2514392-1
ECN 96858

ECM: 96863 - 20010830
Group number: 2514392-0100
Assembly Drawing: 2514392-1_1_AA

Pos	Part No	UN	Qty	Description	Page No
-					
0010	582526-0100		2	CARRIAGE	**10-87**

Pos	Part No	UN	Qty	Description	Page No

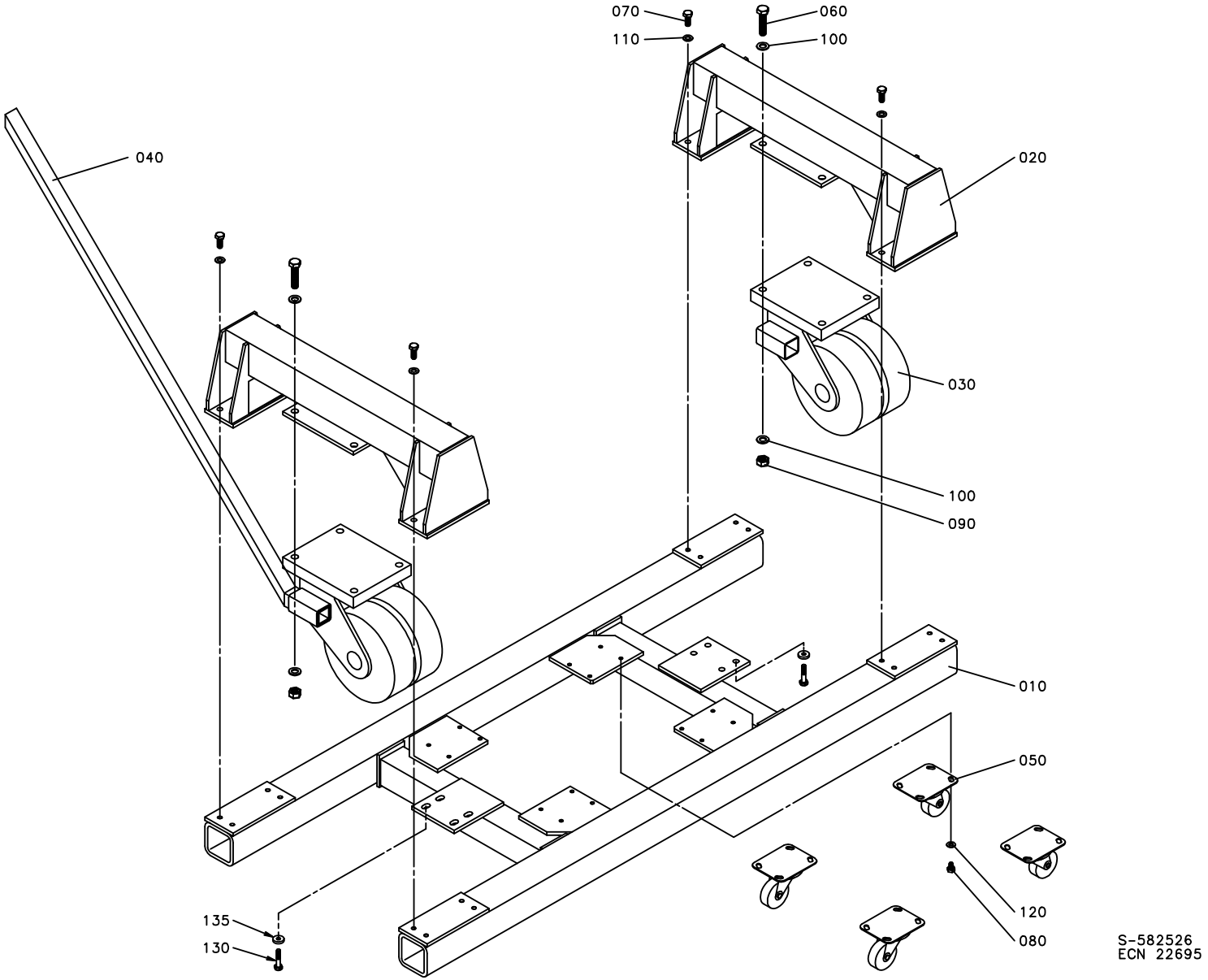
070
110
060
100
040
020
030
100
090
010
050
120
080
135
130
S-582526
ECN 22695

ECM: 96864 - 20010830
Group number: 582526-0100
Assembly Drawing: 582526-1_1_AA

Pos	Part No	UN	Qty	Description	Page No
-					
0010	1140039-0000		1	CONVEYOR FRAME	
0020	1140040-0000		2	BRACKET	
0030	1140840-0000		2	WHEEL	
0040	582527-0000		1	ROD	
0050	90191-0077		4	WHEEL	
0060	312105-0634		8	SCREW M6S ISO 4014 M16X70 A480	
0070	312105-0538		16	SCREW M6S ISO 4017 M12X35 A480	
0080	312105-0489		16	SCREW M6S ISO 4017 M10X16 A480	
0090	312605-0324		8	HEXAGON NUT, M6M M16 A280	
0100	315105-0186		16	WASHER BRB17X30RFR	
0110	315105-0178		16	WASHER BRB13X24RFR	
0120	315105-0173		16	WASHER BRB10,5X22RFR	
0130	312109-0499		8	SCREW M6S ISO 4017 M10X40 A480	
0135	315125-0173		8	WASHER TBRSB 10,5X28X6 A4	

Pos	Part No	UN	Qty	Description	Page No

This page is intentionally left blank.

ECM: 104246 - 20020226
Group number: 1369439-0102
Assembly Drawing:

Pos	Part No	UN	Qty	Description	Page No
-					
0010	48633-0102		1	PLMS ON-LINE CLIENT PROGRAM	**10-91**
0020	48635-0102		1	PLMS ON-LINE SERVER PROGRAM	**10-93**
0030	81595-0101		1	USER MANUAL PLMS ON-LINE	
0040	81596-0101		1	INSTALLATION MANUAL PLMS ON-LINE	

Pos	Part No	UN	Qty	Description	Page No

This page is intentionally left blank.

ECM: 104244 - 20020226
Group number: 48633-0102
Assembly Drawing:

Pos	Part No	UN	Qty	Description	Page No	Pos	Part No	UN	Qty	Description	Page No
-											
0020	58789-0000		1	DOCUMENTATION DISKETT							
0030	1369432-0000		1	LABELS, DISKETT							
0040	58787-0000		1	SHORT FORM INSTRUCTIONS							
0050	58788-0000		1	MASTER DISKETT							

This page is intentionally left blank.

ECM: 104245 - 20020226
Group number: 48635-0102
Assembly Drawing:

Pos	Part No	UN	Qty	Description	Page No	Pos	Part No	UN	Qty	Description	Page No
-											
0020	58801-0000		1	DOCUMENTATION DISKETT							
0030	1369437-0000		1	LABELS, DISKETT							
0040	58799-0000		1	SHORT FORM INSTRUCTIONS							
0050	58800-0000		1	MASTER DISKETT							

Tetra Pak

SPC
Spare Parts Catalogue

Part No	Description	Page No
2033-0011	WASHER	1-27, 1-29, 1-31, 1-33, 1-45, 1-47, 1-49, 1-51, 1-53, 1-61, 1-63, 1-67, 1-69, 1-79, 1-81, 1-83, 1-85
6278-0000	WASHER	7-33, 7-35
12242-0003	GASKET 48X38X5,5	1-137, 1-139, 1-141
14600-0000	HOOD	1-185, 1-187
14729-0000	NUT	4-157, 4-159, 4-167, 4-169
19972-0000	WASHER	4-7, 4-9, 4-13, 4-15, 4-49, 4-55
20494-0000	COMPRESSION SPRING	4-151, 4-161
22462-0000	SHAFT	4-91, 4-93, 4-119, 4-121
22463-0000	ROLL	4-91, 4-93, 4-119, 4-121
23765-0001	INSULATING PIPE	5-123, 5-125, 5-127
23765-0002	INSULATING PIPE	5-123, 5-125, 5-127
23765-0003	INSULATING PIPE	5-123, 5-125, 5-127
23765-0004	INSULATING PIPE	5-123, 5-125, 5-127
23765-0005	INSULATING PIPE	5-123, 5-125, 5-127
24928-0000	LOCKING RUBBER	1-185, 1-187
26075-0000	VOLUME BULGE	4-39, 4-41, 4-43, 4-45, 9-9, 9-11
28509-0000	WASHER	4-67, 4-69, 4-73, 4-105, 4-107, 9-5
29876-0000	COVER	1-169
29886-0000	LACE	4-151, 4-161
30298-0000	INSULATION	1-169
31838-0000	PLUNGER	4-151, 4-161
32079-0000	WASHER	4-73
32544-0000	INSULATION NUT	4-67, 4-69, 4-73, 4-105, 4-107, 9-5
32957-0000	SCREW	4-157, 4-159, 4-167, 4-169
36753-0000	RING	4-151, 4-161
47937-0410	PLMS OFF-LINE PROGRAM	8-107
48633-0102	PLMS ON-LINE CLIENT PROGRAM	10-89
48635-0102	PLMS ON-LINE SERVER PROGRAM	10-89
58787-0000	SHORT FORM INSTRUCTIONS	10-91
58788-0000	MASTER DISKETT	10-91
58789-0000	DOCUMENTATION DISKETT	10-91
58799-0000	SHORT FORM INSTRUCTIONS	10-93
58800-0000	MASTER DISKETT	10-93
58801-0000	DOCUMENTATION DISKETT	10-93
67379-0101	TRANSFORMER	4-73
67379-0105	TRANSFORMER	4-73
67379-0249	RANSFORMER	4-73
67379-0269	TRANSFORMER	4-73
67379-0404	TRANSFORMER	1-11
67379-0405	TRANSFORMER	1-11
67379-0412	TRANSFORMER	1-11
67379-0414	TRANSFORMER	1-11
67379-0417	TRANSFORMER	1-11
67380-0207	TRANSFORMER	7-13
67380-0213	TRANSFORMER	7-13
67380-0214	TRANSFORMER	7-13
67388-0102	RACK FRONTMOUNTED 84TE	8-99
68262-0101	BACKPLANE FRONT RACK 8TE	8-99
68445-0104	FRONT PLATE 8 TE	8-99
68445-0105	FRONT PLATE 10TE	8-99
72846-0101	COMPRESSION SPRING	10-5
72887-0000	COMPRESSION SPRING	10-29
72888-0001	SPRING BRACKET	10-29
72888-0002	SPRING BRACKET	10-29
74305-0100	PULLER	10-5
74363-0000	FASTENING PLATE	10-47
74364-0000	EXTRACTOR BOLT	10-47
74365-0000	SCREW	10-47
74655-0000	SHAFT	10-27
76131-0000	ASSEMBLY CONE	10-31
76132-0000	ASSEMBLY TOOL	10-31
78801-0000	CALIBRATION TOOL	10-31
81595-0101	USER MANUAL PLMS ON-LINE	10-89
81596-0101	INSTALLATION MANUAL PLMS ON-LINE	10-89
82197-0103	UM DOCUMENT SERIAL COMUNICATION ONLY EN	8-107
82351-0106	USER MANUAL PLMS OFF-LINE	8-107
90001-0033	WALL SOCKET OUTLET	8-91, 8-93
90002-0004	BLANK-OFF PLUG, PR 22,5 SKINDICHT-BLK16	1-275, 1-335, 1-339, 1-341, 1-349, 1-351, 1-365, 1-367, 2-97, 6-65, 7-135, 7-137, 7-139, 7-141, 7-143, 8-21
90002-0009	BLANK-OFF PLUG, PR 18.6 SKINDICHT-BLK11	1-335, 1-339, 1-341, 1-349, 1-351, 2-55, 2-97, 2-155, 2-157, 5-223, 7-135, 7-137, 7-139, 7-141, 7-143
90002-0010	BLANK-OFF PLUG, PR 37 SKINDICHT-BLK29	2-97, 7-43, 7-45
90002-0012	BLANK-OFF PLUG, PR 28,3 SKINDICHT-BLK21	1-349, 1-351, 1-365, 1-367, 2-97, 7-135, 7-137, 7-139, 7-141, 7-143
90002-0013	BLANK-OFF PLUG, PR 15,2 SKINDICHT-BLK9	1-201, 1-335, 1-339, 1-341, 1-349, 1-351, 2-55, 2-157, 6-29, 6-65, 7-135, 7-137, 7-139, 7-141, 7-143
90002-0016	BLANK-OFF PLUG PR 20.4 SKINDICHT-BLK13,5	1-339, 1-341, 1-349, 1-351, 1-365, 1-367, 8-21
90005-0060	WASHER PLAIN, RBS 6,4/M6)/18,H=1,5	1-67, 1-69, 1-143, 1-161, 8-21
90005-0077	WASHER PL.RND.NYL.8,4/7, H=2	8-33, 8-41
90005-0082	WASHER PLAIN ROUND 4,3(M4)/12,H=1	4-49, 4-55, 7-13, 7-19, 7-77, 7-81, 7-85, 8-21, 8-53, 8-91, 8-93
90005-0116	WASHER PLAIN ROUND 8,4(M8)/24, H=2	1-295
90007-0127	CIRCUIT BREAKER, 1P 2 A K	8-83

Part No	Description	Page No
90007-0128	CIRCUIT BREAKER, 1P 6 A K	8-83
90007-0129	CIRCUIT BREAKER, 1P 10 A K	8-79, 8-81, 8-83
90007-0131	CIRCUIT BREAKER, 1P 16 A K	8-85
90007-0138	CIRCUIT BREAKER, 2P 10 A K	8-85
90007-0146	CIRCUIT BREAKER, 3P 6 A K	8-83
90007-0147	CIRCUIT BREAKER, 3P 10 A K	8-79, 8-81, 8-85
90007-0148	CIRCUIT BREAKER, 3P 16 A K	8-83
90007-0150	CIRCUIT BREAKER, 3P 25 A K	8-83
90007-0151	CIRCUIT BREAKER, 3P 40 A K	8-83
90007-0155	CIRCUIT BREAKER, 1P 0,5 A K	8-79, 8-81
90007-0156	CIRCUIT BREAKER, 1P 4 A K	8-85
90007-0312	AUXILIARY CONTACT	8-83
90012-0049	CABLE GLAND, STR13,5, PR20,4/PG13,5	1-349, 1-351
90012-0063	CABLE GLAND PR 15,2	2-41
90012-0125	GLAND FITTING	2-55, 2-97, 2-155, 7-135, 7-137, 7-139, 7-141, 7-143
90012-0126	HOSE GLAND W/O INSERT PG29 NORMAL	1-169
90012-0131	HOSE GLAND W/O INSERT PG21 NORMAL	1-263
90012-0137	GLAND, EXTENDED WITH INSERT, PG11	1-127, 1-129, 7-173
90015-0020	LEAD-IN, TET5-7, E-1458016	1-205, 2-7, 2-45, 2-47, 2-125, 2-127, 2-129, 2-149, 2-151
90015-0021	LEAD-IN, TET10-14, E-1458023	2-57, 2-59, 2-209, 2-211, 7-77
90015-0022	LEAD-IN, TET14-20, E-1458029	2-7
90015-0023	LEAD-IN, TET7-10, E-1458019	2-7, 2-49, 2-131, 2-133, 2-149, 2-151
90015-0024	LEAD-IN, TET20-26, E-1458035	7-77
90015-0025	LEAD-IN, TET26-35, E-1458041	6-11
90015-0037	RUBBER BUSHING	6-25
90017-0015	HANDLE, NO. 14.4012.02.308	8-33
90017-0016	HANDLE, NO. 14.4012.02.120	1-373, 1-375, 1-379, 2-233, 8-41
90017-0017	HANDLE, NO. 547-128	8-91, 8-93
90024-0036	FILTERED TERMINAL BLOCK	6-11
90024-0060	POWER LINE FILTER, 80 A 250/440 VAC	6-11
90028-0020	CONE TUBE 2,5MM	4-7, 4-9, 4-13, 4-15, 4-49, 4-55, 4-131, 4-133, 4-135, 4-151, 4-153, 4-155, 4-157, 4-159, 4-161, 4-163, 4-165, 4-167, 4-169, 5-105
90028-0021	CONE TUBE 4 MM	2-89, 4-151, 4-153, 4-155, 4-157, 4-159, 4-161, 4-163, 4-165, 4-167, 4-169
90028-0022	CONE TUBE 6 MM	2-87, 2-89, 4-141
90028-0024	CONE TUBE 4 MM	4-131, 4-153, 4-155, 4-163, 4-165
90028-0025	CONE TUBE 6 MM	4-153, 4-155, 4-163, 4-165, 5-105
90030-0030	CONN. BULKHEAD SV 12-L/SY	1-229, 1-231
90030-0058	CONN. T-PIPE T-12	1-231
90030-0065	PIPE CONNECTION	4-57, 4-59, 4-97, 4-99
90030-0067	CONN. BULKHEAD SV 8-L/SY	2-83
90030-0071	CONN. ELBOW WA 8-R1/4	2-37
90030-0076	CONN. T-PIPE T-6	1-223, 5-119
90030-0088	CONN. STR., 12-R1/4, EXT. THREAD	1-195, 1-229
90030-0098	ACCESSORIES, FERRULE 8	2-83, 4-185
90030-0106	CONN. PIPE G-12	1-265
90030-0121	CONN. ELBOW ADJ.,INT 10	2-79
90030-0157	CONN. STR. 10-R3/8, EXT. THREAD	2-79
90030-0166	NIPPLE,REDUCING G1/4"-G1/4"	2-197, 2-199
90030-0171	ADJUSTABLE ELBOW CONNECTION,EXT 6-G1/8	2-33, 5-119
90030-0178	CONN. STR., 10-R1/4, EXT. THREAD	2-81
90030-0180	CONN. STR. GE 12-1/2-14 NPTF	1-229, 1-265
90030-0181	CONN. STR. GE 12-3/8-18 NPTF	1-179
90030-0184	CONN. STR. GA-6-G1/8	1-195, 1-223, 1-281, 1-339, 1-341, 2-29, 2-65
90030-0185	CONN. STR. GA-8-G1/4	6-39, 6-41
90030-0187	CONN. STR. GA-12-G3/8	1-231, 1-265, 1-281
90030-0188	CONN. STR. GA-15-G1/2	1-179, 1-229, 1-265, 1-267
90030-0193	CONN. STR. GA-28-G1	1-229
90030-0202	CONN. STR., 6-G1/4, EXT. THREAD	1-273
90030-0203	ADJUSTABLE ELBOW CONNECTION,EXT 6-G1/4	1-197, 1-199
90030-0219	CONN. ELBOW BULKHEAD WSV 6	2-89
90030-0223	BUSHING, INT/EXT. G-THREAD NO. 2531	10-51, 10-53
90030-0224	NIPPLES, EXT. THREAD, HEXAGON, NO. 2511	10-51, 10-53
90030-0225	BUSHING, INT/EXT. R-THREAD 1/4X3/8	10-51, 10-53
90030-0257	CONN. ELBOW, 8-R1/8, EXT.THREAD	4-75, 4-77, 4-79, 4-111, 4-113, 4-115
90030-0336	CONN. STRAIGHT, 316L-12M-BVCO-3	1-207, 9-29
90030-0338	NUT, PIPE & CONNECTORS, SS-8-BVCO-4	1-207
90030-0340	NIPPLES, EXT. THREAD, HEXAGON, RA-G1/2A3	2-81
90030-0344	CONN. STR., 8-G1/4	2-23
90030-0465	STRAIGHT CONNECTION, MAD DN 15	6-35
90030-0481	REDUCER M12TURM6-316	1-229
90030-0485	CONN. BULKHEAD SV 8-	1-249, 2-39
90030-0549	CONN. STRAIGHT, BULKHEAD, SS-4-VCO-61	1-223
90030-0567	CONN. STR., 15-R1/2, EXT. THREAD	2-77
90031-0031	ENHANCED GENIUS COMMUNICATION MODULE	8-61, 8-63
90031-0051	BASEPLATE, 10-SLOT	8-61, 8-63
90031-0052	BASEPLATE, 5-SLOT	8-59
90031-0053	BASEPLATE,10-SLOT	8-61, 8-63
90031-0057	PLC, DIGITAL INPUT MODULE	8-61, 8-63
90031-0058	PLC, DIGITAL INPUT MODULE	8-61, 8-63
90031-0059	PLC, DIGITAL OUTPUT MODULE	8-61, 8-63
90031-0060	PLC,ANALOG INPUT MODULE 16 PT/VOLTAGE	8-61, 8-63
90031-0061	PLC,ANALOG INPUT MODULE 16 PT/CURRENT	8-61, 8-63
90031-0062	PLC, ANALOG OUTPUT MODULE 8PT/CURR/VOLT	8-61, 8-63
90031-0065	PLC,TEMPERATUR CONTROL,INPUT MODULE 8 PT	8-61, 8-63

Part No	Description	Page No
90031-0068	PLC, POWER SUPPLY	8-59, 8-61, 8-63
90031-0076	CPU364, ETHERNET COMMUNICATION	8-61, 8-63
90031-0300	PLC,COMM.CABLE AND ADAPTER	10-61
90031-0305	I/O EXPANSION CABLE	8-61, 8-63
90032-0038	BLOCK 2 WAYS	2-89, 4-151, 4-161
90032-0039	BLOCK 4 WAYS	4-131, 4-151, 4-153, 4-155, 4-157, 4-159, 4-161, 4-163, 4-165, 4-167, 4-169
90032-0040	BLOCK 6 WAYS	4-157, 4-159, 4-167, 4-169, 5-105
90032-0043	DISTRIBUTION BLOCK 3 WAYS	2-89, 4-153, 4-155, 4-163, 4-165
90032-0046	DISTRIBUTION BLOCK 6 WAYS	2-89
90032-0053	DISTR. BLOCK 1/4NPT, 1/8	2-89
90036-0057	LIGHT BULB, BA9S 28V	9-5
90036-0068	BULB 6.5W 24V	2-173
90038-0049	DIODE	1-347
90040-0011	LIFTING EYE BOLT, VLBG(4)2.5T M20	10-83
90041-0029	FLOPPY DISC UNIT FD-235HF 1,4MB	8-103
90041-0068	DATACABLE MODEM PC	8-107
90041-0090	HARD DISC 2,5" , U036403A	8-101
90041-0091	PC 2,5" HD BAY, 3016-0028-013	8-103
90042-0170	SOLENOID VALVE BURKERT	6-9
90042-0171	SOLENOID VALVE BUERKERT	1-197, 1-199
90042-0172	SOLENOID VALVE 4023/1005/1032 24VDC	1-179, 1-267
90042-0203	SOLENOID VALVE BURKERT	1-195, 1-281
90042-0206	SOLENID VALVE G1/8, 444-111-000-1	2-27
90042-0215	VALVE BODY 5/2 UNISTABLE	1-319, 1-321, 1-323, 1-329, 1-331, 2-51, 2-135, 2-137, 2-139, 6-73, 7-159, 7-161
90042-0221	VALVE BODY 5/2 BISTABLE	7-159, 7-161
90042-0230	VALVE BODY 5/3 OPEN CENTRE	7-159, 7-161
90042-0248	SOLENOID VALVE OFFICIENE DI ENSINO	2-201, 2-205
90042-0249	SOLENOID VALVE OFFICINE DI ENSINO	6-67, 6-69
90042-0254	SOLENOID VALVE, R1 1/2	6-33
90042-0265	HIGH SPEED VENTING VALVE 583-590-000-1	7-159, 7-161
90042-0271	VALVE BODY 2X3/2	1-321, 1-323, 1-329, 1-331, 2-51
90042-0392	CONTACT 2 POLE + EARTH	7-59
90042-0487	COIL 24 VDC/15W, 04983 197 18	2-27
90042-0519	BLANK PLATE ISO SIZE 1	1-319, 1-321, 1-323, 1-329, 1-331, 2-51, 2-135, 2-137, 2-139, 6-73, 7-159, 7-161
90042-0520	BASE PLATE ISO SIZE 1	1-319, 1-321, 1-323, 1-329, 1-331, 2-51, 2-135, 2-137, 2-139, 7-159, 7-161
90042-0522	PORTED END PIECE ISO SIZE 1	1-319, 1-321, 1-323, 1-329, 1-331, 2-51, 2-135, 2-137, 2-139, 6-73, 7-159, 7-161
90042-0526	PROTECTIVE SLEEVE MECMAN, 04938 294 08	6-73
90042-0528	BLANKING KIT SEALS ISO SIZE 1	1-319, 1-321, 1-323, 1-329, 1-331, 2-51, 2-135, 2-137, 2-139, 6-73, 7-159, 7-161
90042-0532	BASE PLATE ISO SIZE 1	1-319, 1-321, 1-323, 1-329, 1-331, 2-51, 2-135, 2-137, 2-139, 6-73, 7-159, 7-161
90042-0535	TERMINAL BOARD 19 CORDS	1-319, 1-321, 1-323, 1-329, 1-331, 2-51, 2-135, 2-137, 2-139, 6-73, 7-159, 7-161
90042-0538	PILOT VALVE L=500MM	1-319, 1-321, 1-323, 1-329, 1-331, 2-51, 2-135, 2-137, 2-139, 6-73, 7-159, 7-161
90042-0539	PILOT VALVE L=350MM	7-159, 7-161
90042-0545	SUB-BASE SOFT START ISO 1 AND VDMA 01	7-159, 7-161
90042-0582	COIL NORGREN QM/48/127/21	7-59
90042-0583	CABLE MECMAN 440-827 000-1	6-75
90042-0585	PILOT VALVE L=5M	6-75, 7-159, 7-161
90042-0591	PILOT VALVE, 04938-333-08	7-159, 7-161
90043-0002	PRESSURE GAUGE, 2040 D=63 MM	1-265
90043-0006	PRESSURE GAUGE, 2041 D=63 MM	6-67, 6-69
90043-0021	PRESSURE GAUGE, 0-1 BAR 1/8"	2-49, 10-45, 10-51, 10-53
90043-0043	PRESSURE GAUGE, 0-10 BAR 1/8"	6-35, 10-23, 10-51, 10-53
90043-0064	PRESSURE GAUGE, 2048 D=40 MM	2-131, 2-133, 7-159, 7-161
90043-0065	PRESSURE GAUGE, 2048 D=40 MM	1-317, 1-327, 6-73, 7-159, 7-161
90043-0082	PRESSURE GAUGE, 2740, D=63 MM	1-229
90043-0090	PRESSURE GAUGE, 2048 D=40 MM	2-49, 2-131, 2-133
90043-0095	PRESSURE GAUGE, 2740, D=63 MM, GLYC.	1-165
90043-0100	PRESSURE GAUGE, 2948 D=63 MM	6-19
90043-0107	PRESSURE GAUGE	6-75
90044-0084	LIMIT SW. 14 CE1-4	1-269, 1-271
90044-0117	PROX.SW. IX 0208	5-167
90044-0165	SENSOR, SME-8-K5-LED-24	7-31, 7-63
90044-0192	LIMIT SW. SZ2586.000	8-21
90044-0194	PROX.SW. IN5329/IN3002-BPKG	1-123, 1-125, 1-137, 1-139, 1-141, 1-205, 1-253, 1-295, 5-129, 5-149, 5-151, 5-153, 5-199, 5-203, 5-205, 7-27, 7-77
90044-0195	PROX.SW. IO 9922 IOW2010-ARKG/M/UP/80CM	3-11, 3-27
90044-0204	KEY SAF.SW. NZIVZ-538-E	2-99
90044-0310	KEY FOR SAFETY SWITCH, AZ 15/16 B1	1-7, 1-9, 1-93, 1-103, 1-105, 1-145, 1-147, 7-77
90045-0162	MOTOR G42X25	2-41
90048-0037	OIL PUMP INCL. CONTAINER 1,5 L	2-87
90051-0035	KNOB, EXTERNAL THREAD. NO. 8308-1135	7-87
90051-0045	STELLAR KNOB, NO. 8323-2575	1-113
90051-0049	KNOB, ADJUST.HI.EXT.THREAD, NO 8324-3755	1-289, 1-291
90051-0082	KNOB, CIRCUL, THREADED BUSH, M6 25X21 MM	7-121, 7-129, 7-169
90051-0083	KNOB, EXTERNAL THREAD. NO. 8308-1321	7-107
90051-0084	KNOB, EXTERNAL THREAD. NO. 8308-1534	2-87
90051-0087	LOCK KNOB, NO. GN 617 A5	7-101, 7-103, 7-121, 7-129

Part No	Description	Page No
90051-0088	ADJUSTMENT SCREW	7-77
90051-0106	COCK HANDLE, NO. H6	6-63
90051-0112	LOCK KNOB, NO. GN 617 NIK5	2-49, 2-131, 2-133, 3-17, 3-31
90052-0011	HORN HOOTERT 24:48VDC.PT NO.1YA030221	7-43, 7-45
90053-0029	COUNTER, F524.800FA3C 24VDC	8-91, 8-93
90053-0031	HOUR COUNTER, B 609.10 10-50VDC	8-91, 8-93
90055-0033	HOSE NIPPLE, EXT.THR. R1/2-13 MM	2-269
90055-0042	NIPPLES, EXT. THREAD, HEXAGON, NO. 6835-	6-19, 10-81
90055-0051	HOSE NIPPLE, EXT.THR. R3/8X13 MM	2-19, 2-21, 2-23
90055-0053	HOSE NIPPLE, EXT.THR. R1-25 MM	6-47
90055-0097	STRAIGHT COUPLING	6-77
90055-0100	Y-CONNECTION, 6-6	2-125, 2-127, 2-129, 2-131, 2-133
90055-0101	Y-CONNECTION, 8-8	2-49
90055-0118	ELBOW WITH TAILPIECE 8/8 MM	1-327, 2-131, 2-133
90055-0132	HOSE NIPPLE, EXT.THR. R1/4X7,8 MM	2-37
90055-0143	HOSE,ELBOW 90 COUPLING,FPT,6X8MM	1-319, 1-321, 1-323
90055-0145	ELBOW ADAPTOR-R1/4	10-81
90055-0166	HOSE NIPPLE, EXT.THR. R11/2X38 MM	6-33
90055-0172	ELBOW WITH TAILPIECE 8/8 MM	1-329, 1-331, 2-49, 2-125, 2-127, 2-129, 2-131, 2-133, 2-135, 2-137, 2-139, 7-159, 7-161
90055-0173	ELBOW WITH TAILPIECE 8/6 MM	2-51, 7-159, 7-161
90055-0217	ELBOW PIPE JOINT	2-51, 7-105, 7-123, 7-133
90055-0227	Y-CONNECTION, 6-8	2-49
90055-0248	ELBOW WITH TAILPIECE 10/10 MM	2-125, 2-127, 2-129
90055-0249	REDUCER 8-10	6-7
90055-0250	ELBOW WITH TAILPIECE 8/8 MM	6-9
90055-0260	NIPPLE-8 MM G1/4"	6-19, 6-27
90055-0266	STRAIGHT CONNECTION	2-197, 2-199, 6-9
90055-0267	ELBOW PIPE JOINT,EXT.THREAD,D=8 MM G1/4	2-197, 2-199, 6-9, 6-19
90055-0269	ELBOW PIPE JOINT 8X8 MM	2-197, 2-199
90055-0274	STRAIGHT COUPLING, D=8 MM - G1/4"	2-7, 2-197, 2-199, 6-19, 6-25
90055-0276	T-CONNECTION 8 MM	6-7, 6-19, 6-27, 7-105
90055-0277	ELBOW WITH TAILPIECE 12/12 MM	2-209, 2-211
90055-0278	T-COUPLING, ADJ.12-G1/4"	2-49
90060-0080	RELAY, TIME H3DE-S1 24VDC	8-49, 8-51
90062-0015	LOCK WASHER SERRAT.EXT.GEAR,6,4/11 H=0,7	5-107, 5-109, 5-111, 6-11, 8-21, 8-35, 8-37, 8-39, 8-41, 8-71
90062-0016	LOCK WASHER SERRAT.EXT.GEAR,8,4/15 H=0,8	7-43, 7-45, 7-135, 7-137, 7-139, 7-141, 7-143
90062-0022	LOCKING WASHER D=6,4/11	8-49, 8-51, 8-61, 8-63, 8-91, 8-93
90062-0029	WASHER LOCK 5,1X 8,6, T= 1,5 DIN 7980	1-99, 2-79, 6-17
90062-0030	LOCK WASHER 6,1X9,7; T=1,5 DIN 7980	1-99
90062-0031	"LOCK WASHER 8,2X12,8; T=2 DIN 7980"	1-99
90062-0059	LOCK WASHER SERRAT.EXT.GEAR,4,3/8 H=0,5	7-135, 7-137, 7-139, 7-141, 7-143
90062-0061	LOCK WASHER NORD-LOCK,6,5/10,8, H=2,6	4-19, 4-21, 4-29, 4-31, 5-201, 5-207
90064-0082	PUSH BUTTON, WHITE	7-197, 7-213
90064-0084	PUSH BUTTON, YELLOW	1-339, 1-341, 7-197
90067-0301	BRAKE WIRE, 32 82 138 1	10-79
90067-0302	TORSION SPRING	10-77
90067-0317	BRAKE LINING	10-77
90067-0320	COTTER FOR 90067-301	10-79
90067-0336	GUIDE SHAFT UNIT, 32 82 123 3	10-77
90067-0337	BRAKE DRUM	10-77
90067-0338	GUIDE ROLLER 32 44 117 2	10-77
90067-0342	TENSION SPRING	10-77
90067-0349	ROLLER KIT, 34 73 050 7	10-79
90067-0350	AXLE PIN	10-79
90067-0351	SEAL KIT	10-75
90067-0354	PUMP PISTON	10-75
90067-0355	COMPRESSION SPRING	10-75
90067-0356	TOP WASHER	10-75
90067-0357	REPAIR KIT	10-75
90067-0358	SINK HANDLE	10-79
90067-0359	SINK ROD, 34 74 021 7	10-79
90067-0360	MOUNTING KIT, 34 74 022 5	10-79
90067-0361	TIE ROD	10-79
90067-0364	BRAKE HANDLE	10-79
90067-0365	HYDRAULIC HOSE, 32 04 169 1	10-73
90067-0368	YOKE	10-73
90067-0369	VALVE ARM	10-75
90067-0370	WHEEL, 32 04 176 6	10-73
90067-0371	SLEEVE, 32 04 175 8	10-73
90067-0372	SHAFT, 32 04 174 1	10-73
90069-0614	GEARS, WORM MOTOR MC320P2T	7-75
90074-0011	CABLE CLIPS, D=14 MM	8-21, 8-105
90074-0025	CLIPS, CABLE CLIPS DI=8 MM	6-75
90075-0124	CONTACTOR, 4KW 24VDC	8-77, 8-79, 8-81
90075-0126	CONTACTOR, 22KW 24VDC	8-83
90075-0127	CONTACTOR, 4KW 24VDC	7-153, 7-155, 8-77, 8-79, 8-81
90075-0128	CONTACTOR, 7,5KW 24VDC	8-77, 8-79, 8-81
90075-0141	CONTACTOR, 4KW 24VDC	8-49, 8-51
90075-0143	CONTACTOR, 4KW 24VDC	8-49, 8-51
90075-0313	AUXILIARY CONTACT K&M 22 DILM.2NO;2NC	8-77, 8-79, 8-81
90077-0079	FEED THROUGH TERMINAL, 02943.6	5-223
90077-0113	FEED THROUGH TERMINAL, 10-00102150-1	2-97, 2-155, 2-157, 8-65, 8-69, 8-95

Part No	Description	Page No
90077-0114	END PLATE, WAP/WDK 2,5	8-95
90077-0328	RAIL TS15/5	5-223
90082-0013	OVER VOLT. PROTECT. PU 4C-R 230 VAC	6-11
90083-0052	THRUST NEEDLE BEARING, 30X47X2 MM	5-167
90083-0053	PLATE FOR 90083-0052	5-167
90087-0019	PLUG M10X1 STAINLESS	2-89, 3-15, 4-131, 4-151, 4-153, 4-155, 4-161, 4-163, 4-165, 5-105
90087-0036	PLUG, KR 1/4	6-73
90089-0003	REDUCING SLEEVE, PR22,5/PR18,6	1-127, 1-129
90089-0015	REDUCING SLEEVE, PR37M/PR28,3F	1-349, 1-351
90089-0028	MUFF	7-135, 7-137, 7-139, 7-141, 7-143
90090-0016	BALL, D=15 MM	5-217
90091-0074	WEAR RING 35X40X5,3 MM	4-65
90091-0138	V-RINGS 40X50X9 MM V-45A	4-177, 4-179
90091-0148	RADIAL SEAL 25X47X7 MM DUST LIP	5-131, 5-133, 5-135, 5-137, 5-139, 5-141, 5-171
90091-0169	WEAR RING 12X15X3,2 MM	4-95
90091-0216	PISTON SEAL, GLIDORING 7,1X12X2,2 MM	4-95
90091-0237	ROD SEAL, GLIDORING 20X27,5X3 MM	1-209, 1-211, 1-213, 9-29, 9-31
90091-0238	WEAR RING 20X22X10 MM	1-209, 1-211, 1-213, 9-29, 9-31
90091-0266	SEAL RING 10,4X16,3X2,5 MM	1-207, 9-27
90091-0297	RADIAL SEAL 35X47X7 MM DUST LIP	5-5, 5-7, 5-105, 5-149, 5-151, 5-153, 5-199, 5-203, 5-205
90091-0298	RADIAL SEAL 45X65X8 MM DUST LIP	5-149, 5-151, 5-153
90091-0299	RADIAL SEAL 30X52X7 MM DUST LIP	5-5, 5-7, 5-143, 5-145, 5-147, 5-171
90091-0304	RADIAL SEAL 45X65X8 MM DUST LIP	9-31
90091-0306	RADIAL SEAL 30X47X7 MM DUST LIP	5-131, 5-133, 5-135, 5-137, 5-139, 5-141
90091-0335	PISTON SEAL,GLIDORING 62,5X70X3 MM	1-211, 9-31
90091-0336	PISTON SEAL, GLIDORING 79X90X4 MM	1-209, 1-213
90091-0358	SCRAPER, ASOB 45X53X7 MM	4-151, 4-161
90091-0359	X-SEAL 36,17X2,62 MM	4-65
90091-0360	BACK-UP RING 37,5X1,4 MM	4-65
90091-0361	SCRAPER, EXCLUDER2 30X34,8X3,7 MM	4-83, 4-85, 4-87
90091-0362	SCRAPER, EXCLUDER2 18X22,8X3,7 MM	4-65
90091-0364	ROD SEAL, STEPSEAL 18X25,3X3,2 MM	4-65
90091-0365	SEAL GLIDORING 11,55X19,05X3,2M	4-95
90091-0366	WEAR RING 18X23X3,9 MM	4-65
90091-0367	WEAR RING 16X18X3,1 MM	4-95
90091-0368	WEAR RING 30X45X5,3 MM	4-65
90091-0377	ASSEMBLY TOOL SLEEVE GLYD RING	10-31
90091-0378	ASSEMBLY TOOL SLEEVE AQ-SEAL	10-31
90091-0380	SCRAPER, EXCLUDER 20X24,8X3,7 MM	5-149, 5-151, 5-153
90091-0387	ASSEMBLY TOOL	10-31
90091-0391	SEAL SLYDRING	4-65
90091-0398	PISTON SEAL, GLID RING T 20,5X28X3,2 MM	4-65
90091-0404	RADIAL SEAL 22X40X7 MM DUST LIP	5-171, 5-203, 5-205
90091-0406	RADIAL SEAL 25X40X7 MM DUST LIP	5-203, 5-205
90091-0408	BEARING SEAL 70X78X5	5-149, 5-151, 5-153
90091-0412	SEAL RING	2-33
90091-0416	RADIAL SEAL 70X90X10 MM DUST LIP	5-167
90091-0428	PISTON SEAL, GLID RING T 27,5X34,5X3,2 M	4-65
90091-0429	VARILIP 15X26X7 MM	1-143
90091-0436	RADIAL SEAL 20X40X7 MM DUST LIP	4-177, 4-179
90091-0440	RADIAL SEAL 22X40X7 MM DUST LIP	5-199
90092-0052	METERING VALVE 10 MM3	4-131, 4-151, 4-153, 4-155, 4-157, 4-159, 4-161, 4-163, 4-165, 4-167, 4-169, 5-105
90092-0053	METERING VALVE 30 MM3	3-15
90092-0054	METERING VALVE 50 MM3	4-151, 4-157, 4-159, 4-161, 4-167, 4-169, 5-105
90095-0072	OVERLOAD PROTECTION, PKZM 1,0 A	8-77
90095-0073	OVERLOAD PROTECTION, PKZM 1,6 A	8-77
90095-0074	OVERLOAD PROTECTION, PKZM 2,5 A	8-77
90095-0075	OVERLOAD PROTECTION, PKZM 4 A	8-77
90095-0077	OVERLOAD PROTECTION, PKZM 6-10 A	8-77
90095-0078	OVERLOAD PROTECTION, PKZM0-16	8-77
90099-0007	HEXAGON NUT, M10X1, E 63 137 10	7-101, 7-103
90099-0027	HEXAGON NUT, M14, DIN936	1-123, 1-125
90099-0051	NUT HEX. M10X1,25, FE FZB	1-167
90099-0053	HEXAGON NUT, M14X1,5, SMS2176	1-151
90099-0085	NUT	6-11
90099-0095	NUT HEX. M18X1,5	1-107, 1-109, 1-111
90099-0096	NUT	6-11, 8-23, 8-25, 8-27, 8-29
90099-0104	NUT, PR 15,2 (PG9)	1-13, 1-15, 1-157, 1-159, 1-161, 1-165, 1-169, 1-171, 1-205, 1-223, 1-245, 1-263, 1-269, 1-271, 1-281, 1-295, 1-349, 1-351, 1-365, 1-367, 2-39, 2-89, 6-19, 7-7, 7-135, 7-137, 7-139, 7-141, 7-143
90099-0110	NUT, PR 22,5 (PG16)	1-13, 1-15, 1-163, 1-223, 1-349, 1-351, 1-365, 1-367, 2-149, 2-151, 7-7, 7-135, 7-137, 7-139, 7-141, 7-143, 7-213, 8-21
90099-0117	NUT, PR 18,6 (PG11)	1-259, 1-263, 1-317, 1-327, 1-349, 1-351, 6-11, 7-135, 7-137, 7-139, 7-141, 7-143
90099-0118	NUT, PR 20,4 (PG13,5)	1-349, 1-351, 5-219, 7-43, 7-45, 7-135, 7-137, 7-139, 7-141, 7-143, 8-21
90099-0119	NUT, PR 28,3 (PG21)	1-349, 1-351, 1-365, 1-367, 7-7, 7-117, 7-135, 7-137, 7-139, 7-141, 7-143
90099-0120	NUT PR 37 (PG29)	1-205, 2-149, 2-151, 7-117, 7-135, 7-137, 7-139, 7-141, 7-143
90099-0131	NUT HEX. M16X2 SS	7-77
90099-0178	GLAND, LOCKNUT, PG 16	1-99
90100-0041	SERVO DRIVE SAM-DA-400-07B-P4N-F	8-57
90100-0042	SERVO DRIVE SAM-DA-400-014B-P4N-F	8-57, 8-67
90100-0045	CABLE GLAND, MOTOR END 9032 010 806	2-107, 2-109, 2-111, 2-149, 2-151
90100-0047	CONNECTOR, DRIVE END SAM 4/7/14,10-14MM	8-57

Part No	Description	Page No
90100-0048	CONNECTOR, DRIVE END SAM 4/7/14, 9-16MM	8-57, 8-67
90100-0051	CONNECTOR KIT, BRAKE	8-57, 8-67
90100-0052	CONNECTOR KIT, FEEDBACK CABLE DRIVE END	2-107, 2-109, 2-111, 2-149, 2-151
90100-0054	CONNECTOR KIT, SUPPLY (SAM 4-7-14)	8-57, 8-67
90100-0056	CONNECTOR KIT, OPTION	8-57, 8-67
90100-0059	SAM SUPPLY SAM-PA-400-80-E	8-67
90100-0064	CONNECTOR SAM-P_-30, 4MM2	8-67
90100-0068	EMC FILTER 90A, 258-75-34	8-67
90100-0069	SERVO CONTROLLER PAM-P1R-H8F-AP-P, F26	8-57
90100-0072	EASYBUS SAM 0,3M	8-57, 8-67
90100-0075	EASYBUS SAM 2,0M	8-57, 8-67
90100-0303	SAM TO PC TEST MONITORING CABLE	9-3
90110-0028	CONTACT UNIT 4-POLEADAPTER	8-91, 8-93
90110-0095	CONNECTOR 3 POLE + EARTH	2-27, 2-81, 6-67, 6-69
90110-0141	CONTACT UNIT, DE09P064TX	2-107, 2-109, 2-111, 2-149, 2-151
90110-0144	COVER	1-349, 1-351, 2-107, 2-109, 2-111, 2-149, 2-151
90110-0147	CONTACT UNIT	1-349, 1-351
90110-0150	MALE INSERT 121110 0000	1-201, 1-349, 1-351, 2-57, 2-59, 2-107, 2-109, 2-111, 2-149, 2-151, 6-65, 7-135, 7-137, 7-139, 7-141, 7-143
90110-0151	FEMALE INSERT 24-POL 121130 0000	2-95, 2-149, 2-151, 8-47
90110-0152	CABLE HOOD 24-POL 70.352.2428.1	1-201, 1-349, 1-351, 2-57, 2-59, 2-107, 2-109, 2-111, 2-149, 2-151, 7-135, 7-137, 7-139, 7-141, 7-143
90110-0153	CHASSIS HOUSING 24-P CHI 24, 121240 0000	8-23, 8-25, 8-27, 8-29
90110-0156	MALE INSERT 70.210.0653.0	1-349, 1-351, 2-107, 2-109, 2-111, 6-39, 6-41, 7-135, 7-137, 7-139, 7-141, 7-143
90110-0157	CABLE HOOD 6-POL 70.352.0628.1	1-201, 1-349, 1-351, 2-57, 2-59, 2-107, 2-109, 2-111, 2-149, 2-151, 7-117, 7-135, 7-137, 7-139, 7-141, 7-143, 7-173
90110-0159	MALE INSERT 70.310.0640.0	1-201, 1-349, 1-351, 2-57, 2-59, 2-107, 2-109, 2-111, 2-149, 2-151, 6-17, 6-25, 6-29, 7-117, 7-135, 7-137, 7-139, 7-141, 7-143, 7-173, 8-47
90110-0160	CABLE HOOD 6-16-POL 70.352.1628.1	1-349, 1-351, 7-135, 7-137, 7-139, 7-141, 7-143
90110-0161	FEMALE INSERT 70 105 0653 0	8-23, 8-25, 8-27, 8-29, 8-47
90110-0163	FEMALE INSERT 70 300 0640 0	2-95
90110-0164	FEMALE INSERT 70 105 2453 3	8-23, 8-25, 8-27, 8-29
90110-0165	FEMALE INSERT 70.005.0653.0	8-23, 8-25, 8-27, 8-29
90110-0166	CHASSIS HOUSING 310144-33	8-23, 8-25, 8-27, 8-29, 8-47
90110-0167	CHASSIS HOUSING 310133-33	8-23, 8-25, 8-27, 8-29
90110-0221	CHASSIS HOUSING 310162-33	2-95
90110-0224	CHASSIS HOUSING 310166-33	2-95
90110-0225	CHASSIS HOUSING 310168-33	2-95
90110-0226	CABLE HOOD 6-POL 70.350.0628.0	6-17, 6-25, 6-29
90110-0227	CABLE HOOD 6-16-POL 71.350.1628.0	6-39, 6-41
90110-0228	CABLE HOOD 24-POL 71.350.2428.0	2-149, 2-151, 6-65
90110-0235	CABLE CONTACT, PX0739/S	1-349, 1-351, 2-107, 2-109, 2-111, 4-143, 4-145, 7-117
90110-0236	CHASSIS CONTACT PX0767/S	2-107, 2-109, 2-111, 8-23, 8-25, 8-27, 8-29
90110-0244	CABLE HOOD 6-POL 70.350.1628.0	2-107, 2-109, 2-111
90110-0247	FEMALE INSERT 70.200.0653.0	2-95
90110-0295	CONNECTOR 4 POLE + EARTH	2-227
90110-0296	CONTACT SCREW	2-107, 2-109, 2-111
90110-0348	CABLE SEALING, 12033/I, ELFA. 44-625-78	2-107, 2-109, 2-111
90110-0349	COOVER/TOOL PX 0733	2-107, 2-109, 2-111
90110-0370	BASE HOUSING	2-107, 2-109, 2-111
90110-0371	PLUG HOOD	2-227
90110-0381	COVER	1-349, 1-351, 2-107, 2-109, 2-111, 2-149, 2-151
90110-0383	CONTACT COVER 15 PIN	8-5
90110-0385	HOLDER	1-349, 1-351, 2-57, 2-59, 2-107, 2-109, 2-111, 2-149, 2-151, 7-135, 7-137, 7-139, 7-141, 7-143
90110-0513	CHASSIS CONTACT	2-149, 2-151
90110-0516	SOCKET	8-23, 8-25, 8-27, 8-29
90110-0517	MALE PLUG	2-107, 2-109, 2-111, 2-149, 2-151
90110-0518	PLINTH 15 PIN	8-5
90111-0120	SWITCH, 2 POS.704.510 .0A+704.901.5/A	7-193, 7-209
90111-0122	KEY SWITCH, 2 NO CONTACTS	8-91, 8-93
90111-0124	KEY SWITCH, 1NO,1NC CONTACT	8-91, 8-93
90111-0172	EARTH FAULT BREAKER, F 362-25/0.03	8-91, 8-93
90111-0173	MAIN SW.NZM64-100/ZM64-100-760+AS4-NZM64	6-11
90113-0056	REGULATOR, 11-818-998	2-49, 10-45
90113-0059	FILTER REGULATOR 50UM, B08-396-A3MG	10-51, 10-53
90113-0064	PRESSURE REGULATOR	1-229
90113-0072	FILTER REGULATOR 40µ, 915-331242	6-75
90113-0098	PRESSURE REGULATOR	6-35
90113-0113	FILTER REGULATOR, B64G-NNK-AD3-RMN	7-59
90113-0140	QUICK CLAMP	1-317, 1-327, 2-131, 2-133
90113-0155	SOFT START VALVE	7-59
90113-0374	SLOW STARTING VALVE	6-75
90113-0375	PRESSURE DISTRIBUTION	6-75
90113-0377	SHUT OFF VALVE G1/2, 915-331053	6-75
90113-0384	BRACKET FOR R11, 5203-06	10-51, 10-53
90113-0407	YOKE SINGLE, Y64A-4GA-N1N	7-59
90113-0413	END CONNECTOR G3/4, 18-026-981	7-59
90113-0423	HIGH SPEED VENTING VALVE G1/2, R40403053	6-75
90113-0427	SHUT OFF VALVE G1/8, T64T-NNS-001	7-59
90113-0469	MANIFOLD REGULATOR 4 BAR	1-317, 1-327, 2-131, 2-133
90113-0470	MANIFOLD REGULATOR 10 BAR	6-73, 7-159, 7-161
90115-0134	ROD END, ID=10 MM, M10X1,25	2-261, 5-77, 5-79, 5-81

Machine Type Group Description Page No

Part No	Description	Page No
90115-0137	ROD END, ID=6 MM, M6X1	5-19, 5-21, 5-65, 5-67, 5-69
90115-0139	ROD END, ID=8 MM, M8X1,25	5-9, 5-11
90115-0180	ROD END, ID=8 MM, M8X1,25 LH	5-9, 5-11
90115-0181	ROD END, ID=10 MM M10X1,5	5-5, 5-7
90115-0182	ROD END, ID=10 MM M10X1,5LH	5-5, 5-7
90117-0030	LOCKING HANDLE, M8/F	5-211
90119-0043	OPTO-RELAY, 22DC 60S-3/32VDC	8-73
90119-0056	RELAY, AUXILIARY MK3P5-S 24VDC	8-49, 8-51
90119-0063	OPTO-RELAY, DC/DC AMMS-10-1/30VDC	2-157, 8-95
90119-0067	SOLID-STATE RELAY, H12WD4850	8-73
90119-0072	SAFETY RELAY, JSBR4	8-49, 8-51
90119-0082	SSR 90119-67 + HEAT SINK	8-75
90119-0089	SAFETY RELAY, JSBT4 24VDC	8-49, 8-51
90119-0105	SAFETY RELAY JOKAB JSR 3T	8-49, 8-51
90121-0114	RESISTANCE FIXED, 0,22 KOHM, 25 W	8-71
90121-0127	RESISTANCE FIXED, 1,5 KOHM, 0,25 W	1-347
90121-0132	RESISTANCE FIXED, 0,51 KOHM, 0,25 W	1-349, 1-351
90121-0137	RESISTANCE FIXED, 2,2 OHM, 15 W	8-55
90129-0006	BASE, S3-B	8-49, 8-51
90132-0021	HOSE CLIP 6-10MM	2-27
90132-0030	HOLDER MV 87177 KS 580T	1-165, 1-179
90134-0030	SLEEVE FOR PLASTIC TUBE	2-87, 2-89, 4-185, 5-105
90134-0031	SLEEVE FOR PLASTIC TUBE	3-9, 4-151, 4-157, 4-159, 4-161, 4-167, 4-169
90134-0038	BUSHING/NUT INLET/OUTLET 4 MM	4-131, 4-151, 4-153, 4-155, 4-157, 4-159, 4-161, 4-163, 4-165, 4-167, 4-169
90134-0039	BUSHING VALVE CONNECTION 2,5 MM	4-131, 4-151, 4-153, 4-155, 4-157, 4-159, 4-161, 4-163, 4-165, 4-167, 4-169, 5-105
90134-0040	BUSHING VALVE CONNECTION 4 MM	2-89, 4-151, 4-153, 4-155, 4-157, 4-159, 4-161, 4-163, 4-165, 4-167, 4-169
90134-0051	SPACING COLLAR DOSING BLOCK	4-151, 4-153, 4-155, 4-157, 4-159, 4-161, 4-163, 4-165, 4-167, 4-169
90134-0052	PLUG DOSING BLOCK	4-153, 4-155, 4-157, 4-159, 4-163, 4-165, 4-167, 4-169, 5-105
90134-0054	BLOCK CONNECTION M10X1	2-89
90134-0055	BUSHING/NUT INLET/OUTLET 6 MM	2-89, 4-141, 4-153, 4-155, 4-163, 4-165, 5-105
90134-0058	CONNECTION	4-75, 4-77, 4-79, 4-111, 4-113, 4-115, 4-151, 4-153, 4-155, 4-157, 4-159, 4-161, 4-163, 4-165, 4-167, 4-169, 4-173, 5-9, 5-11, 5-129, 5-149, 5-151, 5-153
90134-0063	BUSHING/NUT M8X1, D=2,5 MM	4-7, 4-9, 4-13, 4-15, 4-49, 4-55, 4-133, 4-135
90134-0065	CONNECTION M6 TUBE 2,5 MM	4-131
90134-0068	CONNECTION	3-9, 4-75, 4-77, 4-79, 4-111, 4-113, 4-115, 4-181, 4-183
90135-0026	EARTH TERMINAL, 3802.6	5-223
90135-0035	EARTH WIRE, L=250 MM 16 MM2	8-35, 8-37, 8-39, 8-41, 8-91, 8-93
90135-0040	EARTH WIRE, L=150 MM 16 MM2	7-135, 7-137, 7-139, 7-141, 7-143
90140-0011	T-PIPE, INT. THREAD, NO. 2070-1/2-1/2	2-203
90140-0012	ELBOW, 90 INT/EXT, 2020-1/2-1/2	1-265
90140-0013	ELBOW, 90 INT/EXT, 2020-1/4-1/4	2-197, 2-199, 2-205
90140-0015	T-PIPE, INT. THREAD, 2003-1/8	10-51, 10-53
90140-0018	T-PIPE, INT. THREAD, 2003-1/4	10-45
90140-0019	ELBOW, 90, INT. THREAD, NO. 2013-1/4	2-205
90140-0020	ELBOW, 90, INT/EXT. THREAD, NO. 2020-3/8	6-67, 6-69, 7-159, 7-161
90140-0021	ELBOW, 90 INT/EXT, 20201/8-1/8	7-59
90140-0023	T-PIPE, INT. THREAD, NO. 2070-3/8-3/8	6-17, 6-67, 6-69
90140-0079	SLEEVE, INT. THREAD, NO. 501-08	6-77
90141-0015	RETAINING RING FOR SHAFT DIN 471 8 A2	4-65, 7-7, 7-11, 7-79
90141-0016	RETAINING RING FOR SHAFT DIN 471 10 A2	1-123, 1-125, 1-137, 1-139, 1-141, 1-289, 1-291, 3-17, 3-31, 4-137, 4-139, 7-11, 7-33, 7-35, 7-81, 7-87, 7-101, 7-103
90141-0017	RETAINING RING SHAFT DIN 471 17 A2	1-223, 7-97
90141-0019	RETAINING RING FOR BORE DIN 472 50 A2	5-105, 5-169, 5-199, 5-203, 5-205
90141-0020	RETAINING RING FOR BORE DIN 472 42 A2	2-41
90141-0022	SNAP RING B 16	1-167, 1-171
90141-0029	CIRCLIP	4-91, 4-93, 4-119, 4-121
90143-0020	STRIP	2-31
90143-0054	STRIP	2-233
90143-0057	STRIP EMKA 1011-05 21X11MM	6-11, 8-21
90143-0059	SEAL STRIP 4610069	1-333, 1-349, 1-351, 1-379, 2-7, 2-39, 2-255, 2-267
90143-0060	EDGE STRIP 9,5X6,3MM BLACK PVC	6-11, 6-53, 6-57, 7-69, 7-71, 7-73
90143-0073	RUBBER STRIP	7-7
90144-0007	TAPE	1-273, 6-33, 6-35, 6-37, 6-43, 6-77
90144-0072	TAPE SCOTCH VHBS 4945 W=12,7MM	7-203
90144-0073	TREBOFLON-TAPE W=13MM	1-165, 1-179, 1-225, 1-263, 1-265, 1-269, 1-271, 2-39
90148-0101	MEASURING HOSE,MINIMESS S110-AC-FA-0063	2-77
90152-0016	HOSE (SPIRAL)	2-141
90152-0017	HOSE (SPIRAL)	2-207
90152-0050	SPIRAL CONDUIT, 20X13, UL 1313	1-103, 1-263, 1-335, 1-339, 1-341, 1-349, 1-351
90152-0051	SPIRAL CONDUIT, 25X18, UL 1816	1-193, 1-201, 1-223, 1-263, 2-149, 2-151, 7-213
90152-0058	SPIRAL CONDUIT, 15X9, UL 0909	1-201, 1-339, 1-341, 1-349, 1-351, 6-19
90152-0059	SPIRAL CONDUIT, 18X12, UL 1211	1-223
90152-0060	SPIRAL CONDUIT, 42X35, UL3529	7-117
90152-0070	METAL HOSE, 32,5X26, UL 2621	1-201, 1-349, 1-351, 2-149, 2-151, 7-117
90153-0015	ADHESIVE,LOCTITE IS 496/CYANOLOT 303	4-83, 4-85, 4-87
90153-0020	ADHESIVE, BOSTIK 1782 125ML	1-169
90153-0023	ADHESIVE, SILICON 251470 TUB 90CC	1-13, 1-15, 1-101, 2-31
90153-0049	ADHESIVE, LOCTITE 409 20G	2-215, 2-217, 2-229, 2-233, 2-243, 2-245, 2-247, 2-249, 2-251, 2-255
90155-0008	HANGER CHAIN, 18	1-223, 1-245
90155-0309	SECURITY HOOK	10-83

Part No	Description	Page No
90157-0016	LOCKING FLUID LOCTITE 242 50 ML	2-65, 5-211, 6-67, 6-69, 7-105, 7-121, 7-123, 7-129, 7-133
90157-0021	LOCKING FLUID LOCTITE 270	2-143, 2-145, 4-127, 4-129, 4-151, 4-161
90157-0034	THREAD SEALANT LOCTITE 572 50 ML	2-209, 2-211
90157-0037	THREAD SEALANT LOCTITE 542	1-11, 1-165, 1-179, 1-263, 1-265
90157-0041	SEALING COMPOUND, RHODORSEAL 5651	2-215, 2-217, 2-229, 2-233, 2-243, 2-245, 2-247, 2-249, 2-251, 2-255, 2-257
90159-0100	CAPACITOR, 100000 æF 40 V	8-55
90159-0101	CAPACITOR, 6800 æF 400 V	8-71
90159-0304	HOLDER	8-55
90159-0305	CLAMP	8-71
90161-0001	O-RING MATERIAL 3 MM	2-119
90163-0007	CONNECTION	10-45, 10-65
90163-0014	QUICK COUPLING, (M) LP-006-1-WR013	2-87
90163-0016	QUICK COUPLING, (F) LP 006-0-WR013	10-45
90163-0041	HOSE NIPPLE, EXT.THR. 3/8-12 MM	2-39, 2-87, 6-67, 6-69
90163-0052	HOSE NIPPLE, EXT.THR. 1/4-12 MM	2-77
90163-0056	QUICK COUPLING, (F) 5054-6/4	10-51, 10-53
90163-0057	QUICK COUPLING, (M) 5150-1/8	1-303, 1-305, 10-51, 10-53
90163-0062	QUICK COUPLING, (F) 5053-1/8	1-303, 1-305
90163-0063	QUICK COUPLING, (M) 5450-6/4	4-141
90163-0064	QUICK COUPLING, (M) LP-006-2-WR517	2-77, 2-87
90163-0076	QUICK COUPLING, (F) LP-006-0-WR021	2-77
90163-0087	QUICK COUPLING, (M) 5150-1/4	10-51, 10-53
90163-0113	QUICK COUPLING, (M) LP-006-1-WR013-22	10-45
90163-0141	QUICK-RELEASE COUPLING SS-QTM2A-B-8M0-K2	2-39
90163-0172	QUICK-RELEASE COUPLING SS-QTM2A-B-8M0-K4	2-39
90163-0304	QUICK COUPLING, LP-006-5-74-KU (DUST CAP	2-77, 2-87
90164-0015	LIGHT FIXTURE, DWDCV111B/230V 50HZ	7-43, 7-45
90164-0303	BRACKET SK2202 WALDMANN	7-43, 7-45
90165-0007	PIPE CLIP FOR TUBE D=8 MM	8-71
90165-0009	PIPE CLIP FOR TUBE D=12 MM	7-43, 7-45
90165-0019	TOOL CLIP, 81/3, OPEN, 20 - 30 MM	2-49, 2-131, 2-133
90165-0022	PIPE CLIP, FOR TUBE D=2,5 MM, B-3570	8-71
90165-0039	PIPE CLAMP, RSGU 1.15/12, D=15 MM	1-179
90165-0056	PIPE CLIP FOR TUBE D=4 MM	4-57, 4-59, 4-75, 4-77, 4-79, 4-97, 4-99, 4-111, 4-113, 4-115, 5-149, 5-151, 5-153, 5-157, 5-159
90165-0057	PIPE CLIP FOR TUBE D=6 MM	5-19, 5-21, 5-65, 5-67, 5-69, 5-199, 5-203, 5-205
90165-0058	PIPE CLIP FOR TUBE D=25 MM	4-57, 4-59, 4-75, 4-77, 4-79, 4-97, 4-99, 4-111, 4-113, 4-115, 4-131
90165-0060	PIPE CLIP FOR TUBE D=5 MM	8-61, 8-63, 8-91, 8-93
90165-0076	T-CLIP T8 FOR TUBE D=8 - 9 MM	7-105
90165-0087	T-CLIP T6 FOR TUBE D=6 - 7 MM	7-123, 7-133
90166-0008	HOSE 7/10 PVC TRANSP.	2-37
90166-0013	TUBE 8 MM PA BLUE	1-197, 1-199, 1-317, 1-327, 2-49, 2-125, 2-127, 2-129, 2-131, 2-133, 2-141, 2-203, 2-209, 2-211, 5-47, 5-49, 5-51, 5-89, 5-91, 6-77
90166-0045	HOSE PVC TRANSP. 6/12	6-17, 10-65
90166-0049	HOSE PVC 25/33-34	2-203
90166-0060	HOSE 19/26-27 REINF.PVC	2-15
90166-0068	TUBE 12 MM PA BLUE	1-317, 1-327, 2-49, 6-73, 7-61, 7-159, 7-161
90166-0081	TUBE 6 MM PA BLUE	1-317, 1-327, 2-7, 2-33, 2-39, 2-45, 2-47, 2-49, 2-125, 2-127, 2-129, 2-131, 2-133, 4-143, 4-145
90166-0087	HOSE 15/23 REINF.PVC TRANSP.	1-265, 1-267, 2-29
90166-0095	TUBE 4 MM PA BLUE	1-317, 1-327, 2-49, 2-131, 2-133, 6-73, 7-81
90166-0101	HOSE, SILICONE, 60 SHORE, 6/10 MM	2-27
90166-0108	TUBE 6 MM PA,TRANSP.	2-89, 4-185, 5-105
90166-0109	TUBE 4 MM PA,TRANSP.	4-151, 4-157, 4-159, 4-161, 4-167, 4-169
90166-0110	TUBE 15 MM PA,TRANSP.	2-203
90166-0113	HOSE	2-87, 10-65
90166-0117	HOSE 4/6 PVC BLUE	7-159, 7-161
90166-0118	TUBE 8 MM PA BLACK	1-11, 2-37, 2-197, 2-199, 5-25, 5-27, 5-71, 5-73, 5-75, 6-9, 6-17, 6-19, 6-27, 6-67, 6-69, 7-13
90166-0121	HOSE	1-179, 2-7, 2-77, 2-121, 2-203, 6-13, 6-15, 6-17, 6-19, 6-21, 6-35
90166-0123	HOSE	4-185
90166-0124	TUBE 6 MM PA,TRANSP.	10-51, 10-53
90166-0132	TUBE 6 MM PA,TRANSP.	2-205, 4-141, 5-163, 5-165
90166-0138	HOSE	2-19, 2-21
90166-0141	TUBE 10 MM PA,TRANSP.	2-207
90166-0143	TUBE 2,5 MM PA,TRANSP.	4-131, 4-151, 4-153, 4-155, 4-157, 4-159, 4-161, 4-163, 4-165, 4-167, 4-169, 5-105
90166-0151	HOSE	2-19, 2-21, 2-65, 2-119
90166-0158	HOSE	2-29
90166-0161	HOSE	1-195, 2-27
90166-0176	RUBBER HOSE	1-339, 1-341
90166-0188	PLASTIC HOSE	6-7
90166-0193	TUBE 6 MM PUR BLUE	1-229, 1-303, 1-305, 7-13, 7-31, 7-51, 7-81, 7-105, 7-107, 7-123, 7-125, 7-131, 7-133
90166-0194	TUBE 8 MM PUR BLUE	6-73, 7-39, 7-41, 7-51, 7-63, 7-105, 7-159, 7-161
90166-0195	TUBE 12 MM PA BLUE	1-229, 1-303, 1-305, 2-87, 2-209, 2-211
90166-0196	TUBE 14MM PA BLUE	2-209, 2-211, 6-75, 6-77
90166-0198	RUBBER HOSE	2-39
90166-0199	RUBBER HOSE	1-163
90166-0216	TUBE 10 MM PUR BLUE	2-125, 2-127, 2-129
90166-0225	HOSE	2-39
90166-0232	SHRINKABLE HOSE	6-11
90166-0233	HOSE	2-69, 6-45

Part No	Description	Page No
90166-0236	HOSE, 38/51 REINFORCED RUBBER	2-113, 2-269, 6-33
90166-0260	HOSE	2-203
90166-0266	TUBE, 6 MM PA BLACK	2-201
90181-0064	LOCK ZP1 FOR CHANNEL T1	8-49, 8-51, 8-61, 8-63, 8-71, 8-91, 8-93
90181-0199	FLEXIBLE CHAIN, LINK 15	7-37
90181-0202	FLEXIBLE CHAIN, BRACKET 1015. 1PZ	7-37
90181-0203	FLEXIBLE CHAIN, BRACKET 1015. 2PZ	7-37
90181-0313	RIVET DUCTAFIX R4	7-135, 7-137, 7-139, 7-141, 7-143
90187-0029	BALL VALVE G1/2, NPBR	6-23, 6-67, 6-69
90187-0045	BALL VALVE G1/4 CR PL	6-7, 6-19, 6-25, 10-45, 10-65
90187-0059	BALL VALVE FOR HYDR.PER. G1/2 3MM HOLE	2-19, 2-21, 2-29
90187-0062	BALL VALVE G1/2, NPBR	1-179, 1-265
90187-0088	BALL VALVE G1/4, NPBR	7-61
90187-0089	BALL VALVE G3/8, NPBR	6-67, 6-69
90187-0096	BALL VALVE G1	1-229
90187-0105	PURGING VALVE, G3/8 FOR WATER	1-263
90187-0110	DIAPHRAGM VALVE DN15, N.C. WELD CONN.	1-231
90187-0130	TEMP. CONTR. VALVE, R3/4 0-30øC	6-21
90187-0133	SAFETY VALVE, 10 BARS, R1/2, R1/2	6-35
90187-0147	BALL VALVE G11/2	6-33
90187-0148	BALL VALVE G1	6-45
90187-0149	THROTTLE VALVE, G1/4, G1/4, MALE	2-201, 2-205
90187-0158	THROTTLE BALL VALVE G1/4, R1/4	1-263, 2-7, 2-77, 2-197, 2-199
90187-0176	ACTUATOR ECC 008 FOR DIAPHR. VALVE	1-223
90187-0312	DIAPHRAGM #328 FOR SIZE 15 VALVE	1-231
90187-0325	DIAPHRAGM, 214/300 AO08 4-B -20-150§C	1-223
90189-0005	BALL BUSHING, 30X47X68 MM	7-95
90189-0011	BALL BUSHING, 16X26X36 MM	2-261, 7-85
90189-0025	BALL BUSHING, 25X37X37 MM	7-177, 7-179
90191-0047	WHEEL, NO. 442-200-113	10-67
90191-0060	CASTOR WHEEL, NO. 1599PRT	10-67
90191-0077	WHEEL	10-87
90194-0016	WARNING SIGN, RISK OF ELECTRIC SHOCK	6-29, 6-63, 6-65, 7-7, 8-31, 8-33
90194-0080	SIGN, IDENTIFICATION OF WIRING	8-39
90194-0113	ADHESIVE LABEL, CALIBRATED & DATE	10-21
90194-0118	SIGN, RESIDUAL VOLTAGE, WAIT 5 MIN.	8-55, 8-65, 8-71
90194-0133	SIGN "DELIVERED DESIGN"	8-39
90194-0143	WARNING SIGN ISO, HOT SURFACE	7-99
90194-0152	SIGN, EARTH	8-21, 8-35, 8-37, 8-39, 8-41, 8-91, 8-93
90195-0020	TERMINAL BLOCK, 1977.2	2-41, 5-107, 5-109, 5-111
90195-0028	TERM.BLOCK 6-POLE STEATIT	1-169
90195-0029	CONN. LINK NO324 FOR -28	1-169
90201-0098	ADJ. FLOW CON. VALVE, NO. 9 PCCM 400SF	10-81
90201-0131	VALVE	2-81
90201-0132	VALVE	2-81
90201-0133	VALVE	2-81
90201-0135	PRESSURE REDUCING VALVE	2-81
90201-0136	DIRECT CHECK VALVE, NO. DGMDC-3-Y-PK-41	2-81
90201-0448	PLUG	2-81
90201-0449	PLUG	2-81
90201-0450	PLUG	2-81
90201-0456	BOLT KIT, NO. BK 464125M	2-81
90206-0030	HEATING ELEMENT, 3000W, 220V	5-107, 5-109, 5-111
90206-0070	HEATING ELEMENT 6000W 380/220V	1-263
90206-0326	JUNCTION BOX FOR 90206-56	1-263
90206-0330	SOCKET WRENCH 2"9	10-5
90207-0363	GASKET	1-207, 9-27
90207-0365	GASKET	1-207, 9-27
90208-0087	CLAMPING ELEMENT WITH SLEEVE, 45X59 MM	5-13, 5-15, 5-53, 5-55, 5-57
90211-0002	WIRE LOCK, 5 MM	7-177, 7-179
90214-0036	BALL BEARING, 10X22X6 MM	3-17, 3-31
90214-0037	BALL BEARING, 5X16X5 MM	1-293
90214-0105	SPHERICAL BALL BEARING, 15X35X14 MM	1-91
90214-0112	BALL BEARING, 12X24X6 MM	1-143
90214-0138	BALL BEARING, 5X19X6 MM	1-295, 7-9, 7-27
90214-0165	BALL BEARING, 25X47X12 MM	1-127, 1-129
90214-0194	SPHERICAL BALL BEARING, 15X35X1 MM	4-177, 4-179
90214-0219	CYL.ROLLER BEARING, 17X40X12 MM	5-199, 5-203, 5-205
90214-0229	BALL BEARING, 65X85X10 MM	5-149, 5-151, 5-153
90217-0206	UNION NUT, 1 1/2 APV, 07-01-376/17	1-245
90217-0306	GASKET 22,8X50,5X5,5 MM	1-253
90217-0348	GASKET 35,4X46,8X4 MM	1-219, 1-221, 1-245, 9-5
90220-0034	THERMOCABLE TEX/SITW-20F-KX 2X0,5MM2	1-157, 1-159, 1-201, 1-223, 1-263, 1-349, 1-351, 2-57, 2-59, 2-107, 2-109, 2-111, 2-149, 2-151, 6-19, 7-99, 8-23, 8-25, 8-27, 8-29
90220-0072	SCR. CABLE 4X0,34MM2	1-349, 1-351
90220-0084	MOTOR CABLE 4X2,5+2(2X0.75)+SHIELD	2-149, 2-151, 8-23, 8-25, 8-27, 8-29
90220-0091	PAIR TWISTED CABLE 2X2X0,25MM2	1-349, 1-351, 2-81, 2-107, 2-109, 2-111, 8-5, 8-107
90220-0092	PAIR TWISTED CABLE 3X2X0,25MM2	7-85
90220-0095	SCR. CABLE 3X0,75MM2	6-11
90220-0104	SCR. CABLE 4X1,5MM2	1-349, 1-351, 2-149, 2-151, 7-75, 7-117, 7-135, 7-137, 7-139, 7-141, 7-143, 7-173, 8-23, 8-25, 8-27, 8-29
90220-0105	SCR. CABLE 4X2,5MM2	1-349, 1-351, 7-7, 8-47
90220-0115	SCR. CABLE 12X0,75MM2	7-7
90220-0116	MOTOR CABLE 4X1,0+2(2X0,5)+SHIELD	2-107, 2-109, 2-111, 8-23, 8-25, 8-27, 8-29

Part No	Description	Page No
90220-0125	MOTOR CABLE 4X4,0+2X1,0+2X0,75+SHIELD	2-107, 2-109, 2-111, 8-23, 8-25, 8-27, 8-29
90220-0131	PAIR TWISTED CABLE 3X2X0,25MM2	2-107, 2-109, 2-111, 2-149, 2-151
90220-0162	SCR. CABLE 10X0,25MM2	1-339, 1-341
90220-0165	SCR. CABLE 5X0,34MM2	1-201, 1-335, 1-339, 1-341, 1-349, 1-351, 2-107, 2-109, 2-111
90220-0180	CABLE, ETHERNET RJ 45 CONNECT. 3 M	8-91, 8-93
90220-0183	SCR. CABLE 2X0,34MM2	8-23, 8-25, 8-27, 8-29
90220-0201	CABLE OLFLEX 18X0,75 MM2	1-201
90220-0303	CLAMP FOR SCR.CABLE, 10MM, 55-016-22	6-11
90220-0305	CLAMP FOR SCR.CABLE, 16MM,	6-11
90224-0229	REDUCER, ART.NO RMM 1238	7-61
90224-0303	CONN. ELBOW 1020-8-1/4	10-51, 10-53
90224-0308	CONN. BANJO, ART. NO. 2023-1/8-1/8	1-303, 1-305
90224-0329	ELBOW 90 COUPL.,EXT.THREAD 6/4-G1/4"	2-201, 2-205
90224-0349	CONN. BULKHEAD. 1250-6	1-229, 1-303, 1-305
90226-0458	MOUNTING SCREW	1-369, 1-373, 1-375, 1-377, 1-379, 2-223, 2-225, 2-239, 2-241, 2-245 2-247, 2-255, 2-261, 2-263, 6-51, 6-57, 6-61, 7-189, 7-191, 7-195, 7-205, 7-207, 7-217, 7-219, 8-31 8-33, 8-43
90230-0017	NON RETURN VALVE RHD 10-L	2-79
90230-0023	NON RETURN VALVE	2-77
90230-0028	NON-RETURN VALVE H 151 R 3/8"	2-205, 6-19
90230-0032	NON-RETURN VALVE, 8MM, L=63,25	2-23, 6-7
90230-0040	NON-RETURN VALVE, R3/8, L=55	6-7
90230-0041	OVERPRESSURE VALVE SS-4 CPA2-RTDG-3	6-25
90230-0042	NON-RETURN VALVE 1/2"	2-121, 6-35, 6-43
90230-0044	NON-RETURN VALVE 1"	2-121, 6-37
90230-0045	NON-RETURN VALVE 1 1/2"	1-255, 1-257
90230-0064	CHECK VALVE, 6 MM HIGH TEMP.	1-193, 2-33
90232-0103	PH.CELL E3S-CT61-L-5M	5-193, 5-221
90232-0104	PH.CELL E3S-CT61-D-5M	5-193, 5-221
90232-0106	PH.CELL E3S-CR11-5M	7-171
90232-0123	PH.CELL WLL170-P135-6011723	1-339, 1-341
90232-0129	PH.CELL E3S-CR61-5M	7-65, 7-171
90232-0333	REFLECTOR E39-R1	7-43, 7-45, 7-171, 7-211, 7-215
90233-0027	TUBE FUSE, 16A	8-79, 8-81, 9-5
90233-0028	TUBE FUSE, 10A	8-77, 8-79, 8-81, 9-5
90233-0029	TUBE FUSE, 25A	8-77, 8-79, 8-81, 9-5
90233-0034	TUBE FUSE, 1 A	8-79, 8-81
90233-0062	TUBE FUSE, 4A 600V	8-79, 8-81
90235-0151	NON-RETURN VALVE, 346-020-000	6-43
90235-0206	QUICK EXHAUST VALVE, SEU-1/8	7-105
90235-0274	THROTTLE CHECK VALVE, G1/8", SCU-604-1/8	1-303, 1-305
90235-0731	THROTTLE CHECK VALVE, G1/4", SCO-606-1/4	5-19, 5-21, 5-65, 5-67, 5-69
90235-0844	THROTTLE CHECK VALVE, M5, MANUAL, 6MM	1-161
90235-0846	THROTTLE CHECK VALVE G1/8", MANUAL, 6	1-137, 1-139, 1-141, 7-31, 7-33, 7-35, 7-125, 7-131
90235-0847	THROTTLE CHECK VALVE, G1/4", MANUAL,6	1-17
90235-0848	THROTTLE CHECK VALVE, G1/8", MANUAL,8	7-39, 7-41
90236-0041	BRACKET	1-197, 1-199
90237-0070	SNAP-IN BALL LOCK, 69X19 MM	2-73, 2-233
90237-0079	FAST LOCKING BOLT, FSQ -M8	2-249
90237-0126	TURNING HANDLE "REPBY 90237-175"	6-55, 6-59
90237-0128	LOCK CYLINDER, 1109-U3	1-373, 1-377, 2-217, 2-219, 2-229, 2-235, 2-237, 2-243, 2-251, 6-55 6-59, 7-201, 7-203, 7-211, 8-35
90237-0151	GUIDE, 1001-U11	8-35, 8-37, 8-39, 8-41
90237-0152	GUIDE, 1001-U12	8-35, 8-37, 8-39, 8-41
90237-0153	LOCK HOUSING, 1121-U26-0B	1-373, 1-377, 2-217, 2-219, 2-229, 2-235, 2-237, 2-243, 2-251 6-55, 6-59, 7-201, 7-203, 7-211, 8-35, 8-37, 8-39, 8-41
90237-0155	LOCK ADAPTER, 1121-U40	8-35, 8-37, 8-39, 8-41
90237-0156	LOCK BOLT, 1000-16	8-35, 8-37, 8-39, 8-41
90237-0157	LOCK BOLT, 1000-230	6-63, 8-91, 8-93
90237-0160	ESCUTCHEON WITH SQUARE, 1121-U23/U13	8-37, 8-39, 8-41
90237-0165	LATCH	1-373, 1-377, 2-217, 2-243, 2-251, 7-211
90237-0168	ROUND BAR WITH END WHEEL, 1049-U5	8-35, 8-37, 8-39, 8-41
90237-0169	LOCK ADAPTER, 1000-U49	8-35, 8-37, 8-39, 8-41
90237-0175	TURNING HANDLE, 1125-U185-0A	7-201, 7-203, 7-211
90237-0176	TURNING HANDLE, 1125-U190-A	1-373, 1-377, 2-217, 2-219, 2-229, 2-235, 2-237, 2-243 2-251, 8-35
90237-0178	FAST LOCKING SOCKET,4-28599, M8	2-249
90237-0206	LOCK, 1000-U45/U2/17/23/24/991	7-135, 7-137, 7-139, 7-141, 7-143
90237-0319	LOCK HOUSING, 1000-U134	6-63, 8-91, 8-93
90237-0320	LOCK HOUSING, 1000-U136	6-63, 8-91, 8-93
90237-0322	LOCK GASKET, 1000-U137	6-63
90237-0323	LOCK O-RING, 1000-24	6-63
90237-0324	KEY, 1104-02 FOR SQUARE 8 MM	8-37, 8-39, 8-41
90239-0405	ROD END,BALL JOINT EYE M10X1,25	7-33, 7-35, 7-125, 7-131
90239-0487	REAR,CLEVIS,MINI-ISO 20-25	7-125, 7-131
90239-0489	ROD END, CLEVIS WITH AXLE M6X1,25	1-123, 1-125, 1-135, 1-137, 1-139, 1-141
90239-0491	ROD END,BALL JOINT EYE,MINI-ISO M6	7-81
90239-0516	ROD END, CLEVIS WITH AXLE M10X1,25	7-101, 7-103
90239-0832	DOUBLE ACTING, MINI-ISO, CYL. 25-125	7-125, 7-131
90239-0841	DOUBLE ACTING, MINI-ISO, CYL. 16-25	1-135
90239-0861	DOUBLE ACTING, MINI-ISO, CYL. 32-125	7-33, 7-35
90240-0119	BEAR. BUSHING WITHOUT FL	3-17, 3-31
90240-0146	FLANGE BUSHING,15X21X20 MM	1-269, 1-271
90240-0165	FLANGE BUSHING, 12X16X10 MM	4-191, 4-193

Part No	Description	Page No
90240-0172	FLANGE BUSHING, 8X12X10 MM	1-27, 1-29, 1-31, 1-33, 1-45, 1-47, 1-49, 1-51, 1-53, 1-61, 1-63, 1-67, 1-69, 1-79, 1-81, 1-83, 1-85
90240-0180	FLANGE BUSHING 10X14X15MM	4-137, 4-139
90240-0258	BUSHING, 15X17X15 MM	5-173, 5-175
90240-0261	FLANGE BUSHING, 12X14X9 MM	4-191
90240-0263	FLANGE BUSHING, 15X17X12 MM	5-173, 5-175
90240-0289	FLANGE BUSHING, 10X12X6 MM	4-191
90240-0293	FLANGE BUSHING, 25X28X21 MM	1-13, 1-15
90240-0302	BUSHING, 10X12X10 MM	1-253
90240-0315	SPHER. BEARING, 30X47X22 PLASTIC MM	2-271, 2-273
90240-0317	BUSHING, 35X39X30 MM	5-149, 5-151, 5-153
90242-0093	O-RING MATERIAL 1,5 MM	4-83, 4-85, 4-87
90242-0222	O-RING 45,36X3,53 MM	2-41
90242-0223	O-RING 47,35X1,78 MM	2-41
90242-0224	O-RING 44,17X1,78 MM	2-41
90242-0270	O-RING 82,27X1,78 MM	1-117, 1-119, 1-121, 5-149, 5-151, 5-153
90242-0271	O-RING 63,22X1,78 MM	5-149, 5-151, 5-153
90242-0281	O-RING 58X3 MM	5-143, 5-145, 5-147
90243-0061	AIR GUN, CEJN SERIE 204 ED: 90459-0173	2-141
90243-0118	TOOL BOX, NO. ZERO 105X-SI	10-55
90243-0137	MEASURING INSTRUMENT	10-51, 10-53
90243-0146	TOOL	10-5
90243-0147	FLOW METER	10-51, 10-53
90243-0203	MEASURING INSTRUMENT	10-5
90243-0214	CONDUCTIVITY METER	8-91, 8-93
90243-0245	MEASURING INSTRUMENT	6-35
90243-0321	CONDUCTIVITY SENSOR, TP5EL. 00343-10803	1-259
90243-0328	PAPER ROLL	10-5
90243-0329	CABLE	10-5
90243-0330	CABLE	10-5
90243-0447	LASER EQUIPMENT	10-5
90243-0456	FORCE GAUGE	10-9
90243-0461	MEASURE GAUGE,6916-0109	10-33
90258-0031	PIN, STRAIGHT SLOTTED SPRING FRP 3X20	1-113, 7-119, 7-127
90259-0313	AUX. CONTACT K&M NHI21-PKZM0	8-77
90261-0016	PLUG, BLIND, PLASTIC GPN300V2	4-7, 4-9, 4-13, 4-15, 7-43, 7-45
90261-0033	PLUG, BLIND, PLASTIC GPN300F182	2-177, 2-179, 2-181, 2-183, 2-189, 2-191
90261-0049	PLUG, BLIND, PLASTIC, NO. SR1750	7-83
90261-0057	PLUG, BLIND, PLASTIC	2-65
90261-0069	PLUG, BLIND, PLASTIC, NO. 055-0615	6-47
90261-0070	PLASTIC PLUG SS 0082.31	2-7
90264-0055	FAN / W25 130-AA 03-01	2-227
90264-0064	FAN / FL 12G308	8-103
90264-0350	FILTER / 554141	8-103
90266-0019	PIPE	4-131, 4-151, 4-153, 4-155, 4-157, 4-159, 4-161, 4-163, 4-165, 4-167, 4-169
90266-0165	BRASS PIPE	4-75, 4-77, 4-79, 4-111, 4-113, 4-115, 4-151, 4-153, 4-155, 4-157, 4-159, 4-161, 4-163, 4-165, 4-167, 4-169, 4-181, 4-183
90266-0166	PIPE	5-129
90270-0017	COMPRESSOR NASH/ELMO 112 MB/4-2083	1-163
90270-0349	CONSTANT FLOW VALVE, 1/2"X1/2" 2GPM	1-179
90274-0042	PRESSURE GUARD, 200 KPA	6-67, 6-69
90274-0056	PRESSURE SWITCH, 100 - 1200 KPA	6-25
90274-0074	PRESSURE GUARD, 530 KPA	6-75
90274-0082	FLOW SWITCH, 2 - 3 L/MIN	6-33
90274-0084	PRESSURE GUARD, 1800 KPA	2-87
90274-0108	DUAL PRESSURE GUARD, -20 - 2800 KPA	6-17
90274-0110	PRESSURE SWITCH, 50 - 1000 KPA	1-197, 1-199
90274-0124	PRESSURE SWITCH	2-81
90277-0039	FILTER HOUSING, LF -1/4-S-5M-B	2-49
90277-0045	FILTER / 9900-05-BK	2-49, 2-131, 2-133
90277-0046	FILTER / 9933-05-101	2-49, 2-131, 2-133
90277-0056	FILTER HOUSING / DMS 011 G 16 H	1-229
90277-0086	AIR FILTER / ART NO BK 464125 (70)	2-77
90277-0104	FILTER F64B-2GN-ARO	1-197, 1-199
90277-0116	FILTER HOUSING / ART.NO FILTER 58P-S5430	1-327, 7-51
90277-0129	EXHAUST FILTER / SK 3322.200	7-7
90277-0323	FILTER HOUSING / ART.NO 95S6-1/4 S 5430	1-197, 1-199
90277-0324	FILTER CARTRIDGE 050-11-A	1-197, 1-199
90277-0355	FILTER INSERT / MBS 100 IPH	1-229
90287-0073	SCREW MC6S M5X70 129	6-75
90287-0075	SCREW SLOT. PAN HEAD LKCS M6X12	2-119
90287-0106	SCREW SPRINGLOAD. SLOTTED HEAD M10X21	7-83
90287-0112	SCREW SPRINGLOAD. SLOTTED HEAD M8X16	1-13, 1-15, 4-149, 4-157, 4-159, 4-167, 4-169, 4-191, 7-87
90287-0124	SCREW PAN HEAD MSCS M4X12 NYLON	8-23, 8-25, 8-27, 8-29, 8-49, 8-51, 8-61, 8-63, 8-71, 8-91, 8-93
90287-0137	SPACER BOLT DSSM60100	8-21
90287-0148	SCREW SPRINGLOAD. SLOTTED HEAD M5X12	4-143, 4-145
90287-0154	SCREW, SOCK.SET DOGPOINT M6X10	7-167, 7-177, 7-179
90287-0157	SCREW M6SF FLAT HEAD M6X10 88	8-21, 8-49, 8-51, 8-61, 8-63, 8-71
90287-0159	SCREW, SOCK.SET DOGPOINT M6X16	2-33
90287-0199	SCREW M6S ISO 4017 M5X6 A480	5-129
90287-0261	SCREW MC6S M5X55 A270	7-177, 7-179
90287-0264	SCREW	2-73

Part No	Description	Page No
90296-0009	SILICONE GREASE TUBE 100 GR.	9-5
90296-0051	PASTE	7-99
90296-0068	GREASE UNIWAY LI62 CARTRID.400GR	3-15, 9-5
90303-0011	PROTECTIVE GOGGLES	9-33
90303-0012	PROTECTIVE GLOVES	9-33
90303-0013	APRON	9-33
90304-0020	LIQUID CONTAINER	6-27
90304-0307	ATTACHMENT PIPE	1-265
90319-0013	ROPE 4MM BLUE 3700N	7-177, 7-179
90321-0102	PUMP	2-41
90321-0116	PUMP GRUNDFOSS CHI 2-60	6-25
90321-0117	PUMP LOWARA SV8-14 F75T	6-39, 6-41
90321-0120	PUMP SV8-09 F756T, 380V60HZ	6-39, 6-41
90321-0128	CHEM. PUMP 081778	2-37
90321-0134	CIRC. PUMP TMB 40/2 230V50HZ	1-263
90321-0135	CIRC. PUMP TMB 40/2 230V60HZ	1-263
90321-0574	PUMP BRACKET LSE-201	2-79
90321-0575	SHAFT COUPLING	2-79
90326-0012	PROTECTIVE COVER, T31A4618	1-13, 1-15, 1-157, 1-159, 1-193, 1-253, 1-263, 1-269, 1-271, 6-19, 7-99
90326-0020	PLUG, FEMALE YELLOW CR-AL	1-13, 1-15, 1-157, 1-159, 1-169, 1-193, 1-223, 1-231, 1-253, 1-263, 1-269, 1-271, 2-57, 2-59, 2-95, 2-107, 2-109, 2-111, 2-149, 2-151, 6-19, 7-99, 8-21
90326-0022	PLUG, MALE YELLOW CR-AL	1-223, 1-349, 1-351, 2-57, 2-59, 2-107, 2-109, 2-111, 2-149, 2-151, 6-19, 7-99
90326-0043	THERMOCOUPLE, CR-ALPREM.G	1-253
90326-0051	THERMOCOUPLE, 12826-33	1-169
90326-0053	THERMOCOUPLE, 12826-35	1-193, 1-269, 1-271, 8-21
90326-0054	THERMOCOUPLE, CR-AL STD.GR, 12826-36	7-99
90326-0057	THERMOCOUPLE, CR-AL	1-157, 1-159, 1-263, 6-19
90326-0060	THERMOCOUPLE, CR-AL	1-223
90326-0081	THERMOCOUPLE, ISA TYPE K.	5-107, 5-109, 5-111
90326-0089	THERMOCOUPLE, 5110-089-000	1-231
90326-0308	THERMOCOUPLE CABLE FOR CE-557793/MALE 5M	10-21
90326-0309	THERMOCOUPLE CABLE FOR CE-557793/FEMALE	10-21
90326-0310	THERMOCOUPLE, 5130020-000	10-21
90328-0001	SILENCER, 338/130 B140-00-120	7-59
90328-0003	SILENCER, 338/110	1-223
90328-0007	SILENCER, 338/125 B140-00-380	6-75
90328-0017	SILENCER, D=6 MM	2-51, 2-135, 2-137, 2-139, 6-73, 7-159, 7-161
90328-0024	SILENCER G3/8	1-319, 1-321, 1-323, 1-329, 1-331, 2-51, 2-135, 2-137, 2-139, 6-73, 7-159, 7-161
90328-0025	SILENCER G1/2	10-65
90328-0026	SILENCER G1/4	1-225, 1-229, 1-253
90328-0038	SILENCER, D=8 MM	7-159, 7-161
90328-0047	SILENCER G1/8	1-231
90330-0004	NIPPLES,HEXAGON,EXT.R-THREAD R3/4"-R3/4"	6-19, 6-21
90330-0011	SLEEVE, REDUCTION, INT, R-2023/8X1/4	1-229
90330-0014	ELBOW, 90 INT. THREAD, R-222R1	6-37, 6-47
90330-0020	ELBOW, 90 INT. THREAD, R-2221/2	6-77
90330-0021	NIPPLES, EXT. THREAD. R-207R1/2	2-23, 2-29, 6-7, 6-35
90330-0026	PLUG, EXT. G-THREAD, G1/4	1-327, 2-7, 6-25
90330-0028	NIPPLES, EXT. THREAD. R-207R3/8	2-23
90330-0029	PLUG, EXT. G-THREAD, R-236R3/8	10-51, 10-53
90330-0036	BUSHING, INT/EXT. THR. RP1/8-RP1/2	6-35
90330-0042	BUSHING, INT/EXT. THR. R3/8-RP1/4	6-7, 6-17, 6-19
90330-0043	NIPPLES, EXT. THREAD. R-207R1/4	1-263, 6-25, 6-43
90330-0045	NIPPLES, EXT. THREAD. R-209 KR11/2- KR1	6-37
90330-0047	SLEEVE, REDUCTION, INT, R-2021/2X3/8	2-23
90330-0048	BUSHING, INT/EXT. THR. R1/2-RP3/8	1-265, 2-23
90330-0049	T-PIPE, INT. THREAD, R-221R1/2	1-179, 1-267, 2-23, 6-35, 6-75, 6-77
90330-0054	SLEEVE, INT. THREAD, NO. R-201R1/2	2-29
90330-0056	NIPPLES, EXT. THREAD. R-207 KR11/2	6-33
90330-0057	ELBOW, 90 INT. THREAD, R-222R11/2	6-33
90330-0066	PLUG, EXT. G-THREAD, G1/8	1-195, 1-231, 1-249, 1-327
90330-0078	BUSHING, INT/EXT. THR. R3/4-RP3/8	1-179
90330-0080	NIPPLES, EXT. THREAD. R3/4-R1/2	6-25, 6-35
90330-0085	BUSHING, INT/EXT. THR. R1/2-RP1/4	2-23, 6-67, 6-69
90330-0093	NUT, HEXAGON, G1/2	2-83, 2-197, 2-199
90330-0102	SLEEVE, INT, THREAD, NO., R-201R1/4	6-19
90330-0185	NIPPLES,REDUCING,INT THR, RC1/8 - R 1/8	7-59
90332-0020	RECORDER, 6 CHANNELS 85-264VAC/DC	8-91, 8-93
90335-0024	COMP. SPRING 22250, 1,25X13,75X27	4-143, 4-145
90335-0025	COMP. SPRING 22010, 1X11X26	7-67, 7-89, 10-69
90335-0027	COMP. SPRING 22170, 1,25X9,25X33	7-11
90335-0036	COMP. SPRING 22450, 1,6X14,1X24	5-19, 5-21, 5-65, 5-67, 5-69
90335-0089	TENSION SPRING 41490, 0,9X10X23	1-295, 7-27, 10-25
90335-0091	TENSION SPRING 41890, 1,2X13X48,2	7-101, 7-103, 7-169
90335-0178	COMP. SPRING 22060, 1X13,5X36,5	5-113, 5-115, 5-117
90342-0022	BELLOWS	1-167
90342-0024	RUBBER BELLOWS, 100X100 MM	2-143
90344-0073	TOOTHED WHEEL	2-271, 2-273
90344-0078	PULLEY	7-97
90347-0004	VIBRATION DAMPER D=30 TH=M8 H=17 H2=21MM	1-287
90347-0007	VIBRATION DAMPER	2-13
90347-0009	FLOOR PLATE, NO 1256730	2-189, 2-191, 2-193

Part No	Description	Page No
90347-0034	VIBRATION DAMPER	1-373, 2-65, 10-11
90347-0039	DAMPER	1-93, 1-103, 1-105, 1-145
90347-0054	DAMPER	1-289, 1-291, 7-33, 7-35, 7-39, 7-41
90347-0080	DAMPER TFE 1201	10-7
90347-0127	DAMPER	1-373
90347-0144	VIBRATION DAMPER, NO. RA 40EM-A	1-163
90347-0175	MACHINE SHOE BRIK T 125	2-11, 7-43, 7-45
90347-0182	SHOCK ABSORBER, YSR-16-20-C	7-31, 7-109, 7-111
90358-0091	REDUCING NIPPLE	6-19
90360-0020	STEAM TRAP / MK36/51 3/8"	1-231
90360-0305	FLOAT, ART NO 10739920	1-165
90410-0337	CALIBRATION INSTRUMENT 5100071-001	10-21
90410-0338	PORTABLE INDICATOR, MICROMITE II	10-21
90411-0001	INSULATING MAT	1-193
90411-0005	INSULATOR	1-169
90411-0020	INSULATING TUBE	2-203
90415-0032	FILTER / 3-02-00-1 1/2"	6-33
90415-0033	OIL FILTER REFILLING UC-HP-1229-25	2-87
90415-0052	FILTER ART NO 12565 C-340-6E FOTVENTI EP	2-37, 2-39
90415-0060	DEIONIZER FILTER, 190035	6-19
90415-0065	FILTER	6-7, 6-19
90418-0045	ADAPTER, INT. CONN. NO. 7272CU/22-G3/4	6-21
90418-0057	ADAPTER, EXT. CONN. NO. 7276CU / 15-G1/2	6-21
90418-0062	T-PIPE, REDUCTION, INT, NO. 7130-22X15X2	6-21
90422-0008	COOLER	2-79
90422-0037	HEAT EXCHANGER	6-21
90424-0054	SPRAY NOZZLE 120 DEG	1-179
90424-0066	ROT.SPRAY NOZZLE, D26984-B3/8"-PVDF/4.5	2-69, 2-121
90424-0068	AIR NOZZLE, G1/4, MOD. 216 BSP	5-19, 5-21, 5-47, 5-49, 5-51, 5-65, 5-67, 5-69, 5-89, 5-91
90424-0071	ROT.SPRAY NOZZLE, D40140-R3/8-PVDF 4.5	2-69
90425-0016	MECMAN TYPE E120 735-120-000	10-65
90426-0003	HAND SHOWER	2-207
90427-0014	INK JET PRINTER A300 STD 3M CONDUIT	10-61
90450-0281	DOUBLE ACTING,PROF.CYL 32-80	1-171
90450-0306	DOUBLE ACTING, MINI-ISO, CYL. 12-25	7-81
90450-0504	DOUBLE ACTING, PROFILE, CYL 50-25	5-195
90450-0654	BRACKET,REAR,EYE WITH AXLE 32	7-39, 7-41
90450-0655	BRACKET,REAR,CLEVIS FLANGE WITH FOOT 32	7-39, 7-41
90450-0669	SENSOR, BRACKET SERIES 168	1-171
90450-0723	ROD END,BALL JOINT EYE M10X1,25	7-39, 7-41
90450-0725	ROD END, CLEVIS WITH AXLE M6	1-161
90450-0756	BRACKET, REAR EYE 32	1-123, 1-125, 1-137, 1-139, 1-141
90453-0001	MODEM MA-12	8-107
90453-0002	MODEM MD-12 DC	8-91, 8-93
90457-0019	LEVEL PROBE, HMFB-S=45-0=80-0=90-T70	2-77
90457-0035	REDUCING UNIUN	2-77, 2-79
90457-0036	3-PHASE MOTOR,FOOT MOUNT.1,1KW,1410 RPM	2-79
90457-0037	HYDR. PUMP TFP100 3/8-S-C001	2-79
90457-0039	PUMP CONN. ELBOW FLANGE T-26/12-3/8	2-79
90457-0043	BUSHING, INT/EXT. G-THREAD NO. 1/2-1/4	2-79
90457-0046	WASHER PLAIN ROUND 25,4/67,5, H=2	2-79
90457-0047	SENSOR 2750-1-5111-1 W.ADAPTER PNP	1-171
90457-0078	PANEL NUT	1-317, 1-327, 2-49, 2-131, 2-133, 6-73, 7-159, 7-161
90457-0092	SAFETY RELAY RT9-24VDC	8-49, 8-51
90457-0100	RESERVATORVZS-2	7-61
90457-0134	O-RING	2-81
90457-0144	REGULATOR 0,3-2 BAR	1-327, 2-49, 2-131, 2-133, 7-159, 7-161
90457-0177	FLOW-RESTRICTOR, 2,0 MM, M6	2-81
90457-0193	EXTERNAL DB RESISTOR 800W 7,9 OHM	8-71
90457-0194	KEY FOR SAF.SW.048850-C2052	2-99, 2-149, 2-151
90457-0195	KEY FOR SAF.SW.TZRE024PG RC1635-057950	2-149, 2-151
90457-0196	KEY SAF.SW. TZ2RE024PG RC1635	2-99, 2-149, 2-151
90457-0920	BUTTON SIGN, ROTATION OF MATERIAL HOLDER	7-213
90457-0921	WORM GEAR MOTOR MC320P2TB5/D	7-75
90458-0058	SCREW M5X60 A280	4-73, 5-113, 5-115, 5-117
90458-0072	SCREW ISO 7380 S M6X12 A2	2-171, 2-175, 2-177, 2-179, 2-181, 2-183, 2-189, 2-191
90458-0073	WASHER 6,4/30, H=1,5	2-171, 2-175, 2-177, 2-179, 2-181, 2-183, 2-189, 2-191, 4-19, 4-21, 4-29, 4-31
90458-0138	PROX.SW. E2EG-X1R5B1-5M	1-225, 1-239, 2-39, 2-115, 4-177, 4-179, 7-21, 7-77
90458-0200	PEROX. SAFETY VALVE, NO. 527-430 1/2X3/4	1-265
90458-0201	FLUID AUT. FEEDER, ALINOX 1/2 46.04.00	1-265, 6-7
90458-0256	PROXIMITY SWITCH IIA 3010-BPKG/6M	2-65
90458-0258	TRANSFORMER, 220VAC/6-9-12VAC	7-135, 7-137, 7-139, 7-141, 7-143
90458-0273	COVER STRIP	7-31, 7-63
90458-0274	DISC FOR COUPLING, HUCO 236.50T	2-33
90458-0292	BASE, KT70-1001	2-173
90458-0293	LIGHT ELEMENT, RED, KL70-401R	2-173
90458-0294	LIGHT ELEMENT, YELLOW, KL70-401Y	2-173
90458-0295	LIGHT ELEMENT, BLUE, KL70-401L	2-173
90458-0306	CABLE GLAND, M16X1,5, NO.5311 1010	7-159, 7-161, 7-193, 7-209
90458-0307	CABLE GLAND, M20X1,5, NO.5311 1020	7-75
90458-0315	CABLE GLAND, M20X1,5, NO.5311 1120	2-149, 2-151, 7-43, 7-45
90458-0322	NUT, M16X1,5	7-159, 7-161, 7-193, 7-209
90458-0341	THERMOCOUPLE, 5130050-001	1-13, 1-15

Part No	Description	Page No
90458-0429	HOSE GLAND W/O INSERT M20 EXTENDED	1-7, 1-9, 1-93, 1-103, 1-105, 1-145, 1-147
90458-0438	GLAND, EXTENDED WITH INSERT, M20X1,5	7-97
90458-0506	RETAINING RING FOR BORE DIN 472 26 A2	2-261
90458-0528	DOUBLE ACTING, COMPACT, CYL 32-25	1-123, 1-125, 1-137, 1-139, 1-141
90458-0601	PHOTOCELL, SICK PHOTOCELL 1	4-143, 4-145
90458-0602	PHOTOCELL,	7-107
90458-0603	CONNECTOR FEMALE 5 PINS	7-107
90458-0638	DISTRIBUTION FRAME, ASB 4/LED 5-4-12/5M	1-13, 1-15
90458-0639	VARILIP 20X30X7 MM	1-91, 1-113, 1-123, 1-125
90458-0640	O-RING 88,62X1,78 MM	1-91, 1-107, 1-109, 1-111
90458-0672	PROXIMITY SENSOR E2E2-X5MB1-5M	1-223, 1-289, 1-291
90458-0676	PROXIMITY SWITCH,E2EG-X5B1-6M	1-245
90458-0677	PROXIMITY SWITCH, E2EG-X5MB1-M1	7-43, 7-45, 7-167, 7-177, 7-179
90458-0751	BUSHING,INT./EXT.G-THREAD G3/4"-G1/2"	1-265
90458-0757	MOTOR END STRAIN RELIEF HPG29 13 20MM	2-107, 2-109, 2-111
90458-0758	CONN.KIT MOTOR END WINDING C38/39/40	2-107, 2-109, 2-111
90458-0759	CONN.KIT MOTOR END FEEDBACK C38/C39/C40	2-107, 2-109, 2-111
90458-0761	SERVO MOTOR EP 165-090-62L3B-X-C33	5-209
90458-0806	FLOW METER, NO. XF DF23-DN32	1-219, 1-221
90458-0921	FILTER SP 122-200	6-67, 6-69
90458-1076	L-SHAPED CONNECTOR CABLE 933 235-042	7-43, 7-45, 7-167, 7-177, 7-179
90458-1092	PROPORTIONAL VALVE 0 - 10V/0-6 BAR	1-317, 1-327
90458-1102	INTOUCH OEM 2000 V.7.0/7.1 HW KEY	8-91, 8-93
90458-1136	TERMINAL BLOCK, 103630	2-97, 7-145, 7-147, 7-149, 7-151
90458-1140	FERRITE, RI-26-28-13	8-71
90458-1155	ENLARGING SLEEVE, 7216220	7-75
90458-1170	FERRITE, SFC-6	8-61, 8-63
90458-1190	ETHERNET RAIL SWITCH, RS2-TX	8-91, 8-93
90458-1307	BLIND PLUG CIRCULAR, M16X1,5 514GFK/216	7-159, 7-161
90458-1314	I/O EXPANSION CABLE	8-59
90458-1393	PUMP CYLINDER, 34 73 522 5	10-75
90458-1404	FLANGE BUSHING, 12X16X16 MM	4-189
90458-1447	MOUNTING RAIL SUPPORT TST 128660	8-61, 8-63
90458-1467	CAP, 32 44 129 7	10-77
90458-1468	SPLIT PIN, 43 71 234 8	10-75
90458-1469	PUMP HOUSING, 34 73 517 5	10-75
90458-1470	SINK VALVE COMPL, 34 73 094 5	10-75
90458-1473	PUMP, 34 73 521 7	10-73
90458-1474	PAPER TROLLEY, 32 04 192 3	10-71
90458-1477	CONNECTOR 6-1/8 NPT, EXT. TAPERED	2-61
90458-1478	BALL VALVE SS-43T6MM-SH-10147	2-61
90458-1531	ACTUATOR, N.O., PA 38/100	1-239, 2-115
90458-1532	ACTUATOR, N.C., PA 38/110	1-239
90458-1535	TRANSDUCER, BTL5-A11-M0850-P-S32	7-85
90458-1537	HOLDER, FOR INDUCTIVE SENSORS	1-239, 2-115
90458-1541	DIAPHRAGM, NA 38/25 PFTE	1-239, 2-115
90458-1592	FLOATING MAGNET, BTL5-P-3800-2	7-85
90458-1595	CONNECTION, BKS-S 33M-00	2-19, 2-21, 7-85
90458-1607	PUMP, SVI 8 03/03 N15T 1.5KW	1-249
90458-1614	SCREW M6S ISO 4014 M5X80 A480	6-9
90458-1651	EMERGENCY STOP, ZB4-BS-844 ZB4-BZ-104	1-339, 1-341, 2-221, 7-199, 7-213, 8-41
90458-1704	BALL BEARING, 15X35X11 MM	1-113, 1-117, 1-119, 1-121, 1-123, 1-125, 1-127, 1-129, 1-131, 1-133
90458-1849	CONN. STR., 6-R1/8, EXT. THREAD	1-303, 1-305
90458-1963	STRAIGHT COUPLING D=8-G3/8"	6-7, 6-9, 6-19
90458-1977	REFRACTOMETER SET DA15FC15A DFTP A	2-61
90458-2003	ADAPTER 1" MALE NPT X 1" DAIRY CLAMP	1-253
90458-2071	RETAINING RING FOR BORE DIN 472 24 A2	1-143
90458-2138	SCREW M6S M12X120 A280	9-3
90458-2173	PIPE CONNECTION, 552608M	6-9
90458-2174	CONDUCTIVITY TRANSMITTER, 418962Z	6-9
90458-2241	PRESSURE SWITCH 0,5-10 BAR ADJUSTABLE	7-59
90458-2264	PRESSURE REGULATOR ARC-30-1/2"	1-229
90458-2300	V-RING 16X22X3 MM	3-21
90458-2301	COMP. SPRING, YELLOW SPRING G40X115	3-21
90458-2302	FREE-WHEEL COUPLING, 16X16 MM	3-21
90458-2303	CLAMPING ELEMENT WITH SLEEVE, 38X50 MM	3-7
90458-2305	COMP. SPRING D22280	3-17, 3-31
90458-2306	TIMING BELT ATL10 2020X50 MM	3-15
90458-2307	LINEAR UNIT HSR25	3-13, 3-29
90458-2329	HOSE, SILICONE, 50 SHORE, 9/13 MM	7-13
90458-2333	VALVE, M8A-V4LQ-KZ-11AO-SS PNEUM. OPER.	2-39
90458-2358	FLOAT, BTL2-S-4414-4Z	2-19, 2-21
90458-2381	POWER LINE FILTER 5 A 250 VAC	8-91, 8-93
90458-2395	FILTER INSERT, SK 3171 100	7-7
90458-2448	ELBOW PIPE JOINT,EXT.THREAD,D=8 MM G1/4	7-105
90458-2466	MOTOR 3GVA071002-CSB	2-33
90458-2490	CONSTANT FLOW VALVE, GX 1"FX1"F 10GPM	1-253
90458-2554	STERILE GRADE MEMBRANE FILTER 0,2µM	1-229
90458-2557	CABLE OLFLEX 25X1 MM2	2-149, 2-151
90458-2580	LEVEL CONTROL RELAY RM4-LA32M	8-49, 8-51
90458-2602	BULKHEAD CONNECTOR, 12 MM	2-209, 2-211
90458-2619	FLOW METER, D-6230-HGB-BB-AV-99-0-N2	1-197, 1-199
90458-2633	HANDLE, 1045-05	2-171
90458-2638	FILTER ELEMENT SINTERED, C3SF	1-251

Part No	Description	Page No
90458-2652	LEVEL PROBE, COD. 600.00.750-1	1-249
90458-2664	CONNECTOR 4 POLE COD.600.00.750-1	1-249
90458-2737	SPHERICAL BALL BEARING, 15X35X14 MM	7-23, 7-25
90458-2775	PROXIMITY SWITCH SMT-8-PS-K-LED-	1-17
90458-2845	SCREW,HEXAGON HEAD M6S ISO 4017 M10X45	2-171, 2-175, 2-181, 2-183
90458-2850	HOSE CLIP , 51 MM	6-33
90458-2890	CONNECTOR, 21N-50N12N133NE	1-349, 1-351
90458-2892	CONNECTOR, 11 N-50-3-31/133 NE	1-349, 1-351
90458-2893	SLEEVE, 78 Z-0-3-4	1-349, 1-351
90458-2894	PAIR TWISTED CABLE 1X2X0,2MM2	7-7
90458-2895	COAXIAL CABLE RG 400/U BROWN	1-349, 1-351
90458-2906	HOSE, SILICONE, 60 SHORE, 4/6 MM	1-195
90458-2950	BALL BEARING, 5X16X5 MM	7-115
90458-2954	ELBOW PIPE JOINT, EXT.THREAD, D=4MM M5	7-81
90458-2955	ELBOW PIPE JOINT, EXT.THREAD,	1-317, 1-327, 2-49, 2-131, 2-133
90458-2956	ELBOW PIPE JOINT, EXT.THREAD, D=6MM-G1/8	1-17, 1-195, 1-223, 1-225, 1-231, 1-253, 1-281, 2-27, 2-37, 2-39, 2-125, 2-127, 2-129, 2-261, 5-119, 5-129, 7-159, 7-161
90458-2957	ELBOW PIPE JOINT, EXT.THREAD, D=6MM-G1/4	1-253, 1-317, 1-327, 2-49, 2-131, 2-133, 5-195, 7-51
90458-2958	ELBOW PIPE JOINT, EXT.THREAD, D=8MM-G1/4	1-317, 1-327, 2-49, 2-131, 2-133, 5-65, 5-67, 5-69, 5-89, 5-91, 7-51, 7-63
90458-2959	ELBOW PIPE JOINT, EXT.THREAD,D=12MM-G1/4	1-317, 1-327, 7-159, 7-161
90458-2960	ELBOW PIPE JOINT, EXT.THREAD,D=12MM-G3/8	1-225, 1-319, 1-321, 1-323, 1-329, 1-331, 2-51, 2-135, 2-137, 2-139, 6-77, 7-57, 7-159, 7-161
90458-2963	ELBOW PIPE JOINT, EXT.THREAD,D=14MM-G3/8	6-77
90458-2964	ELBOW PIPE JOINT, EXT.THREAD, D=8MM-G1/8	6-45, 7-105
90459-0094	O-RING 133,07X1,78 MM	1-91, 1-107, 1-109, 1-111
90459-0098	THRUST BALL BEARING, 15X28X9 MM	1-91
90459-0180	FLOW SWITCH, 0,1 - 2,5 L/MIN	6-19
90459-0181	PIPE SURFACE THERM., PT-100 -50° -+260°C	1-219, 1-221
90459-0183	TRANSMITTER , TRANS T02 PCP	8-91, 8-93
90459-0184	INTERFACE CONNECTOR FOR TPIH 2500 GENER.	7-7
90459-0205	QUICK EXHAUST VALVE, SE-1/4-B	7-105
90459-0241	VALVE, SEAT, N.C. SRC-38-NC-21	1-253
90459-0261	ETHERNET NETWORK INTERFACE CARD 50101034	8-101
90459-0262	BACKPLANE CARD AR-MB7P	8-103
90459-0275	PC ENCLOSURE FLEX BOX ISC E100008A	8-101
90459-0283	POWER SUPPLY UNIT UO36422A	8-103
90459-0284	PROCESSOR BOARD CLIPS V, UO36418C	8-101
90459-0285	CD UNIT E100009A	10-61
90459-0287	DISPLAY UNIT 15", UO36419A	2-265
90459-0291	CABLE CD UNIT 50400002	8-101
90459-0363	COOLING UNIT, KB40A0721.03	8-105
90459-0401	DOUBLE ACTING, MINI-ISO, CYL. 25-320	2-261
90459-0462	CANISTER LY 500-10	2-39
90459-0472	KEY SAF.SW. AZ 16 02ZVRK-M20-2152-2254	1-7, 1-9, 1-93, 1-103, 1-105, 1-145, 1-147, 7-43, 7-45
90459-0503	CYLINDER, ADVC-16-10-I-P	7-123, 7-133
90459-0562	SERVO MOT. HR 190J8-520S-F07-R01-K99-B00	3-7
90459-0586	SWIVEL FLANGE 50	1-17
90459-0587	DOUBLE ACTING, PROFILE, CYL 50-50	1-17
90459-0642	PRESSURE TRANSMITTER 0 - 0,250 BAR	1-97
90459-0643	DIFF. PRESS. TRANSDUCER 2671-10CLD2EG2HD	1-339, 1-341
90459-0711	FLOW SENSOR FS-400 SERIES / 26440	1-179
90459-0713	DOUBLE ACTING, MINI-ISO, CYL 12-80	1-161
90459-0729	HEXAGONAL PROTECTIVE CAP GPN 1000	1-185, 1-187
90459-0799	SENSOR BRACKET SMBR-12 FOR CYL 12	1-161
90459-0802	RADIAL SEAL 55X75X10 MM	1-99
90459-0803	O-RING 355,19X3,53 MM	1-99
90459-0804	MOTOR B3/B5 CE CODE: 159353	1-99
90459-0805	BUSHING, 10X14X8 MM	1-143
90459-0829	SENSOR, SMTO-4U-PS-K-LED-24	1-161
90459-0835	THERMO CONTACT PANEL, 16 CONTACTS 2 ROWS	8-23, 8-25, 8-27, 8-29
90459-0871	SEALING RING 18X30X7 MM	1-13, 1-15
90459-0941	QUICK COUPLING, PLCD 130-M8	2-197, 2-199
90459-0951	TRANSDUCER, BTL5-A11-M0400-B-S32	2-19, 2-21
90459-0952	LINEAR GUIDE UNIT, BORE 25-STROKE 80	5-113, 5-115, 5-117
90459-0953	DOUBLE ACTING, ROUND, CYL 25-80	5-113, 5-115, 5-117
90459-0960	QUICK COUPLING, PLCD 200-M8	2-197, 2-199
90459-0969	COMP. SPRING A D22430, 1,6X11,6X58,5	5-61
90459-0997	STRAIGHT COUPLING D=8-R1/4"	6-7, 6-9
90459-1000	LIGHT FIXTURE, RL 70CV-136	2-93
90459-1009	RUBBER STRIP, 309Z0475	2-7, 2-119
90459-1018	ROD END,BALL JOINT EYE M10X1,25	1-143
90459-1037	CRIMP TOOL FOR COAX. CONN. HTG 58-901200	10-5
90459-1038	PRESSURE TRANSMITTER, 250BAR	2-81
90459-1126	PLASTIC HOSE PVC TRANSPARENT, 8X11MM	7-21
90459-1130	EM. STOP XAL-K178F	1-19
90459-1147	GEARS, WORM MOTOR VF30 F1-10 P63 B14 V6	2-271, 2-273
90459-1148	VARILIP 14X24X7 MM	1-115
90459-1174	O-RING 75,87X2,62 MM	1-13, 1-15
90459-1175	O-RING 418X3,0 MM	1-13, 1-15
90459-1189	O-RING 56,87X1,78 MM	1-161
90459-1202	TANK AND COVER, A1-17324 + A3-16783	2-77

Part No	Description	Page No
90459-1223	PRESSURE GAUGE HYDRAULIC, 1184954.03-11	2-77
90459-1224	FILTER UNIT, MDF-BNHC-30-LB10-C1.0/B6	2-79
90459-1226	GEARS, WORM MOTOR VF 44P-10+BN71B 0.37KW	1-127, 1-129
90459-1227	MANIFOLD BLOCK, A1-17351	2-81
90459-1228	SCREW ISO 1207 M3X4 A4	1-27, 1-29, 1-31, 1-45, 1-47, 1-49, 1-51, 1-53
90459-1235	ANGLE SEAT VALVE, N.C. DN13 TYPE 2002	1-229
90459-1241	ANGLE SEAT VALVE, TRI-CLAMP, N.C. DN20	1-253
90459-1254	TUBE FUSE, 4A 500V	8-79, 8-81, 9-5
90459-1256	SERVO MOTOR HDDB09N-PA-A-A-B-A-AAA	4-177, 4-179
90459-1297	RESISTANCE FIXED, 120 OHM, 0,25 W	1-349, 1-351, 7-7
90459-1314	O-RING 491X3 MM	1-101
90459-1352	PCI COMMUNICATION INTERFACE PCI-1612B-A	8-101
90459-1395	SCREW HEX.SOCK.SET CONEPT.MS6SS M4X4 A2	1-17
90459-1411	O-RING 7,8X1,9 MM	3-13, 3-29
90459-1420	PROPORTIONAL VALVE 0 - 10V/0-6 BAR	1-197, 1-199
90459-1424	CONN. STR., 6-G1/8, EXT. THREAD	2-39
90459-1425	CONN. T-PIPE 8	2-39
90459-1427	QUICK-RELEASE COUPLING, SS-QTM2-D-8M0-K2	2-39
90459-1430	QUICK-RELEASE COUPLING, SS-QTM2-D-8M0-K4	2-39
90459-1467	FORCE GAUGE 0-250N, AFG 250N	10-5
90459-1472	FILTER, KW0604NP3	6-9
90459-1501	CABLE SEALING, 12023/I, ELFA. 44-625-78	4-143, 4-145, 7-85
90459-1509	CYLINDER, ADVC-20-20-I-P	7-105
90459-1535	FLEXIBLE COUPLING DISC, 16 MM	2-33
90459-1536	FLEXIBLE COUPLING DISC, 14 MM	2-33
90459-1544	HANDLE, GR/10	7-31
90459-1545	CARRIAGE, 1653-314-20	7-31
90459-1566	BELLOW COUPLING, 24X24 MM	5-209
90459-1615	RECORDER, 95.5010/11-888,888-54-01/020,2	8-91, 8-93
90459-1617	TERMINAL BOX FL CAT5	2-157
90459-1619	CONNECTOR 9-032-001-0698	8-67
90459-1620	DIODE, 3A 100V	8-65
90459-1621	CABLE, ETHERNET RJ 45 CONNECT. 1 M	8-91, 8-93, 8-95
90459-1623	O-RING 66,40X1,78 MM	1-127, 1-129
90459-1627	O-RING 114,02X1,78 MM	1-113, 1-117, 1-119, 1-121, 1-127, 1-129
90459-1650	VARILIP 30X40X7 MM	1-127, 1-129
90459-1686	O-RING 126,72X1,78 MM	1-113
90459-1690	DIRECTIONAL VALVE, DG4V-3-6C-MUH-7-60-EN	2-81
90459-1728	SCREW ISO4029 M6X45 A4	1-123, 1-125
90459-1733	BELLOW COUPLING, 15X15 MM	4-181, 4-183
90459-1736	PURGE VALVE, 2RM-PG4L-SS	6-25
90459-1738	MANDATORY ACTION SIGN ISO, READ MAINTENA	8-91, 8-93
90459-1742	FEED THROUGH TERMINAL, 1024100	1-203, 1-277
90459-1812	CABLE, ETHERNET RJ 45 CONNECT. 8 M	2-149, 2-151
90459-1848	TAPE, SAFETY WALK R25MM X 18,3M	7-43, 7-45
90459-1849	DOUBLE ACTING SHUTTLE CYL. 40-550 MM	7-63
90459-1898	LIFTING EYE BOLT, VLBG(1)1.0T M12 TURN.	10-83
90459-1899	CHAIN, KLU-13-8	10-83
90459-1900	CHAIN LINK, G-13-8	10-83
90459-1953	DOUBLE ACTING, MINI-ISO, CYL. 25-10	5-77, 5-79, 5-81
90459-1996	FILTER CULLIGAN REFILL LINE 10 760664	6-9
90459-2004	FILTER CATRIDGE ION-EXCHANGE, 759807	6-9
90459-2096	GEARS, WORM MOTOR F2 15 P63 B14 B8 PV 75	7-173
90459-2101	CYLINDER, ADVC-80-25-I-P	7-105
90459-2102	CYLINDER, AEVC 100-25-I-P	7-105
90459-2103	SINGLE ACTING, MINI-ISO, CYL 25-25	7-101, 7-103
90459-2106	CABLE CONNECTOR, C091 31D004 100 2	1-349, 1-351
90459-2122	THERMOCOUPLE, EN-5130060-0001	1-193
90459-2132	WEAR RING 17X22X5,6 MM	4-95
90459-2145	BACK-UP RING 43,5X1,4 MM	4-65
90459-2146	X-SEAL 42,52X2,62 MM	4-65
90459-2172	SEAL GLYDRING 14,55X22X3,2 MM	4-95
90459-2173	SEAL GLYDRING 32,5X40X3,2 MM	4-65
90459-2181	BELT TENSION METER, TSM 4	10-5
90459-2198	TIMING BELT T10X480X16 POLYURETHANE	7-97
90459-2258	SEAL GLYDRING 25,1X30X2,2 MM	4-91, 4-93, 4-119, 4-121
90459-2290	LIFTING EYE BOLT, LBG M16 RS 1T	10-83
90459-2363	O-RING MATERIAL 1,78 MM	4-83, 4-85, 4-87
90459-2366	HOSE CLIP, (32)-35	2-69, 2-203, 6-45
90459-2553	ELBOW PIPE JOINT 16 MM	8-105
90459-2555	T-CONNECTION 16MM	8-105
90459-2557	BLIND PLUG 16 MM	8-105
90459-2560	LIGHT FIXTURE, TMS121 1XTL-D30W/830 IP	8-21
90459-2563	BRACKET FOR RAIL, TYPE FM 4	8-65
90459-2609	BALL VALVE 3/8", SS-1GS6-S1-SPR	2-39
90459-2615	HOSE NIPPLE SS-6-HC-A-601	2-39
90459-2635	NUT, HEX.LOCK "CONELOCK" M6 DIN 980V	7-99
90459-2647	DOUBLE ACTING, SHUTTLE, CYL. 25-780	7-31
90459-2704	SNAP HOOK STAINLESS 50X5MM	7-177, 7-179
90459-2705	LIFTING EYE BOLT, M6X40MM	7-177, 7-179
90459-2769	ELBOW PIPE JOINT, EXT.THREAD,D=10MM-G1/2	6-7
90459-2826	GEARS, HELICAL MOTOR ME0102210012	7-97
90459-2843	HEATING CARTRIDGE, 800W 240V	7-99
90459-2935	CHASSIS HOUSING 16-P COB 16 BC	8-47

Part No	Description	Page No
90459-2936	CHASSIS HOUSING 24-P COB 24 BC	8-47
90459-2937	CHASSIS HOUSING 6-P COB 06 BC	8-47
90459-2938	POWER SUPPLY, 6EP1437-3BA00	8-21
90459-2939	POWER SUPPLY UNIT, 6EP1961-3BA00	8-45
90459-3080	HOOD HAN-BRID 3A 19 20 003 1443	2-149, 2-151
90459-3081	HOUSING HAN A 19 20 003 1250	2-149, 2-151
90459-3082	MALE INSERT HAN-BRID RJ45 09 12 003 3001	2-149, 2-151
90459-3083	FEMALE INSERT HAN-BRID RJ45 09 120032790	2-149, 2-151
90459-3130	BOW SHACKLE, D=32 MM - 9500 KG	10-83
90459-3154	CABLE OLFLONPTFE 1X4,72 MM² YELLOW-GREEN	1-193
90459-3165	CABLE OLFLON PTFE 1X4,72 MM² BLACK	1-193
90459-3179	GAS SPRING BRACKET, BES/AUG/06/001	7-187
90459-3181	GAS SPRING, G15-150-50N STAINLESS STEEL	7-187
90459-3182	GAS SPRING FITTNG, AU16 STAINLESS STEEL	7-187
90459-3339	GASKET NBR/PTFE 17X24X2 MM 3/4"	6-17, 6-21
90459-3370	DOUBLE ACTING, PROFILE,CYL 32-140	7-39, 7-41
90459-3449	VARIABLE FREQUENCY DRIVE 22A-A2P3N104	8-71
90459-3450	VARIABLE FREQUENCY DRIVE 22A-A4P5N104	8-71
90459-3451	VARIABLE FREQUENCY DRIVE 22A-D4P0N104	8-71
90459-3460	FOOTPRINT FILTER 22-RF010-AL	8-71
90459-3461	FOOTPRINT FILTER 22-RF5P7-AL	8-71
90459-3618	HAND OPERATED CHAIN-HOIST, P.H.D. 250KG	10-17, 10-19
90459-3650	DOUBLE ACTING, MINI-ISO, CYL 25-40	1-143
90459-3682	ROTARY POSITION SENSOR RPN1A111	1-143
90459-3705	RUBBER BUFFER, TYPE P 20 10 - 60SH	1-143
90459-3709	CONNECTOR 3-POLE AMP 282087-1	1-143
90459-3759	TIMING BELT, 5MR-550-25	4-177, 4-179
90459-3799	FUSE HOLDER, MSC 10 1-POLE A250148	8-79, 8-81
90459-3800	FUSE HOLDER, MSC 10 3-POLE D250151	8-77, 8-79, 8-81
90459-3832	VENTING BOX, P9852	7-43, 7-45
90459-3994	FIBRE E32T14L	1-339, 1-341
90459-4032	HYDR.ACC., SBO-210-1.4E1/112U-210AK	2-81
90459-4046	FEMALE INSERT 72.208.0453.0	8-47
90459-4077	WIRE SEAL , AMP 281934	1-143
90459-4079	MINI MIC SRS, AMP 183035-1	1-143
90459-4145	ROTARY ACTUATOR DRD-4-F05	1-253
90459-4169	HOSE ASSEMBLY 919-1D-1D-8-8-5C-3800	1-249
90459-4179	GASKET 30,5X42X4 MM FDA	1-219, 1-221
90459-4504	ROD END, ID=6MM, M6X1	4-191
90459-4505	ROD END, ID=6MM, M6X1 LH	4-191
90459-4553	FUSE HOLDER, MSC 10 2-POLE C250150	8-77
90459-4576	O-RING 55X3 MM	5-143, 5-145, 5-147
90459-4577	O-RING 64X3 MM	5-131, 5-133, 5-135, 5-137, 5-139, 5-141
90459-4578	O-RING 78X3 MM	5-131, 5-133, 5-135, 5-137, 5-139, 5-141
90459-4579	O-RING 94X3 MM	5-131, 5-133, 5-135, 5-137, 5-139, 5-141
90459-4580	O-RING 165X4 MM	5-131, 5-133, 5-135, 5-137, 5-139, 5-141
90459-4585	RADIAL SEAL 25X52X7 MM DUST LIP	5-131, 5-133, 5-135, 5-137, 5-139, 5-141
90459-4586	RADIAL SEAL 30X55X7 MM DUST LIP	5-143, 5-145, 5-147
90459-4587	RADIAL SEAL 35X52X7 MM DUST LIP	5-131, 5-133, 5-135, 5-137, 5-139, 5-141
90459-4588	RADIAL SEAL 60X85X8 MM DUST LIP	5-131, 5-133, 5-135, 5-137, 5-139, 5-141
90459-4686	NON RETURN VALVE, M12A-C6L-1-EPR-SS	1-229
90459-4705	LOCKING DEVICE	2-101
90459-4932	REAR CLEVIS FOOT MOUNTING , CRLBN-20/25	5-77, 5-79, 5-81
90459-4991	PRESSURE GAUGE, 9063064 D=40 MM	1-327
107426-0000	GUIDE SLEEVE	4-65, 9-5
209183-0000	RING	1-223, 1-245
229207-0000	BEARING SLEEVE	5-157, 5-159
230551-0000	GASKET	1-163
232979-0000	PRESSURE ROLLER	1-185, 1-187, 9-23, 9-25
239874-0000	WASHER	4-151, 4-161
245039-0000	GUIDE WHEEL	5-157, 5-159
246513-0000	BEARING	4-151, 4-161
247358-0000	SHIFTER HANDLE	1-115
252766-0001	INSULATING PIPE	5-123, 5-125, 5-127
252766-0002	INSULATING PIPE	5-123, 5-125, 5-127
252766-0004	INSULATING PIPE	5-123, 5-125, 5-127
255978-0000	FORK	1-185, 1-187
256628-0000	PIECE	4-157, 4-159, 4-167, 4-169
256629-0001	AXLE PIN	4-157, 4-159, 4-167, 4-169
257330-0000	PRESSURE ROLLER	1-185, 1-187, 9-23, 9-25
263311-0000	WASHER	1-11
263655-0006	SHAFT	1-75, 1-77
263655-0007	SHAFT	1-75, 1-77
263655-0009	SHAFT	1-41, 1-43, 1-75, 1-77
263655-0015	SHAFT	1-75, 1-77
263655-0018	SHAFT	1-75, 1-77
263673-0000	GASKET	5-123, 5-125, 5-127
266737-0000	WASHER	1-295
266739-0000	CABLE GLAND	5-107, 5-109, 5-111
267728-0000	SHAFT	1-185, 1-187
269151-0000	SHAFT	1-35, 1-37, 1-71, 1-73
269859-0000	BRACKET	1-163
270927-0000	SCREW	5-107, 5-109, 5-111
271239-0000	SLEEVE	10-69

Part No	Description	Page No
271241-0000 ..	SCREW	10-69
271860-0000 ..	CLAMP BLOCK	1-7, 1-9, 1-93, 1-103, 1-105, 1-145, 1-147
272479-0000 ..	PRESSURE ROLLER	1-185, 1-187, 9-23, 9-25
272728-0000 ..	BARRIER	7-67
272810-0001 ..	SLEEVE	10-69
272813-0000 ..	PLUNGER	10-69
273429-0000 ..	WASHER	1-169
273450-0000 ..	SIGN, AIR SPRAY	1-317
273452-0000 ..	SIGN, ROLLING MACHINE FOR FABRICS	1-317
273455-0000 ..	SIGN, COLD WATER	6-67, 6-69
273458-0000 ..	SIGN, AIR	6-75, 7-159, 7-161
273953-0000 ..	SEAL	1-75, 1-77
273977-0000 ..	NUT	2-35, 10-63
273978-0000 ..	LEVEL GLASS	2-35, 10-63
273980-0000 ..	SPRING	2-35, 10-63
273981-0000 ..	GASKET	2-27
273985-0000 ..	CARRIAGE	10-67
273996-0000 ..	NUT	2-35, 10-63
276398-0000 ..	HEXAGON NIPPLE	2-197, 2-199
279008-0000 ..	BUSHING	1-115
282635-0000 ..	GUIDE WHEEL	7-11
294464-0000 ..	BASE PLATE	5-107, 5-109, 5-111
295377-0001 ..	HOOD	1-185, 1-187
295377-0003 ..	HOOD	1-185, 1-187
311103-0235 ..	PARALLEL PIN ISO 2338 3M6X14	10-65
311103-0267 ..	PARALLEL PIN ISO 2338 4M6X10 A1	4-61, 4-63, 4-101, 4-103
311103-0268 ..	PARALLEL PIN ISO 2338 4M6X12 A1	5-59
311103-0270 ..	PARALLEL PIN ISO 2338 4M6X16 A1	1-269, 1-271, 2-33, 7-109, 7-111
311103-0272 ..	PARALLEL PIN ISO 2338 4M6X20 A1	1-253
311103-0274 ..	PARALLELL PIN, M6, 4X25 MM	7-65, 7-67
311103-0276 ..	PARALLEL PIN ISO 2338 4M6X30 A1	1-35, 1-37, 1-71, 1-73
311103-0306 ..	PARALLEL PIN ISO 2338 5M6X12 A1	1-35, 1-37, 1-71, 1-73, 4-133, 4-135
311103-0308 ..	PARALLEL PIN ISO 2338 5M6X16 A1	1-17, 1-71, 1-73
311103-0310 ..	PARALLEL PIN ISO 2338 5M6X20 A1	4-127, 4-129
311103-0312 ..	PARALLELL PIN, M6, 5X25 MM	1-71, 1-73
311103-0351 ..	PARALLEL PIN ISO 2338 6M6X16 A1	1-17, 3-11, 3-27, 4-181, 4-183, 10-41
311103-0353 ..	PARALLEL PIN ISO 2338 6M6X20 A1	1-67, 1-69, 3-11, 3-27
311103-0354 ..	PARALLEL PIN ISO 2338 6M6X22 A1	4-177, 4-179
311103-0355 ..	PARALLELL PIN, M6, 6X25 MM	7-167
311103-0359 ..	PARALLEL PIN ISO 2338 6M6X35 A1	10-57
311103-0361 ..	PARALLEL PIN ISO 2338 6M6X40 A1	7-107
311103-0399 ..	PARALLEL PIN ISO 2338 8M6X16 A1	4-127, 4-129
311103-0400 ..	PARALLEL PIN ISO 2338 8M6X18 A1	4-131
311103-0401 ..	PARALLEL PIN ISO 2338 8M6X20 A1	1-101
311103-0402 ..	PARALLEL PIN ISO 2338 8M6X22 A1	4-127, 4-129
311103-0403 ..	PARALLELL PIN, M6, 8X25 MM	1-283
311103-0407 ..	PARALLEL PIN ISO 2338 8M6X35 A1	5-129, 5-203, 5-205
311103-0409 ..	PARALLEL PIN ISO 2338 8M6X40 A1	3-21
311103-0413 ..	PARALLEL PIN ISO 2338 8M6X50 A1	1-7, 1-9, 1-93, 1-103, 1-105, 1-145, 1-147
311103-0454 ..	PARALLEL PIN ISO 2338 10M6X20 A1	5-167
311103-0456 ..	PARALLELL PIN, M6, 10X25 MM	2-65, 3-13, 3-29
311103-1274 ..	PARALLEL PIN ISO 2338 4M6X24 A1	7-33, 7-35, 7-39, 7-41
311103-1355 ..	PARALLEL PIN ISO 2338 6M6X24 A1	7-119, 7-127
311103-1403 ..	PARALLEL PIN ISO 2338 8M6X24 A1	1-269, 1-271
311111-0345 ..	SPRING PIN ISO 8752 6X32-ST	10-79
311112-0205 ..	SPRING PIN, ISO 8752 3X10-C	3-11, 3-27
311112-0251 ..	SPRING PIN, ISO 8752 4X10-C	5-129
311112-0255 ..	SPRING PIN, ISO 8752 4X18-C	4-191
311112-0256 ..	SPRING PIN, ISO 8752 4X20-C	1-91, 4-191, 4-193
311112-0258 ..	SPRING PIN, ISO 8752 4X24-C	4-191, 7-101, 7-103, 7-169
311112-0262 ..	SPRING PIN, ISO 8752 4X32-C	1-115
311112-0263 ..	SPRING PIN, ISO 8752 4X35-C	4-191
311112-0350 ..	SPRING PIN, ISO 8752 6X55-C	10-69
311411-0152 ..	SPLIT PIN SP2X16RFR	10-47
311411-0169 ..	SPLIT PIN SP2,5X25RFR	2-33
311520-0320 ..	RIVET, BLANK 2,4X6	8-91, 8-93
311520-0329 ..	RIVET, BLANK 2,4X8	6-63
311521-0142 ..	BLANK RIVET 3,2X6	9-3
312101-0293 ..	SCREW M6S M4X16 FZB	10-17, 10-19
312101-0325 ..	SCREW M6S M5X10 FZB	2-261
312101-0364 ..	SCREW M6S M6X10 FZB	8-49, 8-51, 8-73
312101-0381 ..	SCREW M6S M6X55 FZB	10-69
312101-0678 ..	SCREW M6S M20X70 FZB	10-73
312104-0461 ..	SCREW M6S M8X50H FZB	1-287, 2-193
312105-0285 ..	SCREW M6S ISO 4017 M4X6 A470	1-249
312105-0287 ..	SCREW M6S ISO4017 M4X8 A470	1-35, 1-37, 1-71, 1-73, 1-99, 1-169, 1-205, 1-225, 1-227 1-231, 2-201, 4-49, 4-55, 5-19, 5-21, 5-65, 5-67, 5-69, 5-105, 5-193, 7-107, 7-109, 7-111, 7-119 7-127, 7-171, 8-21
312105-0289 ..	SCREW M6S ISO 4017 M4X10 A470	1-27, 1-29, 1-31, 1-45, 1-47, 1-49, 1-51, 1-53, 1-97, 1-113 1-137, 1-139, 1-141, 1-197, 1-199, 1-205, 1-249, 2-171, 2-201, 2-205, 2-261, 5-13, 5-15, 6-9, 7-187
312105-0291 ..	SCREW M6S ISO 4017 M4X12 A470	1-137, 1-139, 1-141, 1-143, 1-317, 5-105, 5-213, 5-215 5-217, 7-97, 7-109, 7-111, 7-119, 7-127, 7-171
312105-0293 ..	SCREW M6S ISO 4017 M4X16 A470	2-271, 2-273, 7-85, 7-119, 7-127
312105-0295 ..	SCREW M6S ISO4017 M4X20 A470	1-295, 2-89, 4-73, 4-151, 4-153, 4-155, 4-157, 4-159

Part No	Description	Page No
		4-161, 4-163, 4-165, 4-167, 4-169, 5-119, 7-27, 7-65
312105-0297 ..	SCREW M6S ISO 4017 M4X25 A470	1-97, 4-191, 4-193, 7-21
312105-0299 ..	SCREW M6S ISO 4017 M4X30 A470	1-227, 7-77, 7-85, 7-171
312105-0301 ..	SCREW M6S ISO 4017 M4X35 A470	1-11, 7-123, 7-133
312105-0303 ..	SCREW M6S ISO 4017 M4X40 A470	1-197, 1-199
312105-0323 ..	SCREW M6S ISO 4017 M5X8 A480	1-35, 1-37, 1-113, 1-153, 1-155, 1-227, 1-253, 3-21, 4-191
		5-157, 5-159, 5-193, 5-221, 7-21, 7-43, 7-45, 7-65, 7-85, 8-21, 10-13
312105-0325 ..	SCREW M6S ISO 4017 M5X10 A480	1-13, 1-15, 1-35, 1-37, 1-71, 1-73, 1-91, 1-143, 1-223
		1-249, 2-65, 4-19, 4-21, 4-29, 4-31, 4-143, 4-145, 10-9, 10-51, 10-53
312105-0327 ..	SCREW M6S ISO 4017 M5X12 A480	1-13, 1-15, 1-17, 1-27, 1-29, 1-31, 1-33, 1-35, 1-37, 1-45
		1-47, 1-49, 1-51, 1-53, 1-61, 1-63, 1-71, 1-73, 1-91, 1-123, 1-125, 1-135, 1-161, 1-267, 1-339
		1-341, 2-261, 4-7, 4-9, 4-13, 4-15, 4-19, 4-21, 4-29, 4-31, 4-51, 4-153, 4-155, 4-163, 4-165, 5-113
		5-115, 5-117, 5-123, 5-125, 5-127, 5-167, 5-193, 5-199, 5-203, 5-205, 5-213, 5-215, 6-19, 6-21
		7-27, 7-43, 7-45, 9-21
312105-0328 ..	SCREW M6S ISO 4017 M5X14 A480	4-7, 4-9, 4-13, 4-15, 4-19, 4-21, 4-29, 4-31, 7-167
312105-0329 ..	SCREW M6S ISO 4017 M5X16 A480	1-27, 1-29, 1-31, 1-35, 1-37, 1-45, 1-47, 1-49, 1-51, 1-53
		1-61, 1-63, 1-67, 1-69, 1-107, 1-109, 1-111, 1-117, 1-119, 1-121, 1-135, 1-295, 1-315, 1-377, 2-39
		2-119, 4-127, 4-129, 4-153, 4-155, 4-163, 4-165, 5-199, 5-203, 5-205, 5-221, 6-21, 7-31, 7-43, 7-45, 7-75
312105-0331 ..	SCREW M6S ISO 4017 M5X20 A480	1-7, 1-9, 1-33, 1-35, 1-37, 1-61, 1-63, 1-67, 1-69, 1-79
		1-91, 1-93, 1-103, 1-105, 1-145, 1-147, 1-295, 4-127, 4-129, 7-119, 7-127
312105-0333 ..	SCREW M6S ISO 4017 M5X25 A480	1-195, 1-223, 2-143, 2-215, 2-217, 2-243, 2-251, 4-191
312105-0335 ..	SCREW M6S ISO 4014 M5X30 A480	4-151, 4-161
312105-0337 ..	SCREW M6S ISO 4014 M5X35 A480	7-9
312105-0339 ..	SCREW M6S ISO 4014 M5X40 A480	6-9
312105-0341 ..	SCREW M6S ISO 4014 M5X50 A480	4-19, 4-21, 4-29, 4-31, 6-7, 7-105
312105-0362 ..	SCREW M6S ISO 4017 M6X8 A480	1-11, 1-35, 1-37, 1-71, 1-73, 1-113, 1-163, 1-197, 1-199
		1-219, 1-221, 1-253, 1-265, 1-297, 1-373, 2-267, 4-75, 4-77, 4-79, 4-111, 4-113, 4-115, 4-151
		4-157, 4-159, 4-161, 4-167, 4-169, 5-47, 5-49, 5-51, 5-95, 5-97, 5-99, 5-101, 5-103, 5-129, 7-13
		7-75, 7-77, 7-119, 7-127, 9-13, 9-15, 9-17, 9-19
312105-0364 ..	SCREW M6S ISO 4017 M6X10 A480	1-35, 1-37, 1-71, 1-73, 1-143, 1-231, 1-349, 1-351, 1-379
		2-259, 4-19, 4-21, 4-29, 4-31, 5-33, 5-35, 5-37, 5-47, 5-49, 5-51, 5-83, 7-7, 7-69, 7-71, 7-73, 7-125
		7-131, 7-177, 7-179, 8-21, 8-91, 8-93
312105-0366 ..	SCREW M6S ISO 4017 M6X12 A480	1-17, 1-83, 1-85, 1-107, 1-109, 1-111, 1-113, 1-117, 1-119
		1-121, 1-127, 1-129, 1-131, 1-133, 1-137, 1-139, 1-141, 1-143, 1-153, 1-155, 1-161, 1-163, 1-169
		1-195, 1-225, 1-245, 1-263, 1-267, 1-275, 1-281, 1-297, 1-303, 1-305, 1-339, 1-341, 1-373, 1-379
		1-381, 2-49, 2-61, 2-65, 2-69, 2-83, 2-87, 2-93, 2-95, 2-119, 2-131, 2-133, 2-177, 2-179, 2-205
		2-217, 2-219, 2-229, 2-235, 2-237, 2-243, 2-251, 2-269, 2-271, 2-273, 4-7, 4-9, 4-13, 4-15, 4-19
		4-21, 4-29, 4-31, 4-83, 4-85, 4-87, 4-131, 4-133, 4-135, 4-149, 4-151, 4-161, 4-189, 5-19, 5-21
		5-25, 5-27, 5-45, 5-47, 5-49, 5-51, 5-65, 5-67, 5-69, 5-71, 5-73, 5-75, 5-77, 5-79, 5-81, 5-149
		5-151, 5-153, 5-157, 5-159, 5-161, 5-189, 5-191, 5-199, 5-203, 5-205, 6-7, 6-9, 6-19, 6-27, 7-21
		7-29, 7-33, 7-35, 7-37, 7-43, 7-45, 7-57, 7-77, 7-97, 7-109, 7-111, 7-157, 7-173, 7-177, 7-179, 8-91
		8-93, 10-9
312105-0367 ..	SCREW M6S ISO 4017 M6X14 A480	1-7, 1-9, 1-93, 1-103, 1-105, 1-145, 1-147, 1-349, 1-351
		2-39, 2-65, 2-73, 2-113, 2-119, 2-121, 4-193, 5-161, 5-201, 5-207, 7-21, 7-27, 7-75, 7-97, 7-101
		7-103, 7-171
312105-0368 ..	SCREW M6S ISO 4017 M6X16 A480	1-13, 1-15, 1-17, 1-35, 1-37, 1-67, 1-69, 1-71, 1-73, 1-91
		1-97, 1-101, 1-107, 1-109, 1-111, 1-113, 1-127, 1-129, 1-135, 1-137, 1-139, 1-141, 1-163, 1-197
		1-199, 1-223, 1-249, 1-253, 1-265, 1-267, 1-281, 1-289, 1-291, 1-299, 1-317, 1-327, 1-333, 1-375
		2-27, 2-37, 2-39, 2-49, 2-65, 2-77, 2-87, 2-103, 2-105, 2-113, 2-119, 2-131, 2-133, 2-255, 2-267
		4-7, 4-9, 4-13, 4-15, 4-19, 4-21, 4-29, 4-31, 4-75, 4-77, 4-79, 4-111, 4-113, 4-115, 4-127, 4-129
		4-143, 4-145, 5-5, 5-7, 5-13, 5-15, 5-19, 5-21, 5-25, 5-27, 5-47, 5-49, 5-51, 5-65, 5-67, 5-69, 5-71
		5-73, 5-75, 5-77, 5-79, 5-81, 5-149, 5-151, 5-153, 5-163, 5-165, 5-173, 5-175, 5-181, 5-183, 5-189
		5-191, 5-201, 5-203, 5-205, 5-207, 5-213, 5-215, 6-7, 6-11, 6-21, 6-47, 6-49, 6-53, 6-65, 6-73
		6-75, 7-31, 7-33, 7-35, 7-43, 7-45, 7-51, 7-61, 7-85, 7-89, 7-109, 7-111, 7-119, 7-127, 7-169
		7-177, 7-179, 8-105, 10-9
312105-0370 ..	SCREW M6S ISO 4017 M6X20 A480	1-7, 1-13, 1-15, 1-35, 1-37, 1-67, 1-69, 1-71, 1-73, 1-83
		1-85, 1-113, 1-115, 1-117, 1-119, 1-121, 1-123, 1-125, 1-127, 1-129, 1-131, 1-133, 1-137, 1-139
		1-141, 1-161, 1-171, 1-173, 1-225, 1-255, 1-257, 1-269, 1-271, 1-289, 1-291, 1-339, 1-341, 1-349
		1-351, 2-33, 2-65, 2-87, 2-93, 2-181, 2-183, 2-189, 2-191, 2-249, 2-271, 2-273, 3-11, 3-27, 4-49
		4-55, 4-127, 4-129, 4-131, 4-191, 4-193, 5-13, 5-15, 5-45, 5-47, 5-49, 5-51, 5-53, 5-55, 5-57, 5-77
		5-79, 5-81, 5-89, 5-91, 5-95, 5-97, 5-99, 5-101, 5-103, 5-105, 5-107, 5-109, 5-111, 5-113, 5-115
		5-117, 5-129, 5-149, 5-151, 5-153, 5-163, 5-165, 5-181, 5-183, 6-67, 6-69, 7-7, 7-11, 7-13, 7-23
		7-25, 7-27, 7-31, 7-39, 7-41, 7-51, 7-81, 7-87, 7-99, 7-101, 7-103, 7-107, 7-109, 7-111, 7-115
		7-169, 7-173, 9-13, 9-15, 9-17, 9-19, 10-13, 10-17, 10-19
312105-0371 ..	SCREW M6S ISO 4017 M6X22 A480	1-107, 1-109, 1-111, 1-143, 1-289, 1-291, 7-15, 7-17
312105-0372 ..	SCREW M6S ISO 4017 M6X25 A480	1-35, 1-37, 1-71, 1-73, 1-75, 1-77, 1-91, 1-107, 1-109
		1-111, 1-117, 1-119, 1-121, 1-135, 1-143, 1-267, 2-33, 2-103, 2-105, 4-191, 4-193, 5-47, 5-49
		5-51, 5-89, 5-91, 5-107, 5-109, 5-111, 5-113, 5-115, 5-117, 5-149, 5-151, 5-153, 5-157, 5-159
		5-161, 5-181, 5-183, 5-195, 5-201, 5-203, 5-205, 5-207, 7-7, 7-13, 7-65, 7-107, 7-167, 7-169, 10-77
312105-0374 ..	SCREW M6S ISO 4014 M6X30 A480	1-35, 1-37, 2-271, 2-273, 5-45, 5-105, 5-181, 5-183, 7-187
		10-27, 10-65
312105-0376 ..	SCREW M6S ISO 4014 M6X35 A480	5-13, 5-15, 5-47, 5-49, 5-51, 5-53, 5-55, 5-57, 5-83, 5-203
		5-205, 6-11, 6-73, 7-167, 7-177, 7-179
312105-0378 ..	SCREW M6S ISO 4014 M6X40 A480	1-231, 4-181, 4-183, 4-185, 5-13, 5-15, 5-201, 5-207
312105-0379 ..	SCREW M6S ISO 4014 M6X45 A480	2-27, 5-45
312105-0380 ..	SCREW M6S ISO 4014 M6X50 A480	1-191, 7-167, 7-181
312105-0381 ..	SCREW M6S ISO 4014 M6X55 A480	1-97, 1-165, 1-179, 1-377, 2-69, 4-141, 5-203, 5-205, 7-67
		7-177, 7-179
312105-0382 ..	SCREW M6S ISO 4014 M6X60 A480	1-227, 5-45, 5-217
312105-0383 ..	SCREW M6S ISO 4014 M6X65 A480	1-231, 2-87, 2-271, 2-273, 7-97, 10-51, 10-53
312105-0384 ..	SCREW M6S ISO 4014 M6X70 A480	1-251, 4-177, 4-179, 7-167
312105-0386 ..	SCREW M6S ISO 4014 M6X80 A480	1-227
312105-0388 ..	SCREW M6S ISO 4014 M6X90 A480	1-379
312105-0447 ..	SCREW M6S ISO 4017 M8X12 A480	1-13, 1-15, 1-107, 1-109, 1-111, 1-157, 1-159, 1-191

Part No	Description	Page No
		1-263, 1-325, 1-335, 1-373, 1-375, 2-29, 2-119, 2-189, 2-191, 2-267, 2-271, 2-273, 3-5, 3-25, 4-81
		4-117, 5-9, 5-11, 5-199, 5-203, 8-33
312105-0449 ..	SCREW M6S ISO 4017 M8X16 A480	1-13, 1-15, 1-79, 1-93, 1-97, 1-103, 1-105, 1-113, 1-145
		1-161, 1-163, 1-167, 1-263, 1-269, 1-271, 1-297, 1-373, 1-375, 1-377, 1-379, 2-19, 2-21, 2-25, 2-61
		2-81, 2-193, 2-233, 2-271, 2-273, 4-143, 4-145, 4-177, 4-179, 5-19, 5-21, 5-65, 5-67, 5-69, 5-161
		5-163, 5-165, 5-167, 5-181, 5-183, 5-213, 5-215, 5-217, 6-47, 7-7, 7-27, 7-29, 7-43, 7-45, 7-95
		7-135, 7-137, 7-139, 7-141, 7-143, 8-41, 10-67
312105-0451 ..	SCREW M6S ISO 4017 M8X20 A480	1-7, 1-9, 1-13, 1-15, 1-33, 1-35, 1-37, 1-41, 1-43, 1-49
		1-51, 1-53, 1-61, 1-63, 1-71, 1-73, 1-75, 1-77, 1-79, 1-93, 1-97, 1-103, 1-105, 1-123, 1-125, 1-145
		1-147, 1-157, 1-159, 1-163, 1-169, 1-193, 1-267, 1-269, 1-271, 1-287, 1-373, 2-7, 2-25, 2-27, 2-29
		2-39, 2-121, 2-193, 2-249, 5-9, 5-11, 5-19, 5-21, 5-33, 5-35, 5-37, 5-65, 5-67, 5-69, 5-129, 5-149
		5-151, 5-153, 5-163, 5-165, 5-181, 5-183, 5-189, 5-199, 5-203, 5-205, 6-27, 6-47, 7-9, 7-31, 7-43
		7-45, 7-57, 7-95, 7-97, 7-99, 7-105, 7-109, 7-111, 8-53, 10-57
312105-0452 ..	SCREW M6S ISO 4017 M8X22 A4 80	1-61, 1-63, 1-83, 1-85, 1-107, 1-109, 1-111, 1-143, 1-379
		2-103, 2-105, 4-137, 4-139, 4-177, 4-179, 5-71, 5-73, 5-75, 7-21, 7-43, 7-45
312105-0453 ..	SCREW M6S ISO 4017 M8X25 A480	1-61, 1-63, 1-113, 1-151, 1-157, 1-159, 1-165, 1-167
		1-169, 1-171, 1-175, 1-177, 1-179, 1-191, 1-205, 1-223, 1-267, 2-9, 2-19, 2-21, 2-25, 2-69, 2-73
		4-149, 4-157, 4-159, 4-167, 4-169, 5-5, 5-7, 5-13, 5-15, 5-19, 5-21, 5-33, 5-35, 5-37, 5-53, 5-55
		5-57, 5-65, 5-67, 5-69, 5-121, 5-129, 5-163, 5-165, 5-167, 5-199, 5-203, 5-205, 6-9, 6-25, 6-39
		6-41, 7-43, 7-45, 7-119, 7-127
312105-0455 ..	SCREW M6S ISO 4017 M8X30 A480	1-13, 1-15, 1-113, 1-157, 1-159, 1-185, 1-187, 1-253
		1-255, 1-257, 1-259, 1-263, 1-267, 2-69, 2-73, 4-127, 4-129, 4-131, 4-153, 4-155, 4-157, 4-159
		4-163, 4-165, 4-167, 4-169, 5-33, 5-35, 5-37, 5-77, 5-79, 5-81, 5-105, 5-113, 5-115, 5-117, 5-123
		5-125, 5-127, 5-149, 5-151, 5-153, 5-195, 7-21, 7-53, 10-17, 10-19, 10-65
312105-0457 ..	SCREW M6S ISO 4014 M8X35 A480	2-13, 4-127, 4-129, 4-131, 5-19, 5-21, 5-65, 5-67, 5-69
		5-77, 5-79, 5-81, 5-123, 5-125, 5-127, 5-149, 5-151, 5-153, 5-195
312105-0459 ..	SCREW M6S ISO 4014 M8X40 A480	5-123, 5-125, 5-127, 10-67
312105-0460 ..	SCREW M6S ISO 4014 M8X45 A480	4-57, 4-59, 4-75, 4-77, 4-79, 4-97, 4-99, 4-111, 4-113, 4-115
312105-0461 ..	SCREW M6S ISO 4014 M8X50 A480	5-33, 5-35, 5-37
312105-0462 ..	SCREW M6S ISO 4014 M8X55 A480	1-41, 1-43, 1-75, 1-77, 1-263, 1-297, 4-189, 5-33, 5-35
		5-37
312105-0463 ..	SCREW M6S ISO 4014 M8X60 A480	1-377, 4-149, 5-33, 5-35, 5-37, 5-71, 5-73, 5-75
312105-0464 ..	SCREW M6S ISO 4014 M8X65 A480	4-127, 4-129, 5-33, 5-35, 5-37, 5-71, 5-73, 5-75, 5-123
		5-125, 5-127
312105-0465 ..	SCREW M6S ISO 4014 M8X70 A480	5-25, 5-27, 5-33, 5-35, 5-37, 5-77, 5-79, 5-81, 5-123, 5-125, 5-127
312105-0466 ..	SCREW M6S ISO 4014 M8X75 A480	2-31, 5-25, 5-27, 5-33, 5-35, 5-37, 5-123, 5-125, 5-127
312105-0467 ..	SCREW M6S ISO 4014 M8X80 A480	5-25, 5-27, 5-33, 5-35, 5-37, 5-77, 5-79, 5-81
312105-0469 ..	SCREW M6S ISO 4014 M8X90 A480	4-81, 4-117, 5-173, 5-175
312105-0471 ..	SCREW M6S ISO 4014 M8X100 A480	5-123, 5-125, 5-127, 5-161
312105-0475 ..	SCREW M6S ISO 4014 M8X120 A480	5-157, 5-159, 5-161, 5-167
312105-0489 ..	SCREW M6S ISO 4017 M10X16 A480	1-13, 1-15, 5-5, 5-7, 10-61, 10-87
312105-0491 ..	SCREW M6S ISO 4017 M10X20 A480	1-163, 1-247, 1-283, 2-73, 2-181, 2-183, 7-39, 7-41, 10-67
312105-0493 ..	SCREW M6S ISO 4017 M10X25 A480	1-27, 1-45, 1-47, 1-163, 1-283, 5-105, 10-57
312105-0495 ..	SCREW M6S ISO 4017 M10X30 A480	1-41, 1-43, 1-75, 1-77, 1-163, 1-169, 1-185, 1-187, 2-175
		2-181, 2-183, 2-189, 2-191, 2-193, 5-5, 5-7, 5-77, 5-79, 5-81, 5-167, 5-169, 5-173, 5-175, 5-199
		5-203, 5-205, 6-47, 7-31, 10-7
312105-0497 ..	SCREW M6S ISO 4017 M10X35 A480	3-11, 3-27, 7-33, 7-35, 7-125, 7-131
312105-0499 ..	SCREW M6S ISO 4014 M10X40 A480	5-129, 6-39, 6-41, 7-39, 7-41
312105-0503 ..	SCREW M6S ISO 4014 M10X60 A480	9-3
312105-0505 ..	SCREW M6S ISO 4014 M10X70 A480	1-283
312105-0506 ..	SCREW M6S ISO 4014 M10X75 A480	2-177, 2-179, 2-181, 2-183
312105-0507 ..	SCREW M6S ISO 4014 M10X80 A480	5-167
312105-0511 ..	SCREW M6S ISO 4014 M10X100 A480	5-161
312105-0513 ..	SCREW M6S ISO 4014 M10X110 A480	5-157, 5-159
312105-0517 ..	SCREW M6S ISO 4014 M10X130 A480	1-279, 5-157, 5-159
312105-0534 ..	SCREW M6S ISO 4017 M12X25 A480	8-21, 10-37
312105-0536 ..	SCREW M6S ISO 4017 M12X30 A480	1-13, 1-15, 2-189, 2-191
312105-0538 ..	SCREW M6S ISO 4017 M12X35 A480	1-13, 1-15, 8-21, 10-87
312105-0542 ..	SCREW M6S ISO 4014 M12X50 A480	3-7, 6-39, 6-41
312105-0546 ..	SCREW M6S ISO 4014 M12X70 A480	2-65, 3-7
312105-0548 ..	SCREW M6S ISO 4014 M12X80 A480	7-43, 7-45
312105-0550 ..	SCREW M6S ISO 4014 M12X90 A480	4-149
312105-0552 ..	SCREW M6S ISO 4014 M12X100 A480	2-65
312105-0622 ..	SCREW M6S ISO 4017 M16X25 A480	2-189, 2-191
312105-0629 ..	SCREW M6S ISO 4017 M16X45 A480	2-181, 2-183
312105-0631 ..	SCREW M6S ISO 4014 M16X55 A480	2-65, 5-129
312105-0633 ..	SCREW M6S ISO 4014 M16X65 A480	2-181, 2-183
312105-0634 ..	SCREW M6S ISO 4014 M16X70 A480	10-73, 10-87
312105-0638 ..	SCREW M6S ISO 4014 M16X90 A480	2-7, 2-119
312105-0640 ..	SCREW M6S ISO 4014 M16X100 A480	7-43, 7-45
312105-0674 ..	SCREW M6S ISO 4017 M20X50 A480	2-181, 2-183
312109-0335 ..	SCREW M6S ISO 4017 M5X30 A480	4-185
312109-0374 ..	SCREW M6S ISO 4017 M6X30 A480	1-135, 2-19, 2-21, 2-67, 2-271, 2-273, 3-13, 3-29, 5-47
		5-49, 5-51, 5-89, 5-91, 5-95, 5-97, 5-99, 5-101, 5-103, 5-203, 5-205, 7-11, 7-89, 7-109, 7-111
		7-123, 7-133, 9-13, 9-15, 9-17, 9-19, 10-79
312109-0376 ..	SCREW M6S ISO 4017 M6X35 A480	1-219, 1-221, 1-281, 1-317, 1-327, 2-49, 2-131, 2-133
		5-47, 5-49, 5-51, 5-89, 5-91, 5-105, 7-109, 7-111
312109-0378 ..	SCREW M6S ISO4017 M6X40 A480	2-175, 2-181, 2-183, 2-271, 2-273, 4-177, 4-179, 5-167, 7-167
312109-0380 ..	SCREW M6S ISO 4017 M6X50 A480	2-33, 6-27
312109-0386 ..	SCREW M6S ISO 4017 M6X80 A480	7-119, 7-127, 10-13
312109-0457 ..	SCREW M6S ISO 4017 M8X35 A480	1-157, 1-159, 1-193, 5-33, 5-35, 5-37, 5-77, 5-79, 5-81
		5-123, 5-125, 5-127, 6-47
312109-0459 ..	SCREW M6S ISO 4017 M8X40 A480	1-29, 1-31, 1-49, 1-51, 1-53, 1-75, 1-77, 1-113, 4-157
		4-159, 4-167, 4-169, 5-123, 5-125, 5-127, 7-9, 10-57

Part No	Description	Page No
312109-0460 ..	SCREW M6S ISO 4017 M8X45 A480	1-29, 1-31, 1-49, 1-51, 1-53, 4-151, 4-161, 5-5, 5-7, 5-77 ..... 5-79, 5-81, 5-123, 5-125, 5-127, 5-149, 5-151, 5-153
312109-0461 ..	SCREW M6S ISO 4017 M8X50 A480	1-41, 1-43, 1-75, 1-77, 5-33, 5-35, 5-37, 5-123, 5-125 5-127
312109-0463 ..	SCREW M6S ISO 4017 M8X60 A480	..... 5-105, 5-123, 5-125, 5-127, 5-199, 5-203, 5-205
312109-0499 ..	SCREW M6S ISO 4017 M10X40 A480	..... 2-79, 3-13, 3-29, 5-199, 5-203, 5-205, 5-209, 10-87
312109-0500 ..	SCREW M6S ISO 4017 M10X45 A480	 5-199
312109-0501 ..	SCREW M6S ISO 4017 M10X50 A480	..... 5-209, 7-109, 7-111
312109-0541 ..	SCREW M6S ISO 4017 M12X45 A480	 2-65
312109-0544 ..	SCREW M6S ISO 4017 M12X60 A480	..... 2-19, 2-21
312111-0297 ..	SCREW HEX.SOCK.HD.MC6S-TT 4X25 88 FZB	 8-21
312111-0327 ..	SCREW HEX.SOCK.HD.MC6S-TT 5X12 88 FZB	 10-59
312111-0366 ..	SCREW HEX.SOCK.HD.MC6S-TT 6X12 88 FZB	..... 8-49, 8-51, 8-55, 8-61, 8-63, 8-71, 10-57
312111-0370 ..	SCREW HEX.SOCK.HD.MC6S-TT 6X20 88 FZB	..... 8-77, 8-79, 8-81, 8-83
312111-0497 ..	SCREW HEX.SOCK.HD.MC6S-TT 10X35 88 FZ	 10-57
312111-0501 ..	SCREW HEX.SOCK.HD.MC6S-TT 10X50 88 FZ	 10-59
312111-0630 ..	SCREW HEX.SOCK.HD.MC6S-TT 16X50 88 FZ	2-171, 2-175, 2-177, 2-179, 2-181, 2-183, 2-189, 2-191
312115-0222 ..	SCREW ISO4762 M3X8 A4	..... 2-107, 2-109, 2-111, 4-191, 4-193, 7-43, 7-45
312115-0226 ..	SCREW ISO4762 M3X12 A4	..... 5-107, 5-109, 5-111
312115-0228 ..	SCREW ISO4762 M3X16 A4	..... 1-295, 5-199, 5-203, 5-205, 7-27
312115-0230 ..	SCREW ISO4762 M3X20 A4	..... 3-21, 5-107, 5-109, 5-111, 5-149, 5-151, 5-153, 10-43
312115-0285 ..	SCREW ISO4762 M4X6 A4	..... 4-57, 4-59, 4-75, 4-77, 4-79, 4-97, 4-99, 4-111, 4-113, 4-115
312115-0287 ..	SCREW ISO4762 M4X8 A4	..... 1-193, 1-225, 2-227, 4-39, 4-41, 4-43, 4-45, 7-87, 9-9, 9-11
312115-0289 ..	SCREW ISO4762 M4X10 A4	..... 3-11, 3-27, 4-39, 4-41, 4-43, 4-45, 9-9, 9-11
312115-0291 ..	SCREW ISO4762 M4X12 A4	1-213, 2-33, 3-17, 3-31, 4-39, 4-41, 4-43, 4-45, 4-131, 4-177, 4-179 ... 5-61, 7-53, 7-101, 7-103, 7-107, 7-135, 7-137, 7-139, 7-141, 7-143, 7-175, 8-91, 8-93, 9-9, 9-11
312115-0293 ..	SCREW ISO4762 M4X16 A4	..... 1-13, 1-15, 4-39, 4-41, 4-43, 4-45, 4-131, 5-223, 9-9, 9-11
312115-0295 ..	SCREW ISO4762 M4X20 A4	..... 1-223, 7-99
312115-0297 ..	SCREW ISO4762 M4X25 A4	..... 1-19, 4-67, 4-69, 4-105, 4-107, 9-5
312115-0305 ..	SCREW ISO4762 M4X50 A4	..... 1-197, 1-199, 1-317, 1-327, 4-67, 4-69, 4-105, 4-107
312115-0323 ..	SCREW ISO4762 M5X8 A4	..... 4-39, 4-41, 4-43, 4-45, 7-81, 7-87, 9-9, 9-11
312115-0325 ..	SCREW ISO4762 M5X10 A4	..... 1-137, 1-139, 1-141
312115-0327 ..	SCREW ISO4762 M5X12 A4	1-137, 1-139, 1-141, 1-317, 1-327, 1-373, 2-49, 2-131, 2-133, 2-171 2-193, 2-217, 2-219, 2-233, 2-235, 2-237, 2-249, 2-251, 4-57, 4-59, 4-67, 4-69, 4-83, 4-85, 4-87 4-97, 4-99, 4-105, 4-107, 5-83, 6-47, 6-55, 6-59, 6-63, 7-21, 7-119, 7-123, 7-127, 7-133, 7-201 ..... 7-203, 7-211, 7-215, 8-71, 10-37
312115-0328 ..	SCREW ISO4762 M5X14 A4	 7-105
312115-0329 ..	SCREW ISO4762 M5X16 A4	1-269, 1-271, 1-325, 4-19, 4-21, 4-29, 4-31, 4-57, 4-59, 4-67, 4-69 4-83, 4-85, 4-87, 4-97, 4-99, 4-105, 4-107, 4-151, 4-161, 5-113, 5-115, 5-117, 7-43, 7-45, 7-119 ..... 7-127, 8-35, 8-37, 8-39, 8-41
312115-0331 ..	SCREW ISO4762 M5X20 A4	1-7, 1-9, 1-93, 1-99, 1-103, 1-105, 1-137, 1-139, 1-141, 1-145 ..... 1-147, 1-315, 2-33, 2-79, 4-83, 4-85, 4-87, 7-107, 7-145, 7-147, 7-149, 7-151, 7-153, 7-155
312115-0333 ..	SCREW ISO4762 M5X25 A4	..... 5-83, 5-113, 5-115, 5-117, 6-21, 7-105
312115-0335 ..	SCREW ISO4762 M5X30 A4	 7-87
312115-0337 ..	SCREW ISO4762 M5X35 A4	..... 2-177, 2-179, 2-181, 2-183
312115-0339 ..	SCREW ISO4762 M5X40 A4	 2-99
312115-0340 ..	SCREW ISO4762 M5X45 A4	..... 2-99, 2-149, 2-151
312115-0362 ..	SCREW ISO4762 M6X8 A4	 2-65
312115-0364 ..	SCREW ISO4762 M6X10 A4	..... 2-33, 6-29, 6-65, 7-69, 7-71, 7-73
312115-0366 ..	SCREW ISO4762 M6X12 A4	1-95, 1-373, 1-375, 1-377, 4-19, 4-21, 4-29, 4-31, 4-177, 4-179 ..... 5-9, 5-11, 7-7, 7-39, 7-41, 7-85, 7-95, 7-97, 7-109, 7-111, 8-35, 8-37, 8-39, 8-41
312115-0367 ..	SCREW ISO4762 M6X14 A4	..... 4-7, 4-9, 4-13, 4-15, 7-159, 7-161
312115-0368 ..	SCREW ISO4762 M6X16 A4	1-91, 2-65, 3-7, 3-11, 3-27, 4-19, 4-21, 4-29, 4-31, 4-39, 4-41, 4-43 4-45, 4-177, 4-179, 4-191, 5-77, 5-79, 5-81, 5-113, 5-115, 5-117, 6-13, 6-15, 6-17, 7-33, 7-35 ..... 7-77, 7-97, 7-105, 7-117, 7-173, 9-9, 9-11
312115-0370 ..	SCREW ISO4762 M6X20 A4	1-99, 1-229, 1-269, 1-271, 5-53, 5-55, 5-57, 5-149, 5-151, 5-153 ..... 6-65, 7-21, 7-95, 7-99, 7-101, 7-103, 7-107, 7-123, 7-133, 7-167, 7-169
312115-0372 ..	SCREW ISO4762 M6X25 A4	1-275, 1-335, 2-55, 2-79, 2-97, 2-155, 2-157, 4-65, 4-173, 7-105 ..... 7-177, 7-179
312115-0374 ..	SCREW ISO4762 M6X30 A4	1-17, 1-289, 1-291, 1-339, 1-341, 5-77, 5-79, 5-81, 6-29, 7-39 ..... 7-41, 7-101, 7-103, 7-167
312115-0376 ..	SCREW ISO4762 M6X35 A4	..... 1-375, 3-13, 3-29, 7-33, 7-35, 7-107, 7-159, 7-161
312115-0378 ..	SCREW ISO4762 M6X40 A4 80	4-19, 4-21, 4-29, 4-31, 5-113, 5-115, 5-117, 7-37, 7-157, 10-59
312115-0379 ..	SCREW ISO4762 M6X45 A4	..... 4-83, 4-85, 4-87
312115-0380 ..	SCREW ISO4762 M6X50 A4	..... 4-65, 7-31
312115-0447 ..	SCREW ISO4762 M8X12 A4	..... 2-171, 4-57, 4-59, 4-97, 4-99
312115-0449 ..	SCREW ISO4762 M8X16 A4	5-19, 5-21, 5-65, 5-67, 5-69, 5-77, 5-79, 5-81, 7-7, 7-79, 7-97 ..... 7-119, 7-127, 7-135, 7-137, 7-139, 7-141, 7-143
312115-0451 ..	SCREW ISO4762 M8X20 A4	1-49, 1-51, 1-53, 3-17, 3-31, 4-151, 4-161, 4-177, 4-179, 5-161 ..... 7-7, 7-135, 7-137, 7-139, 7-141, 7-143
312115-0453 ..	SCREW ISO4762 M8X25 A4	..... 1-99, 1-269, 1-271, 4-177, 4-179, 6-43, 7-79
312115-0455 ..	SCREW ISO4762 M8X30 A4	 5-129
312115-0457 ..	SCREW ISO4762 M8X35 A4	..... 4-65, 7-9, 7-31
312115-0459 ..	SCREW ISO4762 M8X40 A4	 4-65
312115-0460 ..	SCREW ISO4762 M8X45 A4	 7-31
312115-0461 ..	SCREW ISO4762 M8X50 A4	..... 4-65, 7-55
312115-0463 ..	SCREW ISO4762 M8X60 A4	..... 7-43, 7-45
312115-0465 ..	SCREW ISO4762 M8X70 A4	..... 4-157, 4-159, 4-167, 4-169, 7-105
312115-0467 ..	SCREW ISO4762 M8X80 A4	 7-105
312115-0489 ..	SCREW ISO4762 M10X16 A4	..... 7-177, 7-179
312115-0491 ..	SCREW ISO4762 M10X20 A4	 2-145
312115-0497 ..	SCREW ISO4762 M10X35 A4	..... 1-285, 5-163, 5-165, 5-167
312115-0499 ..	SCREW ISO4762 M10X40 A4	 2-143
312115-0500 ..	SCREW ISO4762 M10X45 A4	 5-167

Part No	Description	Page No
312115-0501 ..	SCREW ISO4762 M10X50 A4	2-7, 7-97
312115-0546 ..	SCREW ISO4762 M12X70 A4	2-171, 2-175, 2-181, 2-183
312115-0630 ..	SCREW ISO4762 M16X50 A4	1-279
312115-0634 ..	SCREW ISO4762 M16X70 A4	2-181, 2-183
312121-0226 ..	SCREW ISO 1207 M3X12 4.8 - 5.8 Z.PL.	8-71
312121-0285 ..	SCREW ISO 1207 M4X6 4.8 - 5.8 Z.PL.	7-27, 8-73
312121-0289 ..	SCREW ISO 1207 M4X10 4.8 - 5.8 Z.PL.	8-21, 8-55, 8-57, 8-59, 8-61, 8-63, 8-67, 8-71, 8-73
312121-0321 ..	SCREW ISO 1207 M5X6 4.8 - 5.8 Z.PL.	8-45, 8-49, 8-51, 8-61, 8-63, 8-65, 8-67, 8-75
312121-0323 ..	SCREW ISO 1207 M5X8 4.8 - 5.8 Z.PL.	8-21, 8-71
312121-0364 ..	SCREW ISO 1207 M6X10 4.8 - 5.8 Z.PL.	2-55, 2-97, 2-155, 2-157
312121-0366 ..	SCREW ISO 1207 M6X12 4.8 - 5.8 Z.PL.	8-61, 8-63
312125-0220 ..	SCREW ISO 1207 M3X6 A4	2-41, 2-49, 2-131, 2-133, 6-19
312125-0222 ..	SCREW ISO 1207 M3X8 A4	1-289, 1-291, 2-77, 2-149, 2-151, 7-7, 7-77, 7-171, 7-211, 7-215, 8-23, 8-25, 8-27, 8-29
312125-0226 ..	SCREW ISO 1207 M3X12 A4	2-107, 2-109, 2-111
312125-0228 ..	SCREW ISO 1207 M3X16 A4	1-123, 1-125, 1-137, 1-139, 1-141, 1-253, 2-149, 2-151, 5-129
312125-0230 ..	SCREW ISO 1207 M3X20 A4	1-205, 2-95, 7-77
312125-0232 ..	SCREW ISO 1207 M3X25 A4	2-41
312125-0234 ..	SCREW ISO 1207 M3X30 A4	5-5, 5-7
312125-0285 ..	SCREW ISO 1207 M4X6 A4	1-157, 1-159, 1-165, 1-281, 2-19, 2-21, 7-21, 7-43, 7-45, 7-69, 7-71, 7-73, 7-75, 7-109, 7-111, 7-171, 8-91, 8-93, 8-105
312125-0287 ..	SCREW ISO 1207 M4X8 A4	1-205, 1-289, 1-291, 2-95, 2-149, 2-151, 5-149, 5-151, 5-153, 5-199, 5-203, 5-205, 5-223, 6-11, 6-47, 6-75, 7-13, 7-27, 7-31, 7-57, 7-77, 7-81, 7-85, 7-95, 7-167
312125-0289 ..	SCREW ISO 1207 M4X10 A4	3-11, 3-27, 6-13, 6-15, 8-21, 8-23, 8-25, 8-27, 8-29, 8-53, 8-91, 8-93
312125-0291 ..	SCREW ISO 1207 M4X12 A4	7-81, 7-87
312125-0293 ..	SCREW ISO 1207 M4X16 A4	8-91, 8-93
312125-0295 ..	SCREW ISO 1207 M4X20 A4	4-67, 4-69, 4-105, 4-107, 9-5
312125-0297 ..	SCREW ISO 1207 M4X25 A4	5-221, 7-171
312125-0299 ..	SCREW ISO 1207 M4X30 A4	2-87, 5-217
312125-0303 ..	SCREW ISO 1207 M4X40 A4	1-339, 1-341
312125-0323 ..	SCREW ISO 1207 M5X8 A4	1-169, 1-179, 1-209, 1-211, 1-213
312125-0325 ..	SCREW ISO 1207 M5X10 A4	1-339, 1-341, 8-91, 8-93
312125-0327 ..	SCREW ISO 1207 M5X12 A4	2-79, 5-199, 5-203, 5-205, 8-87, 10-65
312125-0331 ..	SCREW ISO 1207 M5X20 A4	1-169
312125-0335 ..	SCREW ISO 1207 M5X30 A4	8-91, 8-93
312125-0341 ..	SCREW ISO 1207 M5X50 A4	2-49
312125-0364 ..	SCREW ISO 1207 M6X10 A4	1-113, 1-191, 1-263, 1-339, 1-341, 2-57, 2-59, 2-107, 2-109, 2-111, 2-197, 2-199, 3-11, 3-27
312125-0366 ..	SCREW ISO 1207 M6X12 A4	1-13, 1-15, 1-201, 1-275, 1-283, 1-335, 2-181, 2-183
312125-0370 ..	SCREW ISO 1207 M6X20 A4	2-27
312125-0374 ..	SCREW ISO 1207 M6X30 A4	1-201
312125-0376 ..	SCREW ISO 1207 M6X35 A4	7-77, 8-91, 8-93
312132-0284 ..	SCREW SLOT. PAN HEAD MSCS M4X5	5-107, 5-109, 5-111
312132-0287 ..	SCREW SLOT. PAN HEAD MSCS M4X8	8-91, 8-93
312132-0289 ..	SCREW SLOT. PAN HEAD MSCS M4X10	2-77, 6-17
312141-0222 ..	SCREW ISO 2009 MFS M3X8 4.8 EL.PL	4-39, 4-41, 4-43, 4-45, 9-9, 9-11
312145-0222 ..	SCREW ISO 2009 MFS M3X8 A4	1-137, 1-139, 1-141
312145-0224 ..	SCREW ISO 2009 MFS M3X10 A4	1-137, 1-139, 1-141
312145-0228 ..	SCREW ISO 2009 MFS M3X16 A4	1-223
312145-0234 ..	SCREW ISO 2009 MFS M3X30 A4	4-83, 4-85, 4-87
312145-0238 ..	SCREW COUNTERS.SLOT.HD. MFS M3X40 SS	4-83, 4-85, 4-87
312145-0287 ..	SCREW ISO 2009 MFS M4X8 A4	4-7, 4-9, 4-13, 4-15, 4-51, 4-153, 4-155, 4-157, 4-159, 4-163, 4-165, 4-167, 4-169, 7-119, 7-127, 9-21
312145-0289 ..	SCREW ISO 2009 MFS M4X10 A4	4-7, 4-9, 4-13, 4-15, 4-39, 4-41, 4-43, 4-45, 4-49, 4-51, 4-55, 9-9, 9-11, 9-21
312145-0291 ..	SCREW ISO 2009 MFS M4X12 A4	4-7, 4-9, 4-13, 4-15
312145-0327 ..	SCREW ISO 2009 MFS M5X12 A4	7-43, 7-45
312145-0329 ..	SCREW ISO 2009 MFS M5X16 A4	4-49, 4-55
312145-0380 ..	SCREW ISO 2009 MFS M6X50 A4	10-65
312151-0368 ..	SCREW EN 10642 MF6S M6X16 10.9 EL.PL	5-199, 5-203, 5-205
312155-0220 ..	SCREW EN 10642 MF6S M3X6 A480	7-87
312155-0226 ..	SCREW EN 10642 MF6S M3X12 A480	7-87, 7-123, 7-133
312155-0285 ..	SCREW HEX.SOCK.COUNT.MF6S M4X6 A480	4-83, 4-85, 4-87, 10-9
312155-0287 ..	SCREW EN 10642 MF6S M4X8 A480	4-39, 4-41, 4-43, 4-45, 4-67, 4-69, 4-75, 4-77, 4-79, 4-83, 4-85, 4-87, 4-105, 4-107, 4-111, 4-113, 4-115, 5-13, 5-15, 5-53, 5-55, 5-57, 7-105, 7-119, 7-127, 9-9, 9-11
312155-0289 ..	SCREW EN 10642 MF6S M4X10 A480	2-73, 2-233, 4-7, 4-9, 4-13, 4-15, 5-13, 5-15, 5-149, 5-151, 5-153, 5-173, 5-175, 7-21, 7-85, 7-105
312155-0291 ..	SCREW EN 10642 MF6S M4X12 A480	2-233, 3-13, 3-29, 7-107
312155-0295 ..	SCREW EN 10642 MF6S M4X20 A480	4-131, 7-19, 7-105
312155-0297 ..	SCREW EN 10642 MF6S M4X25 A480	5-105, 7-19
312155-0299 ..	SCREW EN 10642 MF6S M4X30 A480	7-19
312155-0323 ..	SCREW EN 10642 MF6S M5X8 A480	4-39, 4-41, 4-43, 4-45, 4-57, 4-59, 4-75, 4-77, 4-79, 4-97, 4-99, 4-111, 4-113, 4-115, 5-201, 5-207, 7-89, 7-107, 9-9, 9-11, 10-13
312155-0325 ..	SCREW EN 10642 MF6S M5X10 A480	1-91, 1-143, 4-39, 4-41, 4-43, 4-45, 4-67, 4-69, 4-105, 4-107, 9-9, 9-11
312155-0327 ..	SCREW EN 10642 MF6S M5X12 A480	4-39, 4-41, 4-43, 4-45, 4-153, 4-155, 4-163, 4-165, 5-61, 5-149, 5-151, 5-153, 7-99, 9-9, 9-11
312155-0329 ..	SCREW EN 10642 MF6S M5X16 A480	1-7, 1-9, 1-93, 1-103, 1-105, 1-145, 1-147, 2-65, 5-181, 5-183
312155-0331 ..	SCREW EN 10642 MF6S M5X20 A480	7-63
312155-0364 ..	SCREW EN 10642 MF6S M6X10 A480	1-95, 7-121, 7-129
312155-0366 ..	SCREW EN 10642 MF6S M6X12 A480	5-77, 5-79, 5-81, 5-169, 7-43, 7-45, 7-83, 7-107, 10-57
312155-0368 ..	SCREW EN 10642 MF6S M6X16 A480	2-271, 2-273, 5-157, 5-159, 7-11, 7-181, 10-13

Part No	Description	Page No
312155-0370 ..	SCREW EN 10642 MF6S M6X20 A480	1-279, 5-13, 5-15, 5-53, 5-55, 5-57, 7-21, 7-63
312155-0376 ..	SCREW EN 10642 MF6S M6X35 A480	5-13, 5-15
312155-0378 ..	SCREW EN 10642 MF6S M6X40 A480	2-233, 5-13, 5-15, 5-173, 5-175
312155-0380 ..	SCREW EN 10642 MF6S M6X50 A480	5-13, 5-15
312155-0449 ..	SCREW EN 10642 MF6S M8X16 A480	1-71, 1-73, 5-181, 5-183, 5-205, 7-11, 7-79
312155-0451 ..	SCREW EN 10642 MF6S M8X20 A480	7-11
312155-0453 ..	SCREW EN 10642 MF6S M8X25 A480	2-73, 5-149, 5-151, 5-153, 5-169
312155-0459 ..	SCREW EN 10642 MF6S M8X40 A480	5-33, 5-35, 5-37, 5-77, 5-79, 5-81
312155-0461 ..	SCREW EN 10642 MF6S M8X50 A480	5-77, 5-79, 5-81
312155-0491 ..	SCREW EN 10642 MF6S M10X20 A480	7-31
312155-0495 ..	SCREW EN 10642 MF6S M10X30 A480	5-105, 5-199, 5-203, 5-205
312155-0499 ..	SCREW EN 10642 MF6S M10X40 A480	5-13, 5-15, 5-53, 5-55, 5-57, 7-43, 7-45
312180-0364 ..	SCREW ISO7379 H6X10	3-13, 3-29
312180-0366 ..	SCREW ISO7379 H6X12	7-15, 7-17, 7-181
312180-0491 ..	SCREW ISO7379 H10X20	7-101, 7-103
312180-0534 ..	SCREW ISO7379 H12X25	1-279
312230-0150 ..	SCREW HEX.HEAD WOOD T6S 10X160 SS	1-381
312306-0546 ..	SCREW ISO4026 M12X70 FZB	10-49
312311-0327 ..	SCREW ISO4028 M5X12 FZB	2-143
312311-0329 ..	SCREW ISO4028 M5X16 FZB	1-205
312311-0370 ..	SCREW ISO4028 M6X20 FZB	5-149, 5-151, 5-153
312311-0372 ..	SCREW ISO4028 M6X25 FZB	7-167
312311-0624 ..	SCREW ISO4028 M16X30 FZB	2-11
312318-0220 ..	SCREW ISO4029 M3X6 A4	5-211, 7-173
312318-0283 ..	SCREW ISO4029 M4X4 A4	7-107, 7-167
312318-0284 ..	SCREW ISO4029 M4X5 A4	7-109, 7-111
312318-0285 ..	SCREW ISO4029 M4X6 A4	1-81, 2-41, 4-7, 4-9, 4-13, 4-15, 4-49, 4-55, 10-33
312318-0287 ..	SCREW ISO4029 M4X8 A4	1-293, 4-133, 4-135, 7-101, 7-103, 7-113
312318-0289 ..	SCREW ISO4029 M4X10 A4	1-27, 1-29, 1-31, 1-45, 1-47, 1-49, 1-51, 1-53, 1-289, 1-291, 4-157, 4-159, 4-167, 4-169
312318-0323 ..	SCREW ISO4029 M5X8 A4	3-17, 3-31, 4-39, 4-41, 4-43, 4-45, 4-143, 4-145, 9-9, 9-11
312318-0325 ..	SCREW ISO4029 M5X10 A4	2-261
312318-0327 ..	SCREW ISO4029 M5X12 A4	5-61
312318-0329 ..	SCREW ISO4029 M5X16 A4	4-49, 4-55, 4-67, 4-69, 4-83, 4-85, 4-87, 4-105, 4-107, 7-99
312318-0333 ..	SCREW ISO4029 M5X25 A4	7-119, 7-127
312318-0362 ..	SCREW ISO4029 M6X8 A4	1-115, 4-181, 4-183, 5-5, 5-7, 7-21, 7-39, 7-41, 7-53, 7-119, 7-127
312318-0364 ..	SCREW ISO4029 M6X10 A4	2-13
312318-0366 ..	SCREW ISO4029 M6X12 A4	1-289, 1-291, 3-19, 7-23, 7-25, 7-113
312318-0368 ..	SCREW ISO4029 M6X16 A4	5-149, 5-151, 5-153, 7-95, 7-167
312318-0370 ..	SCREW ISO4029 M6X20 A4	7-65, 8-49, 8-51, 8-55, 8-71
312318-0372 ..	SCREW ISO4029 M6X25 A4	2-145
312318-0376 ..	SCREW ISO4029 M6X35 A4	1-137, 1-139, 1-141
312318-0443 ..	SCREW ISO4029 M8X8 A4	1-101, 1-239, 2-271, 2-273
312318-0445 ..	SCREW ISO4029 M8X10 A4	7-67
312318-0449 ..	SCREW ISO4029 M8X16 A4	4-153, 4-155, 4-157, 4-159, 4-163, 4-165, 4-167, 4-169
312318-0453 ..	SCREW ISO4029 M8X25 A4	1-285, 2-175, 2-177, 2-179, 2-181, 2-183, 2-189, 2-191
312318-0455 ..	SCREW ISO4029 M8X30 A4	7-43, 7-45
312502-0120 ..	DRIVE SCREW ROUND HEAD KDS 0X5	1-317, 1-327, 2-49, 2-131, 2-133, 6-67, 6-69, 6-73, 6-75
312502-0171 ..	DRIVE SCREW ROUND HEAD KDS 2X6	8-55
312503-0225 ..	TAPPING SCREW ISO 7049-ST2,9X9,5-C-Z	2-41
312503-0275 ..	TAPPING SCREW ISO 7049-ST3,5X6,5-C-Z	7-69, 7-71, 7-73
312601-0316 ..	NUT M6M 6-8 FZB	8-21
312601-0322 ..	NUT M6M 12-8 FZB	3-7
312602-0312 ..	HEXAGON NUT, EN 24032 M6M M4 NIPLBR	1-249, 10-51, 10-53
312602-0316 ..	NUT, EN 24032 M6M M6 NIPLBR	10-79
312602-0318 ..	HEXAGON NUT, EN 24032 M6M M8 NIPLBR	10-79
312605-0310 ..	HEXAGON NUT, M6M M3 A280	1-205, 6-11, 7-77
312605-0312 ..	HEXAGON NUT, M6M M4 A280	1-11, 1-35, 1-37, 1-71, 1-73, 1-137, 1-139, 1-141, 1-165, 1-195, 1-269, 1-271, 1-281, 1-295, 1-339, 1-341, 2-87, 2-225, 2-227, 2-233, 2-271, 2-273, 4-73, 4-127, 4-129, 4-157, 4-159, 4-167, 4-169, 5-119, 5-213, 5-215, 5-221, 7-19, 7-27, 7-77, 7-109, 7-111, 7-171, 7-195, 8-21, 8-23, 8-25, 8-27, 8-29, 8-65, 8-91, 8-93, 8-105
312605-0314 ..	HEXAGON NUT, M6M M5 A280	1-11, 1-35, 1-37, 1-71, 1-73, 1-99, 1-107, 1-109, 1-111, 1-113, 1-167, 1-179, 1-205, 1-281, 1-295, 1-315, 1-349, 1-351, 2-227, 2-233, 4-57, 4-59, 4-97, 4-99, 5-157, 5-159, 5-181, 5-183, 5-193, 5-221, 6-21, 6-73, 7-9, 7-13, 7-15, 7-17, 7-87, 7-119, 7-127, 7-193, 7-197, 7-209, 7-213, 8-91, 8-93, 10-43, 10-51, 10-53
312605-0316 ..	HEXAGON NUT, M6M M6 A280	1-11, 1-13, 1-15, 1-35, 1-37, 1-71, 1-73, 1-91, 1-107, 1-109, 1-111, 1-113, 1-115, 1-117, 1-119, 1-121, 1-123, 1-125, 1-127, 1-129, 1-131, 1-133, 1-135, 1-137, 1-139, 1-141, 1-143, 1-161, 1-163, 1-173, 1-227, 1-231, 1-267, 1-269, 1-271, 1-317, 1-327, 1-339, 1-341, 1-377, 1-381, 2-13, 2-27, 2-29, 2-33, 2-39, 2-49, 2-87, 2-121, 2-131, 2-133, 2-145, 2-171, 2-175, 2-255, 2-269, 2-271, 2-273, 4-75, 4-77, 4-79, 4-111, 4-113, 4-115, 4-127, 4-129, 4-131, 4-177, 4-179, 4-191, 5-19, 5-21, 5-47, 5-49, 5-51, 5-65, 5-67, 5-69, 5-89, 5-91, 5-95, 5-97, 5-99, 5-101, 5-103, 5-149, 5-151, 5-153, 5-181, 5-183, 5-213, 5-215, 5-217, 6-11, 6-27, 6-73, 7-13, 7-21, 7-27, 7-51, 7-61, 7-77, 7-81, 7-87, 7-105, 7-107, 7-109, 7-111, 7-119, 7-123, 7-127, 7-133, 7-157, 7-159, 7-161, 7-167, 7-169, 7-177, 7-179, 7-181, 7-187, 7-211, 7-215, 8-21, 8-35, 8-37, 8-39, 8-41, 8-47, 8-91, 8-93, 9-13, 9-15, 9-17, 9-19, 10-9, 10-13, 10-51, 10-53
312605-0318 ..	HEXAGON NUT, M6M M8 A280	1-13, 1-15, 1-71, 1-73, 1-97, 1-107, 1-109, 1-111, 1-151, 1-157, 1-159, 1-165, 1-167, 1-169, 1-171, 1-175, 1-177, 1-179, 1-185, 1-187, 1-193, 1-223, 1-249, 1-253, 1-255, 1-257, 1-259, 1-263, 1-267, 1-287, 1-289, 1-291, 1-297, 1-373, 1-375, 1-377, 1-379, 2-25, 2-31, 2-39, 2-69, 2-121, 2-193, 2-271, 2-273, 4-19, 4-21, 4-29, 4-31, 4-81, 4-117, 4-137, 4-139, 4-153, 4-155, 4-157, 4-159, 4-163, 4-165, 4-167, 4-169, 4-177, 4-179, 5-9, 5-11, 5-25, 5-27, 5-33, 5-35, 5-37, 5-71, 5-73, 5-75, 5-77, 5-79, 5-81, 5-149, 5-151, 5-153, 5-163, 5-165, 5-167, 5-169, 5-199, 5-203, 5-205, 5-211, 6-39, 6-41, 6-43, 6-47, 7-43, 7-45, 7-57, 7-77, 7-119, 7-121, 7-127, 7-129, 7-135, 7-137, 7-139, 7-141, 7-143, 10-65, 10-67
312605-0320 ..	HEXAGON NUT, M6M M10 A280	1-35, 1-37, 1-169, 1-185, 1-187, 1-295, 2-33, 2-79, 5-5, 5-7

Part No	Description	Page No
		5-105, 5-161, 5-209, 7-109, 7-111
312605-0322 ..	HEXAGON NUT, M6M M12 A280	1-123, 1-125, 1-137, 1-139, 1-141, 2-19, 2-21, 5-105, 9-3
312605-0324 ..	HEXAGON NUT, M6M M16 A280	2-11, 2-189, 2-191, 2-193, 10-87
312605-0328 ..	HEXAGON NUT, M6M M24 A280	10-81
312607-0312 ..	HEXAGON NUT, EN 24032 M6M M4 A480	1-193, 10-17, 10-19
312607-0316 ..	HEXAGON NUT, EN 24032 M6M M6 A480	7-167
312625-0316 ..	HEXAGON THIN NUT, EN 24035 ML6M M6 A4	1-123, 1-125, 1-137, 1-139, 1-141, 1-143, 1-293
		4-39, 4-41, 4-43, 4-45, 4-49, 4-55, 7-89, 7-101, 7-103, 9-9, 9-11
312625-0318 ..	HEXAGON THIN NUT, EN 24035 ML6M M8 A4	1-287, 4-75, 4-77, 4-79, 4-111, 4-113, 4-115
		4-149, 4-157, 4-159, 4-167, 4-169, 4-191, 7-87
312625-0320 ..	HEXAGON THIN NUT, EN 24035 ML6M M10 A4	10-17, 10-19
312625-0322 ..	HEXAGON THIN NUT, EN 24035 ML6M M12 A4	2-271, 2-273
312625-0326 ..	HEXAGON THIN NUT, EN 24035 ML6M M20 A4	2-181, 2-183
312635-0320 ..	NUT M6M 10X1 STAINLESS A2 80	4-157, 4-159, 4-167, 4-169
312705-0310 ..	NUT HEX. DOMED CAP MHM-6 M3 A2	1-137, 1-139, 1-141
312705-0312 ..	NUT HEX. DOMED CAP MHM-6 M4 A280	1-137, 1-139, 1-141, 1-377, 2-217, 2-219, 2-229
		2-233, 2-235, 2-237, 2-243, 2-251, 6-55, 6-59, 7-201, 7-203, 7-211
312705-0314 ..	NUT HEX. DOMED CAP MHM-6 M5 A280	1-349, 1-351, 5-221
312705-0316 ..	NUT HEX. DOMED CAP MHM-6 M6 A280	1-83, 1-85, 1-91, 1-349, 1-351, 2-255, 7-113
312705-0318 ..	NUT HEX. DOMED CAP MHM-6 M8 A280	1-83, 1-85, 1-115
312715-0116 ..	WING NUT DIN 315 A2 MVM-K M6	1-269, 1-271, 1-375
312805-0107 ..	NUT ROUND WITH SLOTS M35X1,5 FE	5-131, 5-133, 5-135, 5-137, 5-139, 5-141
312805-0108 ..	NUT ROUND WITH SLOTS M40X1,5 FE	2-149, 2-151
312805-0110 ..	NUT ROUND WITH SLOTS M50X1,5 FE	5-131, 5-133, 5-135, 5-137, 5-139, 5-141
312810-0310 ..	HEXAGON NUT, NY-LOCK M3 FZB	3-21
312810-0316 ..	HEXAGON NUT, NY-LOCK M6 FZB	8-21
312811-0318 ..	NUT HEX.LOCK HELI COIL M8 SS	4-157, 4-159, 4-167, 4-169
312812-0312 ..	HEXAGON NUT, NY-LOCK M4 A480	2-215, 2-217, 2-243, 2-245, 2-247, 2-251, 4-191, 4-193
		5-47, 5-49, 5-51, 5-89, 5-91, 8-21
312812-0314 ..	HEXAGON NUT, NY-LOCK M5 A480	1-223, 1-295, 2-215, 2-217, 2-243, 2-251
312812-0316 ..	HEXAGON NUT, NY-LOCK M6 A480	1-113, 1-143, 1-265, 1-373, 2-93, 2-113, 2-181, 2-183
		5-201, 5-207, 7-67, 7-77, 7-81, 7-109, 7-111, 7-187, 10-13, 10-65, 10-69, 10-79
312812-0318 ..	HEXAGON NUT, NY-LOCK M8 A480	2-73, 4-153, 4-155, 4-157, 4-159, 4-163, 4-165, 4-167
		4-169, 4-181, 4-183, 5-9, 5-11, 10-13
312812-0320 ..	HEXAGON NUT, NY-LOCK M10 A480	4-177, 4-179, 5-157, 5-159, 7-39, 7-41
312812-0322 ..	HEXAGON NUT, NY-LOCK M12 A480	2-171, 2-175, 2-181, 2-183, 3-23
312812-0324 ..	HEXAGON NUT, NY-LOCK M16 A480	10-73
312902-0316 ..	NUT HEX. LEFT THREAD, M6 A280	4-191
312902-0318 ..	NUT HEX. LEFT THREAD, M8 A280	5-9, 5-11, 5-149, 5-151, 5-153
312902-0320 ..	NUT HEX. LEFT THREAD, M10 A280	5-5, 5-7
312927-0150 ..	RIVET NUT M8, CLAMP. LENGTH 3,0 - 4,5	7-43, 7-45
315101-0124 ..	WASHER PLAIN, BRB, 3,2/6 H=0,5	8-71
315101-0136 ..	WASHER BRB, 4,3/8 H=0,8	8-55, 8-57, 8-59, 8-61, 8-63, 8-67, 8-71, 8-73
315101-0146 ..	WASHER PLAIN, BRB, 5,3/10 H=1	8-21, 8-45, 8-49, 8-51, 8-61, 8-63, 8-65, 8-71
315101-0153 ..	WASHER PLAIN, BRB, 6,4/12 H=1,5	2-37, 2-189, 2-191, 8-21, 8-49, 8-51, 8-55, 8-61, 8-63
		8-71, 8-73, 10-69
315101-0165 ..	WASHER PLAIN, BRB, 8,4/16 H=1,5	1-287, 2-171, 2-189, 2-191
315101-0176 ..	WASHER PLAIN, BRB, 12/22 H=2	10-37
315103-0124 ..	WASHER, BRB, 3,2/6,H=0,5 NI PL BR	7-77
315103-0136 ..	WASHER PLAIN, BRB, 4,3/8,H=0,8 NI PL BR	10-51, 10-53
315103-0153 ..	WASHER, BRB, 6,4/12,H=1,5 NIPL BR	1-117, 1-119, 1-121, 5-13, 5-15, 5-149, 5-151, 5-153, 7-167
315105-0124 ..	WASHER BRB3,2X6RFR	1-123, 1-125, 1-137, 1-139, 1-141, 1-205, 1-253, 1-295, 2-107, 2-109
		2-111, 5-5, 5-7, 5-149, 5-151, 5-153, 5-199, 5-203, 5-205, 6-11, 7-27, 7-77, 8-23, 8-25, 8-27, 8-29
315105-0136 ..	WASHER BRB4,3XRFR	1-97, 1-113, 1-137, 1-139, 1-141, 1-165, 1-193, 1-195, 1-197, 1-199
		1-205, 1-225, 1-249, 1-269, 1-271, 1-281, 1-339, 1-341, 1-377, 2-19, 2-21, 2-87, 2-89, 2-171
		2-201, 2-205, 2-215, 2-217, 2-219, 2-225, 2-227, 2-229, 2-233, 2-235, 2-237, 2-243, 2-245, 2-247
		2-251, 2-261, 3-11, 3-27, 4-153, 4-155, 4-163, 4-165, 5-13, 5-15, 5-19, 5-21, 5-65, 5-67, 5-69
		5-105, 5-119, 5-193, 5-213, 5-215, 5-221, 6-9, 6-75, 7-21, 7-27, 7-77, 7-85, 7-101, 7-103, 7-107
		7-109, 7-111, 7-119, 7-123, 7-127, 7-133, 7-135, 7-137, 7-139, 7-141, 7-143, 7-171, 7-187, 7-195
		7-201, 7-203, 7-211, 7-215, 8-21, 8-23, 8-25, 8-27, 8-29, 8-91, 8-93, 8-105
315105-0146 ..	WASHER BRB5,3X10RFR	1-7, 1-9, 1-11, 1-13, 1-15, 1-35, 1-37, 1-91, 1-93, 1-103, 1-105
		1-107, 1-109, 1-111, 1-113, 1-137, 1-139, 1-141, 1-145, 1-147, 1-153, 1-155, 1-169, 1-179, 1-195
		1-223, 1-281, 1-295, 1-315, 1-339, 1-341, 1-377, 2-39, 2-79, 2-119, 2-193, 2-215, 2-217, 2-227
		2-233, 2-243, 2-251, 2-261, 4-7, 4-9, 4-13, 4-15, 4-19, 4-21, 4-29, 4-31, 4-51, 4-57, 4-59, 4-67
		4-69, 4-83, 4-85, 4-87, 4-97, 4-99, 4-105, 4-107, 4-153, 4-155, 4-163, 4-165, 4-185, 4-191, 5-83
		5-113, 5-115, 5-117, 5-123, 5-125, 5-127, 5-129, 5-157, 5-159, 5-181, 5-183, 5-193, 5-199, 5-203
		5-205, 5-213, 5-215, 5-221, 6-7, 6-9, 6-47, 6-55, 6-59, 6-63, 6-73, 7-9, 7-13, 7-21, 7-27, 7-31, 7-43
		7-45, 7-65, 7-85, 7-105, 7-119, 7-127, 7-145, 7-147, 7-149, 7-151, 7-153, 7-155, 7-167, 7-193
		7-209, 8-75, 8-87, 8-91, 8-93, 9-21, 10-9, 10-13, 10-43, 10-51, 10-53
315105-0153 ..	WASHER BRB6,4X12RFR	1-11, 1-13, 1-15, 1-35, 1-37, 1-71, 1-73, 1-83, 1-85, 1-95, 1-101
		1-107, 1-109, 1-111, 1-115, 1-137, 1-139, 1-141, 1-153, 1-155, 1-191, 1-197, 1-199, 1-201, 1-225
		1-229, 1-245, 1-249, 1-255, 1-257, 1-275, 1-281, 1-289, 1-291, 1-297, 1-299, 1-303, 1-305, 1-327
		1-333, 1-335, 1-373, 1-375, 1-377, 1-379, 2-27, 2-33, 2-39, 2-61, 2-65, 2-67, 2-69, 2-73, 2-83
		2-93, 2-95, 2-119, 2-121, 2-181, 2-183, 2-205, 2-217, 2-219, 2-229, 2-235, 2-237, 2-243, 2-249
		2-251, 2-255, 2-259, 2-267, 2-271, 2-273, 3-11, 3-13, 3-27, 3-29, 4-7, 4-9, 4-13, 4-15, 4-19, 4-21
		4-29, 4-31, 4-49, 4-55, 4-127, 4-129, 4-131, 4-133, 4-135, 4-141, 4-151, 4-157, 4-159, 4-161
		4-167, 4-169, 4-181, 4-183, 4-191, 4-193, 5-5, 5-7, 5-13, 5-15, 5-19, 5-21, 5-25, 5-27, 5-33, 5-35
		5-37, 5-47, 5-49, 5-51, 5-53, 5-55, 5-57, 5-65, 5-67, 5-69, 5-71, 5-73, 5-75, 5-77, 5-79, 5-81, 5-83
		5-89, 5-91, 5-95, 5-97, 5-99, 5-101, 5-103, 5-105, 5-113, 5-115, 5-117, 5-129, 5-149, 5-151, 5-153
		5-157, 5-159, 5-161, 5-163, 5-165, 5-181, 5-183, 5-191, 5-195, 5-201, 5-203, 5-205, 5-207, 5-213
		5-215, 5-217, 6-7, 6-9, 6-11, 6-19, 6-27, 6-47, 6-49, 6-53, 6-65, 6-73, 7-7, 7-11, 7-13, 7-15, 7-17
		7-21, 7-23, 7-25, 7-27, 7-29, 7-31, 7-33, 7-35, 7-37, 7-39, 7-41, 7-43, 7-45, 7-51, 7-57, 7-61, 7-65
		7-67, 7-75, 7-77, 7-81, 7-85, 7-87, 7-97, 7-101, 7-103, 7-105, 7-107, 7-109, 7-111, 7-117, 7-119
		7-127, 7-157, 7-159, 7-161, 7-167, 7-169, 7-171, 7-173, 7-177, 7-179, 7-181, 7-187, 7-211, 7-215

Part No	Description	Page No
		8-21, 8-35, 8-37, 8-39, 8-41, 8-47, 8-91, 8-93, 8-105, 9-13, 9-15, 9-17, 9-19, 10-9, 10-13, 10-17
		10-19, 10-27, 10-51, 10-53, 10-65
315105-0156 ..	WASHER BRB 6.7X14 RFR	1-107, 1-109, 1-111, 1-293, 2-87, 2-261, 5-83, 7-13, 7-21, 7-89
		7-105, 7-107, 7-109, 7-111, 7-113
315105-0165 ..	WASHER BRB8,4X16RFR	1-13, 1-15, 1-29, 1-31, 1-41, 1-43, 1-49, 1-51, 1-53, 1-61, 1-63, 1-71
		1-73, 1-75, 1-77, 1-97, 1-107, 1-109, 1-111, 1-113, 1-115, 1-157, 1-159, 1-191, 1-193, 1-205, 1-223
		1-249, 1-263, 1-289, 1-291, 1-297, 1-325, 1-373, 1-375, 1-377, 1-379, 2-7, 2-13, 2-19, 2-21, 2-27
		2-39, 2-61, 2-69, 2-81, 2-103, 2-105, 2-119, 2-177, 2-179, 2-193, 2-233, 2-267, 4-57, 4-59, 4-75
		4-77, 4-79, 4-81, 4-97, 4-99, 4-111, 4-113, 4-115, 4-117, 4-127, 4-129, 4-131, 4-137, 4-139, 4-143
		4-145, 4-149, 4-151, 4-153, 4-155, 4-157, 4-159, 4-161, 4-163, 4-165, 4-167, 4-169, 4-177, 4-179
		4-189, 5-5, 5-7, 5-9, 5-11, 5-13, 5-15, 5-19, 5-21, 5-25, 5-27, 5-33, 5-35, 5-37, 5-53, 5-55, 5-57
		5-61, 5-65, 5-67, 5-69, 5-71, 5-73, 5-75, 5-77, 5-79, 5-81, 5-105, 5-113, 5-115, 5-117, 5-121, 5-129
		5-149, 5-151, 5-153, 5-157, 5-159, 5-161, 5-163, 5-165, 5-167, 5-173, 5-175, 5-181, 5-183, 5-189
		5-195, 5-199, 5-203, 5-205, 5-213, 5-215, 6-9, 6-25, 6-47, 7-7, 7-9, 7-11, 7-21, 7-29, 7-31, 7-43
		7-45, 7-53, 7-57, 7-77, 7-79, 7-95, 7-97, 7-99, 7-101, 7-103, 7-105, 7-121, 7-129, 7-135, 7-137
		7-139, 7-141, 7-143, 8-41, 8-53, 10-57
315105-0171 ..	WASHER BRB10X18	5-5, 5-7, 5-77, 5-79, 5-81, 5-163, 5-165
315105-0173 ..	WASHER BRB10,5X22RFR	1-143, 1-163, 1-185, 1-187, 1-247, 1-295, 2-33, 2-73, 2-145, 2-171
		2-175, 2-177, 2-179, 2-181, 2-183, 2-189, 2-191, 2-193, 3-11, 3-13, 3-27, 3-29, 4-83, 4-85, 4-87
		5-5, 5-7, 5-19, 5-21, 5-65, 5-67, 5-69, 5-157, 5-159, 5-167, 5-199, 5-203, 5-205, 5-209, 6-39, 6-41
		6-47, 7-11, 7-31, 7-33, 7-35, 7-39, 7-41, 9-3, 10-7, 10-25, 10-87
315105-0178 ..	WASHER BRB13X24RFR	2-19, 2-21, 2-39, 2-49, 2-65, 2-189, 2-191, 3-7, 3-23, 4-149, 5-105
		7-43, 7-45, 8-21, 9-3, 10-25, 10-87
315105-0186 ..	WASHER BRB17X30RFR	2-7, 2-65, 2-119, 2-175, 2-177, 2-179, 2-181, 2-183, 2-189, 2-191
		3-21, 4-153, 4-155, 4-163, 4-165, 5-129, 10-87
315105-0192 ..	WASHER BRB21X36RFR	5-129, 10-67
315111-0156 ..	WASHER PLAIN, TBRB 6,7/14 H=3	5-113, 5-115, 5-117
315111-0173 ..	WASHER PLAIN, TBRB 10,5/22 H=4	5-161
315111-0186 ..	WASHER PLAIN, TBRB 17/30 H=6	2-171, 2-181, 2-183, 2-189, 2-191
315115-0153 ..	WASHER PLAIN, TBRB 6,4/12 H=3	2-87, 2-271, 2-273, 5-45, 5-53, 5-55, 5-57, 6-17, 6-21, 7-43
		7-45, 7-89, 7-119, 7-127, 7-169, 7-187
315115-0165 ..	WASHER PLAIN, TBRB 8,4/16 H=3	1-13, 1-15, 2-271, 2-273, 4-149, 10-13, 10-47
315115-0173 ..	WASHER PLAIN, TBRB 10,5/22 H=4	1-279, 4-177, 4-179, 6-47, 7-177, 7-179, 10-67
315115-0178 ..	WASHER PLAIN, TBRB 13/24 H=4	1-13, 1-15
315125-0153 ..	WASHER TBRSB 6,4X22X4 A4	1-17, 1-75, 1-77, 1-223, 1-267, 1-349, 1-351, 2-39, 2-77, 2-103
		2-105, 2-171, 2-175, 2-181, 2-183, 2-189, 2-191, 2-267, 2-269, 4-177, 4-179, 4-189, 5-181, 5-183
		5-199, 5-203, 5-205, 6-49, 6-53, 6-67, 6-69, 7-69, 7-71, 7-73, 7-75, 7-77, 7-97
315125-0165 ..	WASHER TBRSB 8,4X26X5 A4	1-107, 1-109, 1-111, 1-167, 1-205, 2-9, 2-19, 2-21, 2-73, 2-249
		3-5, 3-25, 4-143, 4-145, 5-107, 5-109, 5-111, 5-167, 5-199, 5-203, 5-205, 6-27, 7-95, 7-135, 7-137
		7-139, 7-141, 7-143
315125-0173 ..	WASHER TBRSB 10,5X28X6 A4	1-13, 1-15, 1-41, 1-43, 1-75, 1-77, 2-175, 2-181, 2-183, 5-199
		5-203, 5-205, 10-87
315202-0101 ..	O-RING 3,1X1,6 MM	4-61, 4-63, 4-101, 4-103, 9-5
315202-0104 ..	O-RING 6,1X1,6 MM	4-83, 4-85, 4-87
315202-0105 ..	O-RING 7,1X1,6 MM	4-61, 4-63, 4-65, 4-101, 4-103
315202-0107 ..	O-RING 9,1X1,6 MM	5-9, 5-11
315202-0110 ..	O-RING 12,1X1,6 MM	4-95
315202-0113 ..	O-RING 15,1X1,6 MM	5-167
315202-0115 ..	O-RING 17,1X1,6 MM	3-15
315202-0116 ..	O-RING 18,1X1,6 MM	4-75, 4-77, 4-79, 4-111, 4-113, 4-115
315202-0118 ..	O-RING 22,1X1,6 MM	4-95
315202-0119 ..	O-RING 25,1X1,6 MM	1-175, 1-177, 2-221, 7-199
315202-0124 ..	O-RING 37,1X1,6 MM	3-7
315202-0208 ..	O-RING 9,3X2,4 MM	4-75, 4-77, 4-79, 4-111, 4-113, 4-115
315202-0211 ..	O-RING 13,3X2,4 MM	2-107, 2-109, 2-111
315202-0214 ..	O-RING 17,3X2,4 MM	9-37
315202-0217 ..	O-RING 24,2X3 MM	5-5, 5-7, 5-149, 5-151, 5-153, 5-171, 9-37
315202-0221 ..	O-RING 34,2X3 MM	5-199, 5-203, 5-205
315202-0225 ..	O-RING 44,2X3 MM	5-13, 5-15, 5-53, 5-55, 5-57, 5-131, 5-133, 5-135, 5-137, 5-139, 5-141
315202-0267 ..	O-RING 16,3X2,4 MM	5-199, 5-203, 5-205
315202-0302 ..	O-RING 54,5X3 MM	2-113, 5-131, 5-133, 5-135, 5-137, 5-139, 5-141
315202-0303 ..	O-RING 59,5X3 MM	5-149, 5-151, 5-153, 5-167, 9-37
315202-0304 ..	O-RING 64,5X3 MM	1-211
315202-0305 ..	O-RING 69,5X3 MM	5-105, 5-149, 5-151, 5-153, 9-37
315202-0307 ..	O-RING 79,5X3 MM	2-145, 9-37
315202-0308 ..	O-RING 84,5X3 MM	1-209, 1-213, 9-37
315202-0311 ..	O-RING 99,5X3 MM	5-13, 5-15, 5-53, 5-55, 5-57, 5-167
315202-0505 ..	O-RING 6,07X1,78 MM	3-9
315202-0701 ..	O-RING 10,82X1,78 MM	2-41
315202-0709 ..	O-RING 23,52X1,78 MM	2-65, 2-119
315202-0739 ..	O-RING 55,25X2,62 MM	1-99
315204-0103 ..	O-RING 5,1X1,6 MM	2-27
315204-0105 ..	O-RING 7,1X1,6 MM	4-83, 4-85, 4-87
315204-0122 ..	O-RING 32,1X1,6 MM	1-123, 1-125
315204-0123 ..	O-RING 35,1X1,6 MM	1-115
315204-0206 ..	O-RING 7,3X2,4 MM	1-161
315204-0207 ..	O-RING 8,3X2,4 MM	2-37
315204-0208 ..	O-RING 9,3X2,4 MM	1-223
315204-0209 ..	O-RING 10,3X2,4 MM	1-113
315204-0213 ..	O-RING 15,2X2,4 MM	1-165
315204-0214 ..	O-RING 17,3X2,4 MM	1-223
315204-0215 ..	O-RING 19,2X3 MM	1-185, 1-187, 1-209, 1-211, 1-213, 5-107, 5-109, 5-111, 9-23, 9-25, 9-27
		9-29, 9-31
315204-0219 ..	O-RING 29,2X3 MM	1-185, 1-187, 1-229, 9-23, 9-25

Part No	Description	Page No
315204-0222 ..	O-RING 36,2X3 MM	2-33
315204-0223 ..	O-RING 39,2X3 MM	1-185, 1-187, 9-23, 9-25
315204-0301 ..	O-RING 49,5X3 MM	1-211, 9-27
315204-0303 ..	O-RING 59,5X3 MM	5-107, 5-109, 5-111
315204-0307 ..	O-RING 79,5X3 MM	1-173
315204-0308 ..	O-RING 84,5X3 MM	9-29
315204-0317 ..	O-RING 129,5X3 MM	1-165, 1-179
315204-0324 ..	O-RING 164,3X5,7 MM	1-41, 1-43, 1-75, 1-77
315205-0505 ..	O-RING 6,07X1,78 MM	1-223
315205-0703 ..	O-RING 14,0X1,78 MM	1-17
315205-0704 ..	O-RING 15,6X1,78 MM	1-107, 1-109, 1-111, 1-151
315205-0705 ..	O-RING 17,17X1,78 MM	1-107, 1-109, 1-111
315205-0707 ..	O-RING 20,35X1,78 MM	1-13, 1-15
315205-0709 ..	O-RING 23,52X1,78 MM	1-135
315205-0713 ..	O-RING 29,87X1,78 MM	1-117, 1-119, 1-121
315205-0714 ..	O-RING 31,47X1,78 MM	1-115
315205-0715 ..	O-RING 33,05X1,78 MM	1-143
315205-0716 ..	O-RING 34,65X1,78 MM	1-91, 1-123, 1-125
315205-0801 ..	O-RING 37,82X1,78 MM	1-13, 1-15, 1-113
315205-0802 ..	O-RING 41,0X1,78 MM	1-107, 1-109, 1-111, 1-117, 1-119, 1-121, 1-127, 1-129, 1-131, 1-133, 1-269, 1-271
315205-0803 ..	O-RING 44,17X1,78 MM	1-91
315205-0804 ..	O-RING 47,35X1,78 MM	1-113, 1-131, 1-133, 1-137, 1-139, 1-141
315205-0805 ..	O-RING 53,7X1,78 MM	1-91
315205-0807 ..	O-RING 94,97X1,78 MM	1-91, 1-161
315205-0808 ..	O-RING 7,59X2,62 MM	1-153, 1-155
315206-0506 ..	O-RING 7,65X1,78 MM	2-39
315211-0103 ..	BONDED SEAL SS/NBR90 M6	4-75, 4-77, 4-79, 4-83, 4-85, 4-87, 4-111, 4-113, 4-115, 5-167, 9-5
315211-0104 ..	BONDED SEAL SS/NBR90 M8	4-57, 4-59, 4-97, 4-99, 9-5
315211-0111 ..	BONDED SEAL SS/NBR90 G1/2	2-81
315220-0143 ..	V-RINGS 18X26X10,5 MM V-20S	4-191
315220-0180 ..	V-RINGS 34X42X10,5 MM V-38S	2-119
315220-0183 ..	V-RINGS 36X46X13 MM V-40S	2-113
315220-0198 ..	V-RINGS 45X55X13 MM V-50S	2-39, 2-119
315229-0101 ..	GASKETS, 10,4X17,4X3,7 MM 1/2" FDA	1-267
315229-0102 ..	GASKETS, 16,8X23,8X3,7 MM 3/4" FDA	1-97, 6-19
315229-0103 ..	GASKETS, 23,1X30,1X3,7 MM 1" FDA	1-263, 1-267, 2-25, 2-69, 2-121, 6-39, 6-41, 6-45, 9-5
315229-0104 ..	GASKETS, 35,8X42,8X3,7 MM 1"1/2 FD	1-97, 1-107, 1-109, 1-111, 1-253, 1-255, 1-257, 1-259, 1-263, 2-25, 9-5
315229-0105 ..	GASKETS, 48,5X55,5X3,7 MM 2" FDA	1-97, 1-267, 2-25, 2-29, 9-5
315229-0106 ..	GASKETS, 61,2X68,2X3,7 MM 2"1/2 FD	1-267
315229-0107 ..	GASKETS, 73,9X80,9X3,7 MM 2"1/2 FD	2-25, 9-5
315229-0203 ..	GASKET 22,1X31,1X3,7 MM 1"	1-151, 1-157, 1-159, 1-165, 1-175, 1-177
315229-0204 ..	GASKET 34,8X42,8X3,7 MM 1"1/2	1-157, 1-159, 1-179
315229-0205 ..	GASKET 47,5X55,5X3,7 MM 2"	1-157, 1-159, 1-167, 1-171, 1-179
315229-0206 ..	GASKET 60,2X68,2X3,7 MM 2"1/2	1-157, 1-159, 1-167, 1-169, 1-171
315229-0208 ..	GASKET 97,4X105,4X3,7 MM 4"	1-193
315233-0101 ..	WASHER CAPTIVE SEALING M5	1-209, 1-211, 1-213
315233-0109 ..	WASHER CAPTIVE SEALING G1/8	10-51, 10-53
315233-0110 ..	WASHER CAPTIVE SEALING G1/4	2-87, 6-19, 6-75, 10-45, 10-51, 10-53, 10-65
315233-0111 ..	WASHER CAPTIVE SEALING G3/8	2-87, 10-51, 10-53
315233-0113 ..	WASHER CAPTIVE SEALING G1/2	2-121, 2-197, 2-199, 6-23, 6-75, 6-77, 10-51, 10-53, 10-65
315234-0109 ..	WASHER,PL.RND.CU.10,3/13,5 H=1,0	5-107, 5-109, 5-111
315234-0110 ..	WASHER,PL.RND.CU.13,5/18 H=1,5	2-77, 10-81
315234-0113 ..	WASHER PL.RND.CU.21,3//26 H=1,5	1-163, 2-77
315237-0109 ..	WASHER,PL.RND.AL.10/14,H=1,5	1-303, 1-305
315237-0110 ..	WASHER,PL.RND.AL.13,5/18,H=1,5	1-13, 1-15, 1-269, 1-271, 2-7, 2-87, 2-197, 2-199
315239-0109 ..	NYLON WASHER G1/8	6-67, 6-69
315239-0111 ..	NYLON WASHER G3/8	6-67, 6-69
315239-0113 ..	NYLON WASHER G1/2	6-67, 6-69
315402-0136 ..	LOCK WASHER FBB 4,1	1-213
315402-0156 ..	LOCK WASHER FBB 6,5	1-127, 1-129, 4-39, 4-41, 4-43, 4-45, 9-9, 9-11
315402-0173 ..	LOCK WASHER FBB 10,2	2-143
315701-0165 ..	PARALLEL KEY W. ROUND ENDS 4X4X10 MM	4-177, 4-179
315701-0166 ..	PARALLEL KEY W. ROUND ENDS 4X4X12 MM	7-173
315701-0170 ..	PARALLEL KEY W. ROUND ENDS 4X4X20 MM	7-83, 7-97
315701-0239 ..	PARALLEL KEY W. ROUND ENDS 6X6X40 MM	1-127, 1-129
315705-0135 ..	PARALLEL KEY W. ROUND ENDS 3X3X12 MM	1-143
315705-0164 ..	PARALLEL KEY W. ROUND ENDS 4X4X8 MM	1-71, 1-73, 2-271, 2-273
315705-0196 ..	PARALLEL KEY W.ROUND ENDS 5X5X10	2-33
315705-0201 ..	PARALLEL KEY W. ROUND ENDS 5X5X20 MM	2-271, 2-273, 4-83, 4-85, 4-87
315705-0202 ..	PARALLEL KEY W ROUND ENDS 5X5X25MM	5-199, 5-203, 5-205, 7-173
315705-0238 ..	PARALLEL KEY W. ROUND ENDS 6X6X36 MM	2-271, 2-273
315705-0239 ..	PARALLEL KEY W. ROUND ENDS 6X6X40 MM	5-167
315705-0263 ..	PARALLEL KEY W. ROUND ENDS 8X7X20 MM	5-167
315705-0265 ..	PARALLEL KEY W. ROUND ENDS 8X7X25 MM	5-167
315705-0267 ..	PARALLEL KEY W. ROUND ENDS 8X7X30 MM	5-5, 5-7, 5-149, 5-151, 5-153
315705-0270 ..	PARALLEL KEY W. ROUND ENDS 8X7X40 MM	5-5, 5-7
315705-0301 ..	PARALLEL KEY W. ROUND ENDS 10X8X40 MM	1-71, 1-73
315705-0305 ..	PARALLEL KEY W. ROUND ENDS 10X8X60 MM	7-53
315705-0334 ..	PARALLEL KEY W. ROUND ENDS 12X8X50 MM	1-99
315741-0102 ..	RETAINING RING DIN 705 A2 6	7-167
315742-0112 ..	RETAINING RING 16 SMS 199	4-181, 4-183
315742-0122 ..	RETAINING RING 30 SMS 199	2-271, 2-273

Part No	Description	Page No
315742-0123 ..	RETAINING RING 32 SMS 199	7-67
315750-0119 ..	RETAINING RING SHAFT DIN 471 ST 25	10-77
315751-0103 ..	RETAINING RING FOR SHAFT DIN 471 6 A2	1-35, 1-37, 1-135, 1-161, 7-77, 7-105, 7-107, 7-109, 7-111, 7-167, 7-187
315751-0109 ..	RETAINING RING FOR SHAFT DIN 471 12 A2	1-295, 3-21, 4-191, 7-27, 7-105, 7-107, 7-121, 7-129, 10-25
315751-0111 ..	RETAINING RING FOR SHAFT DIN 471 14 A2	7-173
315751-0112 ..	RETAINING RING FOR SHAFT DIN 471 15 A2	1-117, 1-119, 1-121, 1-127, 1-129, 1-131, 1-133, 3-19, 4-177, 4-179, 7-23, 7-25, 7-101, 7-103, 7-169, 7-177, 7-179
315751-0113 ..	RETAINING RING FOR SHAFT DIN 471 16 A2	1-13, 1-15, 2-33, 2-143
315751-0119 ..	RETAINING RING FOR SHAFT DIN 471 25 A2	5-5, 5-105, 5-169, 5-199, 5-203, 5-205, 7-101, 7-103, 7-169
315753-0122 ..	RETAINING RING FOR BORE DIN 472 30 A2	1-293, 5-149, 5-151, 5-153, 7-113
315753-0123 ..	RETAINING RING FOR BORE DIN 472 32 A2	7-173
315753-0124 ..	RETAINING RING FOR BORE DIN 472 35 A2	1-91, 4-177, 4-179, 7-23, 7-25, 7-97
315753-0127 ..	RETAINING RING FOR BORE DIN 472 40 A2	7-97
315753-0130 ..	RETAINING RING FOR BORE DIN 472 47 A2	7-95
315753-0132 ..	RETAINING RING FOR BORE DIN 472 52 A2	5-5, 5-7
315753-0135 ..	RETAINING RING FOR BORE DIN 472 60 A2	4-151, 4-161
315754-0113 ..	LOCKING WAE 15	1-209, 1-211, 1-213
315755-0105 ..	RETAINING RING SHAFT DIN 6799 3,2 A2	1-173, 10-15
315755-0106 ..	RETAINING RING SHAFT DIN 6799 4 A2	1-373, 1-375, 5-201, 5-207
315755-0107 ..	RETAINING RING SHAFT DIN 6799 5 A2	1-143, 2-271, 2-273
315755-0108 ..	RETAINING RING SHAFT DIN 6799 6 A2	1-289, 1-291, 7-113
315755-0109 ..	RETAINING RING SHAFT DIN 6799 7 A2	7-101, 7-103
315755-0110 ..	RETAINING RING SHAFT DIN 6799 9 A2	2-19, 2-21
315755-0112 ..	RETAINING RING SHAFT DIN 6799 12 A2	7-39, 7-41, 7-65
315755-0113 ..	RETAINING RING SHAFT DIN 6799 15 A2	5-77, 5-79, 5-81
315755-0801 ..	RETAINING RING SHAFT DIN 6799 8 A2	2-13, 7-21
316810-0106 ..	PIPE CLIP FOR TUBE D=8 MM	1-249, 5-65, 5-67, 5-69, 5-105
318301-0120 ..	LIFTING EYE BOLT, TYPE, LT, M10	10-17, 10-19
318301-0130 ..	LIFTING EYE BOLT, TYPE, LT, M30	10-83
318800-0104 ..	HANDLE,SPHERICAL KNOB,INT.THRE.,D.30-M8	1-13, 1-15, 7-21
318850-0113 ..	STELLAR KNOB, INT. THREAD, NO. 8306-0367	10-25, 10-57
318856-0109 ..	KNOB, EXTERNAL THREAD. NO. 8308-1658	10-25
318856-0112 ..	KNOB, EXTERNAL THREAD. NO. 8306-0227	6-9
318860-0106 ..	KNOB, ADJUST.HI.EXT.THREAD, NO 8324-3674	2-143
319030-0125 ..	DISC SPRING, CONICAL 12,5X6,2X0,5 MM	7-99
321101-0162 ..	FLANGE BUSHING, 10X16X8 MM	4-181, 4-183, 7-33, 7-35
321101-0163 ..	FLANGE BUSHING, 10X16X10 MM	4-157, 4-159, 4-167, 4-169
321101-0172 ..	FLANGE BUS 12F7X10	1-247
321101-0202 ..	FLANGE BUSHING, 16X22X12 MM	7-39, 7-41
321101-0203 ..	FLANGE BUSHING, 16X22X16 MM	4-181, 4-183
321101-0222 ..	FLANGE BUSHING, 18X25X12	4-171, 10-49
321101-0223 ..	FLANGE BUSHING, 18X25X16	4-171
321105-0164 ..	BEAR. BUSH. WITHOUT FL, 10X16X16 MM	7-21
321111-0097 ..	FLANGE BUSHING, 8X12X12 MM	7-11
321111-0163 ..	FLANGE BUSHING, 12X18X20 MM	4-191
321116-0234 ..	BEAR. BUSH. WITHOUT FL, 16X20X12 MM	5-195
321120-0108 ..	BEARBUSHING W/O FL 12X14X8	4-127, 4-129
321120-0137 ..	BEARING BUSHING W/O FLANGE,20/23X15	10-79
321130-0200 ..	THRUST WASHER, 14X26X1,5 MM	5-149, 5-151, 5-153
321133-0180 ..	BUSHING, 12X14X12 MM	1-135
321133-0260 ..	BUSHING, 20X23X20 MM	4-193
321136-0140 ..	BUSHING, 10X12X10 MM	4-39, 4-41, 4-43, 4-45, 9-9, 9-11
321137-0140 ..	BUSHING, 10X14X10 MM	1-35, 1-37, 1-71, 1-73
321138-0183 ..	BUSHING, 12X14X15 MM	5-59
321141-0064 ..	BEARING BUSHING W/O FL, 6X8X10 MM	7-77
321141-0104 ..	BEARING BUSHING W/O FL, 8X10X12 MM	7-119, 7-127
321141-0138 ..	BEARING BUSHING W/O FL, 10X12X8 MM	1-293, 7-109, 7-111
321141-0178 ..	BEARING BUSHING W/O FL, 12X14X10 MM	7-119, 7-127
321141-0183 ..	BEARING BUSHING W/O FL, 12X14X15 MM	1-295
321141-0216 ..	BEARING BUSHING W/O FL, 16X18X12 MM	7-119, 7-127
321141-0260 ..	BEARING BUSHING W/O FL, 20X23X20 MM	10-13
321153-0136 ..	FLANGE BUSHING, 10X12X6 MM	5-77, 5-79, 5-81
321161-0185 ..	FLANGE BUSHING, 12X14X17 MM	7-27
321161-0221 ..	FLANGE BUSHING, 16X18X17 MM	2-143
321308-0202 ..	BALL BEARING, 15X32X9 MM	7-33, 7-35, 7-39, 7-41, 7-173
321308-0205 ..	BALL BEARING, 25X47X12MM	5-5, 5-7, 5-105, 5-169, 5-199, 5-203, 5-205, 7-101, 7-103, 7-169
321313-0100 ..	BALL BEARING, 10X30X9 MM	1-293, 7-113
321313-0102 ..	BALL BEARING, 15X35X11 MM	1-289, 1-291, 2-13, 7-23, 7-25, 7-53, 7-97, 7-119, 7-127, 7-167, 7-173, 7-175, 7-177, 7-179
321313-0103 ..	BALL BEARING, 17X40X12MM	2-33, 5-199, 5-203, 5-205, 7-97
321313-0105 ..	BALL BEARING, 25X52X15MM	5-5, 5-7, 5-149, 5-151, 5-153
321313-0107 ..	BALL BEARING, 35X72X17MM	5-149, 5-151, 5-153
321316-0205 ..	BALL BEARING, 25X62X17 MM	3-19
321316-0206 ..	BALL BEARING, 30X72X19 MM	5-105
342203-0107 ..	NIPPLES, EXT. THREAD, HEXAGON,ÿNO. 209	6-7
342203-0120 ..	NIPPLES, EXT. THREAD, HEXAGON,ÿNO. 209	6-37
342206-0109 ..	BUSHING, TAPERED, INT/EXT. THRÿNO. R211	1-165, 1-179, 1-265
342217-0103 ..	SLEEVE, REDUCTION, INT, R-2021/2X1/4	6-7
342245-0102 ..	T-PIPE, INT. THREAD, R1/4XKR1/4	2-49, 2-205
342700-0110 ..	NIPPLES,HEXAGON,EXT.G-THREAD G1/4"-G1/4"	10-45
342700-0111 ..	NIPPLES,HEXAGON,EXT.G-THREAD G3/8"-G3/8"	6-67, 6-69
342700-0113 ..	NIPPLES,HEXAGON,EXT.G-THREAD G1/2"-G1/2"	1-265, 6-75, 6-77

Part No	Description	Page No
342700-0116 ..	NIPPLES,HEXAGON,EXT.G-THREAD G1"-G1"	6-47
342700-0201 ..	NIPPLES,HEXAGON,EXT.G-THREAD G1/4"-G1/8"	7-59
342700-0203 ..	NIPPLES,HEXAGON,EXT.G-THREAD G3/8"-G1/4"	2-87, 2-205
342700-0205 ..	NIPPLES,HEXAGON,EXT.G-THREAD G1/2"-G1/4"	6-75, 7-61
342700-0206 ..	NIPPLES,HEXAGON,EXT.G-THREAD G1/2"-G3/8"	6-77
342701-0201 ..	BUSHING,INT./EXT.G-THREAD G1/4"-G1/8"	2-49, 10-45, 10-51, 10-53
342701-0202 ..	BUSHING,INT./EXT.G-THREAD G3/8"-G1/8"	6-17, 6-25, 6-67, 6-69
342701-0203 ..	BUSHING, INT/EXT. G-THREAD NO. 3/8-1/4	1-265
342701-0205 ..	BUSHING,INT./EXT.G-THREAD G1/2"-G1/4"	2-77, 2-207
342701-0206 ..	BUSHING,INT./EXT.G-THREAD G1/2"-G3/8"	6-17
342701-0208 ..	BUSHING, INT/EXT. G-THREAD NO. 3/4-1/4	2-79
342701-0209 ..	BUSHING,INT./EXT.G-THREAD G3/4"-G3/8"	1-265, 7-57
342703-0208 ..	NUT, PIPES & CONNECTORS,NUT M-8 SS	1-153, 1-155, 2-83, 4-185
342706-0130 ..	ACCESSORIES, INSERT SLEEVE 6 MM	1-229, 1-303, 1-305, 2-33, 4-141
342706-0195 ..	ACCESSORIES, INSERT SLEEVE 12 MM	1-229
342708-0109 ..	REINFORCING RING VSH 15X1 MM	6-23, 6-67, 6-69
342713-0209 ..	PLUG (1UNIT = 10PC)	4-75, 4-77, 4-79, 4-83, 4-85, 4-87, 4-111, 4-113, 4-115, 7-59, 7-159, 7-161
342713-0210 ..	PLUG, EXT THREAD HEX SOCKET 8638-00-140	1-197, 1-199, 1-317, 2-49, 2-131, 2-133
342713-0211 ..	PLUG, EXT THREAD HEX SOCKET 8638-00-380	1-265, 1-319, 1-321, 1-323, 1-329, 1-331, 2-51, 2-135, 2-137, 2-139, 6-73, 7-159, 7-161
342713-0213 ..	PLUG, EXT THREAD HEX SOCKET 8638-00-120	1-163, 2-203, 2-269, 6-21, 6-47
342715-0100 ..	BLIND PLUG 4 MM	1-319, 1-321, 1-323, 1-329, 1-331
342715-0102 ..	BLIND PLUG 6 MM	1-319, 1-321, 1-323, 1-329, 1-331, 2-51, 2-135, 2-137, 2-139, 6-73, 7-159, 7-161
342715-0103 ..	BLIND PLUG 8 MM	1-319, 1-321, 1-323, 1-329, 1-331, 2-51, 2-135, 2-137, 2-139, 6-73, 7-159, 7-161
342715-0105 ..	BLIND PLUG 12 MM	2-209, 2-211
342715-0106 ..	BLIND PLUG 14 MM	2-7, 2-209, 2-211
342716-0202 ..	REDUCER 4-6	1-327, 7-51
342716-0203 ..	REDUCER 6-8	1-327, 2-135, 2-137, 2-139, 7-159, 7-161
342716-0205 ..	REDUCER 4-8	1-317
342716-0206 ..	REDUCER 8-10	2-131, 2-133
342716-0209 ..	REDUCER 8-12	1-317, 1-327, 2-49, 2-209, 2-211, 7-159, 7-161
342716-0210 ..	REDUCER 6-12	1-229, 1-303, 1-305, 1-317, 1-327, 2-49
342716-0211 ..	REDUCER 12-14	2-209, 2-211, 6-75
342720-0114 ..	CONN. STR. GA-15-G1/2	6-23, 6-67, 6-69
342720-0119 ..	CONN. STR., GA-22-G3/4	6-21
342722-0197 ..	STRAIGHT COUPLING	1-135, 7-81, 7-105, 7-123, 7-133
342722-0202 ..	PIPE COUPLING 1/8" D=6MM	1-123, 1-125, 1-143, 1-167, 1-171, 1-239, 2-87, 2-115, 5-129, 7-13, 7-31, 7-107
342722-0203 ..	STRAIGHT COUPLING	2-25, 2-49, 5-163, 5-165
342722-0204 ..	PIPE COUPLING	5-107, 5-109, 5-111, 7-105
342722-0205 ..	STRAIGHT COUPLING D=8-G1/4"	2-37, 6-43
342722-0206 ..	STRAIGHT COUPLING D=8-G3/8"	6-73, 7-159, 7-161
342722-0209 ..	STRAIGHT COUPLING D=12-G1/4"	1-317
342722-0211 ..	STRAIGHT COUPLING D=10-G1/4"	5-107, 5-109, 5-111
342723-0114 ..	CONN. STR. PIPE GI-15-G1/2	2-203
342724-0102 ..	CONN. STR. PIPE GI 6-G1/8	1-303, 1-305
342725-0102 ..	CONN. STR. PIPE GI-6-G1/8	5-119, 7-13
342727-0214 ..	CONN. PIPE G-15-L/SY	2-65
342728-0102 ..	PIPE COUPLING 6 MM	7-51
342728-0103 ..	PIPE COUPLING 8 MM	5-47, 5-49, 5-51, 5-89, 5-91
342728-0104 ..	PIPE COUPLING 10 MM	2-131, 2-133
342728-0110 ..	PIPE COUPLING 14 MM	2-209, 2-211
342732-0100 ..	ELBOW PIPE JOINT, EXT.THREAD, D=4MM-G1/8	6-73
342732-0104 ..	ELBOW PIPE JOINT, EXT.THREAD, D=8MM-G1/4	5-19, 5-21, 5-47, 5-49, 5-51, 6-73, 6-75
342732-0105 ..	ELBOW PIPE JOINT ,EXT.THREAD,D=8 MM R3/8	7-159, 7-161
342732-0109 ..	ELBOW PIPE JOINT, EXT.THREAD, D=1MM-G1/4	6-73
342732-0110 ..	ELBOW PIPE JOINT, EXT.THREAD,D=12MM-G3/8	6-73
342732-0161 ..	ELBOW PIPE JOINT,EXT.THREAD,D=14 MM-G1/2	6-75
342733-0114 ..	CONN. ELBOW WI-15-G1/2	1-179
342735-0102 ..	ELBOW PIPE JOINT	2-201, 7-31
342735-0103 ..	ELBOW PIPE JOINT	2-125, 2-127, 2-129, 2-131, 2-133, 7-159, 7-161
342735-0104 ..	ELBOW PIPE JOINT	2-125, 2-127, 2-129
342735-0109 ..	ELBOW PIPE JOINT	1-229, 1-317, 1-327, 2-209, 2-211, 7-61, 7-159, 7-161
342735-0110 ..	ELBOW PIPE	2-209, 2-211
342737-0204 ..	CONN. ELBOW W-6 LRFR	1-193
342738-0208 ..	ADJUSTABLE ELBOW CONNECTION,EXT 8-G1/4	2-81, 2-83
342738-0221 ..	ADJUSTABLE ELBOW CONNECTION,EXT 15-G1/2	1-165, 1-265
342741-0209 ..	CONN. T-PIPE TE-12-R3/8	1-229, 1-265
342742-0103 ..	T-COUPLING,ADJUST,F.PLASTIC TUBE 6-G1/4"	7-51
342742-0110 ..	T-COUPLING,ADJUST,F.PLAST.TUBE 12-G3/8"	7-61
342744-0114 ..	CONN. ELBOW ADJ.,INT 15	2-77
342747-0102 ..	CONN. T-PIPE T-6	1-303, 1-305
342748-0102 ..	T-CONNECTION 6MM	1-327, 2-125, 2-127, 2-129, 7-105, 7-123, 7-133
342748-0103 ..	T-CONNECTION 8MM	1-317
342748-0109 ..	T-CONNECTION 12MM	1-303, 1-305, 1-317, 1-327, 2-49, 6-73, 7-159, 7-161
342748-0110 ..	T-CONNECTION 14MM	2-209, 2-211, 6-75
342751-0221 ..	CONN. L-PIPE, EXT. LE-15-R1/2	1-229
342752-0104 ..	CONN. STR. GA-10-G1/4	2-79
342752-0114 ..	CONN. STR. GA-15-G1/2	2-81
342767-0100 ..	CONN. BULKHEAD G1/8	1-339, 1-341
342767-0104 ..	CONN. BULKHEAD G1/4	2-7, 2-141, 2-207
342768-0102 ..	BULKHEAD CONNECTOR, 6 MM	2-7, 2-39

Part No	Description	Page No
342768-0103 ..	BULKHEAD CONNECTOR, 8 MM	1-327, 2-49, 2-125, 2-127, 2-129, 2-131, 2-133
342768-0104 ..	BULKHEAD CONNECTOR, 10 MM	2-125, 2-127, 2-129
342768-0110 ..	BULKHEAD CONNECTOR, 14 MM	2-7, 2-209, 2-211
342770-0101 ..	STRAIGHT COUPLING INT, D=4 MM - G1/8	1-317, 1-327, 2-49, 2-131, 2-133, 6-73
342770-0105 ..	STRAIGHT COUPLING INT, D=6 MM - G1/8	7-31, 7-159, 7-161
342770-0107 ..	STRAIGHT COUPLING INT, D=8 MM - G1/8	7-105
342772-0122 ..	ELBOW FITTING, 8 - G1/4	2-131, 2-133
342796-0108 ..	CONN. BANJO,WH 10-G1/4	2-79
342796-0114 ..	CONN. BANJO,WH 15-G1/2	2-79
342797-0121 ..	CONN. BANJO, RINGPIECE 6-1/8	1-303, 1-305
342797-0122 ..	CONN. BANJO, RINGPIECE 6-1/4	1-229
342840-0103 ..	CLAMPING PIECE	1-223, 1-229, 1-237, 1-239, 1-241, 1-243, 1-245, 1-253, 1-255, 1-257, 1-259, 2-113
342840-0105 ..	CLAMPING PIECE	1-165, 1-179, 1-205, 1-253, 2-269
342840-0107 ..	CLAMPING PIECE	1-205, 2-269
342840-0108 ..	CLAMP, 101,6 MM 3-A PCS+PMCS	1-165
342850-0107 ..	GASKET, FDA, 3-A, 3	2-269
342850-0204 ..	GASKET 35,4X49,1X5,2 MM 1"1/2 FDA	1-229
342850-0303 ..	GASKET 22,7X49,1X5,2 MM 1" FDA	1-253, 1-255, 1-257
342850-0304 ..	GASKET 35,4X49,1X5,2 1"1/2 FDA	1-237, 1-239, 1-241, 1-243, 1-245, 1-253, 1-255, 1-257, 1-259, 2-113, 9-5
342850-0305 ..	GASKET 47,8X62,6X5,2 MM 2" FDA	1-205, 1-241, 1-243, 1-253, 2-269
342850-0306 ..	GASKET 60,3X76,1X5,2 MM 2"1/2 FDA	1-241, 1-243, 9-5
342850-0307 ..	GASKET 72,9X89,6X5,2 MM 3" FDA	1-205
342850-0405 ..	GASKET 47,8X62,6X5,2 MM 2" FDA	1-165, 1-179
342850-0408 ..	GASKET 97X117,7X5,2 MM 4" FDA	1-165
342901-0101 ..	HOSE NIPPLE, EXT.THR. R1/8-7 MM	2-27
342901-0102 ..	HOSE NIPPLE, EXT.THR. R1/4-7 MM	6-17, 6-67, 6-69
342901-0105 ..	HOSE NIPPLE, EXT.THR. R1/2-12 MM	1-179, 2-121, 2-203, 6-23, 6-35, 6-67, 6-69
342920-0116 ..	STRAIGHT COUPLING,EXT.THREADED 6/4-R1/2"	2-203
342920-0122 ..	STRAIGHT COUPLING,EXT.THREADED 8/6-R1/4"	1-197, 1-199, 2-141
342920-0124 ..	STRAIGHT COUPLING,EXT.THREADED 8/6-R1/2"	6-67, 6-69
342920-0132 ..	STRAIGHT COUPL.,EXT.THREADED 10/8-R1/4"	2-207
342920-0151 ..	STRAIGHT COUPL.,EXT.THREAD.15/12,5-R1/2"	1-179, 2-203
342921-0113 ..	STRAIGHT COUPLING,EXT.THREADED 6/4-G1/8"	1-339, 1-341, 10-51, 10-53
342921-0114 ..	STRAIGHT COUPLING,EXT.THREADED 6/4-G1/4"	2-205, 10-51, 10-53
342921-0115 ..	STRAIGHT COUPLING,EXT.THREADED 6/4-G3/8"	2-205, 6-67, 6-69
342921-0121 ..	STRAIGHT COUPLING,EXT.THREADED 8/6-G1/8"	5-33, 5-35, 5-37
342921-0122 ..	STRAIGHT COUPLING,EXT.THREADED 8/6-G1/4"	2-203
342923-0122 ..	STRAIGHT COUPL.,INT.THREADED 8/6-G1/4"	2-37
342930-0114 ..	ELBOW 90 COUPL.,EXT.THREAD 6/4-R1/4"	1-197, 1-199, 1-229
342930-0122 ..	ELBOW 90 COUPL.,EXT.THREAD 8/6-R1/4"	1-197, 1-199
342930-0133 ..	ELBOW 90 COUPL.,EXT.THREAD 10/8-R3/8"	6-67, 6-69
342931-0121 ..	ELBOW 90 COUPL.,EXT.THREAD 8/6-G1/8"	1-11, 5-25, 5-27, 5-33, 5-35, 5-37, 5-71, 5-73, 5-75, 5-83, 6-17, 7-13, 7-59
342940-0122 ..	T-COUPLING,EXT.THREAD 8/6-R1/4"	1-197, 1-199
342941-0114 ..	T-COUPLING,EXT.THREAD 6/4-G1/4"	2-201
342980-0114 ..	BANJO-CONNECTION,RING 6/4-G1/4"	10-51, 10-53
342980-0121 ..	BANJO-CONNECTION,RING 8/6-G1/8"	4-57, 4-59, 4-97, 4-99
342980-0122 ..	BANJO-CONNECTION,RING 8/6-G1/4"	2-79
342980-0303 ..	BANJO-HOLLOW BOLT COUPL,EXT.THR.01-G1/8"	1-303, 1-305, 4-57, 4-59, 4-97, 4-99
342980-0304 ..	BANJO-HOLLOW BOLT COUPL,EXT.THR.01-G1/4"	1-229, 2-79
342980-0314 ..	BANJO-HOLLOW BOLT COUPL,EXT.THR.02-G1/4"	10-51, 10-53
342981-0122 ..	BANJO CONNEC,RING,FOR PLAST.TUBE 8-G1/4"	5-19, 5-21, 5-65, 5-67, 5-69
342991-0100 ..	HOSE CLIP,WORM DRIVE TYPE 10-13	1-229, 2-37, 6-17, 6-35, 10-65
342991-0101 ..	HOSE CLIP,WORM DRIVE TYPE (13)-16	1-179, 1-195, 2-19, 2-21, 2-27, 2-39, 2-87, 2-203, 2-269, 6-13, 6-15, 6-17, 6-19, 6-21, 10-65
342991-0102 ..	HOSE CLIP,WORM DRIVE TYPE (16)-19	2-7, 2-39, 2-77, 2-121, 6-47
342991-0103 ..	HOSE CLIP,WORM DRIVE TYPE (19)-23	1-265, 1-267, 2-29
342991-0104 ..	HOSE CLIP,WORM DRIVE TYPE (23)-27	2-19, 2-21, 2-203
342991-0105 ..	HOSE CLIP,WORM DRIVE TYPE (27)-30	2-15, 2-65, 2-119
342991-0106 ..	HOSE CLIP,WORM DRIVE TYPE (30)-36	2-29
342991-0109 ..	HOSE CLIP,WORM DRIVE TYPE (48)-50	1-167, 2-113, 2-269
342991-0110 ..	HOSE CLIP,WORM DRIVE TYPE (54)-63	2-19, 2-21, 2-29
342991-0111 ..	HOSE CLIP,WORM DRIVE TYPE (63)-73	1-163
342991-0114 ..	HOSE CLIP,WORM DRIVE TYPE (93)-110	2-143
344502-0021 ..	GREASE NIPPLE STRAIGHT M6	5-173, 5-175
346800-0110 ..	SILENCER FILTER R1/4"	1-197, 1-199, 1-317, 1-327
350002-0006 ..	PUSH-IN L-FITTING QSL-F-G1/8-6	5-77, 5-79, 5-81
350002-0012 ..	PUSH-IN L-FITTING QSL-F-G1/8-4	2-51
350006-0003 ..	PUSH-IN FITTING QS-F-8H-6	1-317
351120-0126 ..	CABLE SIHF 2X4MM2 GREEN/YELLOW	7-81
351120-0145 ..	CABLE SIHF 3X2,5MM2 GREEN/YELLOW	7-87
351120-0164 ..	CABLE SIHF 4X1,5MM2 GREEN/YELLOW	1-157, 1-159, 1-263
351120-0168 ..	CABLE SIHF 4X10MM2 GREEN/YELLOW	1-349, 1-351
351150-0166 ..	CABLE OLFLEX 4X4 MM2 LIGHT/GREY	2-107, 2-109, 2-111, 6-39, 6-41
351150-0196 ..	CABLE OLFLEX 7X4 MM2 LIGHT/GREY	1-275
351150-0403 ..	CABLE OLFLEX 3X0,75 MM2 LIGHT/GREY	1-201, 1-339, 1-341, 2-57, 2-59, 2-79, 2-81, 2-107, 2-109, 2-111, 2-149, 2-151, 6-33, 6-67, 6-69, 7-193, 7-209
351150-0404 ..	CABLE OLFLEX 4X0,75 MM2 LIGHT/GREY	1-201, 1-335, 1-339, 1-341, 2-57, 2-59, 2-107, 2-109, 2-111
351150-0405 ..	CABLE OLFLEX 5X0,75 MM2 LIGHT/GREY	1-103, 1-335, 1-339, 1-341, 2-57, 2-59, 2-107, 2-109, 2-111, 2-149, 2-151, 5-217, 5-219, 7-43, 7-45, 7-199
351150-0406 ..	CABLE OLFLEX 7X0,75 MM2 LIGHT/GREY	2-57, 2-59, 2-77, 2-107, 2-109, 2-111, 2-149, 2-151, 6-29, 7-43, 7-45

Part No	Description	Page No
351150-0407 ..	CABLE OLFLEX 12X0,75 MM2 LIGHT/GREY	1-339, 1-341, 7-197, 7-213
351150-0412 ..	CABLE OLFLEX 3X1,5 MM2 LIGHT/GREY	1-263, 2-107, 2-109, 2-111, 2-149, 2-151, 7-43, 7-45, 7-135, 7-137, 7-139, 7-141, 7-143
351150-0413 ..	CABLE OLFLEX 4X1,5 MM2 LIGHT/GREY	2-149, 2-151, 7-135, 7-137, 7-139, 7-141, 7-143
351150-0414 ..	CABLE OLFLEX 5X1,5 MM2 LIGHT/GREY	2-149, 2-151
351150-0415 ..	CABLE OLFLEX 7X1,5 MM2 LIGHT/GREY	7-135, 7-137, 7-139, 7-141, 7-143
351150-0417 ..	CABLE OLFLEX 3X2,5 MM2 LIGHT/GREY	1-201, 2-149, 2-151
351150-0418 ..	CABLE OLFLEX 4X2,5 MM2 LIGHT/GREY	1-349, 1-351, 2-33, 2-57, 2-59, 2-79, 2-107, 2-109, 2-111, 6-17, 6-25
351150-0420 ..	CABLE OLFLEX 7X2,5 MM2 LIGHT/GREY	7-135, 7-137, 7-139, 7-141, 7-143
351150-0425 ..	CABLE OLFLEX 25X0,75 MM2 LIGHT/GREY	1-335, 1-339, 1-341, 2-57, 2-59, 2-107, 2-109, 2-111, 2-149, 2-151, 6-65, 7-135, 7-137, 7-139, 7-141, 7-143
351150-0430 ..	CABLE OLFLEX 5X35 MM2 LIGHT/GREY	2-149, 2-151
351150-0431 ..	CABLE OLFLEX 2X0,75 MM2 LIGHT/GREY	6-17, 6-19, 6-25, 7-43, 7-45
351160-0102 ..	CABLE (1UNIT = 100M)	1-339, 1-341, 8-19
351160-0104 ..	CABLE AWM 1X1,5 MM2 DARKBLUE	8-19
351160-0105 ..	CABLE AWM 1X2,5 MM2 DARKBLUE	8-19
351160-0106 ..	CABLE AWM 1X4 MM2 DARKBLUE	8-19
351161-0102 ..	CABLE (1UNIT = 100M)	8-19
351161-0104 ..	CABLE AWM LIGTH BLUE 1,5MM2	8-19
351161-0105 ..	CABLE AWM 1X2,5 MM2 LIGHTBLUE	8-19
351161-0110 ..	CABLE AWM 1X25 MM2 LIGHTBLUE	6-11
351161-0111 ..	CABLE AWM 1X35 MM2 LIGHTBLUE	6-11, 8-19
351162-0102 ..	CABLE AWM 1X0,75 MM2 YELLOW-GREEN	8-19
351162-0104 ..	CABLE AWM 1X1,5 MM2 YELLOW-GREEN	8-19
351162-0105 ..	CABLE AWM 1X2,5 MM2 YELLOW-GREEN	8-19
351162-0106 ..	CABLE AWM 1X4 MM2 YELLOW-GREEN	8-19
351162-0107 ..	CABLE AWM 1X6 MM2 YELLOW-GREEN	8-19
351162-0109 ..	CABLE AWM 1X16 MM2 YELLOW-GREEN	6-11, 8-19
351164-0102 ..	CABLE AWM 1X0,75 MM2 BLACK	8-19
351164-0104 ..	CABLE AWM 1X1,5 MM2 BLACK	8-19
351164-0105 ..	CABLE (1UNIT = 100M)	8-19
351164-0106 ..	CABLE AWM 1X4 MM2 BLACK	8-19
351164-0107 ..	CABLE AWM 1X6 MM2 BLACK	8-19
351164-0110 ..	CABLE AWM 1X25 MM2 BLACK	6-11
351164-0111 ..	8ABLE AWM 1X35 MM2 BLACK	6-11, 8-19
351172-0102 ..	CABLE AWM 1X 0,75 MM2 DARK-BLUE	6-65
351175-0102 ..	CABLE AWM 1X 075 MM2 YELLOW-GREEN	2-41
352103-0100 ..	CABLE GLAND, STR 9, PR15,2/PG9	1-349, 1-351, 2-39, 2-55, 2-155, 2-157, 6-65
352103-0101 ..	CABLE GLAND, ST 9, PR15,2/PG9	1-165, 1-179, 1-197, 1-199, 1-201, 1-205, 1-245, 1-269, 1-271, 1-275, 1-281, 1-335, 1-339, 1-341, 1-349, 1-351, 2-27, 2-39, 2-81, 2-87, 2-89, 2-205, 6-29, 6-33, 6-65, 6-67, 6-69, 6-75, 7-7, 7-135, 7-137, 7-139, 7-141, 7-143
352103-0106 ..	CABLE GLAND, ST 11, PR18,6/PG11	1-197, 1-199, 1-349, 1-351, 2-55, 2-79, 2-97, 2-107, 2-109, 2-111, 2-155, 2-157, 5-107, 5-109, 5-111, 6-11, 7-135, 7-137, 7-139, 7-141, 7-143
352103-0108 ..	CABLE GLAND, ST 13,5 , PR20,4/PG13,5	1-201, 1-349, 1-351, 2-55, 2-57, 2-59, 2-97, 2-99, 2-107, 2-109, 2-111, 2-149, 2-151, 2-155, 2-157, 5-217, 5-219, 6-17, 6-25, 6-29, 7-43, 7-45, 7-117, 7-135, 7-137, 7-139, 7-141, 7-143, 7-173, 8-21
352103-0110 ..	CABLE GLAND, STR 16, PR22,5/PG16	1-335, 1-339, 1-341, 1-349, 1-351, 2-33, 2-97, 2-107, 2-109, 2-111, 2-149, 2-151, 2-155, 2-221, 6-25, 6-29, 6-65, 7-199
352103-0111 ..	CABLE GLAND, ST 16, PR22,5/PG16	1-163, 1-339, 1-341, 1-349, 1-351, 2-79, 2-95, 6-39, 6-41, 7-7, 7-135, 7-137, 7-139, 7-141, 7-143, 7-197
352103-0115 ..	CABLE GLAND, STR 21, PR28,3/PG21	1-275, 2-145, 2-149, 2-151, 6-39, 6-41, 7-7, 7-135, 7-137, 7-139, 7-141, 7-143
352103-0116 ..	CABLE GLAND, ST 21, PR28,3/PG21	1-335, 1-339, 1-341, 1-349, 1-351, 2-95, 6-65, 7-135, 7-137, 7-139, 7-141, 7-143
352103-0120 ..	CABLE GLAND, STR 29, PR37,0/PG29	1-201, 1-349, 1-351, 2-57, 2-59, 2-107, 2-109, 2-111, 2-149, 2-151, 6-65
352103-0121 ..	CABLE GLAND, ST 29, PR37,0/PG29	1-349, 1-351, 2-55, 2-57, 2-59, 2-97, 2-107, 2-109, 2-111, 2-149, 2-151, 2-155, 2-157, 7-135, 7-137, 7-139, 7-141, 7-143
352103-0123 ..	CABLE GLAND, ST 42, PR54,0/PG42	6-11, 8-23, 8-25, 8-27, 8-29
352113-0101 ..	CLIP STRIP, 92X2,5 MM	1-191, 4-75, 4-77, 4-79, 4-111, 4-113, 4-115, 4-185, 5-105, 5-149, 5-151, 5-153
352113-0102 ..	CLIP-STRIP, BLACK 188X4,8 MM	3-11, 3-27, 5-25, 5-27, 5-71, 5-73, 5-75, 5-105, 5-149, 5-151, 5-153, 7-21, 7-57, 7-69, 7-71, 7-73, 10-65
352113-0103 ..	CLIP STRIP, 290X7,6 MM	3-11, 3-27
352113-0104 ..	CLIP STRIP, 300X4,8 MM	2-203
352113-0203 ..	ANCHOR PLATES FOR STRIPS, TYPE TM3S8-M0	6-13, 6-15, 7-77, 8-21
352113-0204 ..	ANCHOR PLATES FOR STRIPS, TYPE TM3S25-M	1-13, 1-15, 1-113, 1-191, 1-263, 1-283, 2-57, 2-59, 2-107, 2-109, 2-111, 2-181, 2-183, 2-197, 2-199, 3-11, 3-27
352113-0205 ..	ANCHOR PLATES FOR STRIPS, TYPE TM2S8-C10	1-289, 1-291, 3-11, 3-27, 6-47, 7-21, 7-27, 7-31, 7-43, 7-45, 7-57, 7-69, 7-71, 7-73, 7-75, 7-77, 7-81, 7-95, 7-109, 7-111, 7-167, 7-171, 8-21, 8-23, 8-25, 8-27, 8-29, 8-91, 8-93
353001-0103 ..	END SLEEVE 0,75 MM2	5-217
353001-0116 ..	END SLEEVE H0.5/14 ORANGE	1-349, 1-351
353021-0120 ..	FEED THROUGH TERMINAL, 10215.8	8-69, 8-97
353021-0122 ..	TERMINAL DISCONNECTBLE, WTR 2,5 D	8-65
353021-0127 ..	TERMINAL DISCONNECTBLE, WTR 2,5+WSD 2,5	1-347
353021-0212 ..	FEED THROUGH TERMINAL, 10200.0	2-97, 2-155, 8-65, 8-85
353021-0213 ..	FEED THROUGH TERMINAL, 10201.0	1-203, 1-277, 7-153, 7-155
353021-0214 ..	FEED THROUGH TERMINAL, 10202.0	8-65, 8-77, 8-79, 8-81, 8-83
353021-0216 ..	FEED THROUGH TERMINAL, 10200.8	6-29, 6-65, 8-65
353021-0219 ..	FEED THROUGH TERMINAL, 10205.0	8-87
353021-0226 ..	BY-PASS TERMINAL WDU 35	8-87
353021-0301 ..	TERMINALS,TRIPLE-LEVEL, DLI 2,5/35 PA	2-55, 2-97, 2-155, 2-157, 7-145, 7-147, 7-149, 7-151

Machine Type Group Description Page No

Part No	Description	Page No
353021-0302 ..	TERMINALS,TRIPLE-LEVEL, DLD 2,5/35 PA	1-203, 1-337, 1-345, 1-347, 7-145, 7-147, 7-149, 7-151
353022-0002 ..	NEUTRAL TERMINAL, 10107.8	8-85
353022-0004 ..	NEUTRAL TERMINAL, 10109.8	8-85
353024-0204 ..	EARTH TERMINAL WPE 2,5	1-277, 2-55, 2-155, 2-157, 6-65, 8-89
353024-0205 ..	EARTH TERMINAL, 1010.1	1-203, 1-337, 1-345, 1-347, 6-29, 6-65, 7-149, 7-151, 7-153, 7-155, 8-65, 8-97
353024-0206 ..	EARTH TERMINAL, 1010.2	8-89
353024-0207 ..	EARTH TERMINAL, 1010.3	8-65, 8-89
353024-0209 ..	EARTH TERMINAL, 1010.5	6-11, 8-87, 8-89
353031-0201 ..	END BRACKET EW35	6-65
353031-0203 ..	END SUPPORT, WEW 35/2	2-55, 2-97, 2-155, 2-157, 6-29, 7-145, 7-147, 7-153, 7-155, 8-65, 8-69, 8-77, 8-79, 8-81, 8-83, 8-85, 8-87, 8-89, 8-95
353032-0004 ..	END PLATE WAP 2,5-10 BEIGE	1-277, 1-347, 2-97, 2-155, 8-65, 8-85
353032-0009 ..	END PLATE, WAP FOR WDK	2-97, 2-155, 2-157, 7-145, 7-147, 7-149, 7-151, 8-65, 8-69
353032-0010 ..	END PLATE WAP	8-69, 8-97
353032-0013 ..	END PLATE, 13818.6	7-145, 7-147, 7-149, 7-151
353032-0301 ..	END PLATE WAP, 13132.6	2-55, 2-97, 2-155, 2-157, 7-145, 7-147, 7-149, 7-151
353032-0302 ..	END PLATE WAP, 13176.6	1-203, 1-337, 1-345, 1-347, 7-149, 7-151
353033-0104 ..	END PLATE, 10502.8	8-85
353034-0018 ..	BRIDGE CONNECTOR WQV 6/2	8-65
353034-0030 ..	BRIDGE CONNECTOR WQV 2,5/10, 10544.6	1-203, 1-277, 2-97, 2-155, 2-157, 6-29, 6-65, 8-65, 8-69, 8-85, 8-97
353034-0031 ..	BRIDGE CONNECTOR, WQV 4/10, 10520.6	7-153, 7-155
353034-0404 ..	BRIDGE CONNECTOR Q10, 13131.0	1-203, 1-337, 1-345, 1-347, 2-55, 2-97, 2-155, 2-157, 7-145, 7-147, 7-149, 7-151
353041-0001 ..	RAIL 10X3MM SSCH	8-85
353041-0106 ..	HOLDER ZB35 K 5026.8	8-85
353042-0005 ..	RAIL TS 35/7.5	6-11, 8-87
353042-0010 ..	BUSBAR, SV 30001	8-77, 8-79, 8-81, 8-83
353042-0012 ..	ADJUSTMENTPLATTA	8-77, 8-79, 8-81, 8-83
353042-0013 ..	PROTECTIVE CASING	8-77, 8-79, 8-81
353042-0014 ..	CONNECTION ADAPTER, AD25/5-1	8-77, 8-79, 8-81, 8-83
353042-0016 ..	CONNECTIONSADAPTER	8-77, 8-79, 8-81, 8-83
353042-0019 ..	SIDE GUARD	8-77, 8-79, 8-81, 8-83
353042-0021 ..	BUSBAR ADAPTER AD40/5-1	8-83
353101-0118 ..	CABLE SHOE 0,5-1,5MM2 M3 RED	2-41
353101-0130 ..	CABLE SHOE 1,5-2,5MM2 M4 BLUE	2-271, 2-273
353101-0132 ..	CABLE SHOE 1,5-2,5MM2 M5 BLUE	7-87
353101-0153 ..	CABLE SHOE 4,0-6,0MM2 M6 YELLOW	2-149, 2-151
353104-0130 ..	CABLE SHOE YAV 025 M 4*	7-87
353104-0140 ..	CABLE SHOE YAV 06 M 4*	7-81
353104-0168 ..	CABLE SHOE YAV 16 M6*	6-11
353105-0117 ..	PIN CABLE SHOE 0,75-1,5MM2 RED A1519SR	2-41
353105-0200 ..	PIN CABLE SKO A4630SR	6-11
353240-0002 ..	GLAND W/O INSERT PG11 NORMAL	2-271, 2-273, 5-223
353240-0005 ..	GLAND W/O INSERT PG21 NORMAL	1-349, 1-351, 2-55, 2-97, 2-155, 7-135, 7-137, 7-139, 7-141, 7-143
353240-0006 ..	GLAND W/O INSERT PG29 NORMAL	1-205, 1-349, 1-351
353241-0002 ..	GLAND W/O INSERT PG11 EXTENDED	5-223
353241-0003 ..	GLAND W/O INSERT PG21 EXTENDED	2-149, 2-151
353242-0005 ..	HOSE GLAND W/O INSERT PG9 NORMAL	6-19, 6-65
353243-0001 ..	HOSE GLAND W/O INSERT PG9 EXTENDED	1-13, 1-15, 1-157, 1-159, 1-161, 1-169, 1-171, 1-179, 1-201, 1-223, 1-263, 1-267, 1-295, 1-339, 1-341, 1-349, 1-351, 1-365, 1-367
353243-0003 ..	HOSE GLAND W/O INSERT PG11 EXTENDED	1-157, 1-159, 1-259, 1-263, 1-317, 1-327, 1-335, 1-339, 1-341, 1-349, 1-351
353243-0004 ..	HOSE GLAND W/O INSERT PG13,5 EXTENDED	1-349, 1-351
353243-0005 ..	HOSE GLAND W/O INSERT PG16 EXTENDED	1-13, 1-15, 1-201, 1-223, 1-349, 1-351, 1-365, 1-367, 2-149, 2-151, 7-213
353243-0007 ..	HOSE GLAND W/O INSERT PG21 EXTENDED	1-201, 1-349, 1-351, 1-365, 1-367, 7-117
353243-0008 ..	HOSE GLAND W/O INSERT PG29 EXTENDED	2-149, 2-151, 7-117
353243-0009 ..	HOSE GLAND W/O INSERT PG13,5 EXTENDED	1-19, 1-103, 1-339, 1-341, 1-349, 1-351
353244-0003 ..	HOSE GLAND W/O INSERT PG13,5 EXTENDED	1-193, 1-201
353245-0005 ..	GLAND, EXTENDED WITH INSERT, PG16/PR 22,	1-99
353245-0006 ..	GLAND, EXTENDED WITH INSERT, PG21/PR28,3	2-149, 2-151
353247-0005 ..	HOSE GLAND EMC PG21 EXTENDED	2-149, 2-151, 5-107, 5-109, 5-111
353249-0003 ..	INSERT, SINGEL HOLE, E151/11	5-223
353249-0008 ..	INSERT, SINGEL HOLE, EK 152/7	1-13, 1-15, 1-157, 1-159, 1-169, 1-171, 1-201, 1-263, 1-295, 1-339, 1-341, 1-349, 1-351, 1-365, 1-367
353249-0009 ..	INSERT, SINGEL HOLE, EK 152/9	1-223, 1-267, 1-339, 1-341, 1-349, 1-351
353249-0011 ..	INSERT, SINGEL HOLE, EK 153/11	1-7, 1-9, 1-19, 1-93, 1-103, 1-105, 1-145, 1-147, 1-157, 1-159, 1-259, 1-263, 1-317, 1-327, 1-335, 1-339, 1-341, 1-349, 1-351
353249-0013 ..	INSERT, SINGEL HOLE, EK 154/13	1-201, 1-263, 1-365, 1-367
353249-0014 ..	INSERT, SINGEL HOLE, EK 154/16	1-13, 1-15, 1-349, 1-351, 7-213
353249-0036 ..	INSERT, MULTI HOLE, EK152 M 2X4	1-161, 1-339, 1-341, 1-349, 1-351, 5-223
353249-0051 ..	INSERT, MULTI HOLE, E154M4X8	1-349, 1-351, 7-135, 7-137, 7-139, 7-141, 7-143
353249-0052 ..	INSERT, MULTI HOLE, E152M 4X3	1-339, 1-341
353249-0054 ..	INSERT, SINGEL HOLE, EK 156/25	7-177, 7-179
353249-0060 ..	INSERT, MULTI HOLE, E155M2X13	1-349, 1-351
353249-0061 ..	INSERT, SINGEL HOLE, EK 155/20	1-349, 1-351
353249-0067 ..	INSERT, SINGEL HOLE, E150/7	6-19, 6-65
353249-0079 ..	INSERT, MULTI HOLE, E155M8X5,5	1-205
353249-0081 ..	INSERT, MULTI HOLE, E155M4X8	2-149, 2-151
353249-0300 ..	SEALING PIN, 3X25	1-339, 1-341
353249-0301 ..	SEALING PIN, 4X20	5-223

Part No	Description	Page No
353249-0303 ..	SEALING PIN, 5,3X25	2-55
353249-0308 ..	SEALING PIN, 8X20	2-149, 2-151
353300-0006 ..	SHRINKABLE HOSE	1-179, 1-349, 1-351
353300-0008 ..	SHRINKABLE HOSE	1-349, 1-351
359000-0025 ..	MARKING CO3/6 "-"	2-209, 2-211
359000-0101 ..	MARKING CO01/3"1"	2-41
359000-0102 ..	MARKING CO01/3"2"	2-41
359000-0400 ..	MARKING CO2/4"0"	1-303, 1-305
359000-0401 ..	MARKING COLLAR 2/4 "1" YELLOW	1-303, 1-305
359000-0402 ..	MARKING COLLAR 2/4 "2" YELLOW	1-303, 1-305
359000-0403 ..	MARKING COLLAR PA2/4 "3" YELLOW	1-303, 1-305
359000-0404 ..	MARKING COLLAR PA2/4 "4" YELLOW	1-303, 1-305
359000-0405 ..	MARKING CO2/4"5"	1-303, 1-305
359000-0406 ..	MARKING COLLAR PA2/4 "6" YELLOW	1-303, 1-305
359000-0407 ..	MARKING COLLAR PA2/4 "7" YELLOW	1-303, 1-305
359000-0408 ..	MARKING COLLAR PA2/4 "8" YELLOW	1-303, 1-305
359000-0409 ..	MARKING COLLAR PA2/4 "9" YELLOW	1-303, 1-305
359000-0500 ..	MARKING COLLAR 3/6 "0" YELLOW	2-209, 2-211
359000-0501 ..	MARKING COLLAR 3/6 "1" YELLOW	2-209, 2-211
359000-0502 ..	MARKING CO3/6"2"	2-209, 2-211
359000-0503 ..	MARKING CO3/6"3"	2-209, 2-211
359000-0504 ..	MARKING CO3/6"4"	2-209, 2-211
359000-0505 ..	MARKING CO3/6"5"	2-209, 2-211
359000-0506 ..	MARKING CO3/6"6"	2-209, 2-211
359000-0507 ..	MARKING CO3/6"7"	2-209, 2-211
359000-0800 ..	MARKING CO3/6"A"	2-209, 2-211
359000-0802 ..	MARKING CO3/6"C"	2-209, 2-211
359000-0803 ..	MARKING COLLAR 3/6 "D" YELLOW	2-209, 2-211
359000-0808 ..	MARKING CO3/6"I"	2-209, 2-211
359000-0812 ..	MARKING CO3/6"M"	2-209, 2-211
359000-0815 ..	MARKING CO3/6"P"	2-209, 2-211
359000-0818 ..	MARKING CO3/6"S"	2-209, 2-211
359000-0819 ..	MARKING CO3/6"T"	2-209, 2-211
359000-0820 ..	MARKING CO3/6"U"	2-209, 2-211
359005-0010 ..	MARKING LABEL KIT 0 - 9, 04.841.2150.0	2-57, 2-59, 2-107, 2-109, 2-111, 2-149, 2-151, 6-17, 6-25, 6-29, 6-39, 6-41, 6-65, 7-135, 7-137, 7-139, 7-141, 7-143
359005-0050 ..	MARKING LABEL KIT X, 04.841.4550.0	2-57, 2-59, 2-107, 2-109, 2-111, 2-149, 2-151, 6-17, 6-25, 6-29, 6-39, 6-41, 6-65, 7-135, 7-137, 7-139, 7-141, 7-143
359011-0807 ..	MARKING PLATES 5-FW 1-50	2-97, 8-65, 8-85, 8-87, 8-89, 8-95, 8-97
359011-0808 ..	MARKING PLATES 5-FW 51-100	8-69, 8-89
359011-0809 ..	MARKING PLATES 5-FW 101-150	6-29, 6-65, 8-69, 8-89
359011-0810 ..	MARKING PLATES 5-FW 151-200	8-69
359011-0811 ..	MARKING PLATES 5-FW 201-250	2-97, 8-69
359011-0817 ..	SYMBOL 5-GW (+) 50PC	2-55, 2-97, 2-155
359011-0818 ..	SYMBOL 5-GW (-) 50PC	2-55, 2-97, 2-155
359011-0819 ..	MARKING PLATES 5-GW (EARTH)	5-223
359011-0821 ..	SET OF SIGNS 6-FW 1-50	1-277, 2-155, 5-223, 7-153, 7-155, 8-85, 8-89
359011-0822 ..	SET OF SIGNS 6-FW 51-100	8-85, 8-89
359011-0823 ..	SET OF SIGNS 6-FW 101-150	1-203, 1-277, 1-337, 1-345, 1-347, 7-149, 7-151, 8-85
359011-0824 ..	SET OF SIGNS 6-FW 151-200	1-337, 1-345, 2-97, 2-155, 7-145, 7-147, 7-149, 7-151
359011-0825 ..	SET OF SIGNS 6-FW 201-250	1-345, 7-145, 7-147
359011-0832 ..	SET OF SIGNS 6-GW (+) .	1-203, 1-277, 1-337, 1-345, 1-347, 7-145, 7-147, 7-149, 7-151, 8-65
359011-0833 ..	SET OF SIGNS 6-GW (-) ..	1-203, 1-277, 1-337, 1-345, 1-347, 7-145, 7-147, 7-149, 7-151, 8-65
359011-0834 ..	SET OF SIGNS 6-GW(EARTH)	1-203, 1-277, 1-337, 1-345, 1-347, 2-55, 2-97, 2-155, 2-157, 7-145, 7-147, 7-149, 7-151, 7-153, 7-155, 8-65, 8-97
359012-0800 ..	TERMINAL MARKING LAB. KIT, BSFW, 101-15	2-55, 2-97, 2-155, 2-157
359240-0100 ..	SIGN HOLDER FOR 359240-0001	6-63, 8-91, 8-93
359241-0122 ..	SIGN: " CLEANING STEAM BARRIER SPACE"	8-91, 8-93
359241-0133 ..	SIGN: " SERVICE SWITCH"	8-91, 8-93
359241-0201 ..	SIGN: " HOUR METER"	8-91, 8-93
359241-0431 ..	SIGN: " MAIN SWITCH"	6-63
359241-0482 ..	SIGN "PACKAGE COUNTER"	8-91, 8-93
359243-0917 ..	SIGN"400V, 50HZ, 100A"	6-63
359243-0918 ..	SIGN"400V, 60HZ, 100A"	6-63
359301-0100 ..	BUTTON SIGN, SPLICING	7-213
359301-0101 ..	BUTTON SIGN, STRIP SPLICING ON	7-197
359301-0110 ..	BUTTON SIGN, SHORT STOP	1-339, 1-341, 7-197
359301-0488 ..	BUTTON SIGN, MATERIAL LOCKING	7-213
359605-0002 ..	MANDATORY SIGN ISO, EYE PROTECTION	2-39
359705-0003 ..	WARNING SIGN ISO, DANGEROUS CHEMICALS	2-39
359705-0004 ..	WARNING SIGN ISO, DANGEROUS CHEMICALS	1-269, 1-271, 2-19, 2-21, 2-39
359705-0005 ..	WARNING SIGN ISO, MOVING PART	7-43, 7-45, 7-65
359705-0007 ..	WARNING SIGN ISO, HOT SURFACE	1-7, 1-9, 1-93, 1-103, 1-105, 1-145, 1-147, 1-157, 1-159, 1-227, 1-231, 1-263, 1-267, 1-375, 7-75
359705-0015 ..	WARNING SIGN ISO, RISK OF ELECTRIC SHOCK	1-169, 1-201, 1-263, 1-275, 1-335, 1-339, 1-341, 2-55, 2-97, 2-155, 2-157, 5-107, 5-109, 5-111, 5-223, 8-35, 8-37, 8-39, 8-41, 8-43, 8-71, 8-91, 8-93
359710-0001 ..	WARNING SIGN ISO, HOT SURFACE	5-123, 5-125, 5-127
400828-0000 ..	SPRING	7-81
400833-0000 ..	PLUNGER	7-81
434320-0000 ..	AXLE PIN	4-7, 4-9, 4-13, 4-15, 4-49, 4-55
434321-0000 ..	CURVE ROLLER	4-7, 4-9, 4-13, 4-15, 4-49, 4-55
434665-0000 ..	HOOD	1-185, 1-187
436556-0000 ..	CURVE ROLLER	4-7, 4-9, 4-13, 4-15

Part No	Description	Page No
436781-0000 ..	GASKET	1-267
440259-0000 ..	RETAINING RING	10-69
440650-0000 ..	WASHER	1-213
440655-0000 ..	RING	1-209
440659-0000 ..	CYLINDRICAL PIN	1-213
440660-0000 ..	COMPRESSION SPRING	1-213
440661-0000 ..	COMPRESSION SPRING	1-213
440662-0000 ..	COMPRESSION SPRING	1-211
440663-0000 ..	COMPRESSION SPRING	1-209, 1-213
441706-0000 ..	WASHER	4-157, 4-159, 4-167, 4-169
441737-0000 ..	WASHER	1-7, 1-9, 1-93, 1-103, 1-105, 1-107, 1-109, 1-111, 1-145, 1-147
441739-0000 ..	WASHER	1-7, 1-9, 1-93, 1-103, 1-105, 1-145, 1-147
441871-0000 ..	PENDULUM SUSPENSION	1-167, 1-171
442237-0000 ..	NUT	1-175, 1-177
445848-0000 ..	ELASTIC COUPLING	2-271, 2-273
449190-0000 ..	SHAFT	5-195
449939-0001 ..	HEATING ELEMENT 15KW	1-169
449969-0100 ..	TOOL DISMOUNTING	10-5
449970-0000 ..	HOLDER	10-49
449971-0000 ..	SPINDLE	10-49
450457-0000 ..	FLANGE	2-65
450833-0000 ..	FILTER	1-195, 1-281
451430-0000 ..	CONNECTION HOUS.(MINOR)	1-169
456123-0000 ..	SUPPORT	1-169
456796-0000 ..	ROLLER	1-75, 1-77
457696-0001 ..	JOINT PIECE	5-157, 5-159
464368-0000 ..	CRAMP	4-185
466042-0000 ..	SEAL	1-41, 1-43, 1-75, 1-77
466046-0000 ..	ROLLER	1-41, 1-43, 1-75, 1-77
466074-0002 ..	SLIDER	5-157, 5-159
469095-0000 ..	HOLDER	2-9
469096-0000 ..	LEG	2-9
476185-0000 ..	VALVE CONE	1-211
476220-0000 ..	SPACER	5-157, 5-159
476975-0000 ..	WHEEL	5-157, 5-159
479261-0000 ..	NIPPLE	1-179, 6-67, 6-69
479964-0000 ..	SIGN	2-131, 2-133
484701-0000 ..	SHUTTER	5-181, 5-183
486826-0001 ..	SIGN "EMERGENCY STOP"	1-19, 1-339, 1-341, 2-221, 7-199, 7-213, 8-41
490901-0000 ..	SEAL	1-75, 1-77
490998-0000 ..	THROTTLE SCREW	1-175, 1-177
491305-0000 ..	CONN.DIAGRAM AIR SUPERH.	1-169
491929-0000 ..	IMPELLER WHEEL	2-33
493735-0000 ..	NIPPLE	10-51, 10-53
495118-0014 ..	DISTANCE PIPE L=14 MM	7-145, 7-147, 7-149, 7-151, 7-153, 7-155
495377-0000 ..	BUSH	8-91, 8-93
495495-0000 ..	COOLING ELEMENT SSR	8-73
497748-0000 ..	PIN	1-215, 1-217
499387-0000 ..	PRESSURE ROLLER	1-185, 1-187, 9-23, 9-25
522308-0000 ..	SIGN	10-71
527898-0100 ..	CONTAINER H2O2	2-17, 10-61
527912-0000 ..	NON-RETURN VALVE	2-27
529345-0100 ..	FILLING STATION H2O2	10-61
530551-0000 ..	WASHER	2-27
530587-0000 ..	WASHER	1-211
530588-0000 ..	SEAL RING	1-211, 9-27
530589-0000 ..	SEAL RING	1-167, 1-171, 1-209, 1-213, 9-27
530590-0000 ..	VALVE CONE	1-167, 1-171, 1-209, 1-213
530591-0000 ..	HOLDER	1-213
530592-0000 ..	SEAL RING HOLDER	1-209
530595-0000 ..	SEAL RING HOLDER	1-209
530597-0000 ..	WASHER	1-213
530598-0000 ..	WASHER	1-213
530599-0000 ..	RING	1-167, 1-171, 1-213
531345-0200 ..	PERSONAL PROTECT. EQ H2O2	9-3
531616-0000 ..	HOLDER	2-255
531731-0000 ..	GASKET	1-169
532117-0000 ..	CLAMP RING	1-215
532118-0000 ..	CLAMP RING	1-217
532208-0000 ..	SHAFT	10-67
532209-0000 ..	SHEET	10-67
532210-0100 ..	PEROXIDE CONTAINER TROLLEY	10-61
532211-0000 ..	DOWEL	10-67
532349-0000 ..	PLAIN BEARING	1-167, 1-171
532655-0000 ..	CAUTION SIGN	2-35, 10-63
532676-0000 ..	SHEET	10-51, 10-53
532677-0000 ..	PIPE	10-51, 10-53
532678-0000 ..	DOWEL	10-51, 10-53
532679-0000 ..	PLATE	10-51, 10-53
533014-0100 ..	LEAK FINDING EQUIPMENT (SUPERSTRUCTURE)	10-5
533015-0000 ..	WIRING DIAGRAM	10-51, 10-53
533169-0000 ..	DIAPHRAGM	1-209, 9-27
533374-0000 ..	FITMENT BOTTOM	10-55
533905-0100 ..	PONCH	10-51, 10-53

Part No	Description	Page No
533906-0000 ..	FITMENT COVER	10-55
534634-0000 ..	PIPE	10-65
534635-0000 ..	VALVE	10-65
534636-0000 ..	LEVEL GLASS	10-65
534637-0000 ..	ATTACHMENT	10-65
534691-0000 ..	DIAPHRAGM	10-65
534692-0000 ..	FRAME SECTION	10-65
534693-0000 ..	PLATE	10-65
534694-0000 ..	SUCTIONPIPE	10-65
534695-0000 ..	WEIGHT	10-65
534696-0000 ..	VALVE	10-65
534697-0000 ..	VALVE HOUSING	10-65
534698-0000 ..	NIPPLE	10-65
536704-0000 ..	WASHER	4-153, 4-155, 4-157, 4-159, 4-163, 4-165, 4-167, 4-169
536916-0000 ..	AXLE PIN	7-77
539212-0000 ..	GASKET	1-207, 9-27
540718-0000 ..	ELBOW PIPE JOINT	2-83
541163-0200 ..	CLAMP RING	1-207
541164-0200 ..	CLAMP RING	1-207
541165-0000 ..	WASHER	1-215, 1-217
541166-0000 ..	WASHER	1-209
544725-0000 ..	AXLE PIN	7-77
546929-0000 ..	FILTER	1-165, 1-179
549267-0000 ..	LID	1-281
553607-0000 ..	SLEEVE	1-209, 1-211, 1-213
554141-0000 ..	FILTER	1-195, 1-281
554142-0000 ..	FILTER HOUSING	1-195, 1-281
554162-0000 ..	SCREW	1-215, 1-217
554585-0000 ..	STUD SCREW	1-281
555458-0000 ..	SEALING WASHER	1-213
556133-0000 ..	SEALING WASHER	1-211
559810-0101 ..	TMCC2 CONTROLLER	8-99
560122-0000 ..	SUPPORT ROLLER	4-137, 4-139
560931-0000 ..	BRACKET	1-165
561427-0000 ..	CONTAINER	2-35, 10-63
563285-0000 ..	BLIND PLUG	2-27
565250-0000 ..	WASHER	2-35, 10-63
565251-0000 ..	VALVE	2-35, 10-63
566171-0000 ..	CUP SPRING	2-31
566194-0000 ..	WEIGHT	2-31
566195-0000 ..	LID	2-31
566196-0100 ..	LID WITH WEIGHT	2-29
567018-0000 ..	STEAM HOUSE	1-207
567070-0012 ..	ELECTRODE	1-269, 1-271
567372-0000 ..	INSTRUCTION FOR USE	10-45
567743-0000 ..	SEAL	1-41, 1-43, 1-75, 1-77
567746-0001 ..	ROLLER, (STD.SIZE)	1-27, 1-45, 1-47
569058-0000 ..	SUPPORT ROLLER	4-137, 4-139
569942-0000 ..	SLEEVE	10-69
569943-0000 ..	SLEEVE	10-69
573504-0000 ..	ROLLER	1-41, 1-43, 1-75, 1-77
574051-0000 ..	RETAINING RING	10-69
574658-0000 ..	LOGOTYPE TP	10-71
575002-0000 ..	PLUNGER	7-67
575034-0000 ..	ROUND NUT	1-7, 1-9, 1-93, 1-103, 1-105, 1-145, 1-147
576436-0100 ..	A-CYLINDER	1-207
576436-0101 ..	===CAD MODEL===	1-209
576436-0102 ..	===CAD MODEL===	1-209
576437-0100 ..	C-CYLINDER	1-207
576438-0100 ..	B-CYLINDER	1-207
576439-0000 ..	CYLINDER HOUSING	1-209, 1-213
576440-0000 ..	END SECTION	1-209, 1-213
576441-0000 ..	PISTON	1-209, 1-213
576442-0000 ..	PISTON ROD	1-213
576443-0000 ..	CYLINDER HOUSING	1-211
576444-0000 ..	END SECTION	1-211
576445-0000 ..	PISTON	1-211
576446-0000 ..	PISTON ROD	1-209
576447-0000 ..	PISTON ROD	1-211
576448-0000 ..	SPACER	1-209
576449-0000 ..	SPACER	1-209
576450-0000 ..	SPACER	1-213
576451-0000 ..	SPACER	1-211
578640-0000 ..	CLAMPING RING	1-285
578684-0000 ..	SPRING BRACKET	7-101, 7-103, 7-169
579318-0000 ..	SEAL	1-75, 1-77
582526-0100 ..	CARRIAGE	10-85
582527-0000 ..	ROD	10-87
583727-0000 ..	SHAFT	7-113
583986-0000 ..	ROLL	7-77
590402-0000 ..	AXLE PIN	7-77
591341-0000 ..	PIN	2-7
596678-0000 ..	KNIFE	7-119, 7-127
598101-0000 ..	BEARING HOUSING	5-105

Part No	Description	Page No
598549-0000 ..	SCREW	5-129
598713-0000 ..	PLATFORM	2-177, 2-179
598878-0000 ..	MACHINE SIGN 2 ADR. EEA	9-3
735041-0000 ..	CONNECTION CLAMP	1-379
751009-0000 ..	INSULATION	1-169
751395-0000 ..	FLANGE	2-33
751485-0000 ..	SCREW	1-285
751491-0000 ..	ROLL	1-61, 1-63
751492-0000 ..	ROLL	1-61, 1-63
751502-0000 ..	ROLLER	1-45, 1-47
751604-0000 ..	SPRING	1-185, 1-187
752115-0000 ..	PLUNGER	4-95
752126-0000 ..	FORMING ROLLER	1-61, 1-63
752127-0000 ..	FORMING ROLLER	1-61, 1-63
752128-0000 ..	FORMING ROLLER	1-61, 1-63
752156-0000 ..	FLANGE BUSHING	1-49, 1-51, 1-53, 1-61, 1-63
752186-0004 ..	SHAFT	1-45, 1-47
752186-0005 ..	SHAFT	1-33, 1-45, 1-47, 1-61, 1-63, 1-81
752186-0006 ..	SHAFT	1-61, 1-63
752186-0007 ..	SHAFT	1-29, 1-31, 1-49, 1-51, 1-53
752186-0008 ..	SHAFT	1-61, 1-63
752186-0012 ..	SHAFT	1-61, 1-63
752186-0014 ..	SHAFT	1-27, 1-45, 1-47
752186-0015 ..	SHAFT	1-29, 1-31, 1-45, 1-47, 1-49, 1-51, 1-53
752186-0016 ..	SHAFT	1-27, 1-45, 1-47, 1-67, 1-69
752186-0019 ..	SHAFT	1-33, 1-61, 1-63
752288-0000 ..	SLEEVE	4-95
777170-0107 ..	HOOK SPANNER	10-39
777200-0101 ..	PIPE WRENCEL	10-5
905373-0000 ..	SCREW - LEG	10-7
906254-0000 ..	ROLLER	7-101, 7-103, 7-169
925998-0000 ..	DIAPHRAGM	1-225, 9-5
926907-0000 ..	SCREW	1-225
926934-0000 ..	SUPPORT	1-225
927044-0000 ..	SPACER	1-225
927203-0000 ..	COVER	1-225
927244-0100 ..	PUMP	2-39
927252-0000 ..	COMPRESSION SPRING	4-123, 9-23, 9-25
927262-0000 ..	PIPE	2-39
927323-0000 ..	SPACER	4-123
927339-0000 ..	ADAPTER	2-41
927340-0000 ..	DISC	2-41
927341-0000 ..	HOLDER	2-41
927342-0000 ..	CYLINDER	2-41
927362-0000 ..	MAGNET	2-41
927363-0000 ..	PLUG	2-41
927420-0001 ..	O-RING 5.1X1.6 SILICON	1-195, 1-281
927421-0002 ..	O-RING 12.3X2.4 SILICON	1-281
927421-0003 ..	O-RING 13.3X2.4 SILICON	1-195, 1-267
927421-0004 ..	O-RING 15.3X2.4 SILICON	1-195, 1-269, 1-271, 1-281
927421-0005 ..	O-RING 7.3X2.4 SILICON	10-65
927422-0001 ..	O-RING 19.2X3 SILICON	1-195, 1-281, 10-65
927422-0003 ..	O.RING 24.2X3 SILICON	2-35, 10-63
927422-0005 ..	O-RING 36.2X3 SILICON	2-33
927422-0006 ..	O-RING 42.2X3 SILICON	1-195, 2-33
927422-0007 ..	O-RING 44.2X3 SILICON	1-195, 1-281
927422-0009 ..	O-RING 54.5X3 SILICON	1-281
927422-0016 ..	O-RING 79.5X3 SILICON	2-19, 2-21
927440-0000 ..	LINK	4-123
927441-0000 ..	NUT	4-123
927454-0000 ..	GASKET	1-169
927859-0000 ..	TOOTHED PULLY	5-203, 5-205
928025-0000 ..	PLUG	2-39
929372-0000 ..	PISTON	4-65
950351-0000 ..	SHAFT	4-65
970215-0000 ..	STOP BLOCK	8-91, 8-93
971346-0000 ..	GUIDE PIN	8-91, 8-93
975917-0000 ..	KEY FOR SAFETY SWITCH 90044-103	7-201
977527-0000 ..	BRACKET	6-19
978380-0000 ..	BLIND PLUG	1-223
978381-0000 ..	WASHER 56X2MM	1-223
978440-0000 ..	CRAMP	1-223
978603-0000 ..	SIGN	2-49
978757-0000 ..	ROLLER 180-284ML	4-137, 4-139
978760-0000 ..	ROLLER TBA200SL	4-137, 4-139
978999-0000 ..	VALVE	2-25
979206-0000 ..	GASKET	2-227
979207-0000 ..	COVER	2-227
979434-0000 ..	FERRULE	1-225
979500-0003 ..	ELECTRODE	1-165
979548-0000 ..	MACHINE PLATE	1-289, 1-291
979813-0000 ..	PLUG	1-223
979847-0000 ..	SHAFT COUPLING	7-173
979931-0000 ..	VOLUME BULGE	4-39, 4-41, 4-43, 4-45, 9-9, 9-11

Part No	Description	Page No
979951-0000 ..	FLANGE	10-45
985328-0000 ..	CONNECTION	2-175, 2-177, 2-179, 2-181, 2-183, 2-189, 2-191
985756-0000 ..	KEY	7-43, 7-45
988666-0000 ..	GASKET	8-35, 8-37, 8-39, 8-41
988685-0000 ..	PIN	1-317, 1-327, 1-373, 1-375, 1-377, 2-49, 2-87, 2-131, 2-133, 2-217, 2-219, 2-233, 2-235 ..... 2-237, 2-249, 2-251, 6-55, 6-59, 6-63, 7-201, 7-203, 7-211, 7-215, 8-35, 8-37, 8-39, 8-41
988690-0000 ..	RIM	7-203
996388-0500 ..	PEROXIDE PUMP	2-17
1010822-0000 .	RAILING	2-177, 2-179, 2-181, 2-183, 2-189, 2-191
1020142-0002 .	RAIL HOLDER, B55 WIDTH 30 MM	5-181, 5-183
1020146-0000 .	LOCKING BLOCK REPL BY 1020290-101	5-181, 5-183
1020637-0000 .	HOLDER	5-193, 5-221
1020638-0000 .	HOLDER	5-221
1020816-0002 .	RAIL HOLDER, B68/R68 WIDTH 30 MM	5-181, 5-183
1035076-0200 .	LEG	2-7, 2-65, 2-119
1035201-0100 .	PAPER REEL HOLDER	10-61
1035362-0100 .	MEASURING DEVICE	10-5
1035471-0100 .	LEG	2-7, 2-119
1035654-0000 .	CONNECTION	1-285
1035788-0000 .	SHAFT	4-153, 4-155, 4-157, 4-159, 4-163, 4-165, 4-167, 4-169
1035792-0000 .	E-HINGE	1-317, 1-327, 1-373, 1-375, 1-377, 2-49, 2-131, 2-133, 2-217, 2-219, 2-233, 2-235 ..... 2-237, 2-249, 2-251, 6-55, 6-59, 6-63, 7-201, 7-203, 7-211, 7-215, 8-35, 8-37, 8-39, 8-41
1035794-0000 .	BLOCKING PIECE	6-55, 6-59, 6-63
1035828-0000 .	VOLUME BULGE	4-7, 4-9, 4-13, 4-15
1035831-0000 .	VOLUME SHIM	4-7, 4-9, 4-13, 4-15, 9-23, 9-25
1035871-0000 .	SCREW	4-83, 4-85, 4-87
1035877-0000 .	ARM LEFT	4-153, 4-155
1035878-0000 .	ARM RIGHT	4-163, 4-165
1035895-0000 .	SHAFT	7-21
1035954-0000 .	BUSHING	4-151, 4-161
1036120-0000 .	SLEEVE	2-11
1036155-0000 .	TOOTH PART	4-157, 4-159, 4-167, 4-169
1036156-0000 .	TOOTH PART	4-153, 4-155, 4-163, 4-165
1036187-0000 .	T-PIPE	1-167, 1-171
1036188-0000 .	SHAFT	1-167, 1-171
1036189-0000 .	SPINDLE GUIDE	1-167, 1-171
1036191-0000 .	SEAL HOLDER	1-167, 1-171
1036192-0000 .	SPACER ROD	1-167, 1-171
1036193-0000 .	CYLINDER BRACKET	1-171
1036241-0000 .	WASHER	2-171
1036278-0000 .	SLEEVE	4-95
1036279-0000 .	PLUNGER	4-95
1036293-0000 .	HOLDER	1-13, 1-15, 1-157, 1-159, 1-171
1036294-0000 .	GASKET	1-157, 1-159
1036304-0001 .	LOCKING ARM	6-59
1036304-0011 .	LOCKING ARM	1-377
1036304-0014 .	LOCKING ARM	6-59
1036304-0016 .	LOCKING ARM	1-377
1036314-0000 .	BOTTOM PANEL	1-163
1036318-0000 .	PIPE	1-163
1036319-0000 .	BRACKET	1-163
1036329-0000 .	PIN	1-373
1036343-0000 .	SCREW	4-57, 4-59, 4-97, 4-99
1036372-0000 .	PIPE	1-169
1036373-0000 .	HOLDER	1-169
1036389-0000 .	LID	4-111, 4-113, 4-115
1036475-0000 .	PIN	1-113
1036483-0000 .	SEAL	4-153, 4-155, 4-163, 4-165
1036484-0000 .	GASKET	4-153, 4-155, 4-163, 4-165
1036485-0000 .	COVERING PLATE	4-153, 4-155, 4-163, 4-165
1036494-0000 .	GUIDE BUSHING	4-83, 4-85, 4-87
1036495-0000 .	BUSHING	4-75, 4-77, 4-79, 4-111, 4-113, 4-115
1036501-0000 .	SPACER	4-153, 4-155, 4-163, 4-165
1036563-0000 .	WASHER	7-201, 7-211, 7-215
1036584-0000 .	WASHER	4-67, 4-69, 4-105, 4-107, 9-5
1036585-0000 .	EAR	4-75, 4-77, 4-79, 4-111, 4-113, 4-115
1036610-0000 .	BRACKET	1-161, 1-295
1036615-0000 .	SHAFT	4-157, 4-159, 4-167, 4-169
1036616-0000 .	WASHER	4-157, 4-159, 4-167, 4-169
1036617-0000 .	BRACKET	4-157, 4-159, 4-167, 4-169
1036618-0000 .	ROLL	4-157, 4-159, 4-167, 4-169
1036620-0000 .	SHAFT	4-157, 4-159, 4-167, 4-169
1036622-0000 .	GUIDE ROLLER	7-113
1036623-0000 .	GUIDE ROLLER	1-293, 7-113
1036664-0000 .	LID	4-75, 4-77, 4-79
1036673-0000 .	WASHER	2-103, 2-105, 4-143, 4-145
1036674-0000 .	FASTENING PLATE	4-143, 4-145
1036685-0000 .	BRACKET	4-143, 4-145
1036794-0000 .	PIPE	6-37
1036811-0000 .	CLAMP	1-165, 1-179
1036826-0000 .	PIPE	6-35
1036827-0000 .	PIPE	6-35, 6-43
1036828-0000 .	TANK	6-39, 6-41
1036911-0000 .	CONTAINER	1-179

Part No	Description	Page No
1036939-0000	.SIDE PIECE	1-287
1036940-0000	.SIDE PIECE	1-287
1036954-0000	.AXLE SUPPORT	1-41, 1-43, 1-75, 1-77
1036955-0000	.AXLE SUPPORT	1-41, 1-43, 1-75, 1-77
1036963-0000	.HOOK HOLDER	1-287
1036965-0000	.HOOK HOLDER	1-287
1037012-0000	.AXLE PIN	2-13
1037041-0000	.HOLDER	1-179
1037044-0000	.RAILING	1-285
1037069-0000	.SCREW	4-153, 4-155, 4-163, 4-165
1037089-0000	.SPACER	1-145
1037093-0000	.SENSOR BRACKET	1-205
1037102-0000	.SPACER PIPE	2-19, 2-21
1037104-0000	.LOCATING PIECE	4-151, 4-161
1037106-0000	.SLEEVE	4-151, 4-161
1037120-0000	.SHAFT	7-81
1037121-0000	.SHAFT	7-81
1037124-0000	.HOLDER	7-81
1037129-0000	.LID	1-175, 1-177, 6-45
1037130-0000	.CONNECTION BOX	2-221, 7-199
1037184-0000	.SPACER SCREW	6-11
1037254-0000	.SHIM	4-157, 4-159, 4-167, 4-169, 9-23, 9-25
1037267-0000	.PIPE	1-175, 1-177
1037268-0000	.LID	1-175, 1-177
1037391-0000	.CANTILEVER	2-193
1037443-0000	.GASKET	2-69, 2-121
1037531-0000	.SPACER PLATE	6-11
1037539-0000	.BRACKET	2-27
1037562-0000	.SHAFT	2-271, 2-273
1037571-0000	.GUIDE BUSHING	2-175, 2-181, 2-183
1037572-0000	.COVER PLATE	8-23, 8-25, 8-27, 8-29
1037573-0000	.GASKET	8-23, 8-25, 8-27, 8-29
1037574-0000	.COVER PLATE	8-23, 8-25, 8-27, 8-29
1037575-0000	.GASKET	8-23, 8-25, 8-27, 8-29
1037583-0000	.HOLDER	6-67, 6-69
1037673-0000	.SLEEVE	2-107, 2-109, 2-111
1037691-0000	.HOOK	10-25
1037696-0000	.CLAMPING PIECE	10-27
1037697-0000	.CLAMPING PIECE	10-27
1037733-0000	.VOLUME BULGE	4-7, 4-9, 4-13, 4-15
1037734-0000	.WEDGE	4-7, 4-9, 4-13, 4-15, 4-51, 9-21
1037735-0000	.VOLUME SHIM	4-7, 4-9, 4-13, 4-15, 9-23, 9-25
1037849-0000	.SLEEVE	4-171
1037851-0000	.LINK	4-171
1037852-0000	.SHAFT	4-173
1037853-0000	.SHAFT	4-153, 4-155, 4-157, 4-159, 4-163, 4-165, 4-167, 4-169
1037885-0000	.REAMED BOLT	1-41, 1-43, 1-75, 1-77
1038021-0000	.WASHER	4-171
1038240-0000	.SPACER	4-65
1038275-0012	.SPACER	8-49, 8-51, 8-71
1038275-0021	.SPACER	8-55
1038275-0030	.SPACER	8-71
1038355-0000	.FRAME	8-91, 8-93
1038408-0000	.COVERING PLATE	8-21
1038464-0000	.SPROCKET	1-115
1038509-0000	.WASHER	4-151, 4-161
1038576-0000	.AXLE SUPPORT	1-75, 1-77
1038634-0000	.DRAINING	1-165
1038637-0000	.WEDGE	4-7, 4-9, 4-13, 4-15
1038638-0000	.VOLUME BULGE	4-7, 4-9, 4-13, 4-15
1038639-0000	.VOLUME SHIM	4-7, 4-9, 4-13, 4-15
1038688-0000	.HOLDER	1-267
1038699-0000	.BRACKET	8-41
1038714-0000	.CABLE	8-49, 8-51, 8-61, 8-63, 8-71
1038828-0000	.PIPE	4-185
1038829-0000	.PIPE	4-185
1038865-0000	.SPACER DISC	7-43, 7-45
1038866-0000	.INTERMEDIARY SECTION	1-165
1038867-0000	.BOW CLAMP	4-157, 4-159, 4-167, 4-169
1040753-0000	.VOLUME FLAP	4-7, 4-9, 4-13, 4-15
1040754-0000	.VOLUME BULGE	4-7, 4-9, 4-13, 4-15
1040755-0000	.VOLUME SHIM	4-7, 4-9, 4-13, 4-15, 9-23, 9-25
1040756-0000	.WEDGE	4-7, 4-9, 4-13, 4-15
1040796-0000	.PIPE	2-33
1040807-0000	.LID	2-29
1040808-0000	.GASKET	2-29
1040840-0000	.FLANGE	2-19, 2-21
1040841-0000	.FLANGE	2-19, 2-21
1040852-0000	.SEALING RING	2-19, 2-21
1040853-0000	.SEALING RING	2-19, 2-21
1040876-0000	.COVER	1-163
1040877-0000	.PLATE	1-163
1040878-0000	.PLATE	1-163
1040970-0000	.BRACKET	1-263, 1-281

Part No	Description	Page No
1040991-0000	.ANGLE	2-249
1040992-0000	.SPACER NUT	2-249
1041046-0000	.FLOW METER	6-19
1041603-0000	.BRACKET	2-13
1041921-0000	.HOLDER	6-75
1041925-0000	.PIPE	6-33
1041926-0000	.PIPE	6-33
1041930-0000	.PIPE	6-23
1041931-0000	.PIPE	6-23
1041932-0000	.PIPE	6-67, 6-69
1041933-0000	.PIPE	6-67, 6-69
1041934-0000	.PIPE	6-43
1041937-0000	.SIGN	1-317
1041938-0000	.SIGN	6-73
1041939-0000	.DOOR	8-31
1041943-0000	.CONNECTION BOX	6-29
1041944-0000	.BRACKET	6-19
1041946-0000	.PIPE	6-39, 6-41
1041948-0000	.DOOR	8-33
1041963-0000	.WASTE BOX	6-47
1041967-0000	.COVERING PANEL	6-53
1041970-0000	.DOOR	6-59
1041972-0000	.DOOR	6-63
1041978-0000	.HINGE FLANGE	1-7, 1-9, 1-93, 1-145, 1-147
1041979-0000	.HINGE FLANGE	1-7, 1-9, 1-93, 1-145, 1-147
1041984-0000	.ATTACHMENT PIPE	6-19
1041988-0000	.CLAMP	1-219, 1-221
1086888-0000	.COVER	5-221
1086889-0000	.COVER	5-193, 5-221
1095607-0200	.COVERING PANEL	6-3, 6-5
1095608-0100	.WATER PANEL	6-3, 6-5
1095609-0200	.PNEUMATIC UNIT	6-71
1095610-0300	.MAIN SWITCH	6-3, 6-5
1095611-0300	.VALVE PANEL	6-71
1095612-0300	.COOLING WATER SYSTEM	6-3, 6-5
1095627-0300	.FOAM CLEANING UNIT	6-3, 6-5
1095630-0200	.CONNECTION BOX	6-3, 6-5
1095634-0100	.DOOR	8-21
1095637-0100	.DOOR	8-21
1095672-0100	.PIPE	6-31
1095673-0100	.SIDE	6-31
1095675-0100	.PIPE	6-31
1095676-0100	.PUMP	6-31
1095677-0100	.BRANCHING PIPE	6-31
1095678-0300	.BALL VALVE	6-31
1095681-0100	.SPRAY GUN	2-195
1095682-0100	.AIR JET GUN	2-123
1095706-0300	.COOLING WATER PUMP	6-13, 6-15
1095709-0200	.CONNECTION BOX	6-13, 6-15
1095710-0300	.COMPRESSOR UNIT	6-13, 6-15
1095714-0300	.SUPPLY SYSTEM	6-3, 6-5
1095715-0100	.ICE WATER	6-21
1095716-0100	.PIPE WORK-AIR	6-71
1095738-0300	.PROTECTIVE COVER	2-253
1095778-0100	.PLINTH	8-71
1095862-0100	.LADDER	1-279
1095863-0200	.PIVOT ARM	2-117
1095883-0200	.GABLE PLATE	6-49
1095884-0100	.ASSEMBLY TOOL	10-5
1095886-0200	.COVERING PANEL	6-49
1095888-0200	.HATCH	6-49
1095889-0100	.DOOR	6-49
1095890-0200	.HATCH	6-49
1095891-0200	.DOOR	6-49
1103298-0000	.NON-SKID	2-65
1103300-0000	.NON-SKID	2-65, 2-119
1110083-0002	.DOLLY	4-83, 4-85, 4-87, 9-23, 9-25
1110930-0000	.INDUCTOR	4-67, 4-69, 4-105, 4-107, 9-23, 9-25
1110932-0000	.INDUCTOR	4-67, 4-69, 4-105, 4-107, 9-23, 9-25
1110936-0000	.INDUCTOR	4-67, 4-69, 4-105, 4-107, 9-23, 9-25
1110937-0000	.INDUCTOR	4-67, 4-69, 4-105, 4-107, 9-23, 9-25
1110938-0000	.INDUCTOR	4-67, 4-69, 4-105, 4-107, 9-23, 9-25
1129066-0000	.RETURN PIPE	6-25
1129079-0000	.FLOW METER	6-19
1129086-0000	.BRACKET	1-13, 1-15
1129141-0000	.MACHINE BODY	6-13, 6-15
1129182-0000	.BRACKET	6-65
1129202-0000	.CONNECTION BOX	6-65
1129209-0000	.MOUNTING RAIL	6-65
1129210-0000	.MOUNTING RAIL	6-29
1129253-0000	.FASTENING PLATE	2-271, 2-273
1129274-0000	.GUIDE LUG	1-377, 2-217, 2-219, 2-229, 2-235, 2-237, 2-243, 2-251, 6-55, 6-59
1129275-0000	.BOX FOR DIAGRAM	2-229
1129276-0000	.GASKET	8-23, 8-25, 8-27, 8-29

Part No	Description	Page No
1129318-0000	.BRACKET	8-21
1129324-0000	.WASHER	2-215, 2-245, 2-247
1129325-0000	.SEALING FLANGE	2-215, 2-245, 2-247
1129328-0000	.ATTACHMENT	2-27
1129342-0000	.PROTECTION	8-73
1129370-0000	.SIGN	2-131, 2-133
1129372-0000	.LID	1-349, 1-351
1129387-0000	.CONNECTION TABLE	6-47
1129402-0000	.SPACER SCREW	6-11
1129431-0000	.WASHER	1-41, 1-43, 1-75, 1-77
1129432-0000	.LID	2-37
1129480-0000	.CABLE DUCT	1-339, 1-341
1129504-0000	.MOUNTING RAIL	2-155
1129549-0000	.SHEET	8-23, 8-25, 8-27, 8-29
1129550-0000	.GASKET	8-23, 8-25, 8-27, 8-29
1129552-0000	.KNOB	4-57, 4-59, 4-97, 4-99
1129599-0000	.CRAMP	4-185
1129600-0000	.BRAID	2-149, 2-151
1129643-0000	.STAIR	1-287
1129644-0000	.BRACKET	1-287
1129741-0000	.RAILING	1-285
1129767-0000	.SCREW	2-215, 2-217, 2-219, 2-229, 2-233, 2-235, 2-237, 2-243, 2-249, 2-251, 7-201, 7-203, 7-211, 7-215
1129770-0000	.BLOCKING PIECE	1-317, 1-327, 1-373, 1-375, 1-377, 2-49, 2-131, 2-133, 2-215, 2-217, 2-219, 2-229, 2-233, 2-235, 2-237, 2-243, 2-249, 2-251, 7-201, 7-203, 7-211, 7-215, 8-35, 8-37, 8-39, 8-41
1129801-0000	.PIPE	1-205
1129802-0000	.PIPE	1-205
1129833-0000	.GUIDE ROLLER	4-57, 4-59, 4-97, 4-99
1129839-0000	.COOLING PLATE	7-13
1129869-0000	.COOLING PLATE	7-13
1140039-0000	.CONVEYOR FRAME	10-87
1140040-0000	.BRACKET	10-87
1140077-0000	.RING	1-11, 7-13
1140082-0000	.LOCK SHAFT	5-211
1140129-0000	.HOLDER	2-93
1140268-0000	.TEMPLATE	10-25
1140283-0000	.TEMPLATE	10-25
1140320-0000	.TEMPLATE	10-25
1140414-0000	.BEARING	10-25
1140431-0000	.RULER	10-25
1140432-0000	.BRACKET	10-25
1140433-0000	.SHEET	10-25
1140434-0000	.SHEET	10-25
1140480-0000	.CLAMP	1-219, 1-221
1140603-0000	.COMPRESSOR UNIT	6-17
1140642-0000	.PIPE	6-39, 6-41
1140670-0000	.BRACKET	6-39, 6-41
1140685-0000	.BEAM	1-381
1140769-0000	.DOOR STOPPER	8-21
1140840-0000	.WHEEL	10-87
1143215-0000	.SPRING	4-19, 4-21, 4-29, 4-31
1143216-0000	.SPRING	4-19, 4-21, 4-29, 4-31
1143530-0000	.SPRING	5-149, 5-151, 5-153
1144264-0000	.HUB	5-13, 5-15, 5-53, 5-55, 5-57
1144312-0000	.AXLE PIN	5-13, 5-15, 5-53, 5-55, 5-57
1144324-0300	.FRAMEWORK	5-3
1144329-0300	.PULL-DOWN DEVICE	5-3
1144331-0300	.PRESSURE DEVICE	5-3
1144335-0000	.ROLLER	5-13, 5-15, 5-53, 5-55, 5-57
1144354-0000	.WASHER	5-13, 5-15, 5-53, 5-55, 5-57
1144356-0000	.COVER	5-13, 5-15, 5-53, 5-55, 5-57
1144417-0000	.BUSHING	5-13, 5-15, 5-53, 5-55, 5-57
1144468-0000	.BEARING HOUSING	5-203, 5-205
1144470-0000	.SHAFT	5-199, 5-203, 5-205
1144472-0000	.LEVER	5-5, 5-7
1144473-0000	.LEVER	5-5, 5-7
1144475-0000	.BRACKET	5-5, 5-7
1144476-0000	.BRACKET	5-5, 5-7
1144482-0000	.SUPPORT	5-149, 5-151, 5-153
1144483-0000	.PLATE	5-149, 5-151, 5-153
1144484-0000	.PLATE	5-149, 5-151, 5-153
1144485-0000	.SUPPORT	5-149, 5-151, 5-153
1144486-0000	.CAM	5-149, 5-151, 5-153
1144488-0000	.COLUMN	5-149, 5-151, 5-153
1144489-0000	.FLANGE	5-149, 5-151, 5-153
1144492-0000	.SPRING	5-149, 5-151, 5-153
1144493-0000	.WASHER	5-149, 5-151, 5-153
1144494-0000	.AXLE PIN	5-149, 5-151, 5-153
1144495-0000	.ECCENTRIC	5-149, 5-151, 5-153
1144496-0000	.ECCENTRIC	5-149, 5-151, 5-153
1144498-0000	.FLANGE	5-149, 5-151, 5-153
1144500-0000	.SUPPORT	5-149, 5-151, 5-153
1144501-0000	.SPACER	5-149, 5-151, 5-153
1144502-0000	.WASHER	5-149, 5-151, 5-153

Part No	Description	Page No
1144503-0000	.FLANGE	5-149, 5-151, 5-153
1144505-0000	.COLUMN	5-149, 5-151, 5-153
1144506-0000	.LEVER	5-149, 5-151, 5-153
1144507-0000	.BUSHING	5-149, 5-151, 5-153
1144508-0000	.AXLE PIN	5-149, 5-151, 5-153
1144511-0000	.SHIM	5-149, 5-151, 5-153
1144514-0000	.BUSHING	5-149, 5-151, 5-153
1144515-0000	.INSERT	5-149, 5-151, 5-153
1144517-0000	.BUSHING	5-149, 5-151, 5-153
1144520-0000	.ROLLER	5-149, 5-151, 5-153
1144521-0000	.CLAMP	5-149, 5-151, 5-153
1144552-0000	.PLATE	5-163, 5-165
1144555-0000	.STUD SCREW	5-25, 5-27, 5-33, 5-35, 5-37, 5-71, 5-73, 5-75
1144566-0000	.FLANGE	5-5, 5-7
1144577-0000	.BLOCK	5-195
1144579-0000	.AXLE	5-195
1144581-0000	.ROLLER	5-169, 5-199, 5-203, 5-205
1144593-0000	.PLATE	5-199, 5-203, 5-205
1144595-0000	.ECCENTRIC SHAFT	5-199, 5-203, 5-205
1144596-0000	.PLUG	5-199, 5-203, 5-205
1144597-0000	.SPACER	5-199, 5-203, 5-205
1144598-0000	.SHAFT	5-203, 5-205
1144601-0000	.GUIDE STUD	4-19, 4-21, 4-29, 4-31, 4-39, 4-41, 4-43, 4-45, 9-9, 9-11
1144606-0000	.SIGN	2-131, 2-133
1144607-0000	.SIGN	2-131, 2-133
1144618-0000	.FLANGE	5-105
1144619-0000	.SHAFT	5-199, 5-203, 5-205
1144620-0000	.WASHER	5-105
1144621-0000	.PLATE	5-47, 5-49, 5-51, 5-95, 5-97, 5-99, 5-101, 5-103
1144625-0000	.SPACER	5-199, 5-203, 5-205
1144645-0200	.PROTECTIVE COVER	5-199, 5-203
1144653-0000	.SWITCH	5-217
1144662-0000	.BUSHING	5-173, 5-175
1144665-0000	.SEAL RING	5-105
1144667-0000	.HINGE	5-201, 5-207
1144668-0000	.HINGE	5-201, 5-207
1144669-0000	.PIN	5-201, 5-207
1144678-0000	.SHAFT	5-5, 5-7
1144681-0000	.WASHER	5-5, 5-7, 5-129, 5-167
1144683-0000	.AXLE PIN	5-5, 5-7
1144684-0000	.SPACER	5-5, 5-7
1144685-0000	.SCREW	5-5, 5-7
1144686-0000	.TIE ROD	5-5, 5-7
1144687-0000	.TIE ROD	5-5, 5-7
1144688-0000	.SCREW	5-5, 5-7
1144719-0000	.RAIL	5-33, 5-35, 5-37
1144760-0000	.PLATE	5-199, 5-203
1144783-0000	.TIMING BELT	5-47, 5-49, 5-51, 5-89, 5-91
1144784-0000	.TOOTHED PULLEY	5-199
1144788-0000	.TOOTHED PULLEY	5-199
1144794-0000	.SUPPORT	5-199, 5-203, 5-205
1144797-0000	.SUPPORT	5-105
1144802-0000	.PULLEY	5-167
1144839-0000	.BLOCK	5-105
1144841-0000	.TIMING BELT	5-199, 5-203, 5-205
1144849-0000	.SWITCH	5-129
1144892-0000	.GUIDE RIGHT	5-25, 5-27, 5-71, 5-73, 5-75
1144893-0000	.GUIDE LEFT	5-25, 5-27, 5-71, 5-73, 5-75
1144897-0000	.FOLDING BAR	5-33, 5-35, 5-37
1144898-0000	.FOLDING BAR	5-33, 5-35, 5-37
1144899-0000	.SUPPORT	5-163, 5-165
1144900-0000	.SUPPORT	5-105
1144901-0000	.GUIDE	5-19, 5-21
1144902-0000	.SUPPORT	5-19, 5-21, 5-65, 5-67, 5-69
1144905-0000	.SUPPORT	5-25, 5-27
1144914-0000	.LEVER	5-149, 5-151, 5-153
1144915-0000	.LEVER	5-149, 5-151, 5-153
1144916-0000	.ADJUSTING SCREW	5-149, 5-151, 5-153
1144918-0000	.PLATE	5-47, 5-49, 5-51, 5-89, 5-91
1144919-0000	.CARRIER	5-47, 5-49, 5-51, 5-89, 5-91
1144924-0000	.BOTTOM	5-13, 5-15
1144926-0000	.FLAP	5-13, 5-15
1144927-0000	.FLAP	5-13, 5-15
1144928-0000	.PUSHER	5-149, 5-151, 5-153
1144932-0000	.PLATE	5-149, 5-151, 5-153
1144933-0000	.BLOCK	5-5, 5-7
1144936-0000	.PUSHER	5-149, 5-151, 5-153
1144941-0000	.COVERING PLATE	5-19, 5-21, 5-65, 5-67, 5-69
1144943-0000	.SPACER	5-157, 5-159
1144974-0000	.ADJUSTING PLATE	5-19, 5-21, 5-65, 5-67, 5-69
1144975-0000	.ATTACHMENT PLATE	5-19, 5-21, 5-65, 5-67, 5-69
1144976-0000	.STOP SCREW	5-19, 5-21, 5-65, 5-67, 5-69
1144978-0000	.CAM	5-149, 5-151, 5-153
1144979-0000	.WASHER	5-19, 5-21, 5-65, 5-67, 5-69

Part No	Description	Page No
1144990-0000	.FOLDING BAR	5-33, 5-35, 5-37
1144996-0000	.PUSHER	5-149, 5-151, 5-153
1145391-0000	.ROLLER	7-167
1147253-0000	.NUT	7-211, 7-215
1190006-0402	.PLMS SEND	8-9
1190007-0402	.PLMS RECEIVE	8-107
1195360-0000	.YOKE LEFT	4-151
1195361-0000	.YOKE RIGHT	4-161
1195397-0000	.COMPRESSION SPRING	1-225
1195466-0000	.PIPE	6-45
1254025-0000	.STRIP	2-171, 2-175
1254027-0000	.CORNER STRIP	2-171
1254028-0000	.FASTENING PLATE	2-171, 2-175
1254030-0000	.CHECKER PLATE	2-171
1254109-0000	.BRACKET	4-143, 4-145
1254110-0000	.BRACKET	4-143, 4-145
1254410-0000	.WASHER	1-285
1254442-0000	.CABLE SERIAL	8-91, 8-93
1254494-0000	.SPACER	2-143
1255117-0000	.PLAIN BEARING	4-181, 4-183
1255222-0000	.FRAME	3-11, 3-27
1255223-0000	.HOLDER	3-13, 3-29
1255228-0000	.WHEEL	3-19
1255233-0000	.BUSHING	3-7
1255261-0000	.FLANGE	3-7
1255293-0000	.CROSS BAR	6-47
1255365-0000	.MOUNTING PLATE	6-21
1255389-0000	.BUSHING	4-83, 4-85, 4-87
1255390-0000	.BUSHING	4-83, 4-85, 4-87
1255457-0000	.CARRIER RULER	4-91, 4-93
1255458-0000	.CARRIER RULER	4-91, 4-93
1255459-0000	.CARRIER RULER	4-91, 4-93
1255460-0000	.CARRIER RULER	4-91, 4-93
1255461-0000	.CARRIER RULER	4-119, 4-121
1255462-0000	.CARRIER RULER	4-119, 4-121
1255463-0000	.CARRIER RULER	4-119, 4-121
1255464-0000	.CARRIER RULER	4-119, 4-121
1255540-0000	.WASHER	4-123
1255541-0000	.BUSHING	4-7, 4-9, 4-13, 4-15
1255551-0000	.SEAL CLOTH	1-267
1255557-0000	.GASKET	2-33
1255559-0000	.PEROXIDE TANK	2-19, 2-21
1255633-0000	.HATCH	6-57
1255635-0000	.HATCH	6-61
1255636-0000	.COVERING PANEL	6-49
1255637-0000	.COVER	6-49
1255638-0000	.COVERING PANEL	6-49
1255671-0000	.GABLE PLATE	6-51
1255866-0000	.PROTECTION	6-11
1255916-0000	.BUSHING	4-49, 4-55
1255987-0000	.COVER	1-205
1260247-0000	.CLIP	6-21
1260248-0000	.CLAMP	6-19
1260327-0000	.TUBE	6-21
1260328-0000	.SPRING	4-65
1260547-0100	.ICE WATER UNIT	6-13, 6-15
1260659-0000	.SPRING	4-123, 9-23, 9-25
1260700-0000	.BLOCK	5-5, 5-7
1260701-0000	.PUSHER	5-149, 5-151, 5-153
1260702-0000	.PLATE	5-149, 5-151, 5-153
1260703-0000	.BOTTOM	5-13, 5-15
1260704-0000	.FLAP	5-13, 5-15, 5-53, 5-55, 5-57
1260705-0000	.FLAP	5-13, 5-15
1260709-0000	.GUIDE UPPER R	5-25, 5-27
1260710-0000	.GUIDE UPPER L	5-25, 5-27
1260712-0000	.CRANK	5-211
1260714-0000	.SPACER	5-45
1260824-0000	.SPACER RING	5-5, 5-7
1260832-0000	.WASHER	5-167
1260851-0000	.AXLE PIN	5-173, 5-175
1260852-0000	.WASHER	5-173, 5-175
1260853-0000	.RING	5-173, 5-175
1260883-0200	.CRANK	5-3
1260885-0000	.FLAP	5-13, 5-15
1260886-0000	.FLAP	5-13, 5-15
1260887-0000	.BLOCK	5-5, 5-7
1260888-0000	.BLOCK	5-149, 5-151, 5-153
1260889-0000	.PUSHER	5-149, 5-151, 5-153
1260894-0000	.PROTECTION	5-201
1260895-0000	.SPRING	5-149, 5-151, 5-153
1260931-0000	.SCREW	5-105
1260941-0000	.SLIDE	5-199
1260944-0000	.BUSHING	5-5, 5-7
1279409-0000	.PLATE	5-47, 5-49, 5-51, 5-95, 5-97, 5-99, 5-101, 5-103, 9-13, 9-15, 9-17, 9-19

Part No	Description	Page No
1279559-0000	.ARM	5-13, 5-15, 5-53, 5-55, 5-57
1279573-0000	.SLIDE RAIL U	5-157, 5-159
1279582-0000	.RAIL	5-181, 5-183
1279585-0000	.SUPPORT	5-157, 5-159
1279586-0000	.SUPPORT	5-157, 5-159
1279587-0000	.SLIDE RAIL U	5-157, 5-159
1279670-0000	.SPACER	5-45
1279677-0100	.CRANK GUARD	5-3
1279680-0000	.PIPE	5-213, 5-215
1279688-0000	.SUPPORT	5-199, 5-203, 5-205
1279689-0000	.ACTIVATOR	5-203, 5-205
1282287-0000	.CARRIER	5-47, 5-49, 5-51, 5-89, 5-91
1282290-0000	.GUIDE	5-47, 5-49, 5-51, 5-89, 5-91
1282291-0000	.GUIDE	5-47, 5-49, 5-51, 5-89, 5-91
1282294-0000	.FOLDING BAR	5-33, 5-35, 5-37
1282295-0000	.FOLDING BAR	5-33, 5-35, 5-37
1282335-0000	.FLANGE	5-167
1282343-0000	.BLOCK	5-167
1282345-0000	.SPRING	5-167
1282681-0000	.TOOTHED PULLEY	5-203, 5-205
1282705-0000	.SUPPORT	5-25, 5-27, 5-71, 5-73, 5-75
1282708-0000	.BUSHING	5-9, 5-11, 5-13, 5-15, 5-53, 5-55, 5-57
1282712-0000	.PUSHER	5-149, 5-151, 5-153
1282714-0000	.PLATE	5-149, 5-151, 5-153
1282715-0000	.PUSHER	5-149, 5-151, 5-153
1282844-0000	.SUPPORT	5-105
1282848-0000	.CARRIER	5-47, 5-49, 5-51, 5-89, 5-91
1282864-0000	.SPRING	5-173, 5-175
1282876-0000	.PIPE	2-25
1282879-0000	.CONNECTING PIPE	2-25
1282891-0000	.PIPE	2-19, 2-21
1282892-0000	.TANK	2-29
1282893-0000	.PIPE	2-29
1282894-0100	.PEROXIDE TANK	2-17
1282895-0200	.PEROXIDE PIPE	2-17
1282896-0100	.TANK	2-17
1282898-0000	.HOSE	2-29
1282899-0000	.HOSE	2-19, 2-21
1282901-0000	.PIPE	2-25
1282906-0000	.NIPPLE	2-19, 2-21
1285009-0000	.HOLDER	5-181, 5-183
1285010-0000	.HOLDER	5-193
1285012-0300	.FOLDING PART	5-3
1285014-0000	.DISTRIBUTOR	5-19, 5-21, 5-65, 5-67, 5-69
1285022-0000	.SIDE PLATE	5-195, 9-7
1285023-0000	.SIDE PLATE	5-195, 9-7
1285253-0000	.SPACER	5-181, 5-183
1285254-0000	.WASHER	5-173, 5-175
1285258-0000	.RAIL	5-181, 5-183
1285260-0300	.OUT FEED	5-3
1285265-0000	.PLATE	5-157, 5-159
1285266-0000	.SPACER	5-157, 5-159
1285267-0000	.SUPPORT	5-25, 5-27, 5-71, 5-73, 5-75
1285291-0000	.PLATE	5-121
1285293-0000	.HEATING PIPE	5-107, 5-109, 5-111
1285299-0000	.BRACKET	5-19, 5-21, 5-65, 5-67, 5-69
1285306-0000	.SPACER	5-157, 5-159
1285307-0000	.SPACER	5-107, 5-109, 5-111
1285308-0000	.GASKET	5-107, 5-109, 5-111
1285310-0000	.EXTENSION	5-123, 5-125, 5-127
1285311-0000	.PLATE	5-107, 5-109, 5-111
1285312-0000	.GASKET	5-107, 5-109, 5-111
1285363-0000	.TUBE	6-21
1285870-0000	.EXTENSION	5-123, 5-125, 5-127
1285874-0000	.SPACER	5-123, 5-125, 5-127
1285875-0200	.BELT TENSIONER	5-167
1285955-0000	.PLATE	5-203, 5-205
1285956-0000	.BLOCK	5-203, 5-205
1296066-0000	.NOZZLE	5-123, 5-125, 5-127
1296067-0000	.NOZZLE	5-123, 5-125, 5-127
1296068-0000	.NOZZLE	5-123, 5-125, 5-127
1296070-0000	.HEATING PIPE	5-107, 5-109, 5-111
1296072-0000	.EXTENSION	5-123, 5-125, 5-127
1296079-0000	.RAIL	5-181, 5-183
1296081-0000	.PLATE	5-157, 5-159
1296153-0000	.GUIDE	5-123, 5-125, 5-127
1296176-0000	.SPRING	5-173, 5-175
1296180-0000	.FOLDING DEVICE	5-9, 5-11
1296181-0000	.FOLDING DEVICE	5-9, 5-11
1296218-0200	.LID	2-255
1296289-0000	.TUNNEL	2-259
1296290-0000	.GASKET	2-259
1296387-0000	.NOZZLE	5-123, 5-125, 5-127
1296750-0000	.PLASTIC PIPE	2-203

Part No	Description	Page No
1296845-0000	.BRACKET	2-271, 2-273
1296877-0100	.SEAL KIT	9-5
1296878-0100	.SEAL KIT	9-5
1296879-0100	.SEAL KIT	9-5
1296969-0000	.SCREW HOLDER	5-13, 5-15, 5-53, 5-55, 5-57
1296970-0000	.SCREW BUSHING	5-13, 5-15, 5-53, 5-55, 5-57
1317042-0000	.RAIL	5-33, 5-35, 5-37
1317043-0000	.SUPPORT	5-33, 5-35, 5-37, 5-77, 5-79, 5-81
1317047-0000	.RAIL	5-33, 5-35, 5-37
1317085-0000	.NUT	5-123, 5-125, 5-127
1317088-0000	.SPACER	5-25, 5-27, 5-33, 5-35, 5-37
1317211-0000	.COVERING PLATE	5-19, 5-21, 5-65, 5-67, 5-69
1317213-0000	.ADJUSTING PLATE	5-19, 5-21, 5-65, 5-67, 5-69
1317216-0000	.FOLDING BAR	5-33, 5-35, 5-37
1317217-0000	.FOLDING BAR	5-33, 5-35, 5-37
1317218-0000	.SPACER	5-45, 5-85, 5-87, 5-181, 5-183
1317226-0000	.WEIGHT	2-27
1317228-0000	.WASHER	2-233
1317362-0000	.SHAFT	5-149, 5-151, 5-153
1317363-0000	.SHAFT	5-149, 5-151, 5-153
1317438-0000	.FORK	1-185, 1-187
1317439-0000	.CATCH	4-29, 4-31
1317440-0000	.STOP PIN	4-19, 4-21, 4-29, 4-31
1317475-0000	.BRACKET	2-103, 2-105
1317476-0000	.BRACKET	2-103, 2-105
1317554-0000	.FLAP	5-13, 5-15
1317555-0000	.FLAP	5-13, 5-15
1317556-0000	.BOTTOM	5-13, 5-15
1317633-0000	.SPRING	5-19, 5-21
1317650-0000	.GUIDE	5-47, 5-49, 5-51
1317651-0000	.GUIDE	5-47, 5-49, 5-51
1317652-0000	.FOLDING BAR	5-33, 5-35, 5-37
1317653-0000	.FOLDING BAR	5-33, 5-35, 5-37
1317654-0000	.PUSHER	5-149, 5-151, 5-153
1317655-0000	.PLATE	5-149, 5-151, 5-153
1317656-0000	.INSERT	5-13, 5-15
1317711-0000	.SHAFT	7-113
1317712-0000	.SHAFT	7-113
1317713-0000	.SHAFT	1-289, 1-291
1317740-0000	.RUBBER SLEEVE	4-19, 4-21, 4-29, 4-31
1317741-0000	.CATCH	4-19, 4-21
1317742-0000	.CANTILEVER	4-19, 4-21, 4-29, 4-31
1317784-0000	.BRACKET	2-27
1317787-0000	.CATCH	5-149, 5-151, 5-153
1317789-0000	.BLOCK	5-5, 5-7
1317801-0000	.NOZZLE	5-123, 5-125, 5-127
1317802-0000	.NOZZLE	5-123, 5-125, 5-127
1317803-0000	.NOZZLE	5-123, 5-125, 5-127
1317804-0000	.SPACER	5-123, 5-125, 5-127
1317805-0000	.BAR	5-47, 5-49, 5-51, 5-95, 5-97, 9-17, 9-19
1317823-0000	.CANTILEVER	4-19, 4-21, 4-29, 4-31
1317824-0000	.CATCH	4-19, 4-21, 4-29, 4-31
1334012-0000	.GUIDE UPPER L	5-25, 5-27
1334013-0000	.GUIDE UPPER R	5-25, 5-27
1334018-0000	.SHIM	5-5, 5-7
1334081-0000	.CURVE	4-127, 4-129
1334113-0000	.HOLDER	5-181, 5-183
1334187-0000	.PLATE	7-79
1334188-0000	.AXLE PIN	7-79
1334189-0000	.BLOCK	7-7, 7-79
1334190-0000	.BLOCK	7-7, 7-79
1334271-0000	.BAR	5-47, 5-49, 5-51, 5-99, 5-101, 5-103, 9-13, 9-15
1334328-0000	.SPACER	5-5, 5-7
1334447-0000	.SPACER	5-25, 5-27, 5-71, 5-73, 5-75
1334480-0000	.SUPPORT	5-19, 5-21, 5-65, 5-67, 5-69
1334507-0000	.TUBE	1-263
1334523-0000	.SUPPORT	5-25, 5-27
1334559-0000	.GUIDE UPPER R	5-25, 5-27, 5-71, 5-73, 5-75
1334560-0000	.GUIDE UPPER L	5-25, 5-27, 5-71, 5-73, 5-75
1334561-0000	.SLIDE	5-47, 5-49, 5-51
1334562-0000	.SLIDE	5-47, 5-49, 5-51
1334632-0000	.SPACER	5-123, 5-125, 5-127
1334633-0200	.VOLUME FLAP CUTTING	4-5
1334634-0200	.VOLUME FLAP PRESSURE	4-5
1334635-0200	.SHOCK ABSORBER	4-5
1334636-0200	.SHOCK ABSORBER	4-5
1334651-0100	.LINK	4-147
1334652-0000	.LINK	4-173
1334653-0000	.LINK	3-9
1334654-0000	.CONNECTION CLAMP	3-23, 4-173
1334655-0000	.LINK ROD	3-23
1334659-0000	.SCREW	3-9
1334718-0000	.SPACER	5-33, 5-35, 5-37
1334856-0000	.COUNTER ROLLER	1-27, 1-45, 1-47

Part No	Description	Page No
1334910-0000	.BRACKET	4-143, 4-145
1334928-0000	.CAM	3-21
1334929-0000	.SHAFT	3-21
1334932-0000	.DISC	3-21
1334939-0000	.PLUG	3-15
1334941-0000	.TORSION SPRING	3-21
1334942-0000	.WEDGE	3-21
1334943-0000	.STOP LUG	3-21
1334999-0000	.PUSHER	5-149, 5-151, 5-153
1338402-0000	.GUIDE	10-9
1338403-0000	.GUIDE	10-9
1338404-0000	.BRACKET	10-9
1338405-0000	.BRACKET	10-9
1338941-0000	.BOTTOM	5-53, 5-55, 5-57
1346149-0000	.FOLDING BAR	5-33, 5-35, 5-37
1346150-0000	.FOLDING BAR	5-33, 5-35, 5-37
1346153-0000	.STOP PIN	4-19, 4-21, 4-29, 4-31
1346157-0000	.VOLUME BULGE	4-7, 4-9, 4-13, 4-15
1346158-0000	.VOLUME SHIM	4-7, 4-9, 4-13, 4-15, 9-23, 9-25
1346307-0000	.HOLDER	5-217
1346312-0000	.SCREW	2-271, 2-273
1346313-0000	.PLATE	2-271, 2-273
1346340-0000	.BRACKET	5-25, 5-27, 5-71, 5-73, 5-75
1346343-0000	.RAIL	5-33, 5-35, 5-37, 5-77, 5-79, 5-81
1346344-0000	.RAIL	5-33, 5-35, 5-37, 5-77, 5-79, 5-81
1346471-0000	.WEDGE	5-47, 5-49, 5-51, 5-89, 5-91
1346539-0000	.CONNECTING ROD	5-149, 5-151, 5-153
1346565-0000	.VALVE	2-25
1346568-0000	.HEAT EXCHANGER	1-263
1346580-0000	.NOZZLE	5-123, 5-125, 5-127
1346581-0000	.NOZZLE	5-123, 5-125, 5-127
1346588-0000	.DRIP PLATE	5-163, 5-165
1346641-0000	.SPACER	5-123, 5-125, 5-127
1346642-0000	.SPACER	5-123, 5-125, 5-127
1346643-0000	.NOZZLE	5-123, 5-125, 5-127
1346644-0000	.NOZZLE	5-123, 5-125, 5-127
1346646-0000	.EXTENSION	5-123, 5-125, 5-127
1346656-0000	.ROD	1-167
1346657-0000	.CYLINDER BRACKET	1-167
1346658-0000	.BRACKET	1-167
1346659-0000	.SCREW	1-167
1346677-0000	.CYLINDER	1-167
1346678-0000	.NOZZLE	5-123, 5-125, 5-127
1346679-0000	.NOZZLE	5-123, 5-125, 5-127
1346736-0000	.WEDGE	5-47, 5-49, 5-51, 5-89, 5-91
1346739-0000	.GUIDE	5-181, 5-183
1346845-0000	.PLATE	3-15
1346846-0000	.BELT HOLDER	3-15
1346882-0000	.FLANGE	5-209
1346885-0000	.SUPPORT	2-215, 2-217, 2-243, 2-251
1346887-0000	.SPACER	3-7
1346890-0000	.SPACER	3-19
1346988-0000	.ROLL	7-21
1347017-0000	.PULLEY	5-129
1347018-0000	.PLUG	5-149, 5-151, 5-153
1347057-0000	.GUIDE	5-19, 5-21, 5-65, 5-67, 5-69
1347108-0000	.PLATE	5-105
1347109-0000	.PLATE	5-105
1347245-0000	.HEAT EXCHANGER	1-169
1347410-0000	.ACTIVATOR	5-199
1347495-0000	.AXLE PIN	5-9, 5-11
1347496-0000	.SCREW	5-9, 5-11
1347526-0000	.BRACKET	4-19, 4-21, 4-29, 4-31
1347600-0000	.SUPPORT	5-9, 5-11
1347673-0000	.BRACKET	8-73
1347699-0000	.PLATE	5-199
1347704-0000	.THERMOCOUPLE	2-19, 2-21
1347839-0000	.PULLEY	3-7
1347878-0000	.RAIL	2-97
1348041-0000	.SPACER	5-25, 5-27
1348042-0000	.SPACER	5-33, 5-35, 5-37
1348043-0000	.SPACER	5-123, 5-125, 5-127
1348047-0000	.FORK	1-185, 1-187
1348048-0000	.FORK	1-185, 1-187
1348049-0000	.FORK	1-185, 1-187
1348056-0300	.FOLDING PART	5-5, 5-7
1348072-0000	.DRIP PLATE	5-129
1348118-0000	.WHEEL	5-157, 5-159
1348132-0000	.SLIDE	5-47, 5-49, 5-51
1348133-0000	.SLIDE	5-47, 5-49, 5-51, 5-95, 5-97
1348134-0000	.SLIDE	5-47, 5-49, 5-51
1348135-0000	.SLIDE	5-47, 5-49, 5-51, 5-95, 5-97
1348136-0000	.SLIDE	5-47, 5-49, 5-51, 5-95, 5-97, 9-17, 9-19
1348137-0000	.SLIDE	5-47, 5-49, 5-51

Part No	Description	Page No
1348138-0000	.SLIDE	5-47, 5-49, 5-51
1348139-0000	.SLIDE	5-47, 5-49, 5-51, 5-99, 5-101, 5-103
1348140-0000	.SLIDE	5-47, 5-49, 5-51
1348141-0000	.SLIDE	5-47, 5-49, 5-51, 5-99, 5-101, 5-103
1348142-0000	.SLIDE	5-47, 5-49, 5-51, 5-99, 5-101, 5-103, 9-13, 9-15
1348143-0000	.SLIDE	5-47, 5-49, 5-51
1348144-0000	.BAR	5-47, 5-49, 5-51, 5-95, 5-97
1348145-0000	.BAR	5-47, 5-49, 5-51
1348146-0000	.BAR	5-47, 5-49, 5-51
1348147-0000	.BAR	5-47, 5-49, 5-51, 5-95, 5-97
1348148-0000	.BAR	5-47, 5-49, 5-51, 5-95, 5-97, 9-17, 9-19
1348149-0000	.BAR	5-47, 5-49, 5-51
1348150-0000	.BAR	5-47, 5-49, 5-51, 5-99, 5-101, 5-103
1348151-0000	.BAR	5-47, 5-49, 5-51
1348152-0000	.BAR	5-47, 5-49, 5-51
1348153-0000	.BAR	5-47, 5-49, 5-51, 5-99, 5-101, 5-103
1348154-0000	.BAR	5-47, 5-49, 5-51, 5-99, 5-101, 5-103, 9-13, 9-15
1348155-0000	.BAR	5-47, 5-49, 5-51
1348169-0000	.PLATE	5-47, 5-49, 5-51, 5-95, 5-97, 5-99, 5-101, 5-103, 9-13, 9-15, 9-17, 9-19
1348196-0000	.FASTENING PLATE	4-163, 4-165
1348197-0000	.HOLDER	2-131, 2-133
1348263-0000	.FLANGE	10-45
1348303-0000	.STUD SCREW	5-129
1348359-0000	.BRACKET	2-103, 2-105
1348386-0000	.BEARING HOUSING	2-271, 2-273
1348455-0200	.YOKE LEFT	4-147
1348456-0200	.PRESSURE ARM LEFT	4-147
1348457-0200	.CUTTING ARM LEFT	4-147
1348460-0200	.YOKE RIGHT	4-147
1348461-0200	.PRESSURE ARM RIGHT	4-147
1348462-0200	.CUTTING ARM RIGHT	4-147
1348466-0100	.SCISSOR ARM LINK	4-147
1348483-0000	.SPRING RIGHT	4-19, 4-21, 4-29, 4-31, 4-39, 4-41, 4-43, 4-45, 9-9, 9-11
1348484-0000	.SPRING LEFT	4-19, 4-21, 4-29, 4-31, 4-39, 4-41, 4-43, 4-45, 9-9, 9-11
1348504-0000	.SLEEVE	4-65
1348529-0000	.STRAINER	2-25
1348530-0000	.LID	2-25
1348537-0000	.TIMING BELT	5-149, 5-151, 5-153
1348538-0000	.LEVER	5-173, 5-175
1348540-0000	.PIVOT AXLE	5-173, 5-175
1348545-0000	.RAIL	4-67, 4-69
1348546-0000	.RAIL	4-105, 4-107
1348631-0000	.PLATE	5-173, 5-175
1348635-0000	.RUBBER SEAL	5-217
1348663-0000	.PLATE	5-217
1348669-0000	.SCREW	4-157, 4-159, 4-167, 4-169
1348671-0000	.JOINT LEFT	4-157, 4-159
1348672-0000	.JOINT RIGHT	4-167, 4-169
1348808-0000	.CURVE	4-127, 4-129
1348809-0000	.CURVE	4-127, 4-129
1348854-0000	.PLATE	5-195
1348920-0000	.CRADLE	5-195
1348921-0000	.TOOTHED PULLEY	5-199
1348922-0000	.TOOTHED PULLEY	5-199
1348955-0000	.KNIFE	4-123, 9-23, 9-25
1348956-0000	.KNIFE	4-123, 9-23, 9-25
1348957-0000	.BRACKET	5-203
1348963-0000	.SLIDE	5-203
1348966-0000	.KNIFE	4-123, 9-23, 9-25
1348990-0000	.SUPPORT	5-217
1349014-0000	.PAD	7-87
1349017-0000	.PLATE	5-195
1349020-0000	.GLAND FITTING	5-217
1349087-0000	.DISTRIBUTOR	5-19, 5-21, 5-65, 5-67, 5-69
1349152-0000	.TIMING BELT	5-47, 5-49, 5-51, 5-89, 5-91
1349160-0000	.SPACER	5-167
1349181-0000	.TOUCH GUARD	7-81
1349187-0000	.SPRING	2-271, 2-273
1349208-0000	.VOLUME SHIM	4-7, 4-9, 4-13, 4-15, 9-23, 9-25
1349266-0000	.PLATE	3-17, 3-31
1349285-0000	.SUPPORT	3-11, 3-27
1349319-0000	.CANTILEVER	4-19, 4-21, 4-29, 4-31
1349320-0000	.CATCH	4-19, 4-21, 4-29, 4-31
1349398-0000	.NUT	1-167
1349432-0000	.CATCH	7-21
1349516-0000	.SHAFT	5-149, 5-151, 5-153
1349517-0000	.TOOTHED PULLEY	5-149, 5-151, 5-153
1349518-0000	.SUPPORT	5-149, 5-151, 5-153
1349519-0000	.ACTIVATOR	5-149, 5-151, 5-153
1349566-0000	.COVER	5-221
1349568-0000	.CONNECTION BOX	5-223
1349581-0000	.FLAG	7-77
1349584-0000	.BUSHING	4-67, 4-69, 4-83, 4-85, 4-87, 4-105, 4-107
1349595-0000	.SLEEVE	4-65

Part No	Description	Page No
1349596-0000	.CUTTING JAW	4-83, 4-85, 4-87
1349599-0000	.HOLDER	4-67, 4-69, 4-105, 4-107
1349608-0000	.HOLDER	1-263
1349612-0000	.PISTON	4-65
1349672-0000	.GUIDE	7-21
1349738-0100	.PRESSURE TEST EQUIPMENT	10-5
1349741-0000	.CURVE	4-127, 4-129
1349744-0000	.VOLUME CAM	4-127, 4-129
1349780-0000	.LID	4-151, 4-161
1349781-0000	.RULER	4-149
1349806-0000	.GUIDE	5-181, 5-183
1349851-0000	.ROLL	1-27, 1-45, 1-47
1349867-0000	.FASTENING PLATE	4-153, 4-155
1349868-0000	.FASTENING PLATE	4-153, 4-155, 4-163, 4-165
1349914-0100	.TEMPLATE FILLING PIPE	9-35
1349925-0000	.PLATE	4-83, 4-85, 4-87
1349972-0000	.SPRING HOUSING	4-151, 4-161
1349980-0000	.SHAFT	4-67, 4-69, 4-83, 4-85, 4-87, 4-105, 4-107
1349985-0000	.SPRING	5-173, 5-175
1349986-0000	.ROLLER	7-77
1349994-0000	.NUT	7-21
1349997-0000	.CARRIER	5-173, 5-175
1350042-0000	.GASKET	5-143, 5-145, 5-147
1350210-0100	.RUNNER	3-13, 3-29
1350217-0100	.GUIDE	3-11
1350218-0100	.GUIDE	3-27
1350263-0000	.SPRING RIGHT	4-19, 4-21, 4-29, 4-31, 4-39, 4-41, 4-43, 4-45, 9-9, 9-11
1350264-0000	.SPRING LEFT	4-19, 4-21, 4-29, 4-31, 4-39, 4-41, 4-43, 4-45, 9-9, 9-11
1350305-0000	.SEALING RING	5-169
1350421-0000	.NOZZLE	5-123, 5-125, 5-127
1350422-0000	.NOZZLE	5-123, 5-125, 5-127
1350423-0000	.FOLDING BAR	5-25, 5-27, 5-71, 5-73, 5-75
1350424-0000	.GUIDE RIGHT	5-25, 5-27, 5-71, 5-73, 5-75
1350425-0000	.GUIDE LEFT	5-25, 5-27, 5-71, 5-73, 5-75
1350428-0000	.NAIL	5-149, 5-151, 5-153
1350440-0000	.LEVER	5-9, 5-11
1350441-0000	.SUPPORT	5-9, 5-11
1350497-0000	.ASSEMBLY TOOL	10-5
1350498-0000	.ASSEMBLY TOOL	10-5
1350543-0000	.AXLE PIN	5-173, 5-175
1350564-0000	.CLAMP HUB	5-167
1350721-0000	.STUD SCREW	5-25, 5-27, 5-33, 5-35, 5-37
1350808-0000	.BLOCK	5-5, 5-7
1350809-0000	.BLOCK	5-149, 5-151, 5-153
1350810-0000	.PUSHER	5-149, 5-151, 5-153
1350824-0000	.AXLE PIN	3-23
1350825-0000	.LOCK	3-13, 3-29
1350826-0000	.LOCK	3-13, 3-29
1359085-0000	.T-HOLDER	5-191
1359565-0000	.NUT	5-189, 5-191
1360149-0000	.SPACER	5-201, 5-207
1360318-0000	.CARRIER RULER	4-91, 4-93
1360319-0000	.CARRIER RULER	4-119, 4-121
1360399-0000	.PIPE HOLDER	10-51, 10-53
1361560-0000	.PLATE	6-17
1361918-0300	.WHEEL	5-3
1361920-0400	.RAIL OUTFEED	5-155
1361922-0200	.DROP CHUTE VARIANT	5-3
1361923-0200	.INFEED CONVEYOR VARIANT	5-3
1363297-0000	.CABLE LVDS 10M	2-149, 2-151
1366726-0000	.HOLDER	5-191
1366727-0000	.CLAMP	5-189, 5-191
1366777-0101	.ANGLED RAIL HOLDER TPC21	5-181, 5-183
1369432-0000	.LABELS, DISKETT	10-91
1369437-0000	.LABELS, DISKETT	10-93
1369439-0102	.PLMS ON-LINE	10-61
1380755-0100	.CLEANING VALVES	1-237
1380756-0000	.VALVE HOUSING	1-239
1380757-0000	.PIPE	1-239
1380788-0000	.PIPE	1-253
1380789-0000	.PIPE	1-253
1478000-0000	.HOSE	4-153, 4-155, 4-163, 4-165
1478001-0000	.HOSE	4-153, 4-155, 4-163, 4-165
1478127-0000	.DRIP PLATE	5-163, 5-165
1478170-0000	.CONTAINER	1-281
1478189-0000	.SUPPORT	5-149, 5-151, 5-153
1478190-0000	.TEMPLATE	10-25
1478214-0000	.SLIDE	5-47, 5-49, 5-51
1478215-0000	.SLIDE	5-47, 5-49, 5-51
1478227-0000	.CARRIER	5-173, 5-175
1478228-0000	.CAM	5-173, 5-175
1478235-0000	.PLATE	5-181, 5-183
1478302-0000	.AXLE BOLT	5-169
1478303-0000	.TENSION SPRING	7-21

Part No	Description	Page No
1478358-0000	.VOLUME FLAP	4-7, 4-9, 4-13, 4-15
1478359-0000	.ROLLER	1-83, 1-85
1478389-0000	.COVERING PLATE	2-257
1478391-0000	.GASKET	2-257
1478393-0000	.CATCH	4-19, 4-21, 4-29, 4-31
1478395-0000	.CATCH	4-19, 4-21, 4-29, 4-31
1478396-0000	.STOP	4-19, 4-21, 4-29, 4-31
1478417-0000	.ROLLER	5-105
1478418-0000	.AXLE BOLT	5-105
1478497-0000	.VOLUME CAM	4-127, 4-129
1478558-0000	.WASHER	5-173, 5-175
1478583-0100	.PRESSURE GAUGE	10-5
1478584-0000	.NIPPLE	10-23
1478585-0000	.NEEDLE	10-23
1478659-0000	.BRACKET	5-221
1478753-0000	.SHAFT	5-167
1478768-0100	.KNIFE	4-5
1478813-0000	.SPACER	1-225
1478814-0000	.SENSOR	1-225
1478905-0000	.FLANGE	5-167
1478908-0000	.SUPPORT	5-167
1478925-0000	.HATCH	5-173, 5-175
1478926-0000	.GUIDE RIGHT	5-25, 5-27
1478927-0000	.GUIDE LEFT	5-25, 5-27
1478928-0000	.BUSHING	5-195
1478966-0000	.LINK	4-123
1478967-0000	.WASHER	4-123
1478968-0000	.LINK	4-123
1484002-0000	.PLATE	4-83, 4-85, 4-87
1484003-0000	.PLATE	4-83, 4-85, 4-87
1484067-0000	.BRACKET	1-283
1484080-0000	.SUPPORT	1-169
1484081-0000	.BRACKET	1-265, 6-27
1484093-0000	.INSERT	2-149, 2-151
1484096-0000	.COVER	5-107, 5-109, 5-111
1484196-0100	.PACK COUNTER	5-219
1484197-0100	.CONNECTION BOX	5-219
1484210-0200	.OUT FEED DRIVING SYSTEM	5-155
1484211-0000	.WASHER	4-123
1484250-0000	.VOLUME CAM	4-127, 4-129
1484251-0000	.VOLUME CAM	4-127, 4-129
1484258-0000	.CRADLE	5-195
1484289-0000	.HATCH	5-173, 5-175
1484320-0000	.ROD	4-157, 4-159, 4-167, 4-169
1484363-0000	.COVER	7-195
1484379-0000	.INSERT	2-149, 2-151
1484405-0000	.PIPE	1-303, 1-305
1484428-0000	.PLASTIC PLUG	1-269, 1-271
1484447-0000	.BALL BEARING	5-167
1484448-0000	.BEARING ROLLER	5-167
1484620-0000	.SHAFT	5-199
1484693-0000	.KNIFE HOLDER	7-105
1484695-0000	.KNIFE	7-105, 9-5
1484697-0000	.RAIL	7-109, 7-111
1484703-0000	.TIE ROD	7-105
1484704-0000	.SHAFT	7-95, 7-167
1484705-0000	.SLIDER	7-107
1484706-0000	.GEAR WHEEL	7-107
1484707-0200	.STRIP MAGAZINE	7-3, 7-5
1484708-0000	.MOUNTING PLATE	7-77
1484711-0000	.BRACKET	7-85
1484718-0000	.AXLE PIN	7-77
1484719-0000	.AXLE PIN	7-85
1484720-0100	.HINGE	7-75
1484724-0000	.HUB	7-83
1484725-0100	.HUB	7-75
1484726-0000	.SHAFT	7-83
1484728-0000	.BRACKET	7-167
1484738-0000	.BRACKET	7-167
1484740-0000	.BRACKET	7-77
1484745-0100	.WEB GUIDE	7-91, 7-93, 7-167
1484750-0000	.BRACKET	7-113
1484752-0000	.SLIDER	7-177, 7-179
1484760-0000	.SLIDER	7-177, 7-179
1484761-0000	.ANGLE BRACKET	7-177, 7-179
1484766-0000	.DANCE ROLLER	7-167, 7-177, 7-179
1484776-0000	.RAIL	7-107
1484777-0000	.SLIDER	7-107
1484778-0000	.PLATE	7-177, 7-179
1484779-0000	.ROD	7-107
1484781-0000	.PIN	7-105
1484782-0000	.CLAMP BLOCK	7-107
1484783-0000	.CLAMPING ELEMENT	7-107
1484784-0000	.LOCATING PIECE	7-107

Part No	Description	Page No
1484785-0000	.LOCATING PIECE	7-107
1484865-0000	.VOLUME FLAP	4-13, 4-15
1484866-0000	.VOLUME FLAP	4-7, 4-9
1484867-0000	.VOLUME FLAP	4-7, 4-9
1484868-0000	.VOLUME FLAP	4-13, 4-15
1484889-0100	.DOOR	6-53
1484890-0000	.DOOR	6-55
1484969-0000	.SLEEVE	1-97
1487023-0000	.PIPE	6-45
1487038-0200	.OUTFEED WHEEL	5-155
1487158-0300	.FLAP HEATER VARIANT	5-3
1487159-0000	.CARRIER	5-173, 5-175
1487177-0000	.GUIDE	5-181, 5-183
1487200-0000	.CLAMP	1-227
1487338-0100	.SUPPORT LEVEL DETECTOR	2-101
1487504-0000	.WASHER	4-127, 4-129
1487505-0001	.WASHER	4-127, 4-129
1487505-0002	.WASHER	4-127, 4-129
1487510-0000	.RACK GEAR	7-107
1487511-0000	.BRACKET	7-107
1487517-0000	.CATCH	7-105
1487518-0000	.RULER	7-119, 7-127
1487519-0000	.SHAFT	7-177, 7-179
1487521-0000	.SHAFT	7-169
1487528-0100	.CYLINDER	7-127
1487530-0001	.GUIDE ROD	7-177, 7-179
1487536-0000	.GUIDE BRACKET	7-177, 7-179
1487537-0000	.BRACKET	7-177, 7-179
1487538-0000	.BRACKET	7-177, 7-179
1487544-0200	.SIDE FEEDER	7-43, 7-45
1487550-0000	.ANGLE BRACKET	7-177, 7-179
1487551-0000	.PLATE	7-177, 7-179
1487554-0000	.BRACKET	7-107
1487555-0000	.BUSHING	7-107
1487556-0000	.BAR	7-107
1487557-0000	.BAR	7-107
1487558-0000	.FASTENING PLATE	7-107
1487559-0000	.SLIDER	7-107
1487560-0200	.MACHINE BODY	7-3, 7-5
1487618-0000	.CUTTING JAW	4-83, 4-85, 4-87
1487619-0000	.PLATE	4-83, 4-85, 4-87
1487626-0000	.VOLUME BULGE	4-7, 4-9, 4-13, 4-15
1487627-0000	.VOLUME SHIM	4-7, 4-9, 4-13, 4-15, 9-23, 9-25
1487629-0100	.DAMPER	3-11
1487630-0100	.DAMPER	3-27
1487631-0000	.BRACKET	3-17, 3-31
1487632-0000	.FORK	3-17, 3-31
1487633-0000	.AXLE PIN	3-17, 3-31
1487634-0000	.AXLE PIN	3-17, 3-31
1487635-0000	.WHEEL	3-17, 3-31
1487636-0000	.STOPPER	3-17, 3-31
1487684-0000	.RAIL	5-181, 5-183
1487712-0000	.LEG	2-11
1487738-0000	.FLAP	5-13, 5-15
1487739-0000	.FLAP	5-13, 5-15
1487763-0000	.SHAFT	7-101, 7-103
1487765-0000	.SPACER	7-177, 7-179
1487769-0000	.SPACER	7-177, 7-179
1487770-0000	.BRACKET	7-119, 7-127
1487779-0000	.SHAFT	7-119, 7-127
1487781-0000	.BRACKET	7-119, 7-127
1487782-0000	.SHAFT	7-119, 7-127
1487784-0000	.BRACKET	7-171
1487788-0000	.SPACER	7-173
1487795-0000	.PLATE	7-167
1487796-0000	.PLATE	7-167
1487800-0000	.PLATE	7-167
1487802-0000	.SPACER	7-167
1487808-0200	.BRACKET	7-3, 7-5
1487821-0000	.SPACER	5-105
1487825-0200	.RAIL	5-155
1487839-0000	.CLAMP	1-227
1487840-0000	.CLAMP	1-227
1487922-0000	.FOLDING DEVICE	5-9, 5-11
1487923-0000	.FOLDING DEVICE	5-9, 5-11
1487929-0000	.SPACER	5-45
1487943-0000	.STOPPER	4-39, 4-41, 4-43, 4-45, 9-9, 9-11
1487945-0000	.STOP	4-39, 4-41, 4-43, 4-45, 9-9, 9-11
1487946-0000	.SHAFT	4-39, 4-41, 4-43, 4-45, 9-9, 9-11
1487948-0000	.BUSHING	4-39, 4-41, 4-43, 4-45, 9-9, 9-11
1487954-0000	.CUTTING JAW	4-83, 4-85, 4-87
1487955-0000	.HOLDER	4-67, 4-69, 4-105, 4-107
1487995-0000	.HATCH	7-189, 7-191
1488000-0000	.DOOR	7-201

Part No	Description	Page No
1488005-0000	.BEARING BLOCK	7-43, 7-45
1490031-0000	.PLATE	5-149, 5-151, 5-153
1490032-0000	.PUSHER	5-149, 5-151, 5-153
1490033-0000	.SLIDE	5-47, 5-49, 5-51
1490034-0000	.SLIDE	5-47, 5-49, 5-51
1490035-0000	.BAR	5-47, 5-49, 5-51, 5-95, 5-97
1490036-0000	.BAR	5-47, 5-49, 5-51, 5-99, 5-101, 5-103
1490039-0000	.NOZZLE	5-123, 5-125, 5-127
1490046-0000	.PIN	1-283, 2-65
1490057-0000	.BENDING ROLLER	1-269, 1-271
1490085-0000	.GEAR BOX	5-167
1490112-0100	.OUTFEED CONVEYOR	5-155
1490183-0000	.BRACKET	7-177, 7-179
1490187-0000	.ROCKER ARM	7-77
1490188-0100	.COVER	7-183, 7-185
1490190-0200	.HATCH	7-183, 7-185
1490191-0100	.DOOR	7-183, 7-185
1490193-0100	.COVER	7-183, 7-185
1490199-0000	.BRACKET	7-119, 7-127
1490210-0000	.PLATE	7-65
1490215-0200	.COVERING PANEL	7-3, 7-5
1490219-0000	.BRACKET	7-65
1490220-0000	.ANGLE BRACKET	7-109, 7-111
1490226-0000	.FILTER	7-201
1490442-0000	.STUD SCREW 8X20	5-167
1490713-0000	.SPRING HOLDER	1-95
1490714-0000	.GUIDE	1-95
1490715-0000	.DOLLY	1-95
1490762-0000	.ROLLER	1-75, 1-77
1490765-0000	.ROLLER	1-45, 1-47
1490804-0000	.HOLDER	7-81
1490806-0200	.HEATING DEVICE	7-75
1490809-0000	.ARM	7-121, 7-129
1490810-0000	.ARM	7-121, 7-129
1490812-0000	.AXLE	7-121, 7-129
1490813-0000	.SCREW	7-121, 7-129
1490814-0000	.PLATE	7-167
1490815-0000	.PLATE	7-167
1490818-0000	.ARM	7-77
1490820-0000	.SHAFT	7-95
1490821-0000	.ANGLE PIECE	7-119, 7-127
1490831-0200	.MAGAZINE	7-3, 7-5
1490935-0000	.BAR	3-13, 3-29
1490950-0000	.SPLASH PLATE	2-27
1490962-0000	.LID	1-169
1490994-0100	.LINK	3-5, 3-25
1494664-0000	.AXLE LINK	7-109, 7-111
1498029-0000	.PIN	5-149, 5-151, 5-153
1498047-0000	.SEALING BLOCK	7-81, 9-5
1498064-0000	.BLOCK	5-169
1498066-0000	.SCREW	5-169
1498067-0000	.PLATE	5-169
1498068-0000	.SEAL RING	5-199
1498117-0000	.TEMPLATE	10-25
1498121-0000	.BASE PLATE	1-283
1498122-0000	.BRACKET	1-283
1498130-0000	.PLATE	1-123, 1-125
1498131-0000	.BRACKET	1-123, 1-125
1498132-0000	.SHAFT	1-123, 1-125, 1-137, 1-139, 1-141
1498133-0000	.ARM	1-123, 1-125
1498134-0000	.PLATE	1-123, 1-125
1498135-0000	.ARM	1-123, 1-125
1498143-0000	.LOCKING RING	1-185, 1-187
1498146-0000	.NOZZLE	5-123, 5-125, 5-127
1498147-0000	.NOZZLE	5-123, 5-125, 5-127
1498149-0000	.TEMPLATE	9-37
1498150-0000	.TEMPLATE	9-37
1498151-0000	.TEMPLATE	9-37
1498161-0000	.SUPPORT	5-25, 5-27
1498163-0000	.SPACER	5-123, 5-125, 5-127
1498430-0000	.ROD	7-13
1498445-0000	.COVER	7-75
1498450-0001	.PLATE	7-85
1498451-0001	.SHAFT	7-85
1498453-0200	.DOOR	7-183, 7-185
1498454-0200	.DOOR	7-183, 7-185
1498457-0000	.BRACKET	7-63
1498459-0001	.GLASS PANE	7-211, 7-215
1498459-0002	.GLASS PANE	7-201
1498459-0003	.GLASS PANE	7-189, 7-191, 7-205, 7-207
1498459-0004	.GLASS PANE	7-203
1498460-0000	.HATCH	7-205, 7-207
1498461-0001	.SEALING STRIP	7-211
1498461-0002	.SEALING STRIP	7-189, 7-191, 7-205, 7-207

Part No	Description	Page No
1498461-0005	.SEALING STRIP	7-201, 7-203
1498526-0000	.REGULATOR BODY	1-225
1498528-0000	.TIMING BELT	5-167
1498529-0000	.TIMING BELT	5-167
1498620-0000	.PULLEY	5-167
1498621-0000	.SPRING	1-185, 1-187
1498782-0000	.TANK BRACKET	1-283
1498783-0000	.WHEEL	1-113
1498784-0000	.BENDING ROLLER	1-107, 1-109, 1-111
1498787-0000	.BRACKET	1-283
1498789-0000	.BRACKET	1-283
1498790-0000	.SHAFT	1-123, 1-125
1498791-0000	.FLANGE	1-123, 1-125
1498827-0000	.FOLDING BAR	5-33, 5-35, 5-37
1498828-0000	.FOLDING BAR	5-33, 5-35, 5-37
1498849-0000	.BUSBAR	4-67, 4-69
1498850-0000	.BUSBAR	4-105, 4-107
1498855-0000	.GASKET	2-113
1498856-0000	.FLANGE	2-113
1498857-0000	.CONNECTION	2-113
1498858-0000	.FLANGE	2-113
1498929-0000	.SPRING	5-131, 5-133, 5-135, 5-137, 5-139, 5-141
1499043-0000	.BRACKET	5-167
1499059-0000	.TIMING BELT	5-167
1499064-0000	.PULLEY	5-167
1499071-0000	.SPACER	5-25, 5-27, 5-33, 5-35, 5-37
1499072-0000	.SPACER	5-33, 5-35, 5-37
1499094-0000	.SPACER SCREW	5-33, 5-35, 5-37
1499103-0000	.TIE ROD	5-9, 5-11
1499114-0000	.LOCKING RING	1-185, 1-187
1499135-0000	.GUIDE	5-47, 5-49, 5-51
1499136-0000	.GUIDE	5-47, 5-49, 5-51
1499143-0000	.PLATE	5-149, 5-151, 5-153
1499144-0000	.PUSHER	5-149, 5-151, 5-153
1499150-0000	.RAIL	5-33, 5-35, 5-37, 5-77, 5-79, 5-81
1499151-0000	.RAIL	5-33, 5-35, 5-37, 5-77, 5-79, 5-81
1499156-0000	.PIPE	1-267
1499157-0000	.HEATING PIPE	1-169
1499158-0100	.AIR SUPER-HEATER	1-149
1499160-0200	.SCRUBBER	1-149
1499162-0000	.TUBE	1-179
1499166-0000	.PIPE	1-265
1499168-0000	.LID	1-113
1499169-0000	.GASKET	1-113
1499170-0000	.GASKET	1-113
1499171-0000	.LID	1-113
1499172-0000	.UPPER SECTION	1-179
1499320-0000	.TIE ROD	4-75, 4-77, 4-79, 4-111, 4-113, 4-115
1499327-0000	.SHAFT	4-39, 4-41, 4-43, 4-45, 9-9, 9-11
1499328-0000	.STOPPER	4-39, 4-41, 4-43, 4-45, 9-9, 9-11
1499336-0000	.STOPPER	4-39, 4-41, 4-43, 4-45, 9-9, 9-11
1499345-0000	.FLAP HOLDER	4-39, 4-41, 4-43, 4-45, 9-9, 9-11
1499346-0000	.FLAP HOLDER	4-39, 4-41, 4-43, 4-45, 9-9, 9-11
1499348-0000	.STOP	4-39, 4-41, 4-43, 4-45, 9-9, 9-11
1499349-0000	.STOPPER	4-39, 4-41, 4-43, 4-45, 9-9, 9-11
1499350-0000	.CAM	4-39, 4-41, 4-43, 4-45, 9-9, 9-11
1499351-0200	.ROLLER UNIT	4-131
1499355-0000	.ROLLER	4-39, 4-41, 4-43, 4-45, 9-9, 9-11
1499356-0000	.CAM	4-39, 4-41, 4-43, 4-45, 9-9, 9-11
1499357-0000	.VOLUME FLAP	4-39, 4-41, 4-43, 4-45, 9-9, 9-11
1499358-0000	.VOLUME FLAP	4-39, 4-41, 4-43, 4-45, 9-9, 9-11
1499400-0000	.GUIDE	5-47, 5-49, 5-51
1499401-0000	.GUIDE	5-47, 5-49, 5-51
1499411-0000	.COUNTER ROLLER	1-45, 1-47
1499413-0000	.HOLDER	5-181, 5-183
1499417-0000	.BAR	5-47, 5-49, 5-51
1499418-0000	.SLIDE	5-47, 5-49, 5-51
1499422-0000	.SLIDE	5-47, 5-49, 5-51
1499423-0000	.BAR	5-47, 5-49, 5-51
1499426-0000	.GUIDE	5-47, 5-49, 5-51
1499427-0000	.GUIDE	5-47, 5-49, 5-51
1499444-0000	.NOZZLE	5-123, 5-125, 5-127
1499445-0000	.NOZZLE	5-123, 5-125, 5-127
1499446-0000	.NOZZLE	5-123, 5-125, 5-127
1499475-0000	.HOLDER	5-47, 5-49, 5-51, 5-89, 5-91
1499476-0000	.HOLDER	5-47, 5-49, 5-51, 5-89, 5-91, 5-201, 5-207
1499538-0000	.GLASS PANE	1-147
1499539-0000	.GASKET	1-147
1499562-0003	.LOCKING ARM	7-201, 7-203
1499562-0004	.LOCKING ARM	7-201, 7-203
1499564-0100	.COVER	7-183, 7-185
1499566-0000	.WASHER	7-109, 7-111
1499568-0000	.HATCH	7-217
1499569-0000	.BRACKET	7-77

Part No	Description	Page No
1499570-0000	.HOLDER	7-43, 7-45
1499571-0100	.PAPER REEL HOLDER	7-43, 7-45
1499573-0000	.PIN	7-65
1499577-0000	.ARM	7-127
1499578-0300	.CABLE CONDUIT	7-91, 7-93
1499579-0000	.SEALING STRIP	7-215
1499582-0000	.AXLE PIN	7-119, 7-127
1499584-0000	.AXLE PIN	7-53, 7-167, 7-175
1499588-0000	.BENDING ROLLER	7-119, 7-127
1499594-0000	.VOLUME CAM	4-127, 4-129
1499635-0000	.LEVER	5-5, 5-7
1499642-0101	.TPIH 2500 HORIZONTAL MOUNTING	7-7, 8-53
1499675-0000	.VOLUME BULGE	4-7, 4-9, 4-13, 4-15
1499678-0000	.ROLLER	4-137, 4-139
1499726-0000	.PLASTIC HOSE	1-267
1499735-0000	.RAILING	1-285
1499765-0000	.AXLE LINK	5-9, 5-11
1499786-0000	.BRACKET	6-39, 6-41
1499901-0000	.VOLUME FLAP	4-7, 4-9
1499902-0000	.VOLUME FLAP	4-13, 4-15
1511192-0000	.ROCKER	3-21
1511193-0000	.SUPPORT PULLEY	3-19
1511194-0000	.AXLE PIN	3-19
1511195-0000	.SHAFT	3-19
1511196-0000	.SHAFT	3-21
1511197-0100	.PULLEY	3-11, 3-27
1511198-0100	.BELT TENSIONER	3-11, 3-27
1511203-0000	.PIPE	2-69
1511209-0000	.BUSHING	3-21
1511225-0000	.CARRIER	5-173, 5-175
1511335-0000	.VOLUME BULGE	4-39, 4-41, 4-43, 4-45, 9-9, 9-11
1511336-0000	.VOLUME SHIM	4-39, 4-41, 4-43, 4-45, 9-9, 9-11, 9-23, 9-25
1511337-0000	.VOLUME SHIM	4-39, 4-41, 4-43, 4-45, 9-9, 9-11, 9-23, 9-25
1511338-0000	.STOP	4-39, 4-41, 4-43, 4-45, 9-9, 9-11
1511339-0000	.STOP	4-39, 4-41, 4-43, 4-45, 9-9, 9-11
1511351-0000	.FOLDING FLAP	4-91, 4-93, 4-119, 4-121
1511352-0000	.FOLDING FLAP	4-91, 4-93, 4-119, 4-121
1511492-0000	.SHAFT	1-83, 1-85
1511497-0000	.CONTAINER	1-265
1511503-0000	.PIPE	1-157, 1-159
1511504-0000	.SPACER	1-279
1511506-0000	.CONNECTION PIPE	1-267
1511512-0000	.BEARING BUSHING	1-143
1511556-0000	.SET SCREW	4-19, 4-21, 4-29, 4-31
1511558-0000	.BOTTOM	5-13, 5-15
1511564-0000	.BRACKET	7-177, 7-179
1511568-0000	.PIN	7-119, 7-127
1511569-0000	.SPACER	7-125, 7-131
1511575-0000	.ARM	7-119
1511579-0000	.BRACKET	7-177, 7-179
1511585-0200	.STRIP GUIDE	7-75
1511586-0001	.BAR	7-85
1511587-0000	.BUSHING BLOCK	7-85
1511600-0000	.SPACER	1-225
1511615-0000	.BRACKET	6-21
1511616-0000	.BRACKET	6-21
1511680-0000	.TUBE	6-21
1511692-0000	.SPACER	5-123, 5-125, 5-127
1511697-0000	..FOLDING FLAP	4-91, 4-93, 4-119, 4-121
1511698-0000	.FOLDING FLAP	4-91, 4-93, 4-119, 4-121
1511699-0000	.FOLDING FLAP	4-91, 4-93, 4-119, 4-121
1511700-0000	.FOLDING FLAP	4-91, 4-93, 4-119, 4-121
1511740-0000	.CARRIER	1-115
1511755-0000	.NET	1-157, 1-159
1511759-0000	.SPRING	1-269, 1-271
1511769-0000	.ROLLER	1-117, 1-119, 1-121, 1-123, 1-125
1512145-0000	.LID	2-267
1512146-0000	.AXLE PIN	4-39, 4-41, 4-43, 4-45, 9-9, 9-11
1512147-0000	.WASHER	4-39, 4-41, 4-43, 4-45, 9-9, 9-11
1512265-0000	.SLEEVE	7-67
1512266-0000	.SLEEVE	7-67
1512267-0000	.ECCENTRIC BUSHING	7-101, 7-103, 7-169
1512275-0000	.PROTECTION PLATE	7-65
1512276-0000	.PROTECTION PLATE	7-119, 7-127
1512278-0000	.SEALING STRIP	7-217
1512279-0200	.MACHINE BODY	7-43, 7-45
1512307-0000	.GUIDE	5-47, 5-49, 5-51
1512308-0000	.GUIDE	5-47, 5-49, 5-51
1512315-0000	.ARM RIGHT	4-167, 4-169
1512316-0000	.ARM LEFT	4-157, 4-159
1512322-0000	.COPPER BRAID	8-61, 8-63
1512339-0100	.PHOTOCELL OUTFEED	5-155
1512363-0000	.BEARING HOUSING	7-33, 7-35
1512405-0000	.NUT	1-273

Part No	Description	Page No
1512413-0200	.CONTROL PANEL	7-195
1512414-0000	.SEALING STRIP	7-195
1512420-0000	.PLATE	7-43, 7-45
1512421-0000	.CABLE DUCT	7-69, 7-71, 7-73
1512423-0000	.CABLE DUCT	7-69, 7-71, 7-73
1512425-0000	.CABLE DUCT	7-69, 7-71, 7-73
1512426-0000	.CABLE DUCT	7-69, 7-71, 7-73
1512428-0200	.MOUNTING SHEET	7-75
1512429-0100	.PRESSURE ROLLER	7-167
1512430-0000	.VOLUME SHIM	7-109, 7-111
1512526-0000	.STEERING	7-113
1512563-0200	.PRESSURE JAW LEFT	4-5
1512564-0200	.CARRIER CUTTING LEFT	4-5
1512565-0200	.CUTTING JAW LEFT	4-5
1512568-0200	.PRESSURE JAW RIGHT	4-5
1512569-0200	.CARRIER CUTTING RIGHT	4-5
1512570-0200	.CUTTING JAW RIGHT	4-5
1512579-0000	.BRACKET	4-19, 4-21, 4-29, 4-31
1512998-0000	.FOLDING FLAP CAM	4-181, 4-183
1517053-0000	.SPRING	1-185, 1-187
1517087-0000	.HINGE	7-77
1517088-0200	.CONTROL PANEL	7-211
1517101-0000	.PIPE	7-43, 7-45
1517105-0000	.PLATE	7-171
1517107-0000	.PROTECTION	7-75
1517113-0000	.RAIL	7-109, 7-111
1517134-0100	.COMPRESSOR UNIT	1-149
1517135-0000	.FRONT PLATE	1-163
1517136-0000	.COVER	1-163
1517137-0000	.COVER	1-163
1517138-0000	.COVER	1-163
1517242-0000	.GUIDE	5-47, 5-49, 5-51
1517243-0000	.GUIDE	5-47, 5-49, 5-51
1517244-0000	.GUIDE	5-47, 5-49, 5-51
1517245-0000	.GUIDE	5-47, 5-49, 5-51
1517295-0000	.SHEET	6-73
1517298-0200	.INFEED CONVEYOR	5-3
1517299-0200	.INFEED CONVEYOR LONG	5-197
1517300-0300	.INFEED CONVEYOR SHORT	5-197
1517302-0000	.SUPPORT PLATE	5-163, 5-165
1517348-0000	.HOSE	4-185
1517350-0000	.BULB	3-21
1517472-0000	.SIDE PLATE	5-195
1517473-0000	.SIDE PLATE	5-195
1517474-0000	.GUIDE	5-47, 5-49, 5-51
1517475-0000	.GUIDE	5-47, 5-49, 5-51
1517476-0000	.WEDGE	5-47, 5-49, 5-51
1517477-0000	.PLATE	5-47, 5-49, 5-51
1517478-0000	.BAR	5-47, 5-49, 5-51
1517479-0000	.BAR	5-47, 5-49, 5-51
1517480-0000	.SLIDE	5-47, 5-49, 5-51
1517481-0000	.SLIDE	5-47, 5-49, 5-51
1517482-0000	.TUBE	1-157, 1-159
1517524-0000	.GUIDE	5-47, 5-49, 5-51
1517525-0000	.GUIDE	5-47, 5-49, 5-51
1517526-0000	.GUIDE	5-47, 5-49, 5-51
1517527-0000	.GUIDE	5-47, 5-49, 5-51
1517563-0000	.BRACKET	5-163, 5-165
1517564-0000	.SUPPORTING ARM	5-163, 5-165
1517567-0000	.PLATE	5-163, 5-165
1517568-0000	.SUPPORTING ARM	5-163, 5-165
1517707-0000	.BRACKET	1-263
1517751-0000	.SHAFT	7-87
1517987-0000	.TEMPLATE	9-37
1519089-0000	.GUIDE	5-47, 5-49, 5-51
1519090-0000	.GUIDE	5-47, 5-49, 5-51
1519093-0000	.GUIDE	5-47, 5-49, 5-51
1519094-0000	.GUIDE	5-47, 5-49, 5-51
1519150-0000	.PIN	1-13, 1-15
1519156-0000	.AIR DISTRIBUTOR	1-137, 1-139, 1-141
1519158-0000	.LID	1-137, 1-139, 1-141
1519159-0000	.BUSHING	1-137, 1-139, 1-141
1519160-0000	.SHAFT	1-137, 1-139, 1-141
1519163-0000	.ARM	1-137, 1-139, 1-141
1519166-0000	.BUSHING	1-137, 1-139, 1-141
1519336-0000	.NOZZLE	5-123, 5-125, 5-127
1519338-0000	.TIMING BELT	5-47, 5-49, 5-51
1519339-0000	.SPACER	5-123, 5-125, 5-127
1519340-0000	.TIE ROD	5-9, 5-11
1519341-0000	.BLOCK	5-5, 5-7
1519344-0000	.CARRIER	5-47, 5-49, 5-51
1519345-0000	.GUIDE	5-47, 5-49, 5-51
1519346-0000	.GUIDE	5-47, 5-49, 5-51
1519352-0000	.GUIDE	5-19, 5-21

Part No	Description	Page No
1519355-0000	.SPACER	5-33, 5-35, 5-37
1519358-0000	.GUIDE	5-25, 5-27
1519359-0000	.GUIDE	5-25, 5-27
1519485-0000	.SPRING	1-185, 1-187
1519486-0000	.FILTER HOUSE	1-195, 1-281
1519540-0000	.RAIL	5-181, 5-183
1519578-0000	.MOUNTING BLOCK	7-109, 7-111
1519580-0000	.GUIDE FINGER	7-107
1519581-0000	.ROLLER BAR	7-167, 7-181
1519583-0000	.BRACKET	7-101, 7-103
1519586-0000	.BRACKET	7-167
1519588-0000	.PROTECTION PLATE	7-43, 7-45
1519589-0100	.HANDLE	7-127
1519591-0000	.RAIL PIN	7-109, 7-111
1519592-0000	.BOW	7-167, 7-181
1519789-0000	.BRACKET	1-339, 1-341
1519790-0000	.PLATE	1-339, 1-341
1519799-0000	.ANGLE BRACKET	1-95
1519942-0000	.PLATE	7-177, 7-179
1519944-0000	.BRACKET	7-109, 7-111
1519955-0000	.WASHER	7-105
1519960-0000	.SPACER	7-167
1519967-0000	.CLAMP	7-105
1520052-0000	.INDUCTOR	4-67, 4-69, 4-105, 4-107, 9-23, 9-25
1520455-0000	.CUTTING RAIL	4-83, 4-85, 4-87
1520493-0000	.CUTTING RAIL	4-83, 4-85, 4-87
1520494-0000	.CUTTING RAIL	4-83, 4-85, 4-87
1520633-0002	.DOLLY	4-83, 4-85, 4-87, 10-61
1520633-0005	.DOLLY	4-83, 4-85, 4-87, 9-23, 9-25
1523091-0000	.TEMPLATE	10-25
1523145-0000	.BEARING HOUSING	4-83, 4-85, 4-87
1523146-0000	.FOLDING FLAP	4-91, 4-93, 4-119, 4-121
1523147-0000	.FOLDING FLAP	4-91, 4-93, 4-119, 4-121
1523148-0000	.CARRIER RULER	4-119, 4-121
1523154-0003	.SPRAY NOZZLE	1-223
1523154-0004	.SPRAY NOZZLE	1-223
1523154-0005	.SPRAY NOZZLE	1-223
1523154-0006	.SPRAY NOZZLE	1-223
1523162-0000	.SCREW	4-75, 4-77, 4-79, 4-111, 4-113, 4-115
1523177-0000	.CARRIER RULER	4-91, 4-93
1523179-0000	.FLANGE	1-135
1523185-0000	.AXLE PIN	1-135
1523190-0000	.SHAFT	1-115
1523191-0000	.SHAFT	1-115
1523206-0000	.RULER	1-113
1523207-0000	.BRACKET	1-113
1523216-0200	.LEVEL CONTROL DEVICE	2-91
1523467-0000	.VOLUME BULGE	5-13, 5-15, 5-149, 5-151, 5-153
1523475-0000	.CANTILEVER	4-19, 4-21, 4-29, 4-31
1523483-0000	.ROLLER	7-33, 7-35, 7-39, 7-41
1523486-0000	.SPACER	7-39, 7-41
1523487-0000	.ROLL	7-77, 7-85
1523490-0000	.VOLUME BULGE	4-127, 4-129
1523497-0000	.SPACER	5-123, 5-125, 5-127
1523641-0000	.SPACER	2-201
1523645-0000	.AIR NOZZLE	2-201
1523664-0001	.ROLLER, (STD.SIZE)	1-27
1523665-0001	.ROLLER, (STD.SIZE)	1-27
1523680-0000	.PIPE	1-97
1523685-0000	.IMPELLER	1-99
1523686-0000	.LID	1-99
1523687-0000	.PUMP BODY	1-99
1523691-0100	.BLOWING DEVICE	1-97
1523696-0000	.GUIDE	1-41, 1-43
1523777-0100	.STAIR CASE	2-159, 2-161, 2-163, 2-165, 2-167, 2-169
1523784-0000	.TOE PLATE	2-171
1523793-0000	.TOE PLATE	2-181, 2-183
1523805-0000	.PIN	1-269, 1-271
1523808-0000	.GASKET	1-267
1523818-0000	.BRACKET	1-303, 1-305
1523819-0000	.BRACKET	1-303, 1-305
1523820-0000	.BRACKET	1-303, 1-305
1523826-0000	.PUSHER	5-149, 5-151, 5-153
1523827-0000	.SCREW	4-83, 4-85, 4-87
1523884-0000	.FLAP	5-149, 5-151, 5-153
1523885-0000	.PUSHER	5-149, 5-151, 5-153
1523926-0000	.SPACER	5-25, 5-27, 5-33, 5-35, 5-37
1523927-0000	.SPACER SCREW	5-33, 5-35, 5-37
1524147-0000	.ROLLER	1-61, 1-63
1524148-0000	.ROLLER	1-61, 1-63
1524149-0000	.ROLLER	1-61, 1-63
1524150-0000	.ROLLER	1-61, 1-63
1524151-0000	.ROLLER	1-49, 1-51, 1-53
1524152-0000	.ROLLER	1-49, 1-51, 1-53

Part No	Description	Page No
1524156-0000	.ROLLER	1-45, 1-47
1524167-0000	.CORNER STRIP	2-177, 2-179, 2-181, 2-183, 2-189, 2-191
1524168-0000	.CORNER STRIP	2-177, 2-179, 2-181, 2-183
1524171-0000	.FRAME	2-189, 2-191
1524172-0000	.CHECKER PLATE	2-189, 2-191
1524173-0000	.CHECKER PLATE	2-189, 2-191
1524174-0000	.HOOK	2-189, 2-191
1524175-0000	.LEG	2-189, 2-191
1524176-0000	.CLAMP	2-189, 2-191
1524177-0000	.TOE PLATE	2-189, 2-191
1524179-0000	.TOE PLATE	2-189, 2-191
1524180-0000	.TOE PLATE	2-189, 2-191
1524181-0000	.PIN	2-189, 2-191
1524182-0000	.RAILING	2-189, 2-191
1524185-0000	.EXTENSION PIECE	2-189, 2-191, 2-193
1524186-0000	.PROFILE	2-193
1524187-0000	.PROFILE	2-193
1524188-0000	.STAIR	2-193
1524190-0000	.BRACKET	2-193
1524191-0000	.RIM	2-193
1524192-0000	.RAILING	2-193
1524193-0000	.RAILING	2-193
1524233-0000	.PIPE	1-303, 1-305
1524234-0000	.PIPE	1-303, 1-305
1524236-0000	.VALVE HOUSING	1-161
1524237-0000	.PIPE	1-303, 1-305
1524238-0000	.PIPE	1-303, 1-305
1524239-0000	.PIPE	1-303, 1-305
1524240-0000	.PIPE	1-303, 1-305
1524241-0000	.PIPE	1-303, 1-305
1524242-0000	.PIPE	1-303, 1-305
1524243-0000	.PIPE	1-303, 1-305
1524310-0000	.VOLUME BULGE	4-39, 4-41, 4-43, 4-45, 9-9, 9-11
1524349-0000	.GUIDE	5-181, 5-183
1524394-0100	.CYLINDER	7-119
1524398-0100	.HANDLE	7-119
1524404-0100	.COVER	7-183, 7-185
1524405-0000	.COVER PLATE	7-219
1524406-0000	.SEALING STRIP	7-219
1524414-0000	.SEAL	1-75, 1-77
1524416-0000	.ROLLER	1-75, 1-77
1524421-0000	.ROLLER	4-137, 4-139
1524477-0200	.CUTTING TABLE	7-75
1524481-0000	.SEALING BLOCK	7-87
1524484-0000	.FLAP	5-13, 5-15
1524547-0000	.COUNTER ROLLER	1-45, 1-47
1524731-0200	.BRACKET	7-167
1524732-0200	.DRIVE UNIT	7-167
1524841-0000	.TEMPLATE	9-37
1524854-0000	.BEAM	2-181, 2-183
1524864-0000	.RAILING	2-189, 2-191
1524870-0000	.RAILING	2-171
1528552-0000	.PLATFORM	2-175
1528553-0000	.PLATFORM	2-175
1528639-0000	.GASKET	1-269, 1-271
1528727-0000	.PIPE	1-303, 1-305
1528728-0000	.PIPE	1-303, 1-305
1528746-0100	.GUIDE	1-87, 1-89
1528838-0000	.CLAMP	10-15
1528839-0000	.SLEEVE	10-15
1528840-0000	.LEVER	10-15
1528841-0000	.HOLDER	10-15
1528842-0000	.PIN	10-15
1528847-0100	.PLATFORM	2-159, 2-161, 2-163, 2-165, 2-167, 2-169
1528848-0100	.PLATFORM	2-159, 2-161, 2-163, 2-165, 2-167, 2-169
1528849-0000	.RAILING	2-177, 2-179
1528850-0000	.CHECKER PLATE	2-175
1528855-0000	.CHECKER PLATE	2-175
1528856-0000	.TOE PLATE	2-175
1528857-0000	.TOE PLATE	2-177, 2-179
1528858-0000	.RAILING	2-175
1528859-0000	.RAILING	2-177, 2-179
1528866-0000	.CHECKER PLATE	2-175
1528867-0000	.TOE PLATE	2-175
1528868-0000	.CHECKER PLATE	2-177, 2-179
1528870-0000	.CHECKER PLATE	2-177, 2-179
1528871-0000	.TOE PLATE	2-177, 2-179
1528872-0000	.TOE PLATE	2-177, 2-179
1528873-0000	.RAILING	2-177, 2-179
1528874-0000	.RAILING	2-175
1528887-0000	.TORSION SPRING	10-15
1532223-0000	.BLOCK	1-281
1532231-0000	.CONNECTION	1-137, 1-139, 1-141
1532235-0000	.HEATER	1-157, 1-159

Part No	Description	Page No
1532236-0000	.CONNECTION BOX	1-275
1532237-0000	.RAIL	1-203, 1-277
1532238-0100	.TERMINAL BLOCK	1-275
1532239-0100	.CONNECTION BOX	1-261
1532240-0000	.BRACKET	1-275
1532249-0000	.WHEEL	1-115
1532250-0100	.HEAT EXCHANGER VALVE	1-149
1532257-0000	.SLIDE	5-47, 5-49, 5-51
1532258-0000	.SLIDE	5-47, 5-49, 5-51
1532261-0000	.GUIDE	5-47, 5-49, 5-51
1532262-0000	.GUIDE	5-47, 5-49, 5-51
1532263-0000	.GUIDE	5-47, 5-49, 5-51
1532264-0000	.GUIDE	5-47, 5-49, 5-51
1532284-0000	.NOZZLE	5-123, 5-125, 5-127
1532285-0000	.NOZZLE	5-123, 5-125, 5-127
1532286-0000	.NOZZLE	5-123, 5-125, 5-127
1532287-0000	.VOLUME FLAP	4-7, 4-9, 4-13, 4-15
1532289-0000	.PUSHER	5-149, 5-151, 5-153
1532290-0000	.PUSHER	5-149, 5-151, 5-153
1532291-0000	.PLATE	5-149, 5-151, 5-153
1532293-0000	.VOLUME SHIM	4-7, 4-9, 4-13, 4-15, 9-23, 9-25
1532294-0000	.RAIL	5-181, 5-183
1532297-0000	.FLAP	5-13, 5-15
1532298-0000	.FLAP	5-13, 5-15
1532459-0100	.SETTING TOOL	10-39
1532466-0000	.BRACKET	10-41
1532516-0000	.CARRIER	5-173, 5-175
1532901-0100	.PLINTH	8-91, 8-93
1532902-0100	.CABINET	8-3
1532903-0001	.WELDED CABINET	8-21
1532904-0100	.DOOR	8-21
1532905-0000	.PLATE	8-43
1532906-0100	.RACK	8-91, 8-93
1532907-0000	.SWING FRAME	8-91, 8-93
1532908-0100	.CONTROL BOARD LEFT	8-3
1532909-0000	.PLATE	8-21
1532911-0000	.FASTENING PLATE	8-21
1532912-0000	.FRAME	8-53
1532913-0000	.PROTECTION	8-71
1532914-0001	.COVERING PANEL	8-21
1532916-0000	.MOUNTING PLATE	8-49, 8-51
1532917-0000	.MOUNTING PLATE	8-61, 8-63
1532918-0000	.MOUNTING PLATE	8-71
1532919-0000	.MOUNTING PLATE	8-71
1532920-0100	.DOOR	8-21
1532921-0000	.DOOR	8-35
1532923-0100	.DOOR	8-21
1532924-0000	.DOOR	8-37
1532926-0000	.GASKET	8-21
1532927-0000	.FASTENING PLATE	8-21
1532928-0000	.COVERING PLATE	8-21
1532929-0000	.COVERING PLATE	8-21
1532930-0000	.PROTECTION	8-71
1532932-0100	.DOOR	8-21
1532933-0000	.DOOR	8-39
1532935-0100	.DOOR	8-21
1532936-0000	.DOOR	8-41
1532965-0000	.GUIDE	5-181, 5-183
1533046-0000	.INDUCTOR	4-67, 4-69, 4-105, 4-107, 9-23, 9-25
1533051-0000	.CUTTING RAIL	4-83, 4-85, 4-87
1533493-0000	.BUSBAR	1-13, 1-15
1535036-0000	.PLATE	2-181, 2-183
1538049-0000	.PIPE	1-263
1538154-0000	.DRAIN PIPE	1-157, 1-159
1538157-0000	.PIPE	1-167
1538158-0000	.PIPE	1-167
1538163-0000	.LEVER	1-135
1538166-0100	.AIR VALVE	1-149
1538169-0000	.HOLDER	1-165
1538181-0000	.PIPE	1-157, 1-159
1538183-0000	.PIPE	1-157, 1-159
1538186-0000	.BRACKET	5-33, 5-35, 5-37
1538186-0100	.PAPER TROLLEY	10-61
1538192-0000	.BRACKET	7-167
1538194-0000	.FINGER	7-87
1538202-0000	.AXLE PIN	7-77
1538234-0000	.SPACER	10-41
1538348-0000	.CATCH	4-83, 4-85, 4-87
1538349-0000	.CATCH	4-65
1538474-0000	.PIPE	1-157, 1-159
1538487-0000	.PIPE	1-157, 1-159
1538488-0000	.PROTECTION	1-157, 1-159
1538494-0000	.LID	1-173
1538496-0000	.ROLLER	1-123, 1-125

Part No	Description	Page No
1538502-0000	.PIPE	1-265
1538503-0000	.PIPE	1-263
1538597-0000	.SHAFT	10-69
1538637-0000	.VOLUME SHIM	4-39, 4-41, 4-43, 4-45, 9-9, 9-11, 9-23, 9-25
1538723-0000	.PIPE	1-263
1538724-0000	.BRACKET	1-263
1538725-0000	.WASHER	1-113
1538726-0000	.BUSHING	1-113
1538735-0000	.GASKET	1-269, 1-271
1538736-0000	.BOTTOM SECTION	1-269, 1-271
1538742-0000	.LID	1-269, 1-271
1538770-0000	.BOTTOM	5-13, 5-15
1538868-0000	.BRACKET	2-217, 2-219, 2-229, 2-235, 2-237, 2-243, 2-251, 6-47, 6-73, 7-43, 7-45
1538890-0000	.RAIL	5-33, 5-35, 5-37
1538891-0000	.RAIL	5-33, 5-35, 5-37
1538952-0000	.FORK	1-185, 1-187
1538953-0000	.SHAFT	1-185, 1-187
1538963-0000	.RAIL	5-163, 5-165
1538970-0000	.SLIDE	5-181, 5-183
1539172-0000	.CANTILEVER	4-19, 4-21, 4-29, 4-31
1539174-0000	.BUSHING	1-11
1539175-0000	.PLATE	1-11
1539387-0000	.SCREW	7-77
1539391-0000	.ROUND NUT	7-201, 7-211, 7-215
1539396-0000	.BOW CLAMP	7-167
1539397-0000	.ROLLER	7-181
1539454-0000	.GUIDE	1-41, 1-43
1539726-0000	.SHAFT	1-269, 1-271
1539727-0000	.WHEEL	1-269, 1-271
1539729-0000	.BRACKET	1-269, 1-271
1539740-0000	.BUSHING	1-161
1539741-0000	.COVER	1-161
1539742-0000	.SHUTTER	1-161
1539743-0000	.SHUTTER	1-161
1539744-0000	.BRACKET	1-161
1539745-0000	.LEVER	1-161
1539746-0100	.DOOR	1-87, 1-89
1539747-0000	.FRAME	1-145
1539748-0000	.GASKET	1-145
1539749-0000	.GLASS PANE	1-145
1539750-0000	.SHAFT	1-161
1539751-0000	.COVER	1-161
1539752-0000	.BRACKET	1-161
1539840-0000	.VOLUME BULGE	4-13, 4-15
1539841-0000	.VOLUME BULGE	4-7, 4-9, 4-13, 4-15
1539842-0000	.VOLUME SHIM	4-13, 4-15
1539843-0000	.VOLUME SHIM	4-7, 4-9, 4-13, 4-15, 9-23, 9-25
1539869-0000	.RAIL	5-181, 5-183
1539871-0000	.SPACER	5-25, 5-27, 5-33, 5-35, 5-37, 5-77, 5-79, 5-81
1539872-0000	.PUSHER	5-149, 5-151, 5-153
1539873-0000	.SPACER	5-33, 5-35, 5-37
1539874-0000	.SLIDE	5-47, 5-49, 5-51, 5-95, 5-97
1539875-0000	.SLIDE	5-47, 5-49, 5-51, 5-99, 5-101, 5-103
1539876-0000	.PLATE	5-47, 5-49, 5-51, 5-95, 5-97, 5-99, 5-101, 5-103
1539877-0000	.BAR	5-47, 5-49, 5-51, 5-95, 5-97
1539878-0000	.BAR	5-47, 5-49, 5-51, 5-99, 5-101, 5-103
1539879-0000	.GUIDE	5-47, 5-49, 5-51
1539880-0000	.GUIDE	5-47, 5-49, 5-51
1539881-0000	.FOLDING BAR	5-33, 5-35, 5-37
1539882-0000	.FOLDING BAR	5-33, 5-35, 5-37
1539886-0000	.CANTILEVER	4-19, 4-21, 4-29, 4-31
1539887-0000	.CATCH	4-19, 4-21, 4-29, 4-31
1539900-0000	.RIGHT UPPER GUIDE	5-25, 5-27, 5-71, 5-73, 5-75
1539983-0000	.GUIDE	5-47, 5-49, 5-51
1539984-0000	.GUIDE	5-47, 5-49, 5-51
1548001-0000	.SIGN	1-327
1548002-0000	.CAM	5-129
1548114-0000	.RAIL	5-181, 5-183
1548116-0000	.SPACER	8-91, 8-93
1548118-0000	.BUSBAR	8-77, 8-79, 8-81
1548121-0000	.PROTECTION	8-55
1548123-0100	.CONTROL BOARD RIGHT	8-3
1548124-0100	.PLINTH	8-61, 8-63
1548125-0100	.PLINTH	8-61, 8-63
1548127-0100	.POWER SUPPLY UNIT	8-3
1548129-0100	.RELAY UNIT 2	8-71
1548130-0100	.FUSE BOARD 1	8-71
1548131-0100	.FUSE BOARD 2	8-71
1548132-0100	.FUSE BOARD 3	8-71
1548133-0100	.PLINTH	8-71
1548134-0100	.PLINTH	8-71
1548136-0100	.DOOR	8-3
1548138-0000	.BRACKET	8-71
1548139-0000	.COVER PLATE	8-23, 8-25, 8-27, 8-29

Part No	Description	Page No
1548195-0000	.ROLL	7-77
1548196-0000	.ROLL	7-77
1548197-0000	.ROLL	7-77
1548200-0000	.BRACKET	7-43, 7-45
1548210-0100	.LOCKING DEVICE	7-177, 7-179
1548211-0000	.RAILING	2-181, 2-183
1548230-0000	.BODY	1-225
1548348-0000	.GUIDE	5-181, 5-183
1548349-0000	.RAIL	5-181, 5-183
1548353-0000	.SLIDE RAIL	5-157, 5-159
1548354-0000	.COVER	5-157, 5-159
1548454-0000	.DISC	3-21, 9-5
1548460-0100	.VOLUME FLAP PRESSURE	4-5
1548460-0101	.VOLUME FLAP	9-7
1548460-0102	.VOLUME FLAP	9-7
1548460-0103	.VOLUME FLAP	9-7
1548460-0104	.VOLUME FLAP	9-7
1548460-0105	.VOLUME FLAP	9-7
1548491-0200	.ELECTRICAL CABINET	7-3, 7-5
1548492-0000	.ELECTRICAL CABINET	7-135, 7-137, 7-139, 7-141, 7-143
1548496-0100	.TERMINAL	7-135, 7-137, 7-139, 7-141, 7-143
1548527-0000	.FOLDING BAR	5-33, 5-35, 5-37
1548528-0000	.FOLDING BAR	5-33, 5-35, 5-37
1548531-0000	.ROLLER	1-49, 1-51, 1-53
1548540-0000	.ROLLER	1-49, 1-51, 1-53
1548541-0000	.OLLER	1-49, 1-51, 1-53
1548550-0000	.RAIL	5-181, 5-183
1548551-0000	.SPACER	5-181, 5-183
1548587-0000	.APPLIANCE BOX	7-7
1548588-0000	.GRID ELEMENT	7-7
1548592-0000	.LID	7-7
1548612-0000	.COVERING PLATE	5-19, 5-21, 5-65, 5-67, 5-69
1548726-0000	.CONNECTION BOX	1-339, 1-341
1548727-0000	.MOUNTING PLATE	1-339, 1-341
1548728-0100	.TERMINAL BLOCK	1-339, 1-341
1548729-0000	.RAIL	1-345, 1-347
1548730-0000	.SPACER	1-339, 1-341
1548732-0000	.LID	1-107, 1-109, 1-111
1548733-0100	.CONNECTION BOX	1-3
1548734-0000	.FLANGE	1-113
1548735-0000	.LID	1-113
1548736-0100	.BENDING ROLLER	1-87, 1-89
1548739-0000	.FLANGE	1-113
1548742-0000	.SPACER	1-161
1548743-0000	.WASHER	1-161
1548749-0000	.PIPE	1-339, 1-341
1548751-0000	.BUSHING	1-127, 1-129
1548753-0100	.DRIVE ROLLER	1-87, 1-89
1548869-0000	.SPACER	1-339, 1-341
1548870-0000	.SPACER	1-339, 1-341
1548872-0100	.PILLAR	1-5
1548876-0100	.IH EQUIPMENT	1-5
1548877-0000	.SPACER	1-93
1548882-0000	.FLANGE	1-127, 1-129
1548892-0100	.CALENDER ROLLER	1-87, 1-89
1548940-0000	.SPRING	4-75, 4-77, 4-79, 4-111, 4-113, 4-115
1549125-0000	.PLUG	4-7, 4-9
1549126-0000	.NOZZLE	5-123, 5-125, 5-127
1549127-0000	.NOZZLE	5-123, 5-125, 5-127
1549312-0000	.INSERT	4-57, 4-59, 4-75, 4-77, 4-79, 4-97, 4-99, 4-111, 4-113, 4-115
1549324-0000	.BRACKET	7-43, 7-45
1549332-0000	.ROLLER	7-181
1549344-0000	.HOLDER	6-9
1549378-0000	.SPRING	4-57, 4-59, 4-97, 4-99, 9-23, 9-25
1549388-0000	.SPACER	5-123, 5-125, 5-127
1549389-0000	.SPACER	5-123, 5-125, 5-127
1549390-0000	.NUT	5-123, 5-125, 5-127
1549406-0000	.PACKAGE GUIDE	5-25, 5-27
1549411-0000	.PACKAGE GUIDE	5-25, 5-27
1549526-0000	.CONTAINER	1-157, 1-159
1549542-0100	.TERMINAL BLOCK	1-339, 1-341
1549545-0000	.FLANGE	1-143
1549548-0000	.FLANGE	1-143
1549568-0000	.CHAIN	1-115
1549573-0100	.CRANK	1-87, 1-89
1549614-0000	.LEFT UPPER GUIDE	5-25, 5-27, 5-71, 5-73, 5-75
1549615-0000	.SPRING	5-173, 5-175
1549803-0000	.BEARING HOUSING	4-83, 4-85, 4-87
1549804-0000	.BEARING HOUSING	4-83, 4-85, 4-87
1549806-0000	.BEARING HOUSING	4-83, 4-85, 4-87
1549807-0000	.BEARING HOUSING	4-83, 4-85, 4-87
1549808-0000	.BEARING HOUSING	4-83, 4-85, 4-87
1549844-0000	.FLAP	5-13, 5-15
1549847-0000	.PUSHER	5-149, 5-151, 5-153

Part No	Description	Page No
1549848-0000	.PUSHER	5-149, 5-151, 5-153
1549849-0000	.PLATE	5-149, 5-151, 5-153
1549940-0000	.PUSHER	5-149, 5-151, 5-153
1549980-0100	.FRAME	1-279
1549981-0000	.FLANGE	1-115
1549982-0000	.FLANGE	1-115
1549992-0000	.HINGE FLANGE	1-103, 1-105
1549993-0000	.HINGE FLANGE	1-103, 1-105
1549994-0000	.SPACER	1-103, 1-105
1550348-0002	.BEARING	5-161
1550595-6740	.SLIDING STRIP	5-161
1550743-0100	.RAIL HOLDER	5-181, 5-183
1550772-0000	.HOLDER	5-189
1550773-0000	.RAIL HOLDER	5-189
1558008-0000	.BLOCK	5-5, 5-7
1558020-0000	.ROD	5-5, 5-7
1558221-0000	.BRACKET	7-57
1558251-0000	.SHAFT	7-115
1558252-0000	.SCREW	7-115
1558253-0000	.ROLLER	7-115
1558254-0000	.SHAFT	1-293
1558268-0000	.LEG	7-55
1558269-0000	.SLEEVE	7-55
1558270-0100	.LEG	7-43, 7-45
1558304-0000	.TEMPLATE	9-37
1558327-0000	.LID	2-19, 2-21
1558352-0000	.FLANGE	1-289, 1-291
1558356-0100	.SPLICE DETECTOR	1-289, 1-291
1558357-0000	.SHAFT	1-143
1558358-0000	.WHEEL	1-143
1558417-0000	.FLANGE	1-173
1558418-0000	.SHAFT	1-173
1558427-0000	.LID	1-267
1558434-0000	.FRAME SECTION,UPPER	1-283
1558437-0000	.FRAME	1-283
1558438-0000	.CHECKER PLATE	1-279
1558439-0000	.CHECKER PLATE	1-279
1558440-0000	.BRACKET	1-283
1558441-0000	.BRACKET	1-11
1558447-0000	.SPACER	4-177, 4-179
1558477-0100	.WHEEL	10-73
1558479-0100	.HANDLE	10-73
1558480-0100	.LIFTING CYLINDER	10-73
1558484-0000	.PROTECTION PLATE	7-43, 7-45
1558485-0000	.AXLE PIN	7-7
1558487-0000	.SUPPORT	7-43, 7-45
1558493-0000	.VALVE BRACKET	1-205
1558494-0100	.PRODUCT VALVE	1-181, 1-183
1558495-0100	.HEATING UNIT	1-261
1558496-0000	.FRAME	1-263
1558497-0100	.FRAME SECTION,UPPER	1-3
1558510-0000	.PIPE	1-157, 1-159
1558511-0100	.PIPE WORK-AIR	1-149
1558512-0000	.PIPE	1-157, 1-159
1558513-0000	.PILLAR	1-13, 1-15
1558516-0000	.PIPE	1-157, 1-159
1558519-0100	.TERMINAL BLOCK	1-335
1558522-0100	.ADJUSTING ROLLER	1-87, 1-89
1558700-0000	.CARRIER	5-47, 5-49, 5-51
1558701-0000	.BUSHING	4-7, 4-9, 4-13, 4-15
1558713-0000	.SPACER SCREW	5-33, 5-35, 5-37
1558733-0000	.VOLUME BULGE	4-83, 4-85, 4-87
1558734-0000	.VOLUME BULGE	4-67, 4-69, 4-105, 4-107
1558748-0000	.FLANGE	1-91
1558749-0000	.FLANGE	1-91
1558750-0000	.FLANGE	1-91
1558751-0000	.FLANGE	1-91
1558752-0000	.FLANGE	1-91
1558754-0000	.LID	1-91
1558755-0000	.FLANGE	1-91
1558756-0000	.HOUSING	1-91
1558757-0000	.NUT	1-91
1558758-0000	.SHAFT	1-91
1558760-0000	.KNOB	1-91
1558761-0000	.SHAFT	1-91
1558762-0000	.LID	1-91
1558763-0000	.SLIDER	1-91
1558764-0000	.FLANGE	1-91
1558765-0000	.FLANGE	1-91
1558766-0000	.BUSHING	1-91
1558768-0000	.WASHER	1-91
1558769-0200	.SEPARATOR	1-149
1558795-0000	.RAILING	2-181, 2-183
1558798-0000	.BRACKET	7-43, 7-45

Part No	Description	Page No
1558801-0000	.SHOULDER SCREW	7-105
1558817-0000	.VOLUME BULGE	4-7, 4-9, 4-13, 4-15
1558819-0000	.RAIL	4-67, 4-69
1558820-0000	.RAIL	4-105, 4-107
1558830-0000	.COOLING PLATE	1-11
1558831-0000	.COOLING PLATE	1-11
1558832-0000	.RAIL	1-337
1558833-0000	.CONNECTION BOX	1-335
1558834-0100	.CONNECTION BOX	1-3
1558838-0000	.BEAM	1-325
1558840-0000	.PIPE	1-267
1558841-0000	.PIPE	1-267
1558842-0000	.PIPE	1-267
1558845-0000	.BRACKET	1-381
1558864-0000	.CARRIER	5-47, 5-49, 5-51
1558911-0000	.PRESSURE ROLLER	7-15, 7-17, 7-167
1558914-0000	.ROLLER BRACKET	7-15, 7-17
1558917-0000	.SPACER DISC	7-19
1558918-0000	.TIGHTENING NUT	7-19
1558932-0100	.TOP SECTION	5-17
1558933-0000	.FRAME	9-3
1558935-0100	.TOP RAIL	5-17
1558940-0200	.FLAP GUIDE	5-17
1558941-0000	.RAIL	5-163, 5-165
1558945-0000	.PIVOT PIN	2-143
1558946-0000	.PLUG	2-193
1558947-0000	.STRIP	2-177, 2-179, 2-181, 2-183
1558948-0000	.PLATE	2-145
1558949-0000	.PLATE	2-143
1558974-0000	.PIPE BRACKET	2-143
1558975-0000	.BLOCKING PIECE	2-143
1558983-0000	.DOOR	7-203
1558988-0100	.DOOR	7-183, 7-185
2500071-0000	.O-RING	1-185, 1-187
2500078-0000	.BODY	1-225
2500081-0000	.ELBOW PIPE	1-219, 1-221
2500082-0000	.MOUNTING PLATE	1-185, 1-187
2500088-0100	.3-WAY VALVE	2-113
2500089-0000	.PIPE	9-39
2500591-0000	.VOLUME BULGE	4-67, 4-69, 4-105, 4-107
2501219-0000	.BRACKET	7-85
2501220-0000	.BRACKET	7-85
2501221-0000	.BRACKET	7-85
2501222-0100	.GENERATOR CABINET	7-3, 7-5
2501275-0100	.CLEANING VALVES	1-233, 1-235
2501278-0000	.ECCENTRIC	1-219, 1-221
2501290-0100	.FILLING SYSTEM	1-3
2501292-0000	.VALVE HOUSING	2-115
2501310-0100	.FILLING PIPE	1-181, 1-183
2501311-0000	.FILLING PIPE	1-185, 1-187
2501312-0000	.CLEANING CUP	1-241, 1-243
2501378-0000	.PIPE	2-61
2501658-0000	.PIPE	1-253
2501660-0000	.PIPE	1-249
2501851-0000	.CURVE	4-127, 4-129
2503436-0000	.SHAFT	1-293
2503438-0000	.LEVER	1-293
2503634-0000	.BEARING FLANGE	1-99
2503635-0000	.SHIELD	1-99
2503636-0000	.STOP SCREW	1-99
2503637-0000	.FAN	1-99
2503638-0000	.FAN HOUSING	1-99
2503654-0000	.RAIL	7-149, 7-151
2503661-0100	.CABLE CONNECTION	4-147
2503665-0100	.DESIGN CORRECTION DEVICE LEFT	4-175
2503666-0100	.DESIGN CORRECTION DEVICE RIGHT	4-175
2503669-0000	.ECCENTRIC SHAFT	4-181, 4-183
2503694-0000	.TEMPLATE	10-25
2503699-0000	.VOLUME BULGE	4-83, 4-85, 4-87
2503700-0000	.VOLUME BULGE	4-67, 4-69, 4-105, 4-107
2503719-0000	.FRAME	10-11
2503720-0100	.OPENING FORCE TESTER	10-5
2503721-0100	.GRIPPING DEVICE	10-9
2503722-0100	.HOLDER	10-9
2503723-0000	.BLOCK	10-13
2503724-0000	.END PLATE	10-13
2503725-0000	.END PLATE	10-13
2503726-0000	.PLATE	10-13
2503727-0000	.PLATE	10-13
2503728-0000	.ARM	10-13
2503729-0000	.MOUNTING PLATE	10-13
2503730-0000	.SPACER	10-13
2503731-0000	.SLEEVE	10-13
2503732-0000	.SHAFT	10-13

Part No	Description	Page No
2503733-0000	.HANDLE	10-13
2503734-0000	.WASHER	10-13
2503735-0100	.FRAME	10-9
2503895-0000	.WASHER	7-135, 7-137, 7-139, 7-141, 7-143
2504412-0000	.RAIL	5-181, 5-183
2504414-0000	.RAIL	5-181, 5-183
2504435-0000	.MACHINE BODY	2-7
2504436-0000	.FRAME	2-65
2504437-0000	.FRAME	2-119
2504496-0100	.TRANSPORT EQUIPMENT	1-3
2504497-0000	.CABLE DUCT	1-349, 1-351
2504498-0000	.CABLE DUCT	1-349, 1-351
2504499-0000	.LID	1-349, 1-351
2504500-0000	.BRACKET	1-335
2504501-0000	.BRACKET	1-335
2504502-0100	.CABLE TRENCH	1-3
2504503-0000	.COVER	1-349, 1-351
2504506-0000	.BRACKET	1-373
2504521-0000	.BAR	1-17
2504523-0000	.CENTERING	1-17
2504547-0000	.GASKET	1-249
2504567-0000	.LINING	1-249
2504569-0000	.WASHER	1-251
2504572-0000	.GASKET	1-249
2504779-0100	.REAR MODULE	2-3
2504780-0100	.MACHINE BODY	2-5
2504781-0100	.HYDROGEN PEROXIDE	2-5
2504782-0100	.CHEMICALS	2-5
2504784-0200	.BENDING ROLLER	2-7
2504785-0100	.CENTRAL MODULE	2-3
2504786-0100	.MACHINE BODY	2-63
2504787-0100	.CLEANING SYSTEM	2-63
2504789-0100	.LUBRICATION UNIT	2-85
2504790-0100	.LIGHT FIXTURE	2-91, 2-147
2504791-0100	.CABLE DUCT	2-3
2504792-0100	.DRAINING	2-63
2504793-0100	.FRONT MODULE	2-3
2504794-0100	.MACHINE BODY	2-117
2504795-0100	.CLEANING SYSTEM	2-117
2504801-0000	.BRACKET	7-11
2504807-0000	.AXLE PIN	7-11
2504809-0000	.ROLLER	7-11
2504812-0000	.BLOCK	7-27
2504917-0100	.PIPE WORK-WATER	2-3
2504918-0100	.PNEUMATIC SYSTEM	2-3
2504920-0100	.DOORS AND COVERS	2-3
2506269-0000	.BUSHING	1-17
2506271-0000	.LEVER	1-17
2506273-0000	.LEVER	1-17
2506281-0000	.PLUG	1-13, 1-15
2506283-0000	.PIN	1-13, 1-15
2506291-0000	.BUSHING	1-17
2506328-0000	.BRACKET	7-53
2506334-0000	.SUPPORT	4-177, 4-179
2506336-0000	.PROTECTIVE COVER	4-177, 4-179
2506337-0000	.ANGLE BRACKET	4-177, 4-179
2506338-0000	.SHAFT	4-177, 4-179
2506340-0000	.ECCENTRIC SHAFT	4-181, 4-183
2506343-0000	.SUPPORT	4-177, 4-179
2506359-0100	.VALVE PANEL	2-43
2506360-0100	.VALVE RAMP	2-49
2506361-0000	.PANEL	2-49
2506362-0100	.VALVE PANEL	2-123
2506363-0100	.VALVE RAMP	2-131, 2-133
2506364-0000	.PLATE	2-131, 2-133
2506391-0000	.SUPPORT	4-177, 4-179
2506392-0000	.SPACER	4-177, 4-179
2506496-0100	.PRESSURE ROLLER	7-13
2506497-0100	.PRESSURE ROLLER	7-13
2506498-0000	.SEALING PLATE	7-19
2506499-0000	.SEALING PLATE	7-19
2506500-0000	.PLATE	7-19
2506501-0000	.PLATE	7-19
2506502-0000	.PLATE	7-19
2506503-0000	.PLATE	7-19
2506504-0000	.PLATE	7-19
2506505-0000	.PLATE	7-19
2506578-0100	.TANK	7-57
2506614-0100	.BOBBIN BRAKE	7-3, 7-5
2506615-0100	.BOBBIN BRAKE	7-3, 7-5
2506636-0000	.PIN	2-7, 2-119
2506637-0100	.AIR PIPE-LINE	2-17
2506647-0000	.LEVER	7-39
2506648-0000	.LEVER	7-41

Part No	Description	Page No
2506649-0000	.BEARING FLANGE	7-39
2506650-0000	.FRAME	7-39, 7-41
2506651-0000	.BEARING FLANGE	7-41
2506652-0000	.AXLE PIN	7-39, 7-41
2506653-0000	.PIPE	2-69
2506654-0000	.BLOCK	7-21
2506656-0000	.PLATE	7-21
2506657-0000	.SPACER	7-21
2506659-0000	.ROLLER	7-25
2506660-0000	.SPACER	7-9
2506661-0000	.ROLLER	7-23, 7-25
2506663-0000	.SUPPORT	7-23
2506664-0000	.STEERING	7-9
2506666-0000	.AXEL	7-23, 7-25
2506668-0200	.STRIP APPLICATOR	7-3, 7-5
2506776-0100	.CENTRAL LUBRICATION	2-85
2506777-0000	.BRACKET	2-87
2506796-0100	.CABLE CONNECTION	2-91
2506920-0000	.CANTILEVER	2-95
2506921-0000	.SUPPORT	2-119
2506922-0000	.PIPE	2-121
2506923-0000	.PIPE	2-121
2506924-0000	.PIPE	2-121
2506925-0000	.PIPE	2-121
2506927-0000	.HINGE	2-87
2506928-0000	.MOUNTING SHEET	2-87
2506929-0000	.BLOCKING PIECE	2-87
2506933-0000	.PIPE	2-69
2506934-0000	.PIPE	2-69
2507019-0100	.ROLLER	7-9
2507020-0100	.ROLLER	7-9
2507022-0200	.SPLICE DETECTOR	7-9
2507048-0000	.GASKET	1-185, 1-187
2507059-0200	.REGULATING VALVE	1-219, 1-221
2507060-0200	.PRODUCT LINES	1-181, 1-183
2507076-0000	.FOLDING FLAP	4-91, 4-93, 4-119, 4-121
2507077-0000	.FOLDING FLAP	4-91, 4-93, 4-119, 4-121
2507092-0000	.FOLDING FLAP	4-91, 4-93, 4-119, 4-121
2507093-0000	.FOLDING FLAP	4-91, 4-93, 4-119, 4-121
2507103-0000	.BEARING FLANGE	7-39, 7-41
2508129-0100	.DOOR	2-213
2508130-0000	.DOOR	2-215
2508131-0000	.GLASS PANE	2-215, 2-217
2508132-0000	.RUBBER SEAL	2-215
2508133-0000	.LOCKING ARM	2-217, 2-219, 2-229, 2-237, 2-243, 2-251
2508134-0000	.LOCKING ARM	2-217, 2-243, 2-251
2508135-0100	.DOOR	2-213
2508136-0000	.DOOR	2-217
2508137-0000	.RUBBER SEAL	2-217
2508138-0100	.DOOR	2-213
2508139-0000	.DOOR	2-229
2508140-0000	.LOCKING ARM	2-219, 2-229, 2-237
2508141-0100	.DOOR	2-213
2508142-0000	.DOOR	2-219
2508147-0000	.LOCKING ARM	2-235
2508149-0100	.DOOR	2-213
2508150-0000	.DOOR	2-235
2508151-0000	.RUBBER SEAL	2-235
2508152-0000	.LOCKING ARM	2-235
2508153-0000	.COVER	2-227
2508159-0100	.COVER	2-213
2508160-0000	.COVER	2-223
2508161-0000	.RUBBER SEAL	2-223, 2-263
2508162-0100	.COVER	2-213
2508163-0000	.COVER	2-239
2508164-0000	.RUBBER SEAL	2-239
2508165-0100	.COVER	2-213
2508166-0000	.COVER	2-241
2508167-0000	.RUBBER SEAL	2-241
2508168-0100	.COVER	2-213
2508169-0000	.COVER	2-225
2508170-0100	.COVER	2-225
2508171-0000	.RUBBER SEAL	2-225
2508172-0000	.COVER	2-227
2508173-0100	.DIAGRAM	2-229
2508175-0100	.DOOR	2-213
2508176-0000	.DOOR	2-243
2508177-0100	.DOOR	2-213
2508178-0000	.DOOR	2-245
2508179-0000	.RUBBER SEAL	2-245
2508180-0001	.GLASS PANE	2-245
2508180-0002	.GLASS PANE	2-247
2508181-0100	.DOOR	2-213
2508182-0000	.DOOR	2-247

Part No	Description	Page No
2508183-0000	.RUBBER SEAL	2-247
2508186-0000	.RUBBER SEAL	2-219, 2-229
2508187-0100	.EMERGENCY STOP	7-195
2508192-0000	.GUARD PLATE	2-271, 2-273
2508196-0000	.DRIVE SHAFT	2-271, 2-273
2508200-0000	.SHAFT	2-271, 2-273
2508201-0000	.CONVEYOR CHAIN	2-271, 2-273
2508203-0000	.HOLDER	2-271, 2-273
2508204-0000	.FLANGE	7-175
2508205-0001	.BRACKET	7-175
2508205-0002	.BRACKET	7-175
2508205-0003	.BRACKET	7-175
2508205-0007	.BRACKET	7-175
2508205-0010	.BRACKET	7-175
2508205-0012	.BRACKET	7-175
2508206-0000	.BENDING ROLLER	7-175
2508279-0100	.DOOR	1-5
2508280-0000	.FRAME	1-9
2508281-0000	.GASKET	1-9
2508282-0000	.GLASS PANE	1-9
2508283-0100	.DOOR	1-5
2508284-0000	.FRAME	1-7
2508285-0000	.GASKET	1-7
2508286-0000	.GLASS PANE	1-7
2508292-0000	.BUSHING	1-35, 1-37, 1-71, 1-73
2508297-0000	.WASHER	1-17, 1-35, 1-37, 1-71, 1-73
2508309-0000	.PLATE	1-35, 1-37, 1-71, 1-73
2508311-0000	.PLATE	1-35, 1-37, 1-71, 1-73
2508314-0000	.GASKET	1-7
2508315-0000	.SCREW	1-269, 1-271
2508369-0100	.PLATFORM	2-159, 2-161, 2-163, 2-165, 2-167, 2-169
2508370-0000	.PLATFORM	2-171
2508371-0000	.PLATFORM	2-171
2508374-0000	.CHECKER PLATE	2-171
2508375-0000	.CHECKER PLATE	2-171
2508379-0000	.CHECKER PLATE	2-171
2508380-0000	.CHECKER PLATE	2-171
2508381-0000	.CHECKER PLATE	2-171
2508384-0000	.CHECKER PLATE	2-171
2508385-0000	.CHECKER PLATE	2-171
2508390-0000	.FASTENING PLATE	2-271, 2-273
2508406-0000	.STRUT	4-181, 4-183
2508424-0000	.PIPE	2-69
2508425-0000	.PIPE	2-121
2508426-0000	.BRACKET	2-121
2508427-0000	.BRACKET	2-69
2508428-0000	.PIPE	2-69
2509544-0000	.PIPE	2-113
2509545-0000	.PIPE	2-113
2509546-0000	.CONNECTION	2-113
2509547-0000	.PIPE	2-113
2509552-0000	.DRAINING	2-65, 2-119
2509613-0000	.BUSHING	7-19
2509614-0000	.BUSHING	7-19
2509617-0100	.INDUCTOR	7-13
2509642-0000	.DOOR	1-373
2509643-0000	.BRACKET	8-21
2509644-0000	.BRACKET	1-373
2509646-0000	.CABLE DUCT	1-349, 1-351
2509647-0000	.CABLE DUCT	1-349, 1-351
2509648-0000	.CABLE DUCT	1-349, 1-351
2509649-0000	.COVER	1-349, 1-351
2509650-0000	.COVER	1-349, 1-351
2509651-0000	.COVER	1-349, 1-351
2509652-0000	.COVER	1-349, 1-351
2509654-0000	.PIPE	1-267
2509655-0000	.PIPE	1-267
2509656-0000	.PIPE	1-267
2509658-0000	.BRACKET	1-373
2509659-0000	.PLATE	1-373
2509674-0000	.BRACKET	1-137, 1-139, 1-141
2509681-0000	.RAIL	1-137, 1-139, 1-141
2509935-0000	.SPACER	5-33, 5-35, 5-37
2509936-0000	.SPACER SCREW	5-33, 5-35, 5-37
2509937-0000	.SPACER	5-33, 5-35, 5-37
2509938-0000	.BOTTOM	5-13, 5-15
2509941-0000	.SUPPORT	2-119
2510347-0100	.FRONT GUARD	2-213
2510348-0000	.COVER	2-261
2510349-0000	.SEALING STRIP	2-261
2510350-0000	.SUPPORT	2-261
2510351-0000	.SHAFT	2-261
2510352-0000	.DOOR	2-261
2510353-0000	.GUIDE	2-261

Part No	Description	Page No
2510354-0000	.PIN	2-261
2510355-0000	.SHAFT	2-261
2510359-0000	.FASTENING BRACKET	7-21
2510360-0000	.SHAFT	7-21
2510361-0000	.CONNECTING ROD	7-21
2510362-0000	.SHAFT	7-21
2510363-0000	.SHAFT	7-21
2510364-0000	.SHAFT	7-21
2510365-0000	.ROLLER	7-13
2510366-0000	.SHAFT	7-13
2510372-0000	.BUSHING	2-33
2510393-0000	.BRACKET	7-7
2510399-0000	.BRACKET	7-89
2510400-0000	.HOLDER	7-89
2510401-0100	.HOLDER	7-75
2510404-0000	.SUPPORT	7-23, 7-25
2510405-0000	.SUPPORT	7-23, 7-25
2510755-0000	.BRACKET	6-9
2510764-0100	.COVER	2-213
2510765-0000	.COVER	2-249
2510769-0000	.HOLDER	2-7
2510784-0000	.RUBBER SEAL	2-249
2510785-0000	.COVER PLATE	2-119
2510787-0000	.HOSE	4-185
2510833-0000	.PIPE	2-69
2510901-0000	.BRACKET	2-65
2510902-0000	.BRACKET	2-65
2510904-0000	.HOLDER	2-65
2511330-0000	.SPACER	1-197, 1-199, 1-317
2512737-0000	.ROLLER	1-29, 1-31, 1-49, 1-51, 1-53
2512738-0000	.ROLLER	1-29, 1-31, 1-49, 1-51, 1-53
2512740-0000	.ROLLER	1-49, 1-51, 1-53
2512741-0000	.ROLLER	1-29, 1-31, 1-49, 1-51, 1-53
2512742-0000	.ROLLER	1-29, 1-31, 1-49, 1-51, 1-53
2512746-0000	.ROLLER	1-33, 1-61, 1-63
2512748-0000	.ROLLER	1-33, 1-61, 1-63
2512749-0000	.ROLLER	1-33, 1-61, 1-63
2512762-0000	.ROLLER	1-29, 1-31, 1-49, 1-51, 1-53
2512768-0000	.SHAFT	1-13, 1-15
2512769-0000	.SHAFT	1-13, 1-15
2512772-0001	.SHIM	1-13, 1-15
2512772-0002	.SHIM	1-13, 1-15
2512772-0003	.SHIM	1-13, 1-15
2512774-0000	.SHIM	1-13, 1-15
2512779-0000	.RING	1-75, 1-77
2512780-0100	.SEAL	1-21, 1-23, 1-25
2512786-0000	.PIN	1-13, 1-15
2512817-0000	.SUPPORTING ARM	5-163, 5-165
2512821-0000	.EXTERNAL CLEANING DIAGRAM	2-231, 6-31
2512825-0000	.DIAGRAM	2-231
2512826-0000	.DIAGRAM	2-231
2512829-0000	.PNEUMATIC DIAGRAM	2-131, 2-133, 2-231
2512830-0100	.FRONT COVER	2-213
2512834-0000	.SUPPORTING ARM	5-163, 5-165
2512863-0000	.CAN	1-237
2512869-0000	.DRAIN PIPE	1-255, 1-257
2512889-0000	.PIPE SUPPORT	1-245
2512891-0000	.PIPE	1-255, 1-257
2512910-0100	.CLEANING SYSTEM	1-3
2512930-0100	.SUPPORT RAIL	1-5
2512936-0100	.CLEANING CUP	1-233, 1-235
2512939-0000	.DISTRIBUTOR BLOCK	1-195
2513013-0000	.SHAFT	4-67, 4-69, 4-83, 4-85, 4-87, 4-105, 4-107
2513014-0000	.CUTTING JAW	4-83, 4-85, 4-87
2513015-0000	.HOLDER	4-67, 4-69, 4-105, 4-107
2514045-0000	.CARRIER	4-57, 4-59
2514047-0000	.CARRIER	4-97, 4-99
2514048-0200	.CARRIER PRESSURE LEFT	4-5
2514049-0000	.CARRIER	4-57, 4-59
2514050-0200	.CARRIER PRESSURE RIGHT	4-5
2514051-0000	.CARRIER	4-97, 4-99
2514077-0100	.EXPANSION VESSEL	6-13, 6-15
2514083-0000	.REDUCTION NIPPLE	6-27
2514087-0000	.PLATE	6-27
2514149-0000	.HEATING ELEMENT	5-107, 5-109, 5-111
2514204-0100	.DRAINING	2-7
2514205-0100	.PIPE WORK-WATER	2-195
2514254-0100	.TUBE FLUSHING	2-195
2514255-0100	.PIPE WORK-WATER	2-195
2514370-0000	.PLATE	2-119
2514371-0000	.PLUG	2-149, 2-151
2514372-0000	.BUSHING	2-149, 2-151
2514392-0100	.MACHINE CARRIAGE	10-61
2514507-0000	.ROLLER	1-29, 1-31, 1-49, 1-51, 1-53

Part No	Description	Page No
2514508-0000	.ROLLER	1-29, 1-31, 1-49, 1-51, 1-53
2514509-0000	.ROLLER	1-49, 1-51, 1-53
2514510-0000	.ROLLER	1-29, 1-31, 1-49, 1-51, 1-53
2514511-0000	.ROLLER	1-29, 1-31, 1-49, 1-51, 1-53
2514514-0000	.INDUCTOR	1-35, 1-37, 1-71, 1-73
2514521-0000	.ROLLER	1-61, 1-63
2514522-0000	.INDUCTOR	1-35, 1-37, 1-71, 1-73
2514530-0000	.HOLDER	1-379
2514531-0000	.SPACER PIECE	1-375
2514532-0000	.ANGLE BRACKET	1-377, 1-379
2514533-0000	.HOLDER	1-375
2514535-0000	.HOLDER	1-375
2514536-0000	.SPACER PLATE	1-377
2514804-0000	.PIN	2-65
2514830-0000	.FRONT COVER	2-255
2514831-0000	.SEALING STRIP	2-255
2514832-0000	.GLASS PANE	2-255
2515216-0000	.BRACKET	2-119
2515217-0000	.BRACKET	2-119
2515289-0000	.BRACKET	7-77
2515291-0000	.BRACKET	10-57
2515292-0000	.BRACKET	10-57
2515323-0100	.VALVE RAMP	1-327
2515324-0100	.VALVE RAMP	1-317
2515325-0100	.VALVE RAMP	1-317
2517062-0100	.FRONT COVER	2-253
2517495-0000	.RAIL	5-181, 5-183
2517965-0000	.GUIDE	5-181, 5-183
2517967-0000	.EXTENSION	5-123, 5-125, 5-127
2518035-0000	.FLAP	5-53, 5-55, 5-57
2518098-0000	.COUNTER ROLLER	1-27, 1-45, 1-47
2518100-0000	.RAIL	5-181, 5-183
2518119-0000	.PLATE	7-51
2518129-0000	.GUIDE	5-95, 5-97
2518130-0000	.GUIDE	5-99, 5-101, 5-103
2518145-0101	.FLEXBOX TETRA BRIK	8-91, 8-93
2518146-0100	.TPOP PANEL 15"	2-3
2518147-0101	.PANEL UNIT 15"	2-265
2519430-0000	.BRACKET	2-121
2519437-0000	.TUBE	1-179
2519439-0000	.TUBE	1-179
2519440-0000	.TUBE	1-179
2519441-0000	.TUBE	1-267
2519442-0000	.TUBE	1-267
2519443-0000	.TUBE	1-267
2519444-0000	.TUBE	1-267
2519554-0000	.PIPE	2-25
2519555-0000	.PIPE	2-25
2519556-0000	.BRACKET	2-61
2519570-0100	.DRAINING	2-3
2519571-0000	.PIPE	2-269
2519572-0000	.PIPE	2-269
2519574-0100	.HYDROGEN PEROXIDE CONCENTRATION METER	2-53
2520160-0000	.CLAMP	5-89, 5-91
2520163-0000	.PLATE	5-113, 5-115, 5-117
2520165-0000	.GUIDE PLATE	5-113, 5-115, 5-117
2520168-0000	.SLIDE	5-61
2520170-0000	.FLAP	5-61
2520172-0000	.FOLDING PART	5-77, 5-79, 5-81
2520175-0000	.FOLDING PART	5-77, 5-79, 5-81
2520178-0000	.GUIDE	5-71, 5-73, 5-75
2520179-0000	.GUIDE	5-71, 5-73, 5-75
2520180-0000	.CABLE DUCT	2-267
2520181-0000	.LID	2-267
2520183-0000	.RAIL	5-181, 5-183
2520346-0000	.RAIL	5-181, 5-183
2520430-0000	.HOLDER	2-119
2520431-0000	.SUPPORT	2-119
2520484-0100	.PIPE WORK-HYDRAULIC	2-71
2522128-0100	.MOTOR UNIT	5-3
2522129-0100	.INFEED CONVEYOR VARIANT	5-3
2522145-0000	.RAIL	5-181, 5-183
2522148-0000	.PIPE	6-45
2522165-0000	.CANTILEVER	2-205
2522166-0000	.GUIDE	5-95, 5-97
2522167-0000	.GUIDE	5-99, 5-101, 5-103
2522181-0000	.RAIL	5-181, 5-183
2522184-0000	.PIPE	6-45
2522195-0000	.CONNECTION	1-229
2522213-0004	.SHAFT	1-33, 1-49, 1-51, 1-53, 1-61, 1-63
2522213-0005	.SHAFT	1-33, 1-61, 1-63
2522213-0006	.SHAFT	1-45, 1-47, 1-61, 1-63, 1-79
2522213-0007	.SHAFT	1-49, 1-51, 1-53, 1-79
2522213-0008	.SHAFT	1-61, 1-63

Part No	Description	Page No
2522213-0009	.SHAFT	1-61, 1-63
2522213-0010	.SHAFT	1-61, 1-63
2522213-0015	.SHAFT	1-49, 1-51, 1-53, 1-67, 1-69
2522213-0016	.SHAFT	1-67, 1-69
2522213-0017	.SHAFT	1-67, 1-69
2522213-0019	.SHAFT	1-61, 1-63
2522213-0020	.SHAFT	1-61, 1-63
2522232-0000	.SHAFT	1-17
2522233-0000	.BUSHING	1-17
2522234-0000	.LEVER	1-17
2522235-0000	.COMPRESSION SPRING	1-17
2522258-0000	.FLANGE	1-135
2523265-0000	.HOOK	10-57
2523266-0000	.PUMP SHAFT	2-33
2523268-0000	.SHAFT	1-185, 1-187, 9-23, 9-25
2523480-0000	.SLIDE	5-181, 5-183
2523482-0000	.PUSH BUTTON BOX	7-213
2523483-0000	.PUSH BUTTON BOX	7-213
2523497-0000	.BENDING ROLLER	7-173
2523499-0000	.SHAFT	7-173
2523500-0000	.AXLE PIN	7-173
2523597-0000	.SLIDER	7-87
2523598-0000	.SPLICING TABLE	7-87
2523600-0000	.PIN	7-87
2523601-0000	.PAD	7-87
2523765-0000	.BENDING ROLLER	7-53
2523766-0001	.BRACKET	7-53
2523766-0002	.BRACKET	7-53
2523766-0003	.BRACKET	7-53
2523766-0007	.BRACKET	7-53
2523766-0010	.BRACKET	7-53
2523766-0012	.BRACKET	7-53
2523767-0000	.FLANGE	7-53
2523811-0100	.WHEEL	5-3
2523812-0100	.FLAP	5-53, 5-55, 5-57
2524349-0000	.CONNECTING PIPE	1-245
2524363-0000	.HANGER	6-47
2524504-0000	.BRACKET	2-65
2524509-0100	.FLAP HEATER BODY	5-3
2524512-0000	.PUSHER	5-149, 5-151, 5-153
2524515-0000	.CABINET	6-11
2524600-0100	.PRESSURE ROLLER	7-91, 7-93
2524601-0000	.AXLE PIN	7-101, 7-103
2524602-0000	.HANDLE	7-101, 7-103
2524603-0000	.HOLDER	7-101, 7-103
2524604-0000	.ROCKER ARM	7-101, 7-103
2524606-0000	.CABLE DUCT	7-69, 7-71, 7-73
2524607-0000	.CABLE DUCT	7-69, 7-71, 7-73
2525338-0000	.PLUG	1-245
2525339-0000	.BRACKET	7-77
2525570-0000	.COVER	3-21
2526563-0000	.HANDLE	5-61
2526567-0000	.CYLINDER	5-61
2526575-0000	.FOLDING BAR	5-71, 5-73, 5-75
2526578-0000	.GUIDE	5-95, 5-97, 9-17, 9-19
2526579-0000	.GUIDE	5-99, 5-101, 5-103, 9-13, 9-15
2526810-0000	.HOLDER	4-83, 4-85, 4-87
2526811-0000	.HOLDER	4-67, 4-69, 4-105, 4-107
2526812-0000	.SHAFT	4-67, 4-69, 4-83, 4-85, 4-87, 4-105, 4-107
2526820-0000	.LINK	1-135
2526825-0000	.WASHER	1-27, 1-29, 1-31, 1-45, 1-47, 1-49, 1-51, 1-53
2526826-0000	.BUSHING	1-27, 1-29, 1-31, 1-45, 1-47, 1-49, 1-51, 1-53
2526827-0000	.SHAFT	1-27, 1-29, 1-31, 1-45, 1-47, 1-49, 1-51, 1-53
2526830-0000	.SHAFT	1-27, 1-29, 1-31, 1-45, 1-47, 1-49, 1-51, 1-53
2526832-0000	.SPRING	1-27, 1-29, 1-31, 1-45, 1-47, 1-49, 1-51, 1-53
2526833-0000	.NUT	1-27, 1-29, 1-31, 1-45, 1-47, 1-49, 1-51, 1-53
2526836-0000	.BUSHING	1-27, 1-29, 1-31, 1-45, 1-47, 1-49, 1-51, 1-53
2526841-0000	.SHAFT	1-17
2526842-0000	.LINK	1-135
2526849-0000	.PLATE	1-135
2526850-0000	.SHAFT	1-135
2526851-0000	.SHUTTER	1-135
2526852-0000	.PLATE	1-327
2526853-0200	.VALVE PANEL	1-325
2526854-0100	.VALVE PANEL	1-315
2526855-0000	.PLATE	1-317
2526858-0000	.DOWEL	1-13, 1-15, 1-39
2526859-0000	.CAM	1-13, 1-15
2527252-0100	.CONNECTION BOX	2-91
2527253-0100	.CONNECTION BOX	2-53
2527295-0100	.CABLE HARNESS	2-147
2527297-0100	.CONNECTION BOX	2-147
2527299-0100	.CONNECTION BOX	2-147
2527300-0100	.ELECTRIC EQUIPMENT	2-117

Part No	Description	Page No
2527326-0000	.SPACER	7-11
2527368-0000	.PNEUMATIC DIAGRAM	2-49, 2-131, 2-133, 2-231, 6-75
2527371-0000	.INSERT	2-149, 2-151
2527509-0000	.PNEUMATIC DIAGRAM	2-49, 2-231
2527525-0000	.BRACKET	2-83
2527639-0000	.RUBBER SEAL	2-243, 2-251
2527640-0000	.GLASS PANE	2-243, 2-251
2527703-0100	.GUIDE	5-89, 5-91
2527703-0101	.GUIDE	9-7
2527703-0102	.GUIDE	9-7
2527703-0103	.GUIDE	9-7
2527703-0104	.GUIDE	9-7
2527703-0105	.GUIDE	9-7
2527703-0108	.GUIDE	9-7
2527703-0109	.GUIDE	9-7
2527704-0100	.GUIDE	5-89, 5-91
2527704-0101	.GUIDE	9-7
2527704-0102	.GUIDE	9-7
2527704-0103	.GUIDE	9-7
2527704-0104	.GUIDE	9-7
2527704-0105	.GUIDE	9-7
2527704-0108	.GUIDE	9-7
2527704-0109	.GUIDE	9-7
2527725-0000	.CATCH	4-19, 4-21, 4-29, 4-31
2527766-0000	.RAIL	5-181, 5-183
2527792-0000	.SUPPORT	5-201, 5-207
2527793-0000	.SHAFT	5-201, 5-207
2528044-0100	.PNEUMATIC SYSTEM	2-117
2528046-0100	.HOSE INSTALLATION	2-123
2528054-0000	.PEROXIDE CHAMBER	1-269, 1-271
2528055-0000	.PEROXIDE CHAMBER	1-269, 1-271
2528056-0000	.RESISTANCE	1-269, 1-271
2528057-0000	.RESISTANCE	1-269, 1-271
2528058-0000	.COVER	1-269, 1-271
2528059-0000	.BRACKET	1-269, 1-271
2528061-0000	.SCREW	1-161
2528062-0000	.SCREW	1-161
2528068-0000	.CAM	1-13, 1-15
2528070-0000	.LOCKING LEVER	1-13, 1-15
2528073-0000	.LID	1-91
2528074-0100	.BATH	1-261
2528075-0100	.PNEUMATIC PANEL	1-301
2528076-0100	.STERILE AIR SYSTEM	1-3
2528077-0100	.PNEUMATIC PANEL	1-301
2528078-0000	.BRACKET	1-315
2528079-0100	.PNEUMATIC SYSTEM	1-3
2528080-0100	.HOSE INSTALLATION	1-301
2528081-0100	.HOSE HOLDER	1-301
2528082-0000	.PIPE	1-333
2528083-0000	.TUBE	1-333
2528084-0000	.TUBE	1-333
2528085-0000	.FRAME	1-375
2528087-0100	.EMERGENCY STOP	1-5
2528088-0000	.HOLDER	1-13, 1-15
2528096-0000	.RING	1-75, 1-77
2528097-0000	.PLATE	1-75, 1-77
2528101-0100	.BLOWING SYSTEM	1-87, 1-89
2528102-0000	.LOCKING LEVER	1-13, 1-15
2528104-0000	.PIPE	1-185, 1-187
2528105-0000	.PLATE	1-295
2528106-0000	.FLANGE	1-13, 1-15
2528107-0000	.SHIM	1-13, 1-15
2528109-0000	.PIN	1-13, 1-15
2528110-0000	.HOUSING	1-289, 1-291
2528111-0000	.PLATE	1-13, 1-15
2528112-0000	.BRACKET	1-83, 1-85
2528113-0000	.BRACKET	1-83, 1-85
2528114-0000	.COVER PLATE	1-83, 1-85
2528115-0000	.UPPER FORMING RING	1-49, 1-51, 1-53
2528116-0000	.UPPER FORMING RING	1-49, 1-51, 1-53
2528117-0000	.UPPER FORMING RING	1-49, 1-51, 1-53
2528118-0001	.LOCK PLATE	1-29, 1-31, 1-49, 1-51, 1-53
2528118-0002	.LOCK PLATE	1-49, 1-51, 1-53
2528118-0003	.LOCK PLATE	1-49, 1-51, 1-53
2528118-0004	.LOCK PLATE	1-27, 1-45, 1-47, 1-49, 1-51, 1-53
2528118-0005	.LOCK PLATE	1-27, 1-29, 1-31, 1-45, 1-47, 1-49, 1-51, 1-53
2528119-0001	.LOCK PLATE	1-29, 1-31, 1-49, 1-51, 1-53
2528119-0002	.LOCK PLATE	1-49, 1-51, 1-53
2528119-0003	.LOCK PLATE	1-49, 1-51, 1-53
2528119-0004	.LOCK PLATE	1-27, 1-45, 1-47, 1-49, 1-51, 1-53
2528119-0005	.LOCK PLATE	1-27, 1-29, 1-31, 1-45, 1-47, 1-49, 1-51, 1-53
2528120-0000	.LOWER FORMING RING	1-45, 1-47
2528121-0000	.UPPER FORMING RING	1-45, 1-47
2528122-0000	.LOWER FORMING RING	1-45, 1-47

Part No	Description	Page No
2528123-0001	.LOCK PLATE	1-29, 1-31, 1-33, 1-49, 1-51, 1-53, 1-61, 1-63
2528123-0002	.LOCK PLATE	1-33, 1-49, 1-51, 1-53, 1-61, 1-63
2528123-0003	.LOCK PLATE	1-49, 1-51, 1-53
2528123-0004	.LOCK PLATE	1-27, 1-29, 1-31, 1-45, 1-47, 1-49, 1-51, 1-53
2528123-0005	.LOCK PLATE	1-49, 1-51, 1-53
2528123-0006	.LOCK PLATE	1-67, 1-69
2528123-0007	.LOCK PLATE	1-33, 1-61, 1-63
2528123-0008	.LOCK PLATE	1-33, 1-61, 1-63
2528123-0009	.LOCK PLATE	1-67, 1-69
2528124-0000	.LOWER FORMING RING	1-45, 1-47
2528125-0000	.LOWER FORMING RING	1-45, 1-47
2528126-0000	.LOWER FORMING RING	1-45, 1-47
2528127-0000	.BRACKET	1-295
2528128-0000	.SHAFT	1-295
2528129-0100	.FRAME HOUSING	1-107, 1-109, 1-111
2528133-0000	.WASHER	1-113
2528134-0000	.GASKET	1-113
2528135-0000	.SHAFT	1-295
2528136-0000	.SQUEE-GEE ROLLER	1-117, 1-119, 1-121, 1-123, 1-125
2528142-0100	.DOOR	1-87, 1-89
2528143-0000	.FRAME	1-147
2528144-0000	.FRAME	1-105
2528145-0100	.DOOR	1-87, 1-89
2528146-0100	.DOOR	1-87, 1-89
2528455-0100	.ELECTRIC EQUIPMENT	2-5
2528457-0100	.PNEUMATIC SYSTEM	2-5
2529069-0000	.PIPE	2-69
2529072-0000	.PIPE	1-267
2529073-0000	.PIPE	1-267
2529074-0000	.INTERMEDIATE PART	1-281
2529110-0000	.BRACKET	2-69
2529111-0000	.BRACKET	2-69
2529116-0100	.ELECTRIC EQUIPMENT	2-63
2529117-0100	.DOOR SAFETY SWITCH	2-91
2529167-0100	.LUBRICATING SYSTEM	2-63
2529169-0000	.HOLDER	2-119
2529178-0000	.HYDRAULIC PIPE	2-83
2529179-0000	.HYDRAULIC PIPE	2-83
2529182-0000	.HYDRAULIC PIPE	2-83
2529183-0000	.HYDRAULIC PIPE	2-83
2529187-0000	.SPACER	3-9
2529267-0000	.GUIDE	5-95, 5-97
2529275-0000	.SLIDE	5-95, 5-97
2529276-0000	.SLIDE	5-99, 5-101, 5-103
2529277-0000	.BAR	5-95, 5-97
2529278-0000	.BAR	5-99, 5-101, 5-103
2529279-0000	.PLATE	5-95, 5-97
2529289-0000	.PUSHER	5-149, 5-151, 5-153
2529341-0000	.GASKET	2-65
2529342-0000	.GASKET	2-65
2529410-0100	.CABLE HARNESS	2-91
2529412-0000	.PUMP HOUSING	2-33
2529413-0000	.EXTENSION PIPE	2-33
2529416-0000	.SHAFT	1-185, 1-187, 9-23, 9-25
2529418-0000	.SHAFT	1-185, 1-187, 9-23, 9-25
2529419-0000	.SHAFT	1-185, 1-187, 9-23, 9-25
2529420-0000	.SHAFT	1-185, 1-187, 9-23, 9-25
2529484-0100	.PEROXIDE PIPE	1-261
2529485-0100	.SPRAY SYSTEM	1-279
2529498-0000	.GASKET	2-107, 2-109, 2-111
2529499-0100	.CABLE HARNESS	2-53
2529544-0000	.CABLE DUCT	7-69, 7-71, 7-73
2529546-0000	.SUPPORT	7-115
2529547-0100	.PAPER GUIDE	7-91, 7-93, 7-167
2529549-0000	.PLATE	7-101, 7-103, 7-169
2529550-0000	.SUPPORT	7-21
2529551-0000	.PROTECTION PLATE	7-43, 7-45
2529569-0100	.INDUCTOR	7-9
2529571-0100	.PRESSURE ROLLER	7-9
2529572-0000	.BRACKET	7-17
2529573-0000	.BRACKET	7-15
2529578-0000	.BUSHING	7-19
2529579-0000	.COVER	2-271, 2-273
2529597-0100	.DOOR	2-213
2529598-0000	.DOOR	2-237
2529599-0000	.RUBBER SEAL	2-237
2529609-0000	.GUIDE	5-47, 5-49, 5-51
2529610-0000	.GUIDE	5-47, 5-49, 5-51
2529664-0000	.CARRIER	5-173, 5-175
2529670-0000	.WASHER	2-271, 2-273
2529671-0000	.FOLDING DEVICE	5-9, 5-11
2529672-0000	.FOLDING DEVICE	5-9, 5-11
2529675-0000	.LEVER	5-9, 5-11
2529676-0000	.LEVER	5-9, 5-11

Part No	Description	Page No
2529737-0000	.ANGLE BRACKET	1-379
2529739-0000	.LOCK PLATE	1-377
2529740-0000	.LOCK PLATE	1-377
2529741-0000	.COVERING PANEL	1-379
2529742-0000	.CLAMP	1-379
2529743-0000	.COVERING PANEL	1-379
2529744-0000	.DOOR	1-377
2529745-0000	.DOOR	1-375
2529750-0000	.COVERING PANEL	1-219, 1-221
2529754-0000	.DOWEL	1-375
2529756-0000	.COVERING PANEL	1-379
2529757-0000	.COVERING PANEL	1-379
2529760-0100	.COVERING PANEL	1-371
2529785-0000	.KNOB	5-89, 5-91
2529786-0000	.KNOB	5-89, 5-91
2529925-0000	.STEP	1-299
2529926-0000	.RAILING	1-285
2529930-0000	.AIR NOZZLE	7-13
2529990-0000	.FRAME	7-69, 7-71, 7-73
2529991-0100	.RAILING	1-279
2530080-0100	.DOOR	2-213
2530082-0000	.GLASS PANE	2-249
2530086-0000	.COVER STRIP	2-237
2530087-0000	.DOOR	2-251
2530096-0000	.RAILING	1-285
2530188-0100	.STEP	1-279
2530284-0000	.GASKET	8-91, 8-93
2530285-0000	.GASKET	8-91, 8-93
2530286-0000	.RAIL	8-21
2530287-0000	.PLATE	8-21
2530288-0000	.GLASS PANE	8-35
2530300-0000	.PIPE	2-119
2530301-0000	.PIPE	2-119
2530302-0000	.PIPE	2-119
2530303-0000	.PIPE	2-119
2530313-0000	.BUSHING	4-39, 4-41, 4-43, 4-45, 9-9, 9-11
2530399-0000	.HANGER	7-11
2530405-0000	.BRACKET	7-11
2530406-0000	.ADJUSTING SCREW	7-11
2530407-0000	.BRACKET	7-11
2530408-0000	.LEVER	7-11
2530409-0000	.ROD	7-11
2530410-0200	.STRIP GUIDE	7-9
2530418-0000	.SPRING	5-201, 5-207
2530508-0000	.TIE ROD	4-75, 4-77, 4-79, 4-111, 4-113, 4-115
2530875-0000	.BRACKET	1-249
2531037-0000	.FRAME	1-93
2531038-0000	.FRAME	1-103
2531039-0100	.DOOR	1-87, 1-89
2531040-0000	.GASKET	1-103, 1-105
2531041-0000	.GLASS PANE	1-103, 1-105
2531043-0100	.HOUSING	1-87, 1-89
2531044-0000	.BOX FRAME	1-101
2531045-0000	.GASKET	1-93
2531046-0000	.GLASS PANE	1-93
2531047-0100	.HOUSING	1-87, 1-89
2531048-0000	.BENDING ROLLER	1-107, 1-109, 1-111
2531052-0100	.PRESSURE UNIT	1-261
2531053-0000	.PLUG	1-107, 1-109, 1-111
2531054-0000	.PLUG	1-107, 1-109, 1-111
2531055-0000	.PLUG	1-107, 1-109, 1-111
2531056-0000	.LOWER FORMING RING	1-45, 1-47
2531057-0000	.LOWER FORMING RING	1-45, 1-47
2531059-0000	.LOCK PLATE	1-315, 1-325
2531060-0000	.BRACKET	1-35, 1-37, 1-71, 1-73
2531064-0000	.PIPE	1-255, 1-257
2531065-0000	.PIPE	1-255, 1-257
2531066-0000	.PIPE	1-255, 1-257
2531067-0000	.PIPE	1-255, 1-257
2531068-0000	.PIPE	1-255, 1-257
2531069-0000	.PIPE	1-259
2531070-0000	.PIPE	1-255, 1-257
2531071-0000	.PIPE	1-259
2531073-0000	.TANK	1-249
2531074-0000	.HINGE	1-247
2531075-0000	.SCREW	1-247
2531076-0100	.INTEGRATED CLEANING UNIT	1-233, 1-235
2531077-0100	.CLEANING TANK	1-247
2531078-0100	.VALVE PIPE	1-247
2531079-0000	.PIPE	1-253
2531080-0000	.PIPE	1-255, 1-257
2531082-0000	.CLAMP	1-255, 1-257
2531083-0000	.SLEEVE	1-255, 1-257
2531114-0000	.CARRIER	4-75, 4-77, 4-79

Part No	Description	Page No
2531233-0000	.HYDRAULIC PIPE	2-83
2531234-0000	.HYDRAULIC PIPE	2-83
2531235-0000	.HYDRAULIC PIPE	2-83
2531236-0000	.HYDRAULIC PIPE	2-83
2531237-0000	.HYDRAULIC PIPE	2-83
2531238-0000	.HYDRAULIC PIPE	2-83
2531245-0000	.HOSE NIPPLE	6-17, 6-19, 6-21
2531274-0100	.ELECTRICAL CONNECTION	5-3
2531276-0000	.BRACKET	5-213, 5-215
2531277-0000	.PIPE	5-213, 5-215
2531278-0000	.PIPE	5-213, 5-215
2531423-0000	.NUT	6-17, 6-19, 6-21
2531435-0000	.PLUG	1-253
2531493-0000	.BRACKET	7-87
2531500-0000	.PIPE	2-61
2531501-0000	.PIPE	2-61
2531558-0000	.RAIL	5-181, 5-183
2531703-0000	.BUSHING	4-67, 4-69, 4-83, 4-85, 4-87, 4-105, 4-107
2532535-0000	.HATCH	7-195
2532553-0000	.PLATE	1-297
2532561-0000	.SPACER	7-173
2532574-0000	.COVER	6-17, 6-21
2532580-0000	.HATCH	5-173, 5-175
2532619-0000	.COVER	2-219, 2-229
2532620-0000	.GLASS PANE	2-229
2532806-0000	.ATTACHMENT PIPE	6-25
2532837-0000	.TUBE FLUSHING DEVICE	4-141
2532838-0000	.TUBE FLUSHING DEVICE	4-141
2532854-0000	.SUPPORT	2-65
2532864-0000	.BRACKET	5-181, 5-183
2532895-0002	.LOCK PLATE	1-61, 1-63
2532895-0003	.LOCK PLATE	1-33, 1-61, 1-63
2532895-0004	.LOCK PLATE	1-33, 1-61, 1-63, 1-67, 1-69
2532895-0005	.LOCK PLATE	1-79
2532895-0008	.LOCK PLATE	1-61, 1-63, 1-67, 1-69
2532895-0009	.LOCK PLATE	1-79
2532896-0000	.COVER	1-107, 1-109, 1-111
2532897-0000	.GASKET	1-107, 1-109, 1-111
2532898-0000	.BRACKET	1-35, 1-37, 1-71, 1-73
2532899-0000	.BRACKET	1-35, 1-37, 1-71, 1-73
2532900-0000	.LOWER FORMING RING	1-45, 1-47
2532908-0000	.ROLLER	1-289, 1-291
2532909-0100	.COVERING PANEL	1-3
2532911-0000	.ROLLER	1-289, 1-291
2532912-0001	.LOCK PLATE	1-61, 1-63
2532912-0002	.LOCK PLATE	1-61, 1-63
2532914-0000	.SPACER	1-29, 1-31, 1-49, 1-51, 1-53
2532915-0000	.WASHER	1-137, 1-139, 1-141
2532916-0000	.AIR GUIDE	1-137, 1-139, 1-141
2532918-0000	.HOLDER	1-137, 1-139, 1-141
2532919-0000	.PLATE	1-137, 1-139, 1-141
2532922-0000	.PLATE	1-137, 1-139, 1-141
2532925-0000	.INDUCTOR	1-35, 1-37, 1-71, 1-73
2532931-0000	.FLANGE	1-127, 1-129
2532934-0100	.AIR KNIFE	1-87, 1-89
2532938-0000	.INDUCTOR	1-35, 1-37, 1-71, 1-73
2532956-0000	.BENDING ROLLER	1-131, 1-133
2532963-0000	.DEFLECTOR	1-101
2532964-0000	.DEFLECTOR	1-101
2532965-0000	.ROLLER	1-49, 1-51, 1-53
2532968-0000	.BUSHING	1-167
2532969-0000	.SHAFT	1-123, 1-125
2532973-0000	.KNOB	1-27, 1-29, 1-31, 1-45, 1-47, 1-49, 1-51, 1-53
2532974-0000	.SETTING TOOL	10-5
2532977-0000	.BRACKET	1-13, 1-15
2532978-0000	.PLATE	1-13, 1-15
2532979-0000	.SPACER	1-11
2532983-0000	.FLANGE	1-117, 1-119, 1-121
2532984-0000	.FLANGE	1-117, 1-119, 1-121
2532985-0000	.DRYING CHAMBER	1-113
2533627-0000	.SUPPORT BLOCK	1-13, 1-15
2533628-0000	.SUPPORT BLOCK	1-13, 1-15
2533638-0000	.AXLE PIN	3-5, 3-25
2533651-0100	.IH EQUIPMENT	8-49, 8-51
2533655-0000	.PROTECTION	8-49, 8-51
2533670-0000	.SUPPORT	1-293
2533671-0000	.SCREW	1-293
2533672-0000	.SHAFT	1-293
2533673-0000	.ROLLER	1-293
2533736-0000	.SLEEVE	4-127, 4-129
2533737-0000	.RAIL BRACKET	4-127, 4-129
2533740-0000	.RAIL BRACKET	4-127, 4-129
2533741-0000	.RAIL BRACKET	4-127, 4-129
2533742-0000	.RAIL BRACKET	4-127, 4-129

Part No	Description	Page No
2533744-0000	.RAIL BRACKET	4-127, 4-129
2533749-0000	.DOOR	1-373
2533750-0000	.DOOR	1-373
2533751-0000	.DOOR	1-373
2533753-0000	.PANEL	1-373
2533754-0000	.BRACKET	8-21
2533755-0000	.BRACKET	8-21
2533763-0000	.COVERING PANEL	1-369
2533766-0100	.COVERING PANEL	1-3
2533768-0000	.COVERING PLATE	1-369
2534851-0000	.BAR	4-181, 4-183
2535441-0000	.LEVER	4-191
2535442-0000	.PIVOT PIN	4-191
2535443-0000	.PIVOT PIN	4-127, 4-129
2535455-0000	.LINK	4-191, 4-193
2535457-0000	.WOODRUFF KEY	4-191, 4-193
2535458-0000	.SHAFT	4-191, 4-193
2535461-0000	.CONNECTING ROD	4-191
2535538-0100	.FRAME	5-107, 5-109, 5-111
2535540-0100	.PNEUMATIC CIRCUIT	5-113, 5-115, 5-117
2535757-0000	.PIPE	5-119
2535758-0000	.PIPE	5-119
2535759-0000	.BRACKET	5-119
2535932-0000	.CAM	7-21
2535937-0000	.PIPE	5-119
2536026-0000	.CARRIER	4-111, 4-113, 4-115
2536047-0000	.ARM	4-167, 4-169
2536048-0000	.ARM	4-157, 4-159
2537111-0000	.CONNECTION BOX	2-97
2537112-0000	.BOX	2-55
2537113-0000	.CONNECTION BOX	2-155
2537114-0000	.CONNECTION BOX	2-157
2537120-0000	.BRACKET	2-65
2537126-0000	.BRACKET	2-119
2537127-0000	.RAIL	5-181, 5-183
2537128-0100	.DROP CHUTE VARIANT	5-3
2537129-0000	.SPACER	5-85, 5-87
2537819-0000	.RAIL	5-181, 5-183
2537848-0000	.HOUSE	1-251
2537849-0100	.DIFFUSOR	1-249
2538064-0000	.REFLECTOR	7-127
2538065-0000	.REFLECTOR	7-119
2538072-0100	.AUTOMATIC REEL LOADING	7-3, 7-5
2538073-0001	.SHIMS	7-43, 7-45
2538073-0002	.SHIMS	7-43, 7-45
2538075-0000	.BRACKET	7-43, 7-45
2538076-0000	.BRACKET	7-43, 7-45
2538110-0000	.RAIL	5-181, 5-183
2539173-0000	.FLAP	5-61
2539178-0000	.FLAP	5-53, 5-55, 5-57
2539186-0000	.SPACER	5-123, 5-125, 5-127
2539189-0000	.EXTENSION	5-123, 5-125, 5-127
2539229-0000	.RAIL	5-181, 5-183
2539289-0000	.GUIDE	5-95, 5-97
2539290-0000	.GUIDE	5-99, 5-101, 5-103
2539297-0000	.SLIDE	5-99, 5-101, 5-103
2539298-0000	.SLIDE	5-99, 5-101, 5-103
2539299-0000	.SLIDE	5-99, 5-101, 5-103
2539300-0000	.SLIDE	5-95, 5-97
2539301-0000	.SLIDE	5-95, 5-97
2539302-0000	.SLIDE	5-95, 5-97
2539303-0000	.BAR	5-95, 5-97
2539304-0000	.BAR	5-99, 5-101, 5-103
2539305-0000	.BAR	5-95, 5-97
2539306-0000	.BAR	5-99, 5-101, 5-103
2539359-0000	.BLOCK	5-149, 5-151, 5-153
2539361-0000	.SLIDE	5-61
2539440-0100	.ASEPTIC CHAMBER	1-3
2539442-0100	.CLEANING PIPE	1-233, 1-235
2539445-0200	.PENDULUM ROLLER	1-87, 1-89
2539448-0100	.CLEANING PIPE	1-233, 1-235
2539450-0200	.DRYING CHAMBER	1-3
2539452-0100	.FLOW SWITCH	1-233, 1-235
2539453-0000	.SPRING	1-185, 1-187
2539455-0100	.VALVE	1-87, 1-89
2539457-0000	.LID	9-39
2539458-0100	.SPRAY TANK	1-191
2539459-0000	.HOLDER	9-39
2539471-0000	.COVERING PLATE	1-369
2539473-0000	.LOCK PLATE	1-375
2539474-0000	.HOLDER	1-375
2539475-0000	.HOLDER	1-375
2539477-0000	.COVER	1-377
2539478-0000	.HOLDER	1-379

Part No	Description	Page No
2539479-0000	.HOLDER	1-379
2539482-0000	.COVER	1-379
2539483-0000	.COVER	1-379
2539487-0000	.DOOR	1-373
2539488-0000	.ANGLE BRACKET	1-373
2539532-0000	.GASKET	8-23, 8-25, 8-27, 8-29
2540593-0000	.CAM	5-173, 5-175
2540594-0000	.CAM	5-173, 5-175
2540595-0001	.COAXIAL CABLE	7-7
2540596-0001	.COAXIAL CABLE	7-7
2540596-0002	.COAXIAL CABLE	8-23, 8-25, 8-27, 8-29
2540596-0003	.COAXIAL CABLE	2-107, 2-109, 2-111
2540609-0000	.KNOB	5-85, 5-87
2540612-0000	.PLATE	5-201, 5-207
2540615-0000	.CLEANING CUP	1-241, 1-243
2540716-0100	.SIGNAL LAMP	2-171, 2-177, 2-179, 2-181, 2-183
2540767-0000	.PIPE	2-173
2540813-0000	.CHUTE	2-271, 2-273
2540814-0000	.SPLASH PLATE	2-271, 2-273
2540816-0000	.BRACKET	2-271, 2-273
2540817-0000	.CHUTE	2-271, 2-273
2540818-0000	.BRACKET	2-271, 2-273
2540823-0000	.BRACKET	5-195
2541083-0100	.BENDING ROLLER	7-43, 7-45
2541125-0000	.SCREW	5-25, 5-27
2541633-0000	.FLANGE	1-117, 1-119, 1-121
2541634-0100	.EDGE ROLLER	1-21, 1-23, 1-25
2541635-0100	.SQUEE-GEE ROLLER	1-87, 1-89
2541637-0000	.SHAFT	1-117, 1-119, 1-121
2541639-0000	.LID	1-117, 1-119, 1-121, 1-127, 1-129, 1-131, 1-133
2541640-0000	.FLANGE	1-117, 1-119, 1-121
2541641-0000	.FLANGE	1-117, 1-119, 1-121
2541643-0000	.FLANGE	1-123, 1-125
2541645-0000	.SHIM	1-13, 1-15
2541646-0000	.SHIM	1-13, 1-15
2541647-0000	.LID	1-117, 1-119, 1-121
2541648-0000	.LID	1-117, 1-119, 1-121
2541650-0000	.LID	1-123, 1-125
2541651-0000	.PLATE	1-7, 1-9, 1-93, 1-103, 1-105, 1-145, 1-147
2541656-0000	.BEAM	1-381
2541657-0000	.BEAM	1-381
2541658-0000	.SCREW	1-17
2541661-0000	.LID	1-135
2541664-0000	.COVER	1-11
2541673-0000	.WASHER	1-279
2541680-0100	.HYDROGEN PEROXIDE	1-3
2541681-0000	.WASHER	1-123, 1-125
2541682-0000	.BUSHING	1-123, 1-125
2541714-0100	.DROP CHUTE CRADLE	5-3
2541877-0000	.NAIL	5-149, 5-151, 5-153
2541878-0000	.WASHER	5-149, 5-151, 5-153
2541890-0100	.BRACKET	7-43, 7-45
2541891-0100	.FILTER	7-43, 7-45
2541942-0000	.BRACKET	7-171
2541943-0000	.BRACKET	7-211, 7-215
2542325-0100	.WASTE CONVEYOR	2-3
2542332-0000	.COLUMN	2-65
2542333-0000	.COLUMN	2-65
2542340-0000	.COLUMN	2-65
2542341-0000	.DRAINING	2-65
2542486-0000	.GUIDE	4-149
2542488-0000	.NUT	2-65, 4-149
2542489-0100	.GUIDE	4-147
2542490-0000	.LID	2-67
2542491-0100	.HOLDER	2-65
2542492-0000	.LID	2-67
2542493-0000	.BLOCK	2-65
2542494-0000	.BLOCK	2-65
2542496-0000	.BRACKET	7-171
2543231-0000	.CARRIER	5-173, 5-175
2543234-0000	.BRACKET	5-181, 5-183
2543242-0000	.ANGLE BLOCK	5-47, 5-49, 5-51
2543349-0000	.DRAINING	2-65
2543473-0000	.PLUG	5-209
2543474-0000	.PLUG	5-209
2543480-0100	.FOLDING PART	5-3
2543481-0100	.TOP SECTION	5-63
2543482-0100	.TOP RAIL	5-63
2544192-0000	.CLAMP	1-227
2544195-0000	.CLAMP	1-231
2544197-0000	.PIPE	1-229
2544199-0100	.STEAM PIPE	1-227
2544204-0000	.TOUCH GUARD	1-227
2544205-0000	.TOUCH GUARD	1-227

Part No	Description	Page No
2544213-0000	.BRACKET	2-69
2544214-0000	.PIPE	2-69
2544303-0000	.GASKET	2-67
2544305-0000	.PROTECTION	2-233
2544306-0000	.DOOR	2-233
2544307-0000	.RUBBER SEAL	2-233
2544308-0000	.GLASS PANE	2-233
2544310-0100	.PROTECTIVE COVER	2-213
2544311-0000	.BOX	2-39
2544312-0000	.FLOAT	2-39
2544313-0000	.PIPE	2-39
2544314-0000	.PIPE	2-39
2544316-0000	.PIPE	2-39
2544318-0000	.PIPE	2-39
2544319-0000	.COVER	2-39
2544321-0000	.COVER	2-39
2544324-0000	.PIPE	2-39
2544325-0000	.GASKET	2-39
2544326-0100	.INTEGRATED CLEANING UNIT	2-5
2544330-0000	.PLUG	2-39
2544331-0000	.COVER	2-263
2544332-0000	.PROTECTION	2-263
2544333-0100	.DOOR	2-213
2544334-0000	.COVER STRIP	2-235
2544339-0100	.FRAME	5-107, 5-109, 5-111
2544342-0000	.BRACKET	5-77, 5-79, 5-81
2544850-0100	.FORMING SECTION	1-3
2544865-0000	.BUSHING	1-13, 1-15
2544866-0000	.WASHER	1-13, 1-15
2544873-0100	.CONNECTION PIPE	9-3
2544880-0000	.PROTECTION	1-263
2544881-0000	.ROLLER	1-61, 1-63
2544882-0000	.COUNTER ROLLER	1-45, 1-47
2544883-0000	.PLATE	1-123, 1-125
2544884-0000	.PLATE	1-123, 1-125
2544885-0000	.ARM	1-123, 1-125
2544886-0000	.ARM	1-123, 1-125
2544887-0000	.GUIDE	1-35, 1-37
2544888-0000	.BRACKET	1-35, 1-37
2544889-0000	.BRACKET	1-35, 1-37
2544890-0100	.LONGITUDINAL SEALING	1-21, 1-23, 1-25
2544891-0000	.INSULATING PLATE	1-35, 1-37, 1-71, 1-73
2544892-0000	.INSULATING PLATE	1-35, 1-37, 1-71, 1-73
2544893-0000	.INSULATING PLATE	1-35, 1-37, 1-71, 1-73
2544894-0000	.INSULATING PLATE	1-35, 1-37, 1-71, 1-73
2544895-0000	.SHIM	1-35, 1-37
2544896-0000	.SHIM	1-35, 1-37
2544897-0000	.BRACKET	1-35, 1-37, 1-71, 1-73
2544898-0000	.SHAFT	1-35, 1-37, 1-71, 1-73
2544902-0000	.BRACKET	5-129
2544990-0000	.VOLUME FLAP	4-7, 4-9
2544991-0000	.VOLUME FLAP	4-13, 4-15
2544992-0000	.VOLUME BULGE	4-7, 4-9, 4-13, 4-15
2544993-0000	.VOLUME SHIM	4-7, 4-9, 4-13, 4-15
2544995-0000	.GUIDE	5-47, 5-49, 5-51
2544996-0000	.GUIDE	5-47, 5-49, 5-51
2544997-0000	.SLIDE	5-47, 5-49, 5-51, 5-95, 5-97
2544998-0000	.SLIDE	5-47, 5-49, 5-51, 5-99, 5-101, 5-103
2544999-0000	.BAR	5-47, 5-49, 5-51, 5-99, 5-101, 5-103
2545000-0000	.BAR	5-47, 5-49, 5-51, 5-95, 5-97
2545006-0000	.SPACER	5-123, 5-125, 5-127
2545017-0000	.PARALLEL KEYS WITH ROUND ENDS	3-7
2545065-0001	.TPOP BASIC PROGRAM	8-9
2545135-0000	.SPACER	5-123, 5-125, 5-127
2545232-0000	.RAIL	5-181, 5-183
2545245-0000	.BUSHING	5-173, 5-175
2545307-0000	.SHIM	2-65
2545382-0000	.CARRIER	5-173, 5-175
2545433-0000	.SPACER	5-123, 5-125, 5-127
2545537-0000	.SPACER	5-123, 5-125, 5-127
2545639-0100	.COVERING PANEL	1-371
2545643-0000	.TOUCH GUARD	1-227
2545644-0000	.TOUCH GUARD	1-227
2545645-0100	.POST	1-279
2545646-0000	.BRACKET	1-297
2545651-0100	.STEAM SYSTEM	1-181, 1-183
2545653-0000	.PLATE	1-297
2545656-0000	.PLATE	1-297
2545657-0000	.DROP CHUTE	1-297
2545658-0000	.PLATE	1-297
2546229-0100	.ADAPTION TRANSFORMER	4-61, 4-63, 4-101, 4-103
2546319-0000	.HOLDER	2-49
2546463-0000	.PRESSURE RAIL	7-105
2546474-0000	.INDUCTOR	4-67, 4-69, 4-105, 4-107, 9-23, 9-25

Part No	Description	Page No
2546475-0000	.RAIL	4-67, 4-69
2546476-0000	.RAIL	4-105, 4-107
2546486-0000	.GUIDE	2-73
2546487-0000	.GUIDE	2-73
2546488-0000	.BRACKET	2-73
2546489-0000	.GUIDE	2-73
2546490-0000	.BRACKET	2-77
2546491-0000	.SUPPORT	2-73
2546492-0000	.BRACKET	2-77
2546493-0000	.STOP	2-73
2546496-0000	.RAIL	2-55, 2-157
2546499-0100	.GUIDE	2-71
2546500-0100	.HYDRAULIC SYSTEM	2-63
2546501-0000	.FOLDING FLAP	4-91, 4-93, 4-119, 4-121
2547010-0000	.BRACKET	4-7, 4-9, 4-13, 4-15
2547011-0000	.VOLUME FLAP	4-7, 4-9
2547012-0000	.VOLUME FLAP	4-13, 4-15
2547015-0000	.TOOTHED PULLEY	5-203, 5-205
2547017-0000	.TOOTHED PULLEY	5-203, 5-205
2547061-0000	.HOLDER	6-67, 6-69
2547117-0000	.JUMPER SETTINGS CPU	8-101
2547118-0000	.JUMPER SETTINGS PCI	8-101
2547125-0001	.WINDOWS OEM W2000 PROGRAM	8-9
2547131-0004	.PLMS PERFORMANCE/PROCESS RUNTIME	8-9
2547187-0000	.PLATE	5-203
2547205-0200	.PRESSURE REGULATOR	1-149
2547210-0000	.PIPE	1-179
2547215-0000	.INTERMEDIARY SECTION	1-165
2547376-0100	.KNOB	1-35, 1-37, 1-71, 1-73
2547377-0000	.WASHER	1-35, 1-37, 1-71, 1-73
2547378-0000	.PIN	1-35, 1-37
2547379-0000	.COVER	1-35, 1-37
2547386-0000	.SHAFT	1-13, 1-15
2547387-0000	.ROD END	1-17
2547388-0000	.AXLE PIN	1-35, 1-37, 1-71, 1-73
2547391-0100	.NOZZLE	1-261
2547392-0000	.BRACKET	1-35, 1-37
2547393-0000	.JOINT	1-35, 1-37
2547394-0000	.BRACKET	1-35, 1-37
2547395-0000	.JOINT	1-35, 1-37
2547396-0000	.PIN	1-35, 1-37
2547397-0000	.COVER	1-35, 1-37
2547398-0000	.LID	1-107, 1-109, 1-111
2547399-0000	.LID	1-107, 1-109, 1-111
2547401-0000	.SUPPORT PLATE	1-17
2547402-0000	.BRACKET	1-17
2547403-0000	.WHEEL	1-17
2547404-0000	.BRACKET	1-35, 1-37, 1-71, 1-73
2547405-0000	.BRACKET	1-35, 1-37, 1-71, 1-73
2547406-0000	.ROLLER	1-117, 1-119, 1-121, 1-123, 1-125
2547407-0000	.PIPE	1-157, 1-159
2547408-0000	.BODY	1-207
2547410-0100	.PRODUCT VALVE	1-205
2547419-0000	.SHIM	1-17
2547420-0100	.EDGE ROLLER	1-21, 1-23, 1-25
2547421-0100	.FORMING RING	1-21, 1-23, 1-25
2547422-0100	.UPPER FORMING RING	1-21, 1-23, 1-25
2547425-0000	.BRACKET	1-289, 1-291
2547474-0000	.SIGN LANGUAGE INDEPENDENT	6-19
2547565-0000	.HOLDER	1-289, 1-291
2547566-0000	.ROD	1-289, 1-291
2547568-0000	.PLATE	1-289, 1-291
2547666-0000	.DOOR	7-211
2547667-0000	.DOOR	7-215
2549829-0000	.SPACER	7-105
2550125-0100	.COOLING UNIT	8-3
2550126-0000	.RAIL	8-49, 8-51
2550127-0000	.CABLE DUCT	8-49, 8-51
2550128-0000	.CABLE DUCT	8-49, 8-51
2550129-0000	.CABLE DUCT	8-49, 8-51
2550130-0000	.CABLE DUCT	8-49, 8-51
2550131-0000	.CABLE DUCT	8-49, 8-51
2550132-0000	.DIVIDER	8-49, 8-51
2550133-0000	.DIVIDER	8-49, 8-51
2550134-0000	.DIVIDER	8-49, 8-51
2550135-0000	.DIVIDER	8-49, 8-51
2550138-0100	.PLATFORM	2-159, 2-161, 2-163, 2-165, 2-167, 2-169
2550139-0100	.PLATFORM	2-3
2550140-0000	.CHECKER PLATE	2-181, 2-183
2550141-0000	.CHECKER PLATE	2-181, 2-183
2550142-0000	.PLATFORM	2-181, 2-183
2550143-0000	.PLATFORM	2-181, 2-183
2550144-0000	.PLATFORM	2-181, 2-183
2550145-0000	.RAILING	2-181, 2-183

Part No	Description	Page No
2550146-0000	.RAILING	2-181, 2-183
2550147-0000	.RAILING	2-181, 2-183
2550189-0000	.RAILING	2-181, 2-183
2550191-0000	.TOE PLATE	2-181, 2-183
2550192-0000	.TOE PLATE	2-181, 2-183
2550193-0000	.TOE PLATE	2-181, 2-183
2550211-0000	.VOLUME BULGE	5-13, 5-15
2550269-0001	.LOCKING ARM	7-211
2550269-0002	.LOCKING ARM	7-211
2550333-0000	.GUIDE LUG	7-201, 7-203, 7-211
2550890-0100	.VALVE	1-149
2550891-0000	.BENDING ROLLER	1-91
2550893-0000	.BENDING ROLLER	1-91
2550895-0100	.CHANGE OVER VALVE	1-157, 1-159
2550896-0000	.RAIL	7-167
2550944-0000	.WATER DIAGRAM	2-231, 6-67, 6-69
2550945-0000	.WATER DIAGRAM	2-231, 6-67, 6-69
2550979-0000	.TRANSPORT EQUIPMENT	9-3
2551075-0000	.ROLLER	1-289, 1-291
2551119-0000	.PNEUMATIC DIAGRAM	2-231, 6-73
2551951-0000	.RAILING	2-177, 2-179, 2-181, 2-183
2551958-0000	.FRAME	1-377
2551959-0000	.COVER	1-373
2551961-0000	.COVERING PANEL	1-373
2551963-0000	.TOUCH GUARD	1-373
2551964-0000	.TOUCH GUARD	1-373
2551965-0000	.COVERING PANEL	1-375
2551966-0000	.COVERING PANEL	1-373
2551967-0000	.FRAME	1-373
2551968-0000	.COVERING PANEL	1-373
2551970-0100	.COVERING PANEL	1-375
2551971-0100	.COVERING PANEL	1-375
2551988-0000	.CABLE DUCT	8-23, 8-25, 8-27, 8-29
2551989-0000	.CABLE DUCT	8-23, 8-25, 8-27, 8-29
2552001-0000	.HYDRAULIC DIAGRAM	2-71, 2-231
2552002-0200	.BASE UNIT	4-3
2552003-0100	.FORMING UNIT	4-3
2552005-0100	.PRESSURE JAW	4-61, 4-63, 4-101, 4-103
2552006-0100	.INDUCTOR LEFT	4-61, 4-63
2552007-0100	.INDUCTOR RIGHT	4-101, 4-103
2552008-0100	.CUTTING JAW	4-81, 4-117
2552009-0100	.FOLDING FLAP LEFT	4-81
2552010-0100	.PISTON	4-81, 4-117
2552011-0100	.FOLDING FLAP RIGHT	4-117
2552018-0000	.CARRIER	5-173, 5-175
2552022-0000	.GUIDE	5-19, 5-21, 5-65, 5-67, 5-69
2552077-0100	.DRIVE UNIT	3-3
2552078-0100	.DRIVE UNIT	3-3
2552079-0100	.MOTOR UNIT	3-5, 3-25
2552080-0100	.LINK	3-5, 3-25
2552110-0100	.SUPPORT	3-5
2552111-0100	.SUPPORT	3-25
2552113-0100	.FLOW METER	6-13, 6-15
2552121-0000	.BRACKET	1-17
2552124-0000	.BRACKET	1-289, 1-291
2552125-0100	.BENDING ROLLER	1-279
2552127-0000	.FLANGE	1-131, 1-133
2552133-0000	.BENDING ROLLER	1-131, 1-133
2552135-0000	.BENDING ROLLER	1-127, 1-129
2552136-0000	.FLANGE	1-127, 1-129
2552138-0000	.LID	1-13, 1-15
2552139-0000	.BENDING ROLLER	1-127, 1-129
2552140-0000	.BRACKET	1-67, 1-69
2552141-0000	.BRACKET	1-67, 1-69
2552142-0000	.BRACKET	1-67, 1-69
2552143-0000	.BRACKET	1-67, 1-69
2552144-0000	.ROLL	1-67, 1-69
2552151-0000	.BRACKET	10-5
2552152-0000	.BRACKET	10-5
2552153-0000	.BRACKET	10-5
2552154-0000	.BRACKET	10-5
2552155-0000	.ROLL	1-67, 1-69
2552158-0000	.SCREW	1-67, 1-69
2552160-0000	.SUPPORT RING	1-33, 1-61, 1-63
2552161-0000	.SUPPORT RING	1-33, 1-61, 1-63
2552176-0001	.LOCK PLATE	1-33, 1-61, 1-63
2552176-0003	.LOCK PLATE	1-33, 1-61, 1-63
2552177-0001	.LOCK PLATE	1-33, 1-61, 1-63
2552177-0003	.LOCK PLATE	1-33, 1-61, 1-63
2552187-0000	.ROLLER	1-61, 1-63
2552188-0000	.ROLLER	1-33, 1-61, 1-63
2552189-0000	.LOWER FORMING RING	1-27, 1-45, 1-47
2552190-0000	.LOWER FORMING RING	1-27, 1-45, 1-47
2552191-0000	.LOWER FORMING RING	1-27, 1-45, 1-47

Part No	Description	Page No
2552192-0000	.LOWER FORMING RING	1-27, 1-45, 1-47
2552193-0000	.LOWER FORMING RING	1-27, 1-45, 1-47
2552194-0000	.LOWER FORMING RING	1-27, 1-45, 1-47
2552195-0000	.UPPER FORMING RING	1-29, 1-31, 1-49, 1-51, 1-53
2552196-0000	.UPPER FORMING RING	1-29, 1-31, 1-49, 1-51, 1-53
2552197-0000	.UPPER FORMING RING	1-29, 1-31, 1-49, 1-51, 1-53
2552198-0000	.UPPER FORMING RING	1-29, 1-31, 1-49, 1-51, 1-53
2552199-0000	.UPPER FORMING RING	1-29, 1-31, 1-49, 1-51, 1-53
2552200-0000	.UPPER FORMING RING	1-29, 1-31, 1-49, 1-51, 1-53
2552201-0000	.LOCKING DEVICE	1-219, 1-221
2552205-0000	.ROLLER	1-33, 1-61, 1-63
2552206-0000	.ROLLER	1-33, 1-61, 1-63
2552215-0100	.STEAM TRAP	1-227
2552216-0000	.ATTACHMENT PIPE	1-231
2552218-0000	.PIPE	1-231
2552219-0000	.PIPE	1-231
2552445-0000	.SUPPORT	5-199
2552776-0000	.ADAPTER	1-229
2552777-0000	.ADAPTER	1-229
2552794-0000	.PULLEY	5-129
2552798-0000	.COMPRESSION ROD	7-105
2552802-0000	.SLIDE PLATE	7-105
2552821-0000	.BRACKET	7-43, 7-45
2552931-0100	.HOSE INSTALLATION	2-43
2553072-0000	.KEY FOR SAFETY SWITCH	7-211, 7-215
2553092-0000	.PLATE	1-97
2553093-0000	.PLATE	1-97
2553094-0000	.PIPE	1-97
2553095-0000	.PIPE	1-97
2553107-0000	.HOLDER	7-43, 7-45
2553108-0000	.HOLDER	7-43, 7-45
2553109-0000	.HOLDER	7-43, 7-45
2553115-0000	.PLATFORM	2-181, 2-183
2553116-0000	.CHECKER PLATE	2-181, 2-183
2553117-0000	.LEG	10-7
2553118-0000	.TOE PLATE	2-181, 2-183
2553119-0000	.RAILING	2-181, 2-183
2553120-0000	.RAILING	2-181, 2-183
2553122-0000	.PLATE	2-177, 2-179, 2-181, 2-183
2553124-0000	.PIN	2-181, 2-183
2553125-0000	.CHECKER PLATE	2-181, 2-183
2553167-0000	.LID	1-195
2553227-0000	.PIPE	5-213, 5-215
2553272-0000	.SUPPORT BLOCK	7-123, 7-133
2553273-0000	.AXLE PIN	7-123, 7-133
2553275-0000	.SLIDE PLATE	7-119, 7-127
2553276-0000	.ROCKER ARM	7-127
2553277-0000	.ROCKER ARM	7-127
2553284-0000	.BLOCK	5-19, 5-21, 5-65, 5-67, 5-69
2553343-0000	.SUPPORT	5-9, 5-11
2553344-0000	.SUPPORT	5-9, 5-11
2553345-0000	.TIE ROD	5-9, 5-11
2553346-0000	.AXLE LINK	5-9, 5-11
2553347-0000	.FOLDING BAR	5-33, 5-35, 5-37
2553348-0000	.FOLDING BAR	5-33, 5-35, 5-37
2553615-0000	.FLAP	5-61
2553617-0000	.SLIDE	5-61
2553799-0000	.WASHER	7-123, 7-133
2555082-0000	.SPACER SCREW	5-71, 5-73, 5-75, 5-77, 5-79, 5-81
2555393-0100	.START-UP KIT	9-3
2555394-0100	.START-UP KIT	9-5
2555404-0000	.FLAP	5-13, 5-15
2555586-0000	.PIPE	1-231
2555588-0000	.PIPE	1-231
2555590-0000	.SIGN	1-29, 1-31, 1-49, 1-51, 1-53
2555606-0000	.LOWER FORMING RING	1-45, 1-47
2555607-0000	.LOWER FORMING RING	1-45, 1-47
2555608-0000	.LOWER FORMING RING	1-45, 1-47
2555609-0000	.PLUG	1-13, 1-15
2555610-0000	.LID	1-231
2555611-0000	.COVER	1-231
2555612-0000	.CLAMP	1-231
2555613-0000	.BUSHING	1-91
2555614-0000	.BRACKET	1-35, 1-37, 1-71, 1-73
2555615-0000	.BRACKET	1-35, 1-37, 1-71, 1-73
2555616-0000	.ROLLER	1-35, 1-37, 1-71, 1-73
2555617-0000	.PIN	1-35, 1-37, 1-71, 1-73
2555618-0000	.SHAFT	1-35, 1-37, 1-71, 1-73
2555619-0000	.BRACKET	1-35, 1-37, 1-71, 1-73
2555620-0000	.COVER	1-35, 1-37, 1-71, 1-73
2555621-0000	.ROLLER	1-29, 1-31
2555622-0000	.ROLLER	1-29, 1-31
2555623-0000	.COVER	1-35, 1-37, 1-71, 1-73
2555625-0000	.ROLL	1-35, 1-37, 1-71, 1-73

Part No	Description	Page No
2555627-0100	.PRESSURE ROLLER	1-21, 1-23, 1-25
2555635-0000	.SIGNS	1-27, 1-45, 1-47
2556260-0100	.TOOLS AND TEMPLATES	10-3
2556261-0100	.ACCESSORIES	10-3
2556298-0000	.BRACKET	10-25
2556391-0000	.BRACKET	10-25
2556473-0000	.TOOL BOX	10-25
2556496-0000	.CARRIAGE	7-31
2556497-0000	.CARRIAGE	7-31
2556499-0000	.BRACKET	7-31
2556503-0100	.PAPER BRAKE	7-31
2556504-0000	.BRACKET	7-33, 7-35
2556505-0002	.PIN	7-33, 7-35
2556505-0003	.PIN	7-33, 7-35
2556506-0000	.LINK	7-33, 7-35
2556507-0000	.LEVER	7-33, 7-35
2556508-0000	.BRACKET	7-33, 7-35
2556509-0000	.SHAFT	7-33, 7-35
2556510-0000	.BRACKET	7-33, 7-35
2556512-0000	.BRACKET	7-31
2556525-0000	.LEVER	5-173, 5-175
2556526-0000	.LEVER	5-173, 5-175
2556544-0100	.SETTING TOOL	10-5
2556615-0000	.PIPE CONNECTION	4-141
2556893-0100	.TUBE FLUSHING	4-125
2556894-0000	.TUBE FLUSHING DEVICE	4-141
2556895-0000	.TUBE FLUSHING DEVICE	4-141
2557587-0000	.CABLE DUCT	8-61, 8-63
2557588-0000	.CABLE DUCT	8-61, 8-63
2557589-0000	.CABLE DUCT	8-61, 8-63
2557590-0000	.CABLE DUCT	8-61, 8-63
2557591-0000	.DIVIDER	8-49, 8-51, 8-61, 8-63
2557592-0000	.DIVIDER	8-61, 8-63
2557593-0000	.DIVIDER	8-61, 8-63
2557594-0000	.RAIL	8-69
2557612-0000	.SPRING	4-19, 4-21, 4-29, 4-31
2557613-0000	.SPRING	4-19, 4-21, 4-29, 4-31
2558127-0000	.SPACER	5-77, 5-79, 5-81
2558137-0000	.HEATING ELEMENT	1-193
2558144-0000	.BOTTOM	5-13, 5-15
2558145-0000	.FLAP	5-13, 5-15
2558148-0000	.SLIDING STRIP	7-105
2558703-0000	.GUIDE UPPER L	5-71, 5-73, 5-75
2558704-0000	.GUIDE UPPER R	5-71, 5-73, 5-75
2558754-0000	.RAIL	5-181, 5-183
2558760-0000	.CABLE DUCT	8-71
2558761-0000	.CABLE DUCT	8-71
2558762-0000	.CABLE DUCT	8-71
2558763-0000	.CABLE DUCT	8-71
2558764-0000	.CABLE DUCT	8-71
2558765-0000	.CABLE DUCT	8-71
2558766-0000	.CABLE DUCT	8-71
2558769-0000	.DIVIDER	8-71
2558770-0000	.DIVIDER	8-71
2558771-0000	.DIVIDER	8-71
2558772-0000	.DIVIDER	8-71
2558773-0000	.DIVIDER	8-71
2558826-0000	.PIPE	2-39
2558845-0100	.TANK	2-75
2558878-0000	.SIGN	7-75
2558879-0000	.SIGN	7-75
2558920-0000	.STOP	4-29, 4-31
2558921-0000	.STOP	4-19, 4-21
2558922-0000	.STOP	4-29, 4-31
2558923-0000	.STOP	4-19, 4-21
2558929-0000	.BAR	4-19, 4-21, 4-29, 4-31
2558930-0100	.PUMP	2-75
2558932-0000	.RAIL	8-75
2558933-0000	.RAIL	8-85
2558934-0000	.RAIL	8-89
2558937-0000	.RAIL	8-97
2558938-0000	.CABLE DUCT	8-91, 8-93
2558939-0000	.CABLE DUCT	8-91, 8-93
2558940-0000	.DIVIDER	8-91, 8-93
2558941-0000	.DIVIDER	8-91, 8-93
2558942-0000	.RAIL	8-91, 8-93
2558947-0100	.HYDRAULIC UNIT	2-71
2559045-0001	.ELECTRODE	1-195
2559045-0002	.ELECTRODE	1-195
2559045-0003	.ELECTRODE	1-281
2559045-0004	.ELECTRODE	1-281
2559051-0000	.INSERT	1-223
2559052-0000	.RAIL	5-181, 5-183
2559061-0100	.UPPER FORMING RING	1-21, 1-23, 1-25

Part No	Description	Page No
2559062-0100	.LOWER FORMING RING	1-21, 1-23, 1-25
2559063-0100	.LOWER FORMING RING	1-21, 1-23, 1-25
2559064-0100	.SEAL	1-21, 1-23, 1-25
2559066-0000	.STUD SCREW	1-11
2559089-0000	.CLAMP	1-335
2559095-0000	.BRACKET	1-205
2559097-0000	.UPPER FORMING RING	1-49, 1-51, 1-53
2559098-0000	.UPPER FORMING RING	1-49, 1-51, 1-53
2559099-0000	.UPPER FORMING RING	1-49, 1-51, 1-53
2559101-0000	.ROLLER	1-49, 1-51, 1-53
2559102-0000	.RING	1-75, 1-77
2559103-0000	.PLATE	1-75, 1-77
2559104-0000	.PLATE	1-75, 1-77
2559105-0000	.SUPPORT RING	1-61, 1-63
2559111-0200	.HYDRAULIC VALVE	2-75
2559112-0100	.CALIBRATION EQUIPMENT	10-5
2559310-0000	.HYDRAULIC PIPE	2-83
2559311-0000	.HYDRAULIC PIPE	2-83
2559424-0000	.CUTTING JAW	4-83, 4-85, 4-87
2559425-0000	.CLAMP HOLDER	4-67, 4-69, 4-105, 4-107
2559437-0000	.ROCKER ARM	7-119
2559438-0000	.ROCKER ARM	7-119
2559439-0000	.COUPLING BOLT	7-105
2559461-0000	.SPACER	2-39
2559976-0000	.BRACKET	2-39
2559977-0000	.HOSE	2-39
2559978-0000	.PIPE	2-39
2559986-0000	.SEALING PLATE	7-99
2559987-0000	.SEALING PLATE	7-99
2562307-0000	.PIPE	1-193
2562315-0000	.PLUG	1-193
2562551-0000	.SLIDE PLANE	7-95
2562552-0000	.SLIDE PLANE	7-95
2562664-0000	.ROLL	1-67, 1-69
2562667-0002	.LOCK PLATE	1-67, 1-69
2562667-0008	.LOCK PLATE	1-61, 1-63
2562667-0009	.LOCK PLATE	1-61, 1-63
2562677-0000	.WASHER	1-13, 1-15
2562684-0000	.ROLL	1-67, 1-69
2562685-0000	.ROLLER	1-49, 1-51, 1-53
2562686-0000	.ROLLER	1-49, 1-51, 1-53
2562687-0000	.PLATE	1-41, 1-43
2562688-0000	.RING	1-41, 1-43
2562692-0000	.BRACKET	1-67, 1-69
2562693-0000	.BRACKET	1-67, 1-69
2562694-0000	.ROLLER	1-67, 1-69
2562695-0000	.ROLLER	1-67, 1-69
2562696-0000	.BRACKET	1-67, 1-69
2562697-0000	.BRACKET	1-67, 1-69
2562704-0000	.BODY	1-225
2562706-0000	.LIFTING DEVICE	10-83
2562709-0000	.ROLLER	1-75, 1-77
2562710-0000	.RING	1-75, 1-77
2562711-0000	.PLATE	1-75, 1-77
2562736-0001	.COAXIAL CABLE	4-185
2562881-0000	.TRANSITION PIPE	1-223
2562882-0000	.ELBOW PIPE	1-223
2562883-0000	.PIPE	1-223
2562893-0100	.PNEUMATIC PANEL	1-191
2563166-0100	.CONNECTOR	8-21
2563167-0100	.MOTOR DRIVE CONTROL	8-49, 8-51
2563168-0100	.MOTOR DRIVE CONTROL	8-49, 8-51
2563169-0100	.MOTOR DRIVE CONTROL	8-61, 8-63
2563170-0100	.RELAY UNIT 1	8-71
2563171-0000	.RAIL	8-65
2563172-0000	.FUSE BOARD	8-39
2563173-0000	.PROFILE	8-91, 8-93
2563174-0000	.PROFILE	8-91, 8-93
2563175-0000	.BRACKET	8-65
2563183-0000	.GUIDE RAIL	7-109, 7-111
2563274-0000	.CARRIER	5-173, 5-175
2563276-0000	.PNEUMATIC DIAGRAM	1-301, 2-231
2563279-0000	.PIPE	1-267
2563281-0000	.PIPE	1-267
2563289-0000	.LOWER FILLING PIPE	1-185, 1-187
2563290-0000	.PRESSURE FLANGE	1-185, 1-187
2563292-0000	.STOP PIN	1-185, 1-187
2563293-0000	.LOWER FILLING PIPE	1-185, 1-187
2563294-0000	.PRESSURE FLANGE	1-185, 1-187
2563295-0000	.STOP PIN	1-185, 1-187
2563296-0000	.LOWER FILLING PIPE	1-185, 1-187
2563759-0000	.SPRAY SYSTEM	1-273
2563760-0000	.EXTENSION	1-273
2563761-0000	.NUT	1-273

Part No	Description	Page No
2563762-0000	.SPACER	1-273
2563766-0000	.BODY	1-225
2564054-0100	.AIR INLET	7-57
2564074-0100	.TOOLS AND TEMPLATES	10-5
2564105-0000	.CONNECTION BOX	1-201
2564106-0100	.CONNECTION BOX	1-191
2564107-0000	.LID	1-267
2564108-0000	.PIPE	1-223
2564225-0000	.BUSHING	2-33
2564232-0100	.LEG STAND	10-5
2564342-0000	.SPACER	2-33
2564347-0000	.FLAP	5-13, 5-15
2564504-0000	.SUPPORT	7-21
2564545-0000	.PLATE	2-189, 2-191
2564546-0100	.PLATFORM	2-159, 2-161, 2-163, 2-165, 2-167, 2-169
2564561-0000	.PIPE	2-33
2564562-0000	.ROLLER	7-105, 7-107, 7-109, 7-111
2564565-0000	.TOE PLATE	2-171
2564566-0000	.TOE PLATE	2-171
2564596-0000	.FLOAT	1-185, 1-187
2564597-0000	.FLOAT	1-185, 1-187
2564600-0000	.FLOAT	1-185, 1-187
2564601-0000	.FLOAT	1-185, 1-187
2564602-0000	.FLOAT	1-185, 1-187
2564606-0000	.SUPPORT PLATE	1-197, 1-199
2564607-0000	.PLATE	1-197, 1-199
2564608-0000	.HOLDER	1-223
2564623-0000	.HANDLE	7-31
2564630-0100	.CABLE DRAG CHAIN	7-31
2564632-0100	.VALVE PANEL	7-157
2564633-0100	.VALVE PANEL	7-3, 7-5
2564634-0000	.BEARING BLOCK	7-157
2564683-0000	.CURVE	4-127, 4-129
2564978-0000	.PIPE	2-33
2565424-0000	.ROLLER	1-45, 1-47
2565425-0000	.COUNTER ROLLER	1-45, 1-47
2565430-0000	.SUPPORT RING	1-61, 1-63
2565431-0000	.SUPPORT RING	1-61, 1-63
2565432-0100	.TERMINAL BLOCK	1-201
2565435-0000	.PIPE	1-231
2565436-0000	.FILLING PIPE	1-185, 1-187
2565437-0000	.CLEANING CUP	1-241, 1-243
2565440-0000	.INDUCTOR	1-35, 1-37, 1-71, 1-73
2565441-0000	.INSULATING PLATE	1-35, 1-37, 1-71, 1-73
2565443-0100	.LIFTING DEVICE	10-61
2565444-0000	.FILLING PIPE	1-185, 1-187
2565451-0000	.TOUCH GUARD	1-227
2565452-0000	.TOUCH GUARD	1-227
2565453-0000	.TOUCH GUARD	1-227
2565454-0000	.TOUCH GUARD	1-227
2565455-0000	.CLAMP	1-227
2565467-0000	.FLANGE	1-157, 1-159
2565482-0000	.BOX	1-97
2565483-0000	.NOZZLE	1-97
2565492-0000	.PNEUMATIC DIAGRAM	1-301
2565493-0000	.PNEUMATIC DIAGRAM	1-301, 2-231
2565494-0000	.PNEUMATIC DIAGRAM	1-301
2565513-0000	.ROLLER	1-45, 1-47
2565526-0000	.PIPE	2-65
2565555-0002	.PLC-PROGRAMME LIST	8-13
2565561-0001	.PAM - SAM EASY DOWNLOAD	8-15
2565563-0003	.TPOP HMI	8-9
2565566-0003	.PLMS CONFIG	8-9
2565569-0002	.TMCC PROGRAMME	8-11
2565573-0003	.TMCC PROGRAMME	8-11
2565577-0003	.TMCC PROGRAMME	8-11
2565624-0100	.SOFTWARE	8-3
2566117-0000	.CUTTING TABLE	7-119, 7-127
2566118-0000	.BRACKET	7-119, 7-127
2566123-0000	.SLIDE PLANE	7-105
2566124-0000	.SLIDE PLANE	7-105
2566125-0000	.SLIDE PLATE	7-105
2566127-0000	.SPACER	7-99
2566128-0000	.HOUSING	7-99
2566129-0000	.ADJUSTMENT ANGLE	7-99
2566130-0000	.PLATE	7-99
2566209-0000	.PLATE	2-39
2566210-0000	.PLATE	2-39
2566211-0000	.LABEL	2-39
2566212-0000	.LABEL	2-39
2566258-0000	.TOE PLATE	2-181, 2-183
2566317-0000	.CARRIER RULER	4-119, 4-121
2566318-0000	.CARRIER RULER	4-91, 4-93
2566319-0000	.FOLDING FLAP	4-91, 4-93, 4-119, 4-121

Part No	Description	Page No
2566320-0000	.FOLDING FLAP	4-91, 4-93, 4-119, 4-121
2566321-0000	.FLAP	5-53, 5-55, 5-57
2566323-0000	.FLAP	5-53, 5-55, 5-57
2566325-0000	.BEARING HOUSING	4-83, 4-85, 4-87
2566327-0000	.CARRIER	4-111, 4-113, 4-115
2566328-0000	.PLATE	4-75, 4-77, 4-79, 4-111, 4-113, 4-115
2566329-0000	.CARRIER	4-75, 4-77, 4-79
2566330-0000	.SLEEVE	4-95
2566331-0000	.PLUNGER	4-95
2566332-0000	.SHAFT	4-49, 4-55
2566333-0000	.HOLDER	4-49, 4-55
2566336-0000	.BEARING HOUSING	4-65
2566338-0000	.CATCH	4-65
2566339-0000	.CATCH	4-83, 4-85, 4-87
2566340-0000	.CARRIER	4-57, 4-59
2566341-0000	.CARRIER	4-97, 4-99
2569034-0000	.PIPE	2-81
2569035-0000	.PIPE	2-79
2569036-0000	.PIPE	2-77
2569037-0000	.PIPE	2-77
2569038-0000	.PIPE	2-79
2569039-0000	.PIPE	2-79
2569908-0000	.HOUSING	4-65
2569982-0100	.SETTING TOOL	10-5
2570004-0001	.CABLE	2-149, 2-151
2570015-0000	.PRESSURE FLANGE	1-185, 1-187
2570017-0000	.PRESSURE FLANGE	1-185, 1-187
2570301-0000	.CUTTING JAW	4-83, 4-85, 4-87
2570302-0000	.CLAMP HOLDER	4-67, 4-69, 4-105, 4-107
2570616-0100	.FASTENING PLATE	2-143
2570678-0000	.HANDLE	1-339, 1-341
2570741-0000	.HOLDER	10-57
2570743-0000	.BRACKET	10-57
2570744-0000	.HOLDER	10-59
2570746-0000	.BRACKET	10-57
2570747-0000	.PLATE	10-57
2570748-0000	.COVER STRIP	2-235
2570749-0000	.COVER STRIP	2-237
2570821-0000	.SHEET	7-159, 7-161
2570834-0000	.PROTECTIVE CASING	7-157
2570836-0000	.PROTECTION PLATE	7-157
2571843-0000	.CARRIER	4-75, 4-77, 4-79
2572248-0000	.CARRIER	4-111, 4-113, 4-115
2572563-0000	.SUPPORT	5-203
2574401-0000	.FRAME	7-95
2574402-0000	.PRESSURE JAW	7-105
2574421-0000	.PIPE	2-29
2574483-0100	.TOOLS AND TEMPLATES	9-3
2575100-0001	.INSTALLATION DRAWING	9-3
2575101-0001	.INSTALLATION DRAWING	9-3
2575102-0001	.INSTALLATION DRAWING	9-3
2575631-0000	.RAIL BRACKET	4-127, 4-129
2576244-0000	.BRACKET	7-181
2576245-0000	.ARM	7-181
2576334-0100	.TPOP DATA COLLECTION	8-3
2576335-0100	.TPOP LINE SUPERVISION	8-3
2576379-0000	.ROCKER ARM	7-169
2576396-0000	.PLATE	7-99
2578455-0000	.LIFTING HANDLE	7-169
2578486-0000	.BRACKET	1-281
2578785-0000	.PUSH BUTTON BOX	7-197
2579687-0100	.SETTING TOOL	10-5
2579688-0000	.HOLDER	10-59
2579745-0000	.INSERT	1-193
2579838-0000	.TOUCH GUARD	7-87
2579861-0003	.PIVOT BRACKET	6-19
2579988-0000	.CUTTING JAW	4-83, 4-85, 4-87
2579989-0000	.HOLDER	4-67, 4-69, 4-105, 4-107
2579990-0000	.SHAFT	4-67, 4-69, 4-83, 4-85, 4-87, 4-105, 4-107
2579991-0000	.HOLDER	4-67, 4-69, 4-105, 4-107
2579995-0100	.LAST POINT DE	5-3
2579996-0000	.PLATE	7-29
2582002-0000	.VOLUME FLAP	4-13, 4-15
2582003-0100	.GUIDE RAIL	7-91, 7-93
2582558-0000	.BASE PLATE	7-123, 7-133
2582559-0000	.RAIL	7-123, 7-133
2582574-0000	.BODY	1-39
2582575-0000	.KNOB	1-39
2582576-0000	.STOP SCREW	1-161
2582590-0000	.PIPE	1-229
2582613-0000	.BRACKET	10-5
2582616-0000	.PLATE	1-75, 1-77
2582617-0000	.TEMPLATE	9-35
2582618-0000	.TEMPLATE	9-35

Part No	Description	Page No
2582619-0000	.TEMPLATE	9-35
2582620-0000	.TEMPLATE	9-35
2582621-0000	.TEMPLATE	9-35
2582622-0000	.TEMPLATE	9-35
2582623-0000	.SEAL	1-75, 1-77
2582629-0000	.RING	1-75, 1-77
2582630-0000	.ROLLER	1-75, 1-77
2582651-0000	.AIR GUIDE	1-137, 1-139, 1-141
2582652-0000	.AIR GUIDE	1-137, 1-139, 1-141
2582654-0000	.PLATE	1-137, 1-139, 1-141
2582655-0000	.HOLDER	1-137, 1-139, 1-141
2582668-0000	.PLATE	7-109, 7-111
2582680-0000	.BEARING HOUSING	4-83, 4-85, 4-87
2587235-0000	.VOLUME FLAP	4-13, 4-15
2587236-0000	.VOLUME FLAP	4-7, 4-9
2587250-0000	.ARM	7-119, 7-127
2587251-0000	.ANGLE PIECE	7-119, 7-127
2587286-0000	.HOLDER	10-17, 10-19
2587289-0000	.CHECKER PLATE	2-171
2587290-0000	.CHECKER PLATE	2-171
2587291-0000	.CHECKER PLATE	2-171
2587292-0000	.CHECKER PLATE	2-171
2587326-0000	.BRACKET	10-61
2587464-0000	.CANTILEVER	4-189
2588013-0000	.BRACKET	4-57, 4-59, 4-97, 4-99
2588044-0000	.BRACKET	7-107
2588045-0000	.BRACKET	7-107
2588046-0000	.SHAFT	7-105, 7-107
2588067-0000	.SHAFT	7-173
2588290-0000	.BRACKET	7-105
2588291-0000	.TIE ROD	4-75, 4-77, 4-79, 4-111, 4-113, 4-115
2588292-0000	.PLATE	4-83, 4-85, 4-87
2588293-0000	.HOLDER	4-67, 4-69, 4-105, 4-107
2588294-0000	.LID	4-65
2588295-0000	.SLEEVE	4-65
2588296-0000	.PISTON	4-65
2588297-0000	.SHAFT	4-65
2588299-0000	.BUSHING	4-83, 4-85, 4-87
2588300-0000	.RAIL BRACKET	4-127, 4-129
2588301-0000	.CURVE	4-127, 4-129
2588302-0000	.VOLUME CAM	4-127, 4-129
2588303-0000	.SCREW	4-83, 4-85, 4-87
2588304-0000	.VOLUME FLAP	4-49
2588305-0000	.VOLUME FLAP	4-55
2588306-0000	.VOLUME FLAP	4-51, 9-21
2588307-0000	.VOLUME FLAP	4-51, 9-21
2588327-0000	.INSERT	5-53, 5-55, 5-57
2588328-0000	.PULLEY	5-167
2588329-0000	.PULLEY	5-167
2588379-0100	.MATERIAL HOLDER	7-127
2588383-0100	.MATERIAL HOLDER	7-119
2588422-0100	.MATERIAL HOLDER L1	7-3, 7-5
2588423-0100	.MATERIAL HOLDER L2	7-3, 7-5
2588425-0000	.PLATE	10-37
2588426-0100	.ALIGNMENT TEMPLATE	10-5
2588946-0100	.SPLICING DEVICE	7-3, 7-5
2588947-0000	.SHIMS	7-99
2588948-0000	.SHIMS	7-99
2589104-0100	.FRAME	7-91, 7-93
2589105-0100	.DRIVE UNIT	7-91, 7-93
2589106-0100	.HEATING UNIT	7-91, 7-93
2589108-0000	.BENDING ROLLER	7-97
2589109-0000	.TOOTHED PULLEY	7-97
2589110-0000	.SHAFT	7-97
2589111-0000	.FLANGE	7-97
2589112-0000	.FLANGE	7-97
2589113-0000	.SHAFT	7-97
2589114-0000	.SHAFT	7-97
2589115-0000	.COVER	7-97
2589119-0000	.NUT	7-95
2589391-0001	.TPOP BASIC START PROGRAM	8-9
2589786-0000	.BRACKET	7-187
2589787-0000	.FITTING	7-187
2589791-0000	.KNIFE HOLDER	7-119, 7-127
2591680-0100	.HOLDER	7-183, 7-185
2591782-0000	.SPRING	1-293
2591790-0000	.BLOCK	5-5, 5-7
2592525-0000	.FILLING PIPE	1-185, 1-187
2592530-0000	.PLATE	1-113
2592537-0000	.ROLLER	1-29, 1-31
2592538-0000	.ROLLER	1-29, 1-31
2592539-0000	.ROLLER	1-27
2592540-0000	.ROLLER	1-27
2592544-0000	.FILLING PIPE	1-185, 1-187

Part No	Description	Page No
2592545-0000	.ROLLER	1-33
2592546-0000	.ROLLER	1-41, 1-43
2592547-0000	.ROLLER	1-41, 1-43
2592548-0000	.ROLLER	1-41, 1-43
2592549-0000	.ROLLER	1-41, 1-43
2592550-0100	.FORMING RING	1-21, 1-23, 1-25
2592554-0000	.LOWER FORMING RING	1-45, 1-47
2592567-0100	.PRESSURE JAW	7-91, 7-93
2592568-0100	.BAR CODE READER	7-91, 7-93
2592780-0000	.DOLLY	7-105, 9-5
2593831-0100	.VOLUME KIT	9-5
2593851-0100	.EMERGENCY STOP	2-219, 2-229
2594043-0000	.SHOCK ABSORBER	1-225
2594054-0100	.INDEXING UNIT	5-3
2594058-0000	.GUIDE	5-83
2594125-0000	.SLEEVE	1-293
2594126-0000	.GUIDE ROLLER	1-293
2594393-0000	.PNEUMATIC DIAGRAM	2-231, 7-159, 7-161
2594512-0100	.VOLUME FLAP CUTTING	4-5
2594512-0101	.VOLUME FLAP	9-7
2594512-0102	.VOLUME FLAP	9-7
2594512-0103	.VOLUME FLAP	9-7
2594512-0104	.VOLUME FLAP	9-7
2594512-0105	.VOLUME FLAP	9-7
2594567-0000	.PIPE	2-269
2594589-0000	.BRACKET	2-269
2594596-0000	.BRACKET	1-81
2594597-0000	.PIPE	1-229
2594598-0000	.PIPE	1-229
2594599-0000	.PIPE	1-229
2594600-0000	.TUBE	1-333
2594601-0000	.RAIL	1-137, 1-139, 1-141
2594602-0000	.TOUCH GUARD	1-227
2594606-0100	.STERILE AIR PIPE	1-149
2594617-0000	.STOP PIN	1-185, 1-187
2594621-0000	.WASHER	1-143
2594624-0000	.PLUG	1-107, 1-109, 1-111
2594629-0000	.FILLING PIPE	1-185, 1-187
2594633-0000	.PIPE	1-255, 1-257
2594636-0000	.BRACKET	1-71, 1-73
2594646-0000	.PIPE	2-113
2594647-0000	.PIPE	2-113
2594886-0000	.PLATE	5-195
2594887-0000	.SPACER	4-127, 4-129
2594888-0000	.VOLUME BULGE	4-49, 4-55
2594889-0000	.VOLUME BULGE	4-51, 9-21
2594890-0000	.VOLUME SHIM	4-49, 4-55, 9-23, 9-25
2594891-0000	.VOLUME SHIM	4-51, 9-21, 9-23, 9-25
2594892-0000	.SPRING	4-65
2594893-0000	.WEDGE	4-49, 4-55
2594896-0000	.SCREW	4-51, 5-123, 5-125, 5-127, 9-21
2594902-0000	.CATCH	5-149, 5-151, 5-153
2594905-0000	.SLIDE	5-95, 5-97, 9-17, 9-19
2594906-0000	.SLIDE	5-99, 5-101, 5-103, 9-13, 9-15
2594910-0000	.LEVER	5-173, 5-175
2594911-0000	.HATCH	5-173, 5-175
2595704-0000	.FOLDING PART	5-77, 5-79, 5-81
2595705-0000	.FOLDING PART	5-77, 5-79, 5-81
2595706-0000	.BRACKET	5-77, 5-79, 5-81
2595707-0000	.FOLDING PART	5-77, 5-79, 5-81
2595708-0000	.FOLDING PART	5-77, 5-79, 5-81
2595709-0000	.FOLDING PART	5-77, 5-79, 5-81
2597324-0100	.VOLUME FLAP	4-5
2597325-0100	.VOLUME FLAP	4-5
2597326-0100	.SHOCK ABSORBER	4-5
2597329-0100	.CURVE UNIT	4-125
2597330-0100	.CONTROL UNIT	4-187
2597331-0100	.CENTERING UNIT	4-187
2597600-0000	.BUSHING	7-19
2597768-0000	.BRACKET	5-83
2597769-0000	.GUIDE	5-83
2598008-0000	.STOP PIN	1-185, 1-187
2598015-0000	.LOWER FILLING PIPE	1-185, 1-187
2598017-0000	.PRESSURE FLANGE	1-185, 1-187
2598025-0000	.SIGN	2-131, 2-133
2598065-0000	.SUPPORT	4-189
2598067-0000	.SHAFT	4-193
2598084-0000	.PLATE	1-193
2598085-0000	.SPACER	1-193
2598485-0000	.CLAMP	5-83
2598486-0000	.CLAMP	5-83
2598487-0000	.SLIDE	5-95, 5-97, 9-17, 9-19
2598488-0000	.SLIDE	5-99, 5-101, 5-103, 9-13, 9-15
2598491-0000	.FOLDING PART	5-77, 5-79, 5-81

Part No	Description	Page No
2598492-0000	.FOLDING PART	5-77, 5-79, 5-81
2598493-0000	.BRACKET	5-77, 5-79, 5-81
2598494-0000	.FOLDING PART	5-77, 5-79, 5-81
2598495-0000	.FOLDING PART	5-77, 5-79, 5-81
2598496-0000	.FOLDING PART	5-77, 5-79, 5-81
2598497-0000	.FOLDING PART	5-77, 5-79, 5-81
2598498-0000	.NOZZLE	5-123, 5-125, 5-127
2598499-0000	.NOZZLE	5-123, 5-125, 5-127
2598500-0000	.NOZZLE	5-123, 5-125, 5-127
2598502-0000	.SUPPORT	4-191
2598503-0000	.EXTENSION	5-123, 5-125, 5-127
2598504-0000	.STOP	5-123, 5-125, 5-127
2598505-0000	.SPACER	5-123, 5-125, 5-127
2598506-0000	.SPACER	5-123, 5-125, 5-127, 9-7
2598508-0100	.INFEED/OUTFEED CONVEYOR	5-155
2598513-0000	.SPACER	5-161
2598514-0000	.COVER	5-161
2598689-0000	.HOSE	2-25
2598805-0000	.FLAP	5-61
2598807-0000	.SLIDE	5-61
2598819-0000	.SPACER	5-85, 5-87
2598820-0000	.SPACER	5-85, 5-87
2598844-0000	.COVER	2-65
2598916-0000	.GUIDE	5-99, 5-101, 5-103
2598925-0000	.RAIL	5-181, 5-183
2598941-0000	.PIPE	5-119
2598967-0000	.SPACER	5-123, 5-125, 5-127
2599020-0000	.STOP	5-113, 5-115, 5-117
2599044-0000	.BRACKET	5-83
2599738-0000	.ECCENTRIC	4-127, 4-129
2599739-0000	.ECCENTRIC	4-127, 4-129
2599741-0000	.SUPPORT	4-193
2599742-0000	.SHAFT	4-191, 4-193
2599743-0000	.SHAFT	4-193
2599847-0000	.SPACER	5-77, 5-79, 5-81
2599941-0000	.SPACER	2-177, 2-179, 2-181, 2-183, 7-43, 7-45
2601230-0000	.BRACKET	8-91, 8-93
2601231-0000	.RAIL	8-47
2601232-0000	.FRAME	8-91, 8-93
2601233-0000	.RAIL	8-47
2601237-0000	.BENDING ROLLER	1-91
2601239-0000	.SPRING	1-185, 1-187
2601240-0000	.ROLLER	1-33
2601241-0000	.TOUCH GUARD	1-227
2601247-0000	.INDUCTOR	1-71, 1-73
2601248-0000	.INSULATING PLATE	1-71, 1-73
2601249-0000	.BRACKET	1-71, 1-73
2601269-0000	.ROLLER	1-67, 1-69
2601271-0000	.ROLLER	1-67, 1-69
2601272-0000	.ROLLER	1-67, 1-69
2601273-0000	.ROLLER	1-67, 1-69
2601278-0000	.ROLLER	1-61, 1-63
2601279-0000	.ROLLER	1-61, 1-63
2601284-0000	.LEVER	1-143
2601285-0000	.ROLLER	1-61, 1-63
2601286-0000	.ROLLER	1-61, 1-63, 1-83, 1-85
2601289-0000	.INDUCTOR	1-35, 1-37, 1-71, 1-73
2601307-0000	.INSULATING PLATE	1-35, 1-37, 1-71, 1-73
2601445-0000	.FOLDING PART	5-77, 5-79, 5-81
2601455-0000	.FOLDING PART	5-77, 5-79, 5-81
2601464-0000	.FOLDING PART	5-77, 5-79, 5-81
2601465-0000	.FOLDING PART	5-77, 5-79, 5-81
2601469-0000	.PRESSURE FLANGE	1-185, 1-187
2601472-0000	.PRESSURE FLANGE	1-185, 1-187
2601483-0100	.PAPER GUIDE	1-289, 1-291
2601580-0000	.HOSE	8-105
2601581-0000	.HOSE	8-105
2601582-0000	.HOSE	8-105
2602592-0000	.FOLDING PART	5-77, 5-79, 5-81
2602614-0000	.BOTTOM	5-13, 5-15
2602652-0000	.SHAFT	4-191, 4-193
2602655-0000	.ROLLER	4-137, 4-139
2602657-0000	.LOCK PLATE	4-191
2602658-0000	.SHAFT	4-191
2602990-0000	.SHEET	7-9
2602991-0000	.ROD	7-11
2602992-0000	.ROD	7-11
2602993-0000	.LEVER	7-27
2602994-0000	.BRACKET	7-27
2602995-0000	.AXLE	7-27
2603138-0000	.BRACKET	5-83
2603140-0000	.GUIDE	5-83
2603147-0000	.PLATE	5-77, 5-79, 5-81
2603148-0000	.CLAMP	5-83

Part No	Description	Page No
2603151-0000	.SHIM	4-75, 4-77, 4-79, 4-111, 4-113, 4-115
2603374-0000	.ECCENTRIC	4-133, 4-135
2603376-0000	.AXLE PIN	4-133, 4-135
2603378-0000	.ROLLER	4-133, 4-135
2603387-0000	.SPACER	2-39
2603488-0000	.FLAP	5-61
2603489-0000	.BOTTOM	5-61, 9-7
2603490-0000	.SLIDE	5-61
2603546-0000	.SLIDE PLATE	1-137, 1-139, 1-141
2603547-0000	.FOLDING PART	5-77, 5-79, 5-81
2603548-0000	.FOLDING PART	5-77, 5-79, 5-81
2603630-0000	.SLIDE PLATE	1-137, 1-139, 1-141
2603659-0000	.FOLDING PART	5-77, 5-79, 5-81
2603660-0000	.FOLDING PART	5-77, 5-79, 5-81
2603661-0000	.BRACKET	5-77, 5-79, 5-81
2603662-0000	.BRACKET	5-77, 5-79, 5-81
2603663-0000	.SPACER	5-25, 5-27, 5-33, 5-35, 5-37, 5-71, 5-73, 5-75
2603664-0000	.RAIL	5-77, 5-79, 5-81
2603823-0000	.BOTTOM PLATE	1-137, 1-139, 1-141
2603824-0000	.COUNTER PLATE	1-137, 1-139, 1-141
2603826-0100	.FOLDING PART	5-63
2603827-0100	.FLAP GUIDE	5-63
2603853-0001	.INSTALLATION DRAWING	9-3
2603855-0001	.INSTALLATION DRAWING	9-3
2604069-0000	.BRACKET	6-7
2604493-0000	.VOLUME FLAP	4-39, 4-41, 9-9, 9-11
2604494-0000	.VOLUME FLAP	4-43, 4-45
2604495-0000	.VOLUME FLAP	4-39, 4-41, 9-9, 9-11
2604496-0000	.VOLUME FLAP	4-43, 4-45
2604507-0000	.SPACER	5-113, 5-115, 5-117
2604508-0000	.SPACER	5-113, 5-115, 5-117
2604509-0000	.KNOB	5-113, 5-115, 5-117
2604510-0000	.SHAFT	5-113, 5-115, 5-117
2604539-0000	.PROTRACTOR	5-129
2604564-0000	.CUTTING JAW	4-83, 4-85, 4-87
2604565-0000	.HOLDER	4-67, 4-69, 4-105, 4-107
2605066-0000	.CURVE	4-131
2605125-0000	.PUSHER	5-149, 5-151, 5-153
2605148-0000	.STOP PIN	1-185, 1-187
2605166-0000	.VOLUME SHIM	4-39, 4-41, 4-43, 4-45, 9-9, 9-11, 9-23, 9-25
2605191-0000	.VOLUME FLAP	4-39, 4-41, 9-9, 9-11
2605192-0000	.VOLUME FLAP	4-43, 4-45
2605213-0000	.RAIL	5-77, 5-79, 5-81
2605226-0200	.ROLLER UNIT	4-131
2605228-0100	.BENDING ROLLER	7-167
2605869-0000	.FLAP HOLDER	4-39, 4-41, 4-43, 4-45, 9-9, 9-11
2605875-0000	.FOLDING FLAP	4-91, 4-93, 4-119, 4-121
2605876-0000	.FOLDING FLAP	4-91, 4-93, 4-119, 4-121
2605877-0000	.BENDING ROLLER	2-13
2605879-0000	.CANTILEVER	2-13
2605880-0000	.SHAFT	2-13
2605993-0000	.SIDE PLATE	5-195, 9-7
2605994-0000	.SIDE PLATE	5-195, 9-7
2606102-0000	.FLAP HOLDER	4-39, 4-41, 4-43, 4-45, 9-9, 9-11
2606215-0000	.BRACKET	8-21
2606216-0000	.BRACKET	8-91, 8-93
2606218-0000	.CAM	4-39, 4-41, 4-43, 4-45, 9-9, 9-11
2606289-0000	.BOTTOM	5-13, 5-15
2606305-0000	.VOLUME FLAP	4-7, 4-9
2606306-0000	.VOLUME FLAP	4-13, 4-15
2606891-0000	.ECCENTRIC	4-127, 4-129
2606892-0000	.ECCENTRIC	4-127, 4-129
2607082-0100	.HEATER	1-191
2607087-0000	.BOTTOM PLATE	1-137, 1-139, 1-141
2607440-0000	.SLIDE PLATE	1-137, 1-139, 1-141
2608103-0000	.BRACKET	2-39
2608104-0000	.BRACKET	2-39
2608106-0000	.BRACKET	8-21
2608107-0000	.BRACKET	8-21
2608149-0000	.ROLLER	4-137, 4-139
2608150-0000	.ROLLER	4-137, 4-139
2608156-0000	.PIPE FLANGE	1-195
2608157-0000	.PIPE FLANGE	1-195
2608177-0000	.SIGN	8-21, 8-35, 8-37, 8-39, 8-41, 8-91, 8-93
2608273-0000	.HOLDER	2-201
2608274-0000	.PIPE	2-201
2609303-0000	.WEIGHT	7-177, 7-179
2609365-0000	.HOLDER	2-201
2609368-0000	.TIE ROD	5-9, 5-11
2609369-0000	.FOLDING BAR	5-33, 5-35, 5-37
2609370-0000	.FOLDING BAR	5-33, 5-35, 5-37
2609371-0000	.SPACER	5-33, 5-35, 5-37
2609372-0000	.GUIDE	5-65, 5-67, 5-69
2609923-0000	.WASHER	4-133, 4-135

Part No	Description	Page No
2609925-0000	.VOLUME BULGE	4-39, 4-41, 4-43, 4-45, 9-9, 9-11
2610684-0000	.HOLDER	2-65
2610764-0000	.PLATE	5-205
2610793-0000	.BLOCK	4-131
2610954-0000	.RAIL	4-67, 4-69
2610955-0000	.RAIL	4-105, 4-107
2610956-0000	.INDUCTOR	4-67, 4-69, 4-105, 4-107
2610957-0000	.FOLDING FLAP	4-91, 4-93, 4-119, 4-121
2610966-0000	.PIPE	1-195
2610974-0000	.ROLLER	4-137, 4-139
2611009-0000	.SHAFT	1-143
2611034-0000	.BRACKET	1-253
2611035-0000	.PIPE	1-253
2611051-0000	.PIPE	1-265
2611072-0000	.SCREW	1-81
2611077-0000	.PIPE	1-229
2611078-0000	.PIPE	1-229
2611104-0000	.HOLDER	1-97
2611227-0000	.COVER STRIP	2-235
2611228-0000	.COVER STRIP	2-237
2611408-0000	.BRACKET	4-143, 4-145
2611457-0000	.CABLE DUCT	7-135, 7-137, 7-139, 7-141, 7-143
2611458-0000	.CABLE DUCT	7-135, 7-137, 7-139, 7-141, 7-143
2611459-0000	.CABLE DUCT	7-135, 7-137, 7-139, 7-141, 7-143
2611460-0000	.CABLE DUCT	7-135, 7-137, 7-139, 7-141, 7-143
2611461-0000	.CABLE DUCT	7-135, 7-137, 7-139, 7-141, 7-143
2611462-0100	.TERMINAL BLOCK	7-135, 7-137, 7-139, 7-141, 7-143
2611463-0100	.TERMINAL BLOCK	7-135, 7-137, 7-139, 7-141, 7-143
2611464-0000	.RAIL	7-145, 7-147
2611465-0000	.RAIL	7-153, 7-155
2613033-0000	.MACHINE BODY	6-47
2613034-0100	.MACHINE BODY	6-3, 6-5
2613644-0100	.CANTILEVER	4-187
2613645-0100	.CURVE UNIT	4-125
2613646-0100	.VOLUME ADJUSTER	4-147
2613647-0100	.VOLUME CURVE PIECE	4-5
2613648-0100	.SUPPORT ROLLER	4-125
2613749-0100	.COVER	7-3, 7-5
2613763-0000	.SLEEVE	4-131
2613764-0000	.SLEEVE	4-127, 4-129, 4-131
2613809-0000	.SPACER	4-131
2614038-0000	.SPACER	4-193
2614039-0000	.CLAMP	4-189
2614371-0000	.ROLLER BRACKET	4-131
2614372-0000	.SLEEVE	4-127, 4-129, 4-131
2614373-0000	.ROLLER BRACKET	4-131
2614376-0001	.WASHER	4-127, 4-129, 4-131
2614376-0002	.WASHER	4-127, 4-129, 4-131
2615463-0100	.FLUSHING DEVICE	2-195
2616034-0000	.COVER PLATE	7-159, 7-161
2616217-0000	.BOTTOM	5-59
2616218-0000	.BOTTOM	5-59, 9-7
2616219-0000	.BOTTOM	5-59, 9-7
2616220-0000	.BOW CLAMP	4-143, 4-145
2616221-0000	.BRACKET	4-149
2616222-0000	.BRACKET	4-149
2616223-0000	.SUPPORT	4-149
2616224-0100	.PHOTOCELL UNIT	4-5
2616225-0000	.CLAMP	4-149
2616227-0000	.TIMING BELT	5-167
2616229-0000	.BLOCK	5-5, 5-7
2616231-0000	.ROLLER	1-75, 1-77
2616236-0000	.WASHER	1-97
2616237-0000	.CONNECTION	1-97
2616238-0000	.HOLDER	1-97
2616239-0000	.HOLDER	1-97
2616240-0000	.PIPE	1-97
2616297-0000	.PIPE	1-229
2616298-0000	.BRACKET	1-229
2616299-0000	.PIPE	1-229
2618259-0000	.SPACER	4-131
2618302-0000	.PIVOT PIN	4-131
2618329-0000	.PLATE	4-191
2618330-0000	.HANDLE	4-191
2618332-0000	.SHAFT	4-191
2618333-0000	.PLATE	4-191
2618377-0000	.ECCENTRIC	4-127, 4-129, 4-131
2618378-0000	.ECCENTRIC	4-127, 4-129, 4-131
2618430-0000	.PNEUMATIC DIAGRAM	7-159, 7-161
2618683-0000	.SPACER	5-123, 5-125, 5-127
2619069-0000	.SLIDE	1-113
2619170-0000	.PLATE	8-45
2619171-0000	.PLATE	1-113
2619198-0000	.SHAFT	4-137, 4-139

Part No	Description	Page No
2619199-0000	.ROLLER	4-137, 4-139
2619200-0000	.PLATE	4-137, 4-139
2619210-0000	.SPACER	5-161
2619211-0000	.SPACER	5-161
2619212-0000	.SPACER	5-161
2619213-0000	.SPACER	5-161
2619391-0000	.BOTTOM	5-61
2619574-0000	.SPACER	5-85, 5-87
2619576-0000	.SLIDE	5-99, 5-101, 5-103
2619577-0000	.CARRIER	5-89, 5-91
2619581-0000	.SLIDE	5-95, 5-97
2619602-0000	.RAIL	5-181, 5-183
2619618-0000	.FLAP	5-61
2619619-0000	.FLAP	5-53, 5-55, 5-57
2619620-0000	.BOTTOM	5-53, 5-55, 5-57
2619674-0000	.PLATE	5-195
2619675-0000	.PLATE	5-195
2619678-0000	.SPACER	5-85, 5-87
2619679-0000	.GUIDE	5-89, 5-91
2619680-0000	.GUIDE	5-89, 5-91
2619682-0000	.BAR	5-95, 5-97
2619683-0000	.BAR	5-99, 5-101, 5-103
2619684-0000	.SLIDE	5-95, 5-97
2619685-0000	.SLIDE	5-99, 5-101, 5-103
2619692-0000	.GUIDE	5-95, 5-97
2619693-0000	.GUIDE	5-99, 5-101, 5-103
2619697-0000	.PLATE	5-95, 5-97, 5-99, 5-101, 5-103
2619698-0000	.BAR	5-95, 5-97
2619699-0000	.SLIDE	5-95, 5-97
2619700-0000	.GUIDE	5-95, 5-97
2619701-0000	.GUIDE	5-99, 5-101, 5-103
2619704-0000	.GUIDE	5-95, 5-97
2619705-0000	.GUIDE	5-99, 5-101, 5-103
2619711-0000	.BAR	5-99, 5-101, 5-103
2619712-0000	.SLIDE	5-99, 5-101, 5-103
2619727-0000	.GUIDE	5-99, 5-101, 5-103
2619728-0000	.GUIDE	5-95, 5-97
2619730-0000	.PUSHER	5-149, 5-151, 5-153
2619732-0000	.PUSHER	5-149, 5-151, 5-153
2619737-0000	.KNOB	5-89, 5-91
2619759-0000	.SLIDE	1-113
2623513-0000	.BUSHING	4-193
2623514-0000	.SUPPORT	4-193
2623587-0000	.BUSBAR	8-83
2623588-0000	.PROTECTION	8-91, 8-93
2623589-0000	.NUT	8-91, 8-93
2623590-0000	.CABLE	8-91, 8-93
2623591-0000	.CABLE	8-91, 8-93
2623623-0000	.CYLINDER BRACKET	5-113, 5-115, 5-117
2623624-0000	.CYLINDER BRACKET	5-113, 5-115, 5-117
2623712-0000	.HANGER	6-9
2623713-0000	.HOLDER	6-9
2623714-0100	.PEROXIDE REDUCER	6-3, 6-5
2623715-0000	.HOLDER	6-7
2623717-0000	.HOLDER	6-7
2623718-0100	.PEROXIDE REDUCER	6-3, 6-5
2623719-0000	.HOLDER	6-9
2623720-0000	.HOLDER	6-9
2623721-0100	.PEROXIDE REDUCER	2-19, 2-21
2623783-0000	.PLATE	4-137, 4-139
2623869-0000	.RUBBER HOLDER	5-113, 5-115, 5-117
2623870-0000	.RUBBER DAMPER	5-113, 5-115, 5-117
2623883-0000	.BRACKET	7-31
2623884-0000	.PLATE	7-31
2624537-0000	.STOP	4-177, 4-179
2624539-0000	.PIPE	2-23
2624543-0000	.SPACER	4-127, 4-129
2624544-0000	.PIVOT PIN	4-127, 4-129
2624549-0100	.POWER SUPPLY UNIT	8-21
2624550-0000	.RAIL	8-45
2624551-0100	.CONNECTION DEVICE	8-21
2624552-0000	.CABLE	8-99
2624554-0000	.FOLDING FLAP	4-91, 4-93, 4-119, 4-121
2624555-0000	.FOLDING FLAP	4-91, 4-93, 4-119, 4-121
2628598-0000	.SPACER	4-127, 4-129
2628989-0000	.BRACKET	7-117
2628990-0000	.BRACKET	7-117
2629156-0000	.BODY	1-207
2629236-0000	.CAM	4-39, 4-41, 4-43, 4-45, 9-9, 9-11
2629237-0000	.CAM	4-39, 4-41, 4-43, 4-45, 9-9, 9-11
2629239-0000	.TUBE FLUSHING DEVICE	4-141
2629240-0000	.TUBE FLUSHING DEVICE	4-141
2629315-0100	.PAPER BRAKE	7-31
2629321-0000	.COIL	1-193

Part No	Description	Page No
2629322-0000	.COVER	1-193
2629323-0000	.COVER	1-193
2629324-0000	.BRACKET	1-193
2629325-0000	.PIPE	1-191
2629326-0000	.PIPE	1-191
2629327-0000	.FRAME	1-191
2629336-0000	.BOTTOM	5-61
2629338-0000	.GUIDE RAIL	7-31
2629344-0000	.SPACER	5-77, 5-79, 5-81
2630482-0000	.BRACKET	10-17, 10-19
2632534-0000	.HATCH	7-205, 7-207
2632535-0000	.CONNECTION BOX	7-193, 7-209
2632536-0100	.CONTROL PANEL	7-205, 7-207
2632542-0000	.HATCH	7-189, 7-191
2632543-0100	.CONTROL PANEL	7-189, 7-191
2632565-0000	.SHAFT	1-45, 1-47
2632578-0000	.PLATE	2-175
2632638-0000	.HOLDER	1-223
2632639-0000	.VALVE BODY	1-223
2632640-0000	.VALVE BODY	1-223
2632641-0000	.PIPE	1-223
2632642-0100	.NOZZLE UNIT	1-219, 1-221
2632817-0000	.PLATE	4-137, 4-139
2632818-0000	.SHAFT	4-137, 4-139
2633186-0100	.SOFTWARE TPOP	8-7
2633187-0100	.SOFTWARE TMCC	8-7
2633188-0100	.SOFTWARE PLC	8-7
2633189-0100	.SOFTWARE PAM-SAM	8-7
2633328-0000	.PNEUMATIC DIAGRAM	7-159, 7-161
2633438-0000	.SPACER	4-127, 4-129
2633439-0000	.PIPE	5-213, 5-215
2633440-0000	.PIPE	5-213, 5-215
2633441-0000	.BRACKET	5-213, 5-215
2634515-0000	.CANTILEVER	4-19, 4-21, 4-29, 4-31
2634523-0000	.LOWER FILLING PIPE	1-185, 1-187
2634524-0000	.PRESSURE FLANGE	1-185, 1-187
2634565-0001	.PAM - SAM EASY DOWNLOAD	8-15
2634567-0001	.PAM - SAM EASY DOWNLOAD	8-15
2634569-0001	.PAM - SAM EASY DOWNLOAD	8-15
2634571-0001	.PAM - SAM EASY DOWNLOAD	8-15
2634573-0001	.PAM - SAM EASY DOWNLOAD	8-15
2634575-0001	.PAM - SAM EASY DOWNLOAD	8-15
2634577-0001	.PAM - SAM EASY DOWNLOAD	8-15
2634579-0001	.PAM - SAM EASY DOWNLOAD	8-15
2634581-0001	.PAM - SAM EASY DOWNLOAD	8-15
2634583-0001	.PAM - SAM EASY DOWNLOAD	8-15
2634585-0001	.PAM - SAM EASY DOWNLOAD	8-15
2634683-0002	.TMCC PROGRAMME	8-11
2634894-0000	.FLANGE	5-129
2634917-0000	.SIGN	1-327
2634926-0000	.SUPPORT ROLLER	1-61, 1-63
2634930-0000	.SUPPORT ROLLER	1-67, 1-69
2634931-0000	.BRACKET	1-67, 1-69
2634932-0000	.BRACKET	1-83, 1-85
2634933-0000	.BRACKET	1-83, 1-85
2634934-0000	.SHAFT	1-83, 1-85
2634943-0000	.ROLLER	1-79
2634944-0000	.UPPER FORMING RING	1-49, 1-51, 1-53
2634945-0000	.UPPER FORMING RING	1-49, 1-51, 1-53
2634946-0000	.UPPER FORMING RING	1-49, 1-51, 1-53
2634947-0000	.ROLLER	1-49, 1-51, 1-53
2634948-0000	.ROLLER	1-49, 1-51, 1-53
2634949-0000	.ROLLER	1-49, 1-51, 1-53
2634950-0000	.UPPER FORMING RING	1-49, 1-51, 1-53
2634951-0000	.UPPER FORMING RING	1-49, 1-51, 1-53
2634952-0000	.UPPER FORMING RING	1-49, 1-51, 1-53
2634953-0000	.ROLLER	1-49, 1-51, 1-53
2634954-0000	.ROLLER	1-49, 1-51, 1-53
2634955-0000	.ROLLER	1-49, 1-51, 1-53
2634956-0000	.ROLLER	1-49, 1-51, 1-53
2634957-0000	.ROLLER	1-49, 1-51, 1-53
2634958-0000	.ROLLER	1-49, 1-51, 1-53
2634961-0000	.SHIM	1-49, 1-51, 1-53
2634967-0000	.SUPPORT RING	1-61, 1-63
2634968-0000	.ROLLER	1-61, 1-63
2634969-0000	.ROLLER	1-61, 1-63
2634970-0000	.ROLLER	1-61, 1-63
2634971-0000	.ROLLER	1-61, 1-63
2634983-0000	.ROLLER	1-49, 1-51, 1-53
2634984-0000	.ROLLER	1-49, 1-51, 1-53
2634985-0000	.ROLLER	1-49, 1-51, 1-53
2634987-0000	.SPACER	1-49, 1-51, 1-53
2634995-0000	.FLOAT	1-185, 1-187
2634997-0000	.GASKET	1-13, 1-15

Part No	Description	Page No
2635131-0100	.CABLE SET	8-3
2635168-0001	.RECORDER	8-17
2635406-0000	.RAIL	5-181, 5-183
2635543-0000	.RAIL	5-181, 5-183
2636079-0001	.RECORDER	8-17
2637599-0100	.ALIGNMENT TOOL	10-5
2637600-0000	.TOOL	10-33
2637602-0100	.DRILLING JIG	10-5
2637603-0000	.TOOL	10-35
2637604-0000	.BUSHING	10-35
2637605-0000	.BUSHING	10-35
2638180-0000	.INSERT	5-53, 5-55, 5-57
2639127-0000	.FOLDING BAR	5-33, 5-35, 5-37
2639128-0000	.FOLDING BAR	5-33, 5-35, 5-37
2639393-0000	.SPACER	5-33, 5-35, 5-37
2639498-0100	.SOFTWARE RECORDER	8-7
2639832-0000	.RAIL	5-181, 5-183
2640076-0000	.RAIL	5-181, 5-183
2640353-0000	.BRACKET	1-79
2640354-0000	.ROLLER	1-79
2640819-0000	.SCREW	3-15
2640822-0000	.SIGN	1-317
2640826-0000	.NUT	3-21
2640963-0000	.BRACKET	4-143, 4-145
2640991-0000	.SLIDE	1-71, 1-73
2640992-0000	.SLIDE	1-71, 1-73
2640993-0000	.PLATE	1-71, 1-73
2641000-0000	.SHAFT	1-71, 1-73
2641203-0000	.TEMPLATE	10-5
2641204-0000	.TEMPLATE	10-5
2641225-0000	.INSERT	4-97, 4-99
2641285-0000	.ROLLER	1-49, 1-51, 1-53
2641286-0000	.ROLLER	1-49, 1-51, 1-53
2641287-0000	.ROLLER	1-49, 1-51, 1-53
2641288-0000	.ROLLER	1-49, 1-51, 1-53
2641289-0000	.ROLLER	1-49, 1-51, 1-53
2641290-0000	.ROLLER	1-49, 1-51, 1-53
2641294-0000	.STOP PIN	1-185, 1-187
2641296-0000	.PIPE	1-157, 1-159
2641297-0000	.PRESSURE FLANGE	1-185, 1-187
2641298-0000	.PIPE	1-151
2641299-0000	.PIPE	1-157, 1-159
2641317-0000	.PIPE	1-153, 1-155
2641318-0000	.NOZZLE	1-153, 1-155
2641319-0000	.BRACKET	1-153, 1-155
2641322-0000	.PIPE	1-151
2641923-0000	.WASHER	1-71, 1-73
2642097-0000	.PLATE	4-137, 4-139
2642146-0000	.TEMPLATE	10-5
2644177-0000	.CLAMP HUB	5-167
2644178-0000	.BLOCK	5-167
2644202-0100	.SETTING TOOL	10-39
2644203-0000	.PLATE	10-43
2644204-0000	.SPINDLE	10-43
2644205-0000	.SPINDLE	10-43
2645542-0001	.INSTALLATION DRAWING	9-3
2646344-0000	.PLATE	4-137, 4-139
2646345-0000	.SHAFT	4-137, 4-139
2646428-0100	.LIFTING UNIT	10-5
2646470-0000	.RUBBER DAMPER	5-113, 5-115, 5-117
2648780-0000	.LEVER	1-143
2648846-0000	.SHAFT	4-137, 4-139
2648847-0000	.PLATE	4-137, 4-139
2649166-0000	.PIPE FLANGE	1-195
2649167-0000	.INSERT	1-365, 1-367
2649169-0000	.FUNCTION DIAGRAM	1-191
2650709-0100	.DESIGN CORRECTION	4-147
2650710-0100	.DRIVE UNIT	4-175
2650711-0100	.DRIVE UNIT	4-175
2650712-0000	.PLATE	4-177
2650713-0000	.PLATE	4-177, 4-179
2650715-0000	.PLATE	4-179
2650717-0000	.SCREW	4-177, 4-179
2650807-0000	.SIDE PLATE	5-195
2650808-0000	.SIDE PLATE	5-195
2650812-0000	.SHAFT	4-137, 4-139
2650813-0000	.BRACKET	2-103, 2-105
2650814-0000	.BOW CLAMP	4-143, 4-145
2650815-0000	.BRACKET	4-143, 4-145
2650817-0000	.SPRING	5-59, 9-23, 9-25
2651145-0000	.BLOCK	5-149, 5-151, 5-153
2651146-0000	.FLAP	5-53, 5-55, 5-57
2651326-0000	.TOUCH GUARD	1-219, 1-221
2651329-0000	.PIPE	1-193

Part No	Description	Page No
2651695-0000	.COVER PLATE	1-83, 1-85
2651789-0000	.ROLLER	1-67, 1-69
2651790-0000	.ROLLER	1-67, 1-69
2651925-0000	.PLATE	7-171
2652191-0000	.KNOB	5-89, 5-91
2652199-0001	.PAM - SAM EASY DOWNLOAD	8-15
2652202-0001	.PAM - SAM EASY DOWNLOAD	8-15
2652206-0000	.GUIDE	5-181, 5-183
2652311-0000	.PLATE	5-161
2652888-0000	.SHAFT	5-59
2652889-0000	.SCREW	5-59
2652890-0000	.TOOTHED PULLEY	4-177, 4-179
2652891-0000	.TOOTHED PULLEY	4-177, 4-179
2652892-0000	.PLATE	4-137, 4-139
2652896-0000	.SHAFT	4-19, 4-21, 4-29, 4-31
2653607-0000	.SCREW	1-143
2654290-0000	.VOLUME SHIM	4-39, 4-41, 4-43, 4-45, 9-9, 9-11, 9-23, 9-25
2654985-0000	.RAIL	5-181, 5-183
2655095-0000	.BRACKET	4-143, 4-145
2655096-0000	.SLIDE	4-143, 4-145
2655097-0000	.KNOB	4-143, 4-145
2655098-0000	.SHAFT	4-143, 4-145
2655500-0000	.WASHER	5-181, 5-183
2656299-0000	.SHAFT	7-67
2656672-0000	.SPROCKET	5-161
2656899-0000	.BRACKET	2-103, 2-105
2656905-0100	.OPTIONAL PARTS	1-349, 1-351
2656910-0100	.HEAD SPACE BY INJECTION	1-181, 1-183
2656985-0000	.SPACER	5-113, 5-115, 5-117
2657857-0000	.UPPER FORMING RING	1-49, 1-51, 1-53
2657858-0000	.UPPER FORMING RING	1-49, 1-51, 1-53
2657859-0000	.UPPER FORMING RING	1-49, 1-51, 1-53
2657860-0000	.BRACKET	1-79
2657873-0100	.LONGITUDINAL SEALING	1-21, 1-23, 1-25
2657884-0000	.TEMPLATE	9-35
2657886-0000	.COUNTER PLATE	1-137, 1-139, 1-141
2657887-0000	.HORN	1-157, 1-159
2657888-0000	.HORN	1-157, 1-159
2657922-0000	.SHUTTER	1-225
2657923-0000	.COUNTER ROLLER	1-45, 1-47
2657925-0000	.ROLLER	1-81
2658058-0000	.RAIL	7-105
2658077-0000	.SHAFT	1-143
2658390-0100	.BOTTOM	5-53, 5-55, 5-57
2658743-0100	.ELECTRICAL CONNECTION	8-91, 8-93
2660400-0000	.STOP	4-49, 4-55
2660401-0000	.CATCH	4-49, 4-55
2660549-0000	.BRACKET	5-83
2660550-0000	.GUIDE	5-83
2660552-0000	.BRACKET	5-83
2660555-0000	.GUIDE	5-83
2660566-0000	.NOZZLE	5-123, 5-125, 5-127
2660573-0000	.BASIC PLATE	5-113, 5-115, 5-117
2660575-0000	.GUIDE PLATE	5-113, 5-115, 5-117
2660587-0000	.SPACER	5-123, 5-125, 5-127
2660588-0000	.EXTENSION	5-123, 5-125, 5-127
2660596-0000	.SPACER	5-123, 5-125, 5-127
2660597-0000	.EXTENSION	5-123, 5-125, 5-127
2660604-0000	.PIPE	5-119
2660610-0000	.RUBBER DAMPER	5-113, 5-115, 5-117
2660715-0000	.GUIDE	5-181, 5-183
2660732-0000	.SPACER	5-113, 5-115, 5-117
2660737-0000	.STOP	5-113, 5-115, 5-117
2660776-0000	.BEARING BLOCK	7-31
2660841-0000	.PUSHER	5-149, 5-151, 5-153
2661094-0000	.SCREW	10-17, 10-19
2661153-0000	.SPACER	5-85, 5-87
2661429-0000	.PUSHER	5-149, 5-151, 5-153
2661451-0000	.VOLUME FLAP	9-9, 9-11
2662142-0000	.SPRING	5-149, 5-151, 5-153, 9-23, 9-25
2662165-0000	.SPRING	4-19, 4-21, 4-29, 4-31, 9-23, 9-25
2662166-0000	.SPRING	4-19, 4-21, 4-29, 4-31, 9-23, 9-25
2662167-0000	.BUSHING	4-19, 4-21, 4-29, 4-31
2662168-0000	.VOLUME BULGE	9-9, 9-11
2662169-0000	.VOLUME SHIM	9-9, 9-11
2662211-0000	.CHAIN	10-17, 10-19
2662431-0000	.CAM	9-9, 9-11
2662432-0000	.COUPLING	1-253
2662433-0000	.BRACKET	1-253
2662434-0000	.BRACKET	1-253
2662579-0000	.SPACER	4-177, 4-179
2662639-0000	.ROLLER	1-289, 1-291
2664035-0000	.SPACER SCREW	5-77, 5-79, 5-81
2664098-0000	.FILLING PIPE	1-185, 1-187

Part No	Description	Page No
2664200-0000	.GUIDE	5-95, 5-97, 9-17, 9-19
2664201-0000	.GUIDE	5-99, 5-101, 5-103, 9-13, 9-15
2664280-0000	.HOLDER	4-67, 4-69, 4-105, 4-107
2664596-0000	.CARRIER	5-173, 5-175, 9-23, 9-25
2664603-0000	.CAM	4-131
2664761-0000	.KNIFE	4-123, 9-23, 9-25
2664762-0000	.CUTTING JAW	4-83, 4-85, 4-87
2665129-0000	.GABLE PLATE	6-53
2665131-0000	.LOCKING ARM	6-55
2665132-0000	.LOCKING ARM	6-55
2665188-0000	.CUTTING JAW	4-83, 4-85, 4-87
2665197-0000	.BRACKET	5-205
2665198-0000	.PROTECTION	5-207
2665199-0000	.SLIDE	5-205
2665200-0000	.GUIDE	5-89, 5-91
2665201-0000	.GUIDE	5-89, 5-91
2665202-0000	.GUIDE	5-95, 5-97, 9-17, 9-19
2665203-0000	.GUIDE	5-99, 5-101, 5-103, 9-13, 9-15
2665204-0000	.CRADLE	5-195
2665205-0000	.PLATE	5-195
2665206-0000	.PLATE	5-195
2665624-0000	.BENDING ROLLER	7-97
2665720-0000	.SUPPORT	4-191
2665721-0000	.SHAFT	4-191
2665722-0000	.SUPPORT	4-191
2668565-0000	.NOZZLE	1-153, 1-155
2668569-0000	.PLUG	1-153, 1-155
2671730-0100	.AIR NOZZLE	1-151
2672745-0000	.VOLUME SHIM	4-51, 9-21, 9-23, 9-25
2672746-0000	.VOLUME BULGE	4-51, 9-21
2672847-0000	.ARM	1-249
2672936-0000	.SHUTTER	1-225
2672937-0000	.SHUTTER	1-225
2672938-0000	.SHUTTER	1-225
2672942-0000	.SYMBOLSIGN	1-327
2672962-0000	.CONNECTING PIPE	1-219, 1-221
2672963-0000	.CONNECTING PIPE	1-219, 1-221
2672994-0000	.HOOD	1-185, 1-187
2673023-0000	.LOWER FORMING RING	1-45, 1-47
2674188-0100	.EDGE ROLLER	1-21, 1-23, 1-25
2674566-0001	.PAM - SAM EASY DOWNLOAD	8-15
2674953-0000	.PUSHER	5-149, 5-151, 5-153
2674998-0000	.BOTTOM	5-61
2675077-0000	.SUPPORT	5-113, 5-115, 5-117
2675102-0000	.PLATE	5-95, 5-97, 5-99, 5-101, 5-103
2675103-0000	.BAR	5-95, 5-97
2675104-0000	.BAR	5-99, 5-101, 5-103
2675105-0000	.RAIL	5-181, 5-183
2675434-0000	.SUPPORT	10-17, 10-19
2675516-0000	.BRACKET	8-21
2675518-0100	.PLC	8-49, 8-51
2675519-0000	.CABLE DUCT	8-49, 8-51
2675520-0000	.RAIL	8-49, 8-51
2675521-0000	.RAIL	8-91, 8-93
2675522-0000	.DIVIDER	8-61, 8-63
2675580-0001	.PAM - SAM EASY DOWNLOAD	8-15
2676815-0000	.FOLDING BAR	5-71, 5-73, 5-75
2676816-0000	.FOLDING BAR	5-71, 5-73, 5-75
2677636-0000	.LEVER	1-17
2677899-0000	.WASHER	4-143, 4-145
2678621-0000	.GUIDE	5-99, 5-101, 5-103, 9-13, 9-15
2678622-0000	.GUIDE	5-95, 5-97, 9-17, 9-19
2678708-0000	.SUPPORT	5-205
2678709-0100	.PROTECTIVE COVER	5-205
2678710-0100	.INFEED CONVEYOR SHORT	5-197
2678753-0000	.PLATE	5-205
2679598-0000	.SPLASH PLATE	2-271, 2-273
2679599-0000	.CHUTE	2-271, 2-273
2680390-0000	.INDEXING DEVICE	5-129
2680391-0000	.HEAD	5-131, 5-133, 5-135, 5-137, 5-139, 5-141
2680392-0000	.FILTER	5-143, 5-145, 5-147
2680393-0000	.LEVER	5-143, 5-145, 5-147
2680394-0000	.GASKET	5-143, 5-145, 5-147
2680401-0000	.SPRING	5-131, 5-133, 5-135, 5-137, 5-139, 5-141
2681259-0000	.RAIL	7-109, 7-111
2681260-0000	.RAIL	7-109, 7-111
2681261-0000	.SHAFT	7-101, 7-103
2681262-0000	.BRACKET	7-101, 7-103
2681263-0000	.BUSHING	7-101, 7-103
2681264-0000	.ROCKER ARM	7-101, 7-103
2681265-0000	.SUPPORT	7-101, 7-103
2681266-0000	.WASHER	7-101, 7-103
2681267-0000	.PLATE	7-109, 7-111
2681535-0000	.SHAFT	7-109, 7-111

Part No	Description	Page No	Part No	Description	Page No

Machine Type	Group Description	Page No

Tetra Pak

SPC
Spare Parts Catalogue

Pos	Part No	Description	Page No
A			
AS010	1484695-0000 ..	KNIFE	9-5
AS010	2564232-0100 ..	LEG STAND	10-5
AS020	2592780-0000 ..	DOLLY	9-5
A102	90031-0062	PLC, ANALOG OUTPUT MODULE 8PT/CURR/VOLT	8-61, 8-63
A103	90031-0062	PLC, ANALOG OUTPUT MODULE 8PT/CURR/VOLT	8-61, 8-63
A104	90031-0061	PLC,ANALOG INPUT MODULE 16 PT/CURRENT	8-61, 8-63
A105	90031-0060	PLC,ANALOG INPUT MODULE 16 PT/VOLTAGE	8-61, 8-63
A106	90031-0065	PLC,TEMPERATUR CONTROL,INPUT MODULE 8 PT	8-61, 8-63
A107	90031-0065	PLC,TEMPERATUR CONTROL,INPUT MODULE 8 PT	8-61, 8-63
A108	90031-0065	PLC,TEMPERATUR CONTROL,INPUT MODULE 8 PT	8-61, 8-63
A109	90031-0058	PLC, DIGITAL INPUT MODULE	8-61, 8-63
A110	90031-0057	PLC, DIGITAL INPUT MODULE	8-61, 8-63
A111	90031-0057	PLC, DIGITAL INPUT MODULE	8-61, 8-63
A112	90031-0057	PLC, DIGITAL INPUT MODULE	8-61, 8-63
A113	90031-0057	PLC, DIGITAL INPUT MODULE	8-61, 8-63
A114	90031-0057	PLC, DIGITAL INPUT MODULE	8-61, 8-63
A115	90031-0057	PLC, DIGITAL INPUT MODULE	8-61, 8-63
A116	90031-0057	PLC, DIGITAL INPUT MODULE	8-61, 8-63
A117	90031-0057	PLC, DIGITAL INPUT MODULE	8-61, 8-63
A118	90031-0057	PLC, DIGITAL INPUT MODULE	8-61, 8-63
A119	90031-0057	PLC, DIGITAL INPUT MODULE	8-61, 8-63
A120	90031-0057	PLC, DIGITAL INPUT MODULE	8-61, 8-63
A121	90031-0057	PLC, DIGITAL INPUT MODULE	8-61, 8-63
A122	90031-0057	PLC, DIGITAL INPUT MODULE	8-61, 8-63
A123	90031-0057	PLC, DIGITAL INPUT MODULE	8-61, 8-63
A124	90031-0057	PLC, DIGITAL INPUT MODULE	8-61, 8-63
A125	90031-0057	PLC, DIGITAL INPUT MODULE	8-61, 8-63
A126	90031-0057	PLC, DIGITAL INPUT MODULE	8-61, 8-63
A127	90031-0057	PLC, DIGITAL INPUT MODULE	8-61, 8-63
A128	90031-0058	PLC, DIGITAL INPUT MODULE	8-61, 8-63
A129	90031-0058	PLC, DIGITAL INPUT MODULE	8-61, 8-63
A130	90031-0059	PLC, DIGITAL OUTPUT MODULE	8-61, 8-63
A131	90031-0059	PLC, DIGITAL OUTPUT MODULE	8-61, 8-63
A132	90031-0059	PLC, DIGITAL OUTPUT MODULE	8-61, 8-63
A133	90031-0059	PLC, DIGITAL OUTPUT MODULE	8-61, 8-63
A134	90031-0059	PLC, DIGITAL OUTPUT MODULE	8-61, 8-63
A135	90031-0059	PLC, DIGITAL OUTPUT MODULE	8-61, 8-63
A136	90031-0059	PLC, DIGITAL OUTPUT MODULE	8-61, 8-63
A137	90031-0059	PLC, DIGITAL OUTPUT MODULE	8-61, 8-63
A138	90031-0059	PLC, DIGITAL OUTPUT MODULE	8-61, 8-63
A139	90031-0059	PLC, DIGITAL OUTPUT MODULE	8-61, 8-63
A140	90031-0059	PLC, DIGITAL OUTPUT MODULE	8-61, 8-63
A141	90031-0059	PLC, DIGITAL OUTPUT MODULE	8-61, 8-63
A142	90031-0059	PLC, DIGITAL OUTPUT MODULE	8-61, 8-63
A143	90031-0059	PLC, DIGITAL OUTPUT MODULE	8-61, 8-63
A144	90031-0059	PLC, DIGITAL OUTPUT MODULE	8-61, 8-63
A145	90031-0059	PLC, DIGITAL OUTPUT MODULE	8-61, 8-63
A146	90031-0059	PLC, DIGITAL OUTPUT MODULE	8-61, 8-63
A147	90031-0059	PLC, DIGITAL OUTPUT MODULE	8-61, 8-63
A149	90031-0059	PLC, DIGITAL OUTPUT MODULE	8-61, 8-63
A160	90031-0051	BASEPLATE, 10-SLOT	8-61, 8-63
A161	90031-0053	BASEPLATE,10-SLOT	8-61, 8-63
A162	90031-0053	BASEPLATE,10-SLOT	8-61, 8-63
A163	90031-0053	BASEPLATE,10-SLOT	8-61, 8-63
A164	90031-0053	BASEPLATE,10-SLOT	8-61, 8-63
A165	90031-0052	BASEPLATE, 5-SLOT	8-59
A300	90458-2580	LEVEL CONTROL RELAY RM4-LA32M	8-49, 8-51
A301	90458-2580	LEVEL CONTROL RELAY RM4-LA32M	8-49, 8-51
A302	90458-2580	LEVEL CONTROL RELAY RM4-LA32M	8-49, 8-51
A303	90458-2580	LEVEL CONTROL RELAY RM4-LA32M	8-49, 8-51
A304	90458-2580	LEVEL CONTROL RELAY RM4-LA32M	8-49, 8-51
A308	90458-2580	LEVEL CONTROL RELAY RM4-LA32M	8-49, 8-51
A400	68262-0101	BACKPLANE FRONT RACK 8TE	8-99
A400	2565569-0002 ..	TMCC PROGRAMME	8-11
A401	68262-0101	BACKPLANE FRONT RACK 8TE	8-99
A401	2634683-0002 ..	TMCC PROGRAMME	8-11
A402	68262-0101	BACKPLANE FRONT RACK 8TE	8-99
A402	2565577-0003 ..	TMCC PROGRAMME	8-11
A403	68262-0101	BACKPLANE FRONT RACK 8TE	8-99
A403	2565573-0003 ..	TMCC PROGRAMME	8-11
A420	90459-0183	TRANSMITTER , TRANS T02 PCP	8-91, 8-93
A450	90453-0002	MODEM MD-12 DC	8-91, 8-93
A451	2518145-0101 ..	FLEXBOX TETRA BRIK	8-91, 8-93
A452	90458-1190	ETHERNET RAIL SWITCH, RS2-TX	8-91, 8-93
A500	1499642-0101 ..	TPIH 2500 HORIZONTAL MOUNTING	8-53
A501	1499642-0101 ..	TPIH 2500 HORIZONTAL MOUNTING	8-53
A600	90119-0072	SAFETY RELAY, JSBR4	8-49, 8-51
A601	90119-0105	SAFETY RELAY JOKAB JSR 3T	8-49, 8-51
A602	90119-0072	SAFETY RELAY, JSBR4	8-49, 8-51
A603	90119-0105	SAFETY RELAY JOKAB JSR 3T	8-49, 8-51
A604	90457-0092	SAFETY RELAY RT9-24VDC	8-49, 8-51
A605	90457-0092	SAFETY RELAY RT9-24VDC	8-49, 8-51

Pos	Part No	Description	Page No
A			
A606	90119-0089	SAFETY RELAY, JSBT4 24VDC	8-49, 8-51
A700	90100-0069	SERVO CONTROLLER PAM-P1R-H8F-AP-P, F26	8-57
A701	90100-0059	SAM SUPPLY SAM-PA-400-80-E	8-67
A710	90100-0042	SERVO DRIVE SAM-DA-400-014B-P4N-F	8-67
A711	90100-0042	SERVO DRIVE SAM-DA-400-014B-P4N-F	8-67
A712	90100-0042	SERVO DRIVE SAM-DA-400-014B-P4N-F	8-57
A713	90100-0042	SERVO DRIVE SAM-DA-400-014B-P4N-F	8-57
A714	90100-0041	SERVO DRIVE SAM-DA-400-07B-P4N-F	8-57
A715	90100-0041	SERVO DRIVE SAM-DA-400-07B-P4N-F	8-57
A716	90100-0041	SERVO DRIVE SAM-DA-400-07B-P4N-F	8-57
A7417	1499642-0101	TPIH 2500 HORIZONTAL MOUNTING	7-7
B			
B001	90326-0053	THERMOCOUPLE, 12826-35	8-21
B002	90044-0192	LIMIT SW. SZ2586.000	8-21
B003	90044-0192	LIMIT SW. SZ2586.000	8-21
B004	90044-0192	LIMIT SW. SZ2586.000	8-21
B005	90044-0192	LIMIT SW. SZ2586.000	8-21
B1040	90458-0672	PROXIMITY SENSOR E2E2-X5MB1-5M	1-289, 1-291
B1101	90459-0711	FLOW SENSOR FS-400 SERIES / 26440	1-179
B1104	979500-0003	ELECTRODE	1-165
B1106	90326-0057	THERMOCOUPLE, CR-AL	1-157, 1-159
B1109	90458-0341	THERMOCOUPLE, 5130050-001	1-13, 1-15
B1111	90457-0047	SENSOR 2750-1-5111-1 W.ADAPTER PNP	1-171
B1163	90459-0643	DIFF. PRESS. TRANSDUCER 2671-10CLD2EG2HD	1-339, 1-341
B1209	90326-0057	THERMOCOUPLE, CR-AL	1-263
B1210	90459-0951	TRANSDUCER, BTL5-A11-M0400-B-S32	2-19, 2-21
B1240	90458-2775	PROXIMITY SWITCH SMT-8-PS-K-LED-	1-17
B1241	90459-0829	SENSOR, SMTO-4U-PS-K-LED-24	1-161
B1242	90459-0829	SENSOR, SMTO-4U-PS-K-LED-24	1-161
B1243	90459-0829	SENSOR, SMTO-4U-PS-K-LED-24	1-161
B1244	90459-0829	SENSOR, SMTO-4U-PS-K-LED-24	1-161
B1301	90044-0194	PROX.SW. IN5329/IN3002-BPKG	1-205
B1302	90044-0194	PROX.SW. IN5329/IN3002-BPKG	1-205
B1303	90044-0194	PROX.SW. IN5329/IN3002-BPKG	1-205
B1305	90458-0256	PROXIMITY SWITCH IIA 3010-BPKG/6M	2-65
B1306	90458-0676	PROXIMITY SWITCH,E2EG-X5B1-6M	1-245
B1307	90458-0676	PROXIMITY SWITCH,E2EG-X5B1-6M	1-245
B1315	90243-0321	CONDUCTIVITY SENSOR, TP5EL. 00343-10803	1-259
B1316	90458-0806	FLOW METER, NO. XF DF23-DN32	1-219, 1-221
B1321	90458-0138	PROX.SW. E2EG-X1R5B1-5M	1-225
B1322	1478814-0000	SENSOR	1-225
B1331	90458-0138	PROX.SW. E2EG-X1R5B1-5M	1-239
B1332	90458-0138	PROX.SW. E2EG-X1R5B1-5M	1-239
B1333	90458-0138	PROX.SW. E2EG-X1R5B1-5M	1-239
B1334	90458-0138	PROX.SW. E2EG-X1R5B1-5M	1-239
B1335	90458-0138	PROX.SW. E2EG-X1R5B1-5M	1-239
B1336	90458-0138	PROX.SW. E2EG-X1R5B1-5M	1-239
B1337	90458-0138	PROX.SW. E2EG-X1R5B1-5M	1-239
B1403	90044-0194	PROX.SW. IN5329/IN3002-BPKG	1-295
B1405	90044-0194	PROX.SW. IN5329/IN3002-BPKG	1-137, 1-139, 1-141
B1420	90459-0181	PIPE SURFACE THERM., PT-100 -50° -+260°C	1-219, 1-221
B1502	90044-0194	PROX.SW. IN5329/IN3002-BPKG	1-123, 1-125
B1503	90326-0057	THERMOCOUPLE, CR-AL	1-157, 1-159
B1504	90459-0472	KEY SAF.SW. AZ 16 02ZVRK-M20-2152-2254	1-93, 1-105
B1505	90459-0472	KEY SAF.SW. AZ 16 02ZVRK-M20-2152-2254	1-9
B1506	90459-0472	KEY SAF.SW. AZ 16 02ZVRK-M20-2152-2254	1-7
B1507	90459-0472	KEY SAF.SW. AZ 16 02ZVRK-M20-2152-2254	1-147
B1508	90459-0472	KEY SAF.SW. AZ 16 02ZVRK-M20-2152-2254	1-145
B1509	90459-0472	KEY SAF.SW. AZ 16 02ZVRK-M20-2152-2254	1-103
B1511	90459-3682	ROTARY POSITION SENSOR RPN1A111	1-143
B1700	90044-0195	PROX.SW. IO 9922 IOW2010-ARKG/M/UP/80CM	3-27
B1701	90044-0195	PROX.SW. IO 9922 IOW2010-ARKG/M/UP/80CM	3-27
B1710	90044-0195	PROX.SW. IO 9922 IOW2010-ARKG/M/UP/80CM	3-27
B1711	90044-0195	PROX.SW. IO 9922 IOW2010-ARKG/M/UP/80CM	3-27
B1720	90044-0195	PROX.SW. IO 9922 IOW2010-ARKG/M/UP/80CM	3-11
B1721	90044-0195	PROX.SW. IO 9922 IOW2010-ARKG/M/UP/80CM	3-11
B1730	90044-0195	PROX.SW. IO 9922 IOW2010-ARKG/M/UP/80CM	3-11
B1731	90044-0195	PROX.SW. IO 9922 IOW2010-ARKG/M/UP/80CM	3-11
B1803	90458-0138	PROX.SW. E2EG-X1R5B1-5M	2-39
B1807	90458-0138	PROX.SW. E2EG-X1R5B1-5M	2-39
B1810	90458-2652	LEVEL PROBE, COD. 600.00.750-1	1-249
B1812	90044-0194	PROX.SW. IN5329/IN3002-BPKG	1-253
B1816	90458-0138	PROX.SW. E2EG-X1R5B1-5M	2-115
B1820	90326-0043	THERMOCOUPLE, CR-ALPREM.G	1-253
B 2102	90274-0042	PRESSURE GUARD, 200 KPA	6-67, 6-69
B2110	90459-0180	FLOW SWITCH, 0,1 - 2,5 L/MIN	6-19
B2111	90459-0180	FLOW SWITCH, 0,1 - 2,5 L/MIN	6-19
B2201	90274-0074	PRESSURE GUARD, 530 KPA	6-75
B2310	90459-1224	FILTER UNIT, MDF-BNHC-30-LB10-C1.0/B6	2-79
B2320	90457-0019	LEVEL PROBE, HMFB-S=45-0=80-0=90-T70	2-77
B2401	90274-0084	PRESSURE GUARD, 1800 KPA	2-87
B2403	90459-1038	PRESSURE TRANSMITTER, 250BAR	2-81

Pos	Part No	Description	Page No
B			
B2404	90459-1038	PRESSURE TRANSMITTER, 250BAR	2-81
B 2501	90274-0056	PRESSURE SWITCH, 100 - 1200 KPA	6-25
B2510	90326-0057	THERMOCOUPLE, CR-AL	6-19
B2540	90274-0108	DUAL PRESSURE GUARD, -20 - 2800 KPA	6-17
B2810	90457-0196	KEY SAF.SW. TZ2RE024PG RC1635	2-149, 2-151
B2811	90044-0204	KEY SAF.SW. NZIVZ-538-E	2-99
B2812	90457-0196	KEY SAF.SW. TZ2RE024PG RC1635	2-99
B2830	90457-0196	KEY SAF.SW. TZ2RE024PG RC1635	2-149, 2-151
B2831	90457-0196	KEY SAF.SW. TZ2RE024PG RC1635	2-99
B2832	90044-0204	KEY SAF.SW. NZIVZ-538-E	2-99
B3102	90274-0082	FLOW SWITCH, 2 - 3 L/MIN	6-33
B3105	90243-0245	MEASURING INSTRUMENT	6-35
B4315	90458-0138	PROX.SW. E2EG-X1R5B1-5M	4-177, 4-179
B5103	90044-0194	PROX.SW. IN5329/IN3002-BPKG	5-199, 5-203, 5-205
B 5104	1144653-0000	SWITCH	5-217
B5203	90044-0194	PROX.SW. IN5329/IN3002-BPKG	5-199, 5-203, 5-205
B5302	90044-0194	PROX.SW. IN5329/IN3002-BPKG	5-149, 5-151, 5-153
B5307	90326-0081	THERMOCOUPLE, ISA TYPE K.	5-107, 5-109, 5-111
B5308	90326-0081	THERMOCOUPLE, ISA TYPE K.	5-107, 5-109, 5-111
B5309	90326-0081	THERMOCOUPLE, ISA TYPE K.	5-107, 5-109, 5-111
B5310	90326-0089	THERMOCOUPLE, 5110-089-000	1-231
B5314	90044-0194	PROX.SW. IN5329/IN3002-BPKG	5-129
B5402	90232-0104	PH.CELL E3S-CT61-D-5M	5-193
B5403	90232-0103	PH.CELL E3S-CT61-L-5M	5-193
B5501	90232-0104	PH.CELL E3S-CT61-D-5M	5-193
B5502	90232-0103	PH.CELL E3S-CT61-L-5M	5-193
B5601	90232-0103	PH.CELL E3S-CT61-L-5M	5-221
B5602	90232-0104	PH.CELL E3S-CT61-D-5M	5-221
B6105	90044-0194	PROX.SW. IN5329/IN3002-BPKG	7-27
B6107	90458-0677	PROXIMITY SWITCH, E2EG-X5MB1-M1	7-167
B6201	90044-0194	PROX.SW. IN5329/IN3002-BPKG	7-77
B6202	90044-0194	PROX.SW. IN5329/IN3002-BPKG	7-77
B6203	90458-0138	PROX.SW. E2EG-X1R5B1-5M	7-21
B6204	90044-0194	PROX.SW. IN5329/IN3002-BPKG	7-77
B6205	90458-1535	TRANSDUCER, BTL5-A11-M0850-P-S32	7-85
B6208	90458-0138	PROX.SW. E2EG-X1R5B1-5M	7-77
B6209	90459-0472	KEY SAF.SW. AZ 16 02ZVRK-M20-2152-2254	7-43, 7-45
B7210	90232-0129	PH.CELL E3S-CR61-5M	7-171
B7211	90232-0129	PH.CELL E3S-CR61-5M	7-65
B7304	90326-0054	THERMOCOUPLE, CR-AL STD.GR, 12826-36	7-99
B7401	90232-0106	PH.CELL E3S-CR11-5M	7-171
B7411	90458-0677	PROXIMITY SWITCH, E2EG-X5MB1-M1	7-43, 7-45
B7412	90044-0165	SENSOR, SME-8-K5-LED-24	7-63
B7414	90458-0677	PROXIMITY SWITCH, E2EG-X5MB1-M1	7-43, 7-45
B7430	90044-0165	SENSOR, SME-8-K5-LED-24	7-31
B7431	90044-0165	SENSOR, SME-8-K5-LED-24	7-31
B7432	90044-0165	SENSOR, SME-8-K5-LED-24	7-31
B7433	90044-0165	SENSOR, SME-8-K5-LED-24	7-31
B7501	90232-0106	PH.CELL E3S-CR11-5M	7-171
B7512	90044-0165	SENSOR, SME-8-K5-LED-24	7-63
B7801	90459-0472	KEY SAF.SW. AZ 16 02ZVRK-M20-2152-2254	7-43, 7-45
B7806	90459-0472	KEY SAF.SW. AZ 16 02ZVRK-M20-2152-2254	7-43, 7-45
B7807	90459-0472	KEY SAF.SW. AZ 16 02ZVRK-M20-2152-2254	7-43, 7-45
B8420	90458-2241	PRESSURE SWITCH 0,5-10 BAR ADJUSTABLE	7-59
B9104	90274-0110	PRESSURE SWITCH, 50 - 1000 KPA	1-197, 1-199
B9106	90326-0060	THERMOCOUPLE, CR-AL	1-223
B9107	90458-0672	PROXIMITY SENSOR E2E2-X5MB1-5M	1-223
B9108	90458-0672	PROXIMITY SENSOR E2E2-X5MB1-5M	1-223
B9109	90458-0672	PROXIMITY SENSOR E2E2-X5MB1-5M	1-223
B9110	90458-0672	PROXIMITY SENSOR E2E2-X5MB1-5M	1-223
B9111	90458-0672	PROXIMITY SENSOR E2E2-X5MB1-5M	1-223
B9113	2559045-0001	ELECTRODE	1-195
B9115	90326-0053	THERMOCOUPLE, 12826-35	1-193
B9116	90459-2122	THERMOCOUPLE, EN-5130060-0001	1-193
B9116	2559045-0002	ELECTRODE	1-195
B9117	90458-2619	FLOW METER, D-6230-HGB-BB-AV-99-0-N2	1-197, 1-199
B43011	90458-0601	PHOTOCELL, SICK PHOTOCELL 1	4-143, 4-145
B43012	90458-0601	PHOTOCELL, SICK PHOTOCELL 1	4-143, 4-145
B72232	90458-0677	PROXIMITY SWITCH, E2EG-X5MB1-M1	7-177, 7-179
B72234	90458-0677	PROXIMITY SWITCH, E2EG-X5MB1-M1	7-177, 7-179
B74031	90458-0602	PHOTOCELL,	7-107
B74032	90458-0602	PHOTOCELL,	7-107
C			
C700	90159-0100	CAPACITOR, 100000 æF 40 V	8-55
C700:1	90159-0304	HOLDER	8-55
C701	90159-0101	CAPACITOR, 6800 æF 400 V	8-71
C701:1	90159-0305	CLAMP	8-71
C702	90159-0101	CAPACITOR, 6800 æF 400 V	8-71
C702:1	90159-0305	CLAMP	8-71
C1314	90458-1092	PROPORTIONAL VALVE 0 - 10V/0-6 BAR	1-327
C1315	90458-1092	PROPORTIONAL VALVE 0 - 10V/0-6 BAR	1-317
C1316	90458-1092	PROPORTIONAL VALVE 0 - 10V/0-6 BAR	1-327

Pos	Part No	Description	Page No
C			
C1501	90459-3650	DOUBLE ACTING, MINI-ISO, CYL 25-40	1-143
C7410	90459-2101	CYLINDER, ADVC-80-25-I-P	7-105
C7412	90239-0861	DOUBLE ACTING, MINI-ISO, CYL. 32-125	7-33
C7412	90459-1849	DOUBLE ACTING SHUTTLE CYL. 40-550 MM	7-63
C7414	90239-0832	DOUBLE ACTING, MINI-ISO, CYL. 25-125	7-125
C7415	90239-0832	DOUBLE ACTING, MINI-ISO, CYL. 25-125	7-131
C7420	90239-0861	DOUBLE ACTING, MINI-ISO, CYL. 32-125	7-35
C7420	90459-3370	DOUBLE ACTING, PROFILE,CYL 32-140	7-39
C7421	90459-3370	DOUBLE ACTING, PROFILE,CYL 32-140	7-41
C7430	90459-2647	DOUBLE ACTING, SHUTTLE, CYL. 25-780	7-31
C7432	90459-2647	DOUBLE ACTING, SHUTTLE, CYL. 25-780	7-31
C9115	90459-1420	PROPORTIONAL VALVE 0 - 10V/0-6 BAR	1-197, 1-199
C73031	90459-0503	CYLINDER, ADVC-16-10-I-P	7-123
C73032	90459-0503	CYLINDER, ADVC-16-10-I-P	7-123
C73151	90459-0503	CYLINDER, ADVC-16-10-I-P	7-133
C73152	90459-0503	CYLINDER, ADVC-16-10-I-P	7-133
C74071	90459-1509	CYLINDER, ADVC-20-20-I-P	7-105
C74072	90459-1509	CYLINDER, ADVC-20-20-I-P	7-105
C74081	90459-2102	CYLINDER, AEVC 100-25-I-P	7-105
C74082	90459-2102	CYLINDER, AEVC 100-25-I-P	7-105
D			
DC010	2641203-0000	TEMPLATE	10-5
DC020	2641204-0000	TEMPLATE	10-5
DC030	2642146-0000	TEMPLATE	10-5
DC040	2503720-0100	OPENING FORCE TESTER	10-5
DS010	90296-0068	GREASE UNIWAY LI62 CARTRID.400GR	9-5
DS010	90459-2181	BELT TENSION METER, TSM 4	10-5
DS020	1548454-0000	DISC	9-5
DS020	2646428-0100	LIFTING UNIT	10-5
D100	90031-0076	CPU364, ETHERNET COMMUNICATION	8-61, 8-63
D101	90031-0031	ENHANCED GENIUS COMMUNICATION MODULE	8-61, 8-63
E			
E001	90459-2560	LIGHT FIXTURE, TMS121 1XTL-D30W/830 IP	8-21
E002	90459-2560	LIGHT FIXTURE, TMS121 1XTL-D30W/830 IP	8-21
EC010	90233-0028	TUBE FUSE, 10A	9-5
EC010	90243-0203	MEASURING INSTRUMENT	10-5
EC020	90233-0029	TUBE FUSE, 25A	9-5
EC020	2559112-0100	CALIBRATION EQUIPMENT	10-5
EC030	90233-0027	TUBE FUSE, 16A	9-5
EC040	90459-1254	TUBE FUSE, 4A 500V	9-5
E7702	90164-0015	LIGHT FIXTURE, DWDCV111B/230V 50HZ	7-43, 7-45
E7705	90164-0015	LIGHT FIXTURE, DWDCV111B/230V 50HZ	7-43, 7-45
F			
F020	90233-0028	TUBE FUSE, 10A	8-77
F021	90233-0028	TUBE FUSE, 10A	8-77
F022	90233-0029	TUBE FUSE, 25A	8-77
F023	90233-0029	TUBE FUSE, 25A	8-77
F024	90233-0028	TUBE FUSE, 10A	8-79, 8-81
F025	90233-0029	TUBE FUSE, 25A	8-79, 8-81
F026	90233-0027	TUBE FUSE, 16A	8-79, 8-81
F027	90233-0027	TUBE FUSE, 16A	8-79, 8-81
F028	90459-1254	TUBE FUSE, 4A 500V	8-79, 8-81
F029	90459-1254	TUBE FUSE, 4A 500V	8-79, 8-81
F030	90459-1254	TUBE FUSE, 4A 500V	8-79, 8-81
F031	90007-0129	CIRCUIT BREAKER, 1P 10 A K	8-79, 8-81
F032	90007-0129	CIRCUIT BREAKER, 1P 10 A K	8-79, 8-81
F033	90007-0129	CIRCUIT BREAKER, 1P 10 A K	8-79, 8-81
F034	90007-0129	CIRCUIT BREAKER, 1P 10 A K	8-79, 8-81
F035	90007-0129	CIRCUIT BREAKER, 1P 10 A K	8-79, 8-81
F036	90233-0034	TUBE FUSE, 1 A	8-79, 8-81
F037	90233-0062	TUBE FUSE, 4A 600V	8-79, 8-81
F038	90007-0129	CIRCUIT BREAKER, 1P 10 A K	8-79, 8-81
F039	90007-0147	CIRCUIT BREAKER, 3P 10 A K	8-79, 8-81
F042	90233-0027	TUBE FUSE, 16A	8-79, 8-81
F050	90007-0146	CIRCUIT BREAKER, 3P 6 A K	8-83
F051	90007-0148	CIRCUIT BREAKER, 3P 16 A K	8-83
F051	90007-0151	CIRCUIT BREAKER, 3P 40 A K	8-83
F052	90007-0128	CIRCUIT BREAKER, 1P 6 A K	8-83
F053	90007-0129	CIRCUIT BREAKER, 1P 10 A K	8-83
F054	90111-0172	EARTH FAULT BREAKER, F 362-25/0.03	8-91, 8-93
F055	90007-0127	CIRCUIT BREAKER, 1P 2 A K	8-83
F060	90007-0147	CIRCUIT BREAKER, 3P 10 A K	8-85
F061	90007-0138	CIRCUIT BREAKER, 2P 10 A K	8-85
F062	90007-0131	CIRCUIT BREAKER, 1P 16 A K	8-85
F064	90007-0156	CIRCUIT BREAKER, 1P 4 A K	8-85
F070	90007-0155	CIRCUIT BREAKER, 1P 0,5 A K	8-79, 8-81
FF010	1478583-0100	PRESSURE GAUGE	10-5
FF010	2662142-0000	SPRING	9-23, 9-25
FF020	1350497-0000	ASSEMBLY TOOL	10-5
FF020	2650817-0000	SPRING	9-23, 9-25
FF030	1350498-0000	ASSEMBLY TOOL	10-5
FF030	2664596-0000	CARRIER	9-23, 9-25

Pos	Part No	Description	Page No
F			
F150	1523691-0100	BLOWING DEVICE	1-97
F700	90007-0150	CIRCUIT BREAKER, 3P 25 A K	8-83
F700:1	90007-0312	AUXILIARY CONTACT	8-83
G			
G001	90459-2938	POWER SUPPLY, 6EP1437-3BA00	8-21
G002	90459-2939	POWER SUPPLY UNIT, 6EP1961-3BA00	8-45
G003	90459-2939	POWER SUPPLY UNIT, 6EP1961-3BA00	8-45
G010	90459-3449	VARIABLE FREQUENCY DRIVE 22A-A2P3N104	8-71
G011	90459-3449	VARIABLE FREQUENCY DRIVE 22A-A2P3N104	8-71
G012	90459-3449	VARIABLE FREQUENCY DRIVE 22A-A2P3N104	8-71
G013	90459-3450	VARIABLE FREQUENCY DRIVE 22A-A4P5N104	8-71
G014	90459-3450	VARIABLE FREQUENCY DRIVE 22A-A4P5N104	8-71
G015	90459-3451	VARIABLE FREQUENCY DRIVE 22A-D4P0N104	8-71
G100	90031-0068	PLC, POWER SUPPLY	8-61, 8-63
G101	90031-0068	PLC, POWER SUPPLY	8-61, 8-63
G102	90031-0068	PLC, POWER SUPPLY	8-61, 8-63
G103	90031-0068	PLC, POWER SUPPLY	8-61, 8-63
G104	90031-0068	PLC, POWER SUPPLY	8-61, 8-63
G105	90031-0068	PLC, POWER SUPPLY	8-59
H			
H2801	2540716-0100	SIGNAL LAMP	2-171
H7703	90052-0011	HORN HOOTERT 24:48VDC.PT NO.1YA030221	7-43, 7-45
H7703	2540716-0100	SIGNAL LAMP	2-181, 2-183
J			
JS010	28509-0000	WASHER	9-5
JS010	1110083-0002	DOLLY	9-23, 9-25
JS010	1520633-0005	DOLLY	9-23, 9-25
JS010	2556544-0100	SETTING TOOL	10-5
JS020	32544-0000	INSULATION NUT	9-5
JS020	1035362-0100	MEASURING DEVICE	10-5
JS020	1110930-0000	INDUCTOR	9-23, 9-25
JS020	1110932-0000	INDUCTOR	9-23, 9-25
JS020	1110936-0000	INDUCTOR	9-23, 9-25
JS020	1110937-0000	INDUCTOR	9-23, 9-25
JS020	1110938-0000	INDUCTOR	9-23, 9-25
JS020	1520052-0000	INDUCTOR	9-23, 9-25
JS020	1533046-0000	INDUCTOR	9-23, 9-25
JS020	2546474-0000	INDUCTOR	9-23, 9-25
JS030	72846-0101	COMPRESSION SPRING	10-5
JS030	107426-0000	GUIDE SLEEVE	9-5
JS030	1035831-0000	VOLUME SHIM	9-23, 9-25
JS030	1037735-0000	VOLUME SHIM	9-23, 9-25
JS030	1040755-0000	VOLUME SHIM	9-23, 9-25
JS030	1346158-0000	VOLUME SHIM	9-23, 9-25
JS030	1349208-0000	VOLUME SHIM	9-23, 9-25
JS030	1487627-0000	VOLUME SHIM	9-23, 9-25
JS030	1511336-0000	VOLUME SHIM	9-23, 9-25
JS030	1511337-0000	VOLUME SHIM	9-23, 9-25
JS030	1532293-0000	VOLUME SHIM	9-23, 9-25
JS030	1538637-0000	VOLUME SHIM	9-23, 9-25
JS030	2594891-0000	VOLUME SHIM	9-23, 9-25
JS030	2605166-0000	VOLUME SHIM	9-23, 9-25
JS030	2654290-0000	VOLUME SHIM	9-23, 9-25
JS030	2672745-0000	VOLUME SHIM	9-23, 9-25
JS035	1539843-0000	VOLUME SHIM	9-23, 9-25
JS035	2594890-0000	VOLUME SHIM	9-23, 9-25
JS040	90243-0146	TOOL	10-5
JS040	1036584-0000	WASHER	9-5
JS040	1348955-0000	KNIFE	9-23, 9-25
JS040	1348956-0000	KNIFE	9-23, 9-25
JS040	1348966-0000	KNIFE	9-23, 9-25
JS040	2664761-0000	KNIFE	9-23, 9-25
JS050	90206-0330	SOCKET WRENCH 2"9	10-5
JS050	315211-0104	BONDED SEAL SS/NBR90 M8	9-5
JS050	1037254-0000	SHIM	9-23, 9-25
JS060	312115-0297	SCREW ISO4762 M4X25 A4	9-5
JS060	927252-0000	COMPRESSION SPRING	9-23, 9-25
JS060	1095884-0100	ASSEMBLY TOOL	10-5
JS060	1260659-0000	SPRING	9-23, 9-25
JS070	312125-0295	SCREW ISO 1207 M4X20 A4	9-5
JS070	2637599-0100	ALIGNMENT TOOL	10-5
JS070	2662165-0000	SPRING	9-23, 9-25
JS080	315211-0103	BONDED SEAL SS/NBR90 M6	9-5
JS080	2637602-0100	DRILLING JIG	10-5
JS080	2662166-0000	SPRING	9-23, 9-25
JS090	315202-0101	O-RING 3,1X1,6 MM	9-5
JS090	1549378-0000	SPRING	9-23, 9-25
K			
K001	90075-0124	CONTACTOR, 4KW 24VDC	8-77
K002	90075-0124	CONTACTOR, 4KW 24VDC	8-77
K003	90075-0127	CONTACTOR, 4KW 24VDC	8-77
K004	90075-0127	CONTACTOR, 4KW 24VDC	8-77

Pos	Part No	Description	Page No
K			
K005	90075-0124	CONTACTOR, 4KW 24VDC	8-77
K006	90075-0128	CONTACTOR, 7,5KW 24VDC	8-77
K006:1	90075-0313	AUXILIARY CONTACT K&M 22 DILM.2NO;2NC	8-77
K007	90075-0124	CONTACTOR, 4KW 24VDC	8-77
K008	90075-0128	CONTACTOR, 7,5KW 24VDC	8-77
K008:1	90075-0313	AUXILIARY CONTACT K&M 22 DILM.2NO;2NC	8-77
K009	90075-0124	CONTACTOR, 4KW 24VDC	8-77
K020	90075-0128	CONTACTOR, 7,5KW 24VDC	8-77
K020:1	90075-0313	AUXILIARY CONTACT K&M 22 DILM.2NO;2NC	8-77
K021	90075-0128	CONTACTOR, 7,5KW 24VDC	8-77
K021:1	90075-0313	AUXILIARY CONTACT K&M 22 DILM.2NO;2NC	8-77
K022	90075-0128	CONTACTOR, 7,5KW 24VDC	8-77
K023	90075-0128	CONTACTOR, 7,5KW 24VDC	8-77
K024	90075-0127	CONTACTOR, 4KW 24VDC	8-79, 8-81
K025	90075-0128	CONTACTOR, 7,5KW 24VDC	8-79, 8-81
K025:1	90075-0313	AUXILIARY CONTACT K&M 22 DILM.2NO;2NC	8-79, 8-81
K026	90075-0127	CONTACTOR, 4KW 24VDC	8-79, 8-81
K028	90075-0127	CONTACTOR, 4KW 24VDC	8-79, 8-81
K029	90075-0127	CONTACTOR, 4KW 24VDC	8-79, 8-81
K030	90075-0127	CONTACTOR, 4KW 24VDC	8-79, 8-81
K031	90075-0124	CONTACTOR, 4KW 24VDC	8-79, 8-81
K034	90075-0124	CONTACTOR, 4KW 24VDC	8-79, 8-81
K035	90075-0124	CONTACTOR, 4KW 24VDC	8-79, 8-81
K036	90075-0127	CONTACTOR, 4KW 24VDC	8-79, 8-81
K037	90075-0127	CONTACTOR, 4KW 24VDC	8-79, 8-81
K038	90075-0124	CONTACTOR, 4KW 24VDC	8-79, 8-81
K039	90075-0124	CONTACTOR, 4KW 24VDC	8-79, 8-81
K042	90075-0127	CONTACTOR, 4KW 24VDC	8-79, 8-81
K070	90075-0127	CONTACTOR, 4KW 24VDC	8-79, 8-81
K100	90060-0080	RELAY, TIME H3DE-S1 24VDC	8-49, 8-51
K102	90075-0143	CONTACTOR, 4KW 24VDC	8-49, 8-51
K103	90119-0056	RELAY, AUXILIARY MK3P5-S 24VDC	8-49, 8-51
K104	90119-0056	RELAY, AUXILIARY MK3P5-S 24VDC	8-49, 8-51
K105	90119-0056	RELAY, AUXILIARY MK3P5-S 24VDC	8-49, 8-51
K106	90075-0141	CONTACTOR, 4KW 24VDC	8-49, 8-51
K107	90075-0141	CONTACTOR, 4KW 24VDC	8-49, 8-51
K108	90119-0056	RELAY, AUXILIARY MK3P5-S 24VDC	8-49, 8-51
K110	90119-0056	RELAY, AUXILIARY MK3P5-S 24VDC	8-49, 8-51
K111	90119-0056	RELAY, AUXILIARY MK3P5-S 24VDC	8-49, 8-51
K112	90119-0056	RELAY, AUXILIARY MK3P5-S 24VDC	8-49, 8-51
K113	90119-0056	RELAY, AUXILIARY MK3P5-S 24VDC	8-49, 8-51
K114	90119-0056	RELAY, AUXILIARY MK3P5-S 24VDC	8-49, 8-51
K115	90119-0056	RELAY, AUXILIARY MK3P5-S 24VDC	8-49, 8-51
K117	90119-0056	RELAY, AUXILIARY MK3P5-S 24VDC	8-49, 8-51
K120	90119-0056	RELAY, AUXILIARY MK3P5-S 24VDC	8-49, 8-51
K121	90119-0056	RELAY, AUXILIARY MK3P5-S 24VDC	8-49, 8-51
K122	90119-0056	RELAY, AUXILIARY MK3P5-S 24VDC	8-49, 8-51
K123	90119-0056	RELAY, AUXILIARY MK3P5-S 24VDC	8-49, 8-51
K124	90119-0056	RELAY, AUXILIARY MK3P5-S 24VDC	8-49, 8-51
K125	90119-0056	RELAY, AUXILIARY MK3P5-S 24VDC	8-49, 8-51
K126	90119-0056	RELAY, AUXILIARY MK3P5-S 24VDC	8-49, 8-51
K129	90075-0141	CONTACTOR, 4KW 24VDC	8-49, 8-51
K131	90075-0141	CONTACTOR, 4KW 24VDC	8-49, 8-51
K132	90119-0056	RELAY, AUXILIARY MK3P5-S 24VDC	8-49, 8-51
K133	90119-0056	RELAY, AUXILIARY MK3P5-S 24VDC	8-49, 8-51
K134	90119-0056	RELAY, AUXILIARY MK3P5-S 24VDC	8-49, 8-51
K135	90119-0056	RELAY, AUXILIARY MK3P5-S 24VDC	8-49, 8-51
K136	90119-0056	RELAY, AUXILIARY MK3P5-S 24VDC	8-49, 8-51
K137	90119-0056	RELAY, AUXILIARY MK3P5-S 24VDC	8-49, 8-51
K138	90119-0056	RELAY, AUXILIARY MK3P5-S 24VDC	8-49, 8-51
K139	90119-0056	RELAY, AUXILIARY MK3P5-S 24VDC	8-49, 8-51
K200	90119-0082	SSR 90119-67 + HEAT SINK	8-75
K201	90119-0082	SSR 90119-67 + HEAT SINK	8-75
K202	90119-0082	SSR 90119-67 + HEAT SINK	8-75
K203	90119-0082	SSR 90119-67 + HEAT SINK	8-75
K204	90119-0082	SSR 90119-67 + HEAT SINK	8-75
K205	90119-0082	SSR 90119-67 + HEAT SINK	8-75
K206	90119-0082	SSR 90119-67 + HEAT SINK	8-75
K207	90119-0082	SSR 90119-67 + HEAT SINK	8-75
K208	90119-0082	SSR 90119-67 + HEAT SINK	8-75
K209	90119-0082	SSR 90119-67 + HEAT SINK	8-75
K210	90119-0082	SSR 90119-67 + HEAT SINK	8-75
K211	90119-0082	SSR 90119-67 + HEAT SINK	8-75
K213	90119-0082	SSR 90119-67 + HEAT SINK	8-75
K214	90119-0082	SSR 90119-67 + HEAT SINK	8-75
K215	90119-0067	SOLID-STATE RELAY, H12WD4850	8-73
K220	90119-0043	OPTO-RELAY, 22DC 60S-3/32VDC	8-73
K221	90119-0043	OPTO-RELAY, 22DC 60S-3/32VDC	8-73
K222	90119-0043	OPTO-RELAY, 22DC 60S-3/32VDC	8-73
K223	90119-0043	OPTO-RELAY, 22DC 60S-3/32VDC	8-73
K224	90119-0043	OPTO-RELAY, 22DC 60S-3/32VDC	8-73
K225	90119-0043	OPTO-RELAY, 22DC 60S-3/32VDC	8-73

Pos	Part No	Description	Page No
K			
K300	90119-0063	OPTO-RELAY, DC/DC AMMS-10-1/30VDC	8-95
K301	90119-0063	OPTO-RELAY, DC/DC AMMS-10-1/30VDC	8-95
K700	90075-0126	CONTACTOR, 22KW 24VDC	8-83
K701	90075-0126	CONTACTOR, 22KW 24VDC	8-83
K7010	90075-0127	CONTACTOR, 4KW 24VDC	7-153, 7-155
K7011	90075-0127	CONTACTOR, 4KW 24VDC	7-153, 7-155
L			
L4309	1110930-0000	INDUCTOR	4-67, 4-69, 4-105, 4-107
L4309	1110932-0000	INDUCTOR	4-67, 4-69, 4-105, 4-107
L4309	1110936-0000	INDUCTOR	4-67, 4-69, 4-105, 4-107
L4309	1110937-0000	INDUCTOR	4-67, 4-69, 4-105, 4-107
L4309	1110938-0000	INDUCTOR	4-67, 4-69, 4-105, 4-107
L4309	1520052-0000	INDUCTOR	4-67, 4-69, 4-105, 4-107
L4309	1533046-0000	INDUCTOR	4-67, 4-69, 4-105, 4-107
L4309	2546474-0000	INDUCTOR	4-67, 4-69, 4-105, 4-107
L4309	2610956-0000	INDUCTOR	4-67, 4-69, 4-105, 4-107
L6101	2509617-0100	INDUCTOR	7-13
M			
MB010	315229-0105	GASKETS, 48,5X55,5X3,7 MM 2" FDA	9-5
MB020	315229-0104	GASKETS, 35,8X42,8X3,7 MM 1"1/2 FD	9-5
MB030	90459-1037	CRIMP TOOL FOR COAX. CONN. HTG 58-901200	10-5
MB030	315229-0103	GASKETS, 23,1X30,1X3,7 MM 1" FDA	9-5
MB040	315229-0107	GASKETS, 73,9X80,9X3,7 MM 2"1/2 FD	9-5
MB040	2588426-0100	ALIGNMENT TEMPLATE	10-5
MB050	90036-0057	LIGHT BULB, BA9S 28V	9-5
M1101	90270-0017	COMPRESSOR NASH/ELMO 112 MB/4-2083	1-163
M1206	90321-0134	CIRC. PUMP TMB 40/2 230V50HZ	1-263
M1206	90321-0135	CIRC. PUMP TMB 40/2 230V60HZ	1-263
M 1213	90458-2466	MOTOR 3GVA071002-CSB	2-33
M1501	90459-1226	GEARS, WORM MOTOR VF 44P-10+BN71B 0.37KW	1-127, 1-129
M1801	90458-1607	PUMP, SVI 8 03/03 N15T 1.5KW	1-249
M2301	90457-0036	3-PHASE MOTOR,FOOT MOUNT.1,1KW,1410 RPM	2-79
M 2501	90321-0116	PUMP GRUNDFOSS CHI 2-60	6-25
M2715	90459-1256	SERVO MOTOR HDDB09N-PA-A-A-B-A-AAA	4-177, 4-179
M2716	90458-0761	SERVO MOTOR EP 165-090-62L3B-X-C33	5-209
M3102	90321-0117	PUMP LOWARA SV8-14 F75T	6-39, 6-41
M3102	90321-0120	PUMP SV8-09 F756T, 380V60HZ	6-39, 6-41
M5503	90459-1147	GEARS, WORM MOTOR VF30 F1-10 P63 B14 V6	2-271, 2-273
M6201	90069-0614	GEARS, WORM MOTOR MC320P2T	7-75
M6202	90457-0921	WORM GEAR MOTOR MC320P2TB5/D	7-75
M7208	90459-2826	GEARS, HELICAL MOTOR ME0102210012	7-97
M7217	90459-2096	GEARS, WORM MOTOR F2 15 P63 B14 B8 PV 75	7-173
O			
O2530	90304-0020	LIQUID CONTAINER	6-27
P			
P1	90166-0195	TUBE 12 MM PA BLUE	1-303, 1-305
P001	90459-1615	RECORDER, 95.5010/11-888,888-54-01/020,2	8-91, 8-93
P1:1	90166-0193	TUBE 6 MM PUR BLUE	1-303, 1-305
P1:2	90166-0195	TUBE 12 MM PA BLUE	1-303, 1-305
P1:3	90166-0195	TUBE 12 MM PA BLUE	1-303, 1-305
P1:4	90166-0195	TUBE 12 MM PA BLUE	1-303, 1-305
P2	90166-0193	TUBE 6 MM PUR BLUE	1-303, 1-305
P003	90243-0214	CONDUCTIVITY METER	8-91, 8-93
P004	90053-0031	HOUR COUNTER, B 609.10 10-50VDC	8-91, 8-93
P005	90053-0029	COUNTER, F524.800FA3C 24VDC	8-91, 8-93
PT010	2564074-0100	TOOLS AND TEMPLATES	10-5
P101	90166-0196	TUBE 14MM PA BLUE	2-209, 2-211
P102	90166-0195	TUBE 12 MM PA BLUE	2-209, 2-211
P103	90166-0196	TUBE 14MM PA BLUE	2-209, 2-211
P104	90166-0196	TUBE 14MM PA BLUE	2-209, 2-211
P105	90166-0196	TUBE 14MM PA BLUE	2-209, 2-211
P106	90166-0195	TUBE 12 MM PA BLUE	2-209, 2-211
P201	90166-0196	TUBE 14MM PA BLUE	2-209, 2-211
P202	90166-0013	TUBE 8 MM PA BLUE	2-209, 2-211
P203	90166-0196	TUBE 14MM PA BLUE	2-209, 2-211
P204	90166-0195	TUBE 12 MM PA BLUE	2-209, 2-211
P205	90166-0195	TUBE 12 MM PA BLUE	2-209, 2-211
P206	90166-0195	TUBE 12 MM PA BLUE	2-209, 2-211
P207	90166-0195	TUBE 12 MM PA BLUE	2-209, 2-211
P900	90332-0020	RECORDER, 6 CHANNELS 85-264VAC/DC	8-91, 8-93
P901	90332-0020	RECORDER, 6 CHANNELS 85-264VAC/DC	8-91, 8-93
Q			
Q001	90095-0073	OVERLOAD PROTECTION, PKZM 1,6 A	8-77
Q001:1	90259-0313	AUX. CONTACT K&M NHI21-PKZM0	8-77
Q002	90095-0075	OVERLOAD PROTECTION, PKZM 4 A	8-77
Q002:1	90259-0313	AUX. CONTACT K&M NHI21-PKZM0	8-77
Q003	90095-0074	OVERLOAD PROTECTION, PKZM 2,5 A	8-77
Q003:1	90259-0313	AUX. CONTACT K&M NHI21-PKZM0	8-77
Q004	90095-0074	OVERLOAD PROTECTION, PKZM 2,5 A	8-77
Q004:1	90259-0313	AUX. CONTACT K&M NHI21-PKZM0	8-77
Q005	90095-0075	OVERLOAD PROTECTION, PKZM 4 A	8-77
Q005:1	90259-0313	AUX. CONTACT K&M NHI21-PKZM0	8-77

Pos	Part No	Description	Page No
Q			
Q006	90095-0078	OVERLOAD PROTECTION, PKZM0-16	8-77
Q006:1	90259-0313	AUX. CONTACT K&M NHI21-PKZM0	8-77
Q007	90095-0073	OVERLOAD PROTECTION, PKZM 1,6 A	8-77
Q007:1	90259-0313	AUX. CONTACT K&M NHI21-PKZM0	8-77
Q008	90095-0077	OVERLOAD PROTECTION, PKZM 6-10 A	8-77
Q008:1	90259-0313	AUX. CONTACT K&M NHI21-PKZM0	8-77
Q009	90095-0072	OVERLOAD PROTECTION, PKZM 1,0 A	8-77
Q009:1	90259-0313	AUX. CONTACT K&M NHI21-PKZM0	8-77
Q100	90111-0173	MAIN SW.NZM64-100/ZM64-100-760+AS4-NZM64	6-11
R			
R700	90121-0137	RESISTANCE FIXED, 2,2 OHM, 15 W	8-55
R701	90457-0193	EXTERNAL DB RESISTOR 800W 7,9 OHM	8-71
R702	90121-0114	RESISTANCE FIXED, 0,22 KOHM, 25 W	8-71
R703	90121-0114	RESISTANCE FIXED, 0,22 KOHM, 25 W	8-71
R704	90121-0114	RESISTANCE FIXED, 0,22 KOHM, 25 W	8-71
R1105	449939-0001	HEATING ELEMENT 15KW	1-169
R1208	90206-0070	HEATING ELEMENT 6000W 380/220V	1-263
R1209	90206-0070	HEATING ELEMENT 6000W 380/220V	1-263
R1503	1532235-0000	HEATER	1-157, 1-159
R5307	2514149-0000	HEATING ELEMENT	5-107, 5-109, 5-111
R5308	2514149-0000	HEATING ELEMENT	5-107, 5-109, 5-111
R5309	90206-0030	HEATING ELEMENT, 3000W, 220V	5-107, 5-109, 5-111
R6203	1498047-0000	SEALING BLOCK	7-81
R6204	1524481-0000	SEALING BLOCK	7-87
R7304	90459-2843	HEATING CARTRIDGE, 800W 240V	7-99
S			
S001	90458-1651	EMERGENCY STOP, ZB4-BS-844 ZB4-BZ-104	8-41
S003	90111-0122	KEY SWITCH, 2 NO CONTACTS	8-91, 8-93
S003:1	359241-0133	SIGN: " SERVICE SWITCH"	8-91, 8-93
S004	90111-0124	KEY SWITCH, 1NO,1NC CONTACT	8-91, 8-93
S004:1	359241-0122	SIGN: " CLEANING STEAM BARRIER SPACE"	8-91, 8-93
S005	90458-1651	EMERGENCY STOP, ZB4-BS-844 ZB4-BZ-104	8-41
SA010	1498047-0000	SEALING BLOCK	9-5
SU010	90243-0447	LASER EQUIPMENT	10-5
SU010	232979-0000	PRESSURE ROLLER	9-23, 9-25
SU010	257330-0000	PRESSURE ROLLER	9-23, 9-25
SU010	272479-0000	PRESSURE ROLLER	9-23, 9-25
SU010	499387-0000	PRESSURE ROLLER	9-23, 9-25
SU010	1296877-0100	SEAL KIT	9-5
SU010	1349738-0100	PRESSURE TEST EQUIPMENT	10-5
SU010	2582617-0000	TEMPLATE	9-35
SU010	2582618-0000	TEMPLATE	9-35
SU010	2582619-0000	TEMPLATE	9-35
SU010	2582620-0000	TEMPLATE	9-35
SU010	2582621-0000	TEMPLATE	9-35
SU010	2582622-0000	TEMPLATE	9-35
SU010	2657884-0000	TEMPLATE	9-35
SU020	74305-0100	PULLER	10-5
SU020	1296878-0100	SEAL KIT	9-5
SU020	1349914-0100	TEMPLATE FILLING PIPE	9-35
SU020	2523268-0000	SHAFT	9-23, 9-25
SU020	2529416-0000	SHAFT	9-23, 9-25
SU020	2529418-0000	SHAFT	9-23, 9-25
SU020	2529419-0000	SHAFT	9-23, 9-25
SU020	2529420-0000	SHAFT	9-23, 9-25
SU030	315204-0215	O-RING 19,2X3 MM	9-23, 9-25
SU030	315204-0219	O-RING 29,2X3 MM	9-23, 9-25
SU030	315204-0223	O-RING 39,2X3 MM	9-23, 9-25
SU030	777200-0101	PIPE WRENCEL	10-5
SU030	1296879-0100	SEAL KIT	9-5
SU040	90217-0348	GASKET 35,4X46,8X4 MM	9-5
SU040	449969-0100	TOOL DISMOUNTING	10-5
SU050	342850-0304	GASKET 35,4X49,1X5,2 1"1/2 FDA	9-5
SU050	533014-0100	LEAK FINDING EQUIPMENT (SUPERSTRUCTURE)	10-5
SU060	90459-1467	FORCE GAUGE 0-250N, AFG 250N	10-5
SU060	925998-0000	DIAPHRAGM	9-5
SU070	342850-0306	GASKET 60,3X76,1X5,2 MM 2"1/2 FDA	9-5
SU070	2552151-0000	BRACKET	10-5
SU070	2552152-0000	BRACKET	10-5
SU070	2552153-0000	BRACKET	10-5
SU070	2552154-0000	BRACKET	10-5
SU070	2582613-0000	BRACKET	10-5
SU080	342850-0304	GASKET 35,4X49,1X5,2 1"1/2 FDA	9-5
SU080	2532974-0000	SETTING TOOL	10-5
SU120	2569982-0100	SETTING TOOL	10-5
SU130	90243-0328	PAPER ROLL	10-5
SU140	90243-0329	CABLE	10-5
SU150	90243-0330	CABLE	10-5
SU160	2579687-0100	SETTING TOOL	10-5
S1003	90064-0084	PUSH BUTTON, YELLOW	1-339, 1-341
S1802	90458-1651	EMERGENCY STOP, ZB4-BS-844 ZB4-BZ-104	1-339, 1-341
S2803	90458-1651	EMERGENCY STOP, ZB4-BS-844 ZB4-BZ-104	2-221

Pos	Part No	Description	Page No
S			
S6206	90064-0082	PUSH BUTTON, WHITE	7-197
S7303	90064-0082	PUSH BUTTON, WHITE	7-213
S7402	90064-0082	PUSH BUTTON, WHITE	7-213
S7403	90064-0082	PUSH BUTTON, WHITE	7-213
S7408	90235-0206	QUICK EXHAUST VALVE, SEU-1/8	7-105
S7410	90235-0206	QUICK EXHAUST VALVE, SEU-1/8	7-105
S7430	90111-0120	SWITCH, 2 POS.704.510 .0A+704.901.5/A	7-209
S7431	90111-0120	SWITCH, 2 POS.704.510 .0A+704.901.5/A	7-193
S7701	90064-0084	PUSH BUTTON, YELLOW	7-197
S7812	90458-1651	EMERGENCY STOP, ZB4-BS-844 ZB4-BZ-104	7-199
S7813	90458-1651	EMERGENCY STOP, ZB4-BS-844 ZB4-BZ-104	7-213
T			
T1231	90113-0469	MANIFOLD REGULATOR 4 BAR	1-317
T1316	90457-0144	REGULATOR 0,3-2 BAR	1-327
T1332	90113-0469	MANIFOLD REGULATOR 4 BAR	1-327
T1402	67379-0404	TRANSFORMER	1-11
T1402	67379-0405	TRANSFORMER	1-11
T1402	67379-0412	TRANSFORMER	1-11
T1402	67379-0414	TRANSFORMER	1-11
T1402	67379-0417	TRANSFORMER	1-11
T1502	90113-0469	MANIFOLD REGULATOR 4 BAR	1-317
T4200	90113-0469	MANIFOLD REGULATOR 4 BAR	2-131, 2-133
T4301	90457-0144	REGULATOR 0,3-2 BAR	2-49
T5001	90457-0144	REGULATOR 0,3-2 BAR	2-131, 2-133
T5306	90113-0469	MANIFOLD REGULATOR 4 BAR	2-131, 2-133
T5315	90113-0469	MANIFOLD REGULATOR 4 BAR	2-131, 2-133
T5504	90113-0469	MANIFOLD REGULATOR 4 BAR	2-131, 2-133
T6101	67380-0207	TRANSFORMER	7-13
T6101	67380-0213	TRANSFORMER	7-13
T6101	67380-0214	TRANSFORMER	7-13
T6203	90458-0258	TRANSFORMER, 220VAC/6-9-12VAC	7-135, 7-137, 7-139, 7-141, 7-143
T9114	90113-0469	MANIFOLD REGULATOR 4 BAR	1-317
U			
U1231	90043-0065	PRESSURE GAUGE, 2048 D=40 MM	1-317
U1314	90043-0065	PRESSURE GAUGE, 2048 D=40 MM	1-327
U1315	90043-0065	PRESSURE GAUGE, 2048 D=40 MM	1-317
U1316	90459-4991	PRESSURE GAUGE, 9063064 D=40 MM	1-327
U1332	90043-0065	PRESSURE GAUGE, 2048 D=40 MM	1-327
U1502	90043-0065	PRESSURE GAUGE, 2048 D=40 MM	1-317
U4200	90043-0064	PRESSURE GAUGE, 2048 D=40 MM	2-131, 2-133
U4301	90043-0090	PRESSURE GAUGE, 2048 D=40 MM	2-49
U5001	90043-0090	PRESSURE GAUGE, 2048 D=40 MM	2-131, 2-133
U5215	90043-0064	PRESSURE GAUGE, 2048 D=40 MM	2-131, 2-133
U5306	90043-0064	PRESSURE GAUGE, 2048 D=40 MM	2-131, 2-133
U5315	90043-0064	PRESSURE GAUGE, 2048 D=40 MM	2-131, 2-133
U5504	90043-0064	PRESSURE GAUGE, 2048 D=40 MM	2-131, 2-133
U9114	90043-0065	PRESSURE GAUGE, 2048 D=40 MM	1-317
V			
V710	90459-1620	DIODE, 3A 100V	8-65
V711	90459-1620	DIODE, 3A 100V	8-65
V712	90459-1620	DIODE, 3A 100V	8-65
V713	90459-1620	DIODE, 3A 100V	8-65
V714	90459-1620	DIODE, 3A 100V	8-65
V715	90459-1620	DIODE, 3A 100V	8-65
W			
W0001	351150-0430	CABLE OLFLEX 5X35 MM2 LIGHT/GREY	2-149, 2-151
W100	90031-0305	I/O EXPANSION CABLE	8-61, 8-63
W101	90031-0305	I/O EXPANSION CABLE	8-61, 8-63
W102	90031-0305	I/O EXPANSION CABLE	8-61, 8-63
W103	90031-0305	I/O EXPANSION CABLE	8-61, 8-63
W104	90458-1314	I/O EXPANSION CABLE	8-59
W106	90220-0183	SCR. CABLE 2X0,34MM2	8-23, 8-25, 8-27, 8-29
W118	90220-0183	SCR. CABLE 2X0,34MM2	8-23, 8-25, 8-27, 8-29
W119	90220-0183	SCR. CABLE 2X0,34MM2	8-23, 8-25, 8-27, 8-29
W120	90220-0183	SCR. CABLE 2X0,34MM2	8-23, 8-25, 8-27, 8-29
W121	90220-0183	SCR. CABLE 2X0,34MM2	8-23, 8-25, 8-27, 8-29
W122	90220-0183	SCR. CABLE 2X0,34MM2	8-23, 8-25, 8-27, 8-29
W123	90220-0183	SCR. CABLE 2X0,34MM2	8-23, 8-25, 8-27, 8-29
W124	90220-0183	SCR. CABLE 2X0,34MM2	8-23, 8-25, 8-27, 8-29
W125	90220-0183	SCR. CABLE 2X0,34MM2	8-23, 8-25, 8-27, 8-29
W126	90220-0183	SCR. CABLE 2X0,34MM2	8-23, 8-25, 8-27, 8-29
W127	90220-0183	SCR. CABLE 2X0,34MM2	8-23, 8-25, 8-27, 8-29
W130	90220-0183	SCR. CABLE 2X0,34MM2	8-23, 8-25, 8-27, 8-29
W133	90220-0183	SCR. CABLE 2X0,34MM2	8-23, 8-25, 8-27, 8-29
W135	90220-0183	SCR. CABLE 2X0,34MM2	8-23, 8-25, 8-27, 8-29
W137	90220-0183	SCR. CABLE 2X0,34MM2	8-23, 8-25, 8-27, 8-29
W138	90220-0183	SCR. CABLE 2X0,34MM2	8-23, 8-25, 8-27, 8-29
W139	90220-0183	SCR. CABLE 2X0,34MM2	8-23, 8-25, 8-27, 8-29
W200	90459-1621	CABLE, ETHERNET RJ 45 CONNECT. 1 M	8-95
W210	90220-0104	SCR. CABLE 4X1,5MM2	8-23, 8-25, 8-27, 8-29
W211	90220-0104	SCR. CABLE 4X1,5MM2	8-23, 8-25, 8-27, 8-29
W212	90220-0104	SCR. CABLE 4X1,5MM2	8-23, 8-25, 8-27, 8-29

Pos	Part No	Description	Page No
W			
W213	90220-0104	SCR. CABLE 4X1,5MM2	8-23, 8-25, 8-27, 8-29
W214	90220-0104	SCR. CABLE 4X1,5MM2	8-23, 8-25, 8-27, 8-29
W215	90220-0104	SCR. CABLE 4X1,5MM2	8-23, 8-25, 8-27, 8-29
W300	90220-0034	THERMOCABLE TEX/SITW-20F-KX 2X0,5MM2	8-23, 8-25, 8-27, 8-29
W301	90220-0034	THERMOCABLE TEX/SITW-20F-KX 2X0,5MM2	8-23, 8-25, 8-27, 8-29
W302	90220-0034	THERMOCABLE TEX/SITW-20F-KX 2X0,5MM2	8-23, 8-25, 8-27, 8-29
W303	90220-0034	THERMOCABLE TEX/SITW-20F-KX 2X0,5MM2	8-23, 8-25, 8-27, 8-29
W304	90220-0034	THERMOCABLE TEX/SITW-20F-KX 2X0,5MM2	8-23, 8-25, 8-27, 8-29
W305	90220-0034	THERMOCABLE TEX/SITW-20F-KX 2X0,5MM2	8-23, 8-25, 8-27, 8-29
W306	90220-0034	THERMOCABLE TEX/SITW-20F-KX 2X0,5MM2	8-23, 8-25, 8-27, 8-29
W307	90220-0034	THERMOCABLE TEX/SITW-20F-KX 2X0,5MM2	8-23, 8-25, 8-27, 8-29
W308	90220-0034	THERMOCABLE TEX/SITW-20F-KX 2X0,5MM2	8-23, 8-25, 8-27, 8-29
W309	90220-0034	THERMOCABLE TEX/SITW-20F-KX 2X0,5MM2	8-23, 8-25, 8-27, 8-29
W310	90220-0034	THERMOCABLE TEX/SITW-20F-KX 2X0,5MM2	8-23, 8-25, 8-27, 8-29
W312	90220-0034	THERMOCABLE TEX/SITW-20F-KX 2X0,5MM2	8-23, 8-25, 8-27, 8-29
W313	90220-0034	THERMOCABLE TEX/SITW-20F-KX 2X0,5MM2	8-23, 8-25, 8-27, 8-29
W314	90220-0034	THERMOCABLE TEX/SITW-20F-KX 2X0,5MM2	8-23, 8-25, 8-27, 8-29
W315	90220-0034	THERMOCABLE TEX/SITW-20F-KX 2X0,5MM2	8-23, 8-25, 8-27, 8-29
W316	90220-0034	THERMOCABLE TEX/SITW-20F-KX 2X0,5MM2	8-23, 8-25, 8-27, 8-29
W317	90220-0034	THERMOCABLE TEX/SITW-20F-KX 2X0,5MM2	8-23, 8-25, 8-27, 8-29
W318	90220-0034	THERMOCABLE TEX/SITW-20F-KX 2X0,5MM2	8-23, 8-25, 8-27, 8-29
W319	90220-0034	THERMOCABLE TEX/SITW-20F-KX 2X0,5MM2	8-23, 8-25, 8-27, 8-29
W320	90220-0034	THERMOCABLE TEX/SITW-20F-KX 2X0,5MM2	8-23, 8-25, 8-27, 8-29
W321	90220-0034	THERMOCABLE TEX/SITW-20F-KX 2X0,5MM2	8-23, 8-25, 8-27, 8-29
W322	90220-0034	THERMOCABLE TEX/SITW-20F-KX 2X0,5MM2	8-23, 8-25, 8-27, 8-29
W323	90220-0034	THERMOCABLE TEX/SITW-20F-KX 2X0,5MM2	8-23, 8-25, 8-27, 8-29
W331	90220-0034	THERMOCABLE TEX/SITW-20F-KX 2X0,5MM2	8-23, 8-25, 8-27, 8-29
W332	90220-0034	THERMOCABLE TEX/SITW-20F-KX 2X0,5MM2	8-23, 8-25, 8-27, 8-29
W333	90220-0034	THERMOCABLE TEX/SITW-20F-KX 2X0,5MM2	8-23, 8-25, 8-27, 8-29
W382	90220-0034	THERMOCABLE TEX/SITW-20F-KX 2X0,5MM2	8-23, 8-25, 8-27, 8-29
W450	1254442-0000	CABLE SERIAL	8-91, 8-93
W454	2623591-0000	CABLE	8-91, 8-93
W455	2623590-0000	CABLE	8-91, 8-93
W700	90100-0075	EASYBUS SAM 2,0M	8-57
W701	90100-0072	EASYBUS SAM 0,3M	8-57
W702	90100-0072	EASYBUS SAM 0,3M	8-57
W703	90100-0072	EASYBUS SAM 0,3M	8-57
W704	90100-0072	EASYBUS SAM 0,3M	8-57
W705	90100-0072	EASYBUS SAM 0,3M	8-67
W706	90100-0072	EASYBUS SAM 0,3M	8-67
W707	90100-0075	EASYBUS SAM 2,0M	8-67
W710	90220-0125	MOTOR CABLE 4X4,0+2X1,0+2X0,75+SHIELD	8-23, 8-25, 8-27, 8-29
W711	90220-0125	MOTOR CABLE 4X4,0+2X1,0+2X0,75+SHIELD	8-23, 8-25, 8-27, 8-29
W712	90220-0125	MOTOR CABLE 4X4,0+2X1,0+2X0,75+SHIELD	8-23, 8-25, 8-27, 8-29
W713	90220-0125	MOTOR CABLE 4X4,0+2X1,0+2X0,75+SHIELD	8-23, 8-25, 8-27, 8-29
W714	90220-0116	MOTOR CABLE 4X1,0+2(2X0,5)+SHIELD	8-23, 8-25, 8-27, 8-29
W715	90220-0116	MOTOR CABLE 4X1,0+2(2X0,5)+SHIELD	8-23, 8-25, 8-27, 8-29
W716	90220-0084	MOTOR CABLE 4X2,5+2(2X0.75)+SHIELD	8-23, 8-25, 8-27, 8-29
W1001	351150-0425	CABLE OLFLEX 25X0,75 MM2 LIGHT/GREY	1-335
W1002	351150-0425	CABLE OLFLEX 25X0,75 MM2 LIGHT/GREY	1-335
W1003	351150-0425	CABLE OLFLEX 25X0,75 MM2 LIGHT/GREY	1-339, 1-341
W1004	351150-0425	CABLE OLFLEX 25X0,75 MM2 LIGHT/GREY	1-339, 1-341
W1005	351150-0418	CABLE OLFLEX 4X2,5 MM2 LIGHT/GREY	2-57, 2-59
W1005	351150-0425	CABLE OLFLEX 25X0,75 MM2 LIGHT/GREY	1-339, 1-341
W1006	351150-0407	CABLE OLFLEX 12X0,75 MM2 LIGHT/GREY	1-339, 1-341
W1011	351150-0405	CABLE OLFLEX 5X0,75 MM2 LIGHT/GREY	1-339, 1-341
W1012	351150-0403	CABLE OLFLEX 3X0,75 MM2 LIGHT/GREY	1-339, 1-341
W1013	351150-0403	CABLE OLFLEX 3X0,75 MM2 LIGHT/GREY	1-339, 1-341
W1015	351150-0403	CABLE OLFLEX 3X0,75 MM2 LIGHT/GREY	1-339, 1-341
W1018	351150-0403	CABLE OLFLEX 3X0,75 MM2 LIGHT/GREY	1-339, 1-341
W1029	351150-0404	CABLE OLFLEX 4X0,75 MM2 LIGHT/GREY	1-339, 1-341
W1030	351150-0403	CABLE OLFLEX 3X0,75 MM2 LIGHT/GREY	1-339, 1-341
W1031	351150-0403	CABLE OLFLEX 3X0,75 MM2 LIGHT/GREY	1-339, 1-341
W1040	351150-0405	CABLE OLFLEX 5X0,75 MM2 LIGHT/GREY	1-335
W1041	351150-0405	CABLE OLFLEX 5X0,75 MM2 LIGHT/GREY	1-339, 1-341
W1044	351150-0405	CABLE OLFLEX 5X0,75 MM2 LIGHT/GREY	1-339, 1-341
W1045	351150-0405	CABLE OLFLEX 5X0,75 MM2 LIGHT/GREY	1-335
W1046	351150-0405	CABLE OLFLEX 5X0,75 MM2 LIGHT/GREY	1-335
W1048	351150-0405	CABLE OLFLEX 5X0,75 MM2 LIGHT/GREY	1-339, 1-341
W1052	90220-0165	SCR. CABLE 5X0,34MM2	1-349, 1-351
W1053	90220-0091	PAIR TWISTED CABLE 2X2X0,25MM2	1-349, 1-351
W1054	90458-2895	COAXIAL CABLE RG 400/U BROWN	1-349, 1-351
W1058	351150-0403	CABLE OLFLEX 3X0,75 MM2 LIGHT/GREY	1-339, 1-341
W1065	351150-0403	CABLE OLFLEX 3X0,75 MM2 LIGHT/GREY	1-339, 1-341
W1066	351150-0403	CABLE OLFLEX 3X0,75 MM2 LIGHT/GREY	1-339, 1-341
W1067	351150-0405	CABLE OLFLEX 5X0,75 MM2 LIGHT/GREY	1-103
W1235	351150-0403	CABLE OLFLEX 3X0,75 MM2 LIGHT/GREY	1-339, 1-341
W1240	90220-0105	SCR. CABLE 4X2,5MM2	1-349, 1-351
W1300	90220-0034	THERMOCABLE TEX/SITW-20F-KX 2X0,5MM2	1-349, 1-351
W1301	90220-0034	THERMOCABLE TEX/SITW-20F-KX 2X0,5MM2	1-157, 1-159
W1302	90220-0034	THERMOCABLE TEX/SITW-20F-KX 2X0,5MM2	1-349, 1-351
W1303	90220-0034	THERMOCABLE TEX/SITW-20F-KX 2X0,5MM2	1-263

W

Pos	Part No	Description	Page No
W1304	90220-0034	THERMOCABLE TEX/SITW-20F-KX 2X0,5MM2	2-57, 2-59
W1305	90220-0034	THERMOCABLE TEX/SITW-20F-KX 2X0,5MM2	1-349, 1-351
W1307	90220-0034	THERMOCABLE TEX/SITW-20F-KX 2X0,5MM2	1-349, 1-351
W1315	90220-0165	SCR. CABLE 5X0,34MM2	1-349, 1-351
W1316	90220-0165	SCR. CABLE 5X0,34MM2	1-335
W1320	90220-0034	THERMOCABLE TEX/SITW-20F-KX 2X0,5MM2	1-349, 1-351
W1321	90220-0034	THERMOCABLE TEX/SITW-20F-KX 2X0,5MM2	1-157, 1-159
W1322	90220-0034	THERMOCABLE TEX/SITW-20F-KX 2X0,5MM2	1-349, 1-351
W1323	90220-0034	THERMOCABLE TEX/SITW-20F-KX 2X0,5MM2	1-349, 1-351
W1420	90220-0072	SCR. CABLE 4X0,34MM2	1-349, 1-351
W1500	351150-0418	CABLE OLFLEX 4X2,5 MM2 LIGHT/GREY	1-349, 1-351
W1501	351120-0168	CABLE SIHF 4X10MM2 GREEN/YELLOW	1-349, 1-351
W1502	351150-0196	CABLE OLFLEX 7X4 MM2 LIGHT/GREY	1-275
W1503	351120-0164	CABLE SIHF 4X1,5MM2 GREEN/YELLOW	1-157, 1-159
W1511	90220-0165	SCR. CABLE 5X0,34MM2	1-339, 1-341
W1801	351150-0404	CABLE OLFLEX 4X0,75 MM2 LIGHT/GREY	1-335
W1802	351150-0404	CABLE OLFLEX 4X0,75 MM2 LIGHT/GREY	2-57, 2-59
W1804	351150-0403	CABLE OLFLEX 3X0,75 MM2 LIGHT/GREY	2-57, 2-59
W1805	351150-0403	CABLE OLFLEX 3X0,75 MM2 LIGHT/GREY	2-57, 2-59
W1806	351150-0404	CABLE OLFLEX 4X0,75 MM2 LIGHT/GREY	2-57, 2-59
W1810	351150-0404	CABLE OLFLEX 4X0,75 MM2 LIGHT/GREY	1-335
W1820	90220-0034	THERMOCABLE TEX/SITW-20F-KX 2X0,5MM2	1-349, 1-351
W1830	90220-0104	SCR. CABLE 4X1,5MM2	1-349, 1-351
W2001	351150-0425	CABLE OLFLEX 25X0,75 MM2 LIGHT/GREY	2-107, 2-109, 2-111
W 2002	351150-0418	CABLE OLFLEX 4X2,5 MM2 LIGHT/GREY	2-33
W2002	351150-0425	CABLE OLFLEX 25X0,75 MM2 LIGHT/GREY	2-107, 2-109, 2-111
W2003	351150-0166	CABLE OLFLEX 4X4 MM2 LIGHT/GREY	2-107, 2-109, 2-111
W2005	351150-0412	CABLE OLFLEX 3X1,5 MM2 LIGHT/GREY	2-107, 2-109, 2-111
W2007	351150-0418	CABLE OLFLEX 4X2,5 MM2 LIGHT/GREY	2-107, 2-109, 2-111
W2008	351150-0418	CABLE OLFLEX 4X2,5 MM2 LIGHT/GREY	2-107, 2-109, 2-111
W2009	351150-0418	CABLE OLFLEX 4X2,5 MM2 LIGHT/GREY	2-107, 2-109, 2-111
W2010	351150-0425	CABLE OLFLEX 25X0,75 MM2 LIGHT/GREY	2-149, 2-151
W2011	351150-0425	CABLE OLFLEX 25X0,75 MM2 LIGHT/GREY	2-149, 2-151
W2014	351150-0413	CABLE OLFLEX 4X1,5 MM2 LIGHT/GREY	2-149, 2-151
W2015	90220-0104	SCR. CABLE 4X1,5MM2	2-149, 2-151
W2016	351150-0412	CABLE OLFLEX 3X1,5 MM2 LIGHT/GREY	2-149, 2-151
W2017	351150-0412	CABLE OLFLEX 3X1,5 MM2 LIGHT/GREY	2-149, 2-151
W2018	351150-0412	CABLE OLFLEX 3X1,5 MM2 LIGHT/GREY	2-149, 2-151
W2019	351150-0412	CABLE OLFLEX 3X1,5 MM2 LIGHT/GREY	2-149, 2-151
W2021	90220-0034	THERMOCABLE TEX/SITW-20F-KX 2X0,5MM2	2-149, 2-151
W2022	90220-0034	THERMOCABLE TEX/SITW-20F-KX 2X0,5MM2	2-149, 2-151
W2023	90220-0034	THERMOCABLE TEX/SITW-20F-KX 2X0,5MM2	2-149, 2-151
W2027	90220-0095	SCR. CABLE 3X0,75MM2	6-11
W2028	90220-0162	SCR. CABLE 10X0,25MM2	1-339, 1-341
W2029	90220-0104	SCR. CABLE 4X1,5MM2	1-349, 1-351
W2030	351150-0425	CABLE OLFLEX 25X0,75 MM2 LIGHT/GREY	2-149, 2-151
W2040	351150-0412	CABLE OLFLEX 3X1,5 MM2 LIGHT/GREY	1-263
W2041	351120-0164	CABLE SIHF 4X1,5MM2 GREEN/YELLOW	1-263
W2042	351120-0164	CABLE SIHF 4X1,5MM2 GREEN/YELLOW	1-263
W2050	351150-0425	CABLE OLFLEX 25X0,75 MM2 LIGHT/GREY	2-107, 2-109, 2-111
W2055	90220-0034	THERMOCABLE TEX/SITW-20F-KX 2X0,5MM2	2-107, 2-109, 2-111
W2060	90220-0201	CABLE OLFLEX 18X0,75 MM2	1-201
W2061	351150-0417	CABLE OLFLEX 3X2,5 MM2 LIGHT/GREY	1-201
W2062	90220-0165	SCR. CABLE 5X0,34MM2	1-201
W2063	90220-0034	THERMOCABLE TEX/SITW-20F-KX 2X0,5MM2	1-223
W2064	90220-0034	THERMOCABLE TEX/SITW-20F-KX 2X0,5MM2	1-201
W2066	90458-2557	CABLE OLFLEX 25X1 MM2	2-149, 2-151
W2067	90458-2557	CABLE OLFLEX 25X1 MM2	2-149, 2-151
W2068	1363297-0000	CABLE LVDS 10M	2-149, 2-151
W2071	351150-0412	CABLE OLFLEX 3X1,5 MM2 LIGHT/GREY	2-107, 2-109, 2-111
W2072	351150-0412	CABLE OLFLEX 3X1,5 MM2 LIGHT/GREY	2-107, 2-109, 2-111
W2090	2540596-0003	COAXIAL CABLE	2-107, 2-109, 2-111
W2091	2540596-0003	COAXIAL CABLE	2-107, 2-109, 2-111
W2201	90042-0583	CABLE MECMAN 440-827 000-1	6-75
W2208	351150-0403	CABLE OLFLEX 3X0,75 MM2 LIGHT/GREY	2-81
W2209	351150-0403	CABLE OLFLEX 3X0,75 MM2 LIGHT/GREY	2-81
W2209	351150-0418	CABLE OLFLEX 4X2,5 MM2 LIGHT/GREY	2-79
W2211	351150-0412	CABLE OLFLEX 3X1,5 MM2 LIGHT/GREY	2-107, 2-109, 2-111
W2212	351150-0405	CABLE OLFLEX 5X0,75 MM2 LIGHT/GREY	2-149, 2-151
W 2213	351150-0418	CABLE OLFLEX 4X2,5 MM2 LIGHT/GREY	6-25
W 2214	351150-0418	CABLE OLFLEX 4X2,5 MM2 LIGHT/GREY	6-17
W 2220	351150-0403	CABLE OLFLEX 3X0,75 MM2 LIGHT/GREY	6-67, 6-69
W2222	351150-0403	CABLE OLFLEX 3X0,75 MM2 LIGHT/GREY	6-33
W2224	351150-0406	CABLE OLFLEX 7X0,75 MM2 LIGHT/GREY	2-149, 2-151
W2225	351150-0405	CABLE OLFLEX 5X0,75 MM2 LIGHT/GREY	2-107, 2-109, 2-111
W2226	351150-0406	CABLE OLFLEX 7X0,75 MM2 LIGHT/GREY	2-107, 2-109, 2-111
W2228	351150-0406	CABLE OLFLEX 7X0,75 MM2 LIGHT/GREY	2-149, 2-151
W2230	351150-0405	CABLE OLFLEX 5X0,75 MM2 LIGHT/GREY	2-107, 2-109, 2-111
W2231	351150-0406	CABLE OLFLEX 7X0,75 MM2 LIGHT/GREY	2-107, 2-109, 2-111
W2232	351150-0406	CABLE OLFLEX 7X0,75 MM2 LIGHT/GREY	2-107, 2-109, 2-111
W2233	351150-0403	CABLE OLFLEX 3X0,75 MM2 LIGHT/GREY	2-79
W2234	351150-0406	CABLE OLFLEX 7X0,75 MM2 LIGHT/GREY	2-77

Pos	Part No	Description	Page No
W			
W2235	351150-0403	CABLE OLFLEX 3X0,75 MM2 LIGHT/GREY	2-107, 2-109, 2-111
W2236	351150-0403	CABLE OLFLEX 3X0,75 MM2 LIGHT/GREY	2-81
W2237	351150-0403	CABLE OLFLEX 3X0,75 MM2 LIGHT/GREY	2-81
W2238	351150-0403	CABLE OLFLEX 3X0,75 MM2 LIGHT/GREY	2-81
W2242	90220-0034	THERMOCABLE TEX/SITW-20F-KX 2X0,5MM2	6-19
W 2243	351150-0403	CABLE OLFLEX 3X0,75 MM2 LIGHT/GREY	6-67, 6-69
W2244	351150-0412	CABLE OLFLEX 3X1,5 MM2 LIGHT/GREY	2-107, 2-109, 2-111
W2248	351150-0403	CABLE OLFLEX 3X0,75 MM2 LIGHT/GREY	2-81
W2249	351150-0403	CABLE OLFLEX 3X0,75 MM2 LIGHT/GREY	2-81
W2250	351150-0406	CABLE OLFLEX 7X0,75 MM2 LIGHT/GREY	6-29
W 2251	351150-0431	CABLE OLFLEX 2X0,75 MM2 LIGHT/GREY	6-25
W2252	351150-0431	CABLE OLFLEX 2X0,75 MM2 LIGHT/GREY	6-17
W2253	351150-0431	CABLE OLFLEX 2X0,75 MM2 LIGHT/GREY	6-19
W2254	351150-0405	CABLE OLFLEX 5X0,75 MM2 LIGHT/GREY	2-57, 2-59
W2255	351150-0405	CABLE OLFLEX 5X0,75 MM2 LIGHT/GREY	2-57, 2-59
W2256	351150-0166	CABLE OLFLEX 4X4 MM2 LIGHT/GREY	6-39, 6-41
W2258	351150-0425	CABLE OLFLEX 25X0,75 MM2 LIGHT/GREY	6-65
W2270	90220-0091	PAIR TWISTED CABLE 2X2X0,25MM2	2-81, 2-107, 2-109, 2-111
W2271	90220-0091	PAIR TWISTED CABLE 2X2X0,25MM2	2-81, 2-107, 2-109, 2-111
W2710	90220-0125	MOTOR CABLE 4X4,0+2X1,0+2X0,75+SHIELD	2-107, 2-109, 2-111
W2711	90220-0125	MOTOR CABLE 4X4,0+2X1,0+2X0,75+SHIELD	2-107, 2-109, 2-111
W2712	90220-0125	MOTOR CABLE 4X4,0+2X1,0+2X0,75+SHIELD	2-107, 2-109, 2-111
W2713	90220-0125	MOTOR CABLE 4X4,0+2X1,0+2X0,75+SHIELD	2-107, 2-109, 2-111
W2714	90220-0116	MOTOR CABLE 4X1,0+2(2X0,5)+SHIELD	2-107, 2-109, 2-111
W2715	90220-0116	MOTOR CABLE 4X1,0+2(2X0,5)+SHIELD	2-107, 2-109, 2-111
W2716	90220-0084	MOTOR CABLE 4X2,5+2(2X0.75)+SHIELD	2-149, 2-151
W2720	90220-0131	PAIR TWISTED CABLE 3X2X0,25MM2	2-107, 2-109, 2-111
W2721	90220-0131	PAIR TWISTED CABLE 3X2X0,25MM2	2-107, 2-109, 2-111
W2722	90220-0131	PAIR TWISTED CABLE 3X2X0,25MM2	2-107, 2-109, 2-111
W2723	90220-0131	PAIR TWISTED CABLE 3X2X0,25MM2	2-107, 2-109, 2-111
W2724	90220-0131	PAIR TWISTED CABLE 3X2X0,25MM2	2-107, 2-109, 2-111
W2725	90220-0131	PAIR TWISTED CABLE 3X2X0,25MM2	2-107, 2-109, 2-111
W2726	90220-0131	PAIR TWISTED CABLE 3X2X0,25MM2	2-149, 2-151
W4001	351150-0425	CABLE OLFLEX 25X0,75 MM2 LIGHT/GREY	2-57, 2-59
W4002	351150-0425	CABLE OLFLEX 25X0,75 MM2 LIGHT/GREY	2-57, 2-59
W4005	351150-0414	CABLE OLFLEX 5X1,5 MM2 LIGHT/GREY	2-149, 2-151
W4006	351150-0417	CABLE OLFLEX 3X2,5 MM2 LIGHT/GREY	2-149, 2-151
W4008	2562736-0001	COAXIAL CABLE	4-185
W4009	2562736-0001	COAXIAL CABLE	4-185
W4016	90220-0165	SCR. CABLE 5X0,34MM2	2-107, 2-109, 2-111
W4017	90220-0165	SCR. CABLE 5X0,34MM2	2-107, 2-109, 2-111
W4022	351150-0403	CABLE OLFLEX 3X0,75 MM2 LIGHT/GREY	2-57, 2-59
W4052	351150-0403	CABLE OLFLEX 3X0,75 MM2 LIGHT/GREY	2-107, 2-109, 2-111
W4053	351150-0404	CABLE OLFLEX 4X0,75 MM2 LIGHT/GREY	2-107, 2-109, 2-111
W4054	351150-0406	CABLE OLFLEX 7X0,75 MM2 LIGHT/GREY	2-57, 2-59
W4502	2570004-0001	CABLE	2-149, 2-151
W4503	2570004-0001	CABLE	2-149, 2-151
W4505	90459-1812	CABLE, ETHERNET RJ 45 CONNECT. 8 M	2-149, 2-151
W4506	351150-0425	CABLE OLFLEX 25X0,75 MM2 LIGHT/GREY	2-149, 2-151
W4507	90459-1812	CABLE, ETHERNET RJ 45 CONNECT. 8 M	2-149, 2-151
W5002	351150-0413	CABLE OLFLEX 4X1,5 MM2 LIGHT/GREY	2-149, 2-151
W5003	90220-0104	SCR. CABLE 4X1,5MM2	2-149, 2-151
W5004	351150-0412	CABLE OLFLEX 3X1,5 MM2 LIGHT/GREY	2-149, 2-151
W 5006	351150-0405	CABLE OLFLEX 5X0,75 MM2 LIGHT/GREY	5-217
W5021	90220-0034	THERMOCABLE TEX/SITW-20F-KX 2X0,5MM2	2-149, 2-151
W5022	90220-0034	THERMOCABLE TEX/SITW-20F-KX 2X0,5MM2	2-149, 2-151
W5023	90220-0034	THERMOCABLE TEX/SITW-20F-KX 2X0,5MM2	2-149, 2-151
W5510	351150-0405	CABLE OLFLEX 5X0,75 MM2 LIGHT/GREY	5-219
W5603	351150-0405	CABLE OLFLEX 5X0,75 MM2 LIGHT/GREY	5-219
W5700	351150-0403	CABLE OLFLEX 3X0,75 MM2 LIGHT/GREY	2-149, 2-151
W7003	351150-0420	CABLE OLFLEX 7X2,5 MM2 LIGHT/GREY	7-135, 7-137, 7-139, 7-141, 7-143
W7004	351150-0413	CABLE OLFLEX 4X1,5 MM2 LIGHT/GREY	7-135, 7-137, 7-139, 7-141, 7-143
W7005	351150-0412	CABLE OLFLEX 3X1,5 MM2 LIGHT/GREY	7-135, 7-137, 7-139, 7-141, 7-143
W7006	351150-0425	CABLE OLFLEX 25X0,75 MM2 LIGHT/GREY	7-135, 7-137, 7-139, 7-141, 7-143
W7007	351150-0425	CABLE OLFLEX 25X0,75 MM2 LIGHT/GREY	7-135, 7-137, 7-139, 7-141, 7-143
W7008	351150-0425	CABLE OLFLEX 25X0,75 MM2 LIGHT/GREY	7-135, 7-137, 7-139, 7-141, 7-143
W7009	351150-0425	CABLE OLFLEX 25X0,75 MM2 LIGHT/GREY	7-135, 7-137, 7-139, 7-141, 7-143
W7010	90220-0104	SCR. CABLE 4X1,5MM2	7-117
W7011	90220-0104	SCR. CABLE 4X1,5MM2	7-173
W7012	90220-0105	SCR. CABLE 4X2,5MM2	7-7
W7014	351150-0412	CABLE OLFLEX 3X1,5 MM2 LIGHT/GREY	7-43, 7-45
W7015	90458-1076	L-SHAPED CONNECTOR CABLE 933 235-042	7-177, 7-179
W7020	90458-1076	L-SHAPED CONNECTOR CABLE 933 235-042	7-167
W7023	90458-1076	L-SHAPED CONNECTOR CABLE 933 235-042	7-177, 7-179
W7024	90458-1076	L-SHAPED CONNECTOR CABLE 933 235-042	7-43, 7-45
W7025	90458-1076	L-SHAPED CONNECTOR CABLE 933 235-042	7-43, 7-45
W7028	351150-0407	CABLE OLFLEX 12X0,75 MM2 LIGHT/GREY	7-197
W7029	351150-0407	CABLE OLFLEX 12X0,75 MM2 LIGHT/GREY	7-213
W7031	351150-0405	CABLE OLFLEX 5X0,75 MM2 LIGHT/GREY	7-199
W7037	351150-0415	CABLE OLFLEX 7X1,5 MM2 LIGHT/GREY	7-135, 7-137, 7-139, 7-141, 7-143
W7039	90220-0115	SCR. CABLE 12X0,75MM2	7-7
W7042	351150-0405	CABLE OLFLEX 5X0,75 MM2 LIGHT/GREY	7-43, 7-45

Pos	Part No	Description	Page No
W			
W7043	351150-0405	CABLE OLFLEX 5X0,75 MM2 LIGHT/GREY	7-43, 7-45
W7044	351150-0405	CABLE OLFLEX 5X0,75 MM2 LIGHT/GREY	7-43, 7-45
W7045	351150-0431	CABLE OLFLEX 2X0,75 MM2 LIGHT/GREY	7-43, 7-45
W7046	351120-0126	CABLE SIHF 2X4MM2 GREEN/YELLOW	7-81
W7047	2540595-0001	COAXIAL CABLE	7-7
W7048	2540596-0001	COAXIAL CABLE	7-7
W7049	351120-0145	CABLE SIHF 3X2,5MM2 GREEN/YELLOW	7-87
W7050	90220-0092	PAIR TWISTED CABLE 3X2X0,25MM2	7-85
W7054	351150-0406	CABLE OLFLEX 7X0,75 MM2 LIGHT/GREY	7-43, 7-45
W7055	351150-0412	CABLE OLFLEX 3X1,5 MM2 LIGHT/GREY	7-43, 7-45
W7072	90220-0104	SCR. CABLE 4X1,5MM2	7-75
W7073	90220-0104	SCR. CABLE 4X1,5MM2	7-75
W7076	90220-0104	SCR. CABLE 4X1,5MM2	7-135, 7-137, 7-139, 7-141, 7-143
W7077	351150-0405	CABLE OLFLEX 5X0,75 MM2 LIGHT/GREY	7-43, 7-45
W7304	90220-0034	THERMOCABLE TEX/SITW-20F-KX 2X0,5MM2	7-99
W7401	351150-0403	CABLE OLFLEX 3X0,75 MM2 LIGHT/GREY	7-209
W7402	351150-0403	CABLE OLFLEX 3X0,75 MM2 LIGHT/GREY	7-193
W9100:1	90459-3165	CABLE OLFLON PTFE 1X4,72 MM² BLACK	1-193
W9100:2	90459-3165	CABLE OLFLON PTFE 1X4,72 MM² BLACK	1-193
W9100:3	90459-3154	CABLE OLFLONPTFE 1X4,72 MM² YELLOW-GREEN	1-193
W9101	351150-0403	CABLE OLFLEX 3X0,75 MM2 LIGHT/GREY	1-201
W9103	351150-0403	CABLE OLFLEX 3X0,75 MM2 LIGHT/GREY	1-201
W9104	351150-0403	CABLE OLFLEX 3X0,75 MM2 LIGHT/GREY	1-201
W9112	351150-0403	CABLE OLFLEX 3X0,75 MM2 LIGHT/GREY	1-201
W9113	351150-0404	CABLE OLFLEX 4X0,75 MM2 LIGHT/GREY	1-201
W9114	351150-0403	CABLE OLFLEX 3X0,75 MM2 LIGHT/GREY	1-201
W9115	90220-0165	SCR. CABLE 5X0,34MM2	1-201
W9117	90220-0165	SCR. CABLE 5X0,34MM2	1-201
X			
X011	90001-0033	WALL SOCKET OUTLET	8-91, 8-93
X025	90326-0020	PLUG, FEMALE YELLOW CR-AL	8-21
X101	90110-0161	FEMALE INSERT 70 105 0653 0	8-23, 8-25, 8-27, 8-29
X102	90110-0161	FEMALE INSERT 70 105 0653 0	8-23, 8-25, 8-27, 8-29
X103	90110-0161	FEMALE INSERT 70 105 0653 0	8-23, 8-25, 8-27, 8-29
X104	90110-0161	FEMALE INSERT 70 105 0653 0	8-23, 8-25, 8-27, 8-29
X105	90110-0161	FEMALE INSERT 70 105 0653 0	8-23, 8-25, 8-27, 8-29
X106	90110-0161	FEMALE INSERT 70 105 0653 0	8-23, 8-25, 8-27, 8-29
X107	90110-0161	FEMALE INSERT 70 105 0653 0	8-23, 8-25, 8-27, 8-29
X109	90110-0161	FEMALE INSERT 70 105 0653 0	8-23, 8-25, 8-27, 8-29
X111	90110-0161	FEMALE INSERT 70 105 0653 0	8-23, 8-25, 8-27, 8-29
X112	90110-0161	FEMALE INSERT 70 105 0653 0	8-23, 8-25, 8-27, 8-29
X113	90110-0161	FEMALE INSERT 70 105 0653 0	8-23, 8-25, 8-27, 8-29
X114	90110-0161	FEMALE INSERT 70 105 0653 0	8-23, 8-25, 8-27, 8-29
X115	90110-0161	FEMALE INSERT 70 105 0653 0	8-23, 8-25, 8-27, 8-29
X116	90110-0161	FEMALE INSERT 70 105 0653 0	8-23, 8-25, 8-27, 8-29
X117	90110-0161	FEMALE INSERT 70 105 0653 0	8-23, 8-25, 8-27, 8-29
X118	90110-0161	FEMALE INSERT 70 105 0653 0	8-23, 8-25, 8-27, 8-29
X126	90110-0159	MALE INSERT 70.310.0640.0	7-117
X126	90110-0161	FEMALE INSERT 70 105 0653 0	8-23, 8-25, 8-27, 8-29
X127	90110-0161	FEMALE INSERT 70 105 0653 0	8-23, 8-25, 8-27, 8-29
X128	90110-0159	MALE INSERT 70.310.0640.0	7-135, 7-137, 7-139, 7-141, 7-143
X128	90110-0161	FEMALE INSERT 70 105 0653 0	8-23, 8-25, 8-27, 8-29
X129	90110-0161	FEMALE INSERT 70 105 0653 0	8-23, 8-25, 8-27, 8-29
X130	90110-0161	FEMALE INSERT 70 105 0653 0	8-23, 8-25, 8-27, 8-29
X132	90110-0159	MALE INSERT 70.310.0640.0	7-135, 7-137, 7-139, 7-141, 7-143
X132	90110-0161	FEMALE INSERT 70 105 0653 0	8-23, 8-25, 8-27, 8-29
X133	90110-0159	MALE INSERT 70.310.0640.0	7-135, 7-137, 7-139, 7-141, 7-143
X133	90110-0161	FEMALE INSERT 70 105 0653 0	8-23, 8-25, 8-27, 8-29
X134	90110-0159	MALE INSERT 70.310.0640.0	7-135, 7-137, 7-139, 7-141, 7-143
X134	90110-0161	FEMALE INSERT 70 105 0653 0	8-23, 8-25, 8-27, 8-29
X136	90110-0161	FEMALE INSERT 70 105 0653 0	8-23, 8-25, 8-27, 8-29
X137	90110-0161	FEMALE INSERT 70 105 0653 0	8-23, 8-25, 8-27, 8-29
X138	90110-0161	FEMALE INSERT 70 105 0653 0	8-23, 8-25, 8-27, 8-29
X160	2540596-0002	COAXIAL CABLE	8-23, 8-25, 8-27, 8-29
X161	2540596-0002	COAXIAL CABLE	8-23, 8-25, 8-27, 8-29
X162	2540596-0002	COAXIAL CABLE	8-23, 8-25, 8-27, 8-29
X201	90110-0164	FEMALE INSERT 70 105 2453 3	8-23, 8-25, 8-27, 8-29
X202	90110-0164	FEMALE INSERT 70 105 2453 3	8-23, 8-25, 8-27, 8-29
X203	90110-0164	FEMALE INSERT 70 105 2453 3	8-23, 8-25, 8-27, 8-29
X204	90110-0164	FEMALE INSERT 70 105 2453 3	8-23, 8-25, 8-27, 8-29
X206	90110-0164	FEMALE INSERT 70 105 2453 3	8-23, 8-25, 8-27, 8-29
X207	90110-0164	FEMALE INSERT 70 105 2453 3	8-23, 8-25, 8-27, 8-29
X208	90110-0164	FEMALE INSERT 70 105 2453 3	8-23, 8-25, 8-27, 8-29
X209	90110-0164	FEMALE INSERT 70 105 2453 3	8-23, 8-25, 8-27, 8-29
X210	90110-0164	FEMALE INSERT 70 105 2453 3	8-23, 8-25, 8-27, 8-29
X211	90110-0164	FEMALE INSERT 70 105 2453 3	8-23, 8-25, 8-27, 8-29
X212	90110-0164	FEMALE INSERT 70 105 2453 3	8-23, 8-25, 8-27, 8-29
X213	90110-0150	MALE INSERT 121110 0000	7-135, 7-137, 7-139, 7-141, 7-143
X213	90110-0164	FEMALE INSERT 70 105 2453 3	8-23, 8-25, 8-27, 8-29
X214	90110-0150	MALE INSERT 121110 0000	7-135, 7-137, 7-139, 7-141, 7-143
X214	90110-0164	FEMALE INSERT 70 105 2453 3	8-23, 8-25, 8-27, 8-29
X215	90110-0164	FEMALE INSERT 70 105 2453 3	8-23, 8-25, 8-27, 8-29

Pos	Part No	Description	Page No
X			
X216	90110-0164	FEMALE INSERT 70 105 2453 3	8-23, 8-25, 8-27, 8-29
X217	90110-0164	FEMALE INSERT 70 105 2453 3	8-23, 8-25, 8-27, 8-29
X218	90110-0164	FEMALE INSERT 70 105 2453 3	8-23, 8-25, 8-27, 8-29
X219	90110-0150	MALE INSERT 121110 0000	7-135, 7-137, 7-139, 7-141, 7-143
X219	90110-0164	FEMALE INSERT 70 105 2453 3	8-23, 8-25, 8-27, 8-29
X220	90110-0150	MALE INSERT 121110 0000	7-135, 7-137, 7-139, 7-141, 7-143
X220	90110-0164	FEMALE INSERT 70 105 2453 3	8-23, 8-25, 8-27, 8-29
X221	90110-0164	FEMALE INSERT 70 105 2453 3	8-23, 8-25, 8-27, 8-29
X222	90110-0164	FEMALE INSERT 70 105 2453 3	8-23, 8-25, 8-27, 8-29
X223	90110-0164	FEMALE INSERT 70 105 2453 3	8-23, 8-25, 8-27, 8-29
X224	90110-0164	FEMALE INSERT 70 105 2453 3	8-23, 8-25, 8-27, 8-29
X225	90110-0164	FEMALE INSERT 70 105 2453 3	8-23, 8-25, 8-27, 8-29
X226	90110-0164	FEMALE INSERT 70 105 2453 3	8-23, 8-25, 8-27, 8-29
X227	90110-0164	FEMALE INSERT 70 105 2453 3	8-23, 8-25, 8-27, 8-29
X228	90110-0164	FEMALE INSERT 70 105 2453 3	8-23, 8-25, 8-27, 8-29
X300	90459-0835	THERMO CONTACT PANEL, 16 CONTACTS 2 ROWS	8-23, 8-25, 8-27, 8-29
X308	90326-0022	PLUG, MALE YELLOW CR-AL	1-349, 1-351
X312	90326-0022	PLUG, MALE YELLOW CR-AL	1-349, 1-351
X317	90326-0022	PLUG, MALE YELLOW CR-AL	1-349, 1-351
X318	90326-0022	PLUG, MALE YELLOW CR-AL	1-349, 1-351
X320	90326-0022	PLUG, MALE YELLOW CR-AL	7-99
X401	90110-0235	CABLE CONTACT, PX0739/S	7-117
X401	90110-0236	CHASSIS CONTACT PX0767/S	8-23, 8-25, 8-27, 8-29
X402	90110-0235	CABLE CONTACT, PX0739/S	7-117
X402	90110-0236	CHASSIS CONTACT PX0767/S	8-23, 8-25, 8-27, 8-29
X403	90110-0236	CHASSIS CONTACT PX0767/S	8-23, 8-25, 8-27, 8-29
X404	90110-0236	CHASSIS CONTACT PX0767/S	8-23, 8-25, 8-27, 8-29
X405	90110-0236	CHASSIS CONTACT PX0767/S	8-23, 8-25, 8-27, 8-29
X406	90110-0236	CHASSIS CONTACT PX0767/S	8-23, 8-25, 8-27, 8-29
X451	90110-0028	CONTACT UNIT 4-POLEADAPTER	8-91, 8-93
X501	90110-0165	FEMALE INSERT 70.005.0653.0	8-23, 8-25, 8-27, 8-29
X502	90110-0165	FEMALE INSERT 70.005.0653.0	8-23, 8-25, 8-27, 8-29
X503	90110-0165	FEMALE INSERT 70.005.0653.0	8-23, 8-25, 8-27, 8-29
X504	90110-0156	MALE INSERT 70.210.0653.0	7-135, 7-137, 7-139, 7-141, 7-143
X504	90110-0165	FEMALE INSERT 70.005.0653.0	8-23, 8-25, 8-27, 8-29
X600	90110-0381	COVER	1-349, 1-351
X710.1	90110-0516	SOCKET	8-23, 8-25, 8-27, 8-29
X711.1	90110-0516	SOCKET	8-23, 8-25, 8-27, 8-29
X712.1	90110-0516	SOCKET	8-23, 8-25, 8-27, 8-29
X713.1	90110-0516	SOCKET	8-23, 8-25, 8-27, 8-29
X714.1	90110-0516	SOCKET	8-23, 8-25, 8-27, 8-29
X715.1	90110-0516	SOCKET	8-23, 8-25, 8-27, 8-29
X716.1	90110-0516	SOCKET	8-23, 8-25, 8-27, 8-29
X1250	90042-0535	TERMINAL BOARD 19 CORDS	1-319
X1251	90042-0535	TERMINAL BOARD 19 CORDS	1-321, 1-323
X1252	90042-0535	TERMINAL BOARD 19 CORDS	1-321, 1-323
X1253	90042-0535	TERMINAL BOARD 19 CORDS	1-329, 1-331
X1307	90326-0020	PLUG, FEMALE YELLOW CR-AL	1-231
X1511	90459-3709	CONNECTOR 3-POLE AMP 282087-1	1-143
X1512	90459-4077	WIRE SEAL , AMP 281934	1-143
X1513	90459-4079	MINI MIC SRS, AMP 183035-1	1-143
X2038	90326-0022	PLUG, MALE YELLOW CR-AL	6-19
X2051	90042-0535	TERMINAL BOARD 19 CORDS	6-73
X7022	90458-1595	CONNECTION, BKS-S 33M-00	7-85
X7049	90042-0535	TERMINAL BOARD 19 CORDS	7-159, 7-161
X7050	90042-0535	TERMINAL BOARD 19 CORDS	7-159, 7-161
X7051	90042-0535	TERMINAL BOARD 19 CORDS	7-159, 7-161
X7304	90326-0020	PLUG, FEMALE YELLOW CR-AL	7-99
X9115	90326-0020	PLUG, FEMALE YELLOW CR-AL	1-193
X9116	90326-0020	PLUG, FEMALE YELLOW CR-AL	1-193
X74031	90458-0603	CONNECTOR FEMALE 5 PINS	7-107
X74032	90458-0603	CONNECTOR FEMALE 5 PINS	7-107
Y			
Y1104	90042-0172	SOLENOID VALVE 4023/1005/1032 24VDC	1-179
Y1107	90042-0538	PILOT VALVE L=500MM	1-321, 1-323
Y1108	90042-0538	PILOT VALVE L=500MM	1-321, 1-323
Y1111	90042-0538	PILOT VALVE L=500MM	1-321, 1-323
Y1112	90042-0538	PILOT VALVE L=500MM	1-321, 1-323
Y1210	90042-0206	SOLENID VALVE G1/8, 444-111-000-1	2-27
Y1220	90042-0538	PILOT VALVE L=500MM	2-51
Y1221	90042-0538	PILOT VALVE L=500MM	2-51
Y1222	90042-0172	SOLENOID VALVE 4023/1005/1032 24VDC	1-267
Y1223	90042-0172	SOLENOID VALVE 4023/1005/1032 24VDC	1-267
Y1230	90042-0203	SOLENOID VALVE BURKERT	1-281
Y1231	90042-0203	SOLENOID VALVE BURKERT	1-281
Y1241	90042-0538	PILOT VALVE L=500MM	1-321, 1-323
Y1242	90042-0538	PILOT VALVE L=500MM	1-321, 1-323
Y1303	90042-0538	PILOT VALVE L=500MM	1-319
Y1311	90042-0538	PILOT VALVE L=500MM	1-329, 1-331
Y1312	90042-0538	PILOT VALVE L=500MM	1-319
Y1318	90042-0538	PILOT VALVE L=500MM	1-319
Y1320	90042-0538	PILOT VALVE L=500MM	1-329, 1-331

Pos	Part No	Description	Page No
Y			
Y1323	90042-0538	PILOT VALVE L=500MM	1-319
Y1324	90042-0538	PILOT VALVE L=500MM	1-329, 1-331
Y1325	90042-0538	PILOT VALVE L=500MM	1-329, 1-331
Y1326	90042-0538	PILOT VALVE L=500MM	1-329, 1-331
Y1332	90042-0538	PILOT VALVE L=500MM	1-329, 1-331
Y1333	90042-0538	PILOT VALVE L=500MM	1-329, 1-331
Y1333	90187-0110	DIAPHRAGM VALVE DN15, N.C. WELD CONN.	1-231
Y1401	90042-0538	PILOT VALVE L=500MM	1-321, 1-323
Y1501	90042-0538	PILOT VALVE L=500MM	1-321, 1-323
Y1502	90042-0538	PILOT VALVE L=500MM	1-319
Y1503	90042-0538	PILOT VALVE L=500MM	1-319
Y1801	90042-0538	PILOT VALVE L=500MM	1-329, 1-331
Y1802	90042-0538	PILOT VALVE L=500MM	1-329, 1-331
Y1803	90042-0538	PILOT VALVE L=500MM	1-329, 1-331
Y1804	90042-0538	PILOT VALVE L=500MM	2-51
Y1805	90042-0538	PILOT VALVE L=500MM	2-51
Y1808	90042-0538	PILOT VALVE L=500MM	2-51
Y1809	90042-0538	PILOT VALVE L=500MM	2-51
Y1810	90042-0538	PILOT VALVE L=500MM	1-319
Y2104	90042-0538	PILOT VALVE L=500MM	2-51
Y2106	90042-0248	SOLENOID VALVE OFFICIENE DI ENSINO	2-205
Y 2108	90042-0249	SOLENOID VALVE OFFICINE DI ENSINO	6-67, 6-69
Y2201	90042-0585	PILOT VALVE L=5M	6-75
Y2401	90042-0538	PILOT VALVE L=500MM	2-51
Y3101	90042-0254	SOLENOID VALVE, R1 1/2	6-33
Y3103	90042-0538	PILOT VALVE L=500MM	6-73
Y3105	90042-0538	PILOT VALVE L=500MM	2-51
Y3109	90042-0538	PILOT VALVE L=500MM	6-73
Y3110	90042-0538	PILOT VALVE L=500MM	6-73
Y3111	90042-0538	PILOT VALVE L=500MM	6-73
Y3112	90042-0538	PILOT VALVE L=500MM	6-73
Y5200	90042-0538	PILOT VALVE L=500MM	2-135, 2-137, 2-139
Y5210	90042-0538	PILOT VALVE L=500MM	2-135, 2-137, 2-139
Y5315	90042-0538	PILOT VALVE L=500MM	2-135, 2-137, 2-139
Y5501	90042-0538	PILOT VALVE L=500MM	2-51
Y5504	90042-0538	PILOT VALVE L=500MM	2-135, 2-137, 2-139
Y5505	90042-0538	PILOT VALVE L=500MM	2-135, 2-137, 2-139
Y5506	90042-0538	PILOT VALVE L=500MM	2-135, 2-137, 2-139
Y6201	90042-0591	PILOT VALVE, 04938-333-08	7-159, 7-161
Y6203	90042-0539	PILOT VALVE L=350MM	7-159, 7-161
Y6205	90042-0591	PILOT VALVE, 04938-333-08	7-159, 7-161
Y7303	90042-0539	PILOT VALVE L=350MM	7-159, 7-161
Y7315	90042-0591	PILOT VALVE, 04938-333-08	7-159, 7-161
Y7407	90042-0591	PILOT VALVE, 04938-333-08	7-159, 7-161
Y7408	90042-0538	PILOT VALVE L=500MM	7-159, 7-161
Y7410	90042-0539	PILOT VALVE L=350MM	7-159, 7-161
Y7412	90042-0538	PILOT VALVE L=500MM	7-159, 7-161
Y7413	90042-0538	PILOT VALVE L=500MM	7-159, 7-161
Y7414	90042-0538	PILOT VALVE L=500MM	7-159, 7-161
Y7415	90042-0538	PILOT VALVE L=500MM	7-159, 7-161
Y7420	90042-0591	PILOT VALVE, 04938-333-08	7-159, 7-161
Y7421	90042-0591	PILOT VALVE, 04938-333-08	7-159, 7-161
Y7425	90042-0585	PILOT VALVE L=5M	7-159, 7-161
Y7430	90042-0538	PILOT VALVE L=500MM	7-159, 7-161
Y7431	90042-0538	PILOT VALVE L=500MM	7-159, 7-161
Y7432	90042-0538	PILOT VALVE L=500MM	7-159, 7-161
Y7433	90042-0538	PILOT VALVE L=500MM	7-159, 7-161
Y8401	90042-0582	COIL NORGREN QM/48/127/21	7-59
Y9101	90042-0171	SOLENOID VALVE BUERKERT	1-197, 1-199
Y9103	90042-0171	SOLENOID VALVE BUERKERT	1-197, 1-199
Y9105	90042-0538	PILOT VALVE L=500MM	1-321, 1-323
Y9106	90042-0538	PILOT VALVE L=500MM	1-321, 1-323
Y9112	90042-0203	SOLENOID VALVE BURKERT	1-195
Y74121	90166-0194	TUBE 8 MM PUR BLUE	7-63
Y74122	90166-0194	TUBE 8 MM PUR BLUE	7-63
Z			
Z001	90024-0060	POWER LINE FILTER, 80 A 250/440 VAC	6-11
Z002	90082-0013	OVER VOLT. PROTECT. PU 4C-R 230 VAC	6-11
Z004	90024-0036	FILTERED TERMINAL BLOCK	6-11
Z010	90459-3460	FOOTPRINT FILTER 22-RF010-AL	8-71
Z011	90459-3460	FOOTPRINT FILTER 22-RF010-AL	8-71
Z012	90459-3460	FOOTPRINT FILTER 22-RF010-AL	8-71
Z013	90459-3460	FOOTPRINT FILTER 22-RF010-AL	8-71
Z014	90459-3460	FOOTPRINT FILTER 22-RF010-AL	8-71
Z015	90459-3461	FOOTPRINT FILTER 22-RF5P7-AL	8-71
Z100	90458-1140	FERRITE, RI-26-28-13	8-71
Z101	90458-1140	FERRITE, RI-26-28-13	8-71
Z110	90458-1140	FERRITE, RI-26-28-13	8-71
Z111	90458-1140	FERRITE, RI-26-28-13	8-71
Z120	90458-1140	FERRITE, RI-26-28-13	8-71
Z121	90458-1140	FERRITE, RI-26-28-13	8-71
Z130	90458-1140	FERRITE, RI-26-28-13	8-71

Pos	Part No	Description	Page No
Z			
Z131	90458-1140	FERRITE, RI-26-28-13	8-71
Z140	90458-1140	FERRITE, RI-26-28-13	8-71
Z141	90458-1140	FERRITE, RI-26-28-13	8-71
Z150	90458-1140	FERRITE, RI-26-28-13	8-71
Z151	90458-1140	FERRITE, RI-26-28-13	8-71
Z452	90458-2381	POWER LINE FILTER 5 A 250 VAC	8-91, 8-93
Z701	90100-0068	EMC FILTER 90A, 258-75-34	8-67
Z91031	90277-0104	FILTER F64B-2GN-ARO	1-197, 1-199
Z91032	90277-0323	FILTER HOUSING / ART.NO 95S6-1/4 S 5430	1-197, 1-199

Tetra Pak

SPC binder labels. 40 mm Full width *Note! This page is generated* **automatically.**
using the **variable definitions** *made in the* **front page** *file!!*

Tetra Pak A3/Flex 1(2)
648575-0100
Issue: 2004-09 Doc No: SPC-2708464-0101

Tetra Pak A3/Flex 1(2)
648575-0100
Issue: 2004-09 Doc No: SPC-2708464-0101

Tetra Pak A3/Flex 2(2)
648575-0100
Issue: 2004-09 Doc No: SPC-2708464-0101

Tetra Pak A3/Flex 2(2)
648575-0100
Issue: 2004-09 Doc No: SPC-2708464-0101

Tetra Pak A3/Flex 1(2)
648575-0100
Issue: 2004-09 Doc No: SPC-2708464-0101

Tetra Pak A3/Flex 1(2)
648575-0100
Issue: 2004-09 Doc No: SPC-2708464-0101

Tetra Pak A3/Flex 2(2)
648575-0100
Issue: 2004-09 Doc No: SPC-2708464-0101

Tetra Pak A3/Flex 2(2)
648575-0100
Issue: 2004-09 Doc No: SPC-2708464-0101

Tetra Pak A3/Flex 1(2)
648575-0100
Issue: 2004-09 Doc No: SPC-2708464-0101

Tetra Pak A3/Flex 1(2)
648575-0100
Issue: 2004-09 Doc No: SPC-2708464-0101

Tetra Pak A3/Flex 2(2)
648575-0100
Issue: 2004-09 Doc No: SPC-2708464-0101

Tetra Pak A3/Flex 2(2)
648575-0100
Issue: 2004-09 Doc No: SPC-2708464-0101